RUTHZIL TRATOR COMERCIAL DE PEÇAS LTDA 11 97083-6812 ROLANDO CITRANGULO

JANEIRO 2000

Bobcat®

873

G-Series

Parts Manual

S/N 5141 40001 & Above
S/N 5142 40001 & Above
S/N 5179 11001 & Above

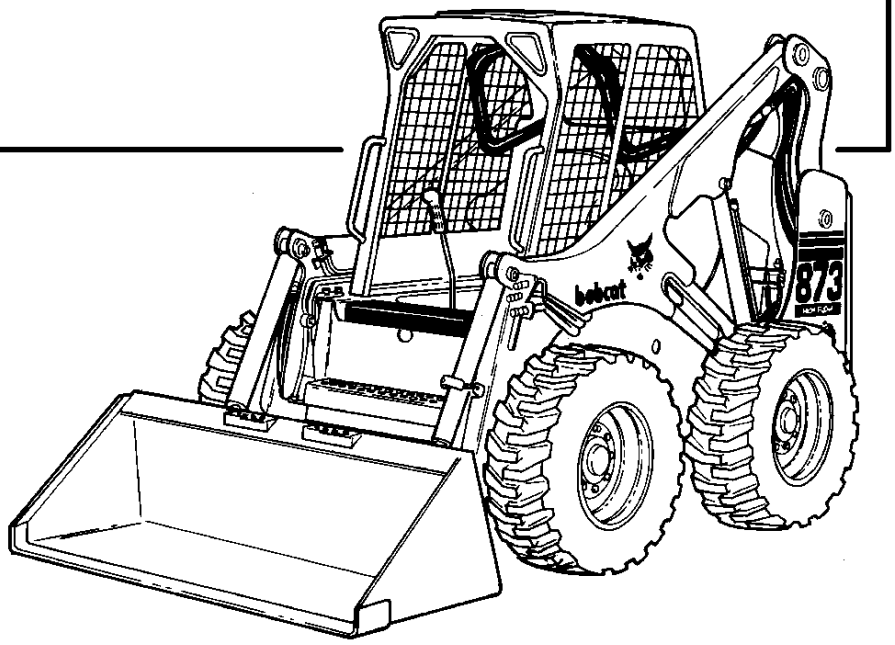

IR Bobcat

6900956 (1-00) Revised (10-00)

Printed in U.S.A.

© Bobcat Company 2000

873 G-SERIES ALPHABETICAL INDEX

ADHESIVE 298
AIR CLEANER 152, 186
ALTERNATOR 142, 158
ANTI-FREEZE 298
AUXILIARY HYDRAULICS 52
AXLE 39

BACK UP ALARM 192
BELT, COOLING FAN 148
BELT, MAIN DRIVE 158
BELT, PUMP DRIVE 156
BELT, TIMING 172
BLACK GOLD 298
BLOCK HEATER 194
BLOCK, ENGINE 176
BOB-TACH 28
BOOT, RUBBER 30
BUCKET POS. KIT 198

CAB DOOR 202, 206
CAB ENCLOSURE 213
CAB 14, 16
CAMSHAFT 172
CAP, FUEL 32
CAP, HYD. OIL 84
CHAINCASE 12
COOLING FAN DRIVE ASSY. 164
CRANKSHAFT 180
CYLINDER HEAD 170
CYLINDER, BOBTACH 269
CYLINDER, LIFT 59
CYLINDER, TILT 42, 46, 56, 58

DECALS 220
DIPSTICK, ENG. OIL 176
DISC BRAKE 38
DOOR, CAB 202, 206
DOOR, REAR 22
DRIVE MOUNT ASSY 36

ENGINE 156, 158
EXTERNAL REMOVAL R. WIN KIT 214

FAN 148
FILTER, AIR 186
FILTER, ENG. OIL 176
FILTER, FUEL 32
FILTER, HYD. OIL 88
FIRE EXTINGUISHER 238
FLASHER LIGHTS 240
FUEL SYSTEM 32

GAS SPRING 14, 202, 206
GASKET KITS, ENG. 166

H-FRAME 24
HARNESS, CAB 124, 126
HARNESS, LIGHTS 265
HEATER 250, 254, 256
HORN 261
HUB, AXLE 39

INJECTOR NOZZLES 182
INJECTORS 182

LATCH, REAR DOOR 22
LEVER, PINTLE 94
LIFT ARM 24
LIGHT KIT 265
LIGHTS, FLASHER 240
LOCK, REAR DOOR 280
LUBRICANT 298

MAIN FRAME 12
MANIFOLD 167
MOTOR, HYDRO. 84
MOUNT, ENGINE 158
MOUNT, HYDRO. PUMP 160
MUFFLER 152

OIL COOLER 88
OIL PAN 176
OIL 298

PAINT 298
PANEL, INSTRUMENT 124, 126
PEDALS, CONTROL 62
PISTON 180
POLISH 298
PUMP, GEAR 117
PUMP, HYDRO 102, 106
PUMP, OIL 185
PURIFIER 275

RADIATOR 150
REAR AUXILIARY KIT 278
RIM 294

SEALANT 298
SEAT BELT 283, 288
SEAT 19, 20
SENDER, FUEL 32
SHOCK CONTROLS 94
SPROCKET, AXLE 39
STARTER 146
STOP, LIFT ARM 26
STROBE LIGHT 293
SWITCH, IGNITION 124, 126

TANK, FUEL 32
TANK, HYDRO 84
THROTTLE 162
TIRE 294
TOOL HOLDER 22
TURBOCHARGER 176

VALVE STEM 294
VALVE, BKT. POS. 74
VALVE, ENGINE 170
VALVE, HYD. CONTROL 64, 70

WINDOW, REAR 216, 224
WINDOW, SIDE 216
WIPER, WINDSHIELD 202

873 G-SERIES CONTENTS

MAIN FRAME 11-34
- MAIN FRAME 11
- OPERATOR CAB 13, 15
- SEAT & SEAT BAR 17
- SEAT 19, 20
- REAR DOOR 21
- LIFT ARMS & BOBTACH 23
- BOB-TACH 27
- PANELS 29
- FUEL SYSTEM 31

DRIVE TRAIN 35-41
- DRIVE TRAIN 35
- MOTOR CARRIER 36
- DISC BRAKE 37-40
- AXLE 41

HYDRAULIC SYSTEM 43-76
- HYDRAULIC CIRCUITRY 43-50
- LIFT & TILT CONTROL CIRCUITRY 51
- AUXILIARY HYDRAULICS 53-56
- TILT CYLINDER 57-60
- LIFT CYLINDER 61
- MANUAL LIFT RELEASE VALVE 62
- CONTROL PEDALS 63
- HYDRAULIC CONTROL VALVE 65-75
- BUCKET POSITIONING VALVE 76

HIGH HORSEPOWER HYDRAULICS 77-84
- HIGH HORSEPOWER HYDRAULICS 77-84

HYDROSTATIC SYSTEM 85-124
- HYDROSTATIC CIRCUITRY 85-94
- HAND CONTROLS 95
- HYDROSTATIC MOTOR 97
- HYDROSTATIC MOTOR & BRAKE 99-102
- HYDROSTATIC PUMP 103-118
- GEAR PUMP 119-120
- 2-SPEED VALVE 121
- HYDROSTATIC OIL FILTER 123-124

ELECTRICAL SYSTEM 125-154
- CAB ELECTRICAL CIRCUITRY 125-128
- ENGINE ELECTRICAL 129-132
- ELECTRICAL CONTROLS 133-148
- ALTERNATOR 149-152
- STARTER 153

POWER UNIT 155-196
- COOLING SYSTEM 155-160
- ENGINE & ATTACHING PARTS 161-170
- THROTTLE 171
- COOLING FAN DRIVE ASSY 173
- ENGINE & GASKET KITS 175-194
- OIL PUMP 195
- AIR CLEANER 196

873 G-SERIES CONTENTS (Cont'd)

ACCESSORIES & OPTIONS 197-314

ACCESS COVER 199
ACCESSORIES HARNESS 200
BACK-UP ALARM KIT 201
BEACON 203
BLOCK HEATER 204-206
BUCKET POSITIONING KIT 207
BUCKET SHIELD KIT 209
CAB DOOR 211-217
CAB ENCLOSURE 219-223
CAB WINDOWS 224- 225
COUNTERWEIGHT KIT 227
DEBRIS EJECTOR KIT 228
DECALS 229-232
DELUXE CAB 233-236
ELECTRICAL CONTROLS KIT 238-242
EUROPEAN ACCESSORIES 243-248
FIRE EXTINGUISHER 250
FLASHER LIGHTS 251
F.O.P.S. KIT 253
GAS SPRING KIT 254
HAND CONTROL KIT 255-258
HEATER & A/C 260-278
HORN KIT 279
LIFT KIT 280
LIFT ARM KIT 281
LIGHT KIT 283
POWER BOB-TACH KIT 285
POWER BOB-TACH CYLINDER 287
POWER BOB-TACH 289-292
PURIFIER 293
REAR AUXILIARY HYDRAULICS 295
REAR AUXILIARY VALVE 297
REAR DOOR LOCK 298
REAR WIPER 299
SEAT 301-304
SEAT BELT 305-307
SEVEN PIN CONNECTOR KIT 308
SOUND OPTION 309
STROBE LIGHT 311
TIRES & RIMS 312-314

BULK ITEMS 315-316

BULK ITEMS 315

NUMERICAL INDEX 317-370

NUMERICAL INDEX 317-370

873 G-SERIES CONTENTS

MAIN FRAME 11-34
- MAIN FRAME 11
- OPERATOR CAB 13, 15
- SEAT & SEAT BAR 17
- SEAT 19, 20
- REAR DOOR 21
- LIFT ARMS & BOBTACH 23
- BOB-TACH 27
- PANELS 29
- FUEL SYSTEM 31

DRIVE TRAIN 35-41
- DRIVE TRAIN 35
- MOTOR CARRIER 36
- DISC BRAKE 37-40
- AXLE 41

HYDRAULIC SYSTEM 43-76
- HYDRAULIC CIRCUITRY 43-50
- LIFT & TILT CONTROL CIRCUITRY 51
- AUXILIARY HYDRAULICS 53-56
- TILT CYLINDER 57-60
- LIFT CYLINDER 61
- MANUAL LIFT RELEASE VALVE 62
- CONTROL PEDALS 63
- HYDRAULIC CONTROL VALVE 65-75
- BUCKET POSITIONING VALVE 76

HIGH HORSEPOWER HYDRAULICS 77-84
- HIGH HORSEPOWER HYDRAULICS 77-84

HYDROSTATIC SYSTEM 85-124
- HYDROSTATIC CIRCUITRY 85-94
- HAND CONTROLS 95
- HYDROSTATIC MOTOR 97
- HYDROSTATIC MOTOR & BRAKE 99-102
- HYDROSTATIC PUMP 103-118
- GEAR PUMP 119-120
- 2-SPEED VALVE 121
- HYDROSTATIC OIL FILTER 123-124

ELECTRICAL SYSTEM 125-154
- CAB ELECTRICAL CIRCUITRY 125-128
- ENGINE ELECTRICAL 129-132
- ELECTRICAL CONTROLS 133-148
- ALTERNATOR 149-152
- STARTER 153

POWER UNIT 155-196
- COOLING SYSTEM 155-160
- ENGINE & ATTACHING PARTS 161-170
- THROTTLE 171
- COOLING FAN DRIVE ASSY 173
- ENGINE & GASKET KITS 175-194
- OIL PUMP 195
- AIR CLEANER 196

873 G-SERIES CONTENTS (Cont'd)

ACCESSORIES & OPTIONS 197-314

ACCESS COVER 199
ACCESSORIES HARNESS 200
BACK-UP ALARM KIT 201
BEACON 203
BLOCK HEATER 204-206
BUCKET POSITIONING KIT 207
BUCKET SHIELD KIT 209
CAB DOOR 211-217
CAB ENCLOSURE 219-223
CAB WINDOWS 224- 225
COUNTERWEIGHT KIT 227
DEBRIS EJECTOR KIT 228
DECALS 229-232
DELUXE CAB 233-236
ELECTRICAL CONTROLS KIT 238-242
EUROPEAN ACCESSORIES 243-248
FIRE EXTINGUISHER 250
FLASHER LIGHTS 251
F.O.P.S. KIT 253
GAS SPRING KIT 254
HAND CONTROL KIT 255-258
HEATER & A/C 260-278
HORN KIT 279
LIFT KIT 280
LIFT ARM KIT 281
LIGHT KIT 283
POWER BOB-TACH KIT 285
POWER BOB-TACH CYLINDER 287
POWER BOB-TACH 289-292
PURIFIER 293
REAR AUXILIARY HYDRAULICS 295
REAR AUXILIARY VALVE 297
REAR DOOR LOCK 298
REAR WIPER 299
SEAT 301-304
SEAT BELT 305-307
SEVEN PIN CONNECTOR KIT 308
SOUND OPTION 309
STROBE LIGHT 311
TIRES & RIMS 312

BULK ITEMS 315-316

BULK ITEMS 315

NUMERICAL INDEX 317-370

NUMERICAL INDEX 317-370

HIGH MAINTENANCE ITEMS
MODEL 873

PART NO.	DESCRIPTION	PAGE #
6665603	ENGINE OIL FILTER (6 PACK)	186
6667352	FUEL FILTER ELEMENT	32
6666375	AIR CLEANER, OUTER	196
6666376	AIR CLEANER, INNER	196
6661248	HYDROSTATIC FILTER, # 3 MEDIA	124
6665427	BATTERY	130
	(HYDRAULIC RESERVOIR CAPACITY)	21 QTS. (19,9 L)
	(HYDRAULIC/HYDROSTATIC SYSTEM)	13 GALS. (49,3 L)
	(CHAINCASE RESERVOIR)	10 GALS. (37,9 L)
6563328	BLACK GOLD Hydraulic/Hydrostatic Fluid - 5 Gallons	316
6563330	BLACK GOLD 55 Gallon Drum	316
	(ENGINE LUBRICATION/COOLING SYSTEM)	16 QTS. (15,1 L)
	(ENGINE OIL W/FILTER CAPACITY)	10 QTS. (23,7 L)
6657299	MOTOR OIL 15W40 CE/SG -1 Qt.	316
6724558	MOTOR OIL 15W40 CE/SG -1 Gal.	316
6674204	MOTOR OIL 15W40 CE/SG -2.5 Gal.	316
6657301	MOTOR OIL 10W30 CE/SG -1 Qt.	316
6724557	MOTOR OIL 10W30 CE/SG -1 Gal.	316
6674205	MOTOR OIL 10W30 CE/SG -2.5 Gal.	316
6657303	MOTOR OIL 30 CE/SG -1 Qt.	316
6724559	MOTOR OIL 30 CE/SG -1 Gal.	316
6674206	MOTOR OIL 30 CE/SG -2.5 Gal.	316

GENERAL INFORMATION

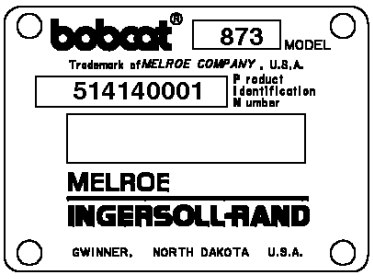

DOMESTIC

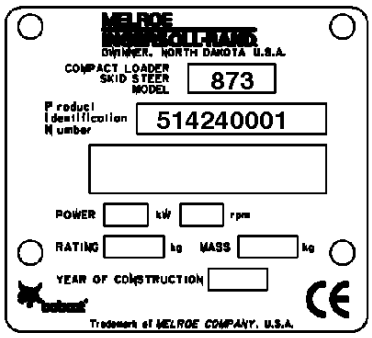

EXPORT

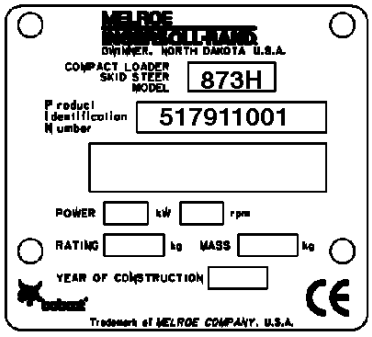

H.H. EXPORT

When using the machine serial number, use the complete number.

Some Serial Number breaks are not available at time of printing. These are listed as & Below or & Above.

The number shown in the quantity column in this manual is the number of parts needed for the illustration on the page. For some parts an "x" will be shown in the quantity column. This "x" indicates that the quantity to be used is "As Needed".

When references L.H. and R.H. are used in this manual, it is done from the operator's seat in the forward operating position.

To find the size and kind of bolt use the Bobcat Standard Microfiche (P/N 6566077).

Some of the illustrations and information found in this parts manual were supplied to Bobcat/Ingersoll-Rand by machine component companies.

ABBREVIATIONS & SYMBOLS

SALES = Order from Gwinner Sales Department

NSS = Not Serviced Seperately

NAP = Not Available as Parts

***** = Changed or Added Sections, Pages or Part Numbers

Disposition Code Definition (Found in the Remarks Column)

[A] = Use Up

[B] = Use Up on Other Appplication (See PNI)

[C] = File PDR Report With Bobcat Parts Sales

[D] = Part Number Error

Explications en francais	Grid Nb	A3
Erklärungen auf deutsch	Grid Nb	A4
Spiegazioni in italiano	Grid Nb	A5
Explicaciones en espanol	Grid Nb	A6
Verklaring in het Nederlands	Grid Nb	A7

NOTE D'INFORMATION

Pour toute référence au numéro de série de l'engin, toujours donner le numéro complet.

Le chiffré apparaissant dans la colonne des quantités de ce manuel représentent le nombre de pièces nécessaires pour l'illustration reprise sur la page. Dans certains cas, on lira un "x" dans la colonne des quantités. Cet "x" indique que la quantité nécessaire est "selon besoin".

Pour toute référence vers la GAUCHE ou la DROITE dans ce manuel, considérer que la personne se trouve assise dans le siège de l'opérateur, en position de fonctionnement en marche avant.

Certaines illustrations et informations reprises dans ce manuel de pièces de rechange ont été fournies à Bobcat/Ingersoll-Rand, par des fabricants de composants.

ABREVIATIONS & SYMBOLES

SALES	= Commander au Service Ventes à Bruxelles
NSS	= Pas vendu séparément
NAP	= Non disponible comme pièce de rechange
*	= Chapitre, page ou numéro de pièce modifié ou supplémentaire
BTI	= Bobcat Technical Information Bulletin : voir à la fin de la microfiché du modèle concerné ou la microfiche générale reprenant l' ensemble des "BTI".
was 6535403	= était avant 6535403
adj. (adjustment)	= réglage
Assembly	= ensemble
available W/Ref.	= disponible avec réf.
bulk/sold per foot	= en vrac/vendu par pied
does not include	= ne comprend pas
included with	= compris dans
I.D.	= D.I. (diamètre intérieur)
O.D.	= D.E. (diamètre extérieur)
not in kit	= pas en kit
W/ - WO/	= inclus/ - non inclus/
Qty	= quantité requise
see page/ref.	= voir page/réf.
used with ref/	= utilisé avec réf.
0,05 inch thickness	= 0,05 pouce d'épaisseur (un pouce = 25.4 mm)
weld on	= à souder

ALLGEMEINE INFORMATIONEN

Bei Angabe der Maschinen-Seriennummer stets die komplette Nummer angeben.

Bei der in der Mengenspalte (Anzahl) in diesem Handbuch angegebenen Zahl handelt es sich um die Anzahl von Teilen, die für die Abbildung auf der betreffenden Seite benötigt werden. Bei manchen Teilen in der Mengenspalte ist ein “x” angegeben. Dieses “x” weist darauf hin, dass sich die Anzahl der verwendeten Teile auf den “Bedarf” bezieht.

Bei Verwendung der Seitenangaben links und rechts in diesem Handbuch gelten diese für die Blickrichtung vom Fahrersitz aus, und zwar in Vorwärts-Betriebsrichtung.

Einige der in diesem Ersatzteilhandbuch aufgeführten Abbildungen und Informationen wurden der Bobcat/Ingersoll-Rand, von den Herstellern von Maschinenbauteilen zur Verfügung gestellt.

ABKÜRZUNGEN UND SYMBOLE

SALES	= Bestellung bei der Verkaufsabteilung in Brüssel
NSS	= Nicht einzeln erhältlich
NAP	= Nicht als Ersatzteil erhältlich
*	= Geänderte oder hinzugefügte Abschnitte, Seiten oder Teilenummern
BTI	= Bobcat Technical Information Bulletin : Siehe am Ende der Mikrokarte des jeweiligen Modells oder der allgemeinen Mikrokarte der BTI.
was 6535403	= War 6535403
adj.	= Einstellung
Assembly	= Baugruppe
available W/Ref.	= erhältlich mit der Referenz
bulk/sold per foot	= Mengenabnahme / Verkauf pro Fuss
does not include	= beinhaltet nicht
included with	= enthalten in
I.D.	= Innendurchmesser
O.D.	= Aussendurchmesser
not in kit	= nicht in Bausatz
W/ - WO/	= mit/ - ohne/
Qty	= Anzahl
see page/ref.	= Siehe Seite / Referenz
used with ref.	= verwendet mit Referenz
0.05 inch thickness	= Dicke : 0.05 Zoll (ein Zoll = 25.4 mm)
weld on	= anschweissen

INFORMAZIONI GENERALI

Quando si usa il numero di serie della macchina usare il numero completo.

Il numero mostrato nella colonna della quantità di questo manuale corrisponde al numero di componenti necessari per l'illustrazione della pagina. Per alcuni componenti appare "X" nella colonna delle quantità. Questa "X" indica che la quantità da usare è "come necessario".

See in questo manuale si fa riferimento alla parte destra o sinistra, si intende dal sedile dell'operatore nella posizione in avanti di funzionamento.

Alcune delle illustrazioni e informazioni trovate in questo manuale di componenti sono state fornite alla Bobcat/Ingersoll-Rand, da società di componenti di macchine.

SIMBOLI E ABBREVIAZIONI

SALES	= Ordinare al servizio vendite di Bruxelles
NSS	= Non vendute separatamente
NAP	= Non disponibile come componente
*	= Sezioni, pagine o numeri di componente cambiati o aggiunti
BTI	= (Bobcat Technical information) Ved. al termine del microfiche del modello relativo oppure microfiche generale
was 6535403	= era 6535403
adj. (adjustment)	= regol. (regolazione)
Assembly	= Complessivo
available W/Ref.	= disponibile con rif.
bulk/sold per foot	= alla rinfusa/venduto al piede
does not include	= non comprende
Included with	= compreso con
I.D.	= d. i.
O.D.	= d. e.
not in kit	= non fa parte del kit
W/ - WO/	= con - senza
Qty	= Qtà
see page/ref	= ved. pagina/rif.
used with ref.	= usato con il rif.
0,05 inch thickness	= spessore 0,05 pollici (un pollice = 25,4 mm)
weld on	= a saldare

INFORMACION GENERAL

Al utilizar el número de serie de la máquina, debe emplearse el número completo.

El número que figura en la columna de “Unidades” en este manual es el número de piezas que se necesitan para la ilustración que consta en la página. En algunas piezas aparece una “x” en la columna de “Unidades”. Esta “x” indica que las unidades a utilizar son “según sea necesario”.

Cuando se empleen las referencias izq. y dcha., éstas se entienden mirando desde el asiento del conductor, en posición de marcha adelante.

Algunas de las ilustraciones y la información que figuran en este manual de piezas han sido facilitadas a Bobcat/Ingersoll-Rand, por empresas de componentes de máquinas.

ABREVIATURAS Y SIMBOLOS

VENTAS	= Pedido al Departamento de Ventas de Bruselas
NSS	= No se vende por separado
NAP	= No disponible como pieza de repuesto
*	= Secciones, páginas o referencias modificadas o añadidas
BTI	= (Bobcat Tecnical Information) Ver al final de la microficha del modelo afectado o en la microficha general “Boletín de Información Técnica Bobcat”.
was 6535403	= era anteriormente el 6535403
adj. (adjustment)	= ajuste
assembly	= conjunto
available W/Ref.	= disponible con la ref.
bulk/sold per foot	= a granel/vendido por pies
does not include	= no incluye
included with	= incluido en
I.D.	= diámetro interior
O.D.	= diámetro exterior
not in kit	= no en el kit
W/ - WO/	= con/ - sin
Qty	= Unidades
see page /ref.	= ver página/ref.
used with ref.	= empleado con la ref.
0,05 inch thickness	= 0,05 pulgadas de espesor (1 pulgada = 25,4 mm)
weld on	= debe ser soldado

ALGEMENE INFORMATIE

Als u het serienummer van de machine gebruikt, geef dan het gehele serienummer.

Het cijfer dat voorkomt in de kolom “Aantal”, in deze handleiding, is het aantal onderdelen dat nodig is van de illustratie op de pagina. Voor sommige onderdelen staat er een “x” in de kolom “Aantal”. Deze “x” betekent dat er een aantal “zoals nodig” vereist is.

Wanneer er in deze handleiding naar “links” en naar “rechts” gerefereerd wordt, moet dit verstaan worden voor een bestuurder die in de bestuurdersstoel zit in de voorwaartse bedrijfsstand.

Sommige van de illustraties en informatie in deze onderdelen-handleiding werden door firma’s van machine-componenten geleverd aan Bobcat/Ingersoll-Rand.

AFKORTINGEN EN SYMBOLEN

SALES	= Bestellen bij de Verkoopafdeling te Brussel
NSS	= Niet afzonderlijk te verkrijgen
NAP	= Niet beschikbaar als onderdeel
*	= Gewijzigde of toegevoegde paragrafen, pagina’s of onderdeelnummers
BTI	= Bobcat Technical Information Bulletin : Zie einde van de microfiche van het desbetreffende model of einde van de algemene microfiche die het geheel van alle “BTI” herneemt.
was 6535403	= was vroeger 6535403
adj. (adjustment)	= afstelling
Assembly	= geheel
available W/Ref.	= beschikbaar met ref.
bulk/sold per foot	= bulk/aan de meter verkocht
does not include	= bevat niet
includes with	= is bevat in
I.D.	= ϕ inw. (inwendige diameter)
O.D.	= ϕ uitw. (uitwendige diameter)
not in kit	= niet in de kit
W/ - WO/	= met/ - zonder/
Qty	= vereiste aantal
see page/ref.	= zie pagina/ref.
used with ref/	= gebruikt met ref.
0,05 inch thickness	= 0.05 inch dik (een inch = 25.4 mm)
weld on	= te lassen

Bobcat Hydraulic/Hydrostatic Fluid
is blended to our specifications
to meet or exceed requirements of our components.

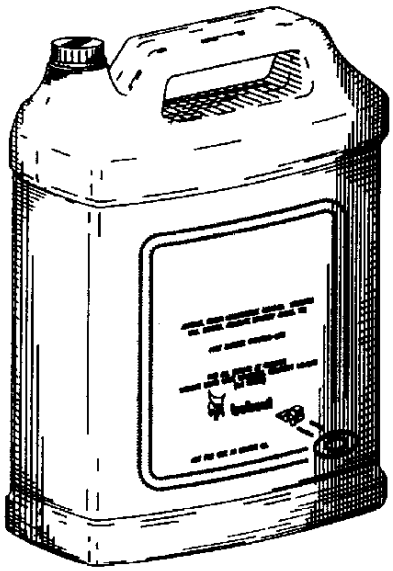

Available from Bobcat Parts.

Bobcat

Use Bobcat replacement tires to maintain designed performance specifications.

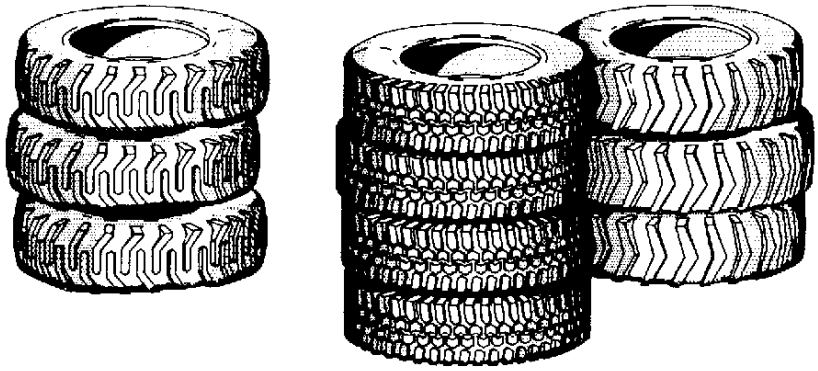

Available from Bobcat Parts.

Bobcat

Both new and rebuilt starters are available from Bobcat.

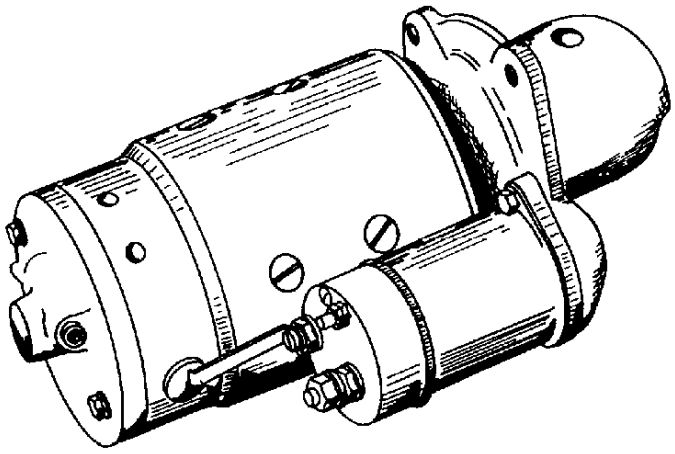

Available from Bobcat Parts.

Bobcat

Bobcat batteries are designed to meet the needs of your machine.

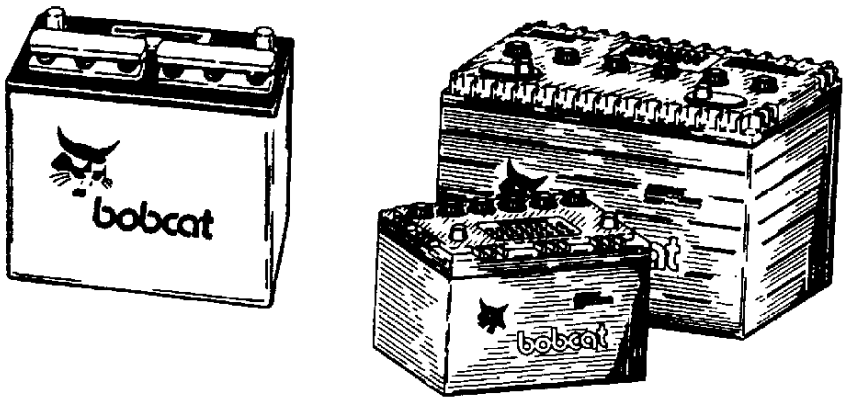

Available from Bobcat Parts.

Bobcat

Use only Bobcat belts and hoses to maintain maximum service life.

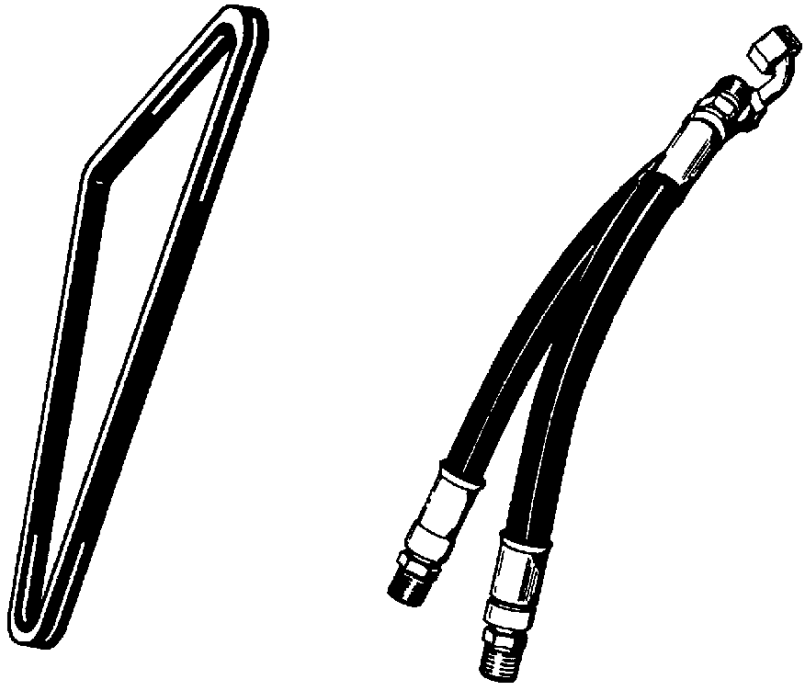

Available from Bobcat Parts.

Bobcat

Bobcat Hydraulic/Hydrostatic Fluid
is blended to our specifications
to meet or exceed requirements of our components.

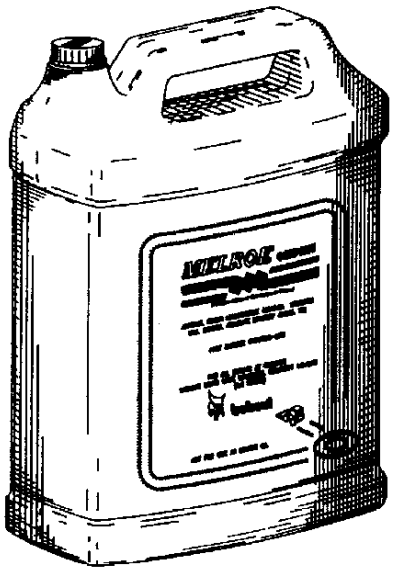

Available from Bobcat Parts.

Bobcat

Use Bobcat branded tires for longer service life and increased sidewall protection.

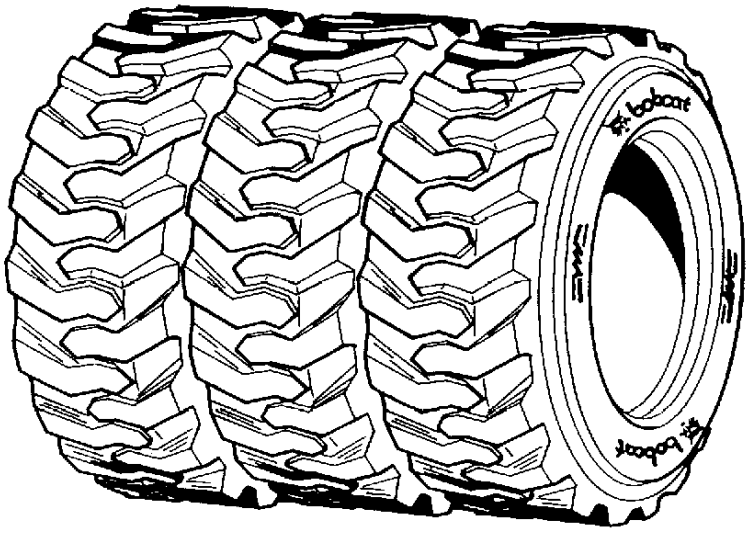

Available from Bobcat Parts.

Bobcat

Bobcat Hydraulic/Hydrostatic Fluid
is blended to our specifications
to meet or exceed requirements of our components.

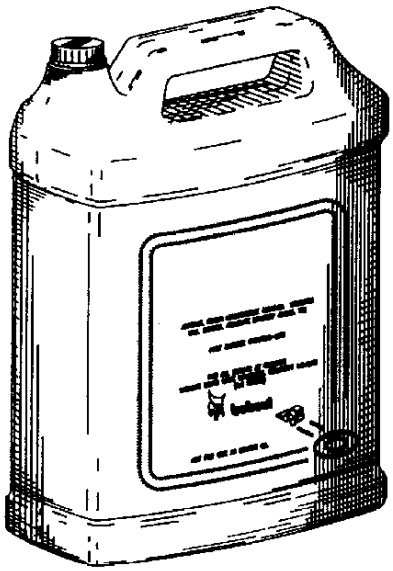

Available from Bobcat Parts.

Bobcat

Both new and rebuilt starters are available from Bobcat.

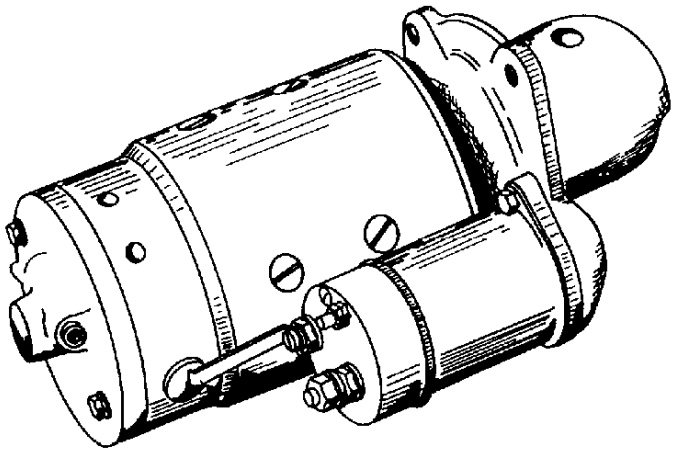

Available from Bobcat Parts.

Bobcat

Use only Bobcat belts and hoses to maintain maximum service life.

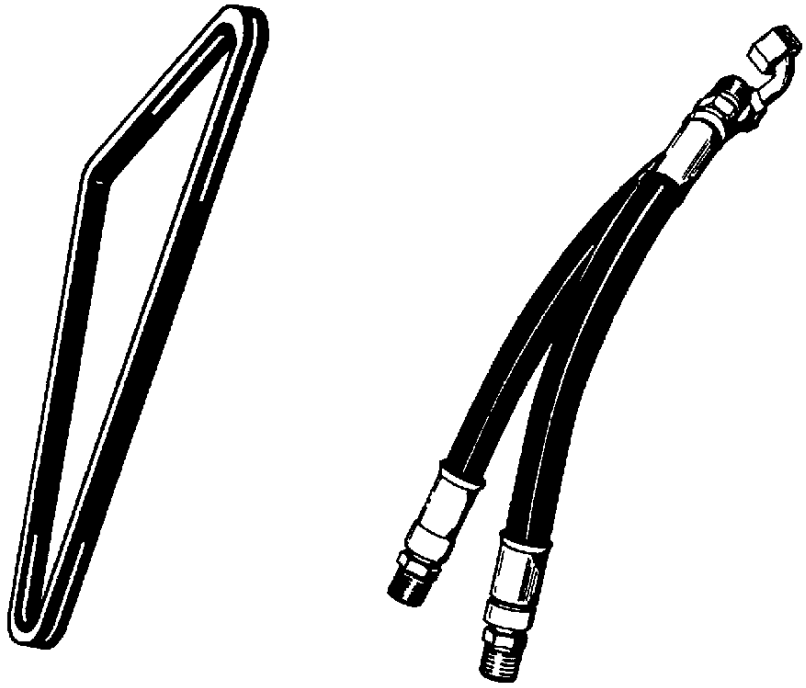

Available from Bobcat Parts.

Bobcat

MAIN FRAME

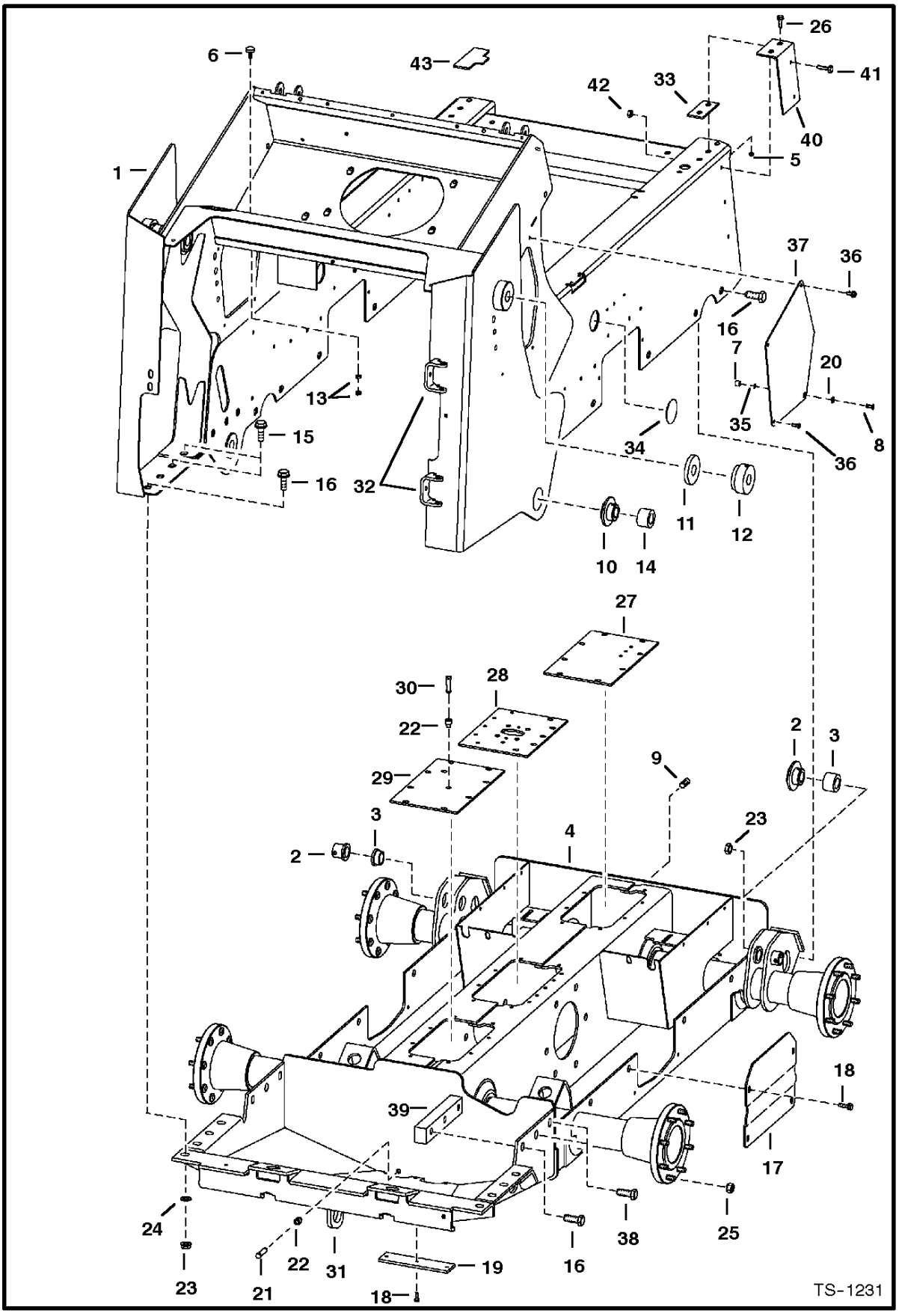
26
6
43
41
42
33
40
1
5
37
36
16
7
20
13
35
8
15
34
36
16
32
11
12
10
14
27
30
28
22
2
3
29
9
3
23
2
4
18
39
17
24
38
25
22
16
23
21
31
19
18
TS-1231

MAIN FRAME

Ref.N°	Part N°	Description	Remarks	Serial N°	Qty.
1	6728479	MAIN FRAME	Was 6717837 [A]		1
2	6716532	BUSHING	weldAon		2
3	6716533	BUSHING	weldAon		2
4		CHAINCASE	See Page DRIVE TRAIN(8) - frame only		1
5	83D-8	NUT			4
6	6655399	BUMPER			4
7	97D-5	NUT			2
8	25G-514	BOLT			1
9	11F-12	PLUG	chaincase fill		1
10	6706712	BUSHING	inside upright weldAon		2
11	6717826	BUSHING	inside upright weldAon		2
12	6717831	BUSHING	outside upright weldAon		2
13	61D-5	NUT			4
14	6709857	BUSHING	outside upright weldAon		2
15	31C-1236	BOLT			4
16	31C-1228	BOLT			18
17	6719168	COVER	Was 6719201 [A]		2
18	84G-3712	BOLT			8
19	6700182	COVER	drain		1
20	25E-15	WASHER			2
21	6599645	PLUG	chaincase drain		1
22	6553411	BUSHING			2
23	53D-12	NUT	83D-12 [A]		20
24	6701097	WASHER			4
25	6564669	NUT	wheel - See Page AXLE(1)		32
26	35C-824	BOLT	used W/metal guide		4
26	35C-832	BOLT	used W/plastic guide		4
27		COVER	See Page DISC BRAKE(1)		1
28		COVER	See Page DISC BRAKE(1)		1
29		COVER	See Page DISC BRAKE(1)		1
30		BREATHER	See Page DISC BRAKE(1)		1
31	6706485	HOOK	tie down - weldAon		2
32	6708987	BRACKET	weldAon		2
33	6709900	SPACER	guide - used W/metal guide		4
33	6709900	SPACER	guide - used W/plastic guide		6
34	6718796	PLUG	Was 6660646 [A]		1
35	6564535	SPACER			2
36	84G-3112	BOLT			4
37	6706730	COVER			2
38	17C-1228	BOLT			4
39	6706857	BLOCK	threaded		2
40	NAP	GUIDE	metal - Order 6718512 (2) also Order 6709900 (2) spacer, 25E-14 (4) washer, 35C-832 (4) bolt & 53C-516 (4) bolt - Was 6709950 [A		2
40	6718512	GUIDE	plastic		2
41	17C-516	BOLT	used W/metal guide		4
41	53C-516	BOLT	used W/plastic guide		4
42	83D-5	NUT			4
43	6707515	BRACE	weldAon		2
44	25E-14	WASHER	used W/plastic guide		4

OPERATOR CAB

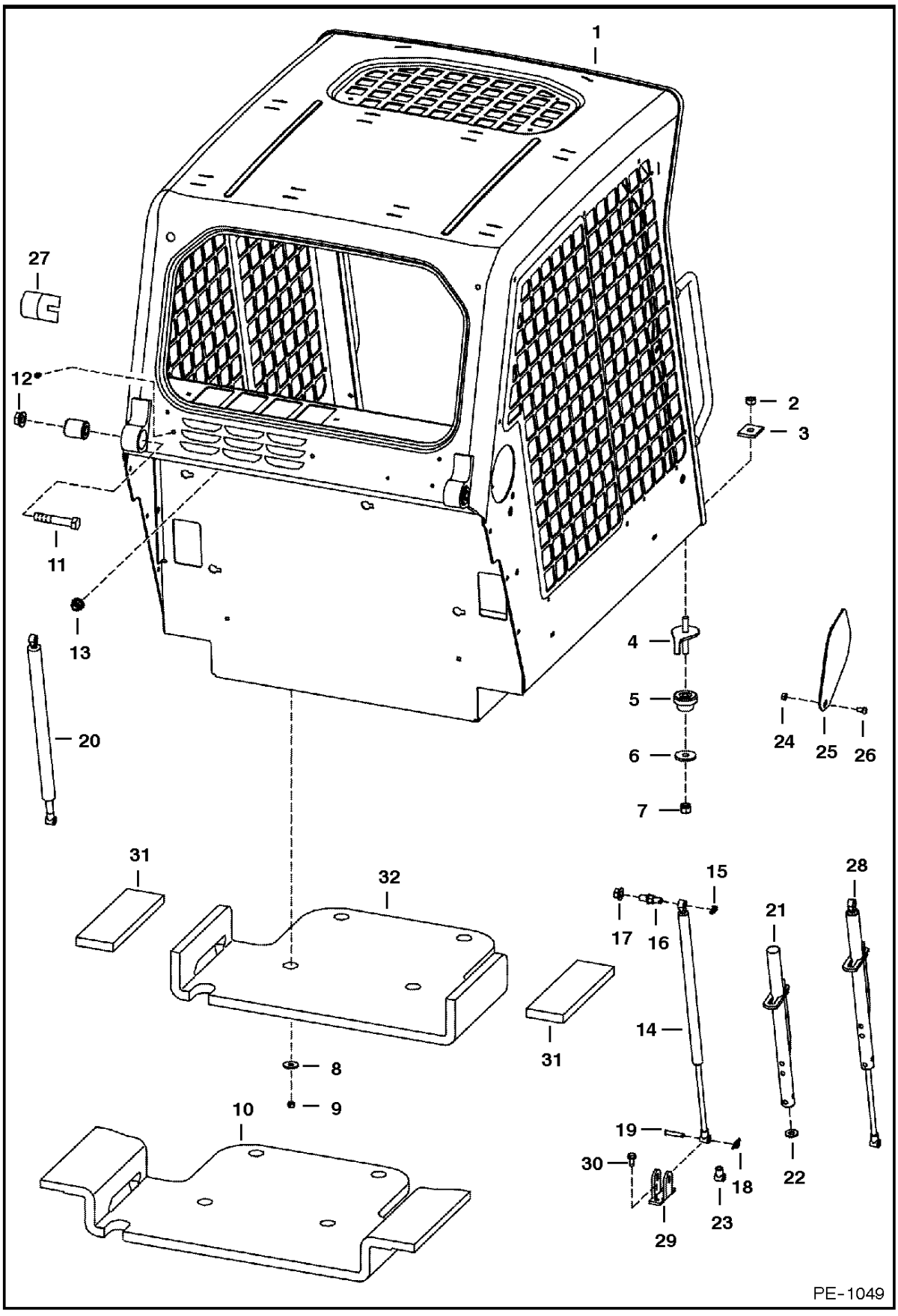

OPERATOR CAB

Ref.N°	Part N°	Description	Remarks	Serial N°	Qty.
1		OPERATOR CAB	includes cab decals		1
2	59D-8	NUT			2
3	6553709	WASHER	rectangular		2
4	6702971	BOLT			2
5	6560633	MOUNT			2
6	6515817	WASHER			2
7	85D-8	NUT			2
8	619021	WASHER			4
9	59D-5	NUT			4
10	NAP	INSULATION	seat pan - Order Ref. OPERATOR CAB(32) & OPERATOR CAB(31) (2) - Was 6719360 [A]		1
11	17C-1056	BOLT			2
12	53D-10	NUT			2
13	53D-6	NUT			4
14	6675135	GAS SPRING	R.H.		1
15	6675140	SNAP RING			2
16	6719064	MOUNT			2
17	83D-8	NUT			2
18	6631418	PIN	ring		2
19	6567743	PIN			2
20	6675137	GAS SPRING	L.H.		1
20	6675139	GAS SPRING	L.H. - for cab W/ enclosure		1
21	6708189	TUBE	stop - R.H.		1
22	6701174	WASHER			1
23	6675258	CLEVIS			1
24	95D-5	NUT			2
25	6718784	COVER			2
26	25G-510	BOLT			2
27	6579613	STOP			2
28	NAP	GAS SPRING	R.H. - W/latch - Order Ref. OPERATOR CAB(14) & OPERATOR CAB(21)-OPERATOR CAB(23) - Was 6719078 [A]		1
29	6706349	MOUNT	gas spring		2
30	84G-3112	BOLT			4
31	6729012	INSULATION	seat pan		2
32	6729013	INSULATION	seat pan		1

OPERATOR CAB

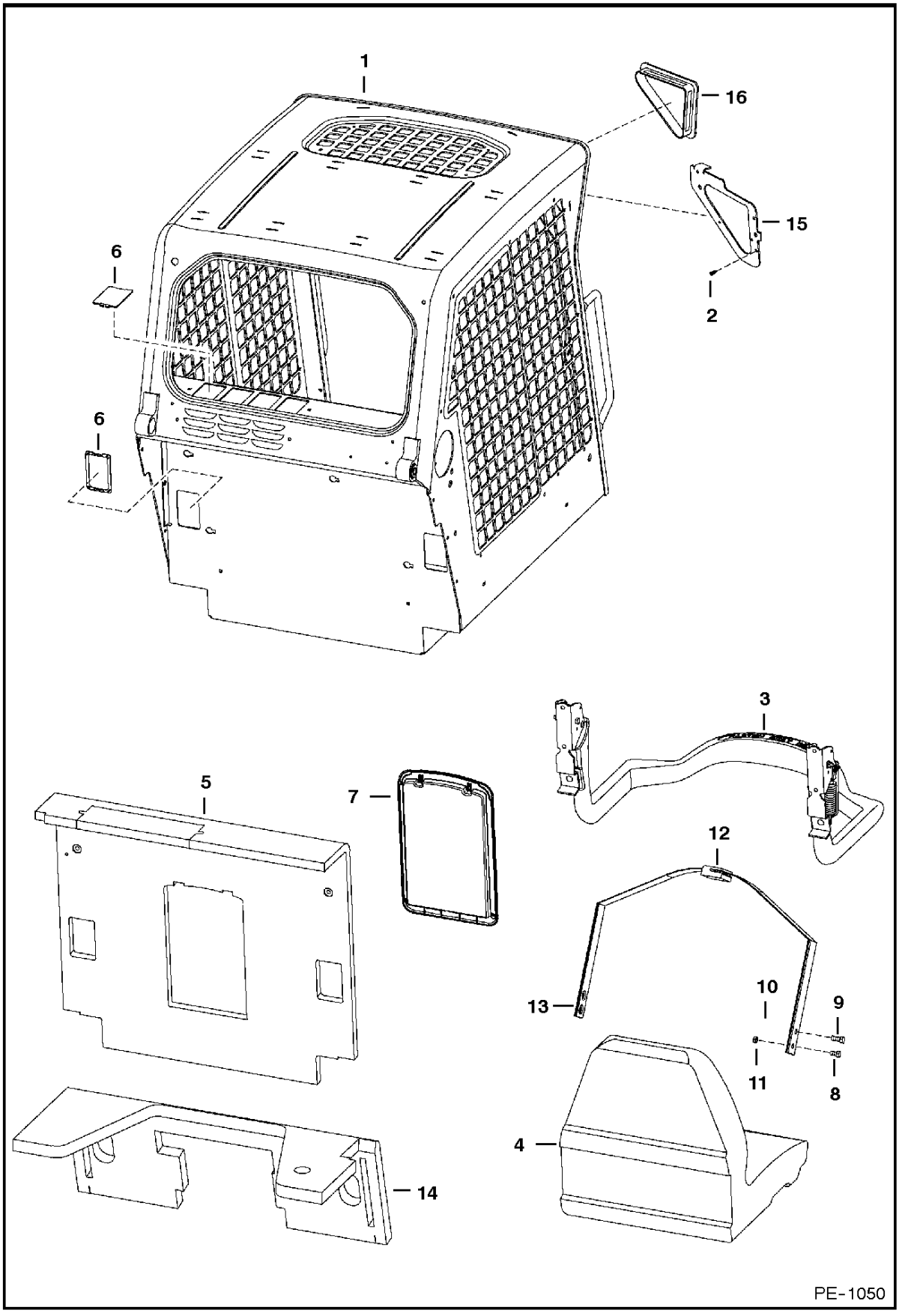

OPERATOR CAB

Ref.N°	Part N°	Description	Remarks	Serial N°	Qty.
1		OPERATOR CAB	includes cab decals		1
2	6675033	INSERT			6
3		SEAT BAR	See Page SEAT & SEAT BAR(2)		1
4		SEAT	See Page SEAT(1), SEAT(1) & SEAT(14)		1
5	6717516	INSULATION			1
6	6718101	COVER			6
7	6719503	CONTAINER	manuals		1
7	6675524	CLIP			2
7	6725301	COVER			1
7	6725303	FRAME			1
8	17C-612	BOLT			2
9	17C-716	BOLT			2
10	85D-7	NUT			2
11	85D-6	NUT			2
12	NAP	SEAT BELT	Order 6675074 seat belt & 6725373 (2) spring plate - Was 6667875 [A]		1
12	NAP	SEAT BELT	W/spring plates - Order 6675074 seat belt & Ref. OPERATOR CAB(13) (2) (6725373 spring plate) - Was 6725403 [A]		1
12	6675074	SEAT BELT	W/O spring plates		1
13	NAP	GUIDE	Order 6711908 spring plate, 6565355 guide & 6630207 (2) rivet - Was 6711907 [A]		2
13	6711908	SPRING PLATE	use W/Ref. OPERATOR CAB(12) (NAP/6667875 seat belt)		2
13	6725373	SPRING PLATE	use W/Ref. OPERATOR CAB(12) (6675074 seat belt)		2
14	6719406	INSULATION			1
15		FRAME	L.H. - weldAon		1
15	NSS	FRAME	R.H. - weldAon		1
16	6674403	COVER	no lights		2

SEAT & SEAT BAR

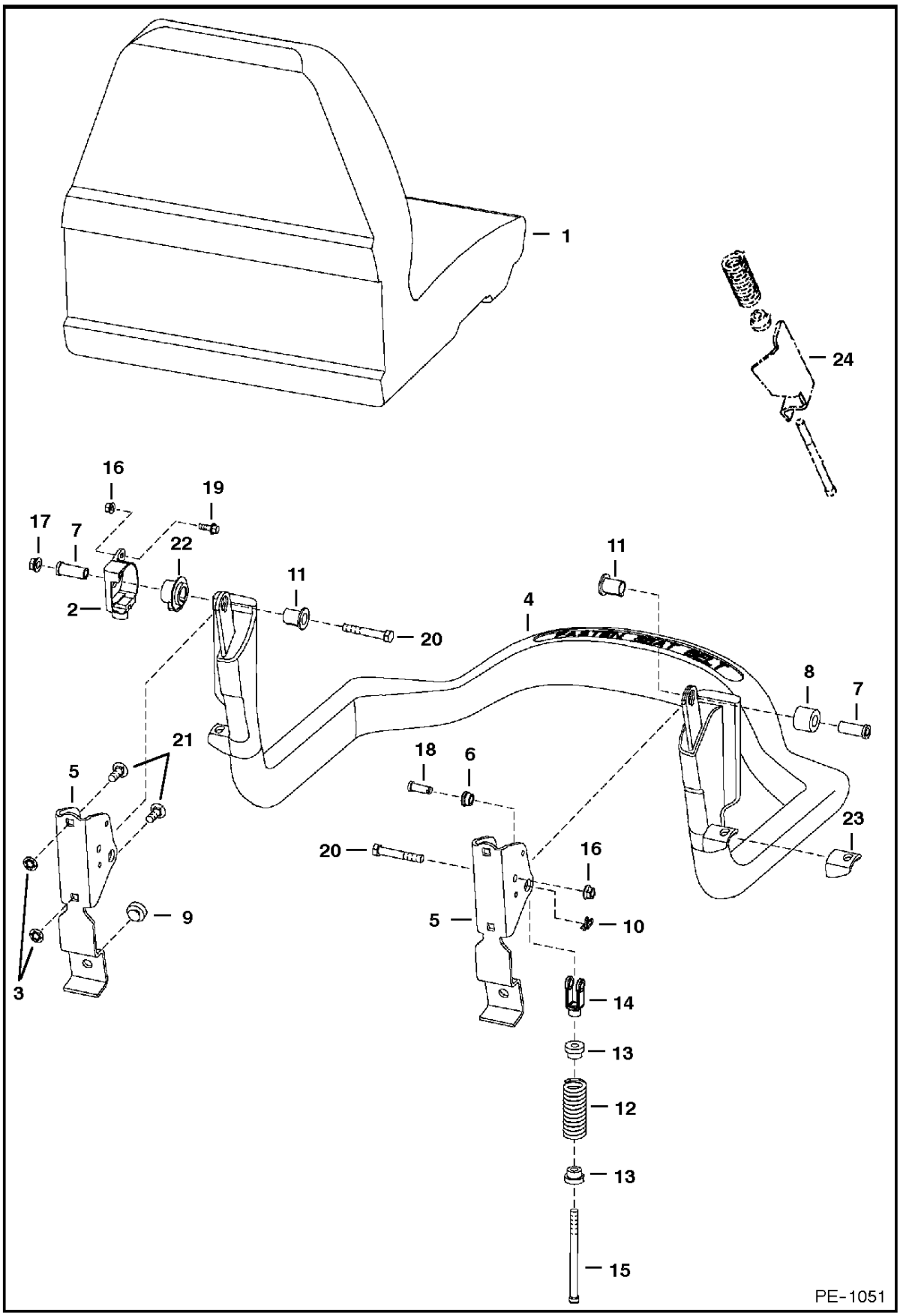

SEAT & SEAT BAR

Ref.N°	Part N°	Description	Remarks	Serial N°	Qty.
1		SEAT	See Page SEAT(1), SEAT(1) & SEAT(14)		1
2	6674406	SENSOR			1
3	6674894	NUT			4
4	6715860	SEAT BAR			1
5	6715863	BRACKET			1
6	6715864	BUSHING			2
7	6715865	BUSHING			2
8	6715866	BUSHING			1
9	6519178	BUMPER			2
10	6631418	PIN	ring		2
11	6664882	BUSHING	keyed		2
12	6701535	SPRING			2
13	6710659	BUSHING			2
14	6713589	CLEVIS			2
15	6713887	BOLT			2
16	83D-4	NUT			1
17	53D-6	NUT			2
18	4F-6106	PIN			2
19	35C-412	BOLT			1
20	17C-640	BOLT			2
21	10C-616	BOLT			4
22	6674405	BUSHING			1
23	NAP	MOUNT	Order Ref. SEAT & SEAT BAR(4)	S/N & Abv.	2
24	NAP	MOUNT	Order Ref. SEAT & SEAT BAR(4)	S/N & Bel.	2

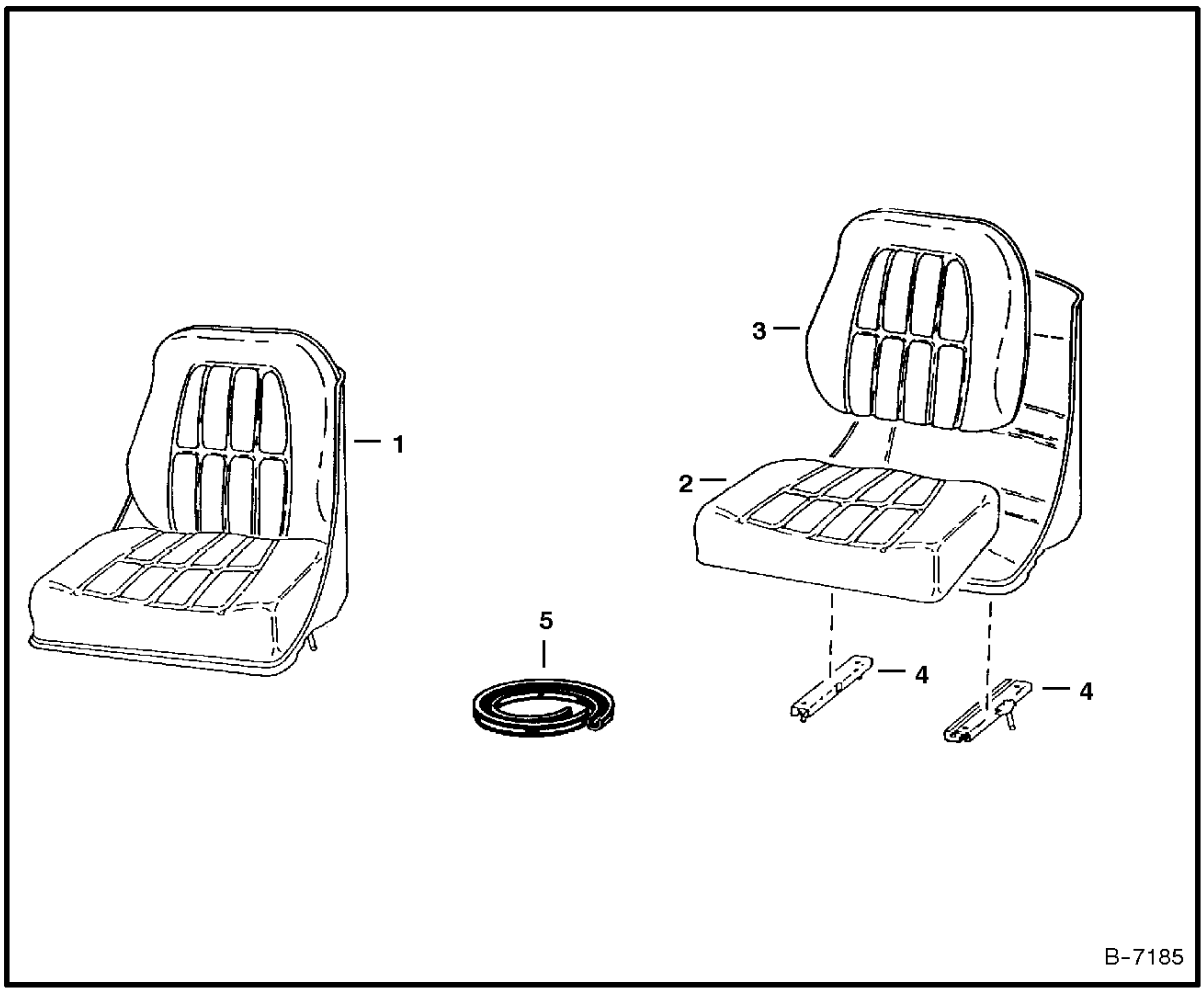

SEAT

Ref. No.	Part Number	Description	Remarks	Serial Number	Qty.

SEAT

Ref.N°	Part N°	Description	Remarks	Serial N°	Qty.
1	6665401	SEAT	seat - black		1
2	6630468	SEAT CUSHION	seat - black		1
3	6630465	BACK CUSHION	back - black		1
4	6630469	TRACK	W/Latch		1
4	6599780	TRACK	WO/Latch		1
5	6652935	EDGING	96" (2,4 m) - For Ref. SEAT(2) & SEAT(3)		x
5	6665656	CLIP	splice		1

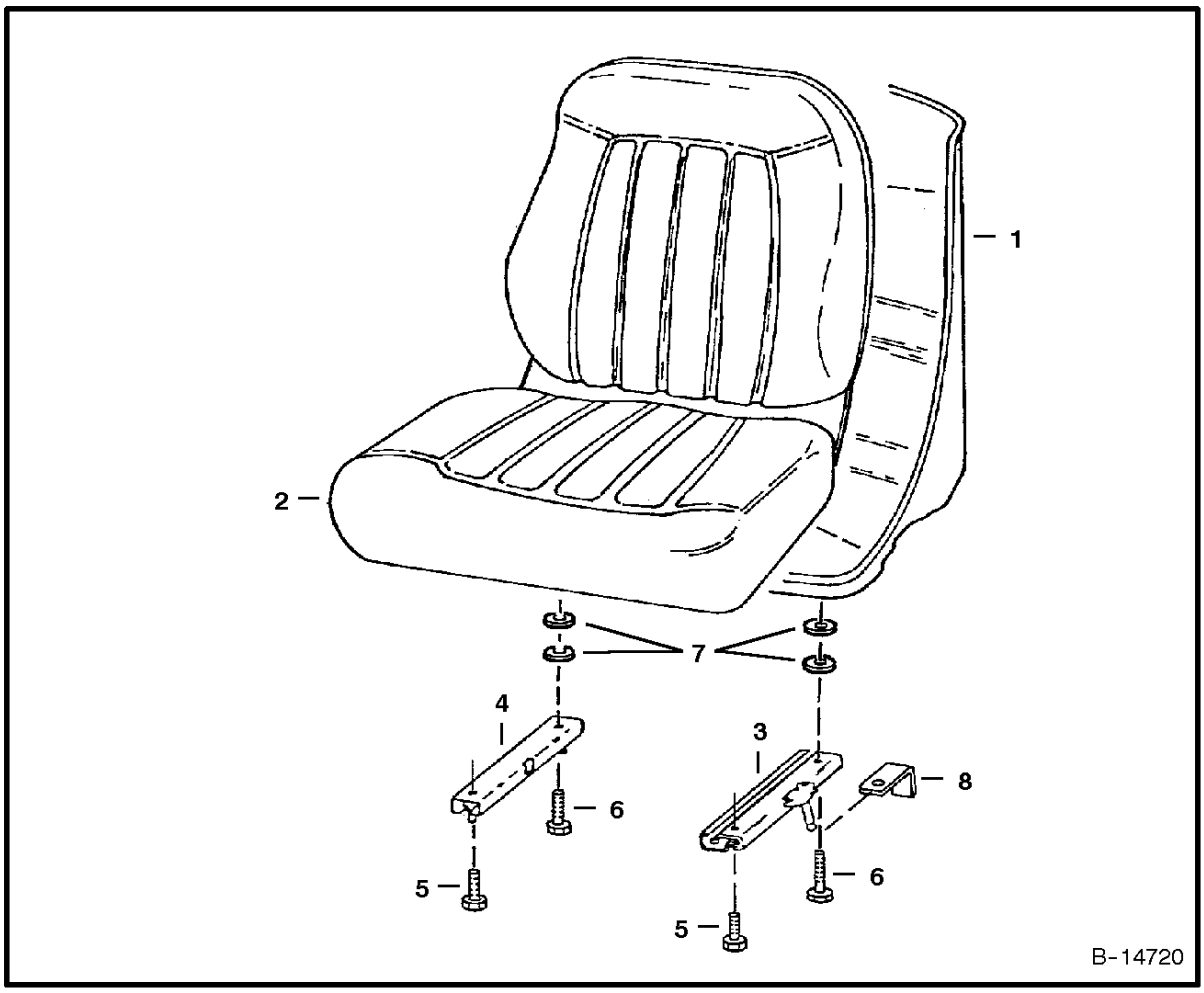

SEAT
(Michigan)

Ref. No.	Part Number	Description	Remarks	Serial Number	Qty.

SEAT

Ref.N°	Part N°	Description	Remarks	Serial N°	Qty.
1	6669135	SEAT	W/Ref. SEAT(2)-SEAT(7)		1
2	6670160	CUSHION	W/edging, clip & (2) grommets		1
2	NSS	EDGING			1
2	NSS	CLIP			1
3	6674013	TRACK	L.H. - W/8' (203,2mm) latch		1
4	6669089	TRACK	R.H. - W/O Latch		1
5	25G-512	BOLT	6669135 seat uses (2) bolts		4
6	25G-520	BOLT			2
7	7000010	SPACER			4

REAR DOOR

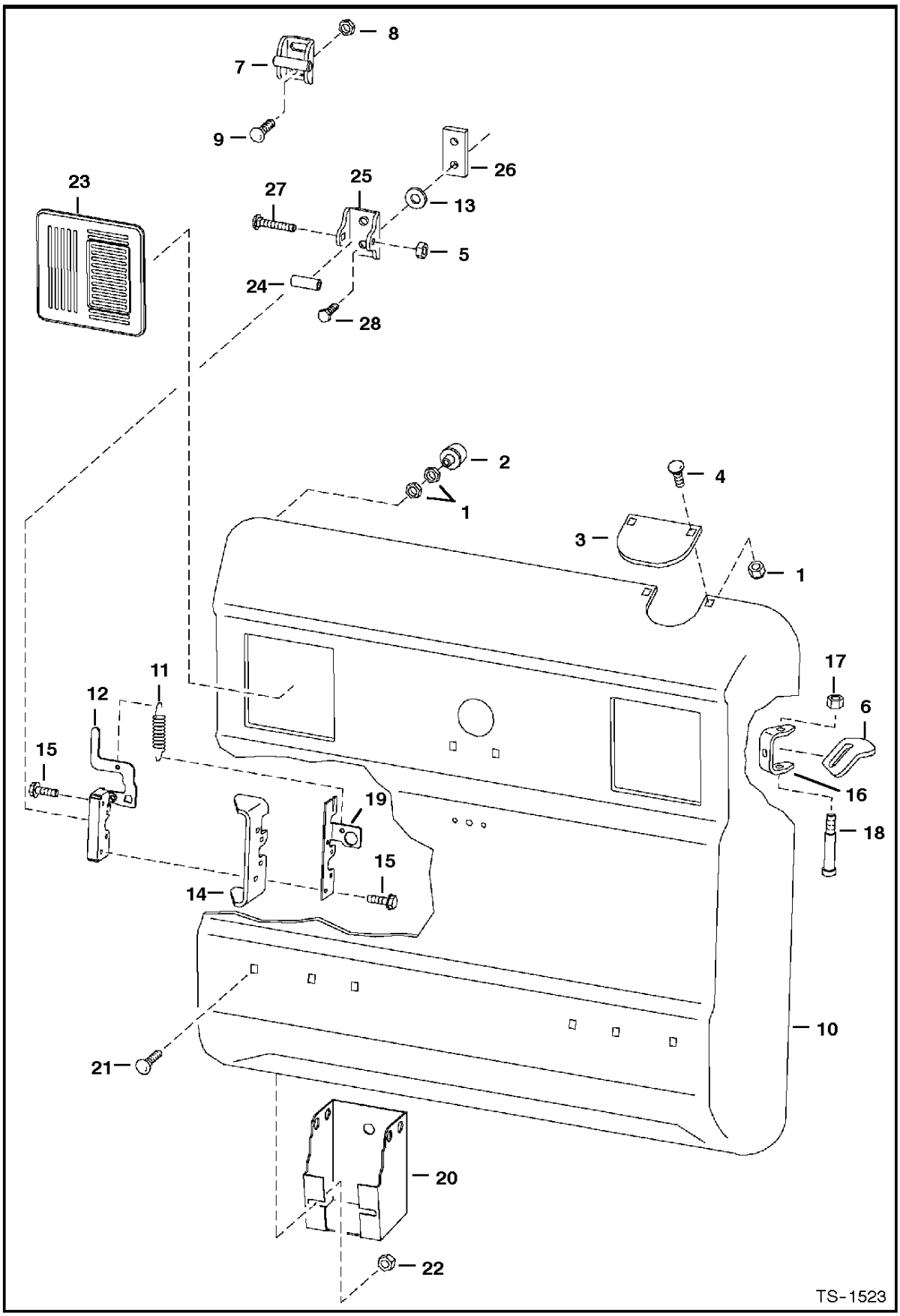
8
7
9
26
23
25
27
13
5
24
28
2
1
4
3
1
17
6
11
12
15
16
18
19
15
14
10
21
20
22
TS-1523

REAR DOOR

Ref.N°	Part N°	Description	Remarks	Serial N°	Qty.
1	61D-5	NUT			6
2	6655399	BUMPER	Was 6714454 [B,D]		2
3	6714509	COVER	exhaust		1
4	37C-512	BOLT			2
5	61D-6	NUT			2
6	6714126	DOOR STOP			1
7	6715157	STRIKER ASSY.			1
8	83D-8	NUT			2
9	37C-820	BOLT	carriage		2
9	25G-820	BOLT	hex socket		2
10	6711524	REAR DOOR			1
11	6714210	SPRING			1
12	6670867	LATCH			1
13	6675273	WASHER	lock - Was 6675263 [B,D]		2
14	6711527	LATCH PLATE	weldAon		1
15	31C-420	BOLT			4
16	6711526	HINGE	weldAon		2
17	59D-6	NUT			2
18	38C-856	BOLT			2
19	6711664	GUIDE	latch		1
20	6715318	TOOL HOLDER			1
21	37C-612	BOLT			2
22	55D-6	NUT			2
23	6670287	COVER			2
24	6719550	TUBE	striker		1
25	6719524	STRIKER			1
26	6719525	BAR	threaded striker		1
27	37C-644	BOLT	carriage		1
28	25G-820	BOLT	Was 17C-820 [B]		2
29	6719766	STOP			1

LIFT ARMS & BOBTACH

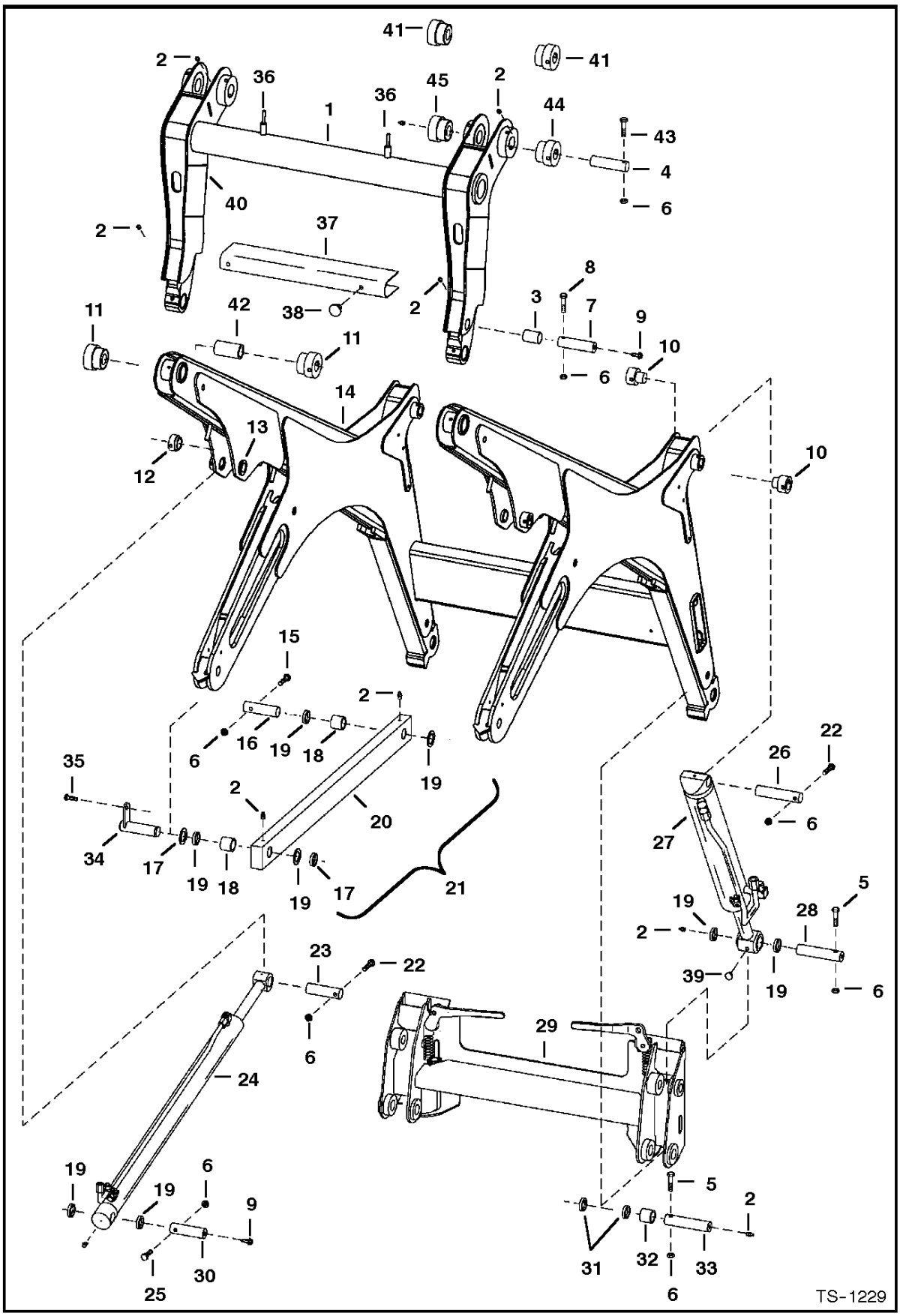

LIFT ARMS & BOBTACH

Ref.N°	Part N°	Description	Remarks	Serial N°	Qty.
1	NAP	FRAME LINK	HAFrame - Order 6727742, also Order 6727748 (2) pin & 6728970 (4) spacer - Was 6718378 [A]	5141 44606 & Bel.	1
1	6727742	FRAME LINK	HAFrame	5141 44607 & Abv.	1
2	10H-25	GREASE ZERK			10
3	6718329	BUSHING			4
4	6725550	PIN	Was 6718294 [A]	5141 44606 & Bel.	2
4	6727748	PIN		5141 44607 & Abv.	2
5	17C-656	BOLT			4
6	85D-6	NUT			16
7	6725551	PIN	Was 6718306 [A]		2
8	17C-680	BOLT			2
9	17C-812	BOLT			4
10	6706606	BUSHING	weldAon		4
11	6670762	BUSHING			4
12	6555987	BUSHING	weldAon	& Bel.	2
12	6729456	BUSHING	weldAon	& Abv.	2
13	6703616	BUSHING	weldAon	& Bel.	2
13	6729457	BUSHING	weldAon	& Abv.	2
14	NAP	LIFT ARM	Order 6729527, also Order 6727742 H-frame, 6727748 (2) pin, 6553709 washer & 6728023 clamp - Was 6717765 [A]	5141 44606 & Bel.	1
14	6729527	LIFT ARM	Was 6727747 [A]	5141 44607 & Abv.	1
15	17C-636	BOLT			2
16	6702452	PIN			2
17	6716792	SHIM			4
18	6716539	BUSHING	wear - for 6716537		4
19	225855	SEAL		5141 44606 & Bel.	20
19	225855	SEAL		5141 44607 & Abv.	12
20	NAP	ROD LINK	Order 6716537 & 6716792 (4) shims		2
21	6716537	LINK ASSY	1' x 2.25' - Ref. LIFT ARMS & BOBTACH(2) & LIFT ARMS & BOBTACH(18)-LIFT ARMS & BOBTACH(20)		2
22	17C-640	BOLT			4
23	6547593	PIN			2
24		CYLINDER	lift - See Page LIFT CYLINDER(1)		2
25	17C-664	BOLT			2
26	6702935	PIN			2
27		CYLINDER	R.H - tilt - See Page TILT CYLINDER(1)		1
27		CYLINDER	L.H - tilt - See Page TILT CYLINDER(2)		1
28	6710234	PIN			2
29	SALES	BOB-TACH	See Page BOB-TACH(3)		1
30	6706287	PIN			2
31	6631067	SEAL			4
32	6708517	BUSHING	wear		2
33	6711334	PIN			2
34	6706292	PIN			2
35	84G-3712	BOLT			5
36	6718447		weldAon		2
37	6708645	STOP	lift arm		1
38	6675358	KNOB	Was 6647668 [B]		2
39	16F-2	PLUG			2
40	11H-25	GREASE ZERK	45 degree		2
41	6717788	BUSHING	weldAon	5141 44606 & Bel.	4
42	6717771	BUSHING	weldAon	5141 44606 & Bel.	2
42	6727746	BUSHING	weldAon	5141 44607 & Abv.	2
43	17C-672	BOLT			2
44	6727525	BUSHING	weldAon	5141 44607 & Abv.	2

LIFT ARMS & BOBTACH

Ref.N°	Part N°	Description	Remarks	Serial N°	Qty.
45	6727832	BUSHING	weldAon	5141 44607 & Abv.	2

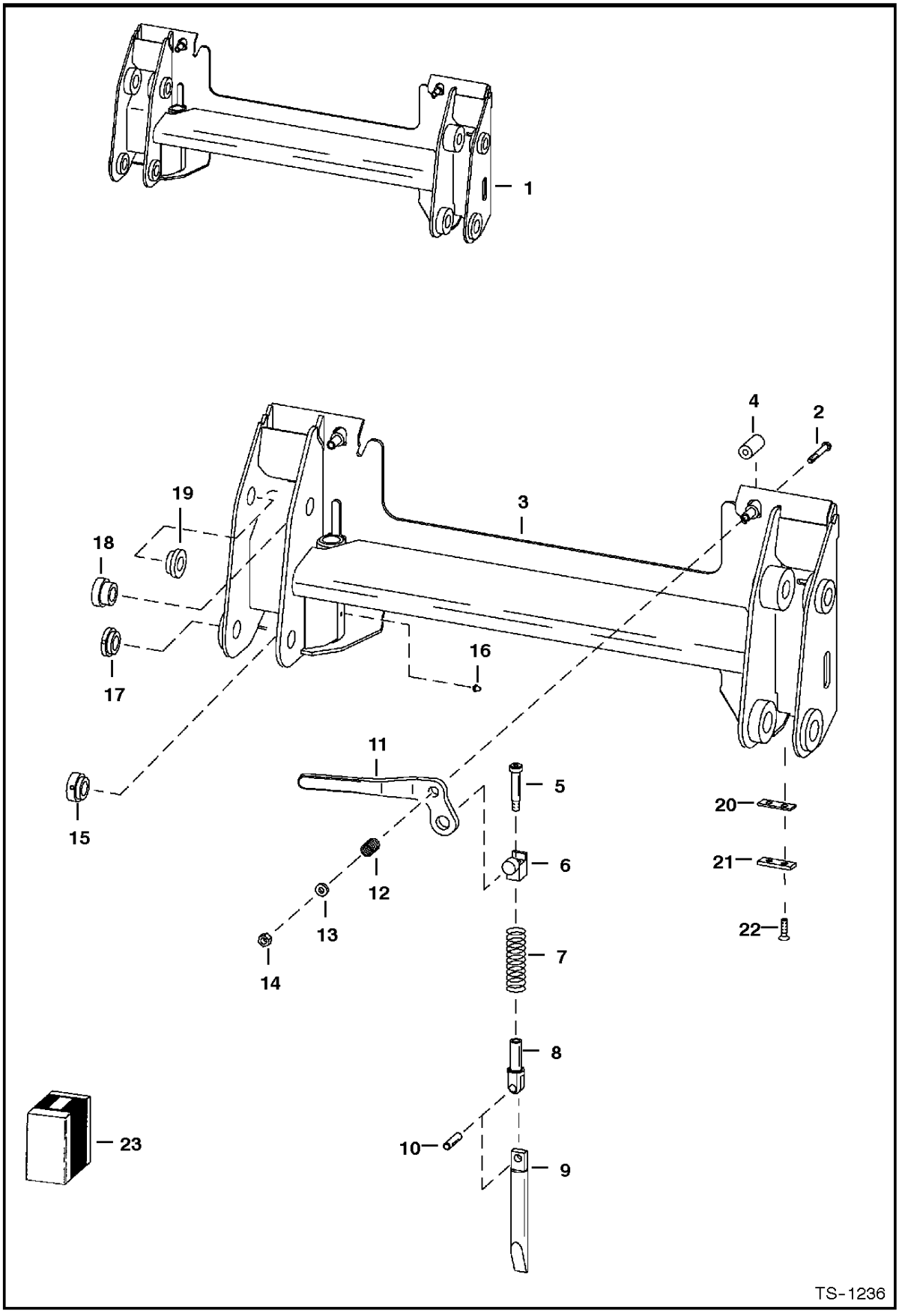
1
4
2
19
3
18
16
17
11
5
15
20
6
21
12
13
22
14
7
8
23
10
9
TS-1236

BOB-TACH

Ref.N°	Part N°	Description	Remarks	Serial N°	Qty.
1	6703666	BOB-TACH	Ref. BOB-TACH (2)-BOB-TACH (22)		2
2	17C-660	BOLT			2
3	NAP	FRAME			1
4	6702958	BUSHING	weld on		2
5	38C-1036	BOLT	shoulder		2
6	6704240	PIVOT ASSY			2
7	6562018	SPRING			2
8	6704248	PIVOT	wedge		2
9	6704242	WEDGE ASSY.			2
10	14J-5032	PIN			2
11	6702904	LEVER	R.H.		1
11	6702903	LEVER	L.H.		1
12	6713040	SPRING			2
13	619021	WASHER			2
14	85D-6	NUT			2
15	6708403	BUSHING	weld on		2
16	12H-15	GREASE ZERK			2
17	6708405	BUSHING	weld on		2
18	6708402	BUSHING	weld on		2
19	6708404	BUSHING	weld on		2
20	6579106	SHIM	.125		4
21	6579104	SHIM	.250		2
22	9G-620	BOLT			4
23	6724775	LEVER KIT	R.H. Bob-tach - Ref. BOB-TACH (2) & BOB-TACH (5) - BOB-TACH (14)		1
23	6724776	LEVER KIT	L.H. Bob-tach - Ref. BOB-TACH (2) & BOB-TACH (5) - BOB-TACH (14)		1

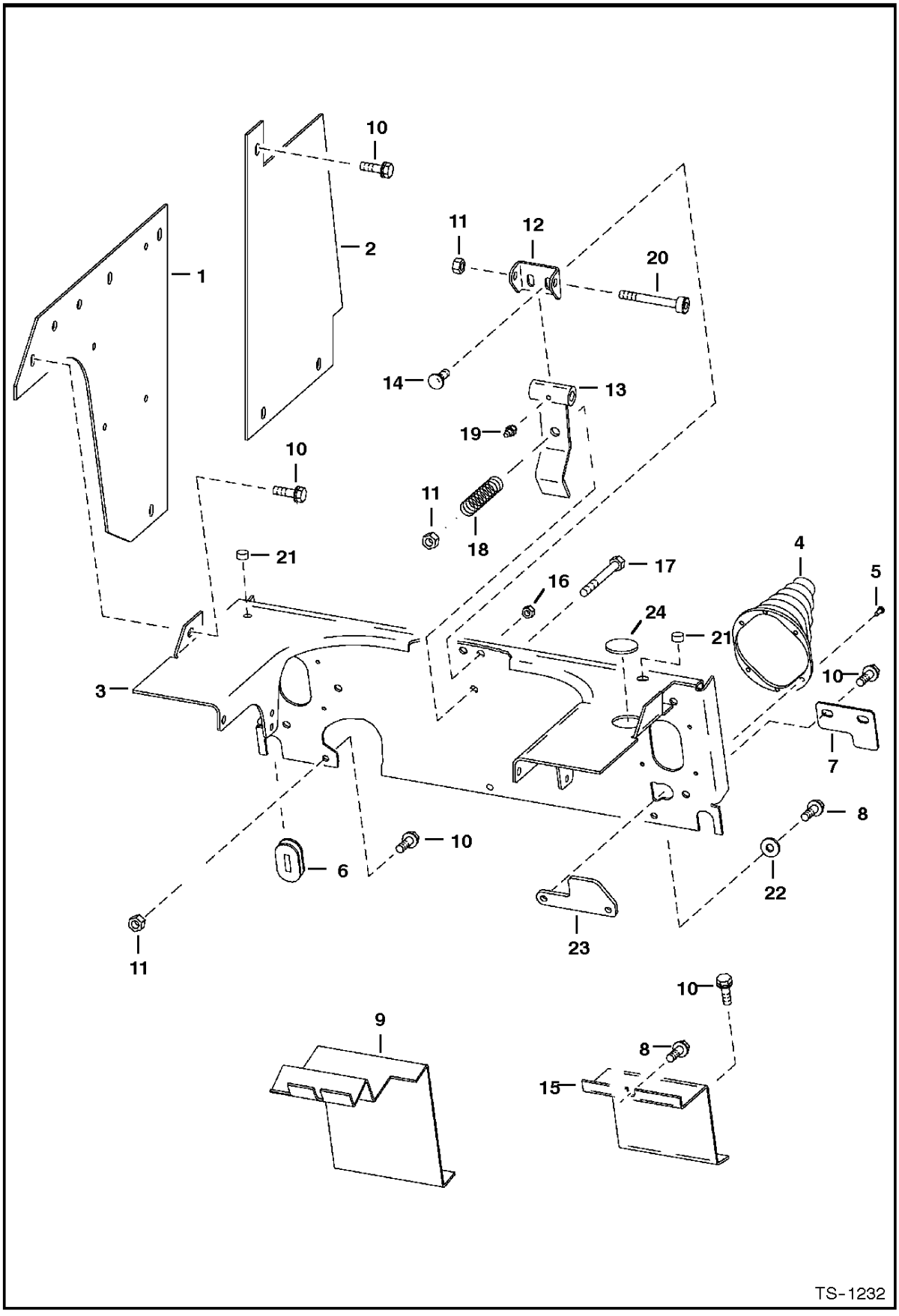
10
2
1
11
12
20
14
13
19
10
11
18
21
4
5
16
17
24
21
3
10
7
8
10
6
22
11
23
10
9
8
15
TS-1232

PANELS

Ref.N°	Part N°	Description	Remarks	Serial N°	Qty.
1	6718187	PANEL			2
2	6718188	PANEL			2
3	6719132	PANEL			1
4	6532127	BOOT			2
5	6630207	RIVET			8
6	6577961	GROMMET			2
7	6719278	LEVER			1
8	84G-3716	BOLT			2
9	6706331	PANEL			1
10	84G-3712	BOLT			30
11	91D-6	NUT			2
12	6701951	MOUNT			1
13	6701950	SPRING PLATE			1
14	10C-512	BOLT			2
15	6706330	PANEL			1
16	59D-5	NUT			2
17	17C-664	BOLT			1
18	6505082	SPRING			1
19	10H-25	GREASE ZERK			1
20	38C-836	BOLT			1
21	6649949	PLUG			2
22	616783	WASHER			2
23	6707344	LEVER	stop		2
24	6707674	PLUG			1

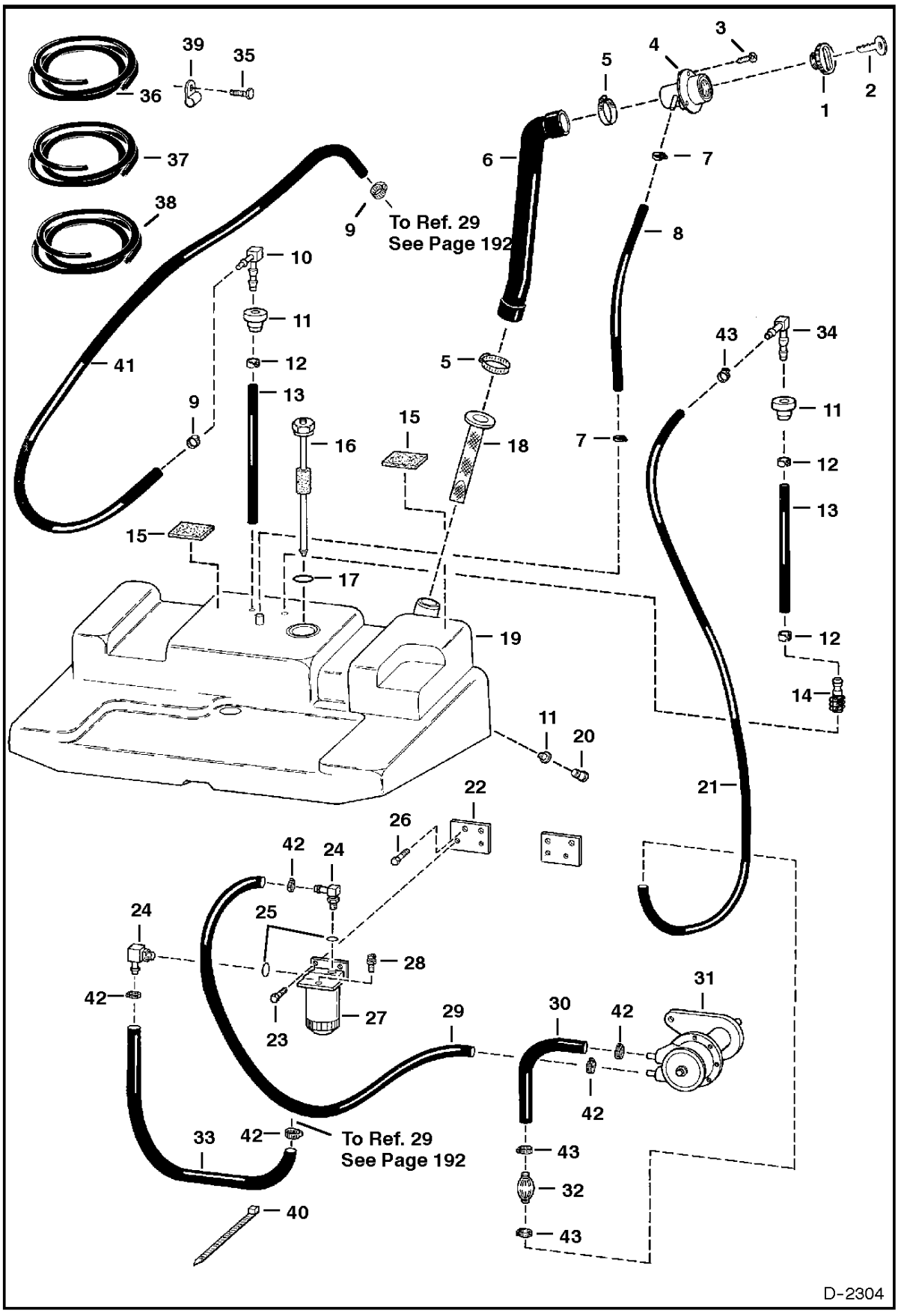
39
35
36
37
38
9
To Ref. 29
See Page 192
10
11
12
13
41
9
16
15
17
19
11
20
22
26
42
24
24
25
28
42
27
23
29
30
42
31
42
33
42
To Ref. 29
See Page 192
40
43
32
43
3
4
5
1
2
6
7
8
5
7
43
34
11
12
13
12
14
21
D-2304

FUEL SYSTEM

Ref.N°	Part N°	Description	Remarks	Serial N°	Qty.
1	6661114	CAP	green fuel fill		1
1	6661696	FUEL CAP	locking - W/Ref. FUEL SYSTEM(2) - Code PK510		1
2	6587458	KEY SET	Code PK510		1
3	6706517	SCREW			3
4	6701449	FILLER TUBE			1
5	42H-24	CLAMP			2
6	6717451	HOSE			1
7	6666864	CLAMP			2
8	NAP	HOSE	38"(965,2 mm)long-Order Ref. FUEL SYSTEM(36)		1
9	5HM-13	CLAMP	Was 6515575 [B]		10
10	6598908	ELBOW			1
11	6553411	BUSHING	.37' (9,4mm) ID		3
11	6717402	BUSHING	.54' (13,7mm) ID		1
12	6661213	CLAMP			3
13	6579554	HOSE			2
14	6650239	SCREEN			1
15	6578278	PAD	self adhesive one side		2
16	NAP	SENSOR	fuel - W/79K-14 OAring - Order 6674209 sensor - See Page ENGINE ELECTRICAL(4) - Was 6669642 [A]		1
16	6674209	SENSOR	fuel - W/6717579 gasket		1
17	79K-14	O-RING			1
17	6717579	GASKET			1
18	6569219	SCREEN			1
19	6708527	TANK			1
20	6599645	PLUG	.5' shoulder		1
20	6717401	PLUG	.75' shoulder		1
21	NAP	HOSE	30"(762 mm) long -Order Ref. FUEL SYSTEM(37)		1
22	6710488	MOUNT			1
23	53CM-830	BOLT			2
24	6657083	ELBOW	W/Ref. FUEL SYSTEM(25) - flat boss face		2
24	6715183	ELBOW	W/Ref. FUEL SYSTEM(25) - tapered boss face		2
25	79K-5	O-RING	for flat boss face		2
25	99K-5	O-RING	for tapered boss face		2
26	43C-512	BOLT			2
27	6667353	FILTER ASSY			1
27	6667352	FILTER			1
27	72F-1	DRAIN COCK			1
28	6658180	PLUG	plug		1
29	NAP	HOSE	14"(353,6 mm) long - Order Ref. FUEL SYSTEM(37)		1
30	NAP	HOSE	9.5"(241,3 mm) long Order Ref. FUEL SYSTEM(37)		1
31		FUEL PUMP	See Page FUEL INJECTION SYSTEM(1)		1
32	6667170	PUMP	hand primer		1
33	NAP	HOSE	21.5"(546 mm) long Order Ref. FUEL SYSTEM(37)		1
34	6726567	ELBOW	Was 6666302 [B]		1
35	1CM-816	BOLT			1
36	6578172	HOSE	bulk - Sold Per Foot		x
37	6577822	HOSE	.375 I.D. - bulk - Sold Per Foot		x
38	6577821	HOSE	.25" I.D. - bulk - Sold Per Foot		x
39	30H-30	CLAMP			1
40	6610510	NYLON TIE			1
41	NAP	HOSE	29.5'(749,3 mm) long Order Ref. FUEL SYSTEM(38)		1
42	5HM-14	CLAMP			5
43	5HM-15	CLAMP			3

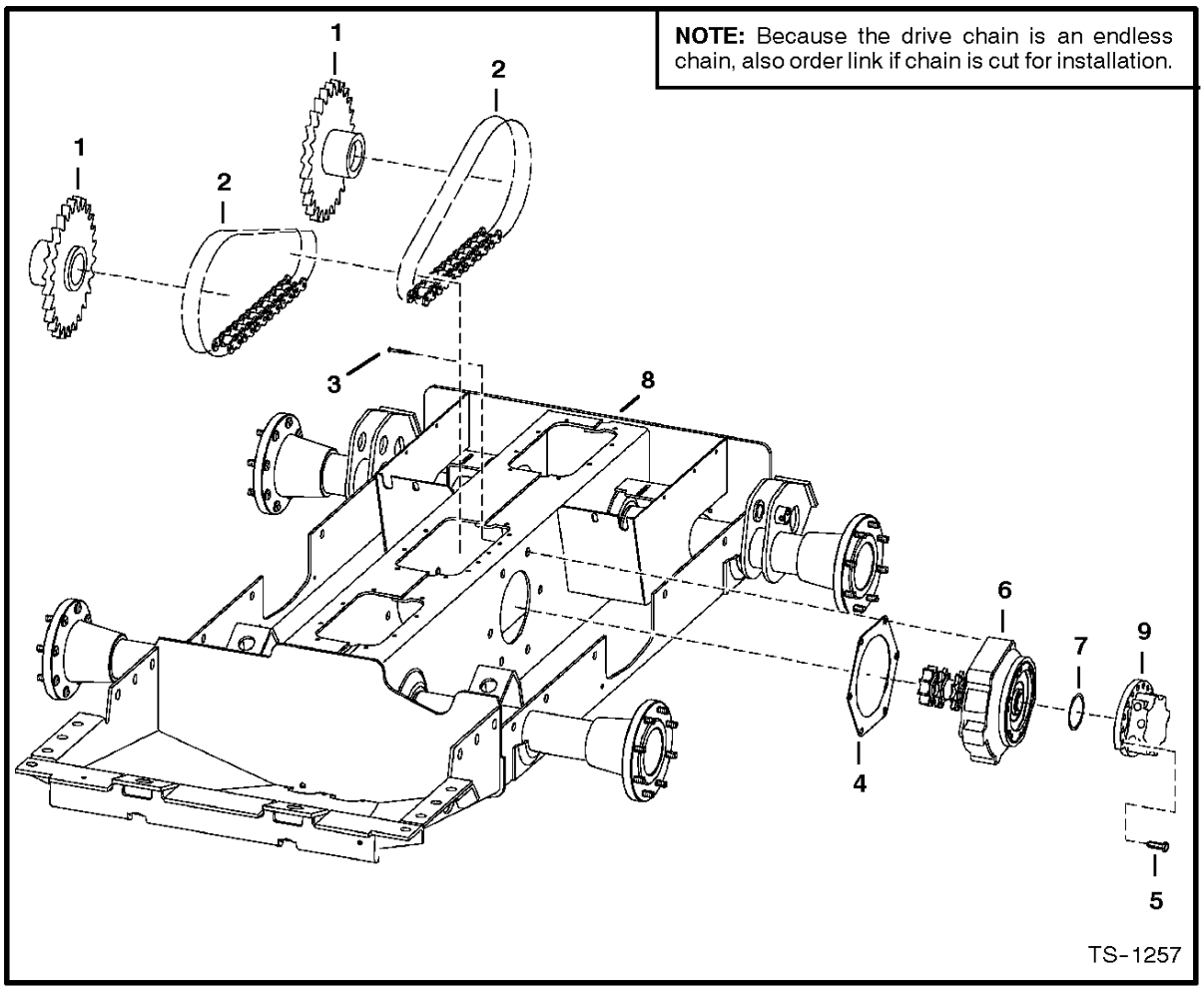

DRIVE TRAIN

Ref. No.	Part Number	Description	Remarks	Serial Number	Qty.

DRIVE TRAIN

Ref.N°	Part N°	Description	Remarks	Serial N°	Qty.
1	6568918	SPROCKET	See Page DISC BRAKE(1)		4
2	NAP	CHAIN	endless - 58 pitches - hour glass shaped links - Order 6675328 - Was 6705987 [A]		4
2	6675328	CHAIN	endless - 58 pitches - oval shaped links		4
2	6591030	LINK	connecting - Tsubaki		x
2	6510614	LINK	connecting - Diamond - hour glass shaped		x
2	6675333	LINK	conn. - Diamond - oval shaped		x
3	6673642	BOLT			12
4	6704879	GASKET			2
5	6717806	BOLT			20
6	6717296	MOUNT ASSY.	drive motor - See Page MOTOR CARRIER(1)		2
7	25K-30812	O-RING			2
8	6719158	CHAINCASE	frame only		1
9		MOTOR	See Page HYDROSTATIC MOTOR(1) or HYDROSTATIC MOTOR & BRAKE(2)		2

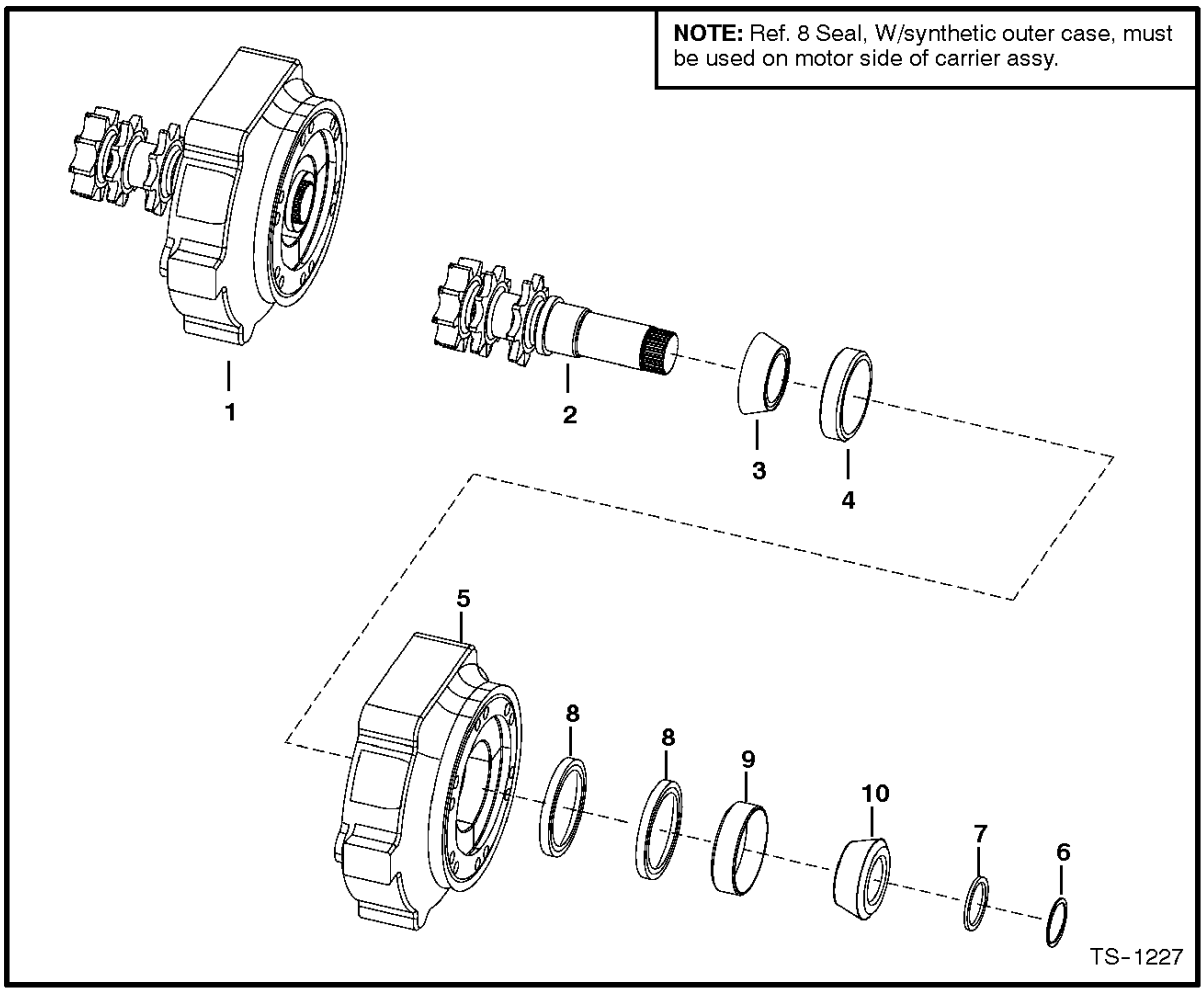

MOTOR CARRIER
(Drive Motor Mount Assy.)

Ref. No.	Part Number	Description	Remarks	Serial Number	Qty.

MOTOR CARRIER

Ref.N°	Part N°	Description	Remarks	Serial N°	Qty.
1	6717296	MOUNT ASSY.	drive motor - Ref. MOTOR CARRIER(2) - MOTOR CARRIER(10)		1
2	6706805	SHAFT	W/snap ring groove		1
3	6664845	BEARING			2
4	6650120	RACE			2
5	6717242	HOUSING			1
6	6664848	SNAP RING	.118' (3,0 mm) thickness		1
7	6706817	SPACER	.152'(3,86 mm) thickness		1
7	6715427	SPACER	.164'(4,16 mm) thickness		1
8	6665755	SEAL	SEE NOTE		2
9	6664847	CUP			1
10	6664846	BEARING			1

DISC BRAKE
(S/N 5141 45999, 5142 45999, 5179 11999 & Below)

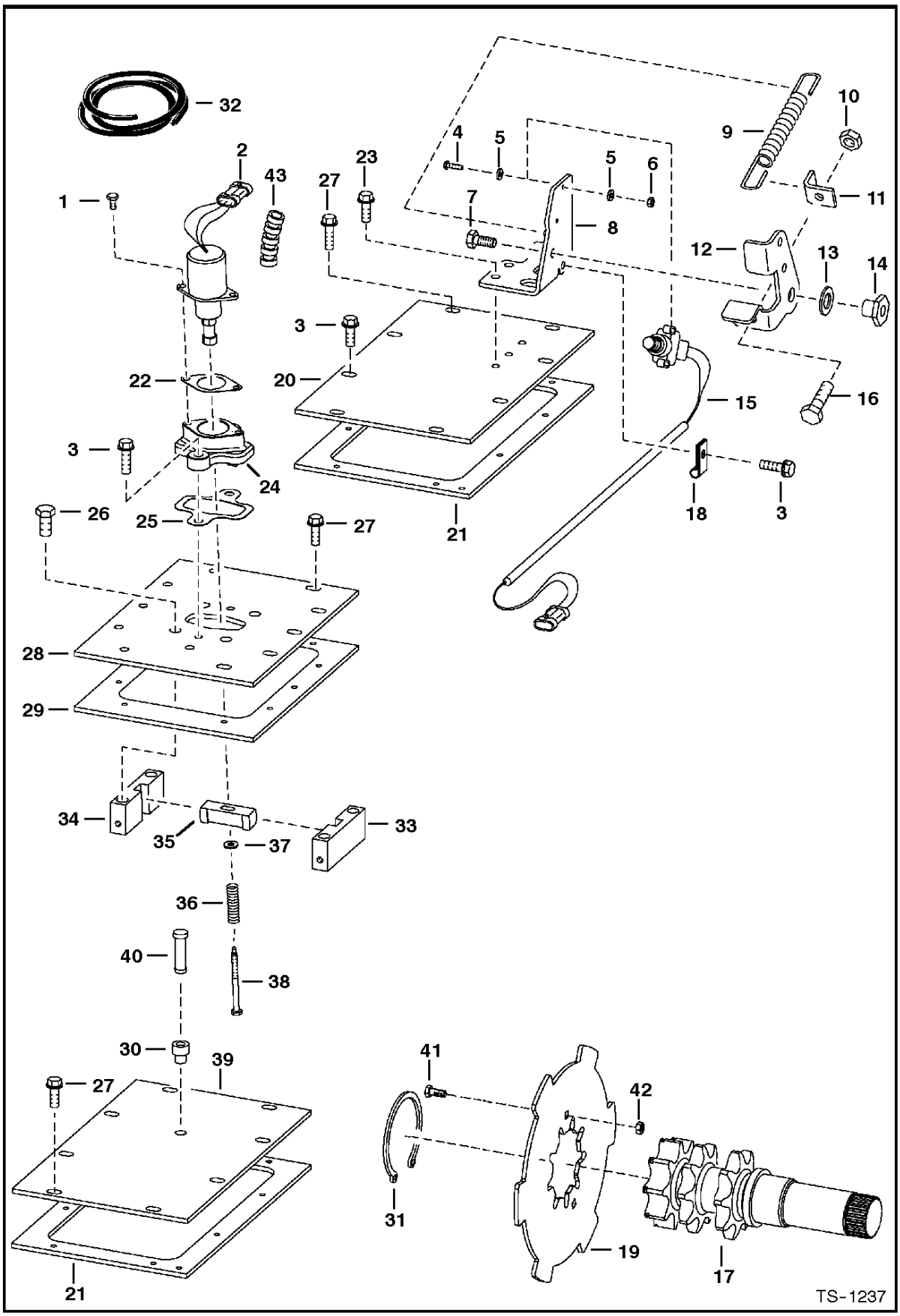

DISC BRAKE

Ref.N°	Part N°	Description	Remarks	Serial N°	Qty.
1	17C-412	BOLT			2
2	6667992	SOLENOID	W/Ref. DISC BRAKE(43)		1
3	84G-3712	BOLT			18
4	23G-812	SCREW			2
5	25E-8	WASHER			2
6	12D-8	NUT			2
7	17C-610	BOLT			1
8	6707313	PEDAL MOUNT			1
9	6585860	SPRING			1
10	91D-6	NUT			1
11	6707315	ANGLE			1
12	6707314	PEDAL	brake		1
13	6700170	WASHER	plastic		2
14	6559479	NUT			1
15	6707337	SWITCH	W/cover and connector		1
15	6664880	SWITCH			1
16	17C-620	BOLT			1
17	6706805	SHAFT	See Page MOTOR CARRIER(2)		2
18	30H-23	CLAMP			1
19	6715630	BRAKE	disc - W/Ref. DISC BRAKE(32) welded to it		2
20	6578505	COVER	See Page MAIN FRAME(1)		1
21	6703097	GASKET			2
22	6706737	GASKET			1
23	84G-3720	BOLT			2
24	6706718	MOUNT			1
25	6708016	GASKET			1
26	47C-820	BOLT			4
27	84G-3716	BOLT			18
28	6706683	COVER	See Page MAIN FRAME(1)		1
28	6725496	COVER	2-speed - See Page MAIN FRAME(1)		1
29	6708070	GASKET			1
30	6553411	BUSHING			1
31	6662298	SNAP RING			2
32	6584978	CONDUIT	bulk - Sold Per Foot		x
33	6719056	BLOCK	guide - R.H.		1
34	6719057	BLOCK	guide - L.H.		1
35	6714278	WEDGE	for brake disc		1
36	6708018	SPRING			1
37	25E-13	WASHER			2
38	6708267	BOLT			2
39	6700330	COVER	See Page MAIN FRAME(1)		1
40	6670627	BREATHER	See Page MAIN FRAME(1)		1
41	37C-512	BOLT	carriage		4
42	59D-5	NUT			4
43	NAP	CONDUIT	5'(127 mm) long - Order Ref. DISC BRAKE(32)		1

DISC BRAKE
(S/N 5141 46001, 5142 41001, 5179 12001 & Above)

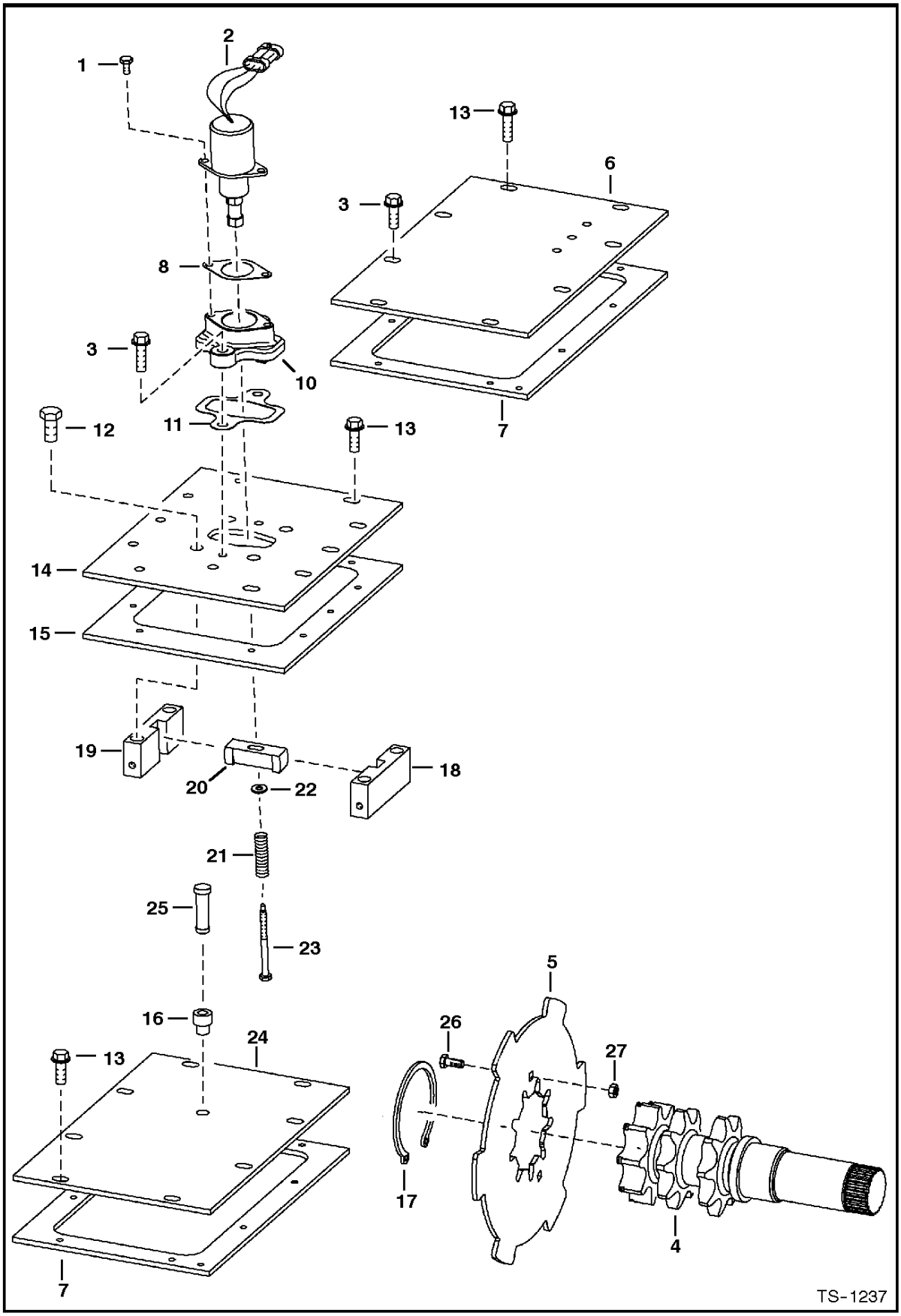

DISC BRAKE

Ref.N°	Part N°	Description	Remarks	Serial N°	Qty.
1	17C-412	BOLT			2
2	6667992	SOLENOID	W/Ref. DISC BRAKE(43)		1
3	84G-3712	BOLT			12
4	6706805	SHAFT	See Page MOTOR CARRIER(2)		2
5	6715630	BRAKE	disc - W/Ref. DISC BRAKE(32) welded to it		2
6	6729173	COVER	See Page MAIN FRAME(1) - Was 6578505 [A]		1
7	6703097	GASKET			2
8	6706737	GASKET			1
9	84G-3720	BOLT			2
10	6706718	MOUNT			1
11	6708016	GASKET			1
12	47C-820	BOLT			4
13	84G-3716	BOLT			18
14	6706683	COVER	See Page MAIN FRAME(1)		1
14	6725496	COVER	2-speed - See Page MAIN FRAME(1)		1
15	6708070	GASKET			1
16	6553411	BUSHING			1
17	6662298	SNAP RING			2
18	6719056	BLOCK	guide - R.H.		1
19	6719057	BLOCK	guide - L.H.		1
20	6714278	WEDGE	for brake disc		1
21	6708018	SPRING			1
22	25E-13	WASHER			2
23	6708267	BOLT			2
24	6700330	COVER	See Page MAIN FRAME(1)		1
25	6670627	BREATHER	See Page MAIN FRAME(1)		1
26	37C-512	BOLT	carriage		4
27	59D-5	NUT			4

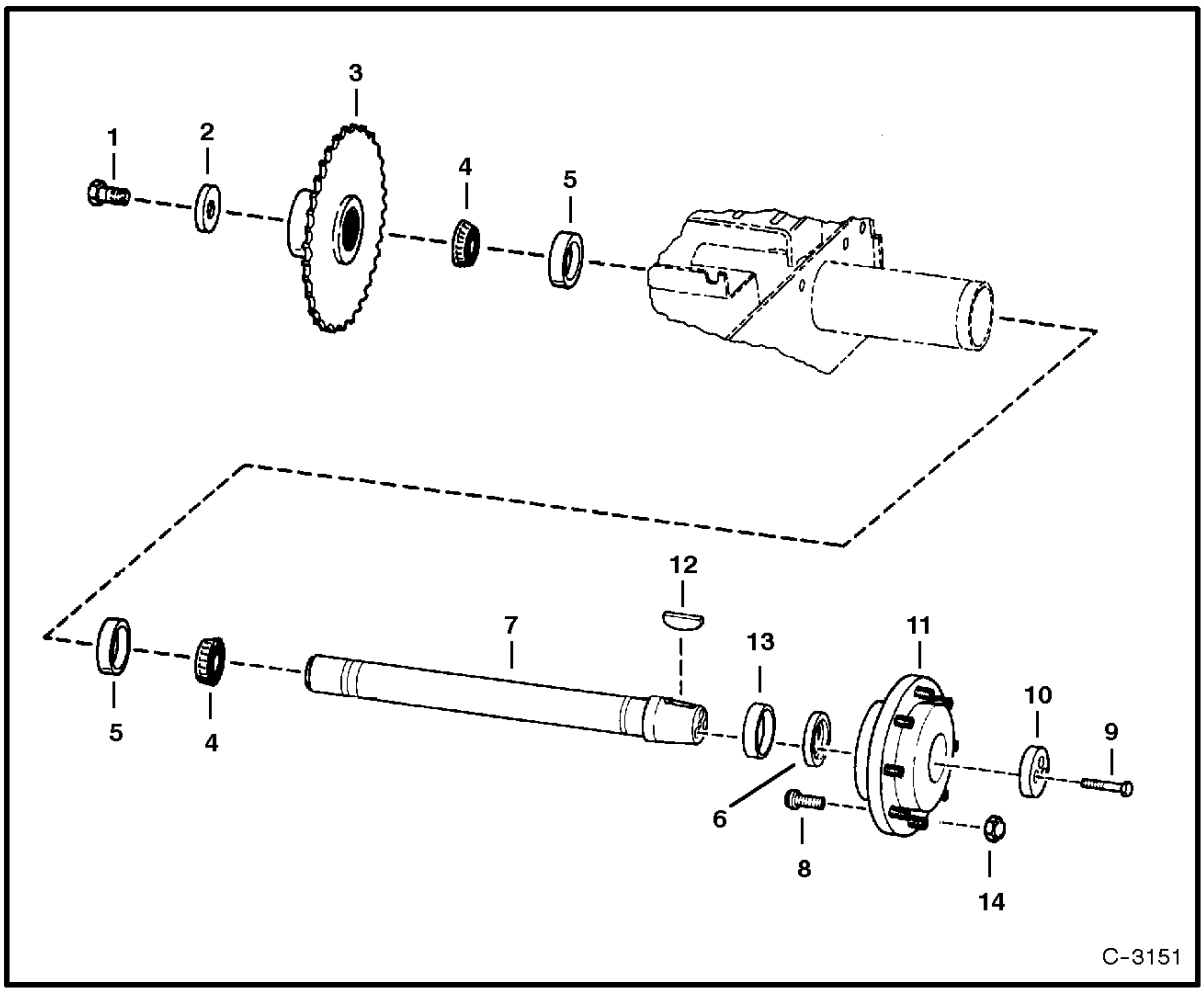

AXLE

Ref. No.	Part Number	Description	Remarks	Serial Number	Qty.

AXLE

Ref.N°	Part N°	Description	Remarks	Serial N°	Qty.
1	2C-1626	BOLT			1
2	6558694	WASHER			1
3	6568918	SPROCKET			1
4	1321608	BEARING			2
5	1321607	RACE			2
6	6671138	SEAL	use W/6709757		1
6	6658229	SEAL	use W/Ref. AXLE(13)		1
7	6709757	AXLE	W/O wear ring		1
8	6709170	STUD	wheel		8
9	17C-1024	BOLT			3
10	6565947	CAP	recessed		1
11	6578857	HUB	W/Ref. AXLE(8)		1
12	6J-1664	KEY			1
13	6558693	RING	wear - service part only		1
14	6564669	NUT	wheel		8

HYDRAULIC CIRCUITRY
(W/O Bucket Positioning Valve)

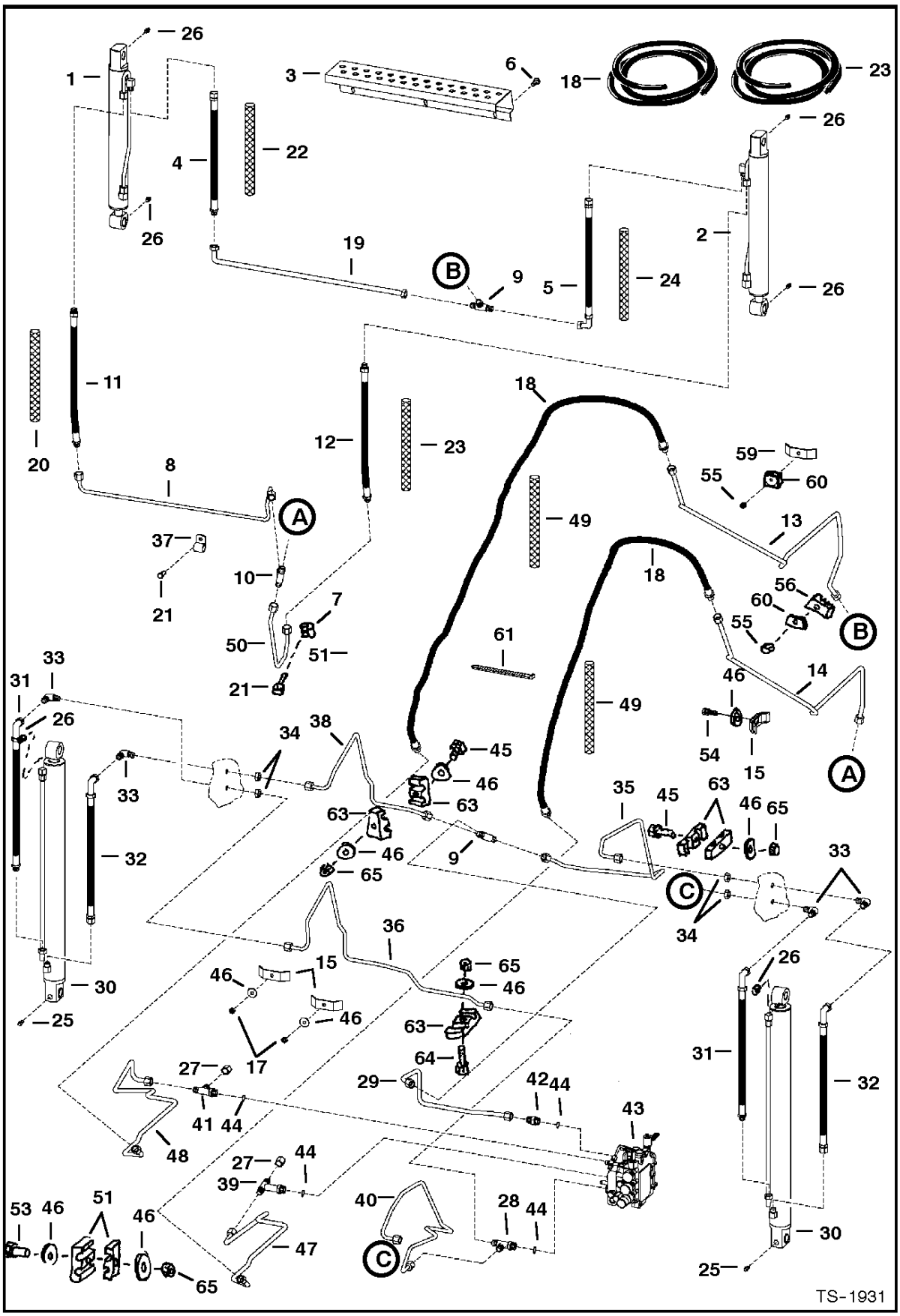

HYDRAULIC CIRCUITRY

Ref.N°	Part N°	Description	Remarks	Serial N°	Qty.
1		CYLINDER	L.H. tilt - See Page TILT CYLINDER(2)		1
2		CYLINDER	R.H tilt - See Page TILT CYLINDER(1)		1
3	6710491	SHIELD	boom step		1
4	6711811	HOSE			1
5	6710642	HOSE			1
6	84G-3712	BOLT			3
7	30H-30	CLAMP			2
8	6718352	TUBELINE			1
9	6716061	TEE			2
9	97K-8	O-RING	flared end		x
9	97K-10	O-RING	flared end		x
10	6569146	TEE			1
11	6718817	HOSE			1
12	6718818	HOSE			1
13	6718476	TUBELINE			1
14	6718477	TUBELINE			1
15	6502203	CLAMP			5
16	84G-3724	BOLT			2
17	95D-6	NUT			4
18	6718854	HOSE		& Abv.	2
19	6710629	TUBELINE			1
20	NAP	SHIELD	13'(330,2 mm) long - .75' (19mm) ID - Order Ref. HYDRAULIC CIRCUITRY(11)		1
21	84G-3112	BOLT			2
22	NAP	SHIELD	14' (356 mm) long - .75' (19mm) ID - Order Ref. HYDRAULIC CIRCUITRY(4)		1
23	NAP	SHIELD	17.5" (444,5 mm) long - .75'(19mm) ID - Order Ref. HYDRAULIC CIRCUITRY(12)		1
24	NAP	SHIELD	16.5" (419 mm)long - .75'(19mm) ID - Order Ref. HYDRAULIC CIRCUITRY(5)		1
25	12H-15	GREASE ZERK			2
26	10H-25	GREASE ZERK			6
27	36K-7	CAP			2
28	6715187	TEE	W/Ref. HYDRAULIC CIRCUITRY(44)		1
28	97K-8	O-RING	flared end		x
29	6715075	TUBELINE			1
30		CYLINDER	lift - See Page LIFT CYLINDER(1)		2
31	6708922	HOSE			2
32	6708923	HOSE			2
33	88FN-6	ELBOW			4
33	97K-8	O-RING	flared end		x
34	86F-6	NUT			4
35	6719537	TUBELINE			1
36	6719540	TUBELINE			1
37	31H-26	CLIP			1
38	6719539	TUBELINE			1
39	6715294	TEE	W/Ref. HYDRAULIC CIRCUITRY(44)		1
39	97K-10	O-RING	flared end		x
40	6719538	TUBELINE			1
41	21KN-7	TEE	W/Ref. HYDRAULIC CIRCUITRY(44)		1
42	15KV-7	ADAPTER	W/Ref. HYDRAULIC CIRCUITRY(44) - tapered boss face		1
42	97K-10	O-RING	flared end		1
43		VALVE	See Page HYDRAULIC CONTROL VALVE(3) or HYDRAULIC CONTROL VALVE(4)		1
44	99K-10	O-RING	tapered boss face		x
45	35C-528	BOLT			2

HYDRAULIC CIRCUITRY

Ref.N°	Part N°	Description	Remarks	Serial N°	Qty.
46	872229	WASHER			8
47	6718693	TUBELINE			1
48	6718694	TUBELINE			1
49	NAP	SHIELD	20.25' (514,4 mm) long - 1.31' (33.3 mm) ID - Order Ref. HYDRAULIC CIRCUITRY(57)		2
50	6718475	TUBELINE			1
51	6701893	CLAMP			2
52	6728023	CLAMP		5141 44607 & Abv.	1
53	35C-536	BOLT			1
54	84G-3728	BOLT			1
55	59D-8	NUT			2
56	6717933	CLAMP		5141 44606 & Bel.	2
56	6717933	CLAMP		5141 44607 & Abv.	1
57					x
58	6675734	TIE STRAP			1
59	6728023	CLAMP			1
60	6553709	WASHER	rectangular		1
61	6624289	STA-STRAP			3
62	36K-8	CAP			2
63	6701892	CLAMP			6
64	17C-532	BOLT			1
65	83D-5	NUT			4

HYDRAULIC CIRCUITRY
(W/ Bucket Positioning Valve)

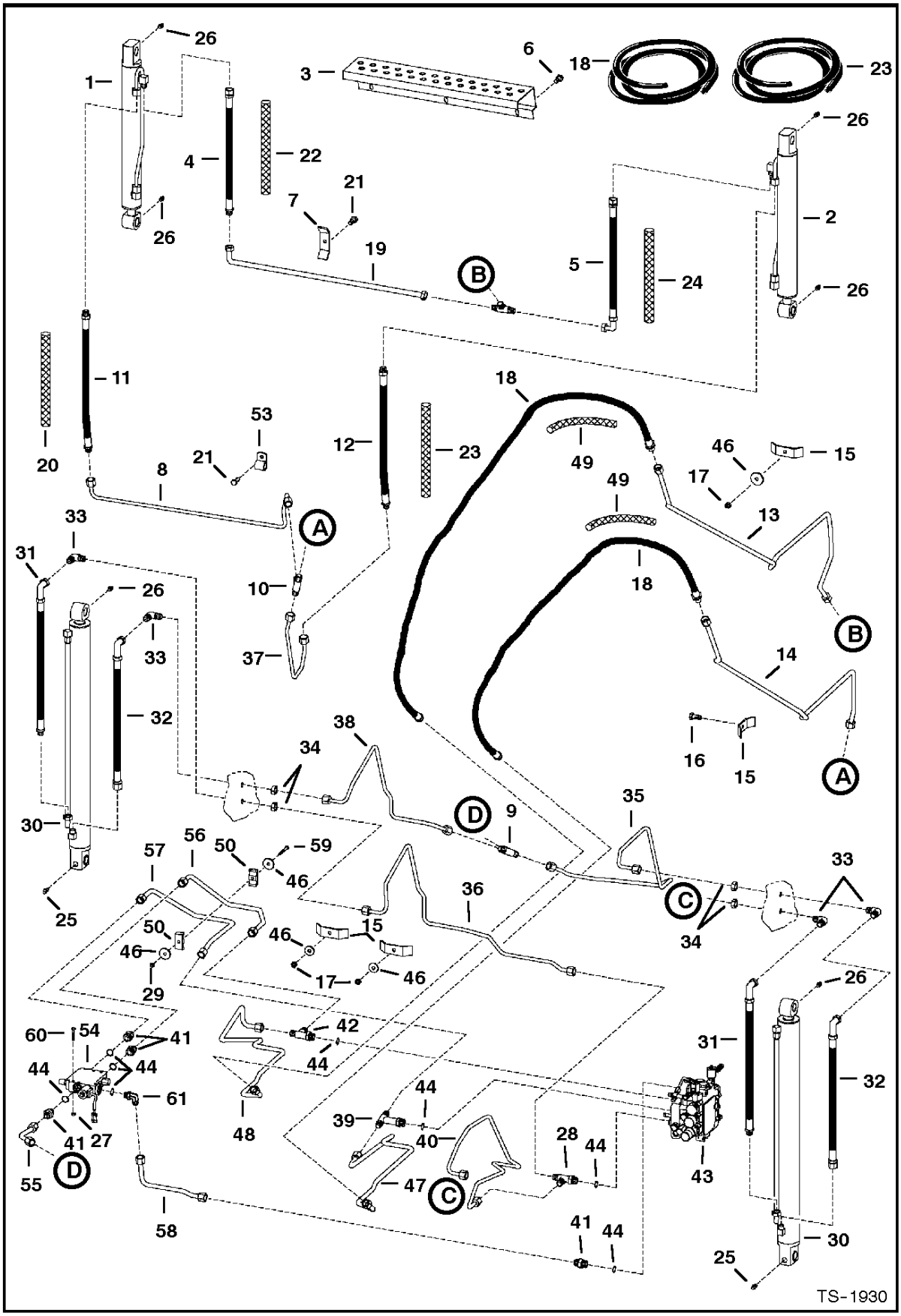

HYDRAULIC CIRCUITRY

Ref.N°	Part N°	Description	Remarks	Serial N°	Qty.
1		CYLINDER	L.H. tilt - See Page TILT CYLINDER(2)		1
2		CYLINDER	R.H tilt - See Page TILT CYLINDER(1)		1
3	6710491	SHIELD	boom step		1
4	6711811	HOSE			1
5	6710642	HOSE			1
6	84G-3712	BOLT			3
7	30H-30	CLAMP			2
8	6718352	TUBELINE			1
9	6716061	TEE			2
9	97K-8	O-RING	flared end		x
9	97K-10	O-RING	flared end		x
10	6569146	TEE			1
11	6718817	HOSE			1
12	6718818	HOSE			1
13	6718476	TUBELINE			1
14	6718477	TUBELINE			1
15	6502203	CLAMP			5
16	84G-3724	BOLT			2
17	95D-6	NUT			4
18	6670120	HOSE			2
19	6710629	TUBELINE			1
20	NAP	SHIELD	13' (330,2 mm) long - .75'(19mm) ID - Order Ref. HYDRAULIC CIRCUITRY(11)		1
21	84G-3112	BOLT			2
22	NAP	SHIELD	14' (356 mm) long - .75' (19mm) ID - Order Ref. HYDRAULIC CIRCUITRY(4)		1
23	NAP	SHIELD	17.5" (445 mm) long - .75' (19mm) ID - Order Ref. HYDRAULIC CIRCUITRY(12)		1
24	NAP	SHIELD	16.5" (419mm) long - .75'(19mm) ID - Order Ref. HYDRAULIC CIRCUITRY(5)		1
25	12H-15	GREASE ZERK			2
26	10H-25	GREASE ZERK			6
27	83D-5	NUT			2
28	6715187	TEE	W/Ref. HYDRAULIC CIRCUITRY(44)		1
28	97K-8	O-RING	flared end		x
29	85D-6	NUT		& Bel.	1
30		CYLINDER	lift - See Page LIFT CYLINDER(1)		2
31	6708922	HOSE			2
32	6708923	HOSE			2
33	88FN-6	ELBOW			4
33	97K-8	O-RING	flared end		x
34	86F-6	NUT			4
35	6719537	TUBELINE			1
36	6719540	TUBELINE			1
37	6718475	TUBELINE			1
38	6719539	TUBELINE			1
39	6715294	TEE	W/Ref. HYDRAULIC CIRCUITRY(44)		1
39	97K-10	O-RING	flared end		x
40	6719538	TUBELINE			1
41	15KV-7	ADAPTER	W/Ref. HYDRAULIC CIRCUITRY(44) - tapered boss face	S/N & Below	4
41	15KV-7	ADAPTER	W/Ref. HYDRAULIC CIRCUITRY(44) - tapered boss face	S/N & Above	2
41	97K-10	O-RING	flared end		x
42	21KN-7	TEE	W/Ref. HYDRAULIC CIRCUITRY(44)		1
43		VALVE	See Page HYDRAULIC CONTROL VALVE(3) or HYDRAULIC CONTROL VALVE(4)		1

HYDRAULIC CIRCUITRY

Ref.N°	Part N°	Description	Remarks	Serial N°	Qty.
44	99K-10	O-RING	tapered boss face		x
45	6714775	TUBELINE			1
46	872229	WASHER		S/N & Below	8
46	872229	WASHER		S/N & Above	7
47	6718693	TUBELINE			1
48	6718694	TUBELINE			1
49	NAP	SHIELD	20.25' (514,4 mm) long - 1.31' (33.3 mm) ID - Order Ref. HYDRAULIC CIRCUITRY(18)		2
50	6701893	CLAMP		S/N & Below	2
51	6717109	HOSE			2
52	6714774	TUBELINE			1
53	31H-26	CLIP			1
54		VALVE	BPV - See Page BUCKET POSITIONING VALVE(5)		1
55	6715076	TUBELINE			1
56	6715077	TUBELINE		S/N & Below	1
56	6725953	TUBELINE		S/N & Above	1
57	6715078	TUBELINE		S/N & Below	1
57	6725954	TUBELINE		S/N & Above	1
58	6715281	TUBELINE			1
59	17C-632	BOLT		S/N & Below	1
60	35C-540	BOLT			2
61	17KV-7	ELBOW		S/N & Below	1
61	17KV-7	ELBOW		S/N & Above	3
61	97K-10	O-RING	flared end		x
62	35C-536	BOLT			1
63	84G-3728	BOLT			1
64	59D-8	NUT			2
65	6717933	CLAMP			2
66	6718854	HOSE			2
67	6675734	TIE STRAP			1

LIFT & TILT CONTROL CIRCUITRY

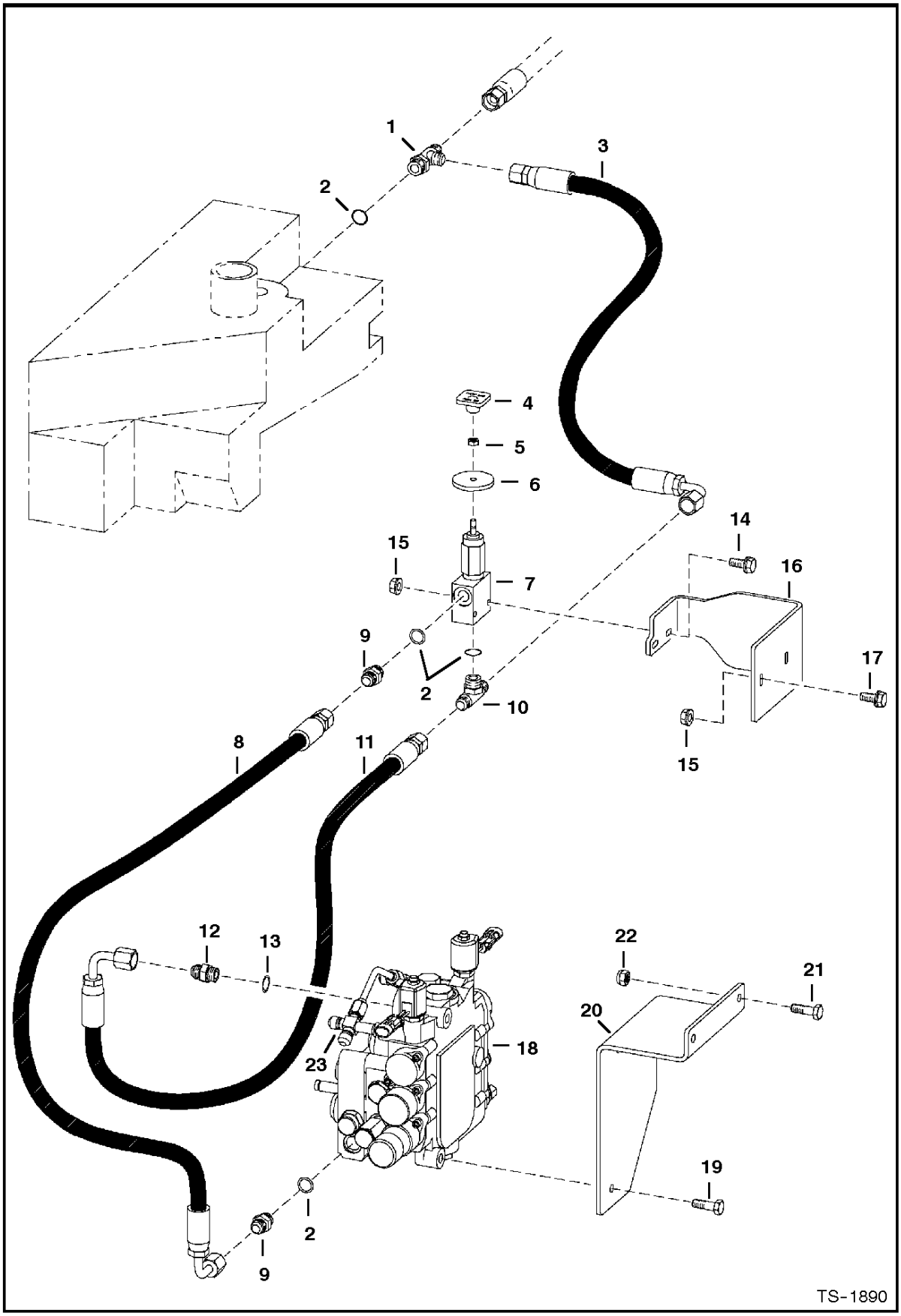

LIFT & TILT CONTROL CIRCUITRY

Ref.N°	Part N°	Description	Remarks	Serial N°	Qty.
1	21KV-5	TEE	W/Ref. LIFT & TILT CONTROL CIRCUITRY(2)		1
1	97K-6	O-RING	flared end		x
2	99K-6	O-RING			4
3	6716337	HOSE	Was 6716123 [A]		1
4	6668913	KNOB			1
5	7D-4	NUT			1
6	6707101	WASHER	neoprene		1
7	6667844	VALVE	manual lift - See Page MANUAL LIFT RELEASE VALVE(1)		1
8	6716124	HOSE			1
9	15KV-5	ADAPTER	W/Ref. LIFT & TILT CONTROL CIRCUITRY(2)		2
9	97K-6	O-RING	flared end		x
10	19KN-5	TEE	W/Ref. LIFT & TILT CONTROL CIRCUITRY(2)	& Bel.	1
10	6725182	TEE	W/Ref. LIFT & TILT CONTROL CIRCUITRY(2)	& Abv.	1
11	6533363	HOSE		& Bel.	1
11	6597884	HOSE		& Abv.	1
12	90KV-8	PLUG	W/Ref. LIFT & TILT CONTROL CIRCUITRY(13)		1
12	97K-12	O-RING	flared end		x
13	95K-12	O-RING	Was 99K-12 [B]		1
14	35C-428	BOLT	17C-428 [B]		2
15	83D-4	NUT			4
16	6719936	BRACKET	Was 6714840 [A]		1
17	35C-416	BOLT			2
18		VALVE	control - See Page HYDRAULIC CONTROL VALVE(3) or HYDRAULIC CONTROL VALVE(4)		1
19	6717378	BOLT			1
20	6727751	MOUNT	Was 6714823 [A]		1
21	17C-616	BOLT			2
22	85D-6	NUT			2
23	36K-5	CAP			1

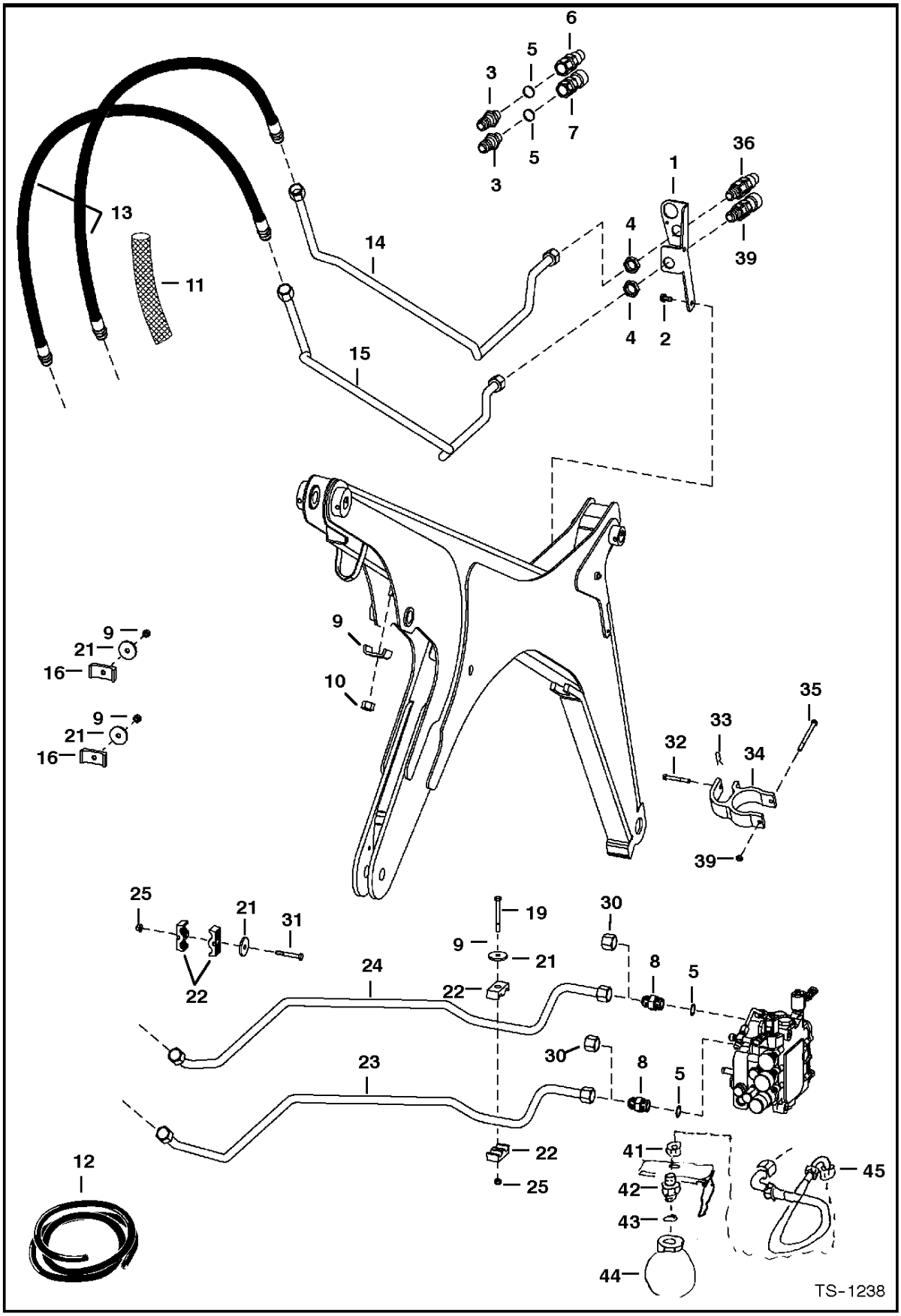
6
5
3
7
5
3
36
1
13
4
39
14
11
4
2
15
9
21
16
9
10
9
21
16
35
33
32
34
39
25
21
31
22
19
9
21
30
8
5
24
22
30
8
5
23
22
25
41
42
43
44
45
12
TS-1238

AUXILIARY HYDRAULICS

Ref.N°	Part N°	Description	Remarks	Serial N°	Qty.
1	6716808	BRACKET			1
2	84G-3712	BOLT			2
3	6716090	ADAPTER	W/Ref. AUXILIARY HYDRAULICS(5) - tapered boss face		2
3	97K-12	O-RING	flared end		2
4	86F-8	NUT			2
5	99K-12	O-RING	tapered boss face		2
6	NAP	COUPLER	male - Order Ref. AUXILIARY HYDRAULICS(36) - Was 6667808 [B]		1
6	6672026	O-RING			1
7	NAP	COUPLER	female - Order Ref. AUXILIARY HYDRAULICS(39) - Was 6672960 [B]		1
8	15KN-8	ADAPTER	W/Ref. AUXILIARY HYDRAULICS(5)		2
8	97K-12	O-RING	flared end		x
9	6718754	CLAMP	Was 6502203 [A]		5
10	95D-6	NUT			4
11	NAP	SHIELD	70.75' (1797,1 mm) long - Order Ref. AUXILIARY HYDRAULICS(12)		1
12	6651436	SHIELD	bulk - 2.38' (60,5 mm) ID - Sold Per Foot		x
13	6718855	HOSE			1
14	6718056	TUBELINE			1
15	6718057	TUBELINE			1
16	95D-6	NUT			1
17	25E-17	WASHER			2
18	17C-612	BOLT			1
19	17C-552	BOLT			1
20	6519187	ELBOW	W/Ref. AUXILIARY HYDRAULICS(26)		2
21	872229	WASHER			5
22	6592506	CLAMP			4
23	6718687	TUBELINE			1
24	6718688	TUBELINE			1
25	85D-5	NUT			2
26	79K-12	O-RING			2
27	6800262	CLAMP		5141 44606 & Bel.	2
27	6800262	CLAMP		5141 44607 & Abv.	1
28	59D-8	NUT			2
29	6806680	ELBOW			1
30	36K-8	CAP			2
31	35C-540	BOLT			1
32	6541981	PIN	clevis		1
33	1306637	PIN			1
34	6713937	CLAMP			1
35	17C-560	BOLT			1
36	6676445	COUPLER	male	5141 45625 & Abv.	1
36	6672026	O-RING			1
37	95D-5	NUT			1
38	30H-31	CLAMP			1
39	6676447	COUPLER	female	5141 45625 & Abv.	1
40	6553709	WASHER		5141 44607 & Abv.	1
41	86F-5	NUT			1
42	6716089	CONNECTOR	W/Ref. AUXILIARY HYDRAULICS(43)		1
42	97K-6	O-RING	flared end		x
43	99K-6	O-RING	tapered boss face		x
44	6676923	ACCUMULATOR			1
45	6727971	HOSE			1

TILT CYLINDER
(R.H.)

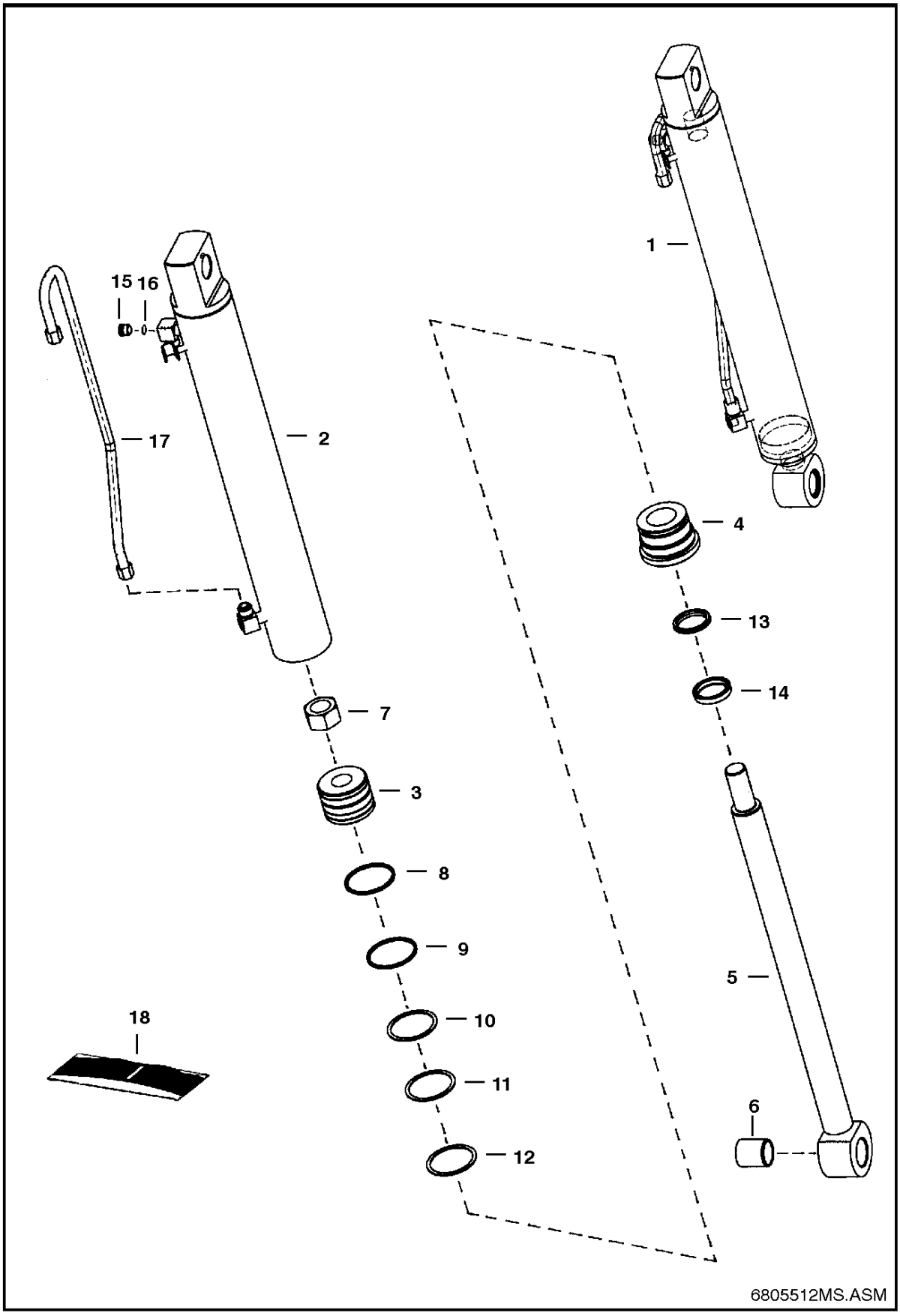

TILT CYLINDER

Ref.N°	Part N°	Description	Remarks	Serial N°	Qty.
1	6805512	CYLINDER	tilt - Ref. TILT CYLINDER(2)-TILT CYLINDER(16)		1
2	6805515	CASE	2.75' (69,9 mm) I.D.		1
3	6800684	PISTON			1
4	6800686	HEAD			1
5	6804391	ROD	W/Ref. TILT CYLINDER(6) - 1.625' (41,3 mm) O.D.		1
6	6802752	BUSHING			1
7	6804592	NUT			1
8	54K-30210	O-RING			1
9	6516229	SEAL			1
10	54K-60212	O-RING			1
11	80K-332	WASHER	back-up		1
12	54K-40224	O-RING			1
13	6669268	SEAL			1
14	6669267	SEAL	wiper		1
15	90KV-5	PLUG	W/Ref. TILT CYLINDER(16) - tapered boss face - socket head		2
16	79K-6	O-RING	for flat boss face		1
16	95K-6	O-RING	for tapered boss face		1
17	6809085	TUBELINE	Was 6806918 [A]		1
18	6804616	SEAL KIT	Ref. TILT CYLINDER(7) - TILT CYLINDER(14)		1

TILT CYLINDER
(L.H.)

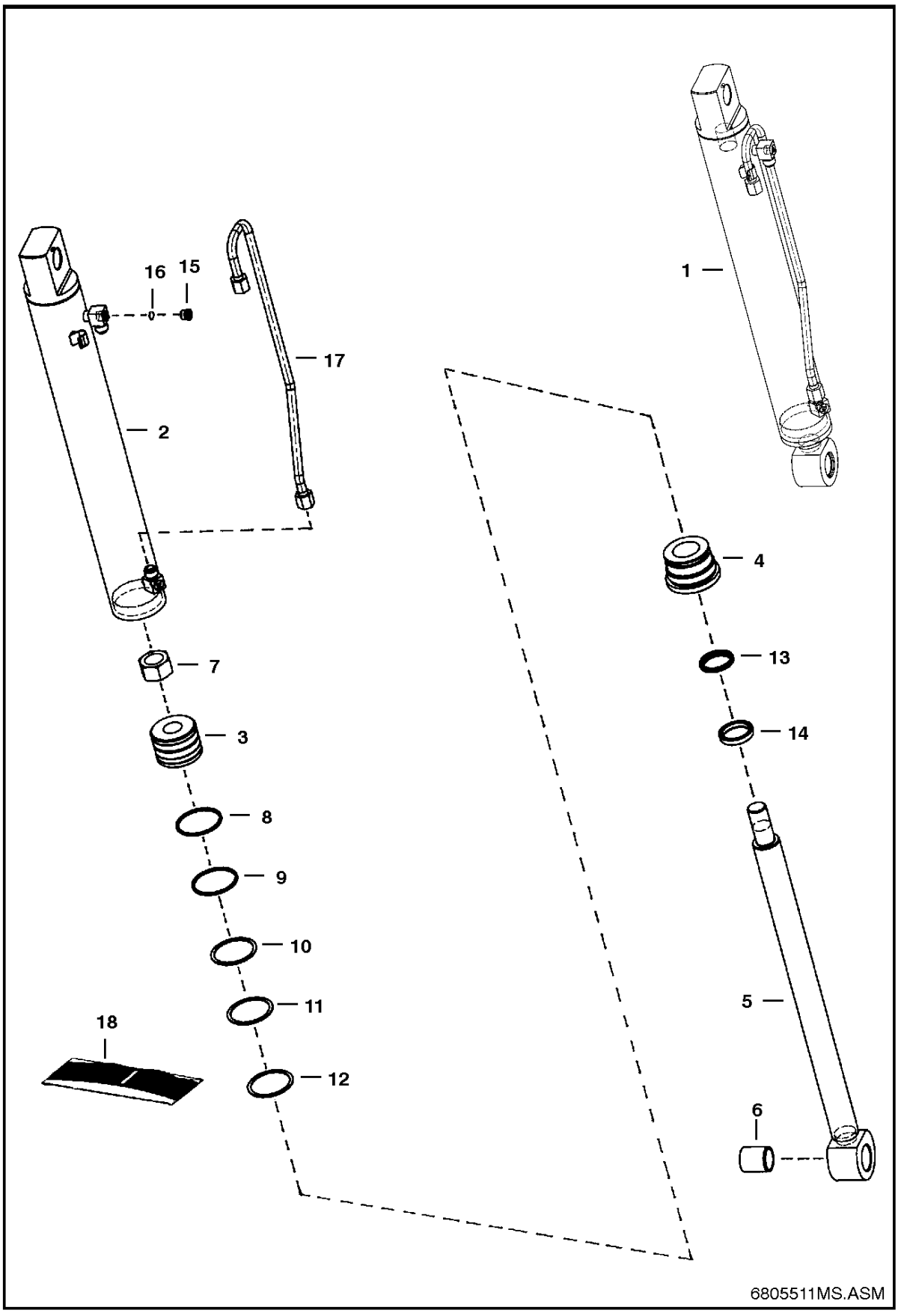

TILT CYLINDER

Ref.N°	Part N°	Description	Remarks	Serial N°	Qty.
1	6805511	CYLINDER	tilt - Ref. TILT CYLINDER(2)-TILT CYLINDER(16)		1
2	6805514	CASE	2.75' (69,9 mm) I.D.		1
3	6800684	PISTON			1
4	6800686	HEAD			1
5	6804391	ROD	W/Ref. TILT CYLINDER(6) - 1.625' (41,3 mm) O.D.		1
6	6802752	BUSHING			1
7	6804592	NUT			1
8	54K-30210	O-RING			1
9	6516229	SEAL			1
10	54K-60212	O-RING			1
11	80K-332	WASHER	back-up		1
12	54K-40224	O-RING			1
13	6669268	SEAL			1
14	6669267	SEAL	wiper		1
15	90KV-5	PLUG	W/Ref. TILT CYLINDER(16) - tapered boss face - socket head		2
16	79K-6	O-RING	for flat boss face		1
16	95K-6	O-RING	for tapered boss face		1
17	6809085	TUBELINE	Was 6806917 [A]		1
18	6804616	SEAL KIT	Ref. TILT CYLINDER(7) - TILT CYLINDER(14)		1

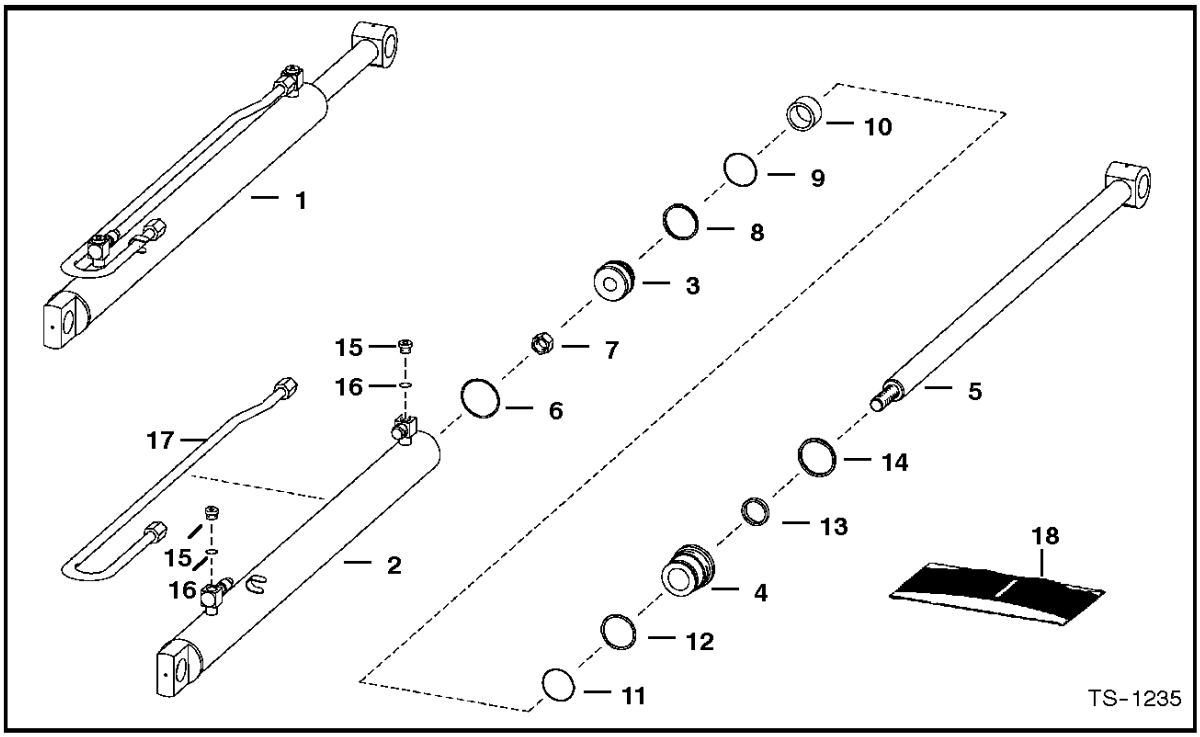

LIFT CYLINDER

Ref. No.	Part Number	Description	Remarks	Serial Number	Qty.
1*	6809763	CYLINDER	Ref. 2-6 - Was 6589198 [A]		1
2	6589338	CASE			1

LIFT CYLINDER

Ref.N°	Part N°	Description	Remarks	Serial N°	Qty.
1	6809763	CYLINDER	Ref. LIFT CYLINDER(2)-LIFT CYLINDER(6) - Was 6589198 [A]		1
2	6589338	CASE			1
3	6666286	PISTON	black - W/Ref. NO PAGE&LIFT CYLINDER(9) - W/Non-Replaceable wear sleeves		1
3	6676977	PISTON	green - W/Ref. NO PAGE&LIFT CYLINDER(9) - W/Non-Replaceable wear sleeves		1
4	6586718	HEAD			1
5	6589339	ROD			1
6	54K-40224	O-RING			1
7	6804592	NUT			1
8	6516229	SEAL			1
9	54K-30210	O-RING			1
10	6589199	SPACER			1
11	54K-60212	O-RING			1
12	80K-332	WASHER	back-up		1
13	6667326	SEAL	rod		1
14	6665086	SEAL	wiper		1
15	90KV-5	PLUG	W/Ref. LIFT CYLINDER(16)		2
16	95K-6	O-RING			2
17	6589271	TUBE			1
18	6804609	SEAL KIT	Ref. LIFT CYLINDER(7) - LIFT CYLINDER(14)		1

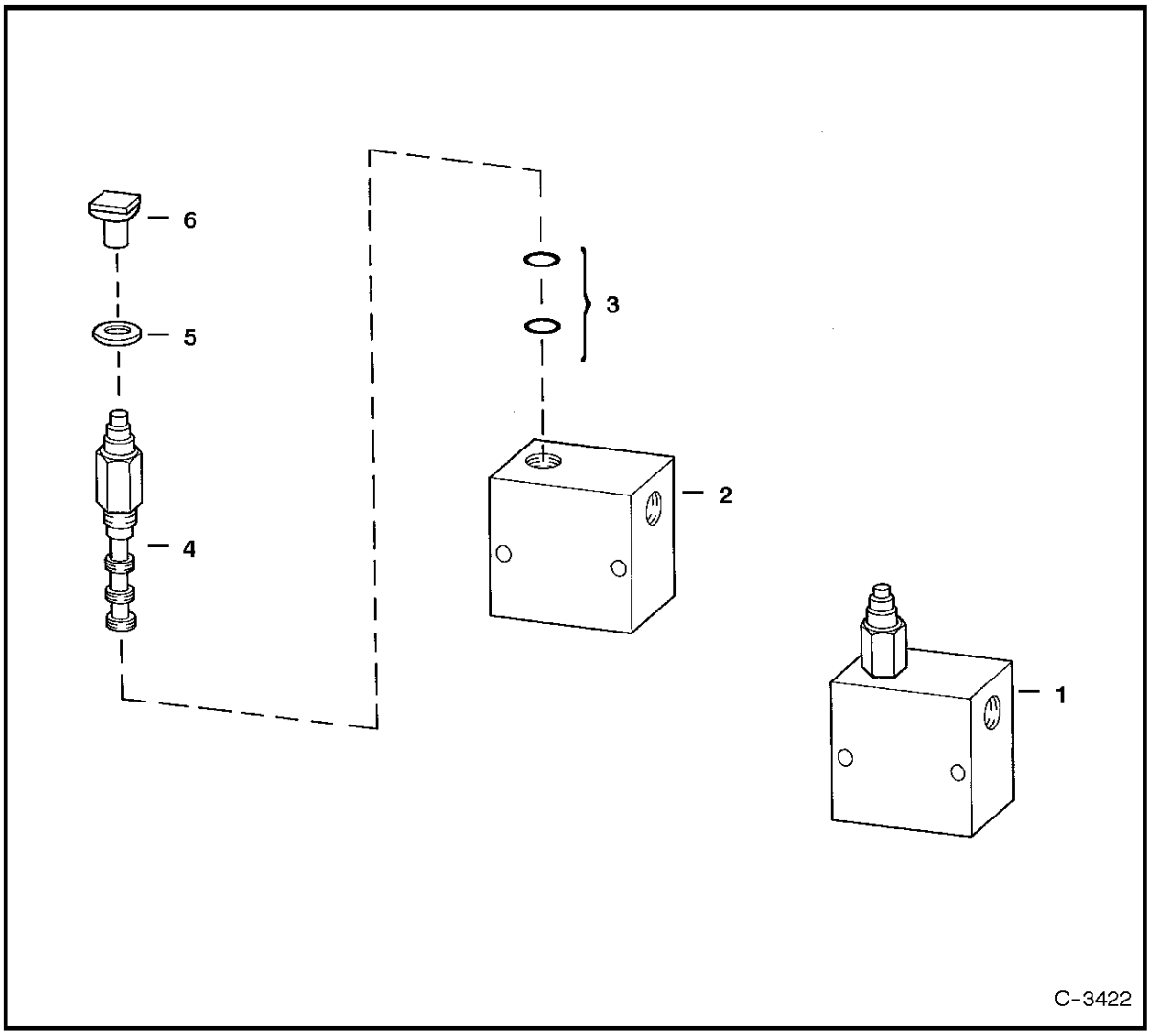

MANUAL LIFT RELEASE VALVE

Ref Part

MANUAL LIFT RELEASE VALVE

Ref.N°	Part N°	Description	Remarks	Serial N°	Qty.
1	6667844	VALVE	Ref. MANUAL LIFT RELEASE VALVE(2) - MANUAL LIFT RELEASE VALVE(4)		1
2	NSS	BLOCK			1
3	6669087	SEAL KIT			1
4	6669085	VALVE			1
5	6707101	WASHER	neoprene		1
6	6668913	KNOB	red square		1

CONTROL PEDALS

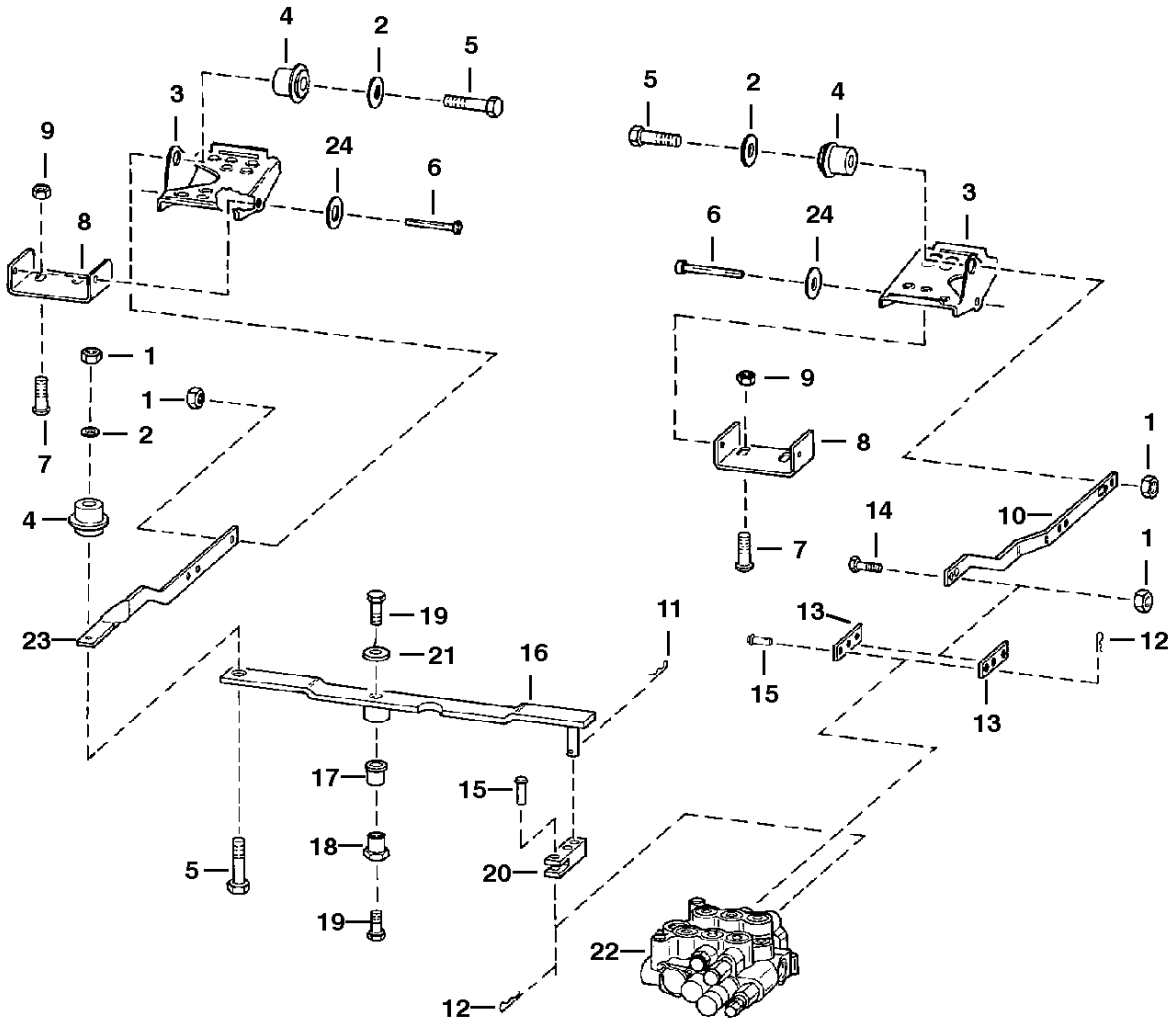

CONTROL PEDALS

Ref.N°	Part N°	Description	Remarks	Serial N°	Qty.
1	91D-6	NUT			5
2	6563914	WASHER			3
3	6726680	PEDAL	Was 6564656 [A]		2
4	6665701	BUSHING			3
5	17C-624	BOLT			3
6	6564657	PIN			2
7	7C-620	BOLT	Was 6704349 [B]		4
8	6726679	BRACKET	Was 6564658 [A]		2
9	57D-6	NUT			4
10	6718292	BAR			1
11	1306637	PIN			2
12	6513495	COTTER PIN			2
13	6708009	LINK			2
14	17C-620	BOLT			1
15	6564654	PIN			2
16	6718285	LEVER			1
17	6512026	BUSHING			1
18	6718283	RETAINING NUT			1
19	17C-612	BOLT			2
20	6706105	YOKE			1
21	619021	WASHER			1
22		VALVE	See Page HYDRAULIC CONTROL VALVE(3) or HYDRAULIC CONTROL VALVE(4)		1
23	6718293	BAR			1
24	25E-21	WASHER	Used if serrations on pins are too long		2

HYDRAULIC CONTROL VALVE
(Spool Lock) (W/ BICS Control Valve)

NOTE: Spools are available for service. The boot end of the lift and tilt spool is stamped W/# 1, 2 , 3 or painted red, green or black respectively. Reference S/L Dated 20 Feb. 1995.

NOTE: When replacing 6806150 valve, remove 6727931 cross (Ref. 49) from 6809267 valve & replace with existing 6805243 tee.

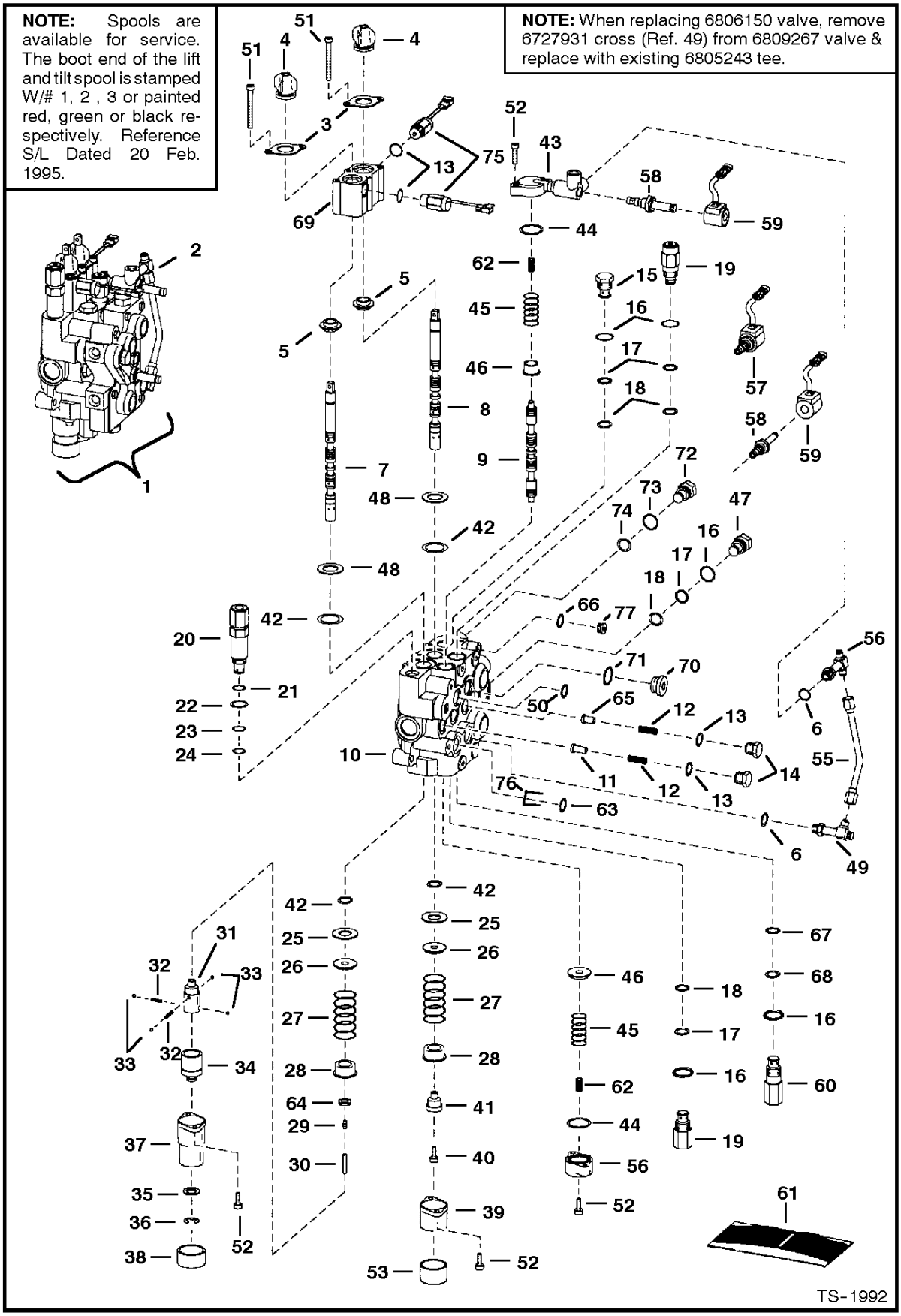

HYDRAULIC CONTROL VALVE

Ref.N°	Part N°	Description	Remarks	Serial N°	Qty.
1	NAP	VALVE	W/Fittings - Ref. HYDRAULIC CONTROL VALVE(2)-HYDRAULIC CONTROL VALVE(76) - Order 6809267 - SEE NOTE - Was 6806150 [A]		1
1	6809267	VALVE	W/Fittings - Ref. HYDRAULIC CONTROL VALVE(2)-HYDRAULIC CONTROL VALVE(76)		1
2	6628571	VALVE	BICS control - See Page BICS CONTROL VALVE(1)		1
3	6589564	RETAINER			2
4	6587763	BOOT			2
5	6805102	BUSHING	alignment		2
6	99K-6	O-RING			x
7	6674808	SPOOL	lift - # 1 or Red - SEE NOTE		1
7	6674809	SPOOL	lift - # 2 or Green-SEE NOTE		1
7	6674810	SPOOL	lift - # 3 or Black - SEE NOTE		1
8	6674814	SPOOL	tilt - # 1 or Red - SEE NOTE		1
8	6674815	SPOOL	tilt - # 2 or Green - SEE NOTE		1
8	6674816	SPOOL	tilt - # 3 or Black - SEE NOTE		1
9	6588074	SPOOL	auxiliary - SEE NOTE		3
10	NSS	BODY			1
11	6592115	SEAT	load check		2
12	6592117	SPRING			3
13	79K-8	O-RING			3
14	6592116	NUT	load check		3
15	6667549	VALVE	anti-cavity check -W/Ref. HYDRAULIC CONTROL VALVE(16)-HYDRAULIC CONTROL VALVE(18)		1
16	79K-10	O-RING			2
17	80K-14	WASHER	back-up		5
18	58K-14	O-RING	backAup washer required		5
18	6677106	O-RING	backAup washer not required		5
19	6673184	VALVE	port relief - W/Ref. HYDRAULIC CONTROL VALVE(16) -HYDRAULIC CONTROL VALVE(18)		2
20	6676198	VALVE	main relief - W/Ref. HYDRAULIC CONTROL VALVE(21)-HYDRAULIC CONTROL VALVE(24) - Was 6665626 [A]		1
21	58K-17	O-RING			1
22	6665569	WASHER	back-up		1
23	25K-20016	O-RING			1
24	6665570	RING	glide		1
25	6595663	BUSHING			2
26	6587523	WASHER			2
27	6587580	SPRING			2
28	6592100	COLLAR			2
29	6596807	PLUG			1
30	6586918	SCREW			1
31	6587575	ADAPTER			1
32	6592107	SPRING			2
33	6592105	BALL			4
34	6531270	SLEEVE			1
35	6592098	WASHER			1
36	799119	RETAINER			1
37	6589226	BONNET	.625' flange		1
38	6660644	CAP			1
39	6587633	BONNET			1
40	30G-416	SCREW			1
41	6592109	ADAPTER			1
42	6665846	SEAL			4
43	6805651	BLOCK	aux		2
44	58K-124	O-RING			2

HYDRAULIC CONTROL VALVE

Ref.N°	Part N°	Description	Remarks	Serial N°	Qty.
45	6596332	SPRING			2
46	6595951	SLEEVE			2
47	6592720	PLUG	W/Ref. HYDRAULIC CONTROL VALVE(16)-HYDRAULIC CONTROL VALVE(18)		1
48	58K-127	O-RING			2
49	6805243	TEE	W/Ref. HYDRAULIC CONTROL VALVE(6) - for 6806150 valve		1
49	6727931	CROSS	W/Ref. HYDRAULIC CONTROL VALVE(6) - for 6809267 valve		1
50	55K-204	O-RING			1
51	29G-444	BOLT			4
52	29G-416	SCREW	1' long		8
53	6662848	CAP			1
54	6805696	TEE	W/Ref. HYDRAULIC CONTROL VALVE(6) - tapered boss face		2
54	97K-6	O-RING	flared end		x
55	6806496	TUBELINE			1
56	6588781	END CAP			1
57	6677201	SOLENOID	W/Ref. HYDRAULIC CONTROL VALVE(58) & HYDRAULIC CONTROL VALVE(59) - Was 6665084 [B]		2
58	6676249	STEM	Was 6666616 [B]		2
58	6586459	SEAL KIT			x
59	6717706	COIL	W/ nut - 10 volt - pwm		2
60	6671632	VALVE	port relief & antiAcav. - W/Ref. HYDRAULIC CONTROL VALVE(16) - 3500 PSI - use in tilt cylinder base end port		1
60	6673904	SEAL KIT	W/Ref. HYDRAULIC CONTROL VALVE(16), HYDRAULIC CONTROL VALVE(67) & HYDRAULIC CONTROL VALVE(68)		x
61	6806941	SEAL KIT	two spool - Ref. HYDRAULIC CONTROL VALVE(4), HYDRAULIC CONTROL VALVE(42) & HYDRAULIC CONTROL VALVE(51)		x
61	6809448	SEAL KIT	complete - Ref. HYDRAULIC CONTROL VALVE(4), HYDRAULIC CONTROL VALVE(13), HYDRAULIC CONTROL VALVE(16)-HYDRAULIC CONTROL VALVE(18)		x
61	6661328	SEAL KIT	main relief - Ref. HYDRAULIC CONTROL VALVE(21)-HYDRAULIC CONTROL VALVE(24)		x
61	6809425	SEAL KIT	upper deck - Ref. HYDRAULIC CONTROL VALVE(13) & HYDRAULIC CONTROL VALVE(16)-HYDRAULIC CONTROL VALVE(18) - Was 6586461 [A]		x
62	6595131	SPRING	.72' O.D.		2
63	55K-212	O-RING			4
64	54K-20002	O-RING			1
65	6596569	SEAT	load check		1
66	95K-6	O-RING			2
67	NSS	O-RING	Order Ref. HYDRAULIC CONTROL VALVE(60) kit		x
68	NSS	O-RING	Order Ref. HYDRAULIC CONTROL VALVE(60) kit		x
69	6805657	BLOCK	lift and tilt lock		1
70	90KV-8	PLUG	W/Ref. 72		1
71	95K-12	O-RING			x
72	6805651	BLOCK	aux lock - W/Ref. HYDRAULIC CONTROL VALVE(73) & HYDRAULIC CONTROL VALVE(74)		1
73	79K-7	O-RING			x
74	58K-12	O-RING			x
75	6674786	SOLENOID	spool lock - W/Ref. HYDRAULIC CONTROL VALVE(13) - 3'(76,2mm) wire - Order 6677383		2
75	6677383	SOLENOID	spool lock - W/Ref. HYDRAULIC CONTROL VALVE(13) - 5'(127mm) wire		2
76	6668791	ORIFICE	.185		1
77	90KV-5	PLUG	W/Ref. HYDRAULIC CONTROL VALVE(66)		1

Bobcat Hydraulic/Hydrostatic Fluid
is blended to our specifications
to meet or exceed requirements of our components.

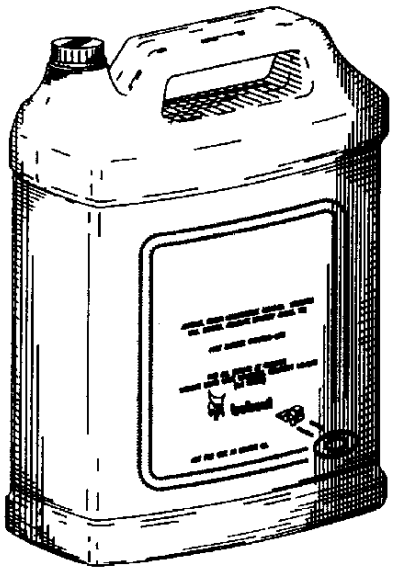

Available from Bobcat Parts.

Bobcat

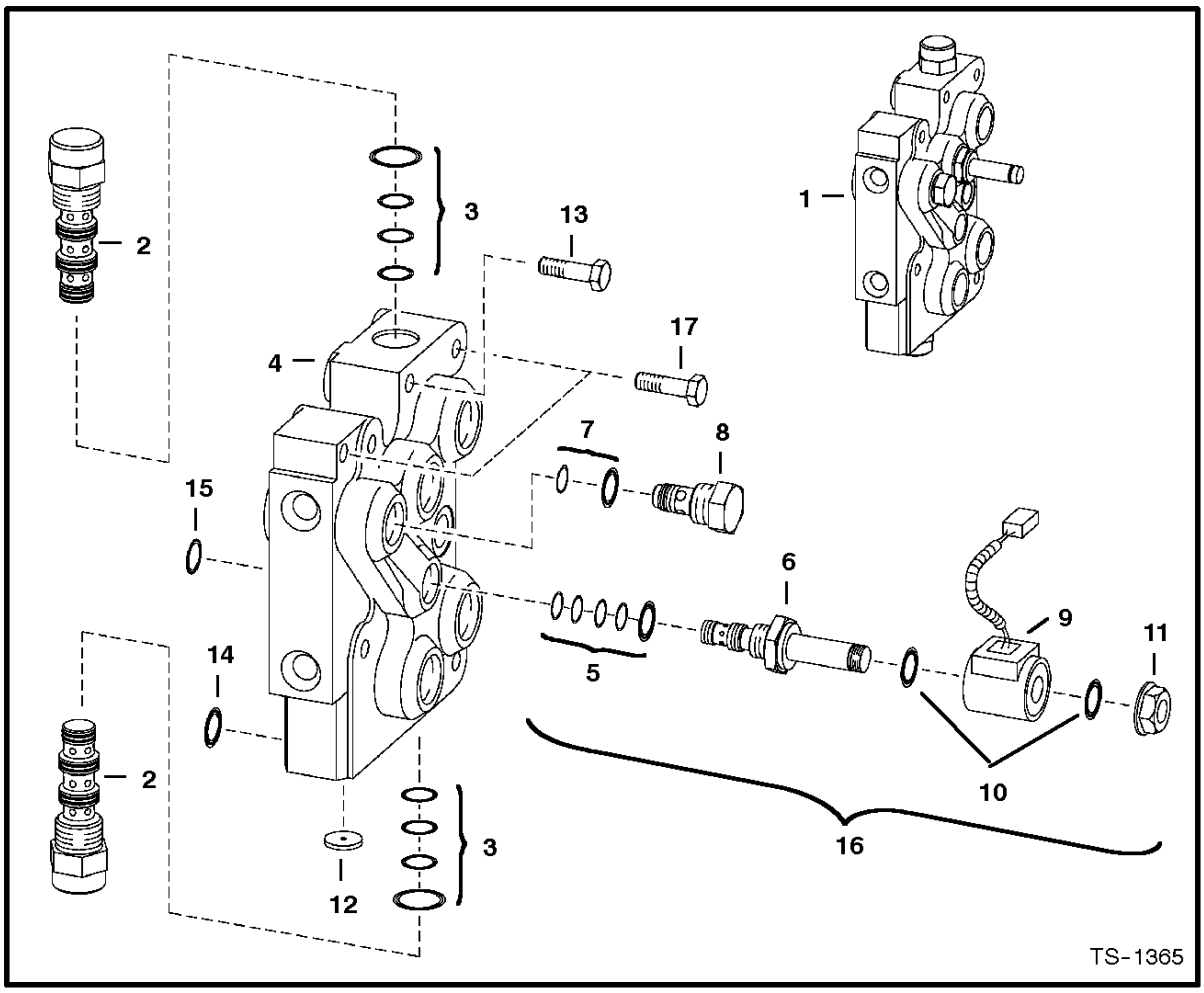

BICS CONTROL VALVE

Ref. No.	Part Number	Description	Remarks	Serial Number	Qty.

BICS CONTROL VALVE

Ref.N°	Part N°	Description	Remarks	Serial N°	Qty.
1	6628571	VALVE	Ref. BICS CONTROL VALVE(2) - BICS CONTROL VALVE(8)		1
2	6668765	VALVE	pilot operated		2
3	6669734	SEAL KIT			x
4	NSS	BODY			1
5	6669732	SEAL KIT			x
6	6665004	STEM	solenoid valve		1
7	6669733	SEAL KIT			x
8	6669057	CHECK VALVE	filter		1
9	6671025	COIL			1
10	54K-20028	O-RING			2
11	6668820	NUT			1
12	6668791	ORIFICE			1
13	43C-532	BOLT			4
14	55K-212	O-RING			4
15	55K-204	O-RING			1
16	6672456	VALVE	assy. - Ref. BICS CONTROL VALVE(5), BICS CONTROL VALVE(6) & BICS CONTROL VALVE(9)-BICS CONTROL VALVE(11)		1
17	43C-524	BOLT			2

HYDRAULIC CONTROL VALVE
(Advanced Hand Control System) (Spool Lock)

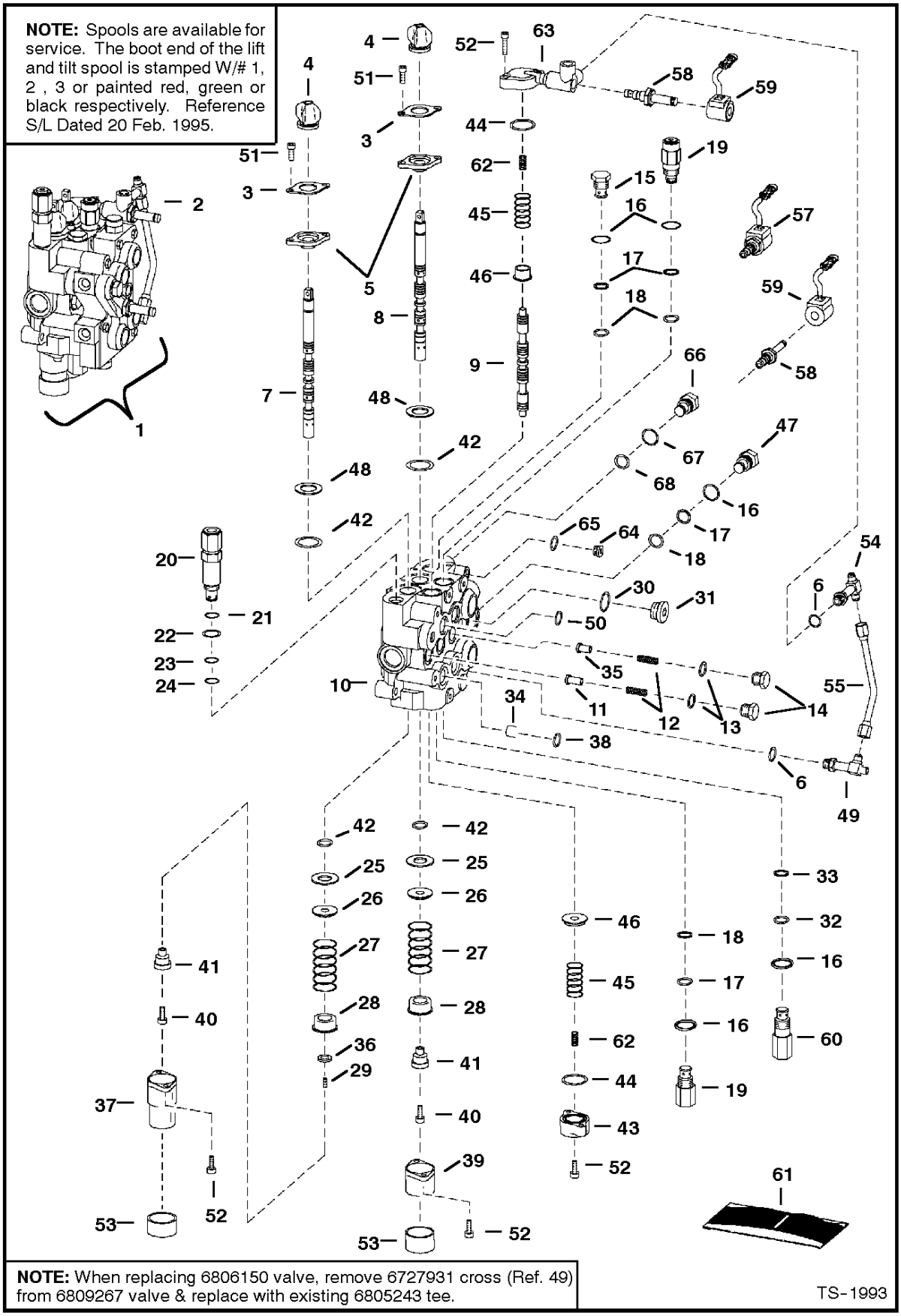

HYDRAULIC CONTROL VALVE

Ref.N°	Part N°	Description	Remarks	Serial N°	Qty.
0	6803092	BONNET	.625 flange		1
1	NAP	VALVE	W/Fittings - Ref. HYDRAULIC CONTROL VALVE(2)-HYDRAULIC CONTROL VALVE(56) - Order 6809107 - SEE NOTE - Was 6805931 [A]		1
1	6809107	VALVE	W/Fittings - Ref. HYDRAULIC CONTROL VALVE(2)-HYDRAULIC CONTROL VALVE(56)		1
2	6628571	VALVE	AHC - BICS control - See Page BICS CONTROL VALVE(1)		1
3	6589564	RETAINER			2
4	6587763	BOOT			2
5	6589565	RETAINER			2
6	99K-6	O-RING	tapered boss face		x
7	6674297	SPOOL	lift - # 1 or Red - SEE NOTE		1
7	6674298	SPOOL	lift - # 2 or Green-SEE NOTE		1
7	6674299	SPOOL	lift - # 3 or Black - SEE NOTE		1
8	6674300	SPOOL	tilt - # 1 or Red - SEE NOTE		1
8	6674301	SPOOL	tilt - # 2 or Green - SEE NOTE		1
8	6674302	SPOOL	tilt - # 3 or Black - SEE NOTE		1
9	6588074	SPOOL	auxiliary - SEE NOTE		3
10	NSS	BODY			1
11	6592115	SEAT	load check		2
12	6592117	SPRING			3
13	79K-8	O-RING			3
14	6592116	NUT	load check - W/Ref. HYDRAULIC CONTROL VALVE(13)		3
15	6667549	VALVE	anti-cavity check -W/Ref. HYDRAULIC CONTROL VALVE(16)-HYDRAULIC CONTROL VALVE(18)		1
16	79K-10	O-RING			2
17	80K-14	WASHER	back-up		5
18	58K-14	O-RING	backAup washer required		5
18	6677106	O-RING	backAup washer not required		5
19	6673184	VALVE	port relief - W/Ref. HYDRAULIC CONTROL VALVE(16)-HYDRAULIC CONTROL VALVE(18)		2
20	6676198	VALVE	main relief - W/Ref. HYDRAULIC CONTROL VALVE(21)-HYDRAULIC CONTROL VALVE(24) - Was 6665626 [A]		1
21	58K-17	O-RING			1
22	6665569	WASHER	back-up		1
23	25K-20016	O-RING			1
24	6665570	RING	glide		1
25	6595663	BUSHING			2
26	6587523	WASHER			2
27	6587580	SPRING			2
28	6592100	COLLAR			2
29	6801167	PLUG	Spool		1
30	95K-12	O-RING			1
31	90KV-8	PLUG	W/Ref. HYDRAULIC CONTROL VALVE(30) - socket head		1
32	NSS	O-RING	Order Ref. HYDRAULIC CONTROL VALVE(60) - kit		1
33	NSS	O-RING	Order Ref. HYDRAULIC CONTROL VALVE(60) - kit		1
34	6800124	RESTRICTOR	.183/.187		1
35	6596569	SEAT			1
36	54K-20002	O-RING			1
38	55K-212	O-RING			4
39	6587633	BONNET			1
40	30G-416	SCREW			2
41	6592109	ADAPTER			1
42	6665846	SEAL	lip		4

HYDRAULIC CONTROL VALVE

Ref.N°	Part N°	Description	Remarks	Serial N°	Qty.
43	6588781	END CAP	.87' thick		2
44	58K-124	O-RING			2
45	6596332	SPRING			2
46	6595951	SLEEVE			2
47	6592720	PLUG	W/Ref. HYDRAULIC CONTROL VALVE(16)-HYDRAULIC CONTROL VALVE(18)		1
48	58K-127	O-RING			2
49	6805243	TEE	W/Ref. HYDRAULIC CONTROL VALVE(6) - for 6805931 valve		1
49	6727931	CROSS	W/Ref. HYDRAULIC CONTROL VALVE(6) - for 6809107 valve		1
49	97K-6	O-RING	flared end		x
50	55K-204	O-RING			1
51	29G-412	SCREW			4
52	29G-416	SCREW	1' long		8
53	6662848	CAP			2
54	6805696	TEE	W/Ref. HYDRAULIC CONTROL VALVE(6)		2
54	97K-6	O-RING	flared end		x
55	6806496	TUBELINE			1
56	6800124	RESTRICTOR	.183/.187		1
57	6677201	SOLENOID	W/Ref. HYDRAULIC CONTROL VALVE(58) & HYDRAULIC CONTROL VALVE(59) - Was 6665084 [B]		2
58	6676249	STEM	Was 6666616 [B]		2
58	6586459	SEAL KIT			x
59	6717706	COIL	W/ nut - pwm - 10 volt		2
60	6671632	VALVE	port relief & antiAcav.AW/Ref. HYDRAULIC CONTROL VALVE(16), HYDRAULIC CONTROL VALVE(32) & HYDRAULIC CONTROL VALVE(33) - 2500 PSI		1
60	6673904	SEAL KIT	W/Ref. HYDRAULIC CONTROL VALVE(16), HYDRAULIC CONTROL VALVE(32) & HYDRAULIC CONTROL VALVE(33)		1
61	6803605	SEAL KIT	one spool - Ref. HYDRAULIC CONTROL VALVE(4), HYDRAULIC CONTROL VALVE(42) & HYDRAULIC CONTROL VALVE(51)		x
61	6809448	SEAL KIT	complete - Ref. HYDRAULIC CONTROL VALVE(4), HYDRAULIC CONTROL VALVE(13), HYDRAULIC CONTROL VALVE(16)-HYDRAULIC CONTROL VALVE(18)		x
61	6661328	SEAL KIT	main relief - Ref. HYDRAULIC CONTROL VALVE(21)-HYDRAULIC CONTROL VALVE(24)		x
61	6809425	SEAL KIT	Ref. HYDRAULIC CONTROL VALVE(13) & HYDRAULIC CONTROL VALVE(16)-HYDRAULIC CONTROL VALVE(18) - Was 6586461 [A]		x
61	6586459	SEAL KIT	W/Ref. HYDRAULIC CONTROL VALVE(16), HYDRAULIC CONTROL VALVE(32), HYDRAULIC CONTROL VALVE(33)		1
62	6595131	SPRING	.72' O.D.		2
63	6805651	BLOCK	aux		1
64	90KV-5	PLUG	W/Ref. HYDRAULIC CONTROL VALVE(65)		2
65	95K-6	O-RING			2
66	6806561	PLUG	W/Ref. HYDRAULIC CONTROL VALVE(67)-HYDRAULIC CONTROL VALVE(68)		1
67	79K-7	O-RING			1
68	58K-12	O-RING			1

BUCKET POSITIONING VALVE

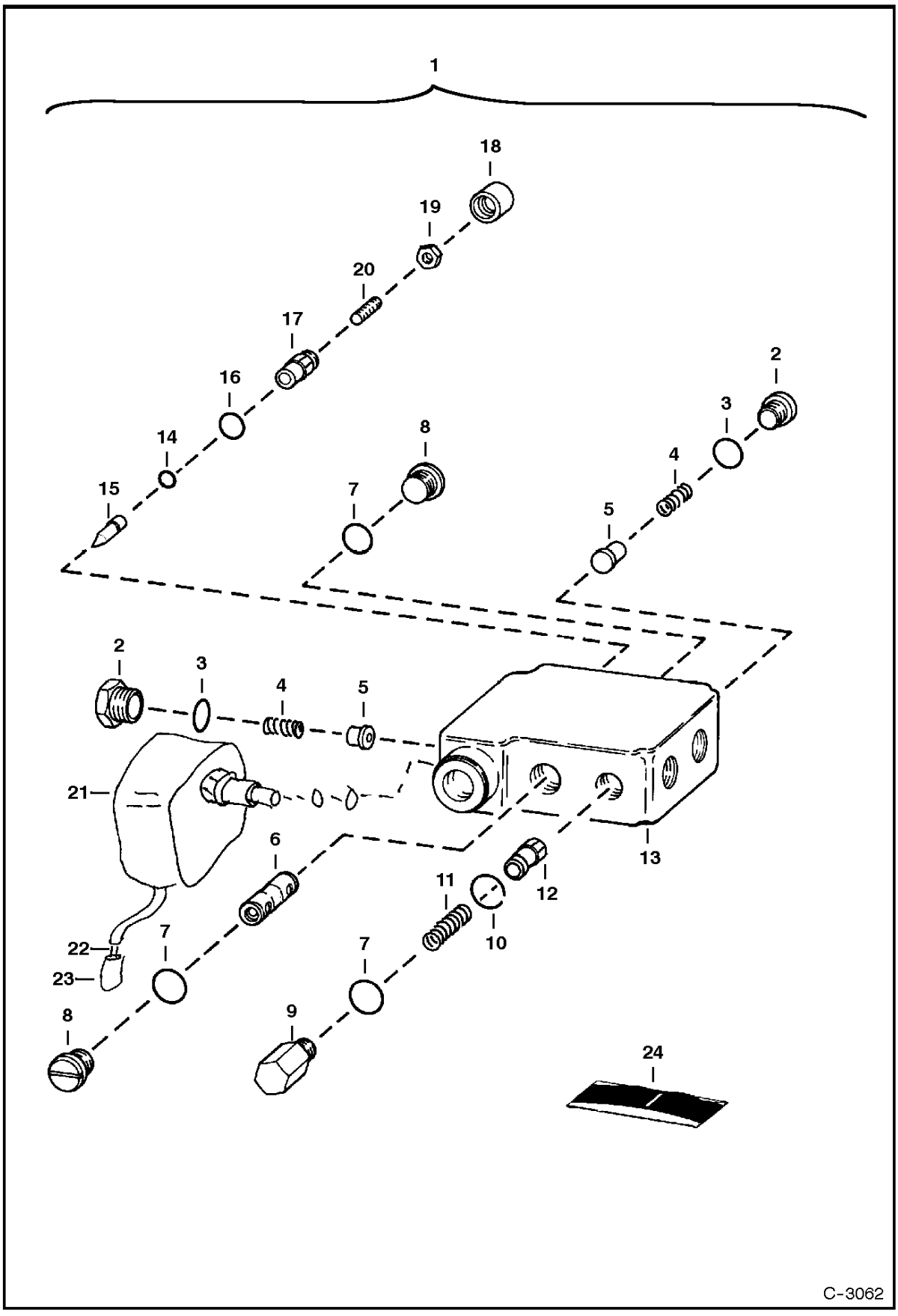

BUCKET POSITIONING VALVE

Ref.N°	Part N°	Description	Remarks	Serial N°	Qty.
1	NAP	VALVE	yellow - Ref. BUCKET POSITIONING VALVE(2)-BUCKET POSITIONING VALVE(20) - Order 6675669 - Was 6666598 [A]		1
1	6675669	VALVE	primer red - Ref. BUCKET POSITIONING VALVE(2)-BUCKET POSITIONING VALVE(21)		1
2	6647784	PLUG	W/Ref. BUCKET POSITIONING VALVE(3)		2
3	79K-8	O-RING			2
4	6647785	SPRING			2
5	6647783	LOAD CHECK			2
6	NSS	SPOOL			1
7	58K-116	O-RING	Was 6667679 [A]		3
8	6647780	PLUG	W/Ref. BUCKET POSITIONING VALVE(7) - for 6666598		2
8	6676543	PLUG	W/Ref. BUCKET POSITIONING VALVE(7) - for 6675669		2
9	6667176	PLUG	W/Ref. BUCKET POSITIONING VALVE(7)		1
10	6667680	SNAP RING			1
11	6648294	SPRING	for 6666598		1
11	6676544	SPRING	for 6675669		1
12	NSS	SPOOL			1
13	NSS	BODY			1
14	6667677	O-RING			1
15	6647777	PIN			1
16	6634874	O-RING			1
17	6647778	CAP	for 6666598		1
17	6676542	CAP	for 6675669		1
18	6667676	COVER			1
19	6631561	NUT			1
20	6648293	SCREW			1
21	6672863	SOLENOID	for 6675669		1
21	6708271	SOLENOID	for 6666598		1
21	6671527	NUT			1
21	6670634	SEAL KIT			1
21	6674331	COIL			1
21	6676545	CARTRIDGE			1
22	6641180	LOCK	2-pin		1
23	6641179	CONNECTOR	2-pin		1
24	6667185	SEAL KIT	Ref. BUCKET POSITIONING VALVE(3), BUCKET POSITIONING VALVE(7), BUCKET POSITIONING VALVE(14), BUCKET POSITIONING VALVE(16) & BUCK		1

* HIGH HORSEPOWER HYDRAULICS

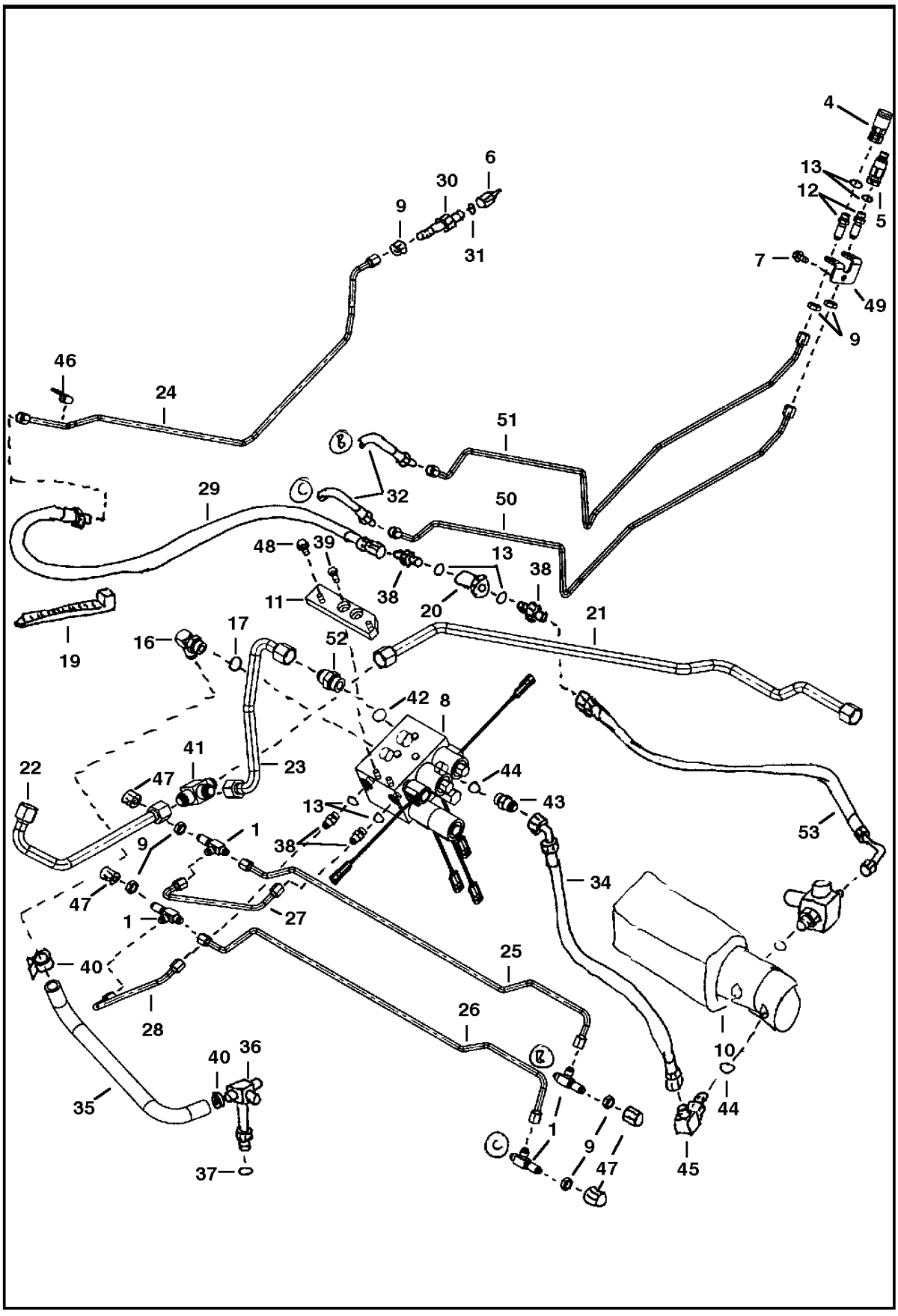

* HIGH HORSEPOWER HYDRAULICS

Ref.N°	Part N°	Description	Remarks	Serial N°	Qty.
1	6719298	TEE			4
1	97K-6	O-RING	flared end		x
2	59D-8	NUT			2
3	6659459	VALVE			1
4	6667803	QUICK COUPLER	female		1
5	6667804	QUICK COUPLER	male		1
6	6667806	QUICK COUPLER	male		1
7	84G-3712	BOLT			1
8	6669203	VALVE	See Page HIGH HORSEPOWER HYDRAULICS(1)		1
9	86F-5	NUT			5
10		PUMP	See Page HYDROSTATIC PUMP(3), HYDROSTATIC PUMP(4), HYDROSTATIC PUMP(5) & HYDROSTATIC PUMP(6)		1
11	6705471	MOUNT	valve		1
12	6716089	CONNECTOR	bulkhead - W/Ref. * HIGH HORSEPOWER HYDRAULICS(13)		2
12	97K-6	O-RING	flared end		x
13	99K-6	O-RING	tapered boss face		x
14	6719431	KIT	attachment controls - See Page ELECTRICAL CONTROLS KIT(3)		1
15	6718645	HARNESS			1
16	6717885	ELBOW	W/Ref. * HIGH HORSEPOWER HYDRAULICS(17)		1
17	79K-10	O-RING			x
18					x
19	6610510	NYLON TIE			3
20	6661022	FILTER	inAline		1
21	6718384	TUBELINE			1
22	6718385	TUBELINE			1
23	6718386	TUBELINE			1
24	6718436	TUBELINE			1
25	6718552	TUBELINE			1
26	6718553	TUBELINE			1
27	6718554	TUBELINE			1
28	6718555	HOSE			1
29	6725435	HOSE			1
30	6726479	ADAPTER	bulkhead - W/Ref. * HIGH HORSEPOWER HYDRAULICS(31)		1
30	97K-6	O-RING	flared end		x
31	99K-8	O-RING	tapered boss face		x
32	6718853	HOSE			2
33	6725436	HOSE			1
34	6718856	HOSE			1
35	6718857	HOSE			1
36	6719133	TEE	W/Ref. * HIGH HORSEPOWER HYDRAULICS(37)		1
37	97K-16	O-RING			x
38	15KV-5	ADAPTER	W/Ref. * HIGH HORSEPOWER HYDRAULICS(13)		4
38	97K-6	O-RING	flared end		x
39	17C-616	BOLT			2
40	5HM-29	CLAMP			2
41	10KN-8	TEE	W/Ref. * HIGH HORSEPOWER HYDRAULICS(42)		1
41	97K-12	O-RING	flared end		x
42	99K-12	O-RING	tapered boss face		x
43	15KN-7	ADAPTER	W/Ref. * HIGH HORSEPOWER HYDRAULICS(44)		1
43	97K-10	O-RING	flared end		x
44	99K-10	O-RING	tapered boss face		x
45	17KV-7	ELBOW	W/Ref. * HIGH HORSEPOWER HYDRAULICS(44)		1

* HIGH HORSEPOWER HYDRAULICS

Ref.N°	Part N°	Description	Remarks	Serial N°	Qty.
45	97K-10	O-RING	flared end		x
46	30H-62	CLIP	insulated		1
47	36K-5	CAP			3
48	35C-614	BOLT			2
49	6718511	BRACKET		S/N & Below	1
49	6725959	BRACKET		S/N & Above	1
50	NAP	TUBELINE	Order 6725962 tubeline, 6725963 tubeline & 6725959 bracket - Was 6718480 [A]	S/N & Below	1
50	6725962	TUBELINE		S/N & Above	1
51	NAP	TUBELINE	Order 6725963 tubeline, 6725962 tubeline & 6725959 bracket - Was 6718481 [A]	S/N & Below	1
51	6725963	TUBELINE		S/N & Above	1
52	6655572	VALVE	check - W/Ref. * HIGH HORSEPOWER HYDRAULICS(42)		1
53	6725436	HOSE	Was 6718852 [B,D]		1

HIGH HORSEPOWER HYDRAULICS
(Double Gear Pump)

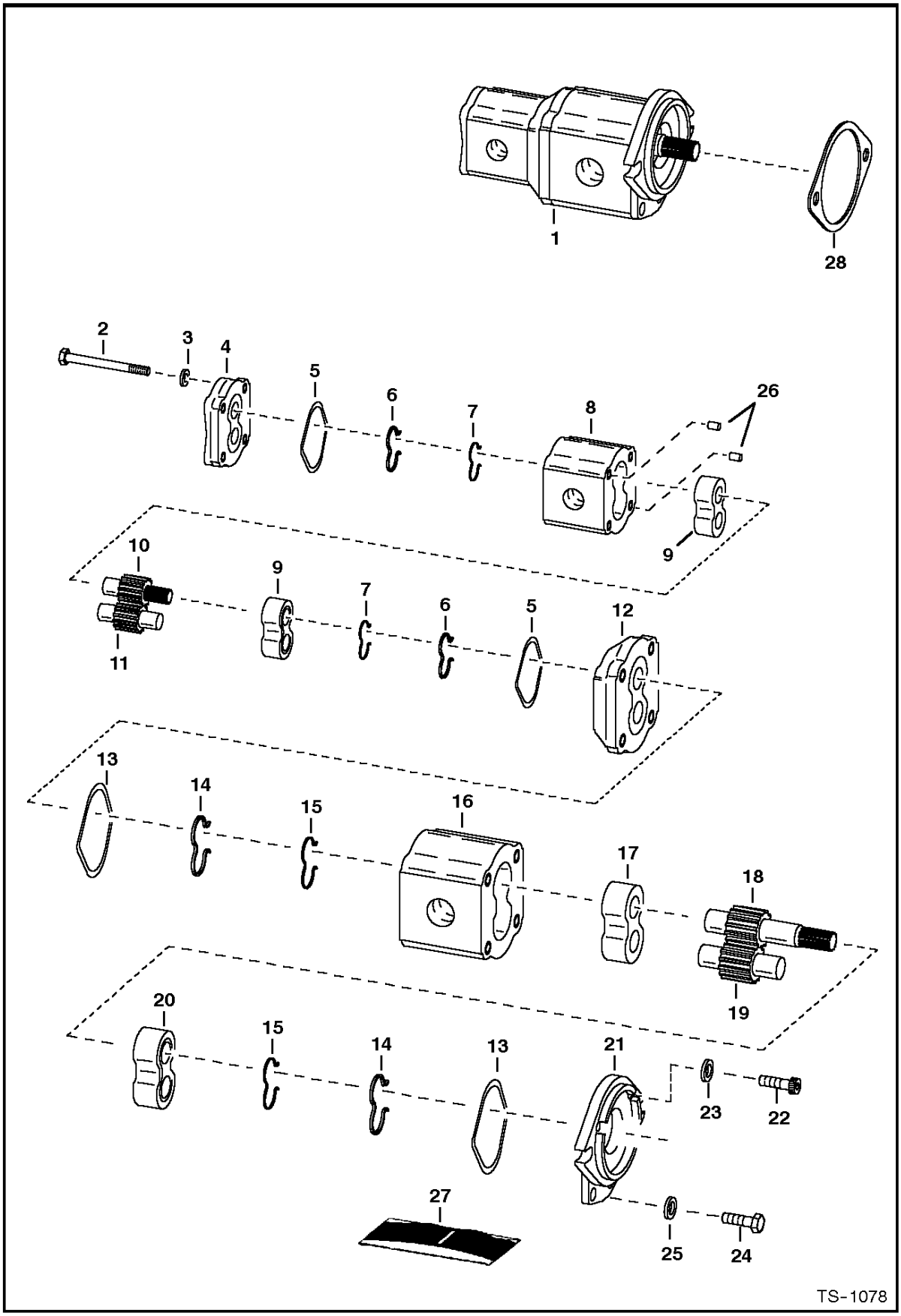

HIGH HORSEPOWER HYDRAULICS

Ref.N°	Part N°	Description	Remarks	Serial N°	Qty.
1	6673913	PUMP	4bolt flange - Ref. HIGH HORSEPOWER HYDRAULICS(2)-HIGH HORSEPOWER HYDRAULICS(26) - for 4445061		1
2	NSS	BOLT			4
3	NSS	WASHER			4
4	NSS	COVER			1
5	NSS	O-RING	seal		2
6	NSS	SEAL			2
7	NSS	RING			2
8	NSS	BODY			1
9	NSS	BEARING			2
10	NSS	GEAR	drive		1
11	NSS	GEAR			1
12	NSS	COVER			1
13	NSS	O-RING	seal		2
14	NSS	SEAL			2
15	NSS	RING			2
16	NSS	BODY			1
17	NSS	BEARING			1
18	NSS	GEAR	drive		1
19	NSS	GEAR	idler		1
20	NSS	BEARING			1
21	NSS	COVER			1
22	NSS	BOLT			2
23	NSS	SEAL			2
24	NSS	BOLT			2
25	NSS	WASHER			2
26	NSS	DOWEL			2
27	6674370	SEAL KIT	Ref. 5-7 & 13-15		1
28	6660339	GASKET			1

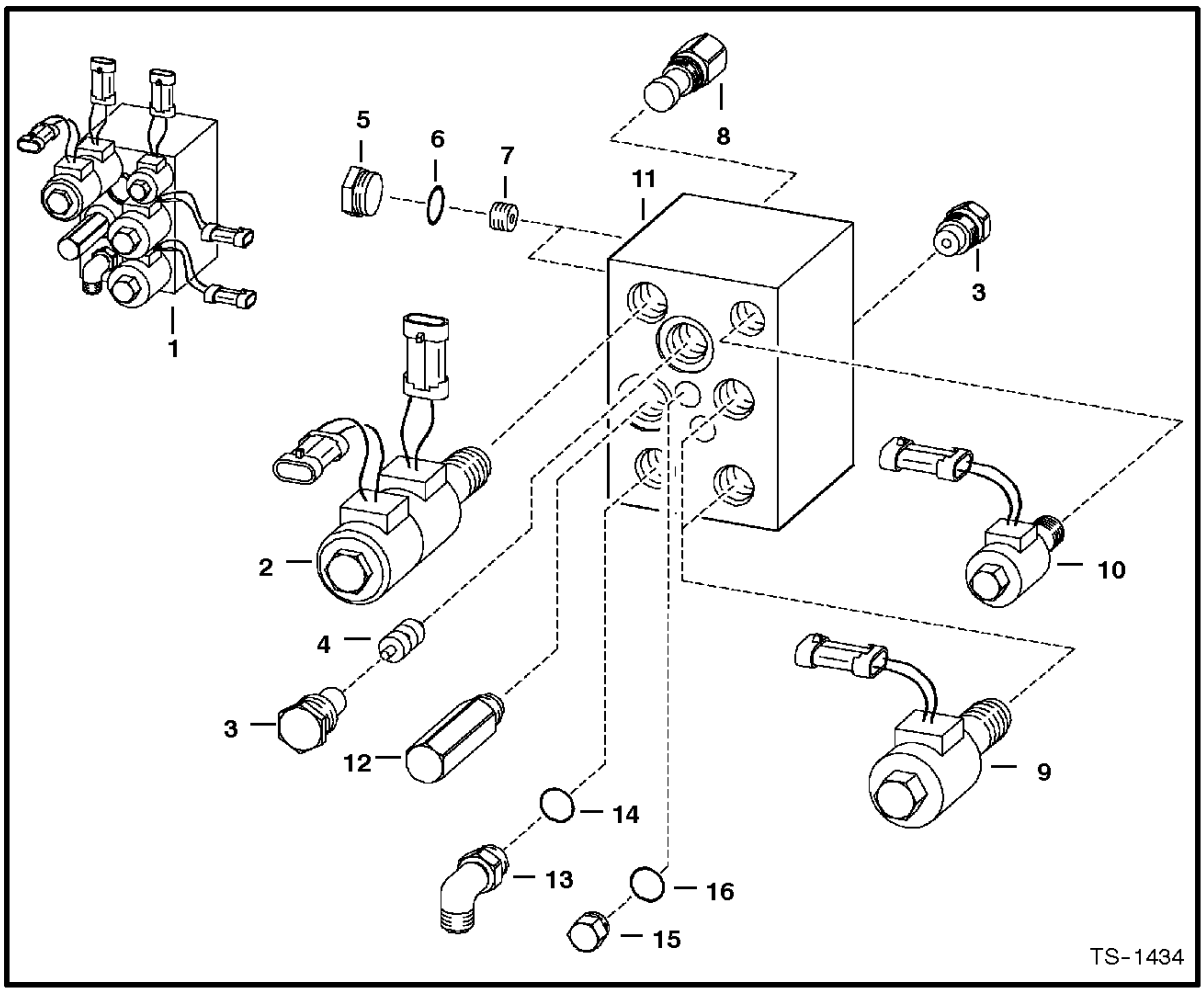

HIGH HORSEPOWER HYDRAULICS
(Control Valve)

Ref. No.	Part Number	Description	Remarks	Serial Number	Qty.

HIGH HORSEPOWER HYDRAULICS

Ref.N°	Part N°	Description	Remarks	Serial N°	Qty.
1	6669203	VALVE	Ref. HIGH HORSEPOWER HYDRAULICS(2) - HIGH HORSEPOWER HYDRAULICS(14)		1
2	6672450	VALVE ASSY.	solenoid		1
2	6664025	STEM			1
2	6671026	COIL	W/Connector		2
2	6671628	NUT			1
2	6661448	SEAL KIT			1
3	6669728	CHECK VALVE			2
4	6673990	PISTON	Was 6664028 [A]		1
5	6665719	PLUG			10
6	79K-5	O-RING			x
7	6669615	ORIFICE	.020		2
8	6669729	SHUTTLE VALVE			1
8	6669736	SEAL KIT			1
9	6672449	VALVE ASSY.	solenoid		2
9	6664024	STEM			2
9	6671026	COIL	W/Connector		2
9	6671629	NUT			2
9	6664032	SEAL KIT			2
10	6672448	VALVE ASSY.	solenoid		1
10	6665702	STEM			1
10	6671025	COIL	W/Connector		2
10	6671628	NUT			1
10	6664033	SEAL KIT			1
11	NSS	BLOCK	Order Ref. HIGH HORSEPOWER HYDRAULICS(1)		1
12	NAP	RELIEF VALVE	2850 PSI - Order 6676155 - Was 6672451 [A]		1
12	6676155	RELIEF VALVE	3300 PSI		1
12	6669737	SEAL KIT			1
13	17KV-7	ELBOW	W/Ref. HIGH HORSEPOWER HYDRAULICS(14) - tapered boss face		1
13	97K-10	O-RING	flared end		1
14	99K-10	O-RING	tapered boss face		1
15	6665719	PLUG			11
16	99K-5	O-RING			x

HYDROSTATIC CIRCUITRY
(W/Motors)

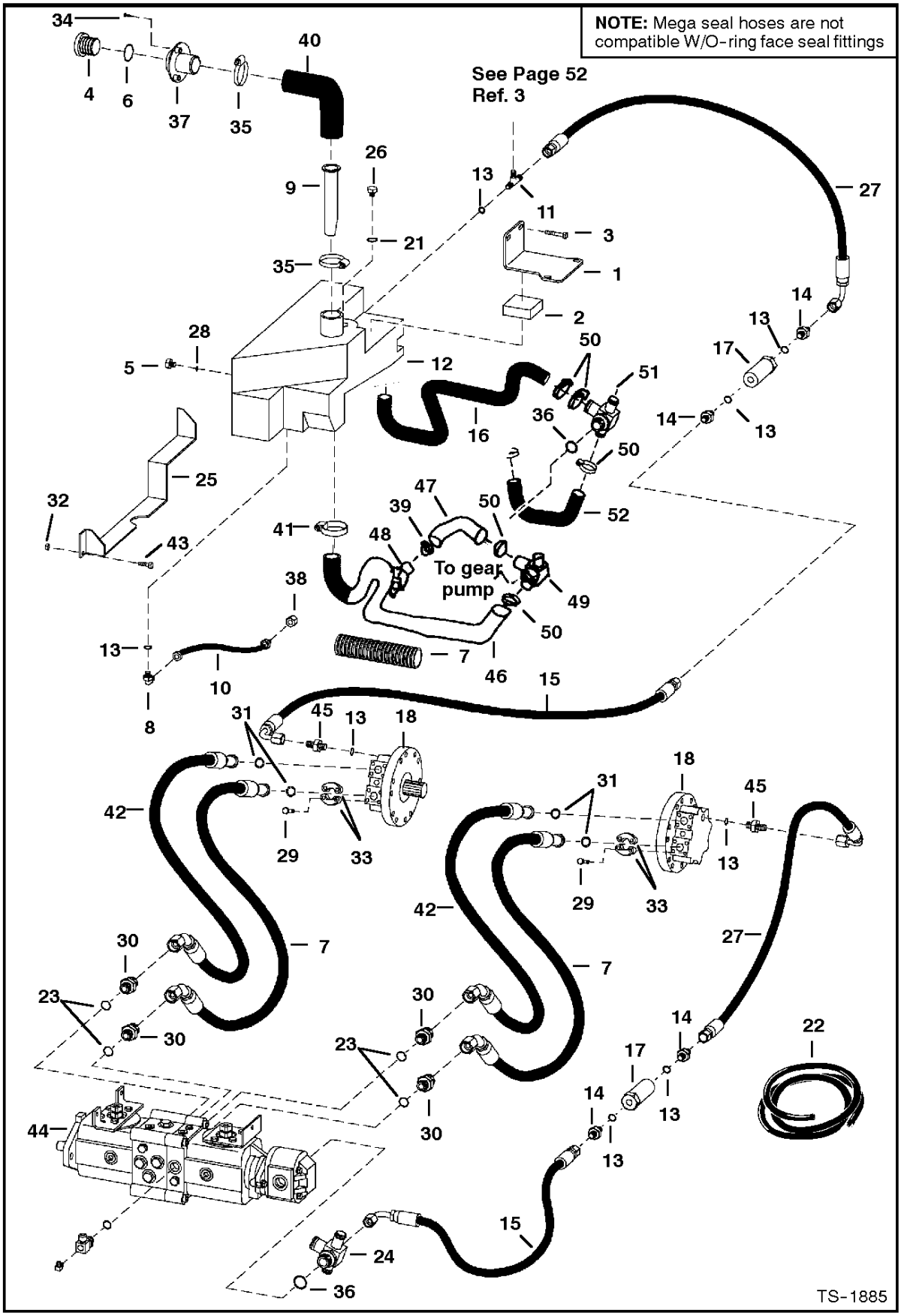

HYDROSTATIC CIRCUITRY

Ref.N°	Part N°	Description	Remarks	Serial N°	Qty.
1	6715079	BRACKET			1
2	6716449				2
3	84G-3716	BOLT			2
4	6727475	CAP	breather & fill - Also Order Ref. HYDROSTATIC CIRCUITRY(6) - Was 6577785 [A]		1
5	6665915	SIGHT GAUGE	sight - W/Ref. HYDROSTATIC CIRCUITRY(28)		1
6	6700631	GASKET			2
7	6673940	HOSE	mega seal - SEE NOTE		3
8	18KV-5	ELBOW	W/Ref. HYDROSTATIC CIRCUITRY(13) - tapered boss face		2
8	97K-6	O-RING	flared end		2
9	6569219	SCREEN			1
10	6708560	HOSE			1
11	21KV-5	TEE	W/Ref. HYDROSTATIC CIRCUITRY(13) - tapered boss face		1
11	97K-6	O-RING	flared end		1
12	NAP	TANK	hydraulic - W/ 9/16' port - Order 6725423 & 6727175 tee - Was 6715818 [A]		1
12	6725423	TANK	hydraulic - W/ 3/4' port		1
13	99K-6	O-RING	tapered boss face		x
14	15KV-5	ADAPTER	W/Ref. HYDROSTATIC CIRCUITRY(13) - tapered boss face		4
14	97K-6	O-RING	flared end		4
15	6717214	HOSE			2
16	6713977	HOSE		S/N & Below	1
17	6661022	FILTER	inAline - 90 micron - See Page HYDROSTATIC OIL FILTER(1)		2
18		MOTOR	See Page HYDROSTATIC MOTOR(1)		2
19	55K-21	O-RING			8
20	NAP	SHIELD	Order Ref. HYDROSTATIC CIRCUITRY(22)		1
21	79K-16	O-RING			x
22	6705749	COVER	bulk - sold by the foot		x
23	79K-12	O-RING			4
24	6716468	TEE	W/Ref. HYDROSTATIC CIRCUITRY(36)		1
24	97K-16	O-RING	flared end		x
25	6707921	BRACKET			1
26	47K-10	PLUG	W/Ref. HYDROSTATIC CIRCUITRY(21) - for flushing hole in tank		1
27	6728079	HOSE	Was 6717332 [A]		2
28	99K-6	O-RING	flat boss face		1
29	17C-728	BOLT			16
30	6715878	CONNECTOR	W/Ref. HYDROSTATIC CIRCUITRY(23)		4
31	55K-219	O-RING	Was 58K-219 [B]		x
32	83D-5	NUT	Was 61D-5 [B]		2
33	20J-16	CLAMP			8
34	6706517	SCREW			3
35	6513595	CLAMP			2
36	99K-16	O-RING	tapered boss face		x
37	6706354	INLET			1
38	36K-5	CAP			2
39	5HM-42	CLAMP	constant tension		2
40	6706445	HOSE			1
41	6672281	CLAMP	constant torque		7
41	5HM-42	CLAMP	constant tension		2
42	6673939	HOSE	mega seal - SEE NOTE		1
43	35C-512	BOLT			2

HYDROSTATIC CIRCUITRY

Ref.N°	Part N°	Description	Remarks	Serial N°	Qty.
44		PUMP	See Page HYDROSTATIC PUMP(3), HYDROSTATIC PUMP(4), HYDROSTATIC PUMP(5) & HYDROSTATIC PUMP(6)		1
45	6717306	ADAPTER	W/Ref. HYDROSTATIC CIRCUITRY(13) - tapered boss face		2
45	97K-6	O-RING	flared end		x
46	6725127	HOSE		S/N & Abv.	1
47	6718885	HOSE		S/N & Abv.	1
48	6715718	ELBOW			1
49	6718882	TEE	W/Ref. HYDROSTATIC CIRCUITRY(36) - tapered boss face	5141 -	1
49	6719378	TEE	W/Ref. HYDROSTATIC CIRCUITRY(36) - tapered boss face	5141 46036 & Abv.	1
49	97K-6	O-RING	flared end		x
50	5HM-35	CLAMP			4
51	6716468	TEE	W/Ref. HYDROSTATIC CIRCUITRY(36)	S/N & Bel.	1
51	97K-6	O-RING	flared end		x
52	6716175	HOSE		S/N & Bel.	1

HYDROSTATIC CIRCUITRY
(W/Cooler)

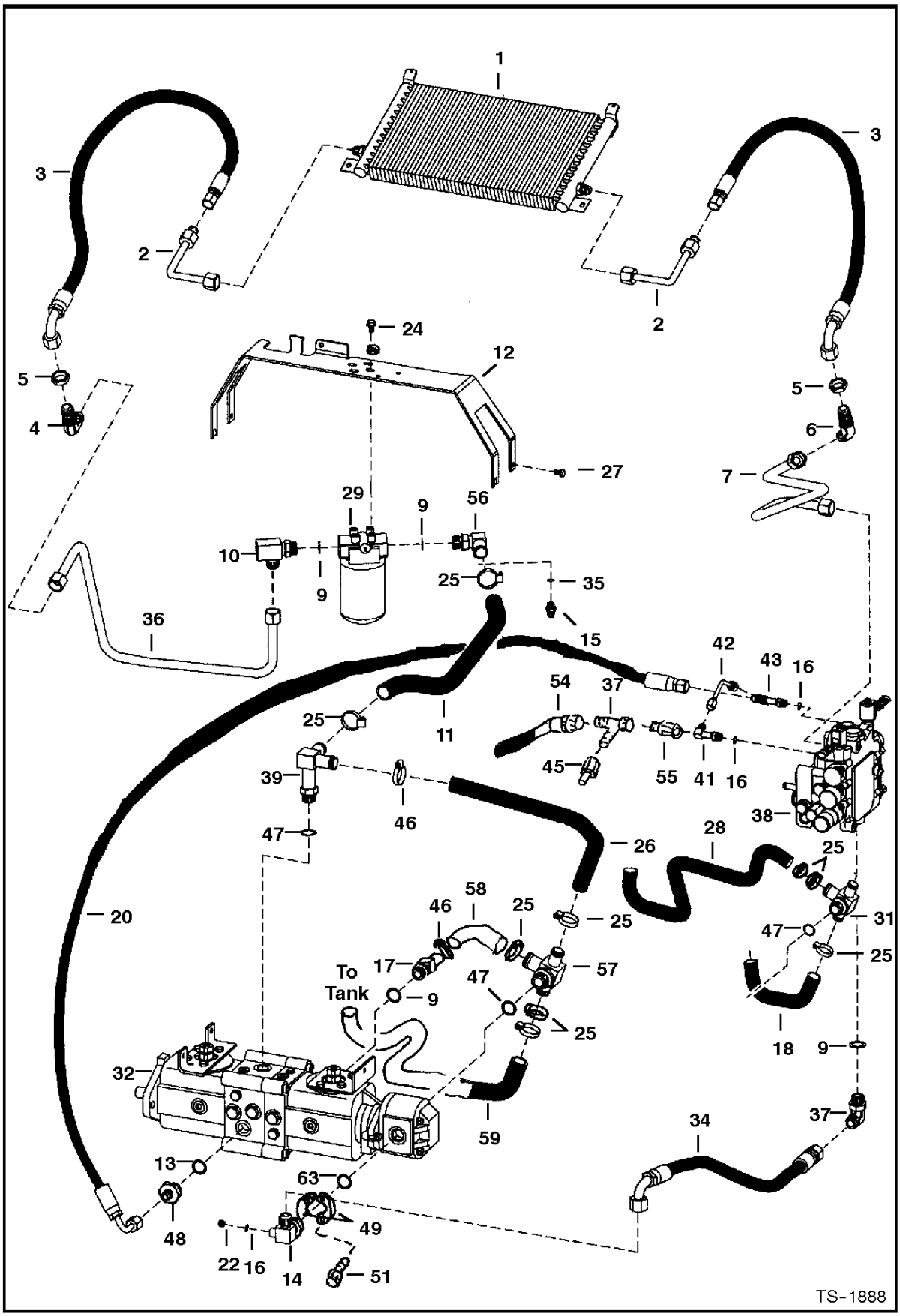

HYDROSTATIC CIRCUITRY

Ref.N°	Part N°	Description	Remarks	Serial N°	Qty.
1	6667896	COOLER	oil		1
2	11KN-8	ELBOW			2
3	6531336	HOSE			2
4	88FN-8	ELBOW		& Bel.	1
4	6725964	ELBOW		& Abv.	1
4	97K-12	O-RING	flared end		1
5	86F-8	NUT			2
6	46KN-8	ELBOW	tapered boss face		1
6	97K-12	O-RING	flared end		1
7	6717227	TUBELINE			1
8	17KV-7	ELBOW	W/Ref. HYDROSTATIC CIRCUITRY(13) - tapered boss face		1
8	97K-10	O-RING	flared end		x
9	99K-12	O-RING			x
10	6700599	ELBOW	W/Ref. HYDROSTATIC CIRCUITRY(9) - Was 6715714 [B,D]		1
10	6706365	ADAPTER	W/Ref. HYDROSTATIC CIRCUITRY(9)		1
11	6719319	HOSE			1
12	6719446	MOUNT			1
13	99K-10	O-RING	tapered boss face		x
14	6717662	TEE	split flange		1
15	90KV-5	PLUG	W/Ref. HYDROSTATIC CIRCUITRY(35) - Was 6630168 [B]		1
16	99K-6	O-RING	tapered boss face		x
17	6715718	ELBOW	W/Ref. HYDROSTATIC CIRCUITRY(9) - tapered boss face		1
18	6716175	HOSE		& Bel.	1
19	83F-3	ELBOW			1
20	6725090	HOSE	Was 6717216 [A]		1
21	85F-3	ELBOW			1
22	24KN-5	PLUG	for rear aux. - tapered boss face		1
23	6674316	SWITCH	Hydrostatic charge pressure - See Page ENGINE ELECTRICAL(1)		1
24	35C-610	BOLT			4
25	5HM-35	CLAMP	constant tension		4
26	6716176	HOSE			1
27	84G-3712	BOLT			2
28	6717215	HOSE		& Bel.	1
29	6661247	FILTER ASSY.	See Page HYDROSTATIC OIL FILTER(1)		2
29	6661248	ELEMENT			2
29	6661334	FILTER ASSY	See Page HYDROSTATIC OIL FILTER(1)		2
29	6661248	ELEMENT			2
30	6716154	HOSE			1
31	6716468	TEE	W/Ref. HYDROSTATIC CIRCUITRY(47)	& Bel.	1
31	97K-6	O-RING	flared end		x
32		PUMP	See Page HYDROSTATIC PUMP(3), HYDROSTATIC PUMP(4), HYDROSTATIC PUMP(5) & HYDROSTATIC PUMP(6)		1
33	79K-20	O-RING			x
34	6716125	HOSE			1
35	95K-6	O-RING	tapered boss face		x
36	NAP	TUBELINE	Order 6725973 & 6725964 elbow - Was 6719318 [A]	& Bel.	1
36	6725973	TUBELINE		& Abv.	1
37	6718660	TEE	tapered boss face		1
37	97K-6	O-RING	flared end		x
38		VALVE	W/Ref. HYDROSTATIC CIRCUITRY(41)-HYDROSTATIC CIRCUITRY(43) - See Page HYDRAULIC CONTROL VALVE(3)		1

HYDROSTATIC CIRCUITRY

Ref.N°	Part N°	Description	Remarks	Serial N°	Qty.
39	6717186	CROSS	W/Ref. HYDROSTATIC CIRCUITRY(47)		1
40	17KV-8	ELBOW	W/Ref. HYDROSTATIC CIRCUITRY(9) - tapered boss face		1
40	97K-12	O-RING	flared end		1
41	6715188	ELBOW	W/Ref. HYDROSTATIC CIRCUITRY(16) - See Page HYDRAULIC CONTROL VALVE(3)	& Bel.	1
41	97K-6	O-RING	flared end		1
41	6805243	TEE	W/Ref. HYDROSTATIC CIRCUITRY(64)	& Abv.	1
42	6577690	TUBE	See Page HYDRAULIC CONTROL VALVE(3)		1
43	6804360	TEE	W/Ref. HYDROSTATIC CIRCUITRY(16) - See Page HYDRAULIC CONTROL VALVE(3)		1
44	75K-6	O-RING			1
45	6718948	ADAPTER	W/Filter		1
45	NSS	FILTER			1
46	5HM-42	CLAMP			2
47	99K-16	O-RING			x
48	6717173	ADAPTER	W/Ref. HYDROSTATIC CIRCUITRY(13)		1
48	97K-6	O-RING	flared end		x
49	19J-12	CLAMP			2
50	58K-214	O-RING			1
51	17C-620	BOLT			4
52	15KN-8	ADAPTER	W/Ref. HYDROSTATIC CIRCUITRY(9)		1
52	97K-12	O-RING			x
53	30H-64	CLAMP			1
54	6716391	HOSE	auxiliary spool		1
55	6672766	CHECK VALVE			1
56	6725032	ELBOW	W/Ref.		1
57	6718882	TEE	W/Ref. HYDROSTATIC CIRCUITRY(47)	5141 - 46035	1
57	6719378	TEE	W/Ref. HYDROSTATIC CIRCUITRY(47)	5141 46036 & Abv.	1
57	97K-6	O-RING	flared end		x
58	6718885	HOSE		S/N & Abv.	1
59	6725127	HOSE		S/N & Abv.	1
60	6E-6	WASHER			1
61	6725497	CROSS			1
62	36K-5	CAP			1
63	55K-214	O-RING			1
64	79K-6	O-RING			x

HYDROSTATIC CIRCUITRY
(2-Speed Option)

NOTE: Option also includes vinyl suspension seat 6718868 & threee point seat belt 6725168.

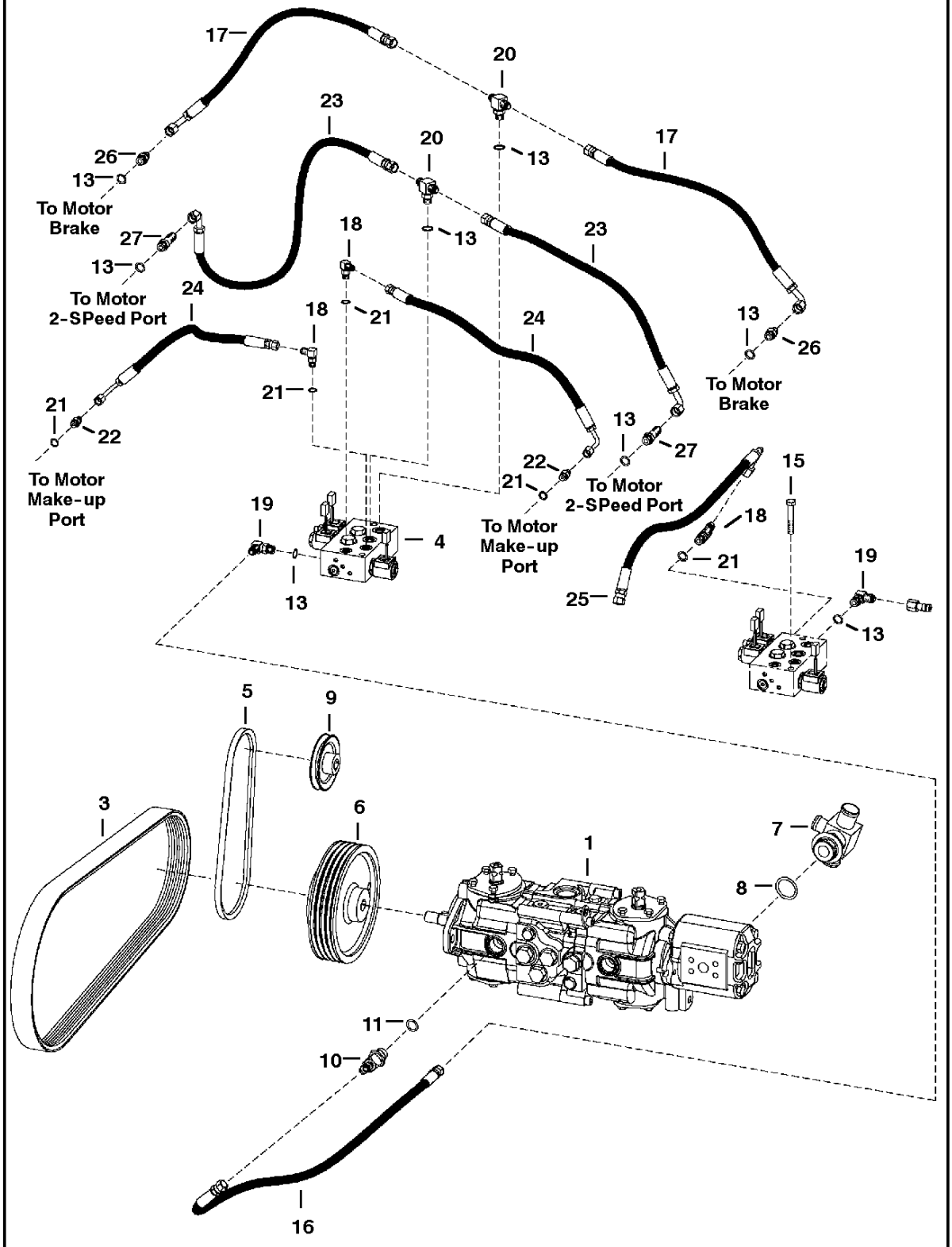

PE-1070

HYDROSTATIC CIRCUITRY

Ref.N°	Part N°	Description	Remarks	Serial N°	Qty.
1		PUMP	See Page HYDROSTATIC PUMP(5)		1
2		MOTOR	See Page HYDROSTATIC MOTOR & BRAKE(2)		2
3	6662855	BELT	drive		1
4	6676417	VALVE	2speed - See Page 2 (1) - Was 6675334 [A]		1
5	6725186	BELT	fan	5141	1
5	6707648	BELT	fan	5142 & 5179	1
6	6713287	PULLEY	pump		1
7	6719378	TEE	W/Ref. HYDROSTATIC CIRCUITRY(8)		1
7	97K-6	O-RING	flared end		x
8	79K-20	O-RING			x
9	6725130	PULLEY	fan	5141	1
9	6712971	PULLEY	fan	5142 & 5179	1
10	6717503	TEE	W/Ref. HYDROSTATIC CIRCUITRY(11)		1
10	97K-6	O-RING	flared end		x
11	99K-10	O-RING			x
12					x
13	99K-6	O-RING			x
14	6725496	COVER	chaincase		1
15	17C-636	BOLT			2
16	6628613	HOSE			1
17	6716391	HOSE			2
18	17KV-3	ELBOW	W/Ref. HYDROSTATIC CIRCUITRY(21)		2
18	97K-4	O-RING	flared end		x
19	17KV-5	ELBOW	W/Ref. HYDROSTATIC CIRCUITRY(13)		3
19	97K-6	O-RING	flared end		x
20	19KV-5	TEE	W/Ref. HYDROSTATIC CIRCUITRY(13)		2
20	97K-6	O-RING	flared end		x
21	99K-4	O-RING			x
22	15KN-3	CONNECTOR	W/Ref. HYDROSTATIC CIRCUITRY(21)		2
22	97K-4	O-RING	flared end		x
23	6725899	HOSE	2-speed port		2
24	6725900	HOSE	makeAup		2
25	6725901	HOSE			1
26	15KV-5	ADAPTER	W/Ref. HYDROSTATIC CIRCUITRY(13)		2
26	97K-6	O-RING	flared end		x
27	16KN-5	CONNECTOR	W/Ref. HYDROSTATIC CIRCUITRY(13)		2
27	97K-6	O-RING	flared end		x
28	6803932	DECAL	2-speed valve		1
29	31C-1228	BOLT			1
30	83D-12	NUT			1
31	6661753	PLUG	diagnostic		1

HAND CONTROLS

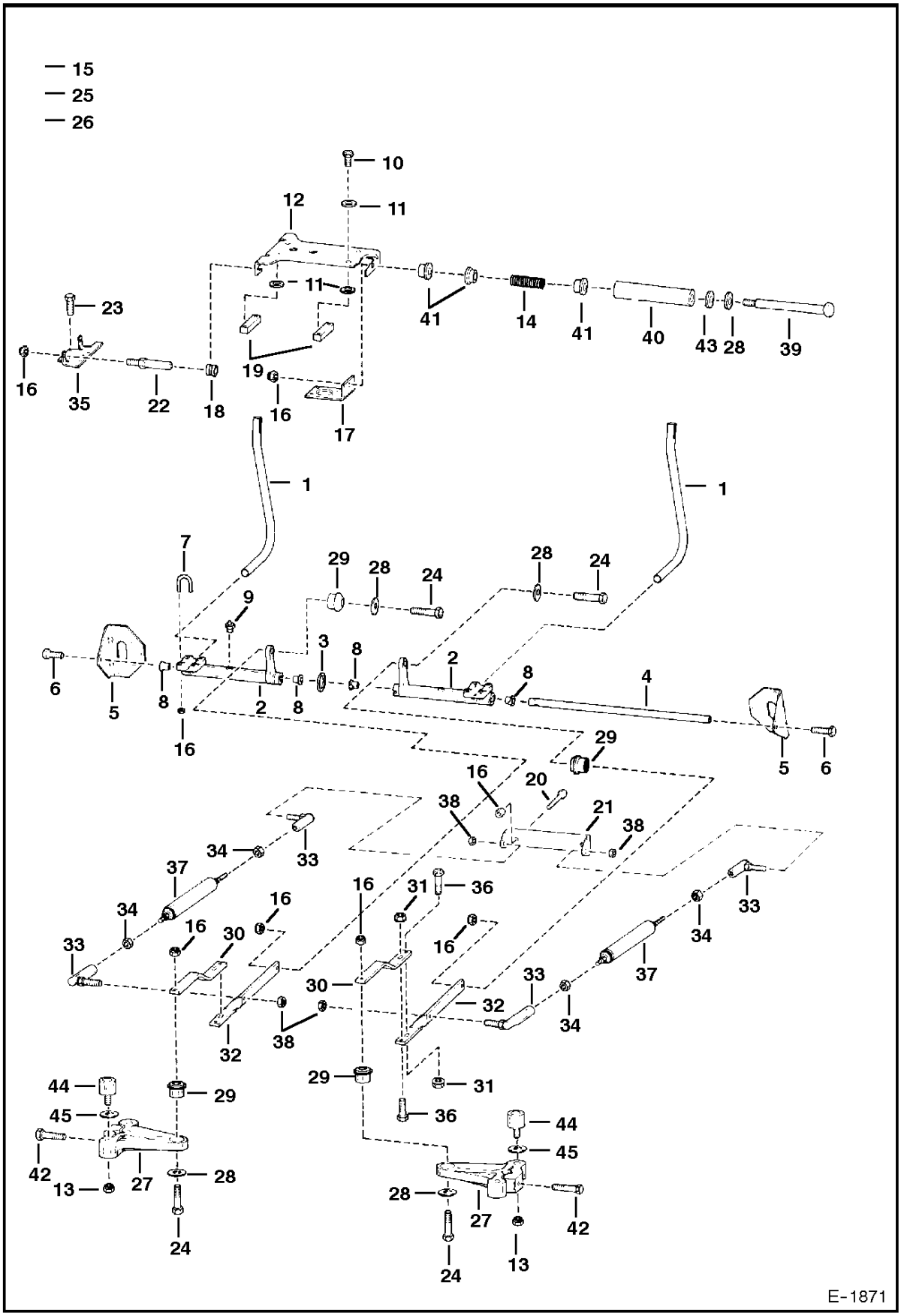

E-1871

HAND CONTROLS

Ref.N°	Part N°	Description	Remarks	Serial N°	Qty.
1	6702543	LEVER			2
2	6716977	BELLCRANK			2
3	6599741	WASHER	wave		1
4	6716545	ROD			1
5	6577230	MOUNT			2
6	45C-620	BOLT			2
7	6700768	U-BOLT			4
8	6673710	BEARING			4
9	6518200	GREASE ZERK			2
10	8C-616	BOLT			4
11	6557831	WASHER			8
12	6716116	MOUNT			1
13	98D-6	NUT			4
14	6701535	SPRING			1
15	6716916	WASHER			4
16	95D-6	NUT			18
17	6576196	BRACKET			1
18	6706098	GUIDE			2
19	6702716	BLOCK			2
20	17C-612	BOLT			2
21	6706106	MOUNT			1
22	6577058	PIN			2
23	1CM-820	BOLT			8
24	17C-626	BOLT			6
25	6708043	BUSHING			1
26	37C-616	BOLT	carriage		2
27	6711644	LEVER			2
28	6563914	WASHER			5
29	6665701	BUSHING	neoprene		4
30	6713111	LINK			2
31	83D-6	NUT			4
32	6714025	LINK			2
33	6599744	BALL JOINT			4
34	8D-6	NUT			4
35	6706096	MOUNT			1
36	17C-620	BOLT			4
37	6649551	DAMPENER			2
38	96D-6	NUT			2
39	17C-680	BOLT			1
40	6715164	SLEEVE			1
41	6715163	BUSHING			3
42	35C-624	BOLT			2
43	25E-24	WASHER	for AHC		1
44	6673789	BEARING			4
45	25E-17	WASHER			4

HYDROSTATIC MOTOR

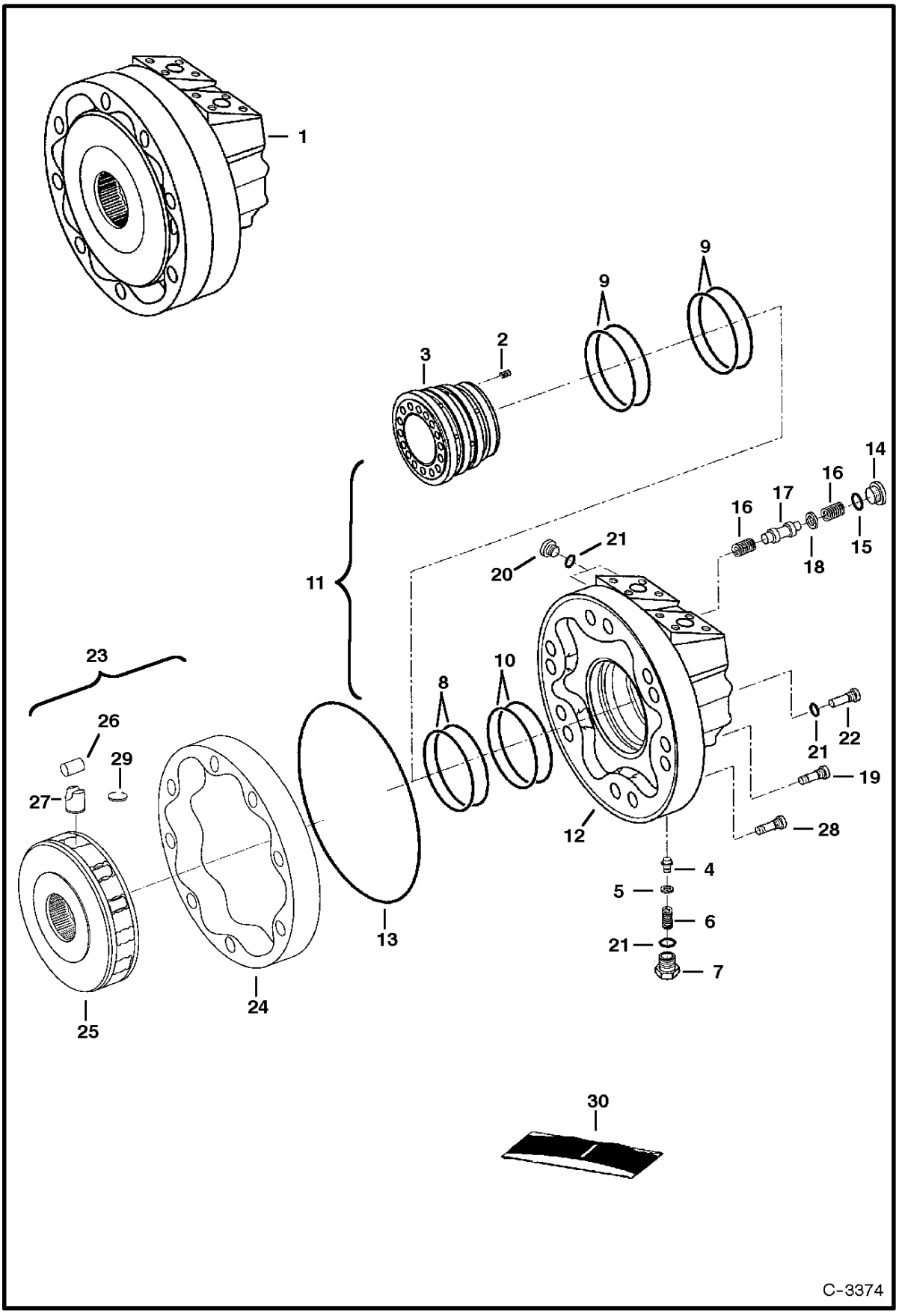

HYDROSTATIC MOTOR

Ref.N°	Part N°	Description	Remarks	Serial N°	Qty.
1	6672825	MOTOR	Ref. HYDROSTATIC MOTOR(2)-HYDROSTATIC MOTOR(28)		1
2	6674037	SPRING			9
3	6674184	DISTRIBUTOR			1
4	6675868	POPPET	Was 6674342 [B]		1
5	6674343	SHIM			1
6	6674344	SPRING			1
7	6674345	PLUG			1
8	6675227	SEAL	W/ O-ring - Was 6674038 [B]		1
9	6675228	SEAL	W/ O-ring - Was 6674336 [B]		2
10	6676022	SEAL	W/ O-ring - Was 6674040 [B]		1
11	6674335	HOUSING ASSY.	rear - Ref. HYDROSTATIC MOTOR(2)-HYDROSTATIC MOTOR(10), HYDROSTATIC MOTOR(14)-HYDROSTATIC MOTOR(18) & HYDROSTATIC MOTOR(20)-HYDR		1
12	6674341	HOUSING	rear		1
13	6674029	O-RING			1
14	6671845	PLUG	W/Ref. HYDROSTATIC MOTOR(15) - Was 6671759 [B]		1
15	6676023	O-RING	Was 6671749 [B]		1
16	6674339	SPRING			2
17	6674337	SPOOL			1
18	6674338	WASHER			1
19	6675021	BOLT	Was 6674030 [B]		2
20	6676024	PLUG	W/Ref. HYDROSTATIC MOTOR(21) - Was 6671783 [B]		1
21	6675869	O-RING	Was 6671784 [B]		3
22	6674340	PIN	locating		1
23	6674390	ROTARY GROUP	Ref. HYDROSTATIC MOTOR(24)-HYDROSTATIC MOTOR(27)		1
24	6675091	CAM	Was 6674034 [B]		1
25	6674219	BLOCK			1
26	NSS	ROLLER	Order Ref. HYDROSTATIC MOTOR(23) - Was 6675973 [A]		8
27	NSS	PISTON	Order Ref. HYDROSTATIC MOTOR(23) - Was 6660026 [A]		8
28	6675020	BOLT	Was 6717806 [B]		3
29	NSS	RING	keeper		8
30	6676021	SEAL KIT	Ref. HYDROSTATIC MOTOR(8)-HYDROSTATIC MOTOR(10), HYDROSTATIC MOTOR(13), HYDROSTATIC MOTOR(15) & HYDROSTATIC MOTOR(21) - Was 6674		1

HYDROSTATIC MOTOR & BRAKE
(2-Speed Option)

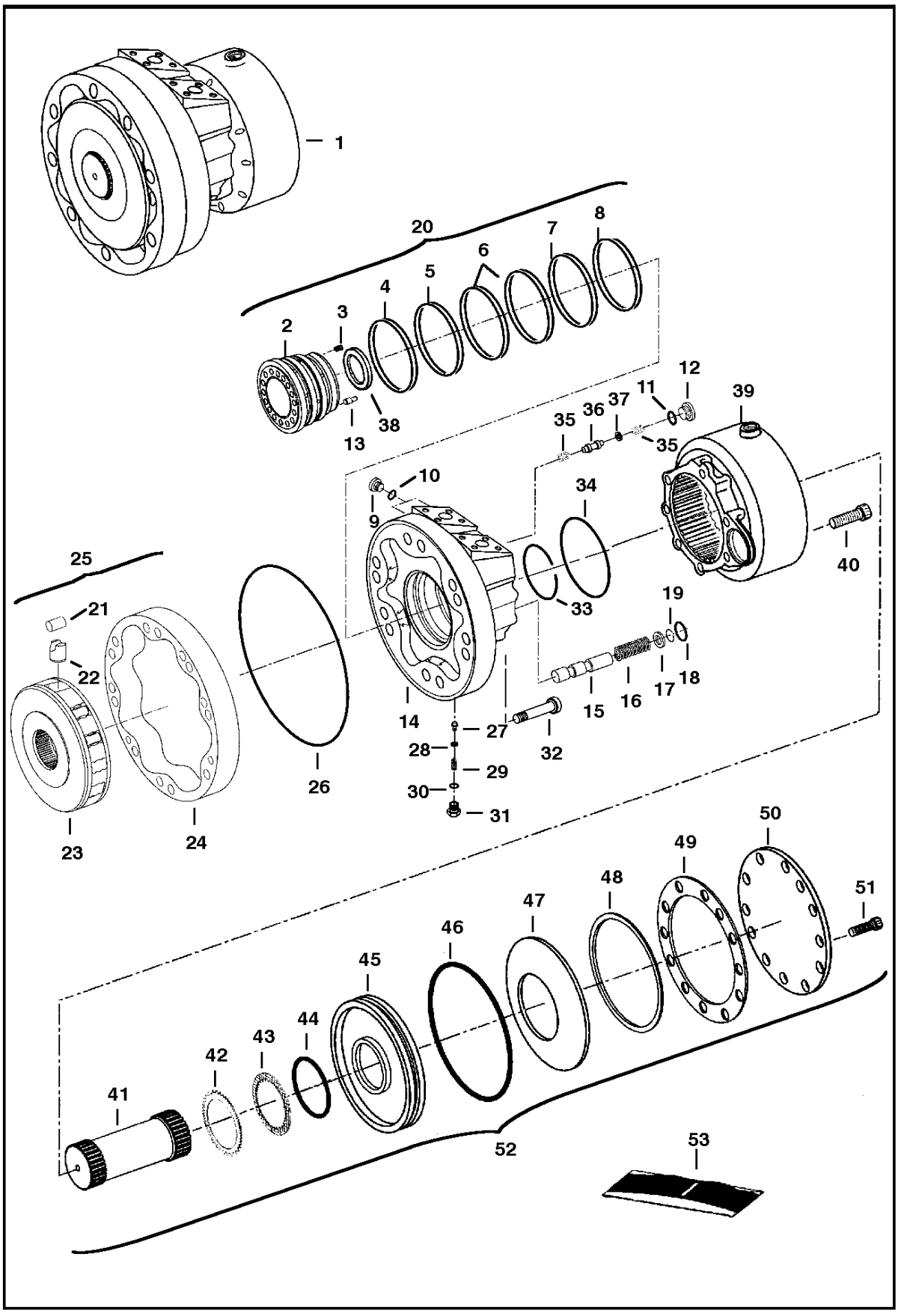

HYDROSTATIC MOTOR & BRAKE

Ref.N°	Part N°	Description	Remarks	Serial N°	Qty.
1	6674738	MOTOR	5830-003-138 - Ref. HYDROSTATIC MOTOR & BRAKE(2)-HYDROSTATIC MOTOR & BRAKE(52)		1
2	6675876	DISTRIBUTOR			1
3	6674037	SPRING			12
4	6675877	SEAL			1
5	6675878	SEAL			1
6	6675879	SEAL			2
7	6675880	SEAL			1
8	6675881	SEAL			1
9	90KV-3	PLUG	W/Ref. HYDROSTATIC MOTOR & BRAKE(10) - Was 6671783 [B]		2
10	95K-4	O-RING	Was 6671784 [B]		2
11	95K-6	O-RING	Was 6671749 [B]		1
12	90KV-5	PLUG	W/Ref. HYDROSTATIC MOTOR & BRAKE(11) - Was 6671759 [B]		1
13	6675189	PIN			1
14	6675875	HOUSING	rear		1
15	6675882	SPOOL			1
16	6676643	SPRING	red		1
16	6676644	SPRING	yellow		1
16	6676645	SPRING	green		1
16	6676646	SPRING	blue		1
17	6676709	WASHER	2,14mm - for red spring		1
17	6676710	WASHER	2,38mm - for yellow spring		1
17	6676711	WASHER	2,62mm - for green spring		1
17	6676712	WASHER	2,86mm - for blue spring		1
18	6675886	QUAD RING			1
19	6675885	SNAP RING			1
20	6675861	REAR HOUSING	assy. - Ref. HYDROSTATIC MOTOR & BRAKE(2)-HYDROSTATIC MOTOR & BRAKE(19)		1
21	NSS	ROLLER	Order Ref. HYDROSTATIC MOTOR & BRAKE(25) - Was 6675872 [A]		8
22	NSS	PISTON	Order Ref. HYDROSTATIC MOTOR & BRAKE(25) - Was 6675873 [A]		8
23	NSS	BLOCK	Order Ref. HYDROSTATIC MOTOR & BRAKE(25) - Was 6675871 [A]		1
24	6675874	CAM			1
25	6675860	ROTARY GROUP	Ref. HYDROSTATIC MOTOR & BRAKE(21)-HYDROSTATIC MOTOR & BRAKE(24)		1
26	6675864	QUAD RING			1
27	6675868	POPPET	1,5mm orifice		1
28	6674343	SHIM	0,6mm		1
29	6674344	SPRING			1
30	6675869	O-RING			1
31	6674345	PLUG			1
32	6675021	BOLT	holds rotary group to the brake		2
33	6675865	SNAP RING			1
34	6675863	QUAD RING			1
35	6674841	SPRING			2
36	6675866	SPOOL			1
37	6675867	WASHER			1
38	6675898	BUSHING			1
39	6675887	HOUSING			1
40	6675896	BOLT			8
41	6675888	SHAFT			1
42	6674192	DISC	outer		14
43	6674193	DISC	inner		13

HYDROSTATIC MOTOR & BRAKE

Ref.N°	Part N°	Description	Remarks	Serial N°	Qty.
44	6675894	SEAL			1
45	6675889	PISTON	brake		1
46	6675893	O-RING			1
47	6675897	WASHER			1
48	6676647	WASHER	0,8mm thick		1
48	6676648	WASHER	1,05mm thick		1
48	6676649	WASHER	1,9mm thick		1
48	6676650	WASHER	2,3mm thick		1
48	6676651	WASHER	2,5mm thick		1
48	6676652	WASHER	2,9mm thick		1
49	6675892	GASKET			1
50	6675890	COVER			1
51	6675895	BOLT			12
52	6675862	BRAKE	Ref. HYDROSTATIC MOTOR & BRAKE(38)-HYDROSTATIC MOTOR & BRAKE(51)		1
53	6675870	SEAL KIT	Ref. HYDROSTATIC MOTOR & BRAKE(4)-HYDROSTATIC MOTOR & BRAKE(8), HYDROSTATIC MOTOR & BRAKE(18), HYDROSTATIC MOTOR & BRAKE(26), HY		1

HYDROSTATIC PUMP
(Left Half) (5141 46035, 5142 40999, 5179 11999 & Below)

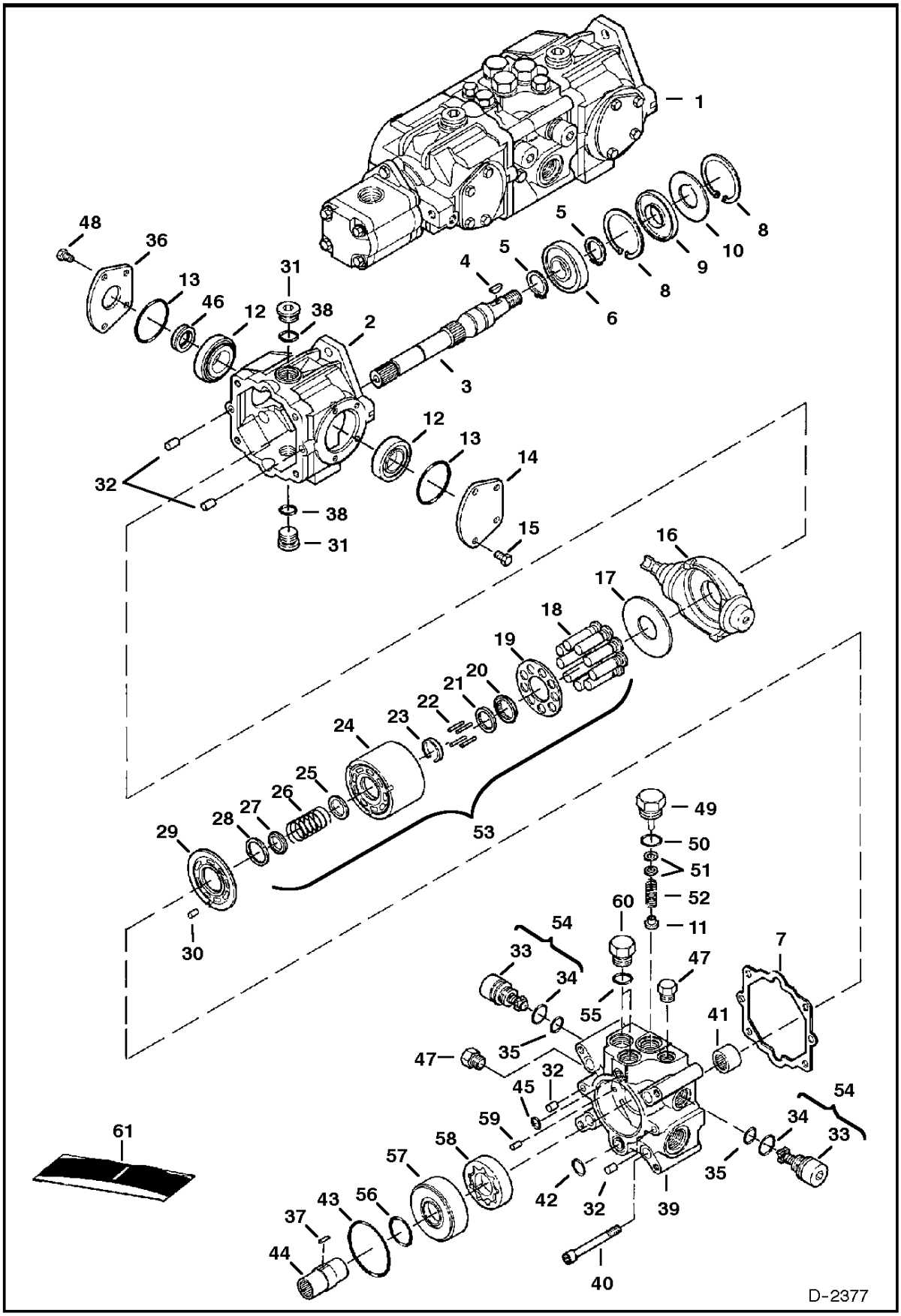

HYDROSTATIC PUMP

Ref.N°	Part N°	Description	Remarks	Serial N°	Qty.
1	6673910	PUMP	complete W/gear pump - model 4445060 - standard flow		1
1	6673912	PUMP	complete W/gear pump - model 4445061 - high flow		1
2	6669402	HOUSING			1
3	6669408	SHAFT			1
4	6J-807	KEY			1
5	658128	SNAP RING			2
6	654299	BEARING			1
7	6650634	GASKET			1
8	669863	SNAP RING			2
9	6645090	SEAL			1
10	6669409	WASHER			1
11	6650652	RELIEF	charge relief		1
12	6669411	BEARING			2
13	6660814	O-RING			2
14	6657068	COVER			2
15	6650668	BOLT			4
16	6671513	SWASH PLATE			1
17	6650627	PLATE			1
18	NAP	PISTON ASSY	Order Ref. HYDROSTATIC PUMP(53)		1
19	NAP	RETAINER	Order Ref. HYDROSTATIC PUMP(53)		1
20	NAP	RETAINER	guide - Order Ref. HYDROSTATIC PUMP(53)		1
21	6666338	WASHER			1
22	6650629	PIN			4
23	6650630	RETAINER			1
24	NAP	BLOCK	Order Ref. HYDROSTATIC PUMP(53)		1
25	NAP	WASHER	Order Ref. HYDROSTATIC PUMP(53)		1
26	NAP	SPRING	Order Ref. HYDROSTATIC PUMP(53)		1
27	NAP	WASHER	Order Ref. HYDROSTATIC PUMP(53)		1
28	NAP	WASHER	Order Ref. HYDROSTATIC PUMP(53)		1
29	6671515	VALVE PLATE			1
30	6650636	PIN			1
31	47K-8	PLUG	W/Ref. HYDROSTATIC PUMP(38)		2
32	6518460	PIN			4
33	NAP	PLUG	Order Ref. HYDROSTATIC PUMP(54)		2
34	6657028	O-RING			2
35	79K-8	O-RING			2
36	6657067	COVER			1
37	6673885	PIN			1
38	79K-12	O-RING			2
39	6673878	END PLATE			1
40	6673886	BOLT			4
41	6650635	BEARING			1
42	6650647	O-RING			1
43	6673884	O-RING			1
44	6673877	COUPLER			1
45	6650646	O-RING			1
46	6673881	SEAL			1
47	6645086	PLUG			2
48	6671518	BOLT			4
49	6650648	PLUG	charge relief - W/Ref. HYDROSTATIC PUMP(50)		1
50	79K-10	O-RING			1
51	6669410	SHIM KIT	charge relief		1
52	6673882	SPRING			1
53	6671512	BLOCK ASSY	W/Ref. HYDROSTATIC PUMP(18) - HYDROSTATIC PUMP(28)		1

HYDROSTATIC PUMP

Ref.N°	Part N°	Description	Remarks	Serial N°	Qty.
54	6672535	RELIEF VALVE	4712 PSI (325 bar)		2
55	79K-14	O-RING			2
56	6673880	OARING			1
57	6673879	SPACER			1
58	6673883	GEROTOR			1
59	3974795	PIN			1
60	24K-7	PLUG			2
61	6671516	SEAL KIT	Ref. HYDROSTATIC PUMP(7), HYDROSTATIC PUMP(9), HYDROSTATIC PUMP(13), HYDROSTATIC PUMP(34), HYDROSTATIC PUMP(35), HYDROSTATIC PUM		1

HYDROSTATIC PUMP
(Right Half) (5141 46035, 5142 40999, 5179 11999 & Below)

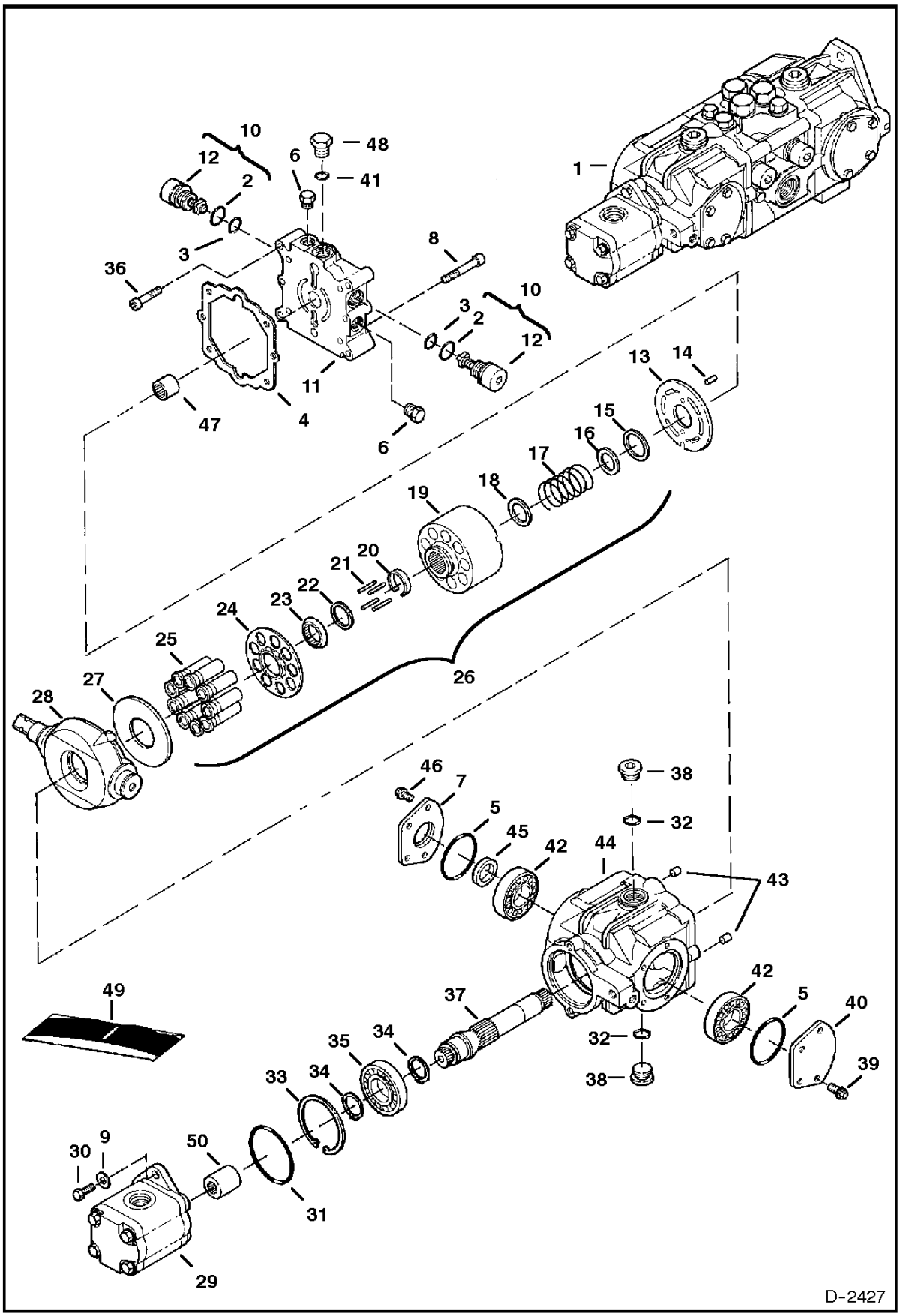

HYDROSTATIC PUMP

Ref.N°	Part N°	Description	Remarks	Serial N°	Qty.
1	6673910	PUMP	complete W/gear pump - model 4445060 - standard flow		1
1	6673912	PUMP	complete W/gear pump - model 4445061 - high flow		1
2	6657028	O-RING			2
3	79K-8	O-RING			2
4	6650634	GASKET			1
5	6660814	O-RING			2
6	6645086	PLUG			4
7	6657067	COVER			1
8	6650637	BOLT			2
9	6518483	WASHER			2
10	6672535	RELIEF VALVE	4712 PSI (325 bar)		1
11	6669405	END CAP			1
12	NAP	PLUG	Order Ref. HYDROSTATIC PUMP(10)		2
13	6671514	VALVE PLATE			1
14	6650636	PIN			2
15	NAP	RETAINER	Order Ref. HYDROSTATIC PUMP(26)		1
16	NAP	WASHER	Order Ref. HYDROSTATIC PUMP(26)		1
17	NAP	SPRING	Order Ref. HYDROSTATIC PUMP(26)		1
18	NAP	WASHER	Order Ref. HYDROSTATIC PUMP(26)		1
19	NAP	BLOCK	Order Ref. HYDROSTATIC PUMP(26)		1
20	6650630	RETAINER			1
21	6650629	PIN			4
22	6666338	WASHER			1
23	NAP	RETAINER	Order Ref. HYDROSTATIC PUMP(26)		1
24	NAP	RETAINER	Order Ref. HYDROSTATIC PUMP(26)		1
25	NAP	PISTON ASSY	Order Ref. HYDROSTATIC PUMP(26)		1
26	6671512	BLOCK ASSY	Ref. HYDROSTATIC PUMP(15) - HYDROSTATIC PUMP(25)		1
27	6650627	PLATE			1
28	6671513	SWASH PLATE			1
29		GEAR PUMP	standard flow - See Page GEAR PUMP(1)		1
29		GEAR PUMP	high flow - See Page HIGH HORSEPOWER HYDRAULICS(1)		1
30	17C-620	BOLT			2
31	6645080	O-RING			1
32	79K-12	O-RING			1
33	669863	SNAP RING			1
34	658128	SNAP RING			2
35	654299	BEARING			1
36	6652018	BOLT			4
37	6669407	SHAFT			1
38	47K-8	PLUG	W/Ref. HYDROSTATIC PUMP(32)		1
39	6650668	BOLT			4
40	6657068	COVER			1
41	79K-14	O-RING			2
42	6669411	BEARING			2
43	6518460	PIN			2
44	6669403	HOUSING			1
45	6673881	SEAL			1
46	1CM-820	BOLT			4
47	6650635	BEARING			1
48	24K-7	PLUG	W/Ref. HYDROSTATIC PUMP(41)		1
49	6671516	SEAL KIT	Ref. HYDROSTATIC PUMP(2)-HYDROSTATIC PUMP(5) - Also includes HYDROSTATIC PUMP(7), HYDROSTATIC PUMP(9), HYDROSTATIC PUMP(13), HYD		1
50	6671509	COUPLER			1

HYDROSTATIC PUMP
(2-Speed) (Left Half)

NOTE: S/N 5141 46036, 5142 41001, 5179 12001 & Above, this pump became standard.

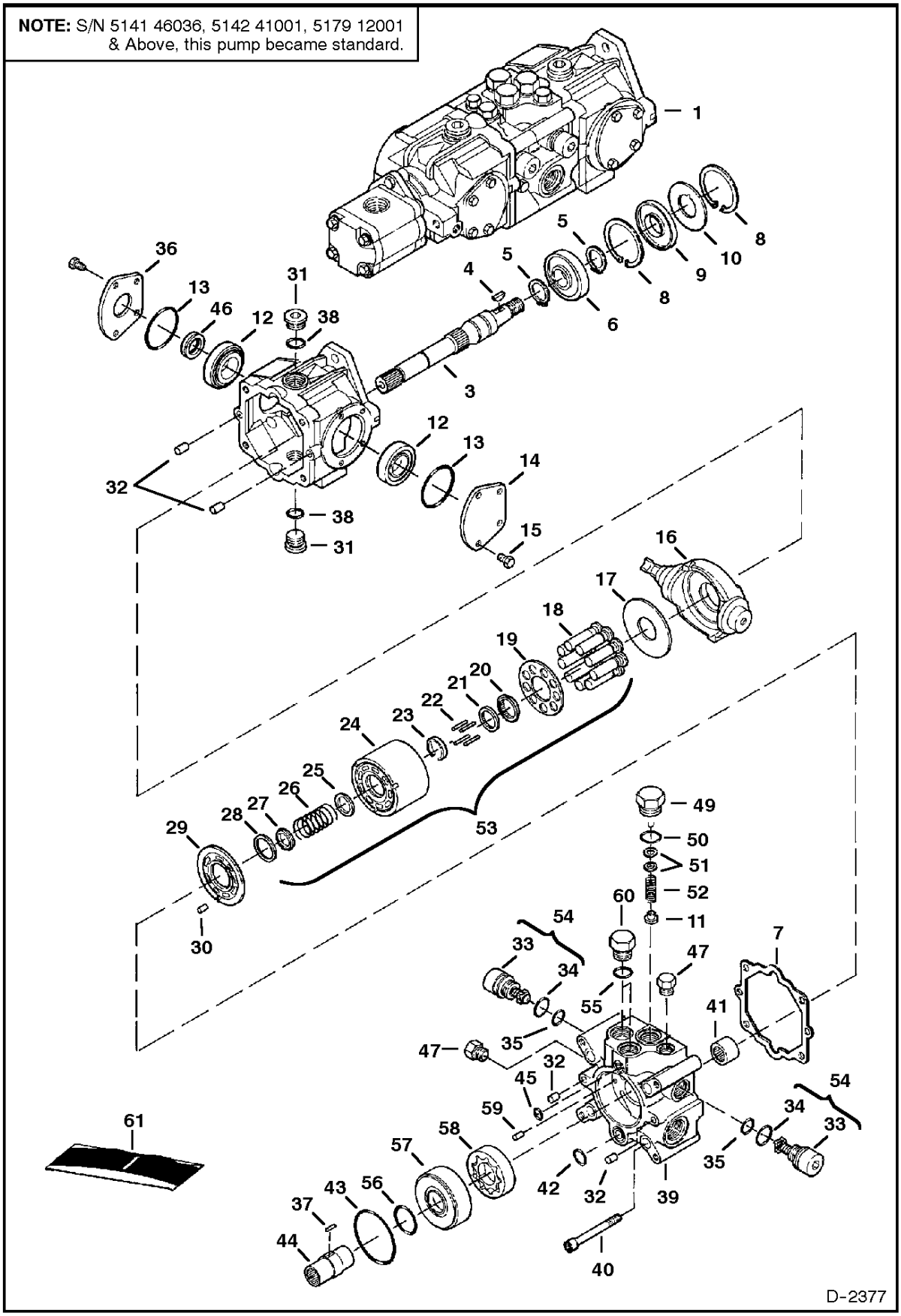

HYDROSTATIC PUMP

Ref.N°	Part N°	Description	Remarks	Serial N°	Qty.
1	6674692	PUMP	complete W/4bolt flange gear pump - Model 4445066 - standard flow	SEE NOTE	1
1	6674693	PUMP	complete W/4bolt flange gear pump - Model 4445067 - high flow	SEE NOTE	1
2	6669402	HOUSING			1
3	6669408	SHAFT			1
4	6J-807	KEY			1
5	658128	SNAP RING			2
6	654299	BEARING			1
7	6650634	GASKET			1
8	669863	SNAP RING			2
9	6645090	SEAL			1
10	6669409	WASHER			1
11	6650652	RELIEF	charge relief		1
12	6669411	BEARING			2
13	6660814	O-RING			2
14	6657068	COVER			2
15	6650668	BOLT			4
16	6671513	SWASH PLATE			1
17	6650627	PLATE			1
18	NAP	PISTON ASSY.	Order Ref. HYDROSTATIC PUMP(53)		1
19	NAP	RETAINER	Order Ref. HYDROSTATIC PUMP(53)		1
20	NAP	RETAINER	guide - Order Ref. HYDROSTATIC PUMP(53)		1
21	6666338	WASHER			1
22	6650629	PIN			4
23	6650630	RETAINER			1
24	NAP	BLOCK	Order Ref. HYDROSTATIC PUMP(53)		1
25	NAP	WASHER	Order Ref. HYDROSTATIC PUMP(53)		1
26	NAP	SPRING	Order Ref. HYDROSTATIC PUMP(53)		1
27	NAP	WASHER	Order Ref. HYDROSTATIC PUMP(53)		1
28	NAP	WASHER	Order Ref. HYDROSTATIC PUMP(53)		1
29	6676147	VALVE PLATE			1
30	6650636	PIN			1
31	47K-8	PLUG	W/Ref. HYDROSTATIC PUMP(38)		2
32	6675342	PIN			4
33	NAP	PLUG	Order Ref. HYDROSTATIC PUMP(54)		2
34	6657028	O-RING			2
35	79K-8	O-RING			2
36	6657067	COVER			1
37	6673885	PIN			1
38	79K-12	O-RING			2
39	6673878	END PLATE			1
40	6673886	BOLT			4
41	6650635	BEARING			1
42	6650647	O-RING			1
43	6673884	O-RING			1
44	6673877	COUPLER			1
45	6650646	O-RING			1
46	6673881	SEAL			1
47	6645086	PLUG			2
48	6671518	BOLT			4
49	6650648	PLUG	charge relief - W/Ref. HYDROSTATIC PUMP(50)		1
50	79K-10	O-RING			1
51	6669410	SHIM KIT	charge relief		1
52	6673882	SPRING			1

HYDROSTATIC PUMP

Ref.N°	Part N°	Description	Remarks	Serial N°	Qty.
53	6675341	BLOCK ASSY.	W/Ref. HYDROSTATIC PUMP(18) - HYDROSTATIC PUMP(28)		1
54	6670685	RELIEF VALVE	5000 PSI (345 bar)		2
55	79K-14	O-RING			2
56	6673880	OARING			1
57	6676145	SPACER			1
58	6676144	GEROTOR			1
59	3974795	PIN			1
60	24K-7	PLUG			2
61	6671516	SEAL KIT	Ref. HYDROSTATIC PUMP(7), HYDROSTATIC PUMP(9), HYDROSTATIC PUMP(13), HYDROSTATIC PUMP(34), HYDROSTATIC PUM		1

HYDROSTATIC PUMP
(2-Speed) (Right Half)

NOTE: S/N 5141 46036, 5142 41001, 5179 12001 & Above, this pump became standard.

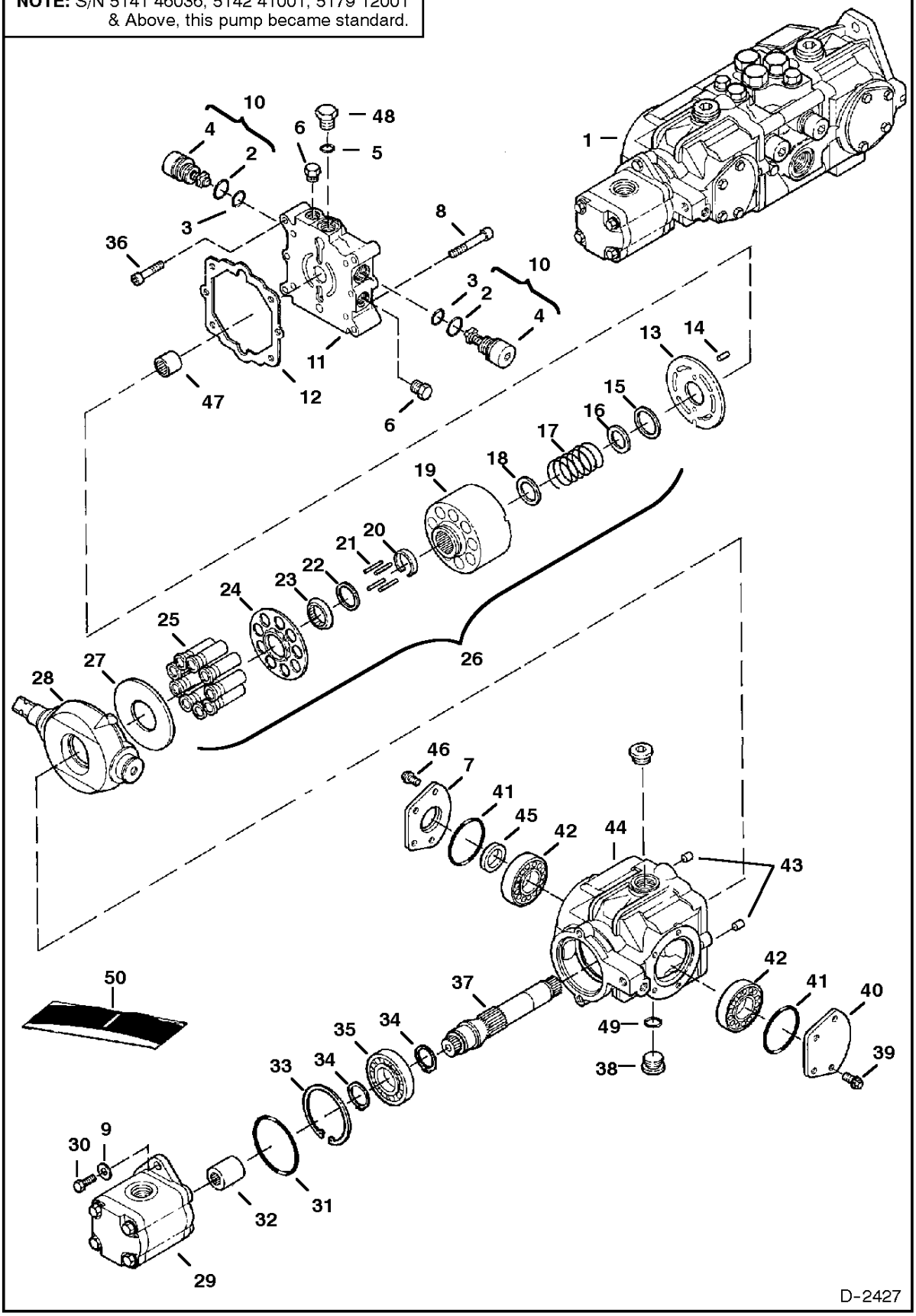

HYDROSTATIC PUMP

Ref.N°	Part N°	Description	Remarks	Serial N°	Qty.
0	6650674	BOLT			2
1	6674692	PUMP	complete W/4bolt flange gear pump - model 4445066 - standard flow	SEE NOTE	1
1	6674693	PUMP	complete W/4bolt flange gear pump - model 4445067 - high flow	SEE NOTE	1
2	6657028	O-RING			2
3	79K-8	O-RING			2
4	NAP	PLUG	Order Ref. HYDROSTATIC PUMP(10)		2
5	79K-14	O-RING			2
6	6645086	PLUG			4
7	6657067	COVER			1
9	6518483	WASHER			2
10	6670685	RELIEF VALVE	5000 PSI (345 bar)		2
11	6669405	END CAP			1
12	6650634	GASKET			1
13	6676148	VALVE PLATE			1
14	6650636	PIN			2
15	NAP	RETAINER	Order Ref. HYDROSTATIC PUMP(26)		1
16	NAP	WASHER	Order Ref. HYDROSTATIC PUMP(26)		1
17	NAP	SPRING	Order Ref. HYDROSTATIC PUMP(26)		1
18	NAP	WASHER	Order Ref. HYDROSTATIC PUMP(26)		1
19	NAP	BLOCK	Order Ref. HYDROSTATIC PUMP(26)		1
20	6650630	RETAINER			1
21	6650629	PIN			4
22	6666338	WASHER			1
23	NAP	RETAINER	Order Ref. HYDROSTATIC PUMP(26)		1
24	NAP	RETAINER	Order Ref. HYDROSTATIC PUMP(26)		1
25	NAP	PISTON ASSY.	Order Ref. HYDROSTATIC PUMP(26)		1
26	6675341	BLOCK ASSY.	Ref. HYDROSTATIC PUMP(15) - HYDROSTATIC PUMP(25)		1
27	6650627	PLATE			1
28	6671513	SWASH PLATE			1
29		GEAR PUMP	See Page GEAR PUMP(7)		1
30	17C-620	BOLT			2
31	6645080	O-RING			1
32	6676146	COUPLING			1
33	669863	SNAP RING			1
34	658128	SNAP RING			2
35	654299	BEARING			1
36	6652018	BOLT			4
37	6669407	SHAFT			1
38	47K-8	PLUG	W/Ref. HYDROSTATIC PUMP(49)		1
39	6650668	BOLT			4
40	6657068	COVER			1
41	6660814	O-RING			2
42	6669411	BEARING			2
43	6675342	PIN			2
44	6669403	HOUSING			1
45	6673881	SEAL			1
46	1CM-820	BOLT			4
47	6650635	BEARING			1
48	24K-7	PLUG	W/Ref. HYDROSTATIC PUMP(41)		1
49	79K-12	O-RING			1
50	6671516	SEAL KIT	Ref. HYDROSTATIC PUMP(2), HYDROSTATIC PUMP(3), HYDROSTATIC PUMP(12) & HYDROSTATIC PUMP(41) - Also includes HYDROSTATIC PUMP(7),		1

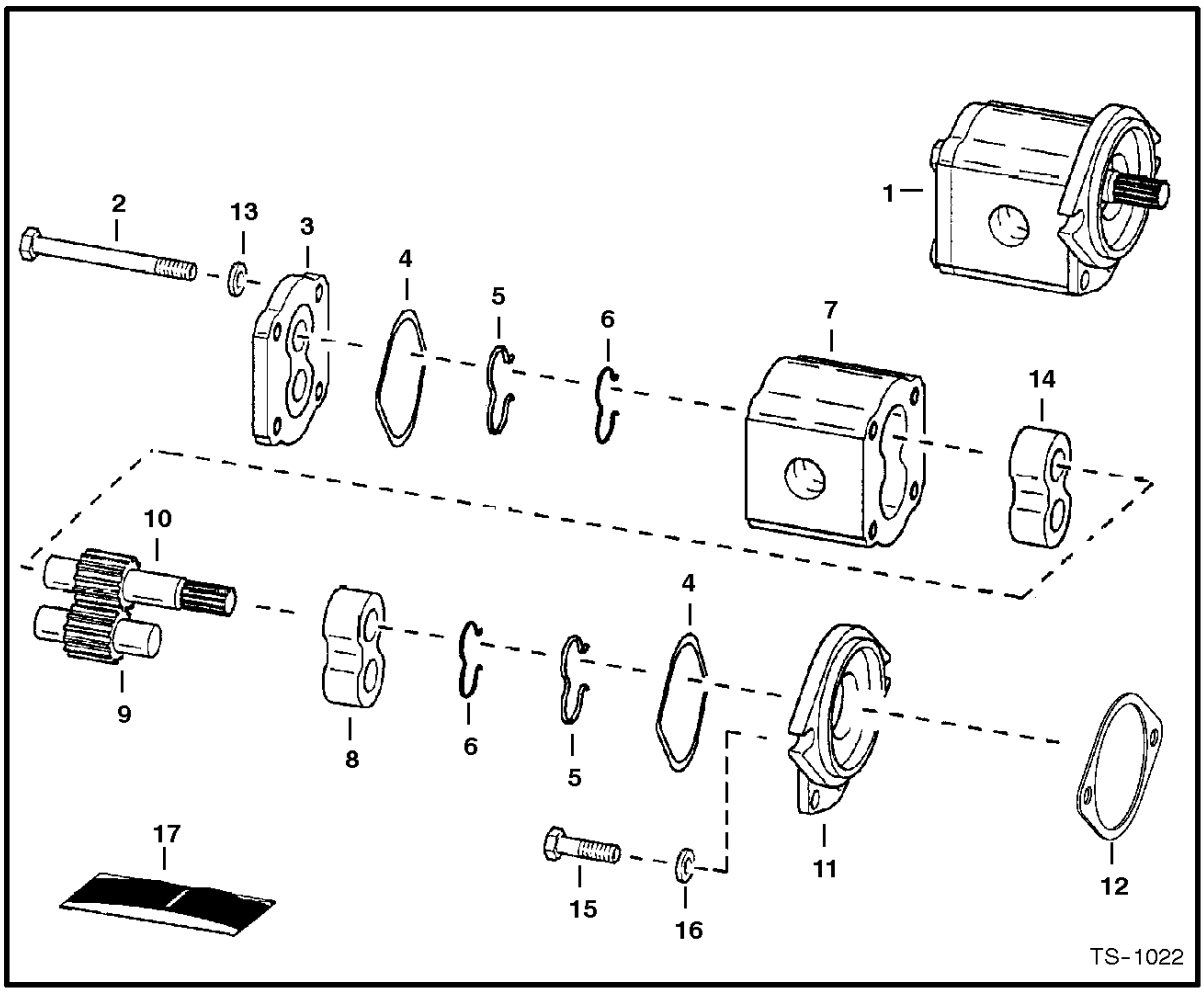

GEAR PUMP
(S/N 5141 46035, 5142 40999, 5179 11999 & Below)

Ref. No.	Part Number	Description	Remarks	Serial Number	Qty.

GEAR PUMP

Ref.N°	Part N°	Description	Remarks	Serial N°	Qty.
1	6673911	PUMP	W/Ref. GEAR PUMP(2)-GEAR PUMP(14) - B550137255 - for model 4445060		1
2	NSS	BOLT			4
3	6658123	COVER			1
4	NSS	O-RING	seal		2
5	NSS	SEAL			2
6	NSS	RING			2
7	NSS	BODY			1
8	NSS	BEARING			1
9	NSS	GEAR	idler		1
10	NSS	GEAR	drive		1
11	6658122	COVER			1
12	6660339	GASKET			1
13	NSS	WASHER			4
14	NSS	BEARING			2
15	6645088	BOLT			2
16	6518483	WASHER			2
17	6674371	SEAL KIT	Ref. GEAR PUMP(4)-GEAR PUMP(6)		1

NOTE: At S/N 5141 46036, 5142 41001, 5179 12001 & Above this gear pump became standard.

DRAWING NOT AVAILABLE AT TIME OF PRINTING

GEAR PUMP
(2-Speed Option)

Ref. No.	Part Number	Description	Remarks	Serial Number	Qty.

GEAR PUMP

Ref.N°	Part N°	Description	Remarks	Serial N°	Qty.
1	6675660	GEAR PUMP	standard flow - B550137525	SEE NOTE	1
1	6675661	GEAR PUMP	high flow - B550137820	SEE NOTE	1

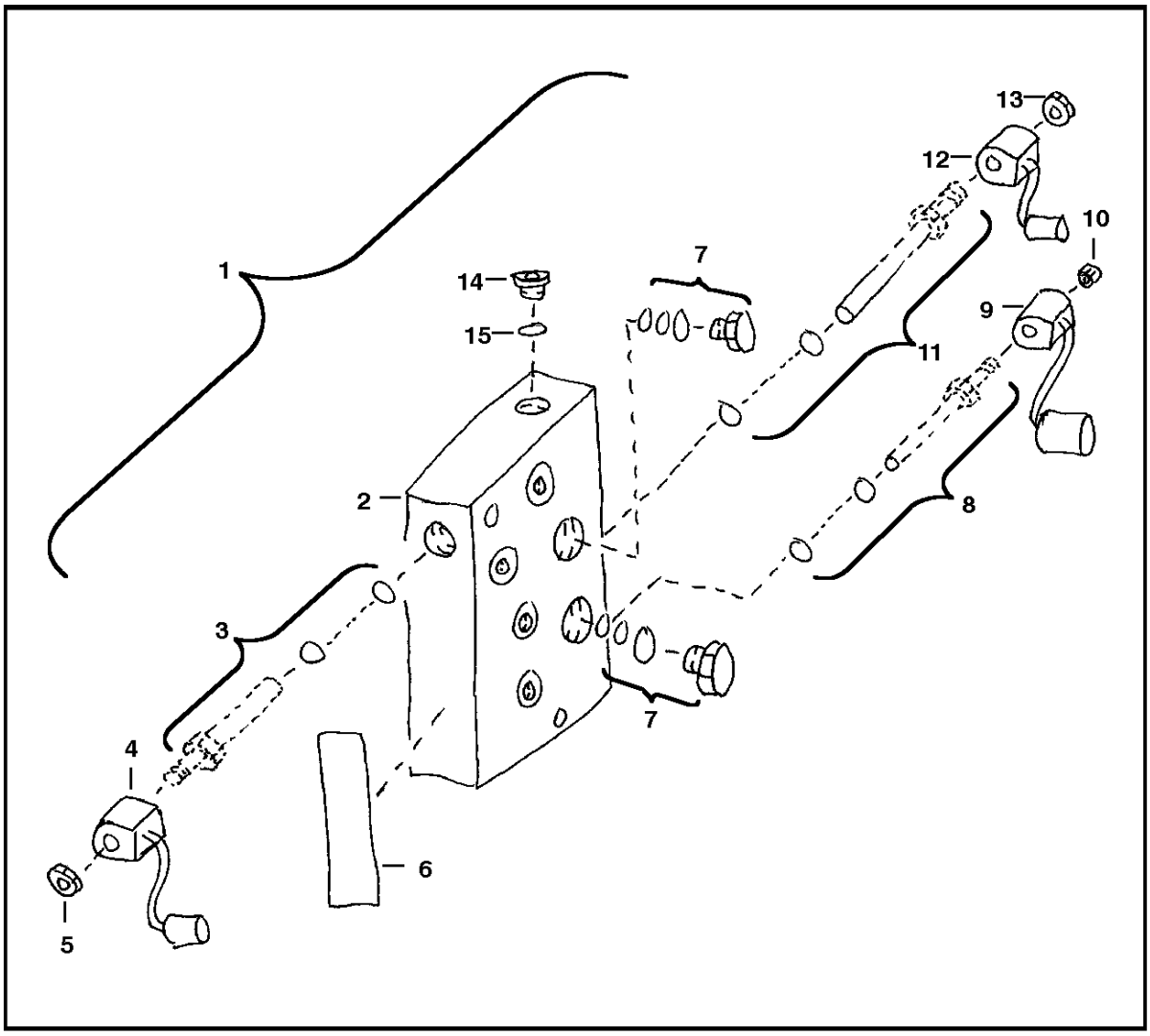

2-SPEED VALVE

Ref Part

2

Ref.N°	Part N°	Description	Remarks	Serial N°	Qty.
1	6676417	VALVE	assy. - Was 6675334 [A]		1
2	NSS	BLOCK	Order Ref. 2 (1)		1
3	6676241	CARTRIDGE			1
3	6672756	SEAL KIT			x
4	6676243	COIL			1
5	6676246	NUT			1
6	6673185	DECAL	warning		1
7	6675265	VALVE			2
7	6669087	SEAL KIT			x
8	6676240	CARTRIDGE			1
8	6673188	SEAL KIT			x
9	6676242	COIL			1
10	6675663	NUT			1
11	6676239	CARTRIDGE			1
11	6676205	SEAL KIT			x
12	6676244	COIL			1
13	6676247	NUT			1
14	6672762	PLUG	W/Ref. 2 (15)		1
15	75K-4	O-RING			x
16	6676245	PLUG	brass	5141 43380 & Bel.	5
16	6677177	PLUG		5141 43381 & Abv.	5

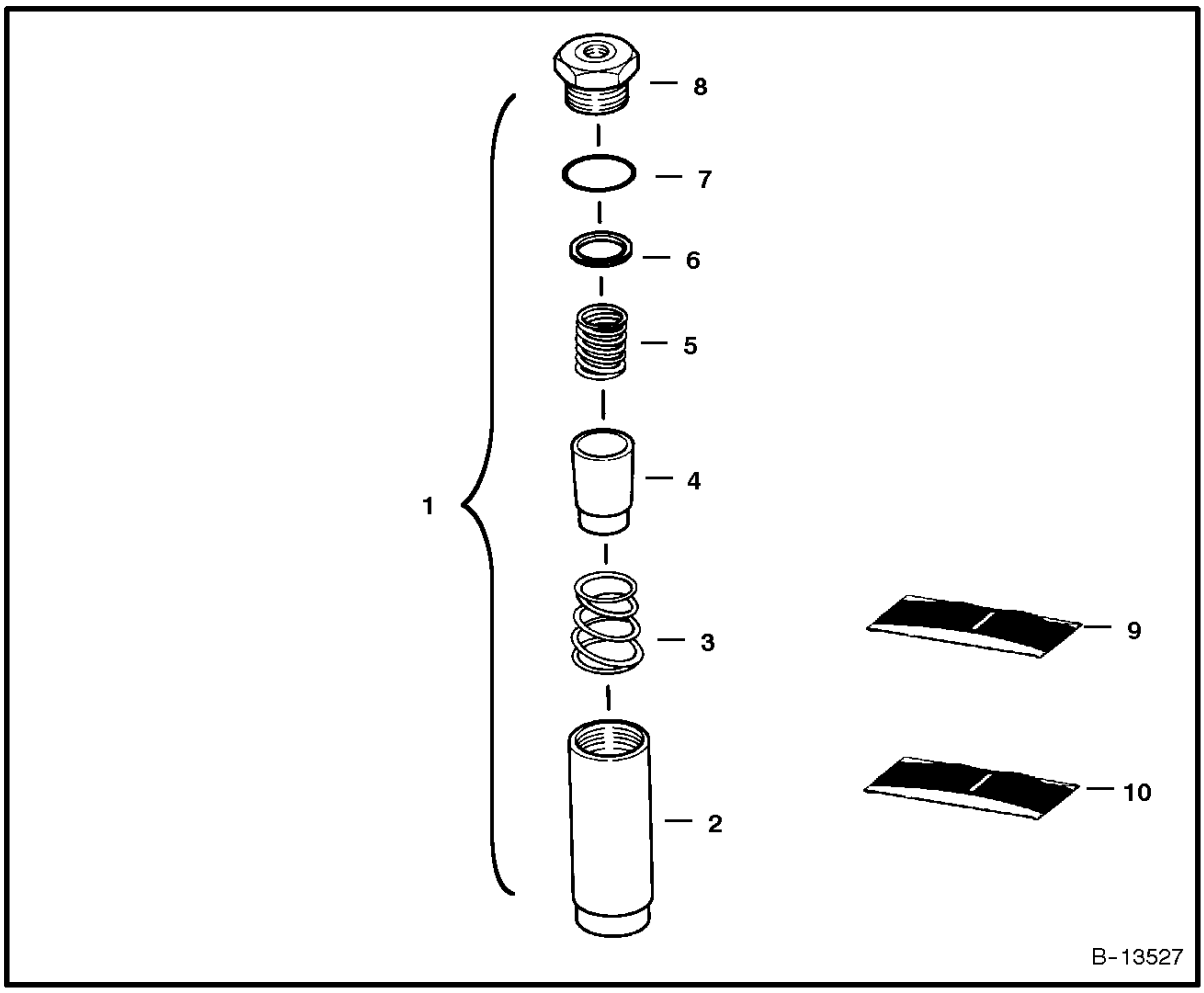

HYDROSTATIC OIL FILTER
(In-Line)

Ref. No.	Part Number	Description	Remarks	Serial Number	Qty.

HYDROSTATIC OIL FILTER

Ref.N°	Part N°	Description	Remarks	Serial N°	Qty.
1	6661022	FILTER	Ref. HYDROSTATIC OIL FILTER(2) - HYDROSTATIC OIL FILTER(8)		1
2	NSS	HOUSING			1
3	NSS	SPRING			1
4	NSS	ELEMENT			1
5	NSS	SPRING			1
6	NSS	GASKET			1
7	NSS	O-RING			1
8	NSS	PLUG			1
9	6661807	KIT	element - Ref. HYDROSTATIC OIL FILTER(4), HYDRO STATIC OIL FILTER(6) & HYDROSTATIC OIL FILTER(7)		1
10	6661808	KIT	spring - Ref. HYDROSTATIC OIL FILTER(3) & HYDRO STATIC OIL FILTER(5)		1

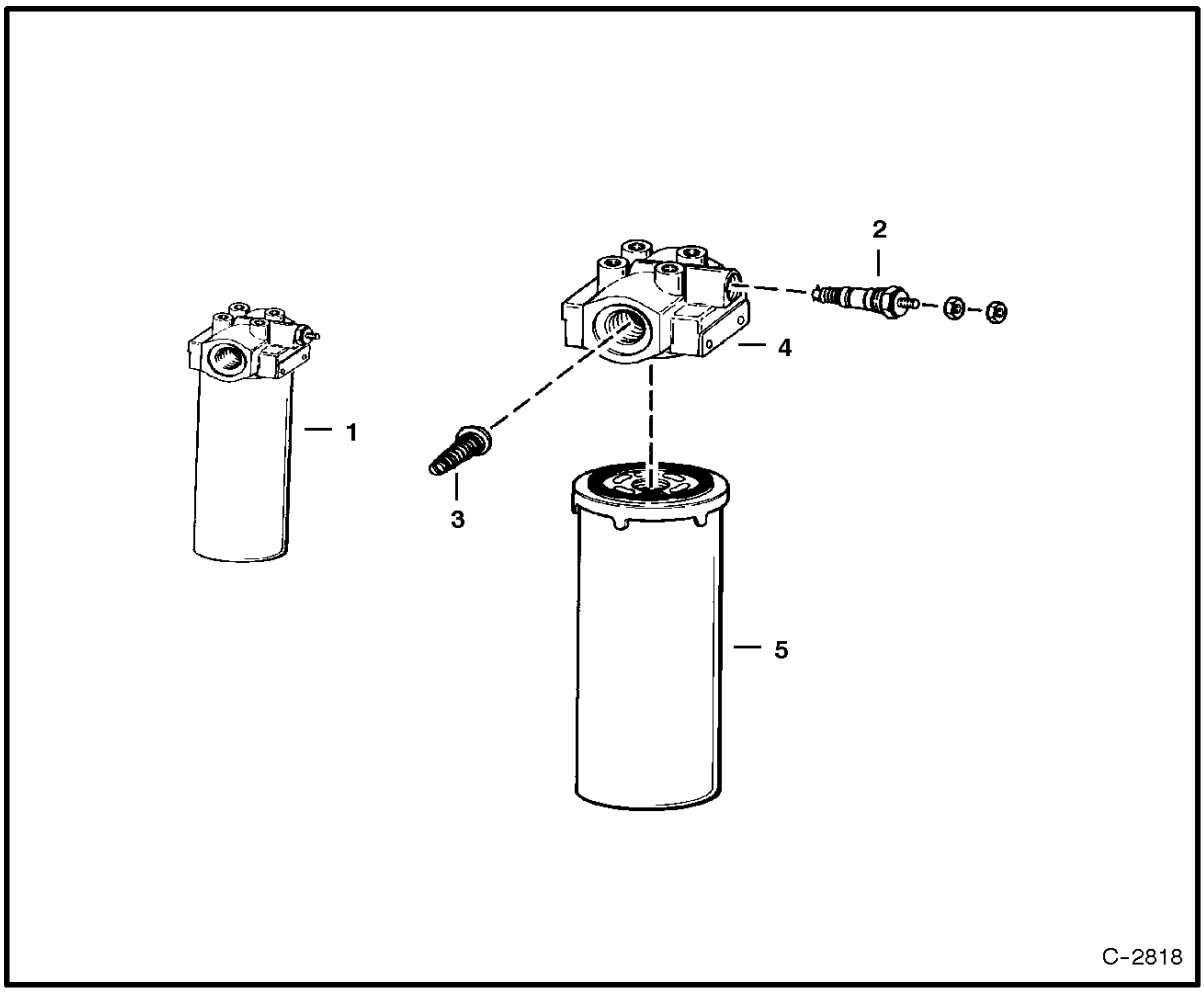

HYDROSTATIC OIL FILTER

Ref. No.	Part Number	Description	Remarks	Serial Number	Qty.

HYDROSTATIC OIL FILTER

Ref.N°	Part N°	Description	Remarks	Serial N°	Qty.
1	6661247	FILTER ASSY.	W/Ref. HYDROSTATIC OIL FILTER(2)-HYDROSTATIC OIL FILTER(5) - 50 PSI byApass & switch		1
2	6660260	SWITCH	pressure - Normally closed		1
2	6599365	KIT	Nut, washer & OArings for switch		1
3	NAP	VALVE	byApass - 50 PSI - Order Ref. HYDROSTATIC OIL FILTER(1)		1
4	NSS	HEAD	Order Ref. HYDROSTATIC OIL FILTER(1) Filter Assy.		1
5	6661248	ELEMENT			1

CAB ELECTRICAL CIRCUITRY
(S/N 5141 40001-45999, 5142 40001-40999, 5179 11001-11999)

NOTE: Front & Rear Light Kit located on Page 283

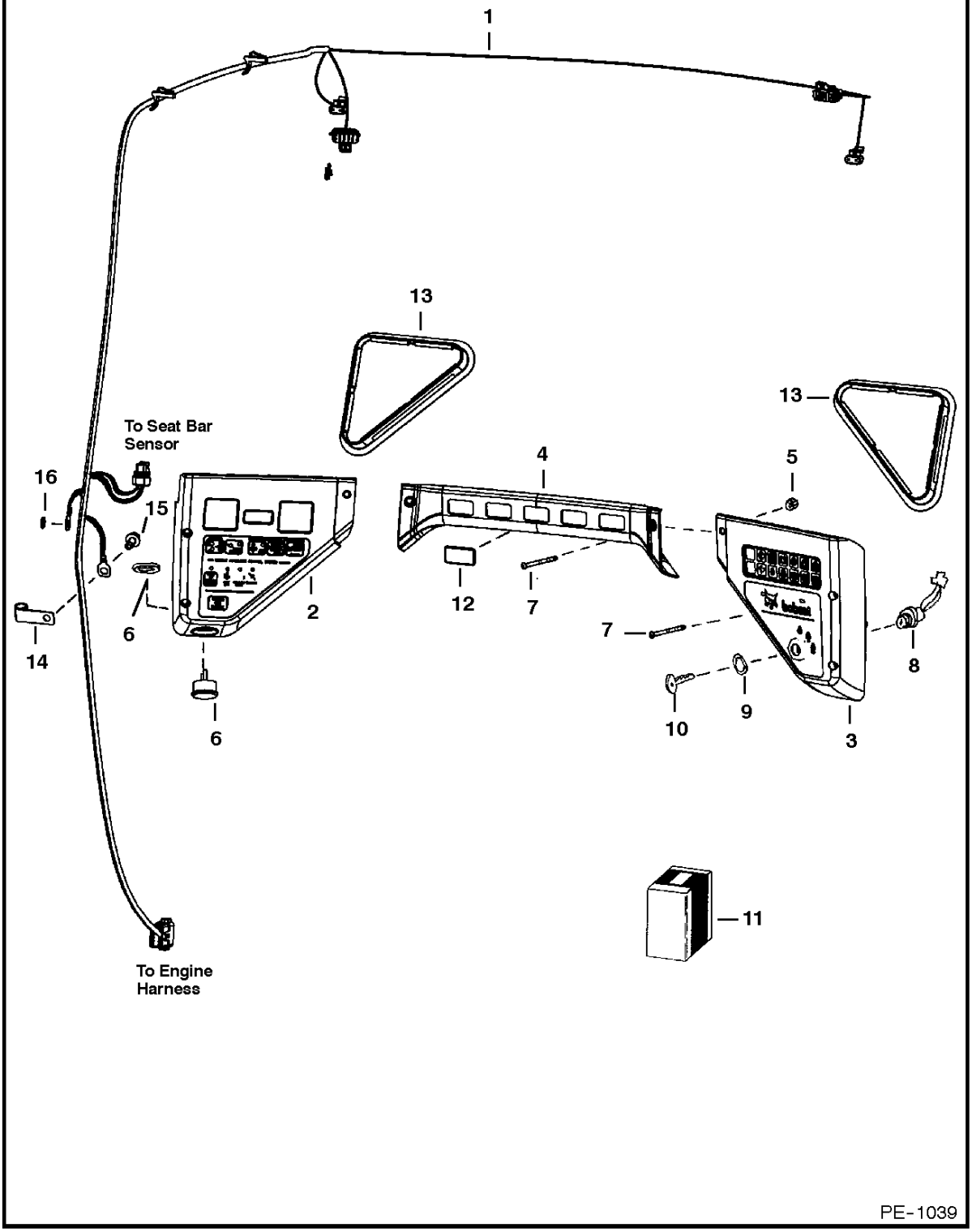

CAB ELECTRICAL CIRCUITRY

Ref.N°	Part N°	Description	Remarks	Serial N°	Qty.
1	6718870	HARNESS			1
2	6675337	BULB			2
2	6672346	PANEL	L.H.		1
2	6675982	PLUG	service part - covers the backlighting service hole		1
3	6677175	PANEL	R.H. - keyed - Was 6672347 [A]		1
3	6672348	PANEL	R.H. - deluxe - keyless		1
4	6674317	CROSSMEMBER			1
5	6675033	INSERT	threaded		6
6	6675390	ALARM	W/nut		1
7	6719084	BOLT			6
8	6675470	SWITCH	ignition - W/Ref. CAB ELECTRICAL CIRCUITRY(9) & CAB ELECTRICAL CIRCUITRY(10)		1
9	6674202	NUT			2
10	6709527	KEY	ignition		1
11	NAP	KIT	keyless ignition - Order 6672348 panel and 6900860 instructions		1
12	6719038	PLUG			x
13	6674403	COVER			2
14	6675171	CLAMP			1
15	84G-3712	BOLT			1
16	6E-5	WASHER			1

CAB ELECTRICAL CIRCUITRY
(S/N 5141 46001 & Above, 5142 41001 & Above, 5179 12001 & Above)

NOTE: Front & Rear Light Kit located on Page 283

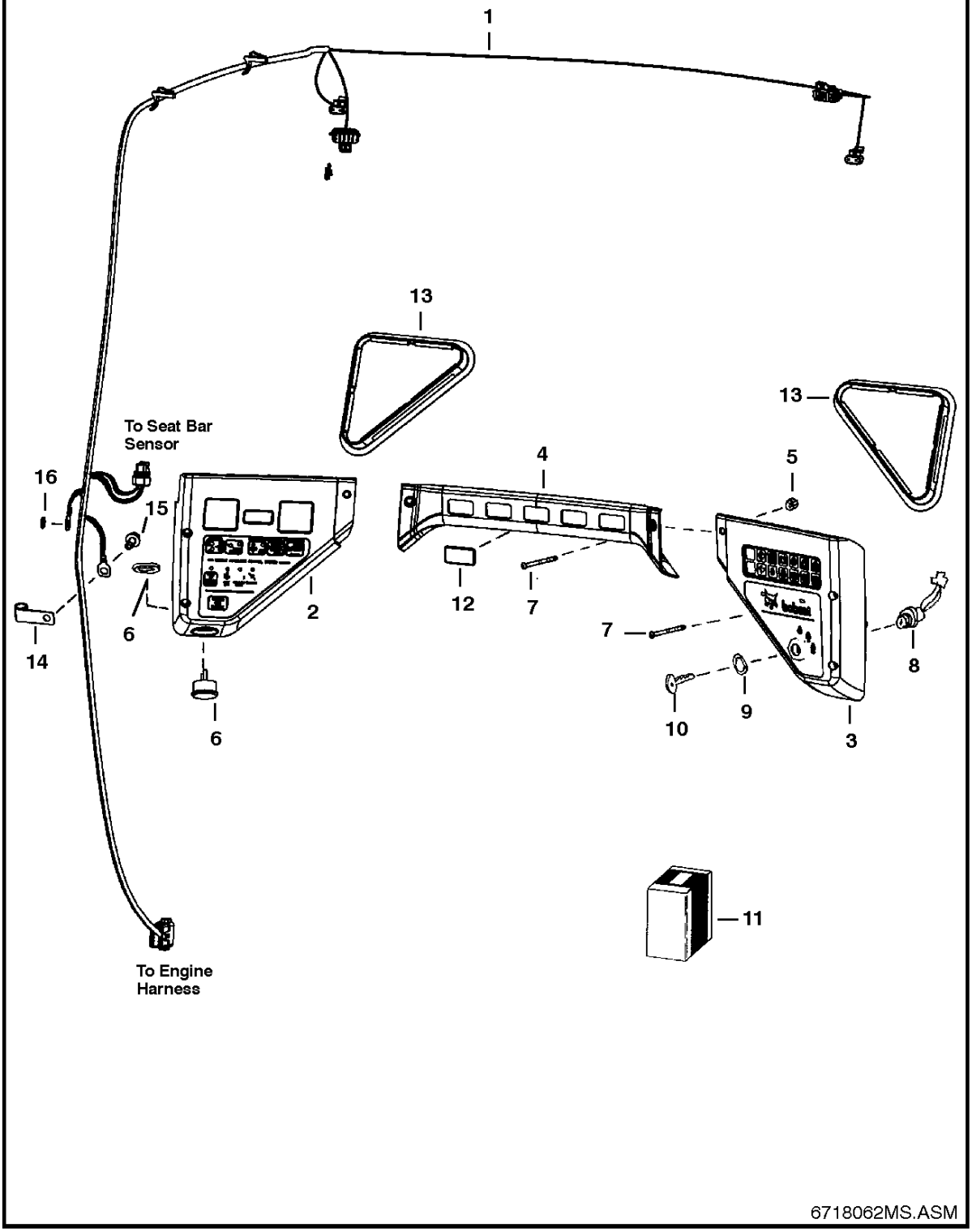

CAB ELECTRICAL CIRCUITRY

Ref.N°	Part N°	Description	Remarks	Serial N°	Qty.
1	6727178	HARNESS			1
2	6672346	PANEL	L.H.		1
2	6675982	PLUG	service part - covers the backlighting service hole		1
2	6675337	BULB			2
3	6677175	PANEL	R.H. - keyed - Was 6672347 [A]		1
3	6672348	PANEL	R.H. - deluxe - keyless		1
4	6676723	CROSSMEMBER			1
5	6675033	INSERT	threaded		6
6	6675390	ALARM	W/nut		1
7	6719084	BOLT			6
8	6675470	SWITCH	ignition - W/Ref. CAB ELECTRICAL CIRCUITRY(9) & CAB ELECTRICAL CIRCUITRY(10)		1
9	6674202	NUT			2
10	6709527	KEY	ignition		1
11	NAP	KIT	keyless ignition - Order 6672348 panel - See Service Manual for proper instructions		1
12	6807730	PLUG			x
13	6674403	COVER			2
14	6675171	CLAMP			1
15	84G-3712	BOLT			1
16	6E-5	WASHER			1
17	6676536	SWITCH	park brake		1

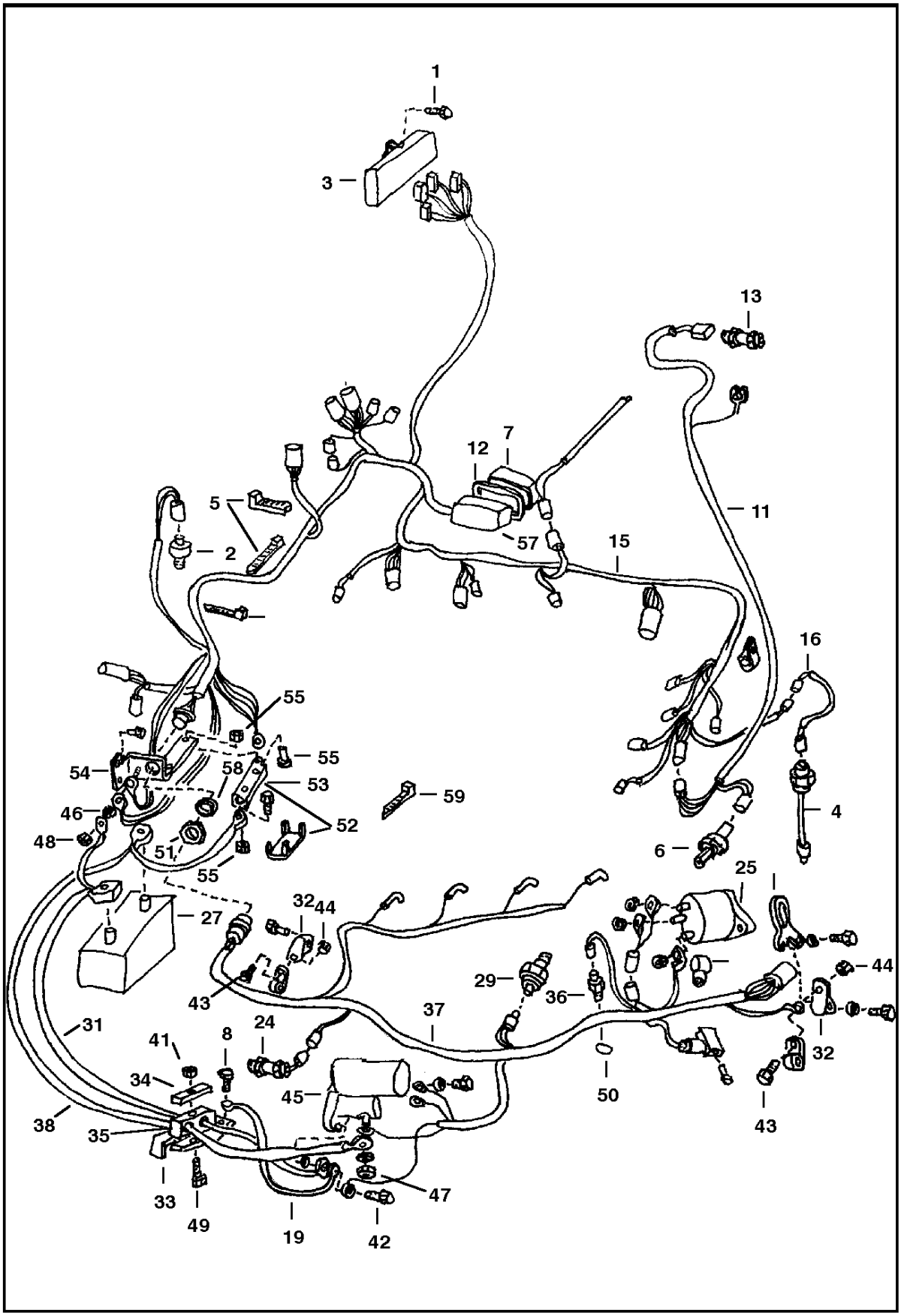
1
3
13
12
7
5
2
11
57
15
16
55
55
54
58
53
59
4
46
52
48
51
6
55
25
27
32
44
29
44
43
36
37
31
41
8
24
32
34
45
50
38
35
43
33
49
19
42
47

ENGINE ELECTRICAL

Ref.N°	Part N°	Description	Remarks	Serial N°	Qty.
1	43C-616	BOLT			3
2	6665371	SWITCH	vacuum		1
3	6676553	CONTROLLER	Was 6672349 [A]		1
4	6674209	SENSOR	fuel - W/gasket		1
4	6717579	GASKET			1
5	6624289	STA-STRAP			3
6	6674316	SWITCH	hyd. charge pressure		1
7	6716621	COVER	fuse box		1
8	84G-3712	BOLT			3
9	NAP	DECAL	fuse/relay - 2.10' x 9.4' (53,3mm x 238,8mm) - Order 6718774		1
9	6718774	DECAL	fuse/relay - 2' x 7' (50,8mm x 177,8mm)		1
10	35C-616	BOLT			1
11	6717247	HARNESS	filter		1
12	6725302	GASKET	fuse cover		1
13	6718417	SENDER	hyd temp		1
14	6718948	ADAPTER			1
14	6675278	FILTER			1
15	6719112	HARNESS	main frame - W/Ref. ENGINE ELECTRICAL(46) & ENGINE ELECTRICAL(51)-ENGINE ELECTRICAL(58)		1
15	6719113	HARNESS	AHC	5141 45999 & Bel.	1
15	6729057	HARNESS	loader	5141 46001 & Abv.	1
16	6719422	HARNESS	fuel sender		1
17	85D-6	NUT			2
18	6560172	COVER	terminal		1
19	6565170	CABLE	negative		1
20	6569203	CLAMP	battery		1
21	6576280	BOLT	battery hold down		2
22	6579989	BRACKET			1
23	6610510	NYLON TIE			2
24	6658260	SENSOR	rpm		1
25		ALTERNATOR	See Page ALTERNATOR(2) or ALTERNATOR(3)		1
26	6718796	PLUG	horn		2
27	6665427	BATTERY			1
28	6670287	COVER	light		2
29	6674315	SWITCH	engine pressure		1
30	6708580	ADAPTER			1
31	6713670	CABLE	negative		1
32	6714979	BRACKET	harness		2
33	6715131	BRACE			1
34	6715132	RETAINER			1
35	6715197	CLAMP			1
36	6718416	SENDER	engine temp		1
37	6719082	HARNESS	engine - W/Ref. ENGINE ELECTRICAL(32), ENGINE ELECTRICAL(43) & ENGINE ELECTRICAL(44)	5141 45999 & Bel.	1
38	6719141	CABLE	positive		1
39	6712536	MOUNT	battery		1
40	6726504	BRACKET	harness		1
41	95D-5	NUT			1
42	35C-620	BOLT	battery pan		1
43	17C-512	BOLT			2
44	85D-5	NUT			2
45		STARTER	See Page STARTER(4)		1
46	53D-6	NUT			1
47	4DM-5	NUT			1
48	59D-6	NUT			1

ENGINE ELECTRICAL

Ref.N°	Part N°	Description	Remarks	Serial N°	Qty.
49	17C-540	BOLT			1
50	6676172	WASHER			1
51	6664972	NUT			1
52	6675154	HOLDER	fuse		1
53	6675155	FUSE	100 amp		1
54	6726504	BRACKET			1
55	59D-4	NUT			2
56	25G-410	BOLT			2
57	6718659	HOUSING	fuse		1
57	6654806	FUSE	15 amp		x
57	6702444	FUSE	25 amp		1
57	6718034	FUSE	30 amp		1
57	6674376	SWITCH	switch		7
58	6664971	WASHER			1
59	6675734	TIE STRAP			1

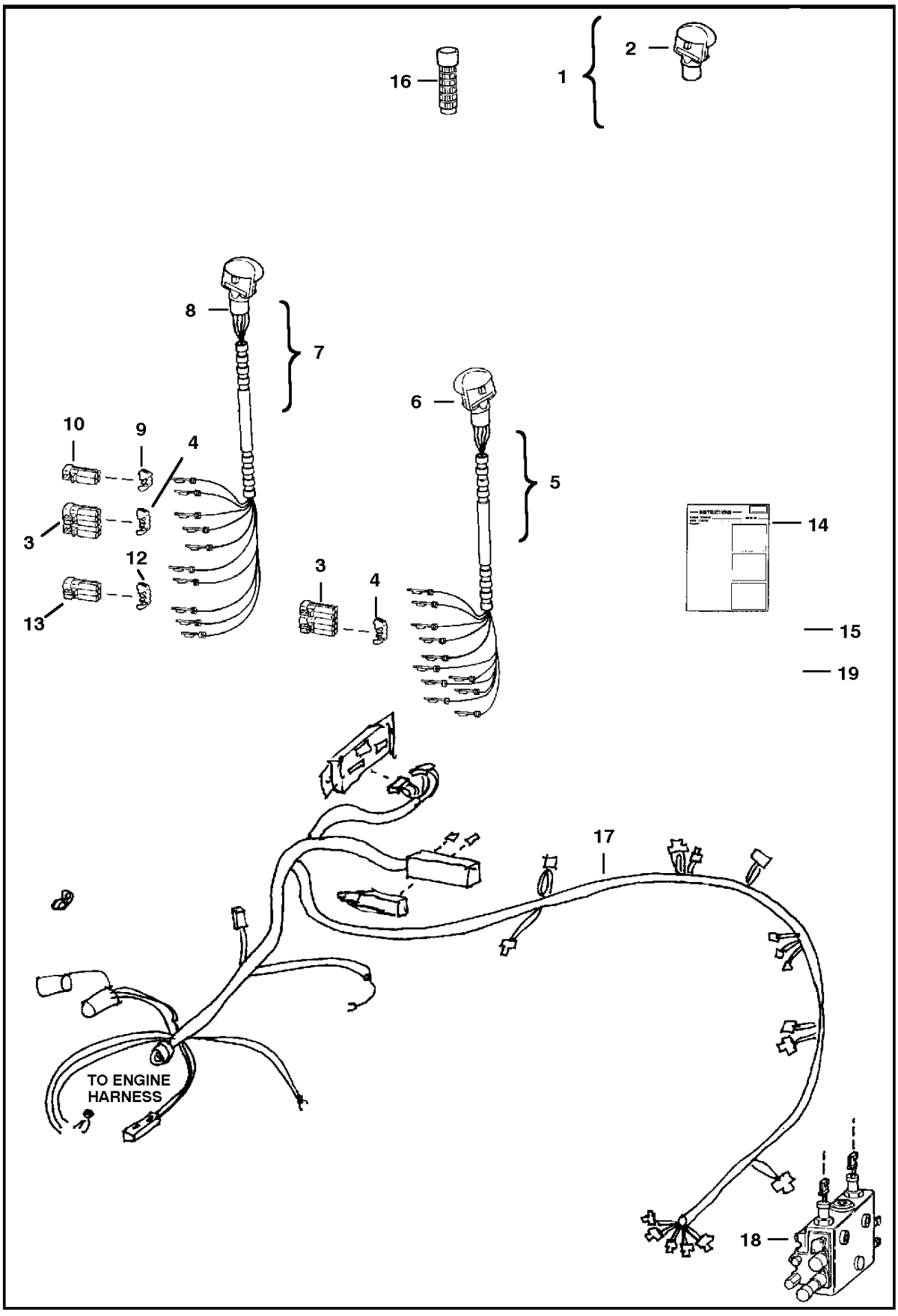
16
1
2
8
7
6
5
10
9
4
3
12
13
3
4
14
15
19
17
TO ENGINE HARNESS
18

ELECTRICAL CONTROLS

Ref.N°	Part N°	Description	Remarks	Serial N°	Qty.
1	6706565	KIT	blank handle - Ref. ELECTRICAL CONTROLS(2) & ELECTRICAL CONTROLS(14)		2
2	6705920	HANDLE	L.H. - blank		2
3	6640692	CONNECTOR	10-pin		1
4	6640694	LOCK	10-pin		1
5		KIT	R.H. deluxe handle - Ref. ELECTRICAL CONTROLS(6) , ELECTRICAL CONTROLS(9), ELECTRICAL CONTR OLS(10), & ELECTRICAL CONTROLS(14)		1
6	6675468	HANDLE ASSY	R.H. - %Also Order Ref. ELECTRICAL CONTROLS(3) & ELECTRICAL CONTROLS(4)		1
6	6640690	PIN			10
6	6641176	SEAL			10
7		KIT	L.H. deluxe handle - Ref. %ELECTRICAL CONTROLS(3), ELECTRICAL CONTROLS(4), ELECTRICAL CONTROLS(9), ELECTRICAL CONTROLS(10), ELEC		1
8	6674450	HANDLE ASSY.	L.H.-Also Order Ref. ELECTRICAL CONTROLS(9) - ELECTRICAL CONTROLS(13)		1
8	6640690	PIN			10
8	6641176	SEAL			10
8	6677370	DECAL			1
9	6641180	LOCK	2 - pin		1
10	6641179	CONNECTOR	2 - pin		2
11	6646582	PLUG			1
12	6667145	LOCK	5 - way		1
13	6667144	CONNECTOR	5 - way		1
14	6722759	INSTRUCTIONS	for Ref. ELECTRICAL CONTROLS(1), ELECTRICAL CONTROLS(5) & ELECTRICAL CONTROLS(7)		1
15	6674000	CLAMP			2
16	6702621	GRIP			2
17	6719112	HARNESS	Was 6718912 [B]		1
17	6719113	HARNESS	AHC		1
18		VALVE	See Page HYDRAULIC CONTROL VALVE(3)		1
19	6715365	HARNESS			1

ELECTRICAL CONTROLS
(Advanced Hand Controls Option - W/O Push Button Float)

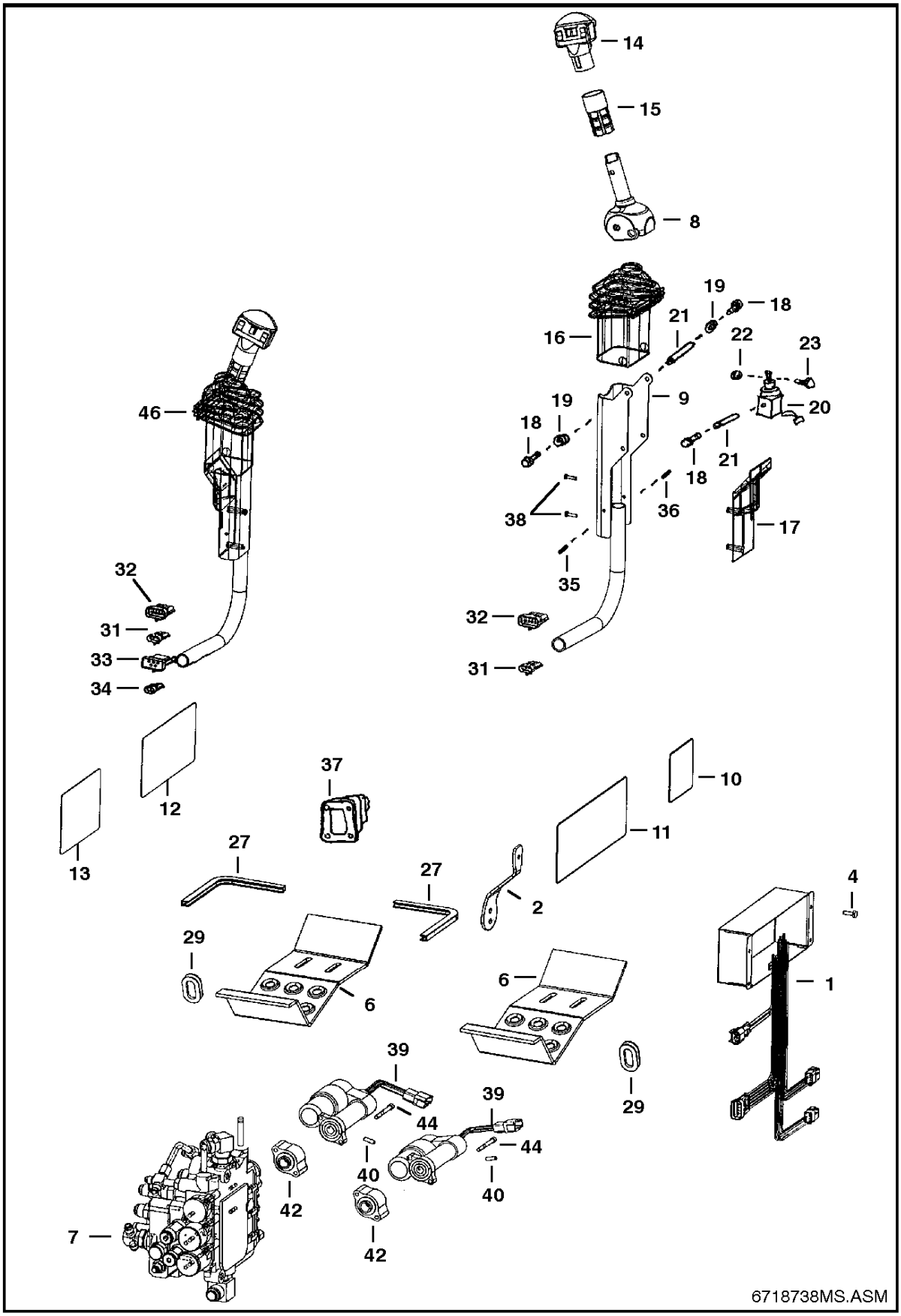

ELECTRICAL CONTROLS

Ref.N°	Part N°	Description	Remarks	Serial N°	Qty.
1	6674804	CONTROLLER			1
2	6717393	LEVER	throttle		1
3	6670707	CONNECTOR	3-way		2
3	6670710	LOCK	3-way		2
4	17C-412	BOLT			4
5	6646582	PLUG			10
6	6712365	STEP			2
7		VALVE	AHC - See Page HYDRAULIC CONTROL VALVE(4)		1
8	6597774	HANDLE	R.H. - tilt		1
8	6717163	HANDLE	L.H. - lift		1
9	6597775	LEVER	R.H. - tilt - S' shaped		1
9	6597776	LEVER	L.H. - lift - S' shaped		1
10	6718706	DECAL	warning		1
11	6718699	DECAL	warning		1
12	6718702	DECAL	operation		1
13	6718704	DECAL	opeation		1
14	6675469	HANDLE ASSY	R.H. - tilt		1
14	6640690	PIN			11
14	6670715	SOCKET			3
14	6641176	SEAL			11
14	6675250	HANDLE ASSY	L.H. - lift		1
14	6640690	PIN			16
14	6670715	SOCKET			3
14	6641176	SEAL			16
14	6677370	DECAL			1
15	6713349	GRIP			2
16	6713898	COVER			2
17	6715957	COVER			2
18	25GT-410	BOLT			8
19	6702990	BUSHING			4
20	6712398	CONTROL	R.H. - tilt		4
20	6712397	CONTROL	L.H. - lift		1
21	6713043	SPACER			4
22	12D-10	NUT			2
23	6716826	BOLT			2
24	58K-120	O-RING			2
25	6670711	LOCK			2
26	25E-24	WASHER			1
27	NAP	MOULDING	10.5'(266 mm) long - Order Ref. ELECTRICAL CONTROLS(28)		2
28	6654139	MOULDING	bulk - Sold Per Foot		x
29	6714726	PLUG			2
30	6665000	CLIP			2
31	6640699	CONNECTOR			1
31	6640700	LOCK			2
32	6640692	CONNECTOR			2
32	6640694	LOCK			2
33	6667144	CONNECTOR			1
33	6667145	LOCK			1
34	6641179	CONNECTOR			1
34	6641180	LOCK			1
35	6665322	RIVET	female		2
36	6665321	RIVET	male		2
37	6532127	BOOT			2
38	6669224	BOLT			4

ELECTRICAL CONTROLS

Ref.N°	Part N°	Description	Remarks	Serial N°	Qty.
39	6674838	ACTUATOR ASSY			2
40	6718506	PIN			2
41	6725257	ADAPTER	spacer	& Abv.	2
42	6725128	ADAPTER			2
43	6719113	HARNESS	AHC		1
43	6654806	FUSE	15 amp		2
43	6702444	FUSE	25 amp		6
43	6718034	FUSE	30 amp		2
43	6670707	CONNECTOR	3-way		2
43	6670711	LOCK	3-way		2
44	69G-436	BOLT			4
45	6725246	PLATE		& Abv.	2
46	NAP	LEVER ASSY	R.H. - tilt - L' shaped - Order 6718201 - Was 6718195 [A]	& Bel.	1
46	6718201	LEVER ASSY	R.H. - tilt - S' shaped	& Abv.	1
46	NAP	LEVER ASSY	L.H. - lift - L' shaped - Order 6718202 - Was 6718194 [A]	& Bel.	1
46	6718202	LEVER ASSY	R.H. - tilt - S' shaped	& Abv.	1
47	58K-120	O-RING			2
48	6728742	HARNESS	jumper - to enhance boom lift		1

ELECTRICAL CONTROLS
(Advanced Hand Control Option - W/ Push Button Float)

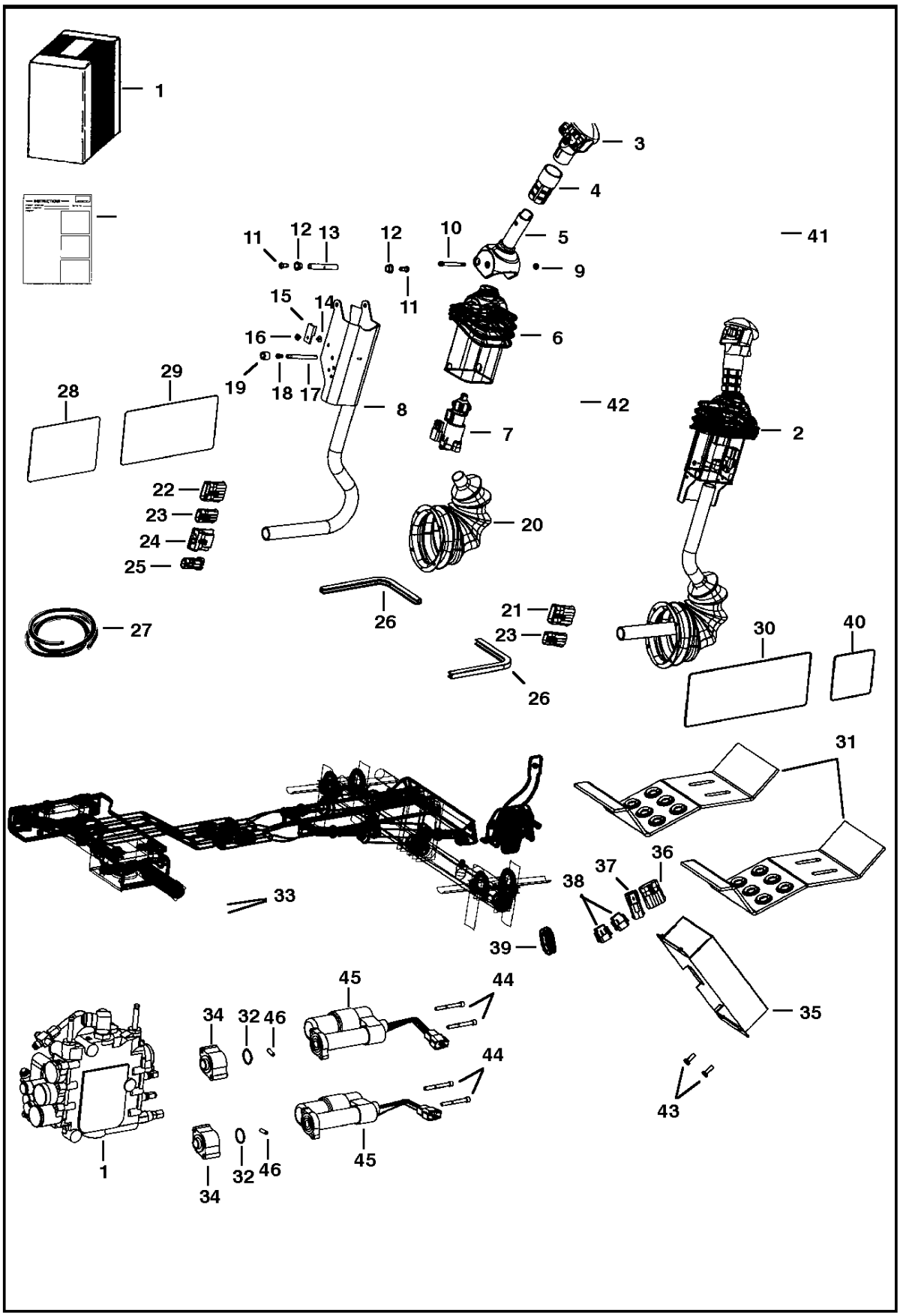

ELECTRICAL

Ref.N°	Part N°	Description	Remarks	Serial N°	Qty.
1		VALVE	See Page HYDRAULIC CONTROL VALVE(4)		1
2	6675742	LEVER	tilt - R.H.		1
2	6675750	LEVER	lift - L.H.		1
3	6675469	HANDLE ASSY	lift - R.H.		1
3	6675749	HANDLE	lift - L.H.		1
4	6713349	GRIP			2
5	6597774	HANDLE	R.H.		1
5	6717163	HANDLE	L.H.		1
6	6713898	COVER			2
7	6675741	SENSOR			2
7	6670706	CONNECTOR	3pin		1
7	6670715	SOCKET			3
7	6670710	LOCK			1
8	6719712	CHANNEL	R.H.		1
8	6719711	CHANNEL	L.H.		1
9	12D-10	NUT			2
10	6716826	BOLT			2
11	25GT-410	BOLT			8
12	6702990	BUSHING			4
13	6713043	SPACER			4
14	6665321	RIVET	male		2
15	6665000	CLIP			2
16	6665322	RIVET	female		2
17	6719834	SPACER	threaded		2
18	6727065	BOLT			4
19	6719835	SLEEVE			4
20	6532127	BOOT			2
21	6640692	CONNECTOR	10pin		1
21	6640690	PIN			8
21	6640694	LOCK			1
21	6641176	SEAL			8
21	6646582	PLUG	cavity		1
22	6640692	CONNECTOR	10pin		1
22	6640690	PIN			6
22	6640694	LOCK			1
22	6641176	SEAL			6
22	6646582	PLUG	cavity		4
23	6640699	CONNECTOR	3pin		2
23	6640690	PIN			3
23	6641176	SEAL			3
23	6640700	LOCK			3
24	6667144	CONNECTOR	5pin		2
24	6640690	PIN			3
24	6641176	SEAL			3
24	6646582	PLUG	cavity		1
24	6667145	LOCK			1
25	6641180	LOCK			1
25	6641179	CONNECTOR	2pin		1
25	6640690	PIN			2
25	6641176	SEAL			2
26	NAP	MOULDING	%10.5'(267mm)long - Order Ref. ELECTRICAL(27)		2
27	6654139	MOULDING	bulk - Sold Per Foot		x
28	6718704	DECAL			1
29	6727155	DECAL		5141 45999 & Bel.	1
29	6728328	DECAL	operation	5141 46001 & Abv.	1

ELECTRICAL

Ref.N°	Part N°	Description	Remarks	Serial N°	Qty.
30	6718699	DECAL			1
31	6712365	STEP			2
32	58K-120	O-RING			2
33	25E-22	WASHER			8
34	6725128	ADAPTER			2
35	6676153	CONTROLLER			1
36	6640692	CONNECTOR	10pin		1
36	6640690	PIN			9
36	6640694	LOCK			1
36	6641176	SEAL			9
36	6646582	PLUG	cavity		1
37	6648307	CONNECTOR	2pin		1
38	6670709	CONNECTOR	8pin		2
39	6714726	PLUG			1
40	6718706	DECAL			1
41	6727131	HARNESS		5141 45999 & Bel.	1
41	6726925	HARNESS		5141 46001 & Abv.	1
42	6670707	CONNECTOR	3pin		1
42	6670715	SOCKET			3
42	6670711	LOCK			1
43	17C-412	BOLT			4
44	69G-436	BOLT			4
45	6674838	ACTUATOR ASSY			2
46	6718506	PIN			2
47	6728742	HARNESS	W/ capacitor		1
48	6717393	LEVER	throttle		1
49	6728742	HARNESS	jumper - to enhance boom lift		1
50	6729054	HARNESS	W/ capacitor (Oct 16 - ACS)	5141 46001-	1

DRAWING NOT AVAILABLE AT TIME OF PRINTING

* CONTROLS ELECTRICAL

Ref.N°	Part N°	Description	Remarks	Serial N°	Qty.
1	6676333	LEVER	tilt - R.H.		1
1	6676497	LEVER	lift - L.H.		1
2	6675745	SPRING			1
3	6675469	HANDLE ASSY	lift- R.H.		1
3	6675749	HANDLE	lift - L.H.		1
4	6713349	GRIP			2
5	6597774	HANDLE	R.H.		1
5	6717163	HANDLE	L.H.		1
6	6713898	COVER			2
7	6675741	SENSOR			2
7	6670706	CONNECTOR	3pin		1
7	6670714	PIN			3
7	6670710	LOCK			1
8	6719712	CHANNEL	R.H.		1
8	6719711	CHANNEL	L.H.		1
9	12D-10	NUT			2
10	6716826	BOLT			2
11	25GT-410	BOLT			8
12	6702990	BUSHING			4
13	6713043	SPACER			4
14	6665321	RIVET	male		2
15	6665000	CLIP			2
16	6665322	RIVET	female		2
17	6719834	SPACER	threaded		2
18	6727065	BOLT			4
19	6719835	SLEEVE			4
20	6532127	BOOT			2
21	6640692	CONNECTOR	10pin		1
21	6640690	PIN			8
21	6640694	LOCK			1
21	6641176	SEAL			8
21	6646582	PLUG	cavity		2
22	6640692	CONNECTOR	10pin		1
22	6640690	PIN			6
22	6640694	LOCK			1
22	6641176	SEAL			6
22	6646582	PLUG	cavity		4
23	6640699	CONNECTOR	3pin		2
23	6640690	PIN			3
23	6641176	SEAL			3
23	6640700	LOCK			3
24	6667144	CONNECTOR	5pin		1
24	6640690	PIN			3
24	6641176	SEAL			3
24	6646582	PLUG	cavity		1
24	6667145	LOCK			1
25	6641179	CONNECTOR	2pin		1
25	6640690	PIN			2
25	6641176	SEAL			2
25	6641180	LOCK			1
26	6727941	DECAL			1
27	6676337	CONTROLLER			1
28	6718706	DECAL			1
29	6727926	DECAL			1
30	6726925	HARNESS			1

* CONTROLS ELECTRICAL

Ref.N°	Part N°	Description	Remarks	Serial N°	Qty.
30	6676870	CONNECTOR	3-pin		1
31	6670707	CONNECTOR	3pin		1
31	6670715	SOCKET			3
31	6670711	LOCK			1
32	6640692	CONNECTOR	10pin		1
32	6640690	PIN			9
32	6640694	LOCK			1
32	6641176	SEAL			9
32	6646582	PLUG	cavity		1
33	6648307	CONNECTOR	2pin		1
34	6670709	CONNECTOR	8pin		2
35	25E-13	WASHER			2
36	6719715	STRAP			1
37	6676029	SOLENOID			2
38	6674838	ACTUATOR ASSY			2
39	6676640	SEAL			2
40	6719716	MOUNT	solenoid		2
41	6726573	BRACKET			2
42		SENSOR ASSY	foot pedal - R.H.		1
42		SENSOR ASSY	foot pedal - L.H.		1
43	6726681	LINK			2
44	6727285	SHIELD	R.H.		1
45	6727286	SHIELD	L.H.		1
46	6727496	PIN			2
47	6676537	SWITCH			2
48	43C-608	BOLT			4
49	38C-604	BOLT			2
50	95D-5	NUT			2
51	6673710	BEARING	needle		4
52	6673789	BEARING	needle		x
53	NAP	MOULDING	10.5' (266 mm) long - Order Ref. * CONTROLS ELECTRICAL(54)		2
54	6654139	MOULDING	bulk - Sold Per Foot		x
55	6714726	PLUG			2
56					x
57					x
58	6725128	ADAPTER			2
59	17C-616	BOLT			2
60	25E-22	WASHER			8
61	58K-120	O-RING			2
62	69G-436	BOLT			4
63					x
64		VALVE			1
65	6726680	PEDAL			2
66	6726679	BRACKET			2
67	7C-620	BOLT			4
68	6718506	PIN			2
69	6728539	DECAL			1
70	6717393	LEVER			1
71	25E-14	WASHER			2

ALTERNATOR
(Melroe)

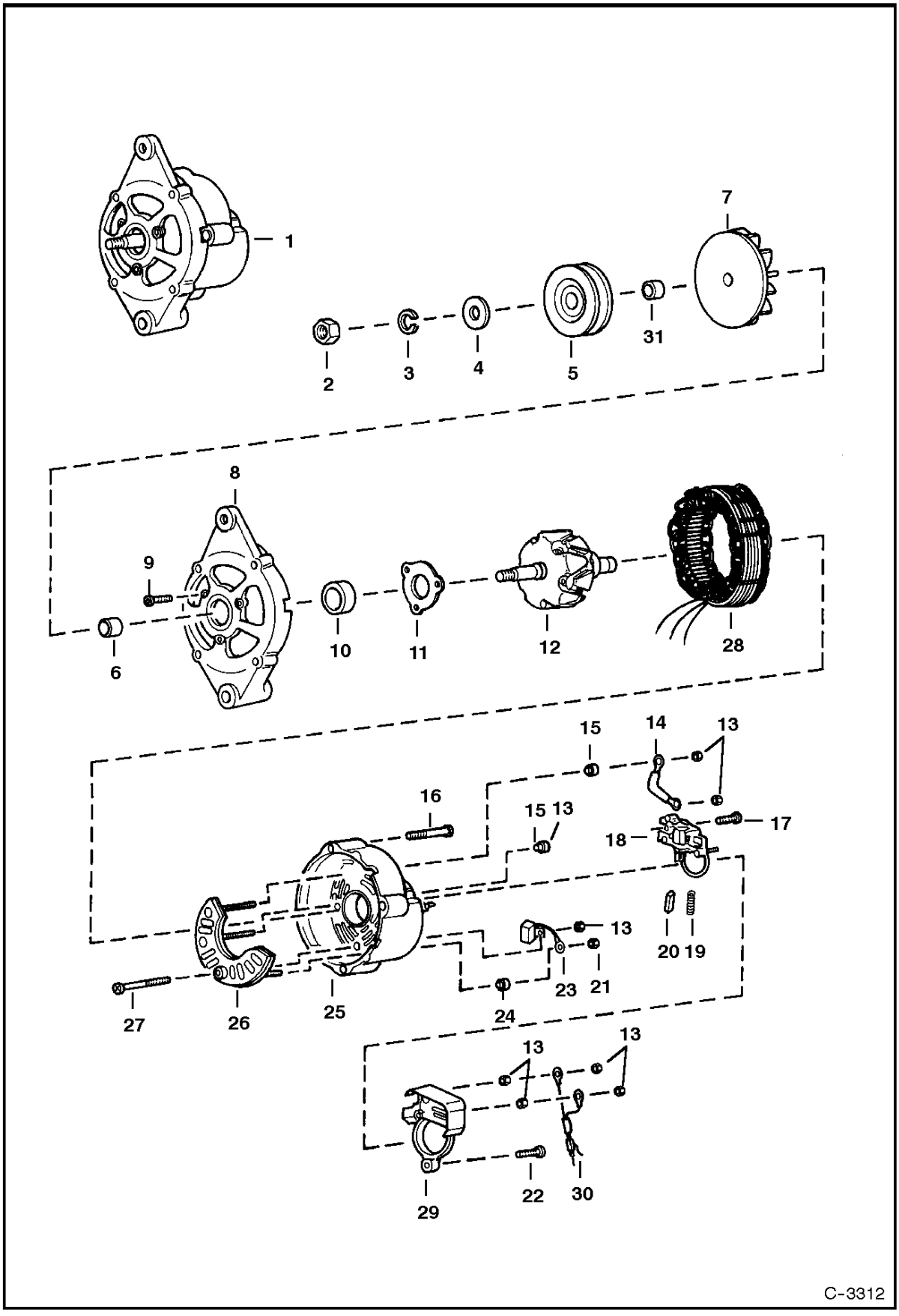

ALTERNATOR

Ref.N°	Part N°	Description	Remarks	Serial N°	Qty.
1	6661611	ALTERNATOR	Less Fan & Pulley		1
2	6659371	NUT			1
3	6659372	WASHER			1
4	6632323	WASHER			1
5	6659373	PULLEY			1
6	6659374	SPACER			2
7	6659375	FAN			1
8	6659376	BRACKET	W/Ref. ALTERNATOR(9) - ALTERNATOR(11)		1
9	6659378	BOLT			3
10	6659379	BEARING			1
11	6632228	RETAINER			1
12	6659380	ROTOR			1
13	6659387	NUT			7
14	6659397	TERMINAL			1
15	6659386	HOLDER			2
16	6659392	BOLT			3
17	6659396	SCREW			2
18	6659393	REGULATOR	W.Ref. ALTERNATOR(19) & ALTERNATOR(20)		1
19	6659395	SPRING			2
20	6659394	BRUSH			2
21	6659391	NUT			1
22	6659399	SCREW			1
23	6659388	CONDENSER			1
24	6659390	HOLDER			1
25	6659382	BRACKET	rear - W/Ref. ALTERNATOR(13), ALTERNATOR(15), ALTERNATOR(21) & ALTERNATOR(23) - ALTERNATOR(27)		1
26	6659384	RECTIFIER			1
27	6659385	SCREW			1
28	6659381	STATOR			1
29	6659398	COVER			1
30	6659400	CONNECTOR	assy.		1
31	6571554	SPACER			1

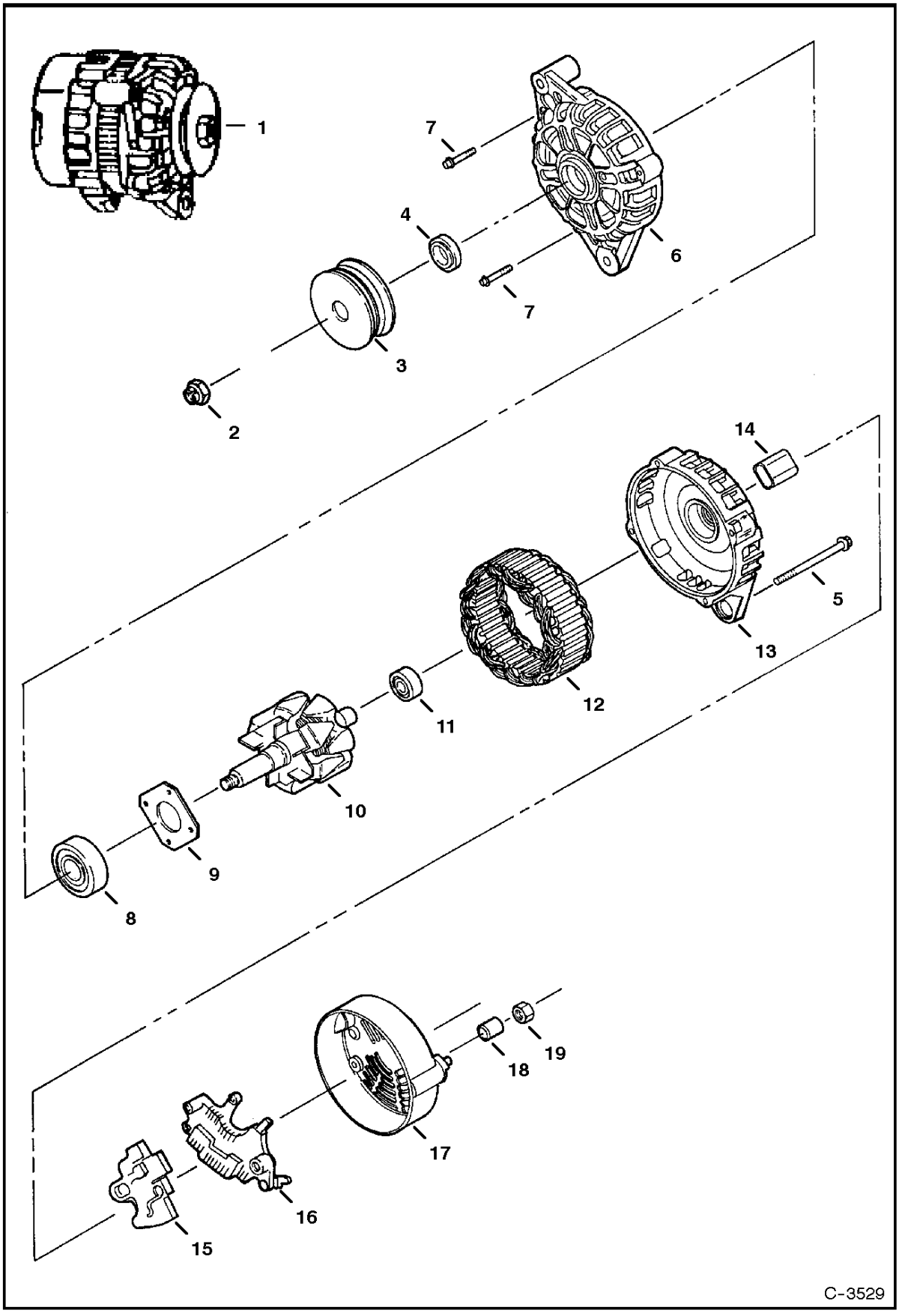
1
7
4
6
7
3
2
14
5
13
12
11
10
9
8
19
18
17
16
15
C-3529

ALTERNATOR

Ref.N°	Part N°	Description	Remarks	Serial N°	Qty.
1	6675292	ALTERNATOR	90 amp - Ref. ALTERNATOR(2)-ALTERNATOR(19)		1
2	6677497	NUT			1
3	6677496	PULLEY			1
4	6677495	SPACER			1
5	6677494	BOLT			4
6	6677491	BRACKET	front		1
7	6677817	BOLT			4
8	6677818	BEARING			1
9	6677819	RETAINER			1
10	6677492	ROTOR ASSY			1
11	6677820	BEARING			1
12	6677493	STATOR ASSY			1
13	6677490	BRACKET			1
14					x
15	6677489	(REGULATOR ASSY			1
16	6677488	RECTIFIER ASSY			1
17	6677487	COVER			1
18	6677485	SPACER			1
19	6677486	NUT			1

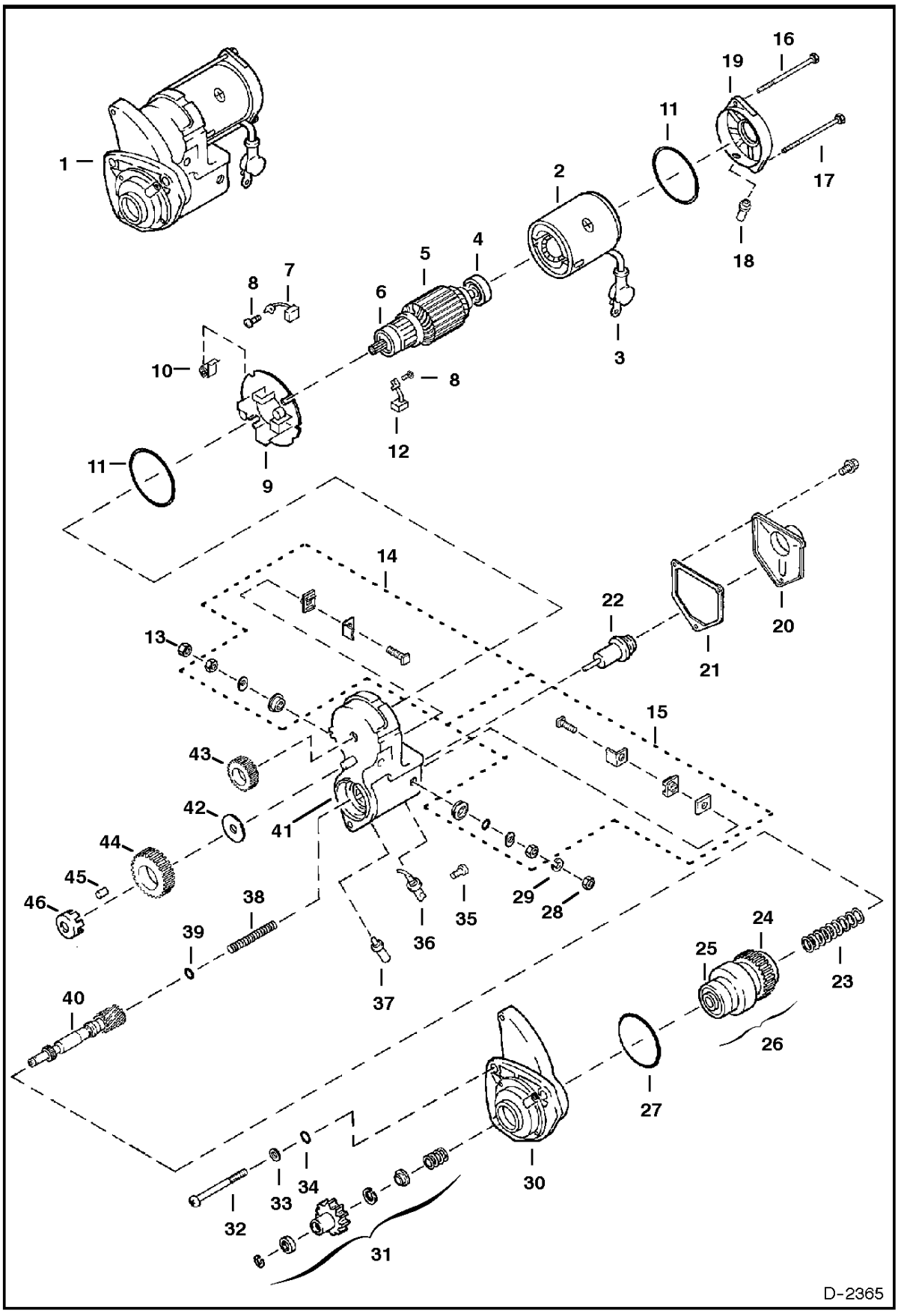
1
2
3
4
5
6
7
8
9
10
11
12
13
14
15
16
17
18
19
20
21
22
23
24
25
26
27
28
29
30
31
32
33
34
35
36
37
38
39
40
41
42
43
44
45
46
D-2365

STARTER

Ref.N°	Part N°	Description	Remarks	Serial N°	Qty.
1	6667825	STARTER			1
2	6669345	YOKE			1
3	6669365	BOOT			1
4	6669349	BEARING			1
5	6669346	ARMATURE ASSY.			1
6	6669347	BEARING			1
6	6669348	BEARING			1
7	6669371	BRUSHES			2
8	6666634	BOLT	W/washer		4
9	6669361	HOLDER	brush - W/Ref. STARTER(10)		1
10	6669362	SPRING	brush		4
11	6669368	O-RING			2
12	6669370	BRUSHES			2
13	6666637	NUT			1
14	6669358	KIT	starter		1
15	6669357	KIT	starter		1
16	6669367	BOLT			1
17	6669366	BOLT			1
18	6669372	COVER			1
19	6669363	FRAME	end		1
20	6632434	COVER	solenoid		1
21	6632433	GASKET	switch		1
22	6632432	PLUNGER			1
23	6632441	SPRING	compresssion		1
24	NAP	BEARING	Order Ref. STARTER(26)		1
25	NAP	BEARING	Order Ref. STARTER(26)		1
26	6666622	DRIVE	Ref. STARTER(23)-STARTER(25), STARTER(31) & STARTER(40)		1
27	6666632	O-RING			1
28	6666628	NUT			1
29	6666630	WASHER			1
30	6669355	HOUSING			1
31	6669350	KIT	starter		1
32	6666633	BOLT			3
33	6666629	WASHER			3
34	6666631	O-RING			3
35	6666635	BOLT	W/washer		1
36	6669359	TERMINAL			1
37	6669360	BUSHING	drain		1
38	6632436	SPRING	compression oil		1
39	6632435	BALL	steel		1
40	6669354	SHAFT			1
41	6669356	SWITCH ASSY.	magnetic		1
42	6666624	SNAP RING			1
43	6669369	PINION			1
44	6669364	PINION			1
45	6632430	ROLLER	clutch		5
46	6632429	RETAINER			1

COOLING SYSTEM

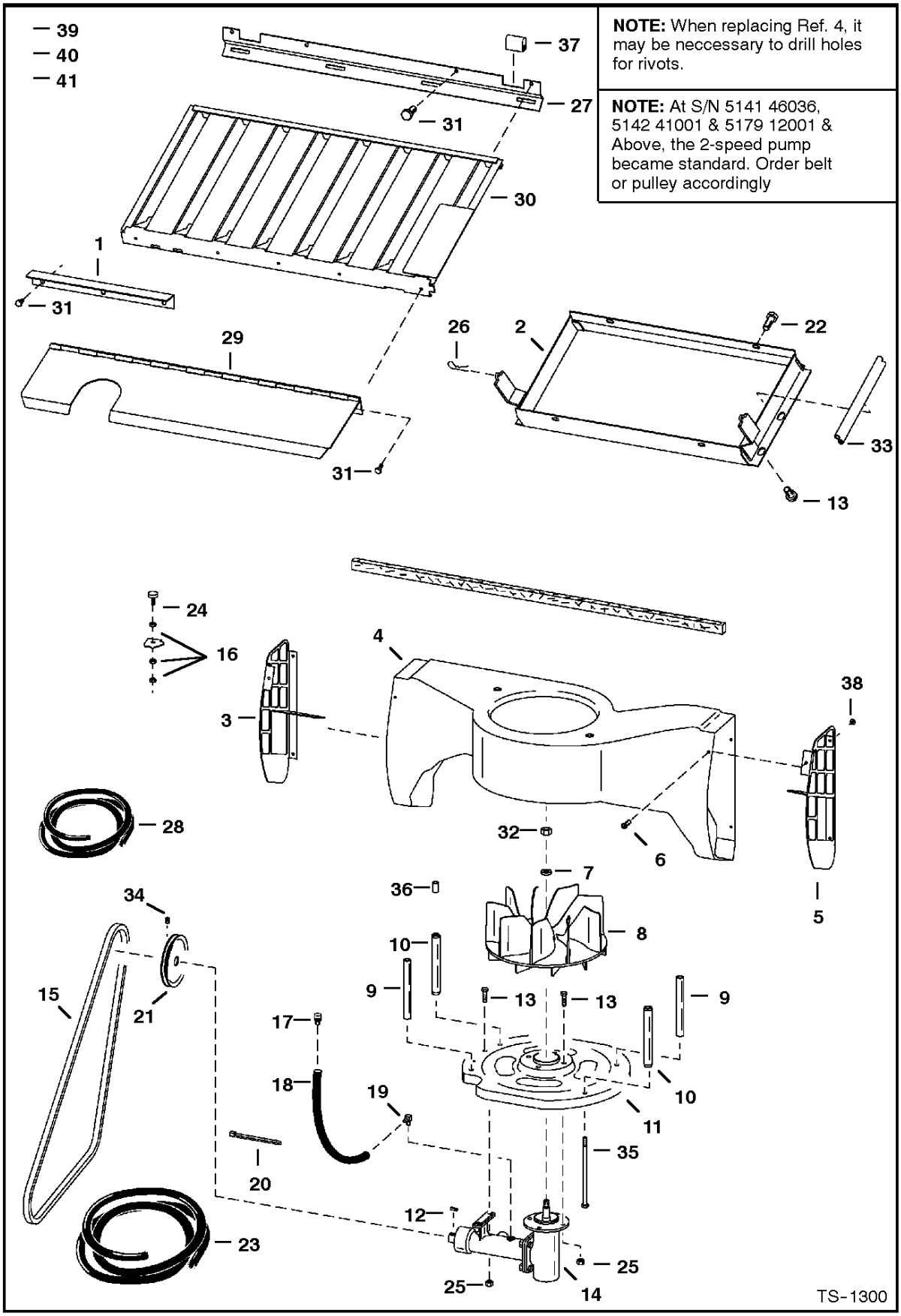

COOLING SYSTEM

Ref.N°	Part N°	Description	Remarks	Serial N°	Qty.
1	6709448	BRACE			1
2	6718757	HOUSING	plenum		1
3	6716574	LOUVER	L.H. - plastic		1
4	6717636	HOUSING			1
5	6716572	LOUVER	R.H. - plastic		1
6	6661209	RIVET	use W/steel louvers		6
6	6706517	SCREW			8
7	6701097	WASHER	Was 6803867 [A]		1
8	6715142	FAN			1
9	6577382	SPACER			2
10	6704907	SPACER			2
11	6717478	INLET	4 slot		1
12	7J-2208	KEY			1
13	17C-616	BOLT			10
14	6707519	HOUSING ASSY.	See Page COOLING FAN DRIVE ASSY(2)		1
15	6713385	BELT	cooling fan drive - 43' (1092mm)	5141 46035 & Bel.	1
15	6725186	BELT	SEE NOTE - cooling fan drive - 41.625' (1057mm) - 2speed	5141, 5142 & 5179	1
15	6707648	BELT	SEE NOTE - cooling fan drive - 43.75' (1111mm) - standard & 2speed	5142 40999 & Bel.	1
16	61D-5	NUT			4
17	6670627	BREATHER			1
18	NAP	HOSE	19.5' (495mm) long - Order Ref. COOLING SYSTEM(23)		1
19	6657376	ELBOW			1
20	6610510	NYLON TIE			1
21	6712970	PULLEY	4.75'(121mm) O.D.	5141 46035 & Bel.	1
21	6725130	PULLEY	SEE NOTE - 4.00'(101,6mm) O.D. - 2speed	5141 46035 & Bel.	1
21	6703483	PULLEY	5.25'(133mm) O.D.	5142 40999 & Bel.	1
21	6712971	PULLEY	SEE NOTE - 5.00' (127 mm) O.D. - 2speed	5142 & 5179	1
22	35C-612	BOLT			4
23	6577822	HOSE	bulk - Sold Per Foot		x
24	6655399	BUMPER			4
25	61D-6	NUT			10
26	1318565	PIN			2
27	6713816	BRACKET			1
28	6513152	SEAL	bulk - Sold Per Foot		x
29	6717738	SHIELD			1
30	6711520	GRILL			1
31	84G-3112	BOLT			10
32	96D-8	NUT			1
33	NAP	SEAL	14.5'(368mm) long - Order Ref. COOLING SYSTEM(28)		2
34	6715143	SET SCREW			1
35	17C-6116	BOLT			4
36	6674894	NUT			4
37	6579613	STOP	cab tilt		2
38	25E-10	WASHER	use W/steel louvers		6
39	6626631	CLAMP			1
40	6719429	SHIELD	belt		1

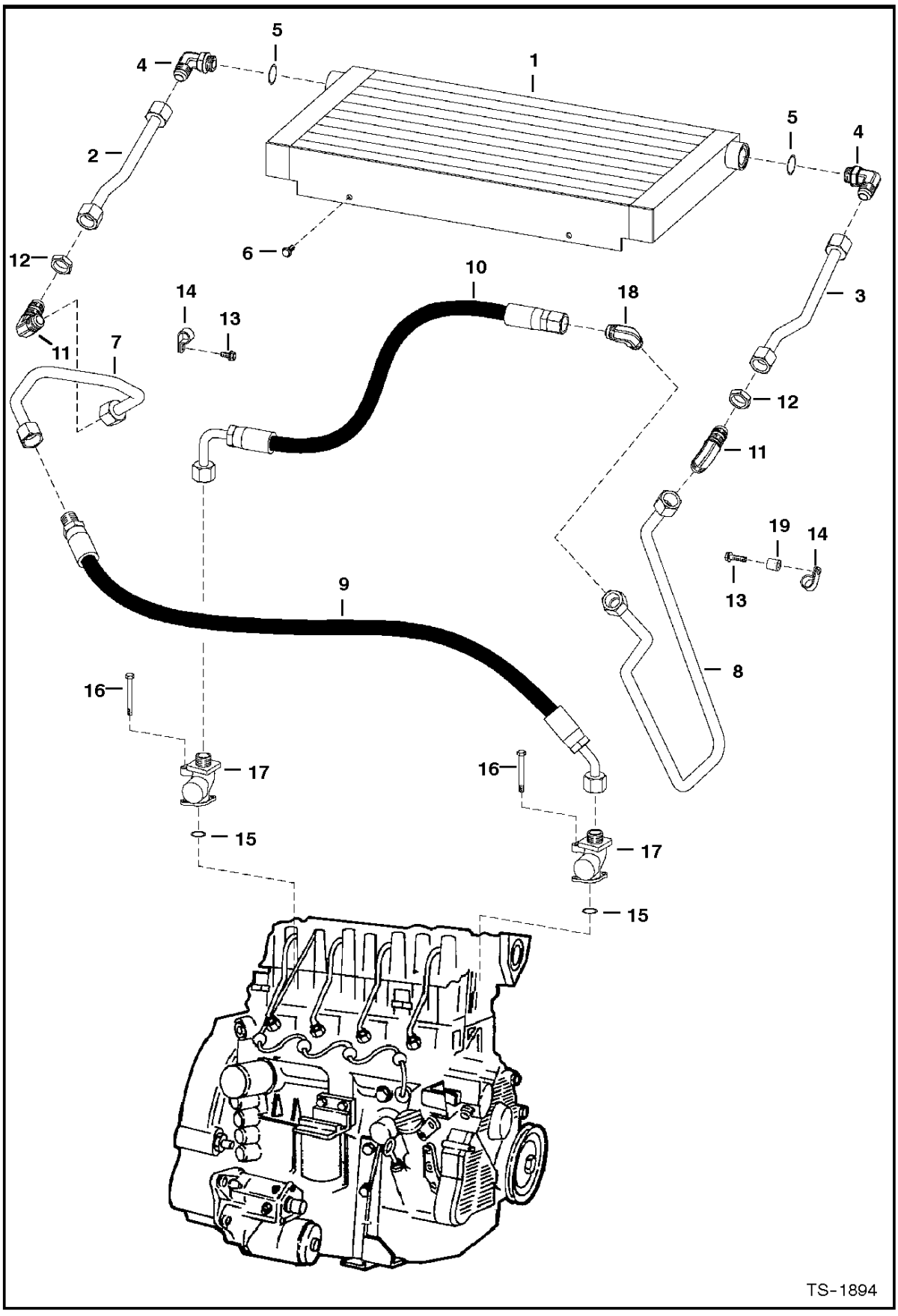
5
4
1
2
5
4
12
6
10
14
18
3
13
11
7
12
11
19
14
13
9
8
16
17
16
15
17
15
TS-1894

COOLING SYSTEM

Ref.N°	Part N°	Description	Remarks	Serial N°	Qty.
1	6710791	COOLER	oil		1
2	6719208	TUBELINE			1
3	6719209	TUBELINE			1
4	17KV-8	ELBOW	W/Ref. COOLING SYSTEM(5) - tapered boss face		2
4	97K-12	O-RING	flared end		2
5	99K-12	O-RING	tapered boss face		x
6	35C-612	BOLT			4
7	6717137	TUBELINE			1
8	6719560	TUBELINE			1
9	6712143	HOSE			1
10	6712144	HOSE			1
11	88FN-8	ELBOW	tapered boss face		2
11	97K-12	O-RING	flared end		4
12	86F-8	NUT			2
13	84G-3112	BOLT			2
14	30H-42	CLAMP	Was 30H-42 [B]		2
15	6666712	O-RING			2
16	6666696	BOLT			1
17	6666762	ADAPTER			2
18	77FN-8	ELBOW			1
19	6529464	BUSHING			1

ENGINE & ATTACHING PARTS
(Air Cleaner, Muffler)

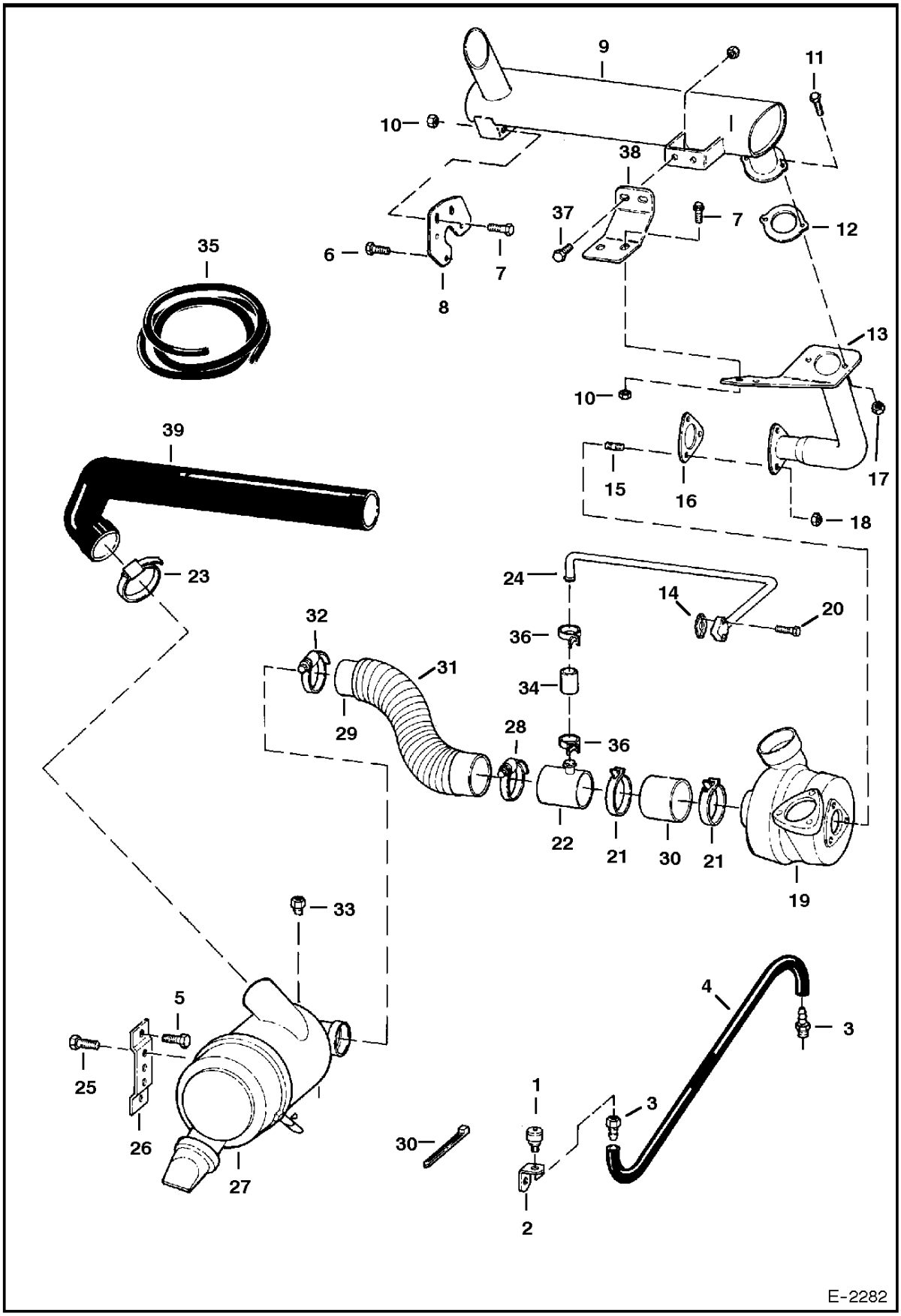

ENGINE & ATTACHING PARTS

Ref.N°	Part N°	Description	Remarks	Serial N°	Qty.
1	6515007	INDICATOR	dust	S/N & Below	1
2	6704823	BRACKET		S/N & Below	1
3	6505813	ADAPTER	barbed	S/N & Below	2
4	NAP	HOSE	18' (457,2 mm) long - Order Ref. ENGINE & ATTACHING PARTS(35)	S/N & Below	1
5	84G-3712	BOLT			2
6	55CM-825	BOLT			3
7	45C-620	BOLT			2
8	6717351	SHIELD	muffler		1
9	6675324	MUFFLER	double insulated		1
10	83D-6	NUT			6
11	17C-616	BOLT			2
12	6713653	GASKET	exhaust		1
13	6717352	TUBE	exhaust		1
14	6672885	GASKET			1
15	6666407	STUD			3
16	6665910	GASKET			1
17	85D-6	NUT			3
18	6666398	NUT			3
19	6673173	TURBOCHARGER			1
20	6672887	BOLT			2
21	6666419	CLAMP			2
22	6673966	TEE			1
23	42H-52	CLAMP			1
24	6671625	TUBELINE			1
25	55CM-816	BOLT	Was 53CM-816 [B]		2
26	6707582	BRACKET			1
27		AIR CLEANER	See Page AIR CLEANER(1)		1
28	42HC-300	CLAMP			1
29	6717495	HOSE			1
30	6673964	HOSE			1
31	6717498	HOSE			1
32	42HC-350	CLAMP			1
33	25F-1	ELBOW		& Abv.	1
34	6673962	HOSE			1
35	6557720	HOSE	bulk - Sold Per Foot	& Bel.	x
36	6673963	CLAMP			2
37	45C-616	BOLT			2
38	6713787	BRACKET			1
39	6710531	HOSE			1

ENGINE & ATTACHING PARTS
(Belt Drive System)

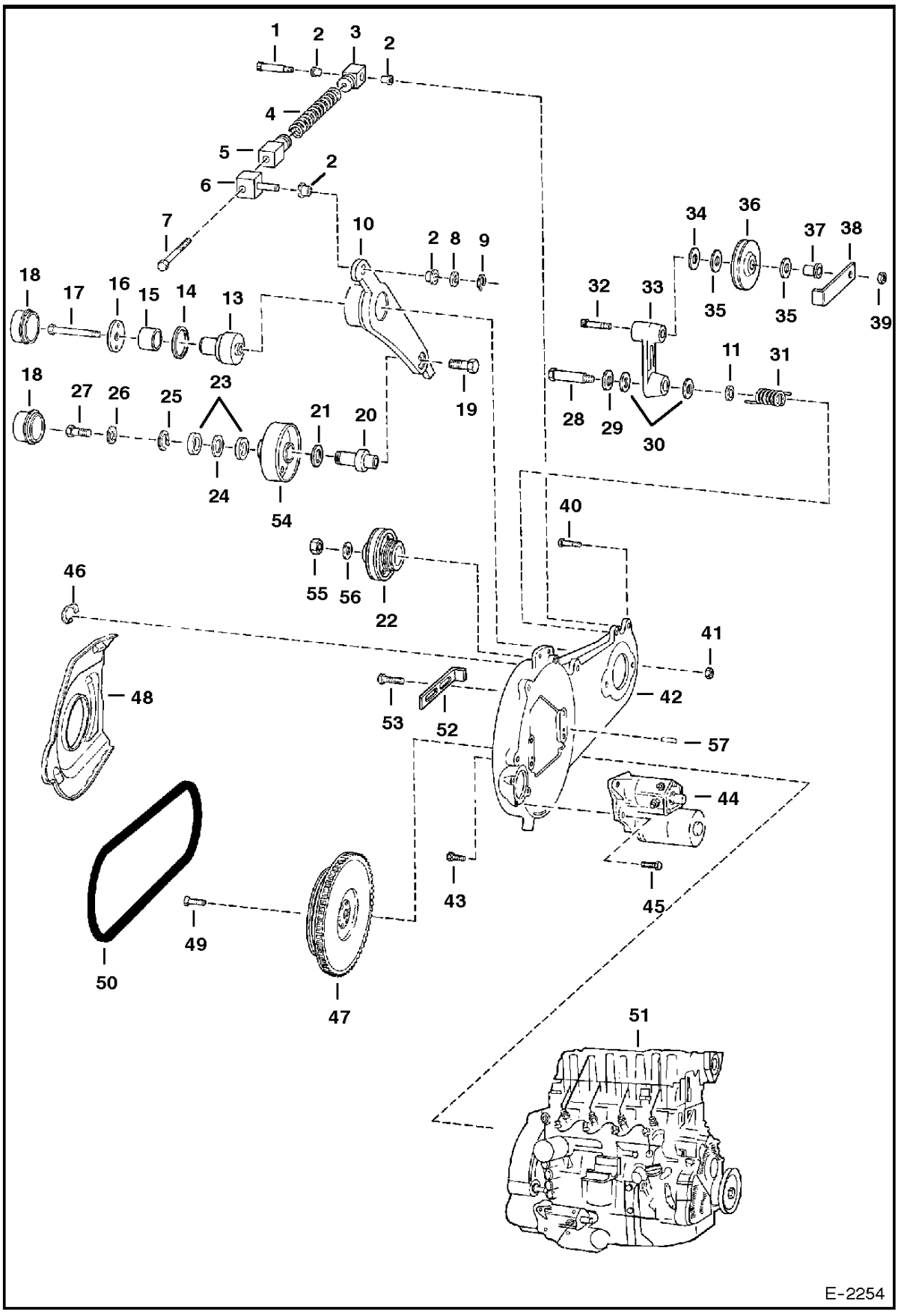

ENGINE & ATTACHING PARTS

Ref.N°	Part N°	Description	Remarks	Serial N°	Qty.
1	38C-828	BOLT	shoulder		1
2	1313116	BUSHING			4
3	6568424	ADAPTER			1
4	6569498	SPRING ASSY			1
5	6568425	STOP			1
6	6587182	PIN			1
7	6586710	BOLT			1
8	25E-21	WASHER			1
9	6518955	RETAINER			1
10	6707607	IDLER			1
11	NAP	BEARING	bronze		1
11	6670682	BEARING	nylon		1
12	83D-8	NUT			2
13	6707699	PIVOT			1
14	6661377	SEAL			1
15	6587765	BUSHING			1
16	6707698	WASHER			1
17	17C-872	BOLT			1
18	6660967	CAP	grease		2
19	17C-816	BOLT			1
20	6707654	IDLER			1
21	6665307	SEAL			1
22	6713342	PULLEY	pump	5141 46035 & Bel.	1
22	6713287	PULLEY	pump	5141 46036 & Abv.	1
23	6661229	BEARING			2
24	6701159	SHIM			1
25	6665308	RETAINER			1
26	6707697	WASHER			1
27	17C-612	BOLT			1
28	38C-820	BOLT			1
29	6655781	BEARING	thrust		1
30	6704820	O-RING			2
31	6700115	SPRING			1
32	73G-656	BOLT			1
33	6725212	IDLER ARM	W/ Ref. ENGINE & ATTACHING PARTS(11) - Was 6707637 [A]		1
34	6704444	WASHER			1
35	6660995	RING			2
36	6662997	PULLEY			1
37	6704443	BUSHING			1
38	6702474	RETAINER			1
39	61D-6	NUT			1
40	17C-832	BOLT			2
41	85D-8	NUT			2
42	6715380	MOUNT	See Page ENGINE & ATTACHING PARTS(1)		1
43	53CM-1230	BOLT			6
44		STARTER	See Page STARTER(4)		1
45	45C-620	BOLT			3
46	6701160	CLIP			3
47	6707642	FLYWHEEL ASSY.	W/ring gear		1
47	6665222	RING GEAR			1
48	6709921	SHIELD			1
49	6666452	BOLT			6
50	6670690	BELT	pump drive	5141 46035 & Bel.	1
50	6662855	BELT	pump drive	5141 46036 & Abv.	1

ENGINE & ATTACHING PARTS

Ref.N°	Part N°	Description	Remarks	Serial N°	Qty.
51		ENGINE	See Page ENGINE & GASKET KITS(3)		1
52	6707714	STOP			1
53	35C-612	BOLT			2
54	6708445	PULLEY	drive idler		1
55	92D-12	NUT			1
56	6576033	WASHER			1
57	4JM-1216	ROLL PIN			2

ENGINE & ATTACHING PARTS
(Engine Mounts)

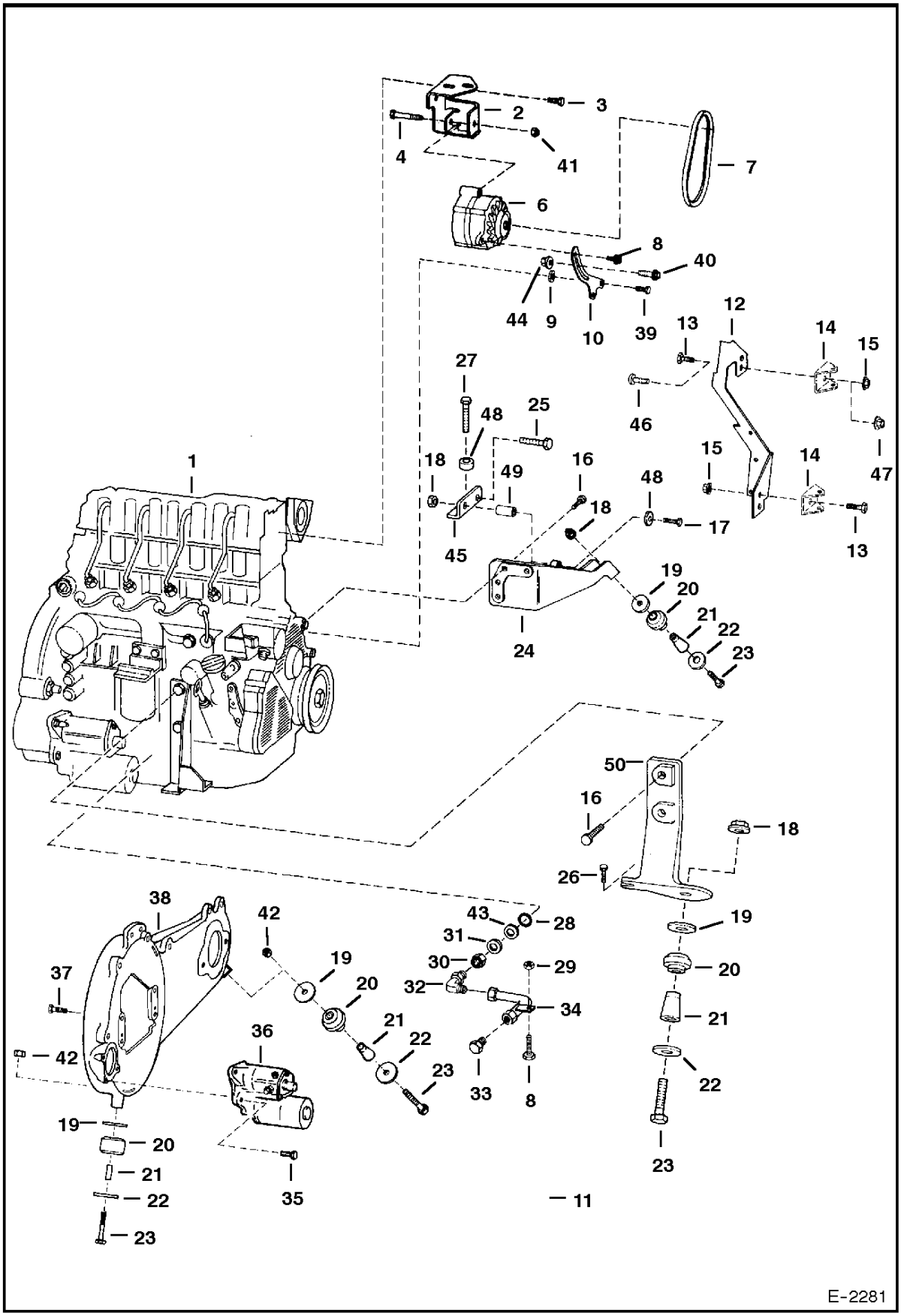

ENGINE & ATTACHING PARTS

Ref.N°	Part N°	Description	Remarks	Serial N°	Qty.
1		ENGINE	See Page ENGINE & GASKET KITS(3)		1
2	6713893	MOUNT			1
2	6725429	MOUNT	90 amp alternator		1
3	55CM-816	BOLT			4
3	55CM-825	BOLT	90 amp alternator		4
4	17C-648	BOLT			1
4	1CM-8100	BOLT	90 amp alternator		1
5	81D-6	NUT			1
6		ALTERNATOR	See Page ALTERNATOR(2) or ALTERNATOR(3)		1
7	6713901	BELT			1
7	6675839	BELT	90 amp alternator		1
8	35C-512	BOLT			2
9	25E-17	WASHER			2
10	6713843	BRACKET			1
10	6726485	BRACKET	90 amp alternator		1
11	1CM-1020	BOLT			1
12	6710652	SHIELD			1
13	35C-612	BOLT			2
14	6577394	BRACKET	weld on - for rear door		2
15	83D-6	NUT			2
16	53CM-1440	BOLT			6
17	17C-864	BOLT			1
18	83D-8	NUT			2
19	6705106	WASHER			4
20	6668104	MOUNT			4
21	6715287	SPACER			4
22	6661787	WASHER			4
23	43C-852	BOLT			4
24	6707757	MOUNT			1
25	17C-820	BOLT			1
26	17C-516	BOLT			1
27	17C-824	BOLT			1
28	58K-114	O-RING			x
29	97D-5	NUT			1
30					x
31	NSS	WASHER	Was 6669067 [A]		1
32	6709168	ELBOW	W/Ref. ENGINE & ATTACHING PARTS(28), ENGINE & ATTACHING PARTS(31) & ENGINE & ATTACHING PARTS(43)		1
33	6518121	PLUG			1
34	6714500	TUBE			1
35	35C-620	BOLT			3
36		STARTER	See Page STARTER(4)		1
37	17C-828	BOLT	hyd. pump mount		2
38	6715380	MOUNT			1
39	1CM-1030	BOLT			2
40	35C-516	BOLT			1
41	85D-6	NUT			1
41	53DM-8	NUT	90 amp alternator - Was 54DM-8 [B]		1
42	6652918	NUT			2
43	6669066	SEAL RING			1
44	57D-5	NUT			1
45	6716226	BRACKET			1
46	10C-516	BOLT			2
47	83D-5	NUT			2
48	6716408	WASHER			1

ENGINE & ATTACHING PARTS

Ref.N°	Part N°	Description	Remarks	Serial N°	Qty.
49	6716225	SPACER			1
50	6717858	MOUNT	cast		2
51	6729354	SHIELD	90 amp alternator		1

THROTTLE

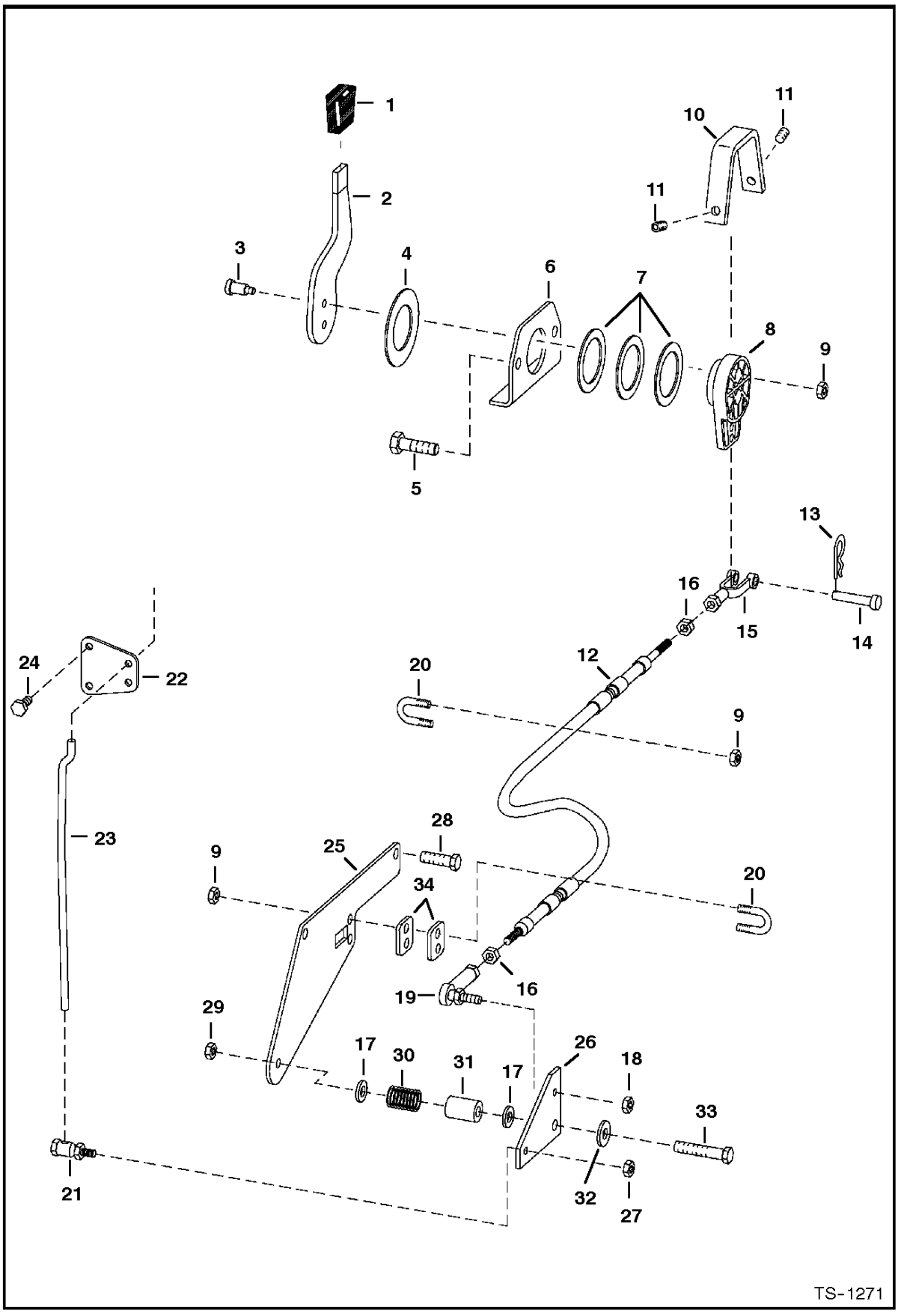
1
2
3
4
5
6
7
8
9
10
11
11
12
13
14
15
16
16
17
17
18
19
20
20
21
22
23
24
25
26
27
28
29
30
31
32
33
34
9
9
TS-1271

THROTTLE

Ref.N°	Part N°	Description	Remarks	Serial N°	Qty.
1	6564452	GRIP			1
2	6705452	LEVER			1
3	38C-610	BOLT	shoulder		2
4	6567962	WASHER			1
5	84G-3724	BOLT			2
6	6576262	MOUNT			1
7	6630945	WASHER			3
8	6709022	LEVER			1
9	85D-5	NUT			6
10	6576261	COVER			1
11	6706572	SET SCREW			2
12	6709959	CABLE			1
13	6513495	COTTER PIN			1
14	2F-4051	PIN			1
15	2J-4200	CLEVIS			1
16	8D-4	NUT			2
17	6700170	WASHER	plastic		2
18	86D-4	NUT			1
19	6631036	BALL JOINT			1
20	6592766	U-BOLT			2
21	6557291	BALL JOINT			1
22	6707903	LEVER			1
23	6707904	ROD			1
24	53CM-616	BOLT			2
25	6709052	MOUNT			1
26	6701187	BELLCRANK			1
27	85D-4	NUT			1
28	53CM-820	BOLT			2
29	85D-6	NUT			1
30	6704453	SPRING			1
31	6708314	BUSHING			1
32	25E-18	WASHER			1
33	84G-3728	BOLT			1
34	6713920	SHIM	.0528' (1,34mm) thick		2

COOLING FAN DRIVE ASSY

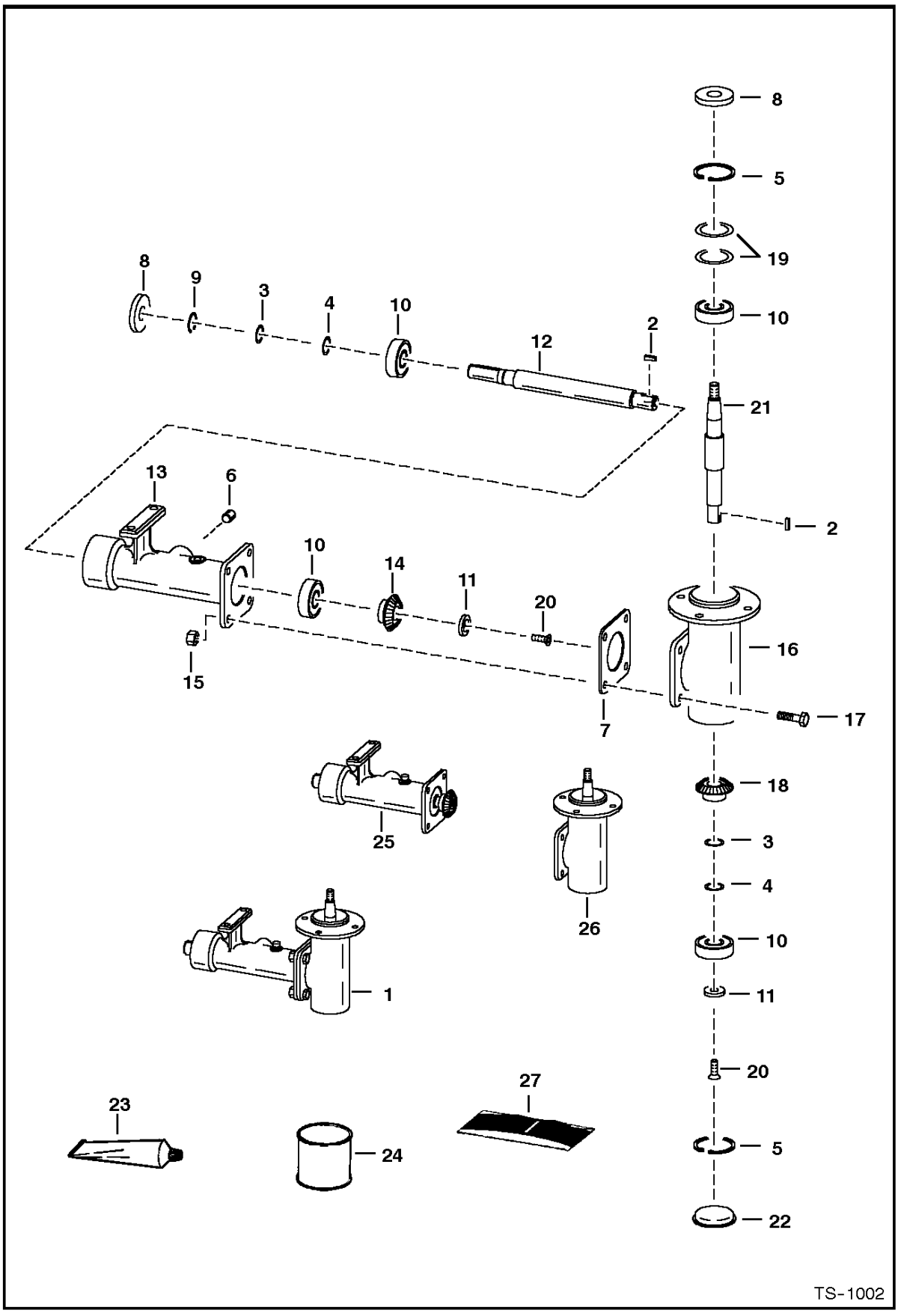

COOLING FAN DRIVE ASSY

Ref.N°	Part N°	Description	Remarks	Serial N°	Qty.
1	6707519	HOUSING ASSY.	Ref. COOLING FAN DRIVE ASSY.(2) - COOLING FAN DRIVE ASSY.(22)		1
2	7J-2010	KEY			2
3	6702165	SHIM	.002'(0,05 mm) thickness - 1'(25,4 mm) O.D.		x
4	6701159	SHIM	.005'(0,13 mm) thickness - 1'(25,4 mm) O.D.		x
5	6653758	SNAP RING			2
6	16F-8	PLUG			1
7	6578284	SHIM	.003" (0,08 mm) thickness		x
8	6653702	SEAL			2
9	6653757	SNAP RING			1
10	6646627	BEARING			4
11	6702140	WASHER	countersink		2
12	6707518	SHAFT	keyed		1
13	6579641	HOUSING			1
14	6702103	GEAR	keyed		1
15	95D-6	NUT			4
16	NSS	HOUSING	Order 6702138 Housing or Ref. COOLING FAN DRIVE ASSY.(26)		1
17	17C-620	BOLT			4
18	6702102	GEAR	keyed		1
19	6702166	SHIM	.002" (0,05 mm) thickness - 2'(50,8 mm) O.D.		x
19	6702144	SHIM	.005" (0,13 mm) thickness - 2'(50,8 mm) O.D.		x
20	9G-512	SCREW			2
21	6702135	SHAFT	keyed		1
22	6700782	CAP	grease		1
23	6672486	SEALANT	polyurethane - Use W/Ref. COOLING FAN DRIVE ASSY.(7) & COOLING FAN DRIVE ASSY.(22)		x
24	6634393	LUBRICANT	gear - 1 pint		x
25	6708642	HOUSING ASSY.	half		1
26	6707077	HOUSING ASSY.	half		1
27	6669384	SPEEDY SLEEVE	repair kit		1

ENGINE & GASKET KITS

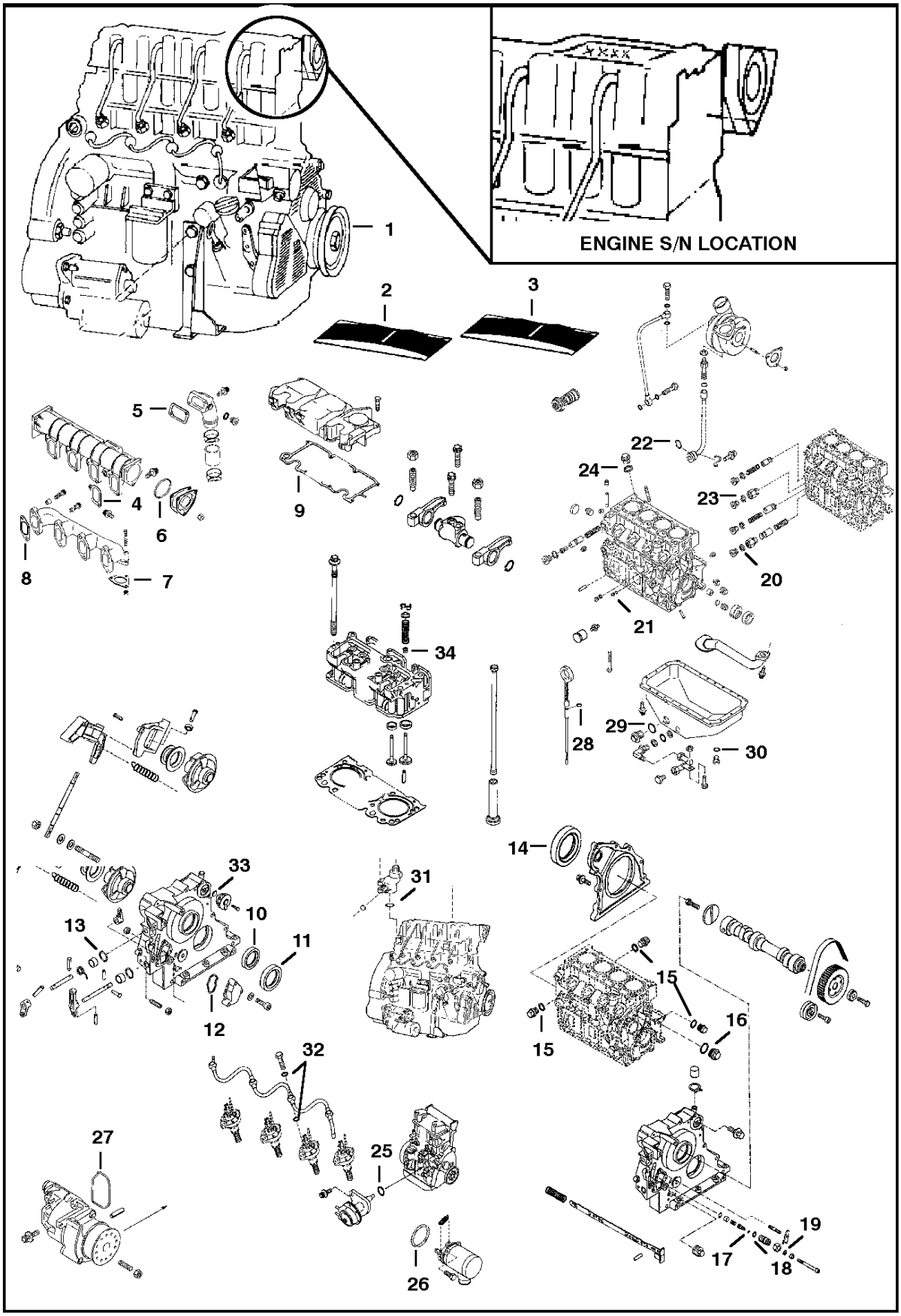

ENGINE & GASKET KITS

Ref.N°	Part N°	Description	Remarks	Serial N°	Qty.
1	6672128	ENGINE	does not include starter, alternator, flywheel or flywheel housing		1
2	6668898	GASKET KIT	upper - Ref. ENGINE & GASKET KITS(4) - ENGINE & GASKET KITS(9) - See Page CYLINDER HEAD & COVER(4) for ordering correct head gas		1
3	6668899	GASKET KIT	lower - Ref. ENGINE & GASKET KITS(10) - ENGINE & GASKET KITS(33)		1
4	6666478	GASKET			4
5	6666479	GASKET			1
6	6666425	O-RING			1
7	6666473	GASKET			1
8	6666472	GASKET			4
9	6672489	GASKET			1
10	6666731	SEAL	front main		1
11	6666730	SEAL	front main		1
12	6666753	WASHER			1
13	6666714	O-RING			2
14	6666490	SEAL	lip - rear main		1
15	6666393	SEAL RING			3
16	6666394	SEAL RING			1
17	6666410	O-RING			1
18	6666408	O-RING			1
19	6666426	SEAL RING			1
20	6668887	O-RING			2
21	6666699	SEAL RING			1
22	6666401	O-RING			1
23	6666395	SEAL RING			4
24	6666393	SEAL RING			3
25	6666420	O-RING			1
26	6666409	O-RING			1
27	6666760	SEAL RING			1
28	6666439	O-RING			2
29	6668694	SEAL			1
30	6666394	SEAL RING			3
31	6666712	O-RING			2
32	6668935	SEAL RING			8
33	6669643	O-RING			1
34	6666460	SEAL			8

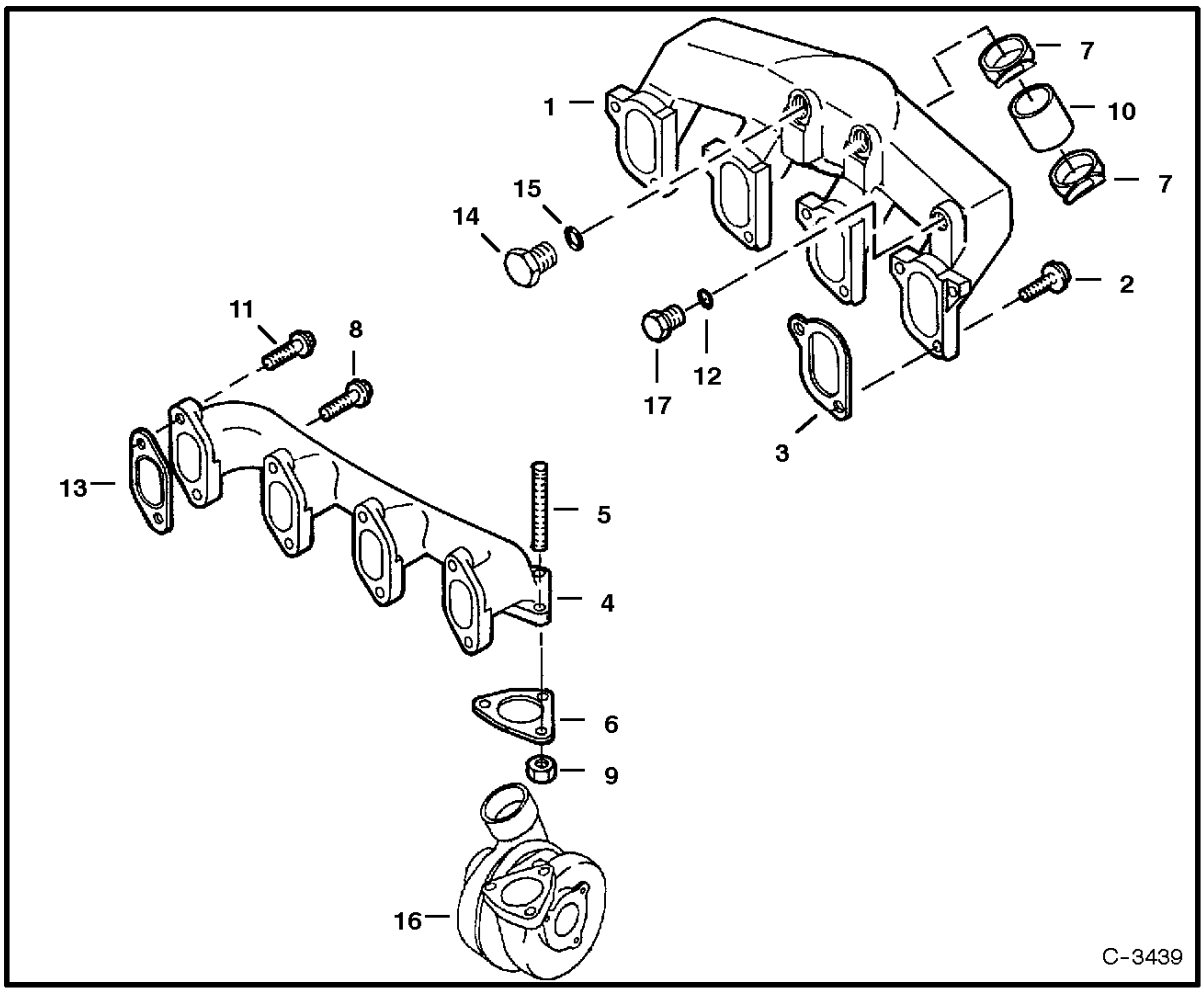

MANIFOLDS

Ref. No.	Part Number	Description	Remarks	Serial Number	Qty.

MANIFOLDS

Ref.N°	Part N°	Description	Remarks	Serial N°	Qty.
1	6670316	MANIFOLD	intake		1
2	6670313	BOLT			8
3	6670315	GASKET			4
4	6673170	MANIFOLD	exhaust		1
5	6672947	STUD			3
6	6666473	GASKET			1
7	6666419	CLAMP			2
8	6673172	BOLT			1
9	6672948	NUT			3
10	6670314	HOSE	3.25' (82,6 mm) long		1
11	6673171	BOLT			7
12	6672939	O-RING			1
13	6666472	GASKET			4
14	6666397	PLUG			1
15	6668888	O-RING			1
16		TURBOCHARGER	See Page CRANKCASE & OIL PAN(6)		1
17	6672938	PLUG			1

Use only Bobcat belts and hoses to maintain maximum service life.

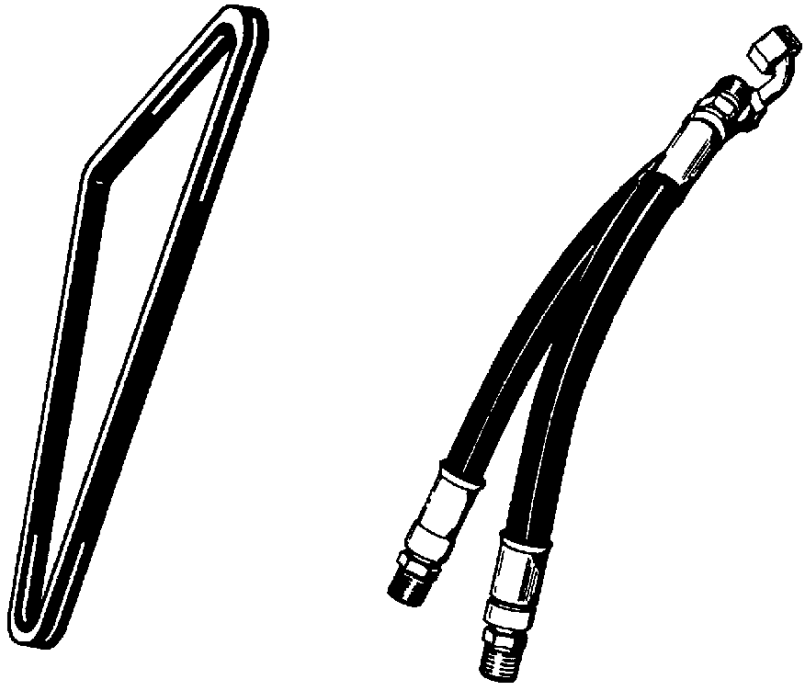

Available from Bobcat Parts.

Bobcat

CYLINDER HEAD & COVER

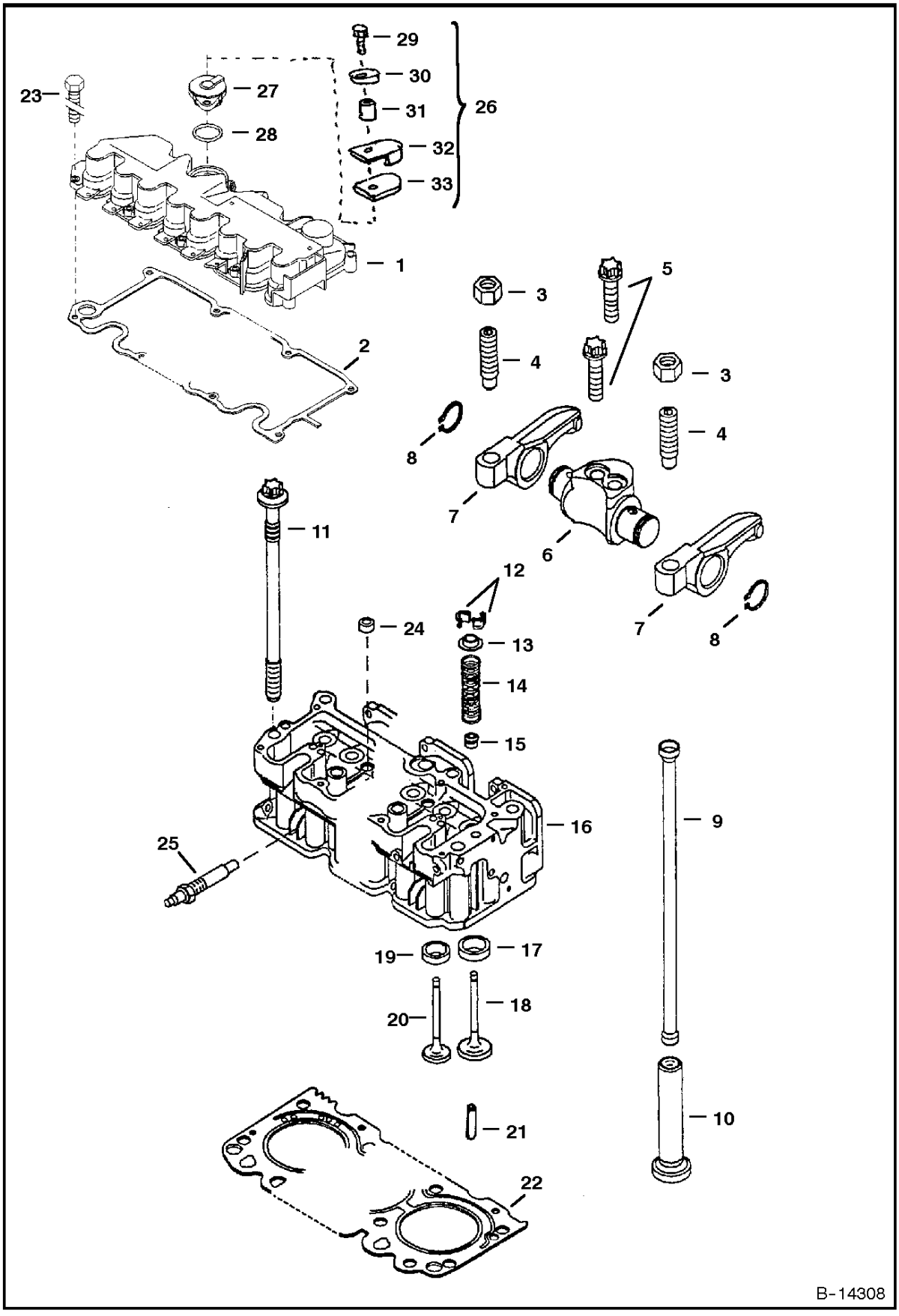

CYLINDER HEAD & COVER

Ref.N°	Part N°	Description	Remarks	Serial N°	Qty.
1	6672770	COVER			1
2	6672489	GASKET			1
3	6666450	NUT			8
4	6666449	SCREW	adjusting		8
5	6672900	BOLT			8
6	6666474	ARM	rocker - W/Ref. CYLINDER HEAD & COVER(3), CYLINDER HEAD & COVER(4), CYLINDER HEAD & COVER(7) & CYLINDER HEAD & COVER(8)		4
7	6666448	ARM	rocker		8
8	6666388	SNAP RING			8
9	6666447	PUSH ROD			8
10	6666504	TAPPET			8
11	6670820	BOLT	fully threaded		10
12	6666443	COLLAR			16
13	6668940	CAP	spring		8
14	6668944	SPRING			8
15	6666460	SEAL			8
16	6672714	HEAD	cylinder - W/Ref. CYLINDER HEAD & COVER(12)-CYLINDER HEAD & COVER(20)	S/N 462225 & Bel.	1
16	6676567	HEAD	cylinder - W/Ref. CYLINDER HEAD & COVER(12)-CYLINDER HEAD & COVER(20)	S/N 465575 & Abv.	1
17	6666505	INSERT	valve seat - intake		4
18	6666526	VALVE	intake		4
19	6666481	INSERT	valve seat - exhaust		4
20	6666466	VALVE	exhaust		4
21	6666519	PIN			2
22	6666754	GASKET	head - 1 notch	S/N 462225 & Bel.	1
22	6676568	GASKET	head - 1 notch	S/N 465575 & Abv.	1
22	6666755	GASKET	head - 2 notch	S/N 462225 & Bel.	1
22	6676571	GASKET	head - 2 notch	S/N 465575 & Abv.	1
22	6672713	GASKET	head - 3 notch	S/N 462225 & Bel.	1
22	6676572	GASKET	head - 3 notch	S/N 465575 & Abv.	1
23	6672771	BOLT			10
24	6666697	PLUG	soft		3
25	6670989	GLOW PLUG			4
26	6673967	KIT	Ref. CYLINDER HEAD & COVER(29)-CYLINDER HEAD & COVER(33)		1
27	6666749	BREATHER	W/Ref. CYLINDER HEAD & COVER(28)		1
28	6669643	O-RING			1
29	NSS	BOLT	Order Ref. CYLINDER HEAD & COVER(26)		1
30	NSS	WASHER	Order Ref. CYLINDER HEAD & COVER(26)		1
31	NSS	SPACER	Order Ref. CYLINDER HEAD & COVER(26)		1
32	NSS	SHIELD	Order Ref. CYLINDER HEAD & COVER(26)		1
33	NSS	INSULATION	Order Ref. CYLINDER HEAD & COVER(26)		1

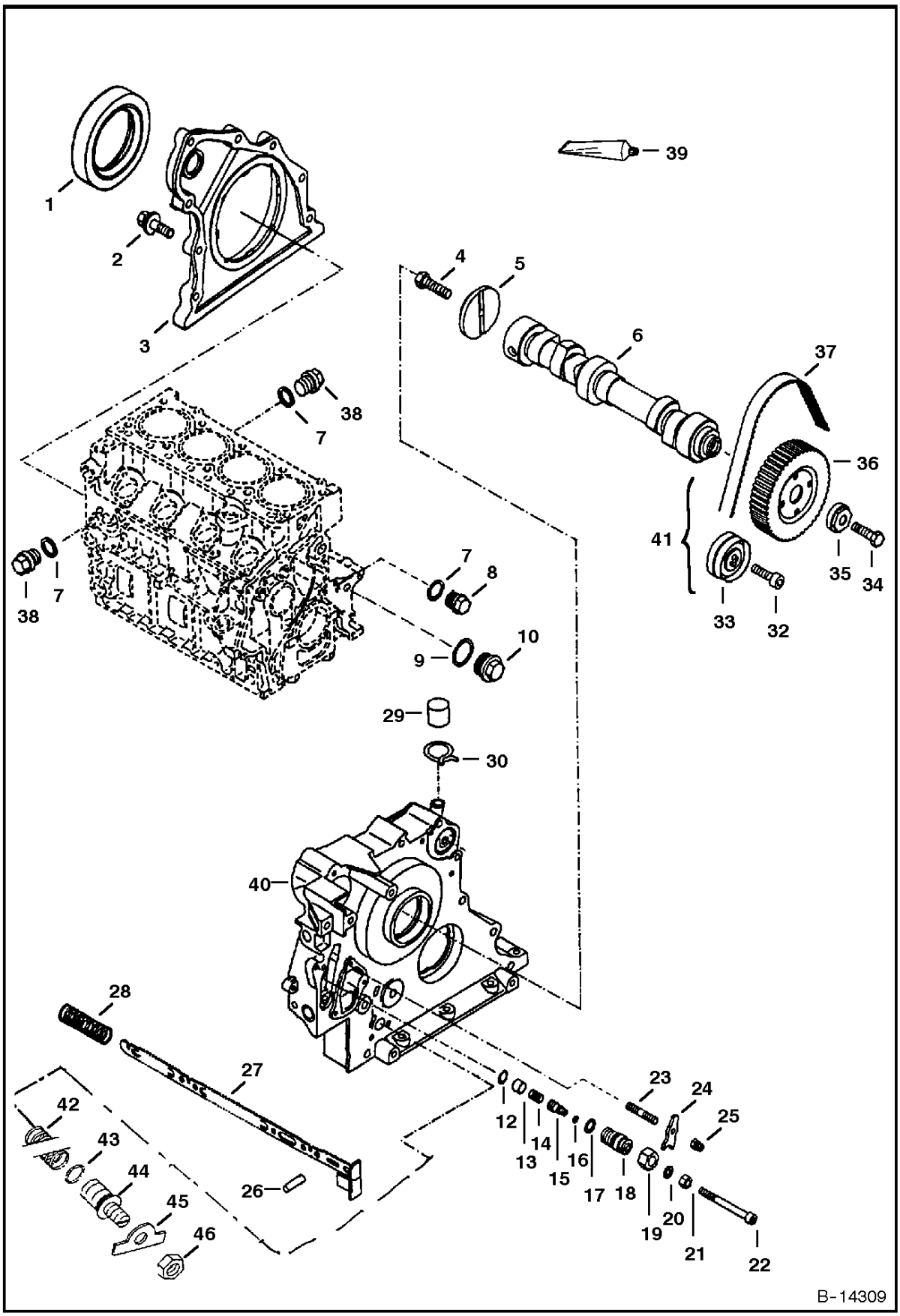
1
2
3
39
4
5
6
37
38
7
36
41
7
38
7
8
10
9
35
34
33
32
29
30
40
28
27
42
43
44
45
46
26
12
13
14
15
16
17
18
19
20
21
22
23
24
25
B-14309

CAMSHAFT

Ref.N°	Part N°	Description	Remarks	Serial N°	Qty.
1	6666490	SEAL	lip - rear main		1
2	6666412	BOLT			8
3	6666491	COVER	rear - Use W/Ref. CAMSHAFT(39)		1
4	6666402	BOLT			1
5	6666469	WASHER	thrust		1
6	6673154	CAMSHAFT			1
7	6666393	SEAL RING	brass - 10 mm x 16 mm		3
8	1KM-10	PLUG			1
9	6666394	SEAL RING	brass - 18mm x 24 mm		1
10	6666399	PLUG			1
11	6673166	WASHER			1
12	6666389	CIR CLIP			1
13	6666476	STOP	limit		1
14	6666483	SPRING			1
15	6666489	SCREW			1
16	6666410	O-RING	7 mm I.D. x 1,5 mm thickness		1
17	6666408	O-RING	16 mm I.D. x 2 mm thickness		1
18	6666480	SCREW	adjusting		1
19	6666450	NUT			1
20	6666426	SEAL RING	brass- 9mm I.D. x 1 mm thickness		1
21	6673162	NUT			1
22	6672942	SET SCREW			1
23	6666406	STUD			1
24	6666475	CLAW			1
25	6513908	NUT			1
26	6666496	PIN	locating		1
27	6673163	ROD			1
28	6666465	SPRING			1
29	6672886	CAP			1
30	6666701	CLAMP			1
31	6513908	NUT			1
32	6666715	BOLT			1
33	NAP	PULLEY	tension - Order Ref. CAMSHAFT(41)		1
34	6666711	BOLT			1
35	6666720	WASHER			1
36	6666725	PULLEY			1
37	NAP	BELT	Order Ref. CAMSHAFT(41)		1
38	6666690	PLUG			2
39	6632823	GASKET	liquid - Use between Ref. CAMSHAFT(3) & block - Use between Ref. CAMSHAFT(40) & block		1
40	6666748	COVER	front - See Page FRONT COVER(5)		1
41	6670555	REPAIR KIT	Ref. CAMSHAFT(32), CAMSHAFT(33) & CAMSHAFT(37)		1
42	6673167	SPRING			1
43	6673165	O-RING			1
44	6673164	CAPSULE			1

FRONT COVER

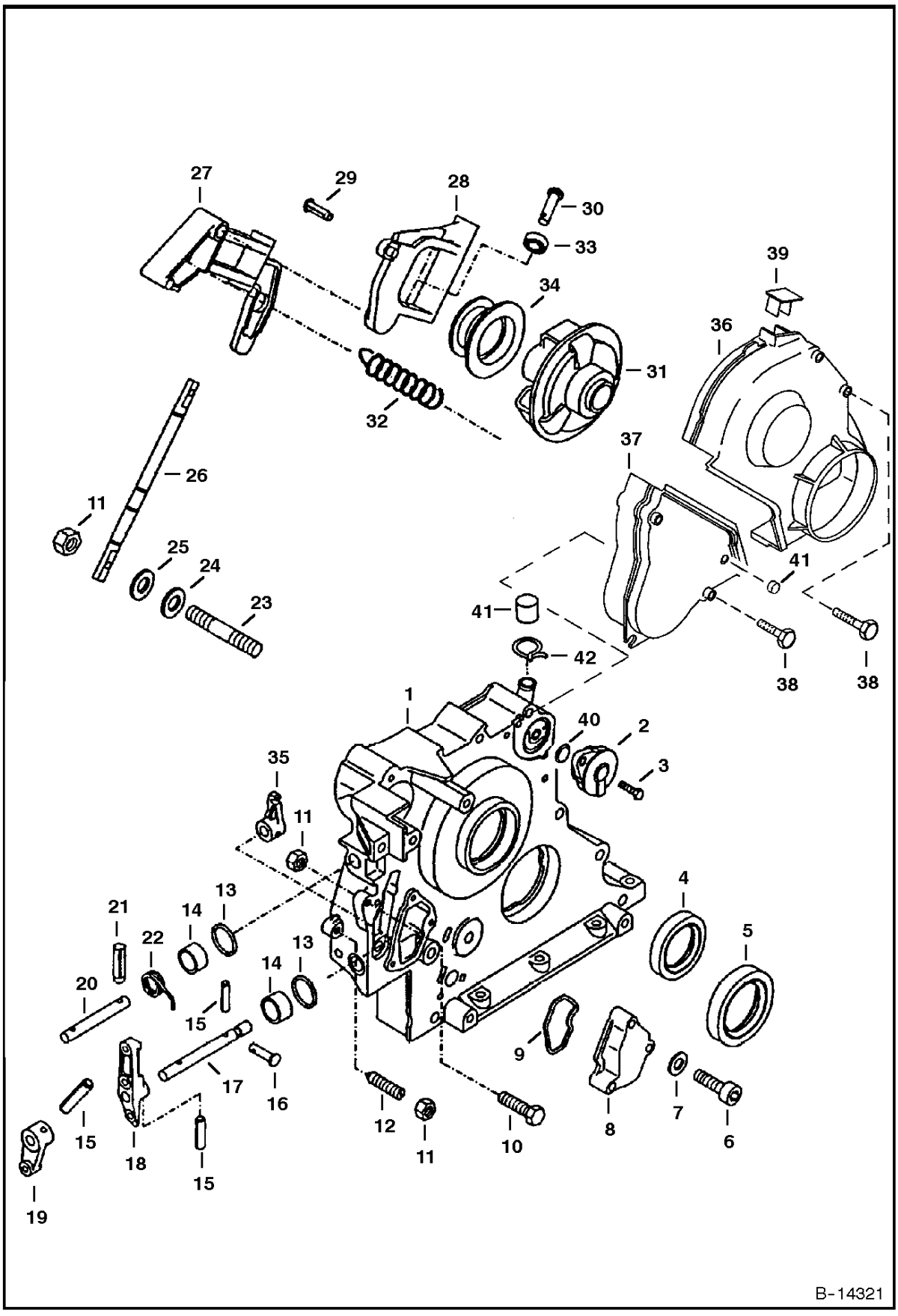
27
29
28
30
33
39
34
36
31
32
37
26
11
25
24
23
41
41
42
38
38
1
40
2
3
35
11
4
5
21
14
13
22
13
14
20
15
9
17
16
12
11
10
8
7
6
15
18
15
19
B-14321

FRONT COVER

Ref.N°	Part N°	Description	Remarks	Serial N°	Qty.
1	6666748	COVER	front		1
2	6666749	BREATHER	vent - W/Ref. FRONT COVER(40)		1
3	6666695	BOLT			1
4	6666731	SEAL	front main		1
5	6666730	SEAL	front main		1
6	6666710	SCREW			3
7	6672943	WASHER			3
8	6666757	COVER			1
9	6666753	WASHER			1
10	6666684	BOLT			1
11	1DM-6	NUT	short stroke		4
12	6666698	SET SCREW			1
13	6666714	O-RING			2
14	6666732	SLEEVE			2
15	6666688	PIN			3
16	6666694	PIN	clevis		1
17	6666729	SHAFT	lever		1
18	6672945	ARM	lever		1
19	6666721	LEVER	shut-off		1
20	6666726	SHAFT	lever		1
21	6666686	PIN	notched		1
22	6666727	SPRING			1
23	6666700	STUD			2
24	6666717	WASHER			2
25	6666723	WASHER			3
26	6666740	SHAFT			1
27	6672946	ARM	lever		1
28	6666745	LEVER	roller - W/Ref. FRONT COVER(29) - FRONT COVER(33)		1
29	6666687	NAIL	notched		1
30	6666713	PIN			2
31	6666736	METER			1
32	6673168	SPRING			1
33	6666692	BEARING	ball		2
34	6666744	SLEEVE			1
35	6666733	ARM	lever		1
36	6668763	SHIELD			1
37	6673153	SHIELD	W/Ref. FRONT COVER(41)		1
38	6666691	BOLT			4
38	6672898	BOLT			1
39	6668904	CAP			1
40	6669643	O-RING			1
41	6672899	PLUG			1

CRANKCASE & OIL PAN

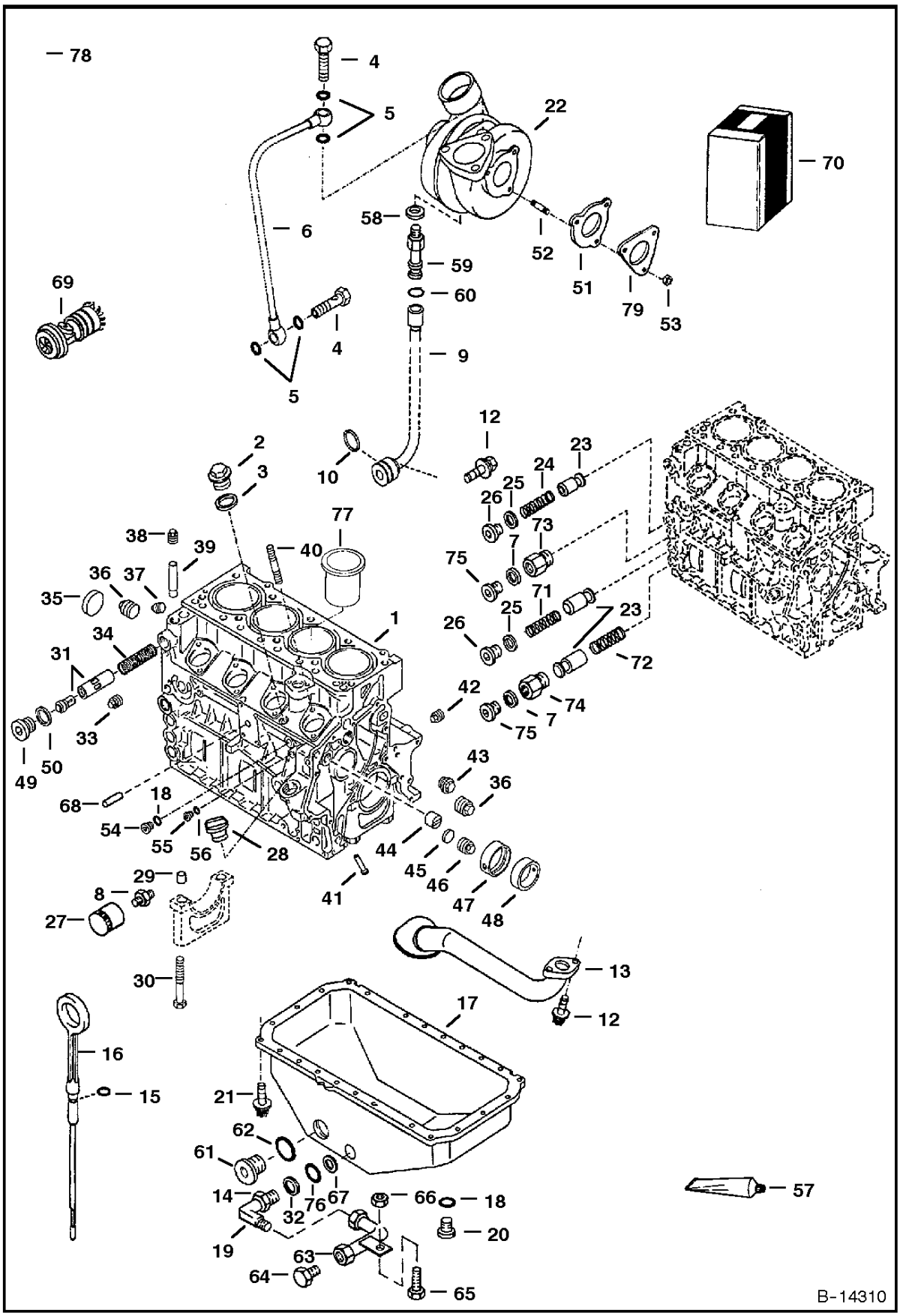

CRANKCASE & OIL PAN

Ref.N°	Part N°	Description	Remarks	Serial N°	Qty.
0	6668106	TUBE	oil return		1
1	NAP	BLOCK	Order complete engine - See Page ENGINE & GASKET KITS(3) - Was 6672800 [A]		1
2	6666690	PLUG			1
3	6666393	SEAL RING	brass - 10mm x 16mm		1
4	6666396	SCREW			2
5	2FM-12155	SEAL RING			4
6	6668948	TUBE	oil lubricating		1
7	6668887	O-RING	brass - 18 mm x 22 mm		2
8	6668897	ADAPTER			1
10	6666401	O-RING	green		1
11	6673169	FLANGE			1
12	6668938	BOLT			3
13	6666508	TUBE	oil suction		1
14	NSS	NUT			1
15	25K-30012	O-RING	.55'(14 mm) O.D.		2
16	6669531	DIPSTICK	W/ .55'(14 mm) O.D. O-Ring		1
17	6670866	OIL PAN(	W/Ref. CRANKCASE & OIL PAN(18), CRANKCASE & OIL PAN(20), CRANKCASE & OIL PAN(61) & CRANK CASE & OIL PAN(62)	00505302 & Bel.	1
18	6666394	SEAL RING	brass - 18 mm x 24 mm		1
19	6709168	ELBOW	W/Ref. CRANKCASE & OIL PAN(14), CRANKCASE & OIL PAN(32), CRANKCASE & OIL PAN(67) & CRANK CASE & OIL PAN(76)		1
20	6666400	PLUG			1
21	6666434	BOLT			26
22	NAP	TURBOCHARGER	Order 6677575, also Order Ref. CRANKCASE & OIL PAN(79)-CRANKCASE & OIL PAN(81) - Was 6673173 [A]	00526322 & Bel.	1
22	6677575	TURBOCHARGER		00526323 & Abv.	1
23	6666510	VALVE			3
24	6668941	SPRING	yellow - .047' (1.2mm) dia. & 3.15' (80mm) long		1
25	6666395	SEAL RING			2
26	6666387	PLUG			4
27	6665603	OIL FILTER	engine		1
28	6666530	CAP	oil fill		1
29	6666722	DOWEL			10
30	6666719	BOLT			10
31	6668945	THERMOSTAT	eng. oil temp.		1
32	6669067	WASHER			1
33	6666703	PLUG			1
34	6668941	SPRING			1
35	6666716	PLUG	soft		1
36	6672873	PLUG			2
37	6672874	PLUG			1
38	6666702	PLUG			1
39	6666741	TUBE			1
40	6666709	STUD			8
41	6666746	NOZZLE	piston cooling		8
42	6672872	PLUG			1
43	6666751	PLUG			1
44	6666718	SLEEVE	guide		2
45	6666697	PLUG	soft		1
46	6672878	PLUG			1
47	6666738	BEARING	wrapped bushing		2
48	6666737	BEARING	wrapped bushing		3
49	6672877	PLUG			1

CRANKCASE & OIL PAN

Ref.N°	Part N°	Description	Remarks	Serial N°	Qty.
50	6666395	SEAL RING			1
51	6665910	GASKET			1
52	6666407	STUD			3
53	6666398	NUT			3
54	6666689	PLUG			1
55	6666690	PLUG			1
56	6666699	SEAL RING	brass - 10 mm x 15 mm		1
57	6632823	GASKET	liquid - use between Ref. CRANKCASE & OIL PAN(17) & block, use between Ref. CRANKCASE & OIL PAN(13) & block		x
58	6668108	WASHER		00526322 & Bel.	1
59	6668107	ADAPTER		00526322 & Bel.	1
60	6668109	O-RING			1
61	6668693	PLUG		00505302 & Bel.	1
61	6666397	PLUG		00505303 & Abv.	1
62	6668694	SEAL	metal W/moulded insert - 59 mm O.D.	00505302 & Bel.	1
62	2FM-22270	SEAL		00505303 & Abv.	1
63	6714500	TUBE	oil drain - Was 6709822 [D]		1
64	6518121	PLUG	oil drain		1
65	35C-512	BOLT			1
66	97D-5	NUT			1
67	58K-114	O-RING			1
68	6668905	PIN			1
69	NAP	CORE	turbocharger - Order Ref. CRANKCASE & OIL PAN(22)		1
70	6668895	REPAIR KIT	turbocharger - includes (2) O-rings, (2) bolts & (2) washers		1
71	6668903	SPRING	red - .055' (1.4mm) dia wire & 3.07' (78mm) long		1
72	6668902	SPRING	blue - .039' (1mm) dia wire & 2.44' (62mm) long		1
73	6668900	ADAPTER			1
74	6668901	ADAPTER			1
75	6668889	PLUG			2
76	6669066	SEAL RING			1
77	6672879	LINER	cylinder		4
78	6666509	RETAINER	Was 6673155 [A]		1
79	6677576	FLANGE		00526323 & Abv.	1
80	6677577	GASKET		00526323 & Abv.	1
81	6677578	BOLT		00526323 & Abv.	2

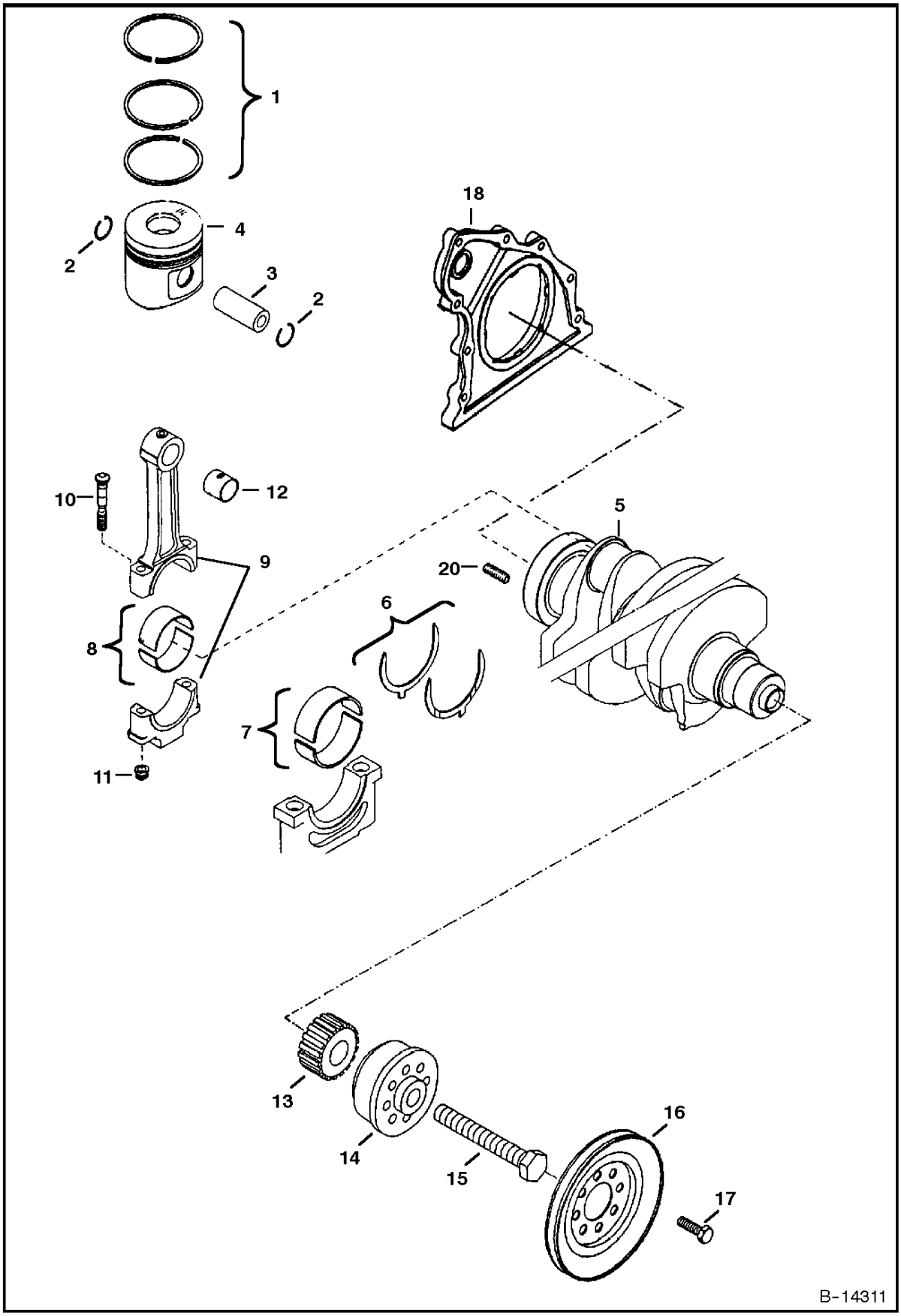
1
2
4
3
2
18
10
12
9
8
11
5
20
6
7
13
14
15
16
17
B-14311

PISTON & CRANKSHAFT

Ref.N°	Part N°	Description	Remarks	Serial N°	Qty.
1	6672896	RING SET			4
2	6666404	SNAP RING			8
3	6666470	PIN			4
4	6673152	PISTON	W/Ref. PISTON & CRANKSHAFT(1) - PISTON & CRANKSHAFT(3)		4
5	6673150	CRANKSHAFT			1
6	6666456	WASHER			1
7	6669395	MAIN BEARING	(70,00mm) 2.7559'		5
7	6669396	MAIN BEARING	(70,25mm) 2.7657'		5
7	6669397	MAIN BEARING	(70,50mm) 2.7750'		5
8	6672889	BEARING	(50,00mm) 1.9685'		4
8	6666458	BEARING	(50,25mm) 1.9783'		4
8	6666459	BEARING	(50,50mm) 1.9881'		4
9	6668943	ROD	connecting - W/Ref. PISTON & CRANKSHAFT(10) - PISTON & CRANKSHAFT(12)		4
10	6668942	BOLT			8
11	6666442	NUT			8
12	6666463	BUSHING			4
13	6666471	PULLEY			1
14	6666482	FLANGE			1
15	6666444	BOLT			1
16	6666446	PULLEY			1
17	6666433	BOLT			4
18	6666491	COVER	rear		1
19	6632823	GASKET	liquid - use between Ref. PISTON & CRANKSHAFT(18) & block		x
20	6672890	INSERT			x

FUEL INJECTION SYSTEM

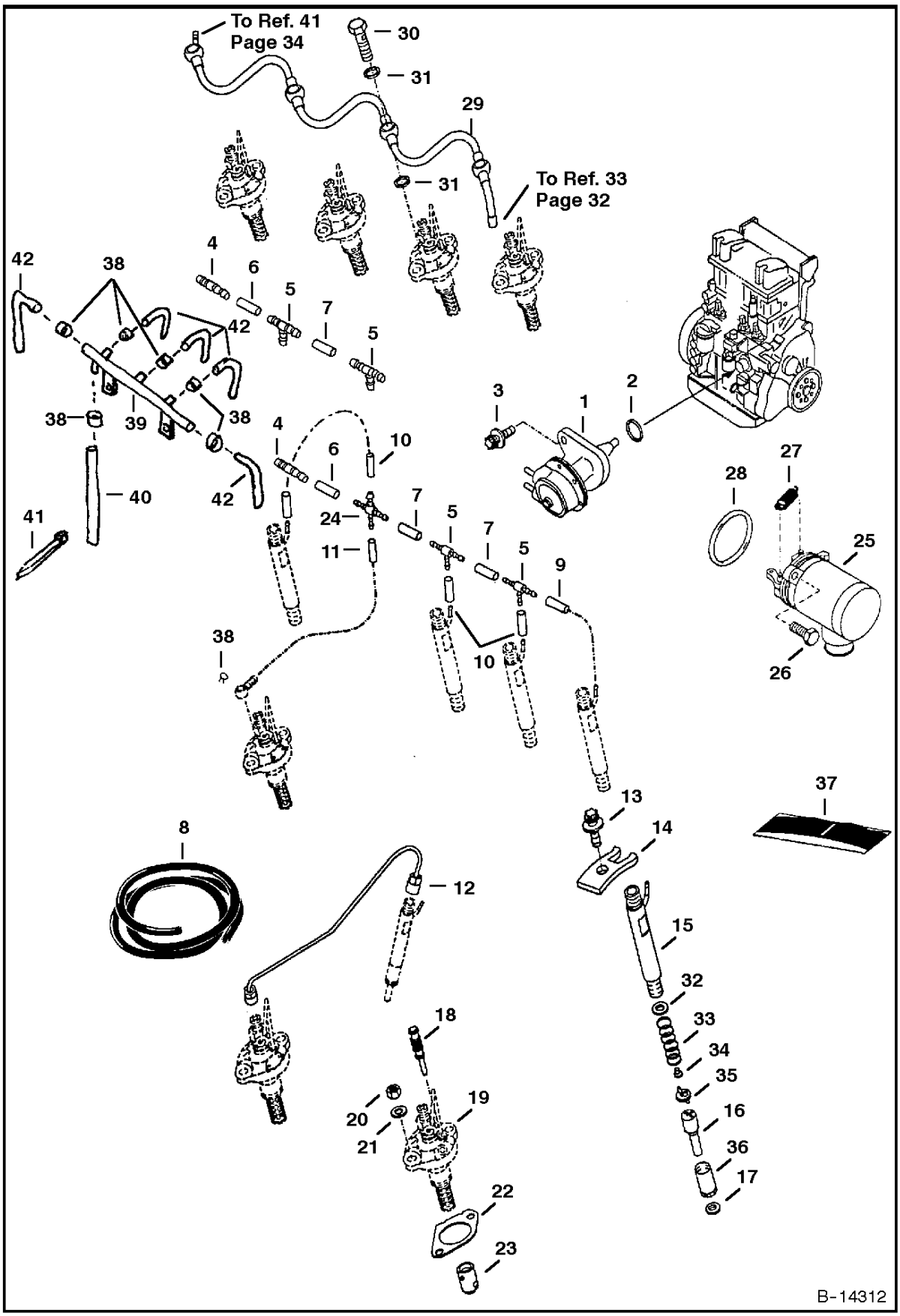

FUEL INJECTION SYSTEM

Ref.N°	Part N°	Description	Remarks	Serial N°	Qty.
1	6666522	FUEL PUMP	fuel	00561530 & Bel.	1
1		PUMP	fuel	00561531 & Abv.	1
2	6666420	O-RING	30 mm x 3 mm thickness		1
3	6673159	BOLT			2
4	NAP	ADAPTER	Order Ref. FUEL INJECTION SYSTEM(39) - Was 6666418 [A]		1
5	NAP	TEE	Order Ref. FUEL INJECTION SYSTEM(39) - Was 6666422 [A]		4
6	NAP	HOSE	Order Ref. FUEL INJECTION SYSTEM(8)		1
7	NAP	HOSE	Order Ref. FUEL INJECTION SYSTEM(8)		2
8	6666416	HOSE	1 meter long (39')		1
9	NAP	HOSE	Order Ref. FUEL INJECTION SYSTEM(8)		1
10	NAP	HOSE	Order Ref. FUEL INJECTION SYSTEM(8)		3
11	NAP	HOSE	Order Ref. FUEL INJECTION SYSTEM(8)		1
12	6666531	TUBE			4
13	6672902	BOLT			4
14	6666501	CLAMP			4
15	6673157	INJECTOR	includes Ref. FUEL INJECTION SYSTEM(16) & FUEL INJECTION SYSTEM(32)-FUEL INJECTION SYSTEM(36)		4
16	6673158	NOZZLE			4
17	6666492	SEAL RING			4
18	6666527	ADAPTER			4
19	6673156	INJECTOR	pump		4
20	1DM-8	NUT			8
21	6666453	WASHER			8
22	6666512	SHIM	.2 mm		x
22	6666513	SHIM	.3 mm		x
22	6666514	SHIM	.4 mm		x
22	6666515	SHIM	.5 mm		x
22	6666516	SHIM	.6 mm		x
22	6666517	SHIM	.7 mm		x
22	6666518	SHIM	.8 mm		x
23	6666493	TAPPET			4
24	NAP	CONNECTOR	cross - Order Ref. FUEL INJECTION SYSTEM(39) - Was 6670681 [A]		1
25	6666403	BOLT			2
26	6668950	SOLENOID	fuel shutAoff - W/Ref. FUEL INJECTION SYSTEM(27)		1
27	6666495	SPRING			1
28	6666409	O-RING	44 mm I.D. x 3mm thickness		1
29	6666763	FUEL LINE			1
30	6514745	SCREW	hollow		4
31	6672933	SEAL RING	brass		8
32	6668890	SHIM			x
33	6668891	SPRING			1
34	6668892	BOLT	thrust		1
35	6668893	SPACER			1
36	6668894	NUT	nozzle cap		1
37	6668906	REPAIR KIT	fuel pump screen, O-ring & screw		1
38	6673160	CLAMP			6
39	6675461	FUEL LINE	metal - assy. - Ref. FUEL INJECTION SYSTEM(38) & FUEL INJECTION SYSTEM(40)-FUEL INJECTION SYSTEM(42)	5141 40118 & Abv.	1
40	6675460	HOSE		5141 40118 & Abv.	1
41	6672934	STA-STRAP		5141 40118 & Abv.	1
42	NSS	HOSE	Order Ref. FUEL INJECTION SYSTEM(8)	5141 40118 & Abv.	5
43	6666418	ADAPTER	use W/bulk hose Ref. FUEL INJECTION SYSTEM(42)		1

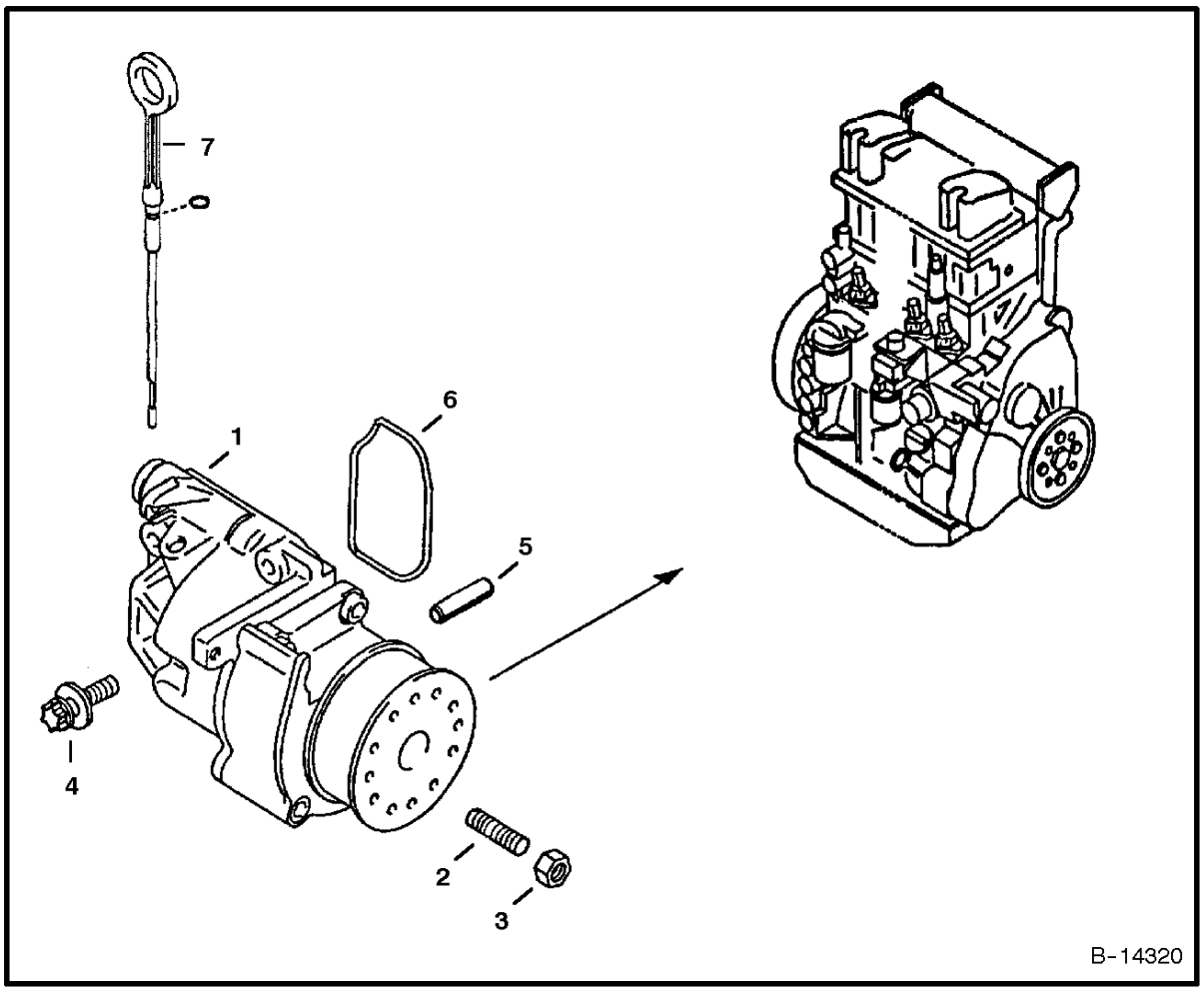

OIL PUMP

Ref. No.	Part Number	Description	Remarks	Serial Number	Qty.

OIL PUMP

Ref.N°	Part N°	Description	Remarks	Serial N°	Qty.
1	6669530	PUMP	oil -W/Ref. OIL PUMP(2) & OIL PUMP(3)		1
2	6668936	SET SCREW			1
3	1DM-6	NUT			1
4	6666708	BOLT			4
5	6666750	PIN			2
6	6666760	SEAL RING			1
7	6669531	DIPSTICK			1

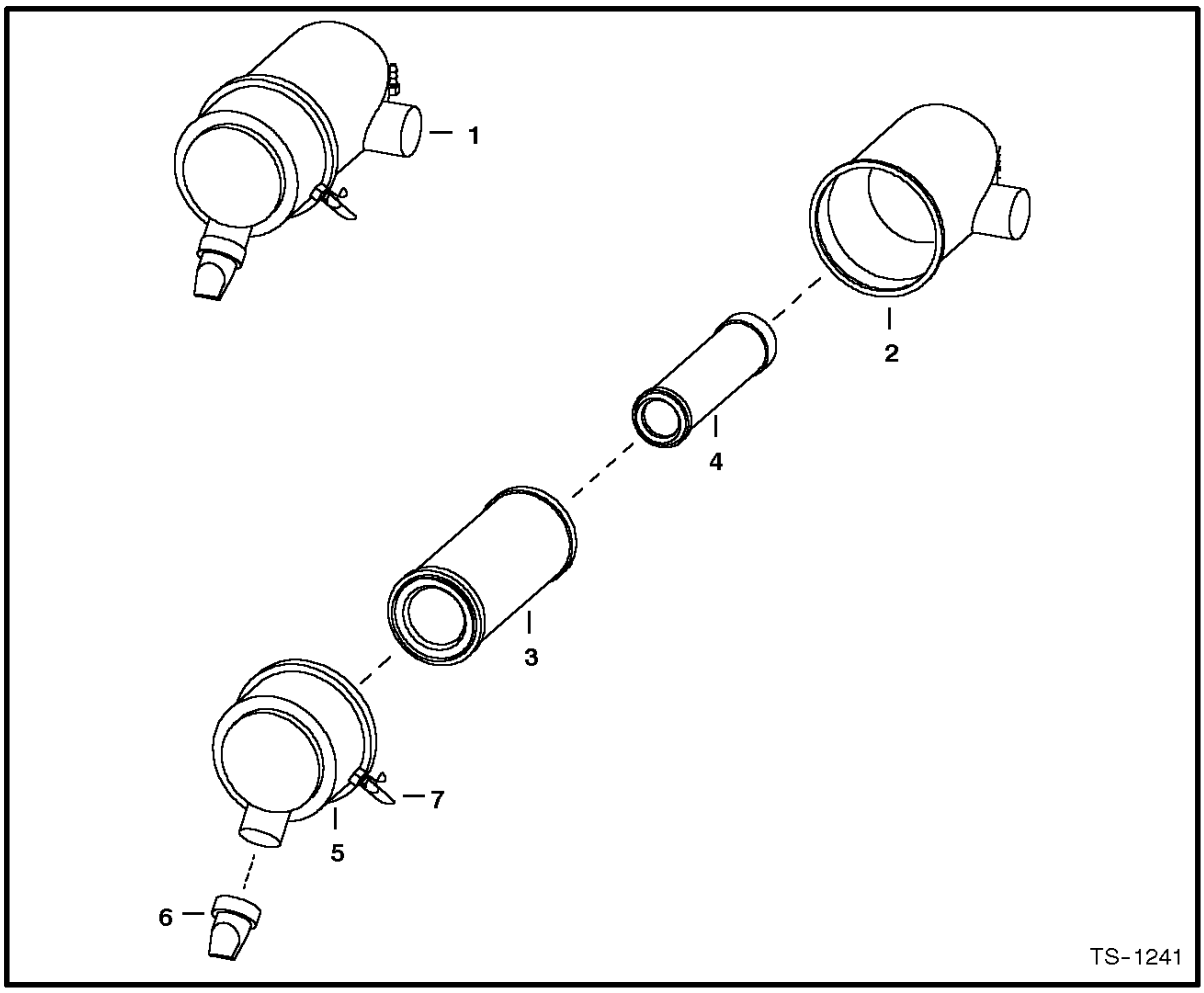

AIR CLEANER

Ref. No.	Part Number	Description	Remarks	Serial Number	Qty.

AIR CLEANER

Ref.N°	Part N°	Description	Remarks	Serial N°	Qty.
1	6674837	AIR CLEANER			1
2	NAP	TANK	Order 6674837		1
3	6666375	CARTRIDGE	outer		1
4	6666376	CARTRIDGE	inner		1
5	6666377	COVER	W/Ref. AIR CLEANER(7)		1
6	6666378	VALVE	evacuator - 2' I.D.		1
7	6670298	CLIP			3

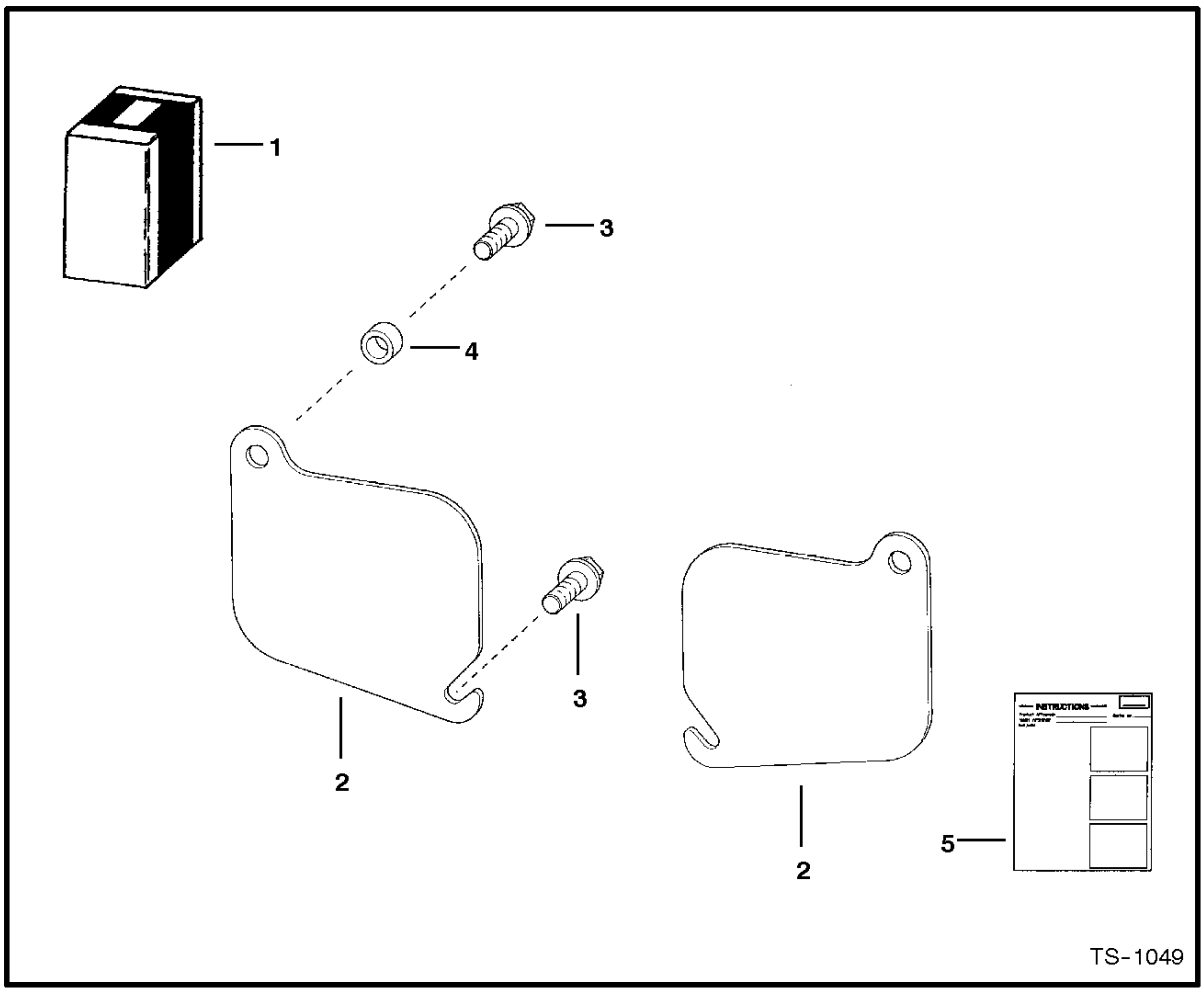

ACCESS COVER
(Cleanout - Lower Front of Chaincase)

Ref. No.	Part Number	Description	Remarks	Serial Number	Qty.

ACCESS COVER

Ref.N°	Part N°	Description	Remarks	Serial N°	Qty.
1	6577880	KIT	Ref. ACCESS COVER(2)-ACCESS COVER(5)		1
2	6577812	COVER			2
3	84G-3720	BOLT			4
4	6562619	BUSHING			2
5	6570931	INSTRUCTIONS			1

NOTE: If loader is not equipped with Deluxe Cab Option, this harness must be used to run Flasher Lights, Turn Indicators, Hazard LIghts, Rotating Beacon and/or Strobe Lights.

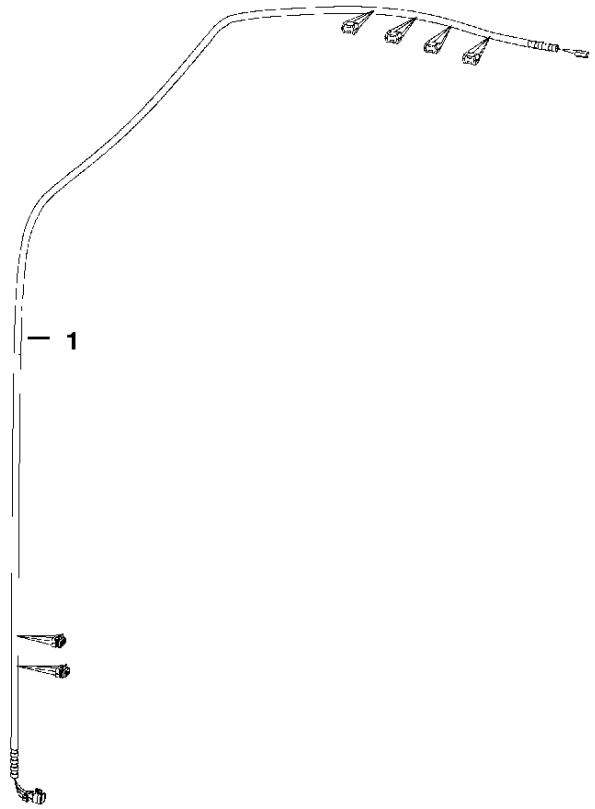

*** ACCESSORIES HARNESS**
(Standard - Non Deluxe Cab)

Ref. No.	Part Number	Description	Remarks	Serial Number	Qty.

* ACCESSORIES HARNESS

Ref.N°	Part N°	Description	Remarks	Serial N°	Qty.
1	6727468	HARNESS	SEE NOTE		1

BACK-UP ALARM KIT

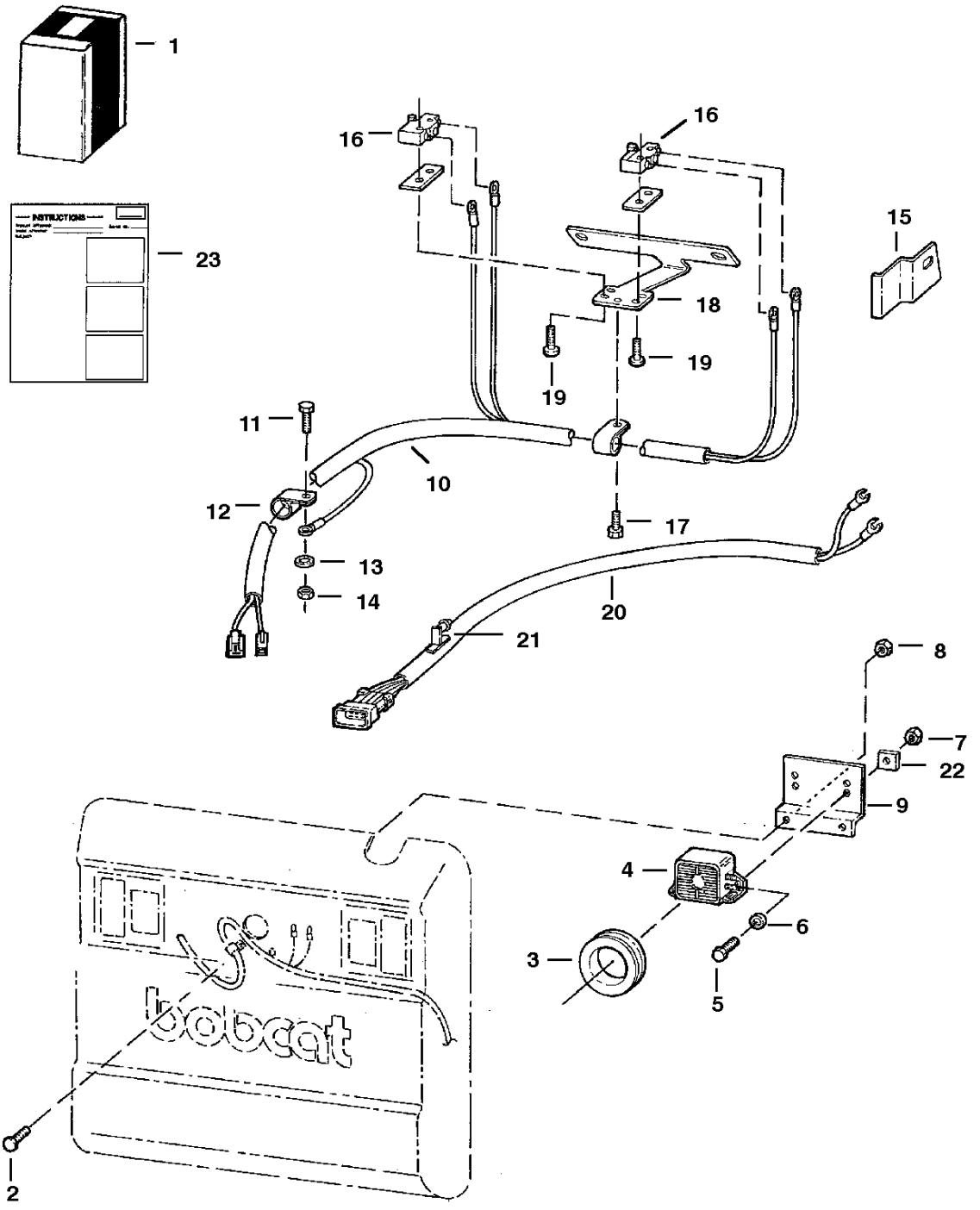

BACK-UP ALARM KIT

Ref.N°	Part N°	Description	Remarks	Serial N°	Qty.
1	6718822	KIT	backup alarm - Ref. BACK-UP ALARM KIT(2) - BACK-UP ALARM KIT(23)		1
2	37C-512	BOLT			2
3	6577545	GROMMET			1
4	6599931	ALARM	backup		1
4	6668879	DECAL			1
5	17C-410	BOLT			2
6	25E-13	WASHER			2
7	61D-5	NUT			2
8	83D-4	NUT			2
9	6707726	MOUNT			1
10	6718820	HARNESS			1
11	17C-412	BOLT			1
12	30H-19	CLAMP	insulated		2
13	6E-4	WASHER			1
14	61D-4	NUT			1
15	6713793	BRACKET	switch		2
16	6646781	SWITCH	alarm		2
17	84G-3112	BOLT			1
18	6713792	MOUNT	switch		1
19	59G-616	BOLT			4
20	6715659	HARNESS	'used on machines W/O rear lights - W/Ref. BACK-UP ALARM KIT(21)		1
21	6672492	RETAINER			1
22	774220	NUT			2
23	6900857	INSTRUCTIONS			1

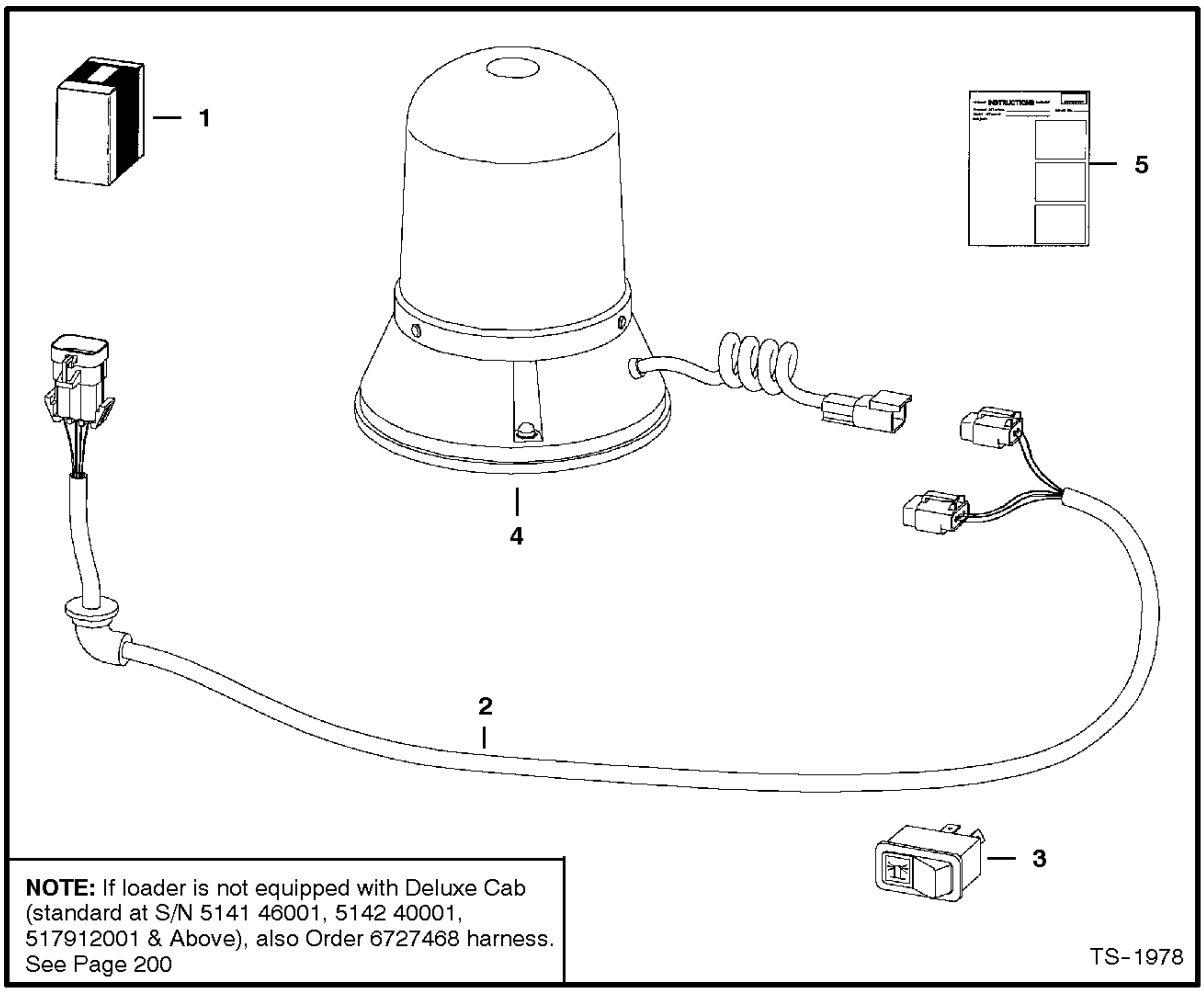

BEACON

Ref. No.	Part Number	Description	Remarks	Serial Number	Qty.

BEACON

Ref.N°	Part N°	Description	Remarks	Serial N°	Qty.
1	6719854	KIT	rotating beacon		1
2	6718872	HARNESS			1
3	6665317	SWITCH	horizontal		1
3	6668816	SWITCH	vertical		1
4	6675523	BEACON			1
4	6666571	BULB			1
5	6900991	INSTRUCTIONS			1

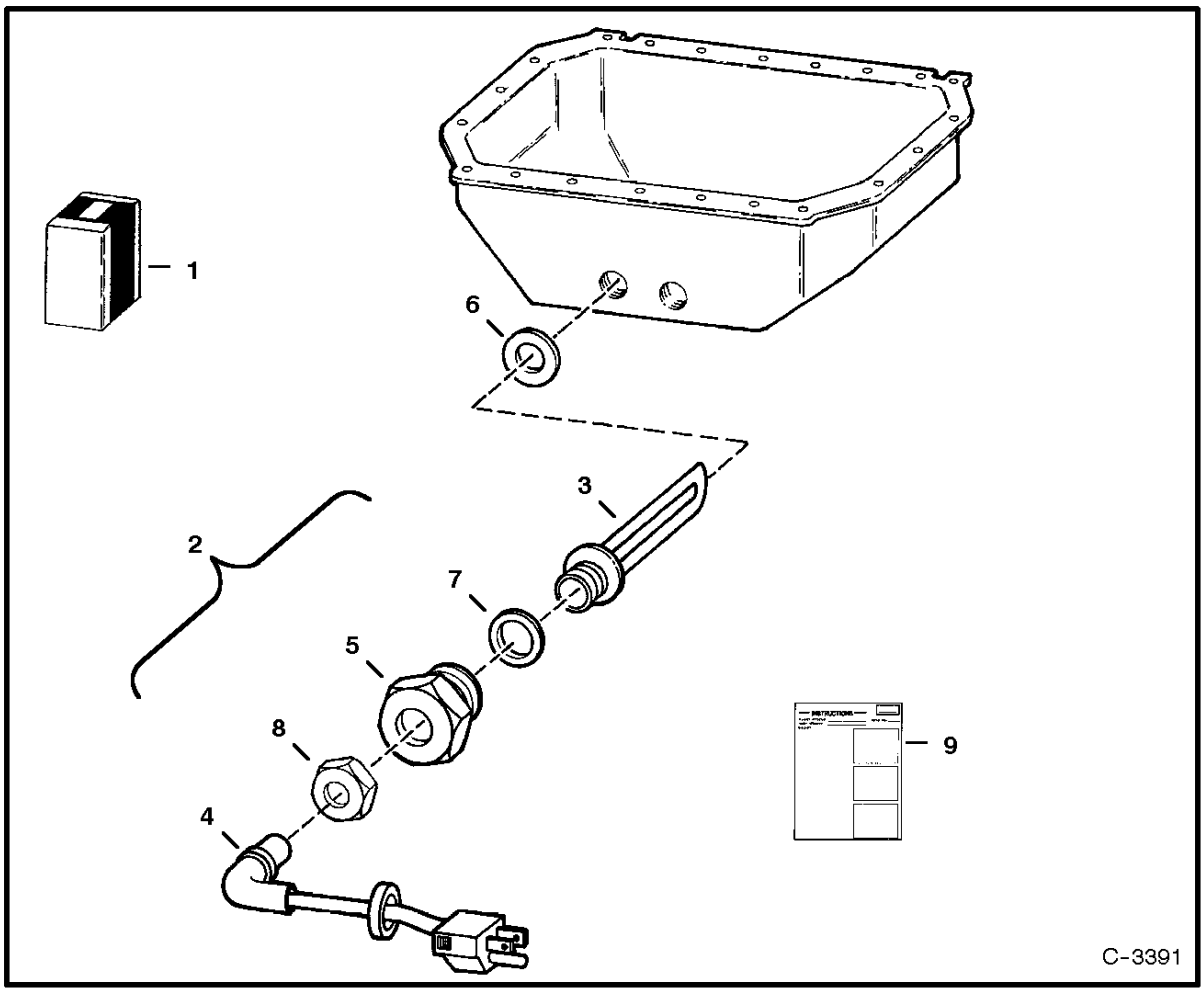

BLOCK HEATER
(Oil Pan Installed) (120 Volt) (Engine S/N 502302 & Below)

Ref. No.	Part Number	Description	Remarks	Serial Number	Qty.

BLOCK HEATER

Ref.N°	Part N°	Description	Remarks	Serial N°	Qty.
1	6710192	KIT	Ref. BLOCK HEATER(2) & BLOCK HEATER(9)		1
2	6709514	HEATER ASSY.	Ref. BLOCK HEATER(3) - BLOCK HEATER(8)		1
3	6709508	ELEMENT			1
4	6709509	CORD SET			1
5	6709510	ADAPTER	48mm threads		1
6	6709511	WASHER	sealing		1
7	6709513	GASKET			1
8	6709840	NUT			1
9	6724397	INSTRUCTIONS			1

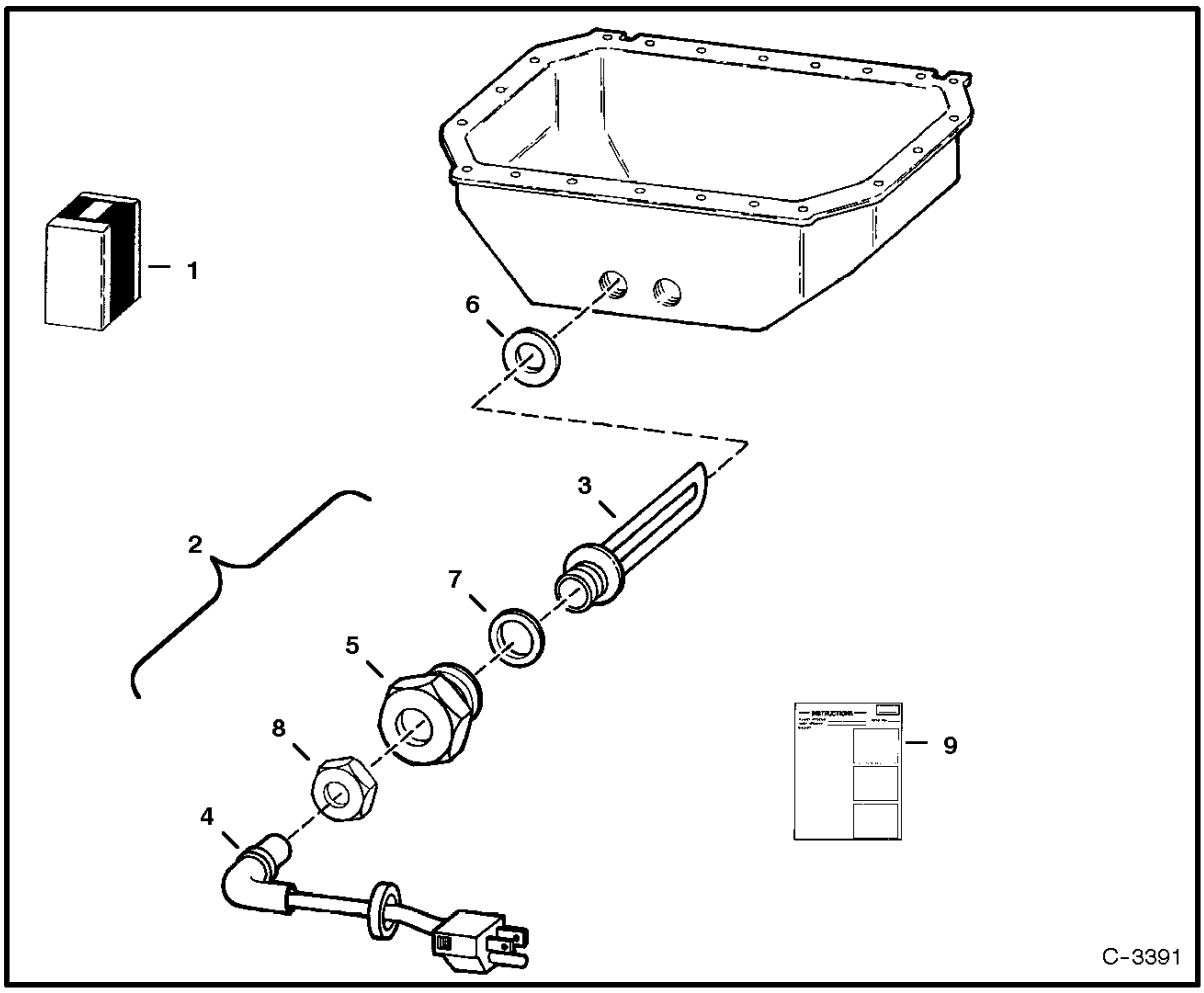

BLOCK HEATER
(Oil Pan Installed) (240 Volt) (Engine S/N 502302 & Below)

Ref. No.	Part Number	Description	Remarks	Serial Number	Qty.

BLOCK HEATER

Ref.N°	Part N°	Description	Remarks	Serial N°	Qty.
1	6711873	KIT	Ref. BLOCK HEATER(2) & BLOCK HEATER(9)		1
2	6711721	HEATER ASSY.	Ref. BLOCK HEATER(3) - BLOCK HEATER(8)		1
3	6711718	ELEMENT			1
4	6711720	CORD SET	European stlye outlet		1
5	6709510	ADAPTER	48mm threads		1
6	6709511	WASHER	sealing		1
7	6709513	GASKET			1
8	6709840	NUT			1
9	6724515	INSTRUCTIONS			1

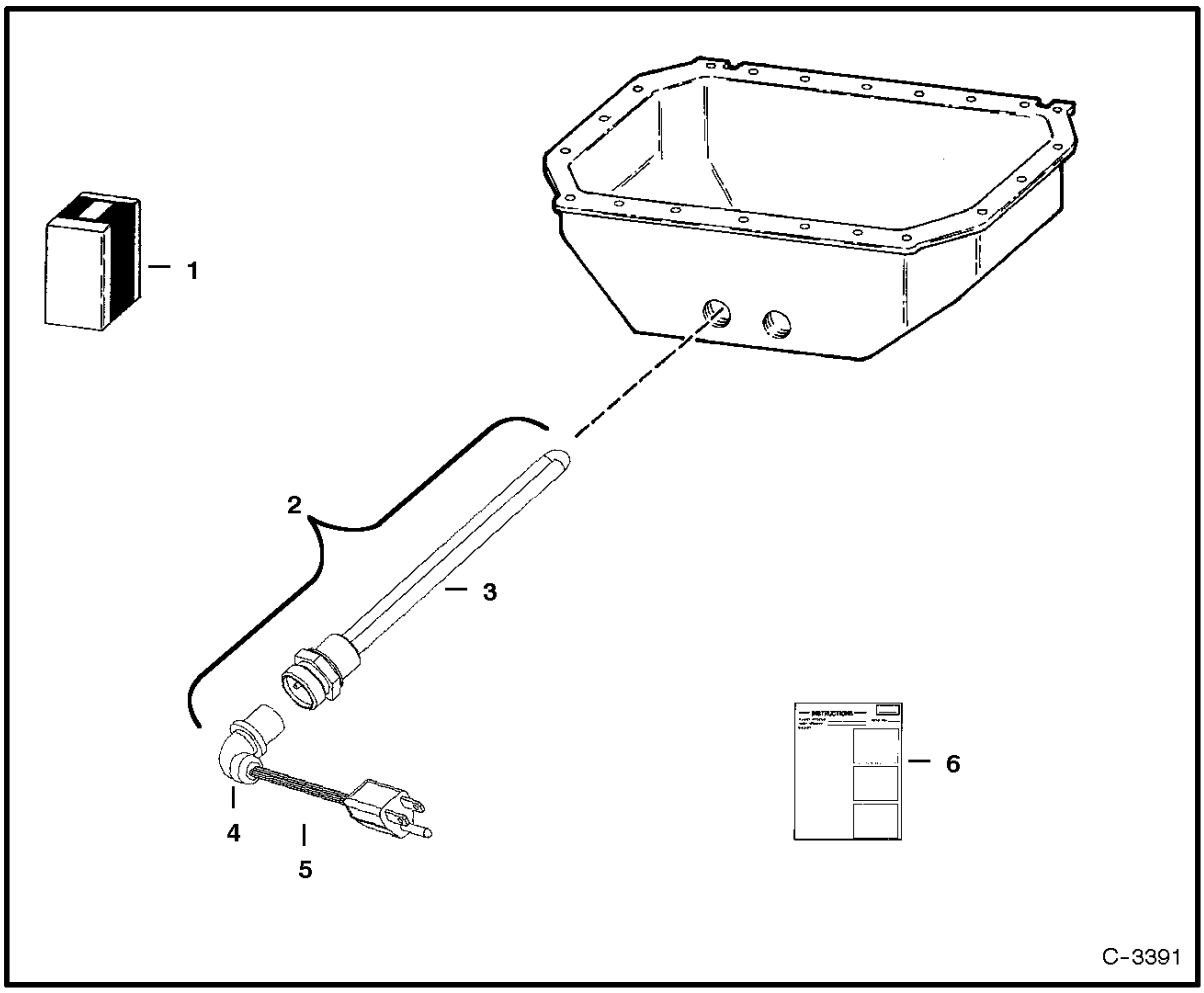

BLOCK HEATER
(Oil Pan Installed) (120 Volt) (Engine S/N 502303 & Above)

Ref. No.	Part Number	Description	Remarks	Serial Number	Qty.

BLOCK HEATER

Ref.N°	Part N°	Description	Remarks	Serial N°	Qty.
1	6725971	KIT	Ref. BLOCK HEATER(2)-BLOCK HEATER(6)		1
2	6675695	HEATER ASSY	Ref. BLOCK HEATER(3) & BLOCK HEATER(4)		1
3	6675708	ELEMENT	W/22mm thread		1
4	6709509	CORD SET	W/Ref. BLOCK HEATER(5)		1
5	NSS	NUT			1
6	6724397	INSTRUCTIONS			1

BUCKET POSITIONING KIT

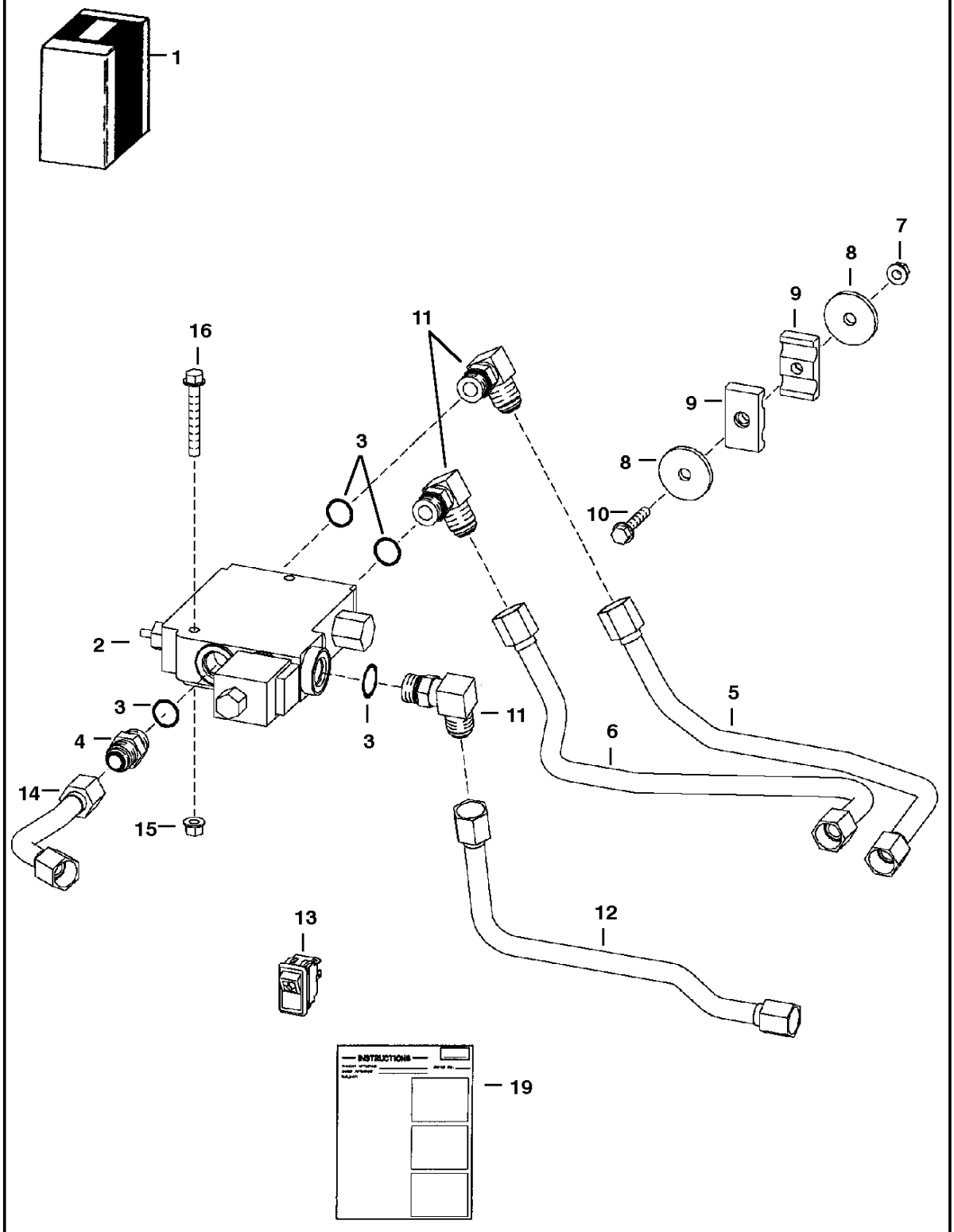

NOTE: For S/N & Below, the fittings (Ref. 11) connecting tubelines 5 & 6 to the BPV, were 15KV-7 (Ref. 4). See 873 (prior to G-series) parts manual.

TS-1689

BUCKET POSITIONING KIT

Ref.N°	Part N°	Description	Remarks	Serial N°	Qty.
1	6716282	KIT	Ref. BUCKET POSITIONING KIT(2)-BUCKET POSITIONING KIT(6) & BUCKET POSITIONING KIT(11)-BUCKET POSITIONING KIT(17)		1
2	NAP	VALVE	painted yellow - See Page BUCKET POSITIONING VALVE(5) - Was 6666598 [A]		1
2	6675669	VALVE	painted primer red - See Page BUCKET POSITIONING VALVE(5)		1
3	99K-10	O-RING			x
4	15KV-7	ADAPTER	W/Ref. BUCKET POSITIONING KIT(3) - not in kit	& Bel.	3
4	15KV-7	ADAPTER	W/Ref. BUCKET POSITIONING KIT(3)	& Abv.	1
4	97K-10	O-RING	flared end		x
5	6715078	TUBELINE	not in kit	& Bel.	1
5	6725954	TUBELINE		& Abv.	1
6	6715077	TUBELINE	not in kit	& Bel.	1
6	6725953	TUBELINE		& Abv.	1
7	85D-6	NUT	not in kit	& Bel.	1
8	872229	WASHER	not in kit	& Bel.	2
9	6701893	CLAMP	not in kit	& Bel.	2
10	17C-632	BOLT	not in kit	& Bel.	1
11	17KV-7	ELBOW	W/Ref. BUCKET POSITIONING KIT(3) - not in kit	& Bel.	1
11	17KV-7	ELBOW	W/Ref. BUCKET POSITIONING KIT(3)	& Abv.	3
11	97K-10	O-RING	flared end		x
12	6715281	TUBELINE			1
13	6668814	SWITCH	not needed for G-Series		1
14	6715076	TUBELINE			1
15	83D-5	NUT			2
16	35C-540	BOLT			2
17	6900573	INSTRUCTIONS			1

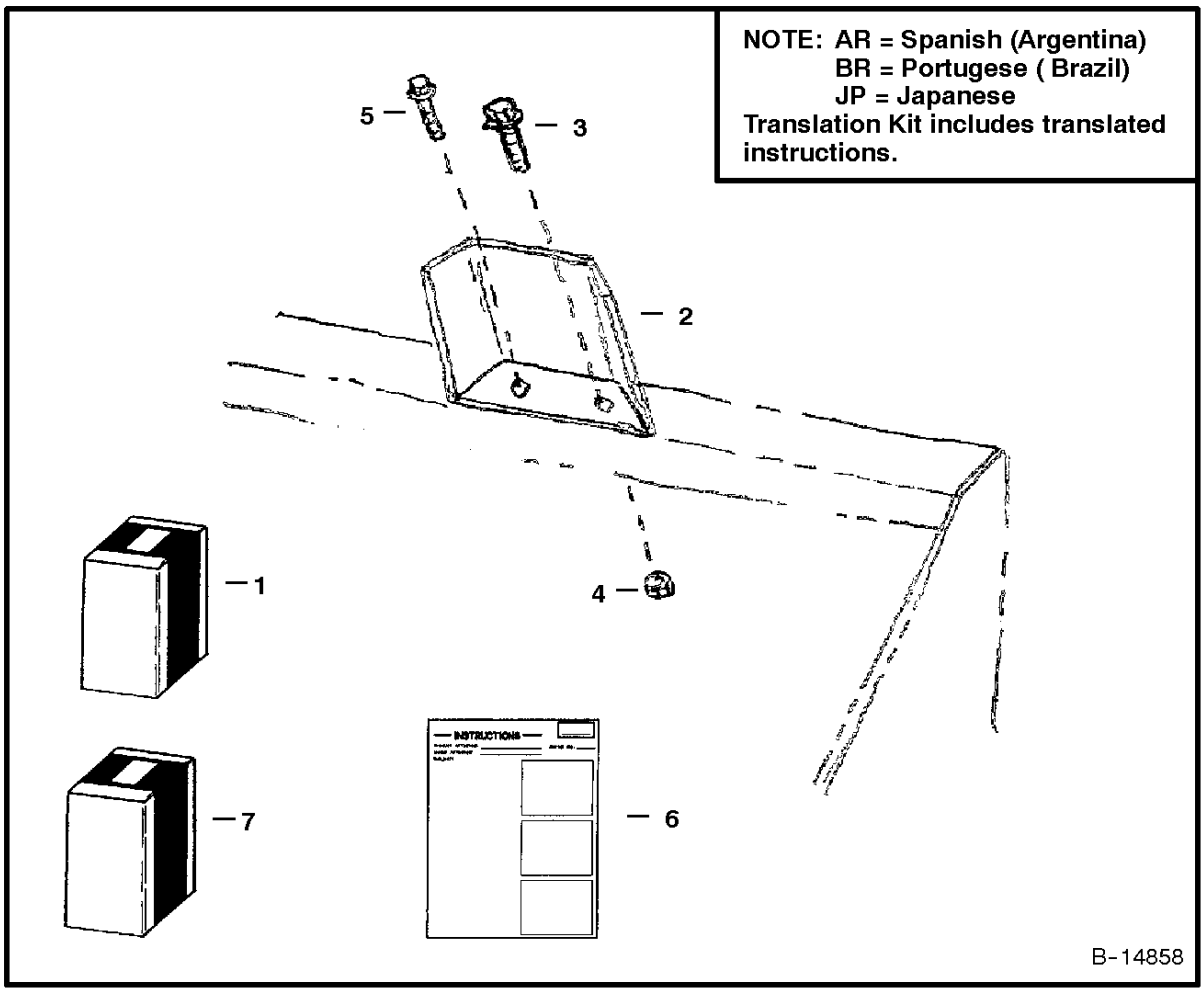

BUCKET SHIELD KIT

Ref. No.	Part Number	Description	Remarks	Serial Number	Qty.

BUCKET SHIELD KIT

Ref.N°	Part N°	Description	Remarks	Serial N°	Qty.
1	6713152	KIT	W/Ref. BUCKET SHIELD KIT(2) - BUCKET SHIELD KIT(6)		1
2	6711158	SHIELD			2
3	35C-820	BOLT			2
4	57D-8	NUT			2
5	84G-3716	BOLT			2
6	6724649	INSTRUCTIONS			1
6	6724649AR	INSTRUCTIONS	Translated - See Note		1
6	6724649BR	INSTRUCTIONS	Translated - See Note		1
7	6719006AR	KIT	Translation - See Note		1
7	6719006BR	KIT	Translation - See Note		1
7	7pro1Page				x

CAB DOOR

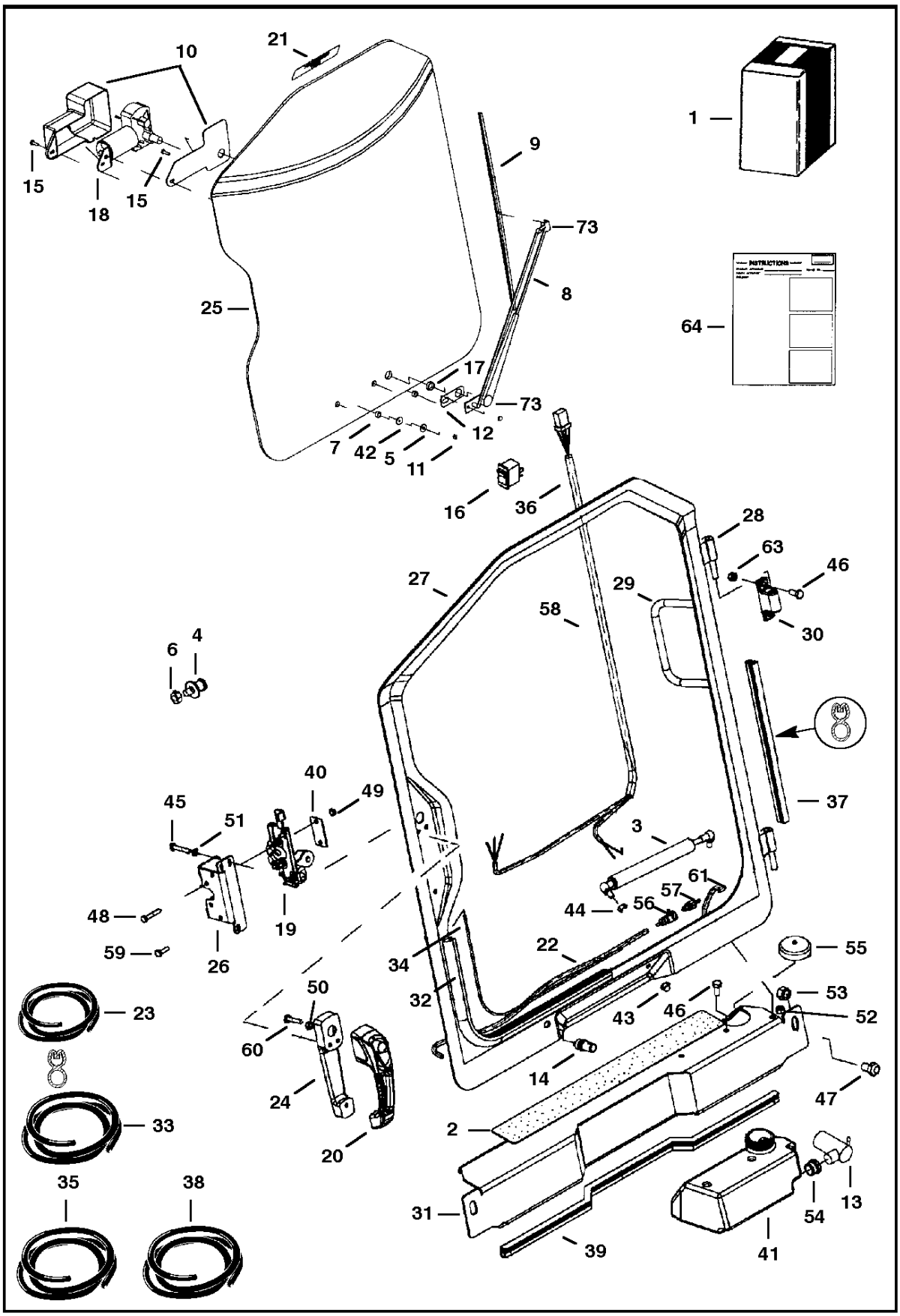
10
21
1
9
15
18
15
73
25
8
64
17
73
12
7
42
5
11
16
36
28
63
46
27
29
58
30
6
4
37
40
49
45
51
3
48
19
61
57
44
56
59
26
22
55
34
32
50
53
43
46
52
60
14
47
24
23
2
33
20
35
38
31
54
13
39
41

CAB DOOR

Ref.N°	Part N°	Description	Remarks	Serial N°	Qty.
1	6718807	KIT	door - Was SALES [D]		1
2	6542731	SAFETY TREAD			1
3	6674938	GAS SPRING			1
4	6654170	STRIKER BOLT			1
5	6664065	WASHER	nylon		1
6	91D-7	NUT			1
7	6664085	BUSHING	nylon		2
8	6664095	ARM	wiper		1
9	6664096	BLADE	wiper		1
10	6664097	COVER	wiper		1
11	6664103	NUT	acorn		2
12	6664178	GASKET	panto adapter		1
13	6664554	PUMP	washer bottle		1
14	6664555	NOZZLE	washer		1
15	6664566	SCREW			2
16	6665707	SWITCH	front wiper		1
17	6667201	SPACER	nylon		1
18	6668137	MOTOR	wiper		1
18	6631928	SHAFT			1
18	6631927	GEAR			1
18	6670164	LINK			1
18	961528	HARDWARE			1
19	6674666	LATCH			1
20	6674667	HANDLE			1
20	6709527	KEY	ignition, front & rear doors		1
21	6707852	DECAL	exit		1
22	NAP	HOSE	washer - 25.25' (641,4 mm) long - Order Ref. CAB DOOR(23)		1
23	6676003	HOSE	bulk - Sold Per Foot - .109' I.D. - Was 6708310 [A]		x
24	6717146	SPACER	handle		1
25	6717360	WINDOW	.25' thick glass		1
26	6717369	BRACKET	latch		1
27	NAP	DOOR	.5' taller than 6726435 door - Was 6717590 [A]		1
27	6726435	DOOR	.5' shorter than NAP (6717590) door		1
28	6718376	HINGE	door		2
29	6718521	HANDLE	grab		1
30	6717593	HINGE	base		2
31	NAP	SHIELD	Was 6718179 [A]		1
31	6725171	SHIELD			1
32	NAP	SEAL	window - 113.3' (2877,8 mm) long - Order Ref. CAB DOOR(33)		1
33	6665568	SEAL	bulk - Sold Per Foot		x
34	NAP	CORD	window - 113.3' (2877,8 mm) long - Order Ref. CAB DOOR(35)		1
35	6554149	CORD	bulk - Sold Per Foot		x
36	6718295	HARNESS	wiper		1
37	NAP	SEAL	127.3' (3233,4 mm) - Order Ref. CAB DOOR(38)		1
38	6675558	SEAL	bulk - Sold Per Foot - Was 6669390 [A]		x
39	NAP	SEAL	threshold - 32' (812,8 mm) - Used W/Ref. CAB DOOR(31) (NAP/6718179 Shield) - Order Ref. CAB DOOR(38)		1
39	NAP	SEAL	threshold - 36' (914,4 mm) - Used W/Ref. CAB DOOR(31) (6725171 Shield) - Order Ref. CAB DOOR(62)		1
40	6718520	COVER	latch		1
41	6725201	TANK	washer - Was 6718627 [A]		1
42	6801059	WASHER	neoprene		1
43	46D-5	NUT	acorn		1

CAB DOOR

Ref.N°	Part N°	Description	Remarks	Serial N°	Qty.
44	25E-16	WASHER			1
45	1CM-640	BOLT			3
46	17C-512	BOLT			6
47	17C-612	BOLT	Was 17C-812 [B]		2
48	1CM-635	BOLT			2
49	4DM-6	NUT			2
50	61D-4	NUT			1
51	6EM-60	WASHER			3
52	61D-5	NUT			5
53	61D-6	NUT	Was 61D-8 [B]		2
54	6666766	GROMMET			1
55	6674993	CAP	vented		1
56	6675298	COUPLER	body		1
57	6675299	COUPLER	insert		1
58	6675378	CLIP	use W/door mounted nozzle		2
58	6675378	CLIP	use W/wiper arm mounted nozzle		1
59	1CM-620	BOLT			2
60	17C-420	BOLT			1
61	NAP	HOSE	4.25' (107,9mm) long - Order Ref. CAB DOOR(23)		1
62	6513152	SEAL	bulk - Sold Per Foot		x
63	59D-5	NUT			4
64	NAP	HOSE	18.25' (463,6mm) long - Order Ref. CAB DOOR(71)		1
65	6676499	GROMMET	wiper		1
66	6676500	ELBOW			1
67	6676498	NOZZLE	wiper arm mounted		1
68	6676501	CLIP			1
69	NAP	HOSE	10.25' (260,4mm) long - Order Ref. CAB DOOR(71)		1
70	6676917	ELBOW			1
71	6676918	HOSE	bulk - sold per foot - .125' I.D.		x
72	6901013	INSTRUCTIONS	Was 6900854 [A]		1
73	6670288	END	plastic		2

CAB DOOR
(Special Applications)

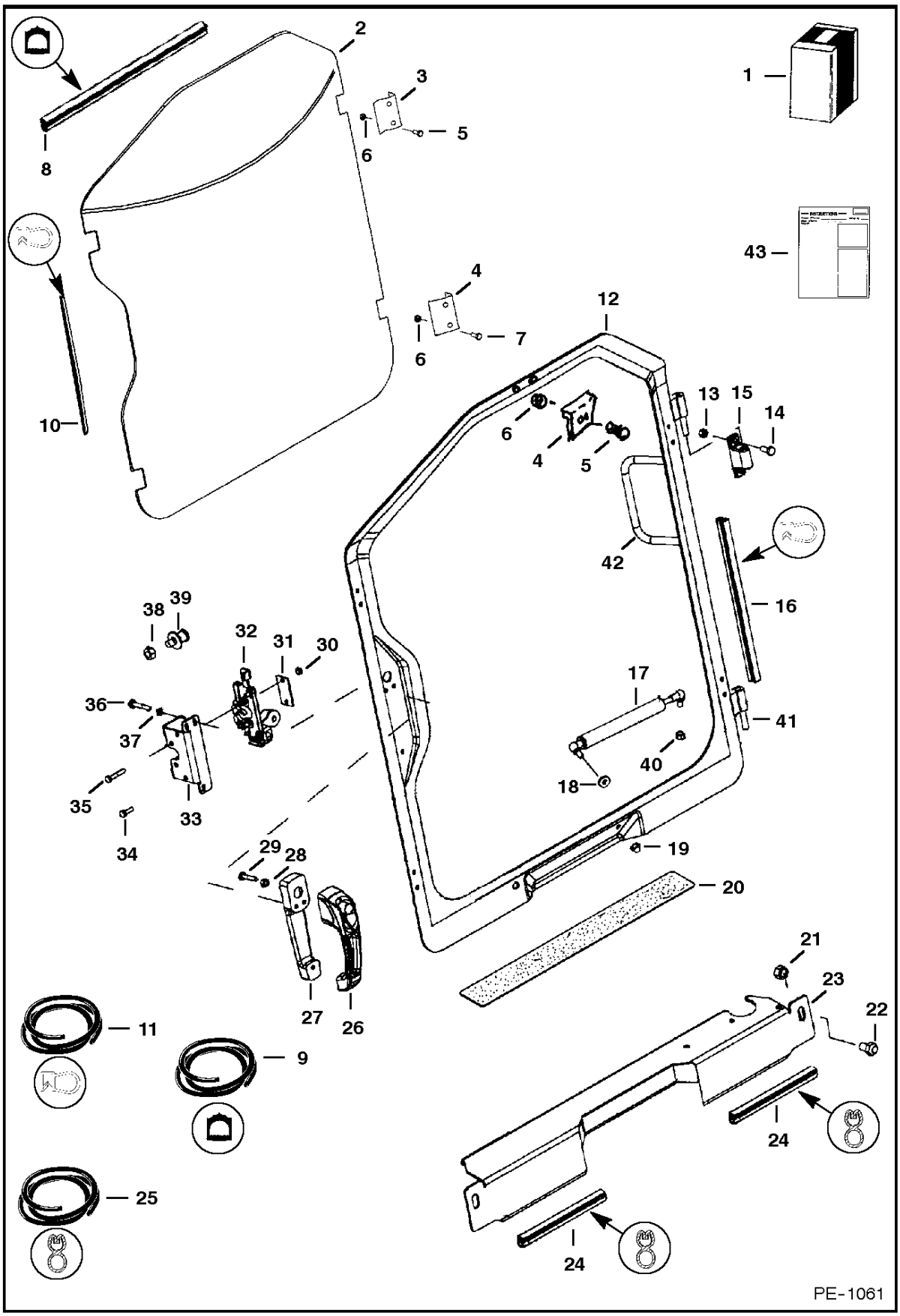

CAB DOOR

Ref.N°	Part N°	Description	Remarks	Serial N°	Qty.
1	6725941	KIT	door		1
2	NAP	WINDOW	.5' thick polycarbonate W/O top notch - Order 6725935 window Ref. CAB DOOR(4) & (2) each of Ref. CAB DOOR(5) & CAB DOOR(6) - Wa		1
2	6725935	WINDOW	.5' thick polycarbonate W/top notch		1
3	6725938	CLAMP			2
4	6725937	CLAMP			3
5	17C-628	BOLT			6
6	95D-6	NUT			10
7	17C-624	BOLT			4
8	NAP	SEAL	'12'(304,8mm) long - Order Ref. CAB DOOR(9) - used W/Ref. CAB DOOR(2) - W/O top notch		1
9	6670759	SEAL	bulk - Sold Per Foot		x
10	NAP	SEAL	'115'(2921mm) long -Order Ref. CAB DOOR(11)		1
11	6675558	SEAL	bulk - Sold Per Foot		x
12	6726932	DOOR	W/Ref. CAB DOOR(41) & CAB DOOR(42)		1
13	59D-5	NUT			4
14	17C-512	BOLT			6
15	6717593	HINGE	base		2
16	NAP	SEAL	127.3'(3233,4mm) long - Order Ref. CAB DOOR(11)		1
17	6674938	GAS SPRING			1
18	25E-16	WASHER			1
19	46D-5	NUT	acorn		1
20	6542731	SAFETY TREAD			1
21	55D-6	NUT			4
22	17C-612	BOLT			2
23	6725042	SHIELD			1
24	NAP	SEAL	'11'(279,4mm) long -Order Ref. CAB DOOR(25)		2
25	6513152	SEAL	bulk - Sold Per Foot		x
26	6674667	HANDLE			1
26	6709527	KEY	ign. & rear door		1
27	6717146	SPACER	handle		1
28	61D-4	NUT			1
29	17C-420	BOLT			1
30	4DM-6	NUT			2
31	6718520	COVER	latch		1
32	6674666	LATCH			1
33	6717369	BRACKET	latch		1
34	1CM-620	BOLT			2
35	1CM-635	BOLT			2
36	1CM-640	BOLT			3
37	6EM-60	WASHER			3
38	91D-7	NUT			1
39	6654170	STRIKER BOLT			1
40	61D-5	NUT			5
41	6718376	HINGE	door		2
42	6718521	HANDLE	grab		1
43	6901013	INSTRUCTIONS			1

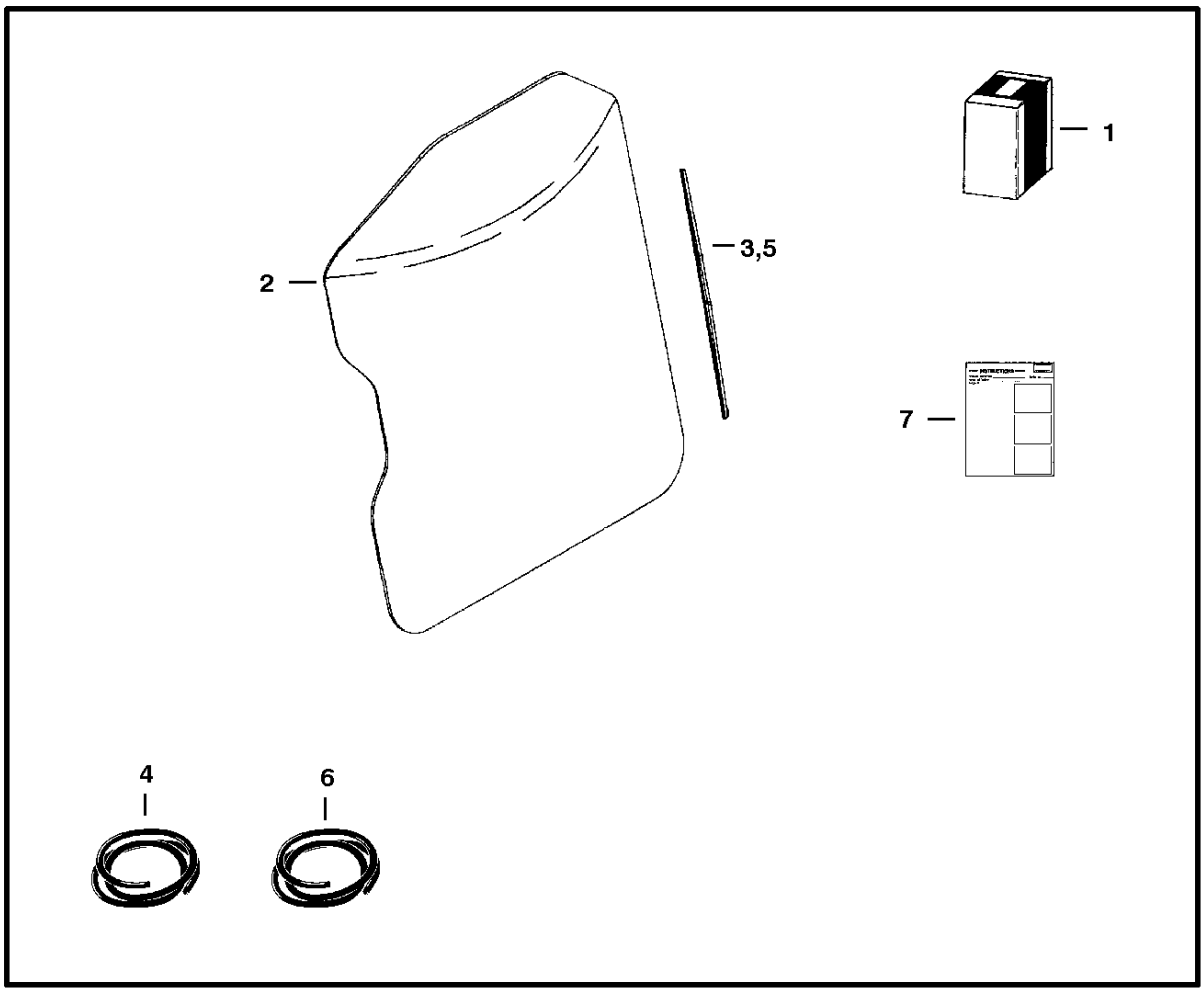

CAB DOOR
(Lexan Window)

Ref. No.	Part Number	Description	Remarks	Serial Number	Qty.

CAB DOOR

Ref.N°	Part N°	Description	Remarks	Serial N°	Qty.
1	6726427	KIT	Ref. CAB DOOR(2)-CAB DOOR(7)		1
2	6675215	WINDOW	lexan		1
3	NAP	SEAL	113.3'(2877,8 mm) long - Order Ref. CAB DOOR(4)		1
4	6665568	SEAL	bulk - Sold Per Foot		x
5	NAP	CORD	113.3'(2877,8 mm) long - Order Ref. CAB DOOR(6)		1
6	6554149	CORD	bulk - Sold Per Foot		x
7	6901036	INSTRUCTIONS			1

NOTE: For Cab Enclosure Kit Order from Gwinner SALES # 6719668.
For Special Applications Kit Order from Gwinner SALES # 6719326.

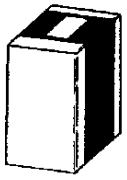

NO DRAWING AT TIME OF PRINTING









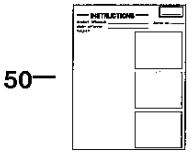

CAB ENCLOSURE

Ref.N°	Part N°	Description	Remarks	Serial N°	Qty.
1	SALES	KIT	cab enclosure - SEE NOTE		1
1	SALES	KIT	special applications - SEE NOTE		1
2	6725360	WINDOW	top - Was 6675214 [A]		1
3	6674741	KNOB			4
4	6717360	WINDOW	for standard door - .25' thick glass		1
4	NAP	WINDOW	for special applications door - .5' thick polycarbonate - Order 6725935		1
5	35C-516	BOLT			1
6	61D-5	NUT			1
7	1CM-640	BOLT			3
8	6717593	HINGE			2
9	61D-8	NUT			6
10	6726435	DOOR	standard - Was 6717590 [A]		1
10	6726932	DOOR	special applications		1
11	NAP	SHIELD	Was 6718179 [A]		1
11	6725171	SHIELD			1
12	NAP	SEAL	rear window - 76.5'(1943 mm) long - Order Ref. CAB ENCLOSURE(49)		1
12	NAP	CORD	rear window - 81.5'(2070 mm) long - Order Ref. CAB ENCLOSURE(27)		1
13	6717369	BRACKET			1
14	6718520	COVER	cover		1
15	6674666	LATCH	rotary		1
16	17C-512	BOLT			6
17	25E-16	WASHER			1
18	6719413	WINDOW	.25' thick poly carbonate - rear		1
19	6559515	EXIT TAG			1
20	17C-612	BOLT	Was 17C-812 [B]		2
21	1CM-635	BOLT			3
22	6717146	SPACER			1
23	6542731	SAFETY TREAD			1
24	6707852	DECAL			1
25	NAP	SEAL	front window - 115"(2921 mm) long - Order Ref. CAB ENCLOSURE(27)		1
25	NAP	CORD	front window - 115"(2921 mm) long - Order Ref. CAB ENCLOSURE(27)		1
26	NAP	SEAL	127.3"(3233,4mm) long - Order Ref. CAB ENCLOSURE(28)		1
27	6665568	SEAL	bulk - Sold Per Foot		x
27	6554149	CORD	bulk - Sold Per Foot		x
28	6675558	SEAL	bulk - Sold Per Foot - Was 6669390 [A]		x
29	6674938	GAS SPRING			1
30	46D-5	NUT	acorn		2
31	6725200	PLATE	plate		1
32	6EM-60	WASHER			3
33	35C-620	BOLT			2
34	6654170	STRIKER BOLT	striker		1
35	55D-6	NUT			2
36	6674667	HANDLE			1
36	6709527	KEY	ignition & front-rear doors		x
37	NAP	SEAL	used W/NAP 6718179 shield - 30"(762 mm) long - Order Ref. CAB ENCLOSURE(28)		1
37	NAP	SEAL	used W/6725171 shield - 40'(1016mm)long - Order Ref. CAB ENCLOSURE(48)		1
38	59D-5	NUT			4
39	6513152	SEAL	Bulk - sold per foot		x
40	17C-420	BOLT			1

CAB ENCLOSURE

Ref.N°	Part N°	Description	Remarks	Serial N°	Qty.
41	6718376	HINGE	door		2
42	6718521	HANDLE	grab		1
43	1CM-620	BOLT			2
44	4DM-6	NUT			2
45	61D-4	NUT			1
46	91D-7	NUT			1
47	83D-5	NUT			1
48	6555351	SEAL	Bulk - sold per foot		x
49	6675387	SEA;	Bulk - sold per foot		x
50	NAP	SEAL	11' (280mm) long - Order Ref. CAB ENCLOSURE(39)		x
51	NAP	SEAL	24' (609,6mm) long - Order Ref. CAB ENCLOSURE(48) - cab to fender		2
52	NAP	SEAL	12' (304,8mm) long - Order Ref. CAB ENCLOSURE(53)		1
53	6670759	SEAL	bulk - sold per foot		x
54	6725937	CLAMP			2
55	6725938	CLAMP			2
56	17C-642	BOLT			4
57	95D-6	NUT			8
58	17C-628	BOLT			4
59	6901013	INSTRUCTIONS	Was 6900854 [A]		1

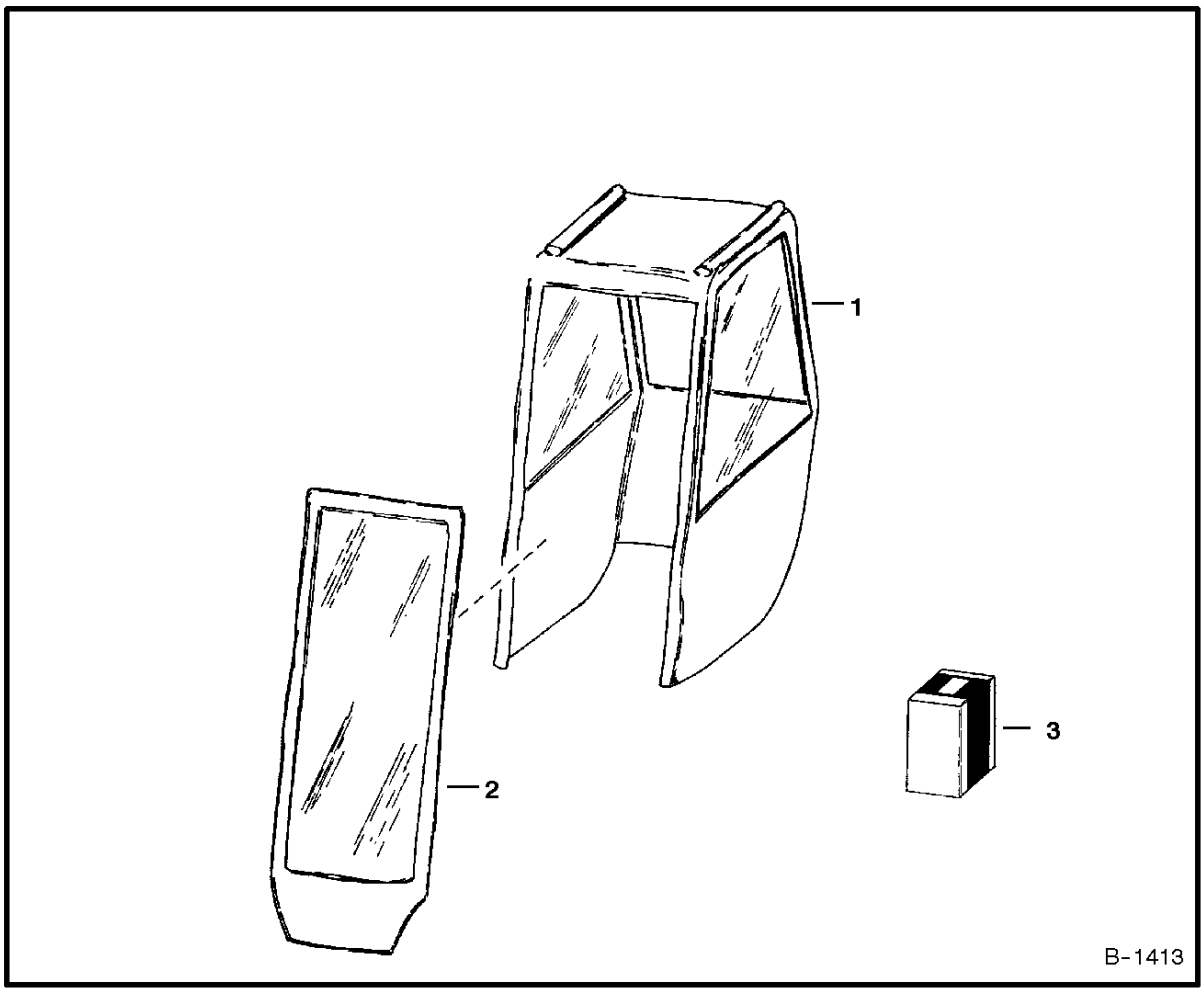

CAB ENCLOSURE
(Envelope)

Ref. No.	Part Number	Description	Remarks	Serial Number	Qty.

CAB ENCLOSURE

Ref.N°	Part N°	Description	Remarks	Serial N°	Qty.
1	6675544	VINYLCAB	fits over cab - W/Ref. CAB ENCLOSURE(2) & CAB ENCLOSURE(3)		1
2	6675590	DOOR	vinyl		1
3	6675591	HINGE KIT			1

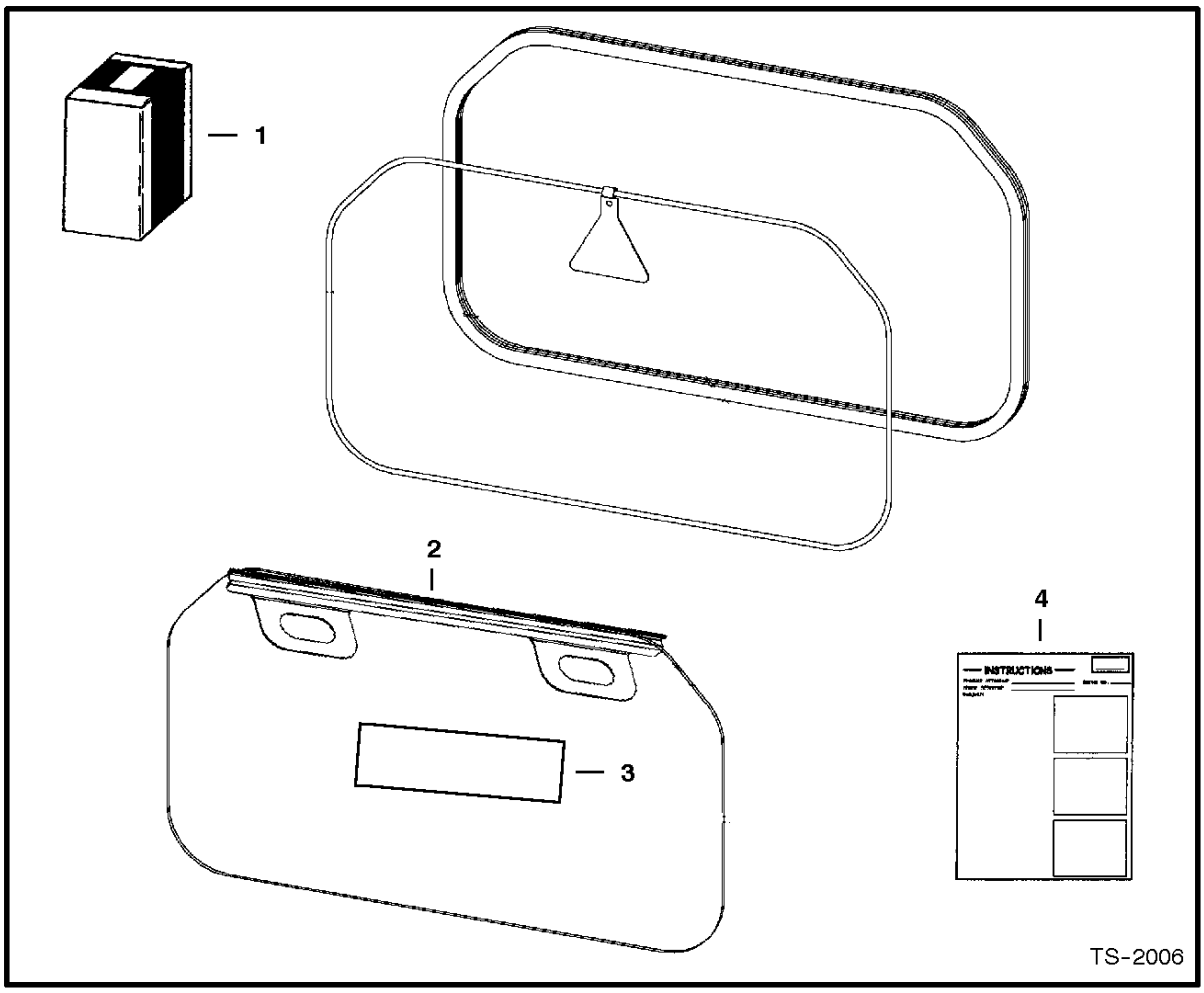

CAB WINDOWS
(External Window Removal Kit)

Ref. No.	Part Number	Description	Remarks	Serial Number	Qty.

CAB WINDOWS

Ref.N°	Part N°	Description	Remarks	Serial N°	Qty.
1	6725946	KIT	Ref. CAB WINDOWS(2) - CAB WINDOWS(4)		1
2	6725421	HANDLE			1
3	6726303	DECAL			1
4	6901029	INSTRUCTIONS			1

CAB WINDOWS
(Top, Rear & Side)

NOTE: Order Top & Rear WIndow Kit from Gwinner Sales # 6718805.
Order Side Window Kit from Gwinner Sales # 6718806.

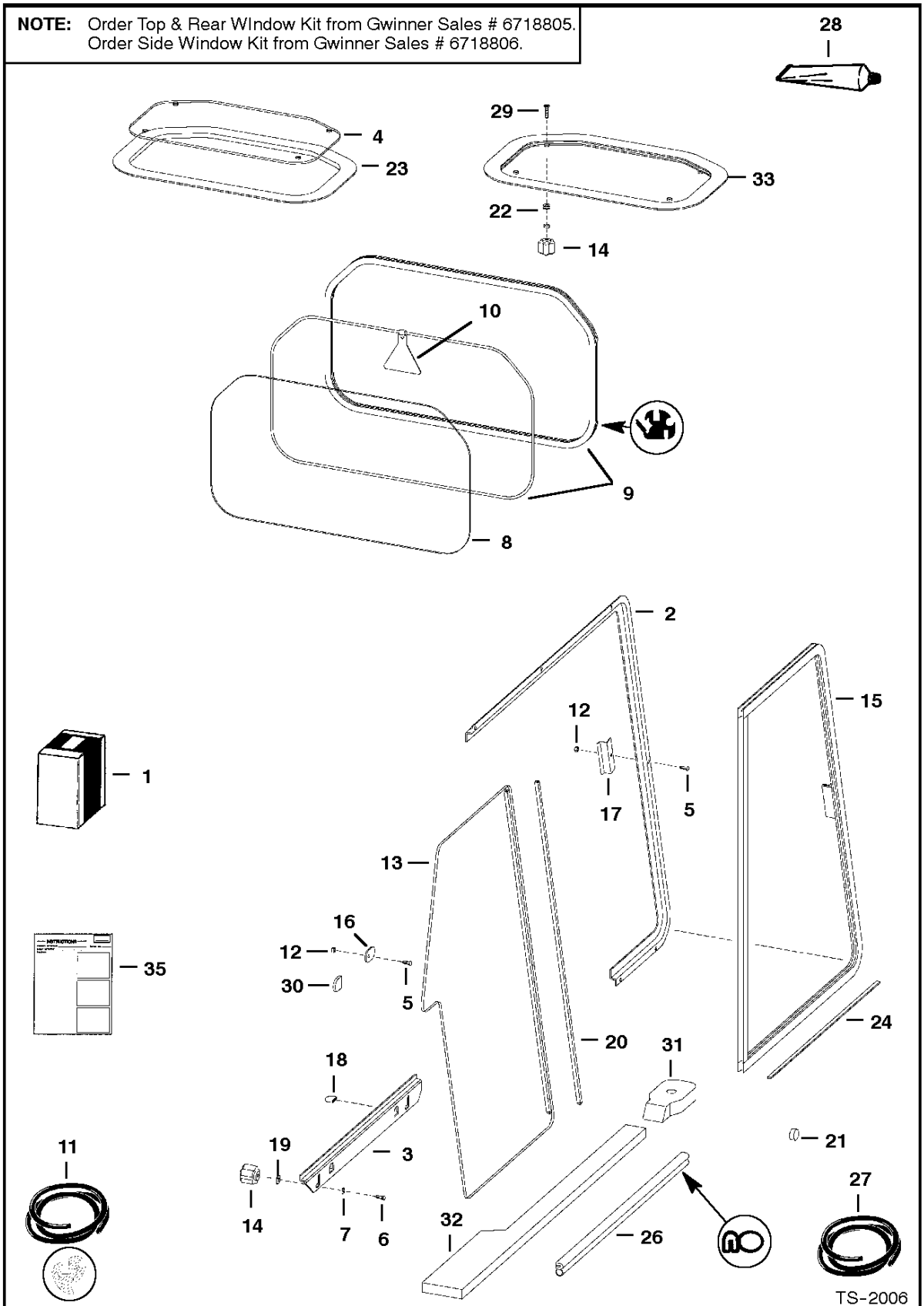

CAB WINDOWS

Ref.N°	Part N°	Description	Remarks	Serial N°	Qty.
1	SALES	KIT	top & rear window		1
1	SALES	KIT	side windows		1
2	6717870	TRACK	L.H. side		1
2	6717872	TRACK	R.H. side		1
3	6717871	TRACK	L.H. bottom		1
3	6717873	TRACK	R.H. bottom		1
4	NAP	WINDOW	top - Order Ref. CAB WINDOWS(33) - Was 6725360 [A]		1
5	10C-410	BOLT			18
6	10C-416	BOLT			4
7	25E-14	WASHER			4
8	6717874	WINDOW	rear		1
9	NAP	EXTRUSION	75.75' (1924 mm) long - Order Ref. CAB WINDOWS(11)		1
10	NAP	CORD	75.75' (1924 mm) long - Order Ref. CAB WINDOWS(11)		1
10	6559515	EXIT TAG			1
11	6675387	SEA;	Bulk - Sold Per Foot		x
11	6554149	CORD	Bulk - Sold Per Foot		x
12	59D-4	NUT			18
13	6674520	WINDOW	L.H. rear - W/Ref. CAB WINDOWS(24)		1
13	6674522	WINDOW	R.H. rear - W/Ref. CAB WINDOWS(24)		1
14	6674741	KNOB			8
15	6674519	WINDOW	L.H. front		1
15	6674521	WINDOW	R.H. front		1
16	6719063	STOP	window		2
17	6719037	STRIKER			2
18	6719065	COVER			4
19	6675212	RETAINER	tab bolt		4
20	6675833	SEAL	rear window - dual wiper W/tape		2
21	6657719	PLUG	for .75' dia. hole		2
22	6675545	GROMMET			4
23	NAP	SEAL	Order Ref. CAB WINDOWS(33) - Was 6675546 [A]		1
24	6676927	FELT STRIP	20.38' (517,7mm) long		2
25	NAP	SEAL	55.25' (1403,4mm) long - Order Ref. CAB WINDOWS(23)		1
26	NAP	SEAL	24' (609,6mm) long - Order Ref. CAB WINDOWS(27)	& Bel.	2
27	6555351	SEAL	bulk - sold per foot		x
28	NAP	ADHESIVE	1 oz. - top window seal - Ref. CAB WINDOWS(23) - Was 6675694 [A]		1
29	91G-416	BOLT			4
30	6677198	CAP	cab		2
31	6729011	SEAL	cab mount	& Abv.	2
32	6729010	SEAL	cab - main frame - L.H. - foam	& Abv.	1
32	6729009	SEAL	cab - main frame - R.H. - foam	& Abv.	1
33	6728629	WINDOW	assy. - W/seal & grommets		1
34	6664085	BUSHING	nylon		4
35	6901013	INSTRUCTIONS	top & rear windows - Was 6900852 [A]		1
35	6900853	INSTRUCTIONS	side windows		1

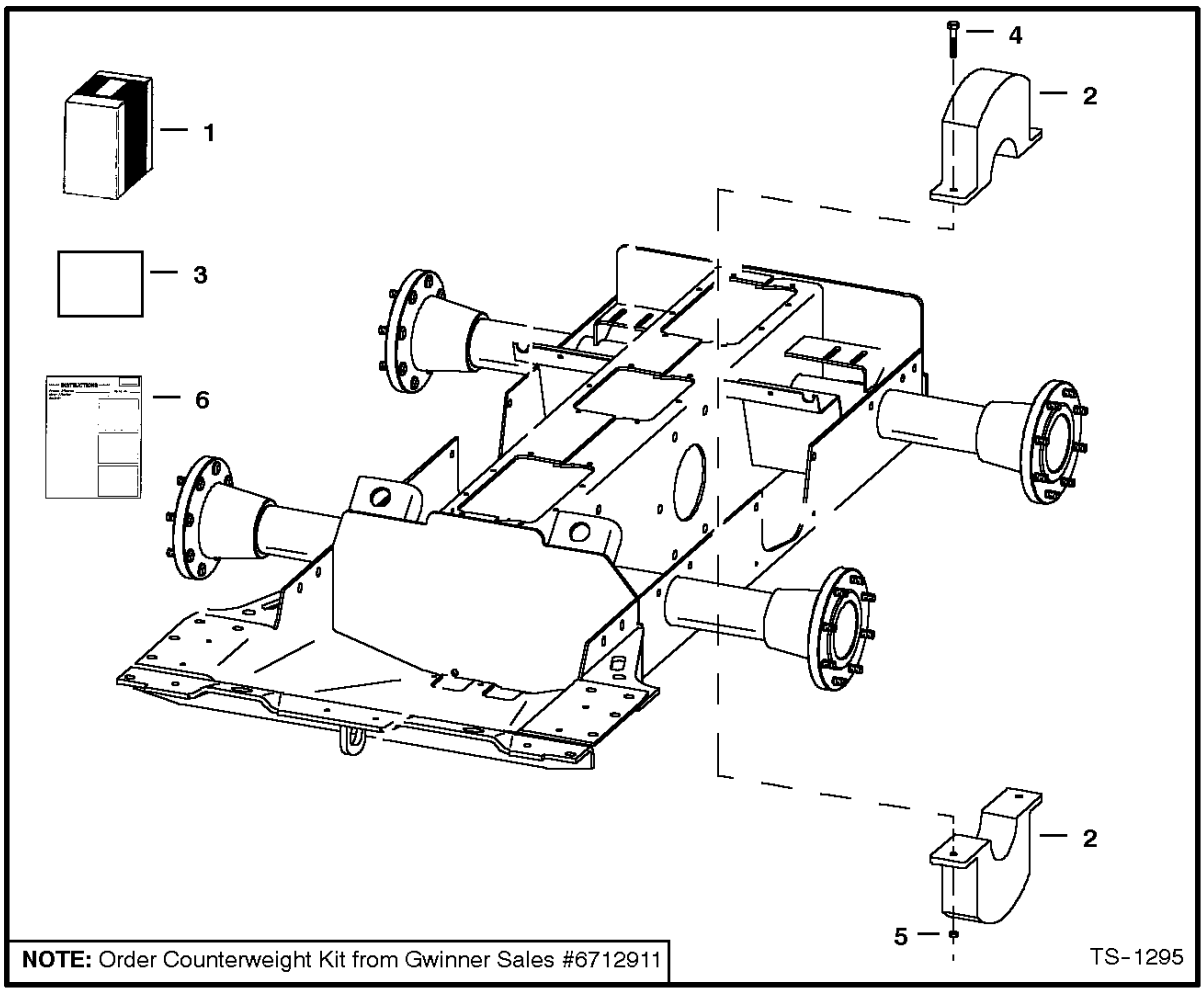

COUNTERWEIGHT KIT
(2000/2500 lb. Rear Axle)

Ref. No.	Part Number	Description	Remarks	Serial Number	Qty.

COUNTERWEIGHT KIT

Ref.N°	Part N°	Description	Remarks	Serial N°	Qty.
1	SALES	KIT	counterweight		1
2	6714362	WEIGHT	rear axle - 42.8 lbs (19,4 kg) - 4.5' (114,3 mm) wide		4
3	6717232	DECAL	2500 lb load - 873		1
3	6712912	DECAL	2000 lb load - 863		1
4	17C-640	BOLT			4
5	61D-6	NUT			4
6	6900366	INSTRUCTIONS			1

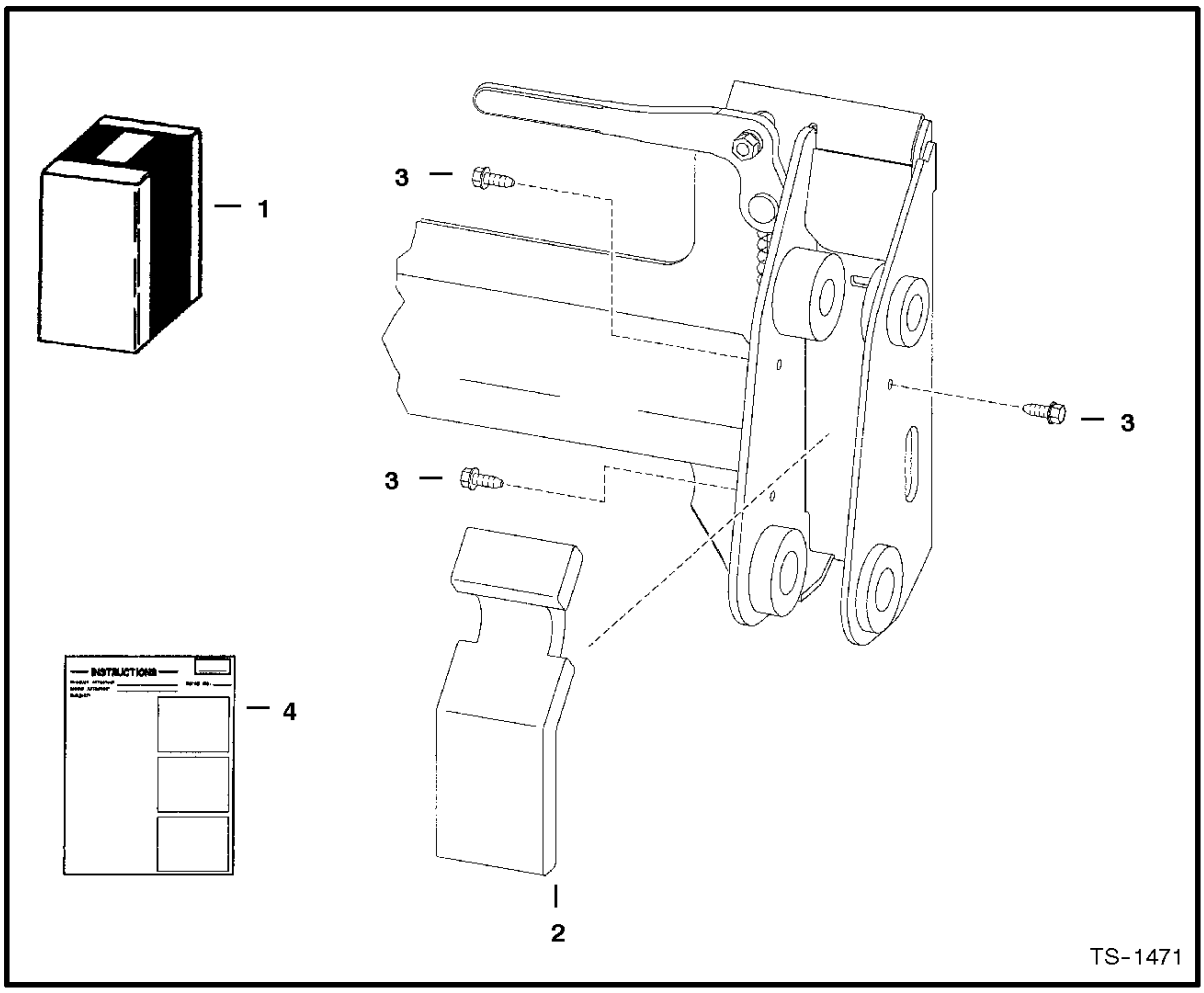

DEBRIS EJECTOR KIT

Ref. No.	Part Number	Description	Remarks	Serial Number	Qty.

DEBRIS EJECTOR KIT

Ref.N°	Part N°	Description	Remarks	Serial N°	Qty.
1	6712988	KIT	Ref. DEBRIS EJECTOR KIT(2) - DEBRIS EJECTOR KIT(4)		1
2	6712415	DEBRIS EJECTOR			2
3	84G-3716	BOLT			6
4	6724593	INSTRUCTIONS			1

DECALS

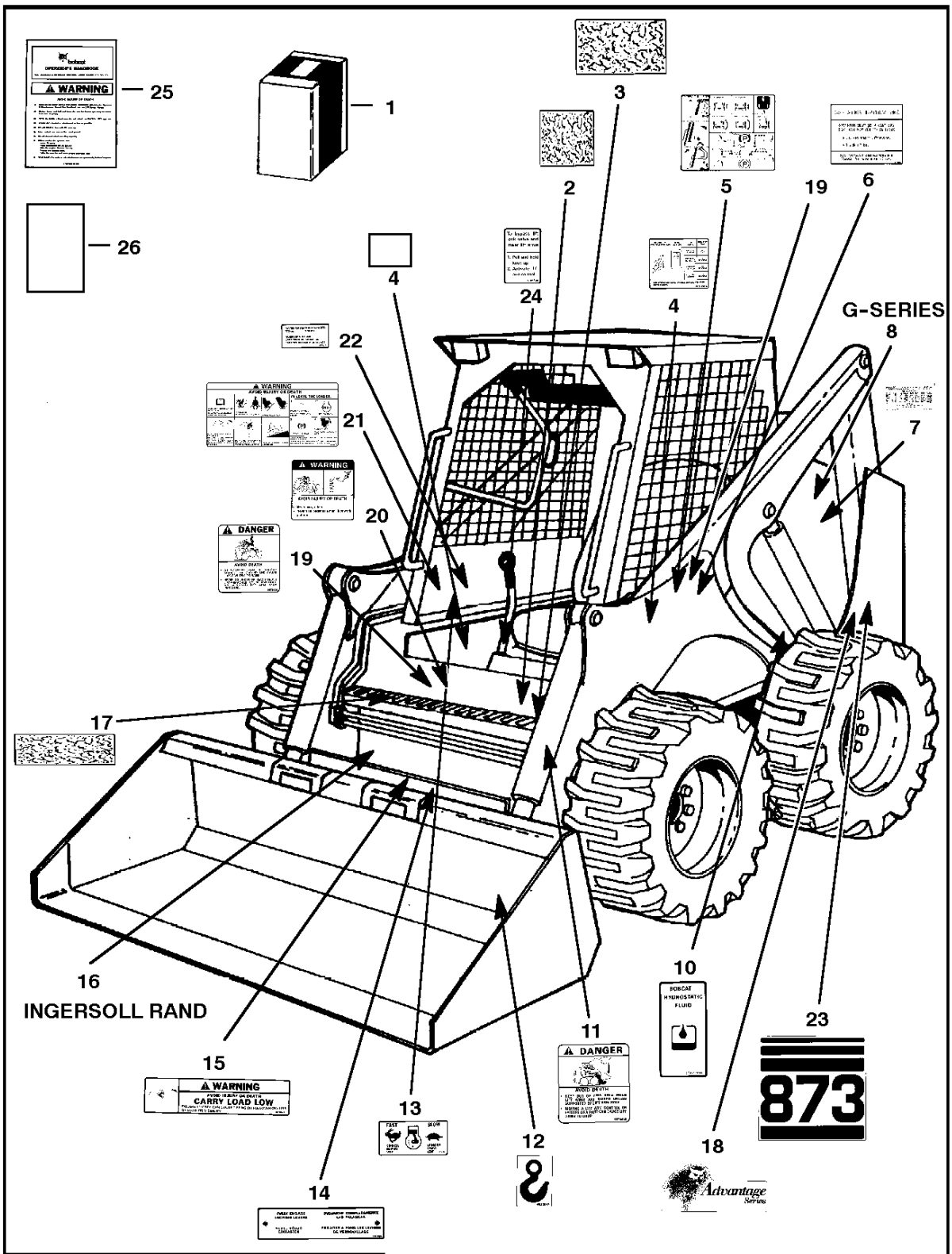

NOTE: AR = Spanish (Argentine)
BR = Portugese (Brazil)
JP = Japanese (Japan)
Translation kit includes Safety Manual, Operators Manual & Decal Kit.

B-14391

DECALS

Ref.N°	Part N°	Description	Remarks	Serial N°	Qty.
1	6725035	KIT	decal		1
1	6725036AR	KIT	translation - SEE NOTE		1
1	6725036BR	KIT	translation - SEE NOTE		1
1	6725035AR	KIT	decal - SEE NOTE		1
1	6725035BR	KIT	decal - SEE NOTE		1
1	6725035JP	KIT	decal - SEE NOTE		1
2	6553976	SAFETY TREAD	5'x8'(127 mm x 203,2 mm)		1
3	6554100	SAFETY TREAD	6' x 6' (152,4 mm x 152,4 mm)		3
4	6717343	DECAL	danger		2
5	6728327	DECAL	operation - Was 6718701 [A]		1
6	6718703	DECAL	seat & seat bar operating		1
7	6557224	DECAL	patent		1
8	6717907	DECAL	G-Series		1
9	6715428	DECAL	dynamic noise level - Europe		1
10	6565990	DECAL	hyd. fill		1
11	6579639	DECAL	danger		1
12	6595014	DECAL	toe hook - See Page DECALS(10)		2
13	6557565	DECAL	throttle		1
14	6561383	DECAL	Bob-tach		1
15	6579528	DECAL	carry load low		1
16	6728125	DECAL	Ingersoll Rand - white lettering - Was 6711328 [A]		1
17	6712791	SAFETY TREAD	'25.3" x 13"(642,6 mm x 330,2 mm) - W/corners (2) cut		1
18	6718271	DECAL	advantage series - L.H.		1
19	6579509	DECAL	danger		1
20	6710358	DECAL	warning		1
21	6718698	DECAL	warning		1
22	6709452	DECAL	rated operating capacity - 2400 lbs.		1
23	6714538	DECAL	model number		2
24	6711840	DECAL	manual lift release		1
25	6719563	KIT	handbook - W/Wire Rope		1
25	6558309	WIRE ROPE	33' (838,2 mm) long - Bulk - Sold Per Foot - Also Order (2) of 6558310		x
25	6558310	SLEEVE	wire rope		2
26	6900791	MANUAL	operator		1

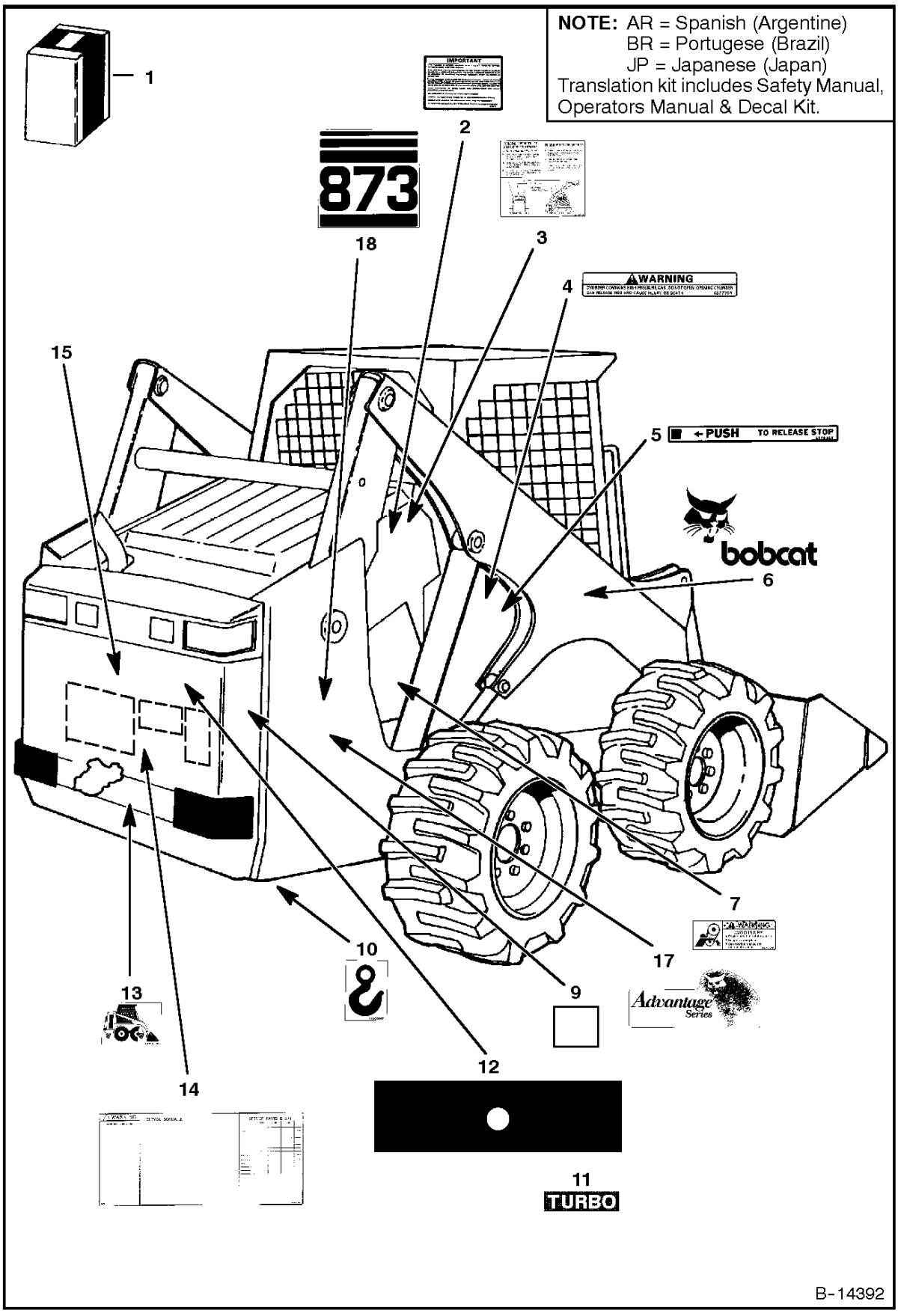
NOTE: AR = Spanish (Argentine)
BR = Portugese (Brazil)
JP = Japanese (Japan)
Translation kit includes Safety Manual, Operators Manual & Decal Kit.
1
2
3
4
5
6
7
9
10
11
12
13
14
15
17
18
873
IMPORTANT
WARNING
← PUSH TO RELEASE STOP
bobcat
Advantage Series
TURBO
B-14392

DECALS

Ref.N°	Part N°	Description	Remarks	Serial N°	Qty.
1	6725035	KIT	decal		1
1	6725036AR	KIT	translation - SEE NOTE		1
1	6725036BR	KIT	translation - SEE NOTE		1
1	6725035AR	KIT	decal - SEE NOTE		1
1	6725035BR	KIT	decal - SEE NOTE		1
1	6725035JP	KIT	decal - SEE NOTE		1
2	6708937	DECAL	spark arrestor		1
3	6708820	DECAL	lift arm stop		1
4	6577754	DECAL	warning		2
5	6578368	DECAL	push		1
6	6727309	DECAL	R.H. Bobcat & head - 10' x 20'		1
6	6727308	DECAL	L.H. Bobcat & head - 10' x 20'		1
7	6708941	DECAL	keep shield		2
8	6565200	DECAL	oil filter		1
9	6715991	DECAL	fuse		1
10	6595014	DECAL	toe hook - See Page REAR AUXILIARY HYDRAULICS(12)		2
11	6727912	DECAL	turbo		1
12	6714242	DECAL	tailgate		1
13	6707867	DECAL	tow hook		1
14	6718398	DECAL	service/warning/filters		1
15	6727311	DECAL	Bobcat Logo'		1
16	6714534	DECAL	high flow		2
17	6718272	DECAL	advantage series - R.H.		1
18	6714538	DECAL	model		2

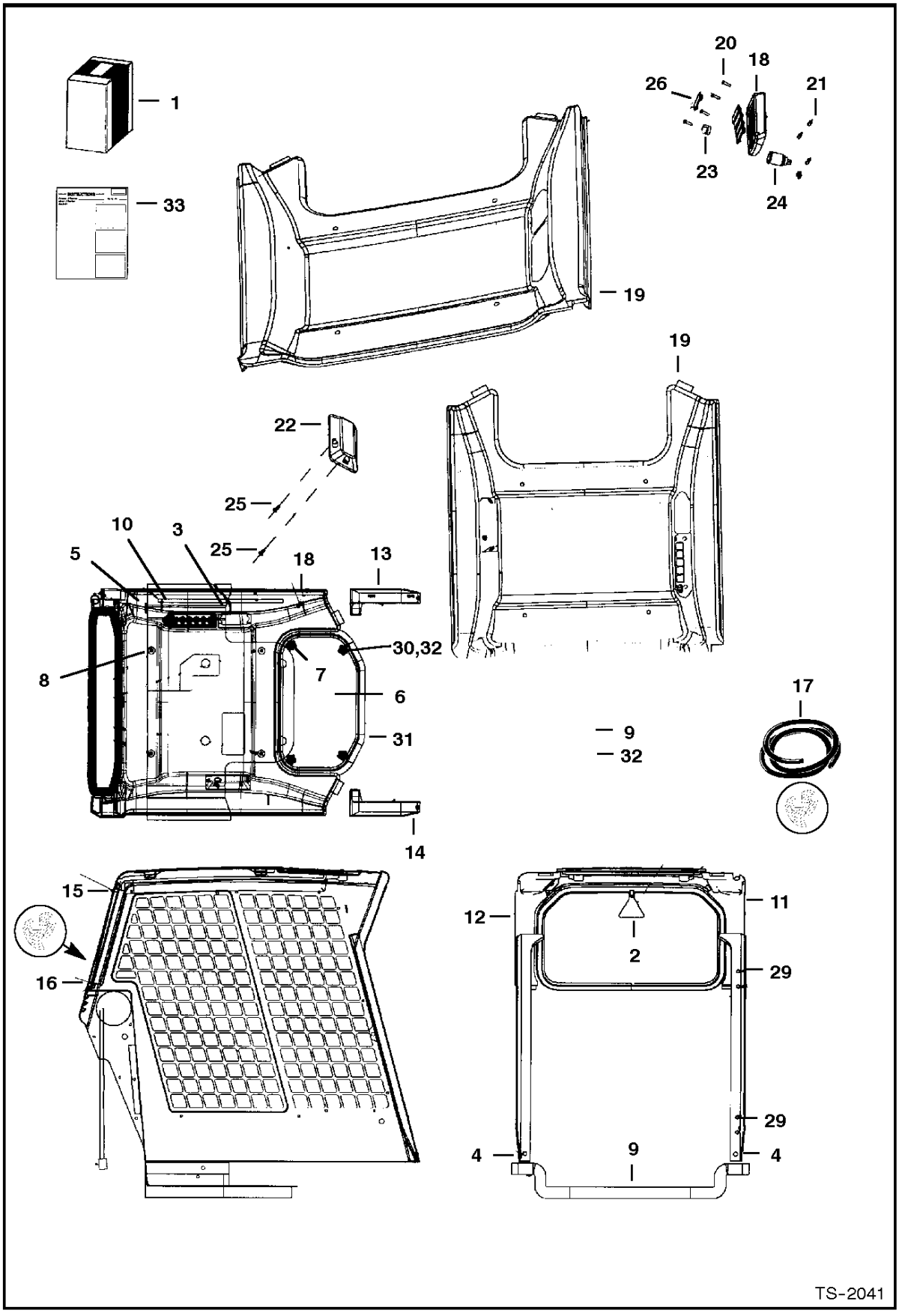
1
33
20
18
26
21
23
24
19
19
22
25
25
10
3
5
18
13
30,32
8
7
6
31
14
9
32
17
15
16
12
11
2
29
29
4
9
4
TS-2041

DELUXE CAB

Ref.N°	Part N°	Description	Remarks	Serial N°	Qty.
1	6718804	KIT		5141 45999 & Bel.	1
1	6729233	KIT	deluxe cab	5141 46001 & Abv.	1
2	6559515	EXIT TAG			1
3	6610510	NYLON TIE			6
4	6649949	PLUG			2
5	6657719	PLUG			1
6	6725360	WINDOW	top		1
7	6674741	KNOB			4
8	6674895	RETAINER	snap in		4
9	6727299	INSULATION	cab back		1
10	NAP	HARNESS	Order 6725273 & 6725275 - Was 6715366 [A]	& Bel.	1
10	6725273	HARNESS	in kit 6718804	5141 -45999	1
10	6727190	HARNESS	deluxe accessories - in kit 6729233	5141 46001 & Abv.	1
10	6715365	HARNESS	accessories - export - not in kit		1
11	6717517	INSULATION			1
12	6717518	INSULATION			1
13	6717519	INSULATION			1
14	6717520	INSULATION			1
15	6717874	WINDOW	rear		1
16	NAP	EXTRUSION	75.75'(1924 mm) long - Order Ref. CAB WINDOWS(6)		x
16	NAP	CORD	75.75'(1924 mm) long - Order Ref. CAB WINDOWS(6)		x
17	6675387	SEA;	bulk - Sold Per Foot		x
17	6554149	CORD	bulk - Sold Per Foot		x
18	6718580	PANEL			1
19	6717515	INSULATION	headliner		1
20	6669224	BOLT			4
21	6669091	CLIP			4
22	6664368	DOME LIGHT	dome		1
22	6665367	BULB			1
23	6664224	CAP			1
24	6664223	OUTLET			1
25	6664221	RETAINER	snap in		2
26	6719038	PLUG			5
27	6672348	PANEL	R.H. - deluxe - keyless - not in kit		1
28	com371}H~10{ M				x
29	5289686	PLUG	black		1
30	6675545	GROMMET			4
31	NAP	SEAL	Order Ref. DELUXE CAB(34) - Was 6675546 [A]		1
32	91G-416	BOLT	Was 88G-1216 [B,D]		4
33	6900851	INSTRUCTIONS			1
34	6728629	WINDOW	assy. - W/seal & grommets		1
35	6664085	BUSHING	nylon		4

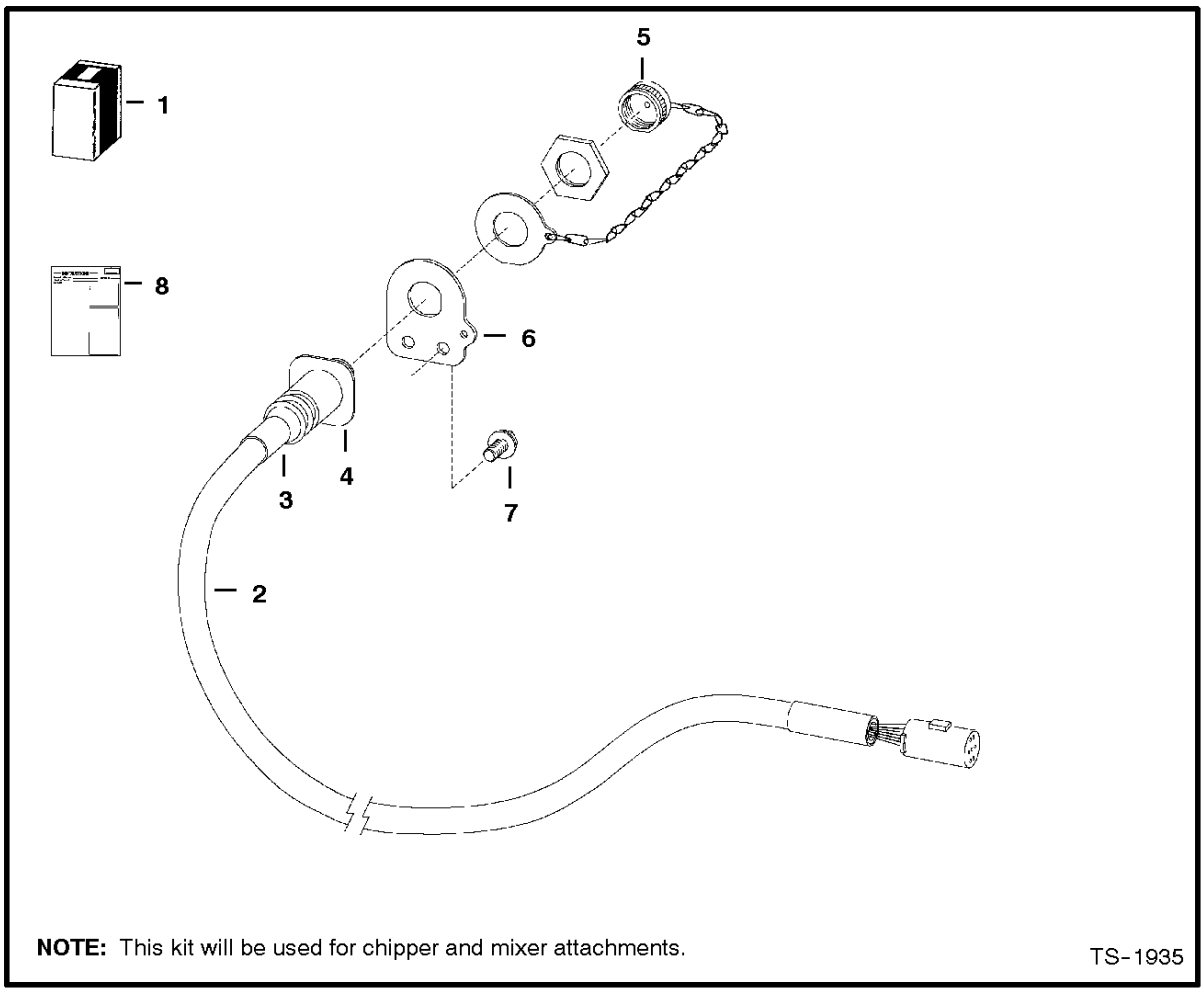

NOTE: This kit will be used for chipper and mixer attachments.

TS-1935

ELECTRICAL CONTROLS KIT
(Electronic Attachments)

Ref. No.	Part Number	Description	Remarks	Serial Number	Qty.

ELECTRICAL CONTROLS KIT

Ref.N°	Part N°	Description	Remarks	Serial N°	Qty.
1	6718812	KIT	Ref. ELECTRICAL CONTROLS KIT(2) - ELECTRICAL CONTROLS KIT(8)		1
2	6718426	HARNESS			1
3	6674799	ADAPTER	heat shrink		1
4	6674802	CONNECTOR	7-pin - See Page SEVEN PIN CONNECTOR KIT(1)		1
4	6669549	SOCKET	small		4
4	6677136	SOCKET	large - 12 ga.		3
5	6675026	CAP			1
6	6718750	MOUNT			1
7	84G-3112	BOLT			2
8	6900855	INSTRUCTIONS			1

ELECTRICAL CONTROLS KIT
(To Run "G" Series Attachments & Old Attachments) (W/Toggle Switch)

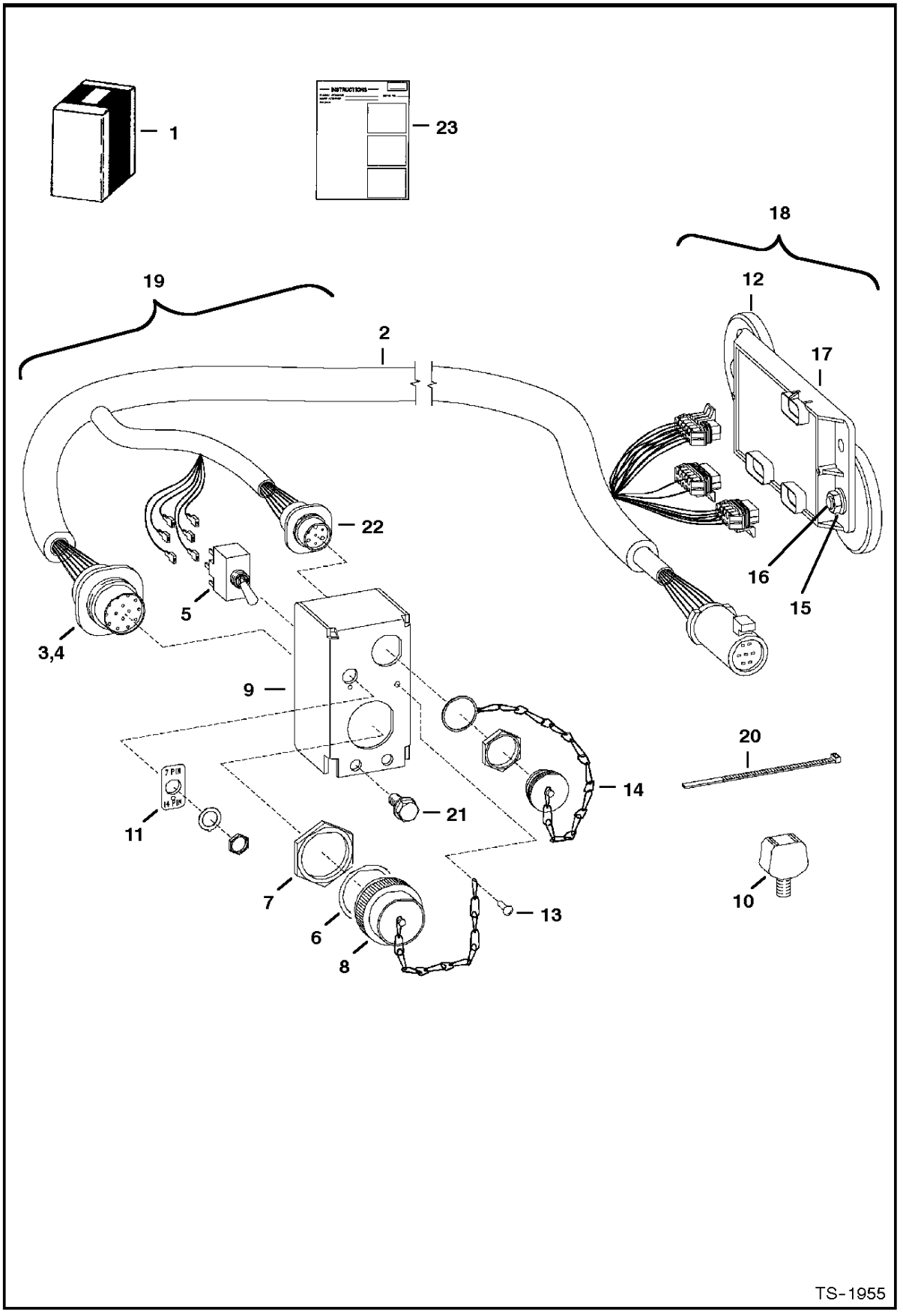

ELECTRICAL CONTROLS KIT

Ref.N°	Part N°	Description	Remarks	Serial N°	Qty.
1	NAP	KIT	order 6727739 kit - See Page ELECTRICAL CONTROL S KIT(4) - Was 6719431 [A]		1
2	6719434	HARNESS	W/Ref. ELECTRICAL CONTROLS KIT(3), ELECTRICA L CONTROLS KIT(4), ELECTRICAL CONTROLS KIT(6)-ELECTRICAL CONTROLS KIT(8) & ELECTRICA		1
3	6667569	CONNECTOR	Also Order (14) of Ref. ELECTRICAL CONTROLS KIT(4)		1
4	6664040	PIN	male		x
5	6675389	SWITCH			1
6	6664037	WASHER			2
7	6664036	NUT			2
8	6664035	CAP			2
9	6719442	MOUNT			2
10	6675281	MOUNT	773G only		1
11	6719441	DECAL	7 pin - 14 pin		1
12	6719448	MAGNET	100 lb. force		4
13	6704892	RIVET			1
14	6675026	CAP			2
15	83D-6	NUT			2
16	25G-612	BOLT			2
17	6676514	CONTROLLER	Was 6674943 [A]		1
18	6675495	CONTROLLER	assy - Ref. ELECTRICAL CONTROLS KIT(12) & ELECTRICAL CONTROLS KIT(15) - ELECTRICAL CONTROLS KIT(17)		1
19	NAP	CONTROL	assy - Order Ref. ELECTRICAL CONTROLS KIT(2), ELECTRICAL CONTROLS KIT(5), ELECTRICAL CONTROLS KIT(9), ELECTRICAL CONTROLS KIT(11		1
20	6624289	STA-STRAP			8
21	84G-3112	BOLT			2
22	6674802	CONNECTOR	7-pin - See Page SEVEN PIN CONNECTOR KIT(1)		1
22	6669549	SOCKET	small		4
22	6677136	SOCKET	large - 12 ga.		3
23	6900921	INSTRUCTIONS			1

ELECTRICAL CONTROLS KIT
(To Run "G" Series Attachments & Old Attachments) (W/O Toggle Switch)

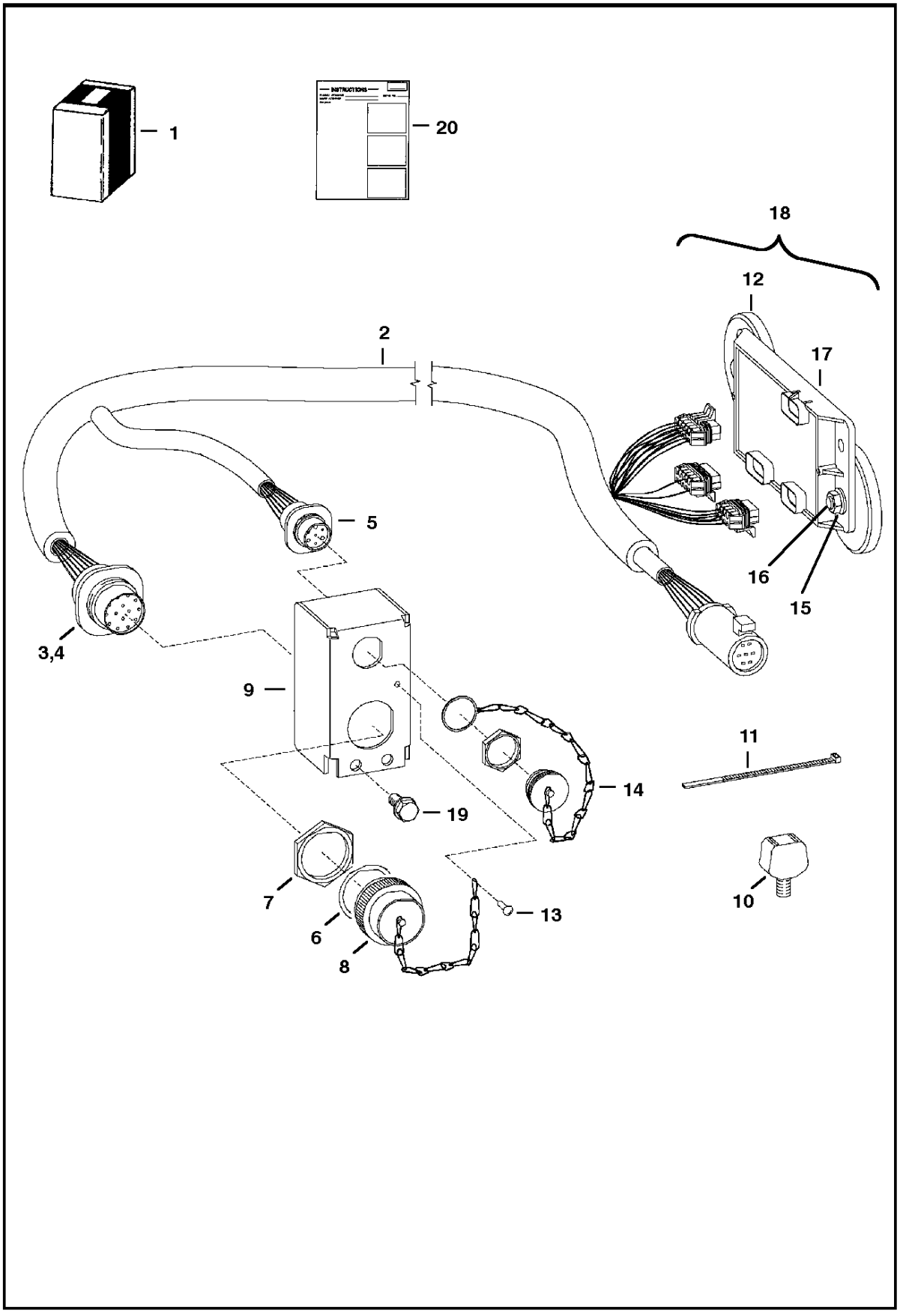

ELECTRICAL CONTROLS KIT

Ref.N°	Part N°	Description	Remarks	Serial N°	Qty.
1	6727739	KIT			1
2	6729380	HARNESS	W/Ref. ELECTRICAL CONTROLS KIT(3)-ELECTRICAL CONTROLS KIT(8) & ELECTRICAL CONTROLS KIT(14) - Was 6727177[A]		1
3	6667569	CONNECTOR	Also Order (14) of Ref. ELECTRICAL CONTROLS KIT(4)		1
4	6664040	PIN	male		x
5	6674802	CONNECTOR	7-pin - See Page SEVEN PIN CONNECTOR KIT(1)		1
5	6669549	SOCKET	small		4
5	6677136	SOCKET	large - 12 ga.		3
6	6664037	WASHER			2
7	6664036	NUT			2
8	6664035	CAP			1
9	6726945	MOUNT			1
10	6675281	MOUNT	773G only		1
11	6624289	STA-STRAP			8
12	6719448	MAGNET	100 lb. force		4
13	6704892	RIVET			1
14	6675026	CAP			2
15	83D-6	NUT			2
16	25G-612	BOLT			2
17	6676514	CONTROLLER			1
18	6676515	CONTROLLER	assy - Ref. ELECTRICAL CONTROLS KIT(12) & ELECTRICAL CONTROLS KIT(15) - ELECTRICAL CONTROLS KIT(17)		1
19	84G-3112	BOLT			2
20	6901116	INSTRUCTIONS			1

EUROPEAN ACCESSORIES
(Sound Option)

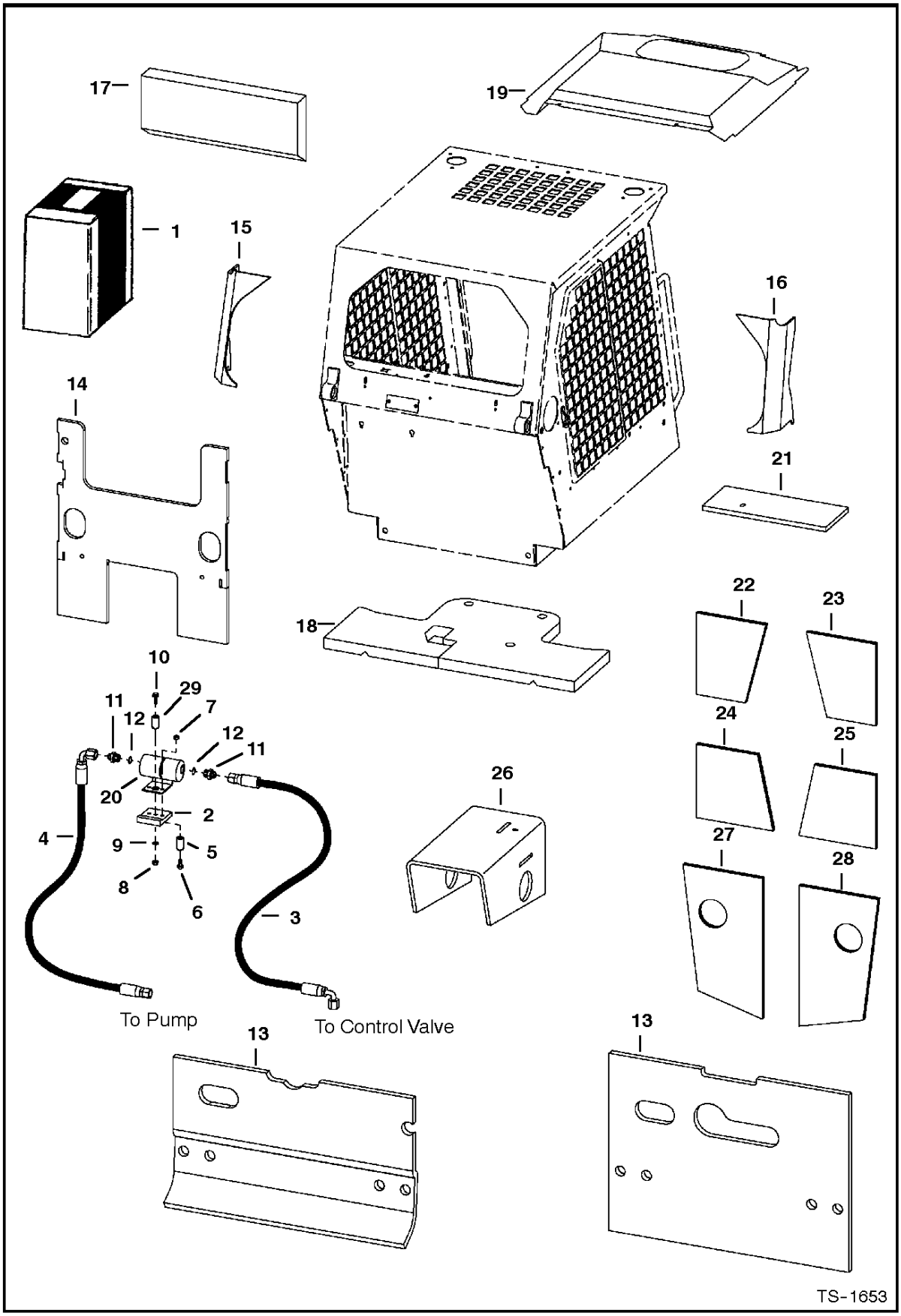

EUROPEAN ACCESSORIES

Ref.N°	Part N°	Description	Remarks	Serial N°	Qty.
1	NAP	KIT	Ref. EUROPEAN ACCESSORIES(2)-EUROPEAN ACCESSORIES(28) - Order individual parts		1
2	6705333	MOUNT			1
3	6714806	HOSE			1
4	6714977	HOSE			1
5	6562619	BUSHING			2
6	35C-616	BOLT			2
7	85D-6	NUT			2
8	83D-6	NUT			1
9	619021	WASHER			1
10	37C-624	BOLT			1
11	15KN-8	ADAPTER	W/Ref. EUROPEAN ACCESSORIES(12)		2
11	96K-12	O-RING			2
12	98K-12	O-RING			2
13	6715106	INSULATION	rear door		1
14	6719449	INSULATION	steering panel		1
15	6703967	INSULATION	fender		2
16	6709829	INSULATION	air inlet		1
17	6715096	INSULATION	cab back		1
18	6719333	INSULATION	blower housing		1
19	6719332	INSULATION	blower housing		1
20	6659982	MUFFLER	hydraulic		1
21	6719478	INSULATION			1
22	6719486	INSULATION			1
23	6719487	INSULATION			1
24	6719488	INSULATION			1
25	6719489	INSULATION			1
26	6715443	INSULATION			1
27	6715456	INSULATION			1
28	6715457	INSULATION			1
29	6715744	BUSHING			1
30	6719479	INSULATION			1
31	6703968	INSULATION	transmission		2
32	6719058	INSULATION	crossmember		1

EUROPEAN ACCESSORIES
(Caliper Brake Kit)

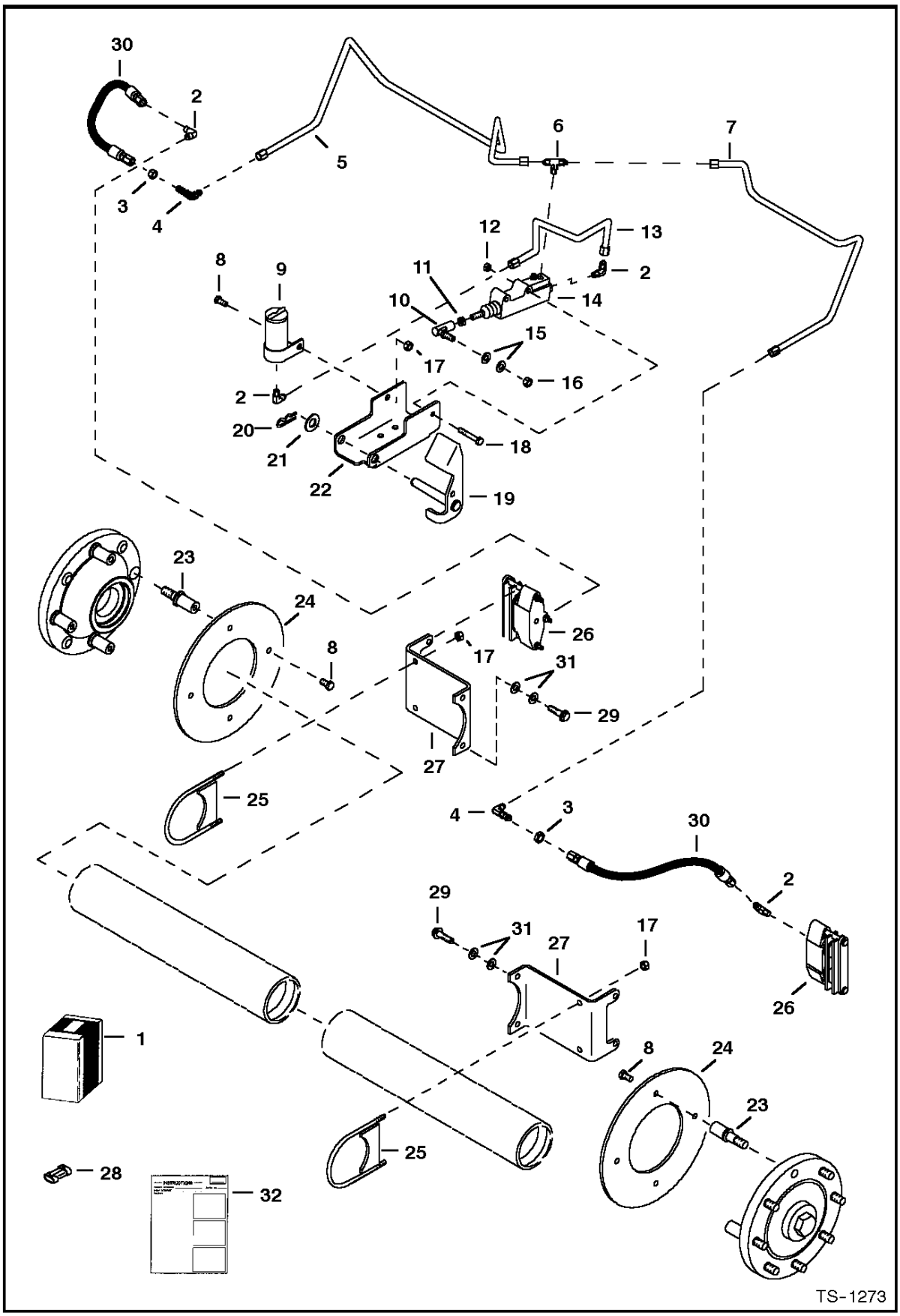

EUROPEAN ACCESSORIES

Ref.N°	Part N°	Description	Remarks	Serial N°	Qty.
1	NAP	KIT	Ref. EUROPEAN ACCESSORIES(2) - EUROPEAN ACCESSORIES(32) - Was 6718032 [A]		1
2	83F-3	ELBOW			4
2	83FN-3	ELBOW			4
3	86F-3	NUT			2
4	88F-3	ELBOW	W/O O-rings		2
4	88FN-3	ELBOW	W/O-rings		2
4	97K-4	O-RING			x
5	6710421	TUBE			1
6	98F-3	TEE			1
7	6710420	TUBE			1
8	17C-612	BOLT			9
9	6661117	TANK			1
10	6599744	BALL JOINT			1
11	8D-6	NUT			1
12	91D-5	NUT			2
13	6709400	TUBE			1
14	6666933	CYLINDER	See Page EUROPEAN ACCESSORIES(1)		1
15	25E-17	WASHER			1
16	62D-6	NUT			1
17	95D-6	NUT			9
18	17C-532	BOLT			2
19	6709239	PEDAL ASSY			1
20	1318565	PIN			1
21	25E-25	WASHER			1
22	6709236	PEDAL MOUNT	pedal		1
23	6709229	BOLT			8
24	6709234	DISC			2
25	6709361	CLAMP			2
26	6666932	BRAKE ASSY	See Page EUROPEAN ACCESSORIES(1)		2
27	6716901	MOUNT	caliper		2
28	6667139	CAP			1
29	17C-620	BOLT			4
30	6710415	HOSE			2
31	27E-6	WASHER			8
32	6724380	INSTRUCTIONS			1

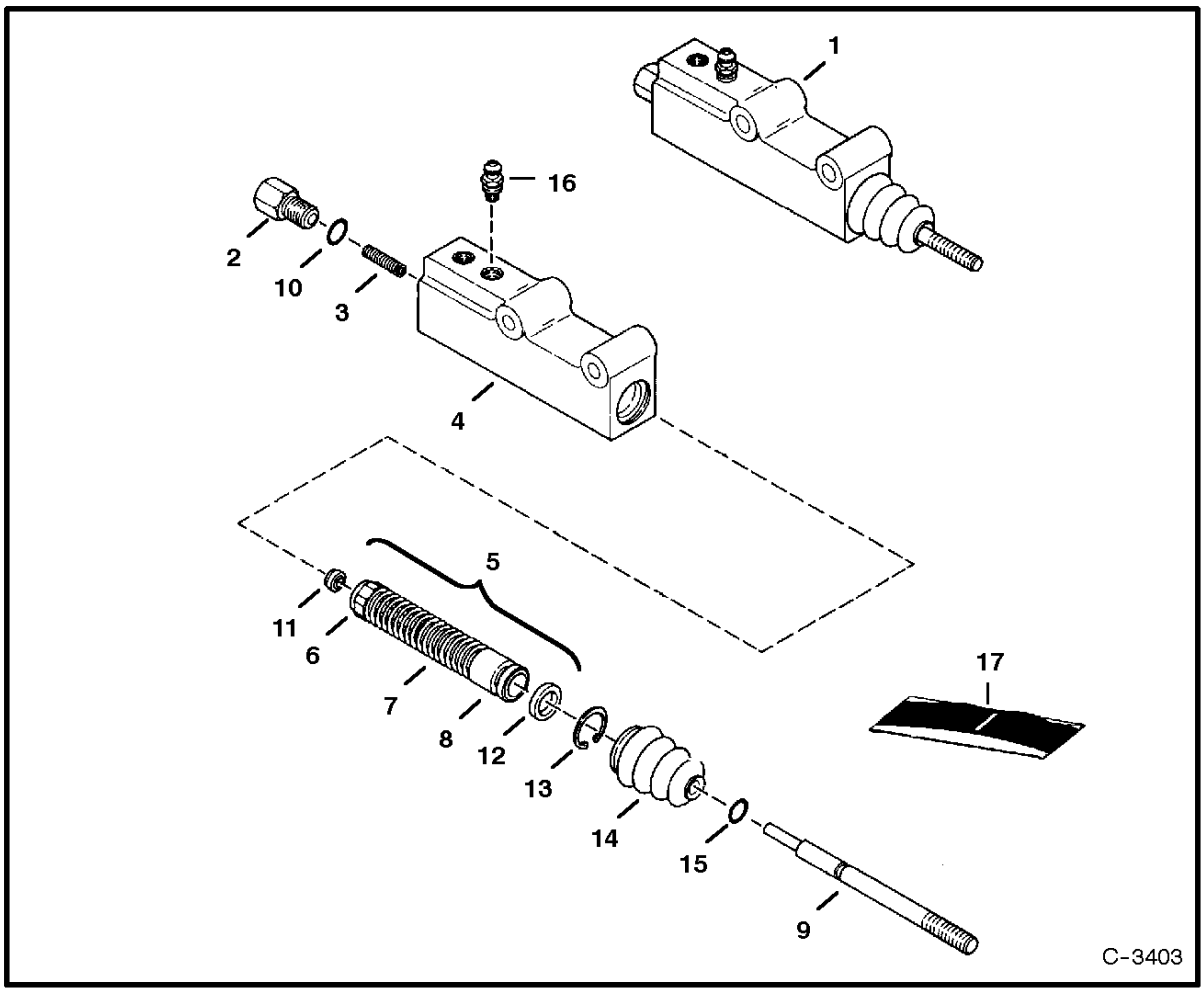

EUROPEAN ACCESSORIES
(Master Cylinder - Caliper Brakes)

Ref. No.	Part Number	Description	Remarks	Serial Number	Qty.

EUROPEAN ACCESSORIES

Ref.N°	Part N°	Description	Remarks	Serial N°	Qty.
1	6666933	CYLINDER	master brake - Ref. EUROPEAN ACCESSORIES(2)-EUROPEAN ACCESSORIES(16)		1
2	NSS	ADAPTER			1
3	NSS	SPRING			1
4	NSS	BODY			1
5	NSS	SPRING ASSY.	Ref. EUROPEAN ACCESSORIES(6)-EUROPEAN ACCESSORIES(8) & EUROPEAN ACCESSORIES(11)		1
6	NSS	RETAINER			1
7	NSS	SPRING			1
8	NSS	PISTON			1
9	NSS	PUSH ROD			1
10	NSS	O-RING			1
11	NSS	SEAT			1
12	NSS	CUP			1
13	NSS	SNAP RING			1
14	NSS	BOOT			1
15	NSS	O-RING			1
16	6668097	SCREW	bleeder		1
17	6661608	SEAL KIT	Ref. EUROPEAN ACCESSORIES(10)-EUROPEAN ACCESSORIES(15)		1

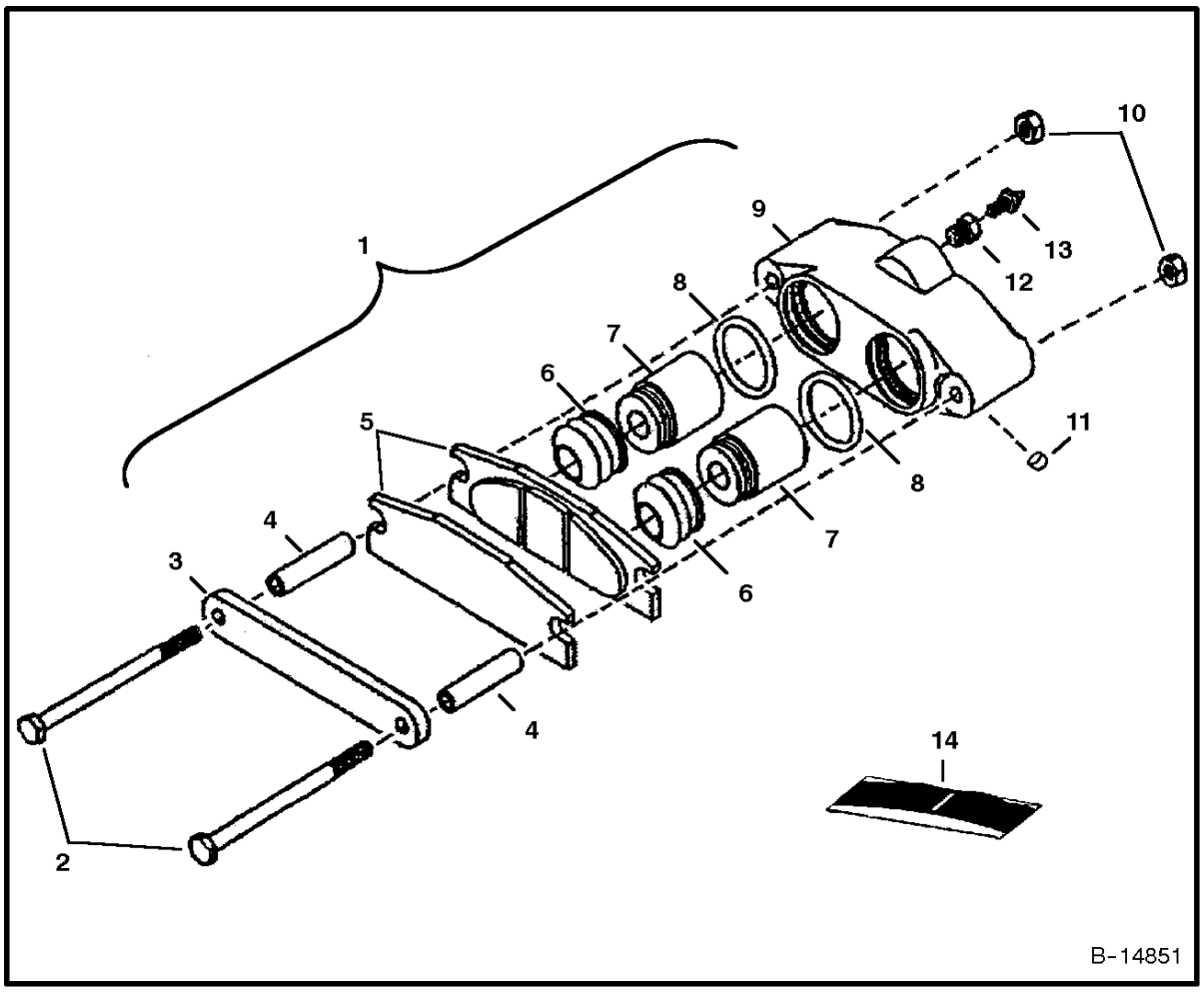

EUROPEAN ACCESSORIES
(Brake)

Ref. No.	Part Number	Description	Remarks	Serial Number	Qty.

EUROPEAN ACCESSORIES

Ref.N°	Part N°	Description	Remarks	Serial N°	Qty.
1	6666932	BRAKE ASSY	W/Ref. EUROPEAN ACCESSORIES(2) - EUROPEAN ACCESSORIES(13)		1
2	6669154	BOLT			2
3	6669155	PLATE			1
4	6669156	SPACER			2
5	6669184	STATOR ASSY			1
6	NSS	BOOT	Order Ref. EUROPEAN ACCESSORIES(14)		2
7	6669159	PISTON			2
8	NSS	O-RING	Order Ref. EUROPEAN ACCESSORIES(14)		2
9	NSS	HOUSING	Order Ref. EUROPEAN ACCESSORIES(1)		1
10	6669162	NUT			2
11	6669163	PLUG			1
12	6669164	ADAPTER			1
13	6669165	SCREW	bleeder		1
14	6669185	SEAL KIT	W/Ref. EUROPEAN ACCESSORIES(6) & EUROPEAN ACCESSORIES(8)		1

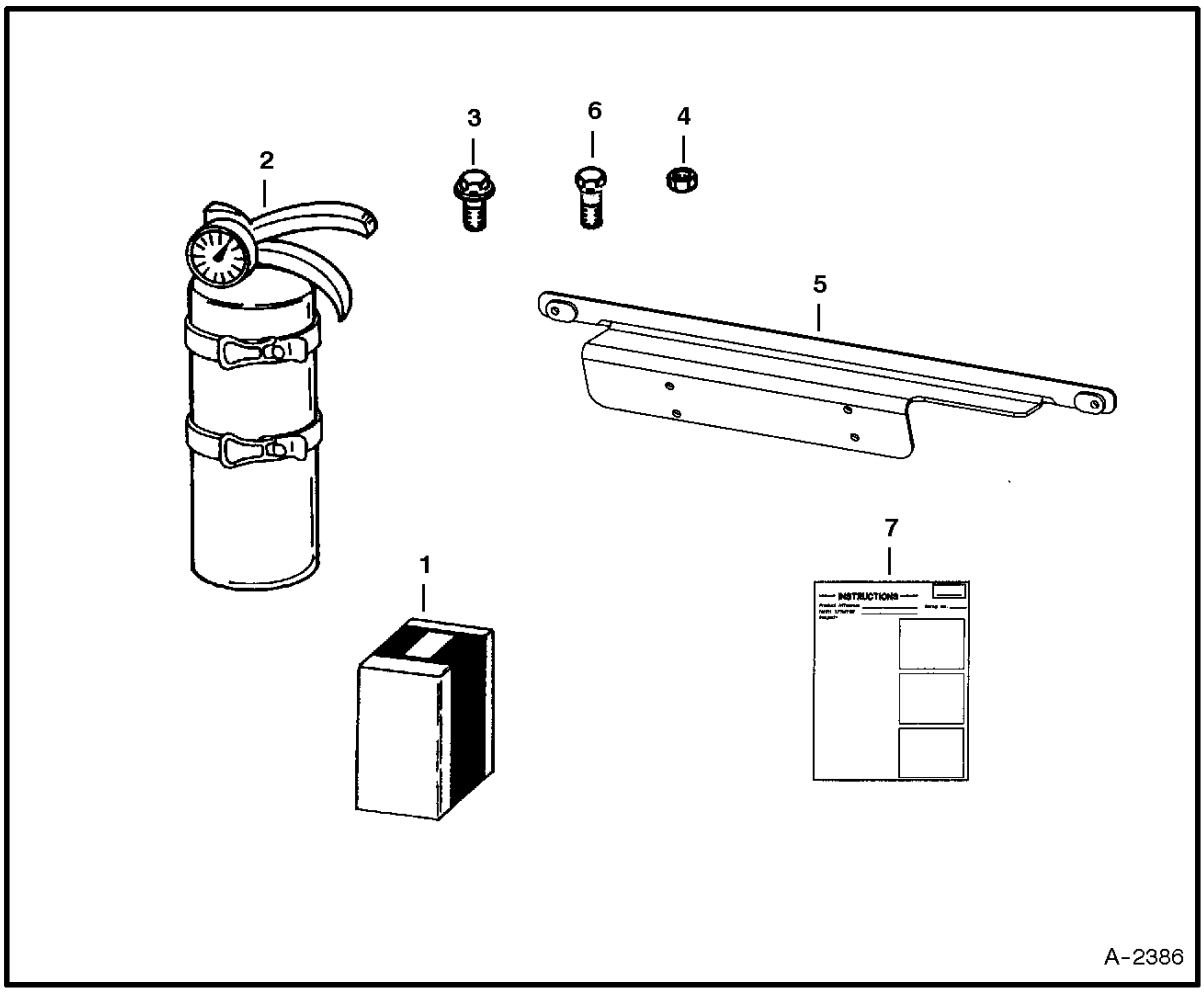

FIRE EXTINGUISHER

Ref. No.	Part Number	Description	Remarks	Serial Number	Qty.

FIRE EXTINGUISHER

Ref.N°	Part N°	Description	Remarks	Serial N°	Qty.
1	6725898	KIT	fire extinguisher - Ref. FIRE EXTINGUISHER(2)-FIRE EXTINGUISHER(7)		1
2	6675581	EXTINGUISHER			1
3	45G-1006	BOLT			4
4	12D-10	NUT			4
5	6725906	BRACKET			1
6	31C-410	BOLT			2
7	6901025	INSTRUCTIONS			1

FLASHER LIGHTS
(4-Way) (Turn Indicators)

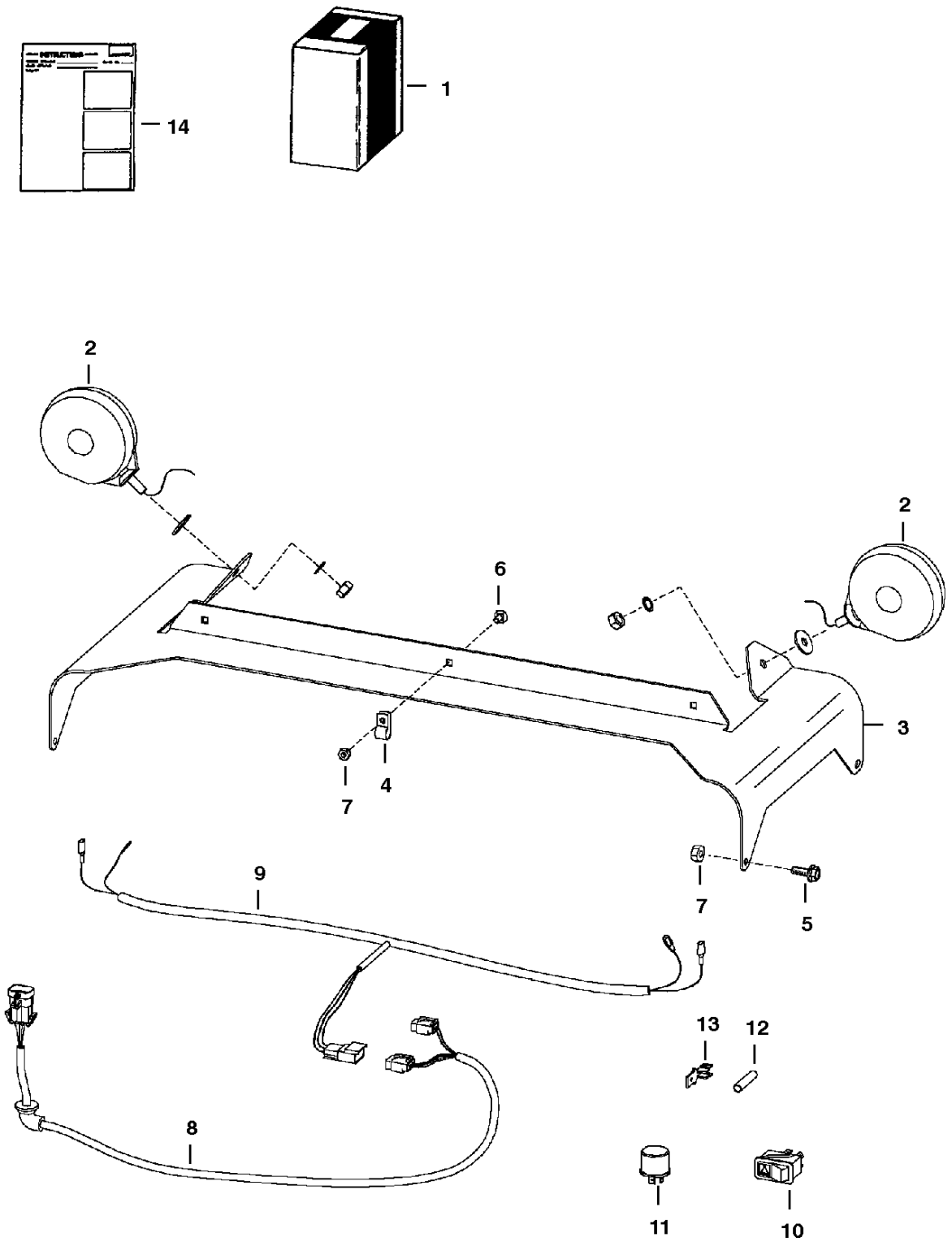

NOTE: If loader is not equipped with Deluxe Cab (standard at S/N 5141 46001, 5142 40001, 517912001 & Above), also Order 6727468 harness.
See Page 200

TS-1983
6718412MS.ASM

FLASHER LIGHTS

Ref.N°	Part N°	Description	Remarks	Serial N°	Qty.
1	6718411	KIT	Ref. FLASHER LIGHTS (2) - FLASHER LIGHTS (14)		1
2	6517516	LIGHT			2
3	6718326	MOUNT			1
4	30H-21	CLAMP			3
5	35C-412	BOLT			4
6	37C-412	BOLT			3
7	59D-4	NUT			7
8	6718872	HARNESS	ext. cab		1
9	6718873	HARNESS	4-way flasher		1
10	6665316	SWITCH			1
11	6557904	FLASHER			1
12	614142	SLEEVE			1
13	6515131	TERMINAL			1
14	6900848	INSTRUCTIONS			1

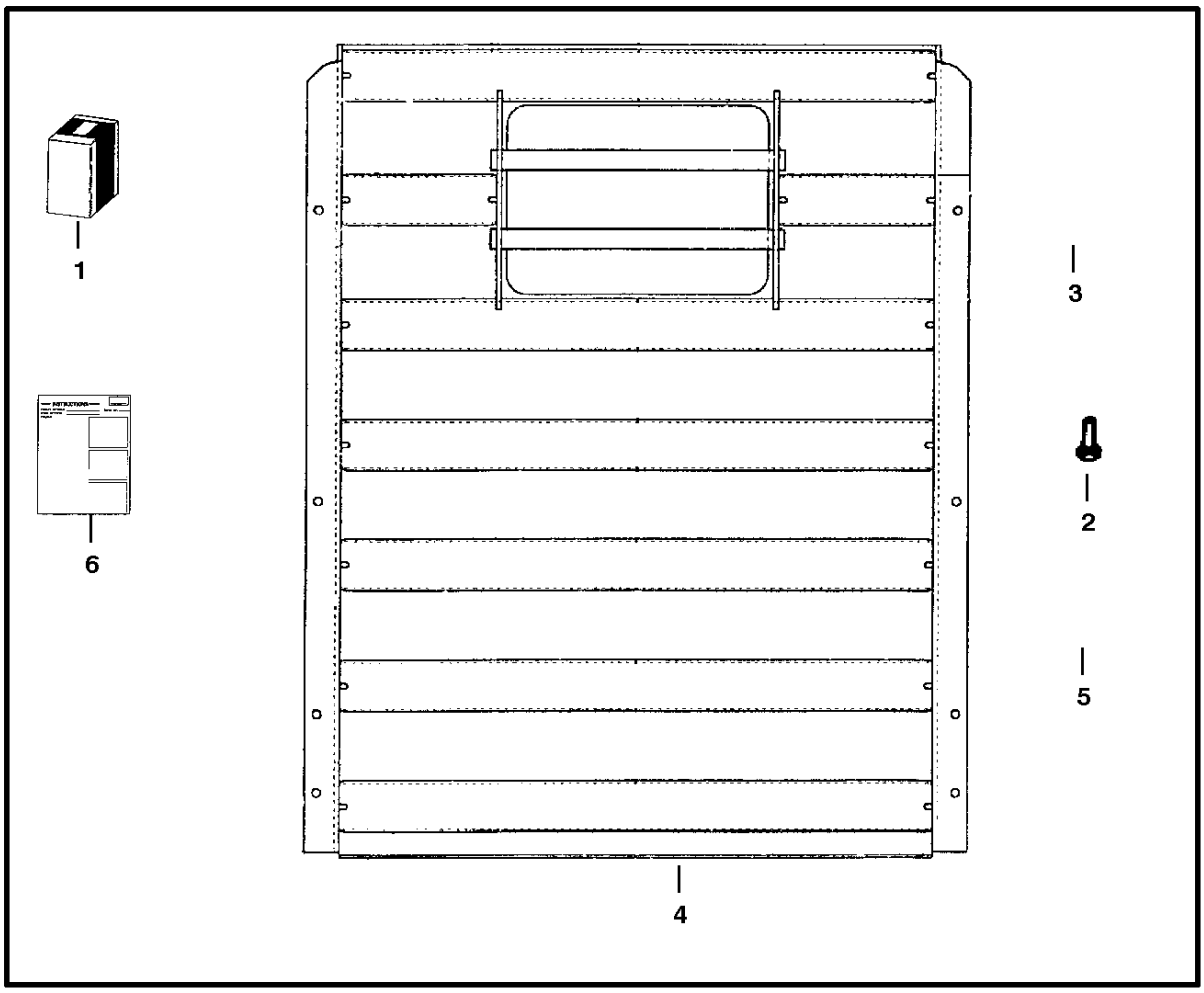

F.O.P.S. KIT

Ref. No.	Part Number	Description	Remarks	Serial Number	Qty.

F.O.P.S. KIT

Ref.N°	Part N°	Description	Remarks	Serial N°	Qty.
1	6718924	KIT	Ref. F.O.P.S. KIT(2) - F.O.P.S. KIT(6)		1
2	17C-616	BOLT			14
3	83D-6	NUT			14
4	6702402	SHIELD			1
5	6718833	BRACKET	L.H.		1
5	6718834	BRACKET	R.H.		1
6	6720592	INSTRUCTIONS			1

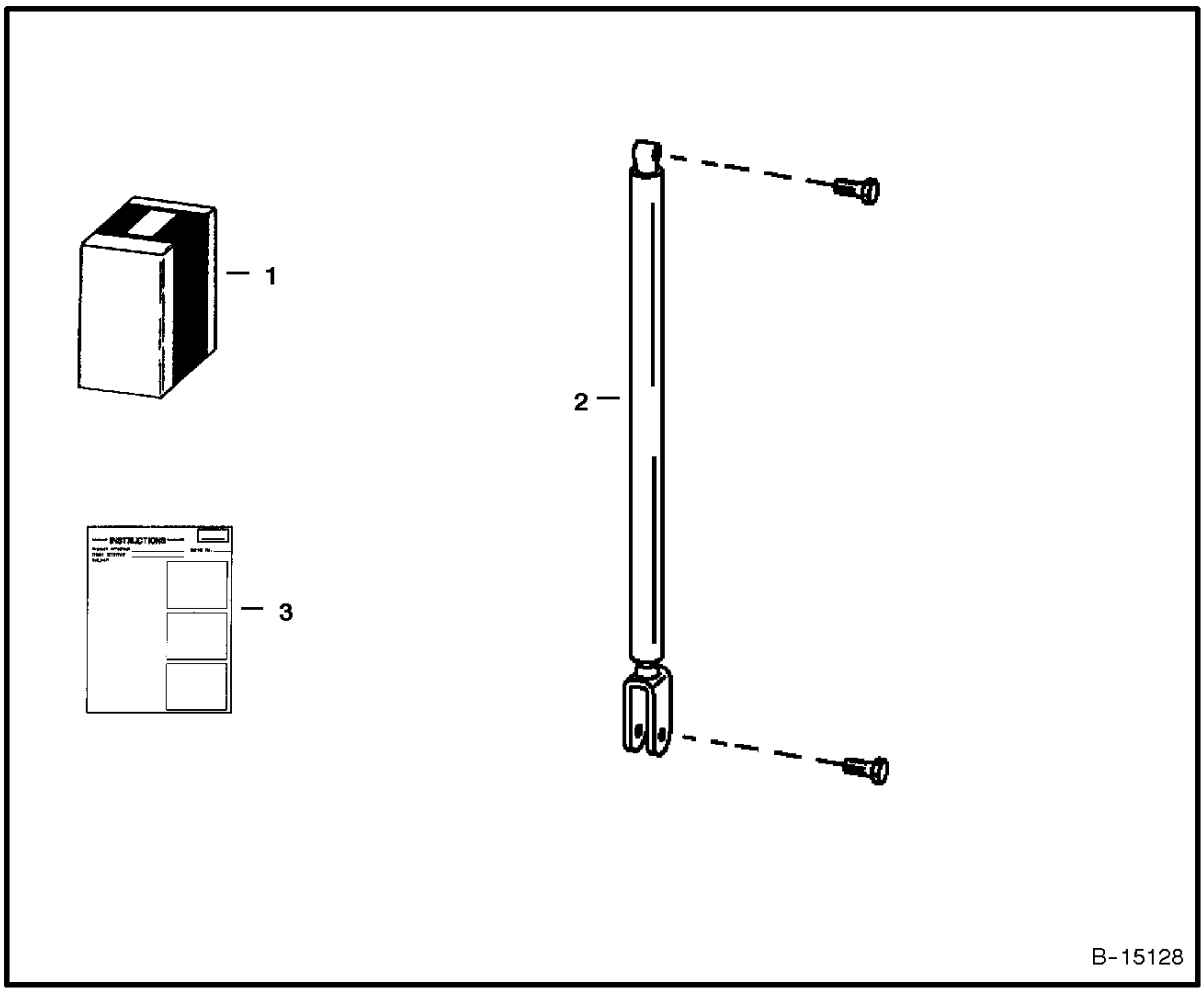

GAS SPRING KIT

Ref. No.	Part Number	Description	Remarks	Serial Number	Qty.

GAS SPRING KIT

Ref.N°	Part N°	Description	Remarks	Serial N°	Qty.
1	NAP	KIT	Ref. GAS SPRING KIT(2)-GAS SPRING KIT(3)		1
2	6675139	GAS SPRING	Also Order Ref. GAS SPRING KIT(3)		1
3	6900531	INSTRUCTIONS			1

HAND CONTROL KIT
(W/Push Button Float)

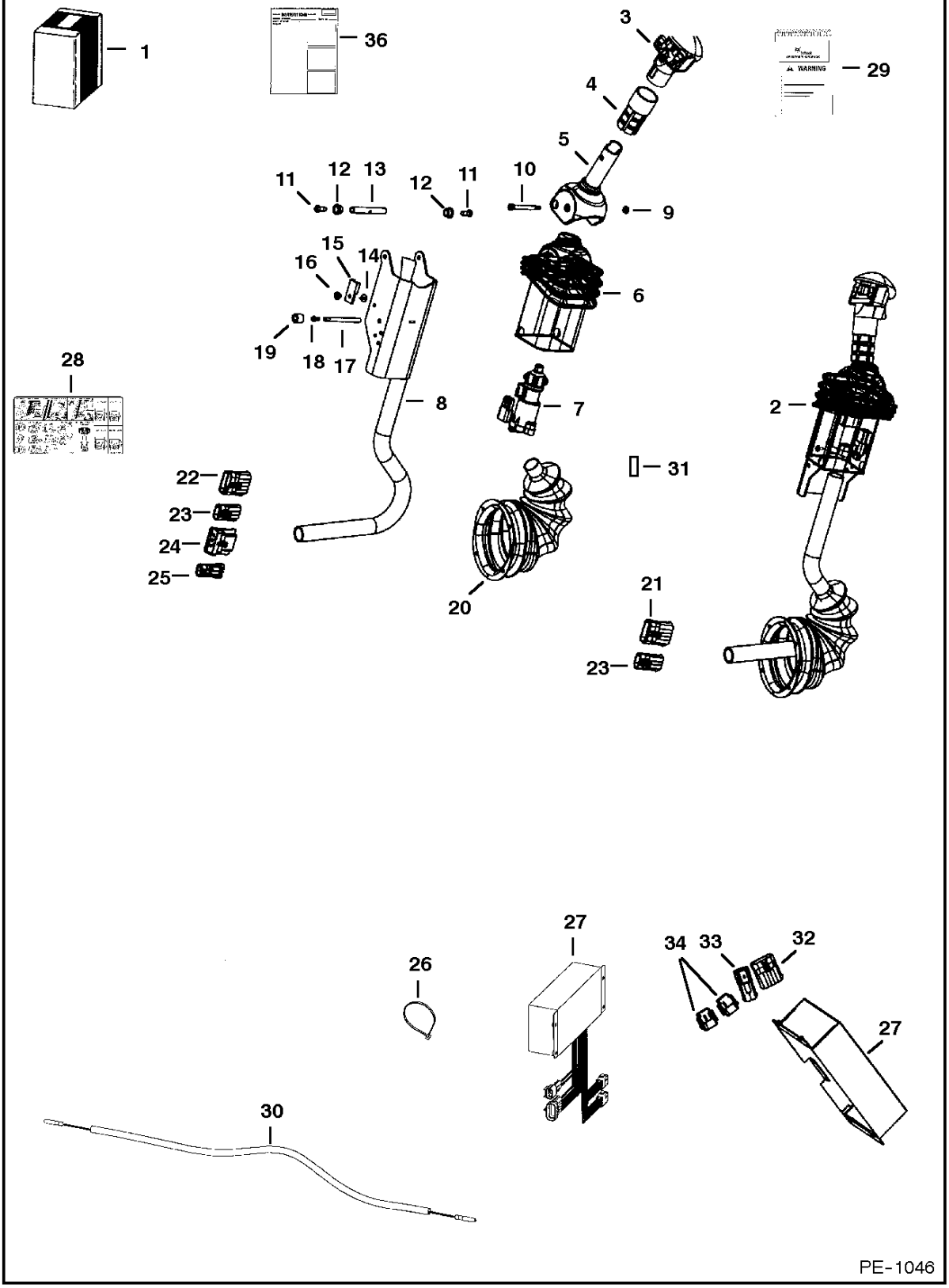

HAND CONTROL KIT

Ref.N°	Part N°	Description	Remarks	Serial N°	Qty.
1	6727298	KIT			1
2	6675742	LEVER	tilt - R.H.		1
2	6675750	LEVER	lift - L.H.		1
3	6675469	HANDLE ASSY	lift - R.H.		1
3	6675749	HANDLE	lift - L.H.		1
4	6713349	GRIP			2
5	6597774	HANDLE	R.H.		1
5	6717163	HANDLE	L.H.		1
6	6713898	COVER			2
7	6675741	SENSOR			2
7	6670706	CONNECTOR	3pin		1
7	6670714	PIN			3
7	6670710	LOCK			1
8	6719712	CHANNEL	R.H.		1
8	6719711	CHANNEL	L.H.		1
9	12D-10	NUT			2
10	6716826	BOLT			2
11	25GT-410	BOLT			8
12	6702990	BUSHING			4
13	6713043	SPACER			4
14	6665321	RIVET	male		2
15	6665000	CLIP			2
16	6665322	RIVET	female		2
17	6719834	SPACER	threaded		2
18	6727065	BOLT			4
19	6719835	SLEEVE			4
20	6532127	BOOT			2
21	6640692	CONNECTOR	10pin		1
21	6640690	PIN			8
21	6640694	LOCK			1
21	6641176	SEAL			8
21	6646582	PLUG	cavity		2
22	6640692	CONNECTOR	10pin		1
22	6640690	PIN			6
22	6640694	LOCK			1
22	6641176	SEAL			6
22	6646582	PLUG	cavity		4
23	6640699	CONNECTOR	3pin		2
23	6640690	PIN			3
23	6641176	SEAL			3
23	6640700	LOCK			3
24	6667144	CONNECTOR	5pin		1
24	6640690	PIN			3
24	6641176	SEAL			3
24	6646582	PLUG	cavity		1
24	6667145	LOCK			1
25	6641179	CONNECTOR	2pin		1
25	6640690	PIN			2
25	6641176	SEAL			2
25	6641180	LOCK			1
26	6610510	NYLON TIE			11

HAND CONTROL KIT (Cont'd)
(W/Push Button Float)

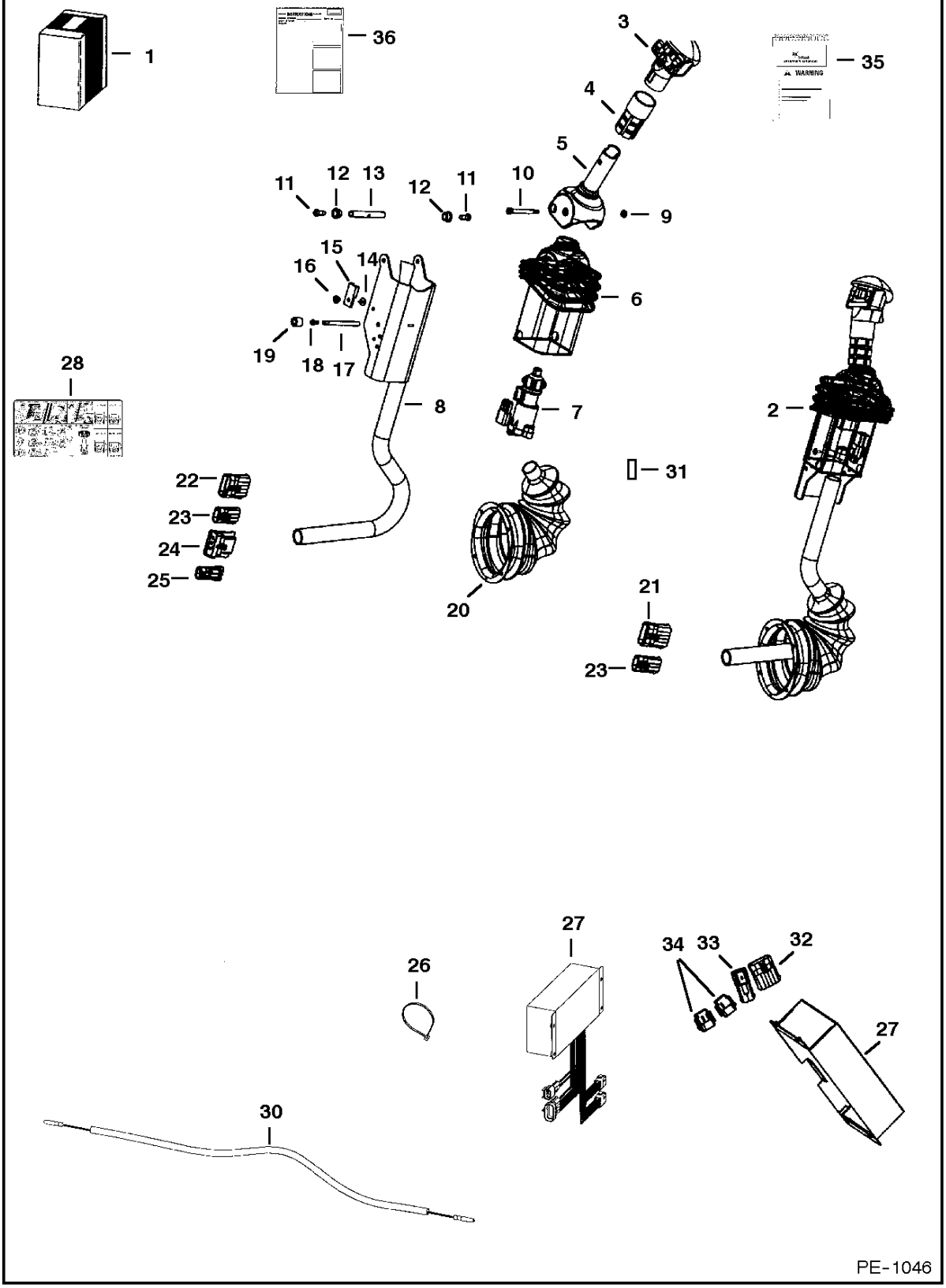

HAND CONTROL KIT

Ref.N°	Part N°	Description	Remarks	Serial N°	Qty.
0	6676153	CONTROLLER			1
28	6727155	DECAL			1
29	6719563	KIT	handbook		1
30	6727328	HARNESS			1
31	6670707	CONNECTOR	3pin		1
31	6670715	SOCKET			3
31	6670711	LOCK			1
32	6640692	CONNECTOR	10pin		1
32	6640690	PIN			9
32	6640694	LOCK			1
32	6641176	SEAL			9
32	6646582	PLUG	cavity		1
33	6648307	CONNECTOR	2pin		1
34	6670709	CONNECTOR	8pin		2
35	6728742	HARNESS	W/ capacitor		1
36	6901100	INSTRUCTIONS			1

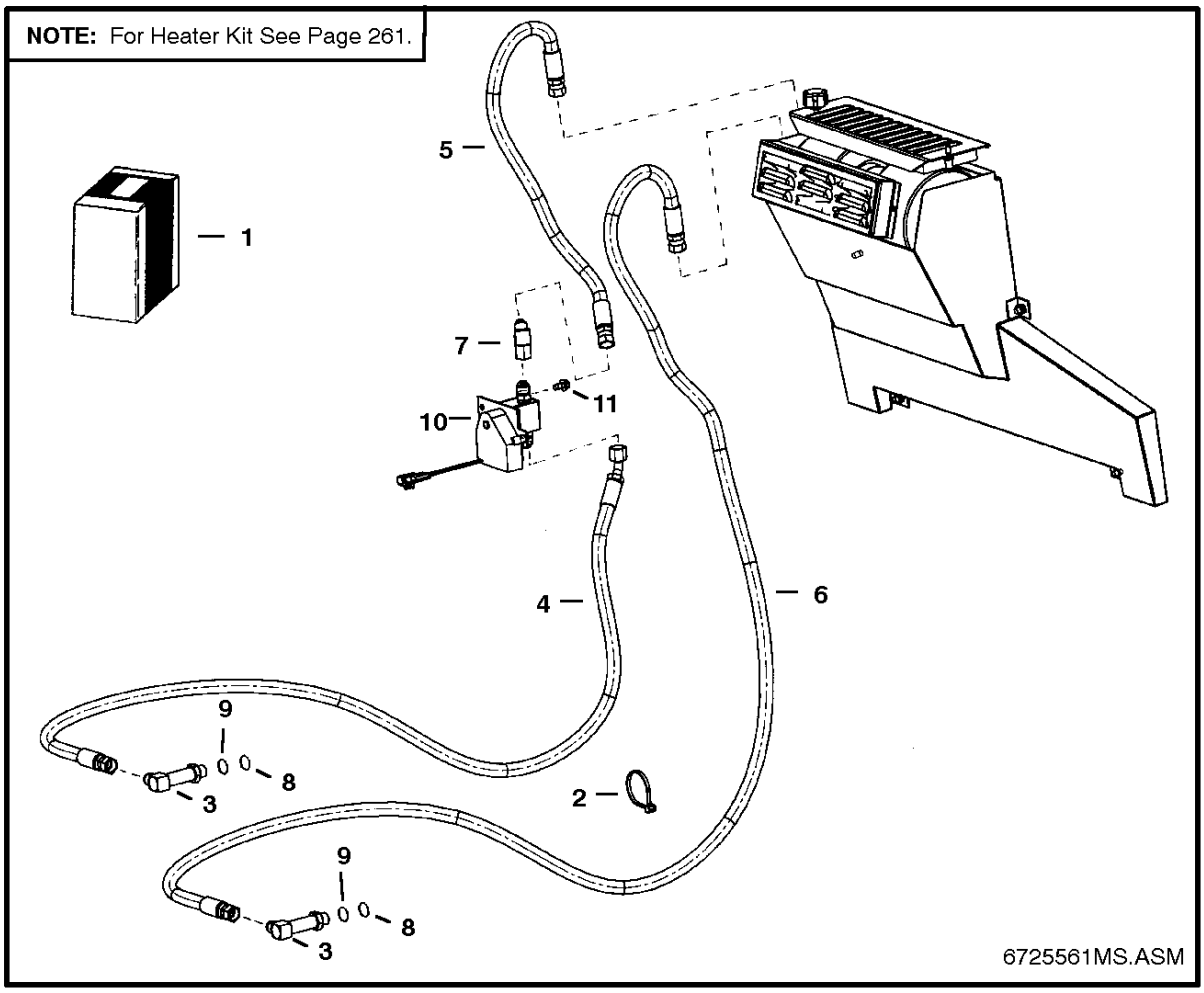

HEATER & A/C
(Heater Plumbing Kit)

Ref. No.	Part Number	Description	Remarks	Serial Number	Qty.

92

Ref.N°	Part N°	Description	Remarks	Serial N°	Qty.
1	6718810	KIT	Ref. NO PAGE - 92(7)		1
2	6624289	STA-STRAP			3
3	6719395	CONNECTOR	W/Ref. 92(8) & 92(9)		2
4	6719914	HOSE	Was 6719533 [A]		1
5	6719514	HOSE	Was 6719534 [A]		1
6	6719515	HOSE	Was 6719535 [A]		1
7	12KN-6	ELBOW			1
8	6676540	O-RING			x
9	NSS	BACKAUP RING			x
10		VALVE	heater - not in kit - See Page HEATER & A/C(5)		1
11	84G-3110	BOLT	not in kit		2

HEATER & A/C
(Heater Kit)

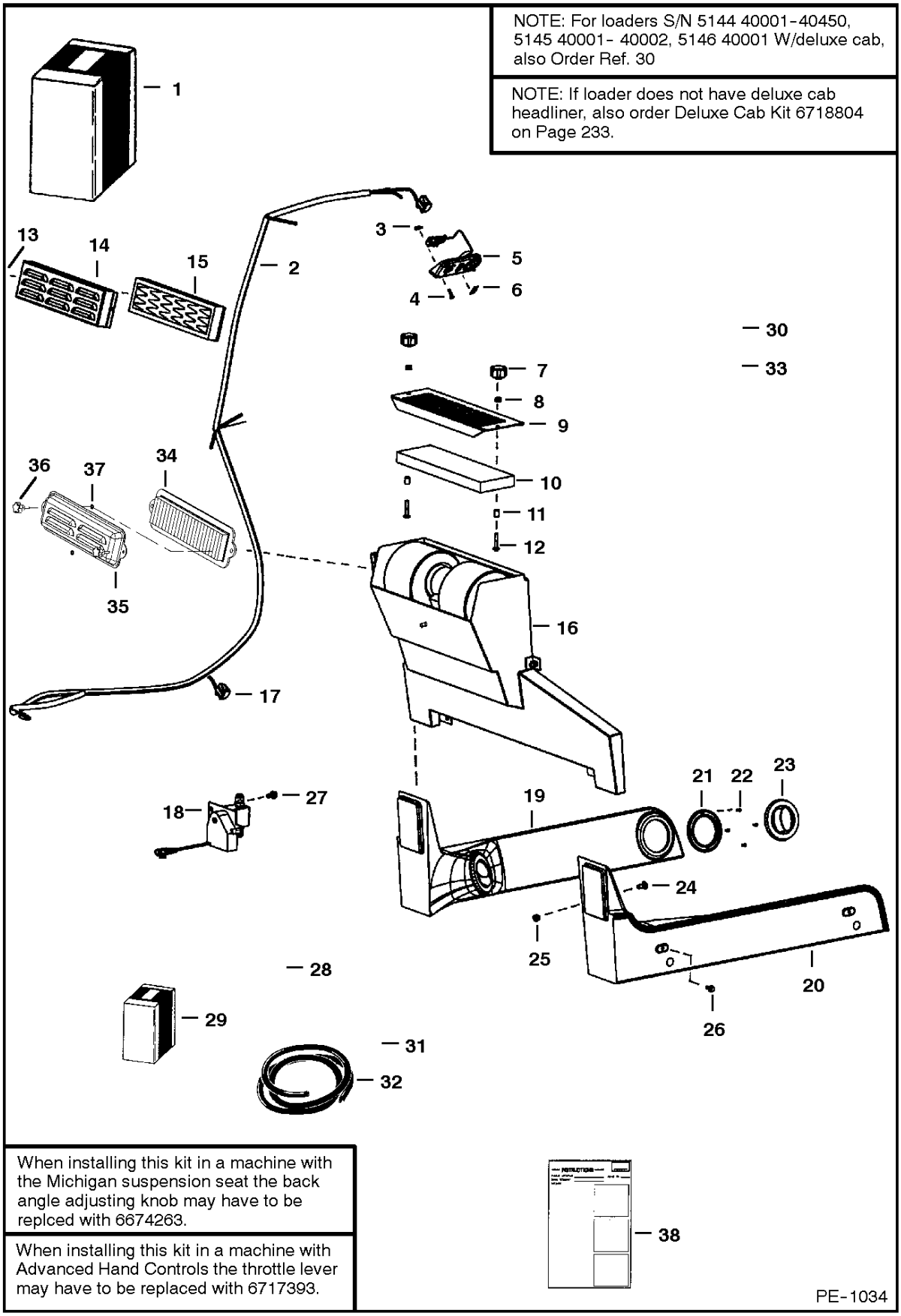

NOTE: For loaders S/N 5144 40001-40450, 5145 40001- 40002, 5146 40001 W/deluxe cab, also Order Ref. 30

NOTE: If loader does not have deluxe cab headliner, also order Deluxe Cab Kit 6718804 on Page 233.

When installing this kit in a machine with the Michigan suspension seat the back angle adjusting knob may have to be replced with 6674263.

When installing this kit in a machine with Advanced Hand Controls the throttle lever may have to be replaced with 6717393.

PE-1034

HEATER & A/C

Ref.N°	Part N°	Description	Remarks	Serial N°	Qty.
1	6718803	HEATER KIT	Ref. HEATER & A/C(2)-HEATER & A/C(28) & HEATER & A/C(38) - SEE NOTE		1
2	NAP	HARNESS	hvac - Order 6725933 Harness - Was 6725275 [A]	& Bel	1
2	6725933	HARNESS	hvac-W/Ref. HEATER & A/C(17)-Was 6717877 [A]	& Abv	1
2	6725273	HARNESS	AHC		1
3	6669091	CLIP	retainer		3
4	6669224	BOLT			3
5	6674228	PANEL	control		1
5	6640699	CONNECTOR			1
5	6718579	DECAL			1
5	6718887	PANEL			1
5	6675176	SWITCH	blower		1
5	6675177	KNOB			1
5	6675846	POTENTIOMETER	Was 6675178 [A]		1
6	6675181	PLUG	switch hole		1
7	6674741	KNOB			2
8	83D-4	NUT			2
9	6718175	SCREEN	filter		1
10	6674229	FILTER	recirculation		1
11	6718837	SPACER			2
12	37C-424	BOLT			2
13	87G-1008	SCREW			2
14	NAP	COVER	filter - Order Ref. HEATER & A/C(34), HEATER & A/C(35) & (2) ea. of Ref. HEATER & A/C(36) & HEATER & A/C(37) -Was 6674236 [A]	5141 44309 & Bel.	1
15	NAP	FILTER	Order Ref. HEATER & A/C(34), HEATER & A/C(35) & (2) ea. of Ref. HEATER & A/C(36) & HEATER & A/C(37) - Was 6674230 [A]	5141 44309 & Bel.	1
16	6674933	HEATER	See Page HEATER & A/C(6)		1
17	6670312	SOLENOID	relay		1
18	NAP	VALVE	Order 6675684 Valve - Was 6674227 [A]		1
18	6675684	VALVE			1
18	6640699	CONNECTOR	for 6674227 valve		1
18	6675175	BRACKET			1
18	6675172	BRACKET			1
18	6675173	ACTUATOR			1
18	6675174	BODY			1
19	6717644	DUCT	L.H.		1
20	6717643	DUCT	R.H.		1
21	6675179	FLANGE			4
22	57G-608	SCREW			16
23	6674231	VENT	round - W/Ref. HEATER & A/C(21) & HEATER & A/C(22)		4
23	6675180	VENT			4
24	37C-512	BOLT			4
25	59D-5	NUT			4
26	35C-410	BOLT			4
27	84G-3110	BOLT			2
28	774220	NUT	spring		2
29	6725513	DECAL PACKAGE	decal		1
30	6725390	HARNESS	jumper - SEE NOTE		1
31	NAP	SEAL	16.25'(412,8 mm) long - Order Ref. HEATER & A/C(32)		1
32	6513152	SEAL	bulk - Sold Per Foot		x
33	6725934	HARNESS	jumper - 4'(101,6 mm) long - connects 'Ref. HEATER & A/C(2) (6725933 Harness) to Ref. HEATER & A/C(18) (NAP/6674227 'Valve)		1

HEATER & A/C

Ref.N°	Part N°	Description	Remarks	Serial N°	Qty.
33	6725936	HARNESS	jumper - 8'(203,2 mm) long - connects 'Ref. HEATER & A/C(2) (NAP/6725275 Harness or NAP/6717877 Harness) to Ref. HEATER & A/C(		x
34	6727140	FILTER		5141 44310 & Abv.	1
35	6726608	COVER		5141 44310 & Abv.	1
36	6726386	KNOB		5141 44310 & Abv.	2
37	6676516	NUT	push	5141 44310 & Abv.	2
38	6900850	INSTRUCTIONS			1

HEATER & A/C
(Heater Assembly) (S/N & Below)

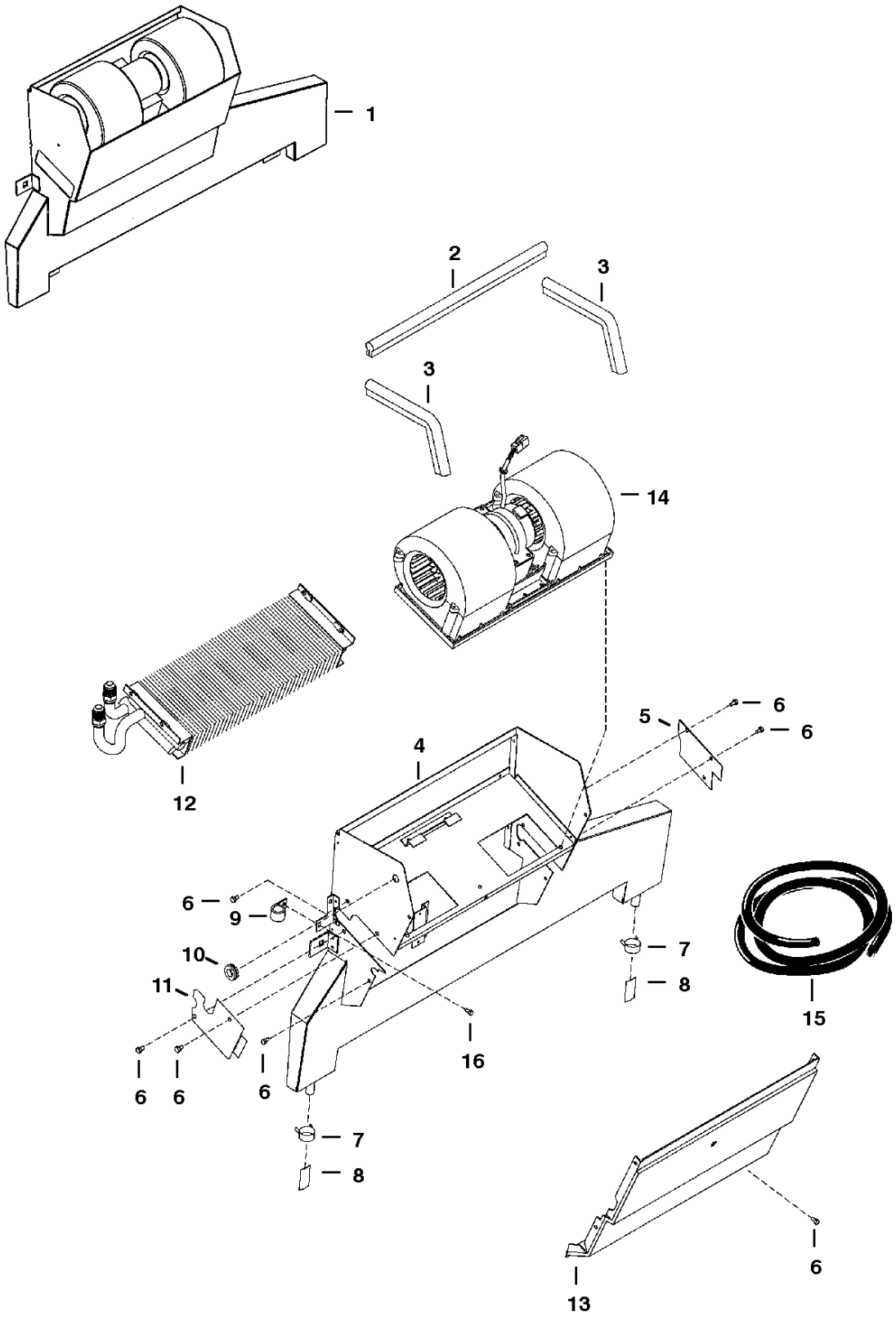

NOTE: See Page 271 for insulation

PE-1141

HEATER & A/C

Ref.N°	Part N°	Description	Remarks	Serial N°	Qty.
1	NAP	HEATER	Ref. HEATER & A/C(2)-HEATER & A/C(16) - Order 6676562 - See Page * HEATER & A/C(7) - Was 66749 33 [A]		1
2	NAP	SEAL	14.75'(375 mm) long - Order Ref. HEATER & A/C(15)'		1
3	NAP	SEAL	8.5'(215 mm) long - Order Ref. HEATER & A/C(15)		2
4	6675499	HOUSING	SEE NOTE		1
5	6675502	PLATE	cover		1
6	6677580	SCREW			13
7	6675510	CLAMP			2
8	6675511	DRAIN VALVE			2
9	6675512	CLAMP			2
10	6675513	GROMMET			2
11	6675501	PLATE	cover		1
12	6675498	COIL			1
13	6675500	COVER	SEE NOTE		1
14	6675497	BLOWER	See Page HEATER & A/C(8)		1
15	6675514	SEAL	bulk - Sold Per Foot - See Page * HEATER & A/C(9)		x
16	6677118	SCREW			2

* HEATER & A/C
(Heater Assembly) (S/N & Above)

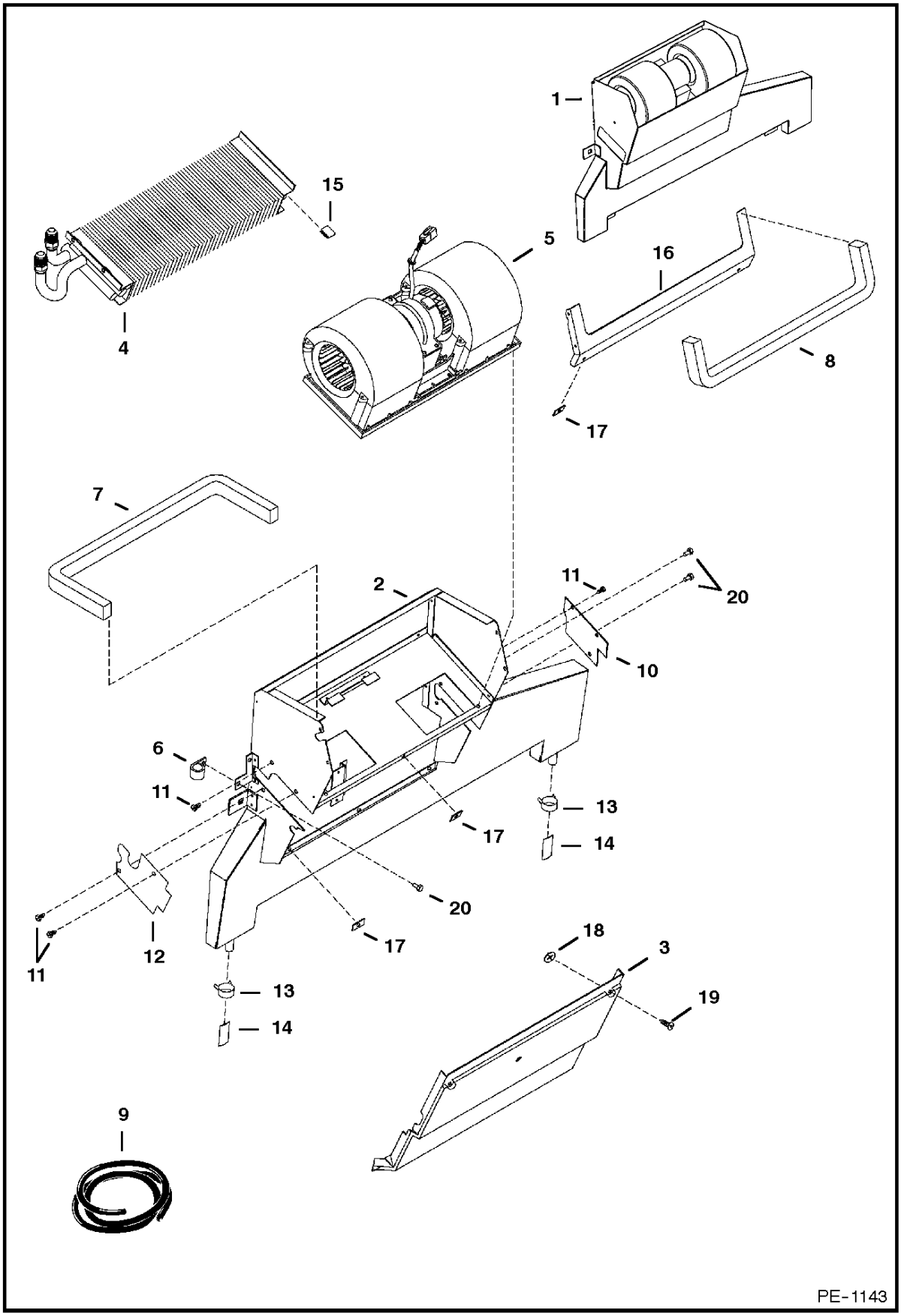

* HEATER & A/C

Ref.N°	Part N°	Description	Remarks	Serial N°	Qty.
1	6676562	HEATER	assy - Ref. * HEATER & A/C(2)-* HEATER & A/C(20)		1
2	6677108	HOUSING			1
3	6677109	COVER			1
4	6676603	COIL	heater		1
5	6675497	BLOWER	assy - See Page HEATER & A/C(8)		1
6	6675512	CLAMP	hose		2
7	NAP	SEAL	25'(635mm) long - Order Ref. * HEATER & A/C(9)		1
8	NAP	SEAL	322.6'(575mm) long - Order Ref. * HEATER & A/C(9)		1
9	6677111	SEAL	bulk - Sold Per Foot		x
10	6677120	COVER			1
11	6726621	SCREW	sheetmetal		7
12	6676604	COVER			1
13	6675510	CLAMP	drain hose		2
14	6675511	DRAIN VALVE			2
15	6676539	CLIP			1
16	6677114	SEAL			1
17	6677115	RECEPTACLE			6
18	6677116	RETAINER			6
19	6677117	SCREW	captive		6
20	6677118	SCREW	w/washer		4

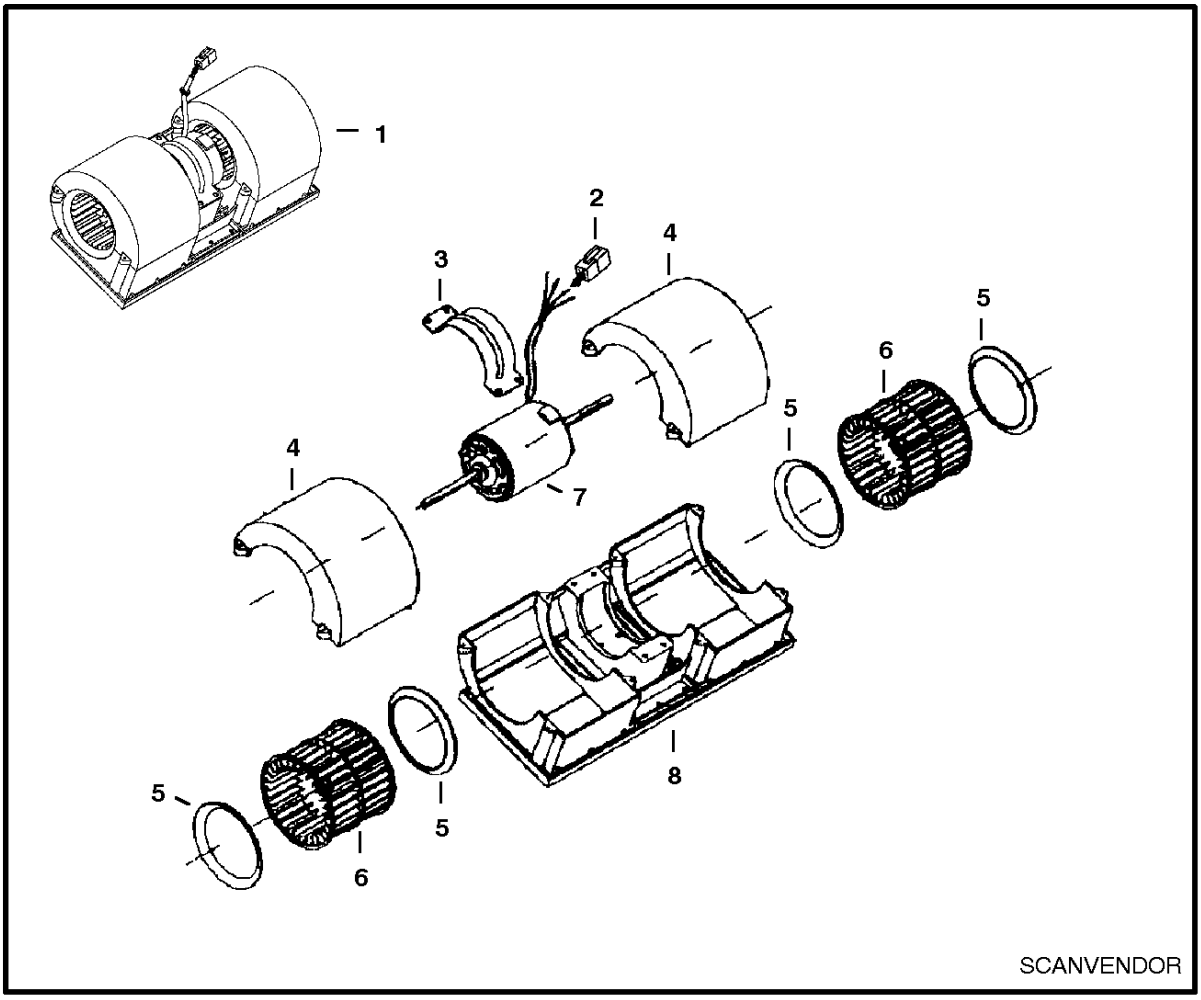

HEATER & A/C
(Blower Assembly)

Ref. No.	Part Number	Description	Remarks	Serial Number	Qty.

HEATER & A/C

Ref.N°	Part N°	Description	Remarks	Serial N°	Qty.
1	6675497	BLOWER	Ref. HEATER & A/C(2)-HEATER & A/C(8)		1
2	6728567	KIT	6 pin		1
2	6662252	LOCK	6 pin		1
2	6662257	PIN			4
2	6665370	PLUG			2
3	6675506	MOUNT			1
4	6675507	COVER			2
5	6675504	RING			4
6	6675505	BLOWER WHEEL			2
7	6675509	MOTOR	W/Ref. HEATER & A/C(2)		1
8	6675503	HOUSING			1

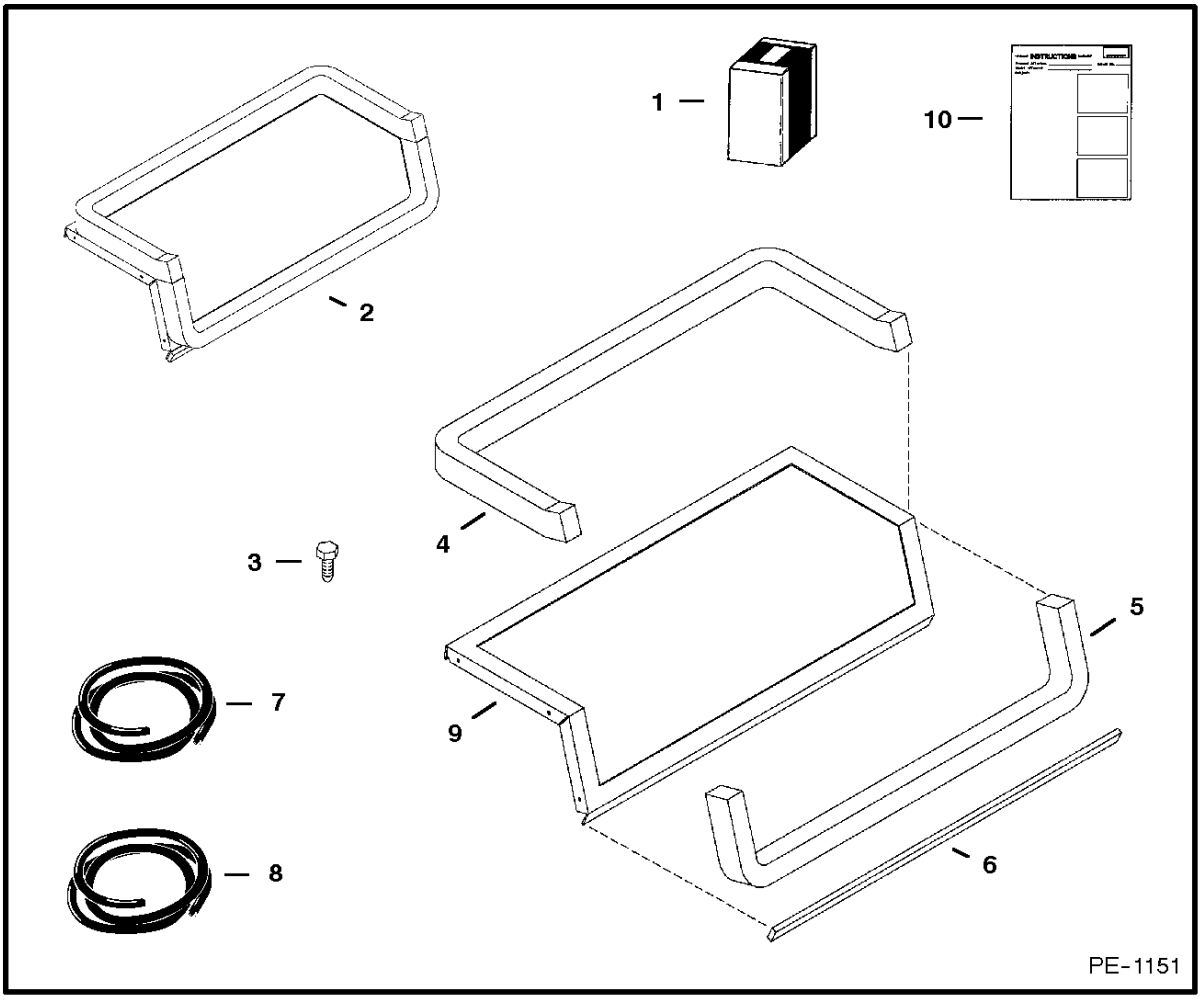

*** HEATER & A/C**
(Blower Seal Kit)

Ref. No.	Part Number	Description	Remarks	Serial Number	Qty.

* HEATER & A/C

Ref.N°	Part N°	Description	Remarks	Serial N°	Qty.
1	6728567	KIT	blower seal - W/Ref. * HEATER & A/C(2), * HEATER & A/C(3) & * HEATER & A/C(10)		1
2	NSS	FLANGE SEAL	assy - Ref. * HEATER & A/C(4), * HEATER & A/C(5), * HEATER & A/C(6) & * HEATER & A/C(9) - Order Ref. NO PAGE		1
3	6726621	SCREW			7
4	NAP	SEAL	27'(686mm) long - Order Ref. * HEATER & A/C(8)		1
5	NAP	SEAL	21'(534mm) long - Order Ref. * HEATER & A/C(8)		1
6	NAP	SEAL	15'(384mm) long - Order Ref. * HEATER & A/C(7)		1
7	6675611	SEAL	bulk - Sold Per Foot		x
8	6677111	SEAL	bulk - Sold Per Foot		x
9	NSS	FLANGE	Order Ref. NO PAGE		1
10	6901213	INSTRUCTIONS			1

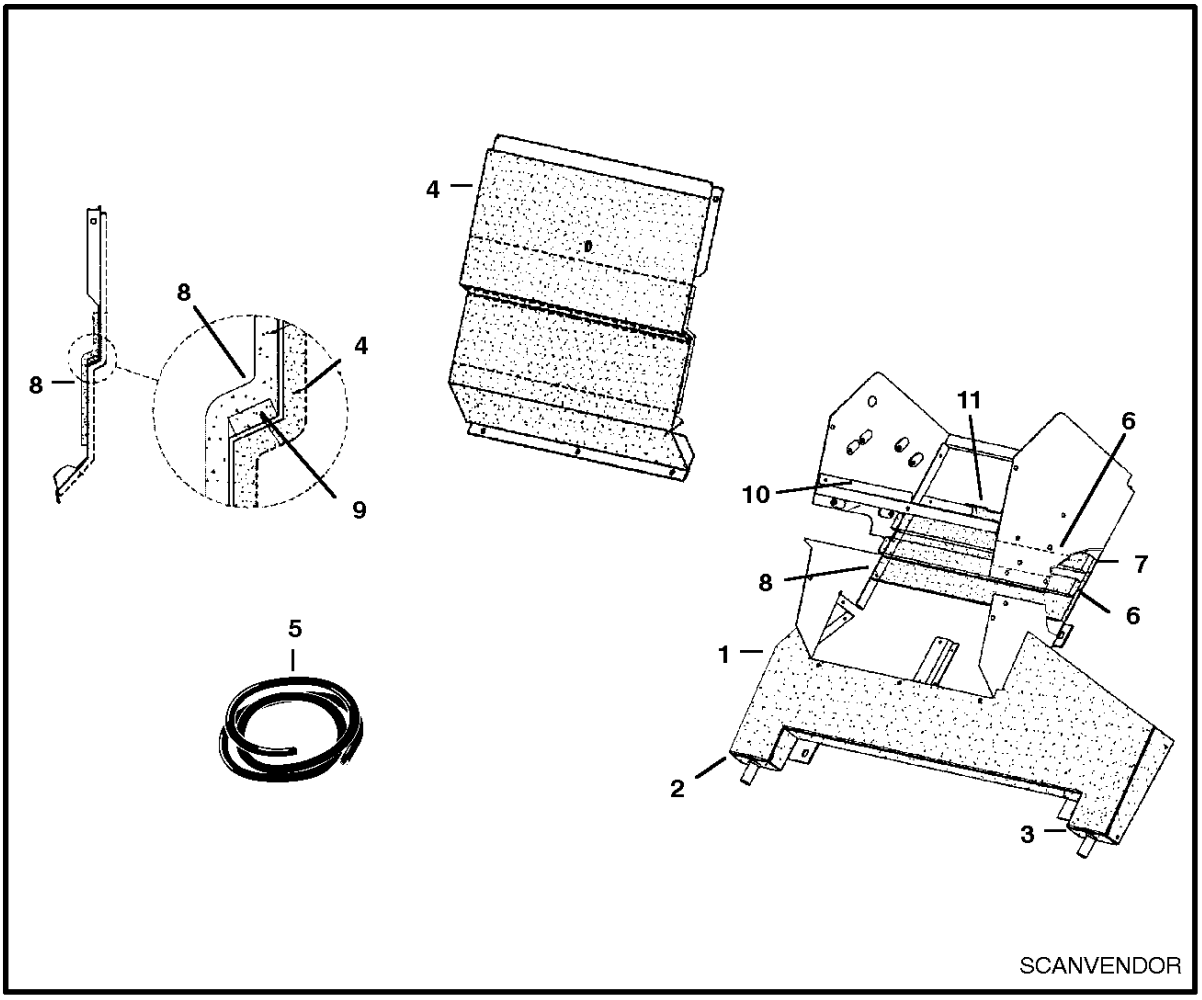

HEATER & A/C
(Insulation)

Ref. No.	Part Number	Description	Remarks	Serial Number	Qty.

HEATER & A/C

Ref.N°	Part N°	Description	Remarks	Serial N°	Qty.
1	6675607	INSULATION			1
2	6675608	INSULATION			1
3	6675609	INSULATION			1
4	6675610	INSULATION			1
5	6675611	SEAL	bulk - Sold Per Foot		x
6	6675612	INSULATION			2
7	6675613	INSULATION			1
8	6675614	INSULATION			2
9	NAP	SEAL	15' (381mm) long - Order Ref. HEATER & A/C(5)		1
10	NAP	SEAL	5.5' (140mm) long - Order Ref. HEATER & A/C(5)		1
11	NAP	SEAL	4' (101,6mm) long - Order Ref. HEATER & A/C(5)		1

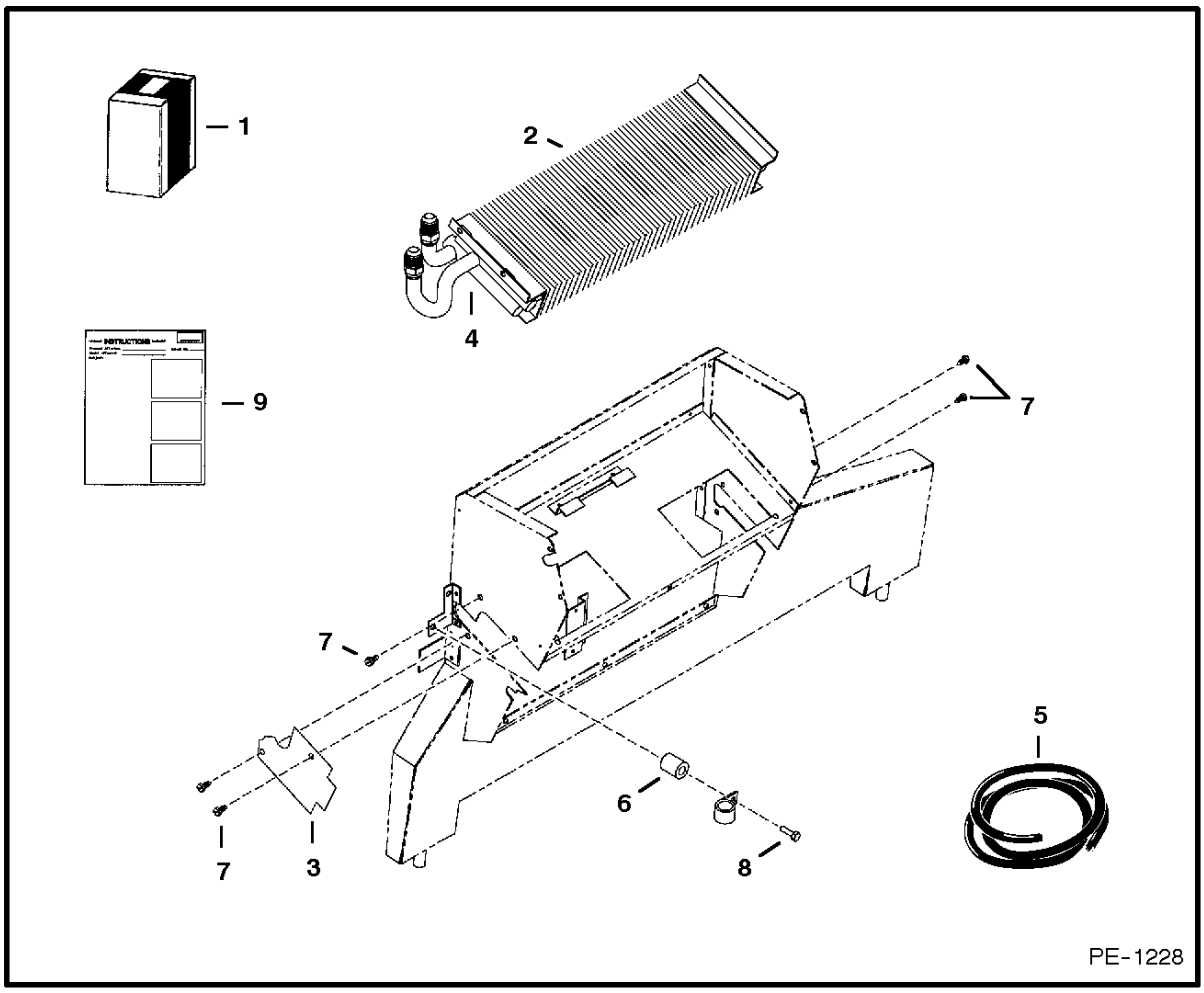

*** HEATER & A/C**
(Heater Coil Kit)

Ref. No.	Part Number	Description	Remarks	Serial Number	Qty.

* HEATER & A/C

Ref.N°	Part N°	Description	Remarks	Serial N°	Qty.
1	6727786	KIT	heater coil - W/Ref. * HEATER & A/C(2)-* HEATER & A/C(9)		1
2	NAP	HEATER COIL	Order 6728990 - Was 6677394 [A]		1
3	6676604	COVER	.279'(7,1mm) thickness		1
4	NAP	INSULATION	6(152.4mm) long - Order Ref. * HEATER & A/C(5)		1
5	6676538	INSULATION	bulk - Sold Per Foot		x
6	6676606	SPACER			1
7	6677579	SCREW			4
8	6676653	SCREW			1
9	6901120	INSTRUCTIONS			1

HEATER & A/C
(HVAC Assembly) (S/N & Below)

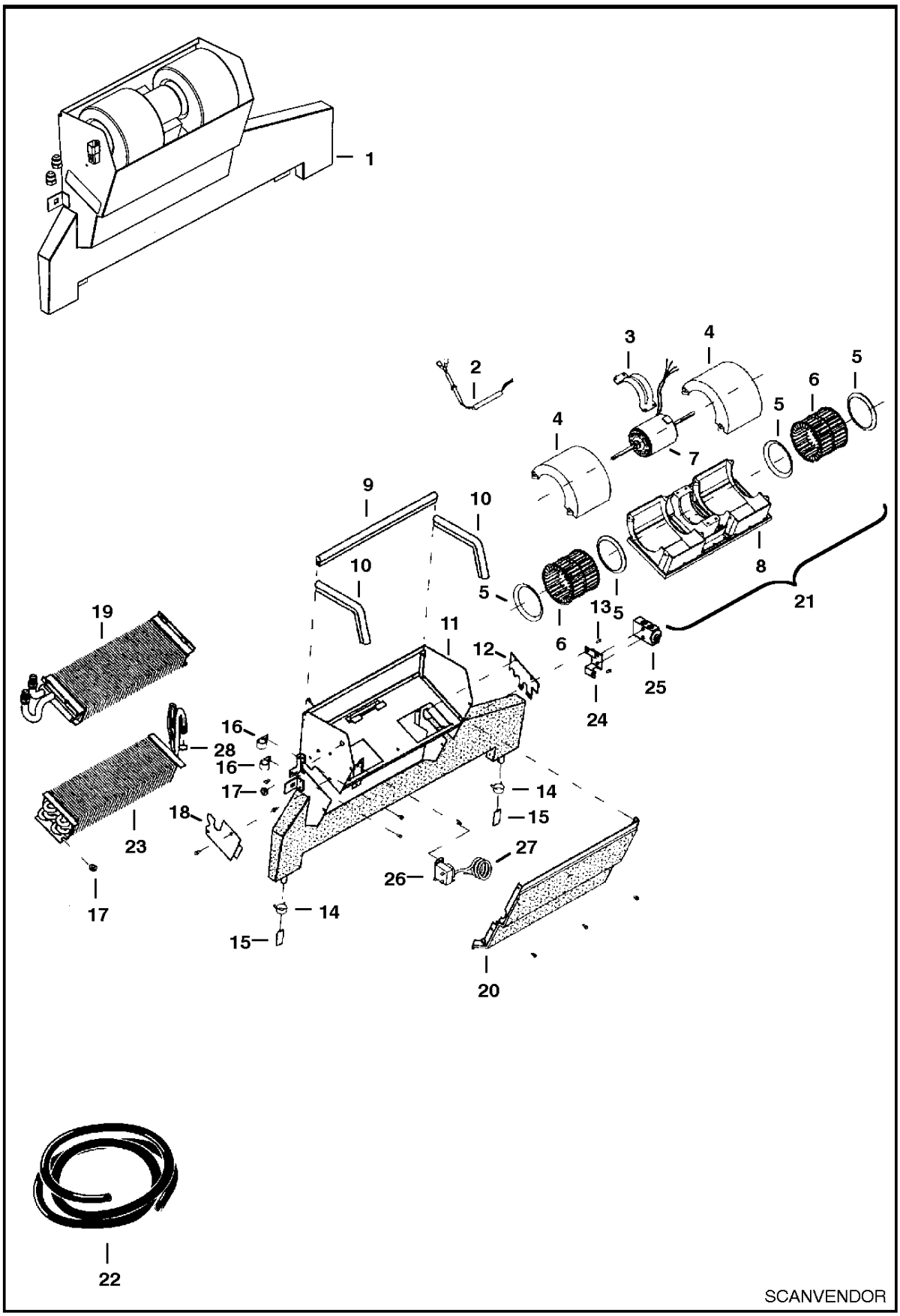

HEATER & A/C

Ref.N°	Part N°	Description	Remarks	Serial N°	Qty.
1	NAP	HEATER/AC	Ref. HEATER & A/C(2)-HEATER & A/C(22) - Order 6676561 - Was 6674226 [A]		1
2	6675508	HARNESS			1
3	6675506	MOUNT			1
4	6675507	COVER			2
5	6675504	RING			4
6	6675505	BLOWER WHEEL			2
7	6675509	MOTOR			1
8	6675503	HOUSING			1
9	NAP	SEAL	'14.75'(375mm)long - Order Ref. HEATER & A/C(22)		1
10	NAP	SEAL	8.5'(215mm)long - Order Ref. HEATER & A/C(22)		2
11	6675499	HOUSING			1
12	6677105	COVER	cover - Was 6675537 [A]		1
13		BOLT			x
14	6675510	CLAMP			2
15	6675511	DRAIN VALVE			2
16	6675512	CLAMP			2
17	6675513	GROMMET			2
18	6675501	PLATE	cover		1
19	NAP	COIL	See Page * HEATER & A/C(1) - Was 6675498 [A]		1
20	6675500	COVER			1
21	6675497	BLOWER	assy. - Ref. HEATER & A/C(2)-HEATER & A/C(8)		1
22	6675514	SEAL	bulk - Sold Per Foot - See Page HEATER & A/C(10)		x
23	6675533	COIL	evaporator		1
24	6676984	BRACKET	valve support - Was 6675536 [A]		1
25	6675534	BLOCK VALVE			1
26	6675790	THERMOSTAT	Was 6675535 [A]		1
27	6675539	HOSE	1/4' OD - 20' long		1
28	6675538	O-RING			2
29	6662246	CONNECTOR	6 pin		1
29	6662252	LOCK	6 pin		1
29	6662257	PIN			4
29	6665370	PLUG			2
30	6728567	KIT	See Page HEATER & A/C(10)		1

HEATER & A/C
(HVAC Assembly) (S/N & Above)

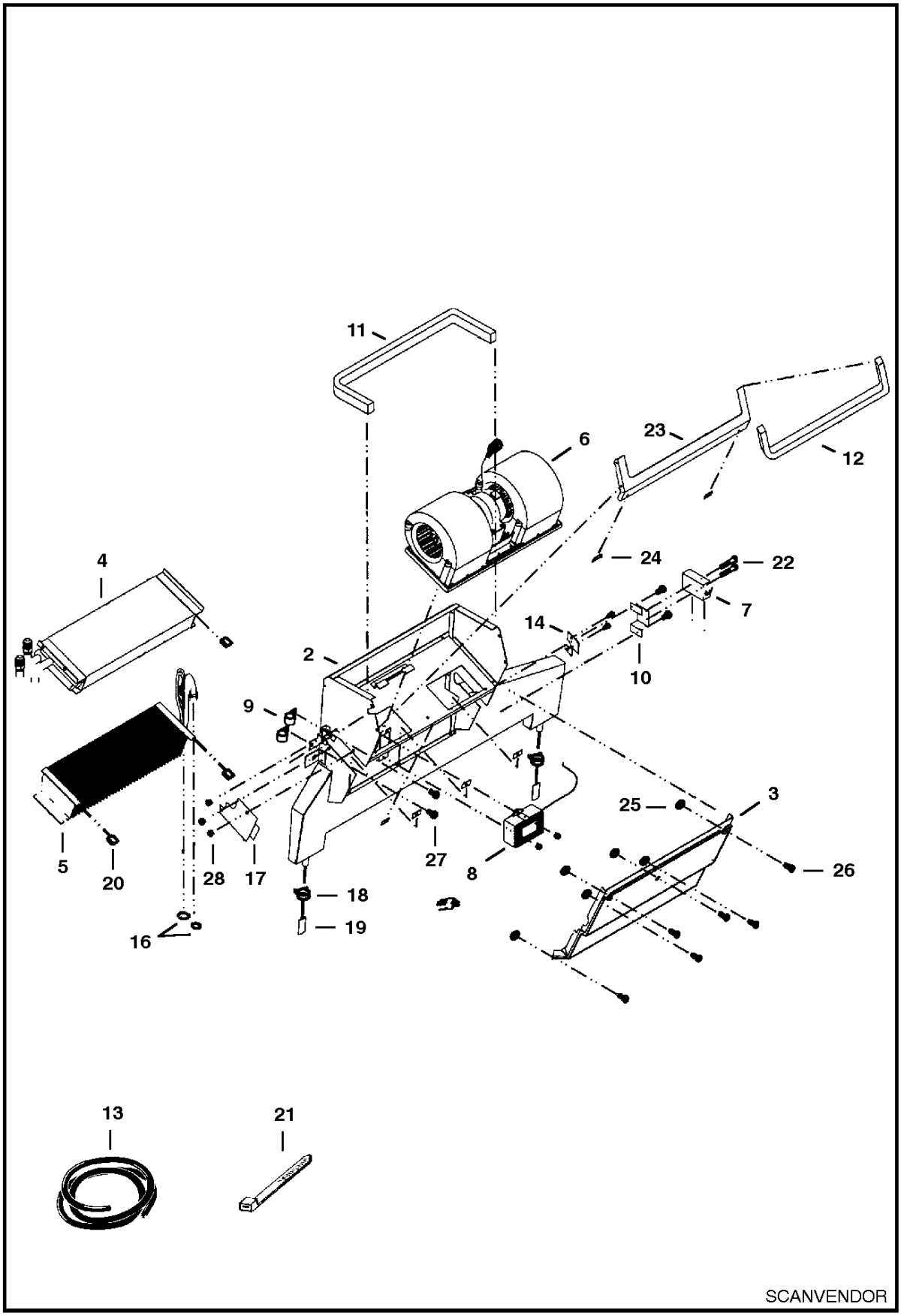

HEATER & A/C

Ref.N°	Part N°	Description	Remarks	Serial N°	Qty.
1	6676561	HVAC ASSY	assy - Ref. HEATER & A/C(2)-HEATER & A/C(28)		1
2	6677108	HOUSING			1
3	6677109	COVER			1
4	NAP	COIL	heater - See Page * HEATER & A/C(1) - Was 6676603 [A]		1
5	6675533	COIL	evaporator		1
6	6675497	BLOWER	assy - See Page HEATER & A/C(11)		1
7	6675534	BLOCK VALVE			1
8	6675790	THERMOSTAT			1
9	6675512	CLAMP	hose		2
10	6676984	BRACKET	valve		1
11	NAP	SEAL	25'(635mm) long - Order Ref. HEATER & A/C(13)		1
12	NAP	SEAL	'22.6'(575mm) long - Order Ref. HEATER & A/C(13)		1
13	6677111	SEAL	bulk - Sold Per Foot		x
14	6677105	COVER			1
15	6675513	GROMMET			1
16	6675538	O-RING			2
17	6676604	COVER			1
18	6675510	CLAMP	drain hose		2
19	6675511	DRAIN VALVE			2
20	6676539	CLIP			3
21	6677113	TIE	6'		1
22	1CM-635	BOLT			2
23	6677114	SEAL			1
24	6677115	RECEPTACLE			6
25	6677116	RETAINER			6
26	6677117	SCREW	captive		6
27	6677118	SCREW	w/washer		4
28	6677119	SCREW	sheetmetal		7

HEATER & A/C
(A/C Kit)

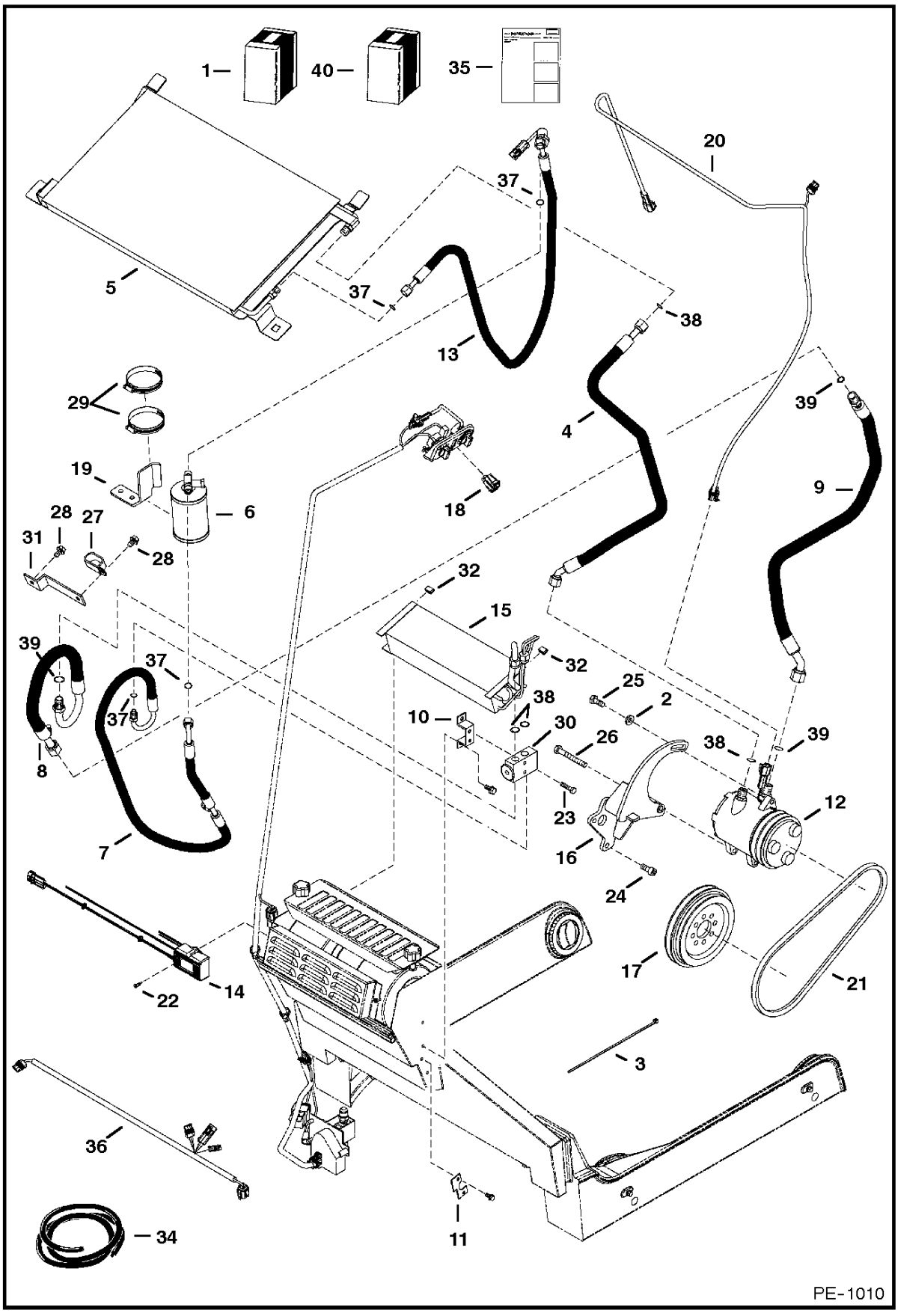

HEATER & A/C

Ref.N°	Part N°	Description	Remarks	Serial N°	Qty.
1	6726490	KIT	Ref. HEATER & A/C(2) - HEATER & A/C(35)		1
2	6557831	WASHER			1
3	6624289	STA-STRAP			1
4	6674232	HOSE	ac - W/Ref. HEATER & A/C(38)		1
5	6674234	CONDENSER			1
6	6674235	RECEIVER DRIER	reciever		1
6	6676062	RELIEF VALVE	relief		1
7	6675075	HOSE	ac - W/Ref. HEATER & A/C(37)		1
7	6677122	CAP			1
8	6675076	HOSE	ac - W/Ref. HEATER & A/C(39)		1
8	6677121	CAP			1
9	6675270	HOSE	ac - W/Ref. HEATER & A/C(39)		1
10	6676984	BRACKET	valve - Was 6675536 [A]		1
11	6677105	COVER	plate - Was 6675537 [A]		1
12	6675667	COMPRESSOR			1
12	6675828	CLUTCH			1
13	6675685	HOSE	ac - W/Ref. HEATER & A/C(37)		1
13	6675779	SWITCH	W/harness		1
13	6676399	VALVE CORE			1
14	6675790	THERMOSTAT			1
15	6675533	COIL	evaporator		1
16	6717375	MOUNT	compressor		1
17	6718310	PULLEY	engine		1
18	6719176	SWITCH	rocker		1
19	6719459	MOUNT	reciever drier		1
20	6719630	HARNESS	ac		1
21	6725943	BELT	compressor		1
22	6726621	SCREW			2
23	1CM-635	BOLT			2
24	3GM-1025	SCREW			3
25	5CM-1025	BOLT			1
26	5CM-1080	BOLT			1
27	31H-46	CLAMP	Was 31H-42 [B]		1
28	84G-3710	BOLT			2
29	6515576	CLAMP			2
30	6675534	BLOCK VALVE			1
31	6727326	MOUNT	clamp		1
32	6676539	CLIP			2
33	NAP	INSULATION	tape - 6' (152,4mm) long - Order Ref. HEATER & A/C(34)		1
34	6676538	INSULATION	bulk - sold per foot		x
35	6901039	INSTRUCTIONS			1
36	6726357	HARNESS	hvac jumper - connects the hvac harness (6725275 or 6717877) to the ac harness (6719630) and	5141 41357 & Bel.	1
37	6675824	O-RING	#6		x
38	6675538	O-RING	#8		x
39	6675825	O-RING	#10		x
40	6676063	KIT	fitting caps		1

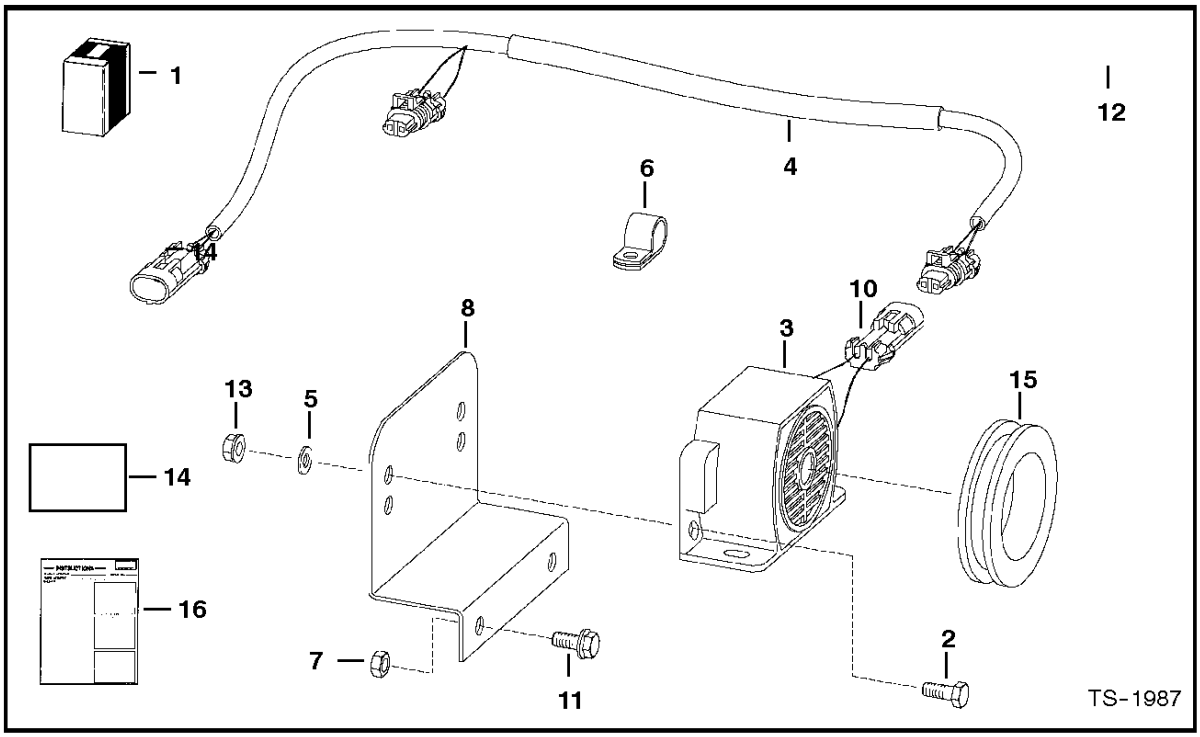

HORN KIT

Ref. No.	Part Number	Description	Remarks	Serial Number	Qty.
1*	NAP	HORN KIT	Ref. 2-16 - Was 6719043 [A]		1
*	6727995	HORN KIT	Ref. 2-16		1

HORN KIT

Ref.N°	Part N°	Description	Remarks	Serial N°	Qty.
1	NAP	HORN KIT	Ref. HORN KIT(2)-HORN KIT(16) - Was 6719043 [A]		1
1	6727995	HORN KIT	Ref. HORN KIT(2)-HORN KIT(16)		1
2	17C-410	BOLT			2
3	6675099	HORN			1
4	6719151	HARNESS	W/metal tube - for kit 6719043		1
4	6727498	HARNESS	for kit 6727995		1
5	25E-13	WASHER			1
6	30H-23	CLAMP			1
7	83D-5	NUT			2
8	6707726	MOUNT			1
9	6641180	LOCK	2 - pin		2
9	6640700	LOCK	3 - pin		2
10	6641179	CONNECTOR	2 - pin		2
10	6640699	CONNECTOR	3 - pin		2
11	35C-512	BOLT			2
12	6705921	HANDLE ASSY.			1
12	6640690	PIN			5
12	6641176	SEAL			5
13	83D-4	NUT			2
14	6703727	DECAL			1
15	6577545	GROMMET			1
16	6901146	INSTRUCTIONS	Was 6900913 [A]		1

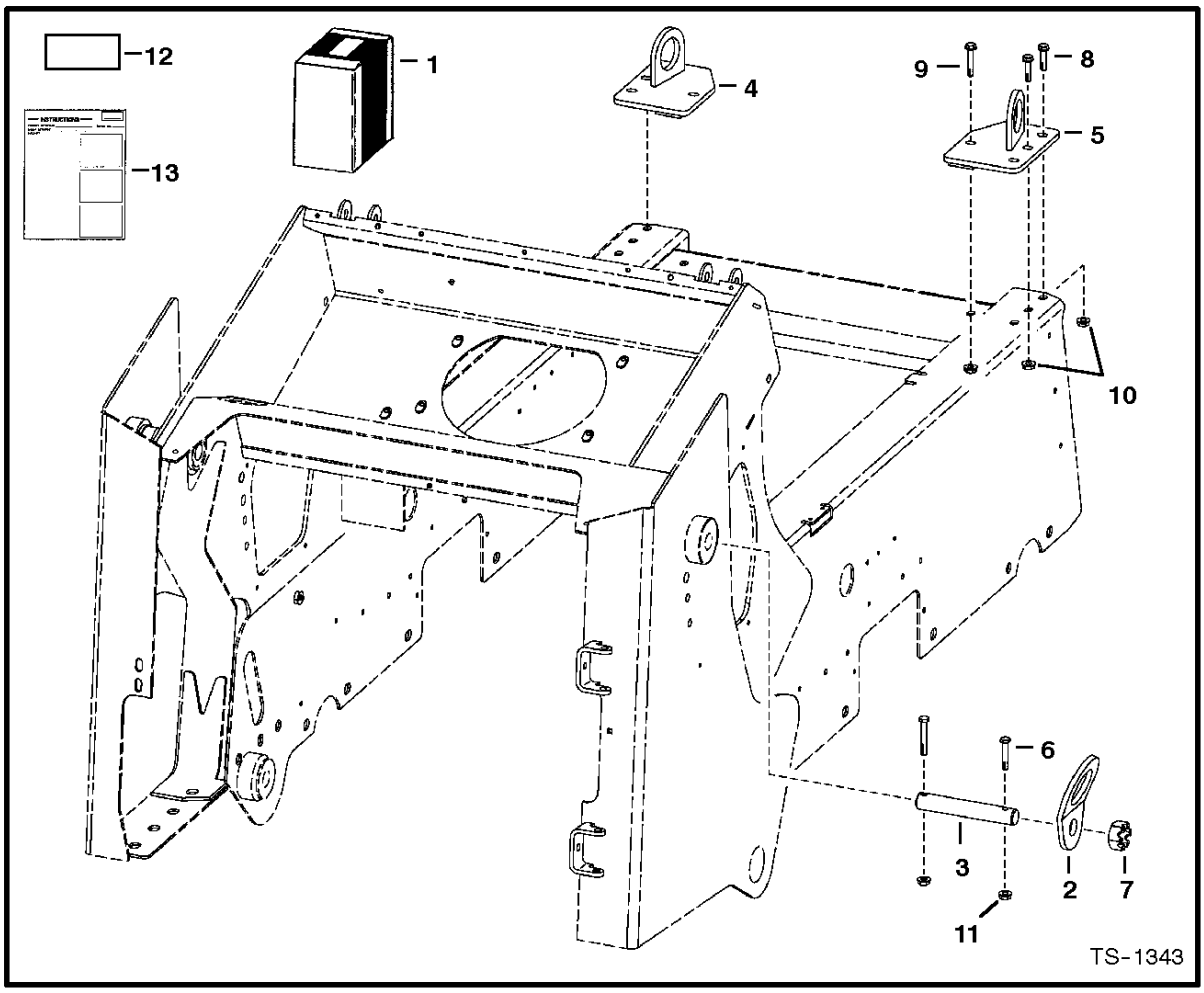

LIFT KIT
(Four Point)

Ref. No.	Part Number	Description	Remarks	Serial Number	Qty.

LIFT KIT

Ref.N°	Part N°	Description	Remarks	Serial N°	Qty.
1	6726717	KIT	lift - Ref. LIFT KIT(4) - LIFT KIT(13)		1
2	6726908	LIFT EYE			2
3	6726907	PIN			2
4	6726716	BRACKET	L.H.		1
5	6726715	BRACKET	R.H.		1
6	17C-652	BOLT			2
7	4D-28	NUT			2
8	35C-824	BOLT			2
9	35C-832	BOLT			2
10	83D-8	NUT			4
11	87D-5	NUT			2
12	6726423	DECAL			1
13	6724488	INSTRUCTIONS			1

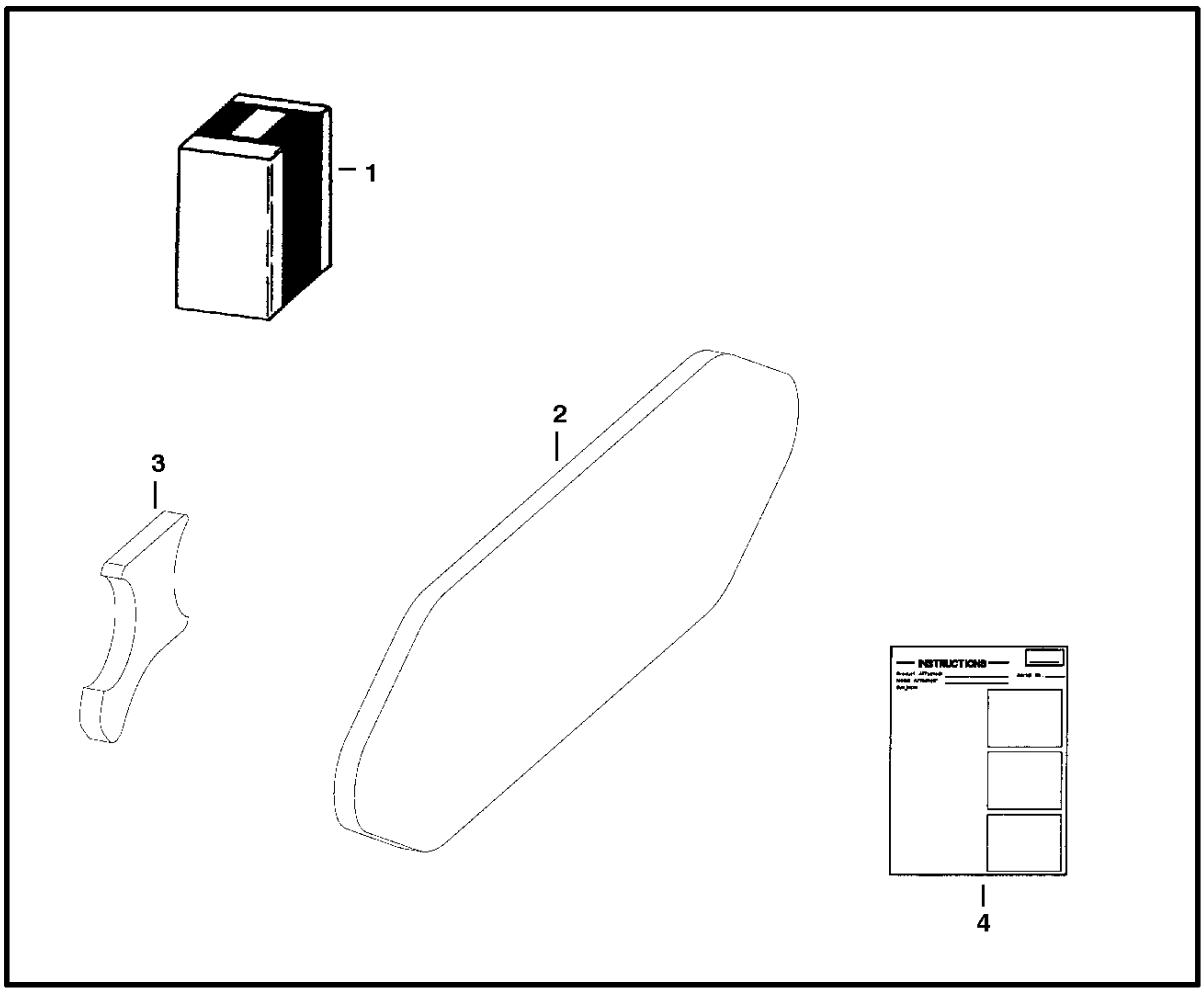

LIFT ARM KIT

Ref. No.	Part Number	Description	Remarks	Serial Number	Qty.

LIFT ARM KIT

Ref.N°	Part N°	Description	Remarks	Serial N°	Qty.
1	6728039	KIT	Ref. LIFT ARM KIT(2)-LIFT ARM KIT(4)		1
2	6727884	PLATE	boom		4
3	6727885	PLATE	H-frame		4
4	6901202	INSTRUCTIONS			1

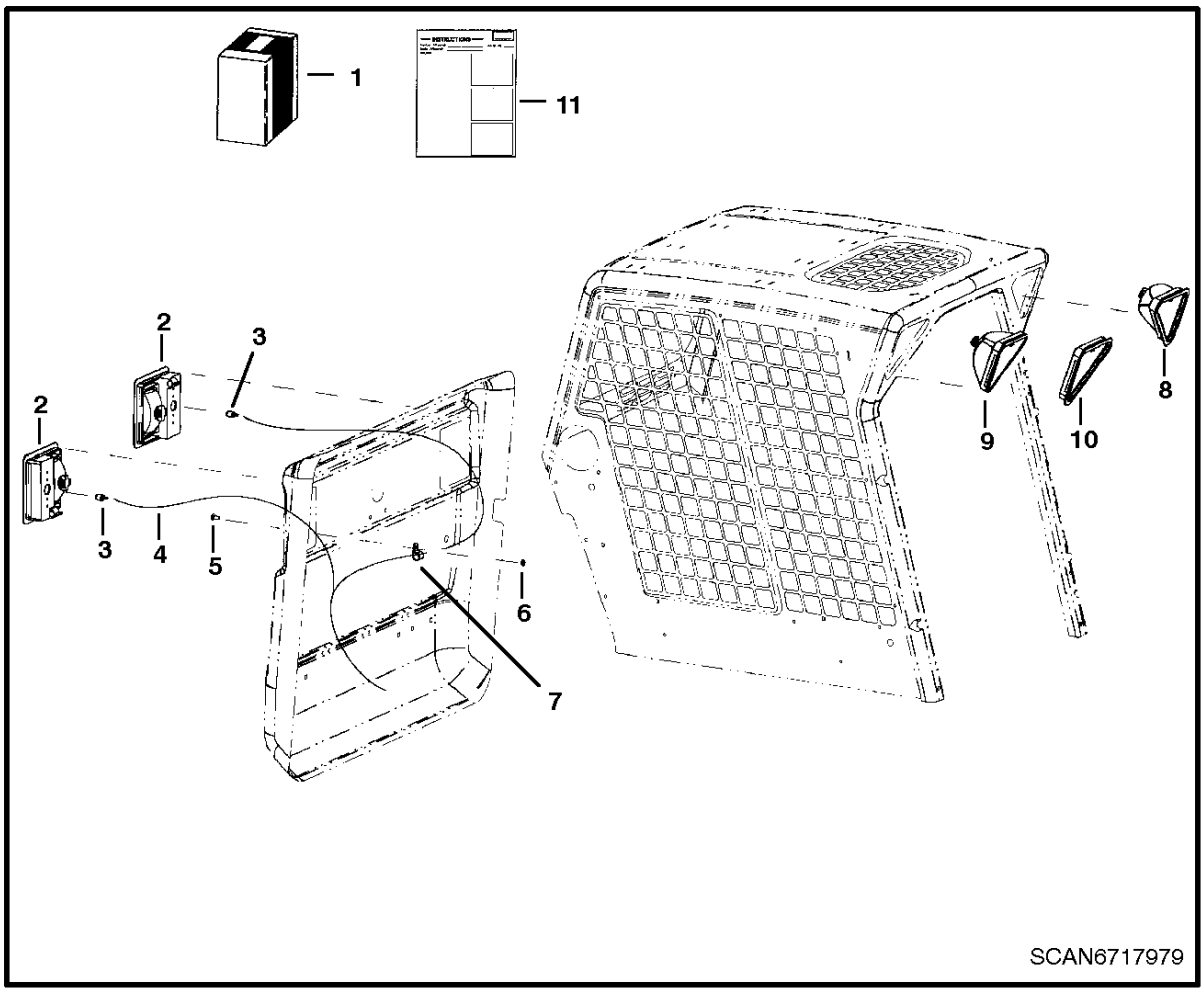

LIGHT KIT

Ref. No.	Part Number	Description	Remarks	Serial Number	Qty.

LIGHT KIT

Ref.N°	Part N°	Description	Remarks	Serial N°	Qty.
1	NAP	KIT	Order components		1
2	6670284	LIGHT	rear		2
2	6672273	SCREW			2
2	6672276	LENS	red		2
2	6672275	GASKET			2
2	6672277	BRACKET			2
2	6672279	MOUNT	rubber		2
2	6672272	WASHER			4
2	6672274	SCREW			4
2	6661353	LIGHT ASSY	W/bulb - white		2
2	898731	LIGHT BULB			2
3	6649481	BULB			2
4	6716419	HARNESS			1
5	37C-512	BOLT			1
6	85D-5	NUT			1
7	30H-42	CLAMP			1
8	NAP	LIGHT ASSY	R.H. - Ref. LIGHT KIT(9) & LIGHT KIT(10)		1
8	NAP	LIGHT ASSY	L.H. - Ref. LIGHT KIT(9) & LIGHT KIT(10)		1
9	6674401	HOUSING	R.H.		1
9	6675336	BULB	55 watt		1
9	6674400	HOUSING	L.H.		1
9	6675336	BULB	55 watt		1
10	6674402	MOUNT			1
11	NAP	INSTRUCTIONS			1

POWER BOB-TACH KIT
(Hydraulic Assisted)

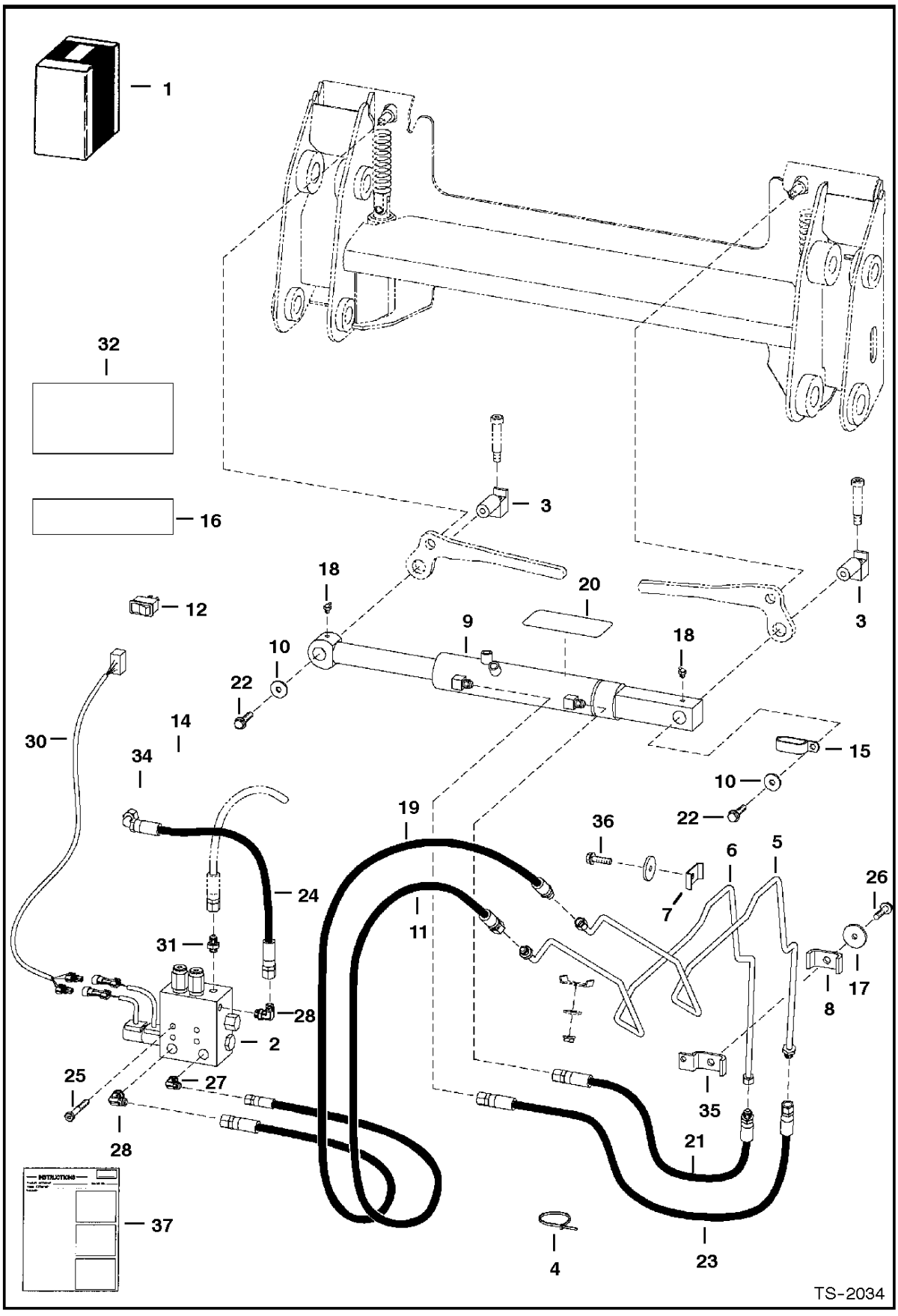

POWER BOB-TACH KIT

Ref.N°	Part N°	Description	Remarks	Serial N°	Qty.
1	6719842	KIT	Ref. POWER BOB-TACH KIT (2)-POWER BOB-TACH KIT (37)		1
2		MANIFOLD	See Page POWER BOB-TACH(12)		1
3	6714576	PIVOT			2
4	6624289	STA-STRAP			4
5	6718478	TUBELINE			1
6	6718479	TUBELINE			1
7	6502203	CLAMP			1
8	6800262	CLAMP			2
9	6805158	CYLINDER	See Page POWER BOB-TACH CYLINDER(1)		1
10	619021	WASHER			2
11	6719451	HOSE			1
12	6674585	SWITCH	horizontal		1
12	6676732	SWITCH	vertical		1
13	99K-6	O-RING			x
14	99K-12	O-RING			x
15	31H-42	CLAMP			2
16	6719888	DECAL			1
17	6563914	WASHER	Was 872229 [B]		1
18	11H-15	GREASE ZERK			2
19	6718358	HOSE			1
20	6554100	SAFETY TREAD	safety		1
21	6719602	HOSE			1
22	35C-616	BOLT			2
23	6719603	HOSE			1
24	6719605	HOSE			1
25	73G-656	BOLT			4
26	84G-3728	BOLT	Was 35C-632 [B]		1
27	17KV-3	ELBOW	W/Ref. POWER BOB-TACH KIT (29)		1
27	97K-4	O-RING	flared end		x
28	17KV-5	ELBOW	W/Ref. POWER BOB-TACH KIT (13)		2
28	97K-6	O-RING	flared end		x
29	99K-4	O-RING			x
30	6718652	HARNESS			3
31	15KV-8	ADAPTER	W/Ref. POWER BOB-TACH KIT (14)		1
31	97K-12	O-RING	flared end		3
32	6725907	DECAL			1
33	14KN-5	TEE	for standard machine W/rear aux.		1
34	6715186	ADAPTER	W/Ref. POWER BOB-TACH KIT (14)		1
34	97K-6	O-RING	flared end		x
35	6726930	CLAMP			1
36	17C-640	BOLT			1
37	6900952	INSTRUCTIONS			1

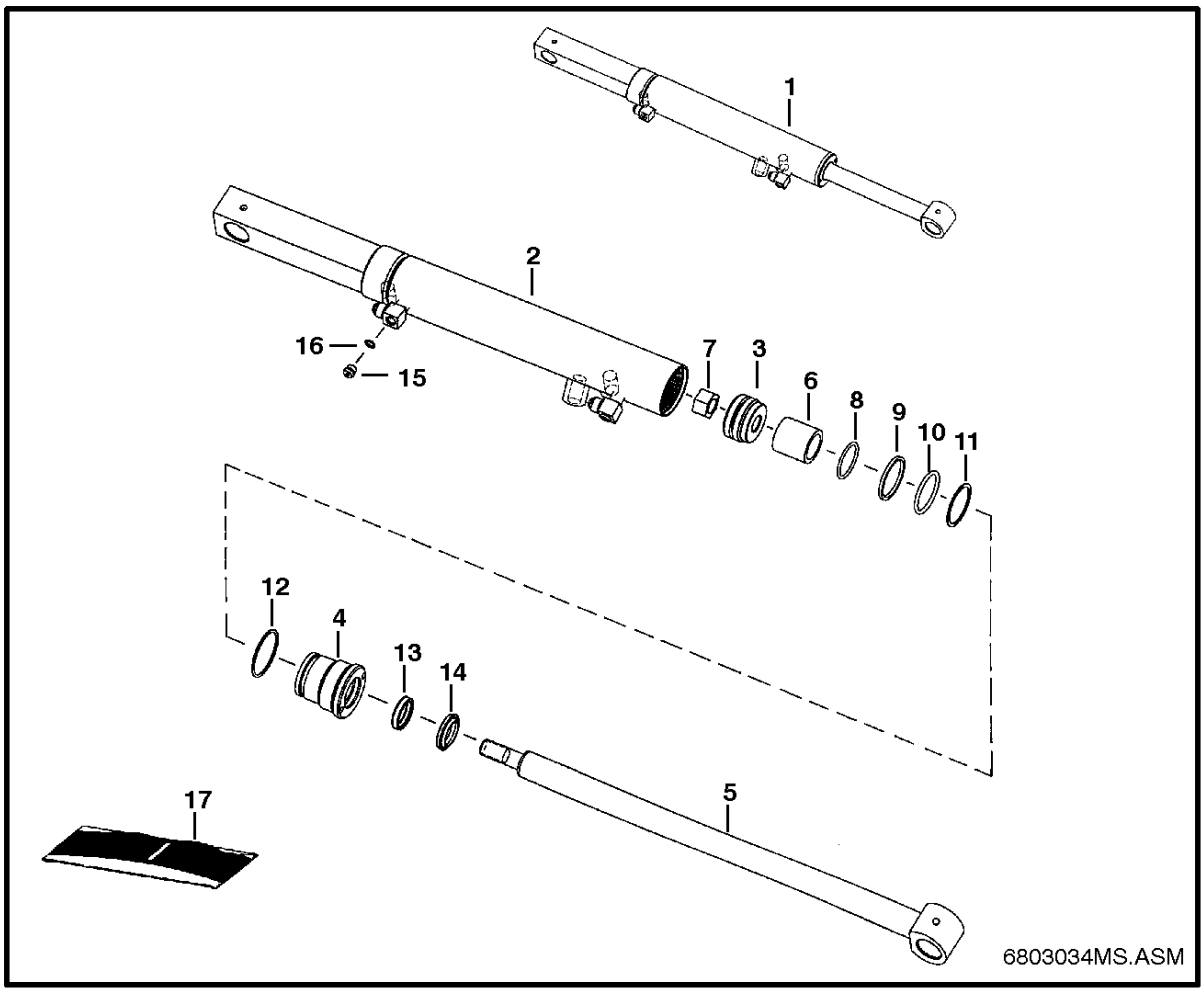

POWER BOB-TACH CYLINDER

Ref. No.	Part Number	Description	Remarks	Serial Number	Qty.

POWER BOB-TACH CYLINDER

Ref.N°	Part N°	Description	Remarks	Serial N°	Qty.
1	6805158	CYLINDER	Ref. POWER BOB-TACH CYLINDER(2) - POWER BOB-TACH CYLINDER(16)		1
2	6805160	CASE	1.75'(45 mm) I.D.		1
3	6586543	PISTON			1
4	6586542	HEAD			1
5	6807508	SHAFT	1'(25.4 mm) O.D.		1
6	6807092	SPACER			1
7	92D-10	NUT			1
8	54K-30110	O-RING			1
9	6532453	RING			1
10	54K-40116	O-RING			1
11	73K-222	WASHER	back-up		1
12	58K-132	O-RING			1
13	6667323	SEAL	rod		1
14	6666542	SEAL	wiper		1
15	90KV-2	PLUG	W/Ref. POWER BOB-TACH CYLINDER(16)		2
16	79K-3	O-RING			2
17	6803473	SEAL KIT	Ref. POWER BOB-TACH CYLINDER(7) - POWER BOB-TACH CYLINDER(14)		1

POWER BOB-TACH
(Valve Assembly)

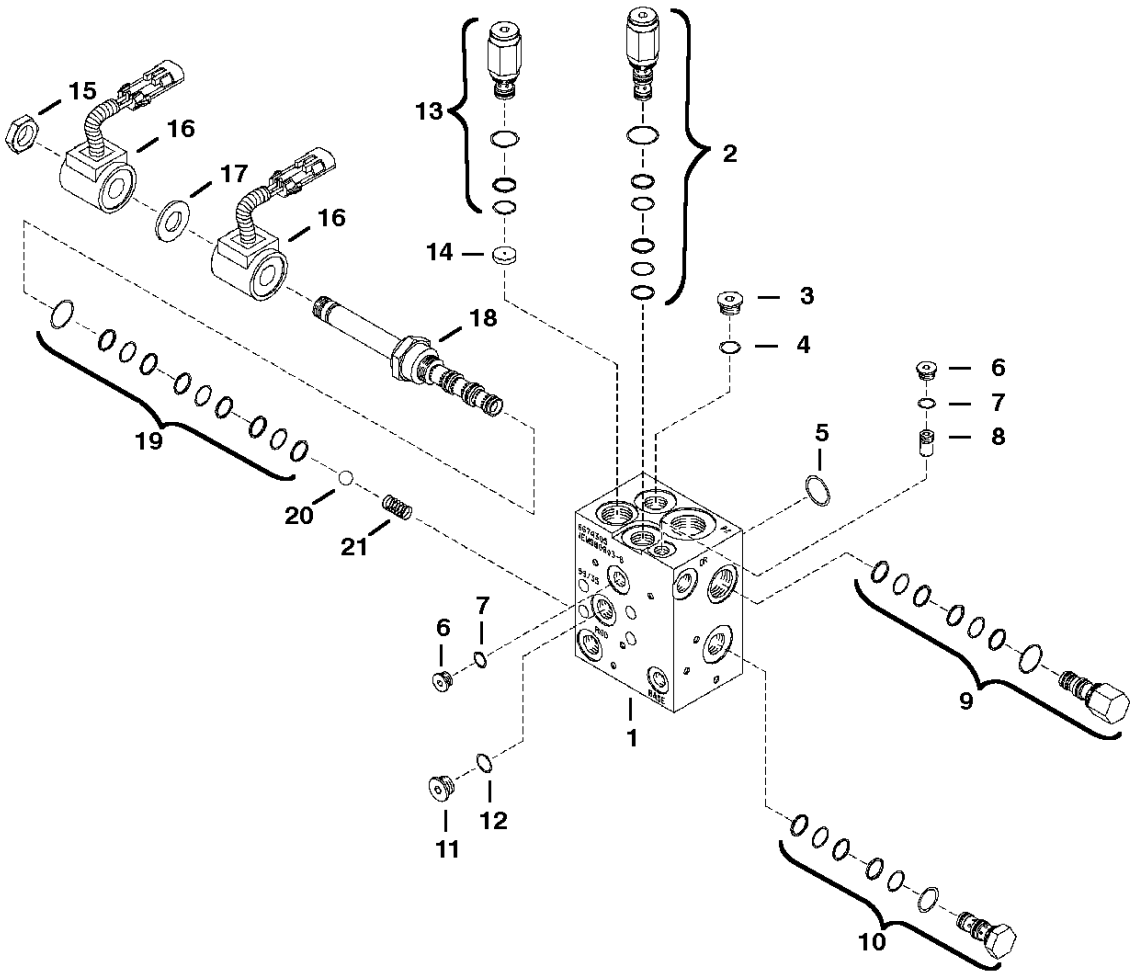

TS-2051

POWER BOB-TACH

Ref.N°	Part N°	Description	Remarks	Serial N°	Qty.
1	NAP	VALVE	Ref. POWER BOB-TACH(2)-POWER BOB-TACH(21) - Order 6676547 - See Page POWER BOB-TACH(13) - Was 6674305 [A]		1
2	6676073	RELIEF VALVE			1
2	6676074	SEAL KIT			1
3	6674548	PLUG	W/Ref. POWER BOB-TACH(4)		1
4	79K-8	O-RING			x
5	6676071	O-RING			1
6	6665719	PLUG	W/Ref. POWER BOB-TACH(7)		2
7	99K-5	O-RING			x
8	6676347	ORIFICE	screw in plug W/screen - Was 6669615 [A]		1
9	6676064	VALVE			1
9	6676065	SEAL KIT			1
10	6669616	CHECK VALVE			1
10	6669622	SEAL KIT			1
11	90KV-5	PLUG	W/Ref. POWER BOB-TACH(12)		1
12	95K-6	O-RING			x
13	6676068	VALVE			1
13	6676069	SEAL KIT			1
14	6676070	ORIFICE			1
15	7D-8	NUT			1
16	6671025	COIL			2
17	6674445	SPACER			1
18	6661443	STEM	W/Ref. POWER BOB-TACH(19)		1
19	6667180	SEAL KIT			1
20	6676066	BALL			1
21	6676067	SPRING			1

POWER BOB-TACH
(Valve Assembly)

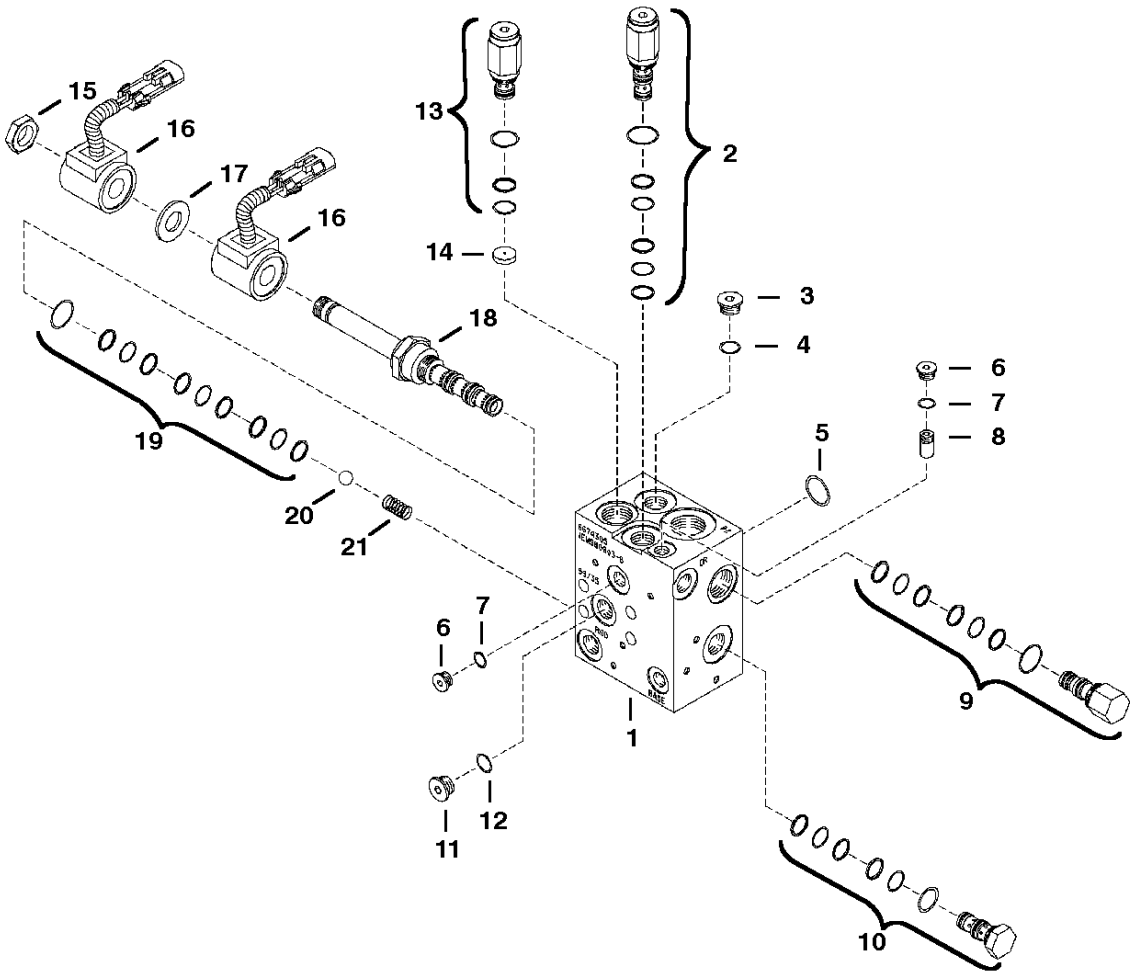

TS-2051

POWER BOB-TACH

Ref.N°	Part N°	Description	Remarks	Serial N°	Qty.
1	6676547	VALVE	Ref. POWER BOB-TACH(2) - POWER BOB-TACH(21)		1
2	6677147	RELIEF VALVE			1
2	6677148	SEAL KIT			1
3	6677158	PLUG	W/Ref. POWER BOB-TACH(4)		1
4	79K-8	O-RING			x
5	6677157	O-RING			1
6	6677159	PLUG	W/Ref. POWER BOB-TACH(7)		2
7	99K-5	O-RING			x
8	6676347	ORIFICE	screw in plug W/screen		1
9	6677155	VALVE			1
9	6677156	SEAL KIT			1
10	6677149	CHECK VALVE			1
10	6677150	SEAL KIT			1
11	90KV-5	PLUG	W/Ref. POWER BOB-TACH(12)		1
12	95K-6	O-RING			x
13	6677151	VALVE			1
13	6677152	SEAL KIT			1
14	6676070	ORIFICE			1
15	7D-8	NUT			1
16	6671025	COIL			2
17	6674445	SPACER			1
18	6677153	STEM	W/Ref. POWER BOB-TACH(19)		1
19	6672756	SEAL KIT			1
20	6676066	BALL			1
21	6676067	SPRING			1

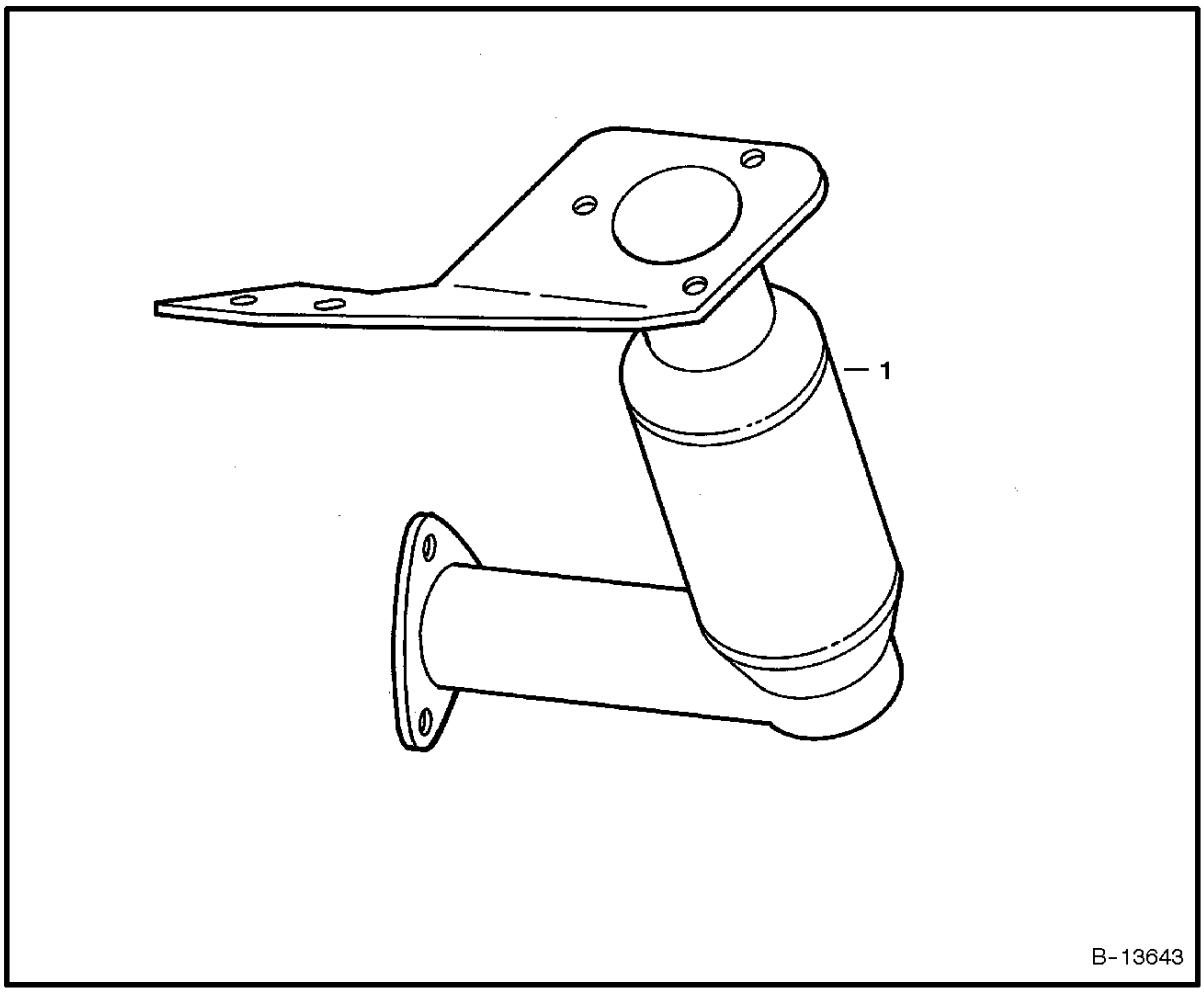

PURIFIER

Ref. No.	Part Number	Description	Remarks	Serial Number	Qty.

PURIFIER

Ref.N°	Part N°	Description	Remarks	Serial N°	Qty.
1	6673826	PURIFIER	'2 hole mounting - replaces exhaust tube - uses existing hardware & gasket		1

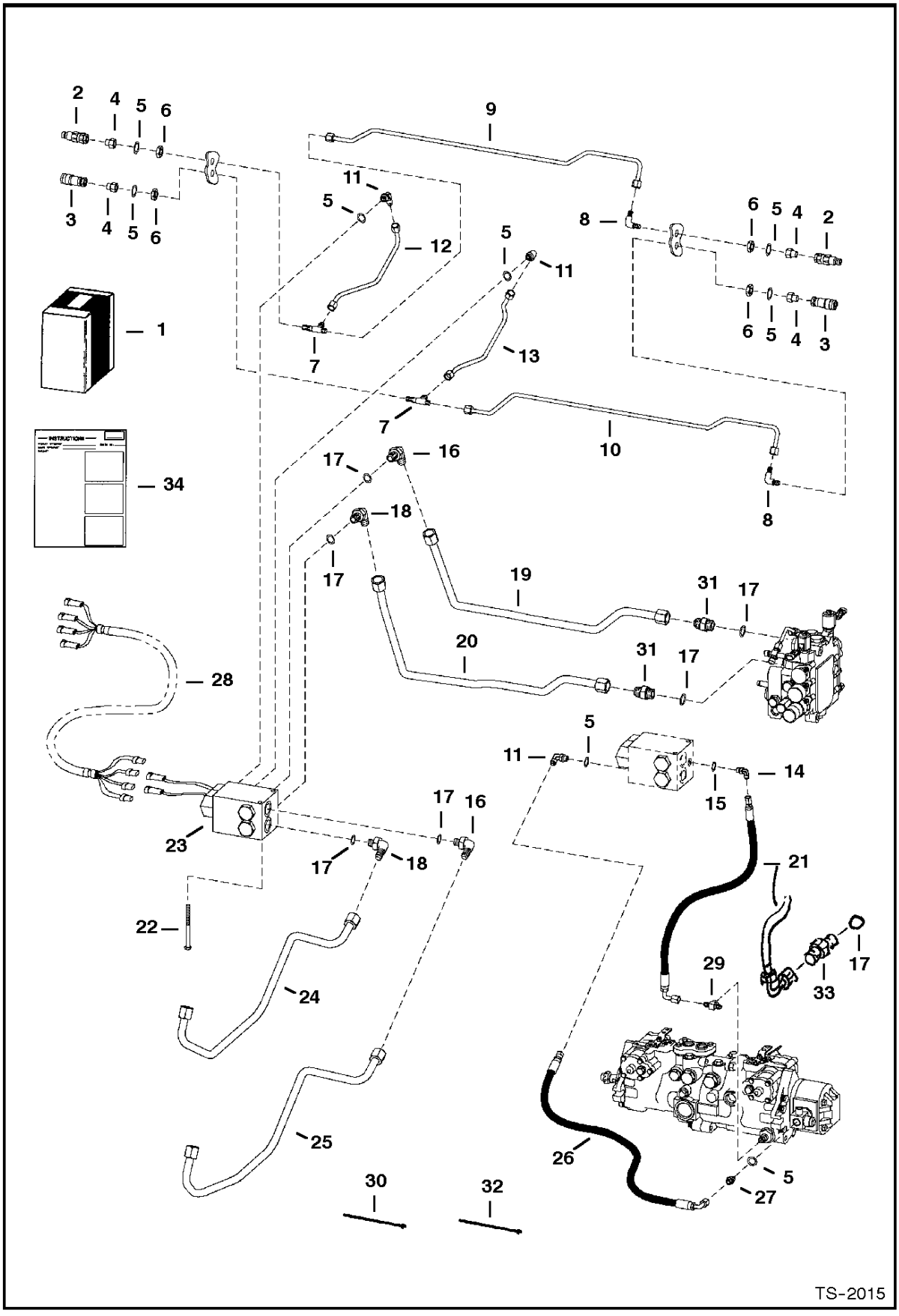
2
4
5
6
3
4
5
6
9
11
5
12
7
5
11
13
7
10
8
6
5
4
2
6
5
4
3
1
34
17
16
18
17
19
31
17
20
31
17
28
5
11
14
15
23
17
16
17
18
21
22
24
29
17
33
25
26
5
27
30
32
TS-2015

REAR AUXILIARY HYDRAULICS

Ref.N°	Part N°	Description	Remarks	Serial N°	Qty.
1	SALES	KIT	Ref. 2 - REAR AUXILIARY HYDRAULICS(34) - Order 6725267 from SALES		1
2	6667803	QUICK COUPLER	female		2
3	6667804	QUICK COUPLER	male		2
4	6706633	CONNECTOR	W/Ref. REAR AUXILIARY HYDRAULICS(5) - flat boss face		4
5	99K-6	O-RING			x
6	86F-5	NUT			4
7	6719298	TEE			2
7	97K-6	O-RING	flared end		x
8	88FN-5	ELBOW			2
9	6718852	TUBELINE			1
10	6718853	HOSE			1
11	17KV-5	ELBOW	W/Ref. REAR AUXILIARY HYDRAULICS(5) - tappered boss face		3
11	97K-6	O-RING	flared end		x
12	6719793	TUBELINE			1
13	6719794	TUBELINE			1
14	96K-4	O-RING	flared end		x
14	17KV-3	ELBOW	W/Ref. REAR AUXILIARY HYDRAULICS(15) - tappere d boss face		1
15	79K-4	O-RING			x
16	6716443	ELBOW	W/Ref. REAR AUXILIARY HYDRAULICS(17)		2
16	97K-12	O-RING	flared end		x
17	99K-12	O-RING	tappered boss face		x
18	17KV-8	ELBOW	W/Ref. REAR AUXILIARY HYDRAULICS(17) - tappere d boss face		2
18	97K-12	O-RING	flared end		x
19	6719789	TUBELINE			1
20	6719790	TUBELINE			1
21	6714875	HOSE			1
22	17C-672	BOLT			2
23	6665572	VALVE	See Page REAR AUXILIARY VALVE(1)		1
24	6719791	KIT			1
25	6719792	TUBELINE			1
26	6714808	HOSE			1
27	15KV-5	ADAPTER	W/Ref. REAR AUXILIARY HYDRAULICS(5)		1
28	6718645	HARNESS			1
29	14KN-5	TEE			1
29	96K-6	O-RING	flared end		x
30	6624289	STA-STRAP			2
31	15K-8	ADAPTER	W/Ref. REAR AUXILIARY HYDRAULICS(17) - flat boss face - not in kit		2
32	6610510	NYLON TIE			5
33	6715186	ADAPTER	W/Ref. REAR AUXILIARY HYDRAULICS(17)	5141 43126 & Abv.	1
33	97K-12	O-RING	flared end		x
34	6900980	INSTRUCTIONS			1

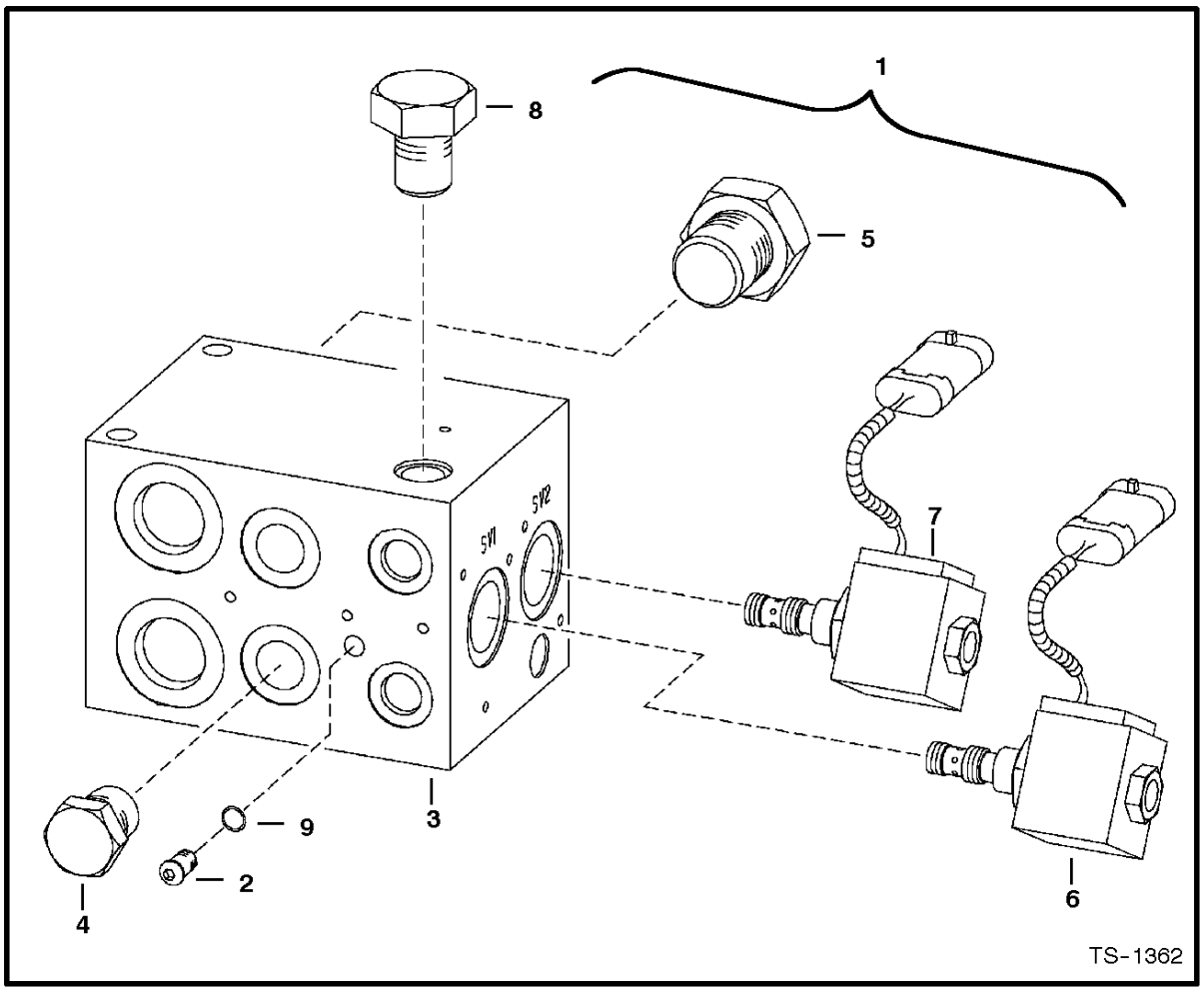

REAR AUXILIARY VALVE

Ref. No.	Part Number	Description	Remarks	Serial Number	Qty.

REAR AUXILIARY VALVE

Ref.N°	Part N°	Description	Remarks	Serial N°	Qty.
1	6665572	VALVE	diverter		1
2	6676152	PLUG	W/Ref. REAR AUXILIARY VALVE(9) - Was 6653490 [A]		18
3	NSS	BODY			1
4	6664212	CHECK VALVE			2
4	6653487	SEAL KIT			2
5	6653484	VALVE			2
5	6653485	SEAL KIT			2
6	6669218	VALVE	'solenoid W/Connector SV2 port		1
6	6669190	COIL			1
6	6669188	STEM			1
6	6669217	SEAL KIT			1
7	6669219	VALVE	'solenoid W/Connector SV1 port		1
7	6669190	COIL			1
7	6669189	STEM			1
7	6669216	SEAL KIT			1
8	6669187	VALVE			1
8	6653487	SEAL KIT			1
9	79K-2	O-RING			x

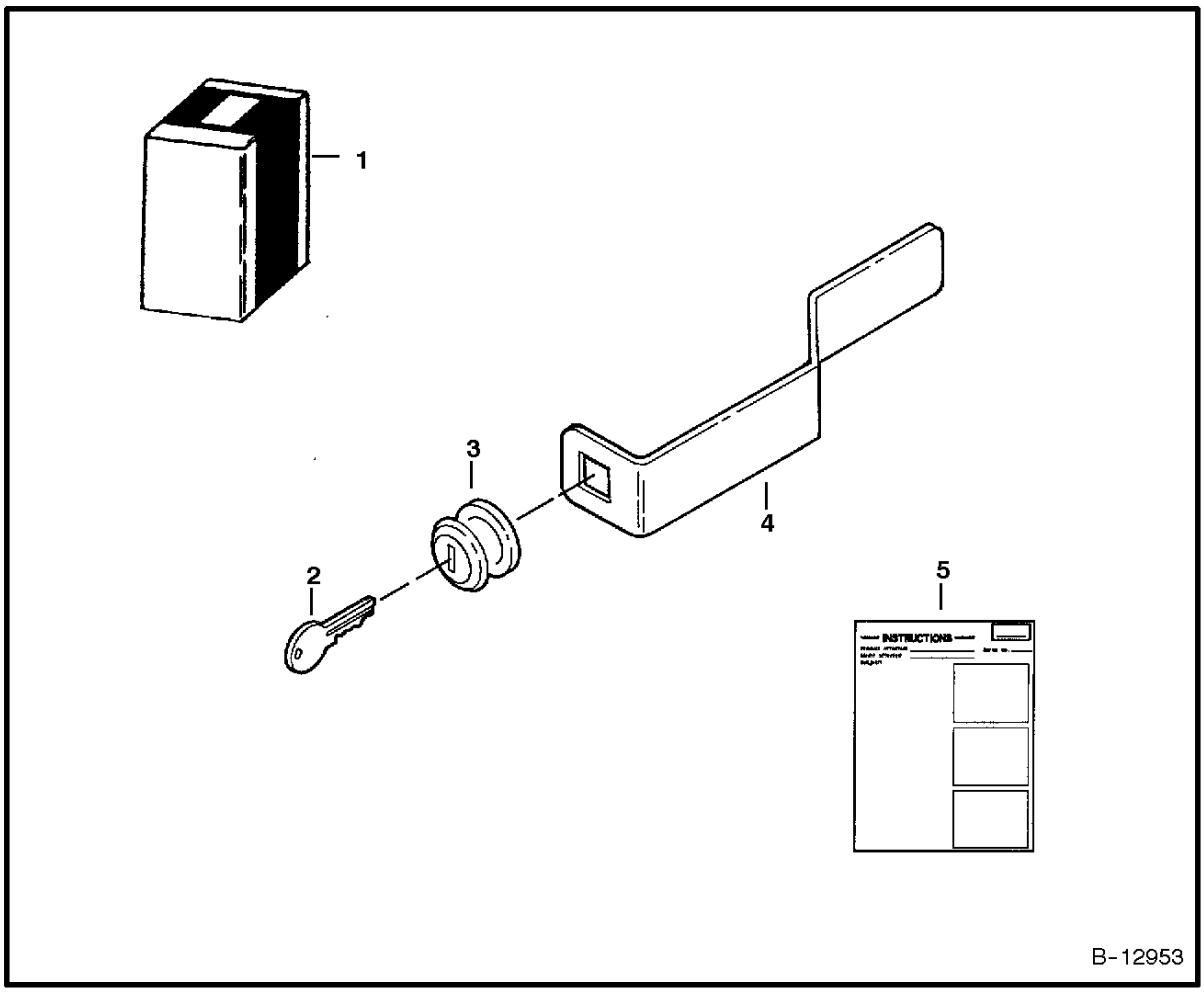

REAR DOOR LOCK

Ref. No.	Part Number	Description	Remarks	Serial Number	Qty.

REAR DOOR LOCK

Ref.N°	Part N°	Description	Remarks	Serial N°	Qty.
1	6714973	KIT	lock - Ref. REAR DOOR LOCK(3)-REAR DOOR LOCK(5)		1
2	6672345	KEY	not in kit - for earlier locks		1
2	6709527	KEY	ignition		1
3	6670726	LOCK			1
4	67140374	LATCH			1
5	6570762	INSTRUCTIONS			1

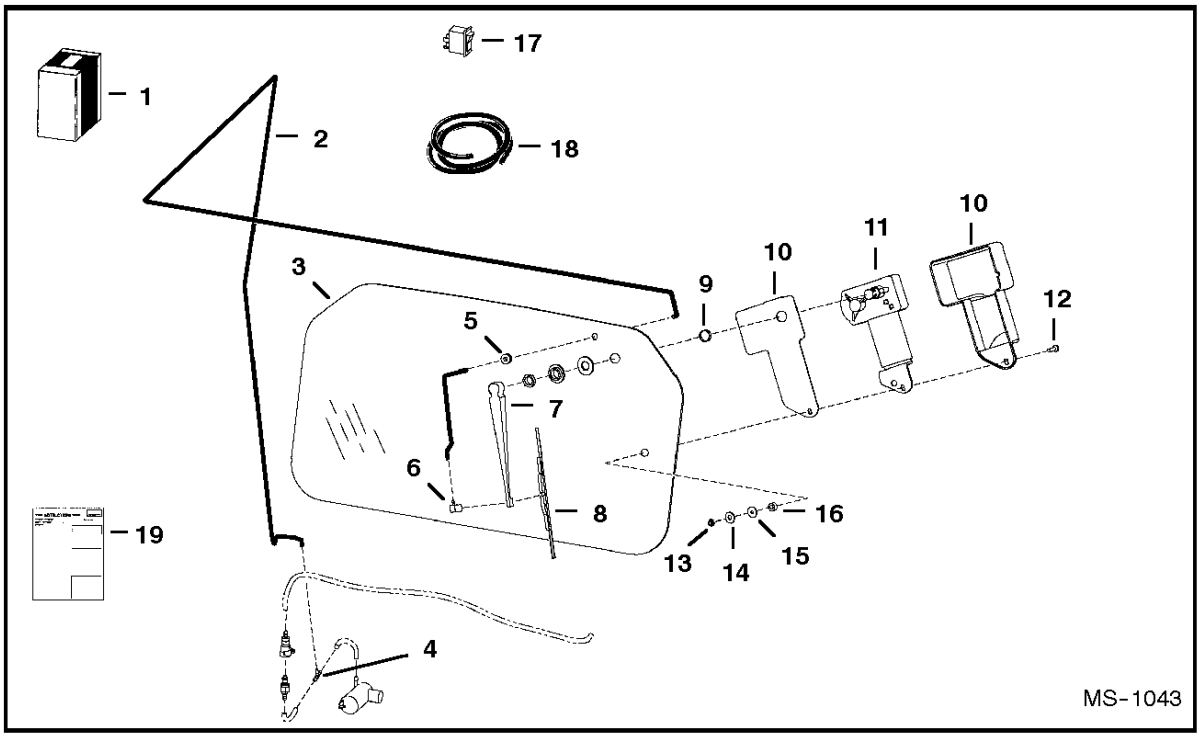

REAR WIPER

Ref. No.	Part Number	Description	Remarks	Serial Number	Qty.
1	6726655	KIT	rear wiper		1
2	NAP	HOSE	96”(2438,4 mm) long -		

REAR WIPER

Ref.N°	Part N°	Description	Remarks	Serial N°	Qty.
1	6726655	KIT	rear wiper		1
2	NAP	HOSE	96'(2438,4 mm) long - Order Ref. REAR WIPER(18)		1
3	6719317	WINDOW			1
4	6676000	TEE			1
5	6557493	GROMMET			1
6	6676028	NOZZLE			1
7	6676001	ARM			1
8	6676002	BLADE			1
9	6667201	SPACER	nylon		1
10	6664097	COVER	wiper		1
11	6665602	MOTOR			1
12	6664566	SCREW			1
13	6664103	NUT			1
14	6664065	WASHER	nylon		1
15	6801059	WASHER	neoprene		1
16	6664085	BUSHING	nylon		1
17	6675999	SWITCH			1
18	6676003	HOSE	bulk - Sold Per Foot		x
19	6901061	INSTRUCTIONS			1

SEAT
(Suspension - Sears)

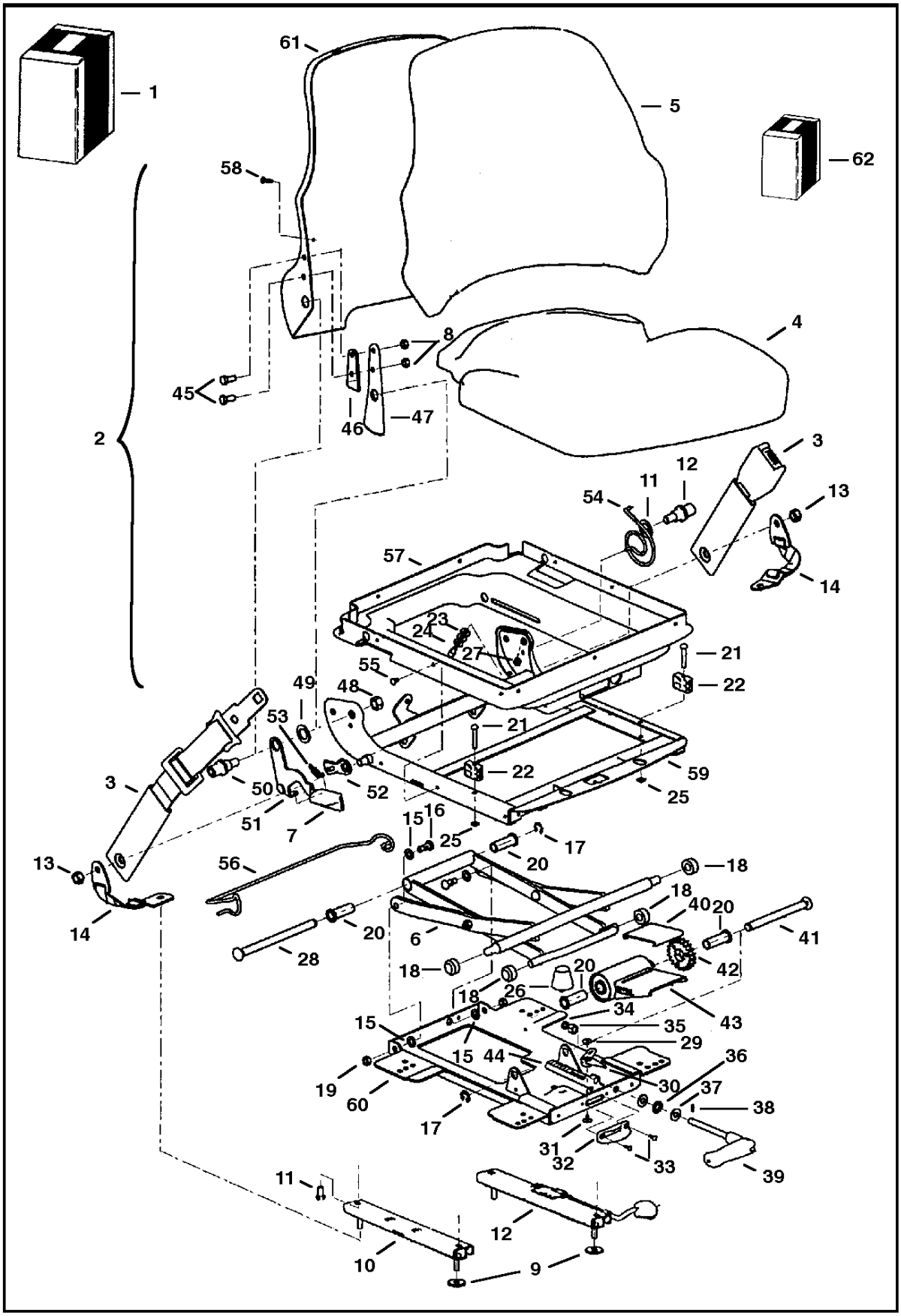

SEAT

Ref.N°	Part N°	Description	Remarks	Serial N°	Qty.
1	NAP	KIT	vinyl seat - Order Ref. SEAT(2), SEAT(3) & SEAT(64) - Was 6718868 [A]		1
1	NAP	KIT	fabric seat - Order Ref. SEAT(2), SEAT(3) & SEAT(64) - Was 6718869 [A]		1
2	NAP	SEAT	vinyl - R.H. recliner lever - Order 6675595 seat - Was 6674896 [A]		1
2	6675595	SEAT	vinyl - L.H. recliner lever		1
2	NAP	SEAT	fabric - R.H. recliner lever - Order 6675596 seat - Was 6674404 [A]		1
2	6675596	SEAT	fabric - L.H. recliner lever		1
3	6675170	SEAT BELT	lap		1
4	6675320	SEAT	seat - fabric		1
4	6675322	SEAT	seat - vinyl		1
5	6675319	SEAT	backrest - fabric - W/Ref. SEAT(58)		1
5	6675321	SEAT	backrest - vinyl - W/Ref. SEAT(58)		1
6	6675317	SCISSORS			1
7	6675323	KNOB	recliner		1
8	NSS	NUT			6
9	619021	WASHER			4
10	NSS	SLIDE	slave		1
11	NSS	BOLT			4
12	NSS	SLIDE	locking		1
13	NSS	NUT			2
14	NSS	BELT	tether		2
15	NSS	WASHER	cross pivot		4
16	NSS	BOLT	pivot		2
17	NSS	RING	retaining		2
18	NSS	ROLLER			4
19	NSS	NUT			2
20	NSS	BUSHING	wt adjustment		4
21	NSS	RIVET			2
22	NSS	BLOCK	up stop		2
23	NSS	WASHER			3
24	NSS	STOP	armrest		1
25	NSS	PUSHNUT			2
26	NSS	BUMPER			1
27	NSS	NUT			1
28	NSS	SHAFT	bearing		1
29	NSS	RIVET	female snap		1
30	NSS	INDICATOR	weight		1
31	NSS	RIVET	male snap		1
32	NSS	DIAL	weight indicator		1
33	NSS	POP RIVET			2
34	NSS	SPACER			1
35	NSS	NUT			1
36	NSS	BEARING	thrust		1
37	NSS	RACE	thrust		2
38	NSS	SHEAR PIN			1
39	NSS	HANDLE	weight adjustment		1
40	NSS	PLATE	wear		1
41	NSS	SHAFT	torsion		1
42	NSS	DRIVE GEAR			1
43	NSS	BUSHING	torsion		1
44	NSS	RACK	wt adjustment		1
45	NSS	BOLT			2
46	NSS	SPACER	recliner		1

SEAT

Ref.N°	Part N°	Description	Remarks	Serial N°	Qty.
47	NSS	BRACKET	back tilt		1
48	NSS	NUT			2
49	NSS	WASHER	plastic		2
50	NSS	BOSS	back pan pivot		2
51	NSS	HANDLE	recliner (RH)		1
52	NSS	LATCH	recliner		1
53	NSS	SPRING	extension		1
54	NSS	SPRING	tilt latch		1
55	NSS	CLIP			6
56	NSS	WIRE	boot support		1
57	NSS	SUSPENSION	boot		1
58	NSS	SCREW			2
59	NSS	HOUSING	upper		1
60	NSS	HOUSING	lower		1
61	NSS	BACK PAN			1
62	6675309	KIT	slides - W/Ref. SEAT(8)-SEAT(12)		1
62	6675310	KIT	tether belt - W/Ref. SEAT(9), SEAT(13) & SEAT(14)		1
62	6675311	KIT	suspension rollers & bearings - W/Ref. SEAT(15)-SEAT(20)		1
62	6675312	KIT	suspension bumpers & stops - W/Ref. SEAT(21)-SEAT(27)		1
62	6675313	KIT	rear tube - W/Ref. SEAT(17), SEAT(20) & SEAT(28)		1
62	6675314	KIT	weight adj. indicator - W/Ref. SEAT(29)-SEAT(33)		1
62	6675315	KIT	weight adj. handle - W/Ref. SEAT(34)-SEAT(39)		1
62	6675316	KIT	weight adj. - W/Ref. SEAT(17), SEAT(20) & SEAT(40)-SEAT(44)		1
62	6675318	KIT	R.H. recliner - W/Ref. SEAT(7),SEAT(8) & SEAT(45)-SEAT(54)		1
62	6676034	KIT	L.H. recliner - W/Ref. SEAT(7),SEAT(8) & SEAT(45)-SEAT(54)		1
62	6675308	KIT	susp. boot - W/Ref. SEAT(55)-SEAT(57)		1
63	6676338	GAS SPRING			1
64	6900861	INSTRUCTIONS			1

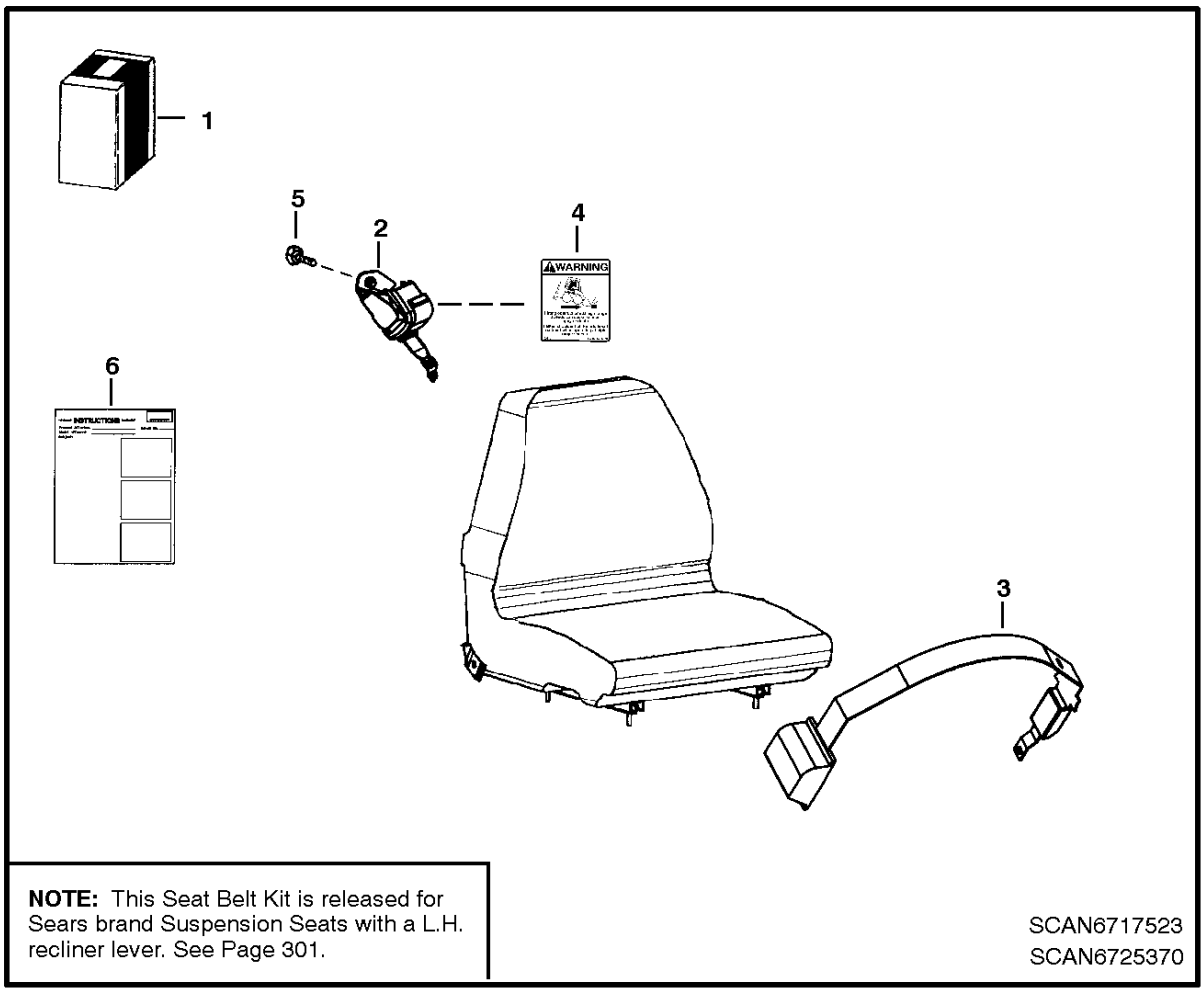

NOTE: This Seat Belt Kit is released for Sears brand Suspension Seats with a L.H. recliner lever. See Page 301.

SCAN6717523
SCAN6725370

SEAT BELT
(Three Point Retractable)

Ref. No.	Part Number	Description	Remarks	Serial Number	Qty.

SEAT BELT

Ref.N°	Part N°	Description	Remarks	Serial N°	Qty.
1	6725168	KIT	three point retractable seat belt		1
2	6674407	SHOULDER BELT			1
3	6674408	SEAT BELT			1
4	6725370	DECAL			1
5	35C-612	BOLT			1
6	6901010	INSTRUCTIONS			1

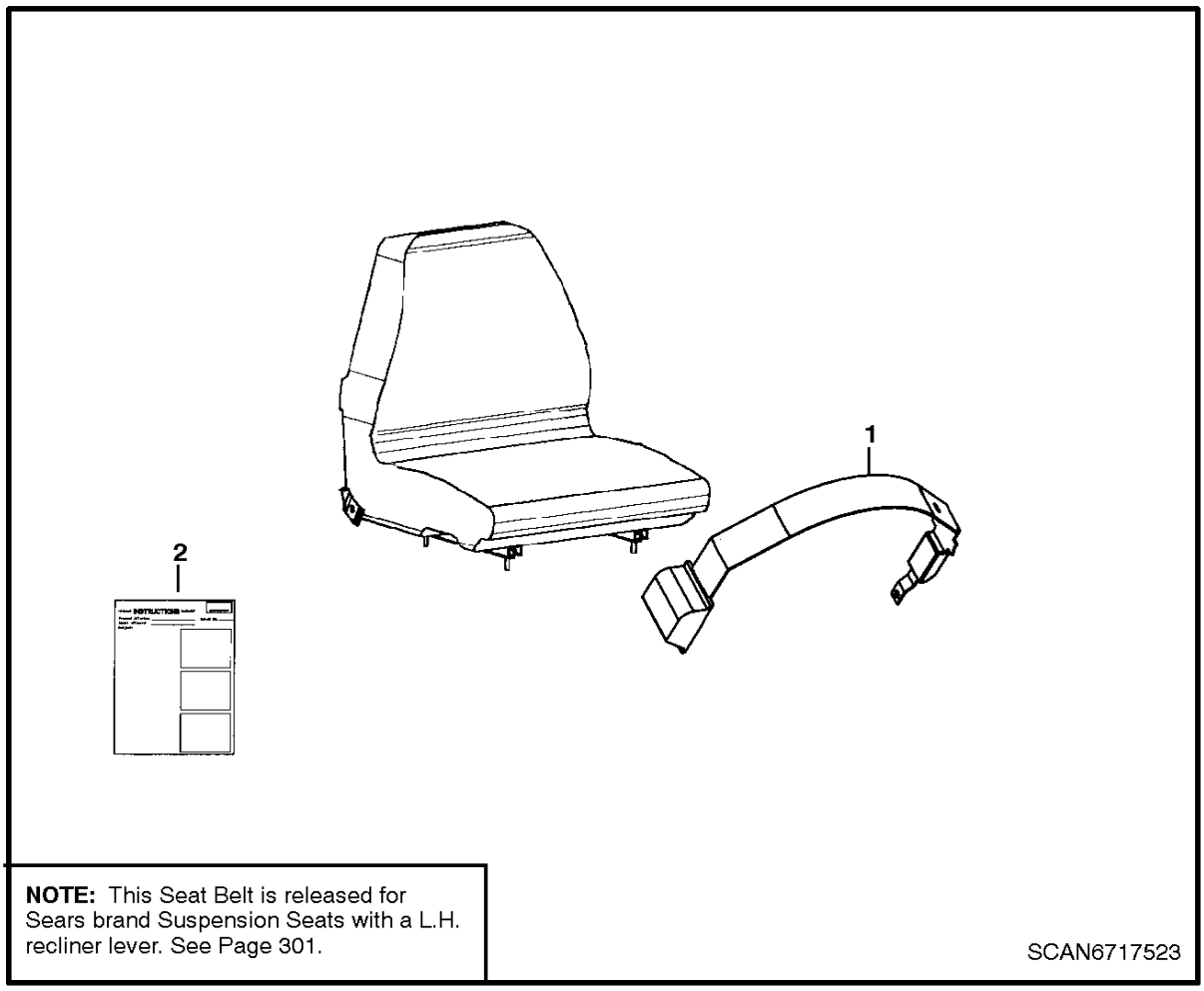

NOTE: This Seat Belt is released for Sears brand Suspension Seats with a L.H. recliner lever. See Page 301.

SCAN6717523

SEAT BELT
(3" Wide Retractable)

Ref. No.	Part Number	Description	Remarks	Serial Number	Qty.

SEAT BELT

Ref.N°	Part N°	Description	Remarks	Serial N°	Qty.
1	6675562	SEAT BELT	3' wide retractable		1
2	6901011	INSTRUCTIONS			1

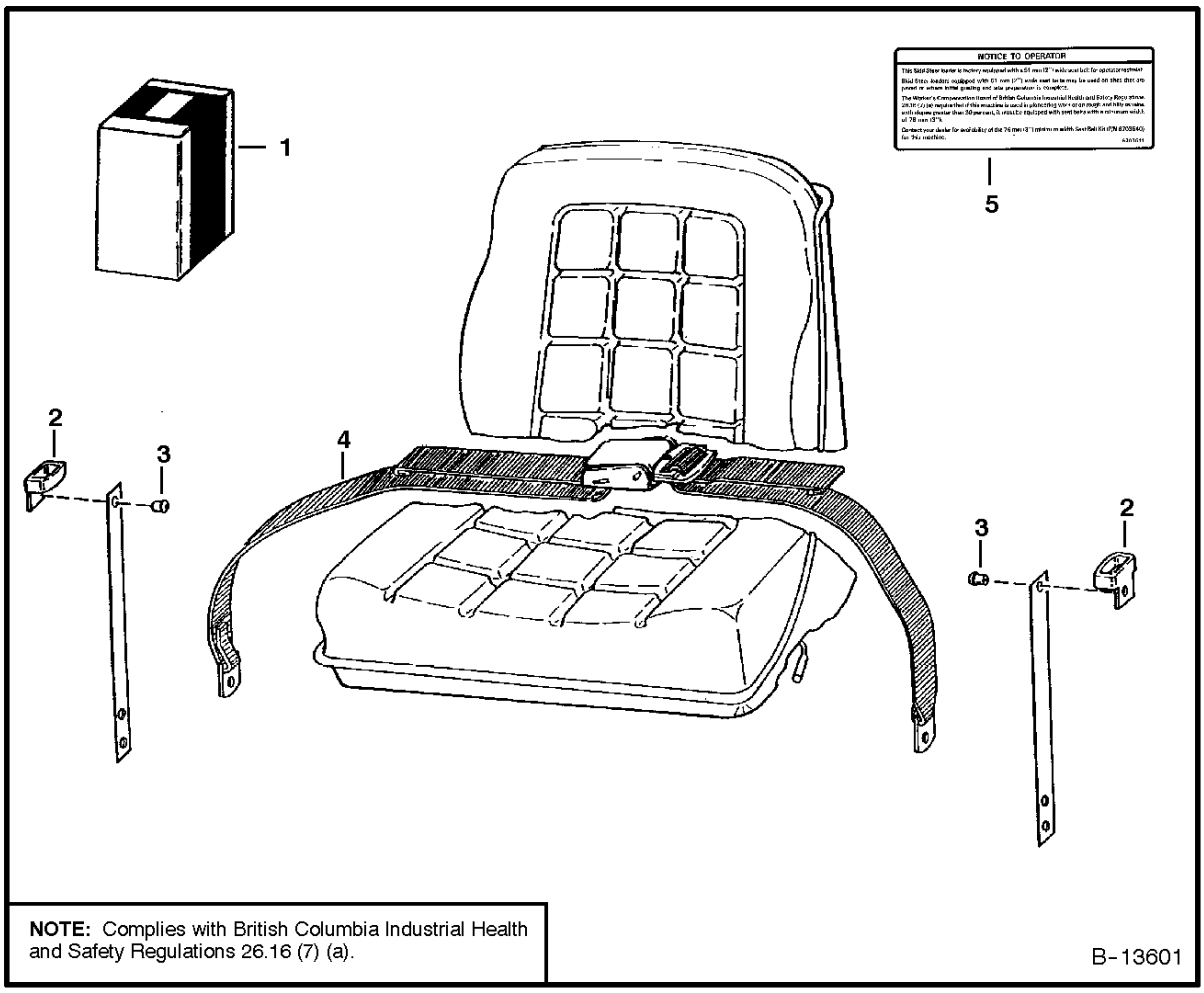

NOTE: Complies with British Columbia Industrial Health and Safety Regulations 26.16 (7) (a).

B-13601

SEAT BELT
(3" Wide)

Ref. No.	Part Number	Description	Remarks	Serial Number	Qty.

SEAT BELT

Ref.N°	Part N°	Description	Remarks	Serial N°	Qty.
1	6703640	KIT	W/Ref. 2-5		1
2	6703703	GUIDE			2
3	6512797	RIVET			4
4	6659999	BELT			1
5	6703641	DECAL			x

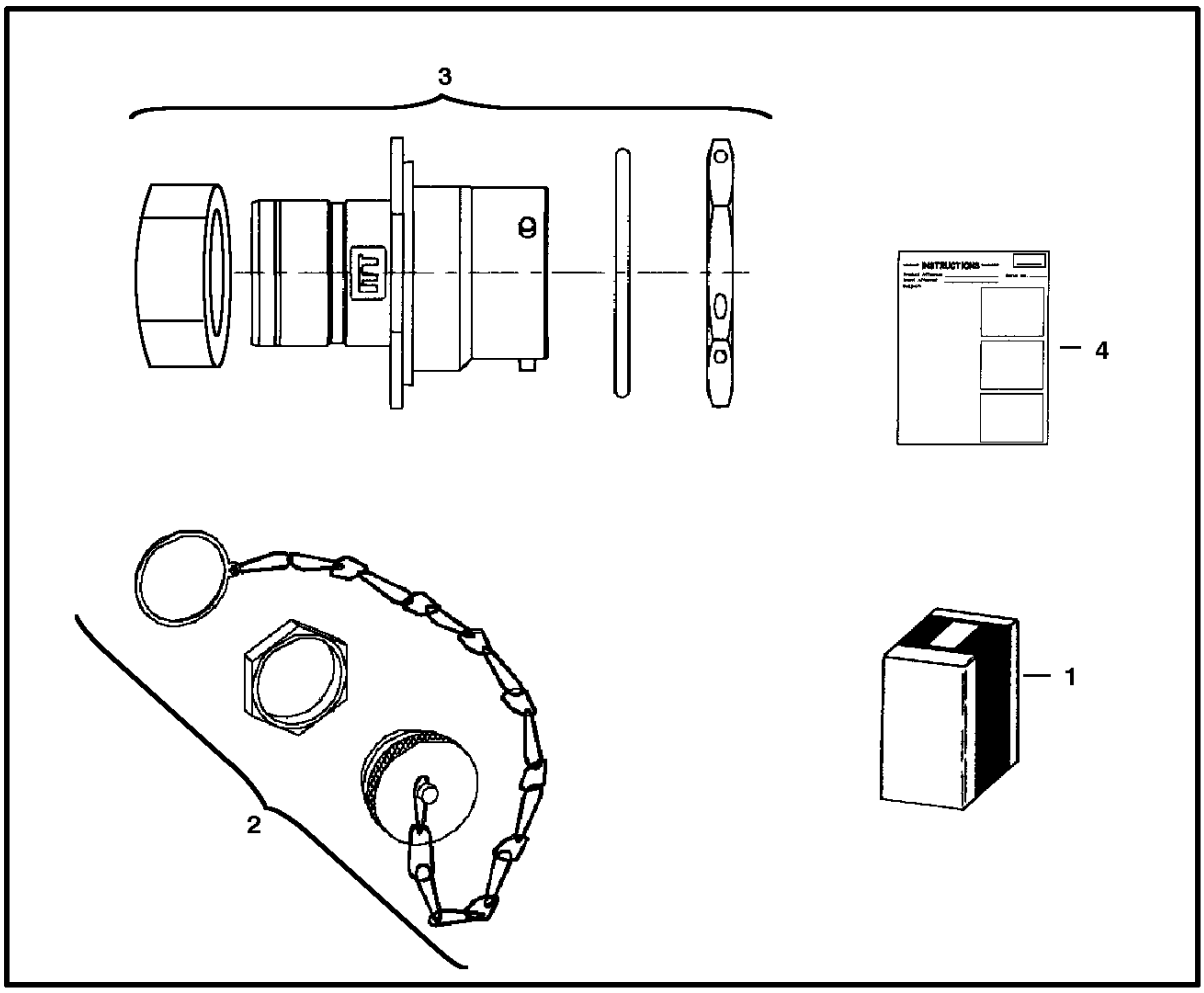

SEVEN PIN CONNECTOR KIT

Ref. No.	Part Number	Description	Remarks	Serial Number	Qty.

SEVEN PIN CONNECTOR KIT

Ref.N°	Part N°	Description	Remarks	Serial N°	Qty.
1	6727176	KIT	Ref. SEVEN PIN CONNECTOR KIT(2)-SEVEN PIN CONNECTOR KIT(4)		1
2	6675026	CAP			1
3	6674802	CONNECTOR	7pin		1
4	6901076	INSTRUCTIONS			1

SOUND OPTION
(Domestic) (85 db)

DRAWING NOT AVAILABLE AT TIME OF PRINTING

SOUND OPTION

Ref.N°	Part N°	Description	Remarks	Serial N°	Qty.
1	6562619	BUSHING	throttle		2
2	6579385	DECAL	noise warning		1
3	6579404	DECAL			1
4	6712971	PULLEY	fan		1
5	6715428	DECAL	dynamic noise level		1
6	6707648	BELT	fan		1
7	6659982	MUFFLER			1
8	6705333	MOUNT			1
9	6715744	BUSHING			1
10	6714977	HOSE			1
11	619021	WASHER			1
12	15KV-8	ADAPTER			2
12	97K-12	O-RING	flared end		x
13	35C-616	BOLT			2
14	83D-6	NUT			1
15	37C-624	BOLT			1
16	85D-6	NUT			2
17	6715456	INSULATION	panel shield		1
18	6719488	INSULATION	panel shield		1
19	6719332	INSULATION	blower housing		1
20	6709829	INSULATION	air inlet		1
21	6719058	INSULATION	crossmember		1
22	6719479	INSULATION	pedal shield		1
23	6703967	INSULATION	fender		2
24	6703968	INSULATION	transmission		2
25	6719489	INSULATION	panel shield		1
26	6719449	INSULATION	steering panel		1
27	6719333	INSULATION	blower housing		1
28	6715106	INSULATION	rear door		1
29	6719478	INSULATION	pedal shield		2
30	6715443	INSULATION	transmission		1
31	6715457	INSULATION	panel shield		1
32	6719486	INSULATION	panel shield		1
33	6719487	INSULATION	panel shield		1

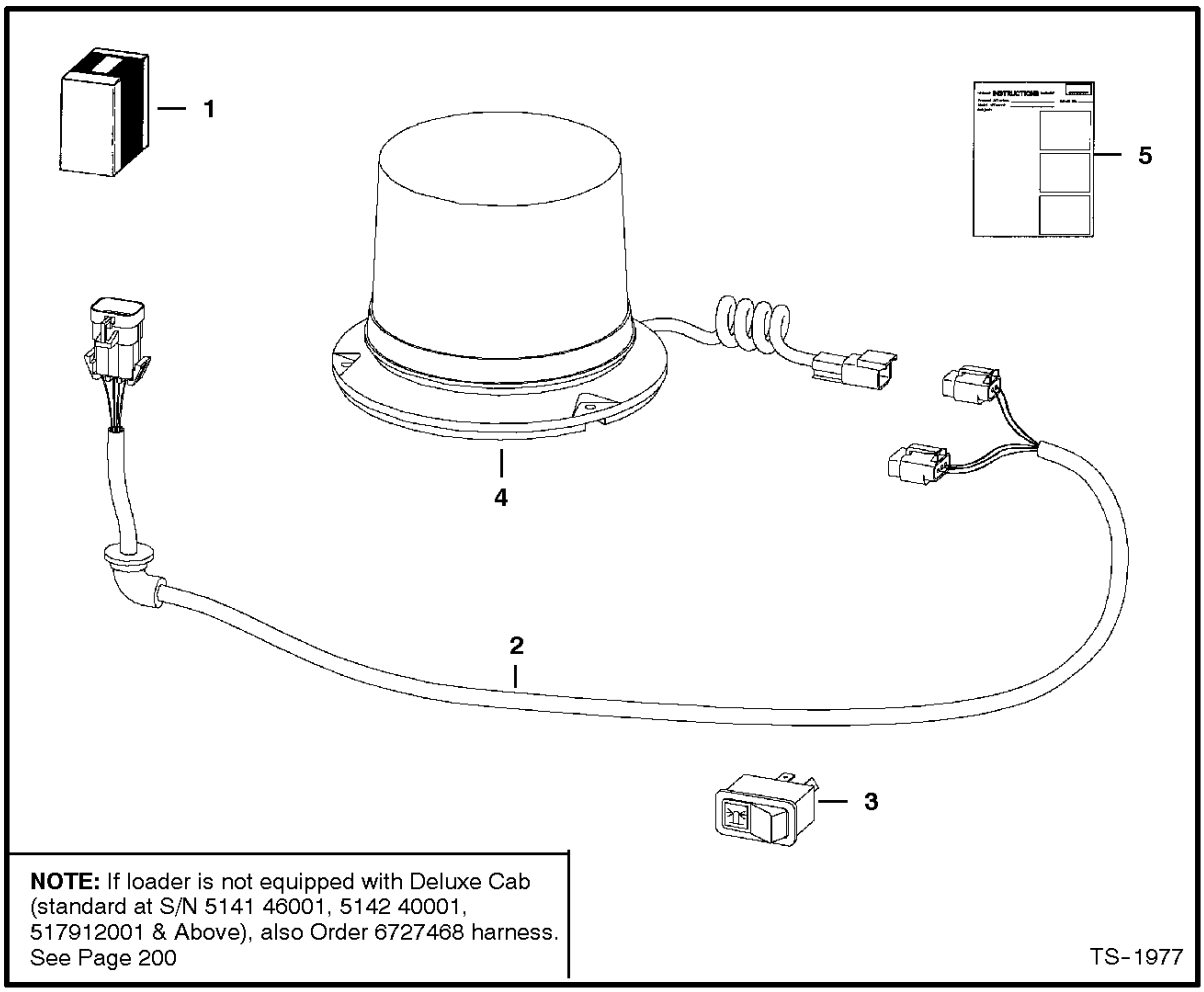

NOTE: If loader is not equipped with Deluxe Cab (standard at S/N 5141 46001, 5142 40001, 517912001 & Above), also Order 6727468 harness.
See Page 200

TS-1977

STROBE LIGHT

Ref. No.	Part Number	Description	Remarks	Serial Number	Qty.

STROBE LIGHT

Ref.N°	Part N°	Description	Remarks	Serial N°	Qty.
1	6719857	KIT	strobe light		1
2	6718872	HARNESS			1
3	6665317	SWITCH	horizontal		1
3	6668816	SWITCH	vertical		1
4	6675522	STROBE			1
4	6675858	FLASH TUBE			1
5	6900992	INSTRUCTIONS			1

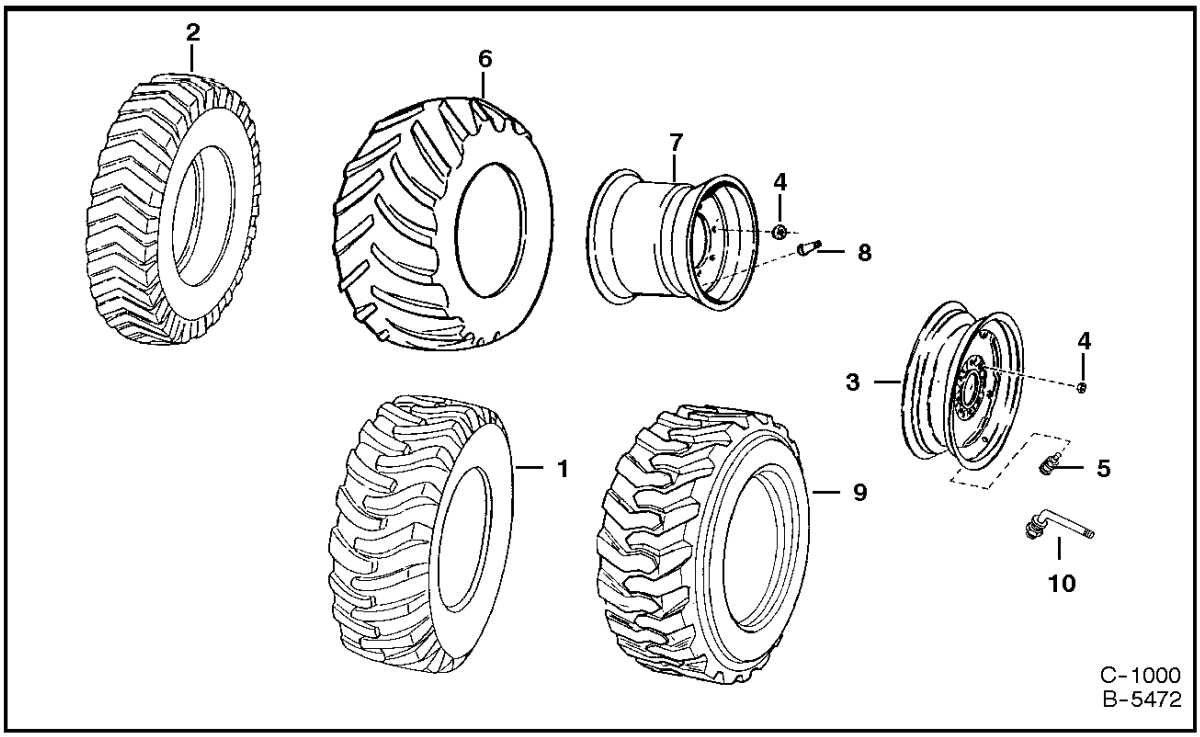

TIRES & RIMS

Ref. No.	Part Number	Description	Remarks	Serial Number	Qty.
1	6519249	TIRE	12 x 16.5 6 Ply Rating - Goodyear		4
	6670145	TIRE	12 x 16.5, 8 Ply Rating - Firestone		4

TIRES & RIMS

Ref.N°	Part N°	Description	Remarks	Serial N°	Qty.
1	6519249	TIRE	'12 x 16.5 6 Ply Rating - Goodyear		4
1	6670145	TIRE	'12 x 16.5, 8 Ply Rating - Firestone		4
1	6590832	TIRE	'12 x 16.5, 8 Ply Rating - Goodyear		4
1	6662754	TIRE	12 x 16.5, 8 Ply - Trac 2 - Dico		4
2	6665725	TIRE	8.25 x 15, 6 Ply Rating IDT (Industrial Deep Tread) - Dico		4
3	6565240	RIM	Used W/Ref. NO PAGE & TIRES & RIMS(9)		4
3	6562498	RIM	Used W/Ref. TIRES & RIMS(2)		4
3	6669060	RIM	Used W/Ref. TIRES & RIMS(9) - for 67' wide - inverted - also Order Ref. TIRES & RIMS(10)		4
4	6564669	NUT	wheel		32
5	1614765	VALVE	valve - used on 6565240 rim		4
6	6513971	TIRE	31 x 15.5, 8 Ply Terra Grip		4
6	6667892	TIRE	31 x 15.5, 8 Ply Terra Grip - Dico		4
6	6666668	TIRE	31 x 15.5, 8 Ply Ultra Grip - Goodyear		4
7	6561095	RIM	Use W/Ref. TIRES & RIMS(6) - Was 6658846 [B]		4
8	6591447	STEM	valve - Use W/Ref. TIRES & RIMS(7)		4
9	6661601	TIRE	12x16.5, 10 Ply Rating - Bobcat		4
9	6667888	TIRE	heavy duty - 12x16.5, 10 Ply Rating - Dico		4
10	6669244	STEM	valve - use W/6669060		4
11	6677674	TIRE	33x15.5x16.5, 14 ply - Bulky Hulk - Galaxy		4
11	6677675	TIRE	33x15.5x16.5, 12 ply - Hippo - Galaxy		4
12	6728991	RIM	used W/Ref. TIRES & RIMS(11)		4

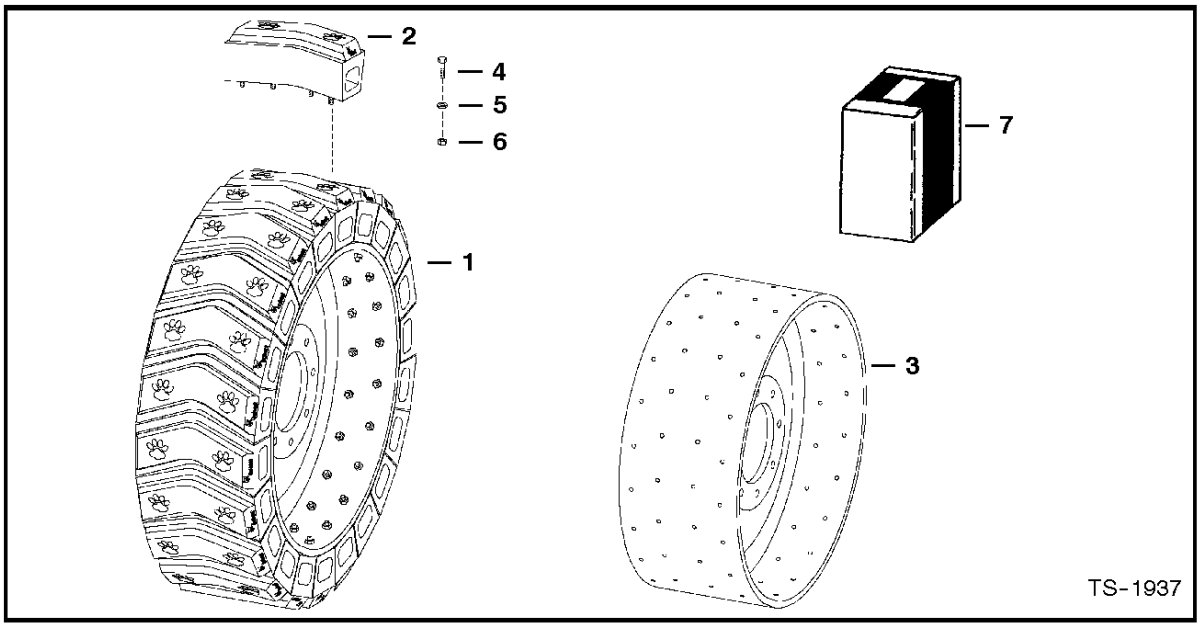

TIRES & RIMS
(Solid Tire - Iatco)

Ref. Part

TIRES & RIMS

Ref.N°	Part N°	Description	Remarks	Serial N°	Qty.
1	6664990	TIRE & RIM	Assy. - R.H. - 8.25 x 15		2
1	6664991	TIRE & RIM	Assy. - L.H. - 8.25 x 15		2
1	6674009	TIRE & RIM	Assy. - R.H. - 12 x 16.5		2
1	6674008	TIRE & RIM	Assy. - L.H. - 12 x 16.5		2
2		KIT	Box of ( ) segments - 8.25 x 15 W/Ref. TIRES & RIMS(4) - TIRES & RIMS(6) - ( ) segments/tire		x
2	6674012	KIT	Box of (11) segments - 12 x 16.5 W/Ref. TIRES & RIMS(4) - TIRES & RIMS(6) - (22) segments/tire		x
3	NAP	RIM	R.H. - 8.25 x 15 - Order Ref. TIRES & RIMS(1)		2
3	NAP	RIM	L.H. - 8.25 x 15 - Order Ref. TIRES & RIMS(1)		2
3	NAP	RIM	R.H. - 12 x 16.5 - Order Ref. TIRES & RIMS(1)		2
3	NAP	RIM	L.H. - 12 x 16.5 - Order Ref. TIRES & RIMS(1)		2
4	1CM-830	BOLT			x
5	25E-15	WASHER			x
6	40DM-8	NUT			x
7	6707173	KIT	wheel - Set of (4) 8.25 x 15 Tire & Rim Assys. - Ref. TIRES & RIMS(1) - (2) R.H. & (2) L.H.		1
8	6718304	KIT	wheel - Set of (4) 12 x 16.5 Tire & Rim Assys. - Ref. TIRES & RIMS(1) - (2) R.H. & (2) L.H.		1

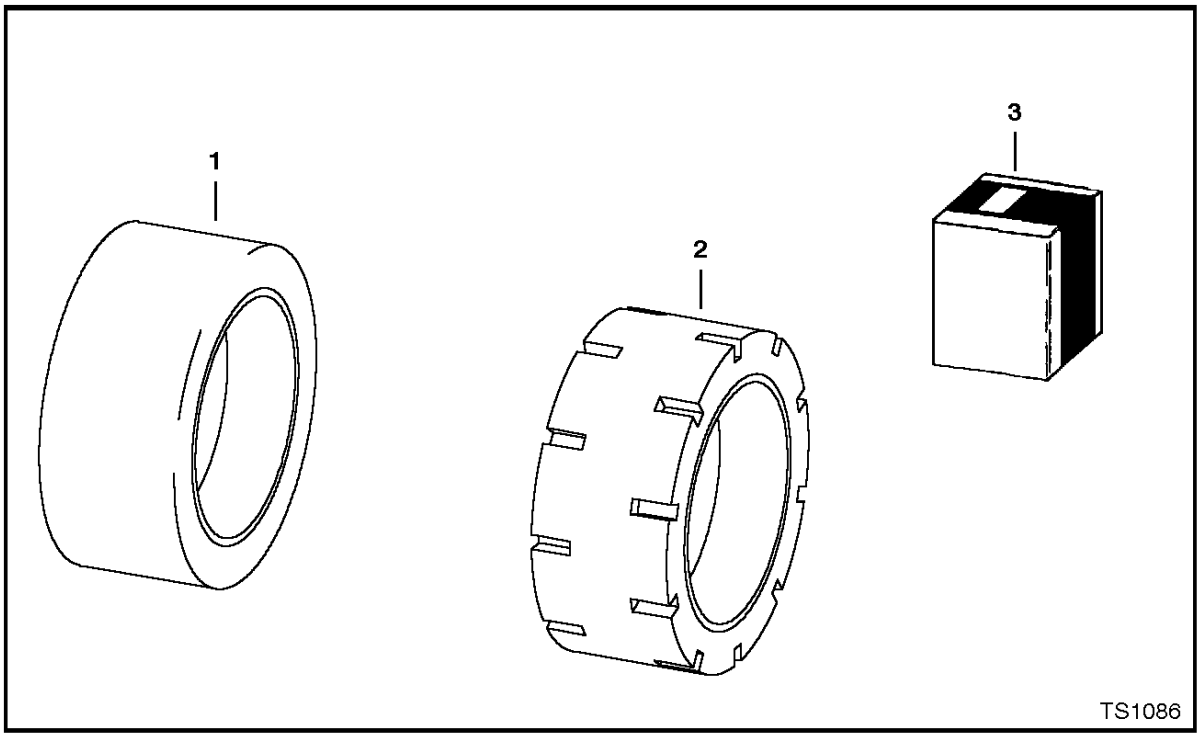

TIRES & RIMS
(Solid Tire - Setco)

Ref. No.	Part Number	Description	Remarks	Serial Number	Qty.
1	6704169	TIRE & RIM	10 X 33 Slick with wire		4
2	6704170	TIRE & RIM	10 X 33 Staggered Gear Lug		4

TIRES & RIMS

Ref.N°	Part N°	Description	Remarks	Serial N°	Qty.
1	6704169	TIRE & RIM	10 X 33 Slick with wire		4
2	6704170	TIRE & RIM	10 X 33 Staggered Gear Lug		4
3	6722151	TIRE & RIM	10 X 33 Slick with wire -Set of (4)		1
3	6722152	TIRE & RIM	10 X 33 Staggered Gear Lug - Set of (4)		1

BULK ITEMS
(See Note)

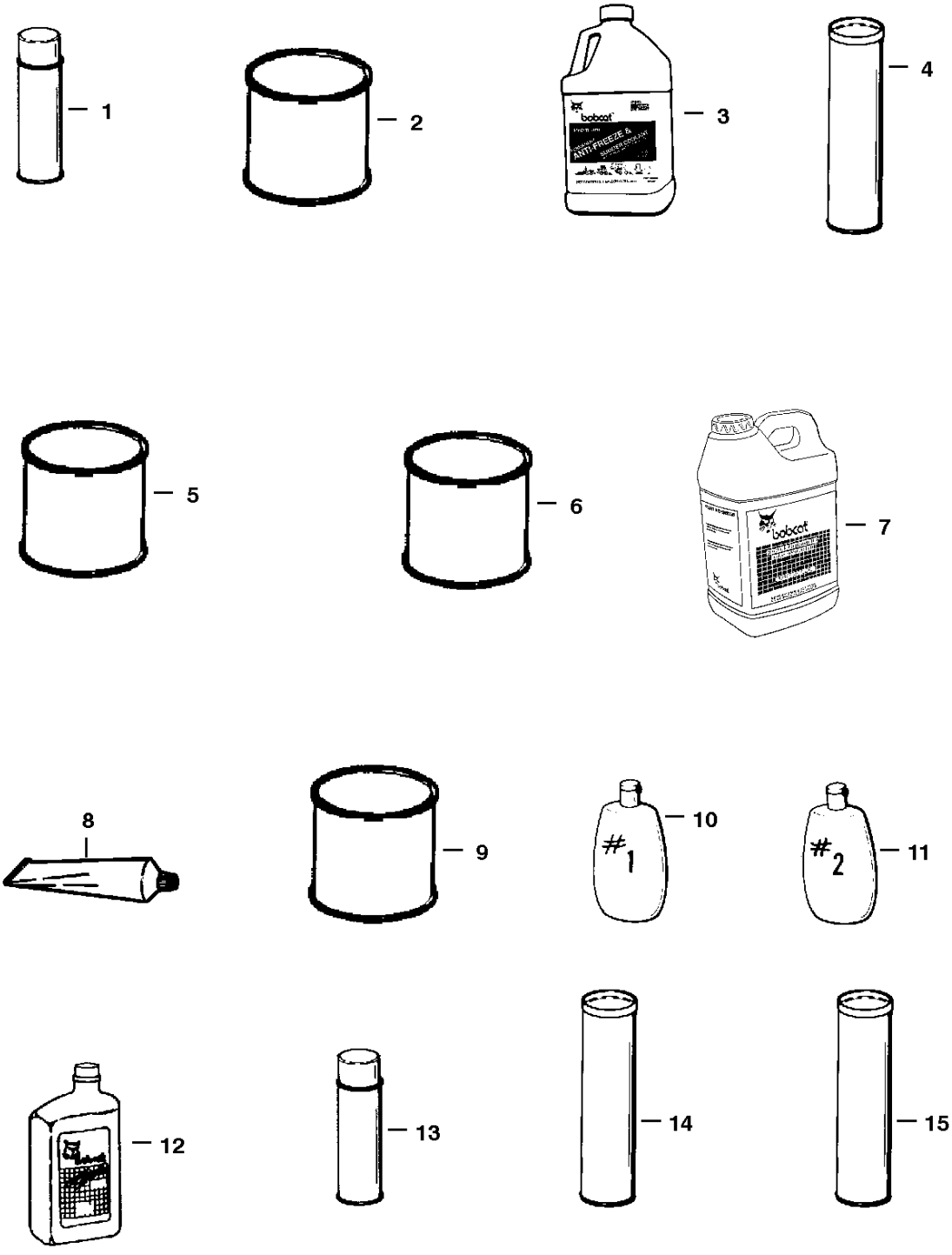

NOTE: Some of these bulk items may not be used on this particular model Bobcat.

NOTE: See Merchandising catalog for more products & information.

NOTE: Paint spray cans are packaged 6 per box. Motor oil quarts are packaged 12 per box. Motor oil 5 qt. jugs are packaged 4 per box.

BULK ITEMS

Ref.N°	Part N°	Description	Remarks	Serial N°	Qty.
1	6722783	PAINT	orange - Spray Can - See Note		x
1	6722786	PAINT	charcoal - Spray Can - See Note		x
1	6722789	PAINT	white - Spray Can - See Note		x
2	6722781	PAINT	orange - Gallon - Also Order Ref. BULK ITEMS(5)		x
2	6722782	PAINT	orange - Qt. - Also Order Ref. BULK ITEMS(5)		x
2	6722784	PAINT	charcoal - Gallon - Also Order Ref. BULK ITEMS(5)		x
2	6722785	PAINT	charcoal - Qt. - Also Order Ref. BULK ITEMS(5)		x
2	6722787	PAINT	white - Gallon - Also Order Ref. BULK ITEMS(5)		x
2	6722788	PAINT	white - Qt. Also Order Ref. BULK ITEMS(5)		x
3	6724094	ANTI-FREEEZE	gallon - PG - premixed		x
3	6724354	ANTI-FREEZE	gallon - PG - concentrate		x
4	6633583	SEALANT	chaincase covers		x
5	6653517	REDUCER	gallon		x
6	6653518	PRIMER	gallon		x
6	6653519	PRIMER	Qt.		x
7	6563328	BLACK GOLD	Hydraulic/Hydrostatic Transmission Fluid - 5 Gallons - 2 - 2 1/2 Gallon Containers		x
7	6722344	BLACK GOLD	Hydraulic/Hydrostatic Transmission Fluid - 5 Gallons Container		x
7	NAP	BLACK GOLD	30 Gallon Drum		x
7	6563330	BLACK GOLD	55 Gallon Drum		x
8	6599360	SEALANT	electrical - 3 oz. tube		x
9	6634393	LUBRICANT	90 wt. gear - pint - For use in cooling fan drive assy.		x
10	6630188	POLISH	window-1 (8 oz.)		x
11	6630189	POLISH	window-2 (8 oz.) - scratch remover		x
12	6657301	MOTOR OIL	10W30 CE/SG - 1 Qt. - See Note		x
12	6657299	MOTOR OIL	15W40 CE/SG - 1 Qt. - See Note		x
12	6724557	MOTOR OIL	SAE 10W30 - 1 Gallon		x
12	6724558	MOTOR OIL	SAE 15W40 - 1 Gallon		x
12	6724559	MOTOR OIL	SAE 30 - 1 Gallon		x
12	6674204	MOTOR OIL	15W-40 - 2.5 Gallon		x
12	6674205	MOTOR OIL	10W-30 - 2.5 Gallon		x
12	6674206	MOTOR OIL	30W - 2.5 Gallon		x
12	6657303	MOTOR OIL	30 CE/SG - 1 Qt. - See Note		x
13	6675380	ADHESIVE	insulation - spray can		x
14	6658266	GREASE	general purpose		x
15	6599719	GREASE	14.5 oz. cartridge - For fan idler bearing		x
16	6650407	ADHESIVE	1 oz. tube		x
17	6650388	SEALANT	flange		x

NUMERICAL INDEX

	Part No.	Description	Was	Code	Page
	225855	SEAL			24
*	614142	SLEEVE			240
	616783	PLUG			30
*	619021	WASHER			292
	619021	WASHER			14, 28, 62, 232, 268, 283
	654299	BEARING			102, 106, 110, 114
	658128	SNAP RING			102, 106, 110, 114
	669863	SNAP RING			102, 106, 110, 114
	742640	WASHER			160
	774220	NUT			192, 250
	799119	SNAP RING			64
	872229	WASHER			44, 48, 52, 198, 268
	898731	BULB			265
	1306637	COTTER PIN			52, 62
	1313116	BUSHING			154
	1318565	HAIR PIN			148, 234
	1321607	RACE			39
	1321608	BEARING			39
	1614765	STEM			294
*	3974795	PIN			112
	3974795	PIN			104
	5289686	PLUG			224
*	6502203	CLAMP			268
	6502203	CLAMP			42, 46
	6505082	SPRING			30
	6505813	ADAPTER			152
	6510614	LINK			35
	6512026	BUSHING			62
*	6512797	RIVET			288
*	6513152	SEAL			204, 206
	6513152	SEAL			148, 212, 252
	6513495	COTTER PIN			62, 162
	6513595	CLAMP			84
	6513908	NUT			172
	6513971	TIRE			294
	6514745	SCREW			182
	6515007	INDICATOR			152
*	6515131	TERMINAL			240
*	6515576	CLAMP			260
	6515817	WASHER			14
	6516229	O-RING			56, 58, 59
	6517516	LIGHT			240
	6518121	PLUG			158, 178
	6518200	GREASE ZERK			94
	6518460	PIN			106
	6518483	WASHER			106, 114, 117
	6518955	SNAP RING			154
	6519178	BUMPER			18
	6519187	ELBOW			52
	6519249	TIRE			294
	6529464	BUSHING			150

Code for disposition of old part number

A — Use up

B — Use on other application (See PNI)

C — File PDR Report with Melroe Parts Sales

D — Part Number Error

NUMERICAL INDEX (Cont'd)

	Part No.	Description	Was	Code	Page
	6531270	SLEEVE			64
	6531336	HOSE			88
*	6532127	BOOT			138, 244
	6532127	BOOT			30, 136
	6532453	RING SEAL			269
	6533363	HOSE			50
	6541981	PIN			52
*	6542731	SAFETY TREAD			206, 210
	6542731	SAFETY TREAD			202
	6547593	PIN			24
	6553411	BUSHING			12, 32, 38
*	6553709	WASHER			44, 54
	6553709	WASHER			14
	6553976	SAFETY TREAD			220
	6554100	SAFETY TREAD			220, 268
*	6554149	CORD			207
	6554149	CORD			202, 210, 216, 224
*	6555351	SEAL			216
	6555351	SEAL			212
	6555987	BUSHING			24
	6557224	DECAL			220
	6557291	BALL JOINT			162
*	6557493	GROMMET			281
	6557565	DECAL			220
	6557720	HOSE			152
*	6557831	WASHER			260
	6557831	WASHER			94
	6557904	FLASHER			240
	6558309	WIRE ROPE			220
	6558310	SLEEVE			220
	6558693	RING			39
	6558694	WASHER			39
	6559479	NUT			38
	6559515	EXIT TAG			210, 216, 224
*	6560172	COVER			128
	6560633	DAMPENER			14
	6561383	DECAL			220
	6562018	SPRING			28
	6562498	RIM			294
*	6562619	BUSHING			292
	6562619	BUSHING			189, 232
	6563328	BLACK GOLD			298
	6563330	BLACK GOLD			, 298
	6563914	WASHER			62, 94
	6564452	GRIP			162
	6564535	WASHER			12
	6564654	PIN			62
	6564657	PIN			62
	6564669	NUT			12, 39, 294
*	6565170	CABLE			128
*	6565200	DECAL			222

Code for disposition of old part number

A — Use up

B — Use on other application (See PNI)

C — File PDR Report with Melroe Parts Sales

D — Part Number Error

NUMERICAL INDEX (Cont'd)

	Part No.	Description	Was	Code	Page
	6565240	RIM			294
	6565947	WASHER			39
	6565990	DECAL			220
	6567743	PIN			14
	6567962	WASHER			162
	6568424	ADAPTER			154
	6568425	ADAPTER			154
	6568918	SPROCKET			35, 39
	6569146	TEE			42, 46
*	6569203	CLAMP			128
	6569219	SCREEN			32, 84
	6569498	SPRING ASSY			154
	6570762	INSTRUCTIONS			280
	6570931	INSTRUCTIONS			189
	6571554	BUSHING			142
	6576033	WASHER			156
	6576196	MOUNT			94
	6576261	COVER			162
	6576262	MOUNT			162
*	6576280	BOLT			128
	6577058	PIN			94
	6577230	MOUNT			94
	6577382	SPACER			148
	6577394	HINGE			158
	6577545	GROMMET			192, 261
	6577690	TUBE			90
	6577754	DECAL			222
	6577785	CAP			84
	6577812	COVER			189
	6577821	HOSE			32
	6577822	HOSE			32, 148
	6577880	KIT			189
	6577961	GROMMET			30
	6578172	HOSE			32
	6578278	PAD			32
	6578284	SHIM			164
	6578368	DECAL			222
	6578505	COVER			38
	6578857	HUB			39
	6579104	STOP			28
	6579106	SHIM			28
*	6579385	DECAL			292
*	6579404	DECAL			292
	6579509	DECAL			220
	6579528	DECAL			220
	6579554	HOSE			32
*	6579613	STOP			14
	6579613	STOP			148
	6579639	DECAL			220
	6579641	HOUSING			164
*	6579989	BRACKET			128

Code for disposition of old part number

A — Use up

B — Use on other application (See PNI)

C — File PDR Report with Melroe Parts Sales

D — Part Number Error

NUMERICAL INDEX (Cont'd)

	Part No.	Description	Was	Code	Page
	6584978	CONDUIT			38
	6585860	SPRING			38
	6586459	SEAL KIT			66, 72
	6586461	SEAL KIT			66, 72
	6586542	HEAD			269
	6586543	PISTON			269
	6586710	BOLT			154
	6586718	HEAD			59
	6586918	SCREW			64
	6587182	SWIVEL PIN			154
	6587458	KEY			32
	6587523	WASHER			64, 70
	6587575	ADAPTER			64
	6587580	SPRING			64, 70
	6587633	BONNET			64, 70
	6587763	BOOT			64, 70
	6587765	BUSHING			154
	6588074	SPOOL			64, 70
	6588781	END CAP			66, 70
	6589198	CYLINDER			59
	6589199	SPACER			59
	6589226	BONNET			64
	6589271	TUBE			59
	6589338	CASE			59
	6589339	ROD			59
	6589475	CYLINDER			42, 46
	6589564	WASHER			64, 70
	6589565	BUSHING			70
	6590832	TIRE			294
	6591030	LINK			35
	6591447	STEM			294
	6592098	WASHER			64
	6592100	COLLAR			64, 70
	6592105	BALL			64
	6592107	SPRING			64
	6592109	ADAPTER			64, 70
	6592115	SEAT			64, 70
	6592116	NUT			64, 70
	6592117	SPRING			64, 70
	6592506	CLAMP			52
	6592720	PLUG			66, 72
	6592766	U-BOLT			162
	6595014	DECAL			220, 222
	6595131	SPRING			66, 72
	6595663	BUSHING			64, 70
	6595951	SLEEVE			64, 72
	6596332	SPRING			64, 70
	6596569	SEAT			66, 70
	6596807	PLUG			64
*	6597774	HANDLE			138, 244
	6597774	HANDLE			134

Code for disposition of old part number

A — Use up

B — Use on other application (See PNI)

C — File PDR Report with Melroe Parts Sales

D — Part Number Error

NUMERICAL INDEX (Cont'd)

	Part No.	Description	Was	Code	Page
	6597775	LEVER			134
	6597776	LEVER			134
	6598908	ELBOW			32
	6599360	SEALANT			298
	6599365	KIT			122
	6599645	PLUG			12, 32
	6599719	GREASE			298
	6599741	WASHER			94
	6599744	BALL JOINT			94, 234
	6599780	TRACK			19
	6599931	ALARM			192
*	6610510	TIE			76, 278
	6610510	TIE			32, 128, 148, 224, 244
	6617871	FRAME			216
*	6624289	TIE			44, 128, 230, 248
	6624289	TIE			228, 260, 268, 278
	6626631	CLAMP			148
	6628031	HEAD			56, 58
	6628571	VALVE ASSY			64, 68, 70
*	6628613	HOSE			92
	6628835	SEAL KIT			66, 72
	6630188	POLISH			298
	6630189	POLISH			298
	6630207	RIVET			30
	6630465	CUSHION			19
	6630468	CUSHION			19
	6630469	TRACK			19
	6630945	WASHER			162
	6631036	BALL JOINT			162
	6631067	SEAL			26
	6631418	PIN			14, 18
	6631561	NUT			74
	6632228	RETAINER			142
	6632323	WASHER			142
	6632429	RETAINER			146
	6632430	ROLLER			146
	6632432	PLUNGER			146
	6632433	GASKET			146
	6632434	COVER			146
	6632435	BALL			146
	6632436	SPRING			146
	6632441	SPRING			146
	6632823	GASKET			172, 178, 180
	6633583	SEALANT			298
	6634393	LUBRICANT			164, 298
	6634874	O-RING			74
*	6640690	PIN			138, 140, 244, 246
	6640690	PIN			132, 134, 261
*	6640692	CONNECTOR			138, 140, 244, 246
	6640692	CONNECTOR			132, 134
*	6640694	CAP			138, 140, 244, 246

Code for disposition of old part number

A — Use up

B — Use on other application (See PNI)

C — File PDR Report with Melroe Parts Sales

D — Part Number Error

NUMERICAL INDEX (Cont'd)

	Part No.	Description	Was	Code	Page
	6640694	LOCK			132, 134
*	6640699	CONNECTOR			138, 244
	6640699	CONNECTOR			134, 250, 261
*	6640700	LOCK			138, 244
	6640700	LOCK			134, 261
*	6641176	SEAL			138, 140, 244, 246
	6641176	SEAL			132, 134, 261
*	6641179	CONNECTOR			138, 244
	6641179	CONNECTOR			74, 132, 134, 261
*	6641180	LOCK			138, 244
	6641180	LOCK			74, 132, 134, 261
	6645080	O-RING			106, 114
	6645086	PLUG			102, 106, 110, 114
	6645088	BOLT			117
	6645090	SEAL			102, 110
*	6646582	PLUG			132, 138, 140, 244, 246
	6646582	PLUG			134
	6646627	BEARING			164
	6646781	SWITCH			192
	6647777	PIN			74
	6647778	CAP			74
	6647780	PLUG			74
	6647783	LOAD CHECK			74
	6647784	PLUG			74
	6647785	SPRING			74
	6648293	SCREW			74
	6648294	SPRING			74
*	6648307	CONNECTOR			140, 246
	6649481	BULB			265
	6649551	SHOCK			94
	6649949	PLUG			30, 224
	6650120	RACE			36
	6650239	SCREEN			32
	6650388	SEALANT			298
	6650407	ADHESIVE			298
	6650627	PLATE			102, 106, 110, 114
	6650629	PIN			102, 106, 110, 114
	6650630	RETAINER			102, 106, 110, 114
	6650634	GASKET			102, 106, 110, 114
	6650635	BEARING			102, 106, 110, 114
	6650636	PIN			102, 106, 110, 114
	6650637	BOLT			106
	6650646	O-RING			102, 110
	6650647	O-RING			102, 110
	6650648	PLUG ASSY			104, 112
	6650652	POPPET			102, 110
	6650668	BOLT			102, 106, 110, 114
*	6650674	BOLT			114
	6651436	SHIELD			52
	6652018	BOLT			106, 114
	6652918	NUT			158

Code for disposition of old part number

A — Use up

B — Use on other application (See PNI)

C — File PDR Report with Melroe Parts Sales

D — Part Number Error

	Part No.	Description	Was	Code	Page
	6652935	EDGING			19
	6653484	VALVE			279
	6653485	SEAL KIT			279
	6653487	SEAL KIT			279
	6653517	REDUCER			298
	6653518	PRIMER			298
	6653519	PRIMER			298
	6653702	SEAL			164
	6653757	SNAP RING			164
	6653758	SNAP RING			164
*	6654139	MOULDING			140, 246
	6654139	MOULDING			134
*	6654170	BOLT			206, 210
	6654170	STRIKER BOLT			202
*	6654806	FUSE			130
	6654806	FUSE			136
*	6655399	BUMPER	6714454	B	22
	6655399	BUMPER			12, 148
	6655781	BEARING			154
	6657028	O-RING			102, 106, 110, 114
	6657067	COVER			102, 106, 110, 114
	6657068	PLATE			102, 106, 110, 114
	6657083	ELBOW			32
	6657299	OIL			298
	6657301	OIL			298
	6657303	OIL			298
	6657376	ELBOW			148
*	6657719	PLUG			216
	6657719	PLUG			224
	6658122	COVER			117
	6658123	COVER			117
	6658180	BREATHER			32
*	6658260	SENSOR			128
	6658266	GREASE			298
	6658460	PIN			102
	6658846	RIM			294
	6659371	NUT			142
	6659372	WASHER			142
	6659373	PULLEY			142
	6659374	SPACER			142
	6659375	FAN			142
	6659376	BRACKET			142
	6659378	BOLT			142
	6659379	BEARING			142
	6659380	ROTOR			142
	6659381	STATOR			142
	6659382	BRACKET			142
	6659384	RECTIFIER			142
	6659385	SCREW			142
	6659386	HOLDER			142
	6659387	NUT			142

Code for disposition of old part number

A — Use up

B — Use on other application (See PNI)

C — File PDR Report with Melroe Parts Sales

D — Part Number Error

NUMERICAL INDEX (Cont'd)

	Part No.	Description	Was	Code	Page
	6659388	CONDENSER			142
	6659390	HOLDER			142
	6659391	NUT			142
	6659392	BOLT			142
	6659393	REGULATOR			142
	6659394	BRUSH			142
	6659395	SPRING			142
	6659396	SCREW			142
	6659397	TERMINAL			142
	6659398	COVER			142
	6659399	SCREW			142
	6659400	CONNECTOR			142
*	6659459	CHECK VALVE			76
*	6659982	MUFFLER			292
	6659982	MUFFLER			232
*	6659999	BELT			288
	6660026	PISTON			96
	6660260	SWITCH			122
	6660339	GASKET			80, 117
	6660644	CAP			64
	6660814	O-RING			102, 106, 110, 114
	6660967	CAP			154
	6660995	GREASE RING			154
*	6661022	FILTER			76
	6661022	FILTER			84, 121
	6661114	CAP			32
	6661117	TANK			234
	6661209	RIVET			148
	6661213	CLAMP			32
	6661229	BEARING			154
	6661247	FILTER ASSY			88, 122
	6661248	ELEMENT			88, 122
	6661328	SEAL KIT			66, 72
	6661334	FILTER ASSY			88
	6661353	LIGHT ASSY			265
	6661377	SEAL			154
	6661443	STEM			272
	6661448	SEAL KIT			81
	6661601	TIRE			294
	6661608	SEAL KIT			235
	6661611	ALTERNATOR			142
	6661696	CAP			32
*	6661753	PLUG			92
	6661787	WASHER			158
	6661807	KIT			121
	6661808	KIT			121
*	6662246	CONNECTOR			254, 256
*	6662252	LOCK			254, 256
*	6662257	PIN			254, 256
	6662298	SNAP RING			38
	6662754	TIRE			294

Code for disposition of old part number

A — Use up

B — Use on other application (See PNI)

C — File PDR Report with Melroe Parts Sales

D — Part Number Error

NUMERICAL INDEX (Cont'd)

	Part No.	Description	Was	Code	Page
	6662848	CAP			66, 72
*	6662855	BELT			92
	6662997	PULLEY			154
	6664024	STEM			81
	6664025	STEM			81
	6664032	SEAL KIT			81
	6664033	SEAL KIT			82
*	6664035	CAP			228, 230
*	6664036	NUT			230
	6664036	NUT			228
*	6664037	WASHER			230
	6664037	WASHER			228
*	6664040	PIN			230
	6664040	PIN			228
*	6664065	WASHER			281
	6664065	WASHER			202
*	6664085	BUSHING			281
	6664085	BUSHING			202
	6664095	ARM			202
	6664096	BLADE			202
*	6664097	COVER			281
	6664097	COVER			202
*	6664103	NUT			281
	6664103	NUT			202
	6664178	GASKET			202
	6664212	CHECK VALVE			279
	6664221	RETAINER			224
	6664223	OUTLET			224
	6664224	CAP			224
	6664368	LIGHT			224
	6664554	PUMP			202
	6664555	NOZZLE			202
*	6664566	BOLT			281
	6664566	SCREW			202
	6664845	BEARING			36
	6664846	BEARING			36
	6664847	RACE			36
	6664848	SNAP RING			36
	6664880	SWITCH			38
	6664882	BUSHING			18
*	6664971	WASHER			130
*	6664972	NUT			130
	6664990	TIRE & RIM			295
	6664991	TIRE & RIM			295
*	6665000	CLIP			138, 244
	6665000	CLIP			134
	6665004	STEM			68
	6665086	SEAL			59
	6665222	RING GEAR			154
	6665307	SEAL			154
	6665308	SNAP RING			154

Code for disposition of old part number

A — Use up

B — Use on other application (See PNI)

C — File PDR Report with Melroe Parts Sales

D — Part Number Error

NUMERICAL INDEX (Cont'd)

	Part No.	Description	Was	Code	Page
	6665316	SWITCH			240
	6665317	SWITCH			193, 293
*	6665321	RIVET			138, 244
	6665321	RIVET			136
*	6665322	RIVET			138, 244
	6665322	RIVET			134
*	6665367	BULB			224
*	6665370	PLUG			254, 256
*	6665371	SWITCH			128
	6665401	SEAT			19
*	6665427	BATTERY			128
*	6665568	SEAL			207
	6665568	SEAL			202, 210
	6665569	WASHER			64, 70
	6665570	RING			64, 70
	6665572	VALVE			278, 279
*	6665602	MOTOR			281
	6665603	OIL FILTER			176
	6665656	CLIP			19
	6665701	BUSHING			62, 94
	6665702	STEM			82
	6665707	SWITCH			202
	6665719	PLUG			81, 82, 272
	6665725	TIRE			294
	6665755	SEAL			36
	6665846	SEAL			64, 70
	6665910	GASKET			152, 178
	6665915	GUAGE			84
	6666286	PISTON			59
	6666338	WASHER			102, 106, 110, 114
	6666375	CARTRIDGE			186
	6666376	CARTRIDGE			186
	6666377	COVER			186
	6666378	VALVE			186
	6666387	PLUG			176
	6666388	SNAP RING			170
	6666389	CIR CLIP			172
	6666393	SEAL RING			166, 172, 176
	6666394	SEAL RING			166, 172, 176
	6666395	SEAL RING			166, 176, 178
	6666396	SCREW			176
	6666397	PLUG			167
	6666398	NUT			152, 178
	6666399	PLUG			172
	6666400	PLUG			176
	6666401	O-RING			166, 176
	6666402	BOLT			172
	6666403	BOLT			182
	6666404	SNAP RING			180
	6666406	STUD			172
	6666407	STUD			152, 178

Code for disposition of old part number

A — Use up

B — Use on other application (See PNI)

C — File PDR Report with Melroe Parts Sales

D — Part Number Error

Part No.	Description	Was	Code	Page
6666408	O-RING			166, 172
6666409	O-RING			166, 182
6666410	O-RING			166, 172
6666412	BOLT			172
6666416	HOSE			182
6666419	CLAMP			152, 167
6666420	O-RING			166, 182
6666425	O-RING			166
6666426	SEAL RING			166, 172
6666433	BOLT			180
6666434	BOLT			176
6666439	O-RING			166
6666442	NUT			180
6666443	COLLAR			170
6666444	BOLT			180
6666446	PULLEY			180
6666447	PUSH ROD			170
6666448	ARM			170
6666449	SCREW			170
6666450	NUT			170, 172
6666452	BOLT			154
6666453	WASHER			182
6666456	WASHER			180
6666458	BEARING			180
6666459	BEARING			180
6666460	SEAL			166, 170
6666463	BUSHING			180
6666465	SPRING			172
6666466	VALVE			170
6666469	WASHER			172
6666470	PIN			180
6666471	PULLEY			180
6666472	GASKET			166, 167
6666473	GASKET			166, 167
6666474	ARM			170
6666475	CLAW			172
6666476	STOP			172
6666478	GASKET			166
6666479	GASKET			166
6666480	SCREW			172
6666481	INSERT			170
6666482	FLANGE			180
6666483	SPRING			172
6666489	SCREW			172
6666490	SEAL			166, 172
6666491	COVER			172, 180
6666492	SEAL RING			182
6666493	TAPPET			182
6666495	SPRING			182
6666496	PIN			172
6666501	CLAMP			182

Code for disposition of old part number

A — Use up

B — Use on other application (See PNI)

C — File PDR Report with Melroe Parts Sales

D — Part Number Error

	Part No.	Description	Was	Code	Page
	6666504	TAPPET			170
	6666505	INSERT			170
	6666508	TUBE			176
*	6666509	RETAINER	6673155	A	178
	6666510	VALVE			176
	6666512	SHIM			182
	6666513	SHIM			182
	6666514	SHIM			182
	6666515	SHIM			182
	6666516	SHIM			182
	6666517	SHIM			182
	6666518	SHIM			182
	6666519	PIN			170
	6666522	FUEL PUMP			32, 182
	6666526	VALVE			170
	6666527	ADAPTER			182
	6666530	CAP			176
	6666531	TUBE			182
	6666542	SEAL			269
*	6666571	BULB			193
	6666622	CLUTCH			146
	6666624	SNAP RING			146
	6666628	NUT			146
	6666629	WASHER			146
	6666630	WASHER			146
	6666631	O-RING			146
	6666632	O-RING			146
	6666633	BOLT			146
	6666634	BOLT			146
	6666635	BOLT			146
	6666637	NUT			146
	6666668	TIRE			294
	6666684	BOLT			174
	6666686	PIN			174
	6666687	NAIL			174
	6666688	PIN			174
	6666689	PLUG			178
	6666690	PLUG			172, 176, 178
	6666691	BOLT			174
	6666692	BEARING			174
	6666694	PIN			174
	6666695	BOLT			174
	6666696	BOLT			150
	6666697	PLUG			170, 176
	6666698	SET SCREW			174
	6666699	SEAL RING			166, 178
	6666700	STUD			174
	6666701	CLAMP			172
	6666702	PLUG			176
	6666703	PLUG			176
	6666708	BOLT			185

Code for disposition of old part number

A — Use up

B — Use on other application (See PNI)

C — File PDR Report with Melroe Parts Sales

D — Part Number Error

	Part No.	Description	Was	Code	Page
	6666709	STUD			176
	6666710	SCREW			174
	6666711	BOLT			172
	6666712	O-RING			150, 166
	6666713	PIN			174
	6666714	O-RING			166, 174
	6666715	BOLT			172
	6666716	PLUG			176
	6666717	WASHER			174
	6666718	SLEEVE			176
	6666719	BOLT			176
	6666720	WASHER			172
	6666721	LEVER			174
	6666722	DOWEL			176
	6666723	WASHER			174
	6666725	PULLEY			172
	6666726	SHAFT			174
	6666727	SPRING			174
	6666729	SHAFT			174
	6666730	SEAL			166, 174
	6666731	SEAL			166, 174
	6666732	SLEEVE			174
	6666733	ARM			174
	6666736	METER			174
	6666737	BEARING			176
	6666738	BEARING			176
	6666740	SHAFT			174
	6666741	TUBE			176
	6666744	SLEEVE			174
	6666745	LEVER			174
	6666746	NOZZLE			176
	6666748	COVER			172, 174
	6666749	BREATHER			170, 174
	6666750	PIN			185
	6666751	PLUG			176
	6666753	WASHER			166, 174
	6666754	GASKET			170
	6666755	GASKET			170
	6666757	COVER			174
	6666760	SEAL RING			166, 185
	6666762	ADAPTER			150
	6666763	FUEL LINE			182
	6666766	GROMMET			204
	6666864	CLAMP			32
	6666932	BRAKE ASSY			234, 236
	6666933	MASTER CYLINDER			234, 235
	6667139	CAP			234
*	6667144	CONNECTOR			138, 244
	6667144	CONNECTOR			132, 134
*	6667145	LOCK			138, 244
	6667145	LOCK			132, 134

Code for disposition of old part number

A — Use up

B — Use on other application (See PNI)

C — File PDR Report with Melroe Parts Sales

D — Part Number Error

	Part No.	Description	Was	Code	Page
	6667170	PUMP			32
	6667176	PLUG			74
	6667180	SEAL KIT			272
	6667185	SEAL KIT			74
*	6667201	SPACER			281
	6667201	SPACER			202
	6667323	SEAL			269
	6667326	SEAL			59
	6667352	ELEMENT			32
	6667353	FILTER ASSY			32
	6667549	VALVE			64, 70
*	6667569	CONNECTOR			230
	6667569	CONNECTOR			228
	6667676	COVER			74
	6667677	O-RING			74
	6667679	O-RING			74
	6667680	SNAP RING			74
*	6667803	COUPLER			76
	6667803	COUPLER			278
*	6667804	COUPLER			76
	6667804	COUPLER			278
*	6667806	COUPLER			76
	6667825	STARTER			146
	6667844	VALVE ASSY			50, 60
	6667888	TIRE			294
	6667892	TIRE			294
	6667896	COOLER			88
	6667992	SOLENOID			38
	6668097	SCREW			235
	6668104	MOUNT			158
	6668106	TUBE			176
	6668107	ADAPTER			178
	6668108	WASHER			178
	6668109	O-RING			178
	6668137	MOTOR			202
	6668693	PLUG			178
	6668694	SEAL			166, 178
	6668763	SHIELD			174
	6668765	VALVE			68
	6668791	ORIFICE			66, 68
	6668814	SWITCH			198
	6668820	NUT			68
	6668879	DECAL			192
	6668887	O-RING			166, 176
	6668888	O-RING			167
	6668889	PLUG			178
	6668890	SHIM			182
	6668891	SPRING			182
	6668892	BOLT			182
	6668893	SPACER			182
	6668894	NUT			182

Code for disposition of old part number

A — Use up

B — Use on other application (See PNI)

C — File PDR Report with Melroe Parts Sales

D — Part Number Error

NUMERICAL INDEX (Cont'd)

	Part No.	Description	Was	Code	Page
	6668895	REPAIR KIT			178
	6668897	ADAPTER			176
	6668898	GASKET KIT			166
	6668899	GASKET KIT			166
	6668900	ADAPTER			178
	6668901	ADAPTER			178
	6668902	SPRING			178
	6668903	SPRING			178
	6668904	CAP			174
	6668905	PIN			178
	6668906	REPAIR KIT			182
	6668913	KNOB			50, 60
	6668935	SEAL RING			166
	6668936	SET SCREW			185
	6668938	BOLT			176
	6668940	CAP			170
	6668941	SPRING			176
	6668942	BOLT			180
	6668943	ROD			180
	6668944	SPRING			170
	6668945	THERMOSTAT			176
	6668948	TUBE			176
	6668950	SOLENOID			182
	6669057	CHECK VALVE			68
	6669060	RIM			294
	6669066	SEAL RING			158, 178
	6669067	WASHER			158, 176
	6669085	VALVE			60
*	6669087	SEAL KIT			119
	6669087	SEAL KIT			60
	6669089	TRACK			20
	6669091	CLIP			224, 250
	6669135	SEAT			20
	6669154	BOLT			236
	6669155	PLATE			236
	6669156	SPACER			236
	6669159	PISTON			236
	6669162	NUT			236
	6669163	PLUG			236
	6669164	ADAPTER			236
	6669165	SCREW			236
	6669184	STATOR ASSY			236
	6669185	SEAL KIT			236
	6669187	VALVE			279
	6669188	STEM			279
	6669189	STEM			279
	6669190	COIL			279
*	6669203	VALVE			76
	6669203	VALVE			81
	6669216	SEAL KIT			279
	6669217	SEAL KIT			279

Code for disposition of old part number

A — Use up

B — Use on other application (See PNI)

C — File PDR Report with Melroe Parts Sales

D — Part Number Error

	Part No.	Description	Was	Code	Page
	6669218	VALVE			279
	6669219	VALVE			279
	6669224	BOLT			136, 224, 250
	6669244	STEM			294
	6669267	SEAL			56, 58
	6669268	SEAL			56, 58
	6669345	YOKE			146
	6669346	ARMATURE			146
	6669347	BEARING			146
	6669348	BEARING			146
	6669349	BEARING			146
	6669350	KIT			146
	6669354	SHAFT			146
	6669355	HOUSING			146
	6669356	SWITCH ASSY			146
	6669357	KIT			146
	6669358	KIT			146
	6669359	BOLT			146
	6669360	BUSHING			146
	6669361	HOLDER			146
	6669362	SPRING			146
	6669363	FRAME			146
	6669364	PINION			146
	6669365	BOOT			146
	6669366	BOLT			146
	6669367	BOLT			146
	6669368	O-RING			146
	6669369	PINION			146
	6669370	BRUSHES			146
	6669371	BRUSHES			146
	6669372	COVER			146
	6669384	SPEEDY SLEAVE			164
	6669395	MAIN BEARING			180
	6669396	MAIN BEARING			180
	6669397	MAIN BEARING			180
	6669402	HOUSING			102, 110
	6669403	HOUSING			106, 114
	6669405	END CAP			106, 114
	6669407	SHAFT			106, 114
	6669408	SHAFT			102, 110
	6669409	WASHER			102, 110
	6669410	SHIM KIT			104, 112
	6669411	BEARING			102, 106, 110, 114
	6669530	PUMP			185
	6669531	DIPSTICK			176, 185
*	6669549	SOCKET			230
	6669549	SOCKET			226, 228
	6669615	ORIFICE			81
	6669616	CHECK VALVE			272
	6669622	SEAL KIT			272
	6669643	O-RING			166, 170, 174

Code for disposition of old part number

A — Use up

B — Use on other application (See PNI)

C — File PDR Report with Melroe Parts Sales

D — Part Number Error

	Part No.	Description	Was	Code	Page
	6669728	CHECK VALVE			81
	6669729	SHUTTLE VALVE			81
	6669732	SEAL KIT			68
	6669733	SEAL KIT			68
	6669734	SEAL KIT			68
	6669736	SEAL KIT			81
	6669737	SEAL KIT			82
	6670120	HOSE			42, 46
	6670145	TIRE			294
	6670160	CUSHION			20
	6670284	LIGHT ASSY			265
*	6670287	PLUG			128
	6670287	COVER			22
	6670298	CLIP			186
*	6670312	SOLENOID			250
	6670313	BOLT			167
	6670314	HOSE			167
	6670315	GASKET			167
	6670316	MANIFOLD			167
	6670555	REPAIR KIT			172
	6670627	BREATHER			38, 148
*	6670634	SEAL KIT			74
	6670682	BEARING			154
*	6670685	RELIEF VALVE			112, 114
	6670690	BELT			156
*	6670706	CONNECTOR			138, 244
*	6670707	CONNECTOR			136, 140, 246
	6670707	CONNECTOR			134
*	6670709	CONNECTOR			140, 246
*	6670710	LOCK			138, 244
	6670710	LOCK			134
*	6670711	LOCK			136, 140, 246
	6670711	LOCK			134
*	6670714	PIN			244
*	6670715	PIN			138, 140, 246
	6670715	SOCKET			134
	6670726	LOCK			280
*	6670759	SEAL			206, 212
	6670762	BUSHING			24
	6670820	BOLT			170
	6670866	OIL PAN			176
	6670867	LATCH			22
	6670989	GLOW PLUG			170
	6671025	COIL			68, 82, 272, 274
	6671026	COIL			81
	6671138	SEAL			39
	6671509	COUPLING			108
	6671512	BLOCK ASSY			104, 106
	6671513	SWASH PLATE			102, 106, 110, 114
	6671514	VALVE PLATE			106
	6671515	VALVE PLATE			102

Code for disposition of old part number

A — Use up

B — Use on other application (See PNI)

C — File PDR Report with Melroe Parts Sales

D — Part Number Error

NUMERICAL INDEX (Cont'd)

	Part No.	Description	Was	Code	Page
	6671516	SEAL KIT			104, 108, 112, 116
	6671518	BOLT			102, 112
*	6671527	NUT			74
	6671625	TUBELINE			152
	6671628	NUT			81, 82
	6671629	NUT			81
	6671632	VALVE			66, 72
*	6671845	PLUG	6671759	B	96
	6672026	O-RING			52
	6672128	ENGINE			166
	6672272	WASHER			265
	6672273	SCREW			265
	6672274	SCREW			265
	6672275	GASKET			265
	6672276	LENS			265
	6672277	BRACKET			265
	6672279	MOUNT			265
	6672281	CLAMP			84
	6672345	KEY			280
	6672346	PANEL			124, 126
	6672347	PANEL			124, 126
	6672348	PANEL			124, 126, 224
	6672448	VALVE ASSY			82
	6672449	VALVE ASSY			81
	6672450	VALVE ASSY			81
	6672456	SOLENOID			68
	6672486	SEALANT			164
	6672489	GASKET			166, 170
	6672492	RETAINER			192
	6672535	RELIEF VALVE			104, 106
	6672713	GASKET			170
	6672714	HEAD			170
*	6672756	SEAL KIT			119, 274
*	6672762	PLUG			120
*	6672766	CHECK VALVE			90
	6672770	COVER			170
	6672771	BOLT			170
	6672825	MOTOR			96
*	6672863	SOLENOID			74
	6672872	PLUG			176
	6672873	PLUG			176
	6672874	PLUG			176
	6672877	PLUG			176
	6672878	PLUG			176
	6672879	LINER			178
	6672885	GASKET			152
	6672886	CAP			172
	6672887	BOLT			152
	6672889	BEARING			180
	6672890	INSERT			180
	6672896	RING SET			180

Code for disposition of old part number

A — Use up

B — Use on other application (See PNI)

C — File PDR Report with Melroe Parts Sales

D — Part Number Error

NUMERICAL INDEX (Cont'd)

	Part No.	Description	Was	Code	Page
	6672898	BOLT			174
	6672899	PLUG			174
	6672900	BOLT			170
	6672902	BOLT			182
	6672933	SEAL RING			182
*	6672934	STA-STRAP			184
	6672938	PLUG			167
	6672939	O-RING			167
	6672942	SET SCREW			172
	6672943	WASHER			174
	6672945	ARM			174
	6672946	ARM			174
	6672947	STUD			167
	6672948	NUT			167
	6673150	CRANKSHAFT			180
	6673152	PISTON			180
	6673153	SHIELD			174
	6673154	CAMSHAFT			172
	6673156	INJECTOR			182
	6673157	INJECTOR			182
	6673158	NOZZLE			182
	6673159	BOLT			182
	6673160	CLAMP			182
	6673162	NUT			172
	6673163	ROD			172
	6673164	CAPSULE			172
	6673165	O-RING			172
	6673166	WASHER			172
	6673167	SPRING			172
	6673168	SPRING			174
	6673169	FLANGE			176
	6673170	MANIFOLD			167
	6673171	BOLT			167
	6673172	BOLT			167
	6673173	TURBOCHARGER			152, 176
	6673184	VALVE			64, 70
*	6673185	DECAL			119
*	6673188	SEAL KIT			119
	6673642	BOLT			35
	6673710	BEARING			94
	6673789	WEAR CAM			94
	6673826	PURIFIER			275
	6673877	COUPLER			102, 110
	6673878	END PLATE			102, 110
	6673879	SPACER			104
	6673880	O-RING			104, 112
	6673881	SEAL			102, 106, 110, 114
	6673882	SPRING			104, 112
	6673883	GEROTOR			104
	6673884	O-RING			102, 110
	6673885	PIN			102, 110

Code for disposition of old part number

A — Use up

B — Use on other application (See PNI)

C — File PDR Report with Melroe Parts Sales

D — Part Number Error

NUMERICAL INDEX (Cont'd)

	Part No.	Description	Was	Code	Page
	6673886	BOLT			102, 110
	6673904	SEAL KIT			66
	6673910	PUMP			102, 106
	6673911	PUMP			117
	6673912	PUMP			102, 106
	6673913	PUMP			80
	6673939	HOSE			86
	6673940	HOSE			84
	6673962	HOSE			152
	6673963	CLAMP			152
	6673964	HOSE			152
	6673966	TEE			152
	6673967	KIT			170
*	6673990	PISTON	6664028	A	81
	6674000	CLAMP			132
	6674008	TIRE & RIM			295
	6674009	TIRE & RIM			295
	6674012	KIT			295
	6674013	TRACK			20
	6674029	O-RING			96
	6674037	SPRING			96, 98
	6674184	DISTRIBUTOR			96
	6674192	BRAKE DISC			98
	6674193	BRAKE DISC			98
	6674202	NUT			124, 126
	6674204	OIL			298
	6674205	OIL			298
	6674206	OIL			298
*	6674209	SENSOR			32, 128
	6674219	BLOCK			96
	6674228	PANEL			250
	6674229	FILTER			250
	6674231	VENT			250
*	6674232	HOSE			260
*	6674234	CONDENSER			260
*	6674235	DRIER			260
	6674297	SPOOL			70
	6674298	SPOOL			70
	6674299	SPOOL			70
	6674300	SPOOL			70
	6674301	SPOOL			70
	6674302	SPOOL			70
*	6674315	SENSOR			128
*	6674316	SENSOR			88, 128
	6674317	CROSSMEMBER			124
*	6674331	COIL			74
	6674335	HOUSING ASSY			96
	6674337	SPOOL			96
	6674338	WASHER			96
	6674339	SPRING			96
	6674340	PIN			96

Code for disposition of old part number

A — Use up

B — Use on other application (See PNI)

C — File PDR Report with Melroe Parts Sales

D — Part Number Error

NUMERICAL INDEX (Cont'd)

	Part No.	Description	Was	Code	Page
	6674341	HOUSING			96
	6674343	SHIM			96, 98
	6674344	SPRING			96, 98
	6674345	PLUG			96, 98
	6674370	SEAL KIT			80
	6674371	SEAL KIT			117
*	6674376	RELAY			130
	6674390	ROTARY GROUP			96
	6674400	HOUSING			266
	6674401	HOUSING			266
	6674402	MOUNT			266
*	6674403	COVER			16
	6674403	COVER			124, 126
	6674405	BUSHING			18
	6674406	SENSOR			18
*	6674407	SHOULDER BELT			286
*	6674408	SEAT BELT			286
	6674445	SPACER			272, 274
	6674450	HANDLE ASSY			132
	6674519	WINDOW ASSY			216
	6674520	WINDOW			216
	6674521	WINDOW ASSY			216
	6674522	WINDOW			216
	6674548	PLUG			272
	6674585	SWITCH			268
*	6674666	LATCH			206
	6674666	LATCH			202, 210
*	6674667	HANDLE			206, 212
	6674667	HANDLE			202
*	6674692	PUMP			110, 114
*	6674693	PUMP			110, 114
	6674738	MOTOR			98
	6674741	KNOB			210, 216, 224, 250
	6674786	SOLENOID			66
	6674799	ADAPTER			226
*	6674802	CONNECTOR			230, 289
	6674802	CONNECTOR			226, 228
	6674804	CONTROLLER			134
	6674808	SPOOL			64
	6674809	SPOOL			64
	6674810	SPOOL			64
	6674814	SPOOL			64
	6674815	SPOOL			64
	6674816	SPOOL			64
	6674837	AIR CLEANER			186
*	6674838	ACTUATOR			140
	6674838	ACTUATOR ASSY			136
	6674841	SPRING			98
	6674894	NUT			18
	6674895	REATAINER			224
	6674933	HEATER			250, 254

Code for disposition of old part number

A — Use up

B — Use on other application (See PNI)

C — File PDR Report with Melroe Parts Sales

D — Part Number Error

NUMERICAL INDEX (Cont'd)

	Part No.	Description	Was	Code	Page
*	6674938	GAS SPRING			206
	6674938	GAS SPRING			202, 210
*	6674943	CONTROLLER			228
	6674993	CAP			204
*	6675020	BOLT	6717806	B	96
*	6675021	BOLT	6674030	B	96
	6675021	BOLT			98
*	6675026	CAP			230, 289
	6675026	CAP			226, 228
	6675033	INSERT			16, 124, 126
*	6675075	HOSE			260
*	6675076	HOSE			260
*	6675091	CAM	6674034	B	96
	6675099	HORN			261
	6675135	GAS SPRING			14
	6675137	GAS SPRING			14
	6675139	GAS SPRING			14, 242
	6675140	SNAP RING			14
*	6675154	HOLDER			130
*	6675155	FUSE			130
	6675170	SEAT BELT			283
	6675171	CLAMP			124, 126
	6675172	BRACKET			250
	6675173	ACTUATOR			250
	6675174	BODY			250
	6675175	BRACKET			250
	6675176	SWITCH			250
	6675177	KNOB			250
	6675179	FLANGE			250
	6675180	VENT			250
	6675181	PLUG			250
	6675189	PIN			98
	6675212	RETAINER			216
*	6675215	WINDOW			207
*	6675227	SEAL	6674038	B	96
*	6675228	SEAL	6674336	B	96
	6675250	HANDLE ASSY			134
	6675258	CLEVIS			14
*	6675265	CHECK VALVE			119
*	6675270	HOSE			260
*	6675273	WASHER	6675263	B	22
*	6675278	FILTER			128
*	6675281	MOUNT			228, 230
*	6675292	ALTERNATOR			144
	6675298	COUPLER			204
	6675299	COUPLER			204
	6675308	KIT			285
	6675309	KIT			285
	6675310	KIT			285
	6675311	KIT			285
	6675312	KIT			285

Code for disposition of old part number

A — Use up

B — Use on other application (See PNI)

C — File PDR Report with Melroe Parts Sales

D — Part Number Error

NUMERICAL INDEX (Cont'd)

	Part No.	Description	Was	Code	Page
	6675313	KIT			285
	6675314	KIT			285
	6675315	KIT			285
	6675316	KIT			285
	6675317	SCISSORS			283
	6675318	KIT			285
	6675319	SEAT			283
	6675320	SEAT			283
	6675321	SEAT			283
	6675322	SEAT			283
	6675323	KNOB			283
	6675324	MUFFLER			152
	6675328	CHAIN			35
	6675333	LINK			35
*	6675334	VALVE			92
	6675336	BULB			266
	6675337	BULB			124, 126
*	6675341	BLOCK ASSY			112, 114
*	6675342	PIN			110, 114
*	6675358	KNOB	6647668	B	26
	6675378	CLIP			204
	6675380	ADHESIVE			298
*	6675387	SEAL			216
	6675387	SEAL			212, 224
*	6675389	SWITCH			228
	6675390	ALARM			124, 126
*	6675460	HOSE			182
*	6675461	FUEL LINE			182
	6675468	HANDLE ASSY			132
*	6675469	HANDLE			138, 244
	6675469	HANDLE ASSY			134
	6675470	SWITCH			124, 126
*	6675495	CONTROLLER			228
	6675497	BLOWER ASSY			254, 256, 258
	6675498	COIL			254, 256
	6675499	HOUSING			254, 256
	6675500	COVER			254, 256
	6675501	PLATE			254, 256
	6675502	PLATE			254
	6675503	HOUSING			254, 256
	6675504	RING			254, 256
	6675505	BLOWER WHEEL			254, 256
	6675506	MOUNT			254, 256
	6675507	COVER			254, 256
	6675508	HARNESS			254, 256
	6675509	MOTOR			254, 256
	6675510	CLAMP			254, 256, 258
	6675511	DRAIN VALVE			254, 256, 258
	6675512	CLAMP			254, 256, 258
	6675513	GROMMET			254, 256, 258
	6675514	SEAL			254, 256

Code for disposition of old part number

A — Use up

B — Use on other application (See PNI)

C — File PDR Report with Melroe Parts Sales

D — Part Number Error

	Part No.	Description	Was	Code	Page
	6675522	STROBE			293
	6675523	BEACON			193
	6675524	CLIP			16
*	6675533	COIL			260
	6675533	COIL			256, 258
*	6675534	BLOCK VALVE			260
	6675534	BLOCK VALVE			256, 258
*	6675536	MOUNT			260
	6675536	BRACKET			256
*	6675537	COVER			260
	6675537	PLATE			256
*	6675538	O-RING			260
	6675538	O-RING			256, 258
	6675539	HOSE			256
	6675544	CANVAS CAB			213
*	6675545	GROMMET			216, 224
*	6675546	SEAL			216, 224
*	6675558	SEAL			206
*	6675558	SEAL	6669390	A	202, 210
*	6675562	SEAT BELT			287
*	6675581	EXTINGUISHER			238
	6675590	DOOR			213
	6675591	HINGE KIT			213
*	6675595	SEAT			283
*	6675596	SEAT			283
	6675607	INSULATION			254
	6675608	INSULATION			254
	6675609	INSULATION			254
	6675610	INSULATION			254
	6675611	INSULATION			254
	6675612	INSULATION			254
	6675613	INSULATION			254
	6675614	INSULATION			254
*	6675660	GEAR PUMP			118
*	6675661	GEAR PUMP			118
*	6675663	NUT			119
*	6675667	COMPRESSOR			260
*	6675669	VALVE			74
*	6675684	VALVE			250
	6675684	VALVE			250
*	6675685	HOSE			260
*	6675694	ADHESIVE			216
*	6675695	HEATER ASSY			196
*	6675708	ELEMENT			196
*	6675734	TIE			44, 48, 130
*	6675741	SENSOR			138, 244
*	6675742	LEVER			138, 244
*	6675749	HANDLE			138, 244
*	6675750	LEVER			138, 244
*	6675779	PRESSURE SWITCH			260
*	6675790	THERMOSTAT			260

Code for disposition of old part number

A — Use up

B — Use on other application (See PNI)

C — File PDR Report with Melroe Parts Sales

D — Part Number Error

NUMERICAL INDEX (Cont'd)

	Part No.	Description	Was	Code	Page
*	6675790	THERMOSTAT	6675535	A	256
	6675790	THERMOSTAT			258
*	6675824	O-RING			260
*	6675825	O-RING			260
*	6675828	CLUTCH			260
*	6675833	SEAL			216
*	6675839	BELT			158
	6675846	POTENTIOMETER	6675178	A	250
	6675858	FLASH TUBES			293
	6675860	ROTARY GROUP			98
	6675861	REAR HOUSING			98
	6675862	BRAKE			100
*	6675863	QUAD RING			98
	6675864	QUAD RING			98
	6675865	SNAP RING			98
	6675866	SPOOL			98
	6675867	WASHER			98
*	6675868	POPPET	6674342	B	96
	6675868	POPPET			98
*	6675869	O-RING	6671784	B	96
	6675869	O-RING			98
	6675870	SEAL KIT			100
	6675874	CAM			98
	6675875	HOUSING			98
	6675876	DISTRIBUTOR			98
	6675877	SEAL			98
	6675878	SEAL			98
	6675879	SEAL			98
	6675880	SEAL			98
	6675881	SEAL			98
	6675882	SPOOL			98
*	6675883	WASHER			98
	6675885	SNAP RING			98
	6675886	QUAD RING			98
	6675887	HOUSING			98
	6675888	SHAFT			98
	6675889	PISTON			98
	6675890	COVER			100
	6675892	GASKET			100
	6675893	O-RING			100
	6675894	SEAL			98
	6675895	BOLT			100
	6675896	BOLT			98
	6675897	WASHER			100
	6675898	BUSHING			98
*	6675973	ROLLER	6666358	B	96
*	6675982	PLUG			124, 126
*	6675999	SWITCH			281
*	6676000	TEE			281
*	6676001	ARM			281
*	6676002	BLADE			281

Code for disposition of old part number

A — Use up

B — Use on other application (See PNI)

C — File PDR Report with Melroe Parts Sales

D — Part Number Error

NUMERICAL INDEX (Cont'd)

	Part No.	Description	Was	Code	Page
*	6676003	HOSE			281
*	6676003	HOSE	6708310	A	202
*	6676021	SEAL KIT	6674201	B	96
*	6676022	SEAL	6674040	B	96
*	6676023	O-RING	6671749	B	96
*	6676024	PLUG	6671783	B	96
*	6676028	NOZZLE			281
	6676034	KIT			285
*	6676062	VALVE			260
*	6676063	KIT			260
*	6676064	VALVE			272
*	6676065	SEAL KIT			272
*	6676066	BALL			272, 274
*	6676067	SPRING			272, 274
*	6676068	VALVE			272
*	6676069	SEAL KIT			272
*	6676070	ORIFICE			272, 274
*	6676071	O-RING			272
*	6676073	RELIEF VALVE			272
*	6676074	SEAL KIT			272
*	6676144	GEROTOR			112
*	6676145	SPACER			112
*	6676146	COUPLING			114
*	6676147	VALVE PLATE			110
*	6676148	VALVE PLATE			114
*	6676152	PLUG	6653490	A	279
*	6676153	CONTROLLER			140
*	6676155	RELIEF VALVE			82
*	6676172	WASHER			130
*	6676198	VALVE	6665626	A	64, 70
*	6676205	SEAL KIT			119
*	6676239	CARTRIDGE			119
*	6676240	CARTRIDGE			119
*	6676241	CARTRIDGE			119
*	6676242	COIL			119
*	6676243	COIL			119
*	6676244	COIL			120
*	6676245	PLUG			120
*	6676246	NUT			119
*	6676247	NUT			120
*	6676249	STEM	6666616	B	66, 72
*	6676338	GAS SPRING			285
*	6676347	ORIFICE			274
*	6676347	ORIFICE	6669615	A	272
*	6676399	VALVE CORE			260
*	6676417	VALVE	6675334	A	119
*	6676445	COUPLER			52
*	6676447	COUPLER			54
*	6676498	NOZZLE			204
*	6676499	GROMMET			204
*	6676500	ELBOW			204

Code for disposition of old part number

A — Use up

B — Use on other application (See PNI)

C — File PDR Report with Melroe Parts Sales

D — Part Number Error

	Part No.	Description	Was	Code	Page
*	6676501	CLIP			204
*	6676514	CONTROLLER			230
*	6676515	CONTROLLER			230
*	6676516	NUT			252
*	6676536	SWITCH			126
*	6676538	INSULATION			260
*	6676539	CLIP			260
	6676539	CLIP			258
*	6676540	O-RING			248
*	6676542	CAP			74
*	6676543	PLUG			74
*	6676544	SPRING			74
*	6676545	CARTRIDGE			74
*	6676547	VALVE			274
*	6676553	CONTROLLER	6672349	A	128
*	6676561	HVAC ASSEMBLY			258
*	6676562	HEATER			254
*	6676567	HEAD			170
*	6676568	GASKET			170
*	6676571	GASKET			170
*	6676572	GASKET			170
*	6676603	HEATER COIL			258
	6676604	COVER			258
*	6676643	SPRING			98
*	6676644	SPRING			98
*	6676645	SPRING			98
*	6676646	SPRING			98
*	6676647	WASHER			100
*	6676648	WASHER			100
*	6676649	WASHER			100
*	6676650	WASHER			100
*	6676651	WASHER			100
*	6676652	WASHER			100
*	6676710	WASHER			98
*	6676711	WASHER			98
*	6676712	WASHER			98
*	6676723	CROSSMEMBER			126
*	6676917	ELBOW			204
*	6676918	HOSE			204
*	6676927	FELT STRIP			216
*	6676984	BRACKET			258
*	6677105	COVER			258
*	6677108	HOUSING			258
*	6677109	COVER			258
*	6677111	SEAL			258
*	6677113	TIE			258
*	6677114	SEAL			258
*	6677115	RECEPTACLE			258
*	6677116	RETAINER			258
*	6677117	SCREW			258
*	6677118	SCREW			258

Code for disposition of old part number

A — Use up

B — Use on other application (See PNI)

C — File PDR Report with Melroe Parts Sales

D — Part Number Error

	Part No.	Description	Was	Code	Page
*	6677119	SCREW			258
*	6677121	CAP			260
*	6677122	CAP			260
*	6677136	SOCKET			230
	6677136	SOCKET			226, 228
*	6677147	RELIEF VALVE			274
*	6677148	SEAL KIT			274
*	6677149	CHECK VALVE			274
*	6677150	SEAL KIT			274
*	6677151	VALVE			274
*	6677152	SEAL KIT			274
*	6677153	STEM			274
*	6677155	VALVE			274
*	6677156	SEAL KIT			274
*	6677157	O-RING			274
*	6677158	PLUG			274
*	6677159	PLUG			274
*	6677177	PLUG			120
*	6677201	SOLENOID	6665084	B	66, 72
*	6678229	SEAL			39
	6700115	SPRING			154
	6700170	WASHER			38, 162
	6700182	COVER			12
	6700330	COVER			38
*	6700599	ADAPTER	6715714	B	88
	6700631	GASKET			84
	6700768	U-BOLT			94
	6700782	CAP			164
*	6701097	WASHER	6803867	A	148
	6701097	WASHER			12
	6701159	SHIM			154, 164
	6701160	CLIP			154
	6701174	WASHER			14
	6701187	BELLCRANK			162
	6701449	FILLER TUBE			32
	6701535	SPRING			18, 94
*	6701892	CLAMP			44
*	6701893	CLAMP			44
	6701893	CLAMP			48, 198
	6701950	SPRING PLATE			30
	6701951	MOUNT			30
	6702102	GEAR			164
	6702103	GEAR			164
	6702135	SHAFT			164
	6702140	WASHER			164
	6702144	SHIM			164
	6702165	SHIM			164
	6702166	SHIM			164
*	6702402	SHIELD			241
*	6702444	FUSE			130
	6702444	FUSE			136

Code for disposition of old part number

A — Use up

B — Use on other application (See PNI)

C — File PDR Report with Melroe Parts Sales

D — Part Number Error

NUMERICAL INDEX (Cont'd)

	Part No.	Description	Was	Code	Page
	6702452	PIN			24
	6702474	RETAINER			154
	6702543	LEVER			94
	6702621	GRIP			132
	6702716	BLOCK			94
	6702826	DECAL			222
	6702827	DECAL			222
	6702903	LEVER			28
	6702904	LEVER			28
	6702935	PIN			26
	6702958	BUSHING			28
	6702971	BOLT			14
*	6702990	BUSHING			138, 244
	6702990	BUSHING			134
	6703097	GASKET			38
	6703349	GRIP			134
	6703483	PULLEY			148
	6703616	BUSHING			24
*	6703640	KIT			288
*	6703641	DECAL			288
	6703666	BOB-TACH			28
*	6703703	GUIDE			288
	6703727	DECAL			261
*	6703967	INSULATION			232, 292
*	6703968	INSULATION			292
	6703968	INSULATION			232
	6704169	TIRE & RIM			296
	6704170	TIRE & RIM			296
	6704240	PIVOT ASSY			28
	6704242	WEDGE			28
	6704248	PIVOT			28
	6704443	BUSHING			154
	6704444	WASHER			154
	6704453	SPRING			162
	6704820	O-RING			154
	6704823	BRACKET			152
	6704879	GASKET			35
*	6704892	RIVET			228, 230
	6704907	SPACER			148
	6705106	WASHER			158
*	6705333	MOUNT			292
	6705333	MOUNT			232
	6705452	LEVER			162
*	6705471	MOUNT			76
	6705733	TUBE			84
	6705749	SHIELD			84
	6705920	HANDLE			132
	6705921	HANDLE ASSY			261
	6706096	MOUNT			94
	6706098	GUIDE			94
	6706105	YOKE			62

Code for disposition of old part number

A — Use up

B — Use on other application (See PNI)

C — File PDR Report with Melroe Parts Sales

D — Part Number Error

NUMERICAL INDEX (Cont'd)

	Part No.	Description	Was	Code	Page
	6706106	MOUNT			94
	6706287	PIN			26
	6706292	PIN			26
	6706330	PANEL			30
	6706331	PANEL			30
	6706354	INLET			84
	6706365	ADAPTER			88
	6706445	HOSE			84
	6706485	HOOK			12
	6706517	SCREW			32, 84, 148
	6706565	KIT			132
	6706572	SET SCREW			162
	6706606	BUSHING			24
	6706633	CONNECTOR			278
	6706683	COVER			38
	6706712	BUSHING			12
	6706718	MOUNT			38
	6706730	COVER			12
	6706737	GASKET			38
	6706805	SHAFT			36, 38
	6706817	SPACER			36
	6706857	BLOCK			12
	6707077	HOUSING ASSY			164
	6707101	SEAL			50, 60
	6707173	KIT			295
	6707313	PEDAL MOUNT			38
	6707314	PEDAL			38
	6707315	ANGLE			38
	6707337	SWITCH			38
	6707344	LEVER			30
	6707515	PLATE			12
	6707518	SHAFT			164
	6707519	HOUSING ASSY			148, 164
	6707582	BRACKET			152
	6707607	IDLER			154
	6707642	FLYWHEEL ASSY			154
*	6707648	BELT			92, 292
	6707648	BELT			148
	6707654	SPINDLE			154
	6707674	PLUG			30
	6707697	WASHER			154
	6707698	WASHER			154
	6707699	PIVOT			154
	6707714	STOP			156
	6707726	MOUNT			192, 261
	6707757	MOUNT			158
	6707852	DECAL			202, 210
	6707867	DECAL			222
	6707903	LEVER			162
	6707904	ROD			162
	6708009	LINK			62

Code for disposition of old part number

A — Use up

B — Use on other application (See PNI)

C — File PDR Report with Melroe Parts Sales

D — Part Number Error

NUMERICAL INDEX (Cont'd)

	Part No.	Description	Was	Code	Page
	6708016	GASKET			38
	6708018	SPRING			38
	6708043	FLANGE			94
	6708070	GASKET			38
	6708189	TUBE			14
	6708267	BOLT			38
*	6708271	SOLENOID			74
	6708314	BUSHING			162
	6708402	BUSHING			28
	6708403	BUSHING			28
	6708404	BUSHING			28
	6708405	BUSHING			28
	6708445	PULLEY			156
	6708517	BUSHING			26
	6708527	TANK			32
	6708560	HOSE			84
*	6708580	ADAPTER			128
	6708642	HOUSING ASSY			164
	6708645	STOP			26
	6708820	DECAL			222
	6708922	HOSE			42, 46
	6708923	HOSE			42, 46
	6708934	SAFETY TREAD			220
	6708937	DECAL			222
	6708941	DECAL			222
	6708987	HINGE			12
	6709022	LEVER			162
	6709052	MOUNT			162
	6709168	ELBOW			158, 176
	6709170	STUD			39
	6709229	BOLT			234
	6709234	DISC			234
	6709236	MOUNT			234
	6709239	PEDAL			234
	6709361	CLAMP			234
	6709400	TUBE			234
	6709448	BRACE			148
*	6709452	DECAL			220
	6709508	ELEMENT			194
*	6709509	CORD			196
	6709509	CORD SET			194
	6709510	ADAPTER			194, 195
	6709511	WASHER			194, 195
	6709513	GASKET			194, 195
	6709514	HEATER ASSY			194
*	6709527	KEY			202, 206, 212
	6709527	KEY			124, 126, 280
	6709757	AXLE			39
	6709822	TUBE			178
*	6709829	INSULATION			292
	6709829	INSULATION			232

Code for disposition of old part number

A — Use up

B — Use on other application (See PNI)

C — File PDR Report with Melroe Parts Sales

D — Part Number Error

NUMERICAL INDEX (Cont'd)

	Part No.	Description	Was	Code	Page
	6709840	NUT			194, 195
	6709857	BUSHING			12
	6709900	SPACER			12
	6709921	SHIELD			154
	6709959	CABLE			162
	6710192	KIT			194
	6710234	PIN			26
	6710358	DECAL			220
	6710415	HOSE			234
	6710420	TUBE			234
	6710421	TUBE			234
	6710488	MOUNT			32
	6710491	SHIELD			42, 46
	6710531	HOSE			152
	6710629	TUBELINE			42, 46
	6710642	HOSE			42, 46
	6710652	SHIELD			158
	6710659	BUSHING			18
	6710791	COOLER			150
	6711158	SHIELD			199
	6711328	DECAL			220
	6711334	PIN			26
	6711520	GRILL			148
	6711524	REAR DOOR			22
	6711526	HINGE			22
	6711527	LATCH PLATE			22
	6711644	LEVER			94
	6711664	GUIDE			22
	6711718	ELEMENT			195
	6711720	CORD SET			195
	6711721	HEATER ASSY			195
	6711811	HOSE			42, 46
*	6711840	DECAL			220
	6711873	KIT			195
*	6711908	SPRING PLATE			16
	6712143	HOSE			150
	6712144	HOSE			150
*	6712365	STEP			140
	6712365	STEP			134
	6712397	CONTROL			134
	6712398	CONTROL			134
	6712415	DEBRIS EJECTOR			218
*	6712536	PAN			128
	6712912	DECAL			217
	6712970	PULLEY			148
*	6712971	PULLEY			92, 148, 292
	6712988	KIT			218
	6713040	SPRING			28
*	6713043	SPACER			138, 244
	6713043	SPACER			134
	6713111	LINK			94

Code for disposition of old part number

A — Use up

B — Use on other application (See PNI)

C — File PDR Report with Melroe Parts Sales

D — Part Number Error

NUMERICAL INDEX (Cont'd)

	Part No.	Description	Was	Code	Page
	6713152	KIT			199
*	6713287	PULLEY			92
	6713342	PULLEY			154
*	6713349	GRIP			138, 244
	6713385	BELT			148
	6713589	CLEVIS			18
	6713653	GASKET			152
*	6713670	CABLE			128
	6713787	BRACKET			152
	6713792	MOUNT			192
	6713793	BRACKET			192
	6713816	BRACKET			148
	6713843	BRACKET			158
	6713887	BOLT			18
	6713893	MOUNT			158
*	6713898	COVER			138, 244
	6713898	COVER			134
	6713901	BELT			158
	6713920	SHIM			162
	6713937	CLAMP			52
	6713977	HOSE			84
	6714025	LINK			94
	6714037	LATCH			280
	6714126	DOOR STOP			22
	6714210	SPRING			22
	6714242	DECAL			222
	6714278	GUIDE			38
	6714362	WEIGHT			217
	6714500	TUBE			158
	6714509	COVER			22
	6714534	DECAL			222
*	6714538	DECAL			220
	6714538	DECAL			222
	6714576	PIVOT			268
*	6714726	PLUG			140
	6714726	PLUG			134
	6714774	TUBELINE			44, 48
	6714775	TUBELINE			44, 48
	6714806	HOSE			232
	6714808	HOSE			278
	6714823	MOUNT			50
	6714875	HOSE			278
	6714973	KIT			280
*	6714977	HOSE			292
	6714977	HOSE			232
*	6714979	BRACKET			128
	6715072	TUBELINE			44
	6715075	TUBELINE			42
	6715076	TUBELINE			48, 198
	6715077	TUBELINE			48, 198
	6715078	TUBELINE			48, 198

Code for disposition of old part number

A — Use up

B — Use on other application (See PNI)

C — File PDR Report with Melroe Parts Sales

D — Part Number Error

	Part No.	Description	Was	Code	Page
	6715079	BRACKET			84
	6715096	INSULATION			232
*	6715106	INSULATION			292
	6715106	INSULATION			232
*	6715131	BRACE			128
*	6715132	RETAINER			128
	6715142	FAN			148
	6715143	SET SCREW			148
	6715157	STRIKER ASSY			22
	6715163	BUSHING			94
	6715164	SLEEVE			94
	6715174	TUBELINE			44
	6715183	ELBOW			32
*	6715186	ADAPTER			278
	6715187	TEE			42, 46
	6715188	ELBOW			90
*	6715197	CLAMP			128
	6715281	TUBELINE			48, 198
	6715287	SPACER			158
	6715294	TEE			42, 46
	6715318	TOOL HOLDER			22
	6715365	HARNESS			132, 224
	6715380	MOUNT			154, 158
	6715427	SPACER			36
*	6715428	DECAL			292
	6715428	DECAL			220
*	6715443	INSULATION			292
	6715443	INSULATION			232
*	6715456	INSULATION			292
	6715456	INSULATION			232
*	6715457	INSULATION			292
	6715457	INSULATION			232
	6715630	BRAKE			38
	6715659	HARNESS			192
*	6715718	ELBOW			86
	6715718	ELBOW			88
*	6715744	SPACER			292
	6715744	BUSHING			232
	6715860	SEAT BAR			18
	6715863	BRACKET			18
	6715864	BUSHING			18
	6715865	BUSHING			18
	6715866	BUSHING			18
	6715878	CONNECTOR			84
	6715957	COVER			134
	6715991	DECAL			222
	6716061	TEE			42, 46
*	6716089	ADAPTER			76
	6716090	ADAPTER			52
	6716116	MOUNT			94
	6716124	HOSE			50

Code for disposition of old part number

A — Use up

B — Use on other application (See PNI)

C — File PDR Report with Melroe Parts Sales

D — Part Number Error

NUMERICAL INDEX (Cont'd)

	Part No.	Description	Was	Code	Page
	6716125	HOSE			88
	6716154	HOSE			88
*	6716175	HOSE			86
	6716175	HOSE			88
	6716176	HOSE			88
	6716225	SPACER			160
	6716226	BRACKET			158
	6716282	KIT			198
*	6716337	HOSE	6716123	A	50
*	6716391	HOSE			90, 92
	6716408	SPACER			160
	6716419	HARNESS			265
	6716443	ELBOW			278
	6716449	FOAM			84
*	6716468	TEE			86
	6716468	TEE			84, 88
	6716532	BUSHING			12
	6716533	BUSHING			12
	6716537	LINK ASSY			24
	6716539	BUSHING			24
	6716545	ROD			94
	6716572	LOUVER			148
	6716574	LOUVER			148
*	6716621	COVER			128
	6716792	SHIM			24
	6716808	BRACKET			52
*	6716826	BOLT			138, 244
	6716826	BOLT			134
	6716901	MOUNT			234
	6716916	WASHER			94
	6716977	BELLCRANK			94
	6717109	HOSE			44, 48
	6717137	TUBELINE			150
*	6717146	SPACER			206
	6717146	SPACER			202, 210
*	6717163	HANDLE			138, 244
	6717163	HANDLE			134
	6717173	ADAPTER			90
	6717186	CROSS			88
	6717214	HOSE			84
	6717215	HOSE			88
	6717227	HOSE			88
	6717232	DECAL			217
	6717242	HOUSING			36
*	6717247	HARNESS			128
	6717296	MOUNT ASSY			35, 36
	6717306	ADAPTER			86
	6717332	HOSE			84
	6717343	DECAL			220
	6717351	SHIELD			152
	6717352	TUBE			152

Code for disposition of old part number

A — Use up

B — Use on other application (See PNI)

C — File PDR Report with Melroe Parts Sales

D — Part Number Error

NUMERICAL INDEX (Cont'd)

	Part No.	Description	Was	Code	Page
*	6717360	WINDOW			210
	6717360	WINDOW			202
*	6717369	BRACKET			206
	6717369	BRACKET			202, 210
*	6717375	MOUNT			260
	6717378	BOLT			50
	6717393	LEVER			134
	6717401	PLUG			32
	6717402	BUSHING			32
	6717451	HOSE			32
	6717478	INLET			148
	6717495	HOSE			152
	6717498	HOSE			152
*	6717503	TEE			92
	6717515	INSULATION			224
	6717516	INSULATION			16
	6717517	INSULATION			224
	6717518	INSULATION			224
	6717519	INSULATION			224
	6717520	INSULATION			224
*	6717579	GASKET			32, 128
	6717590	DOOR			210
*	6717593	HINGE			206
	6717593	HINGE			202, 210
	6717636	HOUSING			148
	6717643	DUCT			250
	6717644	DUCT			250
	6717662	TEE			88
	6717706	COIL			66, 72
	6717738	SHIELD			148
	6717771	BUSHING			26
	6717788	BUSHING			26
	6717806	BOLT			35
	6717826	BUSHING			12
	6717831	BUSHING			12
	6717837	MAIN FRAME			12
	6717858	MOUNT			160
	6717870	FRAME			216
	6717872	FRAME			216
	6717873	FRAME			216
	6717874	WINDOW			216, 224
*	6717885	ELBOW			76
*	6717907	DECAL			220
*	6717933	CLAMP			76
	6717933	CLAMP			44, 48
*	6718034	FUSE			130
	6718034	FUSE			136
	6718056	TUBELINE			52
	6718057	TUBELINE			52
	6718101	COVER			16
	6718175	SCREEN			250

Code for disposition of old part number

A — Use up

B — Use on other application (See PNI)

C — File PDR Report with Melroe Parts Sales

D — Part Number Error

NUMERICAL INDEX (Cont'd)

	Part No.	Description	Was	Code	Page
	6718187	PANEL			30
	6718188	PANEL			30
*	6718201	LEVER ASSY			136
*	6718202	LEVER ASSY			136
*	6718271	DECAL			220
*	6718272	DECAL			222
	6718283	RETAINING NUT			62
	6718285	LEVER			62
	6718292	BAR			62
	6718293	BAR			62
	6718295	HARNESS			202
	6718304	KIT			295
*	6718310	PULLEY			260
	6718326	MOUNT			240
	6718329	BUSHING			24
	6718352	TUBELINE			42, 46
*	6718358	HOSE			268
*	6718376	HINGE			206
	6718376	HINGE			202, 212
*	6718384	TUBELINE			76
*	6718385	TUBELINE			76
*	6718386	TUBELINE			76
*	6718398	DECAL			222
	6718411	KIT			240
*	6718416	SENDER			128
*	6718417	SENDER			128
	6718426	HARNESS			226
*	6718436	TUBELINE			76
	6718447	STUD			26
	6718475	TUBELINE			44, 46
	6718476	TUBELINE			42, 46
	6718477	TUBELINE			42, 46
*	6718478	TUBELINE			268
*	6718479	TUBELINE			268
*	6718506	PIN			140
	6718506	PIN			136
*	6718511	BRACKET			78
*	6718512	GUIDE			12
*	6718520	COVER			206
	6718520	COVER			204, 210
*	6718521	HANDLE			206
	6718521	HANDLE			202, 212
*	6718552	TUBELINE			76
*	6718553	TUBELINE			76
*	6718554	TUBELINE			76
*	6718555	TUBELINE			76
	6718579	DECAL			250
	6718580	PANEL			224
*	6718645	HARNESS			76, 278
	6718652	HARNESS			268
*	6718659	HOUSING			130

Code for disposition of old part number

A — Use up

B — Use on other application (See PNI)

C — File PDR Report with Melroe Parts Sales

D — Part Number Error

NUMERICAL INDEX (Cont'd)

	Part No.	Description	Was	Code	Page
	6718660	ELBOW			88
	6718687	TUBELINE			52
	6718688	TUBELINE			52
	6718693	TUBELINE			48
	6718694	TUBELINE			48
*	6718698	DECAL			220
*	6718699	DECAL			140
	6718699	DECAL			134
*	6718701	DECAL			220
	6718702	DECAL			134
*	6718703	DECAL			220
*	6718704	DECAL			140
	6718704	DECAL			134
*	6718706	DECAL			140
	6718706	DECAL			134
	6718750	MOUNT			226
*	6718754	CLAMP	6502203	A	52
	6718757	HOUSING			148
*	6718774	DECAL			128
*	6718784	COVER			14
*	6718796	PLUG			128
*	6718796	PLUG	6660646	A	12
	6718803	KIT			250
	6718804	KIT			224, 249, 251
	6718807	KIT	SALES	D	202
	6718810	KIT			248
	6718812	KIT			226
	6718817	HOSE			42, 46
	6718818	HOSE			42, 46
	6718820	HARNESS			192
	6718822	BACKUP ALARM KIT			192
*	6718833	BRACKET			241
*	6718834	BRACKET			241
	6718837	SPACER			250
*	6718852	HOSE			78
	6718852	TUBELINE			278
*	6718853	HOSE			76
	6718853	TUBELINE			278
	6718854	HOSE			44, 48
	6718855	HOSE			52
*	6718856	HOSE			76
*	6718857	HOSE			76
	6718870	HARNESS			124
	6718872	HARNESS			193, 240, 293
	6718873	HARNESS			240
*	6718882	TEE			86, 90
*	6718885	HOSE			86, 90
	6718887	PANEL			250
*	6718924	KIT			241
*	6718948	SNUBBER			128
*	6718948	SNUBBER	6563922	B	90

Code for disposition of old part number

A — Use up

B — Use on other application (See PNI)

C — File PDR Report with Melroe Parts Sales

D — Part Number Error

NUMERICAL INDEX (Cont'd)

	Part No.	Description	Was	Code	Page
	6719006AR	KIT			199
	6719006BR	KIT			199
	6719037	STRIKER			216
	6719038	PLUG			124, 224
	6719043	HORN KIT			261
	6719056	BLOCK			38
	6719057	BLOCK			38
*	6719058	INSULATION			292
	6719058	INSULATION			232
	6719063	STOP			216
	6719064	MOUNT			14
	6719065	COVER TAB			216
*	6719082	HARNESS			128
	6719084	BOLT			124, 126
*	6719112	HARNESS			128
*	6719112	HARNESS	6718912	B	132
	6719113	HARNESS			136
	6719132	PANEL			30
*	6719133	TEE			76
*	6719141	CABLE			128
	6719151	HARNESS			261
	6719158	CHAINCASE			35
*	6719168	COVER	6719201	A	12
*	6719176	SWITCH			260
	6719208	TUBELINE			150
	6719209	TUBELINE			150
	6719278	LEVER			30
*	6719298	TEE			76, 278
*	6719317	WINDOW			281
	6719319	HOSE			88
*	6719332	INSULATION			232, 292
*	6719333	INSULATION			232, 292
	6719360	INSULATION			14
*	6719378	TEE			92
*	6719395	CONNECTOR			248
	6719406	INSULATION			16
	6719413	WINDOW			210
*	6719422	HARNESS			128
	6719429	SHIELD			148
*	6719431	KIT			76
	6719434	HARNESS			228
	6719441	DECAL			228
	6719442	MOUNT			228
	6719446	MOUNT			88
*	6719448	MAGNET			230
	6719448	MAGNET			228
*	6719449	INSULATION			292
	6719449	INSULATION			232
	6719451	HOSE			268
*	6719459	MOUNT			260
*	6719478	INSULATION			292

Code for disposition of old part number

A — Use up

B — Use on other application (See PNI)

C — File PDR Report with Melroe Parts Sales

D — Part Number Error

	Part No.	Description	Was	Code	Page
	6719478	INSULATION			232
*	6719479	INSULATION			292
	6719479	INSULATION			232
*	6719486	INSULATION			292
	6719486	INSULATION			232
*	6719487	INSULATION			292
	6719487	INSULATION			232
*	6719488	INSULATION			292
	6719488	INSULATION			232
*	6719489	INSULATION			292
	6719489	INSULATION			232
	6719503	CONTAINER			16
*	6719514	HOSE	6719534	A	248
*	6719515	HOSE	6719535	A	248
	6719524	STRIKER			22
	6719525	BAR			22
	6719537	TUBELINE			42, 46
	6719538	TUBELINE			42, 46
	6719539	TUBELINE			42, 46
	6719540	TUBELINE			42, 46
	6719550	TUBE			22
	6719560	TUBELINE			150
*	6719563	KIT			220
	6719563	KIT			246
*	6719602	HOSE			268
*	6719603	HOSE			268
*	6719605	HOSE			268
*	6719630	HARNESS			260
*	6719711	CHANNEL			138, 244
*	6719712	CHANNEL			138, 244
*	6719766	STOP			22
*	6719789	TUBELINE			278
*	6719790	TUBELINE			278
*	6719791	TUBELINE			278
*	6719792	TUBELINE			278
*	6719793	TUBELINE			278
*	6719794	TUBELINE			278
*	6719834	SPACER			138, 244
*	6719835	SLEEVE			138, 244
*	6719842	KIT			268
	6719854	KIT			193
	6719857	KIT			293
*	6719888	DECAL			268
*	6719914	HOSE	6719533	A	248
*	6719936	BRACKET	6714840	A	50
*	6720592	INSTRUCTIONS			241
	6722151	TIRE & RIM			296
	6722152	TIRE & RIM			296
	6722344	BLACK GOLD			298
	6722759	INSTRUCTIONS			132
	6722781	PAINT			298

Code for disposition of old part number

A — Use up

B — Use on other application (See PNI)

C — File PDR Report with Melroe Parts Sales

D — Part Number Error

NUMERICAL INDEX (Cont'd)

	Part No.	Description	Was	Code	Page
	6722782	PAINT			298
	6722783	PAINT			298
	6722784	PAINT			298
	6722785	PAINT			298
	6722786	PAINT			298
	6722787	PAINT			298
	6722788	PAINT			298
	6722789	PAINT			298
	6724094	ANTI-FREEZE			298
	6724354	ANTI-FREEZE			298
	6724380	INSTRUCTIONS			234
*	6724397	INSTRUCTIONS			196
	6724397	INSTUCTIONS			194
	6724488	INSTRUCTIONS			262
	6724515	INSTUCTIONS			195
	6724557	OIL			298
	6724558	OIL			298
	6724559	OIL			298
	6724593	INSTRUCTIONS			218
	6724649	INSTRUCTIONS			199
	6724649AR	INSTRUCTIONS			199
	6724649BR	INSTRUCTIONS			199
	6724775	LEVER KIT			28
	6724776	LEVER KIT			28
*	6725032	ELBOW			90
*	6725035	KIT			220
*	6725035AR	KIT			220
	6725035AR	KIT			222
*	6725035BR	KIT			220
	6725035BR	KIT			222
*	6725035JP	KIT			220
	6725035JP	KIT			222
*	6725036AR	KIT			220
	6725036AR	KIT			222
*	6725036BR	KIT			220
	6725036BR	KIT			222
*	6725042	SHIELD			206
*	6725090	HOSE	6717216	A	88
*	6725127	HOSE			86, 90
*	6725128	ADAPTER			140
	6725128	ADAPTER			136
*	6725130	PULLEY			92, 148
*	6725168	KIT			286
*	6725171	SHIELD			202
	6725171	SHIELD			210
*	6725186	BELT			92, 148
	6725200	SHIELD			210
*	6725201	TANK	6718627	A	204
*	6725212	ARM	6707637	A	154
	6725246	PLATE			136
	6725257	ADAPTER			136

Code for disposition of old part number

A — Use up

B — Use on other application (See PNI)

C — File PDR Report with Melroe Parts Sales

D — Part Number Error

NUMERICAL INDEX (Cont'd)

	Part No.	Description	Was	Code	Page
*	6725273	HARNESS			224
	6725273	HARNESS			250
	6725301	COVER			16
*	6725302	GASKET			128
	6725303	FRAME			16
*	6725360	WINDOW			216
*	6725360	WINDOW	6675214	A	210
	6725360	WINDOW			224
*	6725370	DECAL			286
	6725390	HARNESS			250
*	6725403	SEAT BELT			16
*	6725421	HANDLE			214
*	6725423	TANK			84
*	6725429	MOUNT			158
*	6725435	HOSE			76
*	6725436	HOSE			76
*	6725496	COVER			38, 92
*	6725497	CROSS			90
	6725513	PACKAGE			250
*	6725550	PIN	6718294	A	24
*	6725551	PIN	6718306	A	24
*	6725898	KIT			238
*	6725899	HOSE			92
*	6725900	HOSE			92
*	6725901	HOSE			92
*	6725906	BRACKET			238
	6725907	DECAL			268
	6725933	HARNESS			250
	6725933	HARNESS	6717877	A	250
*	6725934	HARNESS			252
*	6725935	WINDOW			206
*	6725936	HARNESS			252
*	6725937	CLAMP			206, 212
*	6725938	CLAMP			206, 212
*	6725941	KIT			206
*	6725943	BELT			260
*	6725946	KIT			214
*	6725953	TUBELINE			48
	6725953	TUBELINE			198
*	6725954	TUBELINE			48
	6725954	TUBELINE			198
*	6725959	BRACKET			78
*	6725962	TUBELINE			78
*	6725963	TUBELINE			78
*	6725964	ELBOW			88
*	6725971	KIT			196
*	6725973	TUBELINE			88
*	6726303	DECAL			214
*	6726357	HARNESS			260
*	6726386	KNOB			252
*	6726423	DECAL			262

Code for disposition of old part number

A — Use up

B — Use on other application (See PNI)

C — File PDR Report with Melroe Parts Sales

D — Part Number Error

NUMERICAL INDEX (Cont'd)

	Part No.	Description	Was	Code	Page
*	6726427	KIT			207
*	6726435	DOOR			202
*	6726479	ADAPTER			76
*	6726485	BRACKET			158
*	6726490	KIT			260
*	6726504	BRACKET			128, 130
*	6726567	ELBOW	6666302	B	32
*	6726608	COVER			252
*	6726621	SCREW			260
*	6726655	KIT			281
*	6726679	BRACKET	6564658	A	62
*	6726680	PEDAL	6564656	A	62
*	6726715	BRACKET			262
*	6726716	BRACKET			262
*	6726717	KIT			262
*	6726907	PIN			262
*	6726908	LIFT EYE			262
*	6726932	DOOR			206, 210
*	6726945	MOUNT			230
*	6727065	BOLT			138, 244
*	6727131	HARNESS			140
*	6727140	FILTER			252
*	6727155	DECAL			140, 246
*	6727176	KIT			289
*	6727177	HARNESS			230
*	6727178	HARNESS			126
*	6727190	HARNESS			224
*	6727298	KIT			244
*	6727299	INSULATION			224
*	6727311	DECAL			222
*	6727326	MOUNT			260
*	6727328	HARNESS			246
*	6727468	HARNESS			224
*	6727525	BUSHING			26
*	6727739	KIT			230
*	6727742	FRAME LINK			24
*	6727746	BUSHING			26
*	6727747	LIFT ARM			24
*	6727832	BUSHING			26
*	6727884	PLATE			263
*	6727885	PLATE			263
*	6727912	DECAL			222
*	6728023	CLAMP			44
*	6728039	KIT			263
*	6800124	RESTRICTOR			70
	6800124	RESTRICTOR			72
	6800262	CLAMP			52, 268
	6800684	PISTON			56, 58
*	6801059	WASHER			281
	6801059	WASHER			204
	6801167	PLUG			70

Code for disposition of old part number

A — Use up

B — Use on other application (See PNI)

C — File PDR Report with Melroe Parts Sales

D — Part Number Error

NUMERICAL INDEX (Cont'd)

	Part No.	Description	Was	Code	Page
	6802752	BUSHING			56, 58
	6803092	BONNET			70
	6803473	SEAL KIT			269
	6803605	SEAL KIT			72
*	6803932	DECAL			92
	6804360	TEE			90
	6804391	ROD			56, 58
	6804592	NUT			56, 58, 59
	6804609	SEAL KIT			59
	6804616	SEAL KIT			56, 58
	6805102	BUSHING			64
	6805158	CYLINDER			268, 269
	6805160	CASE			269
*	6805243	TEE			66
	6805243	TEE			72
	6805511	CYLINDER			58
	6805512	CYLINDER			56
	6805514	CASE			58
	6805515	CASE			56
	6805651	BLOCK			64, 66, 72
	6805657	BLOCK			66
	6805696	TEE			66, 72
	6805931	VALVE			70
	6806150	VALVE			64
	6806496	TUBELINE			66, 72
	6806561	PLUG			72
	6806680	ELBOW			52
	6806941	SEAL KIT			66
	6807092	SPACER			269
	6807508	SHAFT			269
*	6807730	PLUG			126
*	6809085	TUBELINE	6806918	A	56, 58
	6900366	INSTRUCTIONS			217
	6900505	KIT			222
	6900531	INSTRUCTIONS			242
	6900573	INSTRUCTIONS			198
*	6900791	MANUAL			220
	6900848	INSTRUCTIONS			240
	6900850	INSTRUCTIONS			252
	6900851	INSTRUCTIONS			224
	6900853	INSTRUCTIONS			216
	6900855	INSTRUCTIONS			226
	6900857	INSTRUCTIONS			192
	6900861	INSTRUCTIONS			285
	6900913	INSTRUCTIONS			261
	6900921	INSTRUCTIONS			228
*	6900952	INSTRUCTIONS			268
*	6900980	INSTRUCTIONS			278
	6900991	INSTRUCTIONS			193
	6900992	INSTRUCTIONS			293
*	6901010	INSTRUCTIONS			286

Code for disposition of old part number

A — Use up

B — Use on other application (See PNI)

C — File PDR Report with Melroe Parts Sales

D — Part Number Error

NUMERICAL INDEX (Cont'd)

	Part No.	Description	Was	Code	Page
*	6901011	INSTRUCTIONS			287
*	6901013	INSTRUCTIONS			206
*	6901013	INSTRUCTIONS	6900852	A	216
*	6901013	INSTRUCTIONS	6900854	A	212
	6901013	INSTRUCTIONS	6900854	A	204
*	6901025	INSTRUCTIONS			238
*	6901029	INSTRUCTIONS			214
*	6901036	INSTRUCTIONS			207
*	6901039	INSTRUCTIONS			260
*	6901061	INSTRUCTIONS			281
*	6901076	INSTRUCTIONS			289
*	6901100	INSTRUCTIONS			246
*	6901116	INSTRUCTIONS			230
*	6901202	INSTRUCTIONS			263
	7000010	SPACER			20

Code for disposition of old part number

A — Use up

B — Use on other application (See PNI)

C — File PDR Report with Melroe Parts Sales

D — Part Number Error

NUMERICAL INDEX (Cont'd)

Part No.	Description	Was	Code	Page
1CM-620	BOLT			204, 206, 212
1CM-635	BOLT			204, 206, 210, 258, 260
1CM-640	BOLT			204, 206, 210
1CM-816	BOLT			32
1CM-820	BOLT			94, 106, 114
1CM-830	BOLT			295
1CM-1020	BOLT			158
1CM-1030	BOLT			158
1CM-8100	BOLT			158
1DM-6	NUT			174, 185
1DM-8	NUT			182
1KM-10	PLUG			172
2C-1626	BOLT			39
2F-4051	PIN			162
2FM-12155	SEAL RING			176
2J-4200	ROD END			162
3GM-1025	BOLT			260
4D-28	NUT			262
4DM-5	NUT			130
4DM-6	NUT			204, 206, 212
4F-6106	PIN			18
4JM-1216	ROLL PIN			156
5CM-1025	SCREW			260
5CM-1080	SCREW			260
5HM-13	CLAMP	6515575	B	32
5HM-14	CLAMP			34
5HM-15	CLAMP			34
5HM-29	CLAMP			76
5HM-35	CLAMP			86, 88
5HM-42	CLAMP			84, 90
6E-4	WASHER			192
6E-5	WASHER			124, 126
6E-6	WASHER			90
6EM-60	WASHER			204, 206, 210
6J-807	KEY			102, 110
6J-1664	WOODRUFF KEY			39
7C-620	BOLT	6704349	B	62
7D-4	NUT			50
7D-8	NUT			272, 274
7J-2010	KEY			164
7J-2204	KEY			148
7J-2208	KEY			148
8C-616	BOLT			94
8D-4	NUT			162
8D-6	NUT			94, 234
9G-512	SCREW			164
9G-620	BOLT			28
10C-410	BOLT			216
10C-416	BOLT			216
10C-512	BOLT			30
10C-516	BOLT			160

Code for disposition of old part number

A — Use up

B — Use on other application (See PNI)

C — File PDR Report with Melroe Parts Sales

D — Part Number Error

NUMERICAL INDEX (Cont'd)

Part No.	Description	Was	Code	Page
10C-616	BOLT			18
10H-25	GREASE ZERK			24, 30, 42, 46
10KN-8	TEE			76
11F-12	PLUG			12
11H-15	GREASE ZERK			268
11H-25	GREASE ZERK			26
11K-8	ELBOW			88
12D-8	NUT			38
12D-10	NUT			134, 138, 238, 244
12H-15	GREASE ZERK			26, 28
12H-25	GREASE ZERK			42, 46
12KN-6	ELBOW			248
14J-5032	PIN			28
14KN-5	TEE			268, 278
15K-8	ADAPTER			278
15KN-3	ADAPTER			92
15KN-7	ADAPTER			76
15KN-8	ADAPTER			52, 78, 90, 232
15KV-5	ADAPTER			50, 76, 84, 92, 278
15KV-7	ADAPTER			42, 46, 198
15KV-8	ADAPTER			268, 292
16F-2	PLUG			26
16F-8	PLUG			164
16KN-5	ADAPTER			92
17C-410	BOLT			192, 261
17C-412	BOLT			38, 134, 140, 192
17C-420	BOLT			204, 206, 212
17C-512	BOLT			128, 204, 206, 210
17C-516	BOLT			12, 158
17C-532	BOLT			44, 234
17C-540	BOLT			130
17C-552	BOLT			52
17C-560	BOLT			52
17C-610	BOLT			38
17C-612	BOLT			16, 52, 62, 94, 154, 206, 234
17C-612	BOLT	17C-812	B	204, 210
17C-616	BOLT			50, 76, 148, 152, 241
17C-620	BOLT			38, 62, 90, 94, 106, 114, 164, 234
17C-624	BOLT			62, 206
17C-626	BOLT			94
17C-628	BOLT			206, 212
17C-632	BOLT			48, 198
17C-636	BOLT			24, 92
17C-640	BOLT			18, 24, 217
17C-642	BOLT			212
17C-648	BOLT			158
17C-652	BOLT			262
17C-656	BOLT			24
17C-660	BOLT			28
17C-664	BOLT			24, 30
17C-672	BOLT			26, 278

Code for disposition of old part number

A — Use up

B — Use on other application (See PNI)

C — File PDR Report with Melroe Parts Sales

D — Part Number Error

NUMERICAL INDEX (Cont'd)

Part No.	Description	Was	Code	Page
17C-680	BOLT			24, 94
17C-716	BOLT			16
17C-728	BOLT			84
17C-812	BOLT			24
17C-816	BOLT			154
17C-820	BOLT			22, 158
17C-824	BOLT			158
17C-828	BOLT			158
17C-832	BOLT			154
17C-864	BOLT			158
17C-872	BOLT			154
17C-1024	BOLT			39
17C-1056	BOLT			14
17C-1228	BOLT			12
17C-6116	BOLT			148
17KV-3	ELBOW			92, 268, 278
17KV-5	ELBOW			92, 268, 278
17KV-7	ELBOW			48, 78, 82, 88, 198
17KV-8	ELBOW			90, 150, 278
18KV-5	ELBOW			84
19J-12	CLAMP			90
19KN-5	TEE			50
19KV-5	TEE			92
20J-16	CLAMP			84
21KN-7	TEE			42, 48
21KV-5	TEE			50, 84
23G-812	SCREW			38
24K-7	PLUG			104, 108, 112, 116
24KN-5	PLUG			88
25E-8	WASHER			38
25E-10	WASHER			148
25E-13	WASHER			38, 192, 261
25E-14	WASHER			12, 216
25E-15	WASHER			12, 295
25E-16	WASHER			204, 206, 210
25E-17	WASHER			52, 94, 158, 234
25E-18	WASHER			162
25E-21	WASHER			62, 154
25E-22	WASHER			140
25E-24	WASHER			94, 134
25E-25	WASHER			234
25F-1	ELBOW			152
25G-410	BOLT			130
25G-510	BOLT			14
25G-512	BOLT			20
25G-514	BOLT			12
25G-520	BOLT			20
25G-612	BOLT			228, 230
25G-820	BOLT			22
25GT-410	BOLT			134, 138, 244
25K-20016	O-RING			64, 70

Code for disposition of old part number

A — Use up

B — Use on other application (See PNI)

C — File PDR Report with Melroe Parts Sales

D — Part Number Error

NUMERICAL INDEX (Cont'd)

Part No.	Description	Was	Code	Page
25K-30012	O-RING			176
25K-30812	O-RING			35
27E-6	WASHER			234
29G-412	SCREW			72
29G-416	SCREW			66, 72
29G-444	SCREW			66
30G-416	BOLT			64, 70
30H-19	CLIP			192
30H-21	CLAMP			240
30H-23	CLAMP			38, 261
30H-30	CLAMP			32, 42, 46
30H-31	CLAMP			52
30H-42	CLAMP			265
30H-44	CLAMP	30H-42	B	150
30H-62	CLIP			78
30H-64	CLAMP			90
31C-410	BOLT			238
31C-420	BOLT			22
31C-1228	BOLT			12, 92
31C-1236	BOLT			12
31H-26	CLIP			42, 48
31H-42	CLAMP			260, 268
35C-410	BOLT			250
35C-412	BOLT			18, 240
35C-416	BOLT			50
35C-428	BOLT	17C-428	B	50
35C-512	BOLT			86, 158, 178, 261
35C-516	BOLT			158, 210
35C-528	BOLT			44
35C-536	BOLT			44, 48
35C-540	BOLT			48, 52, 198
35C-610	BOLT			88
35C-612	BOLT			148, 150, 156, 158, 286
35C-614	BOLT			78
35C-616	BOLT			128, 232, 268, 292
35C-620	BOLT			128, 158, 210
35C-624	BOLT			94
35C-632	BOLT			268
35C-820	BOLT			199
35C-824	BOLT			12, 262
35C-832	BOLT			12, 262
36K-5	CAP			50, 78, 84, 90
36K-7	CAP			42
36K-8	CAP			44, 52
37C-412	BOLT			240
37C-424	BOLT			250
37C-512	BOLT			22, 38, 192, 250, 265
37C-612	BOLT			22
37C-616	BOLT			94
37C-624	BOLT			232, 292
37C-644	BOLT			22

Code for disposition of old part number

A — Use up

B — Use on other application (See PNI)

C — File PDR Report with Melroe Parts Sales

D — Part Number Error

NUMERICAL INDEX (Cont'd)

Part No.	Description	Was	Code	Page
37C-820	BOLT			22
38C-610	BOLT			162
38C-820	BOLT			154
38C-836	BOLT			30
38C-838	BOLT			154
38C-856	BOLT			22
38C-1036	BOLT			28
40DM-8	NUT			295
42H-24	CLAMP			32
42H-52	CLAMP			152
42HC-300	CLAMP			152
42HC-350	CLAMP			152
43C-512	BOLT			32
43C-524	BOLT			68
43C-532	BOLT			68
43C-616	BOLT			128
43C-852	BOLT			158
45C-616	BOLT			152
45C-620	BOLT			94, 152, 154
45G-1006	BOLT			238
46D-5	NUT			204, 206, 210
46KN-8	ELBOW			88
47C-820	BOLT			38
47K-8	PLUG			102, 106, 110, 114
47K-10	PLUG			84
53CM-616	BOLT			162
53CM-820	BOLT			162
53CM-830	BOLT			32
53CM-1230	BOLT			154
53CM-1440	BOLT	1CM-1440	B	158
53D-6	NUT			14, 18, 130
53D-10	NUT			14
54DM-8	NUT			158
54K-20002	O-RING			66, 70
54K-20028	O-RING			68
54K-30110	O-RING			269
54K-30210	O-RING			56, 58, 59
54K-40116	O-RING			269
54K-40224	O-RING			56, 58, 59
54K-60212	O-RING			56, 58, 59
55C-825	BOLT			152
55CM-816	BOLT			158
55CM-825	BOLT			158
55CM-825	BOLT	53CM-825	B	152
55D-6	NUT			22, 206, 212
55K-21	O-RING			84
55K-204	O-RING			66, 68, 72
55K-212	O-RING			66, 68, 70
55K-219	O-RING			84
57D-5	NUT			158
57D-6	NUT			62

Code for disposition of old part number

A — Use up

B — Use on other application (See PNI)

C — File PDR Report with Melroe Parts Sales

D — Part Number Error

NUMERICAL INDEX (Cont'd)

Part No.	Description	Was	Code	Page
57D-8	NUT			199
57G-608	SCREW			250
58K-12	O-RING			66, 72
58K-14	O-RING			64, 70
58K-17	O-RING			64, 70
58K-114	O-RING			158, 178
58K-120	O-RING			134, 140
58K-124	O-RING			64, 70
58K-127	O-RING			66, 72
58K-132	O-RING			269
58K-214	O-RING			90
59D-4	NUT			130, 216, 240
59D-5	NUT			14, 30, 38, 204, 206, 212, 250
59D-6	NUT			22, 130
59D-8	NUT			14, 44, 48, 52, 76
59G-616	BOLT			192
61D-4	NUT			192, 204, 206, 212
61D-5	NUT			12, 22, 84, 148, 192, 204, 206, 210
61D-6	NUT			22, 148, 154, 217
61D-6	NUT	61D-8	B	204
61D-8	NUT			210
62D-6	NUT			234
69G-436	BOLT			136, 140
72F-1	DRAIN COCK			32
73G-656	BOLT			154, 268
73K-222	WASHER			269
75K-4	O-RING			120
75K-6	O-RING			90
77FN-8	ELBOW			150
79K-2	O-RING			279
79K-3	O-RING			269
79K-4	O-RING			278
79K-5	O-RING			32, 81
79K-6	O-RING			56, 58
79K-7	O-RING			66, 72
79K-8	O-RING			64, 70, 74, 102, 106, 110, 114, 272, 274
79K-10	O-RING			64, 70, 76, 104, 112
79K-12	O-RING			52, 84, 102, 106, 110, 116
79K-14	O-RING			32, 104, 106, 112, 114
79K-16	O-RING			84
79K-20	O-RING			88, 92
80K-14	RING			64, 70
80K-332	WASHER			56, 58, 59
81D-6	NUT			158
83D-4	NUT			18, 50, 192, 250, 261
83D-5	NUT			12, 44, 46, 160, 198, 212, 261
83D-6	NUT			94, 152, 158, 228, 230, 232, 241, 292
83D-8	NUT			12, 14, 22, 154, 158, 262
83D-12	NUT			12, 92
83F-3	ELBOW			88, 234
83FN-3	ELBOW			234

Code for disposition of old part number

A — Use up

B — Use on other application (See PNI)

C — File PDR Report with Melroe Parts Sales

D — Part Number Error

NUMERICAL INDEX (Cont'd)

Part No.	Description	Was	Code	Page
84G-3110	BOLT			248, 250
84G-3112	BOLT			12, 42, 46, 148, 192, 226, 228, 230
84G-3124	BOLT			148
84G-3710	SCREW			260
84G-3712	BOLT			12, 26, 30, 38, 42, 46, 52, 76, 88, 124, 126,128, 150, 152
84G-3716	BOLT			30, 38, 84, 199, 218
84G-3720	BOLT			38, 189
84G-3724	BOLT			42, 46, 162
84G-3728	BOLT			44, 48, 162
85D-4	NUT			162
85D-5	NUT			52, 128, 162, 265
85D-6	NUT			16, 24, 28, 46, 50, 128, 152, 158, 162, 198, 232, 292
85D-7	NUT			16
85D-8	NUT			14, 154
85F-3	ELBOW			88
86D-4	NUT			162
86F-3	ELBOW			234
86F-5	NUT			76, 278
86F-6	NUT			42, 46
86F-8	NUT			52, 88, 150
87D-5	NUT			262
87G-1008	SCREW			250
88F-3	ELBOW			234
88FN-3	ELBOW			234
88FN-5	ELBOW			278
88FN-6	ELBOW			42, 46
88FN-8	ELBOW			88, 150
90KV-2	PLUG			269
90KV-3	PLUG	6671783	B	98
90KV-5	PLUG			56, 58, 59, 66, 72, 272, 274
90KV-5	PLUG	6630168	B	88
90KV-5	PLUG	6671759	B	98
90KV-8	PLUG			50, 66, 70
91D-5	NUT			234
91D-6	NUT			30, 38, 62
91D-7	NUT			202, 206, 212
91G-416	BOLT			216, 224
92D-10	NUT			269
92D-12	NUT			156
95D-5	NUT			14, 52, 128
95D-6	NUT			42, 46, 52, 94, 164, 206, 212, 234
95K-4	O-RING	6671784	B	98
95K-6	O-RING			56, 58, 59, 66, 72, 88, 272, 274
95K-6	O-RING	6671749	B	98
95K-12	O-RING			66, 70
95K-12	O-RING	99K-12	B	50
96D-6	NUT			94
96D-8	NUT			148
96K-4	O-RING			278

Code for disposition of old part number

A — Use up

B — Use on other application (See PNI)

C — File PDR Report with Melroe Parts Sales

D — Part Number Error

	Part No.	Description	Was	Code	Page
	96K-6	O-RING			278
	96K-12	O-RING			232
	97D-5	NUT			12, 158, 178
	97K-4	O-RING			92, 234, 268
	97K-6	O-RING			50, 66, 72, 76, 84, 86, 88, 90, 92, 268, 278
	97K-8	O-RING			42, 46
	97K-10	O-RING			42, 46, 48, 76, 78, 82, 88, 198
	97K-12	O-RING			50, 52, 76, 88, 90, 150, 268, 278, 292
	97K-16	O-RING			76, 84
	98D-6	NUT			94
	98F-3	TEE			234
	98K-12	O-RING			232
	99K-4	O-RING			92, 268
	99K-5	O-RING			32, 82, 272, 274
	99K-6	O-RING			50, 64, 70, 76, 84, 88, 92, 268, 278
	99K-8	O-RING			76
	99K-10	O-RING			44, 48, 76, 82, 88, 92, 198
	99K-12	O-RING			52, 76, 88, 150, 268, 278
	99K-16	O-RING			84, 90
*	NAP	ADAPTER	6666418	A	182
*	NAP	BLOCK	6672800	A	176
*	NAP	CONNECTOR	6670681	A	182
*	NAP	CONTROL	6725269	A	228
*	NAP	COUPLER	6667808	B	52
*	NAP	COUPLER	6672960	B	52
*	NAP	COVER	6674236	A	250
*	NAP	DOOR	6717590	A	202
*	NAP	FILTER	6674230	A	250
*	NAP	FRAME LINK	6718378	A	24
*	NAP	GUIDE	6709950	A	12
*	NAP	GUIDE	6711907	A	16
*	NAP	HARNESS	6715366	A	224
*	NAP	HARNESS	6725275	A	250
*	NAP	HEATER	6674226	A	256
*	NAP	LEVER ASSY	6718194	A	136
*	NAP	LEVER ASSY	6718195	A	136
*	NAP	LIFT ARM	6717765	A	24
*	NAP	RELIEF VALVE	6672451	A	82
*	NAP	SEAT	6674404	A	283
*	NAP	SEAT	6674896	A	283
*	NAP	SEAT BELT	6667875	A	16
*	NAP	SENDER	6669642	A	32
*	NAP	SHIELD	6718179	A	202, 210
*	NAP	TANK	6715818	A	84
*	NAP	TEE	6666422	A	182
*	NAP	TUBELINE	6718480	A	78

Code for disposition of old part number

A — Use up

B — Use on other application (See PNI)

C — File PDR Report with Melroe Parts Sales

D — Part Number Error

NUMERICAL INDEX (Cont'd)

	Part No.	Description	Was	Code	Page
*	NAP	TUBELINE	6718481	A	78
*	NAP	TUBELINE	6719318	A	88
*	NAP	VALVE	6666598	A	74, 198
*	NAP	VALVE	6674227	A	250
*	NAP	VALVE	6674305	A	272
	NAP	CHAIN	6705987	A	35
	NAP	KIT	6718032	A	234
	NAP	KIT	6718868	A	283
	NAP	KIT	6718869	A	283
	NAP	KIT	6719431	A	228
*	NSS	BLOCK	6675871	A	98
*	NSS	PISTON	6675873	A	98
*	NSS	ROLLER	6675872	A	98

Code for disposition of old part number

A — Use up

B — Use on other application (See PNI)

C — File PDR Report with Melroe Parts Sales

D — Part Number Error