# TOYOTA 2009

# INDUSTRIAL EQUIPMENT

## PARTS CATALOG

| | | |
|---|---|---|
| MODEL | 32-8FG | |
| FRAME NO. | 8FG | |
| ENGINE NO. | 4Y | |
| LIFTING HEIGHT | 1,500 mm | |

RUTHZIL TRATOR COMERCIAL DE PEÇAS LTDA 11 97083-6812 ROLANDO CITRANGULO

**32-8FG10.15.18.20.25**
**32-8FG30.J35**
**32-8FGK20.25.30**

**No.G125-2**

4Y-ATM 09/09

DESCRIPTION

| | |
|---|---|
| | |
| | |
| | |
| | |
| | |
| | |
| | |
| | |
| | |
| | |
| | |
| | |
| | |

**TOYOTA Material Handling Company**

A Division of TOYOTA INDUSTRIES CORPORATION

## GENERAL INFORMATION (English)

This parts catalog has been prepared for the customers of Toyota Industrial Vehicles and this shows only the part name codes instead of parts numbers.

When ordering parts from your local Toyota dealer, please specify the complete model number of the truck, the engine number or frame number. Also it is essential that you specify the part name codes described in the pages of illustrations and text.

The complete model number and frame number are shown in the front page of this catalog. All the columns in this quick reference index are supposed to be filled out by both the factory and your local dealer.

For the industrial vehicle with optional eiquipment, which is described in the lower part of the DESCRIPTION, it is imperative for you to specify optional equipment when ordering parts.

Your Toyota dealer has always been furnished with enough information to decode the correct part numbers based on your information of model number, engine number or frame number as well as part name code.

## INFORMATIONS D'ORDRE GENERAL (French)

Ce catalogue de pièces a été préparé pour les propriétaires de Véhicules Industriels Toyota. On n'y trouvera que les codes de désignation de pièces au lieu des numéros de pièces.

Pour la commande de pièces auprès de votre concessionnaire Toyota, prière de spécifier le numéro de modèle complet de l'engin, le numéro du moteur ou le numéro du châssis. Il est aussi nécessaire de spécifier les codes de désignation de pièces comme ils sont décrits dans les pages d'illustrations et dans le texte.

Le numéro de modèle complet et le numéro de châssis sont indiqués en première page de ce catalogue. Toutes les colonnes de l'index de référence rapide devraient être remplies par l'usine et par votre concessionnaire.

Pour le véhicule industriel avec équipment optionnel, décrit en bas de page sous la rubrique "DESCRIPTION", il convient de bien spécifier qu'il s'agit de cet équipment lors de commande de pièces.

Votre concessionnaire Toyota est toujours suffisamment informé pour décoder les numéros de pièces sur la base de votre information du numéro de modèle, du numéro de moteur ou de châssis, et des codes de désignation de pièces.

## ALLGEMEINE INFORMATION (German)

Dieser Teilekatalog wurde für die Benutzer von Toyota Industriefahrzeugen zusammengestellt und zeigt anstelle von Teilenummern nur die Teilenamen-Kodes.

Geben Sie bei Teilebestellungen von Ihrem Toyota-Händler am Platz bitte die vollständige Modellnummer des Fahrzeugs, die Motornummer oder Fahrgestellnummer an. Es ist auch erforderlich, daβ Sie die in den Illustrationen und im Text beschriebenen Teilenamen-Kodes angeben.

Die vollständige Modellnummer und Fahrgestellnummer finden Sie auf der Vorderseite dieses Katalogs. Alle Spalten in dieser Bezugstabelle sollen sowohl vom Werk als von Ihrem Händler am Platz ausgefüllt werden.

Für Industriefahrzeuge mit Sonderausrüstung, welche im unteren Teil der BESCHREIBUNG erläutert ist, müssen Sie bei der Bestellung von Teilen unbedingt diesbezügliche Angaben machen.

Ihr Toyota-Händler verfügt stets über genügend Information, um die richtigen Teilenummern zu entschlüsseln, basiert auf Ihren Angaben zu Modellnummer, Motornummer oder Fahrgestellnummer und den Teilenamen-Kodes.

## INFORMACION GENERAL (Spanish)

Este catálogo de piezas ha sido preparado para los clientes de vehículos industriales de TOYOTA, e incluye tan sólo los códigos de nombre de pleza en lugar de los números de pieza.

Cuando solicite piezas a su distribuidor local de TOYOTA especifique por favor el número de modelo completo del vehículo, el número de motor o el número de bastidor. Asimismo, es esencial que Vd. especifique los códogos de nombre de pieza descritos en las páginas de ilustraciones y de texto.

El número completo de modelo y el número de bastidor se indican en la portada de este catálogo. Se supone que todas las columnas de este índice de referencia se han rellenado, tanto por parte de la fábrica como por parte de su distribuidor local.

En lo que concierne a los vehículos industriales con equipos opcionales, que se describen en la parte baja de la DESCRIPCION, es absolutamente necesario que especifique equipos opcionales cuando solicite piezas de repuesto.

Su distribuidor local de TOYOTA posee la información necesaria para descifrar los números correctos de cada pieza a base de su información de número de modelo, número de motor o número de bastidor, así como el código de nombre de la pieza.

## ILLUSTRATION AND PART NAME CODE TEXT PAGE COMPOSITION (English)

Essentially, one (1) page will present both the illustration and part name code. However, when the space for text page is not enough the next page will be used in succession.

❶ Figure number
This parts catalog has been prepared according to the figure numbers.

❷ Figure title
A representative part name which is the major assembly part name is shown as the figure title of the illustration.

❸ Sub title
The optional name or special specification of each illustration are indicated.

❹ Part name code
This is a combination of figure number and codes of illustrations pertaining to each part. This is a key for your Toyota dealer to find the correct part numbers.

❺ Part name
As a rule, the part name is indicated for each of the part name codes.

❻ QTY (Quantity)
The quantity column indicates the utilized pieces of part name code unit.
When the utilized quantity changes according to each of the vehicles, maximum is indicated.
When the utilized quantity of the parts differs or is more than 100 pieces, quantity 99 is indicated.

❼ Standard parts numbers
The standard parts such as the bolts, nuts, washer, etc. are described with parts numbers. When ordering these parts, specify parts numbers.

## ILLUSTRATION ET COMPOSITION DU DE TEXTE DE CODE DE DESIGNATION DE PIECE (French)

Une (1) page contiendra essentiellement une illustration et ses codes de désignation de pièce. Toutefois, lorsque l'espace réservé au texte est insuffisant, la continuation se trouvera sur la page suivante.

❶ Numéro de figure
Ce cataloque de pièces a été préparé en fonction des numéros de figures.

❷ Titre de figure
Une désignation de pièce représentative, celle d'une pièce d'un ensemble important, est indiquée comme titre de figure de l'illustraction.

❸ Sous-titre
La désignation optionnelle ou les spécifications spéciales de chaque illustration sont indiquées.

❹ Code de désignation de pièce
Obtenu en combinant le numéro de figure et les codes des illustrations inhérents à chaque pièce. Ce code permettra à votre concessionnaire Toyota de trouver les numéros de pièces corrects.

❺ Désignation de pièce
La désignation de la pièce est indiqueé pour chacun des codes de désignation de pièce.

❻ Q'ty (quantité)
La colonne quantité indique les pièces utilisées de l'unité de code de désignation de pièce. La quantité maximum est indiquée quand la quantité utilisée diffère pour chacun des véhicules. Quand la quantité de pièces utilisées différe ou lorsqu'elle dépasse 100 pièces, la quantité 99 est indiquée.

❼ Numéros de pièces standard
Les pièces standard comme les boulons, les écrous, les rondelles, etc. sont décrits dans les numéros de pièces. Pour commander ces pièces, prière de spécifier les numéros de pièces.

## ❶—4501 STEERING WHEEL ——— ❷ LENKRAD
## VOLANT DE DIRECTION VOLANTE DE DIRECCION

( )

❸

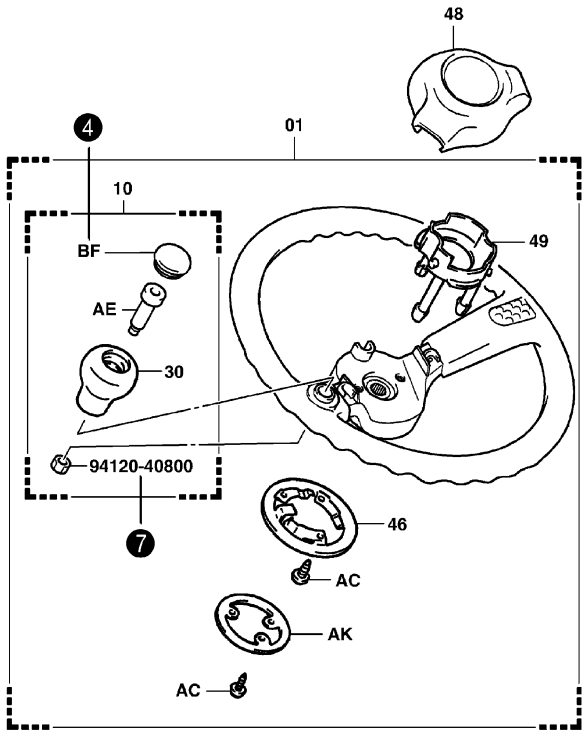


4501-050A

4501-050A

## ❹ 4501 STEERING WHEEL LENKRAD
## VOLANT DE DIRECTION ❻ VOLANTE DE DIRECCION

| PART NAME CODE | ❺ PART NAME | QTY |
|---|---|---|
| 4501-01 | **WHEEL ASSY, STEERING**<br>ENS. DE ROUE<br>RAD, VOLLST.<br>CONJUNTO DE LA RUEDA | 1 |
| 4501-10 | **KNOB ASSY, STEERING WHEEL**<br>ENS. DE BOULE<br>KNOPF, VOLLST.<br>CONJUNTO DEL MANDO | 1 |
| 4501-30 | **KNOB SUB-ASSY, STEERING WHEEL**<br>SOUS-ENS. DE BOULE<br>KNOPF-TEILGRUPPE<br>SUBCONJUNTO DEL MANDO | 1 |
| 4501-46 | **SPRING, HORN CONTACT**<br>RESSORT<br>FEDER<br>RESORTE | 1 |
| 4501-48 | **PAD, STEERING WHEEL**<br>TAMPON<br>KLOTZ<br>ALMOHADILLA | 1 |
| 4501-49 | **CUP, HORN CONTACT**<br>COUPELLE<br>DICHTMANSCHETTE<br>TAZA | 1 |
| 4501-AC | **SCREW**<br>VIS<br>SCHRAUBE<br>TORNILLO | 6 |
| 4501-AE | **BOLT, STEERING WHEEL KNOB SET**<br>BOULON<br>SCHRAUBE<br>PERNO | 1 |
| 4501-AK | **RING, HORN CONTACT NO.1**<br>ANNEAU<br>RING<br>ANILLO | 1 |
| 4501-BF | **CAP**<br>CAPUCHON<br>KAPPE<br>TAPA | 1 |

| PART NAME CODE | PART NAME | QTY |
|---|---|---|
| 4501-BK | **COLLAR, STEERING KNOB**<br>COLLIER<br>BUCHSE<br>COLLAR | 1 |

## ABBILDUNG UND TEXTSEITENAUFBAU FÜR TEILENAMEN-KODE (German)

Grundsätzlich finden Sie auf einer (1) Seite sowohl die Abbildung als auch den Teilenamen-Kode.
Wenn für den Text jedoch nicht genügend Platz vorhanden ist, wird er auf der nächsten Seite Fortgesetzt.

❶ Abbildungsnummer
Dieser Teilekatalog wurde nach Abbildungsnummern zusammengestellt.

❷ Abbildungstitel
Ein stellvertretender Teilename, welcher zugleich die Bezeichnung für die Hauptbaugruppe ist, wird als Abbildungstitel der Illustration angegeben.

❸ Untertitel
Ein zusätzlicher Name oder eine besondere Kennzeichnung werden für jede Illustration angegeben.

❹ Teilenamen-Kode
Dies ist eine Kombination von ziffern und Abbildungskodes, die jedes Teil betreffen. Es ist ein Schlüssel für Ihren Toyota-Händler, um die richtigen Teilenummern zu finden.

❺ Teilename
Grundsätzlich wird der Teilename für alle Teilenamen-Kodes angegeben.

❻ QTY (Menge)
Die Mengenspalte gibt die benutzte Stückzahl von Teilenamen-Kode-Einheiten an.
Wenn die benutzte Stückzahl je nach Fahrzeug Verschieden ist, wird die Höchstmenge angegeben.
Wenn die benutzte Menge 100 Stück überschreiten kann, wird als Menge 99 angegeben.

❼ Standardteile-Nummern
Die Standardteile, wie Schrauben, Muttern, Unterlegscheiben usw., sind in den Teilenummern beschrieben. Geben Sie bei Bestellung dieser Teile die Teilenummern an.

## COMPOSICION DE LAS PAGINAS DE ILUSTRACIONES Y DE TEXTO DE CODIGOS DE NOMBRE DE PIEZAS (Spanish)

Básicamente, una (1) página incluirá tanto la ilustración como el código de nombre de la pieza.
No obstante, si el espacio no fuese suficiente, se utilizará la página siguiente.

❶ Número de figura
Este catálogo de piezas se ha preparado de acuerdo con los números de las figuras.

❷ Título de las figuras
Como título de las figuras de la página de ilustraciones, se incluye un nombre que sea representativo del nombre del mayor conjunto.

❸ Subtítulo
Se indican el nombre opcional o las especificaciones especiales de cada ilustración.

❹ Código de nombre de pieza
Se trata de una combinación de número de figura y de código de las ilustraciones correspondientes a cada pieza. Esta es la clave para que su distribuidor local de TOYOTA pueda encontrar el número de pieza correcto.

❺ Nombre de la pieza
Como norma, se indica el nombre de cada uno de los códigos de nombre de pieza.

❻ QTY (Cantidad)
La columna de cantidad indica el número de piezas utilizadas de cada unidad de código de nombre de pieza.
Cuando la cantidad utilizada es intercambiable entre cada uno de los vehículos, se indica el máximo.
Cuando la cantidad de piezas utilizadas pueda diferir o ser superior a 100, se indica como cantidad 99.

❼ Números de piezas normalizadas
Las piezas corrientes, tales como pernos, tuercas, arandelas etc., se describen con número de pieza. Cuando solicite tales piezas, indique su número de pieza.

| ❶—4501 | STEERING WHEEL ——— ❷<br>VOLANT DE DIRECTION | LENKRAD<br>VOLANTE DE DIRECCION |
|---|---|---|

( )

❸

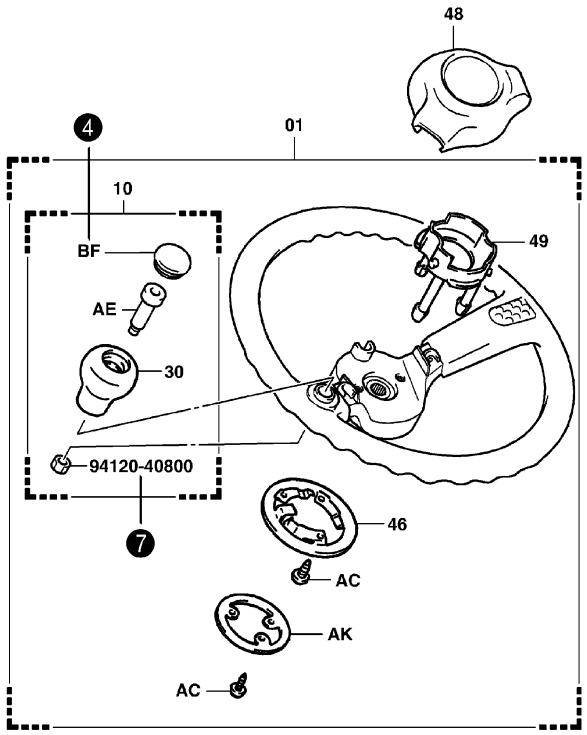


4501-050A

4501-050A

| ❹ 4501 | STEERING WHEEL<br>VOLANT DE DIRECTION | ❻ | LENKRAD<br>VOLANTE DE DIRECCION |
|---|---|---|---|

| PART NAME CODE | ❺ PART NAME | QTY | PART NAME CODE | PART NAME | QTY |
|---|---|---|---|---|---|
| 4501-01 | **WHEEL ASSY, STEERING**<br>ENS. DE ROUE<br>RAD, VOLLST.<br>CONJUNTO DE LA RUEDA | 1 | 4501-BK | **COLLAR, STEERING KNOB**<br>COLLIER<br>BUCHSE<br>COLLAR | 1 |
| 4501-10 | **KNOB ASSY, STEERING WHEEL**<br>ENS. DE BOULE<br>KNOPF, VOLLST.<br>CONJUNTO DEL MANDO | 1 | | | |
| 4501-30 | **KNOB SUB-ASSY, STEERING WHEEL**<br>SOUS-ENS. DE BOULE<br>KNOPF-TEILGRUPPE<br>SUBCONJUNTO DEL MANDO | 1 | | | |
| 4501-46 | **SPRING, HORN CONTACT**<br>RESSORT<br>FEDER<br>RESORTE | 1 | | | |
| 4501-48 | **PAD, STEERING WHEEL**<br>TAMPON<br>KLOTZ<br>ALMOHADILLA | 1 | | | |
| 4501-49 | **CUP, HORN CONTACT**<br>COUPELLE<br>DICHTMANSCHETTE<br>TAZA | 1 | | | |
| 4501-AC | **SCREW**<br>VIS<br>SCHRAUBE<br>TORNILLO | 6 | | | |
| 4501-AE | **BOLT, STEERING WHEEL KNOB SET**<br>BOULON<br>SCHRAUBE<br>PERNO | 1 | | | |
| 4501-AK | **RING, HORN CONTACT NO.1**<br>ANNEAU<br>RING<br>ANILLO | 1 | | | |
| 4501-BF | **CAP**<br>CAPUCHON<br>KAPPE<br>TAPA | 1 | | | |

## DATA PLATE & SERIAL NUMBERS (English)

For retrieving correct part numbers, it's indispensable to know the truck model, as well as frame number (or engine number).
Customers can obtain said information in the data plate on the truck or in this user parts catalog.

## PLAQUE DE DONNEES TECHNIQUES & NUMEROS DE SERIE (French)

Pour relever correctement le numéro des pièces, il est indispensable de connaître le modèle de l'engin, ainsi que le numéro de châssis (ou du moteur).
Les propriétaires peuvent trouver ladite information sur la plaque de données techniques de l'engin ou dans le présent ouvrage.

## DATENPLATTE & SERIENNUMMERN (German)

Um die richtige Teilenummer zu ermitteln, müssen unbedingt das Fahrzeugmodell sowie die Fahrgestellnummer (oder die Motornummer) bekannt sein.
Kunden Können diese Angaben von der Datenplatte am Fahrzeug oder in diesem Teilekatalog für Benutzer entnehmen.

## PLACA DE DATOS Y NUMEROS DE SERIE (Spanish)

Para obtener los números de pieza correctos, es indispensable conocer el modelo del vehículo, así como el número del bastidor (o del motor).
Los clientes pueden obtener dicha información por la placa de datos del vehículo o este catálogo de piezas para el usuario.

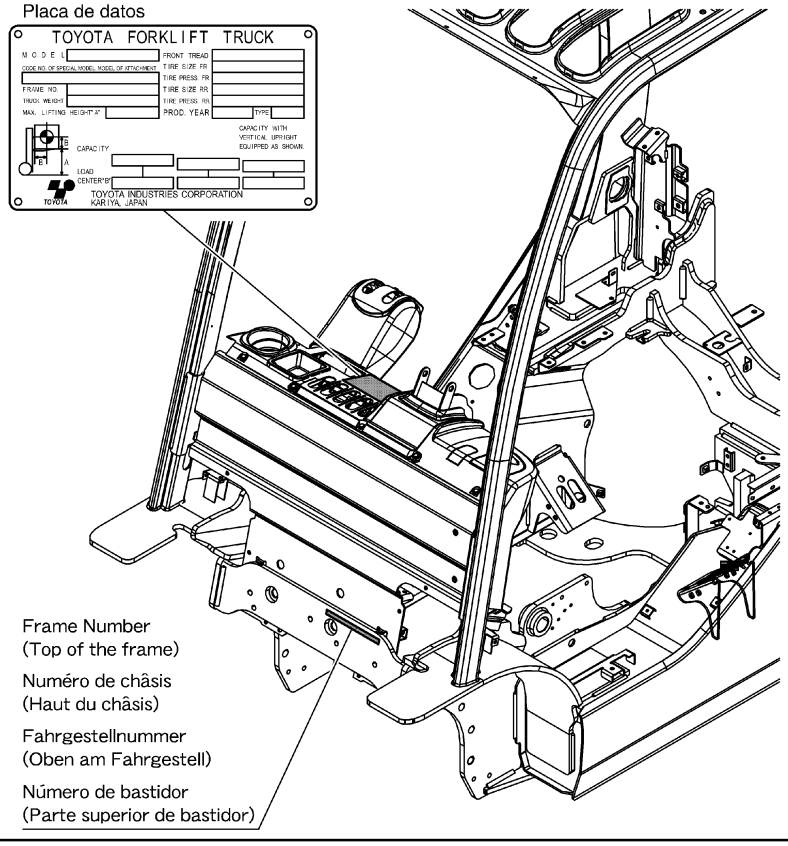

# FIG.INDEX

ILLUSTRATED INDEX
INDEX ILLUSTRE

INDIOE ILLUSTRADO
ILLUSTRIRTES INHALTSVERZEICHNIS

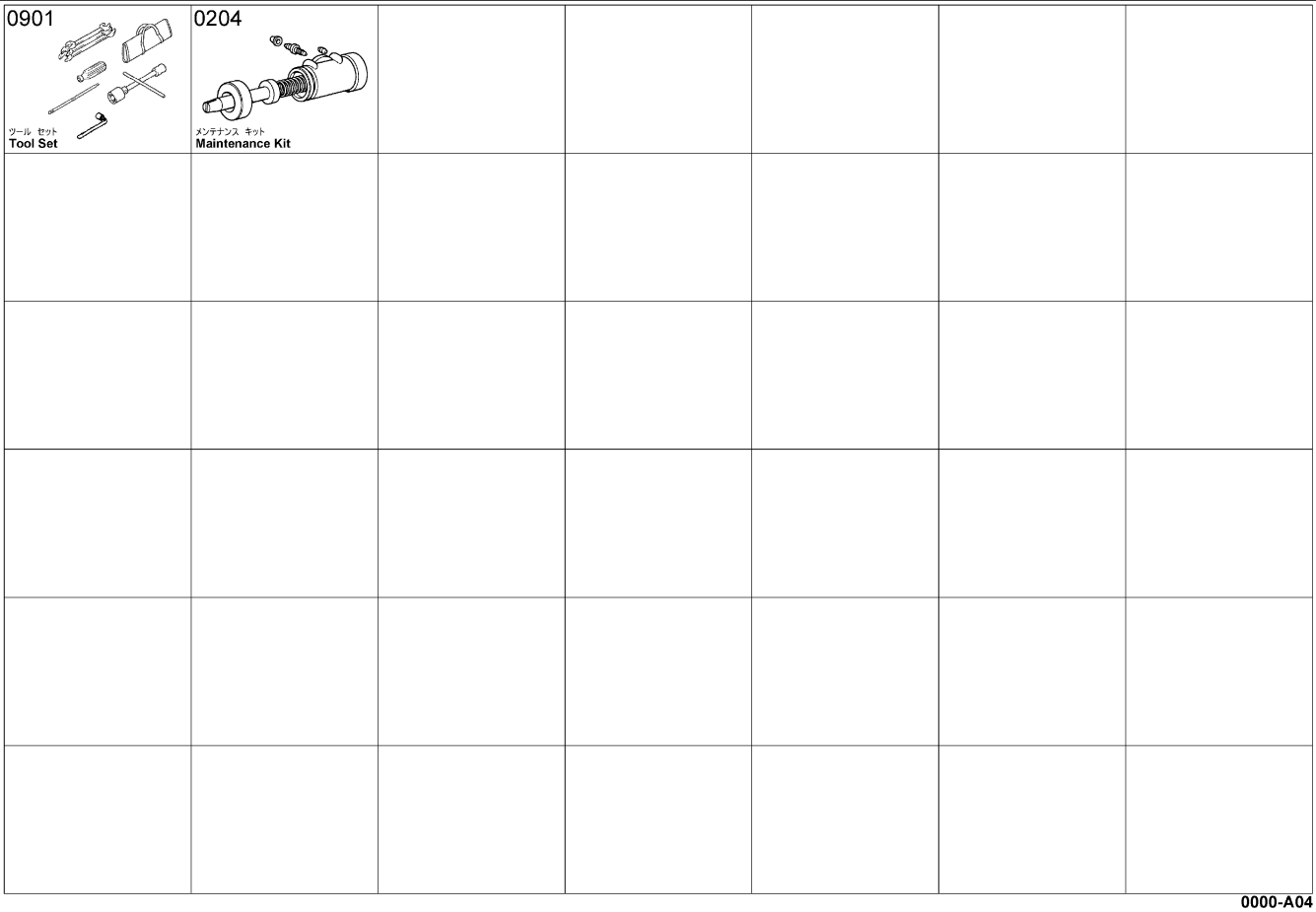


0000-A04
0000-A04_


# FIG.INDEX

ILLUSTRATED INDEX
INDEX ILLUSTRE

INDIOE ILLUSTRADO
ILLUSTRIRTES INHALTSVERZEICHNIS


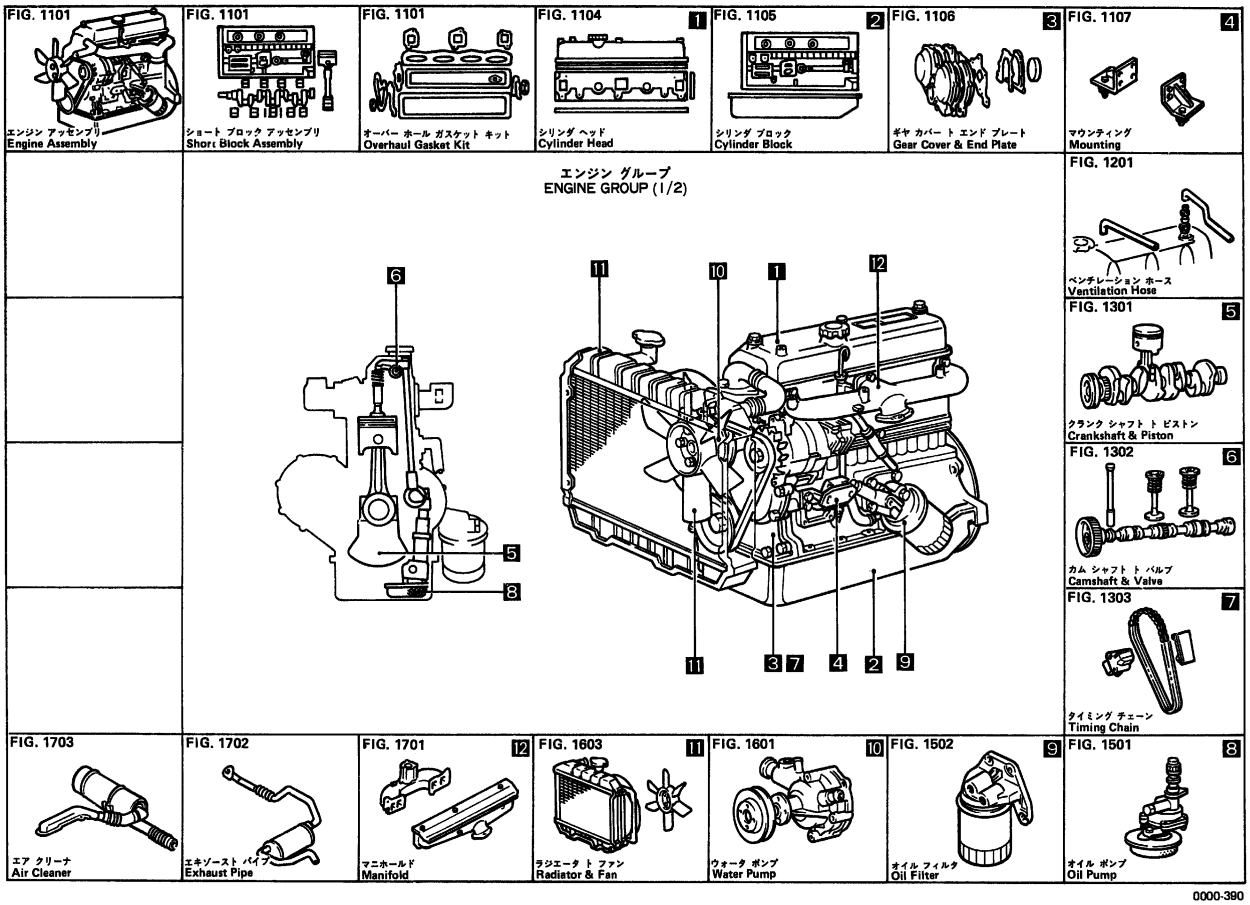


0000-390
0000-390_

# FIG.INDEX

ILLUSTRATED INDEX
INDEX ILLUSTRE
INDIOE ILLUSTRADO
ILLUSTRIRTES INHALTSVERZEICHNIS

1901 1 イグニッション コイル トコード Ignition Coil & Cord

1902 2 ディストリビュータ Distributor

1903 3 オルタネータ Alternator

1904 4 スタータ Starter

1910 コントローラ Controller

2101 5 フューエル パイプ Fuel Pipe

2103 6 キャブレタ Carburator

エンジン、フューエル グループ (2/2)
ENGINE, FUEL GROUP (2/2)

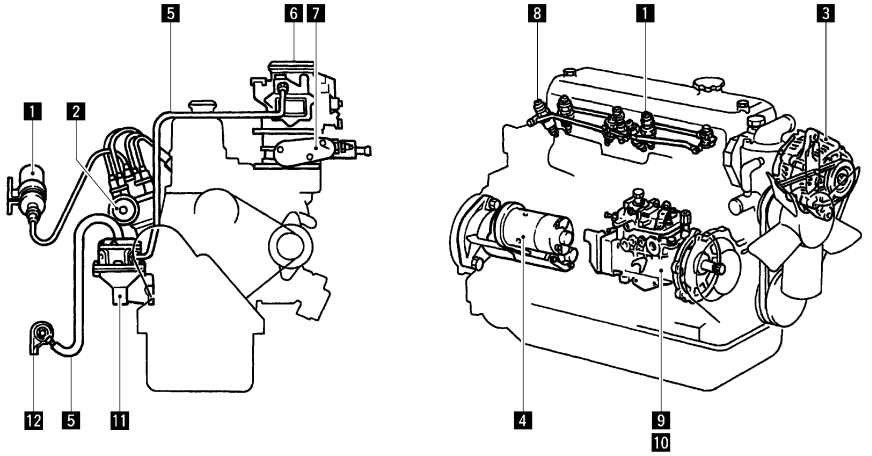


2105 7 エア ガバナ Air Governor

2201 8 インジェクション ノズル Injection Nozzle

2202 9 インジェクション ポンプ アッセンブリ Injection Pump Assembly

2203 10 インジェクション ポンプ ボデー Injection Pump Body

2607 アクセルレータ アクチュエータ Accelerator Actuator

2601 アクセルレータ リンク Accelerator Link

2303 フューエル タンク Fuel Tank

2302 12 フューエル フィルタ Fuel Filter

2301 11 フューエル ポンプ Fuel Pump

0000-989
0000-989_


# FIG.INDEX

ILLUSTRATED INDEX
INDEX ILLUSTRE
INDIOE ILLUSTRADO
ILLUSTRIRTES INHALTSVERZEICHNIS


2311 LPG フューエル パイプ LPG Fuel Pipe

2312 LPG キャブレタ LPG Carburetor

2314 LPG レギュレータ LPG Regulator

2315 LPG フィルタ LPG Filter

2316 LPG コンテナ LPG Container

LPG グループ
LPG GROUP

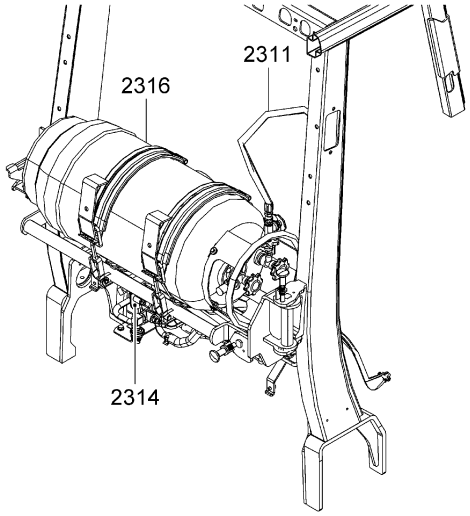


0000-990A
0000-990A

# FIG.INDEX

ILLUSTRATED INDEX
INDEX ILLUSTRE

INDIOE ILLUSTRADO
ILLUSTRIRTES INHALTSVERZEICHNIS

3101 クラッチ **Clutch**

3102 クラッチ ペダル **Clutch Pedal**

3103 クラッチ マスタ シリンダ **Clutch Master Cylinder**

3104 クラッチ レリーズ シリンダ **Clutch Release Cylinder**

3105 クラッチ ブースタ **Clutch Booster**

3201 トルクコンバータ ハウジング **Torqeconverter Housing**

3202 トルクコンバータ **Torqueconverter**

シャシ グループ (1/3)
**CHASSIS GROUP (1/3)**

[MTM]

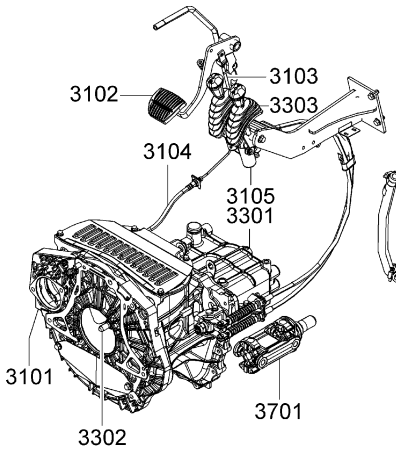


[ATM]

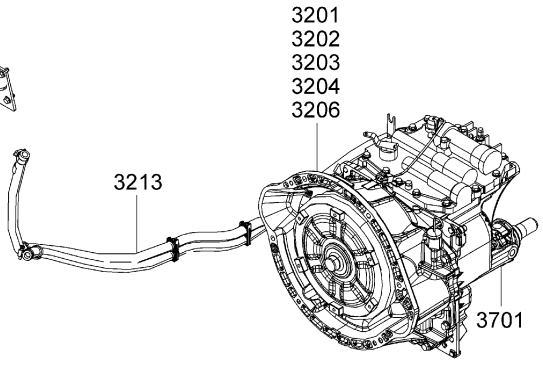


3203 トルクコンバータ クラッチ **Torqueconverter Clutch**

3204 トルクコンバータ ギア **Torqueconverter Gear**

3206 コントロール バルブ **Control Valve**

3213 トルクコンバータ パイピング **Torqueconverter Piping**

3701 プロペラ シャフト **Propeller Shaft**

3303 ギア シフト フォーク **Gear Shift Fork**

3302 トランスミッション ギア **Transmission Gear**

3301 トランスミッション ケース **Transmission Case**

**0000-991**
0000-991_

# FIG.INDEX

ILLUSTRATED INDEX
INDEX ILLUSTRE

INDIOE ILLUSTRADO
ILLUSTRIRTES INHALTSVERZEICHNIS

4101 ディファレンシャル **Differential**

4201 フロント アクスル シャフト **Front Axle Shaft**

4301 リヤ アクスル ト タイロッド **Rear Axle & Tie-Rod**

4302 リヤ アクスル シリンダ **Rear Axle Cylinder**

4401 フロント ホイール ト タイヤ(シングル) **Front Wheel & Tire (Single)**

4402 フロント ホイール ト タイヤ(ダブル) **Front Wheel & Tire (Double)**

4403 リヤ ホイール ト タイヤ **Rear Wheel & Tire**

シャシ グループ (2/3)
**CHASSIS GROUP (2/3)**

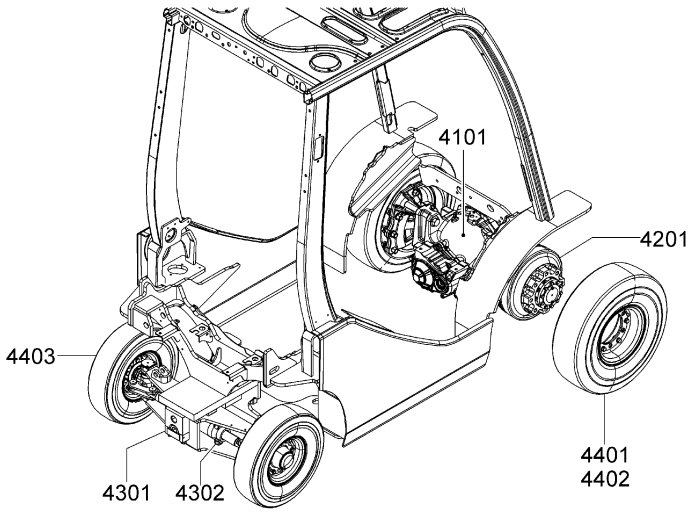


**0000-992**
0000-992_

# FIG.INDEX

ILLUSTRATED INDEX
INDEX ILLUSTRE

INDIOE ILLUSTRADO
ILLUSTRIRTES INHALTSVERZEICHNIS

4501 ステアリング ホイール **Steering Wheel**

4502 ステアリング ポスト **Steering Post**

4503 ハイドロスタティック ステアリング バルブ **Hydrostatic Steering Valve**

4507 ドラッグ リンク ト ステアリング パイピング **Drag Link & Steering Piping**

4601 パーキング ブレーキ **Parking Brake**

4701 ブレーキ ペダル **Brake Pedal**

4702 ブレーキ マスタ シリンダ **Brake Master Cylinder**

シャシ グループ (3/3)
**CHASSIS GROUP (3/3)**

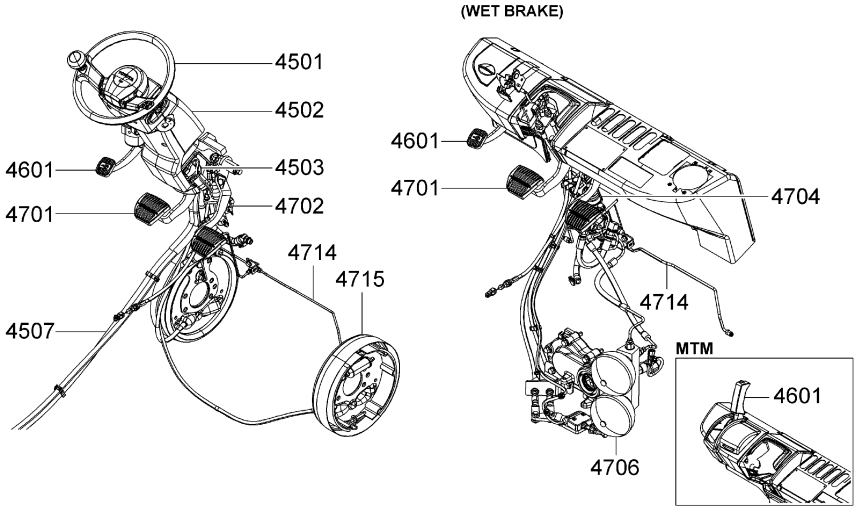


4704 ブレーキ バルブ **Brake Valve**

4706 ブレーキ アキュームレータ **Brake Accumulator**

4714 ブレーキ パイピング **Brake Piping**

4715 ドラム ブレーキ **Drum Brake**

**0000-993**
0000-993_


# FIG.INDEX

ILLUSTRATED INDEX
INDEX ILLUSTRE

INDIOE ILLUSTRADO
ILLUSTRIRTES INHALTSVERZEICHNIS


5101 フレーム ト ウエイト **Frame & Weight**

5201 フード ト ヒンジ **Hood & Hinge**

5301 インストルメント パネル ト フロア **Instrument Panel & Floor**

5308 ドライバ シート **Driver Seat**

5401 ヘッド ガード ト アクセサリ **Head Guard & Accessory**

5405 インジケータ プレート **Indicator Plate**

5501 スチール キャビン **Steel Cabin**

ボディー , エレクトリカル グループ
**BODY , ELECTRICAL GROUP**

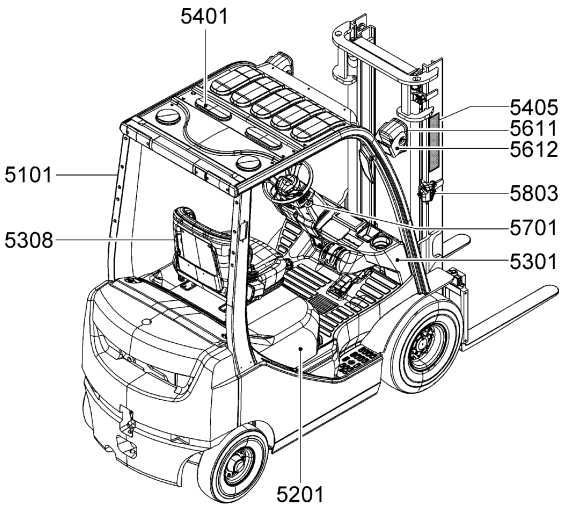


5504 ドア ロック **Door Lock**

5601 ワイヤリング ト クランプ **Wiring & Clamp**

5611 ランプ **Lamp**

5612 ランプ ブラケット **Lamp Bracket**

5804 エア コンディショナ **Air Conditioner**

5803 センサ **Sensor**

5802 ヒータ **Heater**

5801 ワイパ モータ ト ブレード **Wiper Motor & Blade**

5706 スピードメーター **Speedmeter**

5701 メータ ト スイッチ **Meter & Switch**

**0000-994**
0000-994_

# FIG.INDEX

ILLUSTRATED INDEX
INDEX ILLUSTRE

INDIOE ILLUSTRADO
ILLUSTRIRTES INHALTSVERZEICHNIS

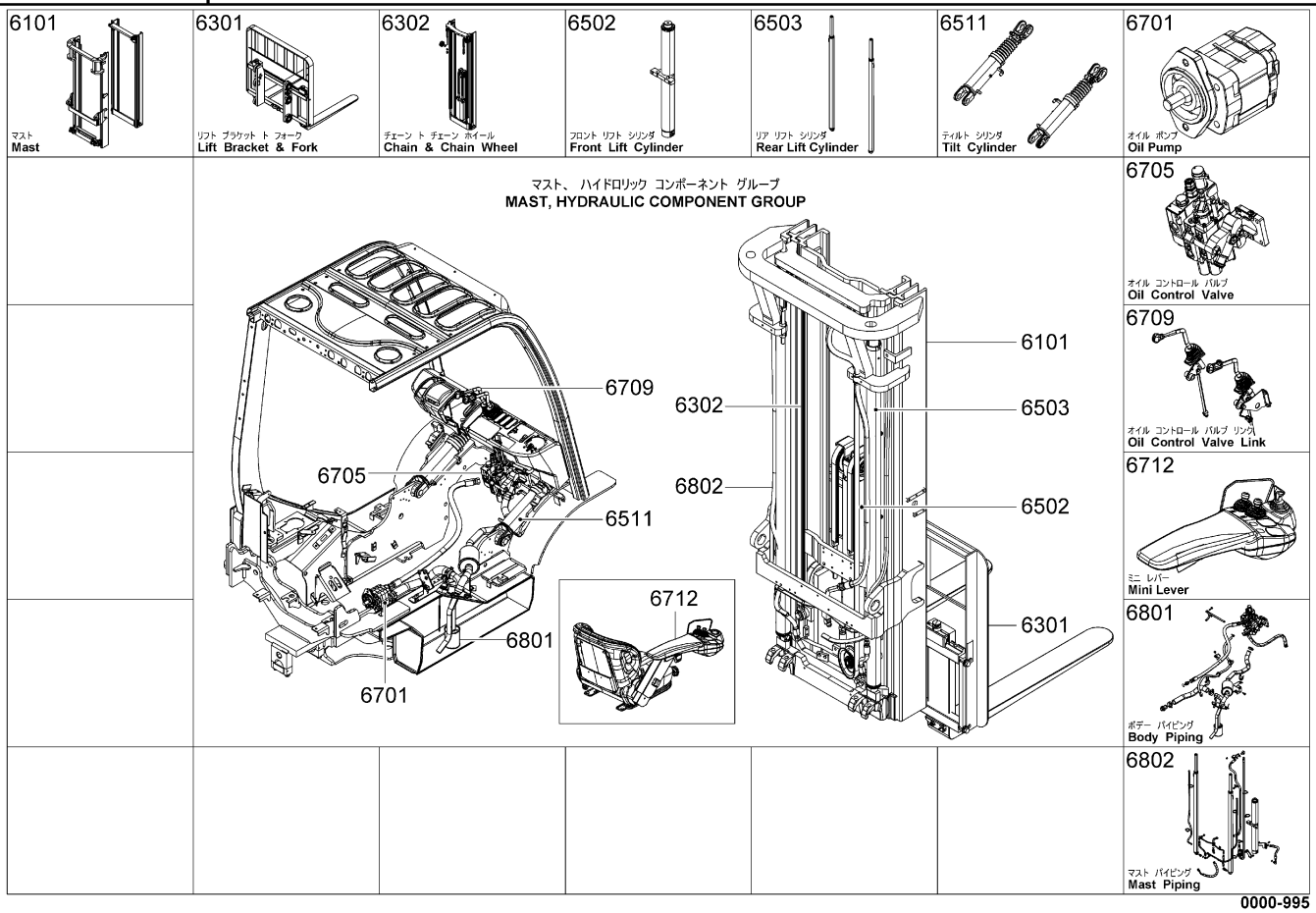


0000-995
0000-995_


# FIG.INDEX

ILLUSTRATED INDEX
INDEX ILLUSTRE

INDIOE ILLUSTRADO
ILLUSTRIRTES INHALTSVERZEICHNIS

| 1101 | ENGINE ASSY<br>ENS. DE MOTEUR | MOTOR-VOLLST.<br>CONJUNTO DEL MOTOR |
|---|---|---|

4Y [ENGINE ASSY]

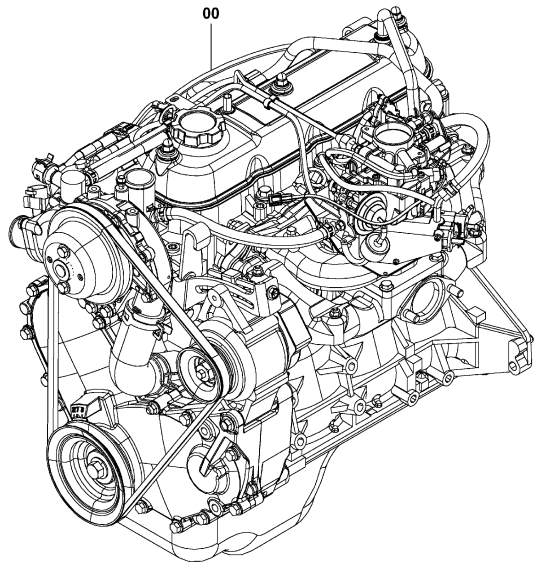


1101-147

1101-147_

4Y [PARTIAL ENGINE ASSY]

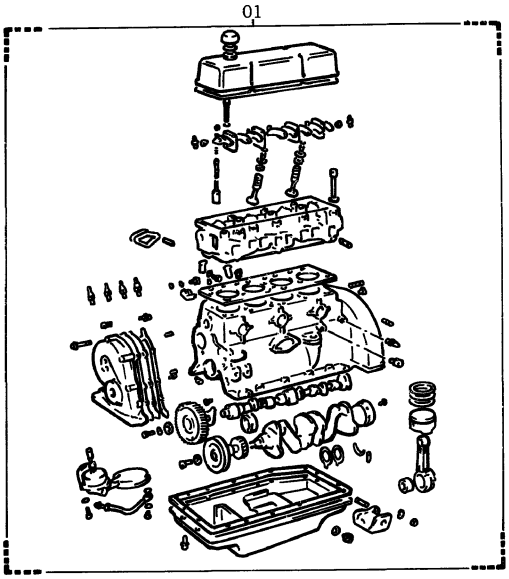


1101-064

1101-064_

| 1101 | ENGINE ASSY<br>ENS. DE MOTEUR | MOTOR-VOLLST.<br>CONJUNTO DEL MOTOR |
|---|---|---|

4Y [SHORT BLOCK ASSY]

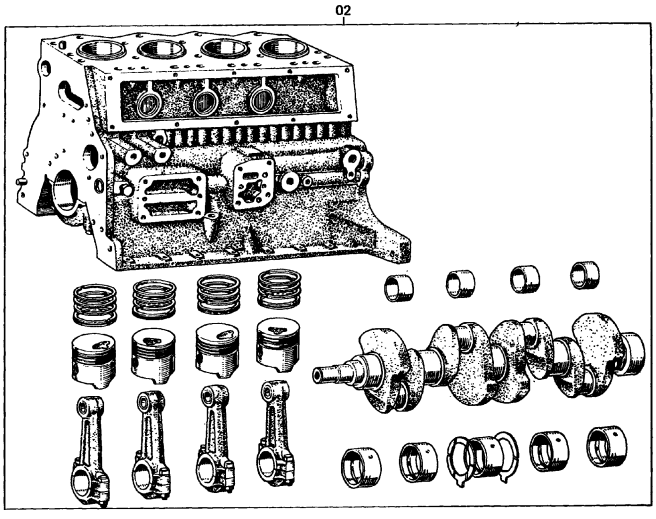


1101-006

1101-006_

4Y (3-WAY CATALYTIC) [KIT]

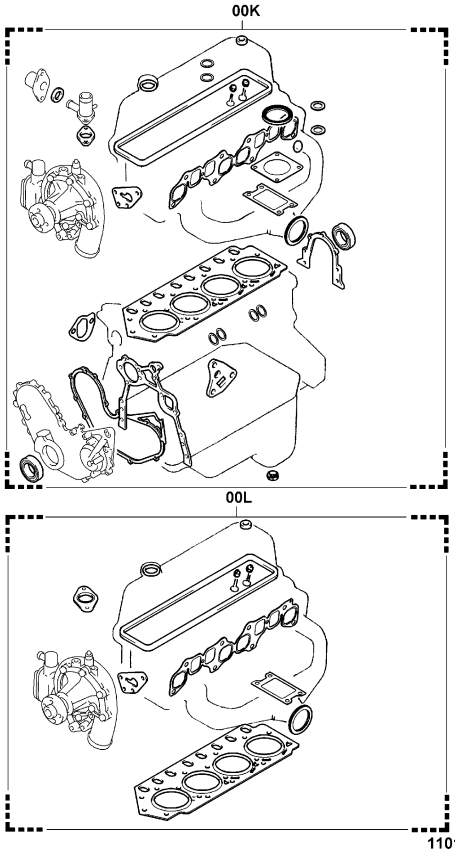


1101-159

1101-159_

4Y (EXCLUSIVE(Z4)) [KIT]

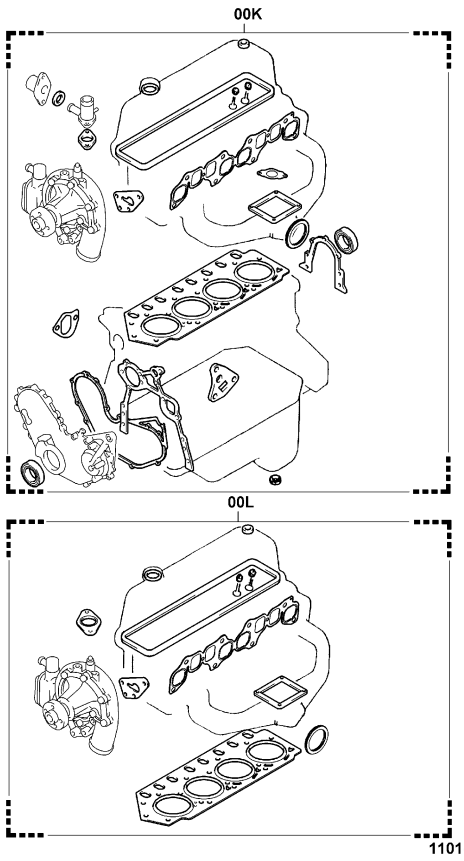


1101-162_

4Y (EXCLUSIVE(Z4)..3-WAY CATALYTIC) [KIT]

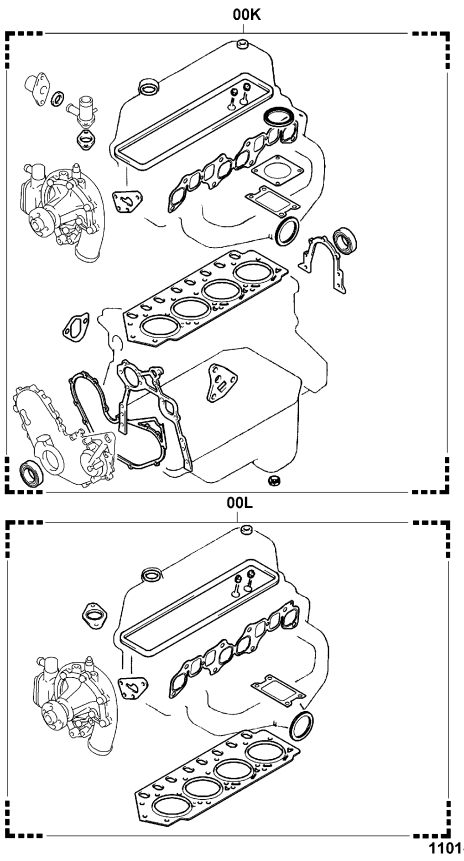


1101-161_


| 1101 | ENGINE ASSY<br>ENS. DE MOTEUR | MOTOR-VOLLST.<br>CONJUNTO DEL MOTOR |
|---|---|---|


4Y [KIT]

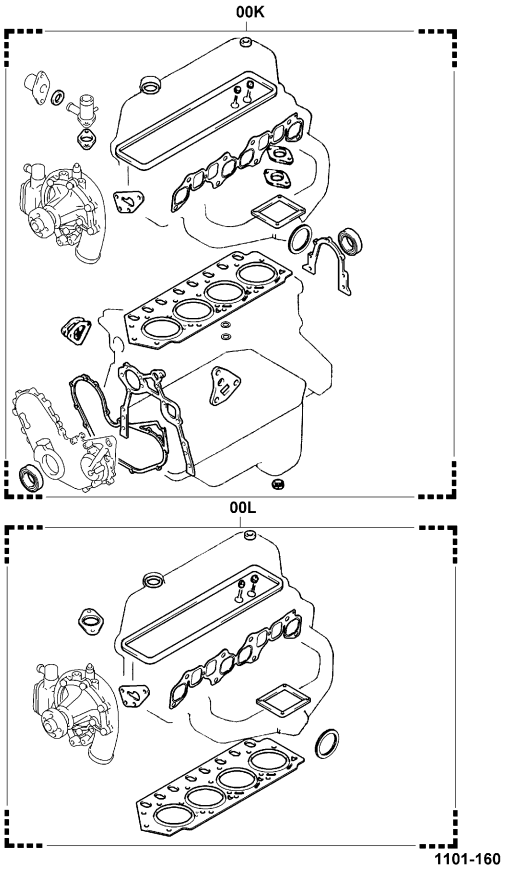


1101-160_

| 1101 | ENGINE ASSY<br>ENS. DE MOTEUR | MOTOR-VOLLST.<br>CONJUNTO DEL MOTOR |
|---|---|---|

| PART NAME CODE | PART NAME | QTY | PART NAME CODE | PART NAME | QTY |
|---|---|---|---|---|---|
| 1101-00 | **ENGINE ASSY**<br>ENS. DE MOTEUR<br>MOTOR, VOLLST.<br>CONJUNTO DEL MOTOR | 1 | | | |
| 1101-00K | **GASKET KIT, ENGINE O/H**<br>POXHETTE DE JOINTS<br>DICHTUNGSAUSRUSTUNG<br>JUEGO DE EMPAQUETADURA | 1 | | | |
| 1101-00L | **GASKET KIT, ENGINE VALVE GRIND**<br>POXHETTE DE JOINTS<br>DICHTUNGSAUSRUSTUNG<br>JUEGO DE EMPAQUETADURA | 1 | | | |
| 1101-02 | **BLOCK ASSY, SHORT**<br>ENS. DE BLOC<br>FLASCHENZUG, VOLLST.<br>CONJUNTO DE BLOQUE | 1 | | | |


| 1101 | ENGINE ASSY<br>ENS. DE MOTEUR | MOTOR-VOLLST.<br>CONJUNTO DEL MOTOR |
|---|---|---|

| PART NAME CODE | PART NAME | QTY | PART NAME CODE | PART NAME | QTY |
|---|---|---|---|---|---|

| 1104 | CYLINDER HEAD<br>TETE DE CYLINDRE | ZYLINDERKOPF<br>CULATA DE CILINDROS |
|---|---|---|

4Y

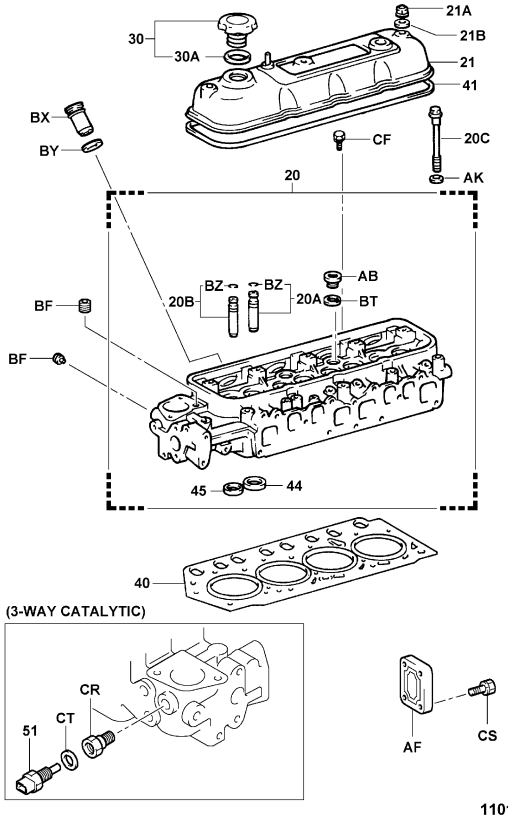


1101-148

1104-148_

4Y (3-WAY CATALYTIC)

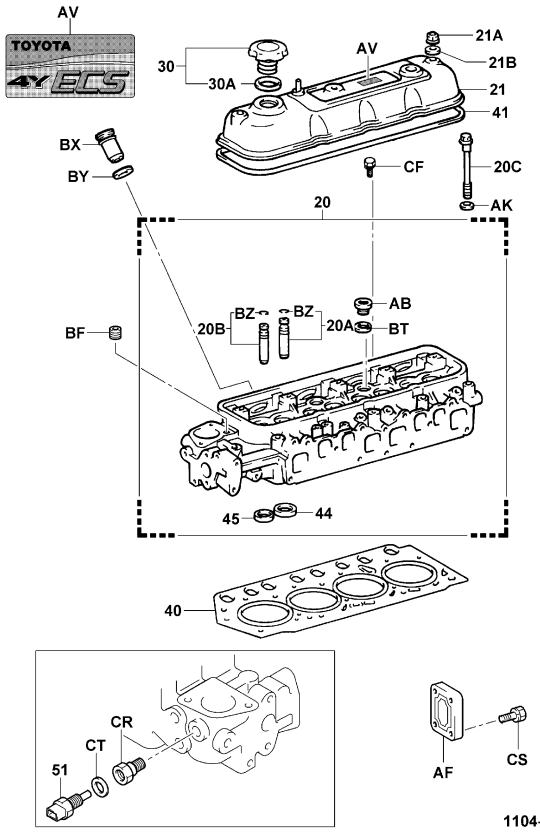


1104-147A

1104-147A

| 1104 | CYLINDER HEAD<br>TETE DE CYLINDRE | ZYLINDERKOPF<br>CULATA DE CILINDROS |
|---|---|---|

| PART NAME CODE | PART NAME | QTY |
|---|---|---|
| 1104-20 | **HEAD SUB-ASSY, CYLINDER**<br>SOUS-ENS. DE TETE<br>KOPF-TEILGRUPPE<br>SUBCONJUNTO DE DE CABEZAL | 1 |
| 1104-20A | **BUSHING, VALVE GUIDE INTAKE**<br>BAGE<br>BUCHSE<br>MANGUITO | 4 |
| 1104-20B | **BUSHING, VALVE GUIDE EXHAUST**<br>BAGE<br>BUCHSE<br>MANGUITO | 4 |
| 1104-20C | **BOLT, CYLINDER HEAD SET**<br>BOULON<br>SCHRÄUBE<br>PERNO | 10 |
| 1104-21 | **COVER SUB-ASSY, CYLINDER HEAD**<br>SOUS-ENS. DE COUVERCLE<br>DECKEL-TEILGRUPPE<br>SUBCONJUNTO DE CUBIERTA | 1 |
| 1104-21A | **NUT, CAP, CYLINDER HEAD COVER**<br>ECROU<br>MUTTER<br>TUERCA | 3 |
| 1104-21B | **WASHER, SEAL (FOR CYLINDER HEAD COVER)**<br>RODELLE<br>UNTERLEGSCHEIBE<br>ARANDELA | 3 |
| 1104-30 | **CAP SUB-ASSY, OIL FILLER**<br>SOUS-ENS. DE CAPUCHON<br>KAPPEN-TEILGRUPPE<br>SUBCONJUNTO DE LA TAPA | 1 |
| 1104-30A | **GASKET, OIL FILLER CAP**<br>JOINT<br>DICHTUNG<br>EMPAQUETADURA | 1 |
| 1104-40 | **GASKET, CYLINDER HEAD**<br>JOINT<br>DICHTUNG<br>EMPAQUETADURA | 1 |
| 1104-41 | **GASKET, CYLINDER HEAD COVER**<br>JOINT<br>DICHTUNG<br>EMPAQUETADURA | 1 |
| 1104-44 | **SEAT, VALVE INTAKE**<br>SIEGE<br>SITZ<br>ASIENTO | 4 |
| 1104-45 | **SEAT, VALVE EXHAUST**<br>SIEGE<br>SITZ<br>ASIENTO | 4 |
| 1104-51 | **SENSOR, WATER TEMPERATURE**<br>DETECTEUR<br>SENSOR<br>SENSOR | 1 |
| 1104-AB | **PLUG, W/HEAD TAPER SCREW**<br>BOUCHON<br>STOPFEN<br>TAPON | 1 |
| 1104-AF | **PLATE, HEAD REAR**<br>PLAQUE<br>PLATTE<br>PLACA | 1 |
| 1104-AK | **WASHER, PLATE**<br>RODELLE<br>UNTERLEGSCHEIBE<br>ARANDELA | 10 |
| 1104-AV | **PLATE, NAME**<br>PLAQUE<br>PLATTE<br>PLACA | 1 |
| 1104-BF | **PLUG**<br>BOUCHON<br>STOPFEN<br>TAPON | 1- 2 |
| 1104-BT | **GASKET**<br>JOINT<br>DICHTUNG<br>EMPAQUETADURA | 1 |

| 1104 | CYLINDER HEAD<br>TETE DE CYLINDRE | ZYLINDERKOPF<br>CULATA DE CILINDROS |
|---|---|---|

| PART NAME CODE | PART NAME | QTY | PART NAME CODE | PART NAME | QTY |
|---|---|---|---|---|---|
| 1104-BX | **TUBE, SPARK PLUG**<br>TUBE<br>ROHR<br>TUBO | 4 | | | |
| 1104-BY | **GASKET**<br>JOINT<br>DICHTUNG<br>EMPAQUETADURA | 4 | | | |
| 1104-BZ | **RING, SHAFT SNAP**<br>ANNEAU<br>RING<br>ANILLO | 8 | | | |
| 1104-CF | **BOLT**<br>BOULON<br>SCHRAUBE<br>PERNO | 3 | | | |
| 1104-CR | **UNION**<br>RACCORD<br>ROHRVERSCHRAUBUNG<br>UNION | 1 | | | |
| 1104-CS | **BOLT**<br>BOULON<br>SCHRAUBE<br>PERNO | 4 | | | |
| 1104-CT | **GASKET**<br>JOINT<br>DICHTUNG<br>EMPAQUETADURA | 1 | | | |


| 1104 | CYLINDER HEAD<br>TETE DE CYLINDRE | ZYLINDERKOPF<br>CULATA DE CILINDROS |
|---|---|---|

| PART NAME CODE | PART NAME | QTY | PART NAME CODE | PART NAME | QTY |
|---|---|---|---|---|---|

4Y

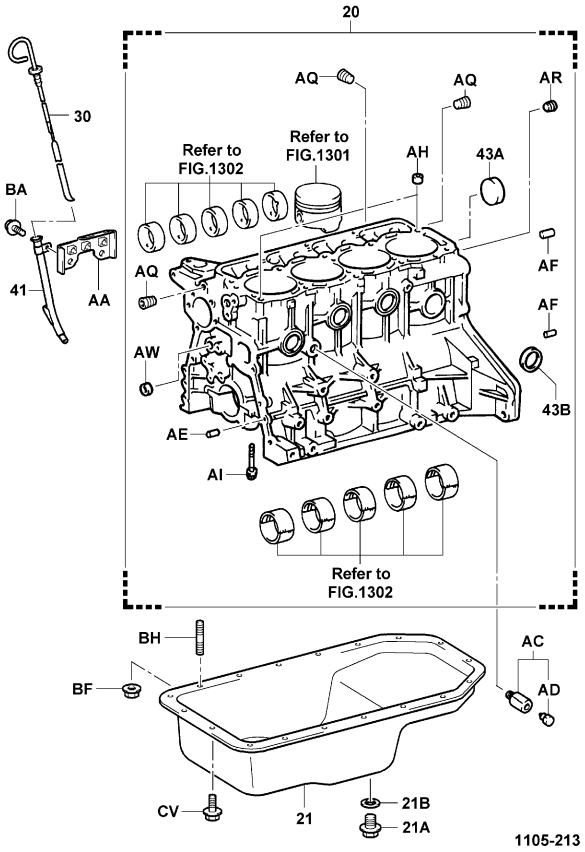


1105-213_


| 1105 | CYLINDER BLOCK<br>BLOC DE CYLINDRE | ZYLINDERBLOCK<br>BLOQUE DE CILINDROS |
|---|---|---|


| PART NAME CODE | PART NAME | QTY |
|---|---|---|
| 1105-20 | **BLOCK SUB-ASSY, CYLINDER**<br>SOUS-ENS. DE BLOC<br>FLASCHENZUG-TEILGRUPPE<br>SUBCONJUNTO DEL BLOQUE | 1 |
| 1105-21 | **PAN SUB-ASSY, OIL**<br>SOUS-ENS. DE CARTER<br>WANNEN-TEILGRUPPE<br>SUBCONJUNTO DEL DEPOSITO | 1 |
| 1105-21A | **PLUG (FOR OIL PAN DRAIN)**<br>BOUCHON<br>STOPFEN<br>TAPON | 1 |
| 1105-21B | **GASKET, OIL PAN DRAIN PLUG**<br>JOINT<br>DICHTUNG<br>EMPAQUETADURA | 1 |
| 1105-30 | **GAGE SUB-ASSY, OIL LEVEL**<br>SOUS-ENS. DE JAUGE<br>MESSGERATE-TEILGRUPPE<br>SUBCONJUNTO DE MEDIDOR | 1 |
| 1105-41 | **GUIDE, OIL LEVEL GAGE**<br>GUIDE<br>FUHRUNG<br>GUIA | 1 |
| 1105-43A | **PLUG, TIGHT, NO.1**<br>BOUCHON<br>STOPFEN<br>TAPON | 1 |
| 1105-43B | **PLUG, TIGHT, NO.2**<br>BOUCHON<br>STOPFEN<br>TAPON | 5 |
| 1105-AA | **SUPPORT, OIL LEVEL GAGE GUIDE**<br>SUPPORT<br>STUTZE<br>SOPORTE | 1 |
| 1105-AC | **COCK SUB-ASSY, DRAIN**<br>SOUS-ENS. DE ROBINET<br>HAHN-TEILGRUPPE<br>SUBCONJUNTO DE GRIFO | 1 |
| 1105-AD | **PLUG, DRAIN COCK**<br>BOUCHON<br>STOPFEN<br>TAPON | 1 |
| 1105-AE | **PIN, STRAIGHT**<br>GOUPILLE<br>STIFT<br>PASADOR | 4 |
| 1105-AF | **PIN, STRAIGHT**<br>GOUPILLE<br>STIFT<br>PASADOR | 2 |
| 1105-AH | **PIN, RING**<br>GOUPILLE<br>STIFT<br>PASADOR | 2 |
| 1105-AI | **BOLT**<br>BOULON<br>SCHRAUBE<br>PERNO | 10 |
| 1105-AQ | **PLUG**<br>BOUCHON<br>STOPFEN<br>TAPON | 3 |
| 1105-AR | **PLUG**<br>BOUCHON<br>STOPFEN<br>TAPON | 1 |
| 1105-AW | **PLUG**<br>BOUCHON<br>STOPFEN<br>TAPON | 1 |
| 1105-BA | **BOLT**<br>BOULON<br>SCHRAUBE<br>PERNO | 2 |
| 1105-BF | **NUT**<br>ECROU<br>MUTTER<br>TUERCA | 2 |

| 1105 | CYLINDER BLOCK<br>BLOC DE CYLINDRE | ZYLINDERBLOCK<br>BLOQUE DE CILINDROS |
|---|---|---|

| PART NAME CODE | PART NAME | QTY | PART NAME CODE | PART NAME | QTY |
|---|---|---|---|---|---|
| 1105-BH | **BOLT, STUD**<br>BOULON<br>SCHRAUBE<br>PERNO | 2 | | | |
| 1105-CV | **BOLT**<br>BOULON<br>SCHRAUBE<br>PERNO | 16 | | | |

| 1105 | CYLINDER BLOCK<br>BLOC DE CYLINDRE | ZYLINDERBLOCK<br>BLOQUE DE CILINDROS |
|---|---|---|

| PART NAME CODE | PART NAME | QTY | PART NAME CODE | PART NAME | QTY |
|---|---|---|---|---|---|

# 1106

**TIMING GEAR COVER & END PLATE**
**PLAQUE D'EXTR. & CACHE D'ENGR DE DISTR**
**STEUERDECKEL & ABDECKPLATTE**
**PLACA Y CUBIERTA DE ENGRANAJE DE DISTRIB.**

**4Y**

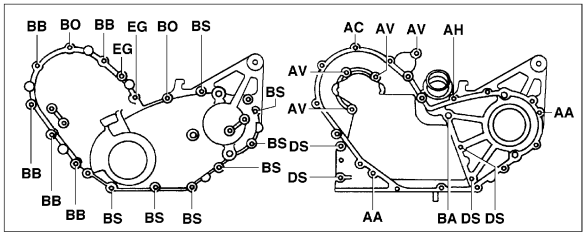


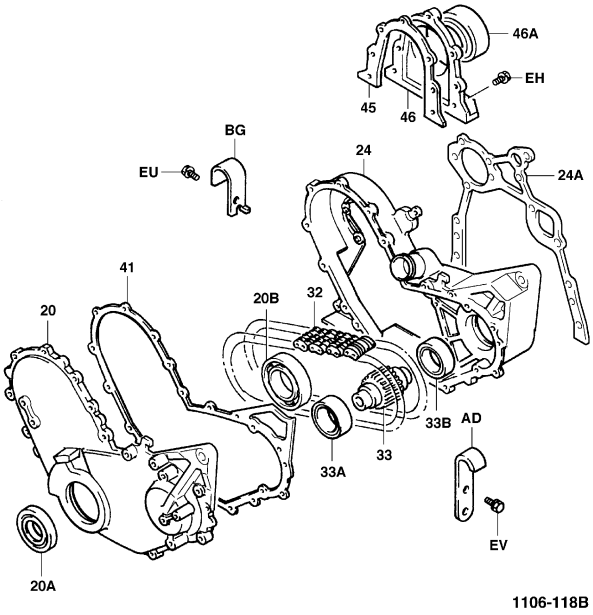


1106-118B

1106-118B

**4Y (3-WAY CATALYTIC)**

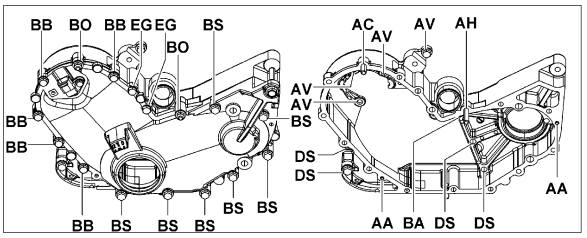


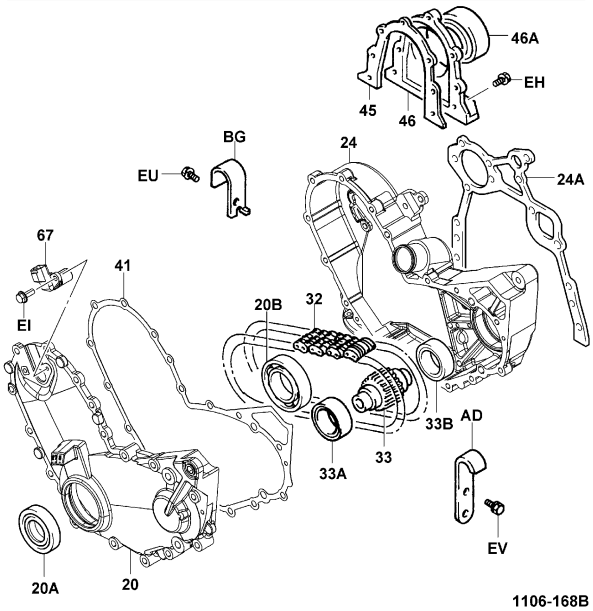


1106-168B

1106-168B

# 1106

**TIMING GEAR COVER & END PLATE**
**PLAQUE D'EXTR. & CACHE D'ENGR DE DISTR**
**STEUERDECKEL & ABDECKPLATTE**
**PLACA Y CUBIERTA DE ENGRANAJE DE DISTRIB.**

| PART NAME CODE | PART NAME | QTY |
|---|---|---|
| **1106-20** | **COVER SUB-ASSY, TIMING GEAR, CHAIN**<br>SOUS-ENS. DE COUVERCLE<br>DECKEL-TEILGRUPPE<br>SUBCONJUNTO DE CUBIERTA | 1 |
| **1106-20A** | **SEAL, OIL (FOR TIMING GEAR COVER)**<br>JOINT<br>ABDICHTUNG<br>SELLO | 1 |
| **1106-20B** | **BEARING, TIMING GEAR COVER**<br>ROULEMENT<br>LAGER<br>COJINETE | 1 |
| **1106-24** | **CASE, TIMING CHAIN**<br>CARTER<br>GEHAUSE<br>CAJA | 1 |
| **1106-24A** | **GASKET, TIMING CHAIN CASE**<br>JOINT<br>DICHTUNG<br>EMPAQUETADURA | 1 |
| **1106-32** | **CHAIN SUB-ASSY**<br>SOUS-ENS. DE CHAINE<br>KETTEN-TEILGRUPPE<br>SUBCONJUNTO DE LA CADENA | 1 |
| **1106-33** | **SPROCKET, HYDRAULIC PUMP DRIVE**<br>PIGNON DE CHAINE<br>KETTENRAD<br>RUEDA DENTADA | 1 |
| **1106-33A** | **BEARING, DRIVE SPROCKET**<br>ROULEMENT<br>LAGER<br>COJINETE | 1 |
| **1106-33B** | **BEARING, DRIVE SPROCKET**<br>ROULEMENT<br>LAGER<br>COJINETE | 1 |
| **1106-41** | **GASKET, TIMING GEAR (OR CHAIN) COVER**<br>JOINT<br>DICHTUNG<br>EMPAQUETADURA | 1 |
| **1106-45** | **GASKET, REAR OIL SEAL RETAINER**<br>JOINT<br>DICHTUNG<br>EMPAQUETADURA | 1 |
| **1106-46** | **RETAINER, REAR OIL SEAL**<br>ARRETOIR<br>SEEGERRING<br>RETENEDOR | 1 |
| **1106-46A** | **SEAL, ENGINE REAR OIL**<br>JOINT<br>ABDICHTUNG<br>SELLO | 1 |
| **1106-67** | **SENSOR, CRANK POSITION**<br>DETECTEUR<br>SENSOR<br>SENSOR | 1 |
| **1106-AA** | **PIN, STRAIGHT**<br>GOUPILLE<br>STIFT<br>PASADOR | 2 |
| **1106-AC** | **BOLT, STUD**<br>BOULON<br>SCHRAUBE<br>PERNO | 1 |
| **1106-AD** | **HANGER, ENGINE**<br>BRIDE DE SUPPORT<br>AUFHANGUNG<br>COLGADOR | 1 |
| **1106-AH** | **BOLT, STUD**<br>BOULON<br>SCHRAUBE<br>PERNO | 1 |
| **1106-AV** | **BOLT**<br>BOULON<br>SCHRAUBE<br>PERNO | 4 |
| **1106-BA** | **BOLT**<br>BOULON<br>SCHRAUBE<br>PERNO | 1 |

| 1106 | TIMING GEAR COVER & END PLATE<br>PLAQUE D'EXTR. & CACHE D'ENGR DE DISTR | STEUERDECKEL & ABDECKPLATTE<br>PLACA Y CUBIERTA DE ENGRANAJE DE DISTRIB. |
|---|---|---|

| PART NAME CODE | PART NAME | QTY | PART NAME CODE | PART NAME | QTY |
|---|---|---|---|---|---|
| 1106-BB | **BOLT**<br>BOULON<br>SCHRAUBE<br>PERNO | 5 | | | |
| 1106-BG | **HANGER, ENGINE, NO.2**<br>BRIDE DE SUPPORT<br>AUFHANGUNG<br>COLGADOR | 1 | | | |
| 1106-BO | **NUT**<br>ECROU<br>MUTTER<br>TUERCA | 2 | | | |
| 1106-BS | **BOLT**<br>BOULON<br>SCHRAUBE<br>PERNO | 7 | | | |
| 1106-DS | **BOLT**<br>BOULON<br>SCHRAUBE<br>PERNO | 4 | | | |
| 1106-EG | **BOLT**<br>BOULON<br>SCHRAUBE<br>PERNO | 2 | | | |
| 1106-EH | **BOLT**<br>BOULON<br>SCHRAUBE<br>PERNO | 5 | | | |
| 1106-EI | **BOLT**<br>BOULON<br>SCHRAUBE<br>PERNO | 1 | | | |
| 1106-EU | **BOLT**<br>BOULON<br>SCHRAUBE<br>PERNO | 1 | | | |
| 1106-EV | **BOLT**<br>BOULON<br>SCHRAUBE<br>PERNO | 2 | | | |


| 1106 | TIMING GEAR COVER & END PLATE<br>PLAQUE D'EXTR. & CACHE D'ENGR DE DISTR | STEUERDECKEL & ABDECKPLATTE<br>PLACA Y CUBIERTA DE ENGRANAJE DE DISTRIB. |
|---|---|---|

| PART NAME CODE | PART NAME | QTY | PART NAME CODE | PART NAME | QTY |
|---|---|---|---|---|---|

| 1107 | MOUNTING<br>MONTAGE | AUFHÄNGUNG<br>MONTAJE |
|---|---|---|

4Y

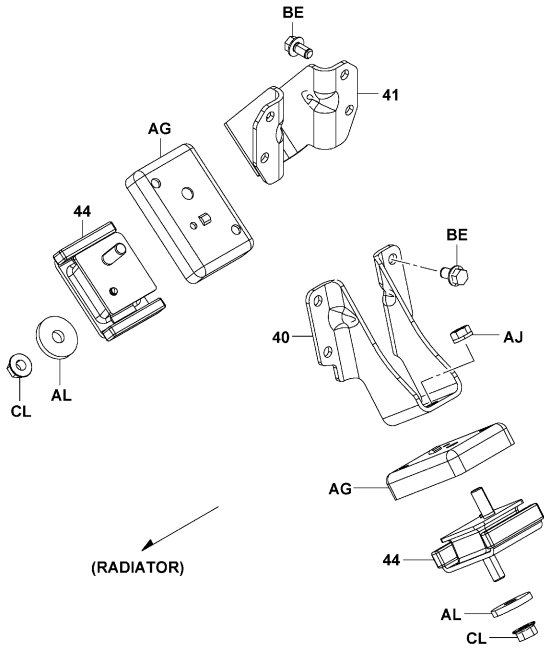


1107-222

1107-222_

| 1107 | MOUNTING<br>MONTAGE | AUFHÄNGUNG<br>MONTAJE |
|---|---|---|

| PART NAME CODE | PART NAME | QTY | PART NAME CODE | PART NAME | QTY |
|---|---|---|---|---|---|
| 1107-40 | **BRACKET, ENGINE MOUNTING, FR, RH**<br>SUPPORT<br>TRAGER<br>SOPORTE | 1 | | | |
| 1107-41 | **BRACKET, ENGINE MOUNTING, FR, LH**<br>SUPPORT<br>TRAGER<br>SOPORTE | 1 | | | |
| 1107-44 | **INSULATOR, ENGINE MOUNTING, RR**<br>ISOLATEUR<br>ISOLATOR<br>AISLADOR | 2 | | | |
| 1107-AG | **STABILIZER, ENGINE MOUNTING**<br>STABILISATEUR<br>STABILISATOR<br>ESTABILIZADOR | 2 | | | |
| 1107-AJ | **NUT**<br>ECROU<br>MUTTER<br>TUERCA | 2 | | | |
| 1107-AL | **WASHER, PLATE**<br>RODELLE<br>UNTERLEGSCHEIBE<br>ARANDELA | 2 | | | |
| 1107-BE | **BOLT**<br>BOULON<br>SCHRAUBE<br>PERNO | 8 | | | |
| 1107-CL | **NUT**<br>ECROU<br>MUTTER<br>TUERCA | 2 | | | |

| 1201 | VENTILATION HOSE<br>FLEXIBLE DE VENTILATION | ENTLÜFTUNGSSCHLAUCH<br>MANGUERA DE VENTILACION |
|---|---|---|

4Y

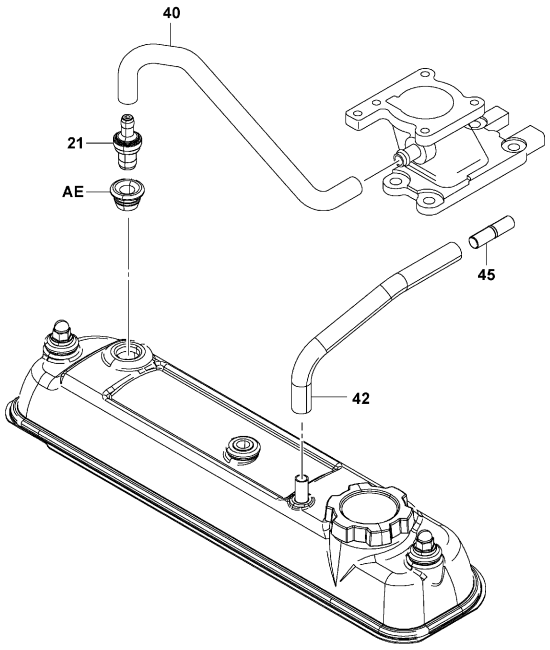


1201-097

1201-097_

| 1201 | VENTILATION HOSE<br>FLEXIBLE DE VENTILATION | ENTLÜFTUNGSSCHLAUCH<br>MANGUERA DE VENTILACION |
|---|---|---|

| PART NAME CODE | PART NAME | QTY | PART NAME CODE | PART NAME | QTY |
|---|---|---|---|---|---|
| 1201-21 | **VALVE SUB-ASSY, VENTILATION**<br>SOUS-ENS. DE SOUPAPE<br>VENTIL-TEILGRUPPE<br>SUBCONJUNTO DE VALVULA | 1 | | | |
| 1201-40 | **HOSE, VENTILATION, NO.1**<br>FLEXIBLE<br>SCHLAUCH<br>MANGUERA | 1 | | | |
| 1201-42 | **HOSE, VENTILATION, NO.3**<br>FLEXIBLE<br>SCHLAUCH<br>MANGUERA | 1 | | | |
| 1201-45 | **PIPE, NO.1**<br>TUYAU<br>ROHR<br>TUBO | 1 | | | |
| 1201-AE | **GROMMET**<br>RONDELLE ISOLANTE<br>DURCHFUHRUNG<br>ANILLO PROTECTOR | 1 | | | |

| 1301 | CRANKSHAFT & PISTON<br>VILEBREQUIN & PISTON | KURBELWELLE & KOLBEN<br>CIGÜEÑAL Y PISTON |
|---|---|---|

4Y

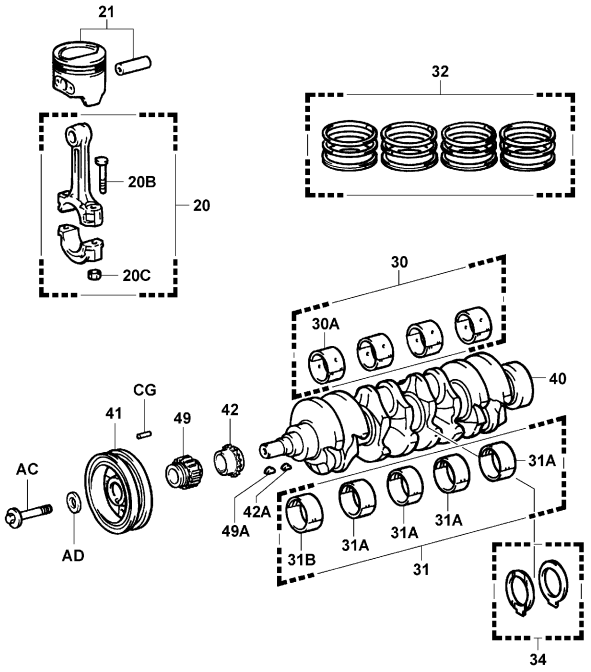


1301-159

1301-159_

| 1301 | CRANKSHAFT & PISTON<br>VILEBREQUIN & PISTON | KURBELWELLE & KOLBEN<br>CIGÜEÑAL Y PISTON |
|---|---|---|

| PART NAME CODE | PART NAME | QTY |
|---|---|---|
| 1301-20 | **ROD SUB-ASSY, CONNECTING**<br>SOUS-ENS. DE BIELLE<br>STANGEN-TEILGRUPPE<br>SUBCONJUNTO DE LA VARILLA | 4 |
| 1301-20B | **BOLT, CONNECTING ROD**<br>BOULON<br>SCHRAUBE<br>PERNO | 8 |
| 1301-20C | **NUT, HEXAGON (FOR CONNECTING ROD)**<br>ECROU<br>MUTTER<br>TUERCA | 8 |
| 1301-21 | **PISTON SUB-ASSY, W/PIN**<br>SOUS-ENS. DE PISTON<br>KOLBEN-TEILGRUPPE<br>SUBCONJUNTO DEL PISTON | 4 |
| 1301-30 | **BEARING SET, CONNECTING ROD**<br>JEU DE ROULEMENT<br>LAGERSATZ<br>JUEGO DE COJINETE | 1 |
| 1301-30A | **BEARING, CONNECTING ROD**<br>ROULEMENT<br>LAGER<br>COJINETE | 4 |
| 1301-31 | **BEARING SET, CRANKSHAFT**<br>JEU DE ROULEMENT<br>LAGERSATZ<br>JUEGO DE COJINETE | 1 |
| 1301-31A | **BEARING, CRANKSHAFT**<br>ROULEMENT<br>LAGER<br>COJINETE | 4 |
| 1301-31B | **BEARING, CRANKSHAFT**<br>ROULEMENT<br>LAGER<br>COJINETE | 1 |
| 1301-32 | **RING SET, PISTON**<br>JEU DE ANNEAU<br>RINGSATZ<br>JUEGO DE ANILLO | 1 |
| 1301-34 | **WASHER SET, CRANKSHAFT THRUST**<br>JEU DE RONDELLE<br>UNTERLEGSCHEIBENSATZ<br>JUEGO DE ARANDELAS | 1 |
| 1301-40 | **CRANKSHAFT**<br>VILEBREQUIN<br>KURBELWELLE<br>CIGÜEÑAL | 1 |
| 1301-41 | **PULLEY, CRANKSHAFT**<br>POULIE<br>RIEMENSCHEIBE<br>POLEA | 1 |
| 1301-42 | **GEAR OR SPROCKET, CRANKSHAFT TIMING**<br>ENGRENAGE OU COURONNE<br>ZAHNRAD ODER KETTENRAD<br>ENGRANAJE O RUEDA DENTADA | 1 |
| 1301-42A | **KEY, CRANKSHAFT (FOR TIMING GEAR SET)**<br>CLAVETTE<br>SCHLUSSEL<br>LLAVE | 1 |
| 1301-49 | **SPROCKET, CRANKSHAFT TIMING**<br>PIGNON DE CHAINE<br>KETTENRAD<br>RUEDA DENTADA | 1 |
| 1301-49A | **KEY, CRANKSHAFT (FOR SPROCKET SET)**<br>CLAVETTE<br>SCHLUSSEL<br>LLAVE | 1 |
| 1301-AC | **BOLT**<br>BOULON<br>SCHRAUBE<br>PERNO | 1 |
| 1301-AD | **WASHER, PLATE**<br>RODELLE<br>UNTERLEGSCHEIBE<br>ARANDELA | 1 |
| 1301-CG | **PIN, STRAIGHT**<br>GOUPILLE<br>STIFT<br>PASADOR | 1 |

| 1302 | CAMSHAFT & VALVE<br>ARBRE A CAMES & SOUPAPE | NOCKENWELLE & VENTIL<br>ARBOL DE LEVAS Y VALVULA |
|---|---|---|

4Y

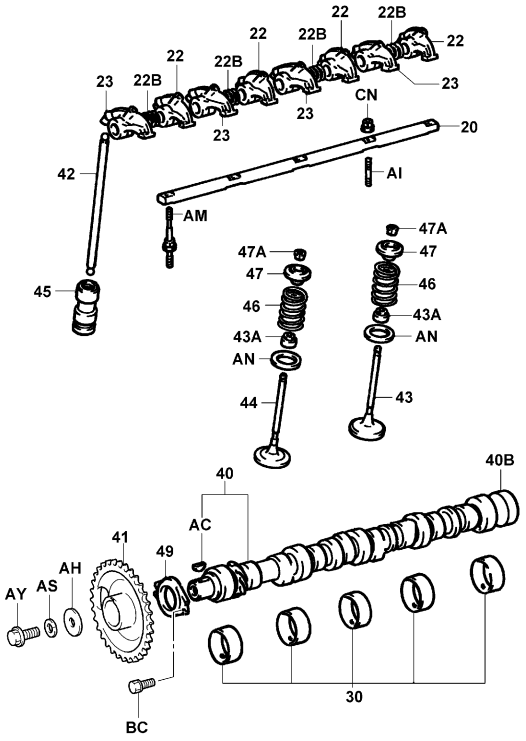


1302-130A

1302-130A

| 1302 | CAMSHAFT & VALVE<br>ARBRE A CAMES & SOUPAPE | NOCKENWELLE & VENTIL<br>ARBOL DE LEVAS Y VALVULA |
|---|---|---|

| PART NAME CODE | PART NAME | QTY |
|---|---|---|
| 1302-20 | **SHAFT SUB-ASSY, VALVE ROCKER, NO.1**<br>SOUS-ENS. D'ARBRE<br>WELLEN-TEILGRUPPE<br>SUBCONJUNTO DEL EJE | 1 |
| 1302-22 | **ARM SUB-ASSY, VALVE ROCKER, NO.1**<br>SOUS-ENS. DE BRAS<br>ARM-TEILGRUPPE<br>SUBCONJUNTO DEL BRAZO | 4 |
| 1302-22B | **SPRING, COMPRESSION (FOR ROCKER ARM)**<br>RESSORT<br>FEDER<br>RESORTE | 4 |
| 1302-23 | **ARM SUB-ASSY, VALVE ROCKER, NO.2**<br>SOUS-ENS. DE BRAS<br>ARM-TEILGRUPPE<br>SUBCONJUNTO DEL BRAZO | 4 |
| 1302-30 | **BEARING SET, CAMSHAFT**<br>JEU DE ROULEMENT<br>LAGERSATZ<br>JUEGO DE COJINETE | 1 |
| 1302-40 | **CAMSHAFT**<br>ARBRE A CAMES<br>NOCKENWELLE<br>ARBOL DE LEVAS | 1 |
| 1302-40B | **PLUG, EXPANSION (FOR CAMSHAFT)**<br>BOUCHON<br>STOPFEN<br>TAPON | 1 |
| 1302-41 | **GEAR OR SPROCKET, CAMSHAFT TIMING**<br>ENGRENAGE OU COURONNE<br>ZAHNRAD ODER KETTENRAD<br>ENGRANAJE O RUEDA DENTADA | 1 |
| 1302-42 | **ROD, VALVE PUSH**<br>BIELLE<br>STANGE<br>VARILLA | 8 |
| 1302-43 | **VALVE, INTAKE**<br>SOUPAPE<br>VENTIL<br>VALVULA | 4 |
| 1302-43A | **SEAL OR RING, O (FOR VALVE STEM OIL)**<br>BAGUE OU JOINT<br>ABDICHTUNG ODER RING<br>SELLO O ANILLO | 8 |
| 1302-44 | **VALVE, EXHAUST**<br>SOUPAPE<br>VENTIL<br>VALVULA | 4 |
| 1302-45 | **LIFTER, VALVE**<br>CAME<br>STÖSSEL<br>ELEVADOR | 8 |
| 1302-46 | **SPRING, VALVE COMPRESSION**<br>RESSORT<br>FEDER<br>RESORTE | 8 |
| 1302-47 | **RETAINER, VALVE SPRING**<br>ARRETOIR<br>SEEGERRING<br>RETENEDOR | 8 |
| 1302-47A | **LOCK, VALVE SPRING RETAINER**<br>VERROU<br>SCHLOSS<br>CIERRE | 16 |
| 1302-49 | **PLATE, CAMSHAFT THRUST**<br>PLAQUE<br>PLATTE<br>PLACA | 1 |
| 1302-AC | **KEY**<br>CLAVETTE<br>SCHLUSSEL<br>LLAVE | 1 |
| 1302-AH | **WASHER**<br>RODELLE<br>UNTERLEGSCHEIBE<br>ARANDELA | 1 |
| 1302-AI | **BOLT, STUD**<br>BOULON<br>SCHRAUBE<br>PERNO | 2 |

| 1302 | CAMSHAFT & VALVE<br>ARBRE A CAMES & SOUPAPE | NOCKENWELLE & VENTIL<br>ARBOL DE LEVAS Y VALVULA |
|---|---|---|

| PART NAME CODE | PART NAME | QTY | PART NAME CODE | PART NAME | QTY |
|---|---|---|---|---|---|
| 1302-AM | **BOLT, STUD**<br>BOULON<br>SCHRAUBE<br>PERNO | 3 | | | |
| 1302-AN | **WASHER**<br>RODELLE<br>UNTERLEGSCHEIBE<br>ARANDELA | 8 | | | |
| 1302-AS | **WASHER**<br>RODELLE<br>UNTERLEGSCHEIBE<br>ARANDELA | 1 | | | |
| 1302-AY | **BOLT**<br>BOULON<br>SCHRAUBE<br>PERNO | 1 | | | |
| 1302-BC | **BOLT**<br>BOULON<br>SCHRAUBE<br>PERNO | 2 | | | |
| 1302-CN | **NUT**<br>ECROU<br>MUTTER<br>TUERCA | 2 | | | |


| 1302 | CAMSHAFT & VALVE<br>ARBRE A CAMES & SOUPAPE | NOCKENWELLE & VENTIL<br>ARBOL DE LEVAS Y VALVULA |
|---|---|---|

| PART NAME CODE | PART NAME | QTY | PART NAME CODE | PART NAME | QTY |
|---|---|---|---|---|---|

| 1303 | TIMING CHAIN<br>CHAINE DE DISTRIBUTION | STEUERKETTE<br>CADENA DE DISTRIBUCION |
|---|---|---|

4Y

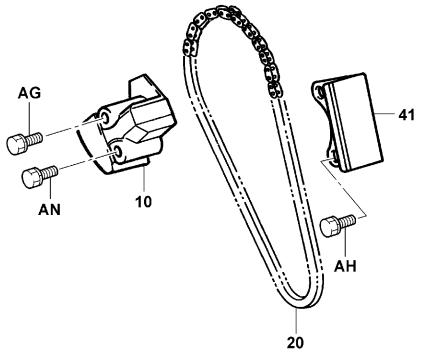


1303-012A

1303-012A

| 1303 | TIMING CHAIN<br>CHAINE DE DISTRIBUTION | STEUERKETTE<br>CADENA DE DISTRIBUCION |
|---|---|---|

| PART NAME CODE | PART NAME | QTY | PART NAME CODE | PART NAME | QTY |
|---|---|---|---|---|---|
| 1303-10 | **TENSIONER ASSY, CHAIN**<br>ENS. DE TENDEUR<br>SPANNVORRICHTUNG, VOLLST.<br>CONJUNTO DEL TENSOR | 1 | | | |
| 1303-20 | **CHAIN SUB-ASSY**<br>SOUS-ENS. DE CHAINE<br>KETTEN-TEILGRUPPE<br>SUBCONJUNTO DE LA CADENA | 1 | | | |
| 1303-41 | **DUMPER, CHAIN VIBRATION, NO.1**<br>PARE-CHOCS<br>KIPPVORRICHTUNG<br>VOLTEADOR | 1 | | | |
| 1303-AG | **BOLT**<br>BOULON<br>SCHRAUBE<br>PERNO | 1- 2 | | | |
| 1303-AH | **BOLT**<br>BOULON<br>SCHRAUBE<br>PERNO | 2 | | | |
| 1303-AN | **BOLT**<br>BOULON<br>SCHRAUBE<br>PERNO | 1 | | | |

| 1501 | OIL PUMP<br>POMPE A HUILE | ÖLPUMPE<br>BOMBA DE ACEITE |
|---|---|---|

4Y

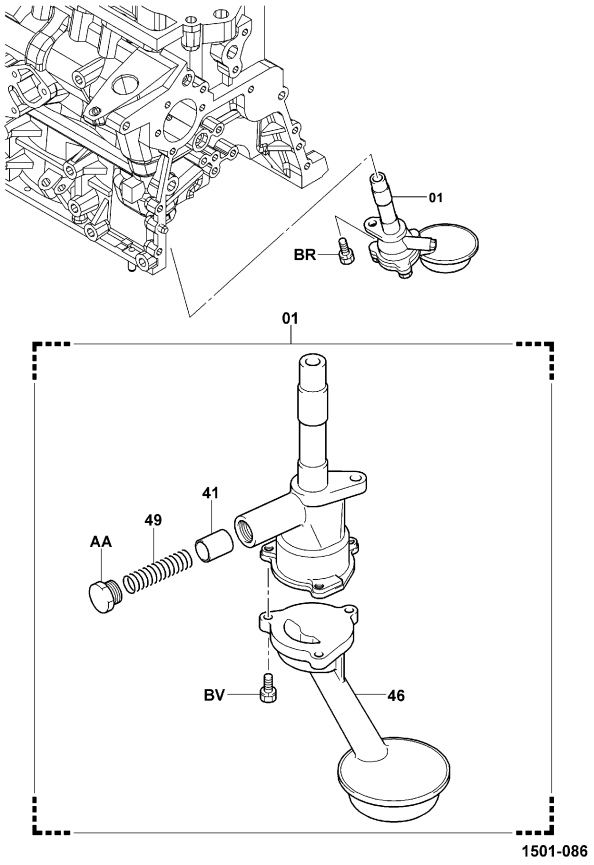


1501-086_

| 1501 | OIL PUMP<br>POMPE A HUILE | ÖLPUMPE<br>BOMBA DE ACEITE |
|---|---|---|

| PART NAME CODE | PART NAME | QTY | PART NAME CODE | PART NAME | QTY |
|---|---|---|---|---|---|
| 1501-01 | **PUMP ASSY, OIL**<br>ENS. DE POMPE<br>PUMPENAGGREGAT<br>CONJUNTO DE LA BOMBA | 1 | | | |
| 1501-41 | **VALVE, OIL PUMP RELIEF**<br>SOUPAPE<br>VENTIL<br>VALVULA | 1 | | | |
| 1501-46 | **COVER, OIL PUMP**<br>COUVERCLE<br>DECKEL<br>CUBIERTA | 1 | | | |
| 1501-49 | **SPRING, OIL PUMP RELIEF VALVE**<br>RESSORT<br>FEDER<br>RESORTE | 1 | | | |
| 1501-AA | **PLUG, OIL PUMP RELIEF VALVE**<br>BOUCHON<br>STOPFEN<br>TAPON | 1 | | | |
| 1501-BR | **BOLT**<br>BOULON<br>SCHRAUBE<br>PERNO | 1 | | | |
| 1501-BV | **BOLT**<br>BOULON<br>SCHRAUBE<br>PERNO | 3 | | | |

| 1502 | OIL FILTER<br>FILTRE A HUILE | ÖLFILTER<br>FILTRO DE ACEITE |
|---|---|---|

4Y

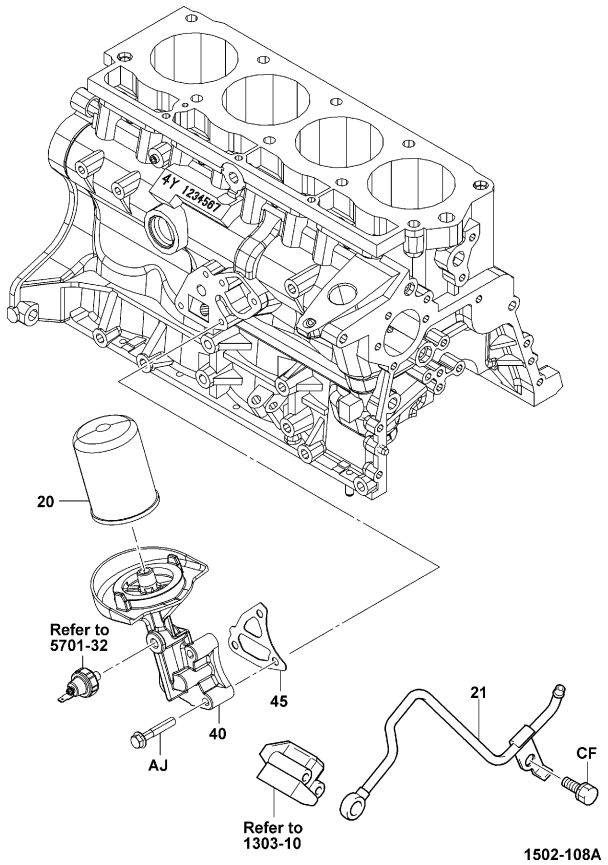


1502-108A

| 1502 | OIL FILTER<br>FILTRE A HUILE | ÖLFILTER<br>FILTRO DE ACEITE |
|---|---|---|

| PART NAME CODE | PART NAME | QTY | PART NAME CODE | PART NAME | QTY |
|---|---|---|---|---|---|
| 1502-20 | **ELEMENT SUB-ASSY, OIL FILTER**<br>SOUS-ENS. DE D'ELEMENT<br>ELEMENT-TEILGRUPPE<br>SUBCONJUNTO DEL ELEMENTO | 1 | | | |
| 1502-40 | **BRACKET, OIL FILTER**<br>SUPPORT<br>TRAGER<br>SOPORTE | 1 | | | |
| 1502-45 | **GASKET, OIL FILTER**<br>JOINT<br>DICHTUNG<br>EMPAQUETADURA | 1 | | | |
| 1502-AJ | **BOLT**<br>BOULON<br>SCHRAUBE<br>PERNO | 3 | | | |

| 1601 | WATER PUMP<br>POMPE A EAU | WASSERPUMPE<br>BOMBA DE AGUA |
|---|---|---|

4Y

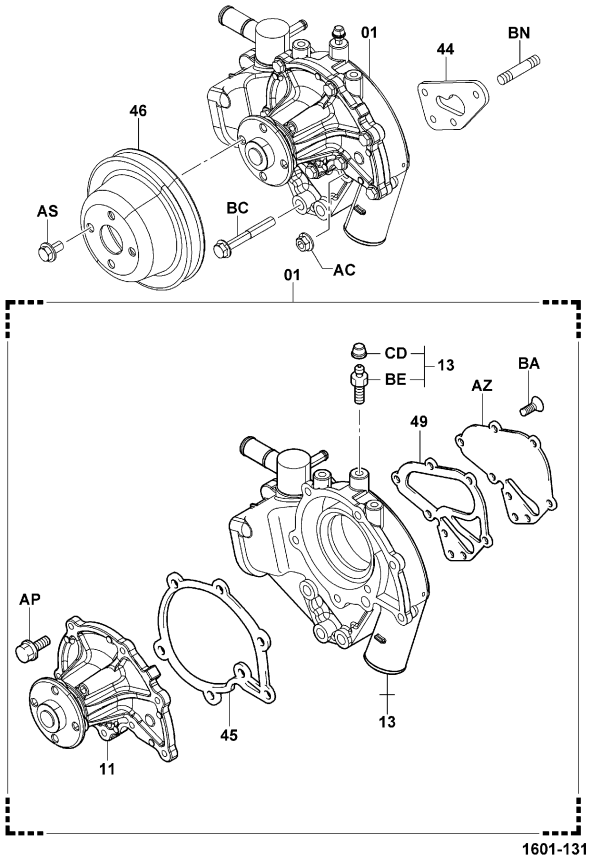


1601-131_

| 1601 | WATER PUMP<br>POMPE A EAU | WASSERPUMPE<br>BOMBA DE AGUA |
|---|---|---|

| PART NAME CODE | PART NAME | QTY |
|---|---|---|
| 1601-01 | **PUMP ASSY, WATER**<br>ENS. DE POMPE<br>PUMPENAGGREGAT<br>CONJUNTO DE LA BOMBA | 1 |
| 1601-11 | **PUMP ASSY, WATER, L/BODY**<br>ENS. DE POMPE<br>PUMPENAGGREGAT<br>CONJUNTO DE LA BOMBA | 1 |
| 1601-13 | **BODY ASSY, WATER PUMP**<br>ENS. DE CARROSSERIE<br>KAROSSERIE, VOLLST.<br>CONJUNTO DE LA CARROCERIA | 1 |
| 1601-41A | **BEARING, WATER PUMP, NO.1**<br>ROULEMENT<br>LAGER<br>COJINETE | 1 |
| 1601-44 | **GASKET, WATER PUMP**<br>JOINT<br>DICHTUNG<br>EMPAQUETADURA | 1 |
| 1601-45 | **GASKET, WATER PUMP COVER**<br>JOINT<br>DICHTUNG<br>EMPAQUETADURA | 1 |
| 1601-46 | **PULLEY, FAN**<br>POULIE<br>RIEMENSCHEIBE<br>POLEA | 1 |
| 1601-49 | **GASKET, WATER PUMP, NO.2**<br>JOINT<br>DICHTUNG<br>EMPAQUETADURA | 1 |
| 1601-AC | **NUT**<br>ECROU<br>MUTTER<br>TUERCA | 2 |
| 1601-AP | **BOLT**<br>BOULON<br>SCHRAUBE<br>PERNO | 7 |

| PART NAME CODE | PART NAME | QTY |
|---|---|---|
| 1601-AS | **BOLT**<br>BOULON<br>SCHRAUBE<br>PERNO | 2 |
| 1601-AZ | **PLATE, WATER PUMP**<br>PLAQUE<br>PLATTE<br>PLACA | 1 |
| 1601-BA | **SCREW**<br>VIS<br>SCHRAUBE<br>TORNILLO | 4 |
| 1601-BC | **BOLT**<br>BOULON<br>SCHRAUBE<br>PERNO | 2 |
| 1601-BE | **PLUG**<br>BOUCHON<br>STOPFEN<br>TAPON | 1 |
| 1601-BN | **BOLT, STUD**<br>BOULON<br>SCHRAUBE<br>PERNO | 2 |
| 1601-CD | **CAP**<br>CAPUCHON<br>KAPPE<br>TAPA | 1 |

4Y..ATM

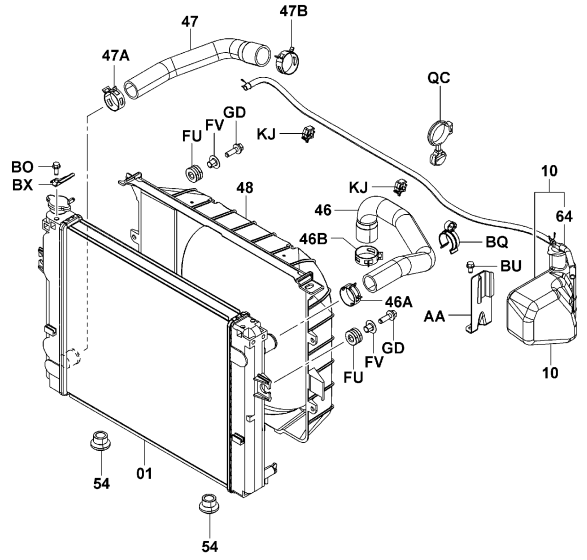


1603-484C

4Y..MTM

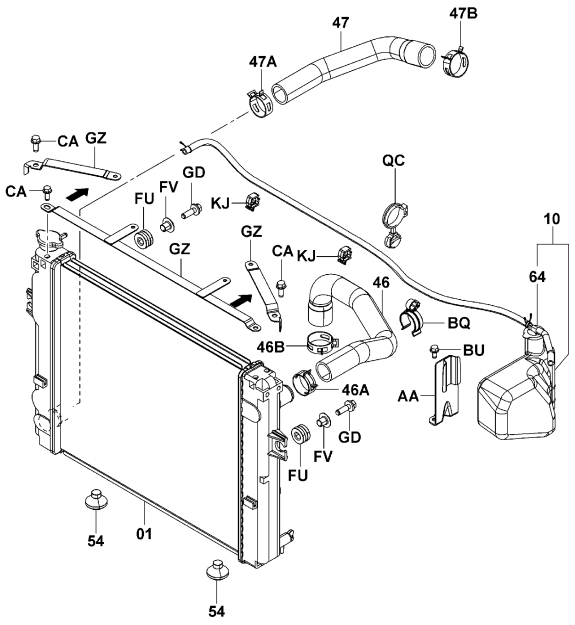


1603-485C

1603-484C
1603-485C


| 1603 | RADIATOR & WATER OUTLET<br>RADIATEUR & ORIFICE D'EAU | KÜHLER & WASSERAUSLASS<br>RADIADOR Y SALIDA DE AGUA |
|---|---|---|


4Y [FAN & V-BELT]

1DZ

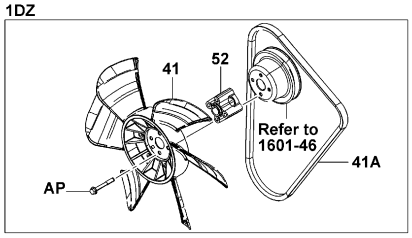


1DZ (COOLING PACKAGE)
(PAPER SPEC BAL)
(LOW NOISE)
(WET BRAKE)

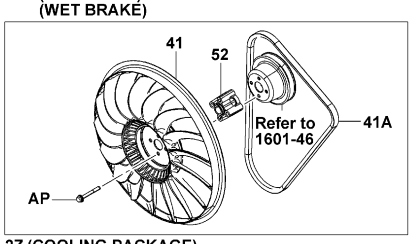


1DZ (COOLER)

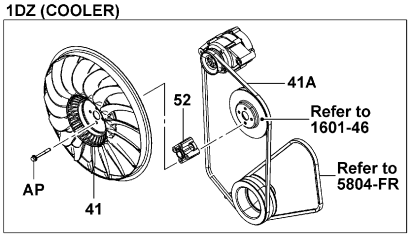


2Z,4Y

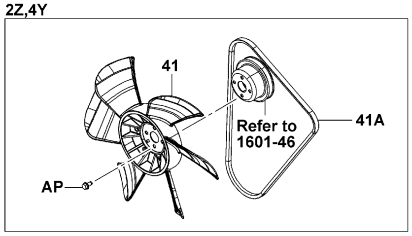


2Z (COOLING PACKAGE)
(PAPER SPEC BAL)
(LOW NOISE)
(WET BRAKE)

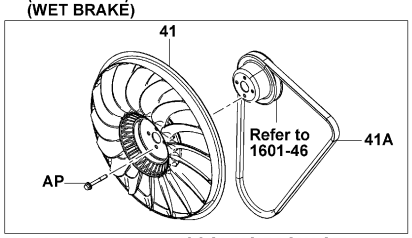


2Z (COOLER)

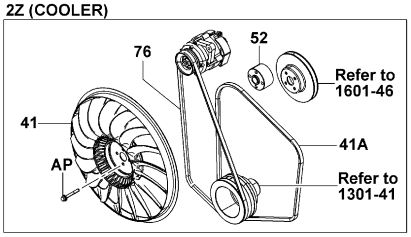


4Y..10,14,15,18,L10,L14,L15,L18 (COOLING PACKAG
10N,15N,18N,K20N,K25N,K30N (PAPER SPEC BAL)
K20,K25,LK20,LK25,K30 (LOW NOISE)

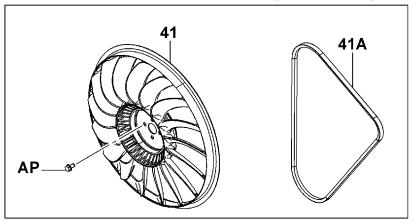


4Y..20,25,L20,L25 (COOLING PACKAGE)
20N,25N,30N,J35N (PAPER SPEC BAL)
28,30,J35,L30 (LOW NOISE)
(WET BRAKE)

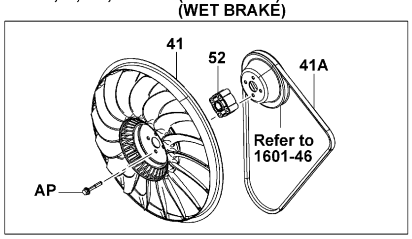


4Y (COOLER)

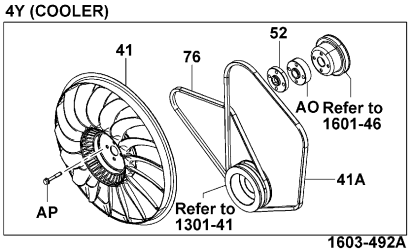


1603-492A

1603-492A

| 1603 | RADIATOR & WATER OUTLET<br>RADIATEUR & ORIFICE D'EAU | KÜHLER & WASSERAUSLASS<br>RADIADOR Y SALIDA DE AGUA |
|---|---|---|

4Y (EEC SPEC ISRAEL, AUSTRALIA) [FAN GUARD]

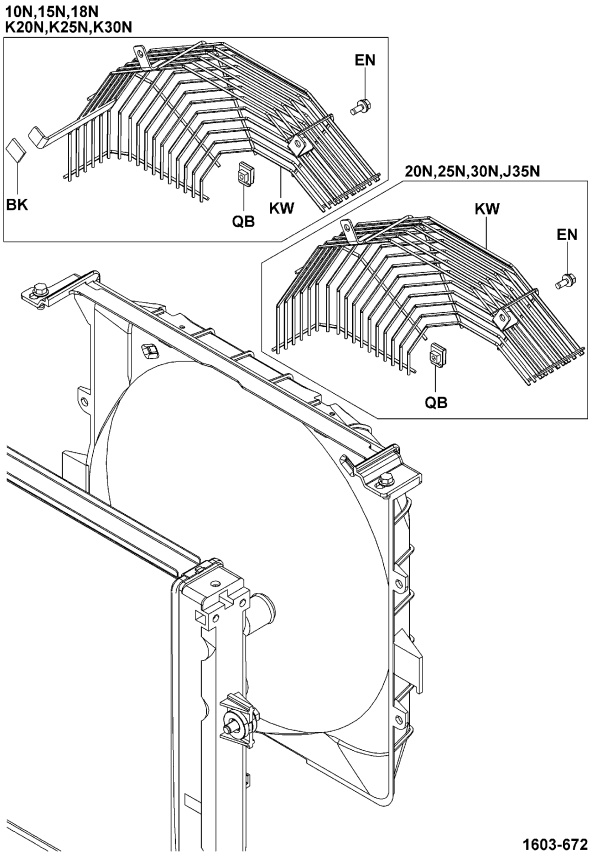


4Y (RUSSIA, LOW PRO RUSSIA) [FAN GUARD]

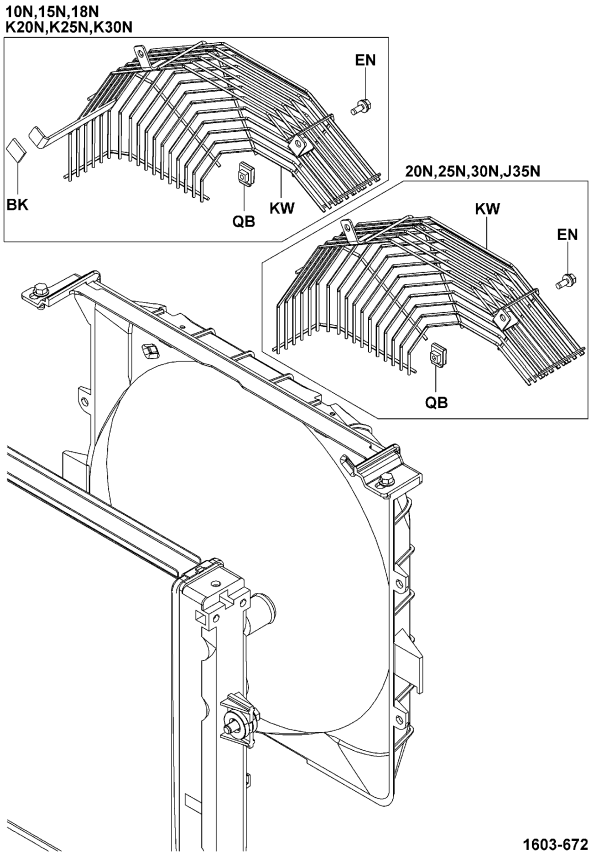


| 1603 | RADIATOR & WATER OUTLET<br>RADIATEUR & ORIFICE D'EAU | KÜHLER & WASSERAUSLASS<br>RADIADOR Y SALIDA DE AGUA |
|---|---|---|

4Y (RADIATOR SCREEN, COOLING PACKAGE, PAPER SPEC BALE)

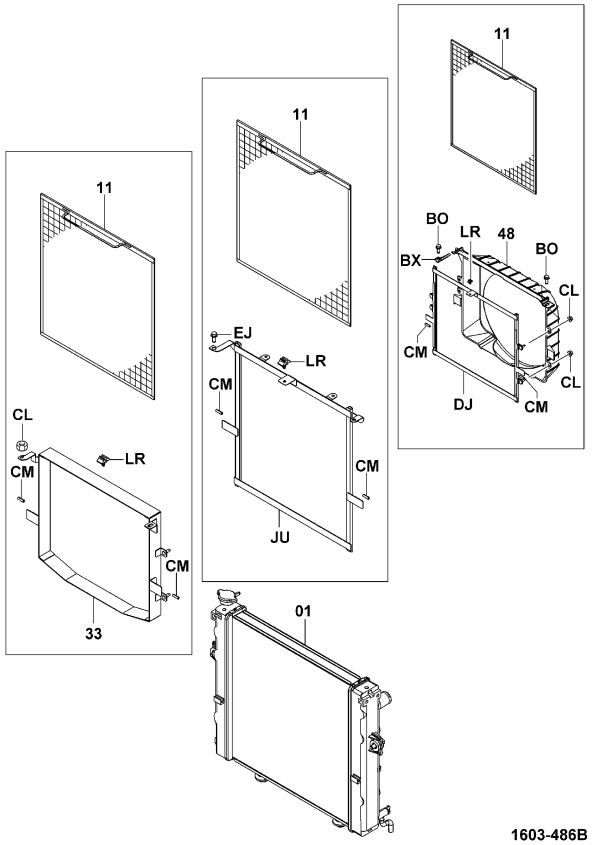


4Y (COOLING PACKAGE, PAPER SPEC BALE) [OIL COOLER]

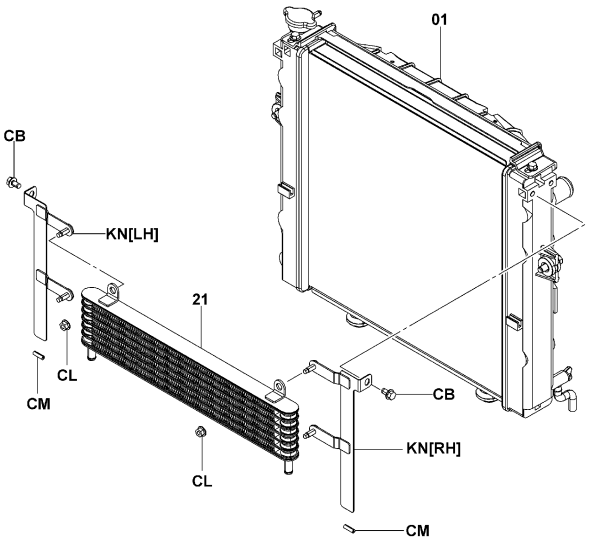

4Y [ENGINE PARTS]

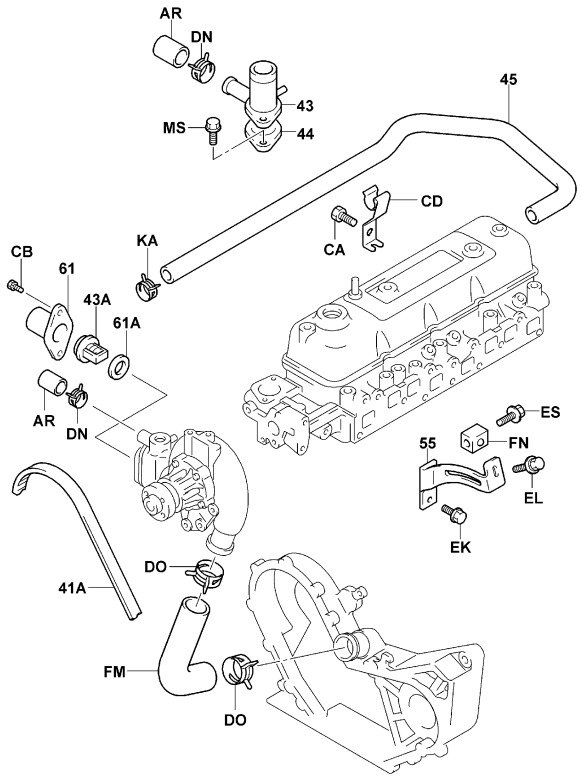


1603-491A

1603-491A

4Y (3-WAY CATALYTIC) [ENGINE PARTS]

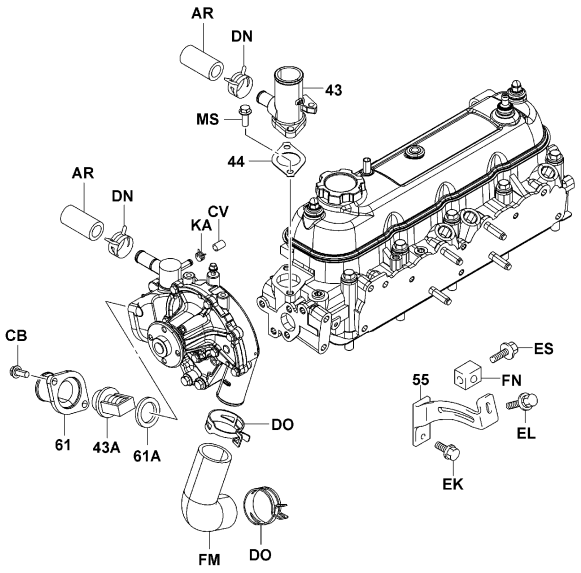


1603-490B

1603-490B


| 1603 | RADIATOR & WATER OUTLET<br>RADIATEUR & ORIFICE D'EAU | KÜHLER & WASSERAUSLASS<br>RADIADOR Y SALIDA DE AGUA |
|---|---|---|


4Y [RADIATOR INNER PARTS]

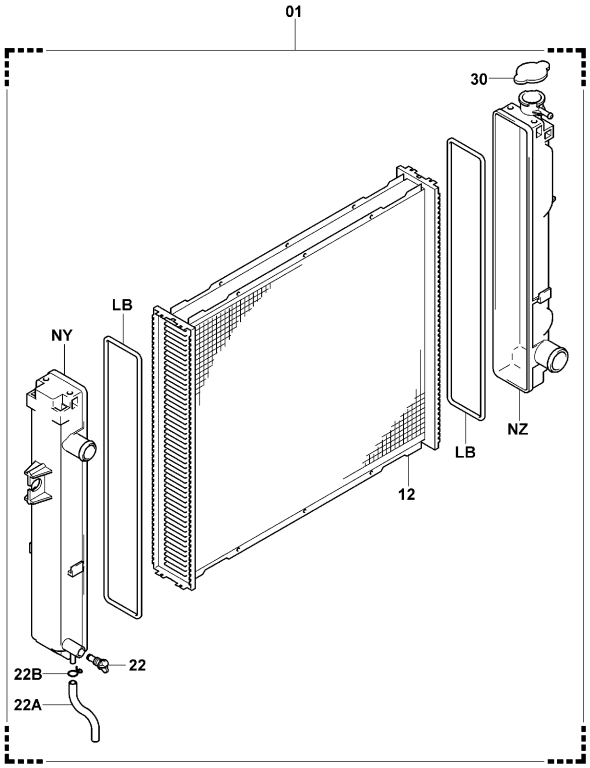


1603-497

1603-497_

## 1603 RADIATOR & WATER OUTLET / RADIATEUR & ORIFICE D'EAU / KÜHLER & WASSERAUSLASS / RADIADOR Y SALIDA DE AGUA

| PART NAME CODE | PART NAME | QTY |
|---|---|---|
| 1603-01 | **RADIATOR ASSY**<br>ENS. DE RADIATEUR<br>KUHLER, VOLLST.<br>CONJUNTO DEL RADIADOR | 1 |
| 1603-10 | **TANK ASSY, RADIATOR RESERVE**<br>ENS. DE RESERVOIR<br>TANK, VOLLST.<br>CONJUNTO DEL DEPOSITO | 1 |
| 1603-11 | **SCREEN SUB-ASSY, RADIATOR**<br>SOUS-ENS. TAMIS<br>SCHIRMBLENDEN-TEILGRUPPE<br>SUBCONJUNTO DE PANTALLA | 1 |
| 1603-12 | **CORE SET**<br>JEU DE NOYAU<br>KERN-SATZ<br>JUEGO DE NUCLEO | 1 |
| 1603-21 | **COOLER ASSY, OIL**<br>ENS. DE REFRIGERANT<br>KUHLER, VOLLST.<br>CONJUNTO DEL ENFRIADOR | 1 |
| 1603-22 | **COCK ASSY, DRAIN**<br>ENS. DE ROBINET<br>HAHN, VOLLST.<br>CONJUNTO DEL GRIFO | 1 |
| 1603-22A | **HOSE, DRAIN COCK**<br>FLEXIBLE<br>SCHLAUCH<br>MANGUERA | 1 |
| 1603-22B | **CLIP**<br>AGRAFE<br>CLIP<br>FIJADOR | 1 |
| 1603-30 | **CAP SUB-ASSY, RADIATOR**<br>SOUS-ENS. DE CAPUCHON<br>KAPPEN-TEILGRUPPE<br>SUBCONJUNTO DE LA TAPA | 1 |
| 1603-41 | **FAN**<br>VENTILATEUR<br>LUFTER<br>VENTILADOR | 1 |
| 1603-41A | **BELT, V**<br>COURROIE<br>RIEMEN<br>CORREA | 1 |
| 1603-43 | **OUTLET, WATER**<br>SORTIE<br>AUSLASS<br>SALIDA | 1 |
| 1603-43A | **THERMOSTAT**<br>THERMOSTAT<br>THERMOSTAT<br>TERMOSTATO | 1 |
| 1603-44 | **GASKET, WATER OUTLET**<br>JOINT<br>DICHTUNG<br>EMPAQUETADURA | 1 |
| 1603-45 | **HOSE, WATER BYPASS**<br>FLEXIBLE<br>SCHLAUCH<br>MANGUERA | 1 |
| 1603-46 | **HOSE, RADIATOR, INLET**<br>FLEXIBLE<br>SCHLAUCH<br>MANGUERA | 1 |
| 1603-46A | **CLAMP, HOSE, RADIATOR INLET**<br>PINSE<br>KLEMME<br>ABRAZADERA | 1 |
| 1603-46B | **CLAMP, HOSE, RADIATOR INLET**<br>PINSE<br>KLEMME<br>ABRAZADERA | 1 |
| 1603-47 | **HOSE, RADIATOR, OUTLET**<br>FLEXIBLE<br>SCHLAUCH<br>MANGUERA | 1 |
| 1603-47A | **CLAMP, HOSE, RADIATOR OUTLET**<br>PINSE<br>KLEMME<br>ABRAZADERA | 1 |

## 1603 RADIATOR & WATER OUTLET / RADIATEUR & ORIFICE D'EAU / KÜHLER & WASSERAUSLASS / RADIADOR Y SALIDA DE AGUA

| PART NAME CODE | PART NAME | QTY |
|---|---|---|
| 1603-47B | **CLAMP, HOSE, RADIATOR OUTLET**<br>PINSE<br>KLEMME<br>ABRAZADERA | 1 |
| 1603-48 | **SHROUD, FAN, NO.1**<br>TABLIER<br>VERKLEIDUNG<br>CUBIERTA | 1 |
| 1603-52 | **SPACER, FAN PULLEY**<br>ENTRETOISE<br>DISTANZSTUCK<br>SEPARADOR | 1 |
| 1603-54 | **RUBBER, MOUNTING (FOR RADIATOR)**<br>CAOUTCHOUC<br>GUMMI<br>GOMA | 2 |
| 1603-55 | **BAR, FAN BELT ADJUSTING**<br>BAR<br>STAB<br>BARRA | 1 |
| 1603-61 | **INLET, WATER**<br>ADMISSION<br>EINLASS<br>ENTRADA | 1 |
| 1603-61A | **GASKET, WATER INLET**<br>JOINT<br>DICHTUNG<br>EMPAQUETADURA | 1 |
| 1603-64 | **CAP & HOSE SET**<br>ENS. BOUCHON DE CONDUITE<br>KAPPEN-UND SCHLAUCHSATZ<br>JUEGO DE TAPA Y MANGUERA | 1 |
| 1603-AA | **BRACKET, RESERVE TANK**<br>SUPPORT<br>TRAGER<br>SOPORTE | 1 |
| 1603-AP | **BOLT, FAN**<br>BOULON<br>SCHRAUBE<br>PERNO | 2- 4 |
| 1603-AR | **PLUG**<br>BOUCHON<br>STOPFEN<br>TAPON | 2 |
| 1603-BK | **RUBBER**<br>CAOUTCHOUC<br>GUMMI<br>GOMA | 1 |
| 1603-BO | **BOLT**<br>BOULON<br>SCHRAUBE<br>PERNO | 2 |
| 1603-BQ | **CLAMP**<br>PINSE<br>KLEMME<br>ABRAZADERA | 1 |
| 1603-BU | **BOLT**<br>BOULON<br>SCHRAUBE<br>PERNO | 1 |
| 1603-BX | **PLATE**<br>PLAQUE<br>PLATTE<br>PLACA | 1 |
| 1603-CA | **BOLT**<br>BOULON<br>SCHRAUBE<br>PERNO | 2 |
| 1603-CB | **BOLT**<br>BOULON<br>SCHRAUBE<br>PERNO | 2 |
| 1603-CL | **NUT**<br>ECROU<br>MUTTER<br>TUERCA | 4 |
| 1603-CM | **INSULATOR, EDGE**<br>ISOLATEUR<br>ISOLATOR<br>AISLADOR | 2 |

## 1603

**RADIATOR & WATER OUTLET**
**RADIATEUR & ORIFICE D'EAU**
**KÜHLER & WASSERAUSLASS**
**RADIADOR Y SALIDA DE AGUA**

| PART NAME CODE | PART NAME | QTY |
|---|---|---|
| 1603-CV | **PLUG**<br>BOUCHON<br>STOPFEN<br>TAPON | 1 |
| 1603-DJ | **BRACKET SUB-ASSY**<br>SOUS-ENS. DE SUPPORT<br>TRAGER-TEILGRUPPE<br>SUBCONJUNTO DE LA SOPORTE | 1 |
| 1603-DN | **CLIP**<br>AGRAFE<br>CLIP<br>FIJADOR | 2 |
| 1603-DO | **CLIP**<br>AGRAFE<br>CLIP<br>FIJADOR | 2 |
| 1603-EJ | **BOLT**<br>BOULON<br>SCHRAUBE<br>PERNO | 2 |
| 1603-EK | **BOLT**<br>BOULON<br>SCHRAUBE<br>PERNO | 2 |
| 1603-EL | **BOLT**<br>BOULON<br>SCHRAUBE<br>PERNO | 1 |
| 1603-EN | **BOLT**<br>BOULON<br>SCHRAUBE<br>PERNO | 2 |
| 1603-ES | **BOLT**<br>BOULON<br>SCHRAUBE<br>PERNO | 1 |
| 1603-FM | **HOSE, WATER INLET**<br>FLEXIBLE<br>SCHLAUCH<br>MANGUERA | 1 |
| 1603-FN | **SLIDER**<br>CURSEUR<br>GLEITTEIL<br>DESLIZADOR | 1 |
| 1603-FU | **INSULATOR**<br>ISOLATEUR<br>ISOLATOR<br>AISLADOR | 2 |
| 1603-FV | **SPACER**<br>ENTRETOISE<br>DISTANZSTUCK<br>SEPARADOR | 2 |
| 1603-GD | **BOLT**<br>BOULON<br>SCHRAUBE<br>PERNO | 2 |
| 1603-GZ | **BRACKET SUB-ASSY**<br>SOUS-ENS. DE SUPPORT<br>TRAGER-TEILGRUPPE<br>SUBCONJUNTO DE LA SOPORTE | 2 |
| 1603-JU | **BRACKET SUB-ASSY, FILTER**<br>SOUS-ENS. DE SUPPORT<br>TRAGER-TEILGRUPPE<br>SUBCONJUNTO DE LA SOPORTE | 1 |
| 1603-KA | **CLIP**<br>AGRAFE<br>CLIP<br>FIJADOR | 1 |
| 1603-KJ | **CLIP**<br>AGRAFE<br>CLIP<br>FIJADOR | 2 |
| 1603-KN | **BRACKET**<br>SUPPORT<br>TRAGER<br>SOPORTE | 1 |
| 1603-KW | **GUARD, FAN**<br>PROTECTEUR<br>SCHUTZBLECH<br>PROTECTOR | 1 |

## 1603

**RADIATOR & WATER OUTLET**
**RADIATEUR & ORIFICE D'EAU**
**KÜHLER & WASSERAUSLASS**
**RADIADOR Y SALIDA DE AGUA**

| PART NAME CODE | PART NAME | QTY |
|---|---|---|
| 1603-LB | **PACKING**<br>CALE<br>DICHTUNG<br>EMPAQUETADURA | 1- 2 |
| 1603-LR | **CLIP**<br>AGRAFE<br>CLIP<br>FIJADOR | 1 |
| 1603-MS | **BOLT**<br>BOULON<br>SCHRAUBE<br>PERNO | 2 |
| 1603-NY | **TANK**<br>RESERVOIR<br>TANK<br>DEPOSITO | 1 |
| 1603-NZ | **TANK**<br>RESERVOIR<br>TANK<br>DEPOSITO | 1 |
| 1603-QB | **NUT SUB-ASSY**<br>ENS. DE ECROU<br>MUTTER-TEILGRUPPE<br>SUBCONJUNTO DE TUERCA | 2 |
| 1603-QC | **CLAMP**<br>PINSE<br>KLEMME<br>ABRAZADERA | 1 |

| 1701 | MANIFOLD<br>COLLECTEUR | SAMMELROHR<br>MULTIPLE |
|---|---|---|

4Y

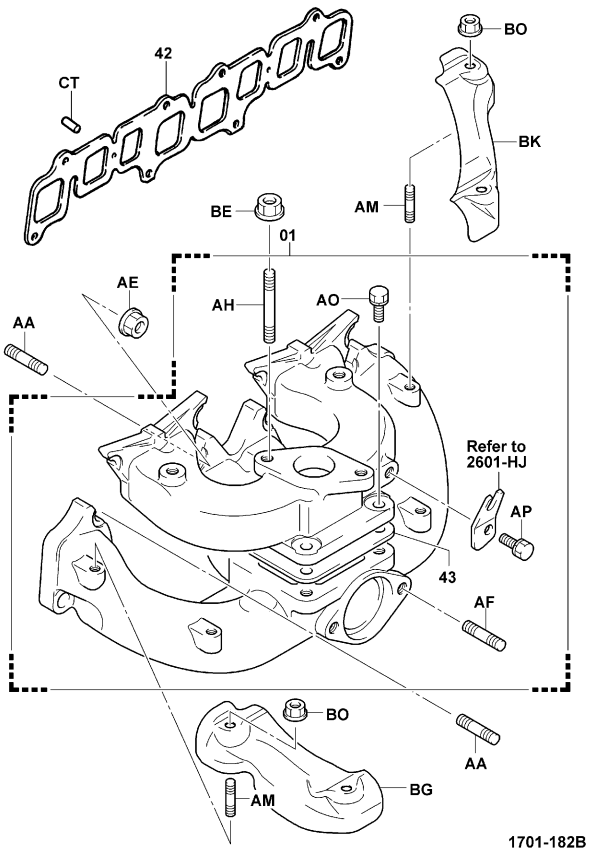


1701-182B

| 1701 | MANIFOLD<br>COLLECTEUR | SAMMELROHR<br>MULTIPLE |
|---|---|---|

4Y (3-WAY CATALYTIC)

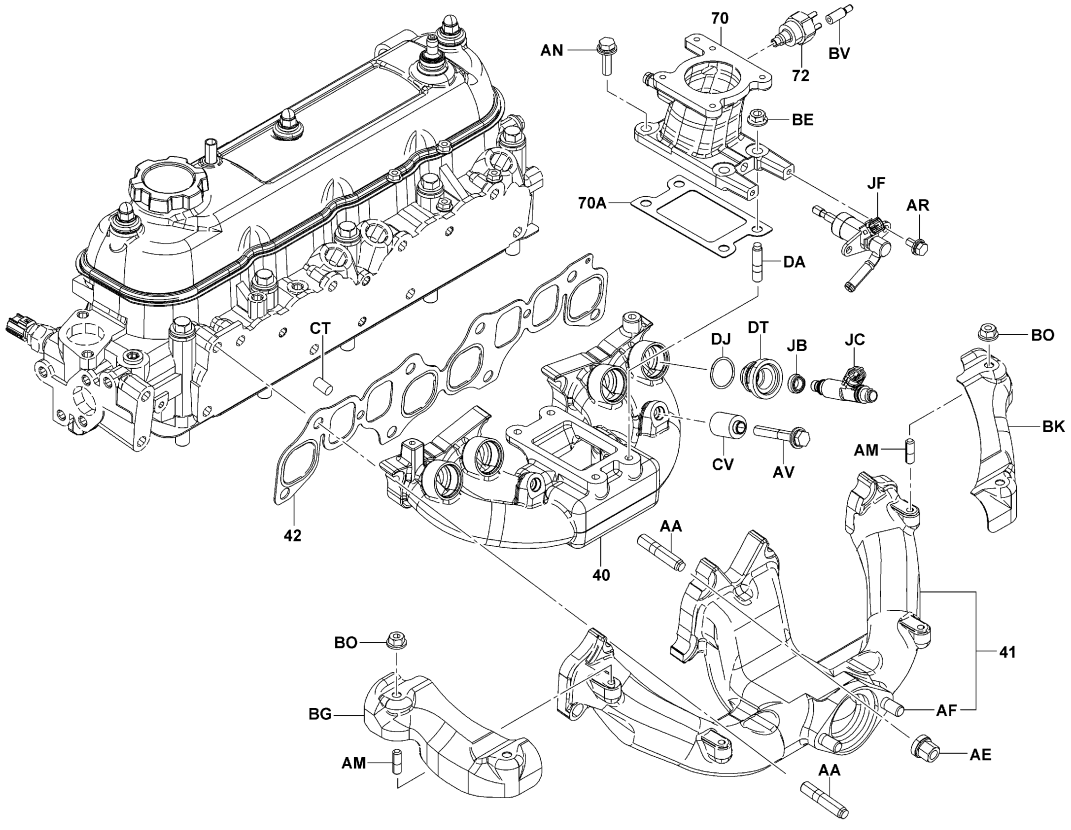


1701-181B

## 1701 MANIFOLD / COLLECTEUR / SAMMELROHR / MULTIPLE

| PART NAME CODE | PART NAME | QTY |
|---|---|---|
| 1701-01 | **MANIFOLD ASSY**<br>ENS. DE COLLECTEUR<br>SÄMMELROHR, VOLLST.<br>CONJUNTO DEL MULTIPLE | 1 |
| 1701-40 | **MANIFOLD, INTAKE**<br>COLLECTEUR<br>SÄMMELROHR<br>MULTIPLE | 1 |
| 1701-41 | **MANIFOLD, EXHAUST**<br>COLLECTEUR<br>SÄMMELROHR<br>MULTIPLE | 1 |
| 1701-42 | **GASKET, MANIFOLD TO CYLINDER HEAD**<br>JOINT<br>DICHTÜNG<br>EMPAQUETADURA | 1 |
| 1701-43 | **GASKET, MANIFOLD**<br>JOINT<br>DICHTÜNG<br>EMPAQUETADURA | 1 |
| 1701-70 | **PIPE, INTAKE**<br>TUYAU<br>ROHR<br>TUBO | 1 |
| 1701-70A | **GASKET, INTAKE PIPE**<br>JOINT<br>DICHTÜNG<br>EMPAQUETADURA | 1 |
| 1701-72 | **FILTER, GAS**<br>FILTRE<br>FILTER<br>FILTRO | 1 |
| 1701-AA | **BOLT, STUD**<br>BOULON<br>SCHRÄÜBE<br>PERNO | 8 |
| 1701-AE | **NUT**<br>ECROU<br>MÜTTER<br>TUERCA | 8 |
| 1701-AF | **BOLT, STUD**<br>BOULON<br>SCHRÄÜBE<br>PERNO | 2 |
| 1701-AH | **BOLT, STUD**<br>BOULON<br>SCHRÄÜBE<br>PERNO | 2 |
| 1701-AM | **BOLT, STUD**<br>BOULON<br>SCHRÄÜBE<br>PERNO | 4 |
| 1701-AN | **BOLT**<br>BOULON<br>SCHRÄÜBE<br>PERNO | 2 |
| 1701-AO | **BOLT**<br>BOULON<br>SCHRÄÜBE<br>PERNO | 4 |
| 1701-AP | **BOLT**<br>BOULON<br>SCHRÄÜBE<br>PERNO | 1 |
| 1701-AR | **BOLT**<br>BOULON<br>SCHRÄÜBE<br>PERNO | 2 |
| 1701-AV | **BOLT**<br>BOULON<br>SCHRÄÜBE<br>PERNO | 2 |
| 1701-BE | **NUT**<br>ECROU<br>MÜTTER<br>TUERCA | 2 |
| 1701-BG | **INSULATOR, HEAT, NO.2**<br>ISOLATEUR<br>ISOLÄTOR<br>AISLADOR | 1 |

## 1701 MANIFOLD / COLLECTEUR / SAMMELROHR / MULTIPLE

| PART NAME CODE | PART NAME | QTY |
|---|---|---|
| 1701-BK | **INSULATOR, HEAT, NO.1**<br>ISOLATEUR<br>ISOLÄTOR<br>AISLADOR | 1 |
| 1701-BO | **NUT**<br>ECROU<br>MÜTTER<br>TUERCA | 4 |
| 1701-BQ | **PLUG**<br>BOUCHON<br>STOPFEN<br>TAPON | 1 |
| 1701-BV | **PLUG**<br>BOUCHON<br>STOPFEN<br>TAPON | 1- 2 |
| 1701-CT | **PIN, STRAIGHT**<br>GOUPILLE<br>STIFT<br>PASADOR | 2 |
| 1701-CV | **SPACER**<br>ENTRETOISE<br>DISTÄNZSTÜCK<br>SEPARADOR | 2 |
| 1701-DA | **BOLT, STUD**<br>BOULON<br>SCHRÄÜBE<br>PERNO | 4 |
| 1701-DJ | **RING, O**<br>ANNEAU<br>RING<br>ANILLO | 4 |
| 1701-DT | **SPACER**<br>ENTRETOISE<br>DISTÄNZSTÜCK<br>SEPARADOR | 4 |
| 1701-JB | **INSULATOR**<br>ISOLATEUR<br>ISOLÄTOR<br>AISLADOR | 4 |
| 1701-JC | **INJECTOR SET**<br>ISOLATEUR<br>ISOLÄTOR<br>AISLADOR | 4 |
| 1701-JF | **INJECTOR**<br>INJECTEUR<br>EINSPRITZVENTIL<br>INYECTOR | 1 |

| 1702 | EXHAUST PIPE & MUFFLER<br>SILENCIEUX & TUYAU D'ECHAPPEMENT | AUSPUFFLEITUNG & AUSPUFFTOPF<br>TUBO DE ESCAPE Y SIENCIADOR |
|---|---|---|

4Y (CATALYTIC, 3-WAY CATALYTIC)

[1ton]

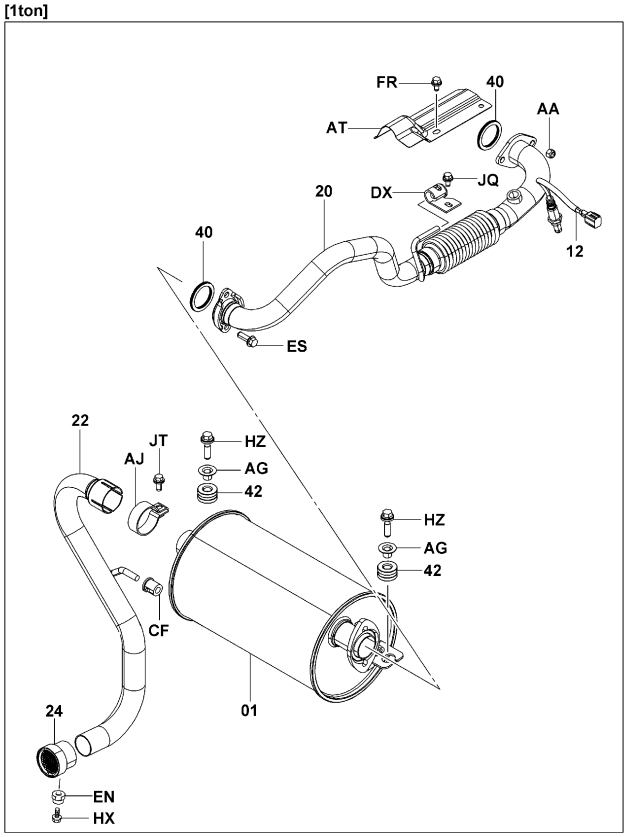


[2,3ton]

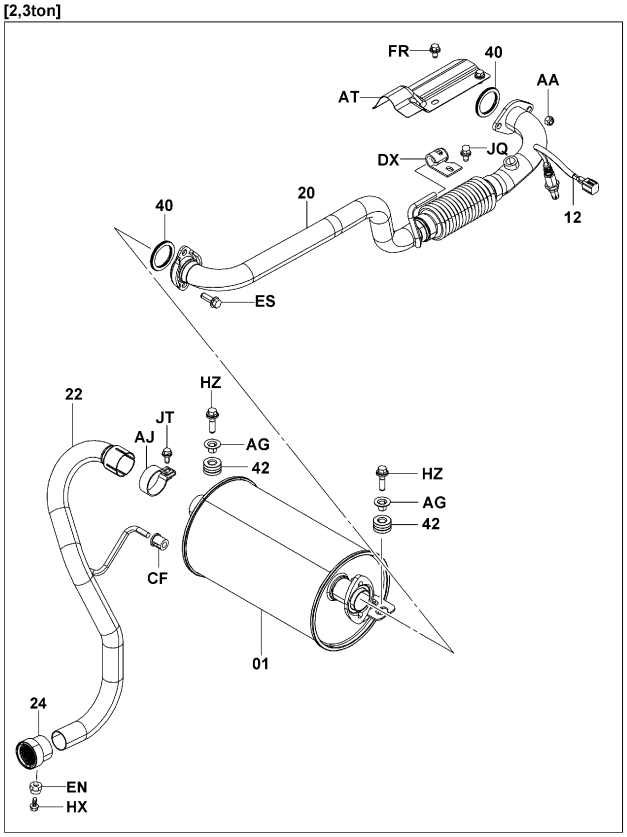


1702-533

1702-533_

| 1702 | EXHAUST PIPE & MUFFLER<br>SILENCIEUX & TUYAU D'ECHAPPEMENT | AUSPUFFLEITUNG & AUSPUFFTOPF<br>TUBO DE ESCAPE Y SIENCIADOR |
|---|---|---|

4Y..10N,15N,18N (UPSWEPT..3-WAY CATALYTIC)

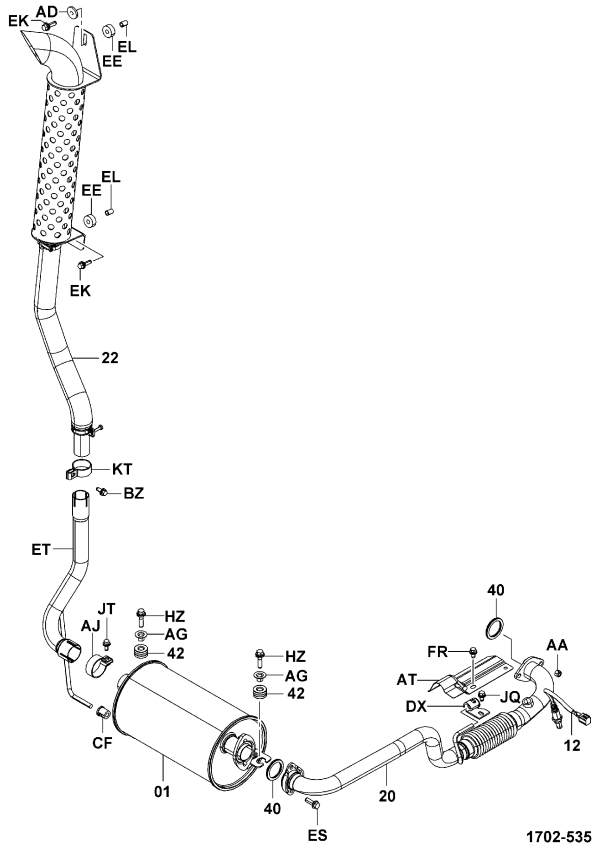


1702-535

1702-535_

4Y..10N,15N,18N (UPSWEPT)

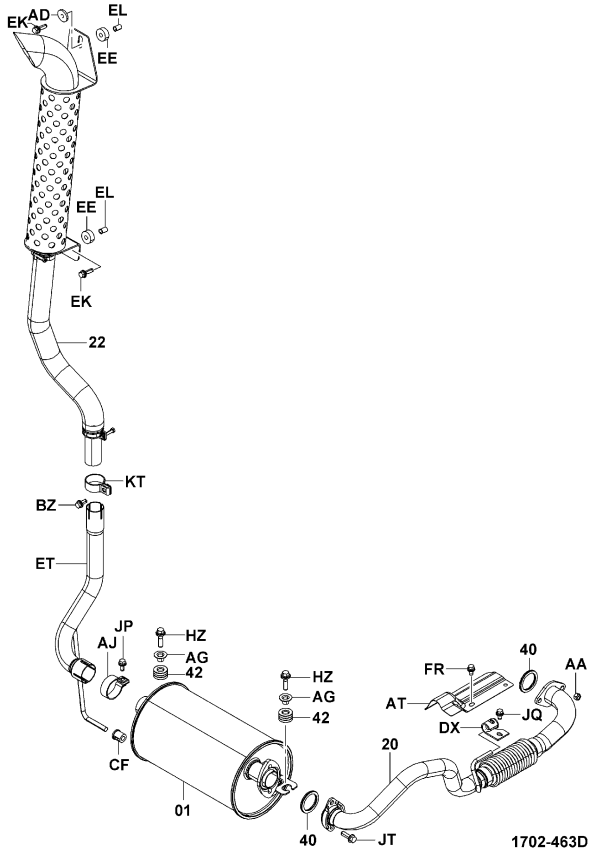


1702-463D

1702-463D

| 1702 | EXHAUST PIPE & MUFFLER<br>SILENCIEUX & TUYAU D'ECHAPPEMENT | AUSPUFFLEITUNG & AUSPUFFTOPF<br>TUBO DE ESCAPE Y SIENCIADOR |
|---|---|---|

4Y..10N,15N,18N,20N,25N,30N,J35N

[1ton]

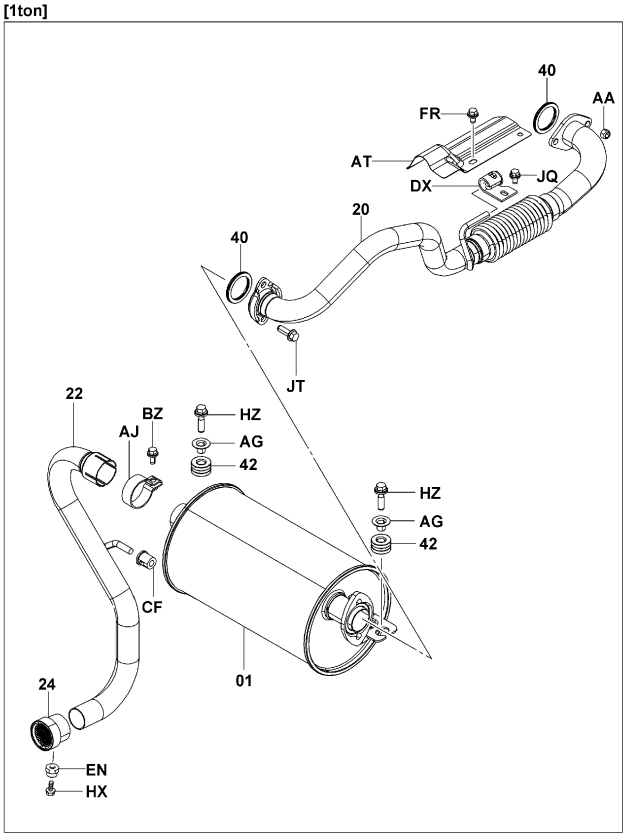


[2,3ton]

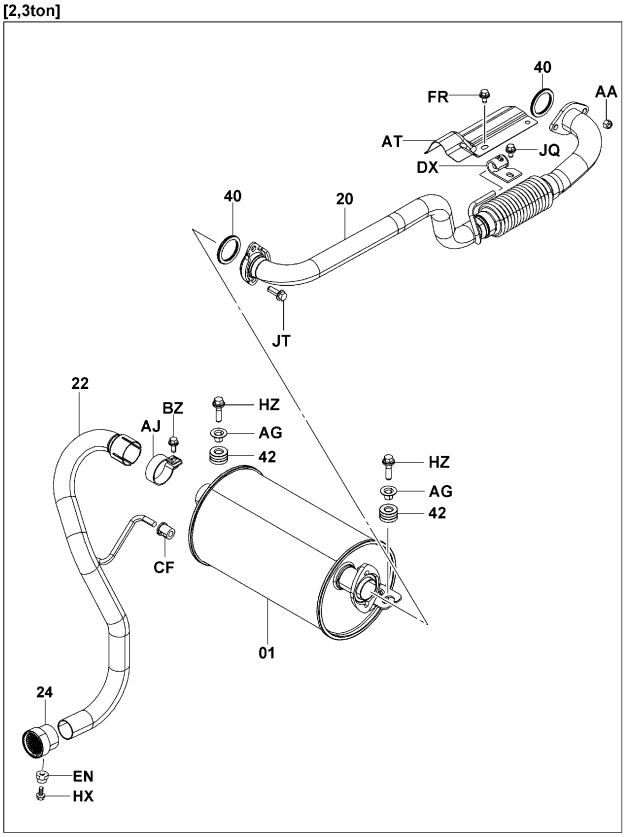


1702-461C

1702-461C

| 1702 | EXHAUST PIPE & MUFFLER<br>SILENCIEUX & TUYAU D'ECHAPPEMENT | AUSPUFFLEITUNG & AUSPUFFTOPF<br>TUBO DE ESCAPE Y SIENCIADOR |
|---|---|---|

4Y..10N,15N,18N,K20N,K25N,K30N (LOW NOISE)

[1ton]

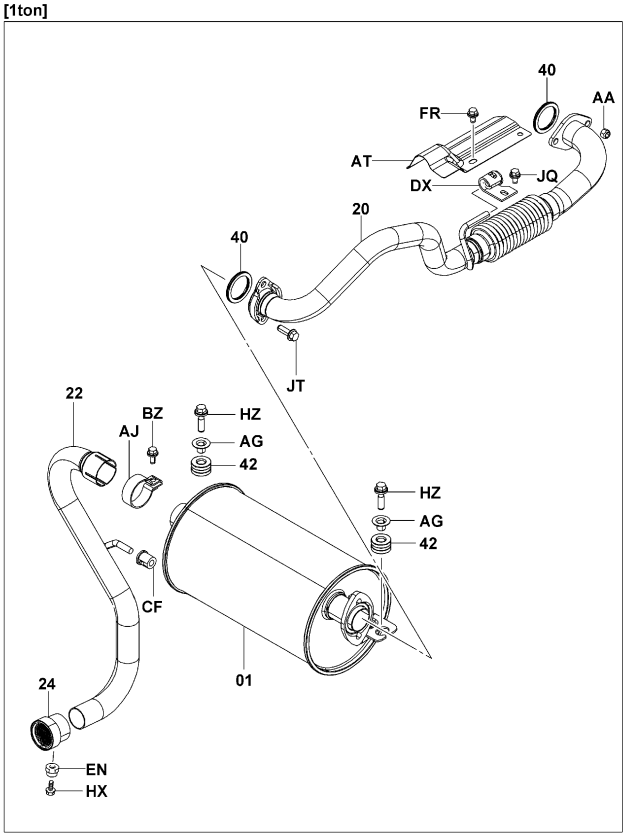


[2,3ton]

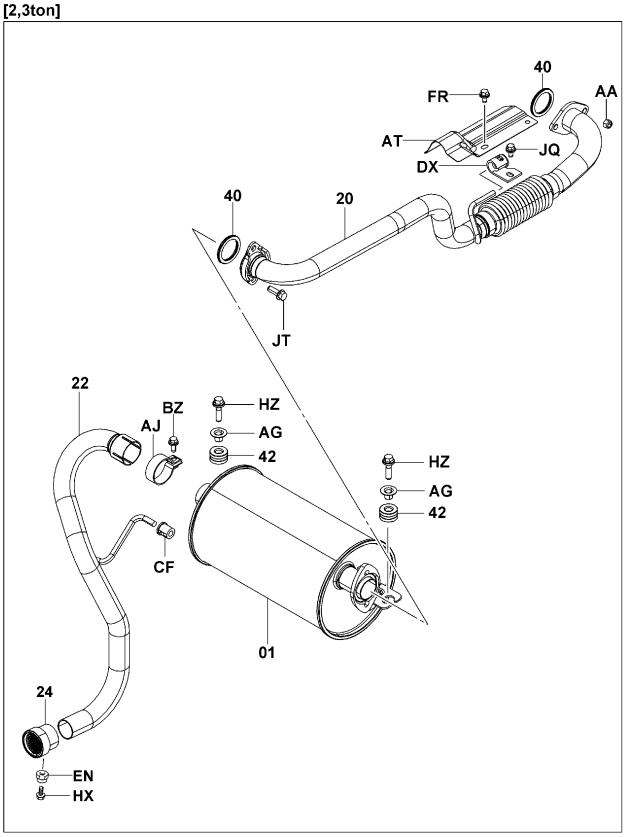


1702-461C

1702-461C

| 1702 | EXHAUST PIPE & MUFFLER<br>SILENCIEUX & TUYAU D'ECHAPPEMENT | AUSPUFFLEITUNG & AUSPUFFTOPF<br>TUBO DE ESCAPE Y SIENCIADOR |
|---|---|---|

4Y..20N,25N,30N,J35N (UPSWEPT..3-WAY CATALYTIC)

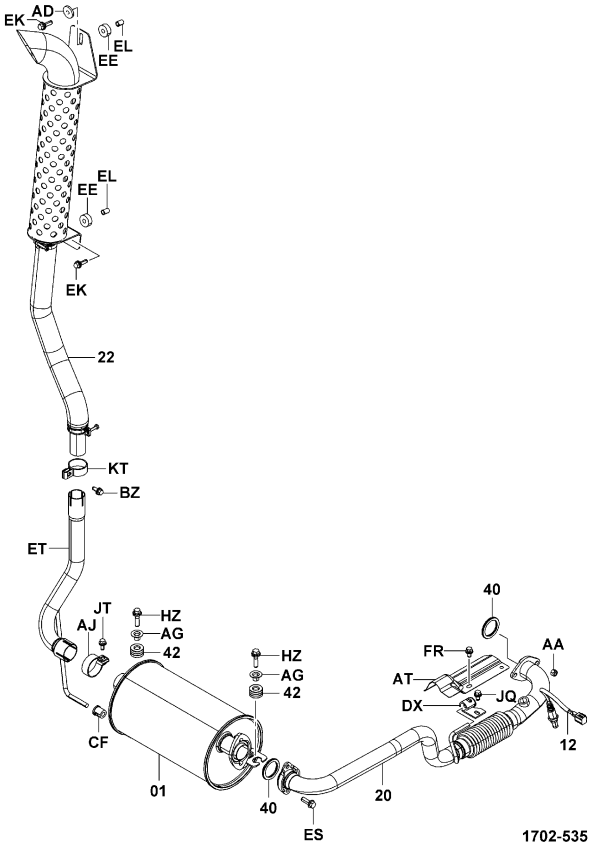


1702-535

1702-535_

4Y..20N,25N,30N,J35N (UPSWEPT)

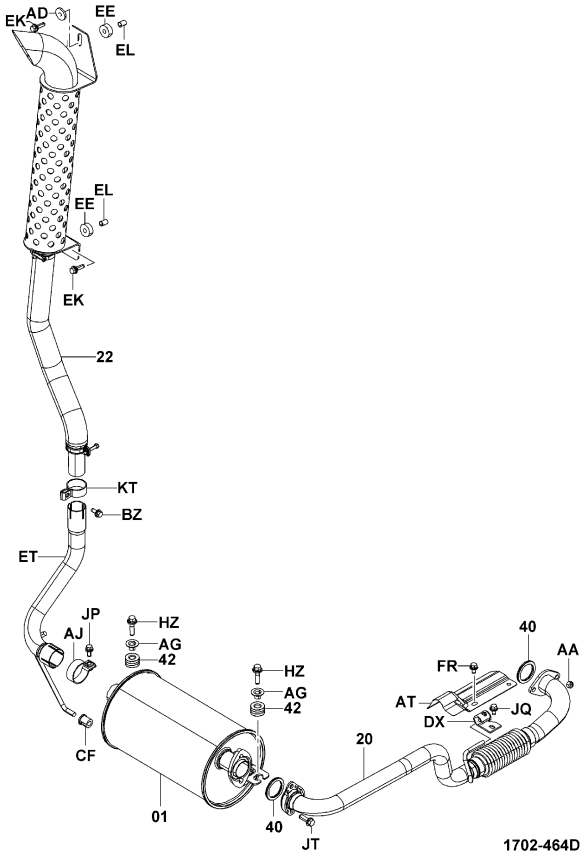


1702-464D

1702-464D

| 1702 | EXHAUST PIPE & MUFFLER<br>SILENCIEUX & TUYAU D'ECHAPPEMENT | AUSPUFFLEITUNG & AUSPUFFTOPF<br>TUBO DE ESCAPE Y SIENCIADOR |
|---|---|---|

4Y..K20N,K25N,K30N,J35N

[1ton]

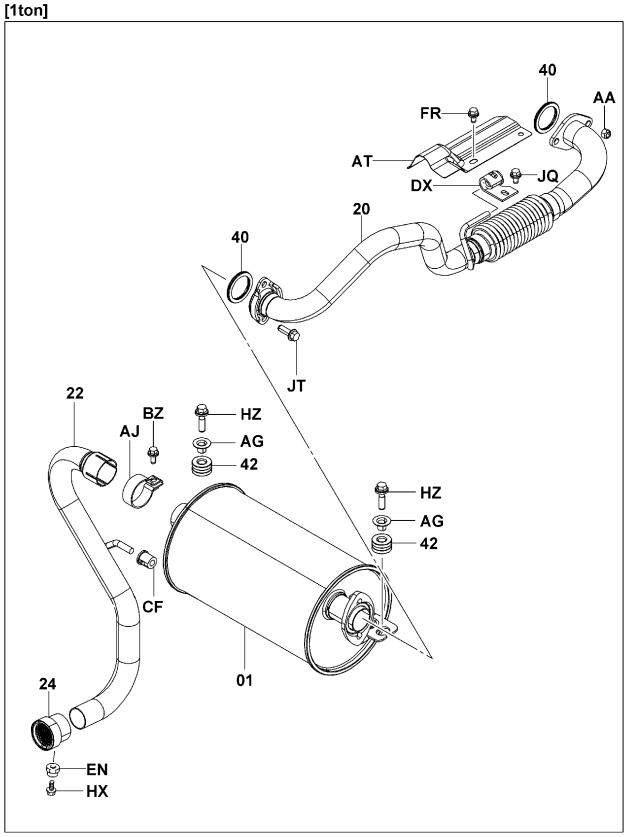


[2,3ton]

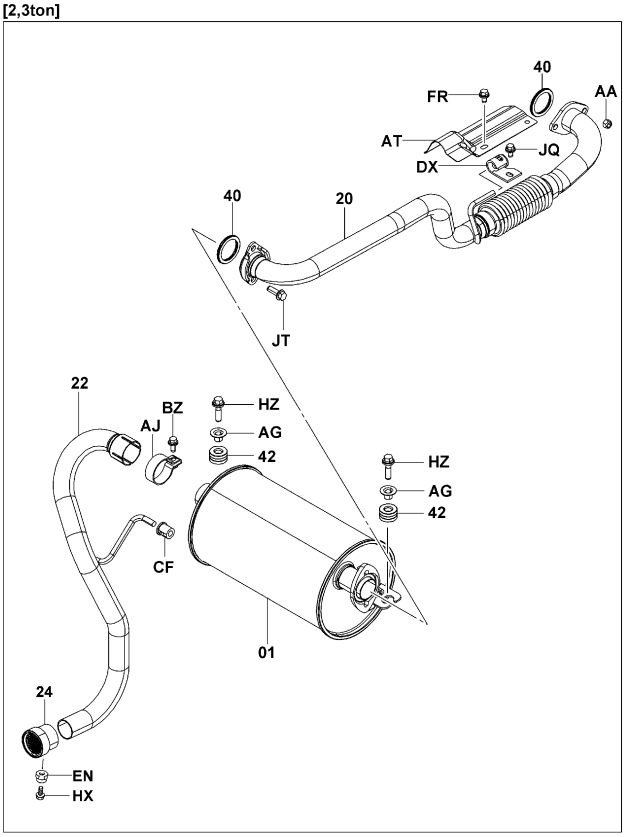


1702-461C

1702-461C

| 1702 | EXHAUST PIPE & MUFFLER<br>SILENCIEUX & TUYAU D'ECHAPPEMENT | AUSPUFFLEITUNG & AUSPUFFTOPF<br>TUBO DE ESCAPE Y SIENCIADOR |
|---|---|---|

| PART NAME CODE | PART NAME | QTY |
|---|---|---|
| 1702-01 | **MUFFLER ASSY**<br>ENS. DE SILENCIEUX D'ECHAPPEMENT<br>SCHÄLLDÄMPFER, VOLLST.<br>CONJUNTO DEL SILENCIADOR | 1 |
| 1702-12 | **SENSOR ASSY, OXYGEN**<br>ENS. DE DETECTEUR<br>SENSOR, VOLLST.<br>CONJUNTO DEL SENSOR | 1 |
| 1702-20 | **PIPE SUB-ASSY, EXHAUST, NO.1**<br>SOUS-ENS. DE TUYAU<br>ROHR-TEILGRÜPPE<br>SUBCONJUNTO DE TUBO | 1 |
| 1702-22 | **PIPE SUB-ASSY, TAIL**<br>SOUS-ENS. DE TUYAU<br>ROHR-TEILGRÜPPE<br>SUBCONJUNTO DE TUBO | 1 |
| 1702-24 | **ARRESTER SUB-ASSY, FRAME**<br>SOUS-ENS. DE PARE-ETINCELLES<br>FÜNKENLÖSCHER-TEILGRÜPPE<br>SUBCONJUNTO DEL PARACHISPAS | 1 |
| 1702-40 | **GASKET, EXHAUST PIPE**<br>JOINT<br>DICHTÜNG<br>EMPAQUETADURA | 1 |
| 1702-42 | **INSULATOR, MUFFLER MOUNTING**<br>ISOLATEUR<br>ISOLÄTOR<br>AISLADOR | 2 |
| 1702-AA | **NUT, HEXAGON**<br>ECROU<br>MÜTTER<br>TUERCA | 2 |
| 1702-AD | **WASHER, PLATE**<br>RODELLE<br>ÜNTERLEGSCHEIBE<br>ARANDELA | 2 |
| 1702-AG | **SPACER**<br>ENTRETOISE<br>DISTÄNZSTÜCK<br>SEPARADOR | 2 |
| 1702-AJ | **CLAMP, PIPE**<br>PINSE<br>KLEMME<br>ABRAZADERA | 1 |
| 1702-AK | **CLAMP, PIPE**<br>PINSE<br>KLEMME<br>ABRAZADERA | 1 |
| 1702-AT | **COVER, EXHAUST PIPE**<br>COUVERCLE<br>DECKEL<br>CUBIERTA | 1 |
| 1702-BZ | **BOLT**<br>BOULON<br>SCHRÄÜBE<br>PERNO | 1 |
| 1702-CF | **INSULATOR**<br>ISOLATEUR<br>ISOLÄTOR<br>AISLADOR | 1 |
| 1702-DX | **CLAMP**<br>PINSE<br>KLEMME<br>ABRAZADERA | 1 |
| 1702-EE | **INSULATOR**<br>ISOLATEUR<br>ISOLÂTOR<br>AISLADOR | 2 |
| 1702-EK | **BOLT**<br>BOULON<br>SCHRÄÜBE<br>PERNO | 2 |
| 1702-EL | **NUT**<br>ECROU<br>MÜTTER<br>TUERCA | 2 |
| 1702-EN | **NUT**<br>ECROU<br>MÜTTER<br>TUERCA | 1 |

| 1702 | EXHAUST PIPE & MUFFLER<br>SILENCIEUX & TUYAU D'ECHAPPEMENT | AUSPUFFLEITUNG & AUSPUFFTOPF<br>TUBO DE ESCAPE Y SIENCIADOR |
|---|---|---|

| PART NAME CODE | PART NAME | QTY |
|---|---|---|
| 1702-ES | **BOLT**<br>BOULON<br>SCHRÄÜBE<br>PERNO | 2 |
| 1702-ET | **PIPE SUB-ASSY**<br>SOUS-ENS. DE TUYAU<br>ROHR-TEILGRÜPPE<br>SUBCONJUNTO DE TUBO | 1 |
| 1702-FR | **BOLT**<br>BOULON<br>SCHRÄÜBE<br>PERNO | 2 |
| 1702-HX | **BOLT**<br>BOULON<br>SCHRÄÜBE<br>PERNO | 1 |
| 1702-HZ | **BOLT**<br>BOULON<br>SCHRÄÜBE<br>PERNO | 2 |
| 1702-JP | **BOLT**<br>BOULON<br>SCHRÄÜBE<br>PERNO | 1 |
| 1702-JQ | **BOLT**<br>BOULON<br>SCHRÄÜBE<br>PERNO | 1 |
| 1702-JT | **BOLT**<br>BOULON<br>SCHRÄÜBE<br>PERNO | 1 |
| 1702-KT | **CLAMP, PIPE**<br>PINSE<br>KLEMME<br>ABRAZADERA | 1 |

| PART NAME CODE | PART NAME | QTY |
|---|---|---|

| 1703 | AIR CLEANER<br>FILTRE A AIR | LUFTFILTER<br>FILTRO DE AIRE |
|---|---|---|

4Y

4Y (3-WAY CATALYTIC)

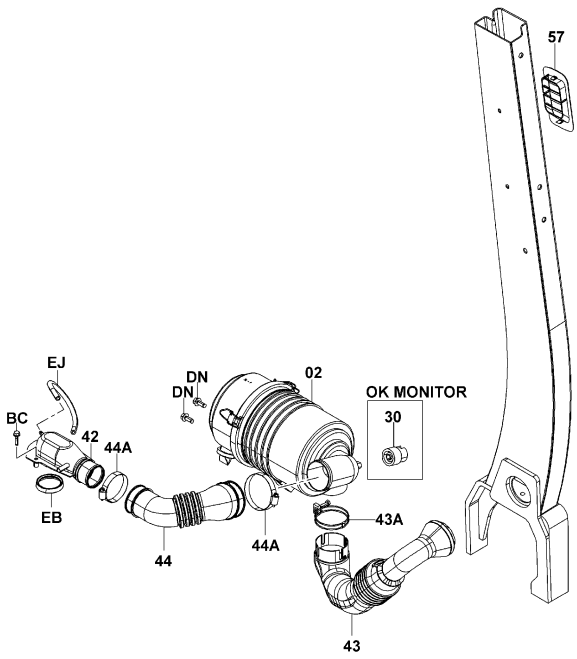


1703-496

1703-496_

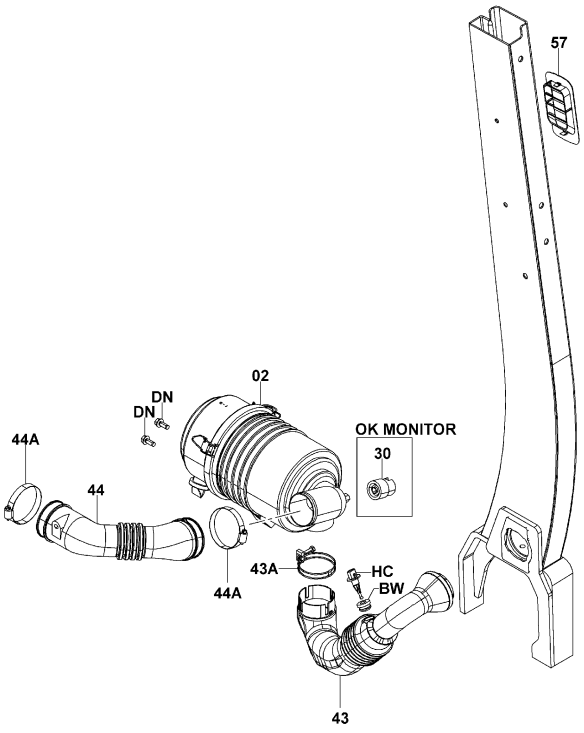


1703-495

1703-495_

| 1703 | AIR CLEANER<br>FILTRE A AIR | LUFTFILTER<br>FILTRO DE AIRE |
|---|---|---|

4Y (HOT AIR INTAKE)

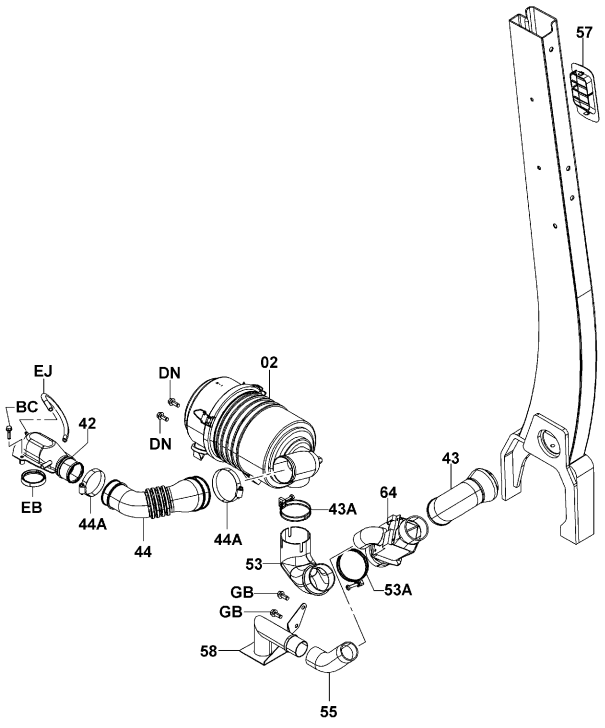


1703-499

1703-499_

| 1703 | AIR CLEANER<br>FILTRE A AIR | LUFTFILTER<br>FILTRO DE AIRE |
|---|---|---|

4Y (PRE-CLEANER)

PRE-CLEANER

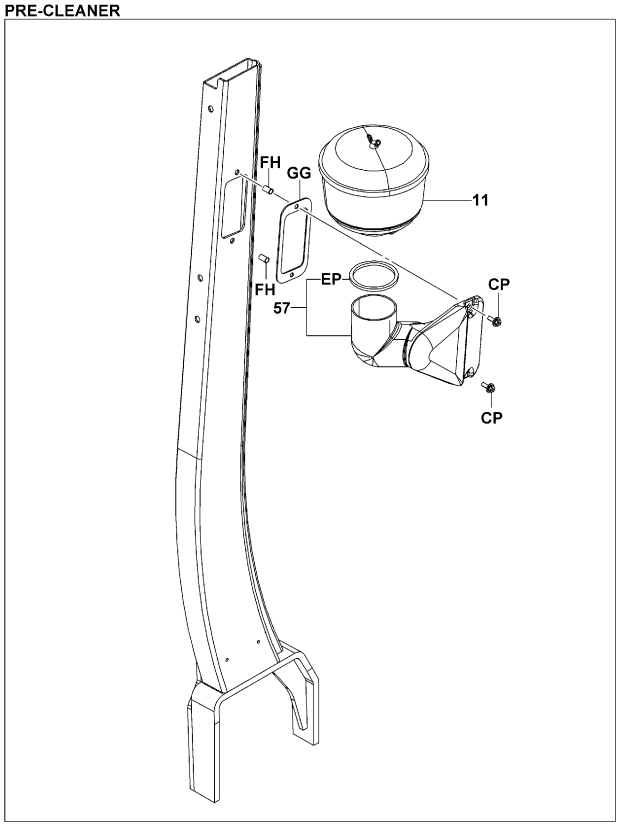


PRE-CLEANER..RR GLASS

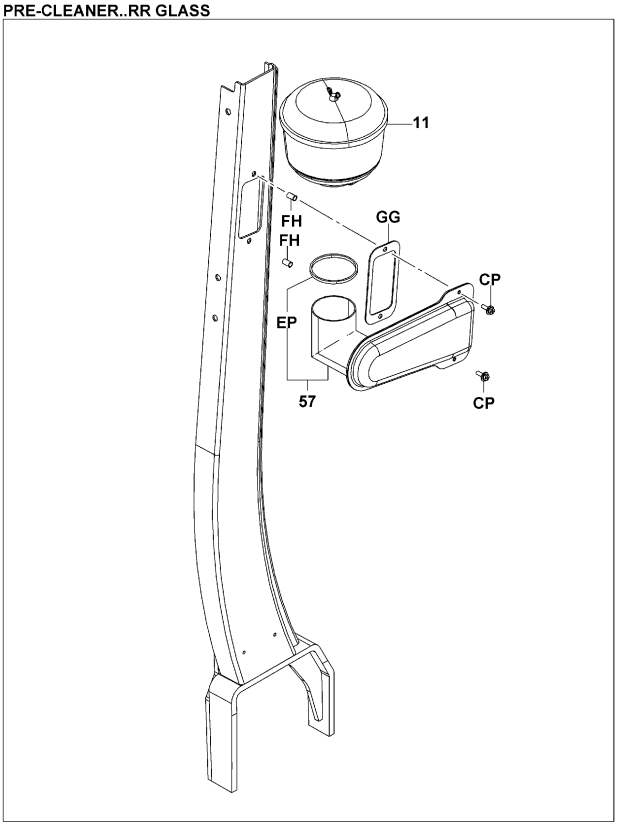


1703-500

1703-500_

| 1703 | AIR CLEANER<br>FILTRE A AIR | LUFTFILTER<br>FILTRO DE AIRE |
|---|---|---|

4Y [AIR CLEANER PARTS]

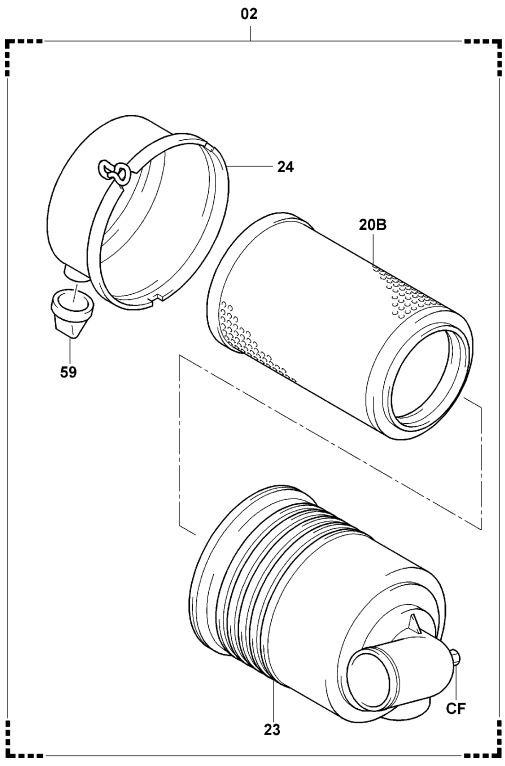


1703-501

1703-501_

4Y (CYCLONE DOUBLE) [AIR CLEANER PARTS]

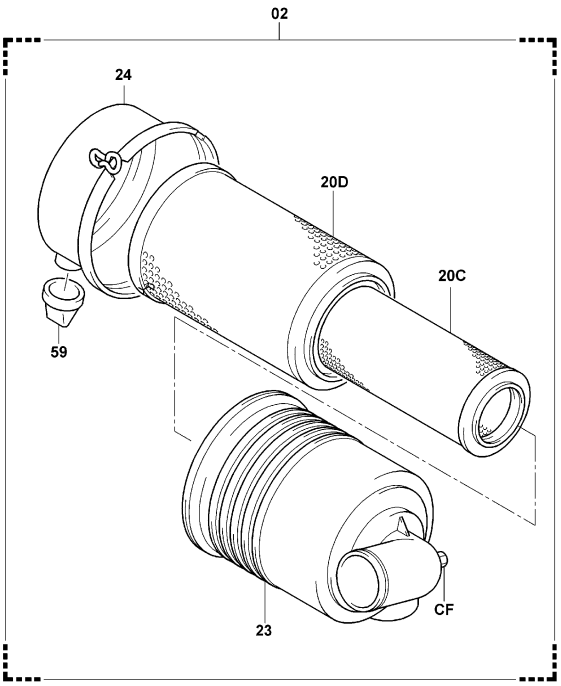


1703-502

1703-502_

4Y (EXCLUSIVE(Z4), CONVERTIBLE(Z3)) [INNER PARTS]

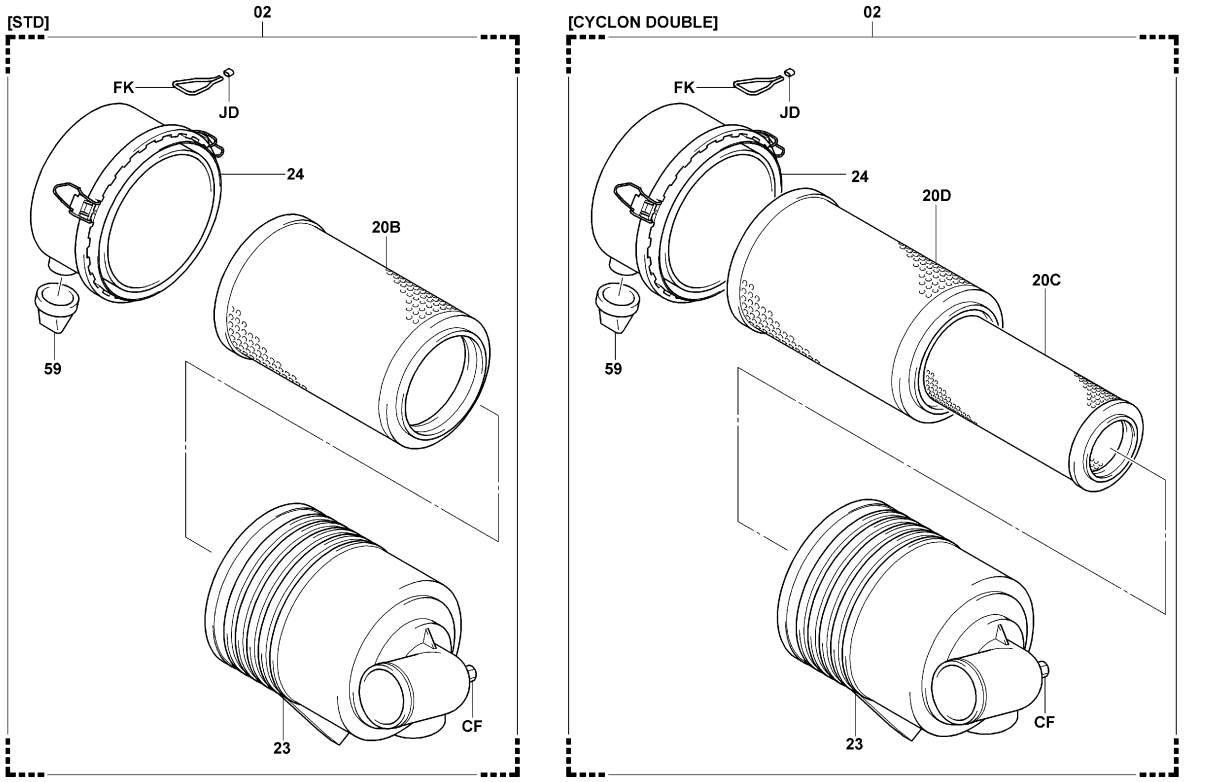


1703-523

1703-523_


| 1703 | AIR CLEANER<br>FILTRE A AIR | LUFTFILTER<br>FILTRO DE AIRE |
|---|---|---|


| PART NAME CODE | PART NAME | QTY |
|---|---|---|
| 1703-02 | **CLEANER ASSY, CYCLONE AIR**<br>ENS. DE EPURATEUR<br>REINIGER, VOLLST.<br>CONJUNTO DEL FILTRO | 1 |
| 1703-11 | **PRECLEANER ASSY**<br>ENS. DE PRE-EPURATEURE<br>VORREINIGER, VOLLST.<br>CONJUNTO DEL FILTRO PREVIO | 1 |
| 1703-20B | **ELEMENT SUB-ASSY, CYCLONE AIR CLEANER**<br>SOUS-ENS. DE D'ELEMENT<br>ELEMENT-TEILGRÜPPE<br>SUBCONJUNTO DEL ELEMENTO | 1 |
| 1703-20C | **ELEMENT SUB-ASSY, CYCLONE AIR CLEANER, INNER**<br>SOUS-ENS. DE D'ELEMENT<br>ELEMENT-TEILGRÜPPE<br>SUBCONJUNTO DEL ELEMENTO | 1 |
| 1703-20D | **ELEMENT SUB-ASSY, CYCLONE AIR CLEANER, OUTER**<br>SOUS-ENS. DE D'ELEMENT<br>ELEMENT-TEILGRÜPPE<br>SUBCONJUNTO DEL ELEMENTO | 1 |
| 1703-23 | **CASE SUB-ASSY, AIR CLEANER**<br>SOUS-ENS. DE CARTER<br>GEHÄÜSE-TEILGRÜPPE<br>SUBCONJUNTO DE LA CAJA | 1 |
| 1703-24 | **CAP SUB-ASSY, AIR CLEANER**<br>SOUS-ENS. DE CAPUCHON<br>KÄPPEN-TEILGRÜPPE<br>SUBCONJUNTO DE LA TAPA | 1 |
| 1703-30 | **SWITCH ASSY, VACUUM**<br>ENS. DE INTERRUPTEUR<br>SCHÄLTER, VOLLST.<br>CONJUNTO DEL INTERRUPUPTOR | 1 |
| 1703-42 | **CONNECTOR, AIR CLEANER**<br>CONNECTEUR<br>STECKVERBINDER<br>CONECTOR | 1 |
| 1703-43 | **HOSE, AIR CLEANER, INLET**<br>FLEXIBLE<br>SCHLÄÜCH<br>MANGUERA | 1 |
| 1703-43A | **CLAMP, AIR CLEANER INLET HOSE**<br>PINSE<br>KLEMME<br>ABRAZADERA | 1 |
| 1703-44 | **HOSE, AIR CLEANER, OUTLET NO.1**<br>FLEXIBLE<br>SCHLÄÜCH<br>MANGUERA | 1 |
| 1703-44A | **CLAMP, AIR CLEANER OUTLET NO.1 HOSE**<br>PINSE<br>KLEMME<br>ABRAZADERA | 1- 2 |
| 1703-57 | **LOUVER, AIR INLET**<br>DISPOSITIF D'AERATION<br>LEITBLECH<br>LUMBRERA | 1 |
| 1703-59 | **VALVE SUB-ASSY**<br>SOUS-ENS. DE SOUPAPE<br>VENTIL-TEILGRÜPPE<br>SUBCONJUNTO DE VALVULA | 1 |
| 1703-BC | **BOLT**<br>BOULON<br>SCHRÄÜBE<br>PERNO | 2 |
| 1703-BW | **GASKET**<br>JOINT<br>DICHTÜNG<br>EMPAQUETADURA | 1 |
| 1703-CF | **NIPPLE**<br>GRAISSEUR<br>NIPPEL<br>NIPLE | 1 |
| 1703-CP | **BOLT**<br>BOULON<br>SCHRÄÜBE<br>PERNO | 2 |
| 1703-DN | **BOLT**<br>BOULON<br>SCHRÄÜBE<br>PERNO | 2 |

| 1703 | AIR CLEANER<br>FILTRE A AIR | LUFTFILTER<br>FILTRO DE AIRE |
|---|---|---|

| PART NAME CODE | PART NAME | QTY | PART NAME CODE | PART NAME | QTY |
|---|---|---|---|---|---|
| 1703-EB | **SEAL**<br>JOINT<br>ÄBDICHTÜNG<br>SELLO | 1 | | | |
| 1703-EJ | **HOSE**<br>FLEXIBLE<br>SCHLÄÜCH<br>MANGUERA | 1 | | | |
| 1703-EP | **SPONGE**<br>EPONGE<br>SCHWÄMM<br>ESPONJA | 1 | | | |
| 1703-FH | **NUT**<br>ECROU<br>MÜTTER<br>TUERCA | 2 | | | |
| 1703-FK | **WIRE**<br>FIL<br>DRÄHT<br>ALAMBRE | 1 | | | |
| 1703-GG | **SEAL**<br>JOINT<br>ÄBDICHTÜNG<br>SELLO | 1 | | | |
| 1703-HC | **SENSOR, THERMO**<br>DETECTEUR<br>SENSOR<br>SENSOR | 1 | | | |
| 1703-JD | **TERMINAL**<br>BORNE<br>ANSCHLUSS<br>TERMINAL | 1 | | | |


| 1703 | AIR CLEANER<br>FILTRE A AIR | LUFTFILTER<br>FILTRO DE AIRE |
|---|---|---|

| PART NAME CODE | PART NAME | QTY | PART NAME CODE | PART NAME | QTY |
|---|---|---|---|---|---|

| 1901 | IGNITION COIL & SPARK PLUG<br>BOBINE D'ALLUMAGE & BOUGIE | ZÜNDSPULE & -KERZE<br>BOBINA DE ENCENDIDO Y BUJIA |
|---|---|---|

4Y

4Y (HI-CAPA BATT)

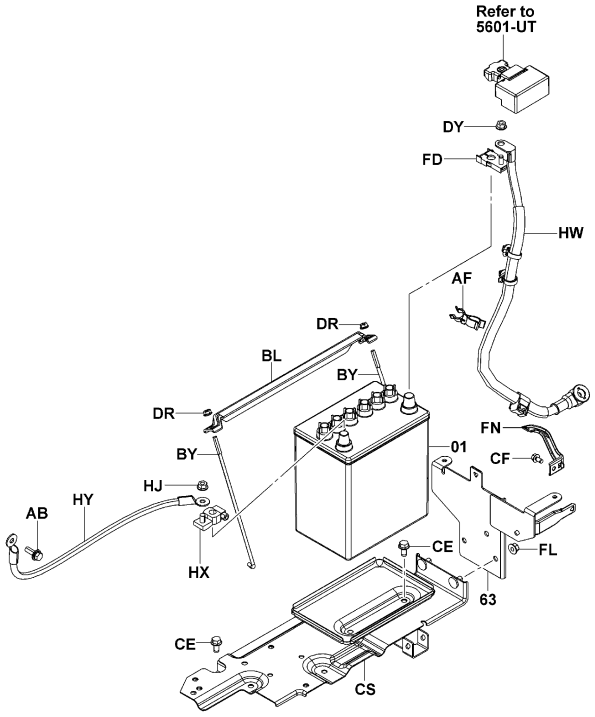


1901-307B

1901-307B

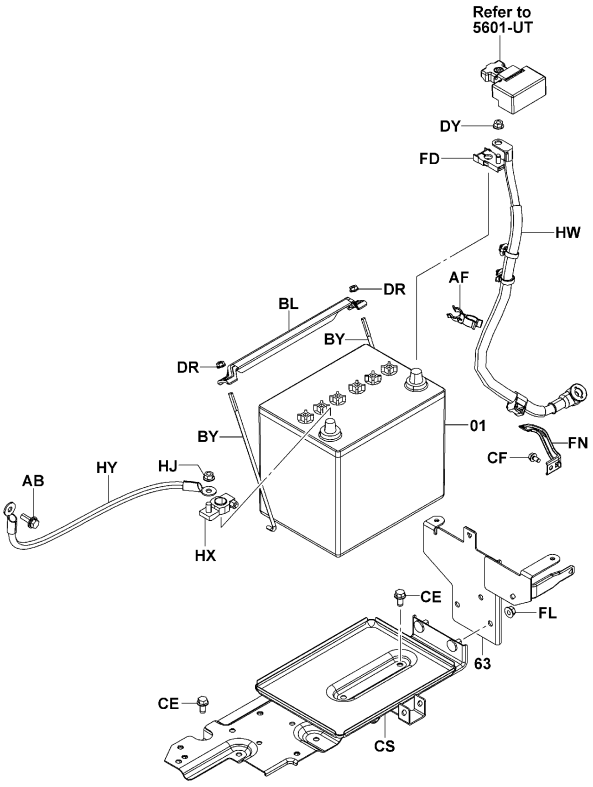


1901-308B

1901-308B

| 1901 | IGNITION COIL & SPARK PLUG<br>BOBINE D'ALLUMAGE & BOUGIE | ZÜNDSPULE & -KERZE<br>BOBINA DE ENCENDIDO Y BUJIA |
|---|---|---|

4Y [ENGINE PARTS]

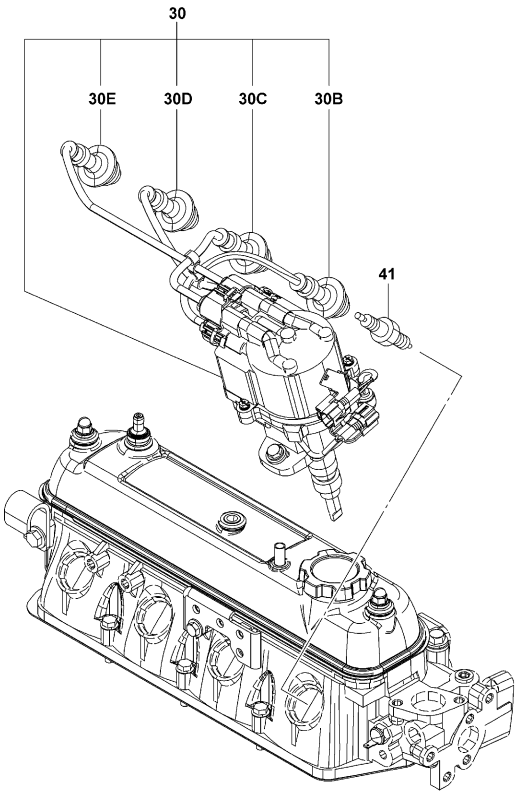


1901-309A

1901-309A

## 1901

**IGNITION COIL & SPARK PLUG**
**BOBINE D'ALLUMAGE & BOUGIE**
**ZÜNDSPULE & -KERZE**
**BOBINA DE ENCENDIDO Y BUJIA**

| PART NAME CODE | PART NAME | QTY |
|---|---|---|
| 1901-01 | **BATTERY ASSY**<br>ENS. DE BATTERIE<br>BATTERIE-VOLLST.<br>CONJUNTO DE LA BATERIA | 1 |
| 1901-30 | **CORD SET, COIL & PLUG, W/RESISTIVE**<br>JEU DE CORDE<br>ZUNDKABEL-SATZ<br>JUEGO DE CABLES | 1 |
| 1901-30B | **CORD, SPARK PLUG RESISTIVE, NO.1**<br>CORDE<br>ZUNDKABEL<br>CABLE | 1 |
| 1901-30C | **CORD, SPARK PLUG RESISTIVE, NO.2**<br>CORDE<br>ZUNDKABEL<br>CABLE | 1 |
| 1901-30D | **CORD, SPARK PLUG RESISTIVE, NO.3**<br>CORDE<br>ZUNDKABEL<br>CABLE | 1 |
| 1901-30E | **CORD, SPARK PLUG RESISTIVE, NO.4**<br>CORDE<br>ZUNDKABEL<br>CABLE | 1 |
| 1901-41 | **PLUG, SPARK**<br>BOUCHON<br>STOPFEN<br>TAPON | 4 |
| 1901-63 | **BRACKET SUB-ASSY**<br>SOUS-ENS. DE SUPPORT<br>TRAGER-TEILGRUPPE<br>SUBCONJUNTO DE LA SOPORTE | 1 |
| 1901-AB | **BOLT**<br>BOULON<br>SCHRAUBE<br>PERNO | 1 |
| 1901-AF | **CLAMP**<br>PINSE<br>KLEMME<br>ABRAZADERA | 1 |
| 1901-BL | **STOPPER, BATTERY**<br>BUTEE<br>ANSCHLAG<br>TOPE | 1 |
| 1901-BY | **BOLT**<br>BOULON<br>SCHRAUBE<br>PERNO | 2 |
| 1901-CE | **BOLT**<br>BOULON<br>SCHRAUBE<br>PERNO | 3 |
| 1901-CF | **BOLT**<br>BOULON<br>SCHRAUBE<br>PERNO | 1 |
| 1901-CS | **PLATE SUB-ASSY, BATTERY SET**<br>SOUS-ENS. DE PLAQUE<br>PLATTEN-TEILGRUPPE<br>SUBCONJUNTO DE PLACA | 1 |
| 1901-DR | **NUT**<br>ECROU<br>MUTTER<br>TUERCA | 2 |
| 1901-DY | **NUT**<br>ECROU<br>MUTTER<br>TUERCA | 1 |
| 1901-FD | **TERMINAL ASSY**<br>ENS. DE BORNE<br>KLEMME, VOLLST.<br>CONJUNTO DE TERMINALES | 1 |
| 1901-FL | **NUT**<br>ECROU<br>MUTTER<br>TUERCA | 2 |
| 1901-FN | **BRACKET**<br>SUPPORT<br>TRAGER<br>SOPORTE | 1 |


## 1901

**IGNITION COIL & SPARK PLUG**
**BOBINE D'ALLUMAGE & BOUGIE**
**ZÜNDSPULE & -KERZE**
**BOBINA DE ENCENDIDO Y BUJIA**


| PART NAME CODE | PART NAME | QTY |
|---|---|---|
| 1901-GF | **COVER, BATTERY**<br>COUVERCLE<br>DECKEL<br>CUBIERTA | 1 |
| 1901-HJ | **NUT**<br>ECROU<br>MUTTER<br>TUERCA | 1 |
| 1901-HW | **WIRE, BATTERY STARTER**<br>FIL<br>DRAHT<br>ALAMBRE | 1 |
| 1901-HX | **TERMINAL ASSY**<br>ENS. DE BORNE<br>KLEMME, VOLLST.<br>CONJUNTO DE TERMINALES | 1 |
| 1901-HY | **WIRE, BATTERY EARTH**<br>FIL<br>DRAHT<br>ALAMBRE | 1 |

| 1902 | DISTRIBUTOR<br>DISTRIBUTEUR | VERTEILER<br>DISTRIBUIDOR |
|---|---|---|

4Y

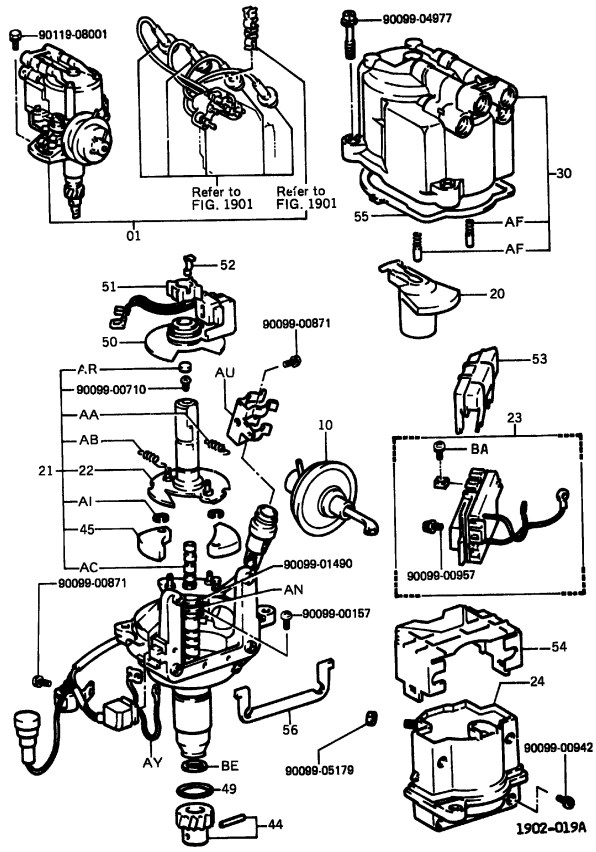


1902-019A

4Y (3-WAY CATALYTIC)

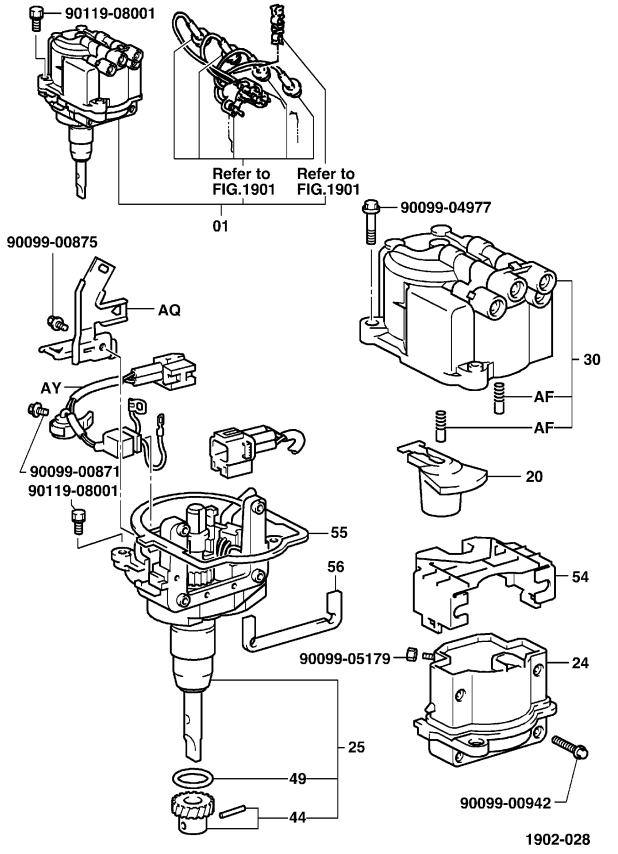


1902-028_

| 1902 | DISTRIBUTOR<br>DISTRIBUTEUR | VERTEILER<br>DISTRIBUIDOR |
|---|---|---|

| PART NAME CODE | PART NAME | QTY |
|---|---|---|
| 1902-01 | **DISTRIBUTOR ASSY**<br>ENS. DE ALLUMEUR<br>VERTEILER, VOLLST.<br>CONJUNTO DEL DISTRIBUIDOR | 1 |
| 1902-10 | **ADVANCER ASSY, VACUUM**<br>ENS. D'AVANCEUR<br>UNTERDRUCKREGLER, VOLLST.<br>CONJUNTO DEL AVANZADOR | 1 |
| 1902-20 | **ROTOR SUB-ASSY, DISTRIBUTOR**<br>SOUS-ENS. DE ROTOR<br>ROTOR-TEILGRUPPE<br>SUBCONJUNTO DEL ROTOR | 1 |
| 1902-21 | **SHAFT AND GOVERNOR SUB-ASSY**<br>SOUS-ENS. DE REGULATEUR ET ARBRE<br>WELLE UND DREHZAHLREGLER, TEILGRUPPE<br>SUBCONJUNTO DE EJE Y REGULADOR | 1 |
| 1902-22 | **ROTOR SUB-ASSY, SIGNAL**<br>SOUS-ENS. DE ROTOR<br>ROTOR-TEILGRUPPE<br>SUBCONJUNTO DEL ROTOR | 1 |
| 1902-23 | **IGNITER ASSY**<br>ENS. D'ALLUMEUR<br>ZUNDER, VOLLST.<br>CONJUNTO DEL ENCENDEDOR | 1 |
| 1902-24 | **COIL, IGNITION**<br>BOBINE<br>SPULE<br>BOBINA | 1 |
| 1902-25 | **HOUSING ASSY**<br>ENS. DE BOITIER<br>GEHAUSE, VOLLST.<br>CONJUNTO DE FUNDA | 1 |
| 1902-30 | **CAP SUB-ASSY, DISTRIBUTOR**<br>SOUS-ENS. DE CAPUCHON<br>KAPPEN-TEILGRUPPE<br>SUBCONJUNTO DE LA TAPA | 1 |
| 1902-44 | **GEAR, SPIRAL**<br>PIGNON<br>ZAHNRAD<br>ENGRANAJE | 1 |
| 1902-45 | **WEIGHT, GOVERNOR**<br>POIDS<br>GEWICHT<br>CONTRAPESO | 2 |
| 1902-49 | **RING, DISTRIBUTOR HOUSING O**<br>ANNEAU<br>RING<br>ANILLO | 1 |
| 1902-50 | **GENERATOR, SIGNAL**<br>GENERATRICE<br>GENERATOR<br>GENERADOR | 1 |
| 1902-51 | **ROTOR, SIGNAL**<br>ROTOR<br>ROTOR<br>ROTOR | 1 |
| 1902-52 | **SPRING, ROTOR SET**<br>RESSORT<br>FEDER<br>RESORTE | 1 |
| 1902-53 | **COVER, DUST PROOF, NO.1**<br>COUVERCLE<br>DECKEL<br>CUBIERTA | 1 |
| 1902-54 | **COVER, DUST PROOF, NO.2**<br>COUVERCLE<br>DECKEL<br>CUBIERTA | 1 |
| 1902-55 | **PACKING, DUST PROOF, NO.1**<br>CALE<br>DICHTUNG<br>EMPAQUETADURA | 1 |
| 1902-56 | **PACKING, DUST PROOF, NO.2**<br>CALE<br>DICHTUNG<br>EMPAQUETADURA | 1 |
| 1902-AA | **SPRING, GOVERNOR, A**<br>RESSORT<br>FEDER<br>RESORTE | 1 |

| 1902 | DISTRIBUTOR<br>DISTRIBUTEUR | | VERTEILER<br>DISTRIBUIDOR | |
|---|---|---|---|---|

| PART NAME CODE | PART NAME | QTY | PART NAME CODE | PART NAME | QTY |
|---|---|---|---|---|---|
| 1902-AB | **SPRING, GOVERNOR, B**<br>RESSORT<br>FEDER<br>RESORTE | 1 | 1902-BE | **WASHER**<br>RODELLE<br>UNTERLEGSCHEIBE<br>ARANDELA | 1 |
| 1902-AC | **SHAFT & PLATE, GOVERNOR**<br>PLAQUE & ARBRE<br>WELLE & PLATTE<br>EJE Y PLACA | 1 | | | |
| 1902-AF | **PIECE, CAP CENTER**<br>PIECE<br>STUCK<br>PIEZA | 2 | | | |
| 1902-AI | **RING, SNAP**<br>ANNEAU<br>RING<br>ANILLO | 2 | | | |
| 1902-AN | **WASHER**<br>RODELLE<br>UNTERLEGSCHEIBE<br>ARANDELA | 2 | | | |
| 1902-AQ | **CLAMP, CORD**<br>PINSE<br>KLEMME<br>ABRAZADERA | 1 | | | |
| 1902-AR | **CAP**<br>CAPUCHON<br>KAPPE<br>TAPA | 1 | | | |
| 1902-AU | **CLAMP, CORD**<br>PINSE<br>KLEMME<br>ABRAZADERA | 1 | | | |
| 1902-AY | **LEAD, BREAKER**<br>FIL<br>ZULEITUNG<br>CONDUCTOR | 1 | | | |
| 1902-BA | **SCREW**<br>VIS<br>SCHRAUBE<br>TORNILLO | 3 | | | |


| 1902 | DISTRIBUTOR<br>DISTRIBUTEUR | | VERTEILER<br>DISTRIBUIDOR | |
|---|---|---|---|---|

| PART NAME CODE | PART NAME | QTY | PART NAME CODE | PART NAME | QTY |
|---|---|---|---|---|---|

# 1903

**ALTERNATOR**
**ALTERNATEUR**

**DREHSTROMGENERATOR**
**ALTERNADOR**

**4Y**

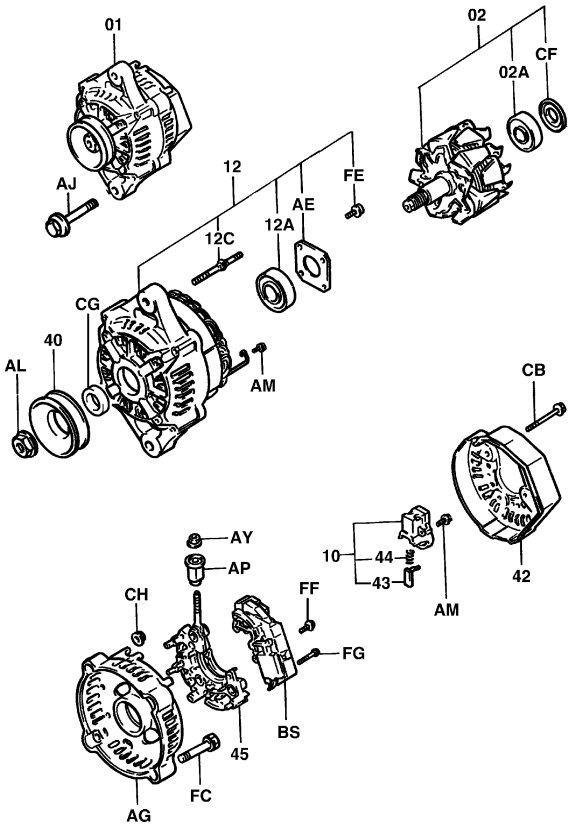


1903-113
1903-113_

**4Y (HI-CAPACITY)**

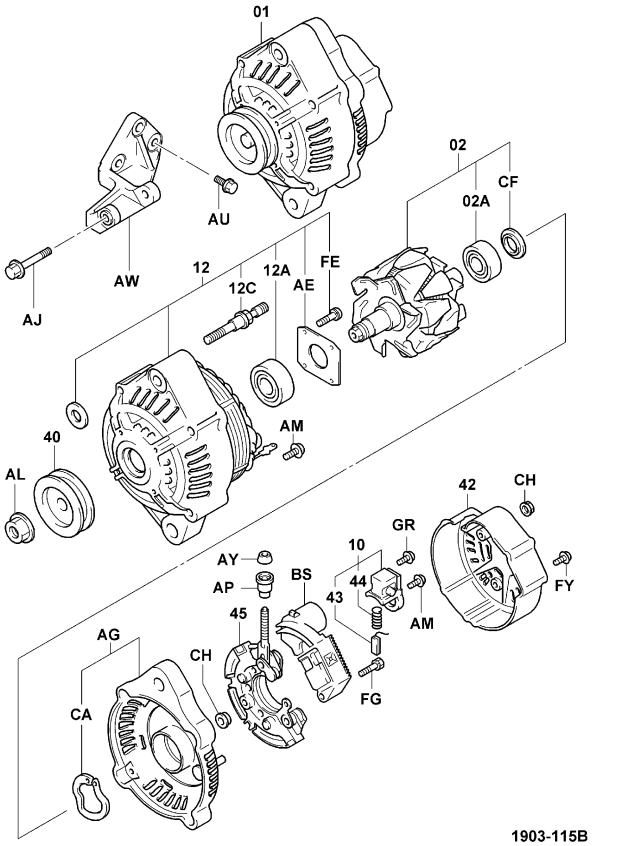


1903-115B
1903-115B

# 1903

**ALTERNATOR**
**ALTERNATEUR**

**DREHSTROMGENERATOR**
**ALTERNADOR**

| PART NAME CODE | PART NAME | QTY |
|---|---|---|
| 1903-01 | **ALTERNATOR ASSY**<br>ENS. D'ALTERNATEUR<br>DREHSTROMGENERATOR, VOLLST.<br>CONJUNTO DEL ALTERNADOR | 1 |
| 1903-02 | **ROTOR ASSY, ALTERNATOR**<br>ENS. DE ROTOR<br>ROTOR, VOLLST.<br>CONJUNTO DEL ROTOR | 1 |
| 1903-02A | **BEARING, ALTERNATOR ROTOR**<br>ROULEMENT<br>LAGER<br>COJINETE | 1 |
| 1903-10 | **HOLDER ASSY, ALTERNATOR BRUSH**<br>ENS. DE SUPPORT<br>DUSENSTOCR, VOLLST.<br>CONJUNTO DE PORTABOQUILLAS | 1 |
| 1903-12 | **FRAME ASSY, DRIVE END**<br>ENS. DE CADRE<br>RAHMEN, VOLLST.<br>CONJUNTO DEL BASTIDOR | 1 |
| 1903-12A | **BEARING, ALTERNATOR DRIVE END FRAME**<br>ROULEMENT<br>LAGER<br>COJINETE | 1 |
| 1903-12C | **BOLT, STUD, ALTERNATOR DRIVE END FRAME**<br>BOULON<br>SCHRAUBE<br>PERNO | 2- 4 |
| 1903-40 | **PULLEY, ALTERNATOR**<br>POULIE<br>RIEMENSCHEIBE<br>POLEA | 1 |
| 1903-42 | **COVER, REAR END**<br>COUVERCLE<br>DECKEL<br>CUBIERTA | 1 |
| 1903-43 | **BRUSH, ALTERNATOR**<br>BALAI<br>BURSTE<br>ESCOBILLA | 2 |
| 1903-44 | **SPRING, BRUSH**<br>RESSORT<br>FEDER<br>RESORTE | 2 |
| 1903-45 | **HOLDER, W/RECTIFIER**<br>SUPPORT<br>DUSENSTOCR<br>SOPORTE PORTADOR | 1 |
| 1903-AE | **PLATE, BEARING RETAINER**<br>PLAQUE<br>PLATTE<br>PLACA | 1 |
| 1903-AF | **BUSHING**<br>BAGE<br>BUCHSE<br>MANGUITO | 1 |
| 1903-AG | **FRAME, RECTIFIER END**<br>CADRE<br>RAHMEN<br>BASTIDOR | 1 |
| 1903-AJ | **BOLT, HEXAGON**<br>BOULON<br>SCHRAUBE<br>PERNO | 1 |
| 1903-AL | **NUT, PULLEY LOCK**<br>ECROU<br>MUTTER<br>TUERCA | 1 |
| 1903-AM | **SCREW**<br>VIS<br>SCHRAUBE<br>TORNILLO | 3- 6 |
| 1903-AP | **INSULATOR**<br>ISOLATEUR<br>ISOLATOR<br>AISLADOR | 1 |
| 1903-AY | **NUT**<br>ECROU<br>MUTTER<br>TUERCA | 1 |

| 1903 | ALTERNATOR<br>ALTERNATEUR | DREHSTROMGENERATOR<br>ALTERNADOR |
|---|---|---|

| PART NAME CODE | PART NAME | QTY |
|---|---|---|
| 1903-BS | **REGULATOR ASSY**<br>ENS. DE REGULATEUR<br>REGLER, VOLLST.<br>CONJUNTO DEL REGULADOR | 1 |
| 1903-BU | **SCREW, W/WASHER**<br>VIS<br>SCHRAUBE<br>TORNILLO | 4 |
| 1903-CA | **WASHER**<br>RODELLE<br>UNTERLEGSCHEIBE<br>ARANDELA | 1 |
| 1903-CB | **BOLT**<br>BOULON<br>SCHRAUBE<br>PERNO | 3 |
| 1903-CF | **COVER, BEARING**<br>COUVERCLE<br>DECKEL<br>CUBIERTA | 1 |
| 1903-CG | **COLLAR, SPACE**<br>COLLIER<br>BUCHSE<br>COLLAR | 1 |
| 1903-CH | **NUT**<br>ECROU<br>MUTTER<br>TUERCA | 2- 7 |
| 1903-FC | **BOLT**<br>BOULON<br>SCHRAUBE<br>PERNO | 2 |
| 1903-FE | **SCREW**<br>VIS<br>SCHRAUBE<br>TORNILLO | 4 |
| 1903-FF | **SCREW**<br>VIS<br>SCHRAUBE<br>TORNILLO | 1 |
| 1903-FG | **SCREW**<br>VIS<br>SCHRAUBE<br>TORNILLO | 2 |
| 1903-FY | **BOLT**<br>BOULON<br>SCHRAUBE<br>PERNO | 1 |
| 1903-FZ | **BOLT**<br>BOULON<br>SCHRAUBE<br>PERNO | 1 |
| 1903-GR | **SCREW**<br>VIS<br>SCHRAUBE<br>TORNILLO | 1 |
| 1903-GV | **SEAL, RING**<br>JOINT<br>ABDICHTUNG<br>SELLO | 1 |
| 1903-GW | **SEAL, RING**<br>JOINT<br>ABDICHTUNG<br>SELLO | 1 |
| 1903-GX | **PLATE, RECTIFIER**<br>PLAQUE<br>PLATTE<br>PLACA | 1 |


| 1903 | ALTERNATOR<br>ALTERNATEUR | DREHSTROMGENERATOR<br>ALTERNADOR |
|---|---|---|

| PART NAME CODE | PART NAME | QTY |
|---|---|---|
| PART NAME CODE | PART NAME | QTY |

| 1904 | STARTER<br>DEMARREUR | STARTER<br>ARRANCADOR |
|---|---|---|

4Y

4Y..MTM (OIL CLUTCH)

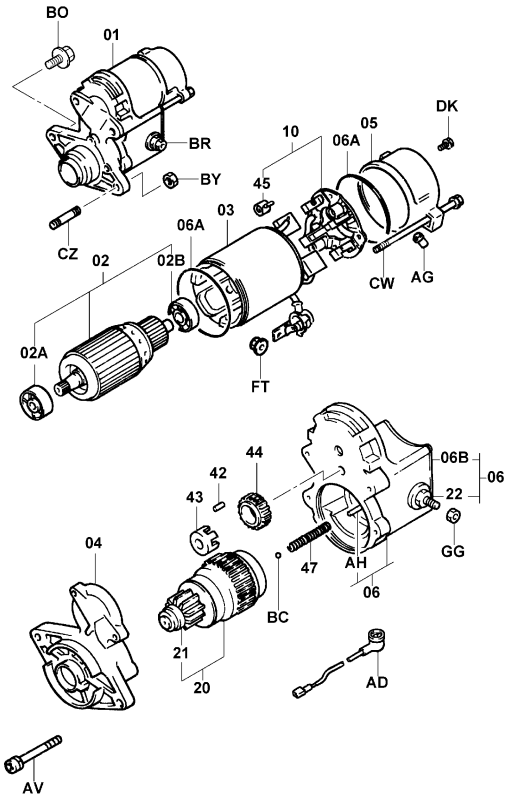


1904-177A

1904-177A

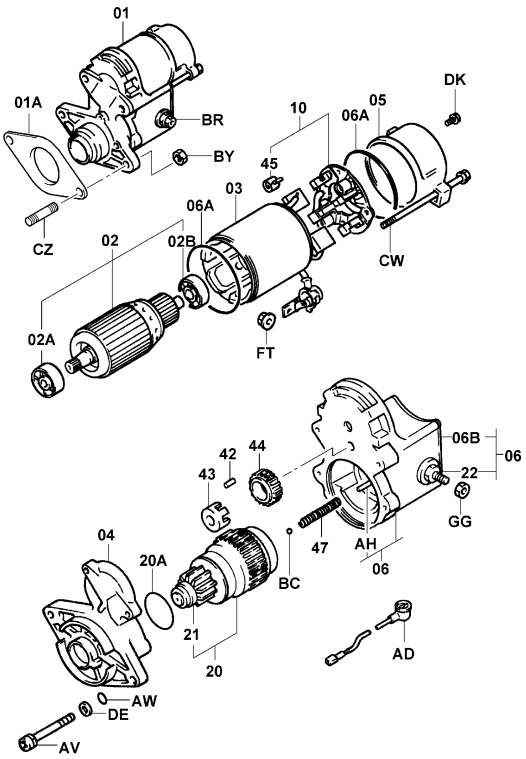


1904-178B

1904-178B

| 1904 | STARTER<br>DEMARREUR | STARTER<br>ARRANCADOR |
|---|---|---|

| PART NAME CODE | PART NAME | QTY |
|---|---|---|
| 1904-01 | **STARTER ASSY**<br>ENS. DE DEMARREUR<br>STARTER, VOLLST.<br>CONJUNTO DEL ARRANCADOR | 1 |
| 1904-01A | **GASKET, STARTER HOUSING**<br>JOINT<br>DICHTUNG<br>EMPAQUETADURA | 1 |
| 1904-02 | **ARMATURE ASSY, STARTER**<br>ENS. D'ARMATURE<br>ANKER, VOLLST.<br>CONJUNTO DEL INDUCIDO | 1 |
| 1904-02A | **BEARING, ARMATURE, NO.1**<br>ROULEMENT<br>LAGER<br>COJINETE | 1 |
| 1904-02B | **BEARING, ARMATURE, NO.2**<br>ROULEMENT<br>LAGER<br>COJINETE | 1 |
| 1904-03 | **YOKE ASSY, STARTER**<br>ENS. D'ETRIER<br>JOCH, VOLLST.<br>CONJUNTO DE HORQUILLA | 1 |
| 1904-04 | **HOUSING ASSY, STARTER DRIVE**<br>ENS. DE BOITIER<br>GEHAUSE, VOLLST.<br>CONJUNTO DE FUNDA | 1 |
| 1904-05 | **FRAME ASSY, COMMUTATOR END**<br>ENS. DE CADRE<br>RAHMEN, VOLLST.<br>CONJUNTO DEL BASTIDOR | 1 |
| 1904-06 | **SWITCH ASSY, MAGNET**<br>ENS. DE INTERRUPTEUR<br>SCHALTER, VOLLST.<br>CONJUNTO DEL INTERRUPUPTOR | 1 |
| 1904-06A | **PACKING, RUBBER (FOR STARTER YOKE)**<br>CALE<br>DICHTUNG<br>EMPAQUETADURA | 2 |
| 1904-06B | **PACKING (FOR MAGNET SWITCH END COVER)**<br>CALE<br>DICHTUNG<br>EMPAQUETADURA | 1 |
| 1904-10 | **HOLDER ASSY, STARTER BRUSH**<br>ENS. DE SUPPORT<br>DUSENSTOCR, VOLLST.<br>CONJUNTO DE PORTABOQUILLAS | 1 |
| 1904-20 | **CLUTCH SUB-ASSY, STARTER**<br>SOUS-ENS. D'EMBRAYAGE<br>KUPPLUNGS-TEILGRUPPE<br>SUBCONJUNTO DEL EMBRAGUE | 1 |
| 1904-20A | **RING, O (FOR STARTER CLUTCH)**<br>ANNEAU<br>RING<br>ANILLO | 1 |
| 1904-21 | **PINION SUB-ASSY, STARTER**<br>SOUS-ENS. DE PIGNON<br>RITZEL-TEILGRUPPE<br>SUBCONJUNTO DEL PIÑON | 1 |
| 1904-22 | **CHIP SUB-ASSY, CONTACT**<br>SOUS-ENS. DE D'ETELLE<br>CHIP-TEILGRUPPE<br>SUBCONJUNTO DE PASTILLA | 1 |
| 1904-42 | **ROLLER, STARTER IDLE GEAR CLUTCH**<br>GALET<br>ROLLE<br>RODILLO | 5 |
| 1904-43 | **RETAINER, STARTER IDLE GEAR**<br>ARRETOIR<br>SEEGERRING<br>RETENEDOR | 1 |
| 1904-44 | **GEAR, STARTER IDLE**<br>PIGNON<br>ZAHNRAD<br>ENGRANAJE | 1 |
| 1904-45 | **SPRING, STARTER BRUSH**<br>RESSORT<br>FEDER<br>RESORTE | 4 |

| 1904 | STARTER<br>DEMARREUR | | STARTER<br>ARRANCADOR | |
|---|---|---|---|---|

| PART NAME CODE | PART NAME | QTY | PART NAME CODE | PART NAME | QTY |
|---|---|---|---|---|---|
| 1904-47 | **SPRING, STARTER MAGNET SWITCH RETURN**<br>RESSORT<br>FEDER<br>RESORTE | 1 | 1904-CW | **BOLT**<br>BOULON<br>SCHRAUBE<br>PERNO | 2 |
| 1904-AD | **WIRE, LEAD**<br>FIL<br>DRAHT<br>ALAMBRE | 1 | 1904-CZ | **BOLT, STUD**<br>BOULON<br>SCHRAUBE<br>PERNO | 2 |
| 1904-AG | **COVER, END FRAME**<br>COUVERCLE<br>DECKEL<br>CUBIERTA | 1 | 1904-DE | **WASHER**<br>RODELLE<br>UNTERLEGSCHEIBE<br>ARANDELA | 2 |
| 1904-AH | **PLUNGER SUB-ASSY, CONTACTOR**<br>SOUS-ENS. DE PLONGEUR<br>PLUNGER-TEILGRUPPE<br>SUBCONJUNTO DEL EMBOLO | 1 | 1904-DK | **SCREW**<br>VIS<br>SCHRAUBE<br>TORNILLO | 2 |
| 1904-AV | **SCREW, W/WASHER**<br>VIS<br>SCHRAUBE<br>TORNILLO | 2 | 1904-FT | **NUT**<br>ECROU<br>MUTTER<br>TUERCA | 1 |
| 1904-AW | **RING, O**<br>ANNEAU<br>RING<br>ANILLO | 2 | 1904-GG | **NUT**<br>ECROU<br>MUTTER<br>TUERCA | 1 |
| 1904-BC | **BALL, STEEL**<br>BILLE<br>KUGEL<br>BOLA | 1 | | | |
| 1904-BO | **BOLT**<br>BOULON<br>SCHRAUBE<br>PERNO | 2 | | | |
| 1904-BR | **NUT**<br>ECROU<br>MUTTER<br>TUERCA | 1 | | | |
| 1904-BY | **NUT**<br>ECROU<br>MUTTER<br>TUERCA | 2 | | | |

| 1904 | STARTER<br>DEMARREUR | | STARTER<br>ARRANCADOR | |
|---|---|---|---|---|

| PART NAME CODE | PART NAME | QTY | PART NAME CODE | PART NAME | QTY |
|---|---|---|---|---|---|

| 1910 | CONTROLLER<br>CONTROLEUR | STEUERTEIL<br>CONTROLADOR |
|---|---|---|

4Y

10N,15N,18N,20N,25N,30N,J35N (SAS)

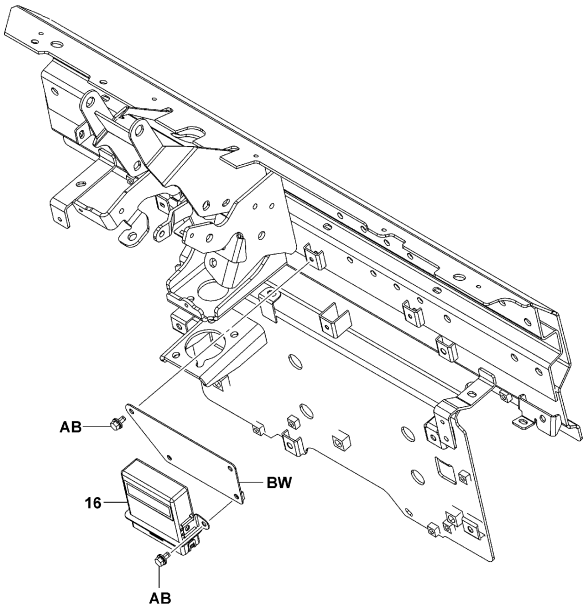


1910-024

1910-024_

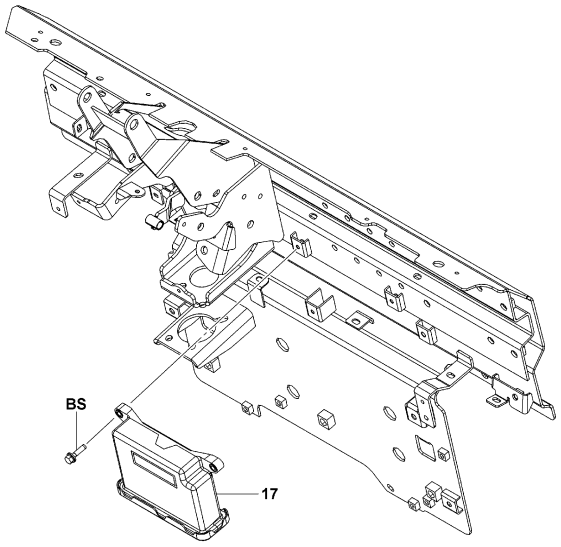


1910-050

1910-050_

| 1910 | CONTROLLER<br>CONTROLEUR | STEUERTEIL<br>CONTROLADOR |
|---|---|---|

K20N,K25N,K30N

ATM (MINI LEVER, JOY STICK)

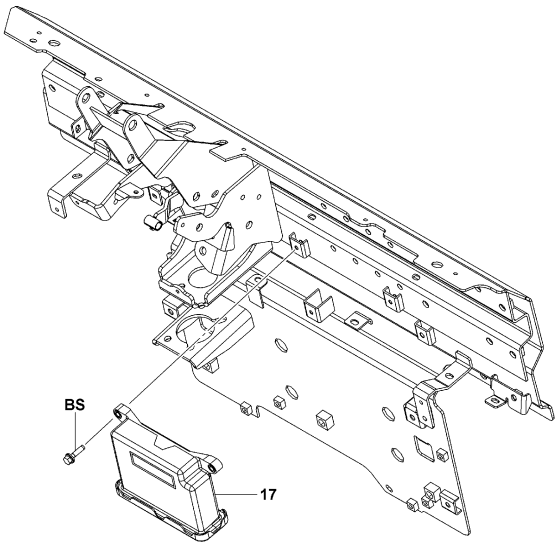


1910-050

1910-050_

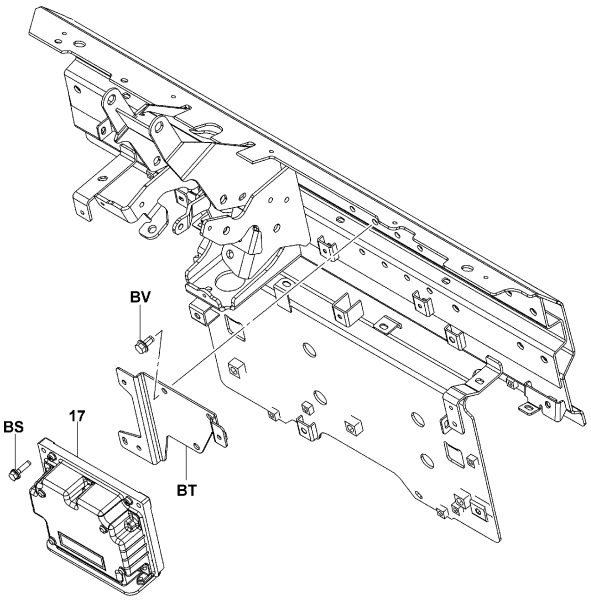


1910-028

1910-028_

| 1910 | CONTROLLER<br>CONTROLEUR | STEUERTEIL<br>CONTROLADOR |
|---|---|---|

4Y [ECS]

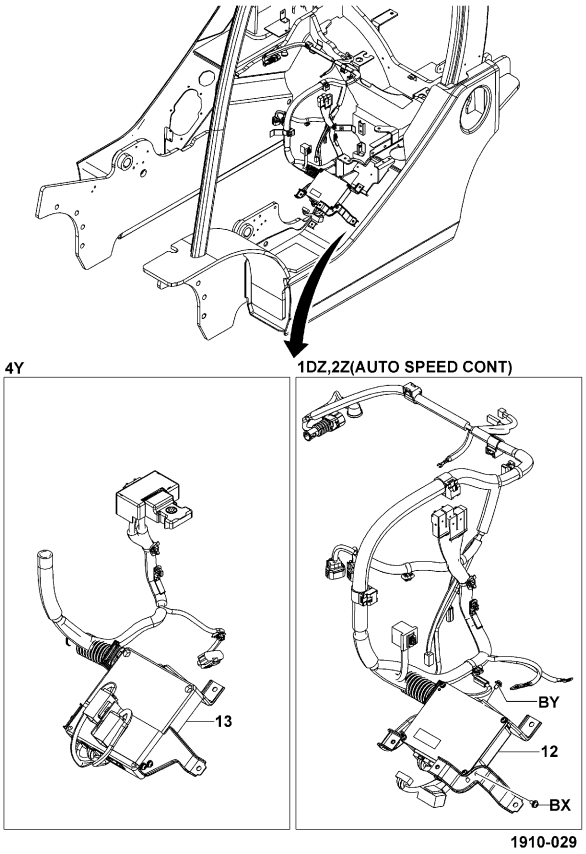


1910-029_

| 1910 | CONTROLLER<br>CONTROLEUR | STEUERTEIL<br>CONTROLADOR |
|---|---|---|

| PART NAME CODE | PART NAME | QTY | PART NAME CODE | PART NAME | QTY |
|---|---|---|---|---|---|
| 1910-13 | **CONTROLLER ASSY, ECS**<br>ENS. DE CONTROLEUR<br>STEUERTEIL, VOLLST.<br>CONJUNTO DEL CONTROLADOR | 1 | | | |
| 1910-16 | **CONTROLLER ASSY, OPS**<br>ENS. DE CONTROLEUR<br>STEUERTEIL, VOLLST.<br>CONJUNTO DEL CONTROLADOR | 1 | | | |
| 1910-17 | **CONTROLLER ASSY, SAS/OPS**<br>ENS. DE CONTROLEUR<br>STEUERTEIL, VOLLST.<br>CONJUNTO DEL CONTROLADOR | 1 | | | |
| 1910-AB | **BOLT**<br>BOULON<br>SCHRAUBE<br>PERNO | 4 | | | |
| 1910-BS | **BOLT**<br>BOULON<br>SCHRAUBE<br>PERNO | 3 | | | |
| 1910-BT | **BRACKET SUB-ASSY**<br>SOUS-ENS. DE SUPPORT<br>TRÄGER-TEILGRUPPE<br>SUBCONJUNTO DE LA SOPORTE | 1 | | | |
| 1910-BV | **BOLT**<br>BOULON<br>SCHRAUBE<br>PERNO | 3 | | | |
| 1910-BW | **BRACKET SUB-ASSY**<br>SOUS-ENS. DE SUPPORT<br>TRÄGER-TEILGRUPPE<br>SUBCONJUNTO DE LA SOPORTE | 1 | | | |

4Y

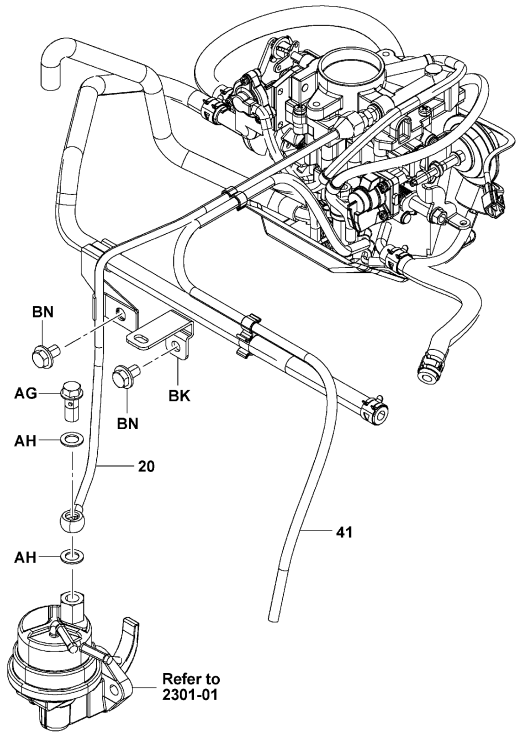


2101-046

2101-046_

4Y (3-WAY CATALYTIC)

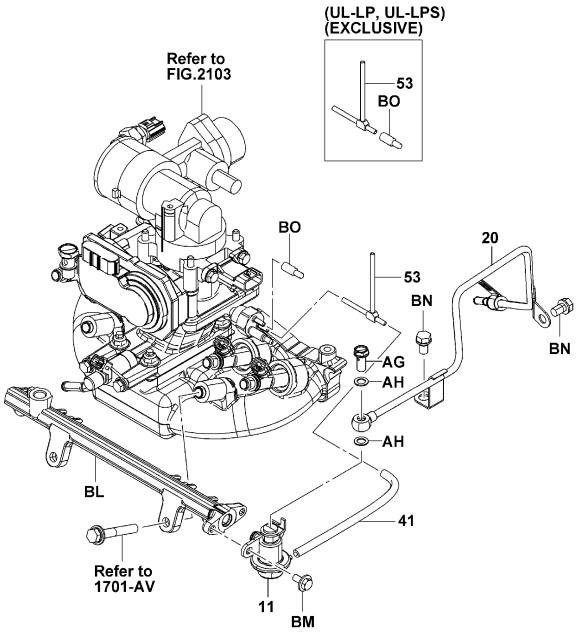


2101-047

2101-047_


| 2101 | FUEL PIPE<br>CONDUITE D'ALIMENTATION | KRAFTSTOFFLEITUNG<br>TUBO DE COMBUSTIBLE |
|---|---|---|


4Y (CONVERTIBLE(Z3))

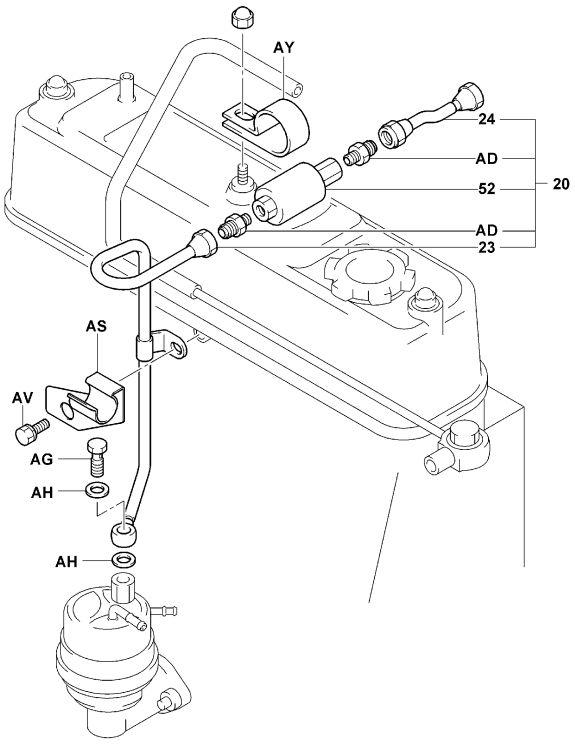


2101-034E

2101-034E

4Y (LPG AUSTRALIA, LPG NZ SPEC(Z3), LPG RUSSIA)

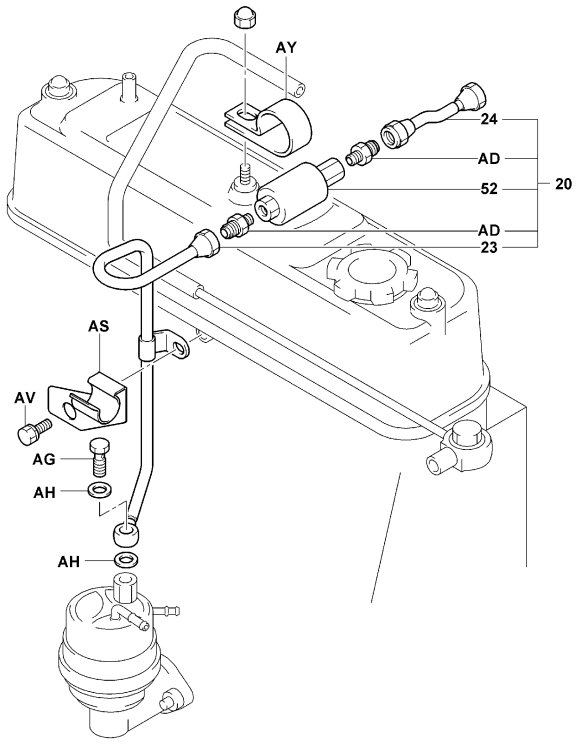


2101-034E

2101-034E

| 2101 | FUEL PIPE<br>CONDUITE D'ALIMENTATION | KRAFTSTOFFLEITUNG<br>TUBO DE COMBUSTIBLE |
|---|---|---|

| PART NAME CODE | PART NAME | QTY |
|---|---|---|
| 2101-11 | **REGULATOR ASSY, FUEL PRESSURE**<br>ENS. DE REGULATEUR<br>REGLER, VOLLST.<br>CONJUNTO DEL REGULADOR | 1 |
| 2101-20 | **PIPE SUB-ASSY, CARBURETOR FUEL**<br>SOUS-ENS. DE TUYAU<br>ROHR-TEILGRUPPE<br>SUBCONJUNTO DE TUBO | 1 |
| 2101-23 | **PIPE SUB-ASSY, FUEL**<br>SOUS-ENS. DE TUYAU<br>ROHR-TEILGRUPPE<br>SUBCONJUNTO DE TUBO | 1 |
| 2101-24 | **PIPE SUB-ASSY, FUEL**<br>SOUS-ENS. DE TUYAU<br>ROHR-TEILGRUPPE<br>SUBCONJUNTO DE TUBO | 1 |
| 2101-41 | **HOSE, DISTRIBUTOR VACUUM**<br>FLEXIBLE<br>SCHLAUCH<br>MANGUERA | 1 |
| 2101-52 | **VALVE ASSY, SOLENOID**<br>ENS. DE SOUPAPE<br>VENTIL, VOLLST.<br>CONJUNTO DE VALVULA | 1 |
| 2101-53 | **HOSE SUB-ASSY, VACUUM**<br>SOUS-ENS. DE FLEXIBLE<br>SCHLAUCH-TEILGRUPPE<br>SUBCONJUNTO DE LA MANGUERA | 1 |
| 2101-AD | **UNION**<br>RACCORD<br>ROHRVERSCHRAUBUNG<br>UNION | 1 |
| 2101-AG | **BOLT, UNION**<br>BOULON<br>SCHRAUBE<br>PERNO | 1 |
| 2101-AH | **GASKET**<br>JOINT<br>DICHTUNG<br>EMPAQUETADURA | 2 |
| 2101-AS | **CLAMP**<br>PINSE<br>KLEMME<br>ABRAZADERA | 1 |
| 2101-AV | **BOLT**<br>BOULON<br>SCHRAUBE<br>PERNO | 1- 2 |
| 2101-AY | **CLAMP**<br>PINSE<br>KLEMME<br>ABRAZADERA | 1 |
| 2101-BK | **BRACKET**<br>SUPPORT<br>TRÄGER<br>SOPORTE | 1 |
| 2101-BL | **PIPE, FUEL DELIVERY**<br>TUYAU<br>ROHR<br>TUBO | 1 |
| 2101-BM | **BOLT**<br>BOULON<br>SCHRAUBE<br>PERNO | 2 |
| 2101-BN | **BOLT**<br>BOULON<br>SCHRAUBE<br>PERNO | 2 |
| 2101-BO | **PLUG**<br>BOUCHON<br>STOPFEN<br>TAPON | 1 |
| 2101-BS | **UNION**<br>RACCORD<br>ROHRVERSCHRAUBUNG<br>UNION | 1 |


| 2101 | FUEL PIPE<br>CONDUITE D'ALIMENTATION | KRAFTSTOFFLEITUNG<br>TUBO DE COMBUSTIBLE |
|---|---|---|


| PART NAME CODE | PART NAME | QTY |
|---|---|---|
| | | |


| PART NAME CODE | PART NAME | QTY |
|---|---|---|
| | | |

| 2103 | CARBURETOR<br>CARBURATEUR | VERGASER<br>CARBURADOR |
|---|---|---|

4Y [1/2]

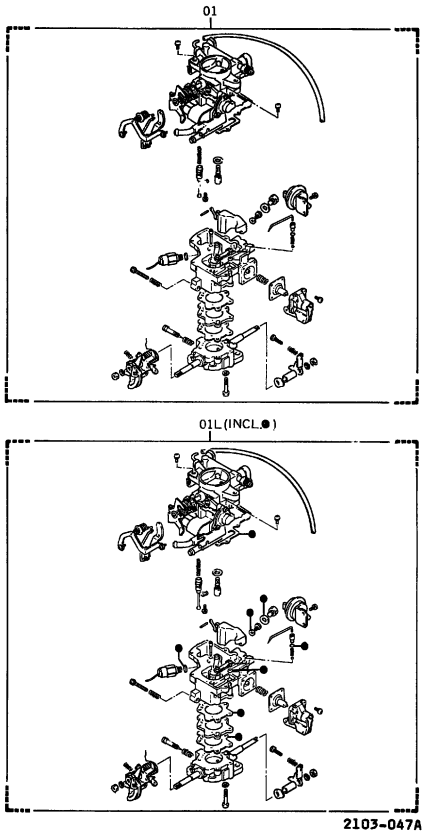


2103-047A

4Y [2/2]

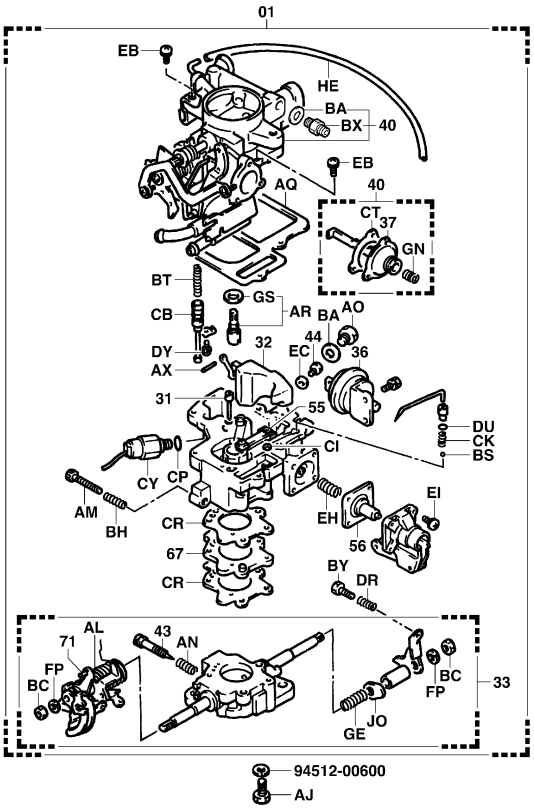


2103-064A

| 2103 | CARBURETOR<br>CARBURATEUR | VERGASER<br>CARBURADOR |
|---|---|---|

4Y (3-WAY CATALYTIC)

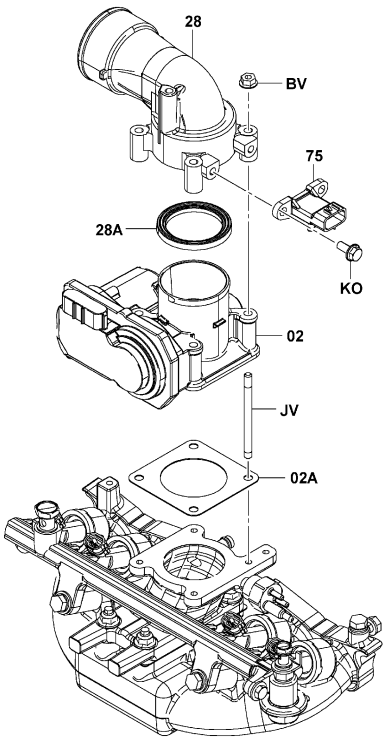


2103-074_

4Y (3-WAY CATALYTIC..EXCLUSIVE(Z4))

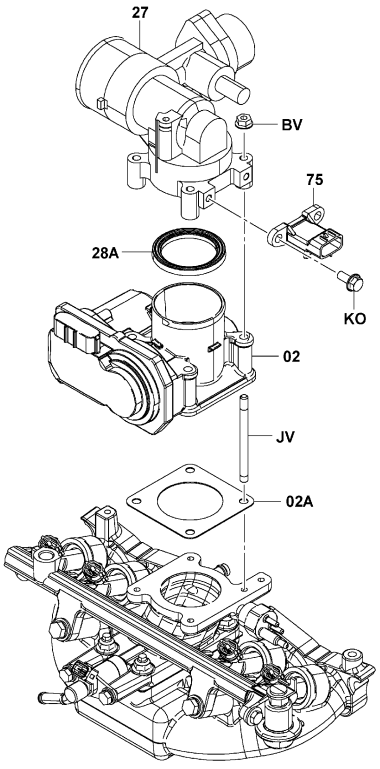


2103-075_

## 2103

**CARBURETOR**
**CARBURATEUR**
**VERGASER**
**CARBURADOR**

| PART NAME CODE | PART NAME | QTY |
|---|---|---|
| 2103-01 | **CARBURETOR ASSY**<br>ENS. DE CARBURATEUR<br>VERGASER, VOLLST.<br>CONJUNTO DEL CARBURADOR | 1 |
| 2103-01L | **GASKET KIT, CARBURETOR**<br>POXHETTE DE JOINTS<br>DICHTUNGSAUSRUSTUNG<br>JUEGO DE EMPAQUETADURA | 1 |
| 2103-02 | **BODY ASSY, THROTTLE W/MOTOR**<br>ENS. DE CARROSSERIE<br>KAROSSERIE, VOLLST.<br>CONJUNTO DE LA CARROCERIA | 1 |
| 2103-02A | **GASKET, THROTTLE BODY**<br>JOINT<br>DICHTUNG<br>EMPAQUETADURA | 1 |
| 2103-27 | **ADAPTOR ASSY**<br>ENS. D'ADAPTATEUR<br>ADAPTER-VOLLST.<br>CONJUNTO DEL ADAPTADOR | 1 |
| 2103-28 | **CONNECTOR, INTAKE AIR**<br>CONNECTEUR<br>STECKVERBINDER<br>CONECTOR | 1 |
| 2103-28A | **GASKET, ADAPTOR**<br>JOINT<br>DICHTUNG<br>EMPAQUETADURA | 1 |
| 2103-31 | **JET SUB-ASSY, SLOW**<br>SOUS-ENS. DE GICLEUR<br>DUSEN-TEILGRUPPE<br>SUBCONJUNTO DEL SURTIDOR | 1 |
| 2103-32 | **FLOAT SUB-ASSY**<br>SOUS-ENS. DE FLOTTEUR<br>SCHWIMMER-TEILGRUPPE<br>SUBCONJUNTO DEL FLOTADOR | 1 |
| 2103-33 | **FLANGE SUB-ASSY**<br>SOUS-ENS. DE BRIDE<br>FLANSCH-TEILGRUPPE<br>SUBCONJUNTO DE LA BRIDA | 1 |
| 2103-36 | **DIAPHRAGM SUB-ASSY**<br>SOUS-ENS. DE DIAPHRAGME<br>MEMBRANE-TEILGRUPPE<br>SUBCONJUNTO DEL DIAFRAGMA | 1 |
| 2103-37 | **DIAPHRAGM SUB-ASSY**<br>SOUS-ENS. DE DIAPHRAGME<br>MEMBRANE-TEILGRUPPE<br>SUBCONJUNTO DEL DIAFRAGMA | 1 |
| 2103-40 | **HORN, AIR**<br>AVERTISSEUR SONORE<br>HORN, VOLLST.<br>BOCINA | 1 |
| 2103-43 | **SCREW, IDLE ADJUSTING**<br>VIS<br>SCHRAUBE<br>TORNILLO | 1 |
| 2103-44 | **JET, 1ST MAIN**<br>GICLEUR<br>DUSE<br>SURTIDOR | 1 |
| 2103-55 | **VALVE, THERMOSTATIC**<br>SOUPAPE<br>VENTIL<br>VALVULA | 1 |
| 2103-56 | **DIAPHRAGM**<br>DIAPHRAGME<br>MEMBRANE<br>DIAFRAGMA | 1 |
| 2103-75 | **SENSOR, VACUUM**<br>DETECTEUR<br>SENSOR<br>SENSOR | 1 |
| 2103-AJ | **SCREW, SET**<br>VIS<br>SCHRAUBE<br>TORNILLO | 2 |
| 2103-AL | **SPRING, THROTTLE BACK**<br>RESSORT<br>FEDER<br>RESORTE | 1 |

## 2103

**CARBURETOR**
**CARBURATEUR**
**VERGASER**
**CARBURADOR**

| PART NAME CODE | PART NAME | QTY |
|---|---|---|
| 2103-AM | **SCREW, THROTTLE ADJUSTING**<br>VIS<br>SCHRAUBE<br>TORNILLO | 1 |
| 2103-AN | **SPRING, IDLE ADJUSTING SCREW**<br>RESSORT<br>FEDER<br>RESORTE | 1 |
| 2103-AO | **PLUG, MAIN PASSAGE**<br>BOUCHON<br>STOPFEN<br>TAPON | 1 |
| 2103-AQ | **GASKET, AIR HORN**<br>JOINT<br>DICHTUNG<br>EMPAQUETADURA | 1 |
| 2103-AR | **VALVE SUB-ASSY, NEEDLE**<br>SOUS-ENS. DE SOUPAPE<br>VENTIL-TEILGRUPPE<br>SUBCONJUNTO DE VALVULA | 1 |
| 2103-AX | **PIN, FLOAT LEVER**<br>GOUPILLE<br>STIFT<br>PASADOR | 1 |
| 2103-BA | **GASKET, PASSAGE PLUG**<br>JOINT<br>DICHTUNG<br>EMPAQUETADURA | 1 |
| 2103-BC | **NUT, THROTTLE LEVER SET**<br>ECROU<br>MUTTER<br>TUERCA | 2 |
| 2103-BH | **SPRING, IDLE ADJUSTING**<br>RESSORT<br>FEDER<br>RESORTE | 1 |
| 2103-BS | **BALL, STEEL**<br>BILLE<br>KUGEL<br>BOLA | 1 |
| 2103-BT | **SPRING**<br>RESSORT<br>FEDER<br>RESORTE | 1 |
| 2103-BV | **NUT**<br>ECROU<br>MUTTER<br>TUERCA | 4 |
| 2103-BX | **UNION**<br>RACCORD<br>ROHRVERSCHRAUBUNG<br>UNION | 1 |
| 2103-BY | **SCREW**<br>VIS<br>SCHRAUBE<br>TORNILLO | 1 |
| 2103-CB | **PISTON, POWER**<br>PISTON<br>KOLBEN<br>PISTON | 1 |
| 2103-CI | **GASKET**<br>JOINT<br>DICHTUNG<br>EMPAQUETADURA | 1 |
| 2103-CK | **SPRING, PUMP**<br>RESSORT<br>FEDER<br>RESORTE | 1 |
| 2103-CP | **GASKET**<br>JOINT<br>DICHTUNG<br>EMPAQUETADURA | 1 |
| 2103-CR | **GASKET**<br>JOINT<br>DICHTUNG<br>EMPAQUETADURA | 2 |
| 2103-CT | **GASKET**<br>JOINT<br>DICHTUNG<br>EMPAQUETADURA | 1 |

| 2103 | CARBURETOR<br>CARBURATEUR<br>VERGASER<br>CARBURADOR | | | | |
|---|---|---|---|---|---|
| PART NAME CODE | PART NAME | QTY | PART NAME CODE | PART NAME | QTY |
| 2103-CY | **VALVE SUB-ASSY, SOLENOID**<br>SOUS-ENS. DE SOUPAPE<br>VENTIL-TEILGRUPPE<br>SUBCONJUNTO DE VALVULA | 1 | 2103-GN | **SPRING**<br>RESSORT<br>FEDER<br>RESORTE | 1 |
| 2103-DR | **SPRING**<br>RESSORT<br>FEDER<br>RESORTE | 1 | 2103-GS | **GASKET, NEEDLE VALVE SEAT**<br>JOINT<br>DICHTUNG<br>EMPAQUETADURA | 1 |
| 2103-DU | **RING, O**<br>ANNEAU<br>RING<br>ANILLO | 1 | 2103-HE | **HOSE**<br>FLEXIBLE<br>SCHLAUCH<br>MANGUERA | 1 |
| 2103-DY | **SCREW**<br>VIS<br>SCHRAUBE<br>TORNILLO | 1 | 2103-JO | **CAM**<br>CAME<br>NOCKEN<br>LEVA | 1 |
| 2103-EB | **SCREW**<br>VIS<br>SCHRAUBE<br>TORNILLO | 4 | 2103-JV | **BOLT, STUD**<br>BOULON<br>SCHRAUBE<br>PERNO | 4 |
| 2103-EC | **GASKET, MAIN JET**<br>JOINT<br>DICHTUNG<br>EMPAQUETADURA | 1 | 2103-KO | **BOLT**<br>BOULON<br>SCHRAUBE<br>PERNO | 2 |
| 2103-EH | **SPRING**<br>RESSORT<br>FEDER<br>RESORTE | 1 | | | |
| 2103-EI | **SCREW**<br>VIS<br>SCHRAUBE<br>TORNILLO | 4 | | | |
| 2103-FP | **WASHER, LOCK**<br>RODELLE<br>UNTERLEGSCHEIBE<br>ARANDELA | 2 | | | |
| 2103-GE | **SPRING**<br>RESSORT<br>FEDER<br>RESORTE | 1 | | | |

| 2103 | CARBURETOR<br>CARBURATEUR<br>VERGASER<br>CARBURADOR | | | | |
|---|---|---|---|---|---|
| PART NAME CODE | PART NAME | QTY | PART NAME CODE | PART NAME | QTY |
| | | | | | |

| 2105 | AIR GOVERNOR<br>REGULATEUR D'AIR | LUFTREGLER<br>REGULADOR DE AIRE |
|---|---|---|

4Y

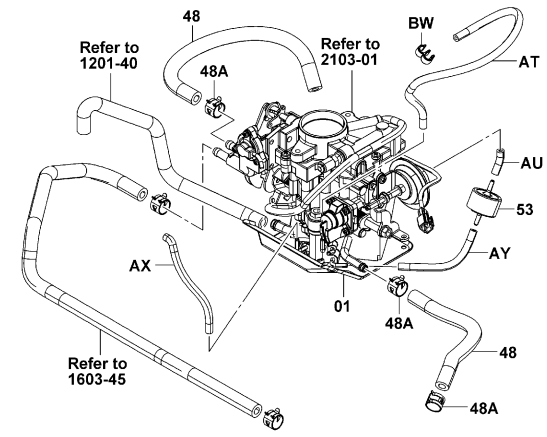


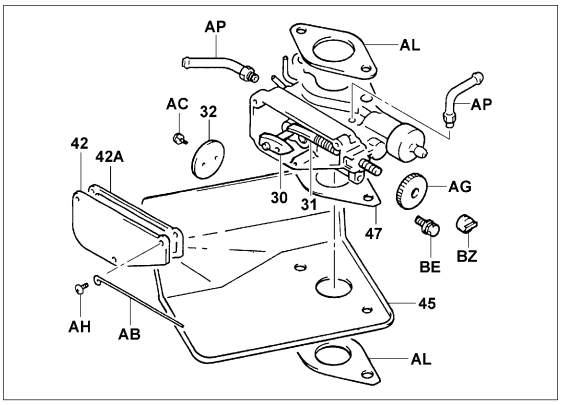


2105-091A

2105-091A

| 2105 | AIR GOVERNOR<br>REGULATEUR D'AIR | LUFTREGLER<br>REGULADOR DE AIRE |
|---|---|---|

4Y (CONVERTIBLE(Z3), EXCLUSIVE(Z4))

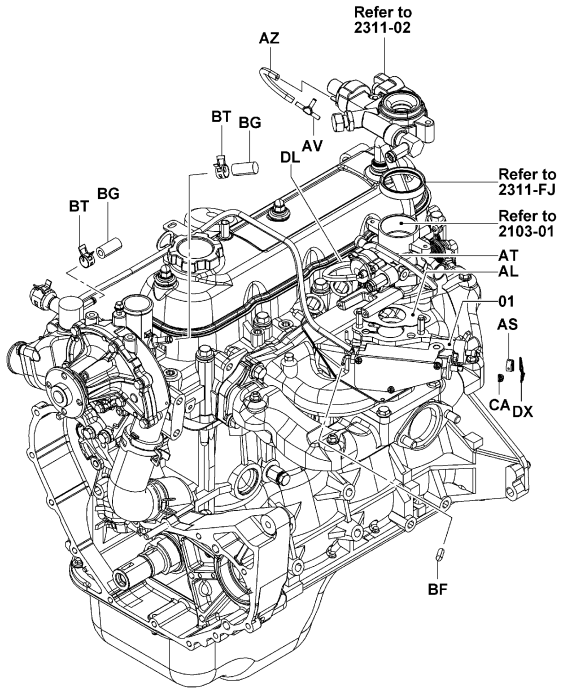


2105-092A

2105-092A

4Y (CONVERTIBLE(Z3), EXCLUSIVE(Z4)) [REGISTOR]

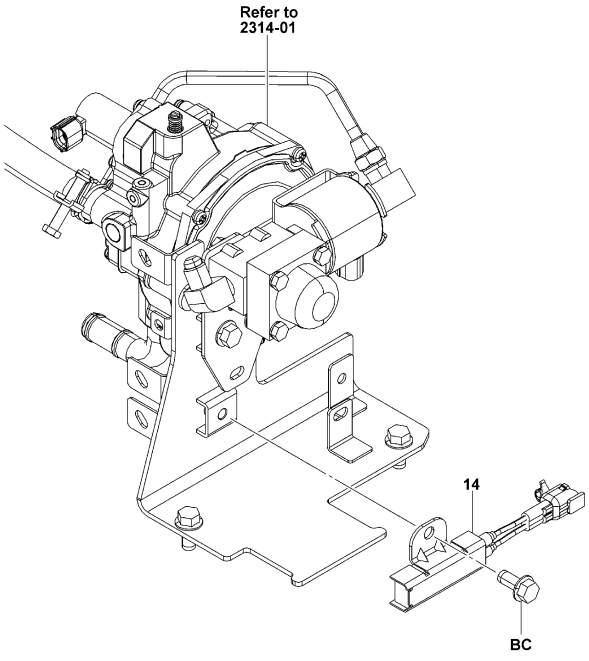


2105-093

2105-093_

## 2105

**AIR GOVERNOR**
**REGULATEUR D'AIR**
**LUFTREGLER**
**REGULADOR DE AIRE**

| PART NAME CODE | PART NAME | QTY |
|---|---|---|
| 2105-01 | **GOVERNOR ASSY, AIR**<br>ENS. DE REGULATEUR<br>DREHAZHLREGLER, VOLLST.<br>CONJUNTO DEL REGULADOR | 1 |
| 2105-14 | **RESISTOR ASSY**<br>ENS. DE RESISTANCE<br>WIDERSTAND, VOLLST.<br>CONJUNTO DEL RESISTOR | 1 |
| 2105-30 | **SHAFT SUB-ASSY, THROTTLE VALVE**<br>SOUS-ENS. D'ARBRE<br>WELLEN-TEILGRUPPE<br>SUBCONJUNTO DEL EJE | 1 |
| 2105-31 | **SPRING SUB-ASSY**<br>SOUS-ENS. DE RESSORT<br>FEDER-TEILGRUPPE<br>SUBCONJUNTO DEL RESORTE | 1 |
| 2105-32 | **VALVE SUB-ASSY, AIR GOVERNOR THROTTLE**<br>SOUS-ENS. DE SOUPAPE<br>VENTIL-TEILGRUPPE<br>SUBCONJUNTO DE VALVULA | 1 |
| 2105-42 | **COVER**<br>COUVERCLE<br>DECKEL<br>CUBIERTA | 1 |
| 2105-42A | **GASKET, COVER**<br>JOINT<br>DICHTUNG<br>EMPAQUETADURA | 1 |
| 2105-45 | **PLATE, FUEL INSULATOR**<br>PLAQUE<br>PLATTE<br>PLACA | 1 |
| 2105-47 | **INSULATOR, HEAT, NO.2**<br>ISOLATEUR<br>ISOLATOR<br>AISLADOR | 1 |
| 2105-48 | **HOSE, WATER**<br>FLEXIBLE<br>SCHLAUCH<br>MANGUERA | 2 |
| 2105-48A | **CLAMP, HOSE**<br>PINSE<br>KLEMME<br>ABRAZADERA | 4 |
| 2105-53 | **VALVE, VACUUM TRANSMITTING**<br>SOUPAPE<br>VENTIL<br>VALVULA | 1 |
| 2105-AB | **WIRE**<br>FIL<br>DRAHT<br>ALAMBRE | 1 |
| 2105-AC | **SCREW**<br>VIS<br>SCHRAUBE<br>TORNILLO | 2 |
| 2105-AG | **BUSHING**<br>BAGE<br>BUCHSE<br>MANGUITO | 1 |
| 2105-AH | **SCREW**<br>VIS<br>SCHRAUBE<br>TORNILLO | 3 |
| 2105-AL | **GASKET, CARBURETOR**<br>JOINT<br>DICHTUNG<br>EMPAQUETADURA | 1- 2 |
| 2105-AP | **UNION**<br>RACCORD<br>ROHRVERSCHRAUBUNG<br>UNION | 2 |
| 2105-AS | **CAP**<br>CAPUCHON<br>KAPPE<br>TAPA | 1 |
| 2105-AT | **HOSE, VACUUM**<br>FLEXIBLE<br>SCHLAUCH<br>MANGUERA | 1 |

## 2105

**AIR GOVERNOR**
**REGULATEUR D'AIR**
**LUFTREGLER**
**REGULADOR DE AIRE**

| PART NAME CODE | PART NAME | QTY |
|---|---|---|
| 2105-AU | **HOSE, VACUUM**<br>FLEXIBLE<br>SCHLAUCH<br>MANGUERA | 1 |
| 2105-AV | **3-WAY**<br>3 SENS<br>DREIWEG-VERTEILER<br>3 VIAS | 1 |
| 2105-AX | **HOSE, VACUUM**<br>FLEXIBLE<br>SCHLAUCH<br>MANGUERA | 1 |
| 2105-AY | **HOSE, VACUUM**<br>FLEXIBLE<br>SCHLAUCH<br>MANGUERA | 1 |
| 2105-AZ | **HOSE**<br>FLEXIBLE<br>SCHLAUCH<br>MANGUERA | 1 |
| 2105-BC | **BOLT**<br>BOULON<br>SCHRAUBE<br>PERNO | 1 |
| 2105-BE | **BOLT**<br>BOULON<br>SCHRAUBE<br>PERNO | 1 |
| 2105-BF | **PLUG**<br>BOUCHON<br>STOPFEN<br>TAPON | 1 |
| 2105-BG | **PLUG**<br>BOUCHON<br>STOPFEN<br>TAPON | 2 |
| 2105-BK | **CLAMP, HOSE**<br>PINSE<br>KLEMME<br>ABRAZADERA | 1 |
| 2105-BT | **CLIP**<br>AGRAFE<br>CLIP<br>FIJADOR | 2 |
| 2105-BW | **CLAMP**<br>PINSE<br>KLEMME<br>ABRAZADERA | 2 |
| 2105-BZ | **CAP**<br>CAPUCHON<br>KAPPE<br>TAPA | 1 |
| 2105-CA | **SEAL, LEAD**<br>JOINT<br>ABDICHTUNG<br>SELLO | 1 |
| 2105-DL | **HOSE, VACUUM**<br>FLEXIBLE<br>SCHLAUCH<br>MANGUERA | 1 |
| 2105-DX | **WIRE**<br>FIL<br>DRAHT<br>ALAMBRE | 1 |

| 2301 | FUEL PUMP<br>POMPE D'ALIMENTATION | KRAFTSTOFFPUMPE<br>BOMBA DE COMBUSTIBLE |
|---|---|---|

4Y

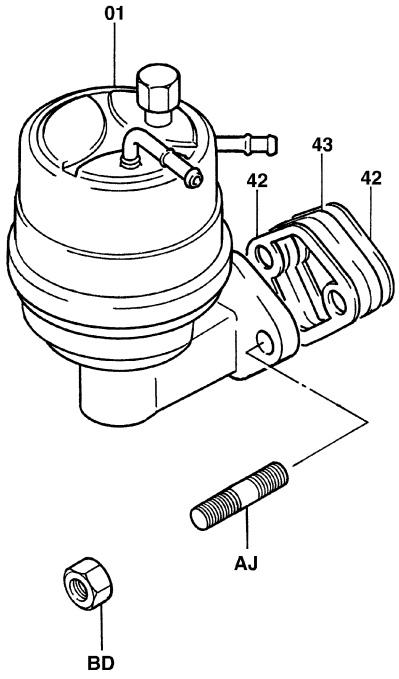


2301-017C

2301-017C


| 2301 | FUEL PUMP<br>POMPE D'ALIMENTATION | KRAFTSTOFFPUMPE<br>BOMBA DE COMBUSTIBLE |
|---|---|---|


| PART NAME CODE | PART NAME | QTY | PART NAME CODE | PART NAME | QTY |
|---|---|---|---|---|---|
| 2301-01 | **PUMP ASSY, FUEL**<br>ENS. DE POMPE<br>PUMPENAGGREGAT<br>CONJUNTO DE LA BOMBA | 1 | | | |
| 2301-42 | **GASKET, FUEL PUMP**<br>JOINT<br>DICHTUNG<br>EMPAQUETADURA | 2 | | | |
| 2301-43 | **INSULATOR, FUEL PUMP**<br>ISOLATEUR<br>ISOLATOR<br>AISLADOR | 1 | | | |
| 2301-AJ | **BOLT, STUD**<br>BOULON<br>SCHRAUBE<br>PERNO | 2 | | | |
| 2301-BD | **NUT**<br>ECROU<br>MUTTER<br>TUERCA | 2 | | | |

# 2302

**FUEL FILTER**
**FILTRE A CARBURANT**
**KRAFTSTOFF-FILTER**
**FILTRO DE COMBUSTIBLE**

**4Y**

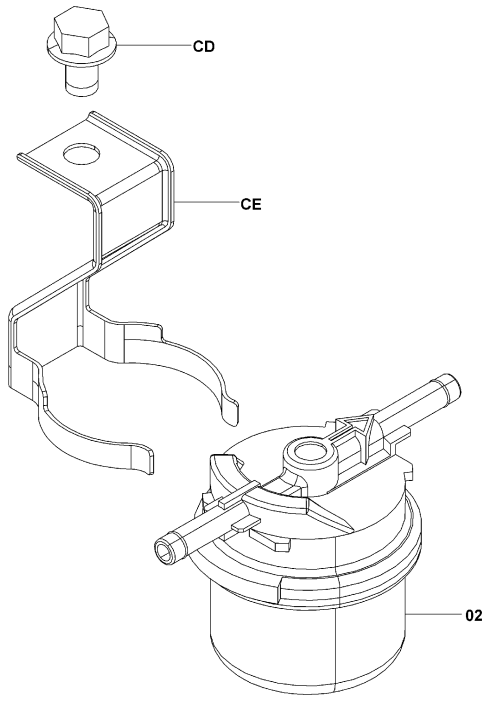


2302-134

2302-134_

**4Y (3-WAY CATALYTIC)**

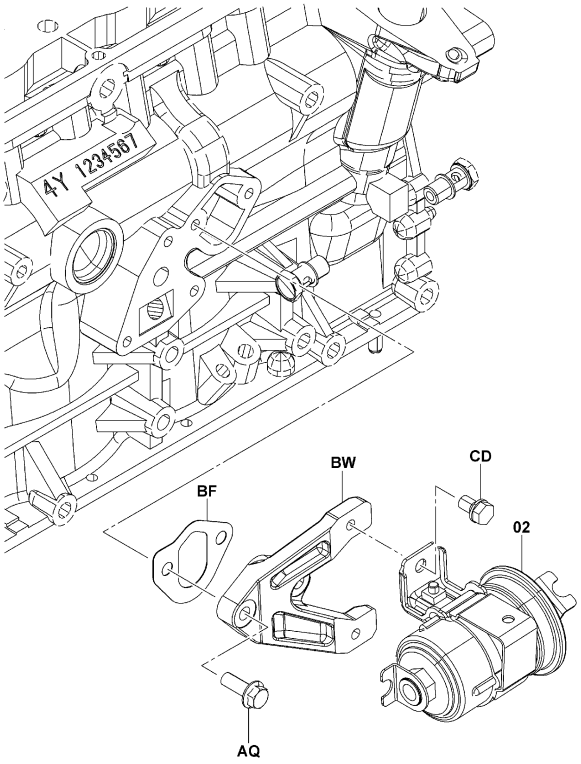


2302-135A

2302-135A


# 2302

**FUEL FILTER**
**FILTRE A CARBURANT**
**KRAFTSTOFF-FILTER**
**FILTRO DE COMBUSTIBLE**


| PART NAME CODE | PART NAME | QTY |
|---|---|---|
| **2302-02** | **FILTER ASSY, FUEL, ELEMENT NO SERVICE TYPE**<br>ENS. DE FILTRE<br>FILTER, VOLLST.<br>CONJUNTO DEL FILTRO | 1 |
| **2302-AQ** | **BOLT**<br>BOULON<br>SCHRAUBE<br>PERNO | 2 |
| **2302-BF** | **GASKET**<br>JOINT<br>DICHTUNG<br>EMPAQUETADURA | 1 |
| **2302-BW** | **BRACKET**<br>SUPPORT<br>TRAGER<br>SOPORTE | 1 |
| **2302-CD** | **BOLT**<br>BOULON<br>SCHRAUBE<br>PERNO | 1- 2 |
| **2302-CE** | **CLAMP, FUEL FILTER**<br>PINSE<br>KLEMME<br>ABRAZADERA | 1 |

| PART NAME CODE | PART NAME | QTY |
|---|---|---|

4Y (3-WAY CATALYTIC) [ENGINE PARTS]

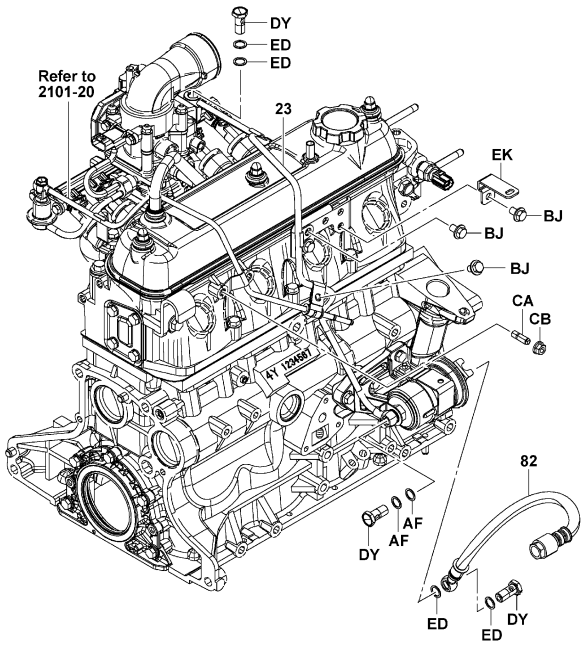


2303-324

2303-324_

4Y (CONVERTIBLE(Z3)) [ENGINE PARTS]

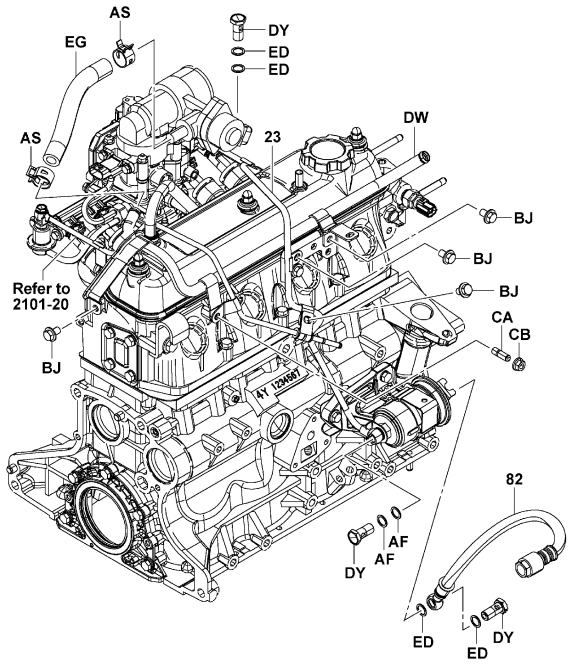


2303-325

2303-325_



4Y (EXCLUSIVE(Z4)) [ENGINE PARTS]

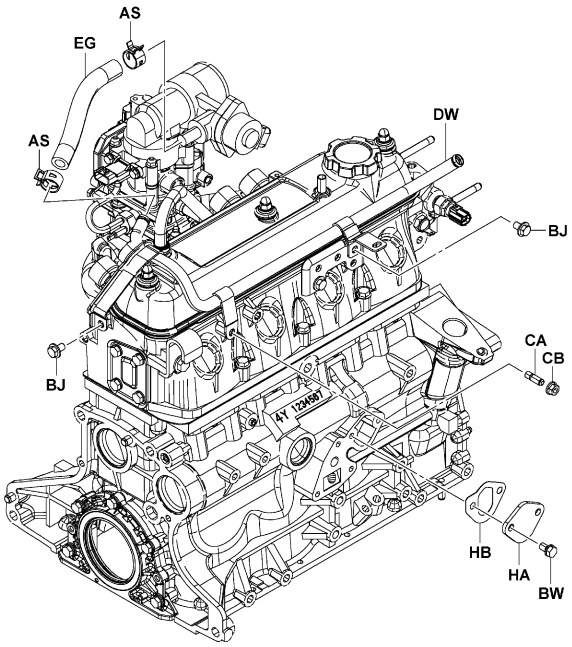


2303-326

2303-326_

4Y

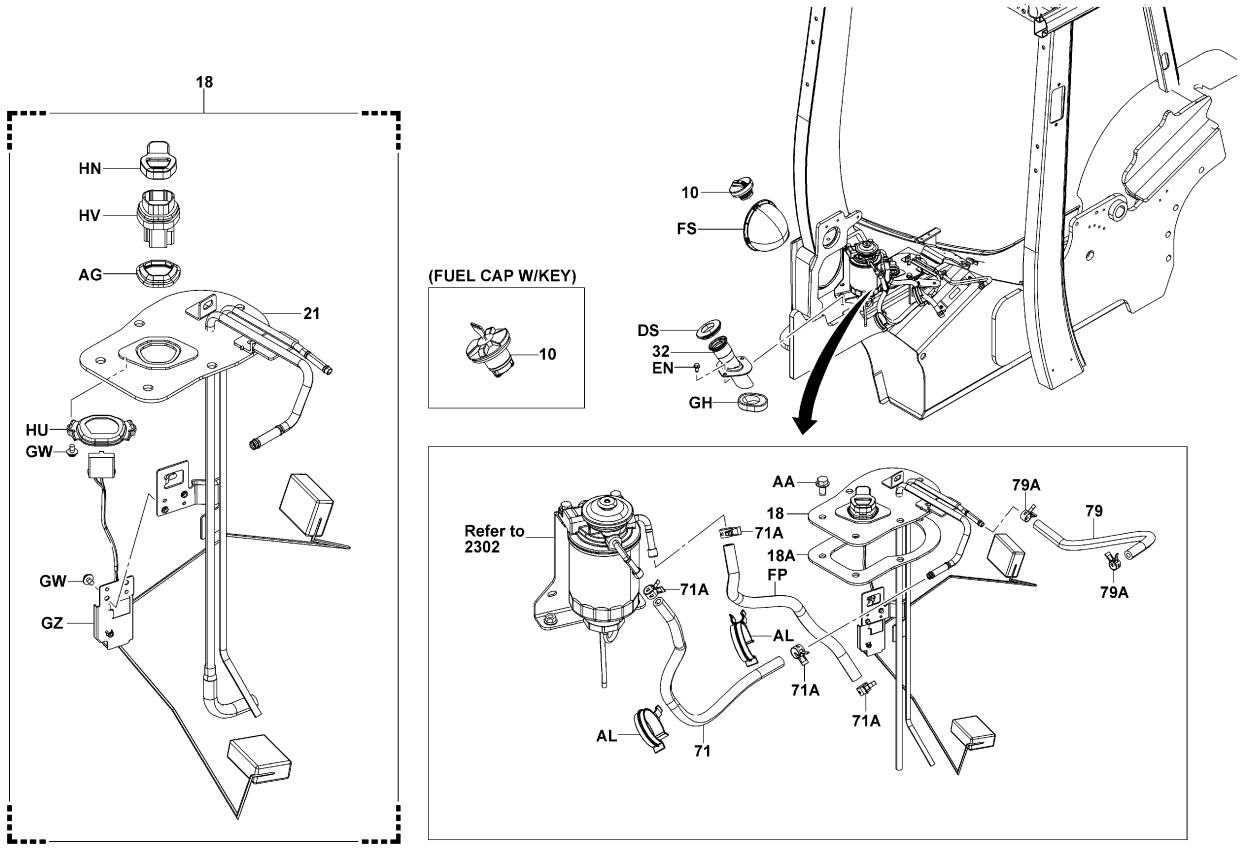


2303-322C

2303-322C


| 2303 | FUEL TANK & FUEL PIPE<br>RESERVOIR DE CARBURANT & CONDUITE D'ALIM | KRAFTSTOFFTANK & -LEITUNG<br>DEPOSITO Y TUBO DE COMBUSTIBLE |
|---|---|---|


4Y (EXCLUSIVE(Z4)) [2/2]

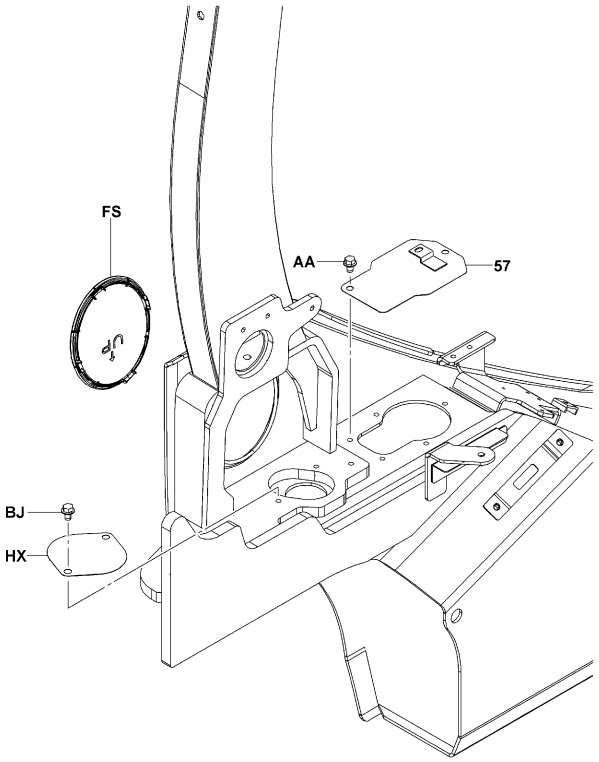


2303-321A

2303-321A

| 2303 | FUEL TANK & FUEL PIPE<br>RESERVOIR DE CARBURANT & CONDUITE D'ALIM | KRAFTSTOFFTANK & -LEITUNG<br>DEPOSITO Y TUBO DE COMBUSTIBLE |
|---|---|---|

| PART NAME CODE | PART NAME | QTY |
|---|---|---|
| 2303-10 | **CAP ASSY, FUEL TANK**<br>ENS. DE CAPUCHON<br>KAPPE, VOLLST.<br>CONJUNTO DE LA TAPA | 1 |
| 2303-18 | **COVER ASSY**<br>ENS. DE COUVERCLE<br>DECKEL, VOLLST.<br>CONJUNTO DE CUBIERTA | 1 |
| 2303-18A | **PACKING, FUEL TANK COVER**<br>CALE<br>DICHTUNG<br>EMPAQUETADURA | 1 |
| 2303-21 | **COVER SUB-ASSY, FUEL TANK**<br>SOUS-ENS. DE COUVERCLE<br>DECKEL-TEILGRUPPE<br>SUBCONJUNTO DE CUBIERTA | 1 |
| 2303-23 | **PIPE SUB-ASSY, FUEL, NO.1**<br>SOUS-ENS. DE TUYAU<br>ROHR-TEILGRUPPE<br>SUBCONJUNTO DE TUBO | 1 |
| 2303-32 | **PIPE SUB-ASSY, FUEL**<br>SOUS-ENS. DE TUYAU<br>ROHR-TEILGRUPPE<br>SUBCONJUNTO DE TUBO | 1 |
| 2303-57 | **COVER, FUEL TANK**<br>COUVERCLE<br>DECKEL<br>CUBIERTA | 1 |
| 2303-71 | **HOSE, FUEL (TANK TO FILTER)**<br>FLEXIBLE<br>SCHLAUCH<br>MANGUERA | 1 |
| 2303-71A | **CLAMP, HOSE**<br>PINSE<br>KLEMME<br>ABRAZADERA | 4 |
| 2303-79 | **HOSE, FUEL (RETURN)**<br>FLEXIBLE<br>SCHLAUCH<br>MANGUERA | 1 |
| 2303-79A | **CLAMP, HOSE**<br>PINSE<br>KLEMME<br>ABRAZADERA | 2 |
| 2303-82 | **HOSE, FUEL**<br>FLEXIBLE<br>SCHLAUCH<br>MANGUERA | 1 |
| 2303-AA | **BOLT**<br>BOULON<br>SCHRAUBE<br>PERNO | 2- 5 |
| 2303-AF | **GASKET**<br>JOINT<br>DICHTUNG<br>EMPAQUETADURA | 2 |
| 2303-AG | **GASKET**<br>JOINT<br>DICHTUNG<br>EMPAQUETADURA | 1 |
| 2303-AL | **CLAMP**<br>PINSE<br>KLEMME<br>ABRAZADERA | 1 |
| 2303-BH | **RUBBER**<br>CAOUTCHOUC<br>GUMMI<br>GOMA | 1 |
| 2303-BJ | **BOLT**<br>BOULON<br>SCHRAUBE<br>PERNO | 2- 6 |
| 2303-BW | **BOLT**<br>BOULON<br>SCHRAUBE<br>PERNO | 2 |
| 2303-CA | **BOLT, STUD**<br>BOULON<br>SCHRAUBE<br>PERNO | 1 |


| 2303 | FUEL TANK & FUEL PIPE<br>RESERVOIR DE CARBURANT & CONDUITE D'ALIM | KRAFTSTOFFTANK & -LEITUNG<br>DEPOSITO Y TUBO DE COMBUSTIBLE |
|---|---|---|


| PART NAME CODE | PART NAME | QTY |
|---|---|---|
| 2303-CB | **NUT**<br>ECROU<br>MUTTER<br>TUERCA | 1 |
| 2303-DS | **PACKING**<br>CALE<br>DICHTUNG<br>EMPAQUETADURA | 1 |
| 2303-DY | **BOLT, UNION**<br>BOULON<br>SCHRAUBE<br>PERNO | 3 |
| 2303-ED | **GASKET**<br>JOINT<br>DICHTUNG<br>EMPAQUETADURA | 4 |
| 2303-EF | **CLIP**<br>AGRAFE<br>CLIP<br>FIJADOR | 2 |
| 2303-EN | **BOLT**<br>BOULON<br>SCHRAUBE<br>PERNO | 2 |
| 2303-FP | **HOSE, FUEL**<br>FLEXIBLE<br>SCHLAUCH<br>MANGUERA | 1 |
| 2303-FS | **COVER**<br>COUVERCLE<br>DECKEL<br>CUBIERTA | 1 |
| 2303-GH | **PACKING**<br>CALE<br>DICHTUNG<br>EMPAQUETADURA | 1 |
| 2303-GN | **WIRE**<br>FIL<br>DRAHT<br>ALAMBRE | 1 |
| 2303-GW | **SCREW**<br>VIS<br>SCHRAUBE<br>TORNILLO | 4 |
| 2303-GZ | **UNIT ASSY, FUEL**<br>ENS. D'UNITE<br>EINHEIT, VOLLST.<br>CONJUNTO UNITARIO | 1 |
| 2303-HA | **PLUG, PLATE**<br>BOUCHON<br>STOPFEN<br>TAPON | 1 |
| 2303-HB | **GASKET**<br>JOINT<br>DICHTUNG<br>EMPAQUETADURA | 1 |
| 2303-HE | **HOSE**<br>FLEXIBLE<br>SCHLAUCH<br>MANGUERA | 1 |
| 2303-HN | **CAP**<br>CAPUCHON<br>KAPPE<br>TAPA | 1 |
| 2303-HU | **SUPPORT**<br>SUPPORT<br>STÜTZE<br>SOPORTE | 1 |
| 2303-HV | **HOUSING**<br>BOITIER<br>GEHÄUSE<br>FUNDA | 1 |
| 2303-HX | **COVER, FUEL TANK**<br>COUVERCLE<br>DECKEL<br>CUBIERTA | 1 |

| 2311 | LPG FUEL PIPE<br>CONDUITE DE COMBUSTIBLE GPL | LPG-LEITUNG<br>TUBO DE COMBUSTIBLE LPG |
|---|---|---|

4Y (EXCLUSIVE(Z4), CONVERTIBLE(Z3))

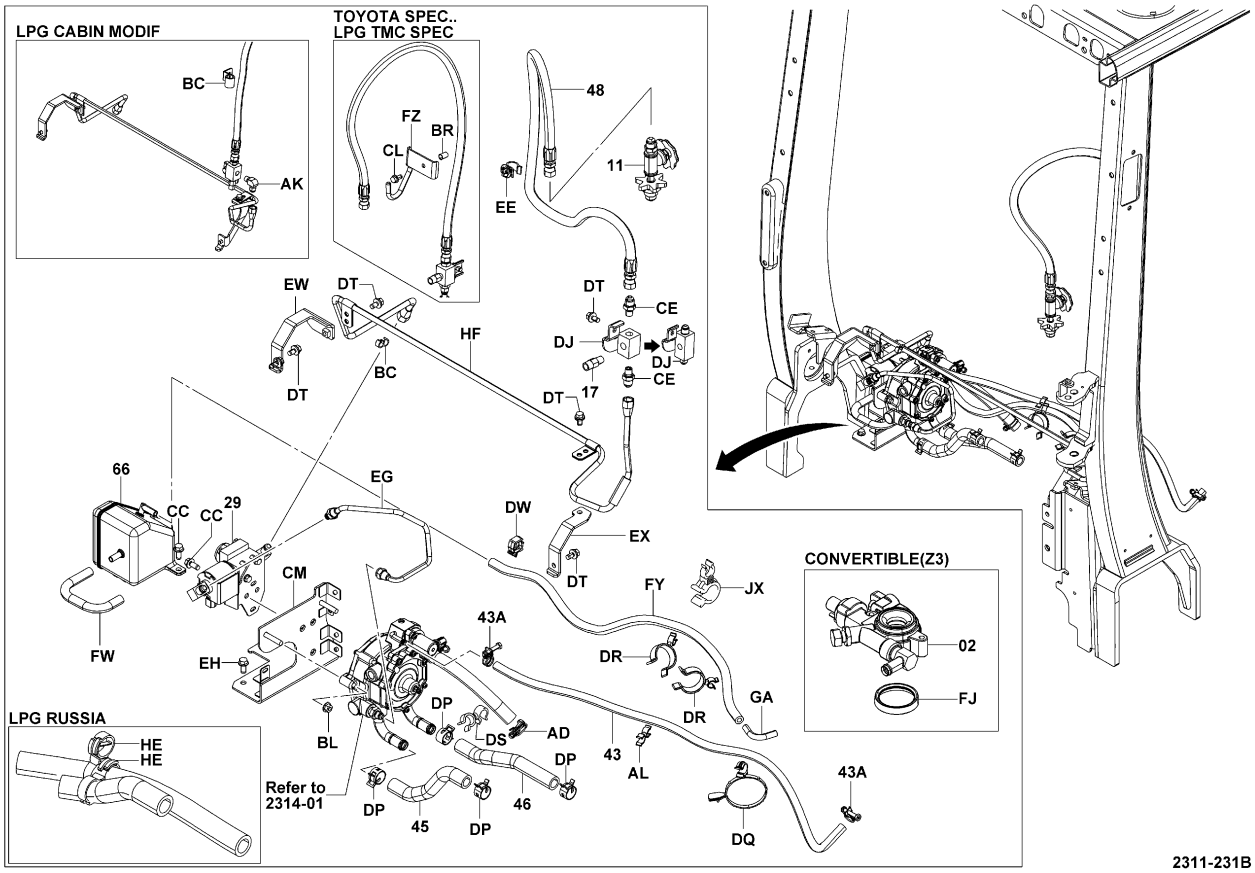


| 2311 | LPG FUEL PIPE<br>CONDUITE DE COMBUSTIBLE GPL | LPG-LEITUNG<br>TUBO DE COMBUSTIBLE LPG |
|---|---|---|

4Y (LPG RUSSIA)

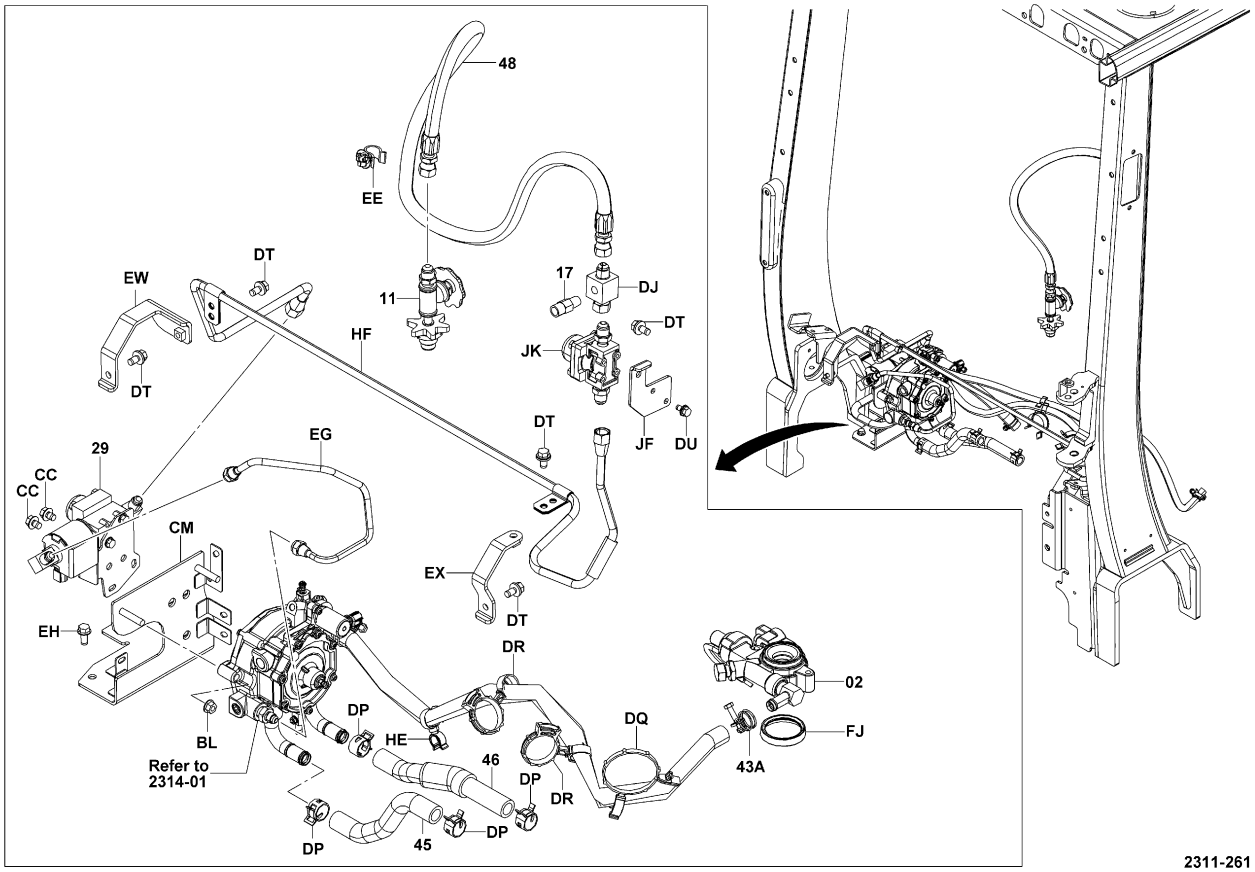

| 2311 | LPG FUEL PIPE<br>CONDUITE DE COMBUSTIBLE GPL | LPG-LEITUNG<br>TUBO DE COMBUSTIBLE LPG |
|---|---|---|

4Y (FUEL WARNING)

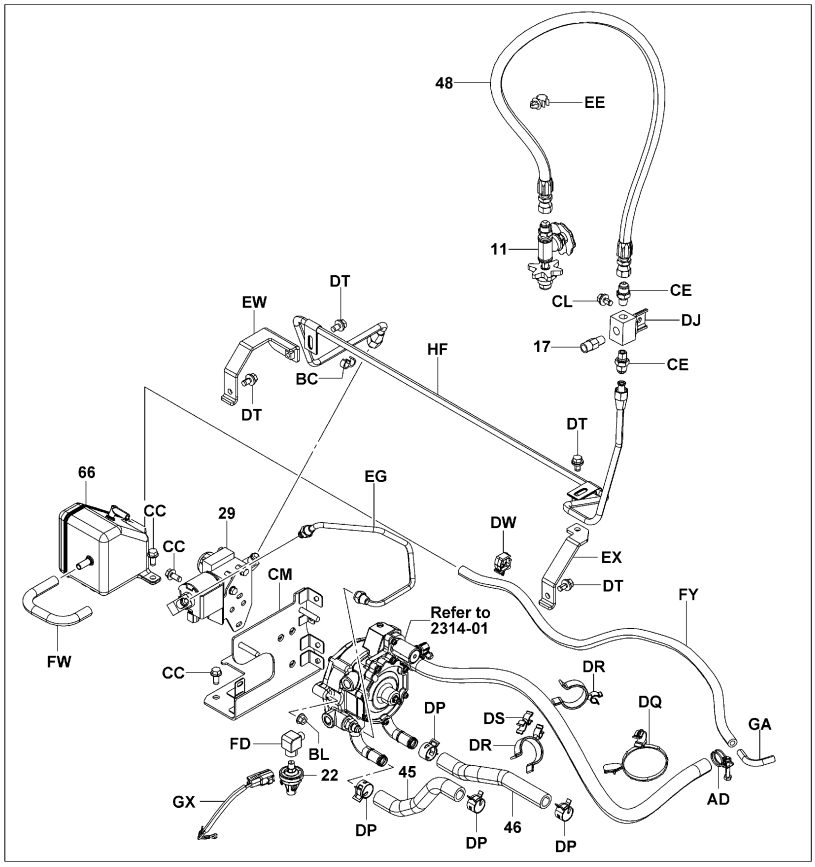


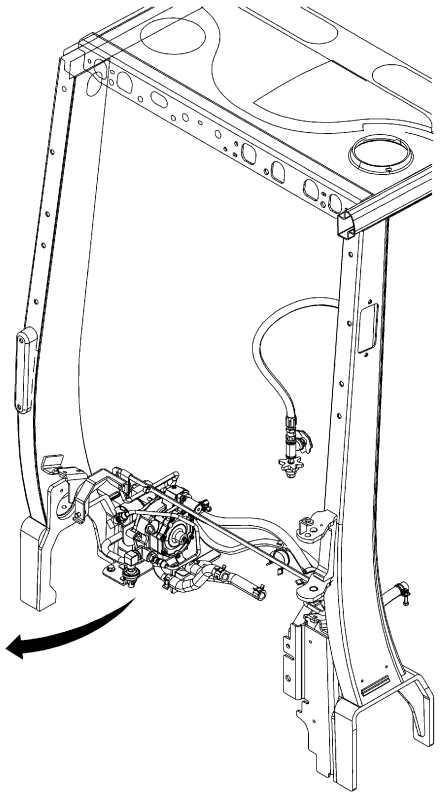

2311-219B

2311-219B

| 2311 | LPG FUEL PIPE<br>CONDUITE DE COMBUSTIBLE GPL | LPG-LEITUNG<br>TUBO DE COMBUSTIBLE LPG |
|---|---|---|

4Y (EXCLUSIVE(Z4), CONVERTIBLE(Z3)) [QUICK COUP]

COUPLING W/MALE

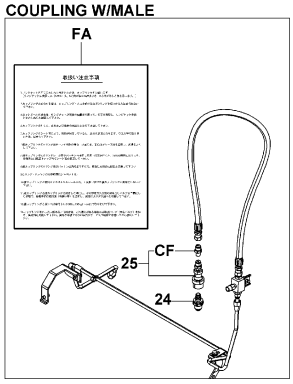


COUPLING L/MALE

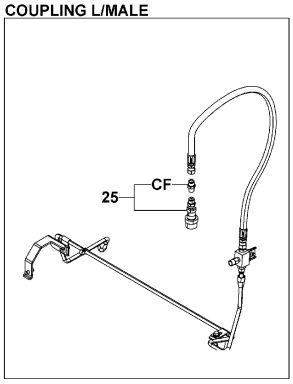


LPG NZ SPEC(Z3)
LPG AUSTRALIA

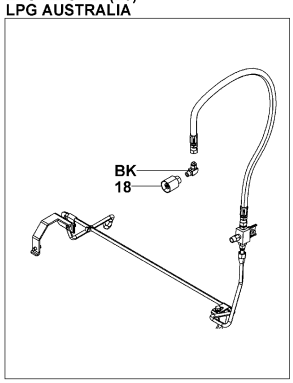


2311-220

2311-220_

4Y (EXCLUSIVE(Z4), CONVERTIBLE(Z3)) [SOLENOID VAL]

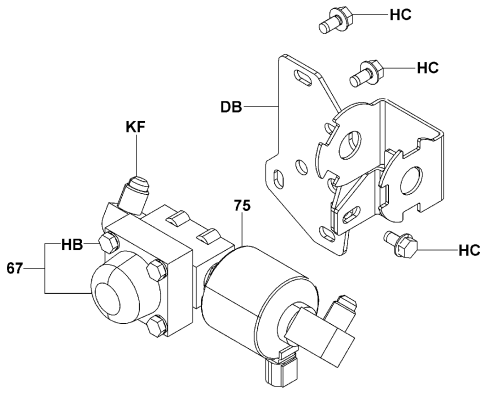


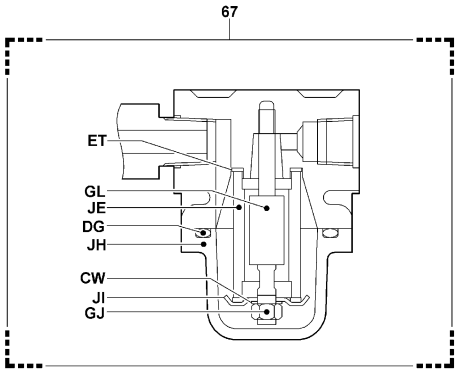


2311-243

2311-243_

| 2311 | LPG FUEL PIPE<br>CONDUITE DE COMBUSTIBLE GPL | LPG-LEITUNG<br>TUBO DE COMBUSTIBLE LPG |
|---|---|---|

4Y (LPG AUSTRALIA, LPG NZ SPEC(Z3)) [SOLENOID VAL]

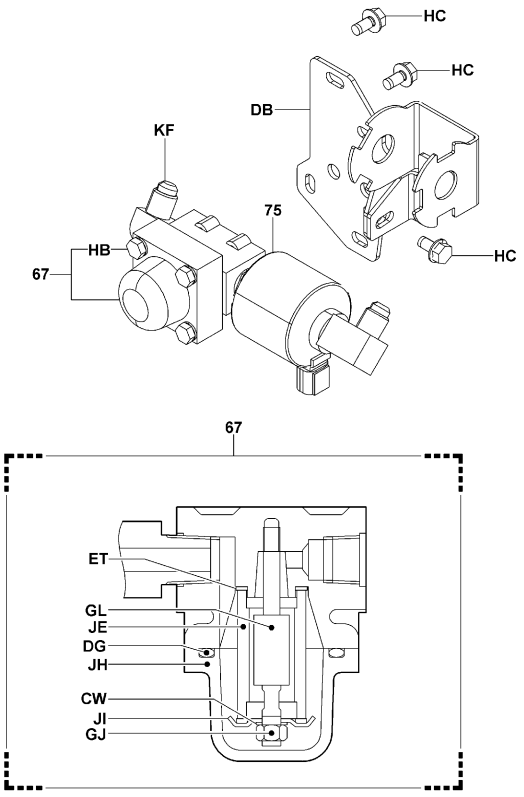


2311-243

2311-243_

| 2311 | LPG FUEL PIPE<br>CONDUITE DE COMBUSTIBLE GPL | LPG-LEITUNG<br>TUBO DE COMBUSTIBLE LPG |
|---|---|---|

| PART NAME CODE | PART NAME | QTY |
|---|---|---|
| 2311-02 | **ADAPTOR ASSY**<br>ENS. D'ADAPTATEUR<br>ADAPTER-VOLLST.<br>CONJUNTO DEL ADAPTADOR | 1 |
| 2311-11 | **CONNECTION ASSY, HIGH PRESSURE, LPG**<br>ENS. DE CONNEXION<br>ANSCHLUSS, VOLLST.<br>CONJUNTO DE CONEXION | 1 |
| 2311-17 | **VALVE ASSY, RELIEF, LPG**<br>ENS. DE SOUPAPE<br>VENTIL, VOLLST.<br>CONJUNTO DE VALVULA | 1 |
| 2311-18 | **COUPLING ASSY, LPG**<br>ENS. D'ACCOUPLEMENT<br>KUPPLUNGS, VOLLST.<br>CONJUNTO DE ACOPLAMIENTO | 1 |
| 2311-22 | **SWITCH ASSY, LPG**<br>ENS. DE INTERRUPTEUR<br>SCHALTER, VOLLST.<br>CONJUNTO DEL INTERRUPUPTOR | 1 |
| 2311-29 | **VALVE ASSY, SOLENOID**<br>ENS. DE SOUPAPE<br>VENTIL, VOLLST.<br>CONJUNTO DE VALVULA | 1 |
| 2311-43 | **HOSE, FUEL SLOW (REGULATOR TO CARBURETOR)**<br>FLEXIBLE<br>SCHLAUCH<br>MANGUERA | 1 |
| 2311-43A | **CLAMP, HOSE**<br>PINSE<br>KLEMME<br>ABRAZADERA | 2 |
| 2311-45 | **HOSE, WATER, NO.1**<br>FLEXIBLE<br>SCHLAUCH<br>MANGUERA | 1 |
| 2311-46 | **HOSE, WATER, NO.2**<br>FLEXIBLE<br>SCHLAUCH<br>MANGUERA | 1 |
| 2311-48 | **HOSE, HIGH PRESSURE**<br>FLEXIBLE<br>SCHLAUCH<br>MANGUERA | 1 |
| 2311-66 | **CASE**<br>CARTER<br>GEHAUSE<br>CAJA | 1 |
| 2311-67 | **FILTER ASSY, LPG**<br>ENS. DE FILTRE<br>FILTER, VOLLST.<br>CONJUNTO DEL FILTRO | 1 |
| 2311-75 | **VALVE ASSY, SOLENOID**<br>ENS. DE SOUPAPE<br>VENTIL, VOLLST.<br>CONJUNTO DE VALVULA | 1 |
| 2311-AD | **CLAMP**<br>PINSE<br>KLEMME<br>ABRAZADERA | 1 |
| 2311-AL | **CLAMP**<br>PINSE<br>KLEMME<br>ABRAZADERA | 2 |
| 2311-BC | **CLAMP**<br>PINSE<br>KLEMME<br>ABRAZADERA | 1 |
| 2311-BK | **ELBOW**<br>COUDE<br>KRUMMER<br>ACODADO | 1 |
| 2311-BL | **NUT**<br>ECROU<br>MUTTER<br>TUERCA | 2- 4 |
| 2311-CC | **BOLT**<br>BOULON<br>SCHRAUBE<br>PERNO | 2 |

## 2311

**LPG FUEL PIPE**
**CONDUITE DE COMBUSTIBLE GPL**
**LPG-LEITUNG**
**TUBO DE COMBUSTIBLE LPG**

| PART NAME CODE | PART NAME | QTY |
|---|---|---|
| 2311-CM | **BRACKET SUB-ASSY, REGULATOR SET**<br>SOUS-ENS. DE SUPPORT<br>TRAGER-TEILGRUPPE<br>SUBCONJUNTO DE LA SOPORTE | 1 |
| 2311-CW | **GASKET**<br>JOINT<br>DICHTUNG<br>EMPAQUETADURA | 1 |
| 2311-DB | **BRACKET**<br>SUPPORT<br>TRAGER<br>SOPORTE | 1 |
| 2311-DG | **RING, O**<br>ANNEAU<br>RING<br>ANILLO | 1 |
| 2311-DJ | **FITTING SUB-ASSY**<br>SOUS-ENS. DE RACCORD<br>ANSCHLUSSTUCK-TEILGRUPPE<br>SUBCONJUNTO DE ACOPLADOR | 1 |
| 2311-DP | **CLAMP**<br>PINSE<br>KLEMME<br>ABRAZADERA | 4 |
| 2311-DQ | **CLAMP**<br>PINSE<br>KLEMME<br>ABRAZADERA | 1 |
| 2311-DR | **CLAMP**<br>PINSE<br>KLEMME<br>ABRAZADERA | 2 |
| 2311-DS | **CLAMP**<br>PINSE<br>KLEMME<br>ABRAZADERA | 1- 2 |
| 2311-DT | **BOLT**<br>BOULON<br>SCHRAUBE<br>PERNO | 4- 5 |
| 2311-DU | **BOLT**<br>BOULON<br>SCHRAUBE<br>PERNO | 2 |
| 2311-DW | **CLAMP**<br>PINSE<br>KLEMME<br>ABRAZADERA | 1 |
| 2311-EE | **CLAMP**<br>PINSE<br>KLEMME<br>ABRAZADERA | 1 |
| 2311-EG | **PIPE**<br>TUYAU<br>ROHR<br>TUBO | 1 |
| 2311-EH | **BOLT**<br>BOULON<br>SCHRAUBE<br>PERNO | 2 |
| 2311-EK | **BOLT**<br>BOULON<br>SCHRAUBE<br>PERNO | 1 |
| 2311-ET | **GASKET**<br>JOINT<br>DICHTUNG<br>EMPAQUETADURA | 2 |
| 2311-EW | **BRACKET SUB-ASSY**<br>SOUS-ENS. DE SUPPORT<br>TRAGER-TEILGRUPPE<br>SUBCONJUNTO DE LA SOPORTE | 1 |
| 2311-EX | **BRACKET SUB-ASSY**<br>SOUS-ENS. DE SUPPORT<br>TRAGER-TEILGRUPPE<br>SUBCONJUNTO DE LA SOPORTE | 1 |
| 2311-FD | **ELBOW**<br>COUDE<br>KRUMMER<br>ACODADO | 1 |

## 2311

**LPG FUEL PIPE**
**CONDUITE DE COMBUSTIBLE GPL**
**LPG-LEITUNG**
**TUBO DE COMBUSTIBLE LPG**

| PART NAME CODE | PART NAME | QTY |
|---|---|---|
| 2311-FJ | **SEAL**<br>JOINT<br>ABDICHTUNG<br>SELLO | 1 |
| 2311-FW | **HOSE**<br>FLEXIBLE<br>SCHLAUCH<br>MANGUERA | 1 |
| 2311-FY | **HOSE**<br>FLEXIBLE<br>SCHLAUCH<br>MANGUERA | 1 |
| 2311-GA | **PIPE**<br>TUYAU<br>ROHR<br>TUBO | 1 |
| 2311-GJ | **NUT**<br>ECROU<br>MUTTER<br>TUERCA | 1 |
| 2311-GL | **BOLT**<br>BOULON<br>SCHRAUBE<br>PERNO | 1 |
| 2311-GX | **WIRE**<br>FIL<br>DRAHT<br>ALAMBRE | 1 |
| 2311-HB | **BOLT**<br>BOULON<br>SCHRAUBE<br>PERNO | 4 |
| 2311-HC | **BOLT**<br>BOULON<br>SCHRAUBE<br>PERNO | 3 |
| 2311-HF | **PIPE SUB-ASSY**<br>SOUS-ENS. DE TUYAU<br>ROHR-TEILGRUPPE<br>SUBCONJUNTO DE TUBO | 1 |
| 2311-JE | **ELEMENT, FILTER**<br>ELEMENT<br>ELEMENT<br>ELEMENTO | 1 |
| 2311-JF | **PLATE**<br>PLAQUE<br>PLATTE<br>PLACA | 1 |
| 2311-JH | **FILTER**<br>FILTRE<br>FILTER<br>FILTRO | 1 |
| 2311-JI | **PLATE**<br>PLAQUE<br>PLATTE<br>PLACA | 1 |
| 2311-JK | **FILTER ASSY, LPG**<br>ENS. DE FILTRE<br>FILTER, VOLLST.<br>CONJUNTO DEL FILTRO | 1 |
| 2311-JX | **CLAMP**<br>PINSE<br>KLEMME<br>ABRAZADERA | 1 |
| 2311-KF | **ELBOW**<br>COUDE<br>KRÜMMER<br>ACODADO | 1 |

| 2312 | LPG CARBURETOR<br>CARBURATEUR GPL | LPG-MISCHER<br>CARBURADOR DE LPG |
|---|---|---|

4Y (EXCLUSIVE(Z4))

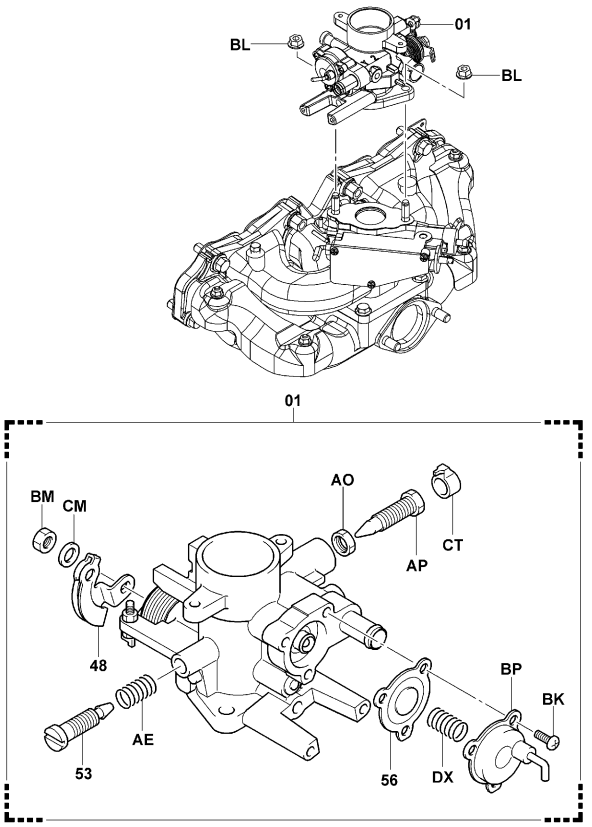


2312-034

2312-034_

| 2312 | LPG CARBURETOR<br>CARBURATEUR GPL | LPG-MISCHER<br>CARBURADOR DE LPG |
|---|---|---|

| PART NAME CODE | PART NAME | QTY |
|---|---|---|
| 2312-01 | **CARBURETOR ASSY, LPG**<br>ENS. DE CARBURATEUR<br>VERGASER, VOLLST.<br>CONJUNTO DEL CARBURADOR | 1 |
| 2312-48 | **LEVER, THROTTLE**<br>LEVIER<br>HEBEL<br>PALANCA | 1 |
| 2312-53 | **SCREW, IDLE ADJUST**<br>VIS<br>SCHRAUBE<br>TORNILLO | 1 |
| 2312-56 | **DIAPHRAGM**<br>DIAPHRAGME<br>MEMBRANE<br>DIAFRAGMA | 1 |
| 2312-AE | **SPRING, IDLE ADJUST SCREW**<br>RESSORT<br>FEDER<br>RESORTE | 1 |
| 2312-AO | **NUT, POWER JET**<br>ECROU<br>MUTTER<br>TUERCA | 1 |
| 2312-AP | **SCREW, POWER JET**<br>VIS<br>SCHRAUBE<br>TORNILLO | 1 |
| 2312-BK | **SCREW**<br>VIS<br>SCHRAUBE<br>TORNILLO | 3 |
| 2312-BL | **NUT**<br>ECROU<br>MUTTER<br>TUERCA | 2 |
| 2312-BM | **NUT**<br>ECROU<br>MUTTER<br>TUERCA | 1 |
| 2312-BP | **COVER**<br>COUVERCLE<br>DECKEL<br>CUBIERTA | 1 |
| 2312-CM | **WASHER, SPRING**<br>RODELLE<br>UNTERLEGSCHEIBE<br>ARANDELA | 1 |
| 2312-CT | **LIMITER, POWER SCREW**<br>LIMITEUR<br>BEGRENZER<br>LIMITADOR | 1 |
| 2312-DX | **SPRING**<br>RESSORT<br>FEDER<br>RESORTE | 1 |

| 2314 | LPG REGULATOR<br>REGULATEUR GPL | LPG-REGLER<br>REGULADOR DE LPG |
|---|---|---|

4Y (CONVERTIBLE(Z3), EXCLUSIVE(Z4))

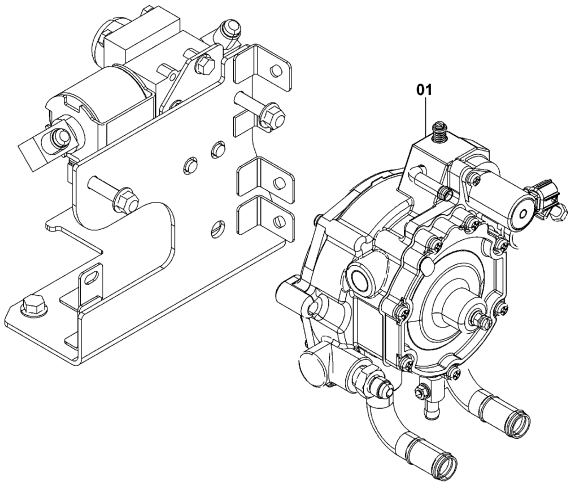


2314-047

2314-047_

4Y (LPG AUSTRALIA, LPG NZ SPEC(Z3))

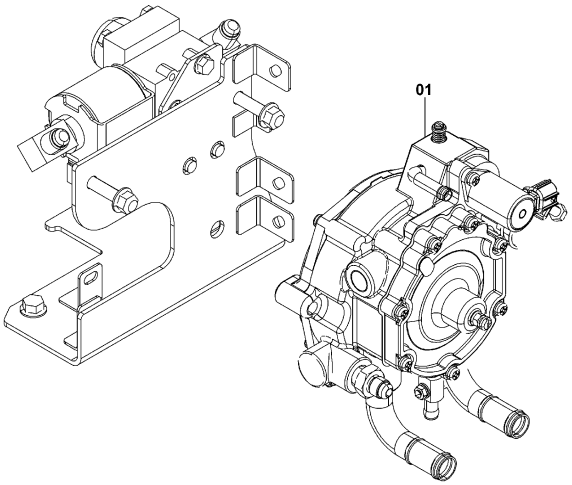


2314-047

2314-047_

| 2314 | LPG REGULATOR<br>REGULATEUR GPL | LPG-REGLER<br>REGULADOR DE LPG |
|---|---|---|

4Y (CONVERTIBLE(Z3), EXCLUSIVE(Z4)) [REGULATOR]

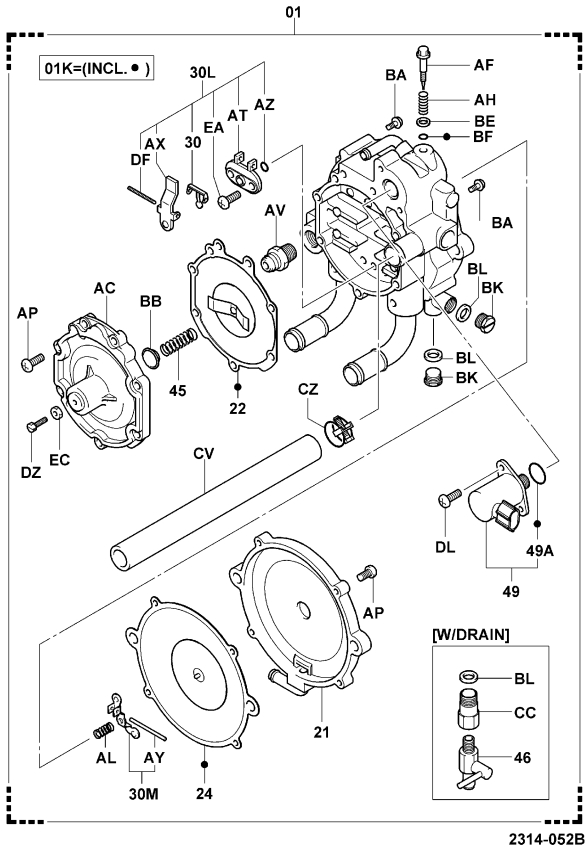


2314-052B

2314-052B

4Y (LPG AUSTRALIA, LPG NZ SPEC(Z3)) [REGULATOR]

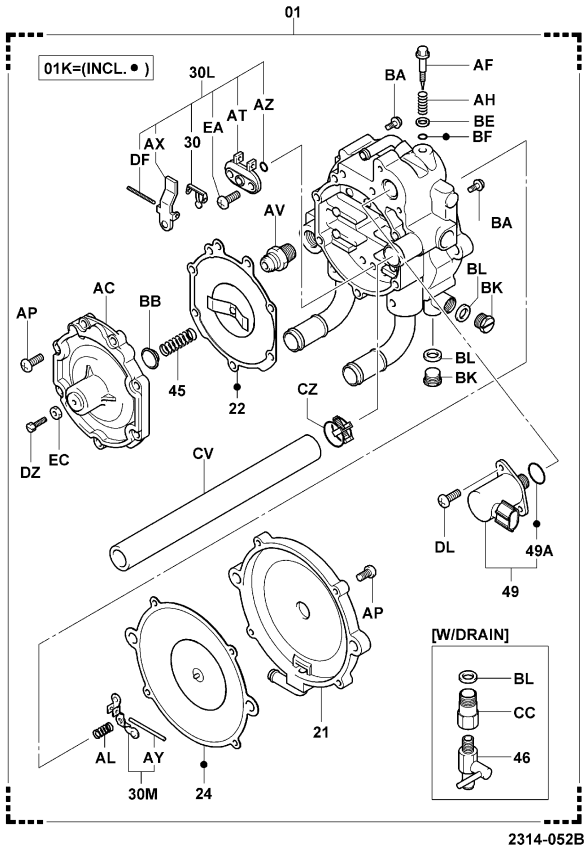


2314-052B

2314-052B

4Y..ATM (LPG RUSSIA) [ASSY]

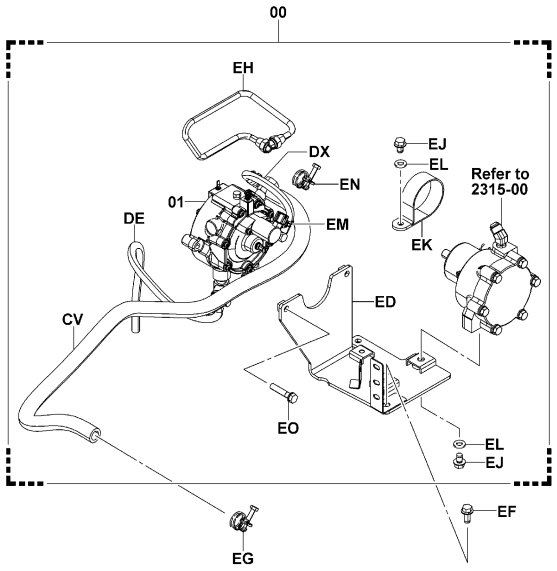


2314-053

2314-053_

4Y..ATM (LPG RUSSIA) [REGULATOR]

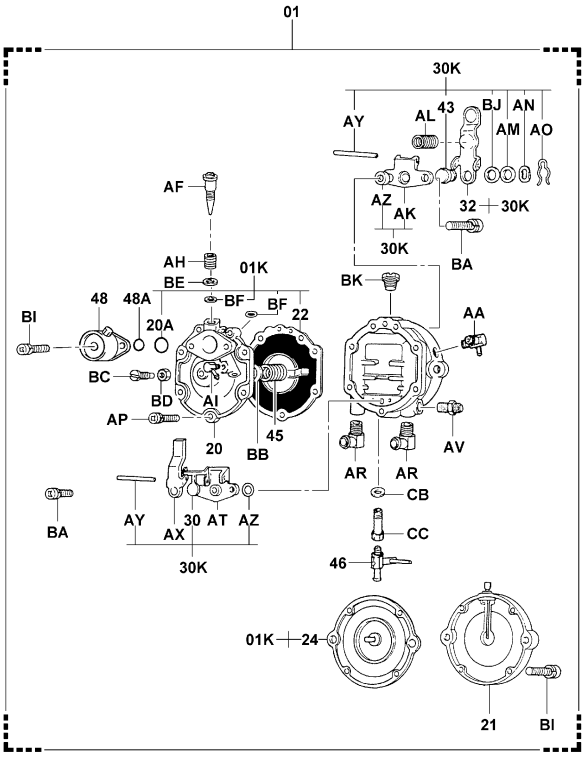


2314-054

2314-054_


| 2314 | LPG REGULATOR<br>REGULATEUR GPL | LPG-REGLER<br>REGULADOR DE LPG |
|---|---|---|


| PART NAME CODE | PART NAME | QTY |
|---|---|---|
| 2314-01 | **REGULATOR ASSY, LPG**<br>ENS. DE REGULATEUR<br>REGLER, VOLLST.<br>CONJUNTO DEL REGULADOR | 1 |
| 2314-01K | **DIAPHRAGM O/H KIT**<br>JEU O/H DE DIAPHRAGME<br>MEMBRANE-UBERHOLSATZ<br>JUEGO O/H DEL DIAFRAGMA | 1 |
| 2314-20 | **COVER SUB-ASSY, 1ST REGULATOR**<br>SOUS-ENS. DE COUVERCLE<br>DECKEL-TEILGRUPPE<br>SUBCONJUNTO DE CUBIERTA | 1 |
| 2314-20A | **RING, O (FOR 1ST REGULATOR COVER)**<br>ANNEAU<br>RING<br>ANILLO | 1 |
| 2314-21 | **COVER SUB-ASSY, 2ND REGULATOR**<br>SOUS-ENS. DE COUVERCLE<br>DECKEL-TEILGRUPPE<br>SUBCONJUNTO DE CUBIERTA | 1 |
| 2314-22 | **DIAPHRAGM SUB-ASSY, 1ST**<br>SOUS-ENS. DE DIAPHRAGME<br>MEMBRANE-TEILGRUPPE<br>SUBCONJUNTO DEL DIAFRAGMA | 1 |
| 2314-24 | **DIAPHRAGM SUB-ASSY, 2ND REGULATOR**<br>SOUS-ENS. DE DIAPHRAGME<br>MEMBRANE-TEILGRUPPE<br>SUBCONJUNTO DEL DIAFRAGMA | 1 |
| 2314-30 | **VALVE SUB-ASSY, 1ST**<br>SOUS-ENS. DE SOUPAPE<br>VENTIL-TEILGRUPPE<br>SUBCONJUNTO DE VALVULA | 1 |
| 2314-30K | **VALVE O/H KIT**<br>JEU O/H DE SOUPAPE<br>VENTIL-UBERHOLSATZ<br>JUEGO O/H DE VALVULA | 1 |
| 2314-30L | **VALVE O/H KIT, 1ST**<br>JEU O/H DE SOUPAPE<br>VENTIL-ÜBERHOLSATZ<br>JUEGO O/H DE VALVULA | 1 |
| 2314-30M | **VALVE O/H KIT, 2ND**<br>JEU O/H DE SOUPAPE<br>VENTIL-ÜBERHOLSATZ<br>JUEGO O/H DE VALVULA | 1 |
| 2314-32 | **LEVER SUB-ASSY, 2ND VALVE**<br>SOUS-ENS. DE LEVIER<br>HEBEL-TEILGRUPPE<br>SUBCONJUNTO DE LA PALANCA | 1 |
| 2314-43 | **VALVE, ELASTIC FACE**<br>SOUPAPE<br>VENTIL<br>VALVULA | 1 |
| 2314-45 | **SPRING, 1ST REGULATOR**<br>RESSORT<br>FEDER<br>RESORTE | 1 |
| 2314-46 | **COCK, DRAIN**<br>ROBINET<br>HAHN<br>GRIFO | 1 |
| 2314-48 | **VALVE SUB-ASSY, SOLENOID**<br>SOUS-ENS. DE SOUPAPE<br>VENTIL-TEILGRUPPE<br>SUBCONJUNTO DE VALVULA | 1 |
| 2314-48A | **RING, O (FOR SOLENOID VALVE)**<br>ANNEAU<br>RING<br>ANILLO | 1 |
| 2314-49 | **VALVE SUB-ASSY, SOLENOID**<br>SOUS-ENS. DE SOUPAPE<br>VENTIL-TEILGRUPPE<br>SUBCONJUNTO DE VALVULA | 1 |
| 2314-49A | **RING, O (FOR SOLENOID VALVE)**<br>ANNEAU<br>RING<br>ANILLO | 1 |
| 2314-AA | **UNION**<br>RACCORD<br>ROHRVERSCHRAUBUNG<br>UNION | 1 |

## 2314

**LPG REGULATOR**
**REGULATEUR GPL**
**LPG-REGLER**
**REGULADOR DE LPG**

| PART NAME CODE | PART NAME | QTY |
|---|---|---|
| 2314-AC | **COVER, 1ST REGULATOR**<br>COUVERCLE<br>DECKEL<br>CUBIERTA | 1 |
| 2314-AF | **SCREW, IDLE ADJUST**<br>VIS<br>SCHRAUBE<br>TORNILLO | 1 |
| 2314-AH | **SPRING, IDLE ADJUST SCREW**<br>RESSORT<br>FEDER<br>RESORTE | 1 |
| 2314-AI | **UNION**<br>RACCORD<br>ROHRVERSCHRAUBUNG<br>UNION | 1 |
| 2314-AK | **SEAT, 2ND VALVE**<br>SIEGE<br>SITZ<br>ASIENTO | 1 |
| 2314-AL | **SPRING, 2ND REGULATOR**<br>RESSORT<br>FEDER<br>RESORTE | 1 |
| 2314-AM | **RETAINER, WIRE SUPPORT**<br>ARRETOIR<br>SEEGERRING<br>RETENEDOR | 1 |
| 2314-AN | **WASHER, WAVE**<br>RODELLE<br>UNTERLEGSCHEIBE<br>ARANDELA | 1 |
| 2314-AO | **RING, SNAP**<br>ANNEAU<br>RING<br>ANILLO | 1 |
| 2314-AP | **SCREW**<br>VIS<br>SCHRAUBE<br>TORNILLO | 7-11 |
| 2314-AR | **UNION**<br>RACCORD<br>ROHRVERSCHRAUBUNG<br>UNION | 2 |
| 2314-AT | **SEAT, 1ST VALVE**<br>SIEGE<br>SITZ<br>ASIENTO | 1 |
| 2314-AV | **UNION**<br>RACCORD<br>ROHRVERSCHRAUBUNG<br>UNION | 1 |
| 2314-AX | **LEVER, 1ST VALVE**<br>LEVIER<br>HEBEL<br>PALANCA | 1 |
| 2314-AY | **PIN**<br>GOUPILLE<br>STIFT<br>PASADOR | 1- 2 |
| 2314-AZ | **RING, O**<br>ANNEAU<br>RING<br>ANILLO | 1- 2 |
| 2314-BA | **SCREW**<br>VIS<br>SCHRAUBE<br>TORNILLO | 2- 4 |
| 2314-BB | **GUIDE, SPRING**<br>GUIDE<br>FUHRUNG<br>GUIA | 1 |
| 2314-BC | **SCREW**<br>VIS<br>SCHRAUBE<br>TORNILLO | 1 |
| 2314-BD | **NUT**<br>ECROU<br>MUTTER<br>TUERCA | 1 |

## 2314

**LPG REGULATOR**
**REGULATEUR GPL**
**LPG-REGLER**
**REGULADOR DE LPG**

| PART NAME CODE | PART NAME | QTY |
|---|---|---|
| 2314-BE | **WASHER**<br>RODELLE<br>UNTERLEGSCHEIBE<br>ARANDELA | 1- 2 |
| 2314-BF | **RING, O**<br>ANNEAU<br>RING<br>ANILLO | 1- 2 |
| 2314-BI | **SCREW**<br>VIS<br>SCHRAUBE<br>TORNILLO | 4 |
| 2314-BJ | **WASHER**<br>RODELLE<br>UNTERLEGSCHEIBE<br>ARANDELA | 1 |
| 2314-BK | **PLUG**<br>BOUCHON<br>STOPFEN<br>TAPON | 1- 2 |
| 2314-BL | **GASKET**<br>JOINT<br>DICHTUNG<br>EMPAQUETADURA | 1- 2 |
| 2314-CC | **PIPE**<br>TUYAU<br>ROHR<br>TUBO | 1 |
| 2314-CM | **SCREW**<br>VIS<br>SCHRAUBE<br>TORNILLO | 2 |
| 2314-CV | **HOSE, FUEL**<br>FLEXIBLE<br>SCHLAUCH<br>MANGUERA | 1 |
| 2314-CZ | **CLAMP, HOSE**<br>PINSE<br>KLEMME<br>ABRAZADERA | 1 |
| 2314-DE | **HOSE, DRAIN**<br>FLEXIBLE<br>SCHLAUCH<br>MANGUERA | 1 |
| 2314-DF | **PIN**<br>GOUPILLE<br>STIFT<br>PASADOR | 1 |
| 2314-DL | **SCREW**<br>VIS<br>SCHRAUBE<br>TORNILLO | 2 |
| 2314-DX | **HOSE**<br>FLEXIBLE<br>SCHLAUCH<br>MANGUERA | 1 |
| 2314-DZ | **SCREW**<br>VIS<br>SCHRAUBE<br>TORNILLO | 1 |
| 2314-EA | **SCREW**<br>VIS<br>SCHRAUBE<br>TORNILLO | 2 |
| 2314-EB | **RING, O**<br>ANNEAU<br>RING<br>ANILLO | 1 |
| 2314-EC | **NUT**<br>ECROU<br>MUTTER<br>TUERCA | 1 |
| 2314-EH | **PIPE SUB-ASSY**<br>SOUS-ENS. DE TUYAU<br>ROHR-TEILGRUPPE<br>SUBCONJUNTO DE TUBO | 1 |
| 2314-EI | **BOLT**<br>BOULON<br>SCHRAUBE<br>PERNO | 2 |

| 2314 | LPG REGULATOR<br>REGULATEUR GPL | | LPG-REGLER<br>REGULADOR DE LPG | | |
|---|---|---|---|---|---|
| PART NAME CODE | PART NAME | QTY | PART NAME CODE | PART NAME | QTY |
| 2314-EJ | **BOLT**<br>BOULON<br>SCHRAUBE<br>PERNO | 3 | | | |
| 2314-EK | **CLAMP**<br>PINSE<br>KLEMME<br>ABRAZADERA | 1 | | | |
| 2314-EL | **WASHER, PLATE**<br>RODELLE<br>UNTERLEGSCHEIBE<br>ARANDELA | 3 | | | |
| 2314-EM | **CLAMP, HOSE**<br>PINSE<br>KLEMME<br>ABRAZADERA | 2 | | | |
| 2314-EN | **CLAMP, HOSE**<br>PINSE<br>KLEMME<br>ABRAZADERA | 1 | | | |

| 2314 | LPG REGULATOR<br>REGULATEUR GPL | | LPG-REGLER<br>REGULADOR DE LPG | | |
|---|---|---|---|---|---|
| PART NAME CODE | PART NAME | QTY | PART NAME CODE | PART NAME | QTY |

| 2315 | LPG FILTER<br>FILTRE GPL | LPG-FILTER<br>FILTRO DE LPG |
|---|---|---|

4Y..ATM (LPG RUSSIA)

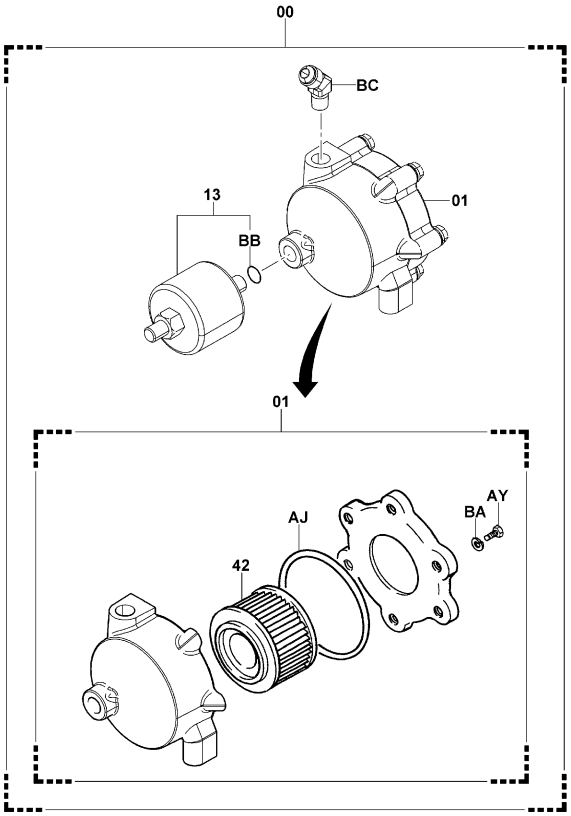


2315-013

2315-013_

| 2315 | LPG FILTER<br>FILTRE GPL | LPG-FILTER<br>FILTRO DE LPG |
|---|---|---|

| PART NAME CODE | PART NAME | QTY | PART NAME CODE | PART NAME | QTY |
|---|---|---|---|---|---|
| 2315-00 | **FILTER SET**<br>ANNEAU<br>RING<br>ANILLO | 1 | | | |
| 2315-01 | **FILTER ASSY, LPG**<br>ENS. DE FILTRE<br>FILTER, VOLLST.<br>CONJUNTO DEL FILTRO | 1 | | | |
| 2315-13 | **VALVE ASSY, SOLENOID**<br>ENS. DE SOUPAPE<br>VENTIL, VOLLST.<br>CONJUNTO DE VALVULA | 1 | | | |
| 2315-42 | **ELEMENT, FILTER**<br>ELEMENT<br>ELEMENT<br>ELEMENTO | 1 | | | |
| 2315-AJ | **RING, O**<br>ANNEAU<br>RING<br>ANILLO | 1 | | | |
| 2315-AY | **BOLT**<br>BOULON<br>SCHRAUBE<br>PERNO | 6 | | | |
| 2315-BA | **WASHER, SPRING**<br>RODELLE<br>UNTERLEGSCHEIBE<br>ARANDELA | 6 | | | |
| 2315-BB | **RING, O**<br>ANNEAU<br>RING<br>ANILLO | 1 | | | |
| 2315-BC | **ELBOW**<br>COUDE<br>KRÜMMER<br>ACODADO | 1 | | | |

| 2316 | LPG CONTAINER & BRACKET<br>RESEROIR GPL & SUPPORT | LPG-BEHÄLTER & HALTER<br>CONTENEDOR DE LPG Y MENSULA |
|---|---|---|

4Y (CYL 15KG GAGE, LESS LPG CYL 15)

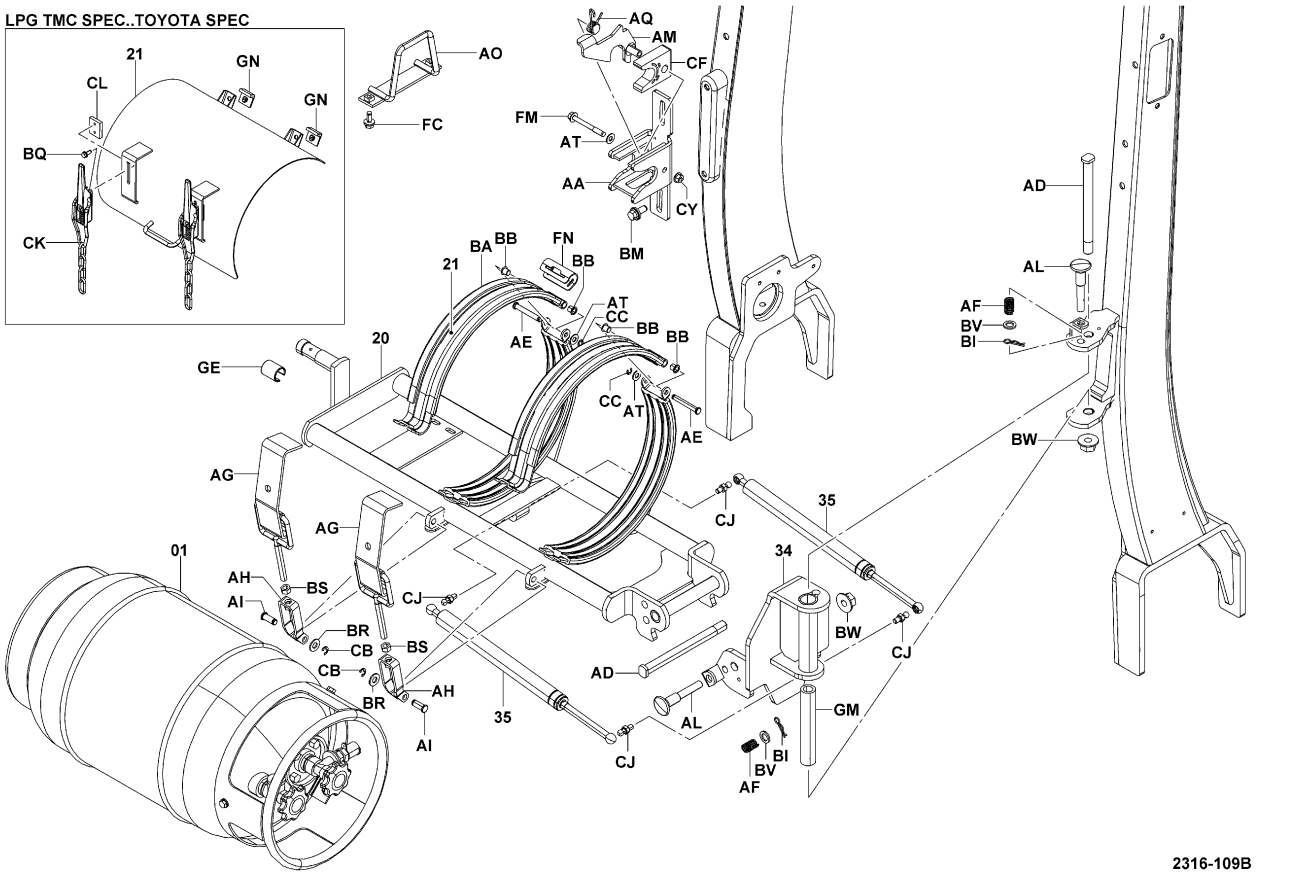


2316-109B

| 2316 | LPG CONTAINER & BRACKET<br>RESEROIR GPL & SUPPORT | LPG-BEHÄLTER & HALTER<br>CONTENEDOR DE LPG Y MENSULA |
|---|---|---|

4Y (CYL 20KG GAGE, LESS LPG CYL 20)

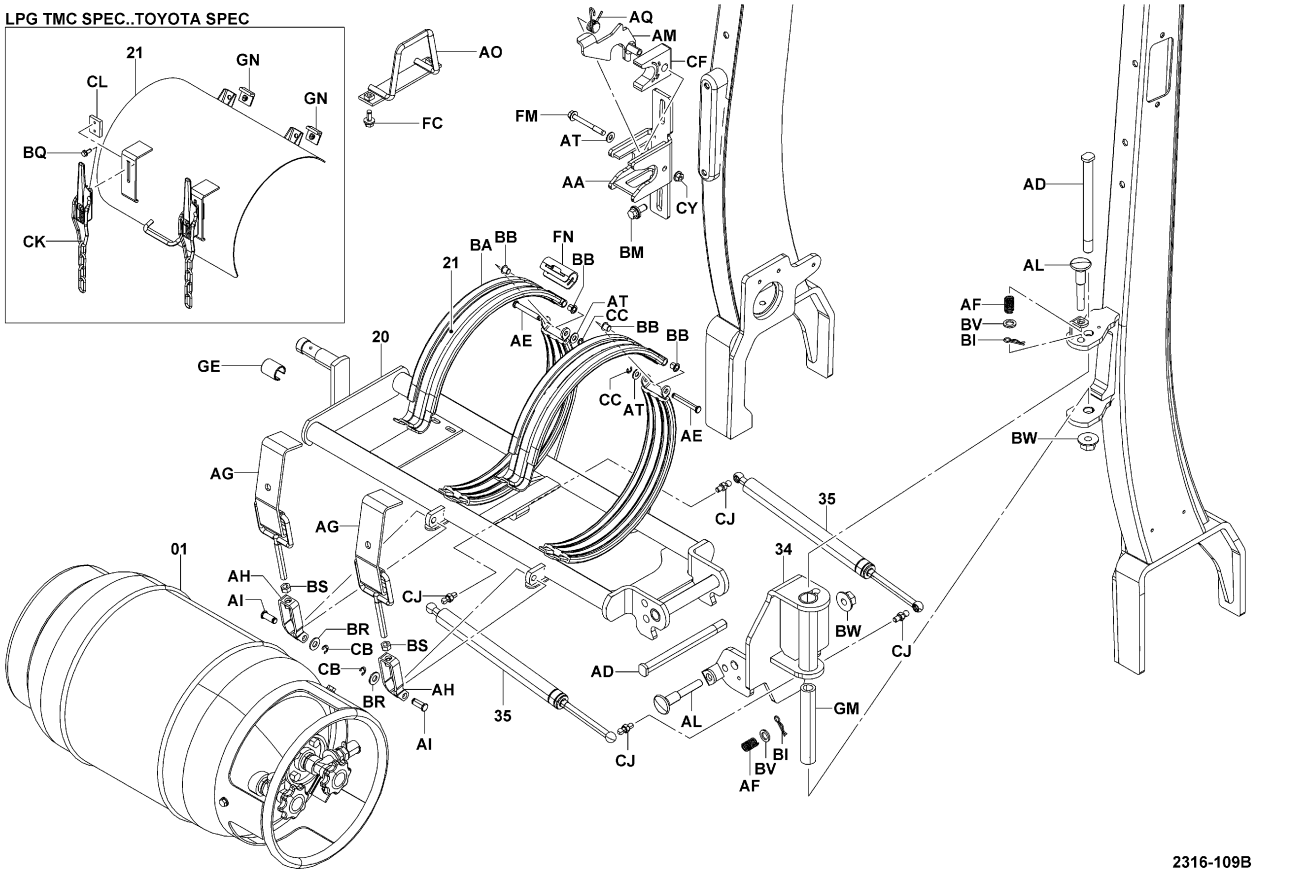


2316-109B

| 2316 | LPG CONTAINER & BRACKET<br>RESEROIR GPL & SUPPORT | LPG-BEHÄLTER & HALTER<br>CONTENEDOR DE LPG Y MENSULA |
|---|---|---|

4Y (LPG AUSTRALIA, LPG NZ SPEC(Z3))

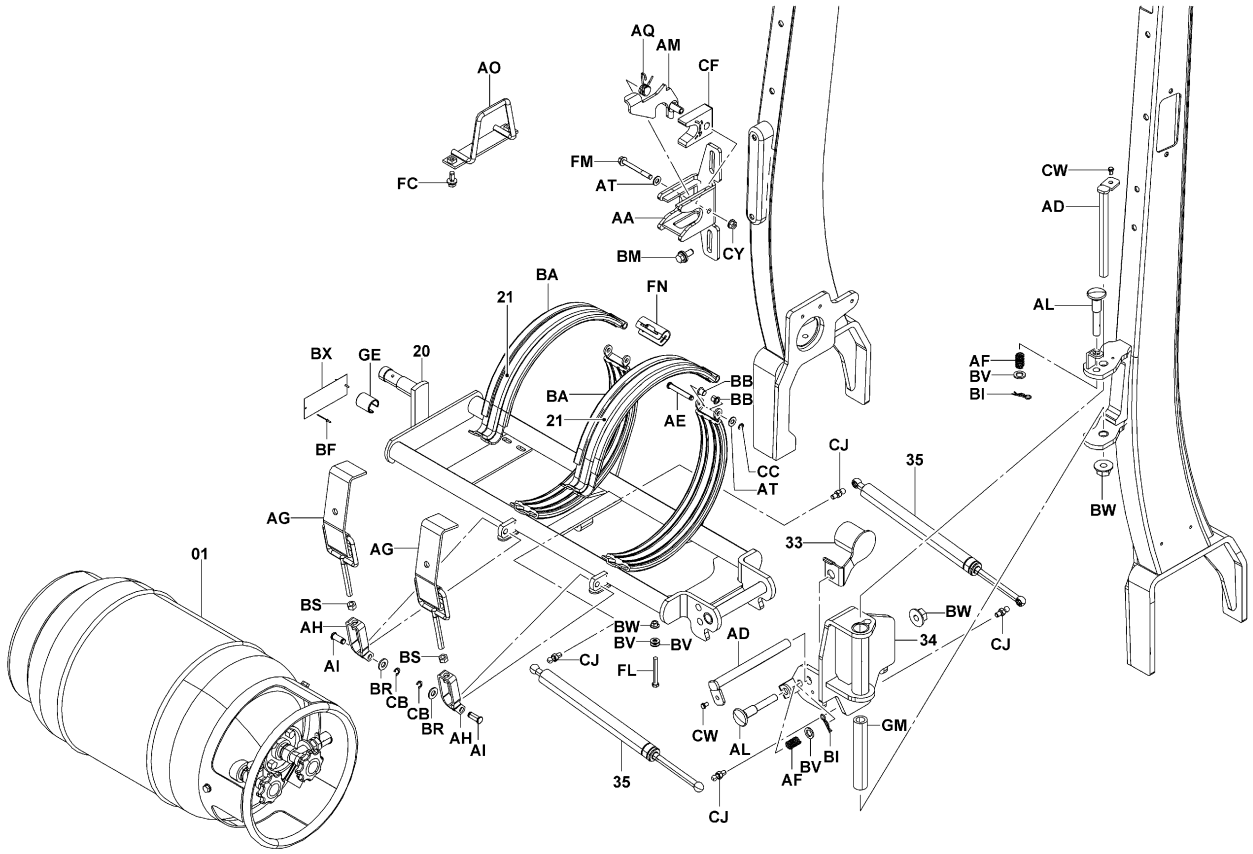


2316-112B

2316-112B

| 2316 | LPG CONTAINER & BRACKET<br>RESEROIR GPL & SUPPORT | LPG-BEHÄLTER & HALTER<br>CONTENEDOR DE LPG Y MENSULA |
|---|---|---|

4Y..25N,30N,J35N (UPSWEPT)

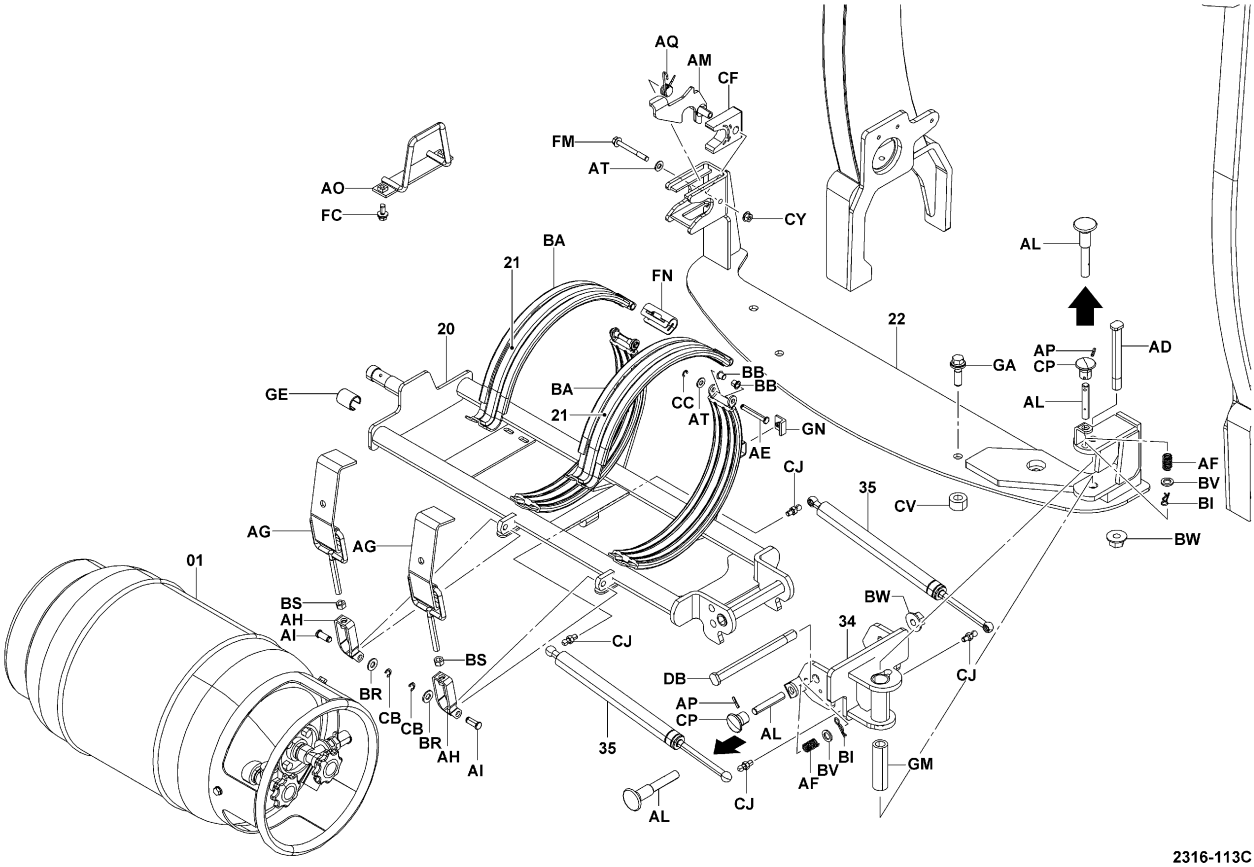


2316-113C

2316-113C

# 2316

**LPG CONTAINER & BRACKET**
**RESEROIR GPL & SUPPORT**

**LPG-BEHÄLTER & HALTER**
**CONTENEDOR DE LPG Y MENSULA**

**4Y..ATM (LPG RUSSIA)**

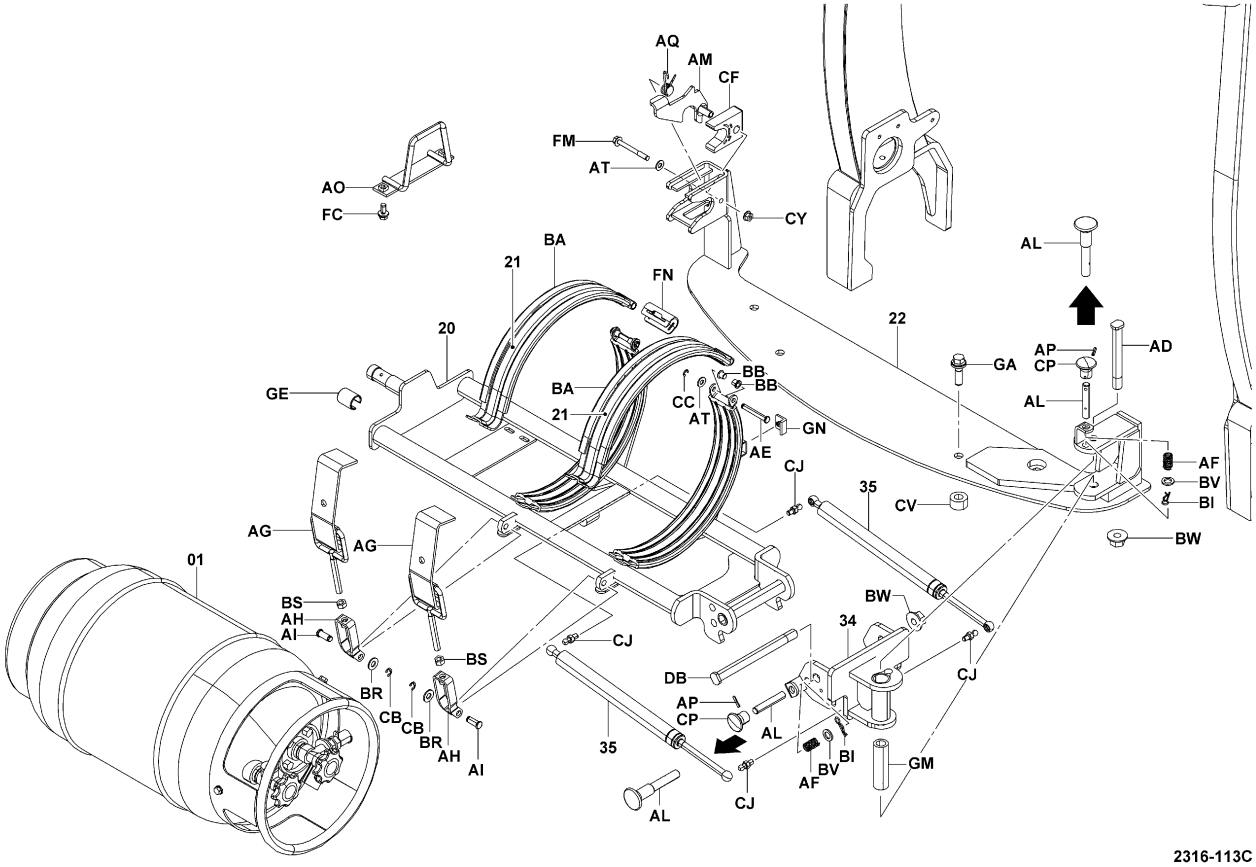


2316-113C


# 2316

**LPG CONTAINER & BRACKET**
**RESEROIR GPL & SUPPORT**

**LPG-BEHÄLTER & HALTER**
**CONTENEDOR DE LPG Y MENSULA**


| PART NAME CODE | PART NAME | QTY |
|---|---|---|
| 2316-01 | **CONTAINER ASSY, LPG**<br>ENS. DE CONTAINEUR<br>BEHALTER, VOLLST.<br>CONJUNTO DE CONTENEDOR | 1 |
| 2316-20 | **BRACKET SUB-ASSY, LPG CONTAINER**<br>SOUS-ENS. DE SUPPORT<br>TRAGER-TEILGRUPPE<br>SUBCONJUNTO DE LA SOPORTE | 1 |
| 2316-21 | **BAND SUB-ASSY**<br>SOUS-ENS. DE BANDE<br>BAND-TEILGRUPPE<br>SUBCONJUNTO DE LA BANDA | 2 |
| 2316-22 | **BRACKET SUB-ASSY, LPG CONTAINER**<br>SOUS-ENS. DE SUPPORT<br>TRAGER-TEILGRUPPE<br>SUBCONJUNTO DE LA SOPORTE | 1 |
| 2316-33 | **HOLDER SUB-ASSY, COUPLING**<br>SOUS-ENS. DE SUPPORT<br>DUSENSTOCR-TEILGRUPPE<br>SUBCONJUNTO DE PORTABOQUILLAS | 1 |
| 2316-34 | **BRACKET SUB-ASSY, HINGE**<br>SOUS-ENS. DE SUPPORT<br>TRAGER-TEILGRUPPE<br>SUBCONJUNTO DE LA SOPORTE | 1 |
| 2316-35 | **DAMPER ASSY**<br>ENS. D'AMORTISSEUR<br>DAMPFER, VOLLST.<br>CONJUNTO DEL AMORTIGUADOR | 2 |
| 2316-AA | **STOPPER, L.P.G CONTAINER**<br>BUTEE<br>ANSCHLAG<br>TOPE | 1 |
| 2316-AD | **SHAFT**<br>ARBRE<br>WELLE<br>EJE | 1- 2 |
| 2316-AE | **PIN**<br>GOUPILLE<br>STIFT<br>PASADOR | 2 |
| 2316-AF | **SPRING**<br>RESSORT<br>FEDER<br>RESORTE | 2 |
| 2316-AG | **CLAMP SUB-ASSY**<br>SOUS-ENS. DE PINCE<br>KLEMMEN-TEILGRUPPE<br>SUBCONJUNTO DE ABRAZADERA | 2 |
| 2316-AH | **CLEVIS**<br>CHAPE<br>GABELKOPF<br>GRILLETE | 2 |
| 2316-AI | **PIN**<br>GOUPILLE<br>STIFT<br>PASADOR | 2 |
| 2316-AL | **PIN, STOPPER**<br>GOUPILLE<br>STIFT<br>PASADOR | 1- 2 |
| 2316-AM | **STOPPER SUB-ASSY**<br>SOUS-ENS. DE BUTEE<br>ANSCHLAG-TEILGRUPPE<br>SUBCONJUNTO DEL TOPE | 1 |
| 2316-AO | **STOPPER, LOWER**<br>BUTEE<br>ANSCHLAG<br>TOPE | 1 |
| 2316-AQ | **SPRING**<br>RESSORT<br>FEDER<br>RESORTE | 1 |
| 2316-AT | **WASHER, PLATE**<br>RODELLE<br>UNTERLEGSCHEIBE<br>ARANDELA | 1- 2 |
| 2316-BA | **RUBBER**<br>CAOUTCHOUC<br>GUMMI<br>GOMA | 4 |

## 2316

**LPG CONTAINER & BRACKET**
**RESEROIR GPL & SUPPORT**
**LPG-BEHÄLTER & HALTER**
**CONTENEDOR DE LPG Y MENSULA**

| PART NAME CODE | PART NAME | QTY |
|---|---|---|
| 2316-BB | **BUSHING**<br>BAGE<br>BUCHSE<br>MANGUITO | 4 |
| 2316-BI | **PIN, SNAP**<br>GOUPILLE<br>STIFT<br>PASADOR | 2 |
| 2316-BM | **BOLT**<br>BOULON<br>SCHRAUBE<br>PERNO | 2 |
| 2316-BR | **WASHER, PLATE**<br>RODELLE<br>UNTERLEGSCHEIBE<br>ARANDELA | 2 |
| 2316-BS | **NUT**<br>ECROU<br>MUTTER<br>TUERCA | 2 |
| 2316-BV | **WASHER, PLATE**<br>RODELLE<br>UNTERLEGSCHEIBE<br>ARANDELA | 1- 2 |
| 2316-BW | **NUT**<br>ECROU<br>MUTTER<br>TUERCA | 1- 2 |
| 2316-CB | **RING, E**<br>ANNEAU<br>RING<br>ANILLO | 2 |
| 2316-CC | **RING, E**<br>ANNEAU<br>RING<br>ANILLO | 2 |
| 2316-CF | **RUBBER**<br>CAOUTCHOUC<br>GUMMI<br>GOMA | 1 |
| 2316-CJ | **BOLT**<br>BOULON<br>SCHRAUBE<br>PERNO | 4 |
| 2316-CV | **SPACER**<br>ENTRETOISE<br>DISTANZSTUCK<br>SEPARADOR | 4 |
| 2316-CY | **NUT**<br>ECROU<br>MUTTER<br>TUERCA | 1 |
| 2316-DB | **SHAFT**<br>ARBRE<br>WELLE<br>EJE | 1 |
| 2316-FC | **BOLT**<br>BOULON<br>SCHRAUBE<br>PERNO | 2 |
| 2316-FL | **BOLT**<br>BOULON<br>SCHRAUBE<br>PERNO | 1 |
| 2316-FM | **BOLT**<br>BOULON<br>SCHRAUBE<br>PERNO | 1 |
| 2316-GA | **BOLT**<br>BOULON<br>SCHRAUBE<br>PERNO | 4 |
| 2316-GE | **COVER**<br>COUVERCLE<br>DECKEL<br>CUBIERTA | 1 |
| 2316-GM | **SPACER**<br>ENTRETOISE<br>DISTANZSTÜCK<br>SEPARADOR | 1- 2 |


## 2316

**LPG CONTAINER & BRACKET**
**RESEROIR GPL & SUPPORT**
**LPG-BEHÄLTER & HALTER**
**CONTENEDOR DE LPG Y MENSULA**


| PART NAME CODE | PART NAME | QTY |
|---|---|---|
| 2316-GN | **CUSHION**<br>COUSSIN<br>POLSTER<br>ALMOHADILLA | 1 |

| 2601 | ACCELERATOR LINK<br>TRINGLE D'ACCELERATEUR | UMLENKHEBEL<br>ARTICULACION DEL ACELERADOR |
|---|---|---|

4Y

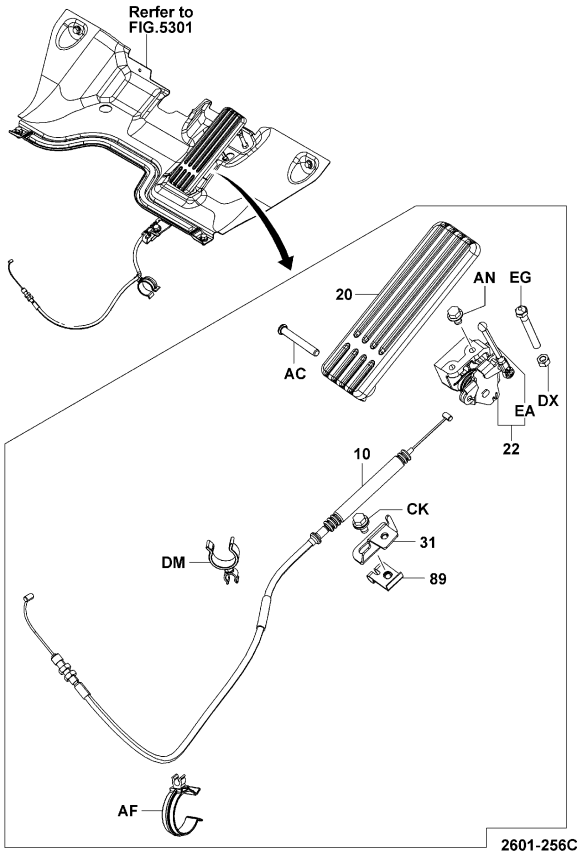


2601-256C

4Y (3-WAY CATALYTIC)

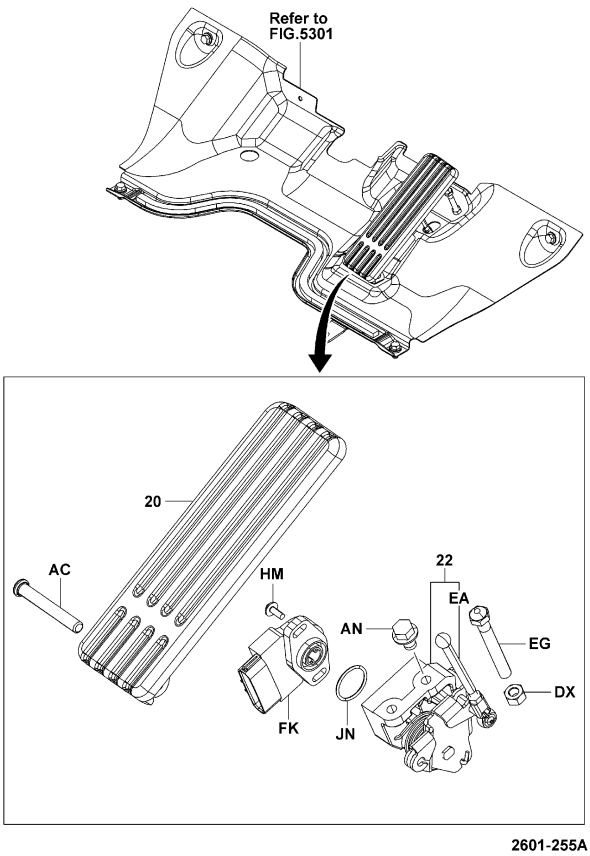


2601-255A

| 2601 | ACCELERATOR LINK<br>TRINGLE D'ACCELERATEUR | UMLENKHEBEL<br>ARTICULACION DEL ACELERADOR |
|---|---|---|

4Y (AUTO SPEED CONT)

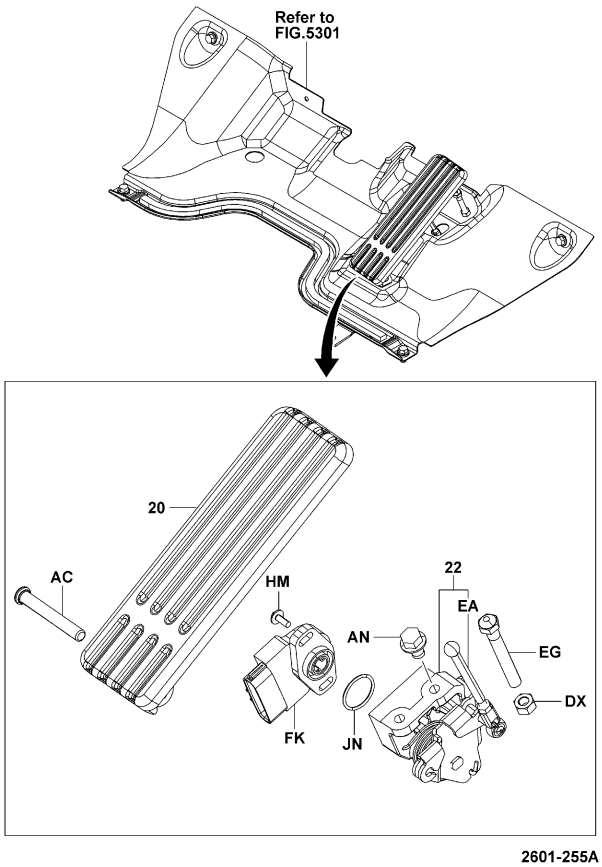


2601-255A

## 2601

**ACCELERATOR LINK**
**TRINGLE D'ACCELERATEUR**
**UMLENKHEBEL**
**ARTICULACION DEL ACELERADOR**

| PART NAME CODE | PART NAME | QTY |
|---|---|---|
| 2601-10 | **WIRE ASSY, ACCELERATOR FLEXIBLE**<br>ENS. DE FIL<br>DRAHT, VOLLST.<br>CONJUNTO DE ALAMBRE | 1 |
| 2601-20 | **PEDAL SUB-ASSY, ACCELERATOR**<br>SOUS-ENS. DE PEDALE<br>PEDAL-TEILGRUPPE<br>SUBCONJUNTO DEL PEDAL | 1 |
| 2601-22 | **LINK SUB-ASSY, ACCELERATOR**<br>SOUS-ENS. DE TRINGLE<br>GELENKTEIL-TEILGRUPPE<br>SUBCONJUNTO DE LA ARTICULACION | 1 |
| 2601-31 | **BRACKET SUB-ASSY, ACCELERATOR WIRE, NO.1**<br>SOUS-ENS. DE SUPPORT<br>TRAGER-TEILGRUPPE<br>SUBCONJUNTO DE LA SOPORTE | 1 |
| 2601-89 | **PLATE SUB-ASSY, WIRE CLAMP**<br>SOUS-ENS. DE PLAQUE<br>PLATTEN-TEILGRUPPE<br>SUBCONJUNTO DE PLACA | 1 |
| 2601-AC | **PIN**<br>GOUPILLE<br>STIFT<br>PASADOR | 1 |
| 2601-AF | **CLAMP**<br>PINSE<br>KLEMME<br>ABRAZADERA | 1 |
| 2601-AN | **BOLT**<br>BOULON<br>SCHRAUBE<br>PERNO | 2 |
| 2601-CK | **BOLT**<br>BOULON<br>SCHRAUBE<br>PERNO | 2 |
| 2601-DM | **CLAMP**<br>PINSE<br>KLEMME<br>ABRAZADERA | 1 |
| 2601-DX | **NUT**<br>ECROU<br>MUTTER<br>TUERCA | 1 |
| 2601-EA | **ROD, ACCELERATOR LINK**<br>BIELLE<br>STANGE<br>VARILLA | 1 |
| 2601-EG | **BOLT**<br>BOULON<br>SCHRAUBE<br>PERNO | 1 |
| 2601-FK | **SENSOR**<br>DETECTEUR<br>SENSOR<br>SENSOR | 1 |
| 2601-HM | **SCREW**<br>VIS<br>SCHRAUBE<br>TORNILLO | 2 |
| 2601-JN | **RING, O**<br>ANNEAU<br>RING<br>ANILLO | 1 |


## 2601

**ACCELERATOR LINK**
**TRINGLE D'ACCELERATEUR**
**UMLENKHEBEL**
**ARTICULACION DEL ACELERADOR**


| PART NAME CODE | PART NAME | QTY |
|---|---|---|
| | | |

| PART NAME CODE | PART NAME | QTY |
|---|---|---|
| | | |

| 3201 | TORQUECONVERTER HOUSING<br>CARTER DE CONVERTISSEUR DE COUPLE | DREHMOMENTWANDLER, GEHÄUSE<br>ENVOLTURA DEL CONVERTIDOR DE PAR |
|---|---|---|

1DZ,2Z,3Z..ATM [ASSY & MOUNT]

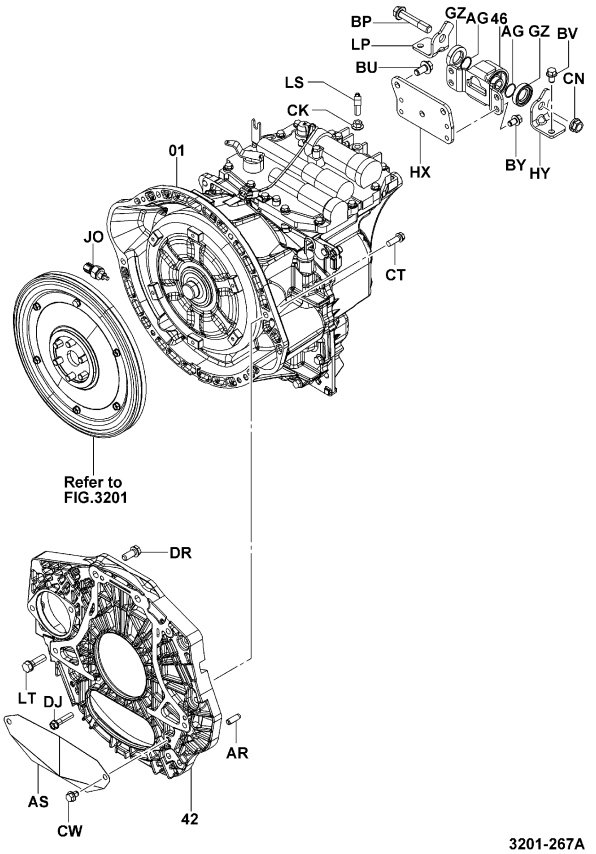


3201-267A

3201-267A

4Y..ATM [ASSY & MOUNT]

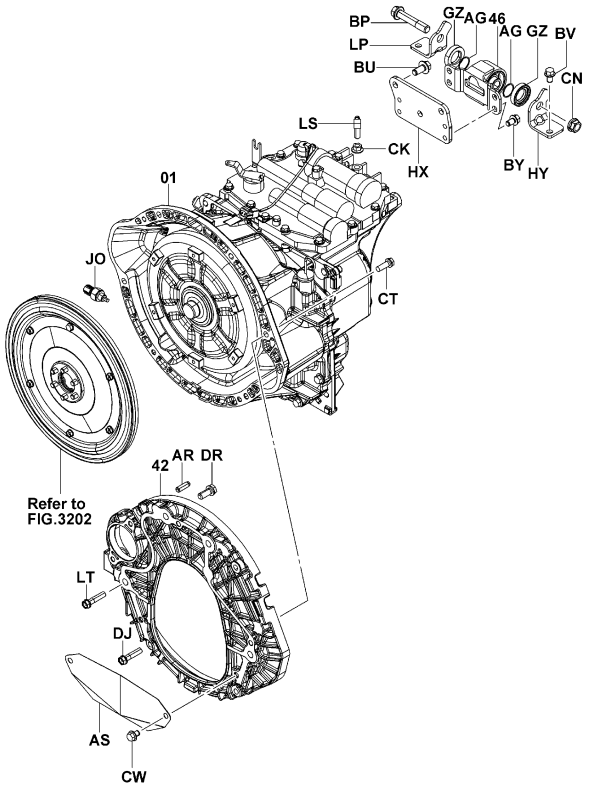


3201-268A

3201-268A

| 3201 | TORQUECONVERTER HOUSING<br>CARTER DE CONVERTISSEUR DE COUPLE | DREHMOMENTWANDLER, GEHÄUSE<br>ENVOLTURA DEL CONVERTIDOR DE PAR |
|---|---|---|

ATM [INNER PARTS]

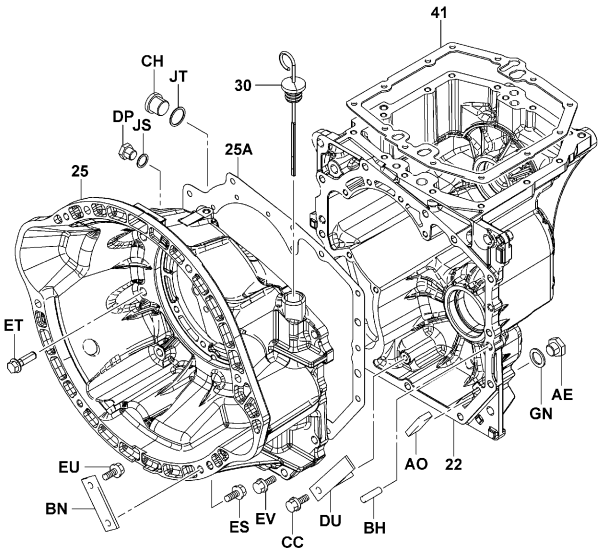


3201-228B

3201-228B

| 3201 | TORQUECONVERTER HOUSING<br>CARTER DE CONVERTISSEUR DE COUPLE | DREHMOMENTWANDLER, GEHÄUSE<br>ENVOLTURA DEL CONVERTIDOR DE PAR |
|---|---|---|

ATM [O/H KIT]

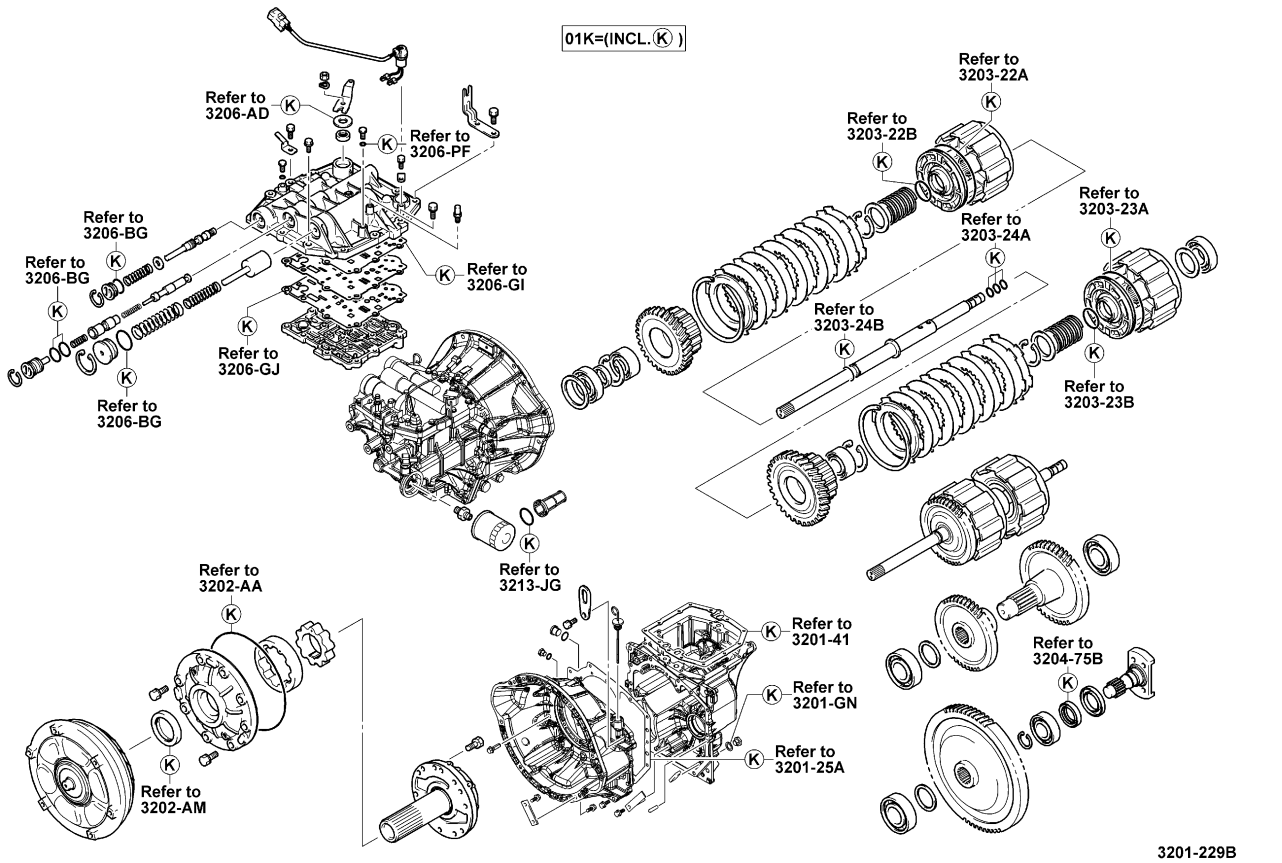


3201-229B

| 3201 | TORQUECONVERTER HOUSING<br>CARTER DE CONVERTISSEUR DE COUPLE | DREHMOMENTWANDLER, GEHÄUSE<br>ENVOLTURA DEL CONVERTIDOR DE PAR |
|---|---|---|

ATM (2-STATOR T/C) [CASE]

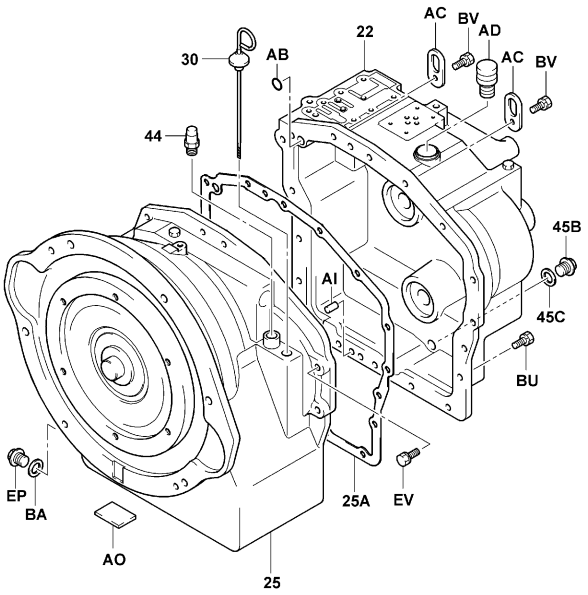


3201-240A

# 3201

**TORQUECONVERTER HOUSING**
**CARTER DE CONVERTISSEUR DE COUPLE**
**DREHMOMENTWANDLER, GEHÄUSE**
**ENVOLTURA DEL CONVERTIDOR DE PAR**

**ATM (2-STATOR T/C) [O/H KIT]**

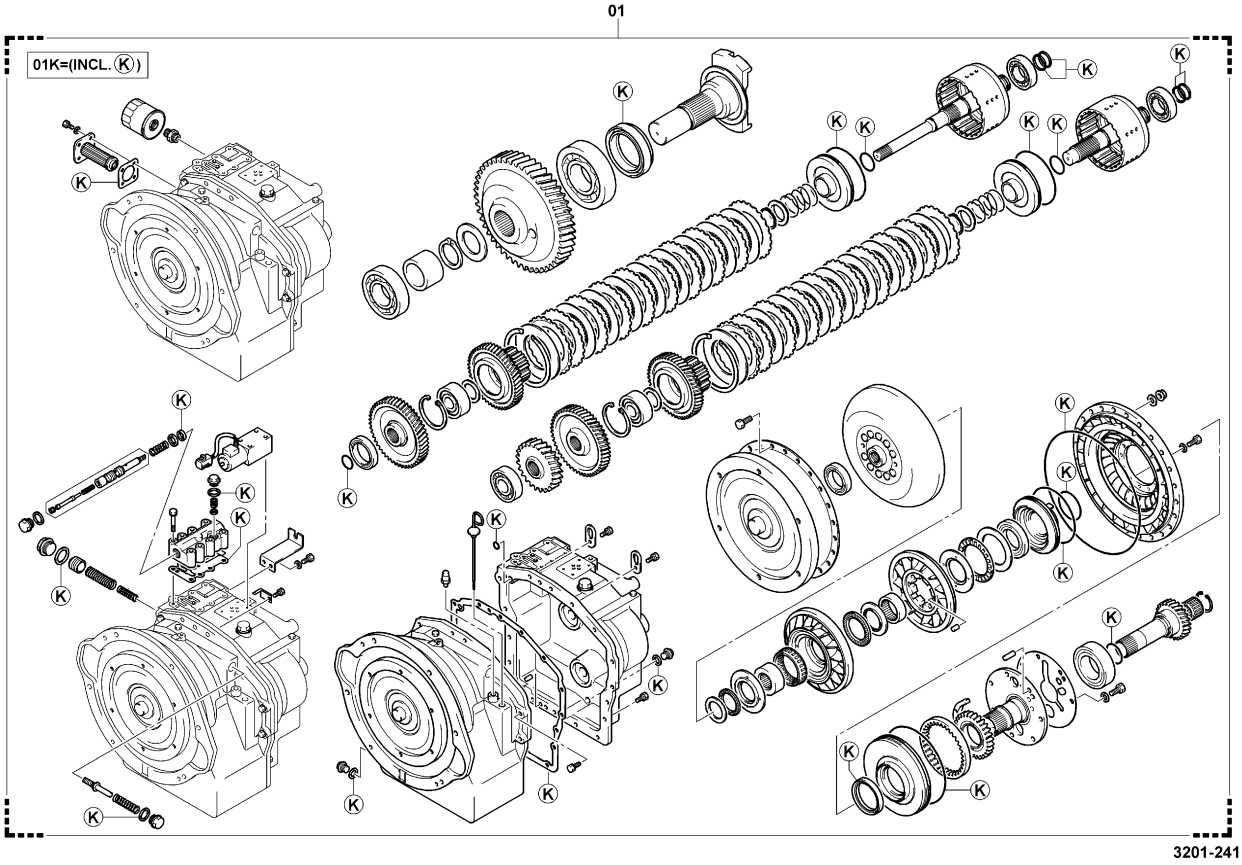


3201-241_


# 3201

**TORQUECONVERTER HOUSING**
**CARTER DE CONVERTISSEUR DE COUPLE**
**DREHMOMENTWANDLER, GEHÄUSE**
**ENVOLTURA DEL CONVERTIDOR DE PAR**


| PART NAME CODE | PART NAME | QTY |
|---|---|---|
| 3201-01 | **TRANSMISSION ASSY, AUTOMATIC, L/DIFFERENTIAL**<br>ENS. DE TRANSMISSION<br>GETRIEBE, VOLLST.<br>CONJUNTO DE LA TRANSMISION | 1 |
| 3201-01K | **TRANSMISSION O/H KIT, AUTOMATIC**<br>JEU O/H DE TRANSMISSION<br>GETRIEBE-UBERHOLSATZ<br>JUEGO O/H DE LA TRANSMISION | 1 |
| 3201-22 | **CASE SUB-ASSY, TRANSMISSION**<br>SOUS-ENS. DE CARTER<br>GEHAUSE-TEILGRUPPE<br>SUBCONJUNTO DE LA CAJA | 1- 2 |
| 3201-25 | **HOUSING, TRANSMISSION**<br>BOITIER<br>GEHAUSE<br>FUNDA | 1 |
| 3201-25A | **GASKET, TRANSMISSION CASE**<br>JOINT<br>DICHTUNG<br>EMPAQUETADURA | 1 |
| 3201-30 | **GAGE SUB-ASSY, OIL LEVEL**<br>SOUS-ENS. DE JAUGE<br>MESSGERATE-TEILGRUPPE<br>SUBCONJUNTO DE MEDIDOR | 1 |
| 3201-41 | **GASKET, UPPER COVER**<br>JOINT<br>DICHTUNG<br>EMPAQUETADURA | 1 |
| 3201-42 | **PLATE, TORQUECONVERTER END**<br>PLAQUE<br>PLATTE<br>PLACA | 1 |
| 3201-44 | **BREATHER, AIR**<br>RENIFLARD<br>WECHSELFILTER<br>RESPIRADERO | 1 |
| 3201-45B | **PLUG, DRAIN**<br>BOUCHON<br>STOPFEN<br>TAPON | 1 |
| 3201-45C | **GASKET, DRAIN PLUG**<br>JOINT<br>DICHTUNG<br>EMPAQUETADURA | 1 |
| 3201-46 | **INSULATOR, TORQUECONVERTER MOUNTING**<br>ISOLATEUR<br>ISOLATOR<br>AISLADOR | 1 |
| 3201-AB | **RING, O**<br>ANNEAU<br>RING<br>ANILLO | 1 |
| 3201-AC | **HANGER**<br>BRIDE DE SUPPORT<br>AUFHANGUNG<br>COLGADOR | 2 |
| 3201-AD | **PLUG**<br>BOUCHON<br>STOPFEN<br>TAPON | 1 |
| 3201-AE | **PLUG, W/HEAD STRAIGHT SCREW**<br>BOUCHON<br>STOPFEN<br>TAPON | 1 |
| 3201-AG | **RING, O**<br>ANNEAU<br>RING<br>ANILLO | 2 |
| 3201-AI | **PIN, STRAIGHT**<br>GOUPILLE<br>STIFT<br>PASADOR | 2 |
| 3201-AO | **MAGNET**<br>AIMANT<br>MAGNET<br>MAGNETO | 1- 2 |
| 3201-AR | **PIN, STRAIGHT**<br>GOUPILLE<br>STIFT<br>PASADOR | 2 |

## 3201

**TORQUECONVERTER HOUSING**
**CARTER DE CONVERTISSEUR DE COUPLE**
**DREHMOMENTWANDLER, GEHÄUSE**
**ENVOLTURA DEL CONVERTIDOR DE PAR**

| PART NAME CODE | PART NAME | QTY |
|---|---|---|
| 3201-AS | **PLATE, COVER**<br>PLAQUE<br>PLATTE<br>PLACA | 1 |
| 3201-BA | **GASKET**<br>JOINT<br>DICHTUNG<br>EMPAQUETADURA | 1 |
| 3201-BH | **PIN, STRAIGHT**<br>GOUPILLE<br>STIFT<br>PASADOR | 2 |
| 3201-BN | **PLATE**<br>PLAQUE<br>PLATTE<br>PLACA | 1 |
| 3201-BP | **BOLT**<br>BOULON<br>SCHRAUBE<br>PERNO | 1 |
| 3201-BU | **BOLT**<br>BOULON<br>SCHRAUBE<br>PERNO | 3-13 |
| 3201-BV | **BOLT**<br>BOULON<br>SCHRAUBE<br>PERNO | 2 |
| 3201-BY | **BOLT**<br>BOULON<br>SCHRAUBE<br>PERNO | 4 |
| 3201-CC | **BOLT**<br>BOULON<br>SCHRAUBE<br>PERNO | 2 |
| 3201-CH | **PLUG**<br>BOUCHON<br>STOPFEN<br>TAPON | 1 |
| 3201-CN | **NUT**<br>ECROU<br>MUTTER<br>TUERCA | 1 |
| 3201-CT | **BOLT**<br>BOULON<br>SCHRAUBE<br>PERNO | 4 |
| 3201-CW | **BOLT**<br>BOULON<br>SCHRAUBE<br>PERNO | 2 |
| 3201-DJ | **BOLT**<br>BOULON<br>SCHRAUBE<br>PERNO | 2 |
| 3201-DP | **PLUG**<br>BOUCHON<br>STOPFEN<br>TAPON | 1 |
| 3201-DR | **BOLT**<br>BOULON<br>SCHRAUBE<br>PERNO | 2- 4 |
| 3201-DU | **PLATE**<br>PLAQUE<br>PLATTE<br>PLACA | 1 |
| 3201-EP | **PLUG**<br>BOUCHON<br>STOPFEN<br>TAPON | 1 |
| 3201-ES | **BOLT**<br>BOULON<br>SCHRAUBE<br>PERNO | 1 |
| 3201-ET | **BOLT**<br>BOULON<br>SCHRAUBE<br>PERNO | 2 |

## 3201

**TORQUECONVERTER HOUSING**
**CARTER DE CONVERTISSEUR DE COUPLE**
**DREHMOMENTWANDLER, GEHÄUSE**
**ENVOLTURA DEL CONVERTIDOR DE PAR**

| PART NAME CODE | PART NAME | QTY |
|---|---|---|
| 3201-EU | **BOLT**<br>BOULON<br>SCHRAUBE<br>PERNO | 1 |
| 3201-EV | **BOLT**<br>BOULON<br>SCHRAUBE<br>PERNO | 2-12 |
| 3201-EW | **BOLT**<br>BOULON<br>SCHRAUBE<br>PERNO | 3 |
| 3201-GN | **WASHER**<br>RODELLE<br>UNTERLEGSCHEIBE<br>ARANDELA | 1 |
| 3201-GZ | **STOPPER**<br>BUTEE<br>ANSCHLAG<br>TOPE | 2 |
| 3201-HX | **BRACKET**<br>SUPPORT<br>TRAGER<br>SOPORTE | 1 |
| 3201-HY | **BRACKET**<br>SUPPORT<br>TRAGER<br>SOPORTE | 1 |
| 3201-JO | **SENSOR**<br>DETECTEUR<br>SENSOR<br>SENSOR | 1 |
| 3201-JS | **WASHER**<br>RODELLE<br>UNTERLEGSCHEIBE<br>ARANDELA | 1 |
| 3201-JT | **WASHER**<br>RODELLE<br>UNTERLEGSCHEIBE<br>ARANDELA | 1 |
| 3201-LP | **BRACKET**<br>SUPPORT<br>TRAGER<br>SOPORTE | 1 |
| 3201-LT | **BOLT**<br>BOULON<br>SCHRAUBE<br>PERNO | 2 |

| 3202 | TORQUECONVERTER<br>CONVERTISSEUR DE COUPLE | DREHMOMENTWANDLER<br>CONVERTIDOR DE PAR |
|---|---|---|

ATM

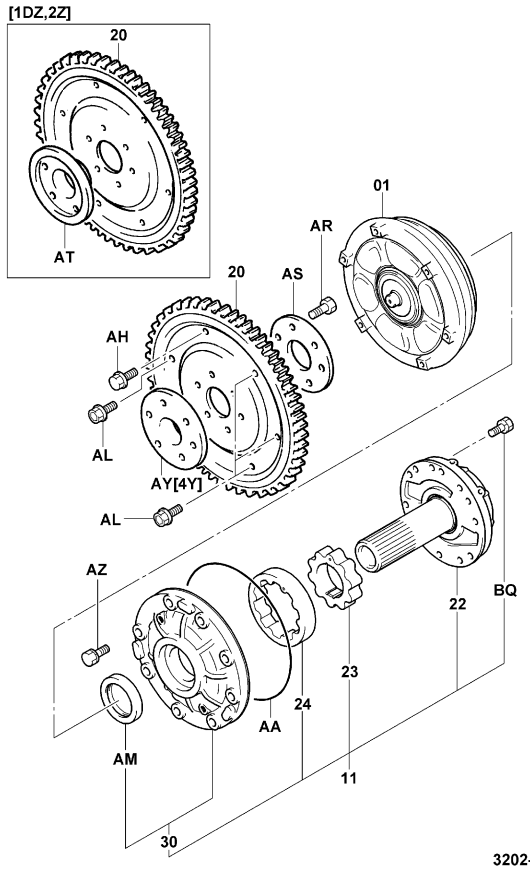


3202-096_

| 3202 | TORQUECONVERTER<br>CONVERTISSEUR DE COUPLE | DREHMOMENTWANDLER<br>CONVERTIDOR DE PAR |
|---|---|---|

ATM (2-STATOR T/C) [2/2]

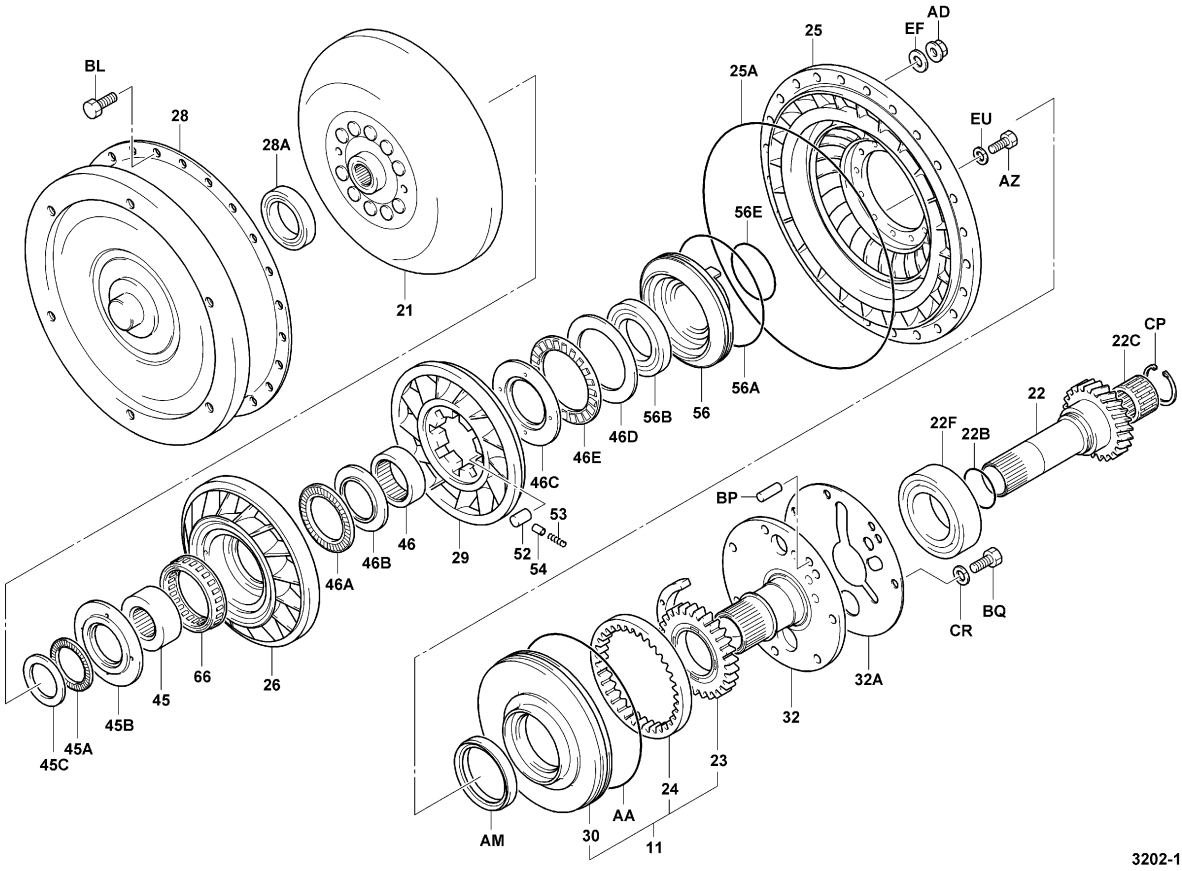


3202-102A

## 3202 TORQUECONVERTER / CONVERTISSEUR DE COUPLE / DREHMOMENTWANDLER / CONVERTIDOR DE PAR

| PART NAME CODE | PART NAME | QTY |
|---|---|---|
| 3202-01 | **TORQUECONVERTER ASSY**<br>ENS. DE CONVERTISSEUR DE COUPLE<br>DREHMOMENTWANDLER, VOLLST.<br>CONJUNTO DEL CONVERTIDOR DE PAR | 1 |
| 3202-11 | **PUMP ASSY, OIL**<br>ENS. DE POMPE<br>PUMPENAGGREGAT<br>CONJUNTO DE LA BOMBA | 1 |
| 3202-20 | **GEAR SUB-ASSY, DRIVE PLATE & RING**<br>SOUS-ENS. DE D'ENGRENAGE<br>ZAHNRAD-TEILGRUPPE<br>SUBCONJUNTO DE ENGRANAJE | 1 |
| 3202-21 | **RUNNER SUB-ASSY, TURBINE**<br>SOUS-ENS. DE GLISSIERE<br>KUFEN-TEILGRUPPE<br>SUBCONJUNTO DE RUEDA INTERMEDIA | 1 |
| 3202-22 | **SHAFT SUB-ASSY, STATOR**<br>SOUS-ENS. D'ARBRE<br>WELLEN-TEILGRUPPE<br>SUBCONJUNTO DEL EJE | 1 |
| 3202-22B | **RING, PISTON**<br>ANNEAU<br>RING<br>ANILLO | 1 |
| 3202-22C | **BEARING, STATOR SHAFT**<br>ROULEMENT<br>LAGER<br>COJINETE | 1 |
| 3202-22F | **BEARING, STATOR SHAFT**<br>ROULEMENT<br>LAGER<br>COJINETE | 1 |
| 3202-23 | **GEAR SUB-ASSY, OIL PUMP DRIVE**<br>SOUS-ENS. DE D'ENGRENAGE<br>ZAHNRAD-TEILGRUPPE<br>SUBCONJUNTO DE ENGRANAJE | 1 |
| 3202-24 | **GEAR SUB-ASSY, OIL PUMP DRIVEN**<br>SOUS-ENS. DE D'ENGRENAGE<br>ZAHNRAD-TEILGRUPPE<br>SUBCONJUNTO DE ENGRANAJE | 1 |
| 3202-25 | **IMPELLER SUB-ASSY, PUMP**<br>SOUS-ENS. DE TURBINE<br>LAUFRAD-TEILGRUPPE<br>SUBCONJUNTO DEL IMPULSOR | 1 |
| 3202-25A | **RING, O (FOR PUMP IMPELLER)**<br>ANNEAU<br>RING<br>ANILLO | 1 |
| 3202-26 | **STATOR SUB-ASSY**<br>SOUS-ENS. DE STATOR<br>STATOR-TEILGRUPPE<br>SUBCONJUNTO DE ESTATOR | 1 |
| 3202-28 | **COVER SUB-ASSY, DRIVE , DISC SUB-ASSY**<br>SOUS-ENS. DE COUVERCLE<br>DECKEL-TEILGRUPPE<br>SUBCONJUNTO DE CUBIERTA | 1 |
| 3202-28A | **BEARING, DRIVE COVER**<br>ROULEMENT<br>LAGER<br>COJINETE | 1 |
| 3202-29 | **STATOR SUB-ASSY, 2ND**<br>SOUS-ENS. DE STATOR<br>STATOR-TEILGRUPPE<br>SUBCONJUNTO DE ESTATOR | 1 |
| 3202-30 | **CASE SUB-ASSY, OIL PUMP**<br>SOUS-ENS. DE CARTER<br>GEHAUSE-TEILGRUPPE<br>SUBCONJUNTO DE LA CAJA | 1 |
| 3202-32 | **SHAFT SUB-ASSY, STATOR, NO.2**<br>SOUS-ENS. D'ARBRE<br>WELLEN-TEILGRUPPE<br>SUBCONJUNTO DEL EJE | 1 |
| 3202-32A | **PACKING, STATOR SHAFT, NO.2**<br>CALE<br>DICHTUNG<br>EMPAQUETADURA | 1 |
| 3202-45 | **HUB (RACE, INNER)**<br>MOYEU<br>NABE<br>CUBO | 1 |

## 3202 TORQUECONVERTER / CONVERTISSEUR DE COUPLE / DREHMOMENTWANDLER / CONVERTIDOR DE PAR

| PART NAME CODE | PART NAME | QTY |
|---|---|---|
| 3202-45A | **BEARING, THRUST, HUB**<br>ROULEMENT<br>LAGER<br>COJINETE | 1 |
| 3202-45B | **WASHER, THRUST, NO.1 (FOR HUB)**<br>RODELLE<br>UNTERLEGSCHEIBE<br>ARANDELA | 1 |
| 3202-45C | **WASHER, THRUST, NO.2 (FOR HUB)**<br>RODELLE<br>UNTERLEGSCHEIBE<br>ARANDELA | 1 |
| 3202-46 | **HUB, STATOR, NO.2**<br>MOYEU<br>NABE<br>CUBO | 1 |
| 3202-46A | **BEARING, THRUST, HUB**<br>ROULEMENT<br>LAGER<br>COJINETE | 1 |
| 3202-46B | **WASHER, THRUST, NO.1 (FOR HUB)**<br>RODELLE<br>UNTERLEGSCHEIBE<br>ARANDELA | 1 |
| 3202-46C | **WASHER, THRUST, NO.2 (FOR HUB)**<br>RODELLE<br>UNTERLEGSCHEIBE<br>ARANDELA | 1 |
| 3202-46D | **WASHER, THRUST, NO.3 (FOR HUB)**<br>RODELLE<br>UNTERLEGSCHEIBE<br>ARANDELA | 1 |
| 3202-46E | **BEARING, THRUST, HUB**<br>ROULEMENT<br>LAGER<br>COJINETE | 1 |
| 3202-52 | **ROLLER (FOR STATOR)**<br>GALET<br>ROLLE<br>RODILLO | 8 |
| 3202-53 | **SPRING (FOR STATOR)**<br>RESSORT<br>FEDER<br>RESORTE | 8 |
| 3202-54 | **CAP, SPRING, STATOR**<br>CAPUCHON<br>KAPPE<br>TAPA | 8 |
| 3202-56 | **BOSS, PUMP**<br>BOSSAGE<br>FLANSCH<br>TETON | 1 |
| 3202-56A | **RING, O (FOR PUMP BOSS)**<br>ANNEAU<br>RING<br>ANILLO | 1 |
| 3202-56B | **BEARING, PUMP BOSS**<br>ROULEMENT<br>LAGER<br>COJINETE | 1 |
| 3202-56E | **RING, PISTON (FOR PUMP BOSS)**<br>ANNEAU<br>RING<br>ANILLO | 1 |
| 3202-66 | **CLUTCH, 1-WAY**<br>EMBRAYAGE<br>KUPPLUNG<br>EMBRAGUE | 1 |
| 3202-AA | **RING, O**<br>ANNEAU<br>RING<br>ANILLO | 1 |
| 3202-AD | **NUT**<br>ECROU<br>MUTTER<br>TUERCA | 24 |
| 3202-AH | **BOLT**<br>BOULON<br>SCHRAUBE<br>PERNO | 1 |

| 3202 | TORQUECONVERTER<br>CONVERTISSEUR DE COUPLE | DREHMOMENTWANDLER<br>CONVERTIDOR DE PAR |
|---|---|---|

| PART NAME CODE | PART NAME | QTY |
|---|---|---|
| 3202-AL | **BOLT**<br>BOULON<br>SCHRAUBE<br>PERNO | 5 |
| 3202-AM | **SEAL, OIL**<br>JOINT<br>ABDICHTUNG<br>SELLO | 1 |
| 3202-AR | **BOLT**<br>BOULON<br>SCHRAUBE<br>PERNO | 6 |
| 3202-AS | **SPACER, DRIVE PLATE**<br>ENTRETOISE<br>DISTANZSTUCK<br>SEPARADOR | 1 |
| 3202-AT | **SUPPORT, CENTERING**<br>SUPPORT<br>STUTZE<br>SOPORTE | 1 |
| 3202-AY | **SPACER**<br>ENTRETOISE<br>DISTANZSTUCK<br>SEPARADOR | 1 |
| 3202-AZ | **BOLT**<br>BOULON<br>SCHRAUBE<br>PERNO | 6-12 |
| 3202-BL | **BOLT**<br>BOULON<br>SCHRAUBE<br>PERNO | 24 |
| 3202-BP | **PIN**<br>GOUPILLE<br>STIFT<br>PASADOR | 2 |
| 3202-BQ | **BOLT**<br>BOULON<br>SCHRAUBE<br>PERNO | 2- 7 |
| 3202-CP | **RING, SNAP**<br>ANNEAU<br>RING<br>ANILLO | 1 |
| 3202-CR | **WASHER, SPRING**<br>RODELLE<br>UNTERLEGSCHEIBE<br>ARANDELA | 7 |
| 3202-EF | **WASHER, SPRING**<br>RODELLE<br>UNTERLEGSCHEIBE<br>ARANDELA | 24 |
| 3202-EU | **WASHER, SPRING**<br>RODELLE<br>UNTERLEGSCHEIBE<br>ARANDELA | 12 |
| 3202-FR | **PIN**<br>GOUPILLE<br>STIFT<br>PASADOR | 2 |


| 3202 | TORQUECONVERTER<br>CONVERTISSEUR DE COUPLE | DREHMOMENTWANDLER<br>CONVERTIDOR DE PAR |
|---|---|---|

| PART NAME CODE | PART NAME | QTY | PART NAME CODE | PART NAME | QTY |
|---|---|---|---|---|---|

| 3203 | TORQUECONVERTER CLUTCH<br>EMBRAYAGE DE CONVERTISSEUR DE COUPLE | DREHMOMENTWANDLER, KUPPLUNG<br>EMGRAGUE DEL CONVERTIDOR DE PAR |
|---|---|---|

ATM

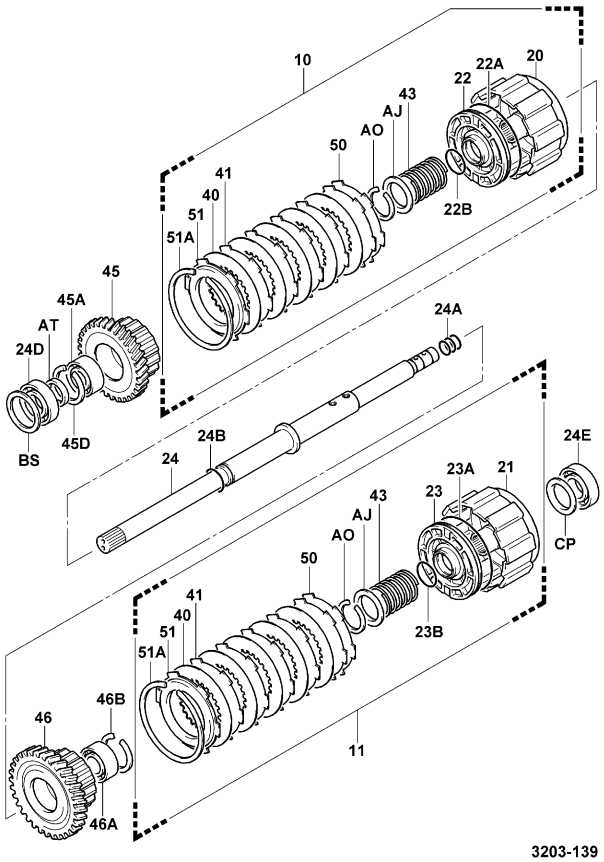


3203-139_

| 3203 | TORQUECONVERTER CLUTCH<br>EMBRAYAGE DE CONVERTISSEUR DE COUPLE | DREHMOMENTWANDLER, KUPPLUNG<br>EMGRAGUE DEL CONVERTIDOR DE PAR |
|---|---|---|

ATM (2-STATOR T/C)

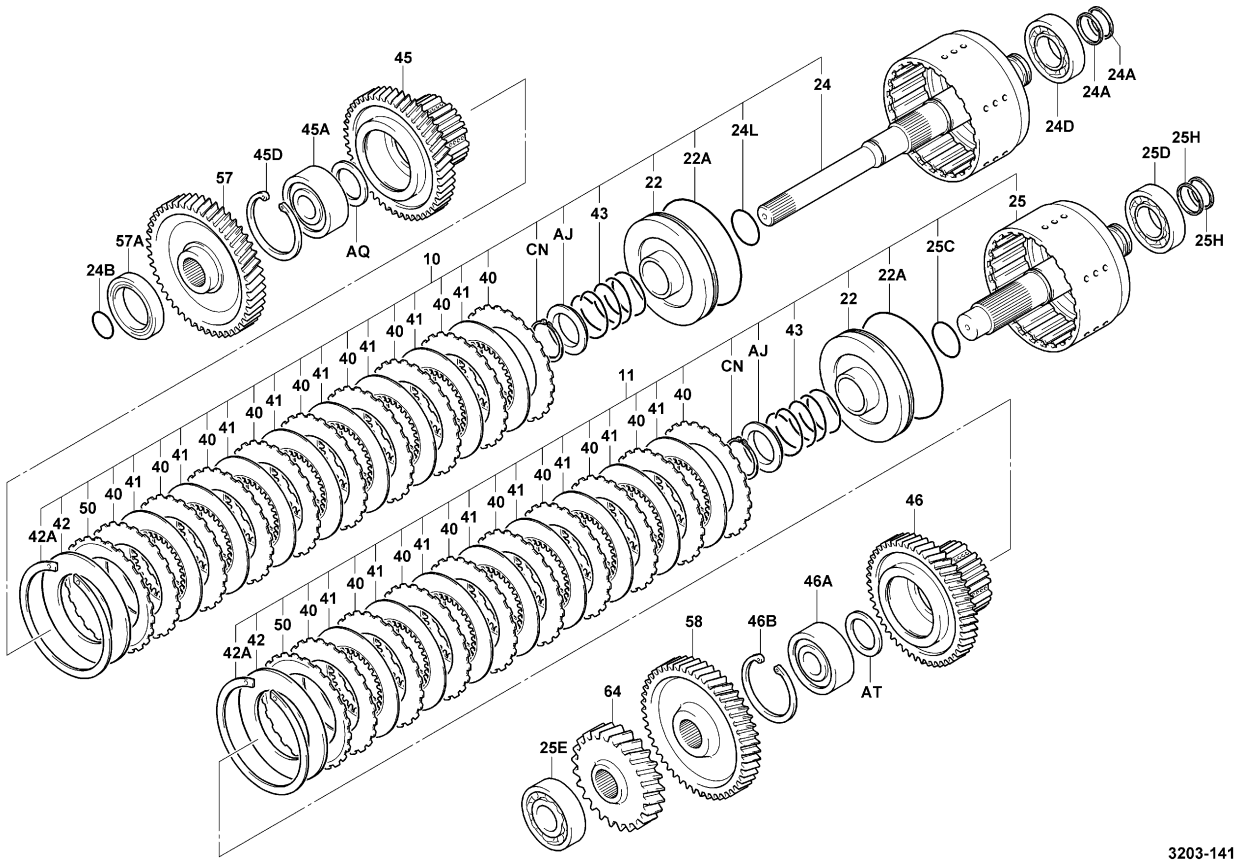


3203-141_

## 3203 TORQUECONVERTER CLUTCH / EMBRAYAGE DE CONVERTISSEUR DE COUPLE / DREHMOMENTWANDLER, KUPPLUNG / EMGRAGUE DEL CONVERTIDOR DE PAR

| PART NAME CODE | PART NAME | QTY |
|---|---|---|
| 3203-10 | **DRUM ASSY, CLUTCH, NO.1**<br>ENS. DE TAMBOUR<br>TROMMEL, VOLLST.<br>CONJUNTO DEL TAMBOR | 1 |
| 3203-11 | **DRUM ASSY, CLUTCH, NO.2**<br>ENS. DE TAMBOUR<br>TROMMEL, VOLLST.<br>CONJUNTO DEL TAMBOR | 1 |
| 3203-20 | **DRUM SUB-ASSY, CLUTCH, NO.1**<br>SOUS-ENS. DE TAMBOUR<br>TROMMEL-TEILGRUPPE<br>SUBCONJUNTO DEL TAMBOR | 1 |
| 3203-21 | **DRUM SUB-ASSY, CLUTCH, NO.2**<br>SOUS-ENS. DE TAMBOUR<br>TROMMEL-TEILGRUPPE<br>SUBCONJUNTO DEL TAMBOR | 1 |
| 3203-22 | **PISTON SUB-ASSY, CLUTCH, NO.1**<br>SOUS-ENS. DE PISTON<br>KOLBEN-TEILGRUPPE<br>SUBCONJUNTO DEL PISTON | 1 |
| 3203-22A | **RING, PISTON (FOR CLUTCH PISTON)**<br>ANNEAU<br>RING<br>ANILLO | 1 |
| 3203-22B | **RING, O (FOR CLUTCH PISTON)**<br>ANNEAU<br>RING<br>ANILLO | 1 |
| 3203-23 | **PISTON SUB-ASSY, CLUTCH, NO.2**<br>SOUS-ENS. DE PISTON<br>KOLBEN-TEILGRUPPE<br>SUBCONJUNTO DEL PISTON | 1 |
| 3203-23A | **RING, PISTON (FOR CLUTCH PISTON)**<br>ANNEAU<br>RING<br>ANILLO | 1 |
| 3203-23B | **RING, O (FOR CLUTCH PISTON)**<br>ANNEAU<br>RING<br>ANILLO | 1 |
| 3203-24 | **SHAFT SUB-ASSY, CLUTCH, NO.1**<br>SOUS-ENS. D'ARBRE<br>WELLEN-TEILGRUPPE<br>SUBCONJUNTO DEL EJE | 1 |
| 3203-24A | **RING, SEAL (FOR CLUTCH SHAFT)**<br>ANNEAU<br>RING<br>ANILLO | 2- 3 |
| 3203-24B | **RING, SEAL (FOR CLUTCH SHAFT)**<br>ANNEAU<br>RING<br>ANILLO | 1 |
| 3203-24D | **BEARING, NO.1, NO.1 CLUTCH SHAFT**<br>ROULEMENT<br>LAGER<br>COJINETE | 1 |
| 3203-24E | **BEARING, NO.2, NO.1 CLUTCH SHAFT**<br>ROULEMENT<br>LAGER<br>COJINETE | 1 |
| 3203-24L | **RING, SEAL (FOR CLUTCH SHAFT)**<br>ANNEAU<br>RING<br>ANILLO | 1 |
| 3203-25 | **SHAFT SUB-ASSY, CLUTCH, NO.2**<br>SOUS-ENS. D'ARBRE<br>WELLEN-TEILGRUPPE<br>SUBCONJUNTO DEL EJE | 1 |
| 3203-25C | **RING, SEAL (FOR CLUTCH SHAFT)**<br>ANNEAU<br>RING<br>ANILLO | 1 |
| 3203-25D | **BEARING, NO.1, NO.2 CLUTCH SHAFT**<br>ROULEMENT<br>LAGER<br>COJINETE | 1 |
| 3203-25E | **BEARING, NO.2, NO.2 CLUTCH SHAFT**<br>ROULEMENT<br>LAGER<br>COJINETE | 1 |

## 3203 TORQUECONVERTER CLUTCH / EMBRAYAGE DE CONVERTISSEUR DE COUPLE / DREHMOMENTWANDLER, KUPPLUNG / EMGRAGUE DEL CONVERTIDOR DE PAR

| PART NAME CODE | PART NAME | QTY |
|---|---|---|
| 3203-25H | **RING, SNAP (FOR CLUTCH NO.2 SHAFT)**<br>ANNEAU<br>RING<br>ANILLO | 2 |
| 3203-40 | **DISC, CLUTCH**<br>DISQUE<br>KUPPLUNGSSCHEIBE<br>DISCO | 9-10 |
| 3203-41 | **PLATE, CLUTCH**<br>PLAQUE<br>PLATTE<br>PLACA | 8 |
| 3203-42 | **PLATE, CLUTCH PRESSURE**<br>PLAQUE<br>PLATTE<br>PLACA | 1 |
| 3203-42A | **RING, HOLE SNAP (FOR CLUTCH PRESSURE PLATE)**<br>ANNEAU<br>RING<br>ANILLO | 1 |
| 3203-43 | **SPRING, CLUTCH RETURN**<br>RESSORT<br>FEDER<br>RESORTE | 1- 2 |
| 3203-45 | **GEAR, CLUTCH (FORWARD)**<br>PIGNON<br>ZAHNRAD<br>ENGRANAJE | 1 |
| 3203-45A | **BEARING, FORWARD CLUTCH GEAR**<br>ROULEMENT<br>LAGER<br>COJINETE | 1 |
| 3203-45D | **RING, SNAP**<br>ANNEAU<br>RING<br>ANILLO | 1 |
| 3203-46 | **GEAR, CLUTCH (REVERSE)**<br>PIGNON<br>ZAHNRAD<br>ENGRANAJE | 1 |
| 3203-46A | **BEARING, REVERSE CLUTCH GEAR**<br>ROULEMENT<br>LAGER<br>COJINETE | 1 |
| 3203-46B | **RING, SNAP**<br>ANNEAU<br>RING<br>ANILLO | 1 |
| 3203-50 | **PLATE, CLUTCH CAMBER**<br>PLAQUE<br>PLATTE<br>PLACA | 1- 2 |
| 3203-51 | **PLATE, CLUTCH BACKING**<br>PLAQUE<br>PLATTE<br>PLACA | 2 |
| 3203-51A | **RING, HOLE SNAP (FOR CLUTCH BACKING PLATE)**<br>ANNEAU<br>RING<br>ANILLO | 2 |
| 3203-57 | **GEAR, COUNTER NO.1**<br>PIGNON<br>ZAHNRAD<br>ENGRANAJE | 1 |
| 3203-57A | **BEARING, COUNTER GEAR NO.1**<br>ROULEMENT<br>LAGER<br>COJINETE | 1 |
| 3203-58 | **GEAR, COUNTER NO.2**<br>PIGNON<br>ZAHNRAD<br>ENGRANAJE | 1 |
| 3203-64 | **GEAR, COUNTER NO.3**<br>PIGNON<br>ZAHNRAD<br>ENGRANAJE | 1 |
| 3203-AJ | **RETAINER, SPRING**<br>ARRETOIR<br>SEEGERRING<br>RETENEDOR | 1- 2 |

| 3203 | TORQUECONVERTER CLUTCH<br>EMBRAYAGE DE CONVERTISSEUR DE COUPLE | DREHMOMENTWANDLER, KUPPLUNG<br>EMGRAGUE DEL CONVERTIDOR DE PAR |
|---|---|---|

| PART NAME CODE | PART NAME | QTY | PART NAME CODE | PART NAME | QTY |
|---|---|---|---|---|---|
| 3203-AO | **RING, HOLE SNAP**<br>ANNEAU<br>RING<br>ANILLO | 2 | | | |
| 3203-AQ | **SPACER**<br>ENTRETOISE<br>DISTANZSTUCK<br>SEPARADOR | 1 | | | |
| 3203-AT | **SPACER**<br>ENTRETOISE<br>DISTANZSTUCK<br>SEPARADOR | 1 | | | |
| 3203-BS | **SHIM**<br>CALE<br>AUSGLEICHSCHEIBE<br>CALCE | 99 | | | |
| 3203-CN | **RING, SNAP**<br>ANNEAU<br>RING<br>ANILLO | 1 | | | |
| 3203-CP | **WASHER**<br>RODELLE<br>UNTERLEGSCHEIBE<br>ARANDELA | 1 | | | |


| 3203 | TORQUECONVERTER CLUTCH<br>EMBRAYAGE DE CONVERTISSEUR DE COUPLE | DREHMOMENTWANDLER, KUPPLUNG<br>EMGRAGUE DEL CONVERTIDOR DE PAR |
|---|---|---|

| PART NAME CODE | PART NAME | QTY | PART NAME CODE | PART NAME | QTY |
|---|---|---|---|---|---|

**ATM**

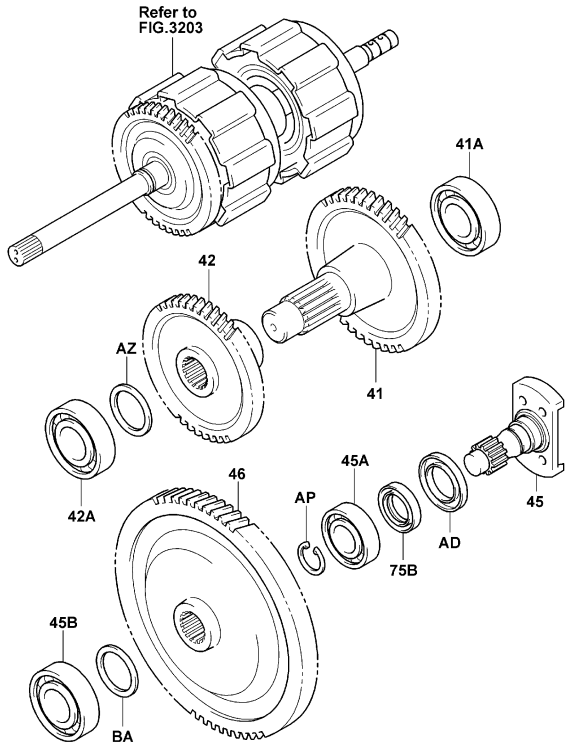


3204-085A

3204-085A

**ATM (2-STATOR T/C)**

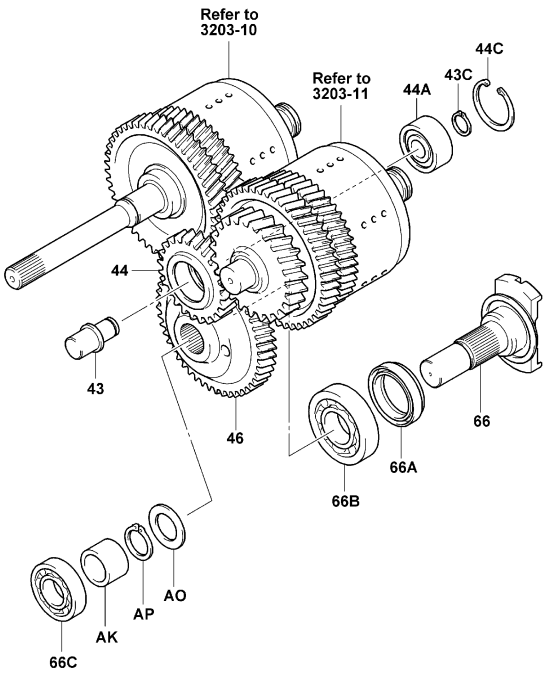


3204-086

3204-086_


| 3204 | TORQUECONVERTER GEAR<br>ENGRENAGE DE CONVERTISSEUR DE COUPLE | DREHMOMENTWANDLER, GETRIEBE<br>ENGRANAJE DEL CONVERTIDOR DE PAR |
|---|---|---|


| PART NAME CODE | PART NAME | QTY |
|---|---|---|
| 3204-41 | **GEAR, COUNTER, NO.1**<br>PIGNON<br>ZAHNRAD<br>ENGRANAJE | 1 |
| 3204-41A | **BEARING, NO.1, COUNTER GEAR**<br>ROULEMENT<br>LAGER<br>COJINETE | 1 |
| 3204-42 | **GEAR, COUNTER, NO.2**<br>PIGNON<br>ZAHNRAD<br>ENGRANAJE | 1 |
| 3204-42A | **BEARING, NO.2, COUNTER GEAR**<br>ROULEMENT<br>LAGER<br>COJINETE | 1 |
| 3204-43 | **SHAFT, IDLE**<br>ARBRE<br>WELLE<br>EJE | 1 |
| 3204-43C | **RING, SNAP (FOR IDLE SHAFT)**<br>ANNEAU<br>RING<br>ANILLO | 1 |
| 3204-44 | **GEAR, IDLE, NO.1**<br>PIGNON<br>ZAHNRAD<br>ENGRANAJE | 1 |
| 3204-44A | **BEARING, IDLE GEAR**<br>ROULEMENT<br>LAGER<br>COJINETE | 1 |
| 3204-44C | **RING, SNAP (FOR IDLE GEAR)**<br>ANNEAU<br>RING<br>ANILLO | 1 |
| 3204-45 | **SHAFT, OUTPUT, NO.1**<br>ARBRE<br>WELLE<br>EJE | 1 |
| 3204-45A | **BEARING, NO.1, OUTPUT SHAFT**<br>ROULEMENT<br>LAGER<br>COJINETE | 1 |
| 3204-45B | **BEARING, NO.2, OUTPUT SHAFT**<br>ROULEMENT<br>LAGER<br>COJINETE | 1 |
| 3204-46 | **GEAR, OUTPUT, NO.1**<br>PIGNON<br>ZAHNRAD<br>ENGRANAJE | 1 |
| 3204-66 | **COUPLING, TORQUECONVERTER, OUTPUT**<br>ACCOULEMENT<br>KUPPLUNG<br>ACOPLAMIENTO | 1 |
| 3204-66A | **SEAL, OIL (FOR COUPLING)**<br>JOINT<br>ABDICHTUNG<br>SELLO | 1 |
| 3204-66B | **BEARING, COUPLING**<br>ROULEMENT<br>LAGER<br>COJINETE | 1 |
| 3204-66C | **BEARING, COUPLING**<br>ROULEMENT<br>LAGER<br>COJINETE | 1 |
| 3204-75B | **SEAL, OIL (FOR OUTPUT COVER)**<br>JOINT<br>ABDICHTUNG<br>SELLO | 1 |
| 3204-AD | **COVER, DUST**<br>COUVERCLE<br>DECKEL<br>CUBIERTA | 1 |
| 3204-AK | **SPACER**<br>ENTRETOISE<br>DISTANZSTUCK<br>SEPARADOR | 1 |

| 3204 | TORQUECONVERTER GEAR<br>ENGRENAGE DE CONVERTISSEUR DE COUPLE | DREHMOMENTWANDLER, GETRIEBE<br>ENGRANAJE DEL CONVERTIDOR DE PAR |
|---|---|---|

| PART NAME CODE | PART NAME | QTY | PART NAME CODE | PART NAME | QTY |
|---|---|---|---|---|---|
| 3204-AO | **SPACER**<br>ENTRETOISE<br>DISTANZSTUCK<br>SEPARADOR | 1 | | | |
| 3204-AP | **RING, SNAP**<br>ANNEAU<br>RING<br>ANILLO | 1 | | | |
| 3204-AZ | **SHIM**<br>CALE<br>AUSGLEICHSCHEIBE<br>CALCE | 99 | | | |
| 3204-BA | **SHIM**<br>CALE<br>AUSGLEICHSCHEIBE<br>CALCE | 99 | | | |


| 3204 | TORQUECONVERTER GEAR<br>ENGRENAGE DE CONVERTISSEUR DE COUPLE | DREHMOMENTWANDLER, GETRIEBE<br>ENGRANAJE DEL CONVERTIDOR DE PAR |
|---|---|---|

| PART NAME CODE | PART NAME | QTY | PART NAME CODE | PART NAME | QTY |
|---|---|---|---|---|---|

| 3206 | CONTROL VALVE<br>SOUPAPE REGULATRICE | STEUERVENTIL<br>VALVULA DE CONTROL |
|---|---|---|

ATM [1/3]

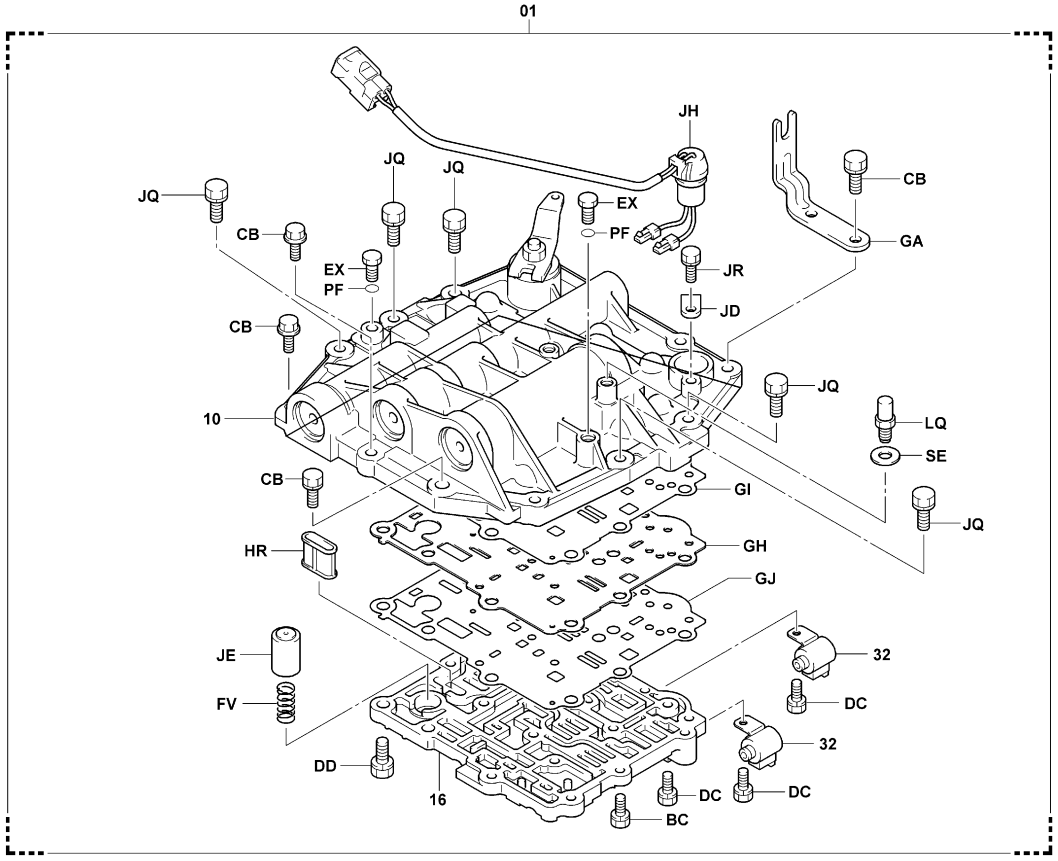


3206-127B

3206-127B

| 3206 | CONTROL VALVE<br>SOUPAPE REGULATRICE | STEUERVENTIL<br>VALVULA DE CONTROL |
|---|---|---|

ATM [2/3]

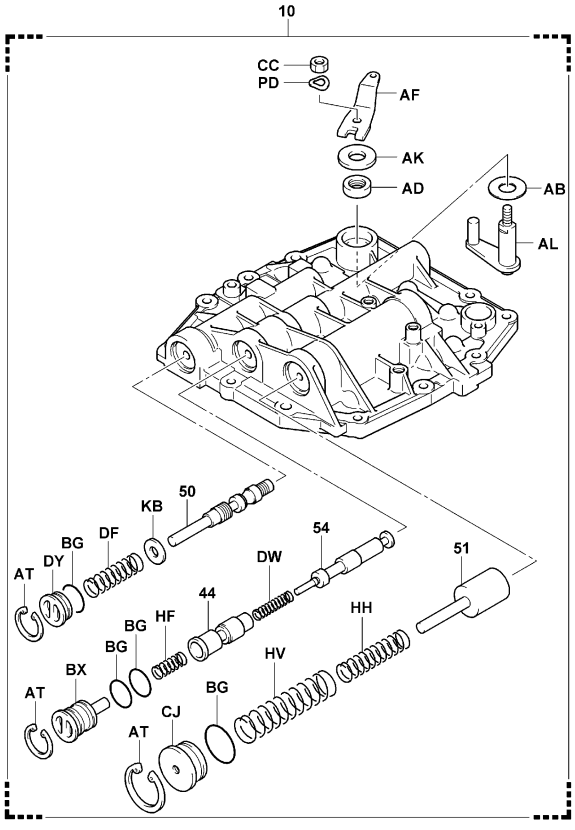


3206-128

3206-128_

ATM [3/3]

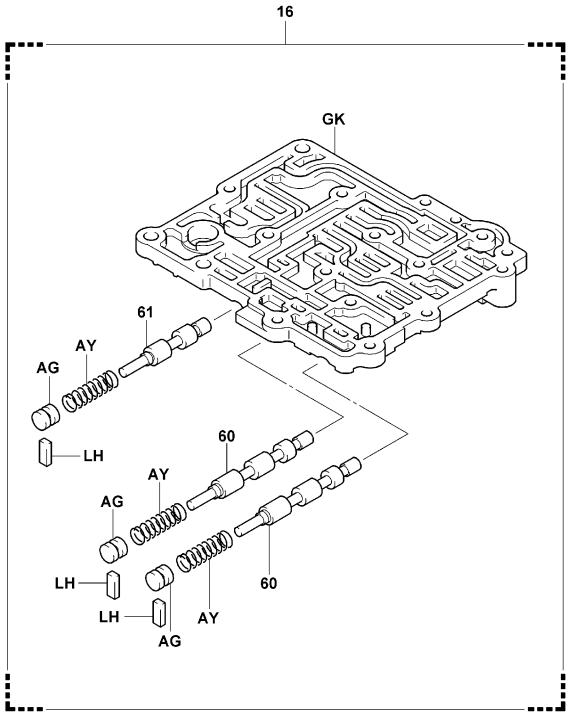


3206-129A

3206-129A

| 3206 | CONTROL VALVE<br>SOUPAPE REGULATRICE | STEUERVENTIL<br>VALVULA DE CONTROL |
|---|---|---|

ATM (2-STATOR T/C) [1/1]

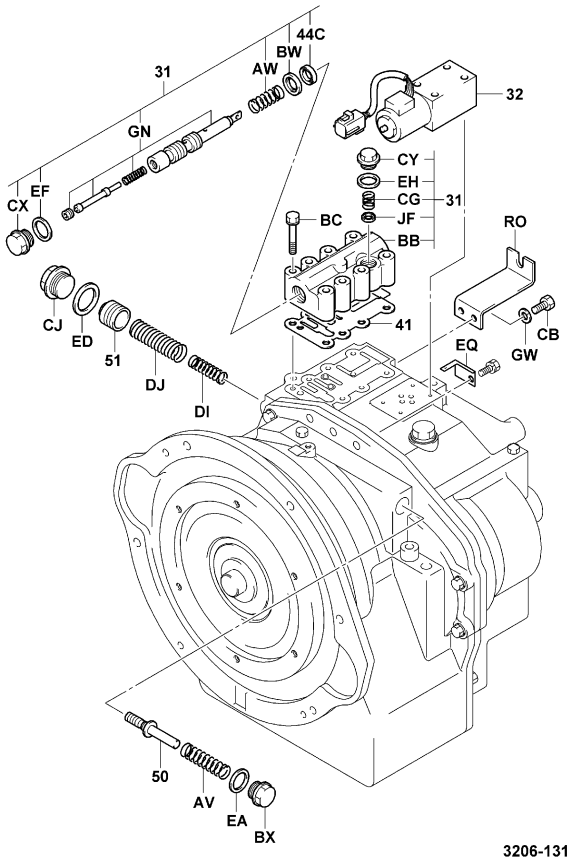


3206-131

3206-131_

| 3206 | CONTROL VALVE<br>SOUPAPE REGULATRICE | STEUERVENTIL<br>VALVULA DE CONTROL |
|---|---|---|

| PART NAME CODE | PART NAME | QTY |
|---|---|---|
| 3206-01 | **COVER & VALVE ASSY, TRANSMISSION**<br>ENS. DE COUVERCLE & SOUPAPE<br>DECKEL & VENTIL, VOLLST.<br>CONJUNTO DE CUBIERTA Y VALVULA | 1 |
| 3206-10 | **COVER ASSY, CONTROL VALVE SMALL UPPER**<br>ENS. DE COUVERCLE<br>DECKEL, VOLLST.<br>CONJUNTO DE CUBIERTA | 1 |
| 3206-16 | **BODY ASSY, LOWER VALVE**<br>ENS. DE CARROSSERIE<br>KAROSSERIE, VOLLST.<br>CONJUNTO DE LA CARROCERIA | 1 |
| 3206-31 | **VALVE SUB-ASSY, INCHING**<br>SOUS-ENS. DE SOUPAPE<br>VENTIL-TEILGRUPPE<br>SUBCONJUNTO DE VALVULA | 1 |
| 3206-32 | **SOLENOID SUB-ASSY, NO.1**<br>SOUS-ENS. DE SOLENOIDE<br>SOLENOID-TEILGRUPPE<br>SUBCONJUNTO DEL SOLENOIDE | 1- 2 |
| 3206-41 | **PACKING, CONTROL VALVE BODY**<br>CALE<br>DICHTUNG<br>EMPAQUETADURA | 1 |
| 3206-44 | **VALVE, INCHING**<br>SOUPAPE<br>VENTIL<br>VALVULA | 1 |
| 3206-44C | **SEAL, OIL (FOR INCHING VALVE)**<br>JOINT<br>ABDICHTUNG<br>SELLO | 1 |
| 3206-50 | **VALVE, REGULATOR**<br>SOUPAPE<br>VENTIL<br>VALVULA | 1 |
| 3206-51 | **PISTON, ACCUMULATOR**<br>PISTON<br>KOLBEN<br>PISTON | 1 |
| 3206-54 | **ROD, INCHING**<br>BIELLE<br>STANGE<br>VARILLA | 1 |
| 3206-60 | **VALVE, CHANGE**<br>SOUPAPE<br>VENTIL<br>VALVULA | 2 |
| 3206-61 | **VALVE, SAFETY**<br>SOUPAPE<br>VENTIL<br>VALVULA | 1 |
| 3206-AB | **WASHER, PLATE**<br>RODELLE<br>UNTERLEGSCHEIBE<br>ARANDELA | 1 |
| 3206-AD | **SEAL, OIL**<br>JOINT<br>ABDICHTUNG<br>SELLO | 1 |
| 3206-AF | **LEVER, INCHING**<br>LEVIER<br>HEBEL<br>PALANCA | 1 |
| 3206-AG | **PLUG**<br>BOUCHON<br>STOPFEN<br>TAPON | 3 |
| 3206-AK | **WASHER, PLATE**<br>RODELLE<br>UNTERLEGSCHEIBE<br>ARANDELA | 1 |
| 3206-AL | **LEVER SUB-ASSY, INCHING CAM**<br>SOUS-ENS. DE LEVIER<br>HEBEL-TEILGRUPPE<br>SUBCONJUNTO DE LA PALANCA | 1 |
| 3206-AT | **RING, SNAP**<br>ANNEAU<br>RING<br>ANILLO | 3 |

| 3206 | CONTROL VALVE<br>SOUPAPE REGULATRICE | STEUERVENTIL<br>VALVULA DE CONTROL |
|---|---|---|

| PART NAME CODE | PART NAME | QTY |
|---|---|---|
| 3206-AV | **SPRING, REGULATOR VALVE**<br>RESSORT<br>FEDER<br>RESORTE | 1 |
| 3206-AW | **SPRING, INCHING VALVE**<br>RESSORT<br>FEDER<br>RESORTE | 1 |
| 3206-AY | **SPRING**<br>RESSORT<br>FEDER<br>RESORTE | 3 |
| 3206-BB | **BODY, CONTROL VALVE**<br>CARROSSERIE<br>KAROSSERIE<br>CARROCERIA | 1 |
| 3206-BC | **BOLT**<br>BOULON<br>SCHRAUBE<br>PERNO | 3- 8 |
| 3206-BG | **RING, O**<br>ANNEAU<br>RING<br>ANILLO | 4 |
| 3206-BW | **RETAINER, SPRING**<br>ARRETOIR<br>SEEGERRING<br>RETENEDOR | 1 |
| 3206-BX | **PLUG**<br>BOUCHON<br>STOPFEN<br>TAPON | 1 |
| 3206-CB | **BOLT**<br>BOULON<br>SCHRAUBE<br>PERNO | 2- 8 |
| 3206-CC | **NUT**<br>ECROU<br>MUTTER<br>TUERCA | 1 |
| 3206-CG | **SPRING**<br>RESSORT<br>FEDER<br>RESORTE | 1 |
| 3206-CJ | **PLUG**<br>BOUCHON<br>STOPFEN<br>TAPON | 1 |
| 3206-CX | **PLUG**<br>BOUCHON<br>STOPFEN<br>TAPON | 1 |
| 3206-CY | **PLUG**<br>BOUCHON<br>STOPFEN<br>TAPON | 1 |
| 3206-DC | **BOLT**<br>BOULON<br>SCHRAUBE<br>PERNO | 7 |
| 3206-DD | **BOLT**<br>BOULON<br>SCHRAUBE<br>PERNO | 6 |
| 3206-DF | **SPRING, REGULATOR, OUTER**<br>RESSORT<br>FEDER<br>RESORTE | 1 |
| 3206-DI | **SPRING, ACCUMULATOR, INNER**<br>RESSORT<br>FEDER<br>RESORTE | 1 |
| 3206-DJ | **SPRING, ACCUMULATOR, OUTER**<br>RESSORT<br>FEDER<br>RESORTE | 1 |
| 3206-DW | **SPRING, INCHING**<br>RESSORT<br>FEDER<br>RESORTE | 1 |

| 3206 | CONTROL VALVE<br>SOUPAPE REGULATRICE | STEUERVENTIL<br>VALVULA DE CONTROL |
|---|---|---|

| PART NAME CODE | PART NAME | QTY |
|---|---|---|
| 3206-DY | **PLUG**<br>BOUCHON<br>STOPFEN<br>TAPON | 1 |
| 3206-EA | **WASHER, SEAL**<br>RODELLE<br>UNTERLEGSCHEIBE<br>ARANDELA | 1 |
| 3206-ED | **WASHER, SEAL**<br>RODELLE<br>UNTERLEGSCHEIBE<br>ARANDELA | 1 |
| 3206-EF | **WASHER, SEAL**<br>RODELLE<br>UNTERLEGSCHEIBE<br>ARANDELA | 1 |
| 3206-EH | **WASHER, SEAL**<br>RODELLE<br>UNTERLEGSCHEIBE<br>ARANDELA | 1 |
| 3206-EQ | **BRACKET**<br>SUPPORT<br>TRAGER<br>SOPORTE | 1 |
| 3206-EX | **PLUG**<br>BOUCHON<br>STOPFEN<br>TAPON | 3 |
| 3206-FV | **SPRING, SAFETY**<br>RESSORT<br>FEDER<br>RESORTE | 1 |
| 3206-GA | **PLATE, HOLDER WIRE CABLE**<br>PLAQUE<br>PLATTE<br>PLACA | 1 |
| 3206-GD | **PLATE, HOLDER WIRE CABLE**<br>PLAQUE<br>PLATTE<br>PLACA | 1 |
| 3206-GH | **PLATE, VALVE BODY**<br>PLAQUE<br>PLATTE<br>PLACA | 1 |
| 3206-GI | **GASKET, VALVE BODY**<br>JOINT<br>DICHTUNG<br>EMPAQUETADURA | 1 |
| 3206-GJ | **GASKET, VALVE BODY**<br>JOINT<br>DICHTUNG<br>EMPAQUETADURA | 1 |
| 3206-GK | **COVER, VALVE BODY PLATE**<br>COUVERCLE<br>DECKEL<br>CUBIERTA | 1 |
| 3206-GN | **SPOOL SUB-ASSY, INCHING**<br>SOUS-ENS. DE TIROIR<br>SPULEN-TEILGRUPPE<br>SUBCONJUNTO DE BOBINA | 1 |
| 3206-GW | **WASHER, SPRING**<br>RODELLE<br>UNTERLEGSCHEIBE<br>ARANDELA | 2 |
| 3206-HF | **SPRING, COMPRESSION**<br>RESSORT<br>FEDER<br>RESORTE | 1 |
| 3206-HH | **SPRING, COMPRESSION**<br>RESSORT<br>FEDER<br>RESORTE | 1 |
| 3206-HR | **STRAINER SUB-ASSY, OIL**<br>SOUS-ENS. DE TAMIS<br>SIEB-TEILGRUPPE<br>SUBCONJUNTO DEL COLADOR | 1 |
| 3206-HV | **SPRING, COMPRESSION**<br>RESSORT<br>FEDER<br>RESORTE | 1 |

| 3206 | CONTROL VALVE<br>SOUPAPE REGULATRICE | | STEUERVENTIL<br>VALVULA DE CONTROL | | |
|---|---|---|---|---|---|
| PART NAME CODE | PART NAME | QTY | PART NAME CODE | PART NAME | QTY |
| 3206-JD | **PLATE**<br>PLAQUE<br>PLATTE<br>PLACA | 1 | 3206-PF | **RING, O**<br>ANNEAU<br>RING<br>ANILLO | 3 |
| 3206-JE | **VALVE, SAFETY**<br>SOUPAPE<br>VENTIL<br>VALVULA | 1 | 3206-RO | **BRACKET**<br>SUPPORT<br>TRAGER<br>SOPORTE | 1 |
| 3206-JF | **FILTER**<br>FILTRE<br>FILTER<br>FILTRO | 1 | 3206-SE | **GASKET**<br>JOINT<br>DICHTUNG<br>EMPAQUETADURA | 1 |
| 3206-JH | **WIRE, SOLENOID**<br>FIL<br>DRAHT<br>ALAMBRE | 1 | | | |
| 3206-JQ | **BOLT**<br>BOULON<br>SCHRAUBE<br>PERNO | 5 | | | |
| 3206-JR | **BOLT**<br>BOULON<br>SCHRAUBE<br>PERNO | 1 | | | |
| 3206-KB | **WASHER**<br>RODELLE<br>UNTERLEGSCHEIBE<br>ARANDELA | 1 | | | |
| 3206-LH | **KEY, STRAIGHT**<br>CLAVETTE<br>SCHLUSSEL<br>LLAVE | 3 | | | |
| 3206-LQ | **PLUG**<br>BOUCHON<br>STOPFEN<br>TAPON | 1 | | | |
| 3206-PD | **WASHER, WAVE**<br>RODELLE<br>UNTERLEGSCHEIBE<br>ARANDELA | 1 | | | |

| 3206 | CONTROL VALVE<br>SOUPAPE REGULATRICE | | STEUERVENTIL<br>VALVULA DE CONTROL | | |
|---|---|---|---|---|---|
| PART NAME CODE | PART NAME | QTY | PART NAME CODE | PART NAME | QTY |
| | | | | | |

ATM

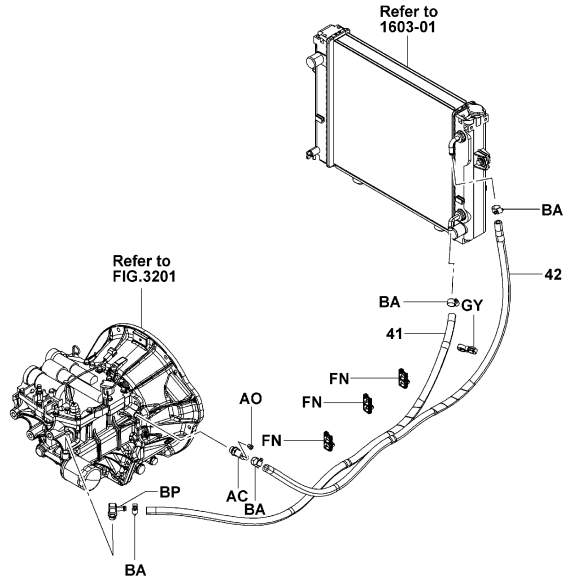


3213-187

3213-187_

2Z..ATM (ARCTIC, HI-CAPA BATT)

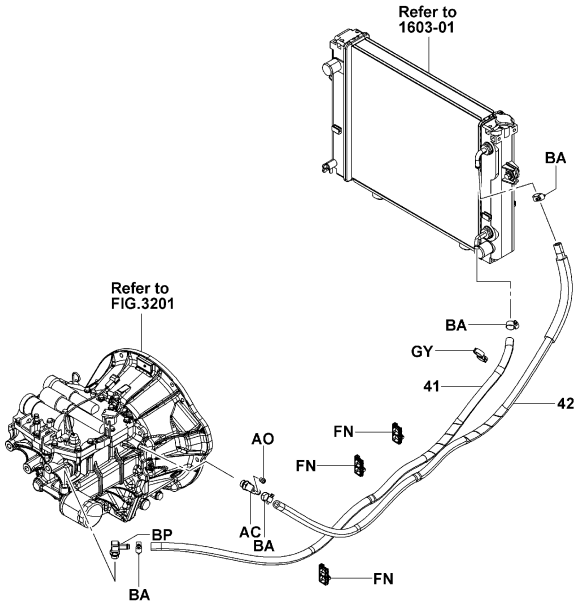


3213-188

3213-188_


| 3213 | TORQUECONVERTER PIPING<br>TUYAUTERIE DE CONVERTISSEUR DE COUPLE | DREHMOMENTWANDLER, LEITUNGEN<br>TUBOS DEL CONVERTIDOR DE PAR |
|---|---|---|


3Z..ATM (ARCTIC, HI-CAPA BATT)

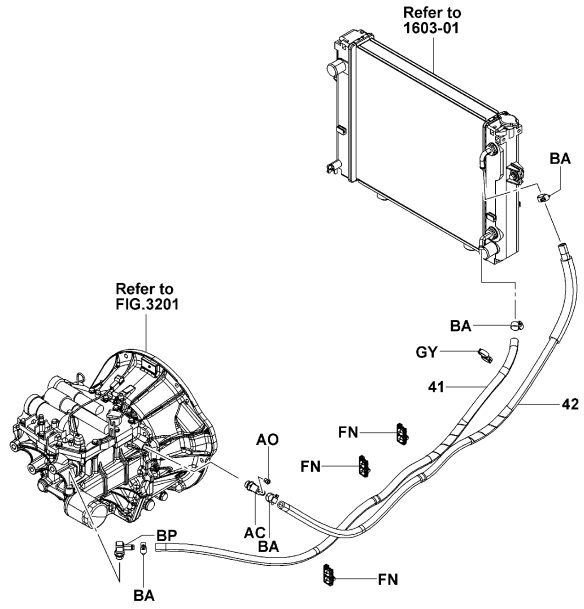


3213-188

3213-188_

ATM (2-STATOR T/C) [FILTER]

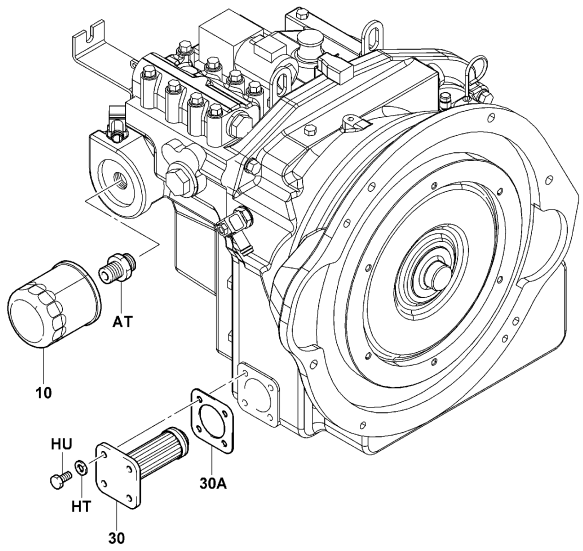


3213-161

3213-161_

| 3213 | TORQUECONVERTER PIPING<br>TUYAUTERIE DE CONVERTISSEUR DE COUPLE | DREHMOMENTWANDLER, LEITUNGEN<br>TUBOS DEL CONVERTIDOR DE PAR |
|---|---|---|

**ATM [FILTER]**

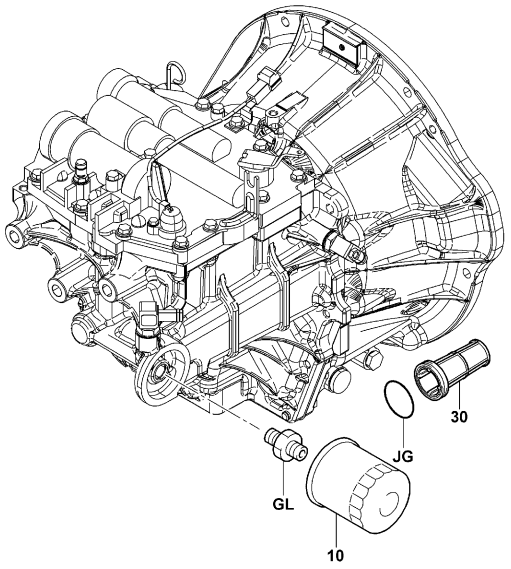


3213-155

3213-155_


| 3213 | TORQUECONVERTER PIPING<br>TUYAUTERIE DE CONVERTISSEUR DE COUPLE | DREHMOMENTWANDLER, LEITUNGEN<br>TUBOS DEL CONVERTIDOR DE PAR |
|---|---|---|


| PART NAME CODE | PART NAME | QTY |
|---|---|---|
| 3213-10 | **FILTER ASSY, OIL**<br>ENS. DE FILTRE<br>FILTER, VOLLST.<br>CONJUNTO DEL FILTRO | 1 |
| 3213-30 | **STRAINER SUB-ASSY, OIL (SCREEN)**<br>SOUS-ENS. DE TAMIS<br>SIEB-TEILGRUPPE<br>SUBCONJUNTO DEL COLADOR | 1 |
| 3213-30A | **PACKING, OIL STRAINER BODY**<br>CALE<br>DICHTUNG<br>EMPAQUETADURA | 1 |
| 3213-41 | **HOSE, LOW PRESSURE**<br>FLEXIBLE<br>SCHLAUCH<br>MANGUERA | 1 |
| 3213-42 | **HOSE, LOW PRESSURE**<br>FLEXIBLE<br>SCHLAUCH<br>MANGUERA | 1 |
| 3213-AC | **ELBOW**<br>COUDE<br>KRUMMER<br>ACODADO | 1 |
| 3213-AO | **BOLT**<br>BOULON<br>SCHRAUBE<br>PERNO | 1 |
| 3213-AT | **NIPPLE**<br>GRAISSEUR<br>NIPPEL<br>NIPLE | 1 |
| 3213-BA | **CLAMP, HOSE**<br>PINSE<br>KLEMME<br>ABRAZADERA | 4 |
| 3213-BP | **ELBOW**<br>COUDE<br>KRUMMER<br>ACODADO | 1 |
| 3213-CT | **CLAMP**<br>PINSE<br>KLEMME<br>ABRAZADERA | 1 |
| 3213-FN | **CLAMP**<br>PINSE<br>KLEMME<br>ABRAZADERA | 3 |
| 3213-GL | **JOINT, OIL FILTER**<br>RACCORD<br>GELENK<br>JUNTA | 1 |
| 3213-GY | **CLAMP**<br>PINSE<br>KLEMME<br>ABRAZADERA | 1 |
| 3213-HT | **WASHER, SPRING**<br>RODELLE<br>UNTERLEGSCHEIBE<br>ARANDELA | 4 |
| 3213-HU | **BOLT**<br>BOULON<br>SCHRAUBE<br>PERNO | 4 |
| 3213-JG | **RING, O**<br>ANNEAU<br>RING<br>ANILLO | 1 |

**ATM**

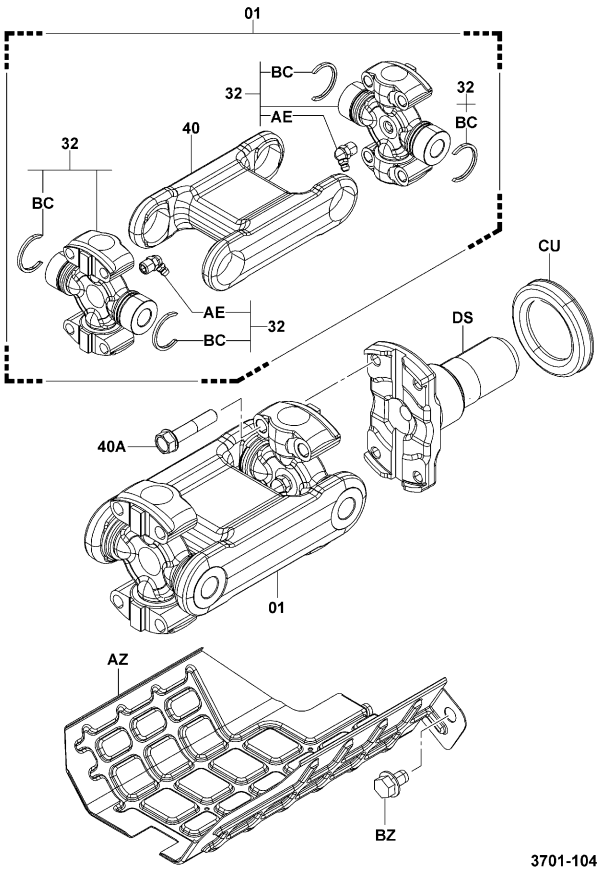


3701-104_


| 3701 | PROPELLER SHAFT & UNIVERSAL JOINT<br>ARBRE DE PROPULSION & JOINT UNIVERSEL | ANTRIEBSWELLE<br>ARBOL DE MANDO Y JUNTA UNIVERSAL |
|---|---|---|


| PART NAME CODE | PART NAME | QTY | PART NAME CODE | PART NAME | QTY |
|---|---|---|---|---|---|
| 3701-01 | **SHAFT ASSY, PROPELLER**<br>ENS. D'ARBRE<br>WELLE, VOLLST.<br>CONJUNTO DEL EJE | 1 | | | |
| 3701-32 | **SPIDER SET, UNIVERSAL**<br>JEU DE CROISILLON<br>ARMSTERNSATZ<br>JUEGO DE LA CRUCETA | 2 | | | |
| 3701-40 | **YOKE, UNIVERSAL JOINT FLANGE**<br>ETRIER<br>JOCH<br>HOROQUILLA | 1 | | | |
| 3701-40A | **BOLT, UNIVERSAL JOINT FLANGE YOKE**<br>BOULON<br>SCHRÄÜBE<br>PERNO | 8 | | | |
| 3701-AE | **FITTING, GREASE**<br>RACCORD<br>ANSCHLUSSTUCK<br>ACOPLADOR | 1 | | | |
| 3701-AZ | **COVER**<br>COUVERCLE<br>DECKEL<br>CUBIERTA | 1 | | | |
| 3701-BC | **RING, SNAP**<br>ANNEAU<br>RING<br>ANILLO | 2 | | | |
| 3701-BZ | **BOLT**<br>BOULON<br>SCHRAUBE<br>PERNO | 2 | | | |
| 3701-CU | **DEFLECTOR**<br>DEFLECTEUR<br>LEITBLECH<br>DEFLECTOR | 1 | | | |
| 3701-DS | **YOKE, JOINT DIFF**<br>ETRIER<br>JOCH<br>HOROQUILLA | 1 | | | |

| 4101 | DIFFERENTIAL<br>DIFFERENTIEL | DIFFERENTIAL<br>DIFERENCIAL |
|---|---|---|

10N,15N,18N

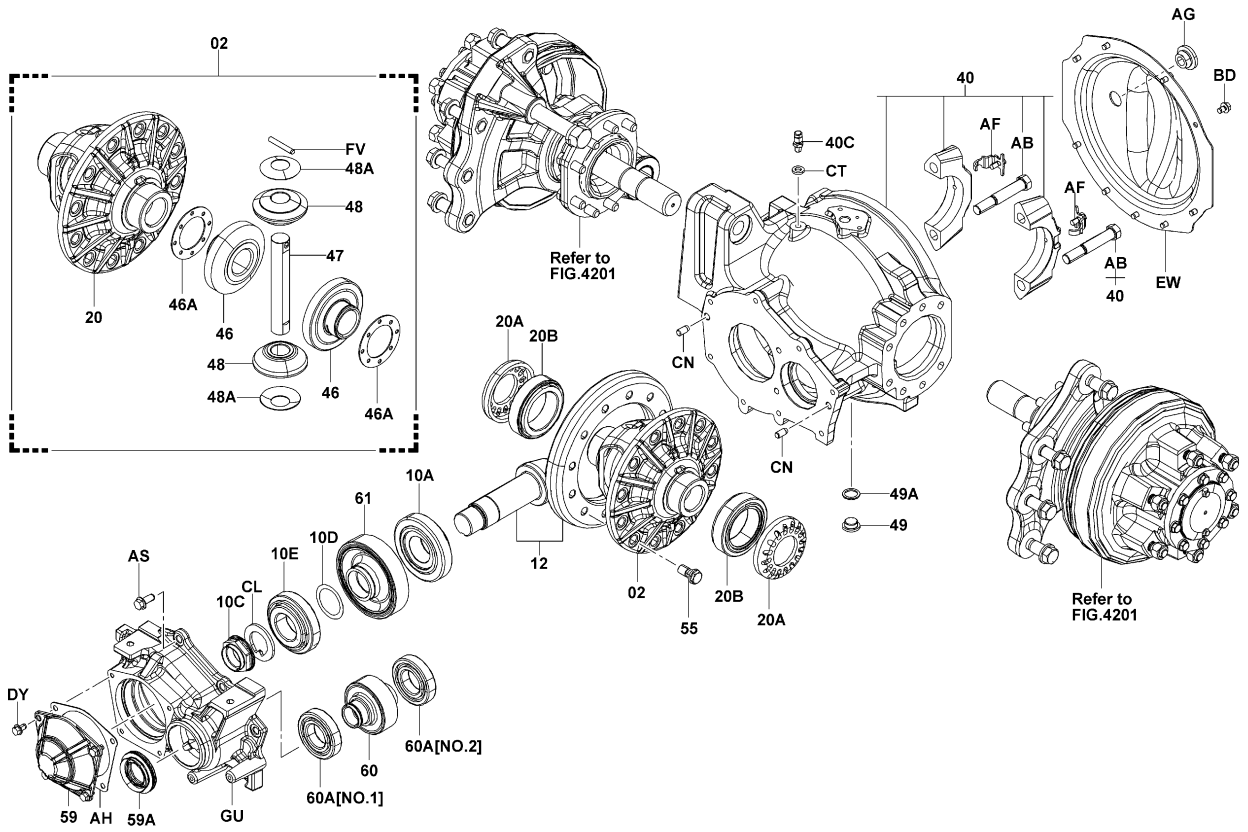


4101-231A

4101-231A

| 4101 | DIFFERENTIAL<br>DIFFERENTIEL | DIFFERENTIAL<br>DIFERENCIAL |
|---|---|---|

20N,25N,K30N

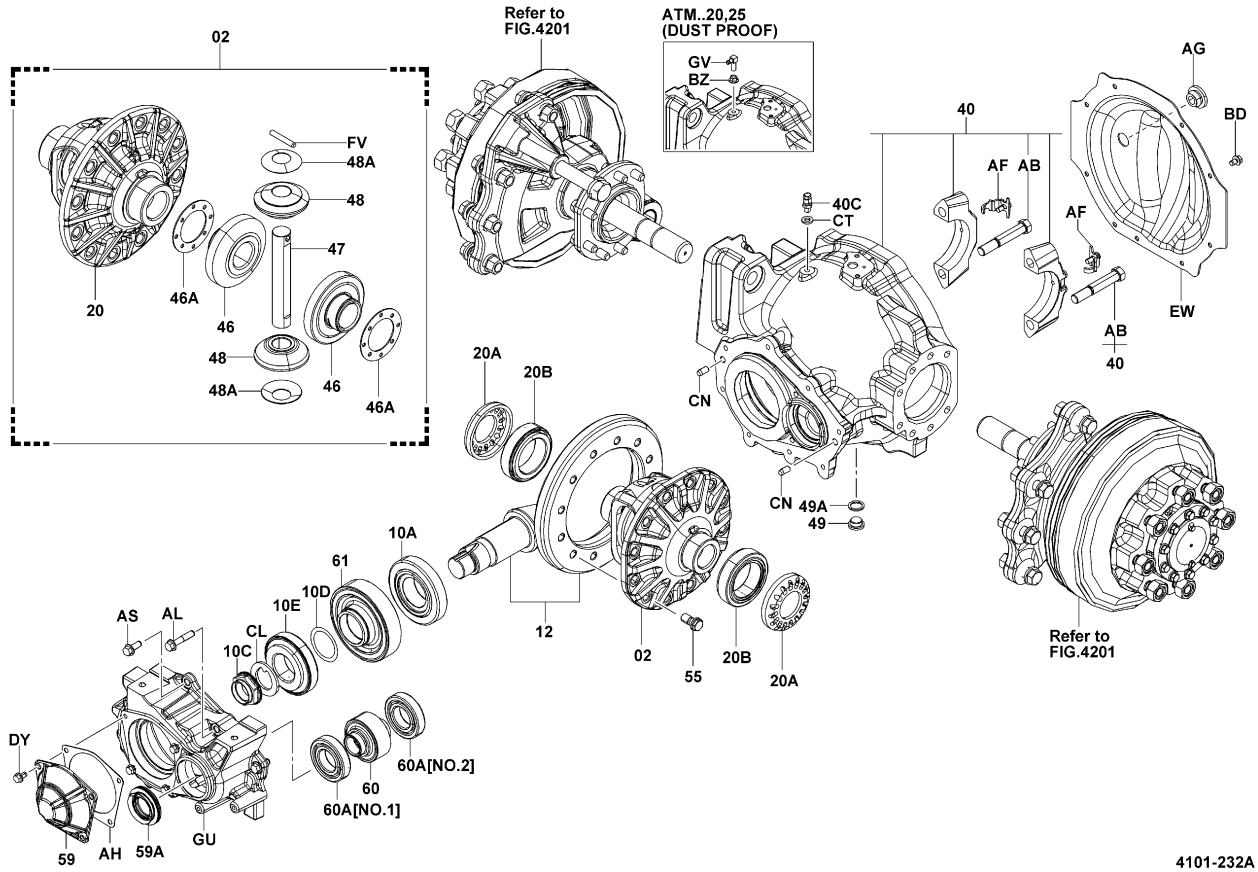


4101-232A

4101-232A

| 4101 | DIFFERENTIAL<br>DIFFERENTIEL | DIFFERENTIAL<br>DIFERENCIAL |
|---|---|---|

K20,K25,K20N,K25N

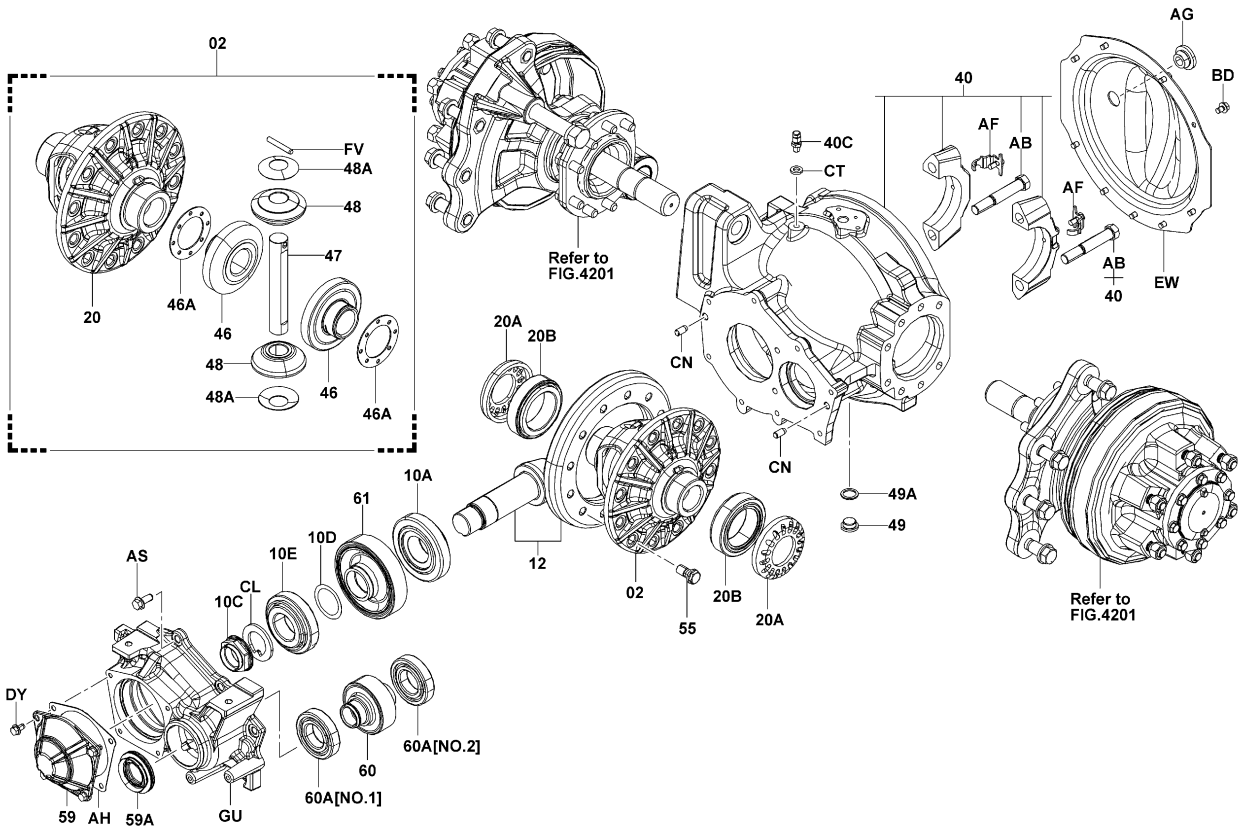


4101-231A

4101-231A

| 4101 | DIFFERENTIAL<br>DIFFERENTIEL | DIFFERENTIAL<br>DIFERENCIAL |
|---|---|---|

20N,25N (LSD)

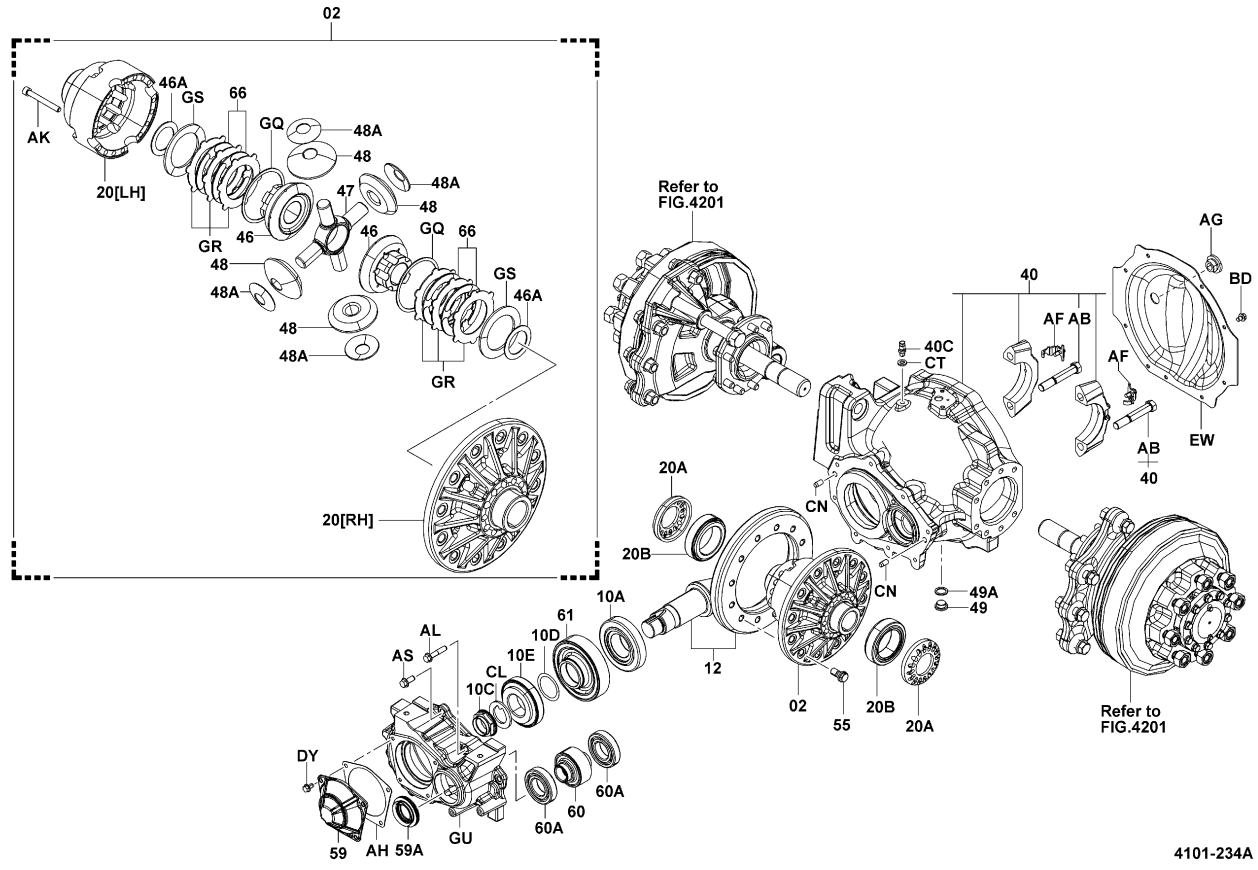


4101-234A

4101-234A

| 4101 | DIFFERENTIAL<br>DIFFERENTIEL | DIFFERENTIAL<br>DIFERENCIAL |
|---|---|---|

4Y..ATM..20N,25N (LSD..3-WAY CATALYTIC)

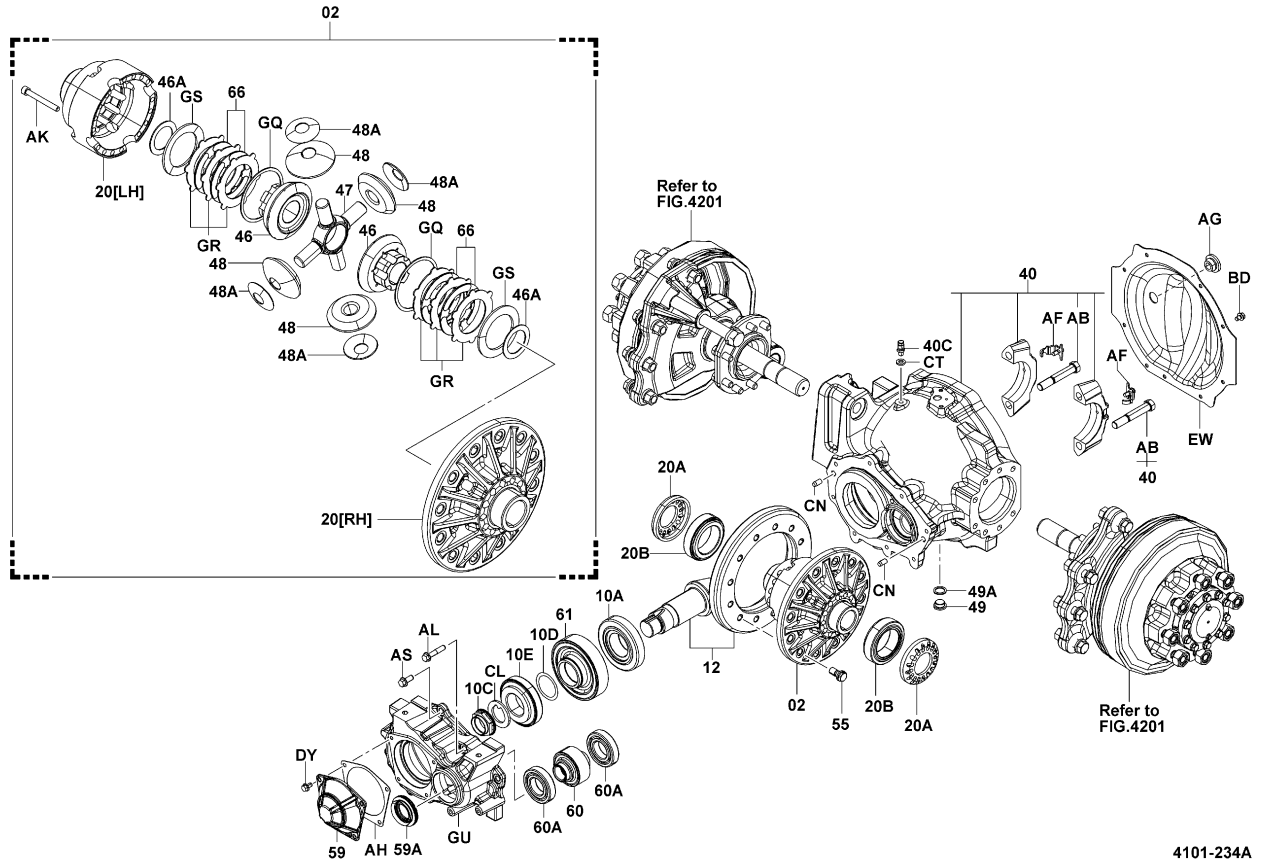


4101-234A

| 4101 | DIFFERENTIAL<br>DIFFERENTIEL | DIFFERENTIAL<br>DIFERENCIAL |
|---|---|---|

30N,J35N

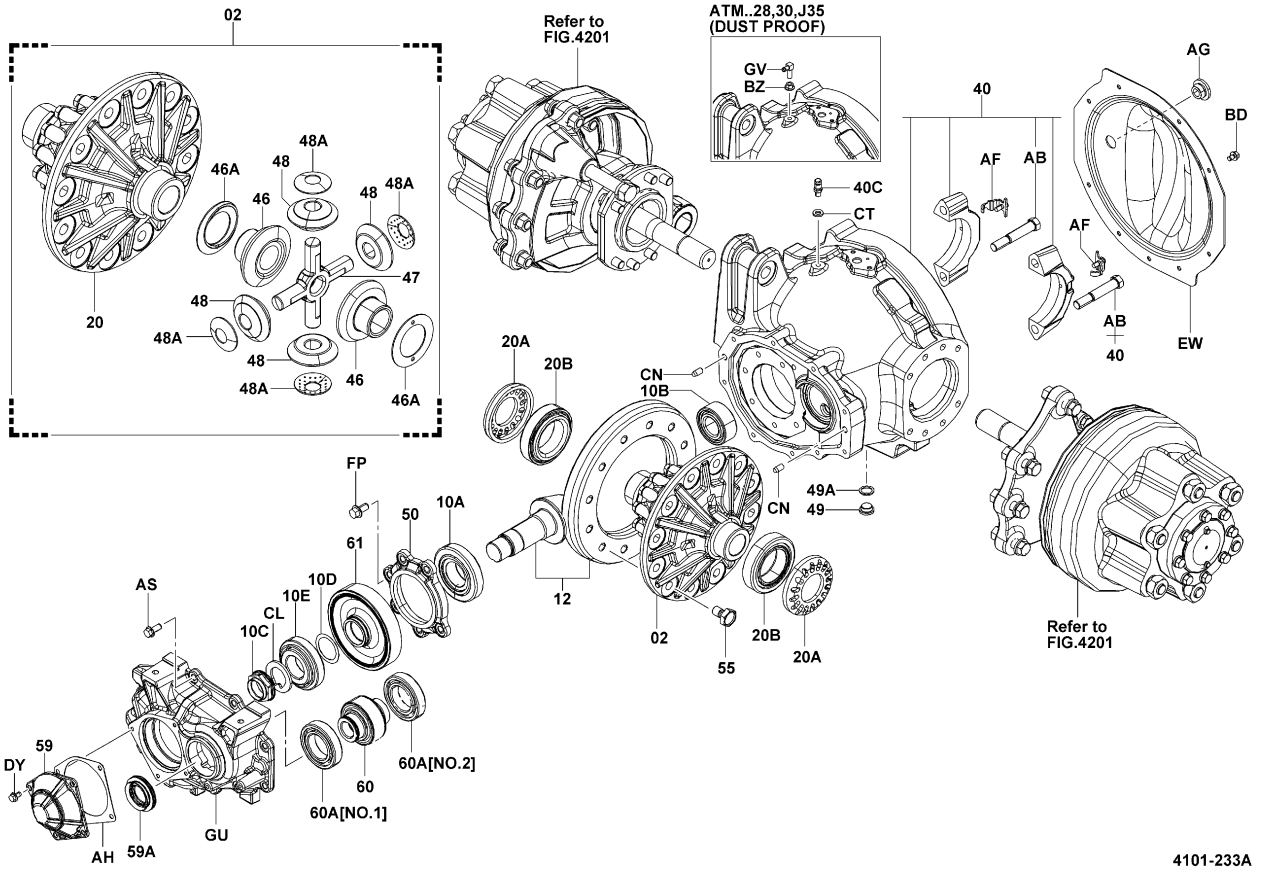


4101-233A

## 4101 DIFFERENTIAL / DIFFERENTIEL / DIFFERENTIAL / DIFERENCIAL

| PART NAME CODE | PART NAME | QTY |
|---|---|---|
| 4101-02 | **CASE ASSY, DIFFERENTIAL**<br>ENS. DE CARTER<br>GEHAUSE, VOLLST.<br>CONJUNTO DE LA CAJA | 1 |
| 4101-10A | **BEARING, DRIVE PINION**<br>ROULEMENT<br>LAGER<br>COJINETE | 1 |
| 4101-10B | **BEARING, DRIVE PINION PILOT**<br>ROULEMENT<br>LAGER<br>COJINETE | 1 |
| 4101-10C | **NUT, LOCK**<br>ECROU<br>MUTTER<br>TUERCA | 1 |
| 4101-10D | **SHIM, BEARING PRELOAD ADJUST**<br>CALE<br>AUSGLEICHSCHEIBE<br>CALCE | 99 |
| 4101-10E | **BEARING, DRIVE PINION**<br>ROULEMENT<br>LAGER<br>COJINETE | 1 |
| 4101-12 | **GEAR ASSY, RING & PINION**<br>ENS. DE PIGNON<br>ZAHNRAD, VOLLST.<br>CONJUNTO DE ENGRANAJE | 1 |
| 4101-20 | **CASE SUB-ASSY, DIFFERENTIAL**<br>SOUS-ENS. DE CARTER<br>GEHAUSE-TEILGRUPPE<br>SUBCONJUNTO DE LA CAJA | 1 |
| 4101-20A | **NUT, ADJUSTING**<br>ECROU<br>MUTTER<br>TUERCA | 2 |
| 4101-20B | **BEARING, DIFFERENTIAL CASE**<br>ROULEMENT<br>LAGER<br>COJINETE | 2 |
| 4101-40 | **HOUSING, DIFFERENTIAL**<br>BOITIER<br>GEHAUSE<br>FUNDA | 1 |
| 4101-40C | **PLUG, BREATHER (FOR DIFFERENTIAL HOUSING)**<br>BOUCHON<br>STOPFEN<br>TAPON | 1 |
| 4101-46 | **GEAR, SIDE**<br>PIGNON<br>ZAHNRAD<br>ENGRANAJE | 2 |
| 4101-46A | **WASHER, SIDE GEAR THRUST**<br>RODELLE<br>UNTERLEGSCHEIBE<br>ARANDELA | 2 |
| 4101-47 | **SPIDER**<br>CROISILLON<br>ARMSTERN<br>CRUCETA | 1 |
| 4101-48 | **PINION**<br>PIGNON<br>RITZEL<br>PIÑON | 2- 4 |
| 4101-48A | **WASHER, PINION THRUST**<br>RODELLE<br>UNTERLEGSCHEIBE<br>ARANDELA | 2- 4 |
| 4101-49 | **PLUG, DRAIN**<br>BOUCHON<br>STOPFEN<br>TAPON | 1 |
| 4101-49A | **GASKET, DRAIN PLUG**<br>JOINT<br>DICHTUNG<br>EMPAQUETADURA | 1 |
| 4101-50 | **RETAINER, DRIVE PINION BEARING**<br>ARRETOIR<br>SEEGERRING<br>RETENEDOR | 1 |

## 4101 DIFFERENTIAL / DIFFERENTIEL / DIFFERENTIAL / DIFERENCIAL

| PART NAME CODE | PART NAME | QTY |
|---|---|---|
| 4101-55 | **BOLT, RING GEAR SET**<br>BOULON<br>SCHRAUBE<br>PERNO | 12 |
| 4101-59 | **COVER, DIFFERENTIAL CARRIER**<br>COUVERCLE<br>DECKEL<br>CUBIERTA | 1 |
| 4101-59A | **SEAL, OIL (FOR CARRIER COVER)**<br>JOINT<br>ABDICHTUNG<br>SELLO | 1 |
| 4101-60 | **GEAR, REDUCTION**<br>PIGNON<br>ZAHNRAD<br>ENGRANAJE | 1 |
| 4101-60A | **BEARING, NO.1, REDUCTION GEAR**<br>ROULEMENT<br>LAGER<br>COJINETE | 1- 2 |
| 4101-61 | **GEAR, OUTPUT**<br>PIGNON<br>ZAHNRAD<br>ENGRANAJE | 1 |
| 4101-66 | **PLATE, FRICTION**<br>PLAQUE<br>PLATTE<br>PLACA | 4 |
| 4101-AB | **BOLT**<br>BOULON<br>SCHRAUBE<br>PERNO | 4 |
| 4101-AF | **LOCK, ADJUSTING**<br>VERROU<br>SCHLOSS<br>CIERRE | 2 |
| 4101-AG | **PLUG**<br>BOUCHON<br>STOPFEN<br>TAPON | 1 |
| 4101-AH | **GASKET**<br>JOINT<br>DICHTUNG<br>EMPAQUETADURA | 1 |
| 4101-AK | **BOLT**<br>BOULON<br>SCHRAUBE<br>PERNO | 16 |
| 4101-AL | **BOLT**<br>BOULON<br>SCHRAUBE<br>PERNO | 5 |
| 4101-AS | **BOLT**<br>BOULON<br>SCHRAUBE<br>PERNO | 3- 9 |
| 4101-BD | **BOLT**<br>BOULON<br>SCHRAUBE<br>PERNO | 9 |
| 4101-CL | **WASHER, CLAW**<br>RODELLE<br>UNTERLEGSCHEIBE<br>ARANDELA | 1 |
| 4101-CN | **PIN, STRAIGHT**<br>GOUPILLE<br>STIFT<br>PASADOR | 2 |
| 4101-CT | **WASHER, SPRING**<br>RODELLE<br>UNTERLEGSCHEIBE<br>ARANDELA | 1 |
| 4101-DY | **BOLT**<br>BOULON<br>SCHRAUBE<br>PERNO | 4 |
| 4101-EW | **COVER, RR**<br>COUVERCLE<br>DECKEL<br>CUBIERTA | 1 |

| 4101 | DIFFERENTIAL<br>DIFFERENTIEL | DIFFERENTIAL<br>DIFERENCIAL |
|---|---|---|

| PART NAME CODE | PART NAME | QTY | PART NAME CODE | PART NAME | QTY |
|---|---|---|---|---|---|
| 4101-FP | **BOLT**<br>BOULON<br>SCHRAUBE<br>PERNO | 6 | | | |
| 4101-FV | **SHAFT**<br>ARBRE<br>WELLE<br>EJE | 1 | | | |
| 4101-GQ | **RING, SNAP**<br>ANNEAU<br>RING<br>ANILLO | 2 | | | |
| 4101-GR | **PLATE**<br>PLAQUE<br>PLATTE<br>PLACA | 99 | | | |
| 4101-GS | **WASHER**<br>RODELLE<br>UNTERLEGSCHEIBE<br>ARANDELA | 2 | | | |
| 4101-GU | **CASE, REDUCTION GEAR**<br>CARTER<br>GEHÄUSE<br>CAJA | 1 | | | |


| 4101 | DIFFERENTIAL<br>DIFFERENTIEL | DIFFERENTIAL<br>DIFERENCIAL |
|---|---|---|

| PART NAME CODE | PART NAME | QTY | PART NAME CODE | PART NAME | QTY |
|---|---|---|---|---|---|

| 4201 | FRONT AXLE SHAFT<br>ARBRE D'ESSIEU AVANT | STECKACHSE, VORDERACHSE<br>SEMIEJE FRONTAL |
|---|---|---|

10N,15N,18N

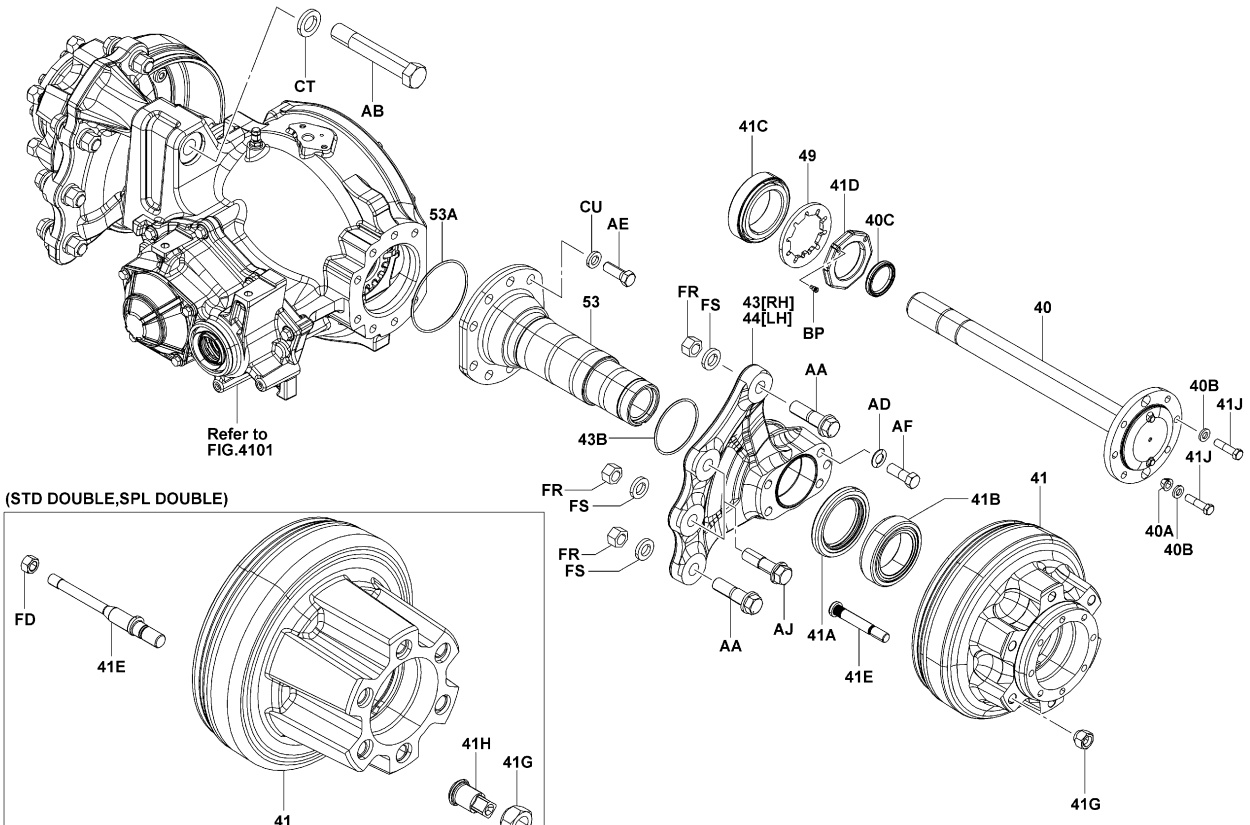


4201-332

4201-332_

| 4201 | FRONT AXLE SHAFT<br>ARBRE D'ESSIEU AVANT | STECKACHSE, VORDERACHSE<br>SEMIEJE FRONTAL |
|---|---|---|

20N,25N

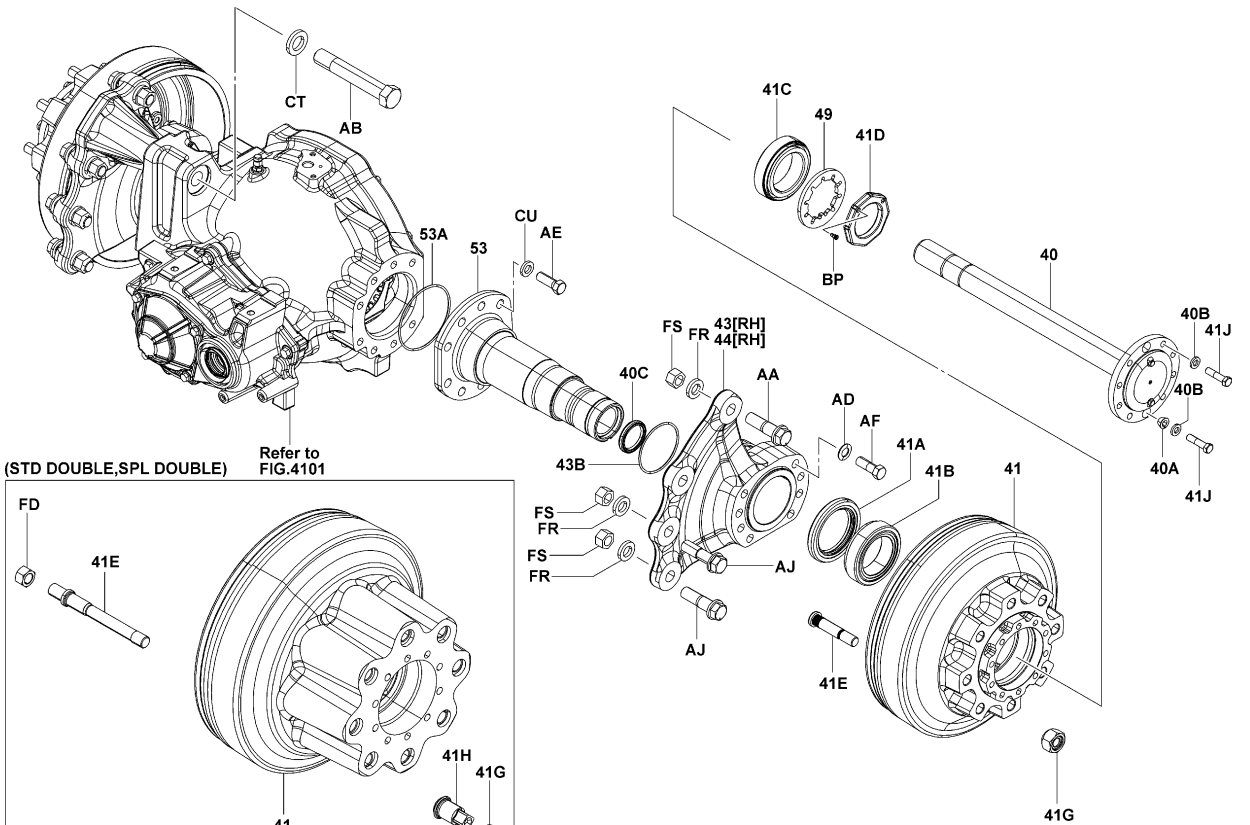


4201-333

4201-333_

| 4201 | FRONT AXLE SHAFT<br>ARBRE D'ESSIEU AVANT | STECKACHSE, VORDERACHSE<br>SEMIEJE FRONTAL |
|---|---|---|

30N,J35N

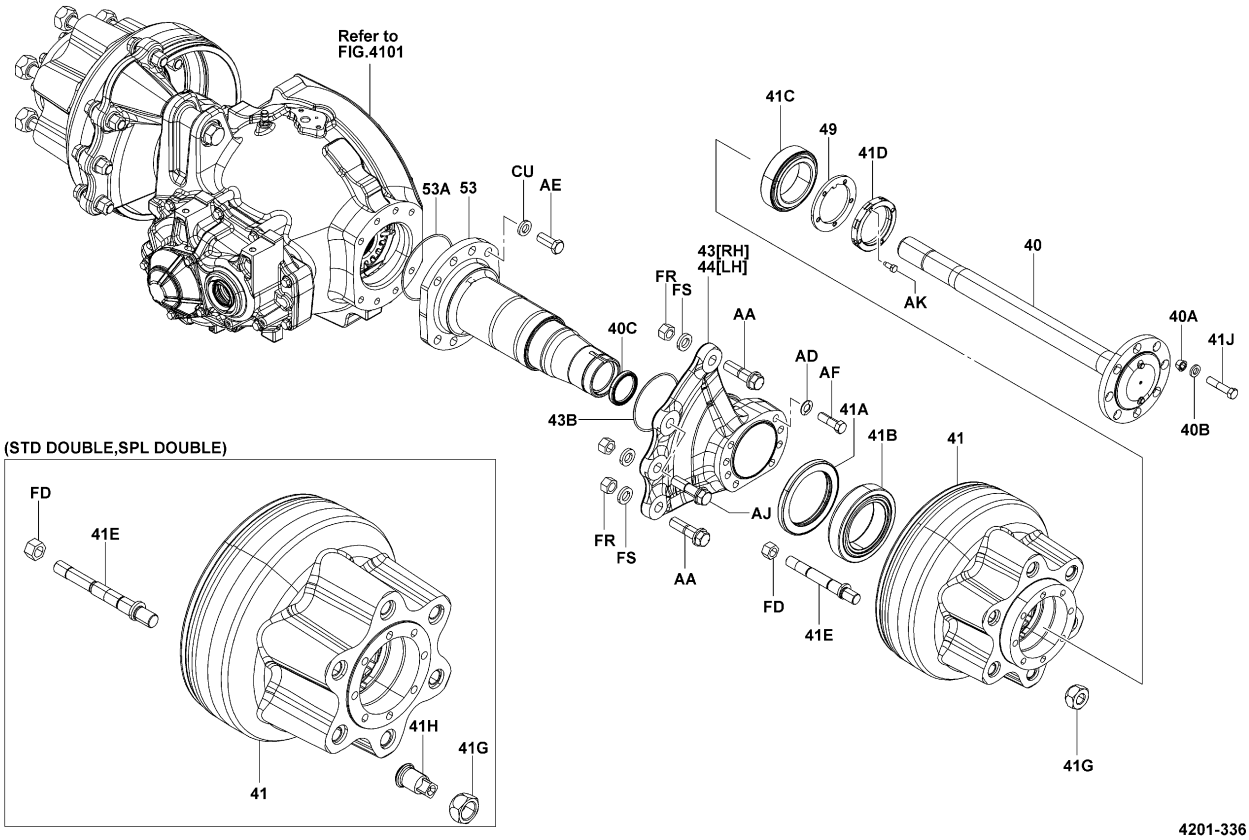


4201-336

4201-336_

| 4201 | FRONT AXLE SHAFT<br>ARBRE D'ESSIEU AVANT | STECKACHSE, VORDERACHSE<br>SEMIEJE FRONTAL |
|---|---|---|

K20N,K25N

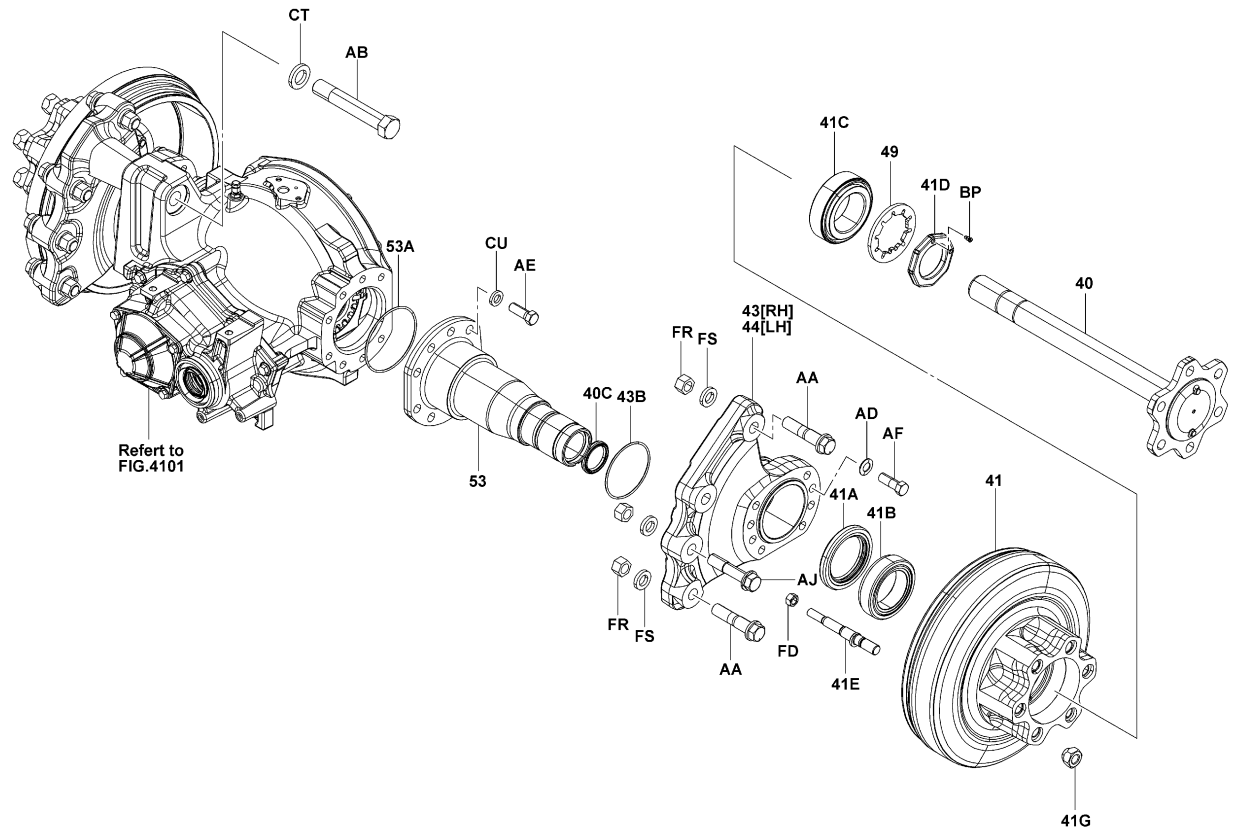


4201-334

4201-334_

| 4201 | FRONT AXLE SHAFT<br>ARBRE D'ESSIEU AVANT | STECKACHSE, VORDERACHSE<br>SEMIEJE FRONTAL |
|---|---|---|

K30N

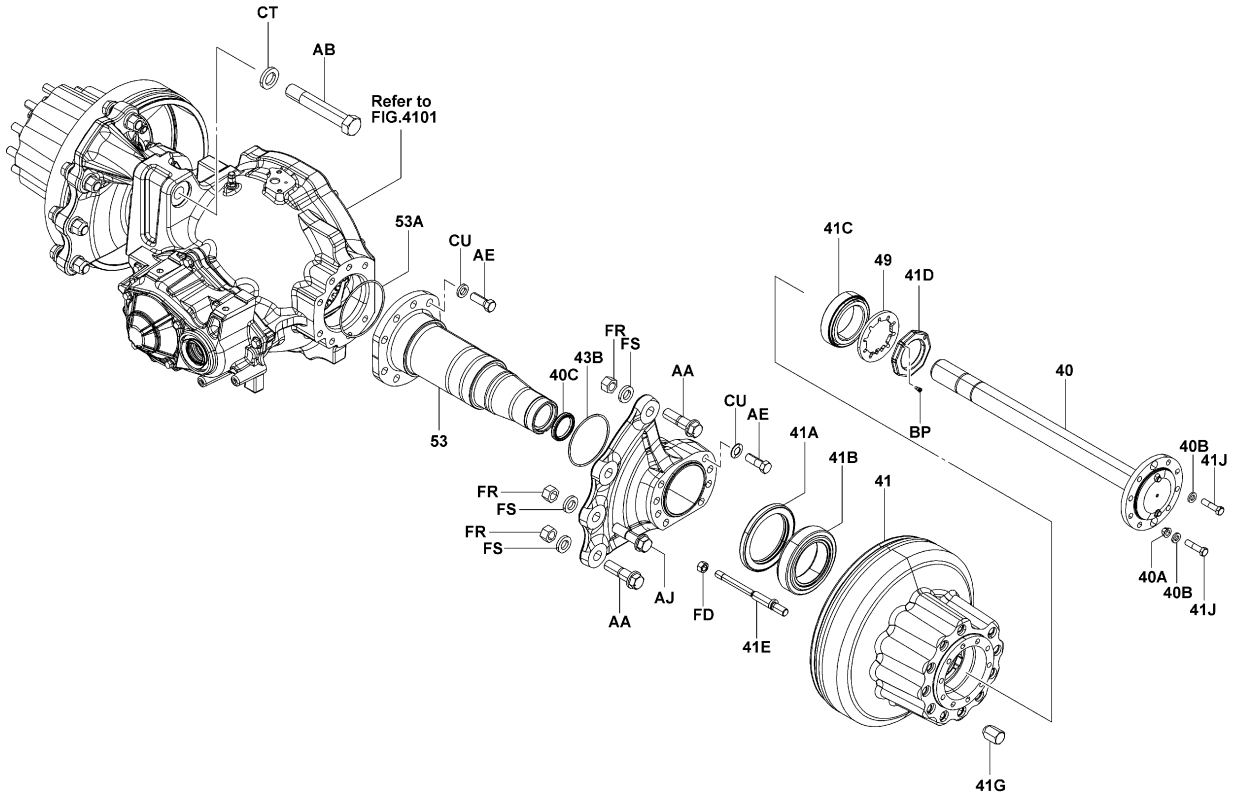


| 4201 | FRONT AXLE SHAFT<br>ARBRE D'ESSIEU AVANT | STECKACHSE, VORDERACHSE<br>SEMIEJE FRONTAL |
|---|---|---|

| PART NAME CODE | PART NAME | QTY |
|---|---|---|
| 4201-40 | **SHAFT, FRONT AXLE**<br>ARBRE<br>WELLE<br>EJE | 2 |
| 4201-40A | **WASHER, CORN**<br>RODELLE<br>UNTERLEGSCHEIBE<br>ARANDELA | 4-16 |
| 4201-40B | **WASHER, SPRING (FOR FRONT AXLE SHAFT)**<br>RODELLE<br>UNTERLEGSCHEIBE<br>ARANDELA | 16-20 |
| 4201-40C | **SEAL, OIL (FOR FRONT AXLE SHAFT)**<br>JOINT<br>ABDICHTUNG<br>SELLO | 2 |
| 4201-41 | **HUB, FRONT AXLE**<br>MOYEU<br>NABE<br>CUBO | 2 |
| 4201-41A | **SEAL, OIL (FOR FRONT AXLE HUB)**<br>JOINT<br>ABDICHTUNG<br>SELLO | 2 |
| 4201-41B | **BEARING, NO.1, FRONT AXLE HUB**<br>ROULEMENT<br>LAGER<br>COJINETE | 2 |
| 4201-41C | **BEARING, NO.2, FRONT AXLE HUB**<br>ROULEMENT<br>LAGER<br>COJINETE | 2 |
| 4201-41D | **NUT, BEARING LOCK**<br>ECROU<br>MUTTER<br>TUERCA | 2 |
| 4201-41E | **BOLT, HUB**<br>BOULON<br>SCHRAUBE<br>PERNO | 12-22 |
| 4201-41G | **NUT, HUB**<br>ECROU<br>MUTTER<br>TUERCA | 12-22 |
| 4201-41H | **BOLT, DOUBLE WHEEL STOP**<br>BOULON<br>SCHRAUBE<br>PERNO | 12-16 |
| 4201-41J | **BOLT, FRONT AXLE SHAFT**<br>BOULON<br>SCHRÄUBE<br>PERNO | 16-20 |
| 4201-43 | **BRACKET, FRONT AXLE, RH**<br>SUPPORT<br>TRAGER<br>SOPORTE | 1 |
| 4201-43B | **RING, O (FOR FRONT AXLE BRACKET)**<br>ANNEAU<br>RING<br>ANILLO | 1 |
| 4201-44 | **BRACKET, FRONT AXLE, LH**<br>SUPPORT<br>TRAGER<br>SOPORTE | 1 |
| 4201-44B | **RING, O (FOR FRONT AXLE BRACKET)**<br>ANNEAU<br>RING<br>ANILLO | 1 |
| 4201-49 | **PLATE, LOCK NUT**<br>PLAQUE<br>PLATTE<br>PLACA | 2 |
| 4201-53 | **HOUSING, FRONT AXLE**<br>BOITIER<br>GEHAUSE<br>FUNDA | 2 |
| 4201-53A | **RING, O (FOR FRONT AXLE HOUSING)**<br>ANNEAU<br>RING<br>ANILLO | 2 |

| 4201 | FRONT AXLE SHAFT<br>ARBRE D'ESSIEU AVANT | STECKACHSE, VORDERACHSE<br>SEMIEJE FRONTAL |
|---|---|---|

| PART NAME CODE | PART NAME | QTY |
|---|---|---|
| 4201-AA | **BOLT**<br>BOULON<br>SCHRAUBE<br>PERNO | 4 |
| 4201-AB | **BOLT, BRACKET SET**<br>BOULON<br>SCHRAUBE<br>PERNO | 1 |
| 4201-AD | **WASHER, CD SPRING**<br>RODELLE<br>UNTERLEGSCHEIBE<br>ARANDELA | 10-16 |
| 4201-AE | **BOLT**<br>BOULON<br>SCHRAUBE<br>PERNO | 16 |
| 4201-AF | **BOLT**<br>BOULON<br>SCHRAUBE<br>PERNO | 8-16 |
| 4201-AJ | **BOLT**<br>BOULON<br>SCHRAUBE<br>PERNO | 4 |
| 4201-AK | **BOLT**<br>BOULON<br>SCHRAUBE<br>PERNO | 2 |
| 4201-BP | **SCREW**<br>VIS<br>SCHRAUBE<br>TORNILLO | 2 |
| 4201-CT | **WASHER, SPRING**<br>RODELLE<br>UNTERLEGSCHEIBE<br>ARANDELA | 1 |
| 4201-CU | **WASHER, SPRING**<br>RODELLE<br>UNTERLEGSCHEIBE<br>ARANDELA | 16 |
| 4201-EJ | **WASHER, SPRING**<br>RODELLE<br>UNTERLEGSCHEIBE<br>ARANDELA | 2 |
| 4201-FD | **NUT**<br>ECROU<br>MUTTER<br>TUERCA | 12-22 |
| 4201-FR | **NUT**<br>ECROU<br>MUTTER<br>TUERCA | 8 |
| 4201-FS | **WASHER, SPRING**<br>RODELLE<br>UNTERLEGSCHEIBE<br>ARANDELA | 8 |


| 4201 | FRONT AXLE SHAFT<br>ARBRE D'ESSIEU AVANT | STECKACHSE, VORDERACHSE<br>SEMIEJE FRONTAL |
|---|---|---|

| PART NAME CODE | PART NAME | QTY | PART NAME CODE | PART NAME | QTY |
|---|---|---|---|---|---|

10N,15N,18N,20N,25N,30N,J35N (SAS)

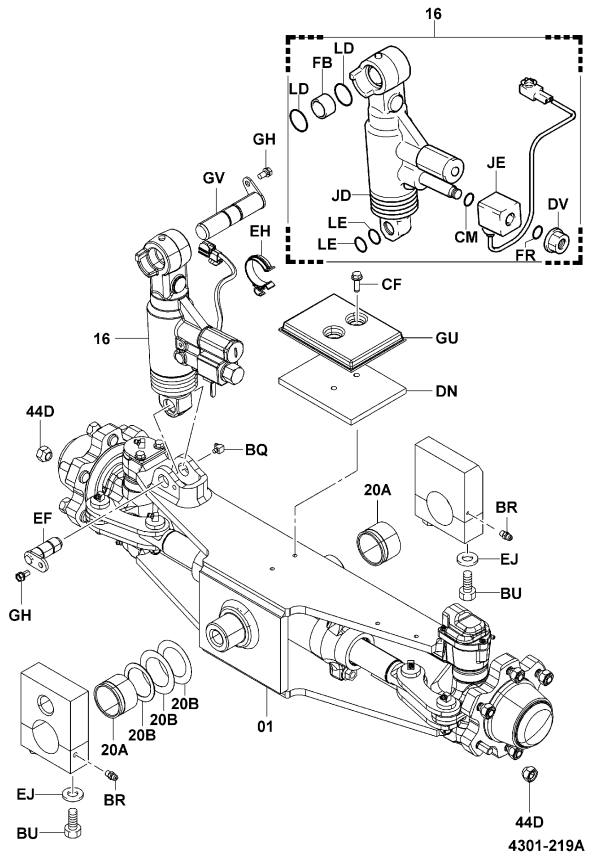


4301-219A

K20N,K25N,K30N [ASSY & LOCK CYLINDER]

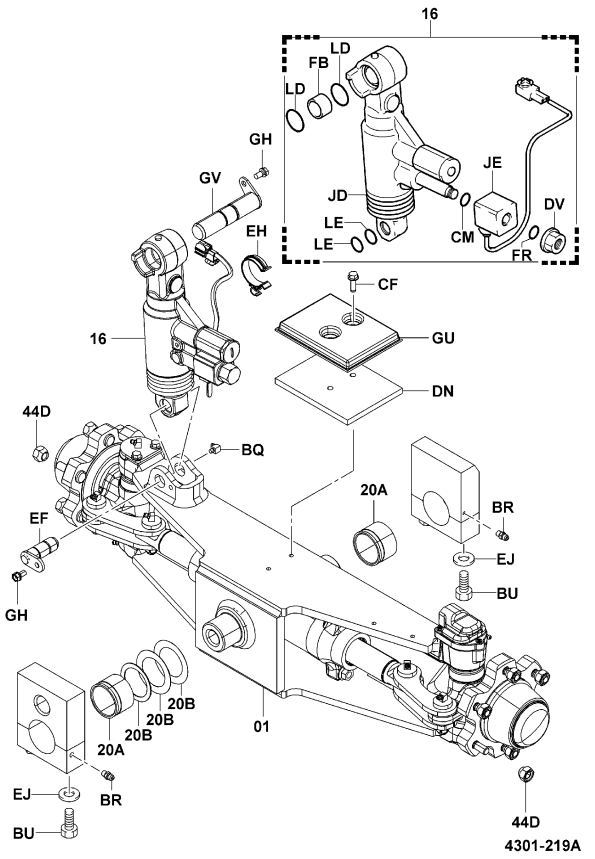


4301-219A


| 4301 | REAR AXLE & TIE-ROD<br>ESSIEU ARRIERE & BARRE D'ACCOUPLEMENT | HINTERACHSE + SPURSTANGE<br>EJE TRASERO Y BIELA |
|---|---|---|


10N,15N,18N

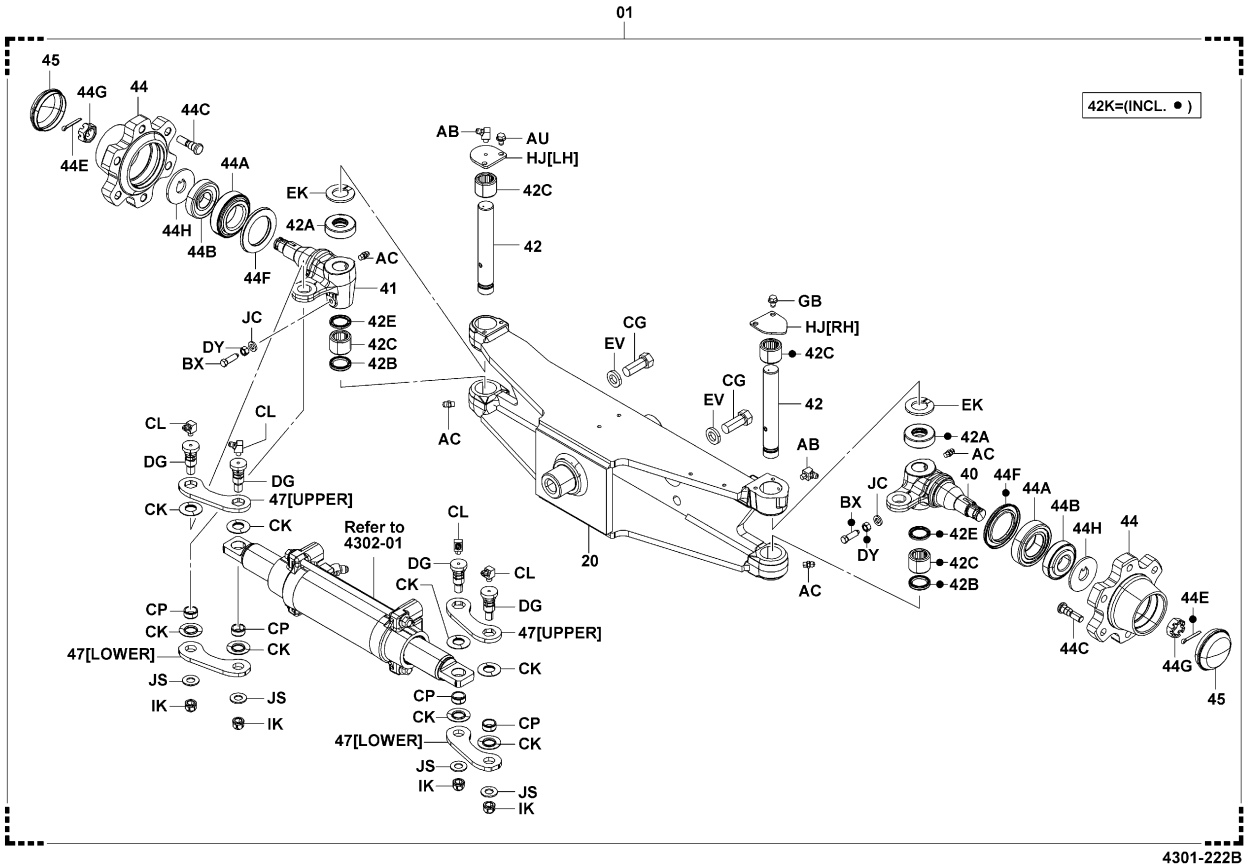


4301-222B

| 4301 | REAR AXLE & TIE-ROD<br>ESSIEU ARRIERE & BARRE D'ACCOUPLEMENT | HINTERACHSE + SPURSTANGE<br>EJE TRASERO Y BIELA |
|---|---|---|

10N,15N,18N (SAS)

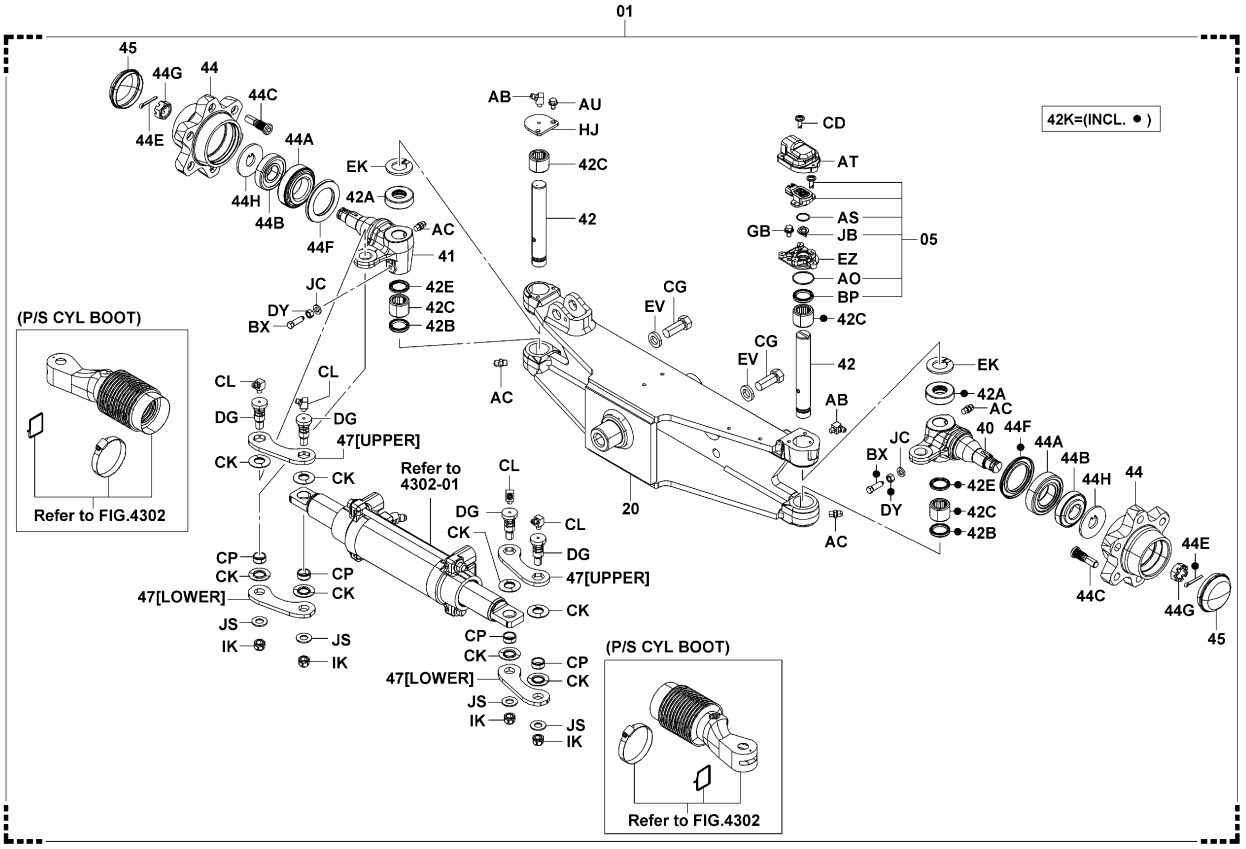


4301-220B

| 4301 | REAR AXLE & TIE-ROD<br>ESSIEU ARRIERE & BARRE D'ACCOUPLEMENT | HINTERACHSE + SPURSTANGE<br>EJE TRASERO Y BIELA |
|---|---|---|

20N,25N,30N,J35N

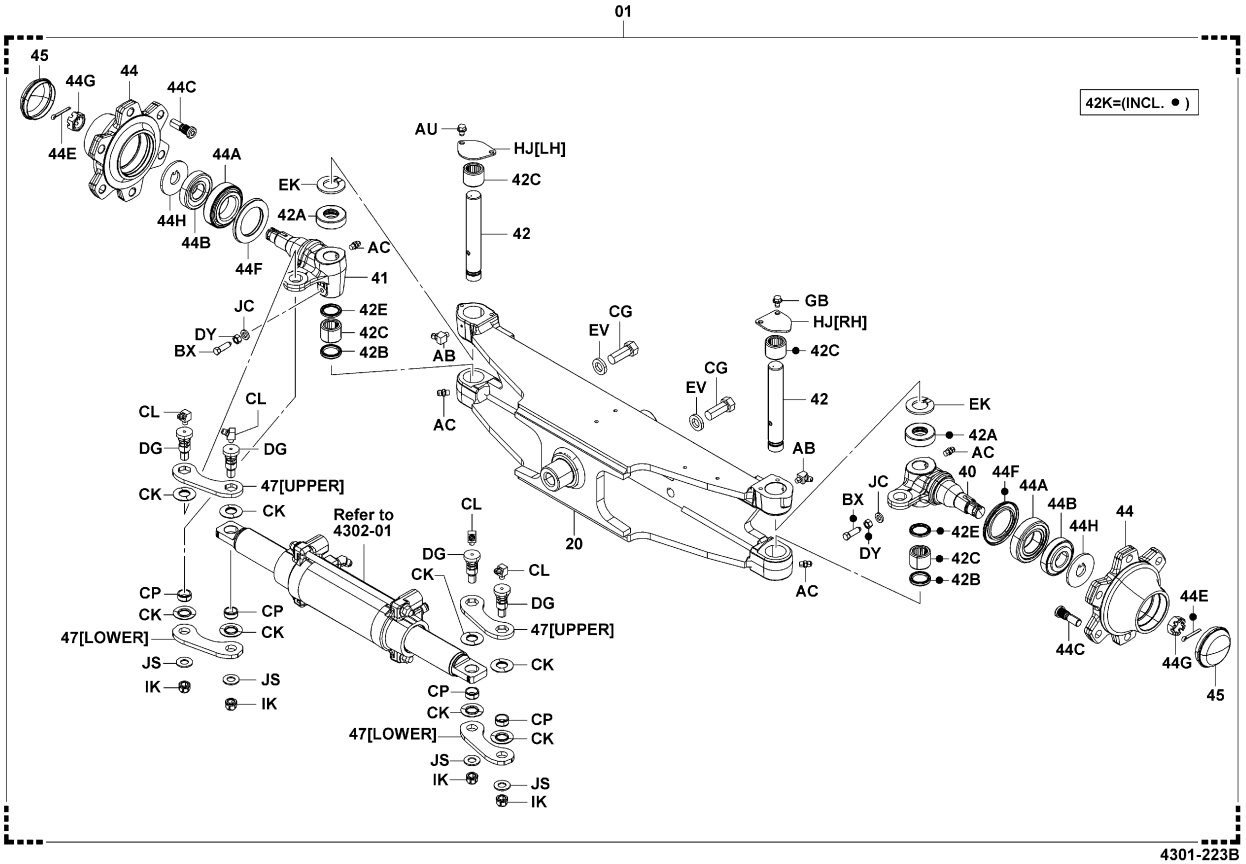


4301-223B

20N,25N (SAS)

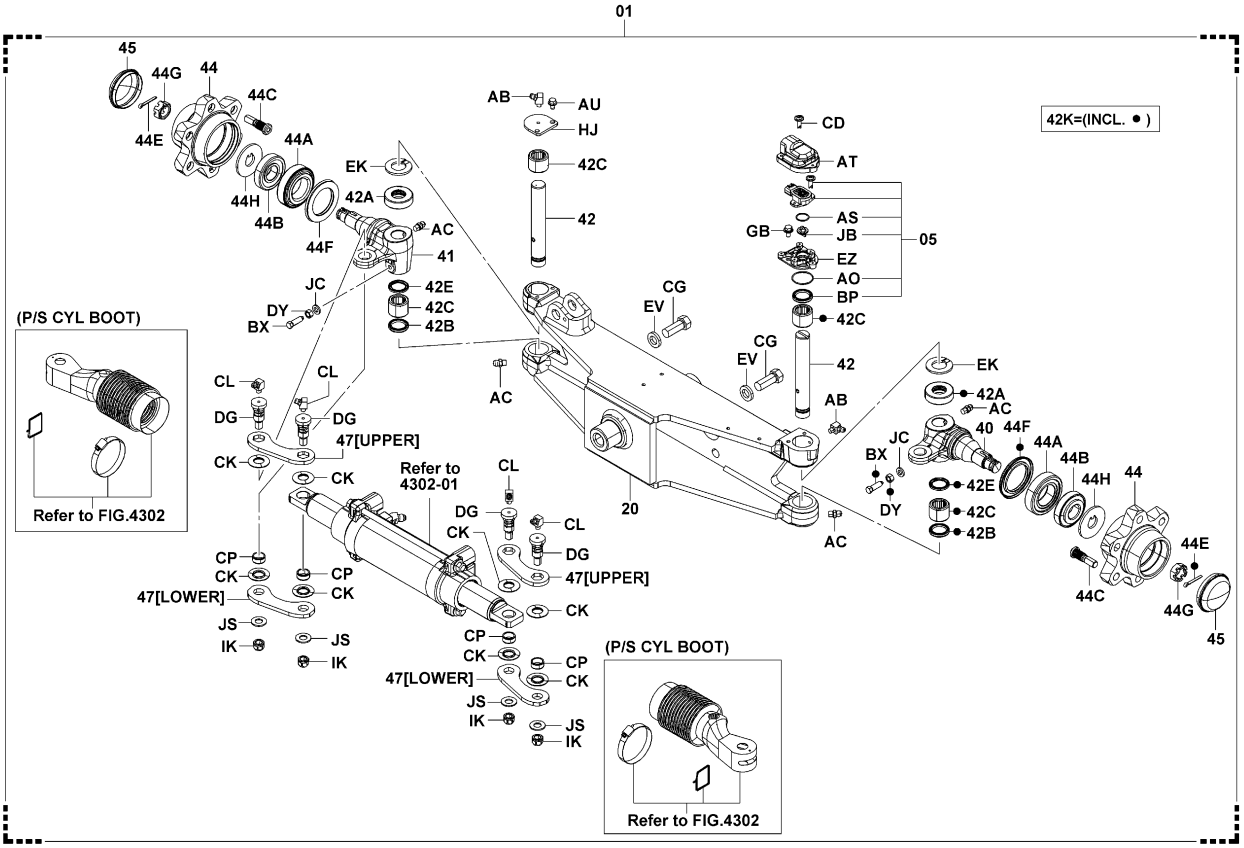


4301-220B


| 4301 | REAR AXLE & TIE-ROD<br>ESSIEU ARRIERE & BARRE D'ACCOUPLEMENT | HINTERACHSE + SPURSTANGE<br>EJE TRASERO Y BIELA |
|---|---|---|


30N

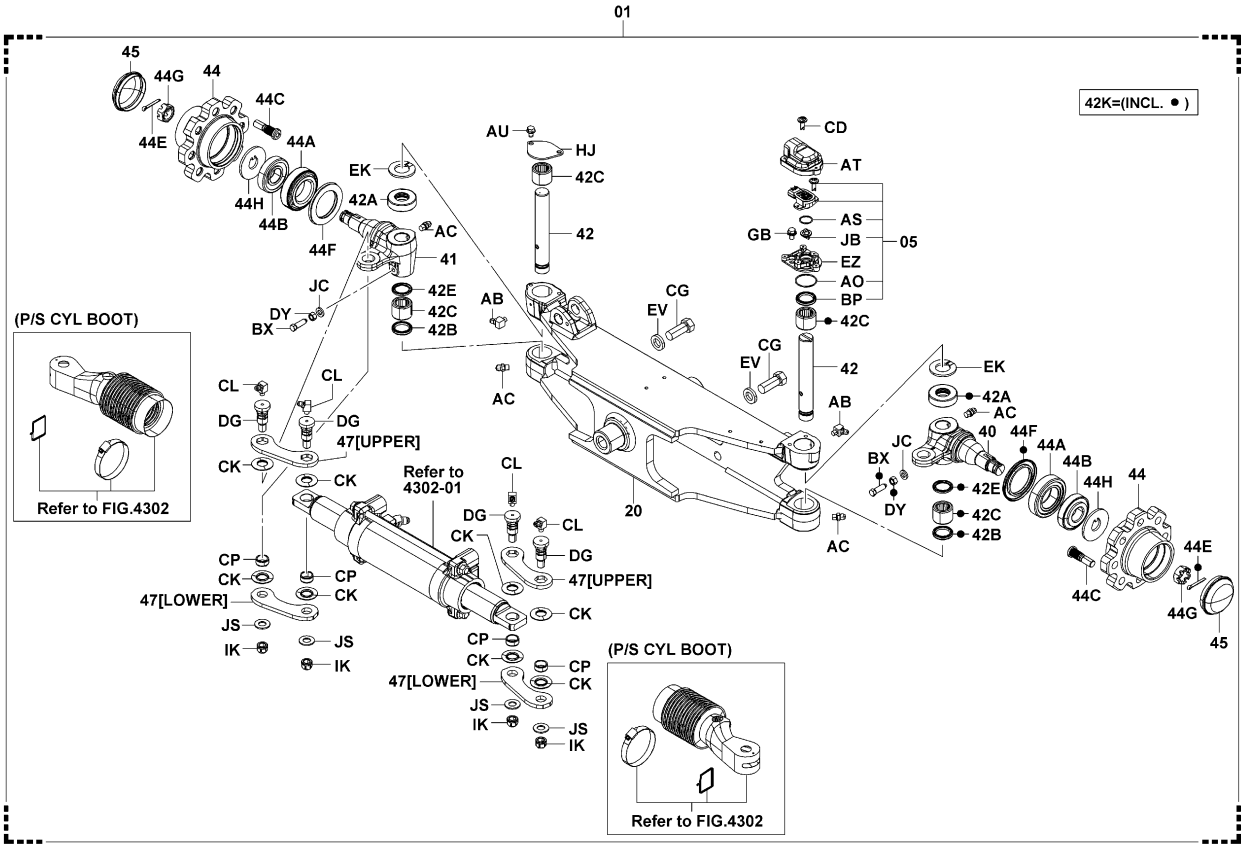


4301-221B

J35N

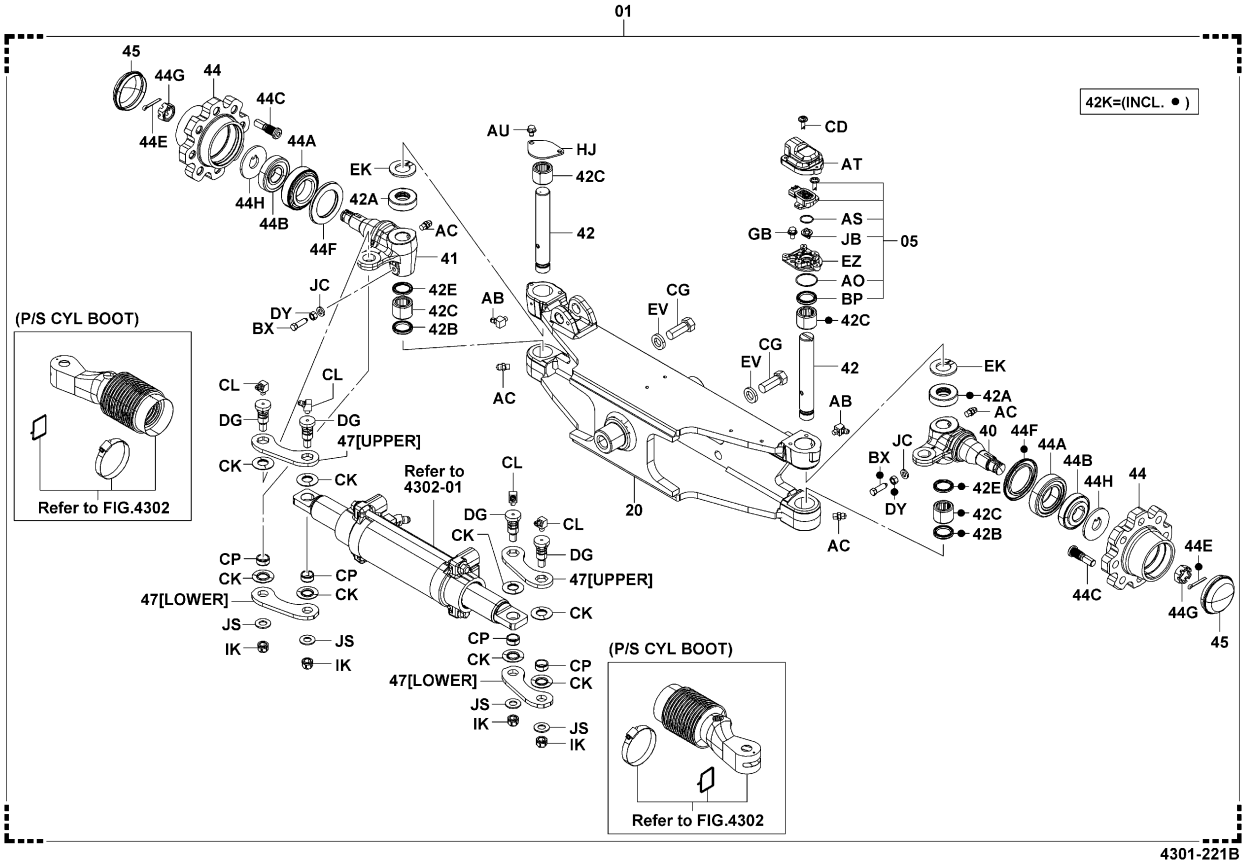


4301-221B



K20N,K25N

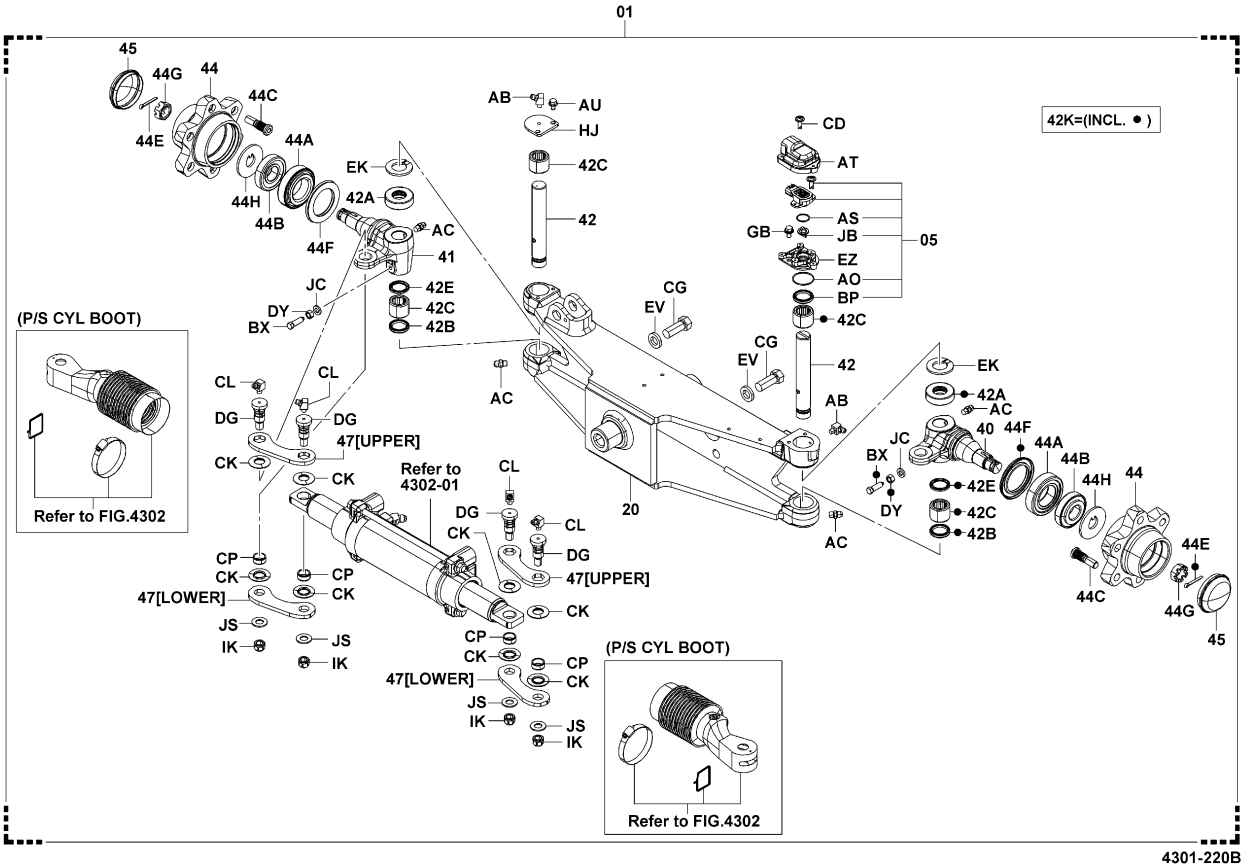


4301-220B

# 4301

REAR AXLE & TIE-ROD
ESSIEU ARRIERE & BARRE D'ACCOUPLEMENT
HINTERACHSE + SPURSTANGE
EJE TRASERO Y BIELA

K30N

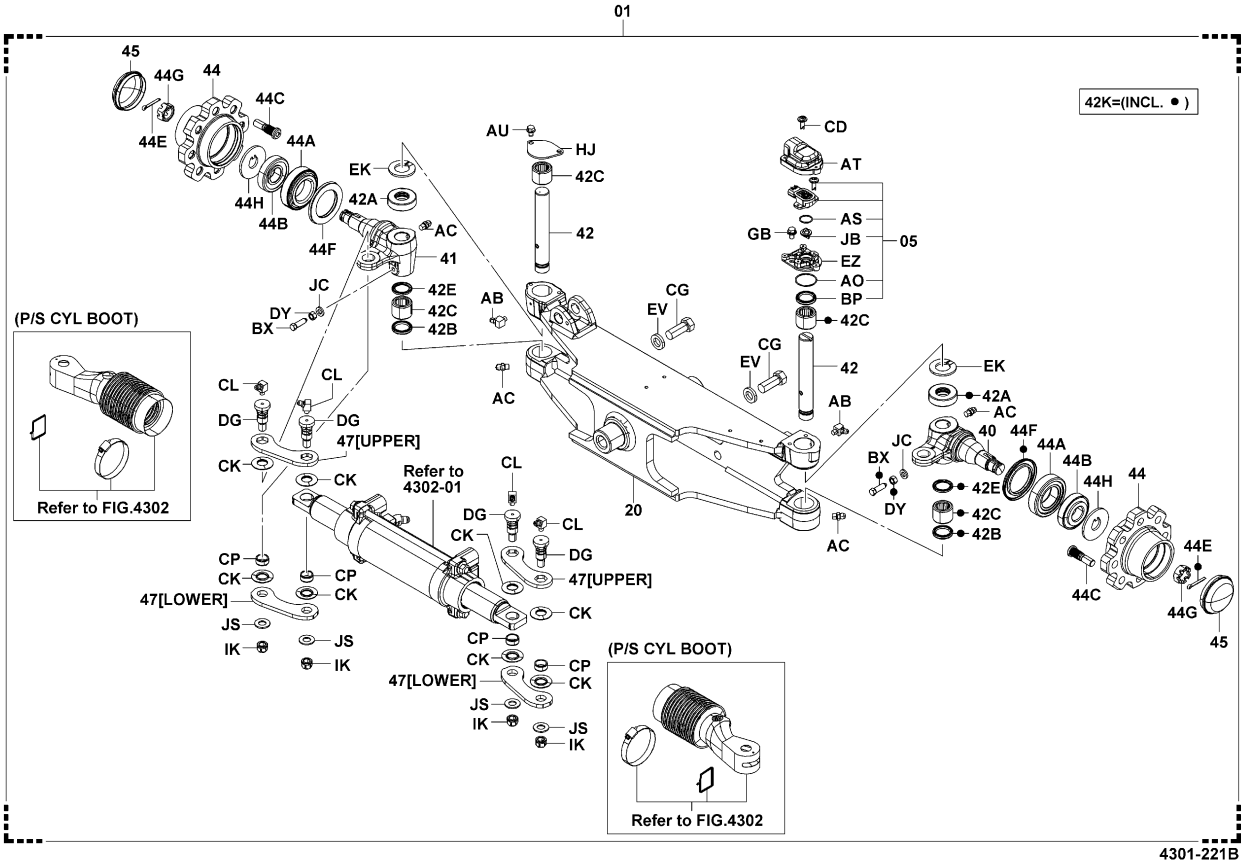


4301-221B

# 4301

REAR AXLE & TIE-ROD
ESSIEU ARRIERE & BARRE D'ACCOUPLEMENT
HINTERACHSE + SPURSTANGE
EJE TRASERO Y BIELA

| PART NAME CODE | PART NAME | QTY |
|---|---|---|
| 4301-01 | **AXLE ASSY, RR**<br>ENS. D'ESSIEU<br>ACHSEN-VOLLST.<br>CONJUNTO DEL EJE | 1 |
| 4301-05 | **SENSOR KIT, ROTARY POSITION**<br>JEU DE DETECTEUR<br>SENSOR-SATZ<br>JUEGO DEL SENSOR | 1 |
| 4301-16 | **CYLINDER ASSY, SWING LOCK**<br>ENS. DE CYLINDRE<br>ZYLINDER, VOLLST.<br>CONJUNTO DEL CILINDRO | 1 |
| 4301-20 | **BEAM SUB-ASSY, REAR AXLE**<br>SOUS-ENS. DE LONGERON<br>ACHSK RPER-TEILGRUPPE<br>SUBCONJUNTO DE LA VIGUETA | 1 |
| 4301-20A | **BUSHING, REAR AXLE BEAM**<br>BAGE<br>BUCHSE<br>MANGUITO | 2-99 |
| 4301-20B | **SHIM, REAR AXLE BEAM**<br>CALE<br>AUSGLEICHSCHEIBE<br>CALCE | 99 |
| 4301-20C | **BUSHING, REAR AXLE BEAM**<br>BAGE<br>BUCHSE<br>MANGUITO | 99 |
| 4301-40 | **KNUCKLE, STEERING, RH**<br>GENOUILLERE<br>ACHSSCHENKEL<br>MUÑON | 1 |
| 4301-41 | **KNUCKLE, STEERING, LH**<br>GENOUILLERE<br>ACHSSCHENKEL<br>MUÑON | 1 |
| 4301-42 | **PIN, STEERING KNUCKLE KING**<br>GOUPILLE<br>STIFT<br>PASADOR | 1- 2 |
| 4301-42A | **BEARING, STEERING KNUCKLE THRUST**<br>ROULEMENT<br>LAGER<br>COJINETE | 2 |
| 4301-42B | **SEAL, OIL, NO.1**<br>JOINT<br>ABDICHTUNG<br>SELLO | 2 |
| 4301-42C | **BEARING, NEEDLE**<br>ROULEMENT<br>LAGER<br>COJINETE | 4 |
| 4301-42E | **SEAL, OIL, NO.2**<br>JOINT<br>ABDICHTUNG<br>SELLO | 2 |
| 4301-42K | **SEAL KIT, KING PIN**<br>KIT JOINT<br>ABDICHTUNGSAUSRUSTUNG<br>JUEGO DE SELLADO | 2 |
| 4301-44 | **HUB, REAR AXLE**<br>MOYEU<br>NABE<br>CUBO | 2 |
| 4301-44A | **BEARING, INNER**<br>ROULEMENT<br>LAGER<br>COJINETE | 2 |
| 4301-44B | **BEARING, OUTER**<br>ROULEMENT<br>LAGER<br>COJINETE | 2 |
| 4301-44C | **BOLT, HUB**<br>BOULON<br>SCHRAUBE<br>PERNO | 12-16 |
| 4301-44D | **NUT, HUB**<br>ECROU<br>MUTTER<br>TUERCA | 12-16 |

## 4301

**REAR AXLE & TIE-ROD**
**ESSIEU ARRIERE & BARRE D'ACCOUPLEMENT**
**HINTERACHSE + SPURSTANGE**
**EJE TRASERO Y BIELA**

| PART NAME CODE | PART NAME | QTY |
|---|---|---|
| 4301-44E | **PIN, REAR AXLE COTTER**<br>GOUPILLE<br>STIFT<br>PASADOR | 2 |
| 4301-44F | **SEAL, OIL (FOR REAR AXLE HUB)**<br>JOINT<br>ABDICHTUNG<br>SELLO | 2 |
| 4301-44G | **NUT, CASTLE (FOR REAR AXLE HUB)**<br>ECROU<br>MUTTER<br>TUERCA | 2 |
| 4301-44H | **WASHER, CLAW (FOR REAR AXLE HUB)**<br>RODELLE<br>UNTERLEGSCHEIBE<br>ARANDELA | 2 |
| 4301-45 | **CAP, REAR AXLE HUB**<br>CAPUCHON<br>KAPPE<br>TAPA | 2 |
| 4301-47 | **TIE-ROD**<br>BARRE D'ACCOUPLEMENT<br>SPURSFANGE<br>BIELA | 2 |
| 4301-AB | **FITTING, GREASE**<br>RACCORD<br>ANSCHLUSSTUCK<br>ACOPLADOR | 2 |
| 4301-AC | **FITTING, GREASE**<br>RACCORD<br>ANSCHLUSSTUCK<br>ACOPLADOR | 4 |
| 4301-AO | **RING, O**<br>ANNEAU<br>RING<br>ANILLO | 1 |
| 4301-AS | **RING, O**<br>ANNEAU<br>RING<br>ANILLO | 1 |
| 4301-AT | **COVER**<br>COUVERCLE<br>DECKEL<br>CUBIERTA | 1 |
| 4301-AU | **BOLT**<br>BOULON<br>SCHRAUBE<br>PERNO | 2- 4 |
| 4301-BP | **SEAL, OIL**<br>JOINT<br>ABDICHTUNG<br>SELLO | 1 |
| 4301-BQ | **FITTING, GREASE**<br>RACCORD<br>ANSCHLUSSTUCK<br>ACOPLADOR | 1 |
| 4301-BR | **FITTING, GREASE**<br>RACCORD<br>ANSCHLUSSTUCK<br>ACOPLADOR | 2 |
| 4301-BU | **BOLT**<br>BOULON<br>SCHRAUBE<br>PERNO | 4 |
| 4301-BX | **BOLT**<br>BOULON<br>SCHRAUBE<br>PERNO | 2 |
| 4301-CD | **SCREW**<br>VIS<br>SCHRAUBE<br>TORNILLO | 3 |
| 4301-CF | **BOLT**<br>BOULON<br>SCHRAUBE<br>PERNO | 2 |
| 4301-CG | **BOLT**<br>BOULON<br>SCHRAUBE<br>PERNO | 4 |


## 4301

**REAR AXLE & TIE-ROD**
**ESSIEU ARRIERE & BARRE D'ACCOUPLEMENT**
**HINTERACHSE + SPURSTANGE**
**EJE TRASERO Y BIELA**


| PART NAME CODE | PART NAME | QTY |
|---|---|---|
| 4301-CK | **WASHER, CD SPRING**<br>RODELLE<br>UNTERLEGSCHEIBE<br>ARANDELA | 8 |
| 4301-CL | **FITTING, GREASE**<br>RACCORD<br>ANSCHLUSSTUCK<br>ACOPLADOR | 4 |
| 4301-CM | **RING, O**<br>ANNEAU<br>RING<br>ANILLO | 1 |
| 4301-CP | **COLLAR**<br>COLLIER<br>BUCHSE<br>COLLAR | 4 |
| 4301-DG | **PIN**<br>GOUPILLE<br>STIFT<br>PASADOR | 4 |
| 4301-DN | **PLATE**<br>PLAQUE<br>PLATTE<br>PLACA | 1 |
| 4301-DV | **NUT**<br>ECROU<br>MUTTER<br>TUERCA | 1 |
| 4301-DY | **NUT**<br>ECROU<br>MUTTER<br>TUERCA | 2 |
| 4301-EF | **PIN SUB-ASSY**<br>SOUS-ENS. DE GOUPILLE<br>STIFT-TEILGRUPPE<br>SUBCONJUNTO DE PASADOR | 1 |
| 4301-EH | **CLAMP**<br>PINSE<br>KLEMME<br>ABRAZADERA | 1 |
| 4301-EJ | **WASHER, SPRING**<br>RODELLE<br>UNTERLEGSCHEIBE<br>ARANDELA | 2 |
| 4301-EK | **SPACER**<br>ENTRETOISE<br>DISTANZSTUCK<br>SEPARADOR | 99 |
| 4301-EV | **WASHER, SPRING**<br>RODELLE<br>UNTERLEGSCHEIBE<br>ARANDELA | 4 |
| 4301-EZ | **PLATE**<br>PLAQUE<br>PLATTE<br>PLACA | 1 |
| 4301-FB | **COLLAR**<br>COLLIER<br>BUCHSE<br>COLLAR | 1 |
| 4301-FR | **RING, O**<br>ANNEAU<br>RING<br>ANILLO | 1 |
| 4301-GB | **BOLT**<br>BOULON<br>SCHRAUBE<br>PERNO | 2 |
| 4301-GH | **BOLT**<br>BOULON<br>SCHRAUBE<br>PERNO | 2 |
| 4301-GU | **DAMPER, REAR AXLE**<br>AMORTISSEUR<br>DAMPFER<br>AMORTIGUADOR | 1 |
| 4301-GV | **PIN SUB-ASSY**<br>SOUS-ENS. DE GOUPILLE<br>STIFT-TEILGRUPPE<br>SUBCONJUNTO DE PASADOR | 1 |

| 4301 | REAR AXLE & TIE-ROD<br>ESSIEU ARRIERE & BARRE D'ACCOUPLEMENT | HINTERACHSE + SPURSTANGE<br>EJE TRASERO Y BIELA |
|---|---|---|

| PART NAME CODE | PART NAME | QTY | PART NAME CODE | PART NAME | QTY |
|---|---|---|---|---|---|
| 4301-HJ | **PLATE**<br>PLAQUE<br>PLATTE<br>PLACA | 1 | | | |
| 4301-IK | **NUT, SELF LOCK**<br>ECROU<br>MUTTER<br>TUERCA | 4 | | | |
| 4301-JB | **JOINT**<br>RACCORD<br>GELENK<br>JUNTA | 1 | | | |
| 4301-JC | **WASHER, SPRING**<br>RODELLE<br>UNTERLEGSCHEIBE<br>ARANDELA | 2 | | | |
| 4301-JD | **BOOT**<br>COFFRE<br>MANSCHETTE<br>FORRO | 1 | | | |
| 4301-JE | **COIL, SOLENOID**<br>BOBINE<br>SPULE<br>BOBINA | 1 | | | |
| 4301-JS | **WASHER, PLATE**<br>RODELLE<br>UNTERLEGSCHEIBE<br>ARANDELA | 4 | | | |
| 4301-LD | **RING, O**<br>ANNEAU<br>RING<br>ANILLO | 2 | | | |
| 4301-LE | **RING, O**<br>ANNEAU<br>RING<br>ANILLO | 2 | | | |


| 4301 | REAR AXLE & TIE-ROD<br>ESSIEU ARRIERE & BARRE D'ACCOUPLEMENT | HINTERACHSE + SPURSTANGE<br>EJE TRASERO Y BIELA |
|---|---|---|


| PART NAME CODE | PART NAME | QTY | PART NAME CODE | PART NAME | QTY |
|---|---|---|---|---|---|

| 4302 | REAR AXLE CYLINDER<br>CYLINDRE D'ESSIEU ARRIERE | HINTERACHSZYLINDER<br>CILINDRO DEL EJE TRASERO |
|---|---|---|

ATM

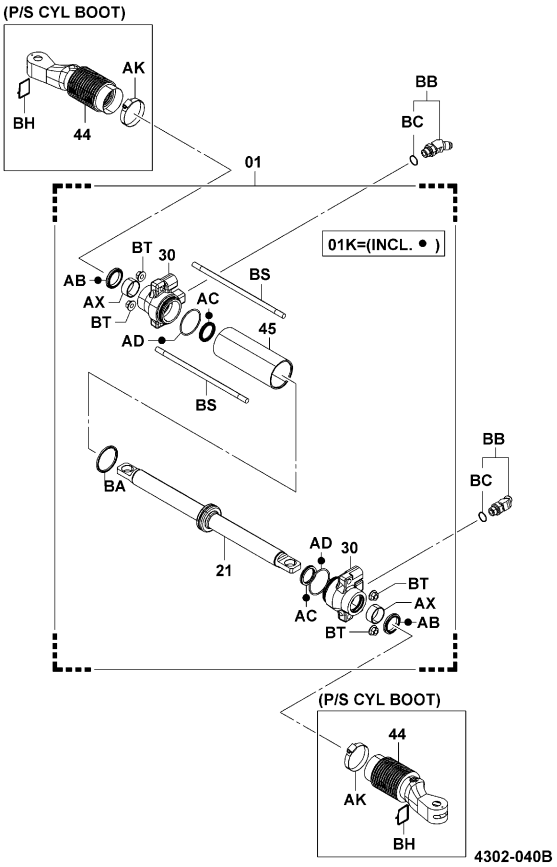


4302-040B

| 4302 | REAR AXLE CYLINDER<br>CYLINDRE D'ESSIEU ARRIERE | HINTERACHSZYLINDER<br>CILINDRO DEL EJE TRASERO |
|---|---|---|

| PART NAME CODE | PART NAME | QTY |
|---|---|---|
| 4302-01 | **CYLINDER ASSY, REAR AXLE**<br>ENS. DE CYLINDRE<br>ZYLINDER, VOLLST.<br>CONJUNTO DEL CILINDRO | 1 |
| 4302-01K | **CYLINDER O/H KIT, REAR AXLE**<br>JEU O/H DE CYLINDRE<br>ZYLINDER-UBERHOLSATZ<br>JUEGO O/H DEL CILINDRO | 1 |
| 4302-21 | **ROD SUB-ASSY, REAR AXLE CYLINDER**<br>SOUS-ENS. DE BIELLE<br>STANGEN-TEILGRUPPE<br>SUBCONJUNTO DE LA VARILLA | 1 |
| 4302-30 | **GUIDE SUB-ASSY, CYLINDER ROD**<br>SOUS-ENS. DE GUIDE<br>FUHRUNGS-TEILGRUPPE<br>SUBCONJUNTO DE GUIA | 2 |
| 4302-44 | **BOOT**<br>COFFRE<br>MANSCHETTE<br>FORRO | 2 |
| 4302-45 | **CYLINDER, REAR AXLE**<br>CYLINDRE<br>ZYLINDER<br>CILINDRO | 1 |
| 4302-AB | **SEAL, DUST**<br>JOINT<br>ABDICHTUNG<br>SELLO | 2 |
| 4302-AC | **PACKING, U**<br>CALE<br>DICHTUNG<br>EMPAQUETADURA | 2 |
| 4302-AD | **RING, O**<br>ANNEAU<br>RING<br>ANILLO | 2 |
| 4302-AK | **CLAMP**<br>PINSE<br>KLEMME<br>ABRAZADERA | 2 |
| 4302-AX | **BUSHING**<br>BAGUE<br>BUCHSE<br>BUJE | 2 |
| 4302-BA | **SEAL, RING**<br>JOINT<br>ABDICHTUNG<br>SELLO | 1 |
| 4302-BB | **FITTING**<br>RACCORD<br>ANSCHLUSSTUCK<br>ACOPLADOR | 2 |
| 4302-BC | **RING, O**<br>ANNEAU<br>RING<br>ANILLO | 2 |
| 4302-BH | **WIRE, CYLINDER BOOT**<br>FIL<br>DRAHT<br>ALAMBRE | 2 |
| 4302-BS | **BOLT, STUD**<br>BOULON<br>SCHRAUBE<br>PERNO | 2 |
| 4302-BT | **NUT**<br>ECROU<br>MUTTER<br>TUERCA | 4 |

# 4401

**FRONT WHEEL & TIRE(SINGLE)**
**PNEU (SINGLE) & ROUE AVANT**
**VORDERRAD & -REIFEN (EINFACH)**
**RUEDA Y NEUMATICO DELANTEROS (SENCILLO)**

**ATM**

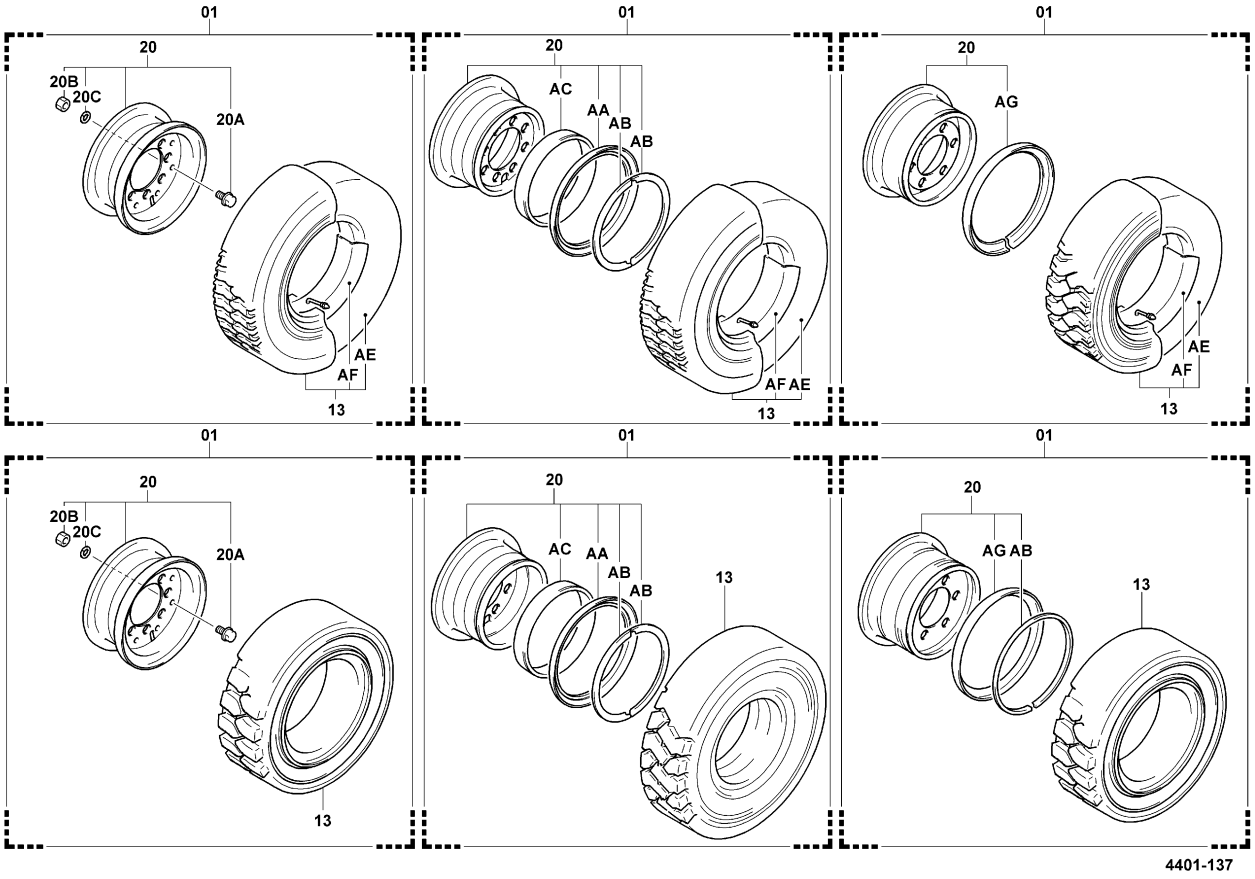


4401-137_

# 4401

**FRONT WHEEL & TIRE(SINGLE)**
**PNEU (SINGLE) & ROUE AVANT**
**VORDERRAD & -REIFEN (EINFACH)**
**RUEDA Y NEUMATICO DELANTEROS (SENCILLO)**

| PART NAME CODE | PART NAME | QTY |
|---|---|---|
| **4401-01** | **WHEEL ASSY**<br>ENS. DE ROUE<br>RAD, VOLLST.<br>CONJUNTO DE LA RUEDA | **2-99** |
| **4401-13** | **TIRE ASSY**<br>ENS. DE PNEU<br>REIFEN, VOLLST.<br>CONJUNTO DEL NEUMATICO | **2-99** |
| **4401-20** | **WHEEL SUB-ASSY, DISC**<br>SOUS-ENS. DE ROUE<br>RAD-TEILGRUPPE<br>SUBCONJUNTO DE LA RUEDA | **2-99** |
| **4401-20A** | **BOLT, DISC WHEEL SET**<br>BOULON<br>SCHRÄUBE<br>PERNO | **12-99** |
| **4401-20B** | **NUT (FOR DISC WHEEL SET)**<br>ECROU<br>MUTTER<br>TUERCA | **12-99** |
| **4401-20C** | **WASHER, SPRING (FOR DISC WHEEL SET)**<br>RODELLE<br>UNTERLEGSCHEIBE<br>ARANDELA | **12-99** |
| **4401-AA** | **FLANGE, SIDE**<br>BRIDE<br>FLANSCH<br>BRIDA | **2** |
| **4401-AB** | **RING, LOCK**<br>ANNEAU<br>RING<br>ANILLO | **4-99** |
| **4401-AC** | **BAND, BEND SHEET**<br>BANDE<br>BAND<br>BANDA | **2** |
| **4401-AE** | **TUBE SUB-ASSY**<br>SOUS-ENS. DE TUBE<br>ROHR-TEILGRUPPE<br>SUBCONJUNTO DE TUBO | **2-99** |
| **4401-AF** | **FLAP**<br>BAVETTE<br>KLAPPE<br>PROTECTOR | **2-99** |
| **4401-AG** | **RING, SIDE**<br>ANNEAU<br>RING<br>ANILLO | **2-99** |

# 4402

**FRONT WHEEL & TIRE(DOUBLE)**
**PNEU (DOUBLE) & ROUE AVANT**
**VORDERRAD & -REIFEN (DOPPELT)**
**RUEDA Y NEUMATICO DELANTEROS (DOBLE)**

**ATM (STD DOUBLE, SPL DOUBLE)**

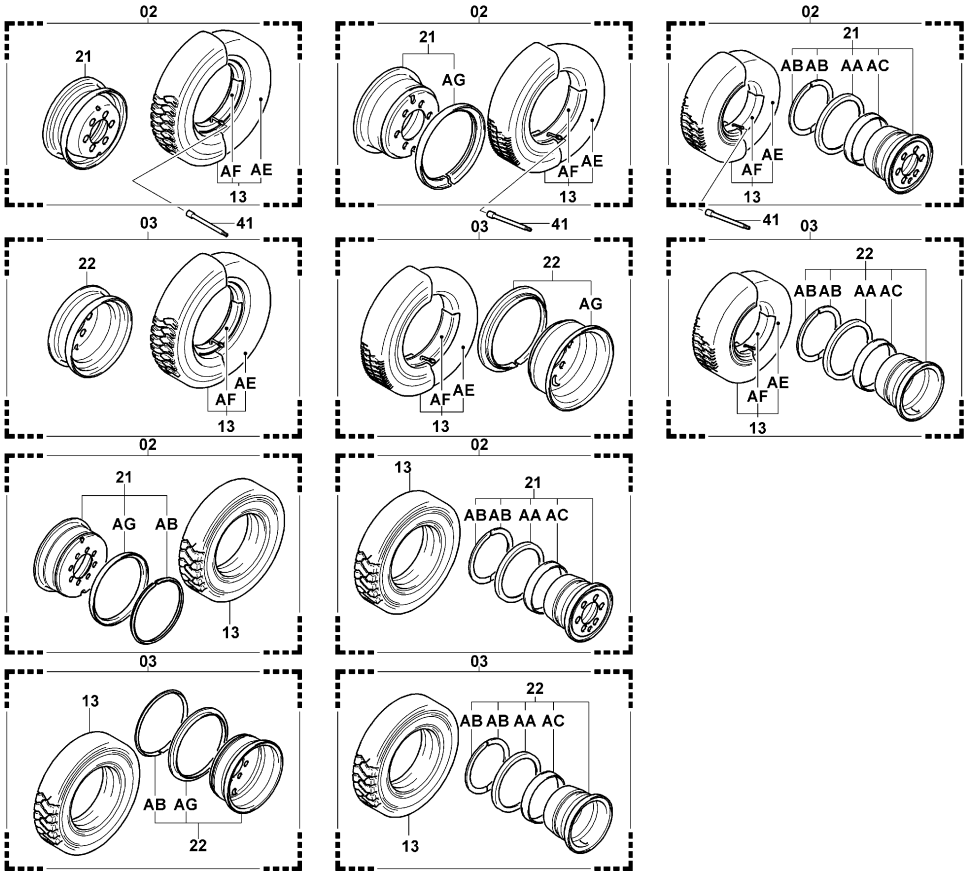


4402-065

4402-065_

# 4402

**FRONT WHEEL & TIRE(DOUBLE)**
**PNEU (DOUBLE) & ROUE AVANT**
**VORDERRAD & -REIFEN (DOPPELT)**
**RUEDA Y NEUMATICO DELANTEROS (DOBLE)**

| PART NAME CODE | PART NAME | QTY |
|---|---|---|
| 4402-02 | **WHEEL ASSY, INNER**<br>ENS. DE ROUE<br>RAD, VOLLST.<br>CONJUNTO DE LA RUEDA | 2 |
| 4402-03 | **WHEEL ASSY, OUTER**<br>ENS. DE ROUE<br>RAD, VOLLST.<br>CONJUNTO DE LA RUEDA | 2 |
| 4402-13 | **TIRE ASSY**<br>ENS. DE PNEU<br>REIFEN, VOLLST.<br>CONJUNTO DEL NEUMATICO | 2- 4 |
| 4402-21 | **WHEEL SUB-ASSY, DISC, INNER**<br>SOUS-ENS. DE ROUE<br>RAD-TEILGRUPPE<br>SUBCONJUNTO DE LA RUEDA | 2 |
| 4402-22 | **WHEEL SUB-ASSY, DISC, OUTER**<br>SOUS-ENS. DE ROUE<br>RAD-TEILGRUPPE<br>SUBCONJUNTO DE LA RUEDA | 2 |
| 4402-41 | **EXTENSION, WHEEL TUBE VALVE**<br>RALLONGE<br>VERLANGERUNG<br>EXTENSION | 2-99 |
| 4402-AA | **FLANGE, SIDE**<br>BRIDE<br>FLANSCH<br>BRIDA | 2 |
| 4402-AB | **RING, LOCK**<br>ANNEAU<br>RING<br>ANILLO | 2- 4 |
| 4402-AC | **BAND, BEND SHEET**<br>BANDE<br>BAND<br>BANDA | 2 |
| 4402-AE | **TUBE SUB-ASSY**<br>SOUS-ENS. DE TUBE<br>ROHR-TEILGRUPPE<br>SUBCONJUNTO DE TUBO | 2-99 |
| 4402-AF | **FLAP**<br>BAVETTE<br>KLAPPE<br>PROTECTOR | 2-99 |
| 4402-AG | **RING, SIDE**<br>ANNEAU<br>RING<br>ANILLO | 2- 4 |

ATM

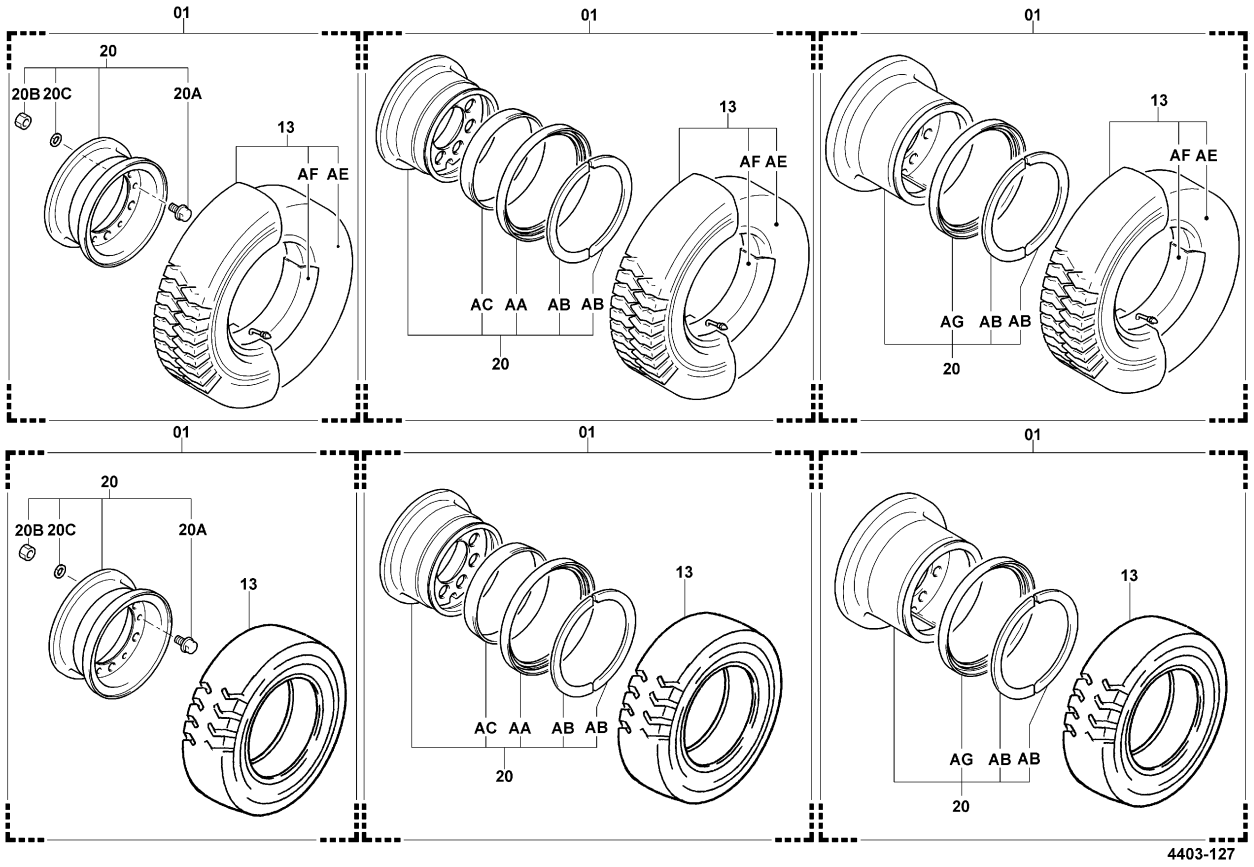


4403-127_


| 4403 | REAR WHEEL & TIRE<br>PNEU & ROUE ARRIERE | HINTERRAD & REIFEN<br>RUEDA Y NEUMATICO TRASEROS |
|---|---|---|


| PART NAME CODE | PART NAME | QTY |
|---|---|---|
| 4403-01 | **WHEEL ASSY**<br>ENS. DE ROUE<br>RAD, VOLLST.<br>CONJUNTO DE LA RUEDA | 2 |
| 4403-13 | **TIRE ASSY**<br>ENS. DE PNEU<br>REIFEN, VOLLST.<br>CONJUNTO DEL NEUMATICO | 2 |
| 4403-20 | **WHEEL SUB-ASSY, DISC**<br>SOUS-ENS. DE ROUE<br>RAD-TEILGRUPPE<br>SUBCONJUNTO DE LA RUEDA | 2 |
| 4403-20A | **BOLT, DISC WHEEL SET**<br>BOULON<br>SCHRAUBE<br>PERNO | 12 |
| 4403-20B | **NUT, WHEEL SET**<br>ECROU<br>MUTTER<br>TUERCA | 12 |
| 4403-20C | **WASHER, WHEEL SET**<br>RODELLE<br>UNTERLEGSCHEIBE<br>ARANDELA | 12 |
| 4403-AA | **FLANGE, SIDE**<br>BRIDE<br>FLANSCH<br>BRIDA | 2 |
| 4403-AB | **RING, LOCK**<br>ANNEAU<br>RING<br>ANILLO | 4 |
| 4403-AC | **BAND, BEND SHEET**<br>BANDE<br>BAND<br>BANDA | 2 |
| 4403-AE | **TUBE SUB-ASSY**<br>SOUS-ENS. DE TUBE<br>ROHR-TEILGRUPPE<br>SUBCONJUNTO DE TUBO | 2-99 |

| PART NAME CODE | PART NAME | QTY |
|---|---|---|
| 4403-AF | **FLAP**<br>BAVETTE<br>KLAPPE<br>PROTECTOR | 2-99 |
| 4403-AG | **RING, SIDE**<br>ANNEAU<br>RING<br>ANILLO | 2 |

| 4501 | STEERING WHEEL<br>VOLANT DE DIRECTION | LENKRAD<br>VOLANTE DE DIRECCION |
|---|---|---|

ATM

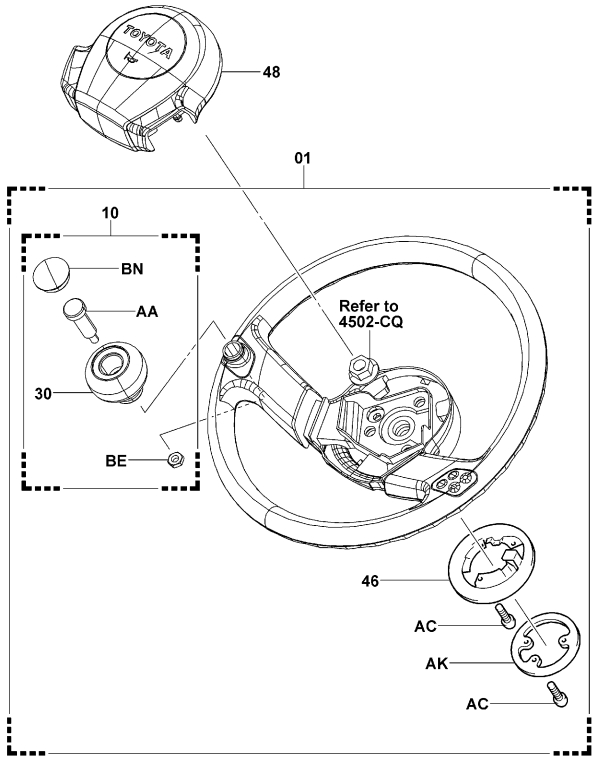


4501-067C

4501-067C

| 4501 | STEERING WHEEL<br>VOLANT DE DIRECTION | LENKRAD<br>VOLANTE DE DIRECCION |
|---|---|---|

| PART NAME CODE | PART NAME | QTY | PART NAME CODE | PART NAME | QTY |
|---|---|---|---|---|---|
| 4501-01 | **WHEEL ASSY, STEERING**<br>ENS. DE ROUE<br>RAD, VOLLST.<br>CONJUNTO DE LA RUEDA | 1 | | | |
| 4501-10 | **KNOB ASSY, STEERING WHEEL**<br>ENS. DE BOULE<br>KNOPF, VOLLST.<br>CONJUNTO DEL MANDO | 1 | | | |
| 4501-30 | **KNOB SUB-ASSY, STEERING WHEEL**<br>SOUS-ENS. DE BOULE<br>KNOPF-TEILGRUPPE<br>SUBCONJUNTO DEL MANDO | 1 | | | |
| 4501-46 | **SPRING, HORN CONTACT**<br>RESSORT<br>FEDER<br>RESORTE | 1 | | | |
| 4501-48 | **PAD, STEERING WHEEL**<br>TAMPON<br>KLOTZ<br>ALMOHADILLA | 1 | | | |
| 4501-AA | **SCREW**<br>VIS<br>SCHRAUBE<br>TORNILLO | 1 | | | |
| 4501-AC | **SCREW**<br>VIS<br>SCHRAUBE<br>TORNILLO | 6 | | | |
| 4501-AK | **RING, HORN CONTACT NO.1**<br>ANNEAU<br>RING<br>ANILLO | 1 | | | |
| 4501-BE | **NUT**<br>ECROU<br>MUTTER<br>TUERCA | 1 | | | |
| 4501-BN | **PLUG, HOLE**<br>BOUCHON<br>STOPFEN<br>TAPON | 1 | | | |

# 4502

**STEERING POST**
**MONTANT DE DIRECTION**
**LENKSÄULE**
**PUNTAL DE LA DIRECCION**

**10N,15N,18N**

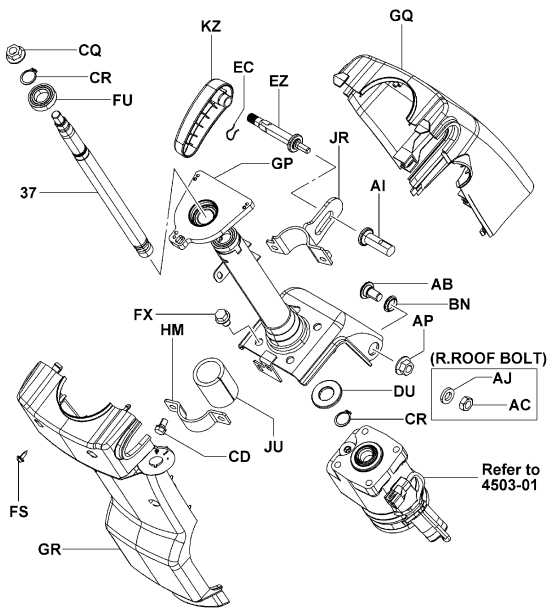


4502-279
4502-279_

**20N,25N,30N,J35N,K20N,K25N,K30N**

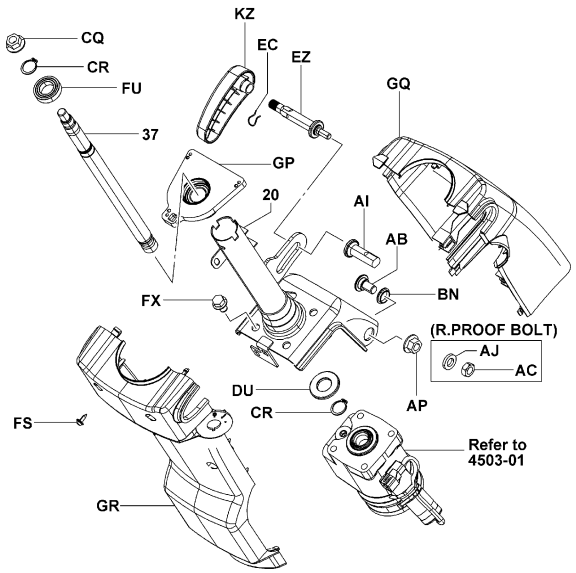


4502-280
4502-280_

# 4502

**STEERING POST**
**MONTANT DE DIRECTION**
**LENKSÄULE**
**PUNTAL DE LA DIRECCION**

| PART NAME CODE | PART NAME | QTY |
|---|---|---|
| 4502-20 | **JACKET SUB-ASSY, MAST**<br>SOUS-ENS. DE CHEMISE<br>MANTEL-TEILGRUPPE<br>SUBCONJUNTO DE LA FUNDA | 1 |
| 4502-37 | **SHAFT, STEERING**<br>ARBRE<br>WELLE<br>EJE | 1 |
| 4502-AB | **BOLT**<br>BOULON<br>SCHRAUBE<br>PERNO | 2 |
| 4502-AC | **NUT**<br>ECROU<br>MUTTER<br>TUERCA | 2 |
| 4502-AI | **NUT**<br>ECROU<br>MUTTER<br>TUERCA | 1 |
| 4502-AJ | **WASHER, SPRING**<br>RODELLE<br>UNTERLEGSCHEIBE<br>ARANDELA | 2 |
| 4502-AP | **NUT**<br>ECROU<br>MUTTER<br>TUERCA | 2 |
| 4502-BN | **BUSHING**<br>BAGUE<br>BUCHSE<br>BUJE | 2 |
| 4502-CD | **BOLT**<br>BOULON<br>SCHRAUBE<br>PERNO | 2 |
| 4502-CQ | **NUT**<br>ECROU<br>MUTTER<br>TUERCA | 1 |
| 4502-CR | **RING, SNAP**<br>ANNEAU<br>RING<br>ANILLO | 2 |
| 4502-DU | **WASHER, PLATE**<br>RODELLE<br>UNTERLEGSCHEIBE<br>ARANDELA | 1 |
| 4502-EC | **RING**<br>ANNEAU<br>RING<br>ANILLO | 1 |
| 4502-EZ | **BOLT, TILT LOCK**<br>BOULON<br>SCHRAUBE<br>PERNO | 1 |
| 4502-FS | **SCREW**<br>VIS<br>SCHRAUBE<br>TORNILLO | 4 |
| 4502-FU | **BEARING**<br>ROULEMENT<br>LAGER<br>COJINETE | 1 |
| 4502-FX | **BOLT**<br>BOULON<br>SCHRAUBE<br>PERNO | 4 |
| 4502-GP | **BRACKET**<br>SUPPORT<br>TRAGER<br>SOPORTE | 1 |
| 4502-GQ | **COVER, STEERING COLUMN**<br>COUVERCLE<br>DECKEL<br>CUBIERTA | 1 |
| 4502-GR | **COVER, STEERING COLUMN**<br>COUVERCLE<br>DECKEL<br>CUBIERTA | 1 |

## 4502

**STEERING POST**
**MONTANT DE DIRECTION**
**LENKSÄULE**
**PUNTAL DE LA DIRECCION**

| PART NAME CODE | PART NAME | QTY | PART NAME CODE | PART NAME | QTY |
|---|---|---|---|---|---|
| 4502-HM | **BRACKET**<br>SUPPORT<br>TRAGER<br>SOPORTE | 1 | | | |
| 4502-JR | **BRACKET SUB-ASSY**<br>SOUS-ENS. DE SUPPORT<br>TRAGER-TEILGRUPPE<br>SUBCONJUNTO DE LA SOPORTE | 1 | | | |
| 4502-JU | **SPONGE**<br>EPONGE<br>SCHWAMM<br>ESPONJA | 1 | | | |
| 4502-KZ | **LEVER**<br>LEVIER<br>HEBEL<br>PALANCA | 1 | | | |


## 4502

**STEERING POST**
**MONTANT DE DIRECTION**
**LENKSÄULE**
**PUNTAL DE LA DIRECCION**


| PART NAME CODE | PART NAME | QTY | PART NAME CODE | PART NAME | QTY |
|---|---|---|---|---|---|
| | | | | | |

10N,15N,18N,20N,25N,30N,J35N

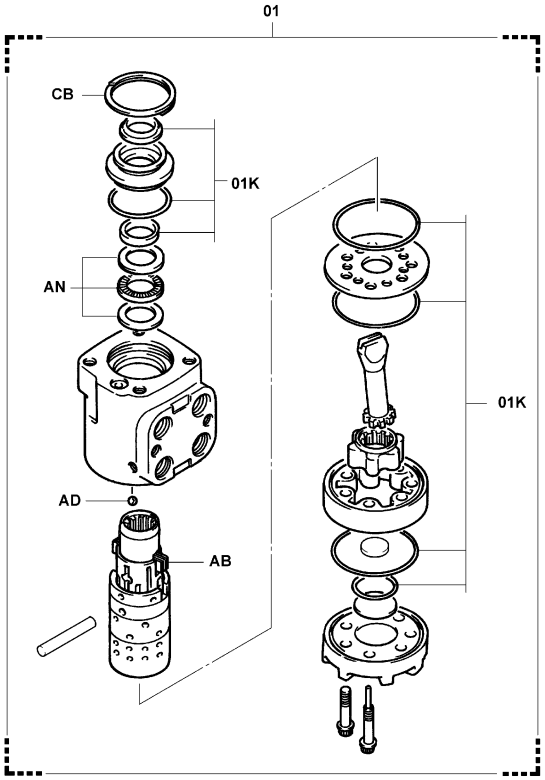


4503-060

4503-060_

10N,15N,18N,20N,25N,30N,J35N (SAS)

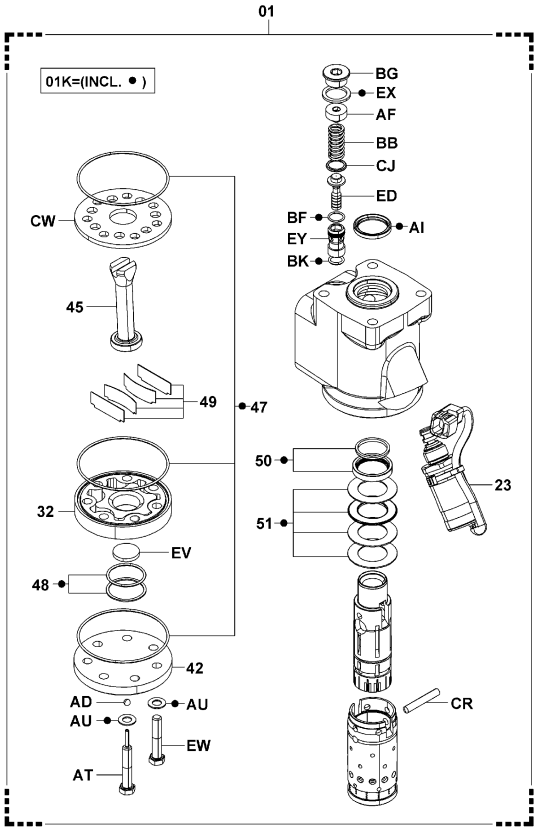


4503-058B

4503-058B


| 4503 | HYDROSTATIC STEERING VALVE<br>SOUPAPE DE DIRECTION HYDROSTATIQUE | HYDROSTATIK-STEUERVENTIL<br>VALVULA DE DIRECCION HIDROSTATICA |
|---|---|---|


K20N,K25N,K30N

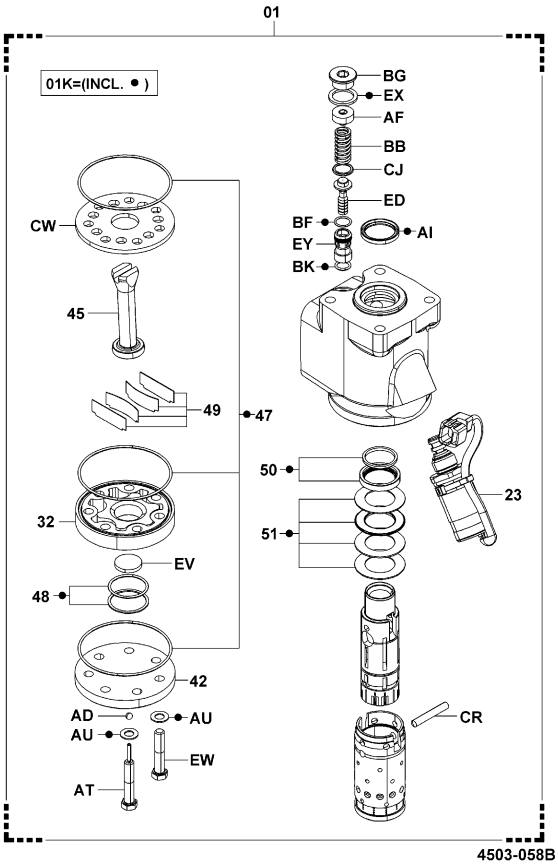


4503-058B

4503-058B

| 4503 | HYDROSTATIC STEERING VALVE<br>SOUPAPE DE DIRECTION HYDROSTATIQUE | HYDROSTATIK-STEUERVENTIL<br>VALVULA DE DIRECCION HIDROSTATICA |
|---|---|---|

| PART NAME CODE | PART NAME | QTY |
|---|---|---|
| 4503-01 | **VALVE ASSY, HYDROSTATIC STEERING**<br>ENS. DE SOUPAPE<br>VENTIL, VOLLST.<br>CONJUNTO DE VALVULA | 1 |
| 4503-01K | **VALVE O/H KIT, HYDROSTATIC STEERING**<br>JEU O/H DE SOUPAPE<br>VENTIL-UBERHOLSATZ<br>JUEGO O/H DE VALVULA | 1 |
| 4503-23 | **VALVE ASSY, SOLENOID**<br>ENS. DE SOUPAPE<br>VENTIL, VOLLST.<br>CONJUNTO DE VALVULA | 1 |
| 4503-32 | **GEAR SET**<br>JEU D'ENGRENAGE<br>ZAHNRADSATZ<br>JUEGO DE ENGRANAJES | 1 |
| 4503-42 | **CAP, END**<br>CAPUCHON<br>KAPPE<br>TAPA | 1 |
| 4503-45 | **DRIVE**<br>ENTRAINEMENT<br>ANTRIEB<br>IMPULSION | 1 |
| 4503-47 | **O-RING SET**<br>RIVET<br>NIET<br>REMACHE | 1 |
| 4503-48 | **RING SET**<br>JEU DE ANNEAU<br>RINGSATZ<br>JUEGO DE ANILLO | 1 |
| 4503-49 | **SPRING & PLATE SET**<br>JEU DE ANNEAU<br>RINGSATZ<br>JUEGO DE ANILLO | 1 |
| 4503-50 | **SEAL & RING SET**<br>JEU DE ANNEAU<br>RINGSATZ<br>JUEGO DE ANILLO | 1 |
| 4503-51 | **BEARING SET**<br>KIT ROULEMENT<br>LAGERSATZ<br>JUEGO DE COJINETE | 1 |
| 4503-AB | **SPRING, CENTERING**<br>RESSORT<br>FEDER<br>RESORTE | 1 |
| 4503-AD | **BALL, STEEL**<br>BILLE<br>KUGEL<br>BOLA | 1 |
| 4503-AF | **PLUG**<br>BOUCHON<br>STOPFEN<br>TAPON | 1 |
| 4503-AI | **SEAL, DUST**<br>JOINT<br>ABDICHTUNG<br>SELLO | 1 |
| 4503-AN | **BEARING, NEEDLE**<br>ROULEMENT<br>LAGER<br>COJINETE | 1 |
| 4503-AT | **BOLT**<br>BOULON<br>SCHRAUBE<br>PERNO | 1 |
| 4503-AU | **GASKET**<br>JOINT<br>DICHTUNG<br>EMPAQUETADURA | 7 |
| 4503-BB | **SPRING**<br>RESSORT<br>FEDER<br>RESORTE | 1 |
| 4503-BF | **RING, O**<br>ANNEAU<br>RING<br>ANILLO | 1 |


| 4503 | HYDROSTATIC STEERING VALVE<br>SOUPAPE DE DIRECTION HYDROSTATIQUE | HYDROSTATIK-STEUERVENTIL<br>VALVULA DE DIRECCION HIDROSTATICA |
|---|---|---|


| PART NAME CODE | PART NAME | QTY |
|---|---|---|
| 4503-BG | **PLUG**<br>BOUCHON<br>STOPFEN<br>TAPON | 1 |
| 4503-BK | **RING, O**<br>ANNEAU<br>RING<br>ANILLO | 1 |
| 4503-CB | **RING, RETAINING**<br>ANNEAU<br>RING<br>ANILLO | 1 |
| 4503-CJ | **RING**<br>ANNEAU<br>RING<br>ANILLO | 1 |
| 4503-CR | **PIN**<br>GOUPILLE<br>STIFT<br>PASADOR | 1 |
| 4503-CW | **PLATE**<br>PLAQUE<br>PLATTE<br>PLACA | 1 |
| 4503-ED | **POPPET**<br>POUPEE<br>TELLERVENTIL<br>BOLILLA DE RETEN | 1 |
| 4503-EV | **PLATE, DRIVE**<br>PLAQUE<br>PLATTE<br>PLACA | 1 |
| 4503-EW | **BOLT**<br>BOULON<br>SCHRAUBE<br>PERNO | 6 |
| 4503-EX | **GASKET**<br>JOINT<br>DICHTUNG<br>EMPAQUETADURA | 1 |
| 4503-EY | **SLEEVE**<br>MANCHON<br>HULSE<br>MANGUITO | 1 |

| 4507 | DRAG LINK & STEERING PIPING<br>TUYAUTERIE DE DIRECTION & CONTRE-MANIVELLE | LENKSCHUBSTANGE & LEITUNGEN<br>BARRA DE DIRECCION Y TUBOS DE DIRECCION |
|---|---|---|

ATM..10N,15N,18N

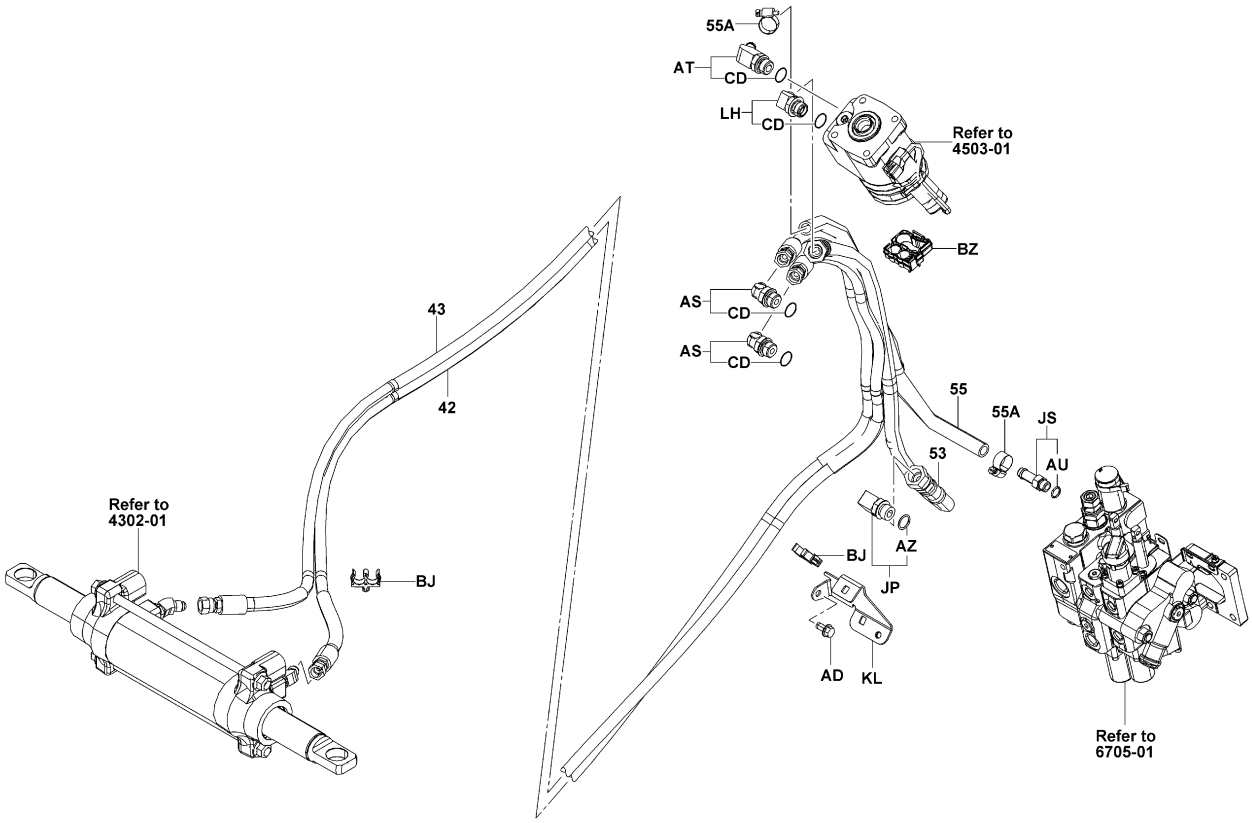


4507-309

4507-309_

| 4507 | DRAG LINK & STEERING PIPING<br>TUYAUTERIE DE DIRECTION & CONTRE-MANIVELLE | LENKSCHUBSTANGE & LEITUNGEN<br>BARRA DE DIRECCION Y TUBOS DE DIRECCION |
|---|---|---|

ATM..20N,25N,30N,J35N

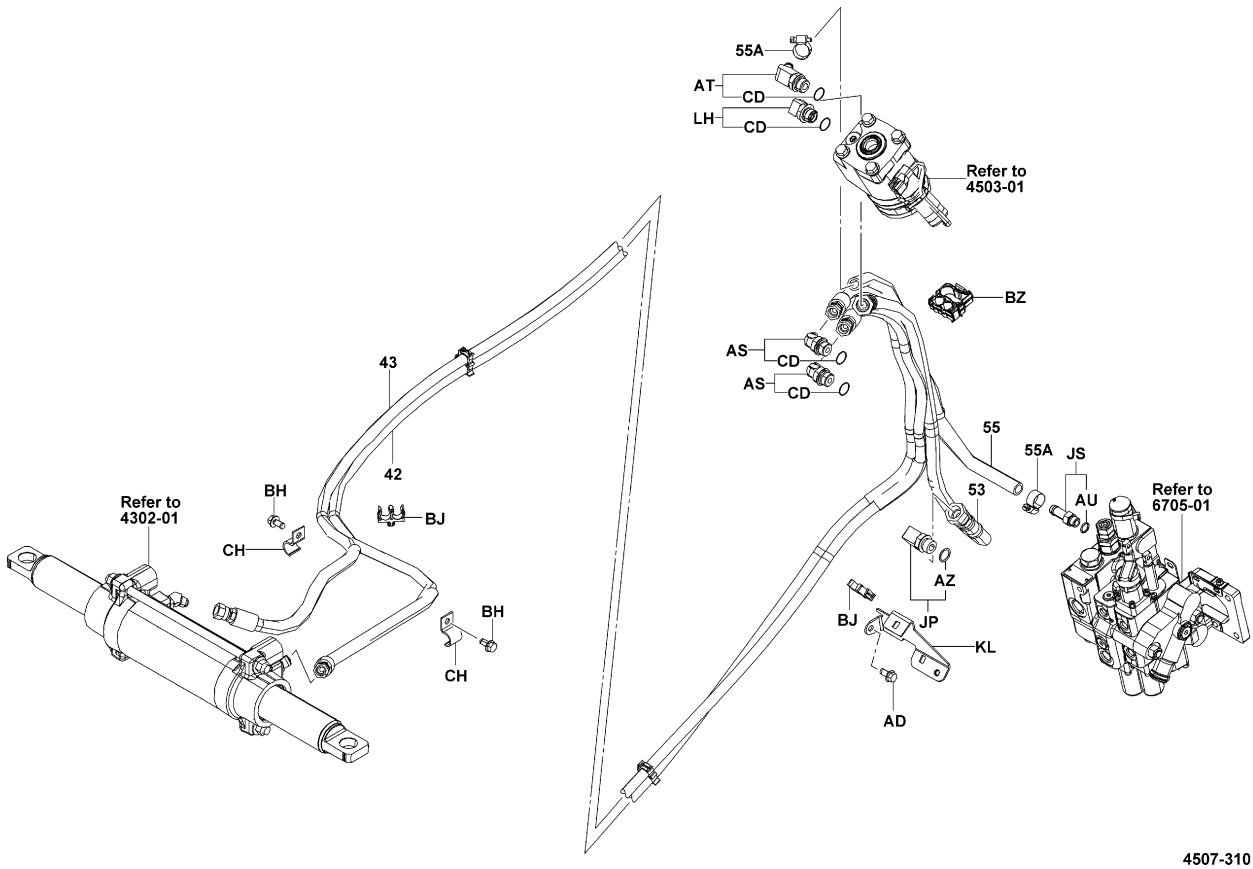


4507-310

4507-310_

# 4507

**DRAG LINK & STEERING PIPING**
**TUYAUTERIE DE DIRECTION & CONTRE-MANIVELLE**
**LENKSCHUBSTANGE & LEITUNGEN**
**BARRA DE DIRECCION Y TUBOS DE DIRECCION**

**ATM..K20N,K25N,K30N**

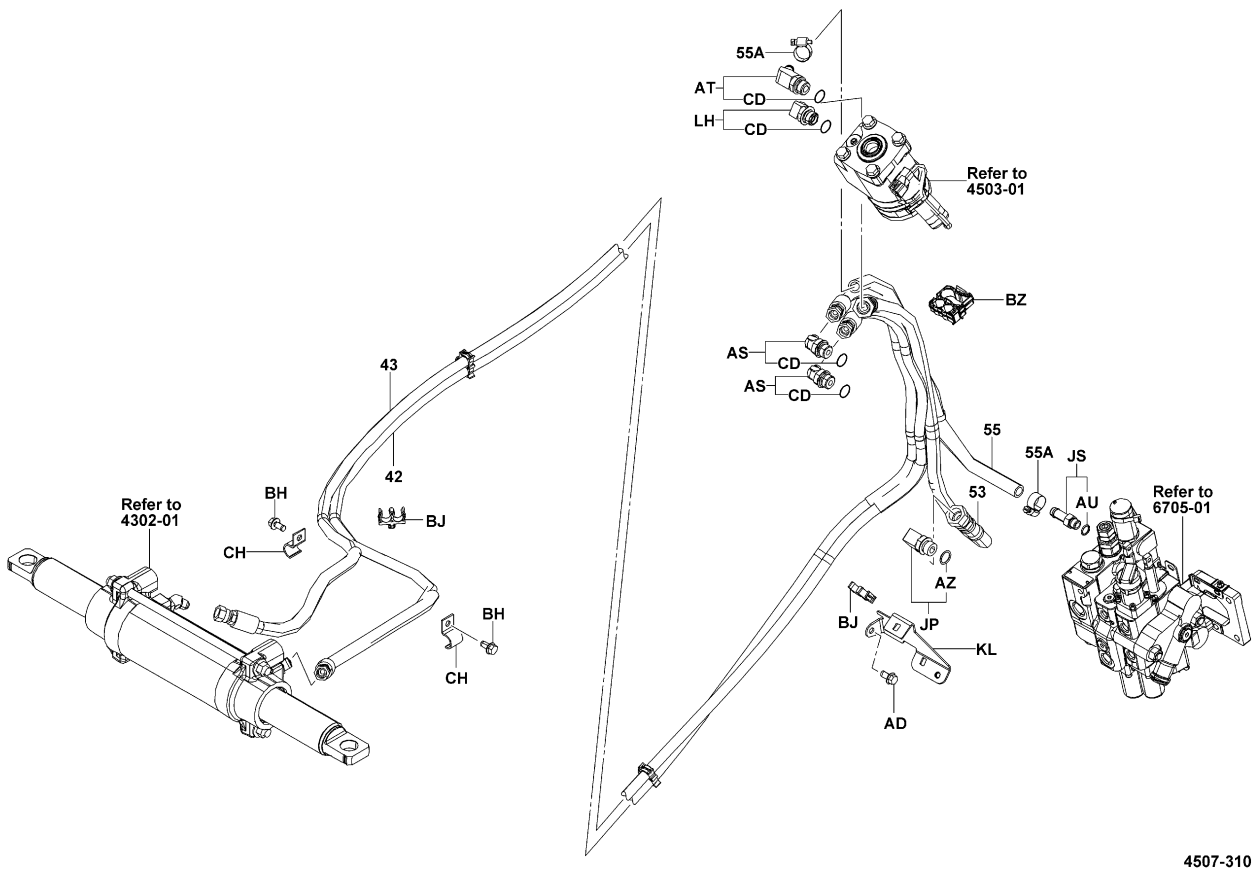


# 4507

**DRAG LINK & STEERING PIPING**
**TUYAUTERIE DE DIRECTION & CONTRE-MANIVELLE**
**LENKSCHUBSTANGE & LEITUNGEN**
**BARRA DE DIRECCION Y TUBOS DE DIRECCION**

| PART NAME CODE | PART NAME | QTY |
|---|---|---|
| 4507-42 | **HOSE, POWER CYLINDER, NO.1**<br>FLEXIBLE<br>SCHLAUCH<br>MANGUERA | 1 |
| 4507-43 | **HOSE, POWER CYLINDER, NO.2**<br>FLEXIBLE<br>SCHLAUCH<br>MANGUERA | 1 |
| 4507-53 | **HOSE, HIGH PRESSURE**<br>FLEXIBLE<br>SCHLAUCH<br>MANGUERA | 1 |
| 4507-55 | **HOSE, LOW PRESSURE**<br>FLEXIBLE<br>SCHLAUCH<br>MANGUERA | 1 |
| 4507-55A | **CLAMP, HOSE**<br>PINSE<br>KLEMME<br>ABRAZADERA | 2 |
| 4507-AQ | **CLAMP**<br>PINSE<br>KLEMME<br>ABRAZADERA | 1 |
| 4507-AS | **FITTING**<br>RACCORD<br>ANSCHLUSSTUCK<br>ACOPLADOR | 2 |
| 4507-AT | **FITTING**<br>RACCORD<br>ANSCHLUSSTUCK<br>ACOPLADOR | 1 |
| 4507-AU | **RING, O**<br>ANNEAU<br>RING<br>ANILLO | 1 |
| 4507-AZ | **RING, O**<br>ANNEAU<br>RING<br>ANILLO | 1 |

| PART NAME CODE | PART NAME | QTY |
|---|---|---|
| 4507-BH | **BOLT**<br>BOULON<br>SCHRAUBE<br>PERNO | 2 |
| 4507-BJ | **CLAMP**<br>PINSE<br>KLEMME<br>ABRAZADERA | 4 |
| 4507-BZ | **CLAMP**<br>PINSE<br>KLEMME<br>ABRAZADERA | 1 |
| 4507-CD | **RING, O**<br>ANNEAU<br>RING<br>ANILLO | 4 |
| 4507-CH | **CLAMP**<br>PINSE<br>KLEMME<br>ABRAZADERA | 2 |
| 4507-JP | **FITTING**<br>RACCORD<br>ANSCHLUSSTUCK<br>ACOPLADOR | 1 |
| 4507-JS | **FITTING**<br>RACCORD<br>ANSCHLUSSTUCK<br>ACOPLADOR | 1 |
| 4507-KL | **BRACKET SUB-ASSY**<br>SOUS-ENS. DE SUPPORT<br>TRAGER-TEILGRUPPE<br>SUBCONJUNTO DE LA SOPORTE | 1 |
| 4507-LH | **VALVE ASSY, CHECK**<br>ENS. DE SOUPAPE<br>VENTIL, VOLLST.<br>CONJUNTO DE VALVULA | 1 |

ATM

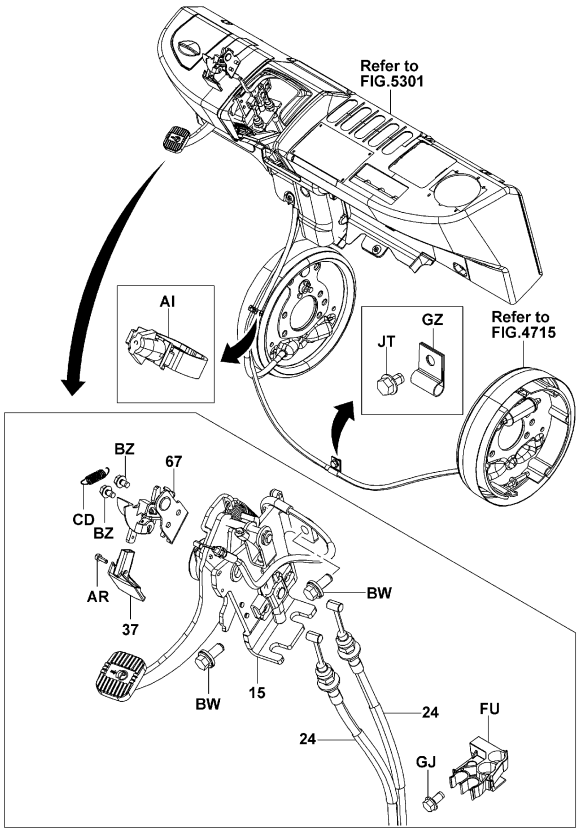


4601-194C

4601-194C

ATM [2/2,PEDAL INNER PARTS]

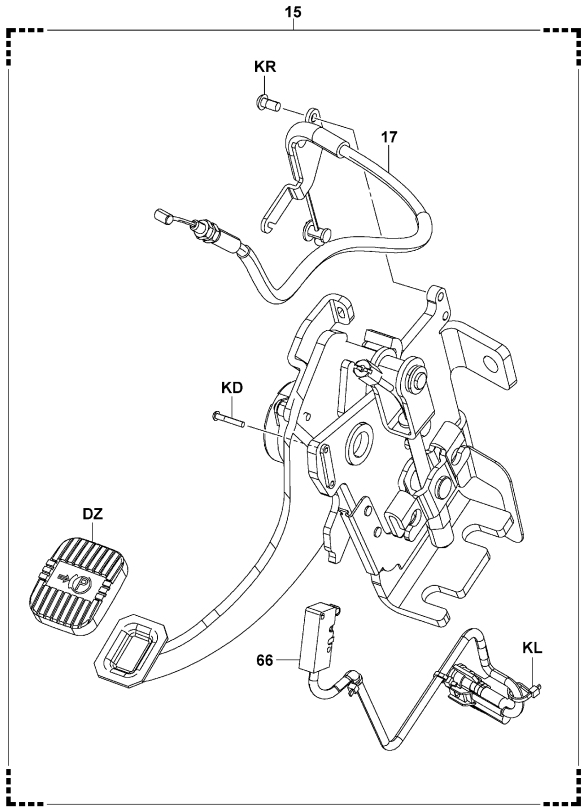


4601-196

4601-196_



ATM (HAND BRAKE)

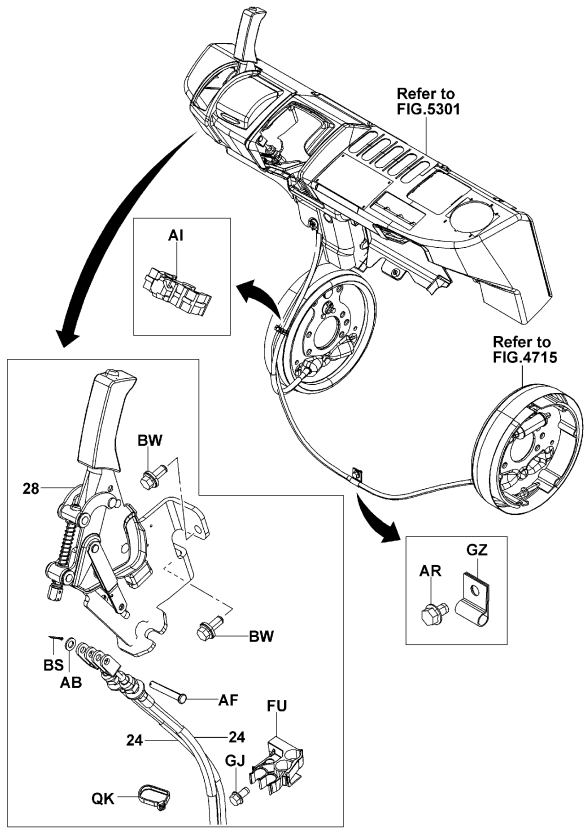


4601-195A

4601-195A

ATM (HAND BRAKE) [LEVER INNER]

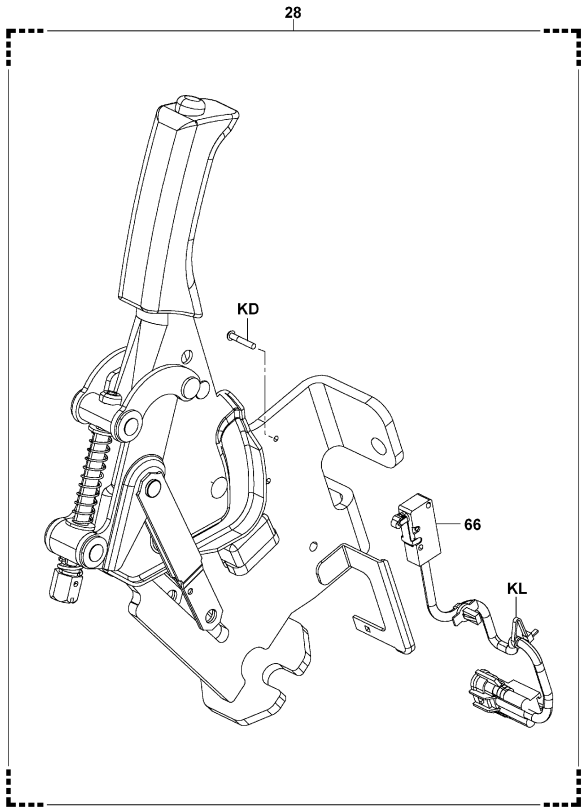


4601-197

4601-197_

## 4601

**PARKING BRAKE**
**FREIN DE STATIONNEMENT**
**FESTSTELLBREMSE**
**FRENO DE ESTACIONAMIENTO**

| PART NAME CODE | PART NAME | QTY |
|---|---|---|
| 4601-15 | **PEDAL ASSY, PARKING BRAKE**<br>ENS. DE PEDALE<br>PEDAL, VOLLST.<br>CONJUNTO DEL PEDAL | 1 |
| 4601-17 | **CABLE ASSY, PARKING BRAKE RELEASE**<br>ENS. DE CABLE<br>SEILZUG, VOLLST.<br>CONJUNTO DE CABLE | 1 |
| 4601-24 | **CABLE SUB-ASSY, PARKING BRAKE, NO.1**<br>SOUS-ENS. DE CABLE<br>SEILZUG-TEILGRUPPE<br>SUBCONJUNTO DE CABLE | 1 |
| 4601-28 | **LEVER SUB-ASSY, PARKING BRAKE**<br>SOUS-ENS. DE LEVIER<br>HEBEL-TEILGRUPPE<br>SUBCONJUNTO DE LA PALANCA | 1 |
| 4601-37 | **KNOB SUB-ASSY, PARKING BRAKE RELEASE ROD**<br>SOUS-ENS. DE BOULE<br>KNOPF-TEILGRUPPE<br>SUBCONJUNTO DEL MANDO | 1 |
| 4601-66 | **SWITCH ASSY, PARKING BRAKE**<br>ENS. DE INTERRUPTEUR<br>SCHALTER, VOLLST.<br>CONJUNTO DEL INTERRUPUPTOR | 1 |
| 4601-67 | **LEVER SUB-ASSY, HAND RELEASE**<br>SOUS-ENS. DE LEVIER<br>HEBEL-TEILGRUPPE<br>SUBCONJUNTO DE LA PALANCA | 1 |
| 4601-AB | **WASHER, PLATE**<br>RODELLE<br>UNTERLEGSCHEIBE<br>ARANDELA | 1 |
| 4601-AF | **PIN, W/HOLE**<br>GOUPILLE<br>STIFT<br>PASADOR | 1 |
| 4601-AI | **CLAMP**<br>PINSE<br>KLEMME<br>ABRAZADERA | 1 |
| 4601-AR | **BOLT**<br>BOULON<br>SCHRAUBE<br>PERNO | 1 |
| 4601-BS | **PIN, COTTER**<br>GOUPILLE<br>STIFT<br>PASADOR | 1 |
| 4601-BW | **BOLT**<br>BOULON<br>SCHRAUBE<br>PERNO | 2 |
| 4601-BZ | **BOLT**<br>BOULON<br>SCHRAUBE<br>PERNO | 2 |
| 4601-CD | **SPRING, TENSION**<br>RESSORT<br>FEDER<br>RESORTE | 1 |
| 4601-DZ | **PAD, PARKING PEDAL**<br>TAMPON<br>KLOTZ<br>ALMOHADILLA | 1 |
| 4601-FU | **CLAMP**<br>PINSE<br>KLEMME<br>ABRAZADERA | 1 |
| 4601-FV | **PIN, COTTER**<br>GOUPILLE<br>STIFT<br>PASADOR | 1 |
| 4601-GJ | **BOLT**<br>BOULON<br>SCHRAUBE<br>PERNO | 1 |
| 4601-GZ | **CLAMP**<br>PINSE<br>KLEMME<br>ABRAZADERA | 1 |


## 4601

**PARKING BRAKE**
**FREIN DE STATIONNEMENT**
**FESTSTELLBREMSE**
**FRENO DE ESTACIONAMIENTO**


| PART NAME CODE | PART NAME | QTY |
|---|---|---|
| 4601-JT | **BOLT**<br>BOULON<br>SCHRAUBE<br>PERNO | 1 |
| 4601-KD | **SCREW**<br>VIS<br>SCHRAUBE<br>TORNILLO | 2 |
| 4601-KL | **CLAMP**<br>PINSE<br>KLEMME<br>ABRAZADERA | 3 |
| 4601-KR | **SCREW**<br>VIS<br>SCHRAUBE<br>TORNILLO | 2 |

| 4701 | BRAKE PEDAL<br>PEDALE DE FREIN | BREMSPEDAL<br>PEDAL DEL FRENO |
|---|---|---|

ATM

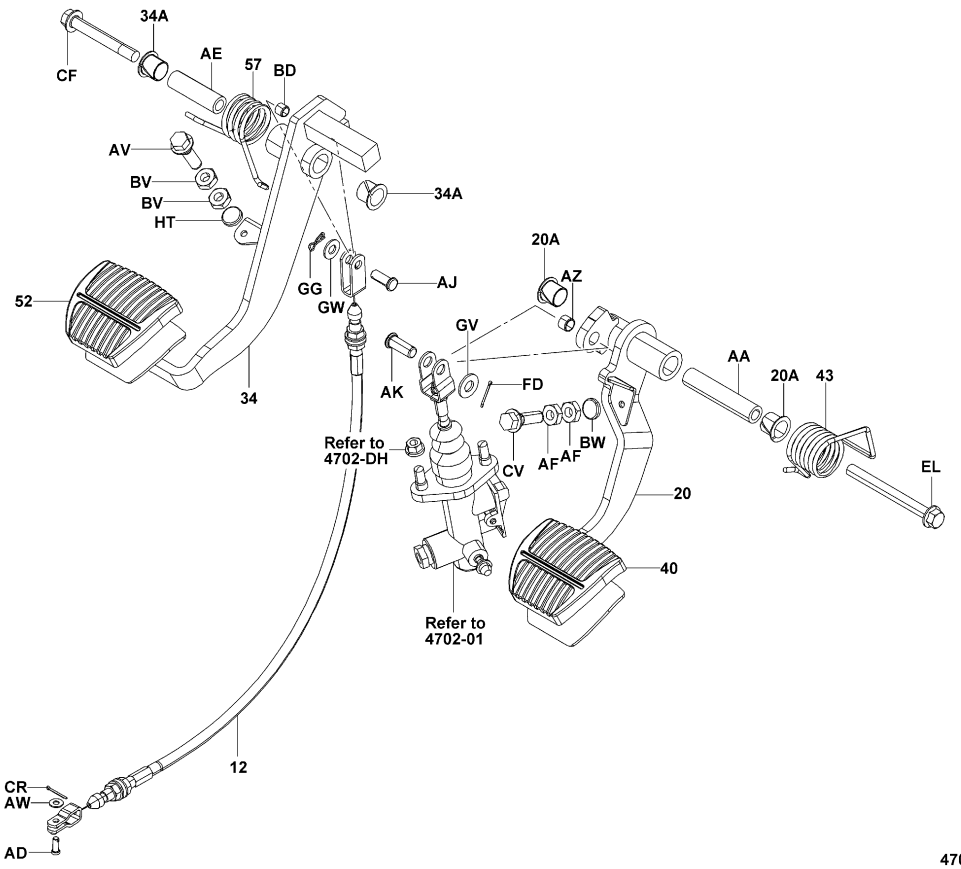


4701-230B

| 4701 | BRAKE PEDAL<br>PEDALE DE FREIN | BREMSPEDAL<br>PEDAL DEL FRENO |
|---|---|---|

| PART NAME CODE | PART NAME | QTY |
|---|---|---|
| 4701-12 | **WIRE ASSY, INCHING**<br>ENS. DE FIL<br>DRAHT, VOLLST.<br>CONJUNTO DE ALAMBRE | 1 |
| 4701-20 | **PEDAL SUB-ASSY, BRAKE**<br>SOUS-ENS. DE PEDALE<br>PEDAL-TEILGRUPPE<br>SUBCONJUNTO DEL PEDAL | 1 |
| 4701-20A | **BUSHING, BRAKE PEDAL**<br>BAGE<br>BUCHSE<br>MANGUITO | 2 |
| 4701-34 | **PEDAL SUB-ASSY, INCHING BRAKE**<br>SOUS-ENS. DE PEDALE<br>PEDAL-TEILGRUPPE<br>SUBCONJUNTO DEL PEDAL | 1 |
| 4701-34A | **BUSHING, INCHING BRAKE PEDAL**<br>BAGE<br>BUCHSE<br>MANGUITO | 2 |
| 4701-40 | **PAD, PEDAL**<br>TAMPON<br>KLOTZ<br>ALMOHADILLA | 1 |
| 4701-43 | **SPRING, TORSION (FOR PEDAL RETURN)**<br>RESSORT<br>FEDER<br>RESORTE | 1 |
| 4701-52 | **PAD, INCHING PEDAL**<br>TAMPON<br>KLOTZ<br>ALMOHADILLA | 1 |
| 4701-57 | **SPRING, TORSION (FOR PEDAL RETURN)**<br>RESSORT<br>FEDER<br>RESORTE | 1 |
| 4701-AA | **SPACER**<br>ENTRETOISE<br>DISTANZSTUCK<br>SEPARADOR | 1 |

| PART NAME CODE | PART NAME | QTY |
|---|---|---|
| 4701-AD | **PIN, W/HOLE**<br>GOUPILLE<br>STIFT<br>PASADOR | 1 |
| 4701-AE | **SPACER**<br>ENTRETOISE<br>DISTANZSTUCK<br>SEPARADOR | 1 |
| 4701-AF | **NUT**<br>ECROU<br>MUTTER<br>TUERCA | 2 |
| 4701-AJ | **PIN, W/HOLE**<br>GOUPILLE<br>STIFT<br>PASADOR | 1 |
| 4701-AK | **PIN, W/HOLE**<br>GOUPILLE<br>STIFT<br>PASADOR | 1 |
| 4701-AV | **BOLT**<br>BOULON<br>SCHRAUBE<br>PERNO | 1 |
| 4701-AW | **WASHER, PLATE**<br>RODELLE<br>UNTERLEGSCHEIBE<br>ARANDELA | 1 |
| 4701-AZ | **BUSHING**<br>BAGUE<br>BUCHSE<br>BUJE | 1 |
| 4701-BD | **BUSHING**<br>BAGUE<br>BUCHSE<br>BUJE | 1 |
| 4701-BV | **NUT**<br>ECROU<br>MUTTER<br>TUERCA | 2 |

| 4701 | BRAKE PEDAL<br>PEDALE DE FREIN | | BREMSPEDAL<br>PEDAL DEL FRENO | | |
|---|---|---|---|---|---|
| PART NAME CODE | PART NAME | QTY | PART NAME CODE | PART NAME | QTY |
| 4701-BW | **CUSHION**<br>COUSSIN<br>POLSTER<br>ALMOHADILLA | 1 | | | |
| 4701-CF | **BOLT**<br>BOULON<br>SCHRAUBE<br>PERNO | 1 | | | |
| 4701-CR | **PIN, COTTER**<br>GOUPILLE<br>STIFT<br>PASADOR | 1 | | | |
| 4701-CV | **BOLT**<br>BOULON<br>SCHRAUBE<br>PERNO | 1 | | | |
| 4701-EL | **BOLT**<br>BOULON<br>SCHRAUBE<br>PERNO | 1 | | | |
| 4701-FD | **PIN, COTTER**<br>GOUPILLE<br>STIFT<br>PASADOR | 1 | | | |
| 4701-GG | **CLIP**<br>AGRAFE<br>CLIP<br>FIJADOR | 1 | | | |
| 4701-GV | **WASHER, PLATE**<br>RODELLE<br>UNTERLEGSCHEIBE<br>ARANDELA | 1 | | | |
| 4701-GW | **WASHER, PLATE**<br>RODELLE<br>UNTERLEGSCHEIBE<br>ARANDELA | 1 | | | |
| 4701-HT | **CUSHION**<br>COUSSIN<br>POLSTER<br>ALMOHADILLA | 1 | | | |

| 4701 | BRAKE PEDAL<br>PEDALE DE FREIN | | BREMSPEDAL<br>PEDAL DEL FRENO | | |
|---|---|---|---|---|---|
| PART NAME CODE | PART NAME | QTY | PART NAME CODE | PART NAME | QTY |

# 4702

**BRAKE MASTER CYLINDER**
**MAITRE-CYLINDRE DE FREIN**
**HAUPTBREMSZYLINDER**
**CILINDRO PRINCIPAL DEL FRENO**

**ATM**

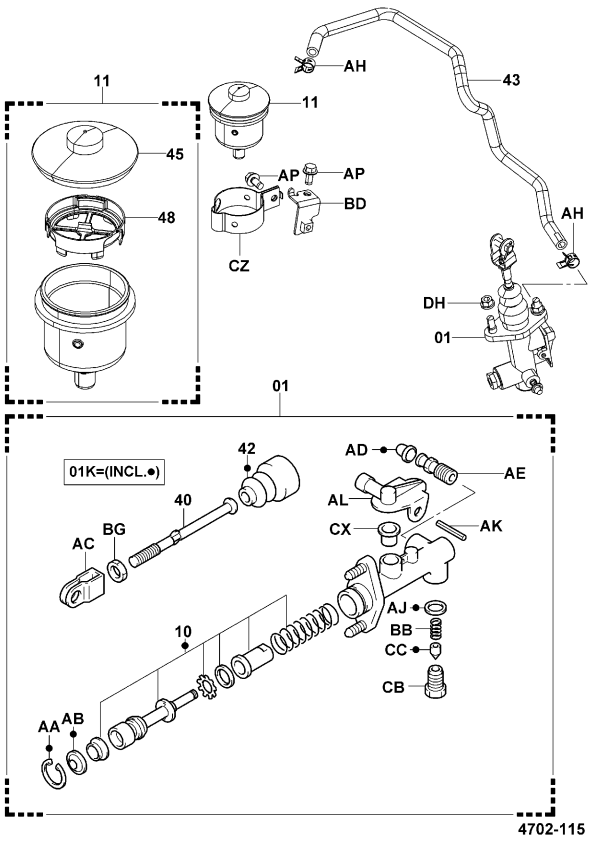


4702-115_

# 4702

**BRAKE MASTER CYLINDER**
**MAITRE-CYLINDRE DE FREIN**
**HAUPTBREMSZYLINDER**
**CILINDRO PRINCIPAL DEL FRENO**

| PART NAME CODE | PART NAME | QTY |
|---|---|---|
| **4702-01** | **CYLINDER ASSY, MASTER**<br>ENS. DE CYLINDRE<br>ZYLINDER, VOLLST.<br>CONJUNTO DEL CILINDRO | 1 |
| **4702-01K** | **CYLINDER O/H KIT, MASTER**<br>JEU O/H DE CYLINDRE<br>ZYLINDER-UBERHOLSATZ<br>JUEGO O/H DEL CILINDRO | 1 |
| **4702-10** | **PISTON SUB-ASSY, MASTER CYLINDER**<br>SOUS-ENS. DE PISTON<br>KOLBEN-TEILGRUPPE<br>SUBCONJUNTO DEL PISTON | 1 |
| **4702-11** | **RESERVOIR SET, MASTER CYLINDER**<br>JEU DE RESERVOIR<br>BEHALTERSATZ<br>JUEGO DEL DEPOSITO | 1 |
| **4702-40** | **ROD, PUSH**<br>BIELLE<br>STANGE<br>VARILLA | 1 |
| **4702-42** | **BOOT**<br>COFFRE<br>MANSCHETTE<br>FORRO | 1 |
| **4702-43** | **HOSE, RESERVOIR**<br>FLEXIBLE<br>SCHLAUCH<br>MANGUERA | 1 |
| **4702-45** | **CAP, RESERVOIR**<br>CAPUCHON<br>KAPPE<br>TAPA | 1 |
| **4702-48** | **STRAINER**<br>TAMIS<br>SIEB<br>COLADOR | 1 |
| **4702-AA** | **RING, HOLE SNAP**<br>ANNEAU<br>RING<br>ANILLO | 1 |
| **4702-AB** | **PLATE, PISTON STOP**<br>PLAQUE<br>PLATTE<br>PLACA | 1 |
| **4702-AC** | **CLEVIS, PUSH ROD**<br>CHAPE<br>GABELKOPF<br>GRILLETE | 1 |
| **4702-AD** | **CAP, BLEEDER PLUG**<br>CAPUCHON<br>KAPPE<br>TAPA | 1 |
| **4702-AE** | **PLUG, BLEEDER**<br>BOUCHON<br>STOPFEN<br>TAPON | 1 |
| **4702-AH** | **CLIP**<br>AGRAFE<br>CLIP<br>FIJADOR | 2 |
| **4702-AJ** | **GASKET**<br>JOINT<br>DICHTUNG<br>EMPAQUETADURA | 1 |
| **4702-AK** | **PIN**<br>GOUPILLE<br>STIFT<br>PASADOR | 1 |
| **4702-AL** | **UNION**<br>RACCORD<br>ROHRVERSCHRAUBUNG<br>UNION | 1 |
| **4702-AP** | **BOLT**<br>BOULON<br>SCHRAUBE<br>PERNO | 2 |
| **4702-BB** | **SPRING, COMPRESSION**<br>RESSORT<br>FEDER<br>RESORTE | 1 |

| 4702 | BRAKE MASTER CYLINDER<br>MAITRE-CYLINDRE DE FREIN | HAUPTBREMSZYLINDER<br>CILINDRO PRINCIPAL DEL FRENO |
|---|---|---|

| PART NAME CODE | PART NAME | QTY | PART NAME CODE | PART NAME | QTY |
|---|---|---|---|---|---|
| 4702-BD | **BRACKET SUB-ASSY, RESERVOIR TANK**<br>SOUS-ENS. DE SUPPORT<br>TRAGER-TEILGRUPPE<br>SUBCONJUNTO DE LA SOPORTE | 1 | | | |
| 4702-BG | **NUT**<br>ECROU<br>MUTTER<br>TUERCA | 1 | | | |
| 4702-CB | **PLUG, FLUID OUTLET**<br>BOUCHON<br>STOPFEN<br>TAPON | 1 | | | |
| 4702-CC | **VALVE, OUTLET CHECK**<br>SOUPAPE<br>VENTIL<br>VALVULA | 1 | | | |
| 4702-CX | **GROMMET**<br>RONDELLE ISOLANTE<br>DURCHFUHRUNG<br>ANILLO PROTECTOR | 1 | | | |
| 4702-CZ | **BAND, RESERVOIR TANK**<br>BANDE<br>BAND<br>BANDA | 1 | | | |
| 4702-DH | **NUT**<br>ECROU<br>MUTTER<br>TUERCA | 2 | | | |
| 4702-EP | **BAND, CLAMP**<br>BANDE<br>BAND<br>BANDA | 1 | | | |


| 4702 | BRAKE MASTER CYLINDER<br>MAITRE-CYLINDRE DE FREIN | HAUPTBREMSZYLINDER<br>CILINDRO PRINCIPAL DEL FRENO |
|---|---|---|

| PART NAME CODE | PART NAME | QTY | PART NAME CODE | PART NAME | QTY |
|---|---|---|---|---|---|

| 4704 | BRAKE VALVE<br>SOUPAPE DE FREIN | BREMSVENTIL<br>VALVULA DEL FRENO |
|---|---|---|

ATM..20N,25N,30N,J35N (WET BRAKE) [1/2]

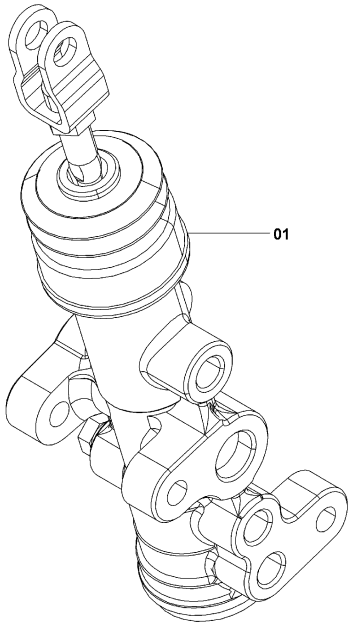


4704-024A

4704-024A

ATM..20N,25N,30N,J35N (WET BRAKE) [2/2]

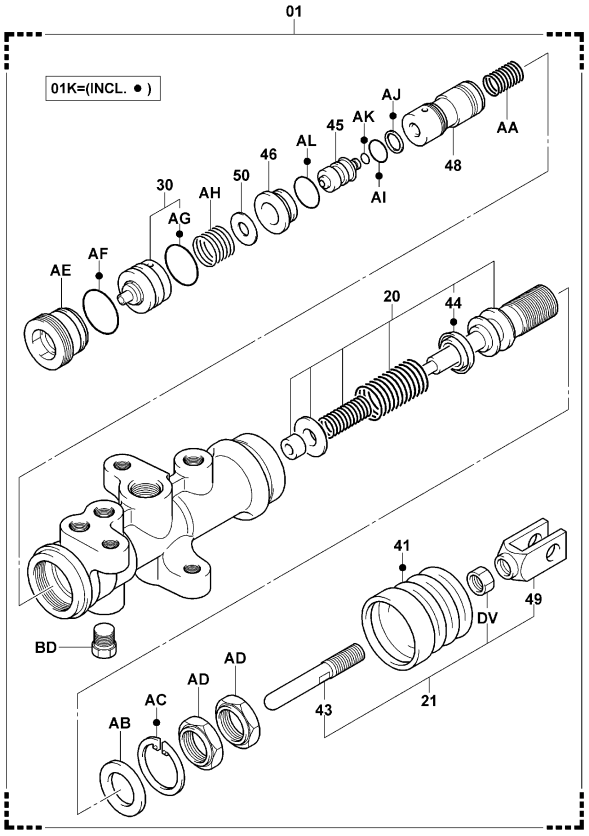


4704-025

4704-025_

| 4704 | BRAKE VALVE<br>SOUPAPE DE FREIN | BREMSVENTIL<br>VALVULA DEL FRENO |
|---|---|---|

| PART NAME CODE | PART NAME | QTY | PART NAME CODE | PART NAME | QTY |
|---|---|---|---|---|---|
| 4704-01 | **VALVE ASSY, BRAKE**<br>ENS. DE SOUPAPE<br>VENTIL, VOLLST.<br>CONJUNTO DE VALVULA | 1 | | | |

| 4706 | BRAKE ACCUMULATOR<br>ACCUMULATEUR DE FREIN | BREMSAKKUMULATOR<br>ACUMULADOR DEL FRENO |
|---|---|---|

ATM..20N,25N,30N,J35N (WET BRAKE)

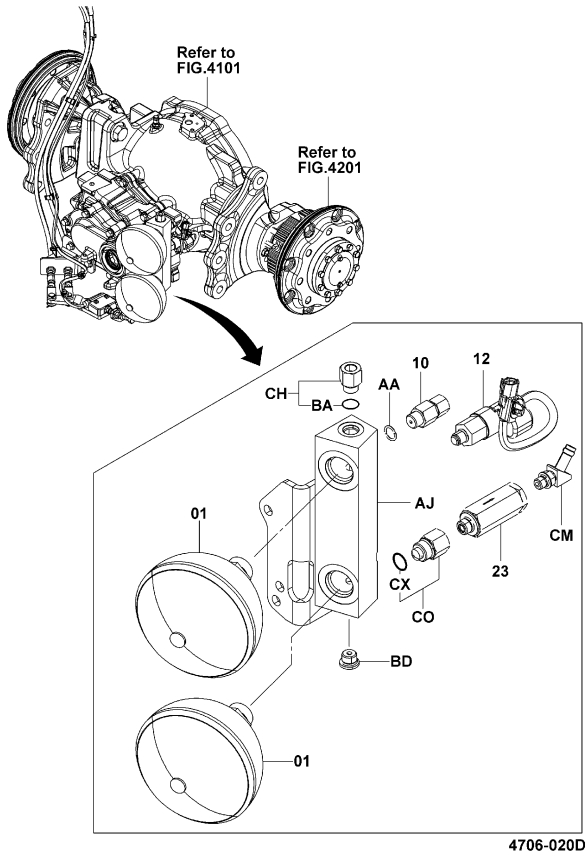


4706-020D

ATM..20N,25N,30N,J35N (WET BRAKE..2-STATOR T/C)

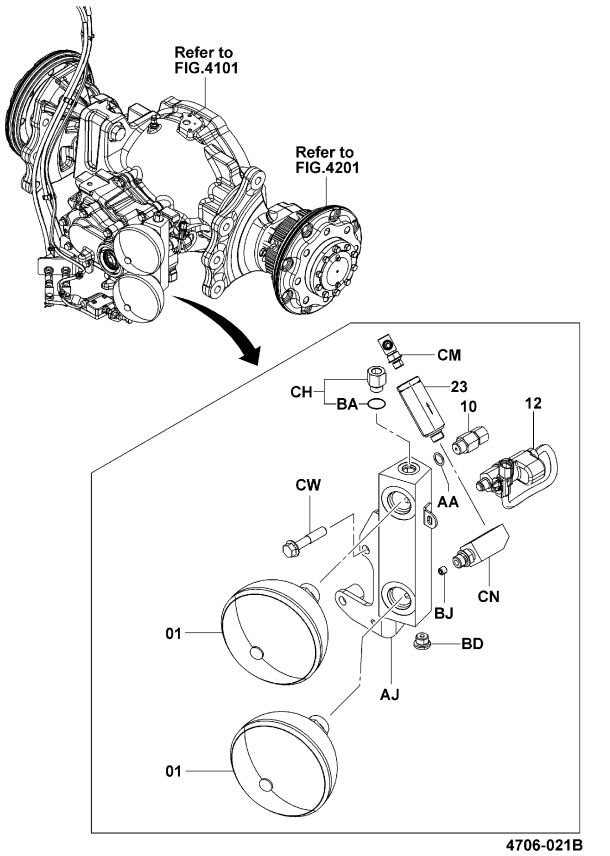


4706-021B

| 4706 | BRAKE ACCUMULATOR<br>ACCUMULATEUR DE FREIN | BREMSAKKUMULATOR<br>ACUMULADOR DEL FRENO |
|---|---|---|

ATM (WET BRAKE) [VALVE INNER PARTS]

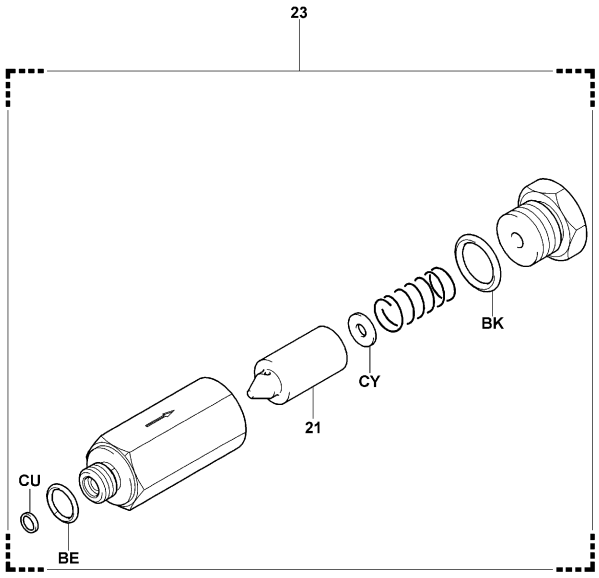


4706-025_

| 4706 | BRAKE ACCUMULATOR<br>ACCUMULATEUR DE FREIN | BREMSAKKUMULATOR<br>ACUMULADOR DEL FRENO |
|---|---|---|

| PART NAME CODE | PART NAME | QTY |
|---|---|---|
| 4706-01 | **ACCUMULATOR ASSY**<br>ENS. D'ACCUMULATEUR<br>AKKUMULATOR-VOLLST.<br>CONJUNTO DEL ACUMULADOR | 2 |
| 4706-10 | **VALVE ASSY, CHECK**<br>ENS. DE SOUPAPE<br>VENTIL, VOLLST.<br>CONJUNTO DE VALVULA | 1 |
| 4706-12 | **SWITCH ASSY, ACCUMULATOR**<br>ENS. DE INTERRUPTEUR<br>SCHALTER, VOLLST.<br>CONJUNTO DEL INTERRUPUPTOR | 1 |
| 4706-21 | **PISTON SUB-ASSY**<br>SOUS-ENS. DE PISTON<br>KOLBEN-TEILGRUPPE<br>SUBCONJUNTO DEL PISTON | 1 |
| 4706-23 | **VALVE ASSY, RELIEF**<br>ENS. DE SOUPAPE<br>VENTIL, VOLLST.<br>CONJUNTO DE VALVULA | 1 |
| 4706-AA | **RING, O**<br>ANNEAU<br>RING<br>ANILLO | 1 |
| 4706-AJ | **BRACKET SUB-ASSY, ACCUMULATOR**<br>SOUS-ENS. DE SUPPORT<br>TRAGER-TEILGRUPPE<br>SUBCONJUNTO DE LA SOPORTE | 1 |
| 4706-BA | **RING, O**<br>ANNEAU<br>RING<br>ANILLO | 1 |
| 4706-BD | **PLUG**<br>BOUCHON<br>STOPFEN<br>TAPON | 1 |
| 4706-BE | **RING, O**<br>ANNEAU<br>RING<br>ANILLO | 1 |
| 4706-BJ | **PLUG**<br>BOUCHON<br>STOPFEN<br>TAPON | 1 |
| 4706-BK | **RING, O**<br>ANNEAU<br>RING<br>ANILLO | 1 |
| 4706-CH | **FITTING**<br>RACCORD<br>ANSCHLUSSTUCK<br>ACOPLADOR | 1 |
| 4706-CM | **FITTING**<br>RACCORD<br>ANSCHLUSSTUCK<br>ACOPLADOR | 1 |
| 4706-CN | **FITTING**<br>RACCORD<br>ANSCHLUSSTUCK<br>ACOPLADOR | 1 |
| 4706-CO | **FITTING**<br>RACCORD<br>ANSCHLUSSTUCK<br>ACOPLADOR | 1 |
| 4706-CU | **FILTER**<br>FILTRE<br>FILTER<br>FILTRO | 1 |
| 4706-CW | **BOLT**<br>BOULON<br>SCHRAUBE<br>PERNO | 2 |
| 4706-CX | **RING, O**<br>ANNEAU<br>RING<br>ANILLO | 1 |
| 4706-CY | **SHIM**<br>CALE<br>AUSGLEICHSCHEIBE<br>CALCE | 3 |


| 4706 | BRAKE ACCUMULATOR<br>ACCUMULATEUR DE FREIN | BREMSAKKUMULATOR<br>ACUMULADOR DEL FRENO |
|---|---|---|


| PART NAME CODE | PART NAME | QTY |
|---|---|---|


| PART NAME CODE | PART NAME | QTY |
|---|---|---|

| 4714 | BRAKE PIPE<br>TUYAUTERIE DE FREIN | BREMSROHRLEITUNG<br>TUBO DEL FRENO |
|---|---|---|

ATM

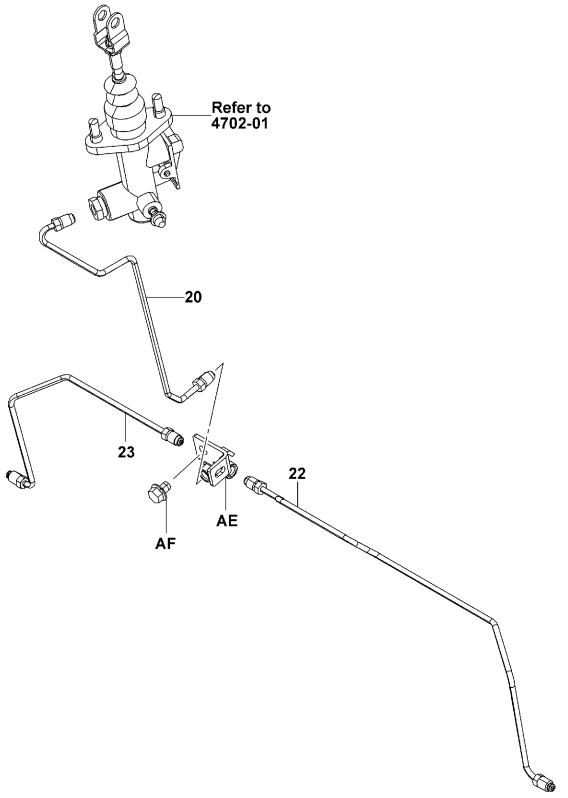


4714-268

4714-268_

| 4714 | BRAKE PIPE<br>TUYAUTERIE DE FREIN | BREMSROHRLEITUNG<br>TUBO DEL FRENO |
|---|---|---|

| PART NAME CODE | PART NAME | QTY | PART NAME CODE | PART NAME | QTY |
|---|---|---|---|---|---|
| 4714-20 | **PIPE SUB-ASSY, BRAKE, MAIN NO.1**<br>SOUS-ENS. DE TUYAU<br>ROHR-TEILGRUPPE<br>SUBCONJUNTO DE TUBO | 1 | | | |
| 4714-22 | **PIPE SUB-ASSY, BRAKE, RH NO.1**<br>SOUS-ENS. DE TUYAU<br>ROHR-TEILGRUPPE<br>SUBCONJUNTO DE TUBO | 1 | | | |
| 4714-23 | **PIPE SUB-ASSY, BRAKE, LH NO.1**<br>SOUS-ENS. DE TUYAU<br>ROHR-TEILGRUPPE<br>SUBCONJUNTO DE TUBO | 1 | | | |
| 4714-AE | **3-WAY**<br>3 SENS<br>DREIWEG-VERTEILER<br>3 VIAS | 1 | | | |
| 4714-AF | **BOLT**<br>BOULON<br>SCHRAUBE<br>PERNO | 1 | | | |

| 4715 | DRUM BRAKE<br>FREIN A TAMBOUR | TROMMELBREMSE<br>FRENO DE TAMBOR |
|---|---|---|

ATM [1/2,ASSY]

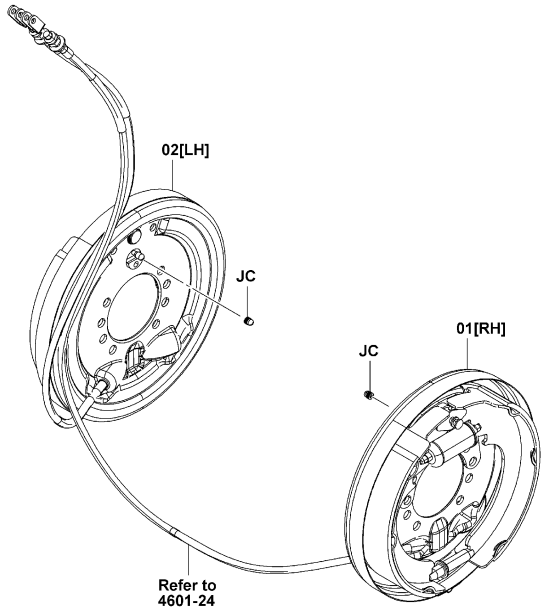


4715-126

4715-126_

10N,15N,18N [2/2]

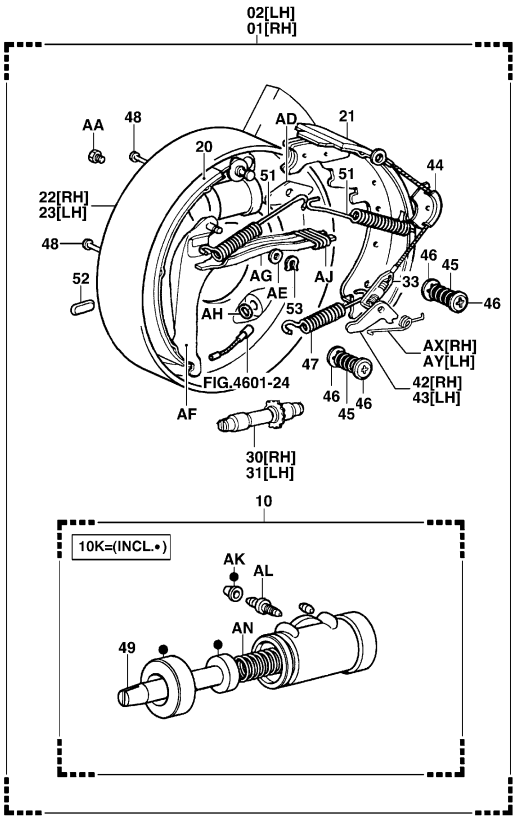


4715-096

4715-096_

| 4715 | DRUM BRAKE<br>FREIN A TAMBOUR | TROMMELBREMSE<br>FRENO DE TAMBOR |
|---|---|---|

20N,25N,30N,K20N,K25N,K30N [2/2]

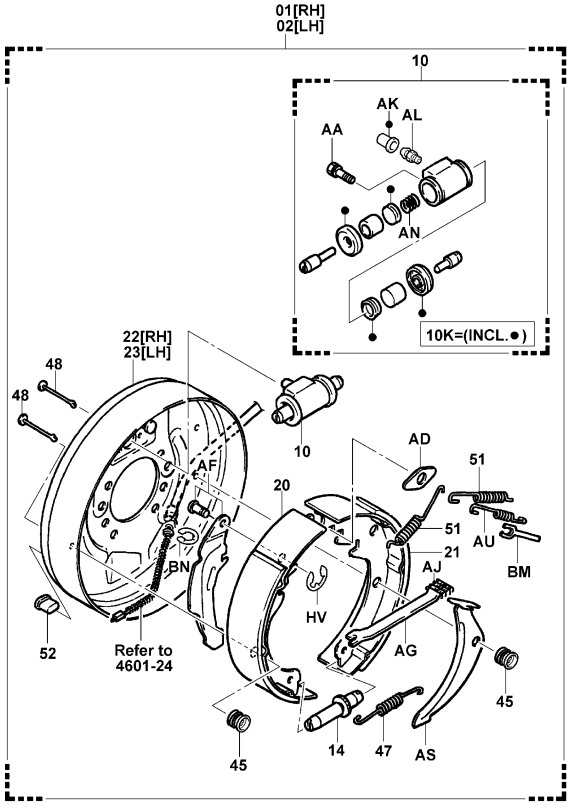


4715-125

4715-125_

J35N [2/2]

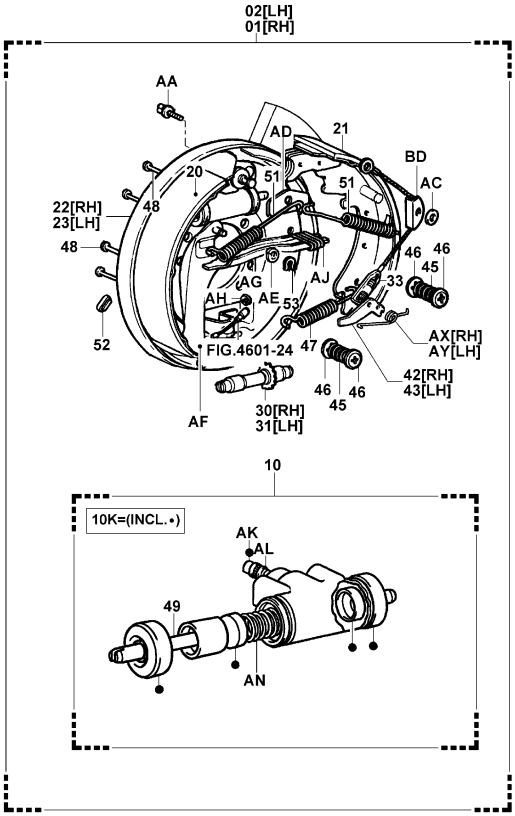


4715-097B

4715-097B

## 4715 DRUM BRAKE / FREIN A TAMBOUR / TROMMELBREMSE / FRENO DE TAMBOR

| PART NAME CODE | PART NAME | QTY |
|---|---|---|
| 4715-01 | **BRAKE ASSY, RH**<br>ENS. DE FREIN<br>BREMSE, VOLLST.<br>CONJUNTO DEL FRENO | 1 |
| 4715-02 | **BRAKE ASSY, LH**<br>ENS. DE FREIN<br>BREMSE, VOLLST.<br>CONJUNTO DEL FRENO | 1 |
| 4715-10 | **CYLINDER ASSY, WHEEL**<br>ENS. DE CYLINDRE<br>ZYLINDER, VOLLST.<br>CONJUNTO DEL CILINDRO | 2 |
| 4715-10K | **CYLINDER O/H KIT, WHEEL**<br>JEU O/H DE CYLINDRE<br>ZYLINDER-UBERHOLSATZ<br>JUEGO O/H DEL CILINDRO | 2 |
| 4715-14 | **ADJUSTER ASSY**<br>ENS. DE TENDEUR<br>VERSTELLER, VOLLST.<br>CONJUNTO DEL AJUSTADOR | 1 |
| 4715-20 | **SHOE SUB-ASSY (FOR FRONT OR UPPER)**<br>SOUS-ENS. DE PATIN<br>SCHUH-TEILGRUPPE<br>SUBCONJUNTO DE LA ZAPATA | 2 |
| 4715-21 | **SHOE SUB-ASSY (FOR REAR OR LOWER)**<br>SOUS-ENS. DE PATIN<br>SCHUH-TEILGRUPPE<br>SUBCONJUNTO DE LA ZAPATA | 1- 2 |
| 4715-22 | **PLATE SUB-ASSY, BACKING, RH**<br>SOUS-ENS. DE PLAQUE<br>PLATTEN-TEILGRUPPE<br>SUBCONJUNTO DE PLACA | 1 |
| 4715-23 | **PLATE SUB-ASSY, BACKING, LH**<br>SOUS-ENS. DE PLAQUE<br>PLATTEN-TEILGRUPPE<br>SUBCONJUNTO DE PLACA | 1 |
| 4715-30 | **SCREW SUB-ASSY, ADJUSTING, RH**<br>SOUS-ENS. DE VIS<br>SCHRAUBEN-TEILGRUPPE<br>SUBCONJUNTO DEL TORNILLO | 1 |
| 4715-31 | **SCREW SUB-ASSY, ADJUSTING, LH**<br>SOUS-ENS. DE VIS<br>SCHRAUBEN-TEILGRUPPE<br>SUBCONJUNTO DEL TORNILLO | 1 |
| 4715-33 | **CABLE & FITTING SUB-ASSY**<br>SOUS-ENS. DE CABLE & FIXATION<br>SEILZUG & ZUBEHÖR, TEILGRUPPE<br>SUBCONJUNTO DE CABLE Y ACCESORIOS | 2 |
| 4715-42 | **LEVER, AUTOMATIC ADJUSTMENT, RH**<br>LEVIER<br>HEBEL<br>PALANCA | 1 |
| 4715-43 | **LEVER, AUTOMATIC ADJUSTMENT, LH**<br>LEVIER<br>HEBEL<br>PALANCA | 1 |
| 4715-44 | **GUIDE, CABLE**<br>GUIDE<br>FUHRUNG<br>GUIA | 2 |
| 4715-45 | **SPRING, SHOE HOLD DOWN**<br>RESSORT<br>FEDER<br>RESORTE | 4- 8 |
| 4715-46 | **CUP, SHOE HOLD DOWN**<br>COUPELLE<br>DICHTMANSCHETTE<br>TAZA | 8 |
| 4715-47 | **SPRING, ADJUSTER**<br>RESSORT<br>FEDER<br>RESORTE | 2 |
| 4715-48 | **PIN, SHOE HOLD DOWN**<br>GOUPILLE<br>STIFT<br>PASADOR | 4- 8 |
| 4715-49 | **ROD, PUSH**<br>BIELLE<br>STANGE<br>VARILLA | 4 |

## 4715 DRUM BRAKE / FREIN A TAMBOUR / TROMMELBREMSE / FRENO DE TAMBOR

| PART NAME CODE | PART NAME | QTY |
|---|---|---|
| 4715-51 | **SPRING, ANCHOR TO SHOE**<br>RESSORT<br>FEDER<br>RESORTE | 2- 4 |
| 4715-52 | **COVER, ADJUSTING HOLE**<br>COUVERCLE<br>DECKEL<br>CUBIERTA | 2 |
| 4715-53 | **RING, PARKING LEVER RETAINING**<br>ANNEAU<br>RING<br>ANILLO | 2 |
| 4715-AA | **BOLT & WASHER SET**<br>JEU DE BOULON & RONDELLE<br>SCHRAUBE & SCHEIBE, SATZ<br>JUEGO DE PERNOY ARANDELA | 4 |
| 4715-AC | **WASHER**<br>RODELLE<br>UNTERLEGSCHEIBE<br>ARANDELA | 2 |
| 4715-AD | **PLATE, SHOE GUIDE**<br>PLAQUE<br>PLATTE<br>PLACA | 2 |
| 4715-AE | **WASHER, SPRING**<br>RODELLE<br>UNTERLEGSCHEIBE<br>ARANDELA | 2 |
| 4715-AF | **LEVER SUB-ASSY, PARKING**<br>SOUS-ENS. DE LEVIER<br>HEBEL-TEILGRUPPE<br>SUBCONJUNTO DE LA PALANCA | 1 |
| 4715-AG | **STRUT, LEVER**<br>TIRANT<br>DRUCKSTAB<br>TIRANTE | 1- 2 |
| 4715-AH | **RING, SNAP**<br>ANNEAU<br>RING<br>ANILLO | 2 |
| 4715-AJ | **SPRING, STRUT TO SHOE**<br>RESSORT<br>FEDER<br>RESORTE | 2 |
| 4715-AK | **CAP, BLEEDER SCREW**<br>CAPUCHON<br>KAPPE<br>TAPA | 2 |
| 4715-AL | **SCREW, BLEEDER**<br>VIS<br>SCHRAUBE<br>TORNILLO | 2 |
| 4715-AN | **SPRING, WHEEL CYLINDER**<br>RESSORT<br>FEDER<br>RESORTE | 2 |
| 4715-AS | **LEVER, PAWL**<br>LEVIER<br>HEBEL<br>PALANCA | 1 |
| 4715-AU | **SPRING, ACTUATOR**<br>RESSORT<br>FEDER<br>RESORTE | 2 |
| 4715-AX | **SPRING, LEVER RETURN, RH**<br>RESSORT<br>FEDER<br>RESORTE | 1 |
| 4715-AY | **SPRING, LEVER RETURN, LH**<br>RESSORT<br>FEDER<br>RESORTE | 1 |
| 4715-BD | **SHEAVE, PARKING BRAKE CABLE**<br>ROUE<br>SEILROLLE<br>ROLDANA | 2 |
| 4715-BM | **STOPPER, POLE LEVER**<br>BUTEE<br>ANSCHLAG<br>TOPE | 2 |

| 4715 | DRUM BRAKE<br>FREIN A TAMBOUR | TROMMELBREMSE<br>FRENO DE TAMBOR |
|---|---|---|

| PART NAME CODE | PART NAME | QTY | PART NAME CODE | PART NAME | QTY |
|---|---|---|---|---|---|
| 4715-BN | **RING, E**<br>ANNEAU<br>RING<br>ANILLO | 2 | | | |
| 4715-HV | **RING, E**<br>ANNEAU<br>RING<br>ANILLO | 2 | | | |
| 4715-JC | **CAP, BLEEDER SCREW**<br>CAPUCHON<br>KAPPE<br>TAPA | 2 | | | |


| 4715 | DRUM BRAKE<br>FREIN A TAMBOUR | TROMMELBREMSE<br>FRENO DE TAMBOR |
|---|---|---|


| PART NAME CODE | PART NAME | QTY | PART NAME CODE | PART NAME | QTY |
|---|---|---|---|---|---|

10N,15N,18N [RADIATOR COVER]

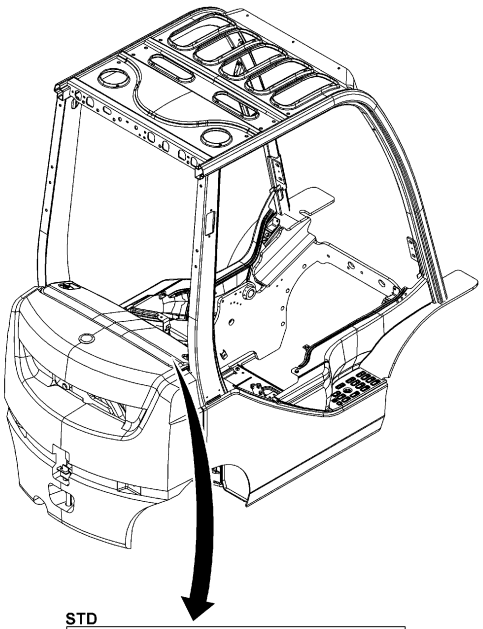

STD

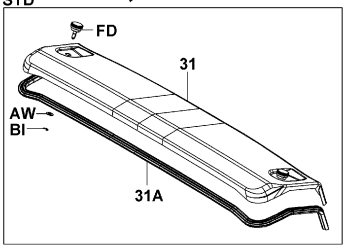


LPG
RR WORKING1,2
SW-BACK BUZZER
PIN ENTRY
IT TERMINAL

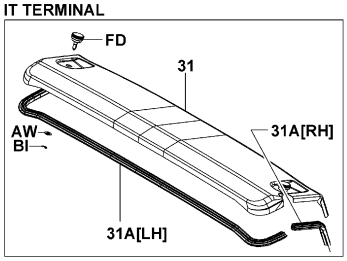


UPSWEPT

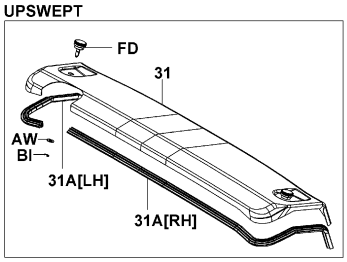


COOLER

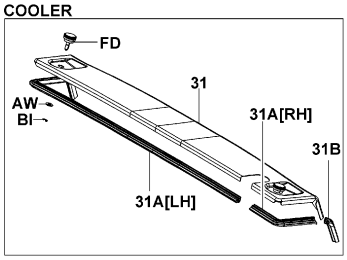


UPSWEPT..RR WORKING1,2
UPSWEPT..SW-BACK BUZZER
UPSWEPT..PIN ENTRY
UPSWEPT..IT TERMINAL

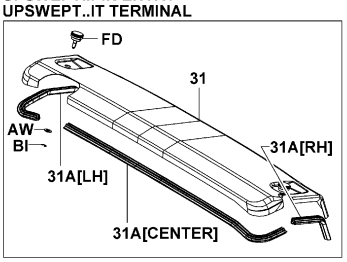


FR&RR GLASS
2-DOOR CABIN
UPSWEPT..CANVAS CABIN WW

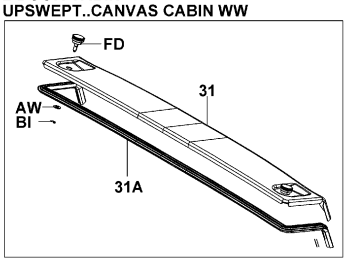


PREMIUM CABIN
PREMIUM CABIN..COOLER

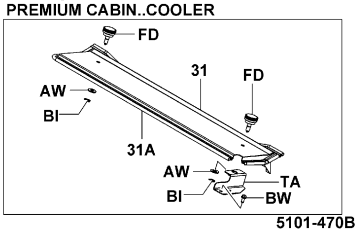


5101-470B

5101-470B

5101 | FRAME & WEIGHT / CADRE & POIDS | RAHMEN & GEGENGEWICHT / BASTIDOR Y CONTRAPESO

20N,25N,30N,J35N [RADIATOR COVER]

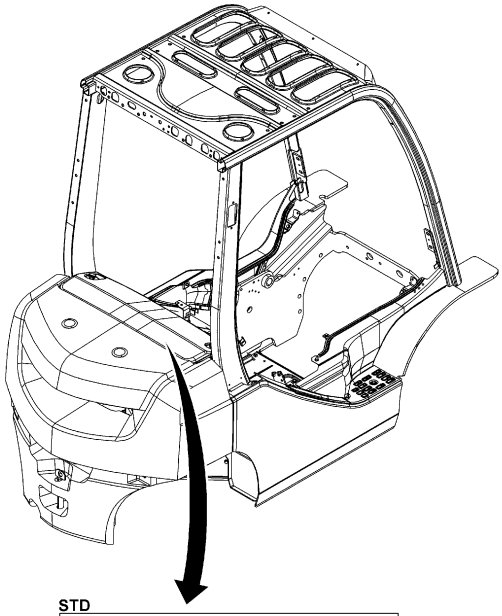

STD

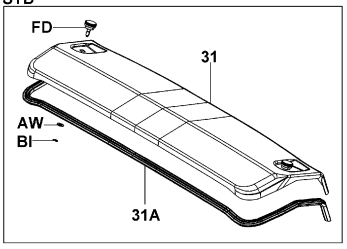


LPG
RR WORKING1,2
SW-BACK BUZZER
PIN ENTRY
IT TERMINAL

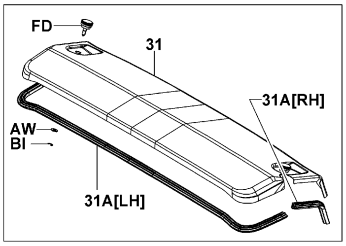


UPSWEPT

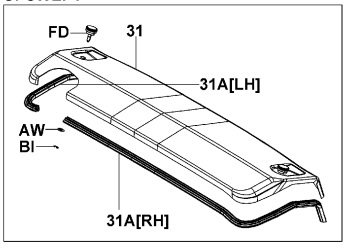


UPSWEPT..LPG

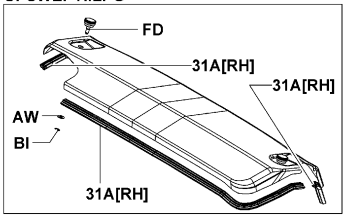


FR&RR GLASS
2-DOOR CABIN
UPSWEPT..CANVAS CABIN WW

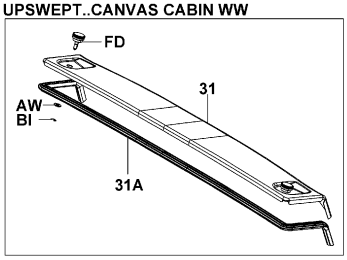


UPSWEPT..RR WORKING1,2
UPSWEPT..SW-BACK BUZZER
UPSWEPT..PIN ENTRY
UPSWEPT..IT TERMINAL

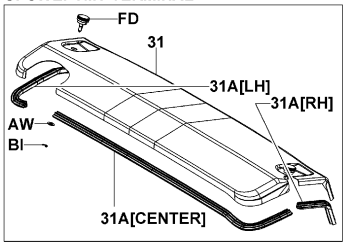


PREMIUM CABIN
PREMIUM CABIN..COOLER

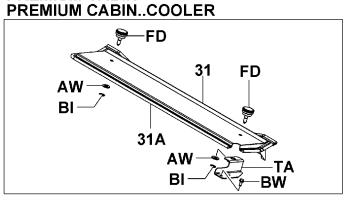


5101-471B

5101-471B

K20N,K25N,K30N [RADIATOR COVER]

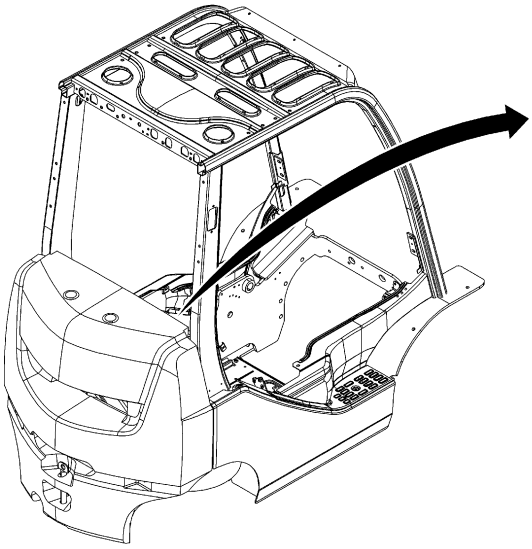

STD

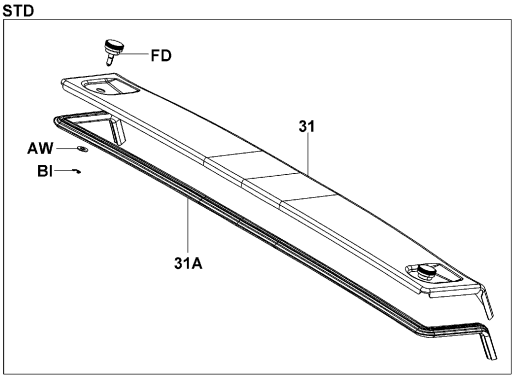


LPG
RR WORKING1,2
SW-BACK BUZZER
PIN ENTRY
IT TERMINAL

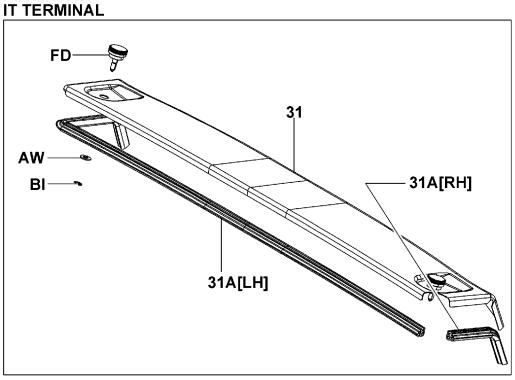


5101-472

5101-472_


| 5101 | FRAME & WEIGHT<br>CADRE & POIDS | RAHMEN & GEGENGEWICHT<br>BASTIDOR Y CONTRAPESO |
|---|---|---|


1DZ,2Z,3Z (DPF, DPF-2) [LH STEP]

1DZ..10,14,15,18,L10,L14,L15,L18,10N,15N,18N

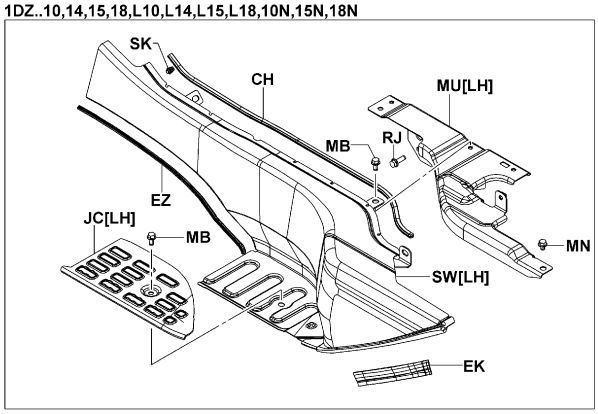


2Z
1DZ..20,25,L20,L25,L30,20N,25N,30N,K20,K25,K30,K20N,K25N,K30N

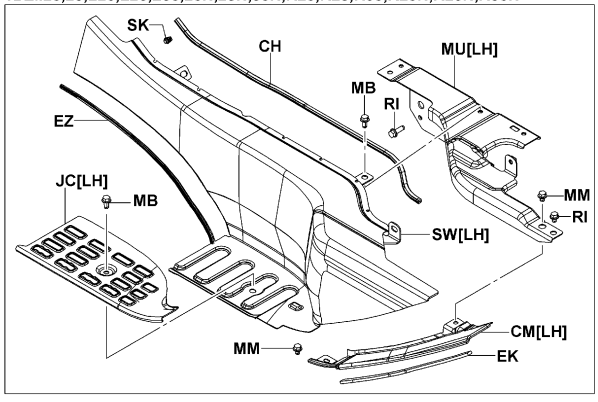


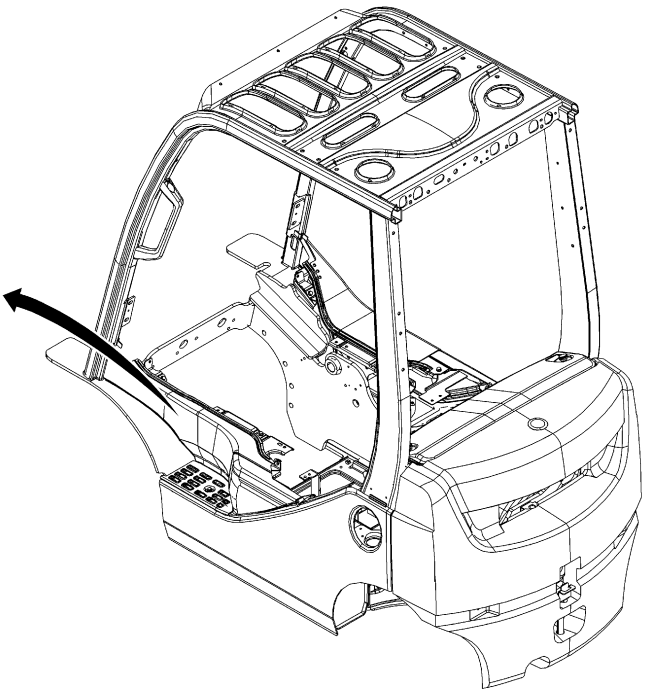

5101-484

5101-484_

1DZ,2Z,3Z (DPF, DPF-2) [RH STEP]

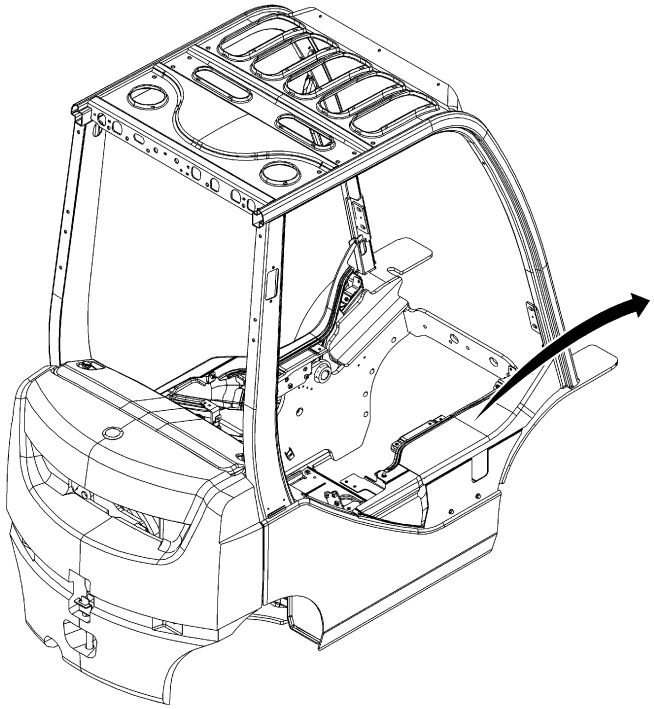

1DZ..10,14,15,18,L10,L14,L15,L18,10N,15N,18N

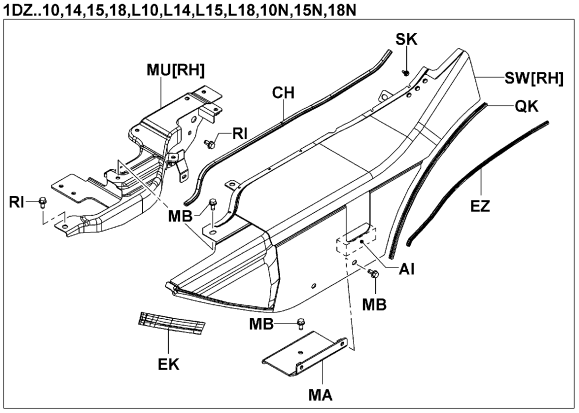


2Z
1DZ..20,25,L20,L25,L30,20N,25N,30N,K20,K25,K30,K20N,K25N,K30N

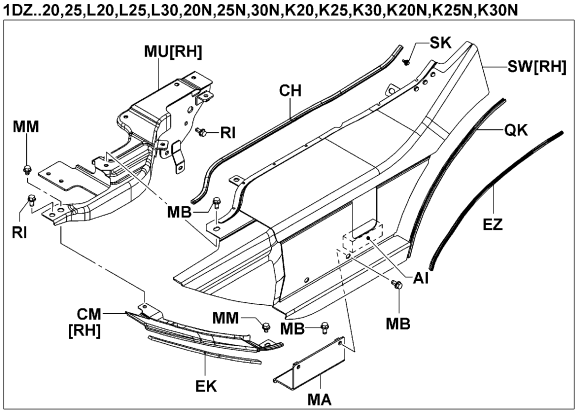


5101-483

5101-483_

5101 | FRAME & WEIGHT / CADRE & POIDS | RAHMEN & GEGENGEWICHT / BASTIDOR Y CONTRAPESO

10N,15N,18N [STEP(RH)]

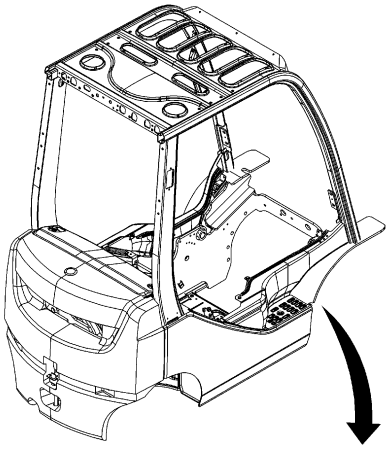

(2-DOOR CABIN)

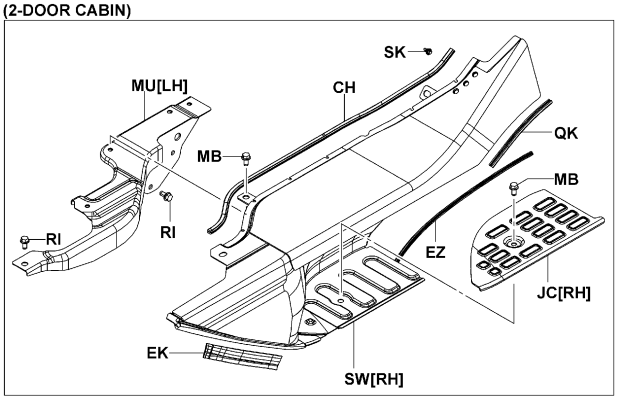


[STD]

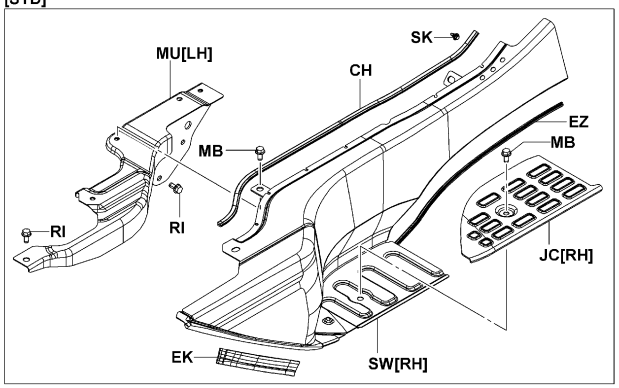


(HEATER)

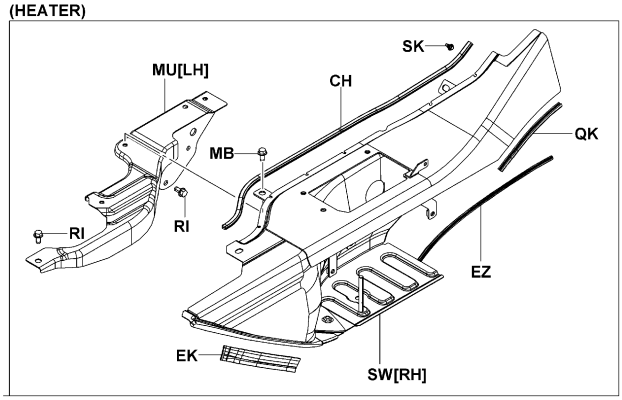


5101-473

5101-473_

10N,15N,18N [STEP(LH)]

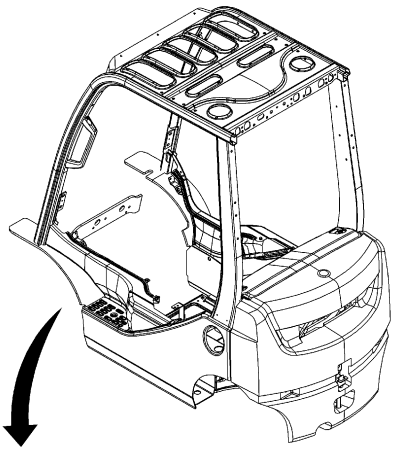

(2-DOOR CABIN)

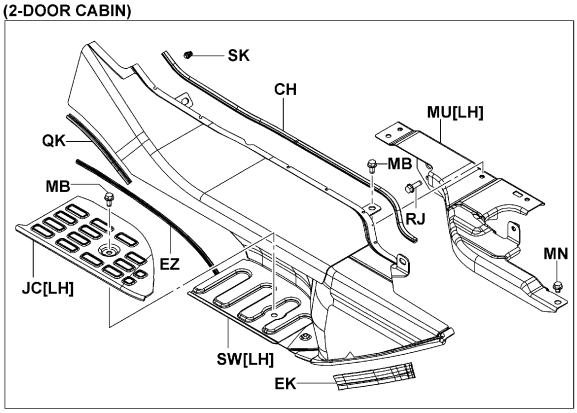


[STD]

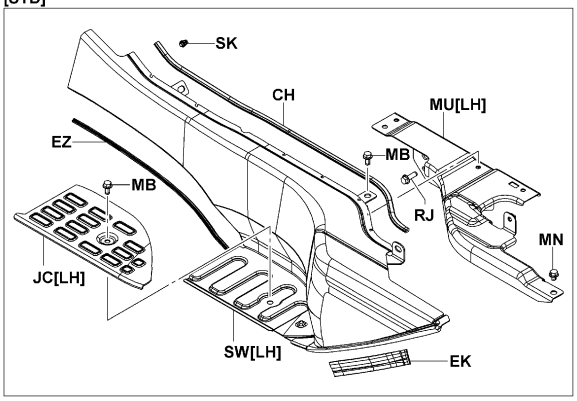


(HEATER)

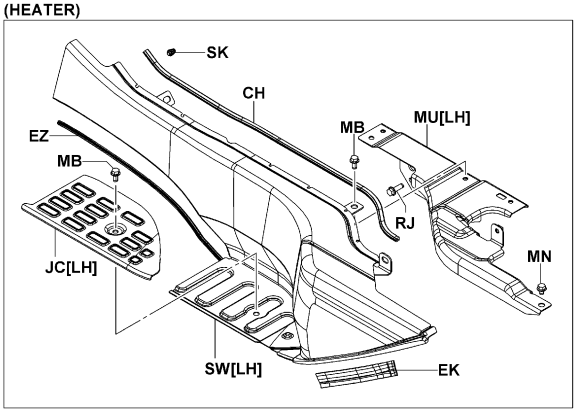


5101-474

5101-474_



20N,25N,30N,J35N [STEP(RH)]

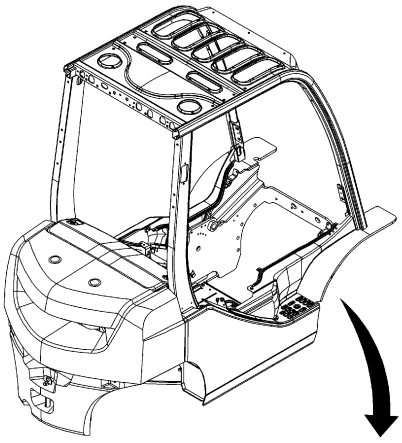

(2-DOOR CABIN)

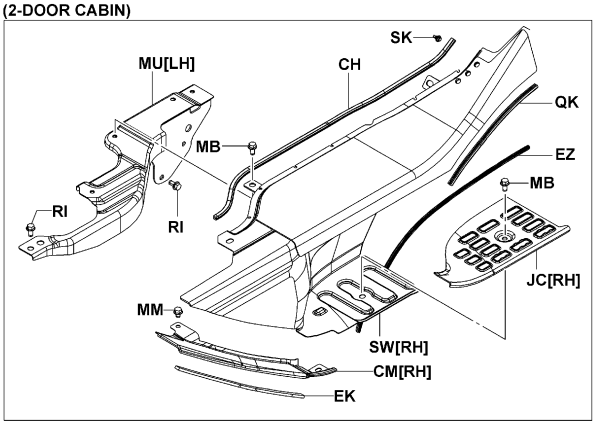


[STD]

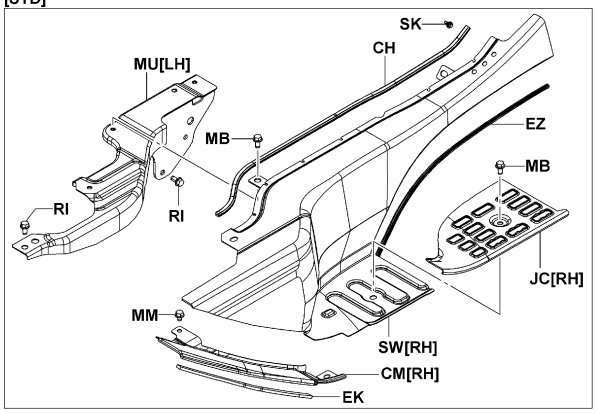


(HEATER)

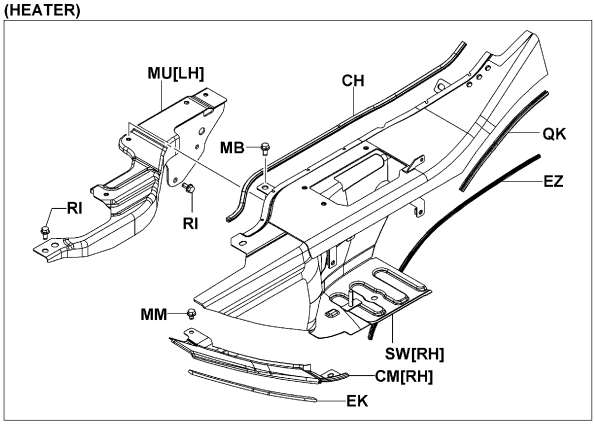


5101-475

5101-475_

K20N,K25N,K30N [STEP(RH)]

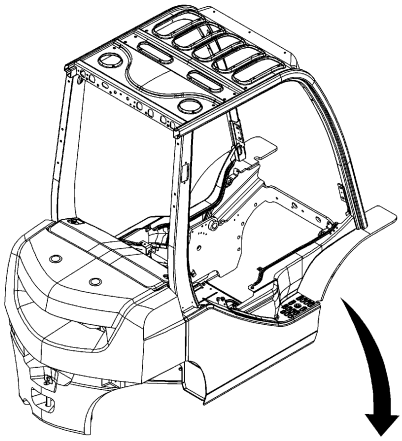

[STD]

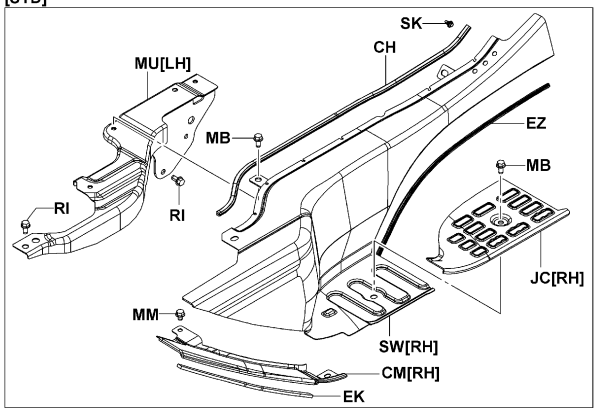


(2-DOOR CABIN)

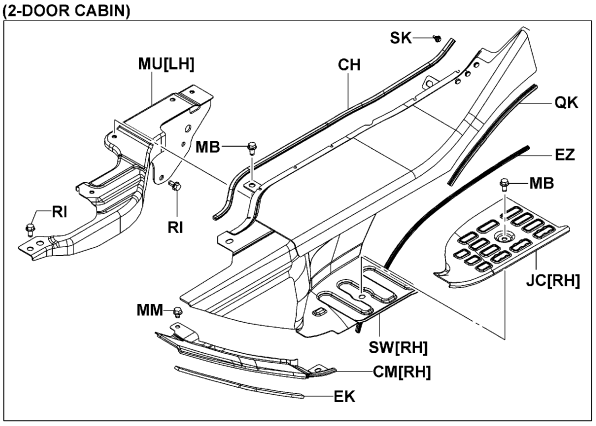


(HEATER)

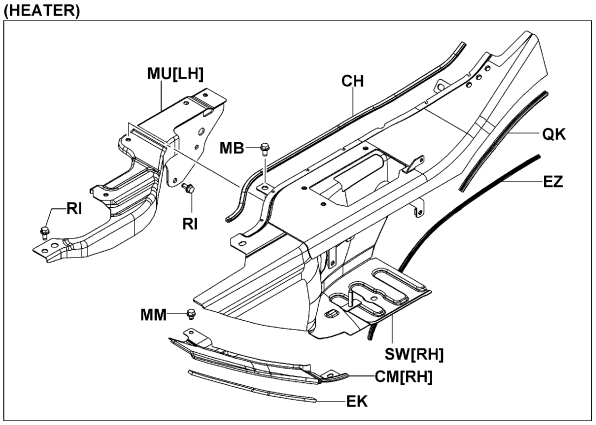


5101-475

5101-475_



20N,25N,30N,J35N [STEP(LH)]

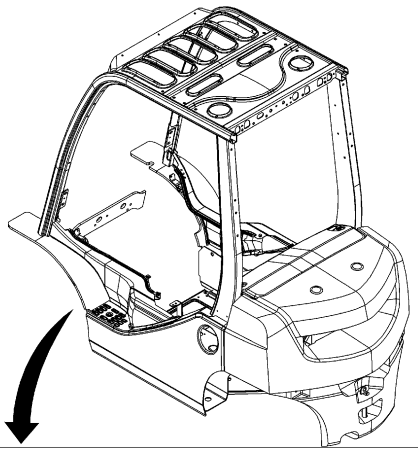

[STD]

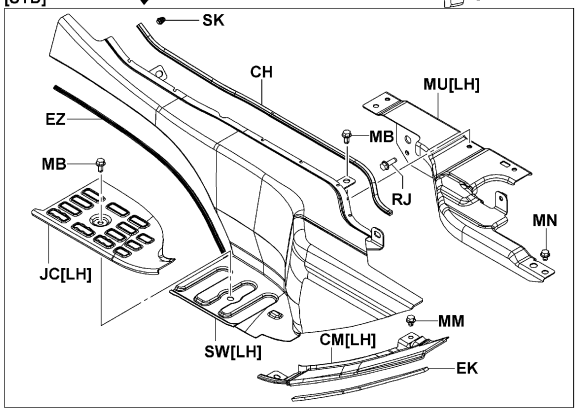


(2-DOOR CABIN)

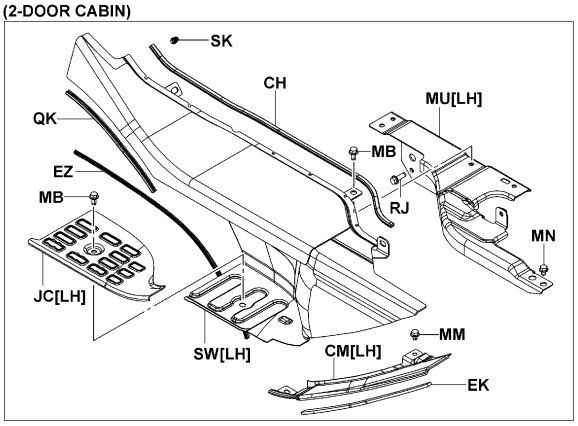


(HEATER)

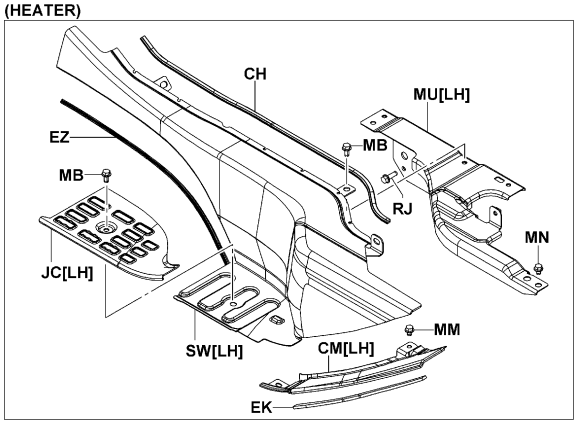


5101-476

5101-476_

K20N,K25N,K30N [STEP(LH)]

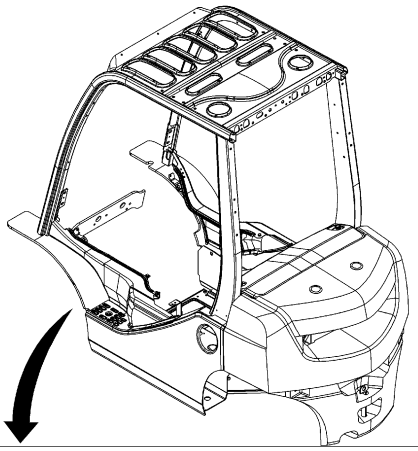

[STD]

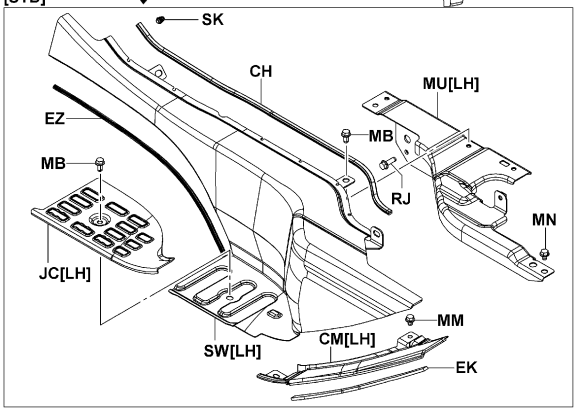


(2-DOOR CABIN)

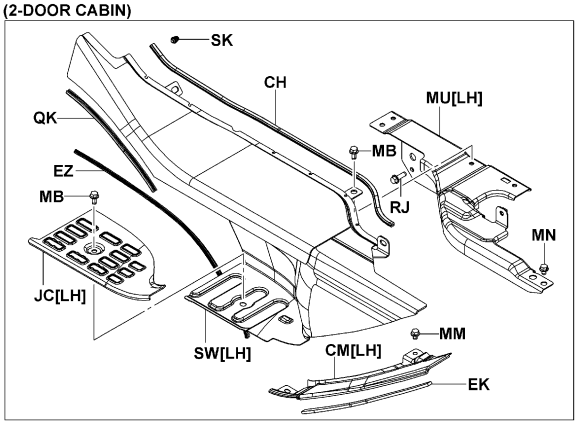


(HEATER)

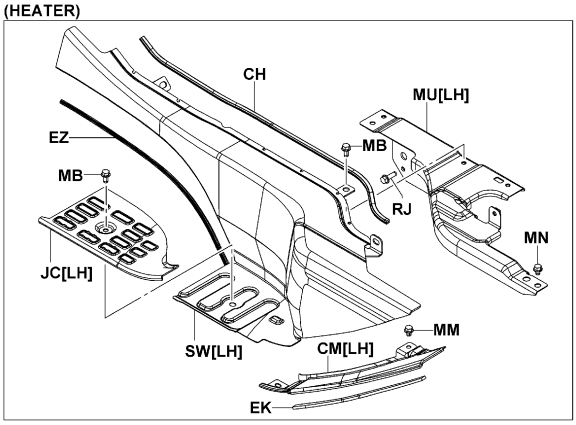


5101-476

5101-476_



ATM (PREMIUM CABIN) [STEP(RH)]

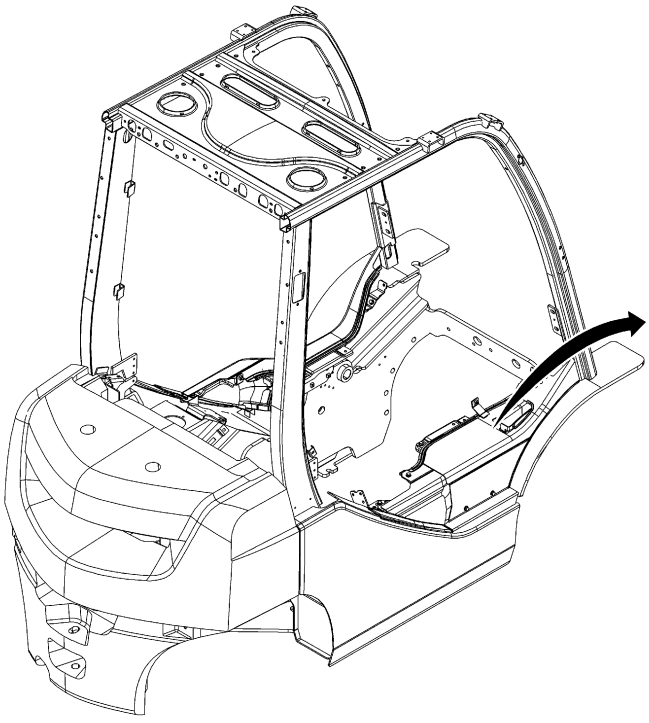

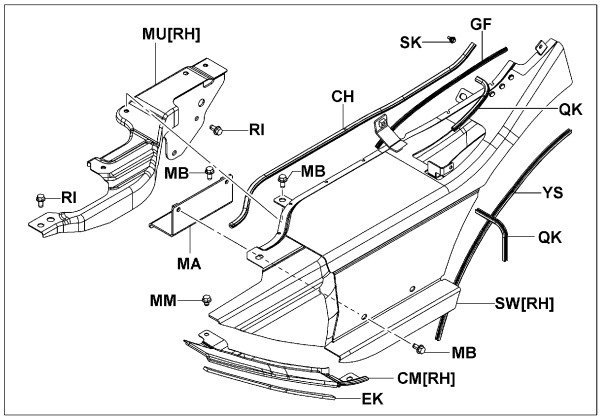


(DPF)

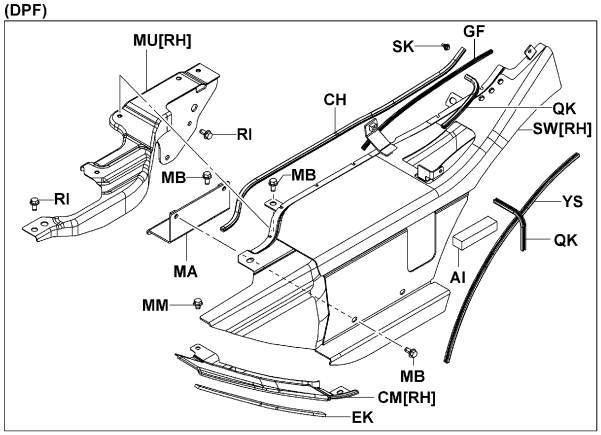


5101-486

5101-486_

ATM (PREMIUM CABIN) [STEP(LH)]

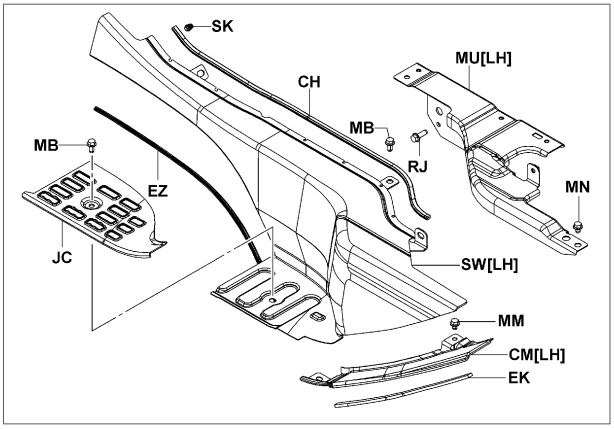


(DPF)

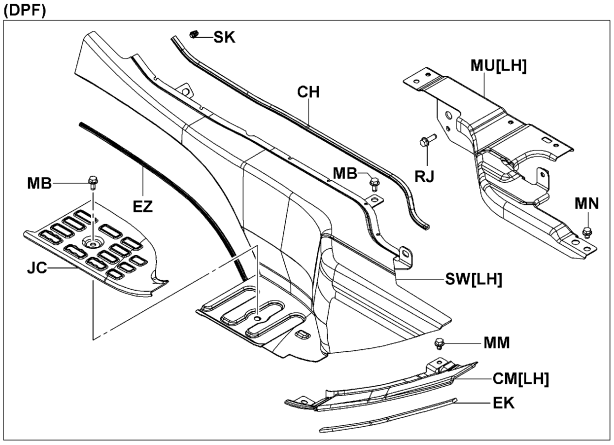


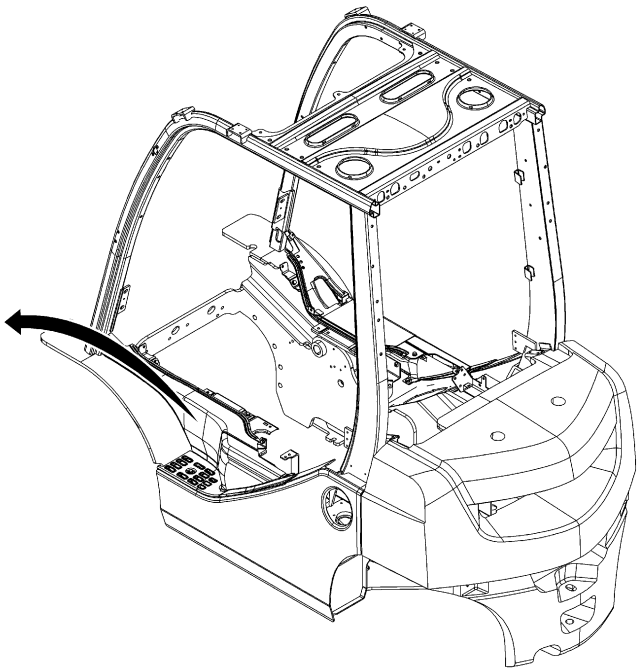

5101-487

5101-487_



10N,15N,18N

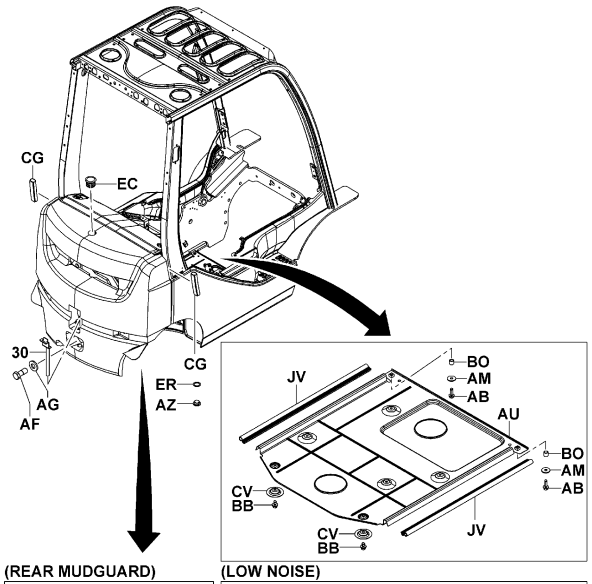


(REAR MUDGUARD)

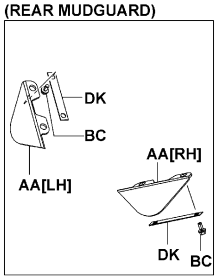


(LOW NOISE)

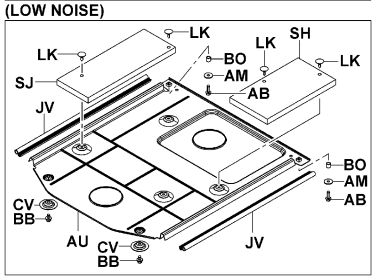


5101-477B

5101-477B

20N,25N,30N,J35N

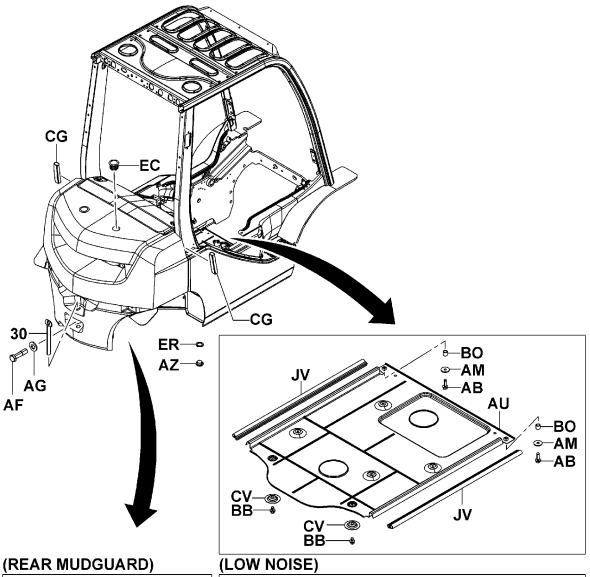


(REAR MUDGUARD)

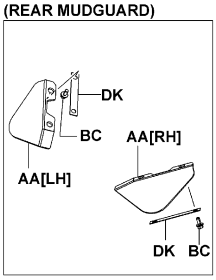


(LOW NOISE)

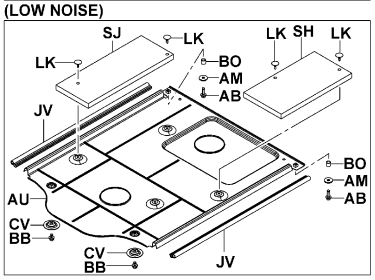


5101-478B

5101-478B

K20N,K25N,K30N

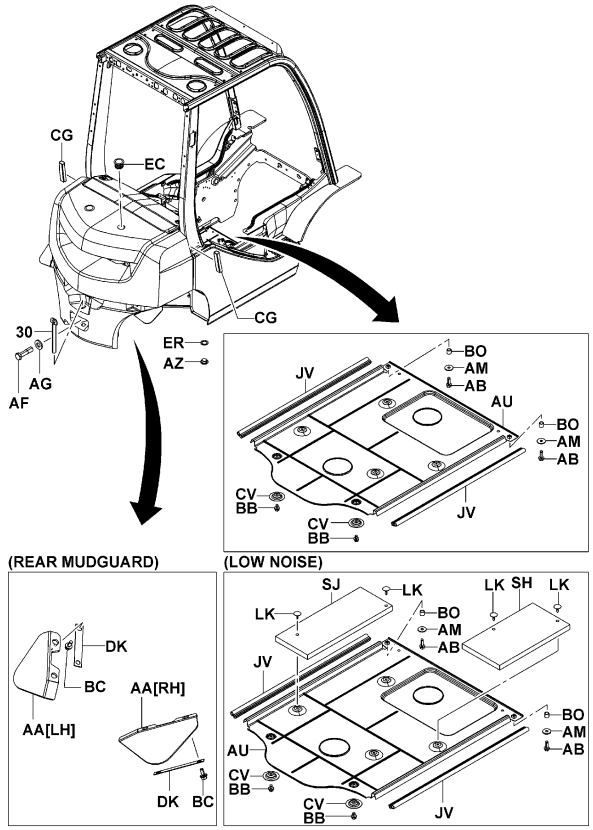


5101-478B

5101-478B

ATM (LOW NOISE)

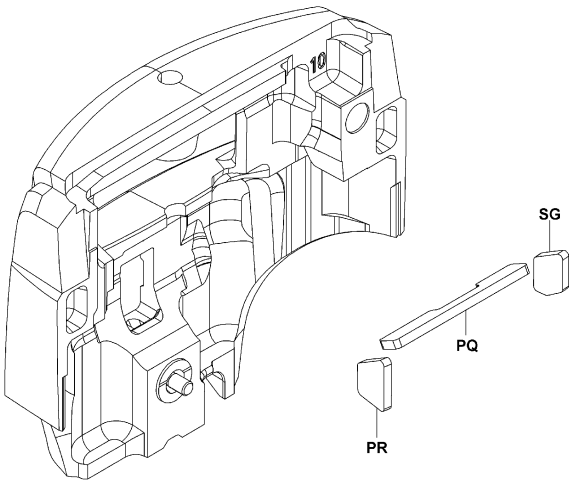


5101-479

5101-479_



10N,15N,18N,K20N,K25N,K30N [TIRE COVER]

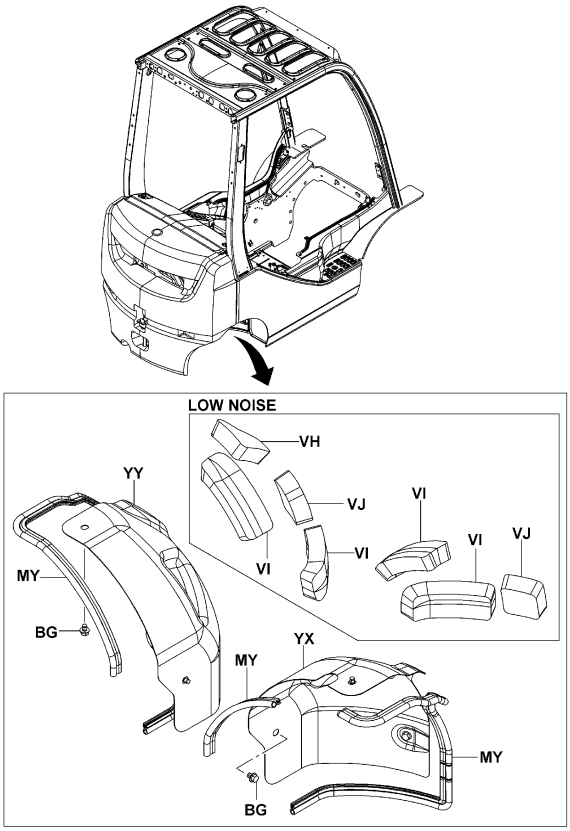


5101-480

5101-480_

20N,25N,30N,J35N [TIRE COVER]

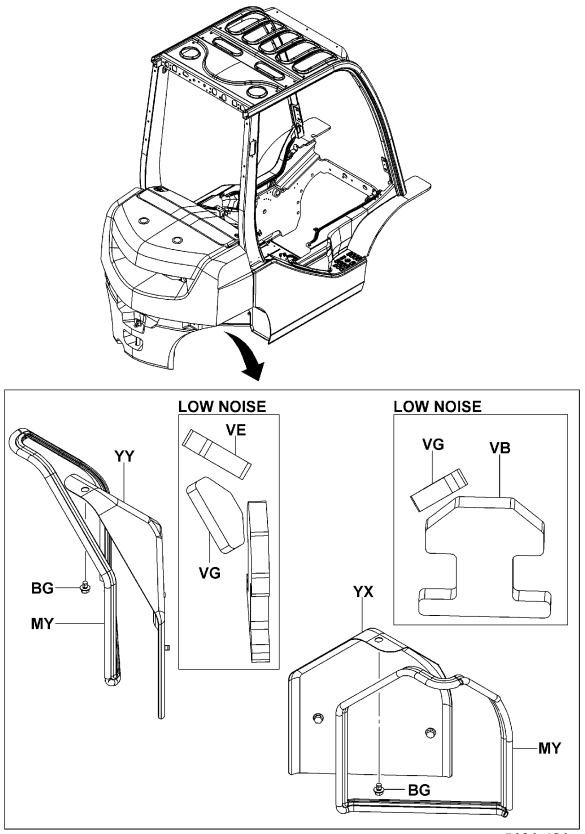


5101-481

5101-481_

ATM

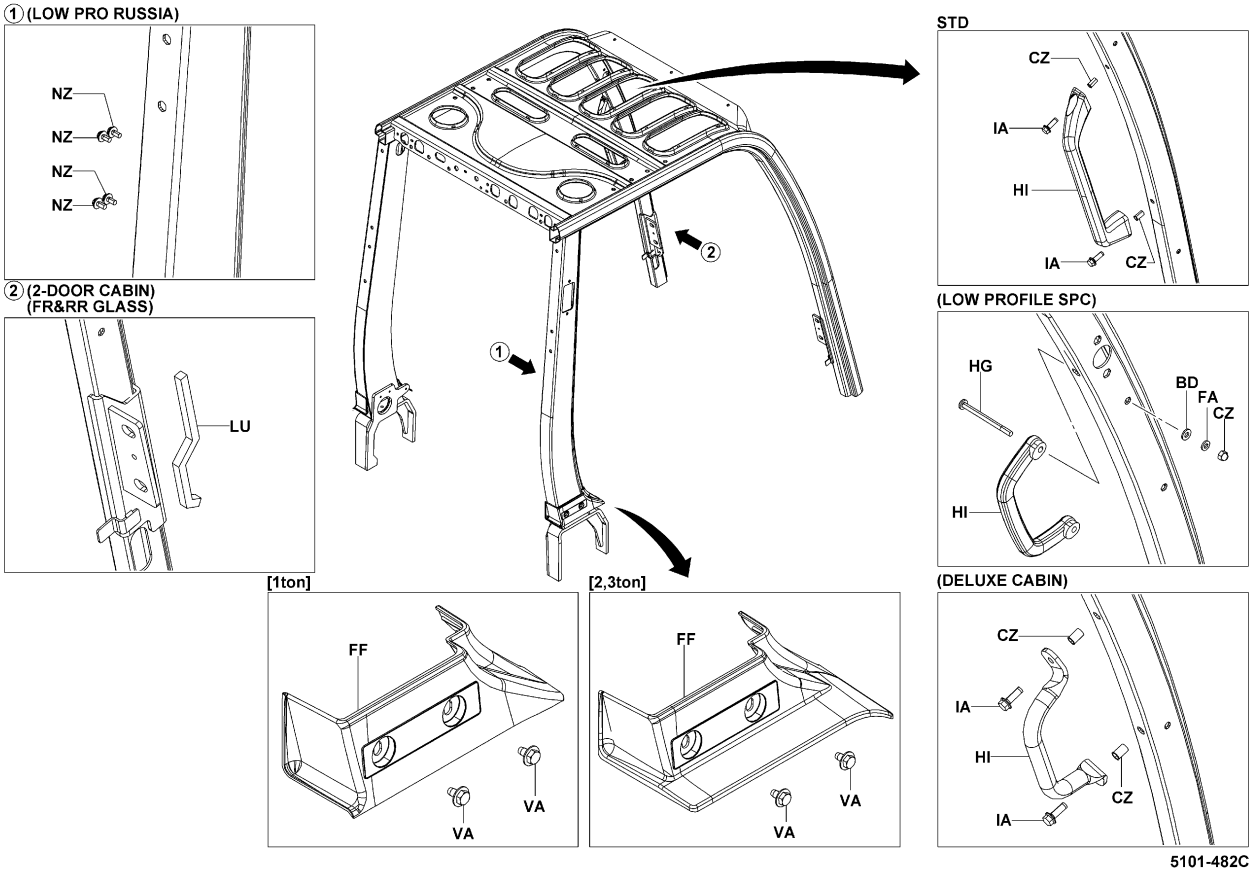


5101-482C


| 5101 | FRAME & WEIGHT<br>CADRE & POIDS | RAHMEN & GEGENGEWICHT<br>BASTIDOR Y CONTRAPESO |
|---|---|---|


ATM [FENDER]

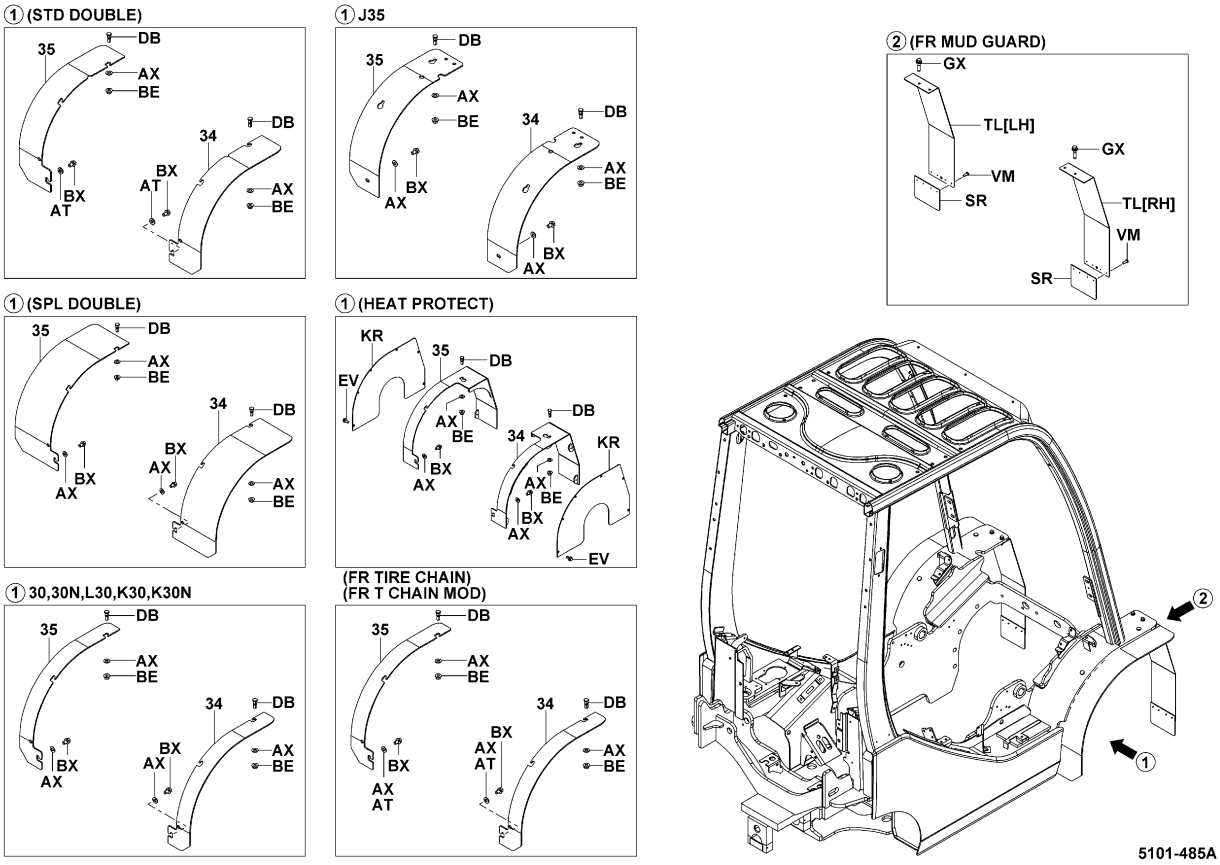


5101-485A

**ATM (LOW NOISE) [SILENCER]**

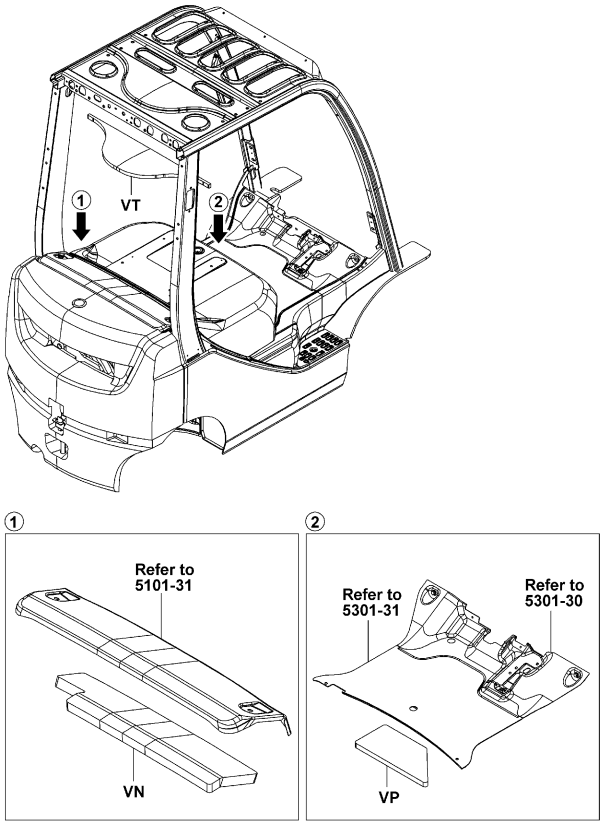


5101-488

5101-488_


| 5101 | FRAME & WEIGHT<br>CADRE & POIDS | RAHMEN & GEGENGEWICHT<br>BASTIDOR Y CONTRAPESO |
|---|---|---|


| PART NAME CODE | PART NAME | QTY |
|---|---|---|
| 5101-30 | **DRAWBAR SUB-ASSY**<br>SOUS-ENS. DE BARRE D'ATTELAGE<br>ZUGSTANGEN-TEILGRUPPE<br>SUBCONJUNTO DE BARRA DE TRACCION | 1 |
| 5101-31 | **COVER SUB-ASSY, RADIATOR**<br>SOUS-ENS. DE COUVERCLE<br>DECKEL-TEILGRUPPE<br>SUBCONJUNTO DE CUBIERTA | 1 |
| 5101-31A | **SEAL, RADIATOR COVER**<br>JOINT<br>ABDICHTUNG<br>SELLO | 1 |
| 5101-34 | **GUARD, MUD, RH**<br>PROTECTEUR<br>SCHUTZBLECH<br>PROTECTOR | 1 |
| 5101-35 | **GUARD, MUD, LH**<br>PROTECTEUR<br>SCHUTZBLECH<br>PROTECTOR | 1 |
| 5101-71 | **COVER SUB-ASSY, FRONT**<br>SOUS-ENS. DE COUVERCLE<br>DECKEL-TEILGRUPPE<br>SUBCONJUNTO DE CUBIERTA | 1 |
| 5101-AB | **BOLT**<br>BOULON<br>SCHRAUBE<br>PERNO | 2 |
| 5101-AF | **BOLT**<br>BOULON<br>SCHRAUBE<br>PERNO | 1 |
| 5101-AG | **WASHER, PLATE**<br>RODELLE<br>UNTERLEGSCHEIBE<br>ARANDELA | 1 |
| 5101-AI | **SPONGE**<br>EPONGE<br>SCHWAMM<br>ESPONJA | 1 |
| 5101-AM | **WASHER, PLATE**<br>RODELLE<br>UNTERLEGSCHEIBE<br>ARANDELA | 2 |
| 5101-AU | **COVER SUB-ASSY, UNDER**<br>SOUS-ENS. DE COUVERCLE<br>DECKEL-TEILGRUPPE<br>SUBCONJUNTO DE CUBIERTA | 1 |
| 5101-AW | **WASHER, PLATE**<br>RODELLE<br>UNTERLEGSCHEIBE<br>ARANDELA | 2 |
| 5101-AX | **WASHER, PLATE**<br>RODELLE<br>UNTERLEGSCHEIBE<br>ARANDELA | 8 |
| 5101-AZ | **PLUG**<br>BOUCHON<br>STOPFEN<br>TAPON | 2 |
| 5101-BB | **BOLT**<br>BOULON<br>SCHRAUBE<br>PERNO | 2 |
| 5101-BE | **NUT**<br>ECROU<br>MUTTER<br>TUERCA | 4 |
| 5101-BG | **BOLT**<br>BOULON<br>SCHRAUBE<br>PERNO | 6 |
| 5101-BI | **RING, E**<br>ANNEAU<br>RING<br>ANILLO | 2 |
| 5101-BO | **COLLAR**<br>COLLIER<br>BUCHSE<br>COLLAR | 2 |

## 5101

**FRAME & WEIGHT**
**CADRE & POIDS**
**RAHMEN & GEGENGEWICHT**
**BASTIDOR Y CONTRAPESO**

| PART NAME CODE | PART NAME | QTY |
|---|---|---|
| 5101-BS | **BOLT**<br>BOULON<br>SCHRAUBE<br>PERNO | 2 |
| 5101-BX | **BOLT**<br>BOULON<br>SCHRAUBE<br>PERNO | 2 |
| 5101-CG | **RUBBER**<br>CAOUTCHOUC<br>GUMMI<br>GOMA | 2 |
| 5101-CH | **RUBBER**<br>CAOUTCHOUC<br>GUMMI<br>GOMA | 2 |
| 5101-CM | **COVER**<br>COUVERCLE<br>DECKEL<br>CUBIERTA | 1- 2 |
| 5101-CV | **PLATE**<br>PLAQUE<br>PLATTE<br>PLACA | 2 |
| 5101-CZ | **NUT**<br>ECROU<br>MUTTER<br>TUERCA | 2 |
| 5101-DB | **BOLT**<br>BOULON<br>SCHRAUBE<br>PERNO | 4 |
| 5101-EC | **CAP**<br>CAPUCHON<br>KAPPE<br>TAPA | 1- 2 |
| 5101-EK | **RUBBER**<br>CAOUTCHOUC<br>GUMMI<br>GOMA | 2 |
| 5101-ER | **GASKET**<br>JOINT<br>DICHTUNG<br>EMPAQUETADURA | 2 |
| 5101-EZ | **RUBBER**<br>CAOUTCHOUC<br>GUMMI<br>GOMA | 1- 2 |
| 5101-FD | **KNOB**<br>BOULE<br>KNOPF<br>MANDO | 2 |
| 5101-FF | **COVER**<br>COUVERCLE<br>DECKEL<br>CUBIERTA | 1 |
| 5101-GV | **NUT**<br>ECROU<br>MUTTER<br>TUERCA | 1 |
| 5101-HI | **GRIP**<br>PRISE<br>GRIFF<br>EMPUÑADURA | 1 |
| 5101-IA | **BOLT**<br>BOULON<br>SCHRAUBE<br>PERNO | 2 |
| 5101-JC | **STEP**<br>MARCHE<br>STUFE<br>PASO | 1 |
| 5101-JV | **SEAL**<br>JOINT<br>ABDICHTUNG<br>SELLO | 2 |
| 5101-LK | **CLIP**<br>AGRAFE<br>CLIP<br>FIJADOR | 4 |

## 5101

**FRAME & WEIGHT**
**CADRE & POIDS**
**RAHMEN & GEGENGEWICHT**
**BASTIDOR Y CONTRAPESO**

| PART NAME CODE | PART NAME | QTY |
|---|---|---|
| 5101-LU | **SPONGE**<br>EPONGE<br>SCHWAMM<br>ESPONJA | 1 |
| 5101-MA | **BRACKET SUB-ASSY**<br>SOUS-ENS. DE SUPPORT<br>TRAGER-TEILGRUPPE<br>SUBCONJUNTO DE LA SOPORTE | 1 |
| 5101-MB | **BOLT**<br>BOULON<br>SCHRAUBE<br>PERNO | 8-12 |
| 5101-MM | **BOLT**<br>BOULON<br>SCHRAUBE<br>PERNO | 2 |
| 5101-MN | **BOLT**<br>BOULON<br>SCHRAUBE<br>PERNO | 1 |
| 5101-MU | **BRACKET SUB-ASSY**<br>SOUS-ENS. DE SUPPORT<br>TRAGER-TEILGRUPPE<br>SUBCONJUNTO DE LA SOPORTE | 1 |
| 5101-MY | **SEAL**<br>JOINT<br>ABDICHTUNG<br>SELLO | 1- 2 |
| 5101-NZ | **SCREW**<br>VIS<br>SCHRAUBE<br>TORNILLO | 4 |
| 5101-PQ | **SILENCER**<br>SILENCIEUX<br>SCHALLDAMPFER<br>SILENCIADOR | 1 |
| 5101-PR | **SILENCER**<br>SILENCIEUX<br>SCHALLDAMPFER<br>SILENCIADOR | 1- 2 |
| 5101-QJ | **PLUG, HOLE**<br>BOUCHON<br>STOPFEN<br>TAPON | 4 |
| 5101-QK | **TRIM, EDGE**<br>GARNITURE<br>ZIERSTREIFEN<br>GUARNICION | 1 |
| 5101-RI | **BOLT**<br>BOULON<br>SCHRAUBE<br>PERNO | 3 |
| 5101-RJ | **BOLT**<br>BOULON<br>SCHRAUBE<br>PERNO | 2 |
| 5101-SG | **SILENCER**<br>SILENCIEUX<br>SCHALLDAMPFER<br>SILENCIADOR | 1 |
| 5101-SH | **SILENCER**<br>SILENCIEUX<br>SCHALLDAMPFER<br>SILENCIADOR | 1 |
| 5101-SJ | **SILENCER**<br>SILENCIEUX<br>SCHALLDAMPFER<br>SILENCIADOR | 1 |
| 5101-SK | **CLIP**<br>AGRAFE<br>CLIP<br>FIJADOR | 2 |
| 5101-SW | **STEP SUB-ASSY**<br>SOUS-ENS. DE MARCHE<br>STUFEN-TEILGRUPPE<br>SUBCONJUNTO DE PASO | 1 |
| 5101-VB | **SILENCER**<br>SILENCIEUX<br>SCHALLDAMPFER<br>SILENCIADOR | 2 |

| 5101 | FRAME & WEIGHT<br>CADRE & POIDS | RAHMEN & GEGENGEWICHT<br>BASTIDOR Y CONTRAPESO |
|---|---|---|

| PART NAME CODE | PART NAME | QTY |
|---|---|---|
| 5101-VE | **SILENCER**<br>SILENCIEUX<br>SCHALLDAMPFER<br>SILENCIADOR | 1 |
| 5101-VG | **SILENCER**<br>SILENCIEUX<br>SCHALLDAMPFER<br>SILENCIADOR | 2 |
| 5101-VH | **SILENCER**<br>SILENCIEUX<br>SCHALLDAMPFER<br>SILENCIADOR | 1 |
| 5101-VI | **SILENCER**<br>SILENCIEUX<br>SCHALLDAMPFER<br>SILENCIADOR | 4 |
| 5101-VJ | **SILENCER**<br>SILENCIEUX<br>SCHALLDAMPFER<br>SILENCIADOR | 2 |
| 5101-VN | **SILENCER**<br>SILENCIEUX<br>SCHALLDAMPFER<br>SILENCIADOR | 1 |
| 5101-VP | **SILENCER**<br>SILENCIEUX<br>SCHALLDAMPFER<br>SILENCIADOR | 1 |
| 5101-VT | **SILENCER**<br>SILENCIEUX<br>SCHALLDAMPFER<br>SILENCIADOR | 1 |
| 5101-YS | **TRIM, EDGE**<br>GARNITURE<br>ZIERSTREIFEN<br>GUARNICION | 1 |
| 5101-YX | **COVER, TIRE, RH**<br>COUVERCLE<br>DECKEL<br>CUBIERTA | 1 |
| 5101-YY | **COVER, TIRE, LH**<br>COUVERCLE<br>DECKEL<br>CUBIERTA | 1 |
| 5101-ZJ | **TRIM**<br>GARNITURE<br>ZIERSTREIFEN<br>GUARNICION | 1 |


| 5101 | FRAME & WEIGHT<br>CADRE & POIDS | RAHMEN & GEGENGEWICHT<br>BASTIDOR Y CONTRAPESO |
|---|---|---|

| PART NAME CODE | PART NAME | QTY |
|---|---|---|
| | | |

| 5201 | HOOD & HINGE<br>CAPOT & CHARNIERE | HAUBE & SCHARNIER<br>CAPO Y BISAGRA |
|---|---|---|

ATM

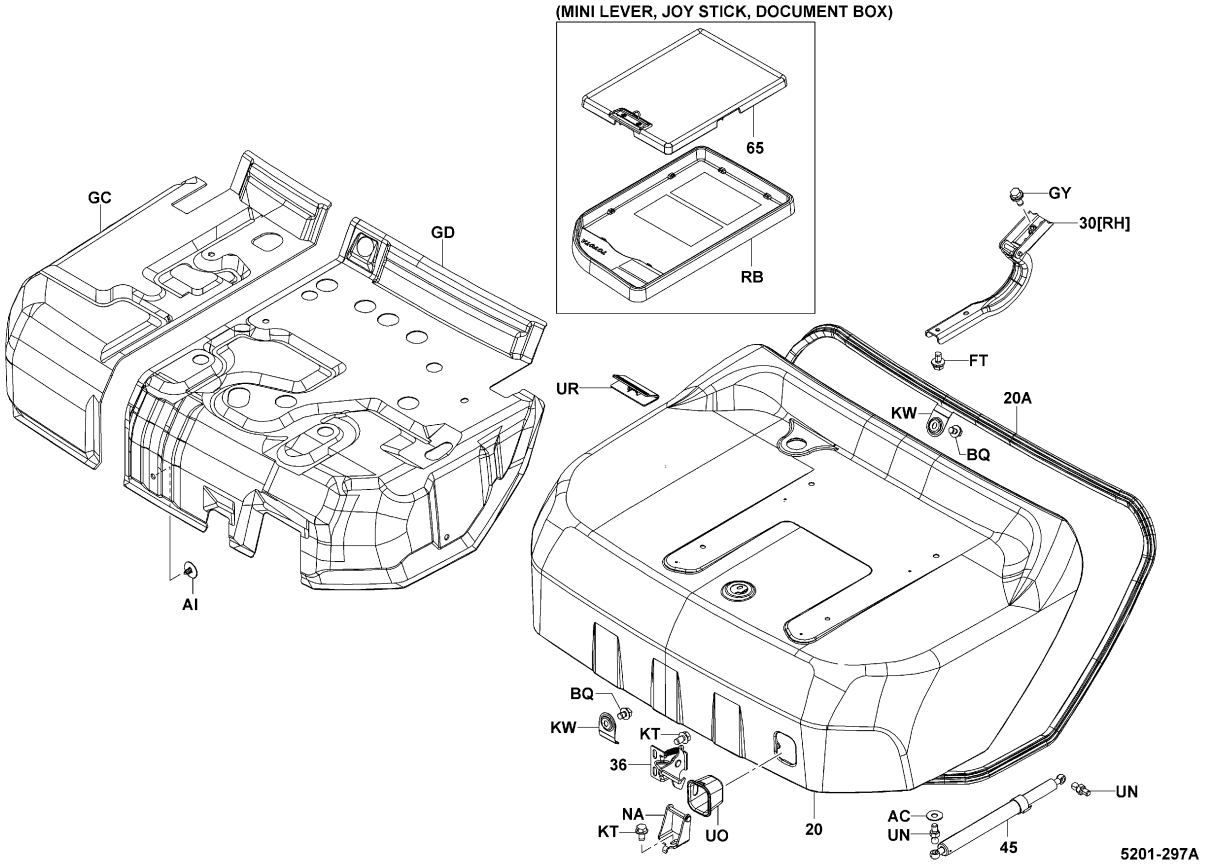


5201-297A

| 5201 | HOOD & HINGE<br>CAPOT & CHARNIERE | HAUBE & SCHARNIER<br>CAPO Y BISAGRA |
|---|---|---|

| PART NAME CODE | PART NAME | QTY |
|---|---|---|
| 5201-20 | **HOOD SUB-ASSY, ENGINE (OR BATTERY)**<br>SOUS-ENS. DE CAPOT<br>HAUBEN-TEILGRUPPE<br>SUBCONJUNTO DEL CAPO | 1 |
| 5201-20A | **SEAL, ENGINE (OR BATTERY) HOOD**<br>JOINT<br>ABDICHTUNG<br>SELLO | 1 |
| 5201-30 | **HINGE SUB-ASSY, ENGINE (OR BATTERY) HOOD**<br>SOUS-ENS. DE CHARNIERE<br>SCHARNIER-TEILGRUPPE<br>SUBCONJUNTO DE BISAGRA | 1 |
| 5201-36 | **LOCK ASSY**<br>ENS. DE VERROU<br>SCHLOSS, VOLLST.<br>CONJUNTO DEL CIERRE | 1 |
| 5201-45 | **DAMPER, ENGINE HOOD**<br>AMORTISSEUR<br>DAMPFER<br>AMORTIGUADOR | 1 |
| 5201-65 | **BOARD ASSY, PAPER**<br>NES. DE PANNEAU<br>BRETT, VOLLST.<br>CONJUNTO DEL TABLERO | 1 |
| 5201-AC | **WASHER, PLATE**<br>RODELLE<br>UNTERLEGSCHEIBE<br>ARANDELA | 1 |
| 5201-AI | **CLIP**<br>AGRAFE<br>CLIP<br>FIJADOR | 6 |
| 5201-BQ | **BOLT**<br>BOULON<br>SCHRAUBE<br>PERNO | 2 |
| 5201-FT | **BOLT**<br>BOULON<br>SCHRAUBE<br>PERNO | 4 |
| 5201-GC | **SILENCER**<br>SILENCIEUX<br>SCHALLDAMPFER<br>SILENCIADOR | 1 |
| 5201-GD | **SILENCER**<br>SILENCIEUX<br>SCHALLDAMPFER<br>SILENCIADOR | 1 |
| 5201-GY | **BOLT**<br>BOULON<br>SCHRAUBE<br>PERNO | 4 |
| 5201-IC | **HINGE SUB-ASSY**<br>SOUS-ENS. DE CHARNIERE<br>SCHARNIER-TEILGRUPPE<br>SUBCONJUNTO DE BISAGRA | 1 |
| 5201-KT | **BOLT**<br>BOULON<br>SCHRAUBE<br>PERNO | 3 |
| 5201-KW | **BRACKET**<br>SUPPORT<br>TRAGER<br>SOPORTE | 2 |
| 5201-NA | **STRIKER SUB-ASSY**<br>SOUS-ENS. DE PERCUTEUR<br>SCHLAGBOLZEN-TEILGRUPPE<br>SUBCONJUNTO DE CERRADERO | 1 |
| 5201-PO | **HINGE**<br>CHARNIERE<br>SCHARNIER<br>BISAGRA | 1 |
| 5201-RB | **TRAY**<br>SUPPORT<br>TROG<br>BANDEJA | 1 |
| 5201-UN | **BOLT, BALL**<br>BOULON<br>SCHRAUBE<br>PERNO | 2 |

| 5201 | HOOD & HINGE<br>CAPOT & CHARNIERE | HAUBE & SCHARNIER<br>CAPO Y BISAGRA |
|---|---|---|

| PART NAME CODE | PART NAME | QTY | PART NAME CODE | PART NAME | QTY |
|---|---|---|---|---|---|
| 5201-UO | **CASE, HOOD LOCK**<br>CARTER<br>GEHÄUSE<br>CAJA | 1 | | | |
| 5201-UR | **CLAMP ASSY, PAPER**<br>ENS. DE PINSE<br>KLEMMEN, VOLLST.<br>CONJUNTO DE ABRAZADERA | 1 | | | |


| 5201 | HOOD & HINGE<br>CAPOT & CHARNIERE | HAUBE & SCHARNIER<br>CAPO Y BISAGRA |
|---|---|---|

| PART NAME CODE | PART NAME | QTY | PART NAME CODE | PART NAME | QTY |
|---|---|---|---|---|---|

ATM [TOE-BOARD]

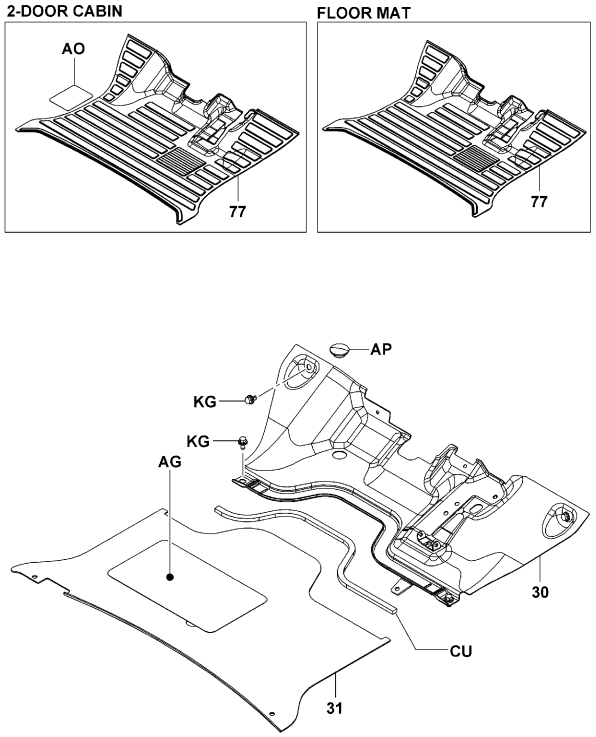


5301-394B

5301-394B



ATM [FRONT BOARD]

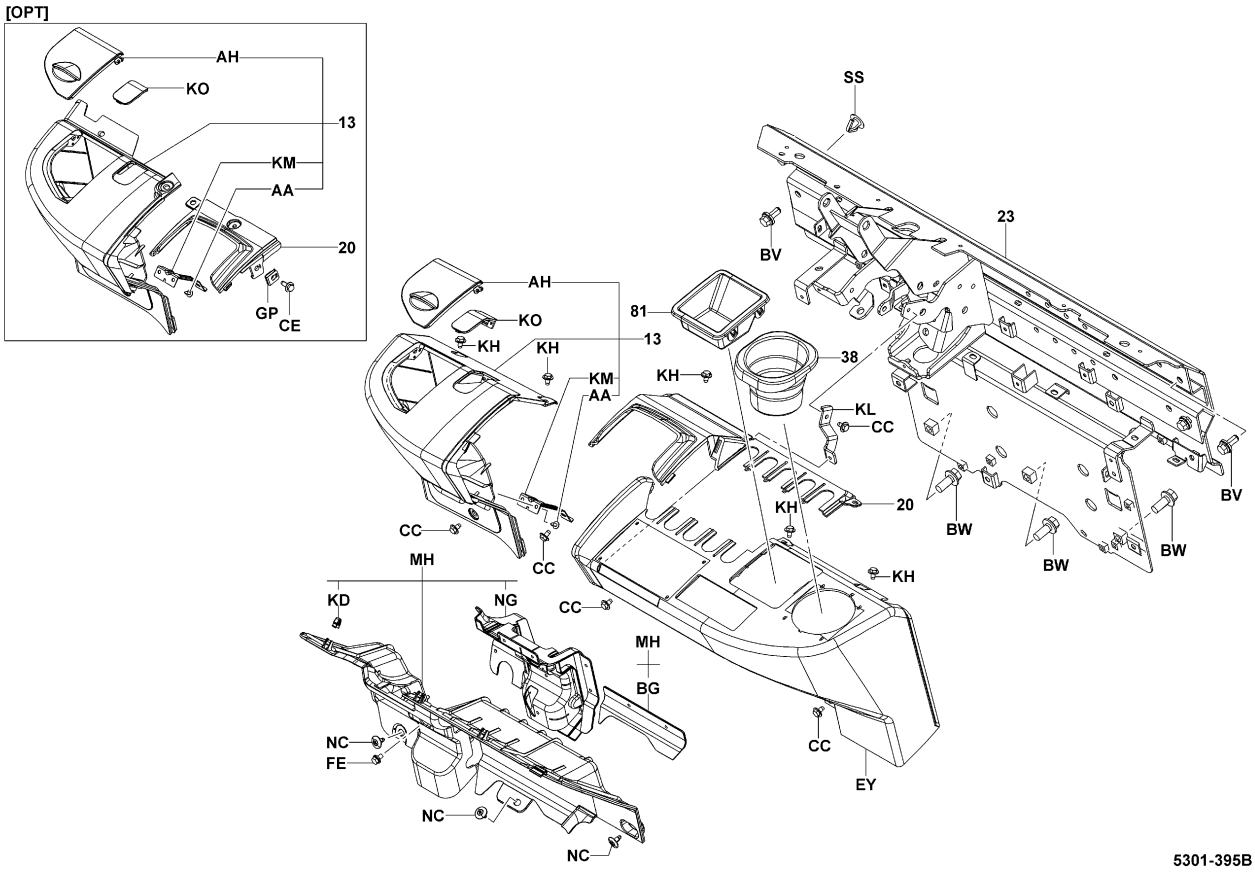


5301-395B

5301-395B

ATM (HAND BRAKE) [FRONT BOARD]

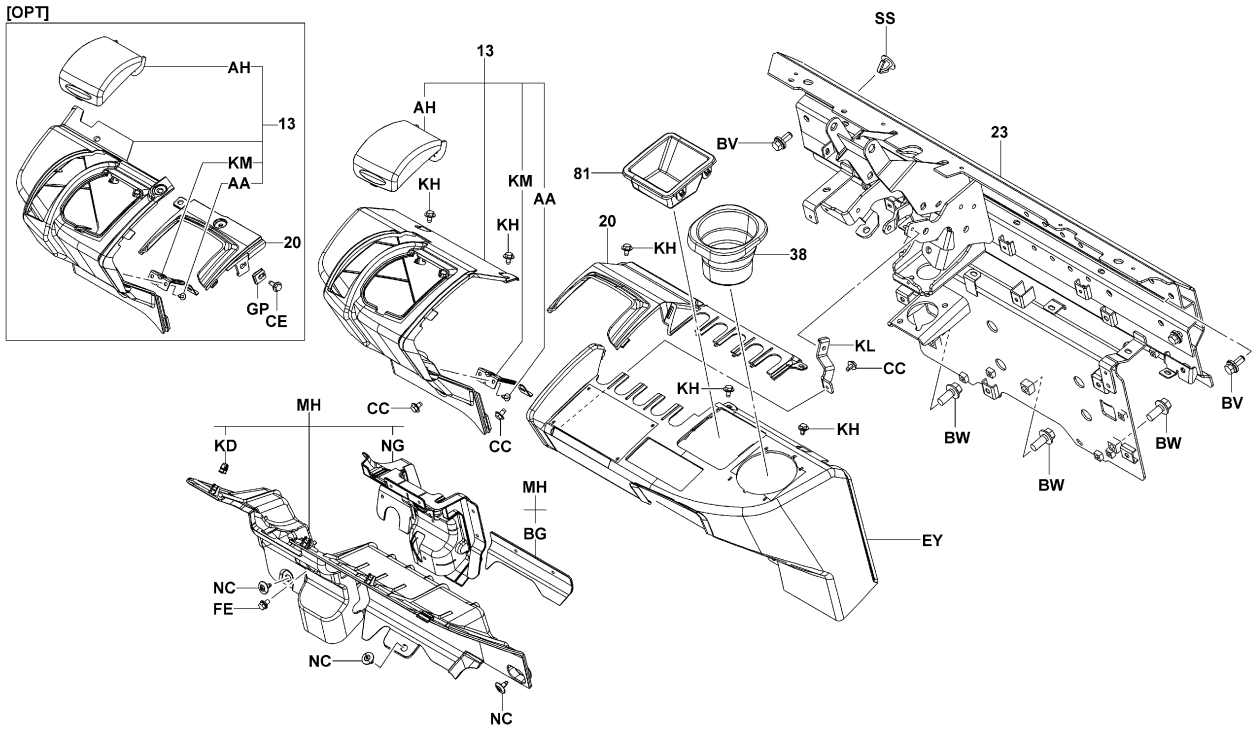


5301-464

5301-464_



ATM (MULTI DISPLAY, MULTI DISP DX)

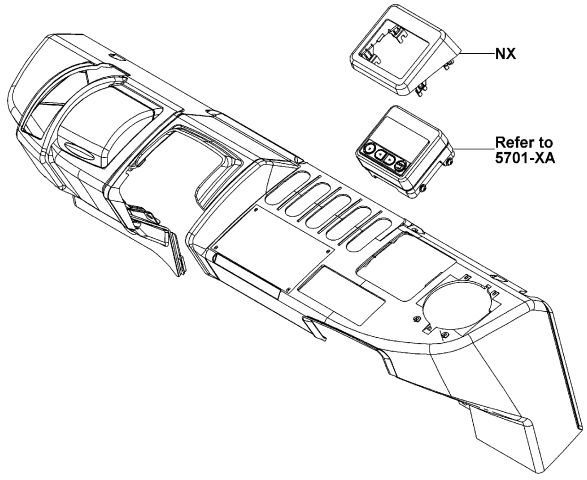


5301-397

5301-397_

ATM (MINI LEVER, JOY STICK)

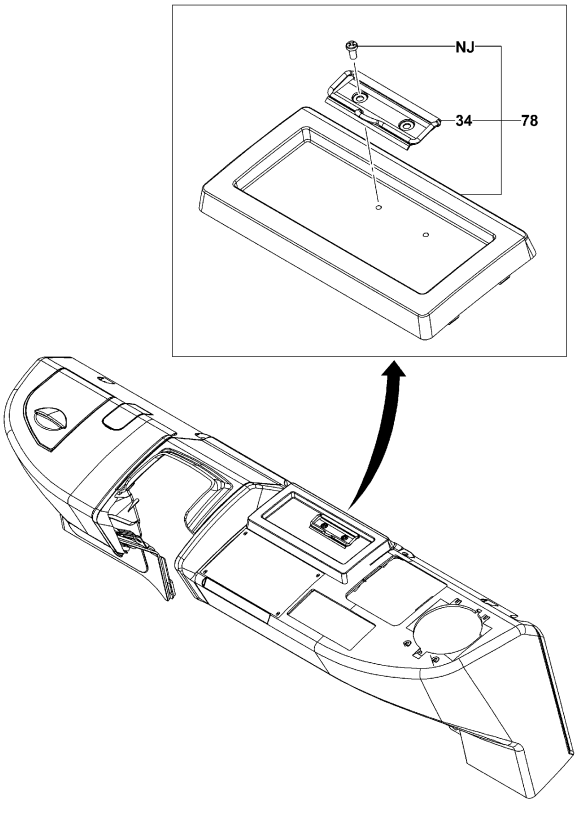


5301-398

5301-398_

**ATM (URETHANE FL MAT)**

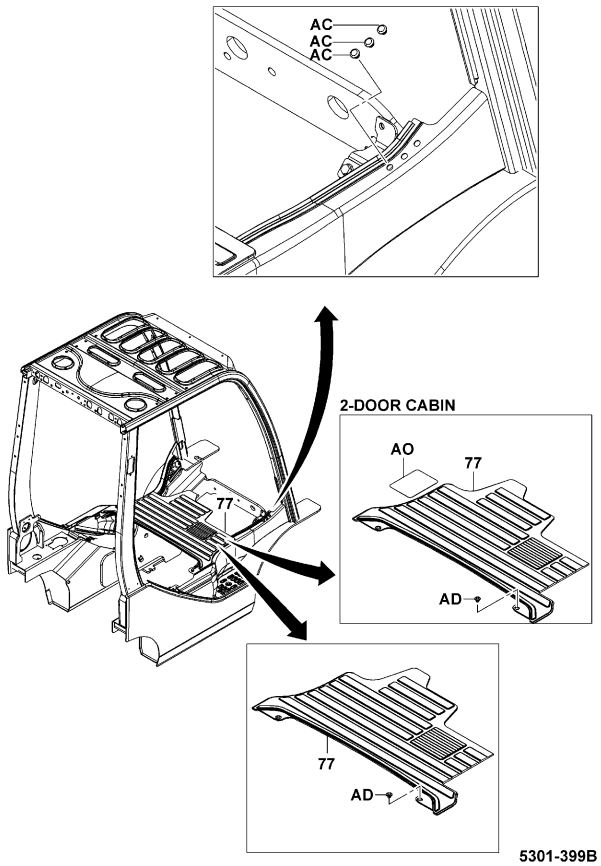


5301-399B


| 5301 | INSTRUMENT PANEL & FLOOR<br>PANNEAU D'INSTRUMENT & PLANCHER | ARMATURCNBRETT & BODENPLATE<br>PISO Y TABLERO DE INSTRUMENTOS |
|---|---|---|


| PART NAME CODE | PART NAME | QTY |
|---|---|---|
| 5301-13 | **PANEL ASSY, INSTRUMENT**<br>ENS. DE PANNEAU<br>TAFEL, VOLLST.<br>CONJUNTO DEL PANEL | 1 |
| 5301-20 | **PANEL SUB-ASSY, INSTRUMENT**<br>SOUS-ENS. DE PANNEAU<br>TAFEL-TEILGRUPPE<br>SUBCONJUNTO DEL PANEL | 1 |
| 5301-23 | **PROTECTOR SUB-ASSY, FR**<br>SOUS-ENS. DE PROTECTEUR<br>SCHUTZABDECKUNGS-TEILGRUPPE<br>SUBCONJUNTO DEL PROTECTOR | 1 |
| 5301-30 | **TOE-BOARD SUB-ASSY, NO.1**<br>SOUS-ENS. DE PLAQUETTE DE CAME<br>BODENBLECH-TEILGRUPPE<br>SUBCONJUNTO DEL PISO OBLICUO | 1 |
| 5301-31 | **TOE-BOARD SUB-ASSY, NO.2**<br>SOUS-ENS. DE PLAQUETTE DE CAME<br>BODENBLECH-TEILGRUPPE<br>SUBCONJUNTO DEL PISO OBLICUO | 1 |
| 5301-34 | **CLAMP SUB-ASSY, PAPER**<br>SOUS-ENS. DE PINCE<br>KLEMMEN-TEILGRUPPE<br>SUBCONJUNTO DE ABRAZADERA | 1 |
| 5301-38 | **HOLDER ASSY, CUP**<br>ENS. DE SUPPORT<br>DUSENSTOCR, VOLLST.<br>CONJUNTO DE PORTABOQUILLAS | 1 |
| 5301-77 | **MAT SUB-ASSY, FLOOR**<br>SOUS-ENS. DE MAT<br>MATTE-TEILGRUPPE<br>SUBCONJUNTO DEL ESTERILLA | 1 |
| 5301-78 | **TRAY ASSY**<br>ENS. DE SUPPORT<br>TROG, VOLLST.<br>CONJUNTO DE LA BANDEJA | 1 |
| 5301-81 | **BOX ASSY**<br>ENS. DE BOITIER<br>KASTEN, VOLLST.<br>CONJUNTO DE LA CAJA | 1 |
| 5301-AA | **SCREW**<br>VIS<br>SCHRAUBE<br>TORNILLO | 2 |
| 5301-AC | **PLUG**<br>BOUCHON<br>STOPFEN<br>TAPON | 3 |
| 5301-AD | **PLUG**<br>BOUCHON<br>STOPFEN<br>TAPON | 2 |
| 5301-AG | **SAFETY WALK**<br>PASSERELLE DE SECURITE<br>SICHERHEITSBELAG<br>MARCHA DE SEGURIDAD | 1 |
| 5301-AH | **COVER**<br>COUVERCLE<br>DECKEL<br>CUBIERTA | 1 |
| 5301-AP | **PLUG, HOLE**<br>BOUCHON<br>STOPFEN<br>TAPON | 1 |
| 5301-BV | **BOLT**<br>BOULON<br>SCHRAUBE<br>PERNO | 4 |
| 5301-BW | **BOLT**<br>BOULON<br>SCHRAUBE<br>PERNO | 3 |
| 5301-CC | **BOLT**<br>BOULON<br>SCHRAUBE<br>PERNO | 5 |
| 5301-CE | **BOLT**<br>BOULON<br>SCHRAUBE<br>PERNO | 1 |

| 5301 | INSTRUMENT PANEL & FLOOR<br>PANNEAU D'INSTRUMENT & PLANCHER | ARMATURCNBRETT & BODENPLATE<br>PISO Y TABLERO DE INSTRUMENTOS |
|---|---|---|

| PART NAME CODE | PART NAME | QTY |
|---|---|---|
| 5301-CU | **RUBBER**<br>CAOUTCHOUC<br>GUMMI<br>GOMA | 1 |
| 5301-EY | **PANEL SUB-ASSY, INSTRUMENT**<br>SOUS-ENS. DE PANNEAU<br>TAFEL-TEILGRUPPE<br>SUBCONJUNTO DEL PANEL | 1 |
| 5301-FE | **BOLT**<br>BOULON<br>SCHRAUBE<br>PERNO | 1 |
| 5301-GP | **NUT**<br>ECROU<br>MUTTER<br>TUERCA | 1 |
| 5301-KD | **CLIP**<br>AGRAFE<br>CLIP<br>FIJADOR | 3 |
| 5301-KG | **BOLT**<br>BOULON<br>SCHRAUBE<br>PERNO | 4 |
| 5301-KH | **BOLT**<br>BOULON<br>SCHRAUBE<br>PERNO | 5 |
| 5301-KL | **BRACKET**<br>SUPPORT<br>TRAGER<br>SOPORTE | 1 |
| 5301-KM | **BRACKET**<br>SUPPORT<br>TRAGER<br>SOPORTE | 1 |
| 5301-KO | **CAP**<br>CAPUCHON<br>KAPPE<br>TAPA | 1 |
| 5301-MH | **PANEL SUB-ASSY**<br>SOUS-ENS. DE PANNEAU<br>TAFEL-TEILGRUPPE<br>SUBCONJUNTO DEL PANEL | 1 |
| 5301-NC | **CLIP**<br>AGRAFE<br>CLIP<br>FIJADOR | 3 |
| 5301-NG | **SEAL, RUBBER**<br>JOINT<br>ABDICHTUNG<br>SELLO | 1 |
| 5301-NJ | **SCREW**<br>VIS<br>SCHRAUBE<br>TORNILLO | 2 |
| 5301-NX | **COVER SUB-ASSY**<br>SOUS-ENS. DE COUVERCLE<br>DECKEL-TEILGRUPPE<br>SUBCONJUNTO DE CUBIERTA | 1 |
| 5301-SS | **PLUG, HOLE**<br>BOUCHON<br>STOPFEN<br>TAPON | 1- 2 |


| 5301 | INSTRUMENT PANEL & FLOOR<br>PANNEAU D'INSTRUMENT & PLANCHER | ARMATURCNBRETT & BODENPLATE<br>PISO Y TABLERO DE INSTRUMENTOS |
|---|---|---|


| PART NAME CODE | PART NAME | QTY |
|---|---|---|

| PART NAME CODE | PART NAME | QTY |
|---|---|---|

| 5308 | DRIVER SEAT<br>SIEGE DU CONDUCTEUR | FAHRERSITZ<br>ASIENTO DEL CONDUCTOR |
|---|---|---|

ATM [ASSY]




5308-328

5308-328_

| 5308 | DRIVER SEAT<br>SIEGE DU CONDUCTEUR | FAHRERSITZ<br>ASIENTO DEL CONDUCTOR |
|---|---|---|

ATM (SWIVEL SEAT)

(TURN SEAT)

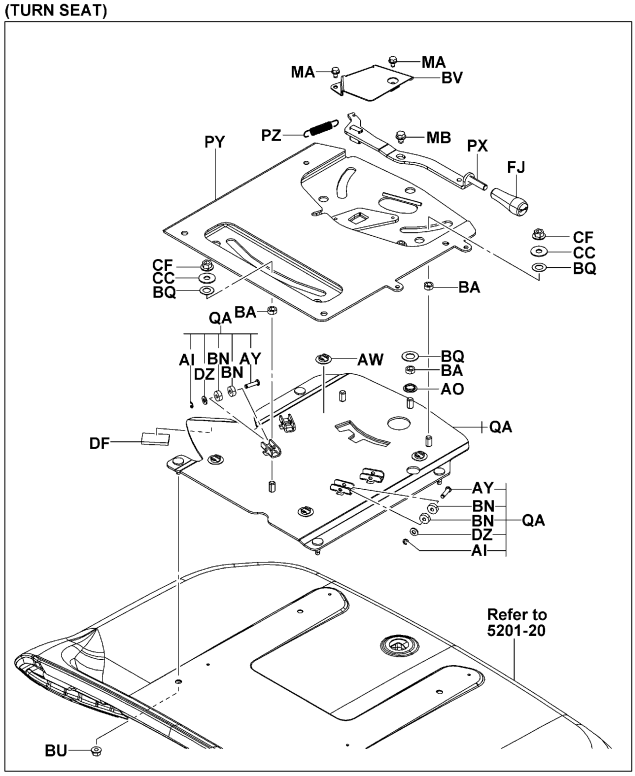


(MINI,JOY)

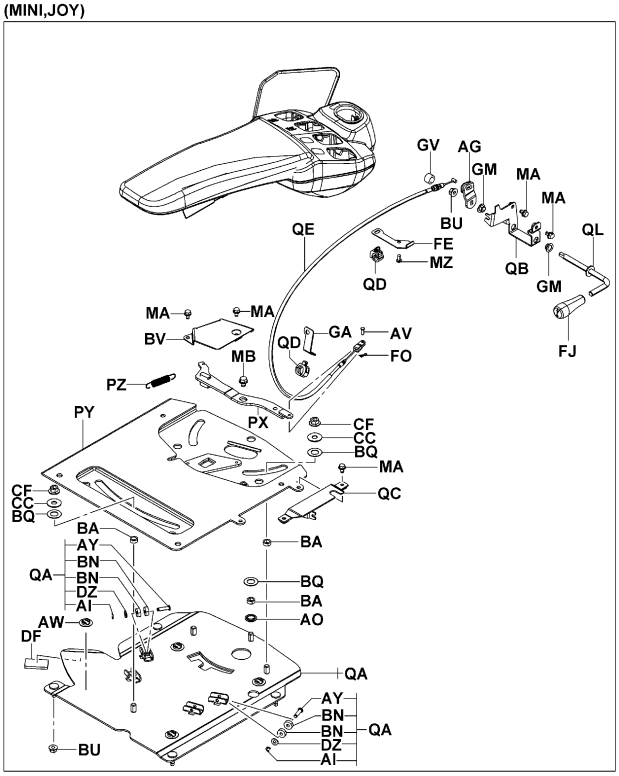


5308-329C

5308-329C

| 5308 | DRIVER SEAT<br>SIEGE DU CONDUCTEUR | FAHRERSITZ<br>ASIENTO DEL CONDUCTOR |
|---|---|---|

ATM

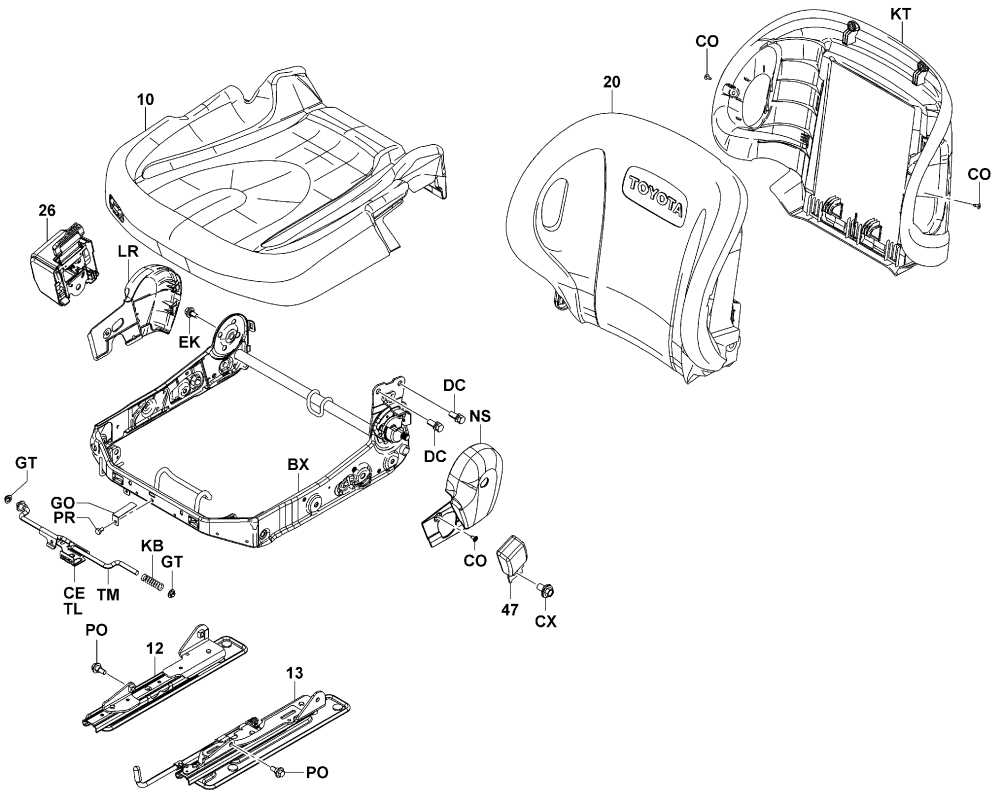


5308-410

5308-410_

| 5308 | DRIVER SEAT<br>SIEGE DU CONDUCTEUR | FAHRERSITZ<br>ASIENTO DEL CONDUCTOR |
|---|---|---|

ATM (PREMIUM CABIN)

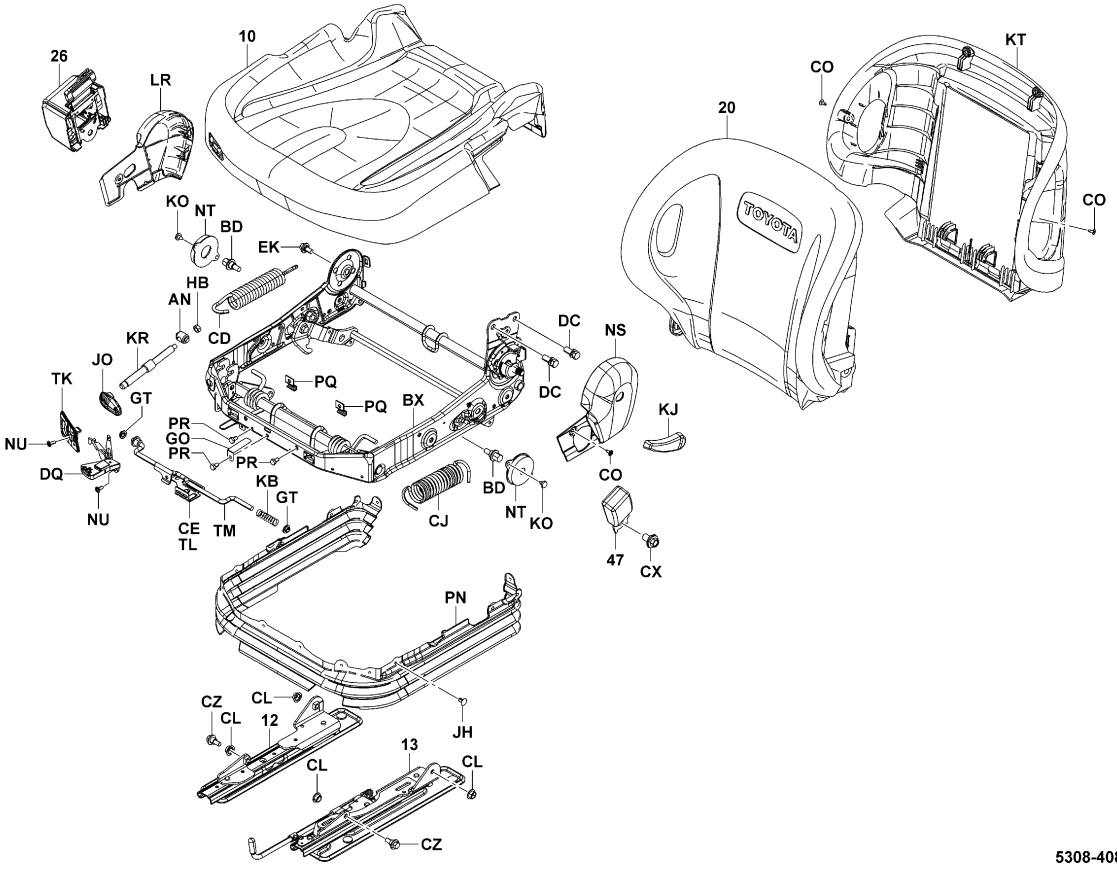


5308-408

5308-408_

| 5308 | DRIVER SEAT<br>SIEGE DU CONDUCTEUR | FAHRERSITZ<br>ASIENTO DEL CONDUCTOR |
|---|---|---|

ATM (W/ABSORBER)

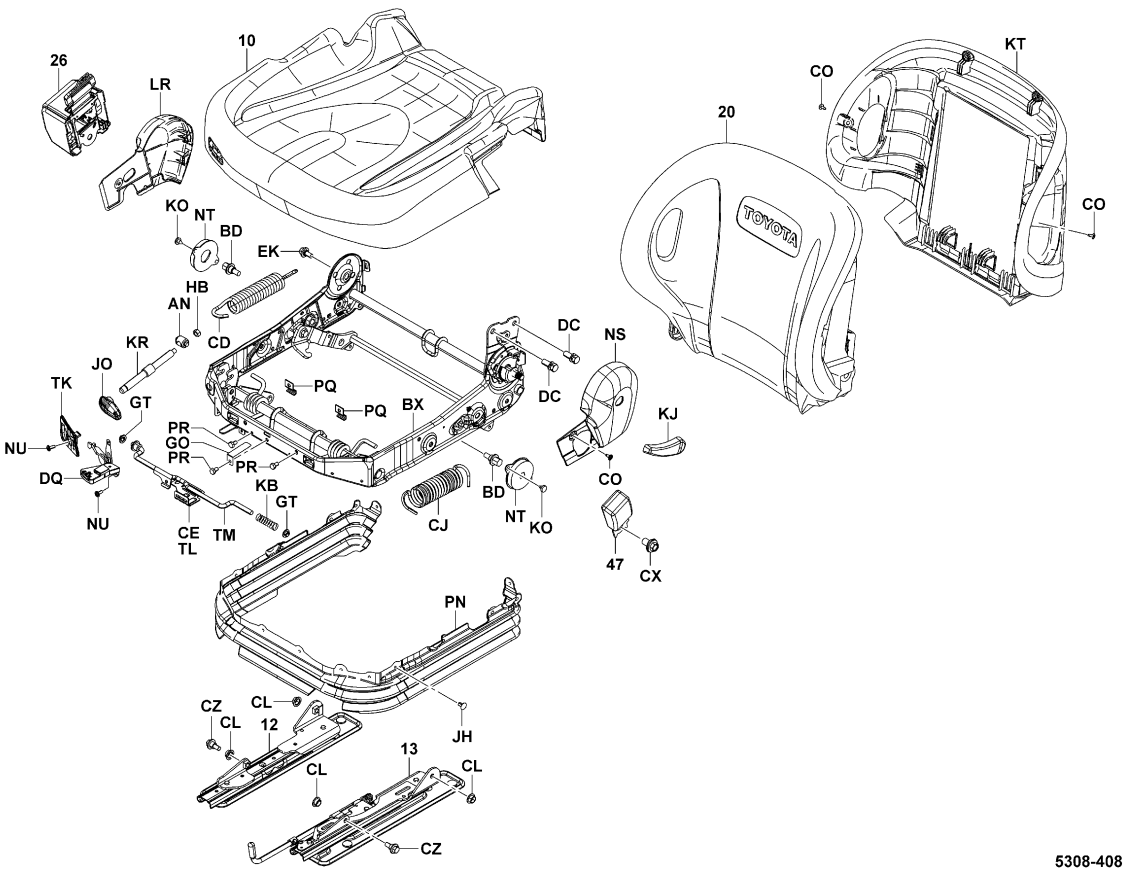


5308-408

5308-408_

| 5308 | DRIVER SEAT<br>SIEGE DU CONDUCTEUR | FAHRERSITZ<br>ASIENTO DEL CONDUCTOR |
|---|---|---|

1DZ..10N,15N,18N (LOW PRO RUSSIA)

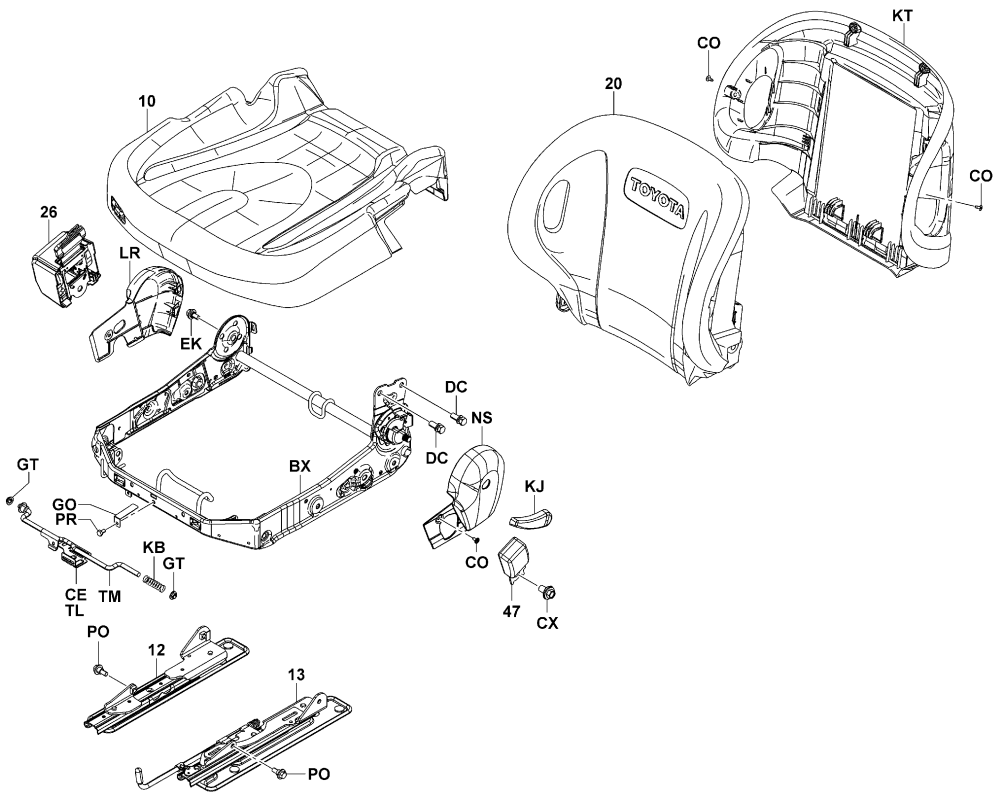


5308-409

5308-409_

| 5308 | DRIVER SEAT<br>SIEGE DU CONDUCTEUR | FAHRERSITZ<br>ASIENTO DEL CONDUCTOR |
|---|---|---|

**ATM (MINI LEVER, JOY STICK)**

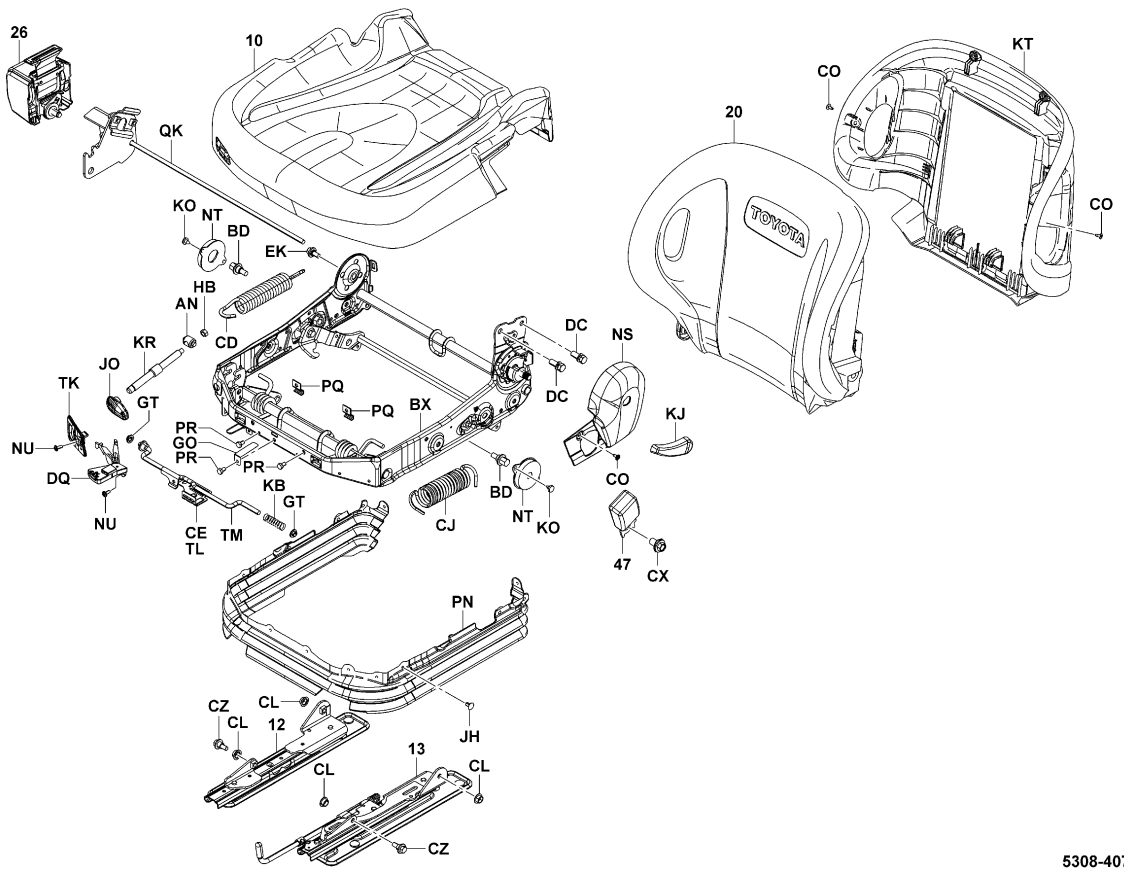


| 5308 | DRIVER SEAT<br>SIEGE DU CONDUCTEUR | FAHRERSITZ<br>ASIENTO DEL CONDUCTOR |
|---|---|---|

| PART NAME CODE | PART NAME | QTY |
|---|---|---|
| 5308-01 | **SEAT ASSY**<br>ENS. DE SIEGE<br>SITZ, VOLLST.<br>CONJUNTO DEL ASIENTO | 1 |
| 5308-10 | **CUSHION ASSY**<br>ENS. DE COUSSIN<br>POLSTER, VOLLST.<br>CONJUNTO DE ALMOHADILLA | 1 |
| 5308-12 | **TRACK ASSY, SEAT OUTER, RH**<br>ENS. DE PISTE<br>GLEITSCHIENE, VOLLST.<br>CONJUNTO DE TRACCION | 1 |
| 5308-13 | **TRACK ASSY, SEAT OUTER, LH**<br>ENS. DE PISTE<br>GLEITSCHIENE, VOLLST.<br>CONJUNTO DE TRACCION | 1 |
| 5308-20 | **SEAT SUB-ASSY, BACK**<br>SOUS-ENS. DE SIEGE<br>SITZ-TEILGRUPPE<br>SUBCONJUNTO DEL ASIENTO | 1 |
| 5308-26 | **BELT ASSY, SEAT**<br>ENS. DE COURROIE<br>RIEMEN, VOLLST.<br>CONJUNTO DE LA CORREA | 1 |
| 5308-47 | **BELT ASSY, SEAT**<br>ENS. DE COURROIE<br>RIEMEN, VOLLST.<br>CONJUNTO DE LA CORREA | 1 |
| 5308-AG | **LINK**<br>TRINGLE<br>GELENKTEIL<br>ARTICULACION | 1 |
| 5308-AH | **PIN**<br>GOUPILLE<br>STIFT<br>PASADOR | 1 |
| 5308-AI | **RING, E**<br>ANNEAU<br>RING<br>ANILLO | 4 |
| 5308-AO | **BUSHING**<br>BAGUE<br>BUCHSE<br>BUJE | 1 |
| 5308-AV | **PIN**<br>GOUPILLE<br>STIFT<br>PASADOR | 1 |
| 5308-AW | **BUSHING**<br>BAGUE<br>BUCHSE<br>BUJE | 4 |
| 5308-AY | **PIN**<br>GOUPILLE<br>STIFT<br>PASADOR | 4 |
| 5308-BA | **SPACER**<br>ENTRETOISE<br>DISTANZSTUCK<br>SEPARADOR | 4 |
| 5308-BD | **BOLT**<br>BOULON<br>SCHRAUBE<br>PERNO | 2 |
| 5308-BG | **BOLT**<br>BOULON<br>SCHRAUBE<br>PERNO | 1 |
| 5308-BN | **BEARING**<br>ROULEMENT<br>LAGER<br>COJINETE | 8 |
| 5308-BQ | **PLATE**<br>PLAQUE<br>PLATTE<br>PLACA | 4 |
| 5308-BU | **NUT**<br>ECROU<br>MUTTER<br>TUERCA | 4- 5 |

| 5308 | DRIVER SEAT<br>SIEGE DU CONDUCTEUR | FAHRERSITZ<br>ASIENTO DEL CONDUCTOR |
|---|---|---|

| PART NAME CODE | PART NAME | QTY |
|---|---|---|
| 5308-BV | **COVER**<br>COUVERCLE<br>DECKEL<br>CUBIERTA | 1 |
| 5308-BX | **FRAME SUB-ASSY, SEAT**<br>SOUS-ENS. DE CADRE<br>RAHMEN-TEILGRUPPE<br>SUBCONJUNTO DEL BASTIDOR | 1 |
| 5308-CC | **WASHER, PLATE**<br>RODELLE<br>UNTERLEGSCHEIBE<br>ARANDELA | 4 |
| 5308-CD | **SPRING**<br>RESSORT<br>FEDER<br>RESORTE | 1 |
| 5308-CE | **SWITCH SUB-ASSY, SEAT**<br>SOUS-ENS. DE INTERRUPTEUR<br>SCHALTER-TEILGRUPPE<br>SUBCONJUNTO DEL INTERRUPTOR | 1 |
| 5308-CF | **NUT**<br>ECROU<br>MUTTER<br>TUERCA | 4 |
| 5308-CJ | **SPRING**<br>RESSORT<br>FEDER<br>RESORTE | 1 |
| 5308-CL | **COLLAR**<br>COLLIER<br>BUCHSE<br>COLLAR | 4 |
| 5308-CO | **SCREW**<br>VIS<br>SCHRAUBE<br>TORNILLO | 5- 6 |
| 5308-CX | **BOLT**<br>BOULON<br>SCHRAUBE<br>PERNO | 1 |
| 5308-CZ | **BOLT**<br>BOULON<br>SCHRAUBE<br>PERNO | 2 |
| 5308-DC | **BOLT**<br>BOULON<br>SCHRAUBE<br>PERNO | 2 |
| 5308-DF | **RUBBER**<br>CAOUTCHOUC<br>GUMMI<br>GOMA | 1 |
| 5308-DQ | **INDICATOR**<br>INDICATEUR<br>ANZEIGER<br>INDICADOR | 1 |
| 5308-DZ | **WASHER, PLATE**<br>RODELLE<br>UNTERLEGSCHEIBE<br>ARANDELA | 4 |
| 5308-EA | **NUT**<br>ECROU<br>MUTTER<br>TUERCA | 4 |
| 5308-EK | **BOLT**<br>BOULON<br>SCHRAUBE<br>PERNO | 1 |
| 5308-EL | **BOLT**<br>BOULON<br>SCHRAUBE<br>PERNO | 2 |
| 5308-FE | **BRACKET**<br>SUPPORT<br>TRAGER<br>SOPORTE | 1 |
| 5308-FJ | **KNOB**<br>BOULE<br>KNOPF<br>MANDO | 1 |

| 5308 | DRIVER SEAT<br>SIEGE DU CONDUCTEUR | FAHRERSITZ<br>ASIENTO DEL CONDUCTOR |
|---|---|---|

| PART NAME CODE | PART NAME | QTY |
|---|---|---|
| 5308-FO | **CLIP**<br>AGRAFE<br>CLIP<br>FIJADOR | 1 |
| 5308-GA | **BRACKET**<br>SUPPORT<br>TRAGER<br>SOPORTE | 4 |
| 5308-GM | **BUSHING**<br>BAGE<br>BUCHSE<br>MANGUITO | 2 |
| 5308-GO | **PLATE**<br>PLAQUE<br>PLATTE<br>PLACA | 1 |
| 5308-GT | **COLLAR**<br>COLLIER<br>BUCHSE<br>COLLAR | 2 |
| 5308-GV | **CAP**<br>CAPUCHON<br>KAPPE<br>TAPA | 1 |
| 5308-GW | **CLAMP**<br>PINSE<br>KLEMME<br>ABRAZADERA | 2 |
| 5308-HB | **NUT**<br>ECROU<br>MUTTER<br>TUERCA | 1 |
| 5308-HJ | **NUT**<br>ECROU<br>MUTTER<br>TUERCA | 1 |
| 5308-JH | **CLIP**<br>AGRAFE<br>CLIP<br>FIJADOR | 12-13 |
| 5308-JO | **KNOB**<br>BOULE<br>KNOPF<br>MANDO | 1 |
| 5308-KB | **SPRING**<br>RESSORT<br>FEDER<br>RESORTE | 1 |
| 5308-KJ | **LEVER**<br>LEVIER<br>HEBEL<br>PALANCA | 1 |
| 5308-KO | **SCREW**<br>VIS<br>SCHRAUBE<br>TORNILLO | 4 |
| 5308-KR | **SHAFT**<br>ARBRE<br>WELLE<br>EJE | 1 |
| 5308-KT | **BOARD, BACK**<br>PANNEAU<br>BRETT<br>TABLERO | 1 |
| 5308-LR | **SHIELD**<br>PARE-POUSSIERE<br>SCHILD<br>PROTECTOR | 1 |
| 5308-LT | **BAND, SEAT BACK POCKET**<br>BANDE<br>BAND<br>BANDA | 1 |
| 5308-MA | **BOLT**<br>BOULON<br>SCHRAUBE<br>PERNO | 2- 6 |
| 5308-MB | **BOLT**<br>BOULON<br>SCHRAUBE<br>PERNO | 1 |

| 5308 | DRIVER SEAT<br>SIEGE DU CONDUCTEUR | FAHRERSITZ<br>ASIENTO DEL CONDUCTOR |
|---|---|---|

| PART NAME CODE | PART NAME | QTY | PART NAME CODE | PART NAME | QTY |
|---|---|---|---|---|---|
| 5308-MG | **CLAMP**<br>PINSE<br>KLEMME<br>ABRAZADERA | 1 | 5308-PR | **BOLT**<br>BOULON<br>SCHRAUBE<br>PERNO | 1- 3 |
| 5308-MZ | **SCREW**<br>VIS<br>SCHRAUBE<br>TORNILLO | 1 | 5308-PX | **LEVER SUB-ASSY, SWIVEL**<br>SOUS-ENS. DE LEVIER<br>HEBEL-TEILGRUPPE<br>SUBCONJUNTO DE LA PALANCA | 1 |
| 5308-NE | **SHAFT**<br>ARBRE<br>WELLE<br>EJE | 1 | 5308-PY | **PLATE SUB-ASSY, SWIVEL**<br>SOUS-ENS. DE PLAQUE<br>PLATTEN-TEILGRUPPE<br>SUBCONJUNTO DE PLACA | 1 |
| 5308-NS | **SHIELD**<br>PARE-POUSSIERE<br>SCHILD<br>PROTECTOR | 1 | 5308-PZ | **SPRING, TENSION**<br>RESSORT<br>FEDER<br>RESORTE | 1 |
| 5308-NT | **ABSORBER ASSY**<br>ENS. AMORTISSEUR<br>STOSSDAMPER-VOLLST.<br>CONJUNTO DEL AMORTIGUADOR | 2 | 5308-QA | **TABLE ASSY, SWIVEL**<br>RESSORT<br>FEDER<br>RESORTE | 1 |
| 5308-NU | **SCREW**<br>VIS<br>SCHRAUBE<br>TORNILLO | 2 | 5308-QB | **BRACKET SUB-ASSY, LEVER**<br>SOUS-ENS. DE SUPPORT<br>TRÄGER-TEILGRUPPE<br>SUBCONJUNTO DE LA SOPORTE | 1 |
| 5308-NV | **SCREW**<br>VIS<br>SCHRAUBE<br>TORNILLO | 1 | 5308-QC | **BRACKET SUB-ASSY, WIRE**<br>SOUS-ENS. DE SUPPORT<br>TRÄGER-TEILGRUPPE<br>SUBCONJUNTO DE LA SOPORTE | 1 |
| 5308-PN | **BOOT**<br>COFFRE<br>MANSCHETTE<br>FORRO | 1 | 5308-QD | **CLAMP**<br>PINSE<br>KLEMME<br>ABRAZADERA | 2 |
| 5308-PO | **BOLT**<br>BOULON<br>SCHRAUBE<br>PERNO | 4 | 5308-QE | **WIRE ASSY, RELEASE LEVER**<br>ENS. DE FIL<br>DRAHT, VOLLST.<br>CONJUNTO DE ALAMBRE | 1 |
| 5308-PQ | **PLATE, SPRING**<br>PLAQUE<br>PLATTE<br>PLACA | 2 | 5308-QH | **BOLT**<br>BOULON<br>SCHRAUBE<br>PERNO | 2 |

| 5308 | DRIVER SEAT<br>SIEGE DU CONDUCTEUR | FAHRERSITZ<br>ASIENTO DEL CONDUCTOR |
|---|---|---|

| PART NAME CODE | PART NAME | QTY | PART NAME CODE | PART NAME | QTY |
|---|---|---|---|---|---|
| 5308-QJ | **COVER, SEAT**<br>COUVERCLE<br>DECKEL<br>CUBIERTA | 1 | | | |
| 5308-QK | **FRAME**<br>CADRE<br>RAHMEN<br>BASTIDOR | 1 | | | |
| 5308-QL | **LEVER**<br>LEVIER<br>HEBEL<br>PALANCA | 1 | | | |
| 5308-TK | **SHIELD**<br>PARE-POUSSIERE<br>SCHILD<br>PROTECTOR | 1 | | | |
| 5308-TL | **BEZEL, SWITCH**<br>COUVERCLE<br>FRONTRING<br>ABISELAR | 1 | | | |
| 5308-TM | **WIRE SUB-ASSY**<br>SOUS-ENS. DE FIL<br>DRAHT-TEILGRUPPE<br>SUBCONJUNTO DE ALAMBRE | 1 | | | |

ATM

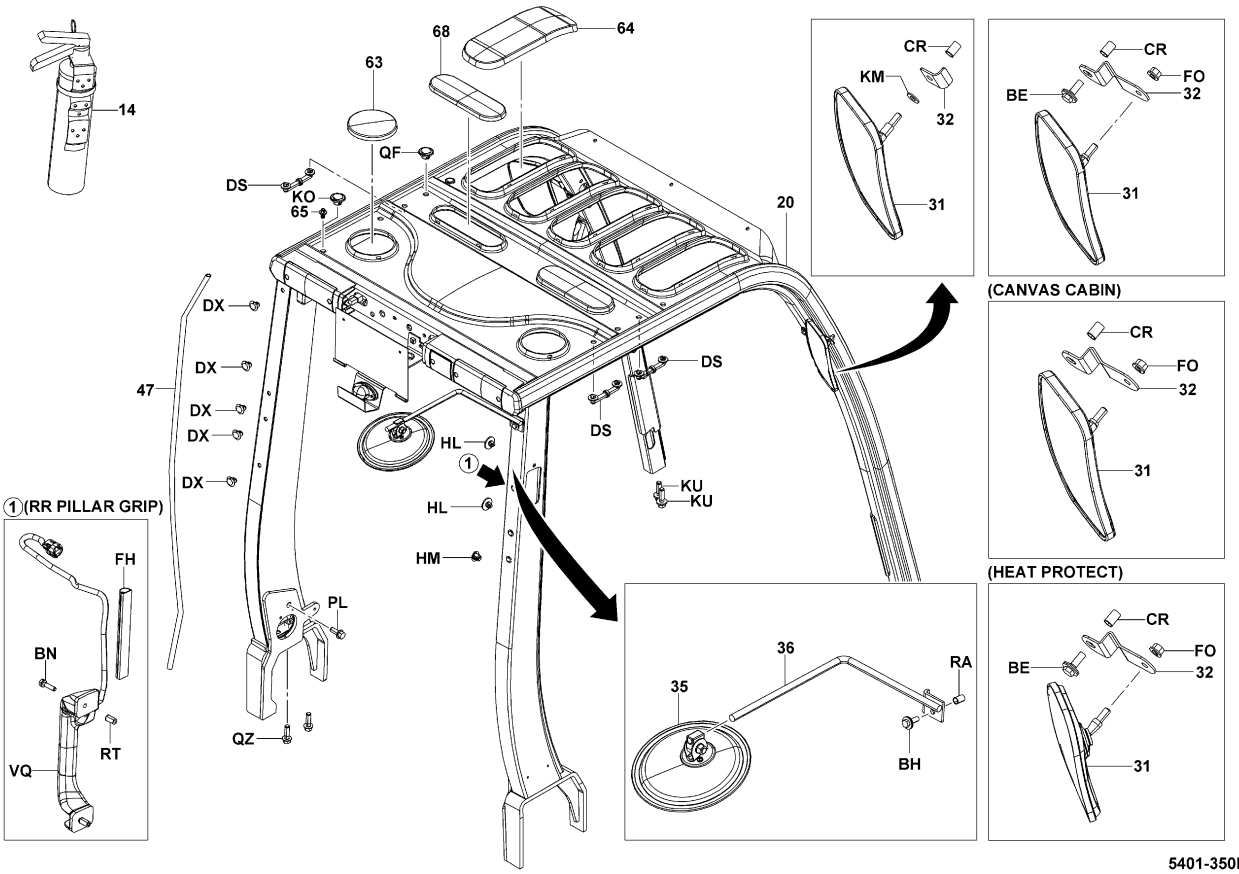


5401-350E



ATM [GUTTER]

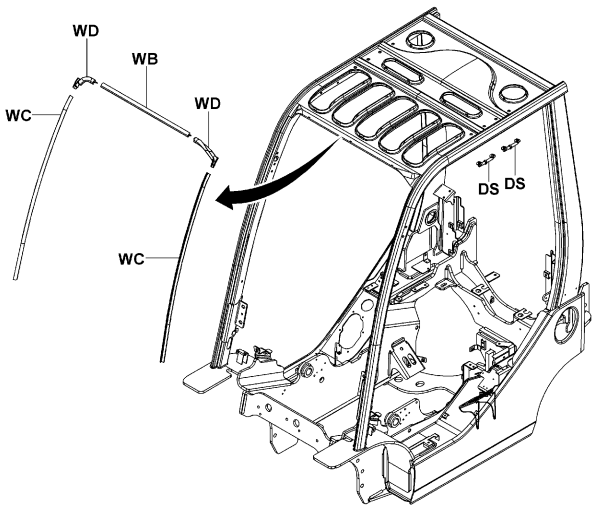


5401-364_

**ATM (2-DOOR CABIN) [BACK MIRROR]**

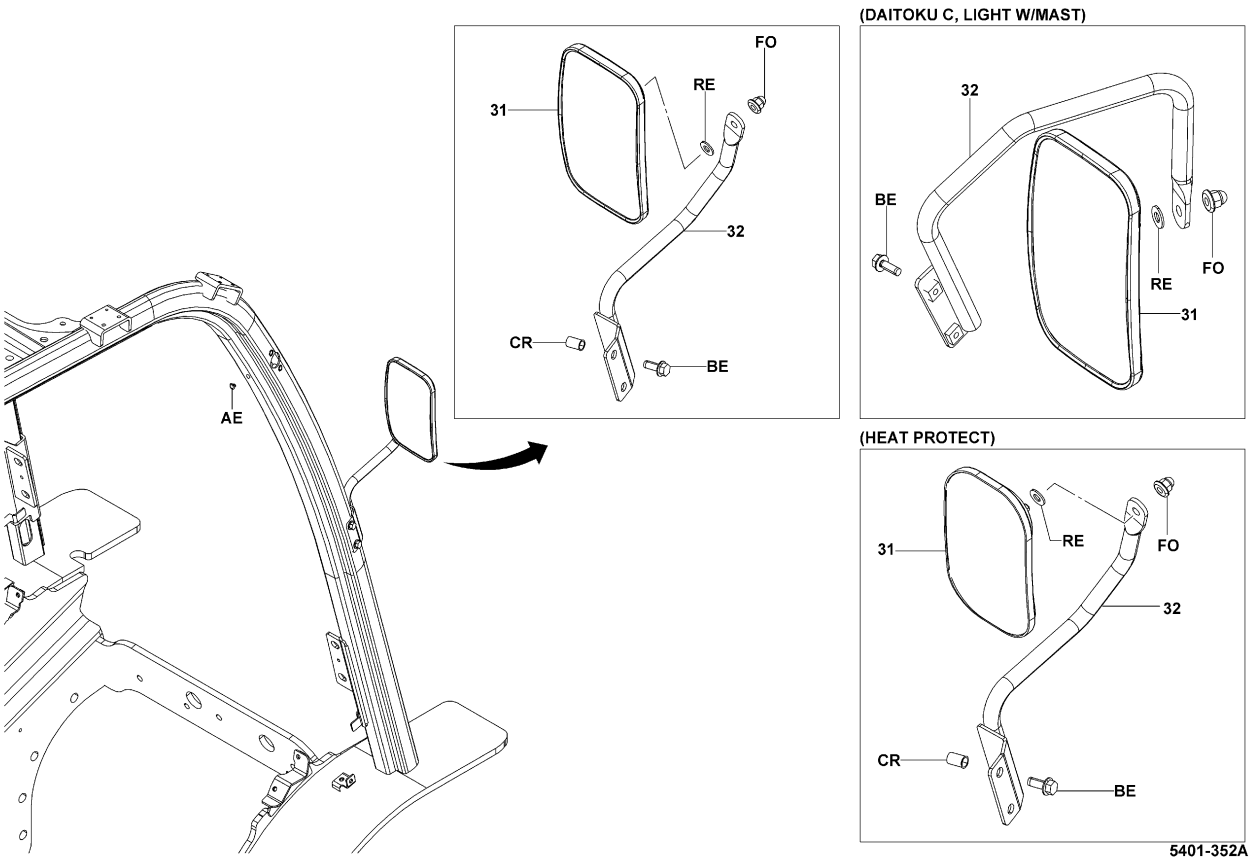


5401-352A


| 5401 | HEAD GUARD & ACCESSORY<br>GARDE AVANT & ACCESSOIRE | FAHRER SCHUTZDACH & ZUBEHÖR<br>PROTECTOR Y ACCESORIOS DE PARTE SUPERIOR |
|---|---|---|


| PART NAME CODE | PART NAME | QTY |
|---|---|---|
| 5401-14 | **FIRE-EXTINGUISHER ASSY**<br>ENS. D'EXTINCTEUR D'INCENDIE<br>FEUERLÖSCHER, VOLLST.<br>CONJUNTO DEL EXTINTOR DE INCENDIOS | 1 |
| 5401-20 | **GUARD SUB-ASSY, HEAD**<br>SOUS-ENS. DE PROTECTEUR<br>SCHUTZBLECH-TEILGRUPPE<br>SUBCONJUNTO DE PROTECTOR | 1 |
| 5401-31 | **MIRROR SUB-ASSY, BACK**<br>SOUS-ENS. DE RETROVISEUR<br>SPIEGEL-TEILGRUPPE<br>SUBCONJUNTO DEL RETROVISOR | 2 |
| 5401-32 | **BRACKET SUB-ASSY, BACK MIRROR**<br>SOUS-ENS. DE SUPPORT<br>TRAGER-TEILGRUPPE<br>SUBCONJUNTO DE LA SOPORTE | 1- 2 |
| 5401-35 | **MIRROR SUB-ASSY, UNDER**<br>SOUS-ENS. DE RETROVISEUR<br>SPIEGEL-TEILGRUPPE<br>SUBCONJUNTO DEL RETROVISOR | 1 |
| 5401-36 | **BRACKET SUB-ASSY, MIRROR**<br>SOUS-ENS. DE SUPPORT<br>TRAGER-TEILGRUPPE<br>SUBCONJUNTO DE LA SOPORTE | 1 |
| 5401-47 | **HOSE**<br>FLEXIBLE<br>SCHLAUCH<br>MANGUERA | 1 |
| 5401-63 | **CAP, ROOF**<br>CAPUCHON<br>KAPPE<br>TAPA | 1- 2 |
| 5401-64 | **CAP, ROOF**<br>CAPUCHON<br>KAPPE<br>TAPA | 5 |
| 5401-65 | **PLUG, RAIN**<br>BOUCHON<br>STOPFEN<br>TAPON | 1 |
| 5401-68 | **CAP, ROOF**<br>CAPUCHON<br>KAPPE<br>TAPA | 2 |
| 5401-AE | **PLUG, HOLE**<br>BOUCHON<br>STOPFEN<br>TAPON | 3 |
| 5401-BE | **BOLT**<br>BOULON<br>SCHRAUBE<br>PERNO | 4 |
| 5401-BH | **BOLT**<br>BOULON<br>SCHRAUBE<br>PERNO | 1 |
| 5401-BN | **BOLT**<br>BOULON<br>SCHRAUBE<br>PERNO | 2 |
| 5401-CR | **NUT**<br>ECROU<br>MUTTER<br>TUERCA | 2- 4 |
| 5401-DX | **PLUG, HOLE**<br>BOUCHON<br>STOPFEN<br>TAPON | 5- 9 |
| 5401-FH | **COVER**<br>COUVERCLE<br>DECKEL<br>CUBIERTA | 1 |
| 5401-FO | **NUT**<br>ECROU<br>MUTTER<br>TUERCA | 2 |
| 5401-HL | **PLUG, HOLE**<br>BOUCHON<br>STOPFEN<br>TAPON | 2 |

## 5401

**HEAD GUARD & ACCESSORY**
**GARDE AVANT & ACCESSOIRE**

**FAHRER SCHUTZDACH & ZUBEHÖR**
**PROTECTOR Y ACCESORIOS DE PARTE SUPERIOR**

| PART NAME CODE | PART NAME | QTY |
|---|---|---|
| 5401-HM | **PLUG, HOLE**<br>BOUCHON<br>STOPFEN<br>TAPON | 1 |
| 5401-KM | **WASHER, PLATE**<br>RODELLE<br>UNTERLEGSCHEIBE<br>ARANDELA | 2 |
| 5401-KO | **PLUG**<br>BOUCHON<br>STOPFEN<br>TAPON | 1 |
| 5401-KU | **BOLT**<br>BOULON<br>SCHRAUBE<br>PERNO | 4 |
| 5401-PL | **BOLT**<br>BOULON<br>SCHRAUBE<br>PERNO | 2 |
| 5401-QF | **PLUG SUB-ASSY**<br>SOUS-ENS. D'BOUCHON<br>STOPFEN-TEILGRUPPE<br>SUBCONJUNTO DEL TAPON | 2 |
| 5401-QZ | **BOLT**<br>BOULON<br>SCHRAUBE<br>PERNO | 4 |
| 5401-RA | **NUT**<br>ECROU<br>MUTTER<br>TUERCA | 1 |
| 5401-RE | **WASHER, PLATE**<br>RODELLE<br>UNTERLEGSCHEIBE<br>ARANDELA | 2 |
| 5401-RT | **NUT**<br>ECROU<br>MUTTER<br>TUERCA | 2 |
| 5401-VQ | **GRIP ASSY, RR ASSIST W/HORN SW**<br>COUVERCLE<br>DECKEL<br>CUBIERTA | 1 |
| 5401-WB | **GUTTER SUB-ASSY**<br>ROULEMENT<br>LAGER<br>COJINETE | 1 |
| 5401-WC | **GUTTER SUB-ASSY**<br>SOUS-ENS. DE TUYAU<br>ROHR-TEILGRUPPE<br>SUBCONJUNTO DE TUBO | 2 |
| 5401-WD | **GUTTER SUB-ASSY**<br>SOUS-ENS. DE TUYAU<br>ROHR-TEILGRUPPE<br>SUBCONJUNTO DE TUBO | 1 |


## 5401

**HEAD GUARD & ACCESSORY**
**GARDE AVANT & ACCESSOIRE**

**FAHRER SCHUTZDACH & ZUBEHÖR**
**PROTECTOR Y ACCESORIOS DE PARTE SUPERIOR**


| PART NAME CODE | PART NAME | QTY |
|---|---|---|
| | | |

| PART NAME CODE | PART NAME | QTY |
|---|---|---|
| | | |

| 5405 | INDICATOR PLATE<br>PLAQUE D'INDICATEUR | ANZEIGESCHILD<br>PLACA INDICADORA |
|---|---|---|

ATM [FRAME]

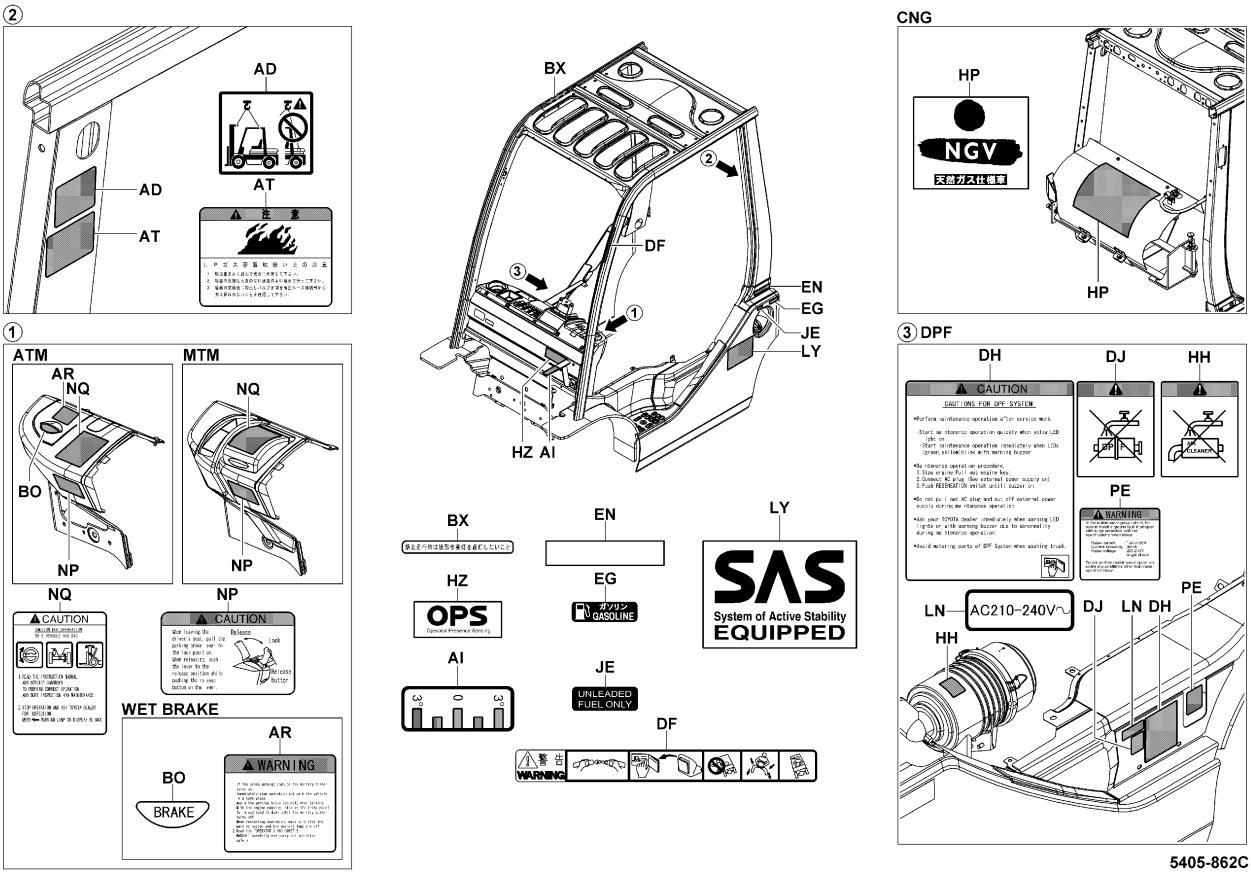


5405-862C

5405-862C

| 5405 | INDICATOR PLATE<br>PLAQUE D'INDICATEUR | ANZEIGESCHILD<br>PLACA INDICADORA |
|---|---|---|

ATM [HOOD]

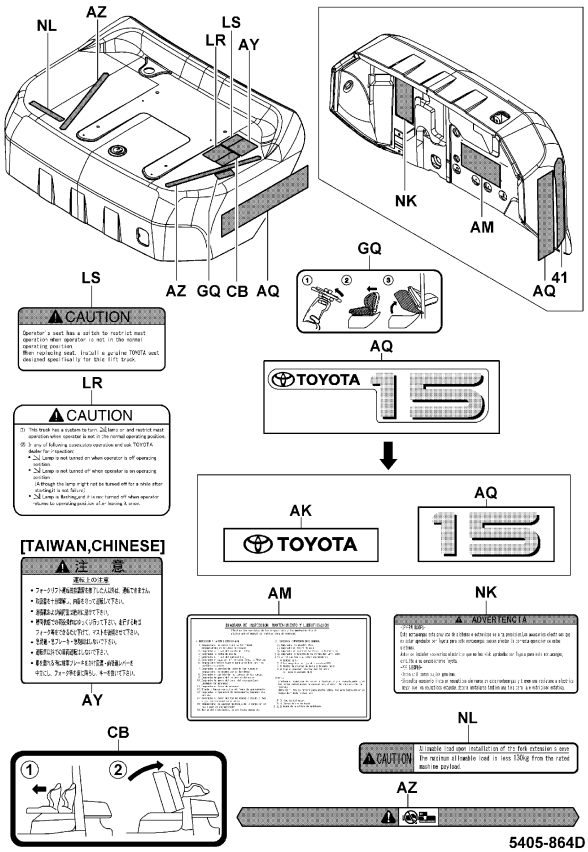


5405-864D

5405-864D

ATM [WEIGHT TOYOTA MARK]

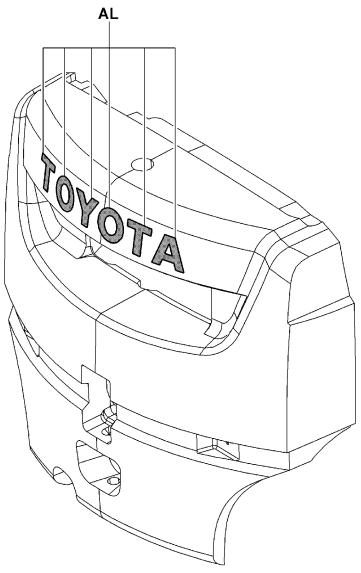


5405-866

5405-866_

| 5405 | INDICATOR PLATE<br>PLAQUE D'INDICATEUR | ANZEIGESCHILD<br>PLACA INDICADORA |
|---|---|---|

1DZ..ATM..15N,18N (LITHUANIAN, EEC SPEC ISRAEL)

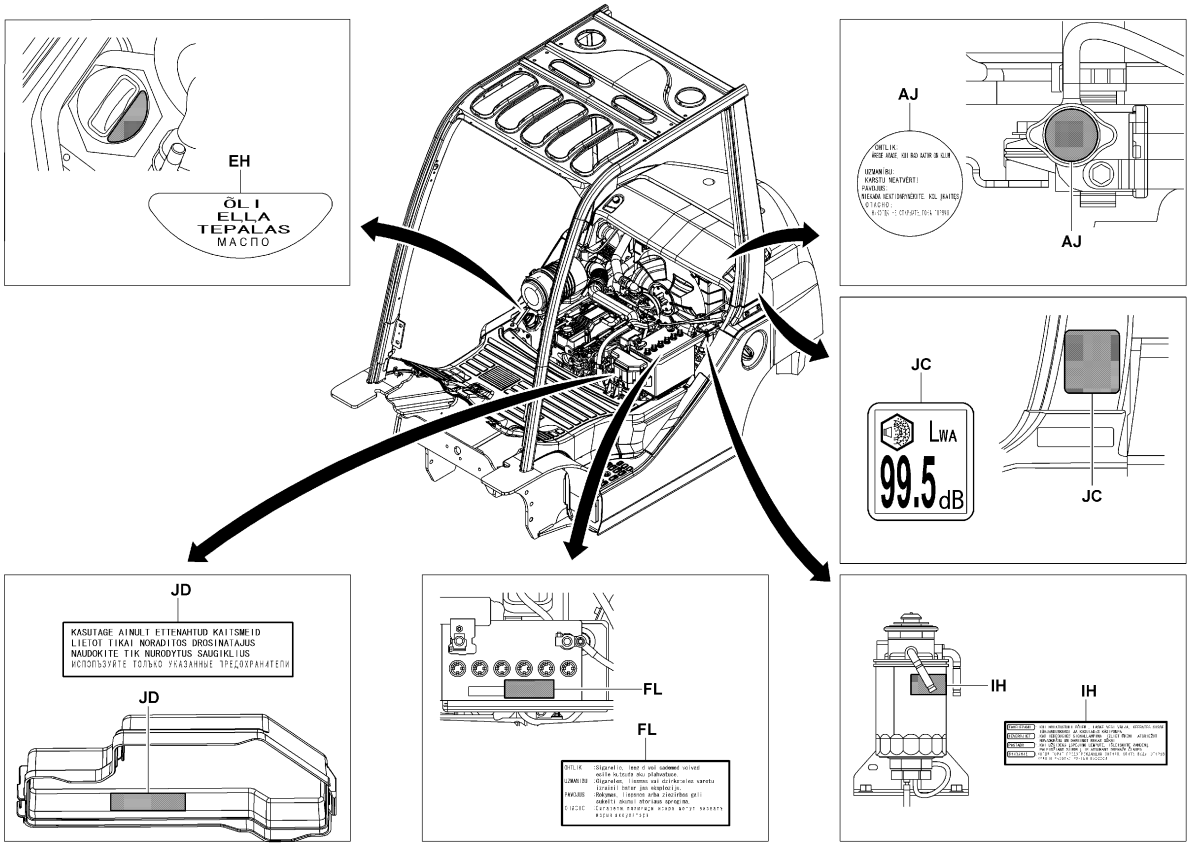


5405-867A

5405-867A

| 5405 | INDICATOR PLATE<br>PLAQUE D'INDICATEUR | ANZEIGESCHILD<br>PLACA INDICADORA |
|---|---|---|

1DZ..ATM..20N,25N,30N (LITHUANIAN, EEC SPEC ISRAEL)

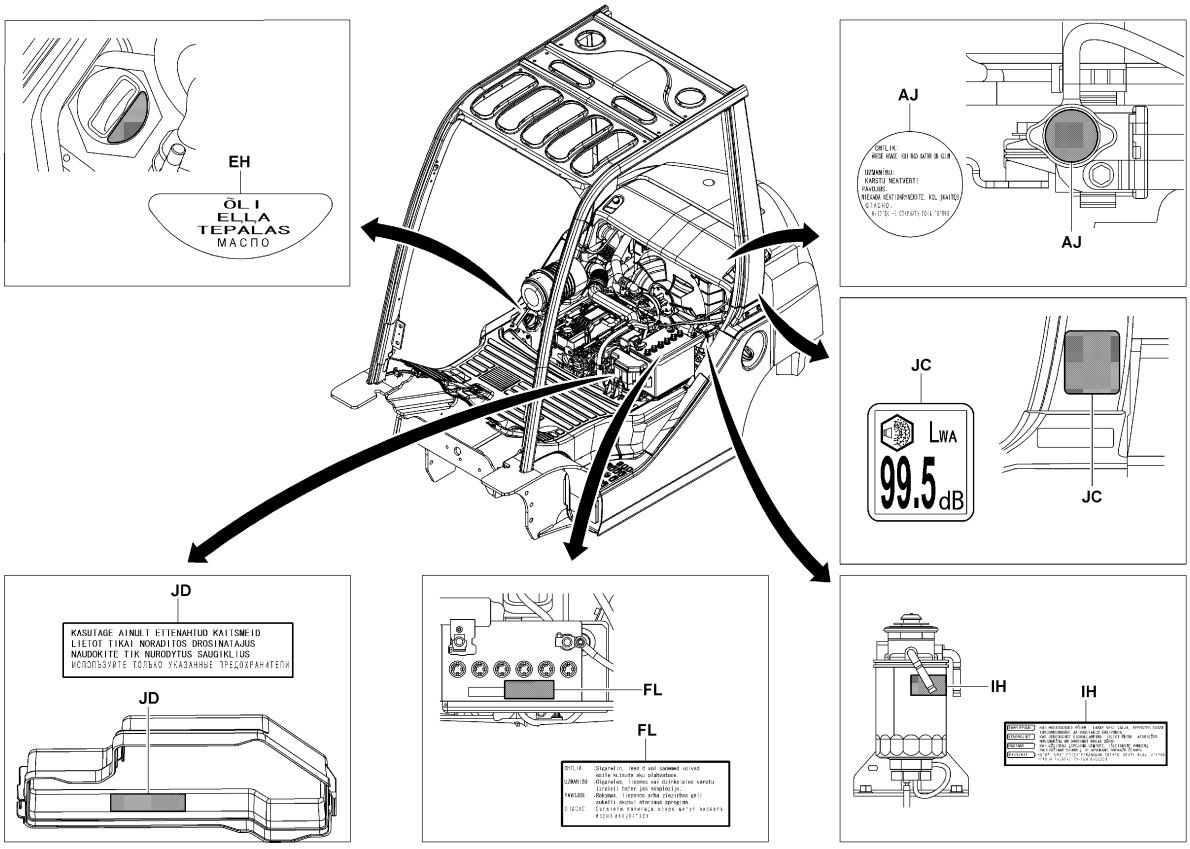


5405-867A

5405-867A

| 5405 | INDICATOR PLATE<br>PLAQUE D'INDICATEUR | ANZEIGESCHILD<br>PLACA INDICADORA |
|---|---|---|

10N,15N,18N,20N,25N,30N,J35N (CHINESE)

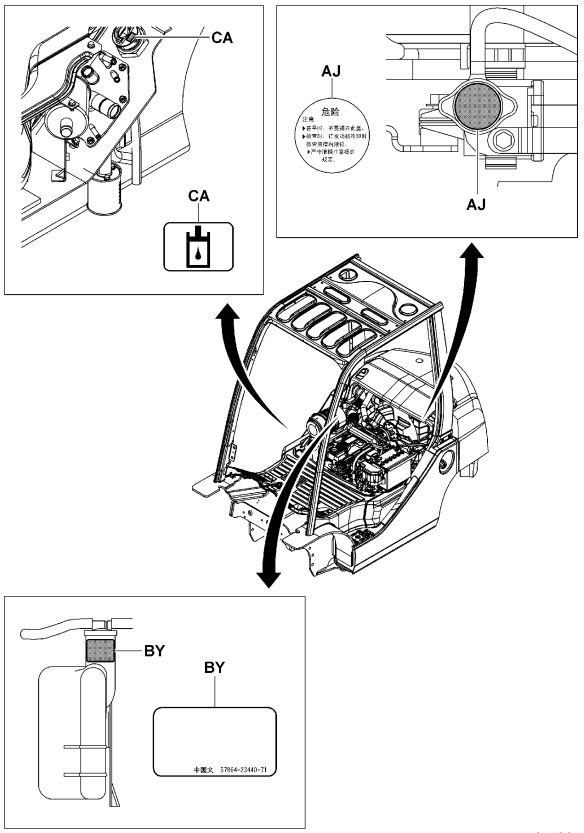


5405-984

5405-984_

ATM [MAST]

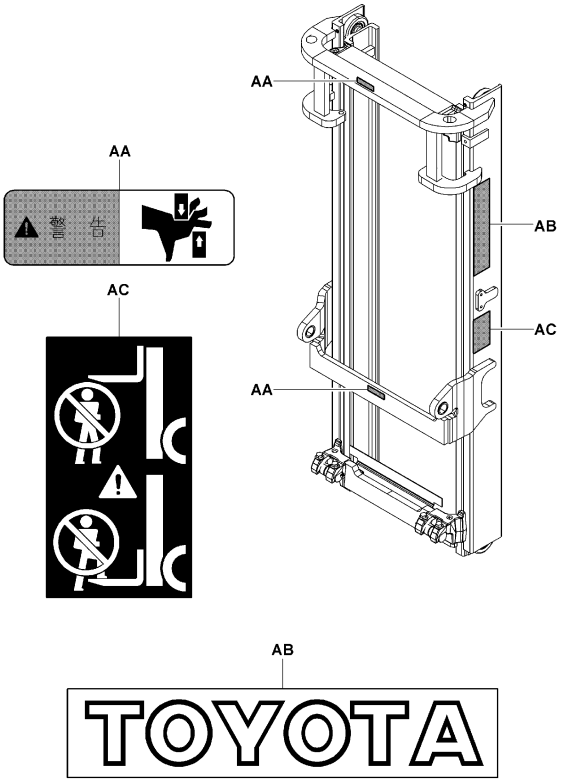


5405-868

5405-868_

| 5405 | INDICATOR PLATE<br>PLAQUE D'INDICATEUR | ANZEIGESCHILD<br>PLACA INDICADORA |
|---|---|---|

ATM [STEERING]

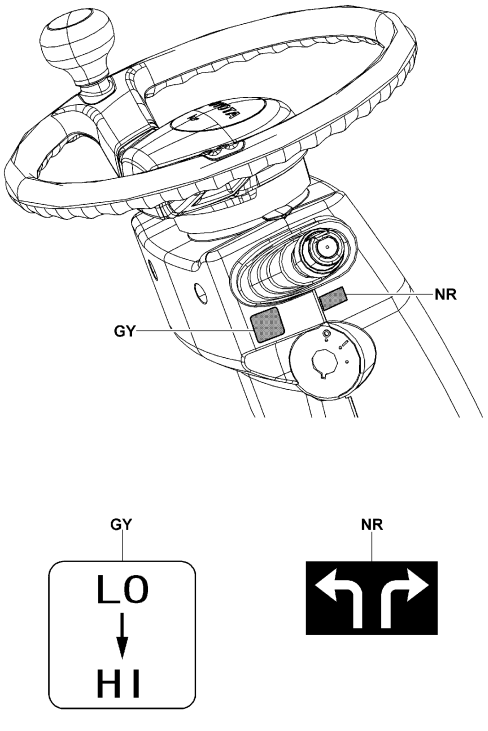


5405-870

5405-870_

ATM (2-DOOR CABIN, F&R GLASS WIPER) [RR GLASS]

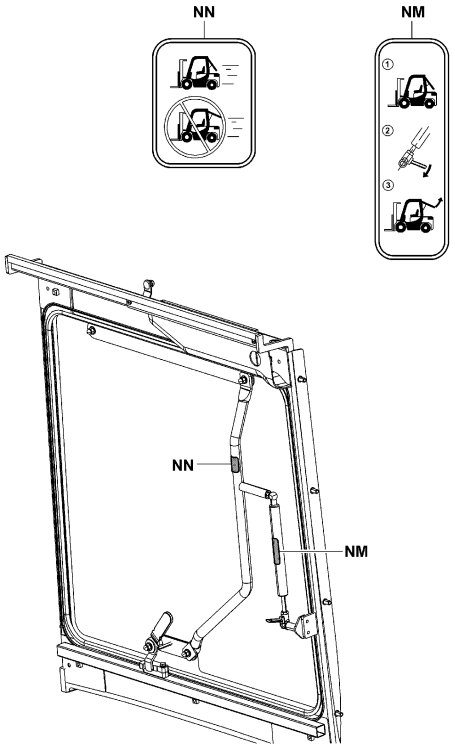


5405-871

5405-871_

| 5405 | INDICATOR PLATE<br>PLAQUE D'INDICATEUR | ANZEIGESCHILD<br>PLACA INDICADORA |
|---|---|---|

**ATM (PREMIUM CABIN) [RR GLASS]**

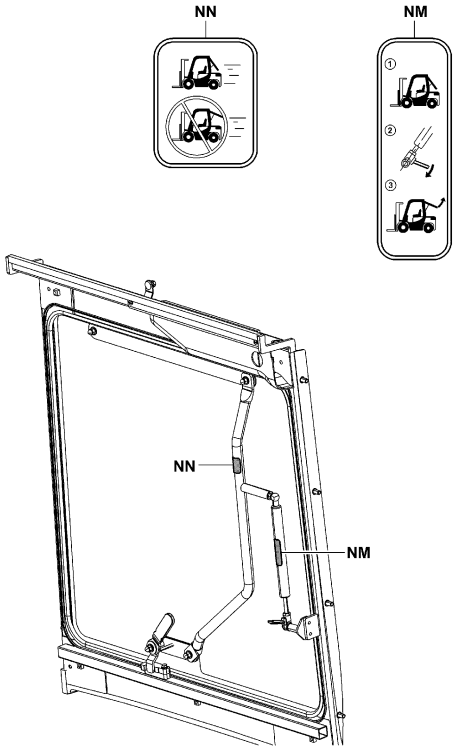


5405-871

5405-871_

**ATM (PREMIUM CABIN) [FRAME]**

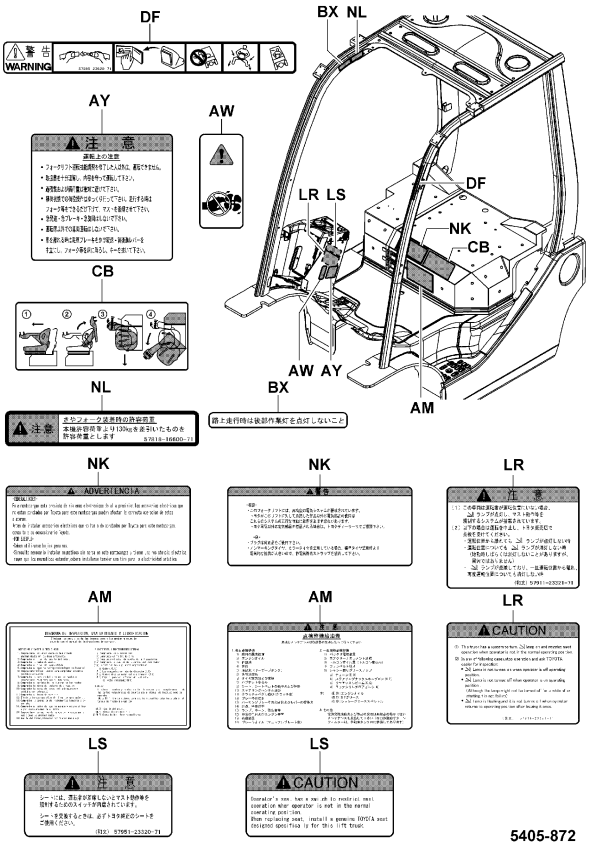


5405-872

5405-872_

| 5405 | INDICATOR PLATE<br>PLAQUE D'INDICATEUR | ANZEIGESCHILD<br>PLACA INDICADORA |
|---|---|---|

**ATM (MINI LEVER, JOY STICK)**

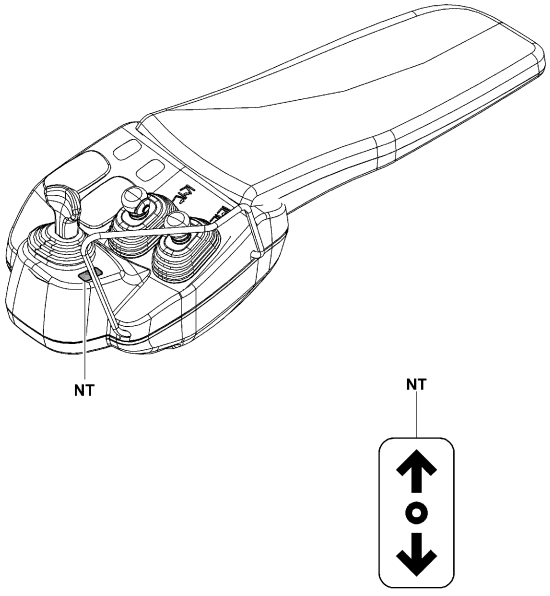


5405-879

5405-879_

| 5405 | INDICATOR PLATE<br>PLAQUE D'INDICATEUR | ANZEIGESCHILD<br>PLACA INDICADORA |
|---|---|---|

| PART NAME CODE | PART NAME | QTY | PART NAME CODE | PART NAME | QTY |
|---|---|---|---|---|---|
| 5405-AA | **PLATE, CAUTION**<br>PLAQUE<br>PLATTE<br>PLACA | 2- 4 | 5405-AT | **PLATE, CAUTION**<br>PLAQUE<br>PLATTE<br>PLACA | 1 |
| 5405-AB | **MARK, TOYOTA**<br>MARQUE<br>MARKIERUNG<br>MARCA | 2 | 5405-AY | **PLATE, CAUTION**<br>PLAQUE<br>PLATTE<br>PLACA | 1 |
| 5405-AC | **PLATE, CAUTION**<br>PLAQUE<br>PLATTE<br>PLACA | 2 | 5405-AZ | **PLATE, CAUTION**<br>PLAQUE<br>PLATTE<br>PLACA | 2 |
| 5405-AD | **PLATE, CAUTION**<br>PLAQUE<br>PLATTE<br>PLACA | 1 | 5405-BY | **PLATE, INDICATOR**<br>PLAQUE<br>PLATTE<br>PLACA | 1 |
| 5405-AI | **PLATE, TILT INDICATOR**<br>PLAQUE<br>PLATTE<br>PLACA | 2 | 5405-CA | **PLATE, CAUTION**<br>PLAQUE<br>PLATTE<br>PLACA | 1 |
| 5405-AJ | **PLATE, CAUTION**<br>PLAQUE<br>PLATTE<br>PLACA | 1 | 5405-CB | **PLATE, INDICATOR**<br>PLAQUE<br>PLATTE<br>PLACA | 1 |
| 5405-AK | **PLATE, INDICATOR**<br>PLAQUE<br>PLATTE<br>PLACA | 1- 2 | 5405-DF | **PLATE, INDICATOR**<br>PLAQUE<br>PLATTE<br>PLACA | 1 |
| 5405-AL | **MARK, TOYOTA**<br>MARQUE<br>MARKIERUNG<br>MARCA | 1- 2 | 5405-DH | **PLATE, CAUTION**<br>PLAQUE<br>PLATTE<br>PLACA | 1 |
| 5405-AM | **PLATE, SERVICE INDICATOR**<br>PLAQUE<br>PLATTE<br>PLACA | 1 | 5405-DJ | **PLATE, CAUTION**<br>PLAQUE<br>PLATTE<br>PLACA | 1 |
| 5405-AQ | **PLATE, CAPACITY INDICATOR**<br>PLAQUE<br>PLATTE<br>PLACA | 1 | 5405-EG | **PLATE, FUEL INDICATOR**<br>PLAQUE<br>PLATTE<br>PLACA | 1 |

| 5405 | INDICATOR PLATE<br>PLAQUE D'INDICATEUR | ANZEIGESCHILD<br>PLACA INDICADORA |
|---|---|---|

| PART NAME CODE | PART NAME | QTY | PART NAME CODE | PART NAME | QTY |
|---|---|---|---|---|---|
| 5405-EH | **PLATE, OIL INDICATOR**<br>PLAQUE<br>PLATTE<br>PLACA | 1 | 5405-LN | **PLATE, CAUTION**<br>PLAQUE<br>PLATTE<br>PLACA | 1 |
| 5405-EN | **PLATE**<br>PLAQUE<br>PLATTE<br>PLACA | 2 | 5405-LR | **PLATE, CAUTION**<br>PLAQUE<br>PLATTE<br>PLACA | 1 |
| 5405-FL | **PLATE, BATTERY CAUTION**<br>PLAQUE<br>PLATTE<br>PLACA | 1 | 5405-LY | **LABEL**<br>ETIQUETTE<br>SCHILD<br>ETIQUETA | 2 |
| 5405-GQ | **PLATE, INDICATOR ACCEL PEDAL**<br>PLAQUE<br>PLATTE<br>PLACA | 1 | 5405-MU | **LABEL**<br>ETIQUETTE<br>SCHILD<br>ETIQUETA | 1 |
| 5405-HH | **PLATE, CAUTION**<br>PLAQUE<br>PLATTE<br>PLACA | 1 | 5405-NK | **PLATE, ELECTRIC EQUIPMENT CAUTION**<br>PLAQUE<br>PLATTE<br>PLACA | 1 |
| 5405-HZ | **LABEL**<br>ETIQUETTE<br>SCHILD<br>ETIQUETA | 1 | 5405-NL | **PLATE, CAUTION, SHEAYH**<br>PLAQUE<br>PLATTE<br>PLACA | 1 |
| 5405-IH | **PLATE, CAUTION**<br>PLAQUE<br>PLATTE<br>PLACA | 1 | 5405-NM | **INDICATOR, REAR GLASS**<br>INDICATEUR<br>ANZEIGER<br>INDICADOR | 1 |
| 5405-JC | **PLATE, EEC**<br>PLAQUE<br>PLATTE<br>PLACA | 1 | 5405-NN | **INDICATOR, RR GLASS CAUTION**<br>INDICATEUR<br>ANZEIGER<br>INDICADOR | 1 |
| 5405-JD | **PLATE, FUSE INDICATOR**<br>PLAQUE<br>PLATTE<br>PLACA | 1 | 5405-NP | **PLATE, PARKING, CAUTION**<br>PLAQUE<br>PLATTE<br>PLACA | 1 |
| 5405-JE | **PLATE, FUEL CAUTION**<br>PLAQUE<br>PLATTE<br>PLACA | 1 | 5405-NQ | **PLATE, SAS CAUTION**<br>PLAQUE<br>PLATTE<br>PLACA | 1 |

| 5405 | INDICATOR PLATE<br>PLAQUE D'INDICATEUR | ANZEIGESCHILD<br>PLACA INDICADORA |
|---|---|---|

| PART NAME CODE | PART NAME | QTY | PART NAME CODE | PART NAME | QTY |
|---|---|---|---|---|---|
| 5405-NR | **PLATE, INDICATOR**<br>PLAQUE<br>PLATTE<br>PLACA | 1 | | | |
| 5405-NT | **INDICATOR**<br>INDICATEUR<br>ANZEIGER<br>INDICADOR | 1 | | | |
| 5405-PE | **PLATE, CAUTION**<br>PLAQUE<br>PLATTE<br>PLACA | 1 | | | |


| 5405 | INDICATOR PLATE<br>PLAQUE D'INDICATEUR | ANZEIGESCHILD<br>PLACA INDICADORA |
|---|---|---|

| PART NAME CODE | PART NAME | QTY | PART NAME CODE | PART NAME | QTY |
|---|---|---|---|---|---|

| 5501 | STEEL CABIN<br>CABINE EN ACIER | STAHLKABINE<br>CABINA DE ACERO |
|---|---|---|

ATM (2-DOOR CABIN, F&R GLASS WIPER) [FR]

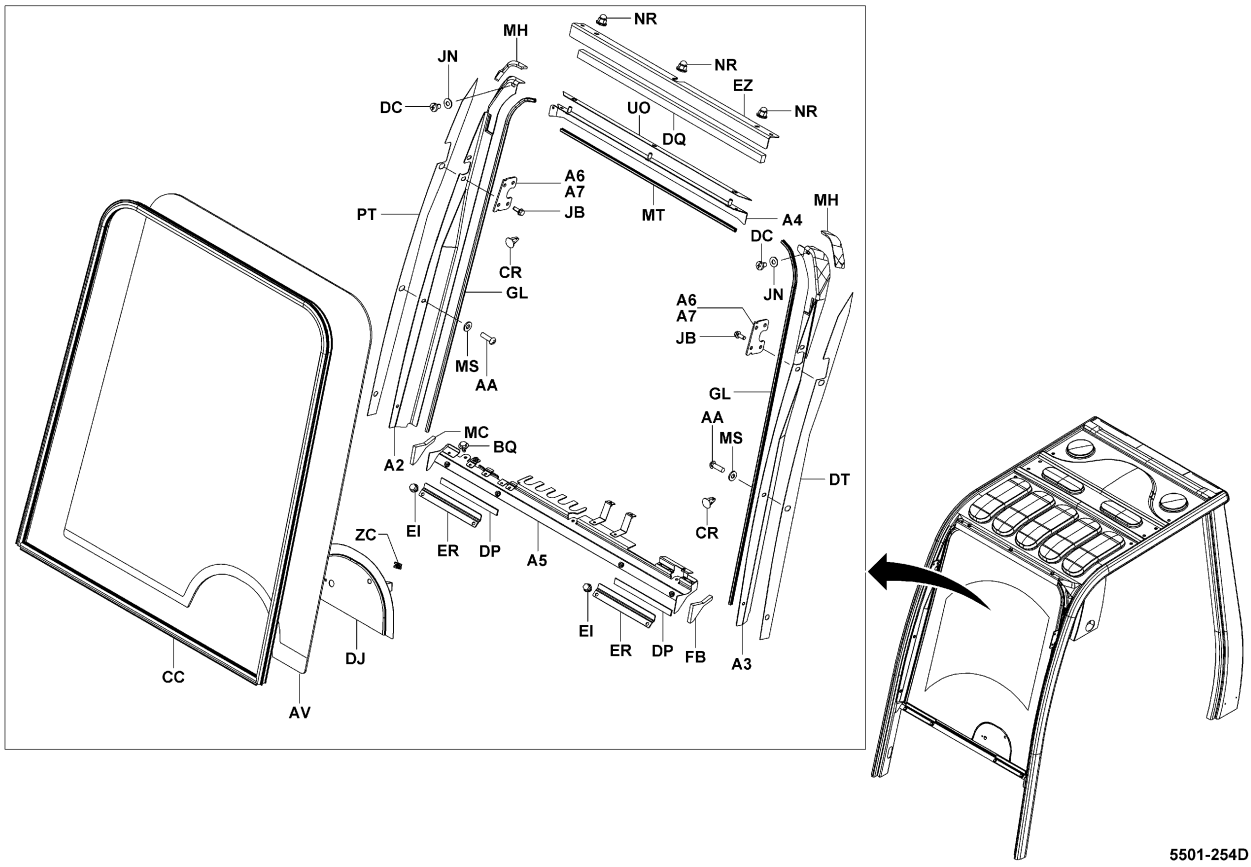


5501-254D

5501-254D

| 5501 | STEEL CABIN<br>CABINE EN ACIER | STAHLKABINE<br>CABINA DE ACERO |
|---|---|---|

ATM (FR GLASS WP&WS, C-CABIN WP&WS) [FR]

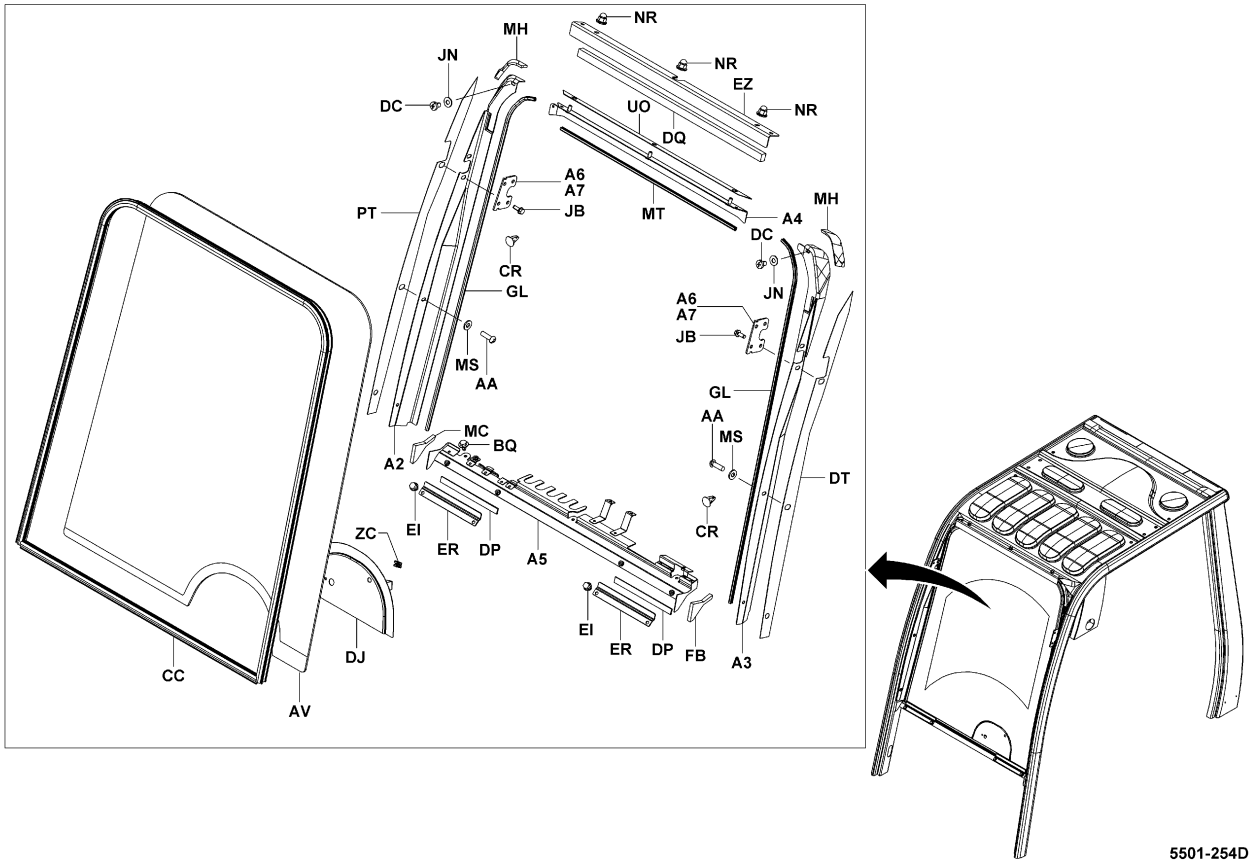


5501-254D

5501-254D

| 5501 | STEEL CABIN<br>CABINE EN ACIER | STAHLKABINE<br>CABINA DE ACERO |
|---|---|---|

ATM (PREMIUM CABIN) [FR]

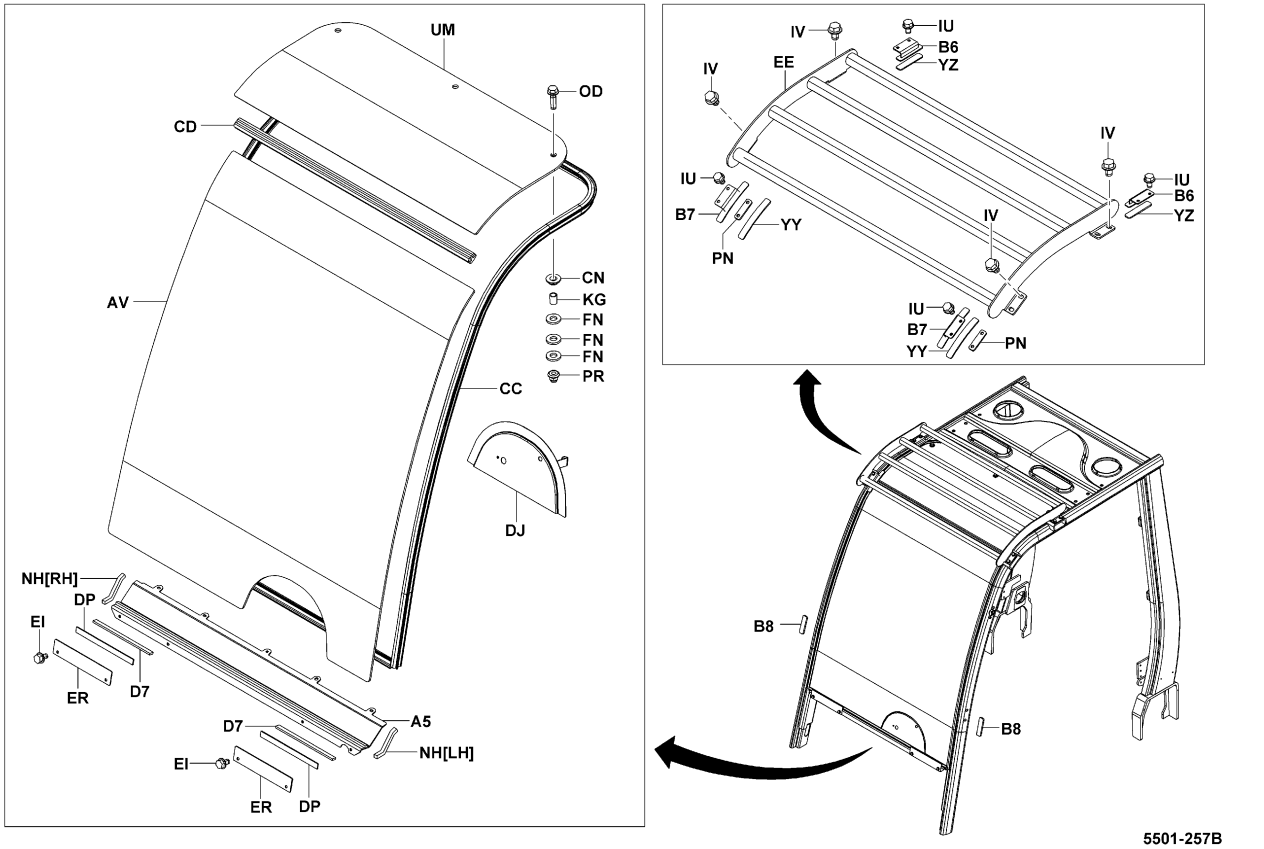


5501-257B

5501-257B

| 5501 | STEEL CABIN<br>CABINE EN ACIER | STAHLKABINE<br>CABINA DE ACERO |
|---|---|---|

10N,15N,18N,20N,25N,30N,J35N (2-DOOR CABIN) [RR]

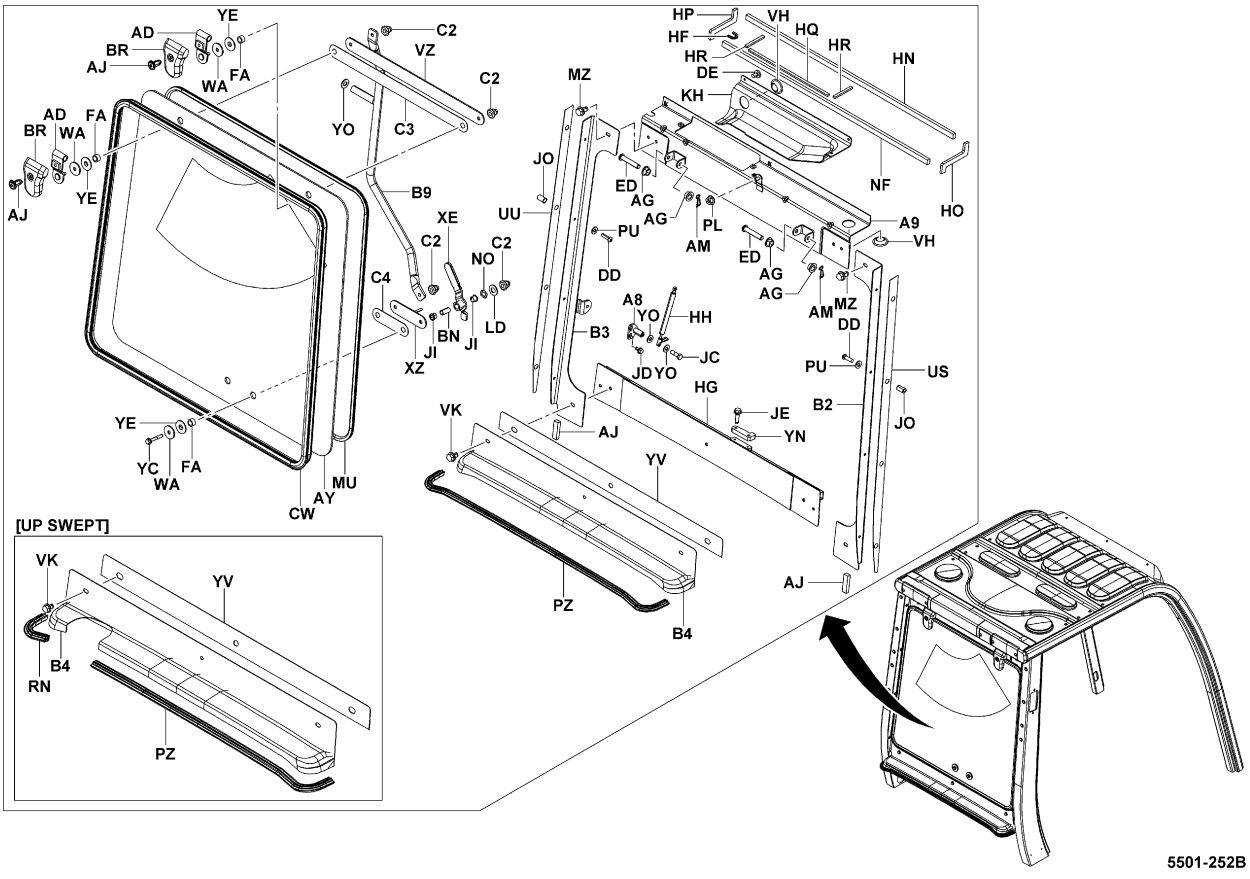


5501-252B

5501-252B

| 5501 | STEEL CABIN<br>CABINE EN ACIER | STAHLKABINE<br>CABINA DE ACERO |
|---|---|---|

10N,15N,18N,20N,25N,30N,J35N (F&R GLASS WIPER) [RR]

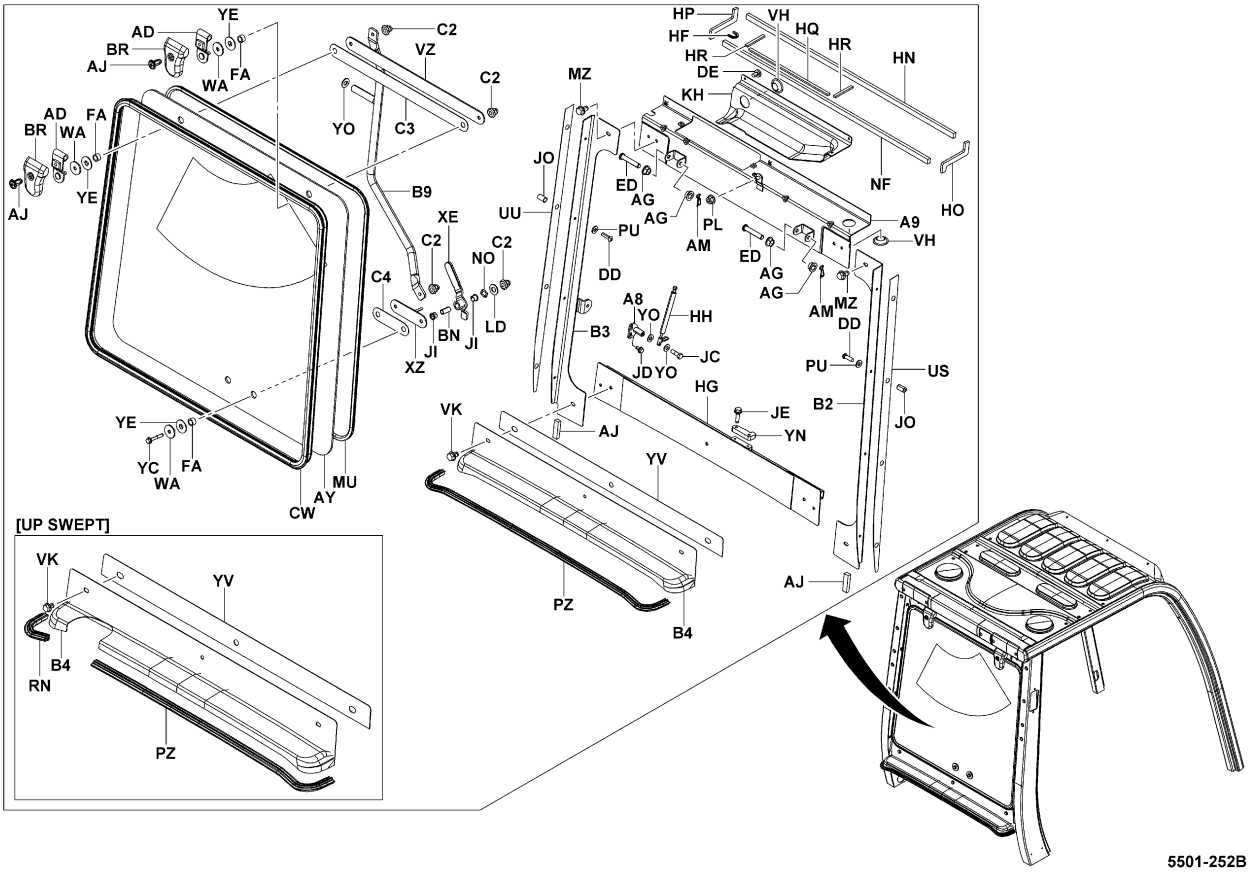


5501-252B

| 5501 | STEEL CABIN<br>CABINE EN ACIER | STAHLKABINE<br>CABINA DE ACERO |
|---|---|---|

ATM (PREMIUM CABIN) [RR]

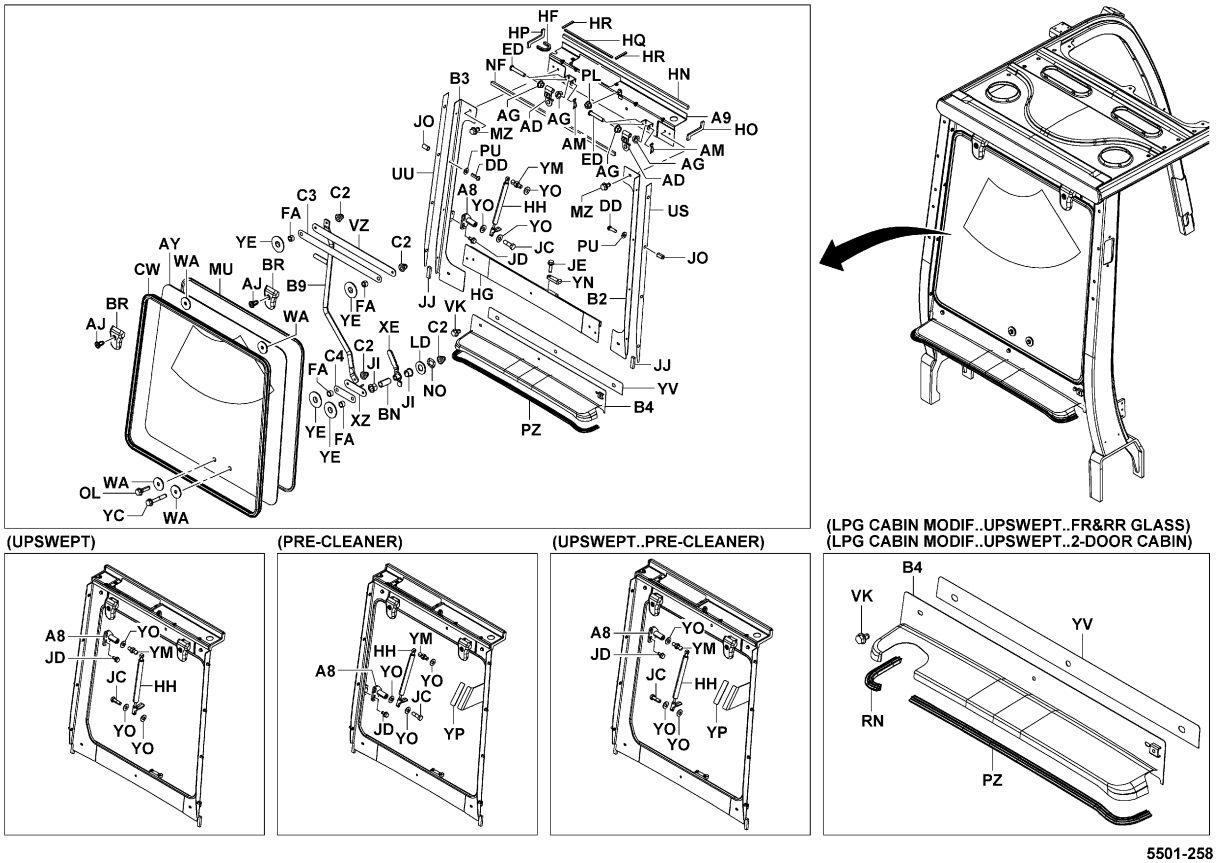


5501-258_

| 5501 | STEEL CABIN<br>CABINE EN ACIER | STAHLKABINE<br>CABINA DE ACERO |
|---|---|---|

K20N,K25N,K30N (2-DOOR CABIN) [RR]

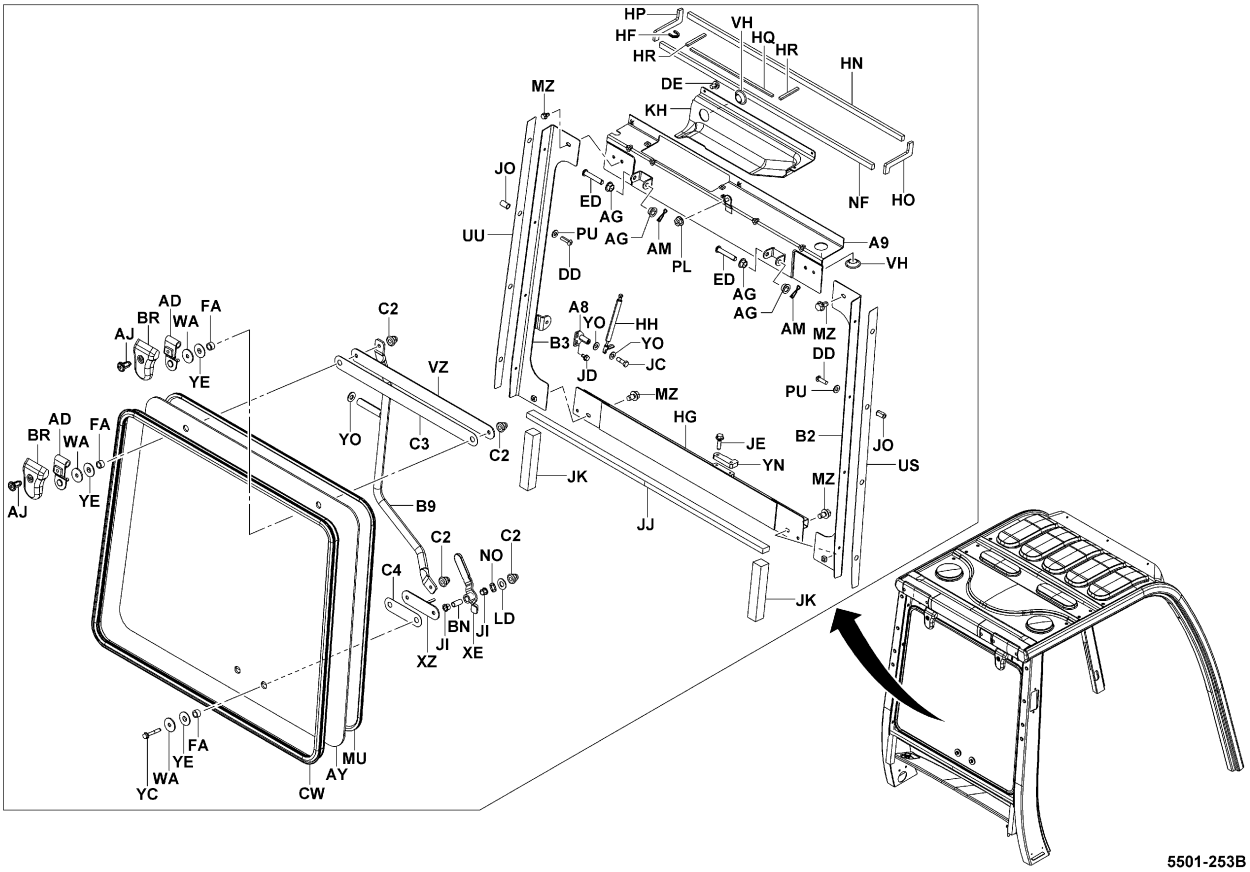


5501-253B

| 5501 | STEEL CABIN<br>CABINE EN ACIER | STAHLKABINE<br>CABINA DE ACERO |
|---|---|---|

K20N,K25N,K30N (F&R GLASS WIPER) [RR]

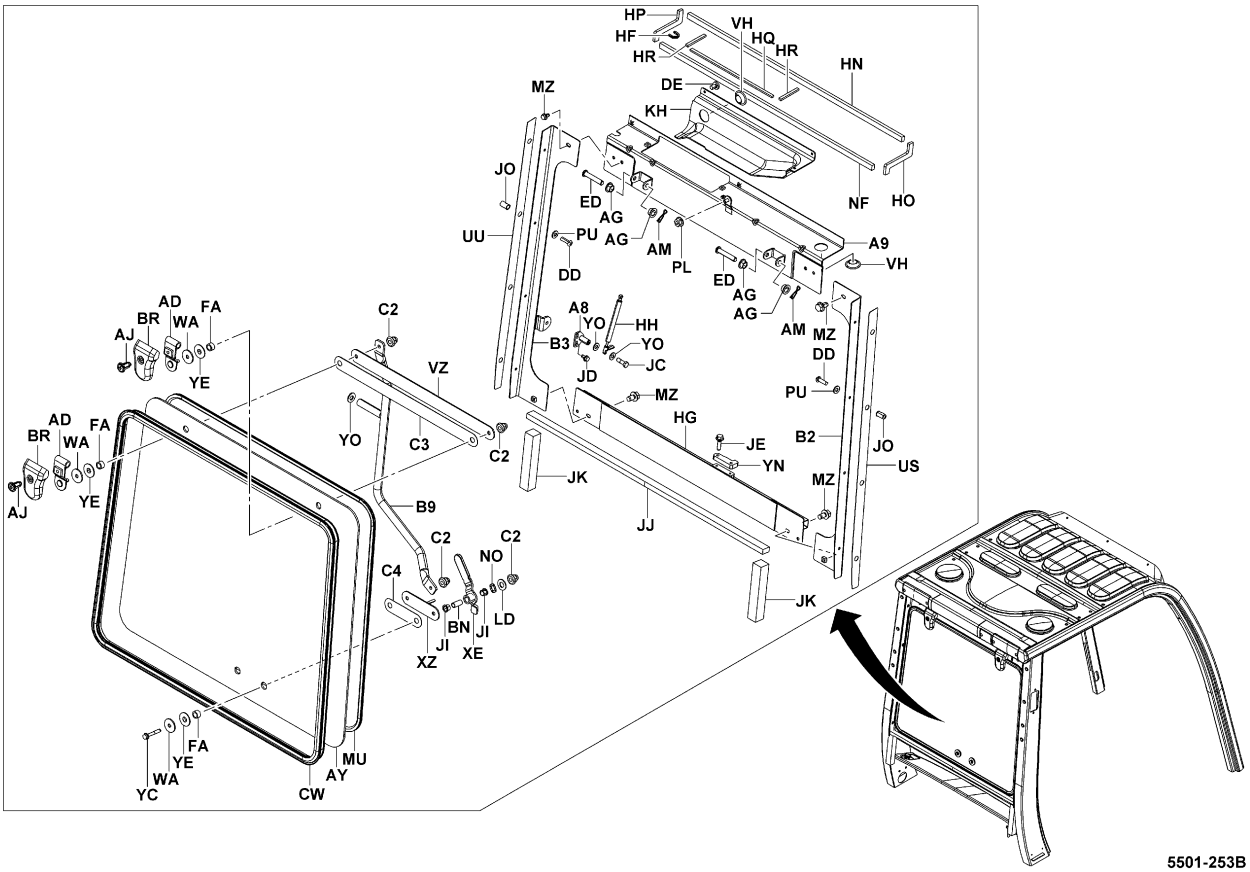


5501-253B

ATM (2-DOOR CABIN) [DOOR]

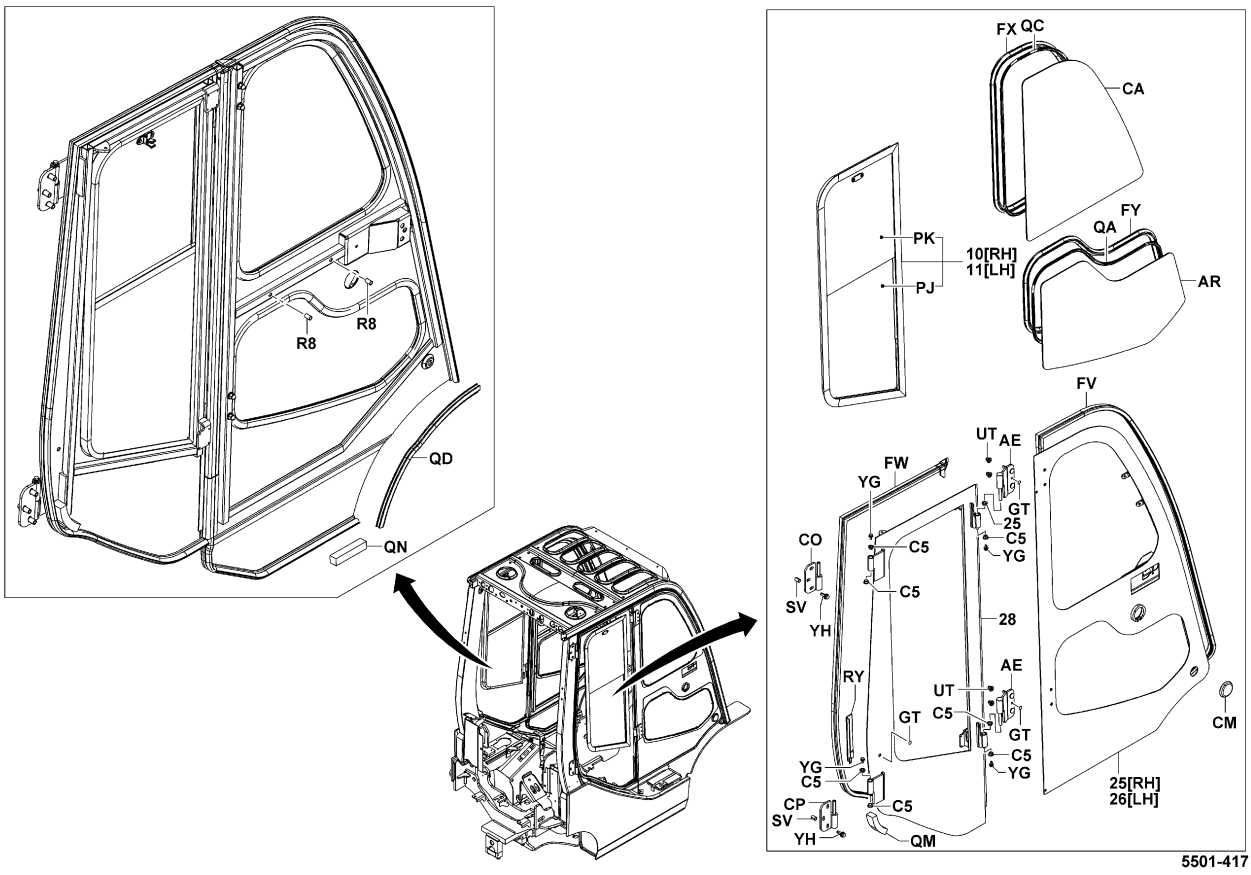


5501-417_



ATM (PREMIUM CABIN) [DOOR]

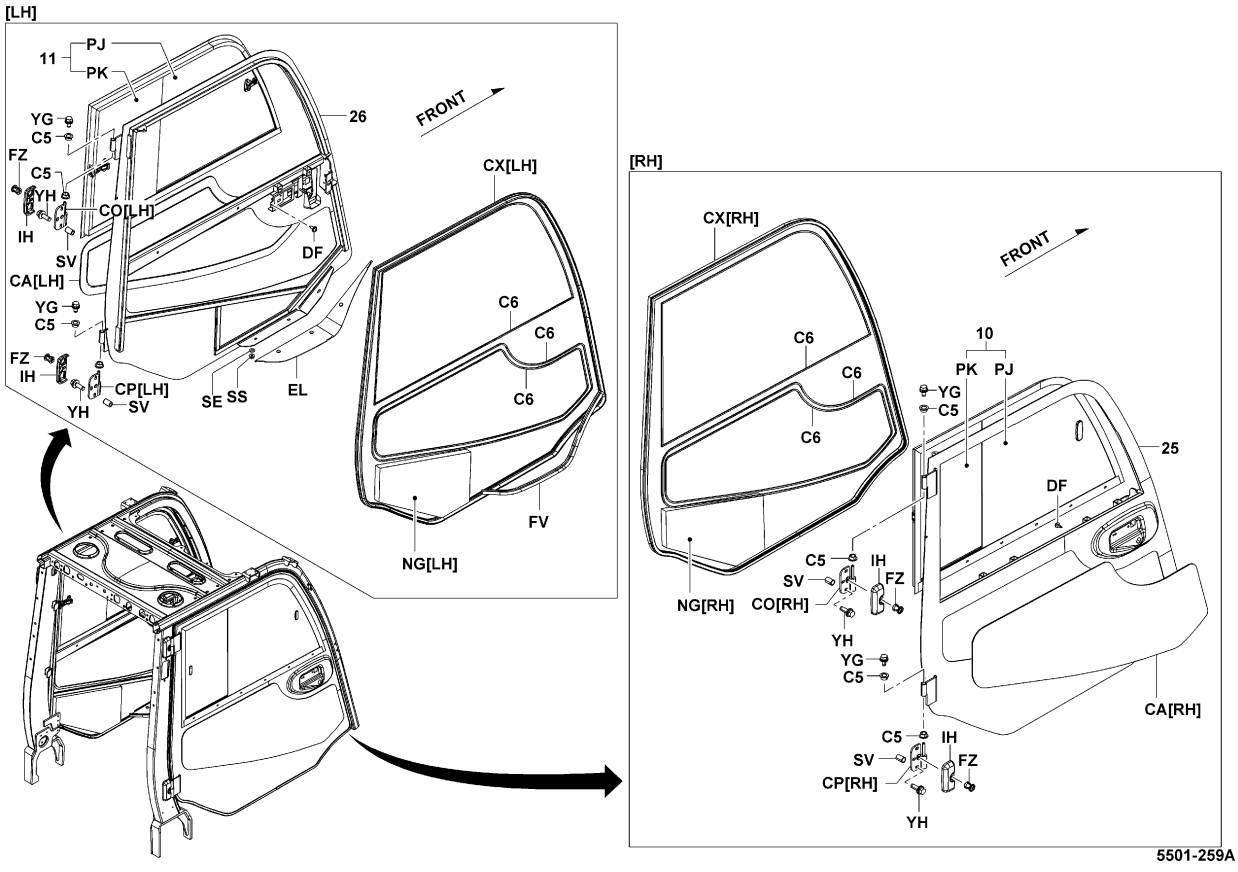


5501-259A

ATM (PREMIUM CABIN) [ROOF]

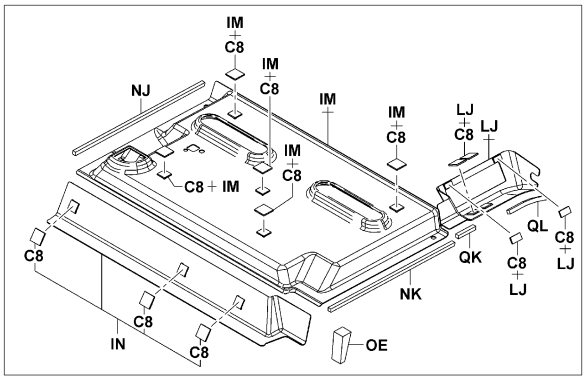


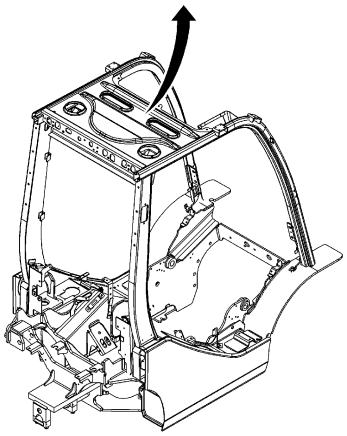

5501-418

5501-418_

ATM (PREMIUM CABIN) [BOARD]

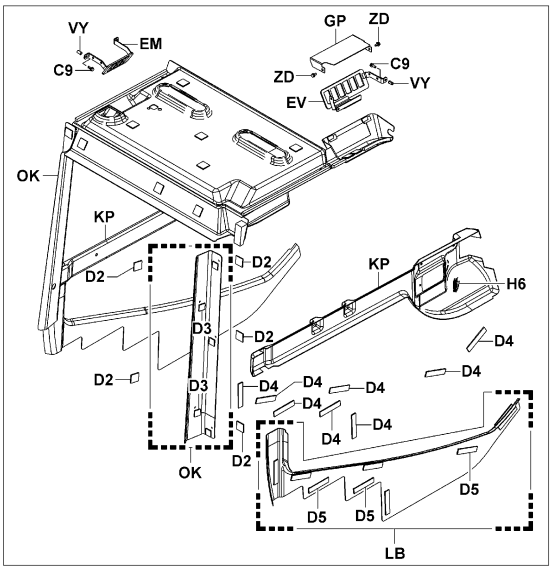


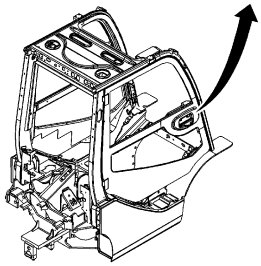

5501-419

5501-419_



ATM (2-DOOR CABIN) [CABIN SILENCER]

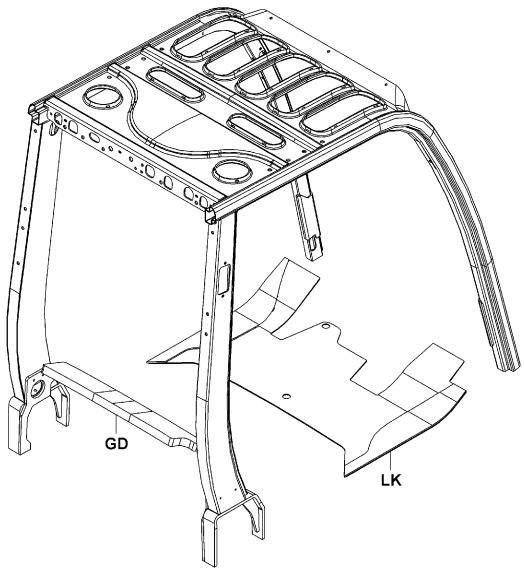


5501-327

5501-327_

| 5501 | STEEL CABIN<br>CABINE EN ACIER | STAHLKABINE<br>CABINA DE ACERO |
|---|---|---|

**ATM (C-CABIN WP&WS)**

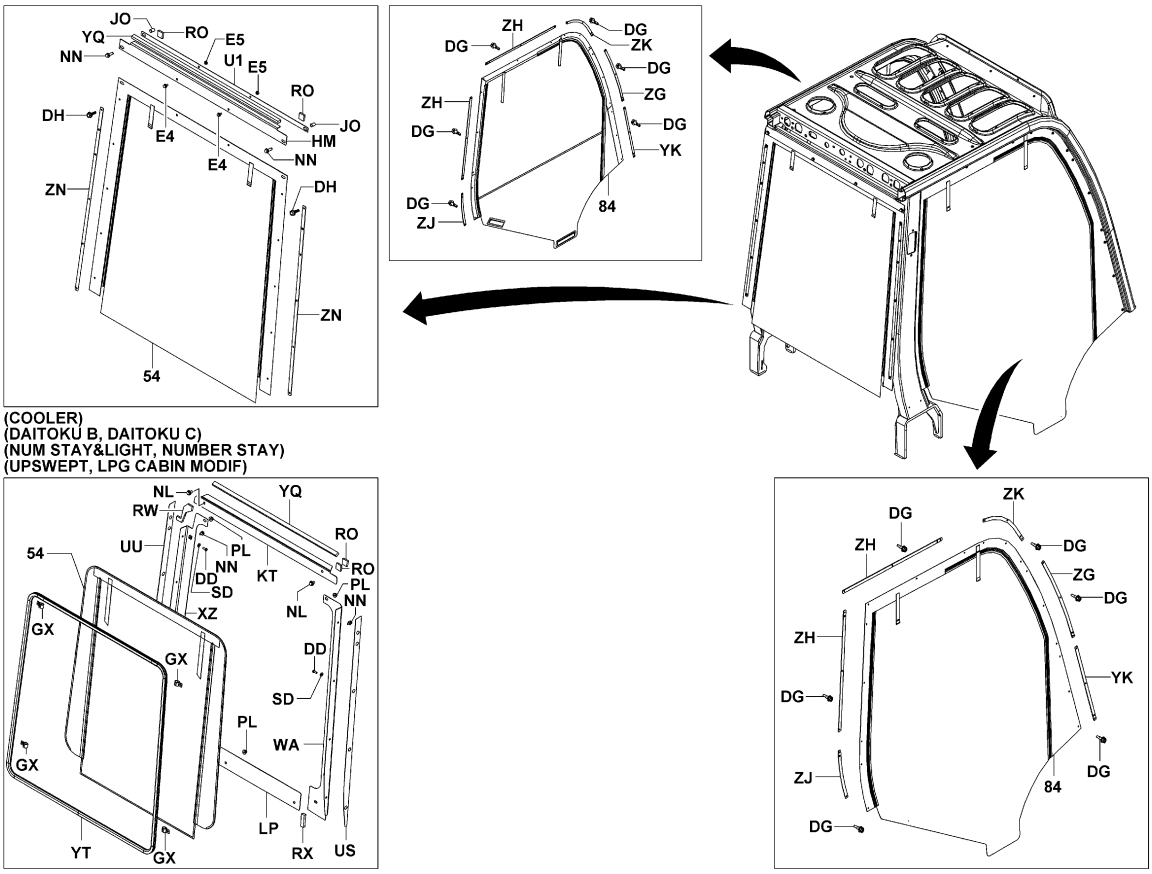


| 5501 | STEEL CABIN<br>CABINE EN ACIER | STAHLKABINE<br>CABINA DE ACERO |
|---|---|---|

| PART NAME CODE | PART NAME | QTY |
|---|---|---|
| 5501-10 | **WINDOW ASSY, DOOR, RH**<br>ENS. DE FENETRE<br>FENSTER, VOLLST.<br>CONJUNTO DE VENTANILLA | 1 |
| 5501-11 | **WINDOW ASSY, DOOR, LH**<br>ENS. DE FENETRE<br>FENSTER, VOLLST.<br>CONJUNTO DE VENTANILLA | 1 |
| 5501-25 | **DOOR SUB-ASSY, RH**<br>SOUS-ENS. DE PORTE<br>TUR-TEILGRUPPE<br>SUBCONJUNTO DE LA PUERTA | 1 |
| 5501-26 | **DOOR SUB-ASSY, LH**<br>SOUS-ENS. DE PORTE<br>TUR-TEILGRUPPE<br>SUBCONJUNTO DE LA PUERTA | 1 |
| 5501-28 | **DOOR SUB-ASSY, REAR**<br>SOUS-ENS. DE PORTE<br>TUR-TEILGRUPPE<br>SUBCONJUNTO DE LA PUERTA | 1 |
| 5501-54 | **DOOR ASSY**<br>ENS. DE PORTE<br>TUR, VOLLST.<br>CONJUNTO DE LA PUERTA | 1 |
| 5501-84 | **DOOR ASSY, CANVAS**<br>ENS. DE PORTE<br>TÜR, VOLLST.<br>CONJUNTO DE LA PUERTA | 1 |
| 5501-A2 | **BRACKET, FRONT GLASS, RH**<br>SUPPORT<br>TRÄGER<br>SOPORTE | 1 |
| 5501-A3 | **BRACKET, FRONT GLASS, LH**<br>SUPPORT<br>TRÄGER<br>SOPORTE | 1 |
| 5501-A4 | **BRACKET, FRONT GLASS, UPR**<br>SUPPORT<br>TRÄGER<br>SOPORTE | 1 |
| 5501-A5 | **BRACKET, FRONT GLASS, LWR**<br>SUPPORT<br>TRÄGER<br>SOPORTE | 1 |
| 5501-A6 | **BRACKET, LAMP**<br>SUPPORT<br>TRÄGER<br>SOPORTE | 2 |
| 5501-A8 | **BRACKET, DAMPER**<br>SUPPORT<br>TRÄGER<br>SOPORTE | 1- 2 |
| 5501-A9 | **BRACKET, GLASS, RR**<br>SUPPORT<br>TRÄGER<br>SOPORTE | 1 |
| 5501-AD | **HINGE SUB-ASSY**<br>SOUS-ENS. DE CHARNIERE<br>SCHARNIER-TEILGRUPPE<br>SUBCONJUNTO DE BISAGRA | 2 |
| 5501-AE | **HINGE SUB-ASSY**<br>SOUS-ENS. DE CHARNIERE<br>SCHARNIER-TEILGRUPPE<br>SUBCONJUNTO DE BISAGRA | 2 |
| 5501-AG | **BUSHING**<br>BAGUE<br>BUCHSE<br>BUJE | 4 |
| 5501-AJ | **CLIP**<br>AGRAFE<br>CLIP<br>FIJADOR | 2 |
| 5501-AM | **CLIP**<br>AGRAFE<br>CLIP<br>FIJADOR | 2 |
| 5501-AR | **GLASS, SIDE**<br>VITRE<br>GLASSCHEIBE<br>VIDRIO | 1 |

## 5501 STEEL CABIN / CABINE EN ACIER / STAHLKABINE / CABINA DE ACERO

| PART NAME CODE | PART NAME | QTY |
|---|---|---|
| 5501-AV | **GLASS, FRONT**<br>VITRE<br>GLASSCHEIBE<br>VIDRIO | 1 |
| 5501-AY | **GLASS, REAR**<br>VITRE<br>GLASSCHEIBE<br>VIDRIO | 1 |
| 5501-B2 | **BRACKET, RR GLASS, RH**<br>SUPPORT<br>TRÄGER<br>SOPORTE | 1- 2 |
| 5501-B3 | **BRACKET, RR GLASS, LH**<br>SUPPORT<br>TRÄGER<br>SOPORTE | 1 |
| 5501-B4 | **COVER, RADIATOR**<br>COUVERCLE<br>DECKEL<br>CUBIERTA | 1 |
| 5501-B6 | **PLATE, GUARD**<br>PLAQUE<br>PLATTE<br>PLACA | 1 |
| 5501-B7 | **PLATE, GUARD**<br>PLAQUE<br>PLATTE<br>PLACA | 1 |
| 5501-B8 | **RUBBER**<br>CAOUTCHOUC<br>GUMMI<br>GOMA | 2 |
| 5501-B9 | **HANDLE**<br>POIGNEE<br>HEBEL<br>VOLAMTE DE DIRECCION | 1 |
| 5501-BN | **SPACER**<br>ENTRETOISE<br>DISTANZSTUCK<br>SEPARADOR | 1 |
| 5501-BQ | **BOLT**<br>BOULON<br>SCHRAUBE<br>PERNO | 3 |
| 5501-BR | **COVER**<br>COUVERCLE<br>DECKEL<br>CUBIERTA | 2 |
| 5501-C2 | **NUT, CAP**<br>ECROU<br>MUTTER<br>TUERCA | 4 |
| 5501-C3 | **RUBBER**<br>CAOUTCHOUC<br>GUMMI<br>GOMA | 1 |
| 5501-C4 | **RUBBER**<br>CAOUTCHOUC<br>GUMMI<br>GOMA | 1 |
| 5501-C5 | **BUSHING**<br>BAGE<br>BUCHSE<br>MANGUITO | 8-16 |
| 5501-C6 | **RUBBER**<br>CAOUTCHOUC<br>GUMMI<br>GOMA | 18 |
| 5501-C7 | **FASTENER**<br>FIXATION<br>BEFESTIGUNG<br>FIJADOR | 11 |
| 5501-C8 | **FASTENER**<br>FIXATION<br>BEFESTIGUNG<br>FIJADOR | 11 |
| 5501-C9 | **BOLT**<br>BOULON<br>SCHRAUBE<br>PERNO | 4 |

## 5501 STEEL CABIN / CABINE EN ACIER / STAHLKABINE / CABINA DE ACERO

| PART NAME CODE | PART NAME | QTY |
|---|---|---|
| 5501-CA | **GLASS, SIDE**<br>VITRE<br>GLASSCHEIBE<br>VIDRIO | 1 |
| 5501-CC | **WEATHERSTRIP**<br>BOURRELET D'ETANCHEITE<br>ABDICHTUNGSPROFIL<br>CANAL PARA EL AGUA | 1 |
| 5501-CD | **WEATHERSTRIP**<br>BOURRELET D'ETANCHEITE<br>ABDICHTUNGSPROFIL<br>CANAL PARA EL AGUA | 1 |
| 5501-CM | **RUBBER, CUSHION**<br>CAOUTCHOUC<br>GUMMI<br>GOMA | 2 |
| 5501-CN | **BUSHING**<br>BAGUE<br>BUCHSE<br>BUJE | 3 |
| 5501-CO | **HINGE SUB-ASSY**<br>SOUS-ENS. DE CHARNIERE<br>SCHARNIER-TEILGRUPPE<br>SUBCONJUNTO DE BISAGRA | 1 |
| 5501-CP | **HINGE SUB-ASSY**<br>SOUS-ENS. DE CHARNIERE<br>SCHARNIER-TEILGRUPPE<br>SUBCONJUNTO DE BISAGRA | 1 |
| 5501-CR | **PLUG**<br>BOUCHON<br>STOPFEN<br>TAPON | 8 |
| 5501-CW | **WEATHERSTRIP**<br>BOURRELET D'ETANCHEITE<br>ABDICHTUNGSPROFIL<br>CANAL PARA EL AGUA | 1 |
| 5501-D2 | **FASTENER**<br>FIXATION<br>BEFESTIGUNG<br>FIJADOR | 10 |
| 5501-D3 | **FASTENER**<br>FIXATION<br>BEFESTIGUNG<br>FIJADOR | 10 |
| 5501-D4 | **FASTENER**<br>FIXATION<br>BEFESTIGUNG<br>FIJADOR | 16 |
| 5501-D5 | **FASTENER**<br>FIXATION<br>BEFESTIGUNG<br>FIJADOR | 16 |
| 5501-DC | **SCREW**<br>VIS<br>SCHRAUBE<br>TORNILLO | 2 |
| 5501-DD | **SCREW**<br>VIS<br>SCHRAUBE<br>TORNILLO | 8 |
| 5501-DE | **SCREW**<br>VIS<br>SCHRAUBE<br>TORNILLO | 3 |
| 5501-DG | **SCREW**<br>VIS<br>SCHRAUBE<br>TORNILLO | 34 |
| 5501-DH | **SCREW**<br>VIS<br>SCHRAUBE<br>TORNILLO | 10 |
| 5501-DJ | **BRACKET**<br>SUPPORT<br>TRAGER<br>SOPORTE | 1 |
| 5501-DP | **RUBBER**<br>CAOUTCHOUC<br>GUMMI<br>GOMA | 2 |

| 5501 | STEEL CABIN<br>CABINE EN ACIER | STAHLKABINE<br>CABINA DE ACERO |
|---|---|---|

| PART NAME CODE | PART NAME | QTY |
|---|---|---|
| 5501-DQ | **RUBBER**<br>CAOUTCHOUC<br>GUMMI<br>GOMA | 1 |
| 5501-DT | **RUBBER**<br>CAOUTCHOUC<br>GUMMI<br>GOMA | 1 |
| 5501-E4 | **BOLT**<br>BOULON<br>SCHRAUBE<br>PERNO | 2 |
| 5501-E5 | **NUT**<br>ECROU<br>MUTTER<br>TUERCA | 2 |
| 5501-ED | **PIN**<br>GOUPILLE<br>STIFT<br>PASADOR | 2 |
| 5501-EE | **PIPE SUB-ASSY**<br>SOUS-ENS. DE TUYAU<br>ROHR-TEILGRUPPE<br>SUBCONJUNTO DE TUBO | 1 |
| 5501-EI | **BOLT**<br>BOULON<br>SCHRAUBE<br>PERNO | 4 |
| 5501-EM | **BRACKET**<br>SUPPORT<br>TRAGER<br>SOPORTE | 1 |
| 5501-ER | **PLATE**<br>PLAQUE<br>PLATTE<br>PLACA | 2 |
| 5501-EV | **BRACKET**<br>SUPPORT<br>TRAGER<br>SOPORTE | 1 |
| 5501-EZ | **PLATE**<br>PLAQUE<br>PLATTE<br>PLACA | 1 |
| 5501-FA | **SPACER**<br>ENTRETOISE<br>DISTANZSTUCK<br>SEPARADOR | 4 |
| 5501-FB | **SPONGE**<br>EPONGE<br>SCHWAMM<br>ESPONJA | 1 |
| 5501-FN | **WASHER**<br>RODELLE<br>UNTERLEGSCHEIBE<br>ARANDELA | 9 |
| 5501-FV | **WEATHERSTRIP**<br>BOURRELET D'ETANCHEITE<br>ABDICHTUNGSPROFIL<br>CANAL PARA EL AGUA | 1 |
| 5501-FW | **WEATHERSTRIP**<br>BOURRELET D'ETANCHEITE<br>ABDICHTUNGSPROFIL<br>CANAL PARA EL AGUA | 1 |
| 5501-FX | **WEATHERSTRIP**<br>BOURRELET D'ETANCHEITE<br>ABDICHTUNGSPROFIL<br>CANAL PARA EL AGUA | 2 |
| 5501-FY | **WEATHERSTRIP**<br>BOURRELET D'ETANCHEITE<br>ABDICHTUNGSPROFIL<br>CANAL PARA EL AGUA | 2 |
| 5501-GD | **SILENCER**<br>SILENCIEUX<br>SCHALLDAMPFER<br>SILENCIADOR | 1 |
| 5501-GL | **TRIM**<br>GARNITURE<br>ZIERSTREIFEN<br>GUARNICION | 2 |

| 5501 | STEEL CABIN<br>CABINE EN ACIER | STAHLKABINE<br>CABINA DE ACERO |
|---|---|---|

| PART NAME CODE | PART NAME | QTY |
|---|---|---|
| 5501-GP | **BRACKET**<br>SUPPORT<br>TRAGER<br>SOPORTE | 1 |
| 5501-GT | **PLUG**<br>BOUCHON<br>STOPFEN<br>TAPON | 6 |
| 5501-GX | **CLAMP**<br>PINSE<br>KLEMME<br>ABRAZADERA | 4 |
| 5501-H6 | **TRIM**<br>GARNITURE<br>ZIERSTREIFEN<br>GUARNICION | 1 |
| 5501-HF | **GROMMET**<br>RONDELLE ISOLANTE<br>DURCHFUHRUNG<br>ANILLO PROTECTOR | 1 |
| 5501-HG | **PLATE**<br>PLAQUE<br>PLATTE<br>PLACA | 1 |
| 5501-HH | **DAMPER ASSY**<br>ENS. D'AMORTISSEUR<br>DAMPFER, VOLLST.<br>CONJUNTO DEL AMORTIGUADOR | 1- 2 |
| 5501-HM | **PLATE, REAR**<br>PLAQUE<br>PLATTE<br>PLACA | 1 |
| 5501-HN | **SEAL**<br>JOINT<br>ABDICHTUNG<br>SELLO | 1 |
| 5501-HO | **SEAL**<br>JOINT<br>ABDICHTUNG<br>SELLO | 1 |
| 5501-HP | **SEAL**<br>JOINT<br>ABDICHTUNG<br>SELLO | 1 |
| 5501-HQ | **SEAL**<br>JOINT<br>ABDICHTUNG<br>SELLO | 1 |
| 5501-HR | **SEAL**<br>JOINT<br>ABDICHTUNG<br>SELLO | 2 |
| 5501-IM | **COVER**<br>COUVERCLE<br>DECKEL<br>CUBIERTA | 1 |
| 5501-IN | **COVER**<br>COUVERCLE<br>DECKEL<br>CUBIERTA | 1 |
| 5501-IU | **BOLT**<br>BOULON<br>SCHRAUBE<br>PERNO | 8 |
| 5501-IV | **BOLT**<br>BOULON<br>SCHRAUBE<br>PERNO | 8 |
| 5501-JB | **BOLT**<br>BOULON<br>SCHRAUBE<br>PERNO | 4 |
| 5501-JC | **BOLT**<br>BOULON<br>SCHRAUBE<br>PERNO | 1 |
| 5501-JD | **BOLT**<br>BOULON<br>SCHRAUBE<br>PERNO | 2 |

| 5501 | STEEL CABIN<br>CABINE EN ACIER | STAHLKABINE<br>CABINA DE ACERO |
|---|---|---|

| PART NAME CODE | PART NAME | QTY |
|---|---|---|
| 5501-JE | **BOLT**<br>BOULON<br>SCHRAUBE<br>PERNO | 2 |
| 5501-JI | **BUSHING**<br>BAGE<br>BUCHSE<br>MANGUITO | 2 |
| 5501-JJ | **SEAL**<br>JOINT<br>ABDICHTUNG<br>SELLO | 1- 2 |
| 5501-JK | **SEAL**<br>JOINT<br>ABDICHTUNG<br>SELLO | 2 |
| 5501-JN | **WASHER, PLATE**<br>RODELLE<br>UNTERLEGSCHEIBE<br>ARANDELA | 2 |
| 5501-JO | **NUT**<br>ECROU<br>MUTTER<br>TUERCA | 2- 8 |
| 5501-JP | **SEAL**<br>JOINT<br>ABDICHTUNG<br>SELLO | 2 |
| 5501-KG | **BOSS**<br>BOSSAGE<br>FLANSCH<br>TETON | 3 |
| 5501-KH | **COVER**<br>COUVERCLE<br>DECKEL<br>CUBIERTA | 1 |
| 5501-KP | **COVER**<br>COUVERCLE<br>DECKEL<br>CUBIERTA | 1 |
| 5501-KT | **PLATE**<br>PLAQUE<br>PLATTE<br>PLACA | 1 |
| 5501-LB | **COVER**<br>COUVERCLE<br>DECKEL<br>CUBIERTA | 1 |
| 5501-LD | **WASHER**<br>RODELLE<br>UNTERLEGSCHEIBE<br>ARANDELA | 1 |
| 5501-LE | **SEAL**<br>JOINT<br>ABDICHTUNG<br>SELLO | 1 |
| 5501-LJ | **COVER**<br>COUVERCLE<br>DECKEL<br>CUBIERTA | 1 |
| 5501-LP | **PLATE**<br>PLAQUE<br>PLATTE<br>PLACA | 1 |
| 5501-MC | **SPONGE**<br>EPONGE<br>SCHWAMM<br>ESPONJA | 1 |
| 5501-MH | **SPONGE**<br>EPONGE<br>SCHWAMM<br>ESPONJA | 2 |
| 5501-MT | **TRIM**<br>GARNITURE<br>ZIERSTREIFEN<br>GUARNICION | 1 |
| 5501-MU | **TRIM**<br>GARNITURE<br>ZIERSTREIFEN<br>GUARNICION | 1 |

| 5501 | STEEL CABIN<br>CABINE EN ACIER | STAHLKABINE<br>CABINA DE ACERO |
|---|---|---|

| PART NAME CODE | PART NAME | QTY |
|---|---|---|
| 5501-MZ | **BOLT**<br>BOULON<br>SCHRAUBE<br>PERNO | 2- 4 |
| 5501-NF | **SPONGE**<br>EPONGE<br>SCHWAMM<br>ESPONJA | 1 |
| 5501-NH | **SPONGE**<br>EPONGE<br>SCHWAMM<br>ESPONJA | 1 |
| 5501-NJ | **SPONGE**<br>EPONGE<br>SCHWAMM<br>ESPONJA | 1 |
| 5501-NK | **SPONGE**<br>EPONGE<br>SCHWAMM<br>ESPONJA | 1 |
| 5501-NL | **BOLT**<br>BOULON<br>SCHRAUBE<br>PERNO | 2- 4 |
| 5501-NN | **BOLT**<br>BOULON<br>SCHRAUBE<br>PERNO | 2- 4 |
| 5501-NO | **WASHER**<br>RODELLE<br>UNTERLEGSCHEIBE<br>ARANDELA | 1 |
| 5501-NR | **NUT, CAP**<br>ECROU<br>MUTTER<br>TUERCA | 5 |
| 5501-OD | **BOLT**<br>BOULON<br>SCHRAUBE<br>PERNO | 3 |
| 5501-OE | **SPONGE**<br>EPONGE<br>SCHWAMM<br>ESPONJA | 1 |
| 5501-OK | **COVER**<br>COUVERCLE<br>DECKEL<br>CUBIERTA | 1 |
| 5501-OL | **BOLT**<br>BOULON<br>SCHRAUBE<br>PERNO | 1 |
| 5501-PJ | **GLASS, WINDOW, NO.1**<br>VITRE<br>GLASSCHEIBE<br>VIDRIO | 2 |
| 5501-PK | **GLASS, WINDOW, NO.2**<br>VITRE<br>GLASSCHEIBE<br>VIDRIO | 2- 3 |
| 5501-PL | **NUT**<br>ECROU<br>MUTTER<br>TUERCA | 1- 5 |
| 5501-PN | **SHIM**<br>CALE<br>AUSGLEICHSCHEIBE<br>CALCE | 99 |
| 5501-PR | **NUT**<br>ECROU<br>MUTTER<br>TUERCA | 3 |
| 5501-PT | **RUBBER**<br>CAOUTCHOUC<br>GUMMI<br>GOMA | 1 |
| 5501-PU | **WASHER, PLATE**<br>RODELLE<br>UNTERLEGSCHEIBE<br>ARANDELA | 8 |

## 5501 STEEL CABIN / CABINE EN ACIER / STAHLKABINE / CABINA DE ACERO

| PART NAME CODE | PART NAME | QTY |
|---|---|---|
| 5501-PZ | **SEAL**<br>JOINT<br>ABDICHTUNG<br>SELLO | 1 |
| 5501-QA | **WEATHERSTRIP**<br>BOURRELET D'ETANCHEITE<br>ABDICHTUNGSPROFIL<br>CANAL PARA EL AGUA | 2 |
| 5501-QC | **WEATHERSTRIP**<br>BOURRELET D'ETANCHEITE<br>ABDICHTUNGSPROFIL<br>CANAL PARA EL AGUA | 2 |
| 5501-QD | **WEATHERSTRIP**<br>BOURRELET D'ETANCHEITE<br>ABDICHTUNGSPROFIL<br>CANAL PARA EL AGUA | 1 |
| 5501-QK | **SPONGE**<br>EPONGE<br>SCHWAMM<br>ESPONJA | 1 |
| 5501-QL | **SPONGE**<br>EPONGE<br>SCHWAMM<br>ESPONJA | 1 |
| 5501-QM | **SPONGE**<br>EPONGE<br>SCHWAMM<br>ESPONJA | 2 |
| 5501-QN | **SPONGE**<br>EPONGE<br>SCHWAMM<br>ESPONJA | 1 |
| 5501-R8 | **NUT**<br>ECROU<br>MUTTER<br>TUERCA | 2 |
| 5501-RN | **SEAL**<br>JOINT<br>ABDICHTUNG<br>SELLO | 1 |
| 5501-RO | **SEAL**<br>JOINT<br>ABDICHTUNG<br>SELLO | 2 |
| 5501-RW | **SEAL**<br>JOINT<br>ABDICHTUNG<br>SELLO | 1 |
| 5501-RX | **SEAL**<br>JOINT<br>ABDICHTUNG<br>SELLO | 2 |
| 5501-RY | **SEAL**<br>JOINT<br>ABDICHTUNG<br>SELLO | 1 |
| 5501-SD | **WASHER**<br>RODELLE<br>UNTERLEGSCHEIBE<br>ARANDELA | 1- 8 |
| 5501-SE | **WASHER**<br>RODELLE<br>UNTERLEGSCHEIBE<br>ARANDELA | 1 |
| 5501-SV | **NUT**<br>ECROU<br>MUTTER<br>TUERCA | 12 |
| 5501-U1 | **PLATE**<br>PLAQUE<br>PLATTE<br>PLACA | 1 |
| 5501-UM | **GLASS, FRONT**<br>VITRE<br>GLASSCHEIBE<br>VIDRIO | 1 |
| 5501-UO | **RUBBER**<br>CAOUTCHOUC<br>GUMMI<br>GOMA | 1 |

## 5501 STEEL CABIN / CABINE EN ACIER / STAHLKABINE / CABINA DE ACERO

| PART NAME CODE | PART NAME | QTY |
|---|---|---|
| 5501-US | **RUBBER**<br>CAOUTCHOUC<br>GUMMI<br>GOMA | 1 |
| 5501-UT | **NUT**<br>ECROU<br>MUTTER<br>TUERCA | 8 |
| 5501-UU | **RUBBER**<br>CAOUTCHOUC<br>GUMMI<br>GOMA | 1 |
| 5501-VH | **GROMMET**<br>RONDELLE ISOLANTE<br>DURCHFUHRUNG<br>ANILLO PROTECTOR | 2 |
| 5501-VK | **BOLT**<br>BOULON<br>SCHRAUBE<br>PERNO | 3 |
| 5501-VY | **NUT**<br>ECROU<br>MUTTER<br>TUERCA | 4 |
| 5501-VZ | **PLATE**<br>PLAQUE<br>PLATTE<br>PLACA | 1 |
| 5501-WA | **PLATE**<br>PLAQUE<br>PLATTE<br>PLACA | 1- 4 |
| 5501-XE | **HANDLE**<br>POIGNEE<br>HEBEL<br>VOLAMTE DE DIRECCION | 1 |
| 5501-XZ | **PLATE**<br>PLAQUE<br>PLATTE<br>PLACA | 1 |
| 5501-YC | **BOLT**<br>BOULON<br>SCHRAUBE<br>PERNO | 1 |
| 5501-YE | **BUSHING**<br>BAGE<br>BUCHSE<br>MANGUITO | 4 |
| 5501-YG | **BOLT**<br>BOULON<br>SCHRAUBE<br>PERNO | 8 |
| 5501-YH | **BOLT**<br>BOULON<br>SCHRAUBE<br>PERNO | 12 |
| 5501-YK | **PLATE**<br>PLAQUE<br>PLATTE<br>PLACA | 2 |
| 5501-YM | **BOLT, BALL**<br>BOULON<br>SCHRAUBE<br>PERNO | 1 |
| 5501-YN | **PLATE, LATCH**<br>PLAQUE<br>PLATTE<br>PLACA | 1 |
| 5501-YO | **WASHER, PLATE**<br>RODELLE<br>UNTERLEGSCHEIBE<br>ARANDELA | 3 |
| 5501-YP | **RUBBER**<br>CAOUTCHOUC<br>GUMMI<br>GOMA | 1 |
| 5501-YQ | **RUBBER**<br>CAOUTCHOUC<br>GUMMI<br>GOMA | 1 |

## 5501

**STEEL CABIN**
**CABINE EN ACIER**
**STAHLKABINE**
**CABINA DE ACERO**

| PART NAME CODE | PART NAME | QTY |
|---|---|---|
| 5501-YT | **TRIM, RR**<br>GARNITURE<br>ZIERSTREIFEN<br>GUARNICION | 1 |
| 5501-YV | **RUBBER**<br>CAOUTCHOUC<br>GUMMI<br>GOMA | 1 |
| 5501-YY | **RUBBER**<br>CAOUTCHOUC<br>GUMMI<br>GOMA | 2 |
| 5501-YZ | **RUBBER**<br>CAOUTCHOUC<br>GUMMI<br>GOMA | 2 |
| 5501-ZB | **BOLT**<br>BOULON<br>SCHRAUBE<br>PERNO | 4 |
| 5501-ZC | **NUT, SPRING**<br>ECROU<br>MUTTER<br>TUERCA | 1 |
| 5501-ZD | **BOLT**<br>BOULON<br>SCHRAUBE<br>PERNO | 3 |
| 5501-ZG | **PLATE**<br>PLAQUE<br>PLATTE<br>PLACA | 2 |
| 5501-ZH | **PLATE**<br>PLAQUE<br>PLATTE<br>PLACA | 4 |
| 5501-ZJ | **PLATE**<br>PLAQUE<br>PLATTE<br>PLACA | 2 |
| 5501-ZK | **PLATE**<br>PLAQUE<br>PLATTE<br>PLACA | 2 |
| 5501-ZN | **PLATE**<br>PLAQUE<br>PLATTE<br>PLACA | 2 |


## 5501

**STEEL CABIN**
**CABINE EN ACIER**
**STAHLKABINE**
**CABINA DE ACERO**


| PART NAME CODE | PART NAME | QTY |
|---|---|---|

| 5504 | DOOR LOCK<br>SERRURE DE PORTE | TÜRSCHLOSS<br>CIERRE DE LA PUERTA |
|---|---|---|

ATM (2-DOOR CABIN) [RH]

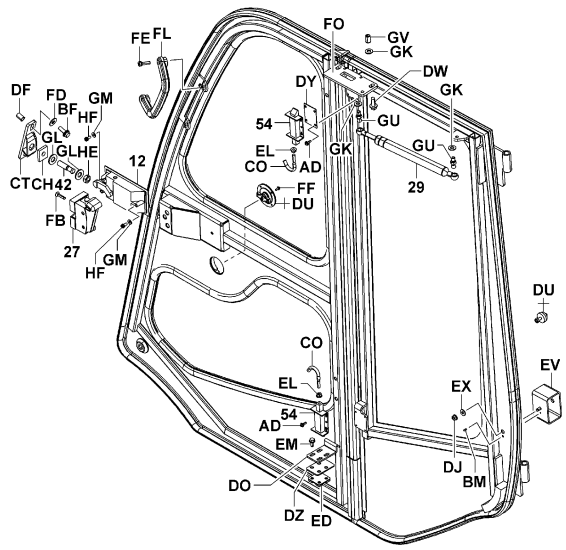


5504-092

5504-092_

ATM (2-DOOR CABIN) [LH]

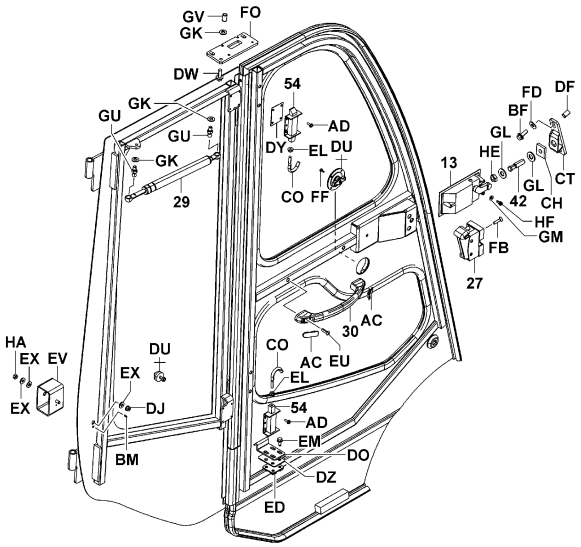


5504-093

5504-093_

| 5504 | DOOR LOCK<br>SERRURE DE PORTE | TÜRSCHLOSS<br>CIERRE DE LA PUERTA |
|---|---|---|

ATM (PREMIUM CABIN) [RH]

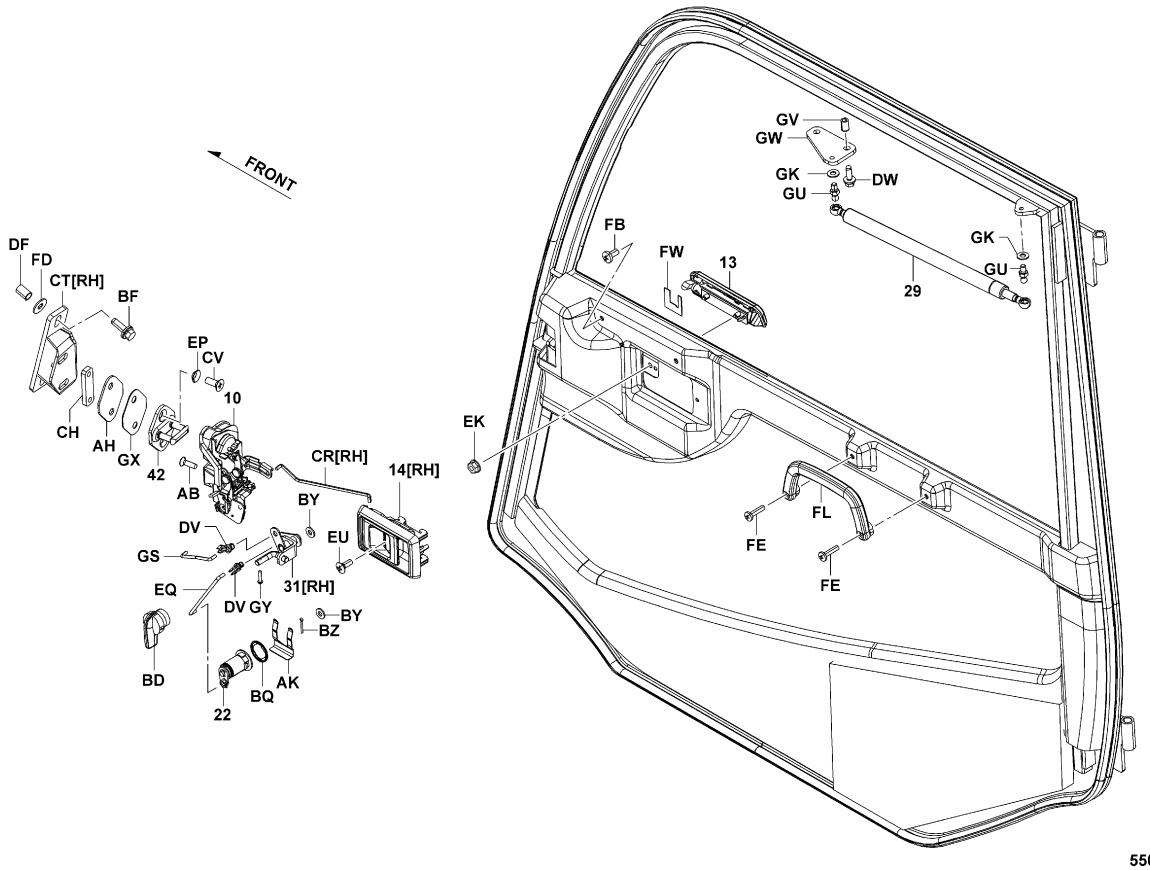


5504-064B

5504-064B

| 5504 | DOOR LOCK<br>SERRURE DE PORTE | TÜRSCHLOSS<br>CIERRE DE LA PUERTA |
|---|---|---|

**ATM (PREMIUM CABIN) [LH]**

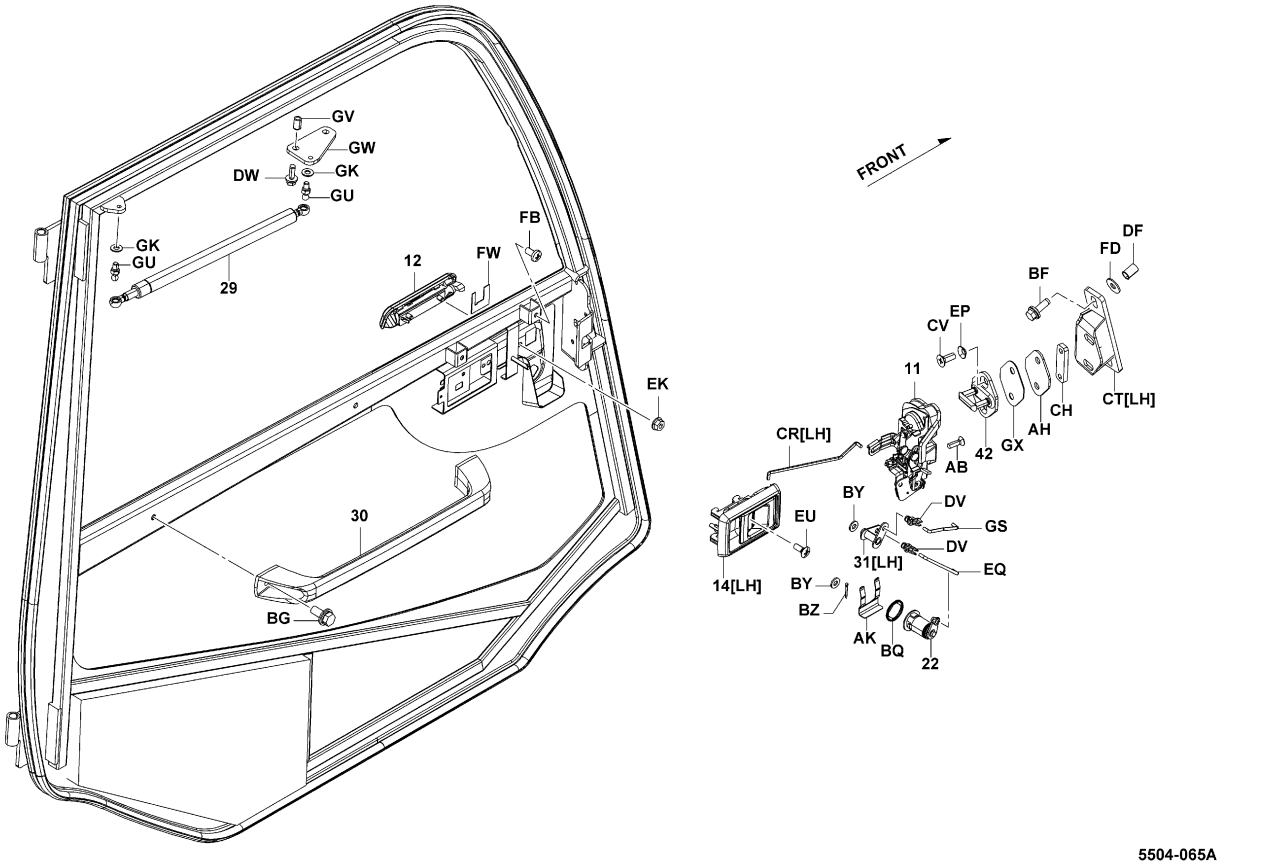


5504-065A

5504-065A

| 5504 | DOOR LOCK<br>SERRURE DE PORTE | TÜRSCHLOSS<br>CIERRE DE LA PUERTA |
|---|---|---|

| PART NAME CODE | PART NAME | QTY |
|---|---|---|
| 5504-10 | **LOCK ASSY, DOOR, RH**<br>ENS. DE VERROU<br>SCHLOSS, VOLLST.<br>CONJUNTO DEL CIERRE | 1 |
| 5504-11 | **LOCK ASSY, DOOR, LH**<br>ENS. DE VERROU<br>SCHLOSS, VOLLST.<br>CONJUNTO DEL CIERRE | 1 |
| 5504-12 | **HANDLE ASSY, FRONT DOOR OUTSIDE, RH**<br>ENS. DE POIGNEE<br>HEBEL, VOLLST.<br>CONJUNTO DEL VOLANTE DE DIRECCION | 1 |
| 5504-13 | **HANDLE ASSY, FRONT DOOR OUTSIDE, LH**<br>ENS. DE POIGNEE<br>HEBEL, VOLLST.<br>CONJUNTO DEL VOLANTE DE DIRECCION | 1 |
| 5504-14 | **HANDLE ASSY, DOOR INSIDE**<br>ENS. DE POIGNEE<br>HEBEL, VOLLST.<br>CONJUNTO DEL VOLANTE DE DIRECCION | 1 |
| 5504-22 | **CYLINDER & KEY SET, DOOR LOCK**<br>ENS. DE CYLINDRE & CLAVETTE<br>ZYLINDER- & KEILSATZ<br>JUEGO DE CILINDRO Y LLAVE | 1 |
| 5504-27 | **LOCK ASSY**<br>ENS. DE VERROU<br>SCHLOSS, VOLLST.<br>CONJUNTO DEL CIERRE | 1 |
| 5504-29 | **DAMPER**<br>AMORTISSEUR<br>DAMPFER<br>AMORTIGUADOR | 2 |
| 5504-30 | **GRIP, ASSIST**<br>PRISE<br>GRIFF<br>EMPUÑADURA | 1 |
| 5504-31 | **LINK**<br>TRINGLE<br>GELENKTEIL<br>ARTICULACION | 1 |
| 5504-42 | **STRIKER, REAR DOOR LOCK**<br>PERCUTEUR<br>SCHLAGBOLZEN<br>CERRADERO | 2 |
| 5504-54 | **LATCH**<br>LOQUET<br>RIEGEL<br>CIERRE | 4 |
| 5504-AB | **SCREW**<br>VIS<br>SCHRAUBE<br>TORNILLO | 6 |
| 5504-AD | **SCREW**<br>VIS<br>SCHRAUBE<br>TORNILLO | 16 |
| 5504-AK | **CLAMP**<br>PINSE<br>KLEMME<br>ABRAZADERA | 2 |
| 5504-BD | **KNOB**<br>BOULE<br>KNOPF<br>MANDO | 1 |
| 5504-BF | **BOLT**<br>BOULON<br>SCHRAUBE<br>PERNO | 4 |
| 5504-BG | **BOLT**<br>BOULON<br>SCHRAUBE<br>PERNO | 2 |
| 5504-BM | **PIN, SPRING**<br>GOUPILLE<br>STIFT<br>PASADOR | 2 |
| 5504-BQ | **PAD**<br>TAMPON<br>KLOTZ<br>ALMOHADILLA | 2 |

| 5504 | DOOR LOCK<br>SERRURE DE PORTE | TÜRSCHLOSS<br>CIERRE DE LA PUERTA |
|---|---|---|

| PART NAME CODE | PART NAME | QTY |
|---|---|---|
| 5504-BY | **WASHER, PLATE**<br>RODELLE<br>UNTERLEGSCHEIBE<br>ARANDELA | 4 |
| 5504-BZ | **PIN, COTTER**<br>GOUPILLE<br>STIFT<br>PASADOR | 2 |
| 5504-CH | **PLATE**<br>PLAQUE<br>PLATTE<br>PLACA | 2 |
| 5504-CO | **ROD**<br>BIELLE<br>STANGE<br>VARILLA | 4 |
| 5504-CR | **ROD**<br>BIELLE<br>STANGE<br>VARILLA | 1 |
| 5504-CT | **BRACKET, LOCK**<br>SUPPORT<br>TRAGER<br>SOPORTE | 1 |
| 5504-CV | **SCREW**<br>VIS<br>SCHRAUBE<br>TORNILLO | 4 |
| 5504-DF | **NUT**<br>ECROU<br>MUTTER<br>TUERCA | 4 |
| 5504-DO | **PLATE**<br>PLAQUE<br>PLATTE<br>PLACA | 1- 2 |
| 5504-DP | **PLATE**<br>PLAQUE<br>PLATTE<br>PLACA | 1 |
| 5504-DU | **CATCH ASSY, DOOR**<br>ENS. DE DISPOSITIF D'ARRET<br>KLINKEN, VOLLST.<br>CONJUNTO DE RETEN | 2 |
| 5504-DV | **SNAP, DOOR LOCK**<br>JONC D'ARRET<br>SPRENGRING<br>ANILLO DE PRESION | 4 |
| 5504-DW | **BOLT**<br>BOULON<br>SCHRAUBE<br>PERNO | 4 |
| 5504-DX | **PLATE**<br>PLAQUE<br>PLATTE<br>PLACA | 1 |
| 5504-DY | **SHIM**<br>CALE<br>AUSGLEICHSCHEIBE<br>CALCE | 99 |
| 5504-DZ | **SHIM**<br>CALE<br>AUSGLEICHSCHEIBE<br>CALCE | 99 |
| 5504-ED | **PLATE SUB-ASSY**<br>SOUS-ENS. DE PLAQUE<br>PLATTEN-TEILGRUPPE<br>SUBCONJUNTO DE PLACA | 2 |
| 5504-EK | **NUT**<br>ECROU<br>MUTTER<br>TUERCA | 4 |
| 5504-EL | **NUT**<br>ECROU<br>MUTTER<br>TUERCA | 4 |
| 5504-EM | **BOLT**<br>BOULON<br>SCHRAUBE<br>PERNO | 8 |

| 5504 | DOOR LOCK<br>SERRURE DE PORTE | TÜRSCHLOSS<br>CIERRE DE LA PUERTA |
|---|---|---|

| PART NAME CODE | PART NAME | QTY |
|---|---|---|
| 5504-EP | **WASHER, TOOTHED**<br>RODELLE<br>UNTERLEGSCHEIBE<br>ARANDELA | 4 |
| 5504-EQ | **ROD**<br>BIELLE<br>STANGE<br>VARILLA | 1 |
| 5504-EU | **SCREW**<br>VIS<br>SCHRAUBE<br>TORNILLO | 2 |
| 5504-EV | **BRACKET**<br>SUPPORT<br>TRAGER<br>SOPORTE | 2 |
| 5504-EX | **WASHER, PLATE**<br>RODELLE<br>UNTERLEGSCHEIBE<br>ARANDELA | 4- 6 |
| 5504-FB | **SCREW**<br>VIS<br>SCHRAUBE<br>TORNILLO | 2- 4 |
| 5504-FD | **WASHER**<br>RODELLE<br>UNTERLEGSCHEIBE<br>ARANDELA | 4 |
| 5504-FE | **SCREW**<br>VIS<br>SCHRAUBE<br>TORNILLO | 2- 4 |
| 5504-FF | **SCREW**<br>VIS<br>SCHRAUBE<br>TORNILLO | 8 |
| 5504-FL | **GRIP**<br>PRISE<br>GRIFF<br>EMPUÑADURA | 1- 2 |
| 5504-FO | **PLATE**<br>PLAQUE<br>PLATTE<br>PLACA | 1 |
| 5504-FW | **SEAL**<br>JOINT<br>ABDICHTUNG<br>SELLO | 1 |
| 5504-GJ | **NUT**<br>ECROU<br>MUTTER<br>TUERCA | 2 |
| 5504-GK | **WASHER, PLATE**<br>RODELLE<br>UNTERLEGSCHEIBE<br>ARANDELA | 4 |
| 5504-GL | **WASHER, PLATE**<br>RODELLE<br>UNTERLEGSCHEIBE<br>ARANDELA | 4 |
| 5504-GM | **WASHER, PLATE**<br>RODELLE<br>UNTERLEGSCHEIBE<br>ARANDELA | 6 |
| 5504-GS | **ROD, DOOR OPEN**<br>BIELLE<br>STANGE<br>VARILLA | 2 |
| 5504-GT | **ROD, DOOR OPEN**<br>BIELLE<br>STANGE<br>VARILLA | 1 |
| 5504-GU | **BOLT, BALL**<br>BOULON<br>SCHRAUBE<br>PERNO | 4 |
| 5504-GV | **NUT**<br>ECROU<br>MUTTER<br>TUERCA | 4 |

| 5504 | DOOR LOCK<br>SERRURE DE PORTE | TÜRSCHLOSS<br>CIERRE DE LA PUERTA |
|---|---|---|

| PART NAME CODE | PART NAME | QTY | PART NAME CODE | PART NAME | QTY |
|---|---|---|---|---|---|
| 5504-GW | **PLATE, DAMPER**<br>PLAQUE<br>PLATTE<br>PLACA | 1 | | | |
| 5504-GX | **SHIM, DOOR LOCK STRIKER**<br>CALE<br>AUSGLEICHSCHEIBE<br>CALCE | 2 | | | |
| 5504-GY | **SCREW**<br>VIS<br>SCHRAUBE<br>TORNILLO | 1 | | | |
| 5504-HA | **NUT**<br>ECROU<br>MUTTER<br>TUERCA | 2 | | | |
| 5504-HE | **NUT**<br>ECROU<br>MUTTER<br>TUERCA | 2 | | | |
| 5504-HF | **SCREW**<br>VIS<br>SCHRAUBE<br>TORNILLO | 6 | | | |


| 5504 | DOOR LOCK<br>SERRURE DE PORTE | TÜRSCHLOSS<br>CIERRE DE LA PUERTA |
|---|---|---|

| PART NAME CODE | PART NAME | QTY | PART NAME CODE | PART NAME | QTY |
|---|---|---|---|---|---|

ATM [MAIN]

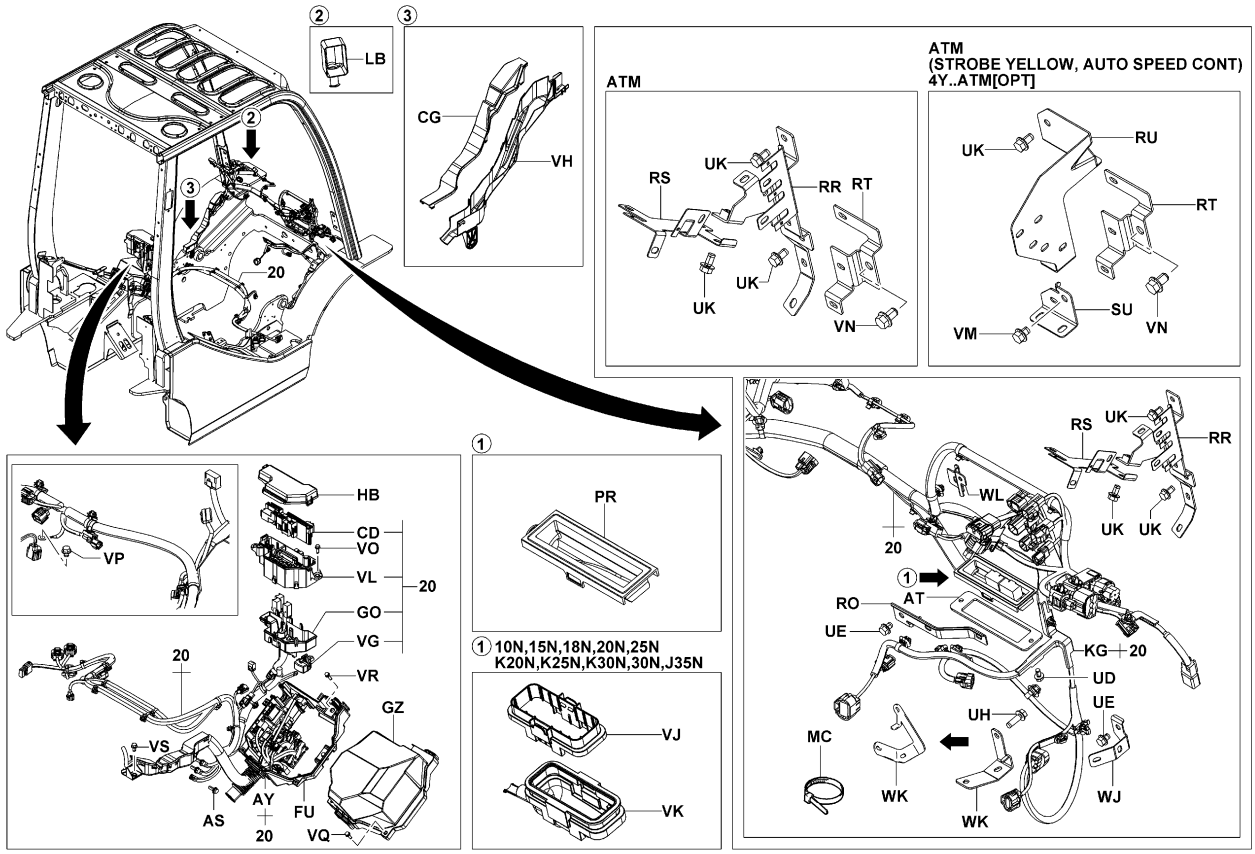


5601-411C

5601-411C



ATM [FR SUB]

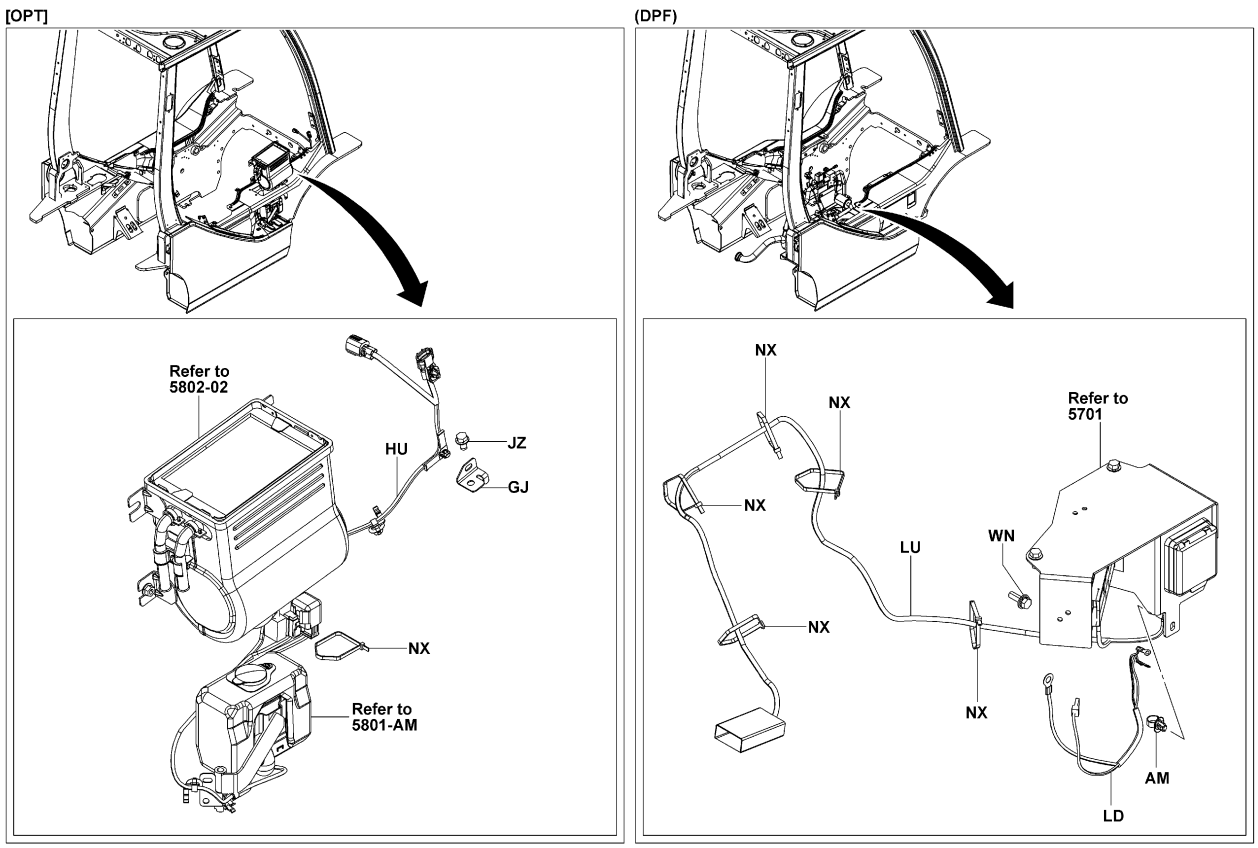


5601-392B

5601-392B

ATM

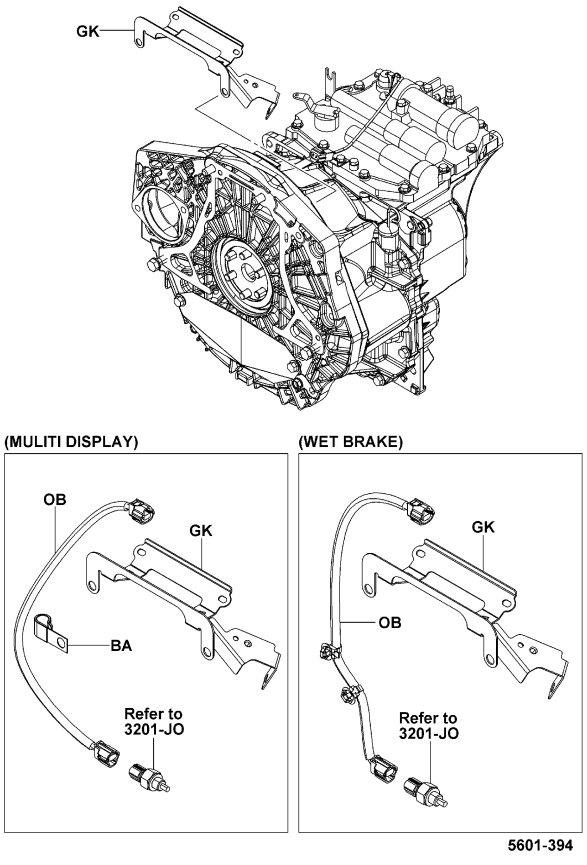


5601-394

5601-394_

4Y [RH SIDE]

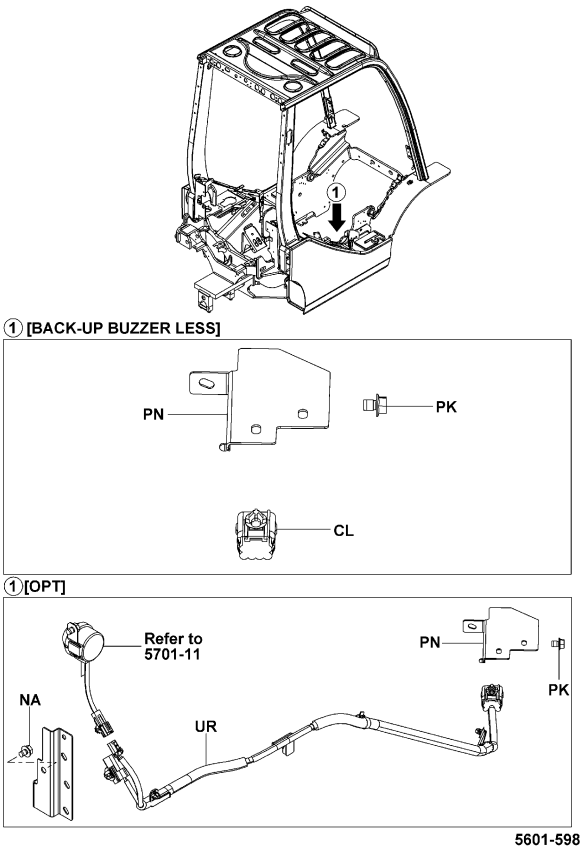


5601-598

5601-598_

5601 | WIRING & CLAMP / CABLAGE & COLLIER | KABEL & KABELKLEMMEN / CABLES Y ABRAZADERA

1DZ,2Z,3Z [RH SIDE]

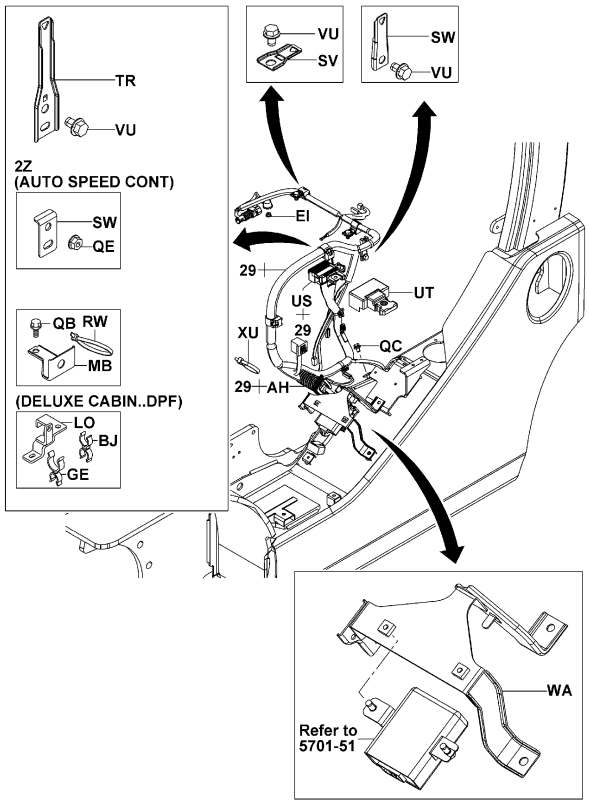


5601-398C

5601-398C

4Y [E/G MAIN]

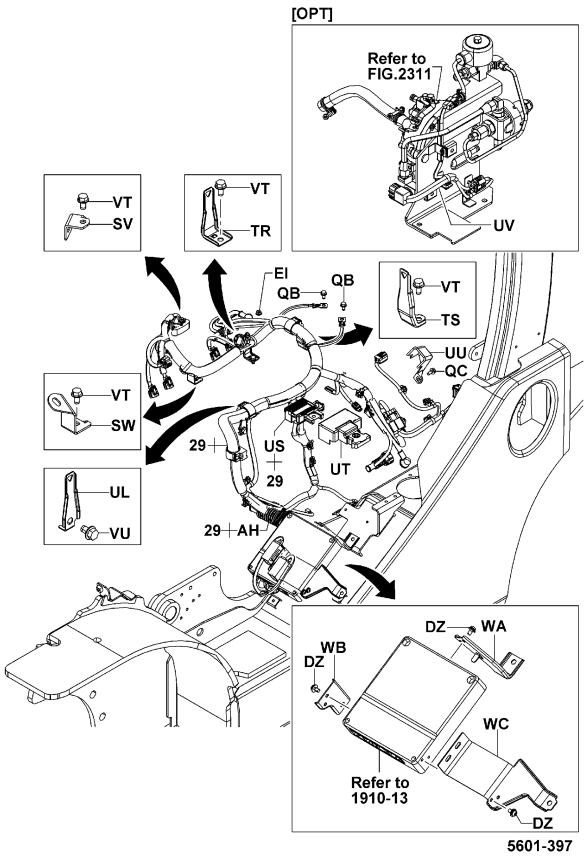


5601-397

5601-397_

1DZ,2Z,3Z [E/G MAIN]

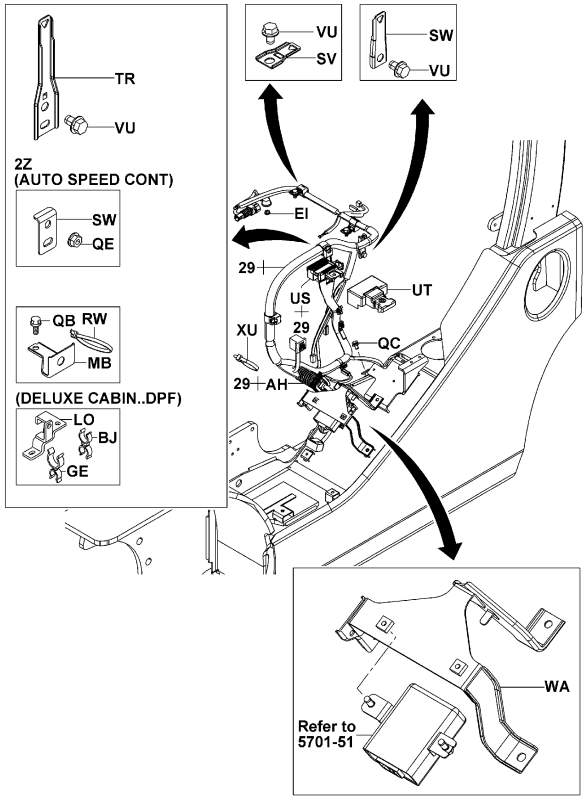


5601-398C

5601-398C

ATM [EARTH]

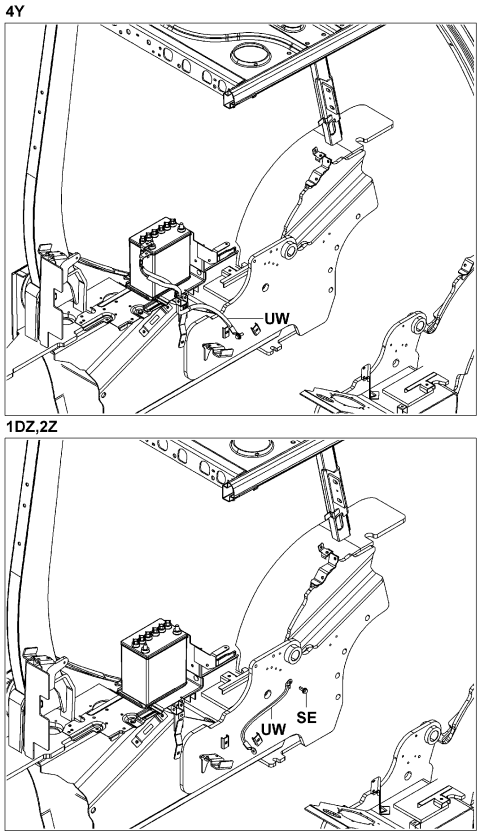


5601-399

5601-399_


| 5601 | WIRING & CLAMP<br>CABLAGE & COLLIER | KABEL & KABELKLEMMEN<br>CABLES Y ABRAZADERA |
|---|---|---|


ATM [INSTRUMENT PANEL]

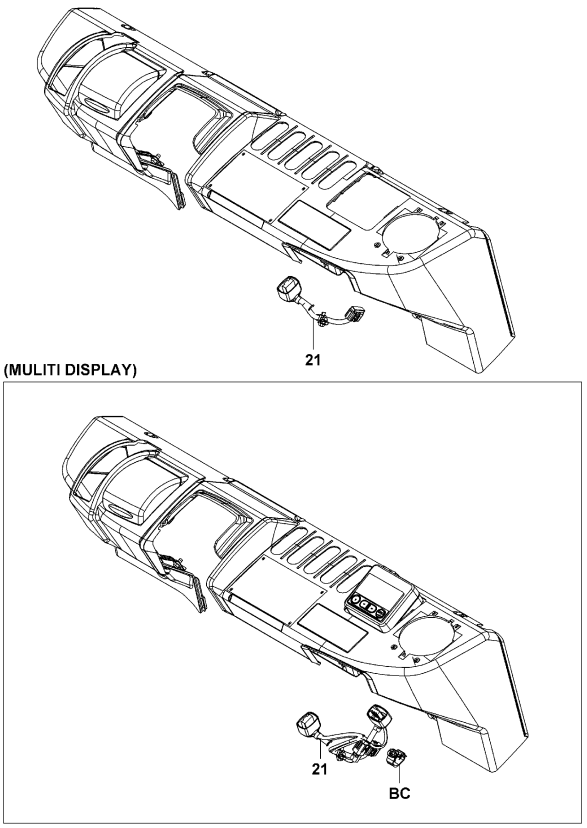


5601-400

5601-400_

ATM [LAMP]

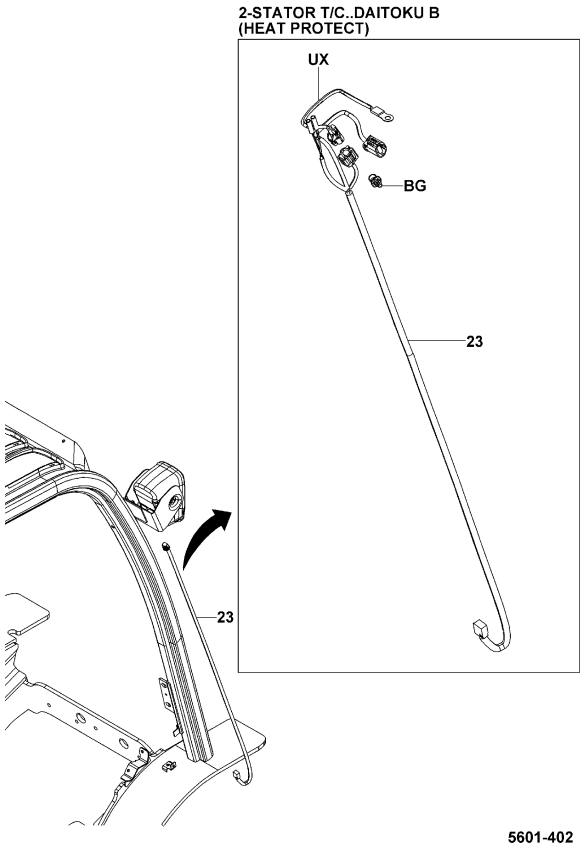


5601-402

5601-402_

ATM [REAR PILLEAR]

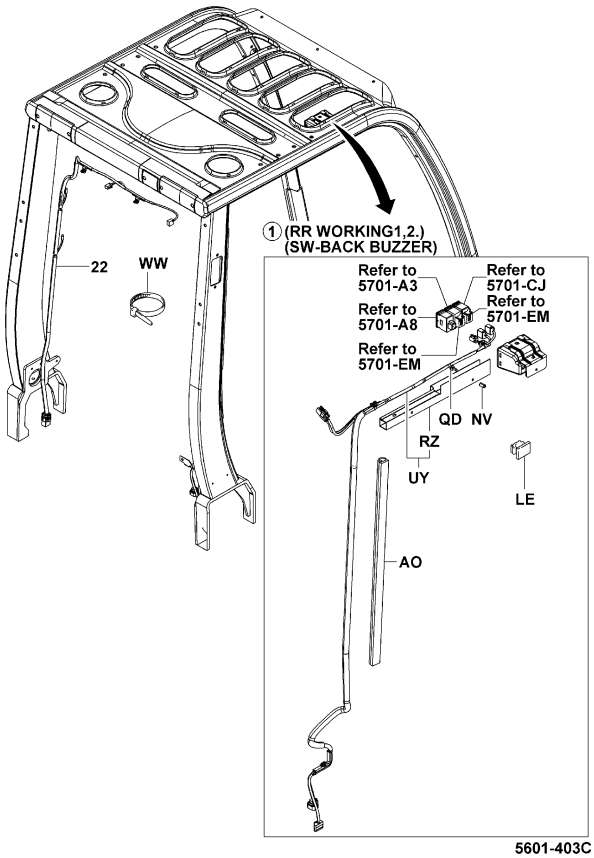


5601-403C

5601-403C

ATM [H/G RH]

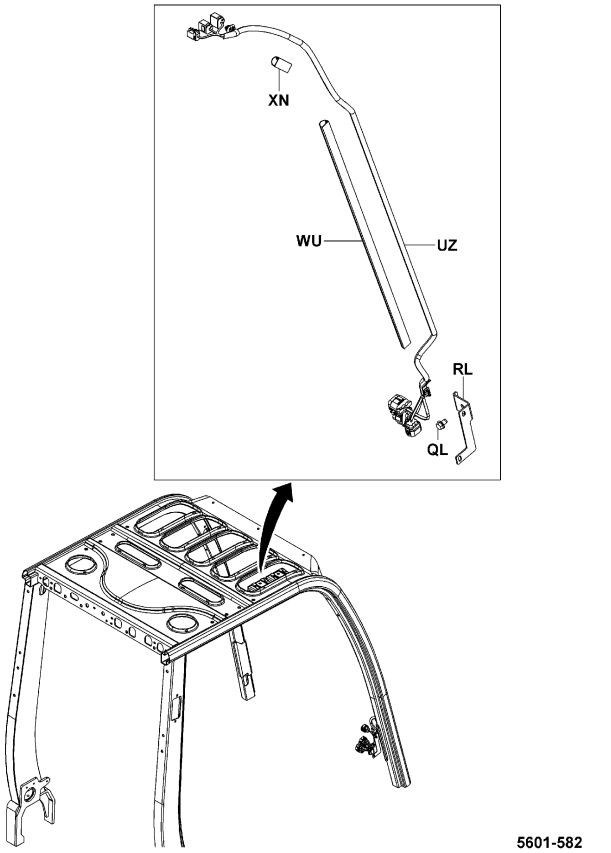


5601-582

5601-582_


| 5601 | WIRING & CLAMP<br>CABLAGE & COLLIER | KABEL & KABELKLEMMEN<br>CABLES Y ABRAZADERA |
|---|---|---|


ATM [LH SIDE & FOOD]

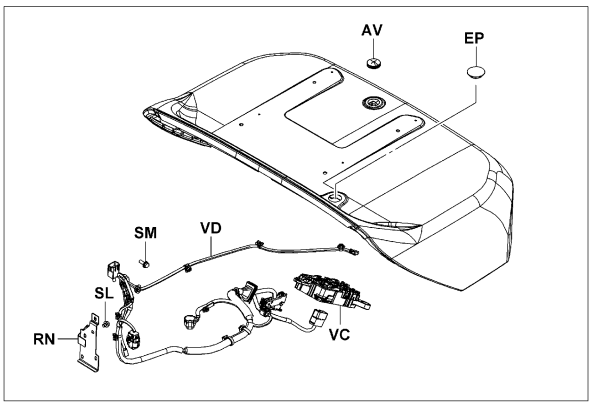


(MINI LEVER, JOY STICK)

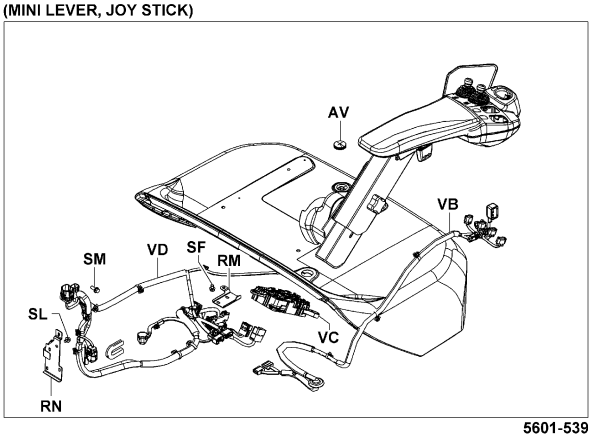


5601-539

5601-539_

ATM [ACCEL]

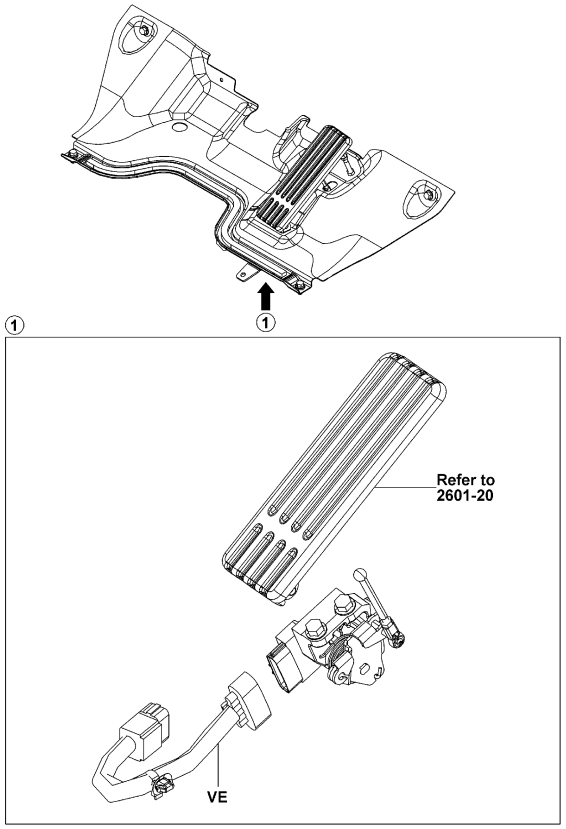


5601-407

5601-407_

ATM [HEAD GUARD UPPER LH]

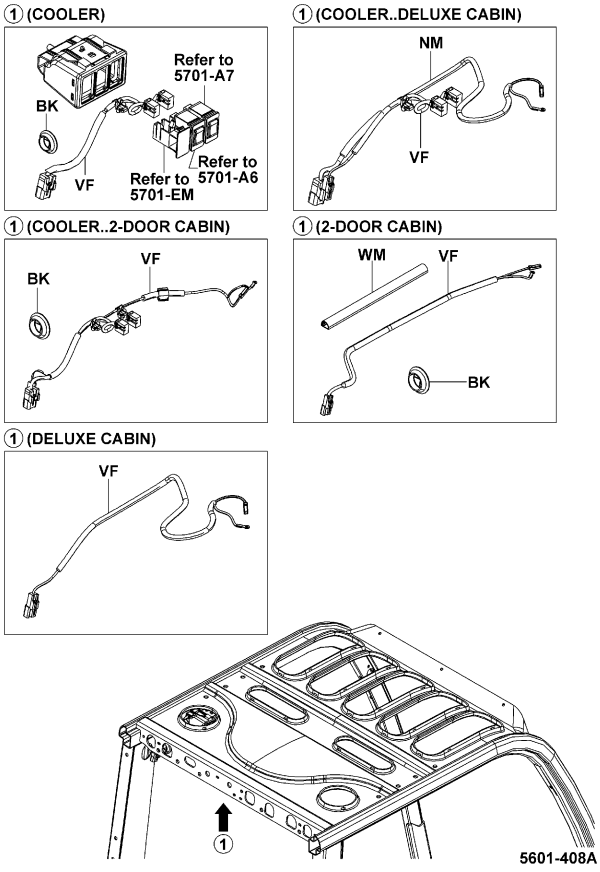


5601-408A



ATM [MAST SENSOR]

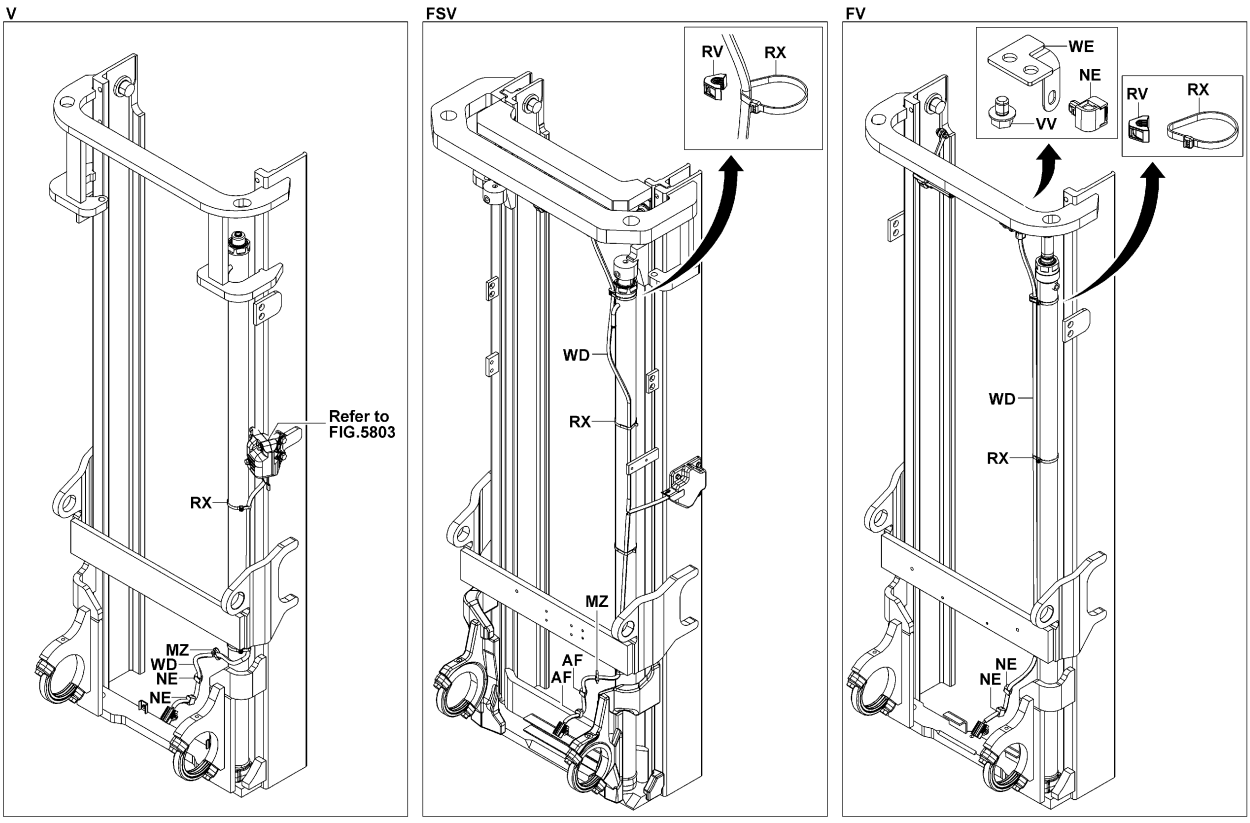


5601-608_

ATM [RR AXLE]

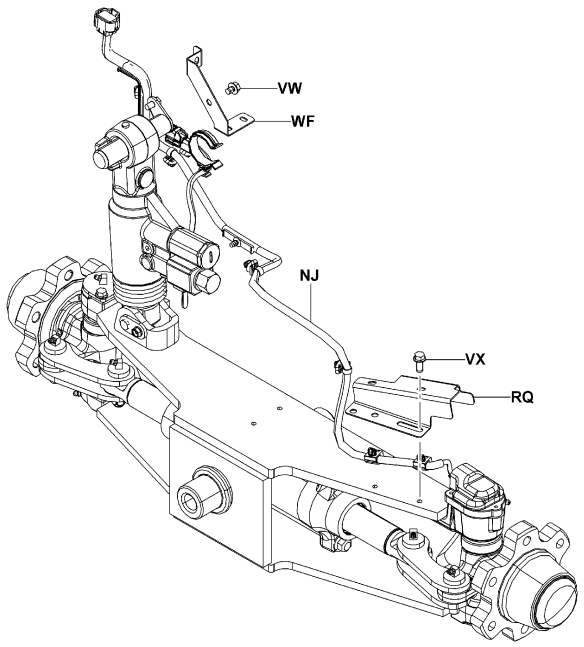


5601-410

5601-410_

ATM [FUSE BOX]

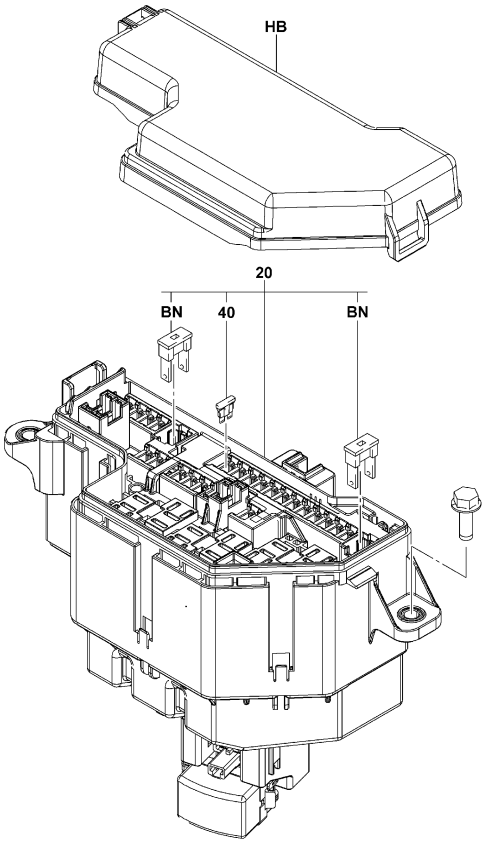


5601-442B

5601-442B


| 5601 | WIRING & CLAMP<br>CABLAGE & COLLIER | KABEL & KABELKLEMMEN<br>CABLES Y ABRAZADERA |
|---|---|---|


ATM (FR WHITE N/PUNC, RR WHITE N/PUNC) [EARTH WIRE]

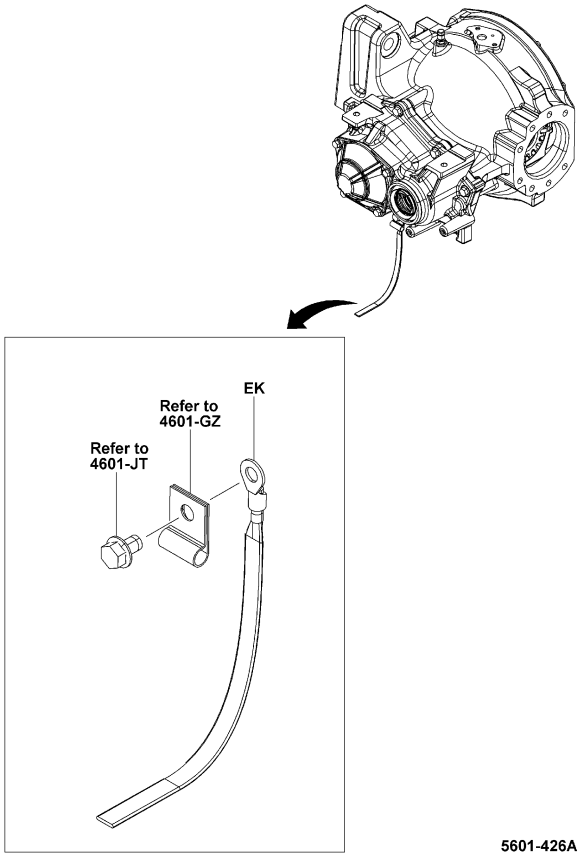


5601-426A

5601-426A

ATM (2-STATOR T/C) [SUB-HARNESS]

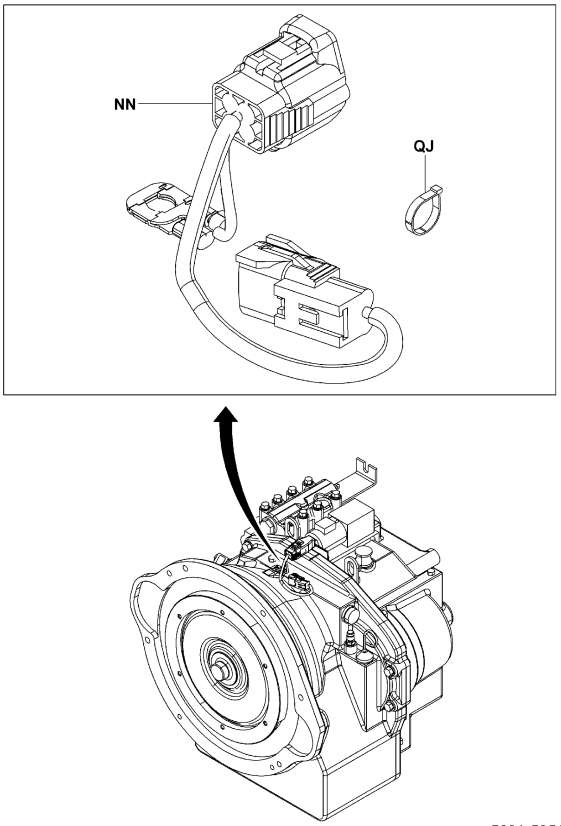


5601-595A

5601-595A

ATM (F&R GLASS WIPER) [FR PILLAR GROMMET]

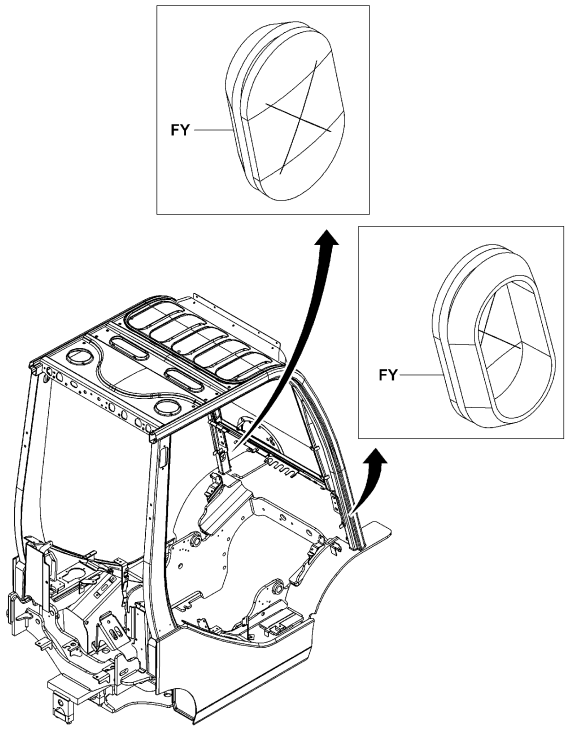


5601-599

5601-599_

ATM (PREMIUM CABIN, C-CABIN WP&WS) [FR PILLAR GROMMET]

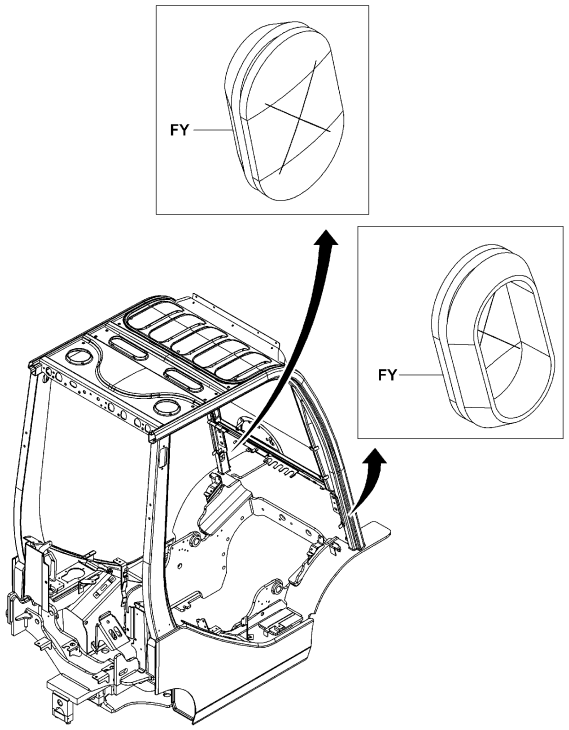


5601-599

5601-599_


| 5601 | WIRING & CLAMP<br>CABLAGE & COLLIER | KABEL & KABELKLEMMEN<br>CABLES Y ABRAZADERA |
|---|---|---|


ATM (R.PROOF FISHER, RUST PROOF) [FR PILLAR GROMMET]

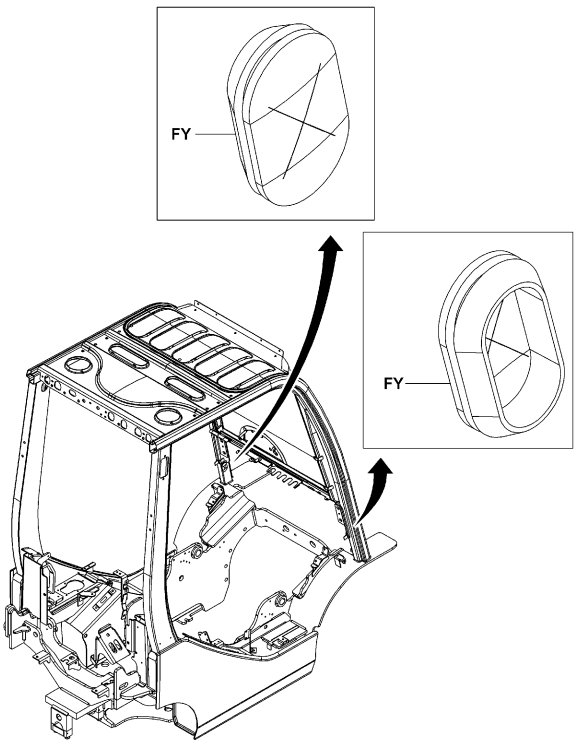


5601-599

5601-599_

## 5601 WIRING & CLAMP / KABEL & KABELKLEMMEN
## CABLAGE & COLLIER / CABLES Y ABRAZADERA

| PART NAME CODE | PART NAME | QTY |
|---|---|---|
| 5601-20 | **HARNESS, MAIN**<br>FAISCEAU<br>KABELBAUM<br>RAMAL DE CABLES | 1 |
| 5601-21 | **HARNESS, PANEL**<br>FAISCEAU<br>KABELBAUM<br>RAMAL DE CABLES | 1 |
| 5601-22 | **HARNESS, RR**<br>FAISCEAU<br>KABELBAUM<br>RAMAL DE CABLES | 1 |
| 5601-23 | **HARNESS, FRONT**<br>FAISCEAU<br>KABELBAUM<br>RAMAL DE CABLES | 2 |
| 5601-29 | **HARNESS, ENGINE**<br>FAISCEAU<br>KABELBAUM<br>RAMAL DE CABLES | 1 |
| 5601-40 | **FUSE**<br>FUSIBLE<br>SICHERUNG<br>FUSIBLE | 1-12 |
| 5601-AF | **CLAMP**<br>PINSE<br>KLEMME<br>ABRAZADERA | 3 |
| 5601-AH | **GROMMET**<br>RONDELLE ISOLANTE<br>DURCHFUHRUNG<br>ANILLO PROTECTOR | 1 |
| 5601-AM | **CLAMP**<br>PINSE<br>KLEMME<br>ABRAZADERA | 1 |
| 5601-AO | **COVER, WIRING HARNESS**<br>COUVERCLE<br>DECKEL<br>CUBIERTA | 1 |
| 5601-AS | **BOLT**<br>BOULON<br>SCHRAUBE<br>PERNO | 1- 3 |
| 5601-AV | **GROMMET**<br>RONDELLE ISOLANTE<br>DURCHFUHRUNG<br>ANILLO PROTECTOR | 1 |
| 5601-AY | **GROMMET**<br>RONDELLE ISOLANTE<br>DURCHFUHRUNG<br>ANILLO PROTECTOR | 1 |
| 5601-BA | **CLAMP**<br>PINSE<br>KLEMME<br>ABRAZADERA | 1 |
| 5601-BC | **CLAMP**<br>PINSE<br>KLEMME<br>ABRAZADERA | 1 |
| 5601-BK | **GROMMET**<br>RONDELLE ISOLANTE<br>DURCHFUHRUNG<br>ANILLO PROTECTOR | 1 |
| 5601-BN | **FUSIBLE LINK**<br>RACCORD-FUSIBLE<br>SCHMELZSTREIFEN<br>FUSIBLE | 1- 2 |
| 5601-CD | **HOLDER, FUSE**<br>SUPPORT<br>DUSENSTOCR<br>SOPORTE PORTADOR | 1 |
| 5601-CG | **COVER SUB-ASSY**<br>SOUS-ENS. DE COUVERCLE<br>DECKEL-TEILGRUPPE<br>SUBCONJUNTO DE CUBIERTA | 1 |
| 5601-CL | **CAP**<br>CAPUCHON<br>KAPPE<br>TAPA | 1 |


## 5601 WIRING & CLAMP / KABEL & KABELKLEMMEN
## CABLAGE & COLLIER / CABLES Y ABRAZADERA


| PART NAME CODE | PART NAME | QTY |
|---|---|---|
| 5601-EI | **NUT**<br>ECROU<br>MUTTER<br>TUERCA | 1- 2 |
| 5601-EK | **TUBE**<br>TUBE<br>ROHR<br>TUBO | 1 |
| 5601-EP | **GROMMET**<br>RONDELLE ISOLANTE<br>DURCHFUHRUNG<br>ANILLO PROTECTOR | 1 |
| 5601-FU | **BOX SUB-ASSY**<br>SOUS-ENS. DE BOITIER<br>KASTEN-TEILGRUPPE<br>SUBCONJUNTO DE LA CAJA | 1 |
| 5601-FY | **GROMMET**<br>RONDELLE ISOLANTE<br>DURCHFUHRUNG<br>ANILLO PROTECTOR | 2 |
| 5601-GJ | **BRACKET**<br>SUPPORT<br>TRAGER<br>SOPORTE | 1 |
| 5601-GK | **BRACKET**<br>SUPPORT<br>TRAGER<br>SOPORTE | 1 |
| 5601-GO | **COVER**<br>COUVERCLE<br>DECKEL<br>CUBIERTA | 1 |
| 5601-GZ | **COVER**<br>COUVERCLE<br>DECKEL<br>CUBIERTA | 1 |
| 5601-HB | **COVER**<br>COUVERCLE<br>DECKEL<br>CUBIERTA | 1 |
| 5601-HU | **WIRE**<br>FIL<br>DRAHT<br>ALAMBRE | 1 |
| 5601-IA | **BRACKET**<br>SUPPORT<br>TRAGER<br>SOPORTE | 1 |
| 5601-JY | **SUPPORTER, CABLE**<br>SUPPORT<br>HALTER<br>SPOPORTE | 1 |
| 5601-JZ | **BOLT**<br>BOULON<br>SCHRAUBE<br>PERNO | 1 |
| 5601-KG | **PROTECTOR**<br>PROTECTEUR<br>SCHUTZABDECKUNG<br>PROTECTOR | 1 |
| 5601-LB | **BOOT**<br>COFFRE<br>MANSCHETTE<br>FORRO | 1 |
| 5601-LD | **WIRE**<br>FIL<br>DRAHT<br>ALAMBRE | 1 |
| 5601-LN | **BRACKET**<br>SUPPORT<br>TRAGER<br>SOPORTE | 1 |
| 5601-LU | **WIRE**<br>FIL<br>DRAHT<br>ALAMBRE | 1 |
| 5601-MB | **BRACKET**<br>SUPPORT<br>TRAGER<br>SOPORTE | 1 |

## 5601

**WIRING & CLAMP**
**CABLAGE & COLLIER**
**KABEL & KABELKLEMMEN**
**CABLES Y ABRAZADERA**

| PART NAME CODE | PART NAME | QTY |
|---|---|---|
| 5601-MC | **CLAMP**<br>PINSE<br>KLEMME<br>ABRAZADERA | 1 |
| 5601-MZ | **CLAMP**<br>PINSE<br>KLEMME<br>ABRAZADERA | 1 |
| 5601-NA | **BOLT**<br>BOULON<br>SCHRAUBE<br>PERNO | 1- 2 |
| 5601-NE | **CLAMP**<br>PINSE<br>KLEMME<br>ABRAZADERA | 2- 3 |
| 5601-NJ | **WIRE**<br>FIL<br>DRAHT<br>ALAMBRE | 1 |
| 5601-NN | **WIRE**<br>FIL<br>DRAHT<br>ALAMBRE | 1 |
| 5601-NX | **BAND**<br>BANDE<br>BAND<br>BANDA | 1- 7 |
| 5601-NY | **CLAMP**<br>PINSE<br>KLEMME<br>ABRAZADERA | 1 |
| 5601-OB | **WIRE, TORCON HEAT GAGE**<br>FIL<br>DRAHT<br>ALAMBRE | 1 |
| 5601-PF | **CLAMP**<br>PINSE<br>KLEMME<br>ABRAZADERA | 1 |
| 5601-PK | **BOLT**<br>BOULON<br>SCHRAUBE<br>PERNO | 1 |
| 5601-PN | **BRACKET, CLAMP**<br>SUPPORT<br>TRAGER<br>SOPORTE | 1 |
| 5601-QB | **BOLT**<br>BOULON<br>SCHRAUBE<br>PERNO | 1- 2 |
| 5601-QC | **BOLT**<br>BOULON<br>SCHRAUBE<br>PERNO | 1- 2 |
| 5601-QE | **NUT**<br>ECROU<br>MUTTER<br>TUERCA | 1 |
| 5601-QJ | **CLAMP**<br>PINSE<br>KLEMME<br>ABRAZADERA | 1 |
| 5601-QL | **BOLT**<br>BOULON<br>SCHRAUBE<br>PERNO | 1 |
| 5601-RL | **BRACKET**<br>SUPPORT<br>TRAGER<br>SOPORTE | 1 |
| 5601-RM | **BRACKET**<br>SUPPORT<br>TRAGER<br>SOPORTE | 1 |
| 5601-RN | **BRACKET**<br>SUPPORT<br>TRAGER<br>SOPORTE | 1 |

## 5601

**WIRING & CLAMP**
**CABLAGE & COLLIER**
**KABEL & KABELKLEMMEN**
**CABLES Y ABRAZADERA**

| PART NAME CODE | PART NAME | QTY |
|---|---|---|
| 5601-RO | **BRACKET**<br>SUPPORT<br>TRAGER<br>SOPORTE | 1 |
| 5601-RP | **BOOT**<br>COFFRE<br>MANSCHETTE<br>FORRO | 1 |
| 5601-RR | **BRACKET**<br>SUPPORT<br>TRAGER<br>SOPORTE | 1 |
| 5601-RS | **BRACKET**<br>SUPPORT<br>TRAGER<br>SOPORTE | 1 |
| 5601-RT | **BRACKET**<br>SUPPORT<br>TRAGER<br>SOPORTE | 1 |
| 5601-RU | **BRACKET**<br>SUPPORT<br>TRAGER<br>SOPORTE | 1 |
| 5601-RV | **STOPPER**<br>BUTEE<br>ANSCHLAG<br>TOPE | 1- 2 |
| 5601-RW | **BAND**<br>BANDE<br>BAND<br>BANDA | 99 |
| 5601-RX | **BAND**<br>BANDE<br>BAND<br>BANDA | 2- 4 |
| 5601-SE | **BOLT**<br>BOULON<br>SCHRAUBE<br>PERNO | 1 |
| 5601-SF | **BOLT**<br>BOULON<br>SCHRAUBE<br>PERNO | 1 |
| 5601-SL | **BOLT**<br>BOULON<br>SCHRAUBE<br>PERNO | 1 |
| 5601-SM | **BOLT**<br>BOULON<br>SCHRAUBE<br>PERNO | 1 |
| 5601-SU | **BRACKET**<br>SUPPORT<br>TRAGER<br>SOPORTE | 1 |
| 5601-SV | **BRACKET**<br>SUPPORT<br>TRAGER<br>SOPORTE | 1- 2 |
| 5601-SW | **BRACKET**<br>SUPPORT<br>TRAGER<br>SOPORTE | 1 |
| 5601-TR | **BRACKET**<br>SUPPORT<br>TRAGER<br>SOPORTE | 1- 2 |
| 5601-TS | **BRACKET**<br>SUPPORT<br>TRAGER<br>SOPORTE | 1 |
| 5601-UD | **BOLT**<br>BOULON<br>SCHRAUBE<br>PERNO | 2 |
| 5601-UE | **BOLT**<br>BOULON<br>SCHRAUBE<br>PERNO | 2 |

## 5601

**WIRING & CLAMP**
**CABLAGE & COLLIER**
**KABEL & KABELKLEMMEN**
**CABLES Y ABRAZADERA**

| PART NAME CODE | PART NAME | QTY |
|---|---|---|
| 5601-UK | **BOLT**<br>BOULON<br>SCHRAUBE<br>PERNO | 2- 3 |
| 5601-UL | **BRACKET**<br>SUPPORT<br>TRAGER<br>SOPORTE | 1 |
| 5601-UR | **WIRE, SIDE**<br>FIL<br>DRAHT<br>ALAMBRE | 1 |
| 5601-US | **BLOCK ASSY, FUSIBLE LINK**<br>ENS. DE BLOC<br>FLASCHENZUG, VOLLST.<br>CONJUNTO DE BLOQUE | 1 |
| 5601-UU | **COVER, SENSOR**<br>COUVERCLE<br>DECKEL<br>CUBIERTA | 1 |
| 5601-UV | **WIRE, ENGINE SUB**<br>FIL<br>DRAHT<br>ALAMBRE | 1 |
| 5601-UW | **WIRE, ENGINE EARTH**<br>FIL<br>DRAHT<br>ALAMBRE | 1 |
| 5601-UY | **WIRE, RR SUB**<br>FIL<br>DRAHT<br>ALAMBRE | 1 |
| 5601-UZ | **WIRE, HEAD GUARD SWITCH**<br>FIL<br>DRAHT<br>ALAMBRE | 1 |
| 5601-VB | **WIRE, HOOD SUB**<br>FIL<br>DRAHT<br>ALAMBRE | 1 |
| 5601-VC | **BLOCK ASSY, JUNCTION**<br>ENS. DE BLOC<br>FLASCHENZUG, VOLLST.<br>CONJUNTO DE BLOQUE | 1 |
| 5601-VD | **WIRE, SIDE**<br>FIL<br>DRAHT<br>ALAMBRE | 1 |
| 5601-VE | **WIRE, ACCELERATOR SUB**<br>FIL<br>DRAHT<br>ALAMBRE | 1 |
| 5601-VF | **WIRE, RR SUB**<br>FIL<br>DRAHT<br>ALAMBRE | 1 |
| 5601-VG | **HOUSING, CONNECTOR CHECKER**<br>BOITIER<br>GEHÄUSE<br>FUNDA | 1 |
| 5601-VH | **PROTECTOR**<br>PROTECTEUR<br>SCHUTZABDECKUNG<br>PROTECTOR | 1 |
| 5601-VJ | **BOOT**<br>COFFRE<br>MANSCHETTE<br>FORRO | 1 |
| 5601-VK | **BOOT**<br>COFFRE<br>MANSCHETTE<br>FORRO | 1 |
| 5601-VL | **BLOCK, RELAY**<br>BLOC<br>FLASCHENZUG<br>BLOQUE | 1 |
| 5601-VN | **BOLT**<br>BOULON<br>SCHRAUBE<br>PERNO | 1- 3 |

## 5601

**WIRING & CLAMP**
**CABLAGE & COLLIER**
**KABEL & KABELKLEMMEN**
**CABLES Y ABRAZADERA**

| PART NAME CODE | PART NAME | QTY |
|---|---|---|
| 5601-VO | **BOLT**<br>BOULON<br>SCHRAUBE<br>PERNO | 2 |
| 5601-VQ | **BOLT**<br>BOULON<br>SCHRAUBE<br>PERNO | 3 |
| 5601-VR | **BOLT**<br>BOULON<br>SCHRAUBE<br>PERNO | 3 |
| 5601-VS | **BOLT**<br>BOULON<br>SCHRAUBE<br>PERNO | 2 |
| 5601-VT | **BOLT**<br>BOULON<br>SCHRAUBE<br>PERNO | 1- 4 |
| 5601-VU | **BOLT**<br>BOULON<br>SCHRAUBE<br>PERNO | 1- 4 |
| 5601-VV | **BOLT**<br>BOULON<br>SCHRAUBE<br>PERNO | 1- 2 |
| 5601-VW | **BOLT**<br>BOULON<br>SCHRAUBE<br>PERNO | 1 |
| 5601-VZ | **BOLT**<br>BOULON<br>SCHRAUBE<br>PERNO | 1 |
| 5601-WA | **BRACKET**<br>SUPPORT<br>TRÄGER<br>SOPORTE | 1 |
| 5601-WB | **BRACKET**<br>SUPPORT<br>TRÄGER<br>SOPORTE | 1 |
| 5601-WC | **BRACKET**<br>SUPPORT<br>TRÄGER<br>SOPORTE | 1 |
| 5601-WD | **WIRE, MAST SENSOR**<br>FIL<br>DRAHT<br>ALAMBRE | 1 |
| 5601-WE | **BRACKET, MAST HARNESS**<br>SUPPORT<br>TRÄGER<br>SOPORTE | 1 |
| 5601-WF | **BRACKET**<br>SUPPORT<br>TRÄGER<br>SOPORTE | 1 |
| 5601-WJ | **BRACKET**<br>SUPPORT<br>TRÄGER<br>SOPORTE | 1 |
| 5601-WM | **COVER**<br>COUVERCLE<br>DECKEL<br>CUBIERTA | 1 |
| 5601-WN | **BOLT**<br>BOULON<br>SCHRAUBE<br>PERNO | 1 |
| 5601-WU | **COVER, HARNESS**<br>COUVERCLE<br>DECKEL<br>CUBIERTA | 1 |
| 5601-WV | **BAND, CLAMP**<br>BANDE<br>BAND<br>BANDA | 99 |

| 5601 | WIRING & CLAMP<br>CABLAGE & COLLIER | KABEL & KABELKLEMMEN<br>CABLES Y ABRAZADERA |
|---|---|---|

| PART NAME CODE | PART NAME | QTY | PART NAME CODE | PART NAME | QTY |
|---|---|---|---|---|---|
| 5601-WW | **BAND**<br>BANDE<br>BAND<br>BANDA | 1 | | | |
| 5601-XF | **BOLT**<br>BOULON<br>SCHRAUBE<br>PERNO | 1 | | | |
| 5601-XN | **COVER**<br>COUVERCLE<br>DECKEL<br>CUBIERTA | 1 | | | |
| 5601-XU | **CLAMP**<br>PINSE<br>KLEMME<br>ABRAZADERA | 2 | | | |
| 5601-XV | **BRACKET**<br>SUPPORT<br>TRÄGER<br>SOPORTE | 1 | | | |
| 5601-XW | **BRACKET**<br>SUPPORT<br>TRÄGER<br>SOPORTE | 1 | | | |
| 5601-XX | **BRACKET**<br>SUPPORT<br>TRÄGER<br>SOPORTE | 1 | | | |
| 5601-XZ | **BRACKET**<br>SUPPORT<br>TRÄGER<br>SOPORTE | 1 | | | |


| 5601 | WIRING & CLAMP<br>CABLAGE & COLLIER | KABEL & KABELKLEMMEN<br>CABLES Y ABRAZADERA |
|---|---|---|

| PART NAME CODE | PART NAME | QTY | PART NAME CODE | PART NAME | QTY |
|---|---|---|---|---|---|

| 5611 | LAMP<br>LAMPE | LAMPE<br>LAMPARA |
|---|---|---|

ATM [HEAD]

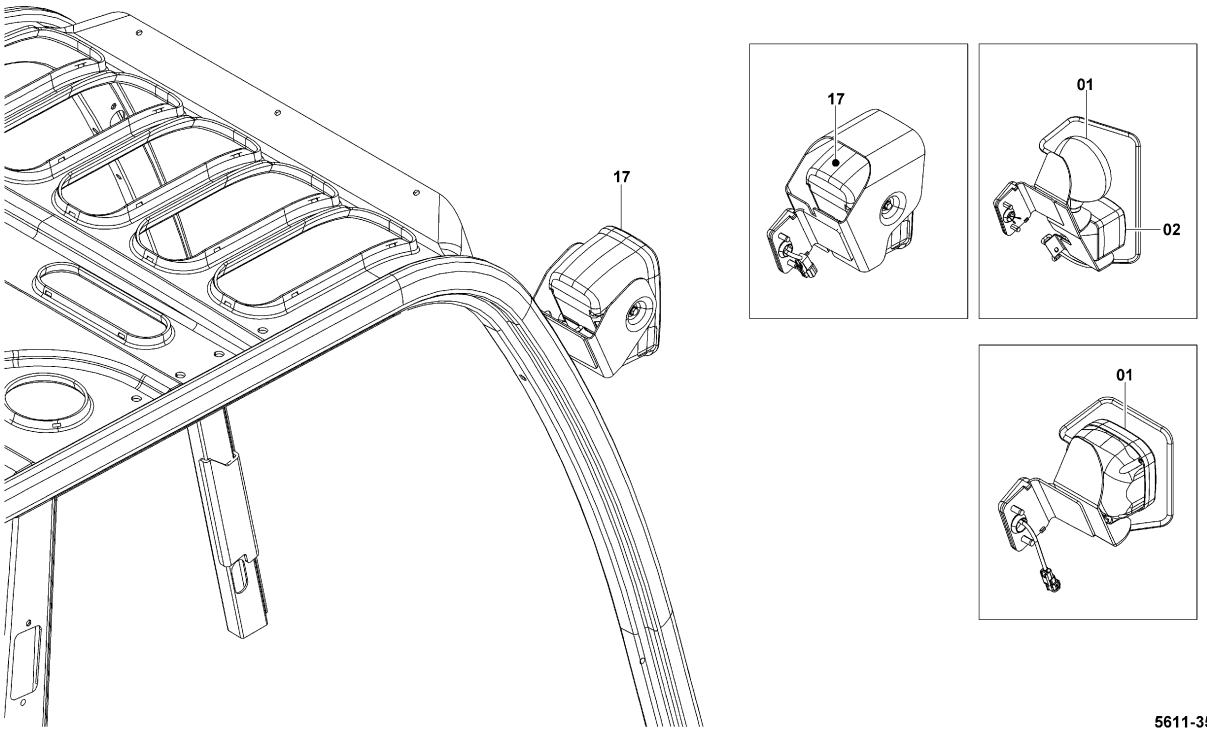


5611-357_

| 5611 | LAMP<br>LAMPE | LAMPE<br>LAMPARA |
|---|---|---|

ATM (RR COMBI. LIGHT) [RR COMBI]

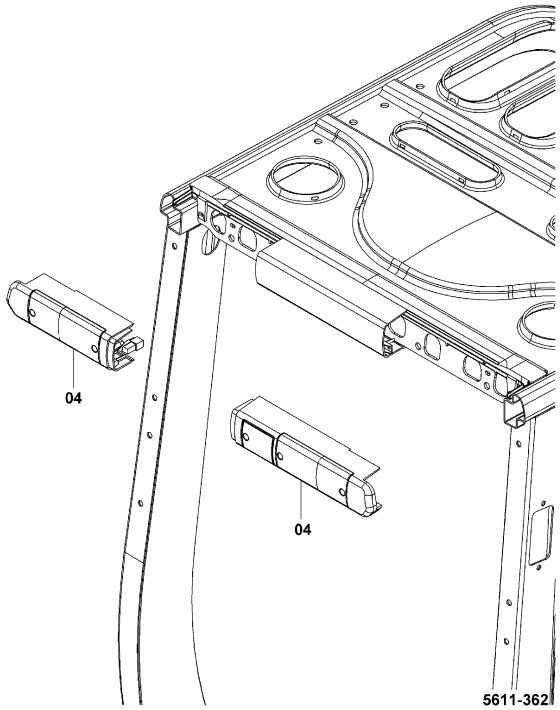


5611-362_

ATM (RR WORKING 1, RR WORKING)

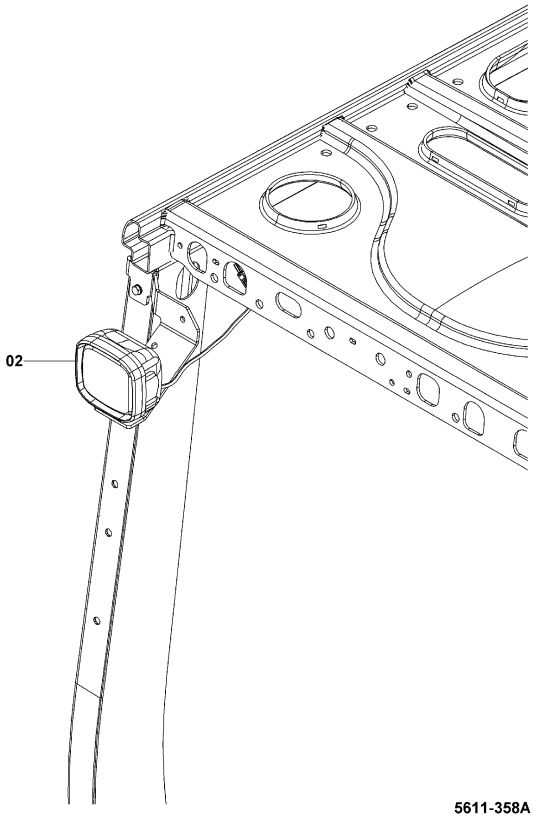


5611-358A

| 5611 | LAMP<br>LAMPE | LAMPE<br>LAMPARA |
|---|---|---|

ATM (RR WORKING 2, DBL RR WORKING)

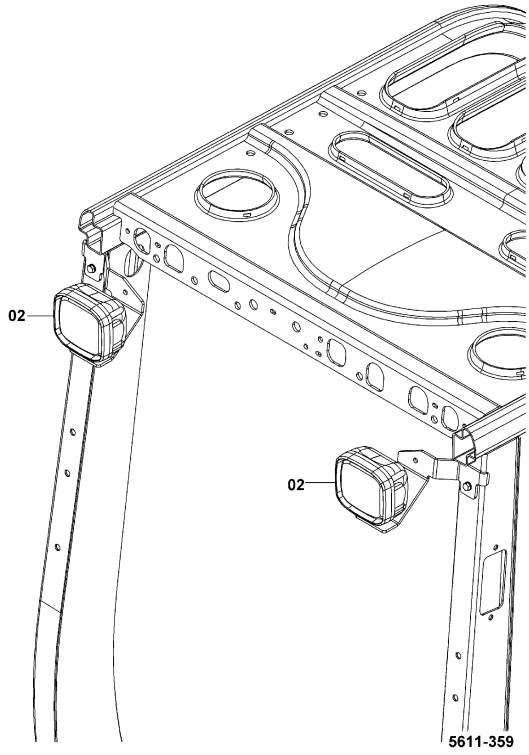


5611-359_

ATM (UPSWEPT..RR WORKING 1, RR WORKING)

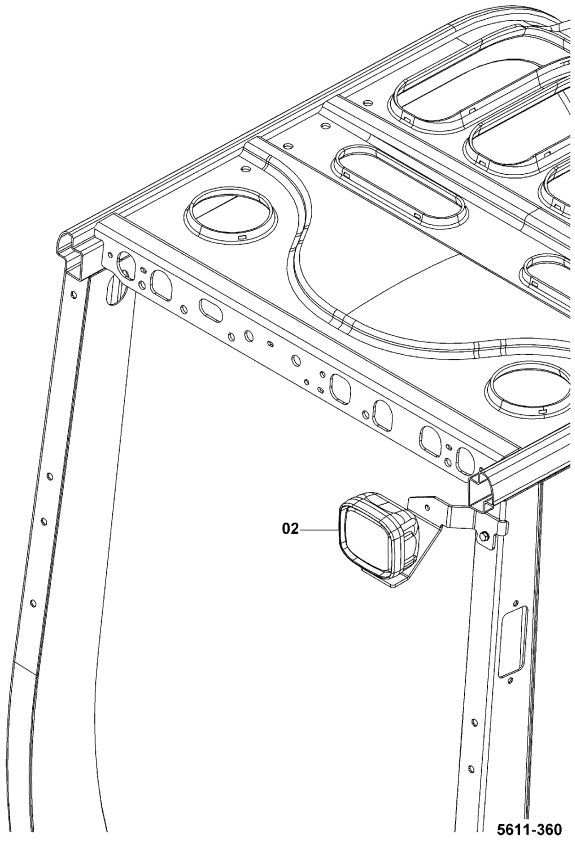


5611-360_

| 5611 | LAMP<br>LAMPE | LAMPE<br>LAMPARA |
|---|---|---|

ATM (STROBE YELLOW) [STOROBE]

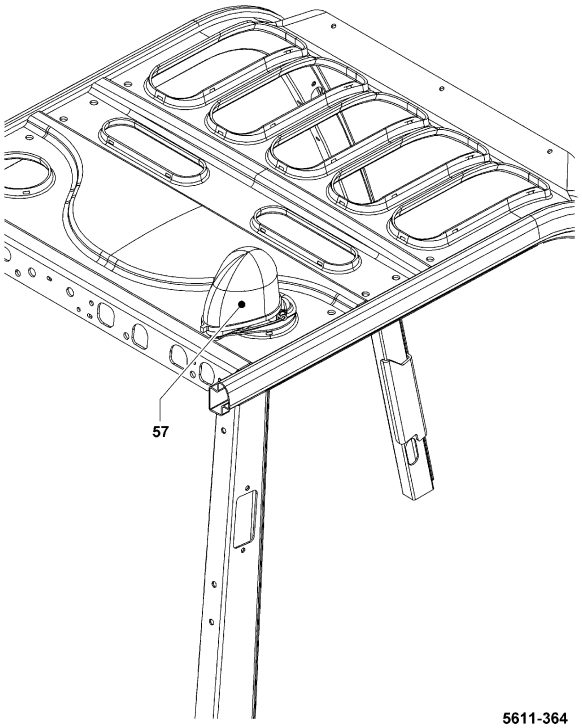


5611-364_

ATM

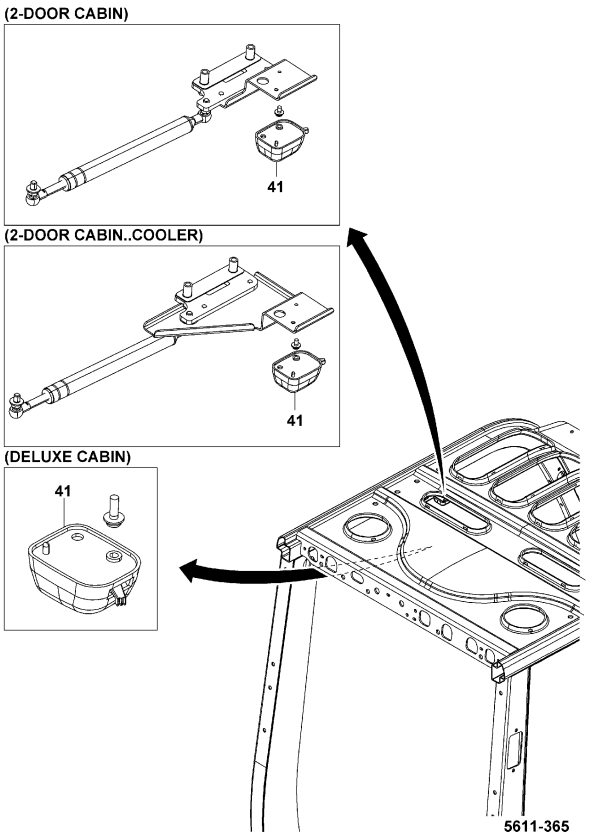


5611-365_

# 5611

**LAMP** / **LAMPE**

**LAMPE** / **LAMPARA**

**ATM [INNER PARTS]**

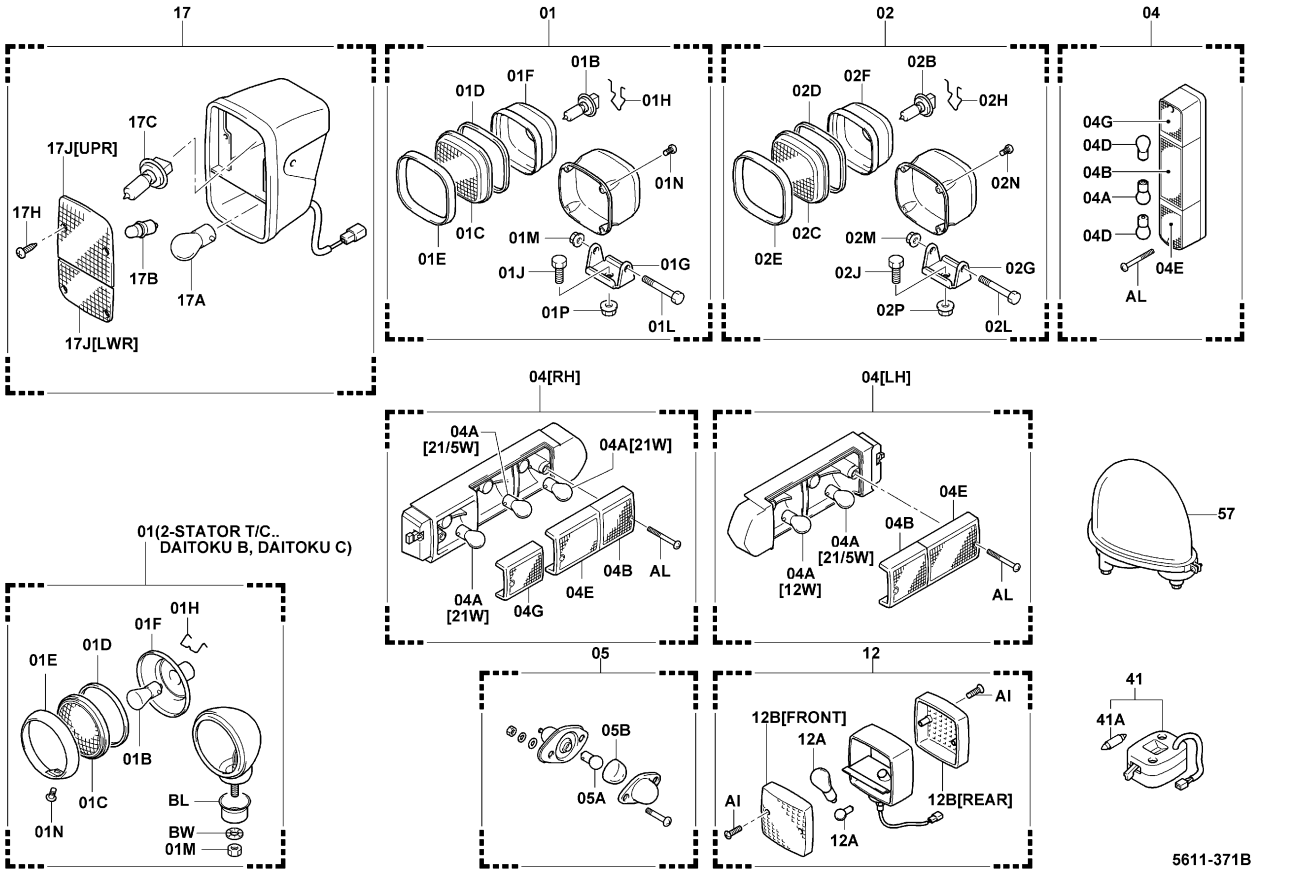


5611-371B

# 5611

**LAMP** / **LAMPE**

**LAMPE** / **LAMPARA**

| PART NAME CODE | PART NAME | QTY |
|---|---|---|
| 5611-01 | **LAMP ASSY, HEAD**<br>ENS. DE LAMPE<br>LAMPEN, VOLLST.<br>CONJUNTO DE LA LAMPARA | 2 |
| 5611-01B | **BULB, HEAD LAMP**<br>AMPOULE<br>GLUHLAMPE<br>LAMPARA | 2 |
| 5611-01C | **LENS, HEAD LAMP**<br>OPTIQUE<br>OBJEKTIV<br>LENTE | 2 |
| 5611-01D | **GASKET, HEAD LAMP**<br>JOINT<br>DICHTUNG<br>EMPAQUETADURA | 2 |
| 5611-01E | **RIM (FOR HEAD LAMP)**<br>JANTE<br>FELGE<br>LLANTA | 2 |
| 5611-01F | **REFLECTOR (FOR HEAD LAMP)**<br>REFLECTEUR<br>REFLEKTOR<br>REFLECTOR | 2 |
| 5611-01G | **BRACKET, HEAD LAMP**<br>SUPPORT<br>TRÄGER<br>SOPORTE | 2 |
| 5611-01H | **SPRING (FOR HEAD LAMP)**<br>RESSORT<br>FEDER<br>RESORTE | 2 |
| 5611-01J | **BOLT, HEAD LAMP**<br>BOULON<br>SCHRÄÜBE<br>PERNO | 2 |
| 5611-01L | **BOLT, HEAD LAMP**<br>BOULON<br>SCHRÄÜBE<br>PERNO | 2 |
| 5611-01M | **NUT (FOR HEAD LAMP)**<br>ECROU<br>MUTTER<br>TUERCA | 2 |
| 5611-01N | **SCREW, HEAD LAMP**<br>VIS<br>SCHRAUBE<br>TORNILLO | 8 |
| 5611-01P | **NUT (FOR HEAD LAMP)**<br>ECROU<br>MUTTER<br>TUERCA | 2 |
| 5611-02 | **LAMP ASSY, WORKING**<br>ENS. DE LAMPE<br>LAMPEN, VOLLST.<br>CONJUNTO DE LA LAMPARA | 1- 2 |
| 5611-02B | **BULB, WORKING LAMP**<br>AMPOULE<br>GLUHLAMPE<br>LAMPARA | 1- 2 |
| 5611-02C | **LENS, WORKING LAMP**<br>OPTIQUE<br>OBJEKTIV<br>LENTE | 1- 2 |
| 5611-02D | **GASKET, WORKING LAMP**<br>JOINT<br>DICHTUNG<br>EMPAQUETADURA | 1- 2 |
| 5611-02E | **RIM (FOR WORKING LAMP)**<br>JANTE<br>FELGE<br>LLANTA | 1- 2 |
| 5611-02F | **REFLECTOR (FOR WORKING LAMP)**<br>REFLECTEUR<br>REFLEKTOR<br>REFLECTOR | 1- 2 |
| 5611-02G | **BRACKET, WORKING LAMP**<br>SUPPORT<br>TRAGER<br>SOPORTE | 1- 2 |

| 5611 | LAMP<br>LAMPE | LAMPE<br>LAMPARA |
|---|---|---|

| PART NAME CODE | PART NAME | QTY |
|---|---|---|
| 5611-02H | **SPRING (FOR WORKING LAMP)**<br>RESSORT<br>FEDER<br>RESORTE | 1- 2 |
| 5611-02J | **BOLT, WORKING LAMP**<br>BOULON<br>SCHRÄUBE<br>PERNO | 1- 2 |
| 5611-02L | **BOLT, WORKING LAMP**<br>BOULON<br>SCHRÄUBE<br>PERNO | 1- 2 |
| 5611-02M | **NUT (FOR WORKING LAMP)**<br>ECROU<br>MUTTER<br>TUERCA | 1- 2 |
| 5611-02N | **SCREW, WORKING LAMP**<br>VIS<br>SCHRAUBE<br>TORNILLO | 1- 8 |
| 5611-02P | **NUT (FOR WORKING LAMP)**<br>ECROU<br>MUTTER<br>TUERCA | 1- 2 |
| 5611-04 | **LAMP ASSY, REAR COMBINATION**<br>ENS. DE LAMPE<br>LAMPEN, VOLLST.<br>CONJUNTO DE LA LAMPARA | 1 |
| 5611-04A | **BULB, REAR COMBINATION LAMP**<br>AMPOULE<br>GLUHLAMPE<br>LAMPARA | 1- 2 |
| 5611-04B | **LENS, REAR COMBINATION LAMP**<br>OPTIQUE<br>OBJEKTIV<br>LENTE | 1 |
| 5611-04E | **LENS, REAR COMBINATION LAMP**<br>OPTIQUE<br>OBJEKTIV<br>LENTE | 1 |
| 5611-04G | **LENS, REAR COMBINATION LAMP**<br>OPTIQUE<br>OBJEKTIV<br>LENTE | 1 |
| 5611-17 | **LAMP ASSY, COMBINATION HEAD**<br>ENS. DE LAMPE<br>LAMPEN, VOLLST.<br>CONJUNTO DE LA LAMPARA | 1 |
| 5611-17A | **BULB, COMBINATION HEAD LIGHT**<br>AMPOULE<br>GLUHLAMPE<br>LAMPARA | 2 |
| 5611-17B | **BULB, COMBINATION HEAD LIGHT**<br>AMPOULE<br>GLUHLAMPE<br>LAMPARA | 2 |
| 5611-17C | **BULB, COMBINATION HEAD LIGHT**<br>AMPOULE<br>GLUHLAMPE<br>LAMPARA | 2 |
| 5611-17H | **SCREW, COMBINATION HEAD LIGHT**<br>VIS<br>SCHRAUBE<br>TORNILLO | 8 |
| 5611-17J | **LENS, COMBINATION HEAD LIGHT**<br>OPTIQUE<br>OBJEKTIV<br>LENTE | 2 |
| 5611-57 | **LAMP ASSY, FLASHING BEACON**<br>ENS. DE LAMPE<br>LAMPEN, VOLLST.<br>CONJUNTO DE LA LAMPARA | 1 |
| 5611-AL | **SCREW**<br>VIS<br>SCHRAUBE<br>TORNILLO | 2- 3 |


| 5611 | LAMP<br>LAMPE | LAMPE<br>LAMPARA |
|---|---|---|


| PART NAME CODE | PART NAME | QTY |
|---|---|---|

| 5612 | LAMP BRACKET<br>SUPPORT DE LAMPE | LAMPENTRÄGER<br>SOPORTE DE LAMPARA |
|---|---|---|

ATM [HEAD]

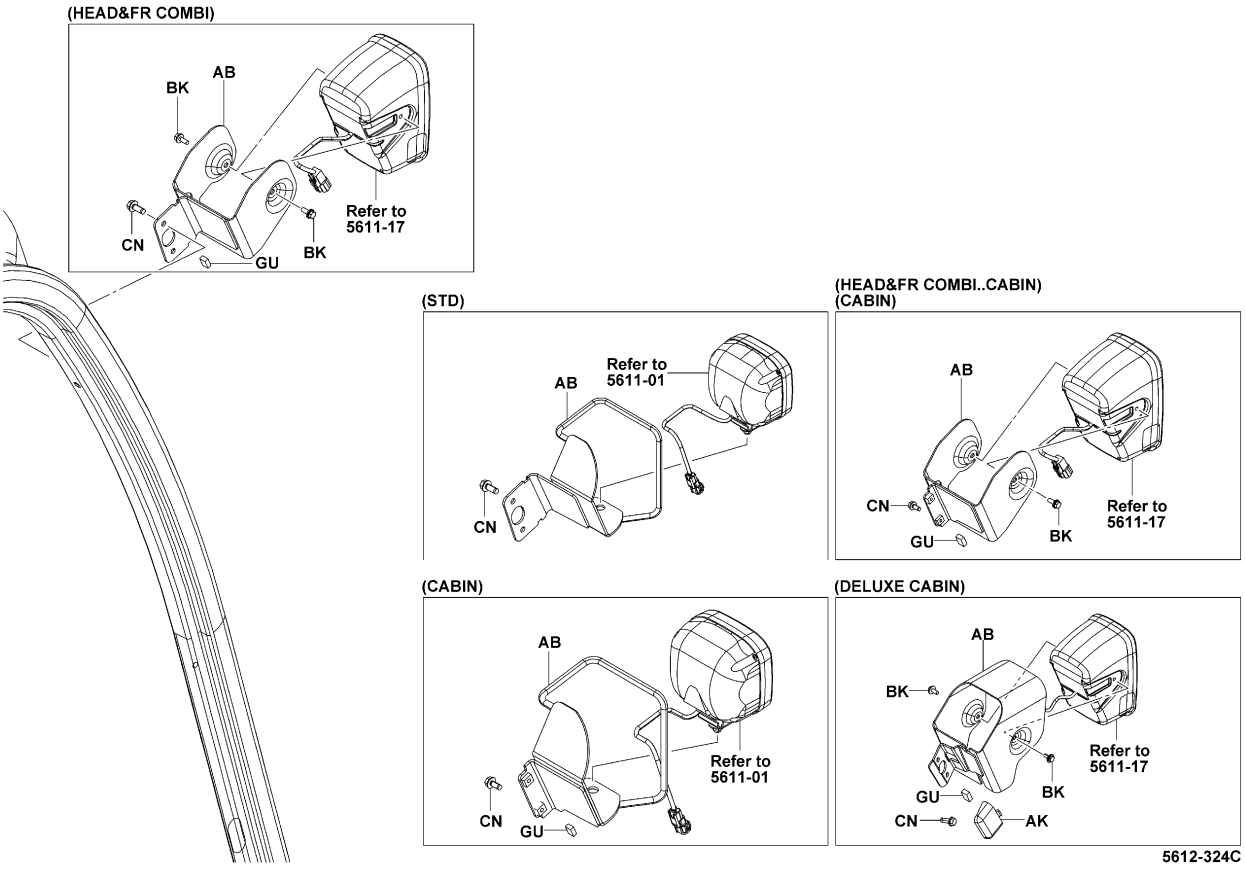


5612-324C

| 5612 | LAMP BRACKET<br>SUPPORT DE LAMPE | LAMPENTRÄGER<br>SOPORTE DE LAMPARA |
|---|---|---|

ATM [LAMP COVER & HARNESS COVER]

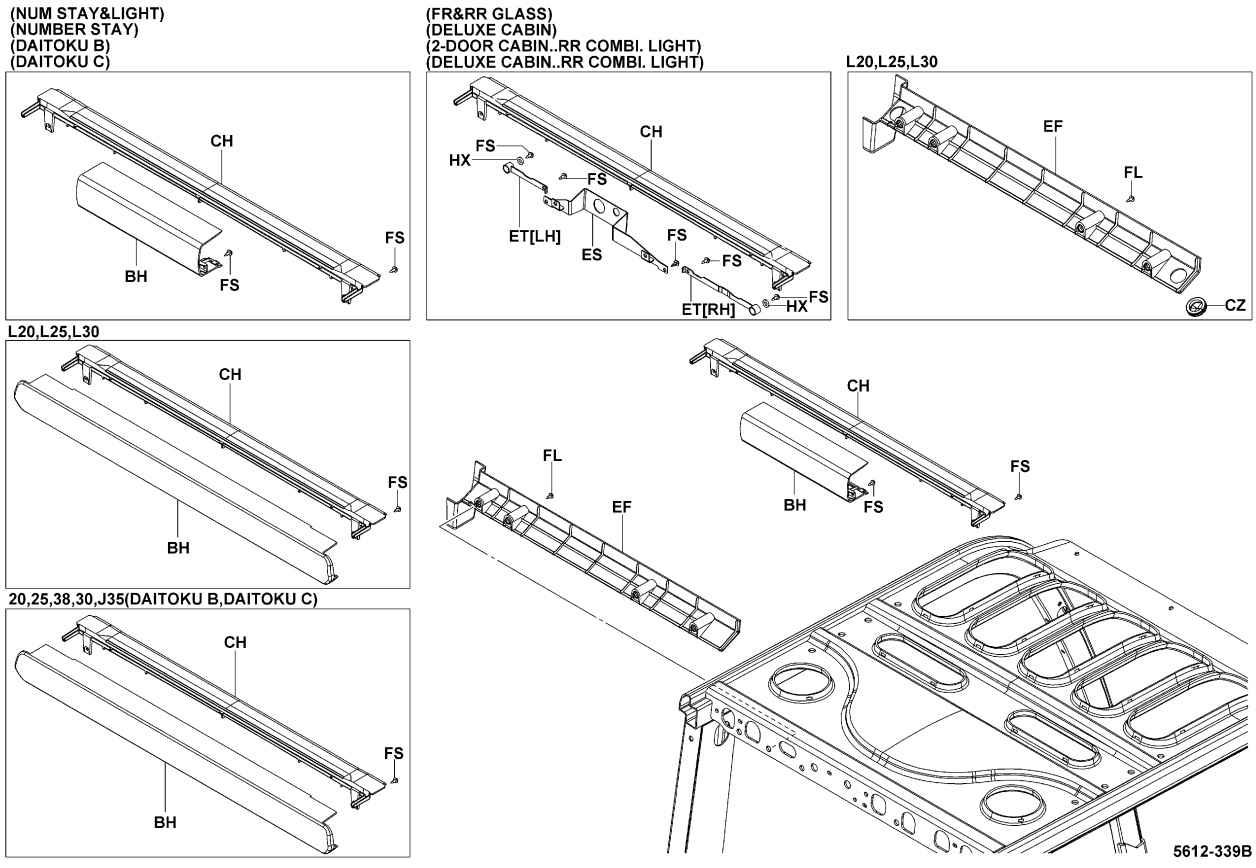


5612-339B

| 5612 | LAMP BRACKET<br>SUPPORT DE LAMPE | LAMPENTRÄGER<br>SOPORTE DE LAMPARA |
|---|---|---|

ATM (RR WORKING 1, RR WORKING)

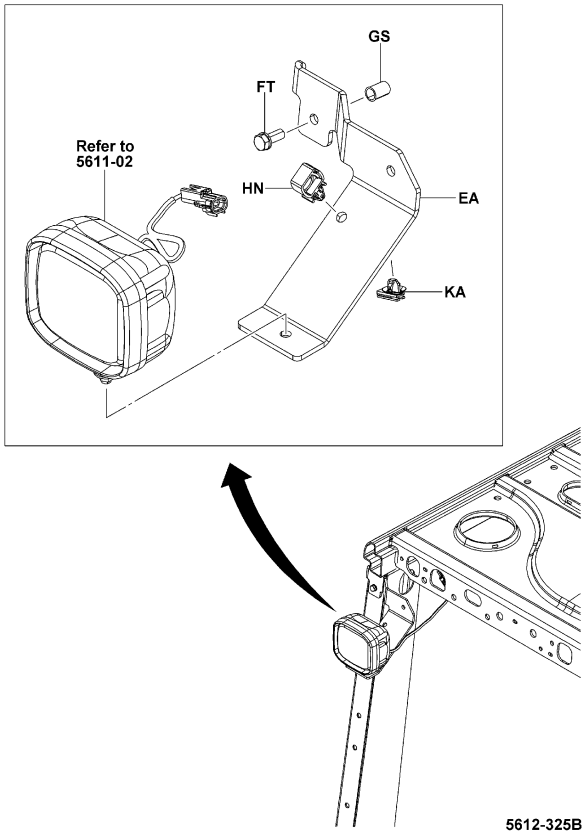


5612-325B

5612-325B

ATM (RR WORKING 1..UPSWEPT)

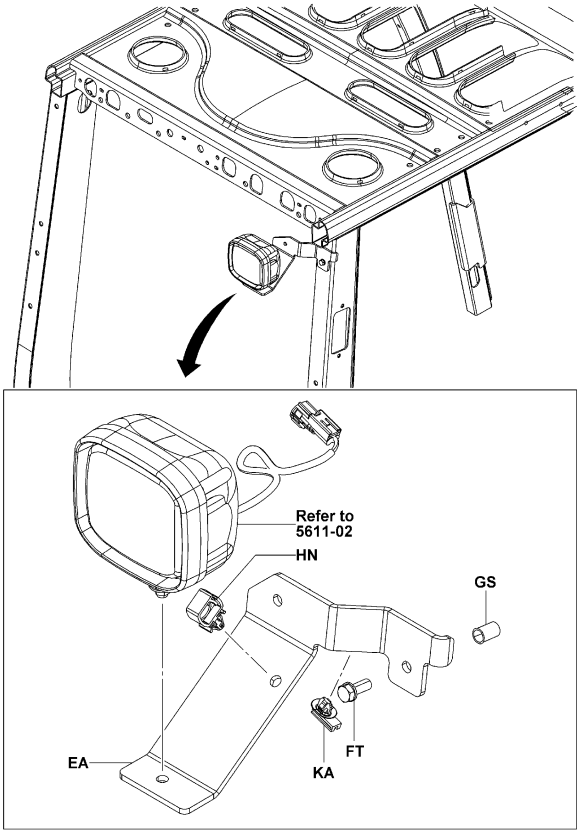


5612-327A

5612-327A

| 5612 | LAMP BRACKET<br>SUPPORT DE LAMPE | LAMPENTRÄGER<br>SOPORTE DE LAMPARA |
|---|---|---|

ATM (RR WORKING 2, DBL RR WORKING)

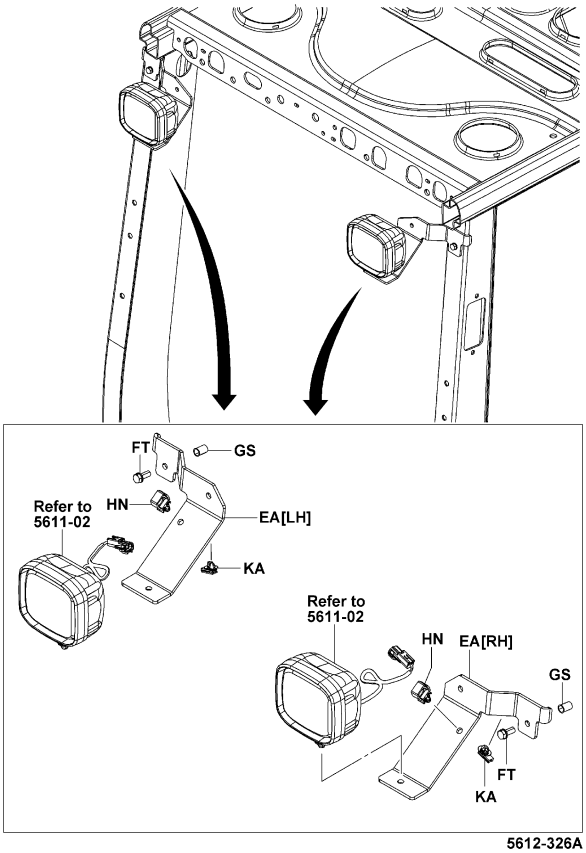


5612-326A

5612-326A

ATM (STROBE YELLOW) [STOROBE]

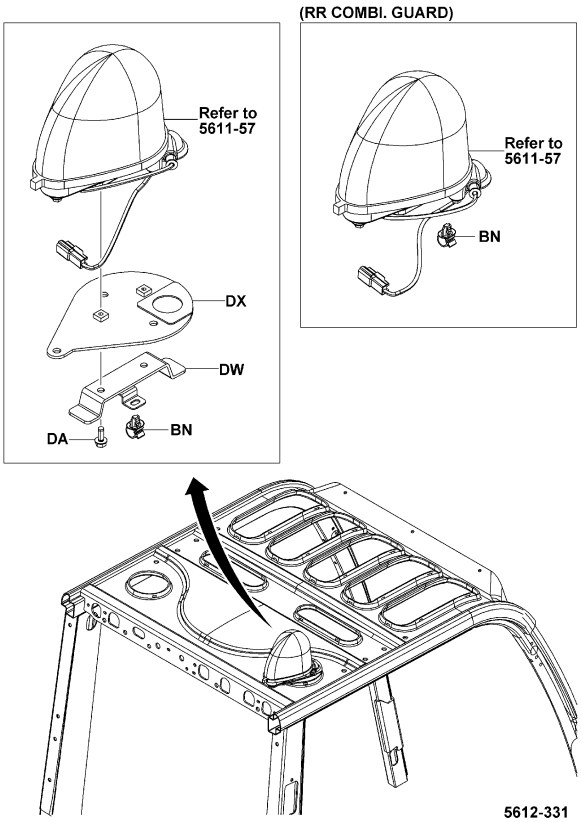


5612-331

5612-331_

# 5612

**LAMP BRACKET**
**SUPPORT DE LAMPE**
**LAMPENTRÄGER**
**SOPORTE DE LAMPARA**

**FSV (LIGHT W/MAST)**

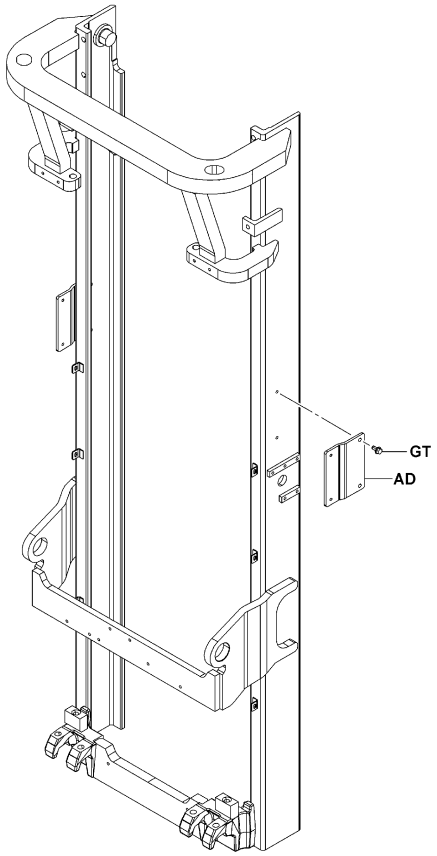


5612-329

5612-329_

**ATM [ROOM]**

**(2-DOOR CABIN)**

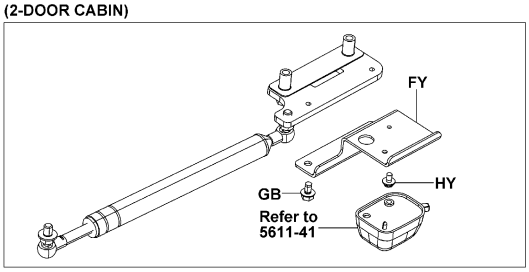


**(2-DOOR CABIN..COOLER)**

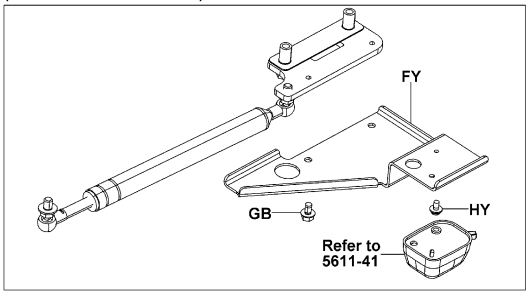


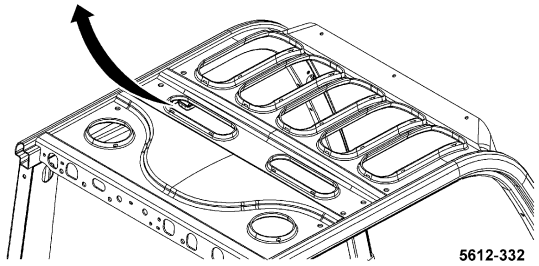

5612-332

5612-332_

# 5612

**LAMP BRACKET**
**SUPPORT DE LAMPE**
**LAMPENTRÄGER**
**SOPORTE DE LAMPARA**

| PART NAME CODE | PART NAME | QTY |
|---|---|---|
| **5612-AB** | **BRACKET SUB-ASSY, HEAD LAMP**<br>SOUS-ENS. DE SUPPORT<br>TRAGER-TEILGRUPPE<br>SUBCONJUNTO DE LA SOPORTE | 1 |
| **5612-AK** | **GROMMET**<br>RONDELLE ISOLANTE<br>DURCHFUHRUNG<br>ANILLO PROTECTOR | 2 |
| **5612-AM** | **BRACKET, REAR COMBINATION LAMP**<br>SUPPORT<br>TRAGER<br>SOPORTE | 1 |
| **5612-BH** | **COVER**<br>COUVERCLE<br>DECKEL<br>CUBIERTA | 1 |
| **5612-BK** | **BOLT**<br>BOULON<br>SCHRAUBE<br>PERNO | 4 |
| **5612-BN** | **CLAMP**<br>PINSE<br>KLEMME<br>ABRAZADERA | 1 |
| **5612-CH** | **COVER, REAR COMBINATION LAMP**<br>COUVERCLE<br>DECKEL<br>CUBIERTA | 1 |
| **5612-CN** | **BOLT**<br>BOULON<br>SCHRAUBE<br>PERNO | 4 |
| **5612-CZ** | **GROMMET**<br>RONDELLE ISOLANTE<br>DURCHFUHRUNG<br>ANILLO PROTECTOR | 2 |
| **5612-DA** | **BOLT**<br>BOULON<br>SCHRAUBE<br>PERNO | 2 |
| **5612-DW** | **BRACKET**<br>SUPPORT<br>TRAGER<br>SOPORTE | 1 |
| **5612-DX** | **BRACKET**<br>SUPPORT<br>TRAGER<br>SOPORTE | 1 |
| **5612-EA** | **BRACKET**<br>SUPPORT<br>TRAGER<br>SOPORTE | 1 |
| **5612-EB** | **BRACKET**<br>SUPPORT<br>TRAGER<br>SOPORTE | 2 |
| **5612-EF** | **COVER**<br>COUVERCLE<br>DECKEL<br>CUBIERTA | 1 |
| **5612-ES** | **BRACKET**<br>SUPPORT<br>TRAGER<br>SOPORTE | 1 |
| **5612-ET** | **BRACKET**<br>SUPPORT<br>TRAGER<br>SOPORTE | 1 |
| **5612-FH** | **GUARD SUB-ASSY**<br>SOUS-ENS. DE PROTECTEUR<br>SCHUTZBLECH-TEILGRUPPE<br>SUBCONJUNTO DE PROTECTOR | 1 |
| **5612-FL** | **SEAL**<br>JOINT<br>ABDICHTUNG<br>SELLO | 4 |
| **5612-FS** | **SCREW**<br>VIS<br>SCHRAUBE<br>TORNILLO | 2- 6 |

| 5612 | LAMP BRACKET<br>SUPPORT DE LAMPE | LAMPENTRÄGER<br>SOPORTE DE LAMPARA |
|---|---|---|

| PART NAME CODE | PART NAME | QTY | PART NAME CODE | PART NAME | QTY |
|---|---|---|---|---|---|
| 5612-FT | **BOLT**<br>BOULON<br>SCHRAUBE<br>PERNO | 1- 2 | | | |
| 5612-FY | **BRACKET, ROOM LAMP**<br>SUPPORT<br>TRÄGER<br>SOPORTE | 1 | | | |
| 5612-GB | **BOLT**<br>BOULON<br>SCHRAUBE<br>PERNO | 2 | | | |
| 5612-GC | **BOLT**<br>BOULON<br>SCHRAUBE<br>PERNO | 4 | | | |
| 5612-GS | **NUT**<br>ECROU<br>MUTTER<br>TUERCA | 1- 2 | | | |
| 5612-GU | **RUBBER**<br>CAOUTCHOUC<br>GUMMI<br>GOMA | 2 | | | |
| 5612-HN | **CLAMP**<br>PINSE<br>KLEMME<br>ABRAZADERA | 1 | | | |
| 5612-HX | **WASHER, PLATE**<br>RODELLE<br>UNTERLEGSCHEIBE<br>ARANDELA | 2 | | | |
| 5612-HY | **SCREW**<br>VIS<br>SCHRAUBE<br>TORNILLO | 1 | | | |
| 5612-KA | **CLAMP**<br>PINSE<br>KLEMME<br>ABRAZADERA | 1 | | | |


| 5612 | LAMP BRACKET<br>SUPPORT DE LAMPE | LAMPENTRÄGER<br>SOPORTE DE LAMPARA |
|---|---|---|

| PART NAME CODE | PART NAME | QTY | PART NAME CODE | PART NAME | QTY |
|---|---|---|---|---|---|

ATM [KEY SW & COMBI. SW]

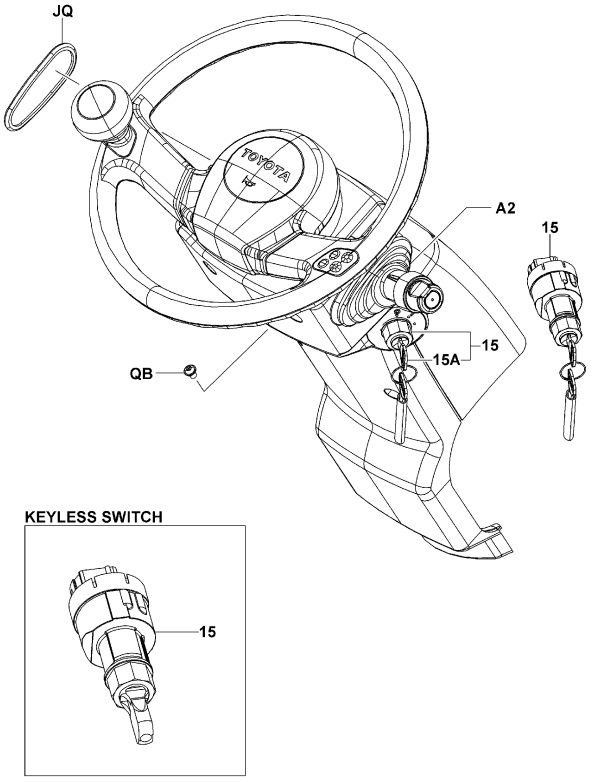


5701-498B

5701-498B

ATM [COMBINATION SW]

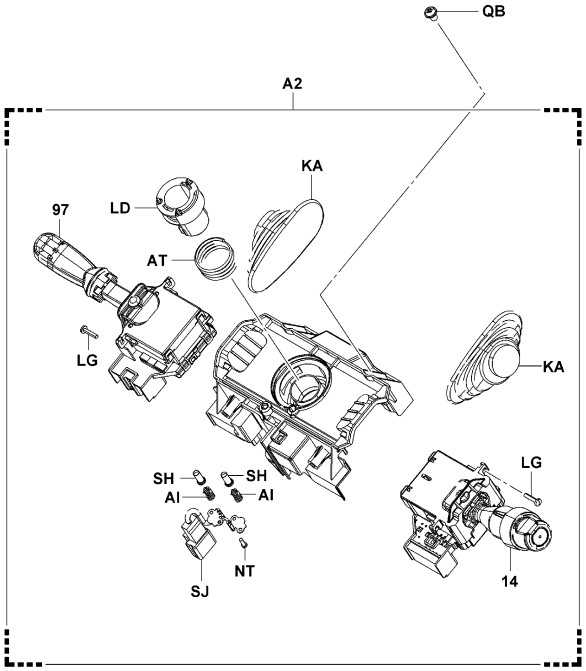


5701-534

5701-534_



10N,15N,18N,20N,25N..ATM (SAS) [COMBINATION SW]

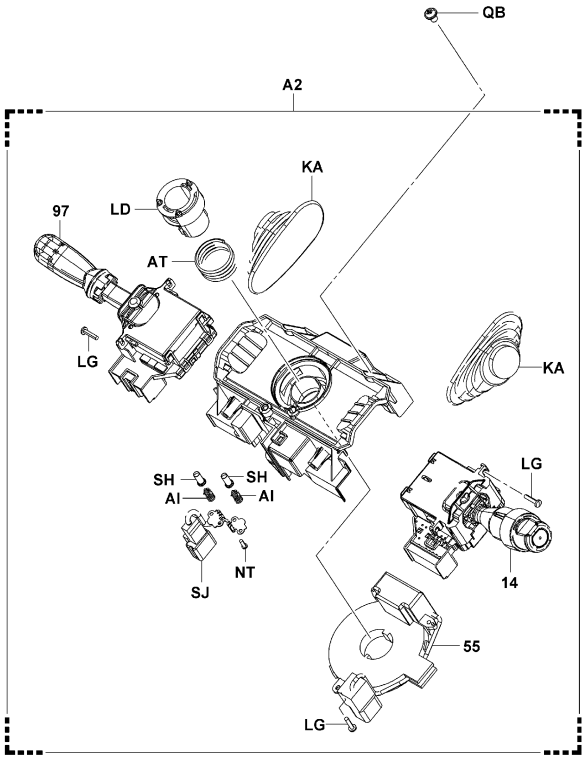


5701-510A

5701-510A

30N,J35N..ATM (SAS) [COMBINATION SW]

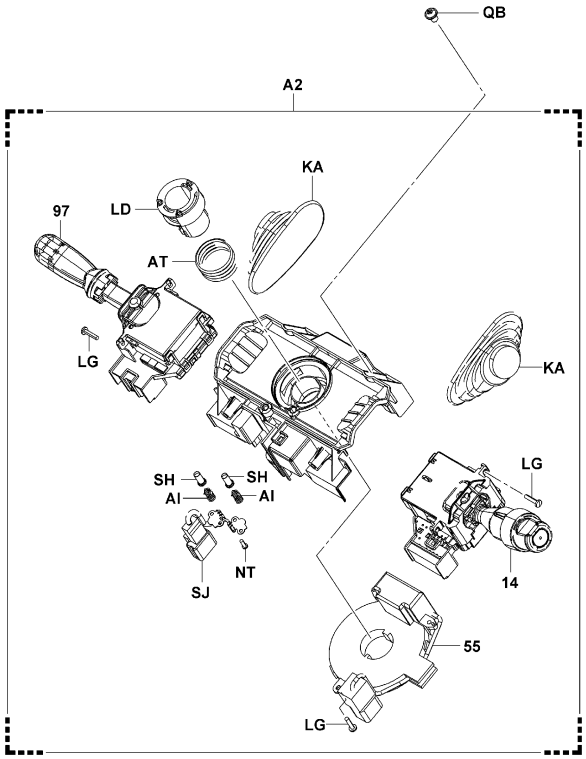


5701-510A

5701-510A

ATM..K20N,K25N,K30N [COMBINATION SW]

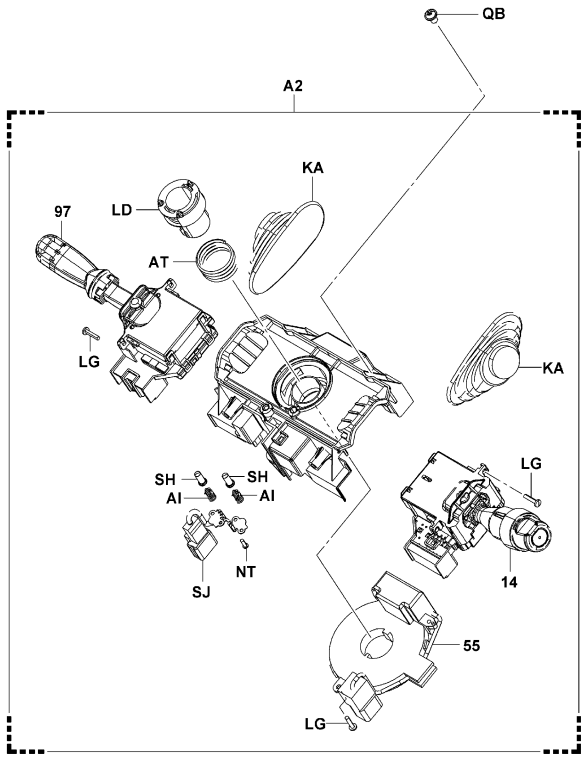


5701-510A

ATM (MINI LEVER, JOY STICK) [COMBINATION SW]

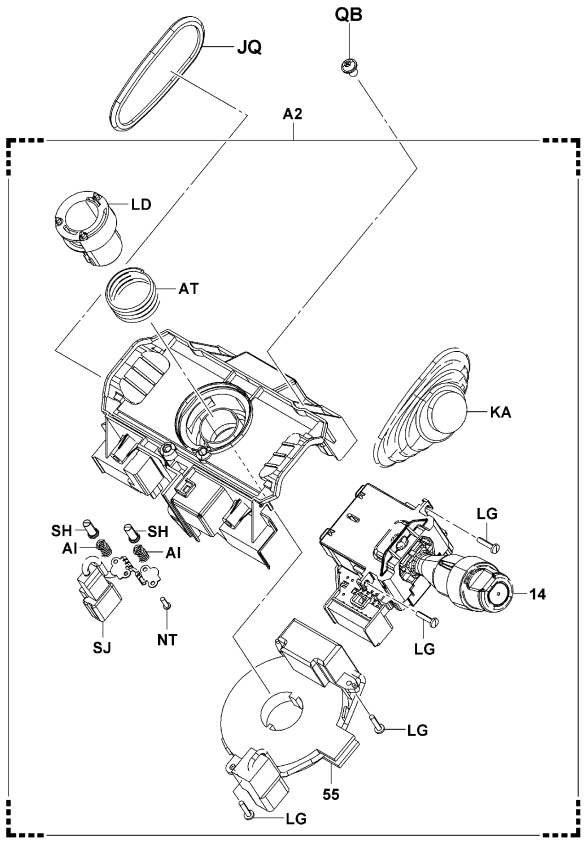


5701-508A

5701-510A

5701-508A


| 5701 | METER & SWITCH<br>INDICATEUR & COMMUTATEUR | INSTRUMENTE & SCHALTER<br>MEDIDOR E INTERRUPTOR |
|---|---|---|


ATM (LH LEVER..MINI LEVER, JOY STICK)

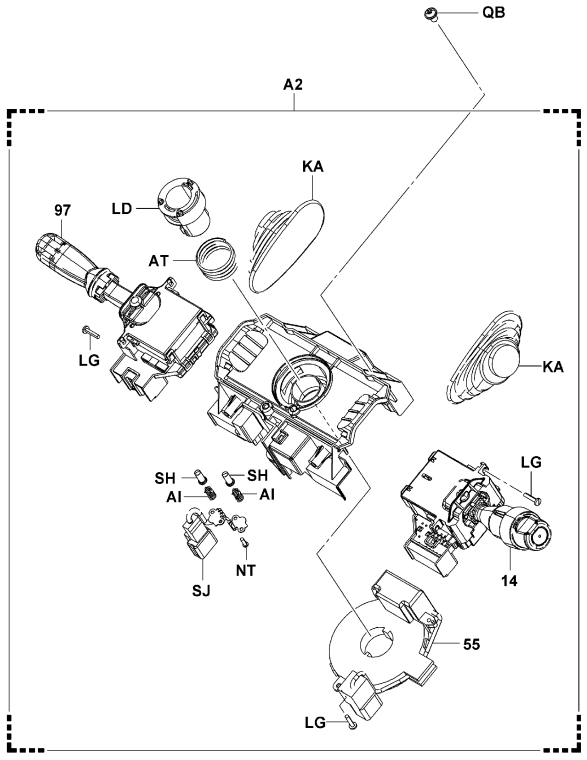


5701-510A

ATM [INPANE METER]

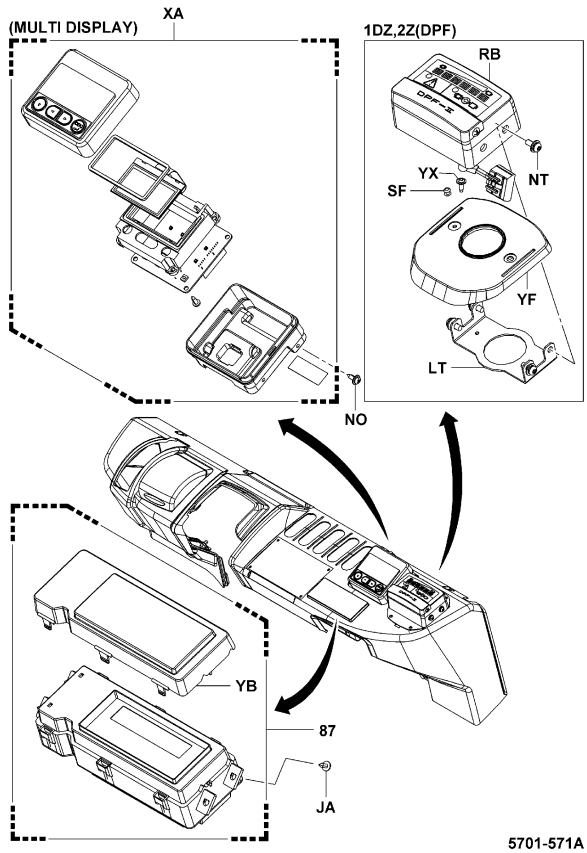


5701-571A

5701-510A

5701-571A

ATM [HORN, BUZZER]

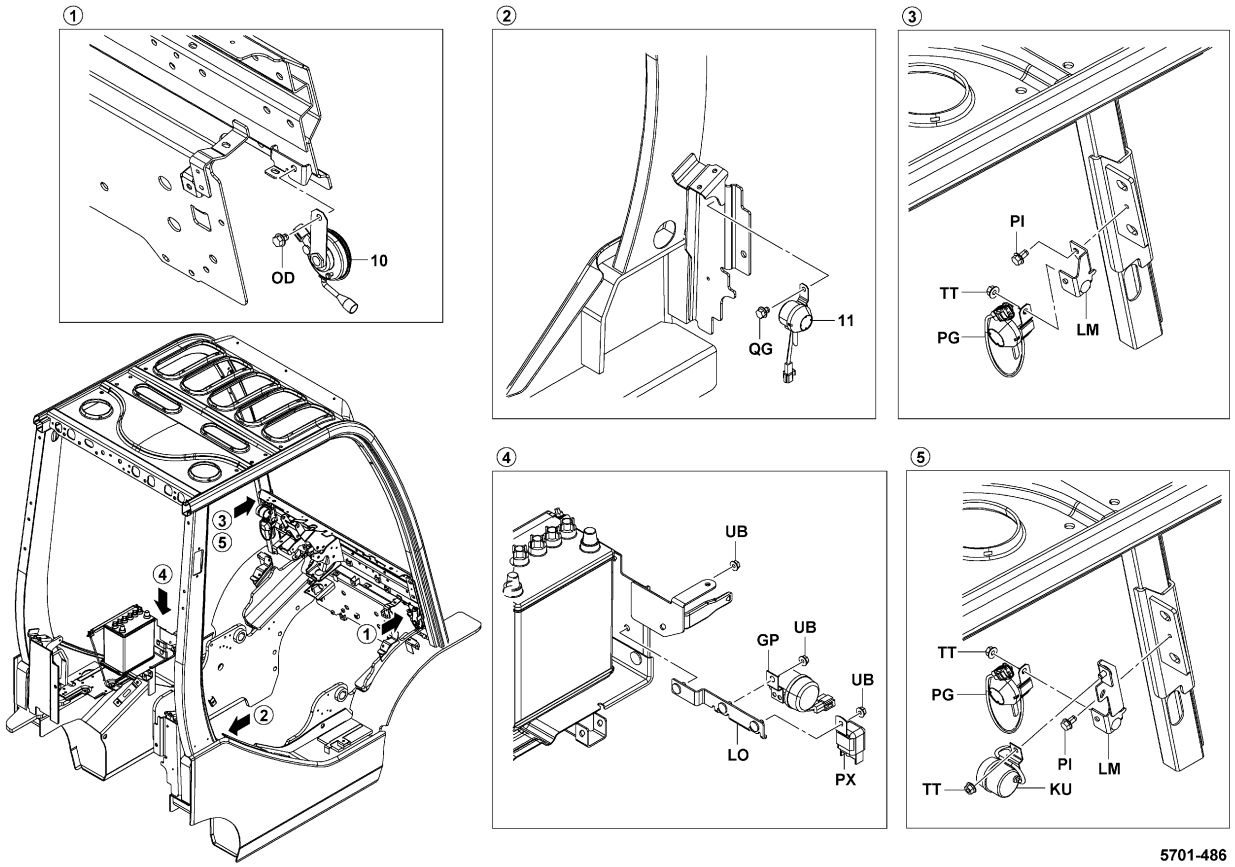


5701-486

5701-486_



ATM [JUNCTION BOX]

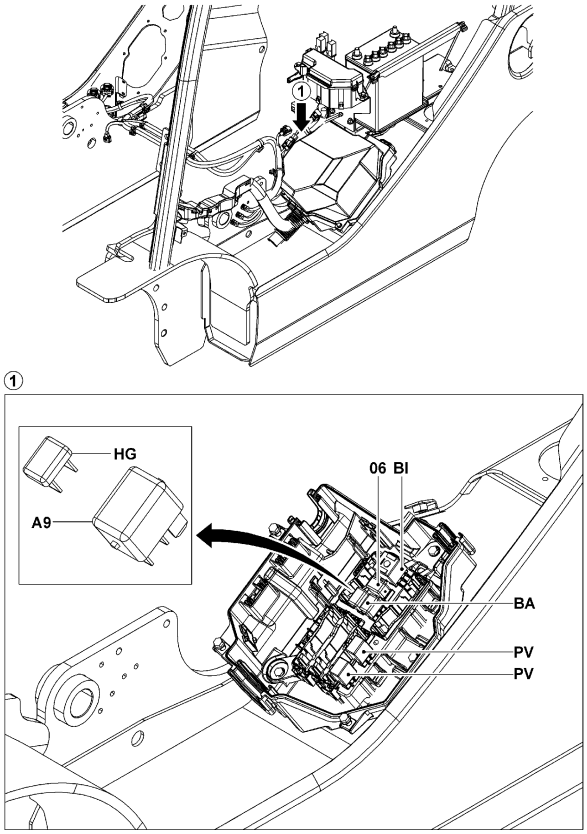


5701-749

5701-749_

ATM [OPT SWITCH]

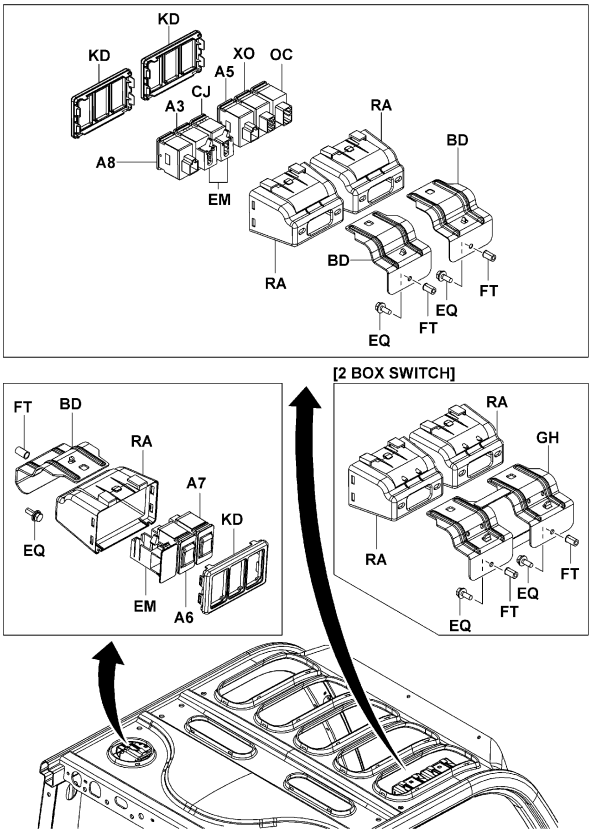


5701-750

5701-750_

ATM [RELAY BOX]

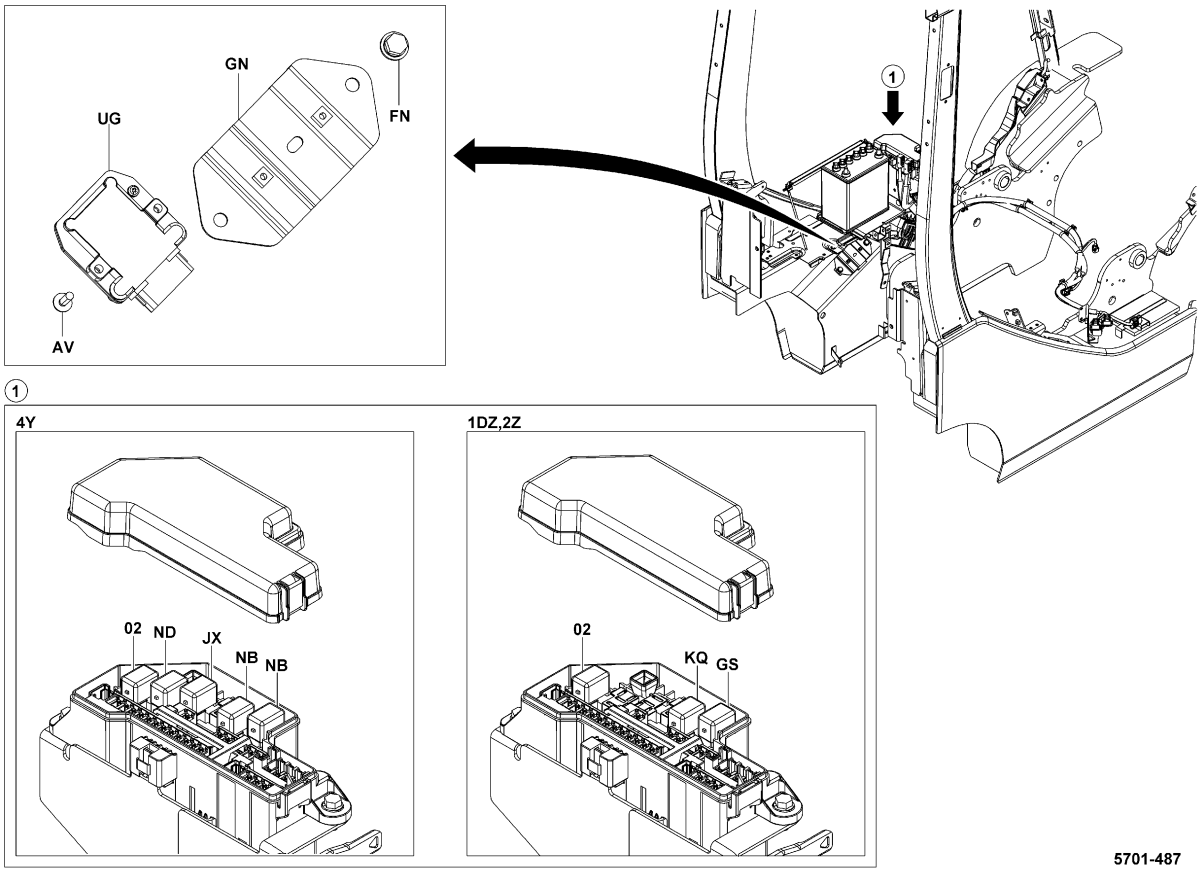


5701-487

5701-487_



ATM [STOP LAMP SW]

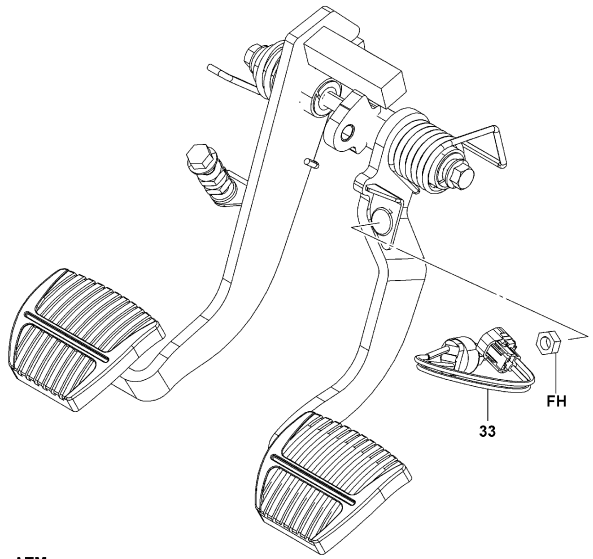


ATM..
(RR COMBI. LIGHT..AUTO SPEED CONT)

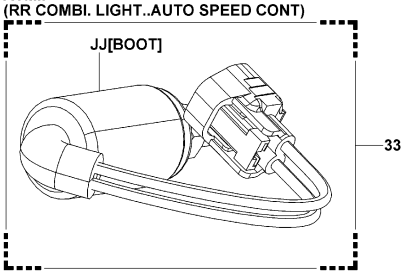


5701-500

5701-500_

1DZ,2Z,3Z [GLOW PLUG TIMER & RELAY]

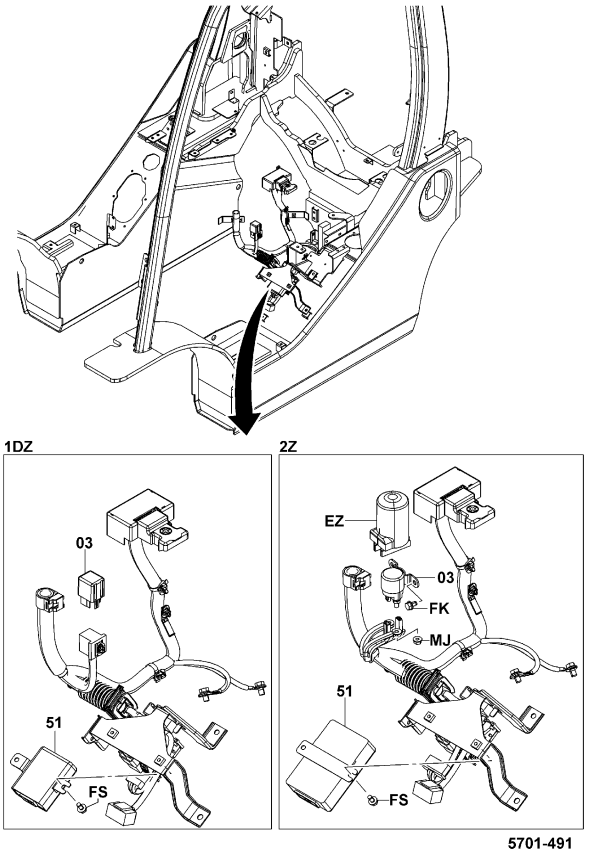


5701-491

5701-491_

1DZ [ENGINE SWITCH]

[WATER TEMPERATURE SW.]

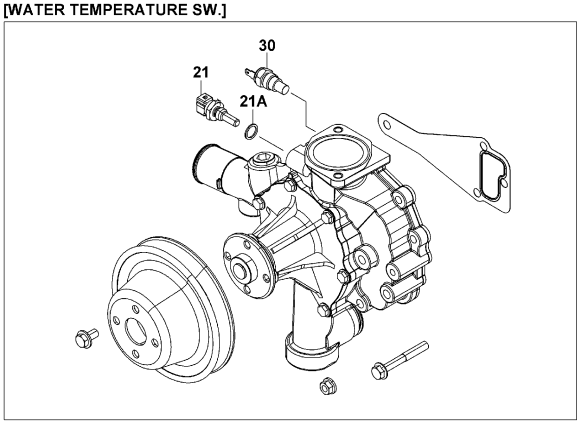


[OIL PRESSURE SW.]

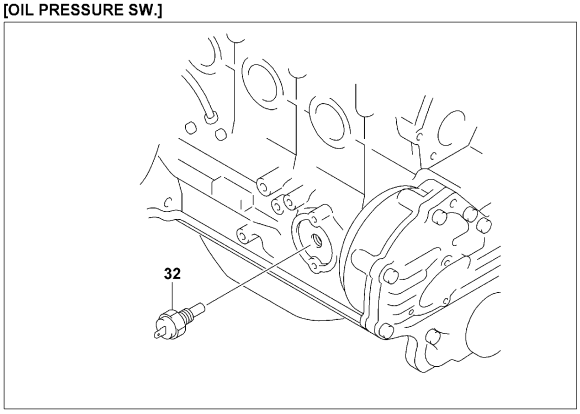


5701-506

5701-506_

2Z [ENGINE SWITCH]

[WATER TEMPERATURE GAGE]

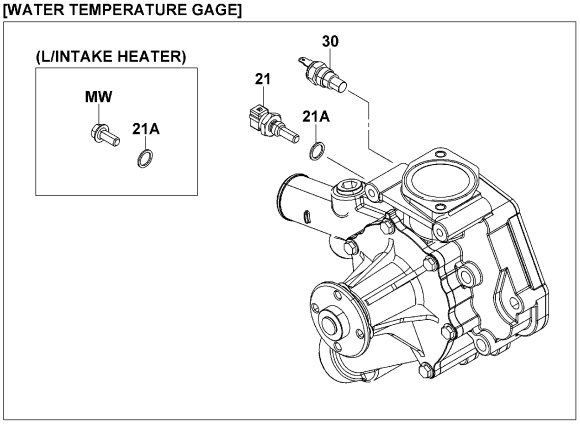


[OIL PRESSURE GAGE]

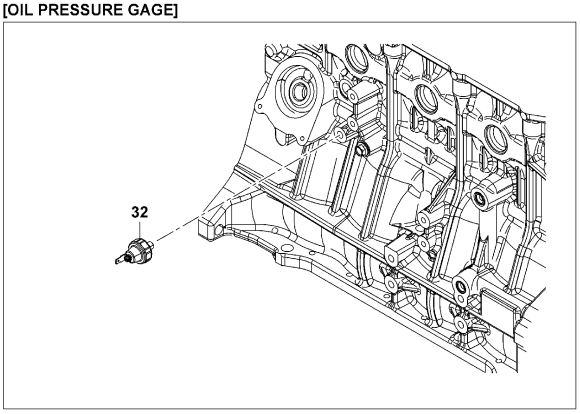


5701-507

5701-507_



3Z [ENGINE SWITCH]

[WATER TEMPERATURE GAGE]

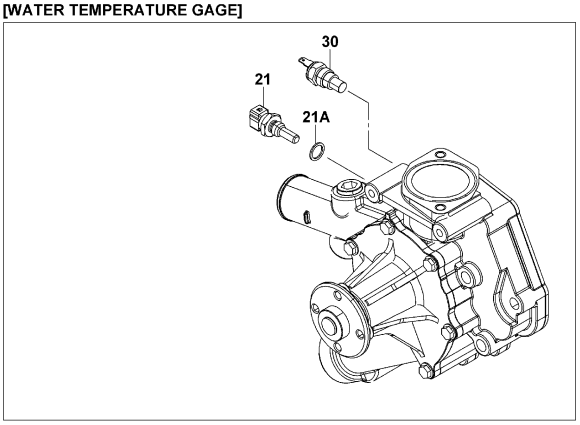


[OIL PRESSURE GAGE]

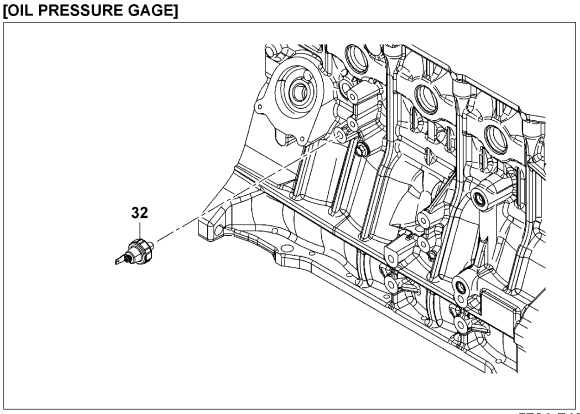


5701-748

5701-748_

4Y [ENGINE SWITCH]

[WATER TEMP.GAGE]

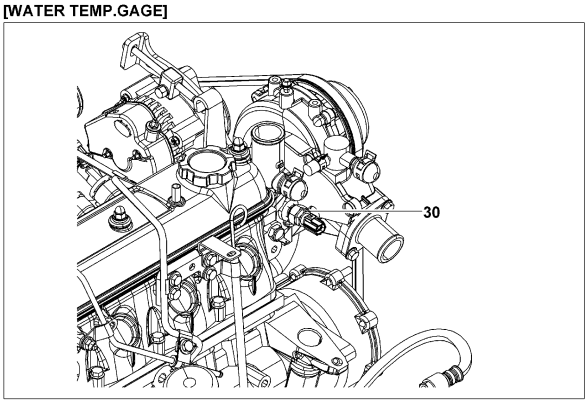


[OIL PRESSURE GAGE]

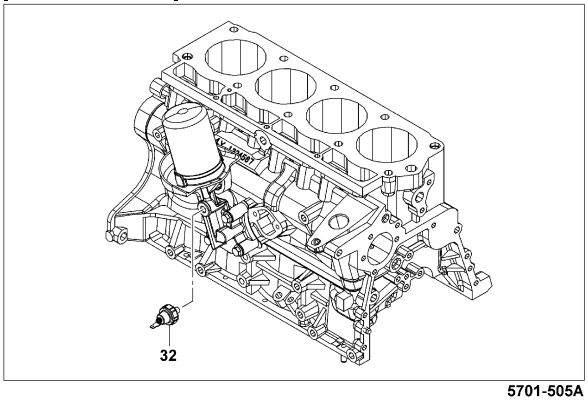


5701-505A

5701-505A

4Y (CONVERTIBLE(Z3), EXCLUSIVE(Z4)) [REVOLUTION SW]

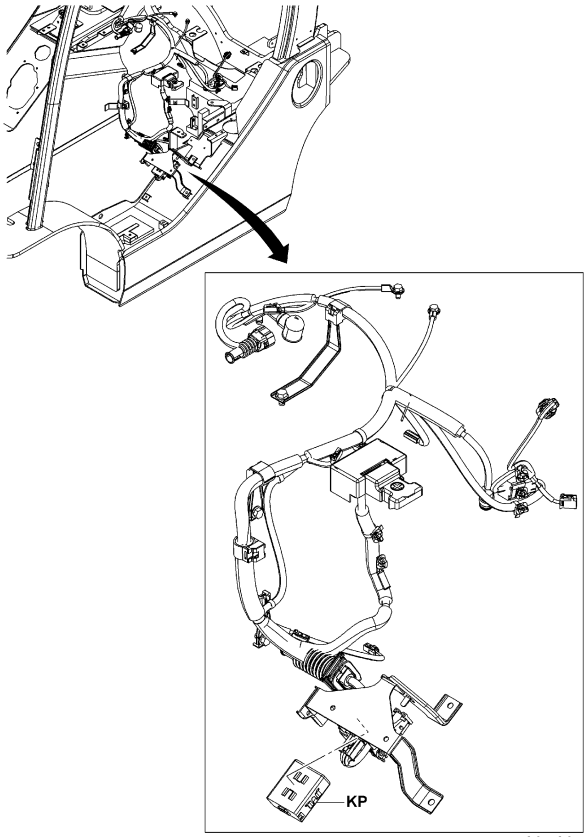


5701-501

5701-501_

4Y (LPG AUSTRALIA, LPG NZ SPEC(Z3)) [REVOLUTION SW]

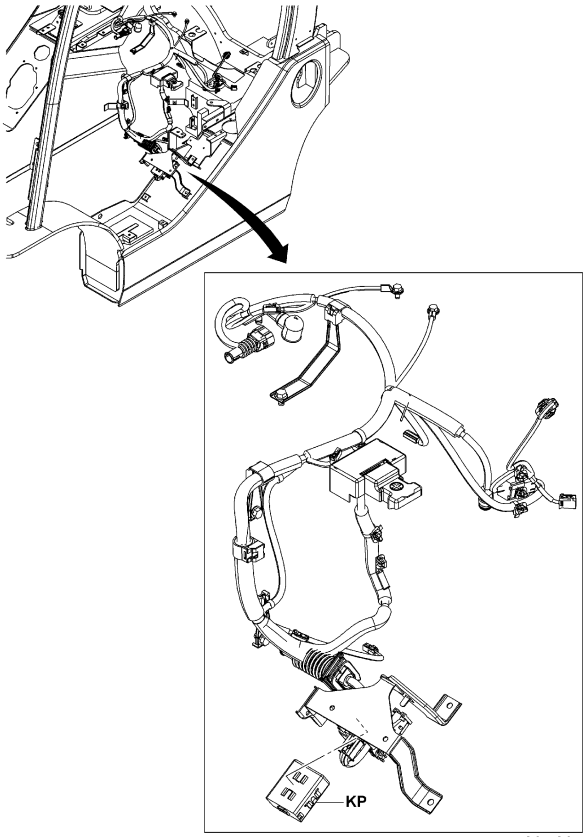


5701-501

5701-501_


| 5701 | METER & SWITCH<br>INDICATEUR & COMMUTATEUR | INSTRUMENTE & SCHALTER<br>MEDIDOR E INTERRUPTOR |
|---|---|---|


ATM..20,25,28,30,J35 (PREMIUM CABIN) [OPT SWITCH]

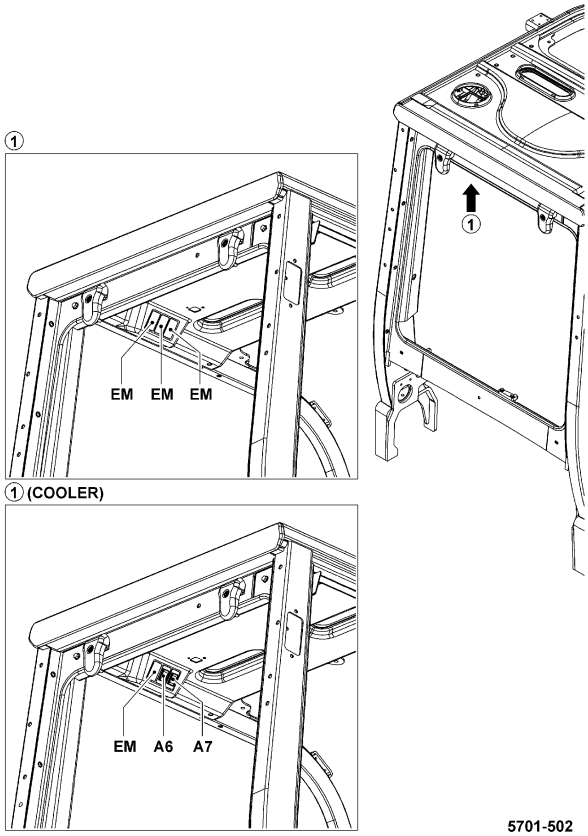


5701-502

5701-502_

1DZ,2Z,3Z (DPF, DPF-2) [RH SIDE]

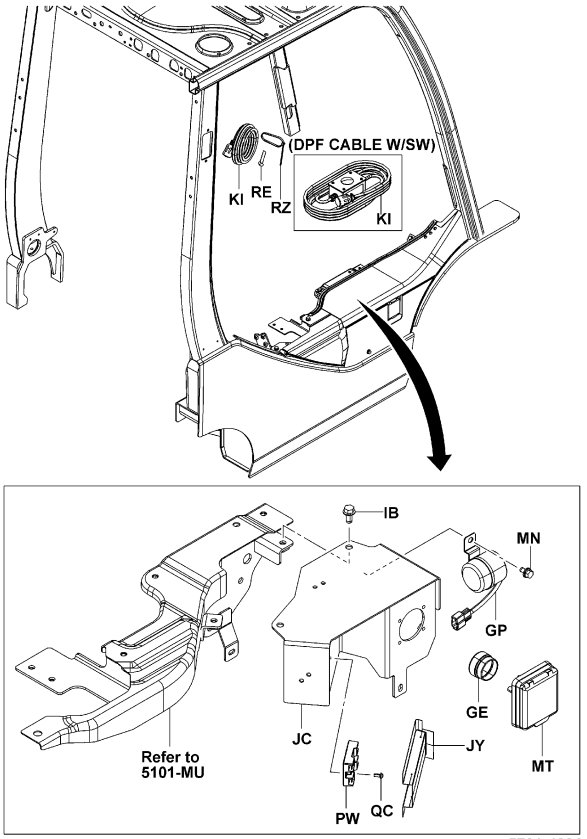


5701-489A

5701-489A

ATM (MULTI DISPLAY) [DISPLAY]

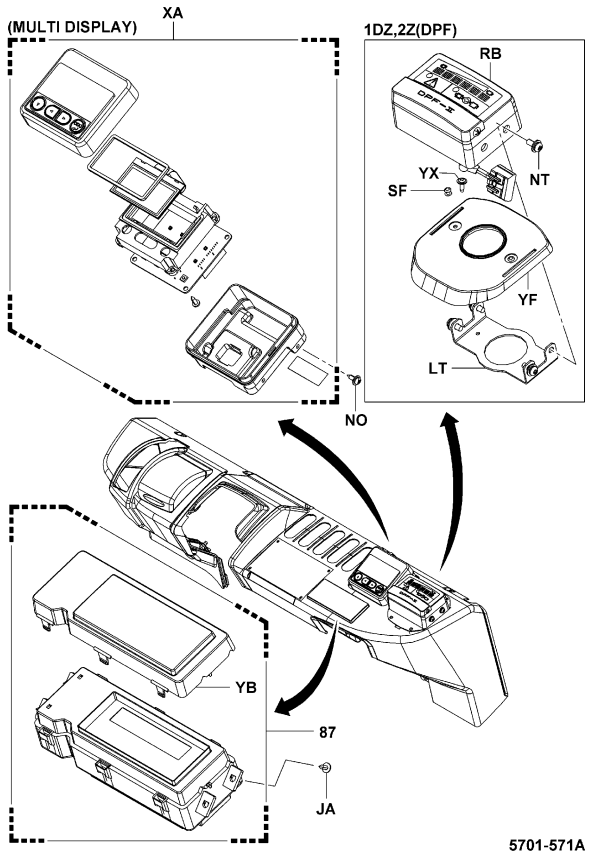


5701-571A

5701-571A

ATM (OK MONITOR) [RESERVE TANK SW]

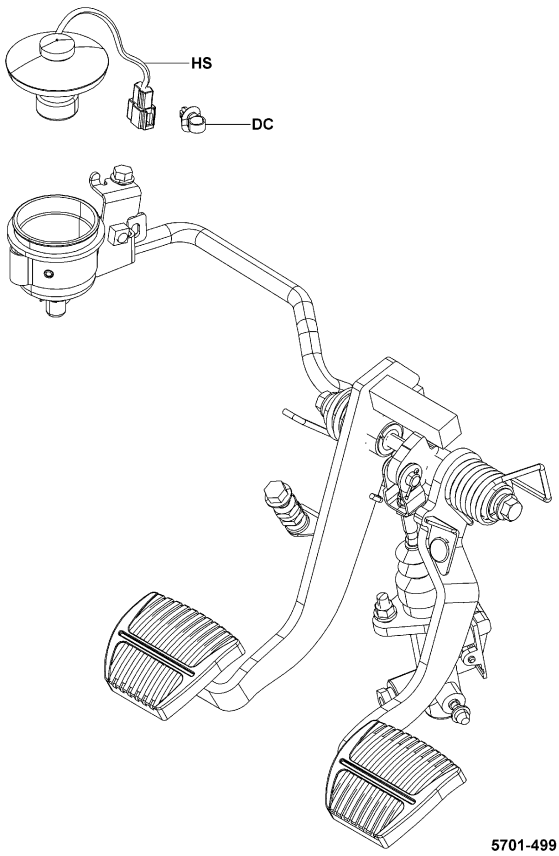


5701-499

5701-499_

5701 METER & SWITCH INDICATEUR & COMMUTATEUR INSTRUMENTE & SCHALTER MEDIDOR E INTERRUPTOR

4Y (FUEL WARNING) [PANEL SWITCH]

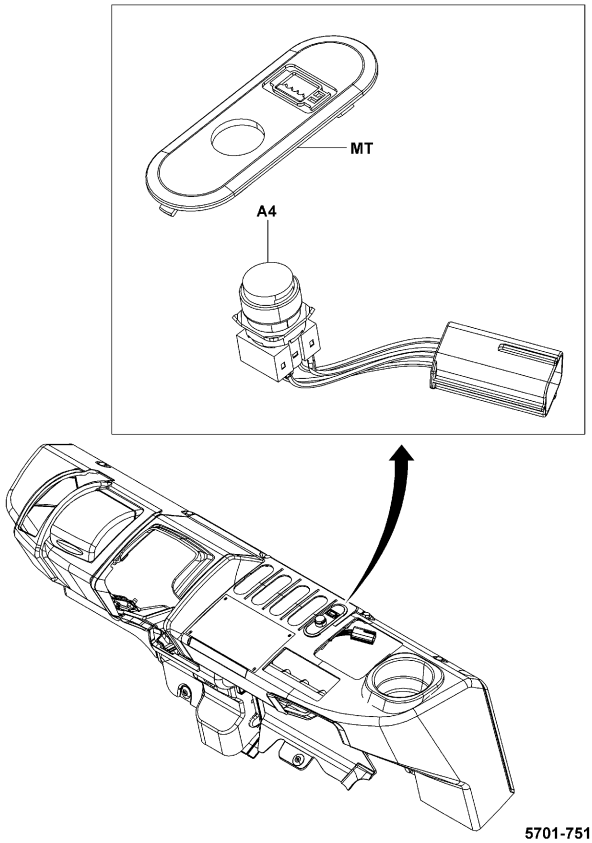


5701-751

5701-751_

## 5701

**METER & SWITCH**
**INDICATEUR & COMMUTATEUR**
**INSTRUMENTE & SCHALTER**
**MEDIDOR E INTERRUPTOR**

| PART NAME CODE | PART NAME | QTY |
|---|---|---|
| 5701-02 | **RELAY ASSY, STARTER**<br>ENS. DE RELAIS<br>RELAIS, VOLLST.<br>CONJUNTO DEL RELE | 1 |
| 5701-03 | **RELAY ASSY, GLOW PLUG**<br>ENS. DE RELAIS<br>RELAIS, VOLLST.<br>CONJUNTO DEL RELE | 1 |
| 5701-06 | **RELAY ASSY, HORN**<br>ENS. DE RELAIS<br>RELAIS, VOLLST.<br>CONJUNTO DEL RELE | 1 |
| 5701-10 | **HORN ASSY**<br>ENS. D'AVERTISSEUR SONORE<br>HORN, VOLLST.<br>CONJUNTO DE LA BOCINA | 1 |
| 5701-11 | **BUZZER ASSY, BACK**<br>ENS. DE AVERTISSEUR<br>SUMMER, VOLLST.<br>CONJUNTO DE ZUMBADOR | 1 |
| 5701-14 | **SWITCH ASSY, LIGHT CONTROL**<br>ENS. DE INTERRUPTEUR<br>SCHALTER, VOLLST.<br>CONJUNTO DEL INTERRUPUPTOR | 1 |
| 5701-15 | **SWITCH ASSY, IGNITION STARTER**<br>ENS. DE INTERRUPTEUR<br>SCHALTER, VOLLST.<br>CONJUNTO DEL INTERRUPUPTOR | 1 |
| 5701-15A | **KEY, CUT**<br>CLAVETTE<br>SCHLUSSEL<br>LLAVE | 1 |
| 5701-21 | **GAGE ASSY, WATER TEMPERATURE, ENGINE**<br>ENS. DE JAUGE<br>MESSGERÄT, VOLLST.<br>CONJUNTO DE MEDIDOR | 1 |
| 5701-21A | **GASKET**<br>JOINT<br>DICHTUNG<br>EMPAQUETADURA | 1 |
| 5701-30 | **GAGE ASSY, WATER TEMPERATURE SENDER, ENGINE**<br>ENS. DE JAUGE<br>MESSGERÄT, VOLLST.<br>CONJUNTO DE MEDIDOR | 1 |
| 5701-32 | **SWITCH ASSY, OIL PRESSURE (ENGINE)**<br>ENS. DE INTERRUPTEUR<br>SCHALTER, VOLLST.<br>CONJUNTO DEL INTERRUPUPTOR | 1 |
| 5701-33 | **SWITCH ASSY, STOP LAMP**<br>ENS. DE INTERRUPTEUR<br>SCHALTER, VOLLST.<br>CONJUNTO DEL INTERRUPUPTOR | 1 |
| 5701-51 | **TIMER, PREHEATING**<br>MINUTERIE<br>SCHALTUHR<br>DISTRIBUIDOR | 1 |
| 5701-55 | **SENSOR ASSY**<br>ENS. DE DETECTEUR<br>SENSOR, VOLLST.<br>CONJUNTO DEL SENSOR | 1 |
| 5701-87 | **METER ASSY, COMBINATION**<br>ENS. DE COMPTEUR<br>INSTRUMENTEN, VOLLST.<br>CONJUNTO DEL MEDIDOR | 1 |
| 5701-97 | **SWITCH ASSY, DIRECTION**<br>ENS. DE INTERRUPTEUR<br>SCHALTER, VOLLST.<br>CONJUNTO DEL INTERRUPUPTOR | 1 |
| 5701-A2 | **SWITCH ASSY, COMBINATION**<br>ENS. DE INTERRUPTEUR<br>SCHALTER, VOLLST.<br>CONJUNTO DEL INTERRUPUPTOR | 1 |
| 5701-A3 | **SWITCH ASSY, LP/CNG**<br>ENS. DE INTERRUPTEUR<br>SCHALTER, VOLLST.<br>CONJUNTO DEL INTERRUPUPTOR | 1 |
| 5701-A4 | **SWITCH ASSY, LPG WARNING**<br>ENS. DE INTERRUPTEUR<br>SCHALTER, VOLLST.<br>CONJUNTO DEL INTERRUPUPTOR | 1 |


## 5701

**METER & SWITCH**
**INDICATEUR & COMMUTATEUR**
**INSTRUMENTE & SCHALTER**
**MEDIDOR E INTERRUPTOR**


| PART NAME CODE | PART NAME | QTY |
|---|---|---|
| 5701-A5 | **SWITCH ASSY, HEATER**<br>ENS. DE INTERRUPTEUR<br>SCHALTER, VOLLST.<br>CONJUNTO DEL INTERRUPUPTOR | 1 |
| 5701-A8 | **SWITCH ASSY, BUZZER ON/OFF**<br>ENS. DE INTERRUPTEUR<br>SCHALTER, VOLLST.<br>CONJUNTO DEL INTERRUPUPTOR | 1 |
| 5701-A9 | **RELAY ASSY, BEACON**<br>ENS. DE RELAIS<br>RELAIS, VOLLST.<br>CONJUNTO DEL RELE | 1 |
| 5701-AI | **SPRING, HORN CONTACT**<br>RESSORT<br>FEDER<br>RESORTE | 2 |
| 5701-AT | **SPRING**<br>RESSORT<br>FEDER<br>RESORTE | 1 |
| 5701-AV | **SCREW**<br>VIS<br>SCHRAUBE<br>TORNILLO | 2 |
| 5701-BA | **RELAY ASSY**<br>ENS. DE RELAIS<br>RELAIS, VOLLST.<br>CONJUNTO DEL RELE | 1 |
| 5701-BD | **PLATE**<br>PLAQUE<br>PLATTE<br>PLACA | 1 |
| 5701-BI | **FLASHER ASSY, TURN SIGNAL**<br>ENS. DE CLIGNOTANT<br>BLINKER, VOLLST.<br>CONJUNTO DE INTERMITENTE | 1 |
| 5701-CJ | **SWITCH ASSY, WORKING LAMP**<br>ENS. DE INTERRUPTEUR<br>SCHALTER, VOLLST.<br>CONJUNTO DEL INTERRUPUPTOR | 1 |
| 5701-DC | **CLAMP**<br>PINSE<br>KLEMME<br>ABRAZADERA | 1 |
| 5701-EM | **PLUG**<br>BOUCHON<br>STOPFEN<br>TAPON | 1- 3 |
| 5701-EQ | **BOLT**<br>BOULON<br>SCHRAUBE<br>PERNO | 1- 2 |
| 5701-EZ | **COVER, RELAY**<br>COUVERCLE<br>DECKEL<br>CUBIERTA | 1 |
| 5701-FH | **NUT**<br>ECROU<br>MUTTER<br>TUERCA | 1 |
| 5701-FK | **BOLT**<br>BOULON<br>SCHRAUBE<br>PERNO | 2 |
| 5701-FN | **BOLT**<br>BOULON<br>SCHRAUBE<br>PERNO | 2 |
| 5701-FS | **BOLT**<br>BOULON<br>SCHRAUBE<br>PERNO | 2 |
| 5701-FT | **NUT**<br>ECROU<br>MUTTER<br>TUERCA | 1- 2 |
| 5701-GH | **BRACKET SUB-ASSY**<br>SOUS-ENS. DE SUPPORT<br>TRAGER-TEILGRUPPE<br>SUBCONJUNTO DE LA SOPORTE | 1 |

## 5701

**METER & SWITCH**
**INDICATEUR & COMMUTATEUR**
**INSTRUMENTE & SCHALTER**
**MEDIDOR E INTERRUPTOR**

| PART NAME CODE | PART NAME | QTY |
|---|---|---|
| 5701-GN | **BRACKET**<br>SUPPORT<br>TRAGER<br>SOPORTE | 1 |
| 5701-GP | **BUZZER ASSY**<br>ENS. DE AVERTISSEUR<br>SUMMER, VOLLST.<br>CONJUNTO DE ZUMBADOR | 1 |
| 5701-GS | **RELAY ASSY**<br>ENS. DE RELAIS<br>RELAIS, VOLLST.<br>CONJUNTO DEL RELE | 1 |
| 5701-HG | **CONNECTOR**<br>CONNECTEUR<br>STECKVERBINDER<br>CONECTOR | 1 |
| 5701-HS | **SWITCH ASSY**<br>ENS. DE INTERRUPTEUR<br>SCHALTER, VOLLST.<br>CONJUNTO DEL INTERRUPUPTOR | 1 |
| 5701-IB | **BOLT**<br>BOULON<br>SCHRAUBE<br>PERNO | 2 |
| 5701-JA | **SCREW**<br>VIS<br>SCHRAUBE<br>TORNILLO | 4 |
| 5701-JC | **BRACKET**<br>SUPPORT<br>TRAGER<br>SOPORTE | 1 |
| 5701-JJ | **BOOT**<br>COFFRE<br>MANSCHETTE<br>FORRO | 1 |
| 5701-JQ | **PLUG, HOLE**<br>BOUCHON<br>STOPFEN<br>TAPON | 1 |
| 5701-JX | **RELAY ASSY**<br>ENS. DE RELAIS<br>RELAIS, VOLLST.<br>CONJUNTO DEL RELE | 1 |
| 5701-JY | **COVER**<br>COUVERCLE<br>DECKEL<br>CUBIERTA | 1 |
| 5701-KA | **BOOT**<br>COFFRE<br>MANSCHETTE<br>FORRO | 1- 2 |
| 5701-KD | **BOX**<br>BOITIER<br>KASTEN<br>CAJA | 1 |
| 5701-KI | **CABLE**<br>CABLE<br>SEILZUG<br>CABLE | 1 |
| 5701-KP | **SWITCH ASSY, ENGINE REVOLUTION**<br>ENS. DE INTERRUPTEUR<br>SCHALTER, VOLLST.<br>CONJUNTO DEL INTERRUPUPTOR | 1 |
| 5701-KQ | **RELAY ASSY**<br>ENS. DE RELAIS<br>RELAIS, VOLLST.<br>CONJUNTO DEL RELE | 1 |
| 5701-LD | **CAM, CANCEL**<br>CAME<br>NOCKEN<br>LEVA | 1 |
| 5701-LM | **BRACKET**<br>SUPPORT<br>TRAGER<br>SOPORTE | 1 |
| 5701-LO | **BRACKET**<br>SUPPORT<br>TRAGER<br>SOPORTE | 1 |

## 5701

**METER & SWITCH**
**INDICATEUR & COMMUTATEUR**
**INSTRUMENTE & SCHALTER**
**MEDIDOR E INTERRUPTOR**

| PART NAME CODE | PART NAME | QTY |
|---|---|---|
| 5701-LT | **BRACKET**<br>SUPPORT<br>TRAGER<br>SOPORTE | 1 |
| 5701-MJ | **NUT**<br>ECROU<br>MUTTER<br>TUERCA | 2 |
| 5701-MN | **BOLT**<br>BOULON<br>SCHRAUBE<br>PERNO | 1 |
| 5701-MT | **PLUG**<br>BOUCHON<br>STOPFEN<br>TAPON | 1 |
| 5701-MW | **PLUG**<br>BOUCHON<br>STOPFEN<br>TAPON | 1 |
| 5701-NB | **RELAY ASSY**<br>ENS. DE RELAIS<br>RELAIS, VOLLST.<br>CONJUNTO DEL RELE | 1- 2 |
| 5701-ND | **RELAY ASSY**<br>ENS. DE RELAIS<br>RELAIS, VOLLST.<br>CONJUNTO DEL RELE | 1 |
| 5701-NO | **SCREW**<br>VIS<br>SCHRAUBE<br>TORNILLO | 4 |
| 5701-NT | **SCREW**<br>VIS<br>SCHRAUBE<br>TORNILLO | 2- 4 |
| 5701-OC | **SWITCH ASSY, WIPER**<br>ENS. DE INTERRUPTEUR<br>SCHALTER, VOLLST.<br>CONJUNTO DEL INTERRUPUPTOR | 1 |
| 5701-OD | **BOLT**<br>BOULON<br>SCHRAUBE<br>PERNO | 1 |
| 5701-PG | **BUZZER ASSY**<br>ENS. DE AVERTISSEUR<br>SUMMER, VOLLST.<br>CONJUNTO DE ZUMBADOR | 1 |
| 5701-PI | **BOLT**<br>BOULON<br>SCHRAUBE<br>PERNO | 1 |
| 5701-PV | **RELAY ASSY**<br>ENS. DE RELAIS<br>RELAIS, VOLLST.<br>CONJUNTO DEL RELE | 2 |
| 5701-PW | **RELAY ASSY**<br>ENS. DE RELAIS<br>RELAIS, VOLLST.<br>CONJUNTO DEL RELE | 1 |
| 5701-PX | **RELAY ASSY**<br>ENS. DE RELAIS<br>RELAIS, VOLLST.<br>CONJUNTO DEL RELE | 1 |
| 5701-QB | **SCREW**<br>VIS<br>SCHRAUBE<br>TORNILLO | 3 |
| 5701-QC | **SCREW**<br>VIS<br>SCHRAUBE<br>TORNILLO | 2 |
| 5701-QG | **BOLT**<br>BOULON<br>SCHRAUBE<br>PERNO | 1 |
| 5701-RA | **BOX**<br>BOITIER<br>KASTEN<br>CAJA | 1 |

| 5701 | METER & SWITCH<br>INDICATEUR & COMMUTATEUR | INSTRUMENTE & SCHALTER<br>MEDIDOR E INTERRUPTOR |
|---|---|---|

| PART NAME CODE | PART NAME | QTY |
|---|---|---|
| 5701-RB | **DISPLAY ASSY**<br>ENS. COMPTEUR D'ETAT<br>ANZEIGEANLAGE<br>CONJUNTO DE INDICADORES | 1 |
| 5701-SF | **RIVET**<br>RIVET<br>NIET<br>REMACHE | 2 |
| 5701-SH | **CONTACT, HORN**<br>CONTACT<br>KONTAKT<br>CONTACTO | 2 |
| 5701-SJ | **WIRE, HORN**<br>FIL<br>DRAHT<br>ALAMBRE | 1 |
| 5701-TT | **NUT**<br>ECROU<br>MUTTER<br>TUERCA | 1 |
| 5701-UB | **NUT**<br>ECROU<br>MUTTER<br>TUERCA | 3 |
| 5701-UG | **IGNITER**<br>ALLUMEUR<br>ZUNDER<br>ENCENDEDOR | 1 |
| 5701-XA | **DISPLAY ASSY, MULTI-FUNCTION**<br>ENS. COMPTEUR D'ETAT<br>ANZEIGEANLAGE<br>CONJUNTO DE INDICADORES | 1 |
| 5701-XO | **SWITCH ASSY, WIPER, RR**<br>ENS. DE INTERRUPTEUR<br>SCHALTER, VOLLST.<br>CONJUNTO DEL INTERRUPUPTOR | 1 |
| 5701-YB | **GLASS**<br>VITRE<br>GLASSCHEIBE<br>VIDRIO | 1 |

| PART NAME CODE | PART NAME | QTY |
|---|---|---|
| 5701-YF | **COVER**<br>COUVERCLE<br>DECKEL<br>CUBIERTA | 1 |
| 5701-YX | **SCREW**<br>VIS<br>SCHRAUBE<br>TORNILLO | 1 |


| 5701 | METER & SWITCH<br>INDICATEUR & COMMUTATEUR | INSTRUMENTE & SCHALTER<br>MEDIDOR E INTERRUPTOR |
|---|---|---|

| PART NAME CODE | PART NAME | QTY |
|---|---|---|

| PART NAME CODE | PART NAME | QTY |
|---|---|---|

**ATM (SPEED METER)**

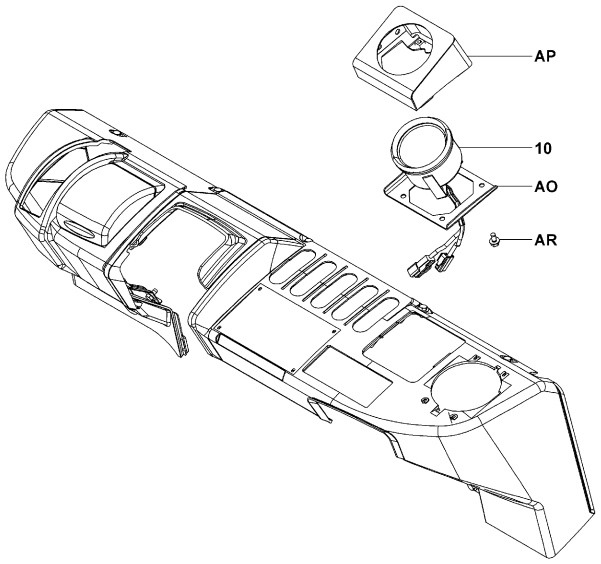


5706-044

5706-044_


| 5706 | SPEEDOMETER & SPEED ALARM<br>COMPTEUR DE VITESSE & ALARME DE VITESSE | TACHOMETER & DREHZAHLALARM<br>VELOCIMETRO Y ALARMA DE VELOCIDAD |
|---|---|---|


| PART NAME CODE | PART NAME | QTY | PART NAME CODE | PART NAME | QTY |
|---|---|---|---|---|---|
| 5706-10 | **SPEEDOMETER ASSY**<br>ENS. DE COMPTEUR DE VITESSE<br>TACHOMETER, VOLLST.<br>CONJUNTO DEL VELOCIMETRO | 1 | | | |
| 5706-AO | **BRACKET**<br>SUPPORT<br>TRAGER<br>SOPORTE | 1 | | | |
| 5706-AP | **BRACKET SUB-ASSY**<br>SOUS-ENS. DE SUPPORT<br>TRAGER-TEILGRUPPE<br>SUBCONJUNTO DE LA SOPORTE | 1 | | | |
| 5706-AR | **BOLT**<br>BOULON<br>SCHRAUBE<br>PERNO | 4 | | | |

| 5801 | WIPER MOTOR & BLADE<br>MOTEUR & BRAS D'ESSUIE-GLACE | SCHEIBENWISCHERMOTOR & WISCHER<br>MOTOR Y CUCHILLA DEL LIMPIADOR |
|---|---|---|

ATM (C-CABIN WP&WS, F&R GLASS WIPER) [FR]

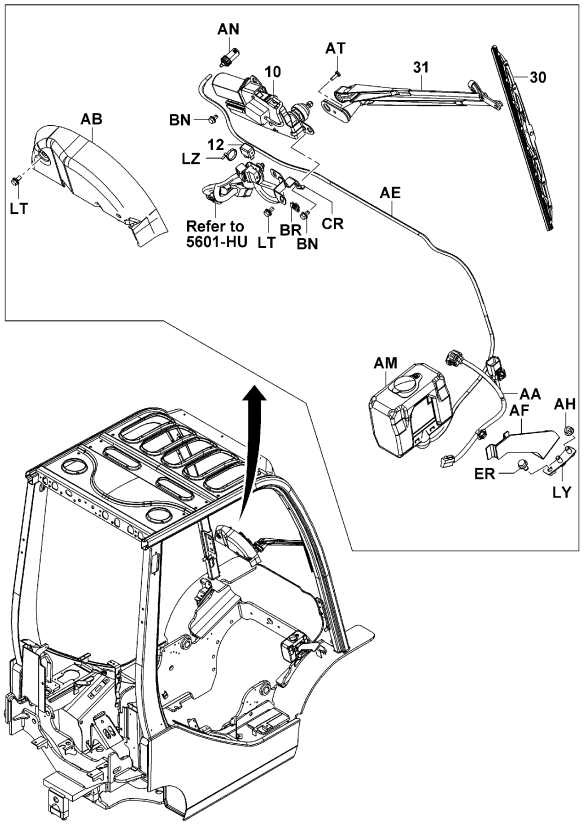


5801-206

5801-206_

ATM (FR GLASS WP&WS, 2-DOOR CABIN) [FR]

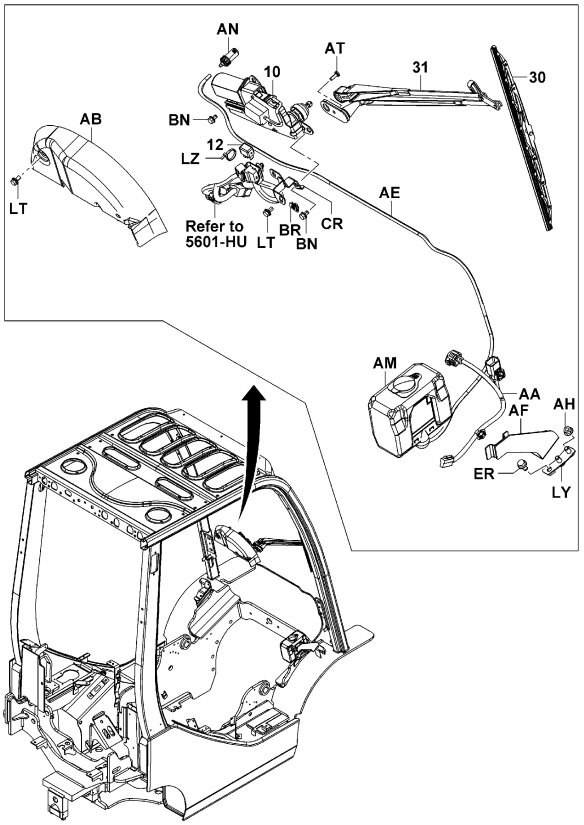


5801-206

5801-206_

| 5801 | WIPER MOTOR & BLADE<br>MOTEUR & BRAS D'ESSUIE-GLACE | SCHEIBENWISCHERMOTOR & WISCHER<br>MOTOR Y CUCHILLA DEL LIMPIADOR |
|---|---|---|

ATM (HEATER..C-CABIN WP&WS, F&R GLASS WIPER) [FR]

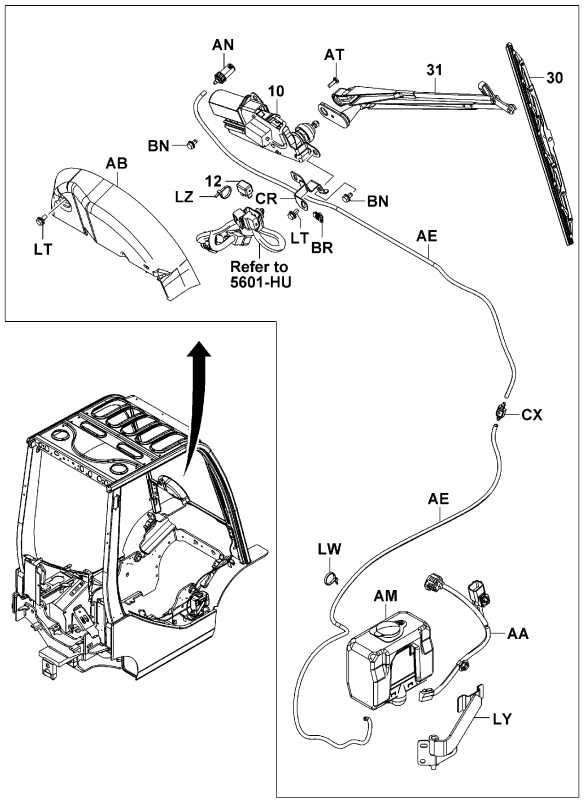


5801-207

5801-207_

ATM (HEATER..FR GLASS WP&WS, 2-DOOR CABIN) [FR]

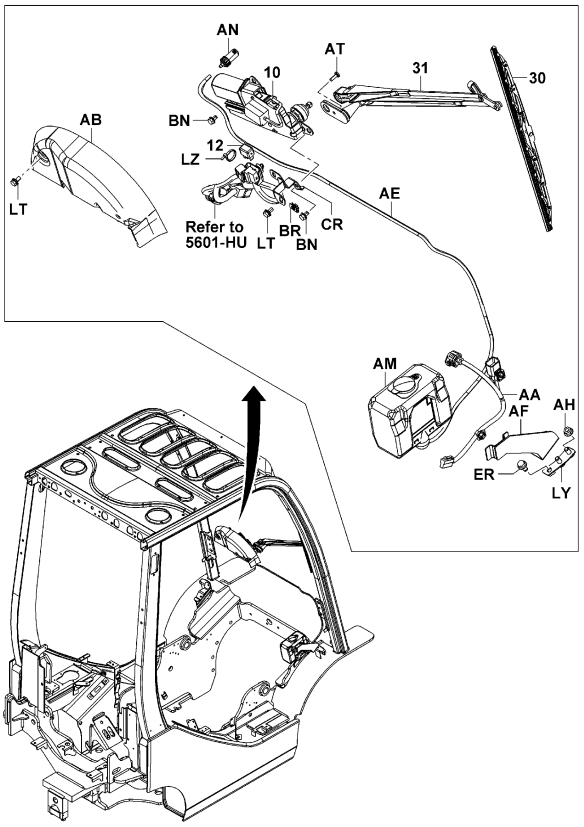


5801-206

5801-206_

| 5801 | WIPER MOTOR & BLADE<br>MOTEUR & BRAS D'ESSUIE-GLACE | SCHEIBENWISCHERMOTOR & WISCHER<br>MOTOR Y CUCHILLA DEL LIMPIADOR |
|---|---|---|

ATM (HEATER..PREMIUM CABIN) [FR]

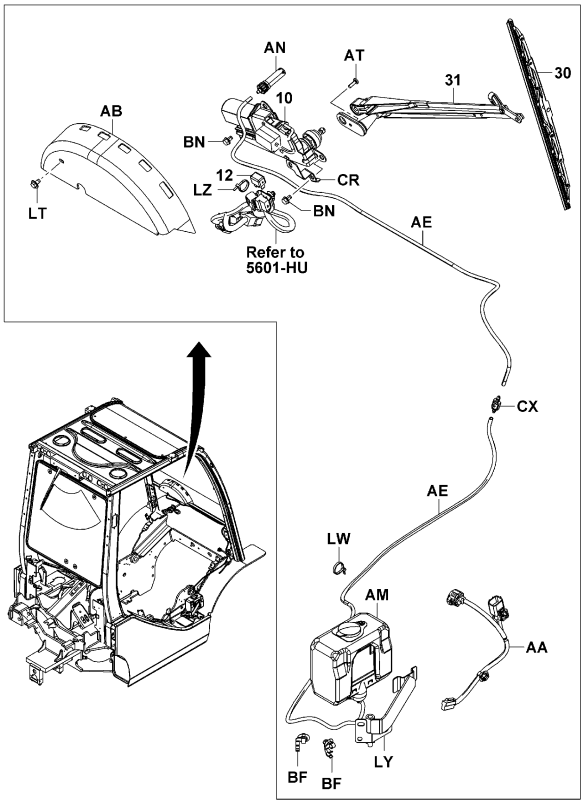


5801-204

5801-204_

ATM (PREMIUM CABIN) [FR]

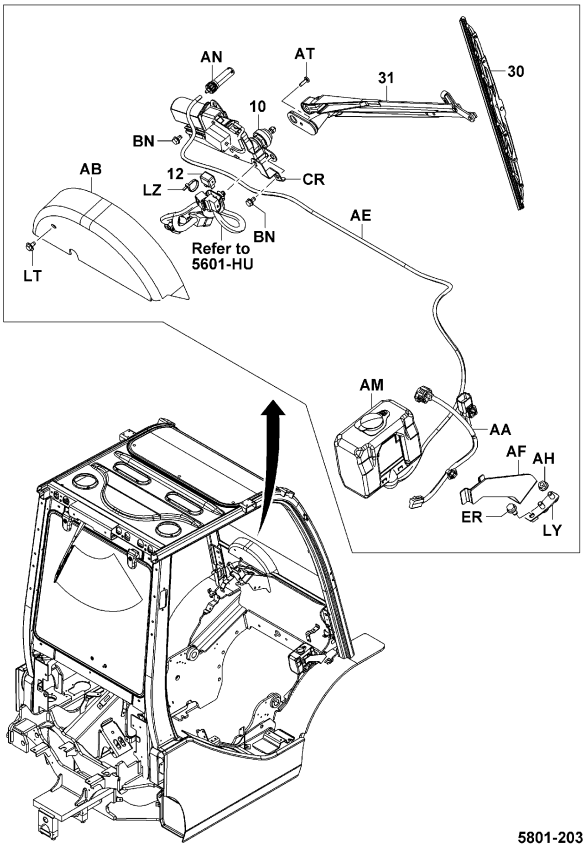


5801-203

5801-203_

| 5801 | WIPER MOTOR & BLADE<br>MOTEUR & BRAS D'ESSUIE-GLACE | SCHEIBENWISCHERMOTOR & WISCHER<br>MOTOR Y CUCHILLA DEL LIMPIADOR |
|---|---|---|

ATM (2-DOOR CABIN, F&R GLASS WIPER) [RR]

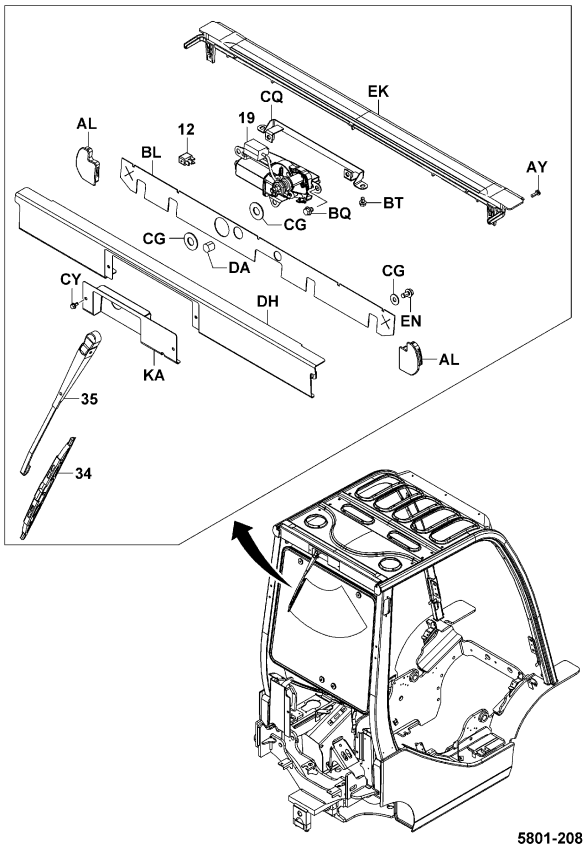


5801-208

5801-208_

ATM (PREMIUM CABIN..RR COMBI. LIGHT) [RR]

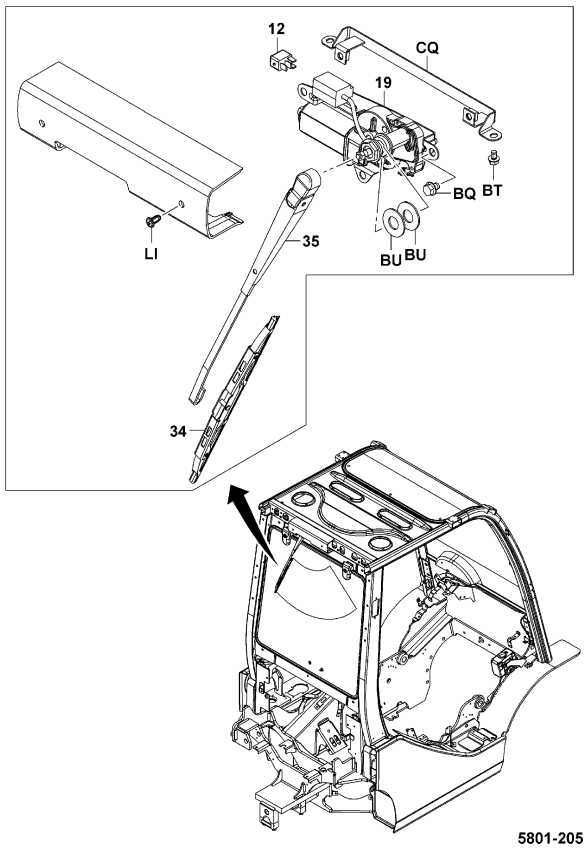


5801-205

5801-205_

| 5801 | WIPER MOTOR & BLADE<br>MOTEUR & BRAS D'ESSUIE-GLACE | SCHEIBENWISCHERMOTOR & WISCHER<br>MOTOR Y CUCHILLA DEL LIMPIADOR |
|---|---|---|

ATM

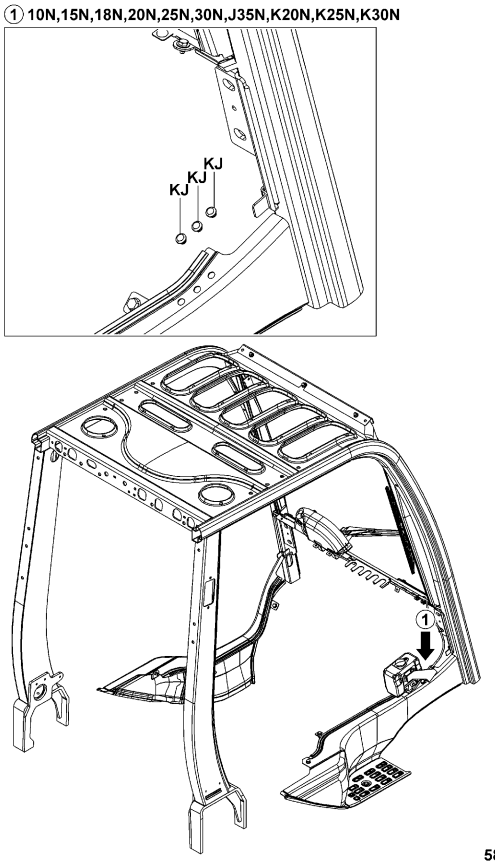


5801-178

5801-178_

| 5801 | WIPER MOTOR & BLADE<br>MOTEUR & BRAS D'ESSUIE-GLACE | SCHEIBENWISCHERMOTOR & WISCHER<br>MOTOR Y CUCHILLA DEL LIMPIADOR |
|---|---|---|

| PART NAME CODE | PART NAME | QTY |
|---|---|---|
| 5801-10 | **MOTOR ASSY, WIPER**<br>ENS. DE MOTEUR<br>MOTOR, VOLLST.<br>CONJUNTO DEL MOTOR | 1 |
| 5801-12 | **RELAY ASSY (FOR WIPER)**<br>ENS. DE RELAIS<br>RELAIS, VOLLST.<br>CONJUNTO DEL RELE | 1 |
| 5801-19 | **MOTOR ASSY, WIPER, REAR**<br>ENS. DE MOTEUR<br>MOTOR, VOLLST.<br>CONJUNTO DEL MOTOR | 1 |
| 5801-30 | **BLADE SUB-ASSY, WIPER**<br>SOUS-ENS. DE LAME<br>SCHAUFEL-TEILGRUPPE<br>SUBCONJUNTO DE LA CUCHILLA | 1 |
| 5801-31 | **ARM SUB-ASSY, WIPER**<br>SOUS-ENS. DE BRAS<br>ARM-TEILGRUPPE<br>SUBCONJUNTO DEL BRAZO | 1 |
| 5801-34 | **BLADE SUB-ASSY, WIPER, REAR**<br>SOUS-ENS. DE LAME<br>SCHAUFEL-TEILGRUPPE<br>SUBCONJUNTO DE LA CUCHILLA | 1 |
| 5801-35 | **ARM SUB-ASSY, WIPER, REAR**<br>SOUS-ENS. DE BRAS<br>ARM-TEILGRUPPE<br>SUBCONJUNTO DEL BRAZO | 1 |
| 5801-AA | **HARNESS, WIPER**<br>FAISCEAU<br>KABELBAUM<br>RAMAL DE CABLES | 1 |
| 5801-AB | **COVER, WIPER**<br>COUVERCLE<br>DECKEL<br>CUBIERTA | 1 |
| 5801-AE | **HOSE**<br>FLEXIBLE<br>SCHLAUCH<br>MANGUERA | 1- 2 |
| 5801-AF | **BRACKET SUB-ASSY, WASHER TANK**<br>SOUS-ENS. DE SUPPORT<br>TRAGER-TEILGRUPPE<br>SUBCONJUNTO DE LA SOPORTE | 1 |
| 5801-AH | **NUT**<br>ECROU<br>MUTTER<br>TUERCA | 2 |
| 5801-AL | **GROMMET**<br>RONDELLE ISOLANTE<br>DURCHFUHRUNG<br>ANILLO PROTECTOR | 1 |
| 5801-AM | **TANK ASSY, WASHER**<br>ENS. DE RESERVOIR<br>TANK, VOLLST.<br>CONJUNTO DEL DEPOSITO | 1 |
| 5801-AN | **NOZZLE ASSY, WASHER**<br>ENS. DE INJECTEUR<br>DUSEN, VOLLST.<br>CONJUNTO DE LA BOQUILLA | 1 |
| 5801-AT | **SCREW**<br>VIS<br>SCHRAUBE<br>TORNILLO | 1 |
| 5801-AY | **SCREW**<br>VIS<br>SCHRAUBE<br>TORNILLO | 2 |
| 5801-BF | **CLAMP**<br>PINSE<br>KLEMME<br>ABRAZADERA | 2 |
| 5801-BH | **BRACKET**<br>SUPPORT<br>TRAGER<br>SOPORTE | 1 |
| 5801-BL | **RUBBER**<br>CAOUTCHOUC<br>GUMMI<br>GOMA | 1 |

## 5801

**WIPER MOTOR & BLADE**
**MOTEUR & BRAS D'ESSUIE-GLACE**
**SCHEIBENWISCHERMOTOR & WISCHER**
**MOTOR Y CUCHILLA DEL LIMPIADOR**

| PART NAME CODE | PART NAME | QTY |
|---|---|---|
| 5801-BN | **BOLT**<br>BOULON<br>SCHRAUBE<br>PERNO | 3 |
| 5801-BQ | **BOLT**<br>BOULON<br>SCHRAUBE<br>PERNO | 2 |
| 5801-BR | **NUT**<br>ECROU<br>MUTTER<br>TUERCA | 1 |
| 5801-BT | **BOLT**<br>BOULON<br>SCHRAUBE<br>PERNO | 2 |
| 5801-BU | **WASHER, PLATE**<br>RODELLE<br>UNTERLEGSCHEIBE<br>ARANDELA | 2 |
| 5801-BV | **COVER**<br>COUVERCLE<br>DECKEL<br>CUBIERTA | 1 |
| 5801-CG | **WASHER**<br>RODELLE<br>UNTERLEGSCHEIBE<br>ARANDELA | 4 |
| 5801-CJ | **PLATE**<br>PLAQUE<br>PLATTE<br>PLACA | 1 |
| 5801-CQ | **BRACKET SUB-ASSY, REAR WIPER**<br>SOUS-ENS. DE SUPPORT<br>TRAGER-TEILGRUPPE<br>SUBCONJUNTO DE LA SOPORTE | 1 |
| 5801-CR | **BRACKET, RELAY**<br>SUPPORT<br>TRÄGER<br>SOPORTE | 1 |
| 5801-CX | **VALVE ASSY, WASHER**<br>ENS. DE SOUPAPE<br>VENTIL, VOLLST.<br>CONJUNTO DE VALVULA | 1 |
| 5801-CY | **BOLT**<br>BOULON<br>SCHRAUBE<br>PERNO | 2 |
| 5801-DH | **COVER**<br>COUVERCLE<br>DECKEL<br>CUBIERTA | 1 |
| 5801-EK | **COVER**<br>COUVERCLE<br>DECKEL<br>CUBIERTA | 1 |
| 5801-EN | **BOLT**<br>BOULON<br>SCHRAUBE<br>PERNO | 4 |
| 5801-ER | **BOLT**<br>BOULON<br>SCHRAUBE<br>PERNO | 1 |
| 5801-EU | **NOZZLE, WASHER**<br>INJECTEUR<br>DUSE<br>BOQUILLA | 1 |
| 5801-KA | **BRACKET SUB-ASSY**<br>SOUS-ENS. DE SUPPORT<br>TRAGER-TEILGRUPPE<br>SUBCONJUNTO DE LA SOPORTE | 1 |
| 5801-KJ | **PLUG, HOLE**<br>BOUCHON<br>STOPFEN<br>TAPON | 3 |
| 5801-LI | **CLIP**<br>AGRAFE<br>CLIP<br>FIJADOR | 2 |


## 5801

**WIPER MOTOR & BLADE**
**MOTEUR & BRAS D'ESSUIE-GLACE**
**SCHEIBENWISCHERMOTOR & WISCHER**
**MOTOR Y CUCHILLA DEL LIMPIADOR**


| PART NAME CODE | PART NAME | QTY |
|---|---|---|
| 5801-LT | **BOLT**<br>BOULON<br>SCHRAUBE<br>PERNO | 1- 2 |
| 5801-LW | **BAND, CLAMP**<br>BANDE<br>BAND<br>BANDA | 1 |
| 5801-LY | **PLATE, WASHER TANK**<br>PLAQUE<br>PLATTE<br>PLACA | 1 |
| 5801-LZ | **BAND, CLAMP**<br>BANDE<br>BAND<br>BANDA | 1 |

ATM (HEATER)

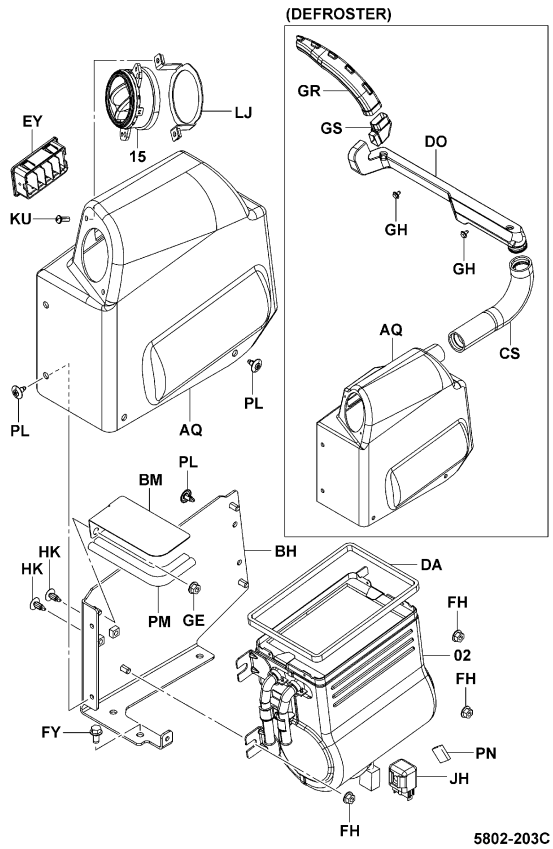


5802-203C

ATM (HEATER) [INNER]

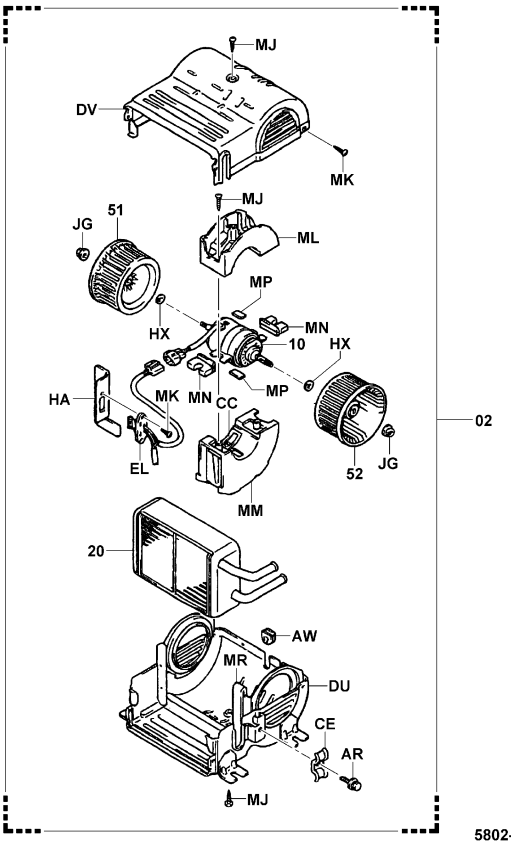


5802-104A



1DZ..ATM (HEATER)

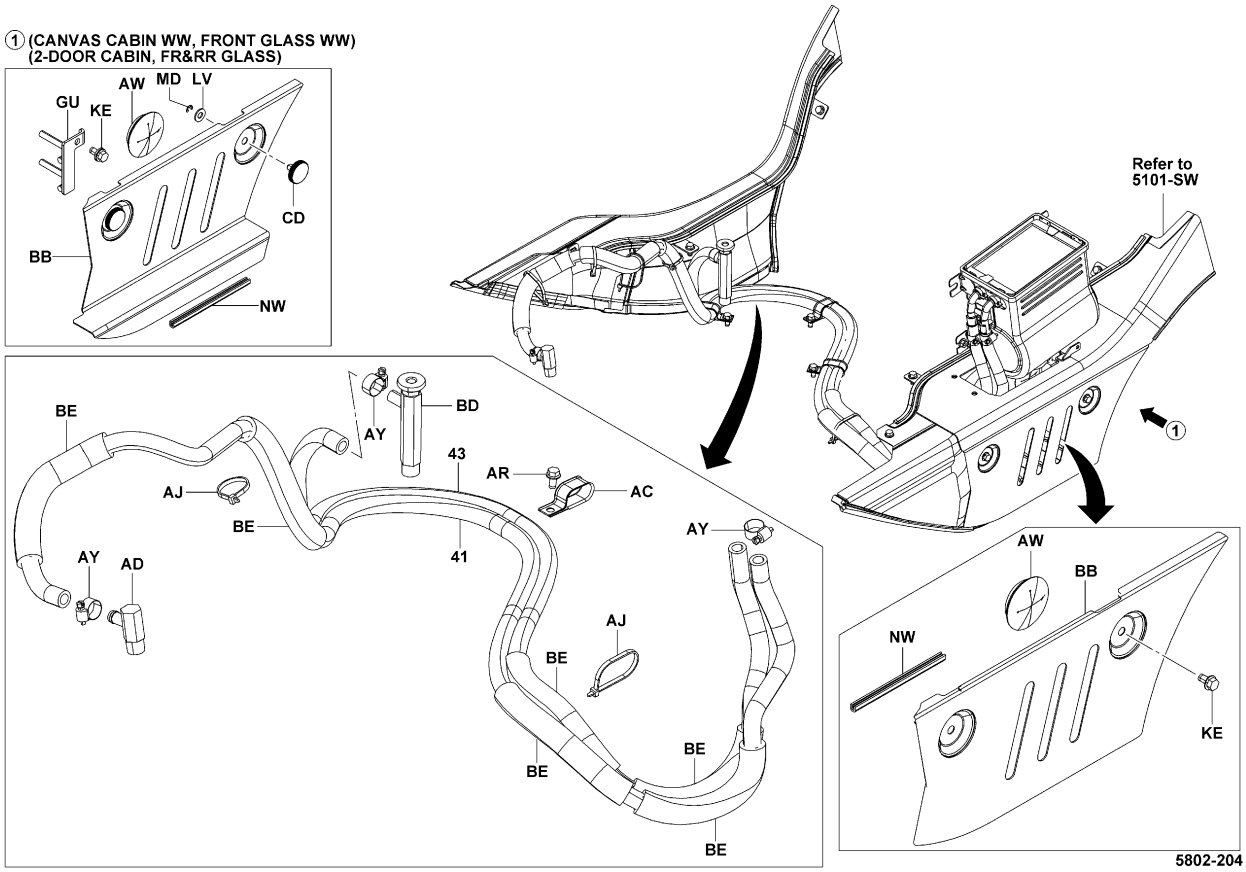


5802-204_

| 5802 | HEATER<br>CHAUFFAGE | HEIZUNG<br>CALEFACTOR |
|---|---|---|

2Z,3Z..ATM (HEATER)

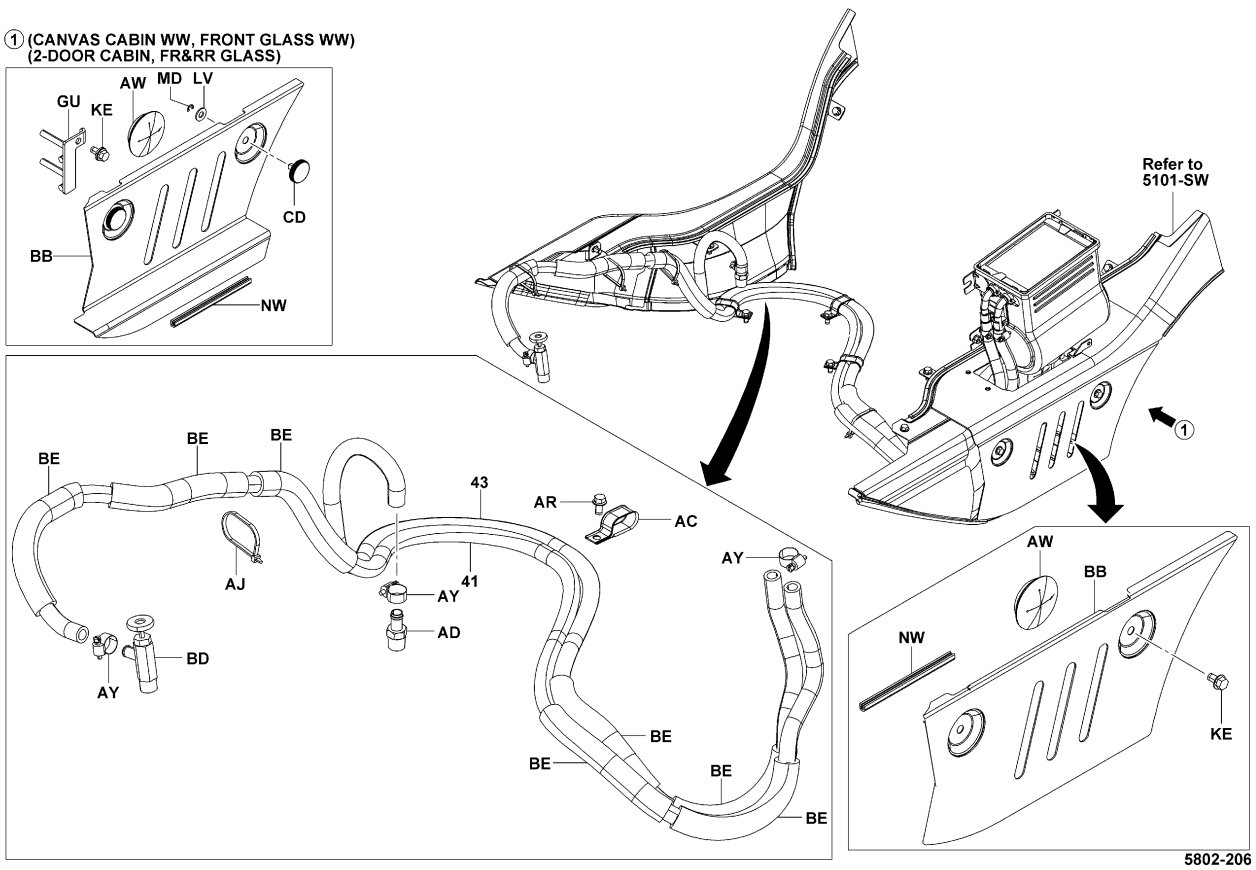


5802-206_

| 5802 | HEATER<br>CHAUFFAGE | HEIZUNG<br>CALEFACTOR |
|---|---|---|

4Y..ATM (HEATER)

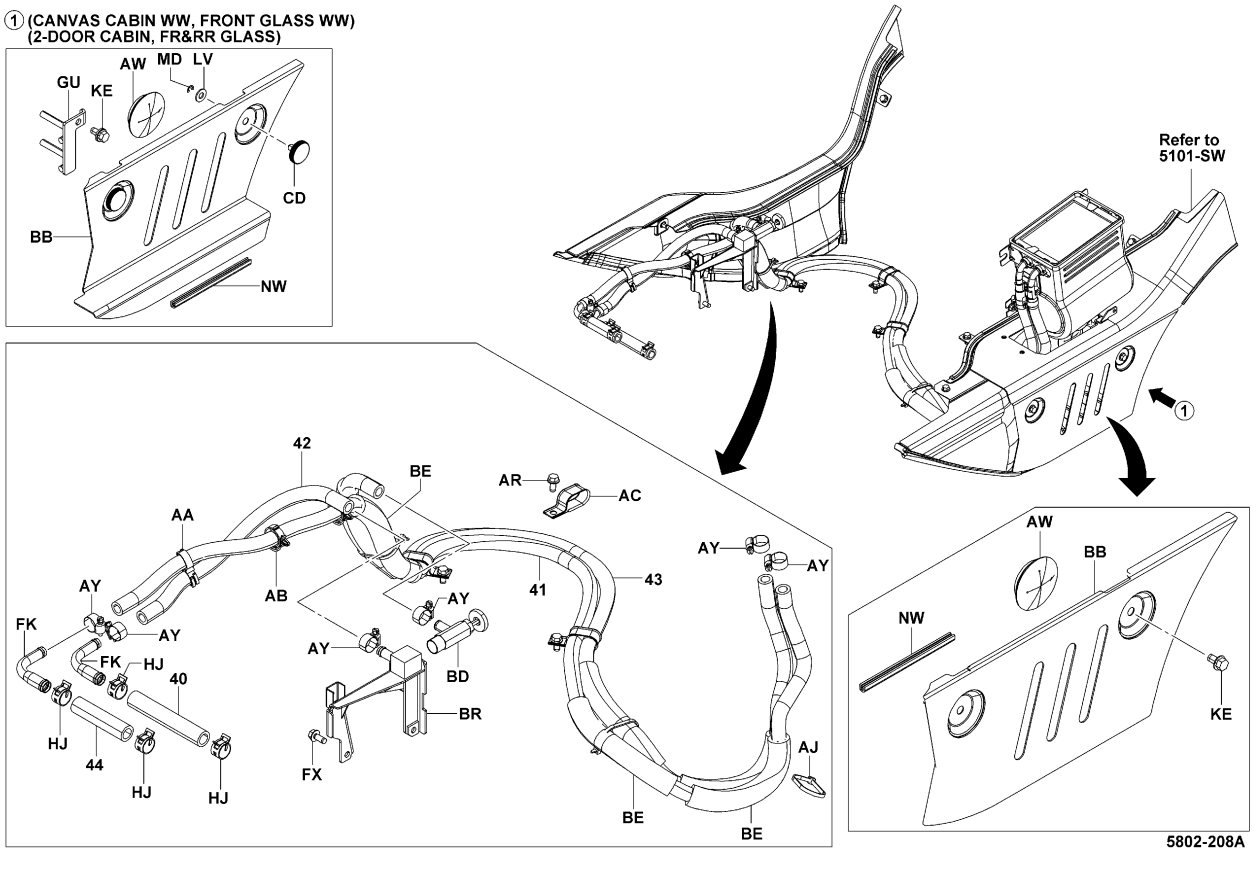


5802-208A

| 5802 | HEATER<br>CHAUFFAGE | HEIZUNG<br>CALEFACTOR |
|---|---|---|

4Y..ATM (HEATER..CONVERTIBLE(Z3))

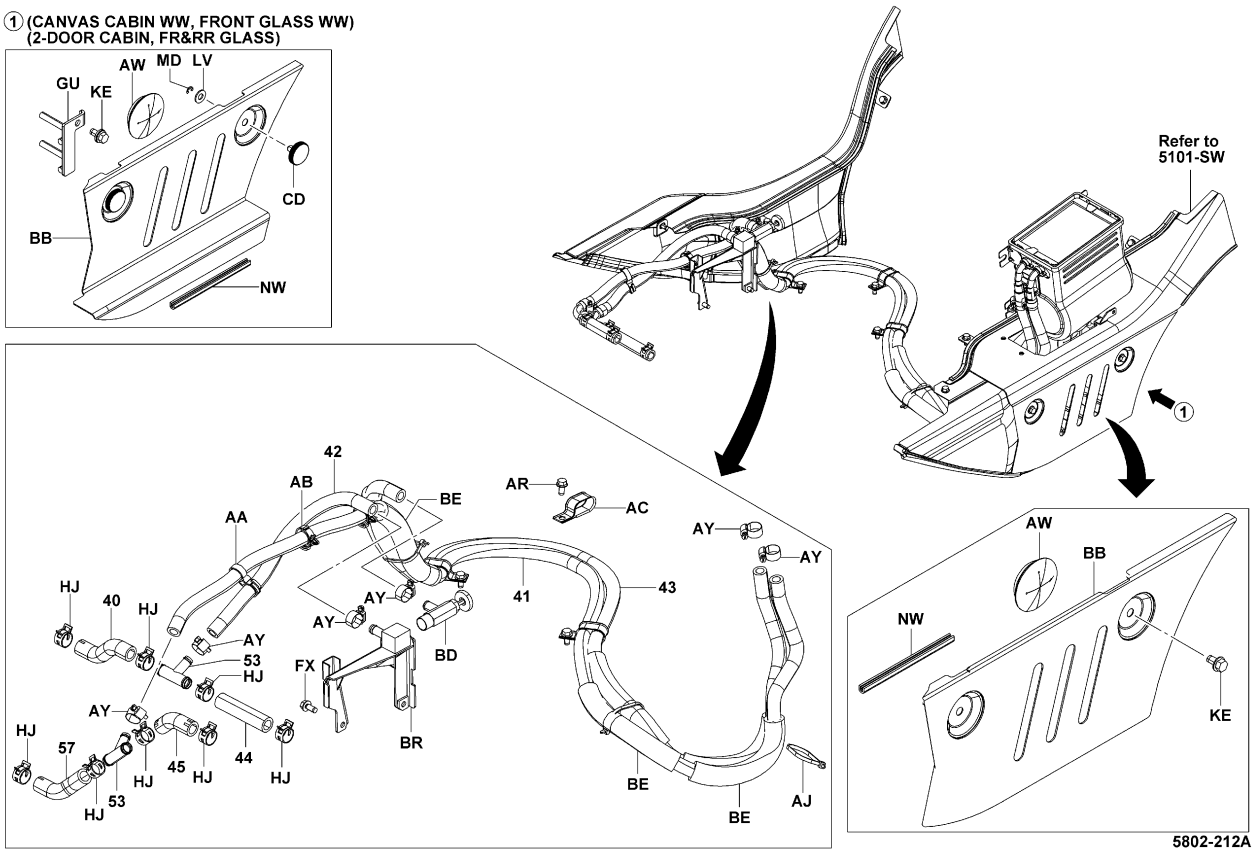


5802-212A

| 5802 | HEATER<br>CHAUFFAGE | HEIZUNG<br>CALEFACTOR |
|---|---|---|

| PART NAME CODE | PART NAME | QTY |
|---|---|---|
| 5802-02 | **HEATER ASSY**<br>ENS. DE CHAUFFAGE<br>HEIZUNG, VOLLST.<br>CONJUNTO DEL CALEFACTOR | 1 |
| 5802-10 | **MOTOR ASSY**<br>ENS. DE MOTEUR<br>MOTOR, VOLLST.<br>CONJUNTO DEL MOTOR | 1 |
| 5802-15 | **RESISTOR ASSY**<br>ENS. DE RESISTANCE<br>WIDERSTAND, VOLLST.<br>CONJUNTO DEL RESISTOR | 1 |
| 5802-20 | **UNIT SUB-ASSY, RADIATOR**<br>SOUS-ENS. D'UNITE<br>EINHEITS-TEILGRUPPE<br>CUBCONJUNTO UNITARIO | 1 |
| 5802-40 | **HOSE, NO.1**<br>FLEXIBLE<br>SCHLAUCH<br>MANGUERA | 1 |
| 5802-41 | **HOSE, NO.2**<br>FLEXIBLE<br>SCHLAUCH<br>MANGUERA | 1 |
| 5802-42 | **HOSE, NO.3**<br>FLEXIBLE<br>SCHLAUCH<br>MANGUERA | 1 |
| 5802-43 | **HOSE, NO.4**<br>FLEXIBLE<br>SCHLAUCH<br>MANGUERA | 1 |
| 5802-44 | **HOSE, NO.5**<br>FLEXIBLE<br>SCHLAUCH<br>MANGUERA | 1 |
| 5802-45 | **HOSE, NO.6**<br>FLEXIBLE<br>SCHLAUCH<br>MANGUERA | 1 |
| 5802-51 | **FAN SUB-ASSY, BLOWER, NO.1**<br>SOUS-ENS. DE VENTILATEUR<br>LUFTER-TEILGRUPPE<br>SUBCONJUNTO DEL VENTILADOR | 1 |
| 5802-52 | **FAN SUB-ASSY, BLOWER, NO.2**<br>SOUS-ENS. DE VENTILATEUR<br>LUFTER-TEILGRUPPE<br>SUBCONJUNTO DEL VENTILADOR | 1 |
| 5802-53 | **PIPE**<br>TUYAU<br>ROHR<br>TUBO | 2 |
| 5802-57 | **HOSE**<br>FLEXIBLE<br>SCHLAUCH<br>MANGUERA | 1 |
| 5802-AA | **CLAMP**<br>PINSE<br>KLEMME<br>ABRAZADERA | 1 |
| 5802-AB | **CLAMP**<br>PINSE<br>KLEMME<br>ABRAZADERA | 2 |
| 5802-AC | **CLAMP**<br>PINSE<br>KLEMME<br>ABRAZADERA | 3 |
| 5802-AD | **JOINT**<br>RACCORD<br>GELENK<br>JUNTA | 1 |
| 5802-AF | **BRACKET**<br>SUPPORT<br>TRAGER<br>SOPORTE | 1 |
| 5802-AJ | **CLAMP**<br>PINSE<br>KLEMME<br>ABRAZADERA | 3- 5 |

## 5802 HEATER / CHAUFFAGE / HEIZUNG / CALEFACTOR

| PART NAME CODE | PART NAME | QTY |
|---|---|---|
| 5802-AQ | **COVER, HEATER**<br>COUVERCLE<br>DECKEL<br>CUBIERTA | 1 |
| 5802-AR | **BOLT**<br>BOULON<br>SCHRAUBE<br>PERNO | 1- 3 |
| 5802-AW | **GROMMET**<br>RONDELLE ISOLANTE<br>DURCHFUHRUNG<br>ANILLO PROTECTOR | 1 |
| 5802-AY | **CLAMP**<br>PINSE<br>KLEMME<br>ABRAZADERA | 4- 6 |
| 5802-BB | **COVER**<br>COUVERCLE<br>DECKEL<br>CUBIERTA | 1 |
| 5802-BD | **VALVE ASSY, WATER**<br>ENS. DE SOUPAPE<br>VENTIL, VOLLST.<br>CONJUNTO DE VALVULA | 1 |
| 5802-BE | **TUBE, RUBBER**<br>TUBE<br>ROHR<br>TUBO | 6- 7 |
| 5802-BH | **BRACKET SUB-ASSY, HEATER**<br>SOUS-ENS. DE SUPPORT<br>TRAGER-TEILGRUPPE<br>SUBCONJUNTO DE LA SOPORTE | 1 |
| 5802-BM | **PLATE**<br>PLAQUE<br>PLATTE<br>PLACA | 1 |
| 5802-BR | **BRACKET**<br>SUPPORT<br>TRAGER<br>SOPORTE | 1 |
| 5802-CC | **PACKING**<br>CALE<br>DICHTUNG<br>EMPAQUETADURA | 2 |
| 5802-CD | **KNOB**<br>BOULE<br>KNOPF<br>MANDO | 2 |
| 5802-CE | **CLAMP**<br>PINSE<br>KLEMME<br>ABRAZADERA | 1 |
| 5802-CS | **HOSE**<br>FLEXIBLE<br>SCHLAUCH<br>MANGUERA | 1 |
| 5802-CU | **HOSE, DEFROSTER**<br>FLEXIBLE<br>SCHLAUCH<br>MANGUERA | 1 |
| 5802-DA | **SPONGE**<br>EPONGE<br>SCHWAMM<br>ESPONJA | 1 |
| 5802-DO | **DUCT**<br>CONDUIT<br>KANAL<br>CONDUCTO | 1 |
| 5802-DU | **CASE SUB-ASSY, HEATER**<br>SOUS-ENS. DE CARTER<br>GEHAUSE-TEILGRUPPE<br>SUBCONJUNTO DE LA CAJA | 1 |
| 5802-DV | **CASE SUB-ASSY, HEATER**<br>SOUS-ENS. DE CARTER<br>GEHAUSE-TEILGRUPPE<br>SUBCONJUNTO DE LA CAJA | 1 |
| 5802-EL | **RESISTOR**<br>RESISTANCE<br>WIDERSTAND<br>RESIDTOR | 1 |

## 5802 HEATER / CHAUFFAGE / HEIZUNG / CALEFACTOR

| PART NAME CODE | PART NAME | QTY |
|---|---|---|
| 5802-EY | **GRILLE ASSY**<br>ENS. DE GRILLE<br>KUHLERGITTER, VOLLST.<br>CONJUNTO DE LA REJILLA | 1 |
| 5802-FH | **NUT**<br>ECROU<br>MUTTER<br>TUERCA | 3 |
| 5802-FK | **UNION**<br>RACCORD<br>ROHRVERSCHRAUBUNG<br>UNION | 2 |
| 5802-FX | **BOLT**<br>BOULON<br>SCHRAUBE<br>PERNO | 2 |
| 5802-FY | **BOLT**<br>BOULON<br>SCHRAUBE<br>PERNO | 3 |
| 5802-GE | **NUT**<br>ECROU<br>MUTTER<br>TUERCA | 1 |
| 5802-GH | **BOLT**<br>BOULON<br>SCHRAUBE<br>PERNO | 2 |
| 5802-GR | **DUCT**<br>CONDUIT<br>KANAL<br>CONDUCTO | 1 |
| 5802-GS | **DUCT**<br>CONDUIT<br>KANAL<br>CONDUCTO | 1 |
| 5802-GU | **PLATE**<br>PLAQUE<br>PLATTE<br>PLACA | 1 |
| 5802-GX | **DUCT**<br>CONDUIT<br>KANAL<br>CONDUCTO | 1 |
| 5802-HA | **PLATE**<br>PLAQUE<br>PLATTE<br>PLACA | 1 |
| 5802-HJ | **CLIP**<br>AGRAFE<br>CLIP<br>FIJADOR | 4- 8 |
| 5802-HK | **CLIP**<br>AGRAFE<br>CLIP<br>FIJADOR | 2 |
| 5802-HX | **WASHER**<br>RODELLE<br>UNTERLEGSCHEIBE<br>ARANDELA | 2 |
| 5802-JG | **NUT**<br>ECROU<br>MUTTER<br>TUERCA | 2 |
| 5802-JH | **RELAY ASSY**<br>ENS. DE RELAIS<br>RELAIS, VOLLST.<br>CONJUNTO DEL RELE | 1 |
| 5802-KE | **BOLT**<br>BOULON<br>SCHRAUBE<br>PERNO | 1- 2 |
| 5802-KU | **SCREW**<br>VIS<br>SCHRAUBE<br>TORNILLO | 2 |
| 5802-LJ | **BRACKET**<br>SUPPORT<br>TRAGER<br>SOPORTE | 1 |

| 5802 | HEATER<br>CHAUFFAGE | HEIZUNG<br>CALEFACTOR |
|---|---|---|

| PART NAME CODE | PART NAME | QTY |
|---|---|---|
| 5802-LV | **WASHER, PLATE**<br>RODELLE<br>UNTERLEGSCHEIBE<br>ARANDELA | 2 |
| 5802-MD | **RING, E**<br>ANNEAU<br>RING<br>ANILLO | 2 |
| 5802-MJ | **SCREW**<br>VIS<br>SCHRAUBE<br>TORNILLO | 4 |
| 5802-MK | **SCREW**<br>VIS<br>SCHRAUBE<br>TORNILLO | 6 |
| 5802-ML | **HOLDER, HEATER**<br>SUPPORT<br>DUSENSTOCR<br>SOPORTE PORTADOR | 1 |
| 5802-MM | **HOLDER, HEATER**<br>SUPPORT<br>DUSENSTOCR<br>SOPORTE PORTADOR | 1 |
| 5802-MN | **PACKING**<br>CALE<br>DICHTUNG<br>EMPAQUETADURA | 2 |
| 5802-MP | **PACKING**<br>CALE<br>DICHTUNG<br>EMPAQUETADURA | 2 |
| 5802-MR | **PACKING**<br>CALE<br>DICHTUNG<br>EMPAQUETADURA | 1 |
| 5802-NW | **TRIM**<br>GARNITURE<br>ZIERSTREIFEN<br>GUARNICION | 1 |
| 5802-PL | **CLIP**<br>AGRAFE<br>CLIP<br>FIJADOR | 6 |
| 5802-PM | **WEATHERSTRIP**<br>BOURRELET D'ETANCHEITE<br>ABDICHTUNGSPROFIL<br>CANAL PARA EL AGUA | 1 |
| 5802-PN | **CUSHION**<br>COUSSIN<br>POLSTER<br>ALMOHADILLA | 1 |


| 5802 | HEATER<br>CHAUFFAGE | HEIZUNG<br>CALEFACTOR |
|---|---|---|


| PART NAME CODE | PART NAME | QTY |
|---|---|---|

| PART NAME CODE | PART NAME | QTY |
|---|---|---|

| 5803 | SENSOR<br>DETECTEUR | SENSOR<br>SENSOR |
|---|---|---|

ATM [L/PICK-UP SENSOR]

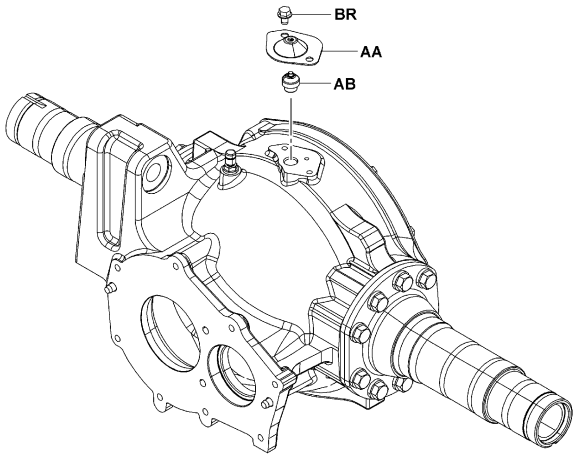


5803-151

5803-151_

10N,15N,18N,20N (SAS, SPEED METER) [PICK-UP SENSOR]

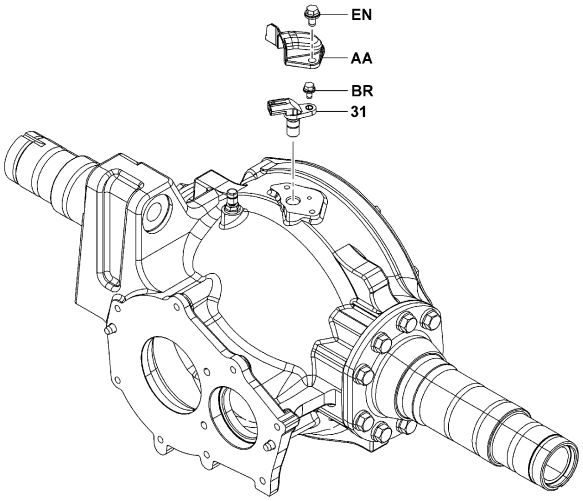


5803-150

5803-150_

| 5803 | SENSOR<br>DETECTEUR | SENSOR<br>SENSOR |
|---|---|---|

25N,30N,J35N (SAS, SPEED METER) [PICK-UP SENSOR]

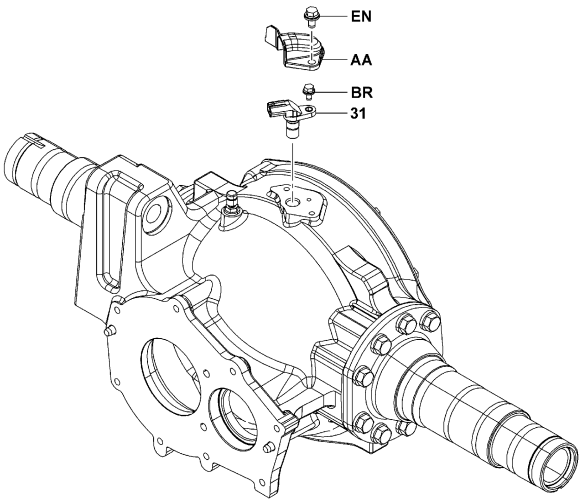


5803-150

5803-150_

K20N,K25N,K30N [PICK-UP SENSOR]

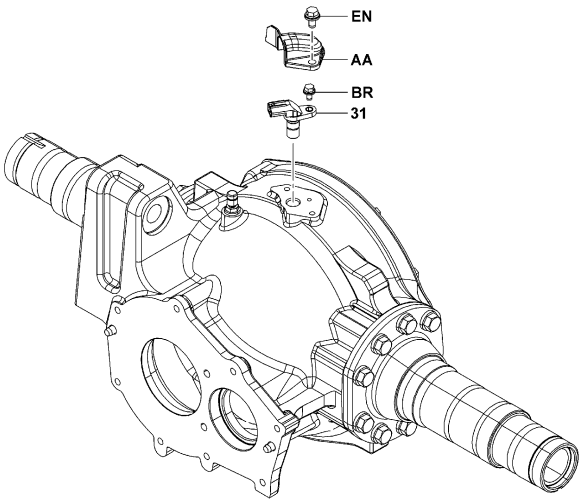


5803-150

5803-150_

| 5803 | SENSOR<br>DETECTEUR | SENSOR<br>SENSOR |
|---|---|---|

10N,15N,18N,20N,25N,30N..V (SAS) [HEIGHT SENSOR]

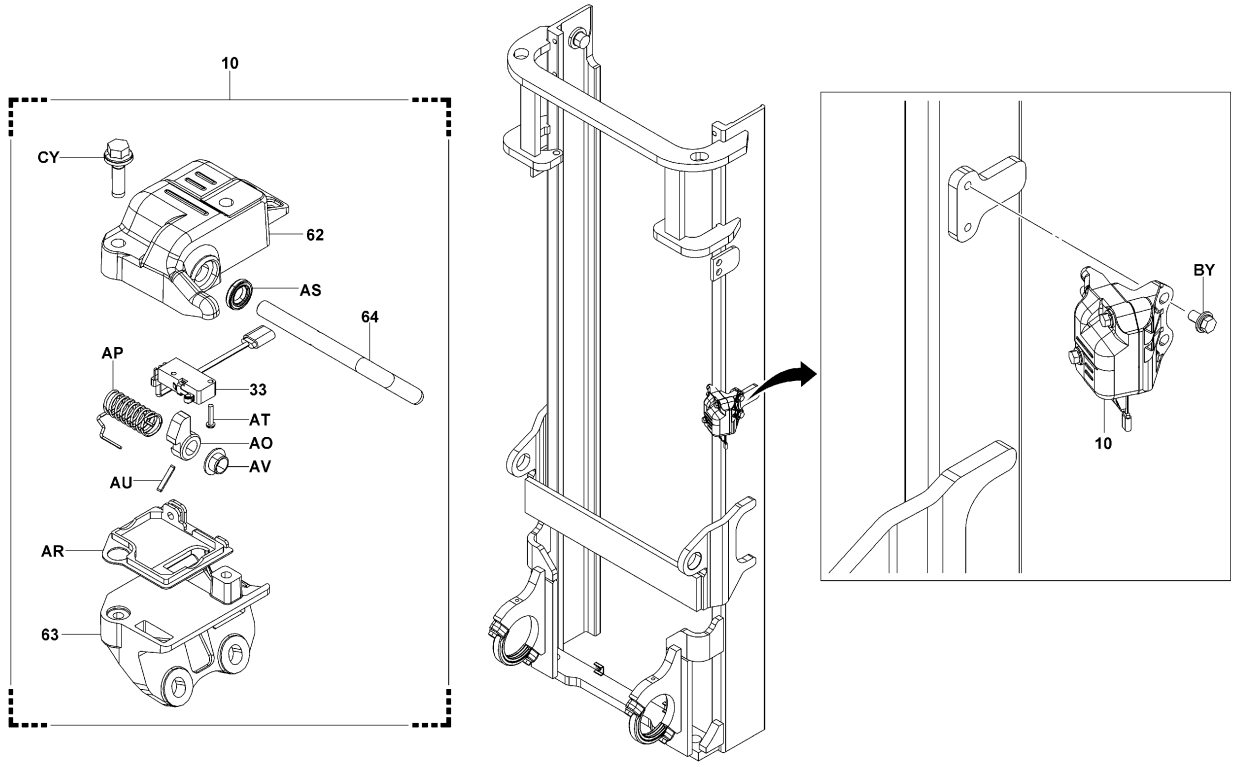


5803-534

5803-534_

| 5803 | SENSOR<br>DETECTEUR | SENSOR<br>SENSOR |
|---|---|---|

K20N,K25N,K30N..V [HEIGHT SENSOR]

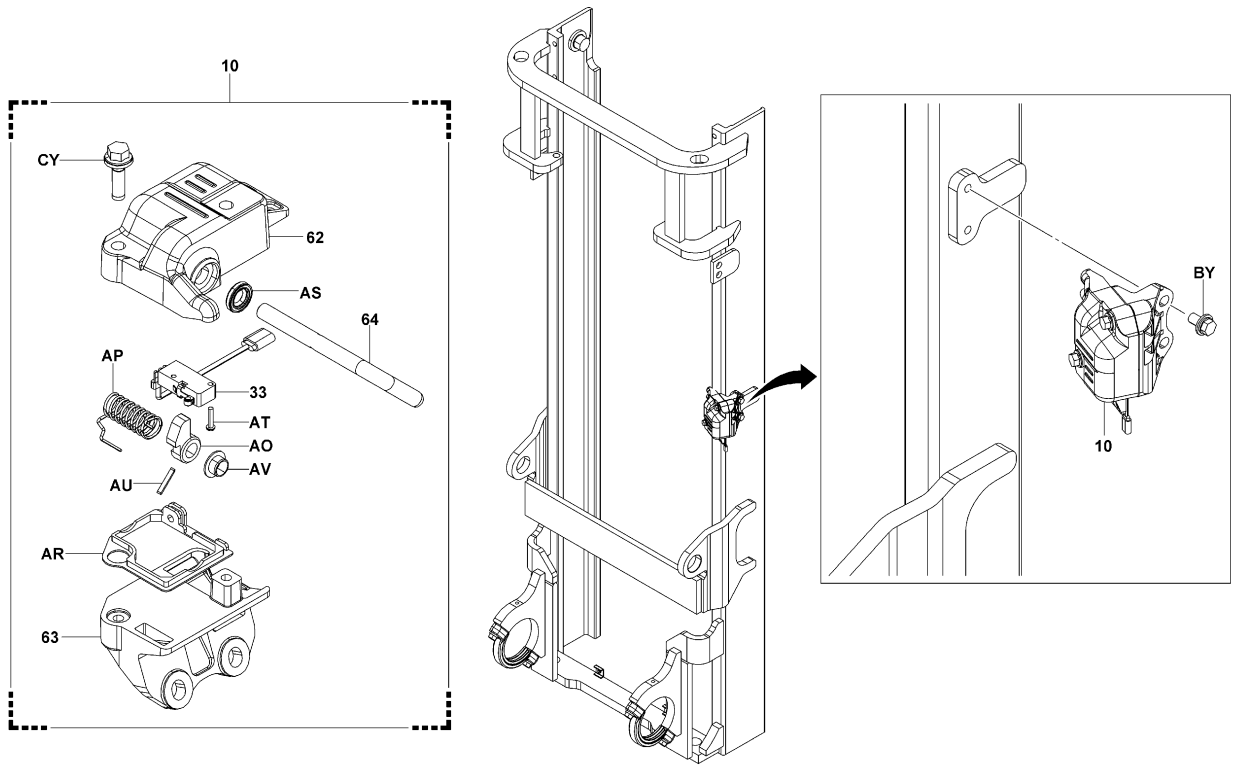


5803-534

5803-534_

| 5803 | SENSOR<br>DETECTEUR | SENSOR<br>SENSOR |
|---|---|---|

J35N..V (SAS) [HEIGHT SENSOR]

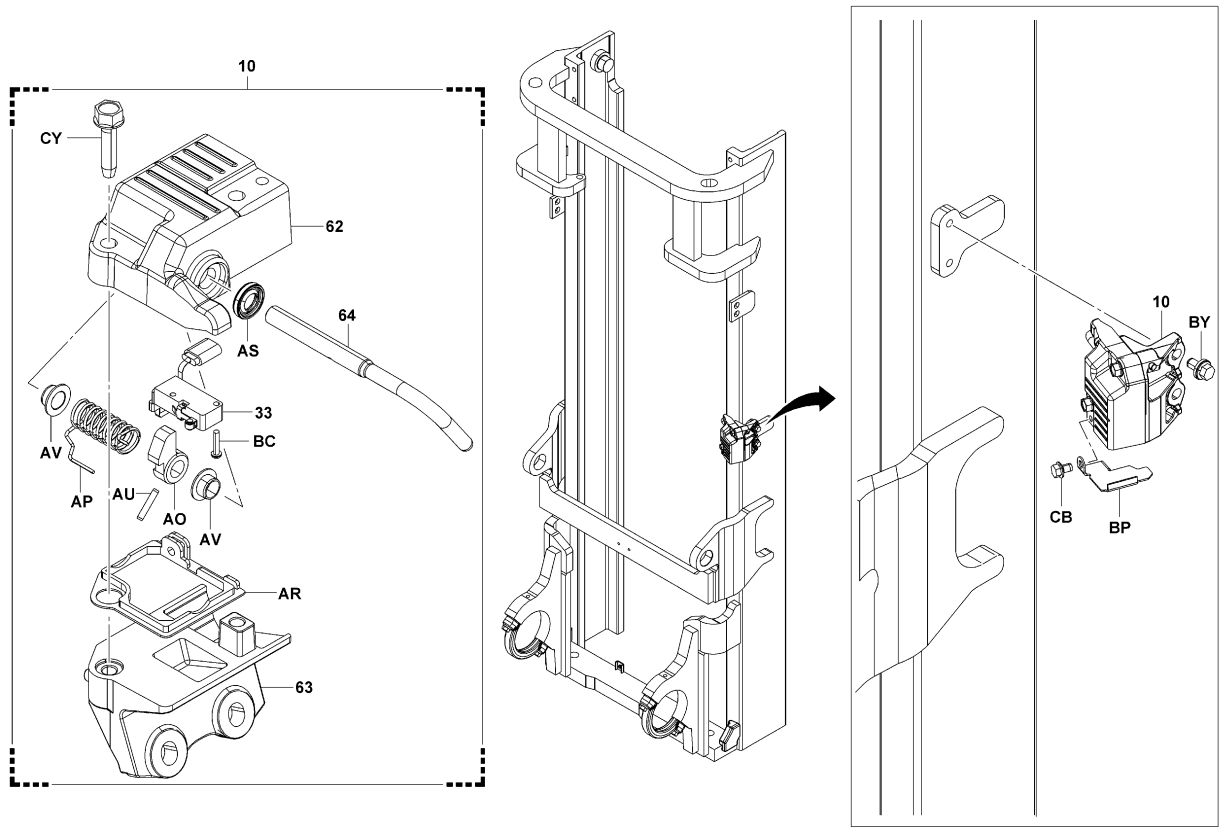


5803-535

5803-535_

| 5803 | SENSOR<br>DETECTEUR | SENSOR<br>SENSOR |
|---|---|---|

10N,15N,18N,20N,25N,30N..FSV (SAS) [HEIGHT SENSOR]

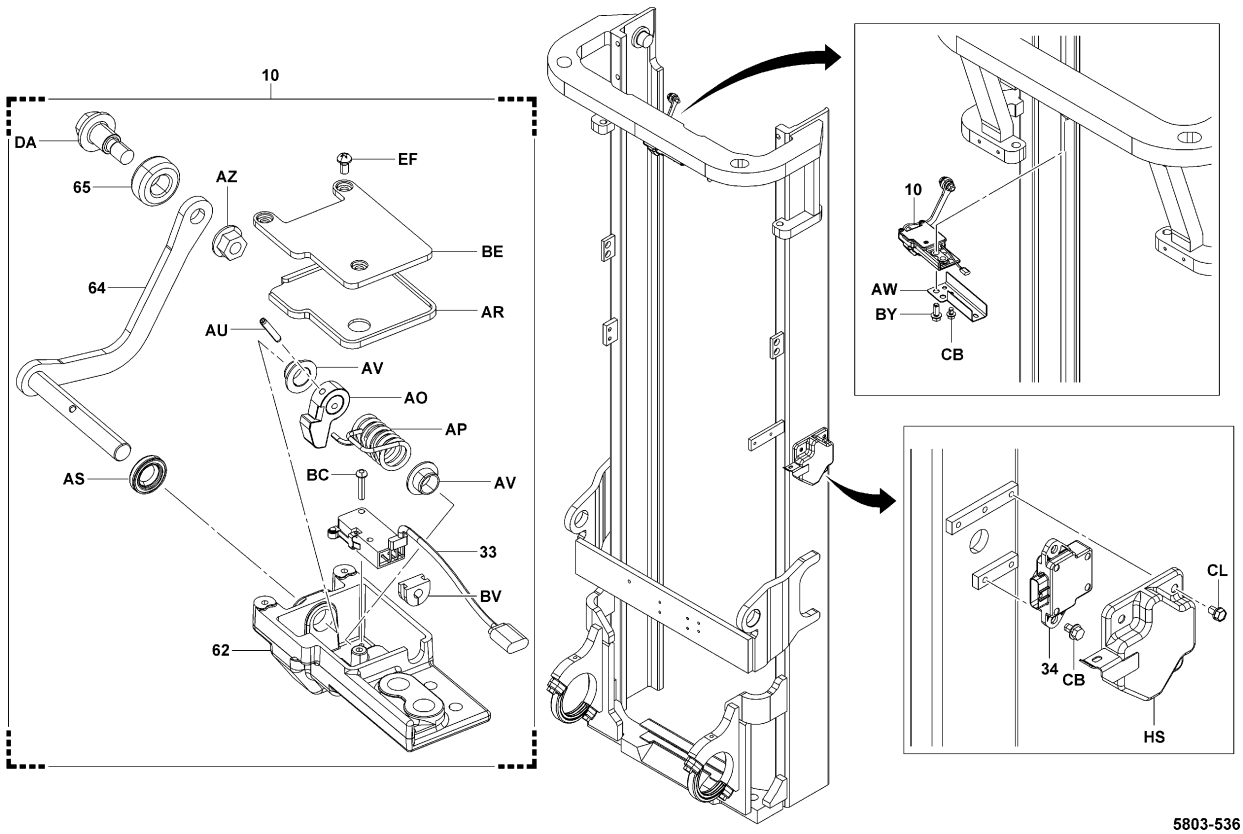


5803-536

5803-536_

| 5803 | SENSOR<br>DETECTEUR | SENSOR<br>SENSOR |
|---|---|---|

K20N,K25N,K30N..FSV [HEIGHT SENSOR]

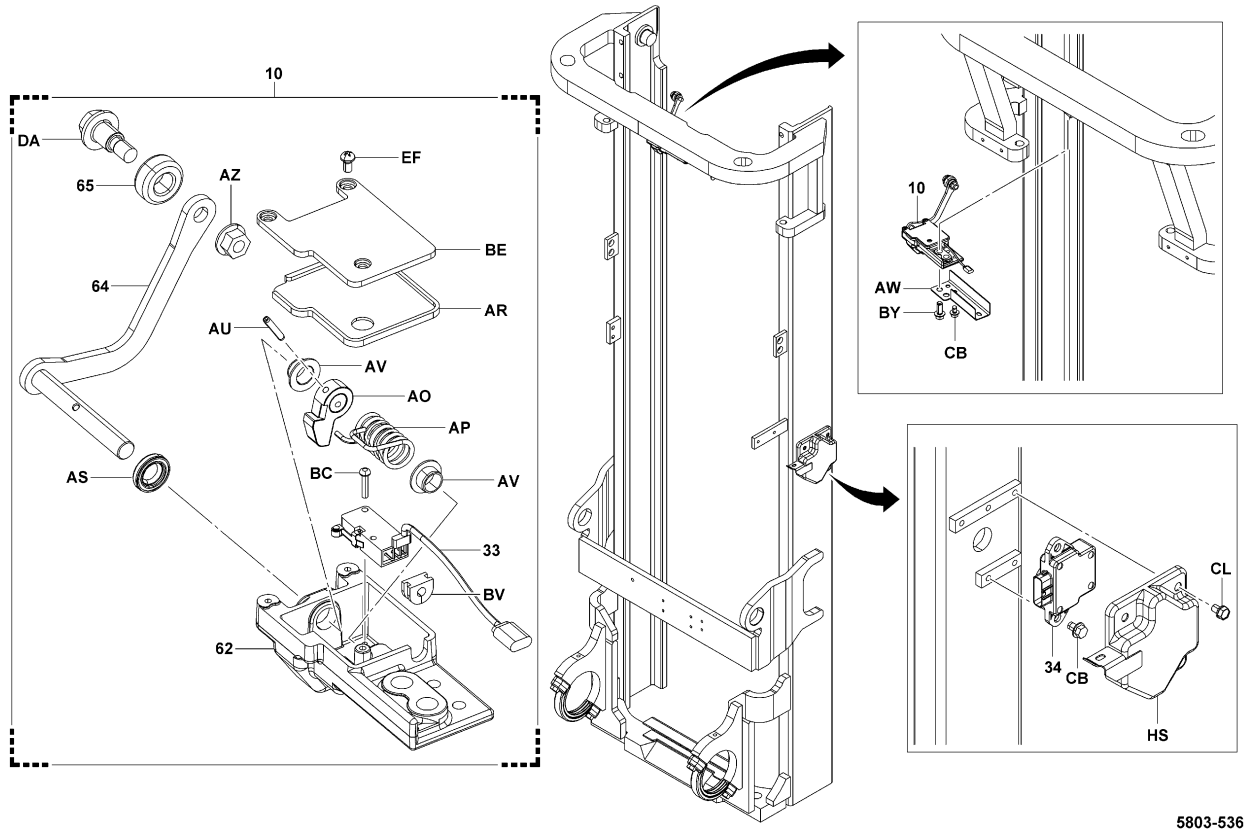


5803-536

5803-536_

| 5803 | SENSOR<br>DETECTEUR | SENSOR<br>SENSOR |
|---|---|---|

J35N..FSV (SAS) [HEIGHT SENSOR]

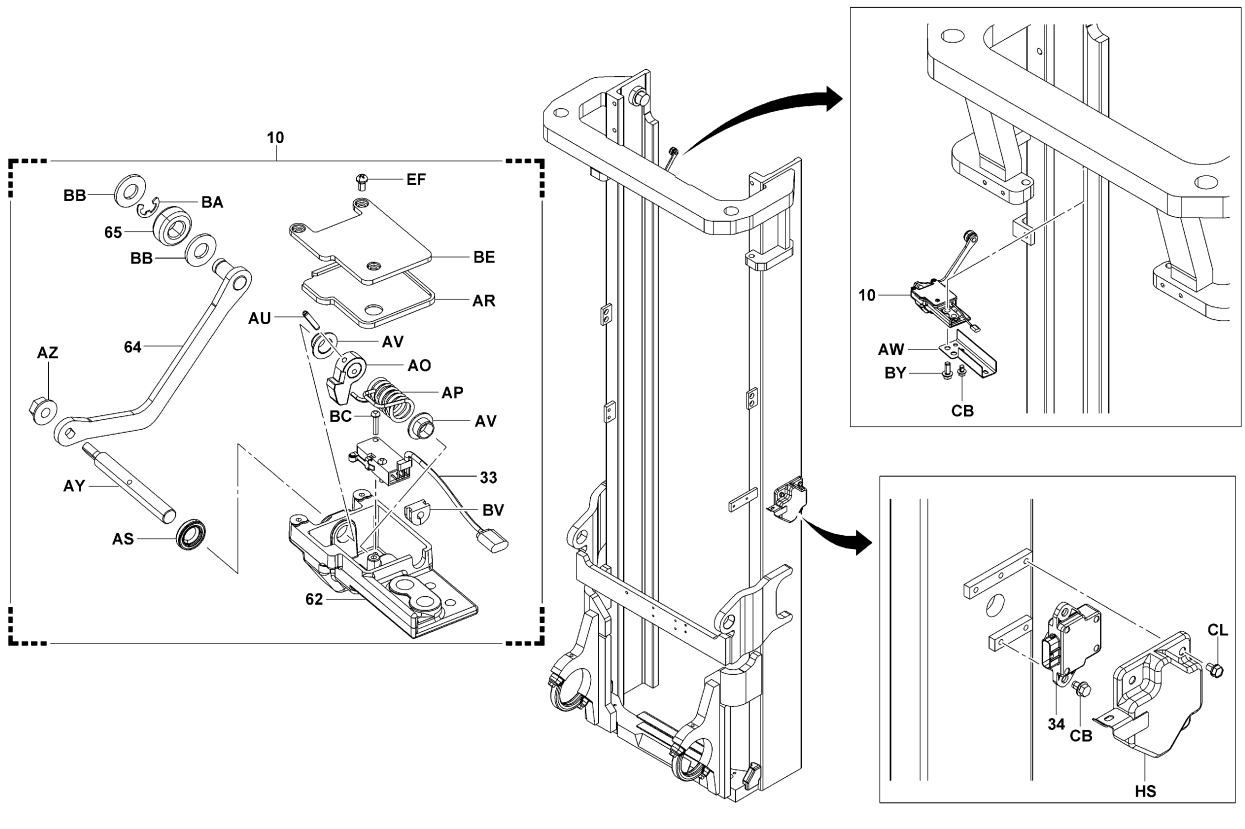


5803-537

5803-537_

| 5803 | SENSOR<br>DETECTEUR | SENSOR<br>SENSOR |
|---|---|---|

10N,15N,18N,20N,25N..FV (SAS) [HEIGHT SENSOR]

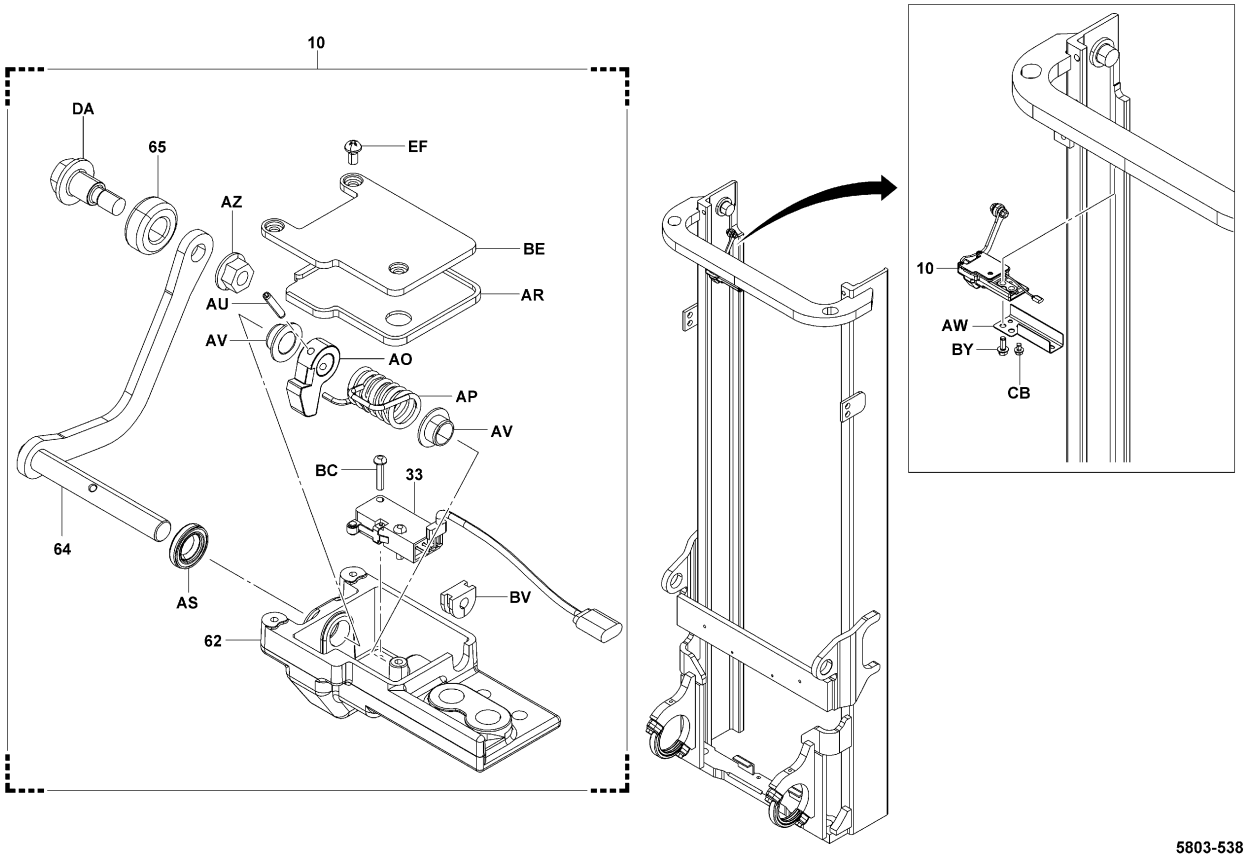


5803-538
5803-538_

| 5803 | SENSOR<br>DETECTEUR | SENSOR<br>SENSOR |
|---|---|---|

30N,J35N..FV (SAS) [HEIGHT SENSOR]

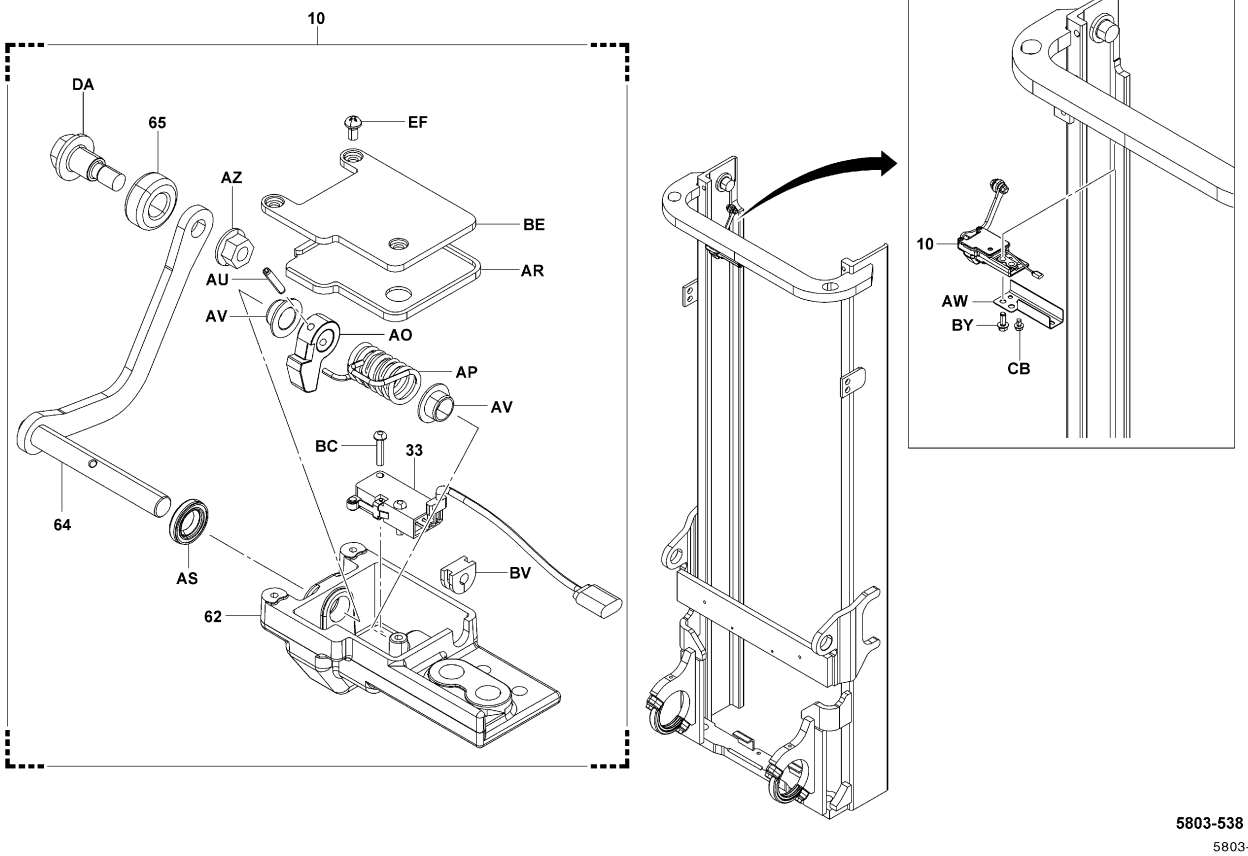


5803-538
5803-538_

| 5803 | SENSOR<br>DETECTEUR | SENSOR<br>SENSOR |
|---|---|---|

K20N,K25N,K30N..FV [HEIGHT SENSOR]

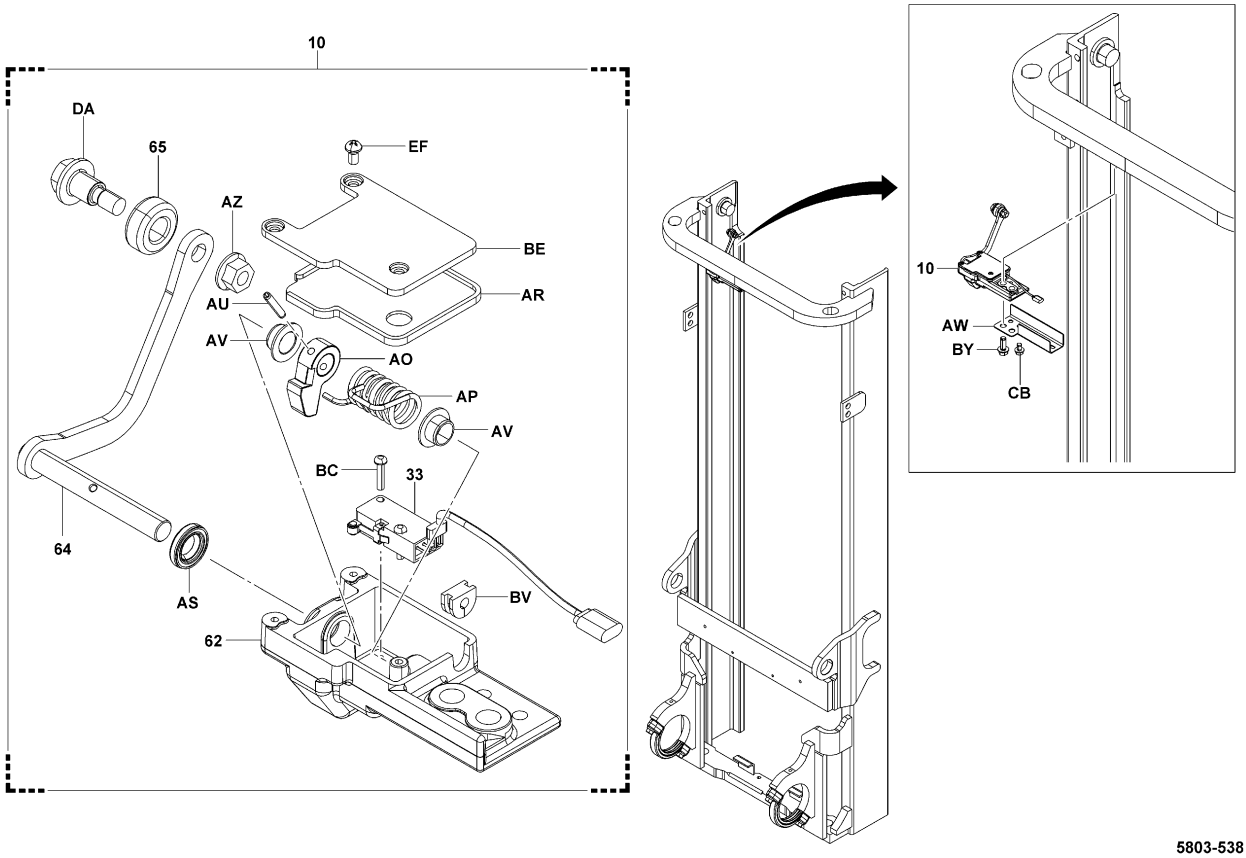


5803-538

5803-538_

| 5803 | SENSOR<br>DETECTEUR | SENSOR<br>SENSOR |
|---|---|---|

ATM [PRESSURE SENSOR]

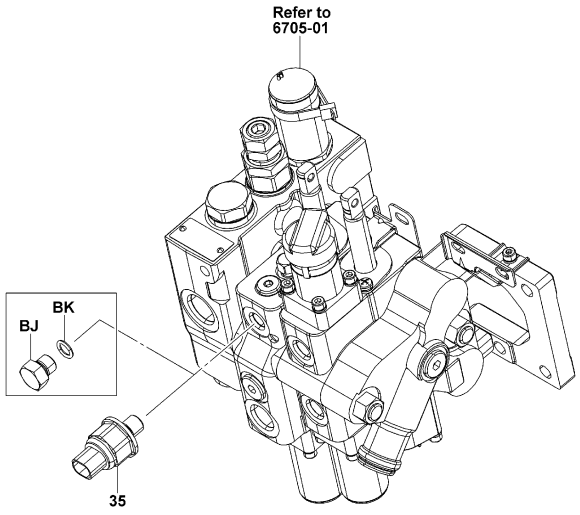


5803-156

5803-156_

10N,15N,18N,20N,25N,30N,J35N (SAS) [TILT SENSOR]

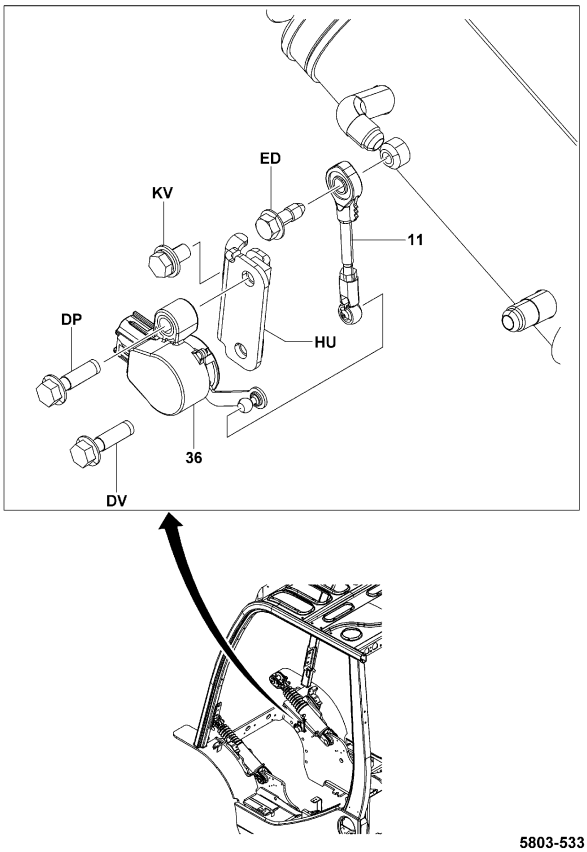


5803-533

5803-533_

| 5803 | SENSOR<br>DETECTEUR | SENSOR<br>SENSOR |
|---|---|---|

**K20N,K25N,K30N [TILT SENSOR]**

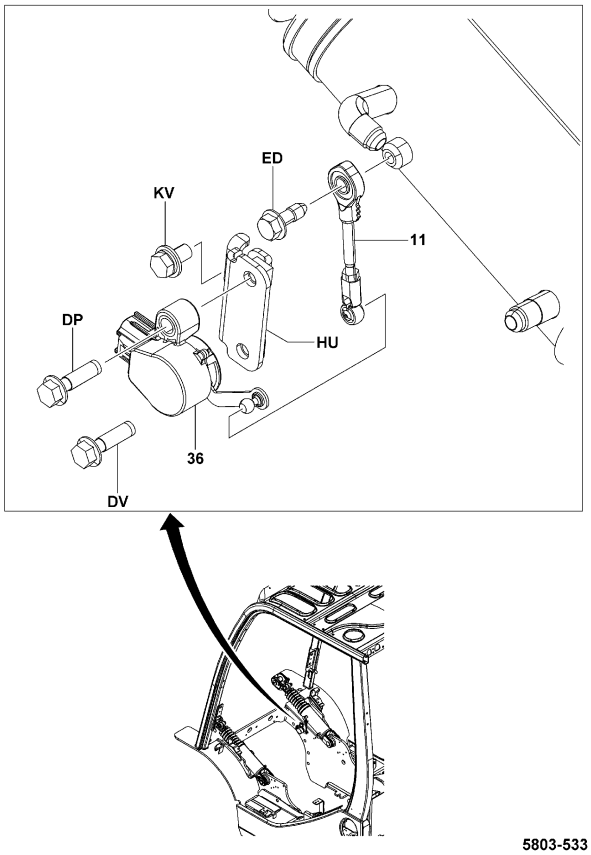


5803-533

5803-533_

**10N,15N,18N,20N,25N,30N,J35N (SAS) [YAWRATE SENSOR]**

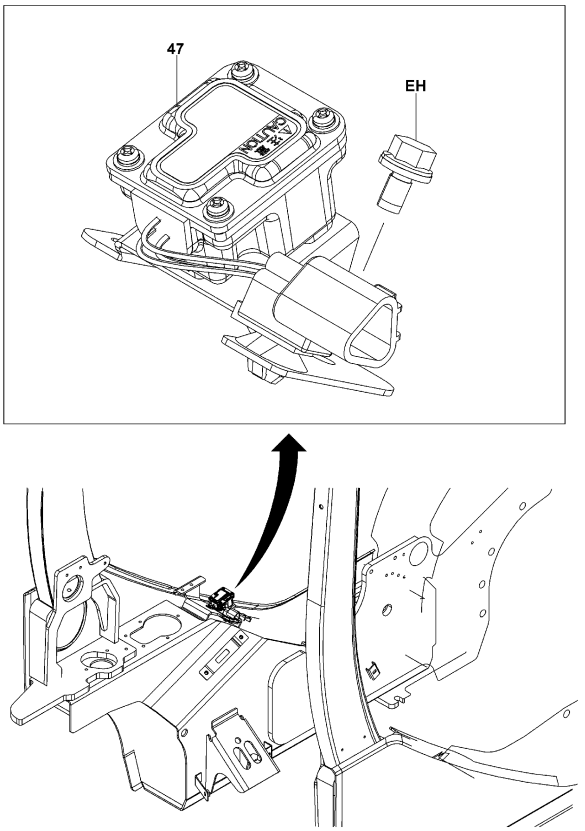


5803-158A

5803-158A

| 5803 | SENSOR<br>DETECTEUR | SENSOR<br>SENSOR |
|---|---|---|

**K20N,K25N,K30N [YAWRATE SENSOR]**

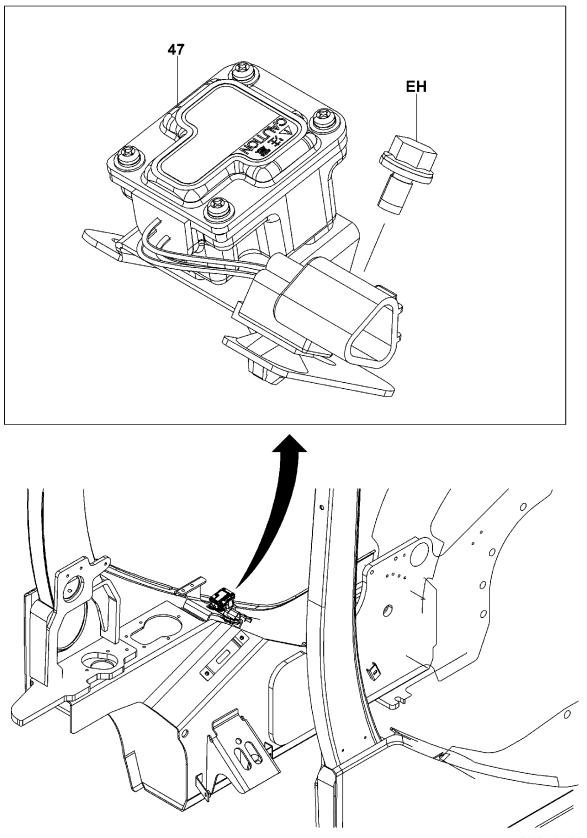


5803-158A

5803-158A

**FSV,V "H4500-H6000" [SWING ANGLE]**

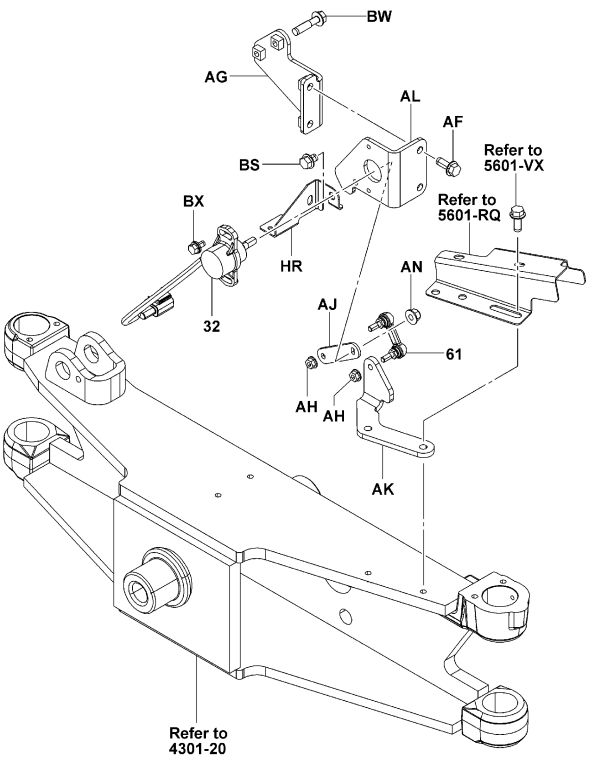


5803-160

5803-160_

| 5803 | SENSOR<br>DETECTEUR | SENSOR<br>SENSOR |
|---|---|---|

10N,15N,18N..FSV,V "H4500-H6000"

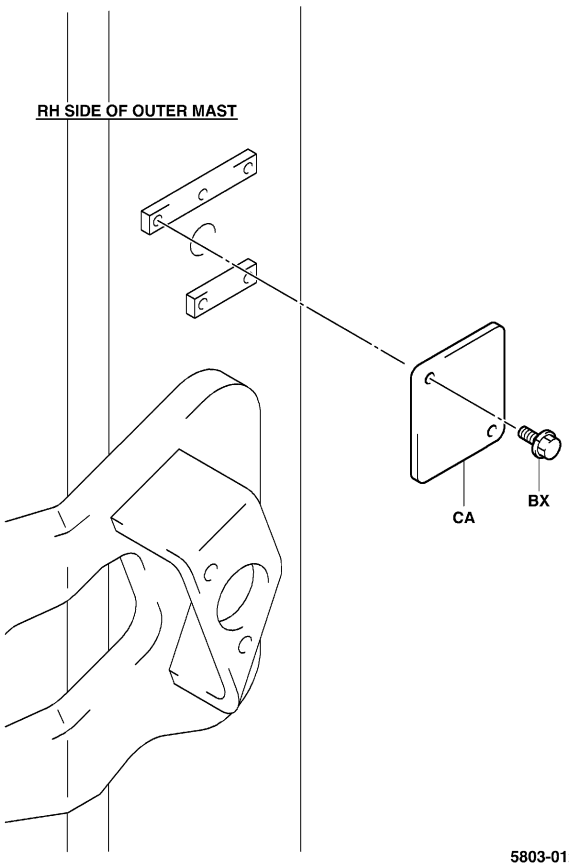


5803-012A
5803-012A

20N,25N..FSV,V "H4500-H6000"

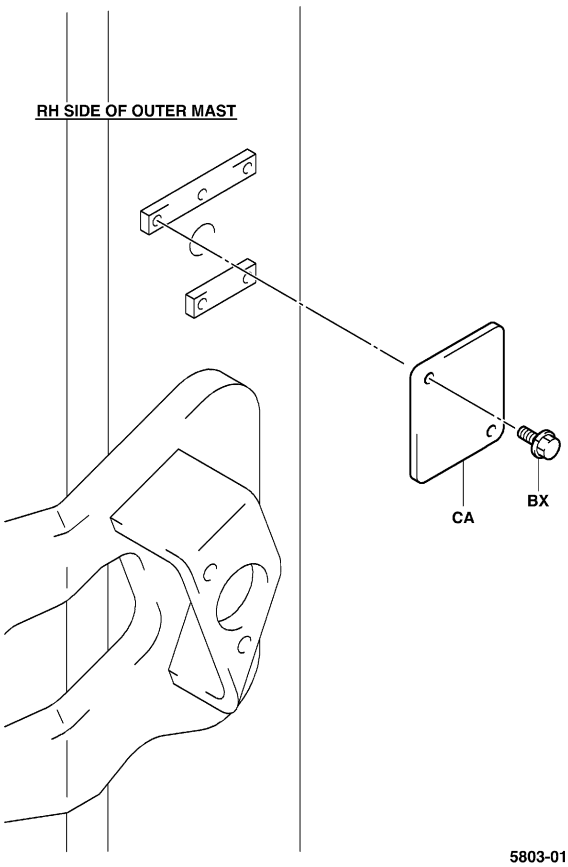


5803-012A
5803-012A

| 5803 | SENSOR<br>DETECTEUR | SENSOR<br>SENSOR |
|---|---|---|

30N,J35N..FSV,V "H4500-H6000"

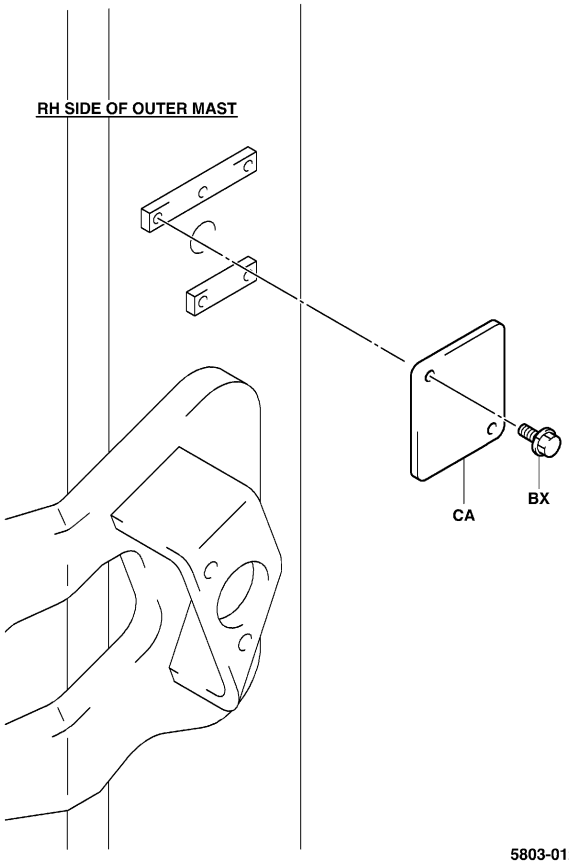


5803-012A
5803-012A

K20N,K25N,K30N..FSV,V (SPL DOUBLE) "H4500-H6000"

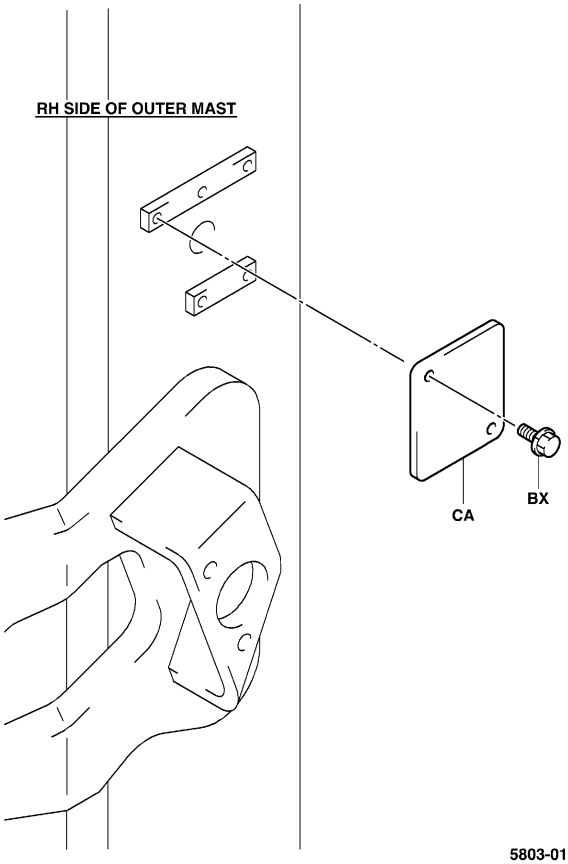


5803-012A
5803-012A

| 5803 | SENSOR<br>DETECTEUR | SENSOR<br>SENSOR |
|---|---|---|

**K20N,K25N,K30N..FSV,V (STD DOUBLE) "H4500-H6000"**

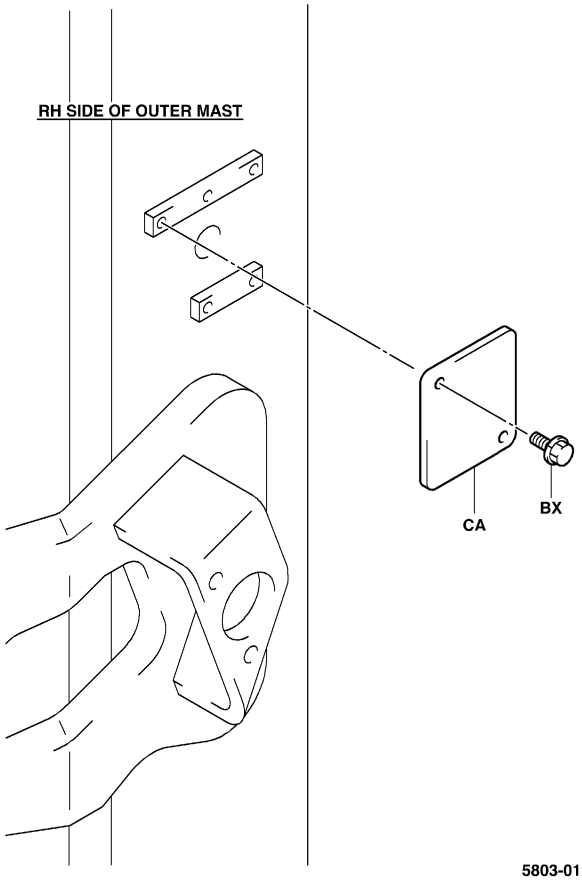


5803-012A

5803-012A

| 5803 | SENSOR<br>DETECTEUR | SENSOR<br>SENSOR |
|---|---|---|

| PART NAME CODE | PART NAME | QTY |
|---|---|---|
| 5803-10 | **SENSOR ASSY, HEIGHT**<br>ENS. DE DETECTEUR<br>SENSOR, VOLLST.<br>CONJUNTO DEL SENSOR | 1 |
| 5803-11 | **ROD ASSY, TILT SENSOR**<br>ENS. DE BIELLE<br>STANGEN, VOLLST.<br>CONJUNTO DE LA VARILLA | 1 |
| 5803-31 | **SENSOR ASSY, PICK UP**<br>ENS. DE DETECTEUR<br>SENSOR, VOLLST.<br>CONJUNTO DEL SENSOR | 1 |
| 5803-32 | **SENSOR ASSY, SWING ANGLE**<br>ENS. DE DETECTEUR<br>SENSOR, VOLLST.<br>CONJUNTO DEL SENSOR | 1 |
| 5803-33 | **SWITCH ASSY, HEIGHT**<br>ENS. DE INTERRUPTEUR<br>SCHALTER, VOLLST.<br>CONJUNTO DEL INTERRUPUPTOR | 1 |
| 5803-34 | **SENSOR ASSY, ULTRA SONIC**<br>ENS. DE DETECTEUR<br>SENSOR, VOLLST.<br>CONJUNTO DEL SENSOR | 1 |
| 5803-35 | **SENSOR ASSY, PRESSURE**<br>ENS. DE DETECTEUR<br>SENSOR, VOLLST.<br>CONJUNTO DEL SENSOR | 1 |
| 5803-36 | **SENSOR ASSY, ROTARY POSITION**<br>ENS. DE DETECTEUR<br>SENSOR, VOLLST.<br>CONJUNTO DEL SENSOR | 1 |
| 5803-47 | **SENSOR ASSY, YAWRATE**<br>ENS. DE DETECTEUR<br>SENSOR, VOLLST.<br>CONJUNTO DEL SENSOR | 1 |
| 5803-61 | **JOINT, BALL**<br>RACCORD<br>GELENK<br>JUNTA | 1 |
| 5803-62 | **BOX, HEIGHT SENSOR**<br>BOITIER<br>KASTEN<br>CAJA | 1 |
| 5803-63 | **BRACKET, HEIGHT SENSOR**<br>SUPPORT<br>TRAGER<br>SOPORTE | 1 |
| 5803-64 | **LEVER**<br>LEVIER<br>HEBEL<br>PALANCA | 1 |
| 5803-65 | **ROLLER**<br>GALET<br>ROLLE<br>RODILLO | 1 |
| 5803-AA | **COVER**<br>COUVERCLE<br>DECKEL<br>CUBIERTA | 1 |
| 5803-AB | **PLUG**<br>BOUCHON<br>STOPFEN<br>TAPON | 1 |
| 5803-AC | **RING, O**<br>ANNEAU<br>RING<br>ANILLO | 1 |
| 5803-AO | **PLATE**<br>PLAQUE<br>PLATTE<br>PLACA | 1 |
| 5803-AP | **SPRING**<br>RESSORT<br>FEDER<br>RESORTE | 1 |
| 5803-AR | **SEAL**<br>JOINT<br>ABDICHTUNG<br>SELLO | 1 |

## 5803

**SENSOR**
**DETECTEUR**

**SENSOR**
**SENSOR**

| PART NAME CODE | PART NAME | QTY |
|---|---|---|
| 5803-AS | **SEAL, OIL**<br>JOINT<br>ABDICHTUNG<br>SELLO | 1 |
| 5803-AU | **PIN, SPRING**<br>GOUPILLE<br>STIFT<br>PASADOR | 1 |
| 5803-AV | **BUSHING**<br>BAGE<br>BUCHSE<br>MANGUITO | 1- 2 |
| 5803-AW | **COVER**<br>COUVERCLE<br>DECKEL<br>CUBIERTA | 1 |
| 5803-AY | **ROD**<br>BIELLE<br>STANGE<br>VARILLA | 1 |
| 5803-AZ | **NUT**<br>ECROU<br>MUTTER<br>TUERCA | 1 |
| 5803-BA | **RING, E**<br>ANNEAU<br>RING<br>ANILLO | 1 |
| 5803-BB | **WASHER, PLATE**<br>RODELLE<br>UNTERLEGSCHEIBE<br>ARANDELA | 2 |
| 5803-BC | **SCREW**<br>VIS<br>SCHRAUBE<br>TORNILLO | 2 |
| 5803-BE | **PLATE**<br>PLAQUE<br>PLATTE<br>PLACA | 1 |
| 5803-BJ | **FITTING**<br>RACCORD<br>ANSCHLUSSTUCK<br>ACOPLADOR | 1 |
| 5803-BK | **RING, O**<br>ANNEAU<br>RING<br>ANILLO | 1 |
| 5803-BP | **PLATE**<br>PLAQUE<br>PLATTE<br>PLACA | 1 |
| 5803-BR | **BOLT**<br>BOULON<br>SCHRAUBE<br>PERNO | 1- 2 |
| 5803-BV | **SEAL**<br>JOINT<br>ABDICHTUNG<br>SELLO | 1 |
| 5803-BY | **BOLT**<br>BOULON<br>SCHRAUBE<br>PERNO | 2 |
| 5803-CA | **PLATE**<br>PLAQUE<br>PLATTE<br>PLACA | 1 |
| 5803-CB | **BOLT**<br>BOULON<br>SCHRAUBE<br>PERNO | 1- 2 |
| 5803-CL | **BOLT**<br>BOULON<br>SCHRAUBE<br>PERNO | 2 |
| 5803-CM | **INSULATOR**<br>ISOLATEUR<br>ISOLATOR<br>AISLADOR | 3 |

## 5803

**SENSOR**
**DETECTEUR**

**SENSOR**
**SENSOR**

| PART NAME CODE | PART NAME | QTY |
|---|---|---|
| 5803-CV | **COVER**<br>COUVERCLE<br>DECKEL<br>CUBIERTA | 1 |
| 5803-CY | **BOLT**<br>BOULON<br>SCHRAUBE<br>PERNO | 2 |
| 5803-DA | **SHAFT**<br>ARBRE<br>WELLE<br>EJE | 1 |
| 5803-DP | **BOLT**<br>BOULON<br>SCHRAUBE<br>PERNO | 2 |
| 5803-EA | **BRACKET**<br>SUPPORT<br>TRAGER<br>SOPORTE | 1 |
| 5803-ED | **BOLT**<br>BOULON<br>SCHRAUBE<br>PERNO | 1 |
| 5803-EF | **SCREW**<br>VIS<br>SCHRAUBE<br>TORNILLO | 3 |
| 5803-EH | **BOLT**<br>BOULON<br>SCHRAUBE<br>PERNO | 2 |
| 5803-EN | **BOLT**<br>BOULON<br>SCHRAUBE<br>PERNO | 2 |
| 5803-ER | **SCREW**<br>VIS<br>SCHRAUBE<br>TORNILLO | 4 |
| 5803-EV | **SCREW**<br>VIS<br>SCHRAUBE<br>TORNILLO | 3 |
| 5803-HU | **BRACKET, TILT SENSOR**<br>SUPPORT<br>TRÄGER<br>SOPORTE | 1 |
| 5803-HX | **BOARD, YAWRATE**<br>PANNEAU<br>BRETT<br>TABLERO | 1 |
| 5803-HY | **CASE**<br>CARTER<br>GEHÄUSE<br>CAJA | 1 |
| 5803-HZ | **GASKET**<br>JOINT<br>DICHTUNG<br>EMPAQUETADURA | 1 |
| 5803-JA | **PLATE, CAUTION**<br>PLAQUE<br>PLATTE<br>PLACA | 1 |
| 5803-JB | **PLATE, NAME**<br>PLAQUE<br>PLATTE<br>PLACA | 1 |
| 5803-KV | **BOLT**<br>BOULON<br>SCHRAUBE<br>PERNO | 1 |

| 6101 | MAST<br>MAT | MAST<br>MASTIL |
|---|---|---|

FSV

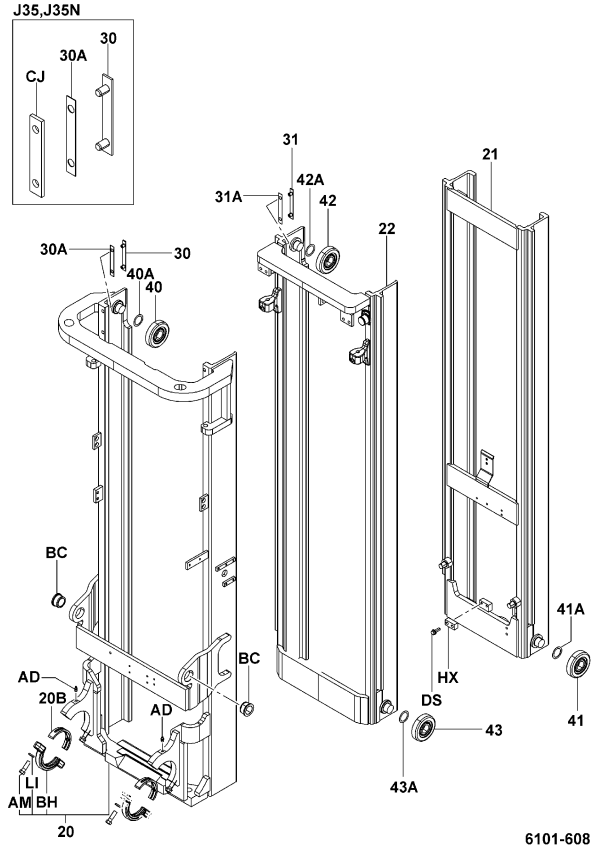


6101-608

6101-608_

FV

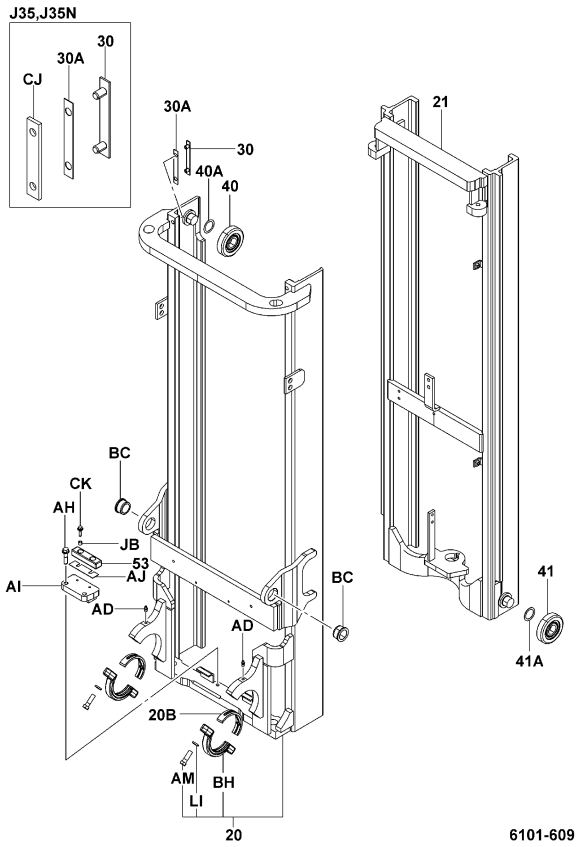


6101-609

6101-609_

| 6101 | MAST<br>MAT | MAST<br>MASTIL |
|---|---|---|

V

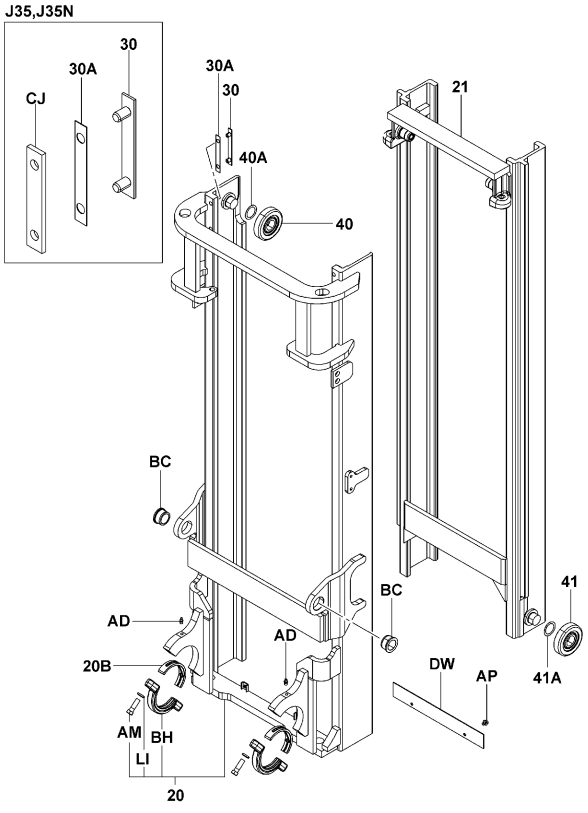


6101-607

6101-607_

| 6101 | MAST<br>MAT | MAST<br>MASTIL |
|---|---|---|

| PART NAME CODE | PART NAME | QTY |
|---|---|---|
| 6101-20 | **MAST SUB-ASSY, OUTER**<br>SOUS-ENS. DE ENS.DE MAT<br>MAST-TEILGRUPPE<br>SUBCONJUNTO DEL MASTIL | 1- 2 |
| 6101-20B | **BUSHING, MAST SUPPORT**<br>BAGE<br>BUCHSE<br>MANGUITO | 2 |
| 6101-21 | **MAST SUB-ASSY, INNER**<br>SOUS-ENS. DE ENS.DE MAT<br>MAST-TEILGRUPPE<br>SUBCONJUNTO DEL MASTIL | 1 |
| 6101-22 | **MAST SUB-ASSY, MIDDLE**<br>SOUS-ENS. DE ENS.DE MAT<br>MAST-TEILGRUPPE<br>SUBCONJUNTO DEL MASTIL | 1 |
| 6101-30 | **STRIP SUB-ASSY, OUTER MAST**<br>SOUS-ENS. DE BANDE<br>KLEMMENTRAGER-TEILGRUPPE<br>SUBCONJUNTO DE FRANJA | 2 |
| 6101-30A | **SHIM, OUTER MAST STRIP**<br>CALE<br>AUSGLEICHSCHEIBE<br>CALCE | 99 |
| 6101-31 | **STRIP SUB-ASSY, MIDDLE MAST**<br>SOUS-ENS. DE BANDE<br>KLEMMENTRAGER-TEILGRUPPE<br>SUBCONJUNTO DE FRANJA | 2 |
| 6101-31A | **SHIM, MIDDLE MAST STRIP**<br>CALE<br>AUSGLEICHSCHEIBE<br>CALCE | 99 |
| 6101-40 | **ROLLER, LIFT (FOR OUTER MAST)**<br>GALET<br>ROLLE<br>RODILLO | 2 |
| 6101-40A | **SHIM, LIFT ROLLER (FOR OUTER MAST)**<br>CALE<br>AUSGLEICHSCHEIBE<br>CALCE | 99 |
| 6101-41 | **ROLLER, LIFT (FOR INNER MAST)**<br>GALET<br>ROLLE<br>RODILLO | 2 |
| 6101-41A | **SHIM, LIFT ROLLER (FOR INNER MAST)**<br>CALE<br>AUSGLEICHSCHEIBE<br>CALCE | 99 |
| 6101-42 | **ROLLER, LIFT (FOR MIDDLE MAST)**<br>GALET<br>ROLLE<br>RODILLO | 2 |
| 6101-42A | **SHIM, LIFT ROLLER (FOR MIDDLE MAST)**<br>CALE<br>AUSGLEICHSCHEIBE<br>CALCE | 99 |
| 6101-43 | **ROLLER, LIFT (FOR MIDDLE MAST)**<br>GALET<br>ROLLE<br>RODILLO | 2 |
| 6101-43A | **SHIM, LIFT ROLLER (FOR MIDDLE MAST)**<br>CALE<br>AUSGLEICHSCHEIBE<br>CALCE | 99 |
| 6101-53 | **CUSHION, MAST, INNER MAST**<br>COUSSIN<br>POLSTER<br>ALMOHADILLA | 1 |
| 6101-AD | **FITTING, GREASE**<br>RACCORD<br>ANSCHLUSSTUCK<br>ACOPLADOR | 2 |
| 6101-AH | **BOLT**<br>BOULON<br>SCHRAUBE<br>PERNO | 2 |
| 6101-AI | **STOPPER**<br>BUTEE<br>ANSCHLAG<br>TOPE | 1 |

| 6101 | MAST<br>MAT | MAST<br>MASTIL |
|---|---|---|

| PART NAME CODE | PART NAME | QTY |
|---|---|---|
| 6101-AJ | **SHIM, STOPPER**<br>CALE<br>AUSGLEICHSCHEIBE<br>CALCE | 99 |
| 6101-AM | **BOLT**<br>BOULON<br>SCHRAUBE<br>PERNO | 2- 4 |
| 6101-AP | **BOLT**<br>BOULON<br>SCHRAUBE<br>PERNO | 2 |
| 6101-BC | **BUSHING**<br>BAGUE<br>BUCHSE<br>BUJE | 2 |
| 6101-BH | **CAP, MAST SUPPORT**<br>CAPUCHON<br>KAPPE<br>TAPA | 2 |
| 6101-CJ | **PLATE**<br>PLAQUE<br>PLATTE<br>PLACA | 2 |
| 6101-CK | **BOLT**<br>BOULON<br>SCHRAUBE<br>PERNO | 2 |
| 6101-DS | **BOLT**<br>BOULON<br>SCHRAUBE<br>PERNO | 2 |
| 6101-DW | **COVER, HOSE**<br>COUVERCLE<br>DECKEL<br>CUBIERTA | 1 |
| 6101-HX | **PLATE**<br>PLAQUE<br>PLATTE<br>PLACA | 1 |
| 6101-JB | **COLLAR**<br>COLLIER<br>BUCHSE<br>COLLAR | 2 |
| 6101-LI | **WASHER, SPRING**<br>RODELLE<br>UNTERLEGSCHEIBE<br>ARANDELA | 4 |

| 6301 | LIFT BRACKET & FORK<br>FOURCHE & SUPPORT DE LEVEE | GABELTRÄGER & GABEL<br>HORQUILLA Y MENSULA DE ELEVACION |
|---|---|---|

FSV..10N,15N,18N [W0920]

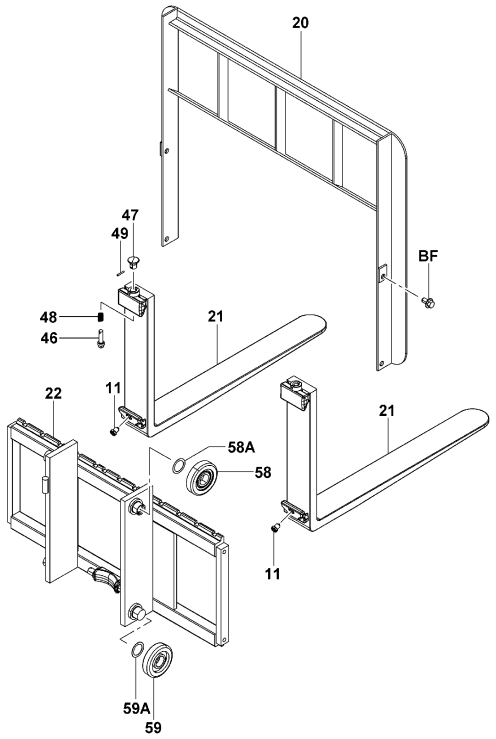


6301-744

6301-744_

FSV..10N,15N,18N [W1020-W1470]

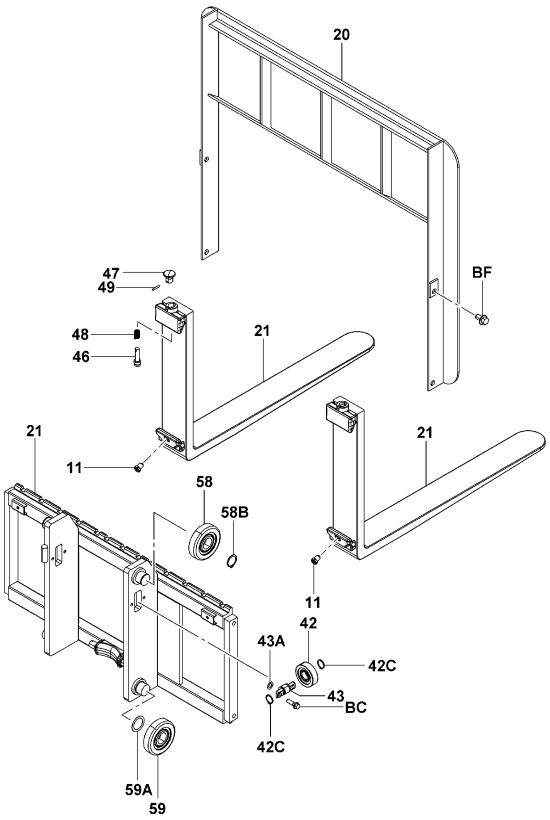


6301-745

6301-745_

| 6301 | LIFT BRACKET & FORK<br>FOURCHE & SUPPORT DE LEVEE | GABELTRÄGER & GABEL<br>HORQUILLA Y MENSULA DE ELEVACION |
|---|---|---|

FSV..20N,25N [W1020]

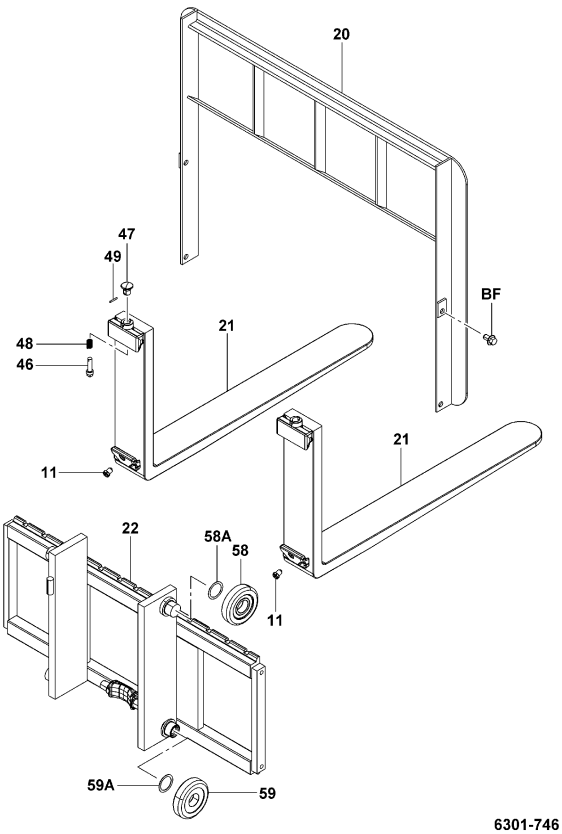


6301-746

6301-746_

FSV..20N,25N [W1170-W1470]

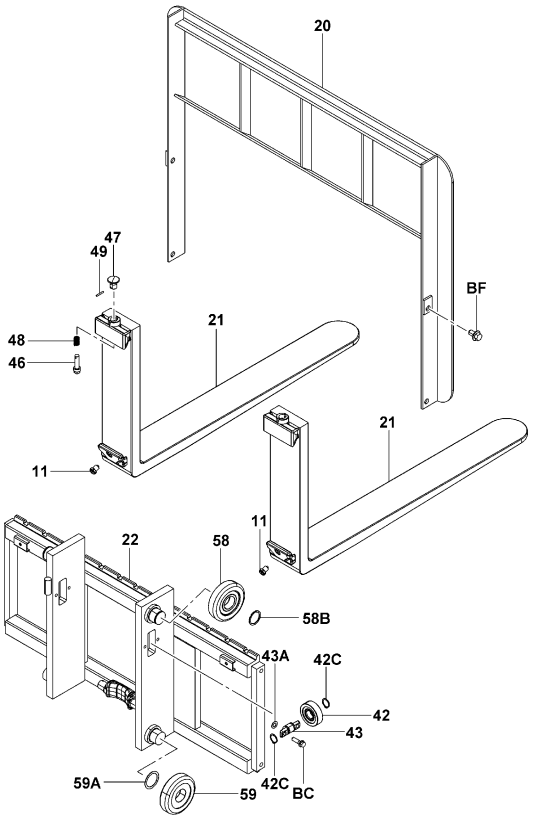


6301-747

6301-747_

| 6301 | LIFT BRACKET & FORK<br>FOURCHE & SUPPORT DE LEVEE | GABELTRÄGER & GABEL<br>HORQUILLA Y MENSULA DE ELEVACION |
|---|---|---|

FSV..J35N

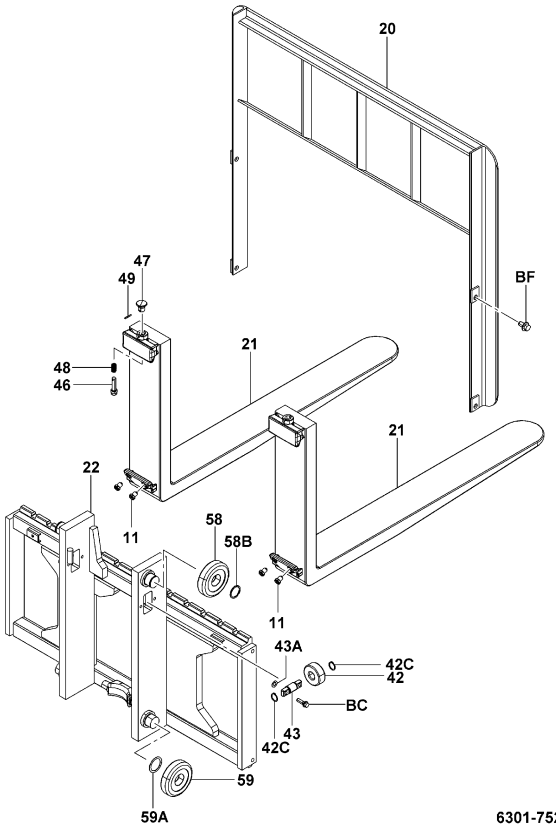


6301-752

6301-752_

FSV..K20N,K25N [W1020]

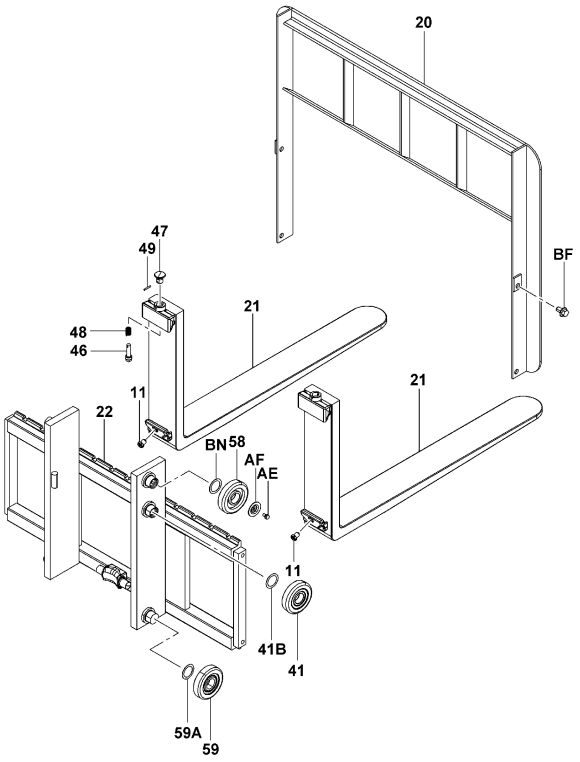


6301-748

6301-748_

| 6301 | LIFT BRACKET & FORK<br>FOURCHE & SUPPORT DE LEVEE | GABELTRÄGER & GABEL<br>HORQUILLA Y MENSULA DE ELEVACION |
|---|---|---|

FSV..K20N,K25N [W1170-W1470]

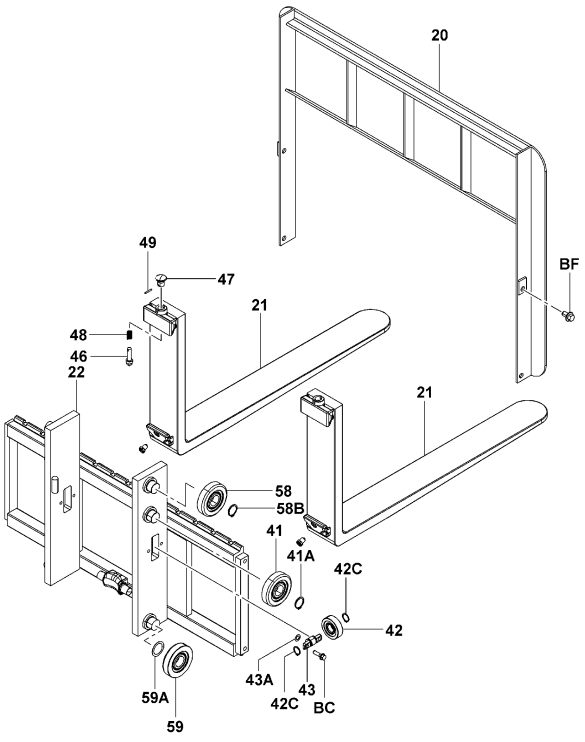


6301-749

6301-749_

FSV..K30N,30N [W1070]

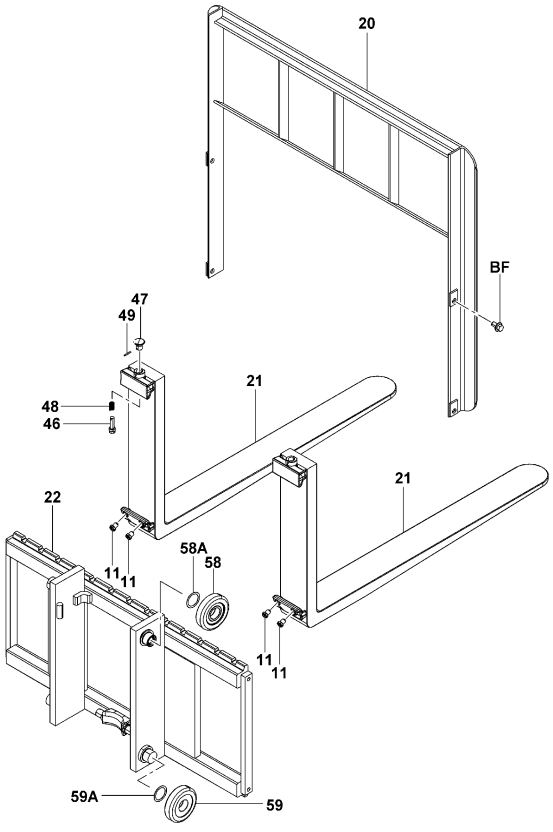


6301-750

6301-750_

| 6301 | LIFT BRACKET & FORK<br>FOURCHE & SUPPORT DE LEVEE | GABELTRÄGER & GABEL<br>HORQUILLA Y MENSULA DE ELEVACION |
|---|---|---|

**FSV..K30N,30N [W1170-W1470]**

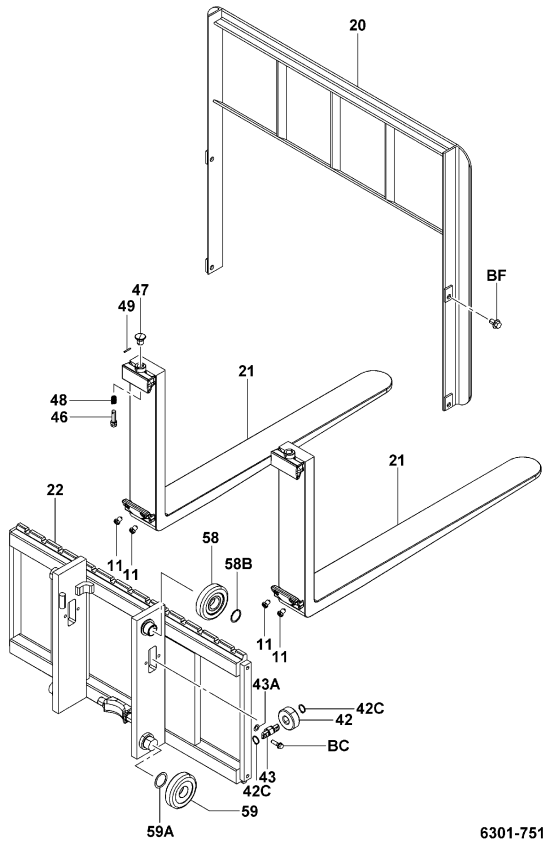


6301-751

6301-751_

**FV..10N,15N,18N**

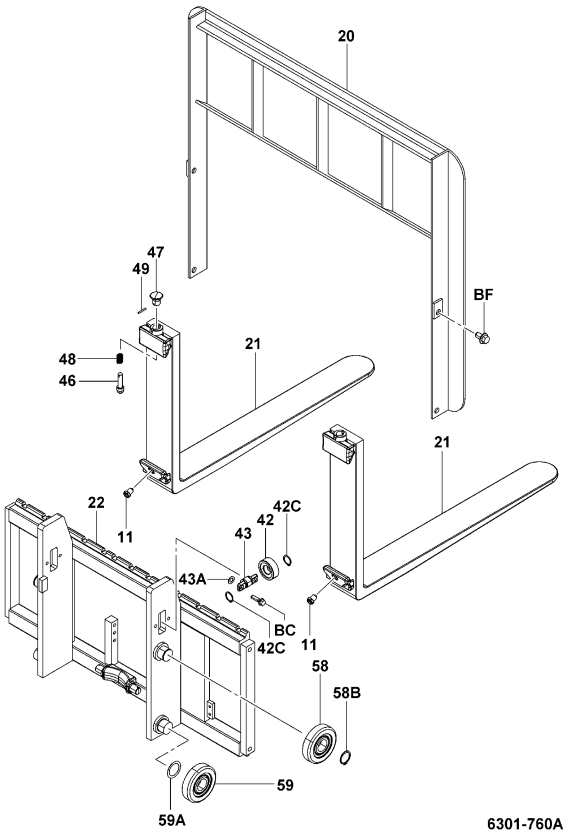


6301-760A

6301-760A

| 6301 | LIFT BRACKET & FORK<br>FOURCHE & SUPPORT DE LEVEE | GABELTRÄGER & GABEL<br>HORQUILLA Y MENSULA DE ELEVACION |
|---|---|---|

**FV..20N,25N**

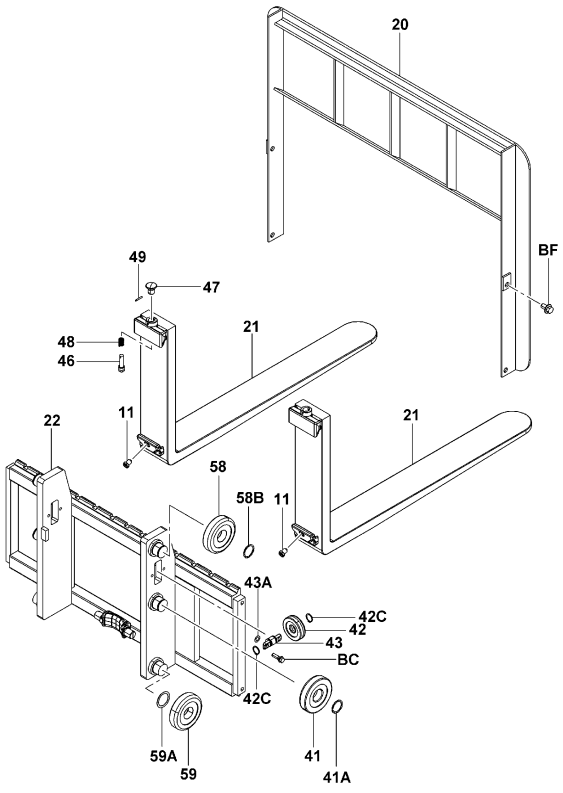


6301-761

6301-761_

**FV..K20N,K25N**

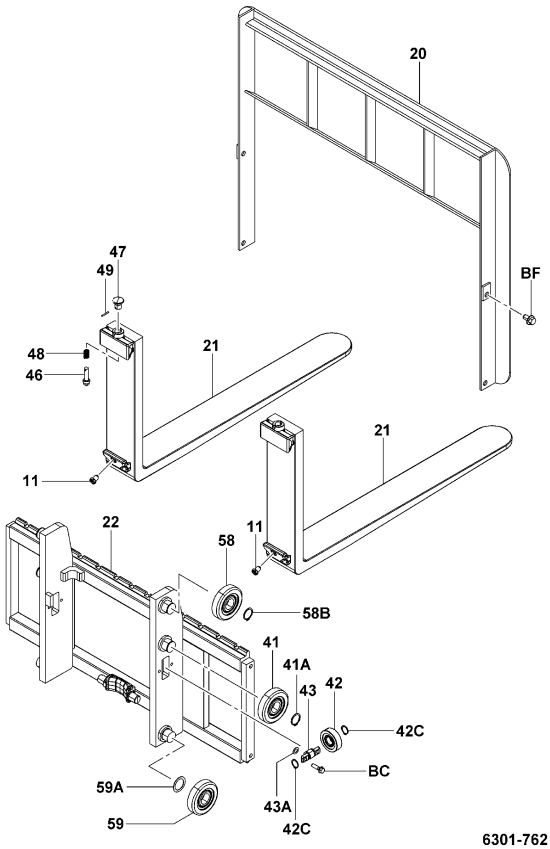


6301-762

6301-762_

| 6301 | LIFT BRACKET & FORK<br>FOURCHE & SUPPORT DE LEVEE | GABELTRÄGER & GABEL<br>HORQUILLA Y MENSULA DE ELEVACION |
|---|---|---|

FV..K30N,30N,J35N

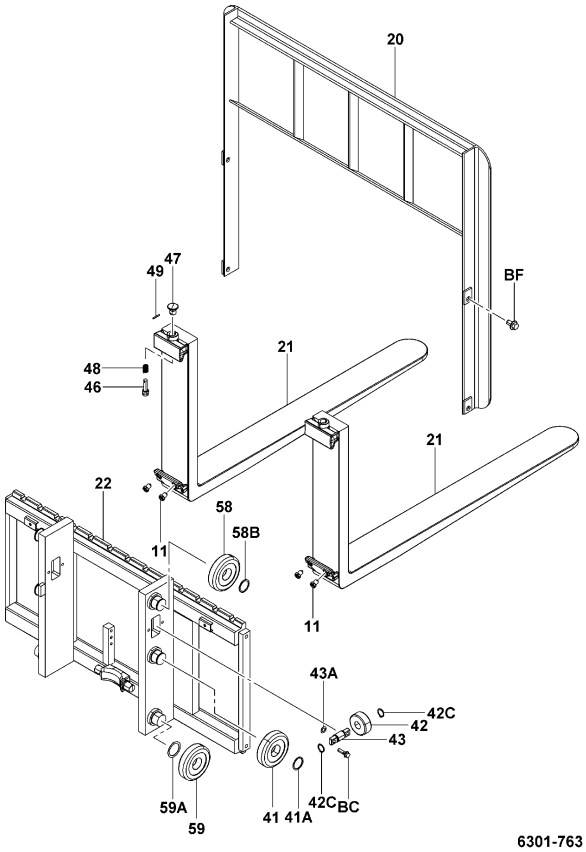


6301-763

6301-763_

V..10N,15N

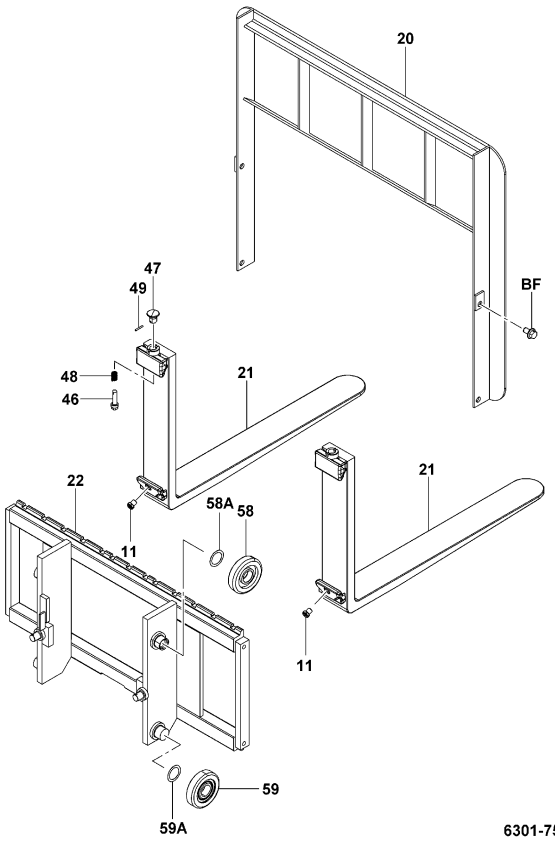


6301-753

6301-753_

| 6301 | LIFT BRACKET & FORK<br>FOURCHE & SUPPORT DE LEVEE | GABELTRÄGER & GABEL<br>HORQUILLA Y MENSULA DE ELEVACION |
|---|---|---|

V..18N

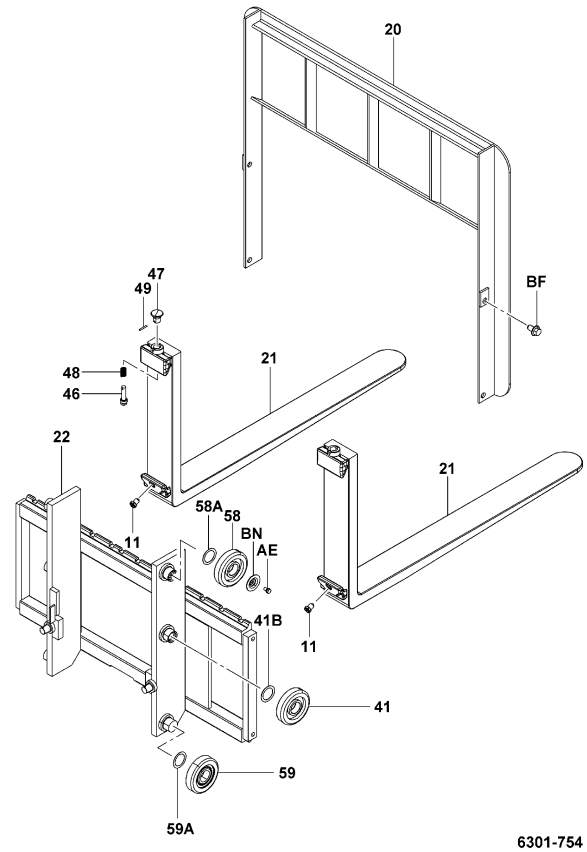


6301-754

6301-754_

V..20N,25N [H2700,H3300-H5000]

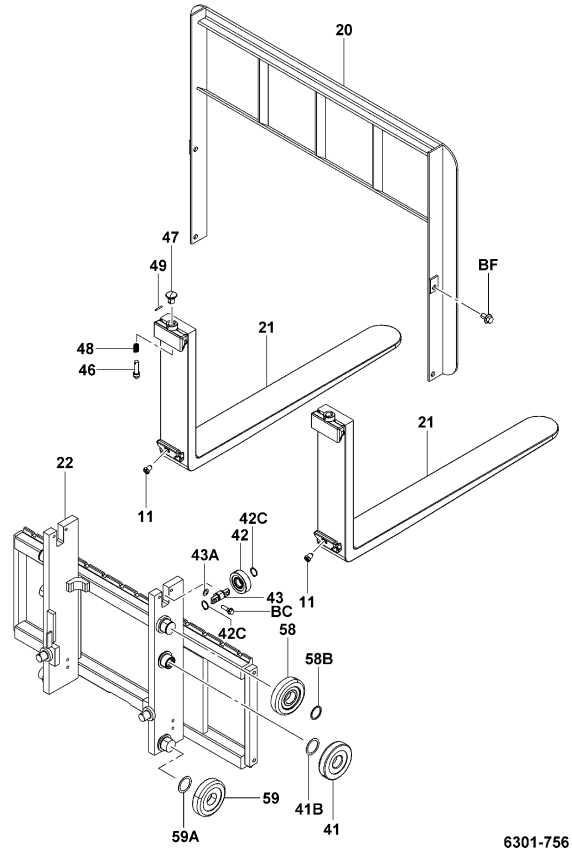


6301-756

6301-756_

| 6301 | LIFT BRACKET & FORK<br>FOURCHE & SUPPORT DE LEVEE | GABELTRÄGER & GABEL<br>HORQUILLA Y MENSULA DE ELEVACION |
|---|---|---|

V..20N,25N [H3000]

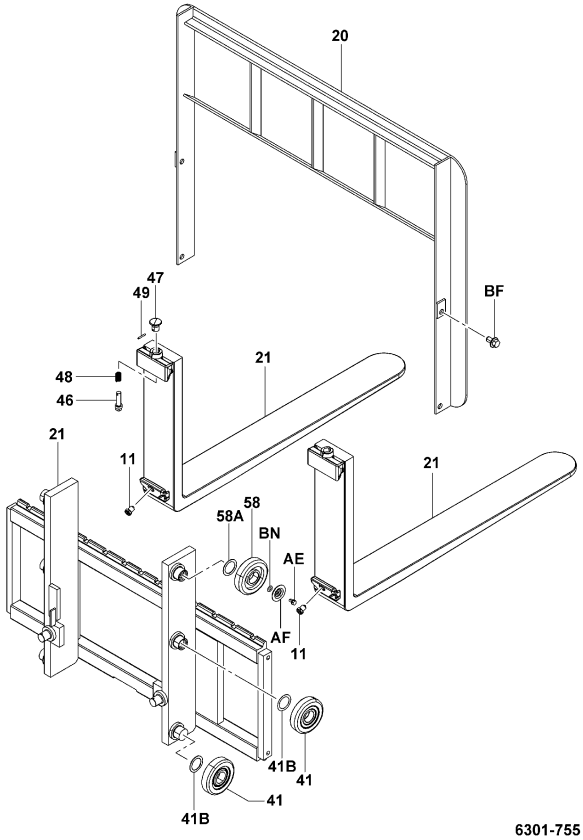


6301-755

6301-755_

V..J35N

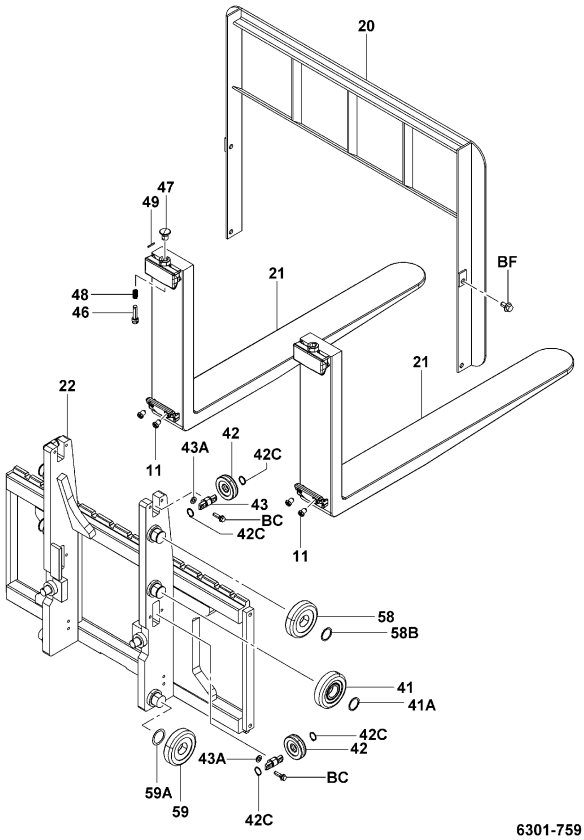


6301-759

6301-759_

| 6301 | LIFT BRACKET & FORK<br>FOURCHE & SUPPORT DE LEVEE | GABELTRÄGER & GABEL<br>HORQUILLA Y MENSULA DE ELEVACION |
|---|---|---|

V..K20N,K25N

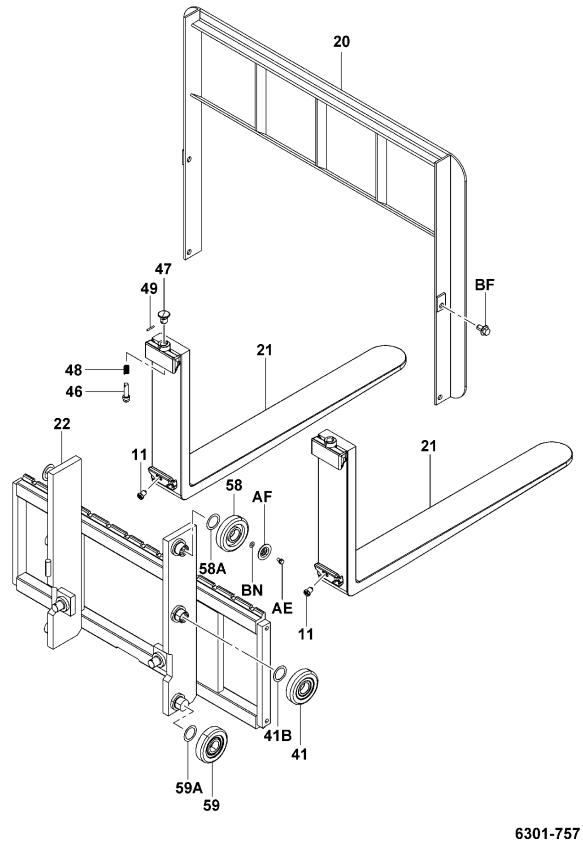


6301-757

6301-757_

V..K30N,30N

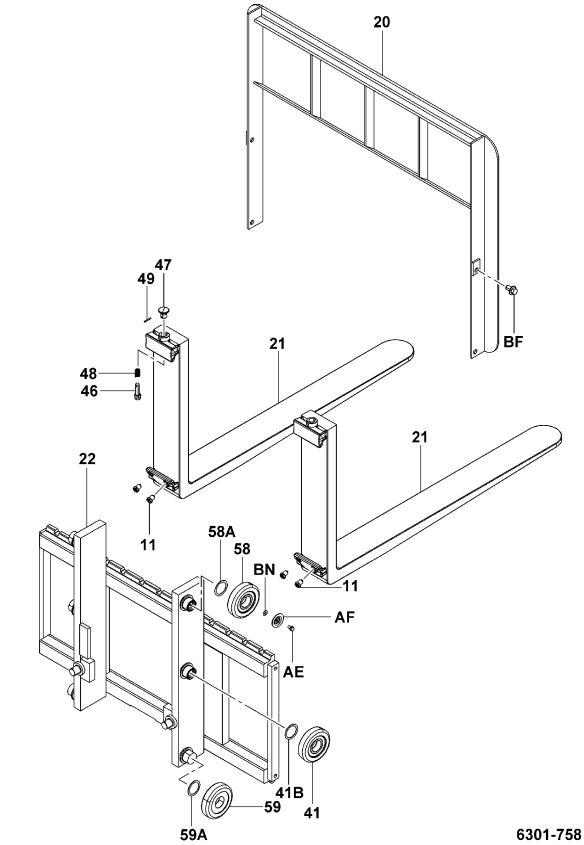


6301-758

6301-758_

| 6301 | LIFT BRACKET & FORK<br>FOURCHE & SUPPORT DE LEVEE | GABELTRÄGER & GABEL<br>HORQUILLA Y MENSULA DE ELEVACION |
|---|---|---|

FSV,V (BACKREST LESS) [SIDE PLATE, 2/2]

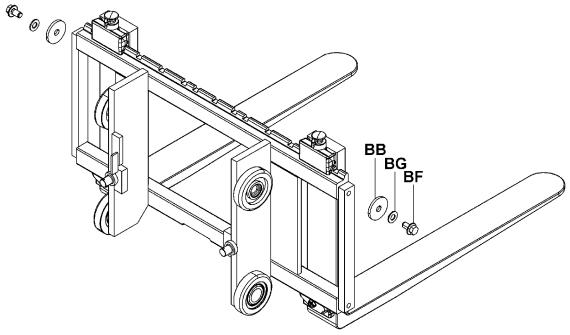


6301-674A

6301-674A

FV [SIDE PLATE, 2/2]

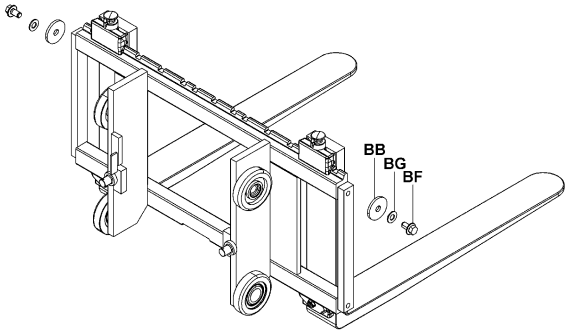


6301-674A

6301-674A

| 6301 | LIFT BRACKET & FORK<br>FOURCHE & SUPPORT DE LEVEE | GABELTRÄGER & GABEL<br>HORQUILLA Y MENSULA DE ELEVACION |
|---|---|---|

(SLEEVED FORK)

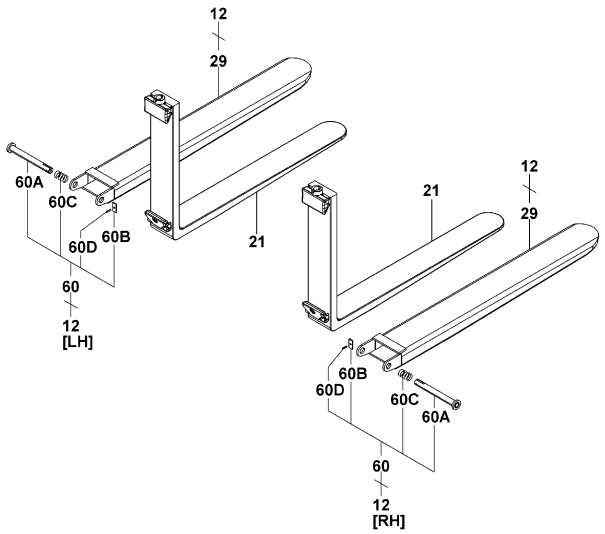


6301-661A

6301-661A

## 6301

**LIFT BRACKET & FORK**
**FOURCHE & SUPPORT DE LEVEE**
**GABELTRÄGER & GABEL**
**HORQUILLA Y MENSULA DE ELEVACION**

| PART NAME CODE | PART NAME | QTY |
|---|---|---|
| 6301-11 | **DAMPER ASSY, FORK**<br>ENS. D'AMORTISSEUR<br>DÄMPFER, VOLLST.<br>CONJUNTO DEL AMORTIGUADOR | 2- 4 |
| 6301-12 | **FORK ASSY, SHEATH**<br>ENS. DE FOURCHE<br>GABEL, VOLLST.<br>CONJUNTO DE LA HORQUILLA | 1 |
| 6301-20 | **BACKREST SUB-ASSY**<br>SOUS-ENS. DE DOSSIER<br>RUCKENLEHNE-TEILGRUPPE<br>SUBCONJUNTO DEL RESPALDO DEL ASIENTO | 1 |
| 6301-21 | **FORK SUB-ASSY**<br>SOUS-ENS. DE FOURCHE<br>GABEL-TEILGRUPPE<br>SUBCONJUNTO DE LA HORQUILLA | 2 |
| 6301-22 | **BRACKET SUB-ASSY, LIFT**<br>SOUS-ENS. DE SUPPORT<br>TRAGER-TEILGRUPPE<br>SUBCONJUNTO DE LA SOPORTE | 1 |
| 6301-29 | **FORK SUB-ASSY, SHEATH**<br>SOUS-ENS. DE FOURCHE<br>GABEL-TEILGRUPPE<br>SUBCONJUNTO DE LA HORQUILLA | 2 |
| 6301-41 | **ROLLER, LIFT (CENTER)**<br>GALET<br>ROLLE<br>RODILLO | 2 |
| 6301-41A | **RING, SHAFT SNAP (CENTER)**<br>ANNEAU<br>RING<br>ANILLO | 2 |
| 6301-41B | **SHIM (CENTER)**<br>CALE<br>AUSGLEICHSCHEIBE<br>CALCE | 99 |
| 6301-42 | **ROLLER, SIDE**<br>GALET<br>ROLLE<br>RODILLO | 2- 4 |
| 6301-42C | **RING, SHAFT SNAP (FOR SIDE ROLLER)**<br>ANNEAU<br>RING<br>ANILLO | 4- 8 |
| 6301-43 | **SHAFT, SIDE ROLLER**<br>ARBRE<br>WELLE<br>EJE | 2- 4 |
| 6301-43A | **SHIM (FOR SIDE ROLLER SHAFT)**<br>CALE<br>AUSGLEICHSCHEIBE<br>CALCE | 99 |
| 6301-46 | **PIN, FORK STOPPER**<br>GOUPILLE<br>STIFT<br>PASADOR | 2 |
| 6301-47 | **KNOB, FORK STOPPER PIN**<br>BOULE<br>KNOPF<br>MANDO | 2 |
| 6301-48 | **SPRING, FORK STOPPER PIN**<br>RESSORT<br>FEDER<br>RESORTE | 2 |
| 6301-49 | **PIN, SPRING (FOR FORK STOPPER PIN)**<br>GOUPILLE<br>STIFT<br>PASADOR | 2 |
| 6301-58 | **ROLLER, LIFT (UPPER)**<br>GALET<br>ROLLE<br>RODILLO | 2 |
| 6301-58A | **SHIM, LIFT ROLLER**<br>CALE<br>AUSGLEICHSCHEIBE<br>CALCE | 99 |
| 6301-58B | **RING, SHAFT SNAP (UPPER)**<br>ANNEAU<br>RING<br>ANILLO | 2 |


## 6301

**LIFT BRACKET & FORK**
**FOURCHE & SUPPORT DE LEVEE**
**GABELTRÄGER & GABEL**
**HORQUILLA Y MENSULA DE ELEVACION**


| PART NAME CODE | PART NAME | QTY |
|---|---|---|
| 6301-59 | **ROLLER, LIFT (LOWER)**<br>GALET<br>ROLLE<br>RODILLO | 2 |
| 6301-59A | **SHIM, LIFT ROLLER**<br>CALE<br>AUSGLEICHSCHEIBE<br>CALCE | 99 |
| 6301-60 | **PIN ASSY, SHEATH FORK**<br>ENS. DE GOUPILLE<br>STIFT, VOLLST.<br>CONJUNTO DE PASADOR | 2 |
| 6301-60A | **PIN SUB-ASSY, SHEATH FORK**<br>SOUS-ENS. DE GOUPILLE<br>STIFT-TEILGRUPPE<br>SUBCONJUNTO DE PASADOR | 2 |
| 6301-60B | **PLATE**<br>PLAQUE<br>PLATTE<br>PLACA | 2 |
| 6301-60C | **SPRING**<br>RESSORT<br>FEDER<br>RESORTE | 2 |
| 6301-60D | **PIN, SPRING**<br>GOUPILLE<br>STIFT<br>PASADOR | 2 |
| 6301-AE | **BOLT**<br>BOULON<br>SCHRAUBE<br>PERNO | 2 |
| 6301-AF | **PLATE**<br>PLAQUE<br>PLATTE<br>PLACA | 2 |
| 6301-BB | **WASHER**<br>RODELLE<br>UNTERLEGSCHEIBE<br>ARANDELA | 2 |
| 6301-BC | **BOLT**<br>BOULON<br>SCHRAUBE<br>PERNO | 4- 8 |
| 6301-BF | **BOLT**<br>BOULON<br>SCHRAUBE<br>PERNO | 2- 4 |
| 6301-BG | **WASHER**<br>RODELLE<br>UNTERLEGSCHEIBE<br>ARANDELA | 2- 4 |
| 6301-BN | **SHIM**<br>CALE<br>AUSGLEICHSCHEIBE<br>CALCE | 99 |

# 6302

CHAIN & CHAIN WHEEL
CHAINE ET GALET DE CHAINE

KETTE & KETTENRAD
CADENA Y RUEDA DE CADENA

FSV..10N,15N,18N

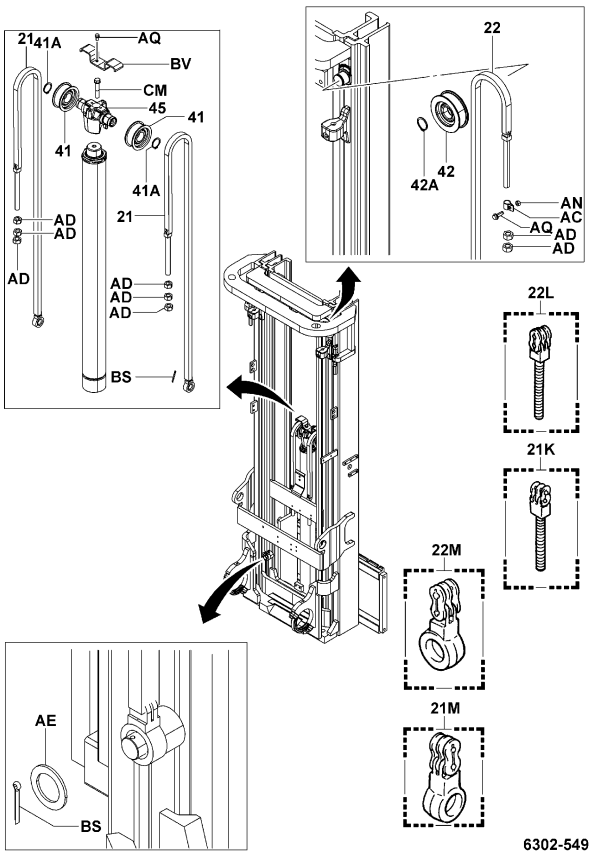


6302-549

6302-549_

FSV..20N,25N

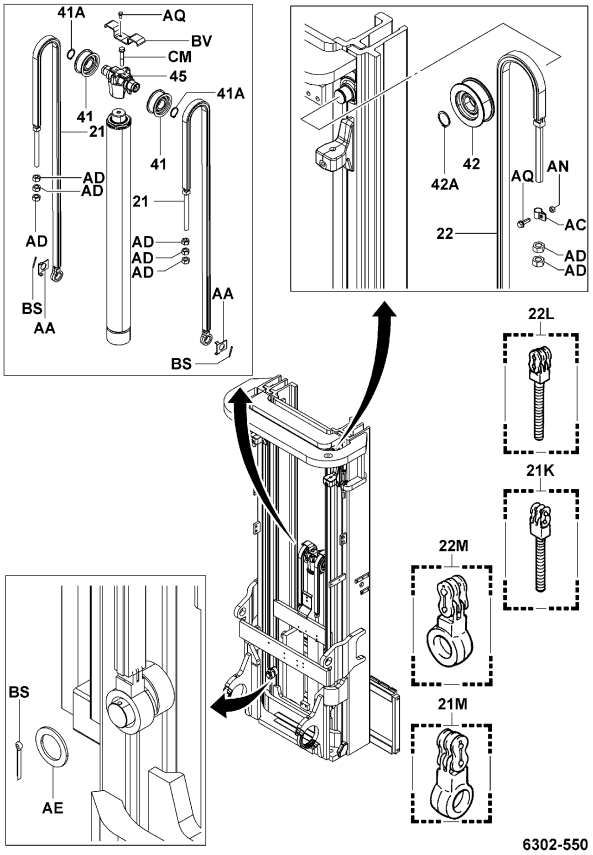


6302-550

6302-550_

# 6302

CHAIN & CHAIN WHEEL
CHAINE ET GALET DE CHAINE

KETTE & KETTENRAD
CADENA Y RUEDA DE CADENA

FSV..K20N,K25N

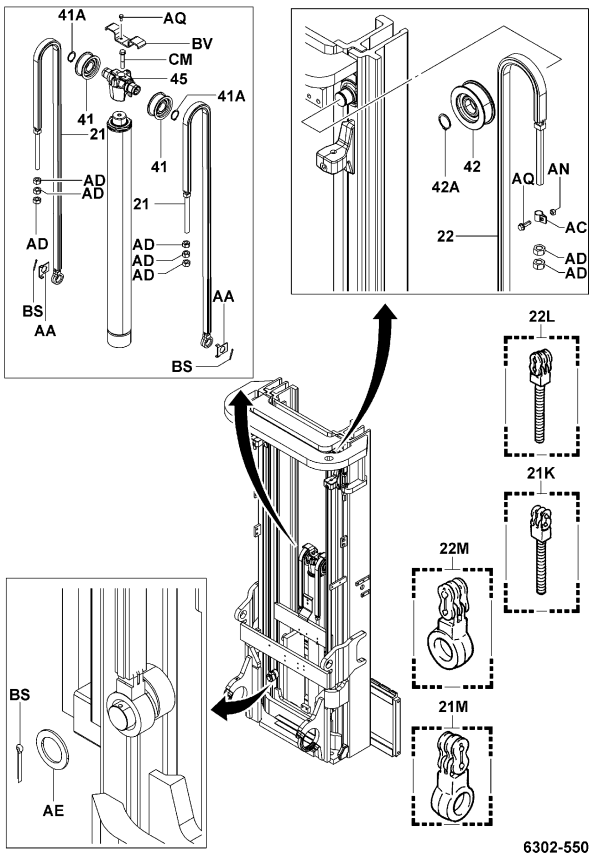


6302-550

6302-550_

FSV..K30N,30N

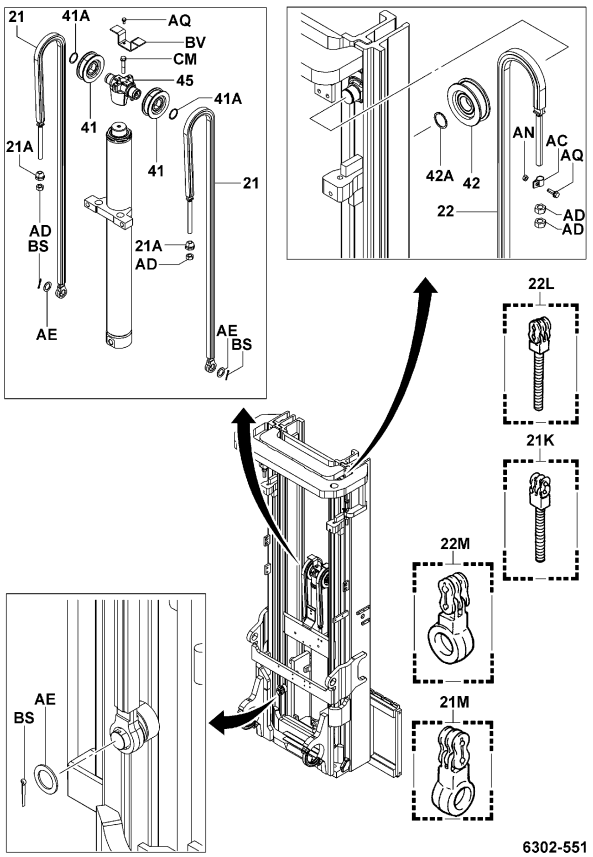


6302-551

6302-551_

FSV..J35N

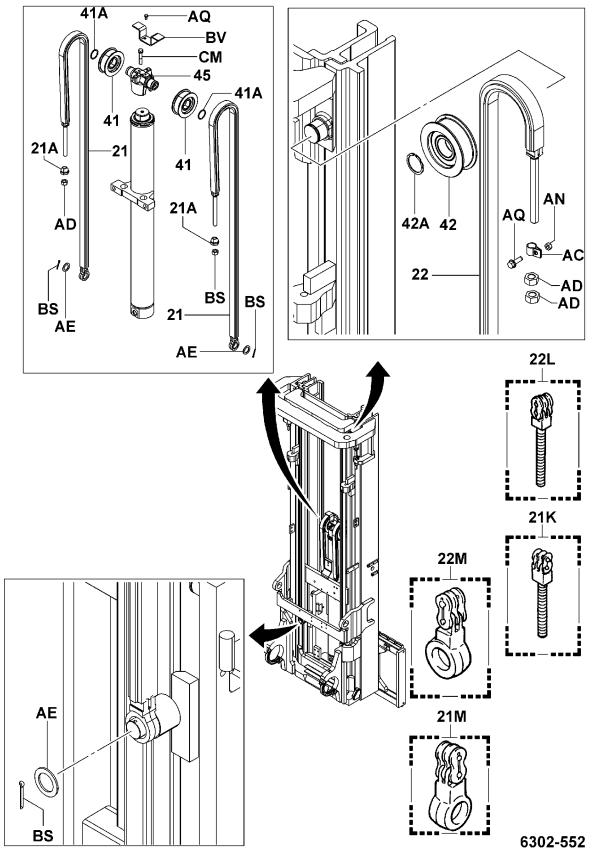


6302-552

6302-552_

FV..10N,15N,18N

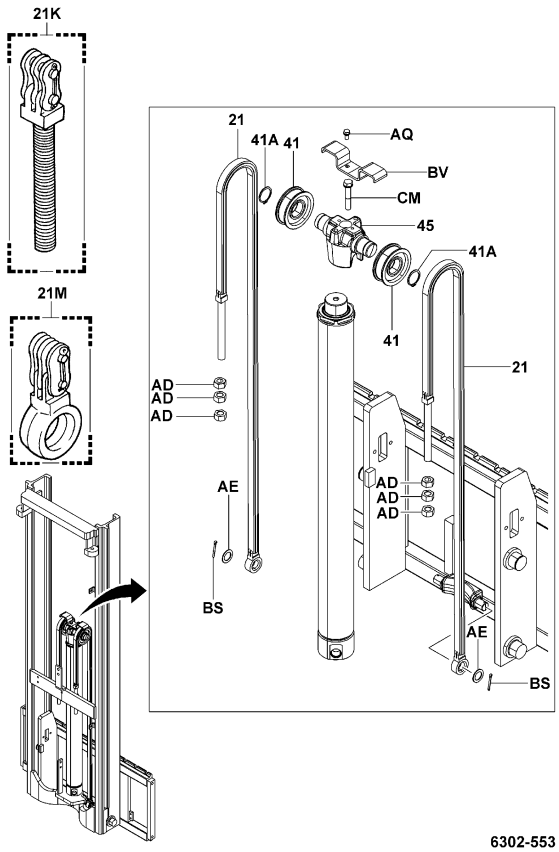


6302-553

6302-553_



FV..20N,25N

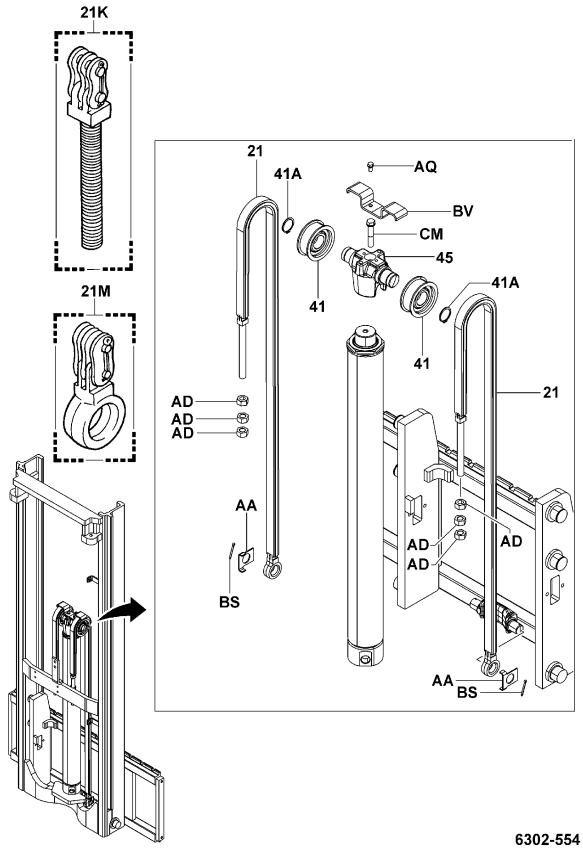


6302-554

6302-554_

FV..K20N,K25N

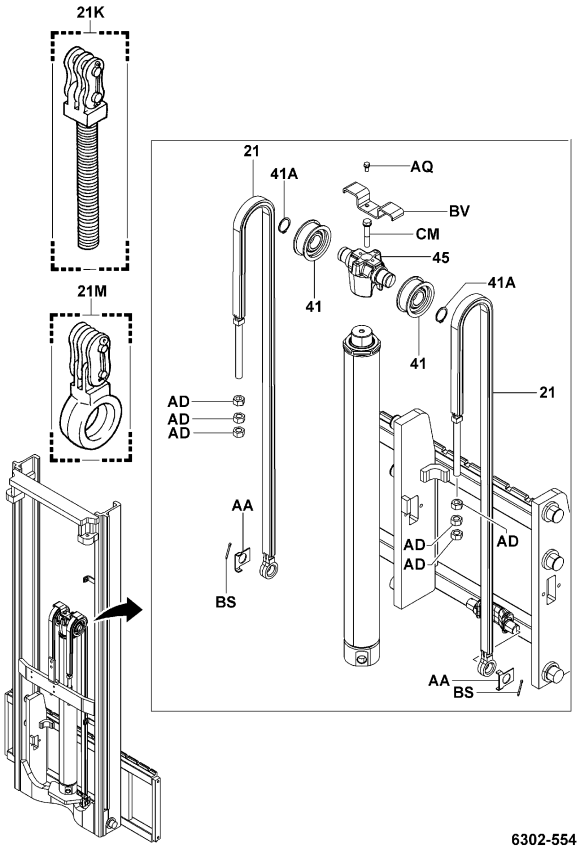


6302-554

6302-554_

# 6302

**CHAIN & CHAIN WHEEL**
**CHAINE ET GALET DE CHAINE**

**KETTE & KETTENRAD**
**CADENA Y RUEDA DE CADENA**

**FV..K30N,30N,J35N**

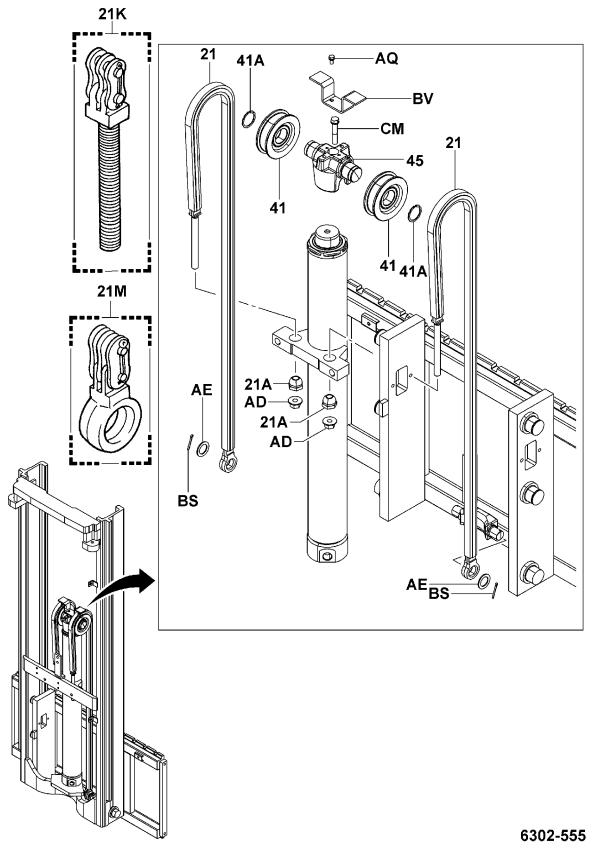


6302-555

6302-555_

**V**

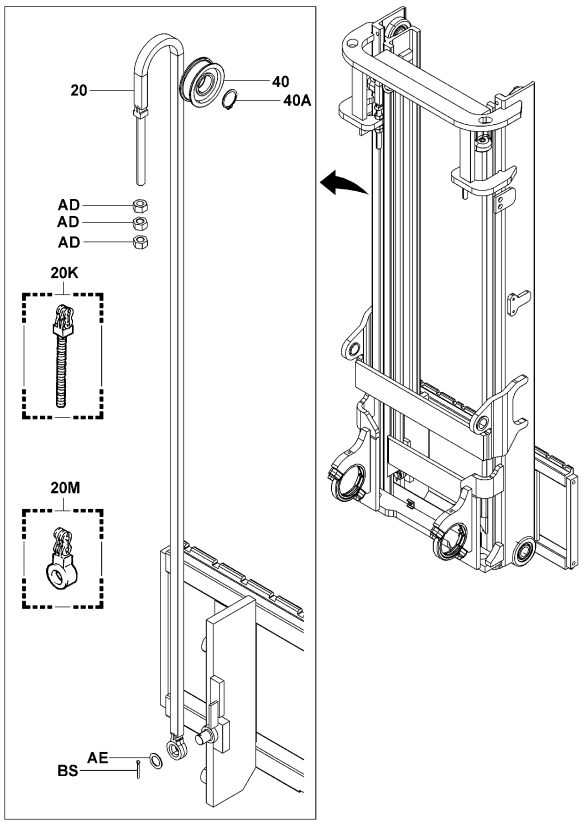


6302-548

6302-548_

# 6302

**CHAIN & CHAIN WHEEL**
**CHAINE ET GALET DE CHAINE**

**KETTE & KETTENRAD**
**CADENA Y RUEDA DE CADENA**

| PART NAME CODE | PART NAME | QTY |
|---|---|---|
| 6302-20 | **CHAIN SUB-ASSY**<br>SOUS-ENS. DE CHAINE<br>KETTEN-TEILGRUPPE<br>SUBCONJUNTO DE LA CADENA | 2 |
| 6302-20K | **BOLT KIT, CHAIN ANCHOR, NO.1**<br>KIT BOULON<br>SCHRAUBEN-AUSRUSTUNG<br>PERNOS DE REPUESTO | 2 |
| 6302-20M | **BOLT KIT, CHAIN EYE**<br>KIT BOULON<br>SCHRAUBEN-AUSRUSTUNG<br>PERNOS DE REPUESTO | 2 |
| 6302-21 | **CHAIN SUB-ASSY, FRONT**<br>SOUS-ENS. DE CHAINE<br>KETTEN-TEILGRUPPE<br>SUBCONJUNTO DE LA CADENA | 2 |
| 6302-21A | **NUT, CHAIN ADJUST (FRONT)**<br>ECROU<br>MUTTER<br>TUERCA | 2 |
| 6302-21K | **BOLT KIT, CHAIN ANCHOR, NO.1, FRONT**<br>KIT BOULON<br>SCHRAUBEN-AUSRUSTUNG<br>PERNOS DE REPUESTO | 2 |
| 6302-21M | **BOLT KIT, CHAIN EYE, FRONT**<br>KIT BOULON<br>SCHRAUBEN-AUSRUSTUNG<br>PERNOS DE REPUESTO | 2 |
| 6302-22 | **CHAIN SUB-ASSY, REAR**<br>SOUS-ENS. DE CHAINE<br>KETTEN-TEILGRUPPE<br>SUBCONJUNTO DE LA CADENA | 2 |
| 6302-22L | **BOLT KIT, CHAIN ANCHOR, NO.2, REAR**<br>KIT BOULON<br>SCHRAUBEN-AUSRUSTUNG<br>PERNOS DE REPUESTO | 2 |
| 6302-22M | **BOLT KIT, CHAIN EYE**<br>KIT BOULON<br>SCHRAUBEN-AUSRUSTUNG<br>PERNOS DE REPUESTO | 2 |
| 6302-40 | **WHEEL, CHAIN**<br>ROUE<br>RAD<br>RUEDA | 2 |
| 6302-40A | **RING, SHAFT SNAP (FOR CHAIN WHEEL)**<br>ANNEAU<br>RING<br>ANILLO | 2 |
| 6302-41 | **WHEEL, CHAIN (FRONT)**<br>ROUE<br>RAD<br>RUEDA | 2 |
| 6302-41A | **RING, SHAFT SNAP (FOR FRONT CHAIN WHEEL)**<br>ANNEAU<br>RING<br>ANILLO | 2 |
| 6302-42 | **WHEEL, CHAIN (REAR)**<br>ROUE<br>RAD<br>RUEDA | 2 |
| 6302-42A | **RING, SHAFT SNAP (FOR CHAIN WHEEL)**<br>ANNEAU<br>RING<br>ANILLO | 2 |
| 6302-45 | **SUPPORT, CHAIN WHEEL**<br>SUPPORT<br>STUTZE<br>SOPORTE | 1 |
| 6302-AA | **PLATE, CHAIN STOPPER**<br>PLAQUE<br>PLATTE<br>PLACA | 1- 2 |
| 6302-AC | **CLAMP, CHAIN ANCHOR BOLT**<br>PINSE<br>KLEMME<br>ABRAZADERA | 2 |
| 6302-AD | **NUT**<br>ECROU<br>MUTTER<br>TUERCA | 2-10 |

| 6302 | CHAIN & CHAIN WHEEL<br>CHAINE ET GALET DE CHAINE | KETTE & KETTENRAD<br>CADENA Y RUEDA DE CADENA |
|---|---|---|

| PART NAME CODE | PART NAME | QTY | PART NAME CODE | PART NAME | QTY |
|---|---|---|---|---|---|
| 6302-AE | **WASHER, CHAIN SPECIAL**<br>RODELLE<br>UNTERLEGSCHEIBE<br>ARANDELA | 2- 4 | | | |
| 6302-AN | **NUT**<br>ECROU<br>MUTTER<br>TUERCA | 2 | | | |
| 6302-AQ | **BOLT**<br>BOULON<br>SCHRAUBE<br>PERNO | 2- 4 | | | |
| 6302-BS | **PIN, COTTER**<br>GOUPILLE<br>STIFT<br>PASADOR | 2- 4 | | | |
| 6302-BV | **STOPPER, CHAIN**<br>BUTEE<br>ANSCHLAG<br>TOPE | 1 | | | |
| 6302-CA | **STOPPER, CHAIN**<br>BUTEE<br>ANSCHLAG<br>TOPE | 2 | | | |
| 6302-CM | **BOLT**<br>BOULON<br>SCHRAUBE<br>PERNO | 1 | | | |
| 6302-DB | **BOLT**<br>BOULON<br>SCHRAUBE<br>PERNO | 2 | | | |


| 6302 | CHAIN & CHAIN WHEEL<br>CHAINE ET GALET DE CHAINE | KETTE & KETTENRAD<br>CADENA Y RUEDA DE CADENA |
|---|---|---|

| PART NAME CODE | PART NAME | QTY | PART NAME CODE | PART NAME | QTY |
|---|---|---|---|---|---|

| 6502 | FRONT LIFT CYLINDER<br>CYLINDRE DE LEVEE AVANT | VORDERER HUBZYLINDER<br>CILINDRO DE ELEVACION FRONTAL |
|---|---|---|

FSV..10N,15N,18N [MOUNT]

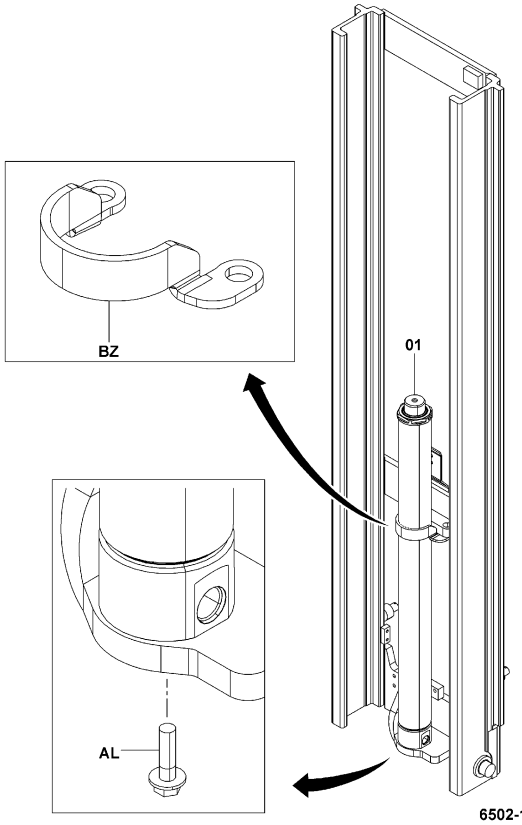


6502-143
6502-143_

FSV..20N,25N,K20N,K25N [MOUNT]

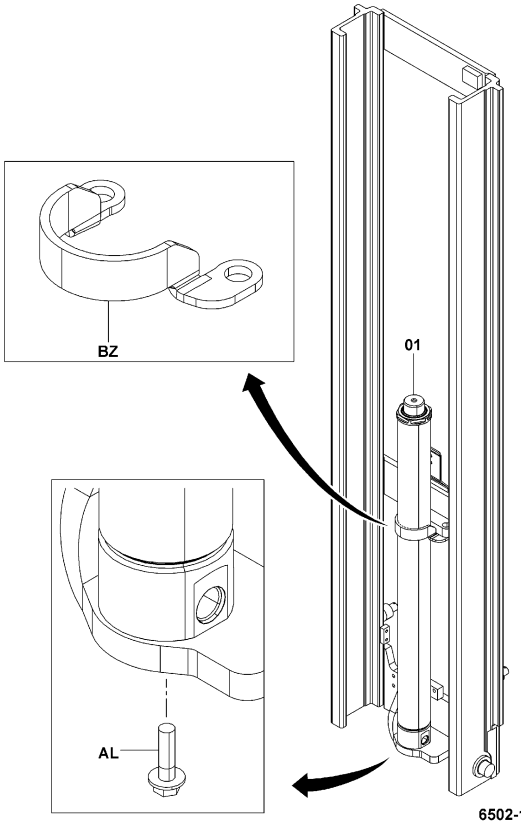


6502-143
6502-143_

| 6502 | FRONT LIFT CYLINDER<br>CYLINDRE DE LEVEE AVANT | VORDERER HUBZYLINDER<br>CILINDRO DE ELEVACION FRONTAL |
|---|---|---|

FSV..30N,K30N,J35N [MOUNT]

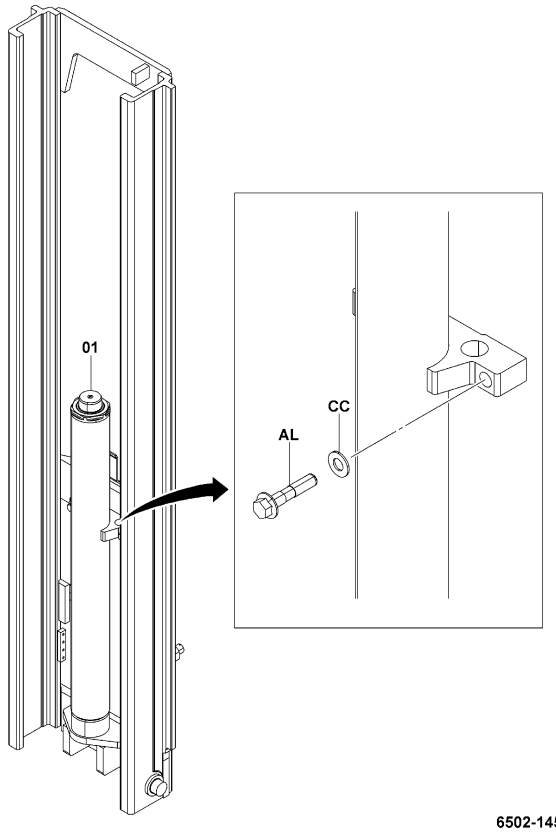


6502-145
6502-145_

FV..10N,15N,18N [MOUNT]

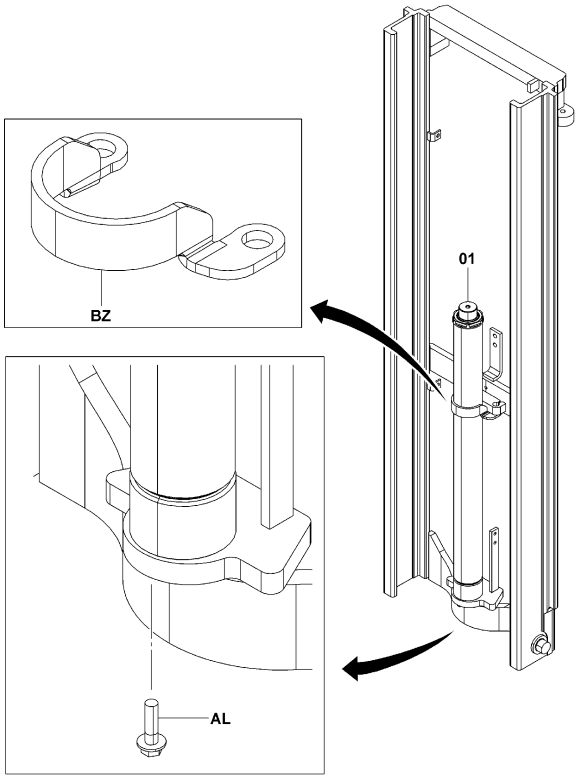


6502-147
6502-147_

| 6502 | FRONT LIFT CYLINDER<br>CYLINDRE DE LEVEE AVANT | VORDERER HUBZYLINDER<br>CILINDRO DE ELEVACION FRONTAL |
|---|---|---|

FV..20N,25N,K20N,K25N [MOUNT]

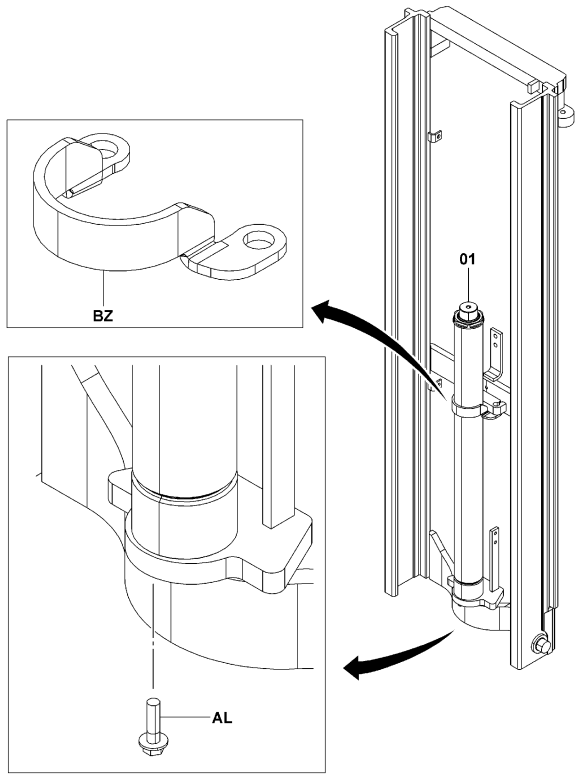


6502-147

6502-147_

FV..30N,K30N,J35N [MOUNT]

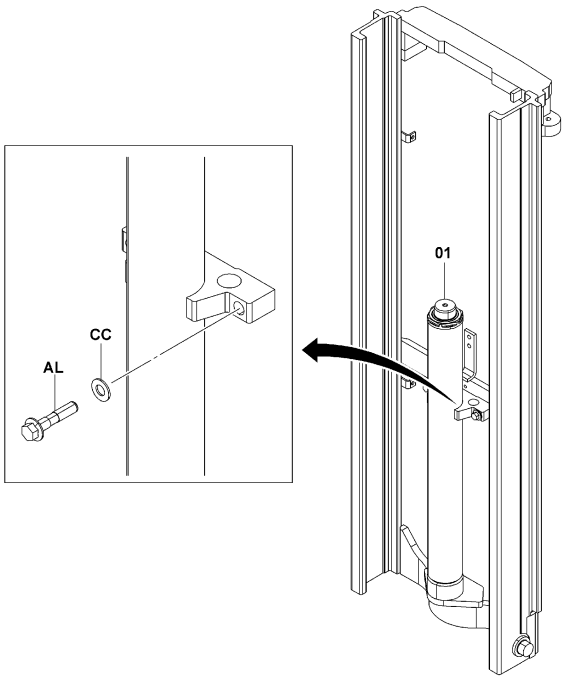


6502-149

6502-149_

| 6502 | FRONT LIFT CYLINDER<br>CYLINDRE DE LEVEE AVANT | VORDERER HUBZYLINDER<br>CILINDRO DE ELEVACION FRONTAL |
|---|---|---|

FSV..10N,15N,18N [INNER PARTS]

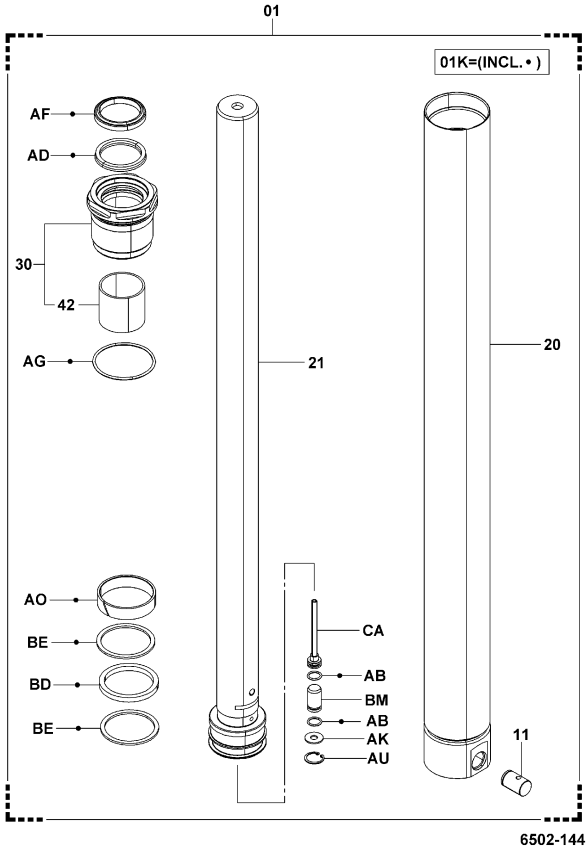


6502-144

6502-144_

FSV..20N,25N,K20N,K25N [INNER PARTS]

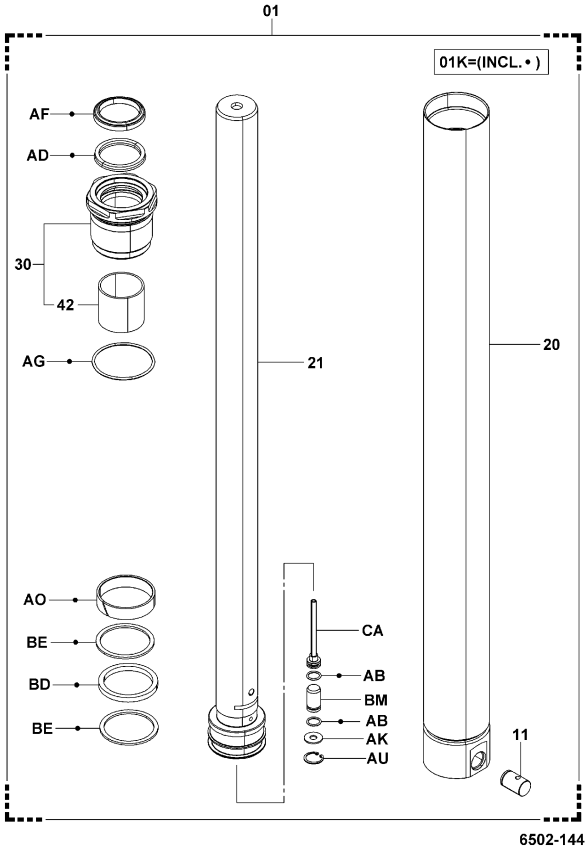


6502-144

6502-144_

# 6502

**FRONT LIFT CYLINDER**
**CYLINDRE DE LEVEE AVANT**
**VORDERER HUBZYLINDER**
**CILINDRO DE ELEVACION FRONTAL**

**FV..10N,15N,18N [INNER PARTS]**

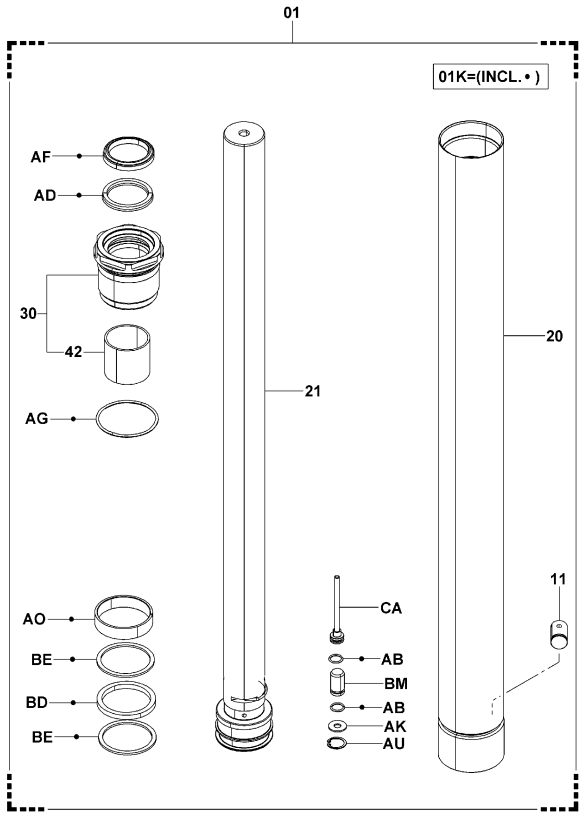


**FV..20N,25N,K20N,K25N [INNER PARTS]**

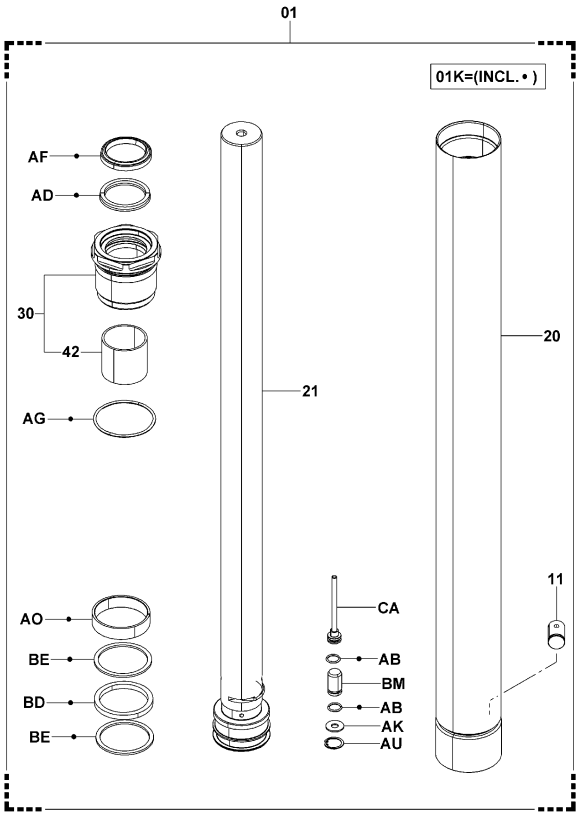



# 6502

**FRONT LIFT CYLINDER**
**CYLINDRE DE LEVEE AVANT**
**VORDERER HUBZYLINDER**
**CILINDRO DE ELEVACION FRONTAL**


| PART NAME CODE | PART NAME | QTY |
|---|---|---|
| 6502-01 | **CYLINDER ASSY, LIFT**<br>ENS. DE CYLINDRE<br>ZYLINDER, VOLLST.<br>CONJUNTO DEL CILINDRO | 1 |
| 6502-01K | **CYLINDER O/H KIT, LIFT**<br>JEU O/H DE CYLINDRE<br>ZYLINDER-UBERHOLSATZ<br>JUEGO O/H DEL CILINDRO | 1 |
| 6502-11 | **VALVE ASSY, SAFETY DOWN**<br>ENS. DE SOUPAPE<br>VENTIL, VOLLST.<br>CONJUNTO DE VALVULA | 1 |
| 6502-20 | **CYLINDER SUB-ASSY, LIFT**<br>SOUS-ENS. DE CYLINDRE<br>ZYLINDER-TEILGRUPPE<br>SUBCONJUNTO DEL CILINDRO | 1 |
| 6502-21 | **ROD SUB-ASSY, LIFT CYLINDER**<br>SOUS-ENS. DE BIELLE<br>STANGEN-TEILGRUPPE<br>SUBCONJUNTO DE LA VARILLA | 1 |
| 6502-22 | **ROD SUB-ASSY, LIFT CYLINDER, RH**<br>SOUS-ENS. DE BIELLE<br>STANGEN-TEILGRUPPE<br>SUBCONJUNTO DE LA VARILLA | 1 |
| 6502-30 | **GUIDE SUB-ASSY, LIFT CYLINDER ROD**<br>SOUS-ENS. DE GUIDE<br>FUHRUNGS-TEILGRUPPE<br>SUBCONJUNTO DE GUIA | 1 |
| 6502-42 | **SLEEVE, LIFT CYLINDER ROD GUIDE**<br>MANCHON<br>HULSE<br>MANGUITO | 1 |
| 6502-AB | **RING, O**<br>ANNEAU<br>RING<br>ANILLO | 2 |
| 6502-AD | **PACKING, U**<br>CALE<br>DICHTUNG<br>EMPAQUETADURA | 1 |
| 6502-AF | **SEAL, DUST**<br>JOINT<br>ABDICHTUNG<br>SELLO | 1 |
| 6502-AG | **RING, O**<br>ANNEAU<br>RING<br>ANILLO | 1 |
| 6502-AK | **WASHER, PLATE**<br>RODELLE<br>UNTERLEGSCHEIBE<br>ARANDELA | 1 |
| 6502-AL | **BOLT**<br>BOULON<br>SCHRAUBE<br>PERNO | 1- 2 |
| 6502-AO | **RING, WEAR**<br>ANNEAU<br>RING<br>ANILLO | 1 |
| 6502-AU | **RING, SNAP**<br>ANNEAU<br>RING<br>ANILLO | 1 |
| 6502-BD | **PACKING**<br>CALE<br>DICHTUNG<br>EMPAQUETADURA | 1 |
| 6502-BE | **RING, BACK UP**<br>ANNEAU<br>RING<br>ANILLO | 2 |
| 6502-BM | **VALVE, CHECK**<br>SOUPAPE<br>VENTIL<br>VALVULA | 1 |
| 6502-BZ | **CLAMP, LIFT CYLINDER**<br>PINSE<br>KLEMME<br>ABRAZADERA | 1 |

| 6502 | FRONT LIFT CYLINDER<br>CYLINDRE DE LEVEE AVANT | VORDERER HUBZYLINDER<br>CILINDRO DE ELEVACION FRONTAL |
|---|---|---|

| PART NAME CODE | PART NAME | QTY | PART NAME CODE | PART NAME | QTY |
|---|---|---|---|---|---|
| 6502-CA | **PIPE SUB-ASSY**<br>SOUS-ENS. DE TUYAU<br>ROHR-TEILGRUPPE<br>SUBCONJUNTO DE TUBO | 1 | | | |
| 6502-CC | **WASHER, PLATE**<br>RODELLE<br>UNTERLEGSCHEIBE<br>ARANDELA | 2 | | | |


| 6502 | FRONT LIFT CYLINDER<br>CYLINDRE DE LEVEE AVANT | VORDERER HUBZYLINDER<br>CILINDRO DE ELEVACION FRONTAL |
|---|---|---|

| PART NAME CODE | PART NAME | QTY | PART NAME CODE | PART NAME | QTY |
|---|---|---|---|---|---|

FSV..10N,15N,18N [MOUNTING]

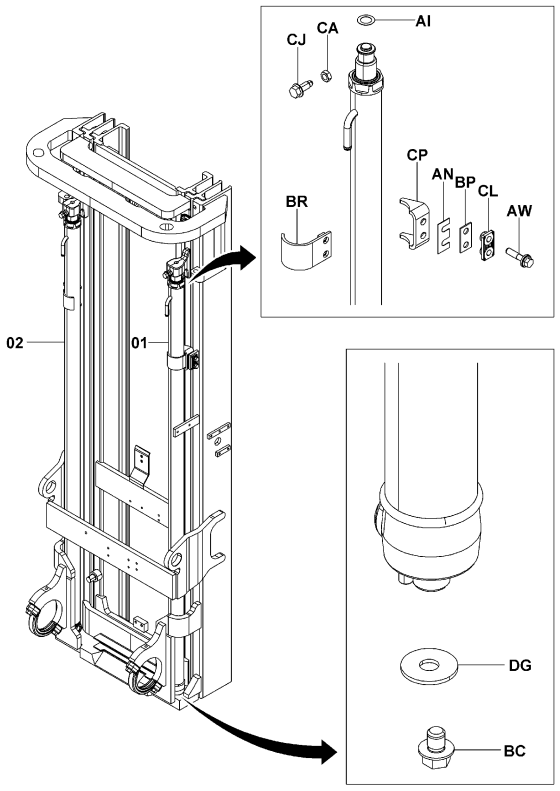


6503-265

6503-265_

FSV..20N,25N [MOUNTING]

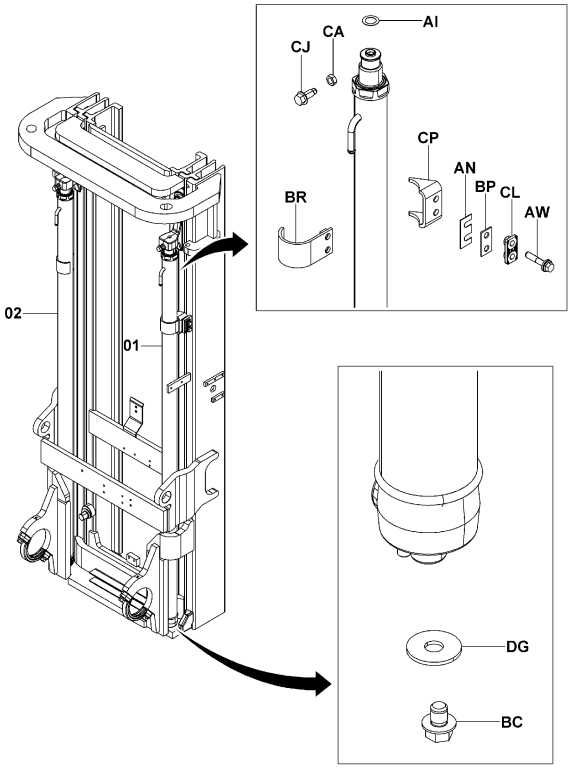


6503-267

6503-267_


| 6503 | REAR LIFT CYLINDER<br>CYLINDRE DE LEVEE ARRIERE | HINTERER HUBZYLINDER<br>CILINDRO DE ELEVACION TRASERO |
|---|---|---|


FSV..30N,K30N [MOUNTING]

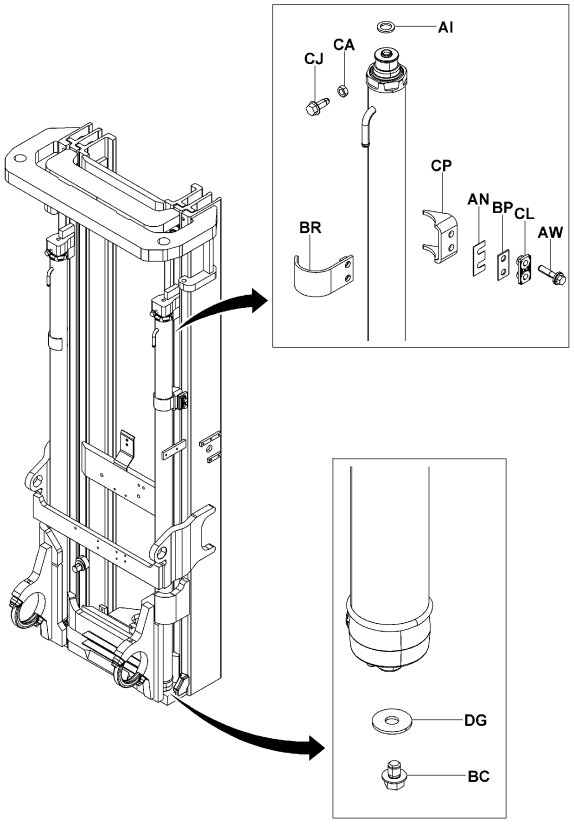


6503-270

6503-270_

FSV..J35N [MOUNTING]

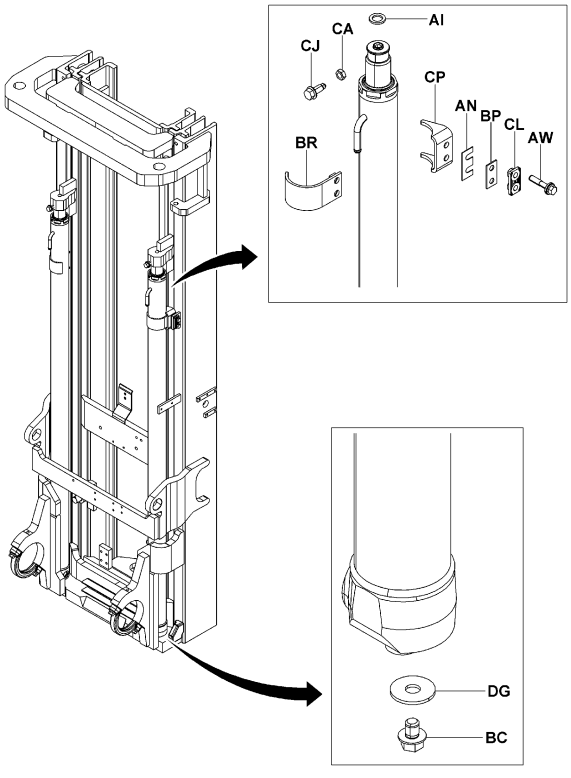


6503-272

6503-272_

| 6503 | REAR LIFT CYLINDER<br>CYLINDRE DE LEVEE ARRIERE | HINTERER HUBZYLINDER<br>CILINDRO DE ELEVACION TRASERO |
|---|---|---|

FSV..K20N,K25N [MOUNTING]

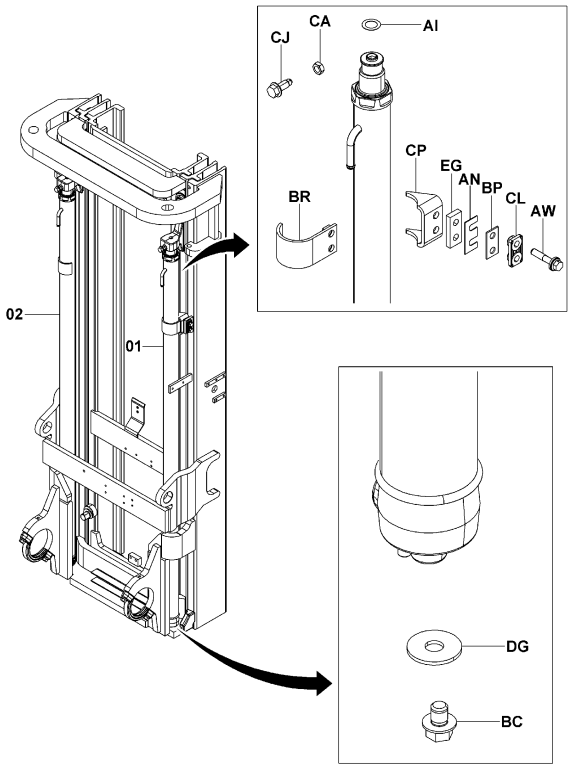


6503-269

6503-269_

FV..10N,15N,18N [MOUNTING]

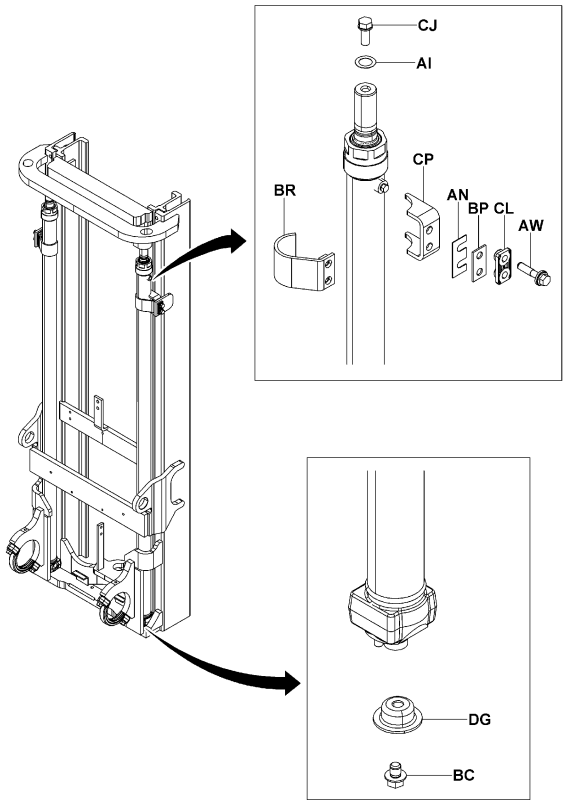


6503-275

6503-275_

| 6503 | REAR LIFT CYLINDER<br>CYLINDRE DE LEVEE ARRIERE | HINTERER HUBZYLINDER<br>CILINDRO DE ELEVACION TRASERO |
|---|---|---|

FV..20N,25N,K20N,K25N [MOUNTING]

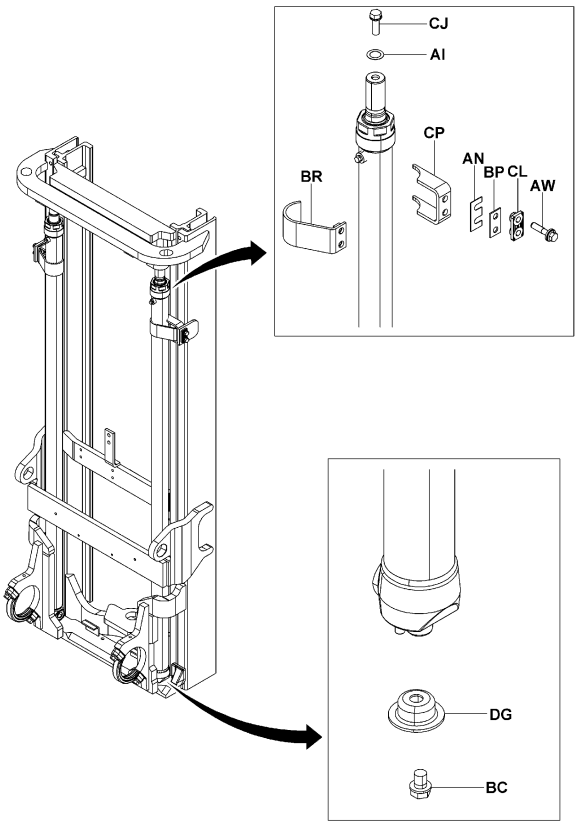


6503-276

6503-276_

FV..30N,K30N [MOUNTING]

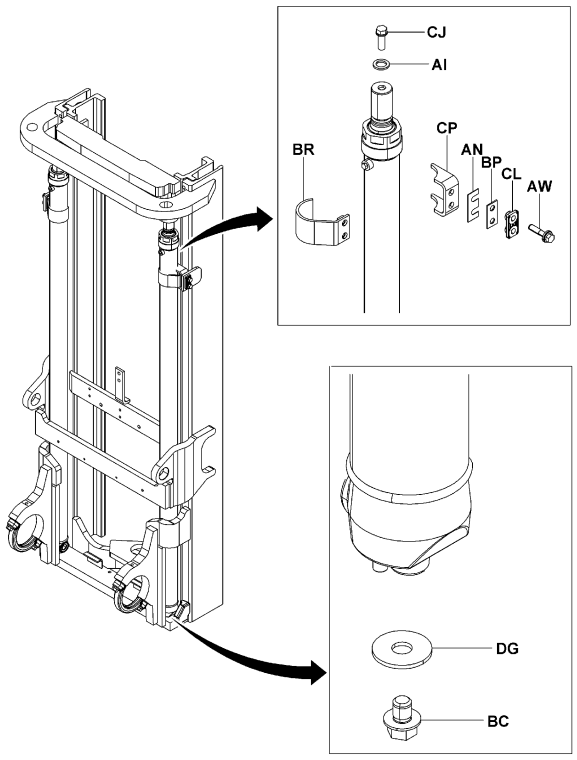


6503-278

6503-278_

| 6503 | REAR LIFT CYLINDER<br>CYLINDRE DE LEVEE ARRIERE | HINTERER HUBZYLINDER<br>CILINDRO DE ELEVACION TRASERO |
|---|---|---|

FV..J35N [MOUNTING]

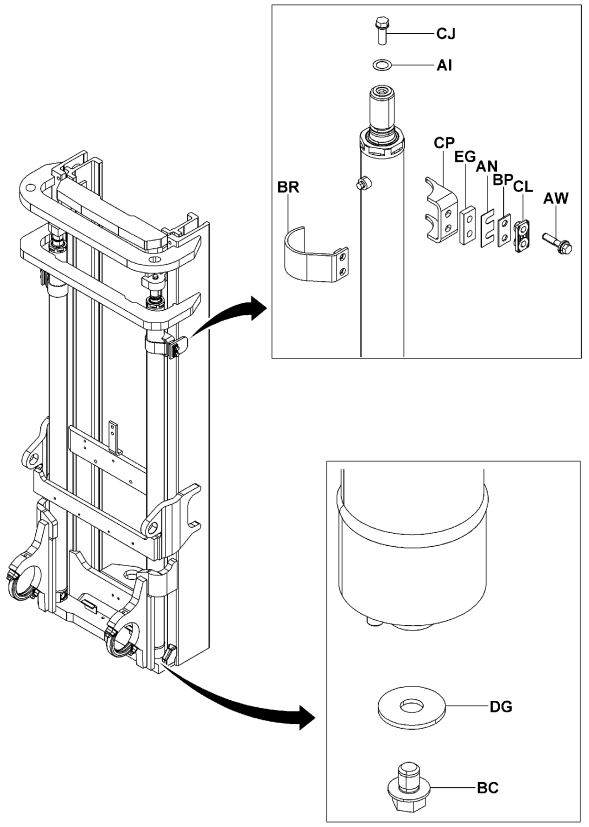


6503-280

6503-280_

V..10N,15N,18N [MOUNTING]

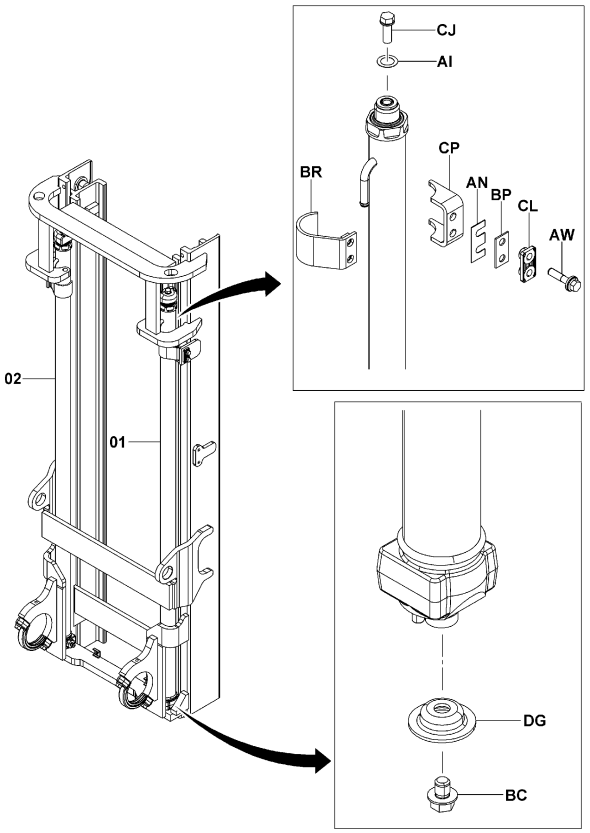


6503-257

6503-257_

| 6503 | REAR LIFT CYLINDER<br>CYLINDRE DE LEVEE ARRIERE | HINTERER HUBZYLINDER<br>CILINDRO DE ELEVACION TRASERO |
|---|---|---|

V..20N,25N [MOUNTING]

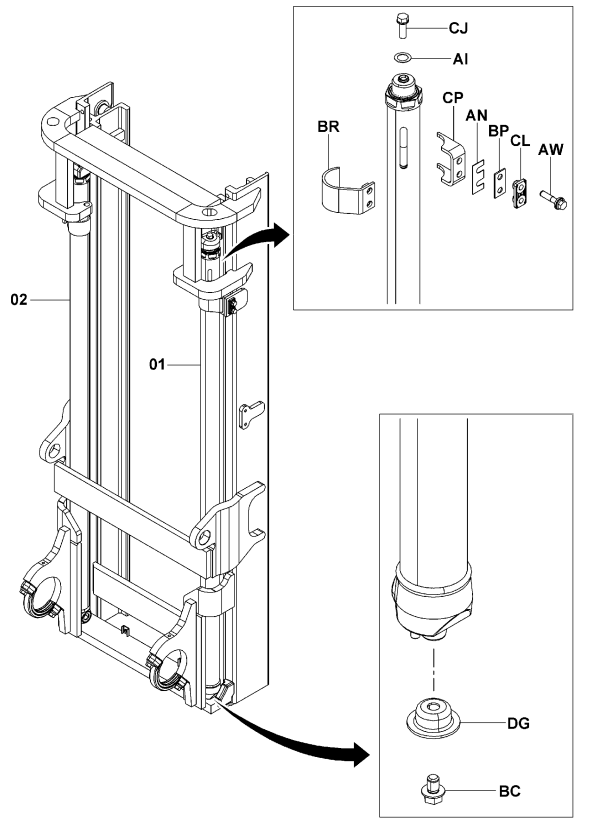


6503-259

6503-259_

V..30N,K30N [MOUNTING]

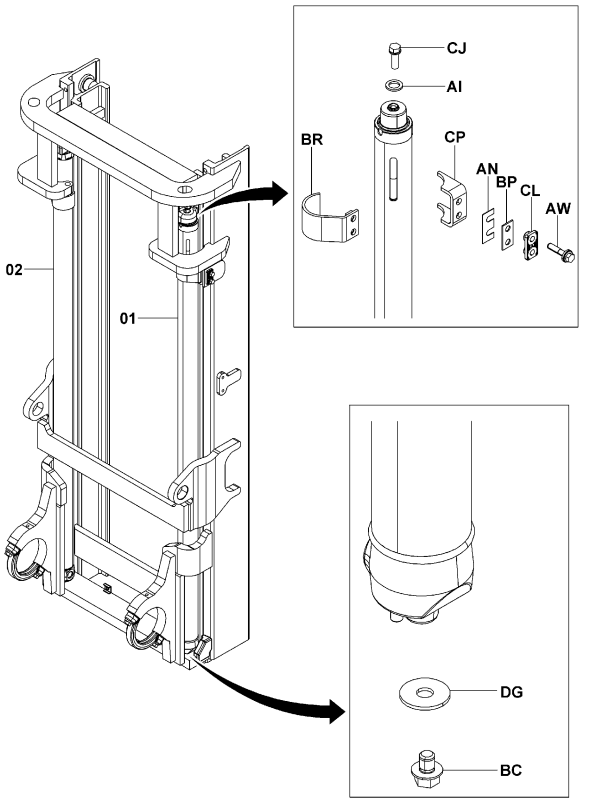


6503-260

6503-260_

| 6503 | REAR LIFT CYLINDER<br>CYLINDRE DE LEVEE ARRIERE | HINTERER HUBZYLINDER<br>CILINDRO DE ELEVACION TRASERO |
|---|---|---|

V..J35N [MOUNTING]

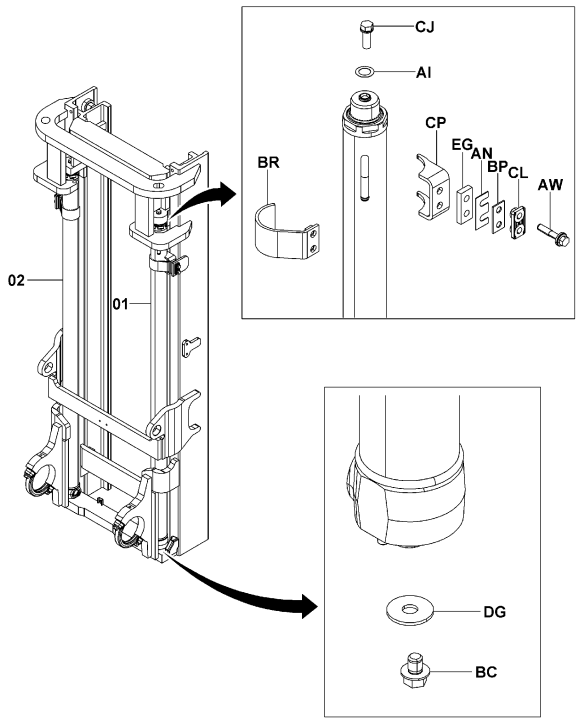


6503-261

6503-261_

V..K20N,K25N [MOUNTING]

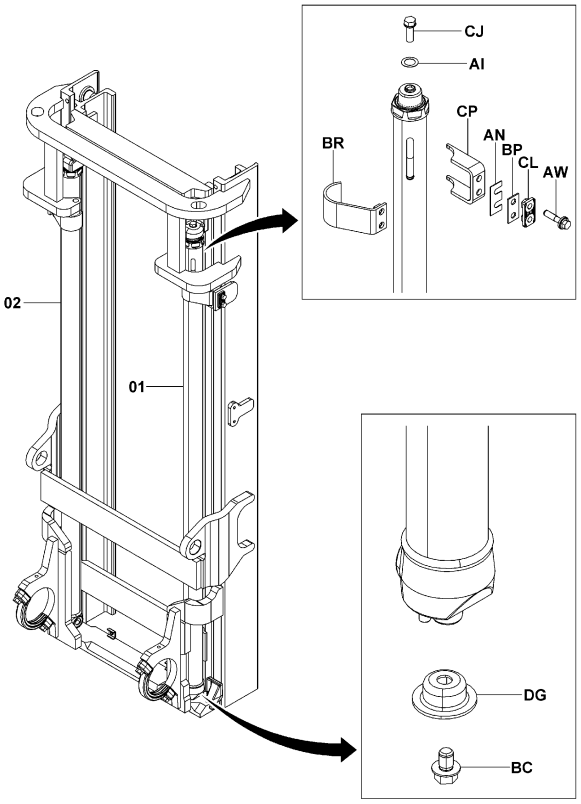


6503-258

6503-258_

| 6503 | REAR LIFT CYLINDER<br>CYLINDRE DE LEVEE ARRIERE | HINTERER HUBZYLINDER<br>CILINDRO DE ELEVACION TRASERO |
|---|---|---|

FSV..10N,15N,18N

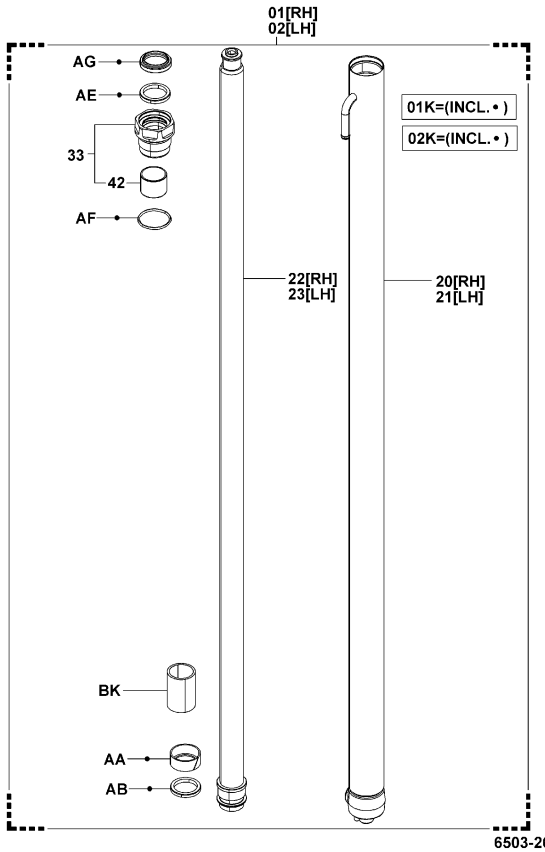


6503-266

6503-266_

FSV..20N,25N,K20N,K25N

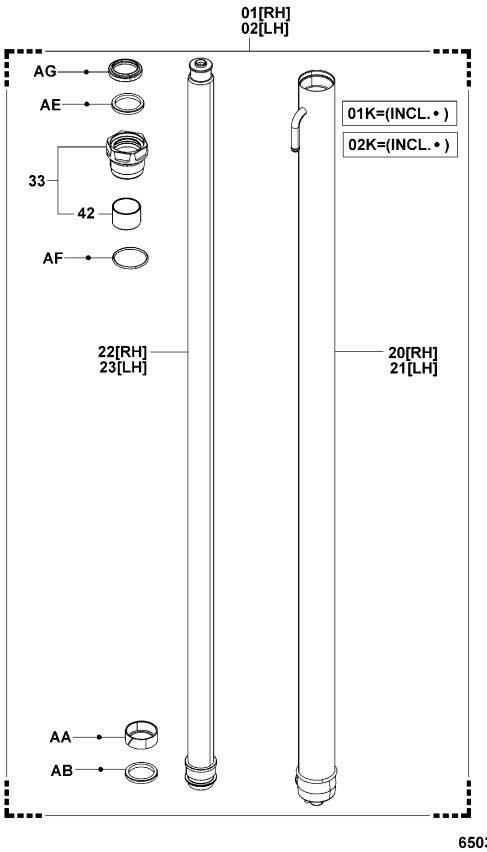


6503-268

6503-268_

| 6503 | REAR LIFT CYLINDER<br>CYLINDRE DE LEVEE ARRIERE | HINTERER HUBZYLINDER<br>CILINDRO DE ELEVACION TRASERO |
|---|---|---|

FSV..J35N

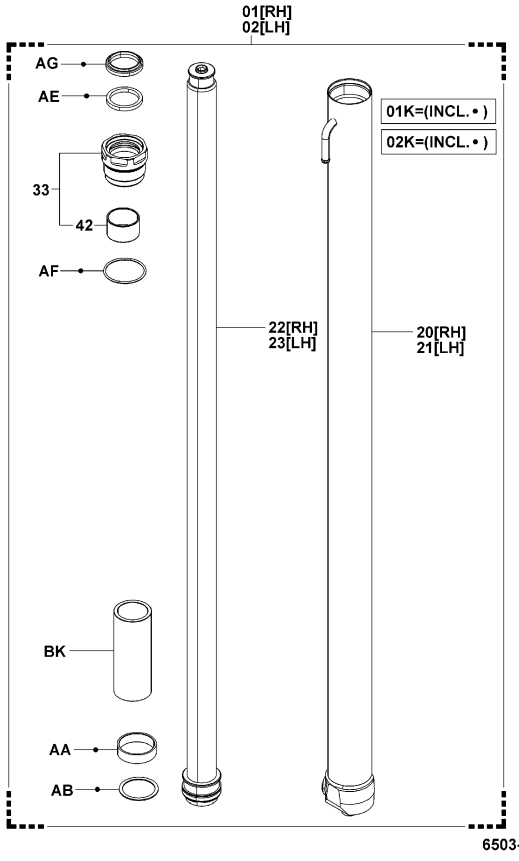


6503-273

6503-273_

FSV..K30N,30N

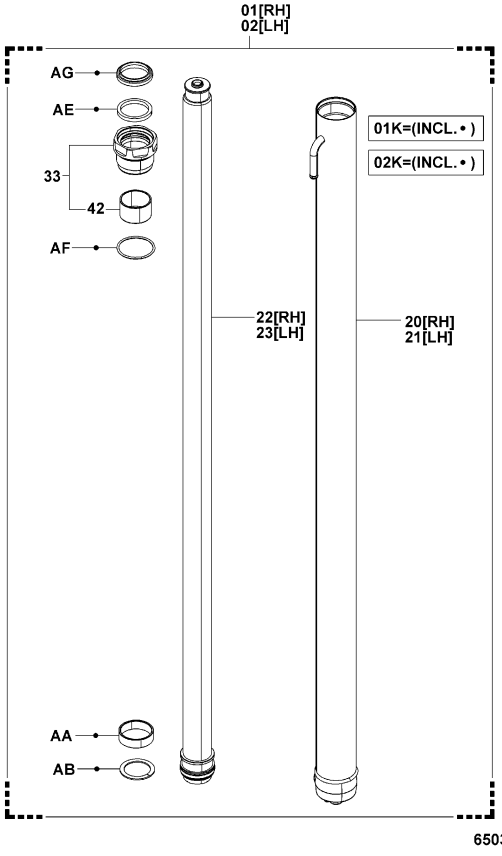


6503-271

6503-271_

| 6503 | REAR LIFT CYLINDER<br>CYLINDRE DE LEVEE ARRIERE | HINTERER HUBZYLINDER<br>CILINDRO DE ELEVACION TRASERO |
|---|---|---|

FV..10N,15N,18N

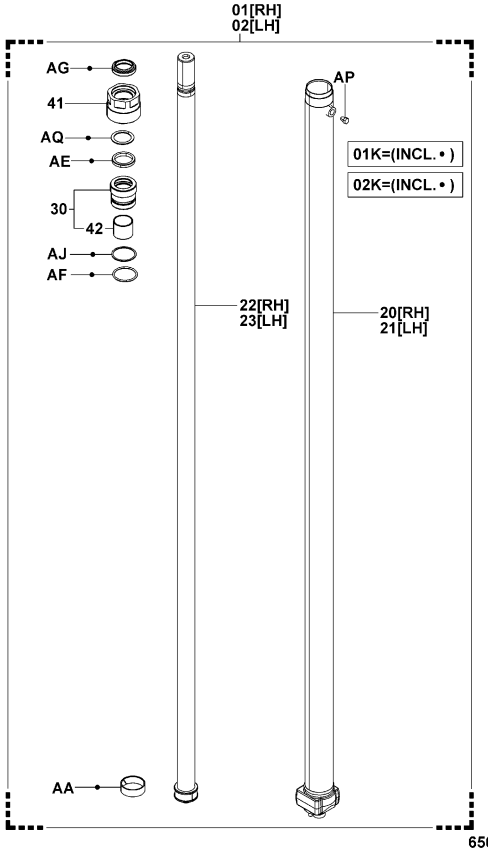


6503-274

6503-274_

FV..20N,25N,K20N,K25N

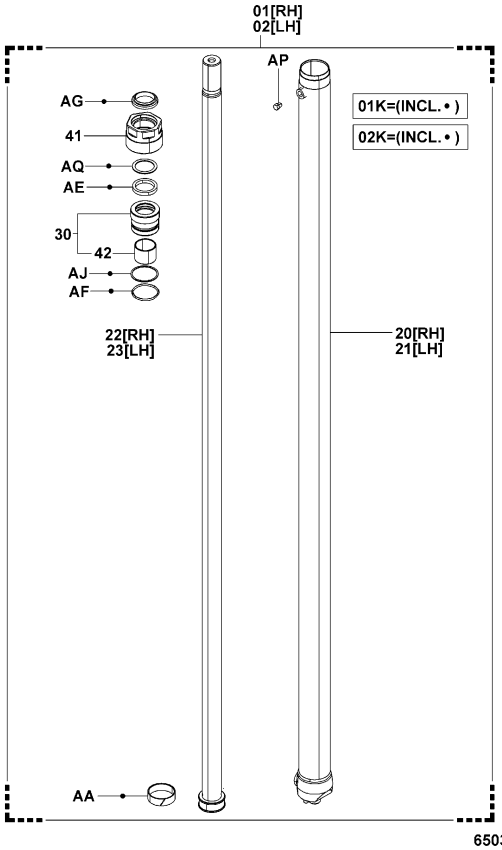


6503-277

6503-277_

## 6503

REAR LIFT CYLINDER
CYLINDRE DE LEVEE ARRIERE

HINTERER HUBZYLINDER
CILINDRO DE ELEVACION TRASERO

FV..30N,K30N

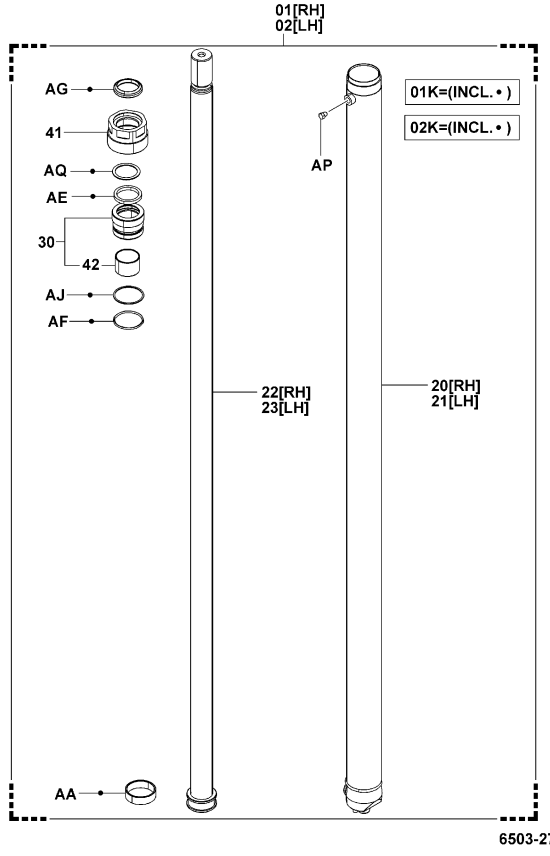


FV..J35N

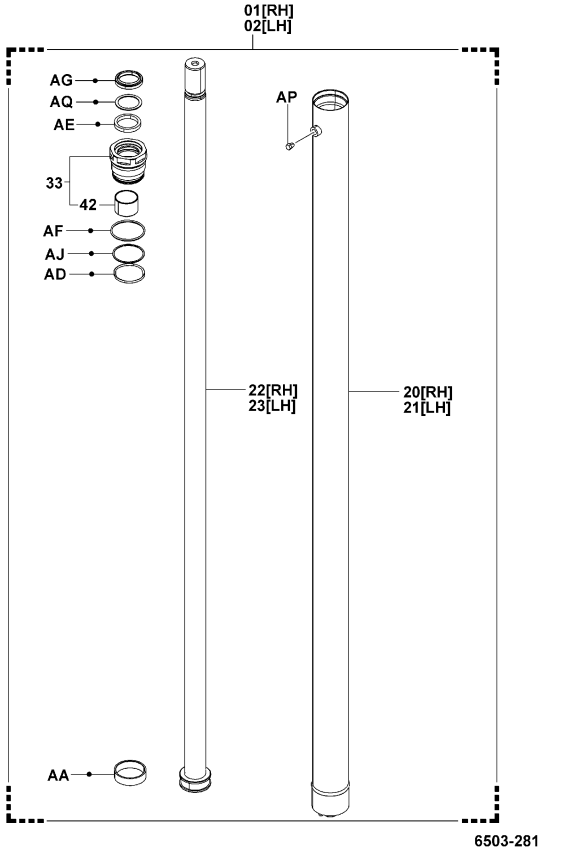


## 6503

REAR LIFT CYLINDER
CYLINDRE DE LEVEE ARRIERE

HINTERER HUBZYLINDER
CILINDRO DE ELEVACION TRASERO

V..10N,15N,18N

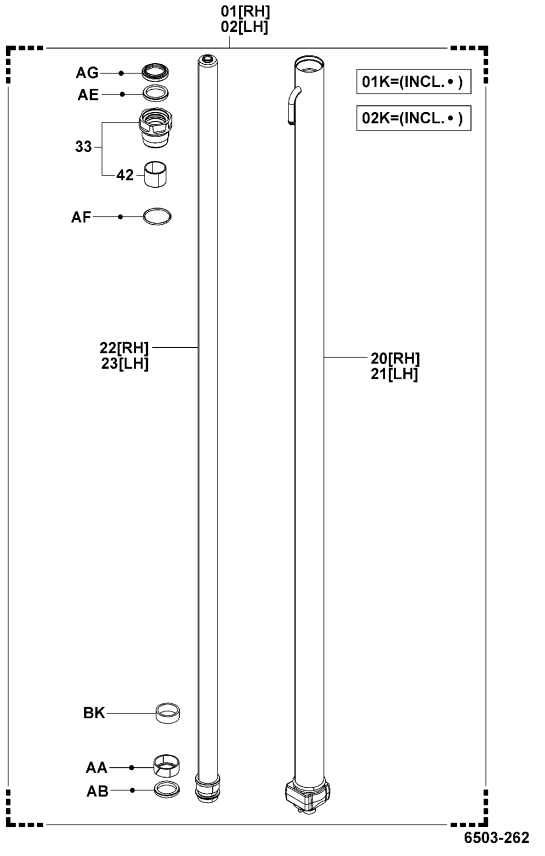


V..J35N

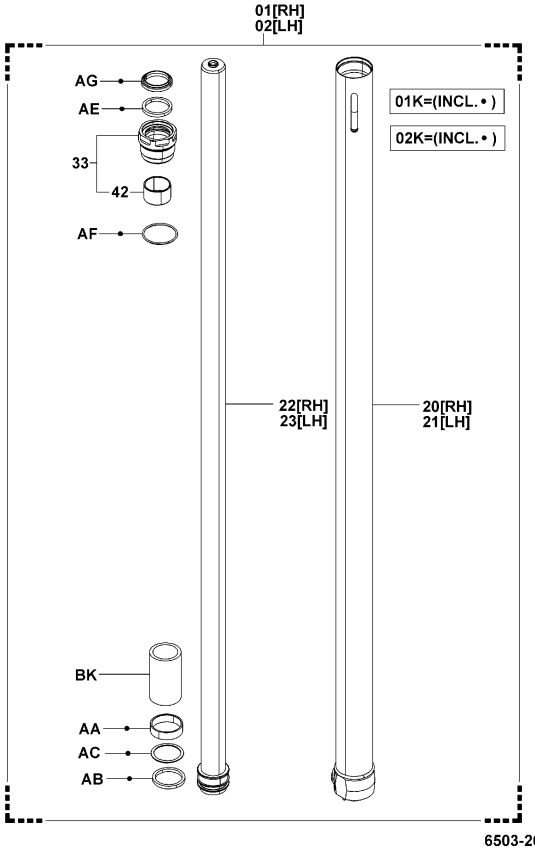

# 6503

**REAR LIFT CYLINDER**
**CYLINDRE DE LEVEE ARRIERE**
**HINTERER HUBZYLINDER**
**CILINDRO DE ELEVACION TRASERO**

**V..K20N,K25N,20N,25N**

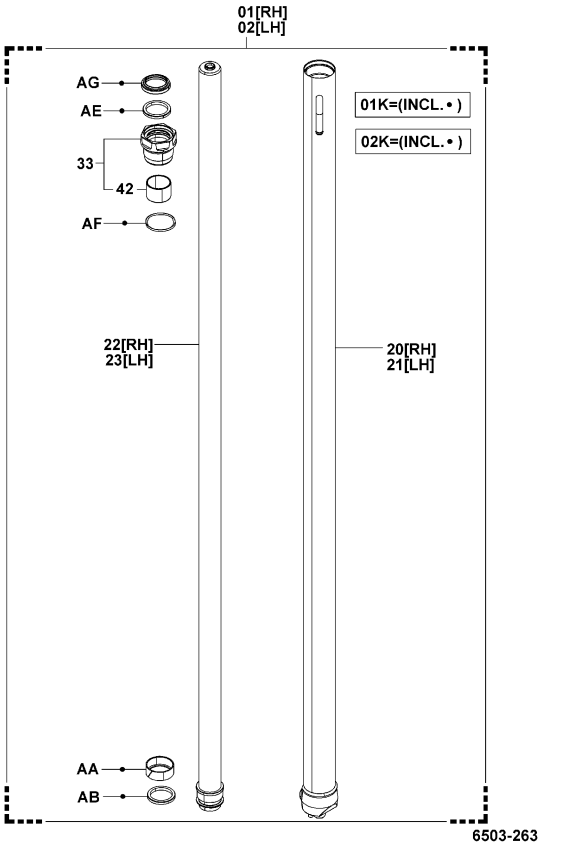


**V..K30N,30N**

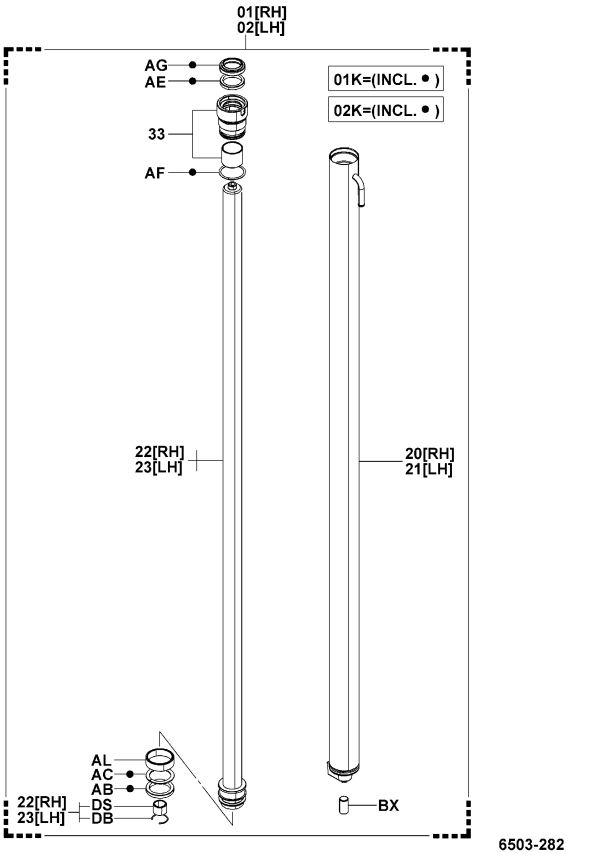



# 6503

**REAR LIFT CYLINDER**
**CYLINDRE DE LEVEE ARRIERE**
**HINTERER HUBZYLINDER**
**CILINDRO DE ELEVACION TRASERO**


| PART NAME CODE | PART NAME | QTY |
|---|---|---|
| **6503-01** | **CYLINDER ASSY, LIFT, RH**<br>ENS. DE CYLINDRE<br>ZYLINDER, VOLLST.<br>CONJUNTO DEL CILINDRO | 1 |
| **6503-01K** | **CYLINDER O/H KIT, LIFT, RH**<br>JEU O/H DE CYLINDRE<br>ZYLINDER-UBERHOLSATZ<br>JUEGO O/H DEL CILINDRO | 1 |
| **6503-02** | **CYLINDER ASSY, LIFT, LH**<br>ENS. DE CYLINDRE<br>ZYLINDER, VOLLST.<br>CONJUNTO DEL CILINDRO | 1 |
| **6503-02K** | **CYLINDER O/H KIT, LIFT, LH**<br>JEU O/H DE CYLINDRE<br>ZYLINDER-UBERHOLSATZ<br>JUEGO O/H DEL CILINDRO | 1 |
| **6503-20** | **CYLINDER SUB-ASSY, LIFT, RH**<br>SOUS-ENS. DE CYLINDRE<br>ZYLINDER-TEILGRUPPE<br>SUBCONJUNTO DEL CILINDRO | 1 |
| **6503-21** | **CYLINDER SUB-ASSY, LIFT, LH**<br>SOUS-ENS. DE CYLINDRE<br>ZYLINDER-TEILGRUPPE<br>SUBCONJUNTO DEL CILINDRO | 1 |
| **6503-22** | **ROD SUB-ASSY, LIFT CYLINDER, RH**<br>SOUS-ENS. DE BIELLE<br>STANGEN-TEILGRUPPE<br>SUBCONJUNTO DE LA VARILLA | 1 |
| **6503-23** | **ROD SUB-ASSY, LIFT CYLINDER, LH**<br>SOUS-ENS. DE BIELLE<br>STANGEN-TEILGRUPPE<br>SUBCONJUNTO DE LA VARILLA | 1 |
| **6503-30** | **GUIDE SUB-ASSY, LIFT CYLINDER ROD, RH**<br>SOUS-ENS. DE GUIDE<br>FUHRUNGS-TEILGRUPPE<br>SUBCONJUNTO DE GUIA | 1 |
| **6503-33** | **COVER SUB-ASSY, LIFT CYLINDER**<br>SOUS-ENS. DE COUVERCLE<br>DECKEL-TEILGRUPPE<br>SUBCONJUNTO DE CUBIERTA | 1- 2 |
| **6503-41** | **COVER, LIFT CYLINDER**<br>COUVERCLE<br>DECKEL<br>CUBIERTA | 1 |
| **6503-42** | **SLEEVE, LIFT CYLINDER ROD GUIDE**<br>MANCHON<br>HULSE<br>MANGUITO | 1 |
| **6503-AA** | **RING, WEAR**<br>ANNEAU<br>RING<br>ANILLO | 1 |
| **6503-AB** | **PACKING, U**<br>CALE<br>DICHTUNG<br>EMPAQUETADURA | 1- 2 |
| **6503-AC** | **RING, BACK UP**<br>ANNEAU<br>RING<br>ANILLO | 1- 2 |
| **6503-AD** | **RING, O**<br>ANNEAU<br>RING<br>ANILLO | 1 |
| **6503-AE** | **PACKING, U**<br>CALE<br>DICHTUNG<br>EMPAQUETADURA | 1- 2 |
| **6503-AF** | **RING, O**<br>ANNEAU<br>RING<br>ANILLO | 1- 2 |
| **6503-AG** | **SEAL, DUST**<br>JOINT<br>ABDICHTUNG<br>SELLO | 1- 2 |
| **6503-AI** | **SHIM**<br>CALE<br>AUSGLEICHSCHEIBE<br>CALCE | 99 |

| 6503 | REAR LIFT CYLINDER<br>CYLINDRE DE LEVEE ARRIERE | HINTERER HUBZYLINDER<br>CILINDRO DE ELEVACION TRASERO |
|---|---|---|

| PART NAME CODE | PART NAME | QTY | PART NAME CODE | PART NAME | QTY |
|---|---|---|---|---|---|
| 6503-AJ | **RING, BACK UP**<br>ANNEAU<br>RING<br>ANILLO | 1 | 6503-BX | **PIN**<br>GOUPILLE<br>STIFT<br>PASADOR | 2 |
| 6503-AL | **BUSHING**<br>BAGE<br>BUCHSE<br>MANGUITO | 2 | 6503-CA | **NUT**<br>ECROU<br>MUTTER<br>TUERCA | 2 |
| 6503-AN | **SHIM**<br>CALE<br>AUSGLEICHSCHEIBE<br>CALCE | 99 | 6503-CJ | **BOLT**<br>BOULON<br>SCHRAUBE<br>PERNO | 2 |
| 6503-AP | **PLUG**<br>BOUCHON<br>STOPFEN<br>TAPON | 1 | 6503-CL | **BUSHING**<br>BAGE<br>BUCHSE<br>MANGUITO | 2 |
| 6503-AQ | **RING, BACK UP**<br>ANNEAU<br>RING<br>ANILLO | 1 | 6503-CP | **PLATE**<br>PLAQUE<br>PLATTE<br>PLACA | 2 |
| 6503-AW | **BOLT**<br>BOULON<br>SCHRAUBE<br>PERNO | 4 | 6503-DB | **RING**<br>ANNEAU<br>RING<br>ANILLO | 1 |
| 6503-BC | **BOLT**<br>BOULON<br>SCHRAUBE<br>PERNO | 2 | 6503-DG | **PLATE**<br>PLAQUE<br>PLATTE<br>PLACA | 2 |
| 6503-BK | **COLLAR**<br>COLLIER<br>BUCHSE<br>COLLAR | 1 | 6503-DS | **BEARING, CUSHION**<br>ROULEMENT<br>LAGER<br>COJINETE | 1 |
| 6503-BP | **PLATE**<br>PLAQUE<br>PLATTE<br>PLACA | 2 | 6503-EG | **COLLAR**<br>COLLIER<br>BUCHSE<br>COLLAR | 2 |
| 6503-BR | **SUPPORT SUB-ASSY**<br>SOUS-ENS. DE SUPPORT<br>STUTZEN-TEILGRUPPE<br>SUBCONJUNTO DEL SOPORTE | 2 | | | |


| 6503 | REAR LIFT CYLINDER<br>CYLINDRE DE LEVEE ARRIERE | HINTERER HUBZYLINDER<br>CILINDRO DE ELEVACION TRASERO |
|---|---|---|

| PART NAME CODE | PART NAME | QTY | PART NAME CODE | PART NAME | QTY |
|---|---|---|---|---|---|

[ASSY & MOUNT]

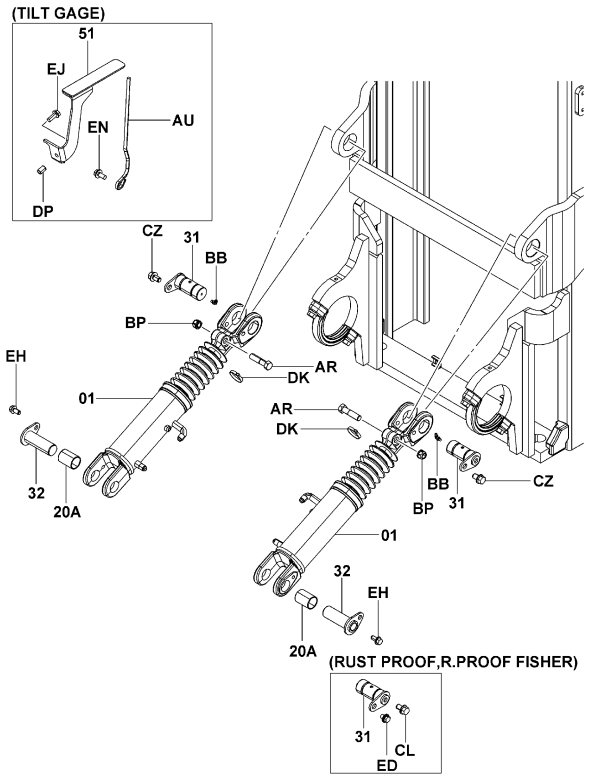


6511-296

6511-296_

10N,15N,18N,20N,25N,K20N,K25N [INNER PARTS]

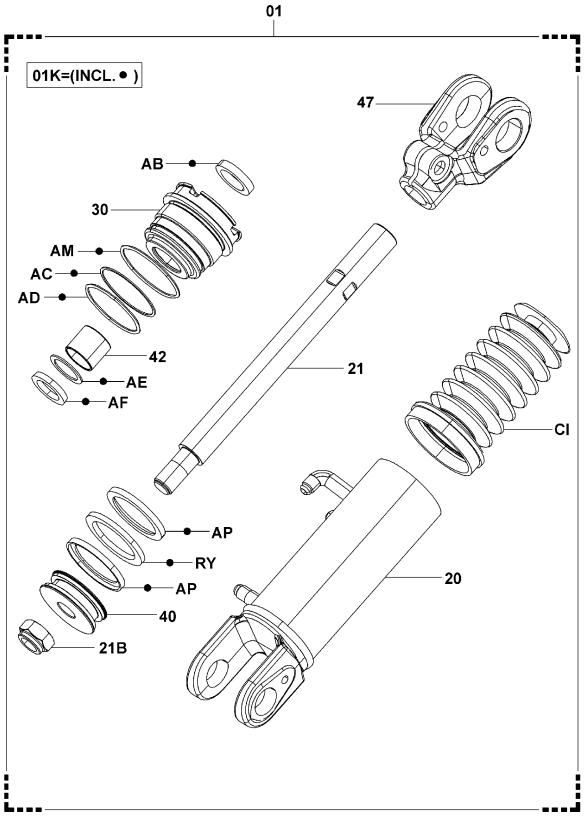


6511-297

6511-297_


| 6511 | TILT CYLINDER<br>CYLINDRE D'INCLINAISON | NEIGEZYLINDER<br>CILINDRO DE INCLINACION |
|---|---|---|


30N,J35N,K30N [INNER PARTS]

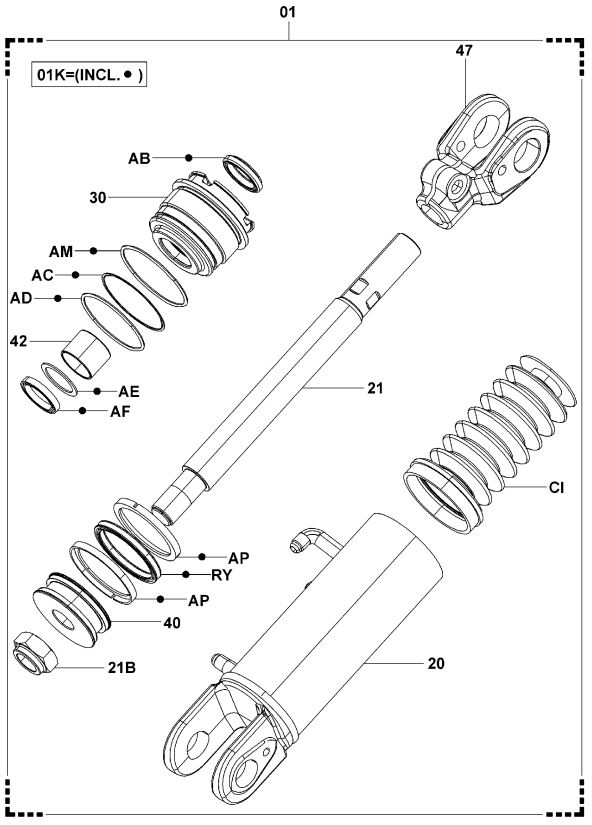


6511-298

6511-298_

(TILT HOLE BOOT, LOW NOISE) [2/2]

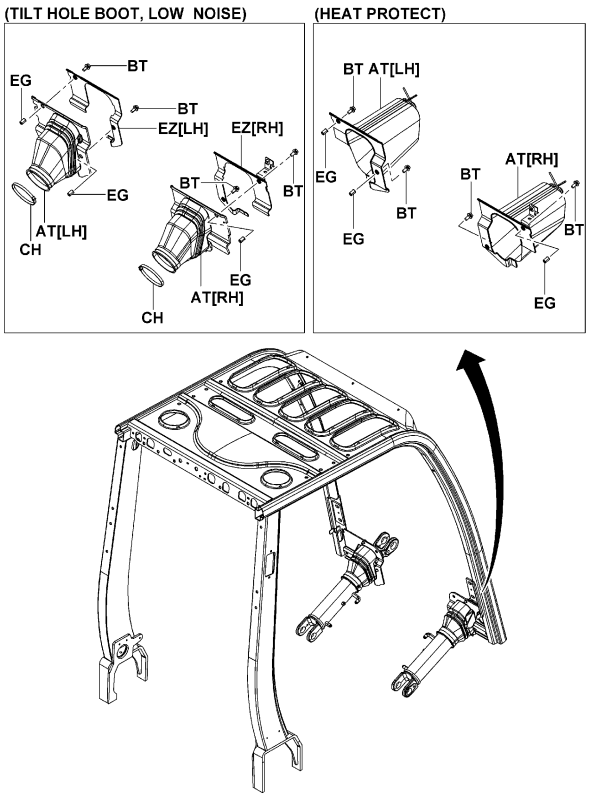


6511-299

6511-299_

## 6511

**TILT CYLINDER**
**CYLINDRE D'INCLINAISON**
**NEIGEZYLINDER**
**CILINDRO DE INCLINACION**

| PART NAME CODE | PART NAME | QTY |
|---|---|---|
| 6511-01 | **CYLINDER ASSY, TILT**<br>ENS. DE CYLINDRE<br>ZYLINDER, VOLLST.<br>CONJUNTO DEL CILINDRO | 2 |
| 6511-01K | **CYLINDER O/H KIT, TILT**<br>JEU O/H DE CYLINDRE<br>ZYLINDER-UBERHOLSATZ<br>JUEGO O/H DEL CILINDRO | 2 |
| 6511-20 | **CYLINDER SUB-ASSY, TILT**<br>SOUS-ENS. DE CYLINDRE<br>ZYLINDER-TEILGRUPPE<br>SUBCONJUNTO DEL CILINDRO | 2 |
| 6511-20A | **BUSHING, PIN, CYLINDER**<br>BAGE<br>BUCHSE<br>MANGUITO | 2 |
| 6511-21 | **ROD SUB-ASSY, TILT CYLINDER PISTON**<br>SOUS-ENS. DE BIELLE<br>STANGEN-TEILGRUPPE<br>SUBCONJUNTO DE LA VARILLA | 2 |
| 6511-21B | **NUT, CASTLE**<br>ECROU<br>MUTTER<br>TUERCA | 2 |
| 6511-30 | **GUIDE SUB-ASSY, TILT CYLINDER ROD**<br>SOUS-ENS. DE GUIDE<br>FUHRUNGS-TEILGRUPPE<br>SUBCONJUNTO DE GUIA | 2 |
| 6511-31 | **PIN SUB-ASSY, TILT CYLINDER, FR**<br>SOUS-ENS. DE GOUPILLE<br>STIFT-TEILGRUPPE<br>SUBCONJUNTO DE PASADOR | 2 |
| 6511-32 | **PIN SUB-ASSY, TILT CYLINDER, RR**<br>SOUS-ENS. DE GOUPILLE<br>STIFT-TEILGRUPPE<br>SUBCONJUNTO DE PASADOR | 2 |
| 6511-40 | **PISTON, TILT CYLINDER**<br>PISTON<br>KOLBEN<br>PISTON | 2 |
| 6511-42 | **SLEEVE, TILT CYLINDER ROD GUIDE**<br>MANCHON<br>HULSE<br>MANGUITO | 2 |
| 6511-47 | **JOINT**<br>RACCORD<br>GELENK<br>JUNTA | 2 |
| 6511-51 | **GAGE SUB-ASSY, TILT**<br>SOUS-ENS. DE JAUGE<br>MESSGERATE-TEILGRUPPE<br>SUBCONJUNTO DE MEDIDOR | 1 |
| 6511-AB | **SEAL, DUST**<br>JOINT<br>ABDICHTUNG<br>SELLO | 2 |
| 6511-AC | **RING, BACK UP**<br>ANNEAU<br>RING<br>ANILLO | 2 |
| 6511-AD | **RING, O**<br>ANNEAU<br>RING<br>ANILLO | 2 |
| 6511-AE | **RING, BACK UP**<br>ANNEAU<br>RING<br>ANILLO | 2 |
| 6511-AF | **PACKING, U**<br>CALE<br>DICHTUNG<br>EMPAQUETADURA | 2 |
| 6511-AM | **RING, O**<br>ANNEAU<br>RING<br>ANILLO | 2 |
| 6511-AP | **SLEEVE, CYLINDER PISTON**<br>MANCHON<br>HULSE<br>MANGUITO | 4 |


## 6511

**TILT CYLINDER**
**CYLINDRE D'INCLINAISON**
**NEIGEZYLINDER**
**CILINDRO DE INCLINACION**


| PART NAME CODE | PART NAME | QTY |
|---|---|---|
| 6511-AR | **BOLT**<br>BOULON<br>SCHRAUBE<br>PERNO | 2 |
| 6511-AT | **BOOT SUB-ASSY**<br>SOUS-ENS. DE COFFRE<br>MANSCHETTEN-TEILGRUPPE<br>SUBCONJUNTO DEL FORRO | 1 |
| 6511-AU | **BAR, TILT GAGE**<br>BAR<br>STAB<br>BARRA | 1 |
| 6511-BB | **FITTING, GREASE**<br>RACCORD<br>ANSCHLUSSTUCK<br>ACOPLADOR | 2 |
| 6511-BP | **NUT**<br>ECROU<br>MUTTER<br>TUERCA | 2 |
| 6511-BT | **BOLT**<br>BOULON<br>SCHRAUBE<br>PERNO | 4 |
| 6511-CH | **CLAMP**<br>PINSE<br>KLEMME<br>ABRAZADERA | 2 |
| 6511-CI | **BOOT, CYLINDER**<br>COFFRE<br>MANSCHETTE<br>FORRO | 2 |
| 6511-CL | **BOLT**<br>BOULON<br>SCHRAUBE<br>PERNO | 1- 2 |
| 6511-CZ | **BOLT**<br>BOULON<br>SCHRAUBE<br>PERNO | 2 |
| 6511-DK | **CLAMP**<br>PINSE<br>KLEMME<br>ABRAZADERA | 2 |
| 6511-DP | **NUT**<br>ECROU<br>MUTTER<br>TUERCA | 1 |
| 6511-DZ | **WASHER, PLATE**<br>RODELLE<br>UNTERLEGSCHEIBE<br>ARANDELA | 1 |
| 6511-ED | **BOLT**<br>BOULON<br>SCHRAUBE<br>PERNO | 2 |
| 6511-EG | **NUT**<br>ECROU<br>MUTTER<br>TUERCA | 2- 3 |
| 6511-EH | **BOLT**<br>BOULON<br>SCHRAUBE<br>PERNO | 2 |
| 6511-EJ | **BOLT**<br>BOULON<br>SCHRAUBE<br>PERNO | 1 |
| 6511-EN | **BOLT**<br>BOULON<br>SCHRAUBE<br>PERNO | 1 |
| 6511-EZ | **BRACKET**<br>SUPPORT<br>TRÄGER<br>SOPORTE | 1 |
| 6511-RY | **PACKING, O**<br>CALE<br>DICHTUNG<br>EMPAQUETADURA | 2 |

| 6701 | OIL PUMP<br>POMPE A HUILE | ÖLPUMPE<br>BOCBA DE ACEITE |
|---|---|---|

[ASSY & MOUNT]

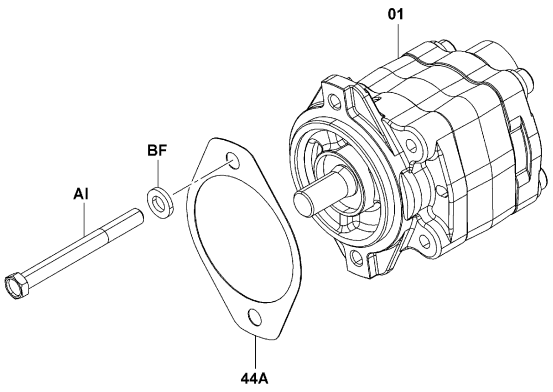


6701-218

6701-218_

1DZ,4Y [INNER PARTS]

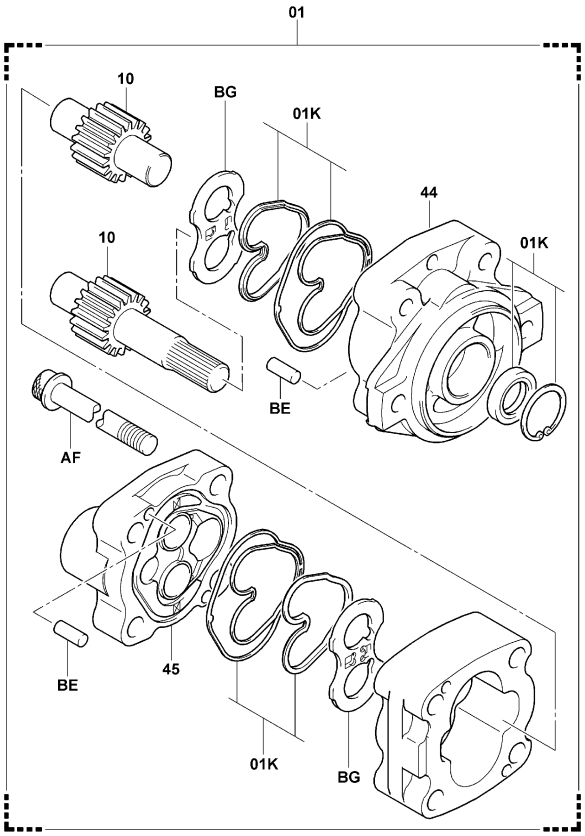


6701-220

6701-220_


| 6701 | OIL PUMP<br>POMPE A HUILE | ÖLPUMPE<br>BOCBA DE ACEITE |
|---|---|---|


2Z,3Z [INNER PARTS]

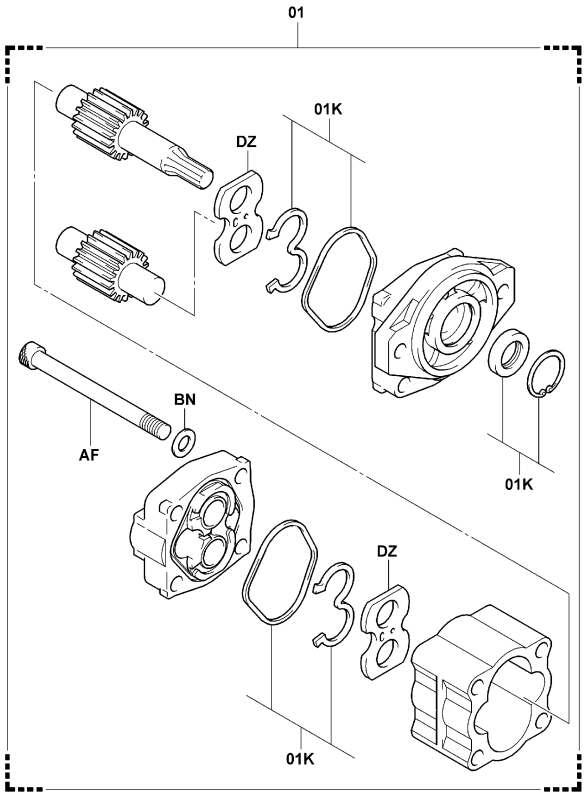


6701-219A

6701-219A

4Y (LOW NOISE, PREMIUM CABIN, 2-DOOR CABIN)

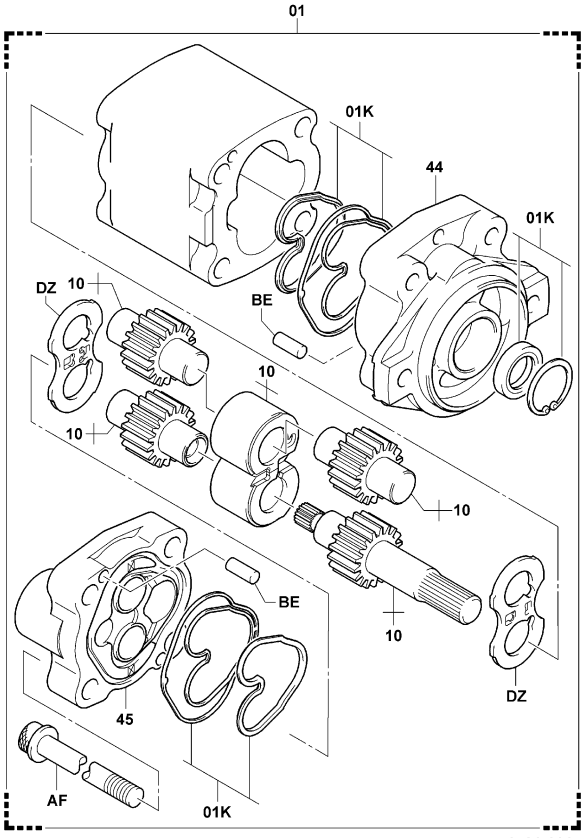


6701-221

6701-221_

| 6701 | OIL PUMP<br>POMPE A HUILE | ÖLPUMPE<br>BOCBA DE ACEITE |
|---|---|---|

| PART NAME CODE | PART NAME | QTY |
|---|---|---|
| 6701-01 | **PUMP ASSY, OIL**<br>ENS. DE POMPE<br>PUMPENAGGREGAT<br>CONJUNTO DE LA BOMBA | 1 |
| 6701-01K | **PUMP O/H KIT, OIL**<br>JEU O/H DE POMPE<br>PUMPEN-UBERHOLSATZ<br>JUEGO O/H DE LA BOMBA | 1 |
| 6701-10 | **GEAR SET**<br>JEU D'ENGRENAGE<br>ZAHNRADSATZ<br>JUEGO DE ENGRANAJES | 1 |
| 6701-44 | **FLANGE, MOUNTING**<br>BRIDE<br>FLANSCH<br>BRIDA | 1 |
| 6701-44A | **PACKING, OIL PUMP**<br>CALE<br>DICHTUNG<br>EMPAQUETADURA | 1 |
| 6701-45 | **COVER**<br>COUVERCLE<br>DECKEL<br>CUBIERTA | 1 |
| 6701-AF | **BOLT**<br>BOULON<br>SCHRAUBE<br>PERNO | 4 |
| 6701-AI | **BOLT**<br>BOULON<br>SCHRAUBE<br>PERNO | 2 |
| 6701-BE | **PIN**<br>GOUPILLE<br>STIFT<br>PASADOR | 4 |
| 6701-BF | **WASHER**<br>RODELLE<br>UNTERLEGSCHEIBE<br>ARANDELA | 2 |
| 6701-BG | **PLATE, SIDE, A**<br>PLAQUE<br>PLATTE<br>PLACA | 2 |
| 6701-BN | **WASHER**<br>RODELLE<br>UNTERLEGSCHEIBE<br>ARANDELA | 4 |
| 6701-DZ | **PLATE**<br>PLAQUE<br>PLATTE<br>PLACA | 2 |


| 6701 | OIL PUMP<br>POMPE A HUILE | ÖLPUMPE<br>BOCBA DE ACEITE |
|---|---|---|


| PART NAME CODE | PART NAME | QTY |
|---|---|---|

| 6705 | OIL CONTROL VALVE<br>SOUPAPE DE COMMANDE D'HUILE | STEUERVENTIL<br>CALVULA DE CONTROL DE ACEITE |
|---|---|---|

[1/2]

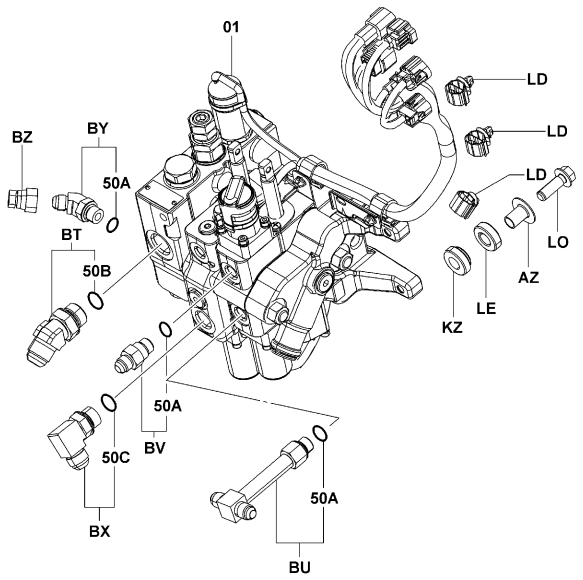


6705-D19

6705-D19_

| 6705 | OIL CONTROL VALVE<br>SOUPAPE DE COMMANDE D'HUILE | STEUERVENTIL<br>CALVULA DE CONTROL DE ACEITE |
|---|---|---|

[2/2]

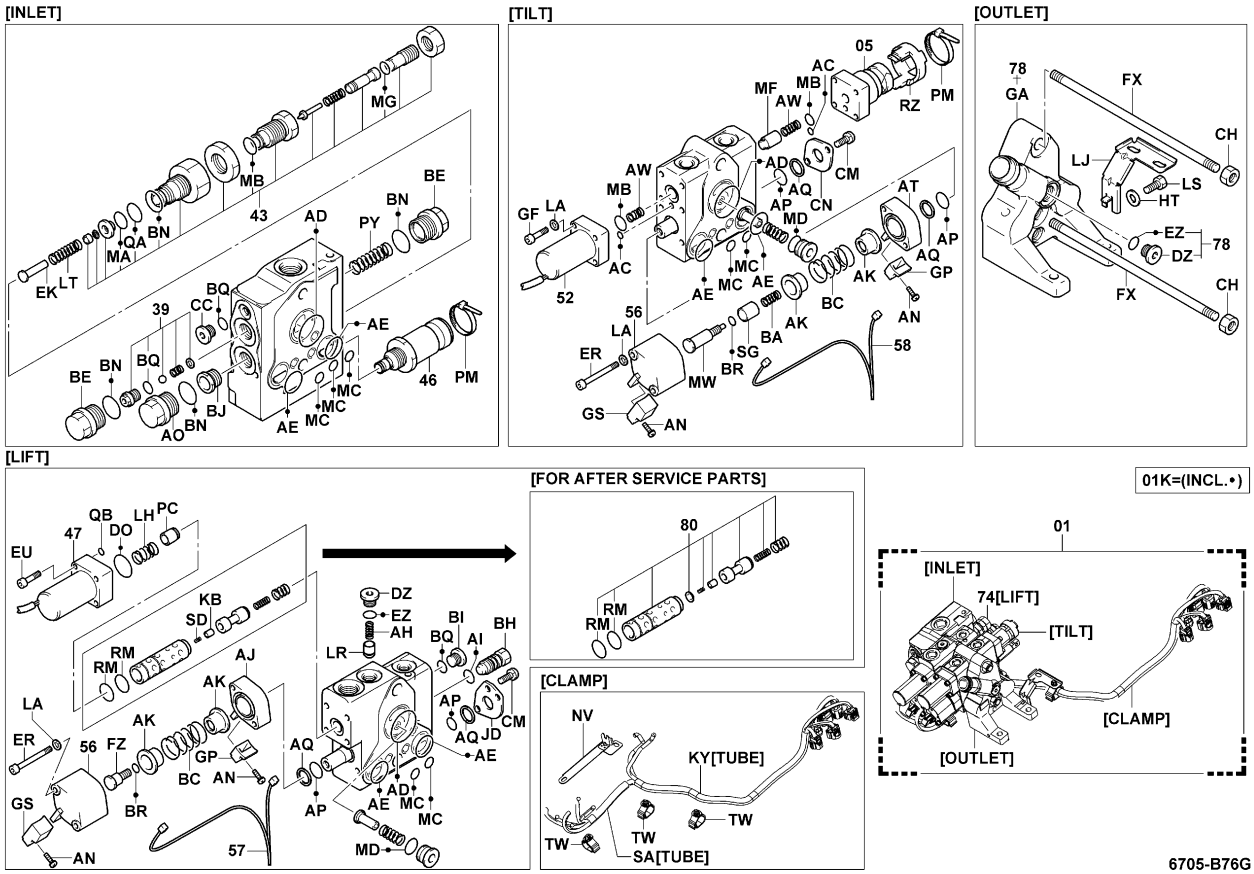


6705-B76G

6705-B76G

| 6705 | OIL CONTROL VALVE<br>SOUPAPE DE COMMANDE D'HUILE | STEUERVENTIL<br>CALVULA DE CONTROL DE ACEITE |
|---|---|---|

(MINI LEVER, JOY STICK) [1/2]

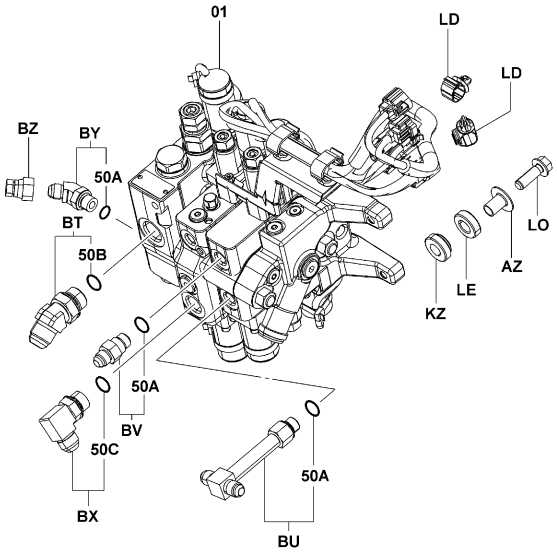


6705-D20

6705-D20_

| 6705 | OIL CONTROL VALVE<br>SOUPAPE DE COMMANDE D'HUILE | STEUERVENTIL<br>CALVULA DE CONTROL DE ACEITE |
|---|---|---|

(MINI LEVER, JOY STICK) [2/2]

[INLET]

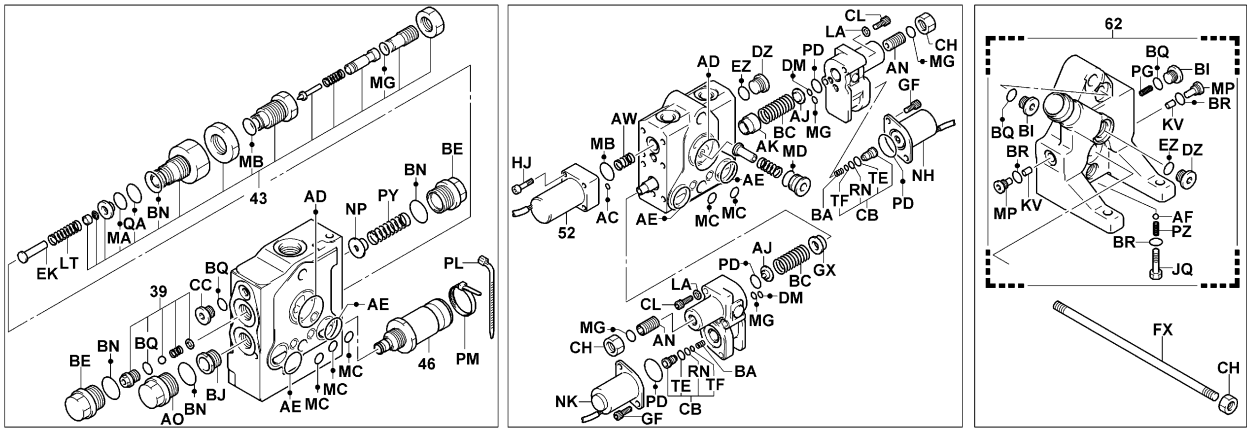


[LIFT]

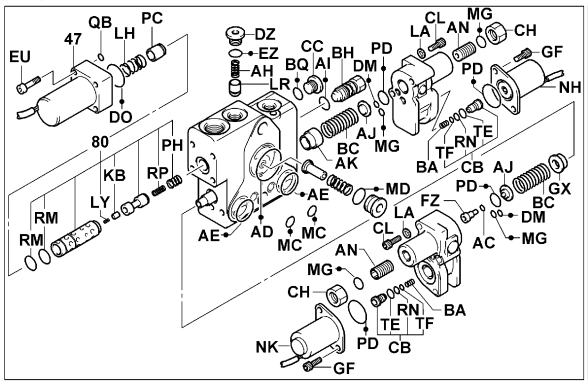


[CLAMP]

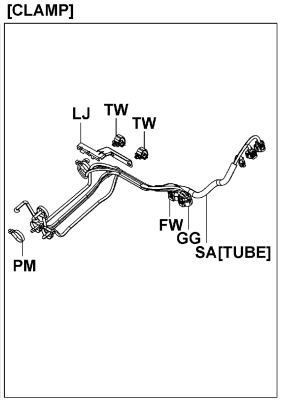


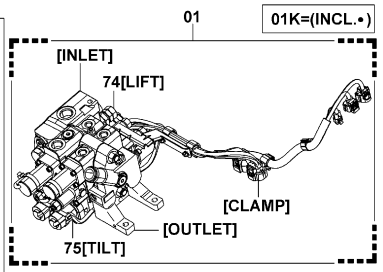


6705-B77D

6705-B77D

## 6705 OIL CONTROL VALVE / SOUPAPE DE COMMANDE D'HUILE / STEUERVENTIL / CALVULA DE CONTROL DE ACEITE

| PART NAME CODE | PART NAME | QTY |
|---|---|---|
| 6705-01 | **VALVE ASSY, OIL CONTROL**<br>ENS. DE SOUPAPE<br>VENTIL, VOLLST.<br>CONJUNTO DE VALVULA | 1 |
| 6705-01K | **VALVE O/H KIT, OIL CONTROL**<br>JEU O/H DE SOUPAPE<br>VENTIL-UBERHOLSATZ<br>JUEGO O/H DE VALVULA | 1 |
| 6705-05 | **VALVE ASSY, SOLENOID**<br>ENS. DE SOUPAPE<br>VENTIL, VOLLST.<br>CONJUNTO DE VALVULA | 1 |
| 6705-39 | **VALVE ASSY, CHECK**<br>ENS. DE SOUPAPE<br>VENTIL, VOLLST.<br>CONJUNTO DE VALVULA | 1 |
| 6705-43 | **VALVE ASSY, PILOT RELIEF**<br>ENS. DE SOUPAPE<br>VENTIL, VOLLST.<br>CONJUNTO DE VALVULA | 1 |
| 6705-46 | **VALVE ASSY, SOLENOID**<br>ENS. DE SOUPAPE<br>VENTIL, VOLLST.<br>CONJUNTO DE VALVULA | 1 |
| 6705-47 | **VALVE ASSY, SOLENOID**<br>ENS. DE SOUPAPE<br>VENTIL, VOLLST.<br>CONJUNTO DE VALVULA | 1 |
| 6705-50A | **RING, O, NO.1 (FOR VALVE FITTING)**<br>ANNEAU<br>RING<br>ANILLO | 3 |
| 6705-50B | **RING, O, NO.2 (FOR VALVE FITTING)**<br>ANNEAU<br>RING<br>ANILLO | 1 |
| 6705-50C | **RING, O, NO.3 (FOR VALVE FITTING)**<br>ANNEAU<br>RING<br>ANILLO | 1 |
| 6705-52 | **VALVE ASSY, SOLENOID**<br>ENS. DE SOUPAPE<br>VENTIL, VOLLST.<br>CONJUNTO DE VALVULA | 1 |
| 6705-56 | **COVER, SPRING**<br>COUVERCLE<br>DECKEL<br>CUBIERTA | 1- 2 |
| 6705-57 | **SWITCH, LIFT**<br>INTERRUPTEUR<br>SCHALTER<br>INTERRUPTOR | 1 |
| 6705-58 | **SWITCH, TILT**<br>INTERRUPTEUR<br>SCHALTER<br>INTERRUPTOR | 1 |
| 6705-62 | **OUTLET SUB-ASSY**<br>SOUS-ENS. DE SORTIE<br>AUSLASS-TEILGRUPPE<br>SUBCONJUNTO DE SALIDA | 1 |
| 6705-74 | **HOUSING ASSY, LIFT**<br>ENS. DE BOITIER<br>GEHÄUSE, VOLLST.<br>CONJUNTO DE FUNDA | 1 |
| 6705-75 | **HOUSING ASSY, TILT**<br>ENS. DE BOITIER<br>GEHÄUSE, VOLLST.<br>CONJUNTO DE FUNDA | 1 |
| 6705-78 | **OUTLET ASSY**<br>JOINT<br>ABDICHTUNG<br>SELLO | 1 |
| 6705-80 | **REGULATOR SUB-ASSY, FLOW**<br>SOUS-ENS. DE POIGNEE<br>HEBEL-TEILGRUPPE<br>SUBCONJUNTO DEL VOLANTE DE DIRECCION | 1 |
| 6705-AC | **RING, O**<br>ANNEAU<br>RING<br>ANILLO | 1- 2 |

## 6705 OIL CONTROL VALVE / SOUPAPE DE COMMANDE D'HUILE / STEUERVENTIL / CALVULA DE CONTROL DE ACEITE

| PART NAME CODE | PART NAME | QTY |
|---|---|---|
| 6705-AD | **RING, O**<br>ANNEAU<br>RING<br>ANILLO | 1 |
| 6705-AE | **RING, O**<br>ANNEAU<br>RING<br>ANILLO | 2 |
| 6705-AF | **BALL, STEEL**<br>BILLE<br>KUGEL<br>BOLA | 1 |
| 6705-AH | **SPRING, COMPRESSION**<br>RESSORT<br>FEDER<br>RESORTE | 1 |
| 6705-AI | **RING, O**<br>ANNEAU<br>RING<br>ANILLO | 1 |
| 6705-AJ | **STOPPER**<br>BUTEE<br>ANSCHLAG<br>TOPE | 1- 2 |
| 6705-AK | **HOLDER, SPRING**<br>SUPPORT<br>DUSENSTOCR<br>SOPORTE PORTADOR | 1- 2 |
| 6705-AN | **SCREW**<br>VIS<br>SCHRAUBE<br>TORNILLO | 2 |
| 6705-AO | **PLUG**<br>BOUCHON<br>STOPFEN<br>TAPON | 1 |
| 6705-AP | **RING, O**<br>ANNEAU<br>RING<br>ANILLO | 1- 2 |
| 6705-AQ | **RING, BACK UP**<br>ANNEAU<br>RING<br>ANILLO | 1- 2 |
| 6705-AR | **HOLDER, SEAL**<br>SUPPORT<br>DUSENSTOCR<br>SOPORTE PORTADOR | 1- 4 |
| 6705-AT | **STOPPER**<br>BUTEE<br>ANSCHLAG<br>TOPE | 1 |
| 6705-AW | **SPRING, COMPRESSION**<br>RESSORT<br>FEDER<br>RESORTE | 1- 2 |
| 6705-AZ | **COLLAR**<br>COLLIER<br>BUCHSE<br>COLLAR | 1- 4 |
| 6705-BA | **SPRING, COMPRESSION**<br>RESSORT<br>FEDER<br>RESORTE | 1- 2 |
| 6705-BC | **SPRING, COMPRESSION**<br>RESSORT<br>FEDER<br>RESORTE | 1- 2 |
| 6705-BE | **STOPPER**<br>BUTEE<br>ANSCHLAG<br>TOPE | 2 |
| 6705-BH | **PLUG**<br>BOUCHON<br>STOPFEN<br>TAPON | 1 |
| 6705-BI | **PLUG**<br>BOUCHON<br>STOPFEN<br>TAPON | 1- 2 |

## 6705

**OIL CONTROL VALVE**
**SOUPAPE DE COMMANDE D'HUILE**
**STEUERVENTIL**
**CALVULA DE CONTROL DE ACEITE**

| PART NAME CODE | PART NAME | QTY |
|---|---|---|
| 6705-BJ | **SEAT, VALVE**<br>SIEGE<br>SITZ<br>ASIENTO | 1 |
| 6705-BN | **RING, O**<br>ANNEAU<br>RING<br>ANILLO | 1- 3 |
| 6705-BQ | **RING, O**<br>ANNEAU<br>RING<br>ANILLO | 1- 2 |
| 6705-BR | **RING, O**<br>ANNEAU<br>RING<br>ANILLO | 1- 3 |
| 6705-BX | **FITTING**<br>RACCORD<br>ANSCHLUSSTUCK<br>ACOPLADOR | 1 |
| 6705-CB | **PISTON SUB-ASSY**<br>SOUS-ENS. DE PISTON<br>KOLBEN-TEILGRUPPE<br>SUBCONJUNTO DEL PISTON | 2 |
| 6705-CC | **PLUG**<br>BOUCHON<br>STOPFEN<br>TAPON | 1 |
| 6705-CH | **NUT**<br>ECROU<br>MUTTER<br>TUERCA | 2 |
| 6705-CL | **BOLT**<br>BOULON<br>SCHRAUBE<br>PERNO | 4 |
| 6705-CM | **SCREW**<br>VIS<br>SCHRAUBE<br>TORNILLO | 1- 3 |
| 6705-CN | **HOLDER, SEAL**<br>SUPPORT<br>DUSENSTOCR<br>SOPORTE PORTADOR | 1 |
| 6705-DM | **RING, O**<br>ANNEAU<br>RING<br>ANILLO | 2 |
| 6705-DO | **RING, O**<br>ANNEAU<br>RING<br>ANILLO | 1 |
| 6705-DZ | **PLUG**<br>BOUCHON<br>STOPFEN<br>TAPON | 1 |
| 6705-EK | **GUIDE**<br>GUIDE<br>FUHRUNG<br>GUIA | 1 |
| 6705-ER | **BOLT**<br>BOULON<br>SCHRAUBE<br>PERNO | 2 |
| 6705-EU | **BOLT**<br>BOULON<br>SCHRAUBE<br>PERNO | 4 |
| 6705-EZ | **RING, O**<br>ANNEAU<br>RING<br>ANILLO | 1 |
| 6705-FW | **CONNECTOR**<br>CONNECTEUR<br>STECKVERBINDER<br>CONECTOR | 1 |
| 6705-FX | **BOLT, STUD**<br>BOULON<br>SCHRAUBE<br>PERNO | 2 |

## 6705

**OIL CONTROL VALVE**
**SOUPAPE DE COMMANDE D'HUILE**
**STEUERVENTIL**
**CALVULA DE CONTROL DE ACEITE**

| PART NAME CODE | PART NAME | QTY |
|---|---|---|
| 6705-FZ | **END, SPOOL**<br>EXTREMITE<br>ENDE<br>EXTREMO | 1 |
| 6705-GA | **HOUSING, OUTLET**<br>BOITIER<br>GEHAUSE<br>FUNDA | 1 |
| 6705-GF | **BOLT**<br>BOULON<br>SCHRAUBE<br>PERNO | 4- 8 |
| 6705-GG | **CONNECTOR**<br>CONNECTEUR<br>STECKVERBINDER<br>CONECTOR | 1 |
| 6705-GP | **COVER**<br>COUVERCLE<br>DECKEL<br>CUBIERTA | 1 |
| 6705-GS | **COVER**<br>COUVERCLE<br>DECKEL<br>CUBIERTA | 2 |
| 6705-GX | **HOLDER, SPRING**<br>SUPPORT<br>DUSENSTOCR<br>SOPORTE PORTADOR | 1 |
| 6705-HJ | **BOLT**<br>BOULON<br>SCHRAUBE<br>PERNO | 4 |
| 6705-HT | **WASHER**<br>RODELLE<br>UNTERLEGSCHEIBE<br>ARANDELA | 1 |
| 6705-JD | **HOLDER, SEAL**<br>SUPPORT<br>DUSENSTOCR<br>SOPORTE PORTADOR | 1 |
| 6705-JQ | **PLUG**<br>BOUCHON<br>STOPFEN<br>TAPON | 1 |
| 6705-KB | **PISTON**<br>PISTON<br>KOLBEN<br>PISTON | 1 |
| 6705-KE | **WASHER**<br>RODELLE<br>UNTERLEGSCHEIBE<br>ARANDELA | 1 |
| 6705-KV | **FILTER**<br>FILTRE<br>FILTER<br>FILTRO | 2 |
| 6705-KY | **TUBE**<br>TUBE<br>ROHR<br>TUBO | 1 |
| 6705-KZ | **RUBBER, CUSHION**<br>CAOUTCHOUC<br>GUMMI<br>GOMA | 4 |
| 6705-LA | **WASHER, SPRING**<br>RODELLE<br>UNTERLEGSCHEIBE<br>ARANDELA | 2- 4 |
| 6705-LD | **CLAMP**<br>PINSE<br>KLEMME<br>ABRAZADERA | 2- 3 |
| 6705-LE | **RUBBER, CUSHION**<br>CAOUTCHOUC<br>GUMMI<br>GOMA | 4 |
| 6705-LH | **SPRING, COMPRESSION**<br>RESSORT<br>FEDER<br>RESORTE | 1 |

## 6705

**OIL CONTROL VALVE**
**SOUPAPE DE COMMANDE D'HUILE**
**STEUERVENTIL**
**CALVULA DE CONTROL DE ACEITE**

| PART NAME CODE | PART NAME | QTY |
|---|---|---|
| 6705-LJ | **BRACKET**<br>SUPPORT<br>TRAGER<br>SOPORTE | 1 |
| 6705-LO | **BOLT**<br>BOULON<br>SCHRAUBE<br>PERNO | 4 |
| 6705-LR | **PLUNGER**<br>PLONGEUR<br>PLUNGER<br>EMBOLO | 1 |
| 6705-LS | **BOLT**<br>BOULON<br>SCHRAUBE<br>PERNO | 1 |
| 6705-LT | **SPRING, COMPRESSION**<br>RESSORT<br>FEDER<br>RESORTE | 1 |
| 6705-LY | **SPRING, COMPRESSION**<br>RESSORT<br>FEDER<br>RESORTE | 1 |
| 6705-MA | **RING, O**<br>ANNEAU<br>RING<br>ANILLO | 1 |
| 6705-MB | **RING, O**<br>ANNEAU<br>RING<br>ANILLO | 1- 2 |
| 6705-MC | **RING, O**<br>ANNEAU<br>RING<br>ANILLO | 2- 3 |
| 6705-MD | **RING, O**<br>ANNEAU<br>RING<br>ANILLO | 1 |
| 6705-MF | **PLUNGER**<br>PLONGEUR<br>PLUNGER<br>EMBOLO | 1 |
| 6705-MG | **RING, O**<br>ANNEAU<br>RING<br>ANILLO | 1- 4 |
| 6705-MP | **PLUG**<br>BOUCHON<br>STOPFEN<br>TAPON | 2 |
| 6705-MW | **END, SPOOL**<br>EXTREMITE<br>ENDE<br>EXTREMO | 1 |
| 6705-NH | **SOLENOID ASSY**<br>ENS. DE SOLENOIDE<br>SOLENOID, VOLLST.<br>CONJUNTO DEL SOLENOIDE | 1 |
| 6705-NK | **SOLENOID ASSY**<br>ENS. DE SOLENOIDE<br>SOLENOID, VOLLST.<br>CONJUNTO DEL SOLENOIDE | 1 |
| 6705-NP | **ORIFICE**<br>ORIFICE<br>MESSBLENDE<br>ORIFICIO | 1 |
| 6705-NV | **BRACKET**<br>SUPPORT<br>TRAGER<br>SOPORTE | 1 |
| 6705-PC | **PLUNGER**<br>PLONGEUR<br>PLUNGER<br>EMBOLO | 1 |
| 6705-PD | **RING, O**<br>ANNEAU<br>RING<br>ANILLO | 4 |

## 6705

**OIL CONTROL VALVE**
**SOUPAPE DE COMMANDE D'HUILE**
**STEUERVENTIL**
**CALVULA DE CONTROL DE ACEITE**

| PART NAME CODE | PART NAME | QTY |
|---|---|---|
| 6705-PG | **SPRING, COMPRESSION**<br>RESSORT<br>FEDER<br>RESORTE | 1 |
| 6705-PH | **SPRING, COMPRESSION**<br>RESSORT<br>FEDER<br>RESORTE | 1 |
| 6705-PL | **BAND**<br>BANDE<br>BAND<br>BANDA | 1- 2 |
| 6705-PM | **BAND**<br>BANDE<br>BAND<br>BANDA | 2- 5 |
| 6705-PY | **SPRING, COMPRESSION**<br>RESSORT<br>FEDER<br>RESORTE | 1 |
| 6705-PZ | **SPRING, COMPRESSION**<br>RESSORT<br>FEDER<br>RESORTE | 1 |
| 6705-QA | **RING, O**<br>ANNEAU<br>RING<br>ANILLO | 1 |
| 6705-QB | **RING, O**<br>ANNEAU<br>RING<br>ANILLO | 1 |
| 6705-RN | **RING, O**<br>ANNEAU<br>RING<br>ANILLO | 2 |
| 6705-RP | **SPRING, COMPRESSION**<br>RESSORT<br>FEDER<br>RESORTE | 1 |
| 6705-RZ | **CLAMP**<br>PINSE<br>KLEMME<br>ABRAZADERA | 1 |
| 6705-SA | **TUBE**<br>TUBE<br>ROHR<br>TUBO | 1 |
| 6705-SD | **SPRING, COMPRESSION**<br>RESSORT<br>FEDER<br>RESORTE | 1 |
| 6705-SG | **COLLAR**<br>COLLIER<br>BUCHSE<br>COLLAR | 1 |
| 6705-TE | **RING, O**<br>ANNEAU<br>RING<br>ANILLO | 2 |
| 6705-TF | **RING, O**<br>ANNEAU<br>RING<br>ANILLO | 2 |
| 6705-TV | **RUBBER**<br>CAOUTCHOUC<br>GUMMI<br>GOMA | 8 |
| 6705-TW | **CLAMP**<br>PINSE<br>KLEMME<br>ABRAZADERA | 2- 3 |

| 6709 | OIL CONTROL VALVE LINK<br>TRINGLE DE SOUPAPE DE COMMANDE D'HUILE | STEUERVENTIL-HEBEL<br>ARTICULACION VALVULA DE CONTROL DE ACEITE |
|---|---|---|

10N,15N,18N,20N,25N,30N,J35N

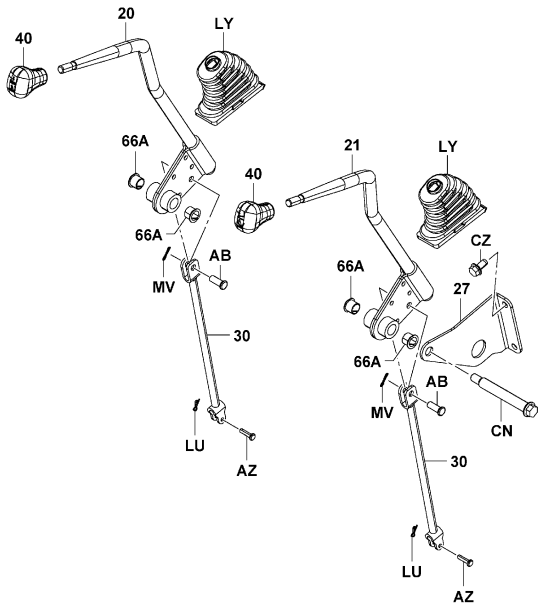


6709-454

6709-454_

10N,15N,18N,20N,25N,30N,J35N (SAS)

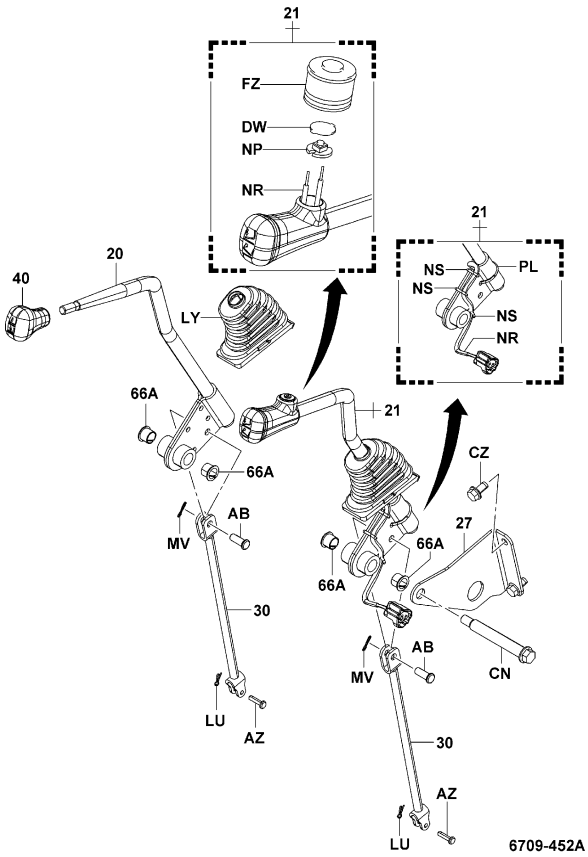


6709-452A

6709-452A_

| 6709 | OIL CONTROL VALVE LINK<br>TRINGLE DE SOUPAPE DE COMMANDE D'HUILE | STEUERVENTIL-HEBEL<br>ARTICULACION VALVULA DE CONTROL DE ACEITE |
|---|---|---|

K20N,K25N,K30N

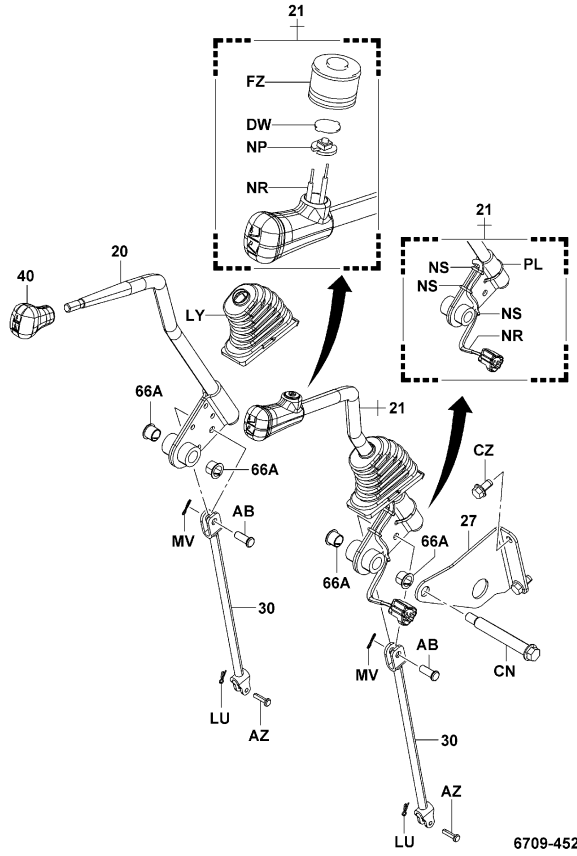


6709-452A

6709-452A_

(MULTI DISP DX)

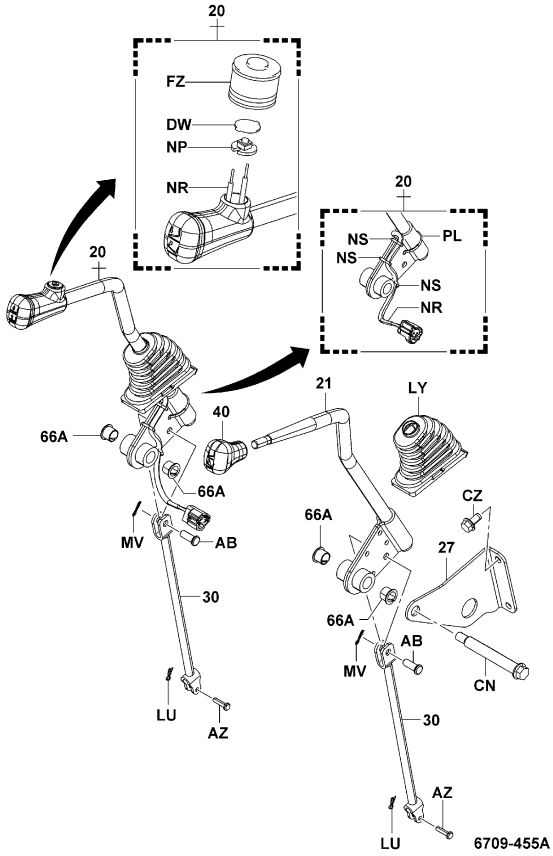


6709-455A

6709-455A_

| 6709 | OIL CONTROL VALVE LINK<br>TRINGLE DE SOUPAPE DE COMMANDE D'HUILE | STEUERVENTIL-HEBEL<br>ARTICULACION VALVULA DE CONTROL DE ACEITE |
|---|---|---|

10N,15N,18N,20N,25N,30N,J35N (SAS..MULTI DISPLAY)

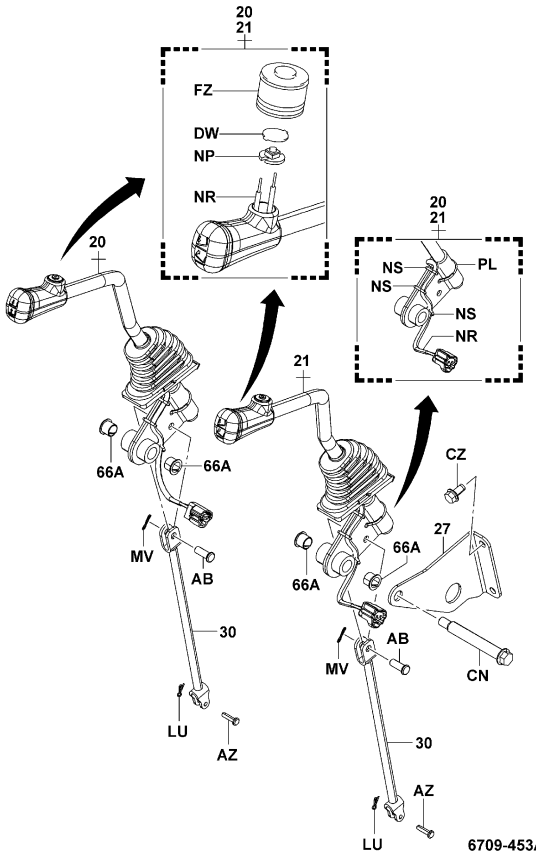


6709-453A

K20N,K25N,K30N (MULTI DISPLAY)

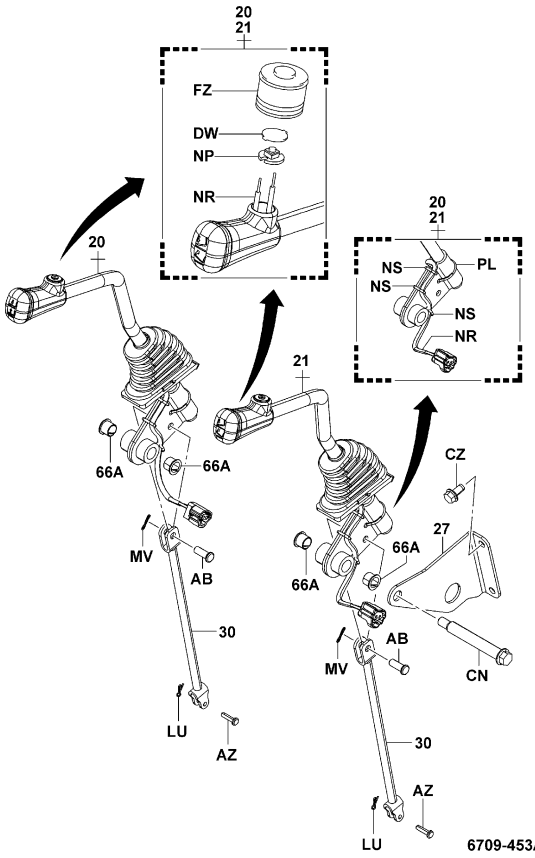


6709-453A

| 6709 | OIL CONTROL VALVE LINK<br>TRINGLE DE SOUPAPE DE COMMANDE D'HUILE | STEUERVENTIL-HEBEL<br>ARTICULACION VALVULA DE CONTROL DE ACEITE |
|---|---|---|

[PLUG]

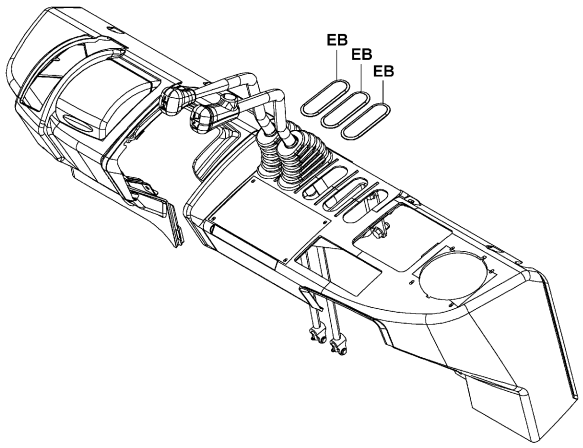


6709-456

6709-456_

## 6709

**OIL CONTROL VALVE LINK**
**TRINGLE DE SOUPAPE DE COMMANDE D'HUILE**
**STEUERVENTIL-HEBEL**
**ARTICULACION VALVULA DE CONTROL DE ACEITE**

| PART NAME CODE | PART NAME | QTY |
|---|---|---|
| 6709-20 | **LEVER SUB-ASSY, CONTROL VALVE, NO.1**<br>SOUS-ENS. DE LEVIER<br>HEBEL-TEILGRUPPE<br>SUBCONJUNTO DE LA PALANCA | 1 |
| 6709-21 | **LEVER SUB-ASSY, CONTROL VALVE, NO.2**<br>SOUS-ENS. DE LEVIER<br>HEBEL-TEILGRUPPE<br>SUBCONJUNTO DE LA PALANCA | 1 |
| 6709-27 | **BRACKET SUB-ASSY, VALVE LEVER, RH**<br>SOUS-ENS. DE SUPPORT<br>TRAGER-TEILGRUPPE<br>SUBCONJUNTO DE LA SOPORTE | 1 |
| 6709-30 | **ROD SUB-ASSY, CONTROL VALVE LEVER, NO.1**<br>SOUS-ENS. DE BIELLE<br>STANGEN-TEILGRUPPE<br>SUBCONJUNTO DE LA VARILLA | 2 |
| 6709-40 | **KNOB, OIL CONTROL VALVE LEVER**<br>BOULE<br>KNOPF<br>MANDO | 1 |
| 6709-66A | **BUSHING**<br>BAGE<br>BUCHSE<br>MANGUITO | 4 |
| 6709-AB | **PIN**<br>GOUPILLE<br>STIFT<br>PASADOR | 2 |
| 6709-AZ | **PIN**<br>GOUPILLE<br>STIFT<br>PASADOR | 2 |
| 6709-CN | **BOLT**<br>BOULON<br>SCHRAUBE<br>PERNO | 1 |
| 6709-CZ | **BOLT**<br>BOULON<br>SCHRAUBE<br>PERNO | 2 |
| 6709-DW | **PLATE**<br>PLAQUE<br>PLATTE<br>PLACA | 1 |
| 6709-EB | **PLUG**<br>BOUCHON<br>STOPFEN<br>TAPON | 3 |
| 6709-FZ | **BOOT**<br>COFFRE<br>MANSCHETTE<br>FORRO | 1 |
| 6709-LU | **CLIP**<br>AGRAFE<br>CLIP<br>FIJADOR | 2 |
| 6709-LY | **BOOT, LEVER**<br>COFFRE<br>MANSCHETTE<br>FORRO | 1- 2 |
| 6709-MV | **CLIP**<br>AGRAFE<br>CLIP<br>FIJADOR | 2 |
| 6709-NP | **SWITCH SUB-ASSY**<br>SOUS-ENS. DE INTERRUPTEUR<br>SCHALTER-TEILGRUPPE<br>SUBCONJUNTO DEL INTERRUPTOR | 1 |
| 6709-NR | **HARNESS SUB-ASSY**<br>SOUS-ENS. DE FAISCEAU<br>KABELBAUM-TEILGRUPPE<br>SUBCONJUNTO DEL RAMAL DE CABLES | 1 |
| 6709-NS | **BAND**<br>BANDE<br>BAND<br>BANDA | 3 |
| 6709-PL | **BAND**<br>BANDE<br>BAND<br>BANDA | 1 |


## 6709

**OIL CONTROL VALVE LINK**
**TRINGLE DE SOUPAPE DE COMMANDE D'HUILE**
**STEUERVENTIL-HEBEL**
**ARTICULACION VALVULA DE CONTROL DE ACEITE**


| PART NAME CODE | PART NAME | QTY |
|---|---|---|

| 6712 | MINI LEVER<br>MINI-LEVIER | MINIHEBEL<br>MINIPALANCA |
|---|---|---|

**ATM (MINI LEVER, PREMIUM CABIN)**

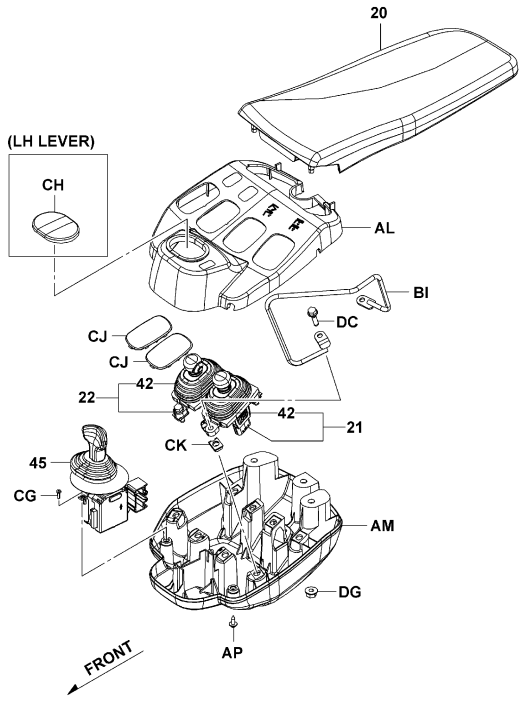


6712-023A

6712-023A

**ATM (JOY STICK)**

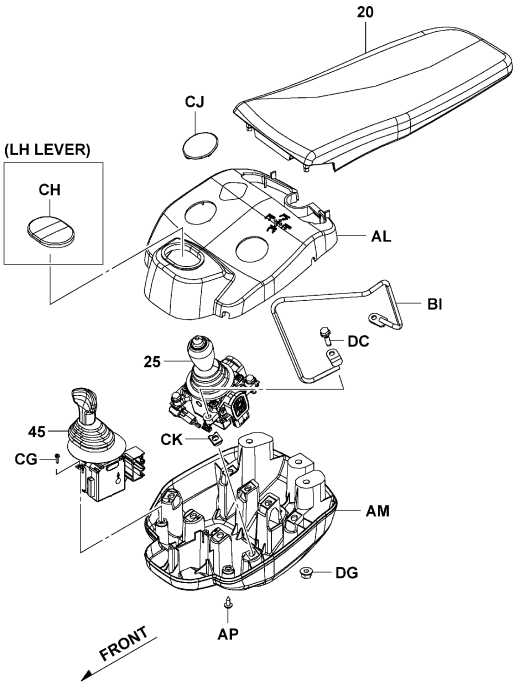


6712-024

6712-024_

| 6712 | MINI LEVER<br>MINI-LEVIER | MINIHEBEL<br>MINIPALANCA |
|---|---|---|

**ATM (MINI LEVER, JOY STICK, PREMIUM CABIN) [ARMREST]**

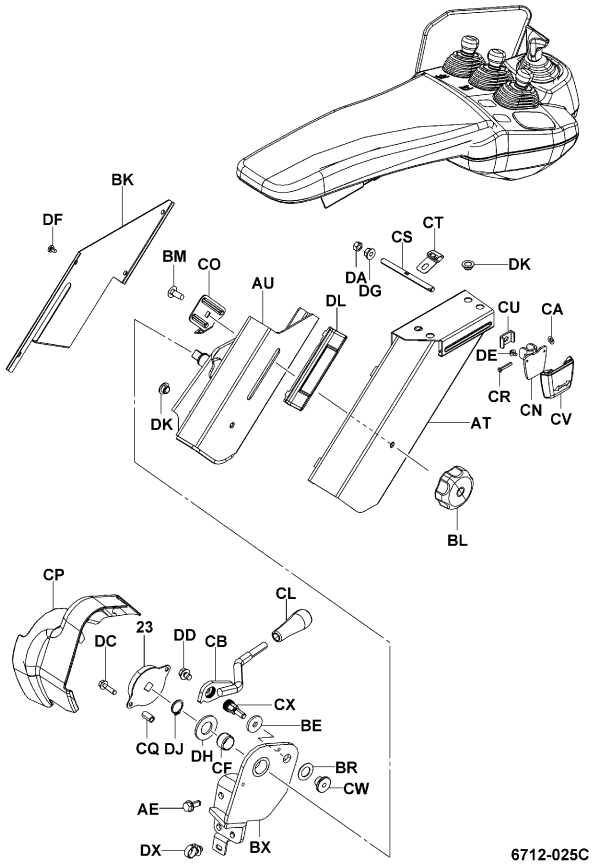


6712-025C

6712-025C

## 6712

**MINI LEVER**
**MINI-LEVIER**
**MINIHEBEL**
**MINIPALANCA**

| PART NAME CODE | PART NAME | QTY |
|---|---|---|
| 6712-20 | **PAD ASSY, ARM**<br>ENS. DE TAMPON<br>KLOTZ, VOLLST.<br>CONJUNTO DE LA ALMOHADILLA | 1 |
| 6712-21 | **LEVER ASSY, MINI**<br>ENS. DE LEVIER<br>HEBEL, VOLLST.<br>CONJUNTO DE PALANCA | 1 |
| 6712-22 | **LEVER ASSY, MINI, W/SWITCH**<br>ENS. DE LEVIER<br>HEBEL, VOLLST.<br>CONJUNTO DE PALANCA | 1 |
| 6712-23 | **DAMPER ASSY**<br>ENS. D'AMORTISSEUR<br>DAMPFER, VOLLST.<br>CONJUNTO DEL AMORTIGUADOR | 1 |
| 6712-25 | **LEVER ASSY, JOYSTICK, W/SWITCH**<br>ENS. DE LEVIER<br>HEBEL, VOLLST.<br>CONJUNTO DE PALANCA | 1 |
| 6712-42 | **BOOT, LEVER**<br>COFFRE<br>MANSCHETTE<br>FORRO | 1 |
| 6712-45 | **SWITCH ASSY**<br>ENS. DE INTERRUPTEUR<br>SCHALTER, VOLLST.<br>CONJUNTO DEL INTERRUPUPTOR | 1 |
| 6712-AE | **BOLT**<br>BOULON<br>SCHRAUBE<br>PERNO | 4 |
| 6712-AL | **BOX, UPPER**<br>BOITIER<br>KASTEN<br>CAJA | 1 |
| 6712-AM | **BOX, LOWER**<br>BOITIER<br>KASTEN<br>CAJA | 1 |
| 6712-AP | **SCREW**<br>VIS<br>SCHRAUBE<br>TORNILLO | 2 |
| 6712-AT | **BRACKET**<br>SUPPORT<br>TRAGER<br>SOPORTE | 1 |
| 6712-AU | **BRACKET**<br>SUPPORT<br>TRAGER<br>SOPORTE | 1 |
| 6712-BE | **WASHER, PLATE**<br>RODELLE<br>UNTERLEGSCHEIBE<br>ARANDELA | 1 |
| 6712-BI | **GUARD SUB-ASSY**<br>SOUS-ENS. DE PROTECTEUR<br>SCHUTZBLECH-TEILGRUPPE<br>SUBCONJUNTO DE PROTECTOR | 1 |
| 6712-BK | **COVER**<br>COUVERCLE<br>DECKEL<br>CUBIERTA | 1 |
| 6712-BL | **KNOB**<br>BOULE<br>KNOPF<br>MANDO | 1 |
| 6712-BM | **BOLT**<br>BOULON<br>SCHRAUBE<br>PERNO | 1 |
| 6712-BR | **WASHER**<br>RODELLE<br>UNTERLEGSCHEIBE<br>ARANDELA | 1 |
| 6712-BX | **BRACKET**<br>SUPPORT<br>TRAGER<br>SOPORTE | 1 |


## 6712

**MINI LEVER**
**MINI-LEVIER**
**MINIHEBEL**
**MINIPALANCA**


| PART NAME CODE | PART NAME | QTY |
|---|---|---|
| 6712-CA | **WASHER**<br>RODELLE<br>UNTERLEGSCHEIBE<br>ARANDELA | 1 |
| 6712-CB | **LEVER**<br>LEVIER<br>HEBEL<br>PALANCA | 1 |
| 6712-CF | **BUSHING**<br>BAGE<br>BUCHSE<br>MANGUITO | 1 |
| 6712-CG | **SCREW**<br>VIS<br>SCHRAUBE<br>TORNILLO | 2 |
| 6712-CH | **PLUG**<br>BOUCHON<br>STOPFEN<br>TAPON | 1 |
| 6712-CJ | **PLUG**<br>BOUCHON<br>STOPFEN<br>TAPON | 1- 2 |
| 6712-CK | **NUT**<br>ECROU<br>MUTTER<br>TUERCA | 4 |
| 6712-CL | **KNOB SUB-ASSY**<br>SOUS-ENS. DE BOULE<br>KNOPF-TEILGRUPPE<br>SUBCONJUNTO DEL MANDO | 1 |
| 6712-CN | **PLATE**<br>PLAQUE<br>PLATTE<br>PLACA | 1 |
| 6712-CO | **PLATE**<br>PLAQUE<br>PLATTE<br>PLACA | 1 |
| 6712-CP | **COVER**<br>COUVERCLE<br>DECKEL<br>CUBIERTA | 1 |
| 6712-CQ | **SPACER**<br>ENTRETOISE<br>DISTANZSTUCK<br>SEPARADOR | 2 |
| 6712-CR | **PIN**<br>GOUPILLE<br>STIFT<br>PASADOR | 1 |
| 6712-CS | **BOLT**<br>BOULON<br>SCHRAUBE<br>PERNO | 1 |
| 6712-CT | **BRACKET**<br>SUPPORT<br>TRAGER<br>SOPORTE | 1 |
| 6712-CU | **RETAINER**<br>ARRETOIR<br>SEEGERRING<br>RETENEDOR | 1 |
| 6712-CV | **GRIP**<br>PRISE<br>GRIFF<br>EMPUÑADURA | 1 |
| 6712-CW | **NUT**<br>ECROU<br>MUTTER<br>TUERCA | 1 |
| 6712-CX | **BOLT**<br>BOULON<br>SCHRAUBE<br>PERNO | 1 |
| 6712-DA | **NUT**<br>ECROU<br>MUTTER<br>TUERCA | 1 |

## 6712

**MINI LEVER**
**MINI-LEVIER**
**MINIHEBEL**
**MINIPALANCA**

| PART NAME CODE | PART NAME | QTY |
|---|---|---|
| 6712-DC | **BOLT** _____ BOULON SCHRAUBE PERNO | 2- 4 |
| 6712-DD | **BOLT** _____ BOULON SCHRAUBE PERNO | 1 |
| 6712-DE | **SCREW** _____ VIS SCHRAUBE TORNILLO | 2 |
| 6712-DF | **SCREW** _____ VIS SCHRAUBE TORNILLO | 4 |
| 6712-DG | **NUT** _____ ECROU MUTTER TUERCA | 1- 3 |
| 6712-DH | **WASHER** _____ RODELLE UNTERLEGSCHEIBE ARANDELA | 1 |
| 6712-DJ | **RING, SNAP** _____ ANNEAU RING ANILLO | 1 |
| 6712-DK | **BUSHING** _____ BAGE BUCHSE MANGUITO | 5 |
| 6712-DL | **RAIL, SLIDE** _____ RAIL SCHIENE RIEL | 2 |

| PART NAME CODE | PART NAME | QTY |
|---|---|---|


## 6712

**MINI LEVER**
**MINI-LEVIER**
**MINIHEBEL**
**MINIPALANCA**

| PART NAME CODE | PART NAME | QTY |
|---|---|---|

| PART NAME CODE | PART NAME | QTY |
|---|---|---|

[OIL TANK]

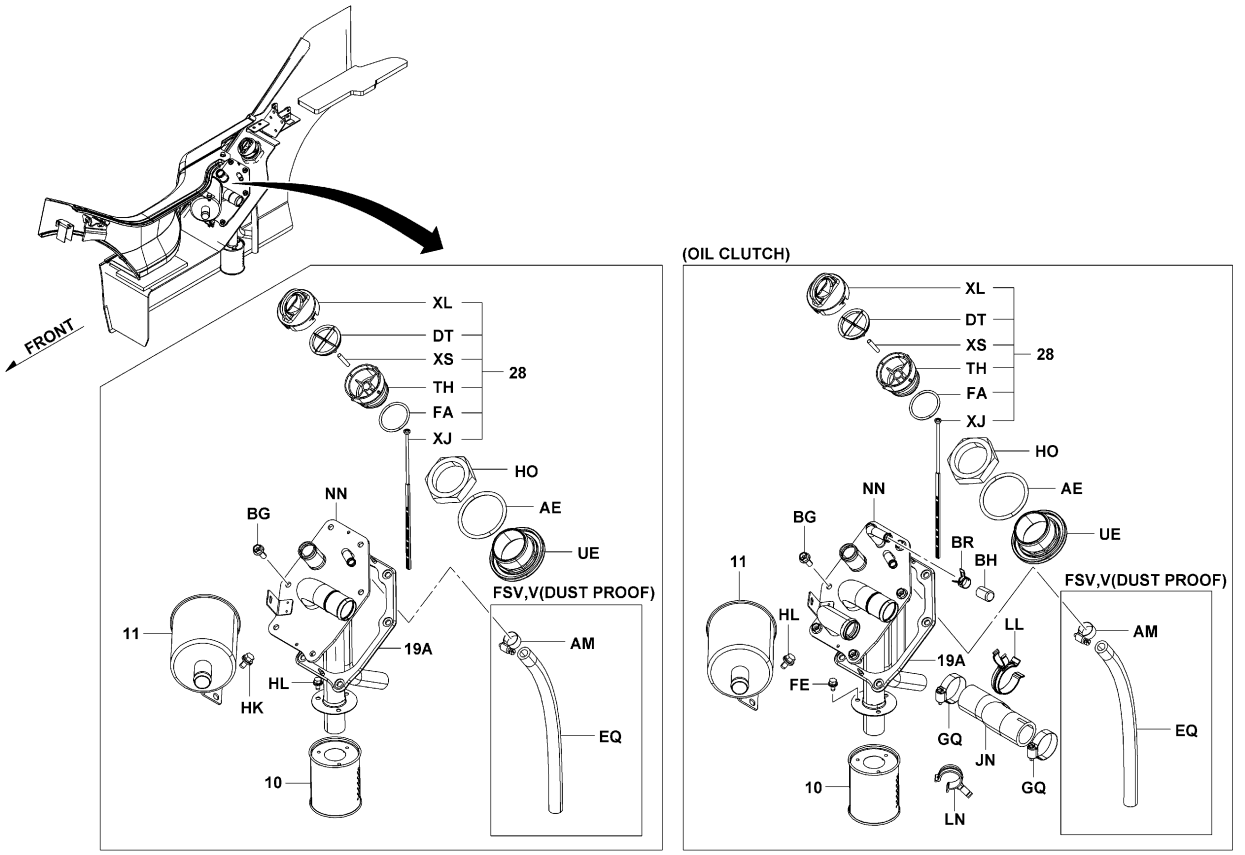


6801-628D



1DZ [PIPING]

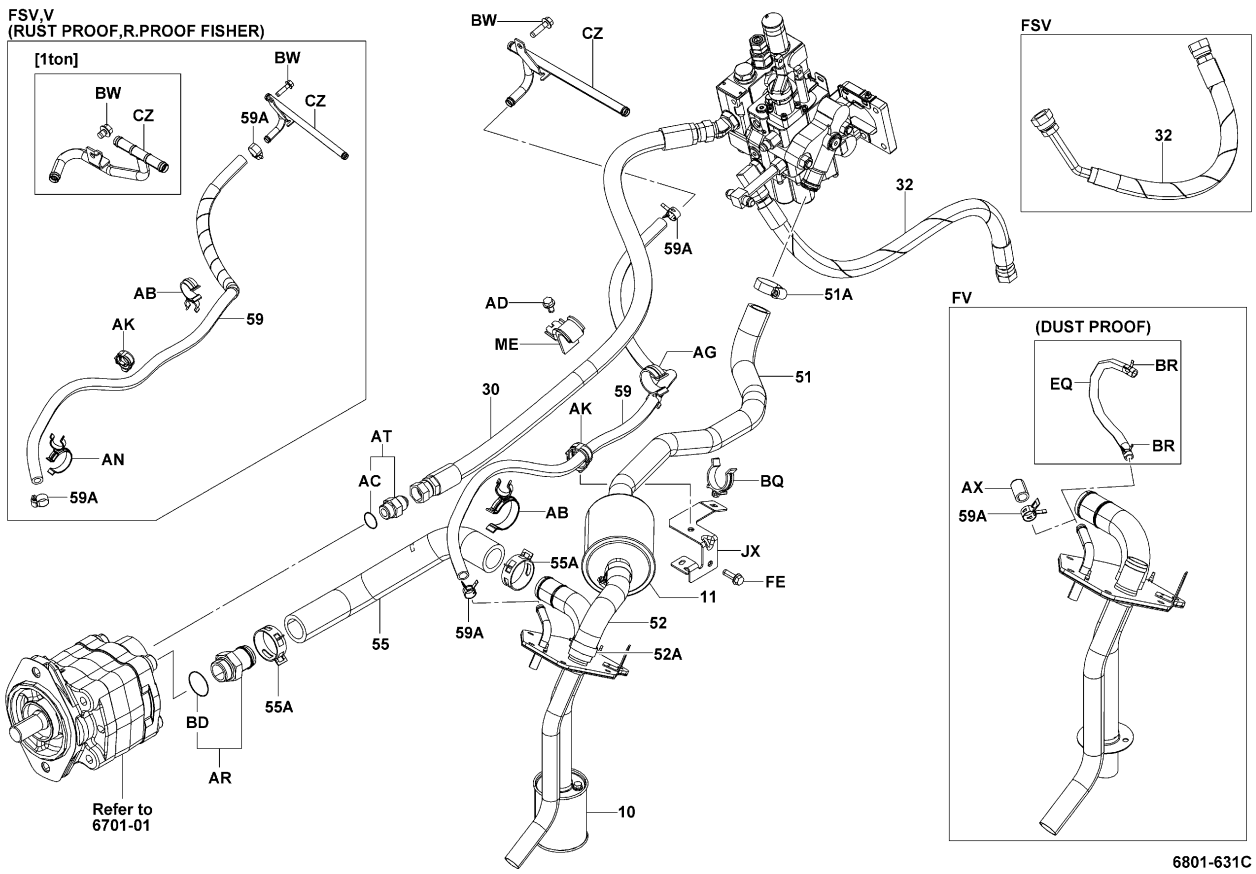


6801-631C

2Z,3Z [PIPING]

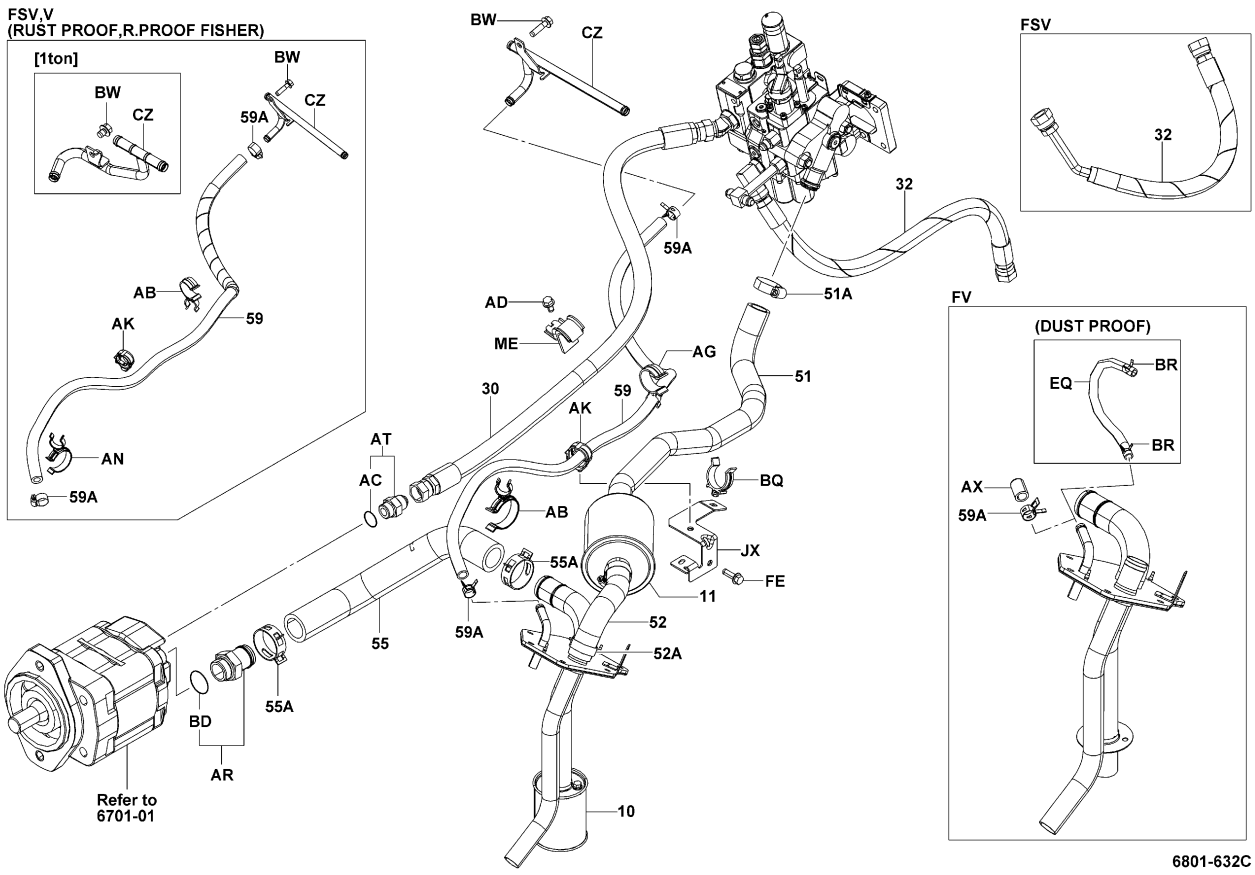



| 6801 | BODY PIPING<br>TUYAUTERIE DE CARROSSERIE | KAROSSERIE, LEITUNGEN<br>TUBOS DE CARROCERIA |
|---|---|---|


4Y [PIPING]

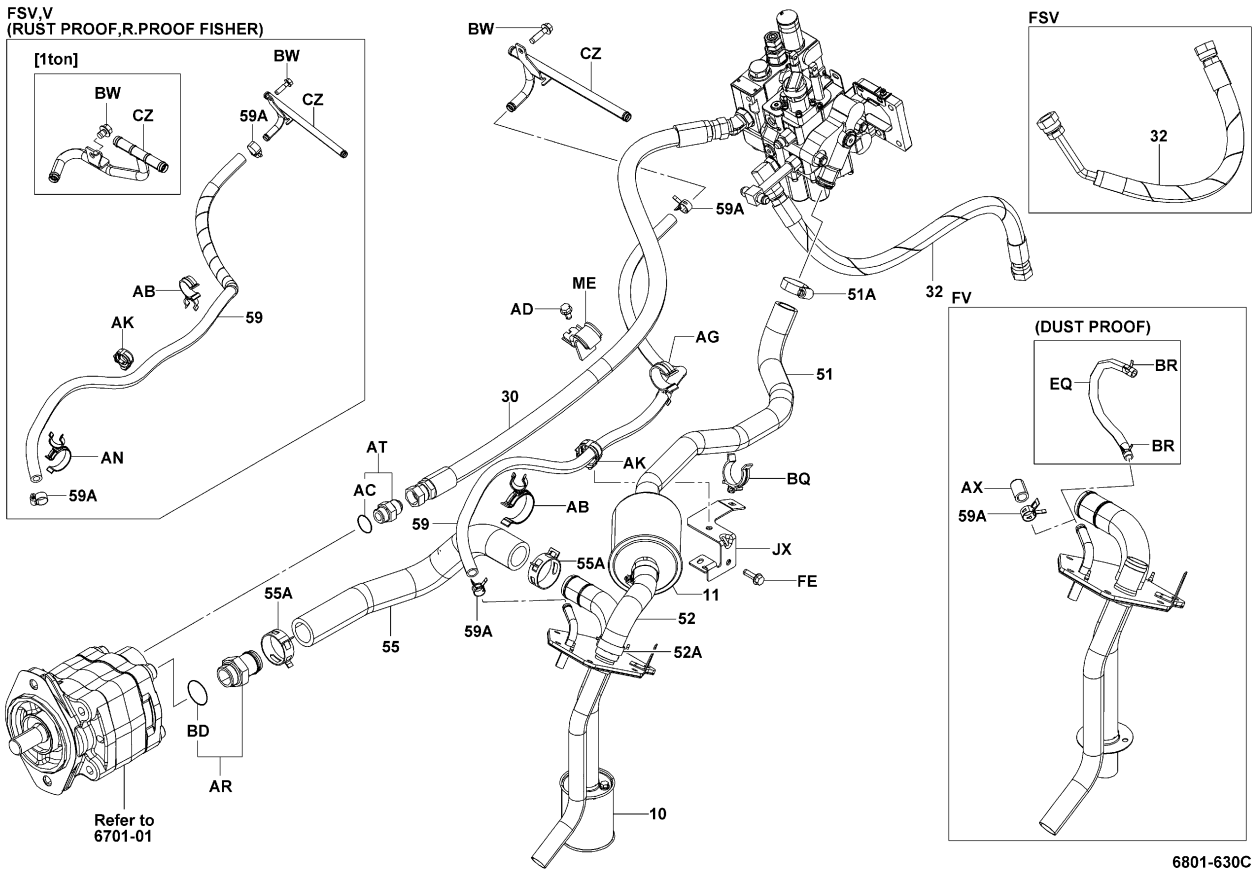

[PIPING(TILT)]

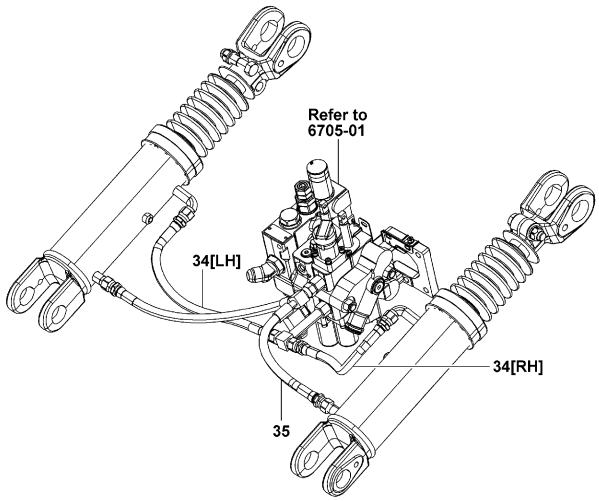


6801-633

6801-633_

| 6801 | BODY PIPING<br>TUYAUTERIE DE CARROSSERIE | KAROSSERIE, LEITUNGEN<br>TUBOS DE CARROCERIA |
|---|---|---|

ATM (2-STATOR T/C) [PIPING(TILT)]

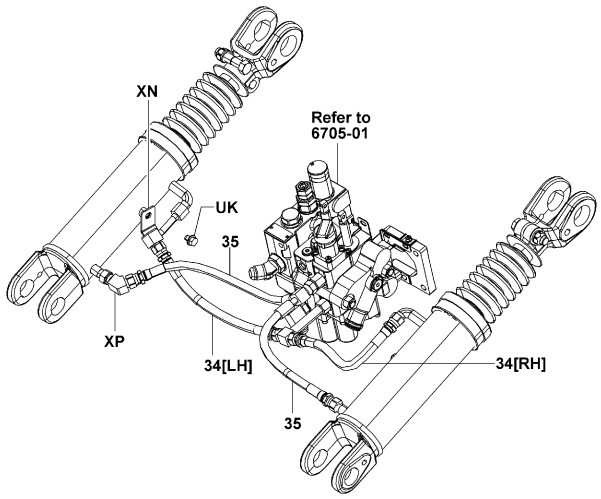


6801-646

6801-646_

(COOLING PACKAGE, PAPER SPEC BALE) [PIPING]

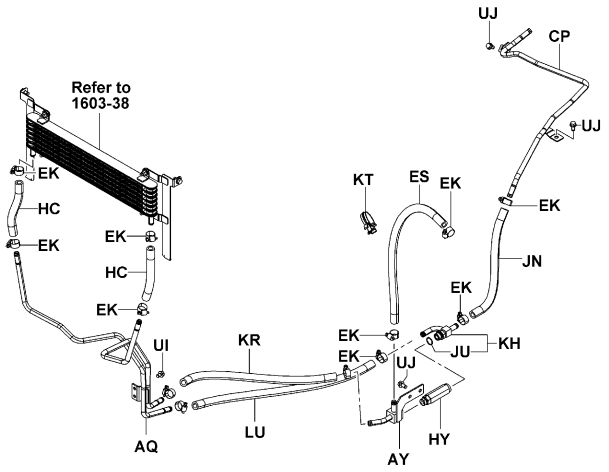


6801-639

6801-639_


| 6801 | BODY PIPING<br>TUYAUTERIE DE CARROSSERIE | KAROSSERIE, LEITUNGEN<br>TUBOS DE CARROCERIA |
|---|---|---|


| PART NAME CODE | PART NAME | QTY |
|---|---|---|
| 6801-10 | **FILTER ASSY, SUCTION**<br>ENS. DE FILTRE<br>FILTER, VOLLST.<br>CONJUNTO DEL FILTRO | 1 |
| 6801-11 | **FILTER ASSY, RETURN**<br>ENS. DE FILTRE<br>FILTER, VOLLST.<br>CONJUNTO DEL FILTRO | 1 |
| 6801-19A | **PACKING SUB-ASSY**<br>SOUS-ENS. DE CALE<br>DICHTUNG-UNTERBAUGRUPPE<br>SUBCONJUNTO DE EMPAQUETADURA | 1 |
| 6801-28 | **GAGE SUB-ASSY, OIL LEVEL**<br>SOUS-ENS. DE JAUGE<br>MESSGERATE-TEILGRUPPE<br>SUBCONJUNTO DE MEDIDOR | 1 |
| 6801-30 | **HOSE, HIGH PRESSURE, NO.1 (PUMP TO VALVE)**<br>FLEXIBLE<br>SCHLAUCH<br>MANGUERA | 1 |
| 6801-32 | **HOSE, HIGH PRESSURE, NO.1 (VALVE TO LIFT)**<br>FLEXIBLE<br>SCHLAUCH<br>MANGUERA | 1 |
| 6801-34 | **HOSE, HIGH PRESSURE, NO.1 (TILT FRONT)**<br>FLEXIBLE<br>SCHLAUCH<br>MANGUERA | 1 |
| 6801-35 | **HOSE, HIGH PRESSURE, NO.1 (TILT REAR)**<br>FLEXIBLE<br>SCHLAUCH<br>MANGUERA | 1 |
| 6801-51 | **HOSE, LOW PRESSURE, NO.1 (VALVE TO TANK)**<br>FLEXIBLE<br>SCHLAUCH<br>MANGUERA | 1 |
| 6801-51A | **CLAMP, VALVE TO TANK NO.1 HOSE**<br>PINSE<br>KLEMME<br>ABRAZADERA | 2 |
| 6801-52 | **HOSE, LOW PRESSURE, NO.2 (VALVE TO TANK)**<br>FLEXIBLE<br>SCHLAUCH<br>MANGUERA | 1 |
| 6801-52A | **CLAMP, VALVE TO TANK NO.2 HOSE**<br>PINSE<br>KLEMME<br>ABRAZADERA | 2 |
| 6801-55 | **HOSE, LOW PRESSURE (TANK TO PUMP)**<br>FLEXIBLE<br>SCHLAUCH<br>MANGUERA | 1 |
| 6801-55A | **CLAMP, TANK TO PUMP HOSE**<br>PINSE<br>KLEMME<br>ABRAZADERA | 2 |
| 6801-59 | **HOSE, LOW PRESSURE, NO.2 (LIFT TO TANK)**<br>FLEXIBLE<br>SCHLAUCH<br>MANGUERA | 1 |
| 6801-59A | **CLAMP, LIFT TO TANK NO.2 HOSE**<br>PINSE<br>KLEMME<br>ABRAZADERA | 1- 4 |
| 6801-AB | **CLAMP**<br>PINSE<br>KLEMME<br>ABRAZADERA | 1 |
| 6801-AC | **RING, O**<br>ANNEAU<br>RING<br>ANILLO | 1 |
| 6801-AD | **BOLT**<br>BOULON<br>SCHRAUBE<br>PERNO | 1 |
| 6801-AE | **RING, O**<br>ANNEAU<br>RING<br>ANILLO | 1 |

## 6801 BODY PIPING / TUYAUTERIE DE CARROSSERIE / KAROSSERIE, LEITUNGEN / TUBOS DE CARROCERIA

| PART NAME CODE | PART NAME | QTY |
|---|---|---|
| 6801-AG | **CLAMP**<br>PINSE<br>KLEMME<br>ABRAZADERA | 1 |
| 6801-AK | **CLAMP**<br>PINSE<br>KLEMME<br>ABRAZADERA | 1 |
| 6801-AM | **CLAMP, HOSE**<br>PINSE<br>KLEMME<br>ABRAZADERA | 1 |
| 6801-AN | **CLAMP, HOSE**<br>PINSE<br>KLEMME<br>ABRAZADERA | 1 |
| 6801-AQ | **PIPE SUB-ASSY**<br>SOUS-ENS. DE TUYAU<br>ROHR-TEILGRUPPE<br>SUBCONJUNTO DE TUBO | 1 |
| 6801-AR | **FITTING**<br>RACCORD<br>ANSCHLUSSTUCK<br>ACOPLADOR | 1 |
| 6801-AT | **FITTING**<br>RACCORD<br>ANSCHLUSSTUCK<br>ACOPLADOR | 1 |
| 6801-AX | **CAP, OIL TANK OVERFLOW PIPE**<br>CAPUCHON<br>KAPPE<br>TAPA | 1 |
| 6801-AY | **FITTING SUB-ASSY**<br>SOUS-ENS. DE RACCORD<br>ANSCHLUSSTUCK-TEILGRUPPE<br>SUBCONJUNTO DE ACOPLADOR | 1 |
| 6801-BD | **RING, O**<br>ANNEAU<br>RING<br>ANILLO | 1 |
| 6801-BG | **BOLT**<br>BOULON<br>SCHRAUBE<br>PERNO | 6 |
| 6801-BH | **CAP, OIL CLUTCH PIPE**<br>CAPUCHON<br>KAPPE<br>TAPA | 1 |
| 6801-BQ | **CLAMP**<br>PINSE<br>KLEMME<br>ABRAZADERA | 1 |
| 6801-BW | **BOLT**<br>BOULON<br>SCHRAUBE<br>PERNO | 1 |
| 6801-CP | **PIPE SUB-ASSY**<br>SOUS-ENS. DE TUYAU<br>ROHR-TEILGRUPPE<br>SUBCONJUNTO DE TUBO | 1 |
| 6801-CZ | **PIPE SUB-ASSY (LIFT CYLINDER RETURN)**<br>SOUS-ENS. DE TUYAU<br>ROHR-TEILGRUPPE<br>SUBCONJUNTO DE TUBO | 1 |
| 6801-DT | **FILTER**<br>FILTRE<br>FILTER<br>FILTRO | 1 |
| 6801-EJ | **CLAMP**<br>PINSE<br>KLEMME<br>ABRAZADERA | 1 |
| 6801-EK | **CLAMP, HOSE**<br>PINSE<br>KLEMME<br>ABRAZADERA | 12 |
| 6801-EQ | **HOSE, LOW PRESSURE**<br>FLEXIBLE<br>SCHLAUCH<br>MANGUERA | 1 |

## 6801 BODY PIPING / TUYAUTERIE DE CARROSSERIE / KAROSSERIE, LEITUNGEN / TUBOS DE CARROCERIA

| PART NAME CODE | PART NAME | QTY |
|---|---|---|
| 6801-ES | **HOSE, LOW PRESSURE**<br>FLEXIBLE<br>SCHLAUCH<br>MANGUERA | 1 |
| 6801-FA | **RING, O**<br>ANNEAU<br>RING<br>ANILLO | 1 |
| 6801-FE | **BOLT**<br>BOULON<br>SCHRAUBE<br>PERNO | 2 |
| 6801-GQ | **CLAMP, HOSE**<br>PINSE<br>KLEMME<br>ABRAZADERA | 2 |
| 6801-HC | **HOSE, LOW PRESSURE**<br>FLEXIBLE<br>SCHLAUCH<br>MANGUERA | 2 |
| 6801-HK | **BOLT**<br>BOULON<br>SCHRAUBE<br>PERNO | 1 |
| 6801-HL | **BOLT**<br>BOULON<br>SCHRAUBE<br>PERNO | 3 |
| 6801-HO | **NUT**<br>ECROU<br>MUTTER<br>TUERCA | 1 |
| 6801-HY | **VALVE ASSY, CHOKE**<br>ENS. DE SOUPAPE<br>VENTIL, VOLLST.<br>CONJUNTO DE VALVULA | 1 |
| 6801-JN | **HOSE, LOW PRESSURE**<br>FLEXIBLE<br>SCHLAUCH<br>MANGUERA | 1 |
| 6801-JX | **BRACKET SUB-ASSY**<br>SOUS-ENS. DE SUPPORT<br>TRAGER-TEILGRUPPE<br>SUBCONJUNTO DE LA SOPORTE | 1 |
| 6801-KH | **FITTING**<br>RACCORD<br>ANSCHLUSSTUCK<br>ACOPLADOR | 1 |
| 6801-KR | **HOSE, LOW PRESSURE**<br>FLEXIBLE<br>SCHLAUCH<br>MANGUERA | 1 |
| 6801-KT | **CLAMP**<br>PINSE<br>KLEMME<br>ABRAZADERA | 1 |
| 6801-LL | **CLAMP**<br>PINSE<br>KLEMME<br>ABRAZADERA | 1 |
| 6801-LN | **CLAMP**<br>PINSE<br>KLEMME<br>ABRAZADERA | 1 |
| 6801-LU | **HOSE, LOW PRESSURE**<br>FLEXIBLE<br>SCHLAUCH<br>MANGUERA | 1 |
| 6801-ME | **CLAMP SUB-ASSY, HOSE**<br>SOUS-ENS. DE PINCE<br>KLEMMEN-TEILGRUPPE<br>SUBCONJUNTO DE ABRAZADERA | 1 |
| 6801-NN | **COVER SUB-ASSY, OIL TANK**<br>SOUS-ENS. DE COUVERCLE<br>DECKEL-TEILGRUPPE<br>SUBCONJUNTO DE CUBIERTA | 1 |
| 6801-TH | **CAP**<br>CAPUCHON<br>KAPPE<br>TAPA | 1 |

| 6801 | BODY PIPING<br>TUYAUTERIE DE CARROSSERIE | | KAROSSERIE, LEITUNGEN<br>TUBOS DE CARROCERIA | | |
|---|---|---|---|---|---|
| PART NAME CODE | PART NAME | QTY | PART NAME CODE | PART NAME | QTY |
| 6801-UE | **RETAINER**<br>ARRETOIR<br>SEEGERRING<br>RETENEDOR | 1 | | | |
| 6801-UI | **BOLT**<br>BOULON<br>SCHRAUBE<br>PERNO | 2 | | | |
| 6801-UJ | **BOLT**<br>BOULON<br>SCHRAUBE<br>PERNO | 4 | | | |
| 6801-XJ | **GAGE, OIL LEVEL**<br>JAUGE<br>MESSGERÄT<br>MEDIDOR | 1 | | | |
| 6801-XL | **CAP**<br>CAPUCHON<br>KAPPE<br>TAPA | 1 | | | |
| 6801-XP | **FITTING**<br>RACCORD<br>ANSCHLUSSTUCK<br>ACOPLADOR | 1 | | | |


| 6801 | BODY PIPING<br>TUYAUTERIE DE CARROSSERIE | | KAROSSERIE, LEITUNGEN<br>TUBOS DE CARROCERIA | | |
|---|---|---|---|---|---|
| PART NAME CODE | PART NAME | QTY | PART NAME CODE | PART NAME | QTY |

| 6802 | MAST PIPING<br>TUYAUTERIE DE MAT | MASTLEITUNGEN<br>TUBOS DEL MASTIL |
|---|---|---|

FSV..10N,15N,18N

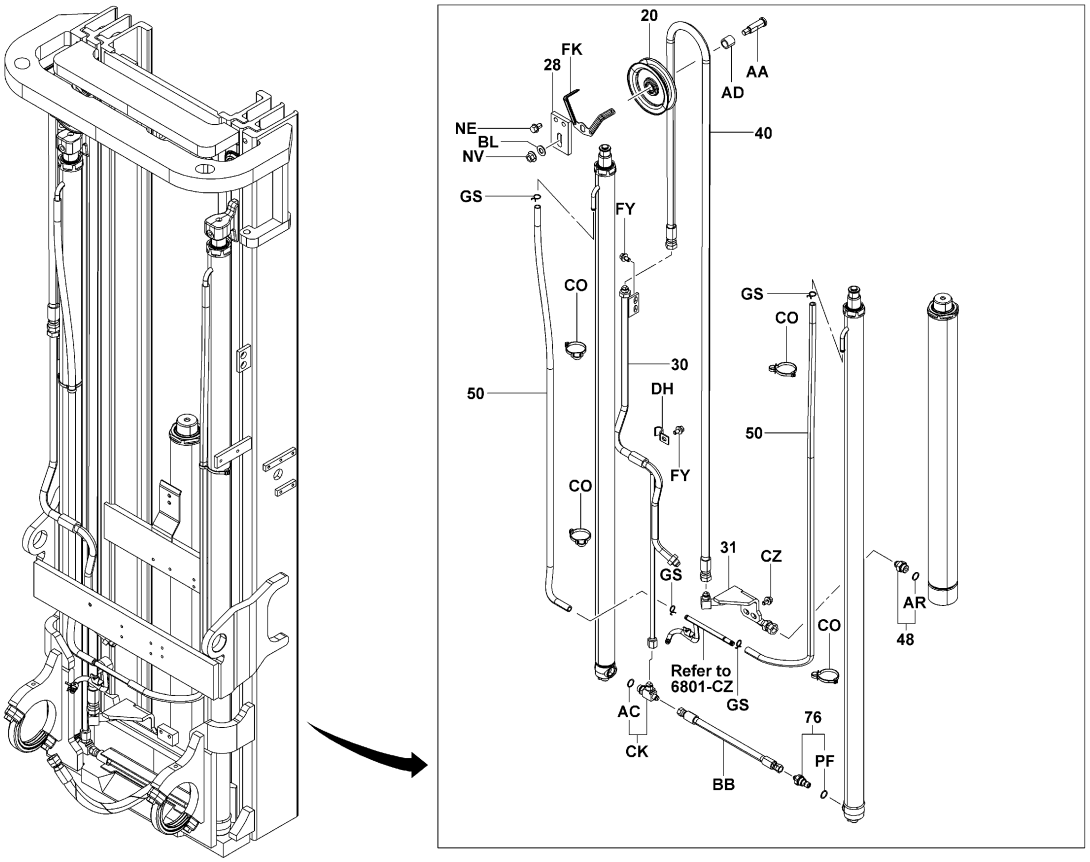


6802-698

6802-698_

| 6802 | MAST PIPING<br>TUYAUTERIE DE MAT | MASTLEITUNGEN<br>TUBOS DEL MASTIL |
|---|---|---|

FSV..J35N

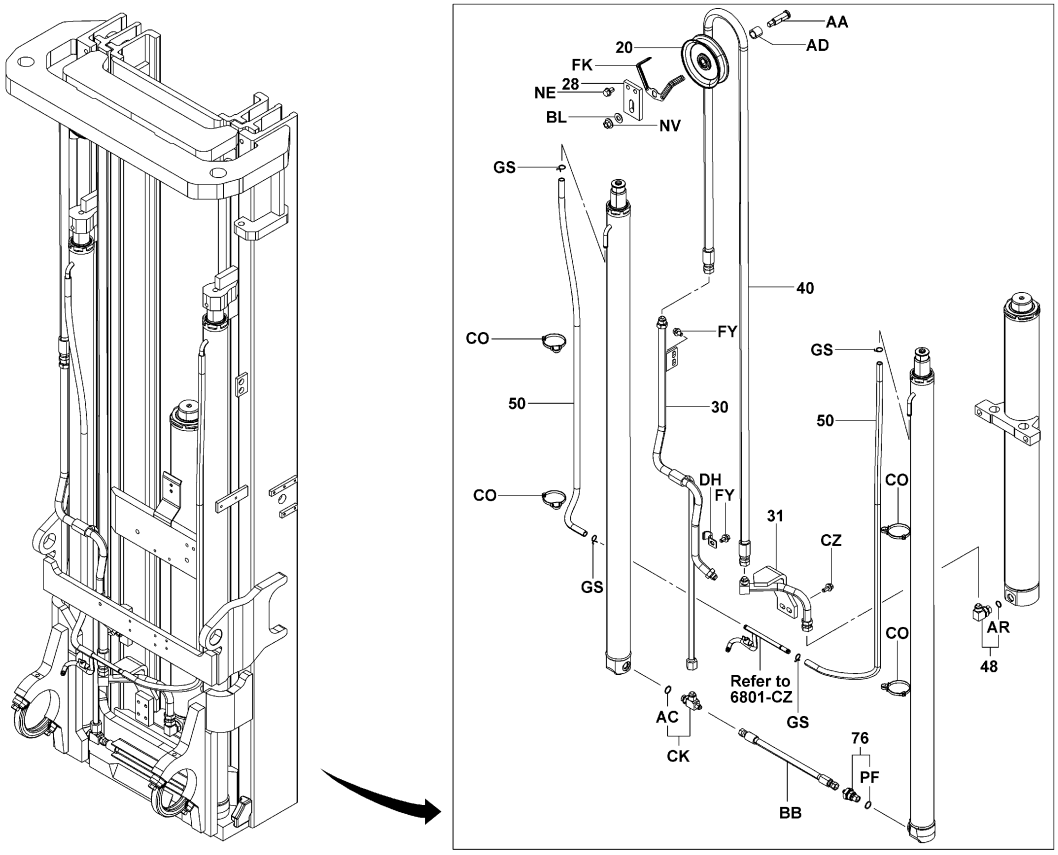


6802-700

6802-700_

| 6802 | MAST PIPING<br>TUYAUTERIE DE MAT | MASTLEITUNGEN<br>TUBOS DEL MASTIL |
|---|---|---|

FSV..K20N,K25N,20N,25N

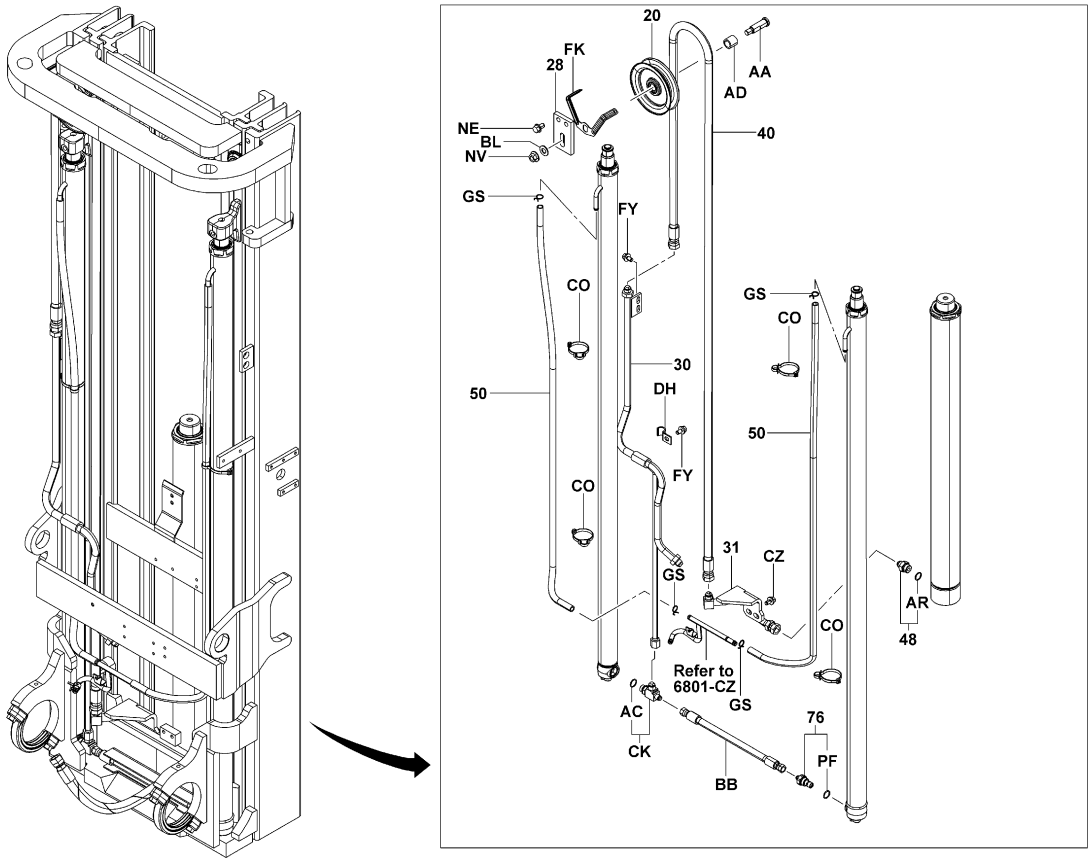


6802-698

6802-698_

| 6802 | MAST PIPING<br>TUYAUTERIE DE MAT | MASTLEITUNGEN<br>TUBOS DEL MASTIL |
|---|---|---|

FSV..K30N,30N

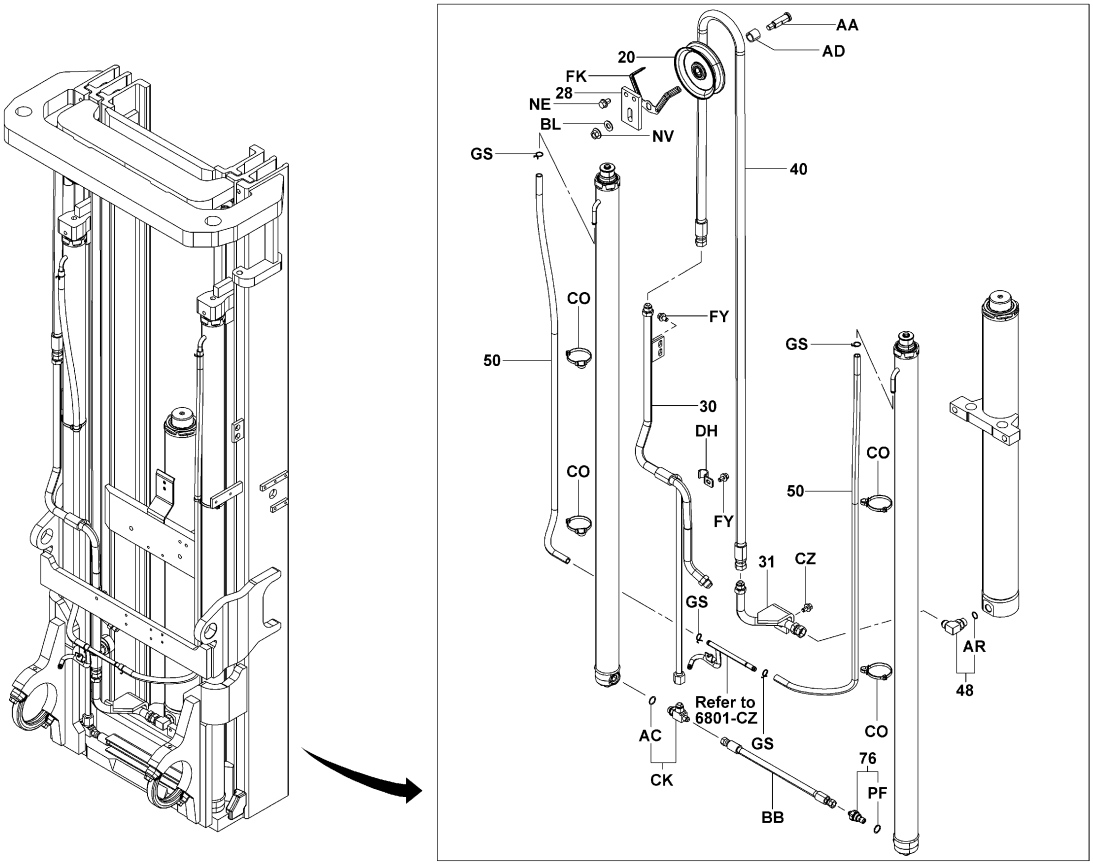


6802-699

6802-699_

| 6802 | MAST PIPING<br>TUYAUTERIE DE MAT | MASTLEITUNGEN<br>TUBOS DEL MASTIL |
|---|---|---|

FV

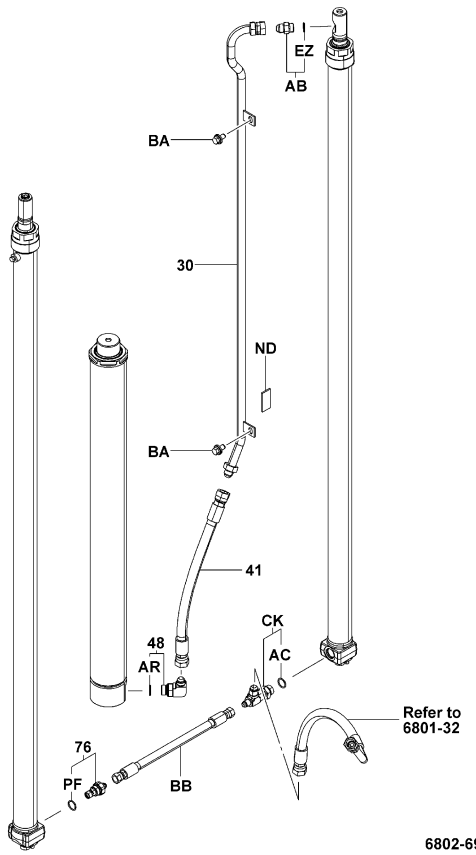


6802-697

6802-697_

V

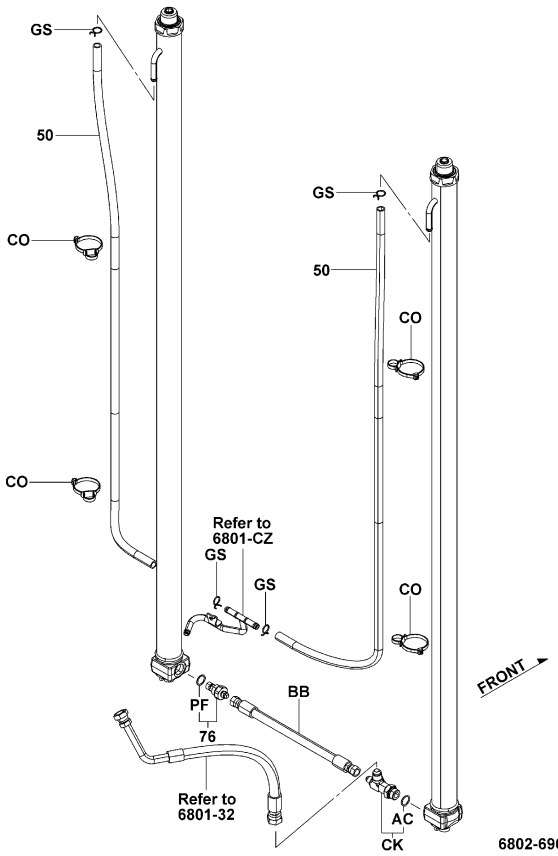


6802-696

6802-696_

| 6802 | MAST PIPING<br>TUYAUTERIE DE MAT | MASTLEITUNGEN<br>TUBOS DEL MASTIL |
|---|---|---|

FSV (FORK VIB ABSO) [2/2]

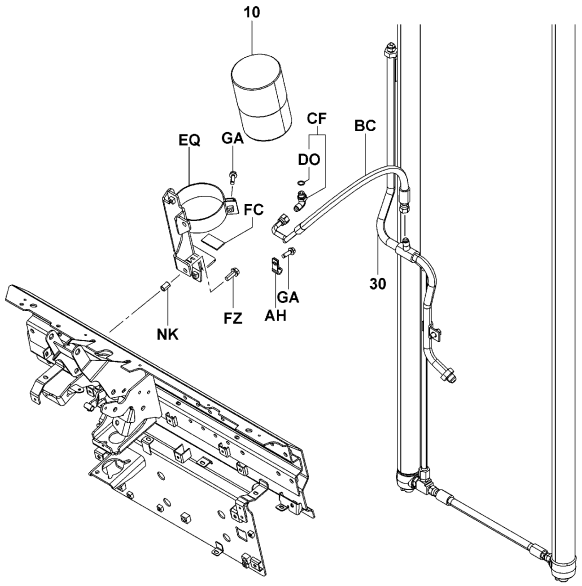


6802-702

6802-702_

FV,V (FORK VIB ABSO) [2/2]

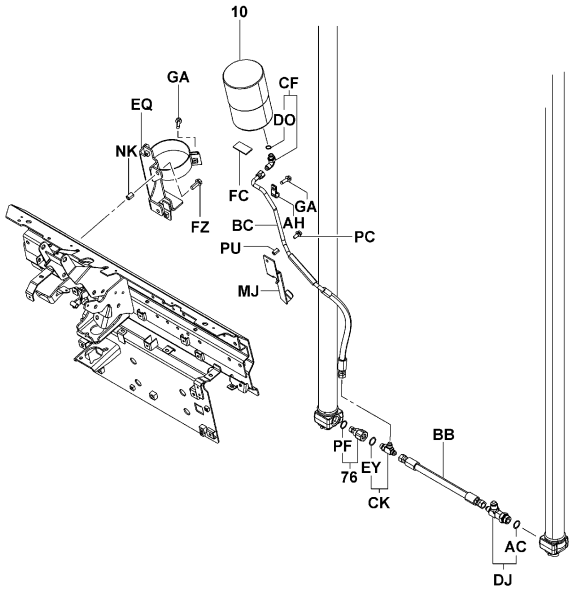


6802-701A

6802-701A

## 6802

**MAST PIPING**
**TUYAUTERIE DE MAT**
**MASTLEITUNGEN**
**TUBOS DEL MASTIL**

| PART NAME CODE | PART NAME | QTY |
|---|---|---|
| 6802-06 | **ACCUMULATOR ASSY**<br>ENS. D'ACCUMULATEUR<br>AKKUMULATOR-VOLLST.<br>CONJUNTO DEL ACUMULADOR | 1 |
| 6802-20 | **PULLEY SUB-ASSY, HOSE GUIDE, NO.1**<br>SOUS-ENS. DE POULIE<br>RIEMENSCHEIBEN-TEILGRUPPE<br>SUBCONJUNTO DE LA POLEA | 1 |
| 6802-28 | **BRACKET SUB-ASSY, PULLEY**<br>SOUS-ENS. DE SUPPORT<br>TRAGER-TEILGRUPPE<br>SUBCONJUNTO DE LA SOPORTE | 1 |
| 6802-30 | **PIPE SUB-ASSY, NO.1 (FRONT LIFT)**<br>SOUS-ENS. DE TUYAU<br>ROHR-TEILGRUPPE<br>SUBCONJUNTO DE TUBO | 1 |
| 6802-31 | **PIPE SUB-ASSY, NO.2 (FRONT LIFT)**<br>SOUS-ENS. DE TUYAU<br>ROHR-TEILGRUPPE<br>SUBCONJUNTO DE TUBO | 1 |
| 6802-40 | **HOSE, HIGH PRESSURE (FRONT LIFT PULLEY)**<br>FLEXIBLE<br>SCHLAUCH<br>MANGUERA | 1 |
| 6802-41 | **HOSE, HIGH PRESSURE, NO.1 (FRONT LIFT)**<br>FLEXIBLE<br>SCHLAUCH<br>MANGUERA | 1 |
| 6802-48 | **FITTING, FRONT LIFT CYLINDER**<br>RACCORD<br>ANSCHLUSSTUCK<br>ACOPLADOR | 1 |
| 6802-50 | **HOSE, LOW PRESSURE (FRONT LIFT OVERFLOW)**<br>FLEXIBLE<br>SCHLAUCH<br>MANGUERA | 2 |
| 6802-76 | **VALVE ASSY, SAFETY DOWN**<br>ENS. DE SOUPAPE<br>VENTIL, VOLLST.<br>CONJUNTO DE VALVULA | 1 |
| 6802-AA | **PIN, HOSE GUIDE PULLEY**<br>GOUPILLE<br>STIFT<br>PASADOR | 1 |
| 6802-AB | **FITTING**<br>RACCORD<br>ANSCHLUSSTUCK<br>ACOPLADOR | 1 |
| 6802-AC | **RING, O**<br>ANNEAU<br>RING<br>ANILLO | 1 |
| 6802-AD | **COLLAR**<br>COLLIER<br>BUCHSE<br>COLLAR | 1 |
| 6802-AH | **CLAMP**<br>PINSE<br>KLEMME<br>ABRAZADERA | 1 |
| 6802-AR | **RING, O**<br>ANNEAU<br>RING<br>ANILLO | 1 |
| 6802-BA | **BOLT**<br>BOULON<br>SCHRAUBE<br>PERNO | 2- 3 |
| 6802-BB | **HOSE, HIGH PRESSURE**<br>FLEXIBLE<br>SCHLAUCH<br>MANGUERA | 1 |
| 6802-BC | **HOSE, HIGH PRESSURE**<br>FLEXIBLE<br>SCHLAUCH<br>MANGUERA | 1 |
| 6802-BL | **WASHER, PLATE**<br>RODELLE<br>UNTERLEGSCHEIBE<br>ARANDELA | 1 |

## 6802

**MAST PIPING**
**TUYAUTERIE DE MAT**
**MASTLEITUNGEN**
**TUBOS DEL MASTIL**

| PART NAME CODE | PART NAME | QTY |
|---|---|---|
| 6802-CF | **FITTING**<br>RACCORD<br>ANSCHLUSSTUCK<br>ACOPLADOR | 1 |
| 6802-CK | **FITTING**<br>RACCORD<br>ANSCHLUSSTUCK<br>ACOPLADOR | 1 |
| 6802-CO | **SUPPORT**<br>SUPPORT<br>STUTZE<br>SOPORTE | 4 |
| 6802-CZ | **BOLT**<br>BOULON<br>SCHRAUBE<br>PERNO | 2 |
| 6802-DH | **CLAMP, PIPE**<br>PINSE<br>KLEMME<br>ABRAZADERA | 1 |
| 6802-DJ | **FITTING**<br>RACCORD<br>ANSCHLUSSTUCK<br>ACOPLADOR | 1 |
| 6802-DO | **RING, O**<br>ANNEAU<br>RING<br>ANILLO | 1 |
| 6802-EQ | **BRACKET**<br>SUPPORT<br>TRAGER<br>SOPORTE | 1 |
| 6802-EY | **RING, O**<br>ANNEAU<br>RING<br>ANILLO | 1 |
| 6802-EZ | **RING, O**<br>ANNEAU<br>RING<br>ANILLO | 1 |
| 6802-FC | **RUBBER**<br>CAOUTCHOUC<br>GUMMI<br>GOMA | 1 |
| 6802-FK | **GUIDE**<br>GUIDE<br>FUHRUNG<br>GUIA | 1 |
| 6802-FZ | **BOLT**<br>BOULON<br>SCHRAUBE<br>PERNO | 1- 2 |
| 6802-GA | **BOLT**<br>BOULON<br>SCHRAUBE<br>PERNO | 2 |
| 6802-GS | **CLIP**<br>AGRAFE<br>CLIP<br>FIJADOR | 4 |
| 6802-MJ | **BRACKET**<br>SUPPORT<br>TRAGER<br>SOPORTE | 1 |
| 6802-ND | **RUBBER**<br>CAOUTCHOUC<br>GUMMI<br>GOMA | 1 |
| 6802-NE | **BOLT**<br>BOULON<br>SCHRAUBE<br>PERNO | 2 |
| 6802-NK | **NUT**<br>ECROU<br>MUTTER<br>TUERCA | 1- 2 |
| 6802-NV | **NUT**<br>ECROU<br>MUTTER<br>TUERCA | 1 |

| 6802 | MAST PIPING<br>TUYAUTERIE DE MAT | MASTLEITUNGEN<br>TUBOS DEL MASTIL |
|---|---|---|

| PART NAME CODE | PART NAME | QTY | PART NAME CODE | PART NAME | QTY |
|---|---|---|---|---|---|
| 6802-PC | **BOLT**<br>BOULON<br>SCHRAUBE<br>PERNO | 1 | | | |
| 6802-PF | **RING, O**<br>ANNEAU<br>RING<br>ANILLO | 1 | | | |
| 6802-PU | **NUT**<br>ECROU<br>MUTTER<br>TUERCA | 1 | | | |


| 6802 | MAST PIPING<br>TUYAUTERIE DE MAT | MASTLEITUNGEN<br>TUBOS DEL MASTIL |
|---|---|---|


| PART NAME CODE | PART NAME | QTY | PART NAME CODE | PART NAME | QTY |
|---|---|---|---|---|---|