CATERPILLAR®

SEBP5102
August 2008

RUTHZIL TRATOR COMERCIAL DE PEÇAS LTDA 11 97083-6812 ROLANDO

Parts Manual

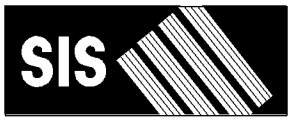

See "General Information" for New Parts Manual Features.

908H Wheel Loader

LMD1-Up (Machine)
CYM1-Up (Engine)

Powered By C3.4 IND Engine

Product and Dealer Information

Note: For product identification plate locations, see the section “Product Identification Information” in the Operation and Maintenance Manual.

Delivery Date: _____

Product Information

Model: _____

Product Identification Number: _____

Engine Serial Number: _____

Transmission Serial Number: _____

Generator Serial Number: _____

Attachment Serial Numbers: _____

Attachment Information: _____

Customer Equipment Number: _____

Dealer Equipment Number: _____

Dealer Information

Name: _____ Branch: _____

Address: _____

_____

_____

	Dealer Contact	Phone Number	Hours
Sales:	_____	_____	_____
Parts:	_____	_____	_____
Service:	_____	_____	_____

MEMORANDA

TABLE OF CONTENTS

Name	Page
GENERAL INFORMATION	A4
REPAIR ALTERNATIVES	A7
SUPPLEMENTAL COOLANT ADDITIVES	A8
MAINTENANCE PARTS	A9
INDEX	A12
MACHINE ARRANGEMENT	1
CHASSIS AR	1
COMMON AR	1
CONVERSION AR-CERTIFICATION	2
ENGINE ARRANGEMENT	3
ENGINE AR-PRIMARY	3
INSTALLATION AR-ENGINE	4
BASIC ENGINE	5
BEARING GP-MAIN	5
CAMSHAFT GP	6
CONNECTING ROD GP	7
COVER GP-VALVE MECHANISM	8
CRANKSHAFT GP	9
CYLINDER BLOCK GP	10
CYLINDER HEAD GP	12
DRAIN GP-ENGINE OIL	13
FLYWHEEL GP	14
GEAR GP-FRONT	15
GUARD GP-BELT	17
HOUSING GP-FLYWHEEL	19
HOUSING GP-FRONT	20
LIFTING GP-ENGINE	22
MOUNTING GP-ENGINE	23
PAN GP-OIL	25
PISTON GP	26
PLUG GP-ENGINE	27
PULLEY GP-CRANKSHAFT	29
PULLEY GP-WATER PUMP	30
V-BELT GP	31
VALVE MECHANISM GP	32
LUBRICATION SYSTEM	33
BREATHER GP	33
FILTER GP-ENGINE OIL	35
LINES GP-ENGINE OIL	36
PUMP GP-ENGINE OIL	37
VALVE GP-ENGINE OIL RELIEF	38
VALVE GP-FLUID SAMPLING	39
VALVE GP-SOLENOID	40
COOLING SYSTEM	41
COOLER GP-ENGINE OIL	41
DRAIN GP-COOLANT	42
FAN GP-SUCTION	43
LINES GP-COOLANT	44
LINES GP-WATER	45
PUMP GP-WATER	46
RADIATOR & MOUNTING GP	47
RECOVERY GP-COOLANT	48
VALVE GP-RELIEF	50
AIR INLET AND EXHAUST SYSTEM	51
AIR CLEANER GP	51
LINES GP-AIR	55
MANIFOLD GP-EXHAUST	56
MANIFOLD GP-INLET	57
MUFFLER GP	58
PIPE GP-EXHAUST	60
TURBOCHARGER GP	61
FUEL SYSTEM	63
CONTROL GP-GOVERNOR	63
FILTER GP-WATER SEP & FUEL	65
LINES GP-FUEL	66
LINES GP-FUEL INJECTION	68
PUMP GP-FUEL INJECTION	70
PUMP GP-FUEL PRM & PRIM FILTER	72
TANK GP-FUEL	73
ELECTRICAL AND STARTING SYSTEM	75
ALTERNATOR GP-CHARGING	75
BATTERY & WIRING GP	78
CONTROL & MTG GP-MACHINE	80
ELECTRONICS GP-MACHINE	81
FUSE GP	82
GLOW PLUG GP	83
HEATER GP-JACKET WATER	84
INSTALLATION GP-SECURITY	85
LAMP GP-DOME	89
LAMP GP-FLOOD	90
LAMP GP-HEAD & SIGNAL	91
LAMP GP-WARNING BEACON	95
LIGHTING GP-FLOOD	96
LIGHTING GP-ROADING	98
LIGHTING GP-WARNING BEACON	102
PANEL GP-FUSE	103
PANEL GP-SWITCH	105
PROTECTION GP-WIRING	107
STARTING MOTOR GP-ELECTRIC	109
SWITCH GP-A/C & HEATER	112
SWITCH GP-DISCONNECT	113
SWITCH GP-PRESS & TEMP	114
SWITCH GP-RIDE CONTROL	115
SWITCH GP-ROCKER	116
SWITCH GP-WIPER	118
WARNING GP-BACKUP	120
WIRING GP-CAB	121
WIRING GP-CHASSIS	130

TABLE OF CONTENTS

Name	Page
WIRING GP-ENGINE	133
WIRING GP-FRONT	135
WIRING GP-WORK TOOL	138
POWER TRAIN	140
AXLE & TRANSFER DRIVE GP-REAR	140
AXLE GP-FRONT	144
DIFFERENTIAL & BEVEL GEAR GP	150
DIFFERENTIAL GP	156
DRIVE GP-TRANSFER	157
FILTER GP-OIL	163
FLANGE GP-WHEEL	164
LINES GP-DIFFERENTIAL LOCK	165
LINES GP-HYDRAULIC FILTER	166
LINES GP-HYDROSTATIC	168
LINES GP-POWER TRAIN OIL	172
MOUNTING GP-AXLE	174
MOUNTING GP-HYDROSTATIC PUMP	175
PLANETARY GP-FINAL DRIVE	176
POWER TRAIN AR	177
SHAFT GP-DRIVE	179
TIRE & RIM GP	181
VALVE & MTG GP-SOLENOID	187
VALVE GP-FLUSHING	188
VALVE GP-TIRE	189
WHEEL & BRAKE GP	190
WHEEL & TIRE GP	191
FRAME AND BODY	195
CONVERSION AR-ROADING	195
COUNTERWEIGHT GP	201
COVER GP-ACCESS	202
COVER GP-ENCLOSURE	203
DOOR GP-ACCESS	205
ENCLOSURE AR-HOOD	206
FENDER GP-FRONT	207
FENDER GP-REAR	208
FRAME GP-LOADER	209
FRAME GP-REAR	210
GUARD GP-LINES	212
HITCH GP-ARTICULATING	215
HOOD GP-ENGINE	217
LINES GP-GREASE	220
MOUNTING GP-REGISTRATION	221
PLATE GP-FIREWALL	223
BRAKING SYSTEM	224
BRAKE GP-PARKING	224
BRAKE GP-SERVICE	225
CONTROL GP-FOOT BRAKE	227
CONTROL GP-PARKING BRAKE	228
CYLINDER GP-MASTER	229
LINES GP-SERVICE BRAKE	230
STEERING SYSTEM	235
CYLINDER GP-STEERING	235
LINES GP-STEERING	236
MOUNTING GP-STEERING CYLINDER	241
PUMP GP-METERING	242
STEERING AR	244
HYDRAULIC SYSTEM	245
ACCUMULATOR GP-HYDRAULIC	245
ACCUMULATOR GP-RIDE CONTROL	246
ACTUATOR GP-PUMP	247
COOLER & CONDENSER GP	248
COOLER & MTG GP-HYDRAULIC OIL	249
CORE GP-HYDRAULIC OIL COOLER	251
CYLINDER GP-COUPLER	252
CYLINDER GP-LIFT	253
CYLINDER GP-MULTIPURPOSE BUKT	254
CYLINDER GP-TILT	255
FITTING GP-HYDRAULIC	256
HEAD GP-PUMP	257
HYDRAULIC AR	259
KIT-GUARD	261
LINES GP-AUXILIARY HYDRAULIC	262
LINES GP-BUCKET	274
LINES GP-CYLINDER	278
LINES GP-HYDRAULIC OIL COOLER	290
LINES GP-PILOT	292
LINES GP-PUMP	296
MANIFOLD GP-CONTROL	300
MANIFOLD GP-RIDE CONTROL	303
MOTOR & LINES GP-HYDRAULIC FAN	304
MOTOR GP-PISTON	306
MOUNTING GP-CONTROL VALVE	307
MOUNTING GP-COOLER & CONDENSER	308
MOUNTING GP-CYLINDER	310
POSITIONER GP-WORK TOOL	311
PUMP GP-PISTON	312
ROTATING GP-PUMP	314
TANK GP-HYDRAULIC	316
VALVE & MTG GP-SOLENOID	317
VALVE GP-DRAIN	318
VALVE GP-MAIN CONTROL	320
VALVE GP-MOTOR CONTROL	322
VALVE GP-PUMP CONTROL	323
IMPLEMENTS	324
BRACKET GP-TRANSPORT	324
CONTROL GP-WORK TOOL	325
WORK TOOLS	327
BUCKET AR-GENERAL PURPOSE	327
BUCKET AR-LIGHT MATERIAL	331

TABLE OF CONTENTS

Name	Page
BUCKET AR-MULTIPURPOSE	333
BUCKET GP-GENERAL PURPOSE	339
BUCKET GP-MULTIPURPOSE	341
CARRIAGE GP-FORK	343
CLAM AS-MULTIPURPOSE BUCKET	345
COUPLER AR-QUICK	346
COUPLER GP-QUICK	347
EDGE GP-CUTTING	349
FORK GP-PALLET	350
GUARD GP-BUCKET	352
LOCK GP-MECHANICAL	353
TOOTH GP-UNI	354
OPERATOR STATION	355
AIR CONDITIONER AR	355
AIR CONDITIONER GP	356
BOX GP-STORAGE	359
CAB AR-ENCLOSED ROPS	361
CAB GP-ENCLOSED ROPS	362
CANOPY AR-OPEN ROPS	363
CANOPY GP-OPEN ROPS	364
COMPRESSOR & MTG GP-REFRIG	365
CONSOLE GP-OPERATOR	366
CONTROL & MTG GP-PEDAL	367
CONTROL AR-TRANSMISSION	368
CONTROL GP-A/C & HEATER	369
CONTROL GP-CREEPER	370
CONTROL GP-JOYSTICK	371
CONTROL GP-RIMPULL	373
CONTROL GP-STEERING	374
COVER GP-CAB	376
DOOR GP-CAB	377
DUCT & FILTER GP-CAB AIR	383
FLOOR MAT GP	384
HEATER & MTG GP-CAB	385
HEATER AR-CAB	386
HEATER GP-CAB	387
INSTALLATION GP-RADIO	389
LATCH GP	391
LINER GP-CAB	392
LINES GP-AIR CONDITIONER	393
LINES GP-CAB HEATER	395
LITERATURE GP	397
MIRROR GP-REAR VIEW	398
MOTOR GP-WINDOW WIPER	401
MOUNTING GP-CAB	403
MOUNTING GP-RADIO	404
OPERATOR AR-ENCLOSED ROPS	406
OPERATOR AR-OPEN ROPS	407
PANEL GP-CAB	408
PANEL GP-INSTRUMENT	409
PEDAL GP-GOVERNOR	410
PLATE GP-SEAT	412
SCREEN GP-SUN	413
SEAT & MOUNTING GP	414
SEAT BELT GP	417
SEAT GP-SUSPENSION	419
SUPPRESSION GP-SOUND	425
TANK GP-WINDOW WASHER	426
TRIM GP-CAB	428
VISOR GP-CAB	435
WIPER GP-WINDOW	436
SERVICE EQUIPMENT AND SUPPLIES	438
CHOCK GP-WHEEL	438
FILM GP	439
PLATE & FILM GP	443
PART NUMBER INDEX	B1

GENERAL INFORMATION

1. MACHINE IDENTIFICATION

Caterpillar machines are identified by Product Identification Numbers (PIN). Some components included in a machine may be identified by Serial Numbers (S/N). Typical components that will be serialized include engines, transmissions, bulldozers, and rippers. The machine and engine are further identified by arrangement numbers and in some cases modification numbers. These numbers are shown on the product identification plate(s) and on the master plate in the operator's compartment.

Caterpillar dealers need all of these numbers to determine accurate parts identification.

SIS *New Feature*

Effective First Quarter 2001 the Caterpillar Product Identification Number (PIN) changed from 8 to 17 characters. In an effort to provide uniform equipment identification, Caterpillar and other construction equipment manufacturers are moving to comply with the latest version of the product identification numbering standard. Non-road machine PINs are defined by ISO 10261. The new PIN format will apply to all Caterpillar machines and generator sets. The PIN plates and frame marking will display the 17 character PIN. The new format will look like the following:

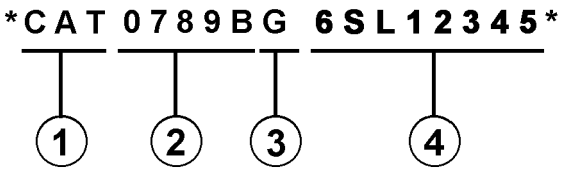

Where:

1. Caterpillar's World Manufacturing Code (characters 1-3)

2. Machine Descriptor (characters 4-8)

3. Check Character (character 9)

4. Machine Indicator Section (MIS) or Product Sequence Number (characters 10-17). These were previously referred to as the Serial Number.

Machines and generator sets produced before First Quarter 2001 will maintain their 8 character PIN format.

Components such as engines, transmissions, axles, etc. and work tools will continue to use an 8 character Serial Number (S/N).

2. ORDERING PARTS

⚠ WARNING

When replacement parts are required for this product Caterpillar recommends using Caterpillar replacement parts or parts with equivalent specifications including, but not limited to, physical dimensions, type, strength and material.

Failure to heed this warning can lead to premature failures, product damage, personal injury or death.

Quality Caterpillar replacement parts are available from Caterpillar dealers throughout the world. Their parts inventories are up to date and include all parts normally required to protect your investment in Caterpillar machines. Dealers may offer repair kits or remanufactured parts to allow selection of the most effective repair alternative for a particular situation. When ordering parts, your order should specify the quantity, part number, part name, and the serial number/product identification number of the machine for which the parts are needed.

3. PARTS MANUAL ORGANIZATION

Product information in this manual is presented as "information elements" that represent all of the components for the specific model. Engine Arrangement and Seat Group are examples of information elements. The information elements are organized alphabetically by part name and secondarily by part number within each major section of the manual.

4. TABLE OF CONTENTS

A table of contents (TOC) is found at the beginning of the manual. The TOC lists each section of the manual with a complete list of all information elements organized as they appear in the manual. Page numbers are provided for quick reference to detailed parts identification illustrations and serviceable consist lists.

5. MAINTENANCE PARTS INDEX

The Maintenance Parts Index, located near the beginning of the manual, references most frequently used maintenance part numbers, providing description, quantity, usage and page number. This information is organized alphabetically by part description.

6. INDEX

The index located near the front of the manual is an alphabetical listing of all information elements included in the manual. Page numbers are provided for quick reference to detailed parts identification illustrations and serviceable consist lists.

7. PART NUMBER INDEX

A numerical index listing all part numbers and the corresponding page number(s) appears at the back of the manual.

8. CAPTIONS

Captions located at the beginning of each information element identify the part number and part name along with additional descriptive information. PIN and S/N information found in each caption should be used to select correct information for a specific machine. Field replacement options, identification of optional attachment components, and where used ("part of") information is also provided.

The first line of a caption is shown in larger type font to indicate the beginning of an information element. Captions for additional pages that may be required to illustrate an information element will be shown in standard type font and will include the term *(contd.)* .

9. NON-SERVICED PARTS

In some instances it is necessary to display non-serviced parts that are a link to a lower level serviceable consist lists. These non-serviced part numbers are shown in *italic* type indicating that they are not available.

10. PARTS LIST REFERENCE NUMBERS

Numbers shown in the Ref No column correspond to numbers used in the associated graphic(s). An alphabetic suffix may be added to a reference number to identify lower level consist items. Numbers shown in the Graphic Ref column refer to the graphic number identifier displayed in the lower left corner of each illustration. The Graphic Ref number may be used in combination with the item Ref No to determine the correct part number. There may be intentional omission of a Ref No in a consist list as information is updated to reflect the latest serviceable part numbers.

11. INDENTED PART NAMES

When a part name is indented in a parts list, it is part of (included in) the group or assembly under which it is indented.

12. ILLUSTRATION REFERENCE LETTERS

When necessary, illustrations contain reference letters (A, B, C etc.) that are intended to track lines and harnesses from one point to another. They are also used to show where to reconnect illustrations that have been separated.

13. ABBREVIATIONS AND SYMBOLS

O.D. – Outside Diameter
I.D. – Inside Diameter
A – Not Part Of This Group
B – Use As Required
C – Change From Previous Type
D – Order By The Meter
E – Order By The Centimeter
F – Not Shown
G – Order By The Inch
I – Refer To Hydraulic Information System
M – Metric Part
R – Remfg Part May Be Available
Y – Separate Illustration
Z – Not Serviced Separately

SIS *New Feature*

14. DESCRIPTION OF TYPE CHANGES

Type - A type is defined as any configuration change that requires an additional Information Element for an Arrangement, Group, or Assembly. If serial number breaks for types are not available, a type # (Type 1, Type 2, etc.) will be displayed in the caption. These "type" changes are identified with a "C" note (change from previous type) in the Parts List. Only the "types" that apply to this Parts Manual will be included. Additional types may exist causing "C" notes to appear on an Information Element when no other types are shown.

15.<END>

This symbol indicates the end of an information element.

NOTE:

Continuing improvement and advancement of product design may cause changes to your machine which may not be included in this publication. Whenever a question arises regarding your caterpillar product or this publication, please consult your caterpillar dealer for the latest available information.

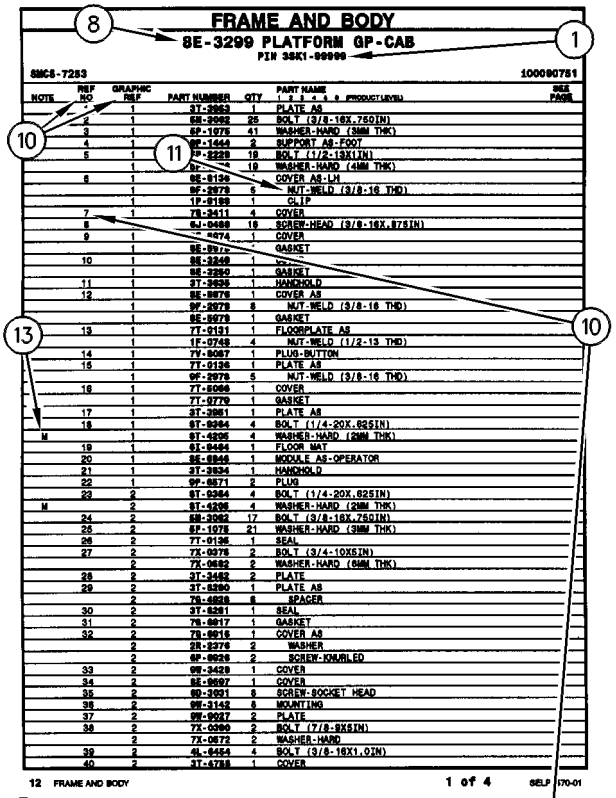
FRAME AND BODY
8E-3299 PLATFORM GP-CAB
PIN 3SK1-99999
SMCS-7283
100090751
12 FRAME AND BODY
1 of 4
SELP4570-01

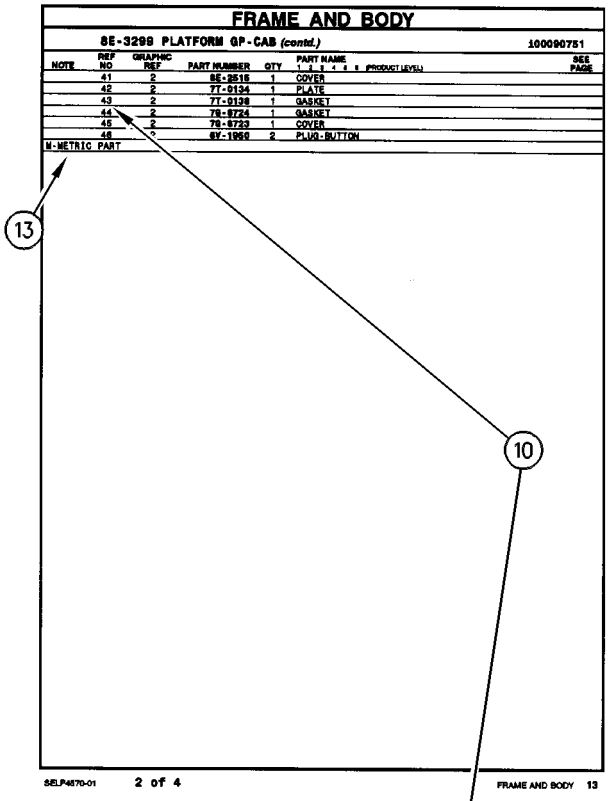
FRAME AND BODY
8E-3299 PLATFORM GP-CAB (contd.)
100090751
M-METRIC PART
SELP4570-01
2 of 4
FRAME AND BODY 13

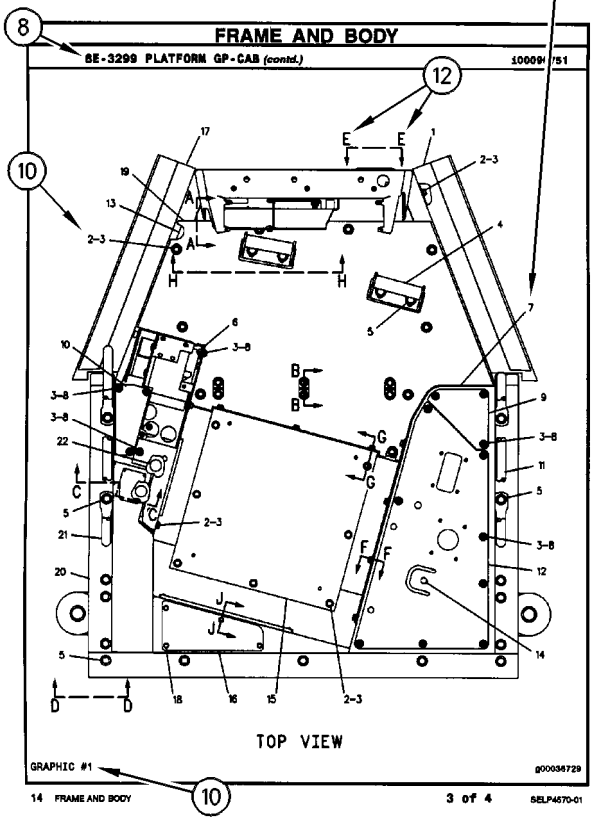
FRAME AND BODY
8E-3299 PLATFORM GP-CAB (contd.)
TOP VIEW
GRAPHIC #1
g00036729
14 FRAME AND BODY
3 of 4
SELP4570-01

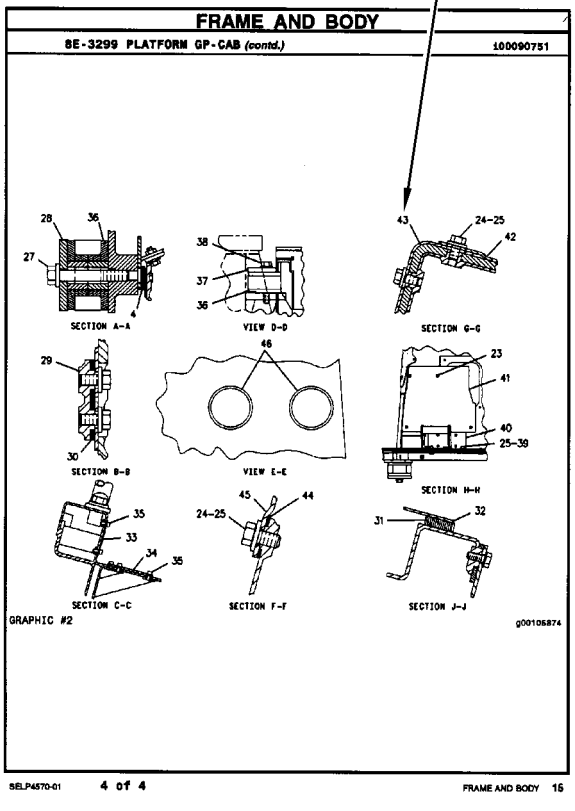
FRAME AND BODY
8E-3299 PLATFORM GP-CAB (contd.)
100090751
SECTION A-A
VIEW D-D
SECTION G-G
SECTION B-B
VIEW E-E
SECTION H-H
SECTION C-C
SECTION F-F
SECTION J-J
GRAPHIC #2
g00105874
SELP4570-01
4 of 4
FRAME AND BODY 15

REPAIR ALTERNATIVES

REMANUFACTURED COMPONENTS

As an option when making repairs consider Caterpillar Remanufactured Components. Components that are available through the Caterpillar Remanufactured Program are identified three ways in the parts book:

- with the letter R in the note field of the parts list
- with an R* at the beginning of the first line of the caption
- with an *R at the end of the first line of the caption

Typical components included in the Remanufacturing Program include:

ALTERNATORS
CONNECTING RODS
CRANKSHAFTS - UNDERSIZE
CRANKSHAFTS - UPGRADE TO NEW
CYLINDER HEADS
ELECTRONIC CONTROL MODULES (ECM)
ELECTRONIC SENSORS
FUEL INJECTORS
FUEL NOZZLES
FUEL PUMPS
GOVERNORS
OIL PUMPS
PISTONS
SHORT BLOCKS
STARTERS
TURBOCHARGERS - COMPLETE
TURBOCHARGER CARTRIDGES
WATER PUMPS

Caterpillar Remanufactured engines for many engine arrangements are also available.

SUPPLEMENTAL COOLANT ADDITIVES

CUSTOMER BENEFITS:

Protects against cavitation, foam, erosion, corrosion, and scale buildup in cooling systems.

- Provides measured coolant conditioner.

DESCRIPTION:

Additives deplete from the coolant with normal operation. For this reason, Supplemental Coolant Additives (SCA) must be added to all heavy duty coolants at regular intervals. In addition, when not using a fully formulated, pre-charged antifreeze, like Caterpillar's DEAC, an initial charge of SCA must be added to the cooling system. The amount of SCA added to the system is dependent on the capacity of the system.

The SCA for initial fill is provided as a liquid. SCA's for maintenance intervals are available in liquid form and as a spin-on element. (No Spin-on available for 3600 Family of Engines)

NOTE:

The amount of SCA added at initial fill is not the same as the amount added at maintenance intervals.

The coolant additive elements can be used with any ethylene or propylene glycol type antifreeze which meets ASTM D4985 or ASTM D5345 Specifications.

NOTE:

For use with standard heavy duty coolant only, not for use with Extended Life Coolant.

PARTS NEEDED:

Cooling System Capacity		Liquid SCA at Initial Fill	Liquid SCA at Maintenance*	Spin-on SCA Maintenance Element*
Liters	Gallons			
22-30	(6-8)	3P-2044 (1)	6V-3542 (1)	111-2370 (1)
30-38	(8-10)	3P-2044 (1) 6V-3542 (1)	111-2372 (1)	111-2369 (1)
38-49	(10-13)	3P-2044 (1) 8T-1589 (1)	111-2372 (1)	111-2369 (1)
49-64	(13-17)	3P-2044 (2)	8T-1589 (1)	9N-3368 (1)
64-83	(17-22)	3P-2044 (2) 8T-1589 (1)	111-2372 (1) 6V-3542 (1)	111-2371 (1)
83-114	(22-30)	3P-2044 (3) 8T-1589 (1)	3P-2044 (1)	9N-3718 (1)
114-163	(30-43)	3P-2044 (5)	3P-2044 (1) 6V-3542 (1)	111-2371 (2)
163-242	(43-64)	3P-2044 (8)	3P-2044 (2)	9N-3718 (2)

** Normal maintenance period is 250 hrs. See your Operation and Maintenance Manual for complete coolant maintenance instructions.*

( ) Indicates quantity required.

MAINTENANCE PARTS

DESCRIPTION	PART NUMBER	QTY	WHERE USED	PAGE
AIR INLET AND EXHAUST SYSTEM				
FILTER ELEMENT AS-AIR (PRIMARY)	110-6326	1	AIR CLEANER GP	52
FILTER ELEMENT AS-AIR (SECONDARY)	110-6331	1	AIR CLEANER GP	52
GASKET-EXHAUST	105-2954	1	PIPE GP-EXHAUST	60
BASIC ENGINE				
CAP-OIL FILLER (ENGINE)	199-2182	1	COVER GP-VALVE MECHANISM	8
GASKET (VALVE COVER)	233-5483	1	COVER GP-VALVE MECHANISM	8
PLUG-DRAIN (ENGINE OIL PAN)	5I-7833	1	PAN GP-OIL	25
COOLING SYSTEM				
CAP AS-COOLANT TANK	251-3227	1	RECOVERY GP-COOLANT	48
GASKET (WATER TEMPERATURE REGULATOR)	235-4959	1	LINES GP-WATER	45
REGULATOR AS-WATER TEMPERATURE (THERMOSTAT)	235-4960	1	LINES GP-WATER	45
ELECTRICAL AND STARTING SYSTEM				
BATTERY (12-VOLT, MAINTENANCE FREE)	230-6368	1	BATTERY & WIRING GP	78
BELT-DRIVE	9X-8139	1	LAMP GP-WARNING BEACON	95
FLASHER AS (12-VOLT)	7T-4848	1	WIRING GP-CAB	121
FUSE (10-AMPERE)	113-8490	1	FUSE GP	82
		17	INSTALLATION GP-SECURITY	85
		2	LIGHTING GP-FLOOD	96
		17	PANEL GP-SWITCH	105
		1	SWITCH GP-RIDE CONTROL	115
		1	SWITCH GP-WIPER	118
FUSE (10-AMPERE) (MINI)	113-8490	17	PANEL GP-FUSE	103
FUSE (15-AMPERE)	113-8491	1	FUSE GP	82
		1	INSTALLATION GP-SECURITY	85
		1	PANEL GP-SWITCH	105
		1	SWITCH GP-WIPER	118
		1	WIRING GP-CAB	125
		1	WIRING GP-CAB	127
FUSE (15-AMPERE) (MINI)	113-8491	1	PANEL GP-FUSE	103
FUSE (20-AMPERE)	113-8492	1	FUSE GP	82
		1	INSTALLATION GP-SECURITY	85
		1	PANEL GP-SWITCH	105
		1	SWITCH GP-WIPER	118
FUSE (20-AMPERE) (MINI)	113-8492	1	PANEL GP-FUSE	103
FUSE (25-AMPERE)	113-8493	1	FUSE GP	82
FUSE (5-AMPERE)	141-2759	1	FUSE GP	82
FUSE (60-AMPERE)	232-6314	1	FUSE GP	82
FUSE (80-AMPERE)	232-6315	1	FUSE GP	82
GLOW PLUG	107-3659	4	GLOW PLUG GP	83
KEY (BATTERY DISCONNECT)	8H-5306	1	SWITCH GP-DISCONNECT	113
KEY AS-ELECTRONIC (SECURITY)	206-5162	2	INSTALLATION GP-SECURITY	85
		2	INSTALLATION GP-SECURITY	87
LAMP (12-VOLT)	210-8754	1	WIRING GP-CAB	123
LAMP (12-VOLT, 21-WATT)	226-4560	1	LAMP GP-HEAD & SIGNAL	91
		1	LAMP GP-HEAD & SIGNAL	92
		1	LAMP GP-HEAD & SIGNAL	93

MAINTENANCE PARTS

DESCRIPTION	PART NUMBER	QTY	WHERE USED	PAGE
		1	LAMP GP-HEAD & SIGNAL	94
	9W-3326	1	LIGHTING GP-ROADING	98
		1	LIGHTING GP-ROADING	100
LAMP (12-VOLT, 5-WATT)	108-7605	1	LIGHTING GP-ROADING	98
		1	LIGHTING GP-ROADING	100
	226-4561	1	LAMP GP-HEAD & SIGNAL	91
		1	LAMP GP-HEAD & SIGNAL	92
		1	LAMP GP-HEAD & SIGNAL	93
		1	LAMP GP-HEAD & SIGNAL	94
LAMP (12-VOLT, 55-WATT)	9W-0607	1	LAMP GP-FLOOD	90
	9X-8118	1	LAMP GP-WARNING BEACON	95
LAMP (24-VOLT, 10-WATT)	259-1286	1	LAMP GP-DOME	89
LAMP GP-DOME (24-VOLT)	107-6032	1	WIRING GP-CAB	123
LAMP-HEAD (12-VOLT, 60/55-WATT)	9W-3324	1	LAMP GP-HEAD & SIGNAL	91
		1	LAMP GP-HEAD & SIGNAL	92
		1	LAMP GP-HEAD & SIGNAL	93
		1	LAMP GP-HEAD & SIGNAL	94
LENS AS (HEADLIGHT)	228-6050	1	LAMP GP-HEAD & SIGNAL	93
		1	LAMP GP-HEAD & SIGNAL	94
FRAME AND BODY				
LAMP (12-VOLT, 10-WATT)	195-9712	1	MOUNTING GP-REGISTRATION	222
FUEL SYSTEM				
FILTER AS-WATER SEP & FUEL	233-9856	1	PUMP GP-FUEL PRM & PRIM FILTER	72
STRAINER-FUEL	282-2270	1	TANK GP-FUEL	73
HYDRAULIC SYSTEM				
BREATHER (HYDRAULIC TANK)	233-7850	1	TANK GP-HYDRAULIC	316
CAP AS-FILLER (HYDRAULIC TANK)	142-8937	1	TANK GP-HYDRAULIC	316
PLUG AS-DRAIN (FUEL TANK)	101-4639	1	VALVE GP-DRAIN	318
PLUG AS-DRAIN (HYDRAULIC TANK)	101-4639	1	VALVE GP-DRAIN	318
STRAINER (HYDRAULIC OIL)	206-8818	1	TANK GP-HYDRAULIC	316
STRAINER (HYDRAULIC TANK)	254-1098	1	TANK GP-HYDRAULIC	316
VALVE GP-PRESSURE REDUCING (ACTUATOR)	267-3196	1	ACTUATOR GP-PUMP	247
LUBRICATION SYSTEM				
BREATHER (CRANKCASE)	235-4948	1	BREATHER GP	33
FILTER-ENGINE OIL	1R-0734	1	FILTER GP-ENGINE OIL	35

MAINTENANCE PARTS

DESCRIPTION	PART NUMBER	QTY	WHERE USED	PAGE
OPERATOR STATION				
BLADE AS-WIPER (450-MM) (REAR)	6V-5853	1	WIPER GP-WINDOW	436
BLADE AS-WIPER (700-MM) (FRONT)	6V-7419	1	WIPER GP-WINDOW	436
CAP-VENTED (WINDOW WASHER)	8E-8292	1	TANK GP-WINDOW WASHER	427
FILTER ELEMENT AS-CAB AIR (DUCT)	270-9018	1	DUCT & FILTER GP-CAB AIR	383
FILTER ELEMENT AS-CAB AIR (DUCT) (PLATE)	313-2458	1	DUCT & FILTER GP-CAB AIR	383
FUSE (10-AMPERE)	113-8490	1	AIR CONDITIONER GP	356
FUSE (15-AMPERE)	113-8491	1	SEAT & MOUNTING GP	416
FUSE (20-AMPERE)	113-8492	1	AIR CONDITIONER GP	356
		1	HEATER & MTG GP-CAB	385
FUSE (5-AMPERE)	141-2759	1	MOUNTING GP-RADIO	404
		1	SEAT & MOUNTING GP	416
KEY	5P-8500	2	LITERATURE GP	397
KEY (CAB)	5P-8500	1	DOOR GP-CAB	381
RECEIVER DRYER AS (REFRIGERANT)	257-3226	1	LINES GP-AIR CONDITIONER	393
V-BELT (MOUNTING)	304-4010	1	COMPRESSOR & MTG GP-REFRIG	365
POWER TRAIN				
BREATHER (AXLE)	197-9155	1	AXLE GP-FRONT	146
BREATHER (AXLE, FRONT)	197-9155	1	AXLE GP-FRONT	144
BREATHER (AXLE, REAR)	253-5024	1	AXLE & TRANSFER DRIVE GP-REAR	140
		1	AXLE & TRANSFER DRIVE GP-REAR	142
BREATHER (DRIVE AXLE)	197-9155	1	DRIVE GP-TRANSFER	157
	253-5024	1	DRIVE GP-TRANSFER	159
FILTER-OIL (ADVANCED EFFICIENCY)	1G-8878	1	FILTER GP-OIL	163
PLUG AS-DRAIN (MAGNETIC)	152-6144	1	AXLE & TRANSFER DRIVE GP-REAR	142
		1	AXLE GP-FRONT	144
		1	AXLE GP-FRONT	146
		2	DRIVE GP-TRANSFER	157
PLUG AS-DRAIN (MAGNETIC) (DIFFERENTIAL)	152-6144	1	DRIVE GP-TRANSFER	159
PLUG AS-DRAIN (MAGNETIC) (DRIVE AXLE)	152-6144	1	AXLE & TRANSFER DRIVE GP-REAR	140
PLUG AS-DRAIN (MAGNETIC) (FINAL DRIVE PLANETARY)	152-6144	1	PLANETARY GP-FINAL DRIVE	176
PLUG-MAGNETIC (DIFFERENTIAL)	152-6145	1	DIFFERENTIAL & BEVEL GEAR GP	150
		1	DIFFERENTIAL & BEVEL GEAR GP	152
		1	DIFFERENTIAL & BEVEL GEAR GP	154
		1	DRIVE GP-TRANSFER	159

INDEX

Name	Page
A	
ACCUMULATOR GP-HYDRAULIC (CHARGED) (PILOT)	292
ACCUMULATOR GP-HYDRAULIC (UNCHARGED) (PILOT)	245
ACCUMULATOR GP-HYDRAULIC–CHARGED–PILOT	245
ACCUMULATOR GP-HYDRAULIC–UNCHARGED–PILOT	245
ACCUMULATOR GP-RIDE CONTROL–CHARGED	246
ACCUMULATOR-REFRIGERANT	393
ACTUATOR GP-PUMP	247
AIR CLEANER GP	51 52 53
AIR COMPRESSOR GP (SUSPENSION SEAT)	421
AIR CONDITIONER AR	355
AIR CONDITIONER GP	356 357
ALTERNATOR GP-CHARGING	75 77
ARM GP-WINDOW WIPER (REAR)	436
AXLE & TRANSFER DRIVE GP-REAR–HIGH SPEED, WITH DIFFERENTIAL LOCK	142
AXLE & TRANSFER DRIVE GP-REAR–STANDARD, WITH DIFFERENTIAL LOCK	140
AXLE GP-FRONT–HIGH SPEED, WITH DIFFERENTIAL LOCK	146 148
AXLE GP-FRONT–STANDARD, WITH DIFFERENTIAL LOCK	144 149
B	
BATTERY & WIRING GP	78
BATTERY (12-VOLT, MAINTENANCE FREE)	78
BEARING GP-MAIN	5
BELT-DRIVE	95
BLADE AS-WIPER (450-MM) (REAR)	436
BLADE AS-WIPER (700-MM) (FRONT)	436
BOLT GP-ENGINE MOUNTING	386 407
BOX GP-STORAGE	359 360
BRACKET GP-TRANSPORT	324
BRAKE GP-HYDRAULIC CALIPER	144
BRAKE GP-PARKING	224
BRAKE GP-SERVICE	225
BREATHER (AXLE)	146
BREATHER (AXLE, FRONT)	144
BREATHER (AXLE, REAR)	140 142
BREATHER (CRANKCASE)	33
BREATHER (DRIVE AXLE)	157 159
BREATHER (HYDRAULIC TANK)	316
BREATHER GP	33
BUCKET AR-GENERAL PURPOSE	327 328 329 330
BUCKET AR-LIGHT MATERIAL	331 332
BUCKET AR-MULTIPURPOSE	333 334 335 336 337 338
BUCKET GP-GENERAL PURPOSE	339 340
BUCKET GP-MULTIPURPOSE	341 342
C	
CAB AR-ENCLOSED ROPS–COMFORT	361
CAB AR-ENCLOSED ROPS–DELUXE	361
CAB GP-ENCLOSED ROPS	362
CAMSHAFT GP	6
CANOPY AR-OPEN ROPS	363
CANOPY GP-OPEN ROPS	364
CAP AS-COOLANT TANK	48
CAP AS-FILLER (HYDRAULIC TANK)	316
CAP GP-FUEL FILLER (VENTED, LOCKABLE)	73
CAP-OIL FILLER (ENGINE)	8
CAP-VENTED (WINDOW WASHER)	427
CARRIAGE GP-FORK	343 344
CARTRIDGE GP-VALVE (PUMP CONTROL)	323
CHASSIS AR	1
CHOCK GP-WHEEL	438
CLAM AS-MULTIPURPOSE BUCKET	345
COMMON AR	1
COMPRESSOR & MTG GP-REFRIG	365
COMPRESSOR GP-REFRIGERANT	365
CONNECTING ROD GP	7
CONSOLE GP-OPERATOR	366
CONTROL & MTG GP-MACHINE	80
CONTROL & MTG GP-PEDAL–GOVERNOR	367
CONTROL AR-TRANSMISSION	368
CONTROL GP-A/C & HEATER	369
CONTROL GP-CREEPER	370
CONTROL GP-FOOT BRAKE	227
CONTROL GP-GOVERNOR–CABLE	64

INDEX

Name	Page
CONTROL GP-GOVERNOR–HAND THROTTLE	63
CONTROL GP-HANDLE (MULTIFUNCTION, WITH FNR)	371, 372
CONTROL GP-JOYSTICK–3-FUNCTION, AUXILIARY CONTROL	371
CONTROL GP-JOYSTICK–3-FUNCTION, AUXILIARY, RETURN TO DIG CONTROL	372
CONTROL GP-PARKING BRAKE	228
CONTROL GP-RIMPULL	373
CONTROL GP-STEERING–ADJUSTABLE COLUMN	375
CONTROL GP-STEERING–FIXED COLUMN	374
CONTROL GP-UNPROGRAMMED (MACHINE)	81
CONTROL GP-WORK TOOL	325
CONVERSION AR-CERTIFICATION	2
CONVERSION AR-ROADING	195, 197, 199, 200
COOLANT HEATER LINES	395
COOLER & CONDENSER GP–HYDRAULIC OIL, REFRIGERANT	248
COOLER & MTG GP-HYDRAULIC OIL	249
COOLER GP-ENGINE OIL	41
CORE AS-HYDRAULIC OIL COOLER	248, 251
CORE GP-HYDRAULIC OIL COOLER	249, 251
COUNTERWEIGHT GP	201
COUPLER AR-QUICK–HORIZONTAL PIN LOCK	346
COUPLER AR-QUICK–VERTICAL PIN LOCK	346
COUPLER AR-QUICK–VERTICAL PIN LOCK, BOOSTED AUXILIARY HYDRAULIC FLOW	346
COUPLER GP-QUICK–HORIZONTAL PIN LOCK	347
COUPLER GP-QUICK–VERTICAL PIN LOCK	348
COUPLING GP (QUICK DISCONNECT, FEMALE)	269
COUPLING GP (QUICK DISCONNECT, MALE)	269
COVER GP	407
COVER GP-ACCESS–CAB, FRONT	202
COVER GP-CAB–REAR SKIRT	376
COVER GP-ENCLOSURE–HOOD, CORNER CAPS	204
COVER GP-ENCLOSURE–HOOD, GRILL	203
COVER GP-VALVE MECHANISM	8
CRANKSHAFT GP	9
CYLINDER BLOCK GP	10
CYLINDER GP-COUPLER	252
CYLINDER GP-HYDRAULIC (COUPLER)	353
CYLINDER GP-LIFT	253
CYLINDER GP-MASTER (HIGH SPEED AXLE)	232
CYLINDER GP-MASTER–STANDARD AXLE	229
CYLINDER GP-MULTIPURPOSE BUKT	254
CYLINDER GP-STEERING	235
CYLINDER GP-TILT	255
CYLINDER HEAD GP	12

D

Name	Page
DIFFERENTIAL & BEVEL GEAR GP–FRONT, LOCKING	150
DIFFERENTIAL & BEVEL GEAR GP–REAR, LOCKING, HIGH SPEED AXLE	154
DIFFERENTIAL & BEVEL GEAR GP–REAR, LOCKING, STANDARD AXLE	152
DIFFERENTIAL GP	156
DOOR GP-ACCESS (CONSOLE)	429
DOOR GP-ACCESS–HOOD	205
DOOR GP-CAB–LH	379
DOOR GP-CAB–RH	377, 381
DRAIN GP-COOLANT	42
DRAIN GP-ENGINE OIL	13
DRIVE GP-TRANSFER–HYDROSTATIC	157
DRIVE GP-TRANSFER–HYDROSTATIC, HIGH SPEED	159
DUCT & FILTER GP-CAB AIR	383

E

Name	Page
EDGE GP-CUTTING	349
ELECTRONICS GP-MACHINE	81
ENCLOSURE AR-HOOD	206
ENGINE AR-PRIMARY	3

F

Name	Page
FAN GP-SUCTION	43
FASTENER GP-FRONT COVER	20
FENDER GP-FRONT	207
FENDER GP-REAR	208
FILM (REFLECTOR)	195, 197
FILM (SEAL)	121
FILM GP–INTERNATIONAL	441
FILM GP–U.S.	439
FILM-CONTROL (AIR CONDITIONER)	112, 369
FILM-COVER (BLACK)	85, 87, 103, 105
FILM-IDENTIFICATION (20-KM/H)	195, 199

INDEX

Name	Page
FILM-IDENTIFICATION (35-KM/H)	197, 200
FILM-IDENTIFICATION (AIR CONDITIONER)	357
FILM-IDENTIFICATION (BIODEGRADABLE HYDRAULIC OIL)	444
FILM-IDENTIFICATION (BUCKET LEVEL)	331, 332, 339, 340, 341, 342
FILM-IDENTIFICATION (CAB HEATER)	387
FILM-IDENTIFICATION (FUSE)	85, 103, 105
FILM-IDENTIFICATION (HYDRAULIC OIL)	230
FILM-IDENTIFICATION (IGNITION SWITCH)	85, 87
FILM-IDENTIFICATION (KEY START SWITCH)	103, 105
FILM-IDENTIFICATION (POWER DISTRIBUTION)	132
FILM-IDENTIFICATION (POWER RECEPTACLE, 12-VOLT)	85, 103, 105
FILM-INFORMATION (SECURITY SYSTEM)	87
FILM-INSTRUCTION (COUPLER OPERATION)	265
FILM-INSTRUCTION (MACHINE SECURITY, CAB STEPS)	87
FILM-INSTRUCTION (MACHINE SECURITY, CONSOLE)	85, 87
FILM-INSTRUCTION (TMSN HIGH, LOW SPEED, READ OMM)	117
FILM-INSTRUCTION (TRANSMISSION CONTROL)	87
FILM-STRIPE (REFLECTIVE, RED, WHITE)	195, 197
FILM-WARNING (ACCUM, HIGH PRESS, READ OMM)	246
FILM-WARNING (CRUSH HAZARD, READ OMM, INTL)	441
FILM-WARNING (CRUSH HAZARD, STAY BACK)	439, 441
FILM-WARNING (DO NOT OPERATE, READ OMM)	439
FILM-WARNING (HIGH PRESS CYLINDER, READ OMM)	285, 288, 292
FILM-WARNING (HIGH PRESSURE, READ OMM)	246
FILM-WARNING (HOT FLUID UND PRESS, READ OMM)	439
FILM-WARNING (HOT FLUID UNDER PRESSURE)	441
FILM-WARNING (NO WELD, NO DRILL, READ OMM)	443
FILTER AS-WATER SEP & FUEL	72
FILTER ELEMENT AS-AIR (PRIMARY)	52
FILTER ELEMENT AS-AIR (SECONDARY)	52
FILTER ELEMENT AS-CAB AIR (DUCT)	383
FILTER ELEMENT AS-CAB AIR (DUCT) (PLATE)	383
FILTER GP-ENGINE OIL	35
FILTER GP-OIL–HYDRAULIC, POWER TRAIN	163
FILTER GP-WATER SEP & FUEL	65
FILTER-ENGINE OIL	35
FILTER-OIL (ADVANCED EFFICIENCY)	163
FITTING GP	304
FITTING GP-HYDRAULIC	256
FLANGE GP-WHEEL	164
FLASHER AS (12-VOLT)	121
FLOOR MAT (FRONT)	384
FLOOR MAT (UPPER)	384
FLOOR MAT GP	384
FLYWHEEL GP	14
FORK GP-PALLET	350, 351
FRAME GP-LOADER	209
FRAME GP-REAR	210
FUSE (10-AMPERE)	82, 85, 96, 105, 115, 118, 356
FUSE (10-AMPERE) (MINI)	103
FUSE (15-AMPERE)	82, 85, 105, 118, 125, 127, 416
FUSE (15-AMPERE) (MINI)	103
FUSE (20-AMPERE)	82, 85, 105, 118, 356, 385
FUSE (20-AMPERE) (MINI)	103
FUSE (25-AMPERE)	82

INDEX

Name	Page
FUSE (5-AMPERE)	82, 404, 416
FUSE (60-AMPERE)	82
FUSE (80-AMPERE)	82
FUSE GP–SPARE	82

G

GASKET (VALVE COVER)	8
GASKET (WATER TEMPERATURE REGULATOR)	45
GASKET-EXHAUST	60
GAUGE-OIL LEVEL (DIPSTICK) (ENGINE)	25
GEAR GP-BEVEL & TRANSFER	150, 152, 154
GEAR GP-FRONT	15
GLOW PLUG	83
GLOW PLUG GP	83
GUARD GP-BELT	17, 18
GUARD GP-BOTTOM	1
GUARD GP-BUCKET–ROADING	352
GUARD GP-LINES	212, 213, 214
GUIDE GP-LINES (QUICK COUPLER)	346

H

HARNESS AS-CAB (MAIN)	121
HARNESS AS-CAB (ROOF)	123, 128
HARNESS AS-CHASSIS (BOOSTED AUXILIARY HYD FLOW)	136
HARNESS AS-CHASSIS (MAIN)	132
HARNESS AS-ENGINE	133
HARNESS AS-FRONT CHASSIS	135
HARNESS AS-HEATER	357
HARNESS AS-HEATER & AIR COND	357
HARNESS AS-LIGHTING (LICENSE PLATE)	222
HARNESS AS-POWER (FRONT)	136, 139
HARNESS AS-RADIO	404
HARNESS AS-SWITCH (WKTL, BOOSTED AUX HYD FLOW)	125, 127
HARNESS AS-WORK TOOL	139
HEAD GP-PUMP–HYDROSTATIC	257
HEATER & MTG GP-CAB	385
HEATER AR-CAB	386
HEATER GP-CAB	387
HEATER GP-JACKET WATER	84
HITCH GP-ARTICULATING	215
HOOD GP-ENGINE	217, 218
HOUSING GP-FLYWHEEL	19
HOUSING GP-FRONT	20
HYDRAULIC AR	260
HYDRAULIC AR–ELECTROHYDRAULIC WITH AUXILIARY CONTROL	259
HYDRAULIC AR–ELECTROHYDRAULIC WITH AUXILIARY, RETURN TO DIG CONTROL	259
HYDRAULIC AR–RIDE CONTROL	260
HYDRAULIC AR–RIDE CONTROL, BOOSTED AUXILIARY HYDRAULIC FLOW	260

I

INDICATOR (AIR RESTRICTION)	52
INSTALLATION AR-ENGINE	4
INSTALLATION GP-RADIO	389
INSTALLATION GP-RADIO–NACD	390
INSTALLATION GP-SECURITY	85, 87

K

KEY	397
KEY (BATTERY DISCONNECT)	113
KEY (CAB)	381
KEY AS-ELECTRONIC (SECURITY)	85, 87
KIT-GUARD–LIGHT	261
KIT-JOINT	372

L

LAMP (12-VOLT)	123
LAMP (12-VOLT, 10-WATT)	222
LAMP (12-VOLT, 21-WATT)	91, 92, 93, 94, 98, 100
LAMP (12-VOLT, 5-WATT)	91, 92, 93, 94, 98, 100
LAMP (12-VOLT, 55-WATT)	90, 95
LAMP (24-VOLT, 10-WATT)	89
LAMP GP-BACKUP	100
LAMP GP-BACKUP (12-VOLT)	98
LAMP GP-DOME	89
LAMP GP-DOME (12-VOLT)	123

INDEX

Name	Page
LAMP GP-DOME (24-VOLT)	123
LAMP GP-FLOOD	90
LAMP GP-HEAD & SIGNAL–LH	92, 94
LAMP GP-HEAD & SIGNAL–RH	91, 93
LAMP GP-REGISTRATION PLATE	222
LAMP GP-ROADING (FOG; RED, REAR)	98, 100
LAMP GP-STOP & TAIL	98, 100
LAMP GP-WARNING BEACON–12-VOLT, AMBER	95
LAMP-HEAD (12-VOLT, 60/55-WATT)	91, 92, 93, 94
LATCH GP–DOOR	391
LENS AS (HEADLIGHT)	93, 94
LIFTING GP-ENGINE	22
LIGHTING GP-FLOOD–FRONT, REAR	96
LIGHTING GP-ROADING–LH	100
LIGHTING GP-ROADING–RH	98
LIGHTING GP-WARNING BEACON	102
LINER GP-CAB	392
LINES GP-AIR	55
LINES GP-AIR CONDITIONER	393
LINES GP-AUXILIARY HYDRAULIC–HORIZONTAL PIN LOCK COUPLER	265
LINES GP-AUXILIARY HYDRAULIC–VERTICAL PIN LOCK COUPLER	262
LINES GP-AUXILIARY HYDRAULIC–VERTICAL PIN LOCK COUPLER, BOOSTED AUXILIARY HYDRAULIC FLOW	269
LINES GP-BUCKET	274, 276
LINES GP-CAB HEATER	395
LINES GP-COOLANT	44
LINES GP-CYLINDER	282
LINES GP-CYLINDER–LOAD CONTROL	278
LINES GP-CYLINDER–RIDE CONTROL ACCUMULATOR	284, 287
LINES GP-DIFFERENTIAL LOCK	165
LINES GP-ENGINE OIL	36
LINES GP-FUEL	66
LINES GP-FUEL INJECTION	68
LINES GP-GREASE–LOADER FRAME, LIFT, TILT CYLINDERS	220
LINES GP-HYDRAULIC FILTER	166
LINES GP-HYDRAULIC OIL COOLER	290, 291
LINES GP-HYDROSTATIC–HIGH SPEED AXLE	168
LINES GP-HYDROSTATIC–STANDARD AXLE	170
LINES GP-PILOT–AUXILIARY CONTROL VALVE	294
LINES GP-PILOT–DIFFERENTIAL LOCK, HYDRAULIC LOCKOUT	292
LINES GP-POWER TRAIN OIL–AXLE SPEED SELECT	172
LINES GP-PUMP	296, 298
LINES GP-SERVICE BRAKE–HIGH SPEED AXLE	232
LINES GP-SERVICE BRAKE–STANDARD AXLE	230
LINES GP-STEERING	236, 239
LINES GP-WATER	45
LINK GP-STEERING FRAME LOCK	1
LITERATURE GP	1, 397
LOCK GP-MECHANICAL–QUICK COUPLER	353
LOCK GP-VANDALISM	202

M

Name	Page
MANIFOLD GP-CONTROL (BOOSTED AUXILIARY HYD FLOW)	269
MANIFOLD GP-CONTROL (DIFF LOCK, HYDRAULIC LOCKOUT)	292
MANIFOLD GP-CONTROL–2-WAY, PROPORTIONAL	300
MANIFOLD GP-CONTROL–BOOSTED AUXILIARY HYDRAULIC FLOW	301
MANIFOLD GP-CONTROL–DIFFERENTIAL LOCK, HYDRAULIC LOCKOUT	302
MANIFOLD GP-EXHAUST	56
MANIFOLD GP-INLET	57
MANIFOLD GP-RIDE CONTROL	303
MIRROR GP-REAR VIEW–EXTERIOR	400
MIRROR GP-REAR VIEW–INTERIOR	398, 399
MODULE GP-INTERFACE (KEY)	85, 87
MOTOR & LINES GP-HYDRAULIC FAN	304
MOTOR GP-PISTON–HYDROSTATIC	306
MOTOR GP-WINDOW WIPER	401
MOTOR GP-WINDOW WIPER–FRONT	401
MOTOR GP-WINDOW WIPER–REAR	402
MOUNTING GP-AXLE	174
MOUNTING GP-CAB	403
MOUNTING GP-CONTROL VALVE	307
MOUNTING GP-COOLER & CONDENSER–HYDRAULIC OIL, REFRIGERANT	308
MOUNTING GP-CYLINDER–MULTIPURPOSE BUCKET	310
MOUNTING GP-ENGINE	23

INDEX

Name	Page
MOUNTING GP-HYDROSTATIC PUMP	175
MOUNTING GP-MOTOR (HYDROSTATIC)	260
MOUNTING GP-PUMP	260
MOUNTING GP-RADIO	404
MOUNTING GP-REGISTRATION	221, 222
MOUNTING GP-STEERING CYLINDER–HYDRAULIC	241
MUFFLER GP	58, 59

O

OPERATOR AR-ENCLOSED ROPS–COMFORT CAB	406
OPERATOR AR-ENCLOSED ROPS–DELUXE CAB	406
OPERATOR AR-OPEN ROPS	407
ORIFICE AS-AIR CONDITIONER	393

P

PAN GP-OIL	25
PANEL GP-CAB–FRONT	408
PANEL GP-FUSE–CONSOLE, RH	103
PANEL GP-INSTRUMENT–GAUGE CLUSTER, SWITCHES	409
PANEL GP-SWITCH–CONSOLE, RH	105
PEDAL GP-GOVERNOR	410
PIPE GP-EXHAUST	60
PISTON GP	26
PLANETARY GP-FINAL DRIVE	176
PLATE & FILM GP	443
PLATE & FILM GP–ENVIRONMENTAL	444
PLATE GP-FIREWALL	223
PLATE GP-SEAT	412
PLATE-IDENTIFICATION (CAT)	331, 332
PLATE-IDENTIFICATION (ENGLISH, GERMAN, SPANISH)	2, 195, 197, 199, 200
PLATE-INSTRUCTION	343, 344
PLATE-INSTRUCTION (AIR CONDITIONER)	355
PLUG AS-DRAIN (FUEL TANK)	318
PLUG AS-DRAIN (HYDRAULIC TANK)	318
PLUG AS-DRAIN (MAGNETIC)	142, 144, 146, 157
PLUG AS-DRAIN (MAGNETIC) (DIFFERENTIAL)	159
PLUG AS-DRAIN (MAGNETIC) (DRIVE AXLE)	140
PLUG AS-DRAIN (MAGNETIC) (FINAL DRIVE PLANETARY)	176
PLUG GP-ENGINE–CYLINDER BLOCK, LH	27
PLUG GP-ENGINE–CYLINDER BLOCK, RH	28
PLUG KIT-CONN	123
PLUG-DRAIN (ENGINE OIL PAN)	25
PLUG-MAGNETIC (DIFFERENTIAL)	150, 152, 154, 159
POSITIONER GP-WORK TOOL–RETURN TO DIG	311
POTENTIOMETER AS (CREEPER CONTROL)	370
POTENTIOMETER AS (RIMPULL CONTROL)	373
POWER TRAIN AR–HIGH SPEED AXLE, WITH DIFFERENTIAL LOCK	177, 178
POWER TRAIN AR–STANDARD AXLE, WITH DIFFERENTIAL LOCK	177
PROTECTION GP-WIRING–CONNECTOR CAPS	107, 108
PULLEY GP-CRANKSHAFT	29
PULLEY GP-WATER PUMP	30
PUMP GP-ENGINE OIL	37
PUMP GP-FUEL INJECTION	70
PUMP GP-FUEL PRM & PRIM FILTER–WATER SEPARATOR	72
PUMP GP-GEAR (BASIC)	260
PUMP GP-METERING–HMU–BOOSTED AUX HYDRAULIC FLOW	243
PUMP GP-METERING–HMU–STANDARD FLOW	242
PUMP GP-PISTON–HYDROSTATIC	312
PUMP GP-WATER	46

R

RADIATOR & MOUNTING GP	47
RADIATOR GP	47
RECEIVER DRYER AS (REFRIGERANT)	393
RECOVERY GP-COOLANT	48
REGULATOR AS-ALTERNATOR	75
REGULATOR AS-WATER TEMPERATURE (THERMOSTAT)	45
RELAY AS (12-VOLT) (3RD, 4TH FUNCTIONS)	127
RELAY AS (12-VOLT) (AIR CONDITIONER, HEATER)	356
RELAY AS (12-VOLT) (BYPASS)	127
RELAY AS (12-VOLT) (DEFROSTER)	118
RELAY AS (12-VOLT) (DETENT)	85, 103

INDEX

Name	Page
	105
RELAY AS (12-VOLT) (DIFFERENTIAL LOCK SOL VALVE)	85, 103, 105
RELAY AS (12-VOLT) (FUEL PUMP)	85, 103, 105
RELAY AS (12-VOLT) (INTERMITTENT WIPER 2)	118
RELAY AS (12-VOLT) (INTERMITTENT WIPER)	118
RELAY AS (12-VOLT) (MAIN, A)	121
RELAY AS (12-VOLT) (MAIN, B)	121
RELAY AS (12-VOLT) (REVERSE LAMP)	85, 103
RELAY AS (12-VOLT) (REVERSING LIGHT)	105
RELAY AS (12-VOLT) (RIDE CONTROL)	115
RELAY AS (12-VOLT) (START)	132
RELAY AS (12-VOLT) (STARTING AID)	132
ROCKER ARM GP	32
ROTATING GP-PUMP	312
ROTATING GP-PUMP–HYDROSTATIC	314

S

SCREEN GP-SUN	413
SEAT & MOUNTING GP	414, 415, 416
SEAT BELT GP	417, 418
SEAT GP-SUSPENSION–AIR, DELUXE, CLOTH	421
SEAT GP-SUSPENSION–CLOTH	423
SEAT GP-SUSPENSION–DELUXE, CLOTH	419
SENSOR AS-POSITION (RETURN TO DIG)	311
SENSOR GP-POSITION (ROTARY) (THROTTLE)	361, 410
SENSOR GP-PRESSURE	130
SENSOR GP-PRESSURE (HYDROSTATIC DRIVE MOTOR OIL)	130
SENSOR GP-SPEED (ENGINE)	133
SENSOR GP-SPEED (HYDROSTATIC DRIVE MOTOR)	130
SENSOR GP-TEMPERATURE (ENGINE COOLANT)	133
SENSOR GP-TEMPERATURE (HYDRAULIC OIL)	130
SENSOR-TEMPERATURE (COOLANT)	114
SERVICE GP-FORK POSITIONER	350, 351
SERVICE GP-MACHINE	81
SHAFT GP-DRIVE–HIGH SPEED AXLE	180
SHAFT GP-DRIVE–STANDARD AXLE	179
SOFTWARE GP-MACHINE (MACHINE)	81
SOLENOID	70
SOLENOID AS	322
SPRING AS-GAS	217
STARTING MOTOR GP-ELECTRIC	109, 111
STEERING AR–BOOSTED AUXILIARY HYDRAULIC FLOW	244
STEERING AR–STANDARD	244
STEERING WHEEL GP	428
STRAINER (HYDRAULIC OIL)	316
STRAINER (HYDRAULIC TANK)	316
STRAINER-FUEL	73
SUN VISOR	435
SUPPRESSION GP-SOUND–CAB	425
SWITCH AS (GEAR INDICATOR)	160
SWITCH AS (STARTING MOTOR, 12-VOLT)	109
SWITCH AS-KEY START (IGNITION)	85, 103, 105
SWITCH AS-MULTIFUNCTION (HD LIGHT, TURN SIG, WDO WIPER) (COLUMN)	409
SWITCH AS-PRESSURE (OIL FILTER BYPASS)	163
SWITCH AS-PRESSURE (REFRIGERANT COMPR, HIGH SIDE)	365
SWITCH AS-PUSH BUTTON (PARKING BRAKE ON, OFF)	121
SWITCH AS-PUSH BUTTON (RETURN TO DIG)	311
SWITCH AS-PUSH BUTTON (STOP LIGHTS ON, OFF)	121
SWITCH AS-ROCKER (AIR CONDITIONER, HEATER SELECT)	369
SWITCH AS-ROCKER (BLOWER FAN SPEED)	112, 369
SWITCH AS-ROCKER (BOOSTED AUX FLOW, 7TH FUNCTION)	125, 127
SWITCH AS-ROCKER (BOOSTED FLOW, 3RD, 4TH FCTN)	127
SWITCH AS-ROCKER (BOOSTED FLOW, 5TH, 6TH FCTN)	125, 127
SWITCH AS-ROCKER (DEFROSTER, REAR)	118
SWITCH AS-ROCKER (FOG LIGHT, REAR)	409
SWITCH AS-ROCKER (HAZARD WARNING LIGHTS)	409
SWITCH AS-ROCKER (HEATER)	112
SWITCH AS-ROCKER (HIGH SPEED SELECT)	117

INDEX

Name	Page
SWITCH AS-ROCKER (HYDRAULIC LOCKOUT)	259
SWITCH AS-ROCKER (QUICK COUPLER PIN LOCK)	116
SWITCH AS-ROCKER (RETURN TO DIG)	259
SWITCH AS-ROCKER (RIDE CONTROL)	115
SWITCH AS-ROCKER (ROADING LIGHTS, HEAD, SIDE)	409
SWITCH AS-ROCKER (STARTING AID)	409
SWITCH AS-ROCKER (WARNING BEACON)	409
SWITCH AS-ROCKER (WIPER, WASHER, REAR)	118
SWITCH AS-ROCKER (WORK LIGHTS)	96
SWITCH AS-ROCKER (WORK TOOL ON, OFF)	125
	127
SWITCH GP-A/C & HEATER	112
SWITCH GP-DISCONNECT–BATTERY	113
SWITCH GP-PRESS & TEMP–ENGINE COOLANT, ENGINE OIL	114
SWITCH GP-PRESSURE (HYDROSTATIC PUMP OIL)	130
SWITCH GP-RIDE CONTROL	115
SWITCH GP-ROCKER (HYDRAULIC LOCKOUT)	259
SWITCH GP-ROCKER (RETURN TO DIG)	259
SWITCH GP-ROCKER–HIGH SPEED SELECT	117
SWITCH GP-ROCKER–QUICK COUPLER PIN LOCK	116
SWITCH GP-WIPER	118
SWITCH-OIL PRESS (ENGINE)	114
SWITCH-TEMPERATURE (AIR CONDITIONER)	357

T

Name	Page
TANK GP-COOLANT	48
TANK GP-FUEL	73
TANK GP-HYDRAULIC	316
TANK GP-WINDOW WASHER	426
	427
TIRE & RIM GP	181
	182
	183
	184
TIRE & RIM GP–LH	186
TIRE & RIM GP–RH	185
TOOTH GP-UNI	354
TRIM GP-CAB–ENCLOSED ROPS	428
TRIM GP-CAB–FRONT	431
	433
TRIM GP-CAB–OPEN ROPS	428
TRIM GP-CAB–RH	429
TURBOCHARGER GP	61

V

Name	Page
V-BELT (MOUNTING)	365
V-BELT GP	31
VALVE & MTG GP-SOLENOID (AXLE SPEED SELECT)	172
VALVE & MTG GP-SOLENOID–AXLE SPEED SELECT	187
VALVE & MTG GP-SOLENOID–QUICK COUPLER	317
VALVE GP-CHECK	301
	302
	306
VALVE GP-CHECK (HYDRAULIC OIL COOLER BYPASS)	304
VALVE GP-DRAIN–ECOLOGY	318
VALVE GP-DRAIN–STANDARD	319
VALVE GP-ENGINE OIL RELIEF	38
VALVE GP-FLUID SAMPLING–ENGINE OIL	39
VALVE GP-FLUSHING–HYDROSTATIC DRIVE MOTOR	188
VALVE GP-MAIN CONTROL–ELECTROHYDRAULIC, 3-FUNCTION	320
VALVE GP-MAKEUP	320
VALVE GP-MOTOR CONTROL–HYDROSTATIC	322
VALVE GP-PILOT (JOYSTICK, 3-FUNCTION)	371
	372
VALVE GP-PRESSURE REDUCING (ACTUATOR)	247
VALVE GP-PUMP CONTROL–HYDROSTATIC	323
VALVE GP-RELIEF	304
VALVE GP-RELIEF (HYDRAULIC OIL)	301
VALVE GP-RELIEF (HYDROSTATIC PUMP)	257
VALVE GP-RELIEF (LINE, LIFT)	320
VALVE GP-RELIEF (LINE, TILT)	320
VALVE GP-RELIEF (MAIN)	320
VALVE GP-RELIEF (PUMP HEAD, CROSSOVER)	257
VALVE GP-RELIEF–PRESSURE OVERRIDE	50
VALVE GP-SOLENOID	40
	187
VALVE GP-SOLENOID (ACCUMULATOR)	303
VALVE GP-SOLENOID (HIGH FLOW BOOST)	301
VALVE GP-SOLENOID (HIGH FLOW)	301
VALVE GP-SOLENOID (HYDRAULIC LOCKOUT)	302
VALVE GP-SOLENOID (RIDE CONTROL, SWITCH)	303
VALVE GP-TIRE	189
VALVE MECHANISM GP	32
VISOR GP-CAB	435

INDEX

Name	Page	Name	Page

W

WARNING GP-BACKUP 120
WHEEL & BRAKE GP–FRONT 190
WHEEL & TIRE GP 191
192
193
194
WIPER GP-WINDOW 436
WIRING GP-CAB 121
WIRING GP-CAB–ROOF 123
128
WIRING GP-CAB–WORK TOOL, BOOSTED AUXILIARY HYDRAULIC FLOW SWITCHES 125
127
WIRING GP-CHASSIS 130
132
WIRING GP-ENGINE 133
WIRING GP-FRONT 135
WIRING GP-FRONT–BOOSTED AUXILIARY HYDRAULIC FLOW . . . 136
WIRING GP-WORK TOOL–BOOSTED AUXILIARY HYDRAULIC FLOW . . . 138
139

MACHINE ARRANGEMENT

322-4878 CHASSIS AR

S/N: LMD1-UP

PART OF 321-8198 COMMON AR

SMCS-7000 **i03103184**

NOTE	PART NUMBER	QTY	PART NAME 1 2 3 4 5 6 (PRODUCT LEVEL)	SEE PAGE
Y	*260-5338*	1	BATTERY & WIRING GP	78
Y	*277-7746*	1	CONTROL & MTG GP-MACHINE	80
Y	*242-5604*	1	CONTROL GP-WORK TOOL	325
Y	*271-3595*	1	COUNTERWEIGHT GP	201
Y	*293-0549*	1	COVER GP-ACCESS (CAB, FRONT)	202
Y	*284-2969*	1	COVER GP-CAB (REAR SKIRT)	376
Y	*282-7715*	1	FENDER GP-FRONT	207
Y	*275-5591*	1	FENDER GP-REAR	208
Y	*236-6833*	1	FRAME GP-LOADER	209
Y	*271-8811*	1	FRAME GP-REAR	210
Y	*292-4855*	1	HITCH GP-ARTICULATING	215
Y	*302-1345*	1	LINES GP-GREASE (LOADER FRAME, LIFT, TILT CYL)	220
Y	*6V-1970*	1	LITERATURE GP	397
Y	*275-9378*	1	MOUNTING GP-AXLE	174
Y	*256-9635*	1	MOUNTING GP-CAB	403
Y	*259-2850*	1	MOUNTING GP-STEERING CYLINDER	241
Y	*293-9760*	1	PLATE & FILM GP	443
Y	*258-8553*	1	PLATE GP-FIREWALL	223
Y	*322-3158*	1	PROTECTION GP-WIRING (CONNECTOR CAPS)	107
Y	*322-3159*	1	PROTECTION GP-WIRING (CONNECTOR CAPS)	108
Y	*242-5760*	1	TANK GP-FUEL	73
Y	*257-7684*	1	TANK GP-HYDRAULIC	316
Y	*259-8001*	1	WIRING GP-CHASSIS	130
Y	*313-1724*	1	WIRING GP-ENGINE	133
Y	*260-5331*	1	WIRING GP-FRONT	135
	305-0629	1	GUARD GP-BOTTOM	
	8T-4121	2	WASHER-HARD (11X21X2.5-MM THK)	
M	**8T-4136**	3	BOLT (M10X1.5X25-MM)	
	8T-4222	1	WASHER-PLATED (11X32X2.5-MM THK)	
	305-0628	1	PLATE AS	
	237-5537	1	LINK GP-STEERING FRAME LOCK	
	3B-5302	1	PIN-COTTER	
	5P-8837	1	LOCK PIN	
	284-9252	1	LINK AS	
	284-9256	2	PIN	

M-METRIC PART
Y-SEPARATE ILLUSTRATION

<END>

321-8198 COMMON AR

S/N: LMD1-UP

SMCS-7000 **i03103244**

NOTE	PART NUMBER	QTY	PART NAME 1 2 3 4 5 6 (PRODUCT LEVEL)	SEE PAGE
Y	*322-4878*	1	CHASSIS AR	1
Y	**305-2572**	1	ENGINE AR-PRIMARY	3
Y	*260-5391*	1	HYDRAULIC AR	260
Y	*321-8232*	1	INSTALLATION AR-ENGINE	4

Y-SEPARATE ILLUSTRATION

<END>

MACHINE ARRANGEMENT

307-1561 CONVERSION AR-CERTIFICATION

S/N: LMD1-UP
SWITZERLAND
AN ATTACHMENT

SMCS-7000 **i03195083**

NOTE	REF NO	GRAPHIC REF	PART NUMBER	QTY	PART NAME 1 2 3 4 5 6 (PRODUCT LEVEL)	SEE PAGE
	1	1	**258-3849**	1	PLATE-IDENTIFICATION (ENGLISH, GERMAN, SPANISH)	

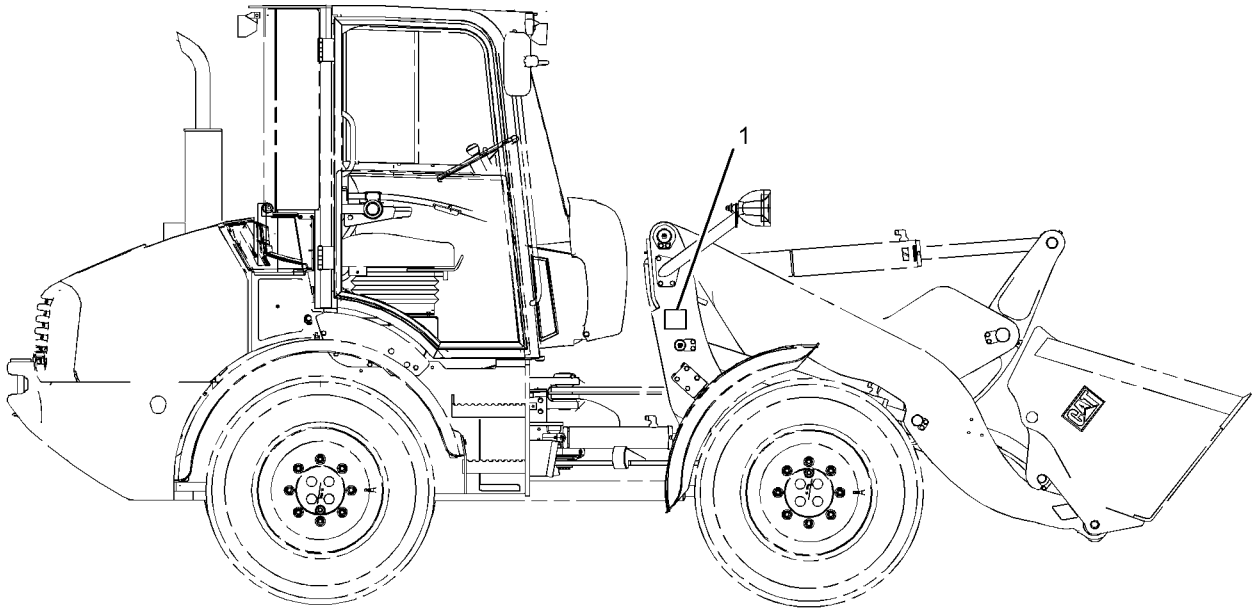

RIGHT SIDE VIEW

GRAPHIC #1 **<END>** g01375892

ENGINE ARRANGEMENT

305-2572 ENGINE AR-PRIMARY

S/N: CYM1-UP
62 BRAKE KW (83 BHP) AT 2500 RPM
PART OF 321-8198 COMMON AR

SMCS-1000 **i03065901**

NOTE	PART NUMBER	QTY	PART NAME 1 2 3 4 5 6 (PRODUCT LEVEL)	SEE PAGE
Y	*326-4122*	1	ALTERNATOR GP-CHARGING	77
Y	*292-4041*	1	BEARING GP-MAIN	5
Y	*331-6959*	1	BREATHER GP	33
Y	*314-9835*	1	CAMSHAFT GP	6
Y	*287-4033*	1	CONNECTING ROD GP	7
Y	*235-5896*	1	COOLER GP-ENGINE OIL	41
Y	*233-5480*	1	COVER GP-VALVE MECHANISM	8
Y	*314-9860*	1	CRANKSHAFT GP	9
Y	*315-8330*	1	CYLINDER BLOCK GP	10
Y	*315-7760*	1	CYLINDER HEAD GP	12
Y	*315-7763*	1	DRAIN GP-COOLANT	42
Y	*314-9901*	1	FILTER GP-ENGINE OIL	35
Y	*314-9861*	1	FLYWHEEL GP	14
Y	*315-7766*	1	GEAR GP-FRONT	15
Y	*235-5904*	1	GLOW PLUG GP	83
Y	*316-1621*	1	HOUSING GP-FLYWHEEL	19
Y	*315-8336*	1	HOUSING GP-FRONT	20
Y	*239-8495*	1	LIFTING GP-ENGINE	22
Y	*316-0471*	1	LINES GP-AIR	55
Y	*287-5377*	1	LINES GP-ENGINE OIL	36
Y	*331-7300*	1	LINES GP-FUEL INJECTION	68
Y	*331-1439*	1	LINES GP-WATER (TEMPERATURE REGULATOR)	45
Y	*241-5985*	1	MANIFOLD GP-EXHAUST	56
Y	*302-7815*	1	MANIFOLD GP-INLET	57
Y	*314-9852*	1	PAN GP-OIL	25
Y	*299-4445*	1	PIPE GP-EXHAUST	60
Y	*314-9855*	1	PISTON GP	26
Y	*287-2983*	1	PLUG GP-ENGINE	28
Y	*287-2922*	1	PLUG GP-ENGINE	27
Y	*301-3396*	1	PULLEY GP-CRANKSHAFT	29
Y	*287-6114*	1	PULLEY GP-WATER PUMP	30
Y	*235-5895*	1	PUMP GP-ENGINE OIL	37
Y	*331-7333*	1	PUMP GP-FUEL INJECTION	70
Y	*316-4744*	1	PUMP GP-WATER	46
Y	*287-6181*	1	STARTING MOTOR GP-ELECTRIC	111
Y	*314-9918*	1	SWITCH GP-PRESS & TEMP (ENGINE COOLANT, ENGINE OIL)	114
Y	*331-6308*	1	TURBOCHARGER GP	61
Y	*326-4120*	1	V-BELT GP (WATER PUMP)	31
Y	*287-5665*	1	VALVE GP-ENGINE OIL RELIEF	38
Y	*235-5880*	1	VALVE MECHANISM GP	32
			AVAILABLE GASKET KIT(S):	
	239-6773	1	KIT-GASKET	

Y-SEPARATE ILLUSTRATION

ENGINE ARRANGEMENT

321-8232 INSTALLATION AR-ENGINE

S/N: LMD1-UP

PART OF 321-8198 COMMON AR

SMCS-1000 **i02987989**

NOTE	PART NUMBER	QTY	PART NAME 1 2 3 4 5 6 (PRODUCT LEVEL)	SEE PAGE
Y	*316-4798*	1	CONTROL GP-GOVERNOR (CABLE)	64
Y	*284-4005*	1	DRAIN GP-ENGINE OIL	13
Y	*242-5899*	1	FAN GP-SUCTION	43
Y	*285-2995*	1	FILTER GP-WATER SEP & FUEL	65
Y	*255-6012*	1	LINES GP-COOLANT	44
Y	*320-6534*	1	LINES GP-FUEL	66
Y	*255-6009*	1	MOUNTING GP-ENGINE	23
Y	*255-6014*	1	MOUNTING GP-HYDROSTATIC PUMP	175
Y	*242-5898*	1	RADIATOR & MOUNTING GP	47
Y	*255-5989*	1	RECOVERY GP-COOLANT	48
Y	*242-8716*	1	VALVE GP-FLUID SAMPLING (ENGINE OIL)	39

Y-SEPARATE ILLUSTRATION

BASIC ENGINE

292-4041 BEARING GP-MAIN

S/N: CYM1-UP

PART OF 305-2572 ENGINE AR-PRIMARY

SMCS-1203 **i02860943**

NOTE	REF NO	GRAPHIC REF	PART NUMBER	QTY	PART NAME 1 2 3 4 5 6 (PRODUCT LEVEL)	SEE PAGE
	1	1	**103-9288**	1	PLATE-THRUST (STANDARD)	
AB		1	**103-9289**	1	PLATE-THRUST (0.15-MM OS)	
AB		1	**103-9290**	1	PLATE-THRUST (0.35-MM OS)	
	2	1	**233-5486**	1	BEARING-MAIN	
AB		1	**294-4890**	1	KIT-BEARING	
AB		1	**294-4891**	1	KIT-BEARING	
AB		1	**294-4892**	1	KIT-BEARING	

A-NOT PART OF THIS GROUP
B-USE AS REQUIRED

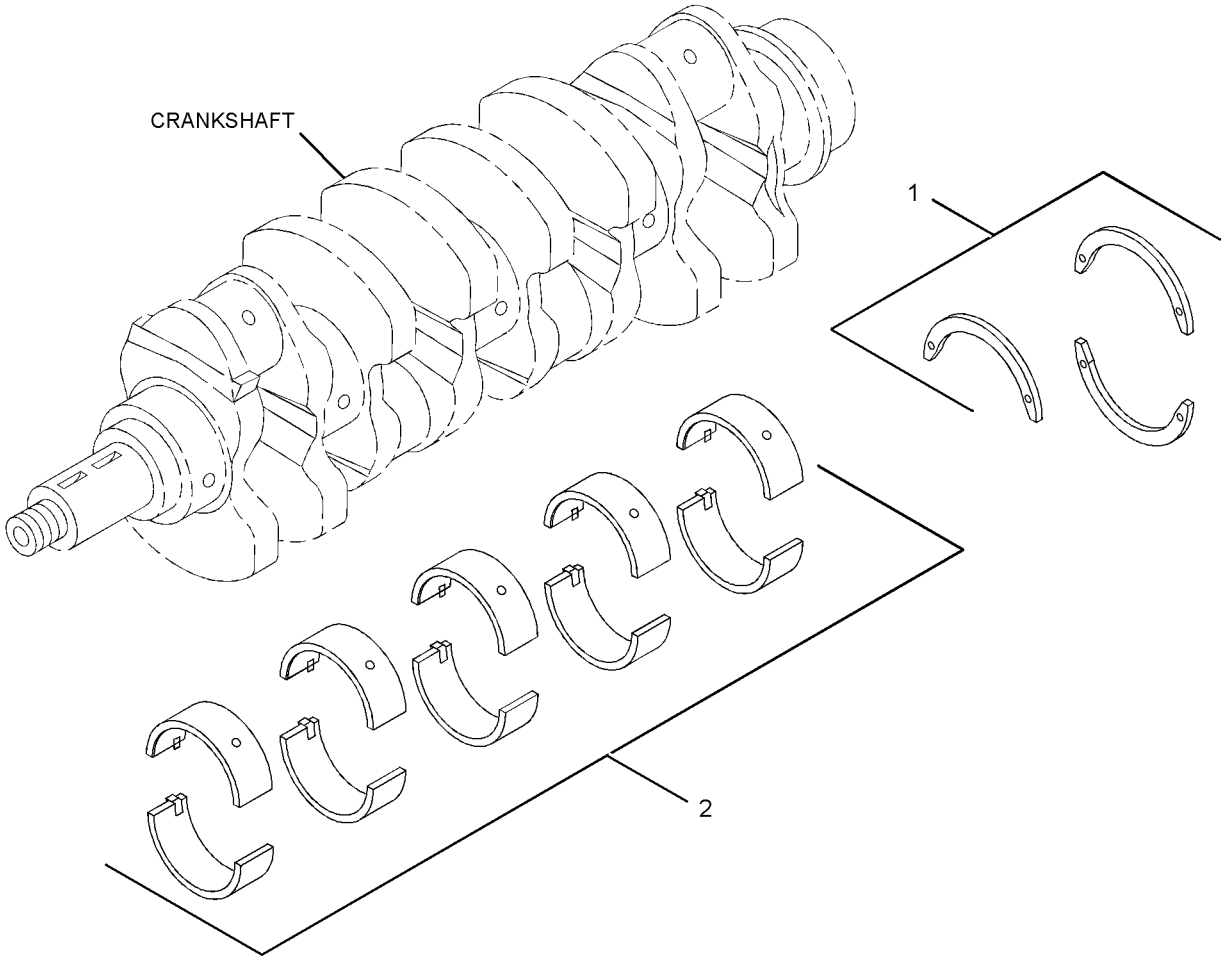

GRAPHIC #1 **<END>** g01379195

BASIC ENGINE

314-9835 CAMSHAFT GP

S/N: CYM1-UP

PART OF 305-2572 ENGINE AR-PRIMARY

SMCS-1210, 1211, 1212 **i03065959**

NOTE	REF NO	GRAPHIC REF	PART NUMBER	QTY	PART NAME 1 2 3 4 5 6 (PRODUCT LEVEL)	SEE PAGE
	1	1	**3B-4505**	2	LOCKWASHER	
M	2	1	**8T-4200**	2	BOLT (M8X1.25X16-MM)	
	3	1	**094-4628**	1	KEY	
	4	1	**233-5485**	1	PLATE-THRUST	
	5	1	**314-9925**	1	CAMSHAFT	
	6	1	**314-9926**	8	PUSHROD	
	7	1	**314-9927**	8	TAPPET	

M-METRIC PART

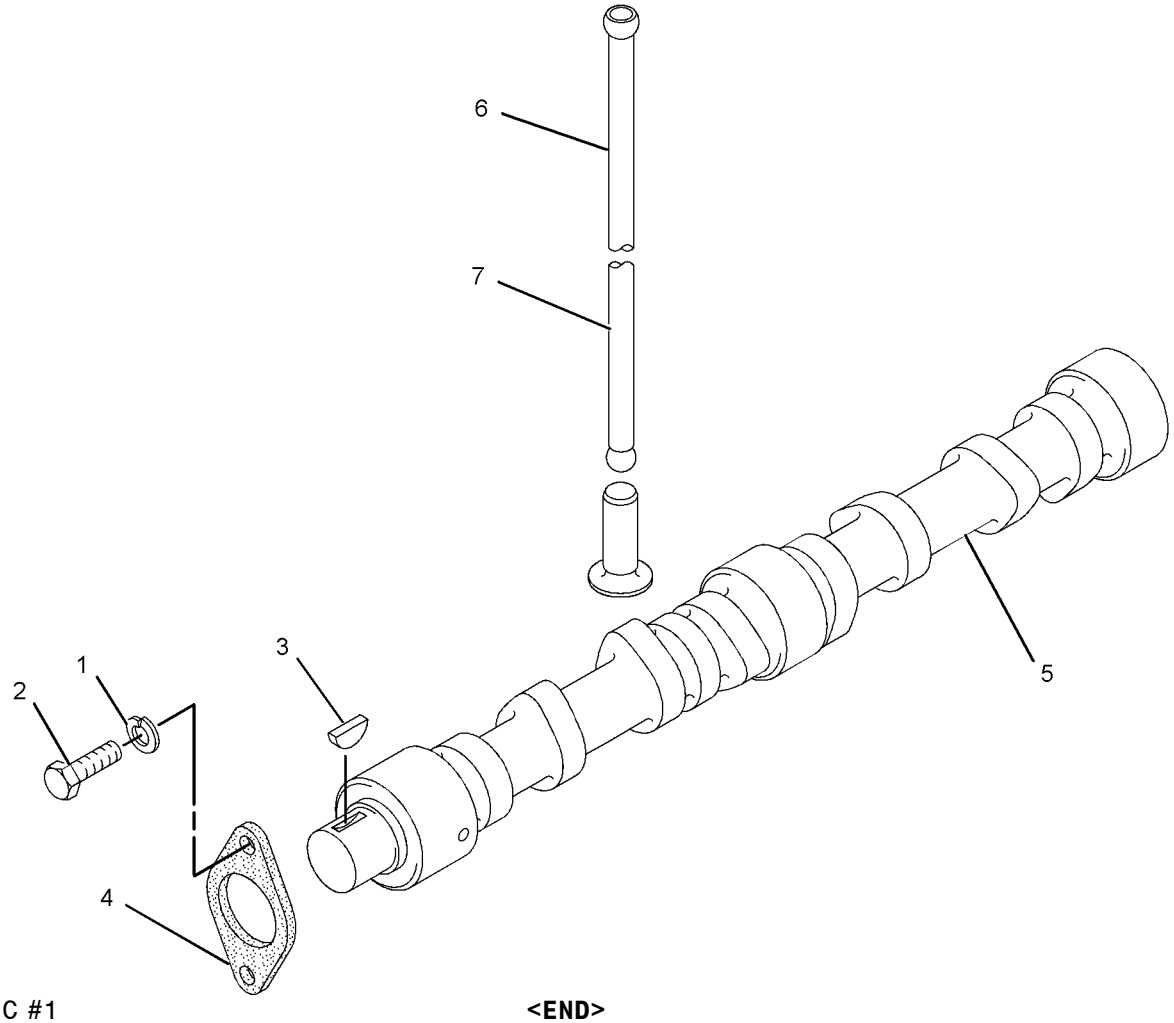

GRAPHIC #1 **<END>** g01396194

BASIC ENGINE

287-4033 CONNECTING ROD GP

S/N: CYM1-UP

PART OF 305-2572 ENGINE AR-PRIMARY

SMCS-1218 **i02860924**

NOTE	REF NO	GRAPHIC REF	PART NUMBER	QTY	PART NAME 1 2 3 4 5 6 (PRODUCT LEVEL)	SEE PAGE
	1	1	**103-9680**	4	ROD AS-CONNECTING	
					(EACH INCLUDES)	
	1A	1	**128-2955**	2	BOLT-CONNECTING ROD	
	1B	1	**128-2956**	2	NUT	
	1C	1	**128-2958**	1	BUSHING	
	2	1	**238-8282**	1	BEARING (STANDARD)	
AB		1	**238-8283**		BEARING (0.25-MM US)	
AB		1	**238-8284**		BEARING (0.5-MM US)	
AB		1	**238-8285**		BEARING (0.75-MM US)	

A-NOT PART OF THIS GROUP
B-USE AS REQUIRED

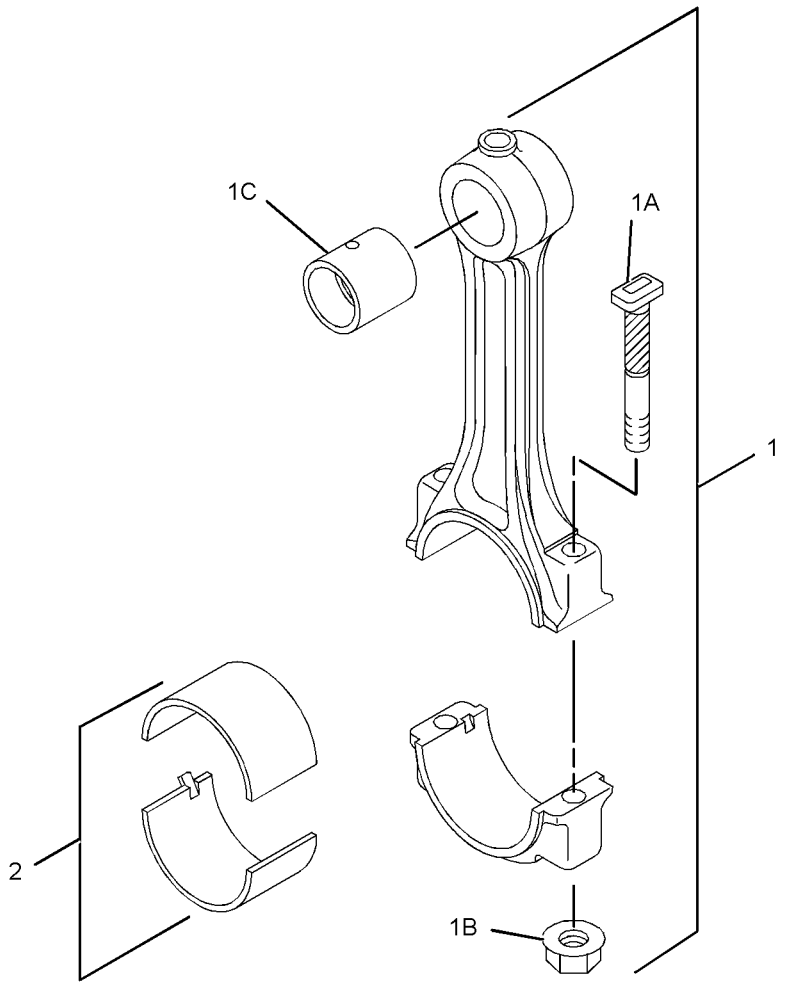

GRAPHIC #1 **<END>** g01380324

BASIC ENGINE

233-5480 COVER GP-VALVE MECHANISM

S/N: CYM1-UP

PART OF 305-2572 ENGINE AR-PRIMARY

SMCS-1107 **i02031795**

NOTE	REF NO	GRAPHIC REF	PART NUMBER	QTY	PART NAME 1 2 3 4 5 6 (PRODUCT LEVEL)	SEE PAGE
M	1	1	**8T-4197**	5	BOLT (M8X1.25X40-MM)	
	2	1	**9M-1974**	5	WASHER-HARD (8.8X16X2-MM THK)	
	3	1	**199-2182**	1	CAP-OIL FILLER (ENGINE)	
	4	1	**233-5483**	1	GASKET (VALVE COVER)	
	5	1	**234-4790**	1	COVER AS	

M-METRIC PART

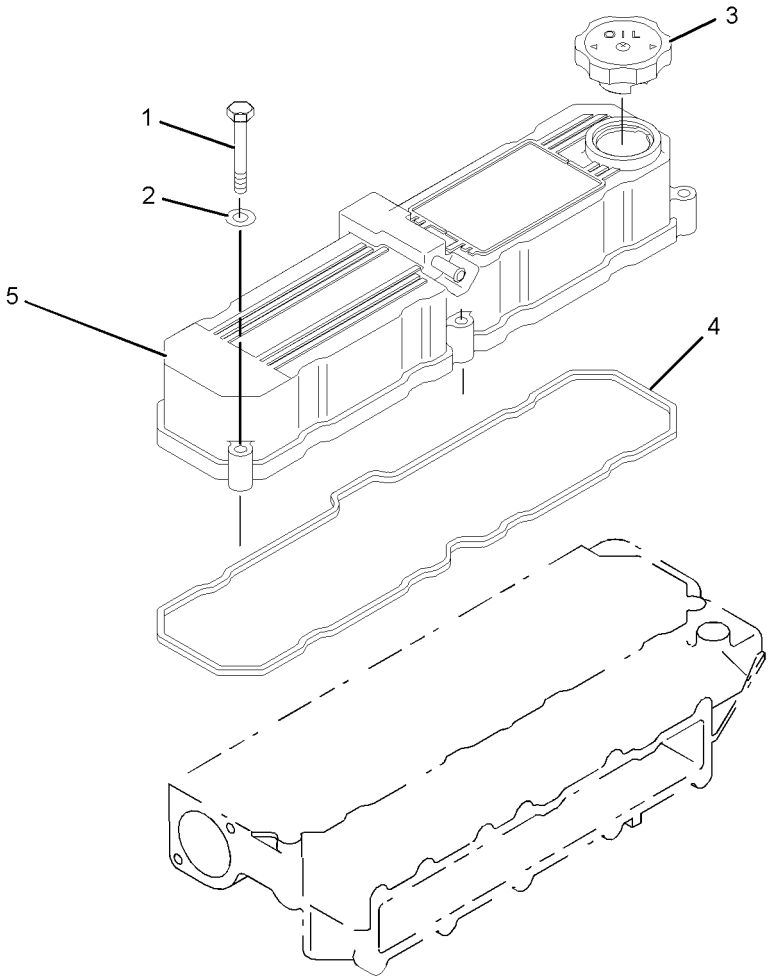

GRAPHIC #1 **<END>** g01011546

BASIC ENGINE

314-9860 CRANKSHAFT GP

S/N: CYM1-UP

PART OF 305-2572 ENGINE AR-PRIMARY

SMCS-1202 **i03118641**

NOTE	REF NO	GRAPHIC REF	PART NUMBER	QTY	PART NAME 1 2 3 4 5 6 (PRODUCT LEVEL)	SEE PAGE
	1	1	**085-9513**	2	PIN	
	2	1	**094-4628**	2	KEY (CRANKSHAFT)	
	3	1	**130-7596**	1	NUT	
	4	1	**294-7922**	1	CRANKSHAFT	

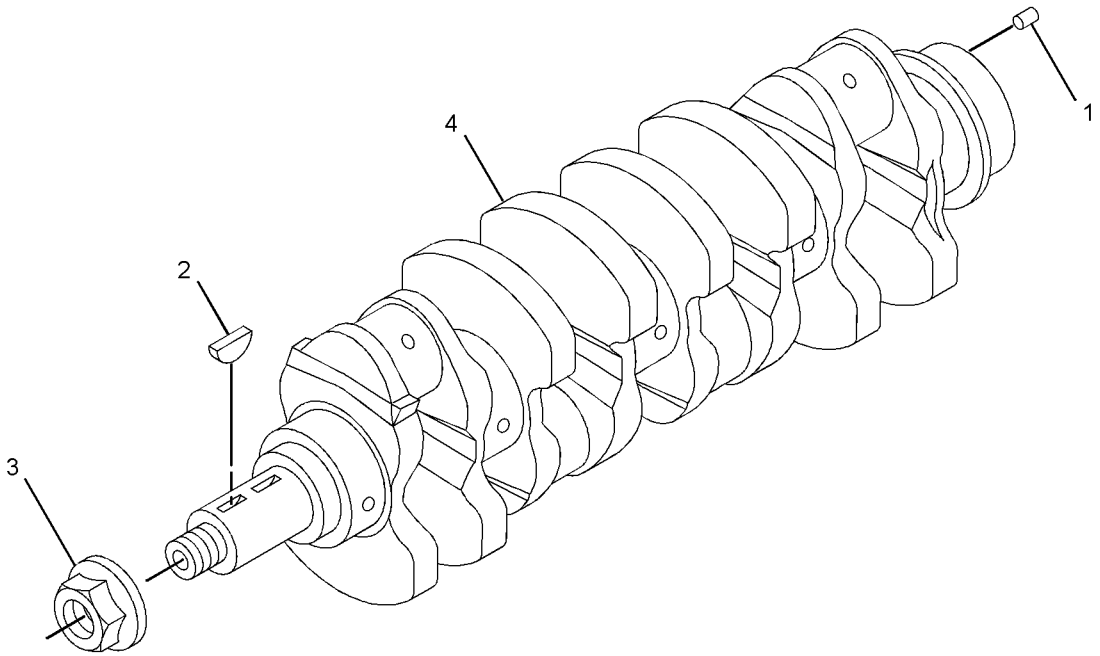

GRAPHIC #1 **<END>** g01392963

BASIC ENGINE

315-8330 CYLINDER BLOCK GP

S/N: CYM1-UP

PART OF 305-2572 ENGINE AR-PRIMARY

SMCS-1201 **i03105544**

NOTE	REF NO	GRAPHIC REF	PART NUMBER	QTY	PART NAME 1 2 3 4 5 6 (PRODUCT LEVEL)	SEE PAGE
	1	1	**5I-7525**	1	PLUG	
	2	1	**096-3741**	5	CAP	
	3	1	**099-4420**	2	PIN	
	4	1	**103-9703**	1	SHAFT-IDLER	
	5	1	**233-5457**	4	ORIFICE-JET (OIL PISTON COOLING)	
	6	1	**183-5916**	1	PIN-SPRING	
	7	1	**199-2139**	2	PIN	
	8	1	**233-5488**	2	PIN	
	9	1	**310-2682**	2	PLUG	
	10	1	**330-7720**	1	CYLINDER BLOCK GP	
	10A	1	**103-9276**	10	BOLT	
	10B	1	**096-3741**	5	CAP	
	10C	1	**3P-1896**	10	PLUG-CUP	
	11	1	**314-9938**	1	BUSHING	
	12	1	**103-9279**	2	SEAL-SIDE	

315-8330 **CYLINDER BLOCK GP** *(contd.)* **i03105544**

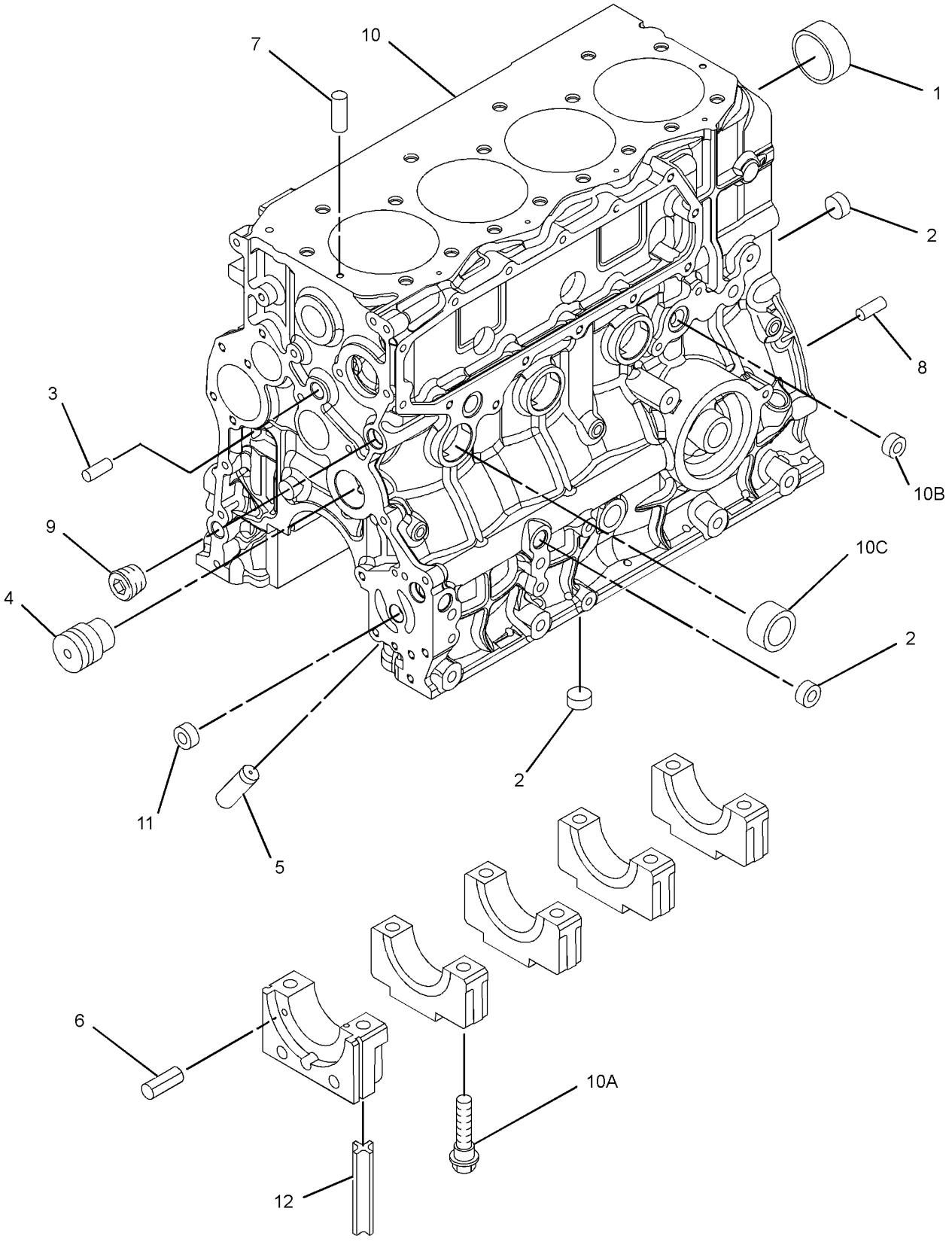

GRAPHIC #1 **<END>** g01624421

BASIC ENGINE

315-7760 CYLINDER HEAD GP

S/N: CYM1-UP

PART OF 305-2572 ENGINE AR-PRIMARY

SMCS-1100 **i03066040**

NOTE	REF NO	GRAPHIC REF	PART NUMBER	QTY	PART NAME 1 2 3 4 5 6 (PRODUCT LEVEL)	SEE PAGE
	1	1	**103-9246**	17	BOLT-CYLINDER HEAD	
	2	1	**299-4645**	1	GASKET-HEAD	
	3	1	**319-7262**	1	STUD	
	4	1	**319-7264**	1	CYLINDER HEAD AS	

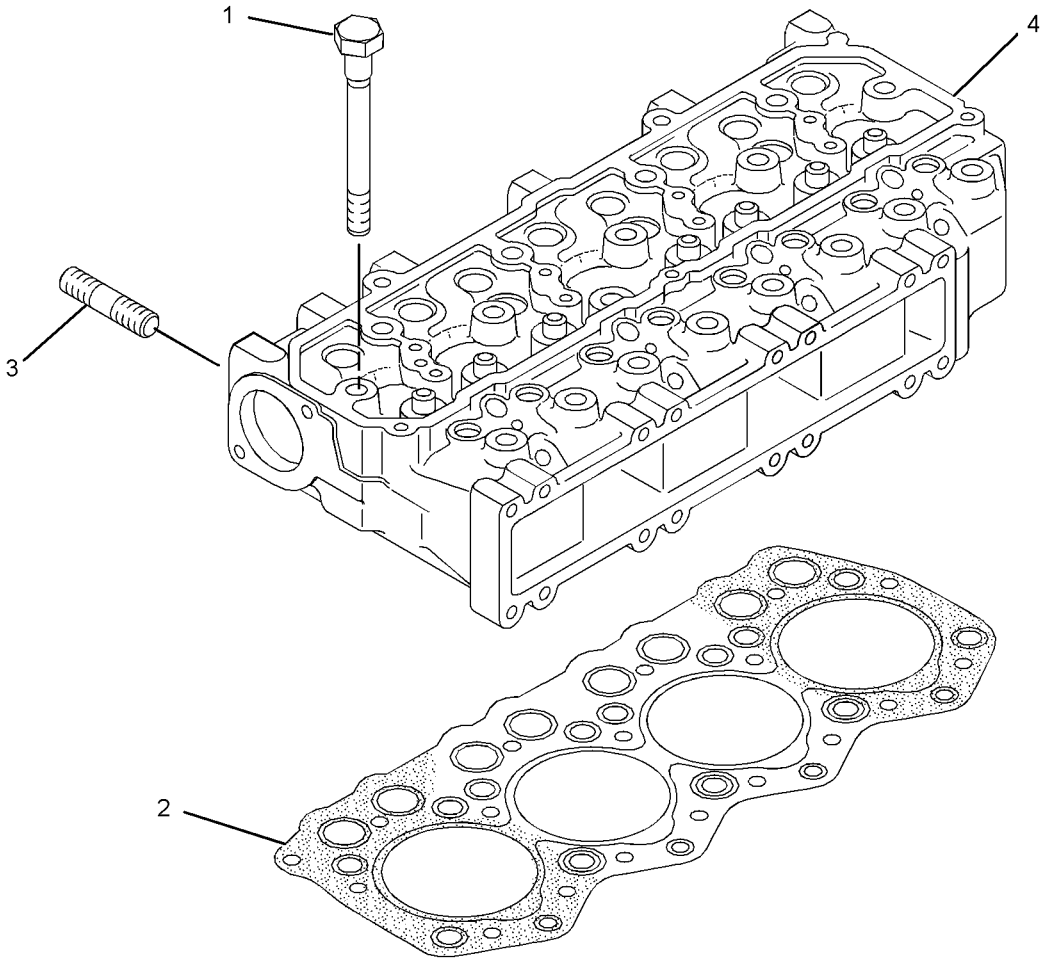

GRAPHIC #1 **<END>** g01447760

284-4005 DRAIN GP-ENGINE OIL

S/N: LMD1-UP

PART OF 321-8232 INSTALLATION AR-ENGINE

SMCS-1302 **i03044921**

NOTE	REF NO	GRAPHIC REF	PART NUMBER	QTY	PART NAME 1 2 3 4 5 6 (PRODUCT LEVEL)	SEE PAGE
	1	1	**5D-1026**	1	CLAMP-HOSE	
	2	1	**6V-7238**	1	VALVE-SHUTOFF (ENGINE OIL PAN)	
	3	1	**237-8058**	1	ELBOW	
M	4	1	**125-2976**	1	NUT (M14X1.5 THD)	
	5	1	**3K-0360**	1	SEAL-O-RING	
	6	1	**7X-0510**	1	WASHER-HARD (15.5X29X3-MM THK)	
	7	1	**9X-7382**	1	SEAL-O-RING	
E	8	1	**5P-0743**		HOSE (35-CM)	

E-ORDER BY THE CENTIMETER
M-METRIC PART

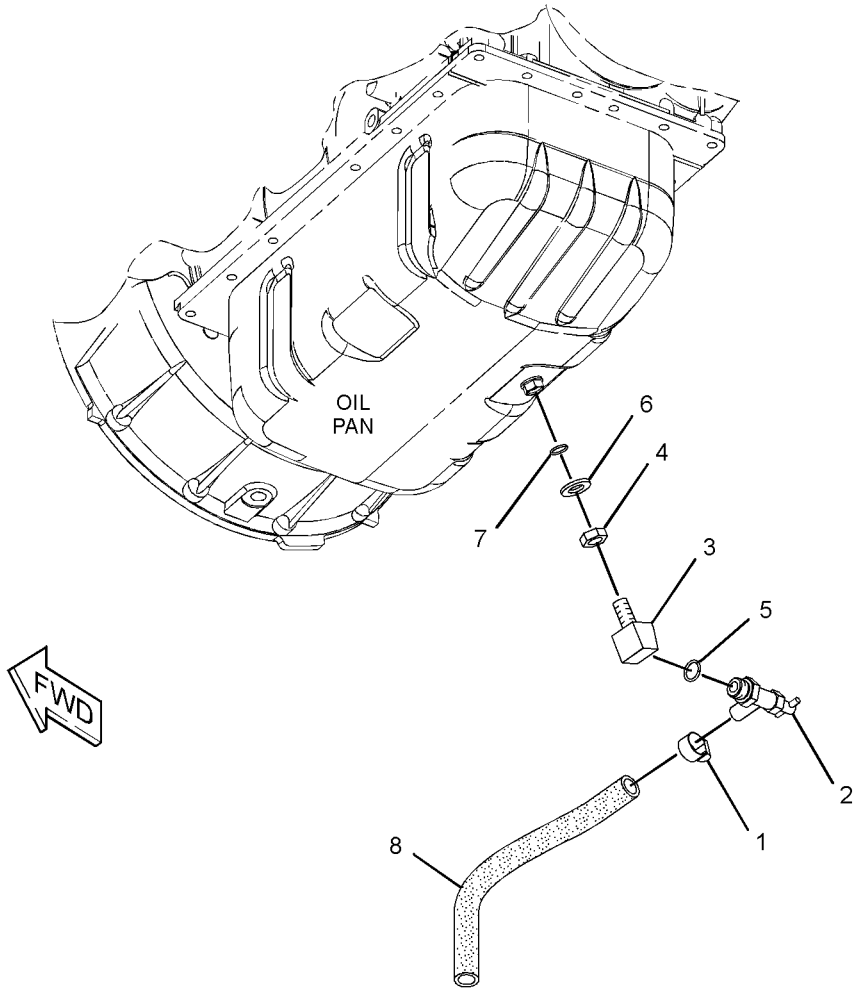

GRAPHIC #1 **<END>** g01379431

BASIC ENGINE

314-9861 FLYWHEEL GP

S/N: CYM1-UP

PART OF 305-2572 ENGINE AR-PRIMARY

SMCS-1156 **i02979794**

NOTE	REF NO	GRAPHIC REF	PART NUMBER	QTY	PART NAME 1 2 3 4 5 6 (PRODUCT LEVEL)	SEE PAGE
M	1	1	**226-3693**	6	BOLT (M12X1.25X30-MM)	
	2	1	**234-4791**	1	FLYWHEEL AS	
	2A	1	**032-8139**	1	GEAR-STARTER (112-TEETH)	

M-METRIC PART

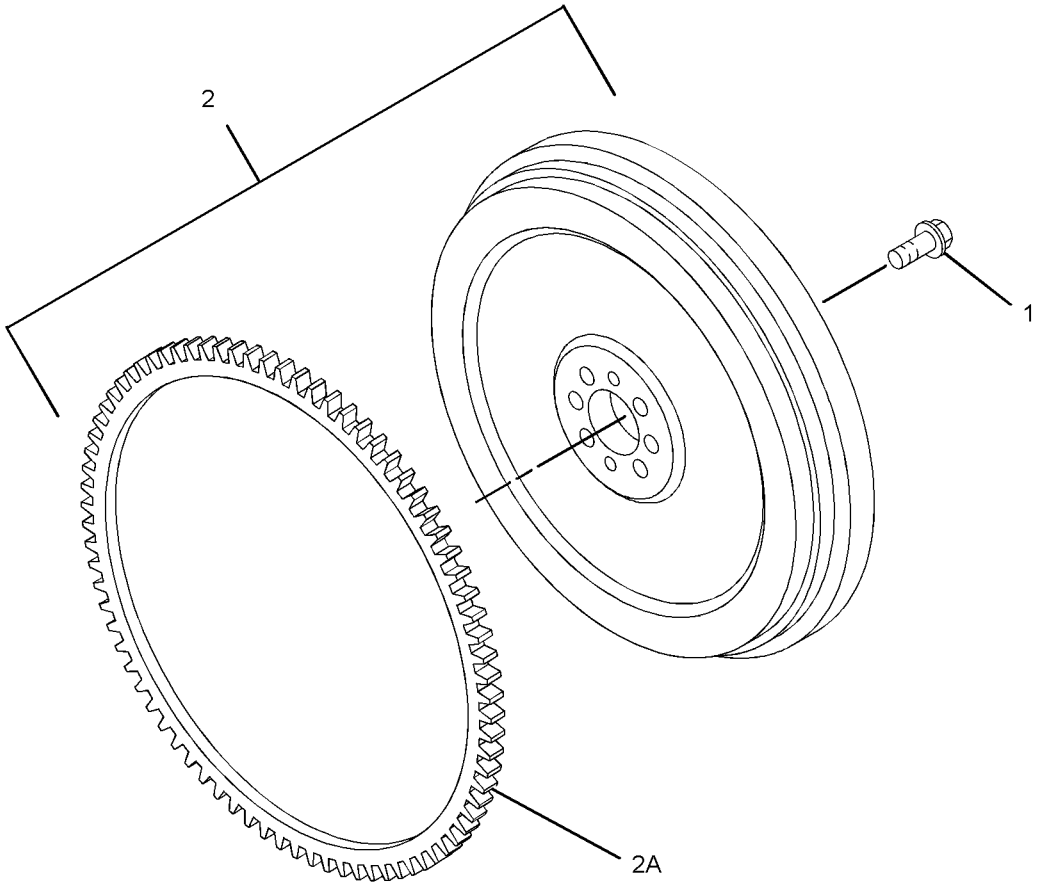

GRAPHIC #1 **<END>** g01394554

BASIC ENGINE

315-7766 GEAR GP-FRONT

S/N: CYM1-UP

PART OF 305-2572 ENGINE AR-PRIMARY

SMCS-1151, 1162, 1206 **i02979795**

NOTE	REF NO	GRAPHIC REF	PART NUMBER	QTY	PART NAME 1 2 3 4 5 6 (PRODUCT LEVEL)	SEE PAGE
	1	1	**315-4680**	1	GEAR-CRANKSHAFT	
	2	1	**315-4681**	1	GEAR-CAMSHAFT	
	3	1	**315-4682**	1	GEAR-PUMP	
	4	1	**315-4683**	1	GEAR-IDLER	
	5	1	**315-4684**	1	GEAR-OIL PUMP	

315-7766 **GEAR GP-FRONT** *(contd.)* **i02979795**

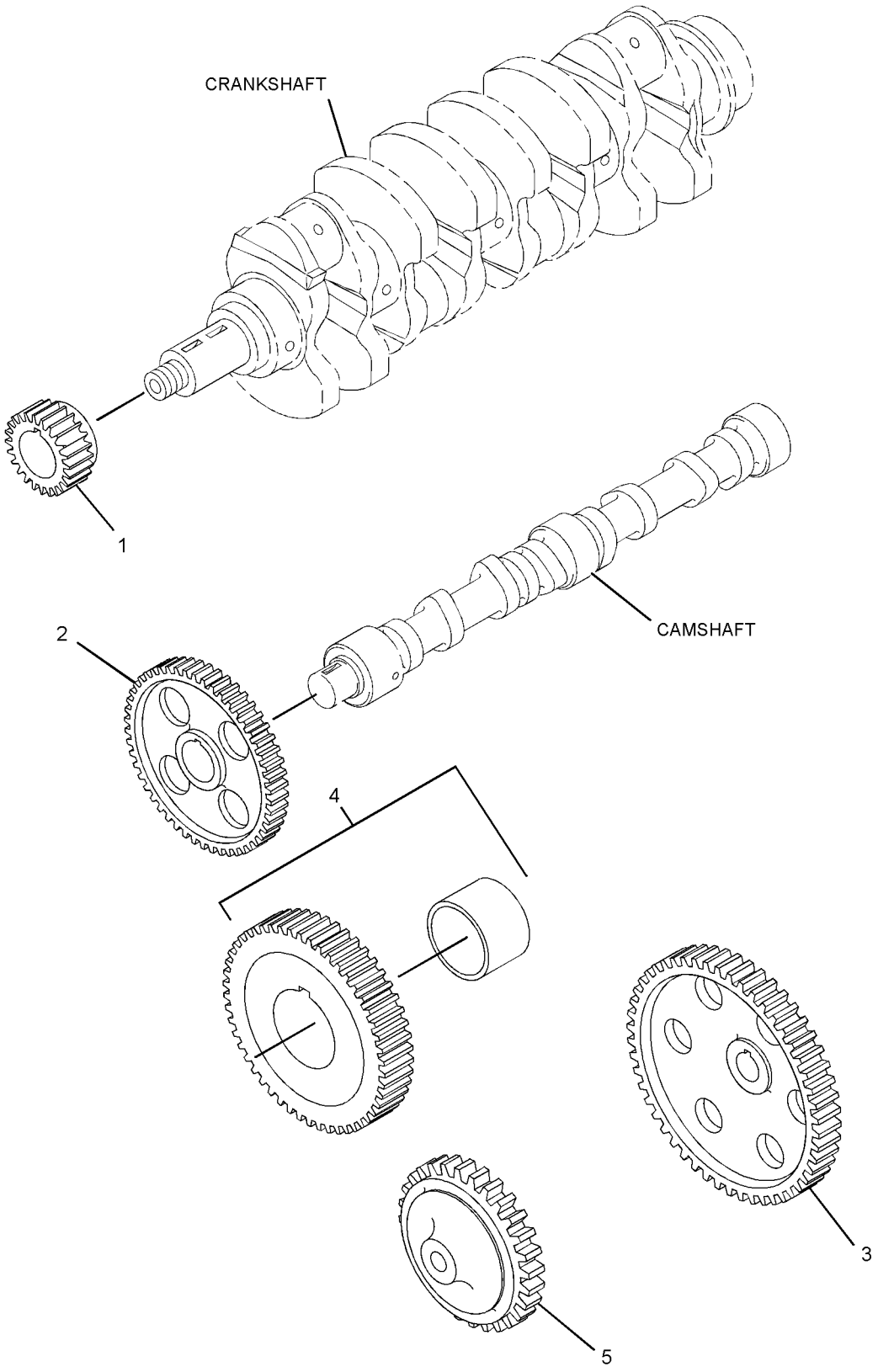

GRAPHIC #1 **<END>** g01413229

311-6316 GUARD GP-BELT

S/N: LMD1-UP
PART OF 322-5769 AIR CONDITIONER AR
AN ATTACHMENT

SMCS-7174 **i03148243**

NOTE	REF NO	GRAPHIC REF	PART NUMBER	QTY	PART NAME 1 2 3 4 5 6 (PRODUCT LEVEL)	SEE PAGE
	1	1	**279-1124**	5	GROMMET	
	2	1	**311-6319**	1	GUARD-BELT	
	3	1	**311-6320**	1	BRACKET	
	4	1	**311-6321**	1	BRACKET	
	5	1	**330-3667**	1	BRACKET AS	
	6	1	**165-9104**	5	SPACER (6.5X9.5X10-MM THK)	
M	7	1	**5C-2890**	1	NUT (M6X1-THD)	
M	8	1	**5C-7261**	1	NUT (M8X1.25-THD)	
	9	1	**5P-4115**	7	WASHER-HARD (7.2X19X2-MM THK)	
	10	1	**5P-4116**	2	WASHER-HARD (8.8X20.5X2-MM THK)	
M	11	1	**6V-7357**	2	BOLT (M6X1X25-MM)	
M	12	1	**8T-4138**	1	BOLT (M6X1X20-MM)	
M	13	1	**8T-4200**	2	BOLT (M8X1.25X16-MM)	
	14	1	**8T-4205**	1	WASHER-HARD (7.2X14.5X2-MM THK)	
	15	1	**8T-4224**	2	WASHER-HARD (8.8X16X2-MM THK)	
M	16	1	**8T-4971**	2	BOLT (M6X1X30-MM)	
M	17	1	**8T-7547**	1	BOLT (M8X1.25X30-MM)	

M-METRIC PART

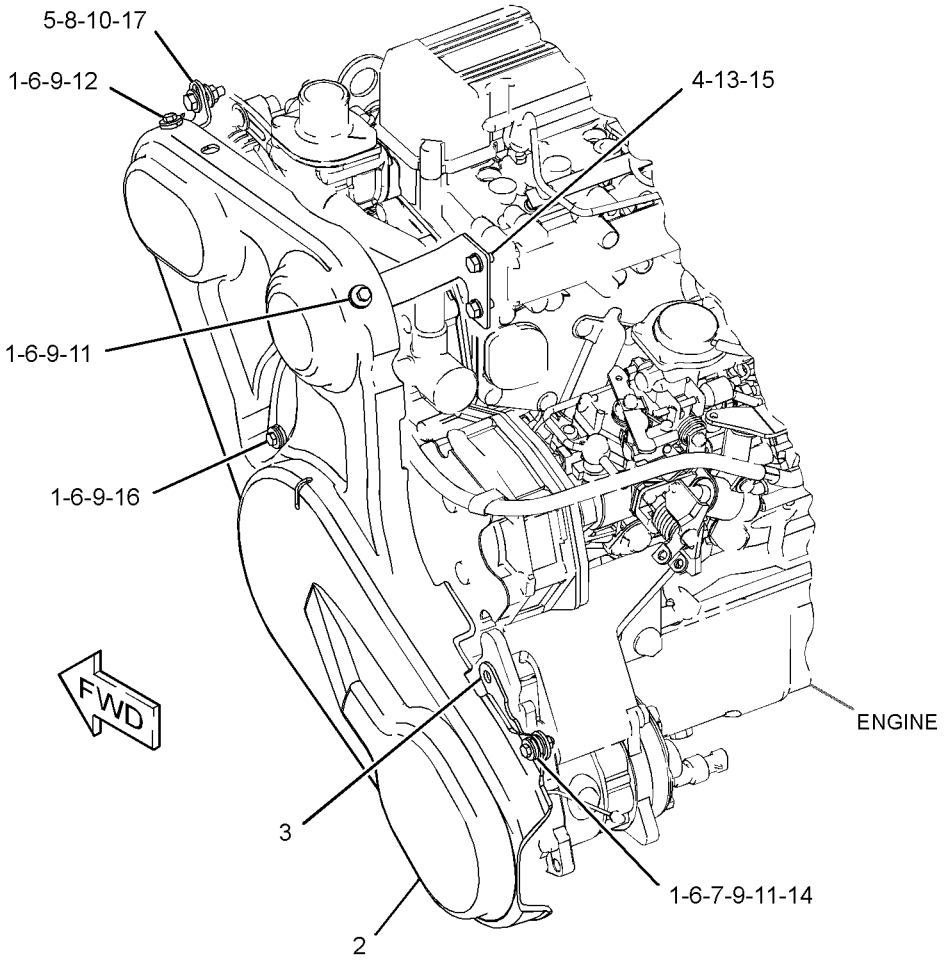

GRAPHIC #1 **<END>** g01629633

315-2631 GUARD GP-BELT

S/N: LMD1-UP

PART OF 322-5768 HEATER AR-CAB, 322-5766 OPERATOR AR-OPEN ROPS

AN ATTACHMENT

SMCS-7174 **i03119915**

NOTE	REF NO	GRAPHIC REF	PART NUMBER	QTY	PART NAME 1 2 3 4 5 6 (PRODUCT LEVEL)	SEE PAGE
	1	1	**279-1124**	4	GROMMET	
	2	1	**311-6321**	1	BRACKET	
	3	1	**314-9420**	1	GUARD-BELT	
	4	1	**330-3667**	1	BRACKET AS	
	5	1	**165-9104**	4	SPACER (6.5X9.5X10-MM THK)	
M	6	1	**5C-7261**	1	NUT (M8X1.25-THD)	
	7	1	**5P-4115**	6	WASHER-HARD (7.2X19X2-MM THK)	
	8	1	**5P-4116**	2	WASHER-HARD (8.8X20.5X2-MM THK)	
M	9	1	**6V-7357**	1	BOLT (M6X1X25-MM)	
M	10	1	**8T-4138**	1	BOLT (M6X1X20-MM)	
M	11	1	**8T-4200**	2	BOLT (M8X1.25X16-MM)	
	12	1	**8T-4224**	2	WASHER-HARD (8.8X16X2-MM THK)	
M	13	1	**8T-4971**	2	BOLT (M6X1X30-MM)	
M	14	1	**8T-7547**	1	BOLT (M8X1.25X30-MM)	

M-METRIC PART

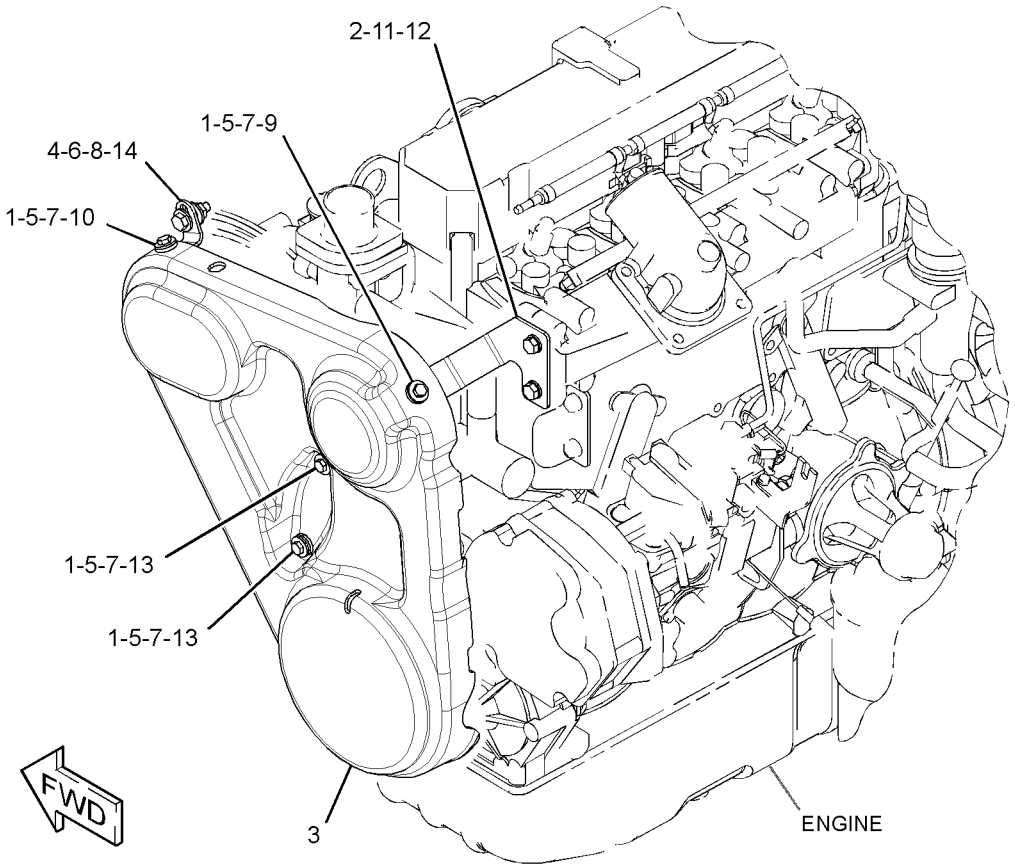

GRAPHIC #1 **<END>** g01596332

316-1621 HOUSING GP-FLYWHEEL

S/N: CYM1-UP

PART OF 305-2572 ENGINE AR-PRIMARY

SMCS-1157 **i02890970**

NOTE	REF NO	GRAPHIC REF	PART NUMBER	QTY	PART NAME 1 2 3 4 5 6 (PRODUCT LEVEL)	SEE PAGE
	1	1	**5I-7628**	1	GASKET	
	2	1	**5I-8056**	1	PLUG	
M	3	1	**8T-4195**	2	BOLT (M10X1.5X30-MM)	
	4	1	**8T-4896**	12	WASHER-HARD (10.2X18.5X2.5-MM THK)	
	5	1	**103-9280**	1	GASKET-REAR	
	6	1	**117-5015**	1	SEAL AS-OIL	
M	7	1	**140-5217**	10	BOLT (M10X1.25X25-MM)	
	8	1	**212-8499**	3	STUD	
	9	1	**212-8510**	3	NUT (M10X1.25 THD)	
	10	1	**315-7703**	1	HOUSING-FLYWHEEL	
	11	1	**316-1552**	1	PLUG	

M-METRIC PART

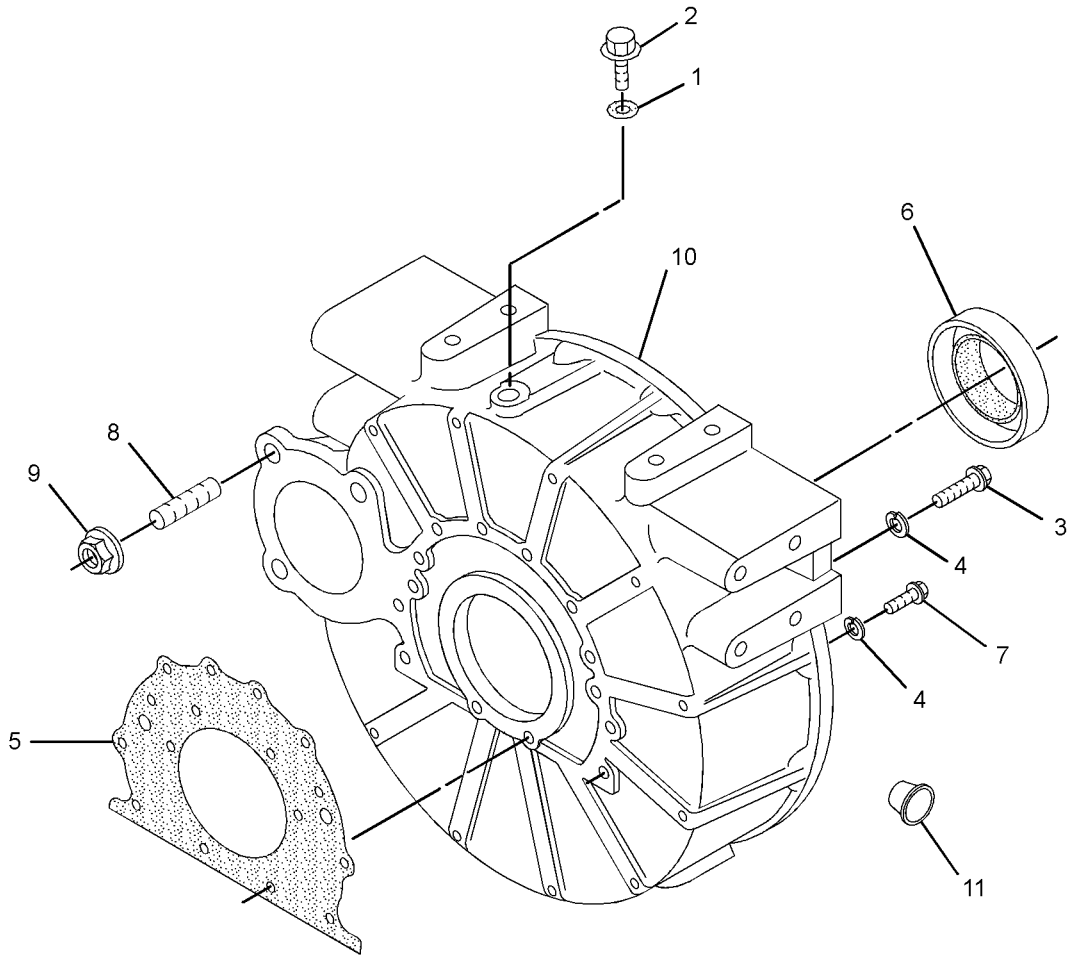

GRAPHIC #1 **<END>** g01412506

BASIC ENGINE

315-8336 HOUSING GP-FRONT

S/N: CYM1-UP

PART OF 305-2572 ENGINE AR-PRIMARY

SMCS-1151, 1162, 1206 **i03195086**

NOTE	REF NO	GRAPHIC REF	PART NUMBER	QTY	PART NAME 1 2 3 4 5 6 (PRODUCT LEVEL)	SEE PAGE
	1	1	**3B-4505**	5	LOCKWASHER	
M	2	1	**6V-7357**	2	BOLT (M6X1X25-MM)	
M	3	1	**8T-4200**	5	BOLT (M8X1.25X16-MM)	
	4	1	**8T-4224**	15	WASHER-HARD (8.8X16X2-MM THK)	
M	5	1	**8T-7329**	11	BOLT (M8X1.25X55-MM)	
	6	1	**9X-8256**	6	WASHER (6.6X12X2-MM THK)	
	7	1	**096-2500**	2	LOCKWASHER	
	8	1	**096-9529**	1	SEAL-O-RING	
	9	1	**199-2212**	4	BOLT (M6X1X18-MM)	
	10	1	**239-8429**	1	SEAL AS-CRANKSHAFT	
	11	1	**246-1259**	1	COVER-INSULATION	
	12	1	**246-1260**	1	COVER-INSULATION	
	13	1	**285-9066**	4	BOLT (M8X1.25X65-MM)	
	14	1	**314-9947**	1	GASKET	
	15	1	**314-9948**	1	FASTENER GP-FRONT COVER	
	16	1	**314-9949**	1	COVER	
	17	1	**315-4667**	1	GASKET	
	18	1	**315-4668**	1	PLATE	
	19	1	**315-4686**	1	HOUSING-FRONT	
	20	1	**315-4687**	1	COVER	
	21	1	**233-5499**	1	SEAL	

M-METRIC PART

315-8336 **HOUSING GP-FRONT** *(contd.)* **i03195086**

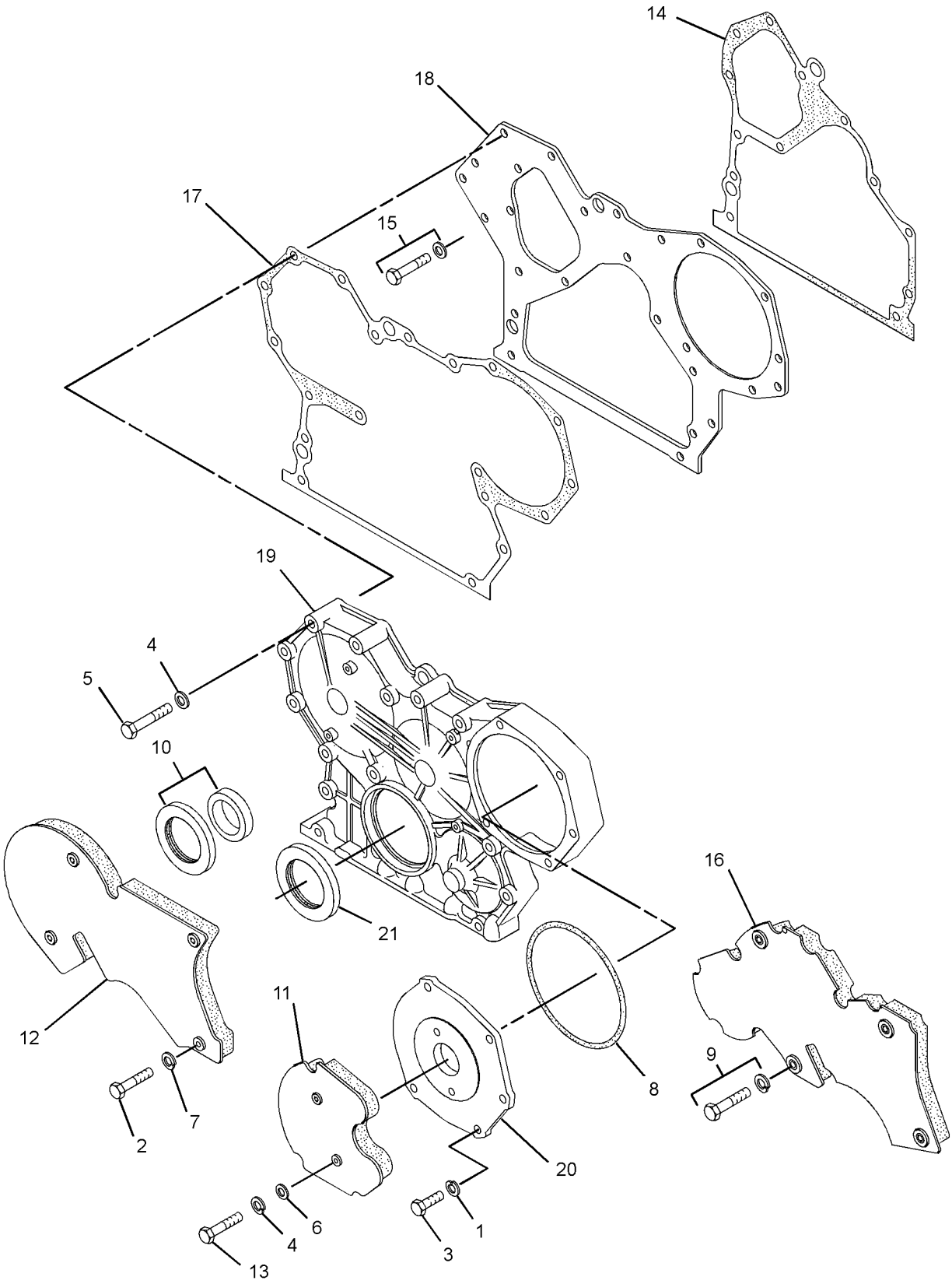

GRAPHIC #1 **<END>** g01413578

BASIC ENGINE

239-8495 LIFTING GP-ENGINE

S/N: CYM1-UP

PART OF 305-2572 ENGINE AR-PRIMARY

SMCS-1122 **i02031805**

NOTE	REF NO	GRAPHIC REF	PART NUMBER	QTY	PART NAME 1 2 3 4 5 6 (PRODUCT LEVEL)	SEE PAGE
M	1	1	**6V-5215**	2	BOLT (M8X1.25X16-MM)	
M	2	1	**6V-5217**	4	BOLT (M8X1.25X20-MM)	
	3	1	**9M-1974**	6	WASHER-HARD (8.8X16X2-MM THK)	
	4	1	**239-8487**	1	EYE-LIFTING (FRONT HEAD)	
	5	1	**239-8488**	1	EYE-LIFTING (REAR HEAD)	
	6	1	**233-5468**	1	GASKET (REAR HEAD)	

M-METRIC PART

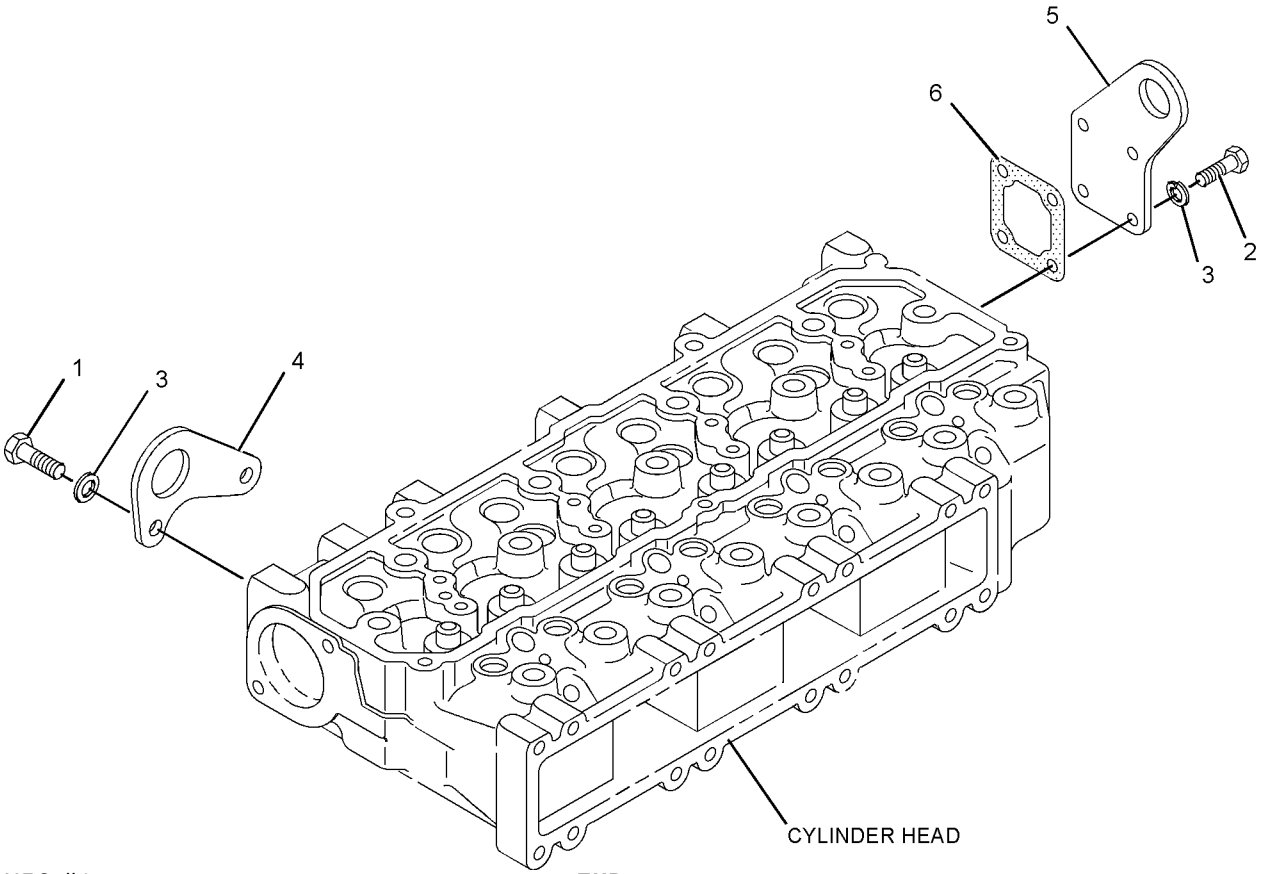

GRAPHIC #1

<END>

g01048282

255-6009 MOUNTING GP-ENGINE

S/N: LMD1-UP

PART OF 321-8232 INSTALLATION AR-ENGINE

SMCS-1152, 1153, 1154 **i02698787**

NOTE	REF NO	GRAPHIC REF	PART NUMBER	QTY	PART NAME 1 2 3 4 5 6 (PRODUCT LEVEL)	SEE PAGE
	1	1	**9R-0390**	2	MOUNT AS	
	2	1	**9W-6226**	1	SLEEVE	
	3	1	**9W-8096**	2	MOUNT	
	4	1	**263-4788**	1	PLATE	
	5	1	**270-4192**	1	PLATE	
	6	1	**270-4193**	1	PLATE	
	7	1	**165-7095**	4	WASHER (16.5X71.5X3-MM THK)	
	8	1	**5P-1076**	2	WASHER-HARD (13.5X30X4-MM THK)	
M	9	1	**7X-2556**	2	BOLT (M16X2X100-MM)	
	10	1	**8T-4122**	2	WASHER-HARD (17X32X3.5-MM THK)	
M	11	1	**8T-4132**	2	NUT (M16X2-THD)	
M	12	1	**8T-4139**	12	BOLT (M12X1.75X30-MM)	
M	13	1	**8T-4176**	1	BOLT (M12X1.75X90-MM)	
	14	1	**8T-4223**	12	WASHER-HARD (13.5X25.5X3-MM THK)	
M	15	1	**8T-4244**	1	NUT (M12X1.75-THD)	

M-METRIC PART

255-6009 **MOUNTING GP-ENGINE** *(contd.)* **i02698787**

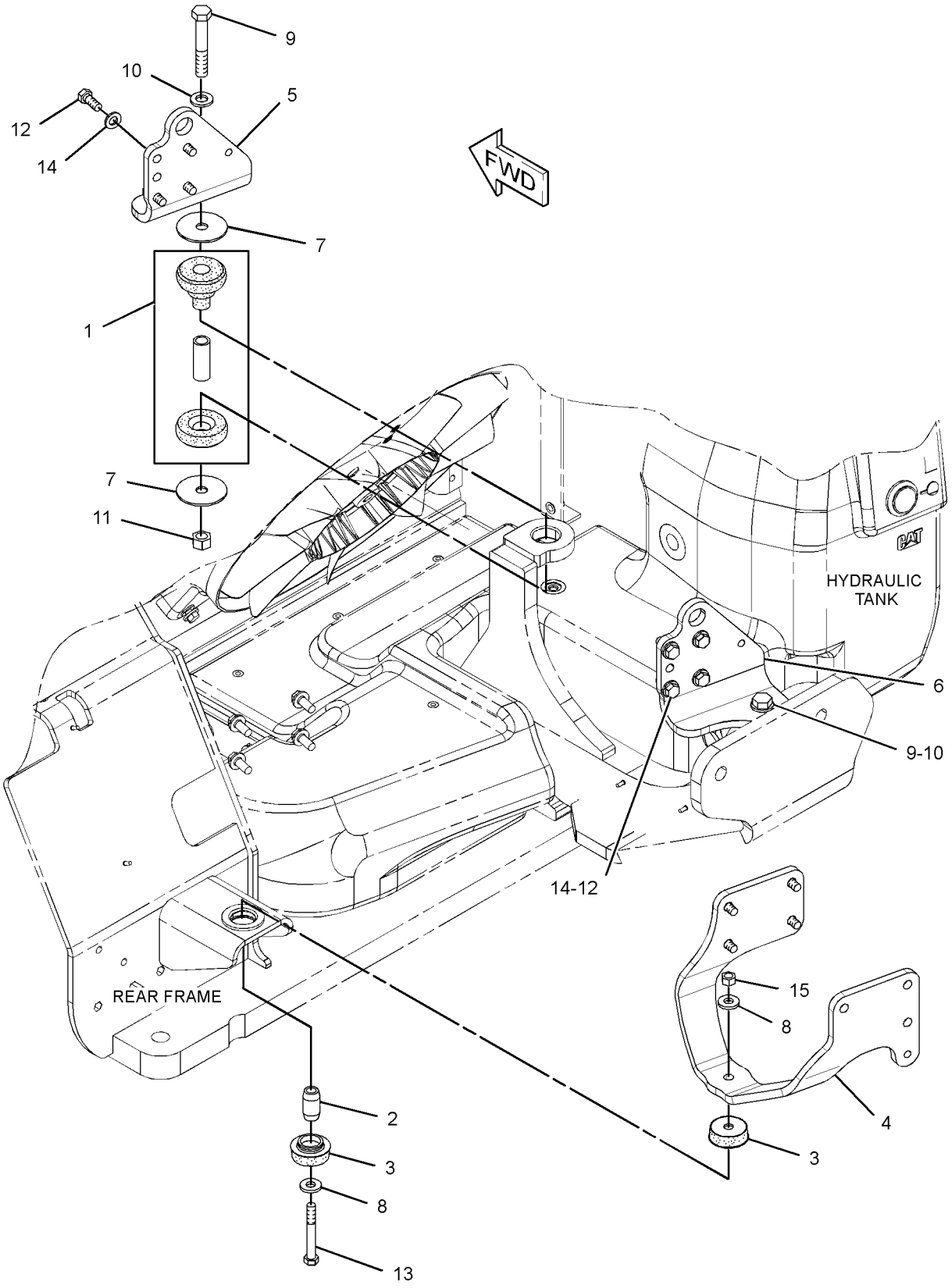

GRAPHIC #1 **<END>** g01368709

BASIC ENGINE

314-9852 PAN GP-OIL

S/N: CYM1-UP

PART OF 305-2572 ENGINE AR-PRIMARY

SMCS-1302 **i02979800**

NOTE	REF NO	GRAPHIC REF	PART NUMBER	QTY	PART NAME 1 2 3 4 5 6 (PRODUCT LEVEL)	SEE PAGE
	1	1	**3B-4505**	25	LOCKWASHER	
	2	1	**5I-4993**	2	SEAL	
M	3	1	**8T-4200**	25	BOLT (M8X1.25X16-MM)	
	5	1	**287-3922**	1	PAN AS-OIL	
	5A	1	**5I-7833**	1	PLUG-DRAIN (ENGINE OIL PAN)	
	5B	1	**234-4811**	1	WASHER	
	6	1	**314-9950**	1	TUBE AS-OIL LEVEL (UPPER)	
	7	1	**309-8908**	1	TUBE AS-OIL LEVEL (LOWER)	
	8	1	**314-9951**	1	GAUGE-OIL LEVEL (DIPSTICK) (ENGINE)	
F			**165-2601**	1	SEALANT-SILICONE	

F-NOT SHOWN
M-METRIC PART

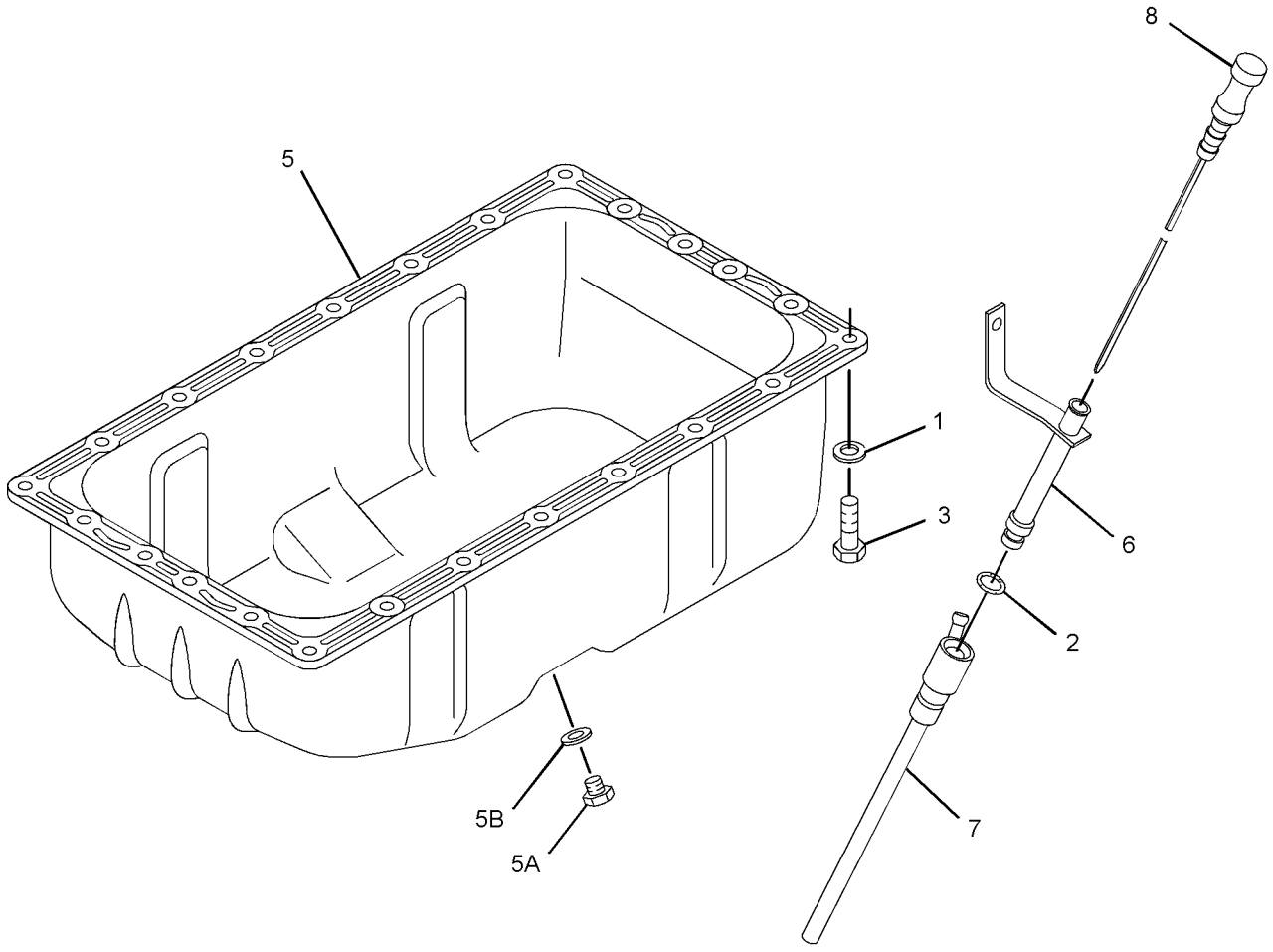

GRAPHIC #1 **<END>** g01394030

314-9855 PISTON GP

S/N: CYM1-UP

PART OF 305-2572 ENGINE AR-PRIMARY

SMCS-1214 **i03067426**

NOTE	REF NO	GRAPHIC REF	PART NUMBER	QTY	PART NAME 1 2 3 4 5 6 (PRODUCT LEVEL)	SEE PAGE
	1	1	**257-8738**	8	RING-SNAP	
	2	1	**234-4815**	4	PIN-PISTON	
	3	1	**314-9959**	4	PISTON (STANDARD)	
AB		1	**314-9952**		PISTON (0.25-MM OS)	
AB		1	**314-9961**		PISTON (0.5-MM OS)	
	4	1	**314-9962**	4	RING-PISTON (STANDARD)	
AB		1	**314-9964**		RING-PISTON (0.25-MM OS)	
AB		1	**314-9963**		RING-PISTON (0.5-MM OS)	

A-NOT PART OF THIS GROUP
B-USE AS REQUIRED

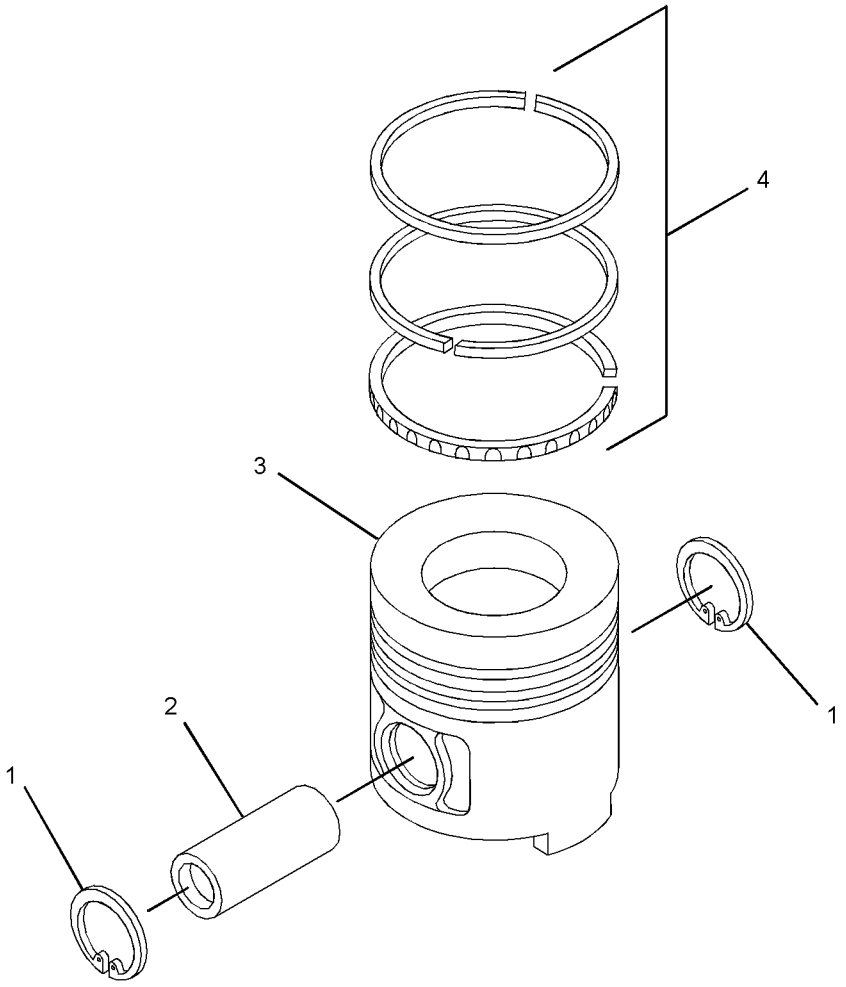

GRAPHIC #1 **<END>** g01348295

287-2922 PLUG GP-ENGINE—CYLINDER BLOCK, LH

S/N: CYM1-UP

PART OF 305-2572 ENGINE AR-PRIMARY

SMCS-1000 **i02860918**

NOTE	REF NO	GRAPHIC REF	PART NUMBER	QTY	PART NAME 1 2 3 4 5 6 (PRODUCT LEVEL)	SEE PAGE
	1	1	**5I-7505**	6	PLUG	

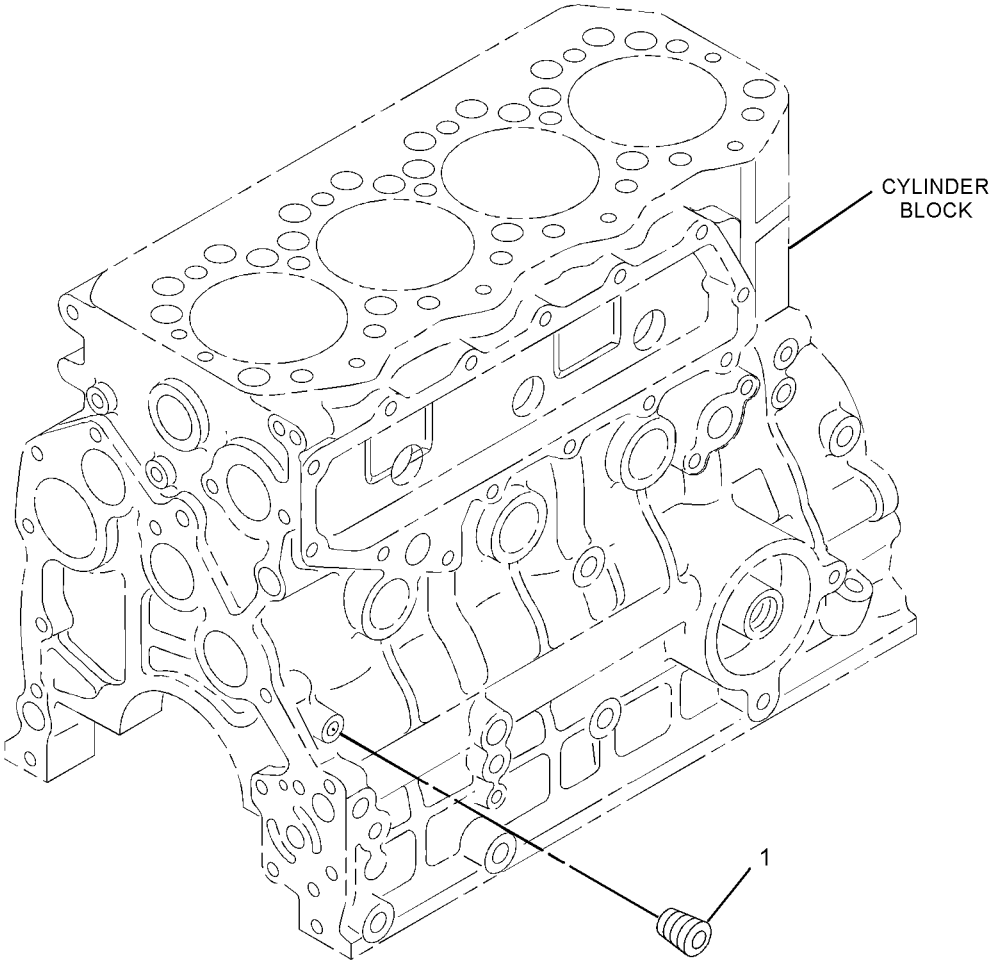

GRAPHIC #1 **<END>** g01325237

287-2983 PLUG GP-ENGINE—CYLINDER BLOCK, RH

S/N: CYM1-UP

PART OF 305-2572 ENGINE AR-PRIMARY

SMCS-1000 **i02860921**

NOTE	REF NO	GRAPHIC REF	PART NUMBER	QTY	PART NAME 1 2 3 4 5 6 (PRODUCT LEVEL)	SEE PAGE
	1	1	**195-8211**	1	PLUG	

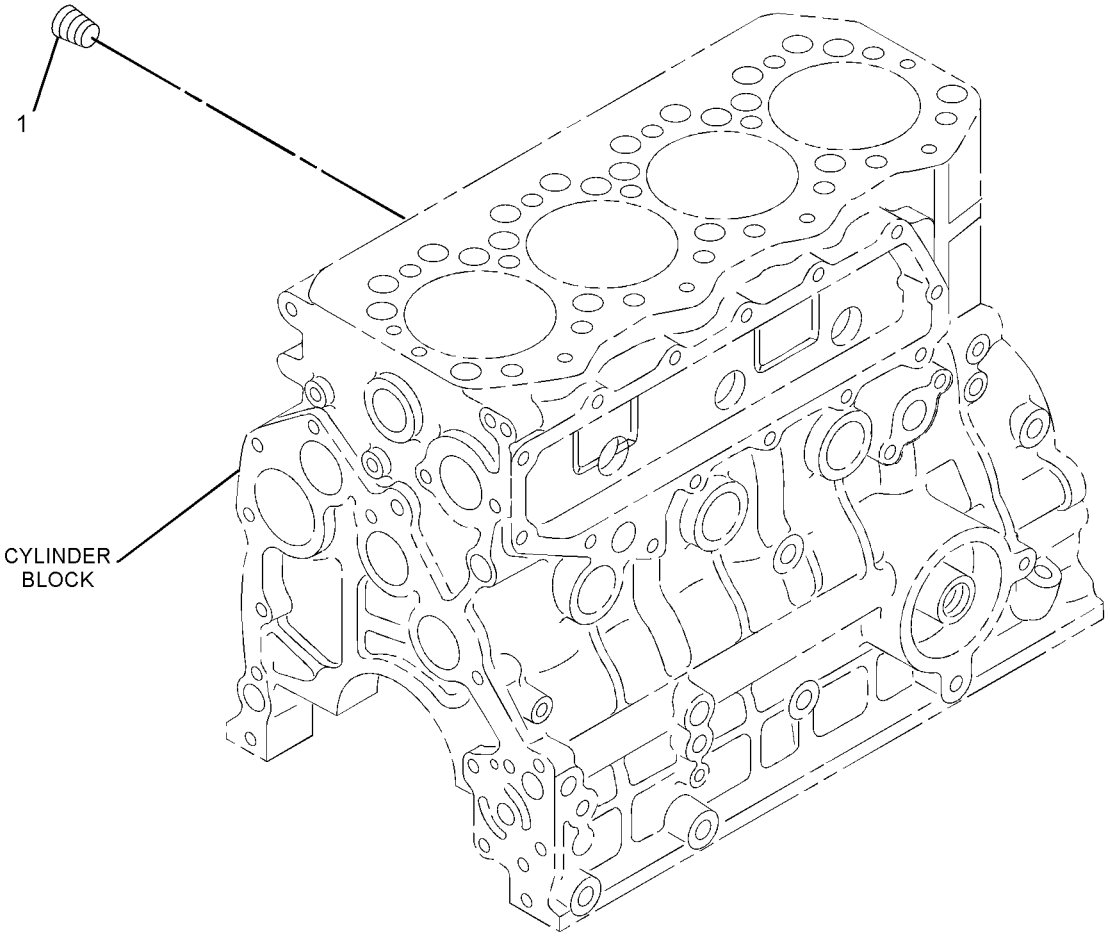

GRAPHIC #1 **<END>** g01325240

301-3396 PULLEY GP-CRANKSHAFT

S/N: CYM1-UP

PART OF 305-2572 ENGINE AR-PRIMARY

SMCS-1205 **i02645581**

NOTE	REF NO	GRAPHIC REF	PART NUMBER	QTY	PART NAME 1 2 3 4 5 6 (PRODUCT LEVEL)	SEE PAGE
	1	1	**301-3397**	1	PULLEY-CRANKSHAFT (2-GROOVE)	

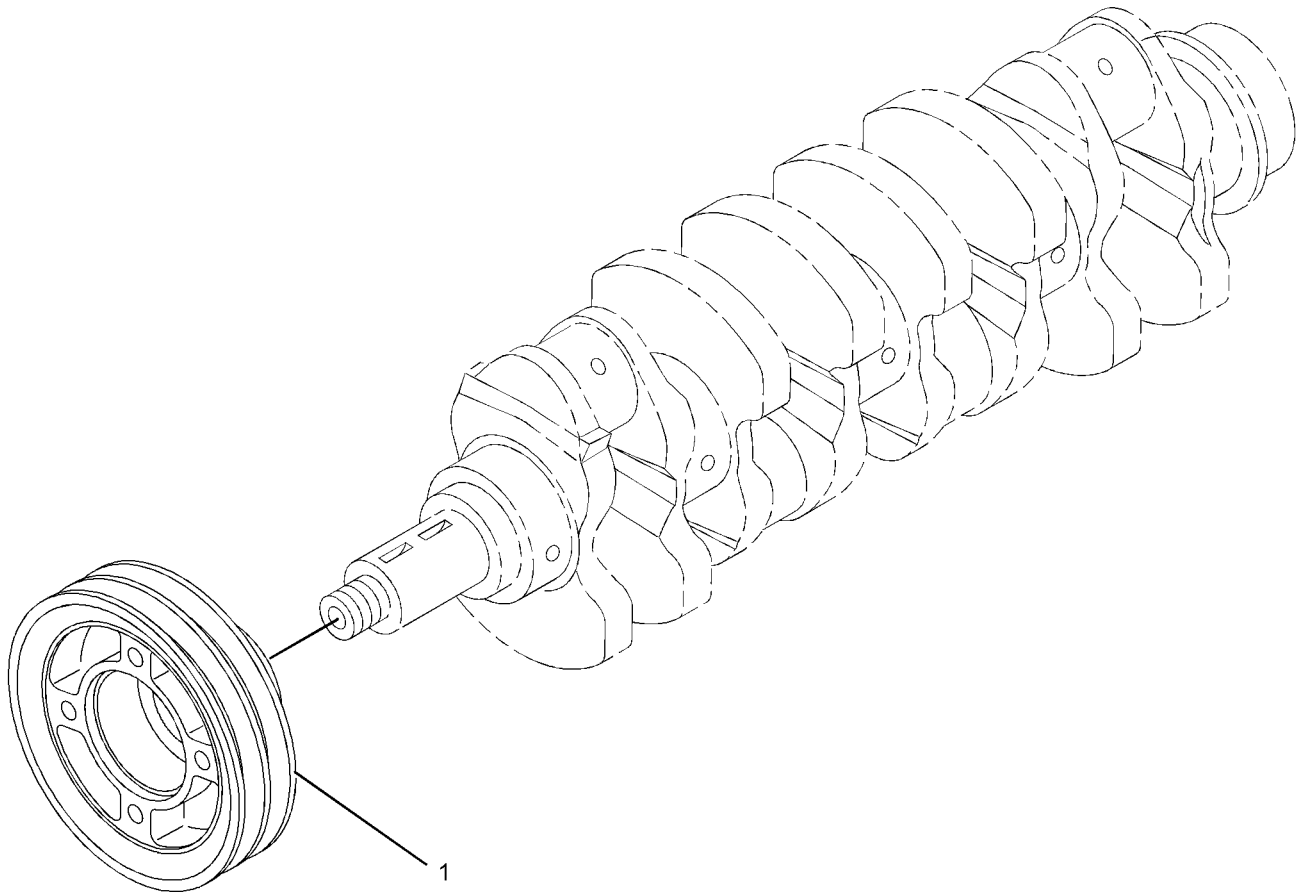

GRAPHIC #1 **<END>** g01351097

BASIC ENGINE

287-6114 PULLEY GP-WATER PUMP

S/N: CYM1-UP

PART OF 305-2572 ENGINE AR-PRIMARY

SMCS-1384 **i02860948**

NOTE	REF NO	GRAPHIC REF	PART NUMBER	QTY	PART NAME 1 2 3 4 5 6 (PRODUCT LEVEL)	SEE PAGE
M	1	1	**8T-0642**	4	BOLT (M8X1.25X14-MM)	
	2	1	**9M-1974**	4	WASHER-HARD (8.8X16X2-MM THK)	
	3	1	**234-4807**	1	PULLEY	

M-METRIC PART

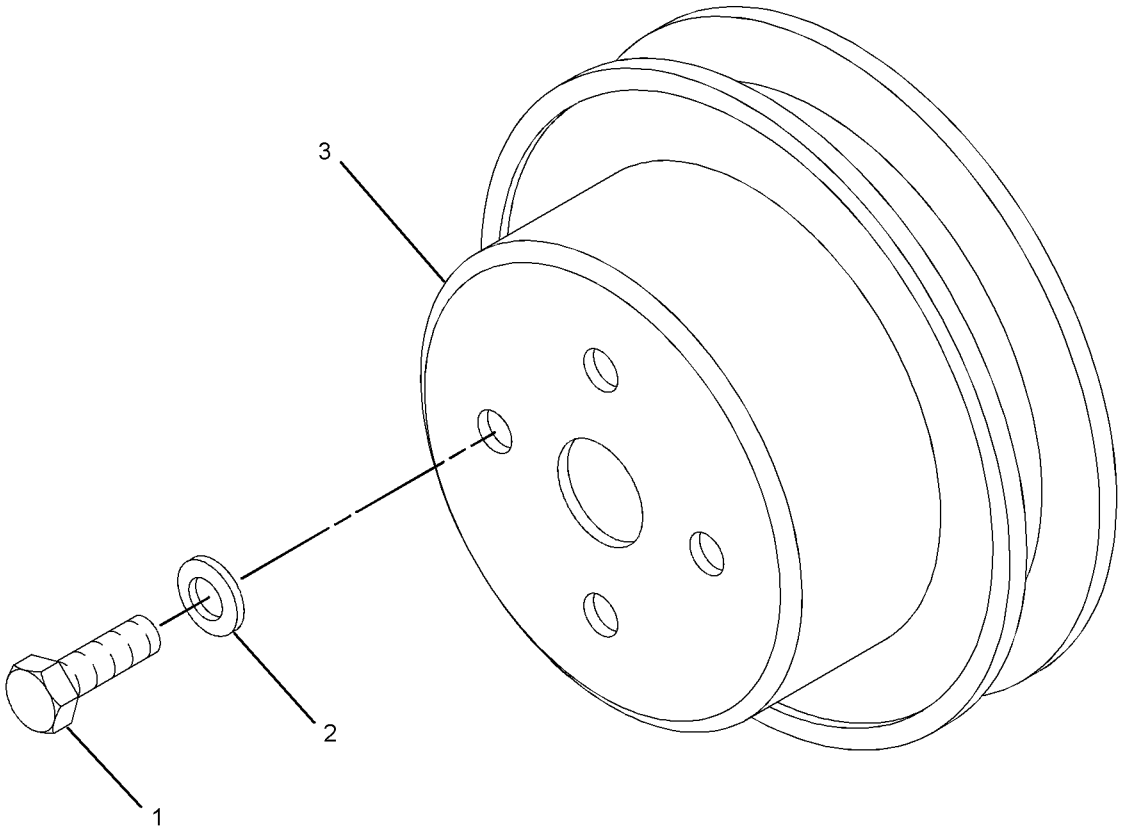

GRAPHIC #1 **<END>** g01326766

BASIC ENGINE

326-4120 V-BELT GP

S/N: CYM1-UP

PART OF 305-2572 ENGINE AR-PRIMARY

SMCS-1357 **i02979813**

NOTE	REF NO	GRAPHIC REF	PART NUMBER	QTY	PART NAME 1 2 3 4 5 6 (PRODUCT LEVEL)	SEE PAGE
	1	1	**319-8499**	1	V-BELT	

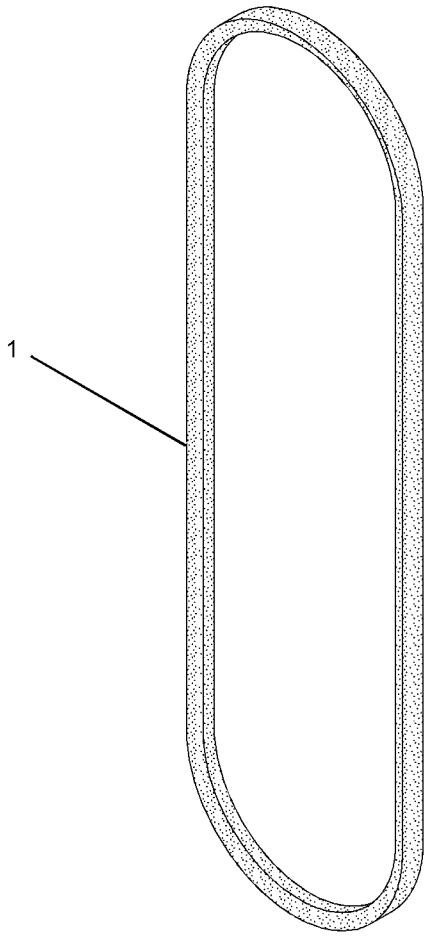

GRAPHIC #1 **<END>** g01547676

BASIC ENGINE

235-5880 VALVE MECHANISM GP

S/N: CYM1-UP

PART OF 305-2572 ENGINE AR-PRIMARY

SMCS-1102, 1121, 1123 **i02628723**

NOTE	REF NO	GRAPHIC REF	PART NUMBER	QTY	PART NAME 1 2 3 4 5 6 (PRODUCT LEVEL)	SEE PAGE
	1	1	**5I-7625**	8	RETAINER	
	2	1	**5I-7630**	8	CAP	
	3	1	**5I-7719**	16	RETAINER	
M	4	1	**6V-3940**	4	BOLT (M8X1.25X25-MM)	
	5	1	**9M-1974**	4	WASHER-HARD (8.8X16X2-MM THK)	
	6	1	**233-5469**	4	VALVE-INLET	
	7	1	**233-5470**	4	VALVE-EXHAUST	
	8	1	**233-5471**	8	SPRING-VALVE	
	10	1	**233-5501**	1	ROCKER ARM GP	
		1	**233-5476**	1	SHAFT AS	
	10A	1	**095-2005**	1	CAP	
	10B	1	**195-8324**	2	RING-SNAP	
	10C	1	**221-5245**	8	ROCKER AS	
	10D	1	**221-5250**	3	SPRING	
	10E	1	**233-5477**	4	BRACKET	
	10F	1	**233-5478**	4	BOLT	

M-METRIC PART

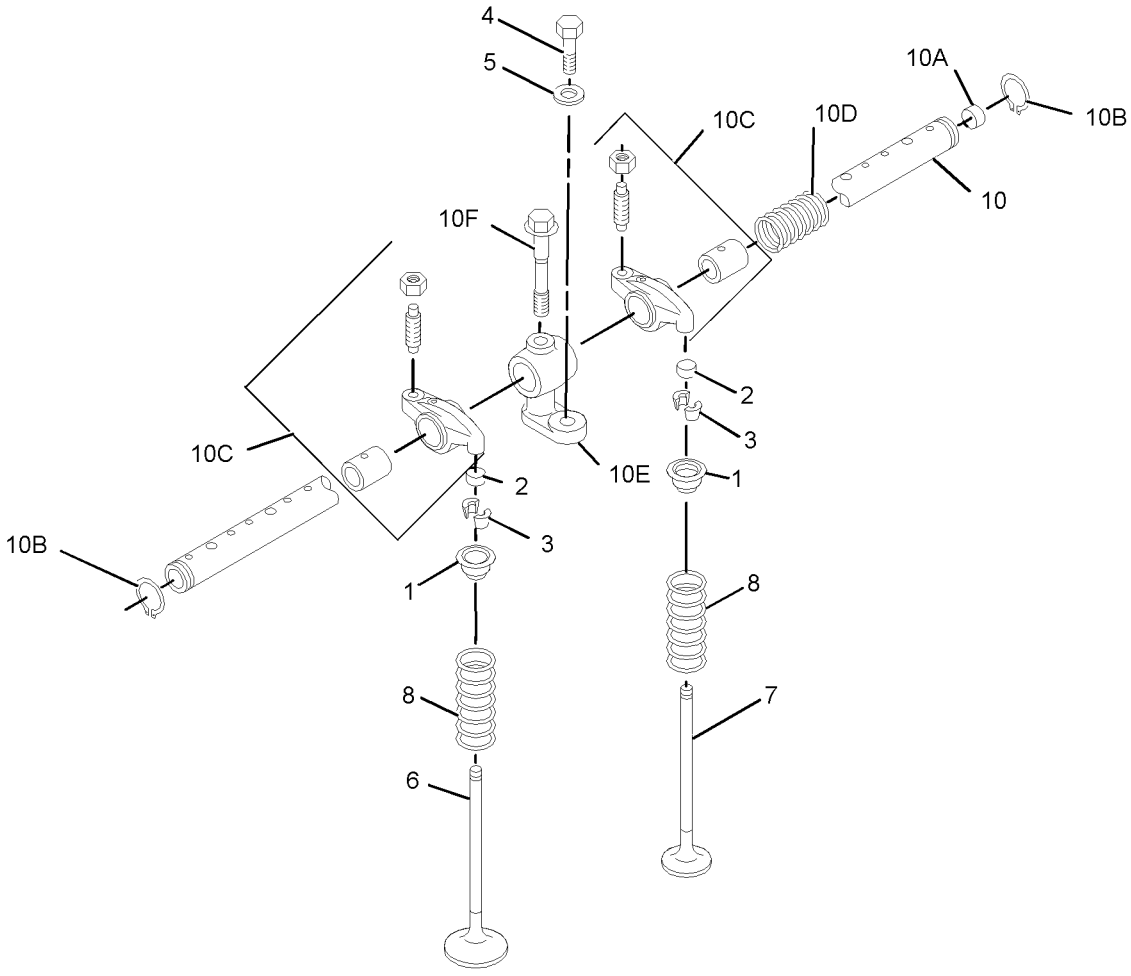

GRAPHIC #1 **<END>** g01348046

LUBRICATION SYSTEM

331-6959 BREATHER GP

S/N: CYM1-UP

PART OF 305-2572 ENGINE AR-PRIMARY

SMCS-1317 **i03067216**

NOTE	REF NO	GRAPHIC REF	PART NUMBER	QTY	PART NAME 1 2 3 4 5 6 (PRODUCT LEVEL)	SEE PAGE
	1	1	**3B-4505**	3	LOCKWASHER	
M	2	1	**6V-2317**	2	BOLT (M8X1.25X30-MM)	
M	3	1	**6V-5221**	2	BOLT (M8X1.25X80-MM)	
M	4	1	**8T-4200**	1	BOLT (M8X1.25X16-MM)	
	5	1	**9M-1974**	2	WASHER-HARD (8.8X16X2-MM THK)	
	7	1	**234-4837**	1	CLIP-HOSE	
	8	1	**234-4838**	3	CLIP	
	9	1	**235-4942**	1	PLATE	
	10	1	**235-4948**	1	BREATHER (CRANKCASE)	
	11	1	**235-4951**	1	ADAPTER	
	12	1	**257-8389**	2	CLIP	
	13	1	**314-9977**	1	HOSE	
	14	1	**318-8034**	1	HOSE	
	15	1	**318-8035**	1	TUBE-BREATHER	
	16	1	**318-8036**	1	HOSE	

M-METRIC PART

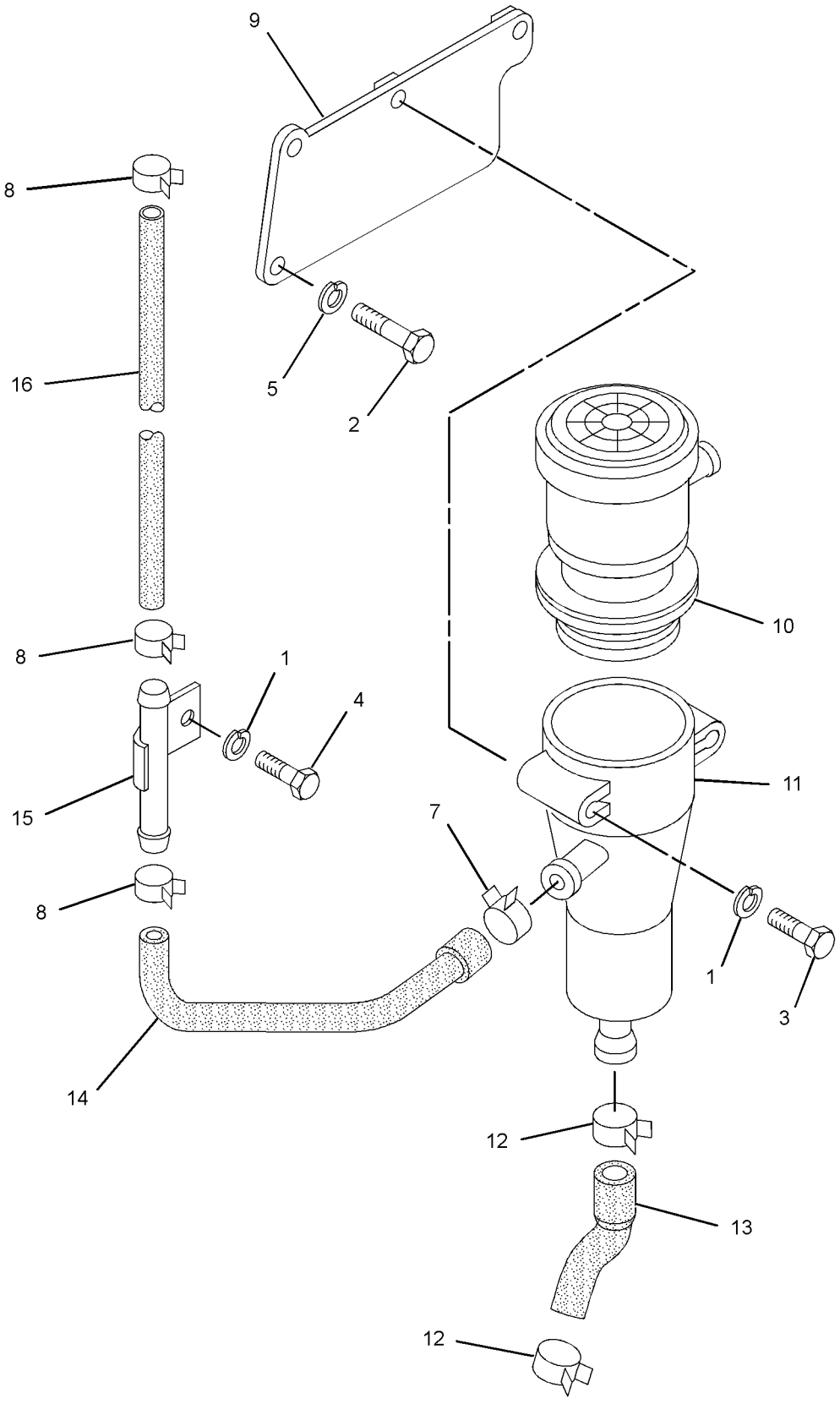

GRAPHIC #1 **<END>** g01560256

314-9901 FILTER GP-ENGINE OIL

S/N: CYM1-UP

PART OF 305-2572 ENGINE AR-PRIMARY

SMCS-1306, 1308 **i02895567**

NOTE	REF NO	GRAPHIC REF	PART NUMBER	QTY	PART NAME 1 2 3 4 5 6 (PRODUCT LEVEL)	SEE PAGE
M	1	1	**6V-3940**	1	BOLT (M8X1.25X25-MM)	
	2	1	**9M-1974**	1	WASHER-HARD (8.8X16X2-MM THK)	
	3	1	**095-1537**	1	SEAL-O-RING	
	4	1	**095-1671**	1	SEAL-O-RING	
	5	1	**234-4827**	1	BOLT	
	6	1	**235-4955**	1	BRACKET AS	
	6A	1	**234-4826**	1	UNION	
	7	1	**253-0244**	1	BUSHING-THREADED	
	8	1	**1R-0734**	1	FILTER-ENGINE OIL	

M-METRIC PART

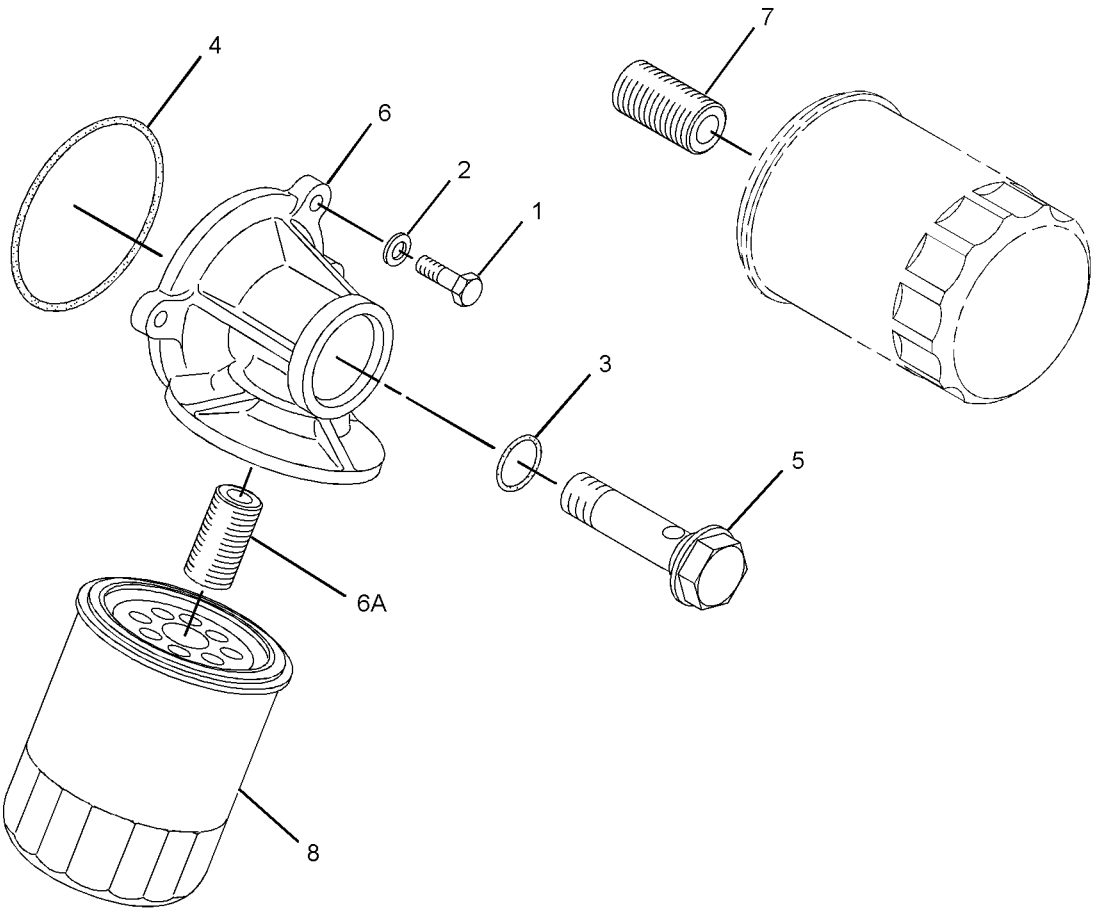

GRAPHIC #1 **<END>** g01392106

LUBRICATION SYSTEM

287-5377 LINES GP-ENGINE OIL

S/N: CYM1-UP

PART OF 305-2572 ENGINE AR-PRIMARY

SMCS-1307 **i02650748**

NOTE	REF NO	GRAPHIC REF	PART NUMBER	QTY	PART NAME 1 2 3 4 5 6 (PRODUCT LEVEL)	SEE PAGE
M	1	1	**6V-5215**	3	BOLT (M8X1.25X16-MM)	
	2	1	**9M-1974**	3	WASHER-HARD (8.8X16X2-MM THK)	
	3	1	**233-5494**	1	STRAINER AS-OIL (ENGINE)	
	4	1	**239-8513**	1	SEAL-O-RING	

M-METRIC PART

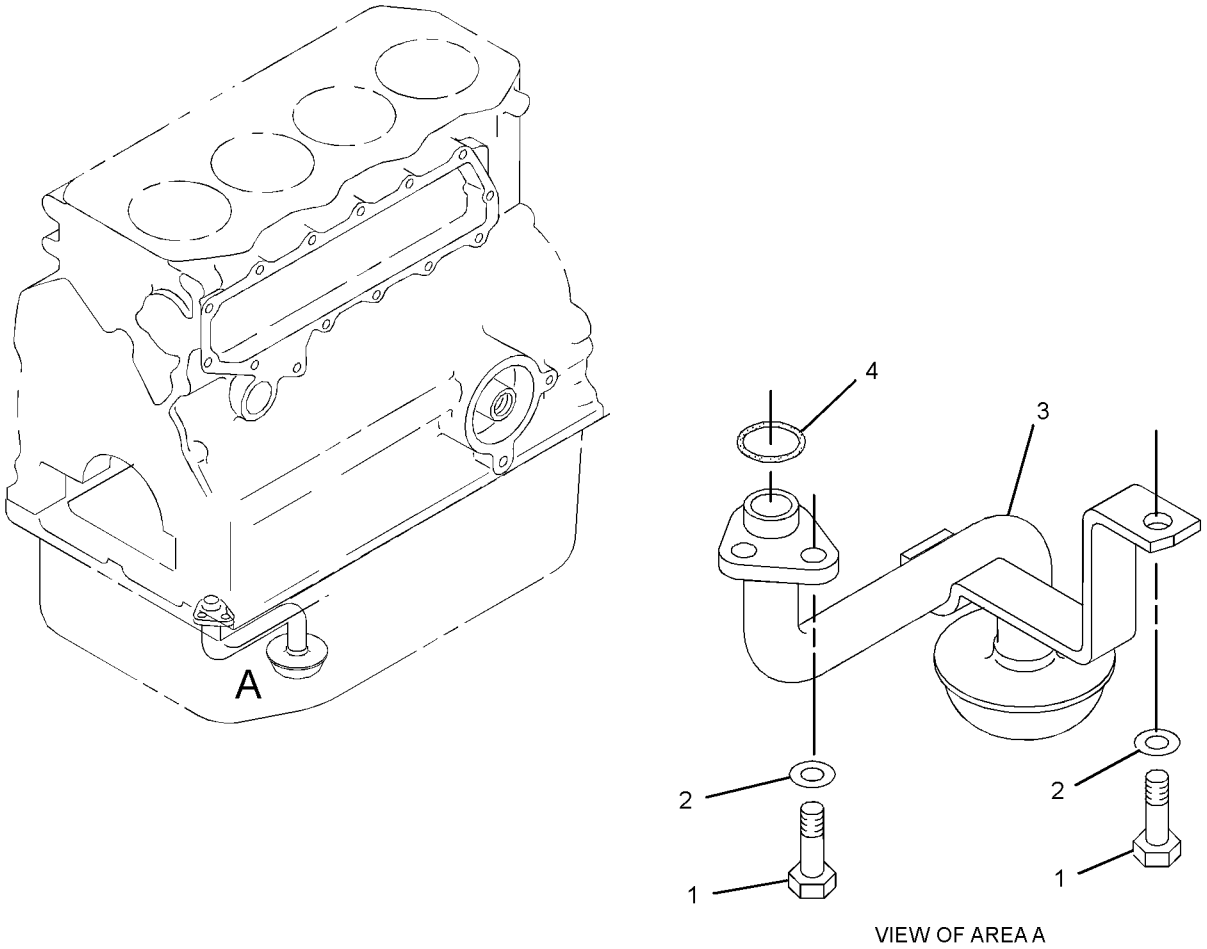

VIEW OF AREA A

GRAPHIC #1 **<END>** g01342337

235-5895 PUMP GP-ENGINE OIL

S/N: CYM1-UP

PART OF 305-2572 ENGINE AR-PRIMARY

SMCS-1304, 1315 **i02524389**

NOTE	REF NO	GRAPHIC REF	PART NUMBER	QTY	PART NAME 1 2 3 4 5 6 (PRODUCT LEVEL)	SEE PAGE
M	1	1	**6V-5217**	4	BOLT (M8X1.25X20-MM)	
	2	1	**9M-1974**	4	WASHER-HARD (8.8X16X2-MM THK)	
	3	1	**113-1141**	1	PUMP AS-OIL	
	4	1	**101-6544**	1	NUT	
	5	1	**6V-5839**	1	WASHER (11X21X2.5-MM THK)	
	6	1	**103-9083**	1	SEAL-O-RING	

M-METRIC PART

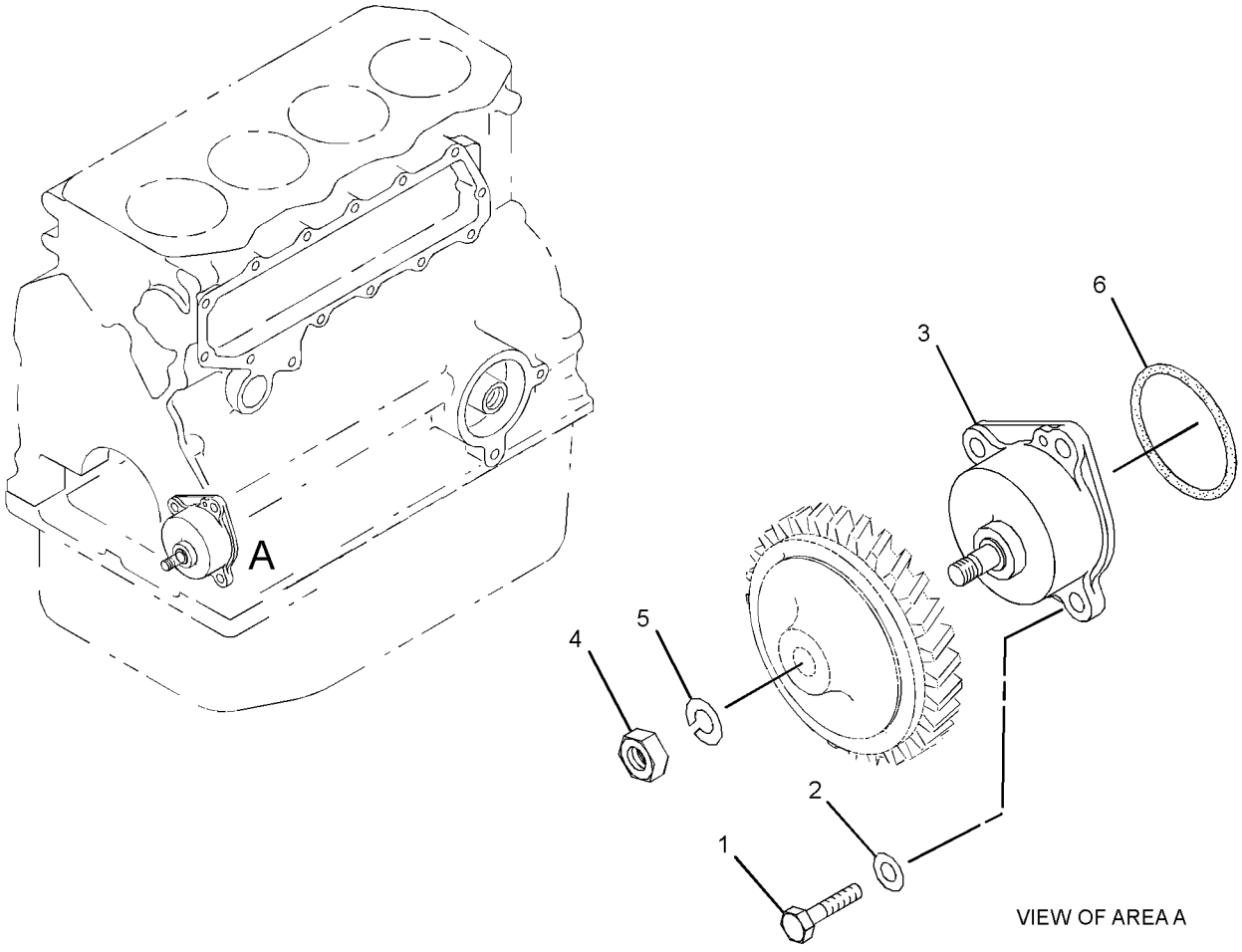

GRAPHIC #1 **<END>** g01348493

LUBRICATION SYSTEM

287-5665 VALVE GP-ENGINE OIL RELIEF

S/N: CYM1-UP

PART OF 305-2572 ENGINE AR-PRIMARY

SMCS-1315 **i02961092**

NOTE	REF NO	GRAPHIC REF	PART NUMBER	QTY	PART NAME 1 2 3 4 5 6 (PRODUCT LEVEL)	SEE PAGE
	1	1	**294-1767**	1	VALVE (ENGINE OIL PRESSURE)	
	2	1	**103-9725**	1	VALVE AS (OIL BYPASS)	
	3	1	**233-5496**	1	GASKET	
	4	1	**234-4796**	1	GASKET	

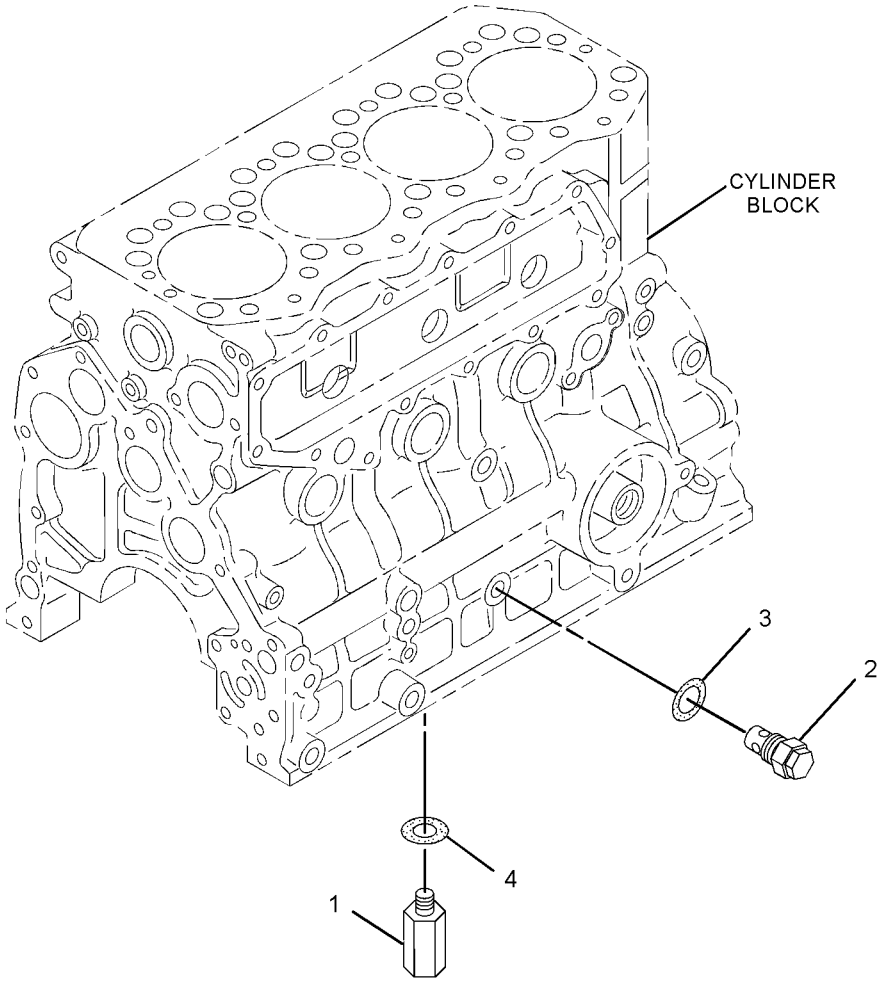

GRAPHIC #1 **<END>** g01323255

242-8716 VALVE GP-FLUID SAMPLING—ENGINE OIL

S/N: LMD1-UP

PART OF 321-8232 INSTALLATION AR-ENGINE

SMCS-7542 **i01994940**

NOTE	REF NO	GRAPHIC REF	PART NUMBER	QTY	PART NAME 1 2 3 4 5 6 (PRODUCT LEVEL)	SEE PAGE
	1	1	**8C-3445**	1	CAP-DUST	
	2	1	**8C-3446**	1	VALVE-FLUID SAMPLING	
	3	1	**242-8717**	1	TEE	
	4	1	**3J-7354**	1	SEAL-O-RING	

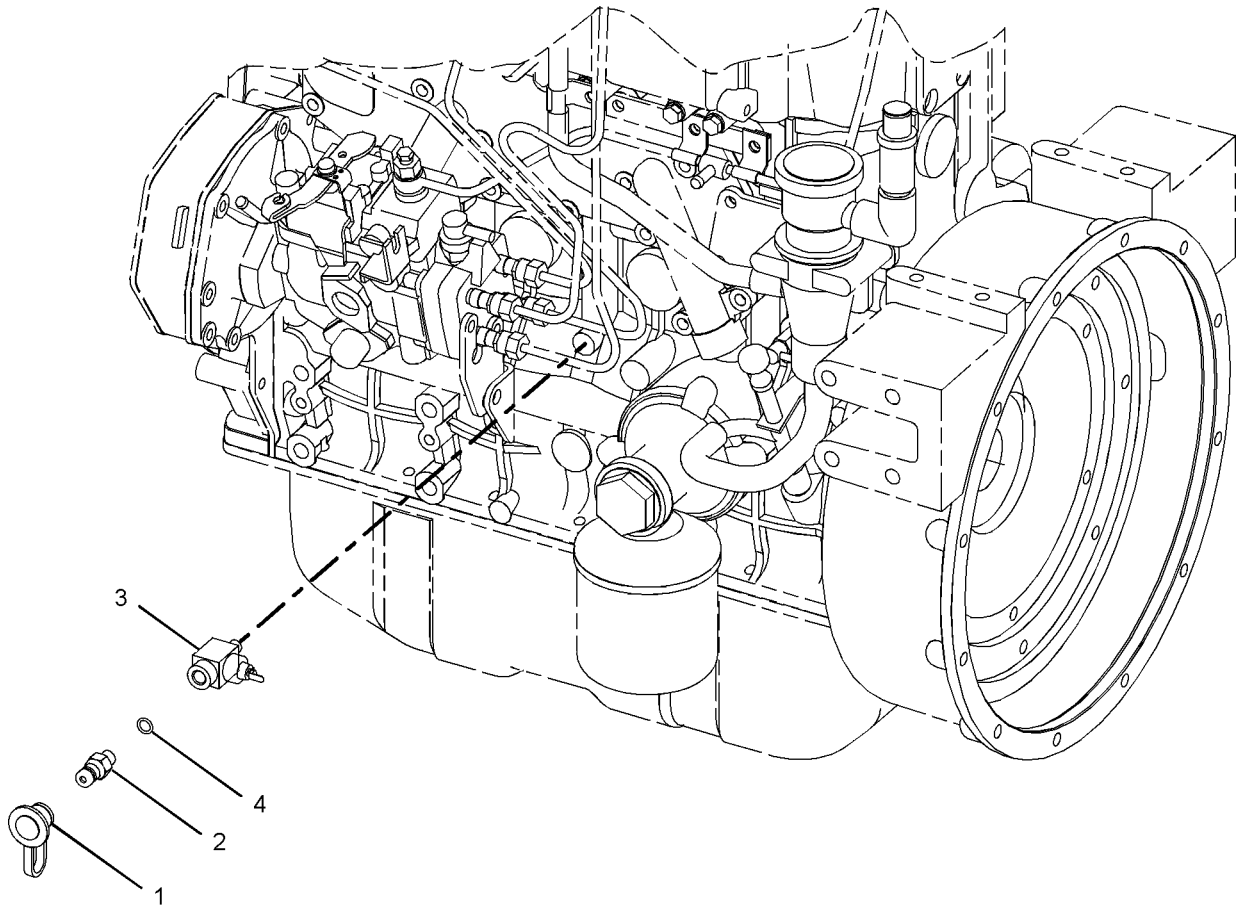

GRAPHIC #1 **<END>** g01044118

185-4254 VALVE GP-SOLENOID

S/N: LMD1-UP
PART OF 244-6735 MANIFOLD GP-CONTROL
AN ATTACHMENT

SMCS-5479 **i01806595**

NOTE	REF NO	GRAPHIC REF	PART NUMBER	QTY	PART NAME 1 2 3 4 5 6 (PRODUCT LEVEL)	SEE PAGE
	1	1	**155-4426**	1	COIL AS	
	2	1	**164-2108**	1	WASHER (13.03X25.4X2.38-MM THK)	
	3	1	**218-2373**	1	NUT (1/2-28-THD)	
	4	1	*185-4253*	1	VALVE AS	
		1	**3E-6749**	1	SEAL-O-RING	
		1	**033-5879**	1	SEAL-O-RING	
		1	**123-2341**	1	SEAL-O-RING	
		1	**172-6301**	1	SEAL-O-RING	
		1	**9N-1756**	1	SEAL-O-RING	

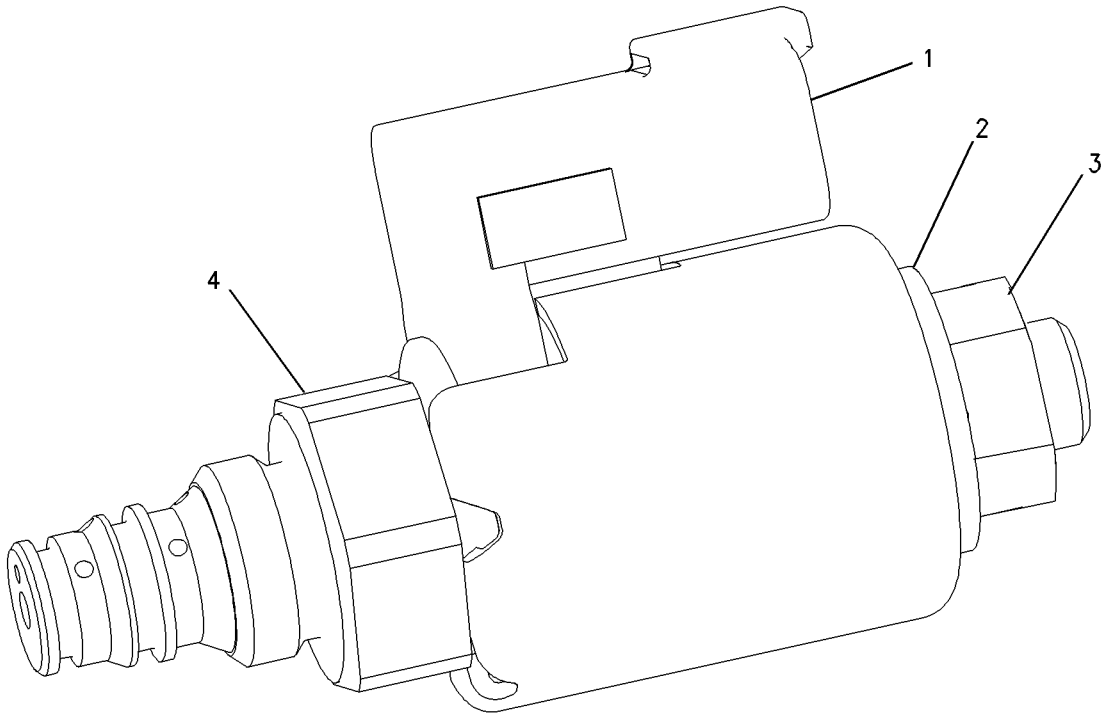

GRAPHIC #1 **<END>** g00924040

235-5896 COOLER GP-ENGINE OIL

S/N: CYM1-UP

PART OF 305-2572 ENGINE AR-PRIMARY

SMCS-1378 **i02656177**

NOTE	REF NO	GRAPHIC REF	PART NUMBER	QTY	PART NAME 1 2 3 4 5 6 (PRODUCT LEVEL)	SEE PAGE
	1	1	**4I-9404**	2	SEAL-O-RING	
M	2	1	**6V-2317**	1	BOLT (M8X1.25X30-MM)	
M	3	1	**195-8222**	11	BOLT AS (M8X1.25X22-MM)	
	4	1	**9M-1974**	12	WASHER-HARD (8.8X16X2-MM THK)	
	5	1	**095-1513**	4	SEAL-O-RING	
	6	1	**234-4800**	1	GASKET	
	7	1	**234-4798**	1	STUD	
	8	1	**244-7127**	5	NUT-FLANGE	
	9	1	**234-4797**	1	GASKET	
	10	1	**234-4801**	1	COVER	
	11	1	**234-4802**	1	COVER AS	
	11A	1	**096-3321**	2	PLUG	
	12	1	**234-4803**	1	COOLER AS	
	13	1	**239-8513**	2	SEAL-O-RING	
F			**3B-4505**	11	LOCKWASHER	
F			**301-3274**	1	HOUSING-OIL COOLER	

F-NOT SHOWN
M-METRIC PART

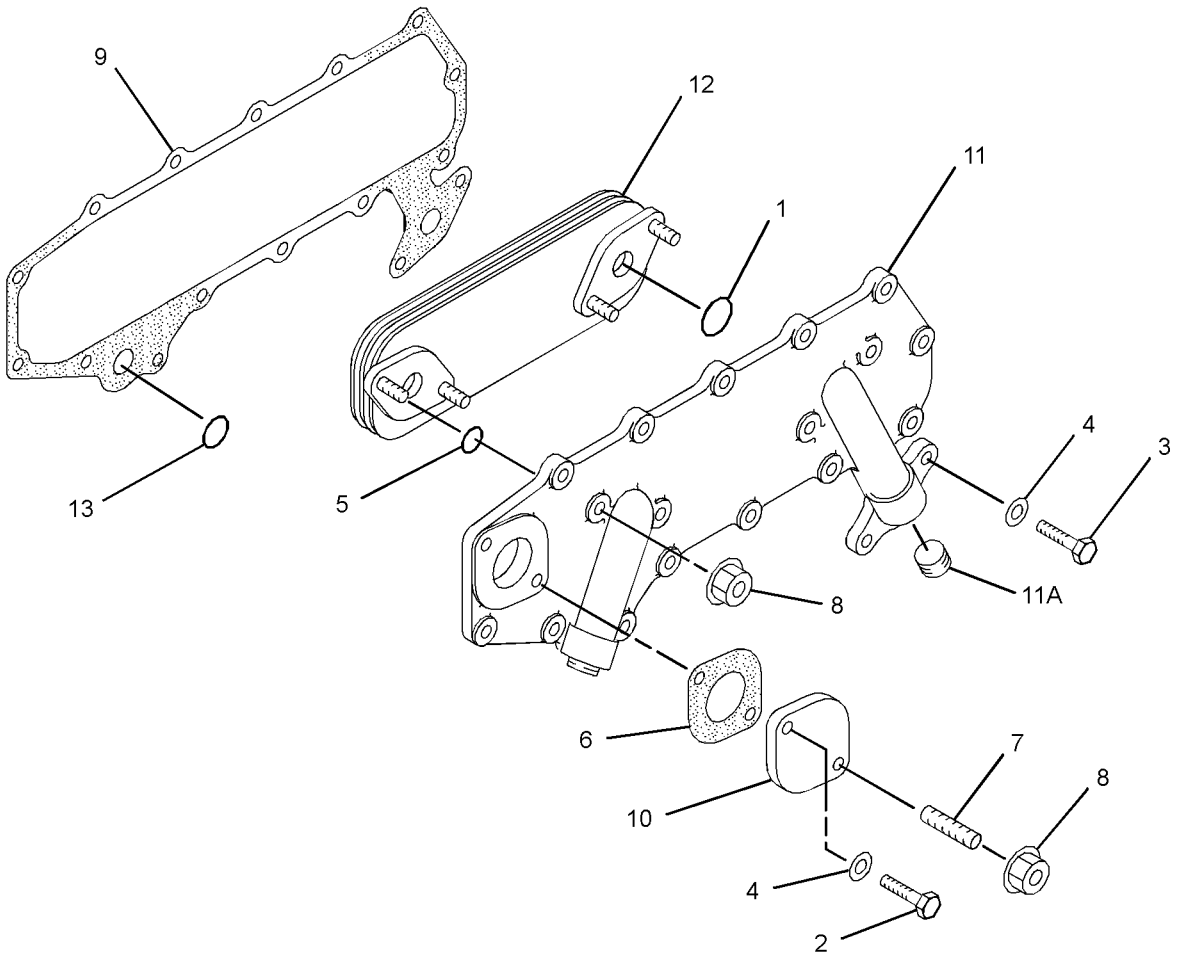

GRAPHIC #1 **<END>** g01354876

COOLING SYSTEM

315-7763 DRAIN GP-COOLANT

S/N: CYM1-UP

PART OF 305-2572 ENGINE AR-PRIMARY

SMCS-1380 **i03066088**

NOTE	REF NO	GRAPHIC REF	PART NUMBER	QTY	PART NAME 1 2 3 4 5 6 (PRODUCT LEVEL)	SEE PAGE
	1	1	**238-8278**	1	VALVE AS-DRAIN	
	2	1	**326-4033**	1	ADAPTER	

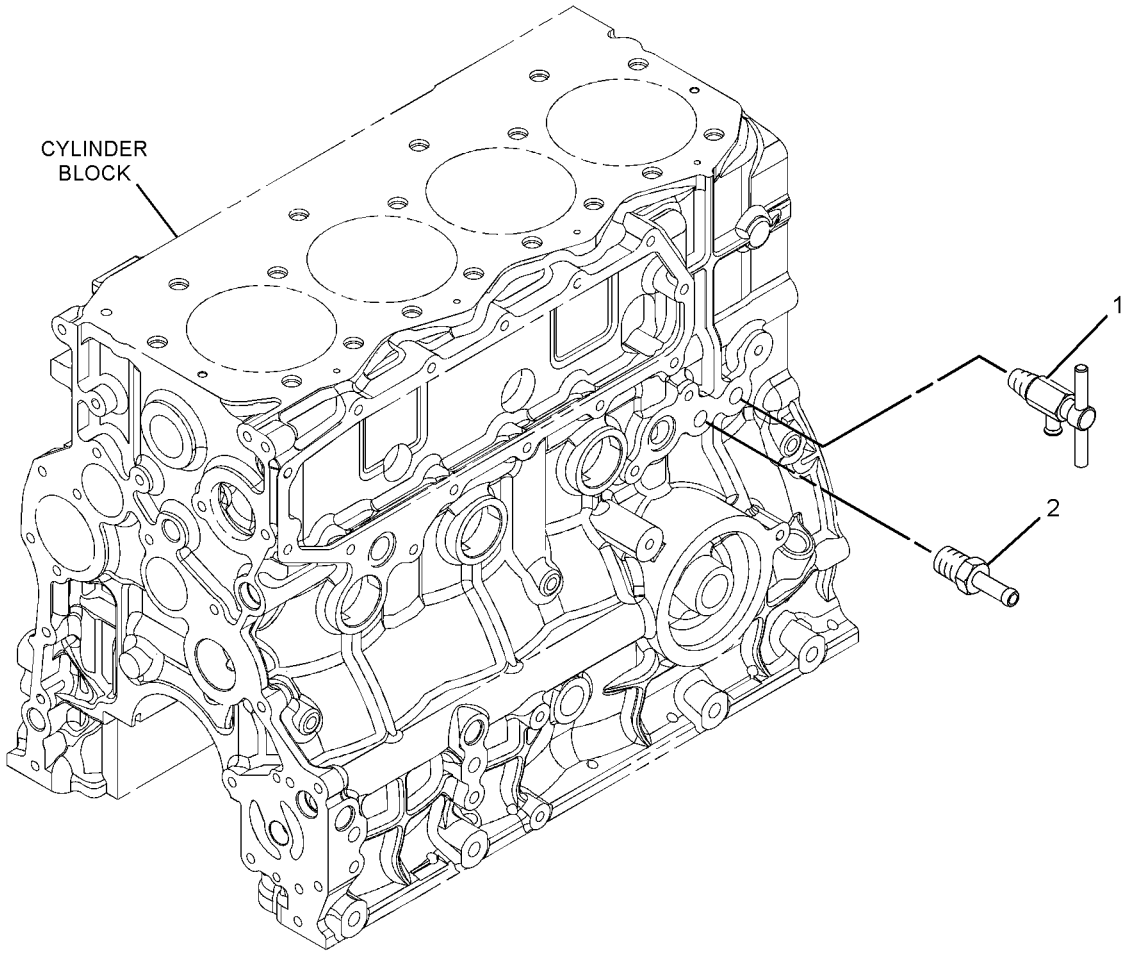

GRAPHIC #1 **<END>** g01412554

242-5899 FAN GP-SUCTION

S/N: LMD1-UP

PART OF 321-8232 INSTALLATION AR-ENGINE

SMCS-1356 **i02698777**

NOTE	REF NO	GRAPHIC REF	PART NUMBER	QTY	PART NAME 1 2 3 4 5 6 (PRODUCT LEVEL)	SEE PAGE
	1	1	**142-3391**	1	SPIDER AS (9-BLADE)	
	2	1	**229-8796**	1	ADAPTER	
	3	1	**261-4223**	1	GUARD AS-FAN	
	4	1	**274-1973**	1	SHROUD AS	
	5	1	**5P-4116**	8	WASHER-HARD (8.8X20.5X2-MM THK)	
	6	1	**7X-7729**	3	WASHER (11X25X3-MM THK)	
M	7	1	**8T-4189**	12	BOLT (M8X1.25X20-MM)	
M	8	1	**8T-4195**	3	BOLT (M10X1.5X30-MM)	
	9	1	**8T-4224**	5	WASHER-HARD (8.8X16X2-MM THK)	
M	10	1	**8T-7547**	1	BOLT (M8X1.25X30-MM)	

M-METRIC PART

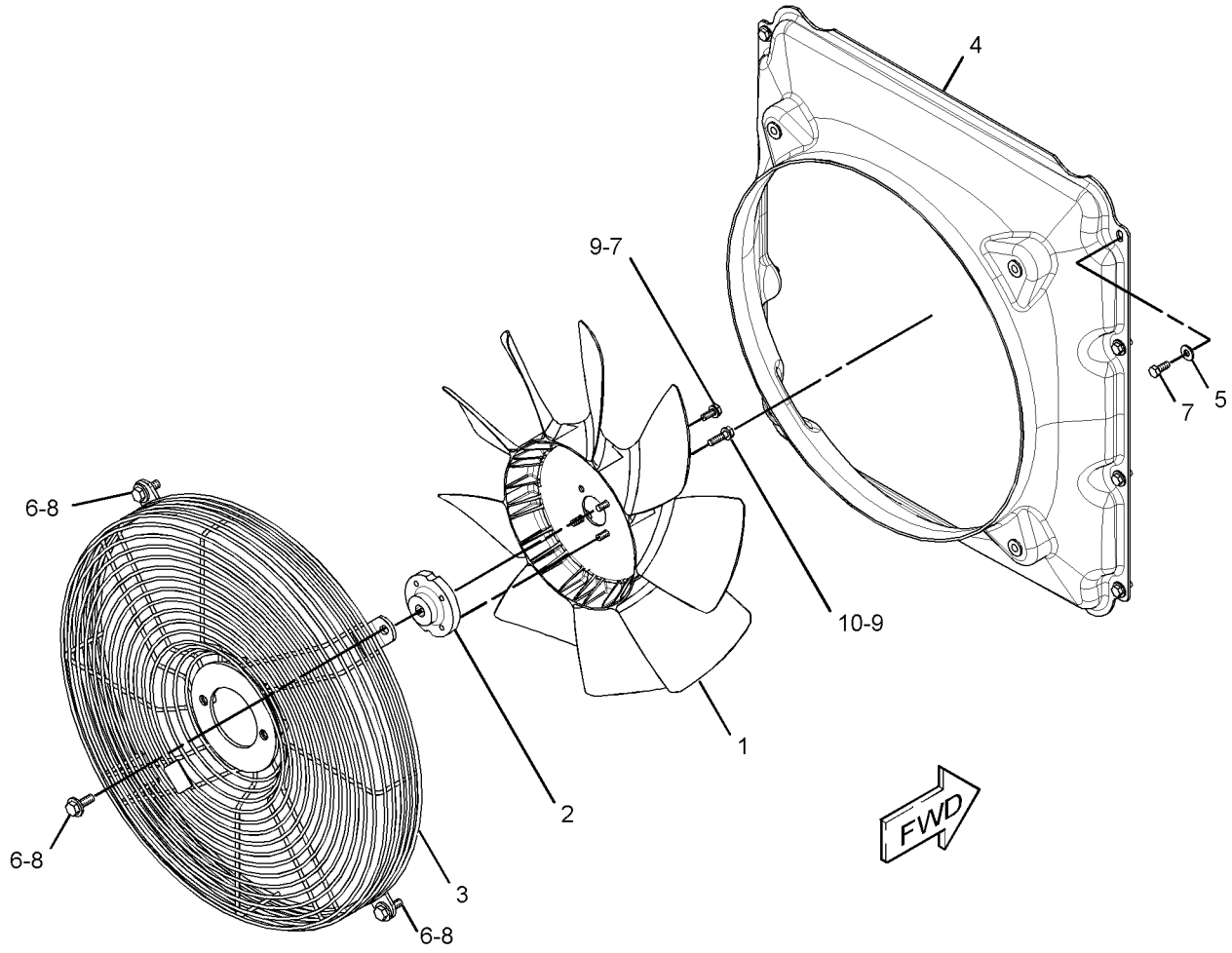

GRAPHIC #1 **<END>** g01368699

COOLING SYSTEM

255-6012 LINES GP-COOLANT

S/N: LMD1-UP

PART OF 321-8232 INSTALLATION AR-ENGINE

SMCS-1380 **i03103117**

NOTE	REF NO	GRAPHIC REF	PART NUMBER	QTY	PART NAME 1 2 3 4 5 6 (PRODUCT LEVEL)	SEE PAGE
	1	1	**1P-4278**	2	CLAMP-HOSE	
	2	1	**8T-6703**	2	CLAMP-HOSE	
	3	1	**089-7338**	1	SLEEVE	
	4	1	**144-3935**	3	CLIP (LOOP)	
	5	1	**175-4614**	1	VALVE AS (COOLANT DRAIN)	
	6	1	**264-2745**	1	HOSE-RADIATOR (UPPER)	
	7	1	**264-2746**	1	HOSE-RADIATOR (LOWER)	
E	8	1	**5P-1420**		HOSE (29-CM)	
	9	1	**8T-4984**	2	CLAMP-HOSE	
M	10	1	**8T-4908**	1	BOLT (M8X1.25X25-MM)	
	11	1	**5P-4116**	1	WASHER-HARD (8.8X20.5X2-MM THK)	
	12	1	**8T-4121**	1	WASHER-HARD (11X21X2.5-MM THK)	
	13	1	**6G-2263**	1	SPACER (10.5X19X28.5-MM THK)	
M	14	1	**8T-4185**	1	BOLT (M10X1.5X50-MM)	
	15	1	**8T-4224**	1	WASHER-HARD (8.8X16X2-MM THK)	
M	16	1	**8T-7547**	1	BOLT (M8X1.25X30-MM)	

E-ORDER BY THE CENTIMETER
M-METRIC PART

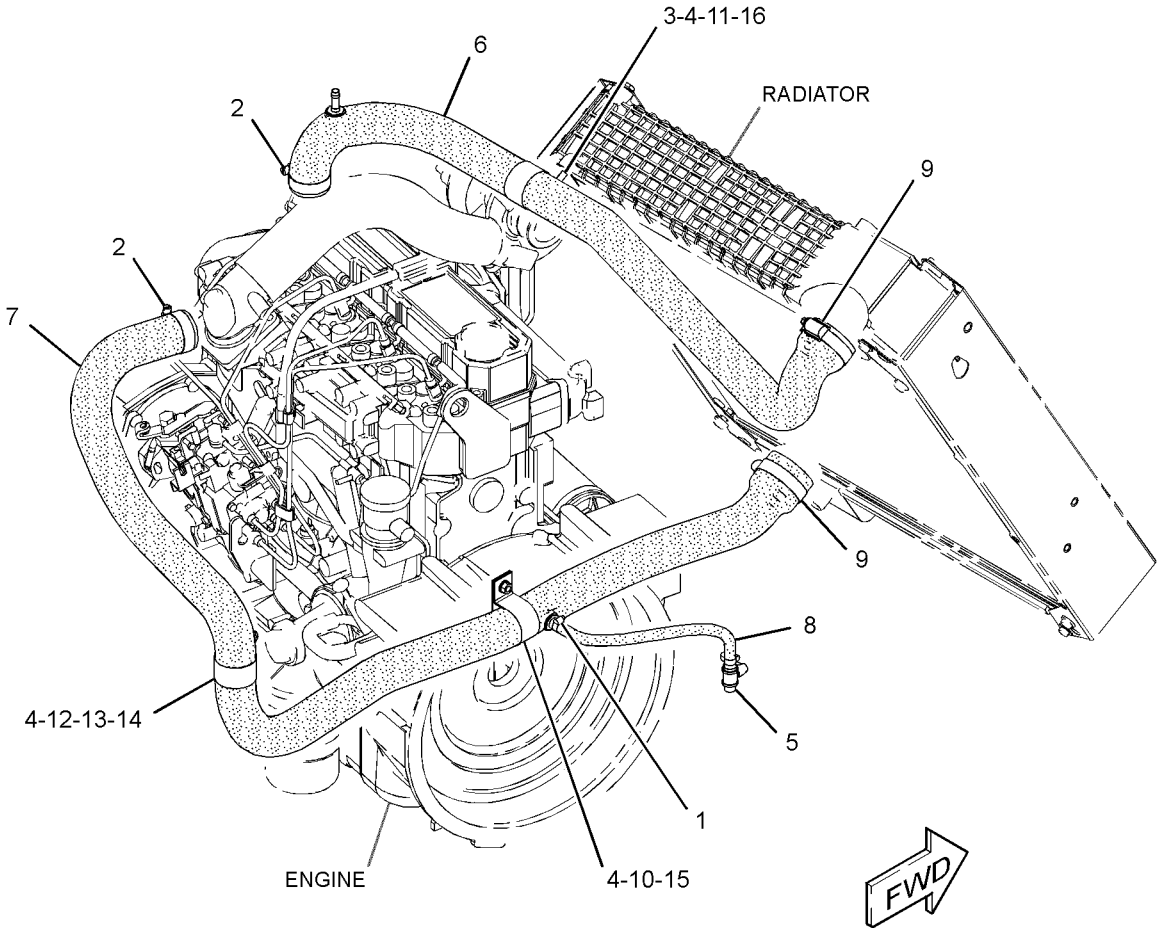

GRAPHIC #1 **<END>** g01394733

COOLING SYSTEM

331-1439 LINES GP-WATER

S/N: CYM1-UP

PART OF 305-2572 ENGINE AR-PRIMARY

SMCS-1380 **i03118720**

NOTE	REF NO	GRAPHIC REF	PART NUMBER	QTY	PART NAME 1 2 3 4 5 6 (PRODUCT LEVEL)	SEE PAGE
	1	1	**5I-7628**	2	GASKET	
	2	1	**5I-8056**	2	PLUG	
M	3	1	**6V-5221**	1	BOLT (M8X1.25X80-MM)	
M	4	1	**8T-0276**	1	BOLT (M8X1.25X45-MM)	
	5	1	**9M-1974**	2	WASHER-HARD (8.8X16X2-MM THK)	
	6	1	**096-8475**	2	BOLT (25-MM LG)	
	7	1	**235-4959**	1	GASKET (WATER TEMPERATURE REGULATOR)	
	8	1	**235-4960**	1	REGULATOR AS-WATER TEMPERATURE (THERMOSTAT)	
	9	1	**241-5986**	1	COVER-THERMOSTAT (WATER)	
	10	1	**246-8314**	1	HOUSING	
	11	1	**246-8315**	1	HOSE-BYPASS	
	12	1	**257-8739**	2	CLAMP-HOSE	
	13	1	**5I-7728**	1	GASKET	

M-METRIC PART

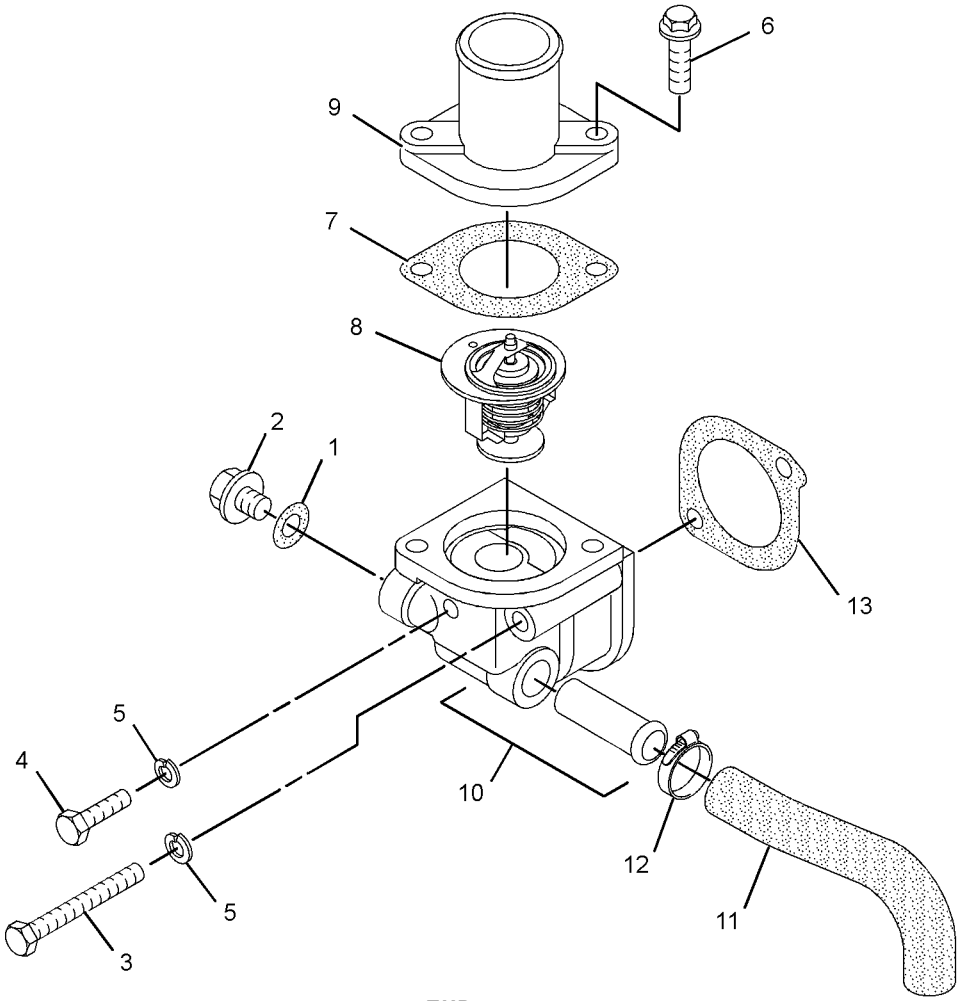

GRAPHIC #1 **<END>** g01561436

COOLING SYSTEM

316-4744 PUMP GP-WATER

S/N: CYM1-UP

PART OF 305-2572 ENGINE AR-PRIMARY

SMCS-1361 **i03067450**

NOTE	REF NO	GRAPHIC REF	PART NUMBER	QTY	PART NAME 1 2 3 4 5 6 (PRODUCT LEVEL)	SEE PAGE
M	1	1	**7X-0818**	4	BOLT (M8X1.25X45-MM)	
M	2	1	**7X-2537**	1	BOLT (M8X1.25X35-MM)	
	3	1	**8T-4224**	5	WASHER-HARD (8.8X16X2-MM THK)	
R	4	1	**235-4952**	1	PUMP GP-WATER	
M	4A	1	**6V-3940**	2	BOLT (M8X1.25X25-MM)	
M	4B	1	**8T-7547**	1	BOLT (M8X1.25X30-MM)	
	4C	1	**9M-1974**	3	WASHER-HARD (8.8X16X2-MM THK)	
	4D	1	**234-4832**	1	FLANGE	
	4E	1	**103-9747**	1	COVER-PUMP	
	4F	1	**103-9750**	1	GASKET-COVER (WATER PUMP)	
	5	1	**235-4958**	1	GASKET	
	6	1	**285-9066**	1	BOLT (M8X1.25X65-MM)	
	7	1	**314-9979**	1	ADAPTER	

M-METRIC PART
R-REMFG PART MAY BE AVAILABLE

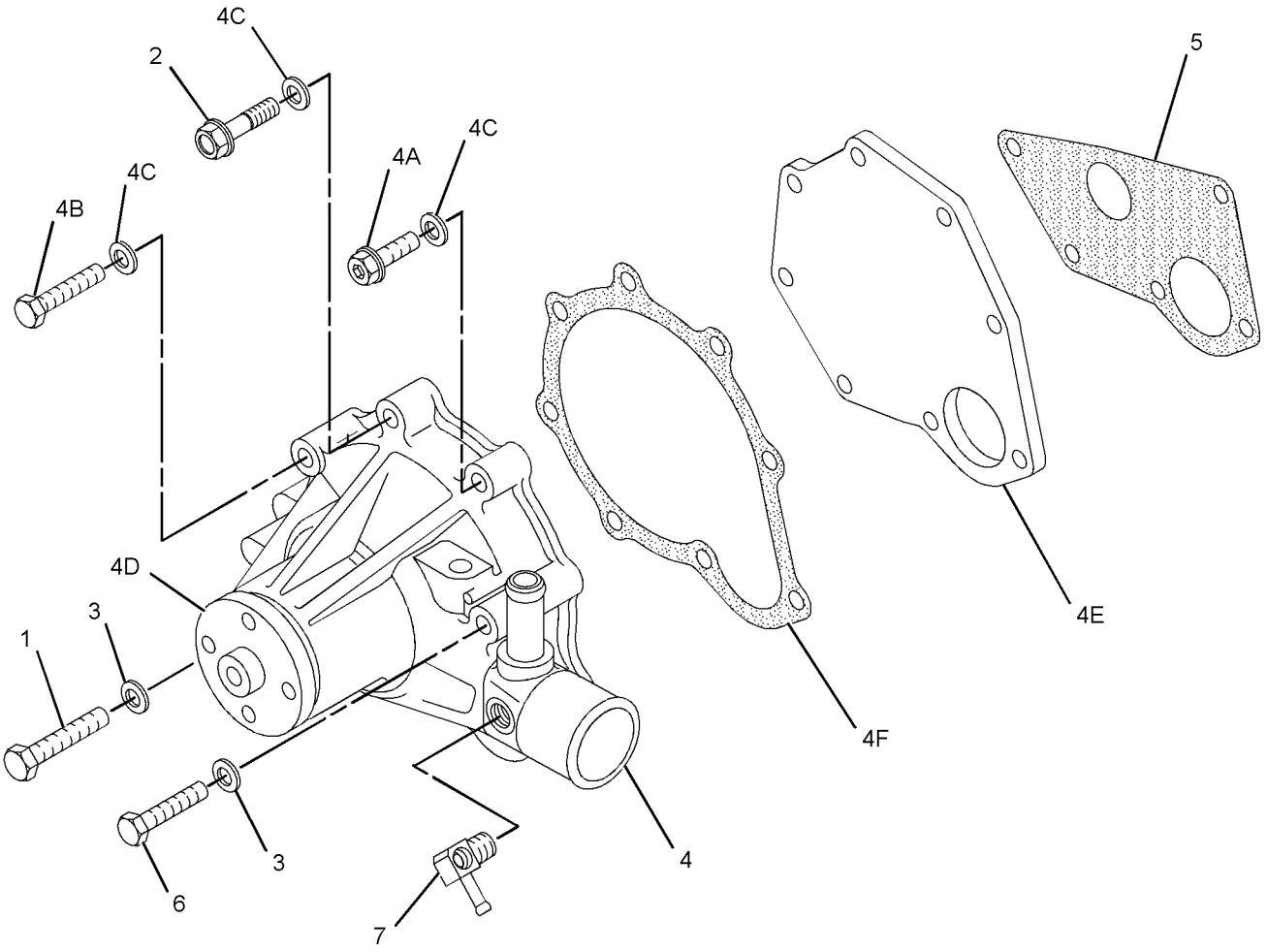

GRAPHIC #1 **<END>** g01418937

242-5898 RADIATOR & MOUNTING GP

S/N: LMD1-UP

PART OF 321-8232 INSTALLATION AR-ENGINE

SMCS-1353 **i02789893**

NOTE	REF NO	GRAPHIC REF	PART NUMBER	QTY	PART NAME 1 2 3 4 5 6 (PRODUCT LEVEL)	SEE PAGE
	1	1	**265-4644**	1	RADIATOR GP	
		1	**5P-4116**	8	WASHER-HARD (8.8X20.5X2-MM THK)	
M		1	**8T-4199**	8	BOLT (M8X1.25X12-MM)	
		1	**300-4479**	1	PLATE AS	
		1	**300-4480**	1	PLATE AS	
	2	1	**302-8723**	1	SEAL	
	3	1	**302-8724**	1	SEAL	
	4	1	**5P-4116**	3	WASHER-HARD (8.8X20.5X2-MM THK)	
M	5	1	**8T-4189**	3	BOLT (M8X1.25X20-MM)	
E	6	1	**145-2350**		SEAL (46-CM)	
E	6A	1	**145-2350**		SEAL (37-CM)	

E-ORDER BY THE CENTIMETER
M-METRIC PART

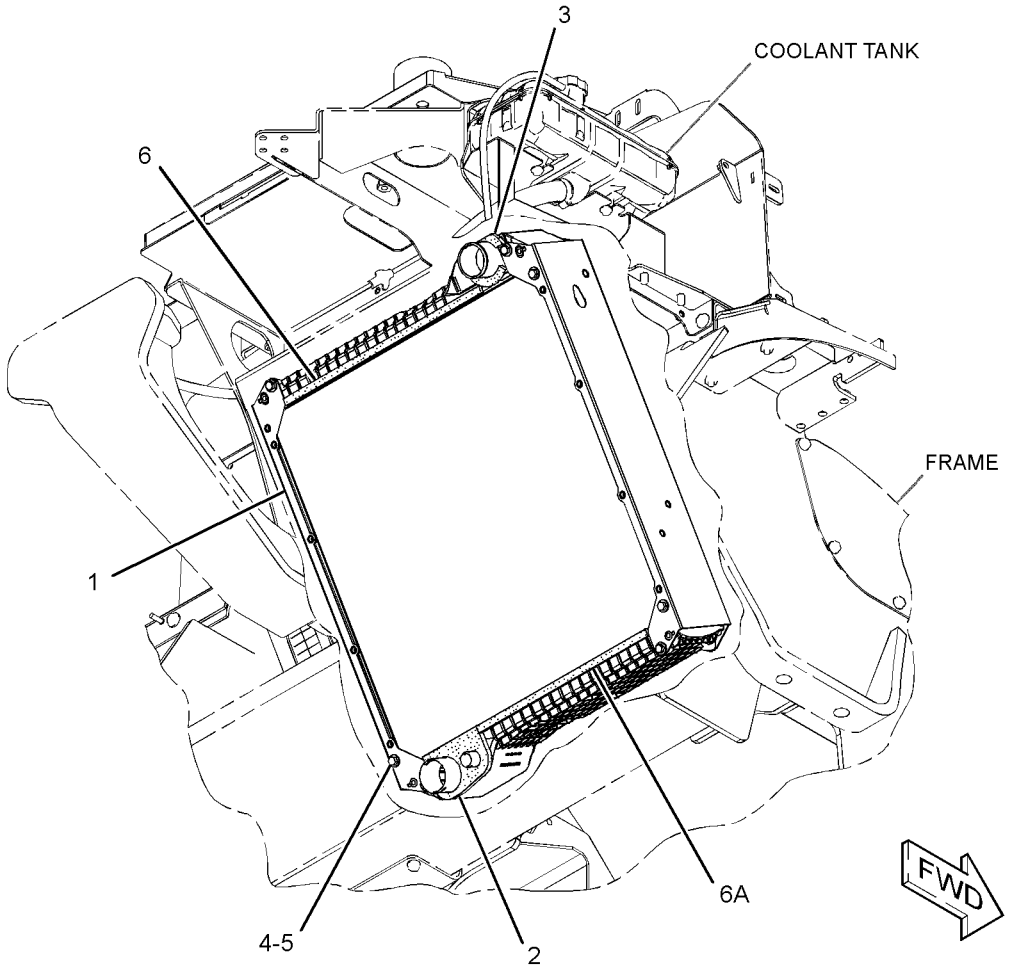

GRAPHIC #1 **<END>** g01357903

COOLING SYSTEM

255-5989 RECOVERY GP-COOLANT

S/N: LMD1-UP

PART OF 321-8232 INSTALLATION AR-ENGINE

SMCS-1354 **i02736956**

NOTE	REF NO	GRAPHIC REF	PART NUMBER	QTY	PART NAME 1 2 3 4 5 6 (PRODUCT LEVEL)	SEE PAGE
	1	1	**247-1385**	1	TANK GP-COOLANT	
		1	**251-3227**	1	CAP AS-COOLANT TANK	
	2	1	**302-4255**	1	TEE	
	3	1	**302-4750**	1	HOSE	
	4	1	**134-3987**	1	CLIP	
	5	1	**174-5907**	1	CLIP	
	6	1	**2S-3440**	2	CLAMP-HOSE	
	7	1	**2Y-5429**	1	GROMMET	
	8	1	**4D-7388**	2	CLIP	
M	9	1	**5C-2890**	1	NUT (M6X1-THD)	
M	10	1	**5C-9553**	1	BOLT (M6X1X16-MM)	
	11	1	**5P-4116**	3	WASHER-HARD (8.8X20.5X2-MM THK)	
	12	1	**6S-8620**	4	CLAMP-HOSE	
	13	1	**6V-7535**	1	ELBOW-PIPE	
	14	1	**7X-0613**	1	WASHER-HARD (8.8X25.5X5-MM THK)	
	15	1	**7X-7729**	1	WASHER (11X25X3-MM THK)	
	16	1	**8T-4121**	2	WASHER-HARD (11X21X2.5-MM THK)	
M	17	1	**8T-4133**	1	NUT (M10X1.5-THD)	
M	18	1	**8T-4182**	1	BOLT (M10X1.5X45-MM)	
M	19	1	**8T-4189**	1	BOLT (M8X1.25X20-MM)	
M	20	1	**8T-4195**	1	BOLT (M10X1.5X30-MM)	
M	21	1	**8T-4200**	3	BOLT (M8X1.25X16-MM)	
	22	1	**8T-4205**	2	WASHER-HARD (7.2X14.5X2-MM THK)	
	23	1	**8T-4224**	1	WASHER-HARD (8.8X16X2-MM THK)	
E	24	1	**8C-3681**		HOSE (76-CM)	
E	25	1	**5P-1442**		HOSE (95-CM)	
E	26	1	**8I-1362**		HOSE (149-CM)	

E-ORDER BY THE CENTIMETER
M-METRIC PART

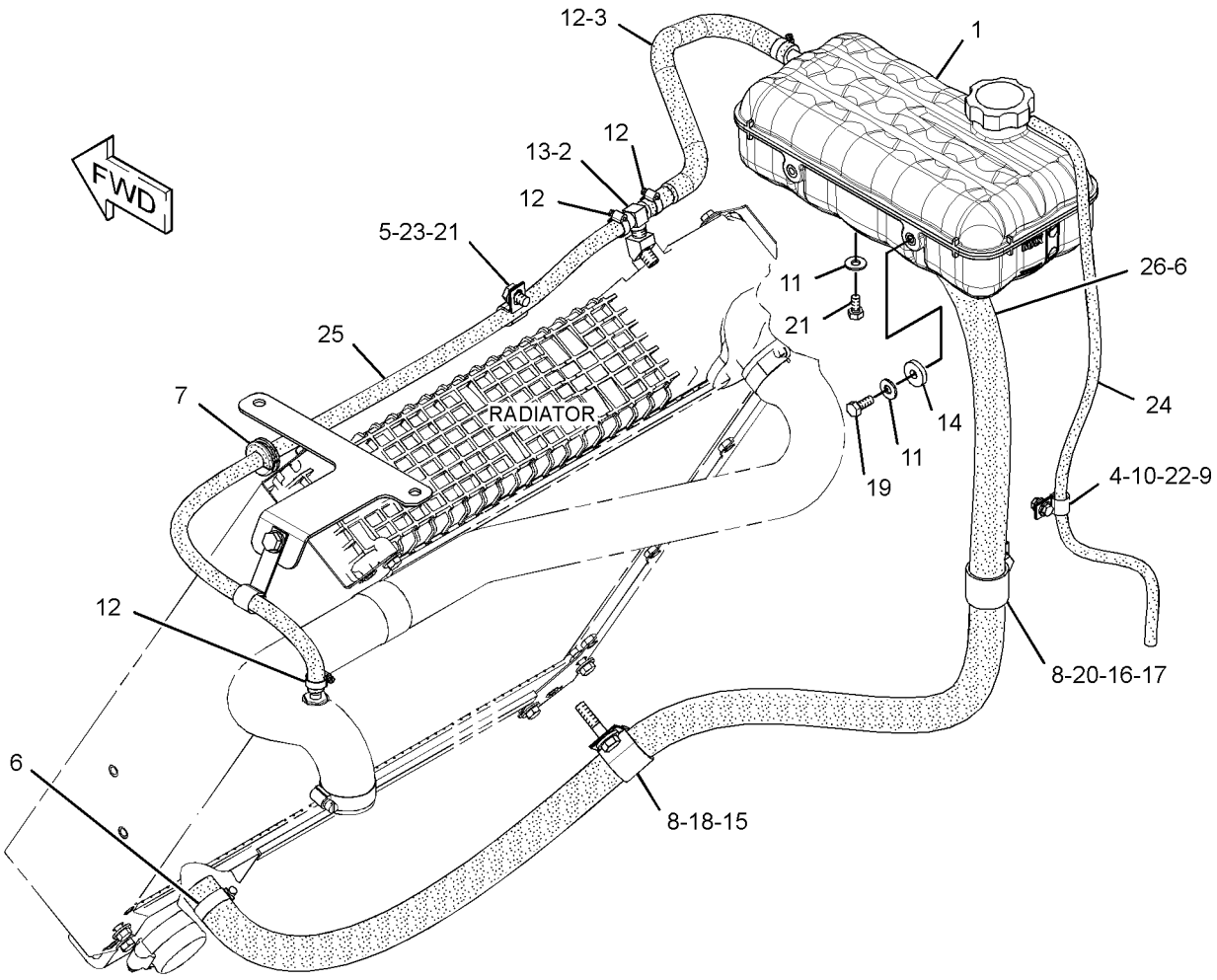

GRAPHIC #1 **<END>** g01380560

152-1811 VALVE GP-RELIEF–PRESSURE OVERRIDE

S/N: LMD1-UP

PART OF 300-5463 HEAD GP-PUMP

SMCS-1314, 1370 **i03193528**

NOTE	REF NO	GRAPHIC REF	PART NUMBER	QTY	PART NAME 1 2 3 4 5 6 (PRODUCT LEVEL)	SEE PAGE
	1	1	**7Y-5219**	1	SEAL-O-RING	
	2	1	**6V-5586**	1	SEAL-O-RING	
M	3	1	**6E-1607**	1	LOCKNUT-SEALING	
					AVAILABLE REPLACEMENT PART(S):	
			122-9363	1	KIT-SEAL (RELIEF VALVE)	
					(INCLUDES LOCKNUT, SEAL & O-RINGS)	

M-METRIC PART

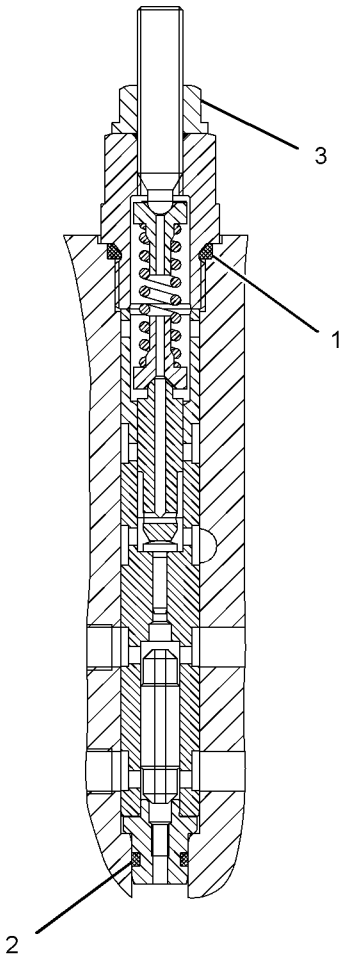

GRAPHIC #1 **<END>** g01046211

AIR INLET AND EXHAUST SYSTEM

242-5900 AIR CLEANER GP

S/N: LMD1-UP
AN ATTACHMENT

SMCS-1051, 1054 **i02698783**

NOTE	REF NO	GRAPHIC REF	PART NUMBER	QTY	PART NAME 1 2 3 4 5 6 (PRODUCT LEVEL)	SEE PAGE
	1	1	**8T-9402**	2	CLAMP-HOSE	
	2	1	**233-5468**	1	GASKET	
I	3	1	**263-4832**	1	HOSE AS	
Y	4	1	**272-2445**	1	AIR CLEANER GP	52
	5	1	**273-9577**	1	CAP-AIR CLEANER	
	6	1	**282-7689**	1	HOSE-AIR	
	7	1	**297-4356**	1	COVER-CYLINDER HEAD	
	8	1	**141-2307**	1	CLAMP-HOSE	
M	9	1	**5C-7261**	2	NUT (M8X1.25-THD)	
	10	1	**5P-4116**	4	WASHER-HARD (8.8X20.5X2-MM THK)	
M	11	1	**8T-4189**	4	BOLT (M8X1.25X20-MM)	
	12	1	**8T-4224**	4	WASHER-HARD (8.8X16X2-MM THK)	
	13	1	**8T-6726**	2	CLAMP-HOSE	
M	14	1	**8T-7547**	2	BOLT (M8X1.25X30-MM)	
E	15	1	**103-2555**		HOSE (45-CM)	

E-ORDER BY THE CENTIMETER
I-REFER TO HYDRAULIC INFORMATION SYSTEM
M-METRIC PART
Y-SEPARATE ILLUSTRATION

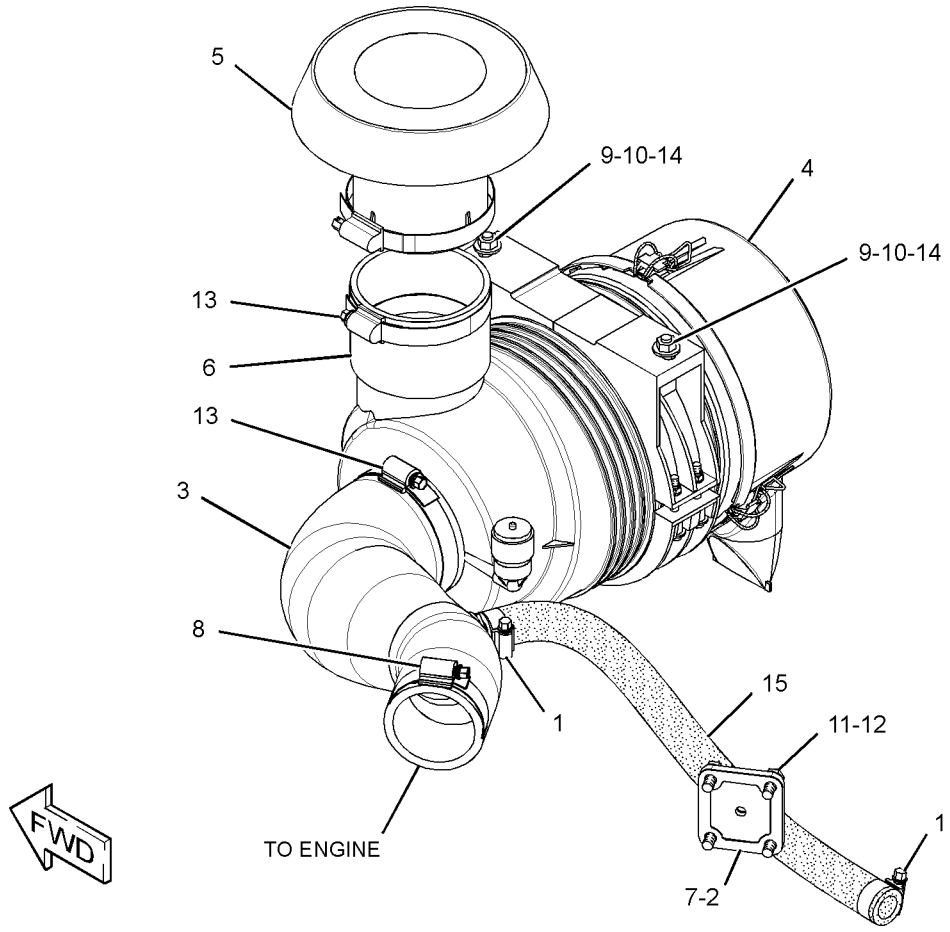

GRAPHIC #1 **<END>** g01368700

AIR INLET AND EXHAUST SYSTEM

272-2445 AIR CLEANER GP

S/N: LMD1-UP
PART OF 242-5900, 308-3010 AIR CLEANER GP
AN ATTACHMENT

SMCS-1051, 1054 **i02700461**

NOTE	REF NO	GRAPHIC REF	PART NUMBER	QTY	PART NAME 1 2 3 4 5 6 (PRODUCT LEVEL)	SEE PAGE
	1	1	**110-2556**	1	AIR CLEANER GP	
		1	**110-6326**	1	FILTER ELEMENT AS-AIR (PRIMARY)	
		1	**110-6331**	1	FILTER ELEMENT AS-AIR (SECONDARY)	
	2	1	**125-6701**	1	VALVE	
	3	1	**136-1419**	1	CLAMP	
	4	1	**258-3661**	1	ELBOW	
	5	1	**143-8170**	1	INDICATOR (AIR RESTRICTION)	

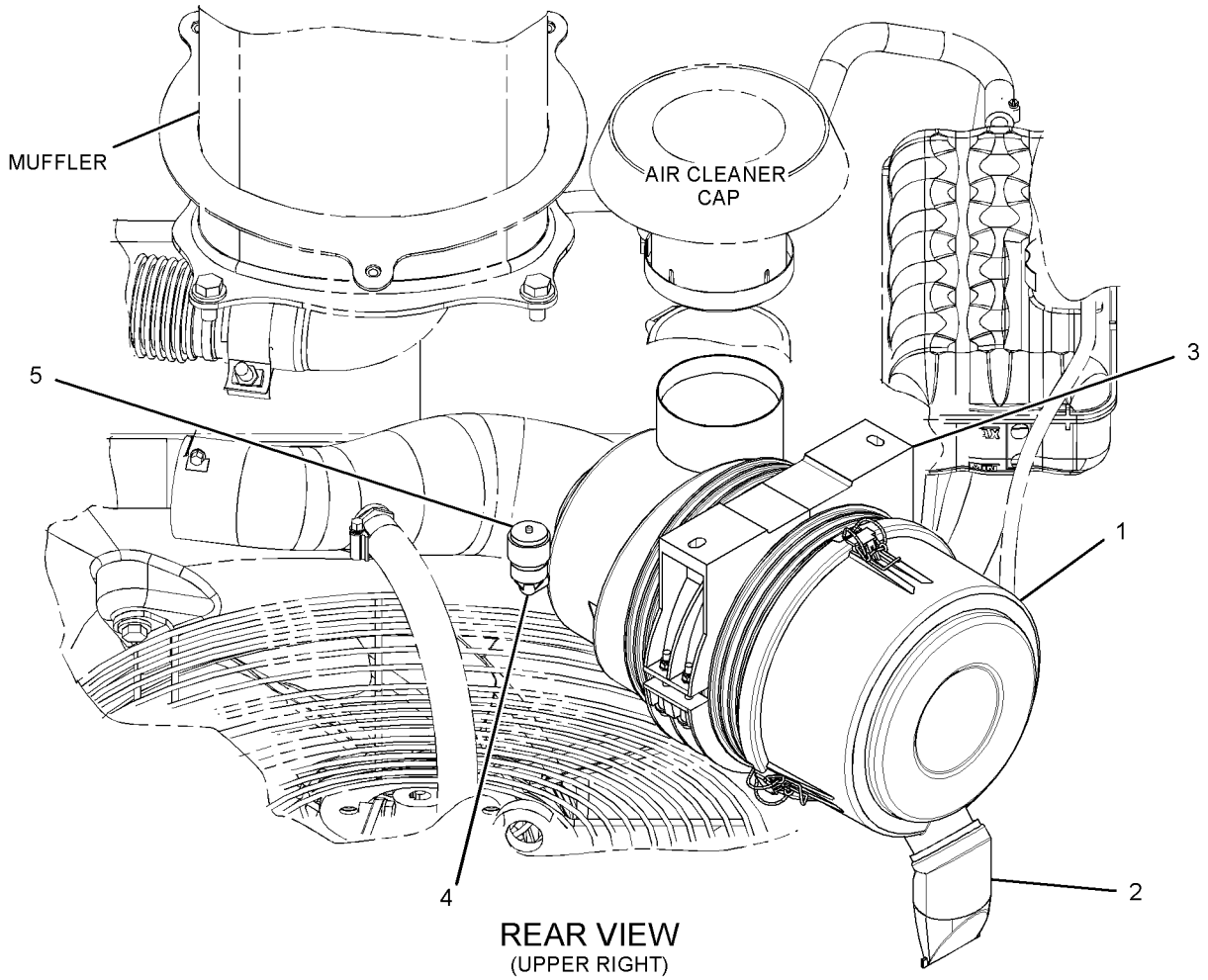

REAR VIEW
(UPPER RIGHT)

GRAPHIC #1

<END>

g01373444

AIR INLET AND EXHAUST SYSTEM

308-3010 AIR CLEANER GP

S/N: LMD1-UP

AN ATTACHMENT

SMCS-1051, 1054 **i02910934**

NOTE	REF NO	GRAPHIC REF	PART NUMBER	QTY	PART NAME 1 2 3 4 5 6 (PRODUCT LEVEL)	SEE PAGE
	1	1	**8T-9402**	2	CLAMP-HOSE	
	2	1	**130-3279**	1	PRECLEANER GP (TURBINE)	
	2A	1	**174-5414**	1	CLAMP	
	3	1	**233-5468**	1	GASKET	
I	4	1	**263-4832**	1	HOSE AS	
Y	5	1	**272-2445**	1	AIR CLEANER GP	52
	6	1	**282-7689**	1	HOSE-AIR	
	7	1	**297-4356**	1	COVER-CYLINDER HEAD	
	8	1	**308-3012**	1	SPACER	
	9	1	**141-2307**	1	CLAMP-HOSE	
M	10	1	**5C-7261**	2	NUT (M8X1.25-THD)	
	11	1	**5P-4116**	4	WASHER-HARD (8.8X20.5X2-MM THK)	
M	12	1	**8T-4189**	4	BOLT (M8X1.25X20-MM)	
	13	1	**8T-4224**	4	WASHER-HARD (8.8X16X2-MM THK)	
	14	1	**8T-6726**	2	CLAMP-HOSE	
M	15	1	**8T-7547**	2	BOLT (M8X1.25X30-MM)	
E	16	1	**103-2555**		HOSE (45-CM)	

E-ORDER BY THE CENTIMETER
I-REFER TO HYDRAULIC INFORMATION SYSTEM
M-METRIC PART
Y-SEPARATE ILLUSTRATION

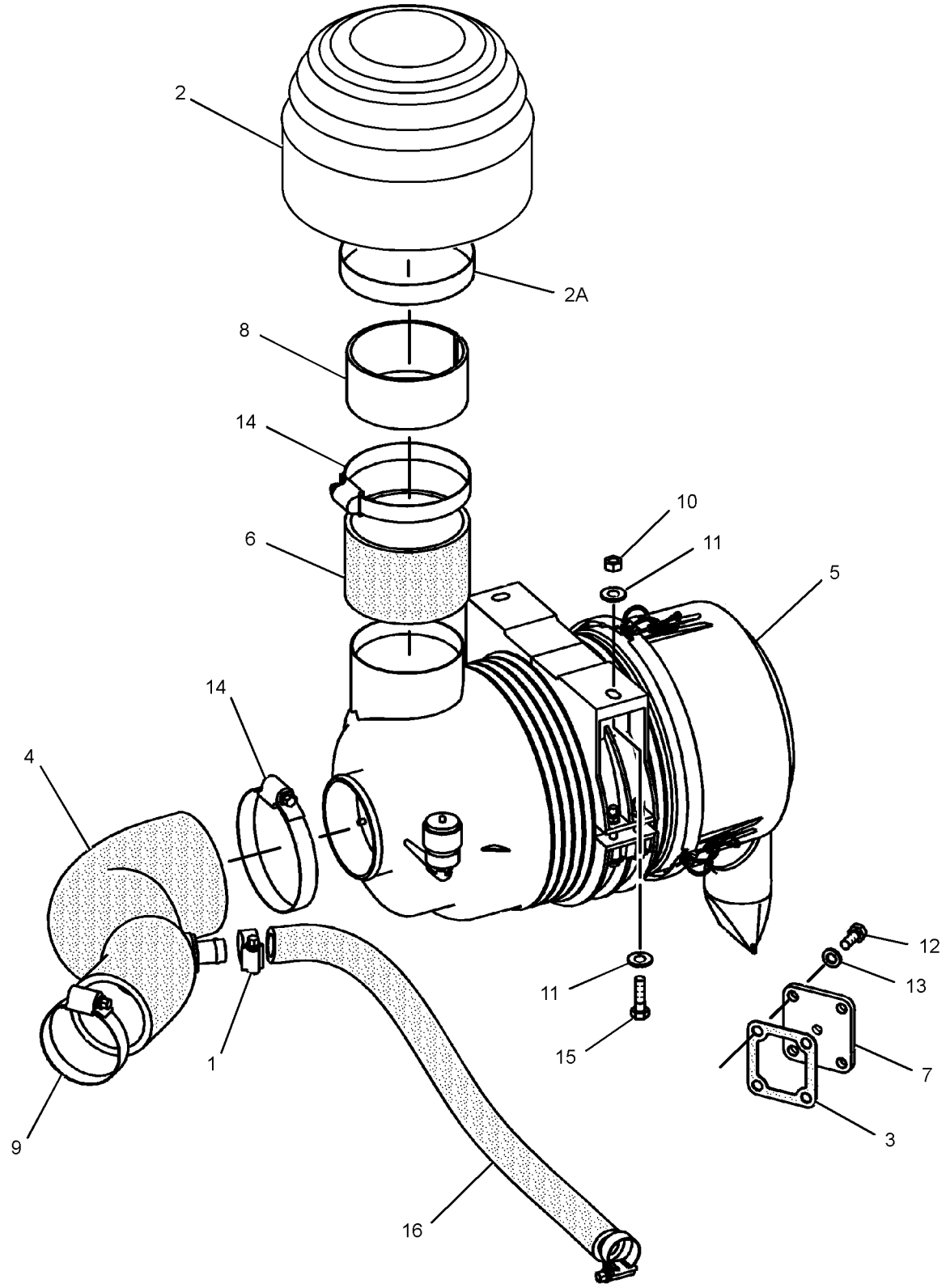

GRAPHIC #1 **<END>** g01458447

AIR INLET AND EXHAUST SYSTEM

316-0471 LINES GP-AIR

S/N: CYM1-UP

PART OF 305-2572 ENGINE AR-PRIMARY

SMCS-1071 **i03066737**

NOTE	REF NO	GRAPHIC REF	PART NUMBER	QTY	PART NAME 1 2 3 4 5 6 (PRODUCT LEVEL)	SEE PAGE
	1	1	**5I-7678**	1	GASKET	
M	2	1	**195-8222**	4	BOLT AS (M8X1.25X22-MM)	
	3	1	**315-2340**	1	ELBOW	
	4	1	**315-2341**	1	FITTING	
	5	1	**315-2342**	1	HOSE	
	6	1	**315-2343**	1	CLIP	
	7	1	**270-6282**	2	CLIP	

M-METRIC PART

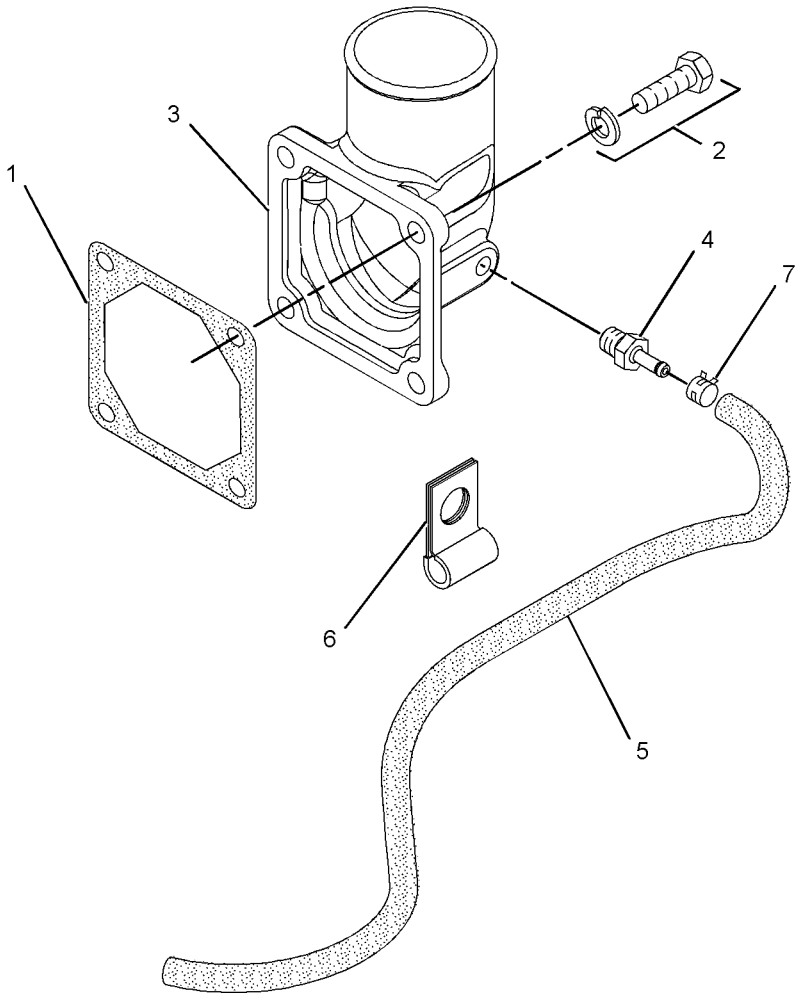

GRAPHIC #1 **<END>** g01448145

AIR INLET AND EXHAUST SYSTEM

241-5985 MANIFOLD GP-EXHAUST

S/N: CYM1-UP

PART OF 305-2572 ENGINE AR-PRIMARY

SMCS-1059 **i02939816**

NOTE	REF NO	GRAPHIC REF	PART NUMBER	QTY	PART NAME 1 2 3 4 5 6 (PRODUCT LEVEL)	SEE PAGE
	1	1	**5I-7931**	4	STUD	
M	2	1	**6V-3918**	8	BOLT (M8X1.25X50-MM)	
	3	1	**299-4511**	1	MANIFOLD EXHAUST	
	4	1	**234-4824**	1	GASKET-MANIFOLD	
	5	1	**239-6604**	8	WASHER	
	6	1	**195-8260**	8	NUT (M8X1.25-THD)	
	7	1	**253-5507**	8	SPACER	
	8	1	**3B-4505**	8	LOCKWASHER	

M-METRIC PART

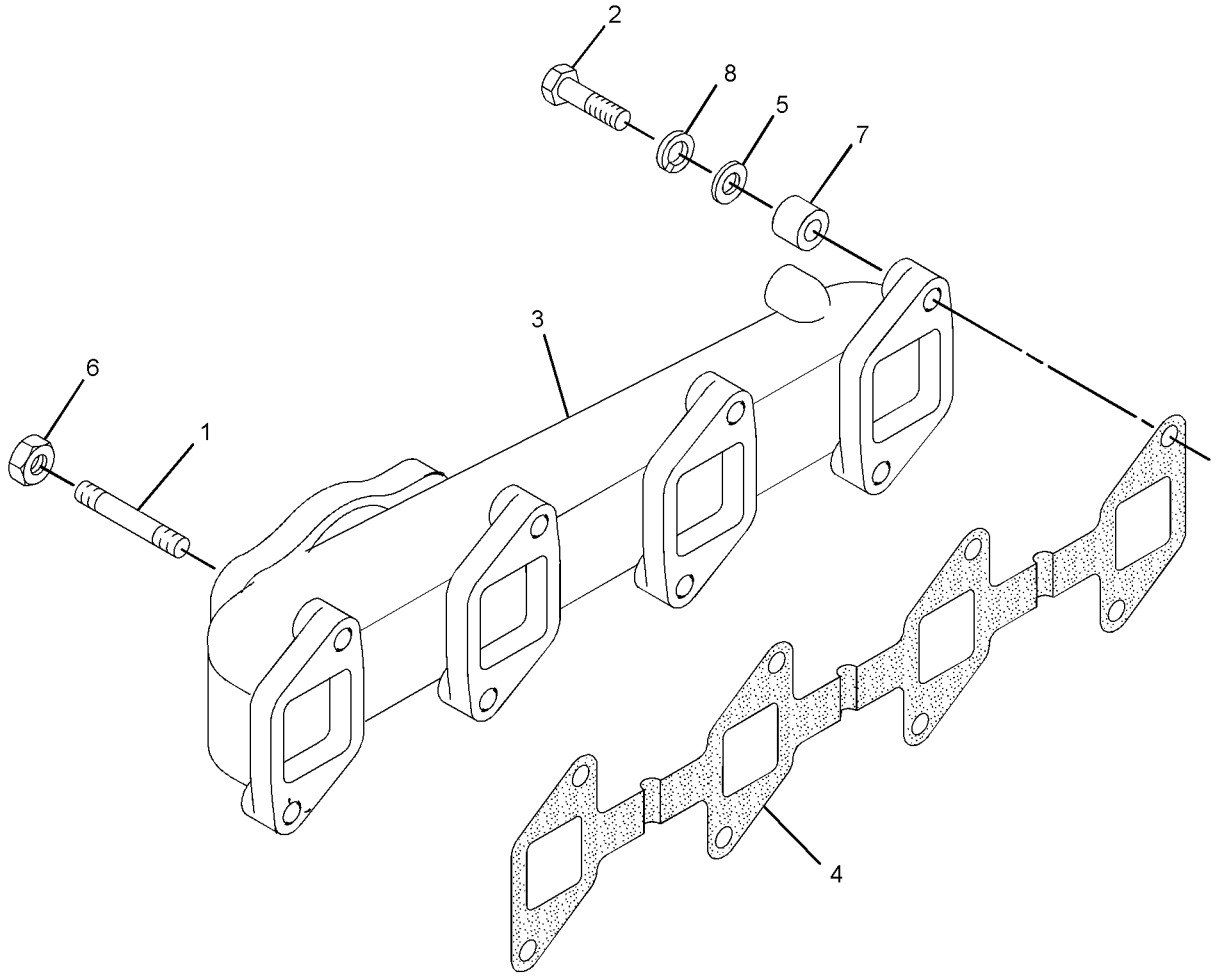

GRAPHIC #1 **<END>** g01420998

AIR INLET AND EXHAUST SYSTEM

302-7815 MANIFOLD GP-INLET

S/N: CYM1-UP

PART OF 305-2572 ENGINE AR-PRIMARY

SMCS-1058 **i03066629**

NOTE	REF NO	GRAPHIC REF	PART NUMBER	QTY	PART NAME 1 2 3 4 5 6 (PRODUCT LEVEL)	SEE PAGE
M	1	1	**8T-4177**	2	BOLT (M8X1.25X90-MM)	
	2	1	**3B-4505**	16	LOCKWASHER	
	3	1	**234-4805**	1	MANIFOLD-INLET	
	4	1	**234-4806**	1	GASKET	
M	5	1	**099-3649**	14	BOLT (M8X1.25X40-MM)	

M-METRIC PART

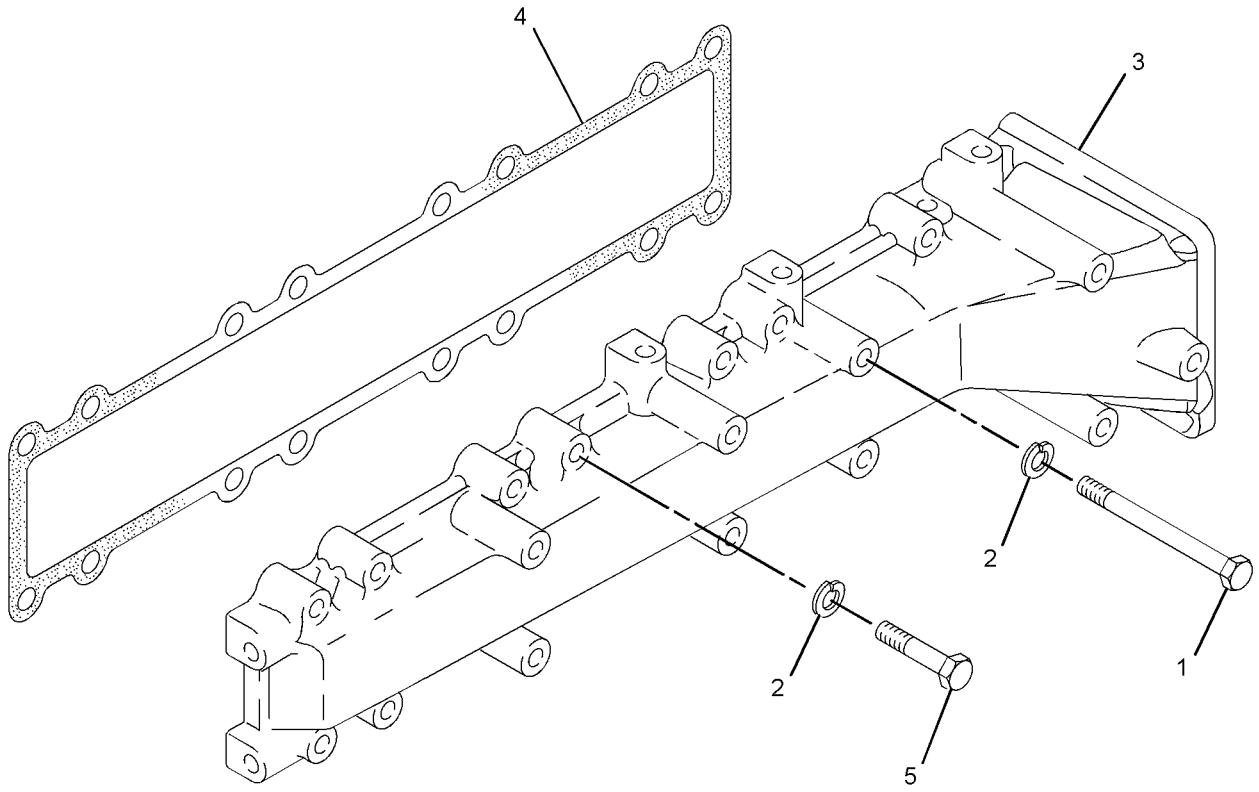

GRAPHIC #1 **<END>** g01393255

AIR INLET AND EXHAUST SYSTEM

242-5815 MUFFLER GP

S/N: LMD1-UP

FOR USE WITH 295-5276—PAGE 406, 295-5275—PAGE 406

AN ATTACHMENT

SMCS-1062 **i02698774**

NOTE	REF NO	GRAPHIC REF	PART NUMBER	QTY	PART NAME 1 2 3 4 5 6 (PRODUCT LEVEL)	SEE PAGE
	1	1	**5I-7937**	1	GASKET	
	2	1	**233-9247**	1	CLAMP-MUFFLER	
	3	1	**268-1168**	1	MUFFLER AS	
	4	1	**271-2936**	1	TUBE AS-EXHAUST	
M	5	1	**6V-8231**	6	NUT (M10X1.25-THD)	
	6	1	**8T-4121**	3	WASHER-HARD (11X21X2.5-MM THK)	
M	7	1	**8T-4192**	4	BOLT (M12X1.75X25-MM)	
	8	1	**8T-4223**	4	WASHER-HARD (13.5X25.5X3-MM THK)	

M-METRIC PART

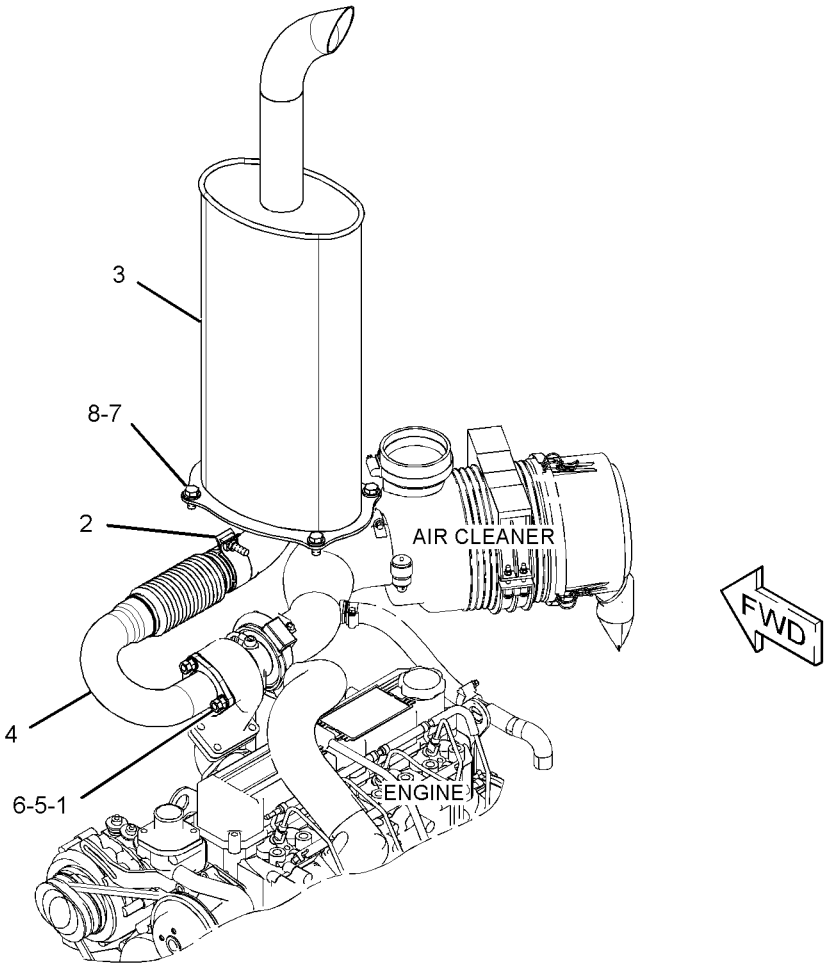

GRAPHIC #1 **<END>** g01368682

318-3666 MUFFLER GP

S/N: LMD1-UP

CANNOT BE USED WITH 295-5275—PAGE 406, 295-5276—PAGE 406

AN ATTACHMENT

SMCS-1062 **i03103242**

NOTE	REF NO	GRAPHIC REF	PART NUMBER	QTY	PART NAME 1 2 3 4 5 6 (PRODUCT LEVEL)	SEE PAGE
	1	1	**5I-7937**	1	GASKET	
	2	1	**233-9247**	1	CLAMP-MUFFLER	
	3	1	**271-2936**	1	TUBE AS-EXHAUST	
	4	1	**318-3667**	1	MUFFLER AS	
M	5	1	**6V-8231**	6	NUT (M10X1.25-THD)	
	6	1	**8T-4121**	3	WASHER-HARD (11X21X2.5-MM THK)	
M	7	1	**8T-4192**	4	BOLT (M12X1.75X25-MM)	
	8	1	**8T-4223**	4	WASHER-HARD (13.5X25.5X3-MM THK)	

M-METRIC PART

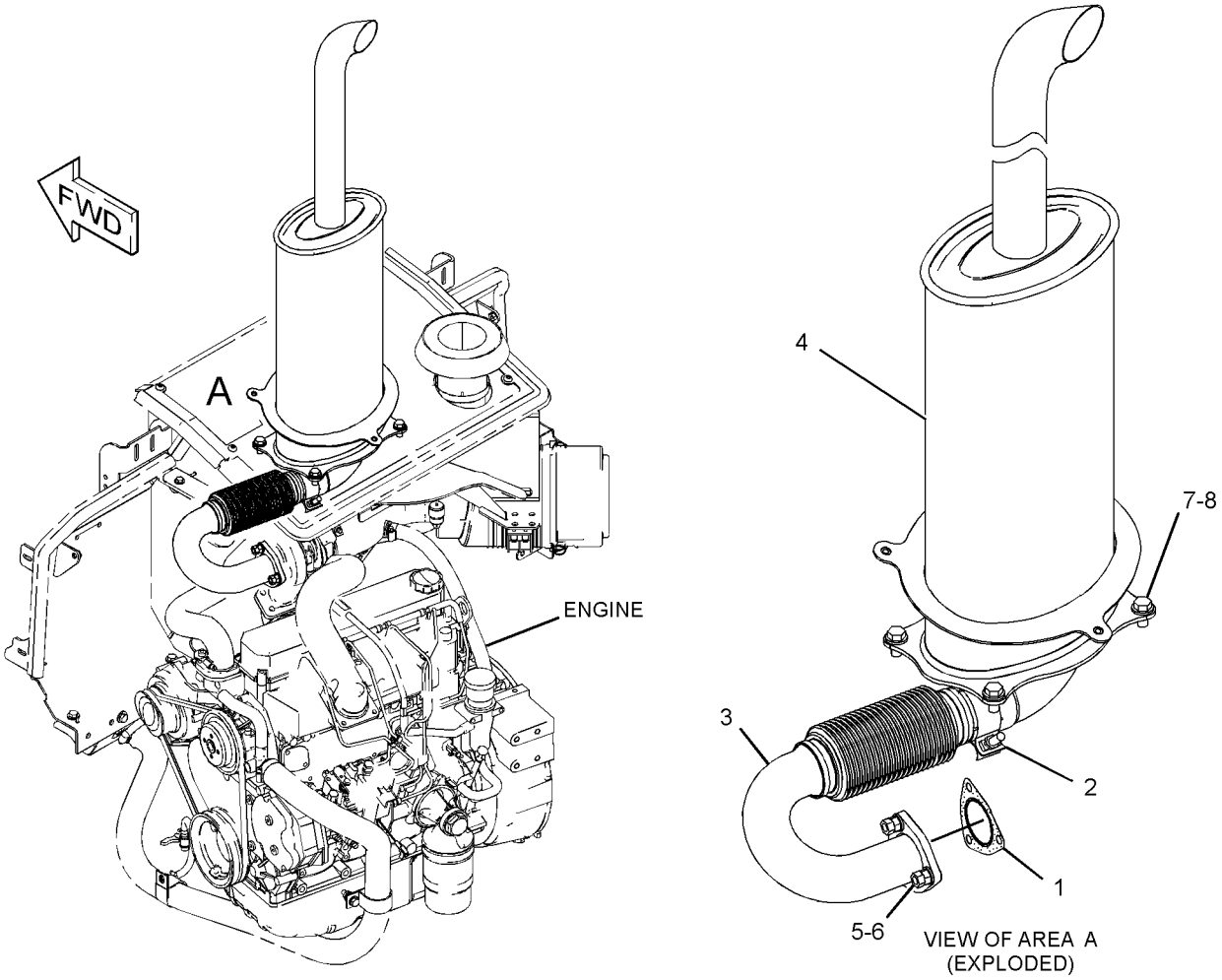

GRAPHIC #1 **<END>** g01591135

AIR INLET AND EXHAUST SYSTEM

299-4445 PIPE GP-EXHAUST

S/N: CYM1-UP

PART OF 305-2572 ENGINE AR-PRIMARY

SMCS-1061 **i02860985**

NOTE	REF NO	GRAPHIC REF	PART NUMBER	QTY	PART NAME 1 2 3 4 5 6 (PRODUCT LEVEL)	SEE PAGE
	1	1	**5I-7633**	8	NUT (M10X1.25-THD)	
	2	1	**105-2954**	1	GASKET-EXHAUST	
	3	1	**212-8499**	4	STUD	
	4	1	**246-1270**	1	PIPE-EXHAUST	

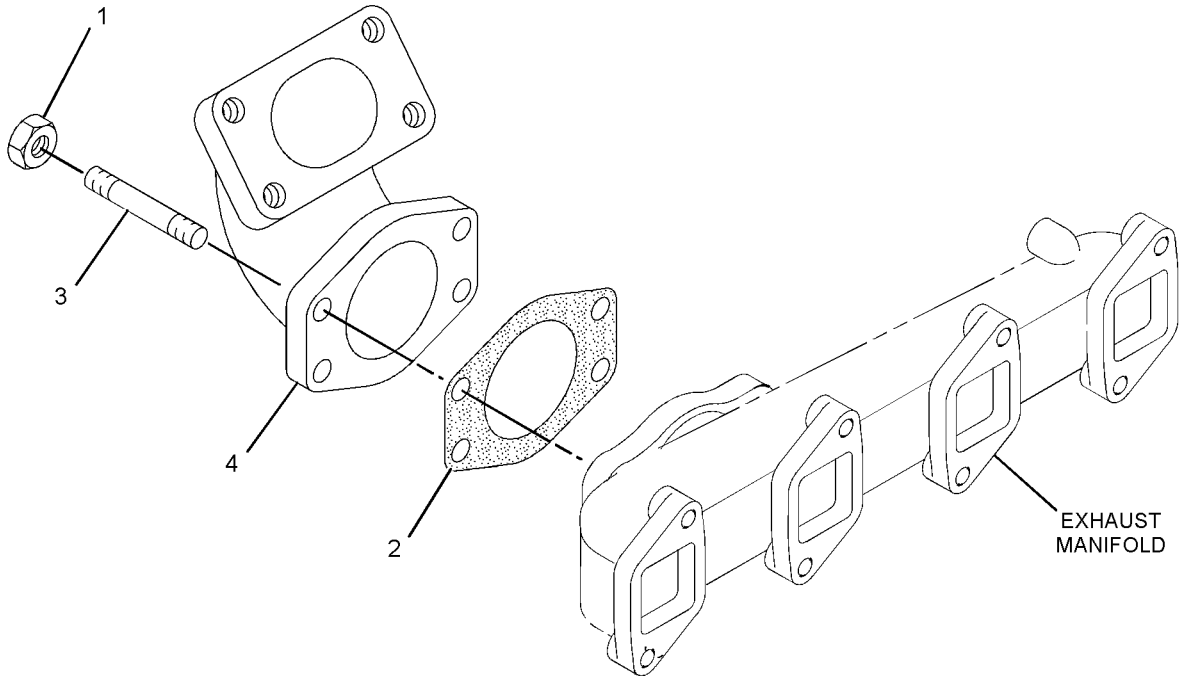

GRAPHIC #1 **<END>** g01411920

AIR INLET AND EXHAUST SYSTEM

331-6308 TURBOCHARGER GP

S/N: CYM1-UP

PART OF 305-2572 ENGINE AR-PRIMARY

SMCS-1052, 1053 **i03066877**

NOTE	REF NO	GRAPHIC REF	PART NUMBER	QTY	PART NAME 1 2 3 4 5 6 (PRODUCT LEVEL)	SEE PAGE
M	1	1	**5C-2890**	1	NUT (M6X1-THD)	
M	2	1	**5C-9553**	2	BOLT (M6X1X16-MM)	
	3	1	**5I-5077**	2	CLAMP	
	4	1	**5I-7623**	1	BOLT (M10X1.25X20-MM)	
	5	1	**5I-7633**	6	NUT (M10X1.25-THD)	
	6	1	**5I-7689**	1	GASKET	
	7	1	**5I-7933**	1	GASKET	
	8	1	**5I-8109**	1	HOSE	
	9	1	**5I-8110**	1	ELBOW	
	10	1	**096-2500**	3	LOCKWASHER	
	11	1	**191-3206**	2	GASKET	
	12	1	**5P-0597**	1	CLAMP-HOSE	
	13	1	**5P-4868**	1	CLAMP-HOSE	
	14	1	**234-4822**	2	CLAMP	
	15	1	**246-1272**	3	STUD	
	16	1	**246-1275**	1	PIPE-OIL	
	17	1	**246-8302**	1	ELBOW	
	18	1	**246-8303**	1	PIPE-OIL DRAIN	
	19	1	**315-4679**	1	TURBOCHARGER AS	
	20	1	**331-6309**	1	HOSE-AIR	

M-METRIC PART

331-6308 **TURBOCHARGER GP** *(contd.)* **i03066877**

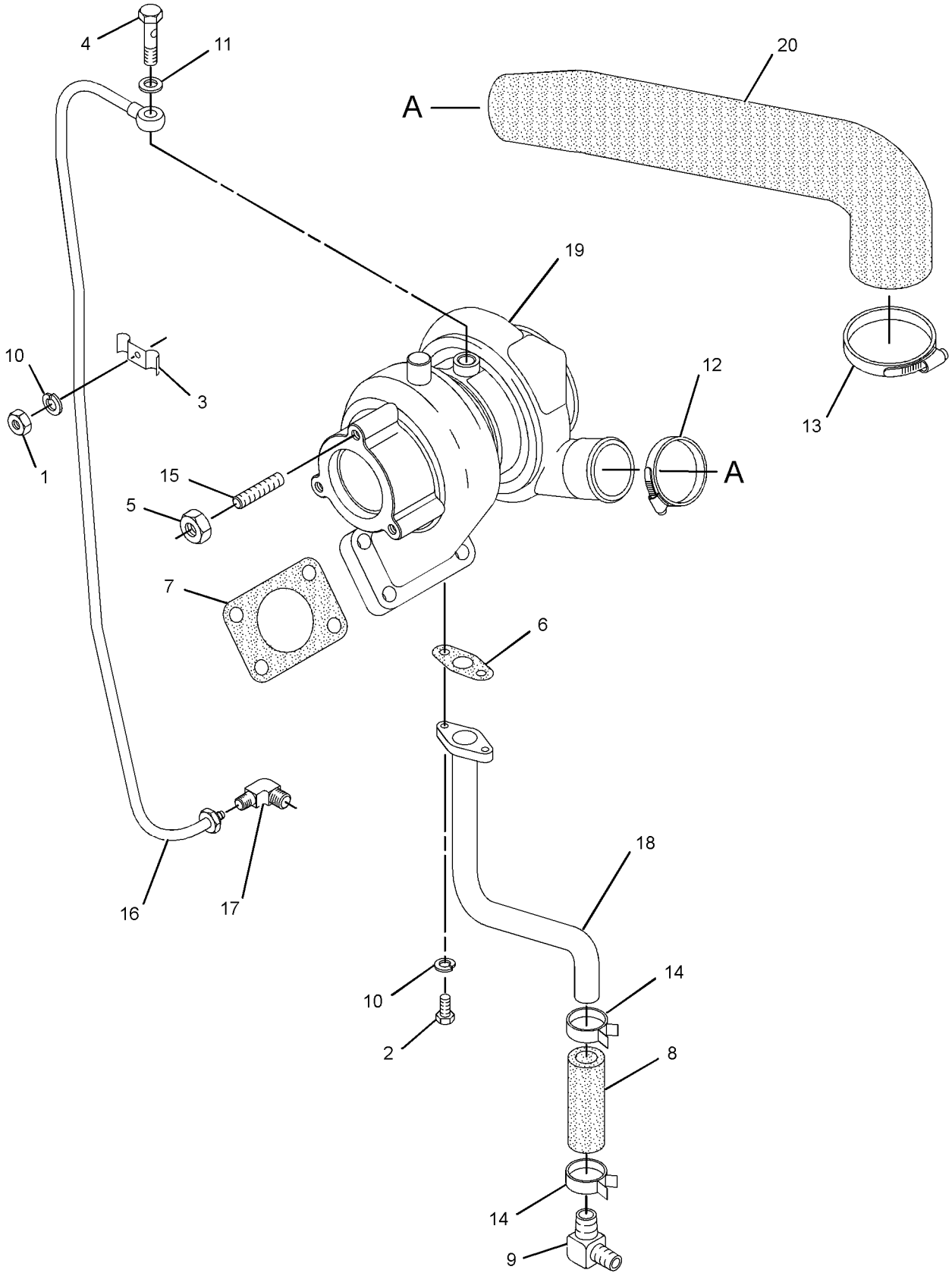

GRAPHIC #1 **<END>** g01563013

292-0914 CONTROL GP-GOVERNOR–HAND THROTTLE

S/N: LMD1-UP

PART OF 295-1706 CONTROL AR-TRANSMISSION

AN ATTACHMENT

SMCS-1265, 1276 **i02819693**

NOTE	REF NO	GRAPHIC REF	PART NUMBER	QTY	PART NAME 1 2 3 4 5 6 (PRODUCT LEVEL)	SEE PAGE
	1	1	**154-2302**	1	SPACER (11X20X15-MM THK)	
	2	1	**222-9151**	1	WASHER-HARD (11X32X5-MM THK)	
	3	1	**292-0913**	1	PLATE AS	
	4	1	**292-1473**	2	WASHER (20.5X32X3.5-MM THK)	
	5	1	**292-1474**	2	WASHER (20.5X32X3.3-MM THK)	
	6	1	**292-1475**	1	WASHER (20.5X25X5-MM THK)	
	7	1	**292-4754**	1	KNOB	
	8	1	**7X-7729**	1	WASHER (11X25X3-MM THK)	
M	9	1	**8T-4196**	1	BOLT (M10X1.5X35-MM)	

M-METRIC PART

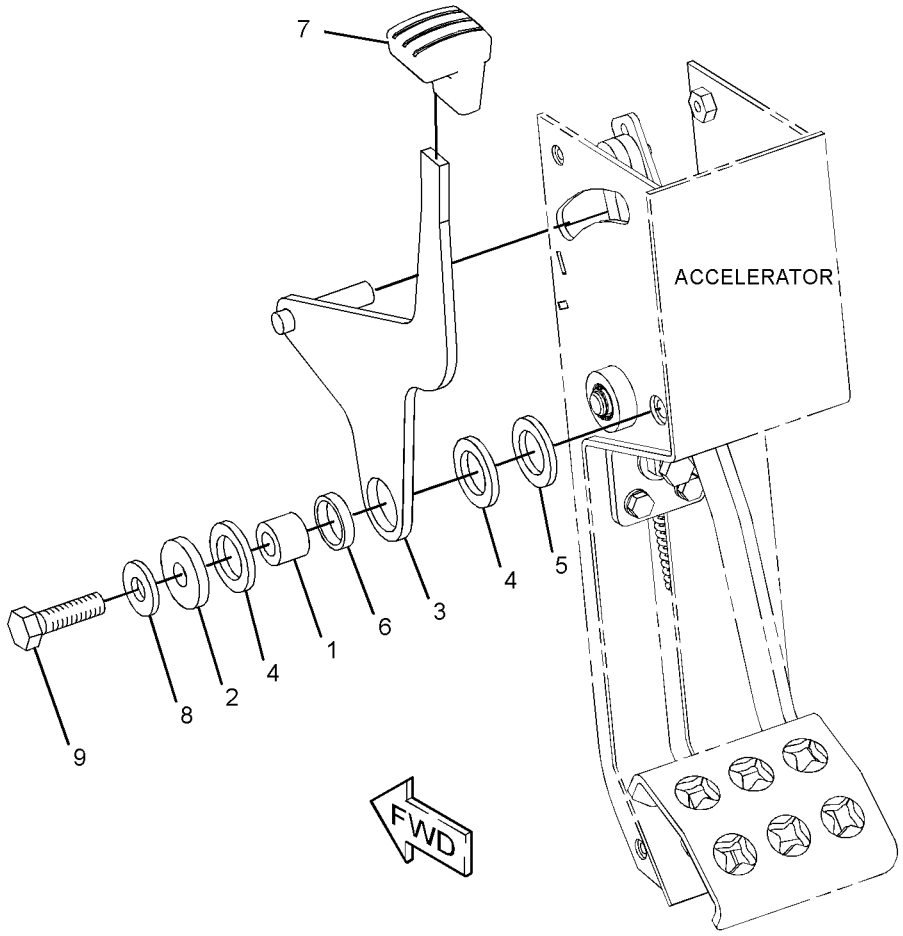

GRAPHIC #1 **<END>** g01378971

FUEL SYSTEM

316-4798 CONTROL GP-GOVERNOR–CABLE

S/N: LMD1-UP

PART OF 321-8232 INSTALLATION AR-ENGINE

SMCS-1265, 1276 **i02988016**

NOTE	REF NO	GRAPHIC REF	PART NUMBER	QTY	PART NAME 1 2 3 4 5 6 (PRODUCT LEVEL)	SEE PAGE
	1	1	**6G-2263**	1	SPACER (10.5X19X28.5-MM THK)	
	2	1	**316-4794**	1	CABLE AS-GOVERNOR CONTROL	
	3	1	**4K-8864**	1	CLIP	
	4	1	**5P-7648**	1	GROMMET	
	5	1	**8T-4121**	1	WASHER-HARD (11X21X2.5-MM THK)	
M	6	1	**8T-4182**	1	BOLT (M10X1.5X45-MM)	

M-METRIC PART

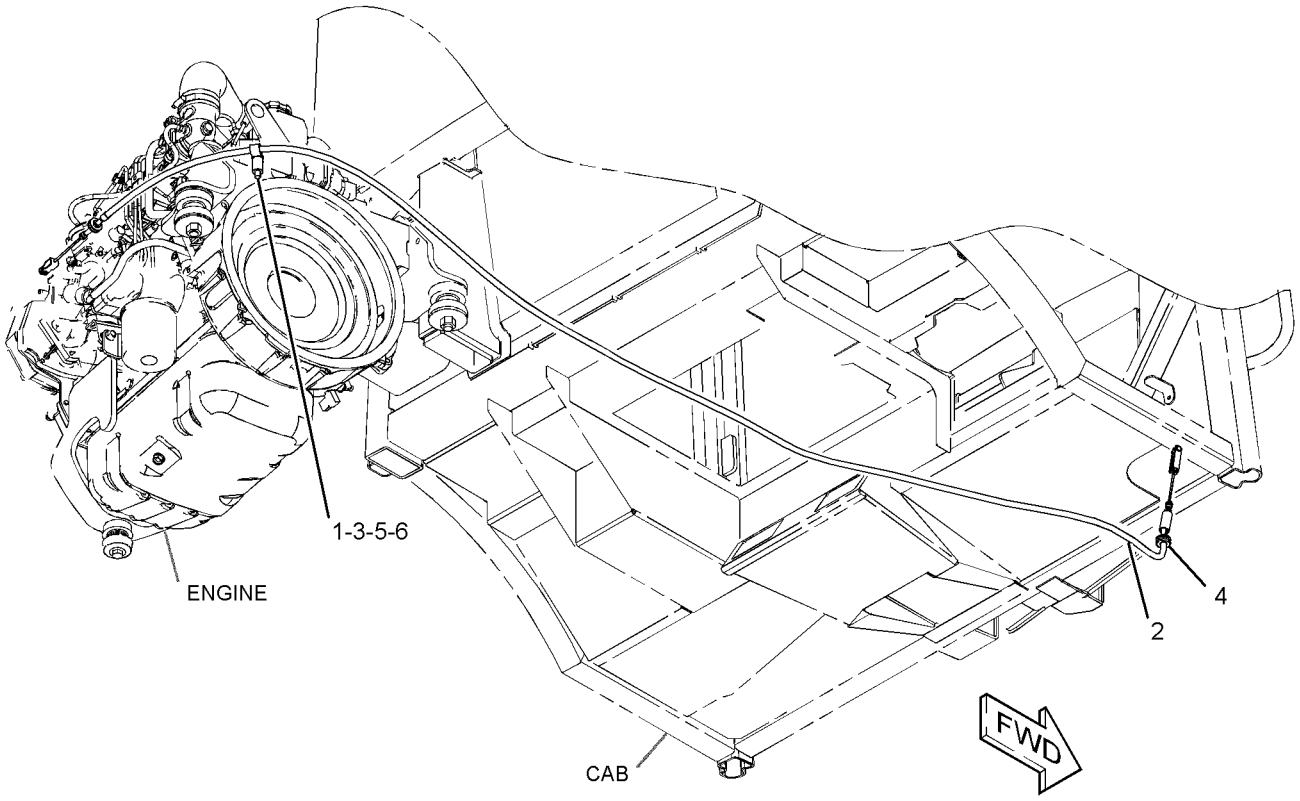

GRAPHIC #1 **<END>** g01526708

285-2995 FILTER GP-WATER SEP & FUEL

S/N: LMD1-UP

PART OF 321-8232 INSTALLATION AR-ENGINE

SMCS-1260, 1261, 1263 **i02762176**

NOTE	REF NO	GRAPHIC REF	PART NUMBER	QTY	PART NAME 1 2 3 4 5 6 (PRODUCT LEVEL)	SEE PAGE
	1	1	**032-8100**	2	WASHER (0.531X0.718X0.064-IN THK)	
	2	1	**033-7849**	2	PLUG	
	3	1	**069-4080**	1	FITTING	
	4	1	**160-0614**	1	TUBE AS	
Y	5	1	**232-5877**	1	PUMP GP-FUEL PRM & PRIM FILTER (WATER SEPARATOR)	72
	6	1	**287-7257**	1	ELBOW (90-DEG)	
	7	1	**300-4477**	2	SPACER	
	8	1	*170-1061*	2	CONNECTOR AS	
					(EACH INCLUDES)	
	8A	1	**5P-7814**	1	SEAL-O-RING	
	8B	1	**8L-2779**	1	SEAL-O-RING	
	8C	1	**8T-5043**	1	CONNECTOR	
M	9	1	**5C-7261**	2	NUT (M8X1.25-THD)	
	10	1	**5P-4116**	2	WASHER-HARD (8.8X20.5X2-MM THK)	
M	11	1	**7X-0818**	2	BOLT (M8X1.25X45-MM)	
	12	1	**8T-4224**	2	WASHER-HARD (8.8X16X2-MM THK)	
E	13	1	**8C-3681**		HOSE (50-CM)	
	14	1	**6D-3479**	1	CLIP	

E-ORDER BY THE CENTIMETER
M-METRIC PART
Y-SEPARATE ILLUSTRATION

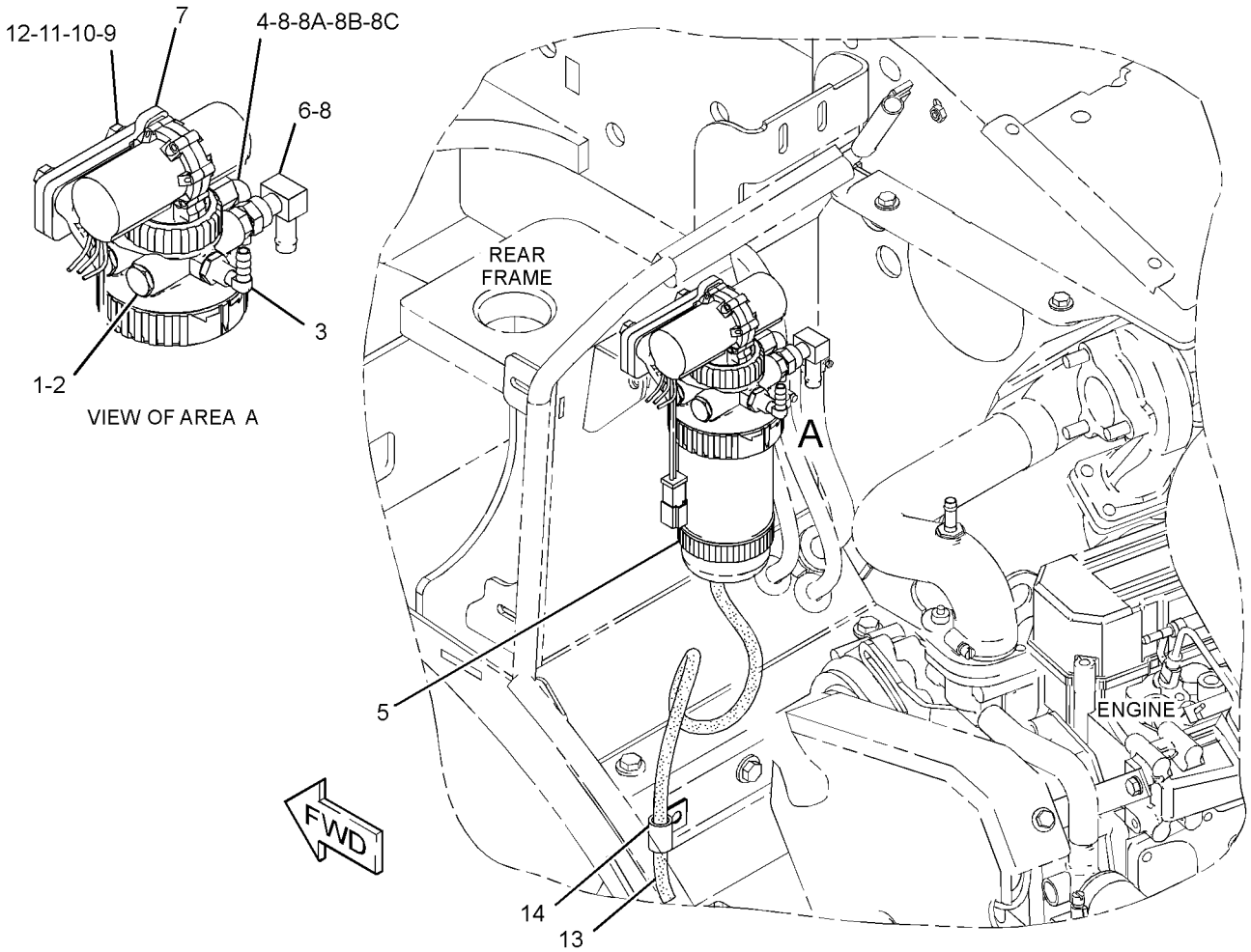

GRAPHIC #1

<END>

g01389342

FUEL SYSTEM

320-6534 LINES GP-FUEL

S/N: LMD1-UP

PART OF 321-8232 INSTALLATION AR-ENGINE

SMCS-1274 **i03103291**

NOTE	REF NO	GRAPHIC REF	PART NUMBER	QTY	PART NAME 1 2 3 4 5 6 (PRODUCT LEVEL)	SEE PAGE
	1	1	**1P-4278**	8	CLAMP-HOSE	
	2	1	**6G-2263**	1	SPACER (10.5X19X28.5-MM THK)	
	3	1	**6S-8620**	2	CLAMP-HOSE	
	4	1	**121-5327**	1	GROMMET	
	5	1	**241-4275**	1	TEE-SPECIAL	
	6	1	**154-2302**	1	SPACER (11X20X15-MM THK)	
	7	1	**174-5907**	1	CLIP	
	8	1	**1P-7009**	3	CLIP	
	9	1	**1S-0994**	2	CLIP	
	10	1	**2Y-5429**	2	GROMMET	
M	11	1	**5C-7261**	1	NUT (M8X1.25-THD)	
	12	1	**5K-8451**	2	CLIP	
	13	1	**5P-4116**	1	WASHER-HARD (8.8X20.5X2-MM THK)	
	14	1	**6K-8178**	2	CLIP	
	16	1	**8T-4224**	6	WASHER-HARD (8.8X16X2-MM THK)	
M	17	1	**8T-4908**	4	BOLT (M8X1.25X25-MM)	
M	18	1	**8T-6869**	1	BOLT (M8X1.25X60-MM)	
M	19	1	**7X-2537**	1	BOLT (M8X1.25X35-MM)	
E	20	1	**5P-1442**		HOSE (83-CM)	
E	21	1	**5P-1505**		HOSE (113-CM)	
E	22	1	**5P-1420**		HOSE (183-CM)	
	22A	1	**5P-1420**		HOSE (172-CM)	
	22B	1	**5P-1420**		HOSE (26.5-CM)	

E-ORDER BY THE CENTIMETER
M-METRIC PART

320-6534 **LINES GP-FUEL** *(contd.)* **i03103291**

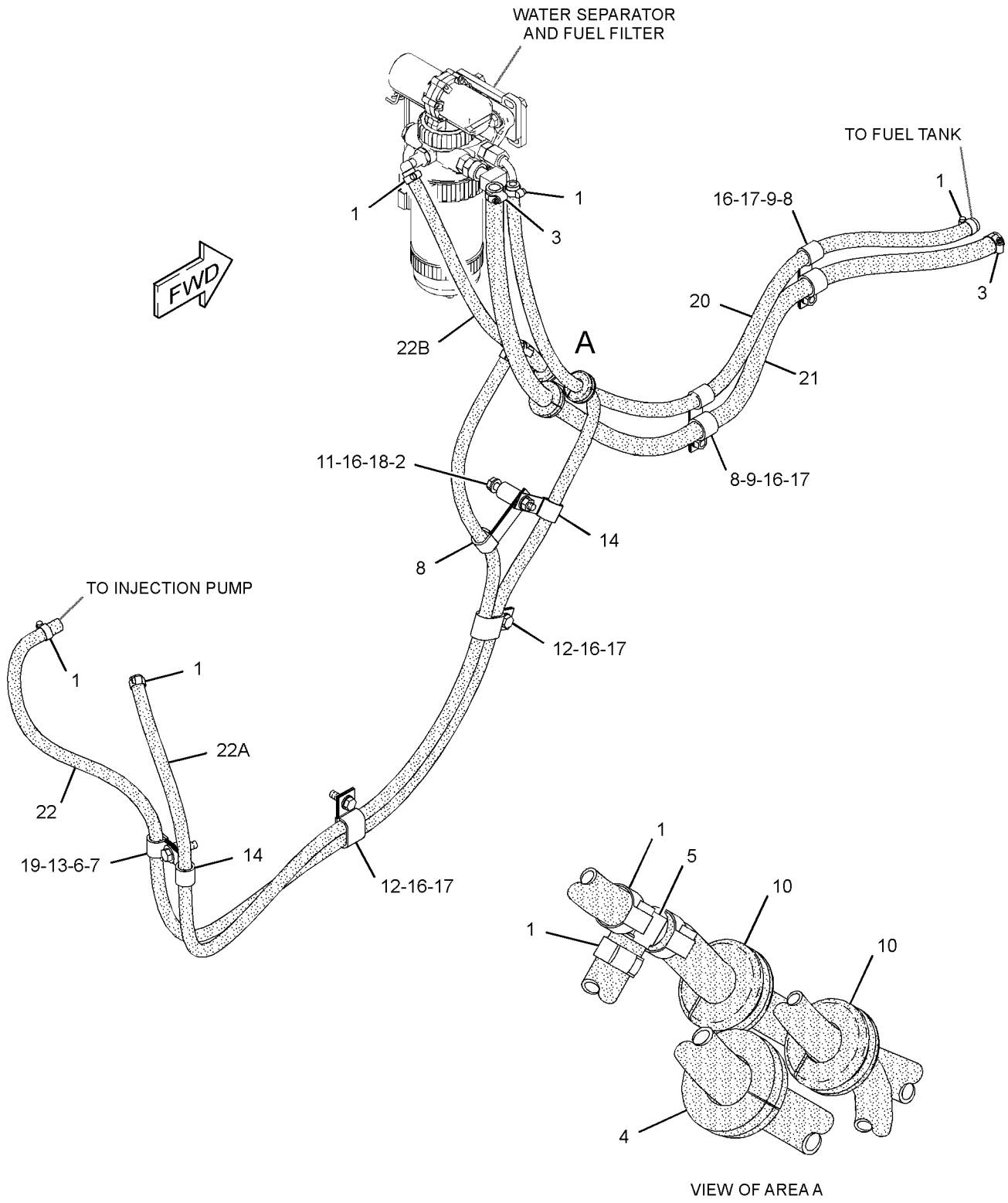

GRAPHIC #1 **<END>** g01613836

FUEL SYSTEM

331-7300 LINES GP-FUEL INJECTION

S/N: CYM1-UP

PART OF 305-2572 ENGINE AR-PRIMARY

SMCS-1252, 1254 **i03067241**

NOTE	REF NO	GRAPHIC REF	PART NUMBER	QTY	PART NAME 1 2 3 4 5 6 (PRODUCT LEVEL)	SEE PAGE
	1	1	**3B-4505**	2	LOCKWASHER	
M	2	1	**6V-2317**	4	BOLT (M8X1.25X30-MM)	
M	3	1	**8T-4200**	2	BOLT (M8X1.25X16-MM)	
	4	1	**9M-1974**	4	WASHER-HARD (8.8X16X2-MM THK)	
	5	1	**094-7235**	1	CAP	
	6	1	**113-0363**	4	SUPPORT	
	7	1	**113-0364**	4	HOSE	
	8	1	**122-8948**	6	CLAMP	
	9	1	**122-8949**	2	CLAMP	
M	10	1	**195-8364**	4	BOLT AS (M6X1X25-MM)	
	11	1	**196-8356**	1	CLIP	
	12	1	**314-9980**	1	TUBE (CYL NO. 1)	
	13	1	**314-9981**	1	TUBE (CYL NO. 2)	
	14	1	**314-9982**	1	TUBE (CYL NO. 3)	
	15	1	**314-9983**	1	TUBE (CYL NO. 4)	
	16	1	**314-9984**	4	WASHER	
	17	1	**314-9985**	4	INJECTOR AS	
					(EACH INCLUDES)	
		1	**314-9986**	1	NOZZLE AS-FUEL INJECTION	
	18	1	**314-9987**	1	TUBE	
	19	1	**331-1471**	1	BRACKET	

M-METRIC PART

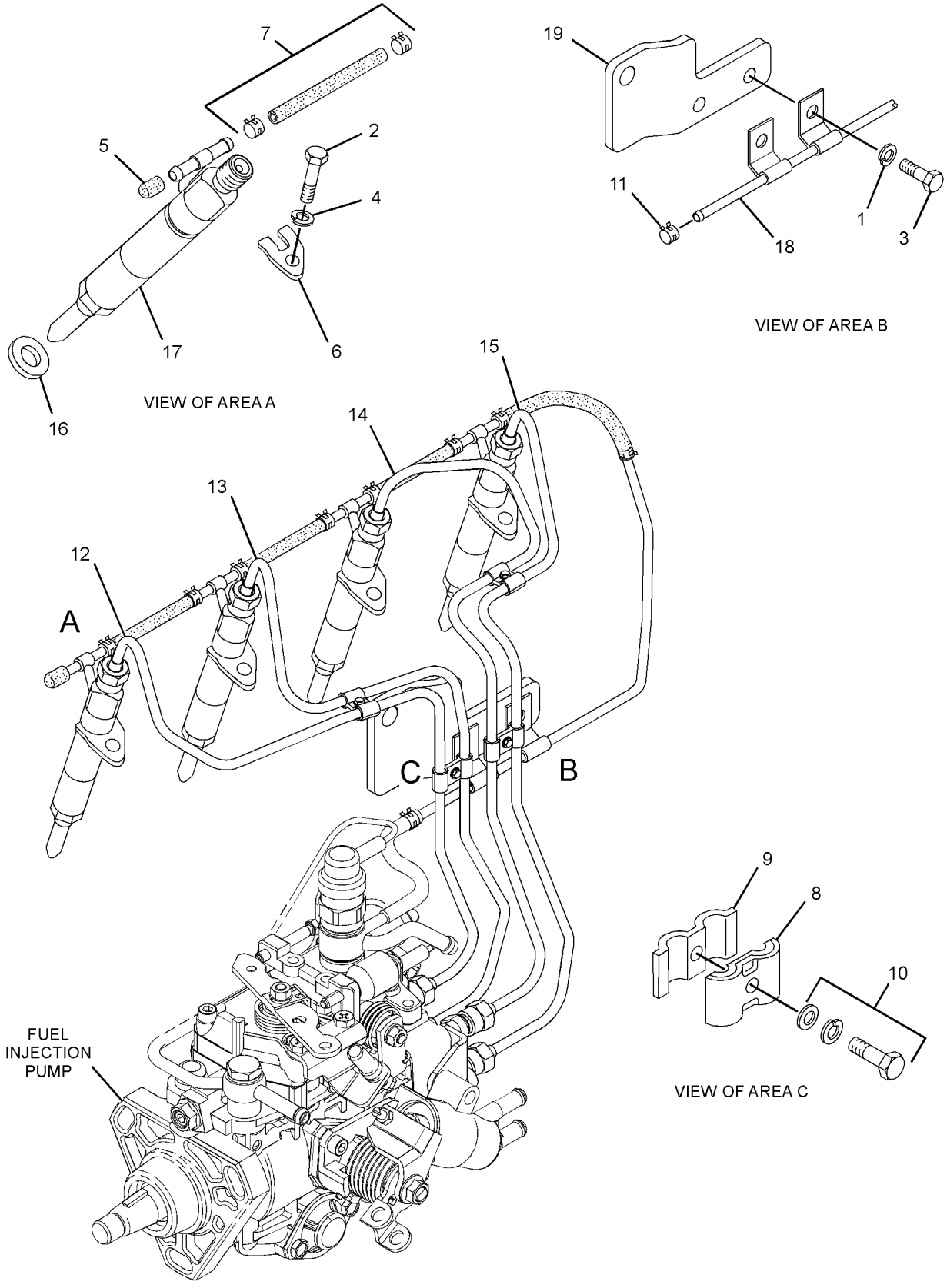

GRAPHIC #1 **<END>** g01562433

FUEL SYSTEM

331-7333 PUMP GP-FUEL INJECTION

S/N: CYM1-UP

PART OF 305-2572 ENGINE AR-PRIMARY

SMCS-1251, 1290 **i03067331**

NOTE	REF NO	GRAPHIC REF	PART NUMBER	QTY	PART NAME 1 2 3 4 5 6 (PRODUCT LEVEL)	SEE PAGE
M	1	1	**6V-5217**	1	BOLT (M8X1.25X20-MM)	
	2	1	**7X-0796**	2	LOCKWASHER	
	3	1	**8T-4121**	2	WASHER-HARD (11X21X2.5-MM THK)	
M	4	1	**8T-4137**	2	BOLT (M10X1.5X20-MM)	
	5	1	**8T-4896**	1	WASHER-HARD (10.2X18.5X2.5-MM THK)	
	6	1	**9M-1974**	1	WASHER-HARD (8.8X16X2-MM THK)	
	7	1	**9X-8256**	1	WASHER (6.6X12X2-MM THK)	
M	8	1	**140-5217**	1	BOLT (M10X1.25X25-MM)	
	9	1	**199-2256**	1	CLIP	
	10	1	**199-2333**	2	BOLT	
	11	1	**212-8510**	1	NUT (M10X1.25 THD)	
	12	1	**225-5249**	1	RETAINER	
	13	1	**234-4835**	3	STUD	
	14	1	**241-6010**	1	BOLT	
	15	1	**244-7127**	3	NUT-FLANGE	
	16	1	**294-5060**	1	SEAL-O-RING	
	17	1	**300-3867**	1	WASHER	
	18	1	**300-3988**	1	SEAL-O-RING	
	19	1	**314-9991**	1	FLANGE	
	20	1	**314-9992**	1	BRACKET	
	21	1	**314-9994**	1	PIPE	
	22	1	**314-9995**	1	HOSE	
	23	1	**314-9996**	1	HOSE	
	24	1	**314-9997**	1	HOSE	
	25	1	**314-9998**	1	BOLT AS	
	26	1	**314-9999**	2	NUT	
	27	1	**315-0000**	1	CLIP	
	28	1	**315-8326**	1	BRACKET	
	29	1	**331-7332**	1	PUMP GP-FUEL INJECTION	
	29A	1	**300-3573**	1	SOLENOID	

M-METRIC PART

331-7333 **PUMP GP-FUEL INJECTION** *(contd.)* **i03067331**

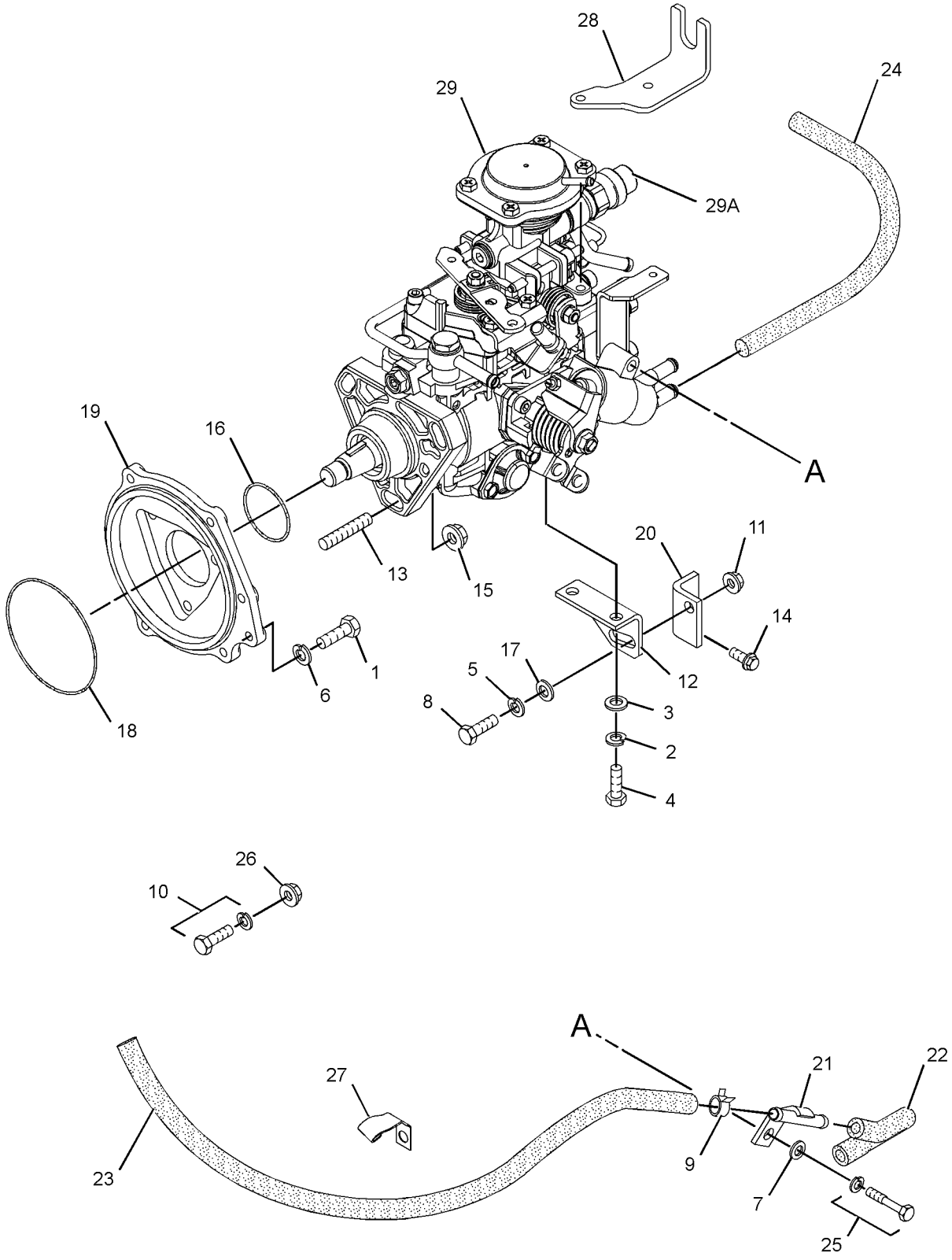

GRAPHIC #1 **<END>** g01619492

232-5877 PUMP GP-FUEL PRM & PRIM FILTER–WATER SEPARATOR

S/N: LMD1-UP

PART OF 285-2995 FILTER GP-WATER SEP & FUEL

SMCS-1258, 1260 **i02162769**

NOTE	REF NO	GRAPHIC REF	PART NUMBER	QTY	PART NAME 1 2 3 4 5 6 (PRODUCT LEVEL)	SEE PAGE
	1	1	**118-8118**	1	RING-RETAINING	
	2	1	**233-9856**	1	FILTER AS-WATER SEP & FUEL	
	3	1	**228-9132**	1	FITTING	
	4	1	**112-9401**	1	BOWL AS-WATER COLLECTION	
		1	**128-8614**	1	KIT-SEAL (WATER SEPARATOR)	

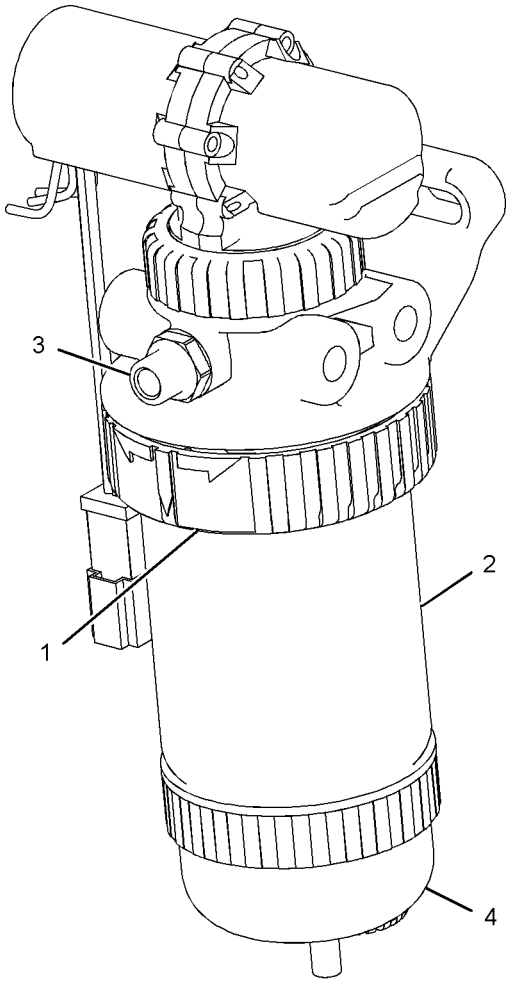

GRAPHIC #1 **<END>** g01096725

242-5760 TANK GP-FUEL

S/N: LMD1-UP

PART OF 322-4878 CHASSIS AR

SMCS-1273 **i03110684**

NOTE	REF NO	GRAPHIC REF	PART NUMBER	QTY	PART NAME 1 2 3 4 5 6 (PRODUCT LEVEL)	SEE PAGE
	1	1	**144-0367**	2	CLAMP-HOSE	
	2	1	**201-0330**	1	CAP GP-FUEL FILLER (VENTED, LOCKABLE)	
	3	1	**242-5761**	1	TANK AS-FUEL	
	4	1	**242-5762**	1	SENDER AS-FUEL LEVEL	
	5	1	**242-5763**	1	STRAP AS-TANK	
	6	1	**244-1370**	3	SPACER (8.2X13X6-MM THK)	
	7	1	**280-9764**	1	COVER	
	8	1	**281-0648**	1	STRAP AS-TANK	
	9	1	**282-2270**	1	STRAINER-FUEL	
	10	1	**282-7720**	1	HOSE	
	11	1	**285-5676**	1	TUBE AS	
	12	1	**298-6407**	1	BAFFLE	
	13	1	**304-2994**	1	PLATE	
M	14	1	**180-4686**	2	BOLT (M10X1.5X60-MM)	
	15	1	**5P-4116**	3	WASHER-HARD (8.8X20.5X2-MM THK)	
M	16	1	**7X-2537**	3	BOLT (M8X1.25X35-MM)	
	17	1	**8C-9987**	3	WASHER (8.3X28X2.5-MM THK)	
	18	1	**8T-4121**	6	WASHER-HARD (11X21X2.5-MM THK)	
M	19	1	**8T-4133**	2	NUT (M10X1.5-THD)	
M	20	1	**8T-4136**	2	BOLT (M10X1.5X25-MM)	
M	21	1	**8T-4189**	7	BOLT (M8X1.25X20-MM)	
	22	1	**8T-4224**	4	WASHER-HARD (8.8X16X2-MM THK)	

M-METRIC PART

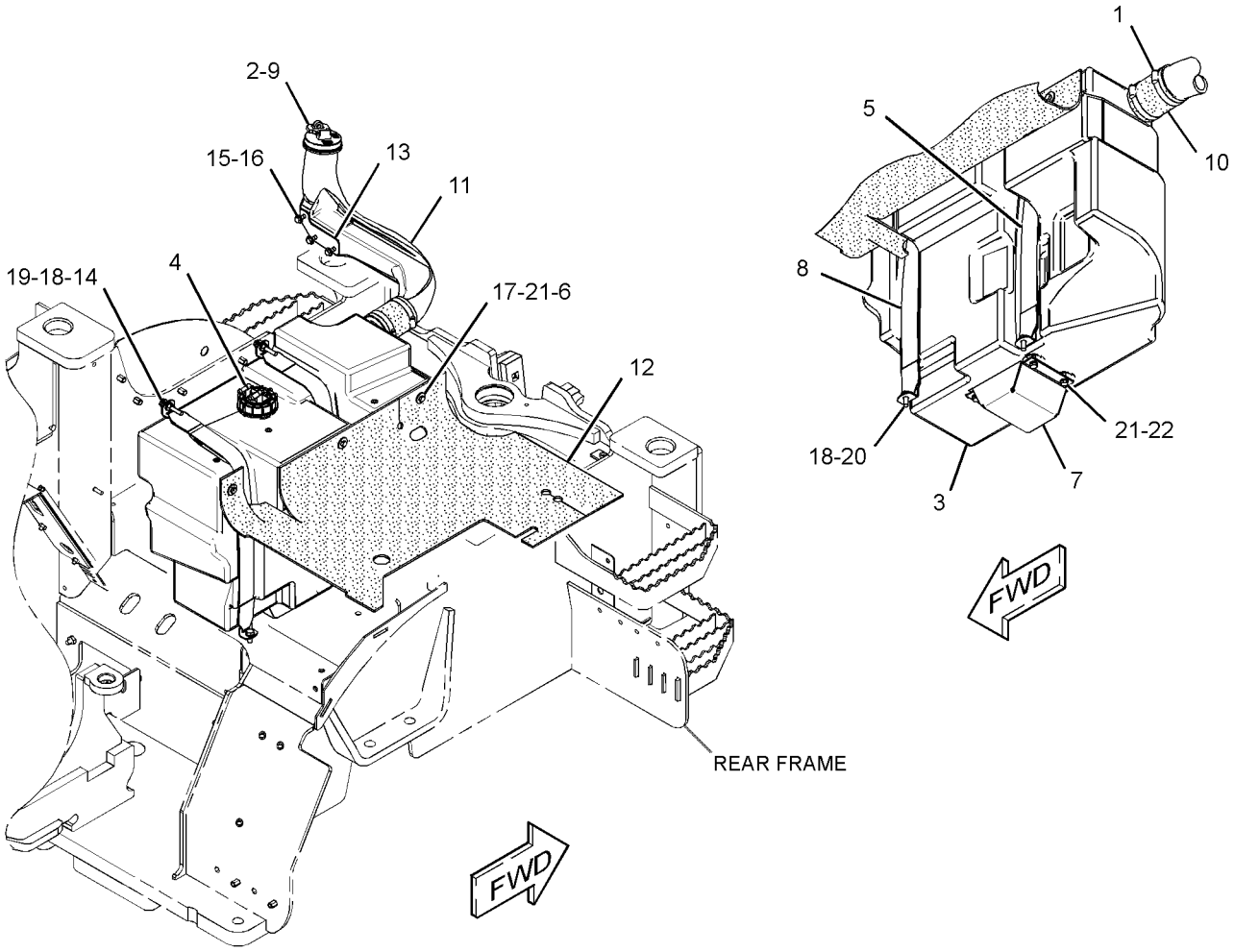

GRAPHIC #1 **<END>** g01382355

105-2814 ALTERNATOR GP-CHARGING*R

S/N: CYM1-UP

PART OF 326-4122 ALTERNATOR GP-CHARGING

SMCS-1405 **i02861004**

NOTE	REF NO	GRAPHIC REF	PART NUMBER	QTY	PART NAME 1 2 3 4 5 6 (PRODUCT LEVEL)	SEE PAGE
	1	1	**113-4458**	1	PULLEY-ALTERNATOR	
	2	1	**113-4459**	1	FRAME AS-ALTERNATOR	
	3	1	**113-4460**	1	ROTOR AS-ALTERNATOR	
	4	1	**113-4461**	1	FRAME AS-ALTERNATOR	
	5	1	**113-4462**	1	REGULATOR AS-ALTERNATOR	
	6	1	**113-4463**	1	RECTIFIER AS-ALTERNATOR	
	7	1	**113-4464**	1	COVER-ALTERNATOR	
	8	1	**113-4469**	4	BUSHING-ALTERNATOR	
	9	1	**113-4470**	1	BUSHING-ALTERNATOR	
M	10	1	**5C-2890**	1	NUT (M6X1-THD)	
	11	1	**8T-4205**	1	WASHER-HARD (7.2X14.5X2-MM THK)	
	12	1	**1H-3244**	1	LOCKWASHER	
					AVAILABLE REPAIR KIT(S):	
			113-4465	1	KIT-ALTERNATOR BEARING	
					(INCLUDES COVERS, BEARINGS & WASHERS)	
			113-4466	1	KIT-REPAIR (ALTERNATOR BRUSHES)	
					(INCLUDES HOLDER ASSEMBLY & SEALS)	
			113-4467	1	KIT-ALTERNATOR TERMINAL	
					(INCLUDES SCREWS, PLATE & NUTS)	
			113-4468	1	KIT-ALTERNATOR HARDWARE	
					(INCLUDES SCREWS)	

M-METRIC PART

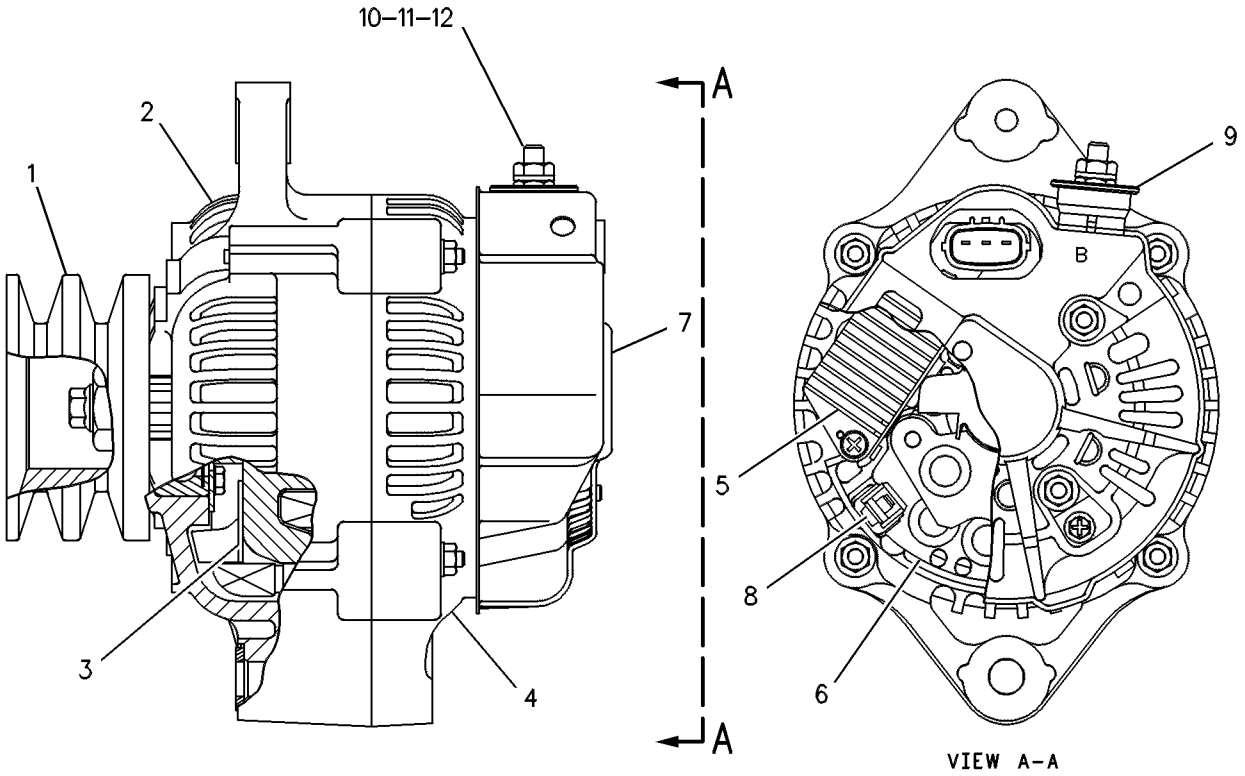

GRAPHIC #1 **<END>** g00128916

326-4122 ALTERNATOR GP-CHARGING

S/N: CYM1-UP

PART OF 305-2572 ENGINE AR-PRIMARY

SMCS-1405 **i03117701**

NOTE	REF NO	GRAPHIC REF	PART NUMBER	QTY	PART NAME 1 2 3 4 5 6 (PRODUCT LEVEL)	SEE PAGE
M	1	1	**6V-5217**	1	BOLT (M8X1.25X20-MM)	
	2	1	**8T-4896**	1	WASHER-HARD (10.2X18.5X2.5-MM THK)	
	3	1	**9M-1974**	1	WASHER-HARD (8.8X16X2-MM THK)	
	4	1	**130-7877**	1	BRACKET	
	5	1	**235-4973**	1	BOLT (M10X1.5X90-MM)	
YR	6	1	**105-2814**	1	ALTERNATOR GP-CHARGING	75
	7	1	**239-8500**	1	BRACKET	
	8	1	**241-6010**	2	BOLT (M8X1.25X18-MM)	
F			**300-1618**	1	KIT-CONNECTION	

F-NOT SHOWN
M-METRIC PART
R-REMFG PART MAY BE AVAILABLE
Y-SEPARATE ILLUSTRATION

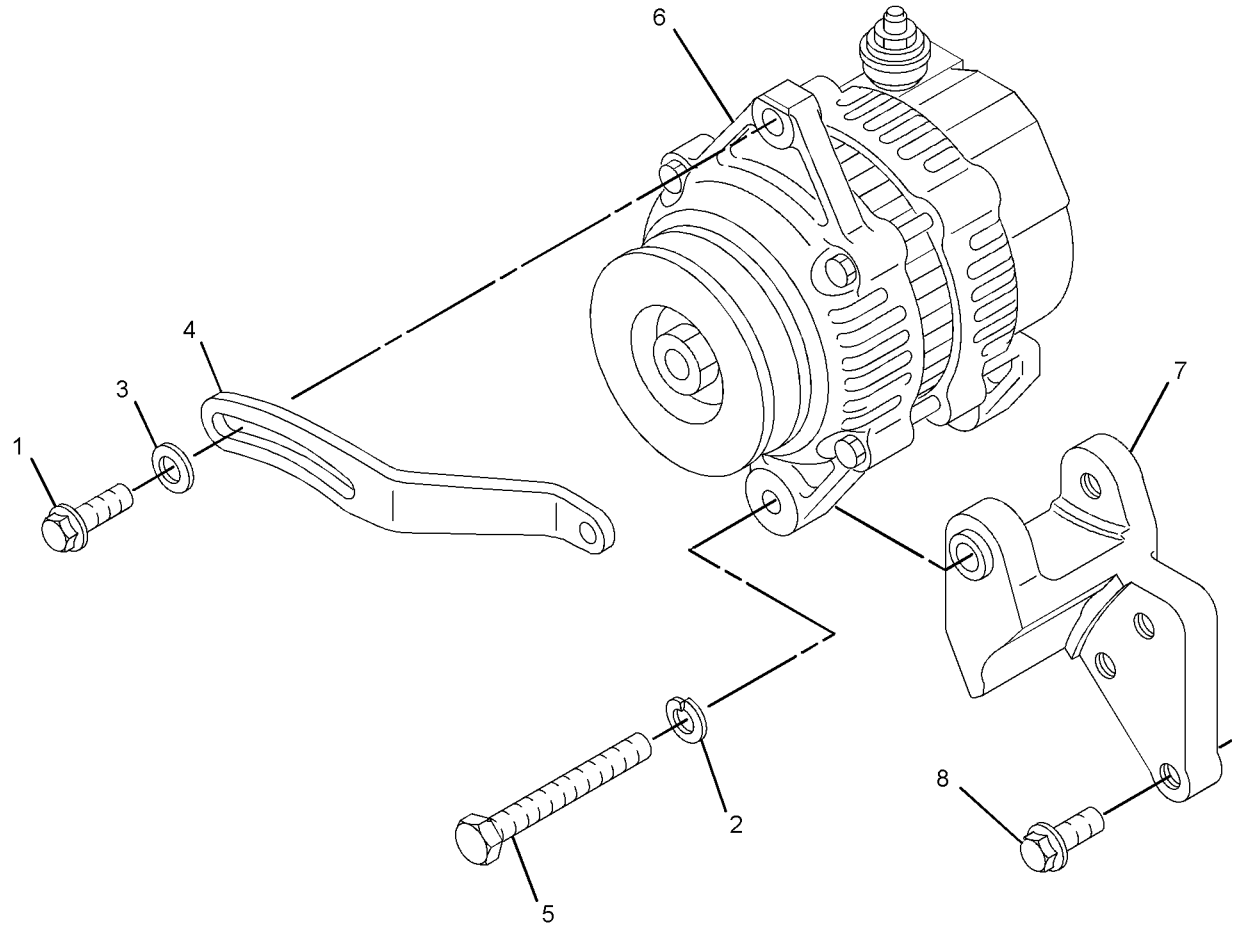

GRAPHIC #1 **<END>** g01547738

ELECTRICAL AND STARTING SYSTEM

260-5338 BATTERY & WIRING GP

S/N: LMD1-UP

PART OF 322-4878 CHASSIS AR

SMCS-1401, 1402, 1408 **i03103223**

NOTE	REF NO	GRAPHIC REF	PART NUMBER	QTY	PART NAME 1 2 3 4 5 6 (PRODUCT LEVEL)	SEE PAGE
	1	1	**3E-8320**	1	PLATE-INSTRUCTION (BATTERY)	
	2	1	**268-1007**	1	STRAP-CABLE	
	3	1	**7K-1181**	1	STRAP-CABLE	
Y	4	1	**7N-0718**	1	SWITCH GP-DISCONNECT	113
	5	1	**230-6368**	1	BATTERY (12-VOLT, MAINTENANCE FREE)	
	6	1	**232-7305**	1	CLIP	
	7	1	**256-5569**	1	PLATE	
	8	1	**262-4256**	1	CABLE AS	
E		1	**5P-0761**		CABLE (00-GA, RED) (97-CM)	
		1	**1S-7251**	1	TERMINAL-CABLE (00-GA, 1/2-IN BOLT)	
		1	**2S-1074**	2	GROMMET	
		1	**8N-0869**	1	COVER-TERMINAL (RED)	
E		1	**8Y-8081**		TUBE-CONVOLUTED (97-CM)	
		1	**272-6401**	1	TERMINAL AS	
	9	1	**262-4257**	1	CABLE AS	
E		1	**5P-0747**		CABLE (00-GA, BLACK) (65-CM)	
		1	**3S-6050**	1	TERMINAL AS-BATTERY (NEGATIVE)	
		1	**1M-6119**	1	BOLT (5/16-18X1.375-IN)	
		1	**1M-6120**	1	NUT (5/16-18-THD)	
		1	**7N-5274**	1	COVER-TERMINAL (BLACK)	
		1	**8S-3020**	1	TERMINAL-CABLE (00-GA, 3/8-IN BOLT)	
E		1	**8Y-8081**		TUBE-CONVOLUTED (65-CM)	
	10	1	**268-7955**	1	CABLE AS	
E		1	**5P-0747**		CABLE (00-GA, BLACK) (30-CM)	
		1	**1S-7252**	1	TERMINAL-CABLE (00-GA, 3/8-IN BOLT)	
		1	**7E-6710**	1	BOOT	
		1	**8S-3020**	1	TERMINAL-CABLE (00-GA, 3/8-IN BOLT)	
	11	1	**8T-4121**	1	WASHER-HARD (11X21X2.5-MM THK)	
M	12	1	**8T-4133**	1	NUT (M10X1.5-THD)	
M	14	1	**8T-4189**	3	BOLT (M8X1.25X20-MM)	
	15	1	**5P-4116**	1	WASHER-HARD (8.8X20.5X2-MM THK)	
	16	1	**8T-4224**	2	WASHER-HARD (8.8X16X2-MM THK)	

E-ORDER BY THE CENTIMETER
M-METRIC PART
Y-SEPARATE ILLUSTRATION

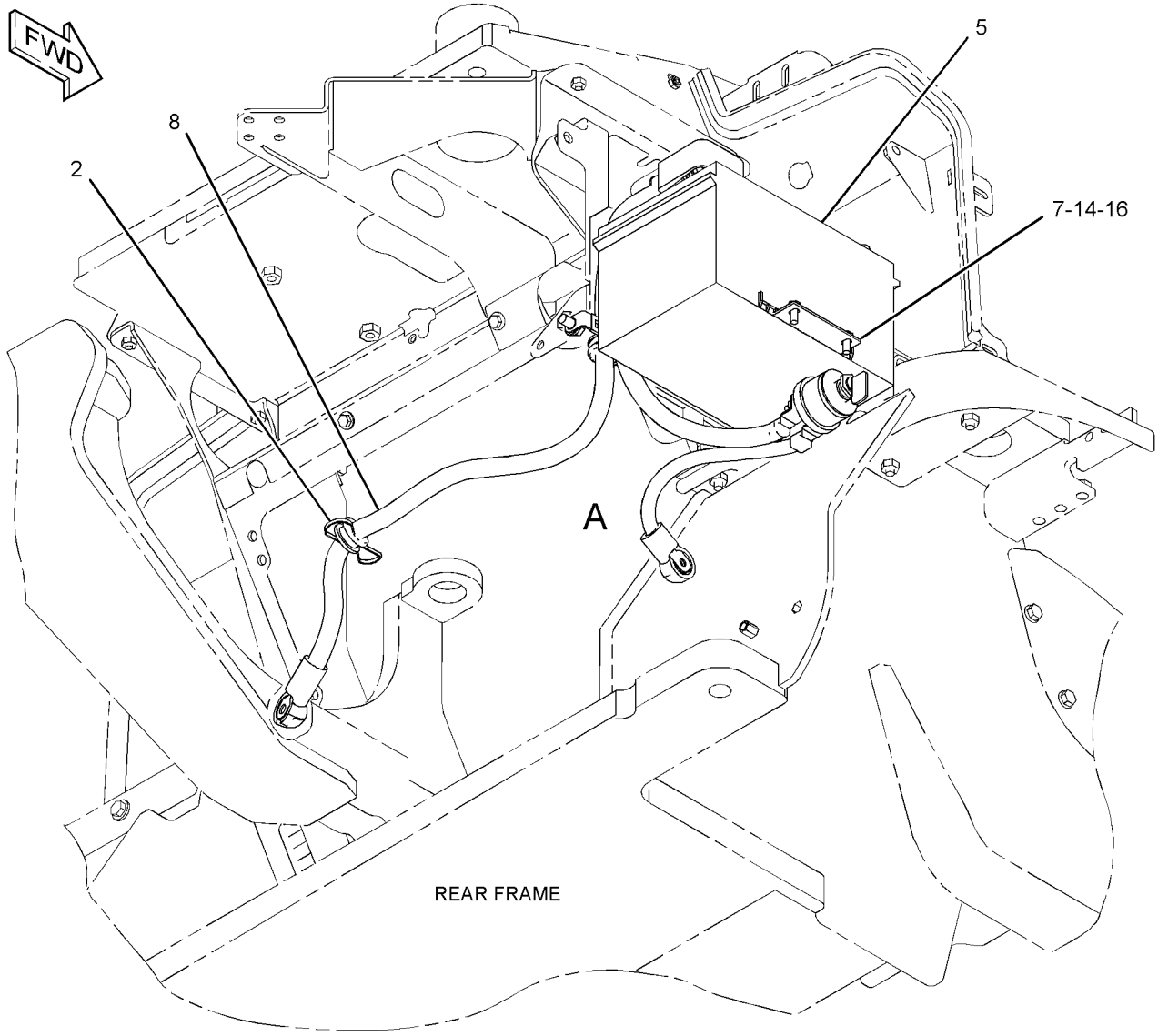

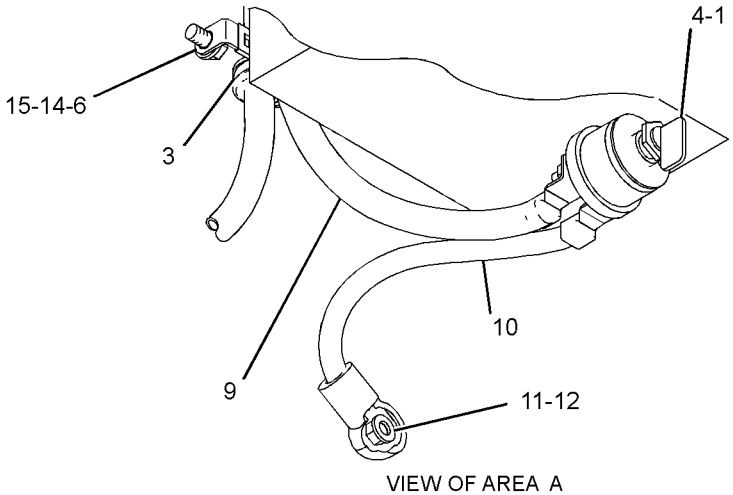

GRAPHIC #1 **<END>** g01588461

277-7746 CONTROL & MTG GP-MACHINE

S/N: LMD1-UP

PART OF 322-4878 CHASSIS AR

SMCS-7610 **i02700480**

NOTE	REF NO	GRAPHIC REF	PART NUMBER	QTY	PART NAME 1 2 3 4 5 6 (PRODUCT LEVEL)	SEE PAGE
	1	1	**6I-1418**	4	SPACER (8.2X12.7X28.7-MM THK)	
	2	1	**8T-9655**	8	MOUNT-ISOLATION	
	3	1	**188-7576**	1	STRAP AS-GROUND	
Y	4	1	*277-7747*	1	ELECTRONICS GP-MACHINE	81
M	5	1	**5C-7261**	4	NUT (M8X1.25-THD)	
	6	1	**7X-0579**	4	WASHER-HARD (8.8X25.5X2-MM THK)	

M-METRIC PART
Y-SEPARATE ILLUSTRATION

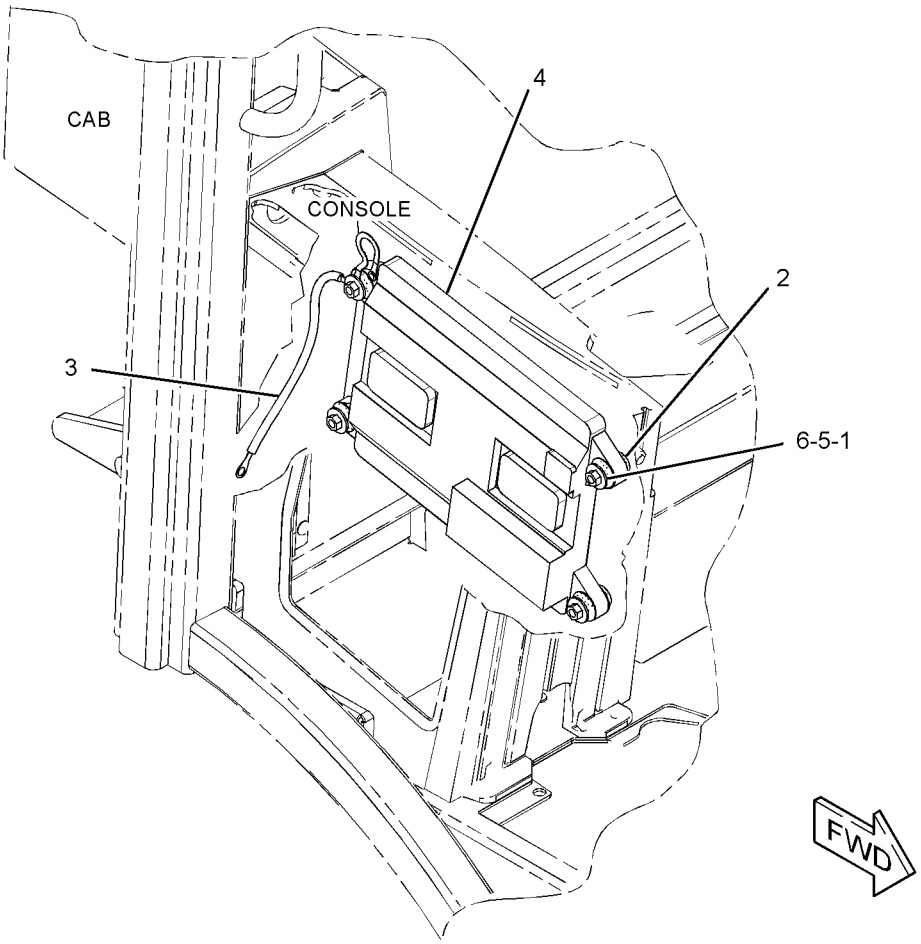

GRAPHIC #1 **<END>** g01379225

277-7747 ELECTRONICS GP-MACHINE

S/N: LMD1-UP

PART OF 277-7746 CONTROL & MTG GP-MACHINE

SMCS-7610, 7620 **i03195102**

NOTE	PART NUMBER	QTY	PART NAME 1 2 3 4 5 6 (PRODUCT LEVEL)	SEE PAGE
	324-5101	1	SOFTWARE GP-MACHINE (MACHINE)	
			-OR-	
	304-5691	1	CONTROL GP-UNPROGRAMMED (MACHINE)	
			-OR-	
	324-5102	1	SERVICE GP-MACHINE (OPTIONAL SERVICE REPLACEMENT) (INCLUDES CONTROL GP & SOFTWARE)	

<END>

293-9791 FUSE GP–SPARE

S/N: LMD1-UP

PART OF 273-0177 INSTALLATION GP-SECURITY, 304-7708 PANEL GP-FUSE, 260-5349 PANEL GP-SWITCH AN ATTACHMENT

SMCS-1417 **i02737684**

NOTE	REF NO	GRAPHIC REF	PART NUMBER	QTY	PART NAME 1 2 3 4 5 6 (PRODUCT LEVEL)	SEE PAGE
	1	1	**113-8490**	1	FUSE (10-AMPERE)	
	2	1	**113-8491**	1	FUSE (15-AMPERE)	
	3	1	**113-8492**	1	FUSE (20-AMPERE)	
	4	1	**116-7471**	1	PULLER-MINIFUSE	
	5	1	**141-2759**	1	FUSE (5-AMPERE)	
	6	1	**232-6314**	1	FUSE (60-AMPERE)	
	7	1	**232-6315**	1	FUSE (80-AMPERE)	
	8	1	**293-8266**	1	BLOCK-RUBBER	
	9	1	**113-8493**	1	FUSE (25-AMPERE)	

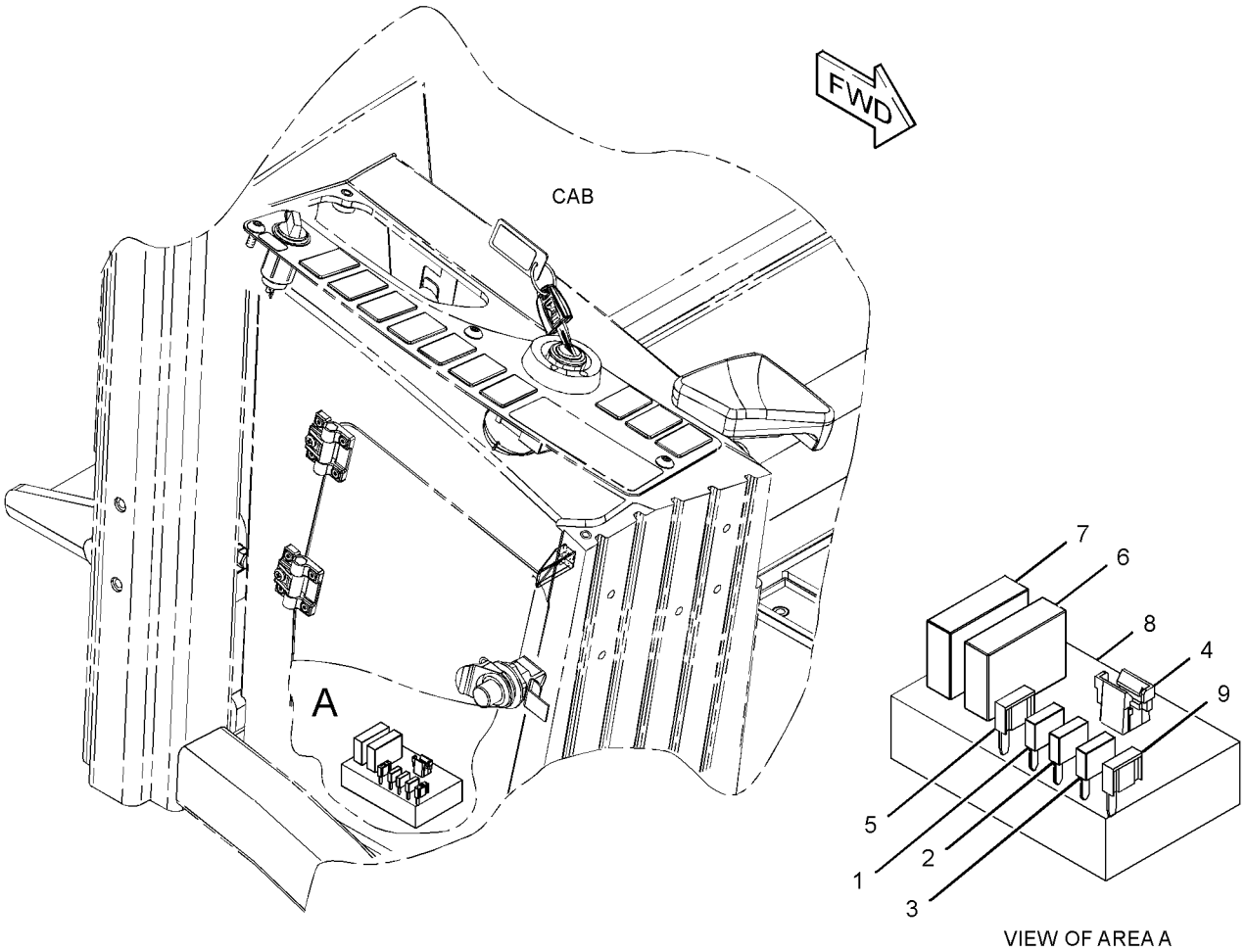

GRAPHIC #1 **<END>** g01375104

235-5904 GLOW PLUG GP

S/N: CYM1-UP

PART OF 305-2572 ENGINE AR-PRIMARY

SMCS-1412 **i02162784**

NOTE	REF NO	GRAPHIC REF	PART NUMBER	QTY	PART NAME 1 2 3 4 5 6 (PRODUCT LEVEL)	SEE PAGE
	1	1	**107-3659**	4	GLOW PLUG	
	2	1	**257-8390**	1	PLATE-CONNECTION	

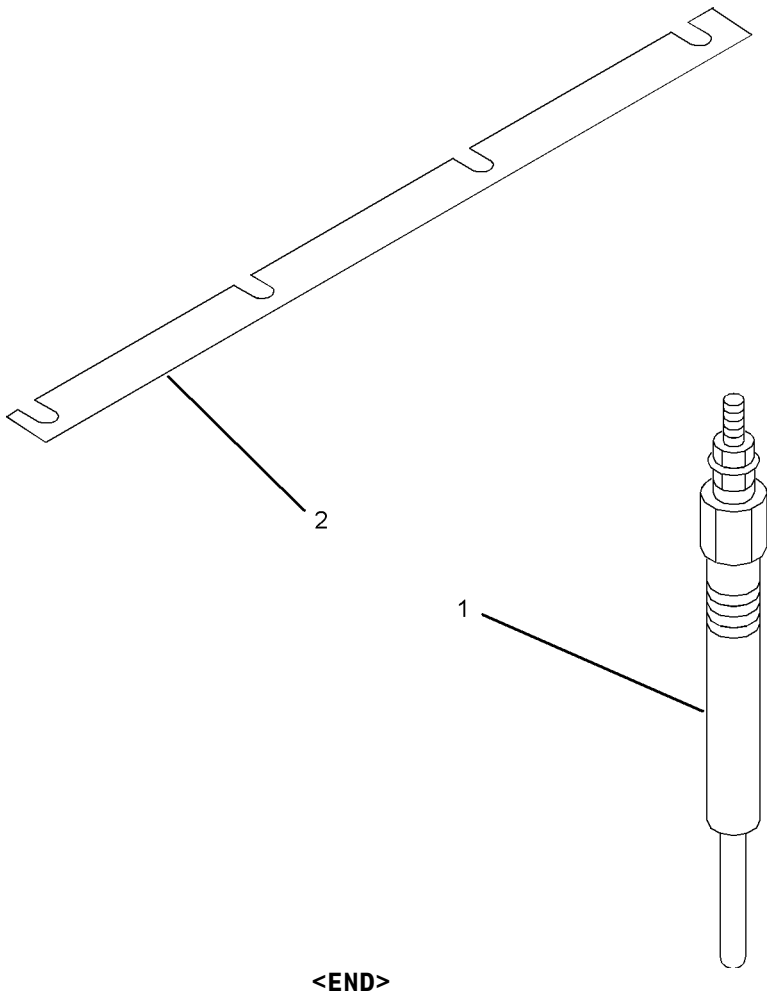

GRAPHIC #1 **<END>** g01011629

ELECTRICAL AND STARTING SYSTEM

218-0942 HEATER GP-JACKET WATER

S/N: LMD1-UP
AN ATTACHMENT

SMCS-1383 **i02703128**

NOTE	REF NO	GRAPHIC REF	PART NUMBER	QTY	PART NAME 1 2 3 4 5 6 (PRODUCT LEVEL)	SEE PAGE
	1	1	**9X-6772**	1	STRAP-CABLE	
	2	1	*225-5642*	1	HEATER GP-JACKET WATER	
		1	**7X-6312**	1	CORD AS-JACKET WATER HEATER	
		1	**225-5541**	1	ELEMENT AS-JACKET WATER HEATER (120-VOLT, 530-WATT)	
		1	**232-4703**	1	GASKET	

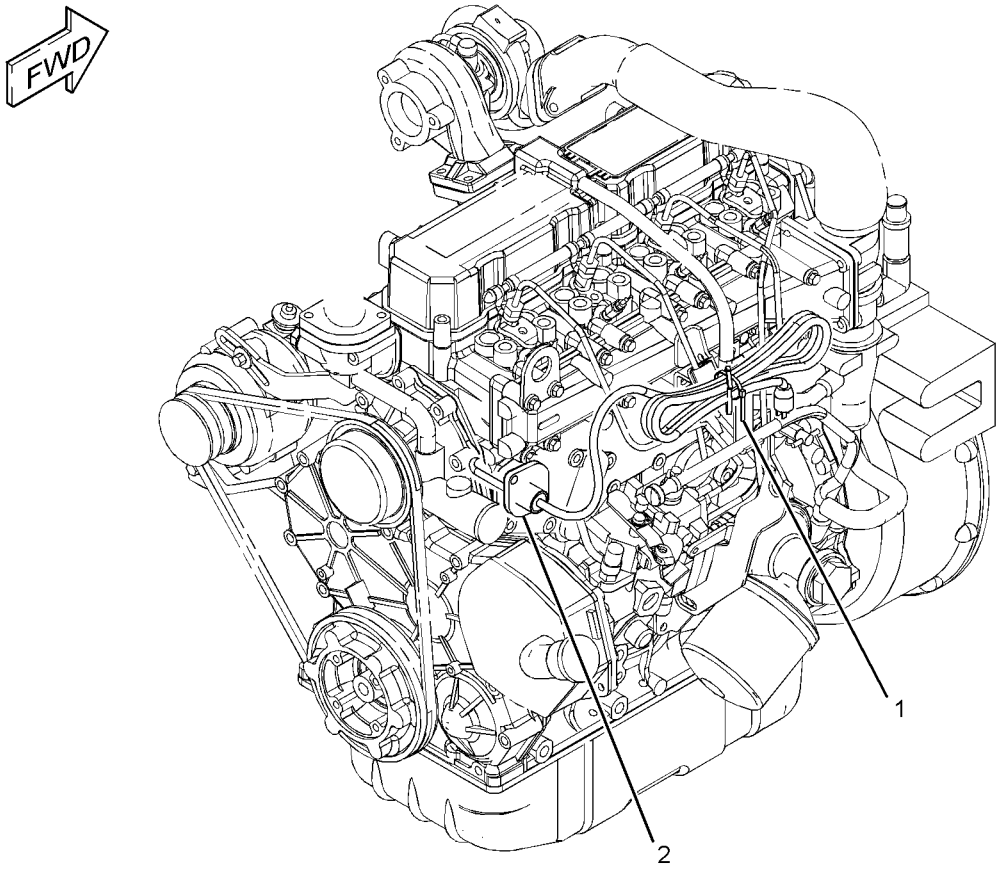

GRAPHIC #1 **<END>** g01183580

273-0177 INSTALLATION GP-SECURITY

S/N: LMD1-UP

CANNOT BE USED WITH 260-5349—PAGE 105, 304-7708—PAGE 103

AN ATTACHMENT

SMCS-7631 **i03195121**

NOTE	REF NO	GRAPHIC REF	PART NUMBER	QTY	PART NAME 1 2 3 4 5 6 (PRODUCT LEVEL)	SEE PAGE
	1	1	**8C-5607**	4	MOUNT-ISOLATION	
	2	1	**8C-5608**	2	SPACER (6.5X9.5X25.4-MM THK)	
	3	1	**109-2356**	10	PLUG	
C	4	1	**113-8490**	17	FUSE (10-AMPERE)	
C	5	1	**113-8491**	1	FUSE (15-AMPERE)	
	6	1	**117-2311**	1	RECEPTACLE AS-POWER (12-VOLT)	
	7	1	**140-9378**	1	RELAY AS (12-VOLT) (DIFFERENTIAL LOCK SOL VALVE)	
	7A	1	**140-9378**	1	RELAY AS (12-VOLT) (FUEL PUMP)	
	7B	1	**140-9378**	1	RELAY AS (12-VOLT) (REVERSE LAMP)	
	7C	1	**140-9378**	1	RELAY AS (12-VOLT) (DETENT)	
	8	1	**142-8858**	1	SWITCH AS-KEY START (IGNITION)	
		1	**167-1530**	1	NUT (1-32-THD)	
	9	1	**169-2876**	1	FILM-IDENTIFICATION (POWER RECEPTACLE, 12-VOLT)	
	10	1	**205-0826**	1	FILM-INSTRUCTION (MACHINE SECURITY, CONSOLE)	
	11	1	**206-5162**	2	KEY AS-ELECTRONIC (SECURITY)	
	12	1	*206-5203*	1	COIL AS (EXCITER)	
		1	**102-8802**	1	KIT-RECEPTACLE (2-PIN)	
					(INCLUDES RECEPTACLE AS & WEDGE)	
		1	**198-5389**	1	FILM-IDENTIFICATION (IGNITION SWITCH)	
		1	**205-8257**	1	COIL AS (EXCITER)	
	13	1	**218-0404**	1	MODULE GP-INTERFACE (KEY)	
		1	**6V-6715**	1	SCREW-PAN HEAD (4-20X0.25-IN)	
		1	**8C-3095**	1	SEAL-O-RING	
	14	1	**219-6314**	2	KEY RING (IDENTIFICATION)	
	16	1	**275-7406**	1	PLATE AS	
Y	17	1	*293-9791*	1	FUSE GP (SPARE)	82
C	18	1	**314-6660**	1	FILM-IDENTIFICATION (FUSE)	
	19	1	**304-8544**	1	FILM-COVER (BLACK)	
M	21	1	**5C-2890**	2	NUT (M6X1-THD)	
M	22	1	**9X-2044**	3	SCREW-TRUSS HEAD (M6X1X16-MM)	
	23	1	**9X-6165**	2	WASHER (6.5X22X2.5-MM THK)	
C	24	1	**113-8492**	1	FUSE (20-AMPERE)	

C-CHANGE FROM PREVIOUS TYPE
M-METRIC PART
Y-SEPARATE ILLUSTRATION

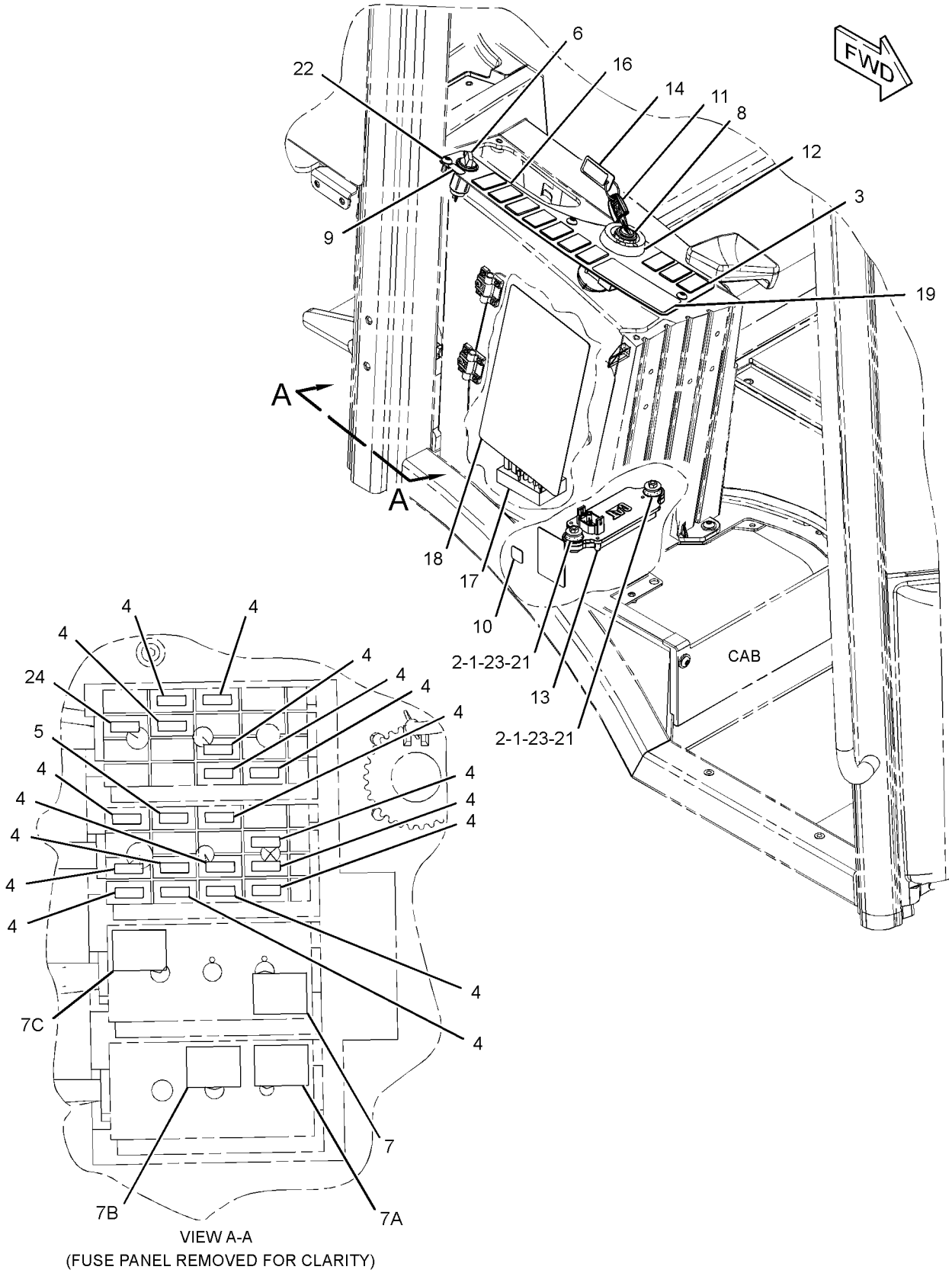

GRAPHIC #1 **<END>** g01522475

315-6084 INSTALLATION GP-SECURITY

S/N: LMD1-UP

CANNOT BE USED WITH 304-7708—PAGE 103, 273-0177—PAGE 85

AN ATTACHMENT

SMCS-7631 **i03195140**

NOTE	REF NO	GRAPHIC REF	PART NUMBER	QTY	PART NAME 1 2 3 4 5 6 (PRODUCT LEVEL)	SEE PAGE
	1	1	**3S-2093**	1	STRAP-CABLE	
	2	1	**8C-5607**	4	MOUNT-ISOLATION	
	3	1	**8C-5608**	2	SPACER (6.5X9.5X25.4-MM THK)	
	4	1	**205-0826**	1	FILM-INSTRUCTION (MACHINE SECURITY, CONSOLE)	
	5	1	**206-5162**	2	KEY AS-ELECTRONIC (SECURITY)	
	6	1	*206-5203*	1	COIL AS (EXCITER)	
		1	**102-8802**	1	KIT-RECEPTACLE (2-PIN)	
					(INCLUDES RECEPTACLE AS & WEDGE)	
		1	**198-5389**	1	FILM-IDENTIFICATION (IGNITION SWITCH)	
		1	**205-8257**	1	COIL AS (EXCITER)	
D		1	**5P-5677**		WIRE (18-GA, BLACK) (0.4-M)	
		1	**186-3735**	2	PIN-CONNECTOR (16-GA TO 18-GA)	
		1	**207-5271**	1	WASHER (27X60.5X0.36-MM THK)	
	7	1	**218-0404**	1	MODULE GP-INTERFACE (KEY)	
		1	**6V-6715**	1	SCREW-PAN HEAD (4-20X0.25-IN)	
		1	**8C-3095**	1	SEAL-O-RING	
	8	1	**219-6314**	2	KEY RING (IDENTIFICATION)	
	9	1	**219-6607**	2	FILM-INFORMATION (SECURITY SYSTEM)	
	10	1	**270-5143**	2	TIE-PUSH MOUNT	
	11	1	**275-7406**	1	PLATE AS	
	12	1	**295-0283**	1	FILM-INSTRUCTION (TRANSMISSION CONTROL)	
	13	1	**304-8544**	1	FILM-COVER (BLACK)	
	14	1	**225-5927**	1	FILM-INSTRUCTION (MACHINE SECURITY, CAB STEPS)	
M	15	1	**5C-2890**	2	NUT (M6X1-THD)	
	16	1	**9X-6165**	2	WASHER (6.5X22X2.5-MM THK)	

D-ORDER BY THE METER
M-METRIC PART

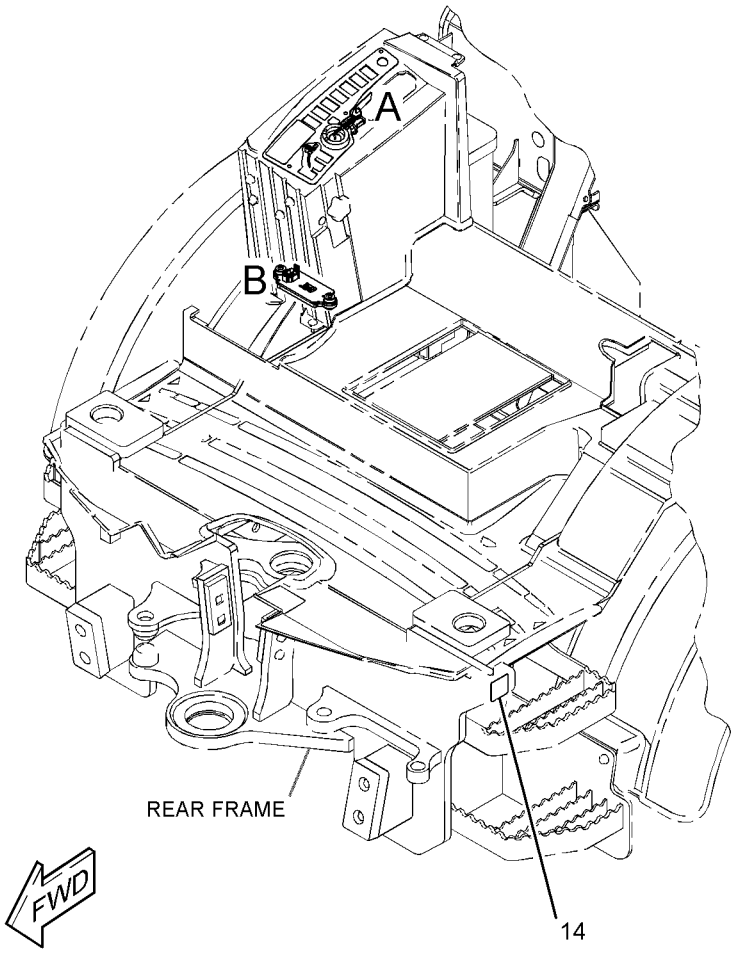

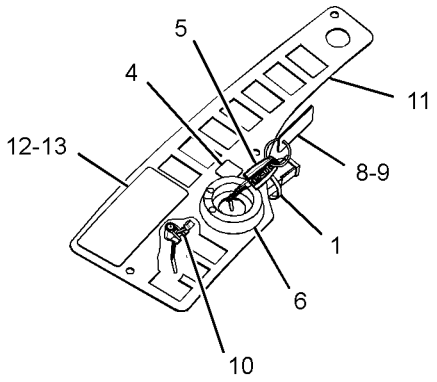

VIEW OF AREA A

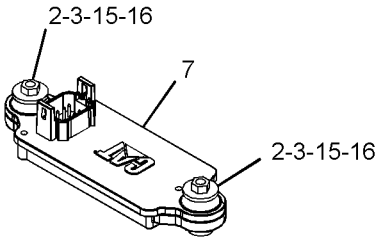

VIEW OF AREA B

GRAPHIC #1 **<END>** g01609060

107-6032 LAMP GP-DOME

S/N: LMD1-UP
24-VOLT
PART OF 260-5334 WIRING GP-CAB
AN ATTACHMENT

SMCS-1433 **i03133960**

NOTE	REF NO	GRAPHIC REF	PART NUMBER	QTY	PART NAME 1 2 3 4 5 6 (PRODUCT LEVEL)	SEE PAGE
	1	1	**259-1286**	1	LAMP (24-VOLT, 10-WATT)	

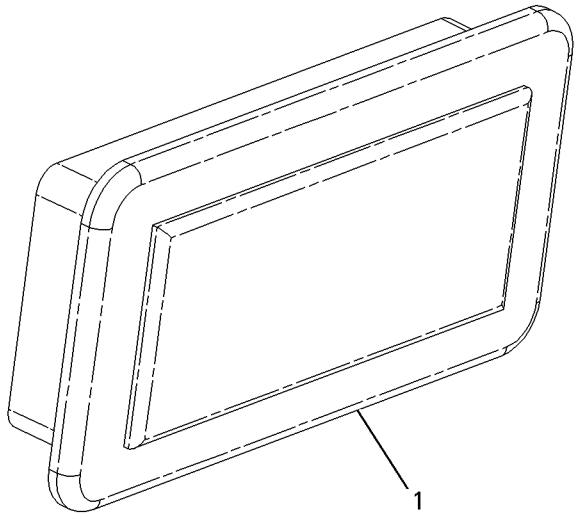

GRAPHIC #1 **<END>** g00866999

214-2968 LAMP GP-FLOOD

S/N: LMD1-UP
12-VOLT
PART OF 260-5500 LIGHTING GP-FLOOD
AN ATTACHMENT

SMCS-1434 **i02234048**

NOTE	REF NO	GRAPHIC REF	PART NUMBER	QTY	PART NAME 1 2 3 4 5 6 (PRODUCT LEVEL)	SEE PAGE
	1	1	**9W-0607**	1	LAMP (12-VOLT, 55-WATT)	
M	2	1	**6V-2317**	1	BOLT (M8X1.25X30-MM)	
M	3	1	**5C-7261**	1	NUT (M8X1.25-THD)	
	4	1	**8T-4224**	2	WASHER-HARD (8.8X16X2-MM THK)	
	5	1	**9X-4244**	2	SCREW-SPECIAL	
	6	1	**202-6614**	1	LENS AS	
	7	1	**175-4292**	1	BODY AS	
	8	1	**164-7556**	1	BRACKET (LAMP RETAINING)	
	9	1	**175-4291**	1	BRACKET AS	

M-METRIC PART

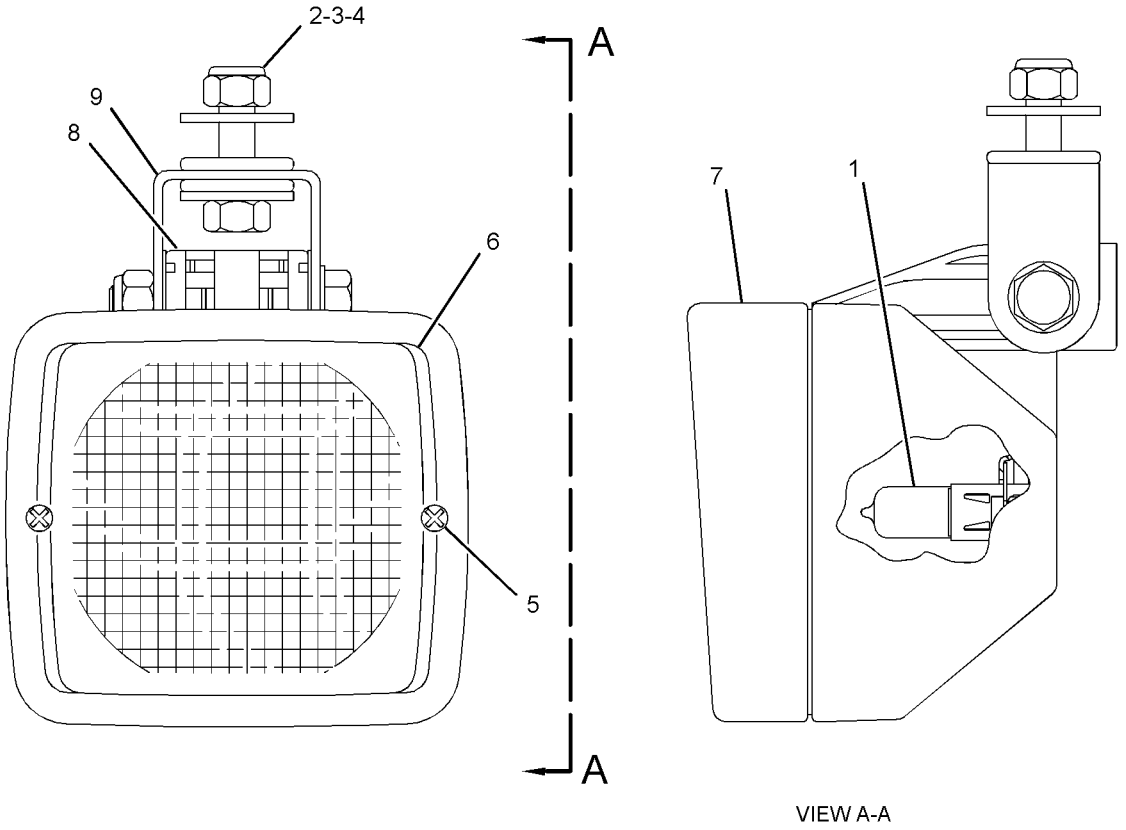

VIEW A-A

GRAPHIC #1 **<END>** g01181714

195-0189 LAMP GP-HEAD & SIGNAL–RH

S/N: LMD1-UP
HIGH, LOW BEAM
PART OF 313-1722 LIGHTING GP-ROADING
AN ATTACHMENT

SMCS-1429, 1430 **i02831681**

NOTE	REF NO	GRAPHIC REF	PART NUMBER	QTY	PART NAME 1 2 3 4 5 6 (PRODUCT LEVEL)	SEE PAGE
	1	1	**228-6053**	1	BODY AS	
	2	1	**228-6054**	1	BEZEL	
	3	1	**228-6051**	1	LENS AS (HEADLIGHT)	
	4	1	**228-6052**	1	LENS AS (TURN SIGNAL)	
	5	1	**228-6056**	6	SCREW (4-32X1.26-IN)	
	6	1	**9W-3324**	1	LAMP-HEAD (12-VOLT, 60/55-WATT)	
	7	1	**226-4560**	1	LAMP (12-VOLT, 21-WATT)	
	8	1	**226-4561**	1	LAMP (12-VOLT, 5-WATT)	
M	9	1	**8T-0389**	1	LOCKNUT (M10X1.15-THD)	
	10	1	**100-3253**	1	SPACER (SPHERICAL)	
	11	1	**100-3254**	1	SPACER (SPHERICAL)	
	12	1	**100-3255**	1	WASHER (SPHERICAL)	
	13	1	**102-8805**	1	KIT-RECEPTACLE (6-PIN)	
					(INCLUDES RECEPTACLE AS & WEDGE)	
	14	1	**186-3735**	5	PIN-CONNECTOR (16-GA TO 18-GA)	
	16	1	**8T-8737**	1	PLUG-SEAL	

M-METRIC PART

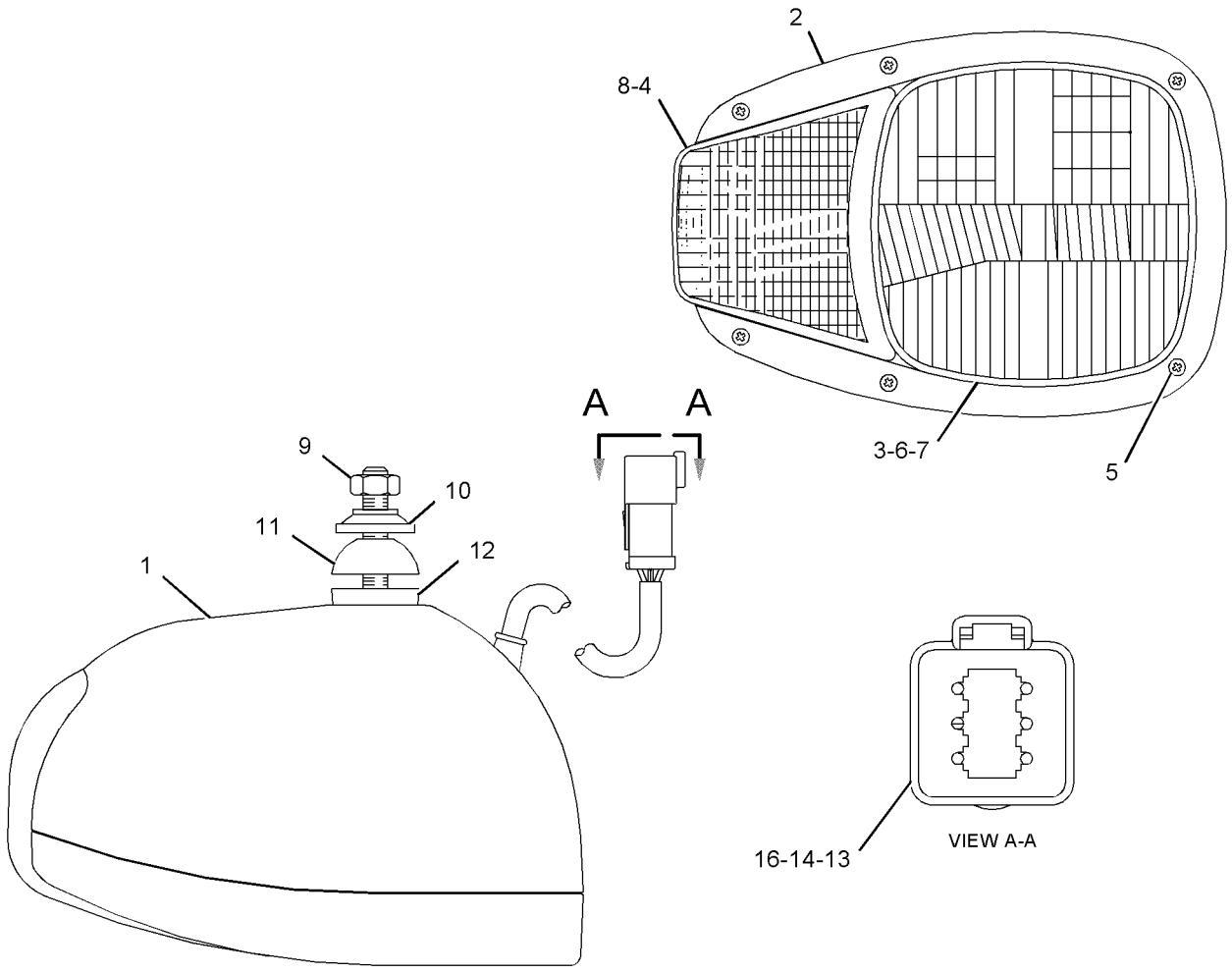

GRAPHIC #1 **<END>** g01109724

195-0190 LAMP GP-HEAD & SIGNAL–LH

S/N: LMD1-UP
HIGH, LOW BEAM
PART OF 313-1722 LIGHTING GP-ROADING
AN ATTACHMENT

SMCS-1429, 1430 **i02833742**

NOTE	REF NO	GRAPHIC REF	PART NUMBER	QTY	PART NAME 1 2 3 4 5 6 (PRODUCT LEVEL)	SEE PAGE
	1	1	**228-6053**	1	BODY AS	
	2	1	**228-6054**	1	BEZEL	
	3	1	**228-6051**	1	LENS AS (HEADLIGHT)	
	4	1	**228-6052**	1	LENS AS (TURN SIGNAL)	
	5	1	**228-6056**	6	SCREW (4-32X1.26-IN)	
	6	1	**9W-3324**	1	LAMP-HEAD (12-VOLT, 60/55-WATT)	
	7	1	**226-4560**	1	LAMP (12-VOLT, 21-WATT)	
	8	1	**226-4561**	1	LAMP (12-VOLT, 5-WATT)	
M	9	1	**8T-0389**	1	LOCKNUT (M10X1.15-THD)	
	10	1	**100-3253**	1	SPACER (SPHERICAL)	
	11	1	**100-3254**	1	SPACER (SPHERICAL)	
	12	1	**100-3255**	1	WASHER (SPHERICAL)	
	13	1	**102-8805**	1	KIT-RECEPTACLE (6-PIN)	
					(INCLUDES RECEPTACLE AS & WEDGE)	
	14	1	**186-3735**	5	PIN-CONNECTOR (16-GA TO 18-GA)	
	16	1	**8T-8737**	1	PLUG-SEAL	

M-METRIC PART

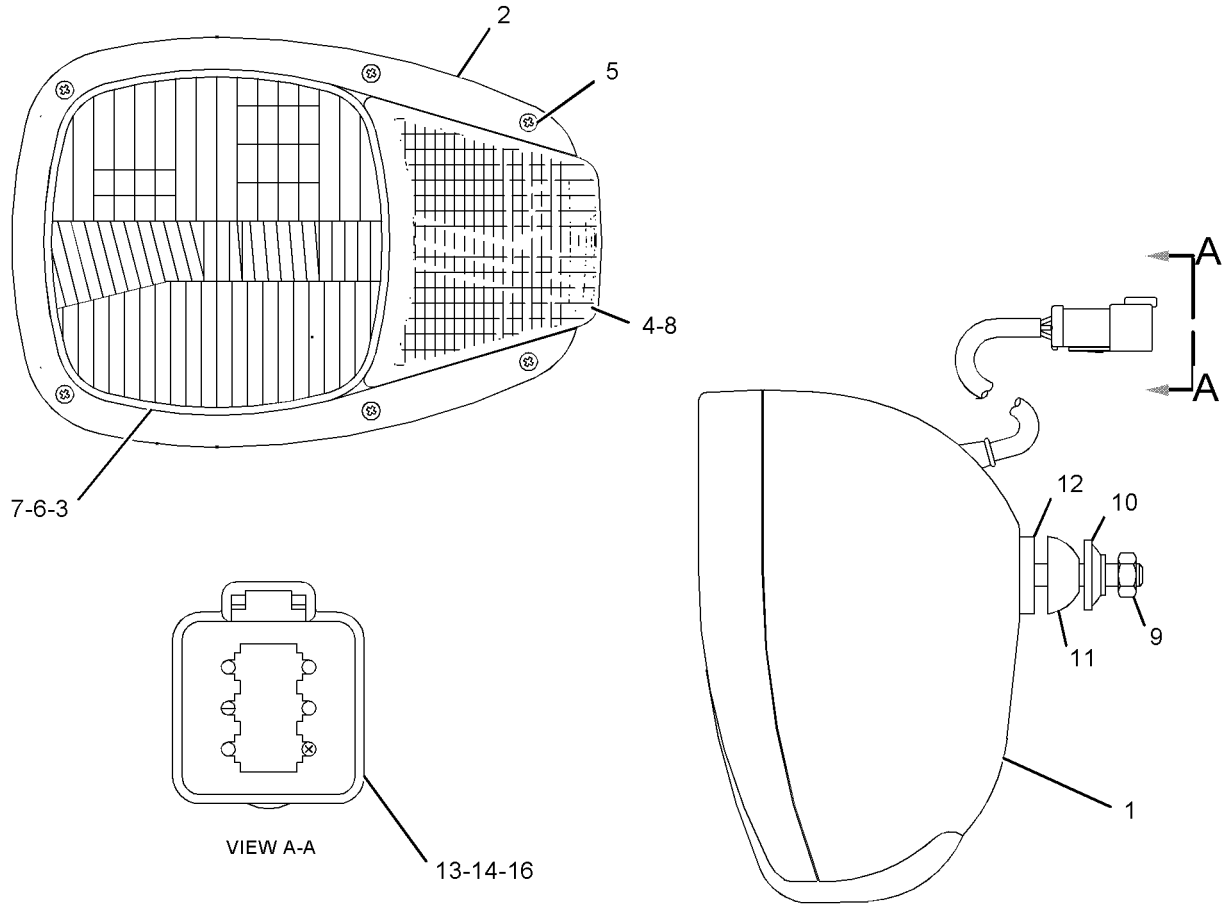

GRAPHIC #1 **<END>** g01109718

195-0191 LAMP GP-HEAD & SIGNAL–RH

S/N: LMD1-UP
PART OF 313-1723 LIGHTING GP-ROADING
AN ATTACHMENT

SMCS-1429, 1430 **i03122820**

NOTE	REF NO	GRAPHIC REF	PART NUMBER	QTY	PART NAME 1 2 3 4 5 6 (PRODUCT LEVEL)	SEE PAGE
	1	1	**228-6053**	1	BODY AS	
	2	1	**228-6054**	1	BEZEL	
	3	1	**228-6050**	1	LENS AS (HEADLIGHT)	
	4	1	**228-6052**	1	LENS AS (TURN SIGNAL)	
	5	1	**228-6056**	6	SCREW (4-32X1.26-IN)	
	6	1	**9W-3324**	1	LAMP-HEAD (12-VOLT, 60/55-WATT)	
	7	1	**226-4560**	1	LAMP (12-VOLT, 21-WATT)	
	8	1	**226-4561**	1	LAMP (12-VOLT, 5-WATT)	
M	9	1	**8T-0389**	1	LOCKNUT (M10X1.5-THD)	
	10	1	**100-3253**	1	SPACER (SPHERICAL)	
	11	1	**100-3254**	1	SPACER (SPHERICAL)	
	12	1	**100-3255**	1	WASHER (SPHERICAL)	
	13	1	**102-8805**	1	KIT-RECEPTACLE (6-PIN)	
					(INCLUDES RECEPTACLE AS & WEDGE)	
	14	1	**186-3735**	5	PIN-CONNECTOR (16-GA TO 18-GA)	
	16	1	**8T-8737**	1	PLUG-SEAL	

M-METRIC PART

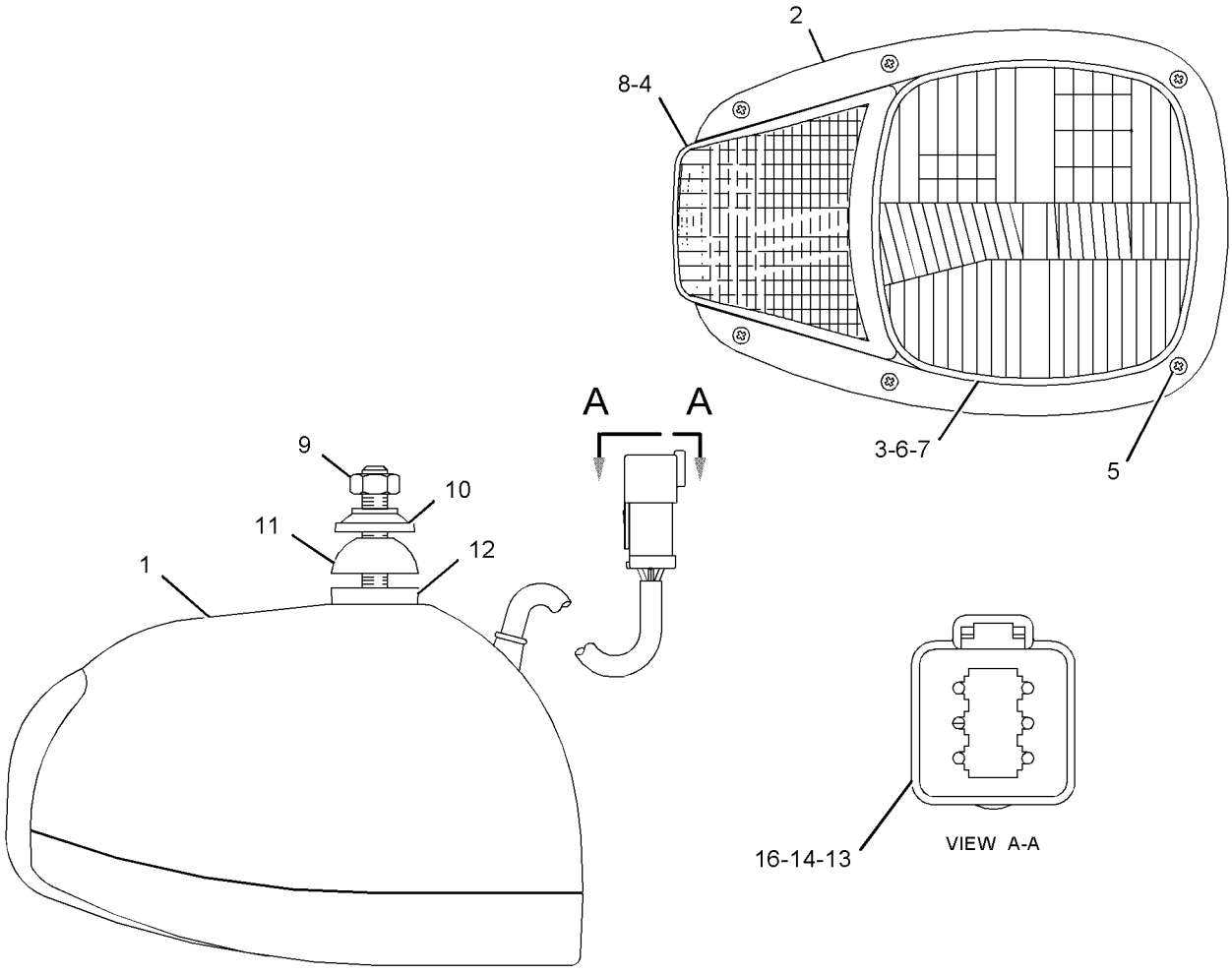

GRAPHIC #1 **<END>** g01109739

195-0192 LAMP GP-HEAD & SIGNAL–LH

S/N: LMD1-UP
PART OF 313-1723 LIGHTING GP-ROADING
AN ATTACHMENT

SMCS-1429, 1430 **i02830209**

NOTE	REF NO	GRAPHIC REF	PART NUMBER	QTY	PART NAME 1 2 3 4 5 6 (PRODUCT LEVEL)	SEE PAGE
	1	1	**228-6053**	1	BODY AS	
	2	1	**228-6054**	1	BEZEL	
	3	1	**228-6050**	1	LENS AS (HEADLIGHT)	
	4	1	**228-6052**	1	LENS AS (TURN SIGNAL)	
	5	1	**228-6056**	6	SCREW (4-32X1.26-IN)	
	6	1	**9W-3324**	1	LAMP-HEAD (12-VOLT, 60/55-WATT)	
	7	1	**226-4560**	1	LAMP (12-VOLT, 21-WATT)	
	8	1	**226-4561**	1	LAMP (12-VOLT, 5-WATT)	
M	9	1	**8T-0389**	1	LOCKNUT (M10X1.15-THD)	
	10	1	**100-3253**	1	SPACER (SPHERICAL)	
	11	1	**100-3254**	1	SPACER (SPHERICAL)	
	12	1	**100-3255**	1	WASHER (SPHERICAL)	
	13	1	**102-8805**	1	KIT-RECEPTACLE (6-PIN)	
					(INCLUDES RECEPTACLE AS & WEDGE)	
	14	1	**186-3735**	5	PIN-CONNECTOR (16-GA TO 18-GA)	
	16	1	**8T-8737**	1	PLUG-SEAL	

M-METRIC PART

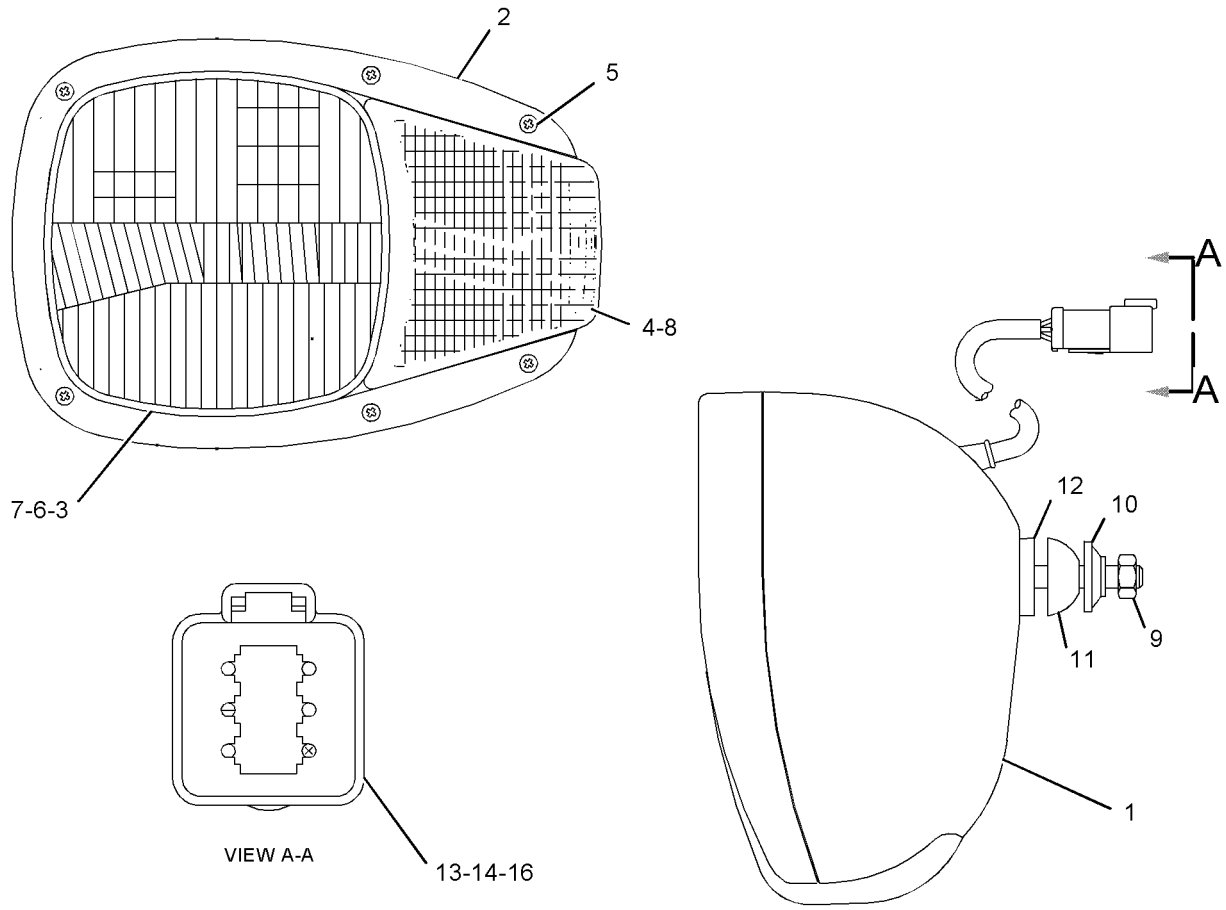

GRAPHIC #1 **<END>** g01109777

309-1325 LAMP GP-WARNING BEACON–12-VOLT, AMBER

S/N: LMD1-UP

PART OF 260-5501 LIGHTING GP-WARNING BEACON

AN ATTACHMENT

SMCS-1431 **i02965801**

NOTE	REF NO	GRAPHIC REF	PART NUMBER	QTY	PART NAME 1 2 3 4 5 6 (PRODUCT LEVEL)	SEE PAGE
	1	1	**272-9800**	1	LENS (AMBER)	
	2	1	**9X-8118**	1	LAMP (12-VOLT, 55-WATT)	
	3	1	**9X-8139**	1	BELT-DRIVE	
	4	1	**9R-7958**	1	CORD AS	
	4A	1	**9R-7942**	1	PLUG AS	

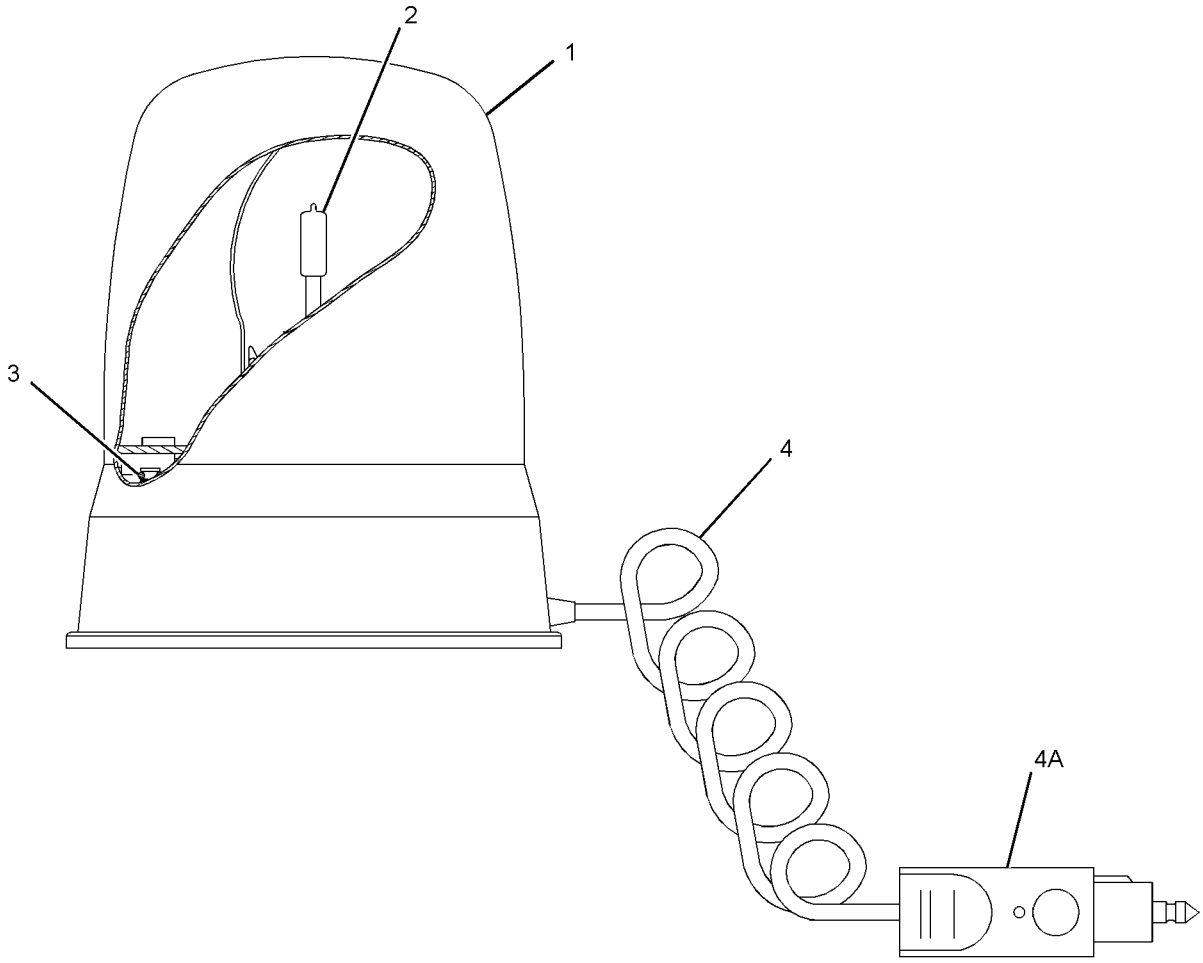

GRAPHIC #1 **<END>** g01382357

ELECTRICAL AND STARTING SYSTEM

260-5500 LIGHTING GP-FLOOD—FRONT, REAR

S/N: LMD1-UP

AN ATTACHMENT

SMCS-1434 **i03103112**

NOTE	REF NO	GRAPHIC REF	PART NUMBER	QTY	PART NAME 1 2 3 4 5 6 (PRODUCT LEVEL)	SEE PAGE
	1	1	**113-8490**	2	FUSE (10-AMPERE)	
	2	1	**155-2270**	4	KIT-CONNECTING PLUG (2-PIN)	
					(EACH INCLUDES PLUG AS & WEDGE)	
Y	3	1	**214-2968**	4	LAMP GP-FLOOD	90
	4	1	**261-5057**	1	SWITCH AS-ROCKER (WORK LIGHTS)	
	5	1	**061-7831**	2	GROMMET	
	6	1	**245-8026**	4	PLUG AS	
	7	1	**7K-6416**	4	GROMMET	

Y-SEPARATE ILLUSTRATION

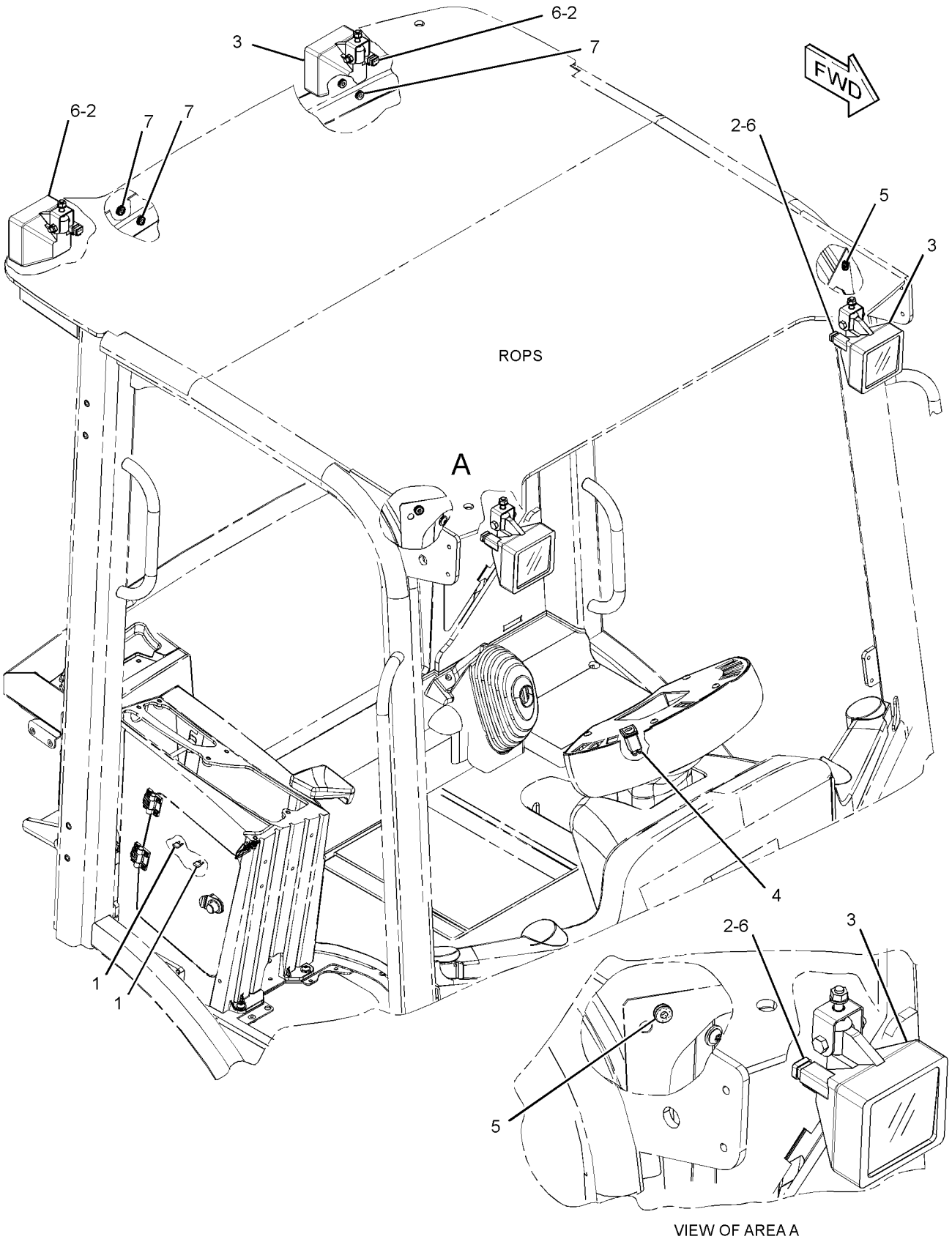

GRAPHIC #1 **<END>** g01585990

ELECTRICAL AND STARTING SYSTEM

313-1722 LIGHTING GP-ROADING—RH

S/N: LMD1-UP

AN ATTACHMENT

SMCS-1429 **i03122822**

NOTE	REF NO	GRAPHIC REF	PART NUMBER	QTY	PART NAME 1 2 3 4 5 6 (PRODUCT LEVEL)	SEE PAGE
Y	1	1	**195-0189**	1	LAMP GP-HEAD & SIGNAL (RH)	91
Y	2	1	**195-0190**	1	LAMP GP-HEAD & SIGNAL (LH)	92
	3	1	**206-1345**	4	STRAP-CABLE	
	4	1	**262-4726**	2	LAMP GP-STOP & TAIL	
					(EACH INCLUDES)	
		1	**9W-3326**	2	LAMP (12-VOLT, 21-WATT)	
		1	**108-7605**	1	LAMP (12-VOLT, 5-WATT)	
	5	1	**262-4727**	1	LAMP GP-ROADING (FOG; RED, REAR)	
		1	**9W-3326**	1	LAMP (12-VOLT, 21-WATT)	
	6	1	**262-4728**	1	LAMP GP-BACKUP (12-VOLT)	
		1	**9W-3326**	1	LAMP (12-VOLT, 21-WATT)	
	7	1	**283-3213**	1	BRACKET AS (RH)	
	8	1	**283-3214**	1	BRACKET AS (LH)	
	9	1	**313-2521**	2	BRACKET	
M	10	1	**5C-2890**	8	NUT (M6X1-THD)	
M	11	1	**5C-9553**	8	BOLT (M6X1X16-MM)	
	12	1	**5P-4115**	8	WASHER-HARD (7.2X19X2-MM THK)	
	13	1	**8S-7583**	2	GROMMET	
	14	1	**8T-4121**	6	WASHER-HARD (11X21X2.5-MM THK)	
M	15	1	**8T-4136**	6	BOLT (M10X1.5X25-MM)	
	16	1	**8T-4205**	8	WASHER-HARD (7.2X14.5X2-MM THK)	
B	17	1	**206-1345**	1	STRAP-CABLE	

B-USE AS REQUIRED
M-METRIC PART
Y-SEPARATE ILLUSTRATION

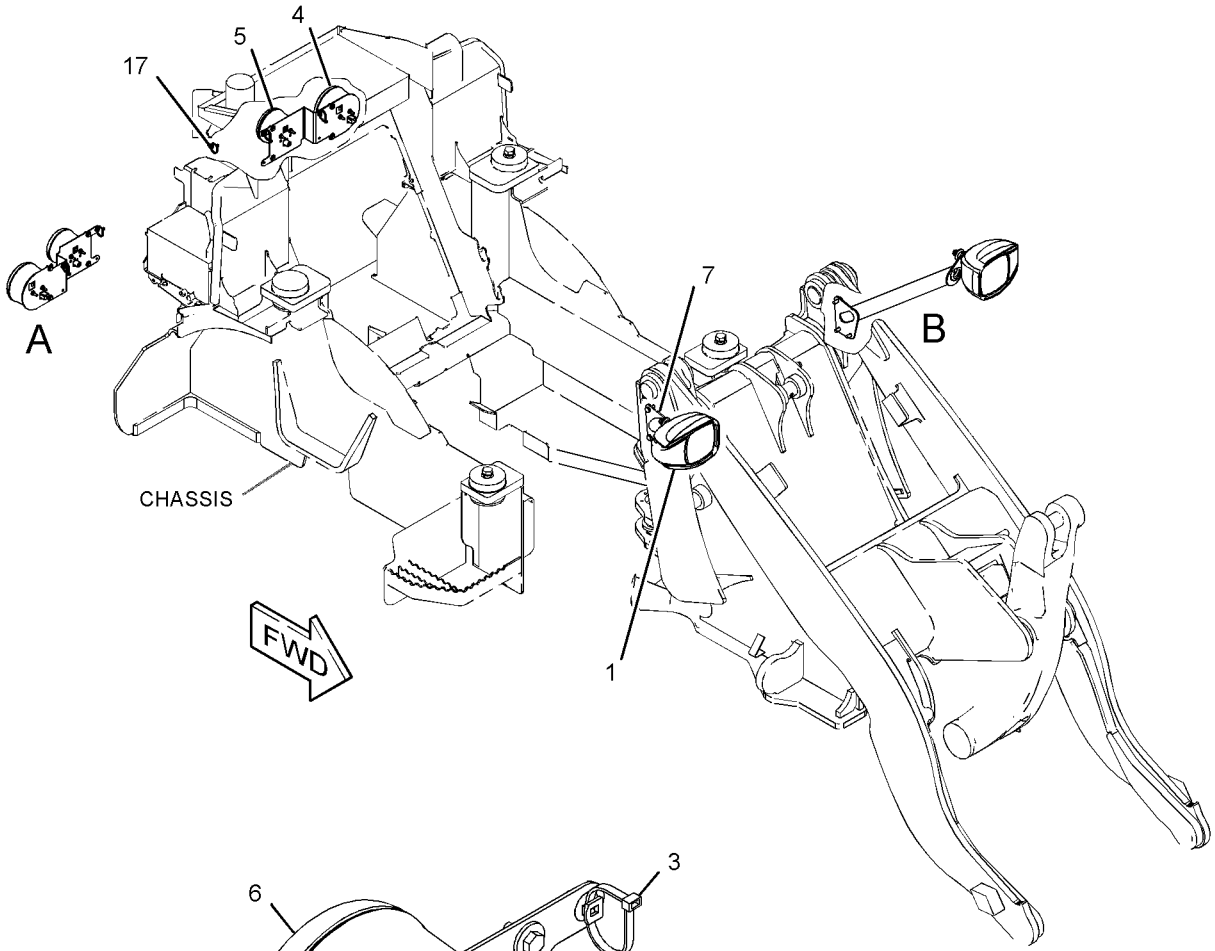

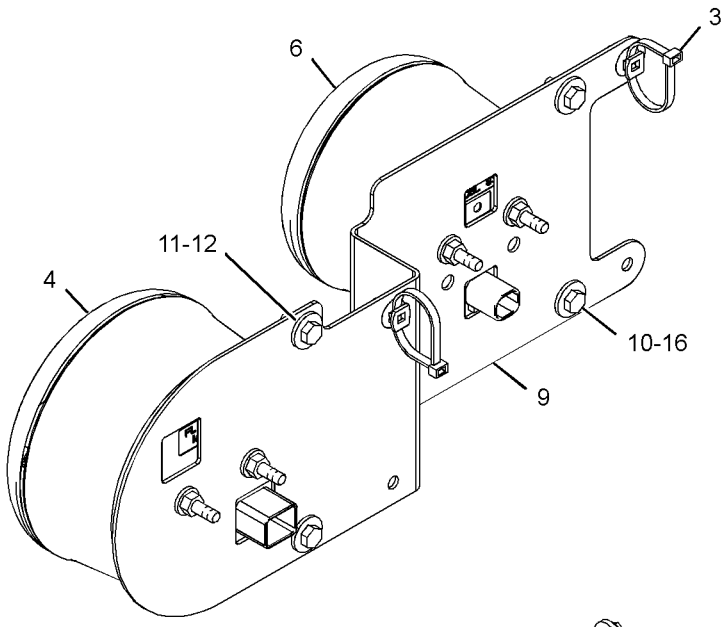

VIEW OF AREA A

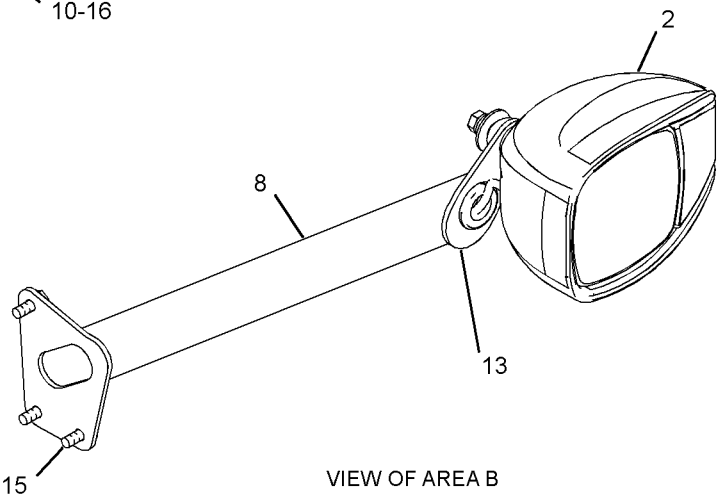

VIEW OF AREA B

GRAPHIC #1

<END>

g01524566

ELECTRICAL AND STARTING SYSTEM

313-1723 LIGHTING GP-ROADING—LH

S/N: LMD1-UP

AN ATTACHMENT

SMCS-1429 **i03122821**

NOTE	REF NO	GRAPHIC REF	PART NUMBER	QTY	PART NAME 1 2 3 4 5 6 (PRODUCT LEVEL)	SEE PAGE
Y	1	1	**195-0191**	1	LAMP GP-HEAD & SIGNAL (RH)	93
Y	2	1	**195-0192**	1	LAMP GP-HEAD & SIGNAL (LH)	94
	3	1	**206-1345**	4	STRAP-CABLE	
	4	1	**262-4726**	2	LAMP GP-STOP & TAIL	
					(EACH INCLUDES)	
		1	**9W-3226**	2	ELBOW	
		1	**108-7605**	1	LAMP (12-VOLT, 5-WATT)	
	5	1	**262-4727**	1	LAMP GP-ROADING (FOG; RED, REAR)	
		1	**9W-3326**	1	LAMP (12-VOLT, 21-WATT)	
	6	1	**262-4728**	1	LAMP GP-BACKUP	
		1	**9W-3326**	1	LAMP (12-VOLT, 21-WATT)	
	7	1	**283-3213**	1	BRACKET AS (RH)	
	8	1	**283-3214**	1	BRACKET AS (LH)	
	9	1	**313-2521**	2	BRACKET	
M	10	1	**5C-2890**	8	NUT (M6X1-THD)	
M	11	1	**5C-9553**	8	BOLT (M6X1X16-MM)	
	12	1	**5P-4115**	8	WASHER-HARD (7.2X19X2-MM THK)	
	13	1	**8S-7583**	2	GROMMET	
	14	1	**8T-4121**	6	WASHER-HARD (11X21X2.5-MM THK)	
M	15	1	**8T-4136**	6	BOLT (M10X1.5X25-MM)	
	16	1	**8T-4205**	8	WASHER-HARD (7.2X14.5X2-MM THK)	
B	17	1	**206-1345**	1	STRAP-CABLE	

B-USE AS REQUIRED
M-METRIC PART
Y-SEPARATE ILLUSTRATION

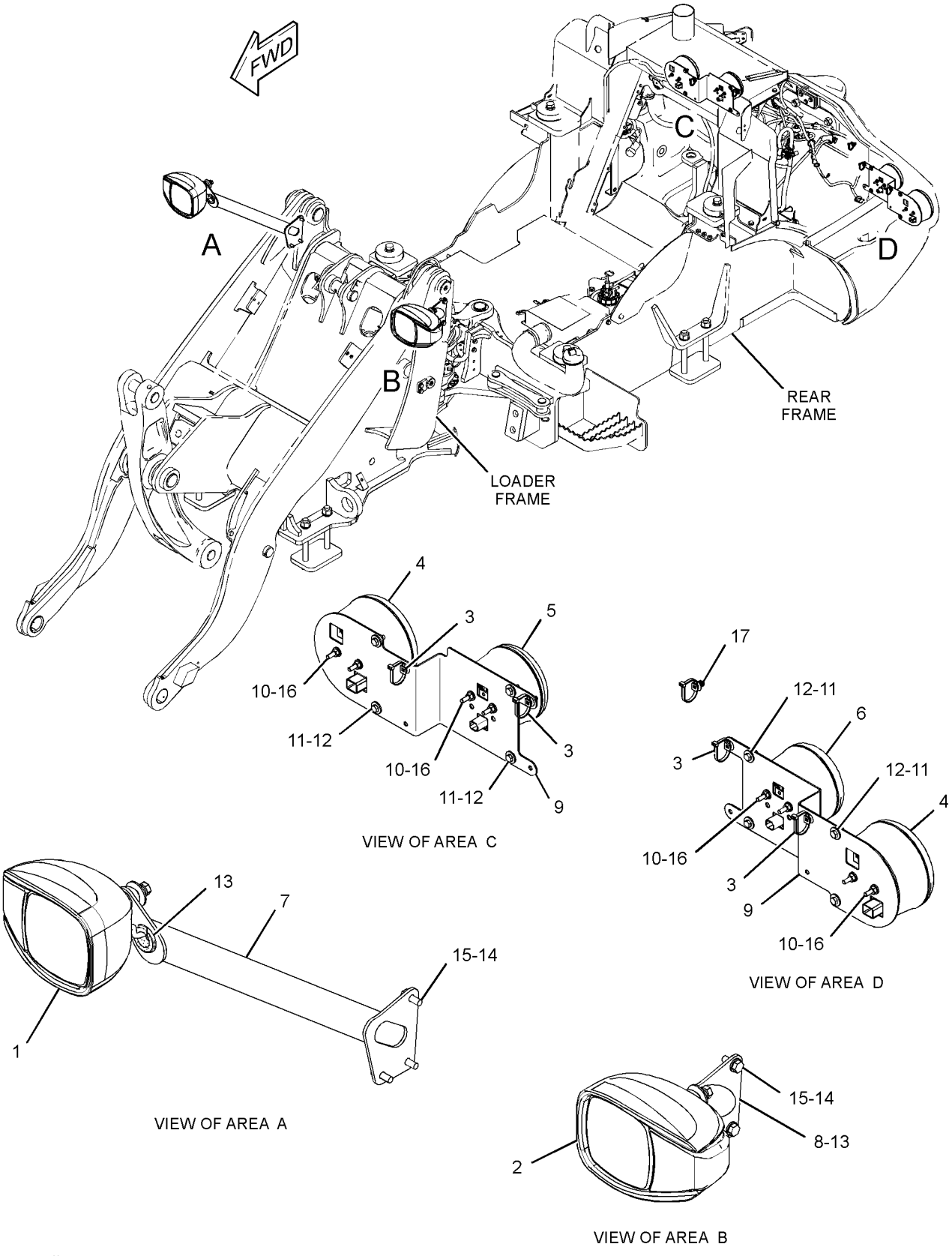

GRAPHIC #1 **<END>** g01533913

260-5501 LIGHTING GP-WARNING BEACON

S/N: LMD1-UP

PART OF 307-1556, 307-1558 CONVERSION AR-ROADING AN ATTACHMENT

SMCS-1431 **i02980738**

NOTE	REF NO	GRAPHIC REF	PART NUMBER	QTY	PART NAME 1 2 3 4 5 6 (PRODUCT LEVEL)	SEE PAGE
Y	1	1	**309-1325**	1	LAMP GP-WARNING BEACON (12-VOLT, AMBER)	95

Y-SEPARATE ILLUSTRATION

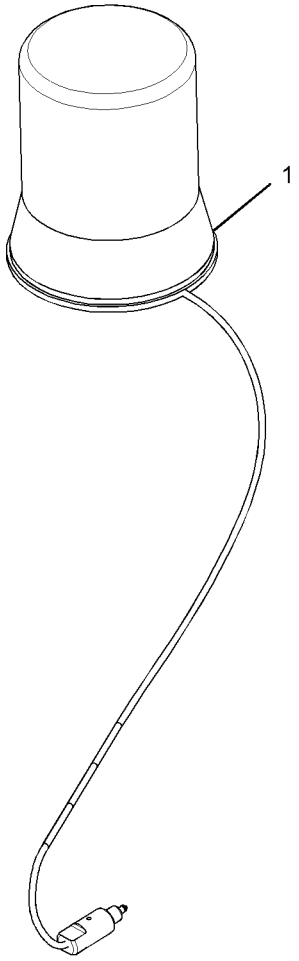

GRAPHIC #1 **<END>** g01381240

304-7708 PANEL GP-FUSE–CONSOLE, RH

S/N: LMD1-UP
PART OF 322-5766 OPERATOR AR-OPEN ROPS
AN ATTACHMENT

SMCS-1417, 1422 **i03195167**

NOTE	REF NO	GRAPHIC REF	PART NUMBER	QTY	PART NAME 1 2 3 4 5 6 (PRODUCT LEVEL)	SEE PAGE
	1	1	**109-2356**	10	PLUG	
C	2	1	**113-8490**	17	FUSE (10-AMPERE) (MINI)	
C	3	1	**113-8491**	1	FUSE (15-AMPERE) (MINI)	
	4	1	**117-2311**	1	RECEPTACLE AS-POWER (12-VOLT) (AUXILIARY)	
	5	1	**140-9378**	1	RELAY AS (12-VOLT) (REVERSE LAMP)	
	5A	1	**140-9378**	1	RELAY AS (12-VOLT) (DETENT)	
	5B	1	**140-9378**	1	RELAY AS (12-VOLT) (DIFFERENTIAL LOCK SOL VALVE)	
	5C	1	**140-9378**	1	RELAY AS (12-VOLT) (FUEL PUMP)	
	6	1	**142-8858**	1	SWITCH AS-KEY START (IGNITION)	
		1	**167-1530**	1	NUT (1-32-THD)	
	7	1	**169-2876**	1	FILM-IDENTIFICATION (POWER RECEPTACLE, 12-VOLT)	
	8	1	**290-2708**	1	PLATE AS	
	9	1	*290-2711*	1	PLATE AS	
E		1	**3E-6600**		SEAL (37-CM)	
E		1	**9X-6383**		SEAL (61-CM)	
		1	**290-2710**	1	PLATE AS	
Y	10	1	*293-9791*	1	FUSE GP (SPARE)	82
C	11	1	**314-6660**	1	FILM-IDENTIFICATION (FUSE)	
	12	1	**304-8544**	1	FILM-COVER (BLACK)	
	13	1	**307-1429**	1	FILM-IDENTIFICATION (KEY START SWITCH)	
M	14	1	**5C-2874**	1	NUT (M5X0.8-THD)	
M	15	1	**9X-2044**	5	SCREW-TRUSS HEAD (M6X1X16-MM)	
E	16	1	**3E-6600**		SEAL (24-CM EACH)	
C	17	1	**113-8492**	1	FUSE (20-AMPERE) (MINI)	

C-CHANGE FROM PREVIOUS TYPE
E-ORDER BY THE CENTIMETER
M-METRIC PART
Y-SEPARATE ILLUSTRATION

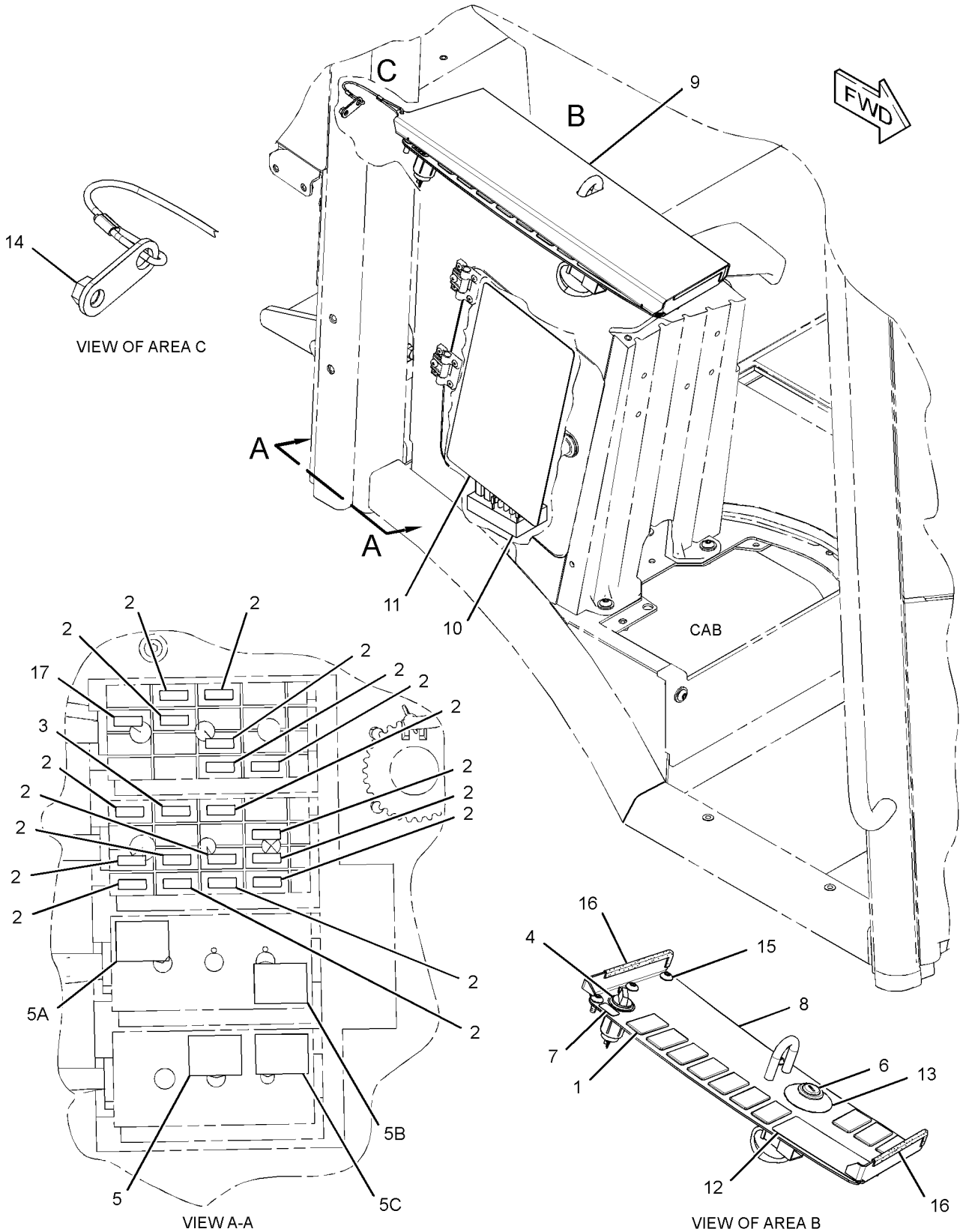

GRAPHIC #1 **<END>** g01524056

260-5349 PANEL GP-SWITCH—CONSOLE, RH

S/N: LMD1-UP

CANNOT BE USED WITH 273-0177—PAGE 85, 304-7708—PAGE 103

AN ATTACHMENT

SMCS-1408, 1429, 7332, 7451 **i03195168**

NOTE	REF NO	GRAPHIC REF	PART NUMBER	QTY	PART NAME 1 2 3 4 5 6 (PRODUCT LEVEL)	SEE PAGE
	1	1	**109-2356**	1	PLUG	
C	2	1	**113-8490**	17	FUSE (10-AMPERE)	
C	3	1	**113-8491**	1	FUSE (15-AMPERE)	
	4	1	**117-2311**	1	RECEPTACLE AS-POWER (12-VOLT)	
	5	1	**140-9378**	1	RELAY AS (12-VOLT) (DETENT)	
	5A	1	**140-9378**	1	RELAY AS (12-VOLT) (REVERSING LIGHT)	
	5B	1	**140-9378**	1	RELAY AS (12-VOLT) (FUEL PUMP)	
	5C	1	**140-9378**	1	RELAY AS (12-VOLT) (DIFFERENTIAL LOCK SOL VALVE)	
J	6	1	**142-8858**	1	SWITCH AS-KEY START (IGNITION)	
	7	1	**169-2876**	1	FILM-IDENTIFICATION (POWER RECEPTACLE, 12-VOLT)	
	8	1	**275-7404**	1	PLATE AS	
Y	9	1	*293-9791*	1	FUSE GP (SPARE)	82
C	10	1	**314-6660**	1	FILM-IDENTIFICATION (FUSE)	
	11	1	**304-8544**	1	FILM-COVER (BLACK)	
	12	1	**307-1429**	1	FILM-IDENTIFICATION (KEY START SWITCH)	
M	13	1	**9X-2044**	3	SCREW-TRUSS HEAD (M6X1X16-MM)	
C	14	1	**113-8492**	1	FUSE (20-AMPERE)	

C-CHANGE FROM PREVIOUS TYPE
J-REQUIRES CORPORATE KEY
M-METRIC PART
Y-SEPARATE ILLUSTRATION

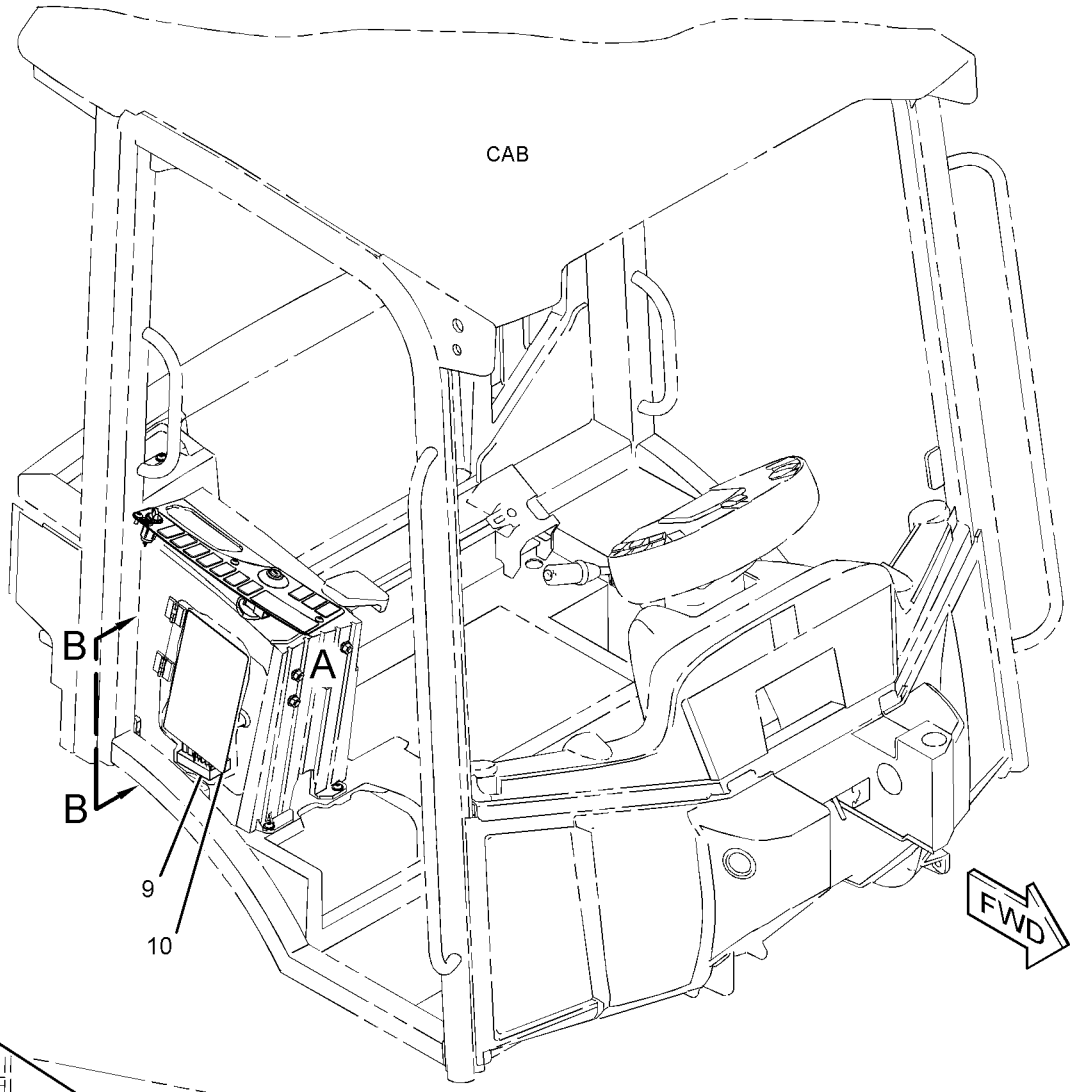

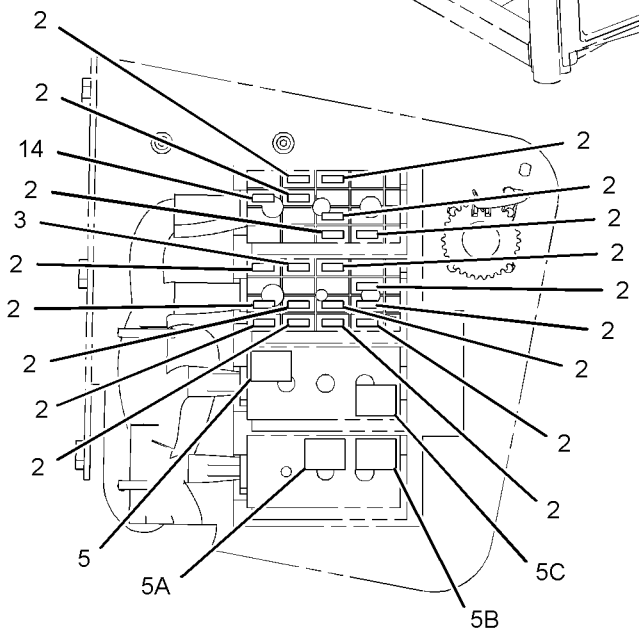

VIEW B-B
(PLATE AND FILM REMOVED FOR CLARITY)

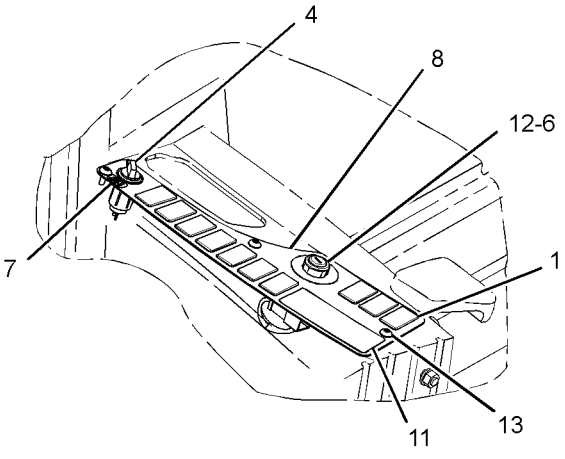

VIEW OF AREA A

GRAPHIC #1 **<END>** g01526484

322-3158 PROTECTION GP-WIRING—CONNECTOR CAPS

S/N: LMD1-UP

PART OF 322-4878 CHASSIS AR

SMCS-7553 **i03017362**

NOTE	REF NO	GRAPHIC REF	PART NUMBER	QTY	PART NAME 1 2 3 4 5 6 (PRODUCT LEVEL)	SEE PAGE
B	1	1	**8T-8737**	2	PLUG-SEAL	
B	2	1	**116-6161**	1	CAP-CONNECTOR	
B	3	1	**274-3774**	10	CAP-CONNECTOR	
B	4	1	**274-3776**	1	CAP-SEAL	
B	5	1	**155-2270**	1	KIT-CONNECTING PLUG (2-PIN)	
					(INCLUDES WEDGE & PLUG AS)	

B-USE AS REQUIRED

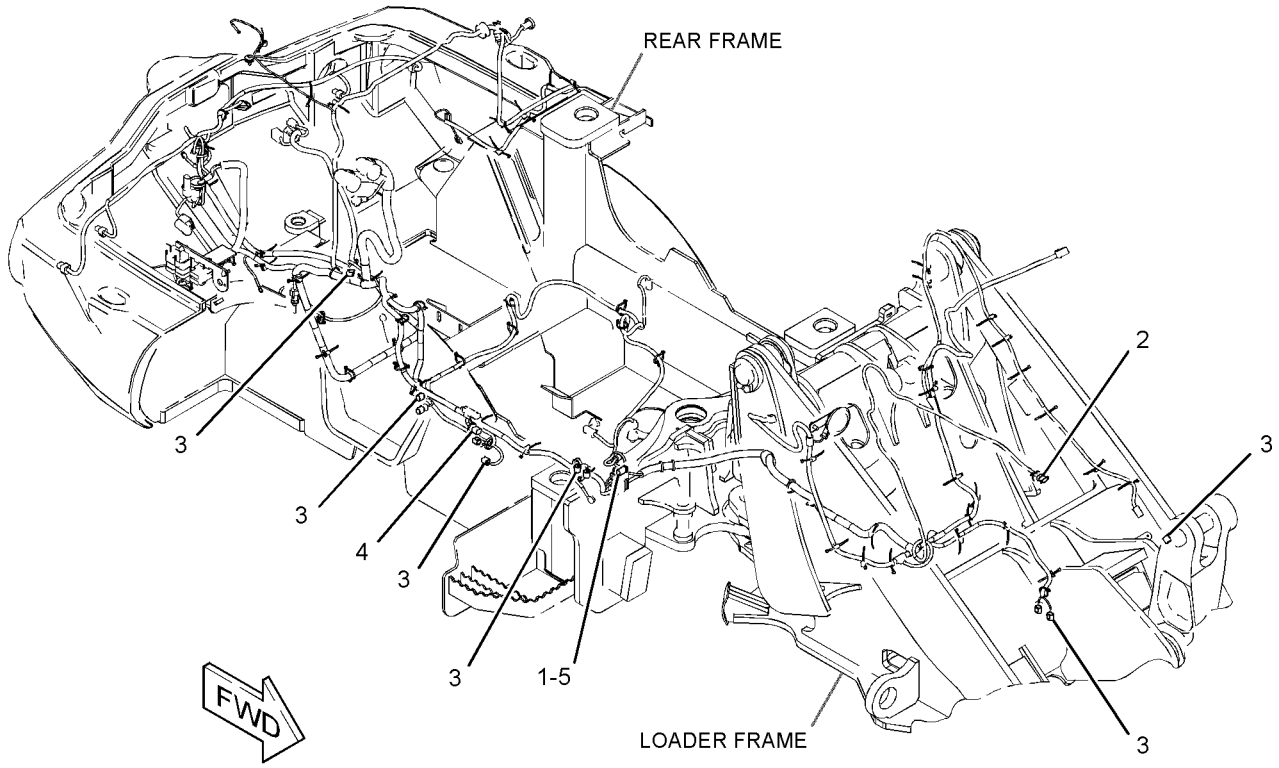

GRAPHIC #1 **<END>** g01528618

322-3159 PROTECTION GP-WIRING—CONNECTOR CAPS

S/N: LMD1-UP

PART OF 322-4878 CHASSIS AR

SMCS-7553 **i03017361**

NOTE	REF NO	GRAPHIC REF	PART NUMBER	QTY	PART NAME 1 2 3 4 5 6 (PRODUCT LEVEL)	SEE PAGE
B	1	1	**274-3774**	4	CAP-CONNECTOR	
B	2	1	**274-3775**	3	CAP-CONNECTOR	
B	3	1	**274-3776**	3	CAP-SEAL	
B	4	1	**274-3778**	1	CAP-SEAL	
B	5	1	**274-3779**	1	CAP-SEAL	

B-USE AS REQUIRED

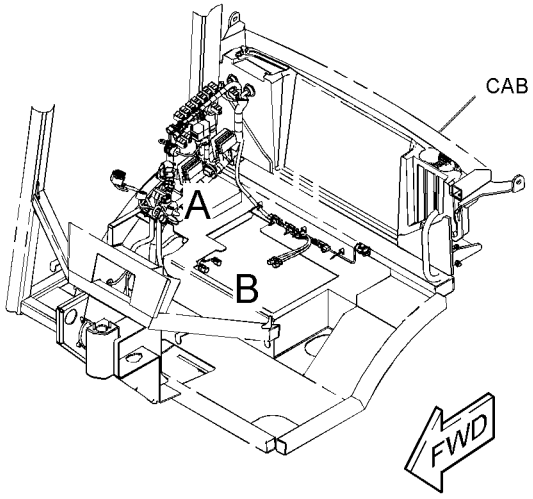

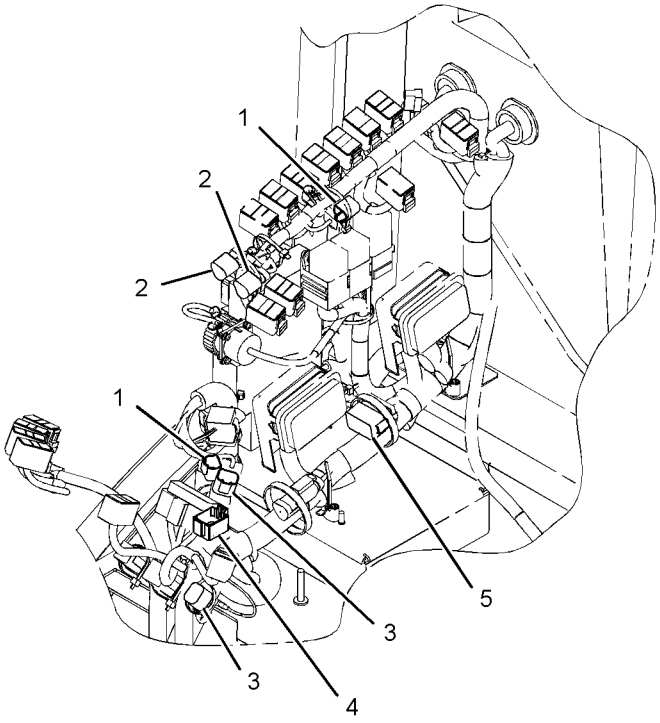

VIEW OF AREA A

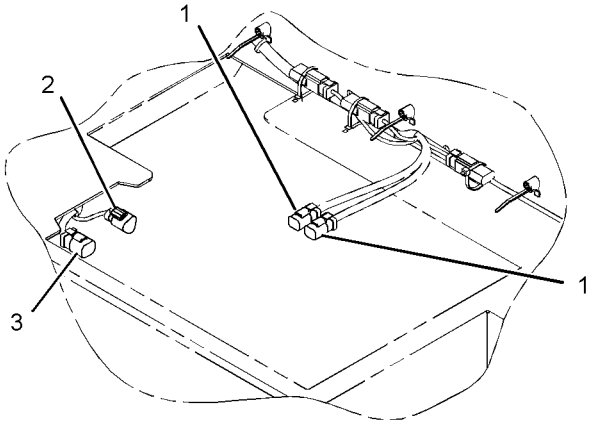

VIEW OF AREA B

GRAPHIC #1 **<END>** g01526703

143-0539 STARTING MOTOR GP-ELECTRIC*R

S/N: CYM1-UP

PART OF 287-6181 STARTING MOTOR GP-ELECTRIC

SMCS-1453 **i02603749**

NOTE	REF NO	GRAPHIC REF	PART NUMBER	QTY	PART NAME 1 2 3 4 5 6 (PRODUCT LEVEL)	SEE PAGE
	1	1	**8C-9778**	1	PLUNGER AS	
	2	1	**8C-9783**	1	GASKET	
	3	1	**2P-8104**	1	BEARING	
	4	1	**7T-6092**	1	HOLDER AS-BRUSH	
M	5	1	**8T-4133**	2	NUT (M10X1.5-THD)	
	6	1	**7T-6088**	1	BEARING AS	
	7	1	**7T-6087**	1	WASHER	
	8	1	**7T-6093**	1	CLUTCH AS	
	9	1	**8J-4455**	1	BALL	
	10	1	**7T-6090**	1	SPRING	
	11	1	**8T-4121**	2	WASHER-HARD (11X21X2.5-MM THK)	
	12	1	**3E-5153**	1	COVER-STARTING MOTOR	
M	13	1	**9X-2036**	1	SCREW-PAN HEAD	
	14	1	**8F-1434**	1	LOCKWASHER	
	15	1	**100-4113**	1	SWITCH AS (STARTING MOTOR, 12-VOLT)	
	16	1	**100-4119**	1	ARMATURE AS	
	17	1	**100-4118**	1	CASE AS-STARTING MOTOR	
	18	1	**100-4115**	1	HOUSING-STARTING MOTOR	
	19	1	**143-1344**	1	FRAME-STARTER	
	20	1	**100-3685**	1	CAP	
	21	1	**3E-5154**	1	BUSHING-STARTING MOTOR	
					AVAILABLE REPAIR KIT(S):	
			7T-6099	1	KIT-GEAR (STARTING MOTOR)	
					(INCLUDES RETAINER, PINION & ROLLERS)	
			8C-5457	1	KIT-CONTACT (STARTING MOTOR)	
					(INCLUDES NUT, WASHER, PLATE, BUSHINGS, & BOLT)	
			146-6729	1	KIT-HARDWARE (STARTING MOTOR)	
					(INCLUDES BOLTS, SCREWS, SCREW ASSEMBLIES & PLATE)	
			100-4112	1	KIT-CONTACT (STARTING MOTOR)	
					(INCLUDES NUT, WASHERS, SEAL, BUSHINGS, PLATE & BOLT)	

M-METRIC PART

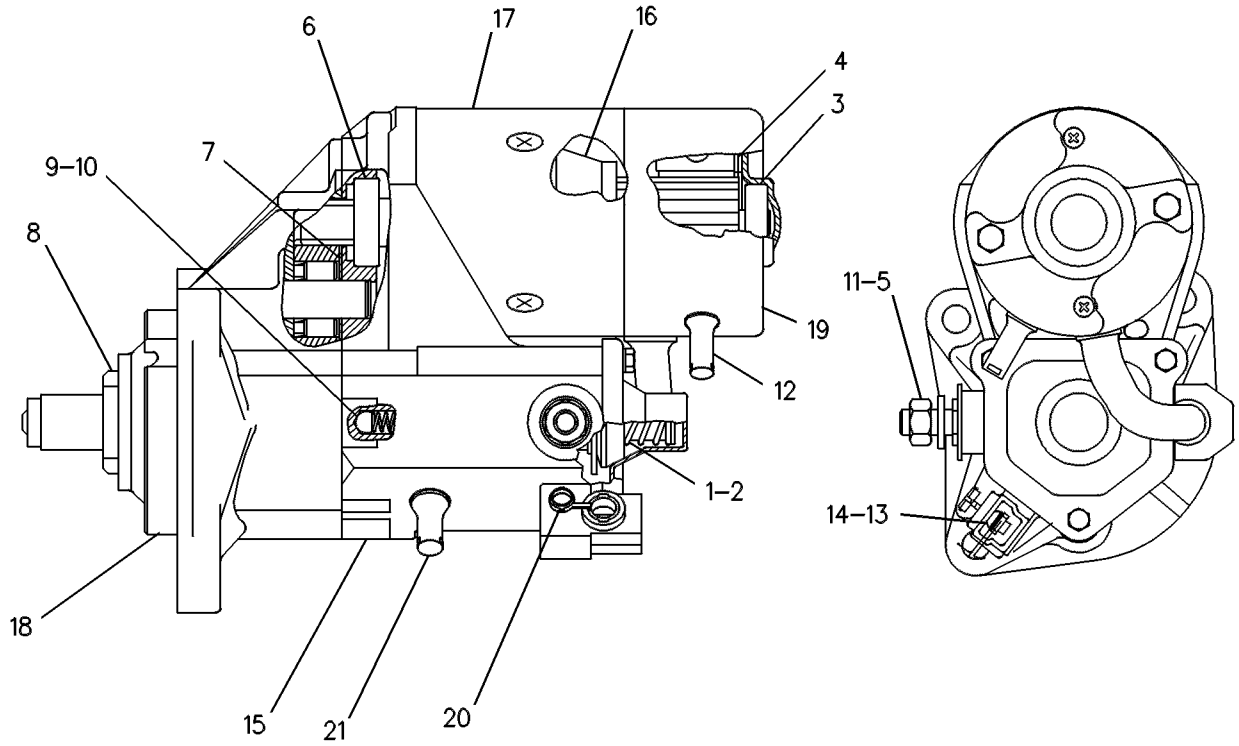

GRAPHIC #1 **<END>** g00131126

287-6181 STARTING MOTOR GP-ELECTRIC

S/N: CYM1-UP
12-VOLT
PART OF 305-2572 ENGINE AR-PRIMARY

SMCS-1453 **i02860986**

NOTE	REF NO	GRAPHIC REF	PART NUMBER	QTY	PART NAME 1 2 3 4 5 6 (PRODUCT LEVEL)	SEE PAGE
YR	1	1	**143-0539**	1	STARTING MOTOR GP-ELECTRIC	109

R-REMFG PART MAY BE AVAILABLE
Y-SEPARATE ILLUSTRATION

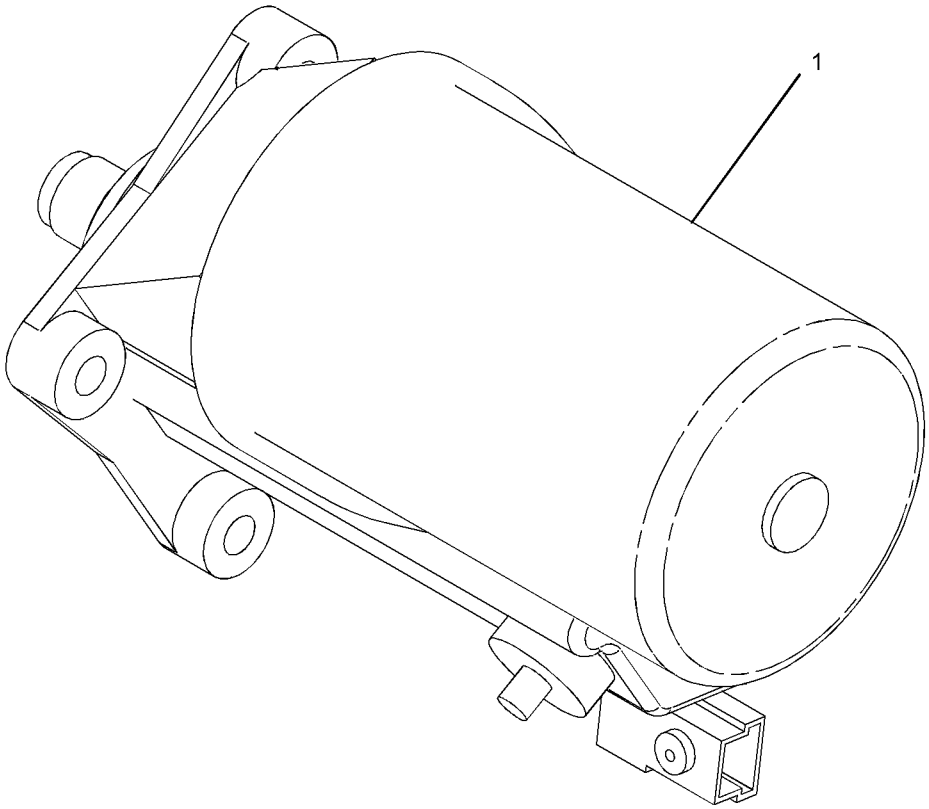

GRAPHIC #1 **<END>** g01345353

274-8254 SWITCH GP-A/C & HEATER

S/N: LMD1-UP

PART OF 259-1633 HEATER & MTG GP-CAB

AN ATTACHMENT

SMCS-7304, 7320, 7332 **i02700470**

NOTE	REF NO	GRAPHIC REF	PART NUMBER	QTY	PART NAME 1 2 3 4 5 6 (PRODUCT LEVEL)	SEE PAGE
	1	1	**129-1831**	1	CLAMP	
	2	1	**157-0449**	1	KNOB-CONTROL	
	3	1	**214-4695**	1	SWITCH AS-ROCKER (BLOWER FAN SPEED)	
	4	1	**214-4703**	1	SWITCH AS-ROCKER (HEATER)	
	5	1	**271-4295**	1	PLATE	
	6	1	**276-3917**	1	CONTROL AS-TEMPERATURE	
	7	1	**283-6952**	1	FILM-CONTROL (AIR CONDITIONER)	
	8	1	**283-9123**	1	CABLE AS	

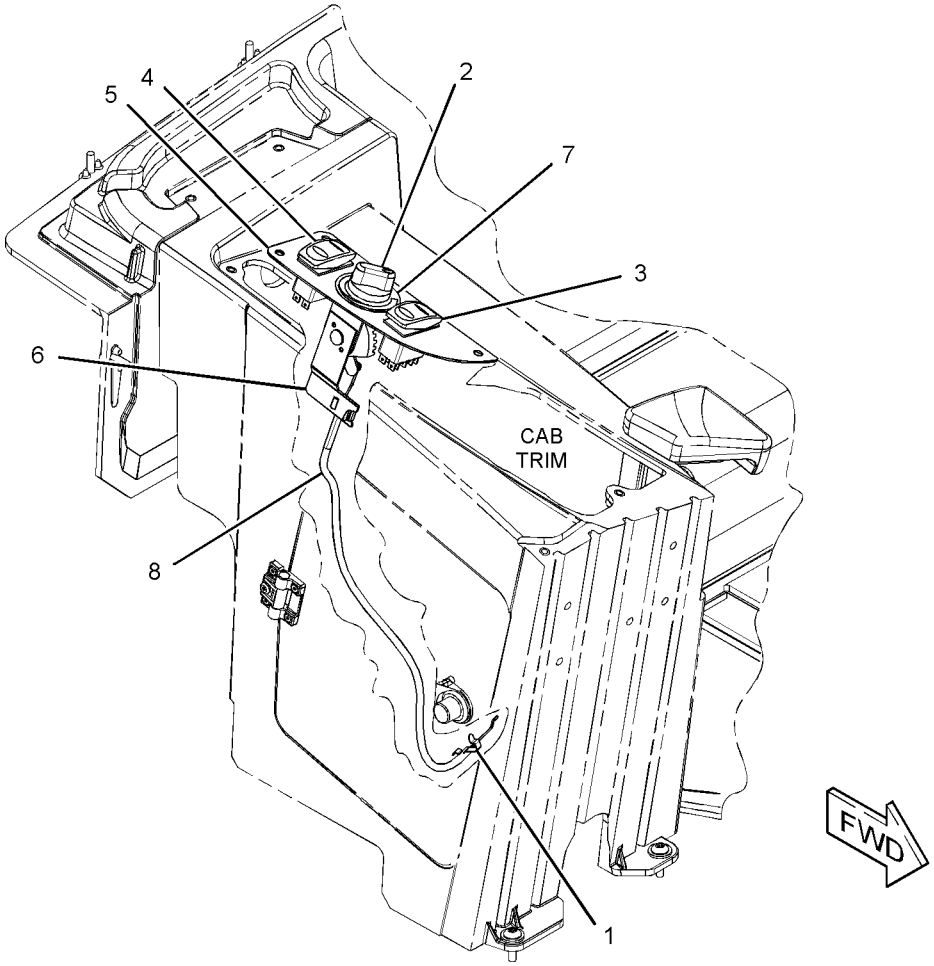

GRAPHIC #1 **<END>** g01376753

7N-0718 SWITCH GP-DISCONNECT–BATTERY

S/N: LMD1-UP

PART OF 260-5338 BATTERY & WIRING GP

SMCS-1411 **i02544993**

NOTE	REF NO	GRAPHIC REF	PART NUMBER	QTY	PART NAME 1 2 3 4 5 6 (PRODUCT LEVEL)	SEE PAGE
	1	1	**8H-5306**	1	KEY (BATTERY DISCONNECT)	
	2	1	**8H-5303**	1	NUT (3/4-16-THD)	
	3	1	**2H-3922**	2	LOCKWASHER	
	4	1	**9F-5644**	2	LOCKWASHER	
	5	1	**6F-7045**	2	NUT-FULL (3/8-24-THD)	

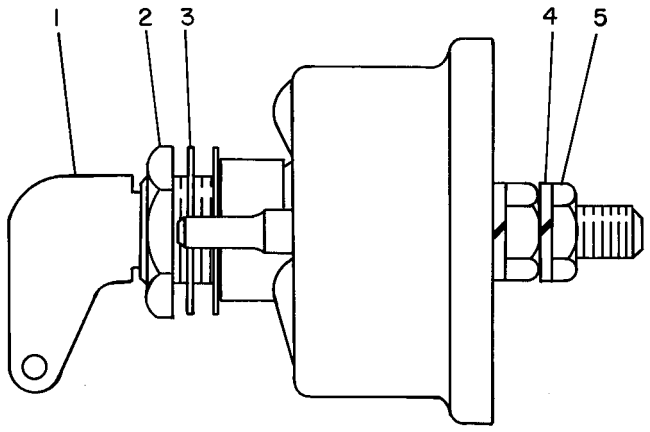

GRAPHIC #1 **<END>** g00084912

314-9918 SWITCH GP-PRESS & TEMP–

ENGINE COOLANT, ENGINE OIL

S/N: CYM1-UP

PART OF 305-2572 ENGINE AR-PRIMARY

SMCS-1435, 7420, 7421, 7484 **i02993555**

NOTE	REF NO	GRAPHIC REF	PART NUMBER	QTY	PART NAME 1 2 3 4 5 6 (PRODUCT LEVEL)	SEE PAGE
	1	1	**327-0752**	1	SWITCH-OIL PRESS (ENGINE)	
	2	1	**315-0001**	1	SENSOR-TEMPERATURE (COOLANT)	

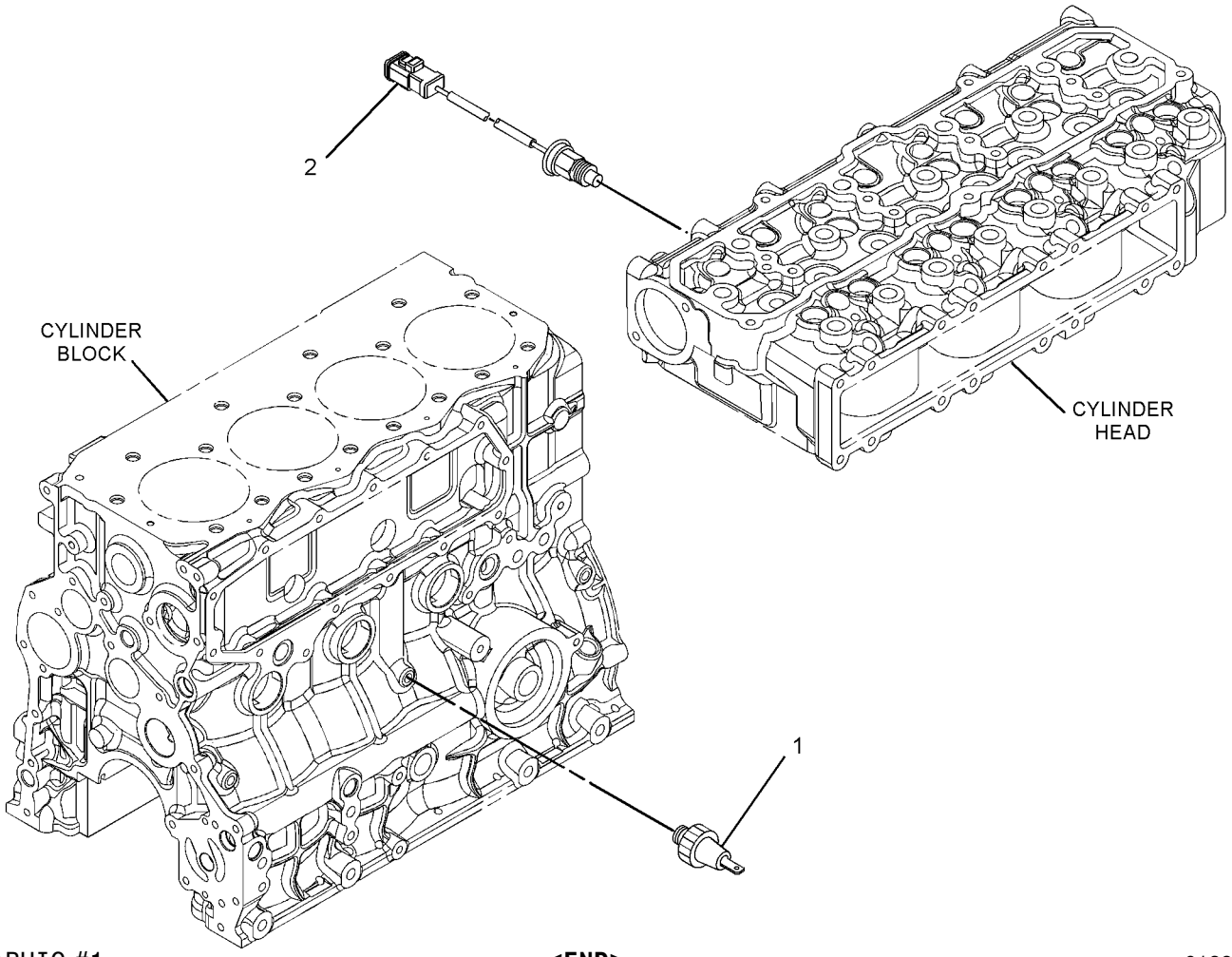

GRAPHIC #1 **<END>** g01397800

260-5521 SWITCH GP-RIDE CONTROL

S/N: LMD1-UP

PART OF 308-6645, 308-6646 HYDRAULIC AR

AN ATTACHMENT

SMCS-7332 **i03122970**

NOTE	REF NO	GRAPHIC REF	PART NUMBER	QTY	PART NAME 1 2 3 4 5 6 (PRODUCT LEVEL)	SEE PAGE
	1	1	**113-8490**	1	FUSE (10-AMPERE)	
	2	1	**140-9378**	1	RELAY AS (12-VOLT) (RIDE CONTROL)	
	3	1	**214-4710**	1	SWITCH AS-ROCKER (RIDE CONTROL)	

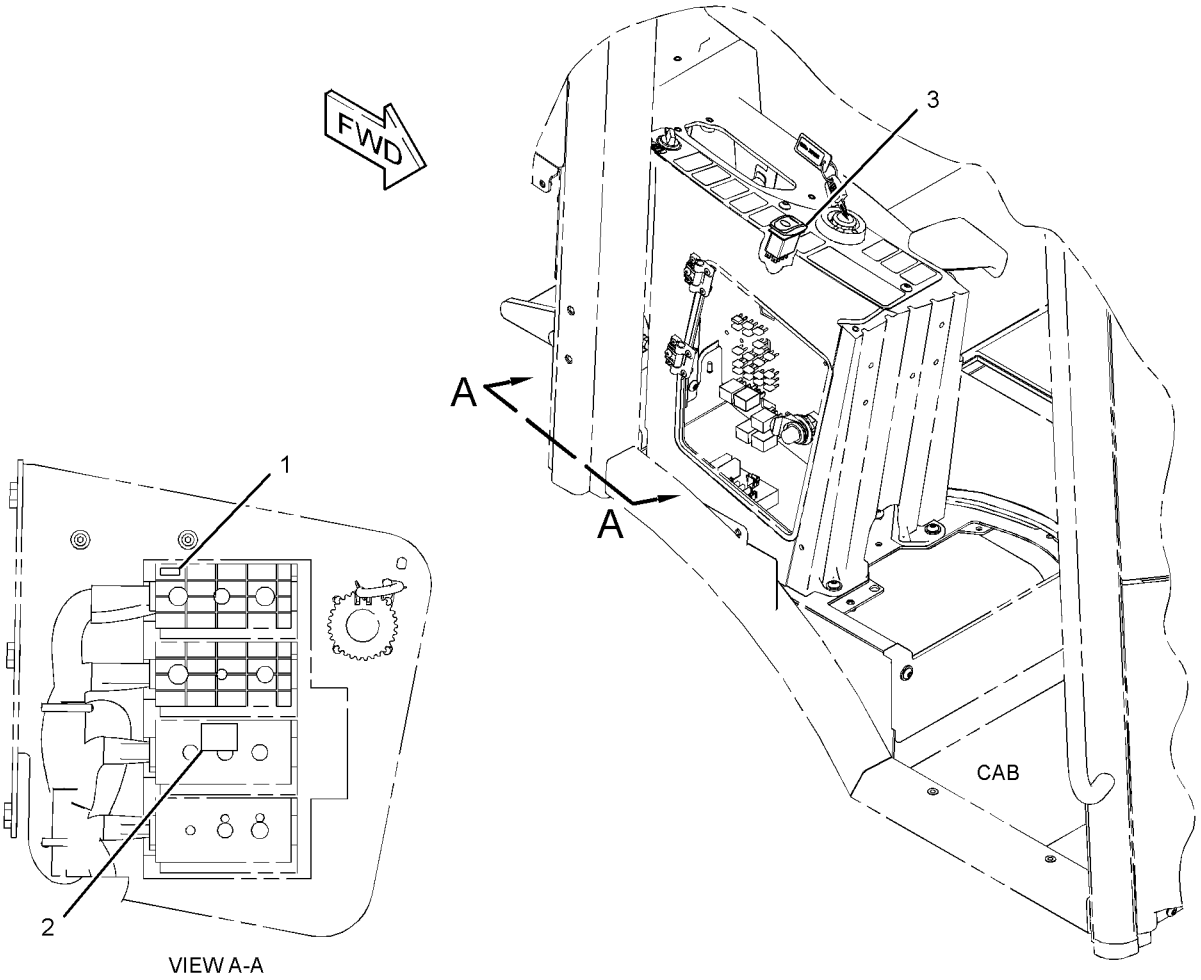

GRAPHIC #1 **<END>** g01376957

260-5507 SWITCH GP-ROCKER—QUICK COUPLER PIN LOCK

S/N: LMD1-UP

PART OF 286-4217, 286-4218 COUPLER AR-QUICK

AN ATTACHMENT

SMCS-7332 **i02980739**

NOTE	REF NO	GRAPHIC REF	PART NUMBER	QTY	PART NAME 1 2 3 4 5 6 (PRODUCT LEVEL)	SEE PAGE
	1	1	**317-2746**	1	SWITCH AS-ROCKER (QUICK COUPLER PIN LOCK)	

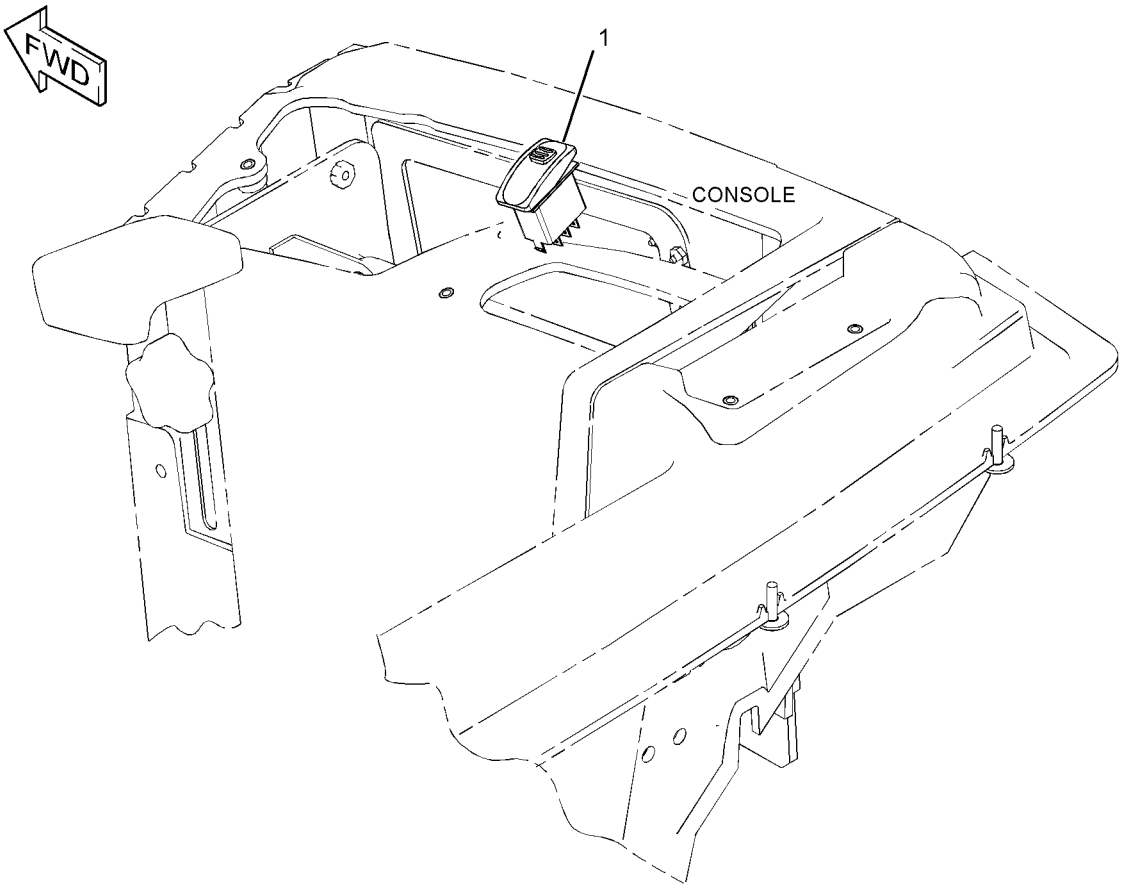

GRAPHIC #1 **<END>** g01378994

260-5510 SWITCH GP-ROCKER—HIGH SPEED SELECT

S/N: LMD1-UP

PART OF 294-8411, 301-1150 POWER TRAIN AR

AN ATTACHMENT

SMCS-7332 **i02739673**

NOTE	REF NO	GRAPHIC REF	PART NUMBER	QTY	PART NAME 1 2 3 4 5 6 (PRODUCT LEVEL)	SEE PAGE
	1	1	**261-5052**	1	SWITCH AS-ROCKER (HIGH SPEED SELECT)	
	2	1	**308-0751**	1	FILM-INSTRUCTION (TMSN HIGH, LOW SPEED, READ OMM)	

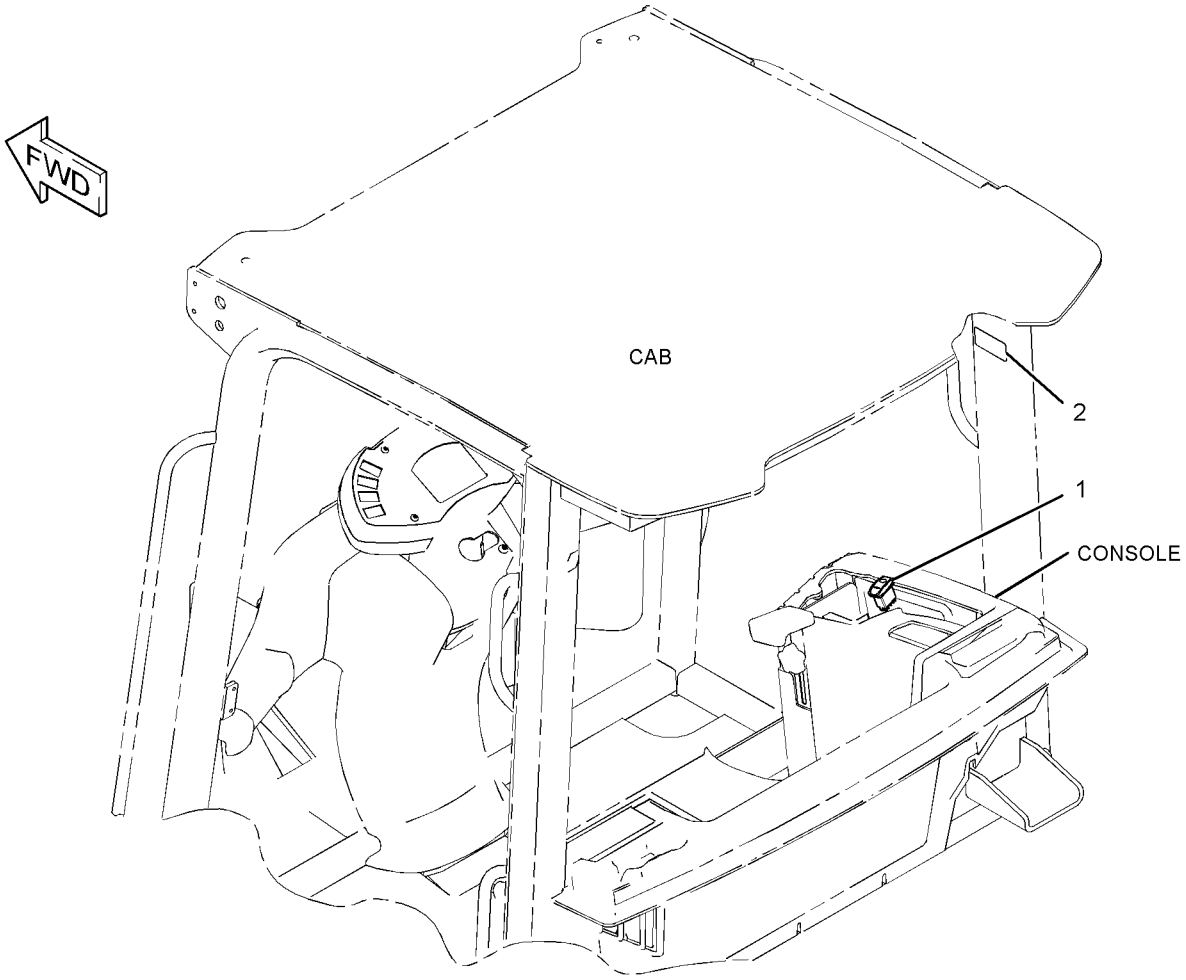

GRAPHIC #1 **<END>** g01378590

ELECTRICAL AND STARTING SYSTEM

266-7112 SWITCH GP-WIPER

S/N: LMD1-UP

PART OF 295-5275, 295-5276 OPERATOR AR-ENCLOSED ROPS

AN ATTACHMENT

SMCS-7332 **i02858119**

NOTE	REF NO	GRAPHIC REF	PART NUMBER	QTY	PART NAME 1 2 3 4 5 6 (PRODUCT LEVEL)	SEE PAGE
	1	1	**113-8490**	1	FUSE (10-AMPERE)	
	2	1	**113-8491**	1	FUSE (15-AMPERE)	
	3	1	**113-8492**	1	FUSE (20-AMPERE)	
	4	1	**140-9378**	1	RELAY AS (12-VOLT) (DEFROSTER)	
	4A	1	**140-9378**	1	RELAY AS (12-VOLT) (INTERMITTENT WIPER)	
	4B	1	**140-9378**	1	RELAY AS (12-VOLT) (INTERMITTENT WIPER 2)	
	5	1	**214-4709**	1	SWITCH AS-ROCKER (WIPER, WASHER, REAR)	
		1	**111-7899**	1	GASKET	
	6	1	**261-5044**	1	SWITCH AS-ROCKER (DEFROSTER, REAR)	
		1	**111-7899**	1	GASKET	

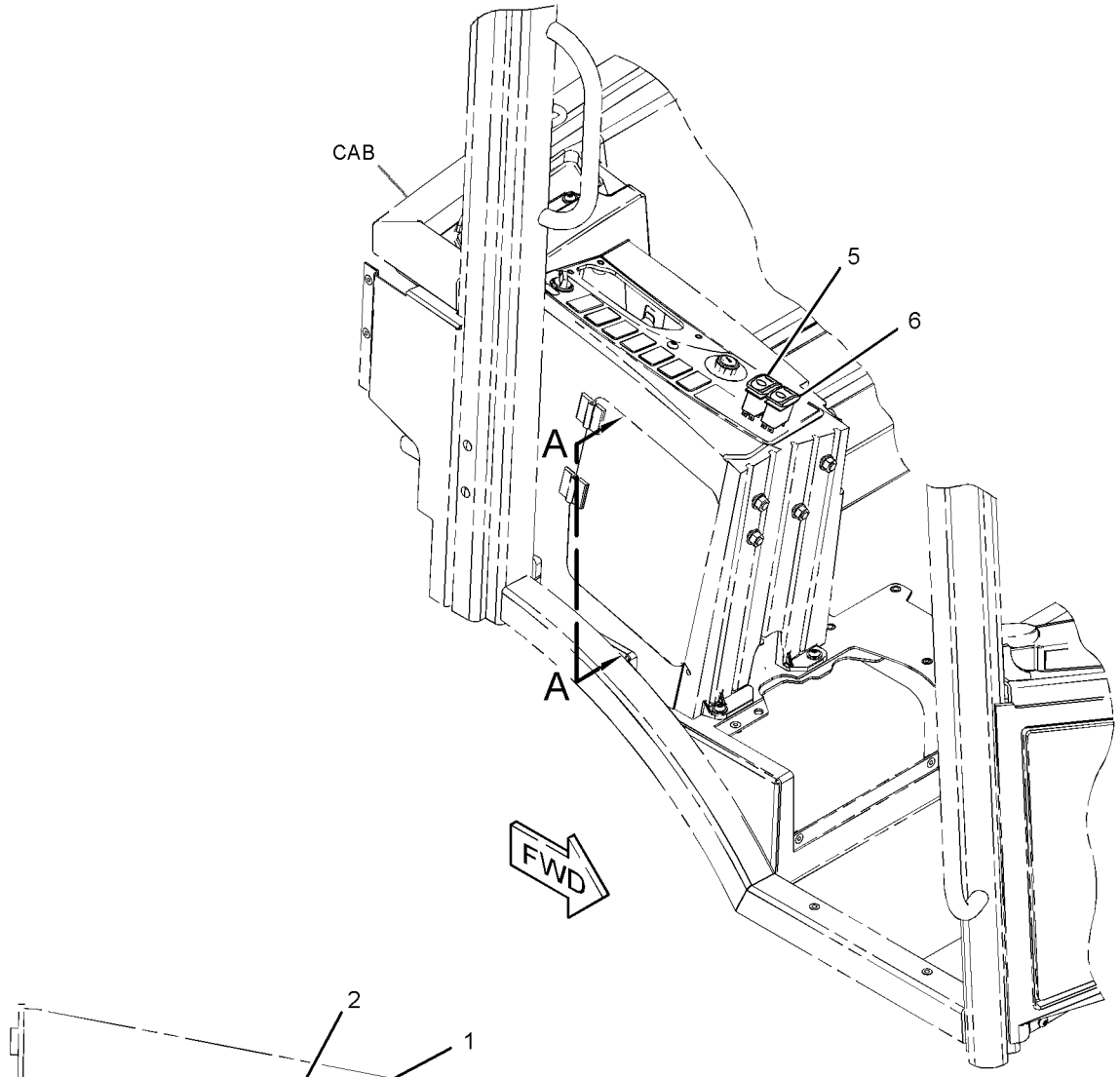

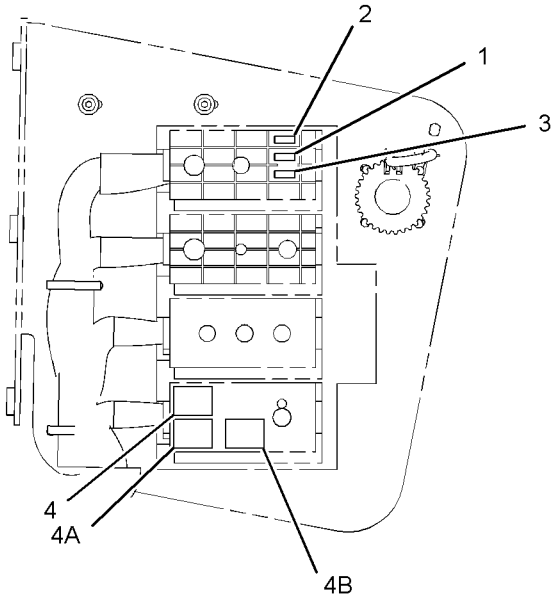

VIEW A-A
(ACCESS DOOR REMOVED FOR CLARITY)

GRAPHIC #1 **<END>** g01424113

313-1726 WARNING GP-BACKUP

S/N: LMD1-UP

AN ATTACHMENT

SMCS-7406 **i02981362**

NOTE	REF NO	GRAPHIC REF	PART NUMBER	QTY	PART NAME 1 2 3 4 5 6 (PRODUCT LEVEL)	SEE PAGE
	1	1	**161-2539**	1	ALARM AS	
		1	**4B-2043**	2	NUT (8-32-THD)	
	2	1	**206-1345**	1	STRAP-CABLE	
	3	1	**312-6370**	1	BRACKET AS	
M	4	1	**5C-9553**	2	BOLT (M6X1X16-MM)	
M	5	1	**8T-4200**	2	BOLT (M8X1.25X16-MM)	
	6	1	**8T-4205**	2	WASHER-HARD (7.2X14.5X2-MM THK)	
	7	1	**8T-4224**	2	WASHER-HARD (8.8X16X2-MM THK)	

M-METRIC PART

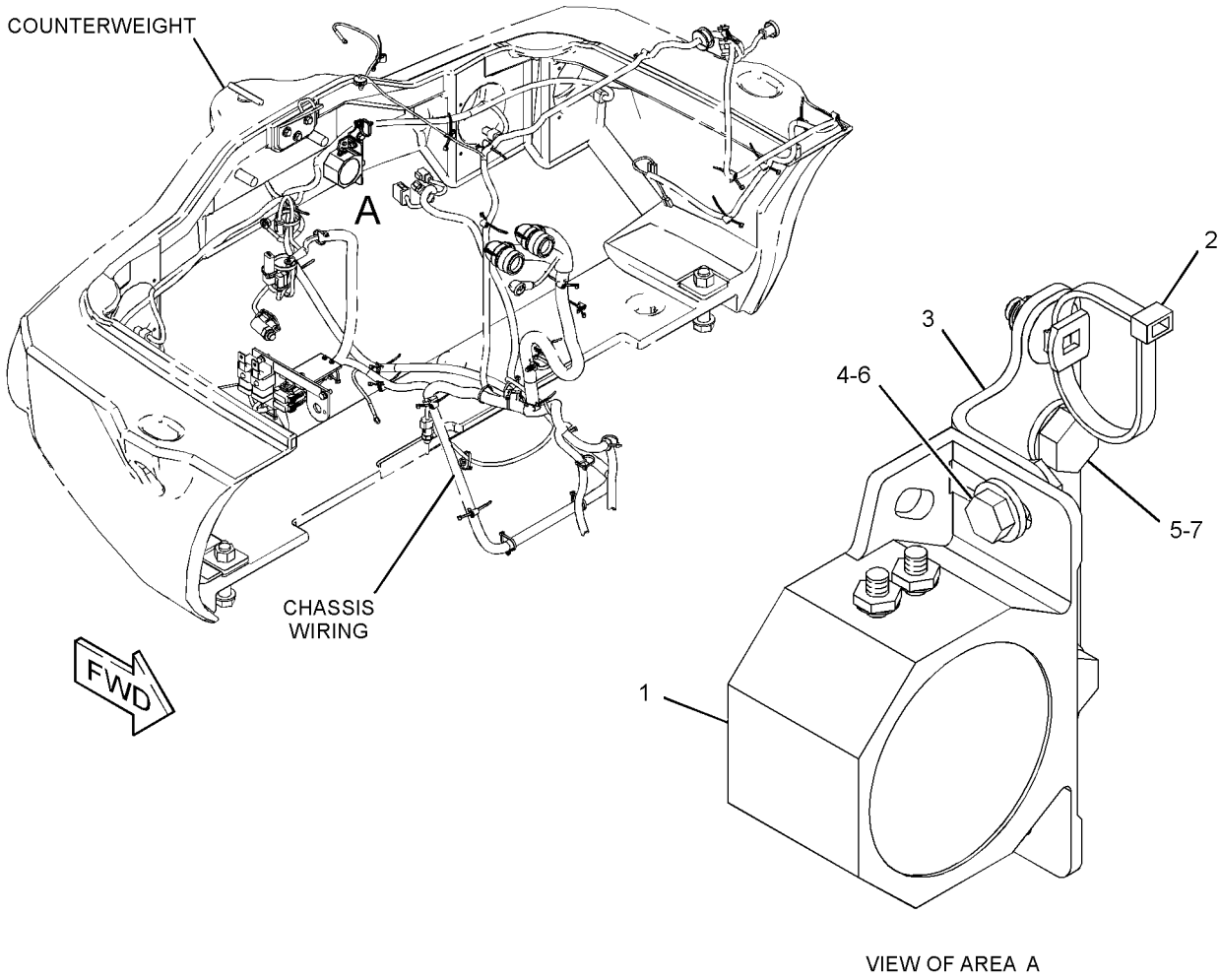

GRAPHIC #1 **<END>** g01530517

260-2594 WIRING GP-CAB

S/N: LMD1-UP

PART OF 295-5275, 295-5276 OPERATOR AR-ENCLOSED ROPS, 322-5766 OPERATOR AR-OPEN ROPS

AN ATTACHMENT

SMCS-1408, 7301 **i03118413**

NOTE	REF NO	GRAPHIC REF	PART NUMBER	QTY	PART NAME 1 2 3 4 5 6 (PRODUCT LEVEL)	SEE PAGE
	1	1	**4B-4863**	4	WASHER (4.7X11X1.2-MM THK)	
	2	1	**4I-3038**	4	WASHER (3.3X8X0.5-MM THK)	
	3	1	**7G-7053**	1	GROMMET	
C	4	1	**7K-1181**	4	STRAP-CABLE	
M	5	1	**8T-3998**	2	BOLT (M4X0.7X12-MM)	
	6	1	**9F-5599**	1	LOCKWASHER	
	7	1	**081-5930**	1	STRAP AS-GROUND	
		1	**1S-7251**	2	TERMINAL-CABLE (00-GA, 1/2-IN BOLT)	
	8	1	**142-2928**	4	LOCKNUT (4-40-THD)	
	9	1	**206-1345**	3	STRAP-CABLE	
	10	1	**248-7959**	1	TERMINAL	
	11	1	**255-1142**	1	SWITCH AS-PUSH BUTTON (PARKING BRAKE ON, OFF)	
	11A	1	**255-1142**	1	SWITCH AS-PUSH BUTTON (STOP LIGHTS ON, OFF)	
C	12	1	**314-6656**	1	HARNESS AS-CAB (MAIN)	
	13	1	**265-8025**	1	RELAY AS (12-VOLT) (MAIN, B)	
	13A	1	**265-8025**	1	RELAY AS (12-VOLT) (MAIN, A)	
	14	1	**270-5143**	19	TIE-PUSH MOUNT	
	15	1	**297-7891**	1	GASKET	
	16	1	**300-6575**	1	FILM (SEAL)	
C	17	1	**314-4019**	1	NUT-SPECIAL (NYLON)	
C	18	1	**3S-2093**	13	STRAP-CABLE	
CM	19	1	**5C-2874**	2	NUT (M5X0.8-THD)	
M	20	1	**5C-7261**	2	NUT (M8X1.25-THD)	
M	21	1	**5C-8312**	4	NUT (M4X0.7-THD)	
M	22	1	**5C-9553**	3	BOLT (M6X1X16-MM)	
	23	1	**6V-8801**	1	NUT (3/8-16-THD)	
M	24	1	**6V-9672**	2	SCREW-MACHINE (M4X0.7X16-MM)	
	25	1	**7F-9223**	1	LOCKWASHER	
	26	1	**7T-4848**	1	FLASHER AS (12-VOLT)	
C	27	1	**6V-2480**	4	SCREW (4-40X0.5-IN)	
C	28	1	**8T-0328**	5	WASHER-HARD (5.5X10X1-MM THK)	
	29	1	**8T-4121**	2	WASHER-HARD (11X21X2.5-MM THK)	
M	30	1	**8T-4127**	2	SCREW-MACHINE (M5X0.8X20-MM)	
M	31	1	**8T-4133**	1	NUT (M10X1.5-THD)	
M	32	1	**8T-4137**	1	BOLT (M10X1.5X20-MM)	
	33	1	**8T-4205**	3	WASHER-HARD (7.2X14.5X2-MM THK)	
	34	1	**8T-4224**	2	WASHER-HARD (8.8X16X2-MM THK)	
	35	1	**8T-4896**	1	WASHER-HARD (10.2X18.5X2.5-MM THK)	
C	36	1	**314-4017**	1	WASHER-SPECIAL (NEOPRENE)	

C-CHANGE FROM PREVIOUS TYPE
M-METRIC PART

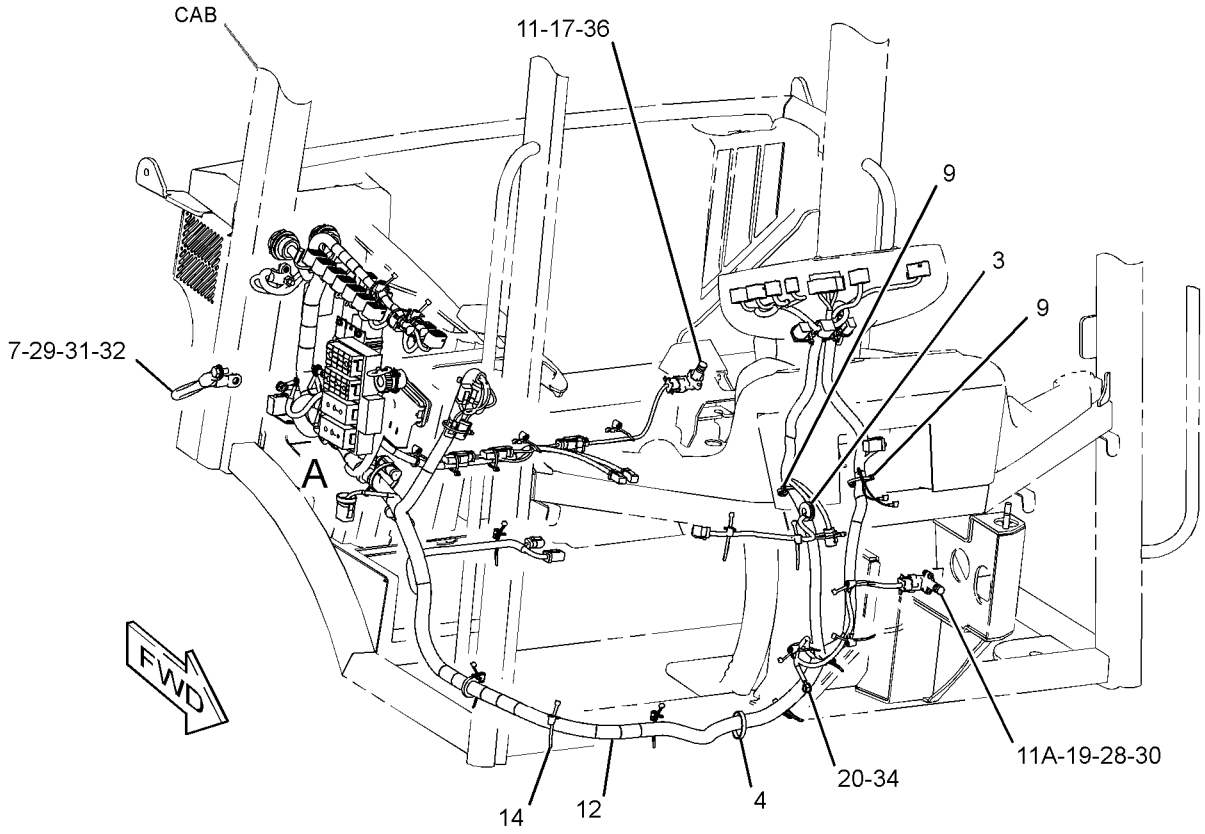

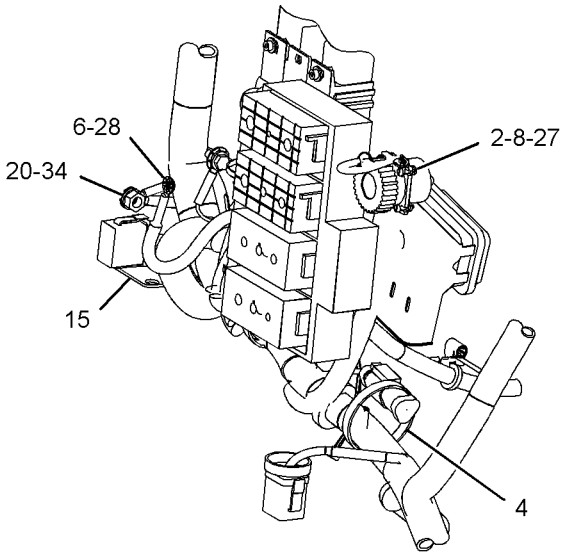

VIEW OF AREA A

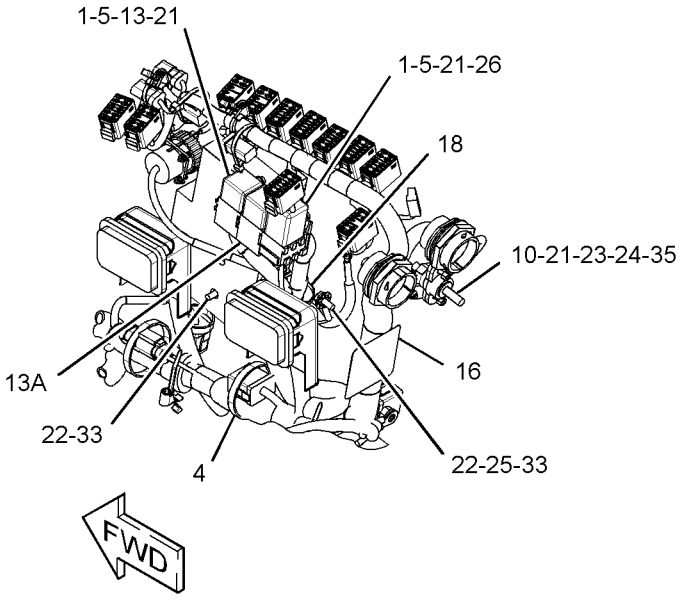

GRAPHIC #1 **<END>** g01523230

260-5334 WIRING GP-CAB–ROOF

S/N: LMD1-UP

PART OF 295-5275, 295-5276 OPERATOR AR-ENCLOSED ROPS AN ATTACHMENT

SMCS-1408, 7301 **i03103222**

NOTE	REF NO	GRAPHIC REF	PART NUMBER	QTY	PART NAME 1 2 3 4 5 6 (PRODUCT LEVEL)	SEE PAGE
	1	1	**9R-7941**	1	SOCKET AS	
		1	**9R-7980**	1	COVER	
B	2	1	**084-4277**	1	LAMP GP-DOME (12-VOLT)	
		1	**210-8754**	1	LAMP (12-VOLT)	
BY	3	1	**107-6032**	1	LAMP GP-DOME (24-VOLT)	89
	4	1	**206-1345**	9	STRAP-CABLE	
	5	1	**260-5333**	1	HARNESS AS-CAB (ROOF)	
D		1	**5P-5628**		TUBE (1.2-M)	
E		1	**125-7874**		TUBE-HEAT SHRINK (5.72-MM DIA) (10-CM)	
E		1	**125-7875**		TUBE-HEAT SHRINK (7.44-MM DIA) (25-CM)	
		1	**176-2947**	1	PLUG KIT-CONN	
					(INCLUDES PLUG AS, WEDGE & INTERFACE SEAL)	
	6	1	**3K-8785**	1	GROMMET	
	7	1	**3D-9871**	5	BUTTON-PLUG	
M	8	1	**5C-7261**	1	NUT (M8X1.25-THD)	
	9	1	**8T-4224**	1	WASHER-HARD (8.8X16X2-MM THK)	

B-USE AS REQUIRED
D-ORDER BY THE METER
E-ORDER BY THE CENTIMETER
M-METRIC PART
Y-SEPARATE ILLUSTRATION

260-5334 **WIRING GP-CAB** *(contd.)* **i03103222**

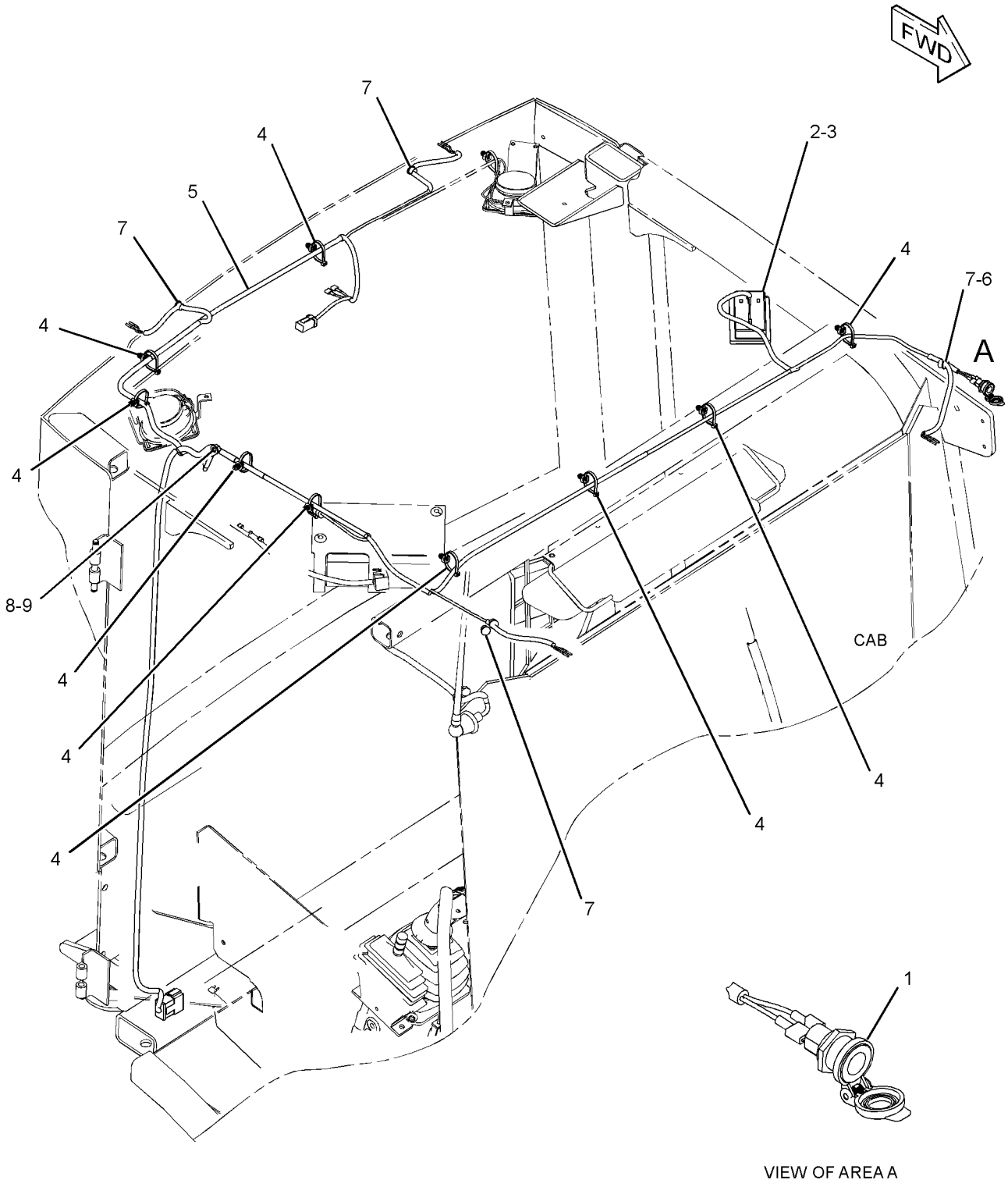

GRAPHIC #1 **<END>** g01361334

260-5524 WIRING GP-CAB–

WORK TOOL, BOOSTED AUXILIARY HYDRAULIC FLOW SWITCHES

S/N: LMD1-UP

5TH, 6TH, 7TH FUNCTIONS

PART OF 260-5389 WIRING GP-WORK TOOL

AN ATTACHMENT

SMCS-1408, 7301 **i03027242**

NOTE	REF NO	GRAPHIC REF	PART NUMBER	QTY	PART NAME 1 2 3 4 5 6 (PRODUCT LEVEL)	SEE PAGE
	1	1	**3S-2093**	4	STRAP-CABLE	
	2	1	**7K-1181**	6	STRAP-CABLE	
	3	1	**113-8491**	1	FUSE (15-AMPERE)	
	4	1	**214-4707**	1	SWITCH AS-ROCKER (WORK TOOL ON, OFF)	
		1	**111-7899**	1	GASKET	
	5	1	**261-5055**	1	SWITCH AS-ROCKER (BOOSTED FLOW, 5TH, 6TH FCTN)	
		1	**111-7899**	1	GASKET	
	6	1	**261-5056**	1	SWITCH AS-ROCKER (BOOSTED AUX FLOW, 7TH FUNCTION)	
		1	**111-7899**	1	GASKET	
	7	1	**276-8008**	1	HARNESS AS-SWITCH (WKTL, BOOSTED AUX HYD FLOW)	

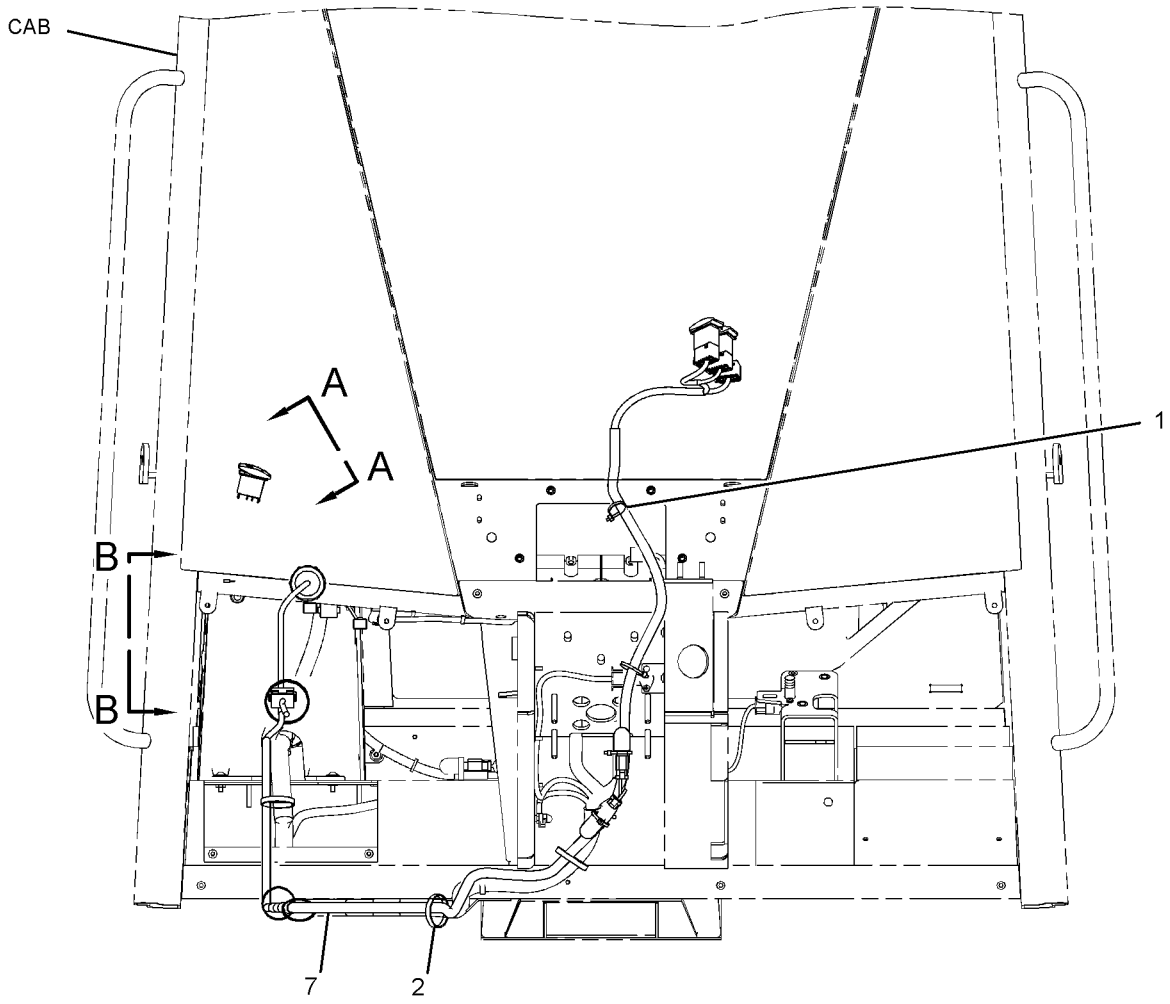

FRONT VIEW

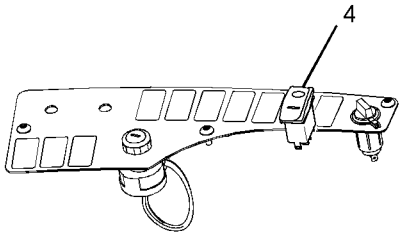

VIEW A-A

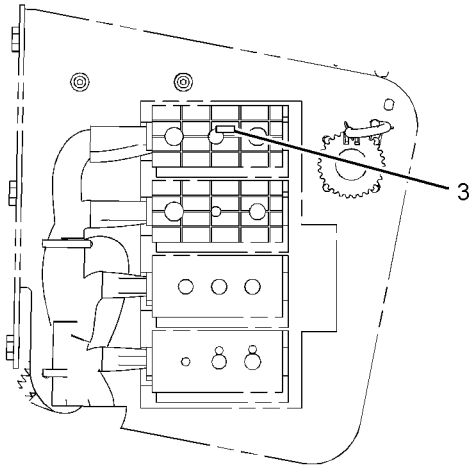

VIEW B-B

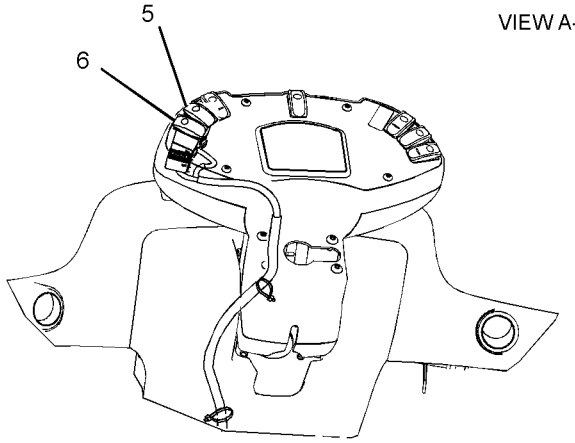

REAR VIEW
(UPPER LEFT)

GRAPHIC #1 **<END>** g01387855

260-5526 WIRING GP-CAB–

WORK TOOL, BOOSTED AUXILIARY HYDRAULIC FLOW SWITCHES
S/N: LMD1-UP
3RD, 4TH FUNCTIONS, 5TH, 6TH, 7TH FUNCTIONS
PART OF 286-4218 COUPLER AR-QUICK
AN ATTACHMENT

SMCS-1408, 7301 **i03027243**

NOTE	REF NO	GRAPHIC REF	PART NUMBER	QTY	PART NAME 1 2 3 4 5 6 (PRODUCT LEVEL)	SEE PAGE
	1	1	**7K-1181**	6	STRAP-CABLE	
	2	1	**113-8491**	1	FUSE (15-AMPERE)	
	3	1	**140-9378**	1	RELAY AS (12-VOLT) (3RD, 4TH FUNCTIONS)	
	3A	1	**140-9378**	1	RELAY AS (12-VOLT) (BYPASS)	
	4	1	**214-4707**	1	SWITCH AS-ROCKER (WORK TOOL ON, OFF)	
	5	1	**261-5054**	1	SWITCH AS-ROCKER (BOOSTED FLOW, 3RD, 4TH FCTN)	
	6	1	**261-5055**	1	SWITCH AS-ROCKER (BOOSTED FLOW, 5TH, 6TH FCTN)	
	7	1	**261-5056**	1	SWITCH AS-ROCKER (BOOSTED AUX FLOW, 7TH FUNCTION)	
	8	1	**276-8008**	1	HARNESS AS-SWITCH (WKTL, BOOSTED AUX HYD FLOW)	
	9	1	**3S-2093**	4	STRAP-CABLE	

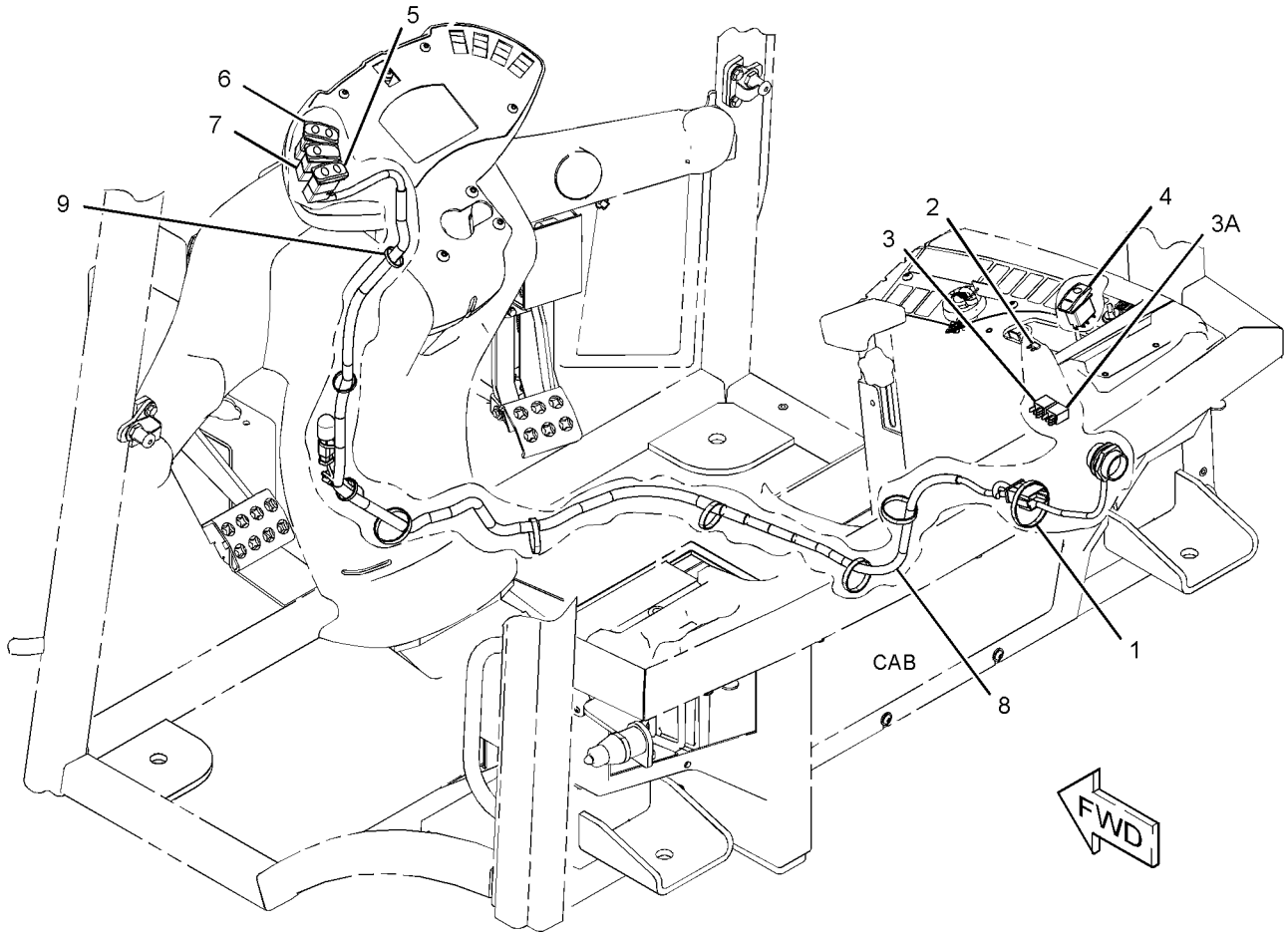

GRAPHIC #1 **<END>** g01424138

291-4622 WIRING GP-CAB–ROOF

S/N: LMD1-UP
PART OF 322-5766 OPERATOR AR-OPEN ROPS
AN ATTACHMENT

SMCS-1408, 7301 **i03027246**

NOTE	REF NO	GRAPHIC REF	PART NUMBER	QTY	PART NAME 1 2 3 4 5 6 (PRODUCT LEVEL)	SEE PAGE
	1	1	**9R-7941**	1	SOCKET AS	
		1	**9R-7980**	1	COVER	
	2	1	**206-1345**	9	STRAP-CABLE	
	3	1	**291-4621**	1	HARNESS AS-CAB (ROOF)	
	4	1	**061-7831**	1	GROMMET	
	5	1	**3D-9871**	5	BUTTON-PLUG	
M	6	1	**5C-7261**	1	NUT (M8X1.25-THD)	
	7	1	**8T-4224**	1	WASHER-HARD (8.8X16X2-MM THK)	

M-METRIC PART

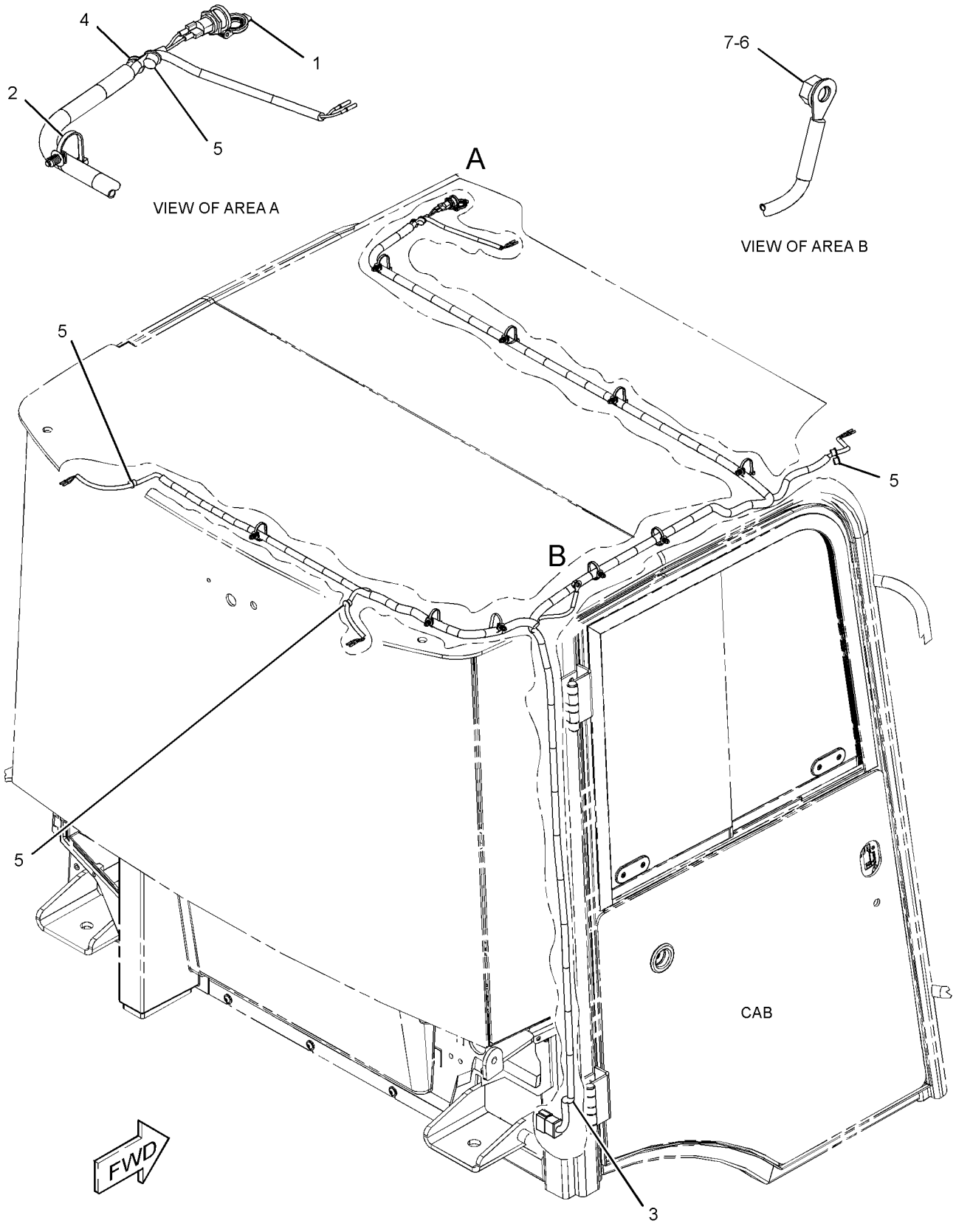

GRAPHIC #1 **<END>** g01378539

ELECTRICAL AND STARTING SYSTEM

259-8001 WIRING GP-CHASSIS

S/N: LMD1-UP

PART OF 322-4878 CHASSIS AR

SMCS-1408 **i03195169**

NOTE	REF NO	GRAPHIC REF	PART NUMBER	QTY	PART NAME 1 2 3 4 5 6 (PRODUCT LEVEL)	SEE PAGE
	1	1	**3E-7675**	1	SWITCH GP-PRESSURE (HYDROSTATIC PUMP OIL)	
		1	**102-8803**	1	KIT-RECEPTACLE (3-PIN)	
					(INCLUDES RECEPTACLE AS & WEDGE)	
		1	**186-3735**	3	PIN-CONNECTOR (16-GA TO 18-GA)	
C	2	1	**3S-2093**	12	STRAP-CABLE	
	3	1	**7K-1181**	7	STRAP-CABLE	
C	5	1	**319-6491**	1	SENSOR GP-SPEED (HYDROSTATIC DRIVE MOTOR)	
		1	**6J-2245**	1	SEAL-O-RING	
	6	1	**206-1345**	15	STRAP-CABLE	
	7	1	**238-0112**	1	SENSOR GP-TEMPERATURE (HYDRAULIC OIL)	
	8	1	**270-5143**	26	TIE-PUSH MOUNT	
Y	9	1	*314-6658*	1	WIRING GP-CHASSIS	132
	11	1	**261-0420**	1	SENSOR GP-PRESSURE (HYDROSTATIC DRIVE MOTOR OIL)	
	12	1	**2M-3432**	1	GROMMET	
C	14	1	**3J-1907**	5	SEAL-O-RING	
	15	1	**6P-6590**	1	GROMMET	
	16	1	**6V-8801**	1	NUT (3/8-16-THD)	
	17	1	**6V-9028**	1	SEAL-O-RING	
	18	1	**8T-4121**	2	WASHER-HARD (11X21X2.5-MM THK)	
M	19	1	**8T-4133**	2	NUT (M10X1.5-THD)	
M	20	1	**8T-4189**	2	BOLT (M8X1.25X20-MM)	
	21	1	**8T-4224**	2	WASHER-HARD (8.8X16X2-MM THK)	
	22	1	**8T-4896**	1	WASHER-HARD (10.2X18.5X2.5-MM THK)	
	23	1	**205-9920**	1	STRAP-CABLE	
C	24	1	**319-8800**	1	ADAPTER	
C	25	1	**298-6488**	1	SENSOR GP-PRESSURE	
C	26	1	**148-8336**	1	CONNECTOR AS	
		1	**3J-1907**	1	SEAL-O-RING	
		1	**6V-8397**	1	SEAL-O-RING	
		1	**6V-8636**	1	CONNECTOR	
C	27	1	**6V-3965**	1	COUPLER AS-QUICK DISCONNECT	
C	28	1	**5I-4376**	1	FITTING	
CM	29	1	**8T-0267**	2	BOLT-SOCKET HEAD (M6X1X12-MM)	
C	30	1	**274-3774**	2	CAP-CONNECTOR	

C-CHANGE FROM PREVIOUS TYPE
M-METRIC PART
Y-SEPARATE ILLUSTRATION

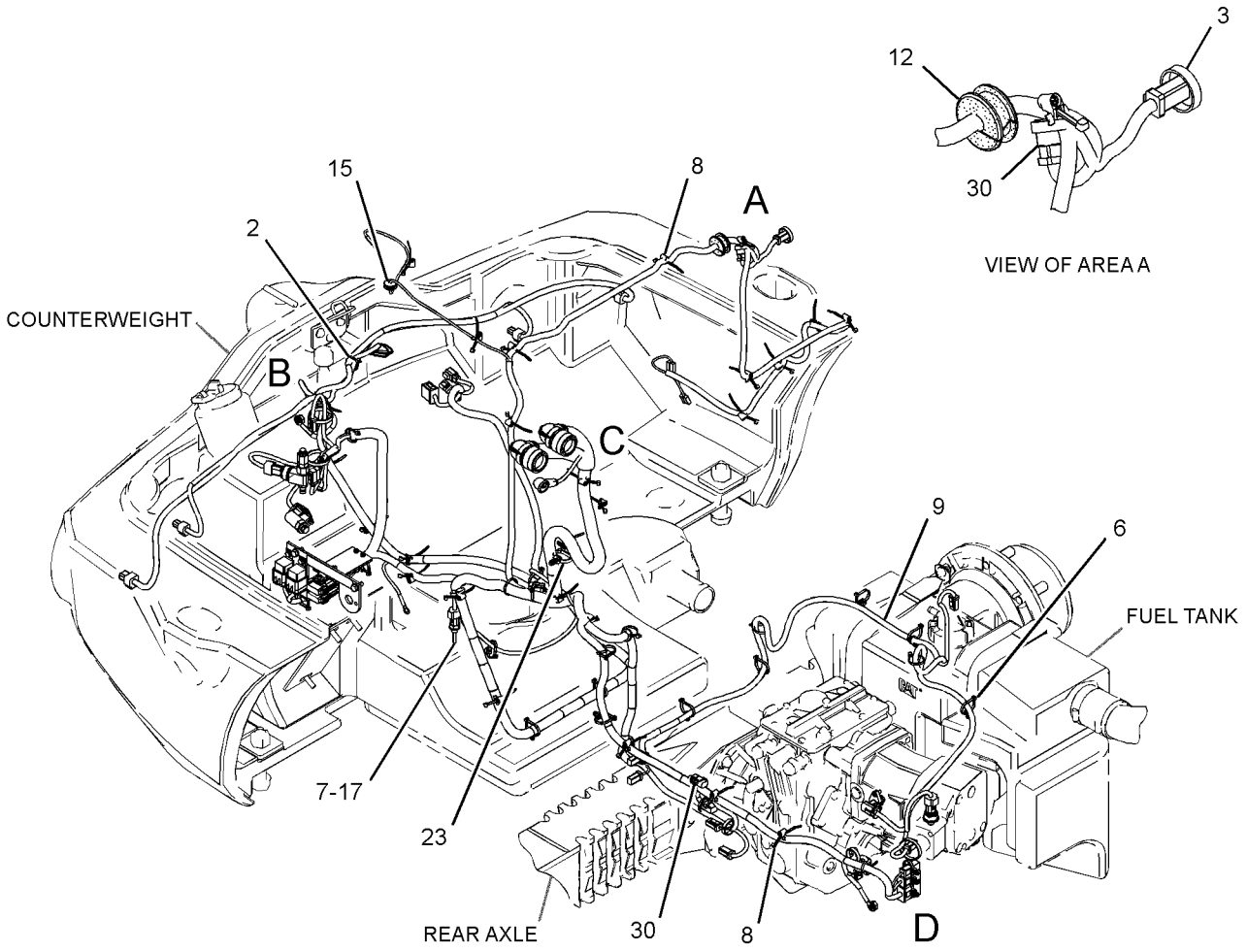

GRAPHIC #1 **<END>** g01590045

314-6658 WIRING GP-CHASSIS

S/N: LMD1-UP

PART OF 259-8001 WIRING GP-CHASSIS

SMCS-1408 **i03027247**

NOTE	REF NO	GRAPHIC REF	PART NUMBER	QTY	PART NAME 1 2 3 4 5 6 (PRODUCT LEVEL)	SEE PAGE
	1	1	**115-1615**	1	RELAY AS (12-VOLT) (START)	
	1A	1	**115-1615**	1	RELAY AS (12-VOLT) (STARTING AID)	
	2	1	**206-1345**	3	STRAP-CABLE	
	3	1	**232-7405**	1	BRACKET	
	4	1	**299-9256**	1	FILM-IDENTIFICATION (POWER DISTRIBUTION)	
	5	1	**314-6659**	1	HARNESS AS-CHASSIS (MAIN)	
	6	1	**314-6664**	1	PLATE AS	
M	7	1	**170-5632**	2	BOLT (M4X0.7X16-MM)	
	8	1	**4B-4863**	2	WASHER (4.7X11X1.2-MM THK)	
M	9	1	**5C-9553**	2	BOLT (M6X1X16-MM)	
	10	1	**8T-4205**	2	WASHER-HARD (7.2X14.5X2-MM THK)	

M-METRIC PART

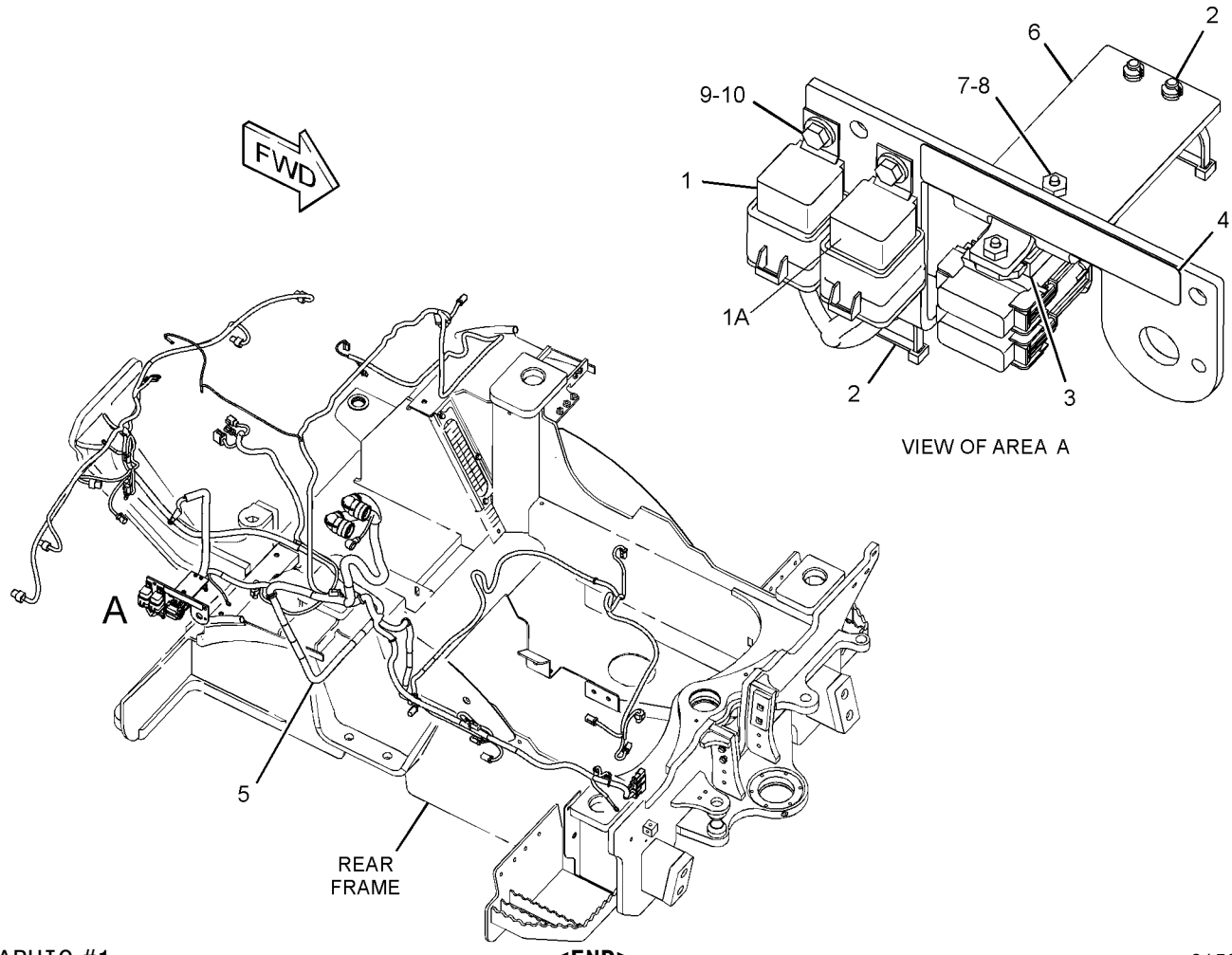

GRAPHIC #1 **<END>** g01534379

313-1724 WIRING GP-ENGINE

S/N: LMD1-UP

PART OF 322-4878 CHASSIS AR

SMCS-1403, 1408 **i03118922**

NOTE	REF NO	GRAPHIC REF	PART NUMBER	QTY	PART NAME 1 2 3 4 5 6 (PRODUCT LEVEL)	SEE PAGE
	1	1	**7I-2673**	3	STRAP-CABLE	
	2	1	**8I-4641**	1	STRAP-GROUND	
	3	1	**8T-8737**	2	PLUG-SEAL	
	4	1	**116-6161**	1	CAP-CONNECTOR	
	5	1	**191-8303**	1	SENSOR GP-SPEED (ENGINE)	
		1	**137-6645**	1	PAD	
		1	**205-6455**	1	SPACER (10X16X20-MM THK)	
	6	1	**205-6455**	1	SPACER (10X16X20-MM THK)	
	7	1	**238-0112**	1	SENSOR GP-TEMPERATURE (ENGINE COOLANT)	
	8	1	**268-1007**	1	STRAP-CABLE	
	9	1	**313-1725**	1	HARNESS AS-ENGINE	
	10	1	**117-1385**	1	SEAL-O-RING	
	11	1	**132-5789**	2	CLIP	
	12	1	**102-8802**	1	KIT-RECEPTACLE (2-PIN)	
					(INCLUDES RECEPTACLE AS & WEDGE)	
	13	1	**3S-2093**	10	STRAP-CABLE	
	14	1	**4H-2558**	1	GROMMET	
	15	1	**4P-7581**	2	CLIP	
	16	1	**4P-8134**	1	CLIP	
	17	1	**6P-6591**	1	GROMMET	
M	18	1	**6V-8231**	1	NUT (M10X1.25-THD)	
	19	1	**6V-9028**	1	SEAL-O-RING	
B	20	1	**8T-4121**	5	WASHER-HARD (11X21X2.5-MM THK)	
M	21	1	**8T-4133**	1	NUT (M10X1.5-THD)	
M	22	1	**8T-4137**	2	BOLT (M10X1.5X20-MM)	
M	23	1	**8T-4200**	2	BOLT (M8X1.25X16-MM)	
B	24	1	**8T-4224**	2	WASHER-HARD (8.8X16X2-MM THK)	

B-USE AS REQUIRED
M-METRIC PART

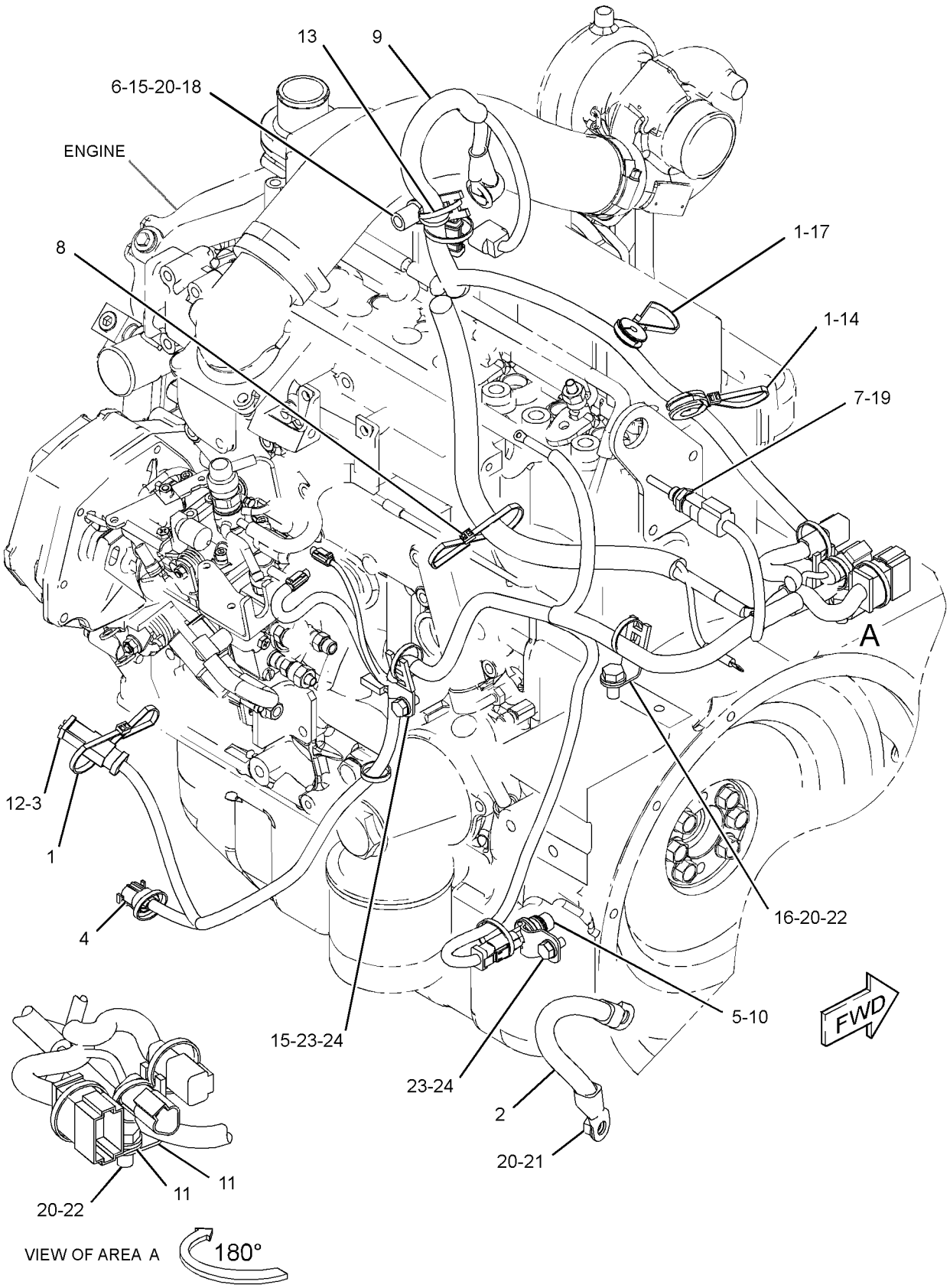

GRAPHIC #1 **<END>** g01526645

260-5331 WIRING GP-FRONT

S/N: LMD1-UP

PART OF 322-4878 CHASSIS AR

SMCS-5734 **i03027240**

NOTE	REF NO	GRAPHIC REF	PART NUMBER	QTY	PART NAME 1 2 3 4 5 6 (PRODUCT LEVEL)	SEE PAGE
	1	1	**3S-2093**	4	STRAP-CABLE	
	2	1	**164-9425**	1	HORN AS (24-VOLT, LOW TONE)	
	3	1	**206-1345**	2	STRAP-CABLE	
C	4	1	**314-6663**	1	HARNESS AS-FRONT CHASSIS	
BC	5	1	**270-5143**	20	TIE-PUSH MOUNT	
	6	1	**8T-4121**	1	WASHER-HARD (11X21X2.5-MM THK)	
M	7	1	**8T-4137**	1	BOLT (M10X1.5X20-MM)	
	8	1	**7K-1181**	1	STRAP-CABLE	

B-USE AS REQUIRED
C-CHANGE FROM PREVIOUS TYPE
M-METRIC PART

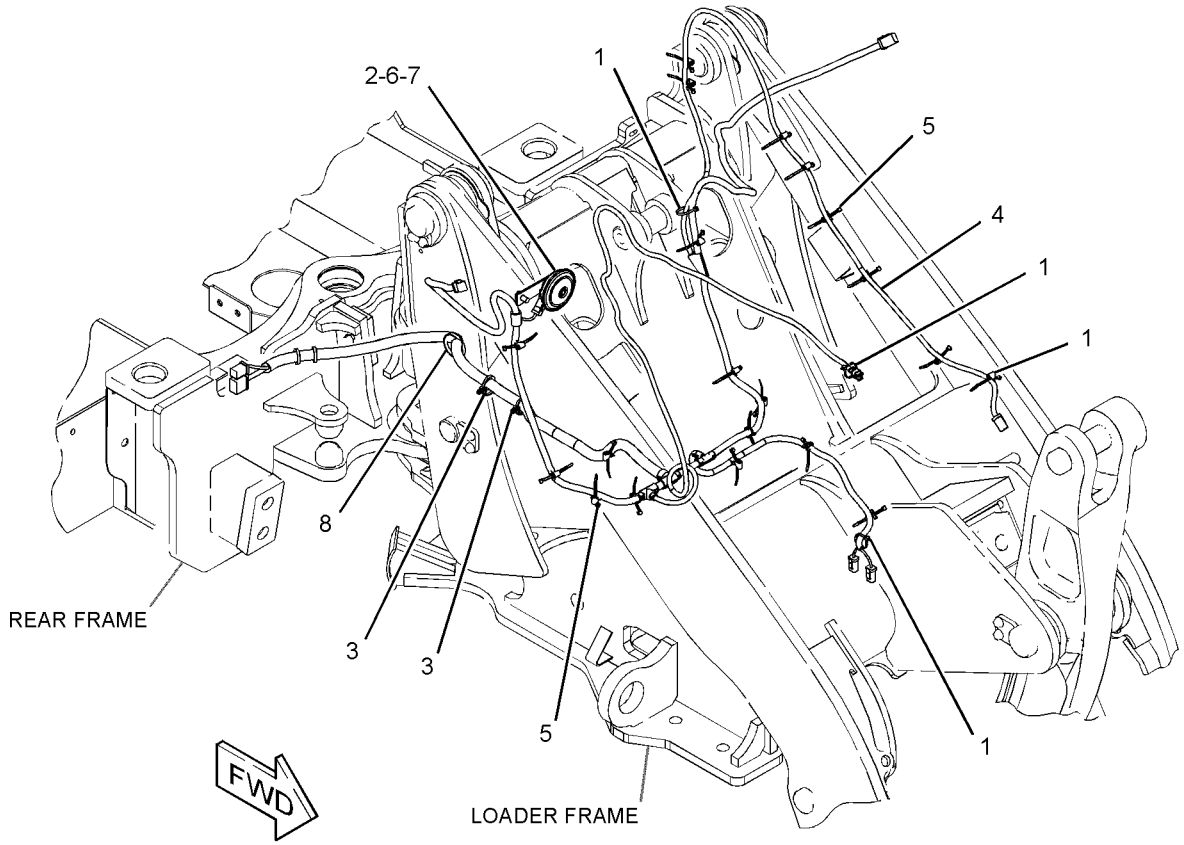

GRAPHIC #1 **<END>** g01522841

276-6814 WIRING GP-FRONT—BOOSTED AUXILIARY HYDRAULIC FLOW

S/N: LMD1-UP

PART OF 286-4218 COUPLER AR-QUICK

AN ATTACHMENT

SMCS-5734 **i03122965**

NOTE	REF NO	GRAPHIC REF	PART NUMBER	QTY	PART NAME 1 2 3 4 5 6 (PRODUCT LEVEL)	SEE PAGE
	1	1	**1S-9593**	1	STRAP-CABLE	
	2	1	**3S-2093**	10	STRAP-CABLE	
	3	1	**7I-2673**	4	STRAP-CABLE	
	4	1	**7K-1181**	3	STRAP-CABLE	
	5	1	**268-1007**	1	STRAP-CABLE	
	6	1	**270-5143**	10	TIE-PUSH MOUNT	
	7	1	**276-6744**	1	HARNESS AS-CHASSIS (BOOSTED AUXILIARY HYD FLOW)	
	8	1	**314-6661**	1	HARNESS AS-POWER (FRONT)	

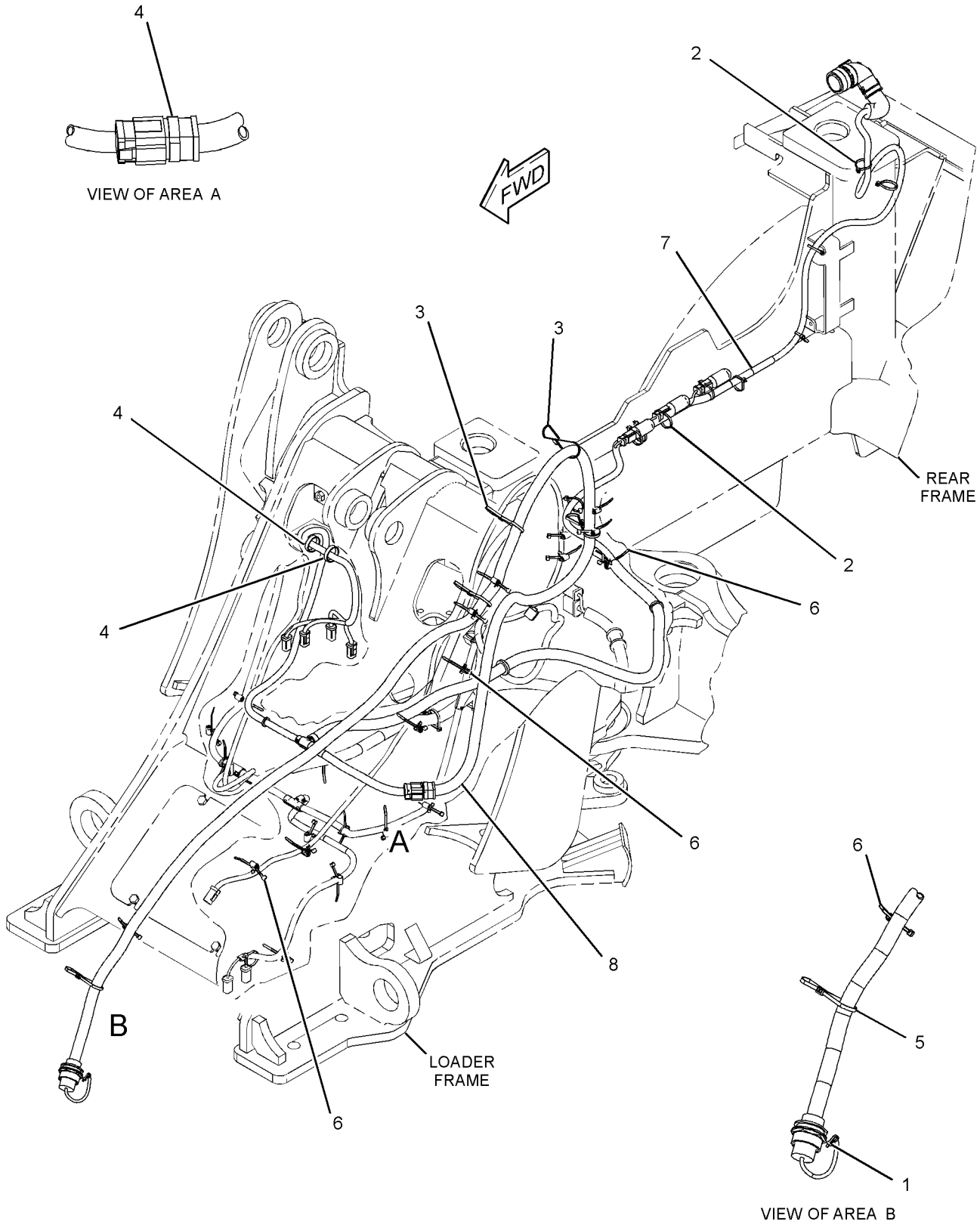

GRAPHIC #1 **<END>** g01523135

260-5389 WIRING GP-WORK TOOL–
BOOSTED AUXILIARY HYDRAULIC FLOW
S/N: LMD1-UP
CANNOT BE USED WITH 286-4218–PAGE 346
AN ATTACHMENT

SMCS-1408 **i03026883**

NOTE	PART NUMBER	QTY	PART NAME 1 2 3 4 5 6 (PRODUCT LEVEL)	SEE PAGE
Y	*260-5524*	1	WIRING GP-CAB (WKTL, BOOSTED AUX FLOW SWITCH)	125
Y	*260-5390*	1	WIRING GP-WORK TOOL (BOOSTED AUX HYDRAULIC FLOW)	139

Y-SEPARATE ILLUSTRATION

<END>

260-5390 WIRING GP-WORK TOOL–

BOOSTED AUXILIARY HYDRAULIC FLOW

S/N: LMD1-UP

PART OF 260-5389 WIRING GP-WORK TOOL

AN ATTACHMENT

SMCS-1408 **i03026962**

NOTE	REF NO	GRAPHIC REF	PART NUMBER	QTY	PART NAME 1 2 3 4 5 6 (PRODUCT LEVEL)	SEE PAGE
	1	1	**1S-9593**	1	STRAP-CABLE	
	2	1	**3S-2093**	7	STRAP-CABLE	
	3	1	**7I-2673**	4	STRAP-CABLE	
	4	1	**7K-1181**	2	STRAP-CABLE	
	5	1	**260-5335**	1	HARNESS AS-WORK TOOL	
	6	1	**268-1007**	1	STRAP-CABLE	
	7	1	**270-5143**	10	TIE-PUSH MOUNT	
	8	1	**314-6661**	1	HARNESS AS-POWER (FRONT)	
	9	1	**315-6539**	1	PLATE	
	10	1	**8W-8909**	1	SLEEVE	

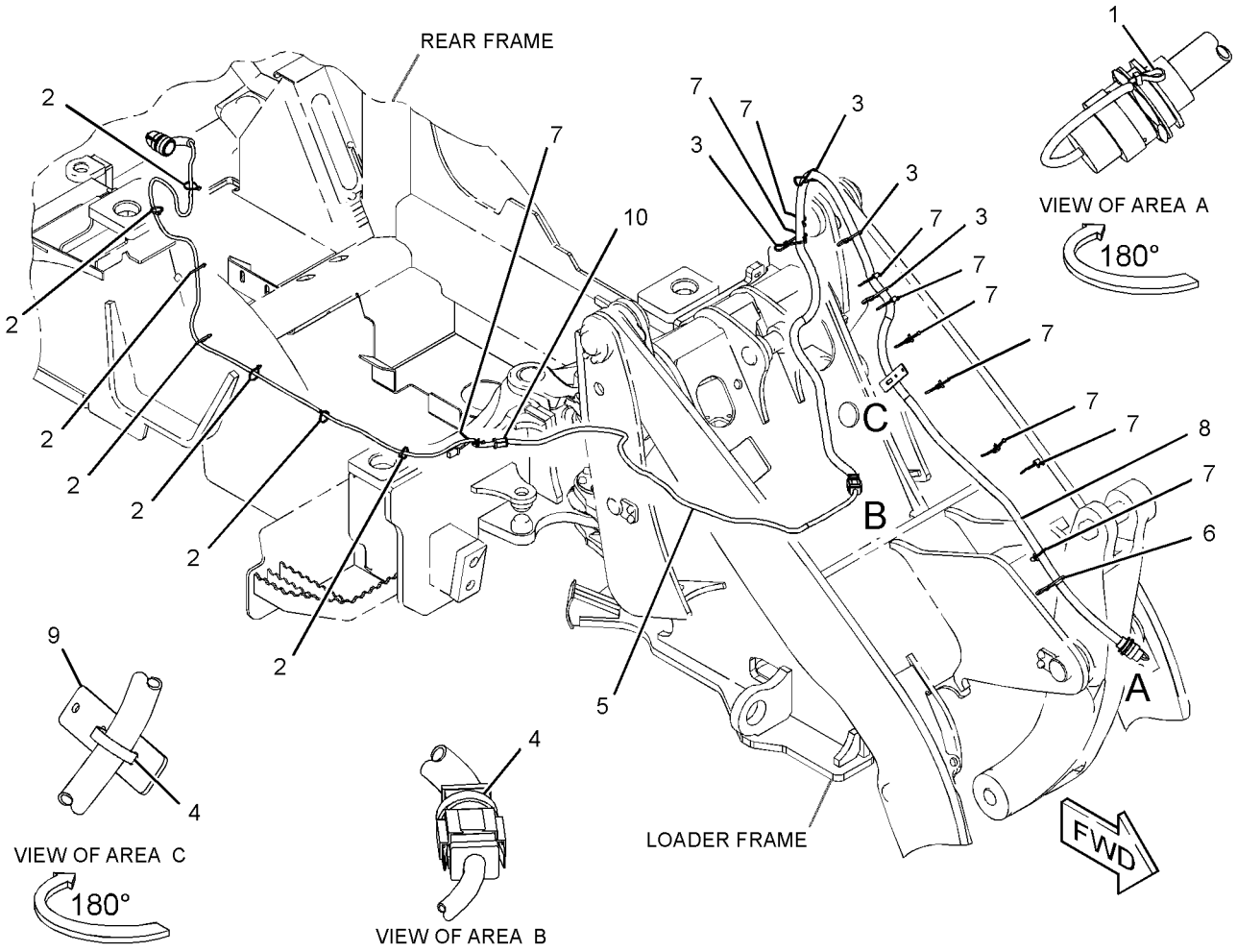

GRAPHIC #1 **<END>** g01534382

262-8654 AXLE & TRANSFER DRIVE GP-REAR–

STANDARD, WITH DIFFERENTIAL LOCK

S/N: LMD1-UP

PART OF 294-8410, 301-1149 POWER TRAIN AR

AN ATTACHMENT

SMCS-3278, 4350 **i02736533**

NOTE	REF NO	GRAPHIC REF	PART NUMBER	QTY	PART NAME 1 2 3 4 5 6 (PRODUCT LEVEL)	SEE PAGE
Y	1	1	*292-5408*	1	DIFFERENTIAL & BEVEL GEAR GP (REAR, LOCKING, STANDARD AXLE)	152
	2	1	**199-0639**	4	SCREW (WHEEL HUB)	
M	3	1	**160-8748**	8	BOLT (M12X1.75X55-MM)	
	4	1	**5S-1522**	2	RING-SNAP	
	5	1	**274-5246**	2	SEAL-LIP TYPE	
	6	1	**161-4102**	2	SEAL-O-RING	
	7	1	**219-8795**	2	CAP	
	8	1	**209-9875**	2	DOWEL	
	9	1	**152-6144**	1	PLUG AS-DRAIN (MAGNETIC) (DRIVE AXLE)	
	10	1	**209-7460**	2	BUSHING	
	11	1	**208-0321**	5	BOLT-FLANGE HEAD (M12X1.75X33-MM)	
	12	1	**293-8763**	5	BOLT (M12X1.75X75-MM)	
M	13	1	**160-8746**	16	BOLT (M12X1.75X18-MM)	
	14	1	**253-5024**	1	BREATHER (AXLE, REAR)	
	15	1	**292-5431**	2	SHAFT-AXLE	
	16	1	**292-5432**	2	SHAFT-INTERMEDIATE	
	17	1	**292-5433**	2	COUPLING-SHAFT	
	18	1	*292-5372*	2	GEAR AS-RING	
					(EACH INCLUDES)	
		1	**209-4153**	1	GEAR (60-TEETH)	
		1	**209-4158**	8	BUSHING	
		1	**209-4159**	1	CARRIER	
		1	**209-7459**	1	RETAINER	
Y	19	1	*292-5373*	2	PLANETARY GP-FINAL DRIVE	176
Y	20	1	*292-5377*	1	DRIVE GP-TRANSFER (HYDROSTATIC)	157
	21	1	**292-5393**	1	HOUSING-AXLE	
Y	22	1	*292-5402*	2	FLANGE GP-WHEEL	164

M-METRIC PART
Y-SEPARATE ILLUSTRATION

262-8654 AXLE & TRANSFER DRIVE GP-REAR *(contd.)* **i02736533**

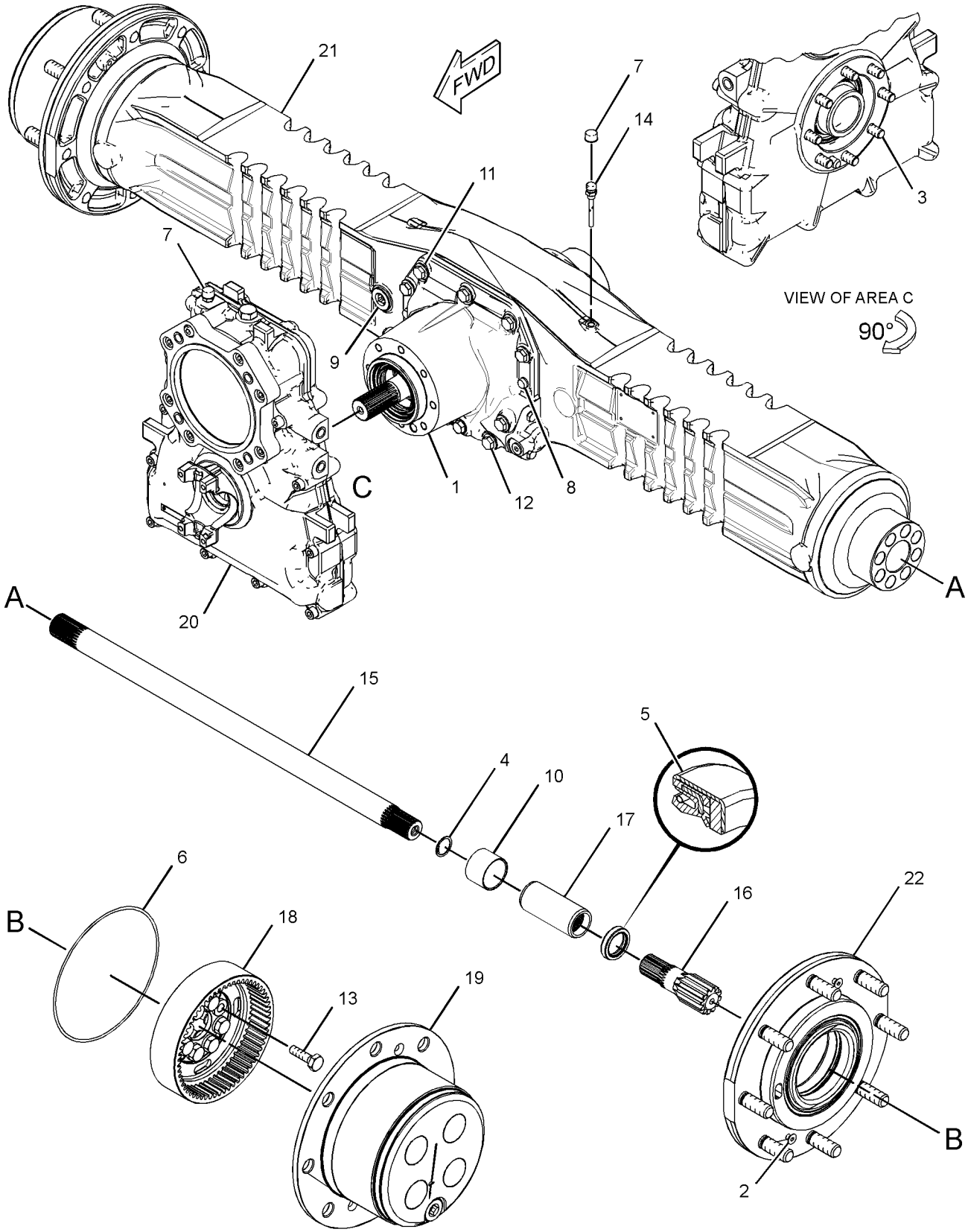

GRAPHIC #1 **<END>** g01384235

262-8662 AXLE & TRANSFER DRIVE GP-REAR–

HIGH SPEED, WITH DIFFERENTIAL LOCK

S/N: LMD1-UP

PART OF 294-8411, 301-1150 POWER TRAIN AR

AN ATTACHMENT

SMCS-3278, 4350 **i02736546**

NOTE	REF NO	GRAPHIC REF	PART NUMBER	QTY	PART NAME 1 2 3 4 5 6 (PRODUCT LEVEL)	SEE PAGE
Y	1	1	*292-5410*	1	DIFFERENTIAL & BEVEL GEAR GP (REAR, LOCKING, HIGH SPEED AXLE)	154
	2	1	**199-0639**	4	SCREW (WHEEL HUB)	
M	3	1	**6V-5843**	6	BOLT (M10X1.5X45-MM)	
	4	1	**5S-1522**	2	RING-SNAP	
	5	1	**274-5246**	2	SEAL-LIP TYPE	
	6	1	**161-4102**	2	SEAL-O-RING	
	7	1	**219-8795**	2	CAP	
	8	1	**209-9875**	2	DOWEL	
	9	1	**152-6144**	1	PLUG AS-DRAIN (MAGNETIC)	
	10	1	**209-7460**	2	BUSHING	
	11	1	**208-0321**	5	BOLT-FLANGE HEAD (M12X1.75X33-MM)	
	12	1	**293-8763**	5	BOLT (M12X1.75X75-MM)	
M	13	1	**160-8746**	16	BOLT (M12X1.75X18-MM)	
	14	1	**253-5024**	1	BREATHER (AXLE, REAR)	
	15	1	**292-5431**	2	SHAFT-AXLE	
	16	1	**292-5432**	2	SHAFT-INTERMEDIATE	
	17	1	**292-5433**	2	COUPLING-SHAFT (COUPLER)	
	18	1	*292-5372*	2	GEAR AS-RING	
					(EACH INCLUDES)	
		1	**209-4153**	1	GEAR (60-TEETH)	
		1	**209-4158**	8	BUSHING	
		1	**209-4159**	1	CARRIER	
		1	**209-7459**	1	RETAINER	
Y	19	1	*292-5373*	2	PLANETARY GP-FINAL DRIVE	176
Y	20	1	*292-5378*	1	DRIVE GP-TRANSFER (HYDROSTATIC, HIGH SPEED)	159
	21	1	**292-5393**	1	HOUSING-AXLE	
Y	22	1	*292-5402*	2	FLANGE GP-WHEEL	164

M-METRIC PART
Y-SEPARATE ILLUSTRATION

262-8662 AXLE & TRANSFER DRIVE GP-REAR *(contd.)* **i02736546**

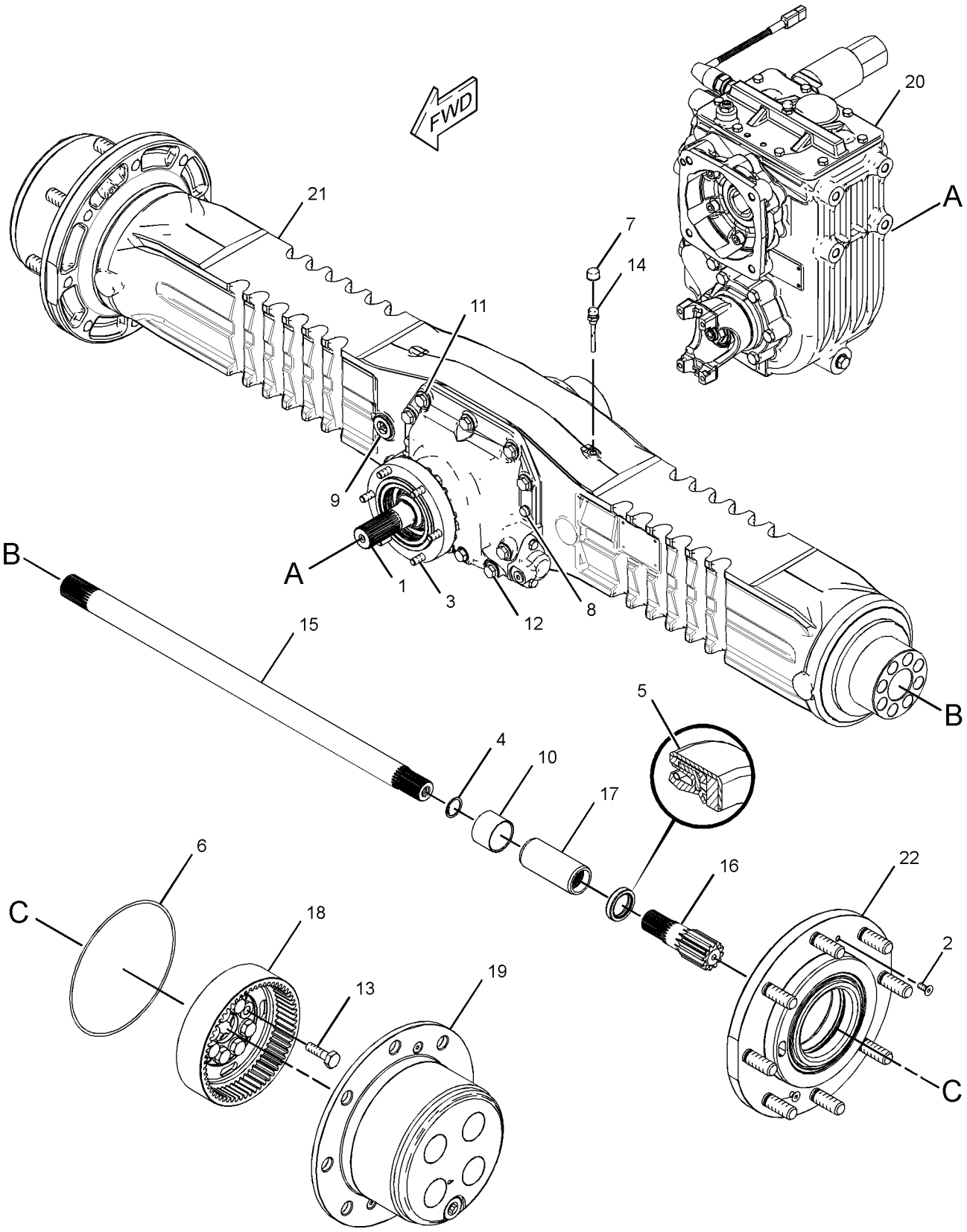

GRAPHIC #1 **<END>** g01382759

262-8652 AXLE GP-FRONT—STANDARD, WITH DIFFERENTIAL LOCK

S/N: LMD1-UP

PART OF 306-5423 AXLE GP-FRONT

AN ATTACHMENT

SMCS-3278 **i03103161**

NOTE	REF NO	GRAPHIC REF	PART NUMBER	QTY	PART NAME 1 2 3 4 5 6 (PRODUCT LEVEL)	SEE PAGE
Y	1	1	*292-5402*	2	FLANGE GP-WHEEL	164
M	2	1	**8C-7505**	4	SCREW-FLAT HEAD (M8X1.25X20-MM)	
M	3	1	**6V-4249**	10	BOLT (M10X1.5X50-MM)	
	4	1	**6V-5200**	2	RING-RETAINING	
	5	1	**5S-1522**	2	RING-SNAP	
	6	1	**274-5246**	2	SEAL-LIP TYPE	
	7	1	**161-4102**	2	SEAL-O-RING	
	9	1	**199-0667**	1	DOWEL-BRACKET	
	10	1	**219-8795**	1	CAP (PLASTIC)	
	11	1	**209-9875**	2	DOWEL	
	12	1	**197-9155**	1	BREATHER (AXLE, FRONT)	
	13	1	**152-6144**	1	PLUG AS-DRAIN (MAGNETIC)	
	14	1	**209-7460**	2	BUSHING	
	15	1	**208-0321**	7	BOLT-FLANGE HEAD (M12X1.75X33-MM)	
	16	1	**293-8763**	5	BOLT (M12X1.75X75-MM)	
	17	1	**157-0741**	1	SEAL-LIP TYPE	
	18	1	**211-1316**	1	BRACKET	
	19	1	**151-6856**	1	BRAKE GP-HYDRAULIC CALIPER	
		1	**5G-5703**	1	SCREW-PURGE	
		1	**151-2628**	2	PAD-BRAKE	
		1	**161-6282**	1	KIT-BRAKE	
					(INCLUDES PINS, CLIPS, CAPS & PLATES)	
M	20	1	**160-8746**	16	BOLT (M12X1.75X18-MM)	
	21	1	**292-5431**	2	SHAFT-AXLE	
	22	1	**292-5432**	2	SHAFT-INTERMEDIATE	
	23	1	**292-5433**	2	COUPLING-SHAFT (COUPLER)	
	24	1	*292-5372*	2	GEAR AS-RING	
					(EACH INCLUDES)	
		1	**209-4153**	1	GEAR (60-TEETH)	
		1	**209-4158**	8	BUSHING	
		1	**209-4159**	1	CARRIER	
		1	**209-7459**	1	RETAINER	
Y	25	1	*292-5373*	2	PLANETARY GP-FINAL DRIVE	176
	26	1	**292-5387**	1	DISC-BRAKE	
	27	1	**292-5393**	1	HOUSING-AXLE	
Y	28	1	*292-5396*	1	DIFFERENTIAL & BEVEL GEAR GP (FRONT, LOCKING)	150

M-METRIC PART
Y-SEPARATE ILLUSTRATION

262-8652 AXLE GP-FRONT *(contd.)* **i03103161**

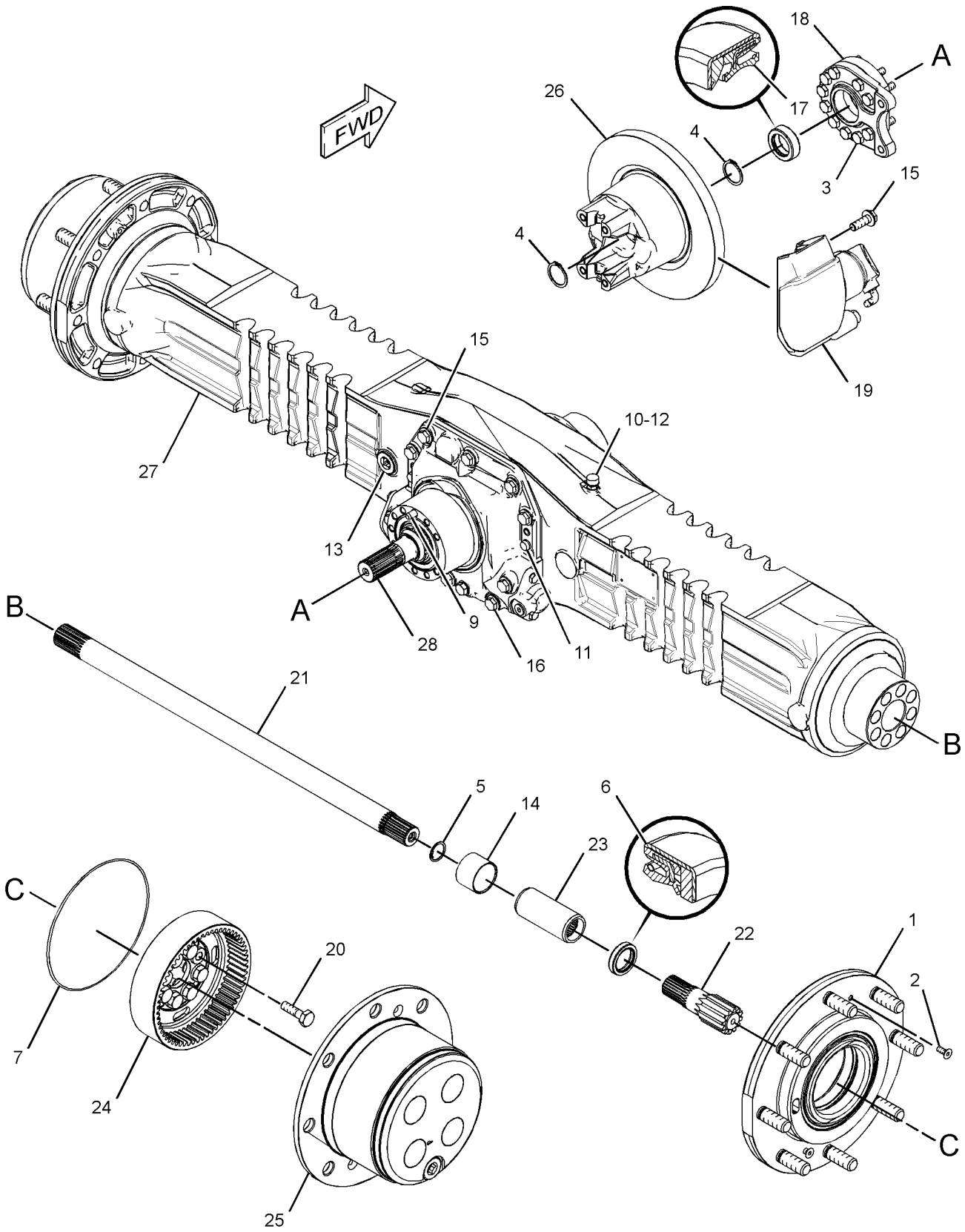

GRAPHIC #1 **<END>** g01382761

262-8660 AXLE GP-FRONT—HIGH SPEED, WITH DIFFERENTIAL LOCK

S/N: LMD1-UP

PART OF 305-1934 AXLE GP-FRONT

AN ATTACHMENT

SMCS-3278 **i02741352**

NOTE	REF NO	GRAPHIC REF	PART NUMBER	QTY	PART NAME 1 2 3 4 5 6 (PRODUCT LEVEL)	SEE PAGE
	1	1	**292-5423**	1	HOUSING-AXLE	
	2	1	**199-0639**	4	SCREW (WHEEL HUB)	
M	3	1	**6V-4249**	10	BOLT (M10X1.5X50-MM)	
	4	1	**207-4255**	2	PLUG	
	5	1	**168-7999**	2	SPRING PIN	
	6	1	**6V-5200**	2	RING-RETAINING	
	7	1	**293-4875**	2	RING-RETAINING	
	8	1	**4D-2297**	2	SEAL-O-RING	
	9	1	**161-4102**	2	SEAL-O-RING	
	10	1	**208-8978**	2	PLUG	
	12	1	**199-0667**	1	DOWEL-BRACKET	
	13	1	**293-2149**	4	DOWEL	
	14	1	**219-8795**	5	CAP	
	15	1	**209-9875**	2	DOWEL	
	16	1	**197-9155**	1	BREATHER (AXLE)	
	17	1	**165-7067**	2	DISC-BRAKE	
	18	1	**168-7998**	6	PIN	
	19	1	**165-8867**	2	SCREW-PURGE	
	20	1	**152-6144**	1	PLUG AS-DRAIN (MAGNETIC)	
	21	1	**165-7069**	2	PLATE-BRAKE	
	22	1	**208-0321**	5	BOLT-FLANGE HEAD (M12X1.75X33-MM)	
	23	1	**293-8763**	5	BOLT (M12X1.75X75-MM)	
M	24	1	**178-9587**	20	BOLT	
	25	1	**293-8735**	2	COUPLING-SHAFT	
	26	1	**157-0741**	1	SEAL-LIP TYPE	
	27	1	**211-1316**	1	BRACKET	
	28	1	**293-8742**	2	SHAFT	
	29	1	**292-5435**	2	SHAFT	
Y	30	1	*292-5373*	2	PLANETARY GP-FINAL DRIVE	176
	31	1	**292-5387**	1	DISC-BRAKE	
Y	32	1	*292-5396*	1	DIFFERENTIAL & BEVEL GEAR GP (FRONT, LOCKING)	150
Y	33	1	*292-5404*	2	WHEEL & BRAKE GP (FRONT)	190

M-METRIC PART
Y-SEPARATE ILLUSTRATION

262-8660 AXLE GP-FRONT *(contd.)* **i02741352**

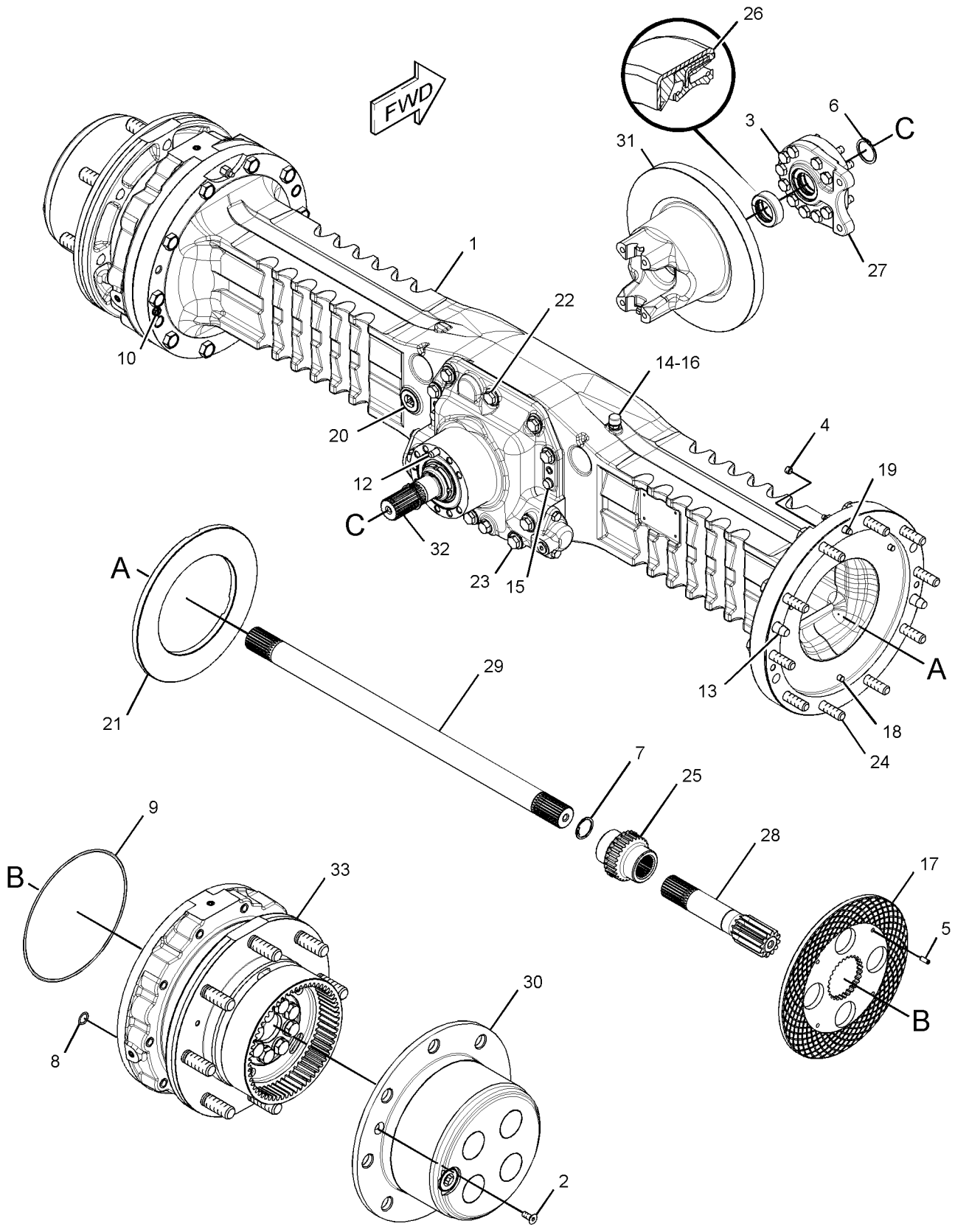

GRAPHIC #1 **<END>** g01382773

305-1934 AXLE GP-FRONT—HIGH SPEED, WITH DIFFERENTIAL LOCK

S/N: LMD1-UP

PART OF 294-8411, 301-1150 POWER TRAIN AR

AN ATTACHMENT

SMCS-3278 **i03103164**

NOTE	REF NO	GRAPHIC REF	PART NUMBER	QTY	PART NAME 1 2 3 4 5 6 (PRODUCT LEVEL)	SEE PAGE
Y	1	1	**227-1092**	1	BRAKE GP-PARKING (MECHANICAL CALIPER)	224
	2	1	**227-1093**	1	BRACKET AS	
Y	3	1	*262-8660*	1	AXLE GP-FRONT (HIGH SPEED, WITH DIFF LOCK)	146
	4	1	**298-7711**	1	CABLE AS-PARKING BRAKE CONTROL	
		1	**098-5623**	1	PIN-COTTER	
		1	**164-8346**	1	PIN	
	5	1	**208-9312**	2	BOLT-FLANGE HEAD (M12X1.75X40-MM)	
	6	1	**4K-8864**	2	CLIP	
M	7	1	**8T-4189**	1	BOLT (M8X1.25X20-MM)	
	8	1	**5P-8247**	2	WASHER-HARD (17X32X3.5-MM THK)	
M	9	1	**7X-2556**	2	BOLT (M16X2X100-MM)	
	10	1	**8T-4224**	2	WASHER-HARD (8.8X16X2-MM THK)	

M-METRIC PART
Y-SEPARATE ILLUSTRATION

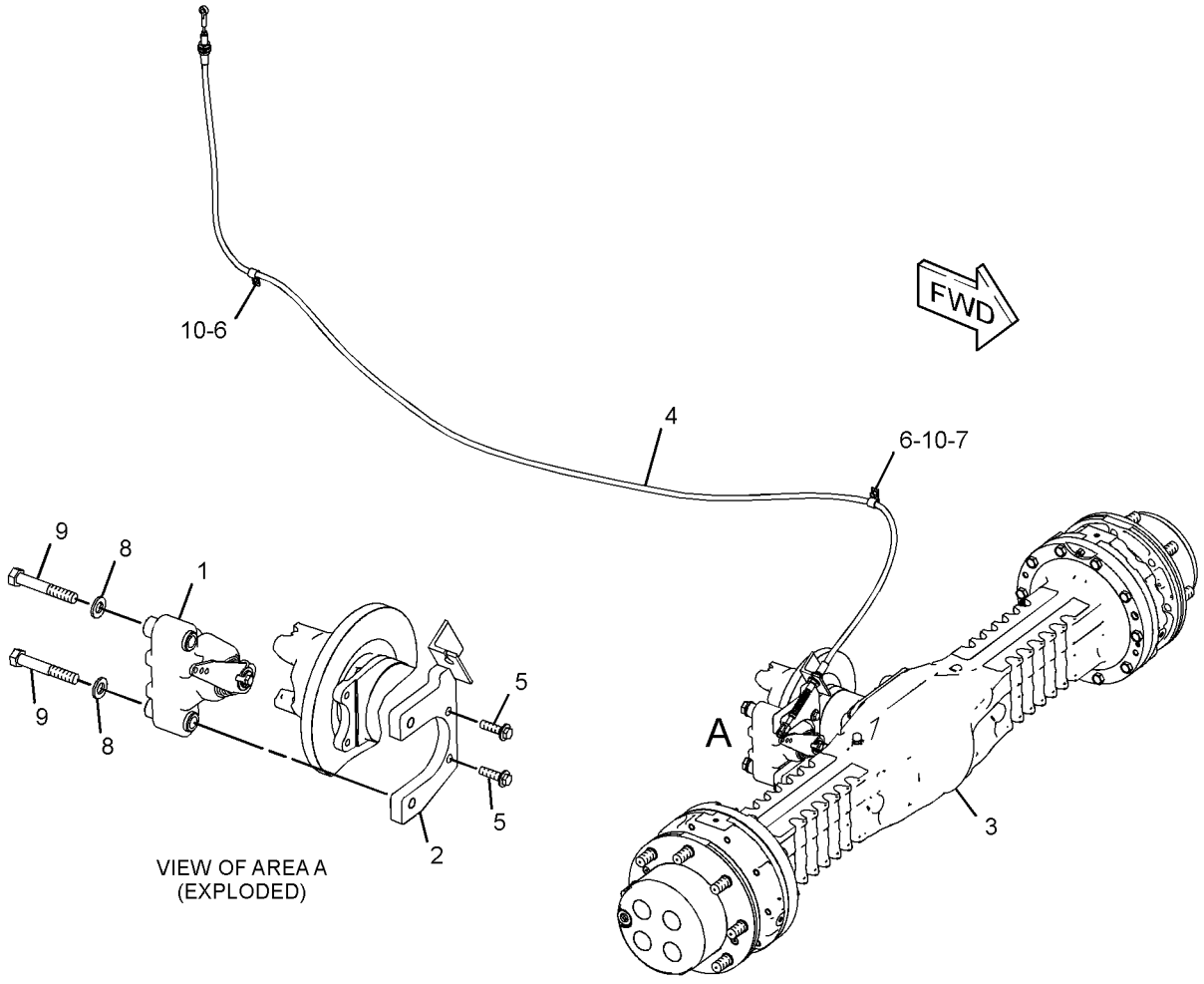

GRAPHIC #1 **<END>** g01378552

306-5423 AXLE GP-FRONT–STANDARD, WITH DIFFERENTIAL LOCK

S/N: LMD1-UP

PART OF 294-8410, 301-1149 POWER TRAIN AR

AN ATTACHMENT

SMCS-3278 **i03103165**

NOTE	REF NO	GRAPHIC REF	PART NUMBER	QTY	PART NAME 1 2 3 4 5 6 (PRODUCT LEVEL)	SEE PAGE
Y	1	1	*262-8652*	1	AXLE GP-FRONT (STANDARD, WITH DIFF LOCK)	144
	2	1	**269-8474**	1	CABLE AS-PARKING BRAKE CONTROL	
	3	1	**4K-8864**	2	CLIP (SLOT)	
M	4	1	**8T-4189**	1	BOLT (M8X1.25X20-MM)	
	5	1	**8T-4224**	2	WASHER-HARD (8.8X16X2-MM THK)	

M-METRIC PART
Y-SEPARATE ILLUSTRATION

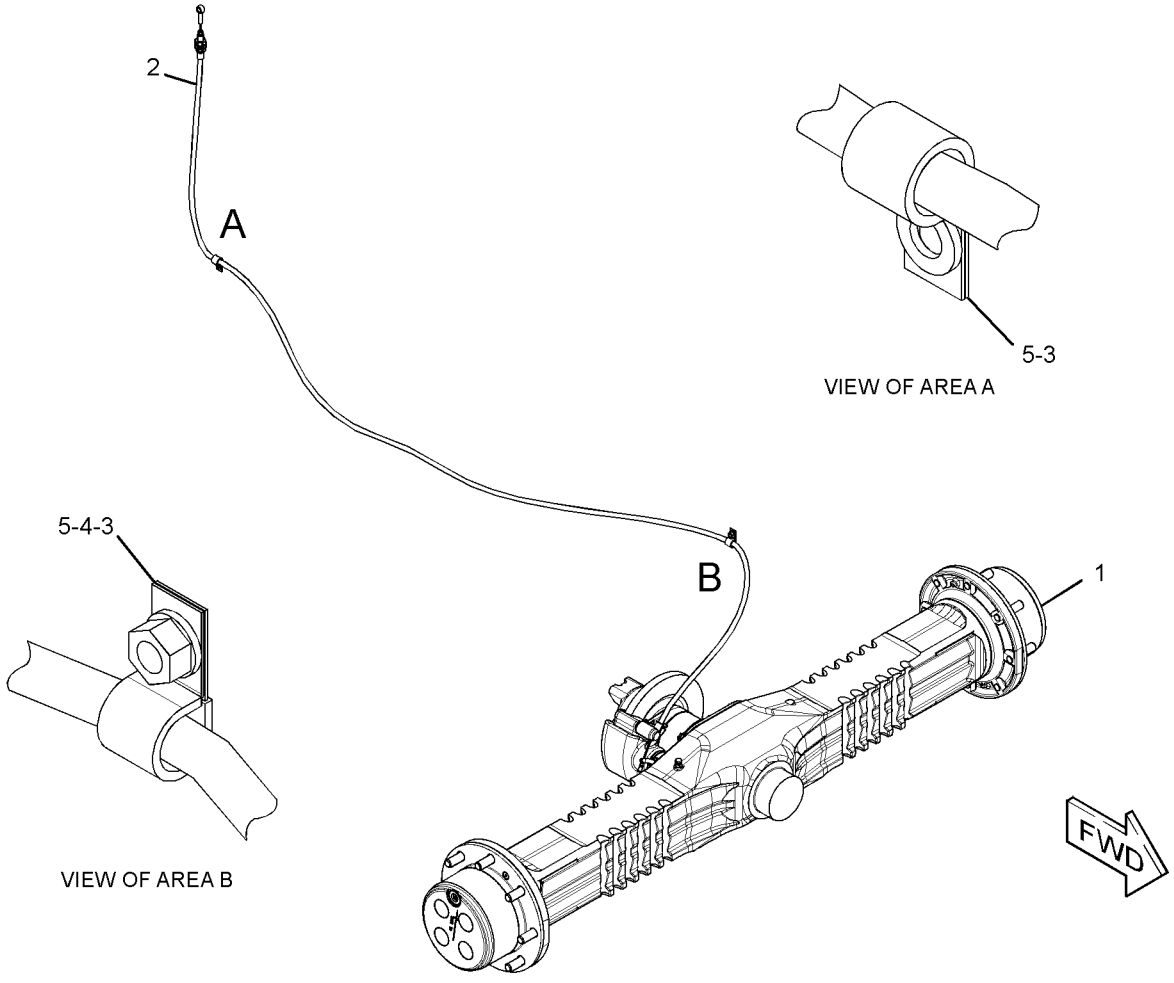

GRAPHIC #1 **<END>** g01377410

292-5396 DIFFERENTIAL & BEVEL GEAR GP—FRONT, LOCKING

S/N: LMD1-UP

PART OF 262-8652, 262-8660 AXLE GP-FRONT

AN ATTACHMENT

SMCS-3254, 3256, 3258 **i02796135**

NOTE	REF NO	GRAPHIC REF	PART NUMBER	QTY	PART NAME 1 2 3 4 5 6 (PRODUCT LEVEL)	SEE PAGE
	1	1	**3J-1907**	1	SEAL-O-RING	
	2	1	**9S-8004**	1	PLUG-O-RING	
M	3	1	**6V-5217**	4	BOLT (M8X1.25X20-MM)	
	4	1	**219-5442**	2	RING-RETAINING	
	5	1	**9W-0614**	2	CONE	
	6	1	**136-7808**	2	BEARING AS-TAPERED ROLLER	
	7	1	**5H-2767**	1	SEAL-O-RING	
	8	1	**4D-3107**	1	SEAL-O-RING	
	9	1	**152-6145**	1	PLUG-MAGNETIC (DIFFERENTIAL)	
	10	1	**209-7454**	2	NUT (M94X2-THD)	
	11	1	**211-0101**	2	PLATE-LOCK	
J	12	1	**211-1313**	1	LOCKWASHER	
J	13	1	**211-1314**	1	NUT-RING (M40X1.5-THD)	
	14	1	**208-0320**	12	BOLT (M10X1.5X75-MM)	
J	15	1	**210-8469**	1	SHIM (COLLAPSIBLE)	
J	16	1	**209-7462**	2	WASHER (40X50X2-MM THK)	
	17	1	**293-8721**	1	FORK	
	18	1	**293-2101**	2	SPACER (12X20X10-MM THK)	
	19	1	**293-8722**	1	BUSHING	
	20	1	**293-8723**	1	PISTON	
	21	1	**293-8724**	1	FLANGE	
	22	1	**293-8725**	2	SPRING	
M	23	1	**199-0695**	2	BOLT (M6X1X14-MM)	
	24	1	**209-7467**	4	PIN	
	25	1	**293-8738**	1	SUPPORT-CYLINDER	
	26	1	**293-8739**	1	PIN	
	27	1	**209-7474**	1	COLLAR	
	28	1	**292-5437**	1	CARRIER AS-DIFFERENTIAL	
		1	**208-0322**	4	BOLT-FLANGE HEAD (M14X2X75-MM)	
		1	**217-2880**	4	DOWEL	
J	29	1	**292-5381**	1	GEAR GP-BEVEL & TRANSFER	
Y	30	1	*292-5397*	1	DIFFERENTIAL GP	156
B	31	1	**208-7797**	1	KIT-SHIM	
J	32	1	**311-2529**	1	KIT-BEVEL GEAR	

B-USE AS REQUIRED
J-KIT MARKED J SERVICES PARTS MARKED J
M-METRIC PART
Y-SEPARATE ILLUSTRATION

292-5396 **DIFFERENTIAL & BEVEL GEAR GP** *(contd.)* **i02796135**

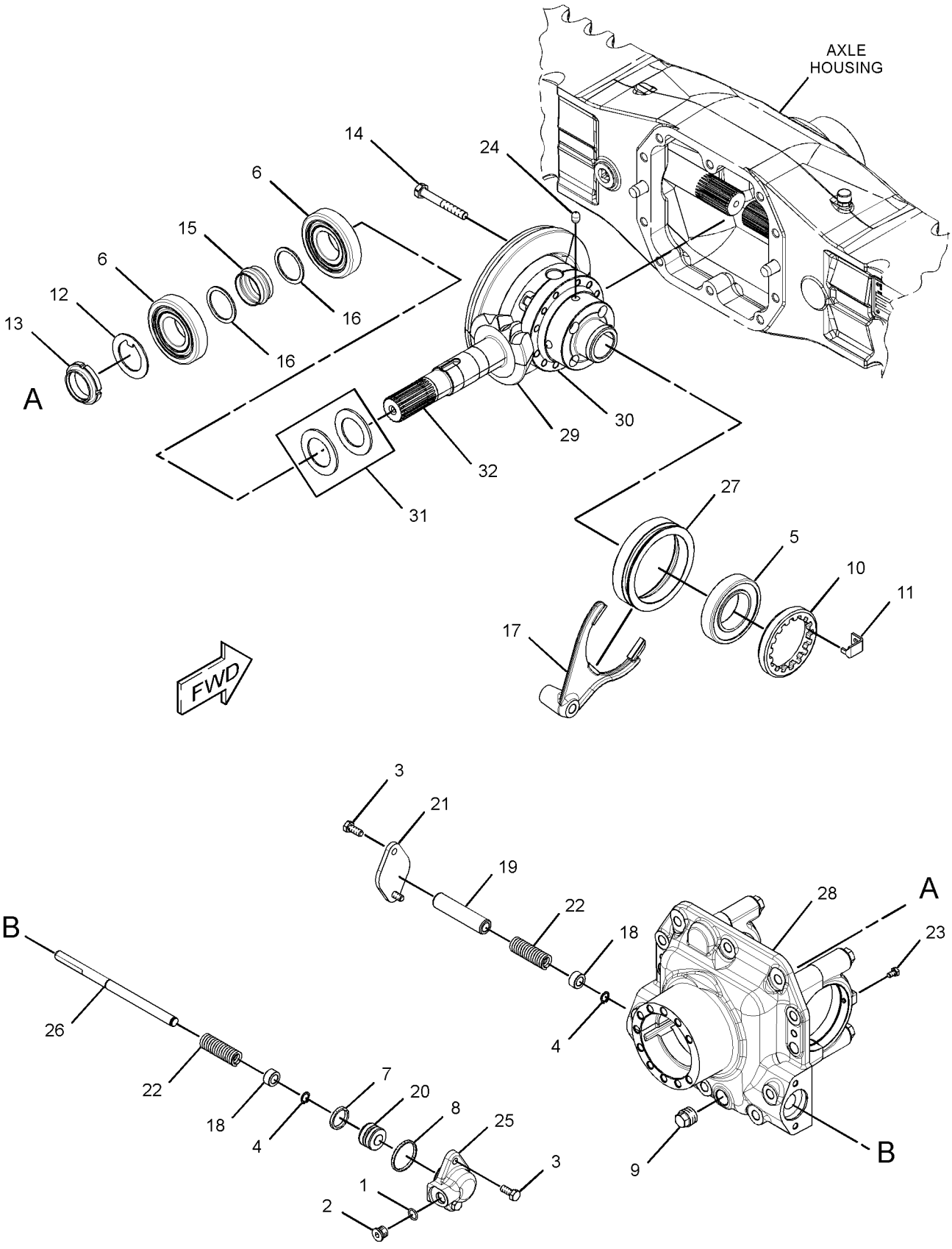

GRAPHIC #1 **<END>** g01397655

292-5408 DIFFERENTIAL & BEVEL GEAR GP–

REAR, LOCKING, STANDARD AXLE

S/N: LMD1-UP

PART OF 262-8654 AXLE & TRANSFER DRIVE GP-REAR

AN ATTACHMENT

SMCS-3254, 3256, 3258 **i02829274**

NOTE	REF NO	GRAPHIC REF	PART NUMBER	QTY	PART NAME 1 2 3 4 5 6 (PRODUCT LEVEL)	SEE PAGE
	1	1	**3J-1907**	1	SEAL-O-RING	
	2	1	**9S-8004**	1	PLUG-O-RING	
M	3	1	**6V-5217**	4	BOLT (M8X1.25X20-MM)	
	4	1	**219-5442**	2	RING-RETAINING	
	5	1	**9W-0614**	2	CONE	
	6	1	**136-7808**	2	BEARING AS-TAPERED ROLLER	
	7	1	**5H-2767**	1	SEAL-O-RING	
	8	1	**4D-3107**	1	SEAL-O-RING	
	9	1	**152-6145**	1	PLUG-MAGNETIC (DIFFERENTIAL)	
	10	1	**209-7454**	2	NUT (M94X2-THD)	
	11	1	**211-0101**	2	PLATE-LOCK	
J	12	1	**211-1313**	1	LOCKWASHER	
J	13	1	**211-1314**	1	NUT-RING (M40X1.5-THD)	
	14	1	**210-8354**	1	SEAL-RING	
	15	1	**208-0320**	12	BOLT (M10X1.5X75-MM)	
J	16	1	**210-8469**	1	SHIM (COLLAPSIBLE)	
J	17	1	**209-7462**	2	WASHER (40X50X2-MM THK)	
	18	1	**293-8721**	1	FORK	
	19	1	**293-2101**	2	SPACER (12X20X10-MM THK)	
	20	1	**293-8722**	1	BUSHING	
	21	1	**293-8723**	1	PISTON	
	22	1	**293-8724**	1	FLANGE	
	23	1	**293-8725**	2	SPRING	
M	24	1	**199-0695**	2	BOLT (M6X1X14-MM)	
	25	1	**209-7467**	4	PIN	
	26	1	**293-8738**	1	SUPPORT-CYLINDER	
	27	1	**293-8739**	1	PIN	
	28	1	**209-7474**	1	COLLAR	
J	29	1	**292-5382**	1	GEAR GP-BEVEL & TRANSFER	
	30	1	**292-5391**	1	CARRIER AS	
		1	**208-0322**	4	BOLT-FLANGE HEAD (M14X2X75-MM)	
		1	**217-2880**	4	DOWEL	
Y	31	1	*292-5397*	1	DIFFERENTIAL GP	156
B	32	1	**208-7797**	1	KIT-SHIM	
J	33	1	**311-2534**	1	KIT-BEVEL GEAR	

B-USE AS REQUIRED
J-KIT MARKED J SERVICES PARTS MARKED J
M-METRIC PART
Y-SEPARATE ILLUSTRATION

292-5408 **DIFFERENTIAL & BEVEL GEAR GP** *(contd.)* **i02829274**

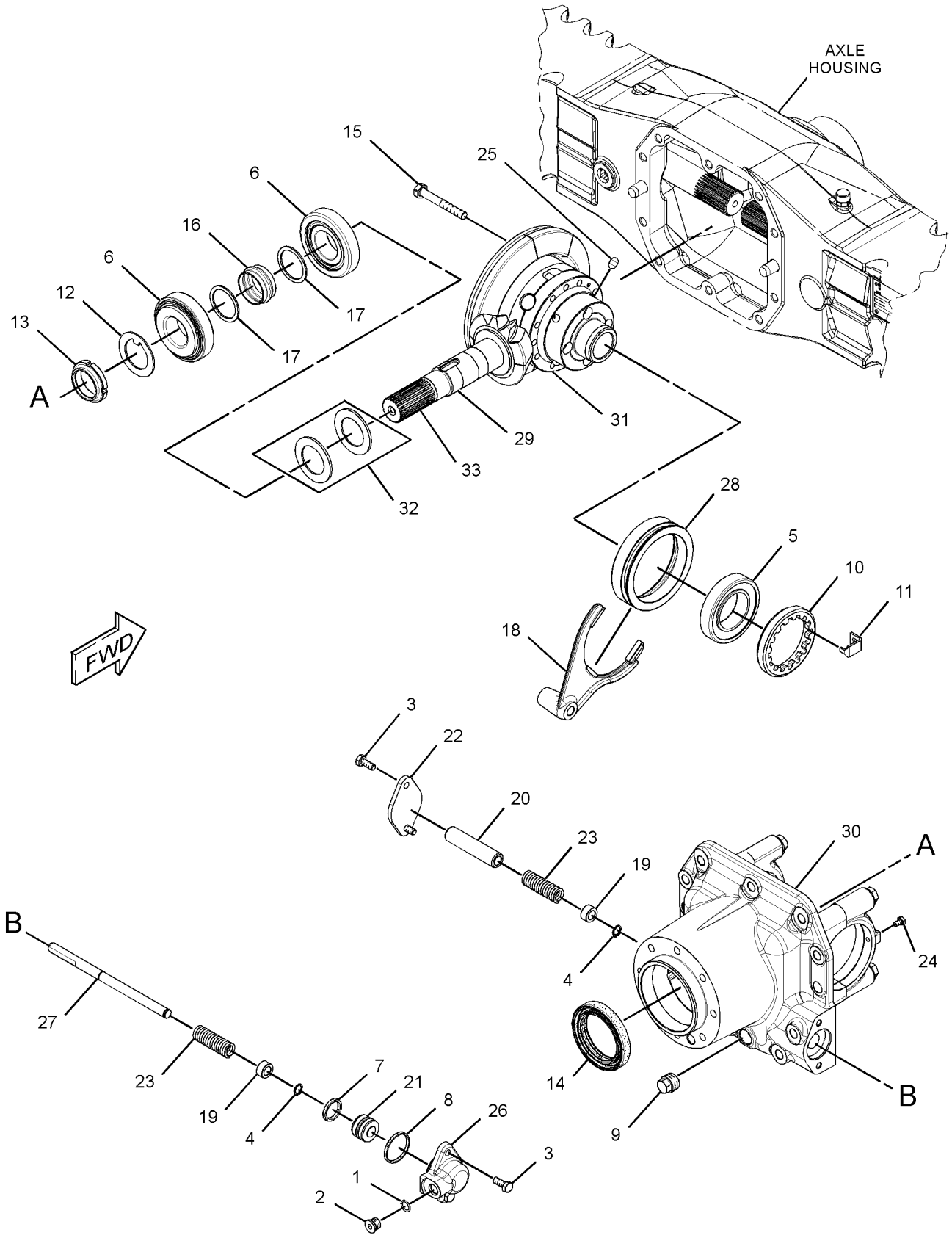

GRAPHIC #1 **<END>** g01397682

292-5410 DIFFERENTIAL & BEVEL GEAR GP–
REAR, LOCKING, HIGH SPEED AXLE

S/N: LMD1-UP

PART OF 262-8662 AXLE & TRANSFER DRIVE GP-REAR

AN ATTACHMENT

SMCS-3254, 3256, 3258 **i02829275**

NOTE	REF NO	GRAPHIC REF	PART NUMBER	QTY	PART NAME 1 2 3 4 5 6 (PRODUCT LEVEL)	SEE PAGE
	1	1	**3J-1907**	1	SEAL-O-RING	
	2	1	**9S-8004**	1	PLUG-O-RING	
M	3	1	**6V-5217**	4	BOLT (M8X1.25X20-MM)	
	4	1	**219-5442**	2	RING-RETAINING	
	5	1	**9W-0614**	2	CONE	
	6	1	**136-7808**	2	BEARING AS-TAPERED ROLLER	
	7	1	**5H-2767**	1	SEAL-O-RING	
	8	1	**4D-3107**	1	SEAL-O-RING	
	9	1	**152-6145**	1	PLUG-MAGNETIC (DIFFERENTIAL)	
	10	1	**209-7454**	2	NUT (M94X2-THD)	
	11	1	**211-0101**	2	PLATE-LOCK	
J	12	1	**211-1313**	1	LOCKWASHER	
J	13	1	**211-1314**	1	NUT-RING (M40X1.5-THD)	
	14	1	**208-0320**	12	BOLT (M10X1.5X75-MM)	
J	15	1	**210-8469**	1	SHIM (COLLAPSIBLE)	
J	16	1	**209-7462**	2	WASHER (40X50X2-MM THK)	
	17	1	**293-8721**	1	FORK	
	18	1	**293-2101**	2	SPACER (12X20X10-MM THK)	
	19	1	**293-8722**	1	BUSHING	
	20	1	**293-8723**	1	PISTON	
	21	1	**293-8724**	1	FLANGE	
	22	1	**293-8725**	2	SPRING	
M	23	1	**199-0695**	2	BOLT (M6X1X14-MM)	
	24	1	**209-7467**	4	PIN	
	25	1	**293-8738**	1	SUPPORT-CYLINDER	
	26	1	**293-8739**	1	PIN	
	27	1	**209-7474**	1	COLLAR	
	28	1	**293-8748**	1	SEAL-LIP TYPE	
J	29	1	**292-5382**	1	GEAR GP-BEVEL & TRANSFER	
	30	1	**292-5394**	1	CARRIER AS	
		1	**208-0322**	4	BOLT-FLANGE HEAD (M14X2X75-MM)	
		1	**217-2880**	4	DOWEL	
Y	31	1	*292-5397*	1	DIFFERENTIAL GP	156
B	32	1	**208-7797**	1	KIT-SHIM	
J	33	1	**311-2534**	1	KIT-BEVEL GEAR	

B-USE AS REQUIRED
J-KIT MARKED J SERVICES PARTS MARKED J
M-METRIC PART
Y-SEPARATE ILLUSTRATION

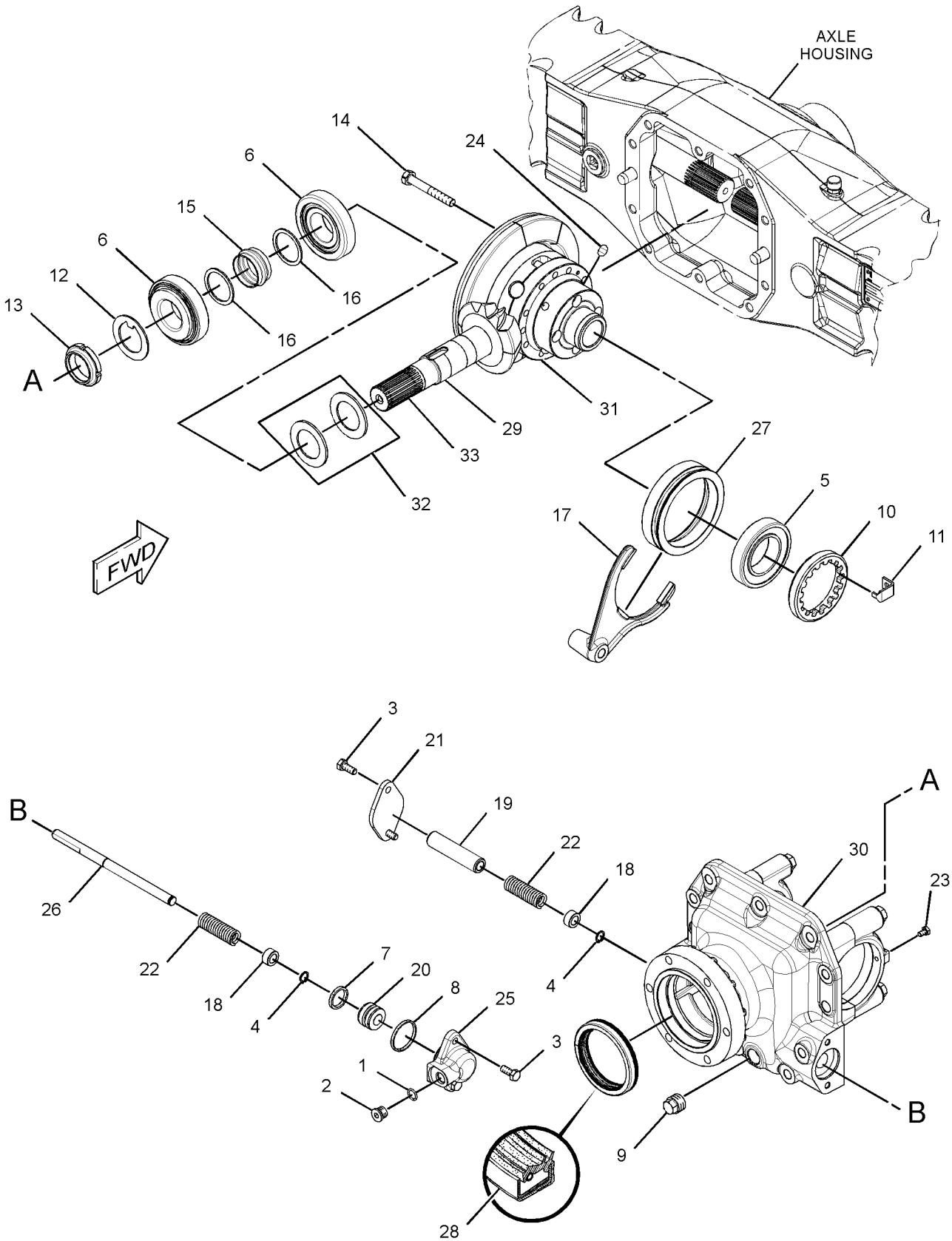

GRAPHIC #1 **<END>** g01397676

292-5397 DIFFERENTIAL GP

S/N: LMD1-UP

PART OF 292-5396, 292-5408, 292-5410 DIFFERENTIAL & BEVEL GEAR GP

AN ATTACHMENT

SMCS-3258 **i02796134**

NOTE	REF NO	GRAPHIC REF	PART NUMBER	QTY	PART NAME 1 2 3 4 5 6 (PRODUCT LEVEL)	SEE PAGE
J	1	1	**211-0092**	4	WASHER-THRUST (22X42X2-MM THK)	
J	2	1	**211-0093**	2	SHAFT	
J	3	1	**216-8693**	2	DISC	
J	4	1	**208-7910**	4	GEAR-BEVEL (12-TEETH)	
J	5	1	**220-6022**	1	PINION-BEVEL	
J	6	1	**293-8728**	1	GEAR-BEVEL	
	7	1	**293-2097**	1	HOUSING AS	
					AVAILABLE REPAIR KIT(S):	
J			**311-2530**	1	KIT-DIFFERENTIAL	

J-KIT MARKED J SERVICES PARTS MARKED J

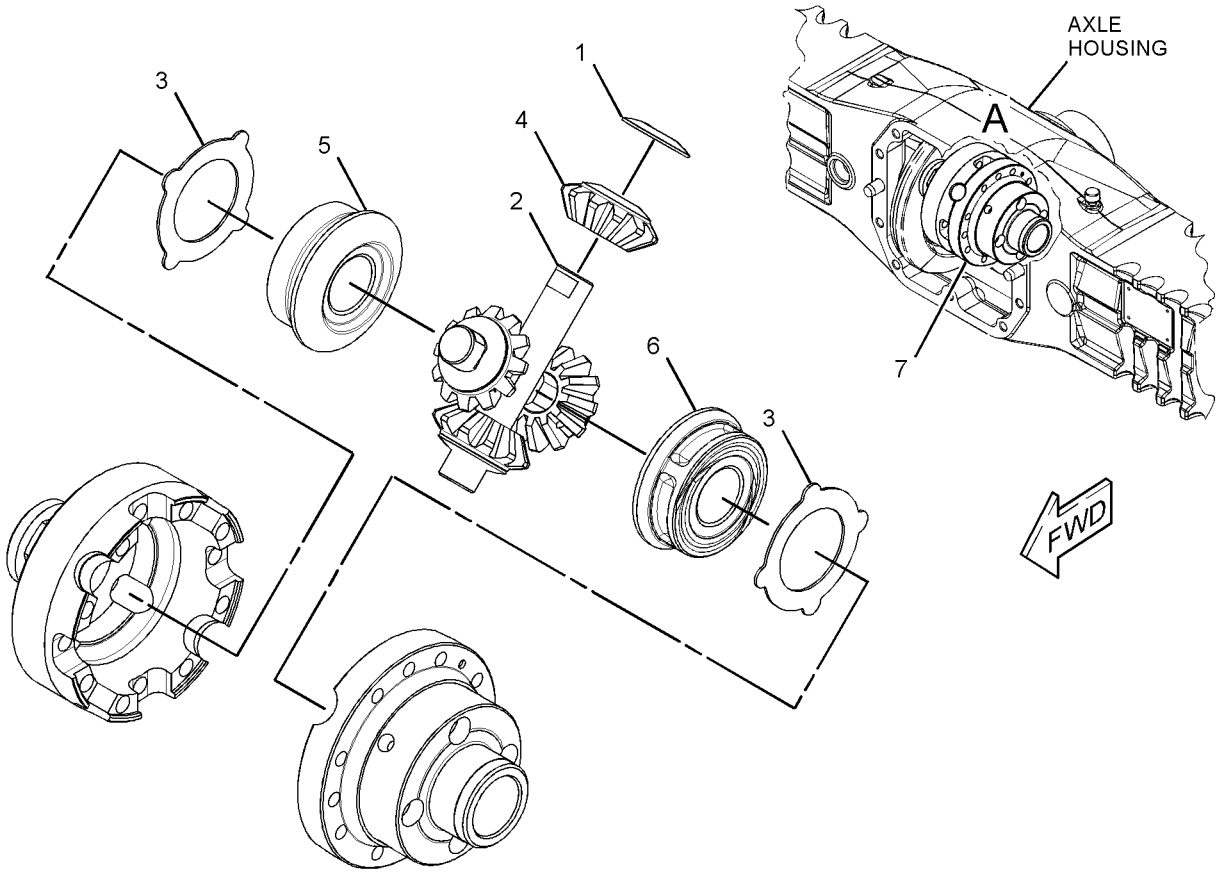

VIEW OF AREA A
(EXPLODED)

GRAPHIC #1 **<END>** g01376041

292-5377 DRIVE GP-TRANSFER—HYDROSTATIC

S/N: LMD1-UP

PART OF 262-8654 AXLE & TRANSFER DRIVE GP-REAR

AN ATTACHMENT

SMCS-3159, 4350, 4355 **i03018442**

NOTE	REF NO	GRAPHIC REF	PART NUMBER	QTY	PART NAME 1 2 3 4 5 6 (PRODUCT LEVEL)	SEE PAGE
M	1	1	**8T-0271**	6	BOLT-SOCKET HEAD (M10X1.5X35-MM)	
M	2	1	**8T-0341**	8	BOLT-SOCKET HEAD (M10X1.5X60-MM)	
M	3	1	**095-0658**	2	BOLT-SOCKET HEAD (M10X1.5X70-MM)	
M	4	1	**9X-2158**	2	BOLT-SOCKET HEAD (M10X1.5X90-MM)	
	5	1	**205-9163**	1	WASHER	
	6	1	**095-0929**	1	RING-RETAINING	
	7	1	**8H-5352**	1	BALL BEARING	
	8	1	**1T-0994**	1	BALL BEARING	
	9	1	**3K-2518**	1	BALL BEARING	
	10	1	**197-5194**	1	BALL BEARING	
	12	1	**5P-5397**	1	SEAL-O-RING	
	13	1	**199-0667**	2	DOWEL-BRACKET	
	14	1	**197-9155**	1	BREATHER (DRIVE AXLE)	
	15	1	**211-1478**	1	PIN	
	16	1	**152-6144**	2	PLUG AS-DRAIN (MAGNETIC)	
	17	1	**208-9007**	1	FLANGE	
	18	1	**197-3695**	1	SEAL-LIP TYPE	
	19	1	**292-5440**	1	CASE-FRONT	
	20	1	**292-5441**	1	CASE-FRONT	
	21	1	**217-5164**	1	COVER	
	22	1	**222-9824**	1	PLUG	
	23	1	**292-5385**	1	GEAR (102-TEETH)	
	24	1	**292-5386**	1	GEAR (34-TEETH)	
	25	1	**292-5388**	1	YOKE-END	

M-METRIC PART

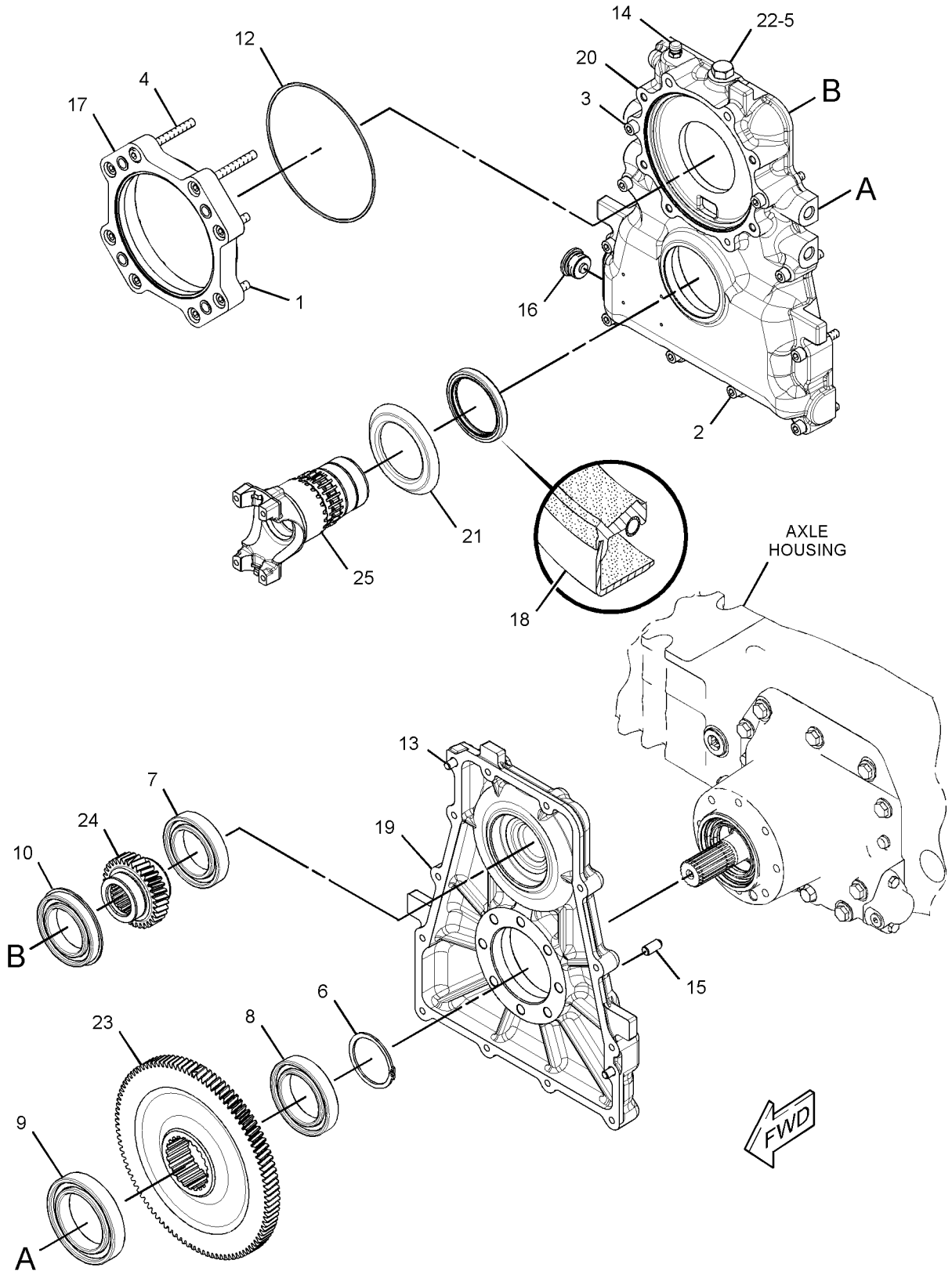

GRAPHIC #1 **<END>** g01529110

292-5378 DRIVE GP-TRANSFER—HYDROSTATIC, HIGH SPEED

S/N: LMD1-UP

PART OF 262-8662 AXLE & TRANSFER DRIVE GP-REAR

AN ATTACHMENT

SMCS-3159, 4350, 4355 **i03103163**

NOTE	REF NO	GRAPHIC REF	PART NUMBER	QTY	PART NAME 1 2 3 4 5 6 (PRODUCT LEVEL)	SEE PAGE
M	1	2	**6V-5217**	10	BOLT (M8X1.25X20-MM)	
M	2	2	**6V-2317**	4	BOLT (M8X1.25X30-MM)	
M	3	1	**6V-3822**	4	BOLT (M10X1.5X35-MM)	
M	4	1	**6V-5843**	6	BOLT (M10X1.5X45-MM)	
M	5	2	**6V-5224**	1	BOLT (M16X2X25-MM)	
M	6	2	**095-0641**	1	BOLT-SOCKET HEAD (M4X0.7X10-MM)	
M	7	2	**6V-5192**	4	BOLT-SOCKET HEAD (M8X1.25X30-MM)	
M	8	1	**8T-9515**	6	BOLT-SOCKET HEAD (M10X1.5X40-MM)	
	9	1	**293-2146**	1	DOWEL	
	10	2	**296-5746**	1	PLUG	
M	11	2	**6V-8225**	1	NUT (M6X1-THD)	
M	12	2	**5C-7261**	1	NUT (M8X1.25-THD)	
M	13	2	**201-9330**	1	NUT (M12X1.75-THD)	
M	14	2	**098-5747**	1	NUT (M16X2-THD)	
	15	2	**293-9645**	1	NUT (M30X2-THD)	
	16	2	**3B-4505**	1	LOCKWASHER	
	17	2	**9X-6381**	1	WASHER (6.5X12.5X1.6-MM THK)	
	18	2	**296-5747**	1	WASHER-COPPER (12X16X1.5-MM THK)	
	19	2	**205-9163**	2	WASHER (16X22X3-MM THK)	
	20	2	**293-8754**	1	SEAL-BONDED	
	21	1	**297-5528**	1	PIN-SPRING	
	22	2	**297-5581**	1	PIN-SPRING	
	23	1	**4K-4284**	2	RING-RETAINING	
	24	2	**3P-3743**	1	RING-RETAINING	
	25	2	**293-8755**	2	SEAL-LIP TYPE	
	26	1	**222-7136**	1	SEAL	
	27	2	**3K-2518**	1	BALL BEARING	
	28	1	**2D-5658**	1	BALL BEARING	
	29	1	**8B-5972**	1	BALL BEARING	
	30	2	**6Y-6846**	1	BALL BEARING	
	31	1,2	**295-4326**	2	BEARING AS	
	32	2	**295-4211**	1	RACE-BEARING	
	33	2	**295-4196**	1	BEARING-CAGED	
	34	2	**8F-3469**	2	SEAL-O-RING	
	35	2	**5H-2767**	1	SEAL-O-RING	
	36	2	**9H-6761**	1	SEAL-O-RING	
	37	2	**293-8756**	1	BALL	
	38	1	**4L-7711**	1	SEAL-O-RING	
	39	2	**208-8978**	2	PLUG	
	40	2	**055-1990**	1	VENT	
	41	2	**293-2148**	1	SPRING	
	42	1	**152-6145**	1	PLUG-MAGNETIC (DIFFERENTIAL)	
	43	2	**253-5024**	1	BREATHER (DRIVE AXLE)	
	44	2	**293-2151**	1	PLUG	
	45	2	**099-3600**	1	WASHER (12.7X30X4-MM THK)	
	46	1	**293-8746**	1	RING-CENTERING	
	47	1	**293-8747**	1	SEAL-LIP TYPE	
M	48	1,2	**150-3715**	3	BOLT (M12X1.25X25-MM)	
	49	1,2	**293-8758**	3	WASHER-HARD	
	50	1	**152-6144**	1	PLUG AS-DRAIN (MAGNETIC) (DIFFERENTIAL)	
	51	1	**293-2154**	1	SHAFT	
	52	1	**292-5442**	1	FLANGE-MOTOR	
	53	1	**293-2155**	1	COVER	
	54	2	**293-2156**	1	COVER-FRONT	
	55	2	**293-2157**	1	COVER	

292-5378 DRIVE GP-TRANSFER *(contd.)* i03103163

NOTE	REF NO	GRAPHIC REF	PART NUMBER	QTY	PART NAME 1 2 3 4 5 6 (PRODUCT LEVEL)	SEE PAGE
	56	1	**293-2158**	1	COVER-LOWER	
	57	2	**293-2159**	1	FORK	
	58	2	**293-8717**	1	LEVER AS-SHIFT	
	59	2	**293-8718**	1	GEAR (34-TEETH)	
	60	2	**293-8719**	1	GEAR (24-TEETH)	
	61	2	**293-8720**	1	GEAR (43-TEETH)	
	62	2	**293-8726**	1	PLATE-LOCK	
	63	2	**293-8727**	1	LEVER AS	
	64	2	**293-8729**	1	BUSHING	
M	65	2	**293-6466**	1	BOLT-SOCKET HEAD (M6X1X70-MM)	
	66	2	**293-8730**	1	BUSHING	
	67	2	**293-8731**	1	PISTON	
	68	2	**293-8732**	1	PLUG	
	69	2	**293-2100**	1	CYLINDER AS	
	70	2	**293-8733**	1	WASHER (35X56X3.5-MM THK)	
	71	2	**293-8734**	1	SPACER	
	72	2	**293-8736**	1	PLUG	
	73	1	**293-8737**	1	SHAFT-INPUT	
	74	1	**208-7914**	1	NUT-RING (M20X1-THD)	
	75	2	**293-8740**	1	SPACER (42.7X51X62.5-MM THK)	
	76	2	**293-8741**	1	DOWEL	
	77	1	**292-5383**	1	GEAR-SLIDING (23-TEETH)	
	78	1	**292-5384**	1	GEAR (40-TEETH)	
	79	2	**292-5389**	1	HOUSING	
	80	1	**292-5390**	1	YOKE-END	
	81	2	**292-5398**	1	BOLT-SPECIAL	
	82	2	**292-5399**	1	SUPPORT	
	83	2	**292-5400**	1	COVER AS-TRANSMISSION	
	84	2	**292-5401**	1	PIN	
	85	2	**292-5411**	1	SHAFT	
	86	2	**293-2095**	1	SWITCH AS (GEAR INDICATOR)	
B	89	2	**294-9770**	2	SHIM (0.3-MM THK)	
B	90	2	**294-9771**	2	SHIM (0.1-MM THK)	
B	91	2	**293-2099**	1	SHIM (0.05-MM THK)	
B	92	2	**294-9773**	2	SHIM (0.1-MM THK)	
B	93	2	**293-2153**	4	SHIM (0.2-MM THK)	
B	94	2	**294-9772**	2	SHIM (0.05-MM THK)	

B-USE AS REQUIRED
M-METRIC PART

292-5378 DRIVE GP-TRANSFER *(contd.)* **i03103163**

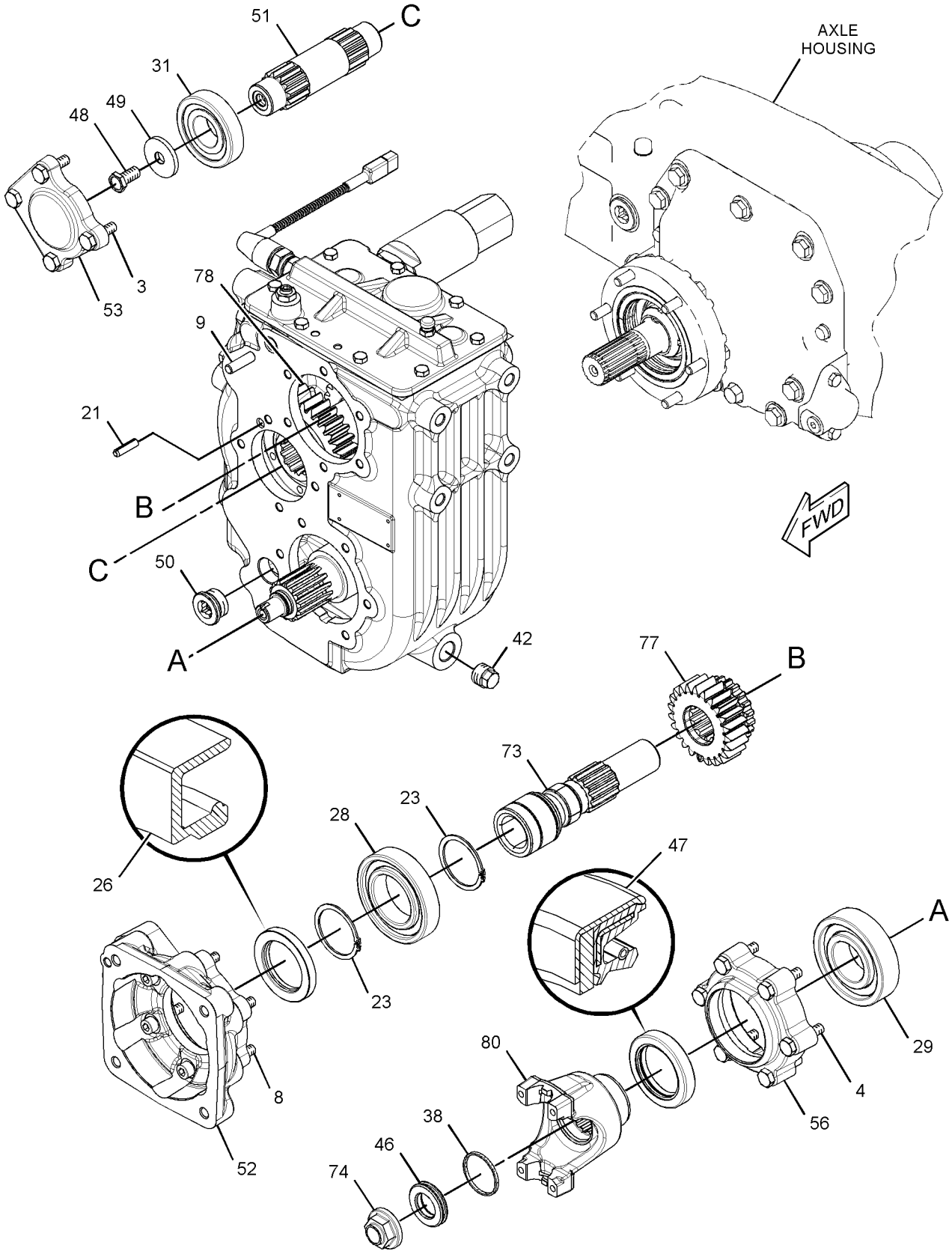

GRAPHIC #1

g01382789

292-5378 DRIVE GP-TRANSFER *(contd.)* i03103163

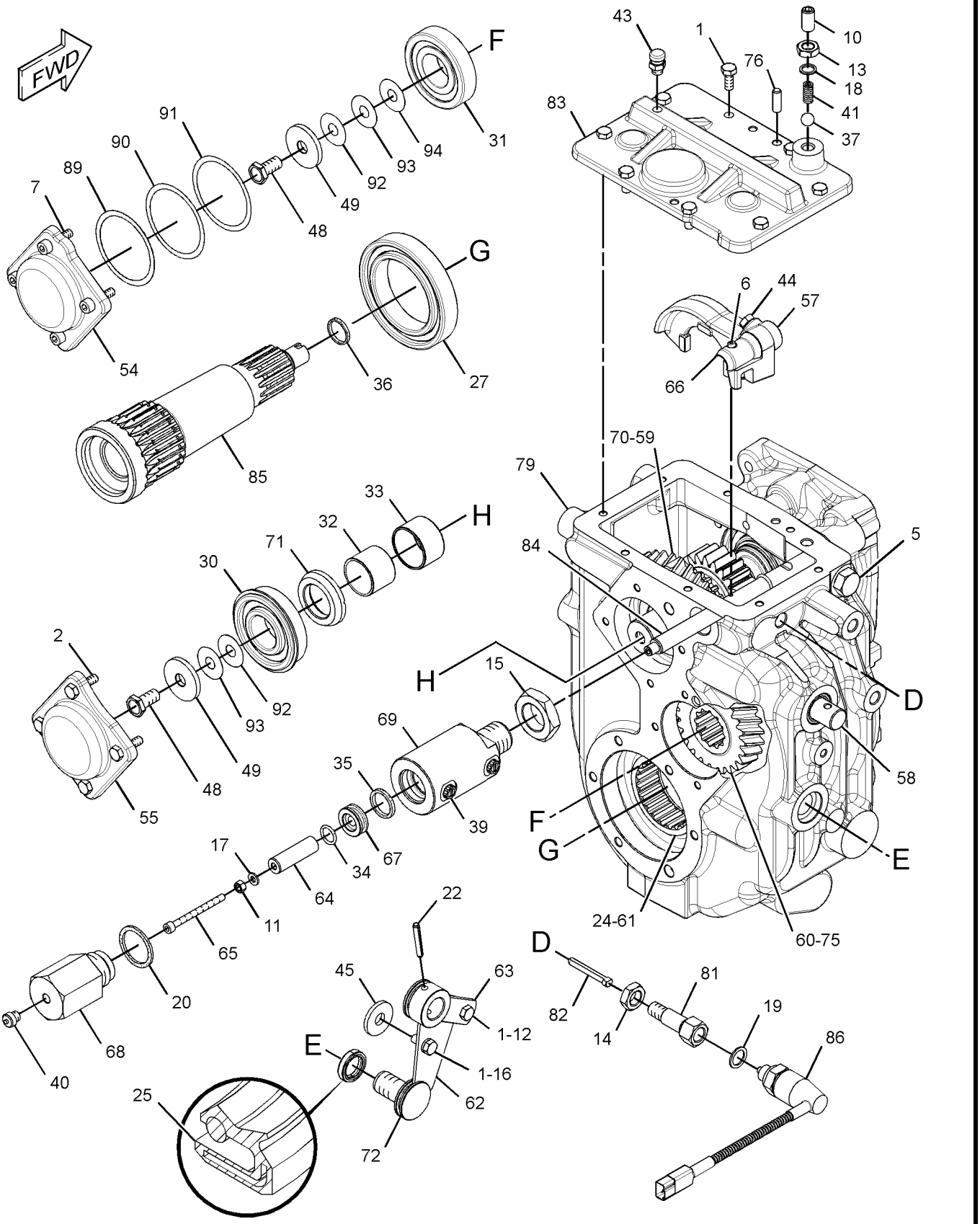

GRAPHIC #2 **<END>** g01382790

137-7747 FILTER GP-OIL–HYDRAULIC, POWER TRAIN

S/N: LMD1-UP

PART OF 257-3925 LINES GP-HYDRAULIC FILTER

SMCS-3004, 3067 **i03193527**

NOTE	REF NO	GRAPHIC REF	PART NUMBER	QTY	PART NAME 1 2 3 4 5 6 (PRODUCT LEVEL)	SEE PAGE
	1	1	**1G-8878**	1	FILTER-OIL (ADVANCED EFFICIENCY)	
	2	1	**6V-0852**	1	CAP-DUST	
	3	1	**6V-3965**	1	COUPLER AS-QUICK DISCONNECT	
	4	1	**7X-8549**	1	SWITCH AS-PRESSURE (OIL FILTER BYPASS)	
	5	1	**8C-3446**	1	VALVE-FLUID SAMPLING (HYDRAULIC, POWER TRAIN OIL)	
	6	1	**8C-3451**	1	CAP-DUST	
	7	1	**3J-1907**	2	SEAL-O-RING	
	8	1	**3J-7354**	1	SEAL-O-RING	

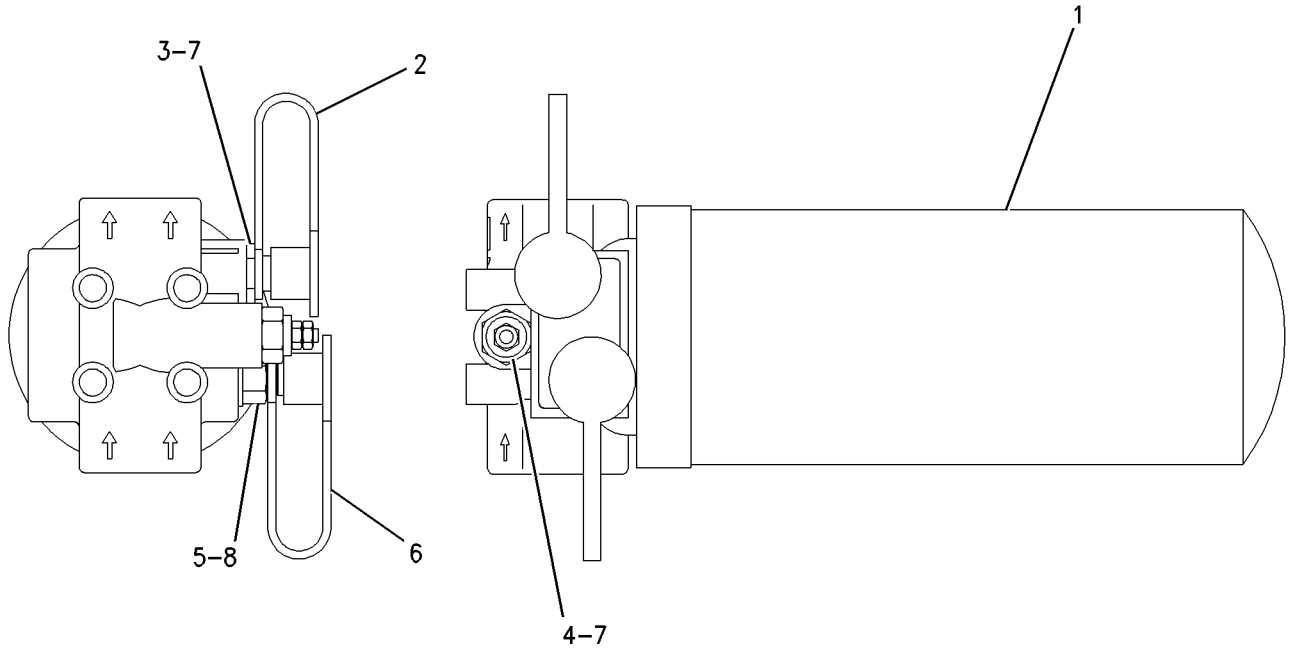

GRAPHIC #1 **<END>** g00712433

292-5402 FLANGE GP-WHEEL

S/N: LMD1-UP

PART OF 262-8654, 262-8662 AXLE & TRANSFER DRIVE GP-REAR, 262-8652 AXLE GP-FRONT, 292-5404 WHEEL & BRAKE GP

AN ATTACHMENT

SMCS-4201 **i02668015**

NOTE	REF NO	GRAPHIC REF	PART NUMBER	QTY	PART NAME 1 2 3 4 5 6 (PRODUCT LEVEL)	SEE PAGE
	1	1	**178-8608**	2	CONE-TAPERED	
	2	1	**2S-0480**	2	CUP-TAPERED ROLLER	
	3	1	**204-3098**	8	STUD	
	4	1	**157-0739**	1	SEAL-LIP TYPE	
	5	1	**292-5436**	1	HUB-WHEEL	

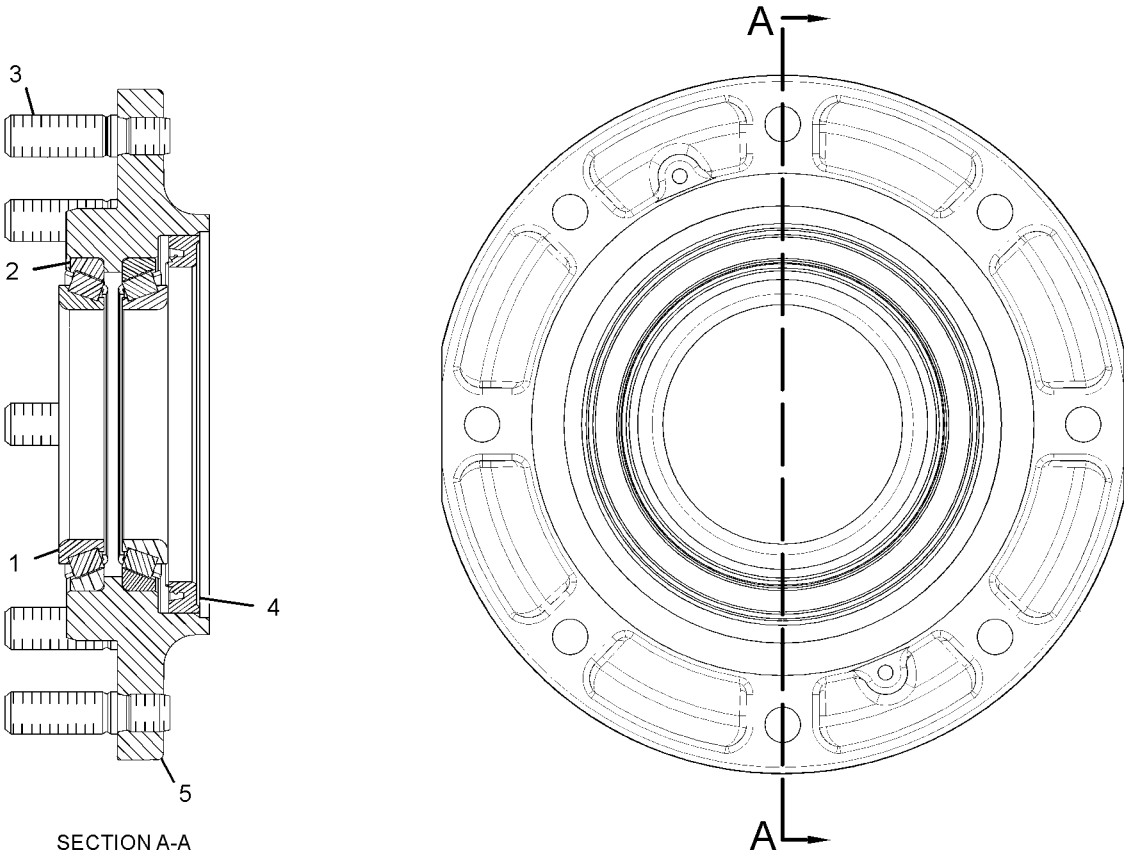

SECTION A-A

GRAPHIC #1 **<END>** g01345838

257-3969 LINES GP-DIFFERENTIAL LOCK

S/N: LMD1-UP
PART OF 294-8410, 294-8411 POWER TRAIN AR
AN ATTACHMENT

SMCS-3016, 3264 **i03122971**

NOTE	REF NO	GRAPHIC REF	PART NUMBER	QTY	PART NAME 1 2 3 4 5 6 (PRODUCT LEVEL)	SEE PAGE
	1	1	**277-7313**	1	HOSE AS	
	2	1	**277-7314**	1	HOSE AS	
	3	1	**124-1479**	1	CLIP	
	4	1	*148-8325*	1	CONNECTOR AS (STORAGE)	
		1	**3J-1907**	1	SEAL-O-RING	
		1	**4J-5477**	1	SEAL-O-RING	
		1	**6V-8641**	1	CONNECTOR	
	5	1	*148-8368*	1	ELBOW AS	
		1	**3J-1907**	1	SEAL-O-RING	
		1	**4J-5477**	1	SEAL-O-RING	
		1	**6V-8627**	1	ELBOW	
	6	1	*148-8439*	1	TEE AS (ORFS)	
		1	**3J-1907**	1	SEAL-O-RING	
		1	**6V-8397**	2	SEAL-O-RING	
		1	**6V-8774**	1	TEE (FACE SEAL)	

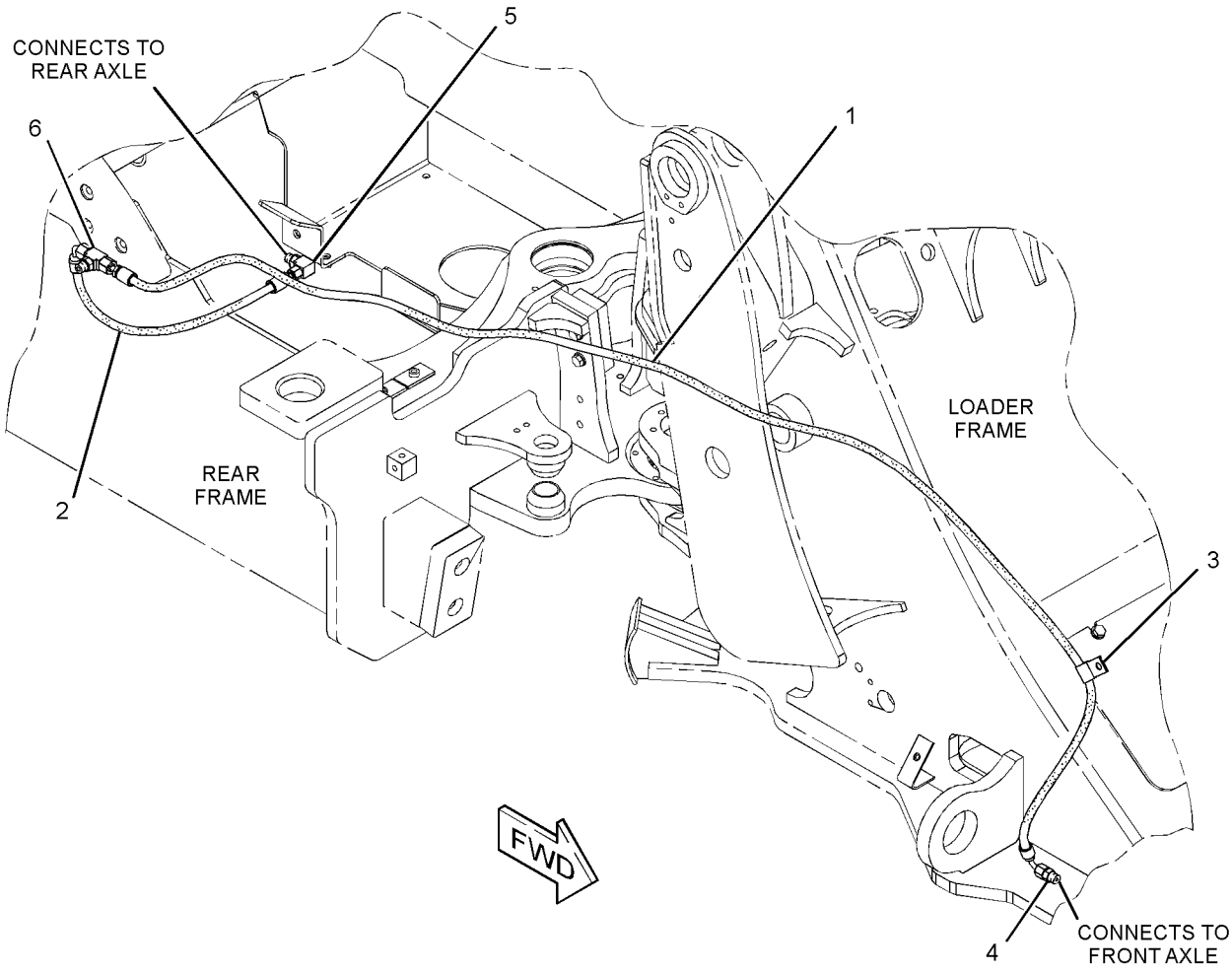

GRAPHIC #1 **<END>** g01374211

257-3925 LINES GP-HYDRAULIC FILTER

S/N: LMD1-UP

PART OF 260-5391 HYDRAULIC AR

SMCS-5068 **i02858163**

NOTE	REF NO	GRAPHIC REF	PART NUMBER	QTY	PART NAME 1 2 3 4 5 6 (PRODUCT LEVEL)	SEE PAGE
I	1	1	**260-5456**	1	HOSE AS	
I	2	1	**260-5457**	1	HOSE AS	
Y	3	1	**137-7747**	1	FILTER GP-OIL (HYDRAULIC, POWER TRAIN)	163
	4	1	*148-8328*	1	CONNECTOR AS	
		1	**3D-2824**	1	SEAL-O-RING	
		1	**6V-8398**	1	SEAL-O-RING	
		1	**6V-8633**	1	CONNECTOR	
	5	1	*148-8340*	1	CONNECTOR AS	
		1	**3K-0360**	1	SEAL-O-RING	
		1	**6V-8398**	1	SEAL-O-RING	
		1	**6V-8639**	1	CONNECTOR	
	6	1	*148-8372*	1	ELBOW AS	
		1	**2M-9780**	1	SEAL-O-RING	
		1	**6V-8398**	1	SEAL-O-RING	
		1	**6V-8721**	1	ELBOW	
	7	1	*148-8381*	1	ELBOW AS	
		1	**3D-2824**	1	SEAL-O-RING	
		1	**6V-8398**	1	SEAL-O-RING	
		1	**8T-5429**	1	ELBOW	
	8	1	**8T-4121**	4	WASHER-HARD (11X21X2.5-MM THK)	
M	9	1	**8T-4137**	4	BOLT (M10X1.5X20-MM)	

I-REFER TO HYDRAULIC INFORMATION SYSTEM
M-METRIC PART
Y-SEPARATE ILLUSTRATION

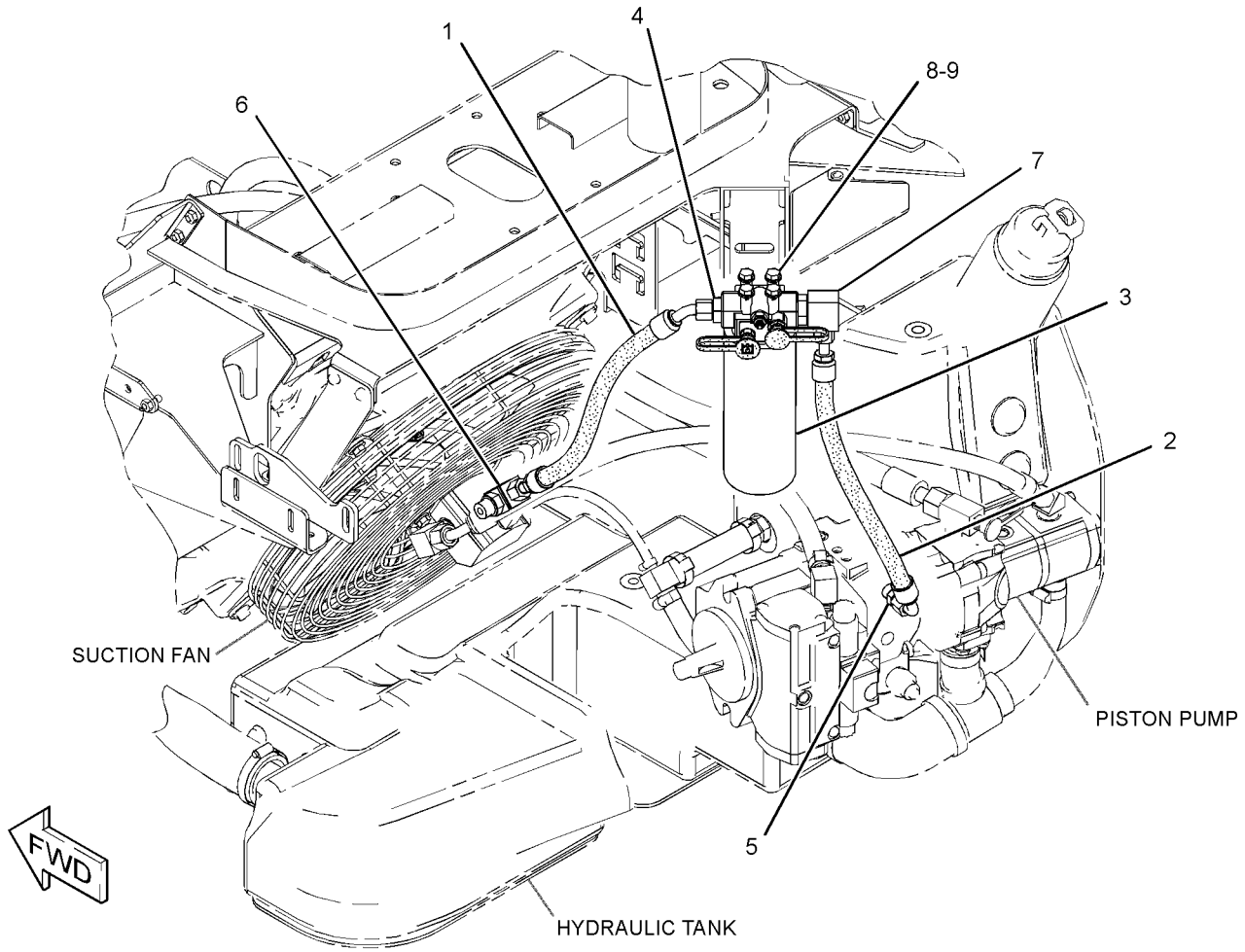

GRAPHIC #1 **<END>** g01357302

286-3549 LINES GP-HYDROSTATIC—HIGH SPEED AXLE

S/N: LMD1-UP

PART OF 294-8411, 301-1150 POWER TRAIN AR

AN ATTACHMENT

SMCS-3016 **i03119920**

NOTE	REF NO	GRAPHIC REF	PART NUMBER	QTY	PART NAME 1 2 3 4 5 6 (PRODUCT LEVEL)	SEE PAGE
	1	1	**6V-0852**	1	CAP-DUST	
I	2	1	**270-4885**	1	HOSE AS	
I	3	1	**270-4886**	1	HOSE AS	
	4	1	**270-5095**	1	HOSE AS	
	5	1	**273-0610**	1	TUBE AS	
	6	1	**274-6113**	4	CLAMP	
	7	1	**276-3191**	1	MANIFOLD	
	8	1	**277-0506**	2	PLATE	
	9	1	**286-2479**	1	TUBE AS	
Y	10	1	*287-7254*	1	FITTING GP-HYDRAULIC	256
	11	1	*148-8347*	1	ELBOW AS	
		1	**3D-2824**	1	SEAL-O-RING	
		1	**6V-9007**	1	ELBOW	
		1	**6V-9746**	1	SEAL-O-RING	
M	12	1	**085-8091**	4	BOLT (M10X1.5X55-MM)	
	13	1	*148-8434*	1	TEE AS	
		1	**6V-8397**	2	SEAL-O-RING	
		1	**6V-9843**	1	TEE-SWIVEL	
	14	1	*148-8443*	1	TEE AS	
		1	**6V-8397**	1	SEAL-O-RING	
		1	**3J-1907**	1	SEAL-O-RING	
		1	**7X-2459**	1	TEE-O-RING	
	15	1	*164-5567*	1	COUPLER AS-QUICK DISCONNECT	
		1	**3J-1907**	1	SEAL-O-RING	
		1	**6V-3965**	1	COUPLER AS-QUICK DISCONNECT	
	16	1	**1P-3702**	1	SEAL-RECTANGULAR	
	17	1	**1P-3703**	3	SEAL-RECTANGULAR	
	18	1	**4P-7581**	2	CLIP	
	19	1	**6V-0400**	2	FLANGE-HALF	
	20	1	**6V-9746**	2	SEAL-O-RING	
	21	1	**8T-4121**	12	WASHER-HARD (11X21X2.5-MM THK)	
M	22	1	**8T-4172**	4	BOLT (M10X1.5X80-MM)	
M	23	1	**8T-4182**	4	BOLT (M10X1.5X45-MM)	
M	24	1	**8T-4184**	4	BOLT (M12X1.75X45-MM)	
	25	1	**8T-4223**	8	WASHER-HARD (13.5X25.5X3-MM THK)	
M	26	1	**8T-4910**	4	BOLT (M12X1.75X60-MM)	
	27	1	**8T-9403**	2	FLANGE-HALF	
	28	1	**298-7736**	2	COLLAR	
	29	1	**7G-3228**	1	GROMMET	
	30	1	**7K-1181**	1	STRAP-CABLE	

I-REFER TO HYDRAULIC INFORMATION SYSTEM
M-METRIC PART
Y-SEPARATE ILLUSTRATION

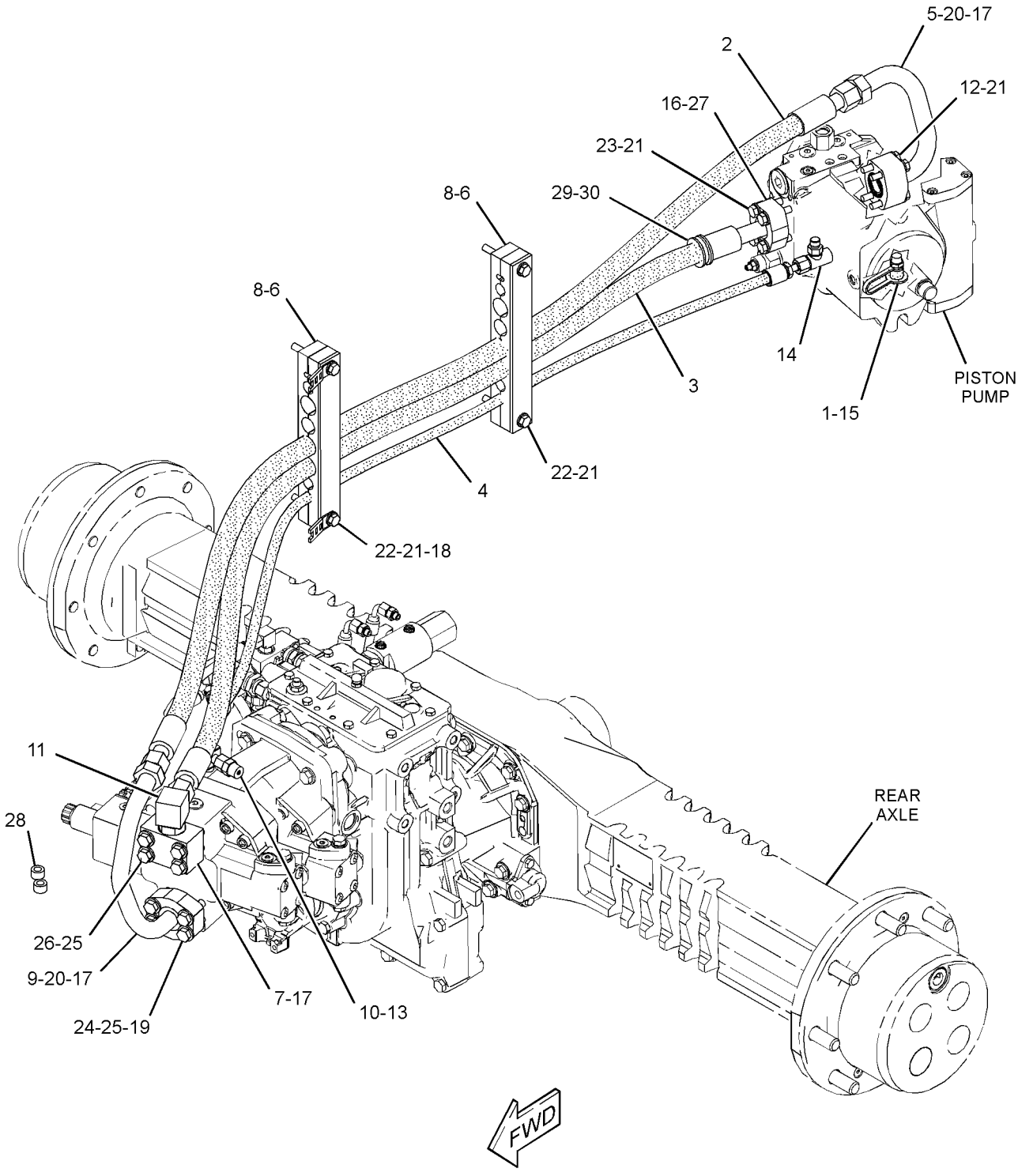

GRAPHIC #1 **<END>** g01597573

286-3550 LINES GP-HYDROSTATIC—STANDARD AXLE

S/N: LMD1-UP

PART OF 294-8410, 301-1149 POWER TRAIN AR

AN ATTACHMENT

SMCS-3016 **i03119919**

NOTE	REF NO	GRAPHIC REF	PART NUMBER	QTY	PART NAME 1 2 3 4 5 6 (PRODUCT LEVEL)	SEE PAGE
	1	1	**6V-0852**	1	CAP-DUST	
I	2	1	**270-4887**	1	HOSE AS	
I	3	1	**270-4888**	1	HOSE AS	
	4	1	**273-0610**	1	TUBE AS	
	5	1	**274-6113**	4	CLAMP	
	6	1	**276-3191**	1	MANIFOLD	
	7	1	**277-0506**	2	PLATE	
	8	1	**286-2479**	1	TUBE AS	
Y	9	1	*287-7254*	1	FITTING GP-HYDRAULIC	256
	10	1	*148-8347*	1	ELBOW AS	
		1	**3D-2824**	1	SEAL-O-RING	
		1	**6V-9007**	1	ELBOW	
		1	**6V-9746**	1	SEAL-O-RING	
M	11	1	**085-8091**	4	BOLT (M10X1.5X55-MM)	
	12	1	*148-8434*	1	TEE AS	
		1	**6V-8397**	2	SEAL-O-RING	
		1	**6V-9843**	1	TEE-SWIVEL	
	13	1	*148-8443*	1	TEE AS	
		1	**7X-2459**	1	TEE-O-RING	
		1	**3J-1907**	1	SEAL-O-RING	
		1	**6V-8397**	1	SEAL-O-RING	
	14	1	*164-5567*	1	COUPLER AS-QUICK DISCONNECT	
		1	**3J-1907**	1	SEAL-O-RING	
		1	**6V-3965**	1	COUPLER AS-QUICK DISCONNECT	
I	15	1	**278-2283**	1	HOSE AS	
	16	1	**1P-3702**	1	SEAL-RECTANGULAR	
	17	1	**1P-3703**	3	SEAL-RECTANGULAR	
	18	1	**4P-7581**	2	CLIP	
	19	1	**6V-0400**	2	FLANGE-HALF	
	20	1	**6V-9746**	2	SEAL-O-RING	
	21	1	**8T-4121**	12	WASHER-HARD (11X21X2.5-MM THK)	
M	22	1	**8T-4172**	4	BOLT (M10X1.5X80-MM)	
M	23	1	**8T-4182**	4	BOLT (M10X1.5X45-MM)	
M	24	1	**8T-4184**	4	BOLT (M12X1.75X45-MM)	
	25	1	**8T-4223**	8	WASHER-HARD (13.5X25.5X3-MM THK)	
M	26	1	**8T-4910**	4	BOLT (M12X1.75X60-MM)	
	27	1	**8T-9403**	2	FLANGE-HALF	
	28	1	**7K-1181**	1	STRAP-CABLE	
	29	1	**7G-3228**	1	GROMMET	

I-REFER TO HYDRAULIC INFORMATION SYSTEM
M-METRIC PART
Y-SEPARATE ILLUSTRATION

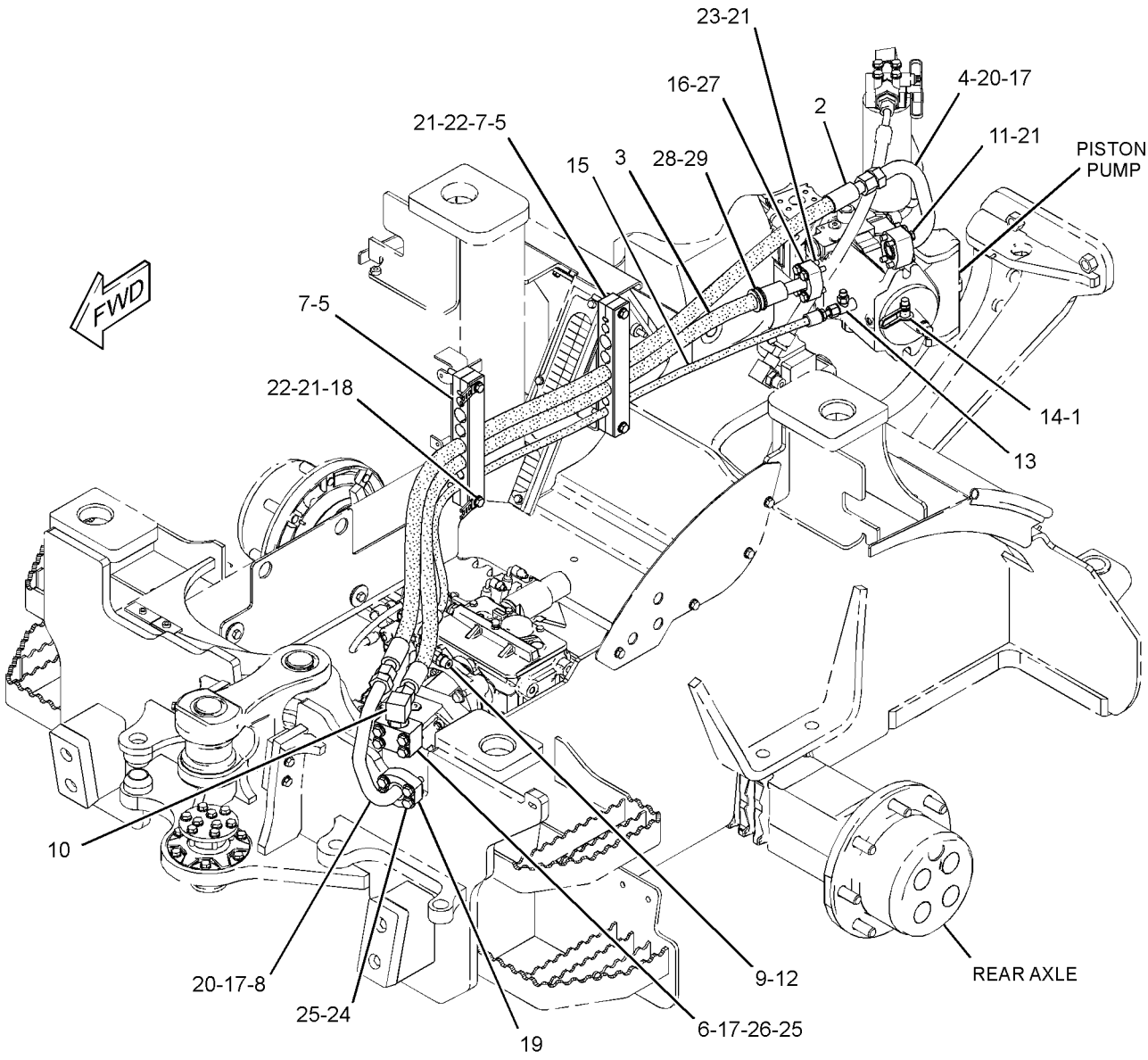

GRAPHIC #1 **<END>** g01597333

276-8702 LINES GP-POWER TRAIN OIL–AXLE SPEED SELECT

S/N: LMD1-UP

PART OF 294-8411, 301-1150 POWER TRAIN AR

AN ATTACHMENT

SMCS-3016 **i02700479**

NOTE	REF NO	GRAPHIC REF	PART NUMBER	QTY	PART NAME 1 2 3 4 5 6 (PRODUCT LEVEL)	SEE PAGE
	1	1	**1P-4278**	4	CLAMP-HOSE	
	2	1	**183-7107**	2	CONNECTOR AS	
					(EACH INCLUDES)	
		1	**4J-5477**	1	SEAL-O-RING	
		1	**184-1575**	1	SEAL	
	3	1	**187-5086**	1	TEE	
	4	1	*215-7067*	1	ELBOW AS	
		1	**3J-1907**	1	SEAL-O-RING	
		1	**215-7066**	1	ELBOW	
	5	1	**250-2910**	2	HOSE AS	
Y	6	1	**260-5411**	1	VALVE & MTG GP-SOLENOID (AXLE SPEED SELECT)	187
I	7	1	**276-8735**	1	HOSE AS	
	8	1	*148-8325*	2	CONNECTOR AS	
					(EACH INCLUDES)	
		1	**3J-1907**	1	SEAL-O-RING	
		1	**4J-5477**	1	SEAL-O-RING	
		1	**6V-8641**	1	CONNECTOR	
	9	1	*148-8368*	1	ELBOW AS	
		1	**3J-1907**	1	SEAL-O-RING	
		1	**4J-5477**	1	SEAL-O-RING	
		1	**6V-8627**	1	ELBOW	
	10	1	*150-5968*	1	TEE AS	
		1	**4J-5477**	2	SEAL-O-RING	
		1	**6V-9835**	1	TEE-SWIVEL	
	11	1	**4P-7581**	1	CLIP	
	12	1	**8T-4121**	2	WASHER-HARD (11X21X2.5-MM THK)	
M	13	1	**8T-4185**	2	BOLT (M10X1.5X50-MM)	
E	14	1	**5P-1442**		HOSE (30-CM)	

E-ORDER BY THE CENTIMETER
I-REFER TO HYDRAULIC INFORMATION SYSTEM
M-METRIC PART
Y-SEPARATE ILLUSTRATION

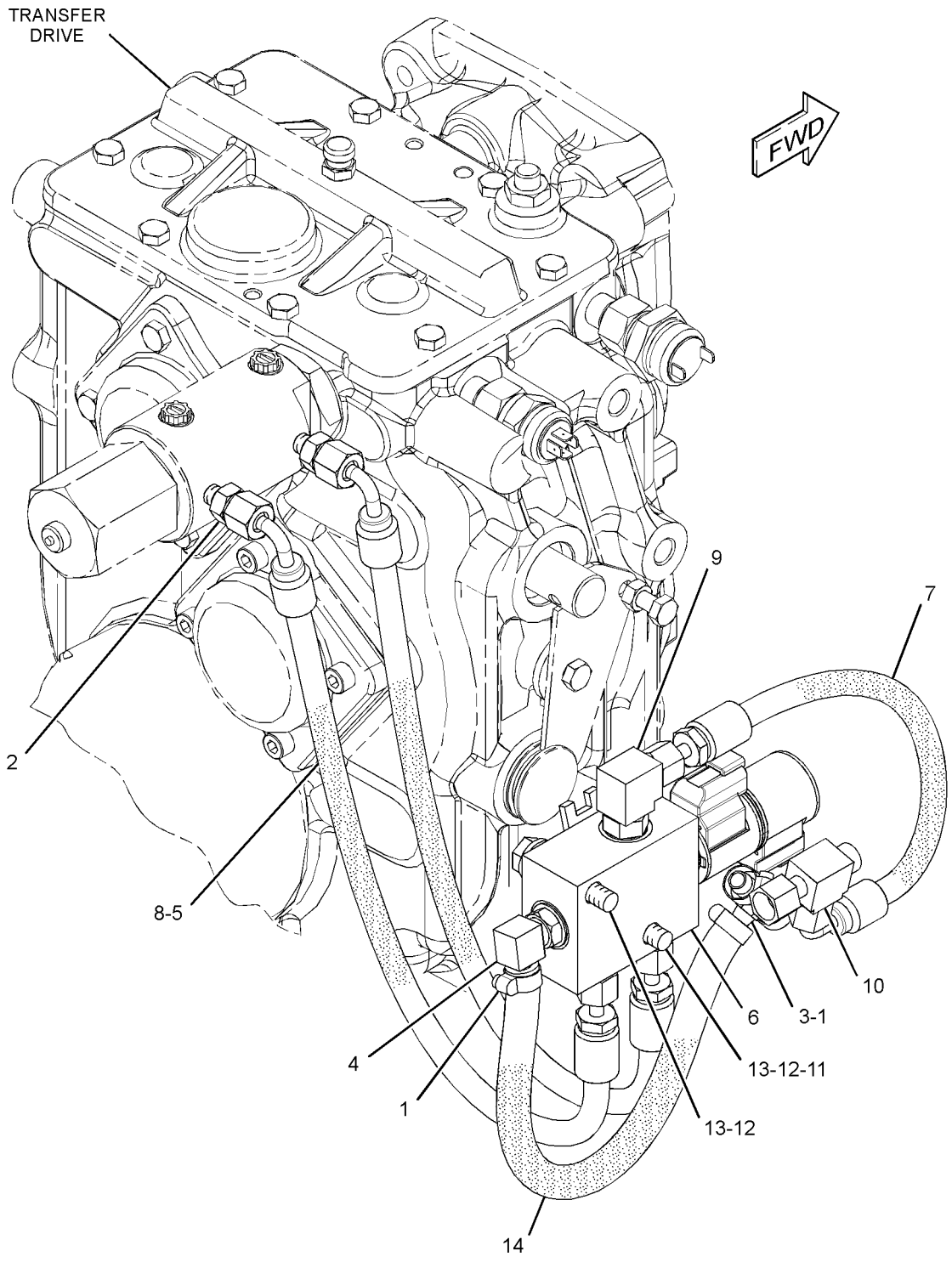

GRAPHIC #1 **<END>** g01379187

POWER TRAIN

275-9378 MOUNTING GP-AXLE

S/N: LMD1-UP

PART OF 322-4878 CHASSIS AR

SMCS-3268, 3278 **i02742004**

NOTE	REF NO	GRAPHIC REF	PART NUMBER	QTY	PART NAME 1 2 3 4 5 6 (PRODUCT LEVEL)	SEE PAGE
	1	1	**275-9379**	4	PLATE	
	2	1	**275-9381**	4	SPACER	
M	3	1	**8T-4001**	8	NUT (M24X3-THD)	
	4	1	**8T-4167**	16	WASHER-HARD (26X44X4-MM THK)	
M	5	1	**9X-8477**	8	BOLT (M24X3X280-MM)	

M-METRIC PART

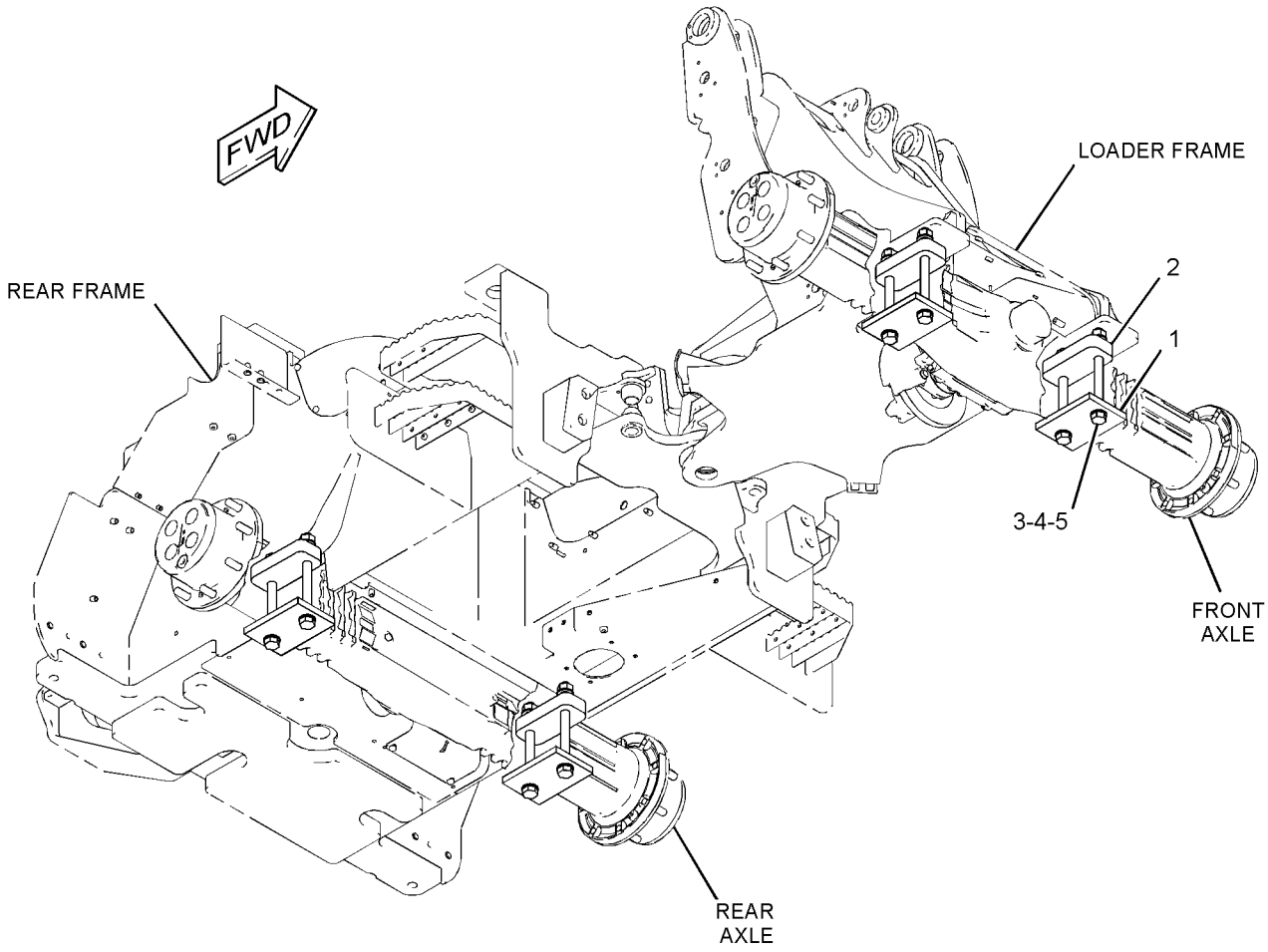

GRAPHIC #1 **<END>** g01382798

255-6014 MOUNTING GP-HYDROSTATIC PUMP

S/N: LMD1-UP

PART OF 321-8232 INSTALLATION AR-ENGINE

SMCS-3203 **i02747536**

NOTE	REF NO	GRAPHIC REF	PART NUMBER	QTY	PART NAME 1 2 3 4 5 6 (PRODUCT LEVEL)	SEE PAGE
	1	1	**226-7635**	1	FLANGE	
	2	1	**252-9197**	1	BOLT-SOCKET HEAD (M12X1.75X35-MM)	
	3	1	**263-1368**	1	HUB-COUPLING	
	4	1	**263-1369**	1	PLATE-ADAPTER	
M	5	1	**8T-4193**	2	BOLT (M16X2X50-MM)	
	6	1	**8T-4121**	12	WASHER-HARD (11X21X2.5-MM THK)	
M	7	1	**8T-4195**	20	BOLT (M10X1.5X30-MM)	
	8	1	**9X-8257**	2	WASHER (17.5X30X3.5-MM THK)	

M-METRIC PART

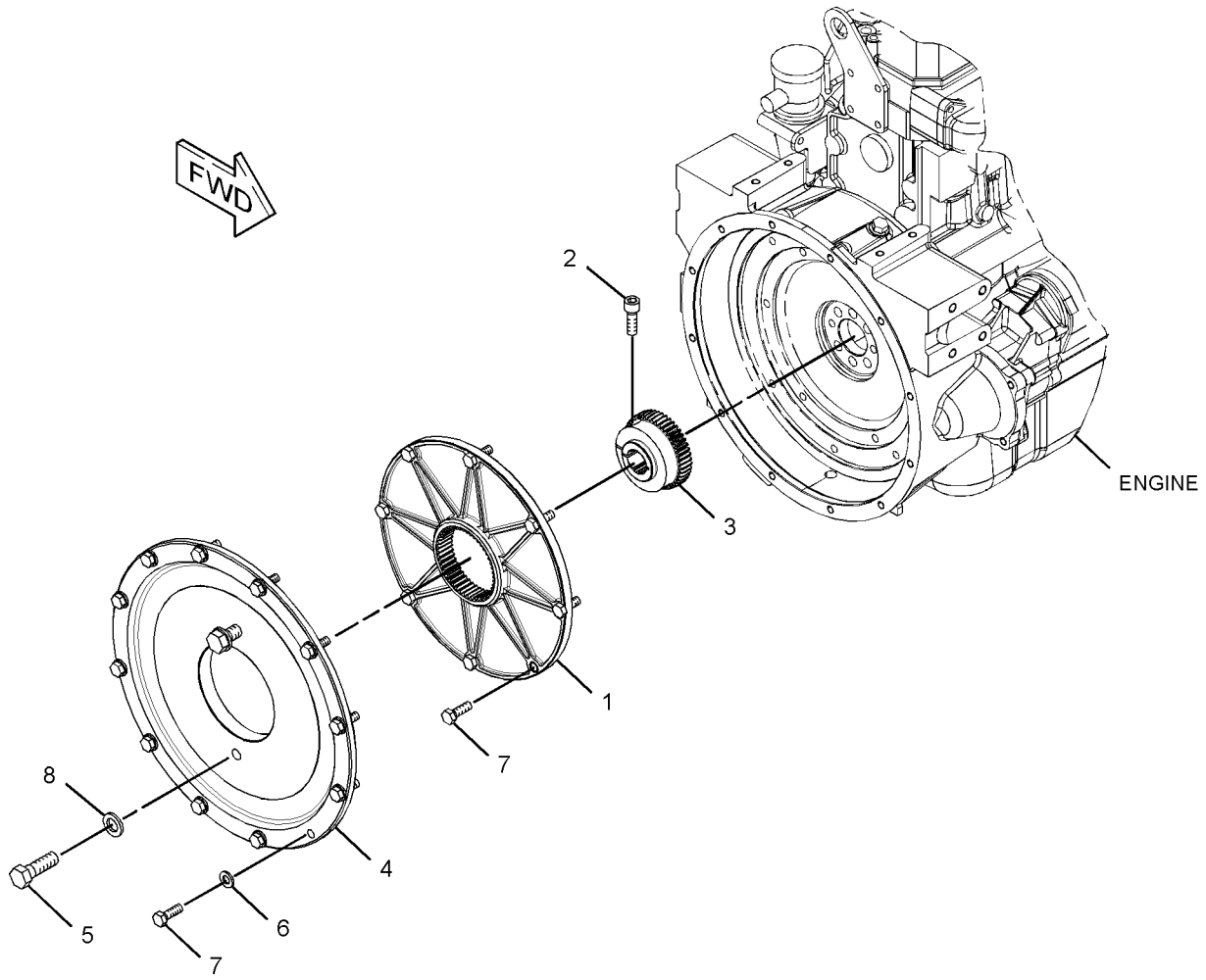

GRAPHIC #1 **<END>** g01369069

292-5373 PLANETARY GP-FINAL DRIVE

S/N: LMD1-UP

PART OF 262-8654, 262-8662 AXLE & TRANSFER DRIVE GP-REAR, 262-8652, 262-8660 AXLE GP-FRONT

AN ATTACHMENT

SMCS-4050, 4084 **i02808693**

NOTE	REF NO	GRAPHIC REF	PART NUMBER	QTY	PART NAME 1 2 3 4 5 6 (PRODUCT LEVEL)	SEE PAGE
	1	1	**095-0924**	4	RING-RETAINING	
J	2	1	**199-0669**	1	PLUG (THRUST)	
	3	1	**152-6144**	1	PLUG AS-DRAIN (MAGNETIC) (FINAL DRIVE PLANETARY)	
J	4	1	**215-7488**	4	SHAFT	
	5	1	**215-1402**	224	NEEDLE-ROLLER	
J	6	1	**293-2098**	1	CARRIER	
	7	1	**210-5931**	4	RETAINER	
	8	1	**209-4157**	4	GEAR (23-TEETH)	
					AVAILABLE REPAIR KIT(S):	
J			**311-2532**	1	KIT-PLANETARY CARRIER	

J-KIT MARKED J SERVICE REPAIR FOR PARTS MARKED J

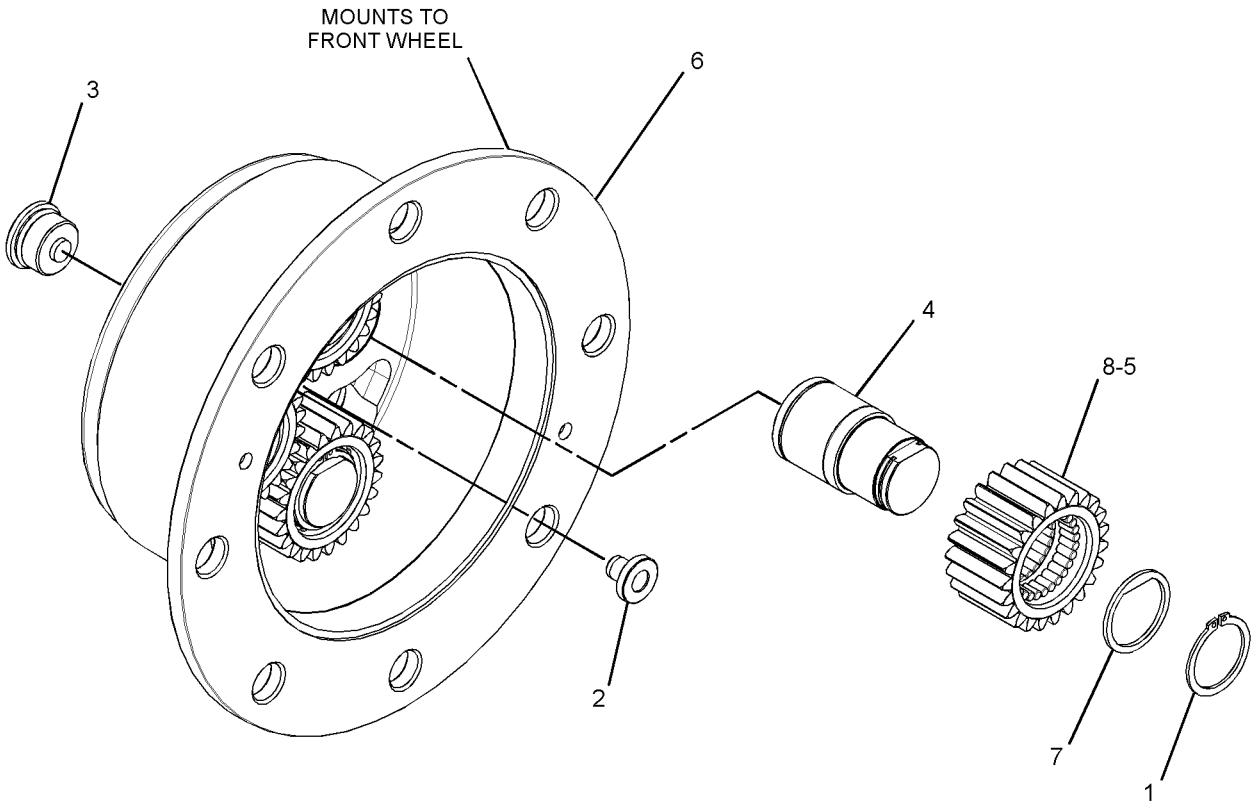

GRAPHIC #1 **<END>** g01381977

294-8410 POWER TRAIN AR–
STANDARD AXLE, WITH DIFFERENTIAL LOCK
S/N: LMD1-UP
CANNOT BE USED WITH 300-8485–PAGE 244
AN ATTACHMENT

SMCS-3000, 4000 **i03111144**

NOTE	PART NUMBER	QTY	PART NAME 1 2 3 4 5 6 (PRODUCT LEVEL)	SEE PAGE
Y	*262-8654*	1	AXLE & TRANSFER DRIVE GP-REAR (STANDARD, WITH DIFF LOCK)	140
Y	*306-5423*	1	AXLE GP-FRONT (STANDARD, WITH DIFF LOCK)	149
Y	*257-3969*	1	LINES GP-DIFFERENTIAL LOCK	165
Y	*286-3550*	1	LINES GP-HYDROSTATIC (STANDARD AXLE)	170
Y	*257-3936*	1	LINES GP-SERVICE BRAKE (STANDARD AXLE)	230
Y	*272-0167*	1	SHAFT GP-DRIVE (STANDARD AXLE)	179
Y-SEPARATE ILLUSTRATION				

<END>

294-8411 POWER TRAIN AR–
HIGH SPEED AXLE, WITH DIFFERENTIAL LOCK
S/N: LMD1-UP
CANNOT BE USED WITH 282-7722–PAGE 244
AN ATTACHMENT

SMCS-3000, 4000 **i02830921**

NOTE	PART NUMBER	QTY	PART NAME 1 2 3 4 5 6 (PRODUCT LEVEL)	SEE PAGE
Y	*262-8662*	1	AXLE & TRANSFER DRIVE GP-REAR (HIGH SPEED, WITH DIFF LOCK)	142
Y	*305-1934*	1	AXLE GP-FRONT (HIGH SPEED, WITH DIFF LOCK)	148
Y	*260-5406*	1	LINES GP-SERVICE BRAKE	232
Y	*257-3969*	1	LINES GP-DIFFERENTIAL LOCK	165
Y	*286-3549*	1	LINES GP-HYDROSTATIC (HIGH SPEED AXLE)	168
Y	*276-8702*	1	LINES GP-POWER TRAIN OIL (AXLE SPEED SELECT)	172
Y	*272-0169*	1	SHAFT GP-DRIVE (HIGH SPEED AXLE)	180
Y	*260-5510*	1	SWITCH GP-ROCKER (HIGH SPEED SELECT)	117
Y-SEPARATE ILLUSTRATION				

<END>

301-1149 POWER TRAIN AR–
STANDARD AXLE, WITH DIFFERENTIAL LOCK
S/N: LMD1-UP
CANNOT BE USED WITH 300-8485–PAGE 244
AN ATTACHMENT

SMCS-3000, 4000 **i03111190**

NOTE	PART NUMBER	QTY	PART NAME 1 2 3 4 5 6 (PRODUCT LEVEL)	SEE PAGE
Y	*262-8654*	1	AXLE & TRANSFER DRIVE GP-REAR (STANDARD, WITH DIFF LOCK)	140
Y	*306-5423*	1	AXLE GP-FRONT (STANDARD, WITH DIFF LOCK)	149
Y	*286-3550*	1	LINES GP-HYDROSTATIC (STANDARD AXLE)	170
Y	*257-3936*	1	LINES GP-SERVICE BRAKE (STANDARD AXLE)	230
Y	*272-0167*	1	SHAFT GP-DRIVE (STANDARD AXLE)	179
Y-SEPARATE ILLUSTRATION				

<END>

301-1150 POWER TRAIN AR–
HIGH SPEED AXLE, WITH DIFFERENTIAL LOCK
S/N: LMD1-UP
CANNOT BE USED WITH 282-7722–PAGE 244
AN ATTACHMENT

SMCS-3000, 4000 **i02830930**

NOTE	PART NUMBER	QTY	PART NAME 1 2 3 4 5 6 (PRODUCT LEVEL)	SEE PAGE
Y	*262-8662*	1	AXLE & TRANSFER DRIVE GP-REAR (HIGH SPEED, WITH DIFF LOCK)	142
Y	*305-1934*	1	AXLE GP-FRONT (HIGH SPEED, WITH DIFF LOCK)	148
Y	*260-5406*	1	LINES GP-SERVICE BRAKE	232
Y	*286-3549*	1	LINES GP-HYDROSTATIC (HIGH SPEED AXLE)	168
Y	*276-8702*	1	LINES GP-POWER TRAIN OIL (AXLE SPEED SELECT)	172
Y	*272-0169*	1	SHAFT GP-DRIVE (HIGH SPEED AXLE)	180
Y	*260-5510*	1	SWITCH GP-ROCKER (HIGH SPEED SELECT)	117

Y-SEPARATE ILLUSTRATION

<END>

272-0167 SHAFT GP-DRIVE–STANDARD AXLE

S/N: LMD1-UP

PART OF 294-8410, 301-1149 POWER TRAIN AR

AN ATTACHMENT

SMCS-3253 **i02986905**

NOTE	REF NO	GRAPHIC REF	PART NUMBER	QTY	PART NAME 1 2 3 4 5 6 (PRODUCT LEVEL)	SEE PAGE
	1	1	**316-1930**	1	SHAFT AS-DRIVE	
M	2	1	**107-6826**	8	BOLT (M24X19.1-MM)	
	3	1	**5V-2545**	4	STRAP	

M-METRIC PART

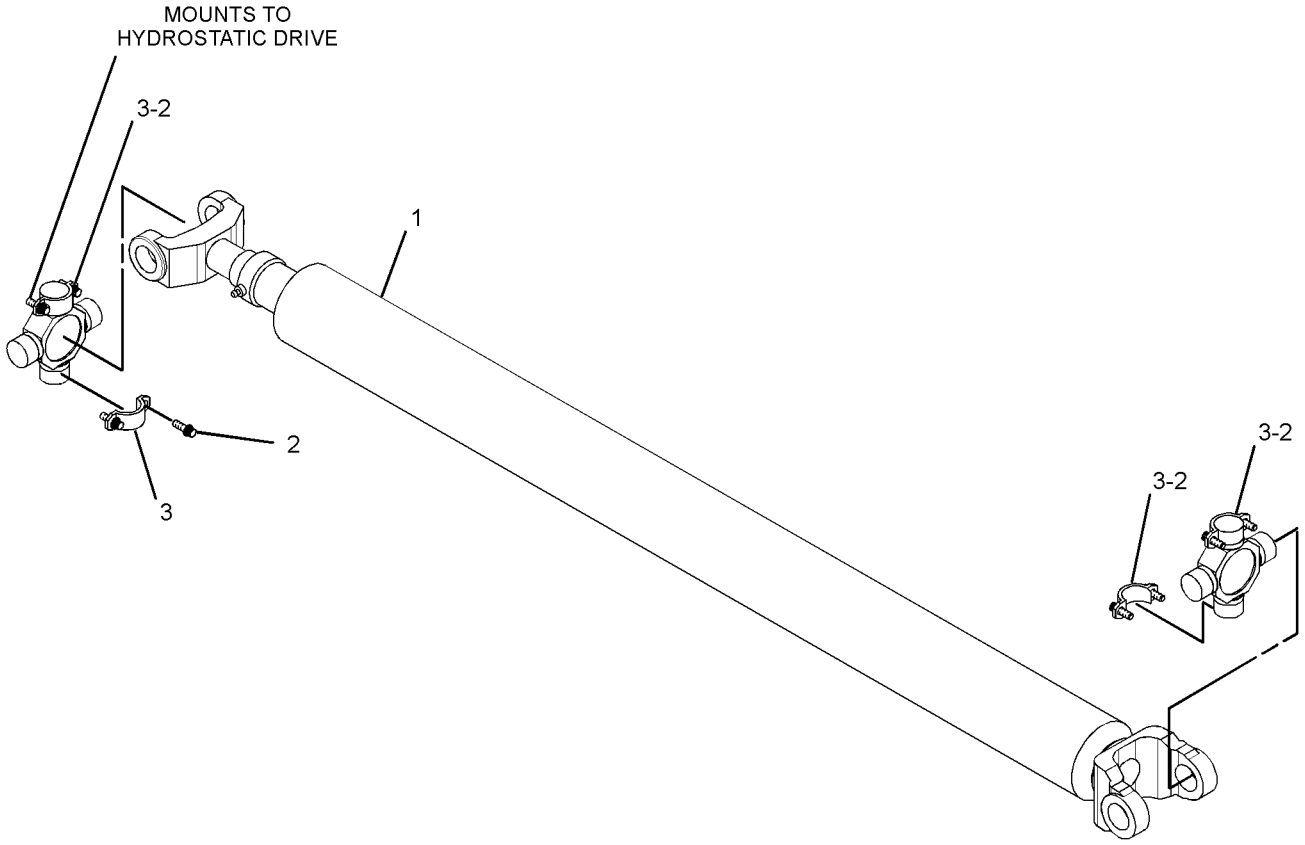

GRAPHIC #1 **<END>** g01376741

272-0169 SHAFT GP-DRIVE–HIGH SPEED AXLE

S/N: LMD1-UP

PART OF 294-8411, 301-1150 POWER TRAIN AR

AN ATTACHMENT

SMCS-3253 **i03109001**

NOTE	REF NO	GRAPHIC REF	PART NUMBER	QTY	PART NAME 1 2 3 4 5 6 (PRODUCT LEVEL)	SEE PAGE
	1	1	**316-1931**	1	SHAFT AS-DRIVE	
M	2	1	**107-6826**	8	BOLT (M24X19.1-MM)	
	3	1	**5V-2545**	4	STRAP	

M-METRIC PART

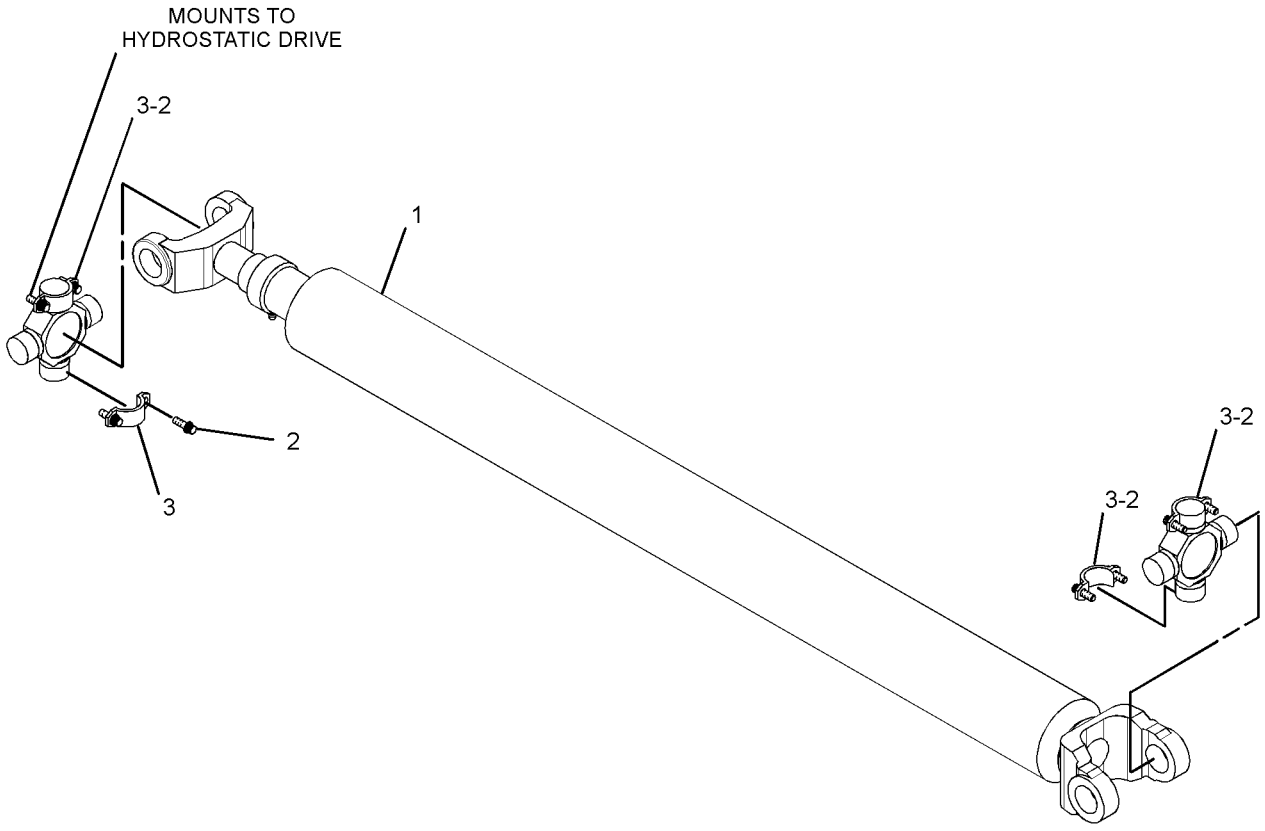

GRAPHIC #1 **<END>** g01376743

259-2926 TIRE & RIM GP

S/N: LMD1-UP
(13X20)
PART OF 259-2925 WHEEL & TIRE GP
AN ATTACHMENT

SMCS-4202 **i03128425**

NOTE	REF NO	GRAPHIC REF	PART NUMBER	QTY	PART NAME 1 2 3 4 5 6 (PRODUCT LEVEL)	SEE PAGE
	1	1	*141-2398*	1	TIRE(405/70R20)	
Y	2	1	**142-1273**	1	VALVE GP-TIRE	189
	3	1	**259-2931**	1	RIM AS (13X20)	

Y-SEPARATE ILLUSTRATION

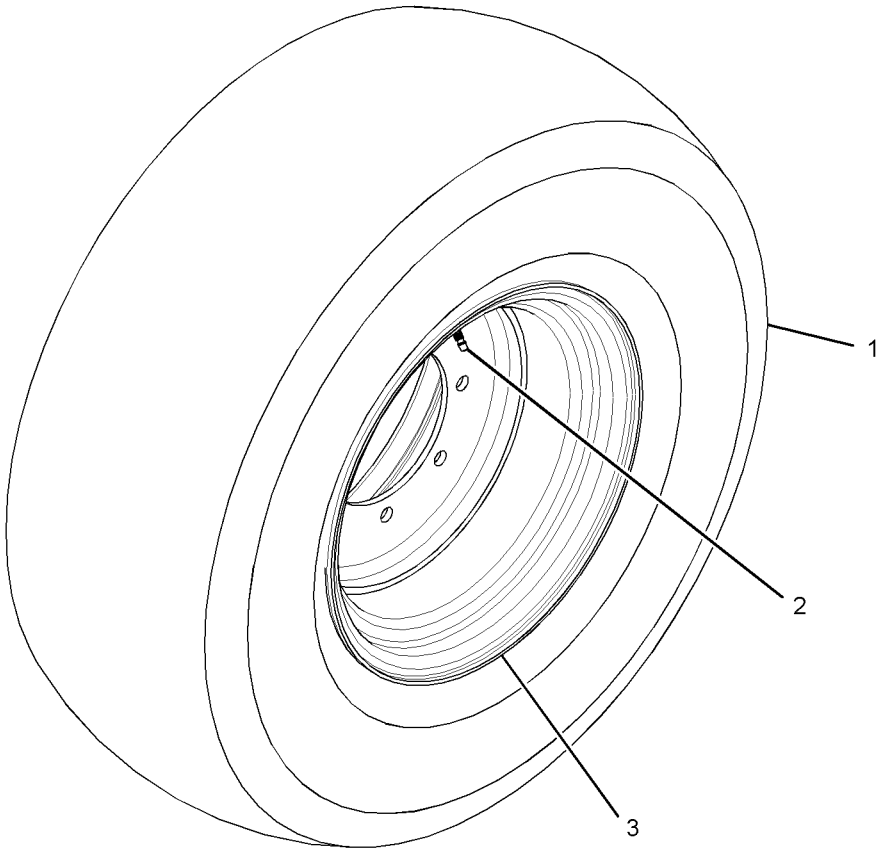

GRAPHIC #1 **<END>** g01392020

259-2929 TIRE & RIM GP

S/N: LMD1-UP
(11X20)
PART OF 259-2928 WHEEL & TIRE GP
AN ATTACHMENT

SMCS-4202 **i02783453**

NOTE	REF NO	GRAPHIC REF	PART NUMBER	QTY	PART NAME 1 2 3 4 5 6 (PRODUCT LEVEL)	SEE PAGE
Y	1	1	**142-1273**	1	VALVE GP-TIRE	189
	2	1	*143-7634*	1	TIRE (16/70-20)	
	3	1	**194-9363**	1	RIM AS (11X20)	

Y-SEPARATE ILLUSTRATION

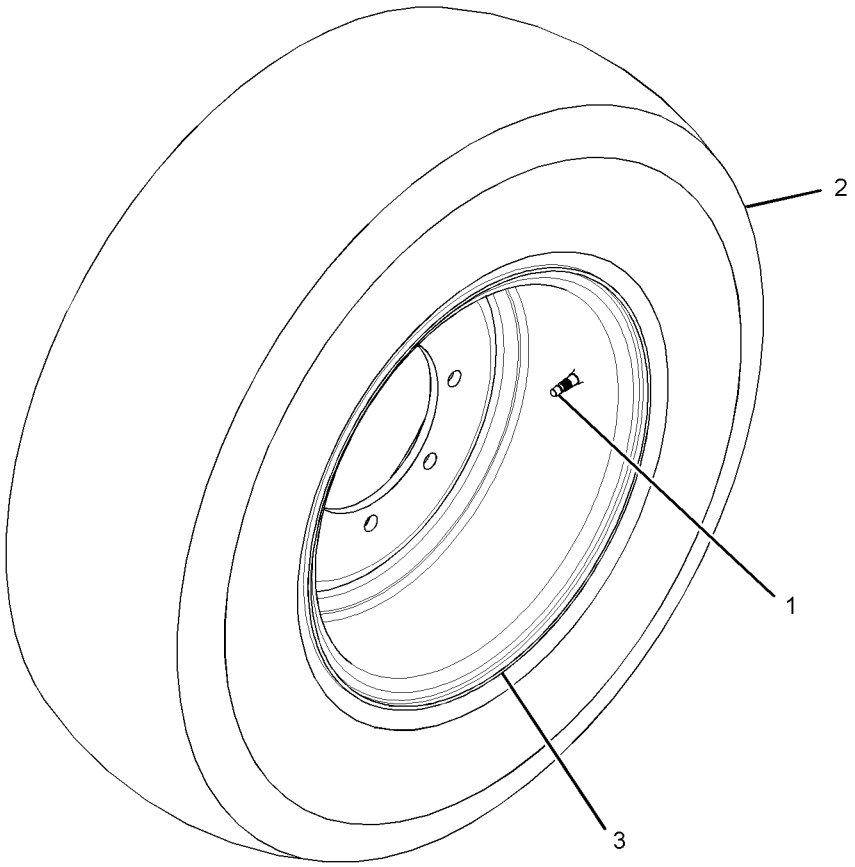

GRAPHIC #1 **<END>** g01392010

259-2930 TIRE & RIM GP

S/N: LMD1-UP
(11X20)
PART OF 259-2928 WHEEL & TIRE GP
AN ATTACHMENT

SMCS-4202 **i02783451**

NOTE	REF NO	GRAPHIC REF	PART NUMBER	QTY	PART NAME 1 2 3 4 5 6 (PRODUCT LEVEL)	SEE PAGE
Y	1	1	**142-1273**	1	VALVE GP-TIRE	189
	2	1	*143-7634*	1	TIRE (16/70-20)	
	3	1	**194-9363**	1	RIM AS (11X20)	

Y-SEPARATE ILLUSTRATION

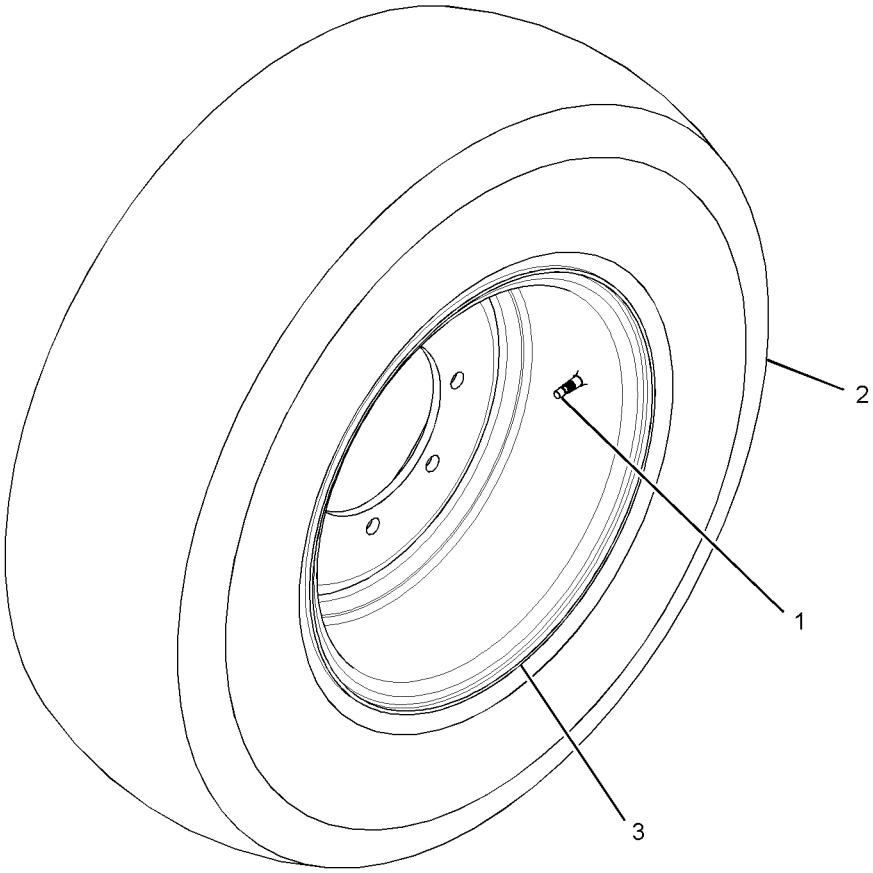

GRAPHIC #1 **<END>** g01392057

259-2933 TIRE & RIM GP

S/N: LMD1-UP
PART OF 259-2932 WHEEL & TIRE GP
AN ATTACHMENT

SMCS-4202 **i02747508**

NOTE	REF NO	GRAPHIC REF	PART NUMBER	QTY	PART NAME 1 2 3 4 5 6 (PRODUCT LEVEL)	SEE PAGE
	1	1	**9R-3545**	1	WHEEL AS (FRONT)	
Y	2	1	**142-1273**	1	VALVE GP-TIRE	189
	3	1	*187-6076*	1	TIRE (375/75-R20)	

Y-SEPARATE ILLUSTRATION

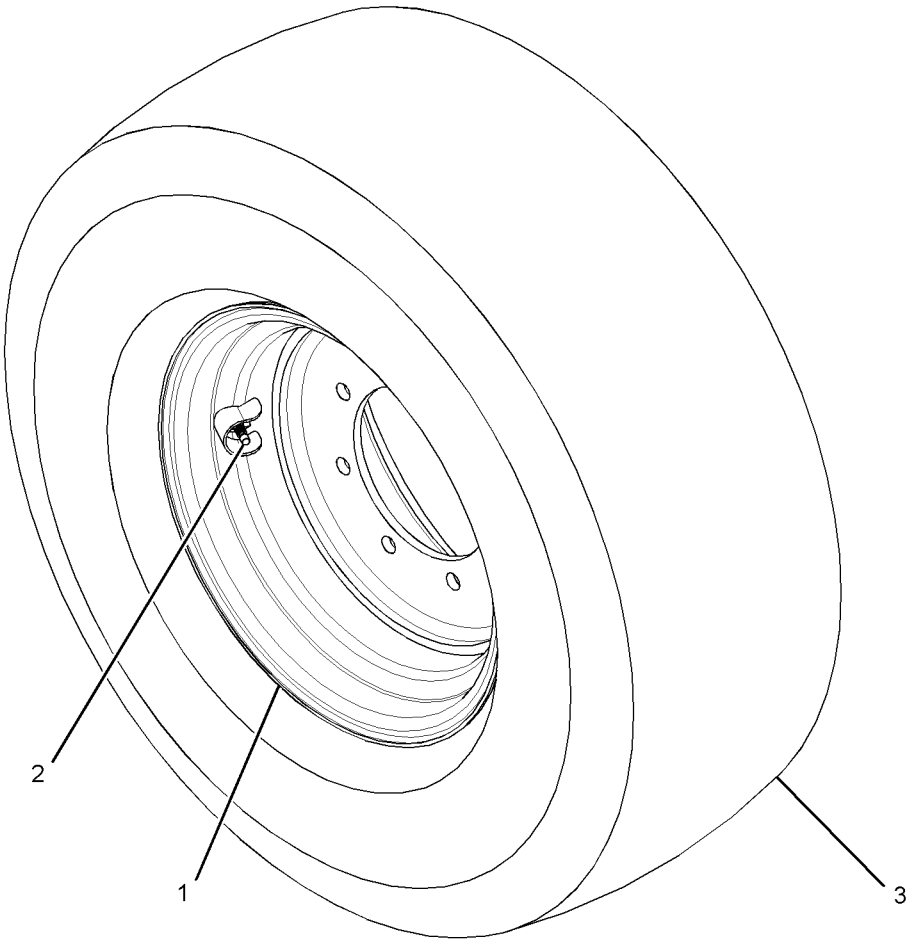

GRAPHIC #1 **<END>** g01379914

295-4001 TIRE & RIM GP–RH

S/N: LMD1-UP
13X20
PART OF 295-4000 WHEEL & TIRE GP
AN ATTACHMENT

SMCS-4202 **i03128424**

NOTE	REF NO	GRAPHIC REF	PART NUMBER	QTY	PART NAME 1 2 3 4 5 6 (PRODUCT LEVEL)	SEE PAGE
Y	1	1	**142-1273**	1	VALVE GP-TIRE	189
	2	1	**259-2931**	1	RIM AS (13X20)	
	3	1	*295-4003*	1	TIRE (70-R20)	

Y-SEPARATE ILLUSTRATION

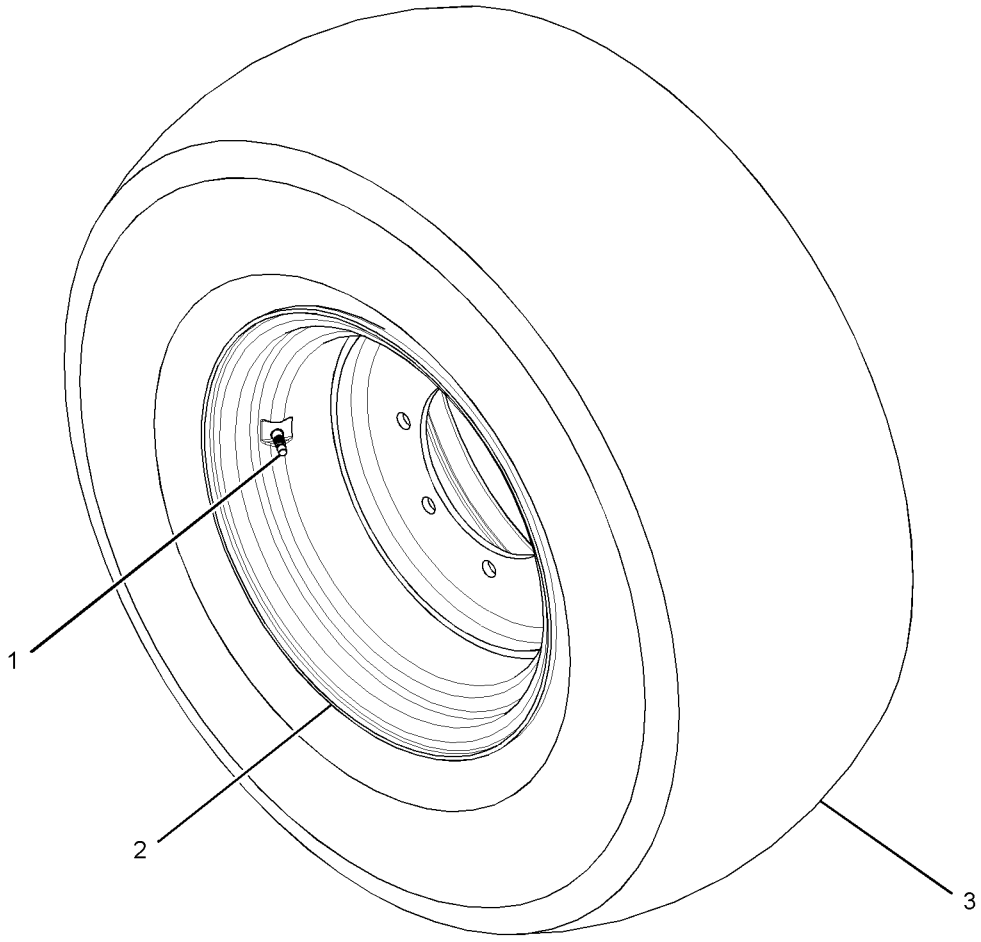

GRAPHIC #1 **<END>** g01379850

295-4002 TIRE & RIM GP–LH

S/N: LMD1-UP
13X20
PART OF 295-4000 WHEEL & TIRE GP
AN ATTACHMENT

SMCS-4202 **i03128423**

NOTE	REF NO	GRAPHIC REF	PART NUMBER	QTY	PART NAME 1 2 3 4 5 6 (PRODUCT LEVEL)	SEE PAGE
Y	1	1	**142-1273**	1	VALVE GP-TIRE	189
	2	1	**259-2931**	1	RIM AS (13X20)	
	3	1	*295-4003*	1	TIRE (70-R20)	

Y-SEPARATE ILLUSTRATION

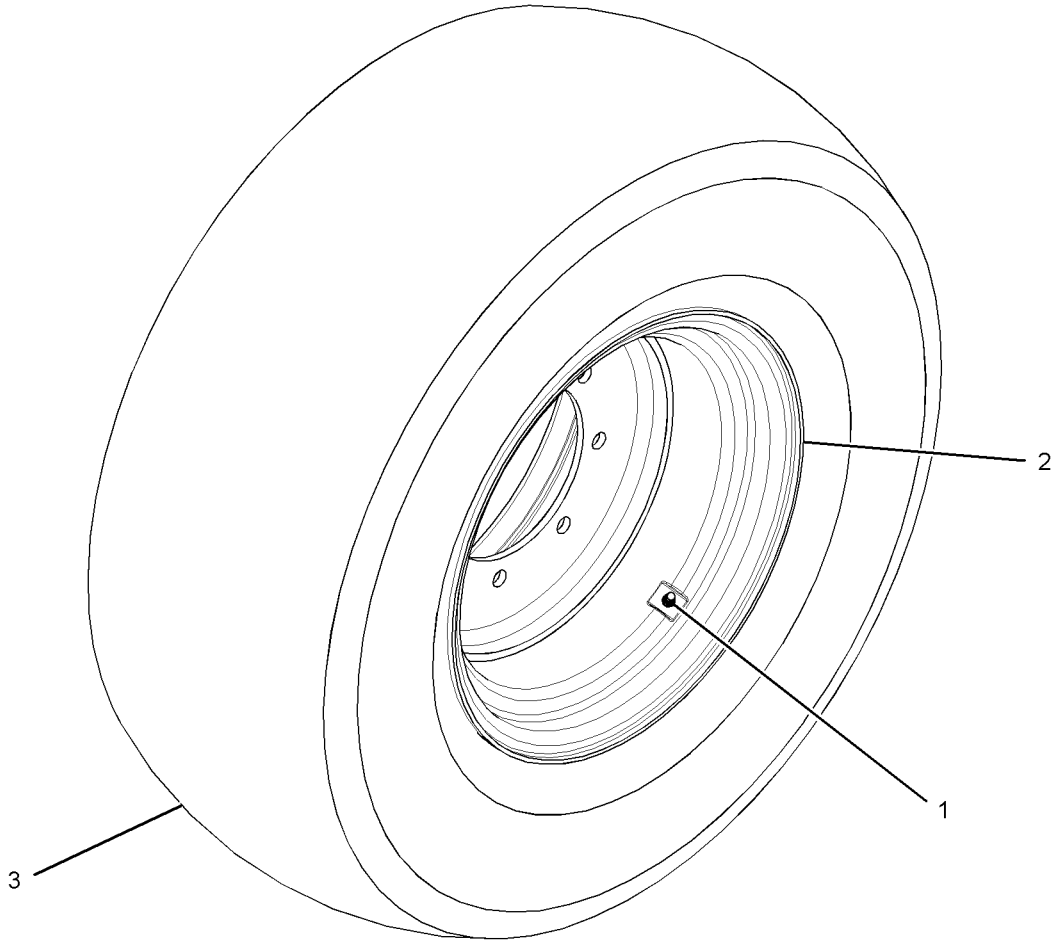

GRAPHIC #1 **<END>** g01379851

260-5411 VALVE & MTG GP-SOLENOID–AXLE SPEED SELECT

S/N: LMD1-UP

PART OF 276-8702 LINES GP-POWER TRAIN OIL

AN ATTACHMENT

SMCS-5479, 5571 **i02762072**

NOTE	REF NO	GRAPHIC REF	PART NUMBER	QTY	PART NAME 1 2 3 4 5 6 (PRODUCT LEVEL)	SEE PAGE
J	1	1	**249-7160**	1	VALVE GP-SOLENOID	
		1	**238-4626**	2	COIL AS	
					AVAILABLE REPAIR KIT(S):	
J			**106-3108**	1	KIT-SEAL	
J-KIT MARKED J SERVICES PART MARKED J						

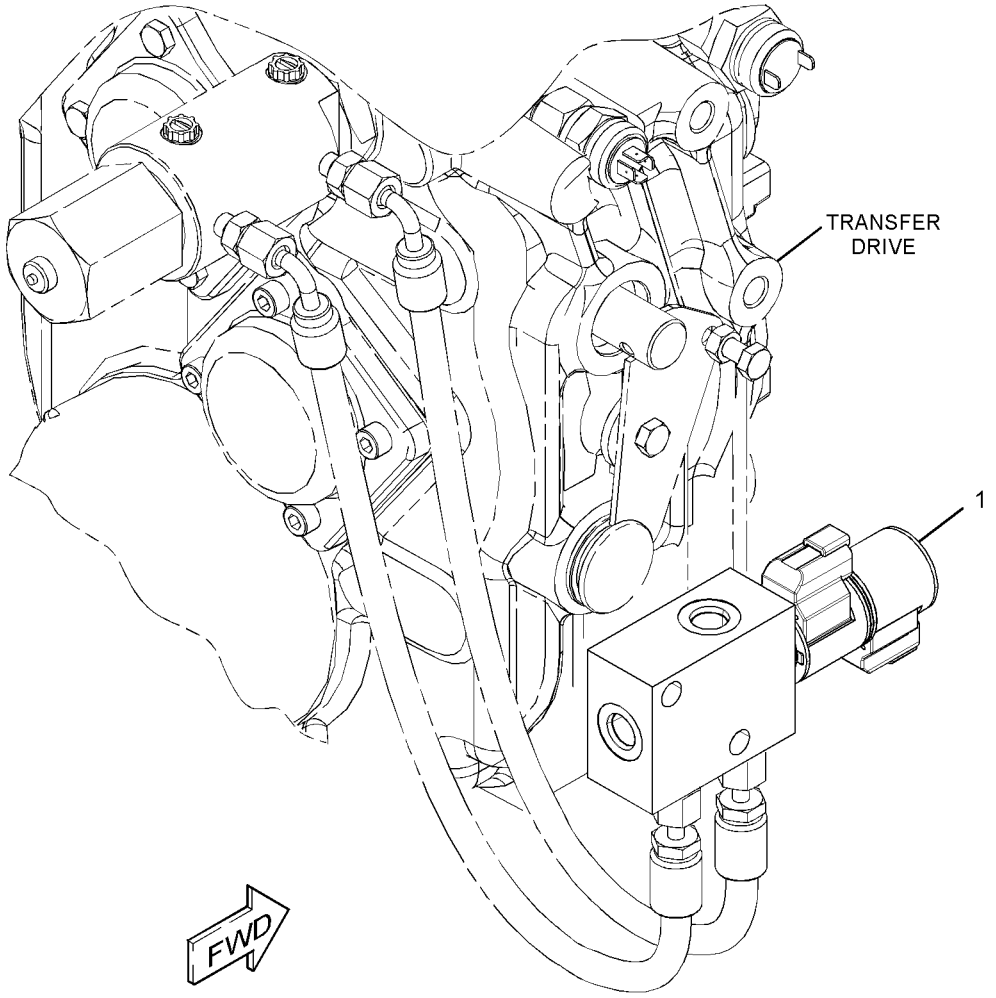

GRAPHIC #1 **<END>** g01388914

289-6366 VALVE GP-FLUSHING—HYDROSTATIC DRIVE MOTOR

S/N: LMD1-UP

PART OF 269-8908 MOTOR GP-PISTON

SMCS-5066 **i02702591**

NOTE	REF NO	GRAPHIC REF	PART NUMBER	QTY	PART NAME 1 2 3 4 5 6 (PRODUCT LEVEL)	SEE PAGE
	1	1	**3J-1907**	2	SEAL-O-RING	
	2	1	**6V-8351**	1	SEAL-O-RING	
	3	1	**9S-8004**	2	PLUG-O-RING	
	4	1	**107-3117**	2	SEAL-O-RING	
M	5	1	**129-3181**	4	BOLT-SOCKET HEAD (M10X1.5X55-MM)	
	6	1	**170-5715**	1	SEAL-O-RING	

M-METRIC PART

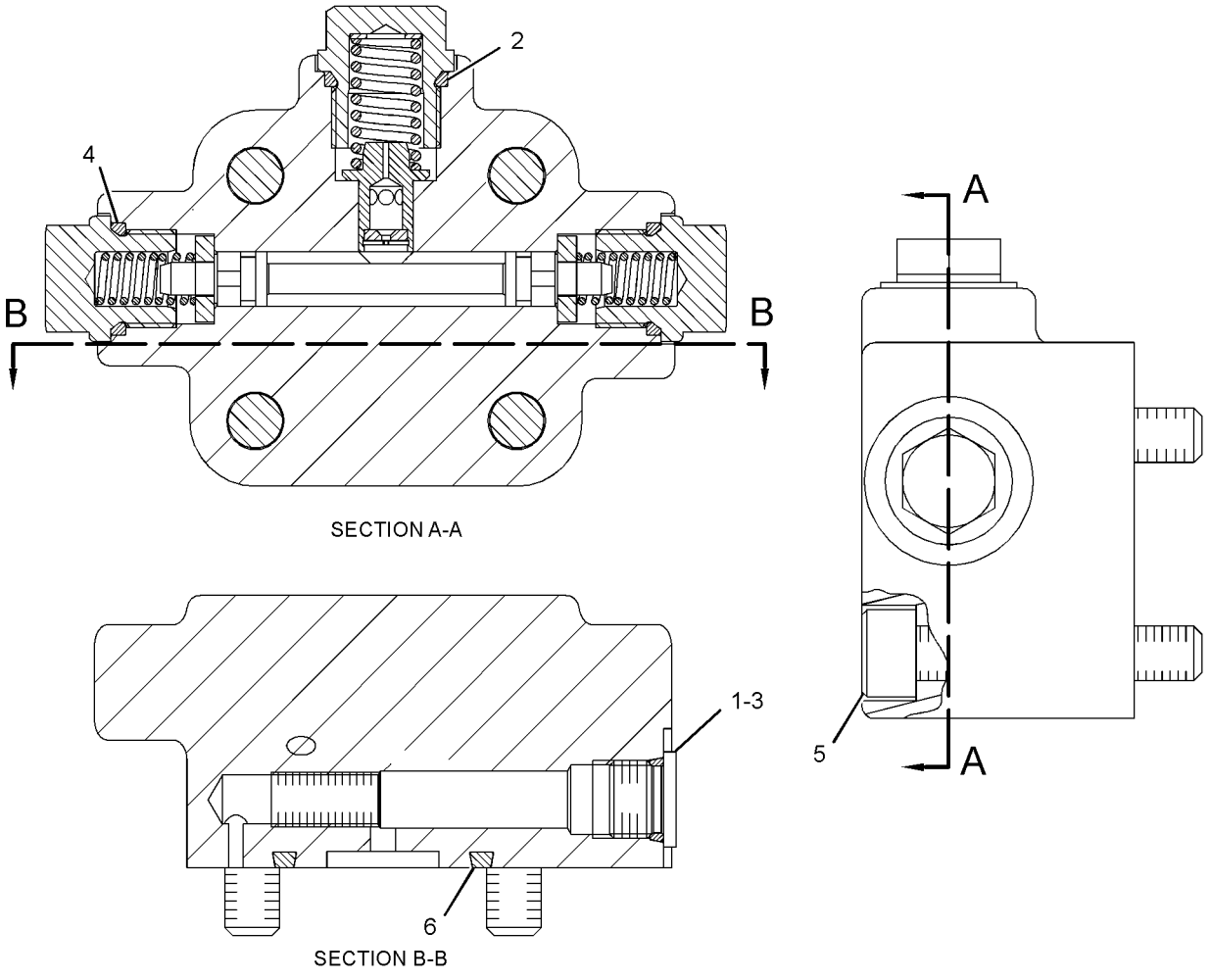

SECTION A-A

SECTION B-B

GRAPHIC #1 **<END>** g01376744

142-1273 VALVE GP-TIRE

S/N: LMD1-UP

PART OF 259-2926, 259-2929, 259-2930, 259-2933, 295-4001, 295-4002 TIRE & RIM GP

AN ATTACHMENT

SMCS-4203 **i00724810**

NOTE	REF NO	GRAPHIC REF	PART NUMBER	QTY	PART NAME 1 2 3 4 5 6 (PRODUCT LEVEL)	SEE PAGE
	1	1	**143-9478**	1	VALVE GP	

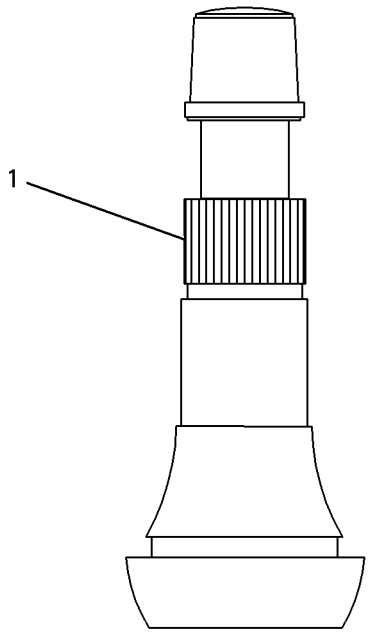

GRAPHIC #1 **<END>** g00284286

292-5404 WHEEL & BRAKE GP–FRONT

S/N: LMD1-UP
PART OF 262-8660 AXLE GP-FRONT
AN ATTACHMENT

SMCS-4006 **i02796139**

NOTE	REF NO	GRAPHIC REF	PART NUMBER	QTY	PART NAME 1 2 3 4 5 6 (PRODUCT LEVEL)	SEE PAGE
M	1	1	**160-8746**	8	BOLT (M12X1.75X18-MM)	
	2	1	*292-5372*	1	GEAR AS-RING	
		1	**209-4153**	1	GEAR (60-TEETH)	
		1	**209-4158**	8	BUSHING	
		1	**209-4159**	1	CARRIER	
		1	**209-7459**	1	RETAINER	
JY	3	1	*292-5402*	1	FLANGE GP-WHEEL	164
Y	4	1	*292-5403*	1	BRAKE GP-SERVICE	225
					AVAILABLE REPAIR KIT(S):	
J			**311-2533**	1	KIT-FLANGE	
					(INCLUDES HUB WHEEL & STUD)	

J-KIT MARKED J SERVICES PARTS MARKED J
M-METRIC PART
Y-SEPARATE ILLUSTRATION

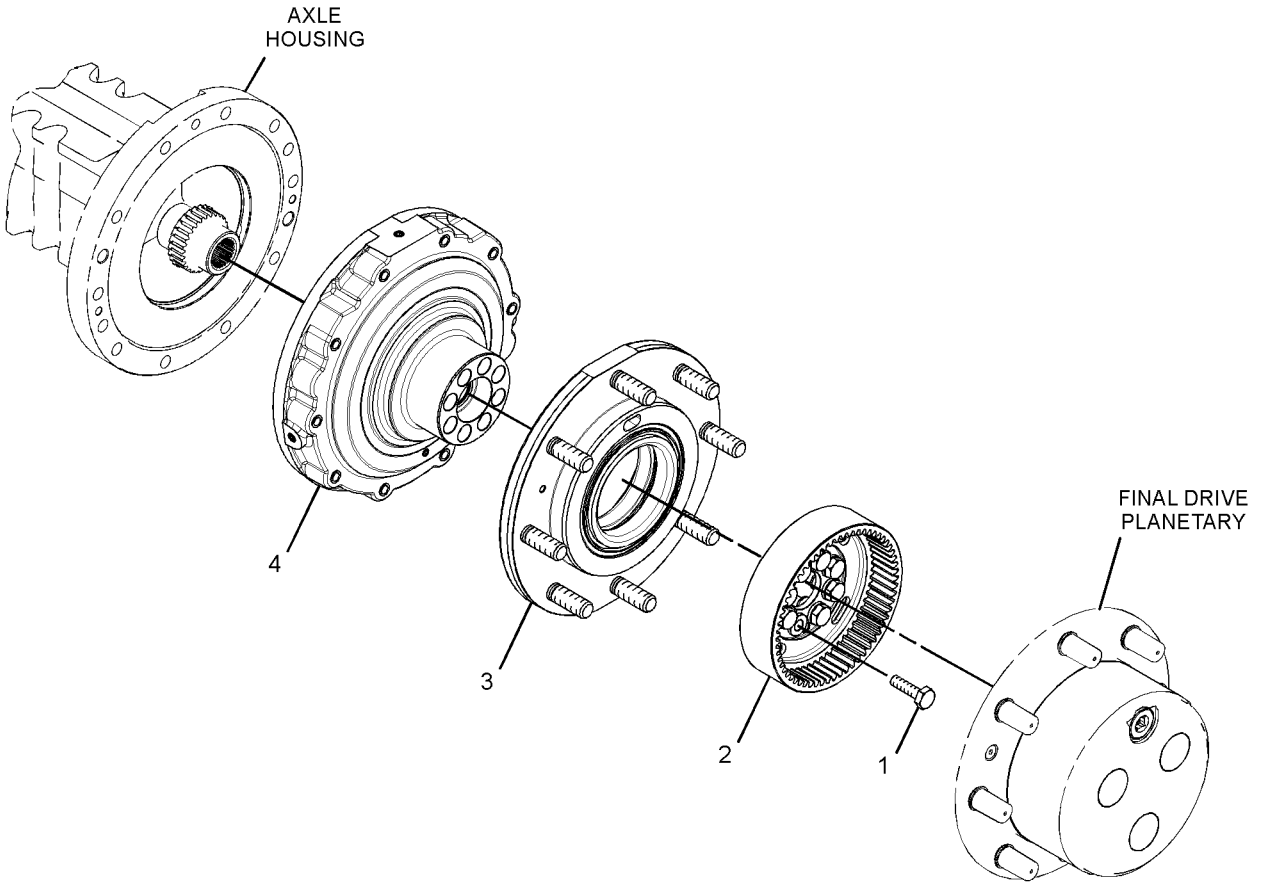

GRAPHIC #1 **<END>** g01375968

259-2925 WHEEL & TIRE GP

S/N: LMD1-UP
AN ATTACHMENT

SMCS-4202 **i02783447**

NOTE	REF NO	GRAPHIC REF	PART NUMBER	QTY	PART NAME 1 2 3 4 5 6 (PRODUCT LEVEL)	SEE PAGE
M	1	1	**201-1919**	32	NUT (M20X1.5-THD)	
Y	2	1	*259-2926*	4	TIRE & RIM GP	181
	3	1	**8T-5439**	32	WASHER-HARD (21.5X45X6-MM THK)	

M-METRIC PART
Y-SEPARATE ILLUSTRATION

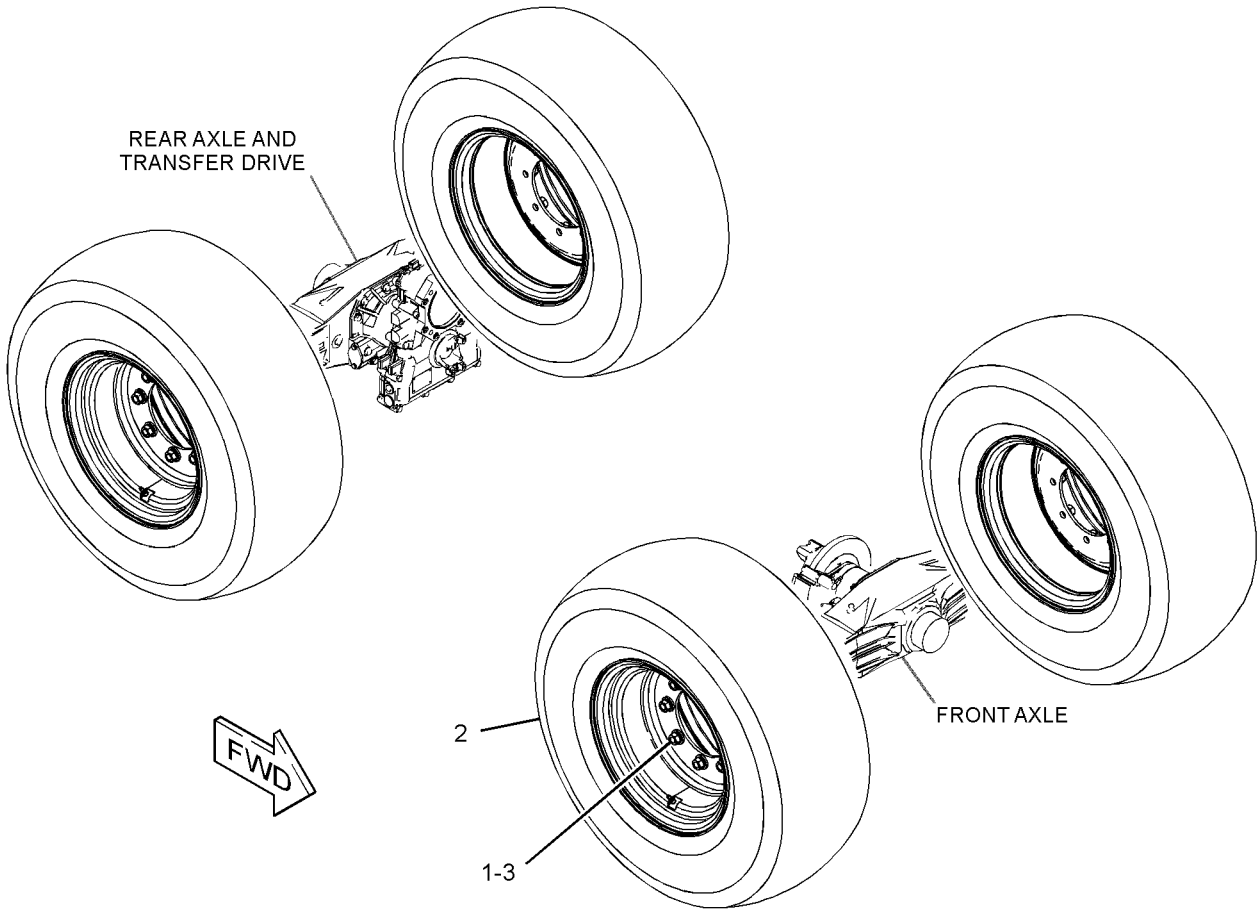

GRAPHIC #1 **<END>** g01392038

259-2928 WHEEL & TIRE GP

S/N: LMD1-UP
AN ATTACHMENT

SMCS-4202 **i03193543**

NOTE	REF NO	GRAPHIC REF	PART NUMBER	QTY	PART NAME 1 2 3 4 5 6 (PRODUCT LEVEL)	SEE PAGE
M	1	1	**201-1919**	32	NUT (M20X1.5-THD)	
Y	2	1	*259-2929*	2	TIRE & RIM GP (RH)	182
Y	3	1	*259-2930*	2	TIRE & RIM GP (LH)	183
	4	1	**8T-5439**	32	WASHER-HARD (21.5X45X6-MM THK)	

M-METRIC PART
Y-SEPARATE ILLUSTRATION

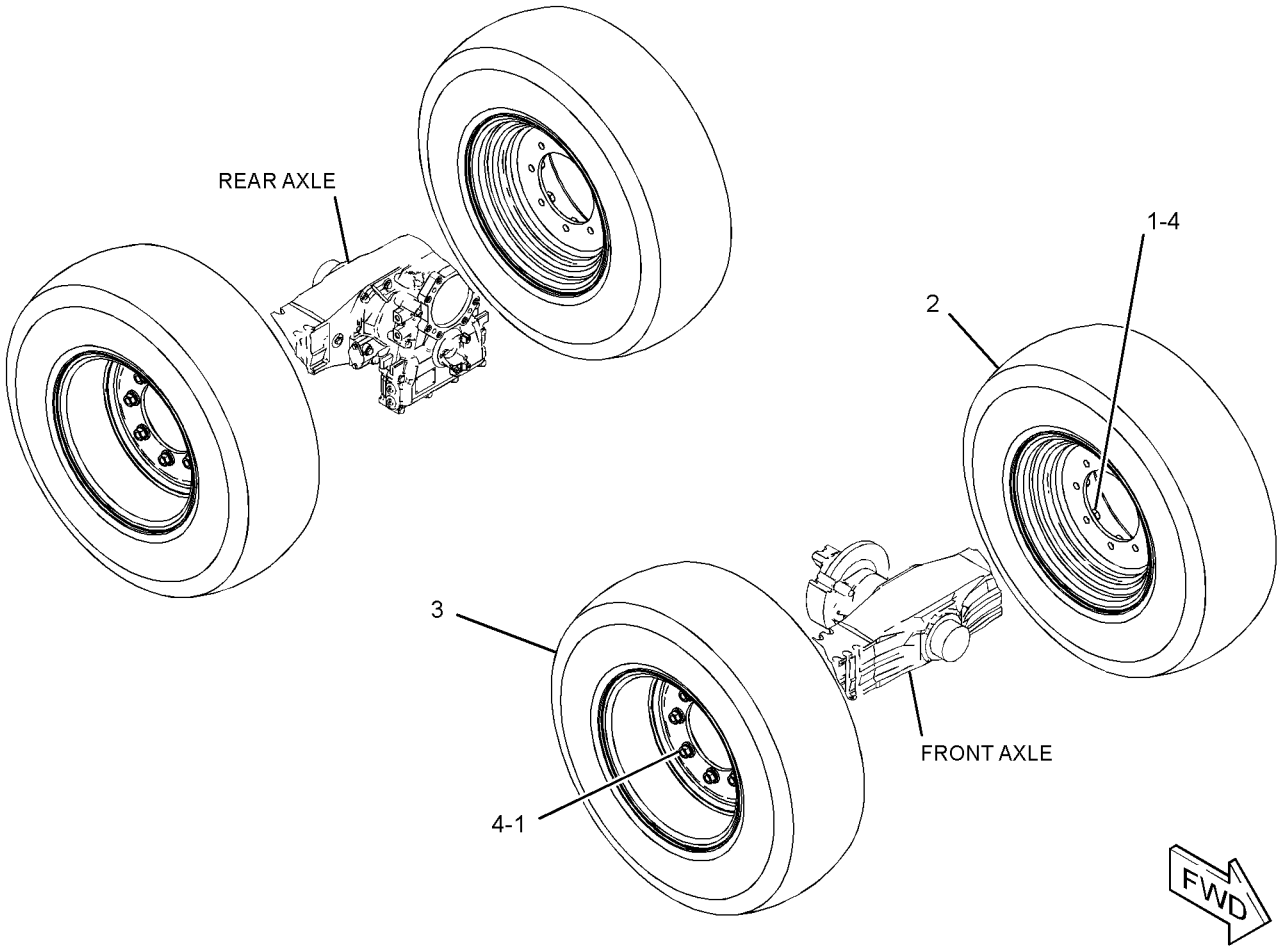

GRAPHIC #1 **<END>** g01392478

259-2932 WHEEL & TIRE GP

S/N: LMD1-UP
AN ATTACHMENT

SMCS-4202 **i02783449**

NOTE	REF NO	GRAPHIC REF	PART NUMBER	QTY	PART NAME 1 2 3 4 5 6 (PRODUCT LEVEL)	SEE PAGE
M	1	1	**201-1919**	32	NUT (M20X1.5-THD)	
Y	2	1	*259-2933*	4	TIRE & RIM GP (375/75-R20)	184
	3	1	**8T-5439**	32	WASHER-HARD (21.5X45X6-MM THK)	

M-METRIC PART
Y-SEPARATE ILLUSTRATION

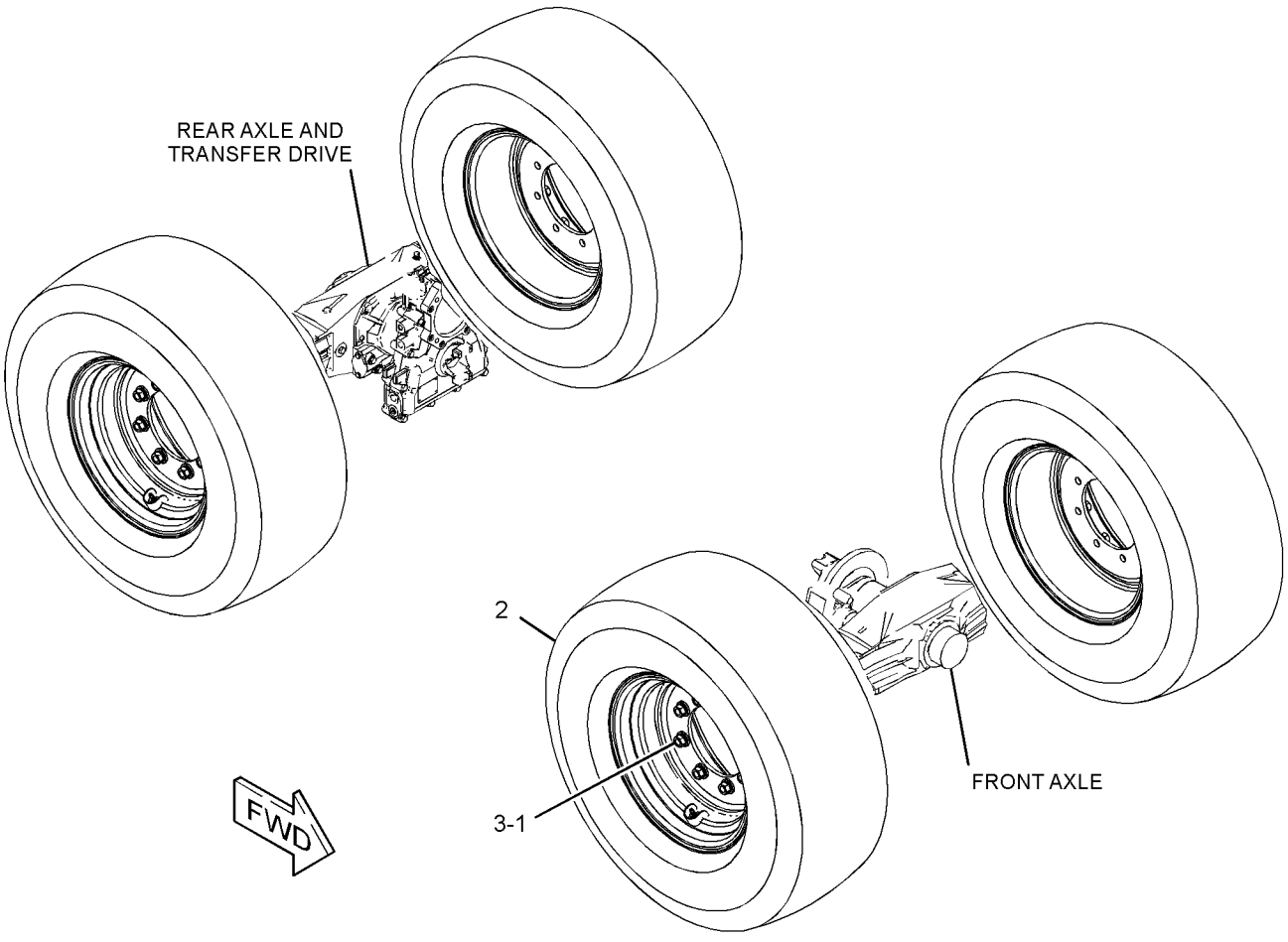

GRAPHIC #1 **<END>** g01392028

POWER TRAIN

295-4000 WHEEL & TIRE GP

S/N: LMD1-UP
AN ATTACHMENT

SMCS-4202 **i02830379**

NOTE	REF NO	GRAPHIC REF	PART NUMBER	QTY	PART NAME 1 2 3 4 5 6 (PRODUCT LEVEL)	SEE PAGE
M	1	1	**201-1919**	32	NUT (M20X1.5-THD)	
Y	2	1	*295-4001*	2	TIRE & RIM GP (RH)	185
Y	3	1	*295-4002*	2	TIRE & RIM GP (LH)	186
	4	1	**8T-5439**	32	WASHER-HARD (21.5X45X6-MM THK)	

M-METRIC PART
Y-SEPARATE ILLUSTRATION

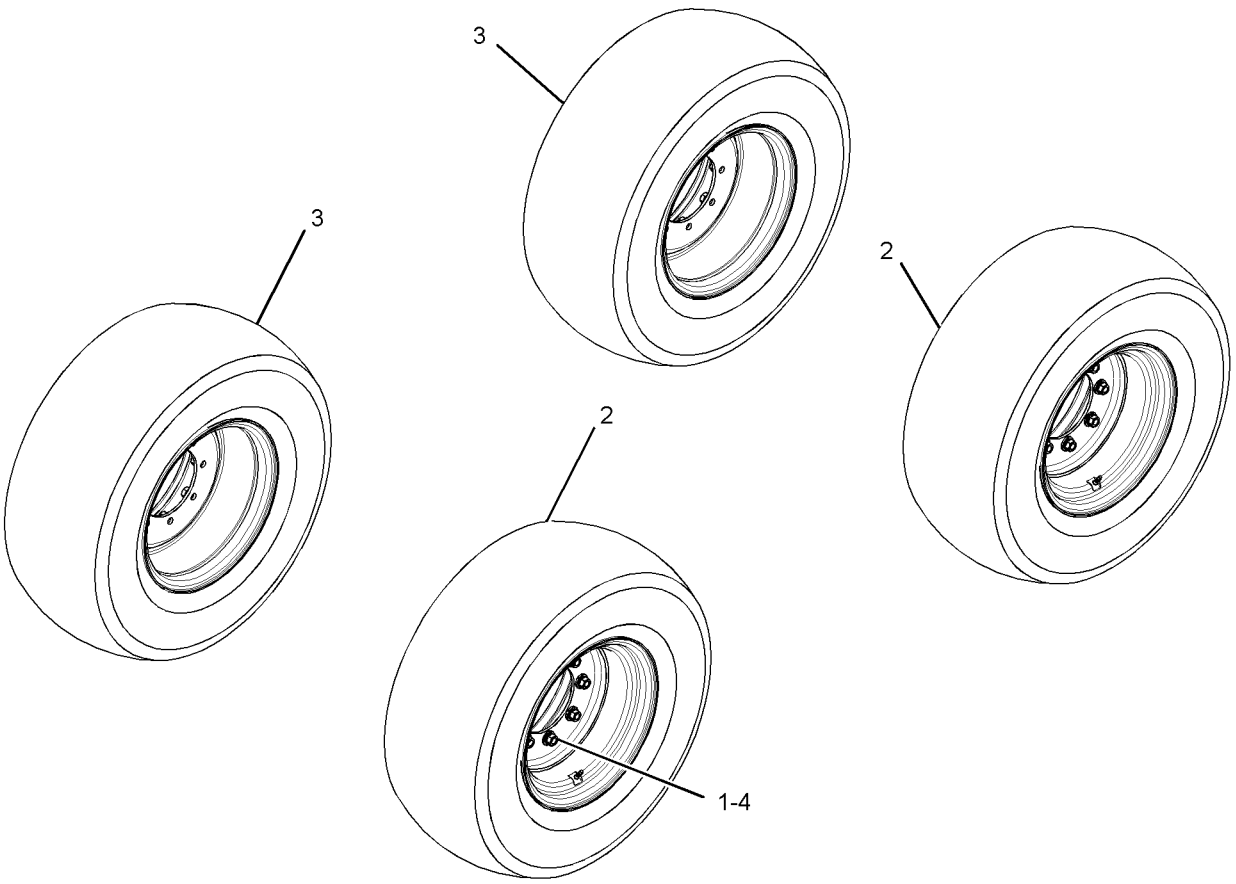

GRAPHIC #1 **<END>** g01375445

307-1556 CONVERSION AR-ROADING

S/N: LMD1-UP

AN ATTACHMENT

SMCS-7000, 7153 **i03111146**

NOTE	REF NO	GRAPHIC REF	PART NUMBER	QTY	PART NAME 1 2 3 4 5 6 (PRODUCT LEVEL)	SEE PAGE
	1	1	**6C-7319**	2	PLATE AS	
					(EACH INCLUDES)	
M		1	**8T-3490**	2	NUT-WELD (M10X1.5-THD)	
	2	1	**6C-7320**	2	FILM (REFLECTOR)	
	3	1	**114-4917**	4	COVER AS-FRONT	
	4	1	**177-7414**	2	FILM-STRIPE (REFLECTIVE, RED, WHITE)	
Y	5	1	*209-3477*	1	GUARD GP-BUCKET (ROADING)	352
	6	1	**258-3849**	1	PLATE-IDENTIFICATION (ENGLISH, GERMAN, SPANISH)	
Y	7	1	*260-5492*	1	MOUNTING GP-REGISTRATION	221
Y	8	1	*260-5501*	1	LIGHTING GP-WARNING BEACON	102
Y	9	1	*301-3069*	1	BRACKET GP-TRANSPORT	324
	10	1	**308-0638**	1	RESTRAINER-BUCKET	
	11	1	**106-0827**	3	FILM-IDENTIFICATION (20-KM/H)	
M	12	1	**8T-4196**	4	BOLT (M10X1.5X35-MM)	

M-METRIC PART
Y-SEPARATE ILLUSTRATION

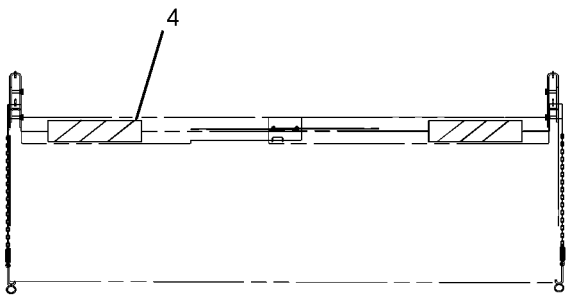

VIEW A-A

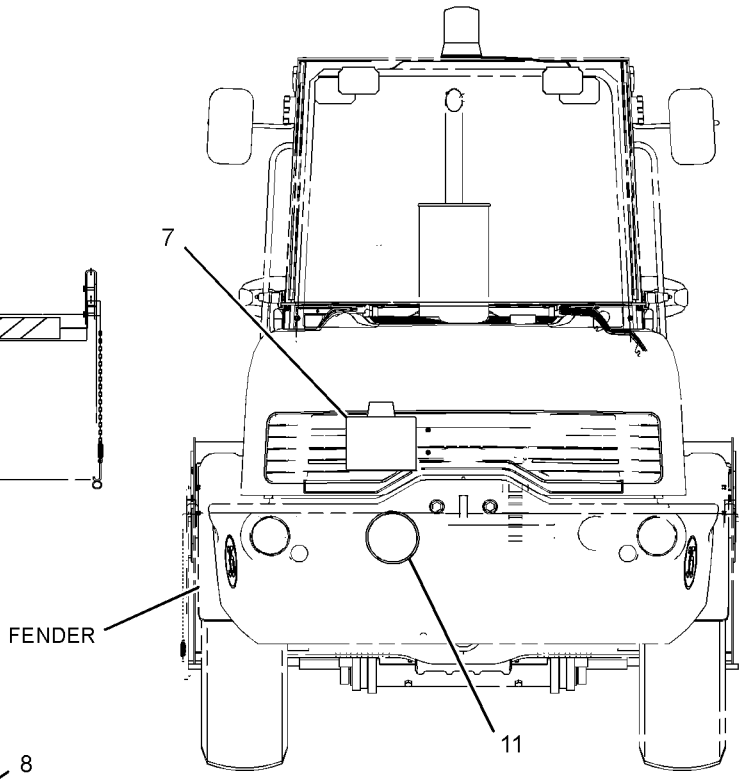

REAR VIEW

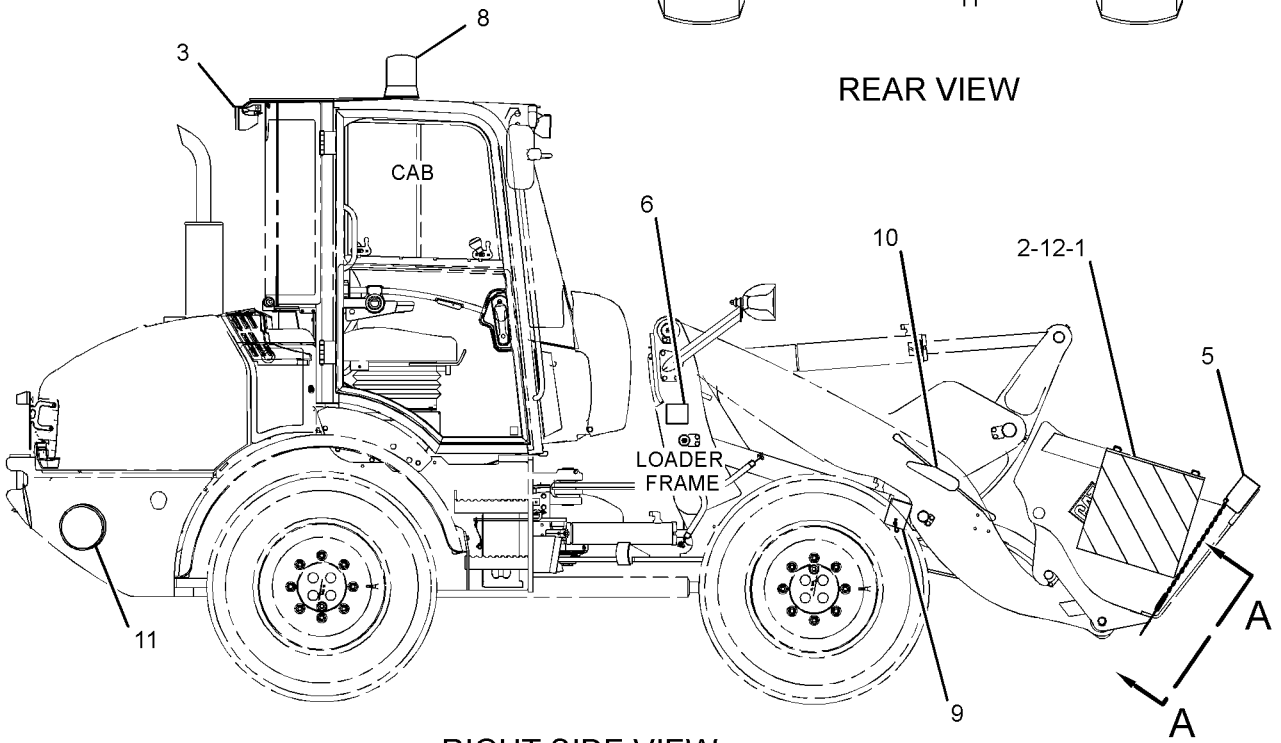

RIGHT SIDE VIEW

GRAPHIC #1 **<END>** g01375896

307-1558 CONVERSION AR-ROADING

S/N: LMD1-UP
35 KPH
AN ATTACHMENT

SMCS-7000, 7153 **i03111148**

NOTE	REF NO	GRAPHIC REF	PART NUMBER	QTY	PART NAME 1 2 3 4 5 6 (PRODUCT LEVEL)	SEE PAGE
	1	1	**6C-7319**	2	PLATE AS	
					(EACH INCLUDES)	
M		1	**8T-3490**	2	NUT-WELD (M10X1.5-THD)	
	2	1	**6C-7320**	2	FILM (REFLECTOR)	
	3	1	**114-4917**	4	COVER AS-FRONT	
	4	1	**121-6752**	3	FILM-IDENTIFICATION (35-KM/H)	
	5	1	**177-7414**	2	FILM-STRIPE (REFLECTIVE, RED, WHITE)	
Y	6	1	*209-3477*	1	GUARD GP-BUCKET (ROADING)	352
	7	1	**258-3849**	1	PLATE-IDENTIFICATION (ENGLISH, GERMAN, SPANISH)	
Y	8	1	*260-5492*	1	MOUNTING GP-REGISTRATION	221
Y	9	1	*260-5501*	1	LIGHTING GP-WARNING BEACON	102
Y	10	1	*301-3069*	1	BRACKET GP-TRANSPORT	324
	11	1	**308-0638**	1	RESTRAINER-BUCKET	
M	12	1	**8T-4196**	4	BOLT (M10X1.5X35-MM)	

M-METRIC PART
Y-SEPARATE ILLUSTRATION

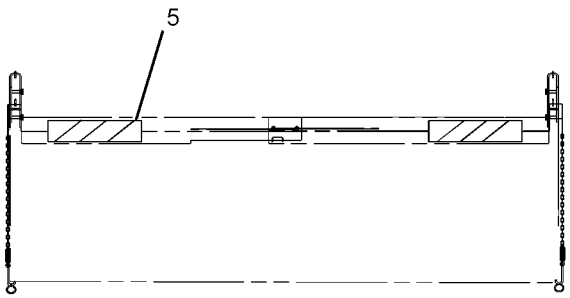

VIEW A-A

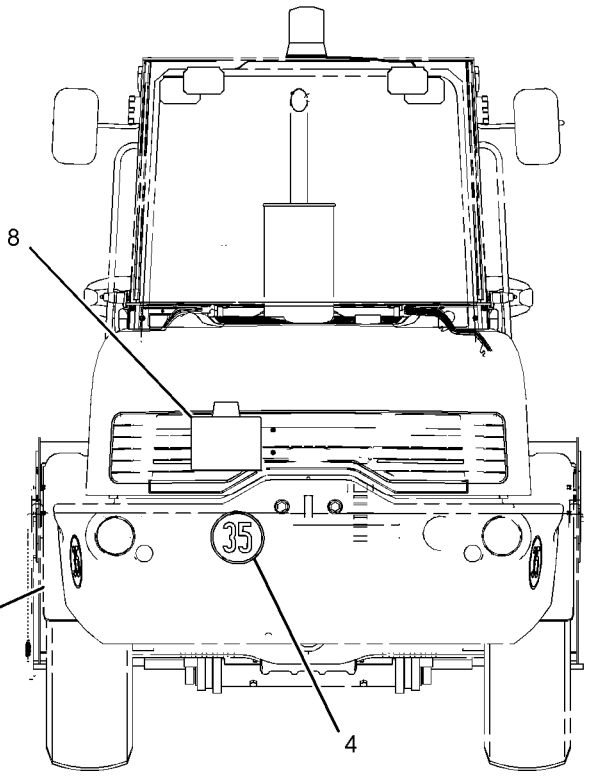

REAR VIEW

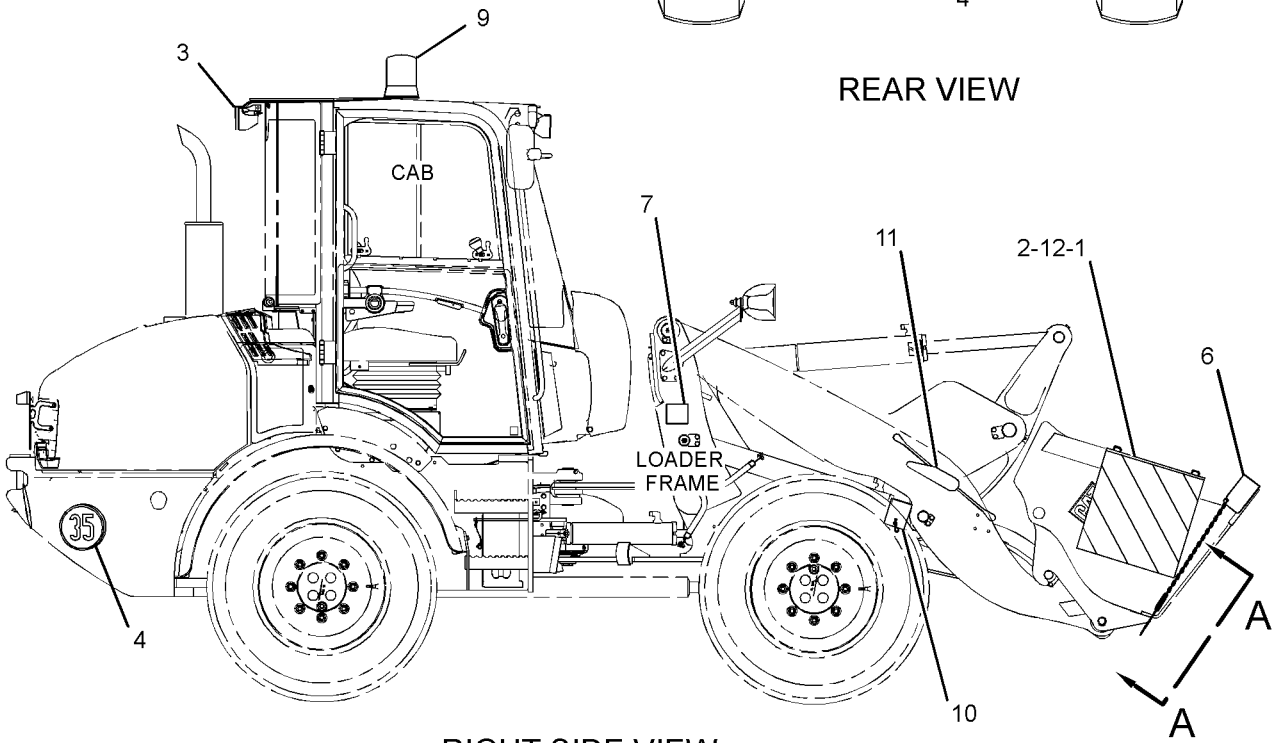

RIGHT SIDE VIEW

GRAPHIC #1 **<END>** g01375895

307-1559 CONVERSION AR-ROADING

S/N: LMD1-UP
20 KPH
AN ATTACHMENT

SMCS-7000, 7153 **i03195192**

NOTE	REF NO	GRAPHIC REF	PART NUMBER	QTY	PART NAME 1 2 3 4 5 6 (PRODUCT LEVEL)	SEE PAGE
Y	1	1	*209-3477*	1	GUARD GP-BUCKET (ROADING)	352
	2	1	**258-3849**	1	PLATE-IDENTIFICATION (ENGLISH, GERMAN, SPANISH)	
Y	3	1	*303-2126*	1	CHOCK GP-WHEEL	438
	4	1	**106-0827**	3	FILM-IDENTIFICATION (20-KM/H)	

Y-SEPARATE ILLUSTRATION

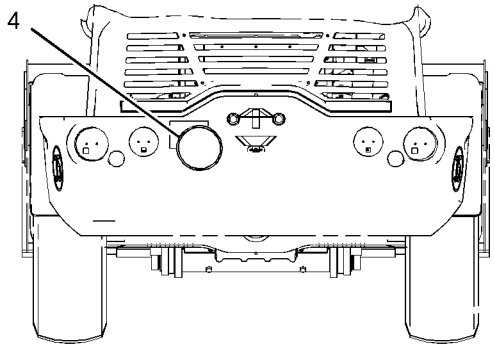

REAR VIEW

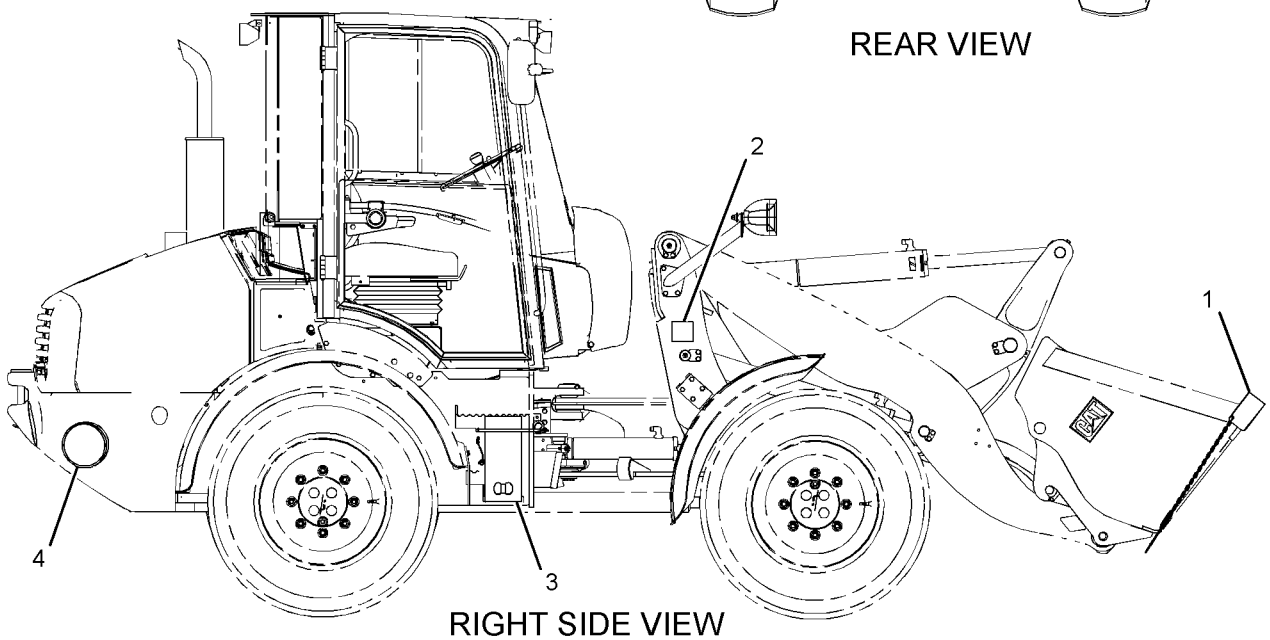

RIGHT SIDE VIEW

GRAPHIC #1 **<END>** g01375539

FRAME AND BODY

307-1560 CONVERSION AR-ROADING

S/N: LMD1-UP
35 KPH
AN ATTACHMENT

SMCS-7000, 7153 **i03195194**

NOTE	REF NO	GRAPHIC REF	PART NUMBER	QTY	PART NAME 1 2 3 4 5 6 (PRODUCT LEVEL)	SEE PAGE
	1	1	**121-6752**	3	FILM-IDENTIFICATION (35-KM/H)	
Y	2	1	*209-3477*	1	GUARD GP-BUCKET (ROADING)	352
	3	1	**258-3849**	1	PLATE-IDENTIFICATION (ENGLISH, GERMAN, SPANISH)	
Y	4	1	*303-2126*	1	CHOCK GP-WHEEL	438

Y-SEPARATE ILLUSTRATION

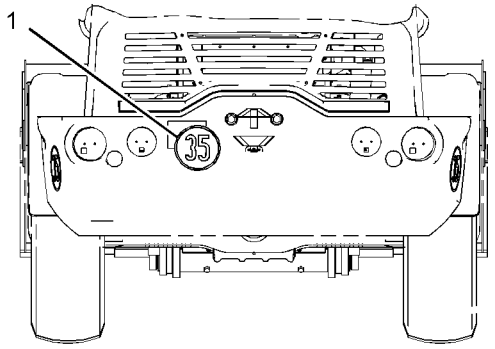

REAR VIEW

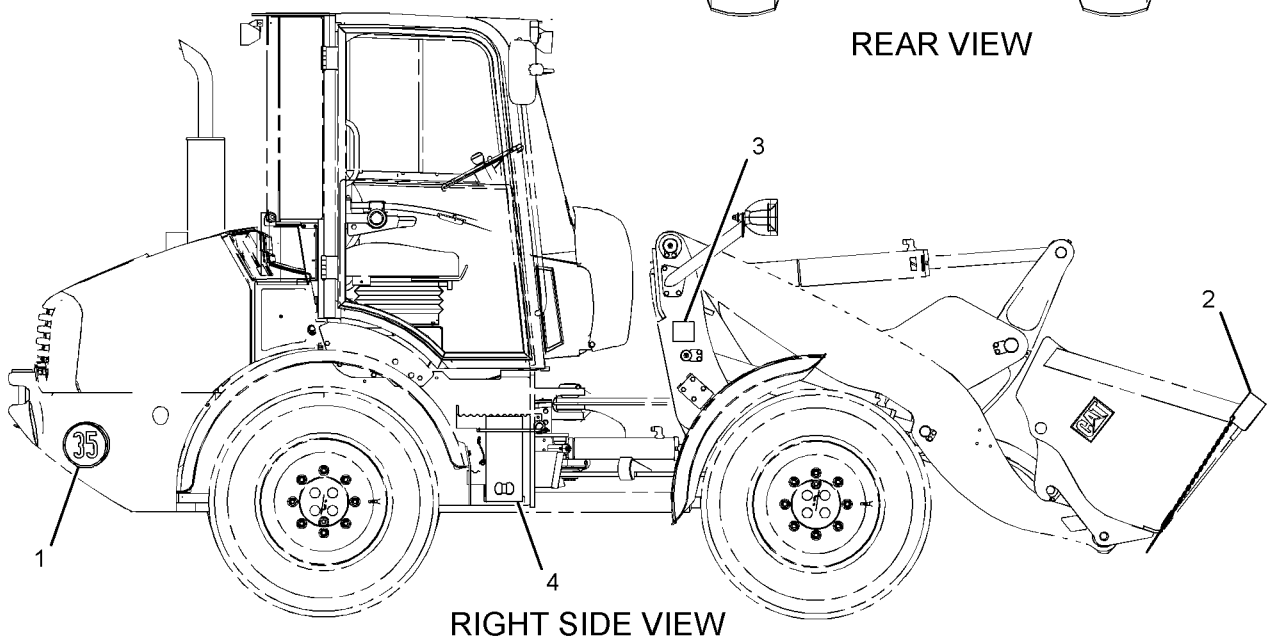

RIGHT SIDE VIEW

GRAPHIC #1

<END>

g01375894

271-3595 COUNTERWEIGHT GP

S/N: LMD1-UP

PART OF 322-4878 CHASSIS AR

SMCS-7056 **i02857448**

NOTE	REF NO	GRAPHIC REF	PART NUMBER	QTY	PART NAME 1 2 3 4 5 6 (PRODUCT LEVEL)	SEE PAGE
	1	1	**103-5796**	1	PIN-KEEPER	
	2	1	**200-1613**	2	REFLECTOR	
	3	1	**257-7688**	1	PIN AS	
	4	1	**257-9657**	1	COUNTERWEIGHT	
	5	1	**296-0512**	2	PLATE AS	
	6	1	**312-8372**	1	PLATE AS	
	7	1	**5P-4116**	3	WASHER-HARD (8.8X20.5X2-MM THK)	
M	8	1	**8T-0363**	2	BOLT (M24X3X120-MM)	
	9	1	**8T-4167**	2	WASHER-HARD (26X44X4-MM THK)	
M	10	1	**8T-4187**	2	BOLT (M20X2.5X80-MM)	
M	11	1	**8T-4189**	3	BOLT (M8X1.25X20-MM)	
B	12	1	**8T-4224**	1	WASHER-HARD (8.8X16X2-MM THK)	
M	13	1	**8T-4908**	1	BOLT (M8X1.25X25-MM)	
	14	1	**8T-5439**	2	WASHER-HARD (21.5X45X6-MM THK)	

B-USE AS REQUIRED
M-METRIC PART

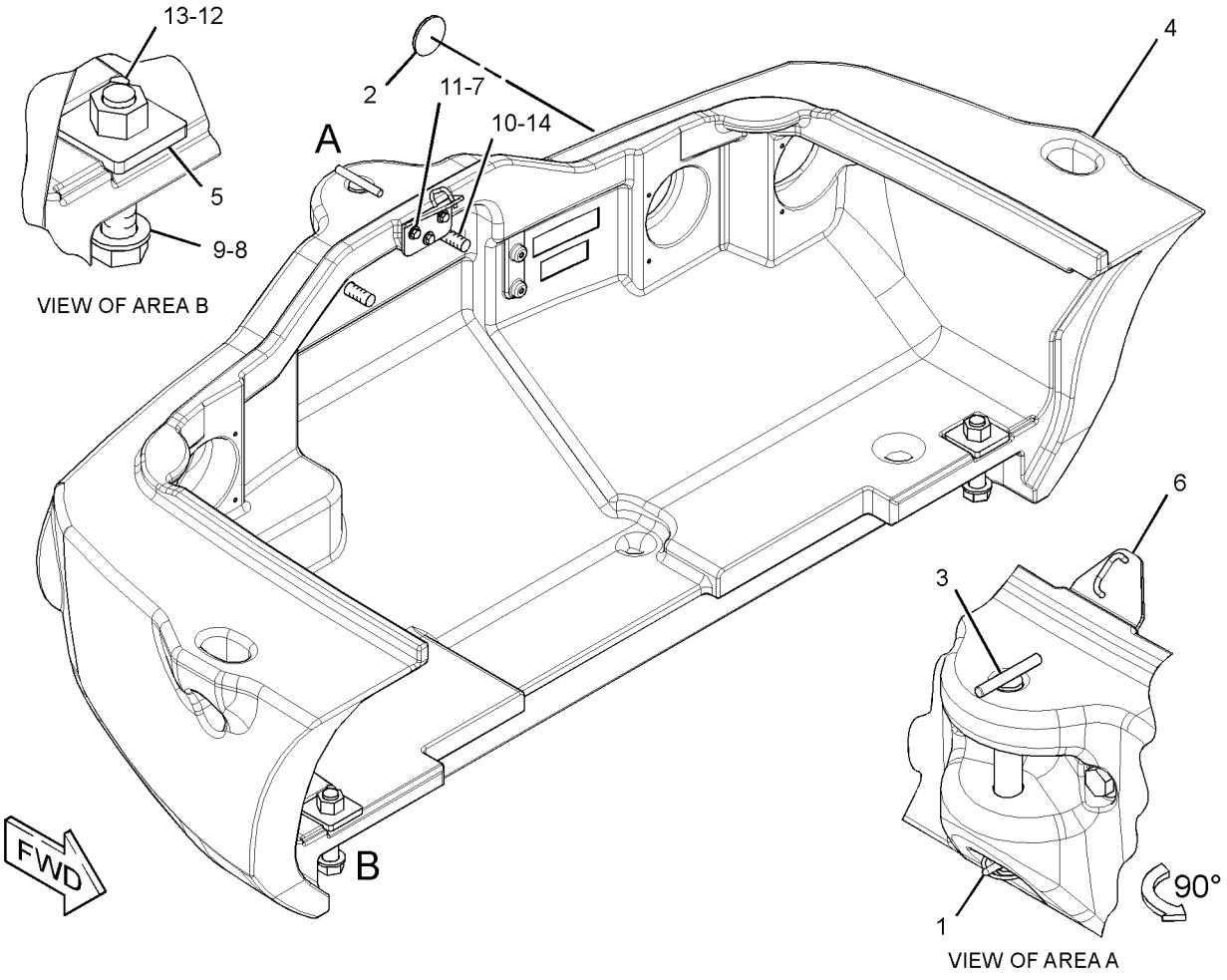

GRAPHIC #1 **<END>** g01427311

293-0549 COVER GP-ACCESS–CAB, FRONT

S/N: LMD1-UP

PART OF 322-4878 CHASSIS AR

SMCS-726A **i02700520**

NOTE	REF NO	GRAPHIC REF	PART NUMBER	QTY	PART NAME 1 2 3 4 5 6 (PRODUCT LEVEL)	SEE PAGE
	1	1	**274-4288**	1	BRACKET AS	
	2	1	**274-4289**	1	PLATE	
	3	1	**286-9548**	1	LOCK GP-VANDALISM	
J		1	**226-0292**	1	LOCK AS	
		1	**284-1042**	1	CAM-LOCK	
	4	1	**293-0548**	1	COVER	
M	5	1	**129-3180**	2	LOCKNUT (M12X1.75-THD)	
M	6	1	**5C-2890**	4	NUT (M6X1-THD)	
M	7	1	**8T-4183**	2	BOLT (M12X1.75X40-MM)	
	8	1	**8T-4223**	4	WASHER-HARD (13.5X25.5X3-MM THK)	
	9	1	**9X-2038**	4	WASHER (7X19X2-MM THK)	
E	10	1	**145-2350**		SEAL (1.2-CM EACH)	

E-ORDER BY THE CENTIMETER
J-REQUIRES CORPORATE KEY
M-METRIC PART

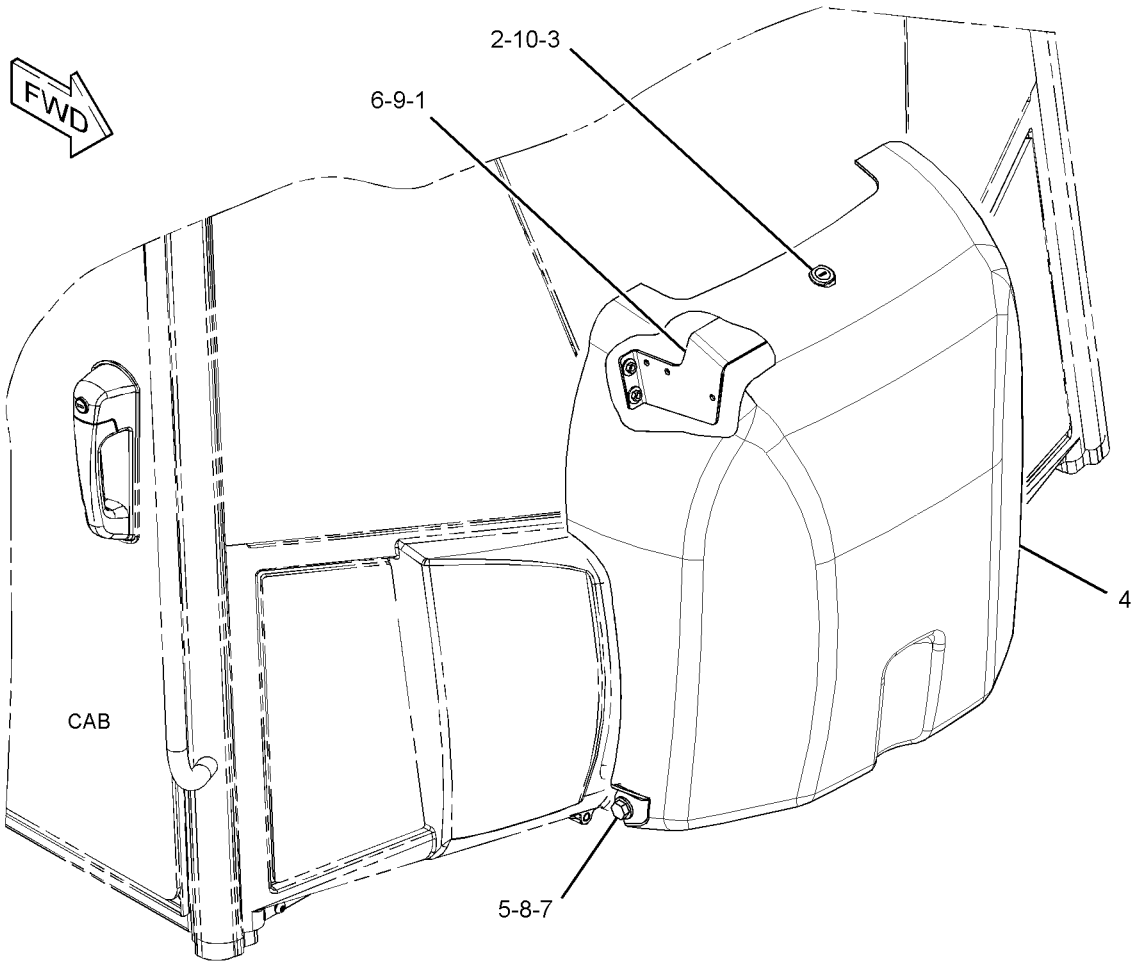

GRAPHIC #1 **<END>** g01374104

297-9677 COVER GP-ENCLOSURE–HOOD, GRILL

S/N: LMD1-UP

PART OF 299-6064 ENCLOSURE AR-HOOD

AN ATTACHMENT

SMCS-7513 **i02781700**

NOTE	REF NO	GRAPHIC REF	PART NUMBER	QTY	PART NAME 1 2 3 4 5 6 (PRODUCT LEVEL)	SEE PAGE
	1	1	**298-5577**	1	PLATE AS	
	2	1	**298-5578**	1	PLATE AS	
M	3	1	**127-2170**	10	SCREW-TRUSS HEAD (M8X1.25X20-MM)	
E	4	1	**124-3243**		SEAL (109-CM)	
E	4A	1	**124-3243**		SEAL (25-CM EACH)	

E-ORDER BY THE CENTIMETER
M-METRIC PART

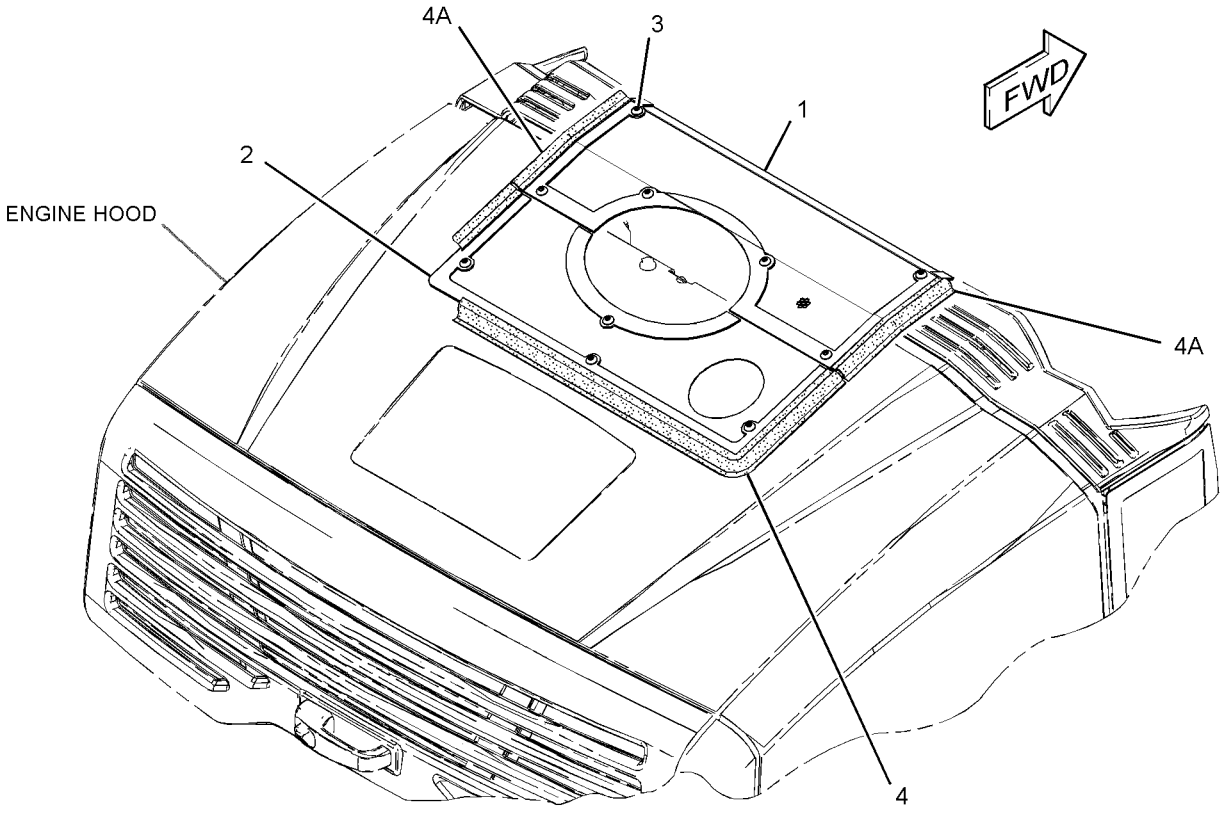

GRAPHIC #1 **<END>** g01389682

297-9678 COVER GP-ENCLOSURE–HOOD, CORNER CAPS

S/N: LMD1-UP

PART OF 299-6064 ENCLOSURE AR-HOOD

AN ATTACHMENT

SMCS-7513 **i03103127**

NOTE	REF NO	GRAPHIC REF	PART NUMBER	QTY	PART NAME 1 2 3 4 5 6 (PRODUCT LEVEL)	SEE PAGE
	1	1	**279-1124**	4	GROMMET	
	2	1	**298-6759**	1	COVER (CORNER, LH)	
	3	1	**298-6761**	1	COVER (CORNER, RH)	
	4	1	**300-5383**	2	BRACKET	
	5	1	**308-6459**	2	PLATE	
M	6	1	**6V-8949**	2	NUT (M10X1.5-THD)	
	7	1	**7X-0603**	2	WASHER-HARD (9.9X35X2.5-MM THK)	
M	8	1	**8T-4138**	8	BOLT (M6X1X20-MM)	
	9	1	**9X-6165**	8	WASHER (6.5X22X2.5-MM THK)	
	10	1	**6V-3959**	2	LOCKWASHER	

M-METRIC PART

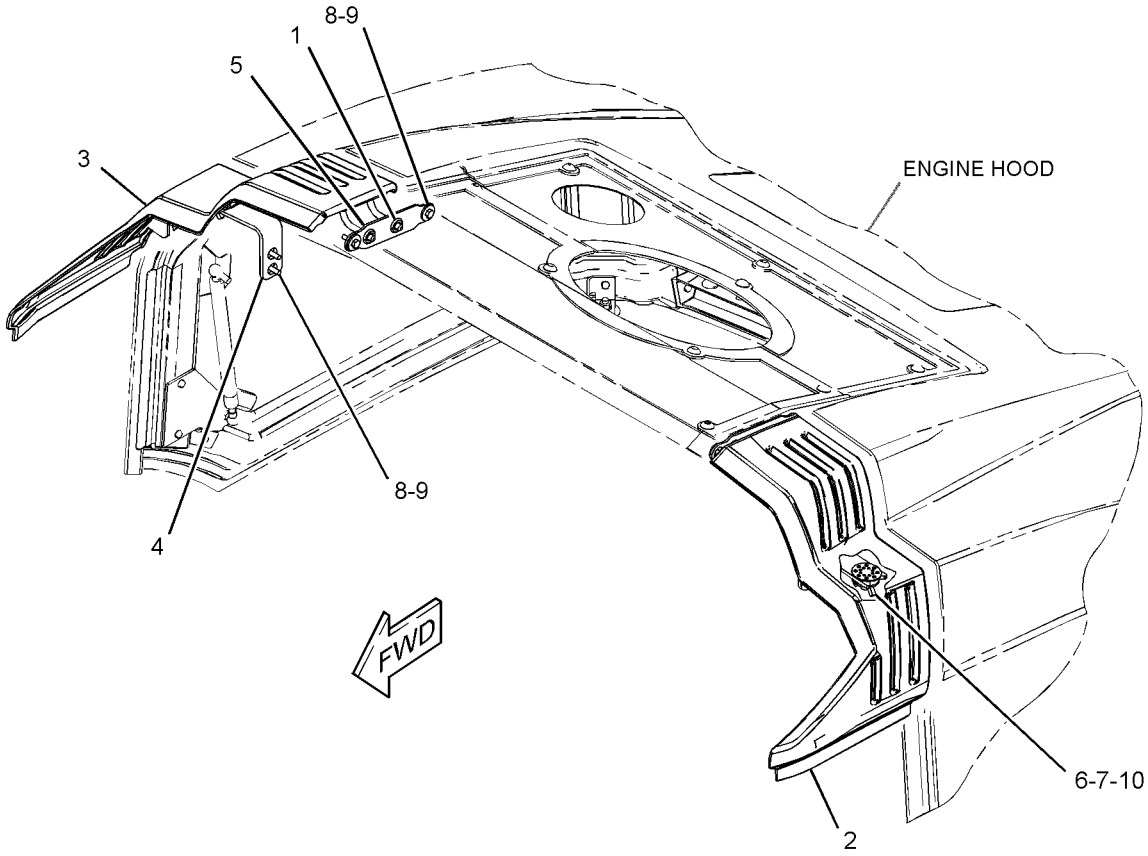

GRAPHIC #1 **<END>** g01585374

301-8252 DOOR GP-ACCESS—HOOD

S/N: LMD1-UP
PART OF 299-6064 ENCLOSURE AR-HOOD
AN ATTACHMENT

SMCS-7273 **i02875151**

NOTE	REF NO	GRAPHIC REF	PART NUMBER	QTY	PART NAME 1 2 3 4 5 6 (PRODUCT LEVEL)	SEE PAGE
J	1	1	**206-1708**	2	LOCK AS	
	2	1	**297-9680**	1	DOOR AS-ACCESS (RH)	
		1	**297-9682**	2	HINGE AS	
	3	1	**297-9681**	1	DOOR AS-ACCESS (LH)	
		1	**297-9682**	2	HINGE AS	
	4	1	**299-3074**	1	PLATE-LATCH (LH)	
	5	1	**299-3077**	1	PLATE-LATCH (RH)	
M	6	1	**5C-7261**	4	NUT (M8X1.25-THD)	
	7	1	**5P-4116**	4	WASHER-HARD (8.8X20.5X2-MM THK)	
M	8	1	**8T-4189**	4	BOLT (M8X1.25X20-MM)	
	9	1	**8T-4224**	8	WASHER-HARD (8.8X16X2-MM THK)	
M	10	1	**8T-4908**	4	BOLT (M8X1.25X25-MM)	
D	11	1	**5P-7211**		SEAL (0.16-M EACH)	
D	11A	1	**5P-7211**		SEAL (0.13-M EACH)	
E	12	1	**145-2350**		SEAL (20-CM EACH)	

D-ORDER BY THE METER
E-ORDER BY THE CENTIMETER
J-REQUIRES CORPORATE KEY
M-METRIC PART

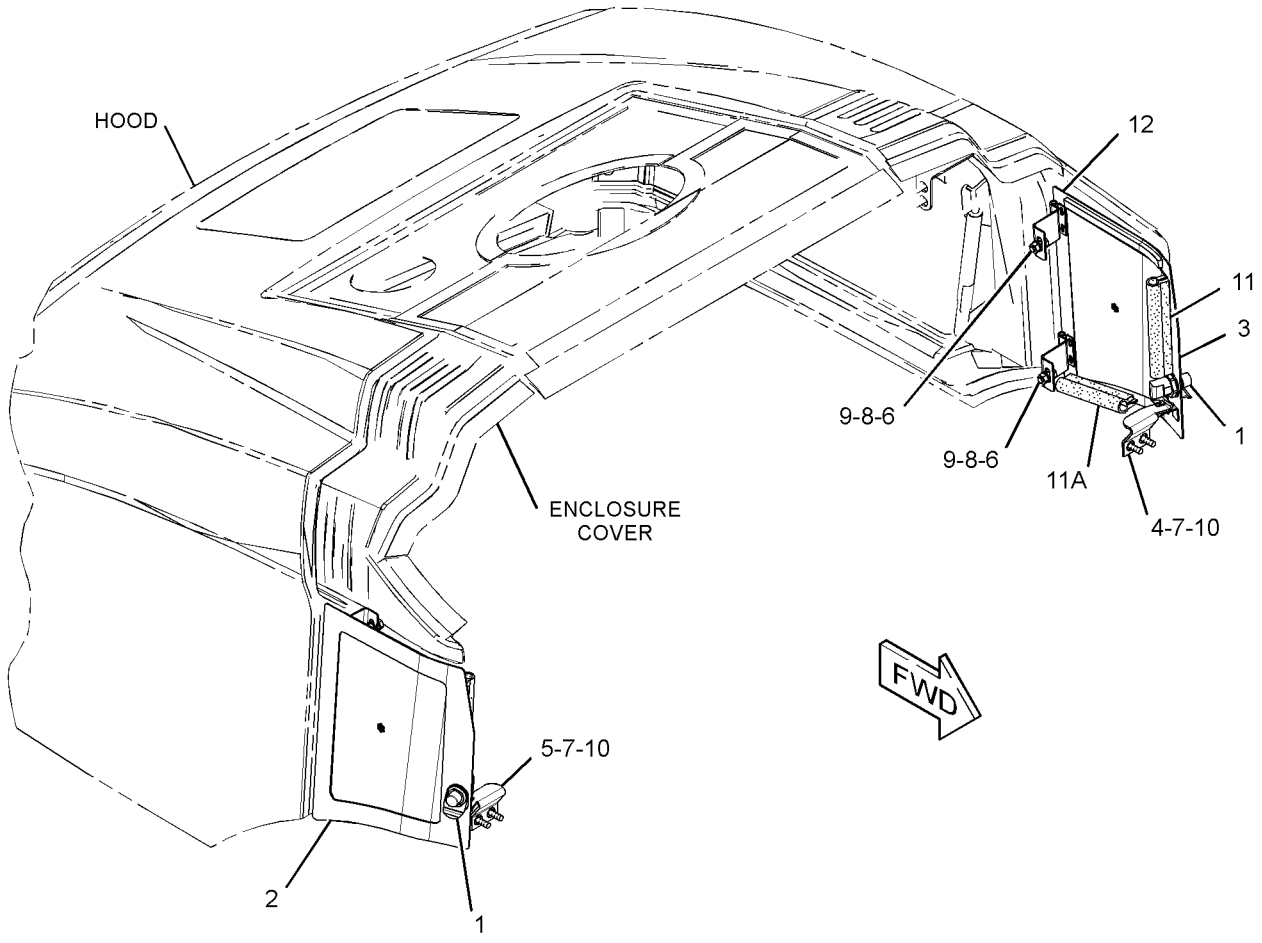

GRAPHIC #1 **<END>** g01395369

299-6064 ENCLOSURE AR-HOOD

S/N: LMD1-UP

AN ATTACHMENT

SMCS-7251 **i02830941**

NOTE	REF NO	GRAPHIC REF	PART NUMBER	QTY	PART NAME 1 2 3 4 5 6 (PRODUCT LEVEL)	SEE PAGE
Y	1	1	*297-9677*	1	COVER GP-ENCLOSURE (HOOD, GRILL)	203
Y	2	1	*297-9678*	1	COVER GP-ENCLOSURE (HOOD, CORNER CAPS)	204
Y	3	1	*299-2158*	1	HOOD GP-ENGINE	217
Y	4	1	*301-8252*	1	DOOR GP-ACCESS (HOOD)	205

Y-SEPARATE ILLUSTRATION

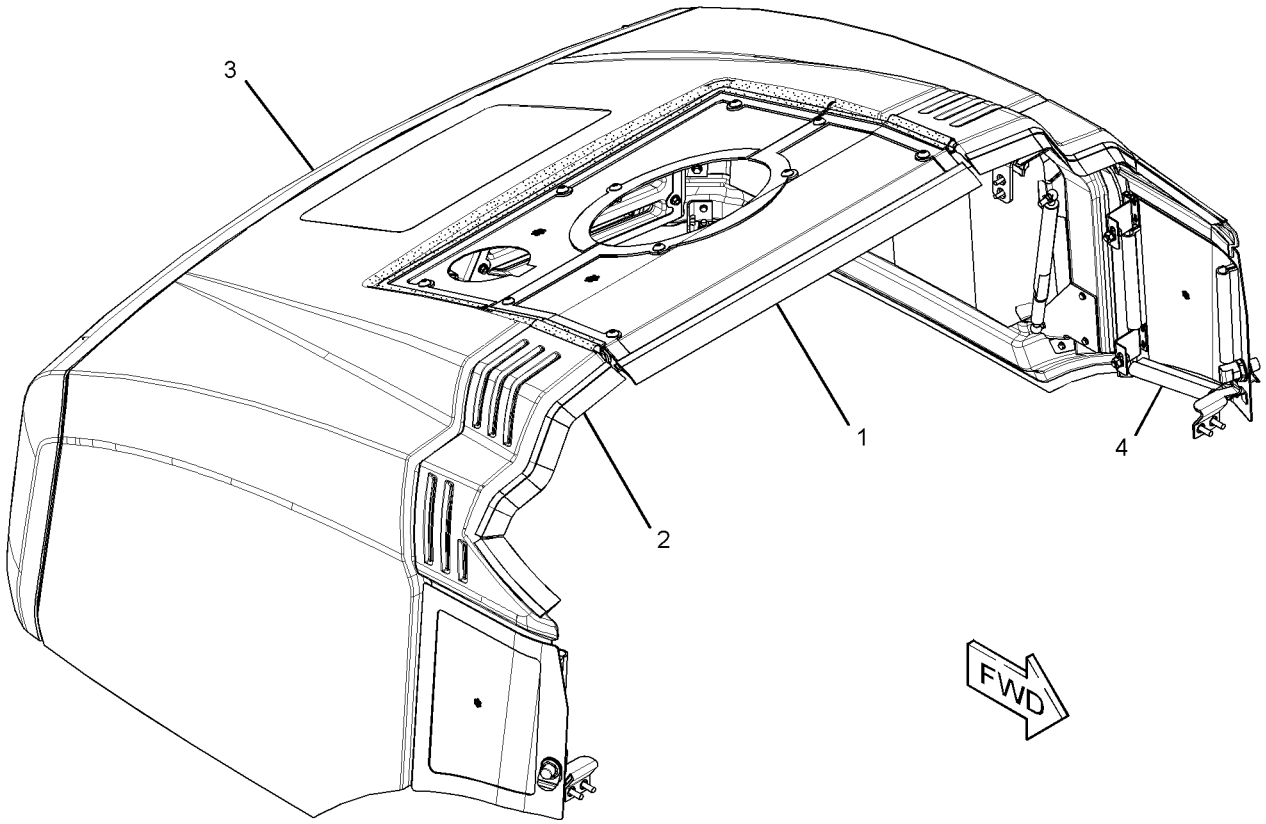

GRAPHIC #1 **<END>** g01388050

282-7715 FENDER GP-FRONT

S/N: LMD1-UP

PART OF 322-4878 CHASSIS AR

SMCS-7252 **i02747515**

NOTE	REF NO	GRAPHIC REF	PART NUMBER	QTY	PART NAME 1 2 3 4 5 6 (PRODUCT LEVEL)	SEE PAGE
	1	1	**262-1689**	2	PLATE	
	2	1	**262-1691**	2	FENDER-FRONT	
	3	1	**282-7717**	2	BRACKET AS	
	4	1	**282-7718**	2	BRACKET AS	
	5	1	**306-9125**	4	INSERT-SQUARE	
M	6	1	**5C-7261**	8	NUT (M8X1.25-THD)	
	7	1	**8C-9987**	8	WASHER (8.3X28X2.5-MM THK)	
	8	1	**8T-4121**	8	WASHER-HARD (11X21X2.5-MM THK)	
M	9	1	**8T-4185**	8	BOLT (M10X1.5X50-MM)	
	10	1	**8T-4224**	8	WASHER-HARD (8.8X16X2-MM THK)	
M	11	1	**8T-4908**	8	BOLT (M8X1.25X25-MM)	

M-METRIC PART

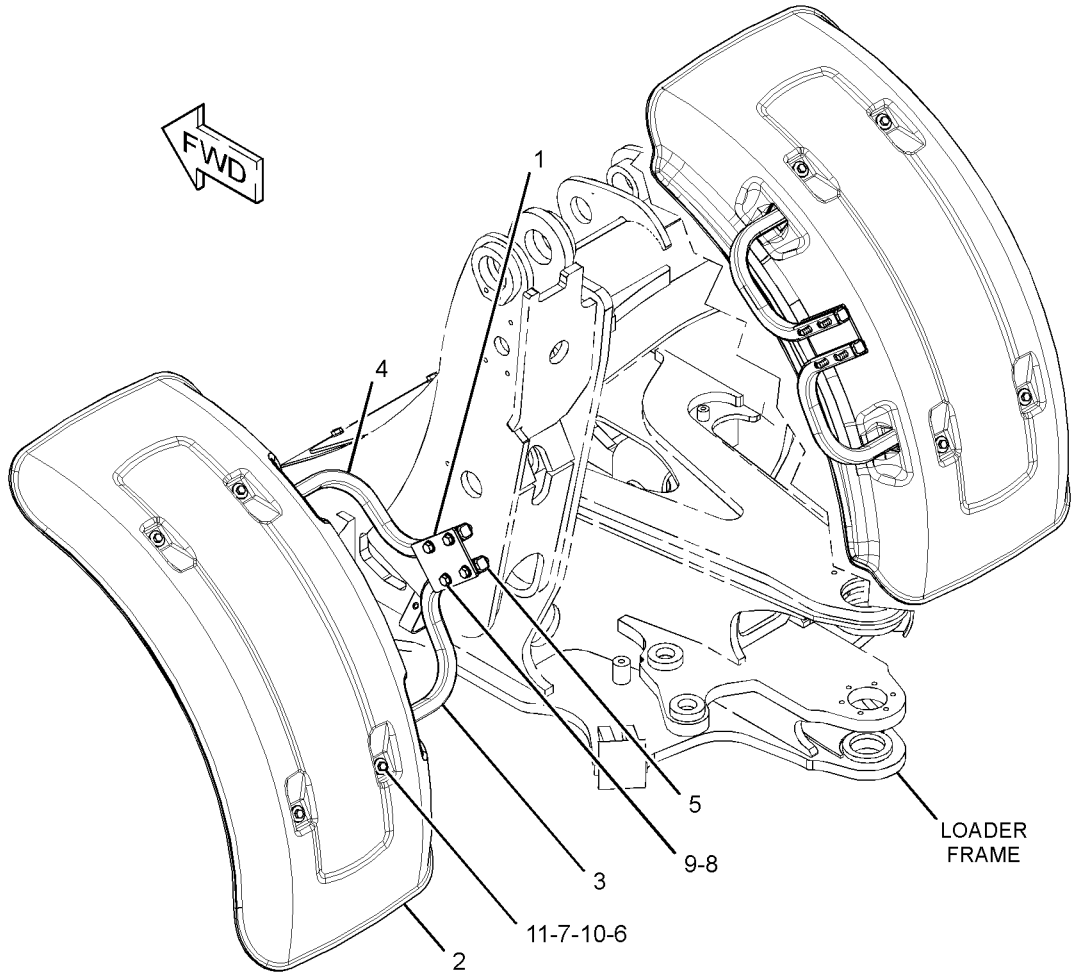

GRAPHIC #1 **<END>** g01384924

FRAME AND BODY

275-5591 FENDER GP-REAR

S/N: LMD1-UP

PART OF 322-4878 CHASSIS AR

SMCS-7252 **i03103290**

NOTE	REF NO	GRAPHIC REF	PART NUMBER	QTY	PART NAME 1 2 3 4 5 6 (PRODUCT LEVEL)	SEE PAGE
	1	1	**275-5590**	2	FENDER AS	
	2	1	**288-3521**	2	PLATE AS	
					(EACH INCLUDES)	
M		1	**8T-3490**	2	NUT-WELD (M10X1.5-THD)	
	3	1	**8T-4121**	4	WASHER-HARD (11X21X2.5-MM THK)	
	4	1	**8T-4226**	8	WASHER-PLATED (10.5X45X3-MM THK)	
M	5	1	**8T-4195**	12	BOLT (M10X1.5X30-MM)	

M-METRIC PART

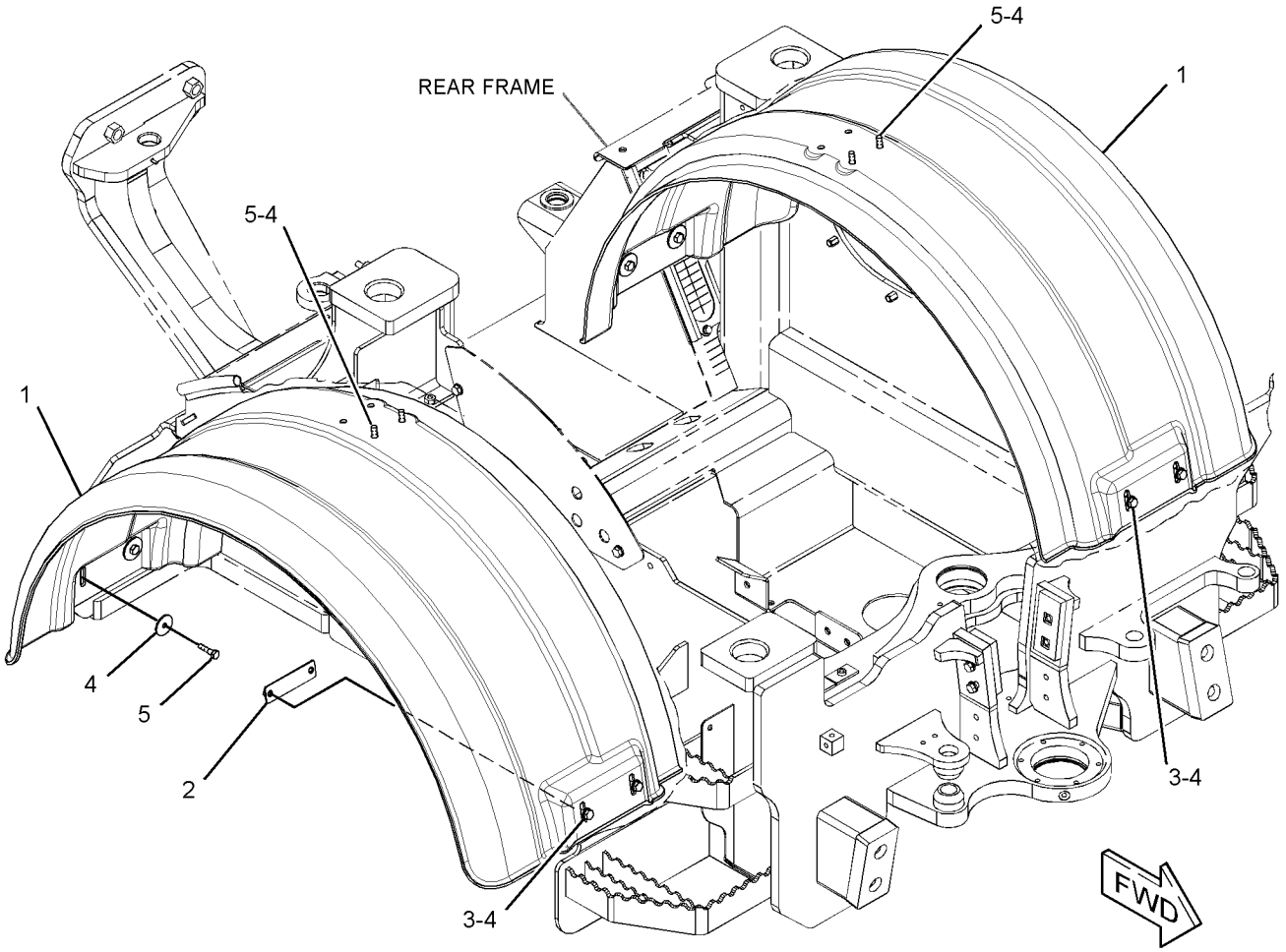

GRAPHIC #1 **<END>** g01588914

FRAME AND BODY

236-6833 FRAME GP-LOADER

S/N: LMD1-UP

PART OF 322-4878 CHASSIS AR

SMCS-7054 **i02738101**

NOTE	REF NO	GRAPHIC REF	PART NUMBER	QTY	PART NAME 1 2 3 4 5 6 (PRODUCT LEVEL)	SEE PAGE
	1	1	**290-6343**	1	FRAME AS	
	2	1	**292-4877**	1	PLATE	
	3	1	**8T-4121**	4	WASHER-HARD (11X21X2.5-MM THK)	
M	4	1	**8T-4195**	4	BOLT (M10X1.5X30-MM)	

M-METRIC PART

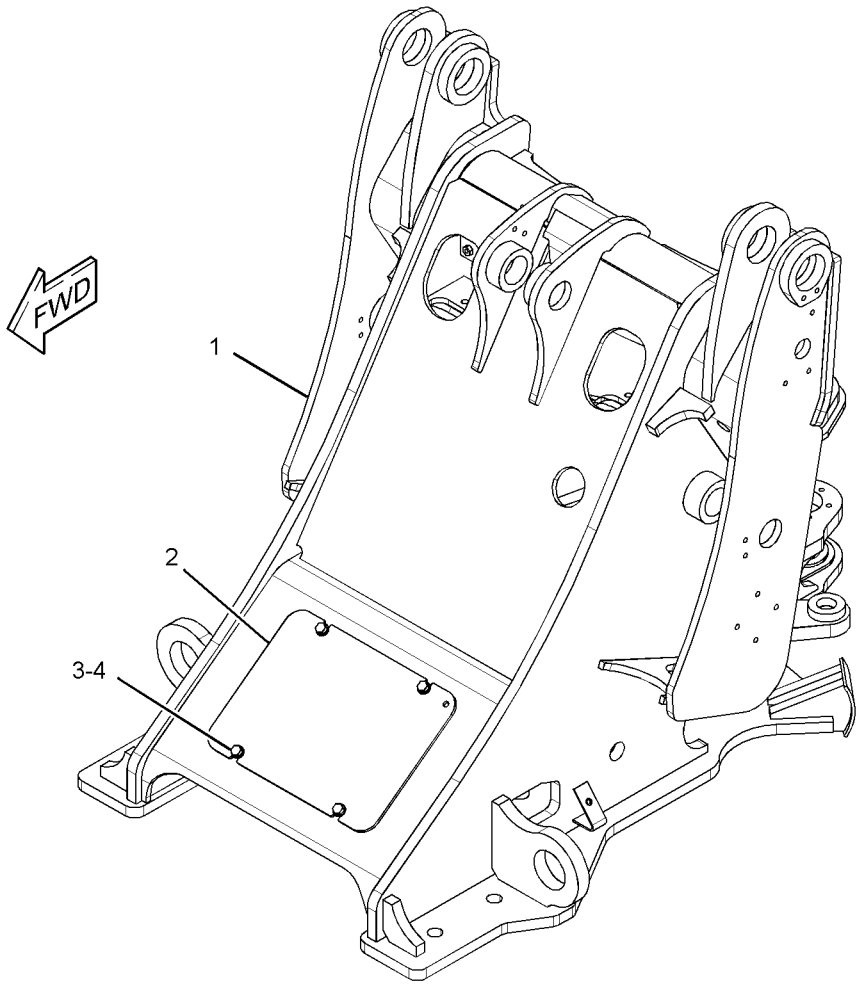

GRAPHIC #1 **<END>** g01375474

FRAME AND BODY

271-8811 FRAME GP-REAR

S/N: LMD1-UP

PART OF 322-4878 CHASSIS AR

SMCS-7051 **i03147261**

NOTE	REF NO	GRAPHIC REF	PART NUMBER	QTY	PART NAME 1 2 3 4 5 6 (PRODUCT LEVEL)	SEE PAGE
M	1	2	**246-7854**	26	NUT-SPECIAL (M10X1.15-THD)	
	2	2	**271-0885**	1	FRAME AS	
	3	2	**271-3596**	1	PLATE	
	4	1,2	**273-8755**	2	BAFFLE	
	5	2	**284-2834**	2	PLATE	
	6	2	**287-0293**	1	PLATE	
	7	1	**287-0294**	1	PLATE	
	8	2	**291-9903**	2	PAD AS	
	9	1	**300-3865**	2	PAD	
	11	2	**8T-4121**	16	WASHER-HARD (11X21X2.5-MM THK)	
M	12	1	**8T-4139**	4	BOLT (M12X1.75X30-MM)	
M	13	2	**8T-4186**	6	BOLT (M10X1.5X40-MM)	
M	14	2	**8T-4196**	10	BOLT (M10X1.5X35-MM)	
	15	1	**8T-4223**	4	WASHER-HARD (13.5X25.5X3-MM THK)	
	16	1,2	**8T-4224**	6	WASHER-HARD (8.8X16X2-MM THK)	
M	17	1,2	**8T-4908**	6	BOLT (M8X1.25X25-MM)	
E	18	1	**8T-9007**		SEAL-BULB (46-CM)	
E	18A	2	**8T-9007**		SEAL-BULB (34-CM)	

E-ORDER BY THE CENTIMETER
M-METRIC PART

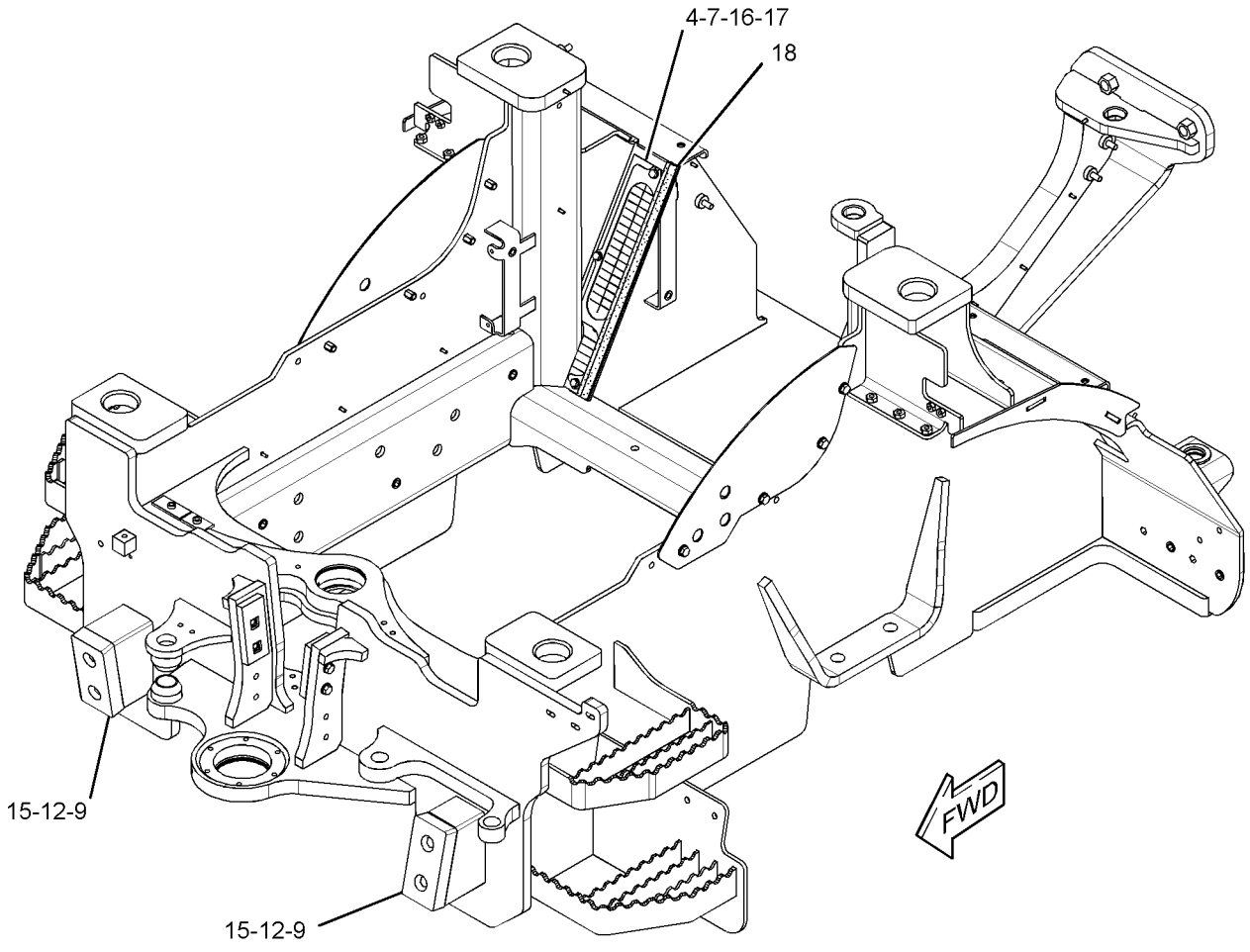

GRAPHIC #1 g01588634

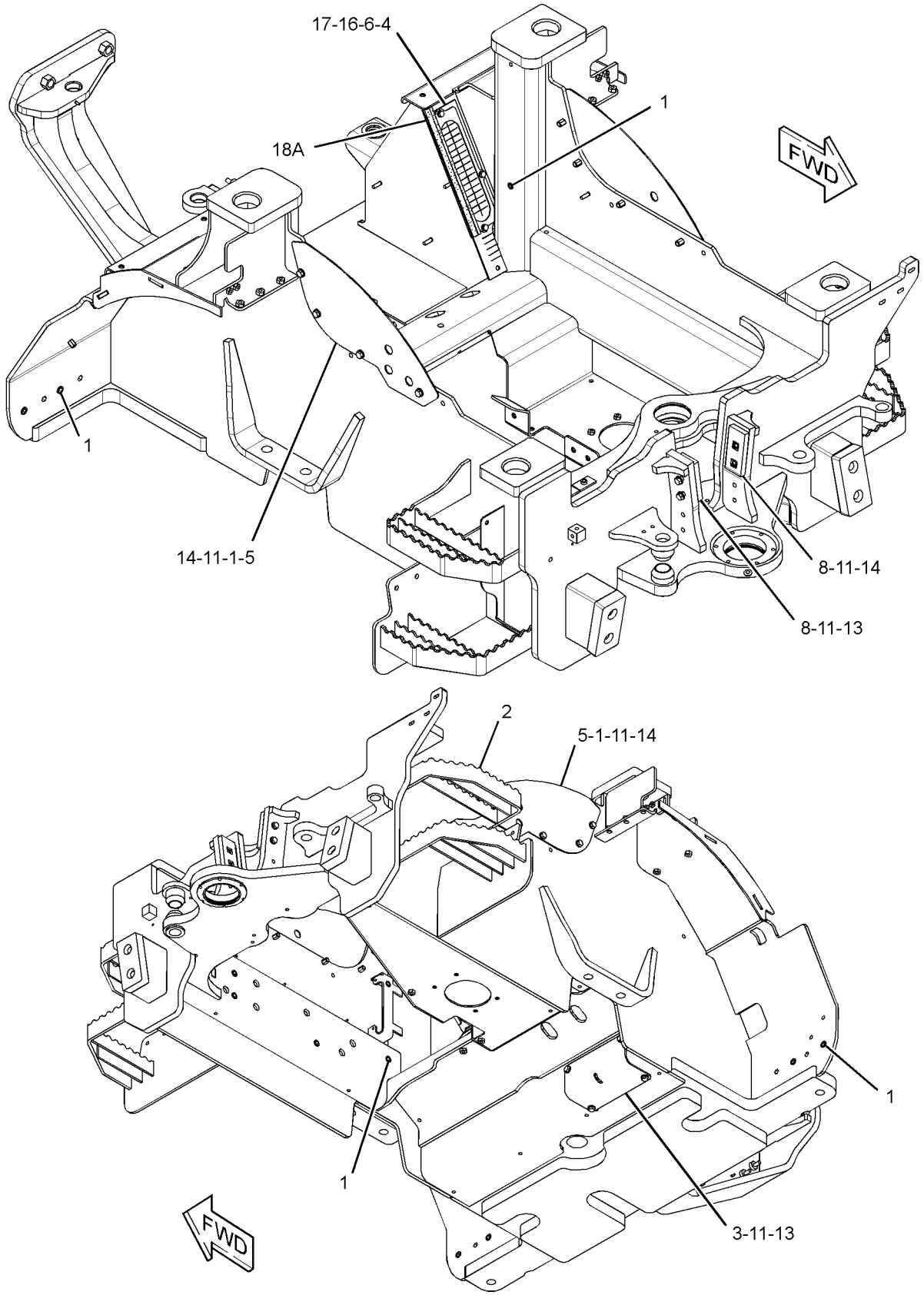

GRAPHIC #2 **<END>** g01619181

320-8422 GUARD GP-LINES

S/N: LMD1-UP

FOR USE WITH 286-4219—PAGE 346. CANNOT BE USED WITH 295-5275—PAGE 406, 295-5276—PAGE 406 AN ATTACHMENT

SMCS-7167 **i02988163**

NOTE	REF NO	GRAPHIC REF	PART NUMBER	QTY	PART NAME 1 2 3 4 5 6 (PRODUCT LEVEL)	SEE PAGE
	1	1	**163-8811**	12	CLAMP	
G	2	1	**160-2246**		SLEEVE-ABRASION (65-IN)	
G	3	1	**160-2247**		SLEEVE-ABRASION (103-IN)	
E	4	1	**8C-7332**		TRIM-EDGE (69-CM)	

E-ORDER BY THE CENTIMETER
G-ORDER BY THE INCH

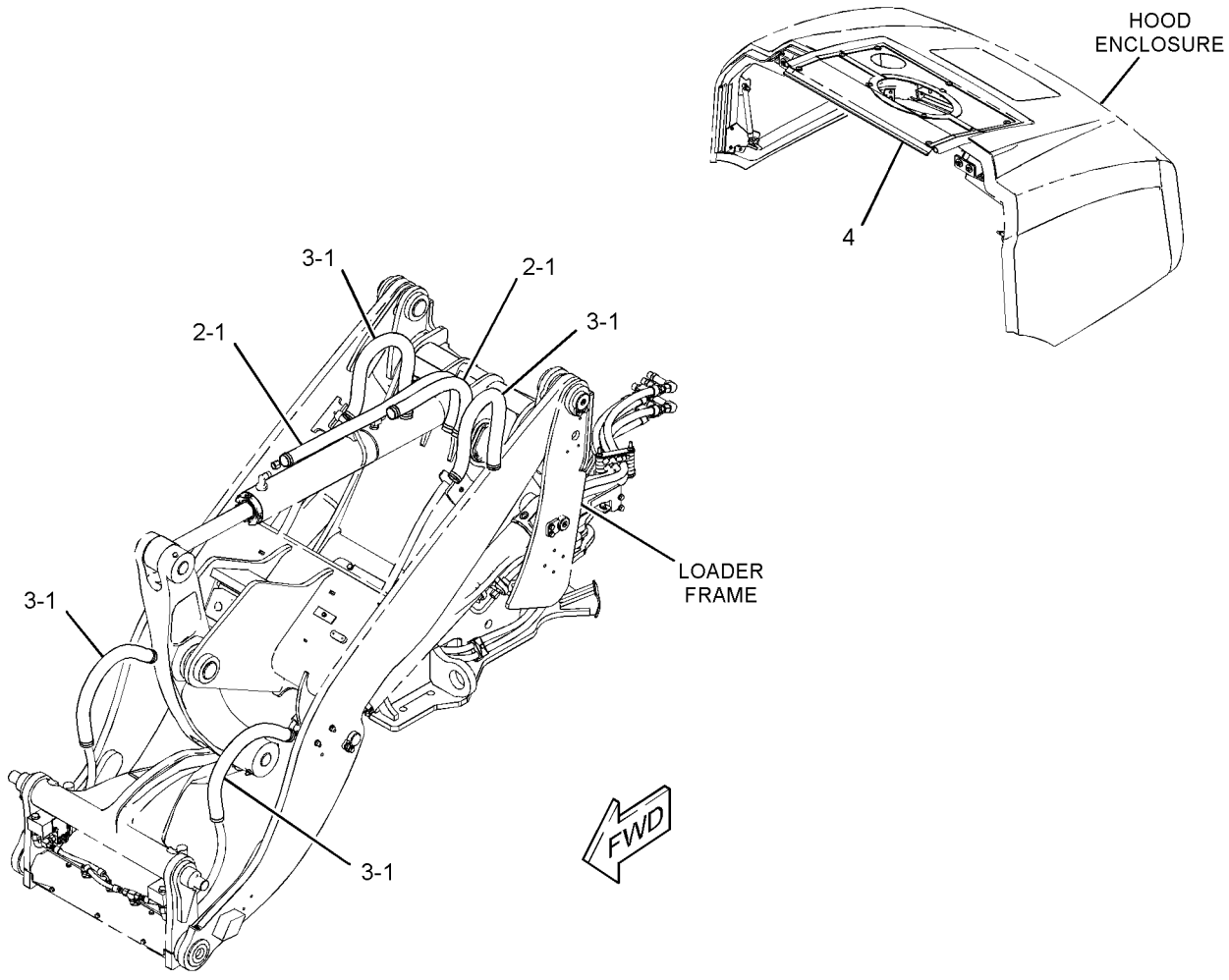

GRAPHIC #1 **<END>** g01526714

320-8424 GUARD GP-LINES

S/N: LMD1-UP

FOR USE WITH 286-4217—PAGE 346. CANNOT BE USED WITH 295-5275—PAGE 406, 295-5276—PAGE 406

AN ATTACHMENT

SMCS-7167 **i02988162**

NOTE	REF NO	GRAPHIC REF	PART NUMBER	QTY	PART NAME 1 2 3 4 5 6 (PRODUCT LEVEL)	SEE PAGE
	1	1	**163-8811**	8	CLAMP	
G	2	1	**160-2247**		SLEEVE-ABRASION (54-CM)	
G	3	1	**160-2246**		SLEEVE-ABRASION (65-IN)	
E	4	1	**8C-7332**		TRIM-EDGE (69-CM)	

E-ORDER BY THE CENTIMETER
G-ORDER BY THE INCH

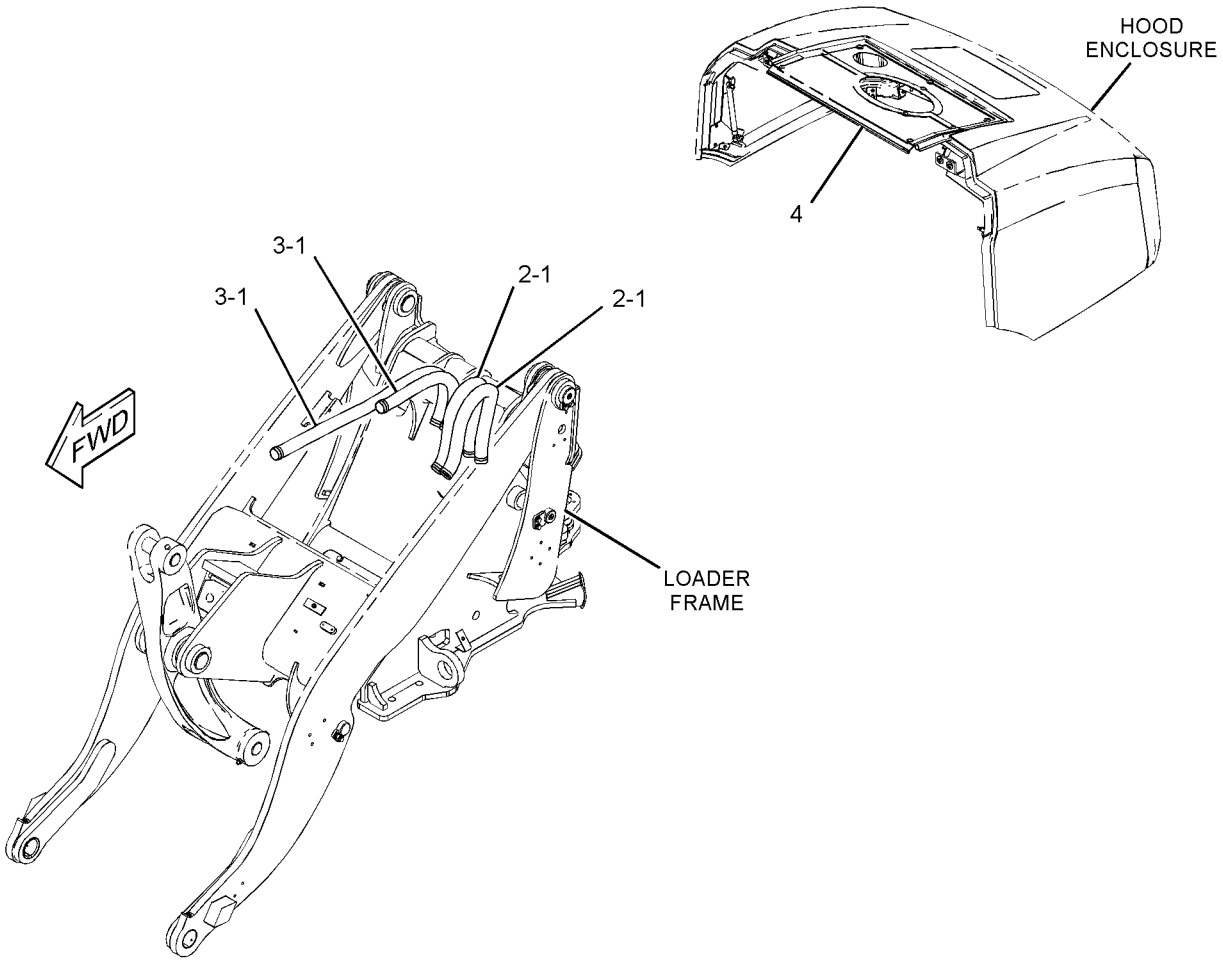

GRAPHIC #1 **<END>** g01527233

320-8425 GUARD GP-LINES

S/N: LMD1-UP

CANNOT BE USED WITH 295-5275—PAGE 406, 295-5276—PAGE 406

AN ATTACHMENT

SMCS-7167 **i02988164**

NOTE	REF NO	GRAPHIC REF	PART NUMBER	QTY	PART NAME 1 2 3 4 5 6 (PRODUCT LEVEL)	SEE PAGE
	1	1	**163-8811**	14	CLAMP	
G	2	1	**160-2247**		SLEEVE-ABRASION (52-IN)	
G	3	1	**160-2243**		SLEEVE-ABRASION (59-IN)	
G	4	1	**160-2246**		SLEEVE-ABRASION (65-IN)	
E	5	1	**8C-7332**		TRIM-EDGE (69-CM)	

E-ORDER BY THE CENTIMETER
G-ORDER BY THE INCH

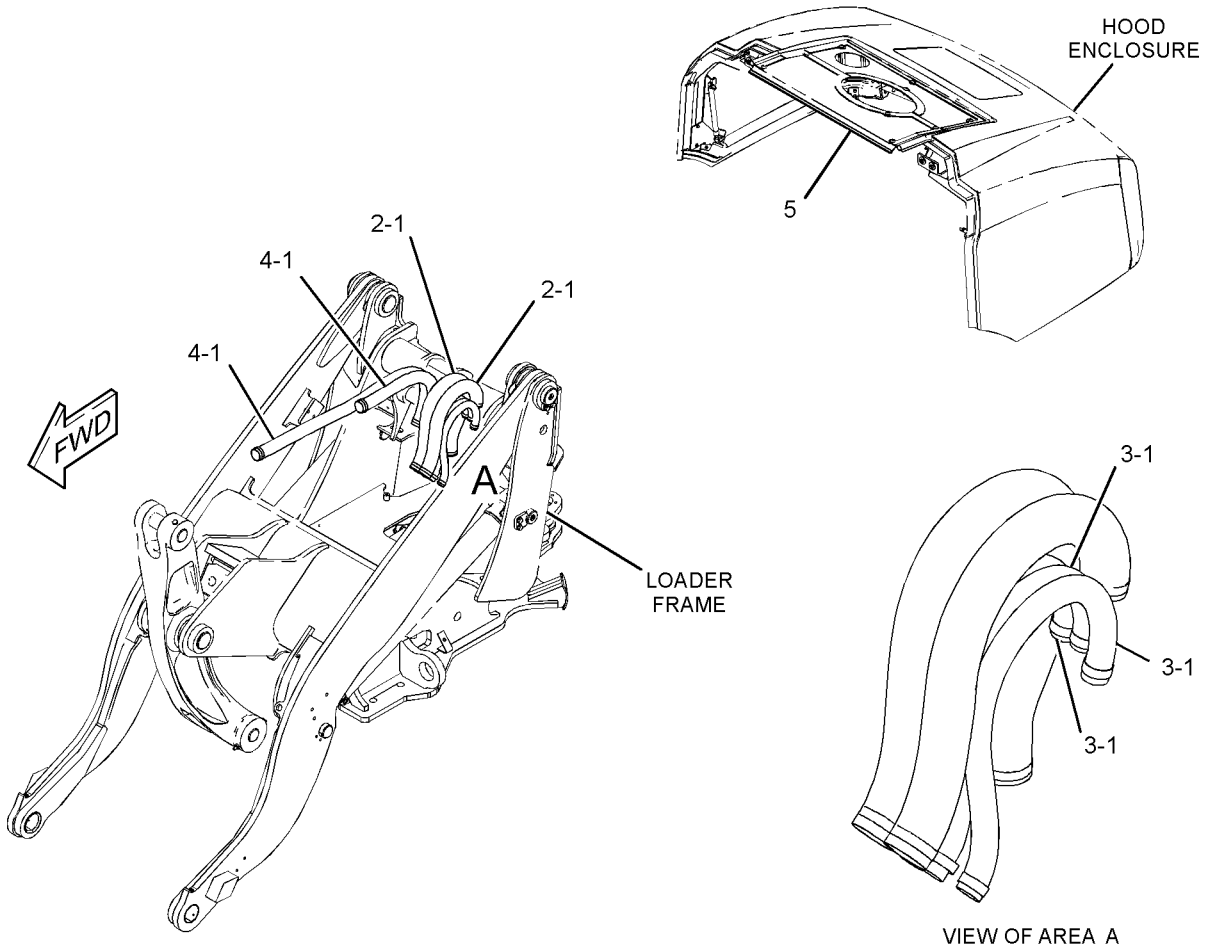

GRAPHIC #1 **<END>** g01527232

292-4855 HITCH GP-ARTICULATING

S/N: LMD1-UP

PART OF 322-4878 CHASSIS AR

SMCS-7057, 7100 **i02789072**

NOTE	REF NO	GRAPHIC REF	PART NUMBER	QTY	PART NAME 1 2 3 4 5 6 (PRODUCT LEVEL)	SEE PAGE
	1	1	**138-2172**	1	SHIM (3.56-MM THK)	
	2	1	**236-8152**	2	BEARING-SELF-ALIGNING	
	3	1	**259-2858**	1	PLATE	
	4	1	**259-2896**	1	PLATE	
	5	1	**279-3438**	1	SHIM (3.56-MM THK)	
	6	1	**291-9914**	1	PIN	
	7	1	**291-9916**	2	PIN	
	8	1	**292-4856**	1	LINK	
	9	1	**292-4876**	2	SHIM (1.5-MM THK)	
	10	1	**294-0884**	1	CAP	
	11	1	**294-5579**	1	BEARING-ALIGNING	
	12	1	**302-5541**	1	PAD-WEAR	
	13	1	**6V-8757**	4	RING-RETAINING	
M	14	1	**6V-9189**	2	LOCKNUT (M8X1.25-THD)	
M	15	1	**7X-2542**	2	BOLT (M8X1.25X150-MM)	
	16	1	**8T-0707**	2	RING-RETAINING	
	17	1	**8T-4121**	18	WASHER-HARD (11X21X2.5-MM THK)	
M	18	1	**8T-4195**	6	BOLT (M10X1.5X30-MM)	
M	19	1	**8T-4196**	12	BOLT (M10X1.5X35-MM)	
	20	1	**8T-4224**	4	WASHER-HARD (8.8X16X2-MM THK)	
	21	1	**313-3812**	1	RING	

M-METRIC PART

292-4855 **HITCH GP-ARTICULATING** *(contd.)* **i02789072**

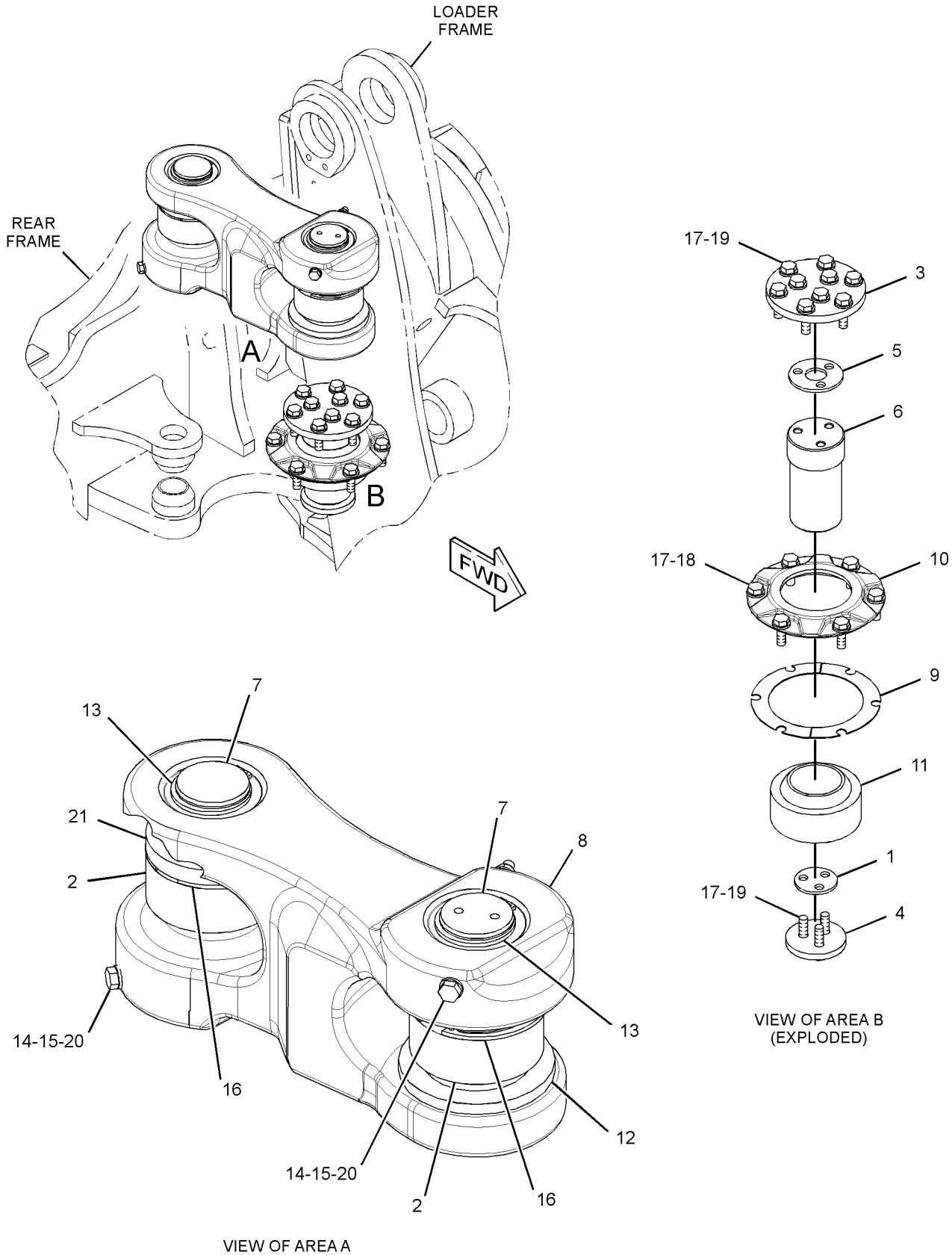

GRAPHIC #1 **<END>** g01393718

299-2158 HOOD GP-ENGINE

S/N: LMD1-UP
PART OF 299-6064 ENCLOSURE AR-HOOD
AN ATTACHMENT

SMCS-7251 **i03103126**

NOTE	REF NO	GRAPHIC REF	PART NUMBER	QTY	PART NAME 1 2 3 4 5 6 (PRODUCT LEVEL)	SEE PAGE
	1	1	**4E-1384**	4	BUMPER-CONICAL	
Y	2	1	*301-8247*	1	HOOD GP-ENGINE	218
	3	1	**305-3330**	1	SPRING AS-GAS	
	4	1	**305-3331**	1	SPRING AS-GAS	
M	5	1	**5C-7261**	14	NUT (M8X1.25-THD)	
	6	1	**8C-9987**	8	WASHER (8.3X28X2.5-MM THK)	
B	7	1	**8T-4224**	8	WASHER-HARD (8.8X16X2-MM THK)	
M	8	1	**8T-4908**	4	BOLT (M8X1.25X25-MM)	
	9	1	**321-5121**	1	PLATE	

B-USE AS REQUIRED
M-METRIC PART
Y-SEPARATE ILLUSTRATION

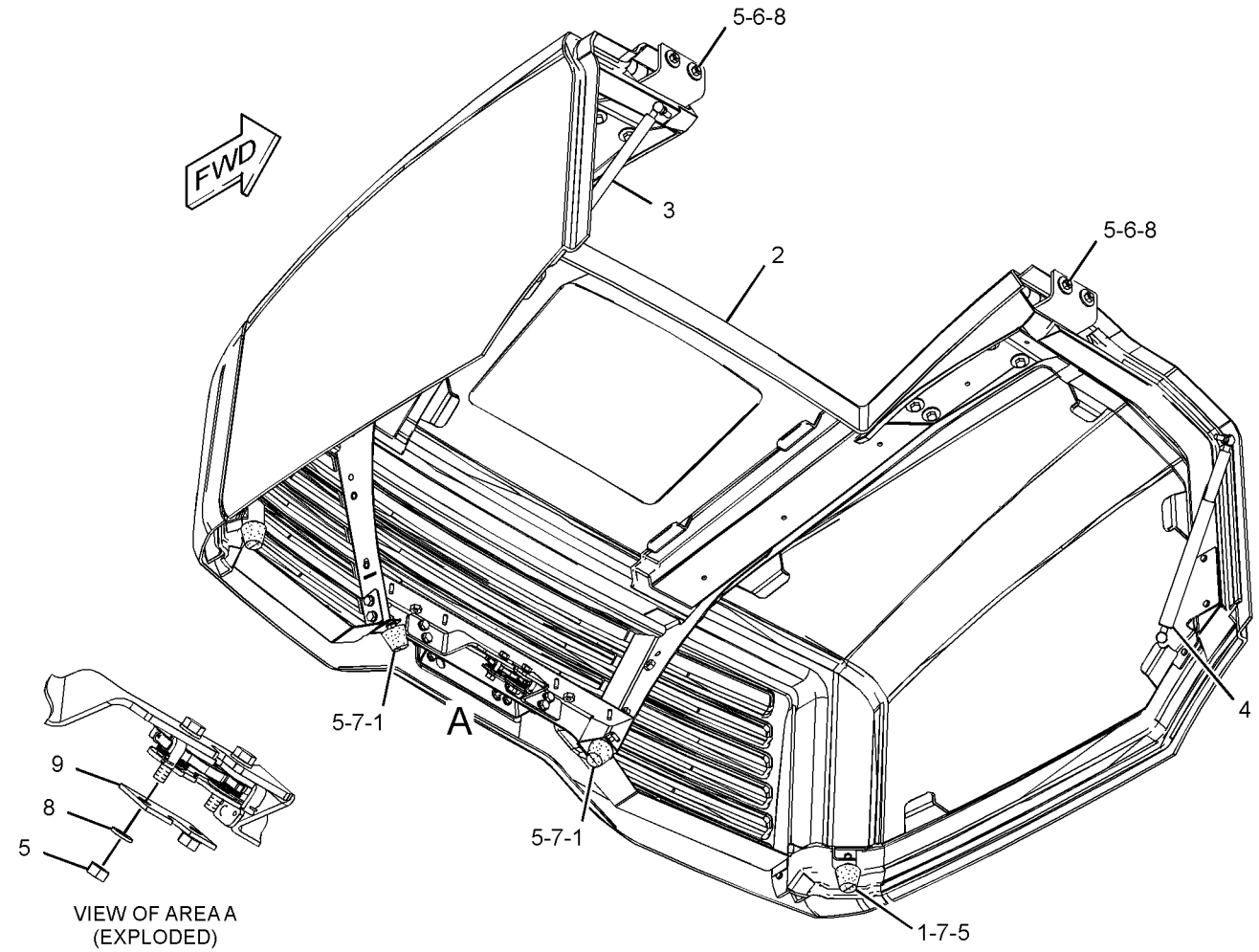

VIEW OF AREA A
(EXPLODED)

GRAPHIC #1 **<END>** g01586273

301-8247 HOOD GP-ENGINE

S/N: LMD1-UP
PART OF 299-2158 HOOD GP-ENGINE
AN ATTACHMENT

SMCS-7251 **i03130940**

NOTE	REF NO	GRAPHIC REF	PART NUMBER	QTY	PART NAME 1 2 3 4 5 6 (PRODUCT LEVEL)	SEE PAGE
	1	1	**297-9676**	2	HINGE AS	
	2	1	*298-5572*	1	PLATE	
M		1	**159-9540**	1	NUT-WELD (M8X1.25-THD)	
	3	1	**298-5575**	1	PLATE AS-HINGE (LH)	
	4	1	**298-5576**	1	PLATE AS-HINGE (RH)	
	5	1	**299-4696**	1	HANDLE-DOOR	
	6	1	**314-6019**	1	LATCH AS	
	7	1	**312-8371**	1	PLATE	
M	8	1	**129-3178**	1	LOCKNUT (M6X1-THD)	
M	9	1	**8C-8990**	1	SCREW-PAN HEAD	
	10	1	**8C-9987**	8	WASHER (8.3X28X2.5-MM THK)	
M	11	1	**8T-4189**	8	BOLT (M8X1.25X20-MM)	
M	12	1	**8T-4200**	4	BOLT (M8X1.25X16-MM)	
	13	1	**8T-4205**	2	WASHER-HARD (7.2X14.5X2-MM THK)	
	14	1	**8T-4224**	14	WASHER-HARD (8.8X16X2-MM THK)	
M	15	1	**8T-4908**	10	BOLT (M8X1.25X25-MM)	
M	16	1	**8T-4138**	2	BOLT (M6X1X20-MM)	

M-METRIC PART

301-8247 HOOD GP-ENGINE *(contd.)* **i03130940**

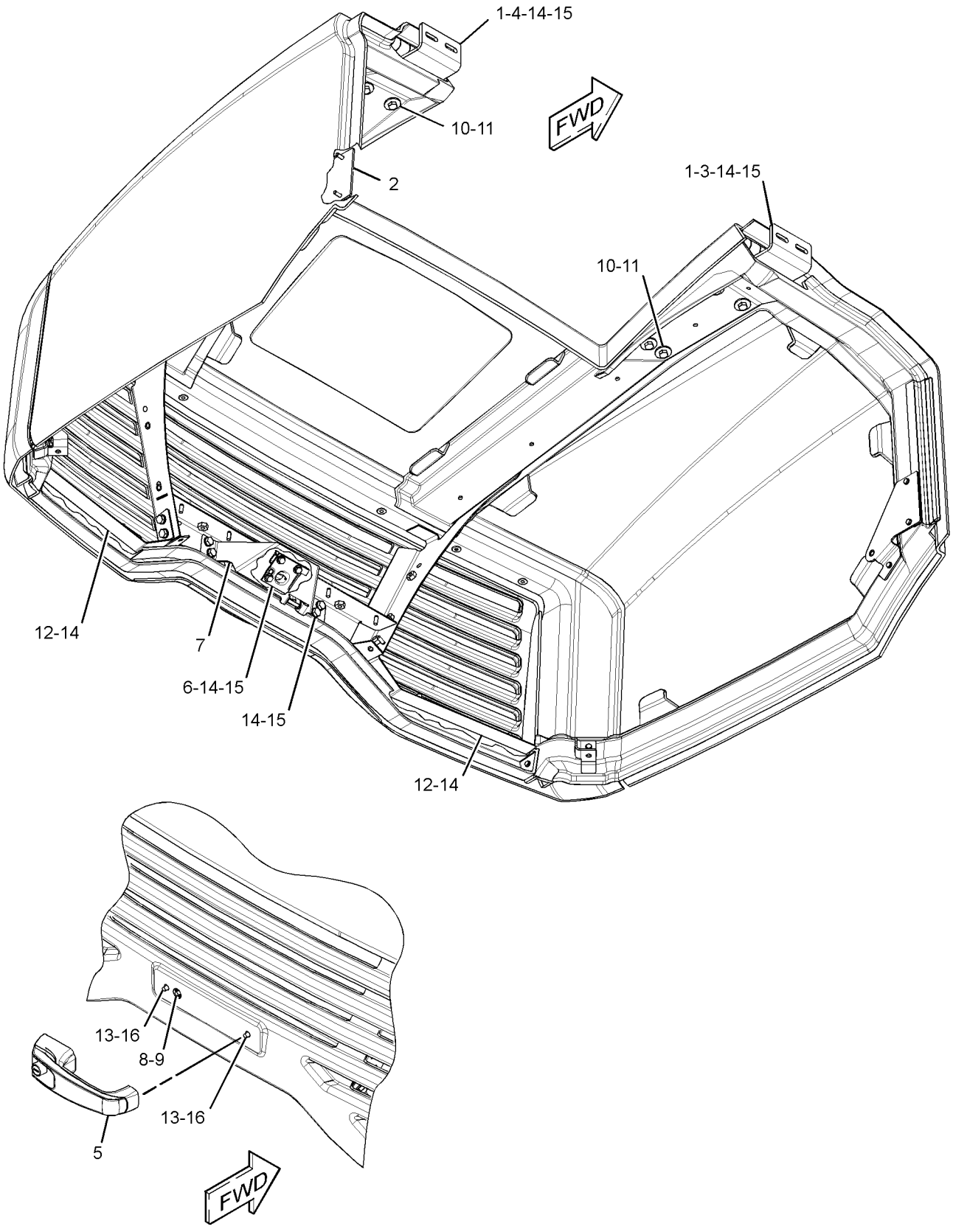

GRAPHIC #1 **<END>** g01583315

302-1345 LINES GP-GREASE–
LOADER FRAME, LIFT, TILT CYLINDERS
S/N: LMD1-UP
PART OF 322-4878 CHASSIS AR

SMCS-7510 **i03147158**

NOTE	REF NO	GRAPHIC REF	PART NUMBER	QTY	PART NAME 1 2 3 4 5 6 (PRODUCT LEVEL)	SEE PAGE
	1	1	**3B-8485**	1	FITTING-GREASE (HYDRAULIC)	
	2	1	**3B-8488**	5	FITTING-GREASE (HYDRAULIC)	
	3	1	**3F-6166**	1	EXTENSION	
	4	1	**5T-9771**	2	HOSE AS	
	5	1	**3B-6552**	2	ELBOW-PIPE	
	6	1	**3B-8489**	4	FITTING-GREASE (HYDRAULIC)	
	7	1	**5P-4116**	2	WASHER-HARD (8.8X20.5X2-MM THK)	
	8	1	**5P-9085**	1	CLIP	

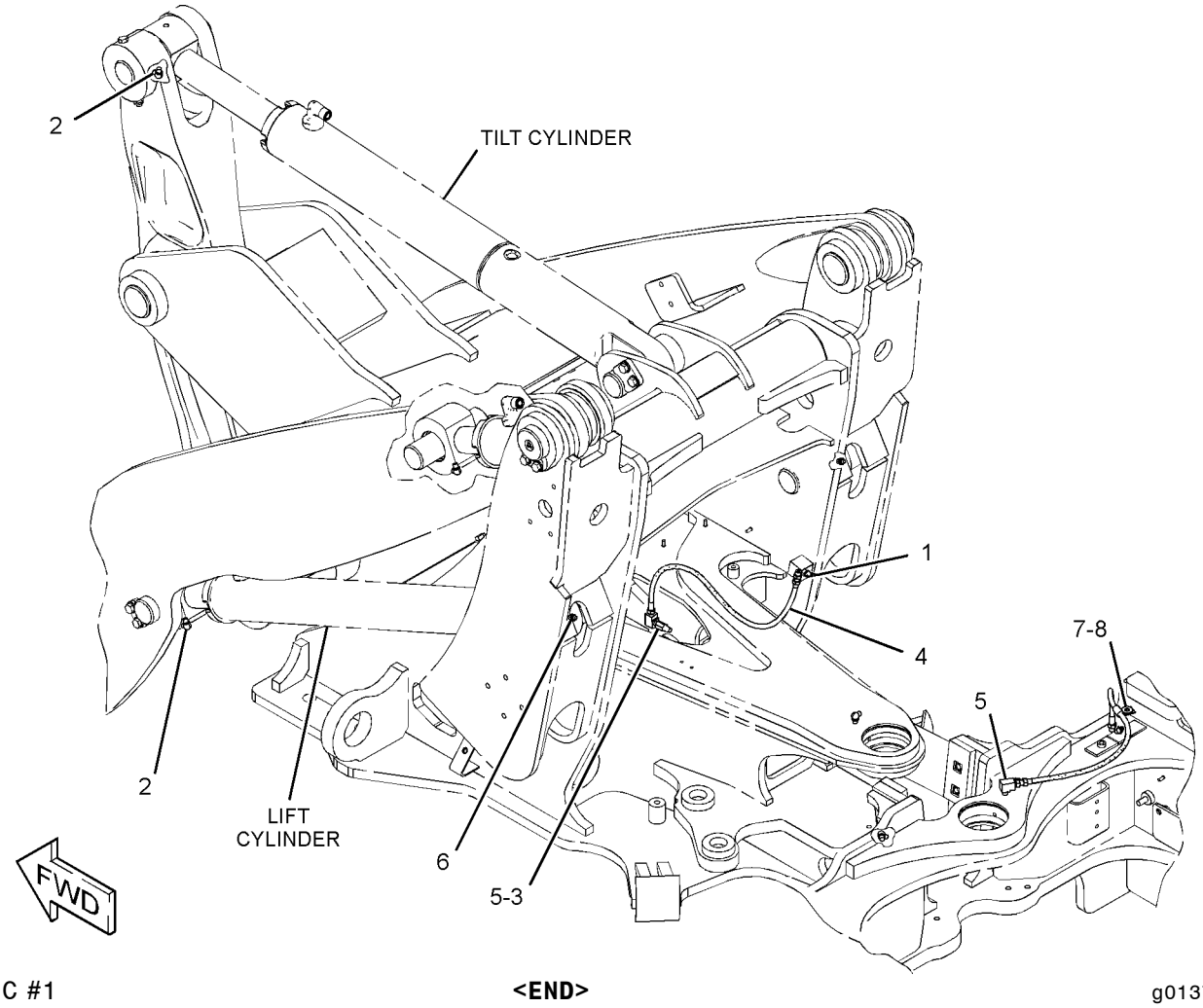

GRAPHIC #1 **<END>** g01379182

260-5492 MOUNTING GP-REGISTRATION

S/N: LMD1-UP
PART OF 307-1556, 307-1558 CONVERSION AR-ROADING AN ATTACHMENT

SMCS-1429, 7050 **i02980737**

NOTE	REF NO	GRAPHIC REF	PART NUMBER	QTY	PART NAME 1 2 3 4 5 6 (PRODUCT LEVEL)	SEE PAGE
	1	1	**206-1345**	5	STRAP-CABLE	
	2	1	**270-5143**	2	TIE-PUSH MOUNT	
Y	3	1	*301-3392*	1	MOUNTING GP-REGISTRATION	222
	4	1	**8T-4224**	2	WASHER-HARD (8.8X16X2-MM THK)	
M	5	1	**8T-4908**	2	BOLT (M8X1.25X25-MM)	

M-METRIC PART
Y-SEPARATE ILLUSTRATION

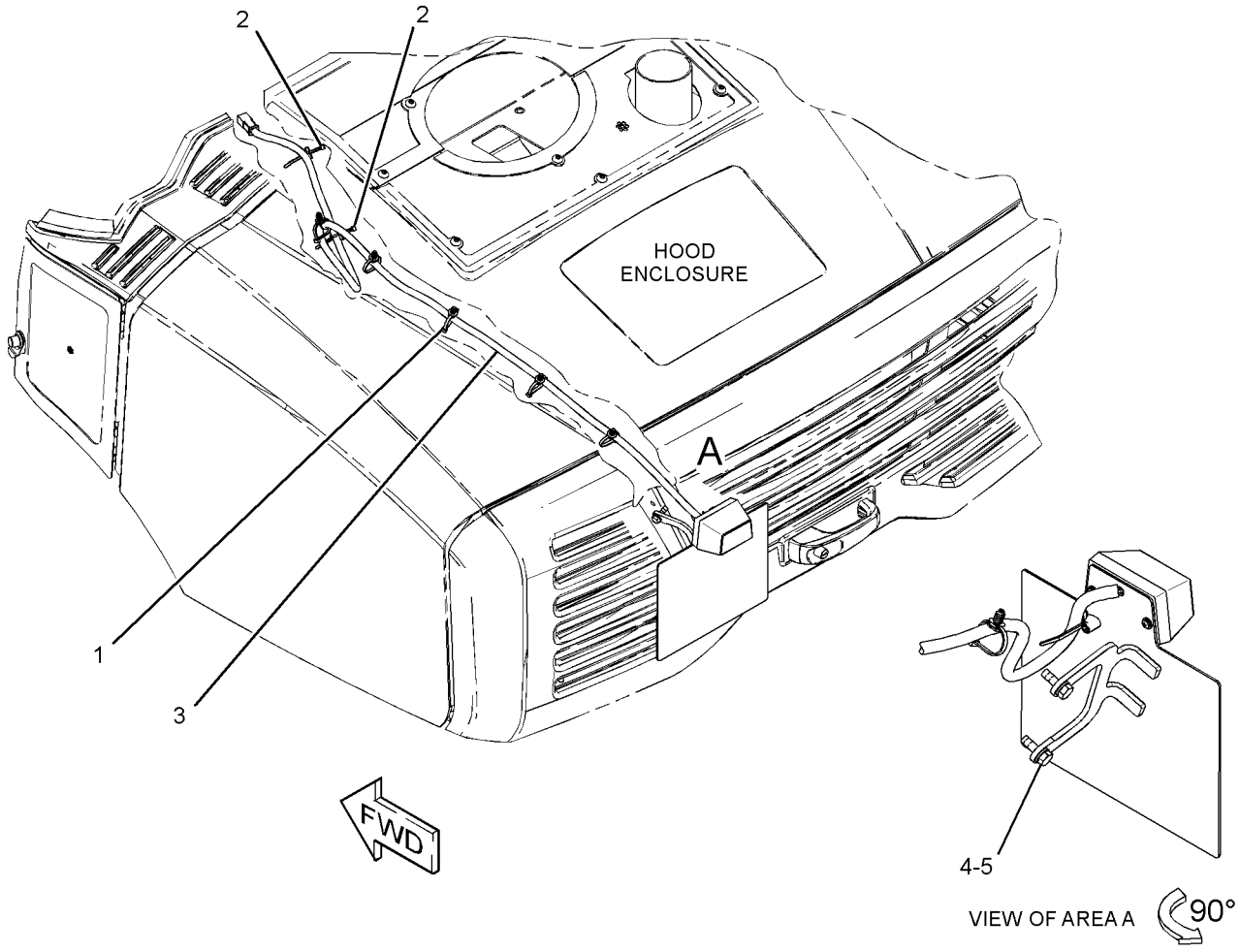

GRAPHIC #1 **<END>** g01525143

301-3392 MOUNTING GP-REGISTRATION

S/N: LMD1-UP
PART OF 260-5492 MOUNTING GP-REGISTRATION
AN ATTACHMENT

SMCS-1429, 7050 **i02980730**

NOTE	REF NO	GRAPHIC REF	PART NUMBER	QTY	PART NAME 1 2 3 4 5 6 (PRODUCT LEVEL)	SEE PAGE
	1	1	**190-8962**	1	LAMP GP-REGISTRATION PLATE	
		1	**195-9712**	1	LAMP (12-VOLT, 10-WATT)	
	2	1	**270-5143**	1	TIE-PUSH MOUNT	
	3	1	**276-8092**	1	HARNESS AS-LIGHTING (LICENSE PLATE)	
	4	1	**317-3576**	1	PLATE AS	
	5	1	**4B-4863**	2	WASHER (4.7X11X1.2-MM THK)	
M	6	1	**5C-8312**	2	NUT (M4X0.7-THD)	
M	7	1	**6V-9672**	2	SCREW-MACHINE (M4X0.7X16-MM)	

M-METRIC PART

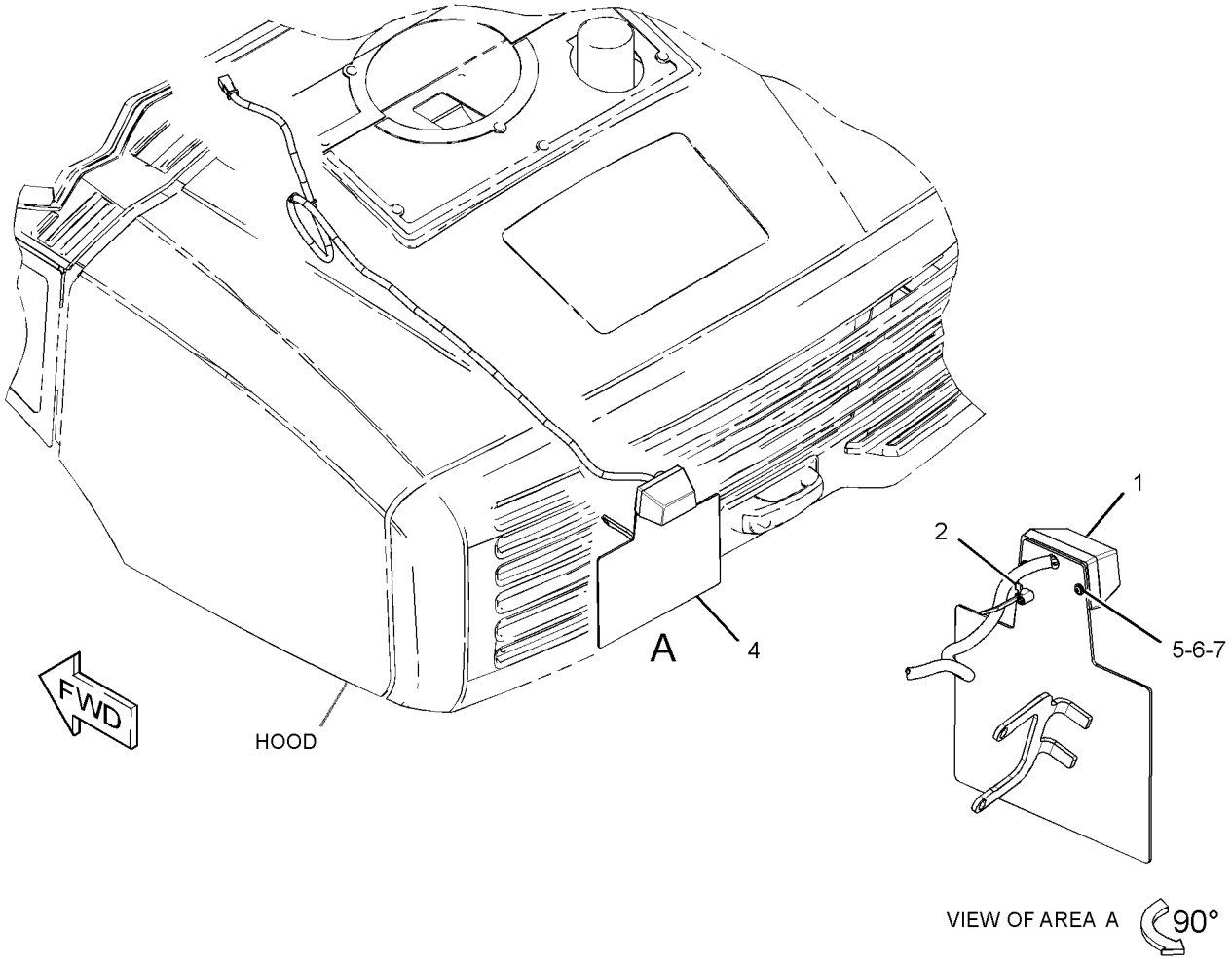

GRAPHIC #1 **<END>** g01522777

258-8553 PLATE GP-FIREWALL

S/N: LMD1-UP

PART OF 322-4878 CHASSIS AR

SMCS-7262 **i03103294**

NOTE	REF NO	GRAPHIC REF	PART NUMBER	QTY	PART NAME 1 2 3 4 5 6 (PRODUCT LEVEL)	SEE PAGE
	1	1	**5P-4116**	6	WASHER-HARD (8.8X20.5X2-MM THK)	
	2	1	**265-5669**	1	PLATE AS	
	3	1	**265-5670**	1	PLATE AS	
	4	1	**7X-7729**	14	WASHER (11X25X3-MM THK)	
M	5	1	**8T-4189**	6	BOLT (M8X1.25X20-MM)	
M	6	1	**8T-4195**	10	BOLT (M10X1.5X30-MM)	
D	7	1	**8T-2563**		SEAL (0.7-M EACH)	
D	7A	1	**8T-2563**		SEAL (0.08-M EACH)	
M	8	1	**8T-4133**	4	NUT (M10X1.5-THD)	

D-ORDER BY THE METER
M-METRIC PART

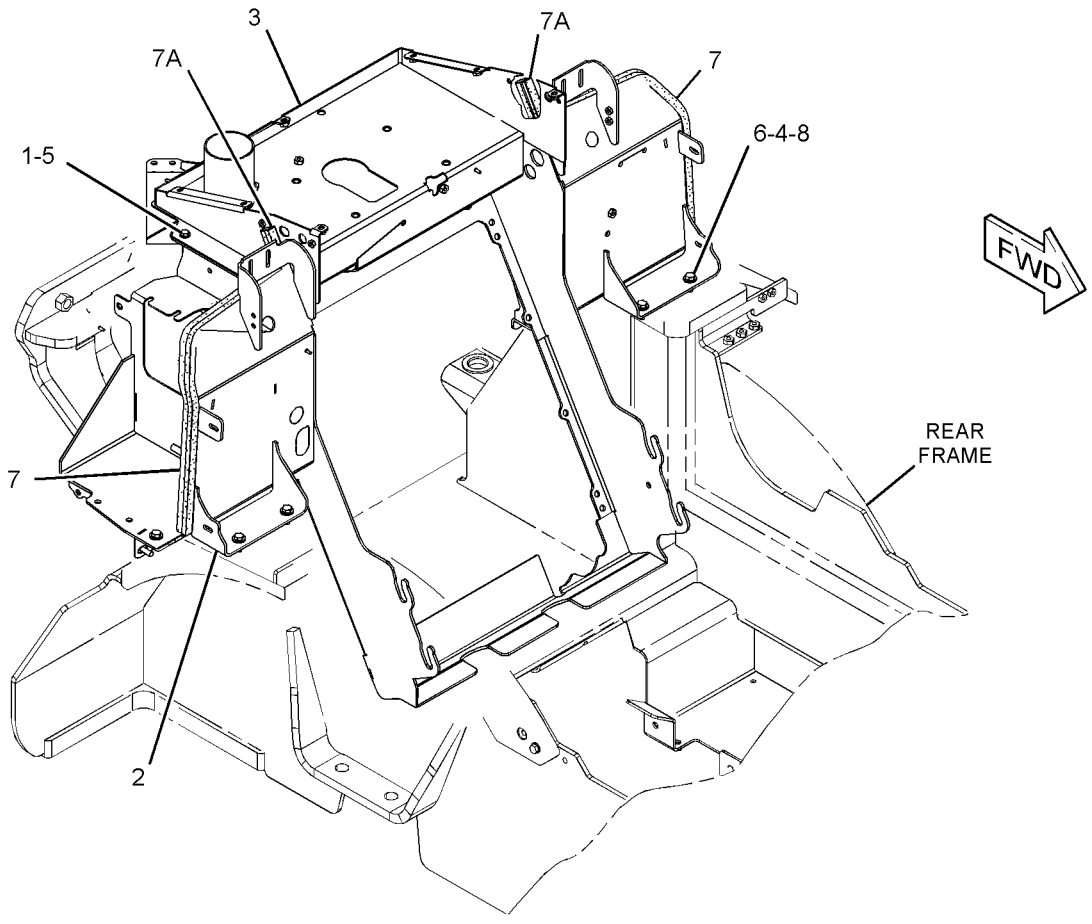

GRAPHIC #1 **<END>** g01589939

227-1092 BRAKE GP-PARKING

S/N: LMD1-UP
PART OF 305-1934 AXLE GP-FRONT
AN ATTACHMENT

SMCS-4267 **i03130941**

NOTE	REF NO	GRAPHIC REF	PART NUMBER	QTY	PART NAME 1 2 3 4 5 6 (PRODUCT LEVEL)	SEE PAGE
	1	1	**227-3652**	1	KIT-BRAKE REPAIR (PARKING)	
					(INCLUDES PADS & HOLDER ASSEMBLIES)	
	2	1	**227-3653**	1	KIT-LEVER (PARKING BRAKE)	
					(INCLUDES LEVER, CLIP, WASHERS & SCREW)	
	3	1	**227-3654**	1	KIT-SEAL (PARKING BRAKE)	
					(INCLUDES BEARING, SEALS, O-RING & LUBRICANT)	
	4	1	**227-3655**	1	KIT-BALL BEARING (PARKING BRAKE)	
					(INCLUDES BEARINGS, SPACER & LUBRICANT)	
	5	1	**227-3656**	1	KIT-BUSHING (PARKING BRAKE)	
					(INCLUDES BUSHINGS, O-RINGS & LUBRICANT)	
	6	1	**227-3657**	1	KIT-SPRING (PARKING BRAKE)	
					(INCLUDES SPRING TORSIONAL)	

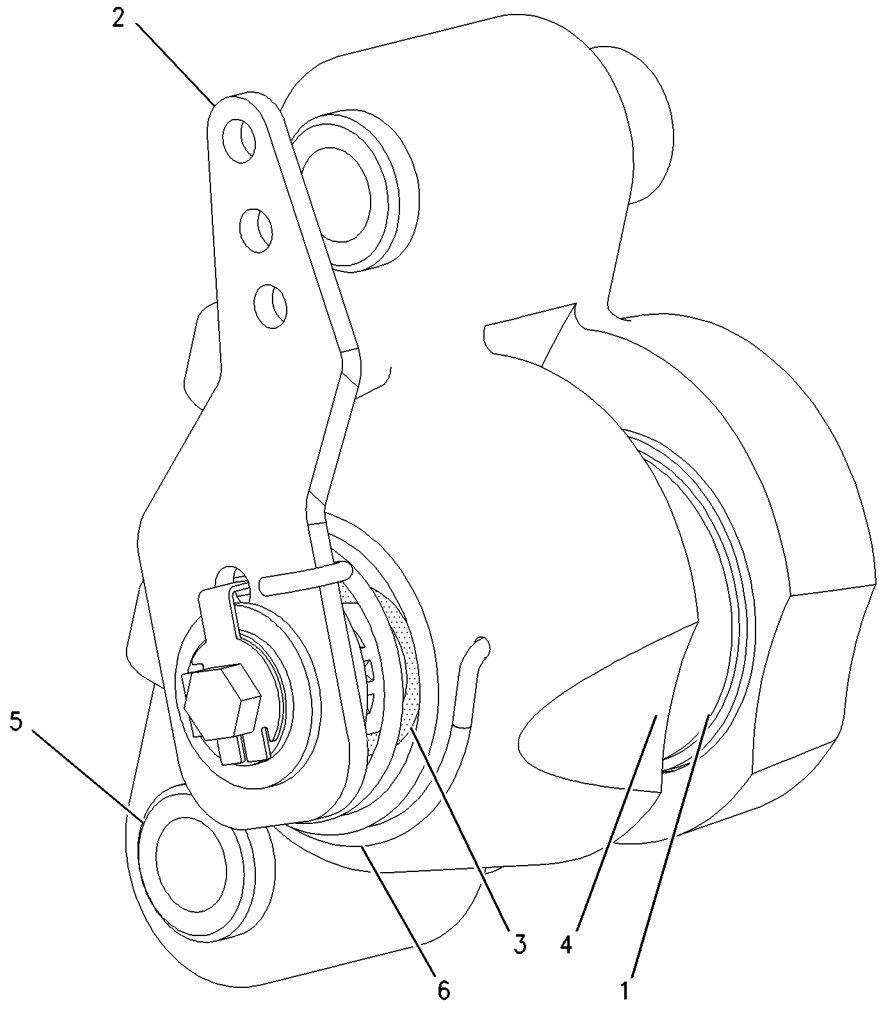

GRAPHIC #1 **<END>** g01004384

292-5403 BRAKE GP-SERVICE

S/N: LMD1-UP

PART OF 292-5404 WHEEL & BRAKE GP

AN ATTACHMENT

SMCS-4251 **i02700516**

NOTE	REF NO	GRAPHIC REF	PART NUMBER	QTY	PART NAME 1 2 3 4 5 6 (PRODUCT LEVEL)	SEE PAGE
M	1	1	**8T-0640**	3	BOLT (M6X1X30-MM)	
M	2	1	**8T-8442**	3	BOLT-SOCKET HEAD (M6X1X30-MM)	
	3	1	**207-4255**	4	PLUG	
	4	1	**157-0740**	1	SEAL-LIP TYPE	
	5	1	**293-2093**	10	PLUG-PLASTIC	
	6	1	**208-7919**	1	BUSHING	
	7	1	**168-7998**	3	PIN	
	8	1	**199-0681**	3	WASHER (6.2X16.5X2-MM THK)	
	9	1	**199-0701**	3	BRAKE-COVER	
	10	1	**199-0702**	3	SPRING (INNER)	
	11	1	**199-0703**	3	SPRING (OUTER)	
	12	1	**167-0014**	1	SEAL-BRAKE	
	13	1	**167-0013**	1	SEAL-BRAKE	
	14	1	**293-8743**	1	HOUSING-BRAKE	
	15	1	**165-7068**	1	PISTON-BRAKE	
	16	1	**293-8749**	3	PIN-SPLIT	
	17	1	**293-8750**	6	BUSHING	
	18	1	**293-8744**	3	SHIM (2-MM THK)	

M-METRIC PART

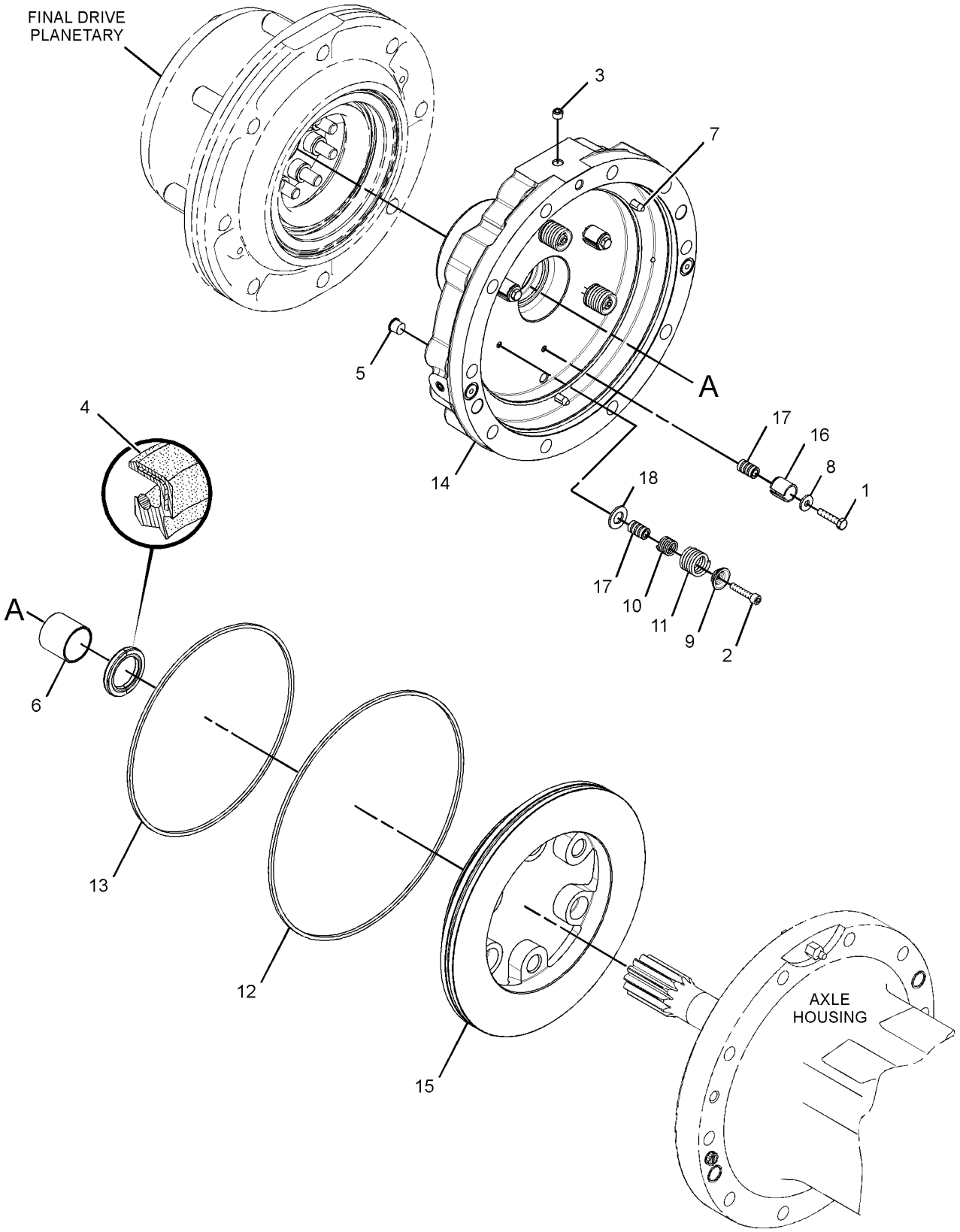

GRAPHIC #1 **<END>** g01375967

257-6371 CONTROL GP-FOOT BRAKE

S/N: LMD1-UP

PART OF 295-5845, 295-5846 CAB AR-ENCLOSED ROPS, 277-2528 CANOPY AR-OPEN ROPS AN ATTACHMENT

SMCS-4269 **i02698861**

NOTE	REF NO	GRAPHIC REF	PART NUMBER	QTY	PART NAME 1 2 3 4 5 6 (PRODUCT LEVEL)	SEE PAGE
	1	1	**233-7948**	1	BEARING	
	2	1	**238-6588**	2	PIN-SPRING	
	3	1	**250-4232**	2	BEARING AS	
	4	1	**260-9103**	1	PEDAL AS (BRAKE)	
	5	1	**260-9108**	1	SHAFT	
	6	1	**273-1705**	1	PLATE	
	7	1	**273-1708**	1	PLATE AS	
	8	1	**273-1945**	1	PLATE AS	
	9	1	**297-4352**	1	SPRING	
	10	1	**305-1856**	1	PLATE	
	11	1	**095-0881**	1	PIN-SPRING	
M	12	1	**8T-0337**	1	SCREW-MACHINE (M4X0.7X12-MM)	
M	13	1	**8T-4189**	4	BOLT (M8X1.25X20-MM)	
	14	1	**8T-4224**	4	WASHER-HARD (8.8X16X2-MM THK)	

M-METRIC PART

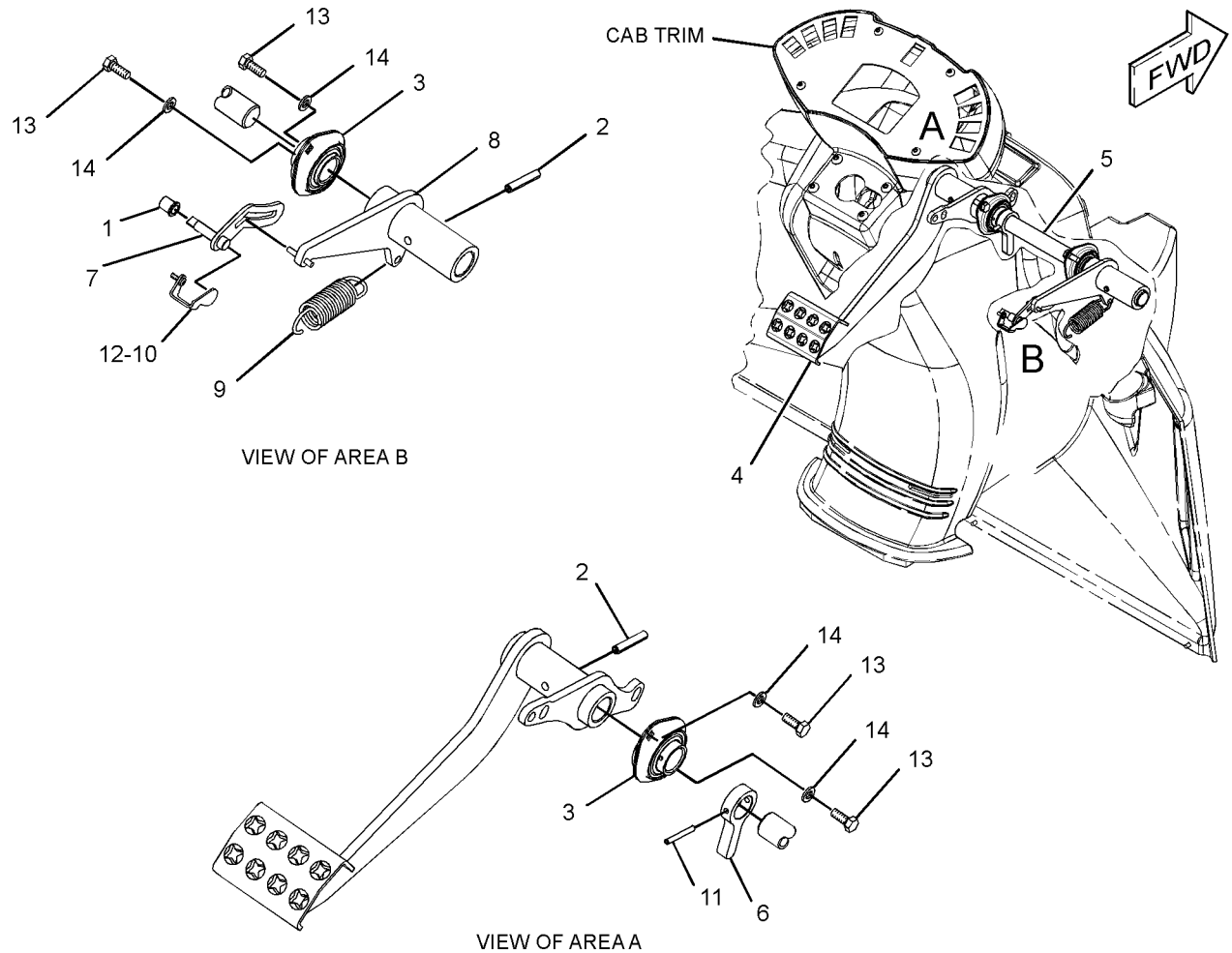

GRAPHIC #1

<END>

g01362530

269-8472 CONTROL GP-PARKING BRAKE

S/N: LMD1-UP

PART OF 295-5275, 295-5276 OPERATOR AR-ENCLOSED ROPS, 322-5766 OPERATOR AR-OPEN ROPS

AN ATTACHMENT

SMCS-4282, 4284 **i02700444**

NOTE	REF NO	GRAPHIC REF	PART NUMBER	QTY	PART NAME 1 2 3 4 5 6 (PRODUCT LEVEL)	SEE PAGE
	1	1	**160-4862**	1	INSULATION	
	2	1	**277-0487**	1	LEVER AS (PARKING BRAKE)	
		1	**3B-4615**	1	PIN-COTTER	
		1	**7H-7241**	1	PIN	
		1	**9R-9110**	1	BUTTON	
		1	**9R-9111**	1	SPRING-COMPRESSION	
	3	1	**8T-4121**	2	WASHER-HARD (11X21X2.5-MM THK)	
M	4	1	**9X-2040**	2	SCREW-TRUSS HEAD (M10X1.5X25-MM)	

M-METRIC PART

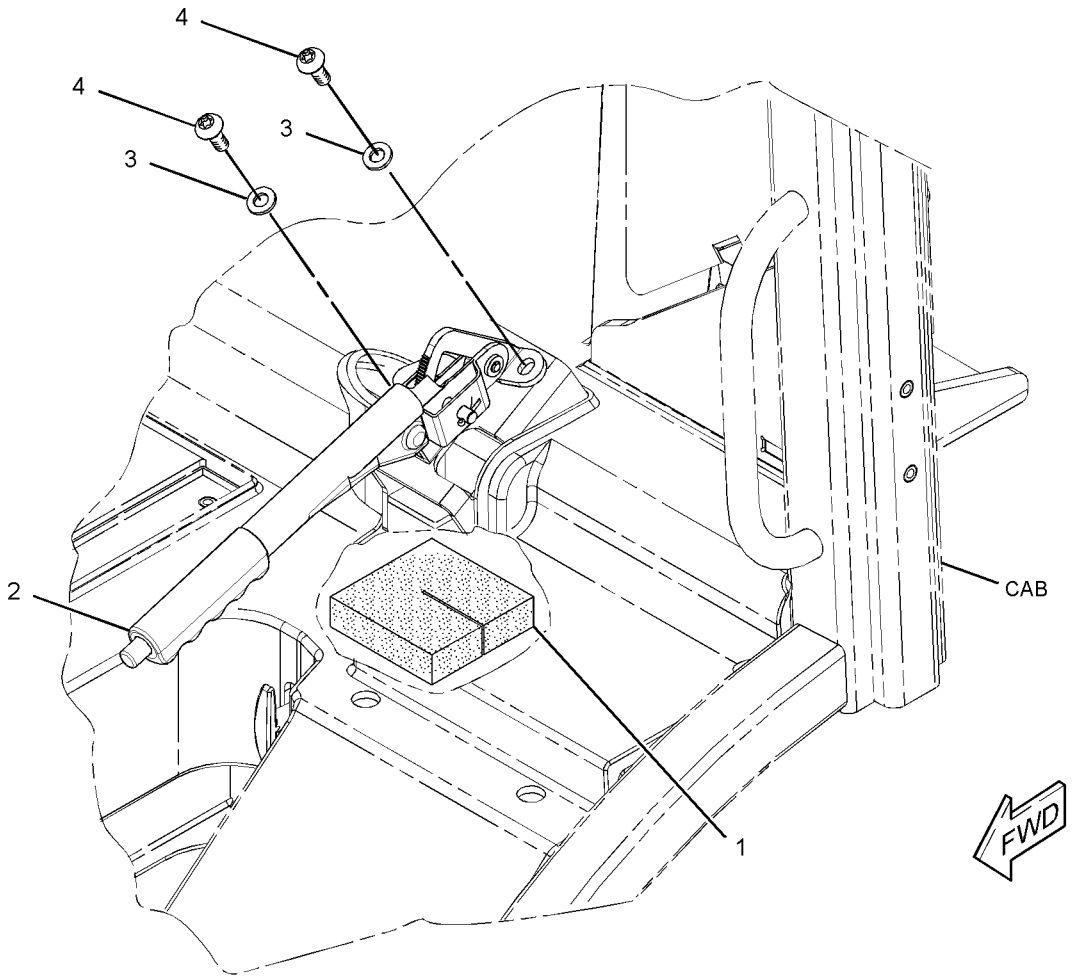

GRAPHIC #1 **<END>** g01361336

257-4004 CYLINDER GP-MASTER—STANDARD AXLE

S/N: LMD1-UP

PART OF 257-3936 LINES GP-SERVICE BRAKE

AN ATTACHMENT

SMCS-4258 **i02698858**

NOTE	PART NUMBER	QTY	PART NAME 1 2 3 4 5 6 (PRODUCT LEVEL)	SEE PAGE
			(NO BREAKDOWN OF SERVICEABLE PARTS AVAILABLE AT TIME OF PUBLICATION)	

<END>

BRAKING SYSTEM

257-3936 LINES GP-SERVICE BRAKE–STANDARD AXLE

S/N: LMD1-UP

PART OF 294-8410, 301-1149 POWER TRAIN AR

AN ATTACHMENT

SMCS-4257 **i03119922**

NOTE	REF NO	GRAPHIC REF	PART NUMBER	QTY	PART NAME 1 2 3 4 5 6 (PRODUCT LEVEL)	SEE PAGE
I	1	1	**1G-8597**	1	HOSE AS	
	2	1	**1P-4278**	2	CLAMP-HOSE	
	3	1	**6V-0852**	1	CAP-DUST	
	4	1	**7K-1181**	1	STRAP-CABLE	
	5	1	*171-8724*	1	CONNECTOR AS	
		1	**4J-5477**	1	SEAL-O-RING	
		1	**8T-7876**	1	SEAL-O-RING	
		1	**171-8728**	1	CONNECTOR	
	6	1	**206-6418**	4	CLAMP-HALF	
	7	1	**249-5314**	1	FITTING-SWIVEL	
Y	8	1	**257-4004**	1	CYLINDER GP-MASTER (STANDARD AXLE)	229
	9	1	**260-5481**	1	RESERVOIR	
	10	1	**296-6483**	1	PLATE	
	11	1	*148-8325*	1	CONNECTOR AS	
		1	**3J-1907**	1	SEAL-O-RING	
		1	**4J-5477**	1	SEAL-O-RING	
		1	**6V-8641**	1	CONNECTOR	
	12	1	*148-8423*	1	TEE AS	
		1	**3J-1907**	1	SEAL-O-RING	
		1	**4J-5477**	1	SEAL-O-RING	
		1	**8T-3311**	1	TEE	
	13	1	*164-5567*	1	COUPLER AS-QUICK DISCONNECT	
		1	**3J-1907**	1	SEAL-O-RING	
		1	**6V-3965**	1	COUPLER AS-QUICK DISCONNECT	
	14	1	**4B-4863**	4	WASHER (4.7X11X1.2-MM THK)	
M	15	1	**5C-7261**	5	NUT (M8X1.25-THD)	
M	16	1	**5C-8312**	2	NUT (M4X0.7-THD)	
	17	1	**107-4749**	2	PLATE	
	18	1	**6D-3479**	1	CLIP	
M	19	1	**7X-2533**	2	BOLT (M6X1X35-MM)	
M	20	1	**8T-3998**	2	BOLT (M4X0.7X12-MM)	
M	21	1	**8T-4189**	2	BOLT (M8X1.25X20-MM)	
	22	1	**8T-4224**	8	WASHER-HARD (8.8X16X2-MM THK)	
	23	1	**8T-4815**	1	ROD END (YOKE)	
M	24	1	**8T-7547**	1	BOLT (M8X1.25X30-MM)	
	25	1	**9R-2806**	1	PIN	
	26	1	**9R-2807**	1	CLIP	
E	27	1	**5P-6442**		HOSE (9-CM)	
	28	1	**310-5620**	1	CLIP	
	29	1	**101-0333**	1	FILM-IDENTIFICATION (HYDRAULIC OIL)	
M	30	1	**8T-4133**	1	NUT (M10X1.5-THD)	
M	31	1	**7X-2534**	2	BOLT (M6X1X50-MM)	
	32	1	**5P-7648**	1	GROMMET	
	33	1	**3S-2093**	1	STRAP-CABLE	

E-ORDER BY THE CENTIMETER
I-REFER TO HYDRAULIC INFORMATION SYSTEM
M-METRIC PART
Y-SEPARATE ILLUSTRATION

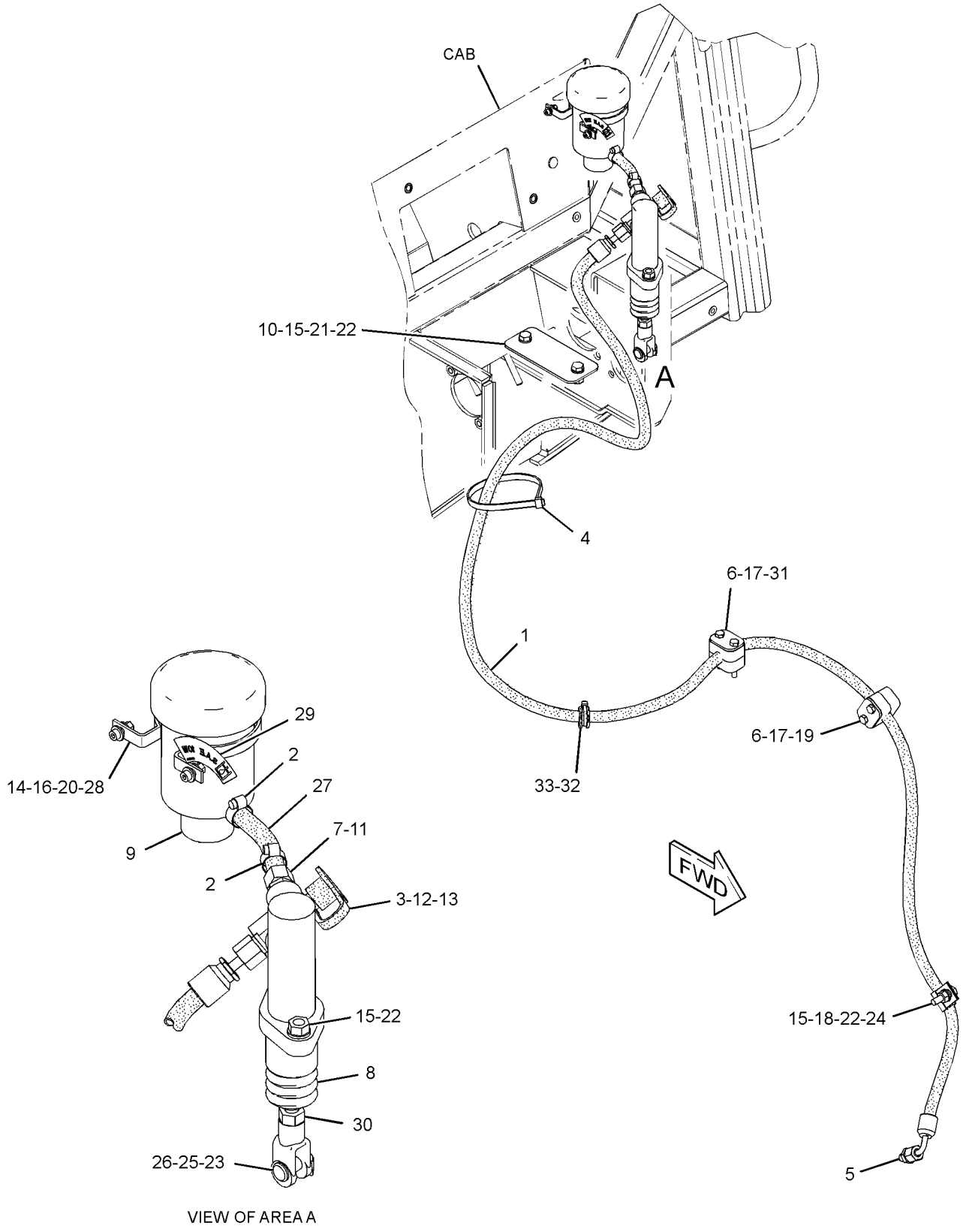

GRAPHIC #1 **<END>** g01598013

BRAKING SYSTEM

260-5406 LINES GP-SERVICE BRAKE—HIGH SPEED AXLE

S/N: LMD1-UP

PART OF 294-8411, 301-1150 POWER TRAIN AR

AN ATTACHMENT

SMCS-4257 **i02859606**

NOTE	REF NO	GRAPHIC REF	PART NUMBER	QTY	PART NAME 1 2 3 4 5 6 (PRODUCT LEVEL)	SEE PAGE
	1	1	**1P-4278**	2	CLAMP-HOSE	
	2	1	**6V-0852**	1	CAP-DUST	
	3	1	**6W-2463**	2	CLAMP	
	4	1	**102-8703**	1	PLATE-COVER	
	5	1	*171-8724*	2	CONNECTOR AS	
					(EACH INCLUDES)	
		1	**4J-5477**	1	SEAL-O-RING	
		1	**8T-7876**	1	SEAL-O-RING	
		1	**171-8728**	1	CONNECTOR	
	6	1	**206-6418**	4	CLAMP-HALF	
	7	1	*215-7067*	1	ELBOW AS	
		1	**3J-1907**	1	SEAL-O-RING	
		1	**215-7066**	1	ELBOW	
	8	1	**238-1844**	1	ELBOW (SWIVEL)	
	9	1	**265-7240**	1	CYLINDER GP-MASTER (HIGH SPEED AXLE)	
I	10	1	**278-5121**	2	HOSE AS	
I	11	1	**108-6941**	1	HOSE AS	
	12	1	**281-0384**	1	HOSE AS	
	13	1	**296-6482**	1	PLATE	
	14	1	**297-4855**	1	PLATE	
	15	1	*148-8318*	1	CONNECTOR AS	
		1	**3K-0360**	1	SEAL-O-RING	
		1	**6V-8397**	1	SEAL-O-RING	
		1	**6V-8634**	1	CONNECTOR (SEAL)	
	16	1	*148-8336*	1	CONNECTOR AS (STORAGE)	
		1	**3J-1907**	1	SEAL-O-RING	
		1	**6V-8397**	1	SEAL-O-RING	
		1	**6V-8636**	1	CONNECTOR (FACE SEAL)	
	17	1	*148-8378*	1	ELBOW AS (FACE SEAL)	
		1	**3J-1907**	1	SEAL-O-RING	
		1	**6V-8397**	1	SEAL-O-RING	
		1	**6V-8724**	1	ELBOW (90-DEG)	
	18	1	*148-8423*	1	TEE AS	
		1	**3J-1907**	1	SEAL-O-RING	
		1	**4J-5477**	1	SEAL-O-RING	
		1	**8T-3311**	1	TEE	
	19	1	*148-8438*	1	TEE AS	
		1	**4J-5477**	3	SEAL-O-RING	
		1	**6V-8787**	1	TEE-FACE SEAL	
	20	1	*164-5567*	1	COUPLER AS-QUICK DISCONNECT	
		1	**3J-1907**	1	SEAL-O-RING	
		1	**6V-3965**	1	COUPLER AS-QUICK DISCONNECT	
M	21	1	**5C-7261**	3	NUT (M8X1.25-THD)	
	22	1	**107-4749**	2	PLATE	
	23	1	**6D-3479**	1	CLIP (SLOT)	
M	24	1	**7X-2533**	2	BOLT (M6X1X35-MM)	
M	25	1	**7X-2537**	1	BOLT (M8X1.25X35-MM)	
	26	1	**8T-4121**	2	WASHER-HARD (11X21X2.5-MM THK)	
M	27	1	**8T-4133**	3	NUT (M10X1.5-THD)	
	28	1	**8T-4224**	4	WASHER-HARD (8.8X16X2-MM THK)	
	29	1	**8T-4815**	1	ROD END (YOKE)	
M	30	1	**8T-7547**	1	BOLT (M8X1.25X30-MM)	
	31	1	**9R-2806**	1	PIN	
	32	1	**9R-2807**	1	CLIP	
E	33	1	**5P-1442**		HOSE (169-CM)	

260-5406 LINES GP-SERVICE BRAKE *(contd.)* i02859606

NOTE	REF NO	GRAPHIC REF	PART NUMBER	QTY	PART NAME 1 2 3 4 5 6 (PRODUCT LEVEL)	SEE PAGE
M	34	1	**7X-2534**	2	BOLT (M6X1X50-MM)	
	35	1	**3E-4321**	1	CLIP	

E-ORDER BY THE CENTIMETER
I-REFER TO HYDRAULIC INFORMATION SYSTEM
M-METRIC PART

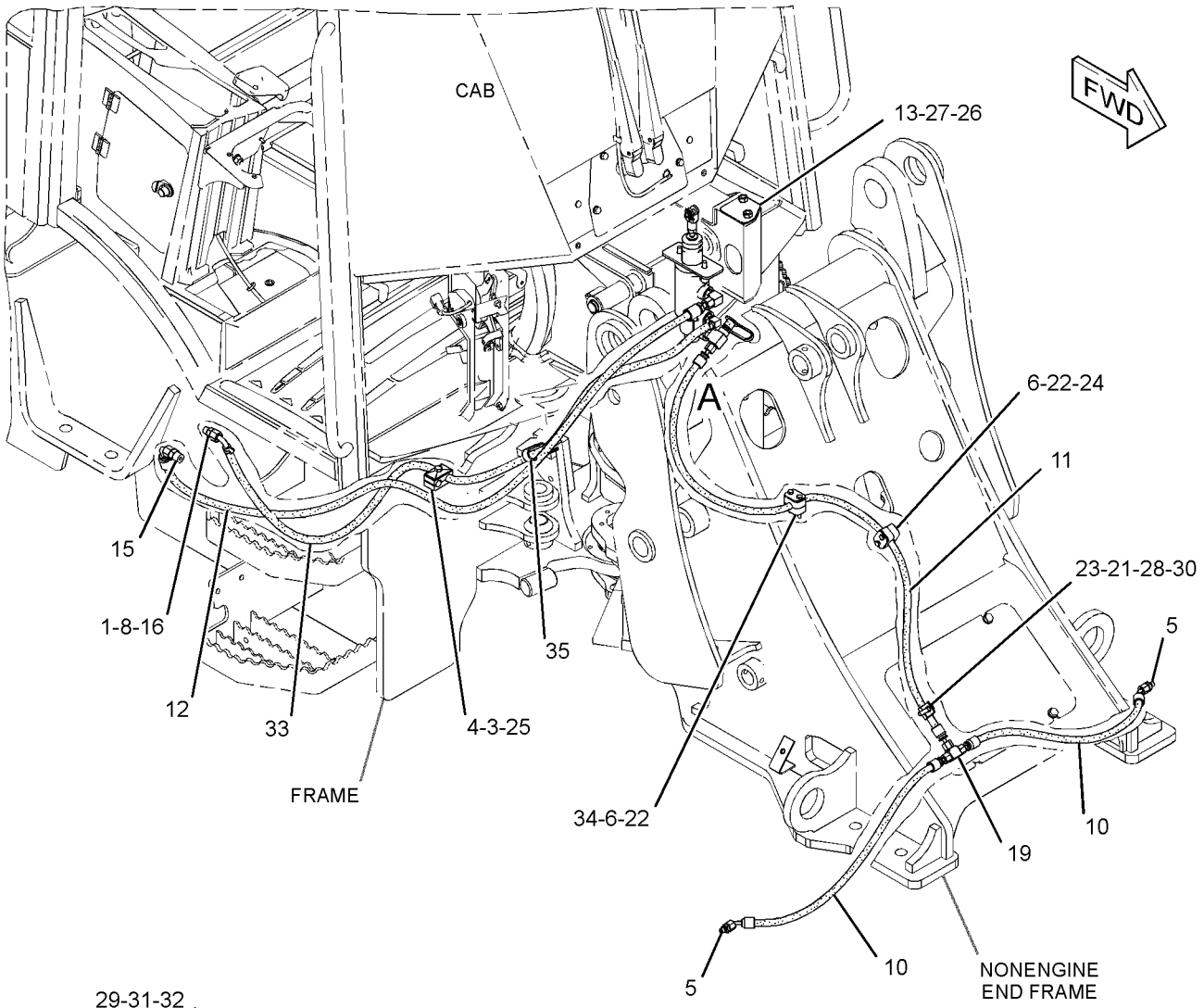

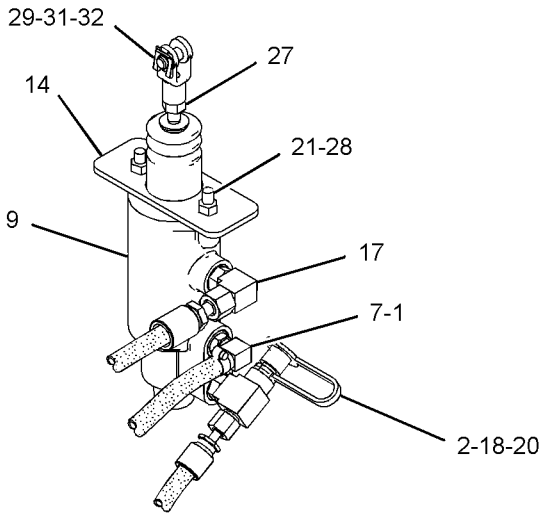

VIEW OF AREA A

GRAPHIC #1 **<END>** g01380062

257-3976 CYLINDER GP-STEERING

S/N: LMD1-UP

PART OF 260-5391 HYDRAULIC AR

SMCS-4303 **i02735815**

NOTE	PART NUMBER	QTY	PART NAME 1 2 3 4 5 6 (PRODUCT LEVEL)	SEE PAGE
	267-6458	1	CYLINDER AS	
	267-6463	1	HEAD	
	5J-4561	1	LOCKNUT (1-14-THD)	
	266-9382	1	PISTON	
	099-7002	1	RING	
	1S-0668	1	RING	
	140-2380	1	RING-WEAR	
	267-6469	1	ROD AS	
	140-2310	1	SEAL-BUFFER	
	140-2392	1	SEAL-LIP TYPE	
	149-0231	1	SEAL-O-RING	
	1H-7339	1	SEAL-O-RING	
	6V-8397	1	SEAL-O-RING	
	161-7147	1	SEAL-PISTON	
	140-2377	1	SEAL-U-CUP	

<END>

STEERING SYSTEM

274-6572 LINES GP-STEERING

S/N: LMD1-UP
PART OF 300-8485 STEERING AR
AN ATTACHMENT

SMCS-4304 **i03119921**

NOTE	REF NO	GRAPHIC REF	PART NUMBER	QTY	PART NAME 1 2 3 4 5 6 (PRODUCT LEVEL)	SEE PAGE
	1	1	**5P-1717**	1	CLAMP-HOSE	
	2	1	**6V-0852**	1	CAP-DUST	
	3	1	**9D-7924**	4	MOUNTING	
	4	1	**9R-2052**	1	BLOCK	
	5	1	**111-7874**	1	SEAL	
	6	1	*148-8420*	1	TEE AS	
		1	**3K-0360**	1	SEAL-O-RING	
		1	**6V-8398**	1	SEAL-O-RING	
		1	**8T-6338**	1	TEE-O-RING PORT	
	7	1	*164-5567*	1	COUPLER AS-QUICK DISCONNECT	
		1	**3J-1907**	1	SEAL-O-RING	
		1	**6V-3965**	1	COUPLER AS-QUICK DISCONNECT	
	8	1	**239-9833**	3	PLATE	
	9	1	**259-5487**	1	PLATE	
I	10	1	**274-6558**	1	HOSE AS	
I	11	1	**274-6561**	1	HOSE AS	
	12	1	**293-3345**	1	TUBE AS	
	13	1	**310-5637**	1	BRACKET	
	14	1	**293-4316**	1	TUBE AS	
I	15	1	**178-2176**	1	HOSE AS	
	16	1	*148-8318*	1	CONNECTOR AS	
		1	**3K-0360**	1	SEAL-O-RING	
		1	**6V-8397**	1	SEAL-O-RING	
		1	**6V-8634**	1	CONNECTOR	
	17	1	*148-8340*	2	CONNECTOR AS	
					(EACH INCLUDES)	
		1	**3K-0360**	1	SEAL-O-RING	
		1	**6V-8398**	1	SEAL-O-RING	
		1	**6V-8639**	1	CONNECTOR	
	18	1	*148-8364*	1	ELBOW AS	
		1	**3K-0360**	1	SEAL-O-RING	
		1	**6V-8398**	1	SEAL-O-RING	
		1	**6V-8625**	1	ELBOW	
	19	1	*148-8365*	1	ELBOW AS	
		1	**3J-1907**	1	SEAL-O-RING	
		1	**6V-8398**	1	SEAL-O-RING	
		1	**8T-6876**	1	ELBOW (90-DEG)	
	20	1	*148-8374*	1	ELBOW AS	
		1	**3K-0360**	1	SEAL-O-RING	
		1	**6V-8397**	1	SEAL-O-RING	
		1	**6V-8723**	1	ELBOW	
	21	1	*148-8444*	1	TEE AS-SWIVEL	
		1	**6V-8398**	2	SEAL-O-RING	
		1	**6V-9837**	1	TEE-SWIVEL	
I	22	1	**257-4048**	1	HOSE AS	
	23	1	**4V-0611**	6	CLAMP	
M	24	1	**5C-7261**	4	NUT (M8X1.25-THD)	
	25	1	**6D-4246**	1	CLIP	
	26	1	**7X-0603**	4	WASHER-HARD (9.9X35X2.5-MM THK)	
M	27	1	**8T-6912**	1	BOLT (M8X1.25X50-MM)	
	28	1	**8T-4121**	6	WASHER-HARD (11X21X2.5-MM THK)	
M	29	1	**8T-4133**	1	NUT (M10X1.5-THD)	
M	30	1	**8T-4136**	4	BOLT (M10X1.5X25-MM)	
M	31	1	**8T-4185**	1	BOLT (M10X1.5X50-MM)	
M	32	1	**8T-6870**	2	BOLT (M8X1.25X70-MM)	

274-6572 **LINES GP-STEERING** *(contd.)* **i03119921**

NOTE	REF NO	GRAPHIC REF	PART NUMBER	QTY	PART NAME 1 2 3 4 5 6 (PRODUCT LEVEL)	SEE PAGE
	33	1	**8T-4224**	2	WASHER-HARD (8.8X16X2-MM THK)	
M	34	1	**6V-9189**	2	LOCKNUT (M8X1.25-THD)	
	35	1	**298-7736**	1	COLLAR	

I-REFER TO HYDRAULIC INFORMATION SYSTEM
M-METRIC PART

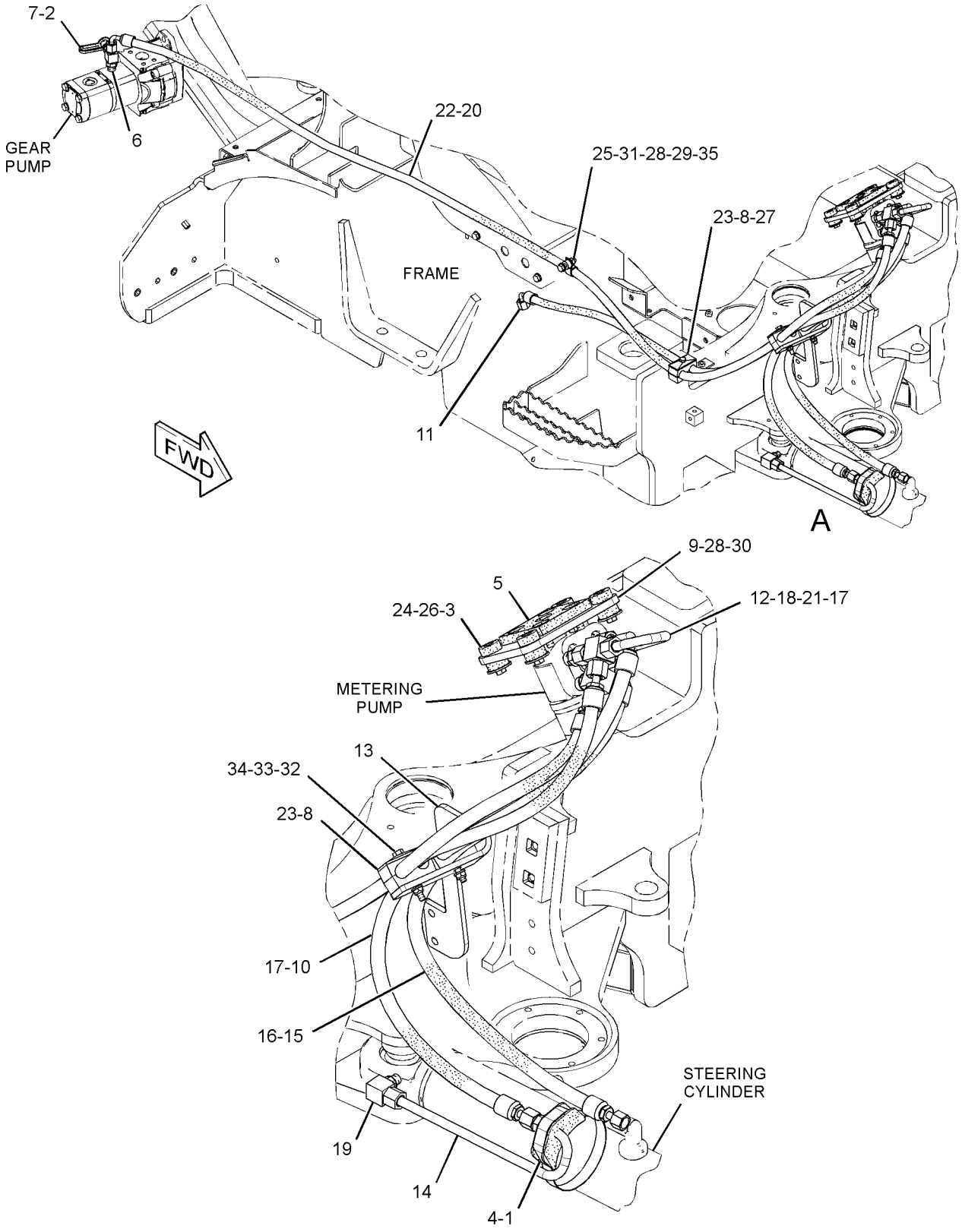

VIEW OF AREA A

GRAPHIC #1 **<END>** g01597774

STEERING SYSTEM

293-4351 LINES GP-STEERING

S/N: LMD1-UP
PART OF 282-7722, 282-7723 STEERING AR
AN ATTACHMENT

SMCS-4304 **i03119918**

NOTE	REF NO	GRAPHIC REF	PART NUMBER	QTY	PART NAME 1 2 3 4 5 6 (PRODUCT LEVEL)	SEE PAGE
	1	1	**5P-1717**	1	CLAMP-HOSE	
	2	1	**6V-0852**	1	CAP-DUST	
	3	1	**9D-7924**	4	MOUNTING	
	4	1	**9R-2052**	1	BLOCK	
	5	1	**111-7874**	1	SEAL	
	6	1	*148-8420*	1	TEE AS	
		1	**3K-0360**	1	SEAL-O-RING	
		1	**6V-8398**	1	SEAL-O-RING	
		1	**8T-6338**	1	TEE-O-RING PORT	
	7	1	*164-5567*	1	COUPLER AS-QUICK DISCONNECT	
		1	**3J-1907**	1	SEAL-O-RING	
		1	**6V-3965**	1	COUPLER AS-QUICK DISCONNECT	
	8	1	**239-9833**	3	PLATE	
	9	1	**259-5487**	1	PLATE	
I	10	1	**274-6558**	1	HOSE AS	
I	11	1	**274-6561**	1	HOSE AS	
	12	1	**310-5637**	1	BRACKET	
	13	1	**293-4316**	1	TUBE AS	
I	14	1	**178-2176**	1	HOSE AS	
	15	1	*148-8318*	1	CONNECTOR AS	
		1	**3K-0360**	1	SEAL-O-RING	
		1	**6V-8397**	1	SEAL-O-RING	
		1	**6V-8634**	1	CONNECTOR	
	16	1	*148-8340*	1	CONNECTOR AS	
		1	**3K-0360**	1	SEAL-O-RING	
		1	**6V-8398**	1	SEAL-O-RING	
		1	**6V-8639**	1	CONNECTOR	
	17	1	*148-8346*	1	ELBOW AS	
		1	**3K-0360**	1	SEAL-O-RING	
		1	**6V-8398**	1	SEAL-O-RING	
		1	**8T-1686**	1	ELBOW	
	18	1	*148-8365*	1	ELBOW AS	
		1	**3J-1907**	1	SEAL-O-RING	
		1	**6V-8398**	1	SEAL-O-RING	
		1	**8T-6876**	1	ELBOW (90-DEG)	
	19	1	*148-8374*	1	ELBOW AS	
		1	**3K-0360**	1	SEAL-O-RING	
		1	**6V-8397**	1	SEAL-O-RING	
		1	**6V-8723**	1	ELBOW	
I	20	1	**257-4048**	1	HOSE AS	
	21	1	**4V-0611**	6	CLAMP	
M	22	1	**5C-7261**	4	NUT (M8X1.25-THD)	
	23	1	**6D-4246**	1	CLIP	
	24	1	**7X-0603**	4	WASHER-HARD (9.9X35X2.5-MM THK)	
M	25	1	**8T-6912**	1	BOLT (M8X1.25X50-MM)	
	26	1	**8T-4121**	6	WASHER-HARD (11X21X2.5-MM THK)	
M	27	1	**8T-4133**	1	NUT (M10X1.5-THD)	
M	28	1	**8T-4136**	4	BOLT (M10X1.5X25-MM)	
M	29	1	**8T-4185**	1	BOLT (M10X1.5X50-MM)	
M	30	1	**8T-6870**	2	BOLT (M8X1.25X70-MM)	
	31	1	**8T-4224**	2	WASHER-HARD (8.8X16X2-MM THK)	
M	32	1	**6V-9189**	2	LOCKNUT (M8X1.25-THD)	
	33	1	**298-7736**	1	COLLAR	

I-REFER TO HYDRAULIC INFORMATION SYSTEM
M-METRIC PART

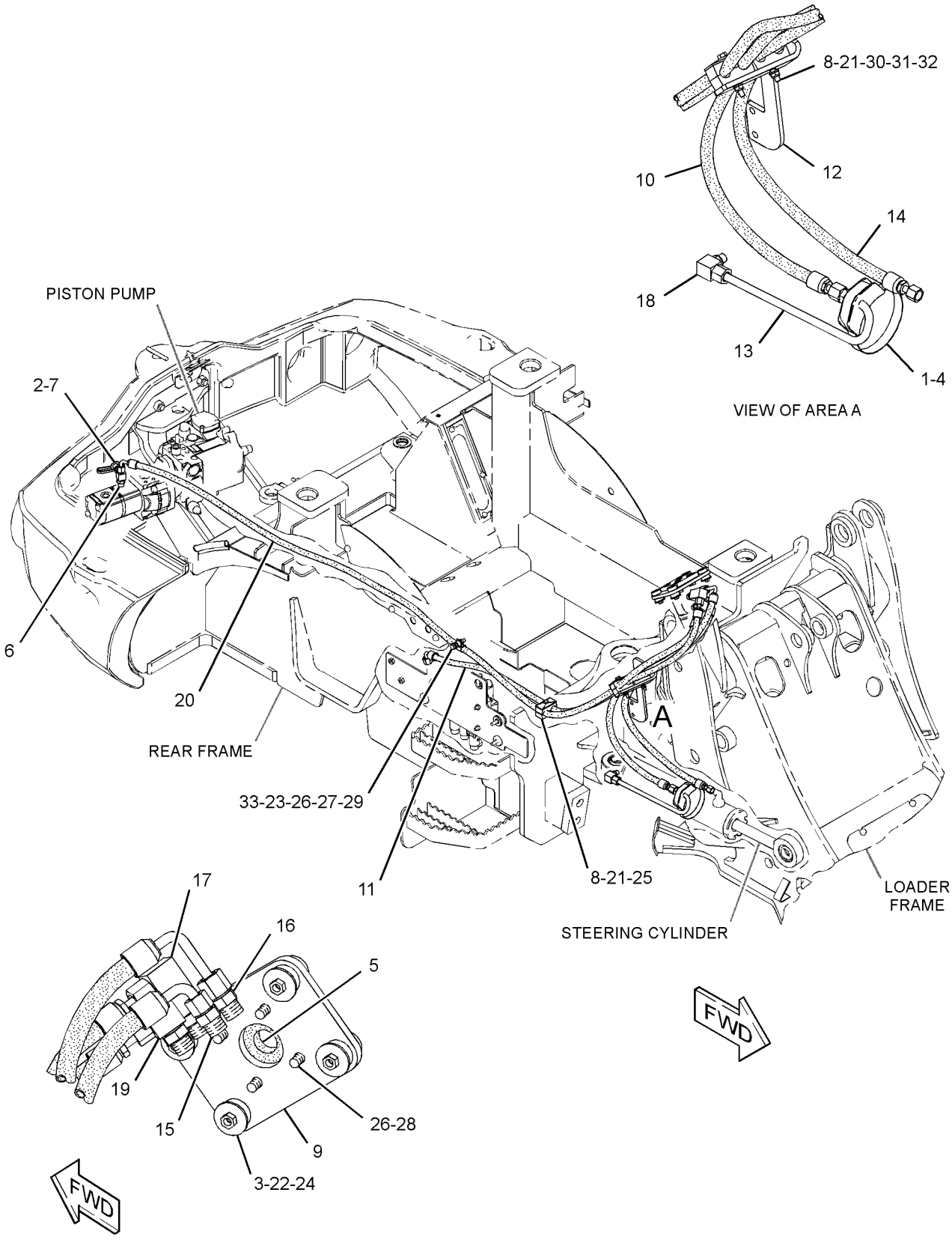

GRAPHIC #1 **<END>** g01597436

259-2850 MOUNTING GP-STEERING CYLINDER—HYDRAULIC

S/N: LMD1-UP

PART OF 322-4878 CHASSIS AR

SMCS-4303 **i02980736**

NOTE	REF NO	GRAPHIC REF	PART NUMBER	QTY	PART NAME 1 2 3 4 5 6 (PRODUCT LEVEL)	SEE PAGE
	1	1	**6V-5200**	3	RING-RETAINING	
M	2	1	**8T-4136**	2	BOLT (M10X1.5X25-MM)	
	3	1	**259-2877**	1	PIN	
	4	1	**300-8583**	1	PLATE	
	5	1	**320-1316**	1	PIN	
	6	1	**8T-4121**	2	WASHER-HARD (11X21X2.5-MM THK)	

M-METRIC PART

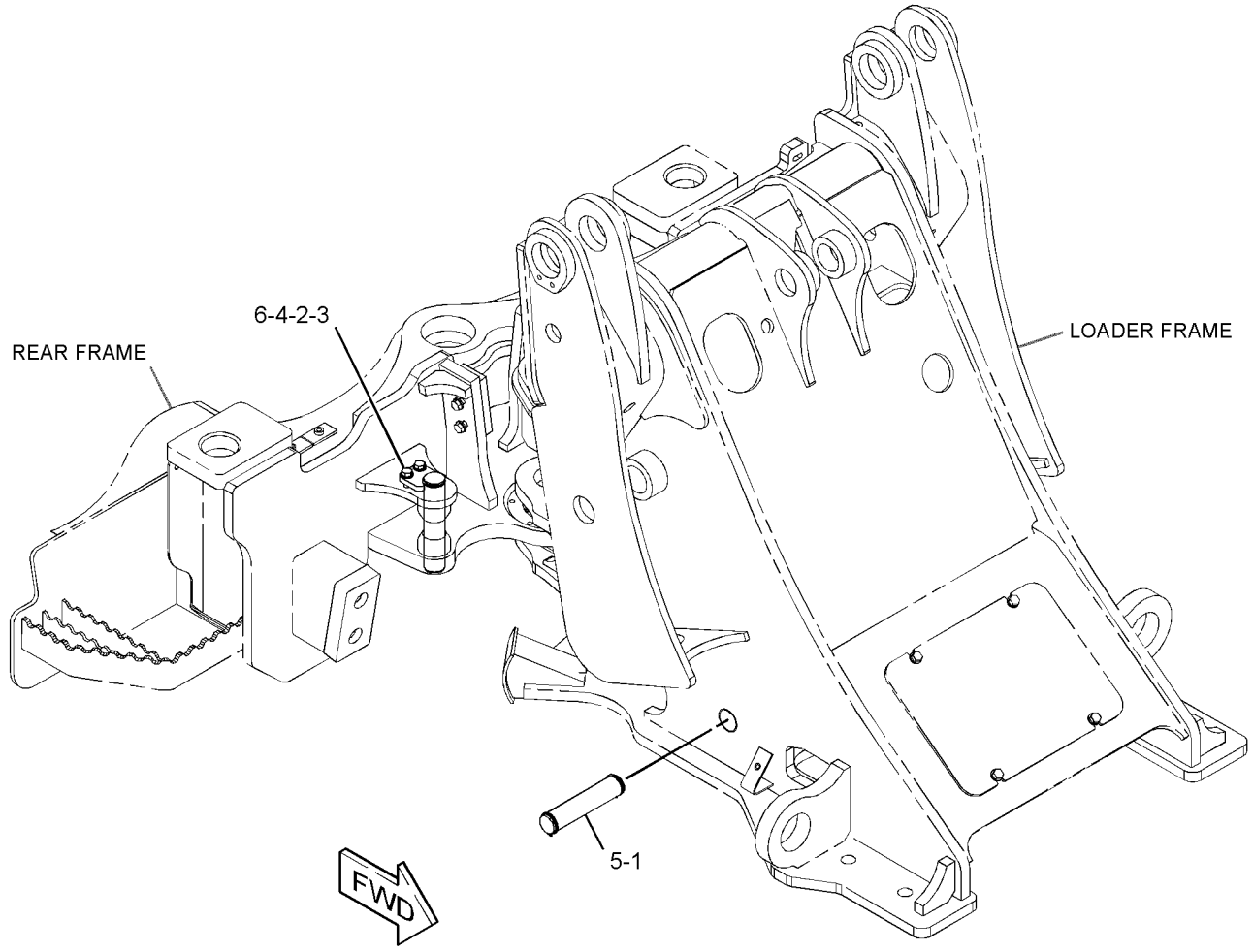

GRAPHIC #1 **<END>** g01547735

257-3927 PUMP GP-METERING–HMU–STANDARD FLOW

S/N: LMD1-UP
PART OF 282-7722 STEERING AR
AN ATTACHMENT

SMCS-4312 **i03117720**

NOTE	REF NO	GRAPHIC REF	PART NUMBER	QTY	PART NAME 1 2 3 4 5 6 (PRODUCT LEVEL)	SEE PAGE
	1	1	**295-1303**	2	RACE-BEARING	
	2	1	**254-7536**	1	BEARING	
					AVAILABLE REPAIR KIT(S):	
			295-1302	1	KIT-SEAL (HMU STEERING PUMP)	
					(INLCUDES SEALS & RINGS)	

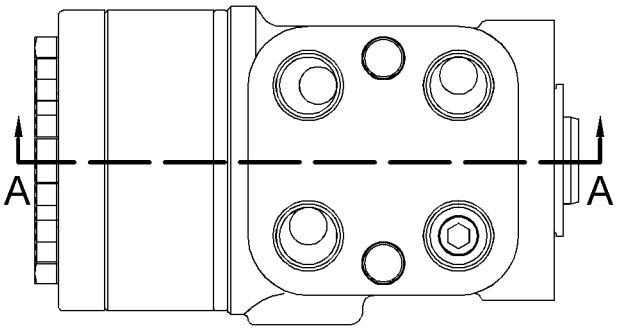

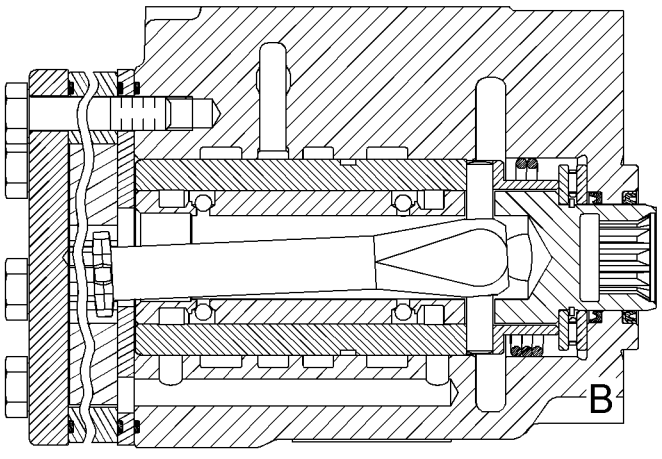

SECTION A-A

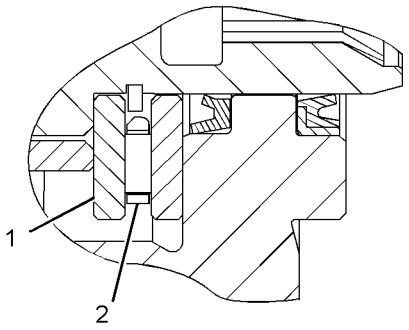

VIEW OF AREA B

GRAPHIC #1 **<END>** g01357041

260-5420 PUMP GP-METERING–HMU–BOOSTED AUX HYDRAULIC FLOW

S/N: LMD1-UP

PART OF 282-7723, 300-8485 STEERING AR

AN ATTACHMENT

SMCS-4312 **i02738352**

NOTE	REF NO	GRAPHIC REF	PART NUMBER	QTY	PART NAME 1 2 3 4 5 6 (PRODUCT LEVEL)	SEE PAGE
	1	1	**264-1335**	2	RACE-BEARING	
	2	1	**254-7536**	1	BEARING	
					AVAILABLE REPAIR KIT(S):	
			257-8471	1	KIT-SEAL (HMU STEERING PUMP)	
					(INCLUDES INSTALLER GP)	

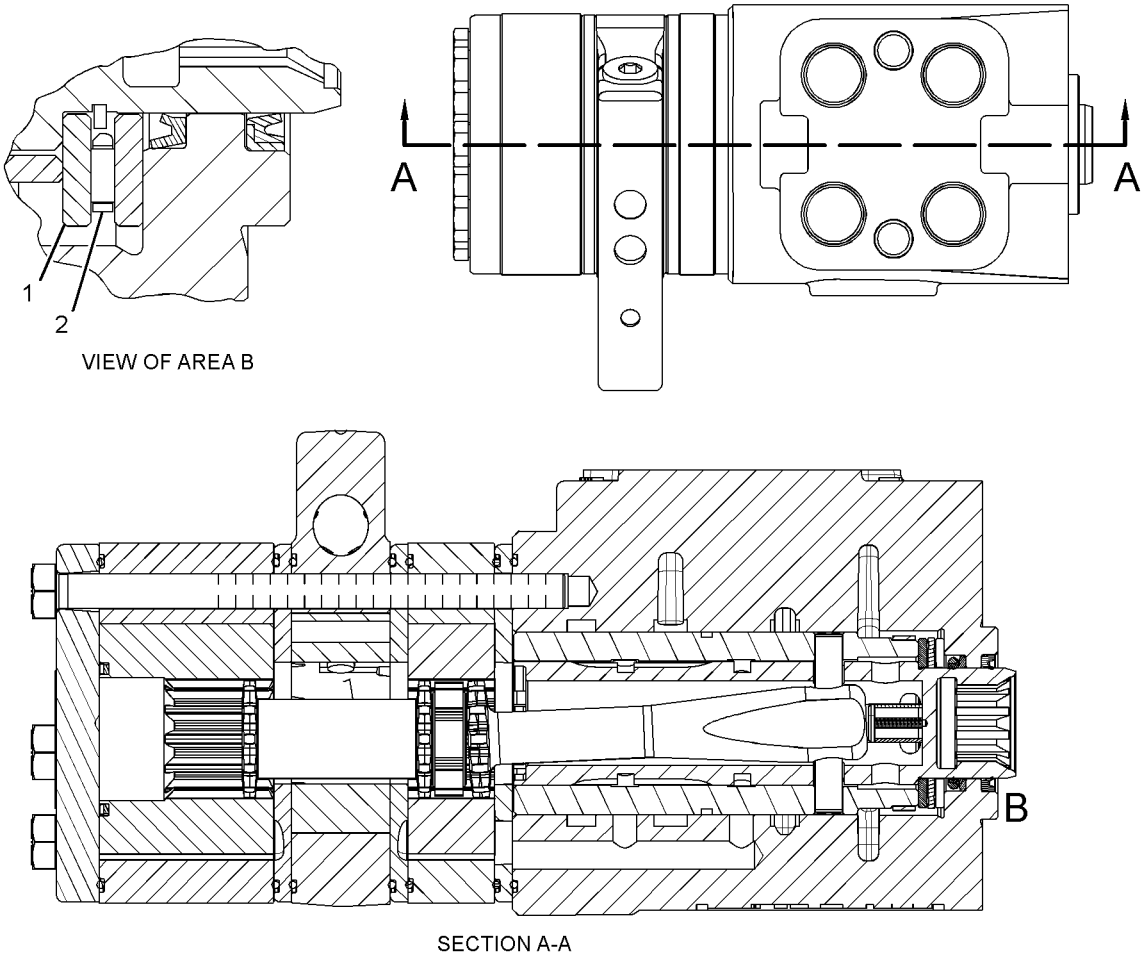

GRAPHIC #1 **<END>** g01378924

STEERING SYSTEM

282-7722 STEERING AR—STANDARD

S/N: LMD1-UP

CANNOT BE USED WITH 286-4218—PAGE 346, 294-8411—PAGE 177, 301-1150—PAGE 178

AN ATTACHMENT

SMCS-4300 **i02814834**

NOTE	PART NUMBER	QTY	PART NAME 1 2 3 4 5 6 (PRODUCT LEVEL)	SEE PAGE
Y	*293-4351*	1	LINES GP-STEERING	239
Y	**257-3927**	1	PUMP GP-METERING (HMU)	242
Y-SEPARATE ILLUSTRATION				

<END>

282-7723 STEERING AR—BOOSTED AUXILIARY HYDRAULIC FLOW

S/N: LMD1-UP

FOR USE WITH 286-4218—PAGE 346. CANNOT BE USED WITH 286-4217—PAGE 346, 286-4219—PAGE 346, 257-3923—PAGE 296

AN ATTACHMENT

SMCS-4300 **i02739958**

NOTE	PART NUMBER	QTY	PART NAME 1 2 3 4 5 6 (PRODUCT LEVEL)	SEE PAGE
Y	*293-4351*	1	LINES GP-STEERING	239
Y	**260-5420**	1	PUMP GP-METERING (HMU)	243
Y-SEPARATE ILLUSTRATION				

<END>

300-8485 STEERING AR—BOOSTED AUXILIARY HYDRAULIC FLOW

S/N: LMD1-UP

CANNOT BE USED WITH 286-4218—PAGE 346, 294-8410—PAGE 177, 301-1149—PAGE 177

AN ATTACHMENT

SMCS-4300 **i02736331**

NOTE	PART NUMBER	QTY	PART NAME 1 2 3 4 5 6 (PRODUCT LEVEL)	SEE PAGE
Y	*274-6572*	1	LINES GP-STEERING	236
Y	**260-5420**	1	PUMP GP-METERING (HMU)	243
Y-SEPARATE ILLUSTRATION				

<END>

149-0686 ACCUMULATOR GP-HYDRAULIC—CHARGED—PILOT

S/N: LMD1-UP
PART OF 257-3944 LINES GP-PILOT
FIELD REPLACEMENT ORDER 227-8807—PAGE 245
AN ATTACHMENT

SMCS-5077 **i02858450**

NOTE	PART NUMBER	QTY	PART NAME 1 2 3 4 5 6 (PRODUCT LEVEL)	SEE PAGE
Y	**227-8807**	1	ACCUMULATOR GP-HYDRAULIC (UNCHARGED) (PILOT)	245

Y-SEPARATE ILLUSTRATION

<END>

227-8807 ACCUMULATOR GP-HYDRAULIC—UNCHARGED—PILOT

S/N: LMD1-UP
PART OF 149-0686 ACCUMULATOR GP-HYDRAULIC
FIELD REPLACEMENT FOR 149-0686—PAGE 245
AN ATTACHMENT

SMCS-5077 **i02858449**

NOTE	PART NUMBER	QTY	PART NAME 1 2 3 4 5 6 (PRODUCT LEVEL)	SEE PAGE
			(NO SERVICED PARTS)	

<END>

162-3960 ACCUMULATOR GP-RIDE CONTROL–CHARGED

S/N: LMD1-UP

PART OF 307-8667, 307-8668 LINES GP-CYLINDER

AN ATTACHMENT

SMCS-5004, 5077 **i02829207**

NOTE	REF NO	GRAPHIC REF	PART NUMBER	QTY	PART NAME 1 2 3 4 5 6 (PRODUCT LEVEL)	SEE PAGE
	1	1	**158-2306**	1	VALVE-GAS	
	2	1	**241-0037**	1	FILM-WARNING (HIGH PRESSURE, READ OMM)	
	3	1	**170-0503**	1	FILM-WARNING (ACCUM, HIGH PRESS, READ OMM)	
					AVAILABLE REPAIR KIT(S):	
			160-0496	1	KIT-SEAL (ACCUMULATOR)	
					(INCLUDES SEALS)	

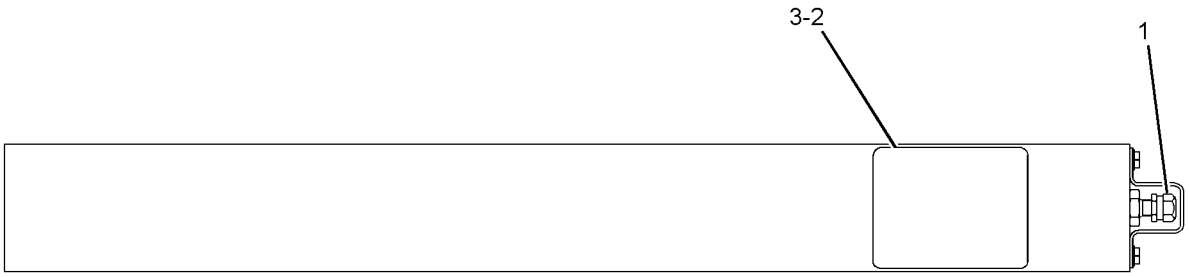

GRAPHIC #1 **<END>** g01220710

300-7511 ACTUATOR GP-PUMP

S/N: LMD2-UP

PART OF 257-3931 PUMP GP-PISTON

SMCS-5078 **i03130944**

NOTE	PART NUMBER	QTY	PART NAME 1 2 3 4 5 6 (PRODUCT LEVEL)	SEE PAGE
M	**8T-2922**	4	BOLT-SOCKET HEAD (M6X1X65-MM)	
M	**143-6020**	1	BOLT-SOCKET HEAD (M6X1X75-MM)	
	205-5007	1	PISTON-CONTROL	
	192-1172	1	RETAINER	
	209-3565	1	SEAL	
	5P-5874	1	SEAL-O-RING	
	267-3197	2	SOLENOID AS	
			(EACH INCLUDES)	
	217-3875	1	SEAL-O-RING	
	247-7054	1	COLLAR-LOCKING	
	296-6713	1	COIL AS	
	106-5618	2	SPRING	
	267-3196	1	VALVE GP-PRESSURE REDUCING (ACTUATOR)	
	9X-7377	1	SEAL-O-RING	
	033-6033	1	SEAL-O-RING	
	228-7105	1	SEAL-O-RING	

M-METRIC PART

<END>

260-3054 COOLER & CONDENSER GP–
HYDRAULIC OIL, REFRIGERANT
S/N: LMD1-UP
PART OF 280-0527 MOUNTING GP-COOLER & CONDENSER
AN ATTACHMENT

SMCS-1374, 1805 **i02698913**

NOTE	REF NO	GRAPHIC REF	PART NUMBER	QTY	PART NAME 1 2 3 4 5 6 (PRODUCT LEVEL)	SEE PAGE
	1	1	**279-1530**	1	CORE AS-HYDRAULIC OIL COOLER	
	2	1	**279-1531**	1	CORE AS-CONDENSER (REFRIGERANT)	
	3	1	**282-9343**	2	BOSS	
	4	1	**282-9427**	1	PLATE AS	
	5	1	**282-9900**	1	PLATE AS	
	6	1	**300-8827**	2	STOP	
M	7	1	**5C-7261**	8	NUT (M8X1.25-THD)	
	8	1	**5P-4116**	16	WASHER-HARD (8.8X20.5X2-MM THK)	
M	9	1	**8T-1158**	2	BOLT-SOCKET HEAD (M8X1.25X20-MM)	
M	10	1	**8T-4200**	8	BOLT (M8X1.25X16-MM)	

M-METRIC PART

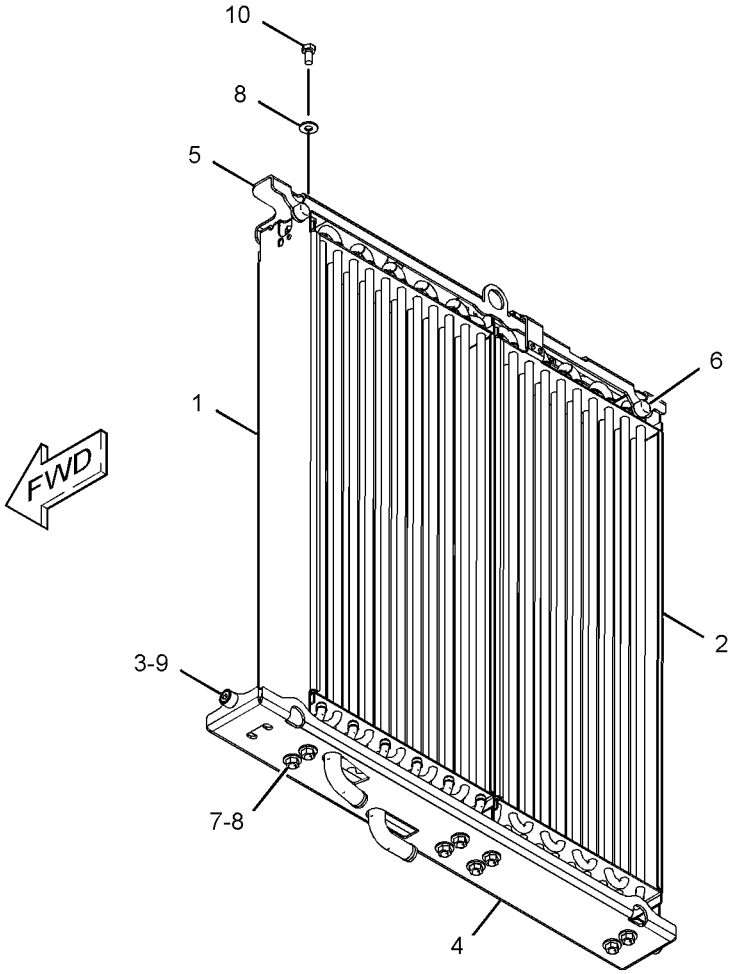

GRAPHIC #1 **<END>** g01375611

HYDRAULIC SYSTEM

255-5988 COOLER & MTG GP-HYDRAULIC OIL

S/N: LMD1-UP

PART OF 322-5768 HEATER AR-CAB, 322-5766 OPERATOR AR-OPEN ROPS AN ATTACHMENT

SMCS-1374 **i02698785**

NOTE	REF NO	GRAPHIC REF	PART NUMBER	QTY	PART NAME 1 2 3 4 5 6 (PRODUCT LEVEL)	SEE PAGE
	1	1	**174-1077**	1	SPRING	
	2	1	**270-2514**	1	WASHER (19.5X35X3-MM THK)	
Y	3	1	*274-5160*	1	CORE GP-HYDRAULIC OIL COOLER	251
	4	1	**295-2199**	1	PLATE	
	5	1	**295-2200**	1	PLATE	
	6	1	**295-2201**	1	GUIDE	
	7	1	**295-2202**	1	GUIDE	
	8	1	**295-2203**	2	BOSS	
	9	1	**295-4040**	1	PLATE	
	10	1	**303-4529**	1	STUD AS	
M	11	1	**5C-7261**	2	NUT (M8X1.25-THD)	
M	12	1	**6V-8202**	1	BOLT-SOCKET HEAD (M8X1.25X16-MM)	
	13	1	**7X-0603**	2	WASHER-HARD (9.9X35X2.5-MM THK)	
	14	1	**8T-4224**	3	WASHER-HARD (8.8X16X2-MM THK)	
	15	1	**8T-4226**	1	WASHER-PLATED (10.5X45X3-MM THK)	
M	16	1	**8T-4908**	1	BOLT (M8X1.25X25-MM)	
M	17	1	**8T-6870**	1	BOLT (M8X1.25X70-MM)	
M	18	1	**8T-7547**	1	BOLT (M8X1.25X30-MM)	
E	19	1	**5P-1442**		HOSE (4-CM)	

E-ORDER BY THE CENTIMETER
M-METRIC PART
Y-SEPARATE ILLUSTRATION

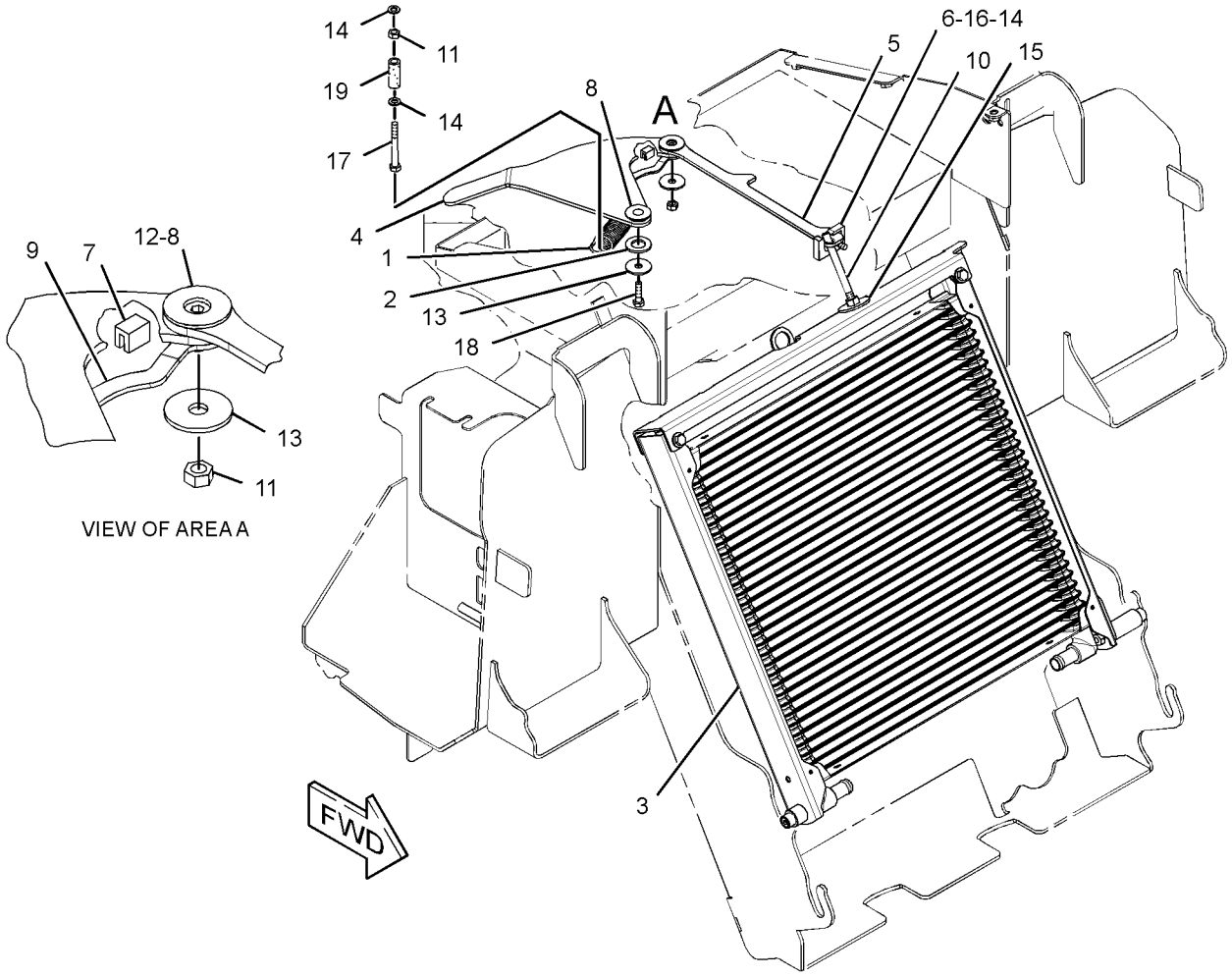

GRAPHIC #1 **<END>** g01370589

274-5160 CORE GP-HYDRAULIC OIL COOLER

S/N: LMD1-UP

PART OF 255-5988 COOLER & MTG GP-HYDRAULIC OIL

AN ATTACHMENT

SMCS-1374 **i02775469**

NOTE	REF NO	GRAPHIC REF	PART NUMBER	QTY	PART NAME 1 2 3 4 5 6 (PRODUCT LEVEL)	SEE PAGE
	1	1	**283-4748**	1	BOSS	
	2	1	**283-4749**	1	BOSS	
	3	1	**300-4478**	1	CORE AS-HYDRAULIC OIL COOLER	
	4	1	**300-8809**	1	PLATE AS	
	5	1	**300-8827**	2	STOP	
	6	1	**308-6210**	1	PLATE	
	7	1	**5P-4116**	4	WASHER-HARD (8.8X20.5X2-MM THK)	
M	8	1	**6V-5196**	1	BOLT-SOCKET HEAD (M8X1.25X80-MM)	
M	9	1	**6V-8337**	1	BOLT-SOCKET HEAD (M8X1.25X35-MM)	
M	10	1	**8T-4200**	4	BOLT (M8X1.25X16-MM)	

M-METRIC PART

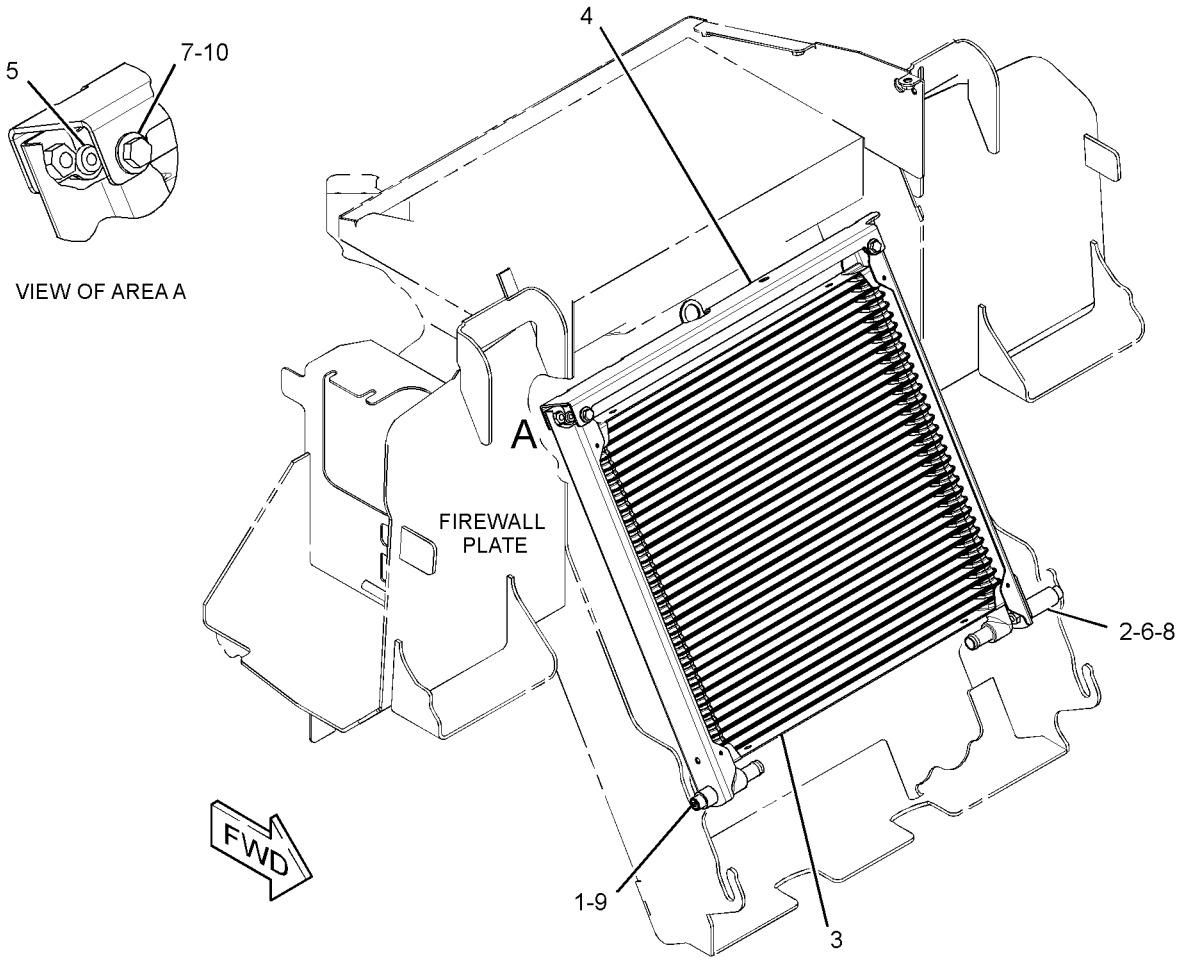

GRAPHIC #1 **<END>** g01387777

HYDRAULIC SYSTEM

178-3713 CYLINDER GP-COUPLER

S/N: LMD1-UP
50.8-MM BORE X 80.5-MM STROKE
PART OF 286-4219 COUPLER AR-QUICK
AN ATTACHMENT

SMCS-5133 **i03131041**

NOTE	REF NO	GRAPHIC REF	PART NUMBER	QTY	PART NAME 1 2 3 4 5 6 (PRODUCT LEVEL)	SEE PAGE
	1	1	**178-3893**	2	ROD	
					AVAILABLE REPAIR KIT(S):	
			180-9872	1	KIT-SEAL (COUPLER CYLINDER)	
					(INCLUDES LOCKNUTS, TEFLON PISTON SEALS, PISTON O-RINGS, SEAL O-RINGS, BACKUP RINGS,	
					SQUARE WIRE RETAINERS, & U-CUP SEALS)	

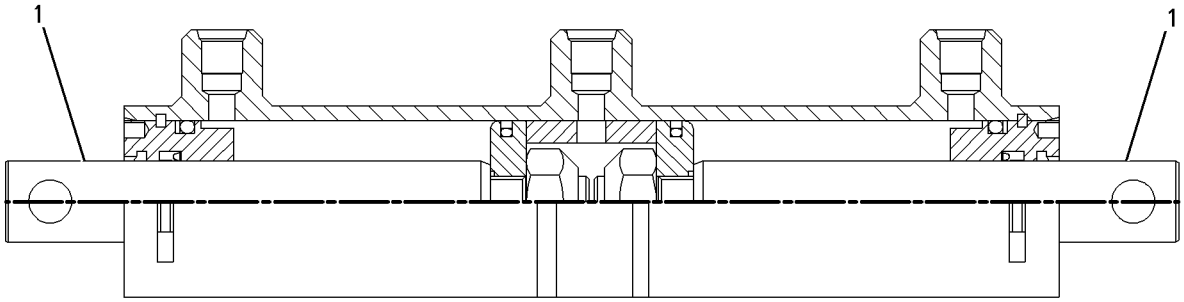

GRAPHIC #1 **<END>** g00753507

260-5415 CYLINDER GP-LIFT

S/N: LMD1-UP

PART OF 260-5391 HYDRAULIC AR

SMCS-5102 **i02735822**

NOTE	REF NO	GRAPHIC REF	PART NUMBER	QTY	PART NAME 1 2 3 4 5 6 (PRODUCT LEVEL)	SEE PAGE
	1	1	**223-3502**	1	RING-WEAR	
	2	1	**233-0619**	1	SEAL-WIPER	
	3	1	**266-6123**	1	HEAD	
	4	1	**266-9383**	1	PISTON	
	5	1	**267-4672**	1	CYLINDER AS-HYDRAULIC	
	6	1	**267-4673**	1	ROD AS-HYDRAULIC CYLINDER	
	7	1	**141-0709**	1	RING-WEAR	
	8	1	**167-2183**	1	SEAL AS-BUFFER	
	9	1	**167-2303**	1	SEAL-U-CUP	
	10	1	**184-1687**	1	SEAL AS	
	11	1	**1H-7339**	1	SEAL-O-RING	
	12	1	**2H-6338**	1	SEAL-O-RING	
	13	1	**5J-4561**	1	LOCKNUT (1-14-THD)	
	14	1	**6V-8398**	1	SEAL-O-RING	
	15	1	**8J-2574**	1	RING-BACKUP	

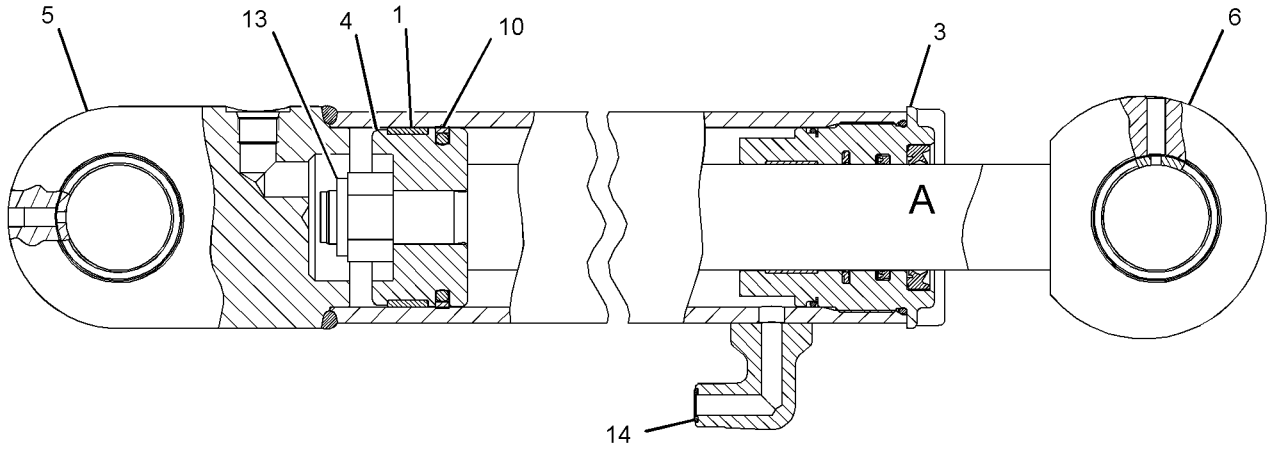

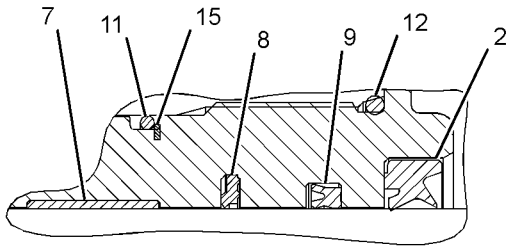

VIEW OF AREA A

GRAPHIC #1

<END>

g01409920

HYDRAULIC SYSTEM

185-1839 CYLINDER GP-MULTIPURPOSE BUKT

S/N: LMD1-UP
76.2-MM (2.99-IN) BORE X 260-MM (10.23-IN) STROKE
PART OF 259-6040, 259-6050 BUCKET AR-MULTIPURPOSE
AN ATTACHMENT

SMCS-5498 **i02336484**

NOTE	REF NO	GRAPHIC REF	PART NUMBER	QTY	PART NAME 1 2 3 4 5 6 (PRODUCT LEVEL)	SEE PAGE
	1	1	**6E-0122**	1	HEAD	
	2	1	**9T-2212**	1	PISTON	
R	3	1	**9T-4008**	1	ROD AS	
	3A	1	**9T-4007**	2	BEARING	
R	4	1	**9T-4009**	1	CYLINDER AS	
	5	1	**167-2186**	1	SEAL AS-BUFFER	
	6	1	**167-2294**	1	SEAL-U-CUP	
	7	1	**1H-7339**	1	SEAL-O-RING	
	8	1	**226-8202**	1	SEAL-WIPER	
	9	1	**4T-6780**	1	RING-WEAR	
	10	1	**5P-8250**	1	WASHER (28X49X5-MM THK)	
	11	1	**6F-7037**	1	BOLT (1-14X3.25-IN)	
	12	1	**6J-1972**	1	SEAL AS	
	13	1	**6J-5733**	1	RING-WEAR	
	14	1	**8J-2574**	1	RING-BACKUP	

R-REMFG PART MAY BE AVAILABLE

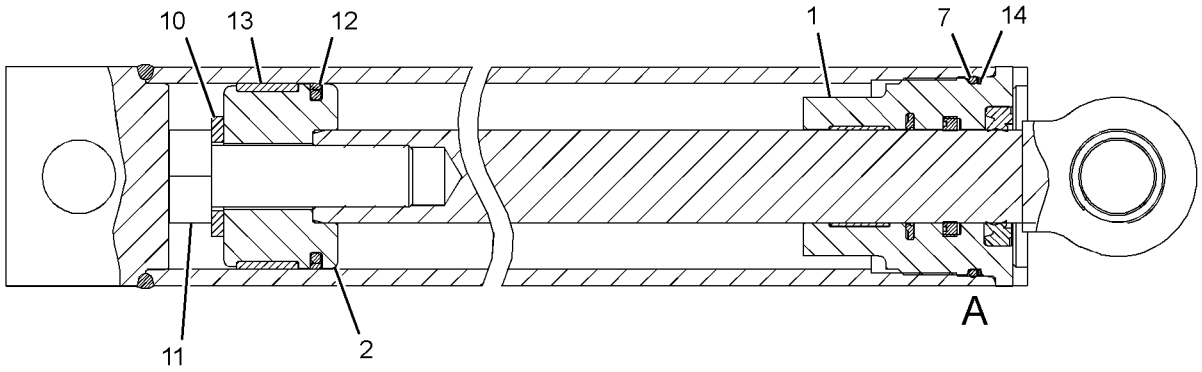

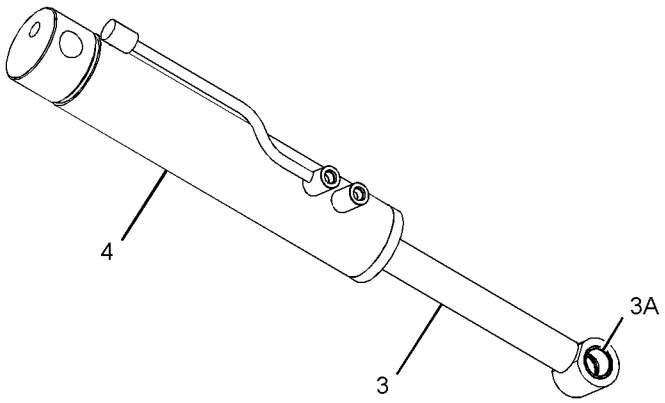

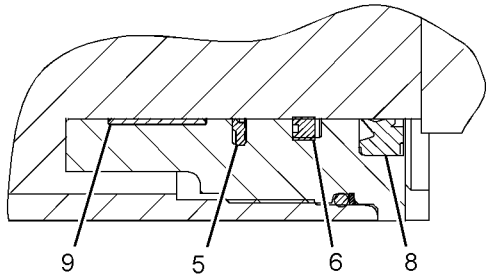

VIEW OF AREA A

GRAPHIC #1 **<END>** g01166193

HYDRAULIC SYSTEM

260-5417 CYLINDER GP-TILT

S/N: LMD1-UP

PART OF 260-5391 HYDRAULIC AR

SMCS-5104 **i02735830**

NOTE	REF NO	GRAPHIC REF	PART NUMBER	QTY	PART NAME 1 2 3 4 5 6 (PRODUCT LEVEL)	SEE PAGE
	1	1	**9X-7298**	1	SEAL AS	
	2	1	**233-0625**	1	SEAL-WIPER	
	3	1	**266-9387**	1	PISTON	
	4	1	**266-9467**	1	HEAD	
	5	1	**267-4506**	1	CYLINDER AS-HYDRAULIC	
	5A	1	**6V-8398**	1	SEAL-O-RING	
		1	*267-4511*	1	CAP AS-END	
	5B	1	**230-9112**	1	BUSHING	
	6	1	**267-4508**	1	ROD AS-HYDRAULIC CYLINDER	
	6A	1	**230-9112**	1	BUSHING	
	7	1	**140-0249**	1	RING-WEAR	
	8	1	**140-7656**	1	RING-WEAR	
	9	1	**167-2199**	1	SEAL AS-BUFFER	
	10	1	**167-2306**	1	SEAL-U-CUP	
	11	1	**1H-8128**	1	SEAL-O-RING	
	12	1	**2K-0512**	1	LOCKNUT	
	13	1	**4J-9219**	1	RING-BACKUP	
	14	1	**8H-7521**	1	SEAL-O-RING	

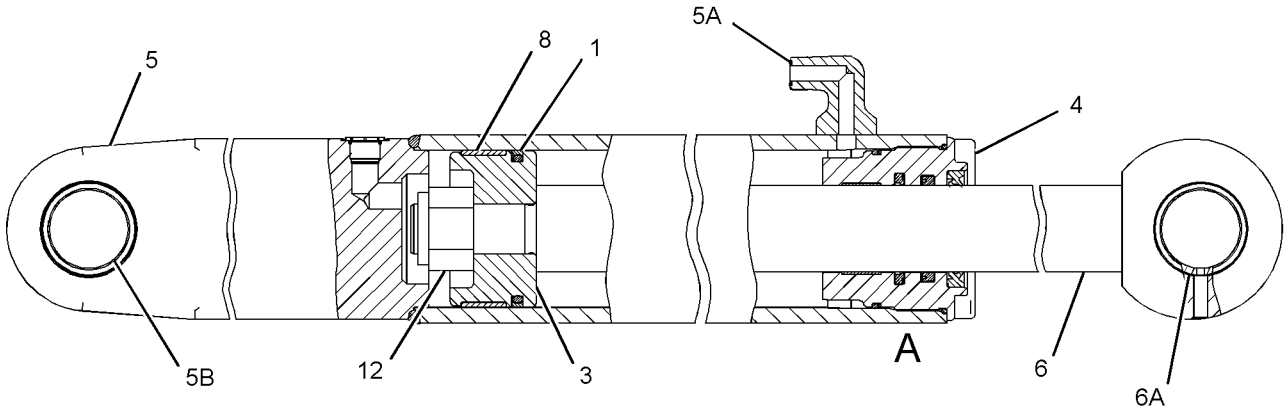

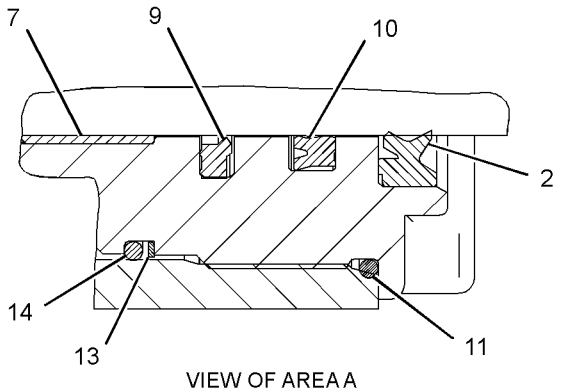

VIEW OF AREA A

GRAPHIC #1 **<END>** g01376392

HYDRAULIC SYSTEM

287-7254 FITTING GP-HYDRAULIC

S/N: LMD1-UP
PART OF 286-3549, 286-3550 LINES GP-HYDROSTATIC
AN ATTACHMENT

SMCS-5057 **i02702609**

NOTE	REF NO	GRAPHIC REF	PART NUMBER	QTY	PART NAME 1 2 3 4 5 6 (PRODUCT LEVEL)	SEE PAGE
	1	1	**135-9269**	1	ADAPTER AS	
		1	**6V-7418**	1	PLUG-PIPE	
	2	1	**3K-0360**	1	SEAL-O-RING	
	3	1	**6V-8397**	1	SEAL-O-RING	

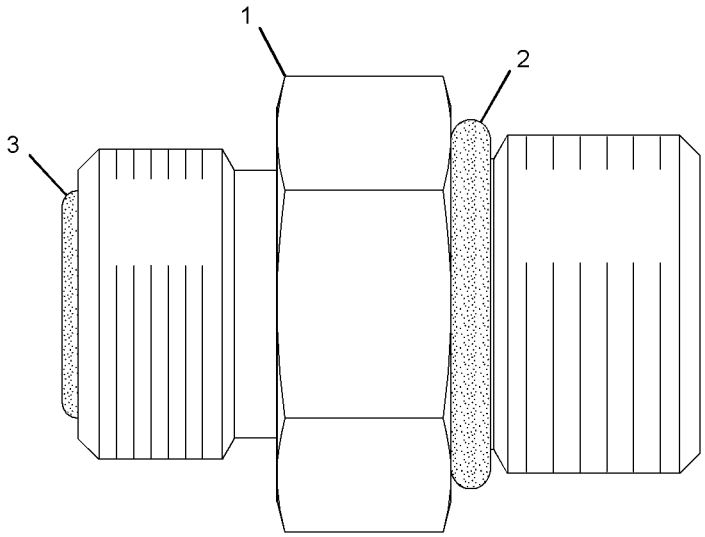

GRAPHIC #1 **<END>** g01376244

300-5463 HEAD GP-PUMP—HYDROSTATIC

S/N: LMD1-UP

PART OF 257-3931 PUMP GP-PISTON

SMCS-5070 **i03122961**

NOTE	REF NO	GRAPHIC REF	PART NUMBER	QTY	PART NAME 1 2 3 4 5 6 (PRODUCT LEVEL)	SEE PAGE
	1	1	**197-1361**	2	VALVE GP-RELIEF (PUMP HEAD, CROSSOVER)	
					(EACH INCLUDES)	
		1	**6V-5326**	1	SEAL-O-RING	
		1	**167-7713**	1	RING-BACKUP	
Y	2	1	**152-1811**	1	VALVE GP-RELIEF (PRESSURE OVERRIDE)	50
	3	1	**087-4772**	3	PLUG-O-RING	
	4	1	**120-4394**	5	PLUG-BREAK OFF	
	5	1	**117-7280**	1	BUSHING (INTERNAL)	
	6	1	**117-7279**	1	BUSHING (EXTERNAL)	
	7	1	**117-7282**	2	SEAL-O-RING	
	9	1	**9S-8002**	2	PLUG-O-RING	
	10	1	**3J-7354**	2	SEAL-O-RING	
	11	1	**5E-6955**	4	BOLT	
	12	1	**123-7562**	2	SEAL-O-RING	
	13	1	**212-6679**	1	VALVE GP-RELIEF (HYDROSTATIC PUMP)	
		1	**6V-8352**	1	SEAL-O-RING	
	14	1	**8T-4231**	2	DOWEL	

Y-SEPARATE ILLUSTRATION

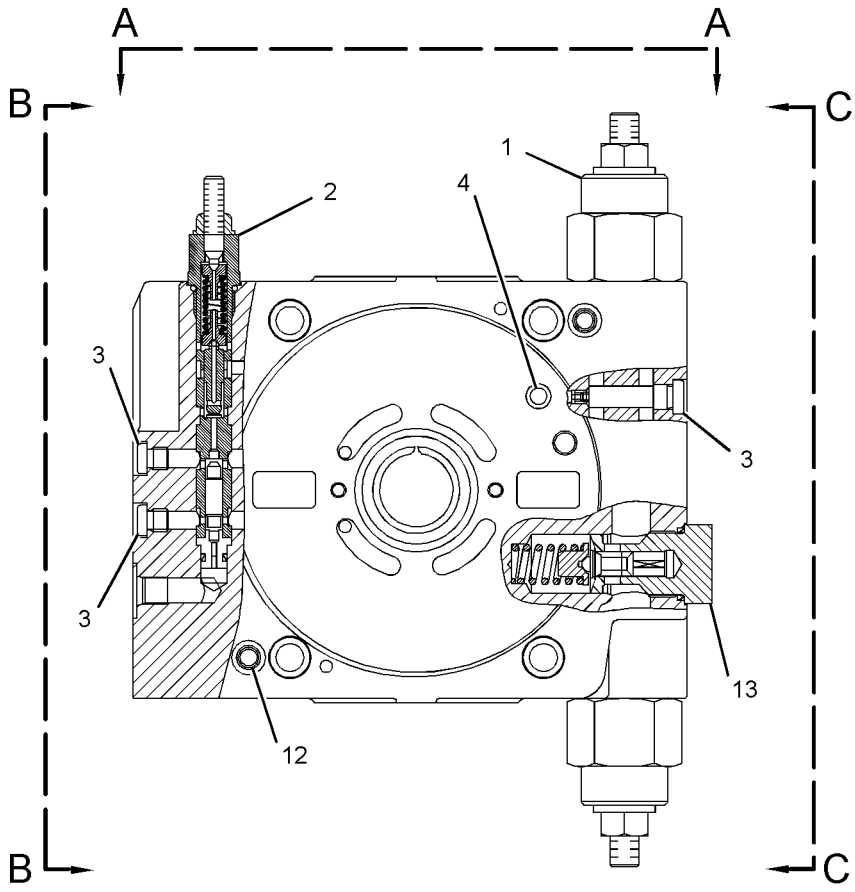

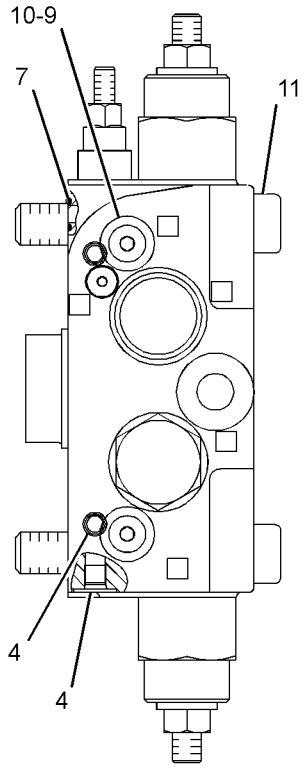

VIEW C-C

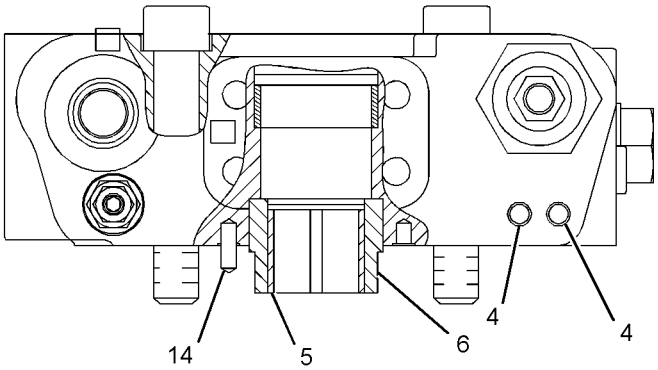

VIEW A-A

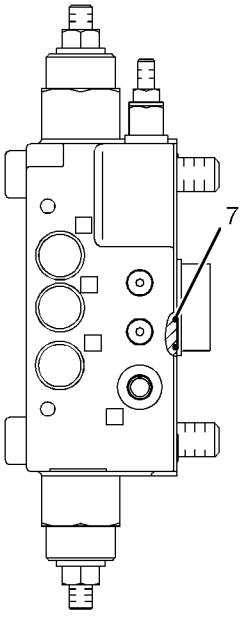

VIEW B-B

GRAPHIC #1 **<END>** g01382416

257-4018 HYDRAULIC AR–
ELECTROHYDRAULIC WITH AUXILIARY CONTROL
S/N: LMD1-UP
AN ATTACHMENT

SMCS-5051 **i02956405**

NOTE	PART NUMBER	QTY	PART NAME 1 2 3 4 5 6 (PRODUCT LEVEL)	SEE PAGE
Y	*280-9177*	1	CONSOLE GP-OPERATOR	366
Y	*257-3944*	1	LINES GP-PILOT (DIFFERENTIAL LOCK, HYD LOCKOUT)	292
Y	*272-2236*	1	LINES GP-PILOT (AUXILIARY CONTROL VALVE)	294
Y	**257-3942**	1	VALVE GP-MAIN CONTROL (ELECTROHYDRAULIC, 3-FUNCTION)	320
Y	**262-8744**	1	CONTROL GP-JOYSTICK (3-FUNCTION, AUXILIARY CONTROL)	371
	260-5506	1	SWITCH GP-ROCKER (HYDRAULIC LOCKOUT)	
	261-5045	1	SWITCH AS-ROCKER (HYDRAULIC LOCKOUT)	

Y-SEPARATE ILLUSTRATION

<END>

257-4019 HYDRAULIC AR–
ELECTROHYDRAULIC WITH AUXILIARY, RETURN TO DIG CONTROL
S/N: LMD1-UP
AN ATTACHMENT

SMCS-5051 **i02956404**

NOTE	PART NUMBER	QTY	PART NAME 1 2 3 4 5 6 (PRODUCT LEVEL)	SEE PAGE
Y	*280-9177*	1	CONSOLE GP-OPERATOR	366
Y	*257-3944*	1	LINES GP-PILOT (DIFFERENTIAL LOCK, HYD LOCKOUT)	292
Y	*272-2236*	1	LINES GP-PILOT (AUXILIARY CONTROL VALVE)	294
Y	*260-5386*	1	POSITIONER GP-WORK TOOL (RETURN TO DIG)	311
Y	**257-3942**	1	VALVE GP-MAIN CONTROL (ELECTROHYDRAULIC, 3-FUNCTION)	320
Y	**262-8745**	1	CONTROL GP-JOYSTICK (3-FCTN, AUX, RET TO DIG CONT)	372
	260-5506	1	SWITCH GP-ROCKER (HYDRAULIC LOCKOUT)	
	261-5045	1	SWITCH AS-ROCKER (HYDRAULIC LOCKOUT)	
	260-5512	1	SWITCH GP-ROCKER (RETURN TO DIG)	
	261-5046	1	SWITCH AS-ROCKER (RETURN TO DIG)	

Y-SEPARATE ILLUSTRATION

<END>

HYDRAULIC SYSTEM

260-5391 HYDRAULIC AR

S/N: LMD1-UP

PART OF 321-8198 COMMON AR

SMCS-5051 **i02735772**

NOTE	PART NUMBER	QTY	PART NAME 1 2 3 4 5 6 (PRODUCT LEVEL)	SEE PAGE
Y	**260-5415**	2	CYLINDER GP-LIFT	253
Y	**257-3976**	1	CYLINDER GP-STEERING	235
Y	**260-5417**	1	CYLINDER GP-TILT	255
Y	*257-3925*	1	LINES GP-HYDRAULIC FILTER	166
Y	**269-8908**	1	MOTOR GP-PISTON (HYDROSTATIC) (SLIPPER)	306
Y	*265-3923*	1	MOUNTING GP-CONTROL VALVE	307
Y	**257-3931**	1	PUMP GP-PISTON (HYDROSTATIC)	312
	310-1850	1	MOUNTING GP-MOTOR (HYDROSTATIC)	
M	**8T-4193**	4	BOLT (M16X2X50-MM)	
	9X-8257	4	WASHER (17.5X30X3.5-MM THK)	
	257-3922	1	MOUNTING GP-PUMP	
	8T-4223	2	WASHER-HARD (13.5X25.5X3-MM THK)	
M	**8T-4956**	2	BOLT (M12X1.75X35-MM)	
J	**257-3980**	1	PUMP GP-GEAR (BASIC)	
			AVAILABLE REPAIR KIT(S):	
J	**287-3617**	1	KIT-SEAL	
			(INCLUDES SEAL SQUARES, SEAL PRESSURES, SEAL BACKUPS, SEAL SHAFTS & RING RETAINING)	

J-KIT MARKED J SERVICES PART MARKED J
M-METRIC PART
Y-SEPARATE ILLUSTRATION

<END>

308-6645 HYDRAULIC AR–RIDE CONTROL

S/N: LMD1-UP

CANNOT BE USED WITH 257-3923–PAGE 296, 286-4218–PAGE 346

AN ATTACHMENT

SMCS-5051 **i02740863**

NOTE	PART NUMBER	QTY	PART NAME 1 2 3 4 5 6 (PRODUCT LEVEL)	SEE PAGE
Y	*307-8667*	1	LINES GP-CYLINDER (RIDE CONTROL ACCUMULATOR)	284
Y	*260-5521*	1	SWITCH GP-RIDE CONTROL	115

Y-SEPARATE ILLUSTRATION

<END>

308-6646 HYDRAULIC AR–
RIDE CONTROL, BOOSTED AUXILIARY HYDRAULIC FLOW

S/N: LMD1-UP

FOR USE WITH 286-4218–PAGE 346. CANNOT BE USED WITH 257-3923–PAGE 296

AN ATTACHMENT

SMCS-5051 **i02740875**

NOTE	PART NUMBER	QTY	PART NAME 1 2 3 4 5 6 (PRODUCT LEVEL)	SEE PAGE
Y	*307-8668*	1	LINES GP-CYLINDER (RIDE CONTROL ACCUMULATOR)	287
Y	*260-5521*	1	SWITCH GP-RIDE CONTROL	115

Y-SEPARATE ILLUSTRATION

<END>

312-8451 KIT-GUARD–LIGHT

S/N: LMD1-UP
AN ATTACHMENT

SMCS-5133 **i03103136**

NOTE	REF NO	GRAPHIC REF	PART NUMBER	QTY	PART NAME 1 2 3 4 5 6 (PRODUCT LEVEL)	SEE PAGE
M	1	1	**8T-4189**	4	BOLT (M8X1.25X20-MM)	
	2	1	**8T-4224**	4	WASHER-HARD (8.8X16X2-MM THK)	
					PARTS SHOWN IN GRAPHIC(S) WITHOUT A REFERENCE NUMBER ARE NOT SERVICED SEPARATELY	

M-METRIC PART

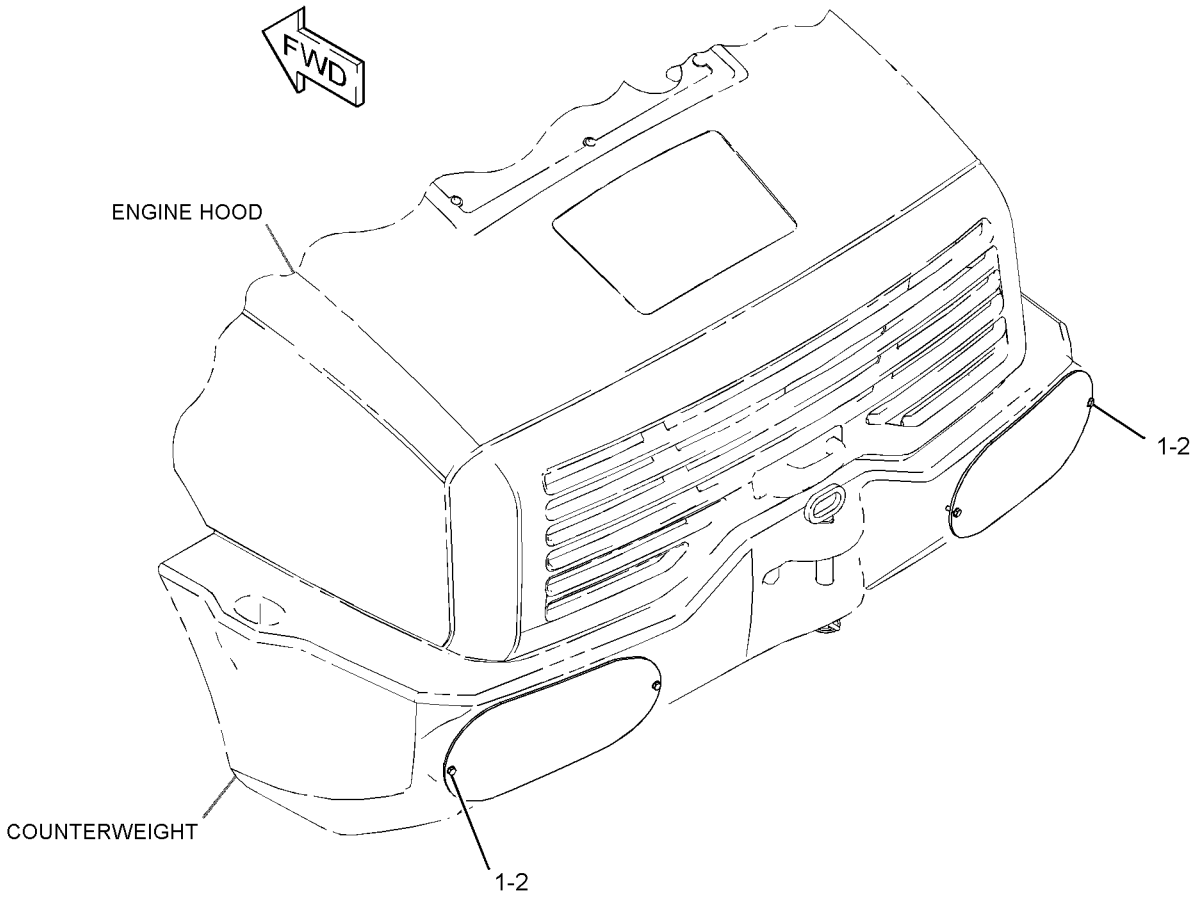

GRAPHIC #1 **<END>** g01586198

HYDRAULIC SYSTEM

257-3930 LINES GP-AUXILIARY HYDRAULIC–

VERTICAL PIN LOCK COUPLER

S/N: LMD1-UP

PART OF 286-4217 COUPLER AR-QUICK

AN ATTACHMENT

SMCS-5057 **i03126750**

NOTE	REF NO	GRAPHIC REF	PART NUMBER	QTY	PART NAME 1 2 3 4 5 6 (PRODUCT LEVEL)	SEE PAGE
	1	1	**4V-0612**	1	PLATE	
	2	1	**6R-3320**	1	COVER	
	3	1	**133-3260**	4	SPACER (11X19X10-MM THK)	
	4	1	**143-9644**	1	PLATE-RETAINER	
	5	1	**154-6583**	2	CLAMP-HALF	
	6	1	*164-9639*	1	CONNECTOR AS	
		1	**3J-1907**	1	SEAL-O-RING	
		1	**4J-5477**	1	SEAL-O-RING	
		1	**148-7925**	1	CONNECTOR	
I	7	1	**185-1463**	1	HOSE AS	
	8	1	**193-8334**	1	FITTING AS (QUICK DISCONNECT, MALE)	
	9	1	**193-8335**	1	FITTING AS (QUICK DISCONNECT, FEMALE)	
	10	1	**208-0075**	4	CLAMP-HALF	
	11	1	**223-5856**	2	CLAMP-HALF	
I	12	1	**230-0815**	1	HOSE AS	
	13	1	**237-4257**	2	CLAMP-HALF	
Y	14	1	**332-6408**	1	VALVE & MTG GP-SOLENOID (QUICK COUPLER)	317
	15	1	*287-7331*	2	ELBOW AS	
					(EACH INCLUDES)	
		1	**2M-9780**	1	SEAL-O-RING	
		1	**7J-9108**	1	SEAL-O-RING	
		1	**287-7330**	1	ELBOW	
	16	1	**294-0287**	1	PLATE	
	17	1	**294-4864**	4	CLAMP	
	18	1	**294-4865**	2	CLAMP	
	19	1	**294-4866**	1	PLATE	
	20	1	**294-5552**	1	PLATE AS	
M	21	1	**297-8659**	2	STUD AS (M10X1.5-THD)	
M		1	**8T-4133**	1	NUT (M10X1.5-THD)	
	22	1	**299-2242**	1	TUBE AS	
I	23	1	**307-8675**	2	HOSE AS	
	24	1	**315-3478**	1	BRACKET AS	
I	25	1	**315-7710**	1	HOSE AS	
	26	1	**316-3179**	1	BRACKET AS	
	27	1	**316-7257**	1	HOSE AS	
I	28	1	**316-7258**	1	HOSE AS	
	29	1	**332-3791**	1	PLATE	
M	30	1	**141-8546**	2	BOLT-SOCKET HEAD (M6X1X100-MM)	
	31	1	*148-8368*	2	ELBOW AS	
					(EACH INCLUDES)	
		1	**3J-1907**	1	SEAL-O-RING	
		1	**4J-5477**	1	SEAL-O-RING	
		1	**6V-8627**	1	ELBOW	
	33	1	*148-8378*	2	ELBOW AS	
					(EACH INCLUDES)	
		1	**3J-1907**	1	SEAL-O-RING	
		1	**6V-8397**	1	SEAL-O-RING	
		1	**6V-8724**	1	ELBOW	
	34	1	*148-8447*	2	TEE AS-SWIVEL	
					(EACH INCLUDES)	
		1	**7J-9108**	1	SEAL-O-RING	
		1	**7X-0872**	1	TEE-SWIVEL	
	35	1	*150-3033*	1	ELBOW AS	
		1	**3J-1907**	1	SEAL-O-RING	

257-3930 **LINES GP-AUXILIARY HYDRAULIC** *(contd.)* **i03126750**

NOTE	REF NO	GRAPHIC REF	PART NUMBER	QTY	PART NAME 1 2 3 4 5 6 (PRODUCT LEVEL)	SEE PAGE
		1	**4J-5477**	1	SEAL-O-RING	
		1	**8T-0164**	1	ELBOW	
	36	1	**152-5717**	1	CAP-DUST	
	37	1	**152-5718**	1	CAP-DUST	
	38	1	*169-7409*	2	UNION AS	
					(EACH INCLUDES)	
		1	**6V-8996**	1	UNION	
		1	**7J-9108**	1	SEAL-O-RING	
M	39	1	**6V-7357**	2	BOLT (M6X1X25-MM)	
	40	1	**6V-8397**	1	SEAL-O-RING	
	41	1	**6V-9170**	4	NUT-BULKHEAD (1-14-THD)	
	42	1	**7J-9108**	2	SEAL-O-RING	
	43	1	**8T-4121**	9	WASHER-HARD (11X21X2.5-MM THK)	
M	44	1	**8T-4133**	7	NUT (M10X1.5-THD)	
M	45	1	**8T-4177**	1	BOLT (M8X1.25X90-MM)	
M	46	1	**8T-4195**	2	BOLT (M10X1.5X30-MM)	
	47	1	**8T-4205**	4	WASHER-HARD (7.2X14.5X2-MM THK)	
M	48	1	**8T-6466**	3	BOLT (M10X1.5X60-MM)	
M	49	1	**8T-6869**	1	BOLT (M8X1.25X60-MM)	
	50	1	**9M-0164**	1	CLAMP-HOSE	
M	51	1	**9X-2480**	2	BOLT (M6X1X45-MM)	
D	52	1	**8T-3425**		CHANNEL-TRIM (1.2-M)	
M	53	1	**8T-4196**	1	BOLT (M10X1.5X35-MM)	

D-ORDER BY THE METER
I-REFER TO HYDRAULIC INFORMATION SYSTEM
M-METRIC PART
Y-SEPARATE ILLUSTRATION

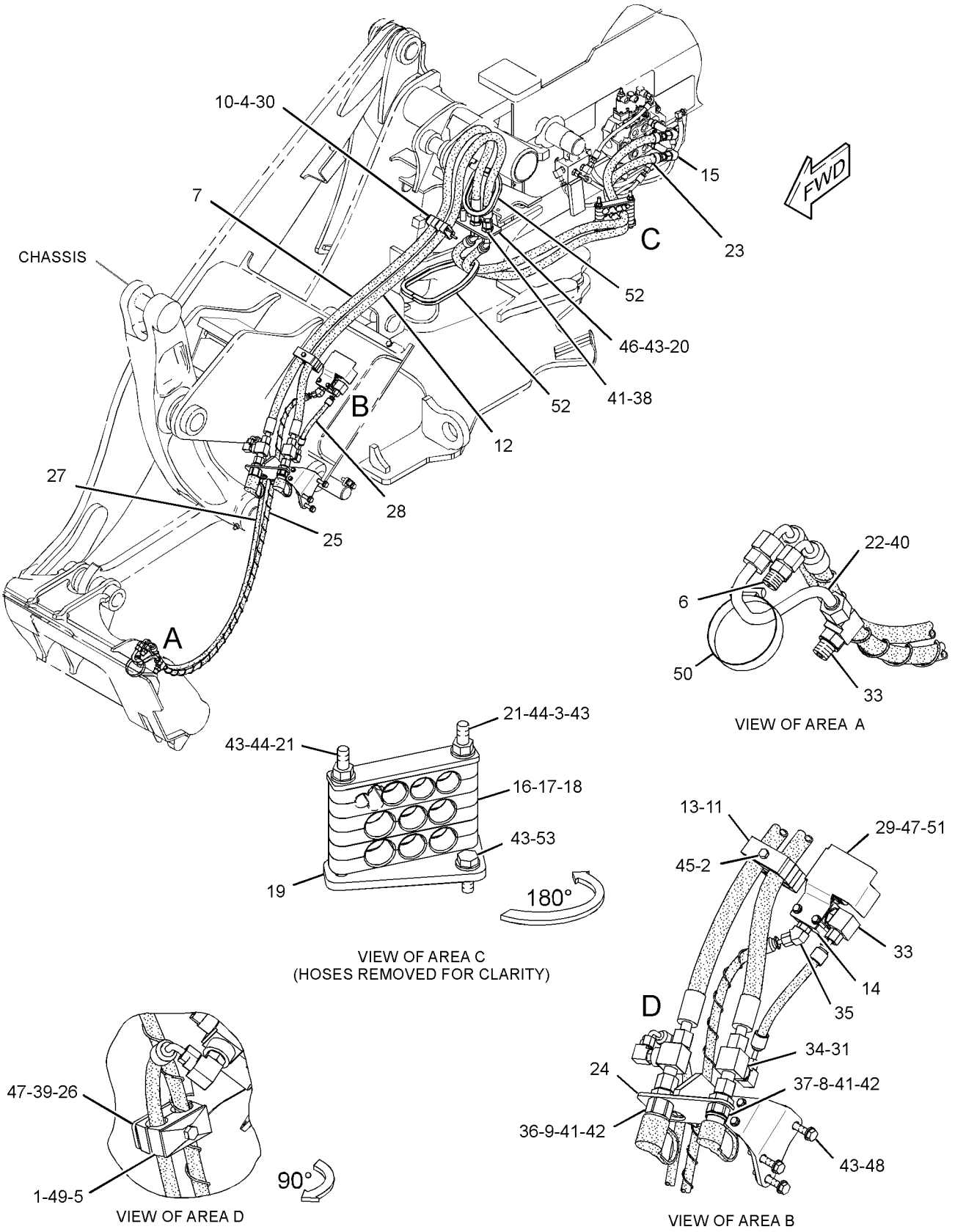

GRAPHIC #1 **<END>** g01606893

HYDRAULIC SYSTEM

257-3940 LINES GP-AUXILIARY HYDRAULIC–

HORIZONTAL PIN LOCK COUPLER

S/N: LMD1-UP

PART OF 286-4219 COUPLER AR-QUICK

AN ATTACHMENT

SMCS-5057 **i02994810**

NOTE	REF NO	GRAPHIC REF	PART NUMBER	QTY	PART NAME 1 2 3 4 5 6 (PRODUCT LEVEL)	SEE PAGE
	1	2	**133-3260**	4	SPACER (11X19X10-MM THK)	
	2	1	**139-0428**	8	CLAMP (HALF)	
	3	1	**143-9644**	4	PLATE-RETAINER	
	4	2	**153-2996**	1	FITTING AS (QUICK DISCONNECT, MALE)	
	5	2	**153-2997**	1	FITTING AS (QUICK DISCONNECT, FEMALE)	
	6	2	**161-2560**	1	CAP-DUST	
	7	2	**161-2561**	1	CAP-DUST	
	8	2	*189-5719*	2	ADAPTER AS	
					(EACH INCLUDES)	
		2	**3K-0360**	2	SEAL-O-RING	
		2	**6V-0467**	1	CONNECTOR	
	9	2	**318-8418**	1	PLATE AS	
I	10	2	**282-7680**	1	HOSE AS	
	11	2	**282-7699**	2	BLOCK	
I	12	1	**282-7702**	2	HOSE AS	
I	13	1	**283-4295**	2	HOSE AS	
	14	1	*287-7331*	2	ELBOW AS	
					(EACH INCLUDES)	
		1	**2M-9780**	1	SEAL-O-RING	
		1	**7J-9108**	1	SEAL-O-RING	
		1	**287-7330**	1	ELBOW	
	15	2	**294-0287**	1	PLATE	
	16	2	**294-4864**	4	CLAMP	
	17	2	**294-4865**	2	CLAMP	
	18	2	**294-4866**	1	PLATE	
	19	1	**294-5552**	2	PLATE AS	
	20	2	**294-7381**	1	PLATE	
M	22	2	**297-8659**	2	STUD AS (M10X1.5-THD)	
					(EACH INCLUDES)	
M		2	**8T-4133**	1	NUT (M10X1.5-THD)	
	23	2	**306-6556**	1	FILM-INSTRUCTION (COUPLER OPERATION)	
I	24	1	**307-8675**	2	HOSE AS	
	25	2	**134-7113**	1	HANDLE	
M	26	2	**134-7114**	1	BOLT-SPECIAL	
	27	2	**8T-7971**	1	WASHER-HARD (13.5X25.5X5-MM THK)	
M	28	2	**138-8454**	4	SCREW-TRUSS HEAD (M4X0.7X10-MM)	
	29	2	*148-8318*	1	CONNECTOR AS	
		2	**3K-0360**	1	SEAL-O-RING	
		2	**6V-8397**	1	SEAL-O-RING	
		2	**6V-8634**	1	CONNECTOR	
	30	2	*148-8325*	2	CONNECTOR AS	
					(EACH INCLUDES)	
		2	**3J-1907**	1	SEAL-O-RING	
		2	**4J-5477**	1	SEAL-O-RING	
		2	**6V-8641**	1	CONNECTOR	
	31	2	*148-8342*	2	CONNECTOR AS	
					(EACH INCLUDES)	
		2	**3K-0360**	1	SEAL-O-RING	
		2	**6V-8632**	1	CONNECTOR	
		2	**7J-9108**	1	SEAL-O-RING	
	32	2	*148-8368*	1	ELBOW AS	
		2	**3J-1907**	1	SEAL-O-RING	
		2	**4J-5477**	1	SEAL-O-RING	
		2	**6V-8627**	1	ELBOW	

257-3940 LINES GP-AUXILIARY HYDRAULIC *(contd.)* i02994810

NOTE	REF NO	GRAPHIC REF	PART NUMBER	QTY	PART NAME 1 2 3 4 5 6 (PRODUCT LEVEL)	SEE PAGE
	33	2	**148-8411**	2	PLUG AS (STORAGE)	
					(EACH INCLUDES)	
		2	**3K-0360**	1	SEAL-O-RING	
		2	**9S-4185**	1	PLUG-O-RING	
	34	2	*148-8439*	1	TEE AS (ORFS)	
		2	**3J-1907**	1	SEAL-O-RING	
		2	**6V-8397**	2	SEAL-O-RING	
		2	**6V-8774**	1	TEE	
	35	2	*150-4050*	1	ELBOW AS	
		2	**3J-1907**	1	SEAL-O-RING	
		2	**8T-0788**	1	ELBOW	
I	36	2	**154-2844**	1	HOSE AS	
	37	2	*154-5232*	1	ADAPTER AS	
		2	**3K-0360**	1	SEAL-O-RING	
		2	**4J-5477**	1	SEAL-O-RING	
		2	**112-9783**	1	ADAPTER	
	38	2	**156-5726**	1	VALVE-SHUTOFF	
		2	**112-9861**	1	KIT-SEAL	
					(INCLUDES SEALS, CONNECTOR-O-RINGS, THRUST RING, & STEM-O-RING)	
I	39	2	**165-3071**	1	HOSE AS	
	40	1,2	*169-7404*	2	ELBOW AS	
					(EACH INCLUDES)	
		1,2	**6V-8982**	1	ELBOW	
		1,2	**7J-9108**	2	SEAL-O-RING	
	41	1	*169-7409*	2	UNION AS	
					(EACH INCLUDES)	
		1	**6V-8996**	1	UNION	
		1	**7J-9108**	2	SEAL-O-RING	
	42	1,2	**6V-9170**	4	NUT-BULKHEAD (1-14-THD)	
M	43	1	**7X-2535**	4	BOLT (M6X1X60-MM)	
	44	1,2	**8T-4121**	10	WASHER-HARD (11X21X2.5-MM THK)	
M	45	2	**8T-4133**	7	NUT (M10X1.5-THD)	
M	46	2	**8T-4177**	4	BOLT (M8X1.25X90-MM)	
M	47	2	**8T-4185**	2	BOLT (M10X1.5X50-MM)	
M	48	1,2	**8T-4195**	5	BOLT (M10X1.5X30-MM)	
	49	2	**8T-4224**	4	WASHER-HARD (8.8X16X2-MM THK)	
M	50	1	**9X-2480**	4	BOLT (M6X1X45-MM)	
D	51	1	**8T-3425**		CHANNEL-TRIM (.70-M)	
D	51A	1	**8T-3425**		CHANNEL-TRIM (.42-M EACH)	

D-ORDER BY THE METER
I-REFER TO HYDRAULIC INFORMATION SYSTEM
M-METRIC PART

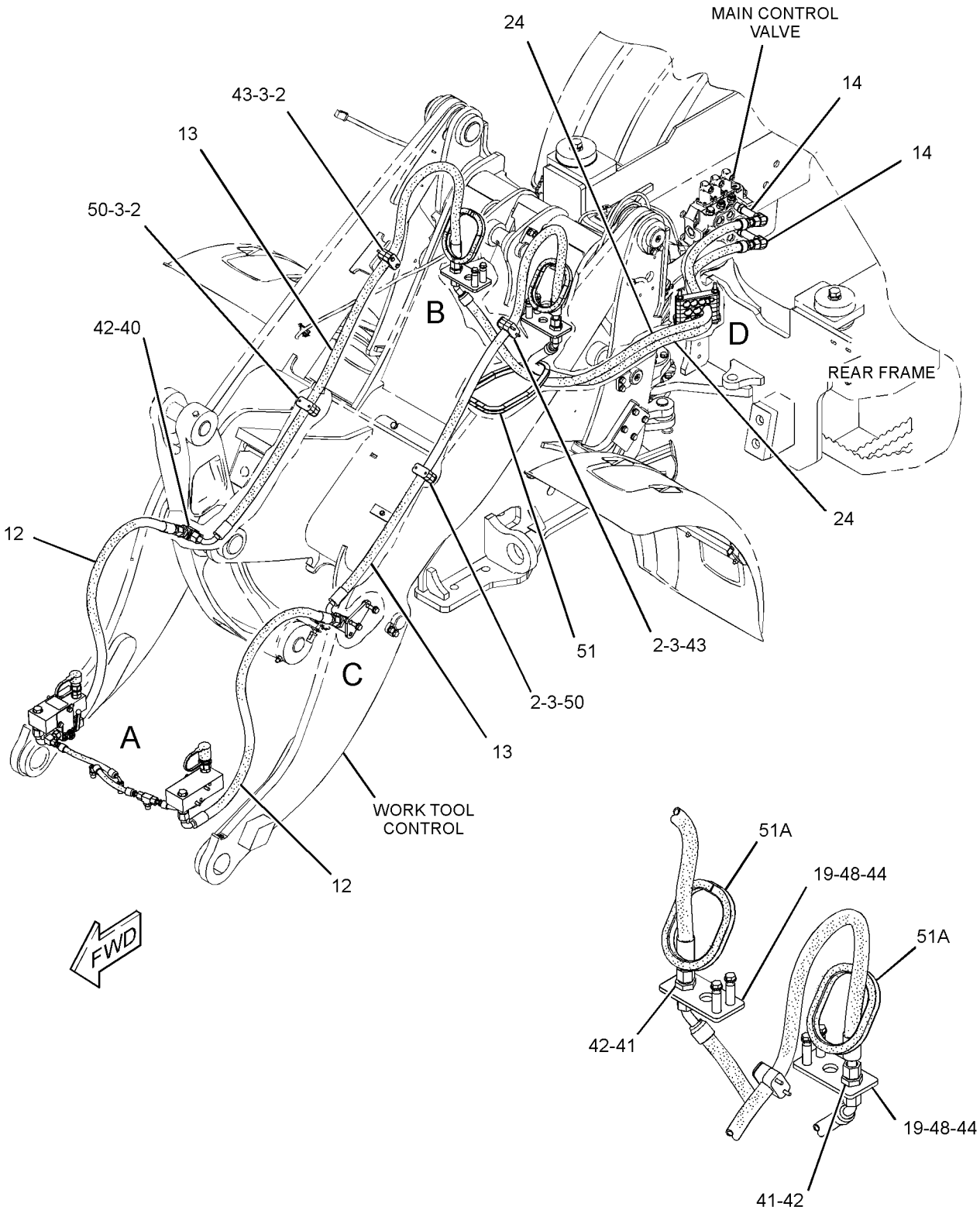

REFER TO ALL ILLUSTRATIONS OF THIS GROUP FOR AUXILIARY VIEWS

VIEW OF AREA B

GRAPHIC #1

g01523108

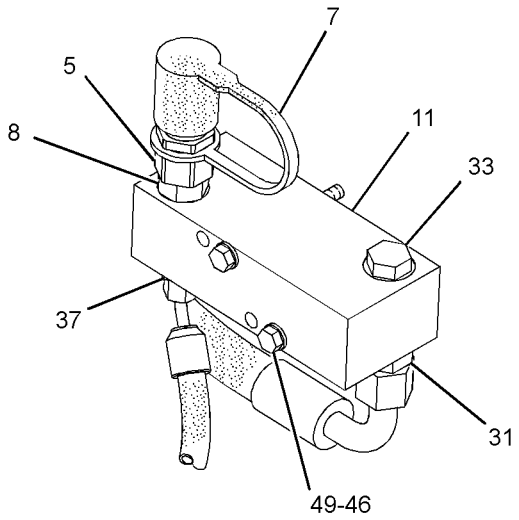

VIEW OF AREA E 90°

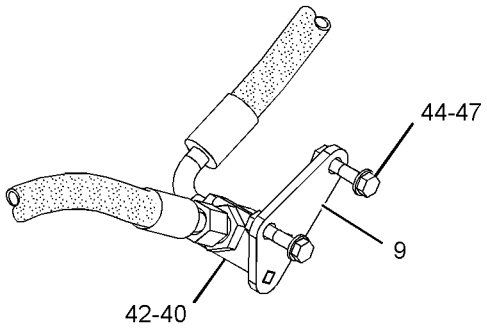

VIEW OF AREA C

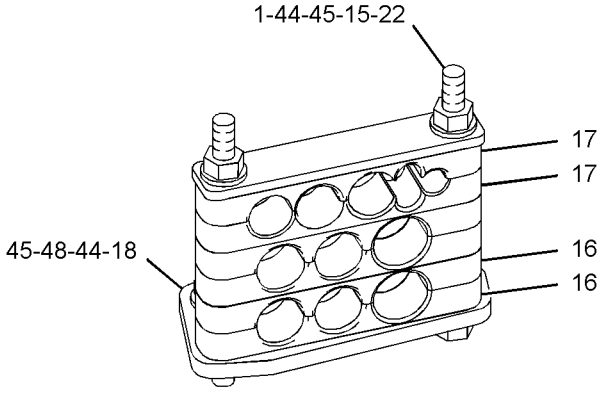

VIEW OF AREA D
(HOSES REMOVED FOR CLARITY)

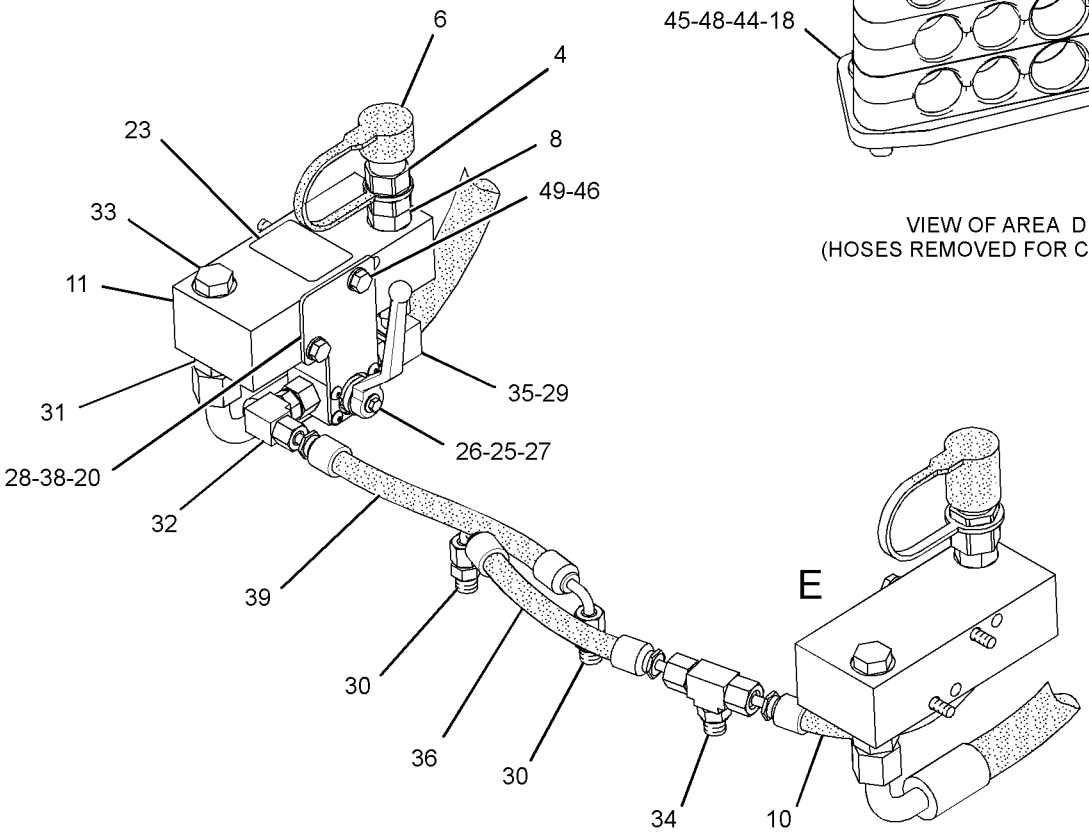

VIEW OF AREA A

GRAPHIC #2 **<END>** g01523109

HYDRAULIC SYSTEM

284-9265 LINES GP-AUXILIARY HYDRAULIC–
VERTICAL PIN LOCK COUPLER, BOOSTED AUXILIARY HYDRAULIC FLOW
S/N: LMD1-UP
PART OF 286-4218 COUPLER AR-QUICK
AN ATTACHMENT

SMCS-5057 **i02986753**

NOTE	REF NO	GRAPHIC REF	PART NUMBER	QTY	PART NAME 1 2 3 4 5 6 (PRODUCT LEVEL)	SEE PAGE
	1	1,2	**4V-0612**	2	PLATE	
	2	1,2	**7K-1181**	4	STRAP-CABLE	
	3	1,2	**102-8703**	2	PLATE-COVER	
M	4	2	**108-2989**	2	BOLT (M8X1.25X130-MM)	
	5	1,2	**116-4410**	2	CLAMP-DOUBLE	
	6	1	**133-3260**	4	SPACER (11X19X10-MM THK)	
	7	1	**143-9644**	1	PLATE-RETAINER	
	8	1,2	**151-4841**	4	BLOCK	
	9	2	**154-6583**	2	CLAMP-HALF	
	10	1	*164-9639*	1	CONNECTOR AS	
		1	**3J-1907**	1	SEAL-O-RING	
		1	**4J-5477**	1	SEAL-O-RING	
		1	**148-7925**	1	CONNECTOR	
	11	2	**205-3324**	2	BOSS	
	12	1	**208-0075**	4	CLAMP-HALF	
	13	1,2	**223-5856**	4	CLAMP-HALF	
	14	2	**229-5468**	1	FITTING AS (QUICK DISCONNECT, MALE)	
	15	2	**229-5471**	1	FITTING AS (QUICK DISCONNECT, FEMALE)	
	16	2	**229-5473**	1	FITTING AS (QUICK DISCONNECT, MALE)	
Y	17	2	**248-7696**	1	MANIFOLD GP-CONTROL (BOOSTED AUXILIARY HYD FLOW)	301
I	18	1	**270-6729**	1	HOSE AS	
	19	1	*287-7331*	2	ELBOW AS	
					(EACH INCLUDES)	
		1	**2M-9780**	1	SEAL-O-RING	
		1	**7J-9108**	1	SEAL-O-RING	
		1	**287-7330**	1	ELBOW	
I	20	2	**291-8345**	1	HOSE AS	
	21	1	**294-0287**	1	PLATE	
	22	1	**294-4864**	4	CLAMP	
	23	1	**294-4865**	2	CLAMP	
	24	1	**294-4866**	1	PLATE	
	25	2	**294-5552**	1	PLATE AS	
M	26	1	**297-8659**	2	STUD AS (M10X1.5-THD)	
	27	1	**299-2242**	1	TUBE AS	
	28	2	**304-3988**	1	COUPLING GP (QUICK DISCONNECT, MALE)	
		2	**218-5842**	1	MANIFOLD	
		2	**3K-0360**	1	SEAL-O-RING	
		2	**2M-9780**	1	SEAL-O-RING	
	29	2	**304-3989**	1	COUPLING GP (QUICK DISCONNECT, FEMALE)	
		2	**218-5842**	1	MANIFOLD	
		2	**3K-0360**	1	SEAL-O-RING	
		2	**2M-9780**	1	SEAL-O-RING	
I	30	1	**307-8675**	2	HOSE AS	
	31	2	**315-3477**	1	BRACKET AS	
I	32	1	**315-6538**	1	HOSE AS	
	33	1	**315-6539**	1	PLATE	
I	34	1	**315-7705**	1	HOSE AS	
I	35	2	**315-7706**	1	HOSE AS	
	36	2	**315-7707**	1	HOSE AS	
I	37	1	**315-7708**	1	HOSE AS	
I	38	1,2	**315-7709**	2	HOSE AS	
I	39	1	**315-7710**	1	HOSE AS	
	40	2	**316-3179**	1	BRACKET AS	

284-9265 LINES GP-AUXILIARY HYDRAULIC *(contd.)* i02986753

NOTE	REF NO	GRAPHIC REF	PART NUMBER	QTY	PART NAME 1 2 3 4 5 6 (PRODUCT LEVEL)	SEE PAGE
	41	2	**332-3791**	1	PLATE	
Y	42	2	**332-6408**	1	VALVE & MTG GP-SOLENOID (QUICK COUPLER)	317
I	43	1	**6R-2934**	1	HOSE AS	
	44	2	**093-2065**	1	GROMMET	
M	45	1	**141-8546**	2	BOLT-SOCKET HEAD (M6X1X100-MM)	
	46	2	*148-8325*	2	CONNECTOR AS	
					(EACH INCLUDES)	
		2	**3J-1907**	1	SEAL-O-RING	
		2	**4J-5477**	1	SEAL-O-RING	
		2	**6V-8641**	1	CONNECTOR	
	47	2	*148-8328*	1	CONNECTOR AS	
		2	**3D-2824**	1	SEAL-O-RING	
		2	**6V-8398**	1	SEAL-O-RING	
		2	**6V-8633**	1	CONNECTOR	
	48	2	*148-8340*	1	CONNECTOR AS	
		2	**3K-0360**	1	SEAL-O-RING	
		2	**6V-8398**	1	SEAL-O-RING	
		2	**6V-8639**	1	CONNECTOR	
	49	1,2	*148-8364*	2	ELBOW AS	
					(EACH INCLUDES)	
		1,2	**3K-0360**	1	SEAL-O-RING	
		1,2	**6V-8398**	1	SEAL-O-RING	
		1,2	**6V-8625**	1	ELBOW	
	50	1,2	*148-8378*	2	ELBOW AS	
					(EACH INCLUDES)	
		1,2	**3J-1907**	1	SEAL-O-RING	
		1,2	**6V-8397**	1	SEAL-O-RING	
		1,2	**6V-8724**	1	ELBOW	
	51	1	*148-8392*	1	ELBOW AS	
		1	**6V-9746**	1	SEAL-O-RING	
		1	**6V-9853**	1	ELBOW	
	52	2	*148-8446*	1	TEE AS-SWIVEL	
		2	**6V-9838**	1	TEE-SWIVEL	
		2	**7J-9108**	2	SEAL-O-RING	
	53	2	*150-3033*	1	ELBOW AS	
		2	**3J-1907**	1	SEAL-O-RING	
		2	**4J-5477**	1	SEAL-O-RING	
		2	**8T-0164**	1	ELBOW	
	54	2	*150-4037*	1	TEE AS	
		2	**6V-8398**	2	SEAL-O-RING	
		2	**6V-9844**	1	TEE-SWIVEL	
	55	2	*169-7409*	2	UNION AS	
					(EACH INCLUDES)	
		2	**6V-8996**	1	UNION	
		2	**7J-9108**	2	SEAL-O-RING	
	56	2	*235-3606*	2	TEE AS	
					(EACH INCLUDES)	
		2	**2M-9780**	1	SEAL-O-RING	
		2	**6V-8398**	1	SEAL-O-RING	
		2	**7J-9108**	1	SEAL-O-RING	
		2	**113-2378**	1	TEE-O-RING	
M	57	1	**5C-2890**	1	NUT (M6X1-THD)	
M	58	2	**6V-7357**	2	BOLT (M6X1X25-MM)	
	59	1	**6V-8397**	1	SEAL-O-RING	
	60	2	**6V-9170**	2	NUT-BULKHEAD (1-14-THD)	
M	61	1	**7X-7888**	1	BOLT (M6X1X90-MM)	
M	62	2	**8T-0341**	4	BOLT-SOCKET HEAD (M10X1.5X60-MM)	
M	63	2	**8T-3647**	1	BOLT (M8X1.25X80-MM)	
	64	1,2	**8T-4121**	9	WASHER-HARD (11X21X2.5-MM THK)	

284-9265 **LINES GP-AUXILIARY HYDRAULIC** *(contd.)* **i02986753**

NOTE	REF NO	GRAPHIC REF	PART NUMBER	QTY	PART NAME 1 2 3 4 5 6 (PRODUCT LEVEL)	SEE PAGE
M	65	1	**8T-4133**	7	NUT (M10X1.5-THD)	
M	66	2	**8T-4195**	2	BOLT (M10X1.5X30-MM)	
M	67	1	**8T-4196**	1	BOLT (M10X1.5X35-MM)	
	68	2	**8T-4205**	4	WASHER-HARD (7.2X14.5X2-MM THK)	
	69	2	**8T-4224**	2	WASHER-HARD (8.8X16X2-MM THK)	
M	70	2	**8T-6466**	3	BOLT (M10X1.5X60-MM)	
M	71	2	**8T-6869**	1	BOLT (M8X1.25X60-MM)	
	72	1	**9M-0164**	1	CLAMP-HOSE	
M	73	2	**9X-2480**	2	BOLT (M6X1X45-MM)	
D	74	2	**8T-3425**		CHANNEL-TRIM (0.4-M)	
D	74A	2	**8T-3425**		CHANNEL-TRIM (0.7-M)	

D-ORDER BY THE METER
I-REFER TO HYDRAULIC INFORMATION SYSTEM
M-METRIC PART
Y-SEPARATE ILLUSTRATION

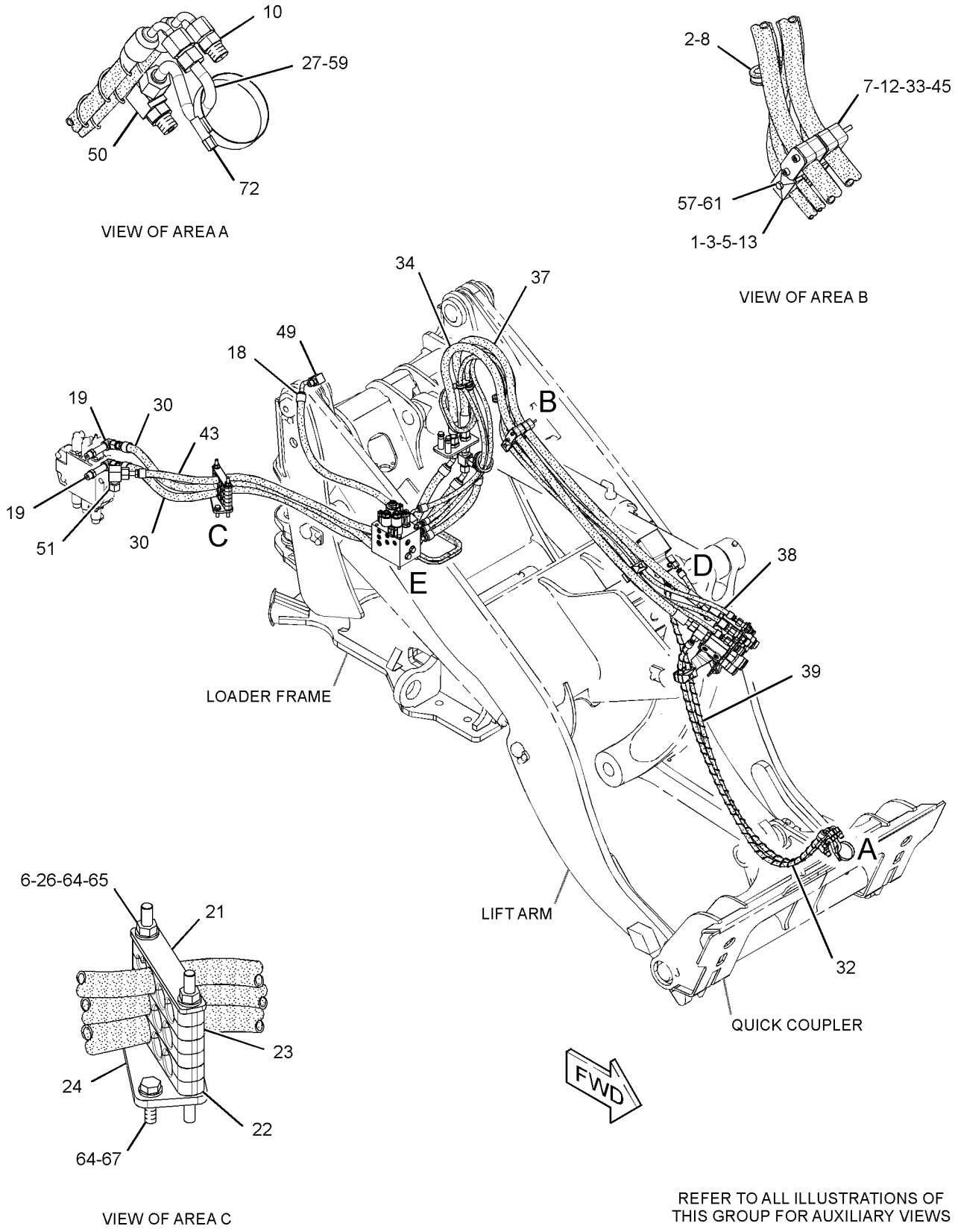

GRAPHIC #1

g01620079

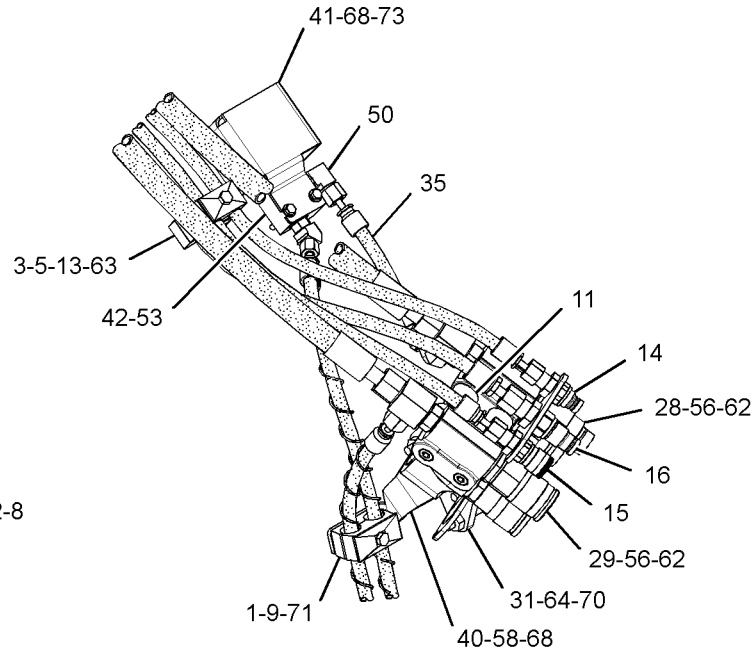

VIEW OF AREA D

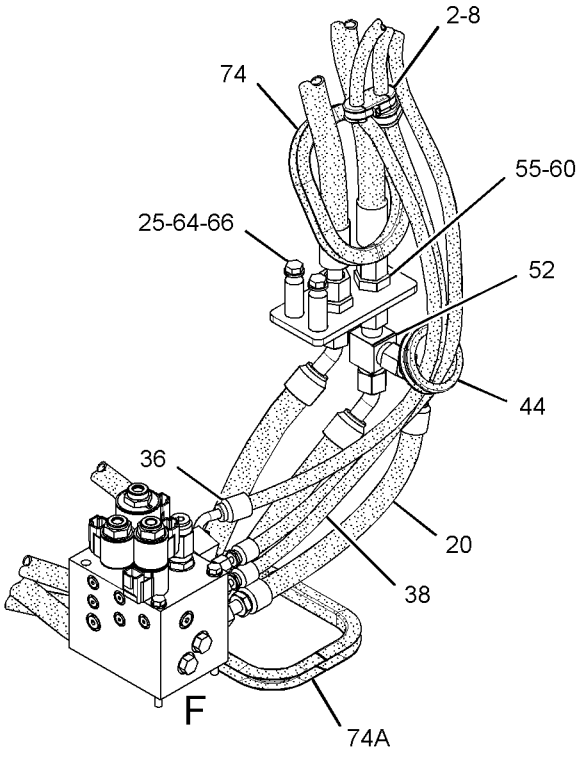

VIEW OF AREA E

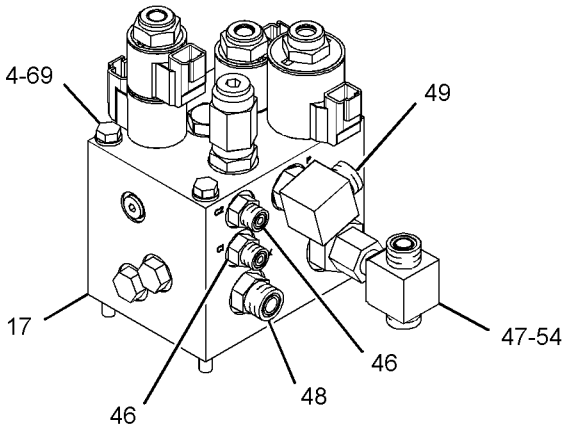

VIEW OF AREA F
(HOSES REMOVED FOR CLARITY) 90°

GRAPHIC #2 **<END>** g01620083

HYDRAULIC SYSTEM

259-6045 LINES GP-BUCKET

S/N: LMD1-UP

PART OF 259-6040 BUCKET AR-MULTIPURPOSE

AN ATTACHMENT

SMCS-5057 **i03139662**

NOTE	REF NO	GRAPHIC REF	PART NUMBER	QTY	PART NAME 1 2 3 4 5 6 (PRODUCT LEVEL)	SEE PAGE
	1	1	**152-5717**	1	CAP-DUST	
	2	1	**152-5718**	1	CAP-DUST	
I	3	1	**314-4067**	1	HOSE AS	
	4	1	*260-9219*	2	CONNECTOR AS	
					(EACH INCLUDES)	
		1	**6V-8638**	1	CONNECTOR	
		1	**228-7090**	1	SEAL-O-RING	
		1	**238-5081**	1	SEAL-O-RING	
	5	1	**185-7887**	1	COUPLER AS-QUICK DISCONNECT (MALE)	
I	6	1	**314-4069**	1	HOSE AS	
I	7	1	**314-4068**	1	HOSE AS	
I	8	1	**259-6017**	2	HOSE AS	
	9	1	*148-8336*	4	CONNECTOR AS	
					(EACH INCLUDES)	
		1	**3J-1907**	1	SEAL-O-RING	
		1	**6V-8397**	1	SEAL-O-RING	
		1	**6V-8636**	1	CONNECTOR	
	10	1	*150-3060*	2	TEE AS	
					(EACH INCLUDES)	
		1	**6V-8397**	2	SEAL-O-RING	
		1	**6V-8398**	1	SEAL-O-RING	
		1	**8T-3444**	1	TEE-UNION	
	11	1	**153-2994**	1	COUPLER AS-QUICK DISCONNECT (FEMALE)	
	13	1	**8T-1887**	6	CLIP (SLOT)	
	14	1	**8T-1888**	6	CLIP (TAB)	
	15	1	**8T-4121**	3	WASHER-HARD (11X21X2.5-MM THK)	
M	16	1	**8T-4136**	3	BOLT (M10X1.5X25-MM)	
D	17	1	**8T-3425**		CHANNEL-TRIM (0.2-M EACH)	
I	18	1	**323-7410**	1	HOSE AS	

D-ORDER BY THE METER
I-REFER TO HYDRAULIC INFORMATION SYSTEM
M-METRIC PART

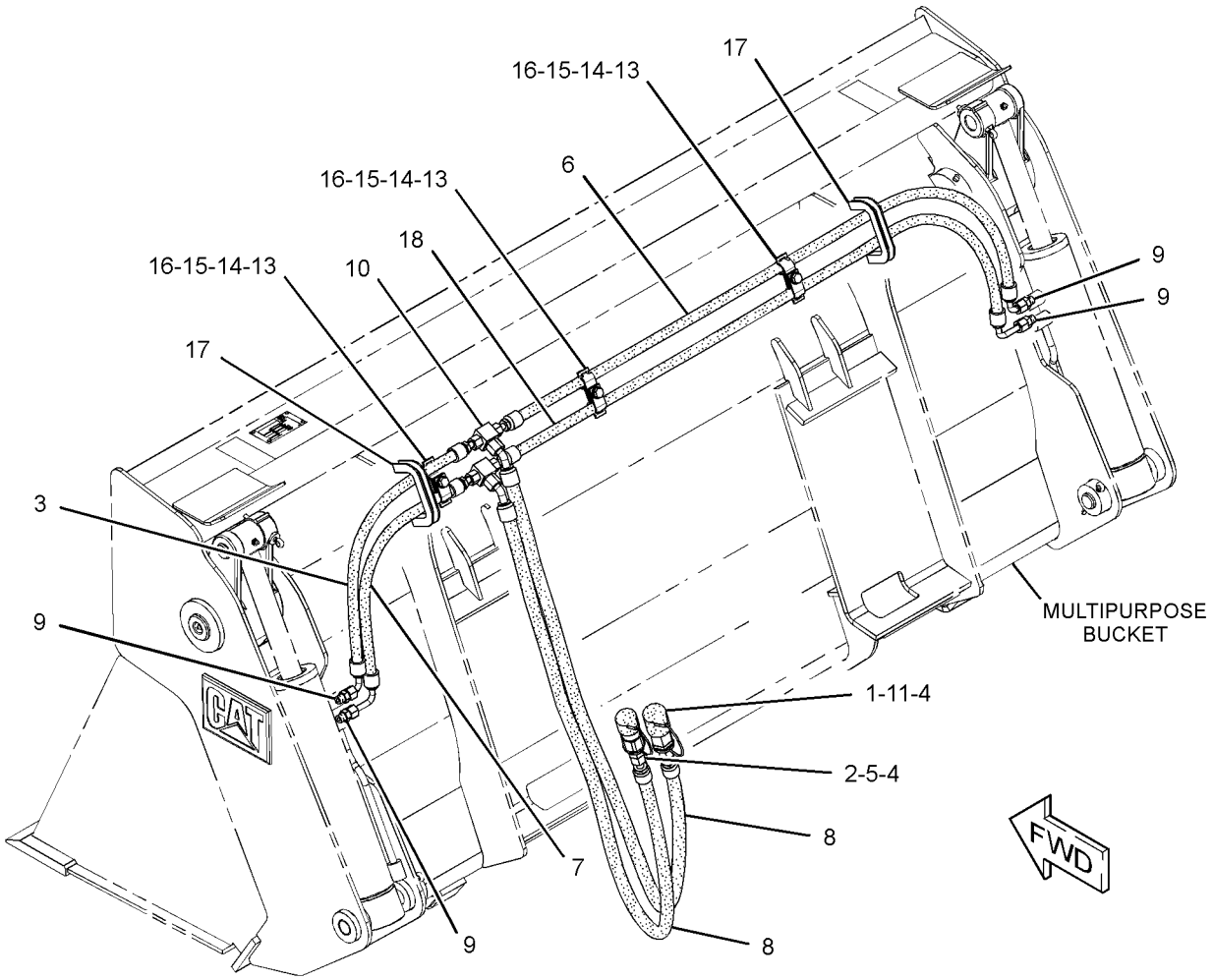

GRAPHIC #1 **<END>** g01623136

HYDRAULIC SYSTEM

284-9275 LINES GP-BUCKET

S/N: LMD1-UP

PART OF 259-6050 BUCKET AR-MULTIPURPOSE

AN ATTACHMENT

SMCS-5057 **i03139663**

NOTE	REF NO	GRAPHIC REF	PART NUMBER	QTY	PART NAME 1 2 3 4 5 6 (PRODUCT LEVEL)	SEE PAGE
	1	1	**153-2997**	1	FITTING AS (QUICK DISCONNECT, FEMALE)	
I	2	1	**154-1711**	1	HOSE AS	
	3	1	**161-2560**	1	CAP-DUST	
	4	1	**161-2561**	1	CAP-DUST	
I	5	1	**188-7677**	1	HOSE AS	
I	6	1	**214-7091**	2	HOSE AS	
I	7	1	**243-1450**	1	HOSE AS	
I	8	1	**252-5664**	1	HOSE AS	
	9	1	**297-7931**	1	COUPLER-QUICK DISCONNECT (MALE)	
	10	1	*148-8336*	4	CONNECTOR AS	
					(EACH INCLUDES)	
		1	**3J-1907**	1	SEAL-O-RING	
		1	**6V-8397**	1	SEAL-O-RING	
		1	**6V-8636**	1	CONNECTOR	
	11	1	*148-8340*	2	CONNECTOR AS	
					(EACH INCLUDES)	
		1	**3K-0360**	1	SEAL-O-RING	
		1	**6V-8398**	1	SEAL-O-RING	
		1	**6V-8639**	1	CONNECTOR	
	12	1	*150-3060*	2	TEE AS	
					(EACH INCLUDES)	
		1	**6V-8397**	2	SEAL-O-RING	
		1	**6V-8398**	1	SEAL-O-RING	
		1	**8T-3444**	1	TEE-UNION	
	13	1	**8T-1887**	4	CLIP (SLOT)	
	14	1	**8T-1888**	4	CLIP (TAB)	
	15	1	**8T-4121**	2	WASHER-HARD (11X21X2.5-MM THK)	
M	16	1	**8T-4136**	2	BOLT (M10X1.5X25-MM)	
D	17	1	**8T-3425**		CHANNEL-TRIM (0.2-M EACH)	

D-ORDER BY THE METER
I-REFER TO HYDRAULIC INFORMATION SYSTEM
M-METRIC PART

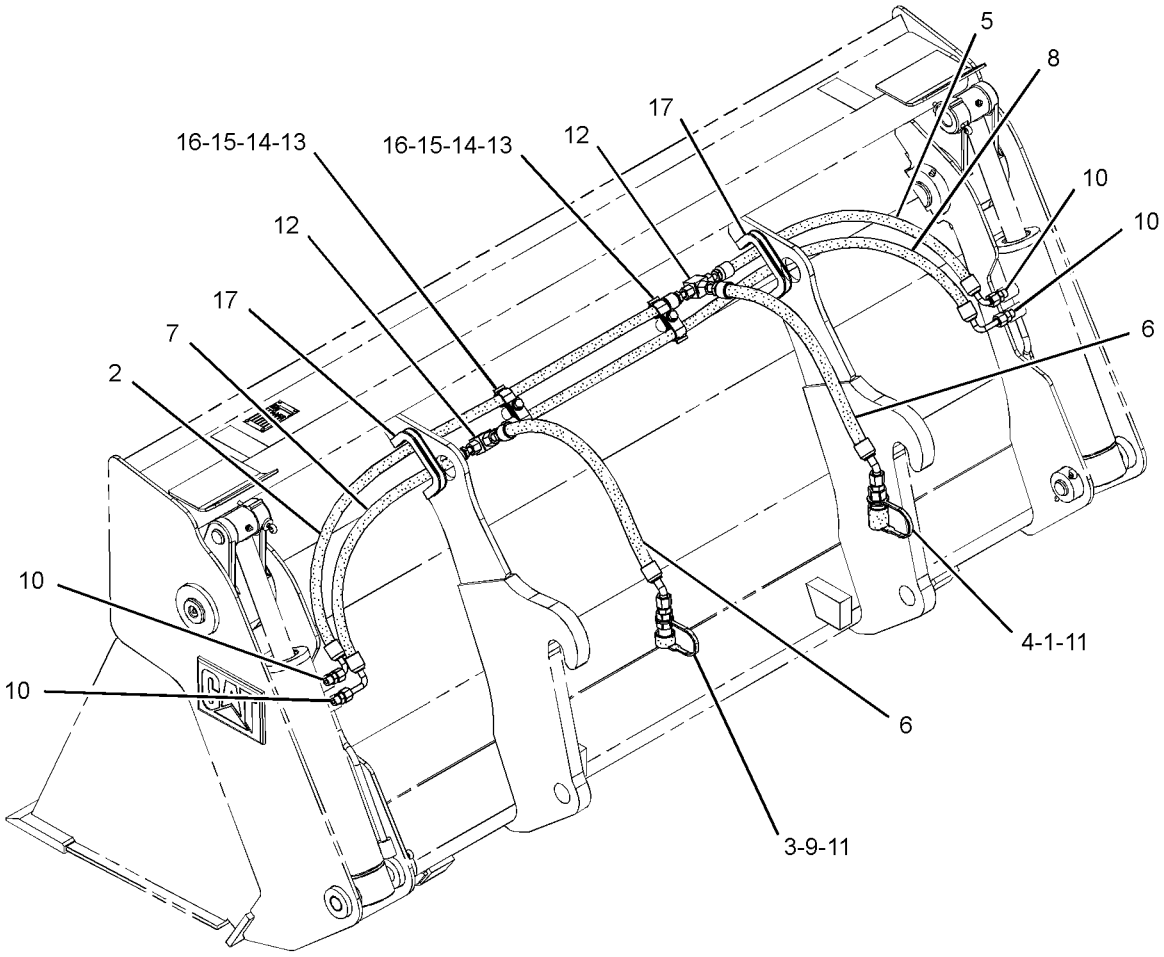

GRAPHIC #1 **<END>** g01375057

HYDRAULIC SYSTEM

294-4432 LINES GP-CYLINDER—LOAD CONTROL

S/N: LMD1-UP

AN ATTACHMENT

SMCS-5057 **i02938508**

NOTE	REF NO	GRAPHIC REF	PART NUMBER	QTY	PART NAME 1 2 3 4 5 6 (PRODUCT LEVEL)	SEE PAGE
	1	1,2	**4V-0612**	2	PLATE	
	2	2	**5P-1717**	2	CLAMP-HOSE	
	3	2	**8T-6726**	2	CLAMP-HOSE	
	4	2	**9M-6738**	4	CLAMP-HOSE	
	5	2	**9R-5948**	4	BLOCK	
	6	1,2	**154-6583**	4	CLAMP-HALF	
	7	2	*169-5722*	1	COUPLING AS	
		2	**3D-2824**	1	SEAL-O-RING	
		2	**158-3049**	1	COUPLING	
I	8	2	**197-8872**	2	HOSE AS	
	9	1	*255-4732*	1	TEE AS	
		1	**4J-5477**	3	SEAL-O-RING	
		1	**8C-6444**	1	TEE-BULKHEAD	
	10	2	**257-3958**	2	VALVE-LOAD CONTROL (LIFT CYLINDER)	
	11	2	**257-3959**	1	VALVE-LOAD CONTROL (TILT CYLINDER)	
I	12	1	**257-3989**	2	HOSE AS	
I	13	1	**257-3990**	2	HOSE AS	
	14	2	**281-8359**	2	BRACKET	
	15	2	*287-7329*	2	ELBOW AS	
					(EACH INCLUDES)	
		2	**2M-9780**	1	SEAL-O-RING	
		2	**6V-8398**	1	SEAL-O-RING	
		2	**287-7328**	1	ELBOW	
	16	1	**293-9783**	1	BRACKET AS	
	17	1	**293-9813**	1	BRACKET AS	
	18	2	**294-7321**	1	HOSE AS	
	19	1,2	**294-7909**	2	TUBE AS	
	20	1	**294-8600**	1	HOSE AS	
	21	2	**295-7713**	1	BRACKET	
I	22	1	**307-1832**	2	HOSE AS	
I	23	1	**307-8673**	1	HOSE AS	
I	24	1	**308-7545**	1	HOSE AS	
	25	2	*148-8325*	3	CONNECTOR AS	
					(EACH INCLUDES)	
		2	**3J-1907**	1	SEAL-O-RING	
		2	**4J-5477**	1	SEAL-O-RING	
		2	**6V-8641**	1	CONNECTOR	
	26	2	*148-8328*	1	CONNECTOR AS	
		2	**3D-2824**	1	SEAL-O-RING	
		2	**6V-8398**	1	SEAL-O-RING	
		2	**6V-8633**	1	CONNECTOR	
	27	1,2	*148-8340*	2	CONNECTOR AS	
					(EACH INCLUDES)	
		1,2	**3K-0360**	1	SEAL-O-RING	
		1,2	**6V-8398**	1	SEAL-O-RING	
		1,2	**6V-8639**	1	CONNECTOR	
	28	1,2	*148-8345*	4	CONNECTOR AS	
					(EACH INCLUDES)	
		1,2	**2M-9780**	1	SEAL-O-RING	
		1,2	**6V-8398**	1	SEAL-O-RING	
		1,2	**6V-8638**	1	CONNECTOR	
	29	2	*148-8359*	1	ELBOW AS	
		2	**3K-0360**	1	SEAL-O-RING	
		2	**6V-9746**	1	SEAL-O-RING	
		2	**6V-9877**	1	ELBOW	
	30	2	*148-8370*	1	ELBOW AS	

294-4432 **LINES GP-CYLINDER** *(contd.)* **i02938508**

NOTE	REF NO	GRAPHIC REF	PART NUMBER	QTY	PART NAME 1 2 3 4 5 6 (PRODUCT LEVEL)	SEE PAGE
		2	**6V-8398**	1	SEAL-O-RING	
		2	**6V-9851**	1	ELBOW	
	31	1	*148-8427*	2	TEE AS	
					(EACH INCLUDES)	
		1	**6V-8398**	3	SEAL-O-RING	
		1	**8T-6895**	1	TEE-UNION	
	32	2	*150-5968*	2	TEE AS	
					(EACH INCLUDES)	
		2	**4J-5477**	2	SEAL-O-RING	
		2	**6V-9835**	1	TEE-SWIVEL	
	33	2	*153-6245*	2	ELBOW AS	
					(EACH INCLUDES)	
		2	**2M-9780**	1	SEAL-O-RING	
		2	**6V-8398**	1	SEAL-O-RING	
		2	**136-6811**	1	ELBOW	
	34	1	**2P-1279**	1	LOCKNUT (9/16-18-THD)	
M	35	2	**5C-7261**	4	NUT (M8X1.25-THD)	
	36	2	**5P-0599**	2	CLAMP-BAND	
	37	1	**6V-9169**	2	NUT-BULKHEAD (13/16-16-THD)	
	38	1,2	**8M-2770**	2	CLIP	
	39	1,2	**8T-4121**	10	WASHER-HARD (11X21X2.5-MM THK)	
M	40	2	**8T-4133**	2	NUT (M10X1.5-THD)	
M	41	1	**8T-4136**	2	BOLT (M10X1.5X25-MM)	
M	42	1	**8T-4195**	2	BOLT (M10X1.5X30-MM)	
M	43	1	**8T-4196**	2	BOLT (M10X1.5X35-MM)	
	44	1,2	**8T-4224**	10	WASHER-HARD (8.8X16X2-MM THK)	
M	45	2	**8T-6466**	2	BOLT (M10X1.5X60-MM)	
M	46	1,2	**8T-6869**	6	BOLT (M8X1.25X60-MM)	
D	47	1	**8T-3425**		CHANNEL-TRIM (0.2-M)	
D	47A	1	**8T-3425**		CHANNEL-TRIM (0.5-M)	
D	47B	1	**8T-3425**		CHANNEL-TRIM (0.3-M EACH)	

D-ORDER BY THE METER
I-REFER TO HYDRAULIC INFORMATION SYSTEM
M-METRIC PART

REFER TO ALL ILLUSTRATIONS OF
THIS GROUP FOR AUXILIARY VIEWS

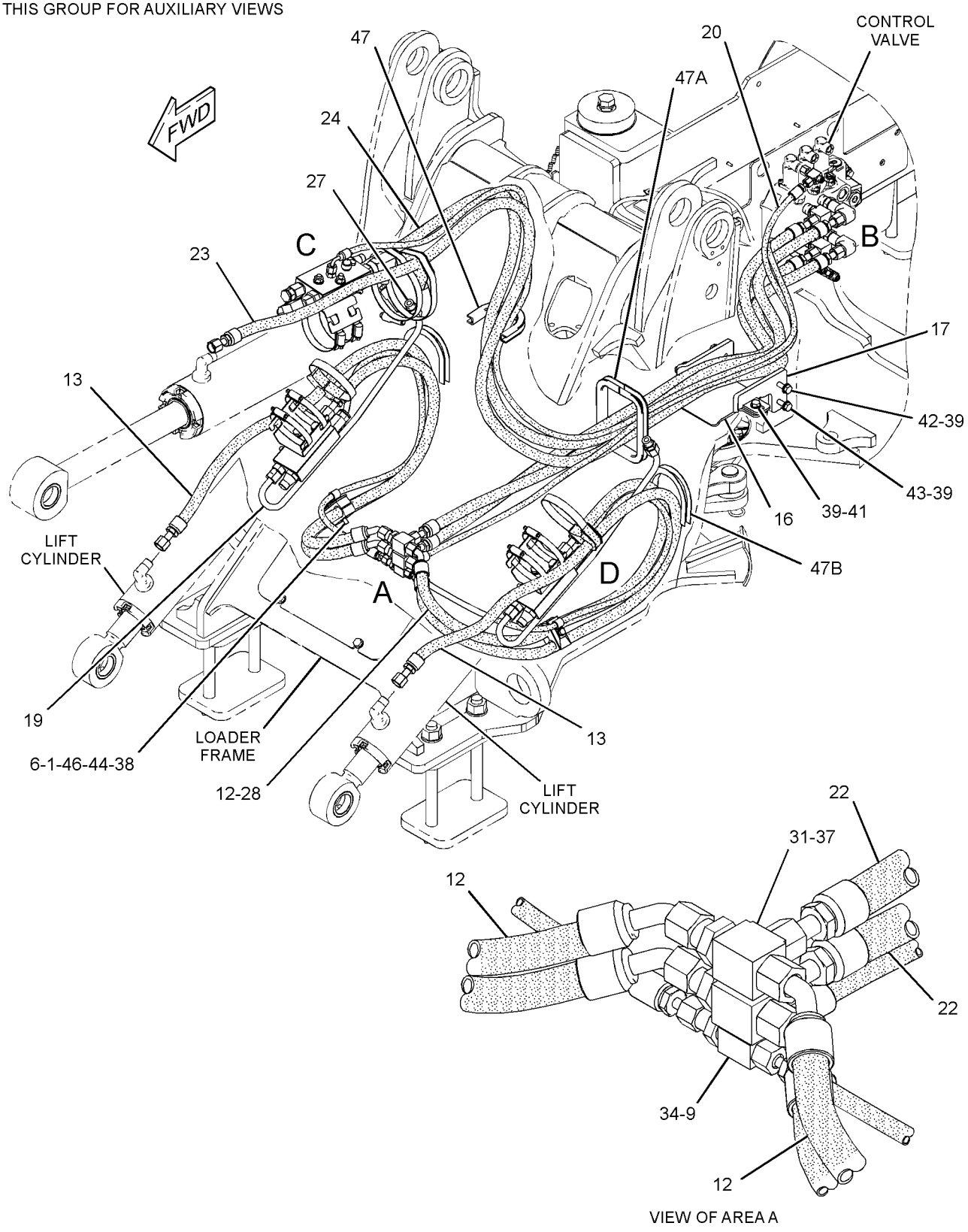

GRAPHIC #1

g01479373

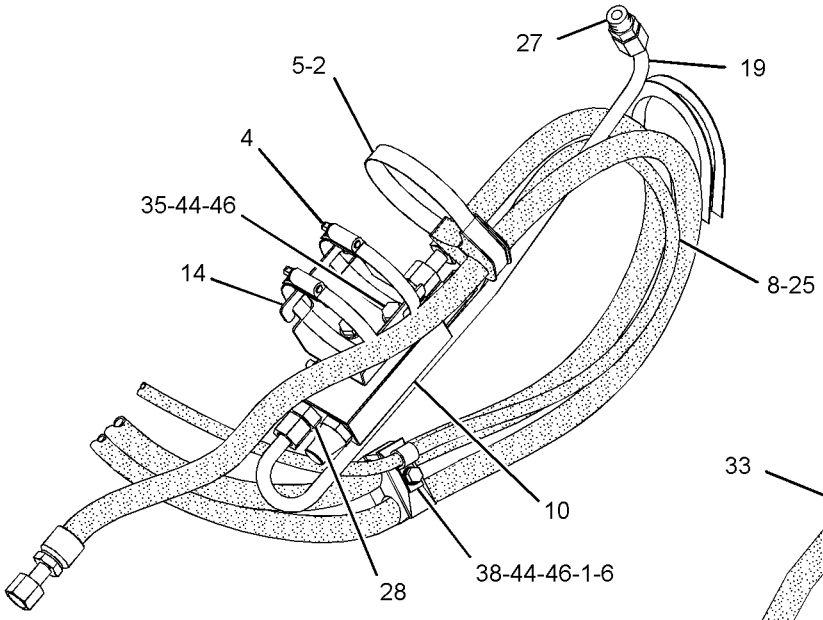

VIEW OF AREA D

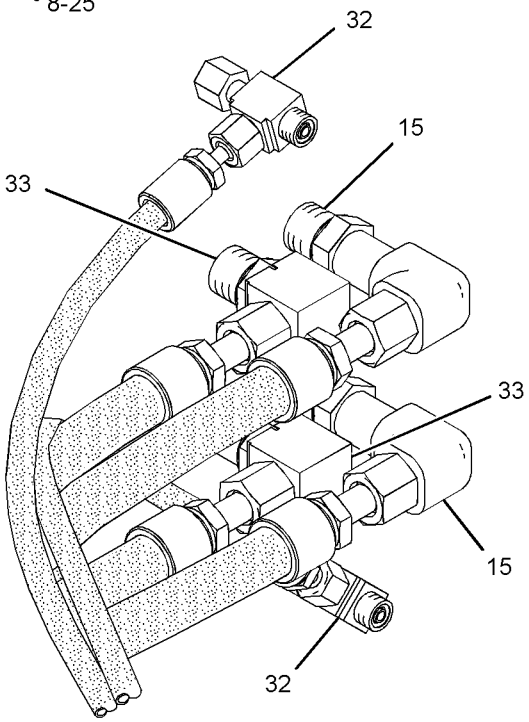

VIEW OF AREA B

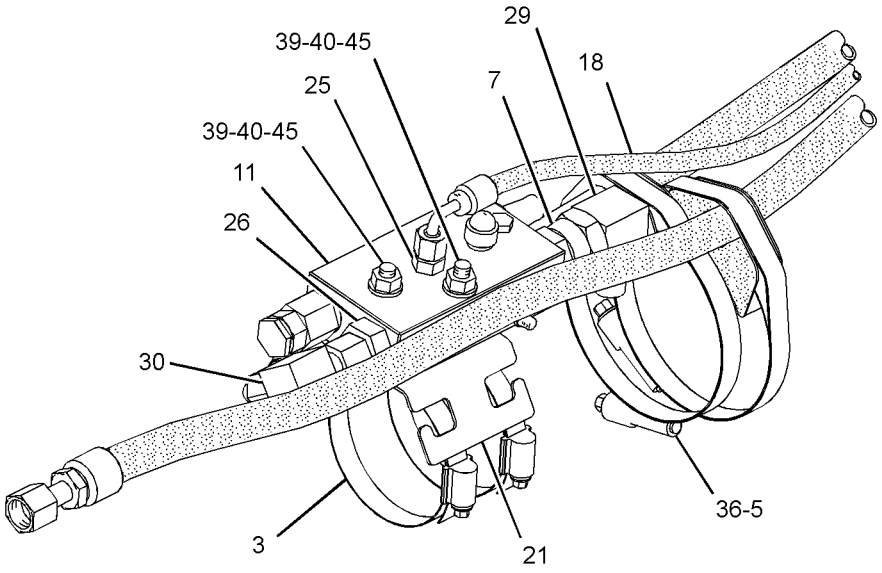

VIEW OF AREA C

GRAPHIC #2 **<END>** g01479374

HYDRAULIC SYSTEM

307-8666 LINES GP-CYLINDER

S/N: LMD1-UP

AN ATTACHMENT

SMCS-5057 **i03119916**

NOTE	REF NO	GRAPHIC REF	PART NUMBER	QTY	PART NAME 1 2 3 4 5 6 (PRODUCT LEVEL)	SEE PAGE
	1	1	**4V-0612**	2	PLATE	
	2	1	**5P-0599**	1	CLAMP-BAND	
	3	1	**5P-1717**	4	CLAMP-HOSE	
	4	1	**9R-5948**	3	BLOCK	
	5	1	**154-6583**	4	CLAMP-HALF	
M	6	1	**8T-4196**	2	BOLT (M10X1.5X35-MM)	
	7	1	*287-7329*	2	ELBOW AS	
					(EACH INCLUDES)	
		1	**2M-9780**	1	SEAL-O-RING	
		1	**6V-8398**	1	SEAL-O-RING	
		1	**287-7328**	1	ELBOW	
	8	1	**291-8132**	1	TUBE AS	
	9	1	**291-8133**	1	TUBE AS	
	10	1	**293-9783**	1	BRACKET AS	
	11	1	**293-9813**	1	BRACKET AS	
I	12	1	**307-1832**	2	HOSE AS	
I	13	1	**307-1833**	1	HOSE AS	
I	14	1	**307-8673**	1	HOSE AS	
	15	1	*148-8340*	2	CONNECTOR AS	
					(EACH INCLUDES)	
		1	**3K-0360**	1	SEAL-O-RING	
		1	**6V-8398**	1	SEAL-O-RING	
		1	**6V-8639**	1	CONNECTOR	
	16	1	*148-8364*	1	ELBOW AS	
		1	**3K-0360**	1	SEAL-O-RING	
		1	**6V-8398**	1	SEAL-O-RING	
		1	**6V-8625**	1	ELBOW	
	17	1	*148-8427*	2	TEE AS	
					(EACH INCLUDES)	
		1	**6V-8398**	3	SEAL-O-RING	
		1	**8T-6895**	1	TEE-UNION	
	18	1	*153-6245*	2	ELBOW AS	
					(EACH INCLUDES)	
		1	**2M-9780**	1	SEAL-O-RING	
		1	**6V-8398**	1	SEAL-O-RING	
		1	**136-6811**	1	ELBOW	
I	19	1	**257-3989**	2	HOSE AS	
I	20	1	**257-3990**	2	HOSE AS	
	21	1	**6V-8398**	2	SEAL-O-RING	
	22	1	**6V-9169**	2	NUT-BULKHEAD (13/16-16-THD)	
	24	1	**8T-4121**	6	WASHER-HARD (11X21X2.5-MM THK)	
M	25	1	**8T-4136**	2	BOLT (M10X1.5X25-MM)	
M	26	1	**8T-4195**	2	BOLT (M10X1.5X30-MM)	
M	27	1	**8T-6869**	2	BOLT (M8X1.25X60-MM)	
	28	1	**9R-2052**	2	BLOCK	
D	29	1	**8T-3425**		CHANNEL-TRIM (0.5-M)	
D	29A	1	**8T-3425**		CHANNEL-TRIM (0.2-M)	
D	29B	1	**8T-3425**		CHANNEL-TRIM (0.3-M EACH)	

D-ORDER BY THE METER
I-REFER TO HYDRAULIC INFORMATION SYSTEM
M-METRIC PART

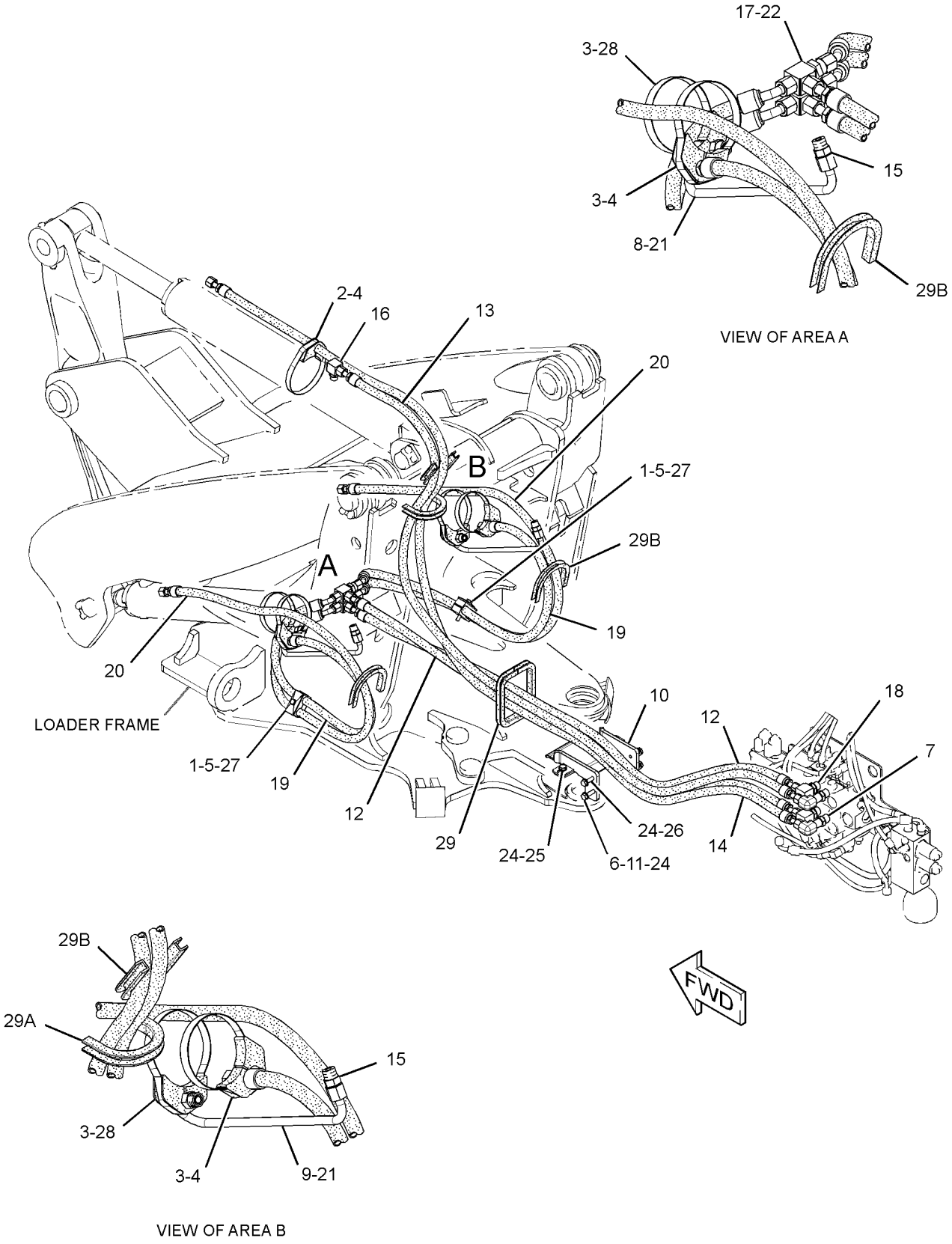

GRAPHIC #1 **<END>** g01597033

HYDRAULIC SYSTEM

307-8667 LINES GP-CYLINDER—RIDE CONTROL ACCUMULATOR

S/N: LMD1-UP
PART OF 308-6645 HYDRAULIC AR
AN ATTACHMENT

SMCS-5057 **i03103166**

NOTE	REF NO	GRAPHIC REF	PART NUMBER	QTY	PART NAME 1 2 3 4 5 6 (PRODUCT LEVEL)	SEE PAGE
	1	1	**4V-0612**	2	PLATE	
	2	1	**5P-0599**	1	CLAMP-BAND	
	3	1	**5P-1717**	4	CLAMP-HOSE	
	4	1	**9R-5948**	3	BLOCK	
	5	1	**154-6583**	4	CLAMP-HALF	
Y	6	1	*162-3960*	1	ACCUMULATOR GP-RIDE CONTROL (CHARGED)	246
I	7	1	**171-0524**	1	HOSE AS	
I	8	1	**205-7234**	1	HOSE AS	
Y	9	1	**245-8780**	1	MANIFOLD GP-RIDE CONTROL	303
I	10	1	**270-8473**	1	HOSE AS	
	11	1	*287-7329*	2	ELBOW AS	
					(EACH INCLUDES)	
		1	**2M-9780**	1	SEAL-O-RING	
		1	**6V-8398**	1	SEAL-O-RING	
		1	**287-7328**	1	ELBOW	
	12	1	**291-8132**	1	TUBE AS	
	13	1	**291-8133**	1	TUBE AS	
	14	1	**293-9783**	1	BRACKET AS	
	15	1	**293-9813**	1	BRACKET AS	
I	16	1	**307-1832**	2	HOSE AS	
I	17	1	**307-1833**	1	HOSE AS	
I	18	1	**307-8673**	1	HOSE AS	
	19	1	**109-1633**	2	CLIP (SLOT)	
	20	1	**109-1634**	2	CLIP (TAB)	
	21	1	*148-8318*	1	CONNECTOR AS	
		1	**3K-0360**	1	SEAL-O-RING	
		1	**6V-8397**	1	SEAL-O-RING	
		1	**6V-8634**	1	CONNECTOR	
	22	1	*148-8340*	2	CONNECTOR AS	
					(EACH INCLUDES)	
		1	**3K-0360**	1	SEAL-O-RING	
		1	**6V-8398**	1	SEAL-O-RING	
		1	**6V-8639**	1	CONNECTOR	
	23	1	*148-8345*	2	CONNECTOR AS	
					(EACH INCLUDES)	
		1	**2M-9780**	1	SEAL-O-RING	
		1	**6V-8398**	1	SEAL-O-RING	
		1	**6V-8638**	1	CONNECTOR	
	24	1	*148-8364*	2	ELBOW AS	
					(EACH INCLUDES)	
		1	**3K-0360**	1	SEAL-O-RING	
		1	**6V-8398**	1	SEAL-O-RING	
		1	**6V-8625**	1	ELBOW	
	25	1	*148-8392*	1	ELBOW AS	
		1	**6V-9746**	1	SEAL-O-RING	
		1	**6V-9853**	1	ELBOW	
	26	1	*148-8407*	1	PLUG AS	
		1	**3J-1907**	1	SEAL-O-RING	
		1	**9S-4191**	1	PLUG-O-RING	
	27	1	*153-6245*	2	ELBOW AS	
					(EACH INCLUDES)	
		1	**2M-9780**	1	SEAL-O-RING	
		1	**6V-8398**	1	SEAL-O-RING	
		1	**136-6811**	1	ELBOW	
	28	1	*164-5549*	1	COUPLING AS	

307-8667 **LINES GP-CYLINDER** *(contd.)* **i03103166**

NOTE	REF NO	GRAPHIC REF	PART NUMBER	QTY	PART NAME 1 2 3 4 5 6 (PRODUCT LEVEL)	SEE PAGE
		1	**3J-1907**	1	SEAL-O-RING	
		1	**4I-6287**	1	COUPLING	
I	29	1	**257-3989**	2	HOSE AS	
I	30	1	**257-3990**	2	HOSE AS	
	31	1	*287-7337*	2	CROSS AS	
					(EACH INCLUDES)	
		1	**6V-8398**	4	SEAL-O-RING	
		1	**287-7336**	1	CROSS	
	32	1	**6V-8398**	2	SEAL-O-RING	
	33	1	**6V-9169**	2	NUT-BULKHEAD (13/16-16-THD)	
	34	1	**276-2334**	1	FILM-WARNING (HIGH PRESS CYLINDER, READ OMM)	
	35	1	**7X-7729**	2	WASHER (11X25X3-MM THK)	
M	36	1	**7X-2539**	2	BOLT (M8X1.25X110-MM)	
	37	1	**8T-4121**	6	WASHER-HARD (11X21X2.5-MM THK)	
M	38	1	**8T-4136**	2	BOLT (M10X1.5X25-MM)	
M	39	1	**8T-4186**	2	BOLT (M10X1.5X40-MM)	
M	40	1	**8T-4195**	2	BOLT (M10X1.5X30-MM)	
	41	1	**8T-4224**	2	WASHER-HARD (8.8X16X2-MM THK)	
M	42	1	**8T-6869**	2	BOLT (M8X1.25X60-MM)	
	43	1	**9R-2052**	2	BLOCK	
D	44	1	**8T-3425**		CHANNEL-TRIM (0.3-M EACH)	
D	44A	1	**8T-3425**		CHANNEL-TRIM (0.5-M)	
D	44B	1	**8T-3425**		CHANNEL-TRIM (0.2-M)	
D	44C	1	**8T-3425**		CHANNEL-TRIM (0.2-M)	
M	45	1	**8T-4196**	2	BOLT (M10X1.5X35-MM)	
	46	1	**085-7329**	2	SPACER (9X19X30-MM THK)	

D-ORDER BY THE METER
I-REFER TO HYDRAULIC INFORMATION SYSTEM
M-METRIC PART
Y-SEPARATE ILLUSTRATION

307-8667 **LINES GP-CYLINDER** *(contd.)* **i03103166**

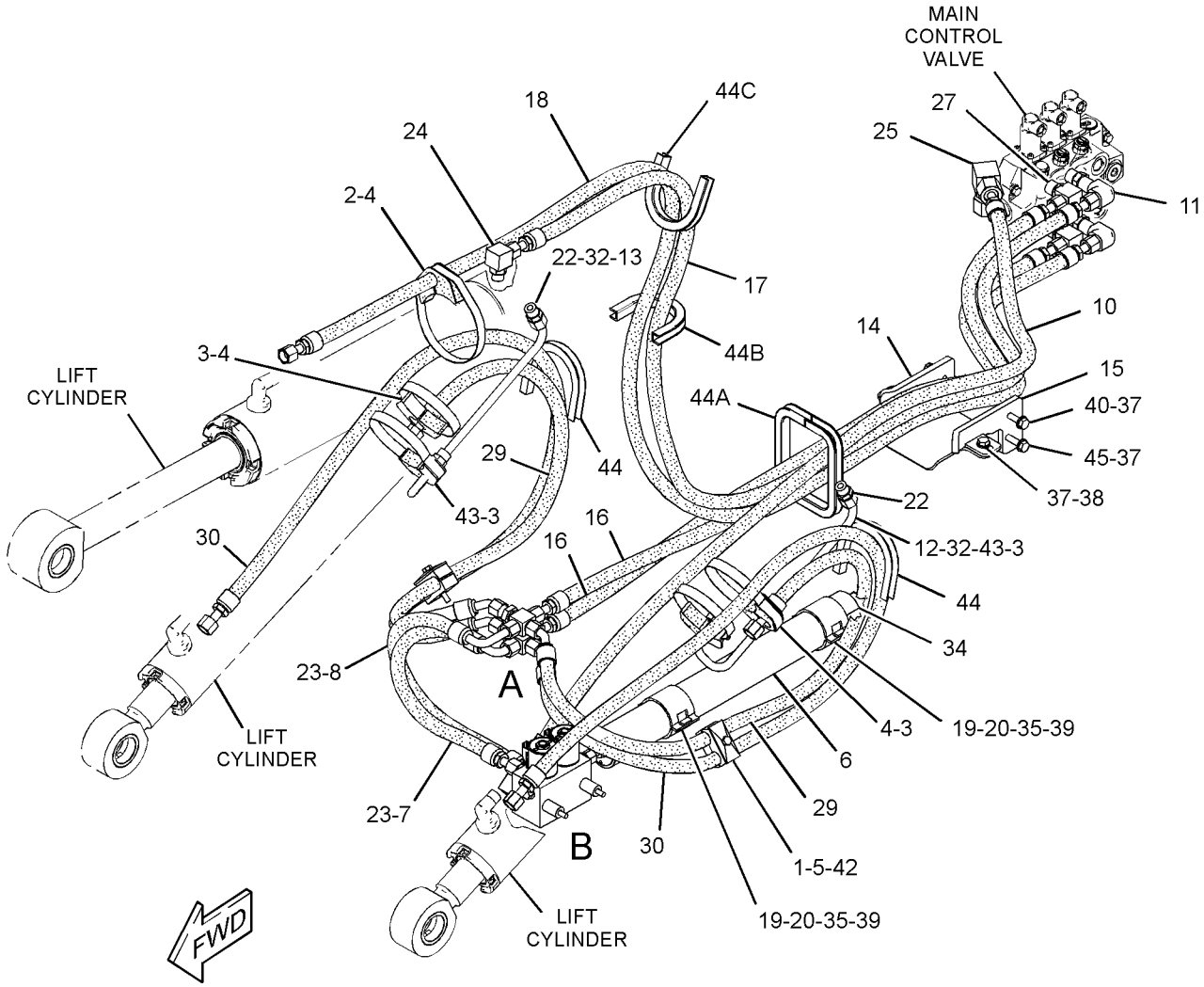

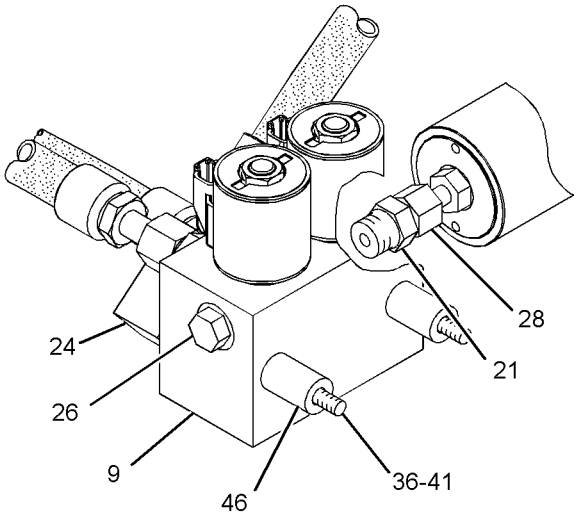

VIEW OF AREA B

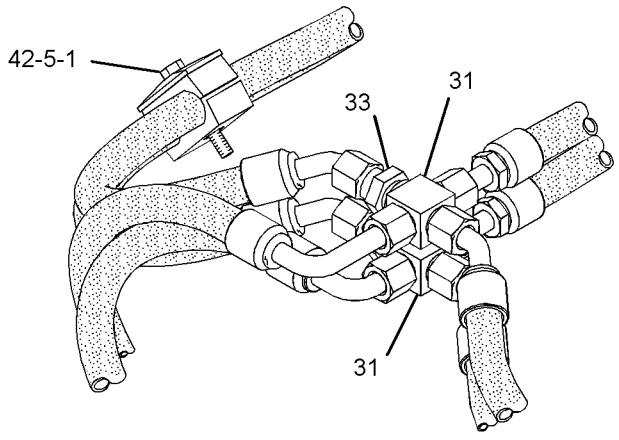

VIEW OF AREA A

GRAPHIC #1 **<END>** g01586117

HYDRAULIC SYSTEM

307-8668 LINES GP-CYLINDER—RIDE CONTROL ACCUMULATOR

S/N: LMD1-UP

PART OF 308-6646 HYDRAULIC AR

AN ATTACHMENT

SMCS-5057 **i03103167**

NOTE	REF NO	GRAPHIC REF	PART NUMBER	QTY	PART NAME 1 2 3 4 5 6 (PRODUCT LEVEL)	SEE PAGE
	1	1	**4V-0612**	2	PLATE	
I	2	1	**109-3262**	1	HOSE AS	
	3	1	**5P-0599**	1	CLAMP-BAND	
	4	1	**5P-1717**	4	CLAMP-HOSE	
	5	1	**9R-5948**	3	BLOCK	
	6	1	**154-6583**	4	CLAMP-HALF	
Y	7	1	*162-3960*	1	ACCUMULATOR GP-RIDE CONTROL (CHARGED)	246
I	8	1	**171-0524**	1	HOSE AS	
I	9	1	**205-7234**	1	HOSE AS	
Y	10	1	**245-8780**	1	MANIFOLD GP-RIDE CONTROL	303
	11	1	*287-7329*	2	ELBOW AS	
					(EACH INCLUDES)	
		1	**2M-9780**	1	SEAL-O-RING	
		1	**6V-8398**	1	SEAL-O-RING	
		1	**287-7328**	1	ELBOW	
	12	1	**291-8132**	1	TUBE AS	
	13	1	**291-8133**	1	TUBE AS	
	14	1	**293-9783**	1	BRACKET AS	
	15	1	**293-9813**	1	BRACKET AS	
I	16	1	**307-1832**	2	HOSE AS	
I	17	1	**307-1833**	1	HOSE AS	
I	18	1	**307-8673**	1	HOSE AS	
	19	1	**109-1633**	2	CLIP (SLOT)	
	20	1	**109-1634**	2	CLIP (TAB)	
	21	1	*148-8318*	1	CONNECTOR AS	
		1	**3K-0360**	1	SEAL-O-RING	
		1	**6V-8397**	1	SEAL-O-RING	
		1	**6V-8634**	1	CONNECTOR (SEAL)	
	22	1	*148-8340*	2	CONNECTOR AS	
					(EACH INCLUDES)	
		1	**3K-0360**	1	SEAL-O-RING	
		1	**6V-8398**	1	SEAL-O-RING	
		1	**6V-8639**	1	CONNECTOR (SEAL)	
	23	1	*148-8345*	2	CONNECTOR AS	
					(EACH INCLUDES)	
		1	**2M-9780**	1	SEAL-O-RING	
		1	**6V-8398**	1	SEAL-O-RING	
		1	**6V-8638**	1	CONNECTOR (O-RING)	
	24	1	*148-8364*	2	ELBOW AS	
					(EACH INCLUDES)	
		1	**3K-0360**	1	SEAL-O-RING	
		1	**6V-8398**	1	SEAL-O-RING	
		1	**6V-8625**	1	ELBOW (90-DEG)	
	25	1	*148-8407*	1	PLUG AS	
		1	**3J-1907**	1	SEAL-O-RING	
		1	**9S-4191**	1	PLUG-O-RING	
	26	1	*148-8444*	1	TEE AS-SWIVEL	
		1	**6V-8398**	2	SEAL-O-RING	
		1	**6V-9837**	1	TEE-SWIVEL	
	27	1	*153-6245*	2	ELBOW AS	
					(EACH INCLUDES)	
		1	**2M-9780**	1	SEAL-O-RING	
		1	**6V-8398**	1	SEAL-O-RING	
		1	**136-6811**	1	ELBOW	
	28	1	*164-5549*	1	COUPLING AS	

307-8668 **LINES GP-CYLINDER** *(contd.)* **i03103167**

NOTE	REF NO	GRAPHIC REF	PART NUMBER	QTY	PART NAME 1 2 3 4 5 6 (PRODUCT LEVEL)	SEE PAGE
		1	**3J-1907**	1	SEAL-O-RING	
		1	**4I-6287**	1	COUPLING	
I	29	1	**257-3989**	2	HOSE AS	
I	30	1	**257-3990**	2	HOSE AS	
	31	1	*287-7337*	2	CROSS AS	
					(EACH INCLUDES)	
		1	**6V-8398**	4	SEAL-O-RING	
		1	**287-7336**	1	CROSS	
	32	1	**6V-8398**	2	SEAL-O-RING	
	33	1	**6V-9169**	2	NUT-BULKHEAD (13/16-16-THD)	
	34	1	**276-2334**	1	FILM-WARNING (HIGH PRESS CYLINDER, READ OMM)	
	35	1	**7X-7729**	2	WASHER (11X25X3-MM THK)	
M	36	1	**7X-2539**	2	BOLT (M8X1.25X110-MM)	
	37	1	**8T-4121**	6	WASHER-HARD (11X21X2.5-MM THK)	
M	38	1	**8T-4136**	2	BOLT (M10X1.5X25-MM)	
M	39	1	**8T-4186**	2	BOLT (M10X1.5X40-MM)	
M	40	1	**8T-4195**	2	BOLT (M10X1.5X30-MM)	
	41	1	**8T-4224**	2	WASHER-HARD (8.8X16X2-MM THK)	
M	42	1	**8T-6869**	2	BOLT (M8X1.25X60-MM)	
	43	1	**9R-2052**	2	BLOCK	
D	44	1	**8T-3425**		CHANNEL-TRIM (0.3-M EACH)	
D	44A	1	**8T-3425**		CHANNEL-TRIM (0.5-M)	
D	44B	1	**8T-3425**		CHANNEL-TRIM (0.2-M)	
D	44C	1	**8T-3425**		CHANNEL-TRIM (0.2-M)	
M	45	1	**8T-4196**	2	BOLT (M10X1.5X35-MM)	
	46	1	**085-7329**	2	SPACER (9X19X30-MM THK)	

D-ORDER BY THE METER
I-REFER TO HYDRAULIC INFORMATION SYSTEM
M-METRIC PART
Y-SEPARATE ILLUSTRATION

307-8668 **LINES GP-CYLINDER** *(contd.)* **i03103167**

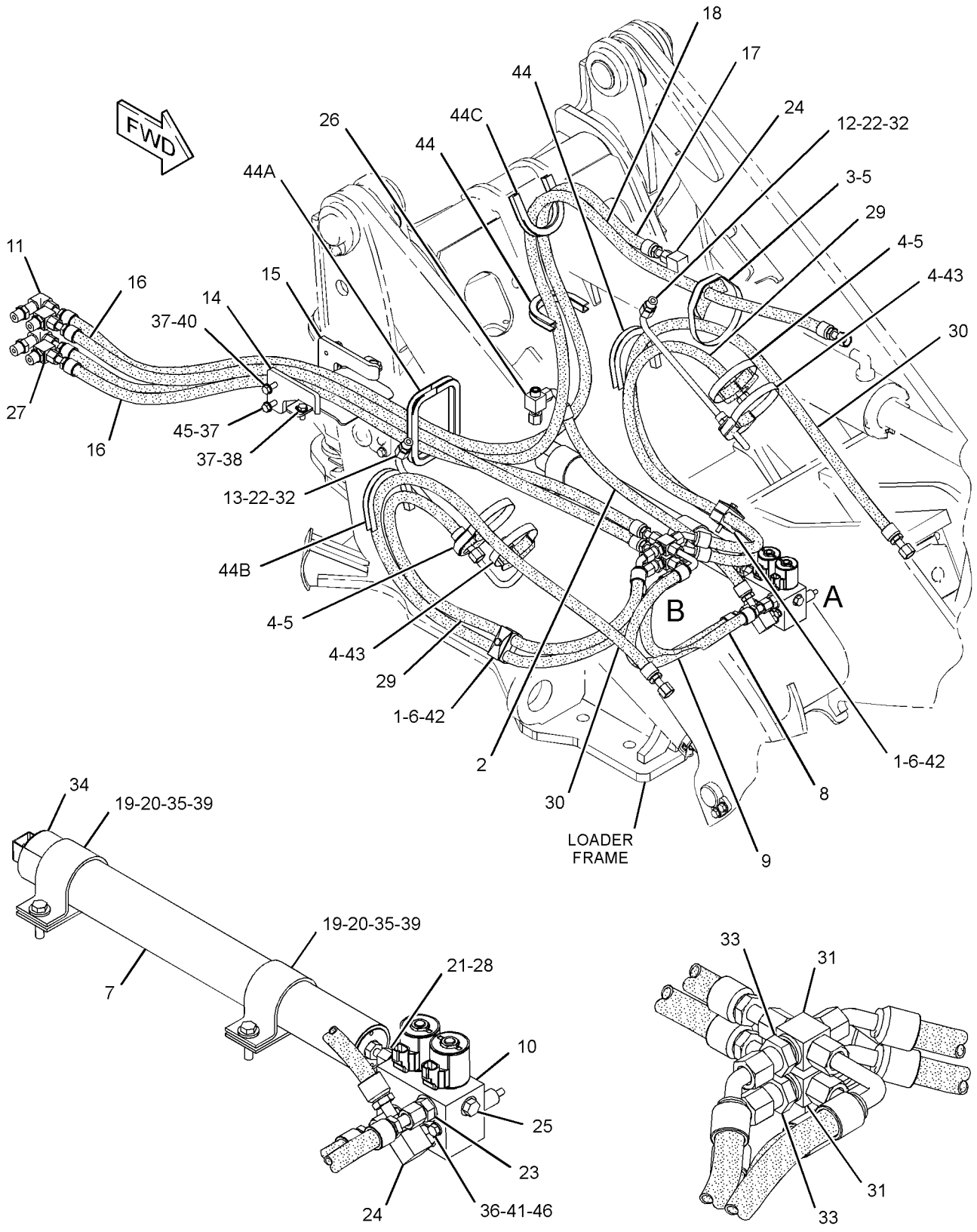

VIEW OF AREA A
(HOSES REMOVED FOR CLARITY)

VIEW OF AREA B

GRAPHIC #1 **<END>** g01587593

HYDRAULIC SYSTEM

257-3946 LINES GP-HYDRAULIC OIL COOLER

S/N: LMD1-UP

PART OF 322-5768 HEATER AR-CAB, 322-5766 OPERATOR AR-OPEN ROPS

AN ATTACHMENT

SMCS-1374, 5057 **i02917833**

NOTE	REF NO	GRAPHIC REF	PART NUMBER	QTY	PART NAME 1 2 3 4 5 6 (PRODUCT LEVEL)	SEE PAGE
	1	1	**5D-1026**	8	CLAMP-HOSE	
	2	1	**7K-1181**	1	STRAP-CABLE	
	3	1	**249-5312**	2	ELBOW	
	4	1	**282-9456**	1	ELBOW	
	5	1	*148-8341*	1	CONNECTOR AS	
		1	**6V-8713**	1	CONNECTOR	
		1	**3D-2824**	1	SEAL-O-RING	
		1	**7J-9108**	1	SEAL-O-RING	
	6	1	*153-6232*	1	ELBOW AS	
		1	**8T-0120**	1	ELBOW	
		1	**3D-2824**	1	SEAL-O-RING	
		1	**7J-9108**	1	SEAL-O-RING	
	7	1	**208-5455**	1	TEE	
	8	1	**6V-9831**	1	CAP AS	
	9	1	**7G-3228**	1	GROMMET	
E	10	1	**136-1955**		HOSE (41-CM)	
E	10A	1	**136-1955**		HOSE (60-CM)	
E	10B	1	**136-1955**		HOSE (70-CM)	
E	10C	1	**136-1955**		HOSE (110-CM)	

E-ORDER BY THE CENTIMETER

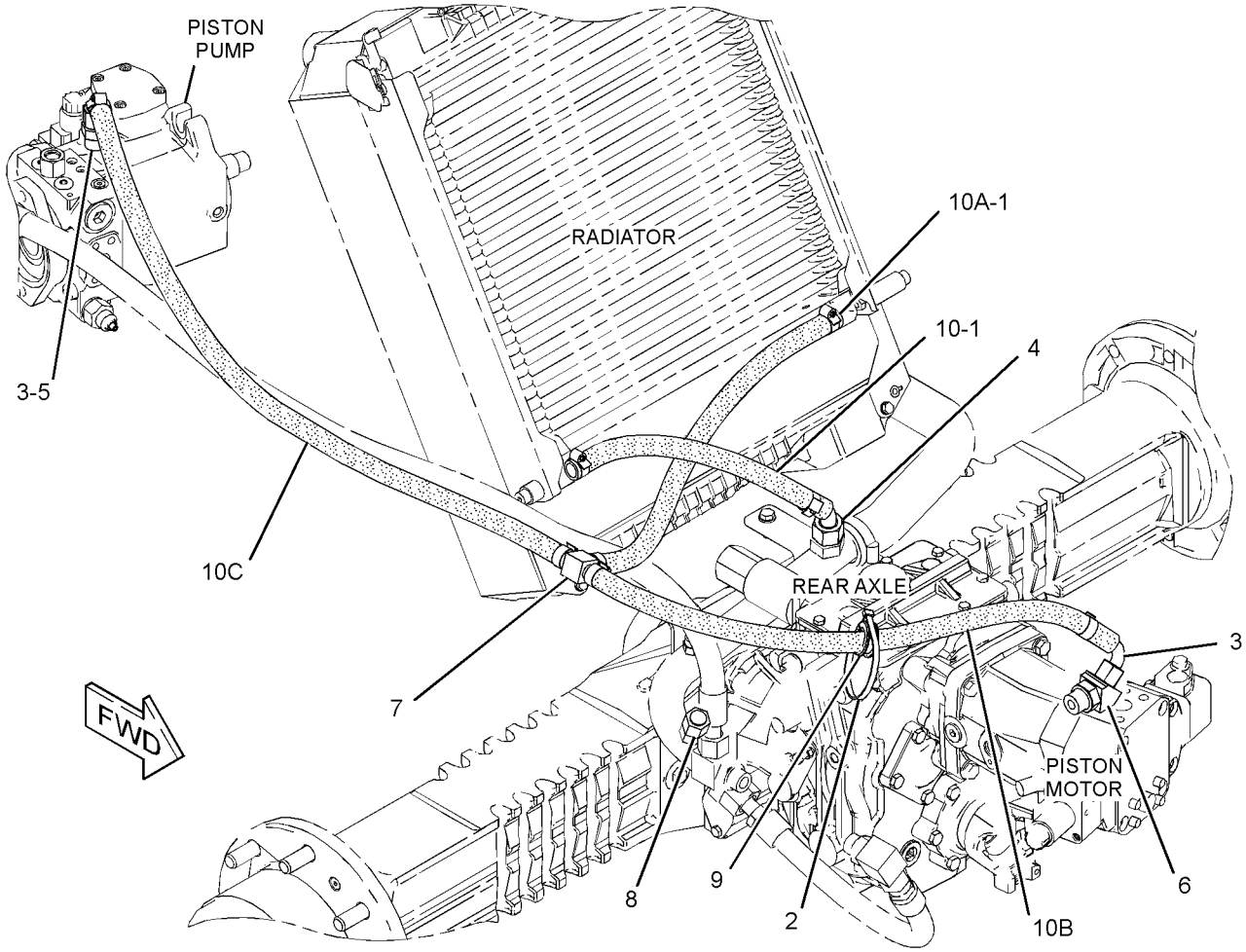

GRAPHIC #1 **<END>** g01377193

HYDRAULIC SYSTEM

282-9570 LINES GP-HYDRAULIC OIL COOLER

S/N: LMD1-UP
PART OF 322-5769 AIR CONDITIONER AR
AN ATTACHMENT

SMCS-1374, 5057 **i03103233**

NOTE	REF NO	GRAPHIC REF	PART NUMBER	QTY	PART NAME 1 2 3 4 5 6 (PRODUCT LEVEL)	SEE PAGE
	1	1	**5D-1026**	8	CLAMP-HOSE	
	2	1	**249-5312**	3	ELBOW	
	3	1	*148-8341*	1	CONNECTOR AS	
		1	**3D-2824**	1	SEAL-O-RING	
		1	**6V-8713**	1	CONNECTOR	
		1	**7J-9108**	1	SEAL-O-RING	
	4	1	*153-6232*	1	ELBOW AS	
		1	**3D-2824**	1	SEAL-O-RING	
		1	**7J-9108**	1	SEAL-O-RING	
		1	**8T-0120**	1	ELBOW	
	6	1	**6V-9832**	1	CAP AS	
E	7	1	**136-1955**		HOSE (110-CM)	
E	7A	1	**136-1955**		HOSE (70-CM)	
E	7B	1	**136-1955**		HOSE (53-CM)	
E	7C	1	**136-1955**		HOSE (43-CM)	
	8	1	**7G-3228**	1	GROMMET	
	9	1	**7K-1181**	1	STRAP-CABLE	

E-ORDER BY THE CENTIMETER

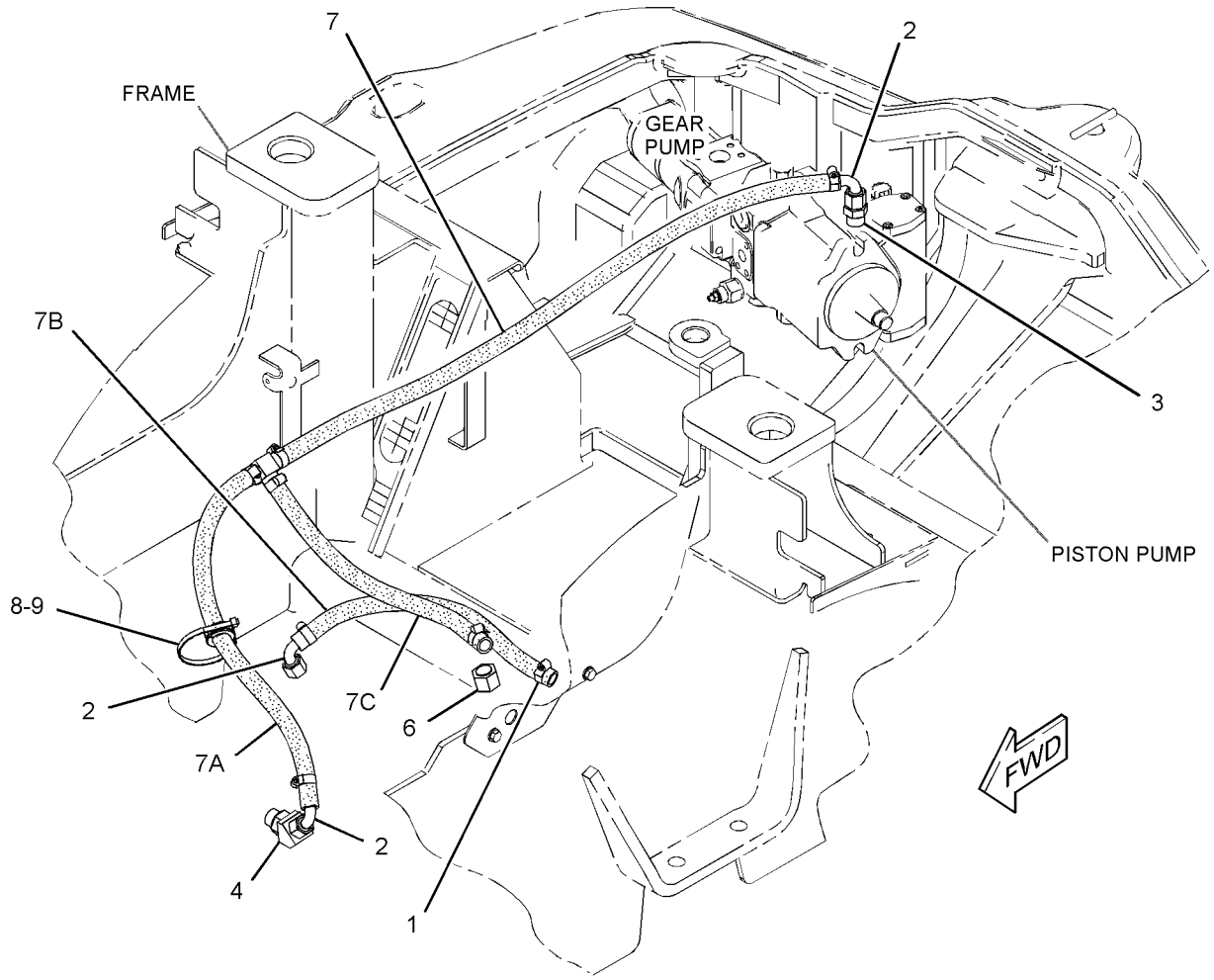

GRAPHIC #1 **<END>** g01388571

HYDRAULIC SYSTEM

257-3944 LINES GP-PILOT–
DIFFERENTIAL LOCK, HYDRAULIC LOCKOUT
S/N: LMD1-UP
PART OF 257-4018, 257-4019 HYDRAULIC AR
AN ATTACHMENT

SMCS-5057, 5059 **i02980717**

NOTE	REF NO	GRAPHIC REF	PART NUMBER	QTY	PART NAME 1 2 3 4 5 6 (PRODUCT LEVEL)	SEE PAGE
	1	1	**1P-4278**	4	CLAMP-HOSE	
Y	2	1	*149-0686*	1	ACCUMULATOR GP-HYDRAULIC (CHARGED) (PILOT)	245
	3	1	*164-9639*	2	CONNECTOR AS	
					(EACH INCLUDES)	
		1	**148-7925**	1	CONNECTOR	
		1	**3J-1907**	1	SEAL-O-RING	
		1	**4J-5477**	1	SEAL-O-RING	
	4	1	*184-6581*	1	CONNECTOR AS	
		1	**195-5830**	1	CONNECTOR	
		1	**3J-1907**	1	SEAL-O-RING	
	5	1	*215-7067*	1	ELBOW AS	
		1	**215-7066**	1	ELBOW	
		1	**3J-1907**	1	SEAL-O-RING	
	7	1	**238-1844**	2	ELBOW (SWIVEL)	
Y	8	1	*262-8718*	1	MANIFOLD GP-CONTROL (DIFF LOCK, HYDRAULIC LOCKOUT)	302
	9	1	**270-5114**	1	HOSE AS	
	10	1	**270-5115**	2	HOSE AS	
	11	1	**270-5116**	2	HOSE AS	
	12	1	**272-2782**	1	HOSE AS	
	13	1	*148-8325*	8	CONNECTOR AS	
					(EACH INCLUDES)	
		1	**6V-8641**	1	CONNECTOR (O-RING FACE SEAL)	
		1	**3J-1907**	1	SEAL-O-RING	
		1	**4J-5477**	1	SEAL-O-RING	
	14	1	*148-8336*	1	CONNECTOR AS	
		1	**6V-8636**	1	CONNECTOR (FACE SEAL)	
		1	**3J-1907**	1	SEAL-O-RING	
		1	**6V-8397**	1	SEAL-O-RING	
	17	1	**3K-0360**	1	SEAL-O-RING	
	18	1	**8T-4121**	2	WASHER-HARD (11X21X2.5-MM THK)	
M	19	1	**8T-4172**	2	BOLT (M10X1.5X80-MM)	
E	20	1	**5P-1442**		HOSE (27-CM)	
E	20A	1	**5P-1442**		HOSE (85-CM)	
	21	1	**290-9635**	1	PLATE AS	
	22	1	**290-9634**	1	PLATE AS	
M	23	1	**3E-8020**	6	SCREW-TRUSS HEAD (M6X1X25-MM)	
	24	1	**034-1432**	1	STRAP-CABLE	
	25	1	**276-2334**	1	FILM-WARNING (HIGH PRESS CYLINDER, READ OMM)	

E-ORDER BY THE CENTIMETER
M-METRIC PART
Y-SEPARATE ILLUSTRATION

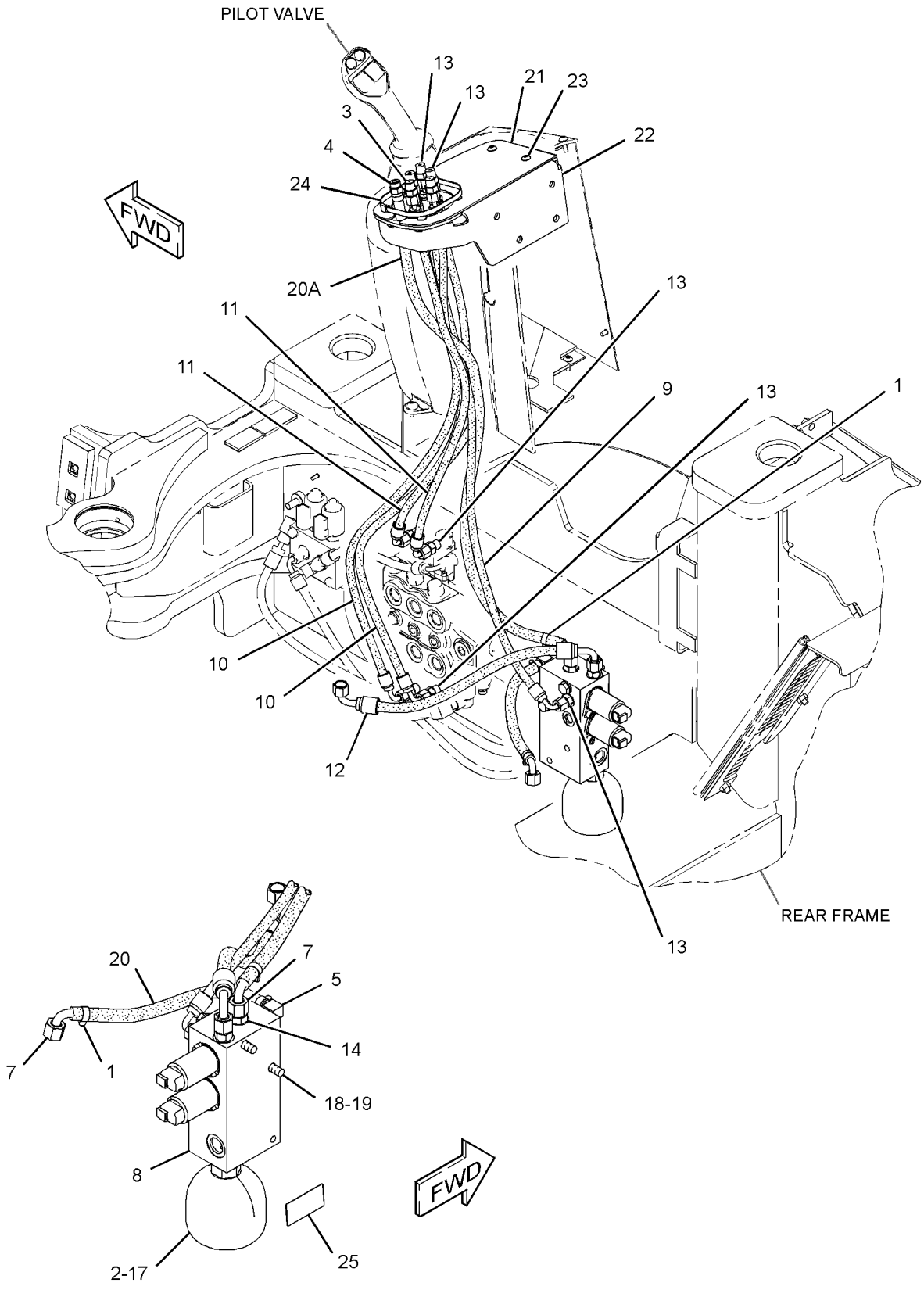

GRAPHIC #1 **<END>** g01523728

HYDRAULIC SYSTEM

272-2236 LINES GP-PILOT—AUXILIARY CONTROL VALVE

S/N: LMD1-UP

PART OF 257-4018, 257-4019 HYDRAULIC AR

AN ATTACHMENT

SMCS-5057, 5059 **i02858187**

NOTE	REF NO	GRAPHIC REF	PART NUMBER	QTY	PART NAME 1 2 3 4 5 6 (PRODUCT LEVEL)	SEE PAGE
	1	1	**1P-4278**	2	CLAMP-HOSE	
	2	1	*215-7067*	2	ELBOW AS	
					(EACH INCLUDES)	
		1	**3J-1907**	1	SEAL-O-RING	
		1	**215-7066**	1	ELBOW	
	3	1	**242-6069**	1	HOSE AS	
Y	4	1	**244-6735**	1	MANIFOLD GP-CONTROL (2-WAY, PROPORTIONAL) (AUXILIARY)	300
	5	1	**251-3251**	1	HOSE AS	
	6	1	**270-5117**	1	HOSE AS	
	7	1	*148-8325*	3	CONNECTOR AS	
					(EACH INCLUDES)	
		1	**3J-1907**	1	SEAL-O-RING	
		1	**4J-5477**	1	SEAL-O-RING	
		1	**6V-8641**	1	CONNECTOR	
	8	1	*148-8368*	3	ELBOW AS	
					(EACH INCLUDES)	
		1	**3J-1907**	1	SEAL-O-RING	
		1	**4J-5477**	1	SEAL-O-RING	
		1	**6V-8627**	1	ELBOW	
	9	1	**8T-4224**	2	WASHER-HARD (8.8X16X2-MM THK)	
M	10	1	**8T-6870**	2	BOLT (M8X1.25X70-MM)	
E	11	1	**5P-1442**		HOSE (60-CM)	

E-ORDER BY THE CENTIMETER
M-METRIC PART
Y-SEPARATE ILLUSTRATION



GRAPHIC #1 **<END>** g01376716

HYDRAULIC SYSTEM

257-3923 LINES GP-PUMP

S/N: LMD1-UP

AN ATTACHMENT

SMCS-5057 **i02698808**

NOTE	REF NO	GRAPHIC REF	PART NUMBER	QTY	PART NAME 1 2 3 4 5 6 (PRODUCT LEVEL)	SEE PAGE
	1	1	**5P-2230**	1	CLAMP-HOSE	
	2	1	**6V-0852**	1	CAP-DUST	
	3	1	**8T-9402**	1	CLAMP-HOSE	
	4	1	**9U-6992**	1	ADAPTER	
	5	1	*180-9286*	1	TEE AS	
		1	**3D-2824**	1	SEAL-O-RING	
		1	**3E-2345**	1	TEE-O-RING	
		1	**6V-9746**	1	SEAL-O-RING	
	6	1	**276-8690**	1	TUBE AS	
	7	1	**276-8872**	1	HOSE-SUCTION	
	8	1	**277-5628**	1	TUBE AS	
	9	1	**279-6392**	1	HOSE-SUCTION	
I	10	1	**281-8519**	1	HOSE AS	
	11	1	*148-8347*	2	ELBOW AS	
					(EACH INCLUDES)	
		1	**3D-2824**	1	SEAL-O-RING	
		1	**6V-9007**	1	ELBOW	
		1	**6V-9746**	1	SEAL-O-RING	
	12	1	*164-5567*	1	COUPLER AS-QUICK DISCONNECT	
		1	**3J-1907**	1	SEAL-O-RING	
		1	**6V-3965**	1	COUPLER AS-QUICK DISCONNECT	
	13	1	**295-1293**	1	STRAP AS	
	14	1	**1P-4578**	2	FLANGE-HALF	
	15	1	**4J-0522**	1	SEAL-O-RING	
	16	1	**5K-9090**	1	SEAL-O-RING	
	17	1	**5P-0597**	1	CLAMP-HOSE	
	18	1	**5P-4868**	2	CLAMP-HOSE	
I	19	1	**5T-9728**	1	HOSE AS	
	20	1	**6V-8397**	1	SEAL-O-RING	
	21	1	**6V-8398**	1	SEAL-O-RING	
	22	1	**6V-9746**	1	SEAL-O-RING	
	23	1	**7J-9108**	1	SEAL-O-RING	
	24	1	**8T-4121**	6	WASHER-HARD (11X21X2.5-MM THK)	
M	25	1	**8T-4195**	2	BOLT (M10X1.5X30-MM)	
M	26	1	**8T-4196**	4	BOLT (M10X1.5X35-MM)	

I-REFER TO HYDRAULIC INFORMATION SYSTEM
M-METRIC PART

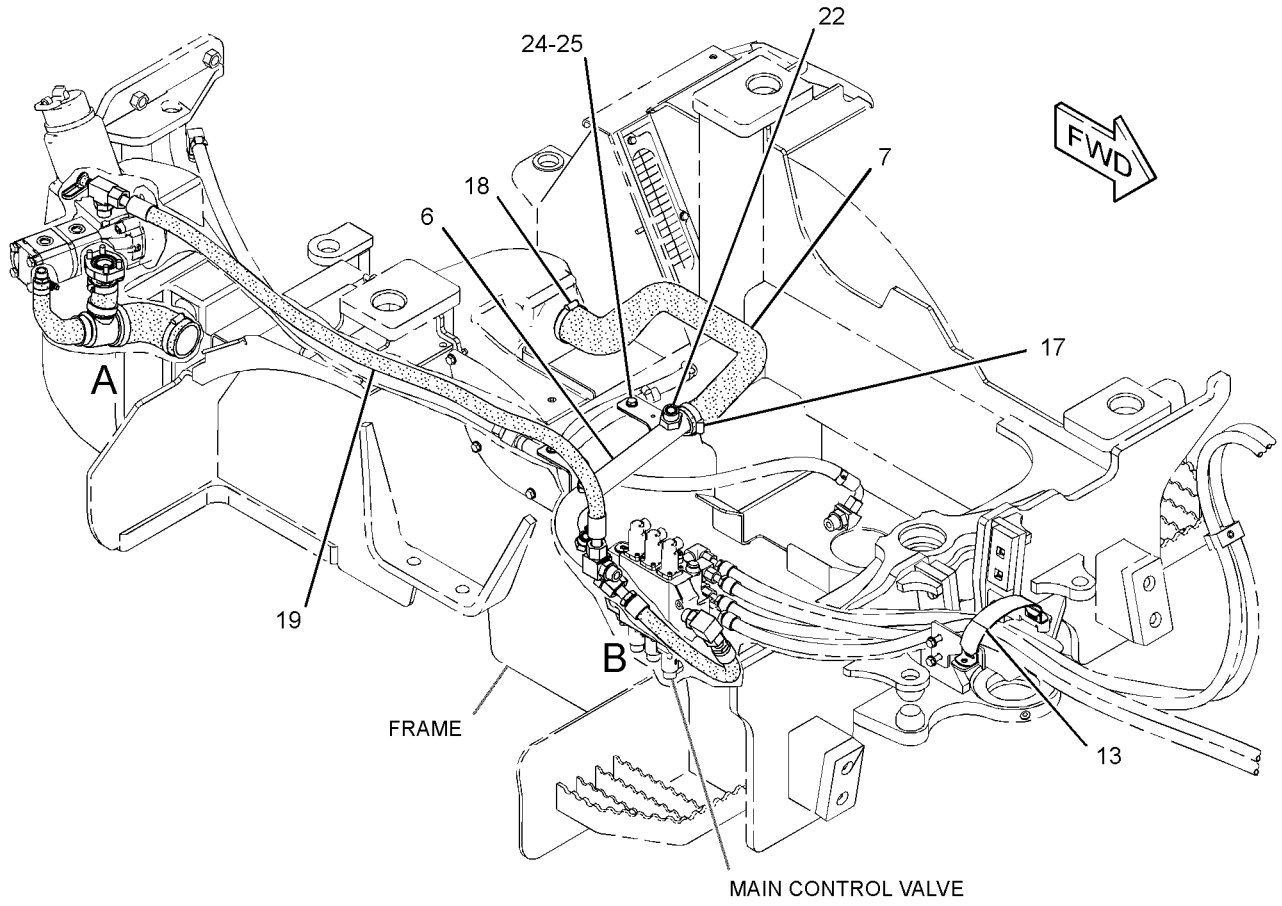

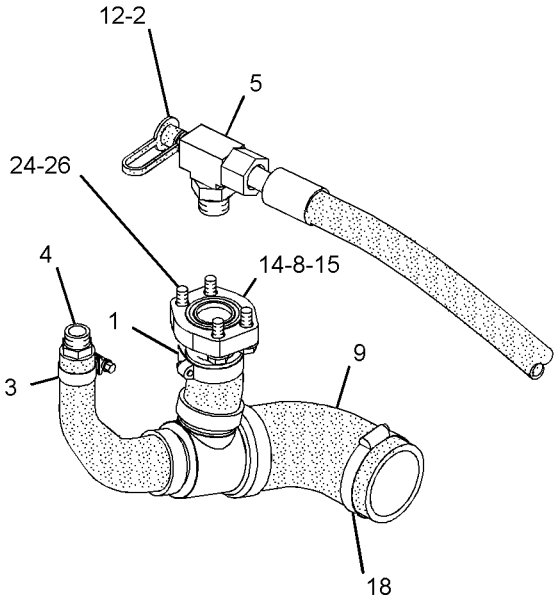

VIEW OF AREA A

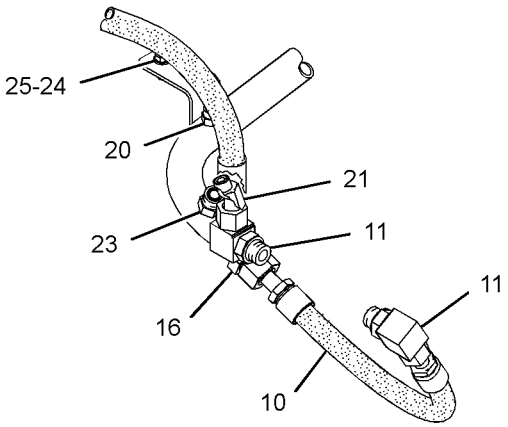

VIEW OF AREA B

GRAPHIC #1 **<END>** g01357180

HYDRAULIC SYSTEM

297-0164 LINES GP-PUMP

S/N: LMD1-UP

AN ATTACHMENT

SMCS-5057 **i02700537**

NOTE	REF NO	GRAPHIC REF	PART NUMBER	QTY	PART NAME 1 2 3 4 5 6 (PRODUCT LEVEL)	SEE PAGE
	1	1	**5P-2230**	1	CLAMP-HOSE	
	2	1	**6V-0852**	1	CAP-DUST	
	3	1	**8T-9402**	1	CLAMP-HOSE	
	4	1	**9U-6992**	1	ADAPTER	
	5	1	*180-9286*	1	TEE AS	
		1	**3D-2824**	1	SEAL-O-RING	
		1	**3E-2345**	1	TEE-O-RING	
		1	**6V-9746**	1	SEAL-O-RING	
	6	1	**276-8690**	1	TUBE AS	
	7	1	**276-8872**	1	HOSE-SUCTION	
	8	1	**277-5628**	1	TUBE AS	
	9	1	**279-6392**	1	HOSE-SUCTION	
I	10	1	*281-8519*	1	HOSE AS	
	11	1	**300-6256**	1	STRAP AS	
	12	1	*148-8347*	1	ELBOW AS	
		1	**3D-2824**	1	SEAL-O-RING	
		1	**6V-9007**	1	ELBOW	
		1	**6V-9746**	1	SEAL-O-RING	
	13	1	*153-6259*	1	TEE AS	
		1	**3D-2824**	1	SEAL-O-RING	
		1	**6V-8777**	1	TEE-FACE SEAL	
		1	**6V-9746**	2	SEAL-O-RING	
	14	1	*164-5567*	1	COUPLER AS-QUICK DISCONNECT	
		1	**3J-1907**	1	SEAL-O-RING	
		1	**6V-3965**	1	COUPLER AS-QUICK DISCONNECT	
	15	1	**1P-4578**	2	FLANGE-HALF	
	16	1	**4J-0522**	1	SEAL-O-RING	
	17	1	**5K-9090**	1	SEAL-O-RING	
	18	1	**5P-0597**	1	CLAMP-HOSE	
	19	1	**5P-4868**	2	CLAMP-HOSE	
I	20	1	**5T-9728**	1	HOSE AS	
	21	1	**6V-8397**	1	SEAL-O-RING	
	22	1	**6V-8398**	1	SEAL-O-RING	
	23	1	**6V-9746**	1	SEAL-O-RING	
	24	1	**7J-9108**	1	SEAL-O-RING	
	25	1	**8T-4121**	6	WASHER-HARD (11X21X2.5-MM THK)	
M	26	1	**8T-4195**	2	BOLT (M10X1.5X30-MM)	
M	27	1	**8T-4196**	4	BOLT (M10X1.5X35-MM)	

I-REFER TO HYDRAULIC INFORMATION SYSTEM
M-METRIC PART

297-0164 **LINES GP-PUMP** *(contd.)* **i02700537**

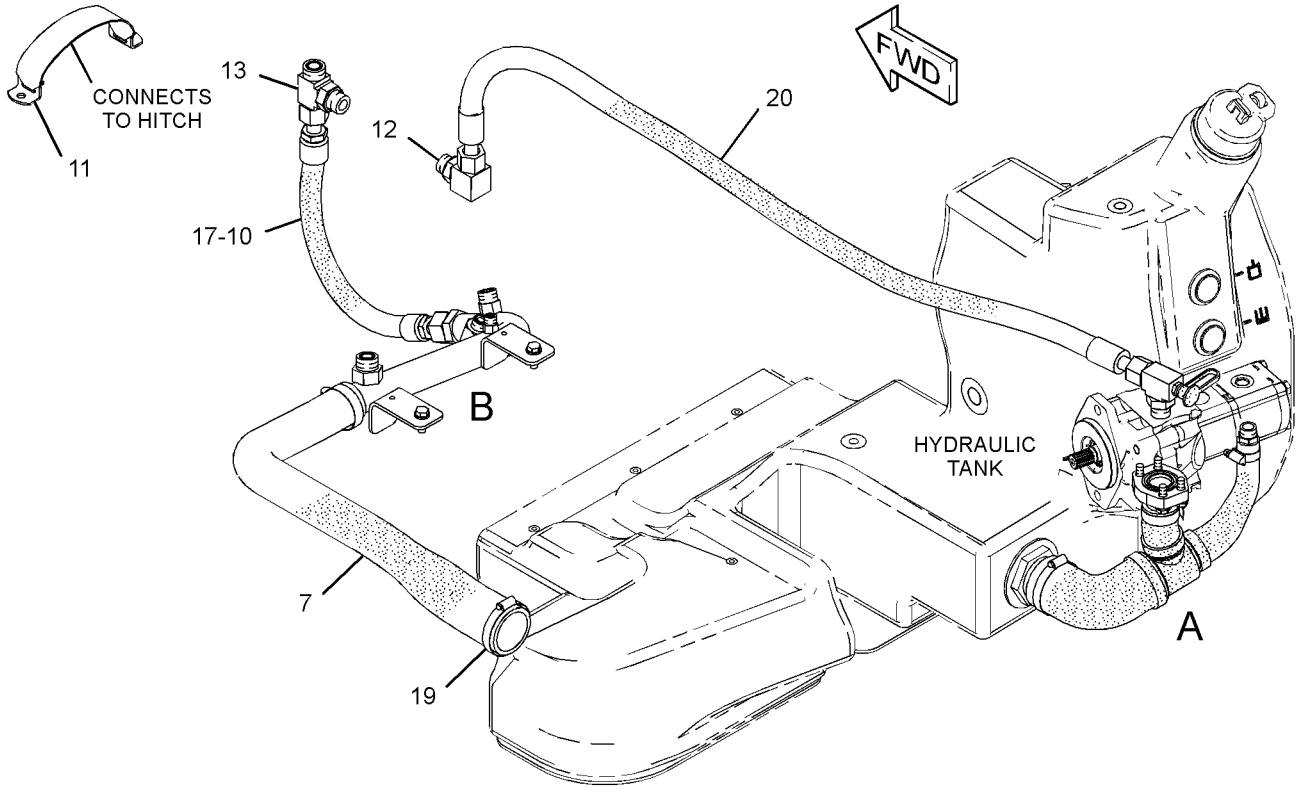

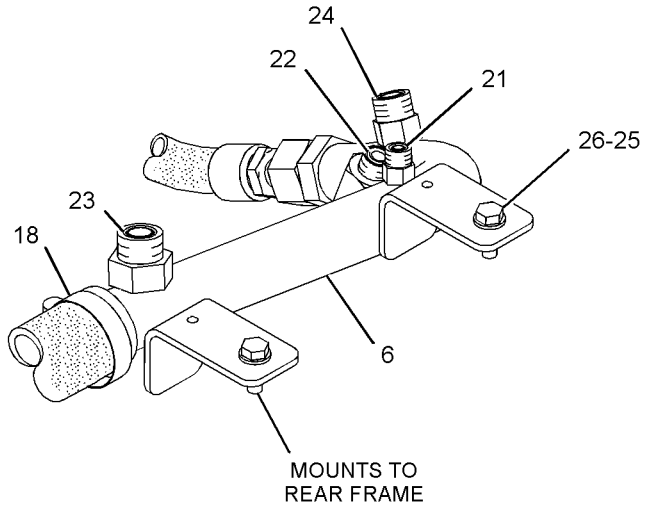

VIEW OF AREA B

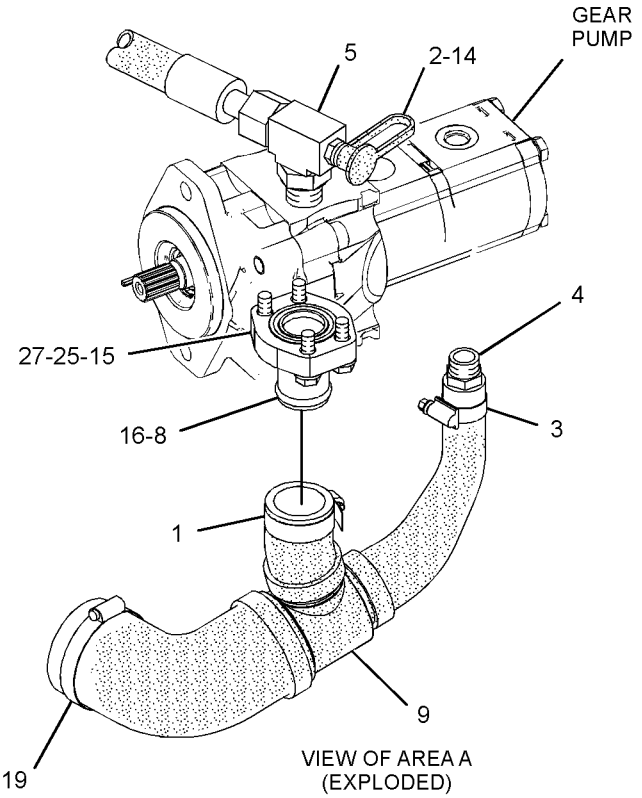

VIEW OF AREA A
(EXPLODED)

GRAPHIC #1 **<END>** g01376721

244-6735 MANIFOLD GP-CONTROL–2-WAY, PROPORTIONAL

S/N: LMD1-UP

PART OF 272-2236 LINES GP-PILOT

AN ATTACHMENT

SMCS-4264, 5072, 5264, 5467, 5479 **i02858190**

NOTE	REF NO	GRAPHIC REF	PART NUMBER	QTY	PART NAME 1 2 3 4 5 6 (PRODUCT LEVEL)	SEE PAGE
Y	1	1	**185-4254**	2	VALVE GP-SOLENOID (12-VOLT) (AUXILIARY)	40

Y-SEPARATE ILLUSTRATION

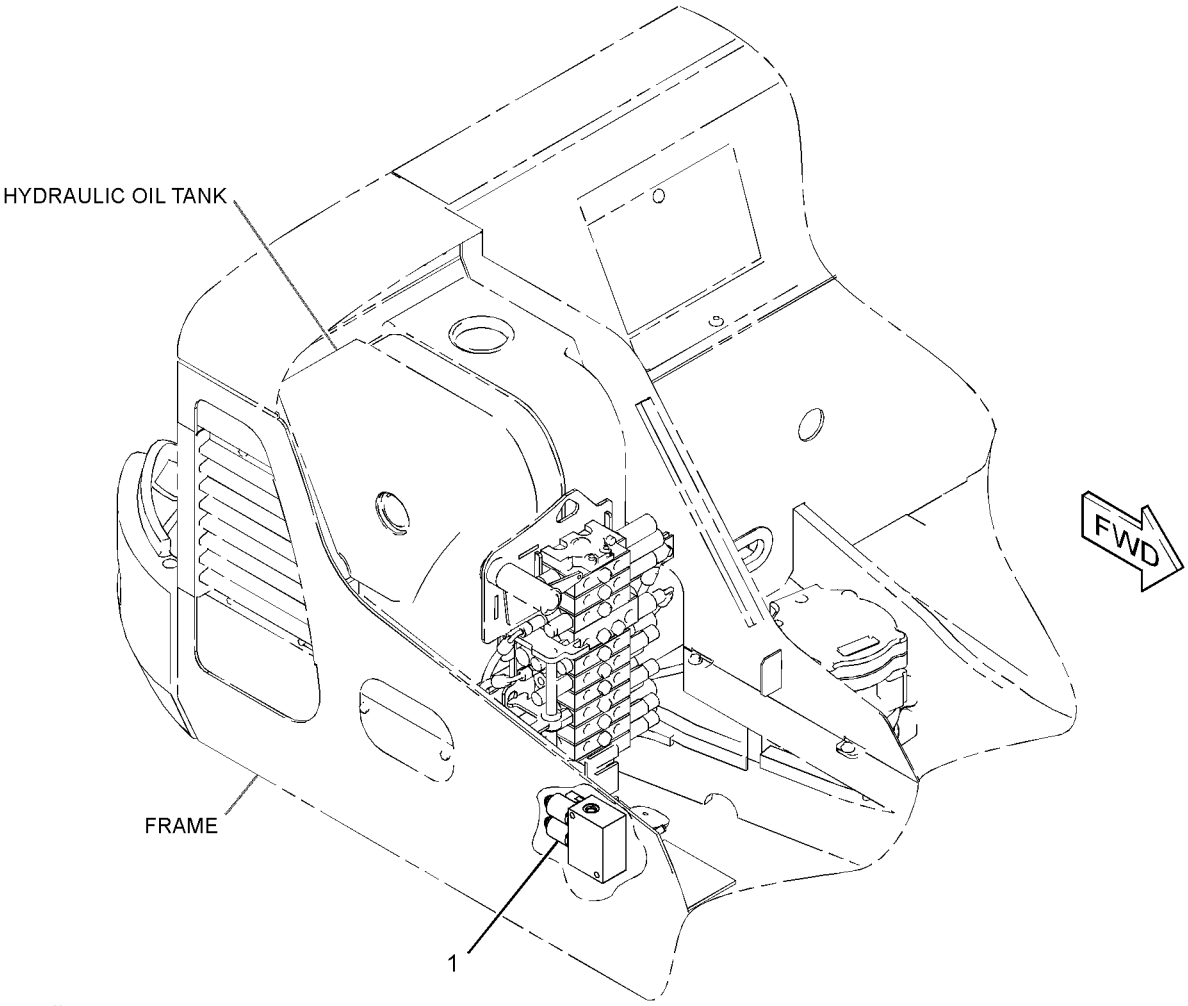

GRAPHIC #1 **<END>** g01273473

248-7696 MANIFOLD GP-CONTROL–

BOOSTED AUXILIARY HYDRAULIC FLOW

S/N: LMD1-UP

PART OF 284-9265 LINES GP-AUXILIARY HYDRAULIC

AN ATTACHMENT

SMCS-4264, 5072, 5264, 5467, 5479 **i03193530**

NOTE	REF NO	GRAPHIC REF	PART NUMBER	QTY	PART NAME 1 2 3 4 5 6 (PRODUCT LEVEL)	SEE PAGE
	1	1	**134-9911**	1	VALVE-CHECK	
	2	1	**148-9364**	1	VALVE GP-CHECK	
J	3	1	**238-4625**	1	VALVE GP-SOLENOID (HIGH FLOW)	
		1	**238-4626**	1	COIL AS	
	4	1	**238-4629**	1	VALVE GP-RELIEF (HYDRAULIC OIL)	
J	5	1	**240-6866**	1	VALVE GP-SOLENOID (HIGH FLOW BOOST)	
		1	**238-4626**	1	COIL AS	
L	6	1	**249-7707**	1	VALVE GP-SOLENOID (HIGH FLOW)	
		1	**238-4628**	1	COIL AS	
	7	1	**250-7662**	1	VALVE GP-CHECK	
					AVAILABLE REPAIR KIT(S):	
J			**106-3108**	1	KIT-SEAL	
L			**141-0888**	1	KIT-SEAL	
					(INCLUDES RING & SEALS)	

J-KIT MARKED J AVAILABLE FOR PART(S) MARKED J
L-KIT MARKED L AVAILABLE FOR PART(S) MARKED L

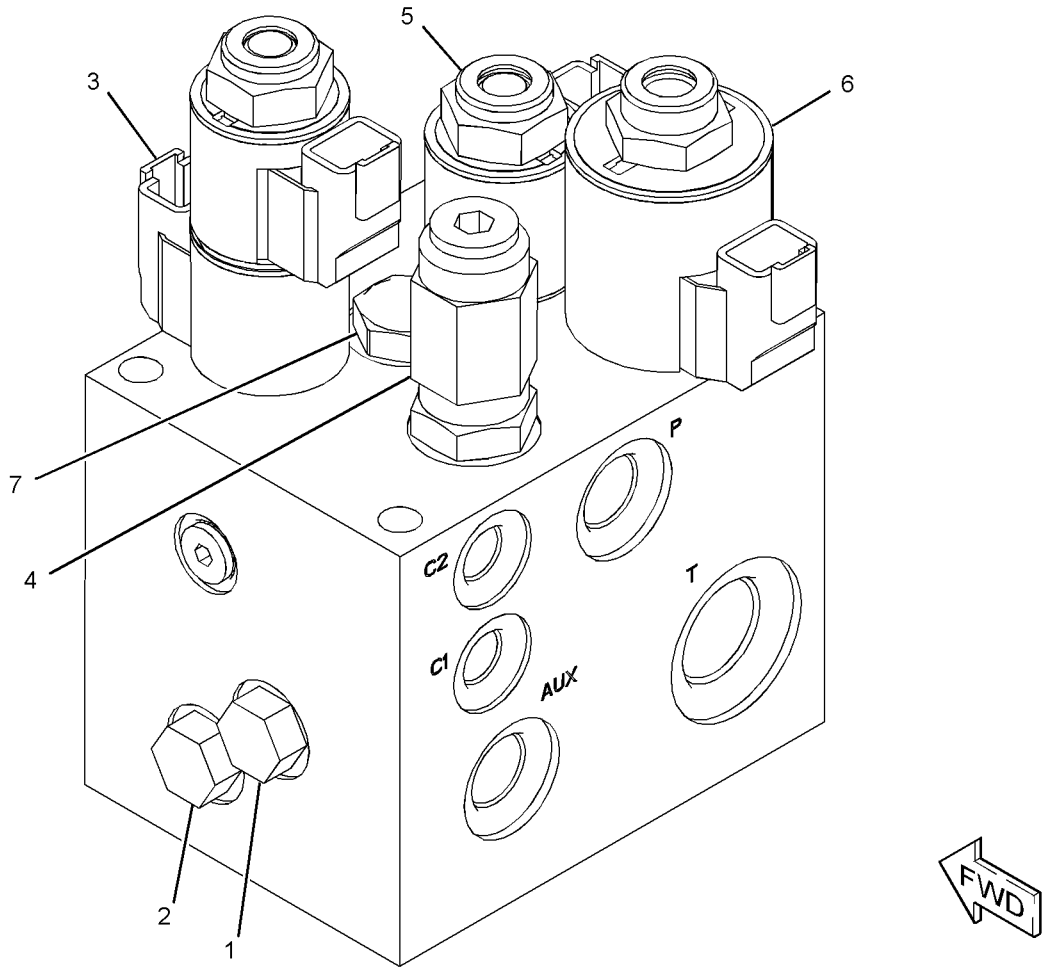

GRAPHIC #1 **<END>** g01151254

262-8718 MANIFOLD GP-CONTROL–
DIFFERENTIAL LOCK, HYDRAULIC LOCKOUT
S/N: LMD1-UP
PART OF 257-3944 LINES GP-PILOT
AN ATTACHMENT

SMCS-4264, 5072, 5264, 5467, 5479 **i02763632**

NOTE	REF NO	GRAPHIC REF	PART NUMBER	QTY	PART NAME 1 2 3 4 5 6 (PRODUCT LEVEL)	SEE PAGE
C	1	1	**6E-4701**	1	VALVE GP-CHECK	
		1	**3J-1907**	1	SEAL-O-RING	
		1	**6V-8397**	1	SEAL-O-RING	
C	2	1	**245-1181**	2	FLANGE	
CJ	3	1	**277-5676**	2	VALVE GP-SOLENOID (HYDRAULIC LOCKOUT)	
CM	4	1	**8T-1158**	2	BOLT-SOCKET HEAD (M8X1.25X20-MM)	
					AVAILABLE REPAIR KIT(S):	
J			**245-1912**	1	KIT-SEAL (SOLENOID VALVE)	
					(INCLUDES SEAL O-RINGS)	

C-CHANGE FROM PREVIOUS TYPE
J-KIT MARKED J AVAILABLE FOR PART MARKED J
M-METRIC PART

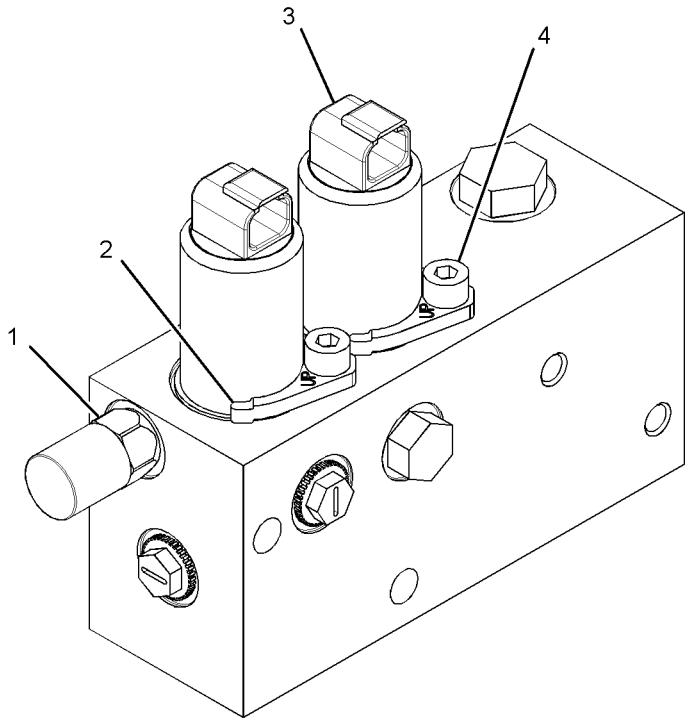

GRAPHIC #1 **<END>** g01388677

HYDRAULIC SYSTEM

245-8780 MANIFOLD GP-RIDE CONTROL

S/N: LMD1-UP
PART OF 307-8667, 307-8668 LINES GP-CYLINDER
AN ATTACHMENT

SMCS-5264 **i03195302**

NOTE	REF NO	GRAPHIC REF	PART NUMBER	QTY	PART NAME 1 2 3 4 5 6 (PRODUCT LEVEL)	SEE PAGE
J	1	1	**249-3124**	1	VALVE GP-SOLENOID (RIDE CONTROL, SWITCH)	
L	2	1	**249-3125**	1	VALVE GP-SOLENOID (ACCUMULATOR)	
	3	1	**238-4628**	1	COIL AS	
					AVAILABLE REPAIR KIT(S):	
J			**141-0888**	1	KIT-SEAL	
L			**227-5509**	1	KIT-SEAL	
					(INCLUDES RING & SEALS)	

J-KIT MARKED J AVAILABLE FOR PART MARKED J
L-KIT MARKED L AVAILABLE FOR PART MARKED L

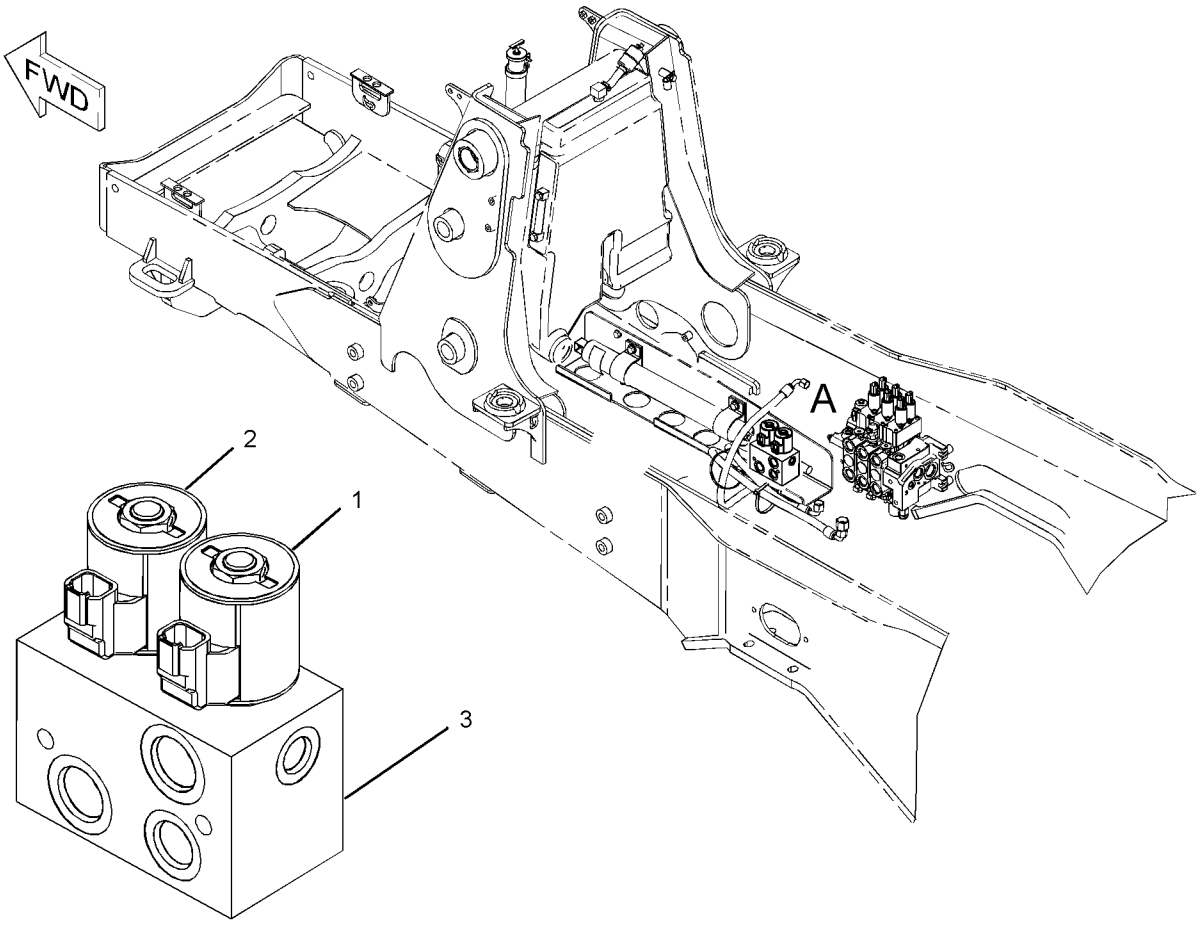

VIEW OF AREA A

GRAPHIC #1 **<END>** g01094840

HYDRAULIC SYSTEM

260-5435 MOTOR & LINES GP-HYDRAULIC FAN

S/N: LMD1-UP

AN ATTACHMENT

SMCS-1386, 5057, 5061 **i02944488**

NOTE	REF NO	GRAPHIC REF	PART NUMBER	QTY	PART NAME 1 2 3 4 5 6 (PRODUCT LEVEL)	SEE PAGE
	1	1	**1P-4278**	2	CLAMP-HOSE	
	2	1	**5D-1026**	2	CLAMP-HOSE	
	3	1	**9M-7958**	2	CLAMP-HOSE	
	4	1	**9U-6993**	1	FITTING GP	
	5	1	*188-3034*	1	ELBOW AS	
		1	**3J-7354**	1	SEAL-O-RING	
		1	**6V-1355**	1	ELBOW (90-DEG)	
	6	1	**248-7591**	1	VALVE GP-CHECK (HYDRAULIC OIL COOLER BYPASS)	
		1	**3D-2824**	1	SEAL-O-RING	
		1	**6V-9746**	1	SEAL-O-RING	
J	7	1	**257-4009**	1	MOTOR GP-GEAR (HYDRAULIC FAN)	
		1	**228-9240**	1	VALVE GP-RELIEF	
		1	**6F-6672**	1	SEAL-O-RING	
		1	**215-3277**	1	SEAL-O-RING	
I	8	1	**260-5458**	1	HOSE AS	
	9	1	**268-1650**	1	CONNECTOR	
	10	1	**278-1541**	1	TEE	
	11	1	*148-8354*	1	ELBOW AS	
		1	**3K-0360**	1	SEAL-O-RING	
		1	**6V-8398**	1	SEAL-O-RING	
		1	**6V-9002**	1	ELBOW (45-DEG)	
	12	1	*148-8390*	1	ELBOW AS	
		1	**2M-9780**	1	SEAL-O-RING	
		1	**6V-8626**	1	ELBOW (FACE SEAL)	
		1	**7J-9108**	1	SEAL-O-RING	
	13	1	**8T-4121**	2	WASHER-HARD (11X21X2.5-MM THK)	
M	14	1	**8T-4195**	2	BOLT (M10X1.5X30-MM)	
E	15	1	**5P-6442**		HOSE (36-CM)	
E	16	1	**146-7453**		HOSE (11-CM)	
E	17	1	**136-1955**		HOSE (20-CM)	
					AVAILABLE REPAIR KIT(S):	
J			**278-8716**	1	KIT-SEAL	
					(INCLUDES SEAL O-RINGS, SHAFT, E-SEALS, SNAP RING, SEAL BACK-UPS & AXIAL)	

E-ORDER BY THE CENTIMETER
I-REFER TO HYDRAULIC INFORMATION SYSTEM
J-KIT MARKED J SERVICES PART MARKED J
M-METRIC PART

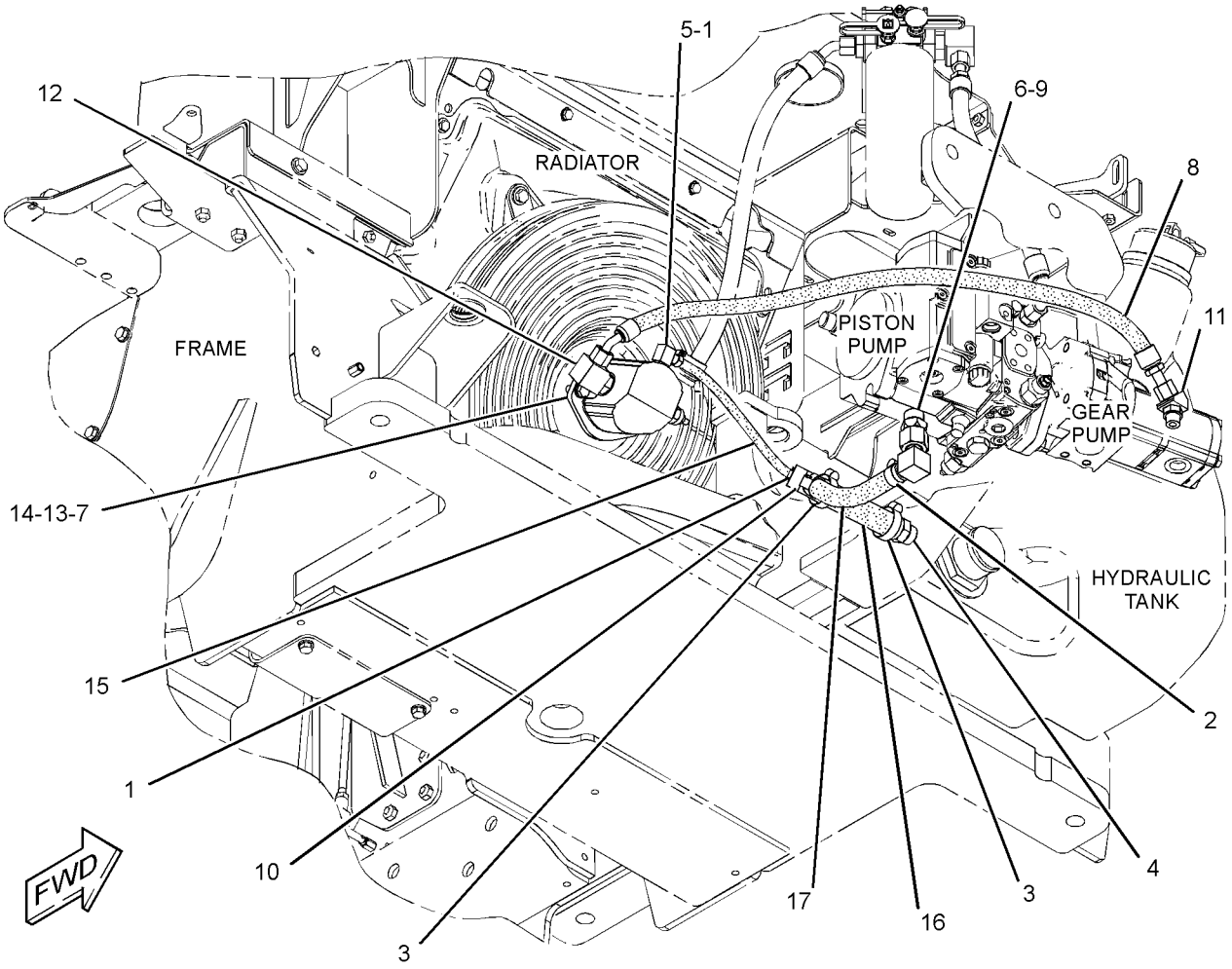

GRAPHIC #1 **<END>** g01387793

269-8908 MOTOR GP-PISTON—HYDROSTATIC

S/N: LMD1-UP

PART OF 260-5391 HYDRAULIC AR

SMCS-1386, 5058 **i02822230**

NOTE	REF NO	GRAPHIC REF	PART NUMBER	QTY	PART NAME 1 2 3 4 5 6 (PRODUCT LEVEL)	SEE PAGE
	1	1	**190-8121**	1	ROTATING GP-MOTOR	
	2	1	**124-9913**	1	SEAL-SHAFT	
	3	1	**124-9914**	1	SHIM (3-MM THK)	
	4	1	**2W-1145**	1	RING-RETAINING	
M	5	1	**6E-3283**	2	LOCKNUT	
	6	1	**6F-4718**	1	SEAL-O-RING	
	7	1	**258-0129**	6	SEAL-O-RING	
M	8	1	**6V-8200**	8	BOLT-SOCKET HEAD (M12X1.75X35-MM)	
	9	1	**123-5787**	2	SEAT	
	10	1	**301-7890**	2	VALVE GP-CHECK	
					(EACH INCLUDES)	
		1	**033-6039**	1	SEAL-O-RING	
		1	**242-0262**	1	RING-BACKUP	
		1	**269-4676**	1	SEAL-O-RING	
Y	11	1	**289-6364**	1	VALVE GP-MOTOR CONTROL (HYDROSTATIC)	322
Y	12	1	**289-6366**	1	VALVE GP-FLUSHING (HYDROSTATIC DRIVE MOTOR)	188

M-METRIC PART
Y-SEPARATE ILLUSTRATION

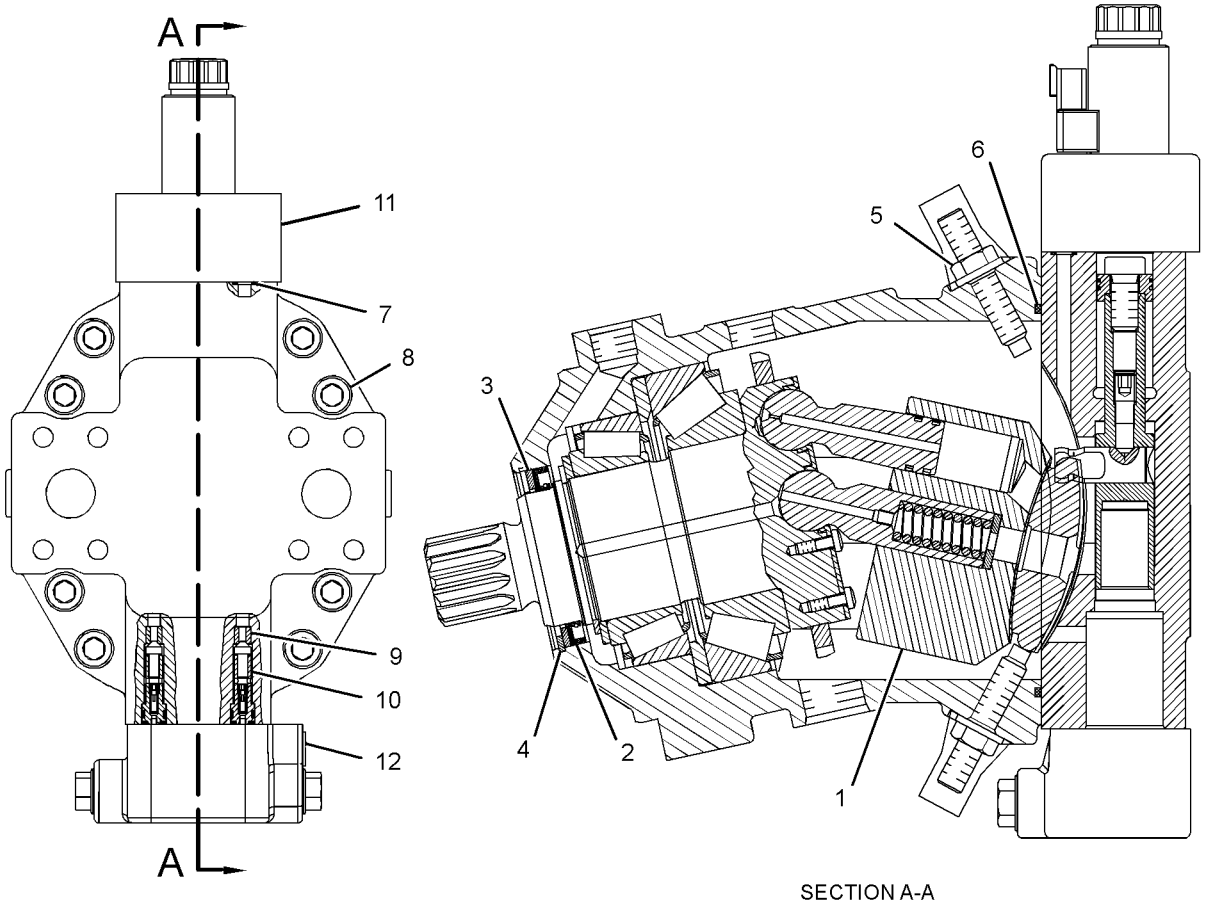

SECTION A-A

GRAPHIC #1 **<END>** g01401958

HYDRAULIC SYSTEM

265-3923 MOUNTING GP-CONTROL VALVE

S/N: LMD1-UP

PART OF 260-5391 HYDRAULIC AR

SMCS-5051 **i02700423**

NOTE	REF NO	GRAPHIC REF	PART NUMBER	QTY	PART NAME 1 2 3 4 5 6 (PRODUCT LEVEL)	SEE PAGE
	1	1	**169-0908**	3	MOUNT AS	
	2	1	**273-3686**	1	PLATE AS	
M	3	1	**8T-4182**	3	BOLT (M10X1.5X45-MM)	
	4	1	**8T-4224**	3	WASHER-HARD (8.8X16X2-MM THK)	
	5	1	**8T-4226**	3	WASHER-PLATED (10.5X45X3-MM THK)	
M	6	1	**8T-6870**	3	BOLT (M8X1.25X70-MM)	

M-METRIC PART

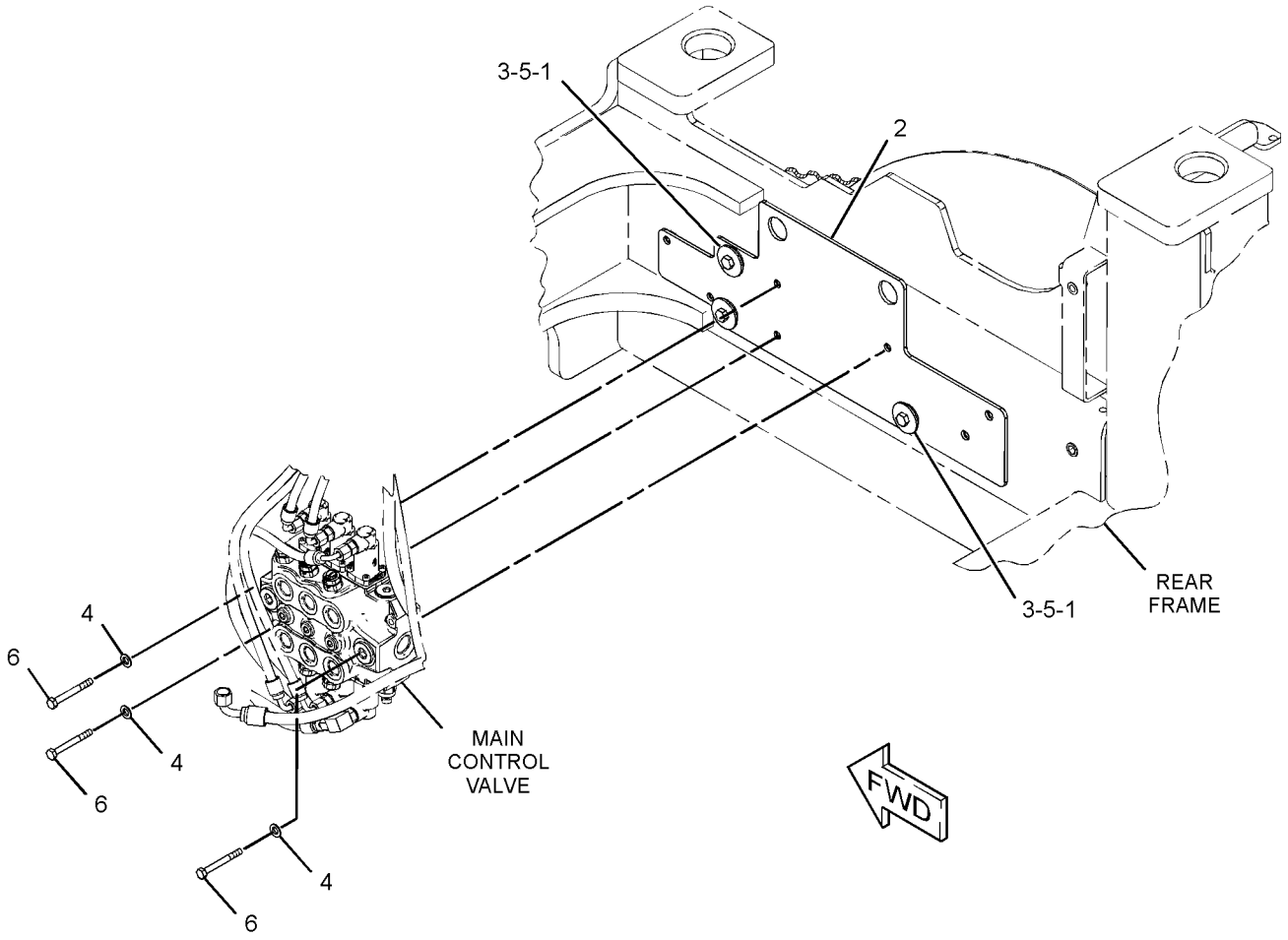

GRAPHIC #1 **<END>** g01381199

280-0527 MOUNTING GP-COOLER & CONDENSER–

HYDRAULIC OIL, REFRIGERANT

S/N: LMD1-UP

PART OF 322-5769 AIR CONDITIONER AR

AN ATTACHMENT

SMCS-1374, 1805 **i02700488**

NOTE	REF NO	GRAPHIC REF	PART NUMBER	QTY	PART NAME 1 2 3 4 5 6 (PRODUCT LEVEL)	SEE PAGE
	1	1	**174-1077**	1	SPRING	
Y	2	1	*260-3054*	1	COOLER & CONDENSER GP (HYDRAULIC OIL, REFRIGERANT)	248
	3	1	**270-2514**	1	WASHER (19.5X35X3-MM THK)	
	4	1	**295-2199**	1	PLATE	
	5	1	**295-2200**	1	PLATE	
	6	1	**295-2201**	1	GUIDE	
	7	1	**295-2202**	1	GUIDE	
	8	1	**295-2203**	2	BOSS	
	9	1	**295-4040**	1	PLATE	
	10	1	**303-4529**	1	STUD AS	
M	11	1	**5C-7261**	2	NUT (M8X1.25-THD)	
M	12	1	**6V-8202**	1	BOLT-SOCKET HEAD (M8X1.25X16-MM)	
	13	1	**7X-0603**	2	WASHER-HARD (9.9X35X2.5-MM THK)	
	14	1	**8T-4224**	3	WASHER-HARD (8.8X16X2-MM THK)	
	15	1	**8T-4226**	1	WASHER-PLATED (10.5X45X3-MM THK)	
M	16	1	**8T-4908**	1	BOLT (M8X1.25X25-MM)	
M	17	1	**8T-6870**	1	BOLT (M8X1.25X70-MM)	
M	18	1	**8T-7547**	1	BOLT (M8X1.25X30-MM)	
E	19	1	**5P-1442**		HOSE (4-CM)	

E-ORDER BY THE CENTIMETER
M-METRIC PART
Y-SEPARATE ILLUSTRATION

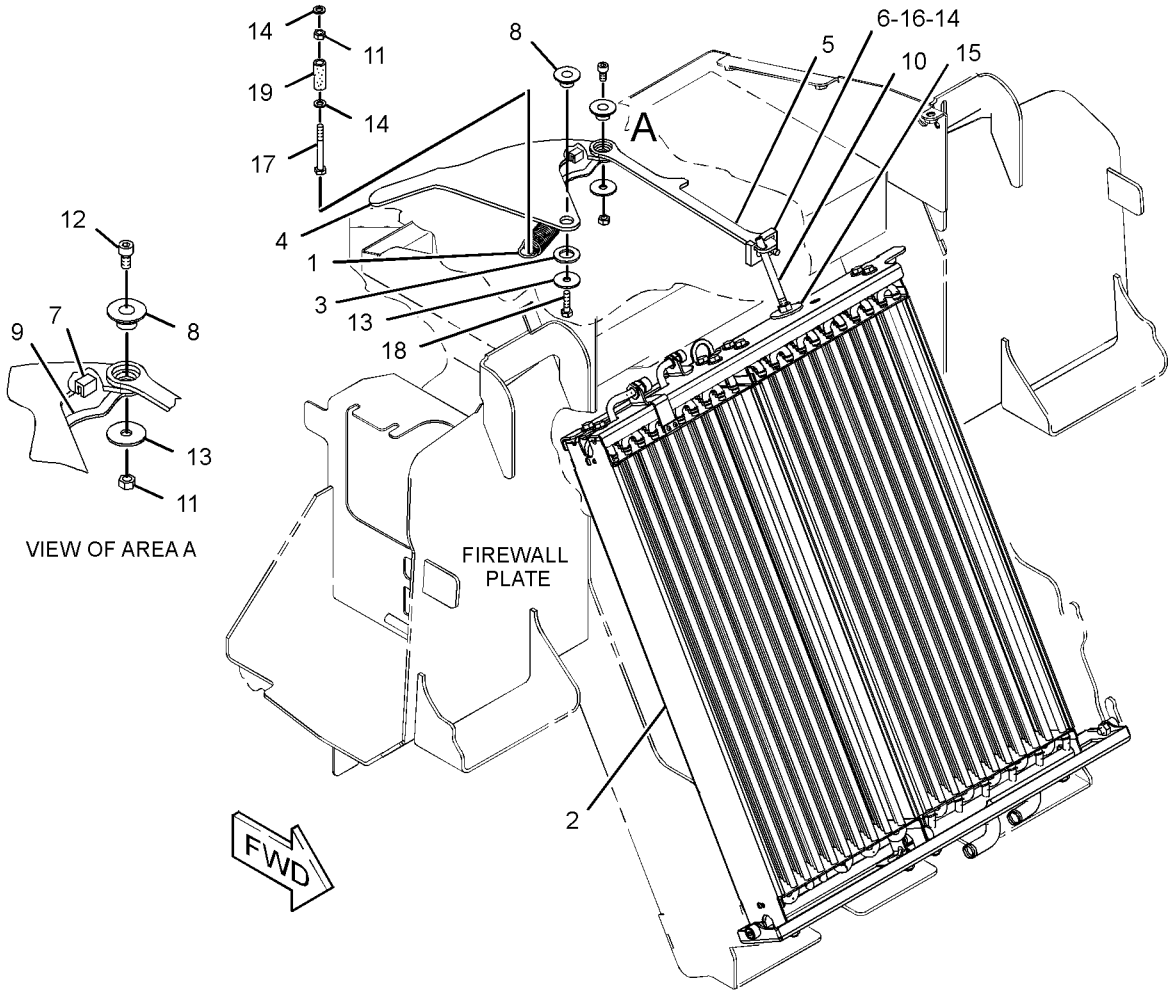

GRAPHIC #1 **<END>** g01379416

9R-4668 MOUNTING GP-CYLINDER—MULTIPURPOSE BUCKET

S/N: LMD1-UP

PART OF 259-6040, 259-6050 BUCKET AR-MULTIPURPOSE

AN ATTACHMENT

SMCS-5498 **i00528574**

NOTE	REF NO	GRAPHIC REF	PART NUMBER	QTY	PART NAME 1 2 3 4 5 6 (PRODUCT LEVEL)	SEE PAGE
	1	1	**9R-4677**	2	PIN	
	2	1	**3B-5317**	4	PIN-COTTER	
	3	1	**9R-4678**	2	PIN	
	4	1	**3B-8489**	4	FITTING-GREASE	

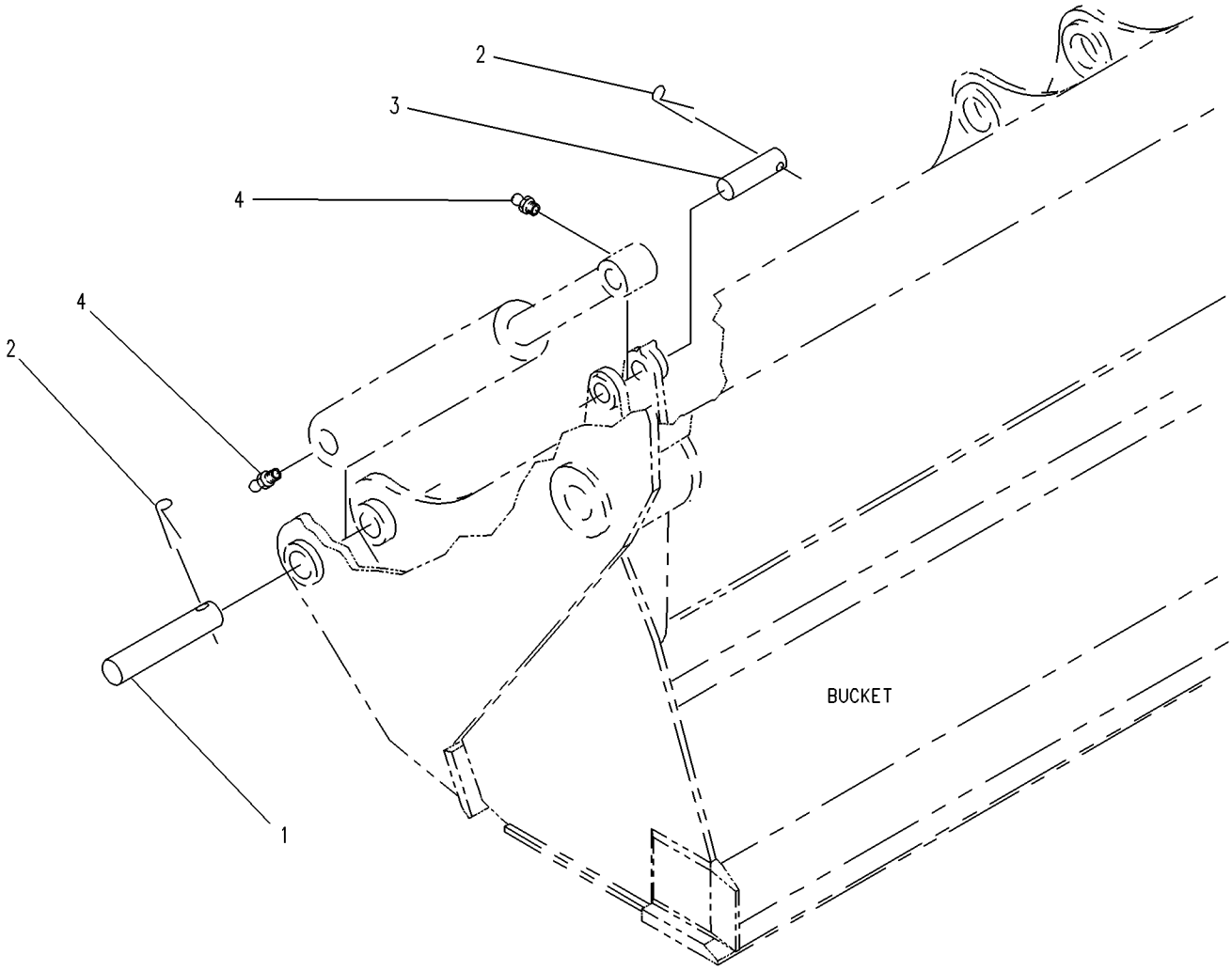

GRAPHIC #1 **<END>** g00219196

260-5386 POSITIONER GP-WORK TOOL—RETURN TO DIG

S/N: LMD1-UP
PART OF 257-4019 HYDRAULIC AR
AN ATTACHMENT

SMCS-5112 **i02754333**

NOTE	REF NO	GRAPHIC REF	PART NUMBER	QTY	PART NAME 1 2 3 4 5 6 (PRODUCT LEVEL)	SEE PAGE
	1	1	**3S-2093**	1	STRAP-CABLE	
	2	1	**5P-0599**	2	CLAMP-BAND	
	3	1	**9R-2053**	2	BLOCK	
	4	1	**110-8760**	2	STRAP	
	5	1	**270-5143**	3	TIE-PUSH MOUNT	
	6	1	**284-0074**	1	SENSOR AS-POSITION (RETURN TO DIG)	
		1	**284-0075**	1	TUBE AS	
		1	**284-0077**	1	ROD AS	
		1	**284-0078**	1	SWITCH AS-PUSH BUTTON (RETURN TO DIG)	
		1	**295-8141**	1	CLIP	
		1	**295-8142**	2	SEAL-O-RING	
		1	**295-8143**	2	SEAL-O-RING	
	7	1	**284-0079**	1	SPACER (50.2X65X3-MM THK)	
	8	1	**284-0080**	1	SPACER (50.2X65X10-MM THK)	
	9	1	**8L-9811**	2	RING-RETAINING	
	10	1	**9G-4191**	2	GROMMET	

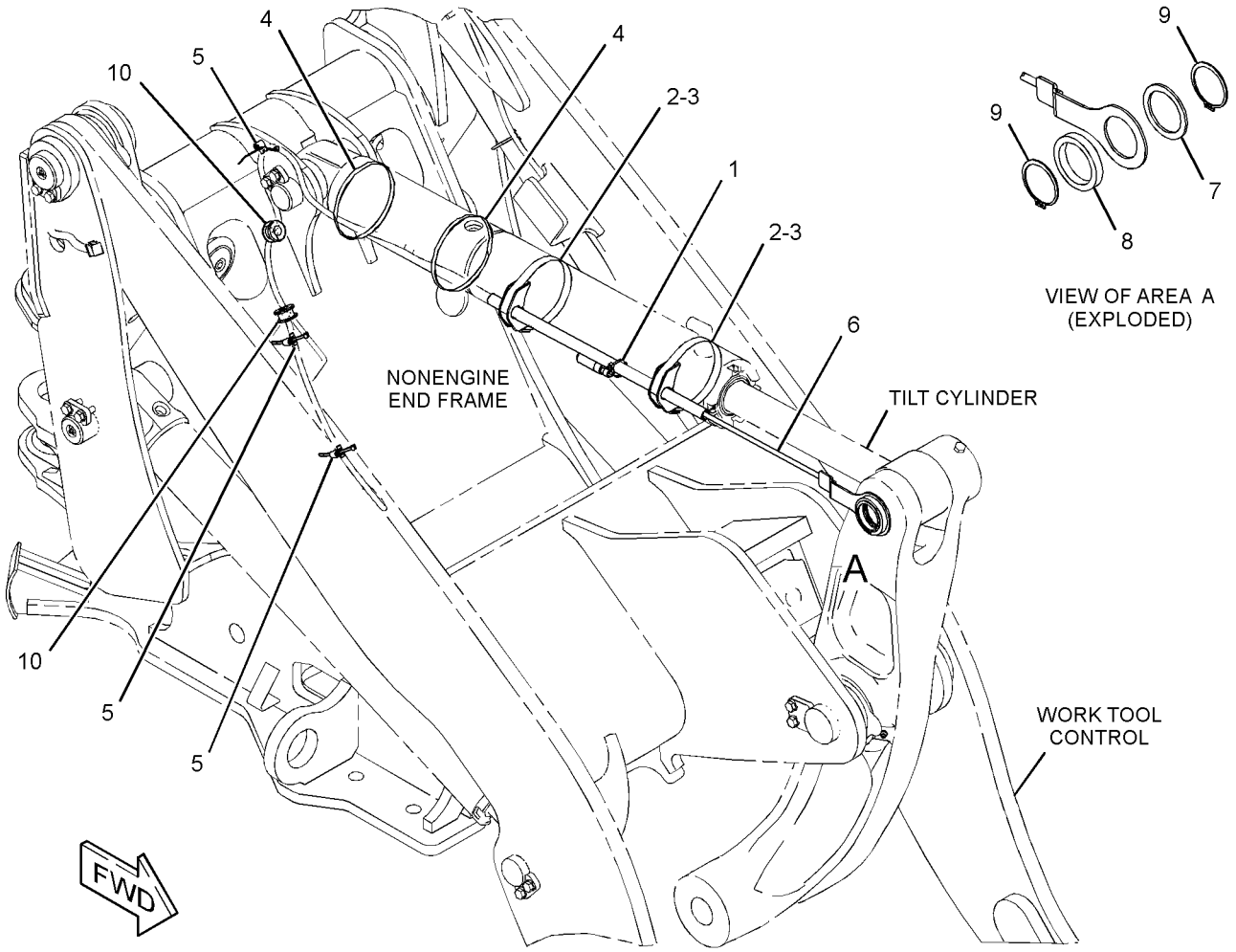

GRAPHIC #1 **<END>** g01381430

HYDRAULIC SYSTEM

257-3931 PUMP GP-PISTON–HYDROSTATIC

S/N: LMD1-UP

PART OF 260-5391 HYDRAULIC AR

SMCS-5070 **i03130889**

NOTE	REF NO	GRAPHIC REF	PART NUMBER	QTY	PART NAME 1 2 3 4 5 6 (PRODUCT LEVEL)	SEE PAGE
Y	1	1	*277-6551*	1	ROTATING GP-PUMP	314
Y	2	1	**300-7541**	1	VALVE GP-PUMP CONTROL (HYDROSTATIC)	323
Y	3	1	**300-5463**	1	HEAD GP-PUMP (HYDROSTATIC)	257
	4	1	**167-6805**	2	PIN	
Y	5	1	**300-7511**	1	ACTUATOR GP-PUMP	247
	6	1	**122-9718**	1	PIN	
M	7	1	**9T-3928**	1	PLUG AS	
		1	**187-8001**	1	SEAL	
	8	1	**9S-8002**	4	PLUG-O-RING	
	9	1	**3J-7354**	4	SEAL-O-RING	
	10	1	**112-4630**	1	SCREW (1-5/16-THD)	
	11	1	**218-6855**	2	SEAL-O-RING	
	12	1	**6V-8978**	1	SEAL-O-RING	
	13	1	**123-7575**	1	SCREW-LOCK	
	14	1	**123-7583**	1	ORIFICE	
	15	1	**9S-8004**	2	PLUG-O-RING	
	16	1	**3J-1907**	2	SEAL-O-RING	
M	17	1	**1G-3176**	1	SCREW-LOCK (M8-THD)	
	18	1	**120-4394**	1	PLUG-BREAK OFF	
	19	1	**9S-8008**	1	PLUG-O-RING	
	20	1	**3D-2824**	1	SEAL-O-RING	
	21	1	**9T-3726**	3	PLUG	
	23	1	**107-3120**	1	SEAL-O-RING	
	24	1	**202-7704**	1	PLUG	
	25	1	**233-5624**	1	PLATE-ADAPTER	
	26	1	**299-8024**	1	COUPLER	
M	27	1	**6V-5192**	4	BOLT-SOCKET HEAD (M8X1.25X30-MM)	
	28	1	**300-7542**	1	FLANGE	
	29	1	**117-7235**	1	SCREW-ADJUSTMENT	
M	30	1	**6E-4240**	1	NUT-SEALING (M10X1-THD)	

M-METRIC PART
Y-SEPARATE ILLUSTRATION

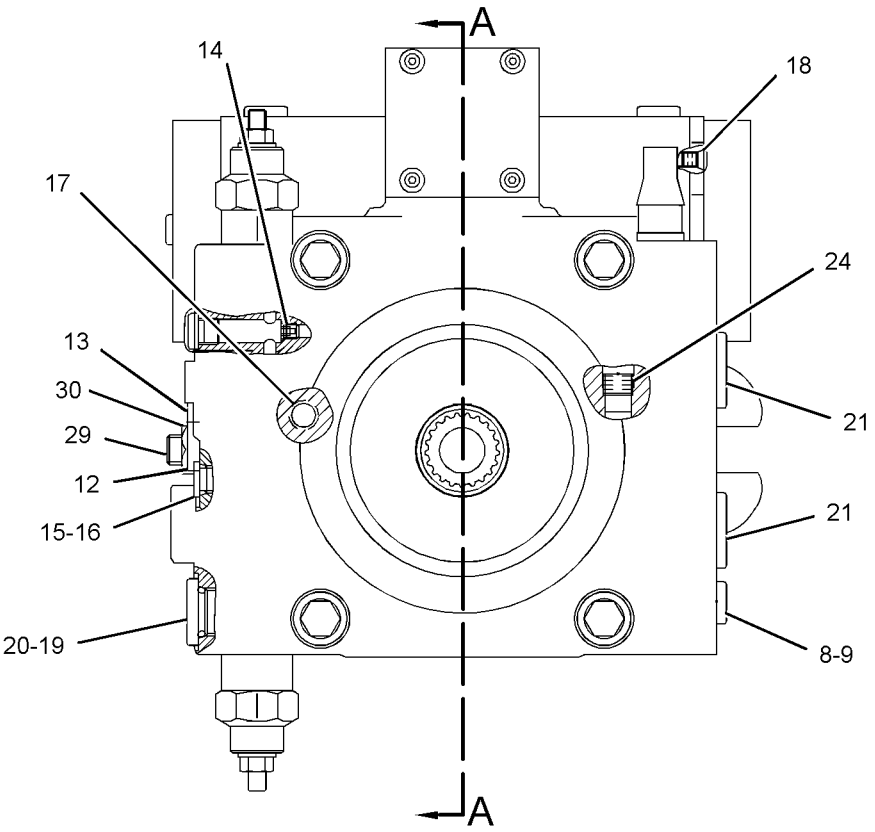

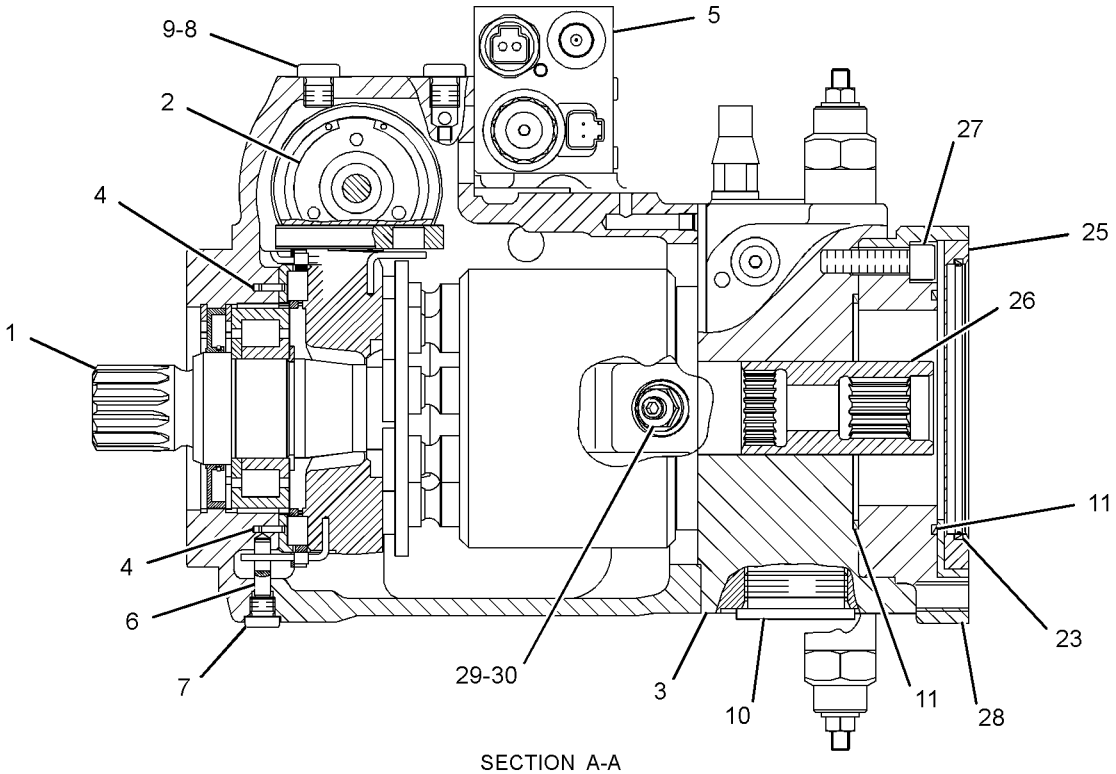

SECTION A-A

GRAPHIC #1 **<END>** g01407799

HYDRAULIC SYSTEM

277-6551 ROTATING GP-PUMP—HYDROSTATIC

S/N: LMD1-UP

PART OF 257-3931 PUMP GP-PISTON

SMCS-1387, 5070, 5084 **i03130912**

NOTE	REF NO	GRAPHIC REF	PART NUMBER	QTY	PART NAME 1 2 3 4 5 6 (PRODUCT LEVEL)	SEE PAGE
	1	1	**212-4483**	1	RING-RETAINING	
	2	1	**194-1983**	1	SEAL-SHAFT	
	3	1	**126-9587**	1	RING-RETAINING	
	4	1	**178-1149**	1	SHAFT	
	5	1	**117-7251**	1	BEARING	
	6	1	**108-3565**	1	CLIP	
	7	1	**125-9134**	1	BEARING	
	8	1	**122-9068**	1	WIRE	
	9	1	**117-7252**	1	CAGE	
	10	1	**112-4657**	1	PIN	
	11	1	**117-7241**	1	PLATE	
	12	1	**117-7240**	1	CRADLE	
	13	1	**1G-3410**	1	WIRE	
J	14	1	**126-8842**	1	RING-SNAP	
J	15	1	**122-9070**	2	SHIM (3-MM THK)	
J	16	1	**122-9071**	1	SPRING	
J	17	1	**117-7239**	1	SPRING SET	
J	18	1	**117-7245**	1	SHIM (1.2-MM THK)	
J	19	1	**117-7246**	1	SHIM (1-MM THK)	
J	20	1	**117-7247**	1	SHIM (0.8-MM THK)	
J	21	1	**117-7248**	1	SHIM (0.6-MM THK)	
J	22	1	**117-7250**	1	RETAINER	
J	23	1	**117-7249**	1	PLATE-RETAINER	
J	24	1	**117-7238**	9	PISTON	
J	25	1	**177-6915**	1	CYLINDER	
	26	1	**6E-0725**	2	ROLLER	
	27	1	**251-1803**	1	PLATE-CONTROL	
					AVAILABLE REPAIR KIT(S):	
J			**251-1752**	1	KIT-PUMP ROTATING GROUP	

J-KIT MARKED J INCLUDES PART(S) MARKED J

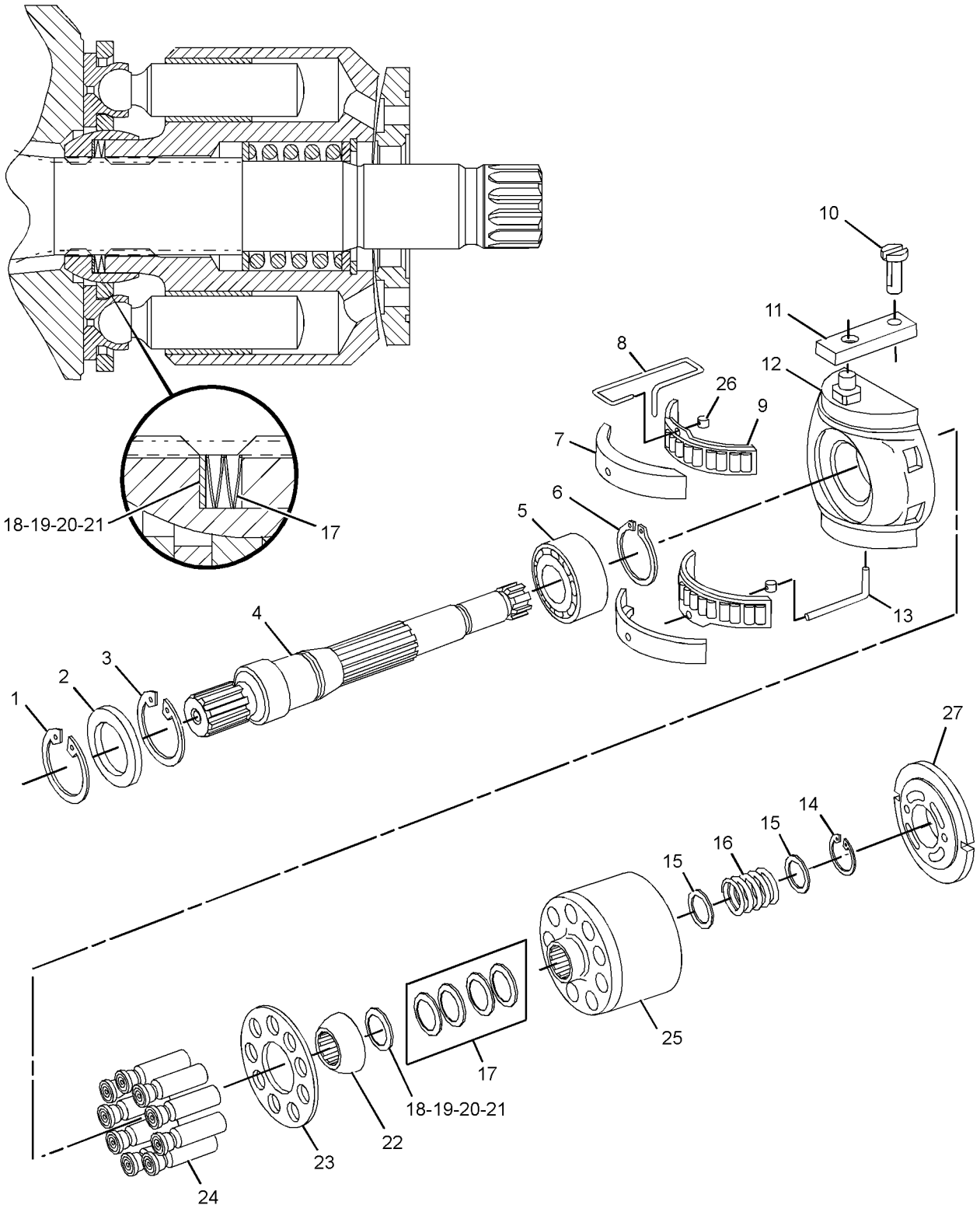

GRAPHIC #1 **<END>** g01329158

HYDRAULIC SYSTEM

257-7684 TANK GP-HYDRAULIC

S/N: LMD1-UP

PART OF 322-4878 CHASSIS AR

SMCS-5056 **i03103221**

NOTE	REF NO	GRAPHIC REF	PART NUMBER	QTY	PART NAME 1 2 3 4 5 6 (PRODUCT LEVEL)	SEE PAGE
	1	1	**9M-7961**	1	FITTING	
	2	1	**142-8937**	1	CAP AS-FILLER (HYDRAULIC TANK)	
	3	1	**206-8818**	1	STRAINER (HYDRAULIC OIL)	
	4	1	**233-7850**	1	BREATHER (HYDRAULIC TANK)	
	5	1	**233-7888**	1	CONNECTOR	
	6	1	**237-5551**	1	PLATE	
	7	1	**254-1098**	1	STRAINER (HYDRAULIC TANK)	
	8	1	**255-6050**	1	TANK GP-HYDRAULIC	
	9	1	**1S-0994**	1	CLIP	
	10	1	**5P-4116**	1	WASHER-HARD (8.8X20.5X2-MM THK)	
M	11	1	**8T-4191**	4	BOLT (M10X1.5X16-MM)	
M	12	1	**8T-4196**	3	BOLT (M10X1.5X35-MM)	
	13	1	**8T-4222**	7	WASHER-PLATED (11X32X2.5-MM THK)	
E	14	1	**5P-1505**		HOSE (22-CM)	
	15	1	**6S-8620**	2	CLAMP-HOSE	
M	16	1	**8T-4908**	1	BOLT (M8X1.25X25-MM)	

E-ORDER BY THE CENTIMETER
M-METRIC PART

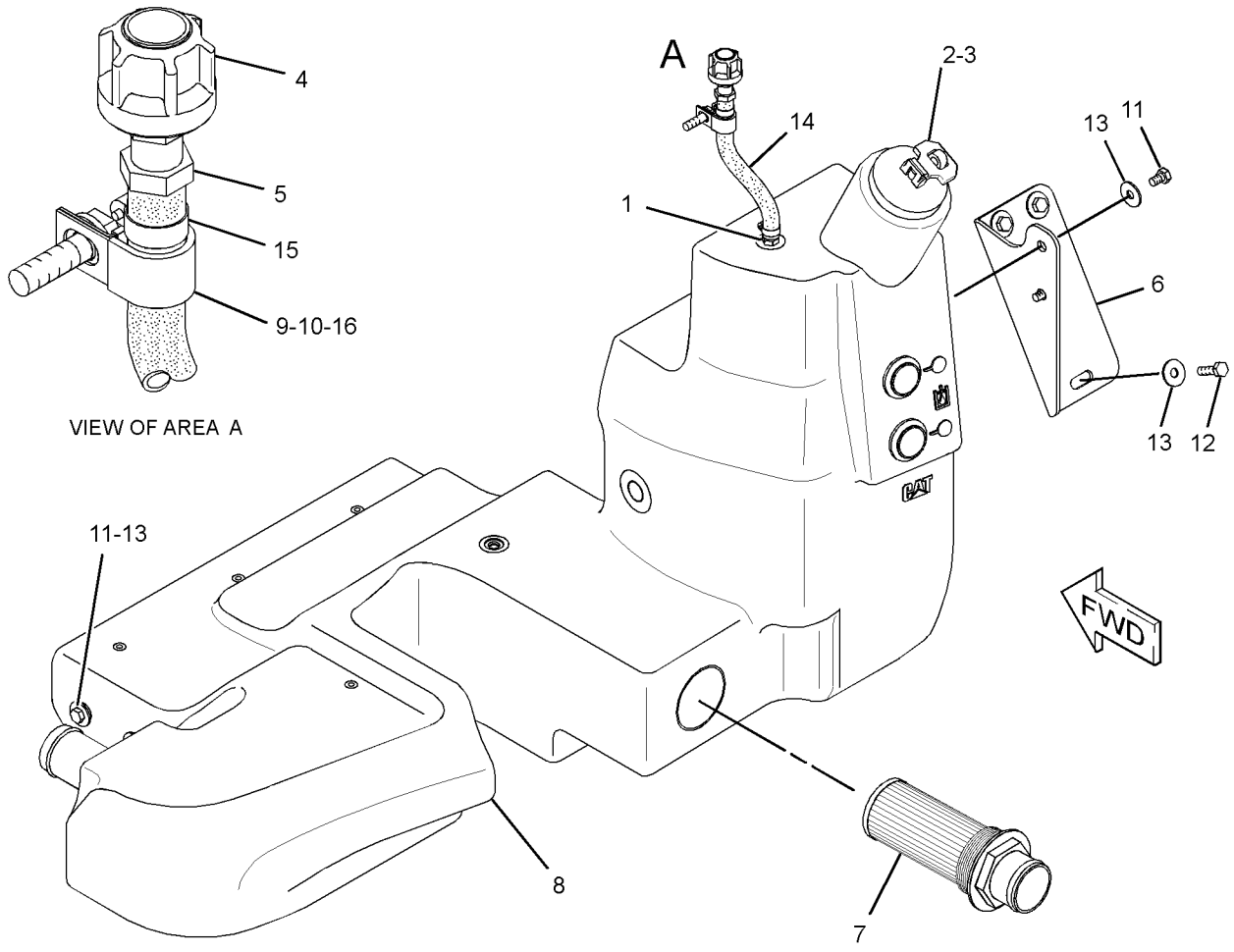

GRAPHIC #1 **<END>** g01588336

HYDRAULIC SYSTEM

332-6408 VALVE & MTG GP-SOLENOID—QUICK COUPLER

S/N: LMD1-UP

PART OF 257-3930, 284-9265 LINES GP-AUXILIARY HYDRAULIC

AN ATTACHMENT

SMCS-4805, 5479 **i03126759**

NOTE	PART NUMBER	QTY	PART NAME 1 2 3 4 5 6 (PRODUCT LEVEL)	SEE PAGE
			NO BREAKDOWN OF SERVICEABLE PARTS AVAILABLE AT TIME OF PUBLICATION	

<END>

HYDRAULIC SYSTEM

308-0189 VALVE GP-DRAIN–ECOLOGY

S/N: LMD1-UP

AN ATTACHMENT

SMCS-5076 **i02858196**

NOTE	REF NO	GRAPHIC REF	PART NUMBER	QTY	PART NAME 1 2 3 4 5 6 (PRODUCT LEVEL)	SEE PAGE
	1	1	**101-4639**	1	PLUG AS-DRAIN (FUEL TANK)	
	1A	1	**101-4639**	1	PLUG AS-DRAIN (HYDRAULIC TANK)	
	2	1	**159-3727**	1	TUBE AS-DRAIN	
	3	1	**160-9192**	2	CLIP	

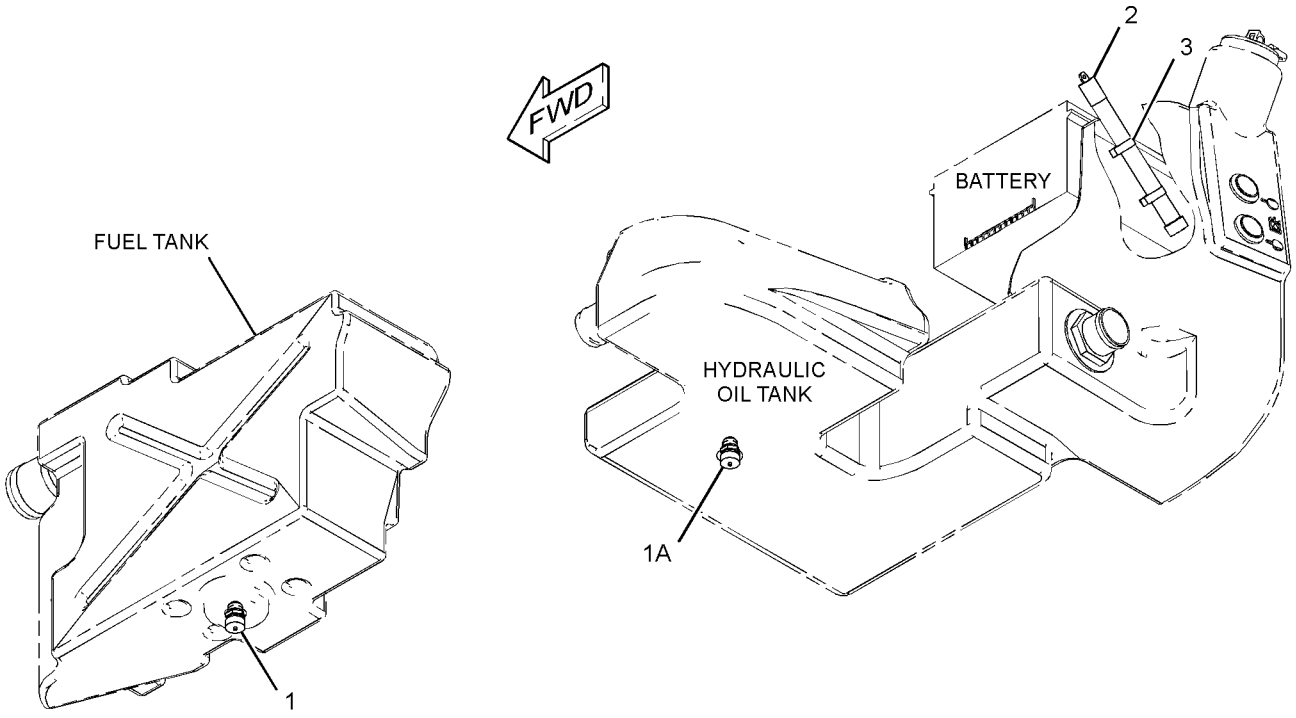

GRAPHIC #1 **<END>** g01424168

308-0190 VALVE GP-DRAIN–STANDARD

S/N: LMD1-UP
AN ATTACHMENT

SMCS-5076 **i02755269**

NOTE	REF NO	GRAPHIC REF	PART NUMBER	QTY	PART NAME 1 2 3 4 5 6 (PRODUCT LEVEL)	SEE PAGE
	1	1	**286-1016**	2	PLUG AS	

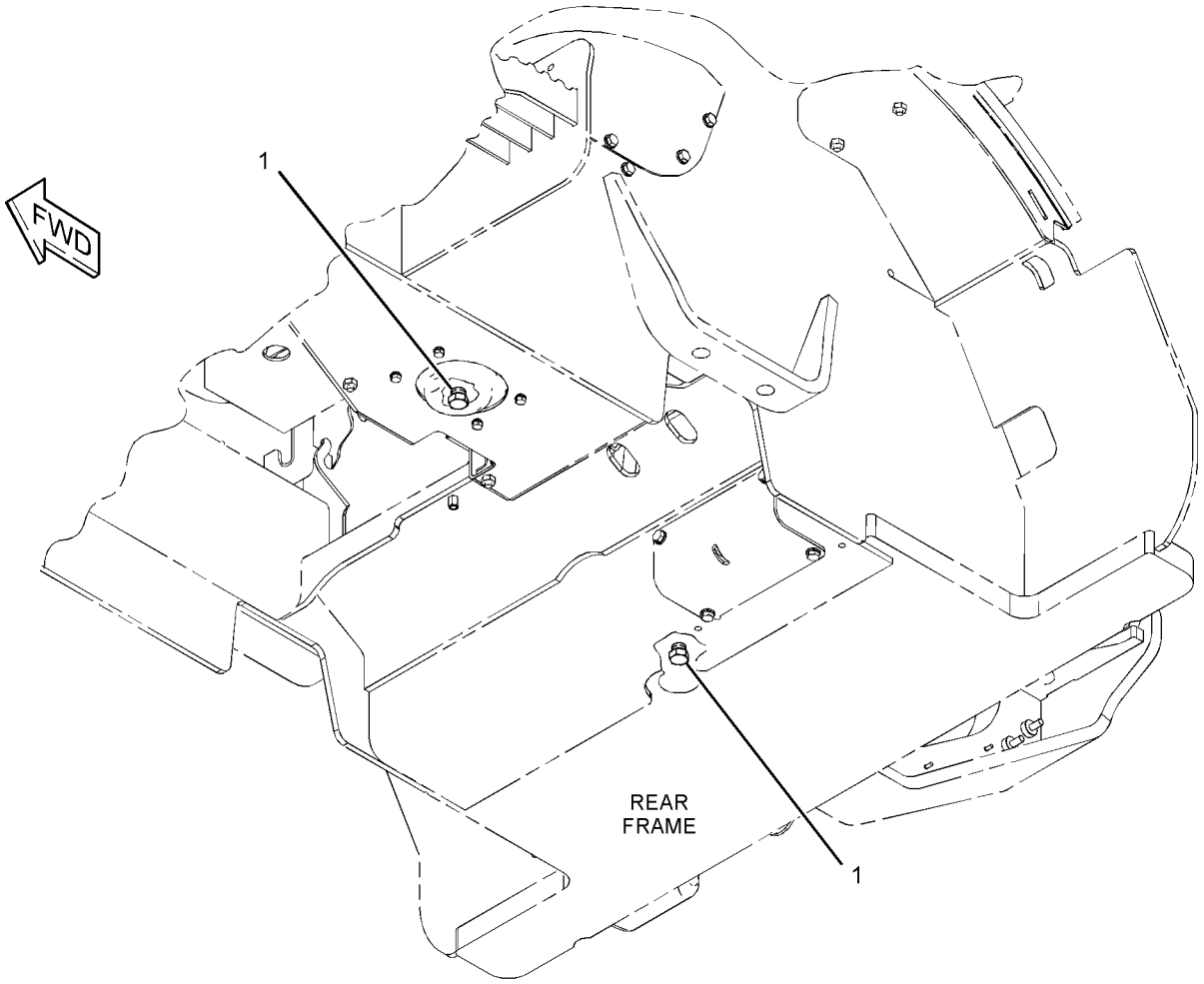

GRAPHIC #1 **<END>** g01388440

HYDRAULIC SYSTEM

257-3942 VALVE GP-MAIN CONTROL–
ELECTROHYDRAULIC, 3-FUNCTION
S/N: LMD1-UP
PART OF 257-4018, 257-4019 HYDRAULIC AR
AN ATTACHMENT

SMCS-5051 **i03105746**

NOTE	REF NO	GRAPHIC REF	PART NUMBER	QTY	PART NAME 1 2 3 4 5 6 (PRODUCT LEVEL)	SEE PAGE
	1	1	**306-7218**	1	VALVE GP-RELIEF (MAIN)	
		1	**221-9941**	1	SEAL-O-RING	
	2	1	**306-7219**	1	VALVE GP-RELIEF (LINE, TILT)	
		1	**5P-9757**		SEAL-O-RING	
	3	1	**306-7220**	1	VALVE GP-RELIEF (LINE, LIFT)	
		1	**5P-9757**	1	SEAL-O-RING	
	4	1	**306-7221**	1	VALVE GP-RELIEF (LINE, TILT)	
		1	**5P-9757**	1	SEAL-O-RING	
	5	1	**306-7222**	1	VALVE GP-MAKEUP	
		1	**5P-9757**		SEAL-O-RING	
C	6	1	**329-3957**	2	PLUG	
C	7	1	**9S-8008**	2	PLUG-O-RING	
C	8	1	**329-3958**	1	PLUG	
C	9	1	**329-3959**	3	VALVE-CHECK	
C	10	1	**8F-0212**	8	SEAL-O-RING	
C	11	1	**329-3960**	5	CAP-END	
C	12	1	**329-3961**	1	CAP-END	
C	13	1	**329-3963**	2	SPACER	
C	14	1	**329-3964**	2	RETAINER	
C	15	1	**329-3965**	2	SPRING	
C	16	1	**329-3966**	2	RETAINER	
C	17	1	**329-3967**	3	BOLT-SHOULDER	
C	18	1	**329-3968**	1	RETAINER	
C	19	1	**329-3969**	1	SPRING	
C	20	1	**329-3970**	1	RETAINER	
C	21	1	**329-3971**	1	RETAINER	
C	22	1	**329-3972**	1	SPRING	
C	23	1	**329-3973**	1	RING	
C	24	1	**329-3974**	1	BOLT-SHOULDER	
CM	25	1	**8C-6567**	1	SETSCREW-SOCKET	
C	26	1	**329-3975**	1	NUT-SEAL	
CM	27	1	**8T-6699**	8	BOLT-SOCKET HEAD (M5X0.8X35-MM)	
CM	28	1	**8C-8580**	16	BOLT-SOCKET HEAD (M5X0.8X16-MM)	
					PARTS SHOWN IN GRAPHIC(S) WITHOUT A REFERENCE NUMBER ARE NOT SERVICED SEPARATELY	

C-CHANGE FROM PREVIOUS TYPE
M-METRIC PART

257-3942 VALVE GP-MAIN CONTROL *(contd.)* i03105746

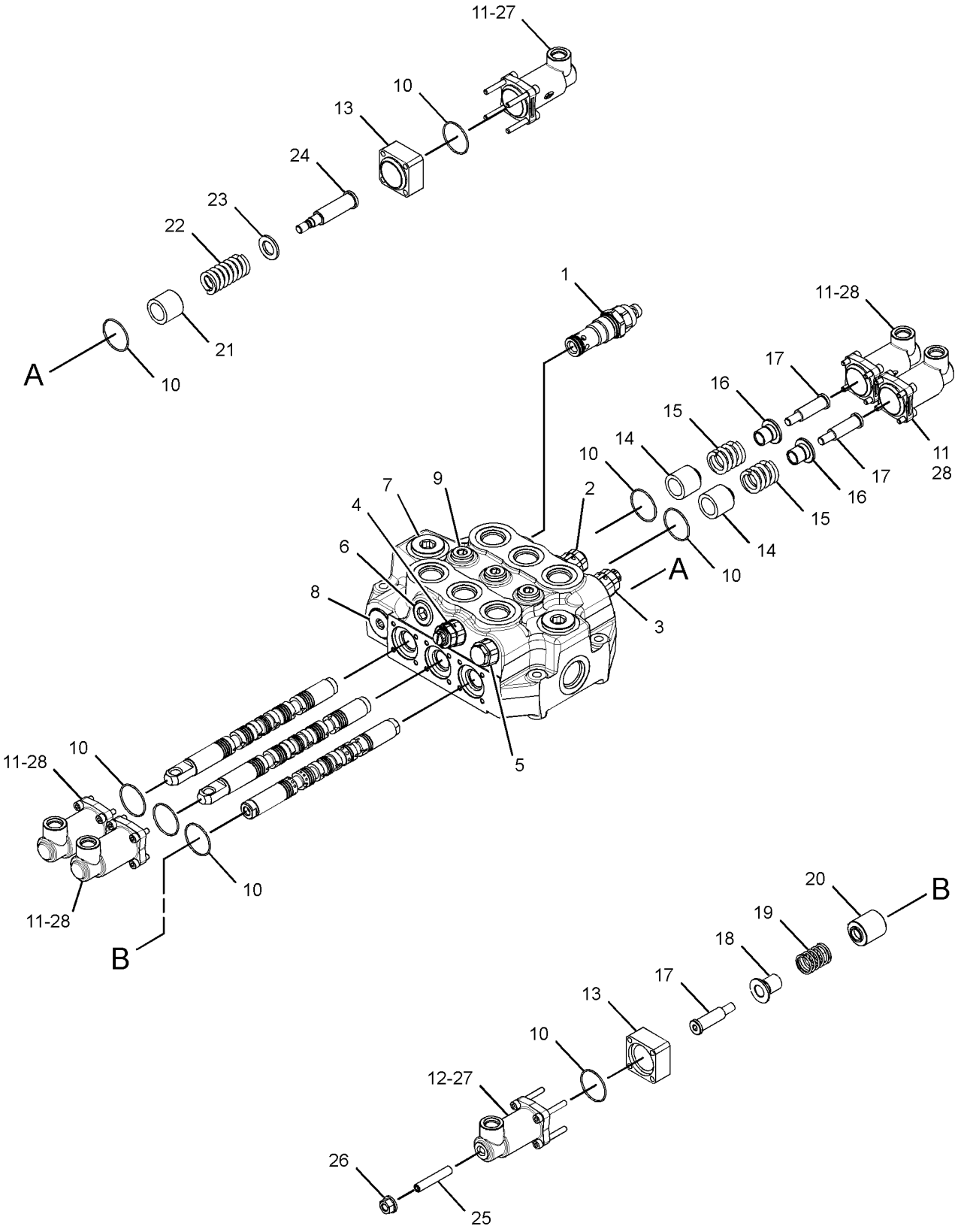

GRAPHIC #1 **<END>** g01591156

289-6364 VALVE GP-MOTOR CONTROL–HYDROSTATIC

S/N: LMD1-UP

PART OF 269-8908 MOTOR GP-PISTON

SMCS-5455 **i02791253**

NOTE	REF NO	GRAPHIC REF	PART NUMBER	QTY	PART NAME 1 2 3 4 5 6 (PRODUCT LEVEL)	SEE PAGE
M	1	1	**8T-0338**	4	BOLT-SOCKET HEAD (M8X1.25X45-MM)	
	2	1	**9S-8004**	1	PLUG-O-RING	
	3	1	**3J-1907**	1	SEAL-O-RING	
	4	1	**6V-1250**	1	SEAL-O-RING	
	5	1	**9T-3853**	1	LOCKNUT	
	6	1	**269-4669**	1	SOLENOID AS	
		1	**217-3875**	1	SEAL-O-RING	
	7	1	**9T-4367**	1	CAP AS	

M-METRIC PART

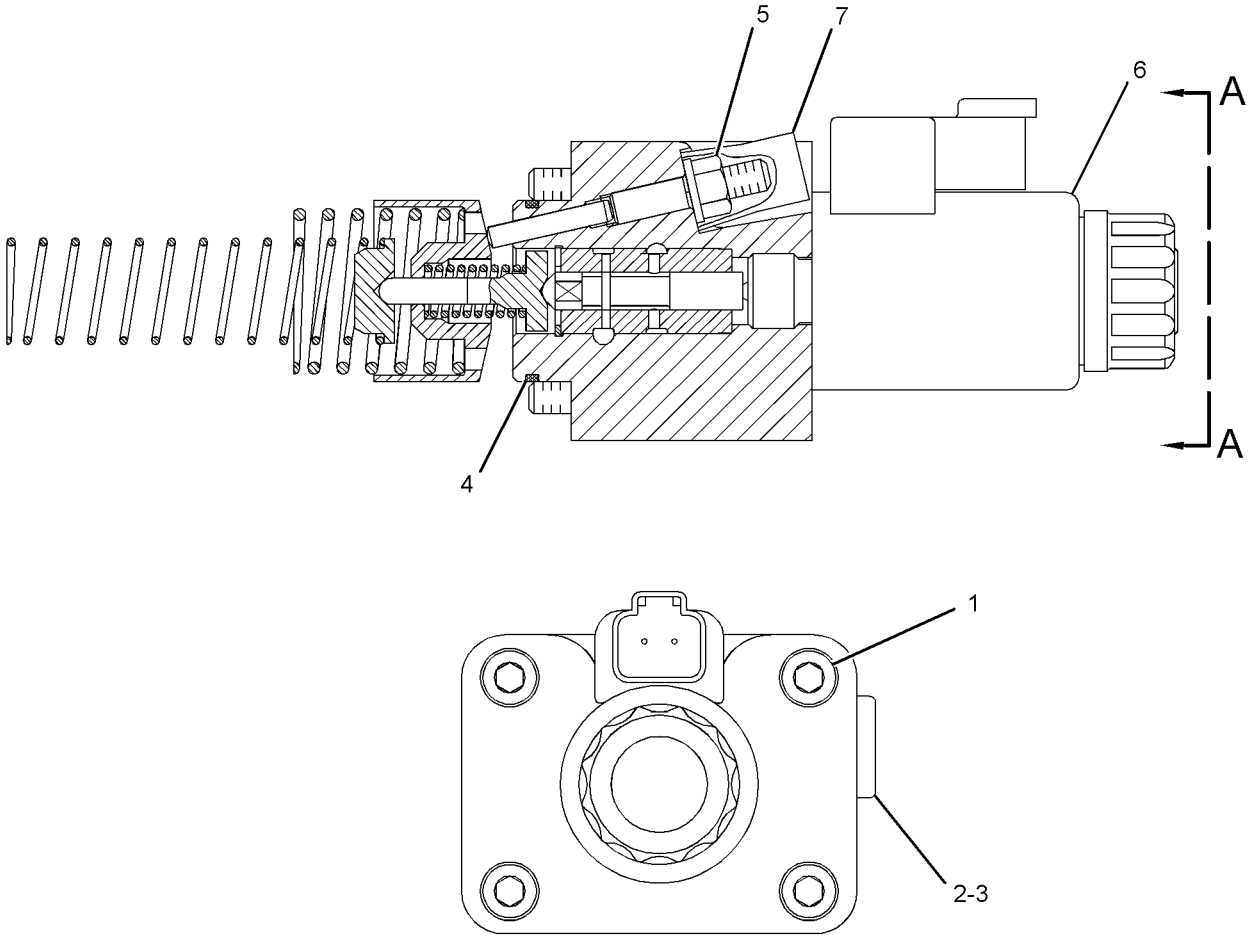

VIEW A-A

GRAPHIC #1 **<END>** g01399848

300-7541 VALVE GP-PUMP CONTROL–HYDROSTATIC

S/N: LMD1-UP

PART OF 257-3931 PUMP GP-PISTON

SMCS-5455 **i02858212**

NOTE	REF NO	GRAPHIC REF	PART NUMBER	QTY	PART NAME 1 2 3 4 5 6 (PRODUCT LEVEL)	SEE PAGE
M	1	1	**6V-8202**	8	BOLT-SOCKET HEAD (M8X1.25X16-MM)	
	2	1	**300-7532**	1	CARTRIDGE GP-VALVE (PUMP CONTROL)	
		1	**6J-7855**	2	RING-LOCK	
		1	**123-7562**	1	SEAL-O-RING	
M	3	1	**188-7789**	1	NUT (M12X1.5-THD)	
	4	1	**117-7273**	2	SEAL-O-RING	
	5	1	**145-3812**	2	RING	
	6	1	**145-3811**	1	COVER	
	7	1	**145-3810**	1	COVER	
	8	1	**145-3813**	2	RING-SEAL	
					PARTS SHOWN IN GRAPHIC(S) WITHOUT A REFERENCE NUMBER ARE NOT SERVICED SEPARATELY	

M-METRIC PART

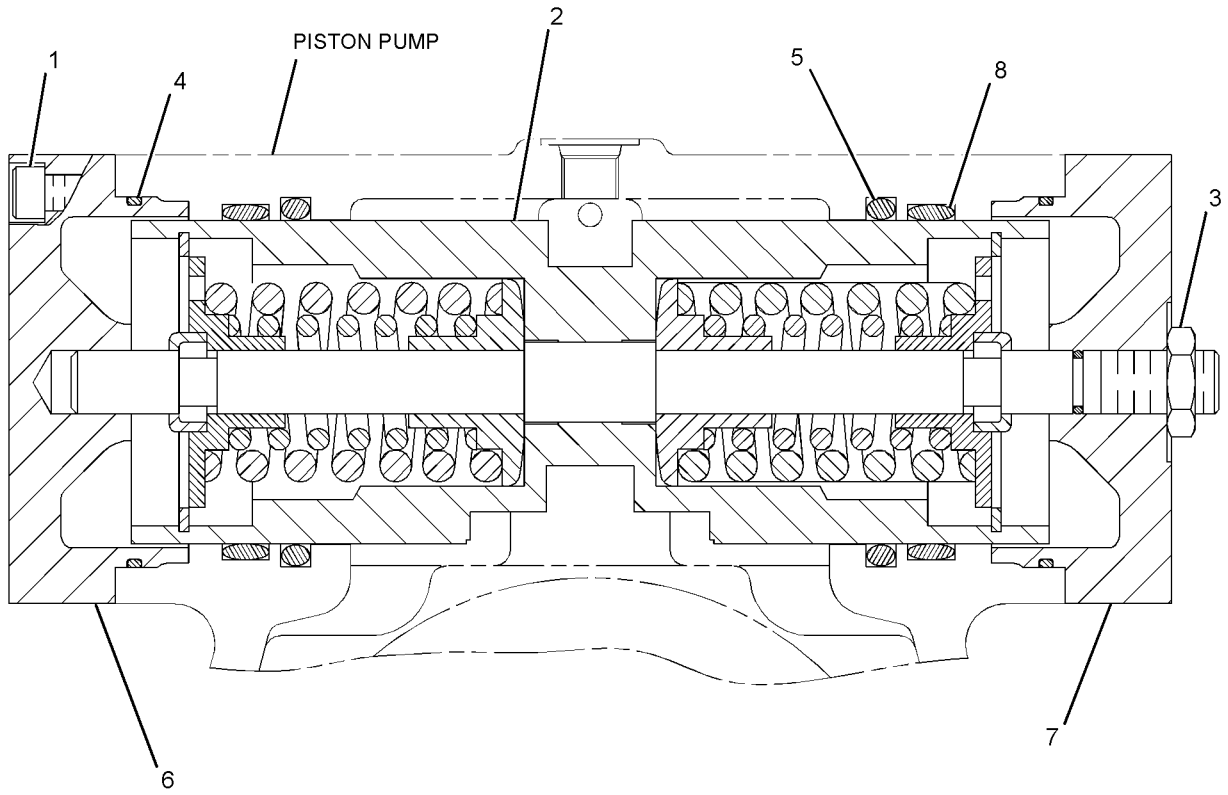

GRAPHIC #1 **<END>** g01381215

301-3069 BRACKET GP-TRANSPORT

S/N: LMD1-UP
PART OF 307-1556, 307-1558 CONVERSION AR-ROADING
AN ATTACHMENT

SMCS-7505 **i02813782**

NOTE	REF NO	GRAPHIC REF	PART NUMBER	QTY	PART NAME 1 2 3 4 5 6 (PRODUCT LEVEL)	SEE PAGE
	1	1	**9R-5301**	1	PIN-COTTER	
	2	1	**107-2502**	2	SPACER	
	3	1	**118-1348**	1	PIN	
	4	1	**301-1901**	1	BRACKET	

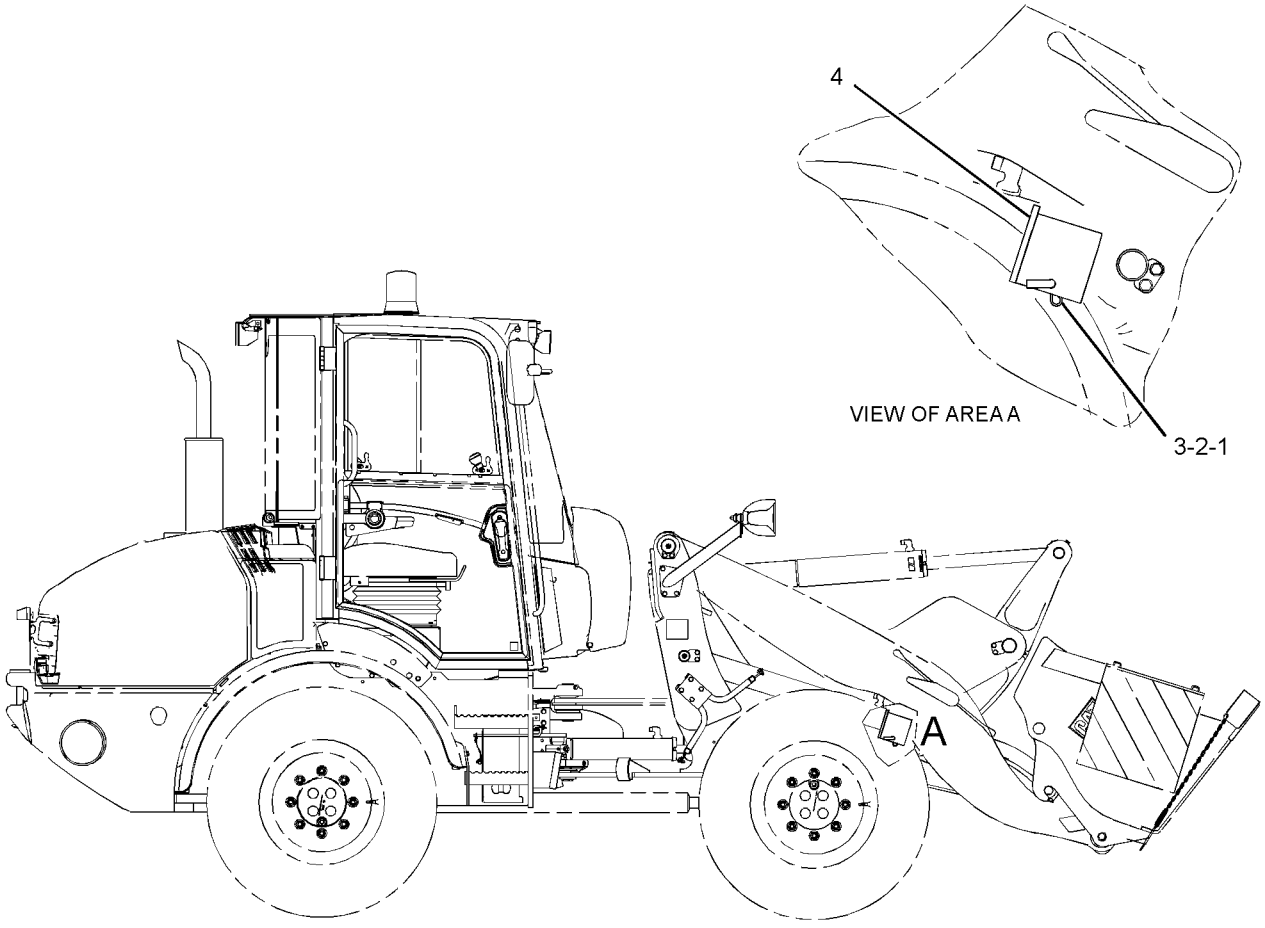

RIGHT SIDE VIEW

GRAPHIC #1 **<END>** g01403767

242-5604 CONTROL GP-WORK TOOL

S/N: LMD1-UP

PART OF 322-4878 CHASSIS AR

SMCS-6116, 6117, 6119, 6700 **i03103160**

NOTE	REF NO	GRAPHIC REF	PART NUMBER	QTY	PART NAME 1 2 3 4 5 6 (PRODUCT LEVEL)	SEE PAGE
	1	1	**112-0885**	1	PAD AS-RESILIENT	
	2	1	**242-5593**	2	PIN	
	3	1	**242-5594**	1	PIN	
	4	1	**242-5595**	2	PIN	
	5	1	**242-5596**	2	PIN	
	6	1	**242-5597**	1	PIN	
	7	1	**242-5598**	1	PIN	
	8	1	**242-5599**	1	PIN	
	9	1	**242-5600**	1	LEVER AS	
		1	**242-5602**	2	BEARING	
	10	1	**242-5667**	2	BEARING	
B	11	1	**292-4872**	6	WASHER	
	12	1	**300-2133**	4	PLATE	
	13	1	**300-8583**	4	PLATE	
B	14	1	**323-3301**	2	WASHER	
B	15	1	**323-3302**	2	WASHER	
	16	1	**323-4281**	1	ARM AS	
M		1	**6V-9632**	4	NUT-WELD (M6X1-THD)	
	17	1	**324-9501**	2	BEARING	
	18	1	**3B-8489**	6	FITTING-GREASE	
M	19	1	**7X-2545**	1	BOLT (M10X1.5X150-MM)	
M	20	1	**8T-0389**	2	LOCKNUT (M10X1.5-THD)	
	21	1	**8T-4121**	17	WASHER-HARD (11X21X2.5-MM THK)	
M	22	1	**8T-4137**	1	BOLT (M10X1.5X20-MM)	
M	23	1	**8T-4195**	16	BOLT (M10X1.5X30-MM)	
M	24	1	**8T-5436**	1	BOLT (M10X1.5X130-MM)	

B-USE AS REQUIRED
M-METRIC PART

242-5604 **CONTROL GP-WORK TOOL** *(contd.)* **i03103160**

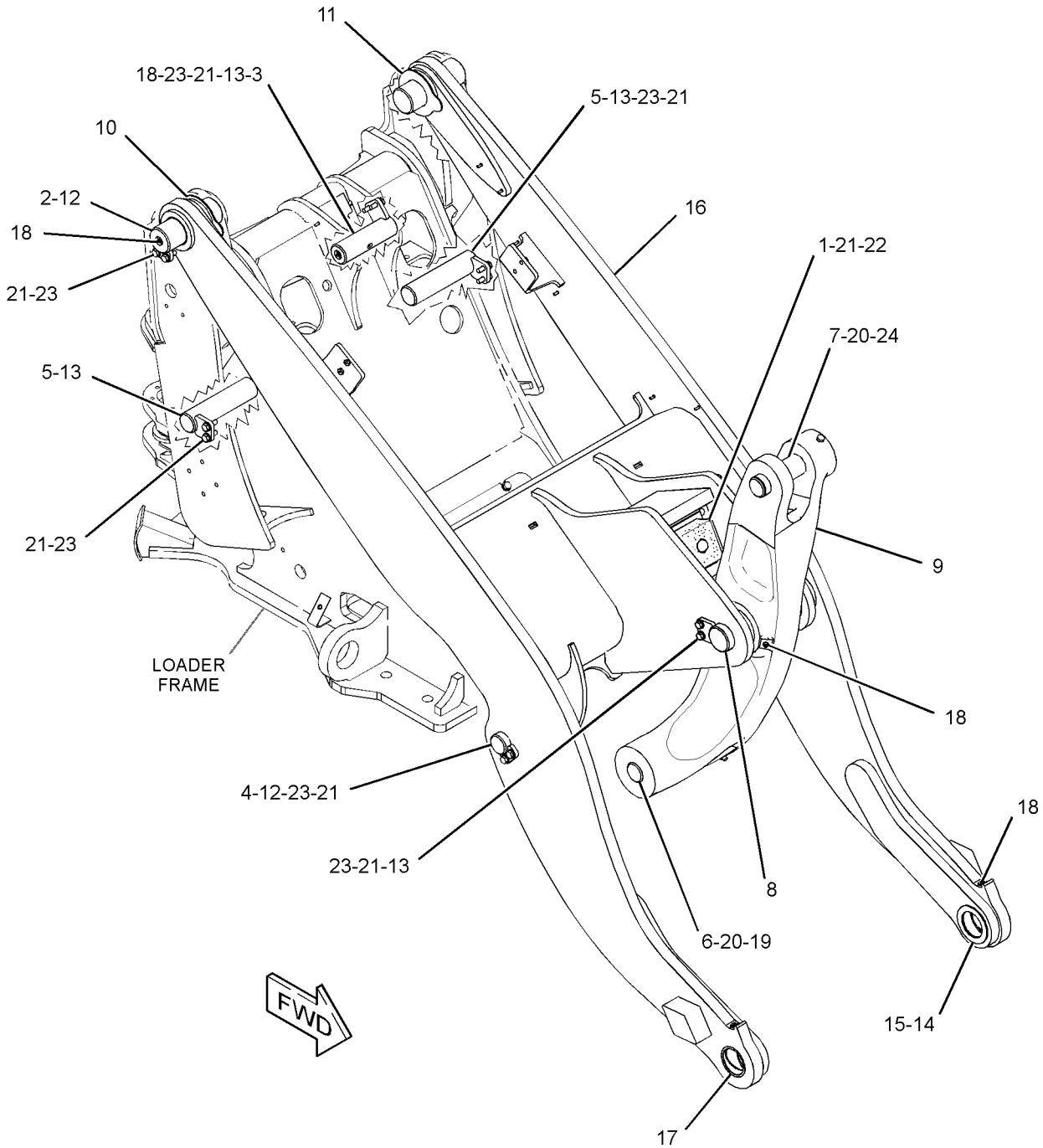

GRAPHIC #1 **<END>** g01586393

286-0581 BUCKET AR-GENERAL PURPOSE

S/N: LMD1-UP
AN ATTACHMENT

SMCS-6101 **i03103183**

NOTE	REF NO	GRAPHIC REF	PART NUMBER	QTY	PART NAME 1 2 3 4 5 6 (PRODUCT LEVEL)	SEE PAGE
Y	1	1	*141-5004*	1	EDGE GP-CUTTING	349
Y	2	1	**261-1362**	1	BUCKET GP-GENERAL PURPOSE	340

Y-SEPARATE ILLUSTRATION

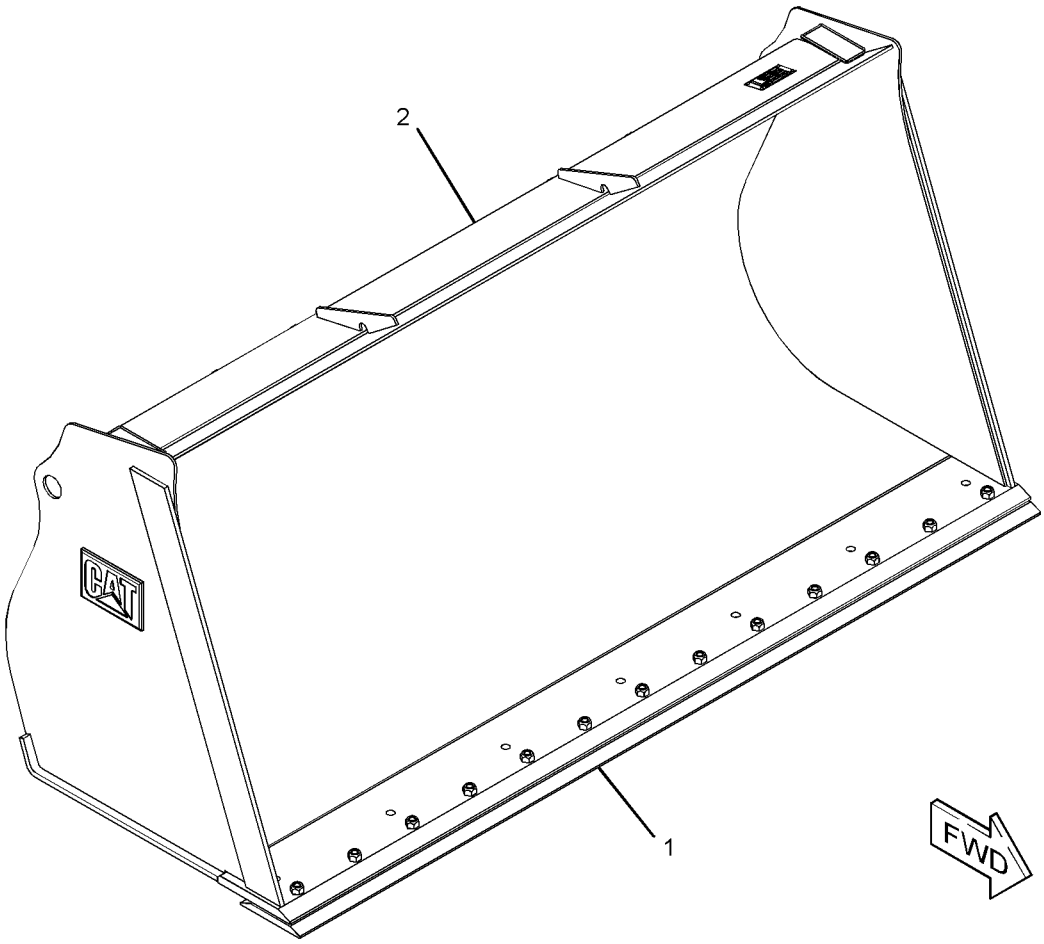

GRAPHIC #1 **<END>** g01590293

286-0582 BUCKET AR-GENERAL PURPOSE

S/N: LMD1-UP

AN ATTACHMENT

SMCS-6101 **i03103182**

NOTE	REF NO	GRAPHIC REF	PART NUMBER	QTY	PART NAME 1 2 3 4 5 6 (PRODUCT LEVEL)	SEE PAGE
Y	1	1	*141-4999*	7	TOOTH GP-UNI	354
Y	2	1	**261-1362**	1	BUCKET GP-GENERAL PURPOSE	340

Y-SEPARATE ILLUSTRATION

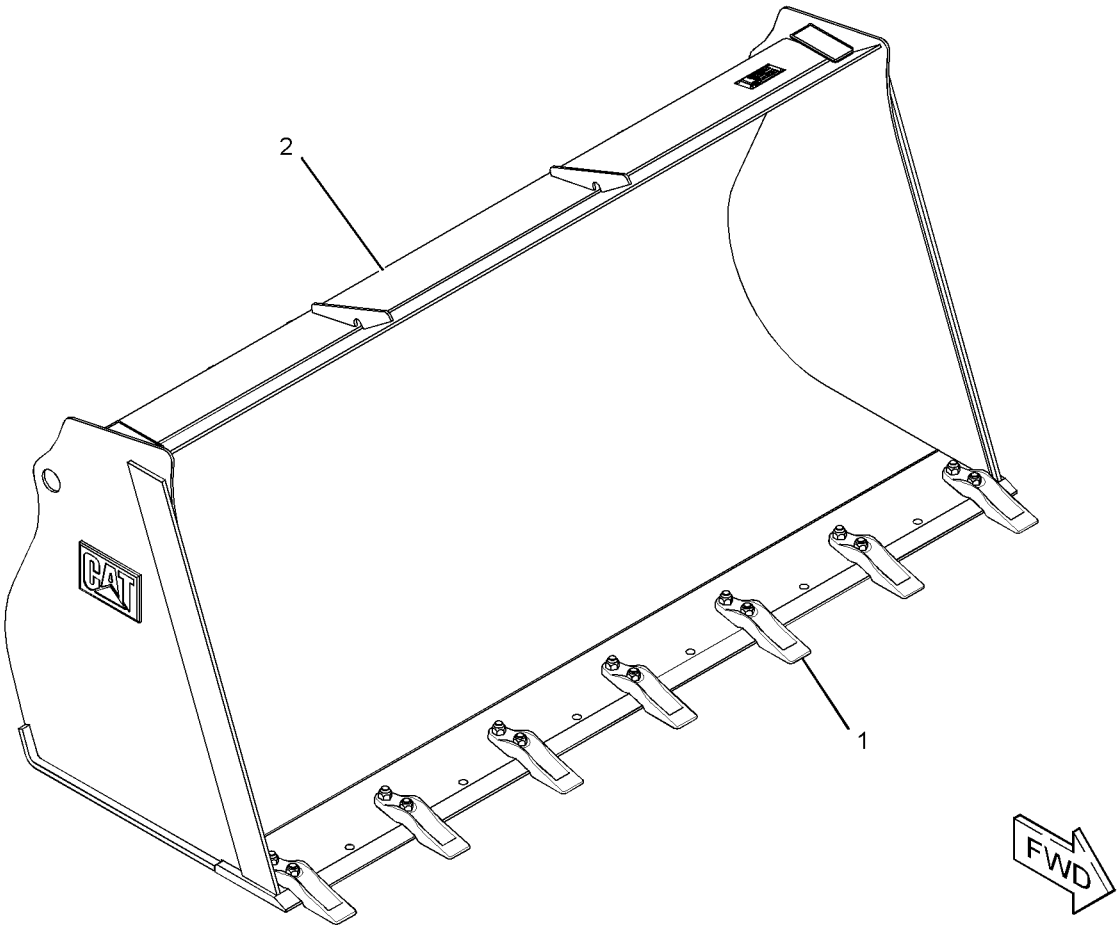

GRAPHIC #1 **<END>** g01590437

WORK TOOLS

286-0583 BUCKET AR-GENERAL PURPOSE

S/N: LMD1-UP

AN ATTACHMENT

SMCS-6101 **i02750348**

NOTE	REF NO	GRAPHIC REF	PART NUMBER	QTY	PART NAME 1 2 3 4 5 6 (PRODUCT LEVEL)	SEE PAGE
Y	1	1	*141-4999*	7	TOOTH GP-UNI	354
Y	2	1	*261-1353*	1	BUCKET GP-GENERAL PURPOSE	339

Y-SEPARATE ILLUSTRATION

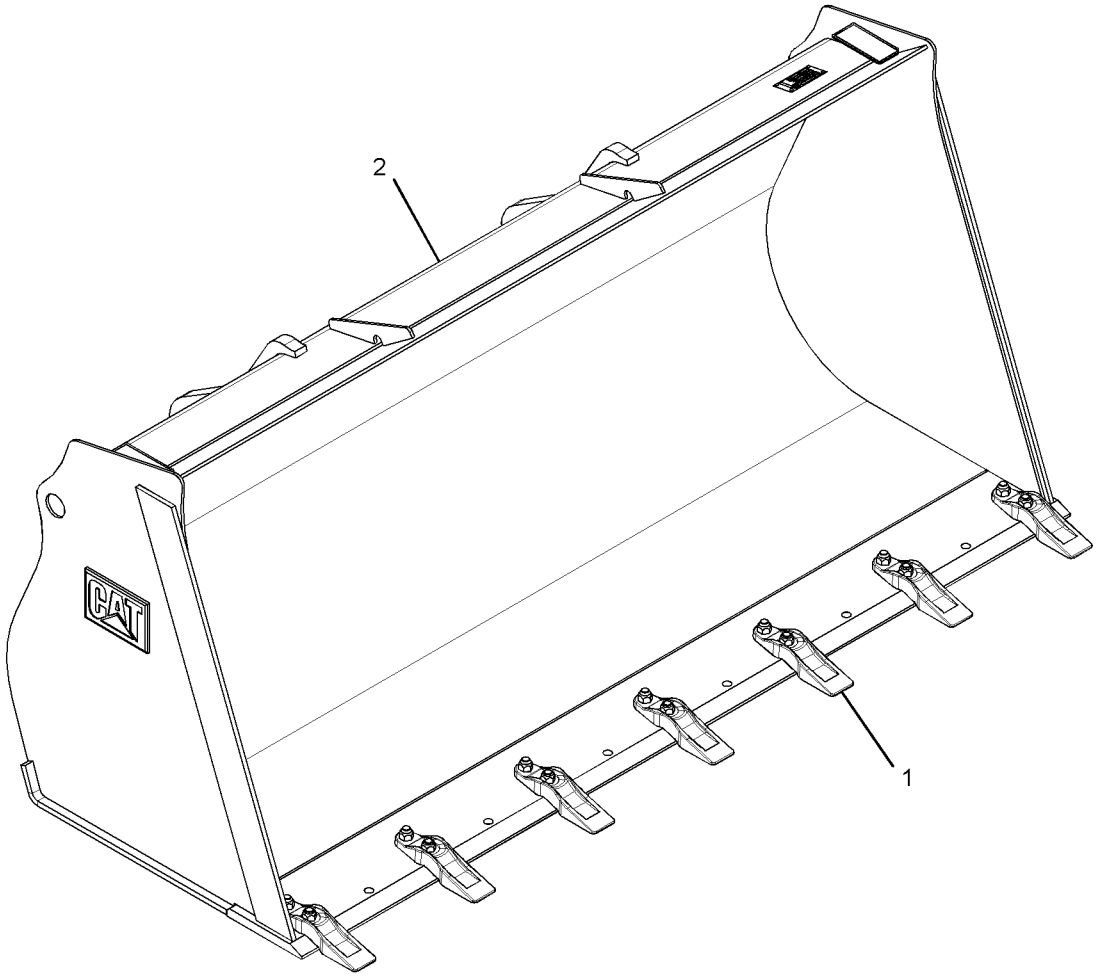

GRAPHIC #1 **<END>** g01385734

286-0584 BUCKET AR-GENERAL PURPOSE

S/N: LMD1-UP

AN ATTACHMENT

SMCS-6101 **i02700505**

NOTE	REF NO	GRAPHIC REF	PART NUMBER	QTY	PART NAME 1 2 3 4 5 6 (PRODUCT LEVEL)	SEE PAGE
Y	1	1	*141-5004*	1	EDGE GP-CUTTING	349
Y	2	1	**261-1353**	1	BUCKET GP-GENERAL PURPOSE	339

Y-SEPARATE ILLUSTRATION

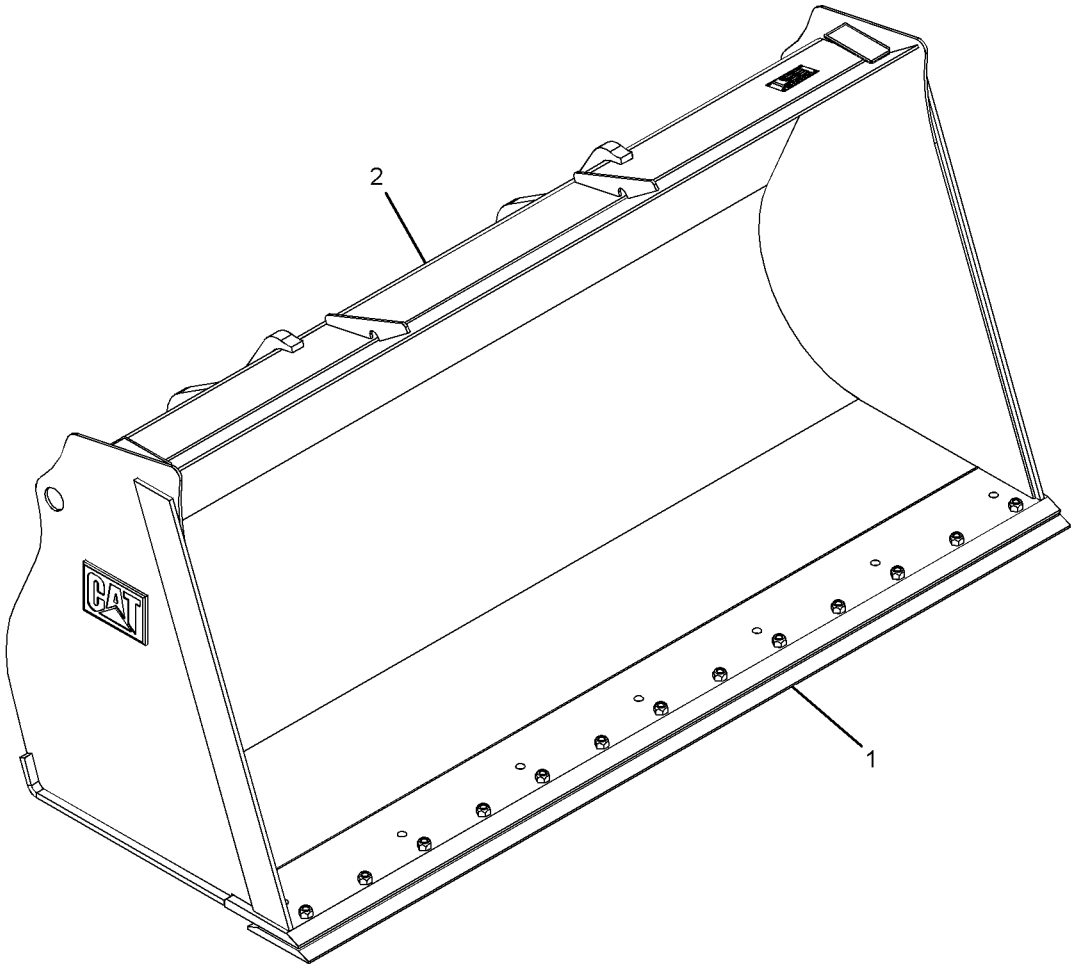

GRAPHIC #1 **<END>** g01373397

261-1396 BUCKET AR-LIGHT MATERIAL

S/N: LMD1-UP
AN ATTACHMENT

SMCS-6103 **i03103180**

NOTE	REF NO	GRAPHIC REF	PART NUMBER	QTY	PART NAME 1 2 3 4 5 6 (PRODUCT LEVEL)	SEE PAGE
Y	1	1	*141-5004*	1	EDGE GP-CUTTING	349
	2	1	**154-2704**	1	PLATE-INSTRUCTION (BUCKET SPECIFICATIONS)	
	3	1	**168-8389**	4	TACK-FASTENER	
	4	1	**173-6205**	2	FILM-IDENTIFICATION (BUCKET LEVEL)	
	5	1	*261-1397*	1	BUCKET AS-LIGHT MATERIAL	
		1	**2C-9259**	2	PLATE-IDENTIFICATION (CAT)	
		1	**138-8937**	1	EDGE	

Y-SEPARATE ILLUSTRATION

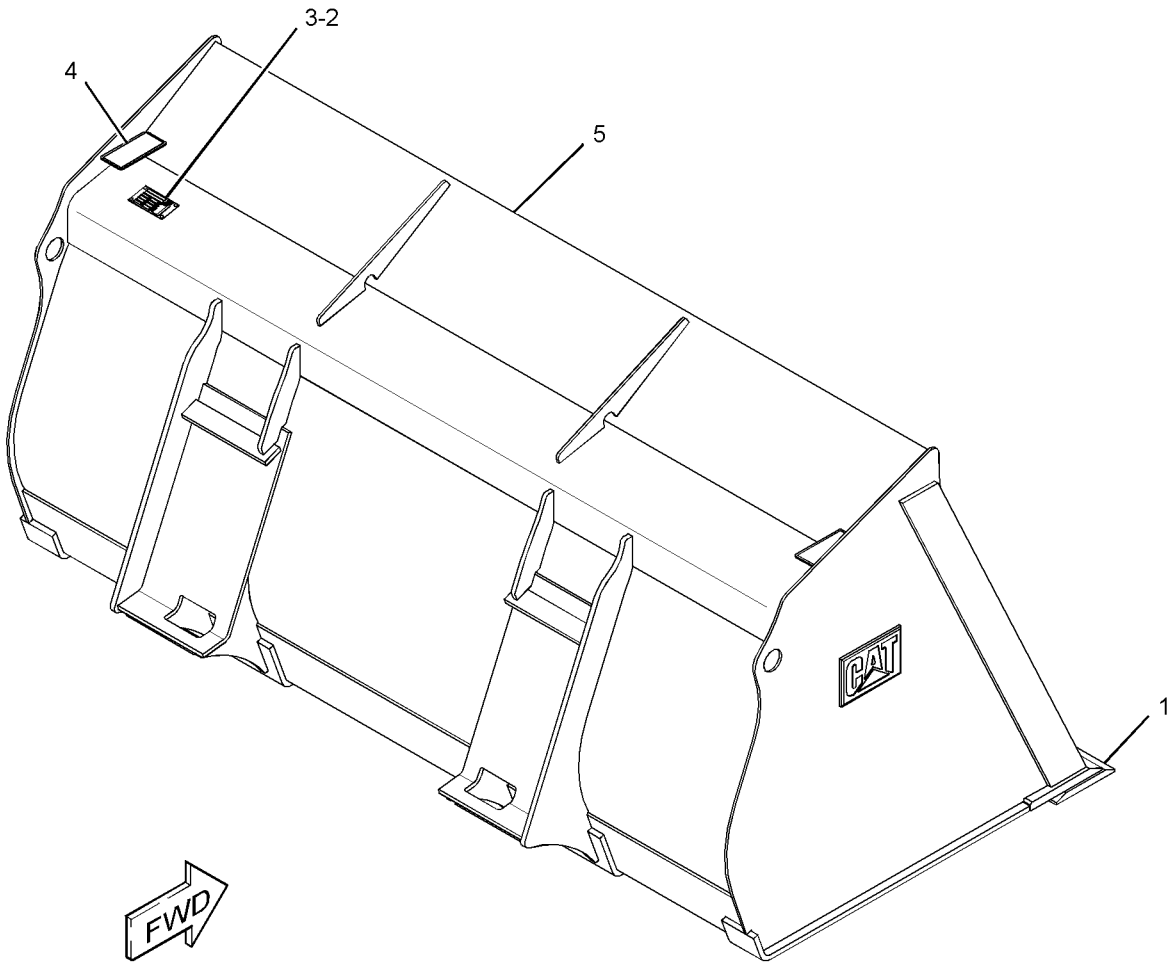

GRAPHIC #1 **<END>** g01590193

WORK TOOLS

261-1404 BUCKET AR-LIGHT MATERIAL

S/N: LMD1-UP

AN ATTACHMENT

SMCS-6103 **i03111141**

NOTE	REF NO	GRAPHIC REF	PART NUMBER	QTY	PART NAME 1 2 3 4 5 6 (PRODUCT LEVEL)	SEE PAGE
Y	1	1	*141-5004*	1	EDGE GP-CUTTING	349
	2	1	**154-2704**	1	PLATE-INSTRUCTION (BUCKET SPECIFICATIONS)	
	3	1	**168-8389**	4	TACK-FASTENER	
	4	1	**173-6205**	2	FILM-IDENTIFICATION (BUCKET LEVEL)	
	5	1	*261-1405*	1	BUCKET AS-GENERAL PURPOSE	
		1	**2C-9259**	2	PLATE-IDENTIFICATION (CAT)	
		1	**138-8937**	1	EDGE	

Y-SEPARATE ILLUSTRATION

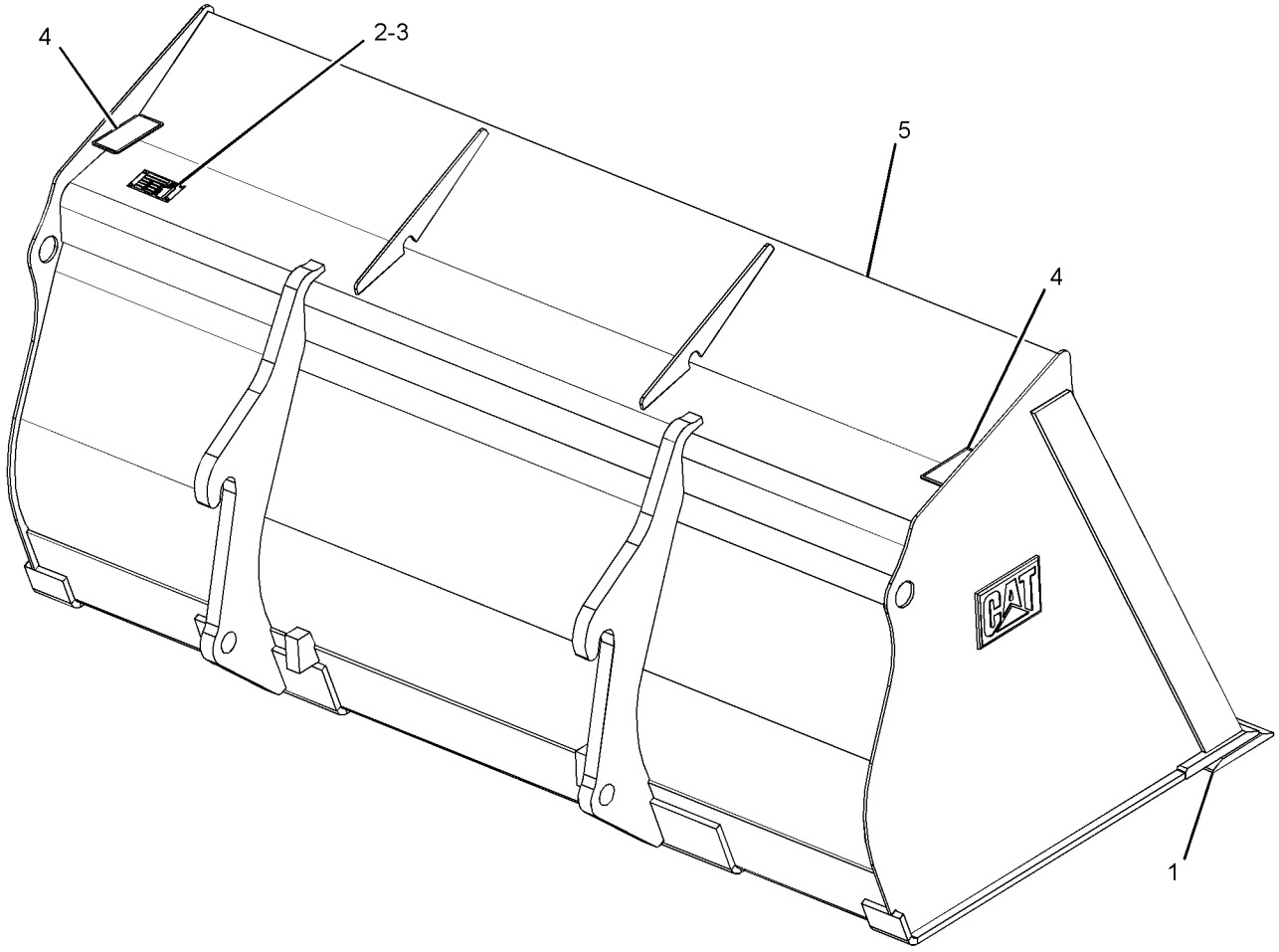

GRAPHIC #1 **<END>** g01375598

259-6040 BUCKET AR-MULTIPURPOSE

S/N: LMD1-UP

PART OF 286-0585, 286-0586 BUCKET AR-MULTIPURPOSE

AN ATTACHMENT

SMCS-6104 **i02740866**

NOTE	REF NO	GRAPHIC REF	PART NUMBER	QTY	PART NAME 1 2 3 4 5 6 (PRODUCT LEVEL)	SEE PAGE
Y	1	1	*9R-4668*	1	MOUNTING GP-CYLINDER (MULTIPURPOSE BUCKET)	310
	2	1	**154-2704**	1	PLATE-INSTRUCTION (BUCKET SPECIFICATIONS)	
	3	1	**168-8389**	4	TACK-FASTENER	
Y	4	1	**185-1839**	2	CYLINDER GP-MULTIPURPOSE BUKT	254
Y	5	1	*259-6041*	1	BUCKET GP-MULTIPURPOSE	341
Y	6	1	*259-6045*	1	LINES GP-BUCKET	274

Y-SEPARATE ILLUSTRATION

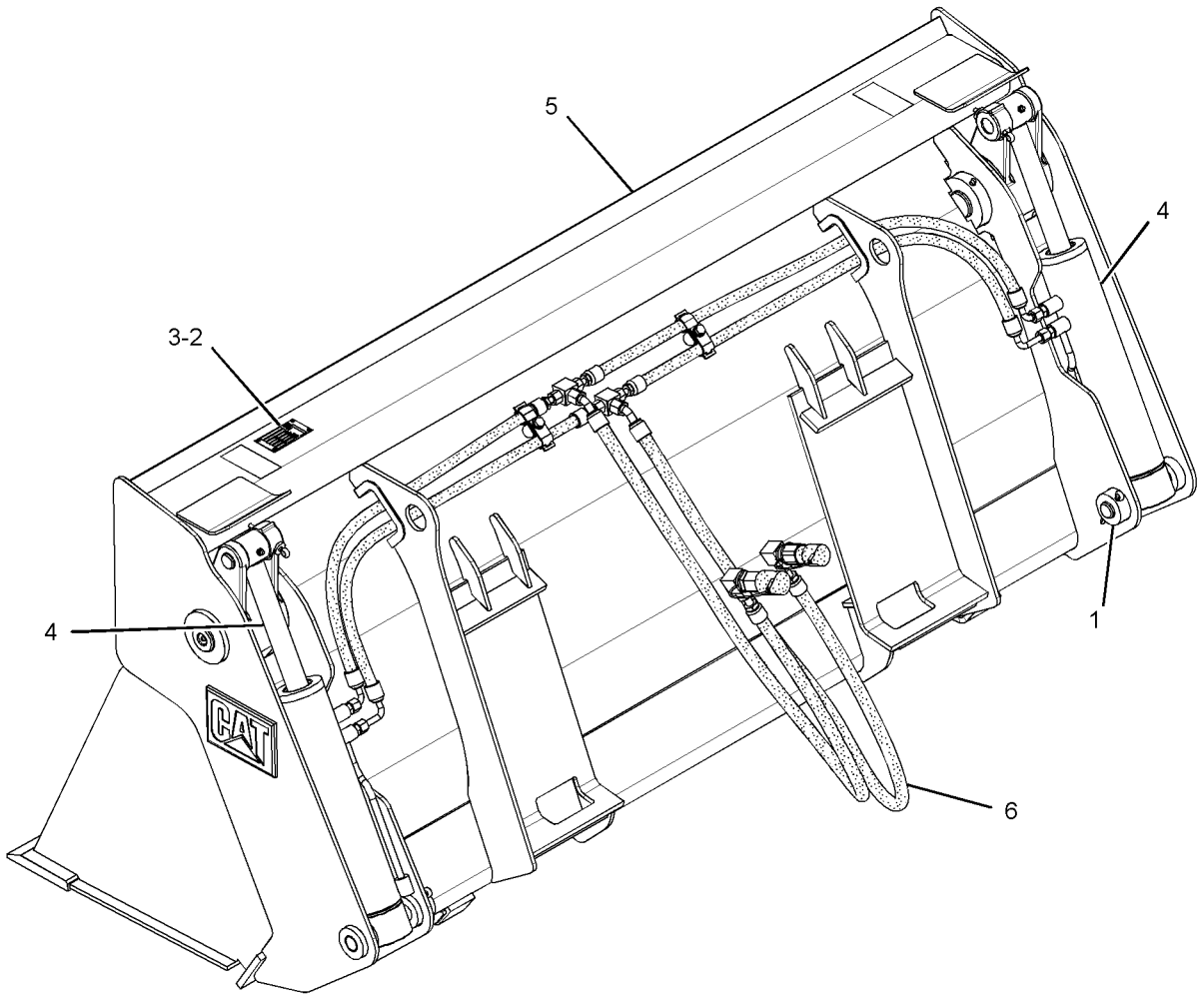

GRAPHIC #1 **<END>** g01375044

WORK TOOLS

259-6050 BUCKET AR-MULTIPURPOSE

S/N: LMD1-UP

PART OF 286-0587, 286-0588 BUCKET AR-MULTIPURPOSE

AN ATTACHMENT

SMCS-6104 **i02740870**

NOTE	REF NO	GRAPHIC REF	PART NUMBER	QTY	PART NAME 1 2 3 4 5 6 (PRODUCT LEVEL)	SEE PAGE
Y	1	1	*9R-4668*	1	MOUNTING GP-CYLINDER (MULTIPURPOSE BUCKET)	310
	2	1	**154-2704**	1	PLATE-INSTRUCTION (BUCKET SPECIFICATIONS)	
	3	1	**168-8389**	4	TACK-FASTENER	
Y	4	1	**185-1839**	2	CYLINDER GP-MULTIPURPOSE BUKT	254
Y	5	1	*259-6051*	1	BUCKET GP-MULTIPURPOSE	342
Y	6	1	*284-9275*	1	LINES GP-BUCKET	276

Y-SEPARATE ILLUSTRATION

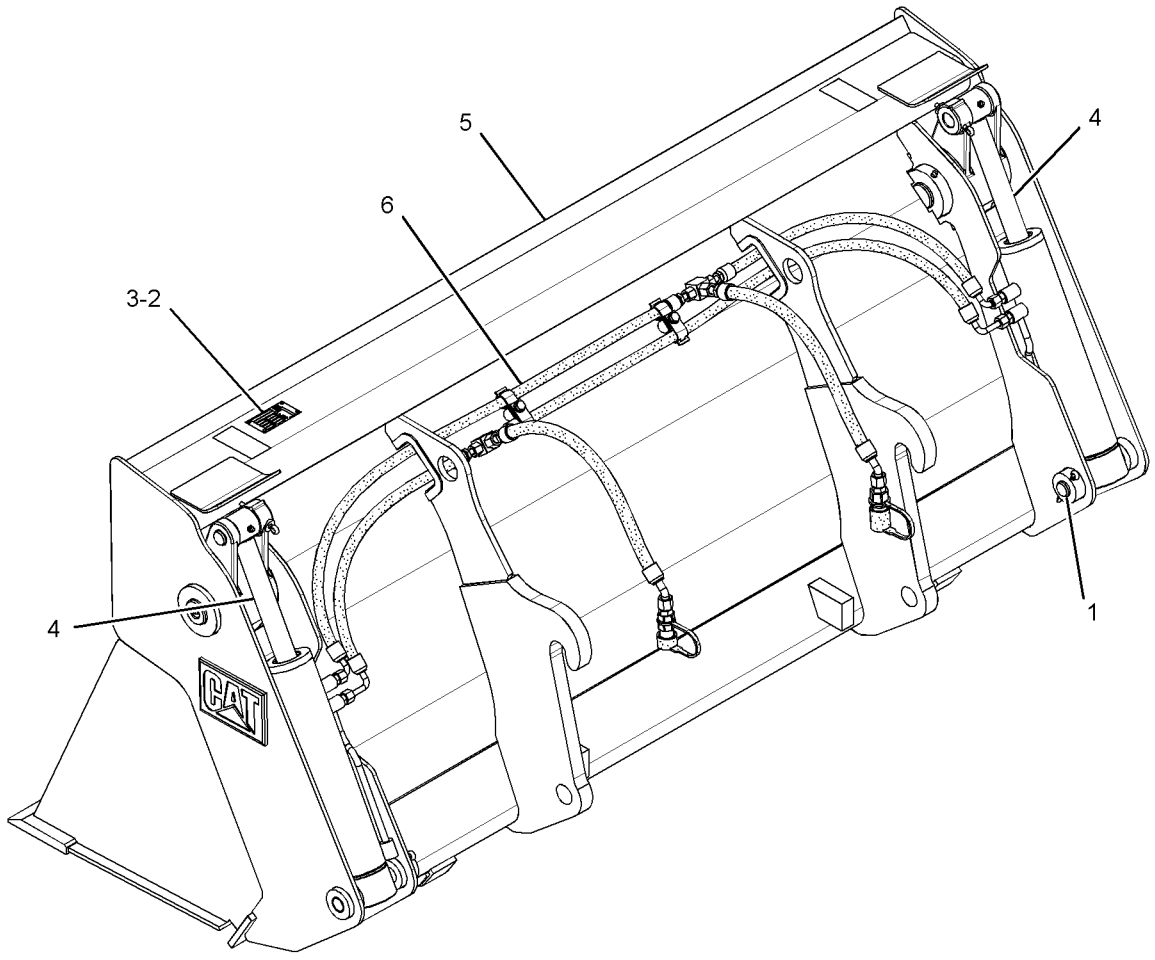

GRAPHIC #1 **<END>** g01375062

286-0585 BUCKET AR-MULTIPURPOSE

S/N: LMD1-UP
AN ATTACHMENT

SMCS-6104 **i02888825**

NOTE	REF NO	GRAPHIC REF	PART NUMBER	QTY	PART NAME 1 2 3 4 5 6 (PRODUCT LEVEL)	SEE PAGE
Y	1	1	*141-5004*	1	EDGE GP-CUTTING	349
Y	2	1	**259-6040**	1	BUCKET AR-MULTIPURPOSE	333

Y-SEPARATE ILLUSTRATION

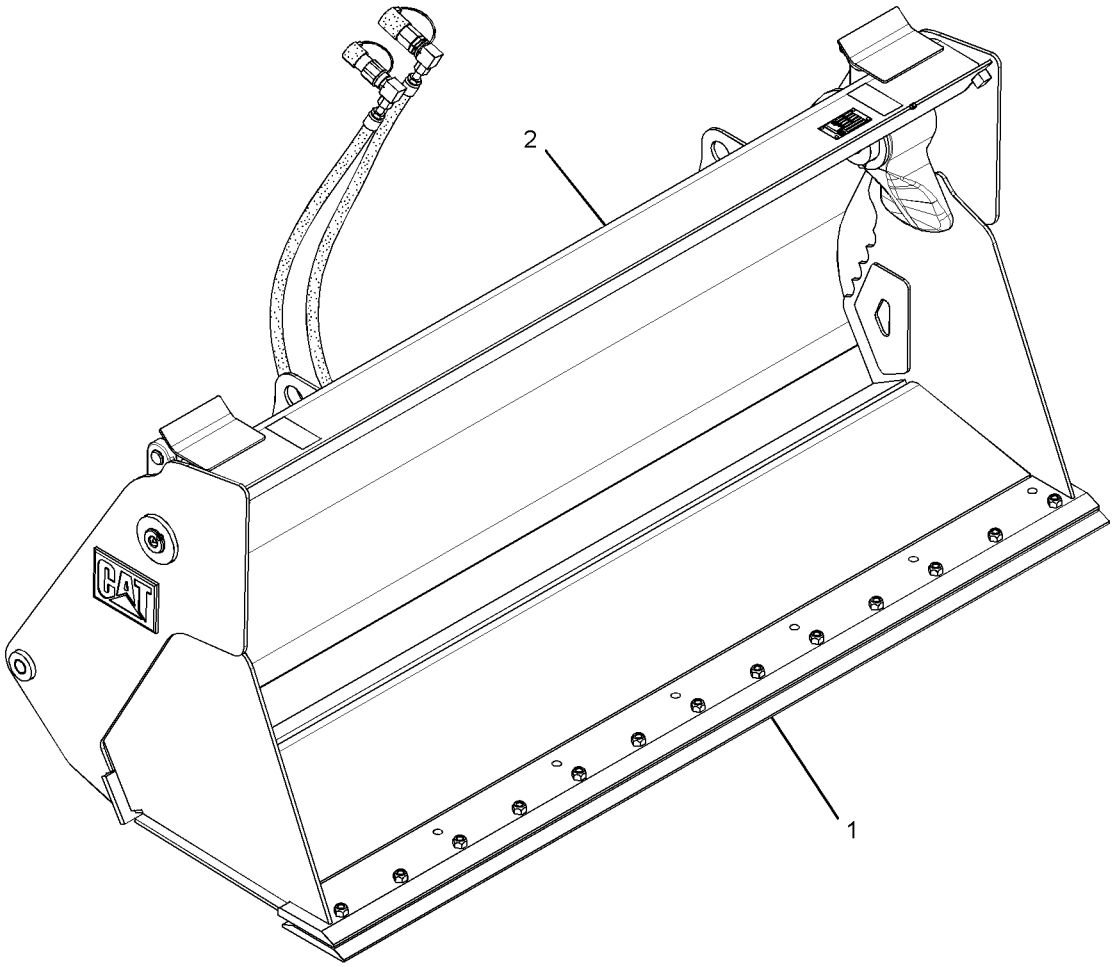

GRAPHIC #1 **<END>** g01440070

WORK TOOLS

286-0586 BUCKET AR-MULTIPURPOSE

S/N: LMD1-UP

AN ATTACHMENT

SMCS-6104 **i02888828**

NOTE	REF NO	GRAPHIC REF	PART NUMBER	QTY	PART NAME 1 2 3 4 5 6 (PRODUCT LEVEL)	SEE PAGE
Y	1	1	*141-4999*	7	TOOTH GP-UNI	354
Y	2	1	**259-6040**	1	BUCKET AR-MULTIPURPOSE	333

Y-SEPARATE ILLUSTRATION

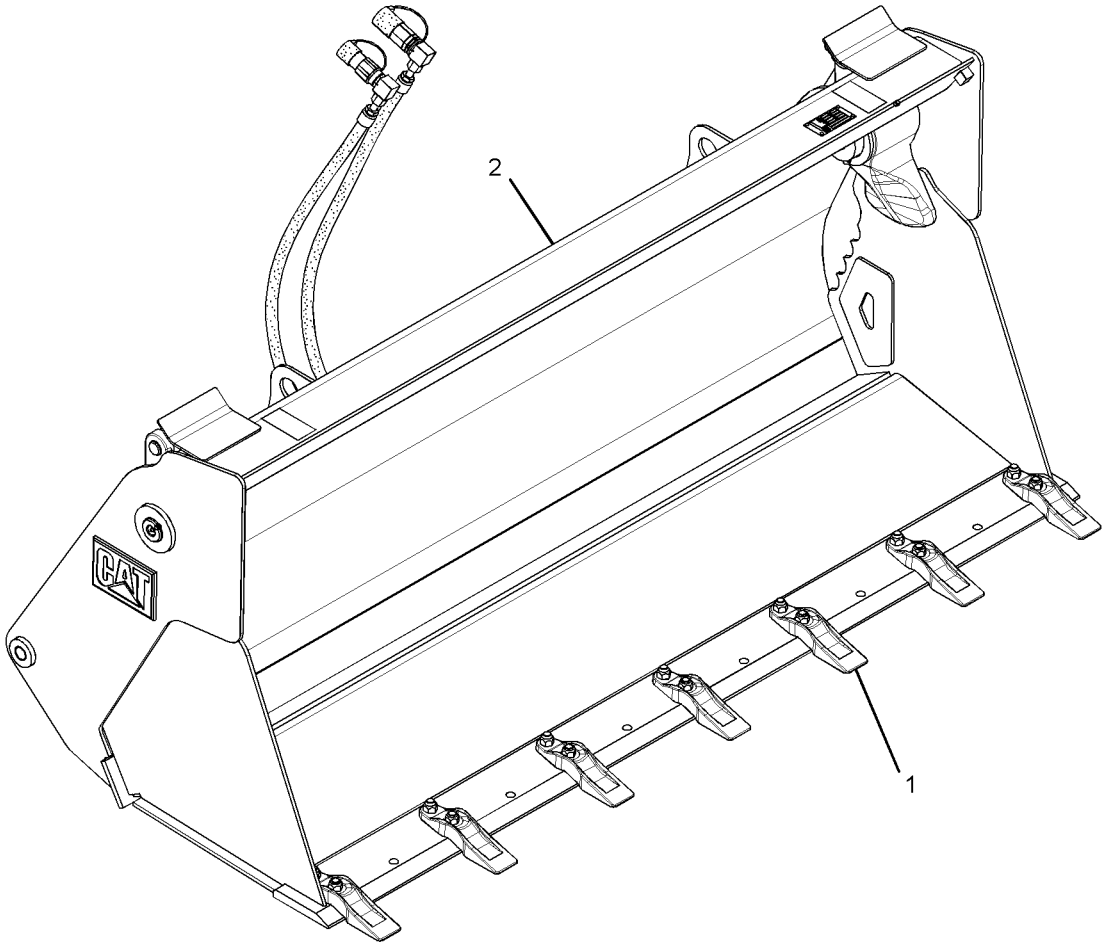

GRAPHIC #1 **<END>** g01439749

WORK TOOLS

286-0587 BUCKET AR-MULTIPURPOSE

S/N: LMD1-UP
AN ATTACHMENT

SMCS-6104 **i02740835**

NOTE	REF NO	GRAPHIC REF	PART NUMBER	QTY	PART NAME 1 2 3 4 5 6 (PRODUCT LEVEL)	SEE PAGE
Y	1	1	*141-5004*	1	EDGE GP-CUTTING	349
Y	2	1	**259-6050**	1	BUCKET AR-MULTIPURPOSE	334

Y-SEPARATE ILLUSTRATION

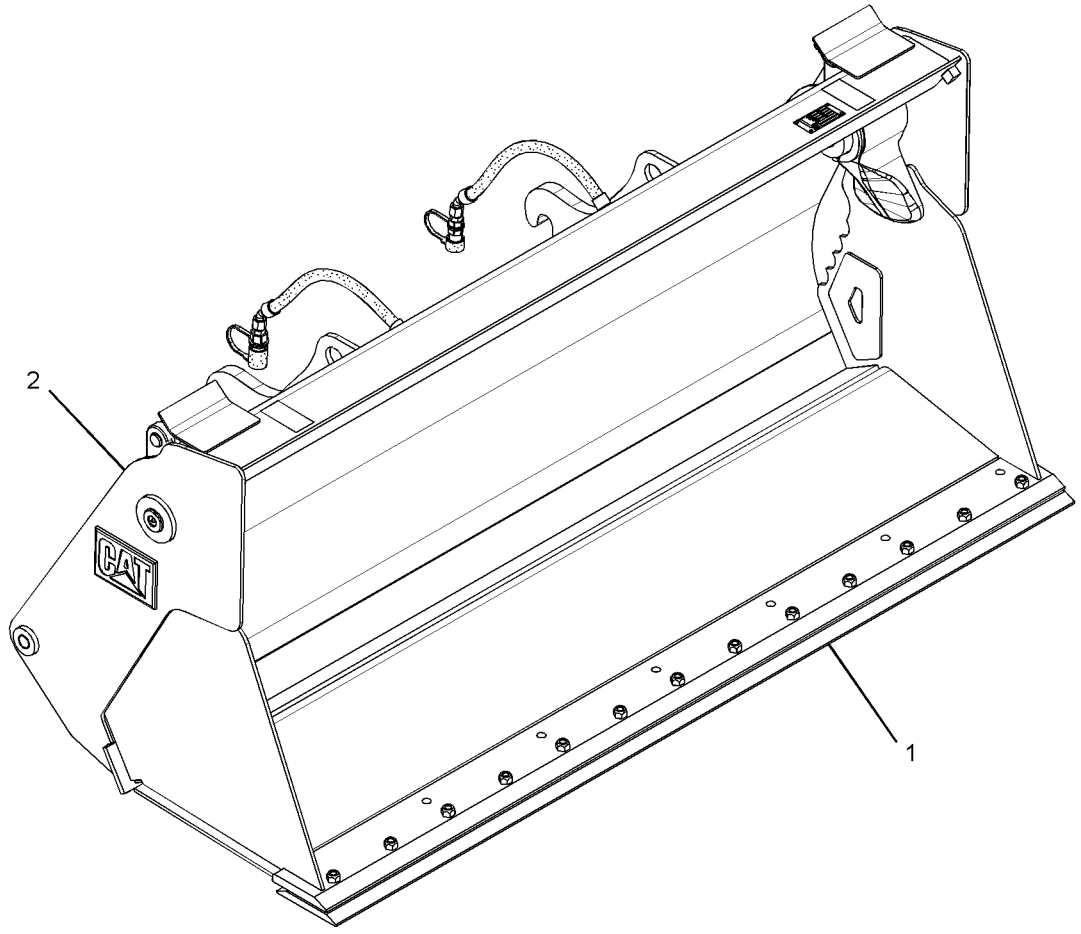

GRAPHIC #1 **<END>** g01375060

WORK TOOLS

286-0588 BUCKET AR-MULTIPURPOSE

S/N: LMD1-UP

AN ATTACHMENT

SMCS-6104 **i02740862**

NOTE	REF NO	GRAPHIC REF	PART NUMBER	QTY	PART NAME 1 2 3 4 5 6 (PRODUCT LEVEL)	SEE PAGE
Y	1	1	*141-4999*	7	TOOTH GP-UNI	354
Y	2	1	**259-6050**	1	BUCKET AR-MULTIPURPOSE	334

Y-SEPARATE ILLUSTRATION

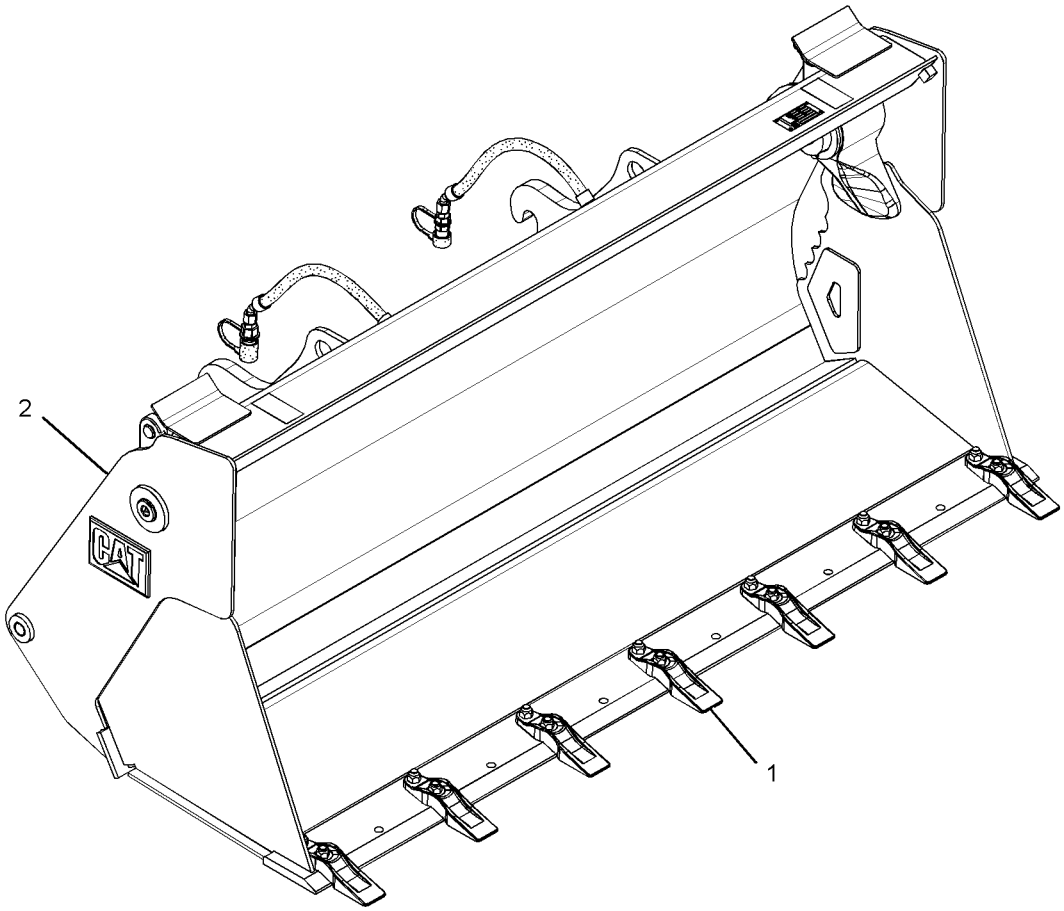

GRAPHIC #1 **<END>** g01375059

WORK TOOLS

261-1353 BUCKET GP-GENERAL PURPOSE

S/N: LMD1-UP

PART OF 286-0583, 286-0584 BUCKET AR-GENERAL PURPOSE

AN ATTACHMENT

SMCS-6101 **i02700391**

NOTE	REF NO	GRAPHIC REF	PART NUMBER	QTY	PART NAME 1 2 3 4 5 6 (PRODUCT LEVEL)	SEE PAGE
	1	1	**154-2704**	1	PLATE-INSTRUCTION (BUCKET SPECIFICATIONS)	
	2	1	**168-8389**	4	TACK-FASTENER	
	3	1	**173-6205**	2	FILM-IDENTIFICATION (BUCKET LEVEL)	
	4	1	**261-1354**	1	BUCKET AS-GENERAL PURPOSE	

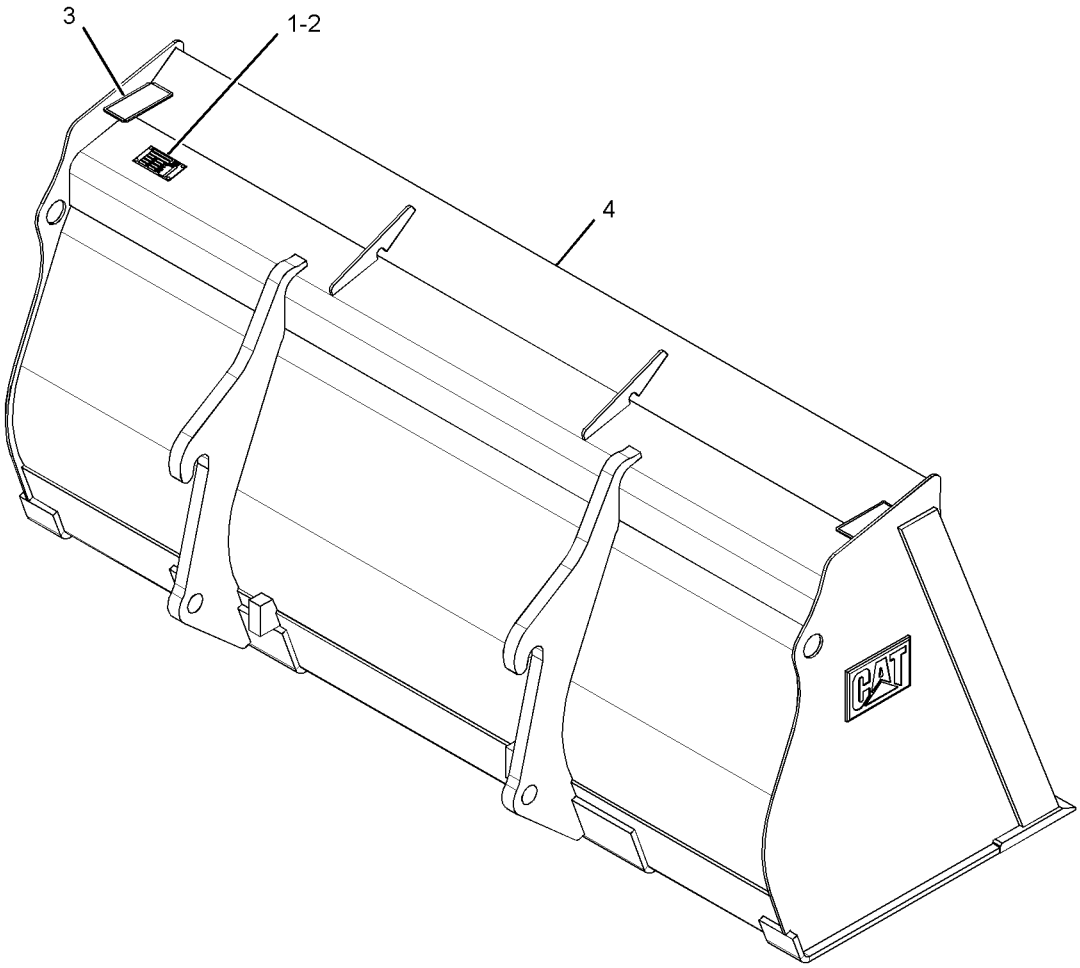

GRAPHIC #1 **<END>** g01376153

261-1362 BUCKET GP-GENERAL PURPOSE

S/N: LMD1-UP
1.1-CU M (1.4-CU YD) CAPACITY
PART OF 286-0581, 286-0582 BUCKET AR-GENERAL PURPOSE
AN ATTACHMENT

SMCS-6101 **i03105805**

NOTE	REF NO	GRAPHIC REF	PART NUMBER	QTY	PART NAME 1 2 3 4 5 6 (PRODUCT LEVEL)	SEE PAGE
	1	1	**154-2704**	1	PLATE-INSTRUCTION (BUCKET SPECIFICATIONS)	
	2	1	**168-8389**	4	TACK-FASTENER	
	3	1	**173-6205**	2	FILM-IDENTIFICATION (BUCKET LEVEL)	
					PARTS SHOWN IN GRAPHIC(S) WITHOUT A REFERENCE NUMBER ARE NOT SERVICED SEPARATELY	

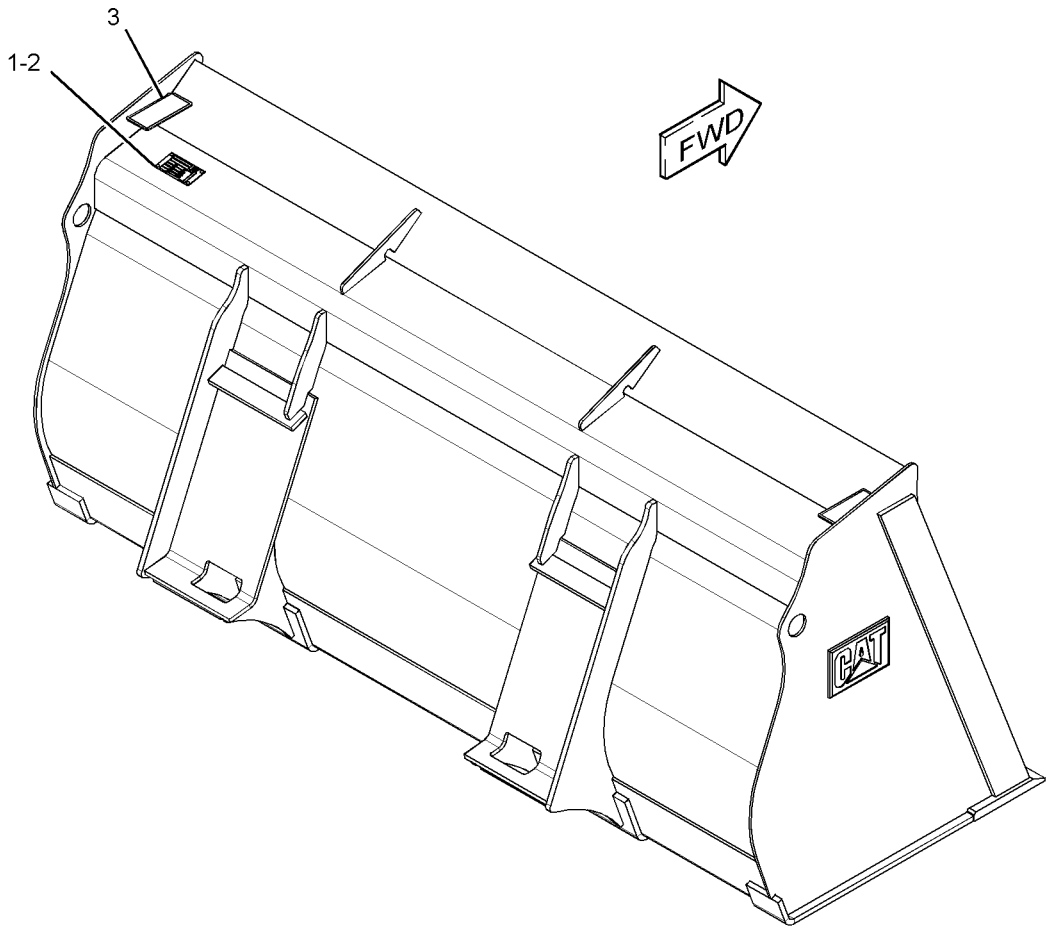

GRAPHIC #1 **<END>** g01588953

WORK TOOLS

259-6041 BUCKET GP-MULTIPURPOSE

S/N: LMD1-UP

PART OF 259-6040 BUCKET AR-MULTIPURPOSE

AN ATTACHMENT

SMCS-6104 **i02740939**

NOTE	REF NO	GRAPHIC REF	PART NUMBER	QTY	PART NAME 1 2 3 4 5 6 (PRODUCT LEVEL)	SEE PAGE
	1	1	**4J-1888**	2	PIN-COTTER	
	2	1	**9R-4676**	2	PIN	
	3	1	**173-6572**	2	FILM-IDENTIFICATION (BUCKET LEVEL)	
	4	1	**259-6042**	1	BULLDOZER AS	
Y	5	1	**259-6043**	1	CLAM AS-MULTIPURPOSE BUCKET	345
	6	1	**3B-8489**	2	FITTING-GREASE	

Y-SEPARATE ILLUSTRATION

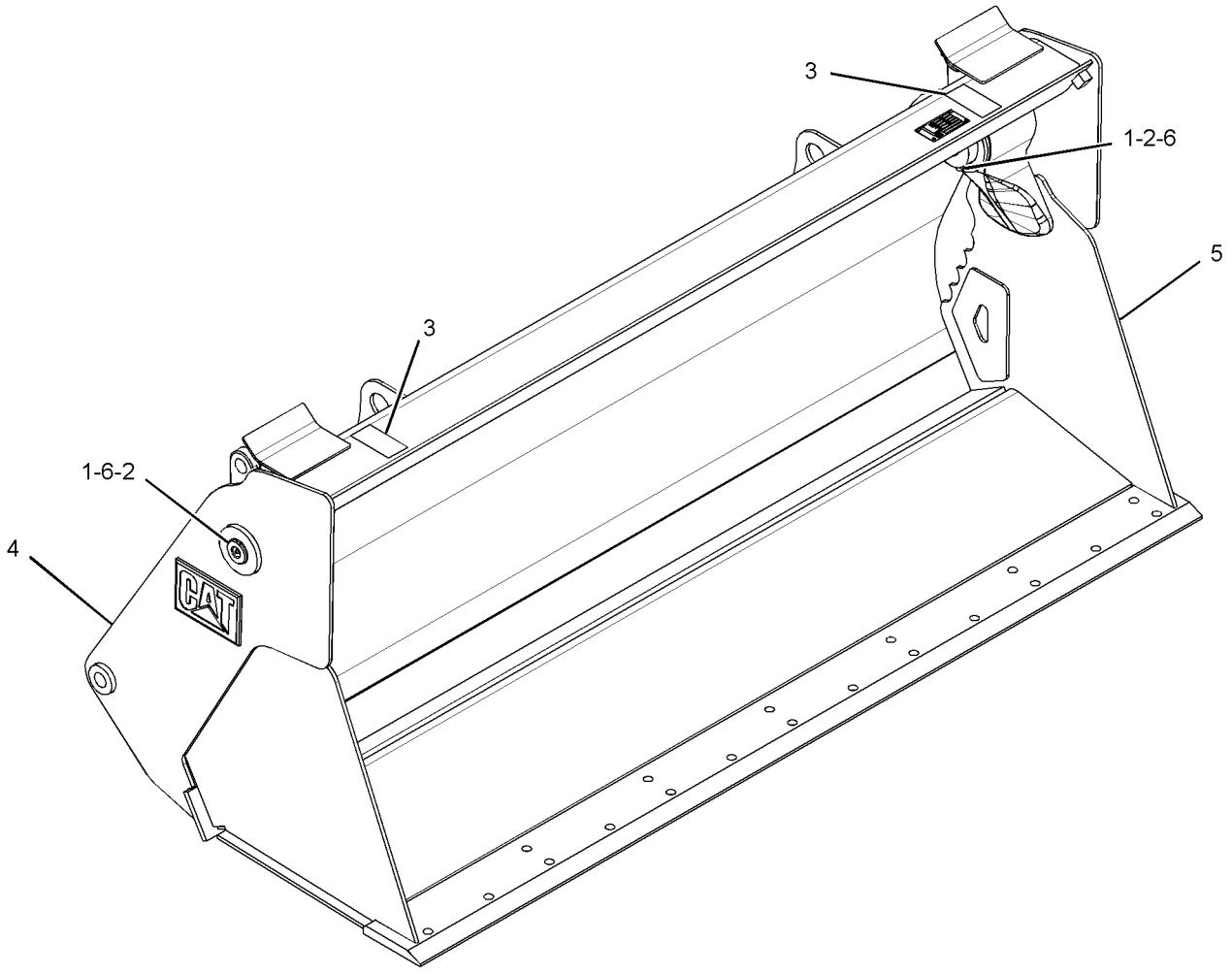

GRAPHIC #1 **<END>** g01381572

259-6051 BUCKET GP-MULTIPURPOSE

S/N: LMD1-UP
PART OF 259-6050 BUCKET AR-MULTIPURPOSE
AN ATTACHMENT

SMCS-6104 **i02740946**

NOTE	REF NO	GRAPHIC REF	PART NUMBER	QTY	PART NAME 1 2 3 4 5 6 (PRODUCT LEVEL)	SEE PAGE
	1	1	**4J-1888**	2	PIN-COTTER	
	2	1	**9R-4676**	2	PIN	
	3	1	**173-6572**	2	FILM-IDENTIFICATION (BUCKET LEVEL)	
Y	4	1	**259-6043**	1	CLAM AS-MULTIPURPOSE BUCKET	345
	5	1	**259-6052**	1	BULLDOZER AS	
	6	1	**3B-8489**	2	FITTING-GREASE	

Y-SEPARATE ILLUSTRATION

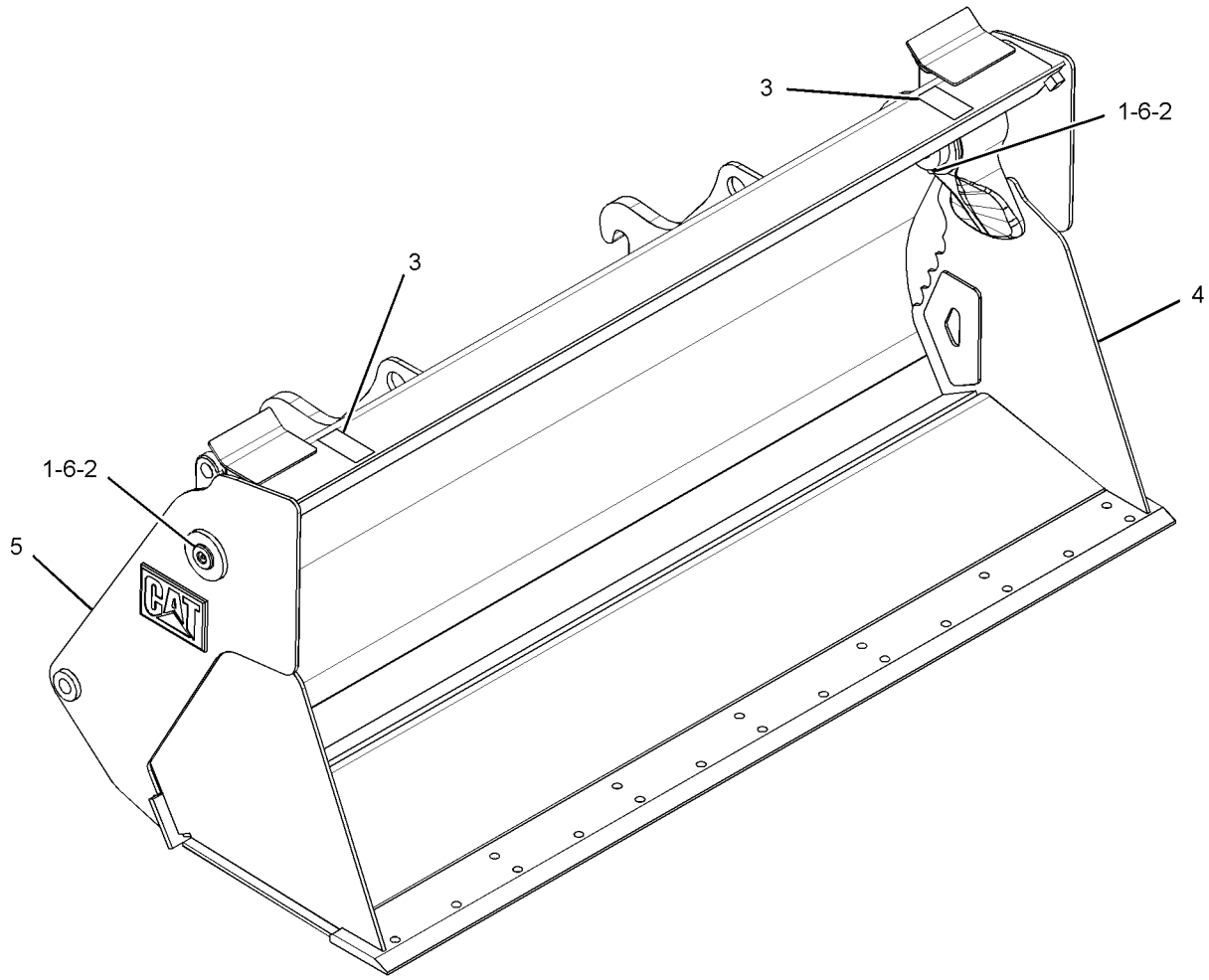

GRAPHIC #1 **<END>** g01381574

261-1413 CARRIAGE GP-FORK

S/N: LMD1-UP
AN ATTACHMENT

SMCS-6402 **i02740822**

NOTE	REF NO	GRAPHIC REF	PART NUMBER	QTY	PART NAME 1 2 3 4 5 6 (PRODUCT LEVEL)	SEE PAGE
	1	1	**157-4835**	1	PLATE-INSTRUCTION	
	2	1	**168-8389**	4	TACK-FASTENER	
	4	1	**5P-1076**	2	WASHER-HARD (13.5X30X4-MM THK)	
M	5	1	**8T-4244**	2	NUT (M12X1.75-THD)	
M	6	1	**8T-4910**	2	BOLT (M12X1.75X60-MM)	

M-METRIC PART

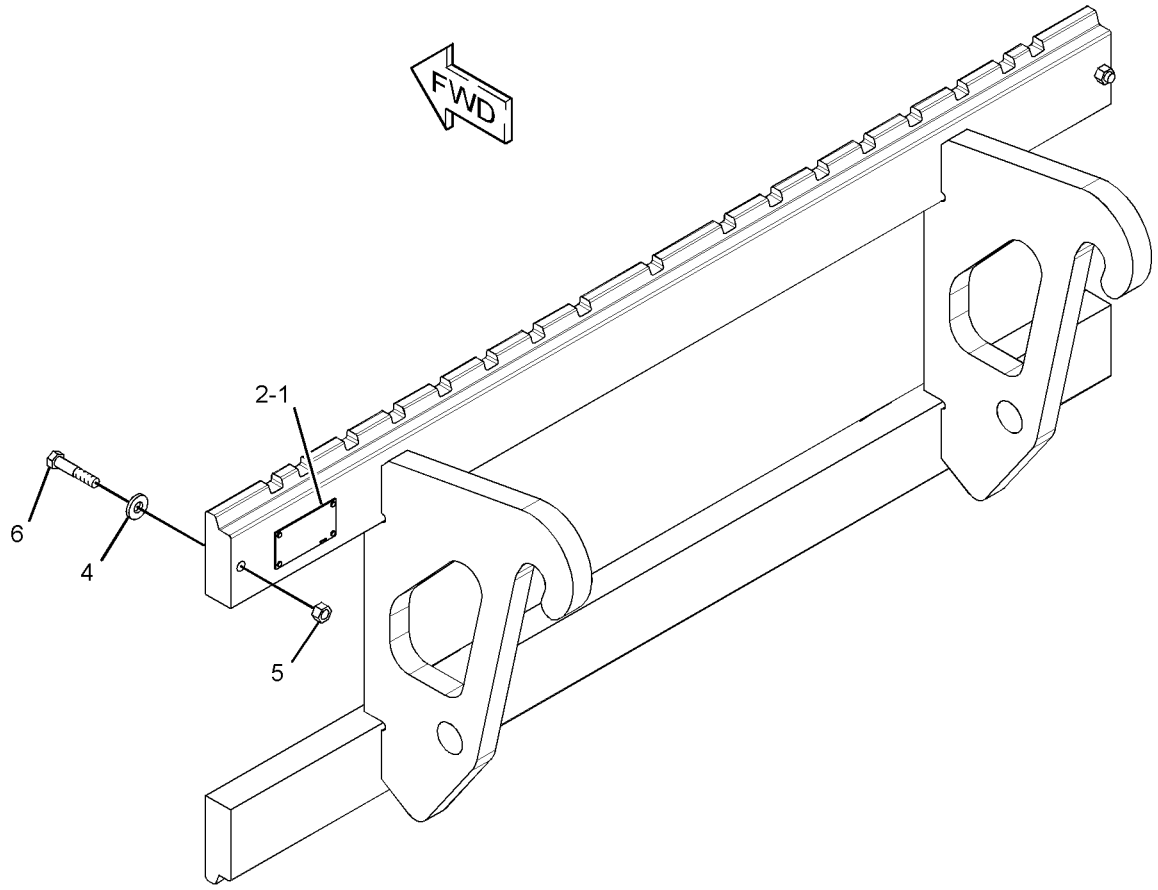

GRAPHIC #1 **<END>** g01375911

WORK TOOLS

261-1425 CARRIAGE GP-FORK

S/N: LMD1-UP

AN ATTACHMENT

SMCS-6402 **i02740818**

NOTE	REF NO	GRAPHIC REF	PART NUMBER	QTY	PART NAME 1 2 3 4 5 6 (PRODUCT LEVEL)	SEE PAGE
	1	1	**157-4835**	1	PLATE-INSTRUCTION	
	2	1	**168-8389**	4	TACK-FASTENER	
	4	1	**5P-1076**	2	WASHER-HARD (13.5X30X4-MM THK)	
M	5	1	**8T-4244**	2	NUT (M12X1.75-THD)	
M	6	1	**8T-4910**	2	BOLT (M12X1.75X60-MM)	

M-METRIC PART

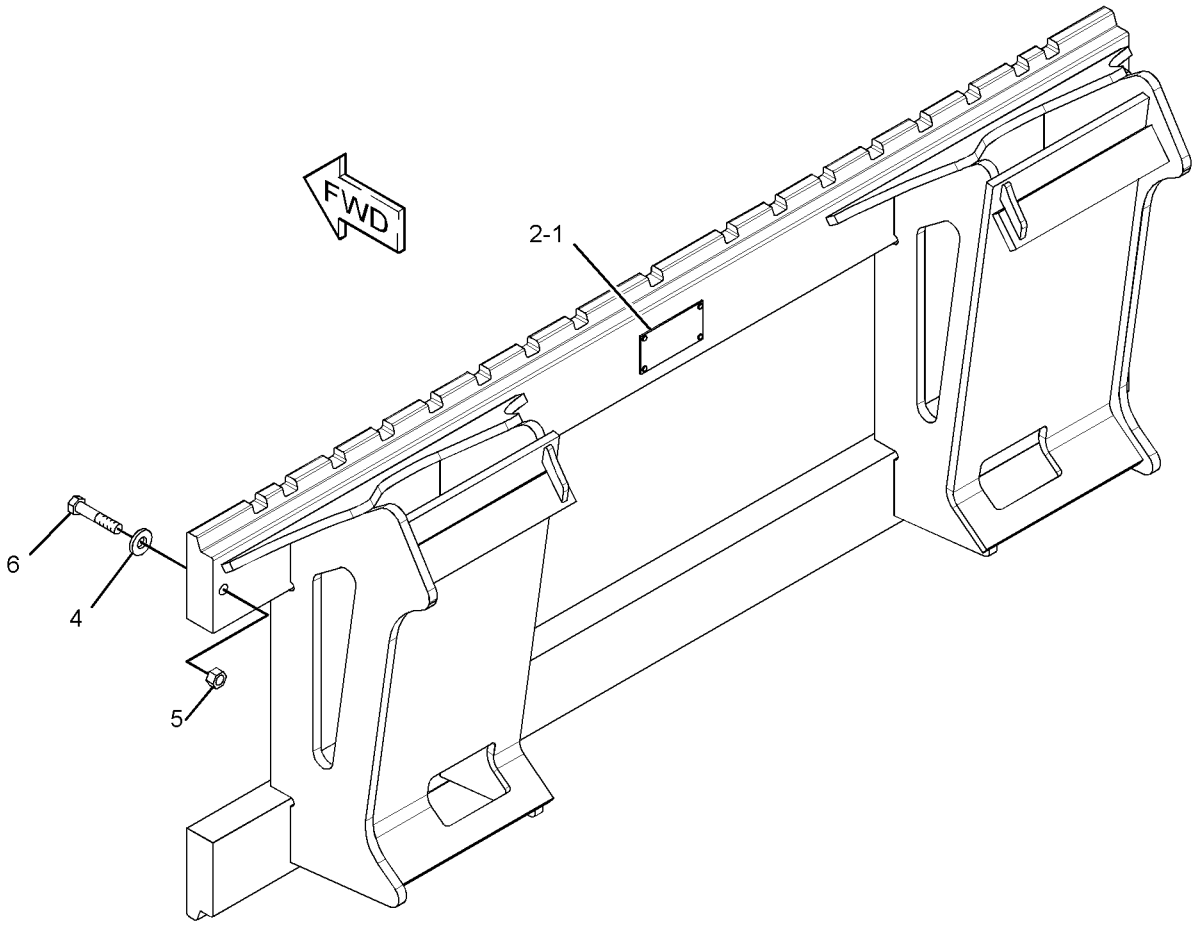

GRAPHIC #1 **<END>** g01375912

259-6043 CLAM AS-MULTIPURPOSE BUCKET

S/N: LMD1-UP

PART OF 259-6041, 259-6051 BUCKET GP-MULTIPURPOSE

AN ATTACHMENT

SMCS-6104 **i02758266**

NOTE	REF NO	GRAPHIC REF	PART NUMBER	QTY	PART NAME 1 2 3 4 5 6 (PRODUCT LEVEL)	SEE PAGE
	1	1	**147-1040**	1	EDGE	
	2	1	*259-6044*	1	CLAM AS	
	2A	1	**9R-4675**	2	BUSHING-TERMINAL	
	2B	1	**9R-5294**	2	HINGE	

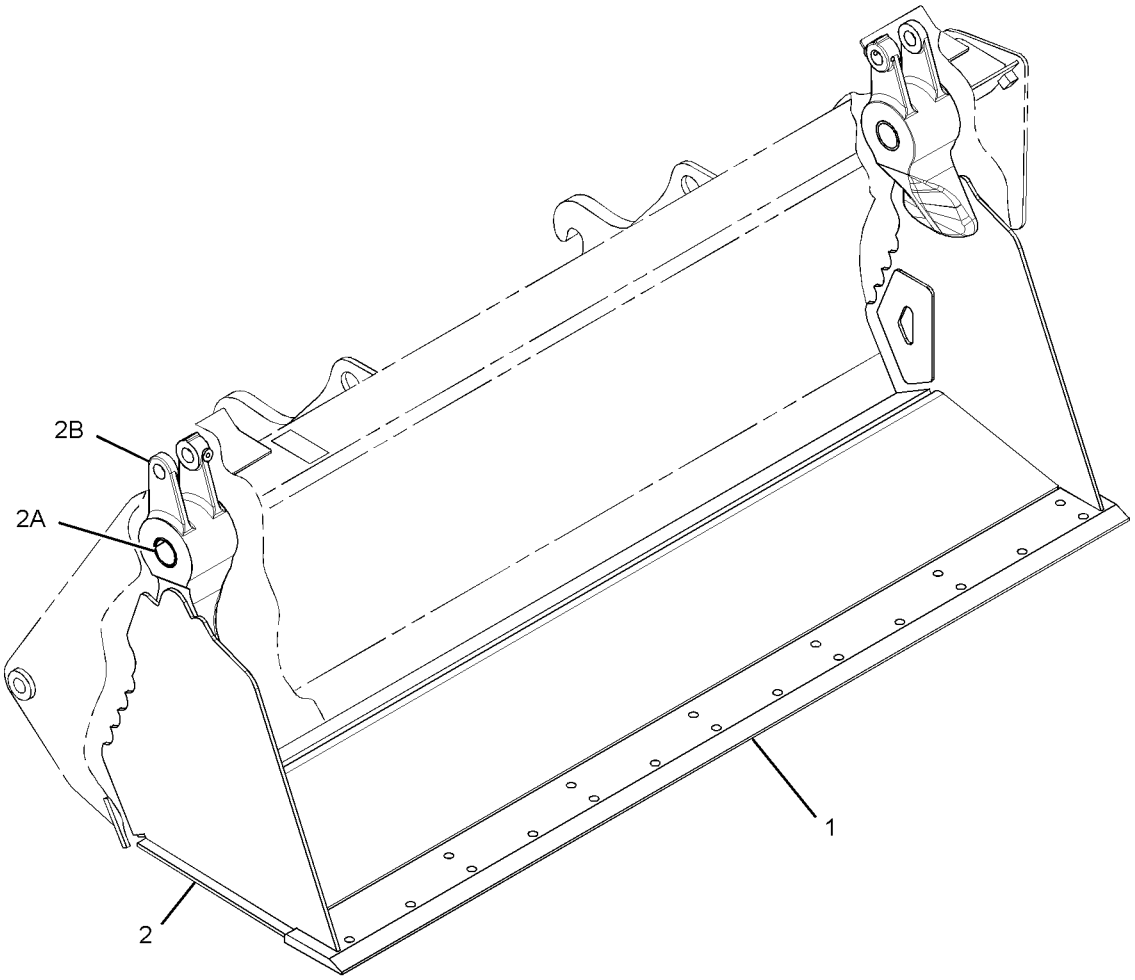

GRAPHIC #1 **<END>** g01382934

286-4217 COUPLER AR-QUICK—VERTICAL PIN LOCK

S/N: LMD1-UP
CANNOT BE USED WITH 282-7723—PAGE 244
AN ATTACHMENT

SMCS-6129 **i03111142**

NOTE	PART NUMBER	QTY	PART NAME 1 2 3 4 5 6 (PRODUCT LEVEL)	SEE PAGE
Y	*274-1323*	1	COUPLER GP-QUICK (VERTICAL PIN LOCK)	348
Y	*257-3930*	1	LINES GP-AUXILIARY HYDRAULIC (VERTICAL PIN LOCK COUPLER)	262
Y	*260-5507*	1	SWITCH GP-ROCKER (QUICK COUPLER PIN LOCK)	116
	311-7474	1	GUIDE GP-LINES (QUICK COUPLER)	
M	**8T-4189**	2	BOLT (M8X1.25X20-MM)	
	8T-4224	2	WASHER-HARD (8.8X16X2-MM THK)	
	311-7461	1	PLATE AS	

M-METRIC PART
Y-SEPARATE ILLUSTRATION

<END>

286-4218 COUPLER AR-QUICK—VERTICAL PIN LOCK, BOOSTED AUXILIARY HYDRAULIC FLOW

S/N: LMD1-UP
FOR USE WITH 282-7723—PAGE 244. CANNOT BE USED WITH 257-3923—PAGE 296
AN ATTACHMENT

SMCS-6129 **i02776285**

NOTE	PART NUMBER	QTY	PART NAME 1 2 3 4 5 6 (PRODUCT LEVEL)	SEE PAGE
Y	*274-1323*	1	COUPLER GP-QUICK (VERTICAL PIN LOCK)	348
Y	*284-9265*	1	LINES GP-AUXILIARY HYDRAULIC (VERTICAL LK, BOOSTED AUX FLOW)	269
Y	*260-5507*	1	SWITCH GP-ROCKER (QUICK COUPLER PIN LOCK)	116
Y	*260-5526*	1	WIRING GP-CAB (WKTL, BOOSTED AUX FLOW SWITCH)	127
Y	*276-6814*	1	WIRING GP-FRONT (BOOSTED AUX HYDRAULIC FLOW)	136
	311-7474	1	GUIDE GP-LINES (QUICK COUPLER)	
M	**8T-4189**	2	BOLT (M8X1.25X20-MM)	
	8T-4224	2	WASHER-HARD (8.8X16X2-MM THK)	
	311-7461	1	PLATE AS	

M-METRIC PART
Y-SEPARATE ILLUSTRATION

<END>

286-4219 COUPLER AR-QUICK—HORIZONTAL PIN LOCK

S/N: LMD1-UP
CANNOT BE USED WITH 282-7723—PAGE 244
AN ATTACHMENT

SMCS-6129 **i02737381**

NOTE	PART NUMBER	QTY	PART NAME 1 2 3 4 5 6 (PRODUCT LEVEL)	SEE PAGE
Y	*274-1321*	1	COUPLER GP-QUICK (HORIZONTAL PIN LOCK)	347
Y	**178-3713**	1	CYLINDER GP-COUPLER	252
Y	*257-3940*	1	LINES GP-AUXILIARY HYDRAULIC (HORIZONTAL PIN LOCK COUPLER)	265

Y-SEPARATE ILLUSTRATION

<END>

274-1321 COUPLER GP-QUICK–HORIZONTAL PIN LOCK

S/N: LMD1-UP

PART OF 286-4219 COUPLER AR-QUICK

AN ATTACHMENT

SMCS-6129 **i02737402**

NOTE	REF NO	GRAPHIC REF	PART NUMBER	QTY	PART NAME 1 2 3 4 5 6 (PRODUCT LEVEL)	SEE PAGE
	1	1	**237-5560**	1	COUPLER AS	
	2	1	**237-5561**	1	PLATE-COVER	
	3	1	**237-5562**	2	PIN	
	4	1	**237-5566**	2	DOWEL	
	5	1	**237-5567**	1	PIN	
	6	1	**257-4033**	2	PIN	
B	7	1	**270-2538**	2	SHIM PACK (INCLUDES 7-SHIMS)	
	8	1	**282-4062**	1	LINK AS	
	9	1	**300-2133**	3	PLATE	
M	10	1	**3E-8008**	2	BOLT-SOCKET HEAD (M16X2X90-MM)	
	11	1	**8T-4121**	6	WASHER-HARD (11X21X2.5-MM THK)	
M	12	1	**8T-4136**	2	BOLT (M10X1.5X25-MM)	
M	13	1	**8T-4190**	2	BOLT (M16X2X25-MM)	
M	14	1	**8T-4196**	4	BOLT (M10X1.5X35-MM)	
	15	1	**8T-4224**	5	WASHER-HARD (8.8X16X2-MM THK)	
M	16	1	**8T-4908**	5	BOLT (M8X1.25X25-MM)	

B-USE AS REQUIRED
M-METRIC PART

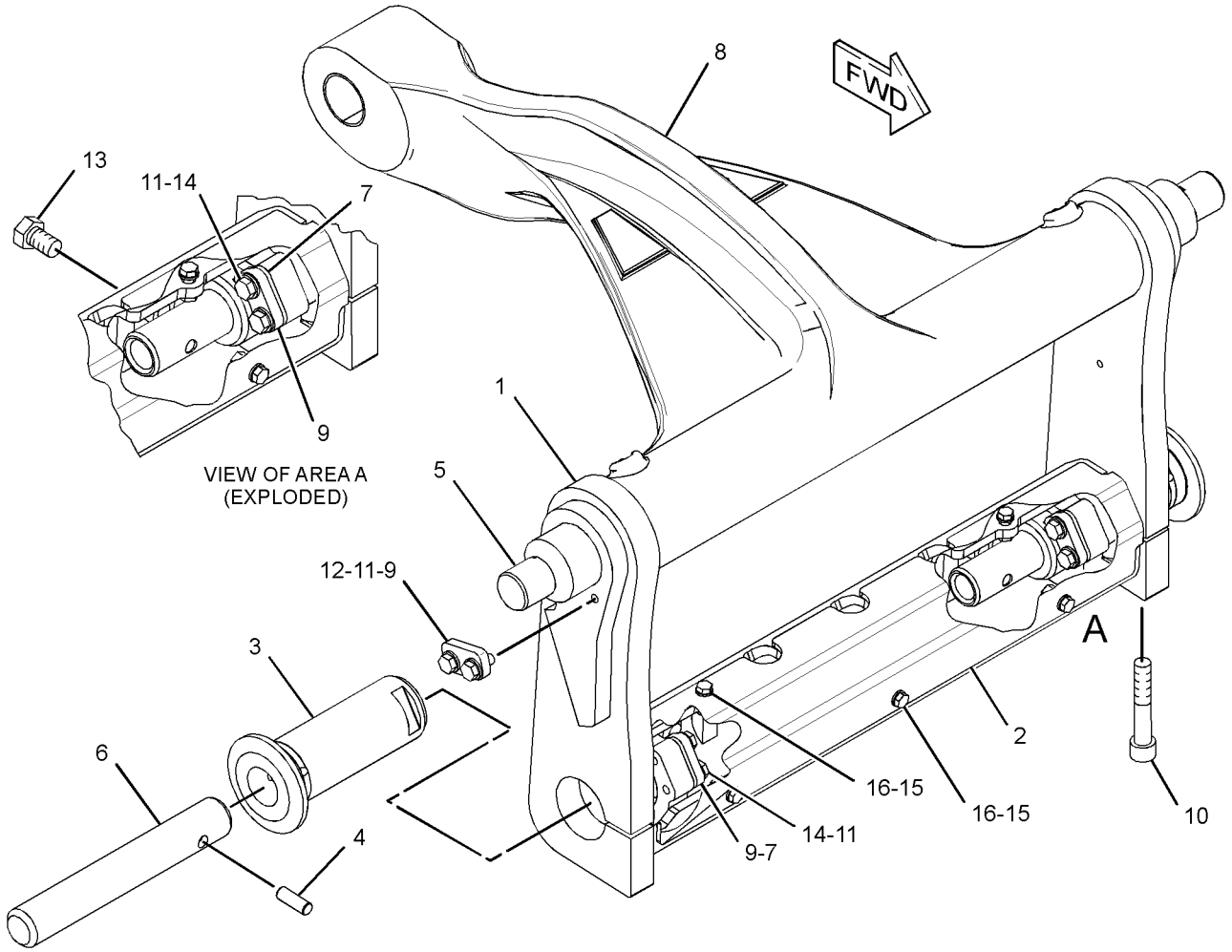

GRAPHIC #1 **<END>** g01382782

274-1323 COUPLER GP-QUICK–VERTICAL PIN LOCK

S/N: LMD1-UP

PART OF 286-4217, 286-4218 COUPLER AR-QUICK

AN ATTACHMENT

SMCS-6129 **i03103162**

NOTE	REF NO	GRAPHIC REF	PART NUMBER	QTY	PART NAME 1 2 3 4 5 6 (PRODUCT LEVEL)	SEE PAGE
	1	1	**8U-6970**	1	RING-RETAINING	
	2	1	**270-2502**	1	PIN	
	3	1	**270-2503**	2	PIN	
	4	1	**270-2513**	3	BEARING	
Y	5	1	*270-2515*	1	LOCK GP-MECHANICAL (QUICK COUPLER)	353
	6	1	**274-1327**	1	COUPLER AS	
	7	1	**283-1364**	1	LINK AS	
		1	**3B-8489**	2	FITTING-GREASE	
		1	**285-6231**	4	BEARING	
	9	1	**306-0356**	1	PIN	
	10	1	**5B-0651**	2	FITTING-STRAIGHT	
	11	1	**7X-0510**	4	WASHER-HARD (15.5X29X3-MM THK)	
M	12	1	**8T-0389**	3	LOCKNUT (M10X1.5-THD)	
M	13	1	**8T-4198**	1	BOLT (M10X1.5X100-MM)	
M	14	1	**8T-6685**	2	BOLT (M10X1.5X110-MM)	

M-METRIC PART
Y-SEPARATE ILLUSTRATION

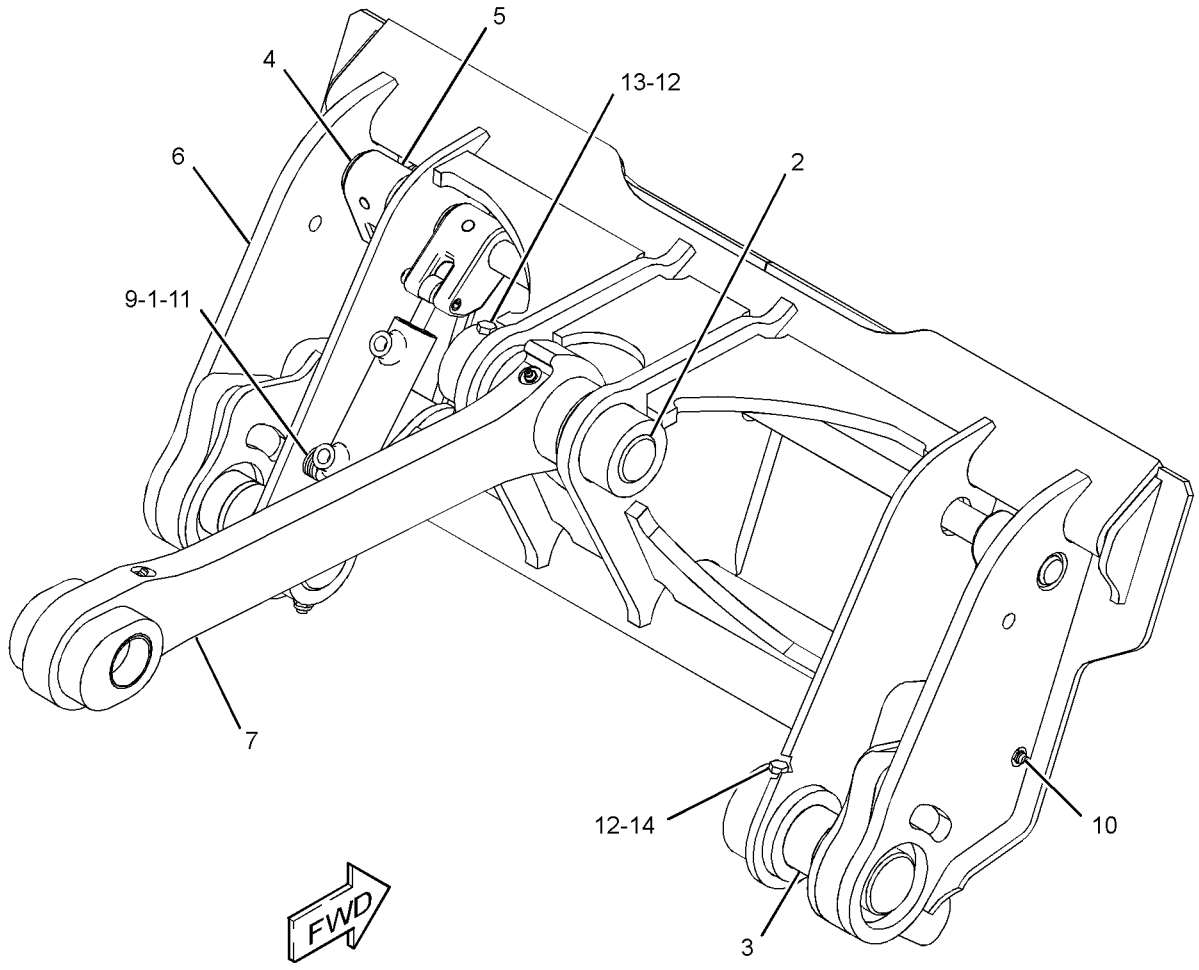

GRAPHIC #1 **<END>** g01586144

141-5004 EDGE GP-CUTTING

S/N: LMD1-UP
BOLT ON
PART OF 286-0581, 286-0584 BUCKET AR-GENERAL PURPOSE, 261-1396, 261-1404 BUCKET AR-LIGHT MATERIAL, 286-0585, 286-0587 BUCKET AR-MULTIPURPOSE AN ATTACHMENT

SMCS-6801 **i00994638**

NOTE	REF NO	GRAPHIC REF	PART NUMBER	QTY	PART NAME 1 2 3 4 5 6 (PRODUCT LEVEL)	SEE PAGE
	1	1	**132-4725**	1	EDGE-CUTTING	
M	2	1	**159-2953**	13	SCREW-FLAT HEAD	
M	3	1	**8T-4778**	13	LOCKNUT (M16X2.00 THD)	

M-METRIC PART

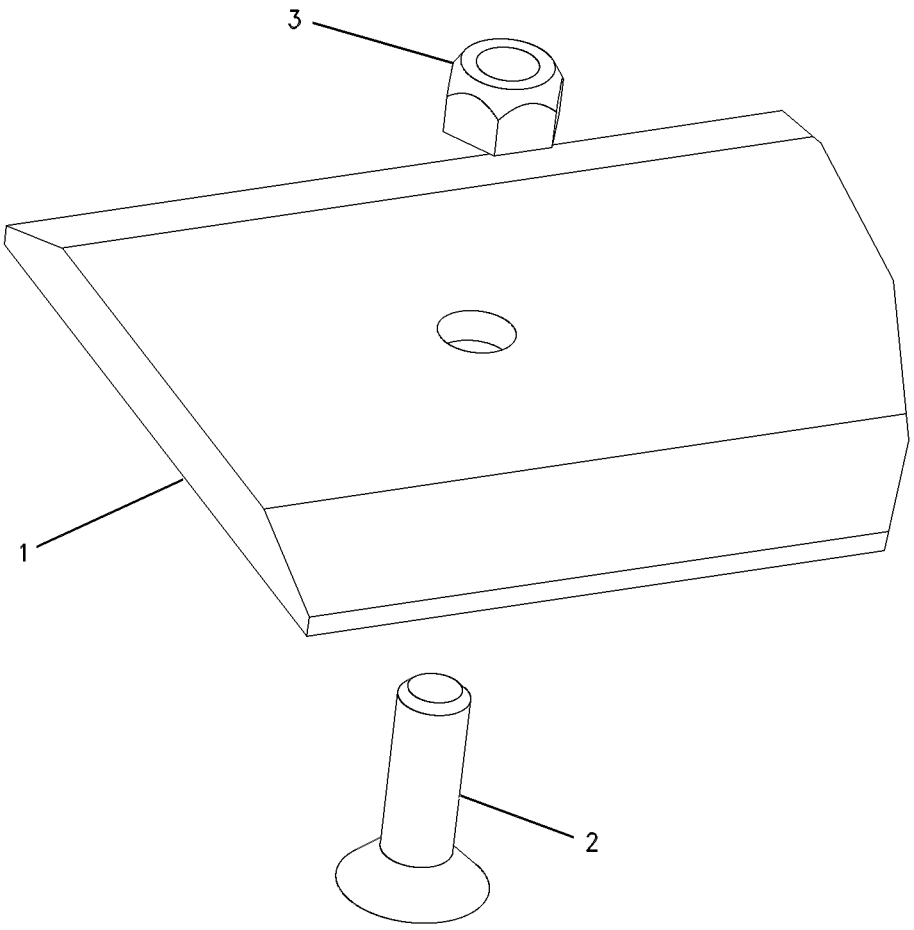

GRAPHIC #1 **<END>** g00547447

WORK TOOLS

138-8896 FORK GP-PALLET

S/N: LMD1-UP
1120-MM LENGTH
AN ATTACHMENT

SMCS-6405 **i01488856**

NOTE	REF NO	GRAPHIC REF	PART NUMBER	QTY	PART NAME 1 2 3 4 5 6 (PRODUCT LEVEL)	SEE PAGE
	1	1	**091-1637**	1	SERVICE GP-FORK POSITIONER	
	1A	1	**8T-0255**	1	PIN-SPRING	
	1B	1	**091-1664**	1	PIN	
	1C	1	**091-1745**	1	WASHER (16.6X24X1.2MM THK)	

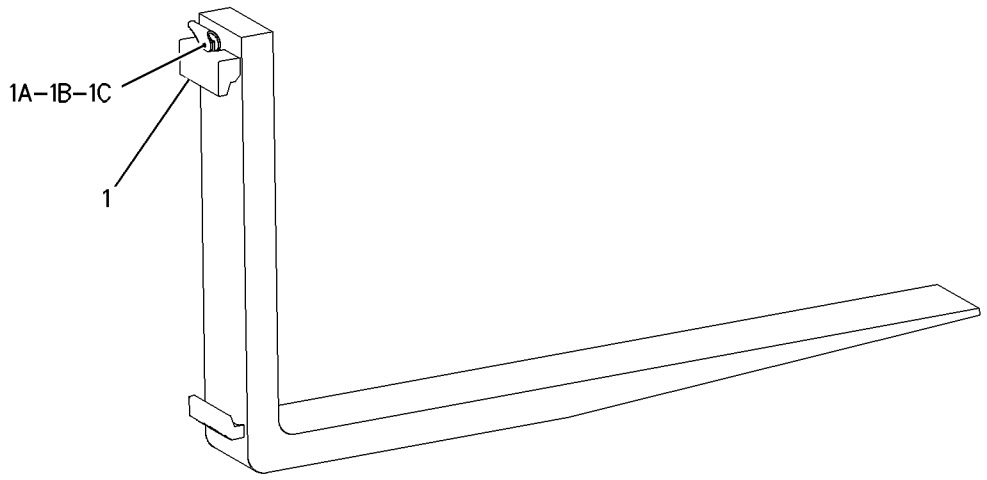

GRAPHIC #1 **<END>** g00773649

WORK TOOLS

202-5483 FORK GP-PALLET

S/N: LMD1-UP
1220-MM LENGTH
AN ATTACHMENT

SMCS-6405 **i02548716**

NOTE	REF NO	GRAPHIC REF	PART NUMBER	QTY	PART NAME 1 2 3 4 5 6 (PRODUCT LEVEL)	SEE PAGE
	1	1	**091-1637**	1	SERVICE GP-FORK POSITIONER	
	1A	1	**8T-0255**	1	PIN-SPRING	
	1B	1	**091-1664**	1	PIN	
	1C	1	**091-1745**	1	WASHER (16.6X24X1.2-MM THK)	

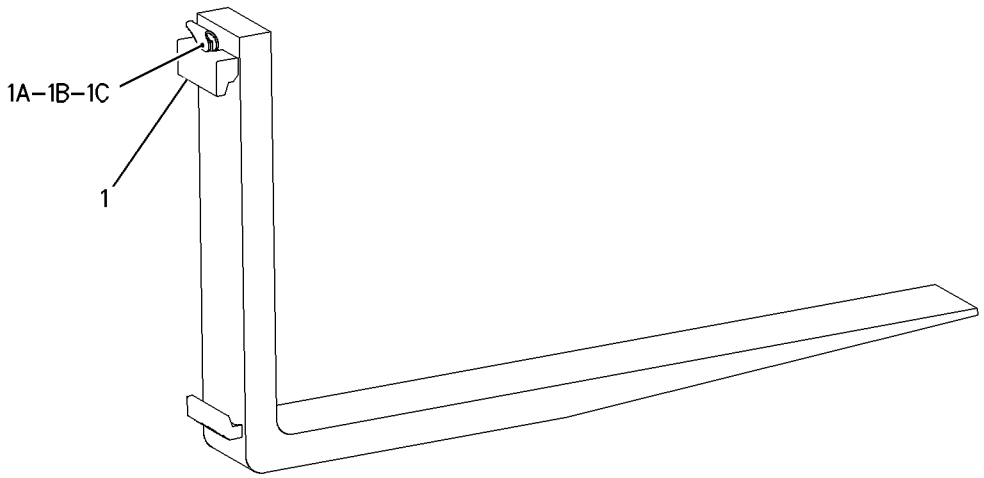

GRAPHIC #1 **<END>** g00773649

209-3477 GUARD GP-BUCKET—ROADING

S/N: LMD1-UP

PART OF 307-1556, 307-1558, 307-1559, 307-1560 CONVERSION AR-ROADING AN ATTACHMENT

SMCS-6001, 6800, 6805 **i01914388**

NOTE	REF NO	GRAPHIC REF	PART NUMBER	QTY	PART NAME 1 2 3 4 5 6 (PRODUCT LEVEL)	SEE PAGE
	1	1	**101-4411**	2	RETAINER AS	
					(EACH INCLUDES)	
		1	**101-4412**	1	CHAIN	
		1	**101-4413**	1	SPRING	
		1	**101-4414**	1	HOOK AS	
	2	1	**206-0869**	1	PLATE AS	
	3	1	**209-3476**	1	PLATE AS	
M	4	1	**5C-2890**	2	NUT (M6X1 THD)	
M	5	1	**8T-4171**	2	BOLT (M6X1X12-MM)	
	6	1	**8T-4205**	4	WASHER-HARD (7.2X14.5X2-MM THK)	

M-METRIC PART

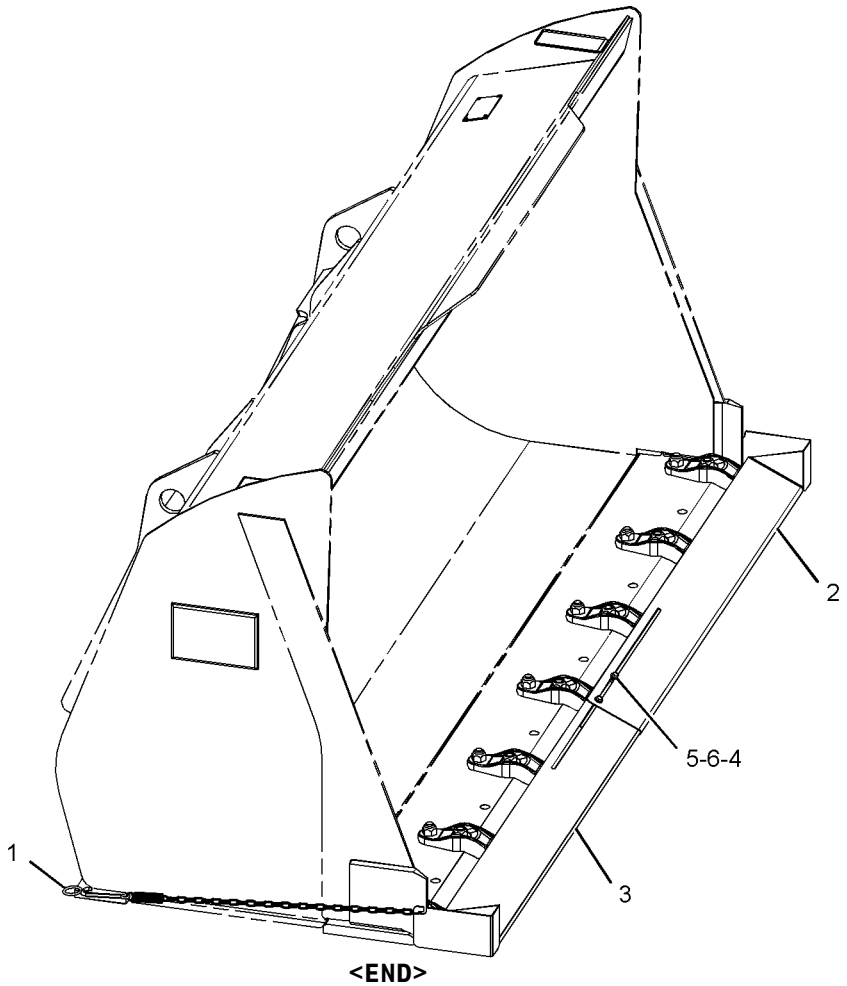

GRAPHIC #1

<END>

g01019641

270-2515 LOCK GP-MECHANICAL—QUICK COUPLER

S/N: LMD1-UP
PART OF 274-1323 COUPLER GP-QUICK
AN ATTACHMENT

SMCS-6129 **i02832544**

NOTE	REF NO	GRAPHIC REF	PART NUMBER	QTY	PART NAME 1 2 3 4 5 6 (PRODUCT LEVEL)	SEE PAGE
	1	1	**166-2560**	4	PIN-SPRING	
	2	1	**192-2637**	2	PLATE	
	3	1	**192-2640**	1	CYLINDER GP-HYDRAULIC (COUPLER)	
	4	1	**192-2645**	2	SPRING	
	5	1	**206-0828**	2	PIN	
	6	1	**248-5882**	3	PIN (SPRING)	
	7	1	**270-2517**	1	BAR	
	8	1	**274-1325**	3	CRANK	
	9	1	**306-6038**	3	DOWEL	
	10	1	**8T-4123**	4	WASHER (22X35X3.5-MM THK)	

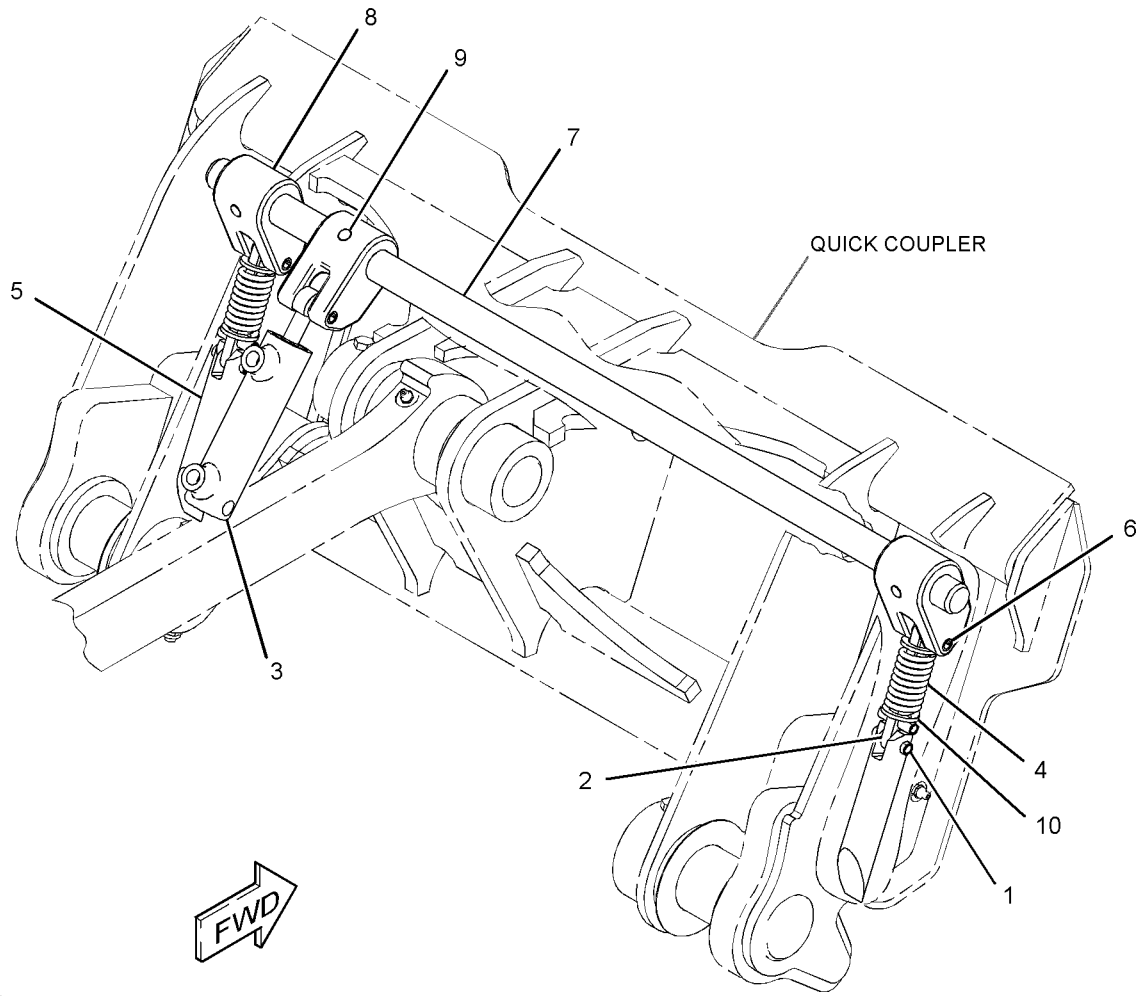

GRAPHIC #1 **<END>** g01382518

WORK TOOLS

141-4999 TOOTH GP-UNI

S/N: LMD1-UP

PART OF 286-0582, 286-0583 BUCKET AR-GENERAL PURPOSE, 286-0586, 286-0588 BUCKET AR-MULTIPURPOSE

AN ATTACHMENT

SMCS-6822 **i03126128**

NOTE	REF NO	GRAPHIC REF	PART NUMBER	QTY	PART NAME 1 2 3 4 5 6 (PRODUCT LEVEL)	SEE PAGE
	1	1	**132-4720**	1	TOOTH-UNI-SINGLE STRAP	
	2	1	**246-4349**	2	SCREW-FLAT HEAD (M16X2-THD)	
M	3	1	**8T-4778**	2	LOCKNUT (M16X2-THD)	

M-METRIC PART

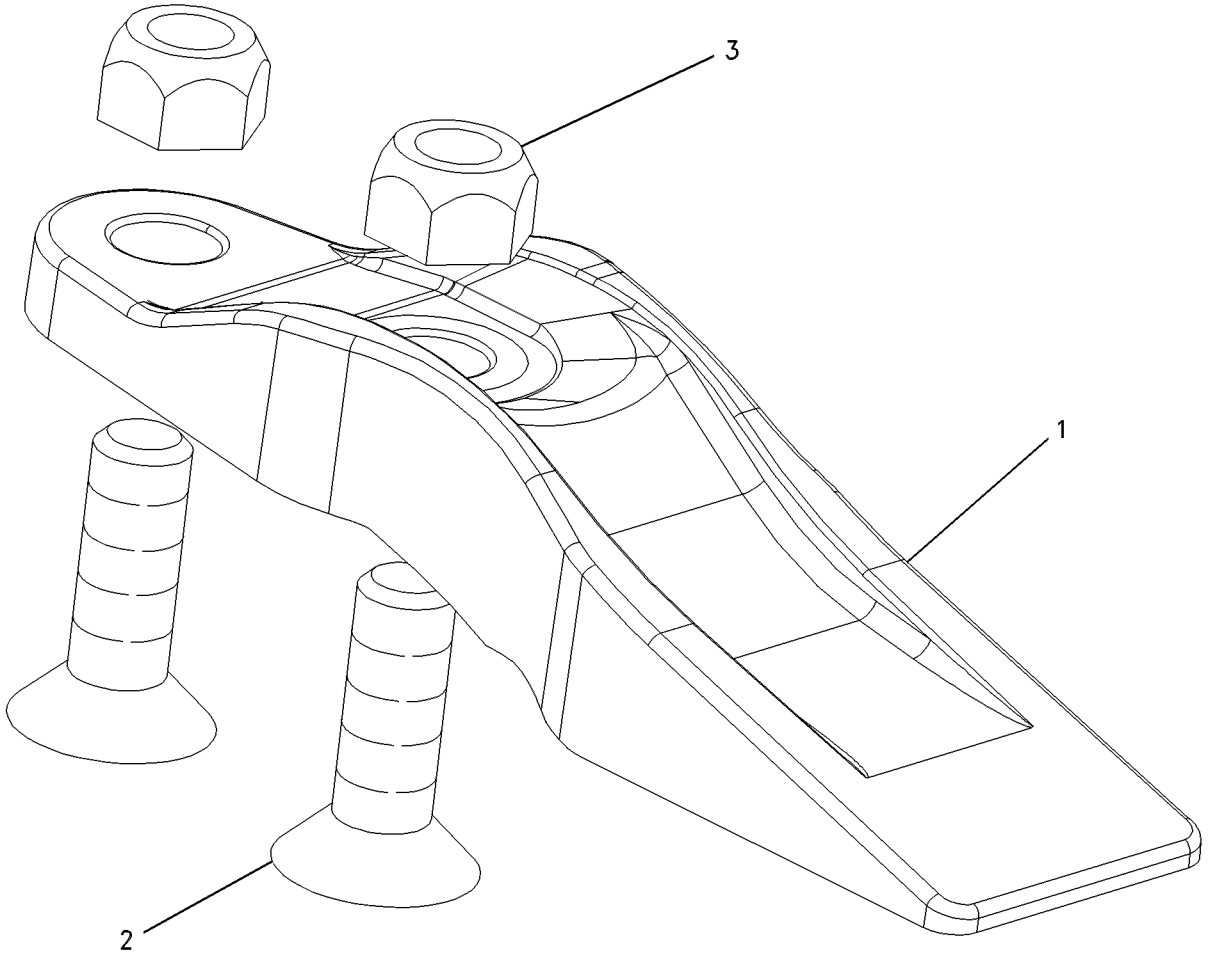

GRAPHIC #1 **<END>** g00422332

322-5769 AIR CONDITIONER AR

S/N: LMD1-UP

CANNOT BE USED WITH 322-5766—PAGE 407, 322-5768—PAGE 386

AN ATTACHMENT

SMCS-7320 **i02981393**

NOTE	PART NUMBER	QTY	PART NAME 1 2 3 4 5 6 (PRODUCT LEVEL)	SEE PAGE
Y	*259-1634*	1	AIR CONDITIONER GP	356
Y	*272-2444*	1	COMPRESSOR & MTG GP-REFRIG	365
Y	*311-6316*	1	GUARD GP-BELT	17
Y	*271-7193*	1	LINES GP-AIR CONDITIONER	393
Y	*320-6051*	1	LINES GP-CAB HEATER	395
Y	*282-9570*	1	LINES GP-HYDRAULIC OIL COOLER	291
Y	*280-0527*	1	MOUNTING GP-COOLER & CONDENSER (HYDRAULIC OIL, REFRIGERANT)	308
	110-6393	1	PLATE-INSTRUCTION (AIR CONDITIONER)	

Y-SEPARATE ILLUSTRATION

<END>

OPERATOR STATION

259-1634 AIR CONDITIONER GP

S/N: LMD1-UP
PART OF 322-5769 AIR CONDITIONER AR
AN ATTACHMENT

SMCS-7320 **i02986734**

NOTE	REF NO	GRAPHIC REF	PART NUMBER	QTY	PART NAME 1 2 3 4 5 6 (PRODUCT LEVEL)	SEE PAGE
C	1	1	**113-8490**	1	FUSE (10-AMPERE)	
	2	1	**113-8492**	1	FUSE (20-AMPERE)	
	3	1	**140-9378**	1	RELAY AS (12-VOLT) (AIR CONDITIONER, HEATER)	
Y	4	1	**269-3820**	1	AIR CONDITIONER GP	357
Y	5	1	*274-8255*	1	CONTROL GP-A/C & HEATER	369
M	6	1	**9X-2042**	3	SCREW-TRUSS HEAD (M6X1X12-MM)	

C-CHANGE FROM PREVIOUS TYPE
M-METRIC PART
Y-SEPARATE ILLUSTRATION

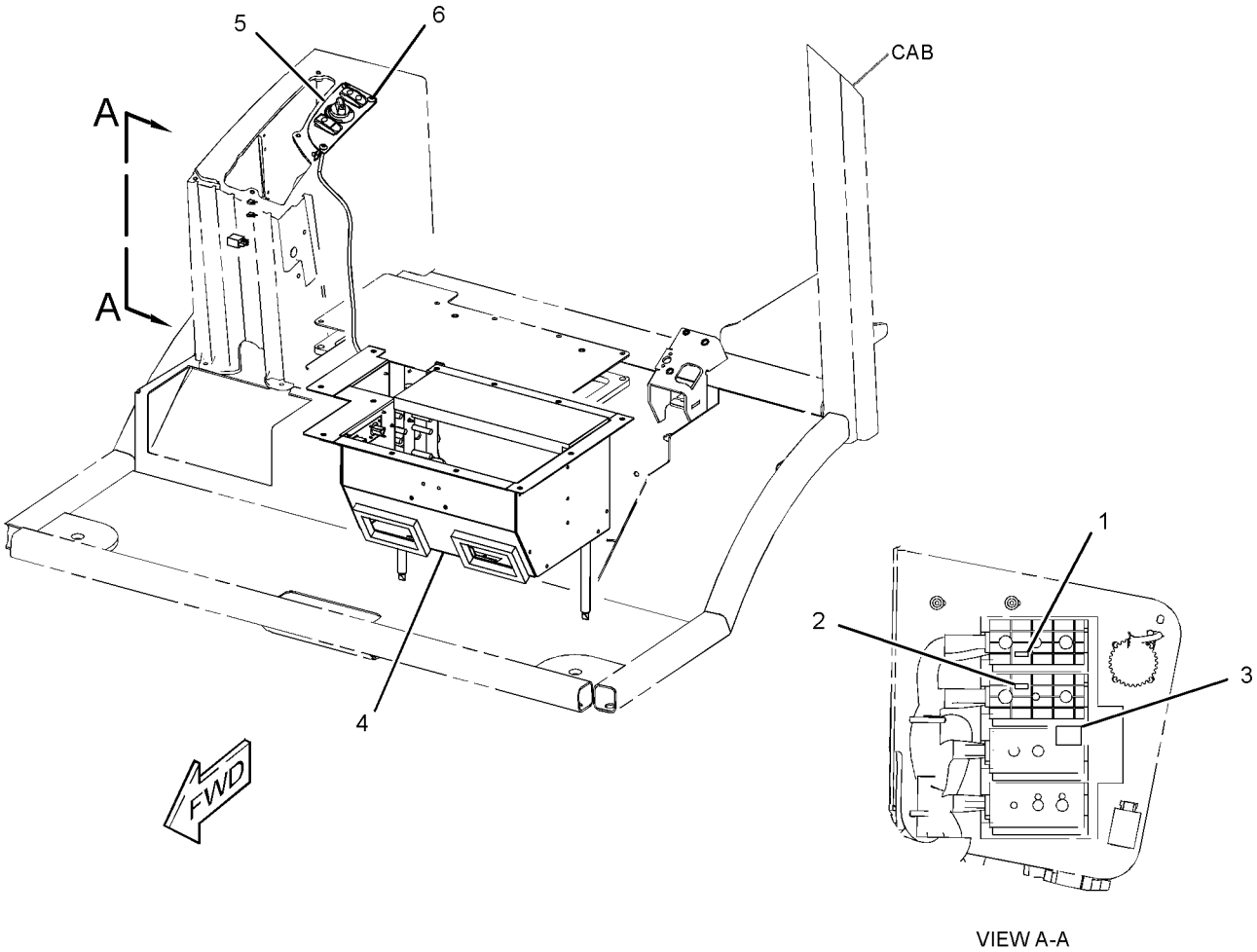

VIEW A-A

GRAPHIC #1 **<END>** g01382040

OPERATOR STATION

269-3820 AIR CONDITIONER GP

S/N: LMD1-UP

PART OF 259-1634 AIR CONDITIONER GP

AN ATTACHMENT

SMCS-7320 **i03125967**

NOTE	REF NO	GRAPHIC REF	PART NUMBER	QTY	PART NAME 1 2 3 4 5 6 (PRODUCT LEVEL)	SEE PAGE
	1	1	**2U-5115**	20	SCREW	
	2	1	**8C-3756**	1	FILM-IDENTIFICATION (AIR CONDITIONER)	
	3	1	**8T-0154**	2	CLAMP-HOSE	
	4	1	**119-9631**	1	SWITCH-TEMPERATURE (AIR CONDITIONER)	
	5	1	**225-4174**	2	FITTING-DRAIN	
	6	1	**225-4183**	2	VALVE-DRAIN	
	7	1	**275-3990**	1	MOTOR AS-BLOWER (AIR CONDITIONER, HEATER)	
	8	1	**275-3991**	1	COIL AS-HEATER	
	9	1	**275-3992**	1	COIL AS-EVAPORATOR	
	10	1	**275-3993**	1	RESISTOR (12-VOLT)	
	11	1	**275-3994**	1	VALVE AS-WATER	
	12	1	**278-4406**	1	CASE AS	
	13	1	**278-4421**	2	SEAL	
	14	1	**278-4422**	1	PLATE	
	15	1	**278-4423**	2	SEAL	
	16	1	**278-4425**	1	PLATE	
	17	1	**278-4427**	1	GASKET	
	18	1	**278-4428**	1	PLATE	
	19	1	**280-9202**	1	GASKET	
	20	1	**290-2524**	1	PLATE AS	
M		1	**9X-2032**	6	NUT-WELD (M4X0.7-THD)	
	21	1	**278-4424**	1	HARNESS AS-HEATER	
	22	1	**278-4431**	1	HARNESS AS-HEATER & AIR COND	
M	23	1	**6V-5210**	6	SCREW-MACHINE (M4X0.7X10-MM)	
	24	1	**291-3803**	1	HOSE	
D	25	1	**6V-2496**		SEAL (0.5-M EACH)	
L	26	1	**267-8575**		TUBE (1.5-DM EACH)	
					AVAILABLE REPAIR KIT(S):	
			275-4003	1	KIT-SEAL	
					(INCLUDES SEALS & GASKETS)	

D-ORDER BY THE METER
L-ORDER BY THE DECIMETER
M-METRIC PART

269-3820 AIR CONDITIONER GP *(contd.)* i03125967

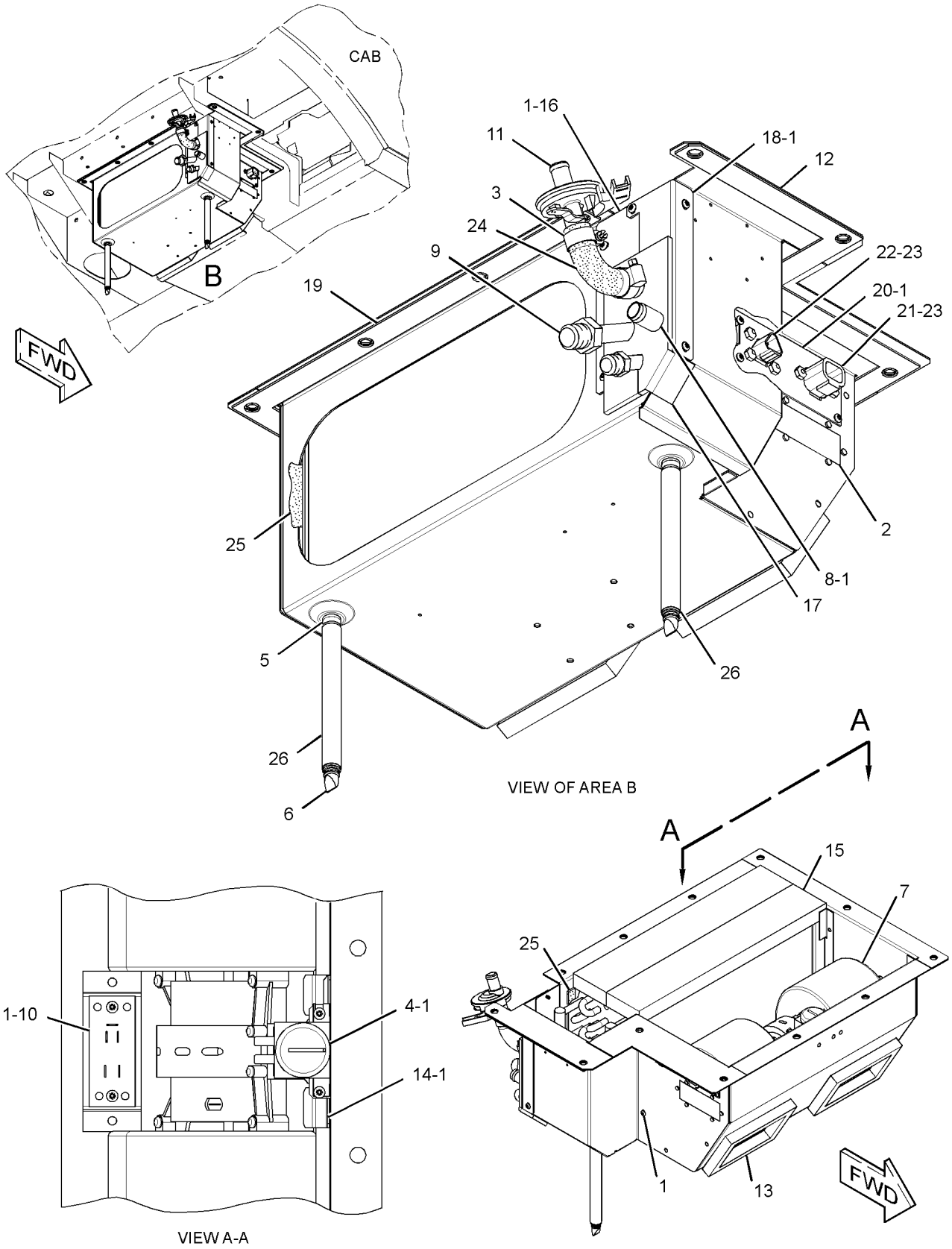

GRAPHIC #1 **<END>** g01391609

OPERATOR STATION

272-2251 BOX GP-STORAGE

S/N: LMD1-UP
PART OF 280-9542 BOX GP-STORAGE
AN ATTACHMENT

SMCS-7268 **i02744021**

NOTE	REF NO	GRAPHIC REF	PART NUMBER	QTY	PART NAME 1 2 3 4 5 6 (PRODUCT LEVEL)	SEE PAGE
	1	1	*272-1370*	1	DOOR GP-ACCESS	
		1	**272-1371**	1	DOOR	
J		1	**206-1708**	1	LOCK AS	
	3	1	**272-1386**	1	BOX AS-STORAGE	
	4	1	**290-5546**	2	BUTTON	
	5	1	**290-5549**	1	BRACKET-LATCH	
M	6	1	**6V-9669**	2	SCREW-MACHINE (M3X0.5X8-MM)	

J-REQUIRES CORPORATE KEY
M-METRIC PART

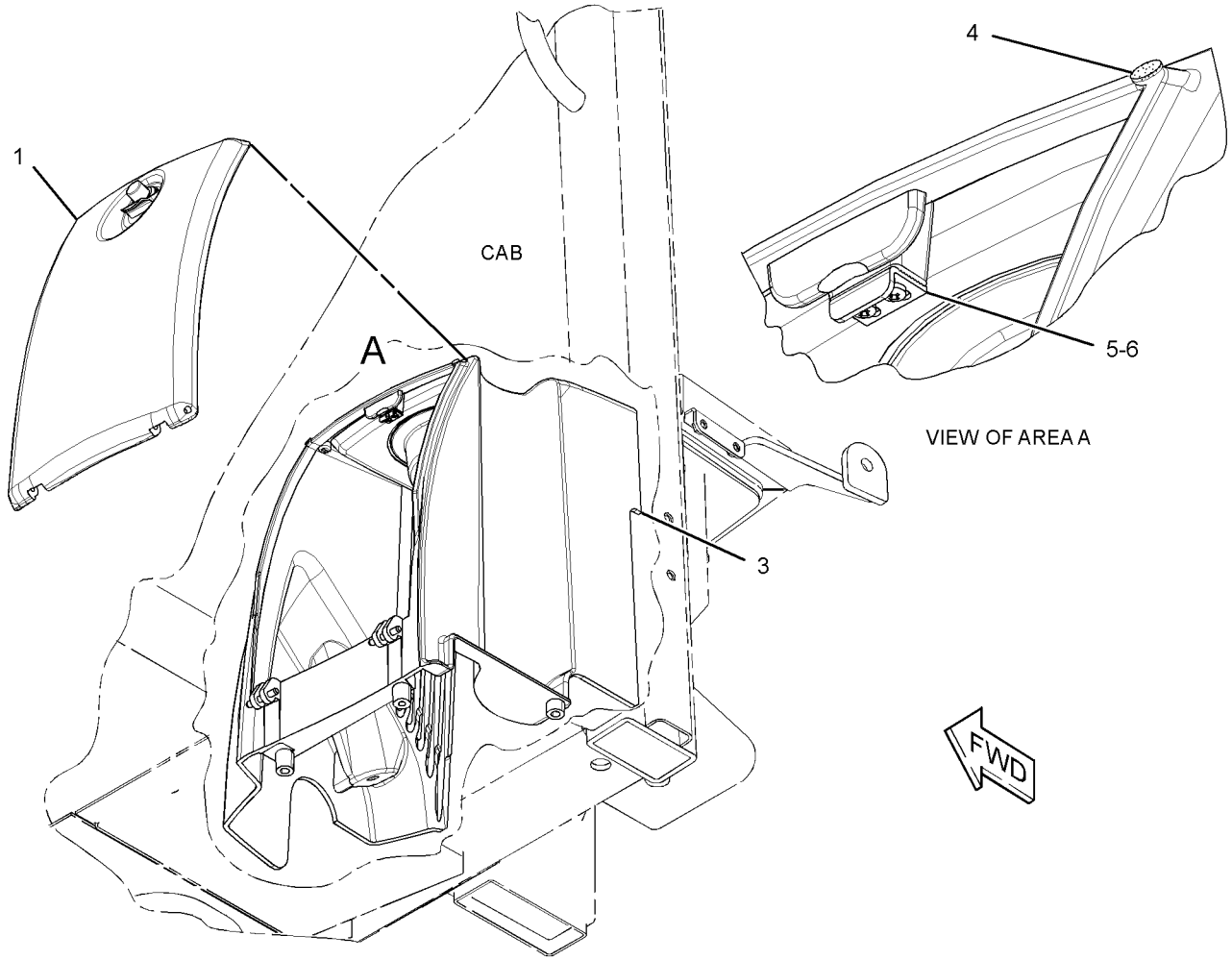

GRAPHIC #1 **<END>** g01378954

OPERATOR STATION

280-9542 BOX GP-STORAGE

S/N: LMD1-UP
AN ATTACHMENT

SMCS-7268 **i03103231**

NOTE	REF NO	GRAPHIC REF	PART NUMBER	QTY	PART NAME 1 2 3 4 5 6 (PRODUCT LEVEL)	SEE PAGE
Y	1	1	*272-2251*	1	BOX GP-STORAGE	359
	2	1	**280-2371**	1	PLATE	
M	3	1	**8T-4138**	1	BOLT (M6X1X20-MM)	
M	4	1	**7X-2534**	1	BOLT (M6X1X50-MM)	
M	5	1	**5C-9553**	1	BOLT (M6X1X16-MM)	
	6	1	**8T-4224**	2	WASHER-HARD (8.8X16X2-MM THK)	
	7	1	**9X-8256**	1	WASHER (6.6X12X2-MM THK)	

M-METRIC PART
Y-SEPARATE ILLUSTRATION

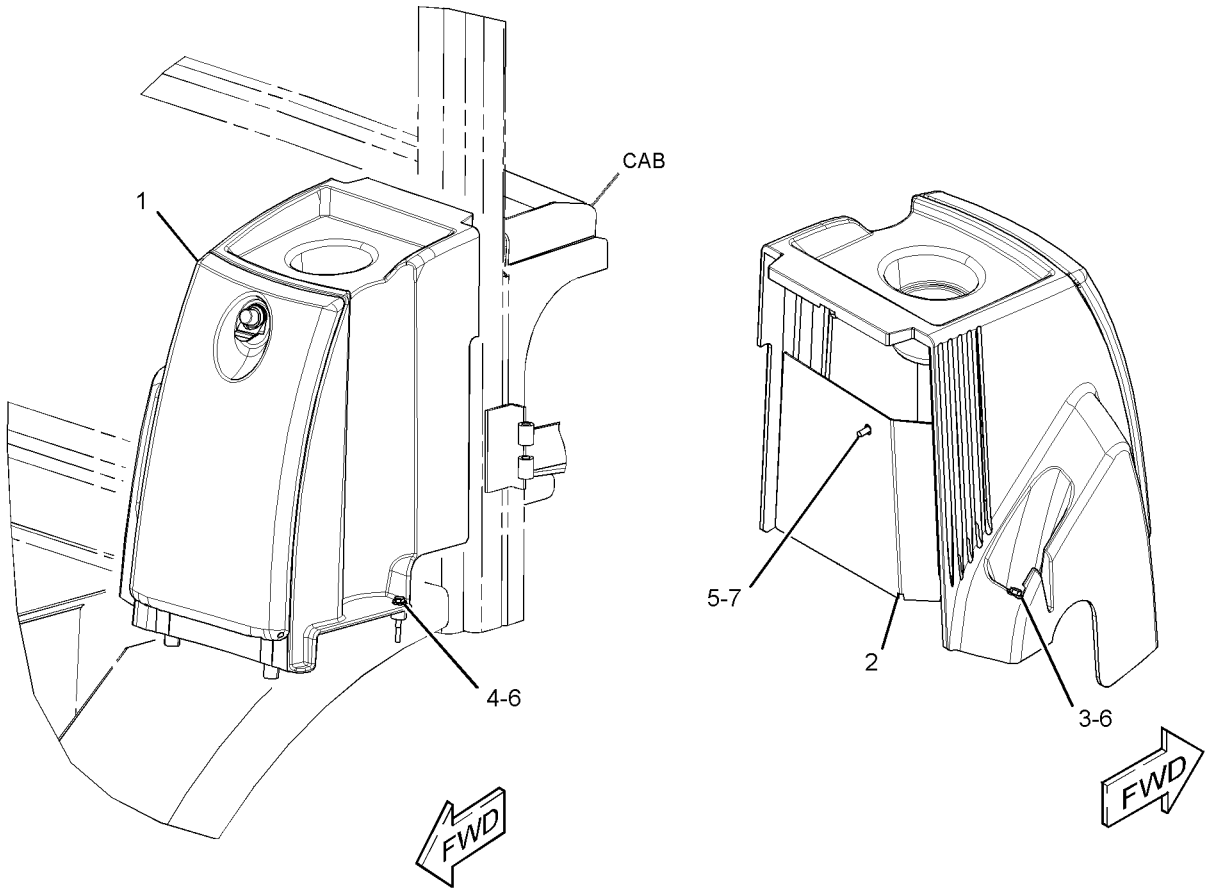

GRAPHIC #1 **<END>** g01588353

OPERATOR STATION

295-5845 CAB AR-ENCLOSED ROPS—COMFORT

S/N: LMD1-UP
PART OF 295-5275 OPERATOR AR-ENCLOSED ROPS
AN ATTACHMENT

SMCS-7301 **i02858219**

NOTE	PART NUMBER	QTY	PART NAME 1 2 3 4 5 6 (PRODUCT LEVEL)	SEE PAGE
Y	*295-7921*	1	CAB GP-ENCLOSED ROPS	362
Y	*295-5535*	1	CONTROL & MTG GP-PEDAL (GOVERNOR)	367
Y	*257-6371*	1	CONTROL GP-FOOT BRAKE (PEDAL)	227
Y	*267-9382*	1	DOOR GP-CAB (RH)	377
Y	*275-8188*	1	DOOR GP-CAB (LH)	379
Y	*284-3889*	1	LATCH GP	391
Y	*293-0547*	1	PANEL GP-CAB (FRONT)	408
M	**6V-2314**	2	BOLT (M5X0.8X35-MM)	
	295-0001	1	GROMMET	
	232-1792	1	HORN	
	198-7409	2	PLUG	
	295-2242	2	PLUG	
	266-1467	1	SENSOR GP-POSITION (ROTARY) (THROTTLE)	
	102-8803	1	KIT-RECEPTACLE (3-PIN)	
			(INCLUDES RECEPTACLE AS & WEDGE)	
	180-9339	3	PIN-CONNECTOR (14-GA TO 18-GA)	

M-METRIC PART
Y-SEPARATE ILLUSTRATION

<END>

295-5846 CAB AR-ENCLOSED ROPS—DELUXE

S/N: LMD1-UP
PART OF 295-5276 OPERATOR AR-ENCLOSED ROPS
AN ATTACHMENT

SMCS-7301 **i02858220**

NOTE	PART NUMBER	QTY	PART NAME 1 2 3 4 5 6 (PRODUCT LEVEL)	SEE PAGE
Y	*295-7921*	1	CAB GP-ENCLOSED ROPS	362
Y	*295-5535*	1	CONTROL & MTG GP-PEDAL (GOVERNOR)	367
Y	*257-6371*	1	CONTROL GP-FOOT BRAKE (PEDAL)	227
Y	*275-8188*	1	DOOR GP-CAB (LH)	379
Y	*275-8189*	1	DOOR GP-CAB (RH)	381
Y	*284-3889*	1	LATCH GP	391
Y	*293-0547*	1	PANEL GP-CAB (FRONT)	408
M	**6V-2314**	2	BOLT (M5X0.8X35-MM)	
	295-0001	1	GROMMET	
	232-1792	1	HORN	
	198-7409	2	PLUG	
	295-2242	2	PLUG	
	266-1467	1	SENSOR GP-POSITION (ROTARY) (THROTTLE)	
	102-8803	1	KIT-RECEPTACLE (3-PIN)	
			(INCLUDES RECEPTACLE AS & WEDGE)	
	180-9339	3	PIN-CONNECTOR (14-GA TO 18-GA)	

M-METRIC PART
Y-SEPARATE ILLUSTRATION

<END>

OPERATOR STATION

295-7921 CAB GP-ENCLOSED ROPS

S/N: LMD1-UP

PART OF 295-5845, 295-5846 CAB AR-ENCLOSED ROPS

AN ATTACHMENT

SMCS-7301 **i02854318**

NOTE	REF NO	GRAPHIC REF	PART NUMBER	QTY	PART NAME 1 2 3 4 5 6 (PRODUCT LEVEL)	SEE PAGE
	1	1	**256-9640**	1	CAB AS	
	2	1	**256-9643**	1	GLASS	
	3	1	**259-5493**	1	GLASS	
	4	1	**259-5494**	1	GLASS	
	5	1	**266-7068**	1	GLASS	
	6	1	**266-7069**	1	GLASS	
	7	1	**266-7070**	1	GLASS	
	8	1	**289-2136**	1	PANEL AS-REAR	
M	9	1	**3E-8020**	10	SCREW-TRUSS HEAD (M6X1X25-MM)	
	10	1	**9X-2038**	10	WASHER (7X19X2-MM THK)	

M-METRIC PART

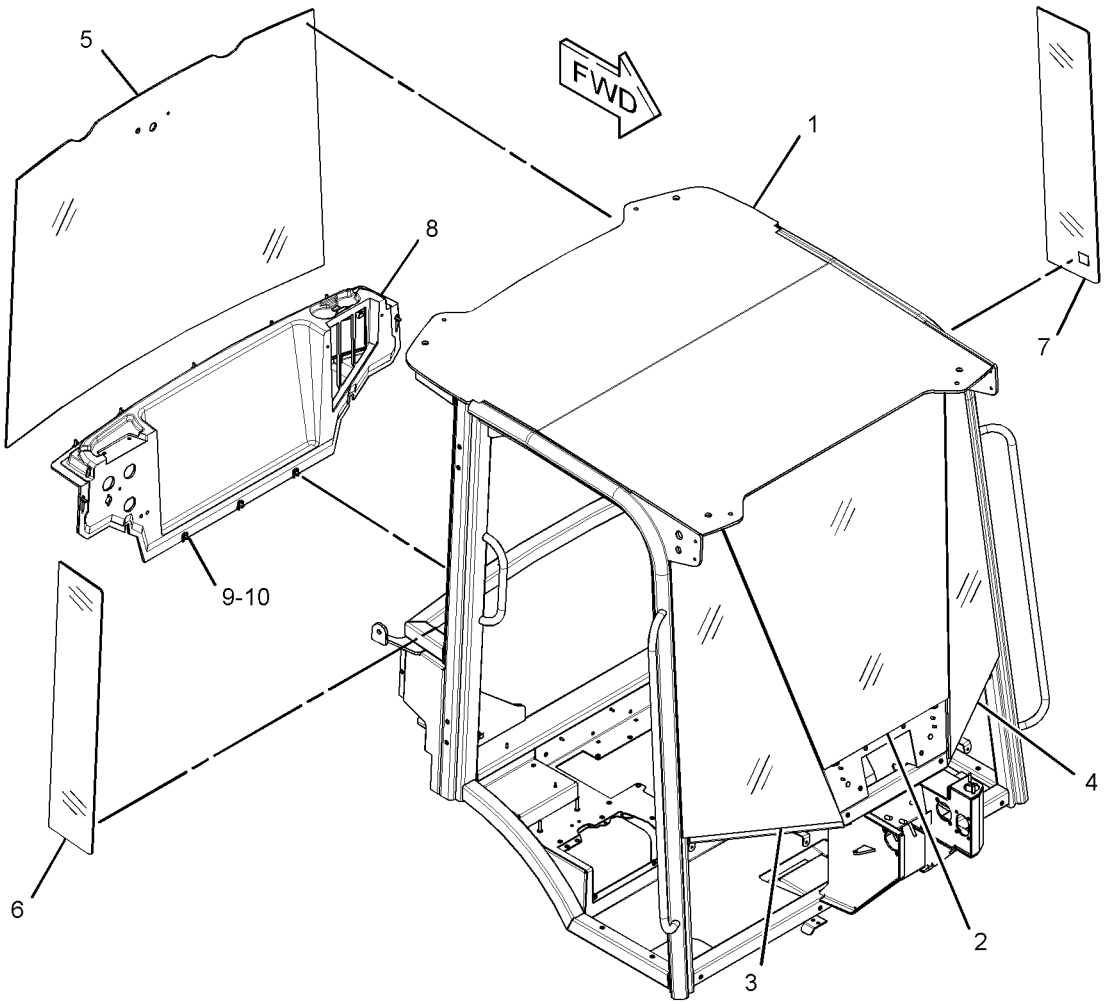

GRAPHIC #1 **<END>** g01386051

OPERATOR STATION

277-2528 CANOPY AR-OPEN ROPS

S/N: LMD1-UP
PART OF 322-5766 OPERATOR AR-OPEN ROPS
AN ATTACHMENT

SMCS-7302, 7323 **i02858224**

NOTE	PART NUMBER	QTY	PART NAME 1 2 3 4 5 6 (PRODUCT LEVEL)	SEE PAGE
Y	*295-7928*	1	CANOPY GP-OPEN ROPS	364
Y	*295-5535*	1	CONTROL & MTG GP-PEDAL (GOVERNOR)	367
Y	*257-6371*	1	CONTROL GP-FOOT BRAKE (PEDAL)	227
Y	*293-0547*	1	PANEL GP-CAB (FRONT)	408
	266-1467	1	SENSOR GP-POSITION (ROTARY) (THROTTLE)	
	102-8803	1	KIT-RECEPTACLE (3-PIN)	
			(INCLUDES RECEPTACLE AS & WEDGE)	
	180-9339	3	PIN-CONNECTOR (14-GA TO 18-GA)	
M	**6V-2314**	2	BOLT (M5X0.8X35-MM)	
	295-0001	1	GROMMET	
	232-1792	1	HORN	
	198-7409	2	PLUG	
	295-2242	2	PLUG	

M-METRIC PART
Y-SEPARATE ILLUSTRATION

<END>

OPERATOR STATION

295-7928 CANOPY GP-OPEN ROPS

S/N: LMD1-UP
PART OF 277-2528 CANOPY AR-OPEN ROPS
AN ATTACHMENT

SMCS-7323 **i03195440**

NOTE	REF NO	GRAPHIC REF	PART NUMBER	QTY	PART NAME 1 2 3 4 5 6 (PRODUCT LEVEL)	SEE PAGE
	1	1	**260-9825**	1	CANOPY AS-OPEN ROPS	
	2	1	**261-5112**	1	PANEL AS-REAR	
M	3	1	**3E-8020**	10	SCREW-TRUSS HEAD (M6X1X25-MM)	
	4	1	**9X-2038**	10	WASHER (7X19X2-MM THK)	

M-METRIC PART

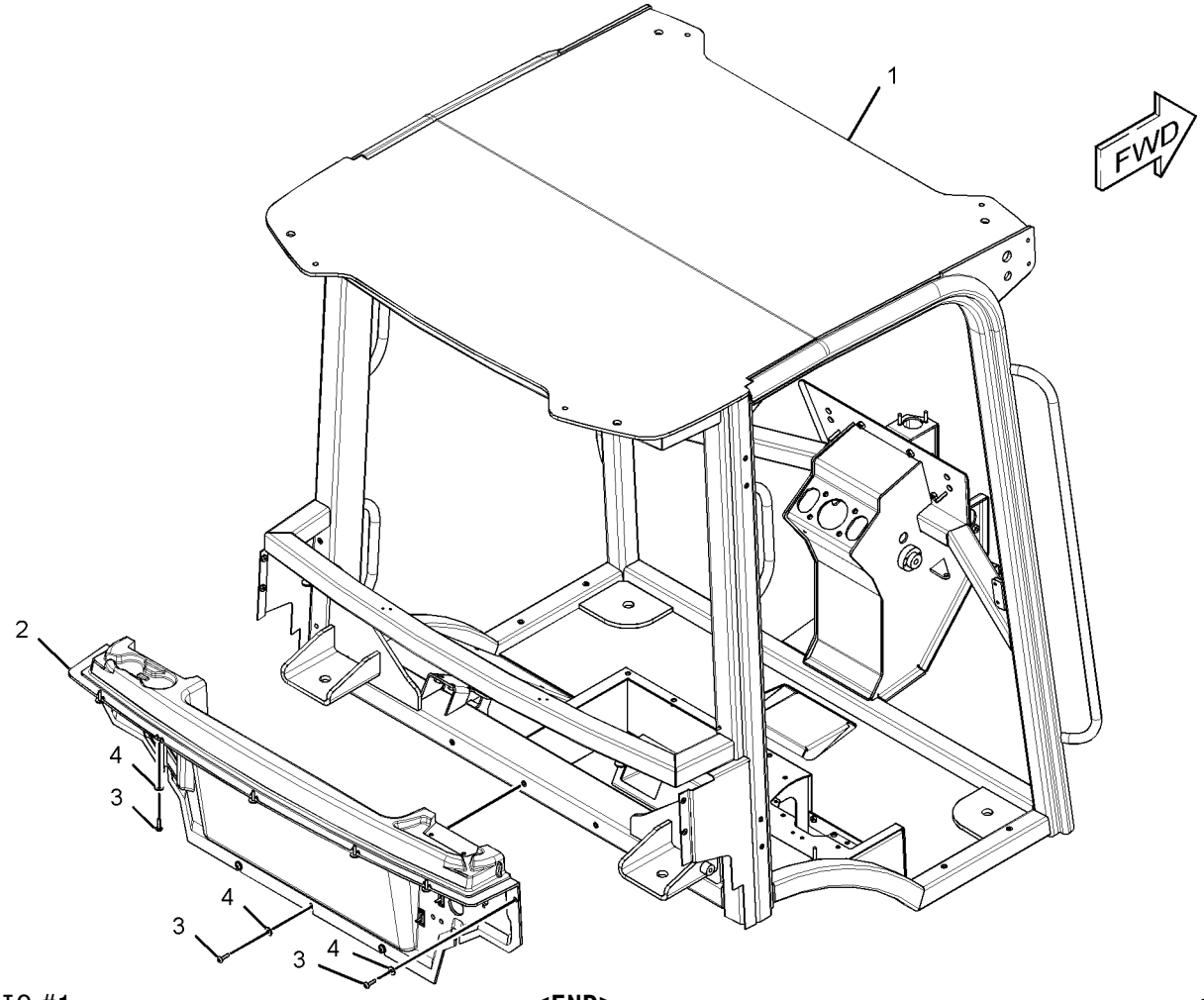

GRAPHIC #1 **<END>** g01378142

OPERATOR STATION

272-2444 COMPRESSOR & MTG GP-REFRIG

S/N: LMD1-UP
PART OF 322-5769 AIR CONDITIONER AR
AN ATTACHMENT

SMCS-1802 **i02980721**

NOTE	REF NO	GRAPHIC REF	PART NUMBER	QTY	PART NAME 1 2 3 4 5 6 (PRODUCT LEVEL)	SEE PAGE
	1	1	**315-6547**	1	COMPRESSOR GP-REFRIGERANT	
	2	1	**236-6923**	1	SWITCH AS-PRESSURE (REFRIGERANT COMPR, HIGH SIDE)	
	3	1	**315-6548**	1	BRACKET	
	4	1	**309-8484**	1	PLATE	
	5	1	**304-4010**	1	V-BELT (MOUNTING)	
M	6	1	**8T-5436**	1	BOLT (M10X1.5X130-MM)	
	8	1	**7X-7729**	1	WASHER (11X25X3-MM THK)	
	9	1	**8T-4121**	5	WASHER-HARD (11X21X2.5-MM THK)	
M	10	1	**8T-4133**	2	NUT (M10X1.5-THD)	
M	11	1	**8T-4183**	3	BOLT (M12X1.75X40-MM)	
M	12	1	**8T-4186**	2	BOLT (M10X1.5X40-MM)	
	13	1	**8T-4223**	3	WASHER-HARD (13.5X25.5X3-MM THK)	
	14	1	**9X-7378**	1	SEAL-O-RING	

M-METRIC PART

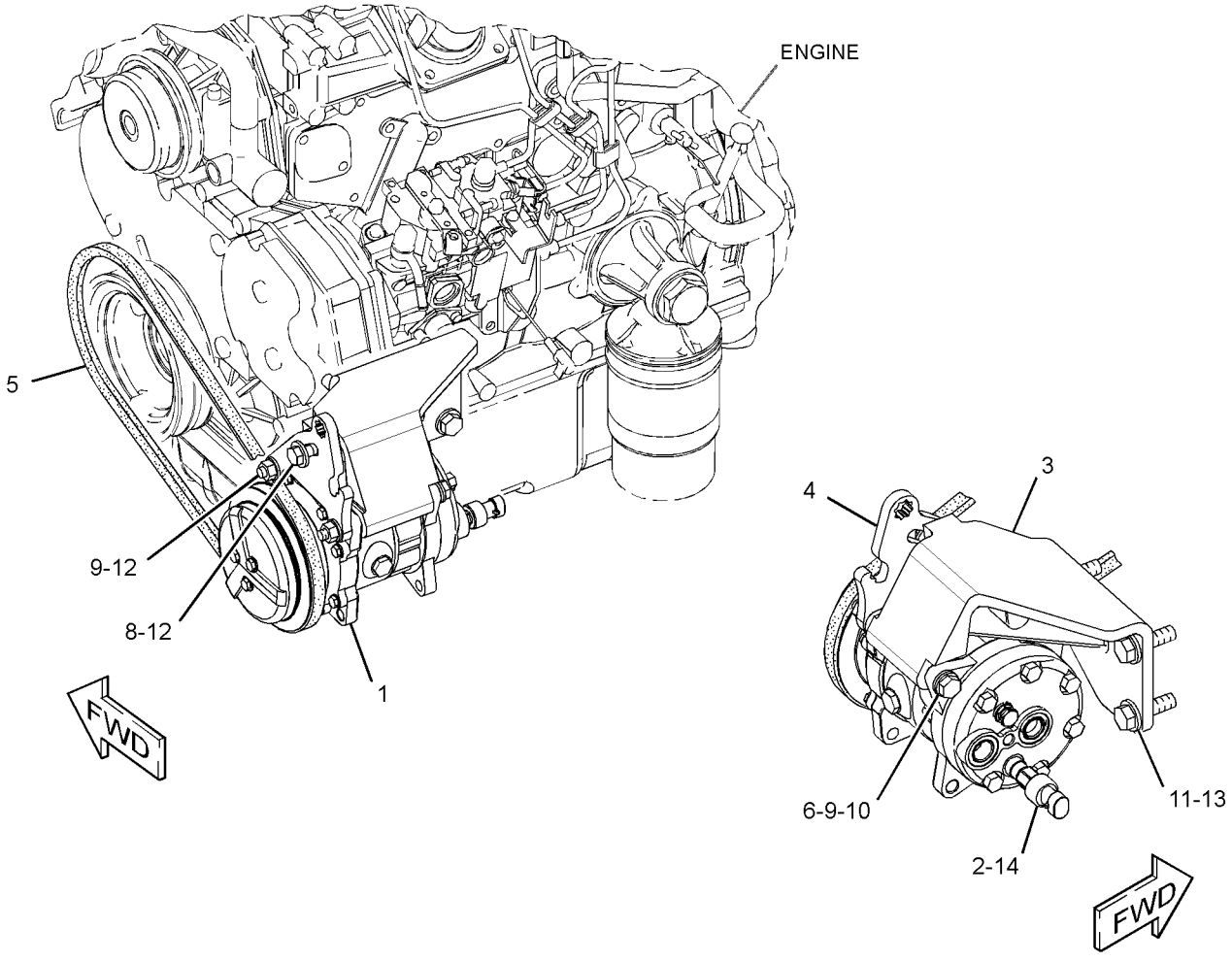

GRAPHIC #1 **<END>** g01523154

OPERATOR STATION

280-9177 CONSOLE GP-OPERATOR

S/N: LMD1-UP

PART OF 257-4018, 257-4019 HYDRAULIC AR

AN ATTACHMENT

SMCS-5258 **i02835358**

NOTE	REF NO	GRAPHIC REF	PART NUMBER	QTY	PART NAME 1 2 3 4 5 6 (PRODUCT LEVEL)	SEE PAGE
	1	1	**270-1653**	1	CONSOLE AS	
	2	1	**285-0465**	1	PLATE AS	
	3	1	**313-9330**	1	BAFFLE	
	4	1	**286-4694**	1	PLATE AS	
	6	1	**9X-2038**	2	WASHER (7X19X2-MM THK)	
M	7	1	**9X-2042**	3	SCREW-TRUSS HEAD (M6X1X12-MM)	
M	8	1	**9X-2045**	8	SCREW-TRUSS HEAD (M6X1X20-MM)	

M-METRIC PART

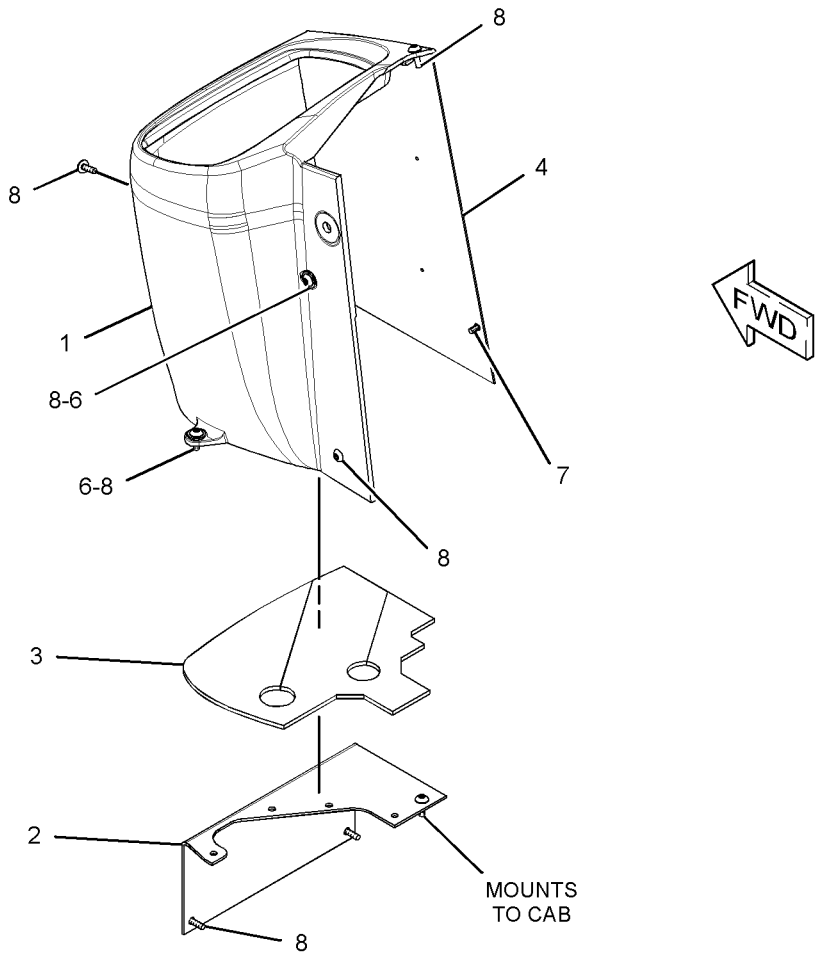

GRAPHIC #1 **<END>** g01422323

295-5535 CONTROL & MTG GP-PEDAL–GOVERNOR

S/N: LMD1-UP

PART OF 295-5845, 295-5846 CAB AR-ENCLOSED ROPS, 277-2528 CANOPY AR-OPEN ROPS AN ATTACHMENT

SMCS-1265, 1276 **i02700530**

NOTE	REF NO	GRAPHIC REF	PART NUMBER	QTY	PART NAME 1 2 3 4 5 6 (PRODUCT LEVEL)	SEE PAGE
Y	1	1	*257-6370*	1	PEDAL GP-GOVERNOR	410
	2	1	**295-5308**	1	PLATE	
	3	1	**295-5309**	1	PLATE	
	4	1	**9X-2038**	8	WASHER (7X19X2-MM THK)	
M	5	1	**9X-2044**	4	SCREW-TRUSS HEAD (M6X1X16-MM)	
M	6	1	**6V-8214**	4	BOLT (M6X1X20-MM)	

M-METRIC PART
Y-SEPARATE ILLUSTRATION

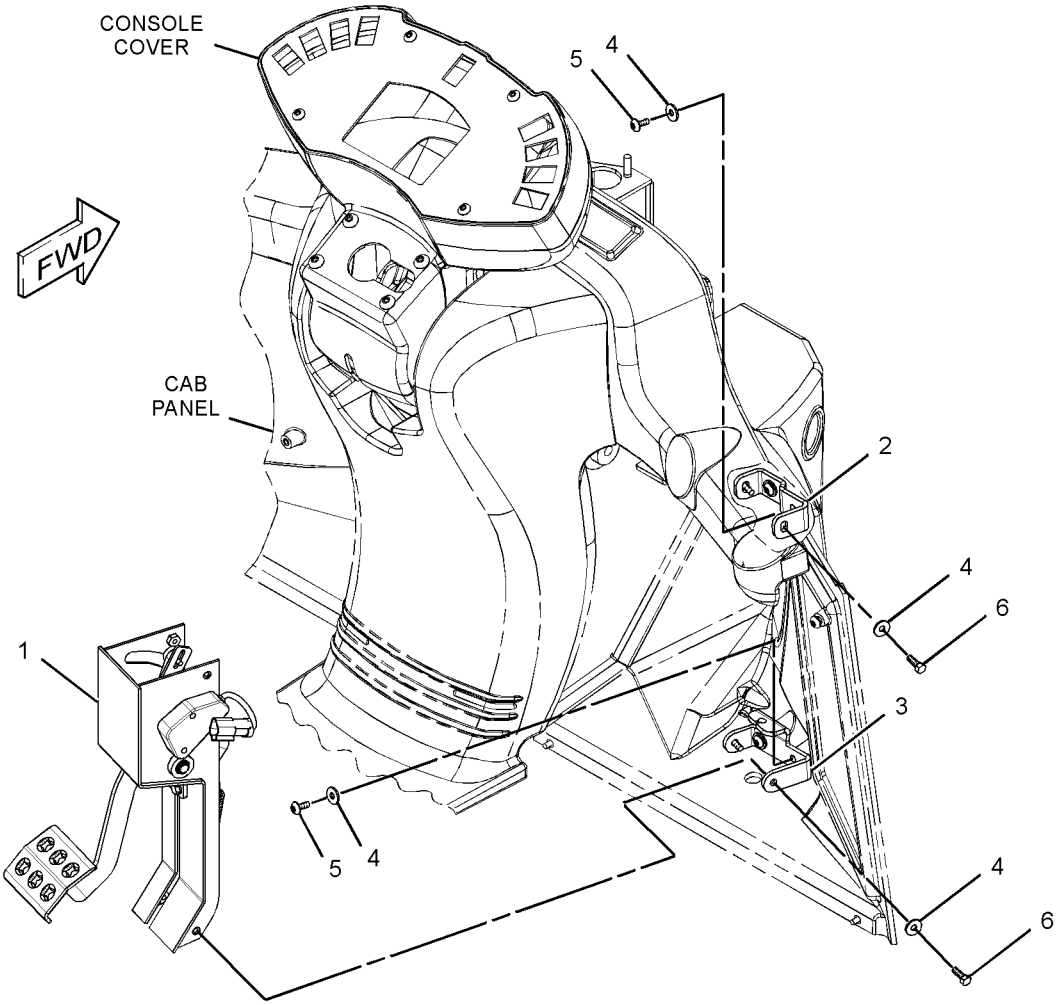

GRAPHIC #1 **<END>** g01374101

OPERATOR STATION

295-1706 CONTROL AR-TRANSMISSION

S/N: LMD1-UP

AN ATTACHMENT

SMCS-3065, 3104 **i02700523**

NOTE	PART NUMBER	QTY	PART NAME 1 2 3 4 5 6 (PRODUCT LEVEL)	SEE PAGE
Y	*260-5509*	1	CONTROL GP-CREEPER	370
Y	*292-0914*	1	CONTROL GP-GOVERNOR (HAND THROTTLE)	63
Y	*284-8648*	1	CONTROL GP-RIMPULL	373

Y-SEPARATE ILLUSTRATION

<END>

OPERATOR STATION

274-8255 CONTROL GP-A/C & HEATER

S/N: LMD1-UP

PART OF 259-1634 AIR CONDITIONER GP

AN ATTACHMENT

SMCS-7304, 7320 **i03195460**

NOTE	REF NO	GRAPHIC REF	PART NUMBER	QTY	PART NAME 1 2 3 4 5 6 (PRODUCT LEVEL)	SEE PAGE
	1	1	**129-1831**	1	CLAMP	
	2	1	**157-0449**	1	KNOB-CONTROL	
	3	1	**214-4695**	1	SWITCH AS-ROCKER (BLOWER FAN SPEED)	
	4	1	**214-4718**	1	SWITCH AS-ROCKER (AIR CONDITIONER, HEATER SELECT)	
	5	1	**271-4295**	1	PLATE	
	6	1	**276-3917**	1	CONTROL AS-TEMPERATURE	
	7	1	**283-6952**	1	FILM-CONTROL (AIR CONDITIONER)	
	8	1	**283-9123**	1	CABLE AS	

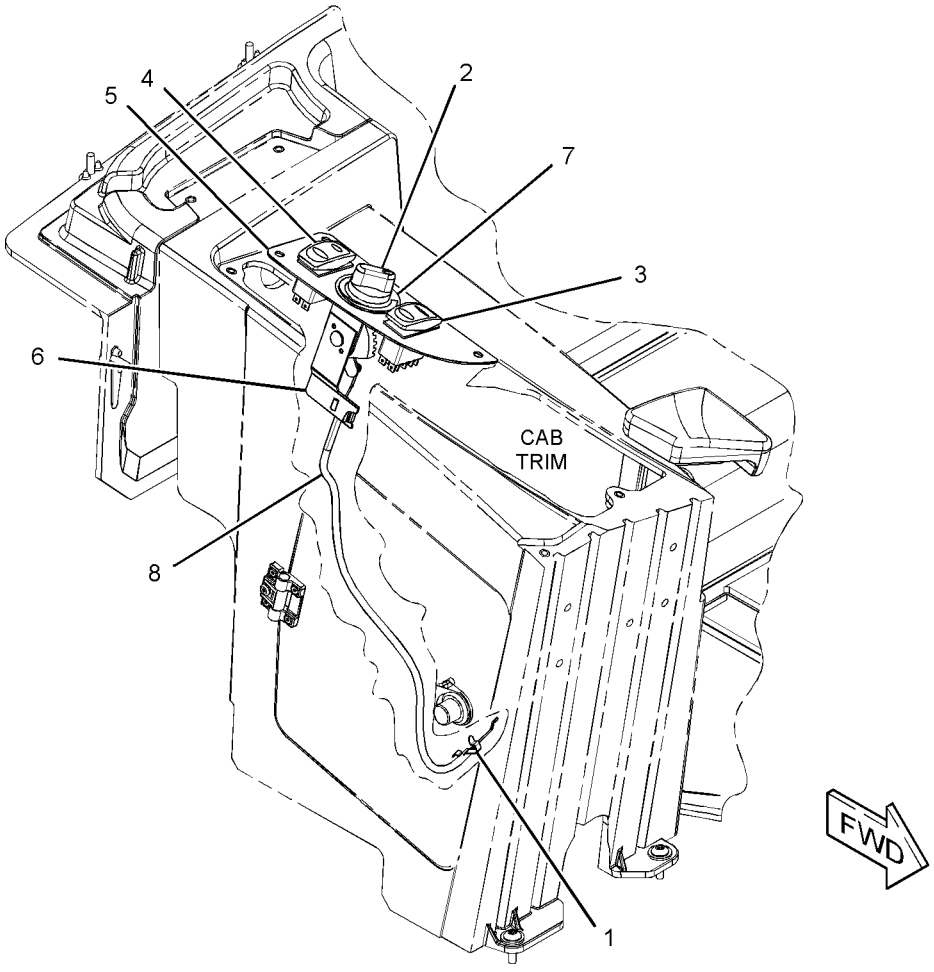

GRAPHIC #1 **<END>** g01376750

OPERATOR STATION

260-5509 CONTROL GP-CREEPER

S/N: LMD1-UP
PART OF 295-1706 CONTROL AR-TRANSMISSION
AN ATTACHMENT

SMCS-3162 **i02698953**

NOTE	REF NO	GRAPHIC REF	PART NUMBER	QTY	PART NAME 1 2 3 4 5 6 (PRODUCT LEVEL)	SEE PAGE
	1	1	**157-0449**	1	KNOB-CONTROL	
	2	1	**265-7952**	1	POTENTIOMETER AS (CREEPER CONTROL)	
		1	**102-8803**	1	KIT-RECEPTACLE (3-PIN)	
					(INCLUDES RECEPTACLE AS & WEDGE)	
E		1	**9X-1813**		SLEEVE (40-CM)	
		1	**186-3735**	3	PIN-CONNECTOR (16-GA TO 18-GA)	
	3	1	**248-2821**	2	NUT-SPECIAL (1/2-28-THD)	

E-ORDER BY THE CENTIMETER

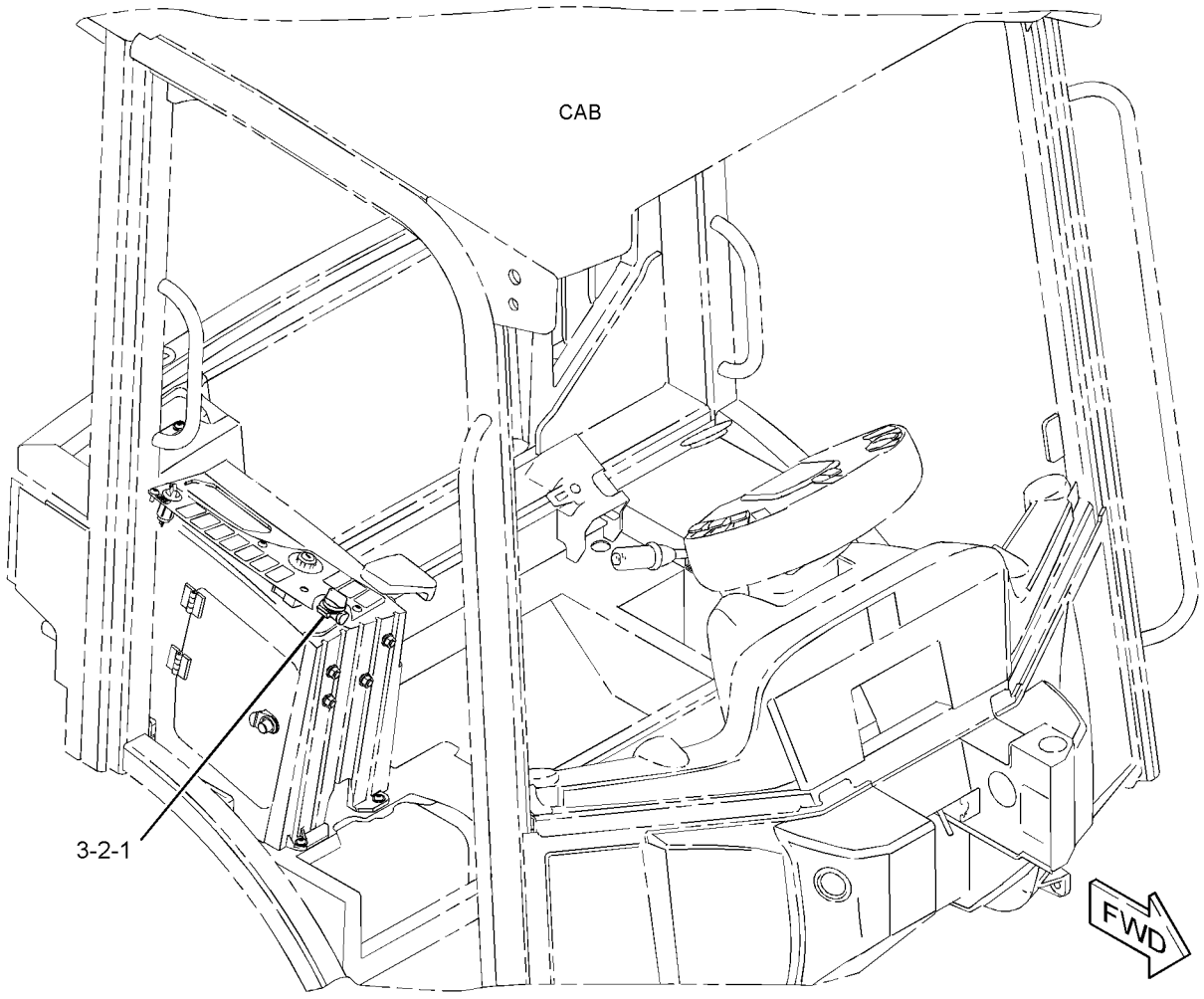

GRAPHIC #1

<END>

g01375792

262-8744 CONTROL GP-JOYSTICK–
3-FUNCTION, AUXILIARY CONTROL
S/N: LMD1-UP
PART OF 257-4018 HYDRAULIC AR
AN ATTACHMENT

SMCS-5063, 5705 **i02858210**

NOTE	REF NO	GRAPHIC REF	PART NUMBER	QTY	PART NAME 1 2 3 4 5 6 (PRODUCT LEVEL)	SEE PAGE
	1	1	**262-8736**	1	CONTROL GP-HANDLE (MULTIFUNCTION, WITH FNR)	
	2	1	**173-0703**	1	BOOT	
	3	1	**262-8738**	1	VALVE GP-PILOT (JOYSTICK, 3-FUNCTION)	
		1	**7K-1181**	1	STRAP-CABLE	
M		1	**8T-9405**	1	BOLT-SOCKET HEAD (M4X0.7X16-MM)	
		1	**172-0970**	1	COIL AS	
		1	**186-3735**	2	PIN-CONNECTOR (16-GA TO 18-GA)	
		1	**102-8802**	1	KIT-RECEPTACLE (2-PIN)	
					(INCLUDES RECEPTACLE AS & WEDGE)	
	4	1	**158-3770**	1	KIT-PILOT VALVE (LEVER)	
					(INCLUDES NUT, LEVER & PIN)	

M-METRIC PART

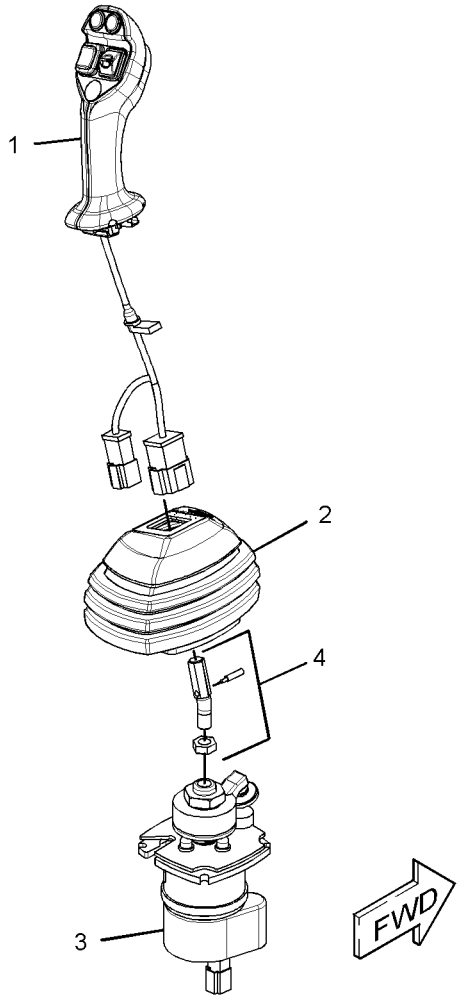

GRAPHIC #1 **<END>** g01401785

OPERATOR STATION

262-8745 CONTROL GP-JOYSTICK–
3-FUNCTION, AUXILIARY, RETURN TO DIG CONTROL
S/N: LMD1-UP
PART OF 257-4019 HYDRAULIC AR
AN ATTACHMENT

SMCS-5063, 5705 **i03117722**

NOTE	REF NO	GRAPHIC REF	PART NUMBER	QTY	PART NAME 1 2 3 4 5 6 (PRODUCT LEVEL)	SEE PAGE
	1	1	**262-8759**	1	CONTROL GP-HANDLE (MULTIFUNCTION, WITH FNR)	
	2	1	**262-8864**	1	BOOT	
J	3	1	**262-8739**	1	VALVE GP-PILOT (JOYSTICK, 3-FUNCTION)	
	4	1	**158-3770**	1	KIT-PILOT VALVE (LEVER)	
					(INCLUDES NUT, LEVER & PIN)	
					AVAILABLE REPAIR KIT(S):	
J			**294-0931**	1	KIT-JOINT	
J			**260-3021**	2	KIT-DETENT	
					(EACH INCLUDES COIL AS, RING & PLUNGER)	

J-PART MARKED J SERVICES KIT(S) MARKED J

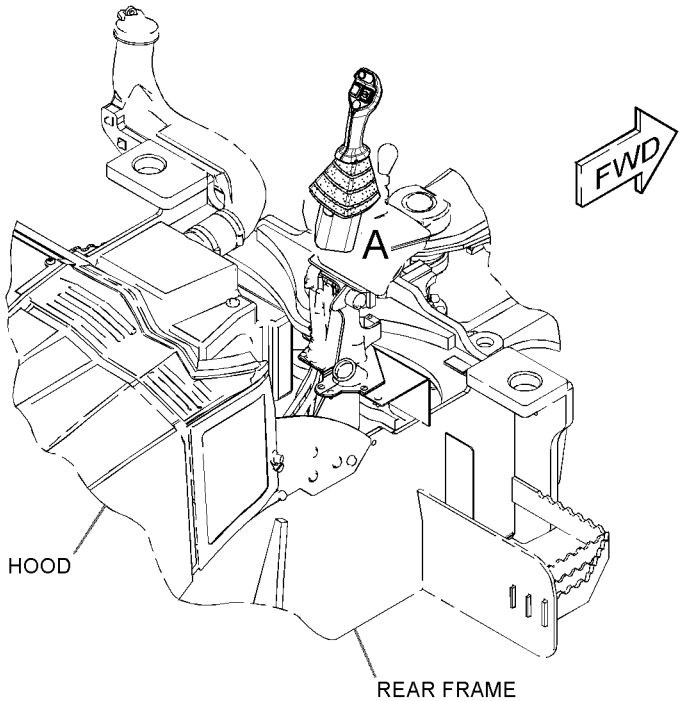

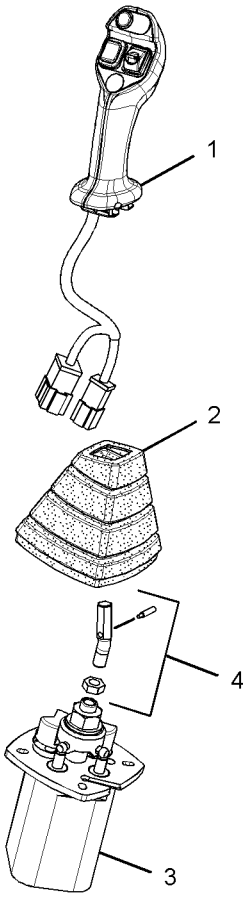

VIEW OF AREA A
(EXPLODED)

GRAPHIC #1 **<END>** g01404268

OPERATOR STATION

284-8648 CONTROL GP-RIMPULL

S/N: LMD1-UP
PART OF 295-1706 CONTROL AR-TRANSMISSION
AN ATTACHMENT

SMCS-3065 **i02858225**

NOTE	REF NO	GRAPHIC REF	PART NUMBER	QTY	PART NAME 1 2 3 4 5 6 (PRODUCT LEVEL)	SEE PAGE
	1	1	**157-0449**	1	KNOB-CONTROL	
	2	1	**265-7952**	1	POTENTIOMETER AS (RIMPULL CONTROL)	
		1	**186-3735**	3	PIN-CONNECTOR (16-GA TO 18-GA)	
		1	**102-8803**	1	KIT-RECEPTACLE (3-PIN)	
					(INCLUDES RECEPTACLE AS & WEDGE)	
BE		1	**9X-1813**		SLEEVE	
	3	1	**248-2821**	2	NUT-SPECIAL (1/2-28-THD)	

B-USE AS REQUIRED
E-ORDER BY THE CENTIMETER

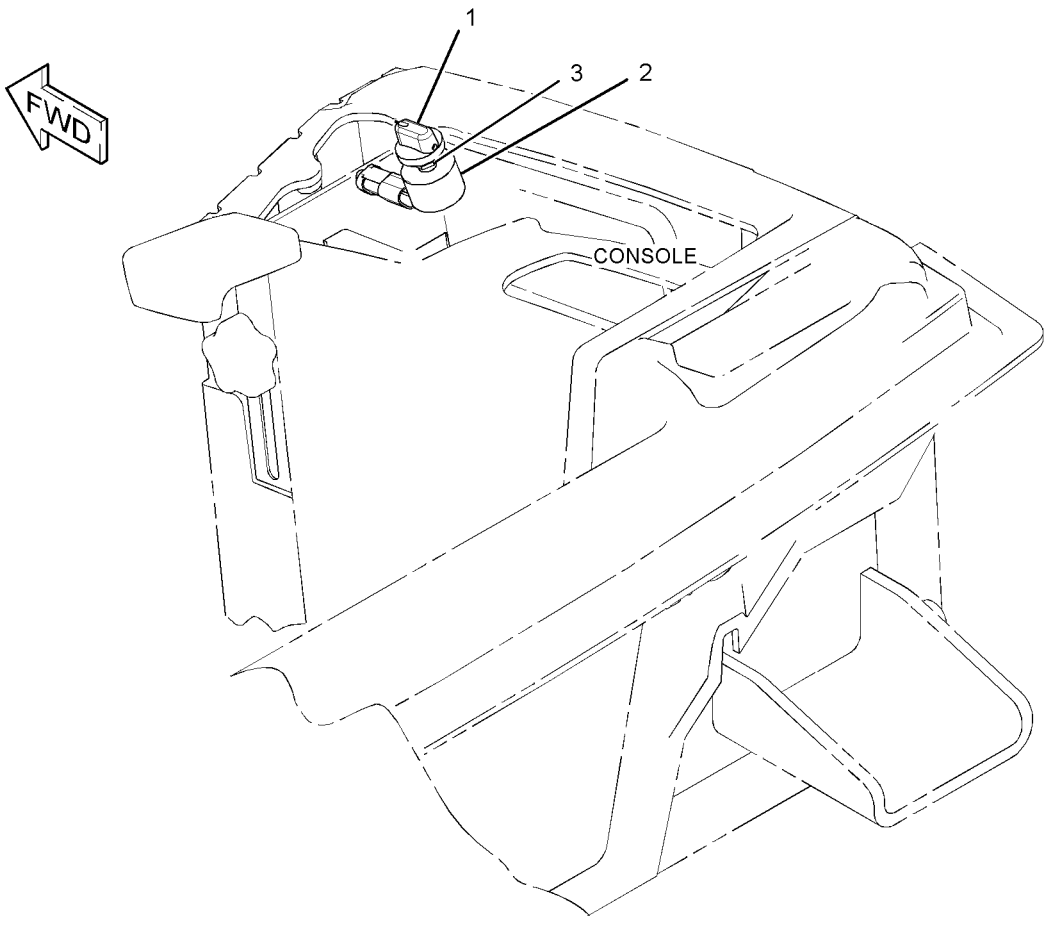

GRAPHIC #1 **<END>** g01378980

OPERATOR STATION

259-1643 CONTROL GP-STEERING–FIXED COLUMN

S/N: LMD1-UP

PART OF 322-5766 OPERATOR AR-OPEN ROPS

AN ATTACHMENT

SMCS-4310, 4338, 4343 **i02944491**

NOTE	REF NO	GRAPHIC REF	PART NUMBER	QTY	PART NAME 1 2 3 4 5 6 (PRODUCT LEVEL)	SEE PAGE
	1	1	**269-0407**	1	STEERING COLUMN AS (FIXED)	
M	2	1	**8T-4189**	4	BOLT (M8X1.25X20-MM)	
	3	1	**8T-4224**	4	WASHER-HARD (8.8X16X2-MM THK)	

M-METRIC PART

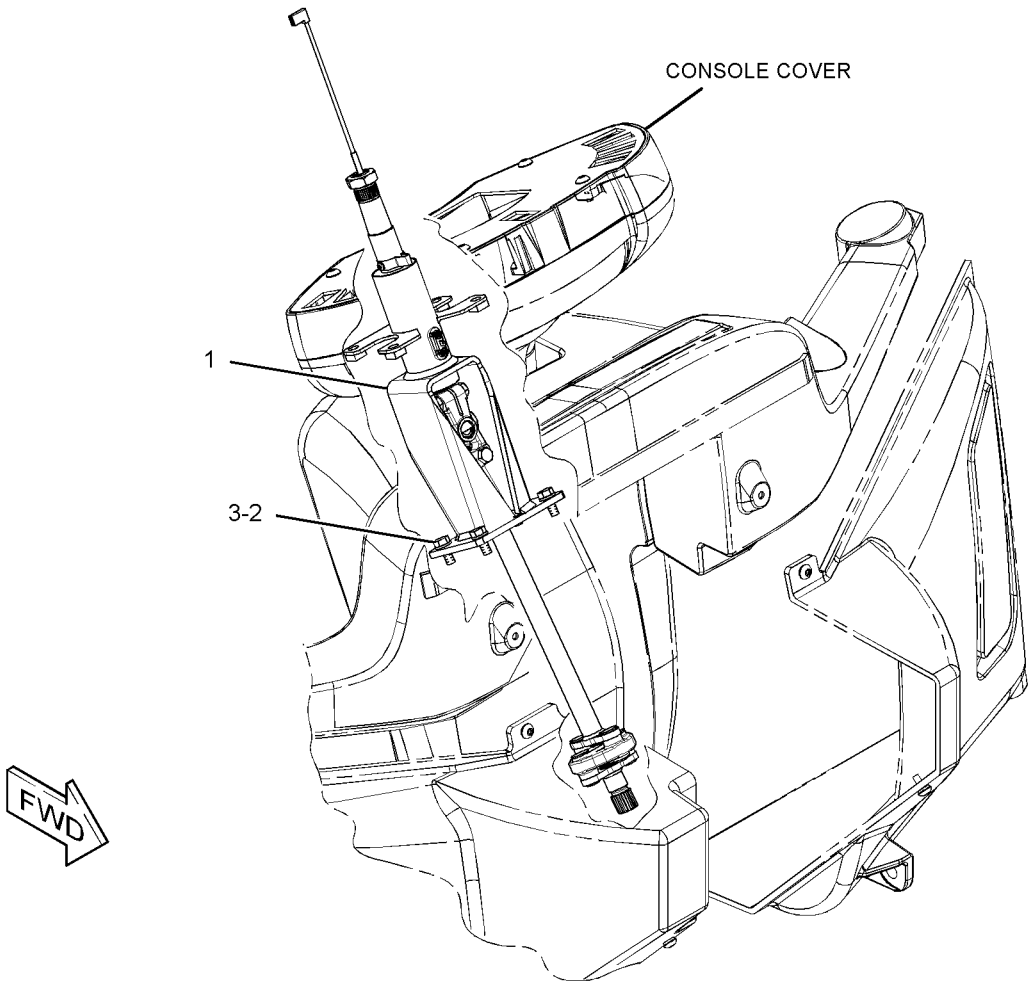

GRAPHIC #1 **<END>** g01459016

259-1644 CONTROL GP-STEERING–ADJUSTABLE COLUMN

S/N: LMD1-UP

PART OF 295-5275, 295-5276 OPERATOR AR-ENCLOSED ROPS

AN ATTACHMENT

SMCS-4310, 4338, 4343 **i03193542**

NOTE	REF NO	GRAPHIC REF	PART NUMBER	QTY	PART NAME 1 2 3 4 5 6 (PRODUCT LEVEL)	SEE PAGE
JST	1	1	**269-0410**	1	STEERING COLUMN AS (ADJUSTABLE)	
	2	1	**291-0799**	1	HANDLE	
M	3	1	**8T-4189**	4	BOLT (M8X1.25X20-MM)	
	4	1	**8T-4224**	4	WASHER-HARD (8.8X16X2-MM THK)	
					AVAILABLE REPAIR KIT(S):	
J			**287-1834**	1	KIT-PIVOT	
					(INCLUDES BOLTS, WASHERS & PIVOT-BEARINGS)	
T			**293-4807**	1	KIT-LEVER	
					(INCLUDES PLATE & PIN-SPRING)	
S			**293-4808**	1	KIT-GAS STRUT	

J-KIT MARKED J SERVICES PART(S) MARKED J
M-METRIC PART
S-KIT MARKED S SERVICES PART(S) MARKED S
T-KIT MARKED T SERVICES PART(S) MARKED T

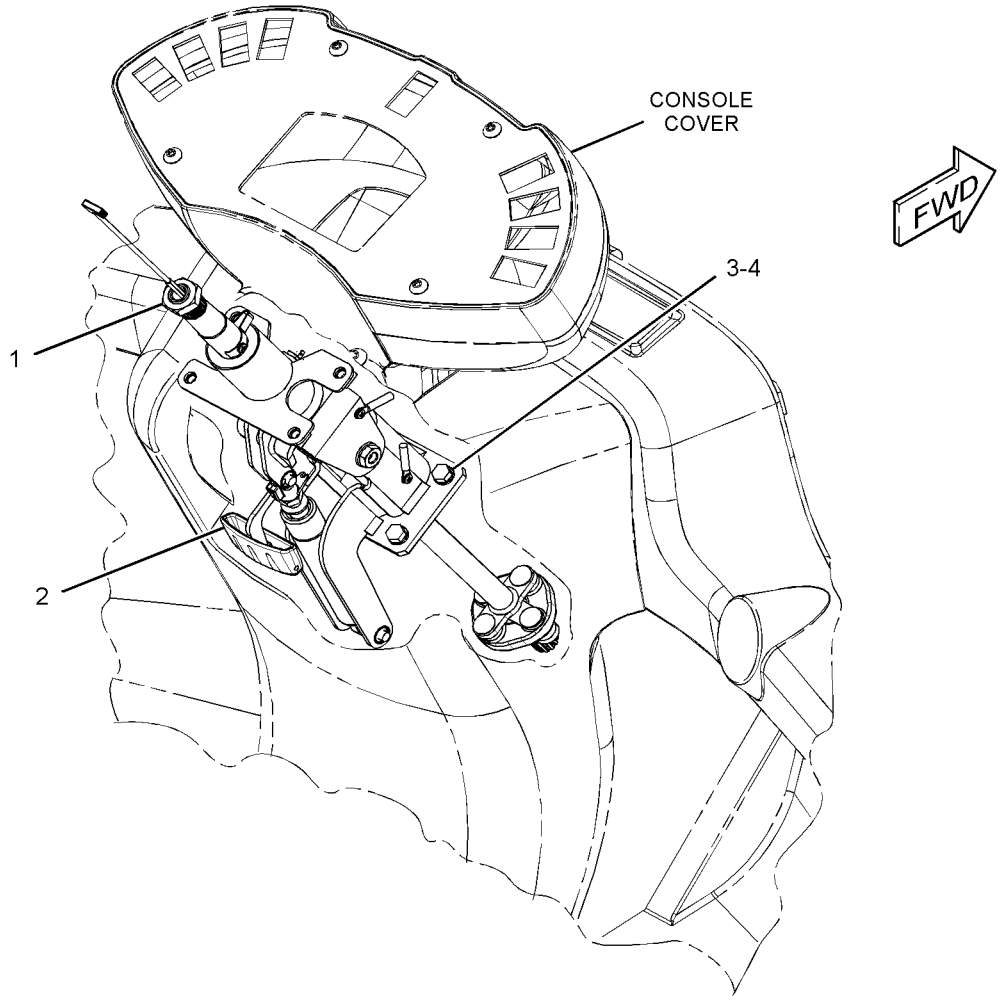

GRAPHIC #1 **<END>** g01381516

OPERATOR STATION

284-2969 COVER GP-CAB–REAR SKIRT

S/N: LMD1-UP

PART OF 322-4878 CHASSIS AR

SMCS-7301 **i02980715**

NOTE	REF NO	GRAPHIC REF	PART NUMBER	QTY	PART NAME 1 2 3 4 5 6 (PRODUCT LEVEL)	SEE PAGE
	1	1	**284-2970**	1	PLATE	
	2	1	**284-2972**	3	BRACKET AS	
	3	1	**299-5488**	1	PLATE	
	4	1	**301-3247**	1	PLATE	
	5	1	**9X-2038**	5	WASHER (7X19X2-MM THK)	
M	6	1	**9X-2045**	13	SCREW-TRUSS HEAD (M6X1X20-MM)	
	7	1	**276-8773**	1	PLATE AS	
	8	1	**276-8774**	1	PLATE AS	

M-METRIC PART

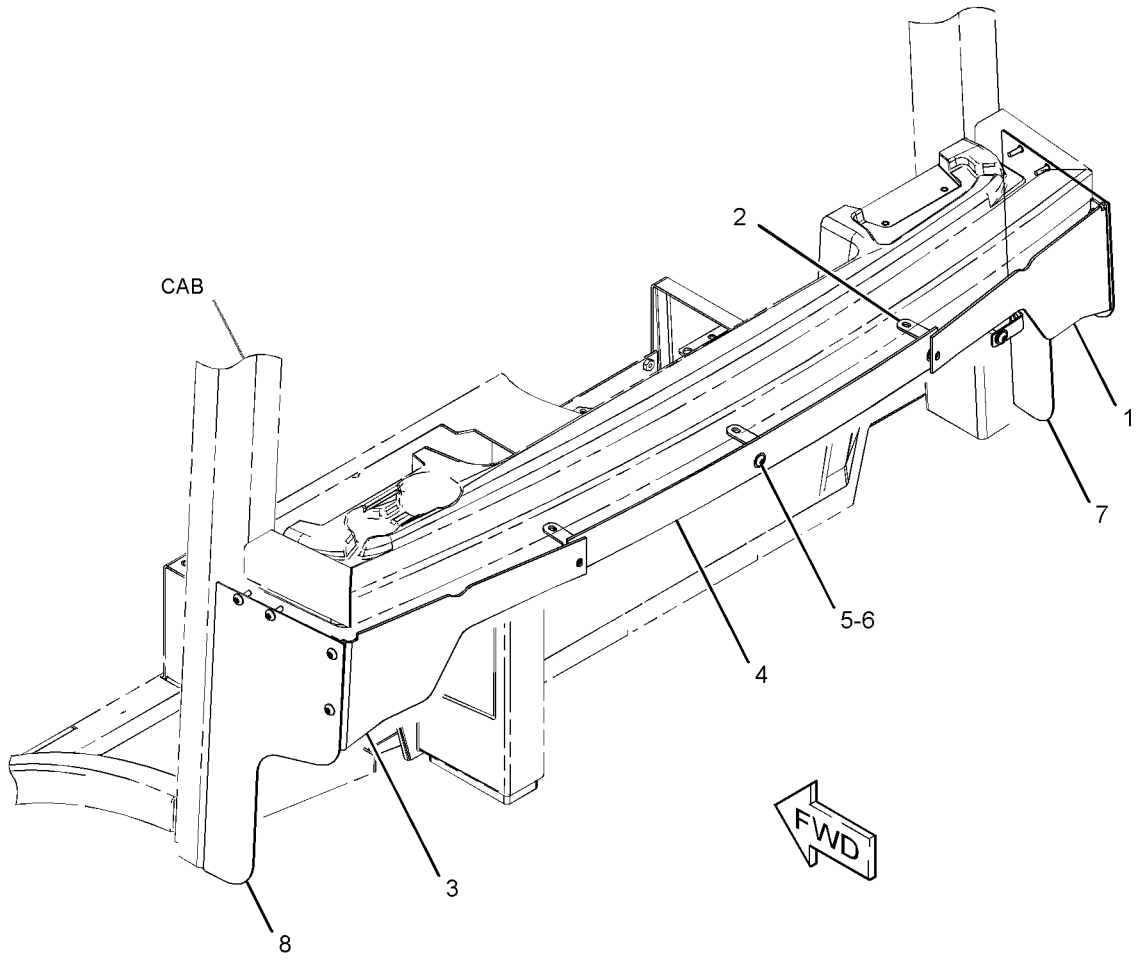

GRAPHIC #1 **<END>** g01524231

OPERATOR STATION

267-9382 DOOR GP-CAB—RH

S/N: LMD1-UP
PART OF 295-5845 CAB AR-ENCLOSED ROPS
AN ATTACHMENT

SMCS-7308 **i02980740**

NOTE	REF NO	GRAPHIC REF	PART NUMBER	QTY	PART NAME 1 2 3 4 5 6 (PRODUCT LEVEL)	SEE PAGE
M	1	1	**197-7499**	4	BOLT (M4X0.7X25-MM)	
	2	1	**252-1862**	1	HANDLE AS	
	3	1	**252-1863**	1	GASKET	
	4	1	**253-1817**	1	SPACER (6.5X14.5X12-MM THK)	
	5	1	**260-0537**	1	DOOR AS-CAB	
	6	1	**263-5752**	1	COVER-LOCK	
	7	1	**273-6167**	1	GLASS (DOOR, RH)	
	8	1	**273-6180**	1	TRIGGER	
	9	1	**273-6182**	1	GROMMET	
	10	1	**273-6185**	1	SEAL-DOOR	
	11	1	**273-6191**	1	GASKET	
	12	1	**274-1347**	1	LOCK AS-DOOR	
J		1	**5P-8500**	1	KEY	
	13	1	**274-6589**	1	ROD	
	14	1	**284-3887**	1	WASHER (7X20X1.8-MM THK)	
	15	1	**308-1192**	1	SPACER (6.5X14X5.8-MM THK)	
	16	1	**308-1193**	1	SPACER	
	17	1	**309-7530**	1	LATCH AS-DOOR	
	18	1	**309-7533**	1	COVER	
M	19	1	**118-6503**	1	BOLT (M6X1X55-MM)	
M	20	1	**127-2170**	4	SCREW-TRUSS HEAD (M8X1.25X20-MM)	
	21	1	**3E-4352**	4	WASHER-HARD (8.8X20.5X2.5-MM THK)	
M	22	1	**6V-7357**	3	BOLT (M6X1X25-MM)	
	23	1	**8T-0328**	4	WASHER-HARD (5.5X10X1-MM THK)	
M	24	1	**9X-2045**	10	SCREW-TRUSS HEAD (M6X1X20-MM)	
	25	1	**9X-8256**	3	WASHER (6.6X12X2-MM THK)	

J-REQUIRES CORPORATE KEY
M-METRIC PART

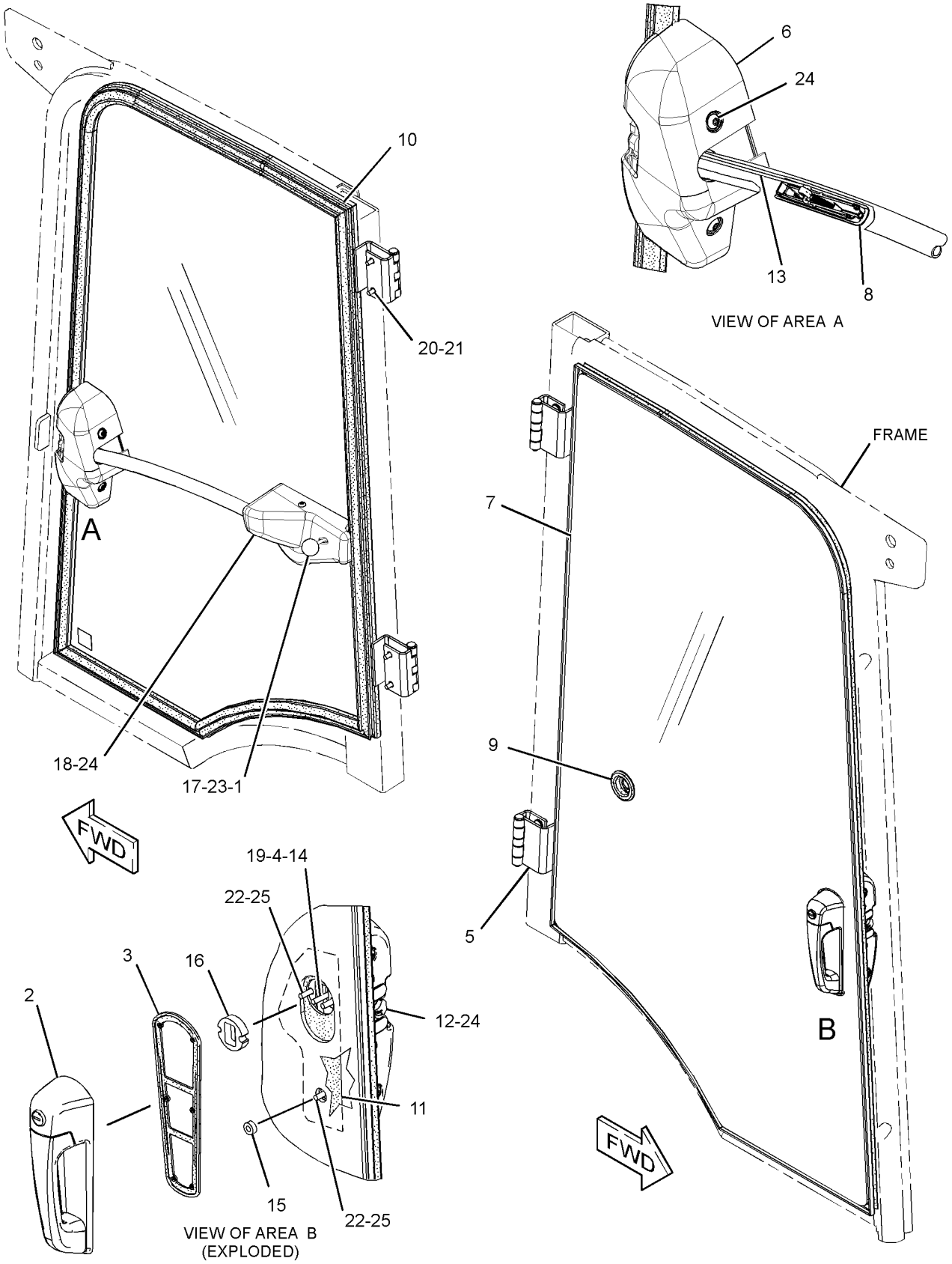

GRAPHIC #1 **<END>** g01412172

OPERATOR STATION

275-8188 DOOR GP-CAB—LH

S/N: LMD1-UP
PART OF 295-5845, 295-5846 CAB AR-ENCLOSED ROPS
AN ATTACHMENT

SMCS-7308 **i02980724**

NOTE	REF NO	GRAPHIC REF	PART NUMBER	QTY	PART NAME 1 2 3 4 5 6 (PRODUCT LEVEL)	SEE PAGE
M	1	1	**197-7499**	4	BOLT (M4X0.7X25-MM)	
J	2	1	**252-1862**	1	HANDLE AS	
	3	1	**252-1863**	1	GASKET	
	4	1	**253-1817**	1	SPACER (6.5X14.5X12-MM THK)	
	5	1	**256-9638**	1	DOOR AS-CAB	
	6	1	**263-5751**	1	COVER-LOCK	
B	7	1	**273-6170**	1	GLASS (DOOR, LH)	
	8	1	**273-6178**	1	ROD	
	9	1	**273-6180**	1	TRIGGER (RELEASE)	
	10	1	**273-6182**	1	GROMMET	
	11	1	**273-6184**	1	SEAL-DOOR	
	12	1	**273-6191**	1	GASKET	
	13	1	**274-1346**	1	LOCK-DOOR	
	14	1	**284-3887**	1	WASHER (7X20X1.8-MM THK)	
	15	1	**303-3003**	1	WINDOW-SLIDING	
	16	1	**308-1192**	1	SPACER (6.5X14X5.8-MM THK)	
	17	1	**308-1193**	1	SPACER	
	18	1	**309-7530**	1	LATCH AS-DOOR	
	19	1	**311-3642**	1	COVER	
M	20	1	**118-6503**	1	BOLT (M6X1X55-MM)	
M	21	1	**127-2170**	4	SCREW-TRUSS HEAD (M8X1.25X20-MM)	
	22	1	**3E-4352**	4	WASHER-HARD (8.8X20.5X2.5-MM THK)	
M	23	1	**6V-7357**	3	BOLT (M6X1X25-MM)	
	24	1	**8T-0328**	4	WASHER-HARD (5.5X10X1-MM THK)	
M	25	1	**9X-2045**	10	SCREW-TRUSS HEAD (M6X1X20-MM)	
	26	1	**9X-8256**	3	WASHER (6.6X12X2-MM THK)	

B-USE AS REQUIRED
J-REQUIRES CORPORATE KEY
M-METRIC PART

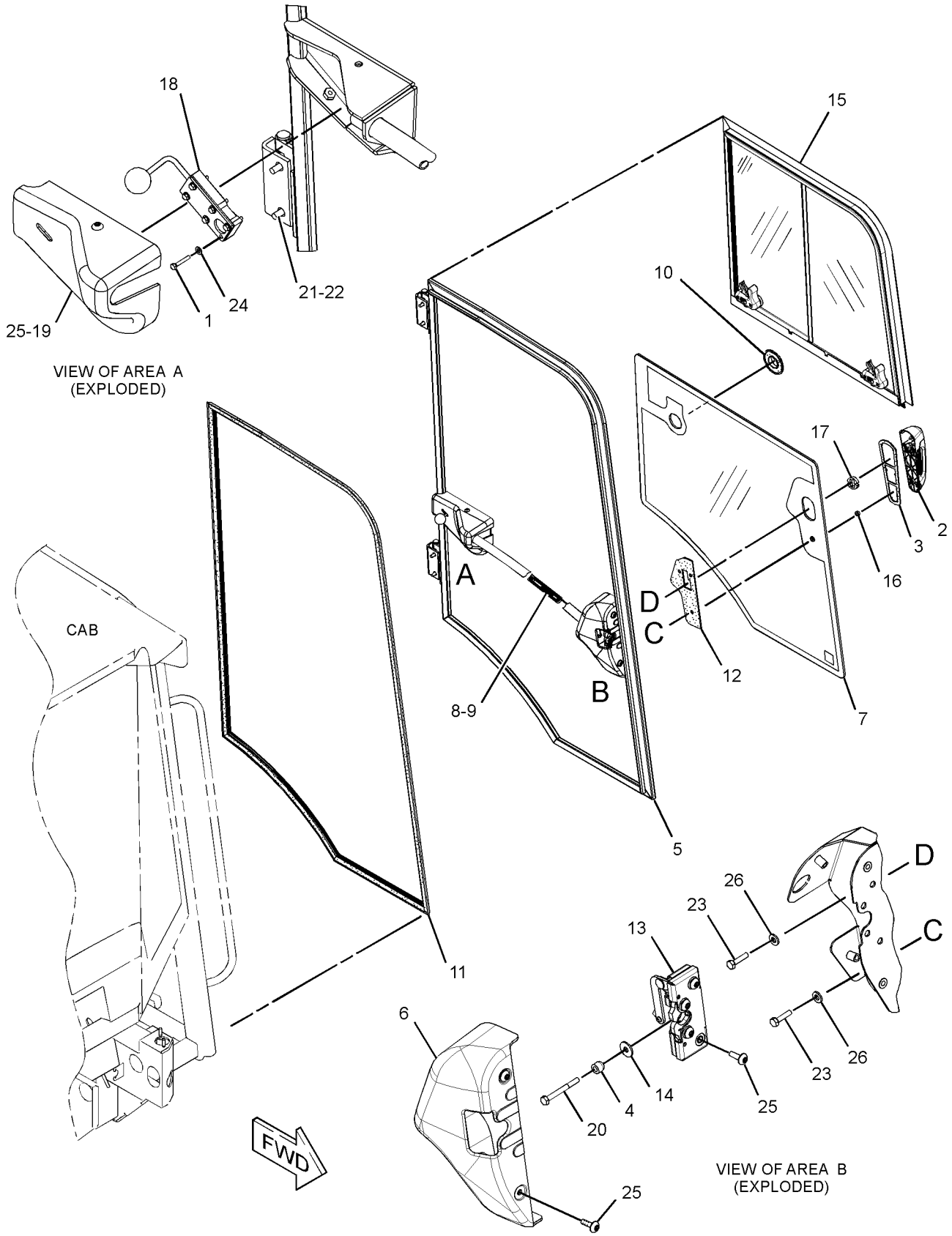

GRAPHIC #1

<END>

g01408441

OPERATOR STATION

275-8189 DOOR GP-CAB—RH

S/N: LMD1-UP
PART OF 295-5846 CAB AR-ENCLOSED ROPS
AN ATTACHMENT

SMCS-7308 **i03131985**

NOTE	REF NO	GRAPHIC REF	PART NUMBER	QTY	PART NAME 1 2 3 4 5 6 (PRODUCT LEVEL)	SEE PAGE
M	1	1	**197-7499**	4	BOLT (M4X0.7X25-MM)	
	2	1	**252-1862**	1	HANDLE AS	
	3	1	**252-1863**	1	GASKET	
	4	1	**253-1817**	1	SPACER (6.5X14.5X12-MM THK)	
	5	1	**260-0537**	1	DOOR AS-CAB	
	6	1	**263-5752**	1	COVER-LOCK	
B	7	1	**273-6171**	1	GLASS (DOOR, RH)	
	8	1	**273-6180**	1	TRIGGER (RELEASE)	
	9	1	**273-6182**	1	GROMMET	
	10	1	**273-6185**	1	SEAL-DOOR	
	11	1	**273-6191**	1	GASKET	
	12	1	**274-1347**	1	LOCK AS-DOOR	
J		1	**5P-8500**	1	KEY (CAB)	
	13	1	**274-6589**	1	ROD	
	14	1	**284-3887**	1	WASHER (7X20X1.8-MM THK)	
	15	1	**303-3004**	1	WINDOW-SLIDING	
	16	1	**308-1192**	1	SPACER (6.5X14X5.8-MM THK)	
	17	1	**308-1193**	1	SPACER	
	18	1	**309-7530**	1	LATCH AS-DOOR	
	19	1	**309-7533**	1	COVER	
M	20	1	**118-6503**	1	BOLT (M6X1X55-MM)	
M	21	1	**127-2170**	4	SCREW-TRUSS HEAD (M8X1.25X20-MM)	
	22	1	**3E-4352**	4	WASHER-HARD (8.8X20.5X2.5-MM THK)	
M	23	1	**6V-7357**	3	BOLT (M6X1X25-MM)	
	24	1	**8T-0328**	4	WASHER-HARD (5.5X10X1-MM THK)	
M	25	1	**9X-2045**	10	SCREW-TRUSS HEAD (M6X1X20-MM)	
	26	1	**9X-8256**	3	WASHER (6.6X12X2-MM THK)	

B-USE AS REQUIRED
J-REQUIRES CORPORATE KEY
M-METRIC PART

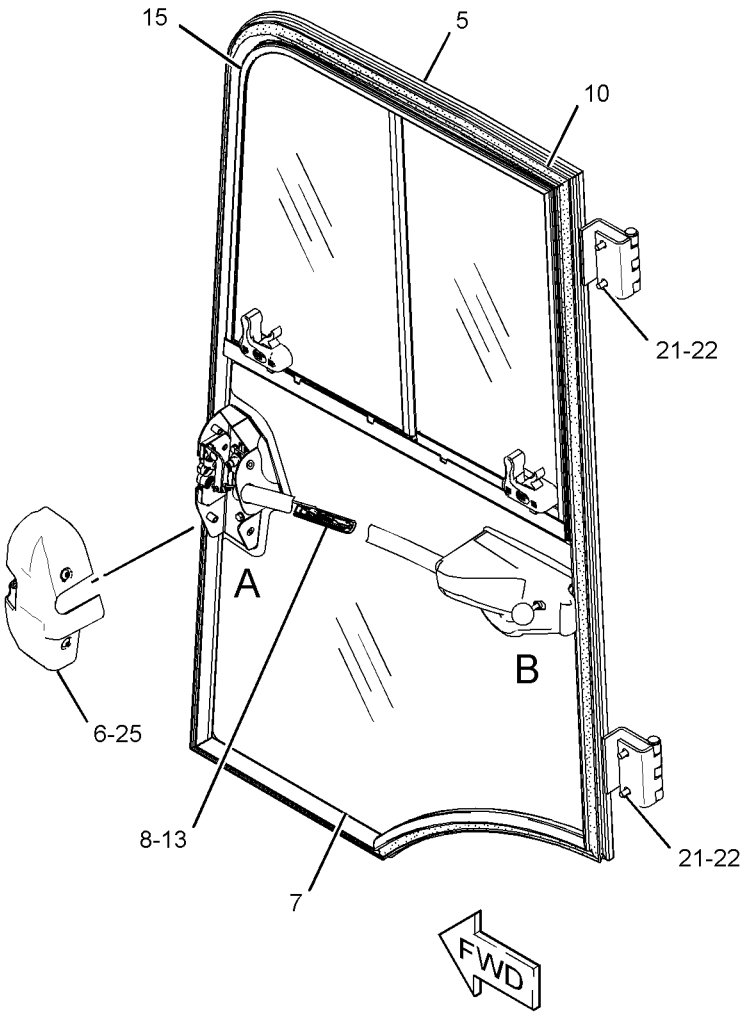

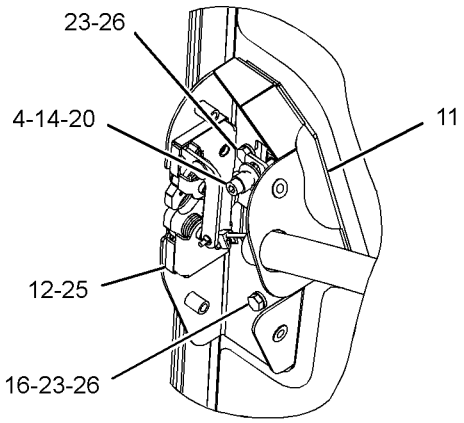

VIEW OF AREA A

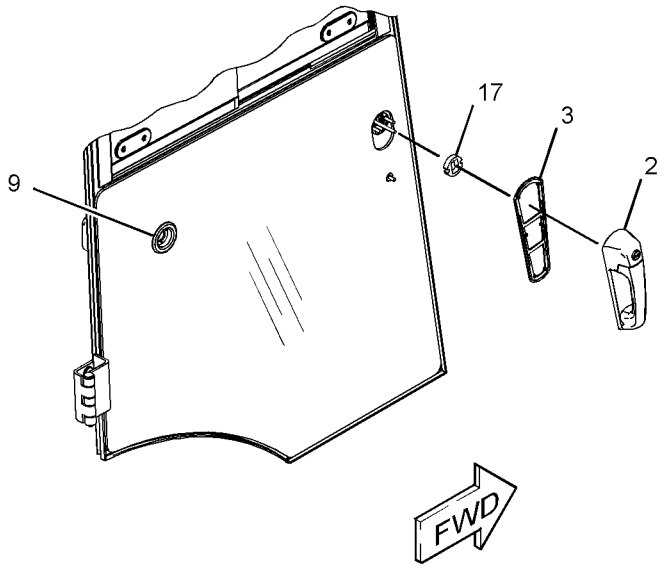

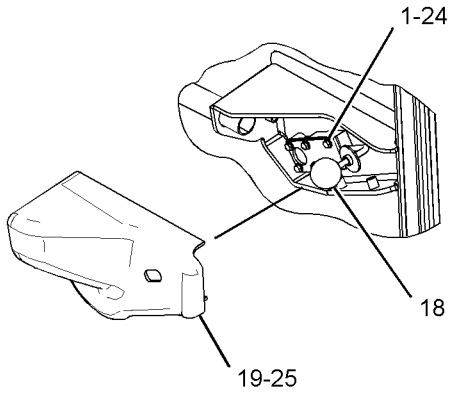

VIEW OF AREA B
(EXPLODED)

GRAPHIC #1 **<END>** g01407583

OPERATOR STATION

257-6374 DUCT & FILTER GP-CAB AIR

S/N: LMD1-UP
PART OF 260-3545 TRIM GP-CAB
AN ATTACHMENT

SMCS-7337, 7342 **i02866187**

NOTE	REF NO	GRAPHIC REF	PART NUMBER	QTY	PART NAME 1 2 3 4 5 6 (PRODUCT LEVEL)	SEE PAGE
	1	1	**117-8929**	3	WASHER (6.6X22X2-MM THK)	
	2	1	**265-9401**	1	PLENUM AS	
	3	1	**270-9018**	1	FILTER ELEMENT AS-CAB AIR (DUCT)	
	4	1	**271-4251**	1	DUCT	
	5	1	**313-2458**	1	FILTER ELEMENT AS-CAB AIR (DUCT) (PLATE)	
	6	1	**289-9461**	3	KNOB AS	
					(EACH INCLUDES)	
		1	**152-5372**	1	KNOB	
	7	1	**313-2419**	1	PLATE AS	
M		1	**3E-4304**	1	INSERT-THREADED (M6X1-THD)	
M	8	1	**9X-2044**	6	SCREW-TRUSS HEAD (M6X1X16-MM)	
	9	1	**9X-8256**	8	WASHER (6.6X12X2-MM THK)	
E	10	1	**305-4105**		SEAL (108-CM)	
D	11	1	**5P-5755**		SEAL (0.17-M)	
D	11A	1	**5P-5755**		SEAL (0.125-M)	
M	12	1	**5C-9553**	2	BOLT (M6X1X16-MM)	

D-ORDER BY THE METER
E-ORDER BY THE CENTIMETER
M-METRIC PART

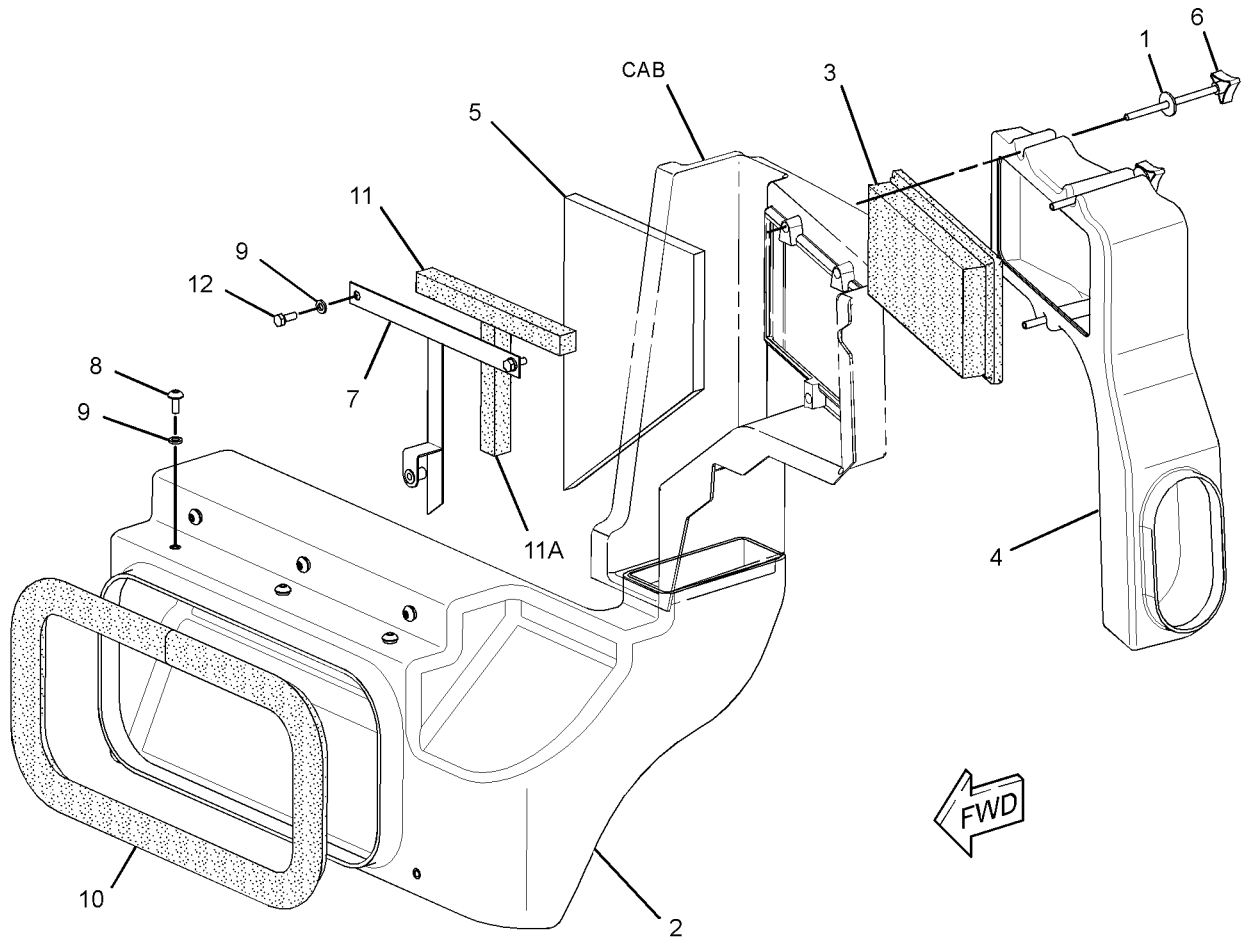

GRAPHIC #1 **<END>** g01408189

OPERATOR STATION

280-2370 FLOOR MAT GP

S/N: LMD1-UP
PART OF 260-3544, 260-3545 TRIM GP-CAB
AN ATTACHMENT

SMCS-726M **i02776853**

NOTE	REF NO	GRAPHIC REF	PART NUMBER	QTY	PART NAME 1 2 3 4 5 6 (PRODUCT LEVEL)	SEE PAGE
	1	1	**269-7537**	1	FLOOR MAT (UPPER)	
	2	1	**269-7538**	1	FLOOR MAT (FRONT)	
	3	1	**271-7653**	2	PLATE	
M	4	1	**3E-8020**	1	SCREW-TRUSS HEAD (M6X1X25-MM)	
	5	1	**9X-2038**	1	WASHER (7X19X2-MM THK)	
M	6	1	**9X-2045**	4	SCREW-TRUSS HEAD (M6X1X20-MM)	
	7	1	**307-6925**	2	FASTENER	

M-METRIC PART

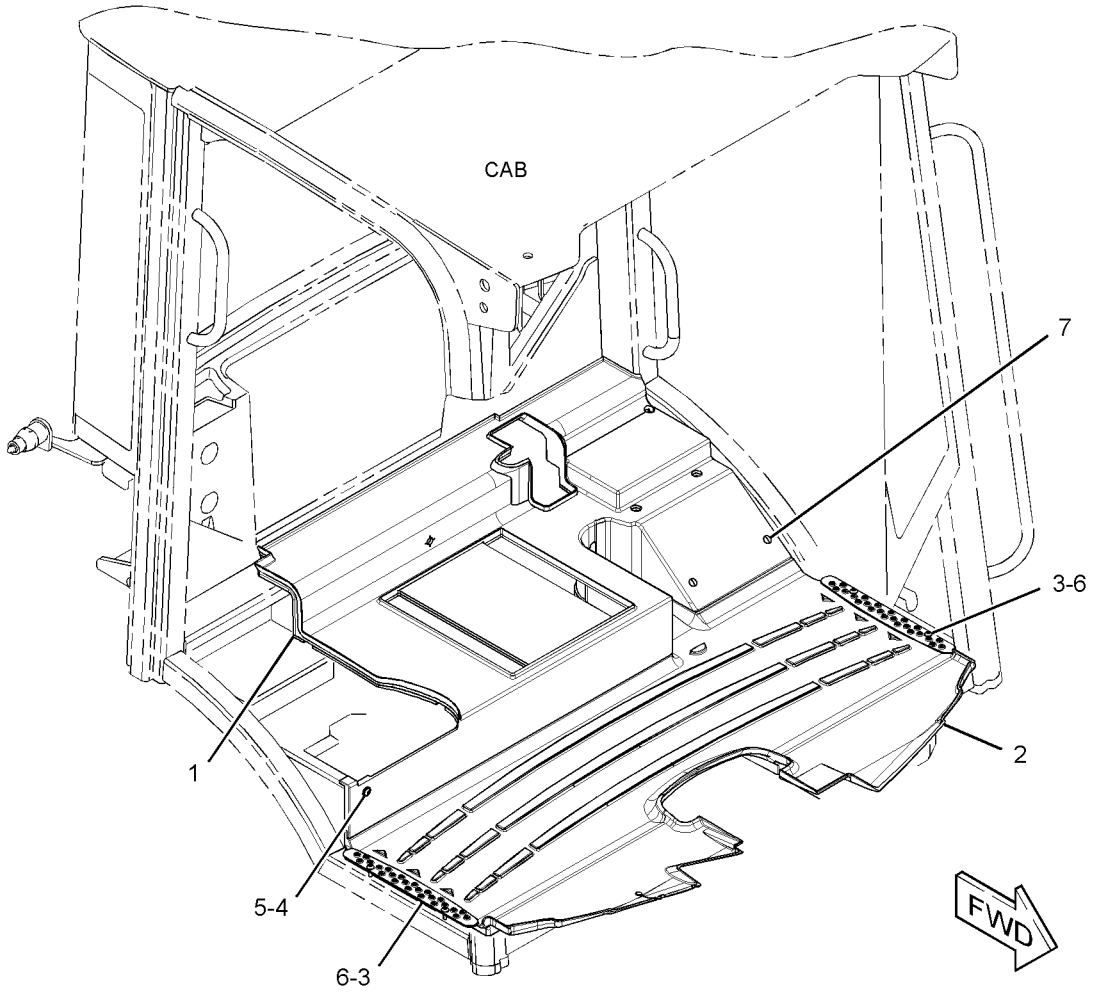

GRAPHIC #1 **<END>** g01388585

OPERATOR STATION

259-1633 HEATER & MTG GP-CAB

S/N: LMD1-UP
PART OF 322-5768 HEATER AR-CAB
AN ATTACHMENT

SMCS-7304 **i02758055**

NOTE	REF NO	GRAPHIC REF	PART NUMBER	QTY	PART NAME 1 2 3 4 5 6 (PRODUCT LEVEL)	SEE PAGE
	1	1	**113-8492**	1	FUSE (20-AMPERE)	
Y	2	1	**269-3819**	1	HEATER GP-CAB	387
Y	3	1	*274-8254*	1	SWITCH GP-A/C & HEATER	112
M	4	1	**9X-2042**	3	SCREW-TRUSS HEAD (M6X1X12-MM)	

M-METRIC PART
Y-SEPARATE ILLUSTRATION

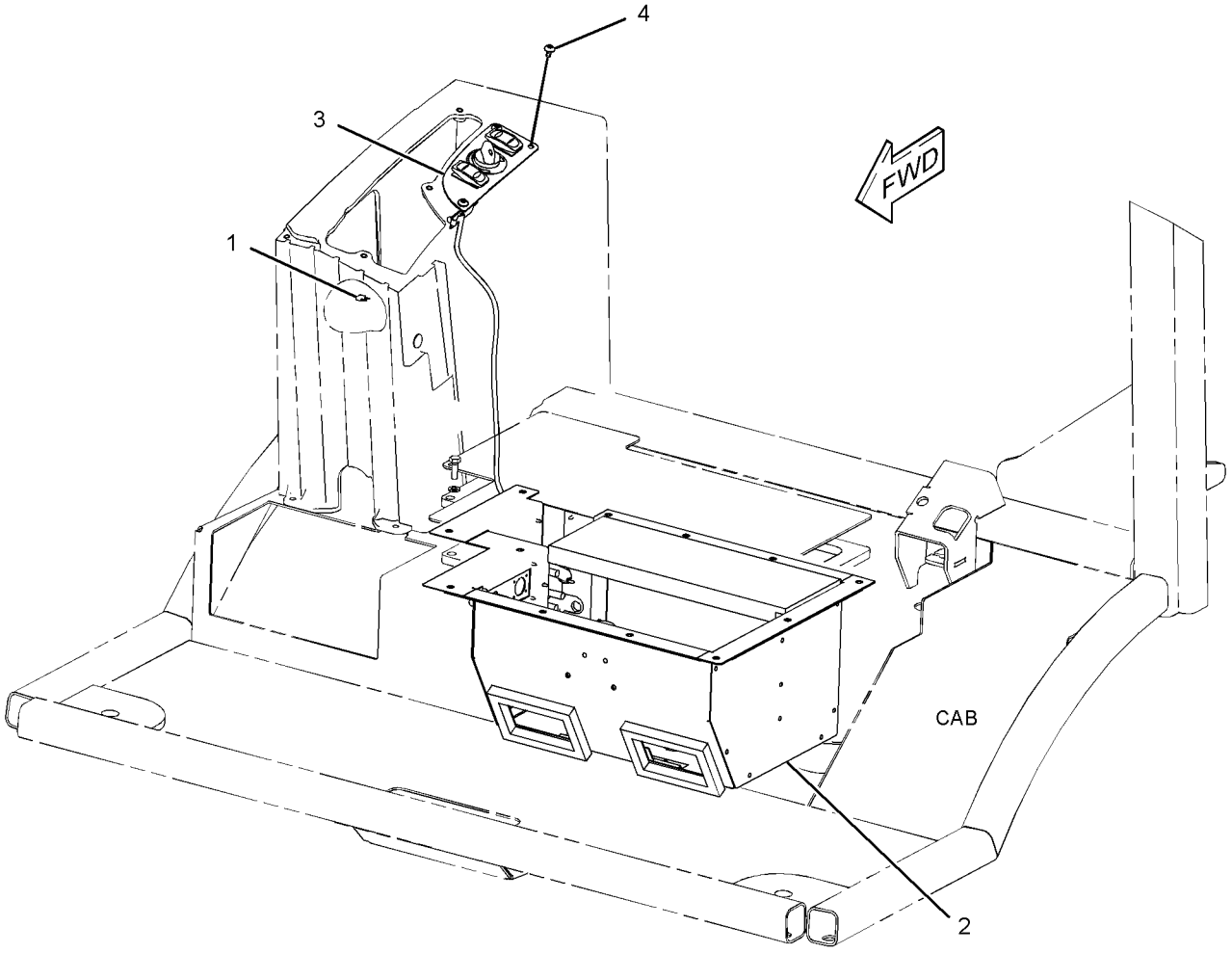

GRAPHIC #1 **<END>** g01389344

OPERATOR STATION

322-5768 HEATER AR-CAB

S/N: LMD1-UP

CANNOT BE USED WITH 322-5766—PAGE 407, 322-5769—PAGE 355

AN ATTACHMENT

SMCS-7304 **i02987988**

NOTE	PART NUMBER	QTY	PART NAME 1 2 3 4 5 6 (PRODUCT LEVEL)	SEE PAGE
Y	*255-5988*	1	COOLER & MTG GP-HYDRAULIC OIL	249
Y	*315-2631*	1	GUARD GP-BELT	18
Y	*259-1633*	1	HEATER & MTG GP-CAB	385
Y	*320-6051*	1	LINES GP-CAB HEATER	395
Y	*257-3946*	1	LINES GP-HYDRAULIC OIL COOLER	290
	271-2175	1	BOLT GP-ENGINE MOUNTING	
M	**8T-4139**	3	BOLT (M12X1.75X30-MM)	
	8Y-4223	3	ROD	

M-METRIC PART
Y-SEPARATE ILLUSTRATION

<END>

OPERATOR STATION

269-3819 HEATER GP-CAB

S/N: LMD1-UP

PART OF 259-1633 HEATER & MTG GP-CAB

AN ATTACHMENT

SMCS-7304 **i03125966**

NOTE	REF NO	GRAPHIC REF	PART NUMBER	QTY	PART NAME 1 2 3 4 5 6 (PRODUCT LEVEL)	SEE PAGE
	2	1	**8C-3756**	1	FILM-IDENTIFICATION (CAB HEATER)	
	3	1	**8T-0154**	2	CLAMP-HOSE	
	4	1	**275-3990**	1	MOTOR AS-BLOWER (AIR CONDITIONER, HEATER)	
	5	1	**275-3991**	1	COIL AS-HEATER	
	6	1	**275-3993**	1	RESISTOR (12-VOLT)	
	7	1	**275-3994**	1	VALVE AS-WATER	
	8	1	**278-4406**	1	CASE AS	
	9	1	**278-4414**	1	PLATE	
	10	1	**278-4418**	1	GASKET	
	11	1	**278-4419**	1	PLATE	
	12	1	**278-4421**	2	SEAL	
	13	1	**278-4422**	1	PLATE	
	14	1	**278-4423**	1	SEAL	
	15	1	**280-9202**	1	GASKET	
	16	1	**290-2523**	1	PLATE AS	
M		1	**9X-2032**	2	NUT-WELD (M4X0.7-THD)	
	17	1	**300-4098**	2	CAP (SEALING)	
M	19	1	**6V-5210**	2	SCREW-MACHINE (M4X0.7X10-MM)	
	20	1	**291-3803**	1	HOSE	
					AVAILABLE REPAIR KIT(S):	
			275-3999	1	KIT-SEAL	
					(INCLUDES GASKETS & SEALS)	

M-METRIC PART

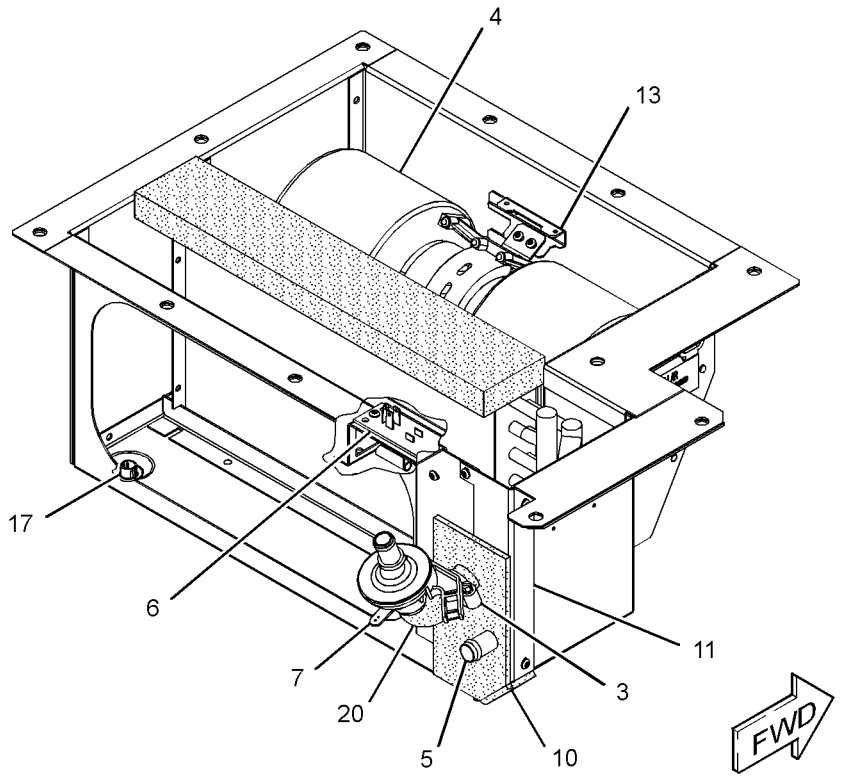

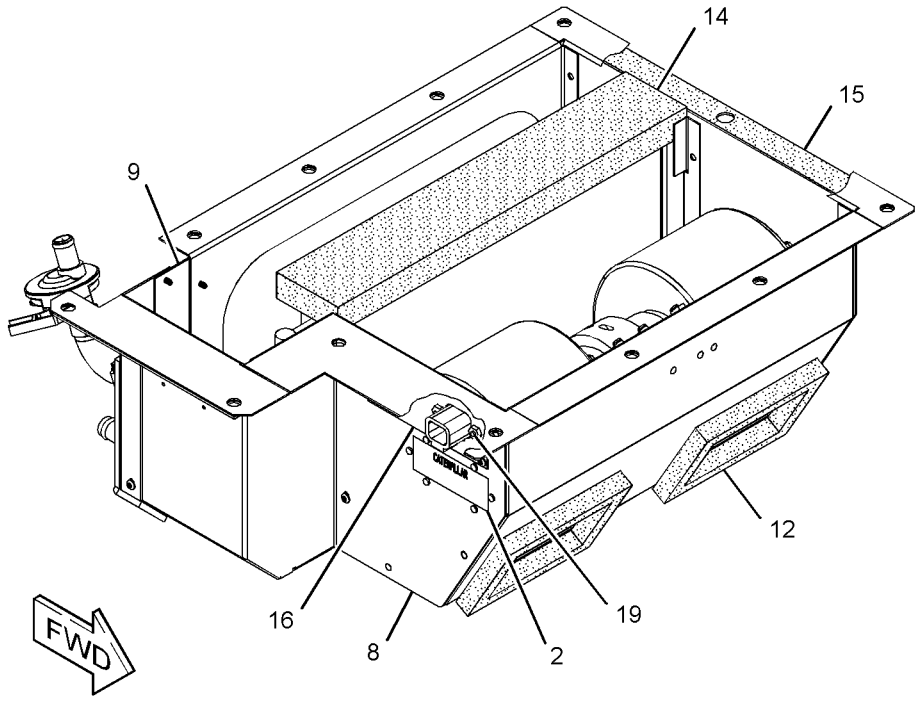

GRAPHIC #1 **<END>** g01402852

OPERATOR STATION

266-1418 INSTALLATION GP-RADIO

S/N: LMD1-UP

FOR USE WITH 260-5499—PAGE 404

AN ATTACHMENT

SMCS-7338 **i02832741**

NOTE	REF NO	GRAPHIC REF	PART NUMBER	QTY	PART NAME 1 2 3 4 5 6 (PRODUCT LEVEL)	SEE PAGE
	1	1	**6K-0806**	1	STRAP-CABLE	
	2	1	**180-8144**	1	CABLE-LOCK	
	3	1	**262-2781**	1	RADIO	
		1	**284-0055**	1	FACEPLATE	

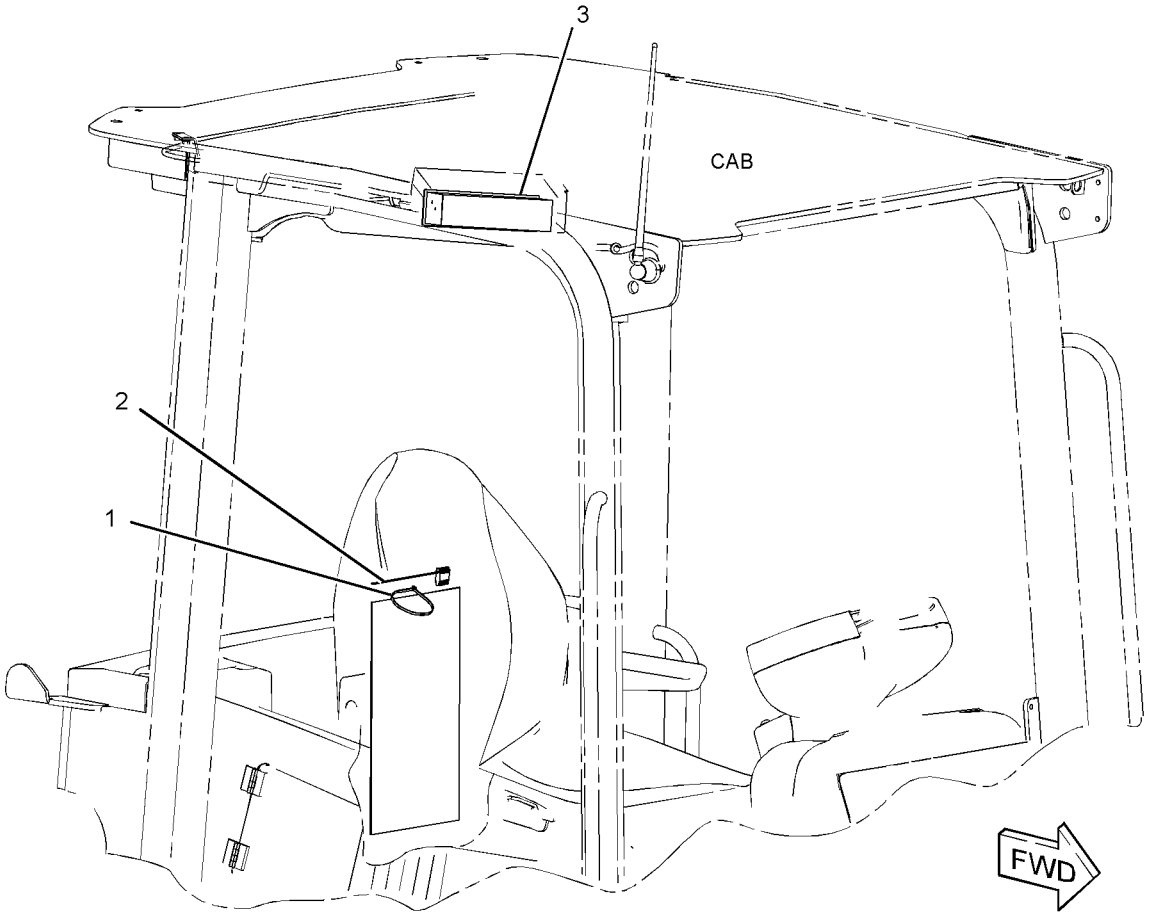

GRAPHIC #1 **<END>** g01378490

266-1420 INSTALLATION GP-RADIO—NACD

S/N: LMD1-UP

FOR USE WITH 260-5499—PAGE 404

AN ATTACHMENT

SMCS-7338 **i03001591**

NOTE	REF NO	GRAPHIC REF	PART NUMBER	QTY	PART NAME 1 2 3 4 5 6 (PRODUCT LEVEL)	SEE PAGE
	1	1	**6K-0806**	1	STRAP-CABLE	
	2	1	**180-8144**	1	CABLE-LOCK	
	3	1	**262-2781**	1	RADIO	
		1	**311-9634**	1	FACEPLATE	

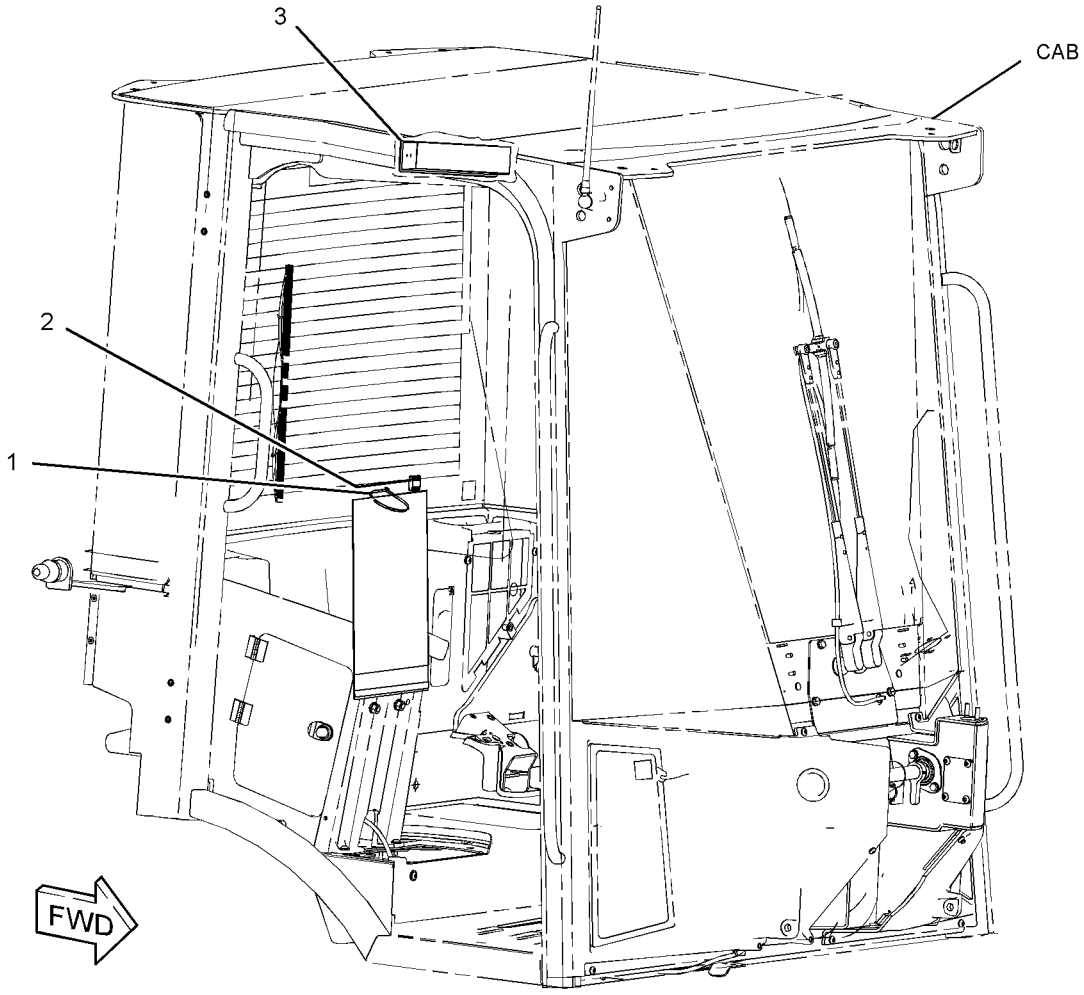

GRAPHIC #1 **<END>** g01387841

OPERATOR STATION

284-3889 LATCH GP–DOOR

S/N: LMD1-UP
PART OF 295-5845, 295-5846 CAB AR-ENCLOSED ROPS
AN ATTACHMENT

SMCS-7308 **i02898886**

NOTE	REF NO	GRAPHIC REF	PART NUMBER	QTY	PART NAME 1 2 3 4 5 6 (PRODUCT LEVEL)	SEE PAGE
	1	1	**284-3885**	2	STRIKER AS	
	2	1	**313-2430**	1	PIN	
	3	1	**313-5245**	1	PLATE	
	4	1	**313-5246**	1	PLATE	
	5	1	**315-2321**	2	BUFFER	
	6	1	**178-2594**	2	BUMPER	
M	7	1	**5C-7261**	4	NUT (M8X1.25-THD)	
	8	1	**5P-4116**	4	WASHER-HARD (8.8X20.5X2-MM THK)	
	9	1	**7X-7729**	12	WASHER (11X25X3-MM THK)	
M	10	1	**8T-0389**	6	LOCKNUT (M10X1.5-THD)	
M	11	1	**8T-4189**	4	BOLT (M8X1.25X20-MM)	
M	12	1	**8T-4196**	4	BOLT (M10X1.5X35-MM)	
	13	1	**8T-4224**	4	WASHER-HARD (8.8X16X2-MM THK)	

M-METRIC PART

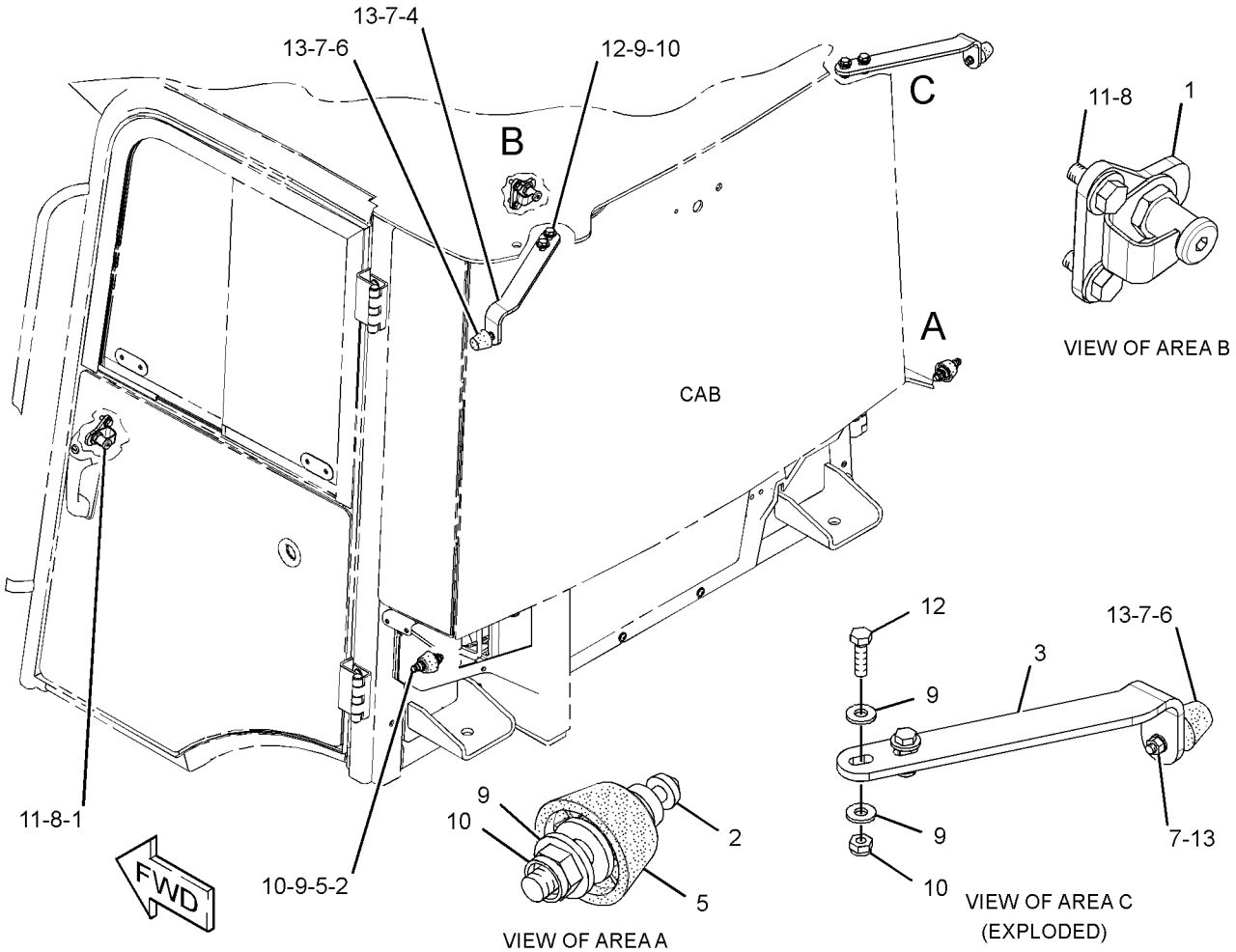

GRAPHIC #1

<END>

g01455686

OPERATOR STATION

257-6373 LINER GP-CAB

S/N: LMD1-UP
PART OF 260-3545 TRIM GP-CAB
AN ATTACHMENT

SMCS-7329 **i02980735**

NOTE	REF NO	GRAPHIC REF	PART NUMBER	QTY	PART NAME 1 2 3 4 5 6 (PRODUCT LEVEL)	SEE PAGE
	1	1	**9U-8263**	1	COVER	
	2	1	**262-9568**	2	COVER-SPEAKER	
	3	1	**263-4795**	1	HEADLINER AS (CAB)	
	4	1	**307-8161**	8	ANCHOR (RATCHET)	
	5	1	**307-8162**	8	STUD-RATCHET	

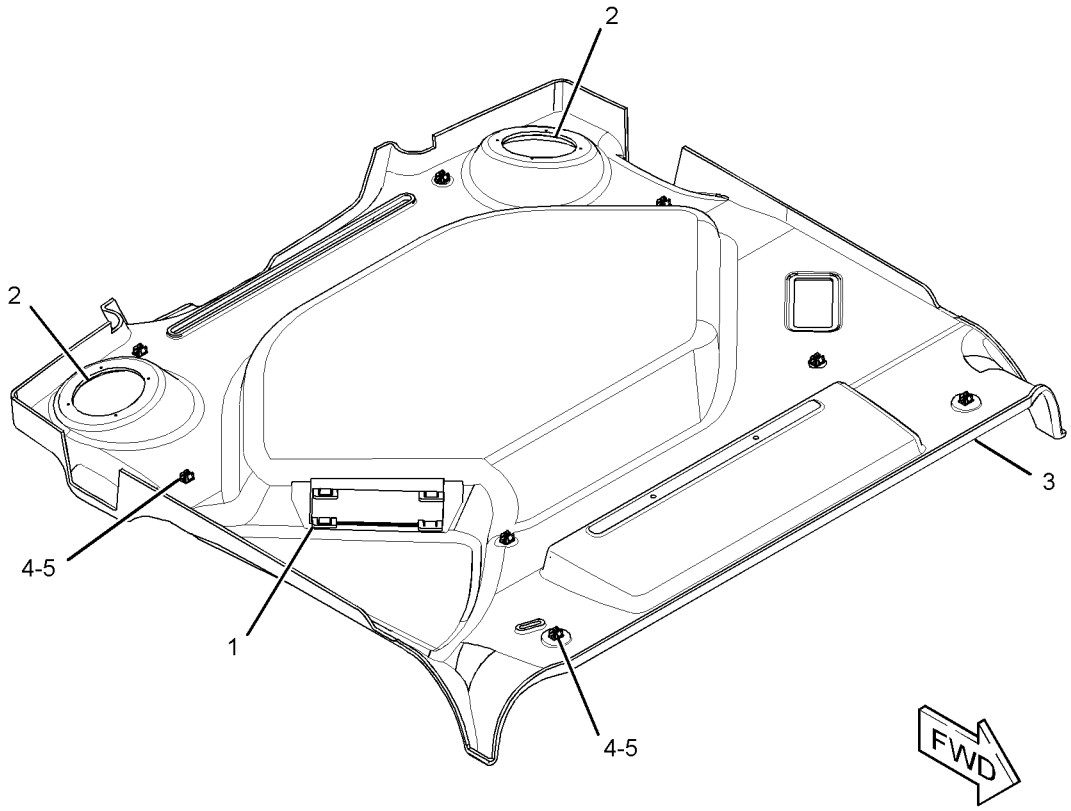

GRAPHIC #1 **<END>** g01530497

OPERATOR STATION

271-7193 LINES GP-AIR CONDITIONER

S/N: LMD1-UP
PART OF 322-5769 AIR CONDITIONER AR
AN ATTACHMENT

SMCS-1808 **i03103116**

NOTE	REF NO	GRAPHIC REF	PART NUMBER	QTY	PART NAME 1 2 3 4 5 6 (PRODUCT LEVEL)	SEE PAGE
	1	1	**315-7790**	1	PLATE	
	2	1	**146-0797**	1	FITTING AS-AIR CONDITIONER	
		1	**3E-4051**	1	CAP-SEAL	
		1	**3E-4057**	1	VALVE AS	
B	3	1	**231-9230**	1	SPACER (8.8X20X8-MM THK)	
	4	1	**257-3226**	1	RECEIVER DRYER AS (REFRIGERANT)	
		1	**189-1707**	1	ORIFICE AS-AIR CONDITIONER	
	5	1	**264-1440**	1	FITTING AS-AIR CONDITIONER	
I	6	1	**274-2062**	1	HOSE AS	
I	7	1	**274-2063**	1	HOSE AS	
I	8	1	**274-2064**	1	HOSE AS	
I	9	1	**274-2065**	1	HOSE AS	
	10	1	**274-5909**	1	ACCUMULATOR-REFRIGERANT	
I	11	1	**300-4506**	1	HOSE AS	
	12	1	**3E-4053**	1	FITTING AS-AIR CONDITIONER	
		1	**3E-4052**	1	CAP-SEAL	
		1	**3E-4058**	1	VALVE AS	
	13	1	**109-1633**	1	CLIP (SLOT)	
	14	1	**109-1634**	1	CLIP (TAB)	
	15	1	**121-5327**	1	GROMMET	
	16	1	**154-2302**	1	SPACER (11X20X15-MM THK)	
	17	1	**174-5907**	1	CLIP	
	18	1	**4D-7735**	1	CLIP	
B	19	1	**4P-7581**	1	CLIP	
	20	1	**313-9198**	1	CLIP	
	21	1	**5K-5338**	1	CLIP	
	22	1	**5P-4116**	1	WASHER-HARD (8.8X20.5X2-MM THK)	
	23	1	**6K-8178**	1	CLIP	
	24	1	**7M-3361**	1	GROMMET	
M	25	1	**7X-2537**	1	BOLT (M8X1.25X35-MM)	
	26	1	**8T-4121**	4	WASHER-HARD (11X21X2.5-MM THK)	
M	27	1	**8T-4133**	1	NUT (M10X1.5-THD)	
M	28	1	**8T-4137**	2	BOLT (M10X1.5X20-MM)	
M	29	1	**8T-4185**	1	BOLT (M10X1.5X50-MM)	
	30	1	**8T-4224**	2	WASHER-HARD (8.8X16X2-MM THK)	
BM	31	1	**8T-4908**	1	BOLT (M8X1.25X25-MM)	
M	32	1	**8T-6466**	1	BOLT (M10X1.5X60-MM)	
	33	1	**8T-6726**	2	CLAMP-HOSE	
	34	1	**9X-7380**	2	SEAL-O-RING	
	35	1	**9X-7381**	4	SEAL-O-RING	
	36	1	**9X-7382**	2	SEAL-O-RING	
	37	1	**9X-7383**	2	SEAL-O-RING	
	38	1	**9X-8250**	1	CLIP	
	39	1	**1P-7009**	1	CLIP	
M	40	1	**8T-4200**	1	BOLT (M8X1.25X16-MM)	
	41	1	**300-4507**	1	PLATE AS	
	42	1	**5P-4115**	1	WASHER-HARD (7.2X19X2-MM THK)	
	43	1	**178-3620**	1	STRAP-DUAL CLAMP	

B-USE AS REQUIRED
I-REFER TO HYDRAULIC INFORMATION SYSTEM
M-METRIC PART

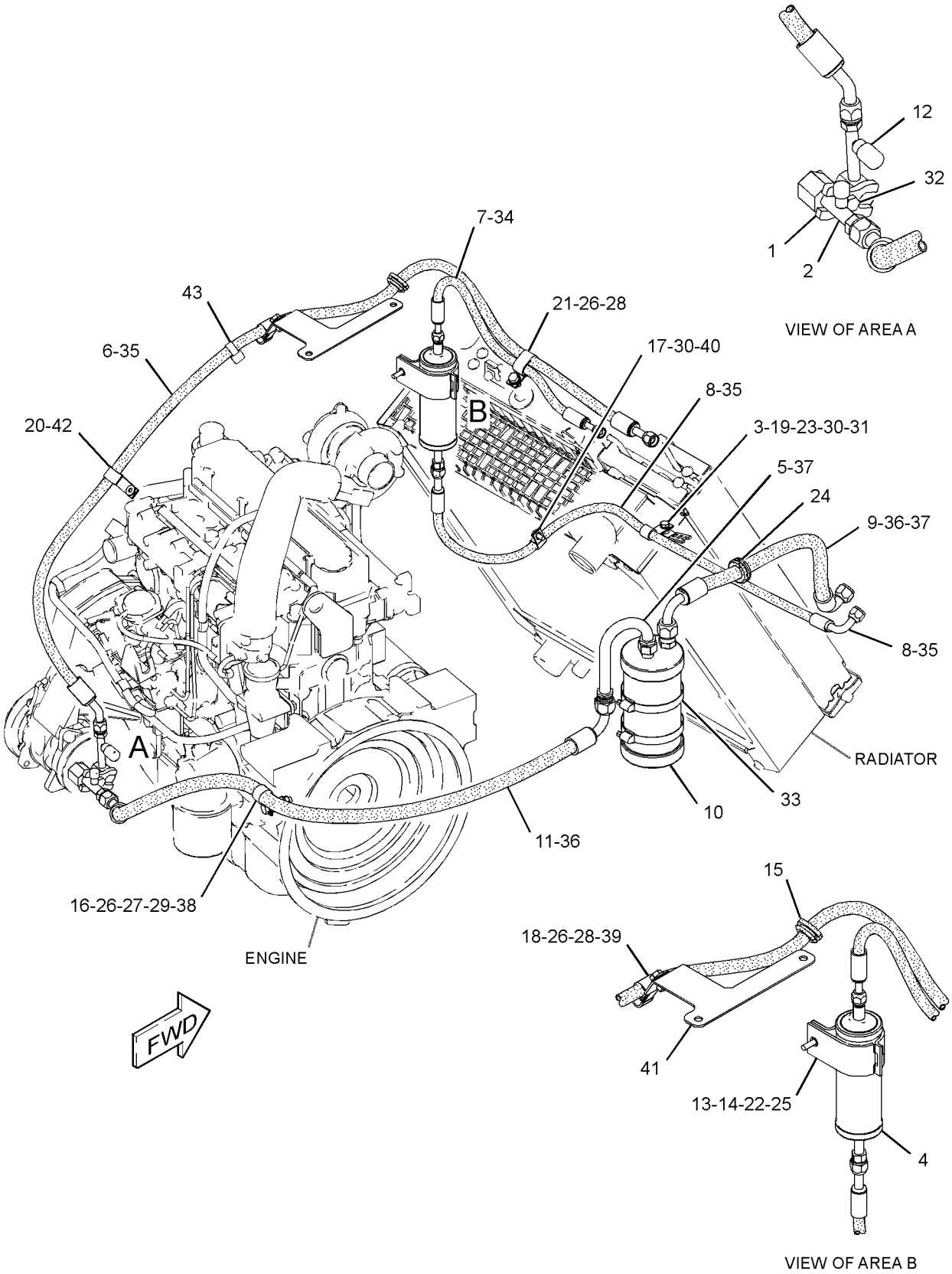

GRAPHIC #1 **<END>** g01588141

OPERATOR STATION

320-6051 LINES GP-CAB HEATER

S/N: LMD1-UP

PART OF 322-5769 AIR CONDITIONER AR, 322-5768 HEATER AR-CAB

AN ATTACHMENT

SMCS-7304 **i03195525**

NOTE	REF NO	GRAPHIC REF	PART NUMBER	QTY	PART NAME 1 2 3 4 5 6 (PRODUCT LEVEL)	SEE PAGE
	1	1	**3K-7928**	1	ELBOW	
	2	1	**6G-2263**	6	SPACER (10.5X19X28.5-MM THK)	
	3	1	**6K-0806**	1	STRAP-CABLE	
	4	1	**131-4798**	1	SPACER (6.6X25X27-MM THK)	
	5	1	**178-3620**	1	STRAP-DUAL CLAMP	
	6	1	**240-0635**	1	ADAPTER	
	7	1	**279-2067**	1	PLATE AS	
	8	1	**135-2221**	1	JOINT	
	9	1	**130-4841**	2	GROMMET	
	10	1	**5D-1026**	4	CLAMP-HOSE (RETAINER)	
	11	1	**5P-4115**	1	WASHER-HARD (7.2X19X2-MM THK)	
	12	1	**5P-4116**	4	WASHER-HARD (8.8X20.5X2-MM THK)	
	13	1	**6D-1641**	1	CLIP	
	14	1	**8T-4121**	4	WASHER-HARD (11X21X2.5-MM THK)	
M	15	1	**8T-4137**	1	BOLT (M10X1.5X20-MM)	
M	16	1	**8T-4172**	3	BOLT (M10X1.5X80-MM)	
M	17	1	**8T-4189**	1	BOLT (M8X1.25X20-MM)	
M	18	1	**8T-6912**	1	BOLT (M8X1.25X50-MM)	
M	19	1	**9X-2480**	1	BOLT (M6X1X45-MM)	
	20	1	**9X-8250**	6	CLIP	
E	21	1	**251-1478**		GUARD (57-CM)	
E	22	1	**5P-0767**		HOSE (185-CM)	
E	22A	1	**5P-0767**		HOSE (217-CM)	
M	23	1	**5C-7261**	1	NUT (M8X1.25-THD)	
	24	1	**6P-6591**	1	GROMMET	
	25	1	**7I-2673**	1	STRAP-CABLE	
M	26	1	**8T-7547**	1	BOLT (M8X1.25X30-MM)	

E-ORDER BY THE CENTIMETER
M-METRIC PART

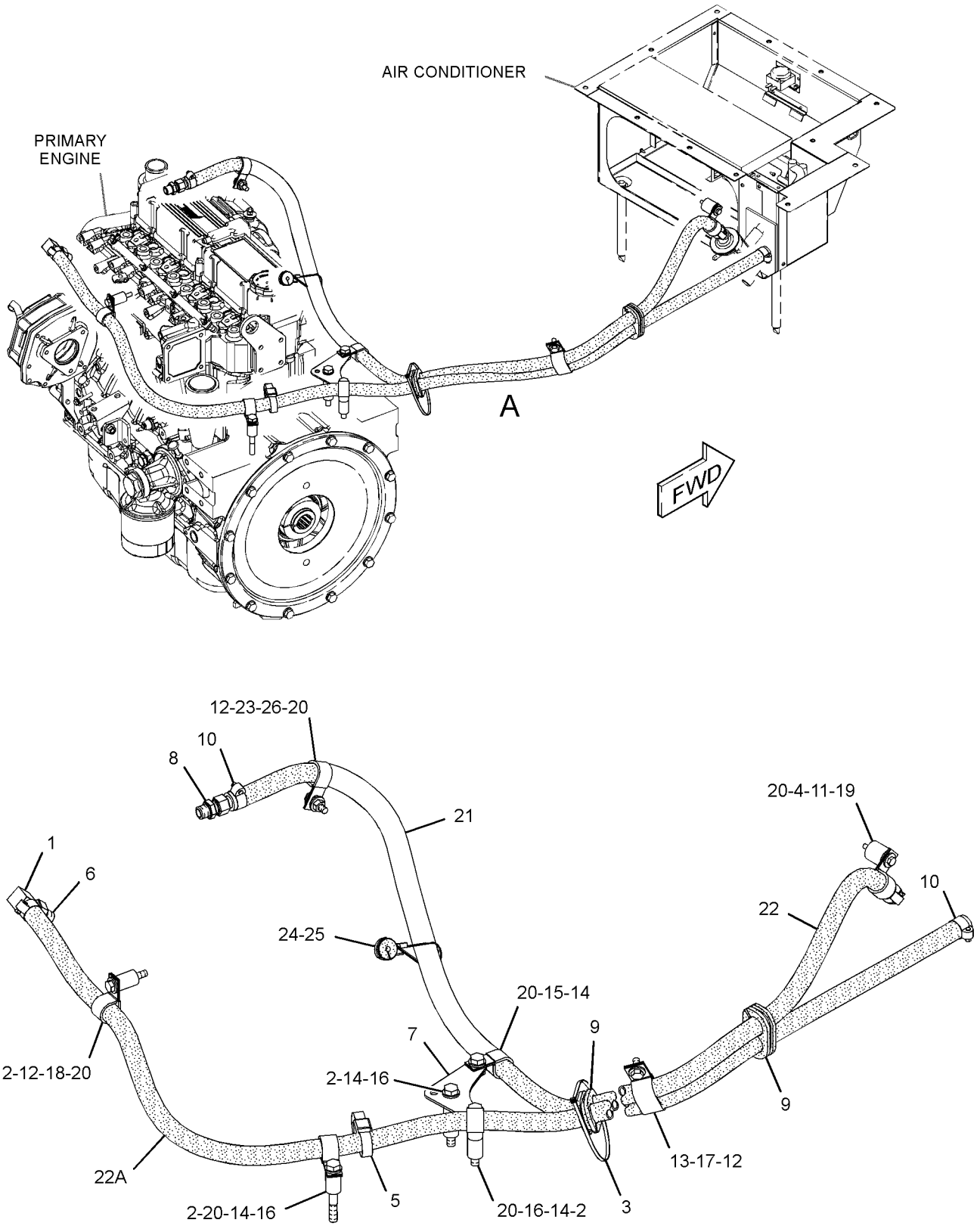

VIEW OF AREA A

GRAPHIC #1 **<END>** g01613213

OPERATOR STATION

6V-1970 LITERATURE GP

S/N: LMD1-UP

PART OF 322-4878 CHASSIS AR

SMCS-7300, 7400 **i02036003**

NOTE	PART NUMBER	QTY	PART NAME 1 2 3 4 5 6 (PRODUCT LEVEL)	SEE PAGE
	7F-3400	1	BAG-POLYETHYLENE	
	5P-8500	2	KEY	
	5P-7958	1	SLEEVE-CABLE SPLICE	

<END>

OPERATOR STATION

257-8403 MIRROR GP-REAR VIEW—INTERIOR

S/N: LMD1-UP

PART OF 260-3556 MIRROR GP-REAR VIEW

AN ATTACHMENT

SMCS-7319 **i02179710**

NOTE	REF NO	GRAPHIC REF	PART NUMBER	QTY	PART NAME 1 2 3 4 5 6 (PRODUCT LEVEL)	SEE PAGE
	1	1	**3B-4503**	1	LOCKWASHER	
M	2	1	**5C-2890**	1	NUT (M6X1-THD)	
	3	1	**8T-4205**	2	WASHER-HARD (7.2X14.5X2-MM THK)	

M-METRIC PART

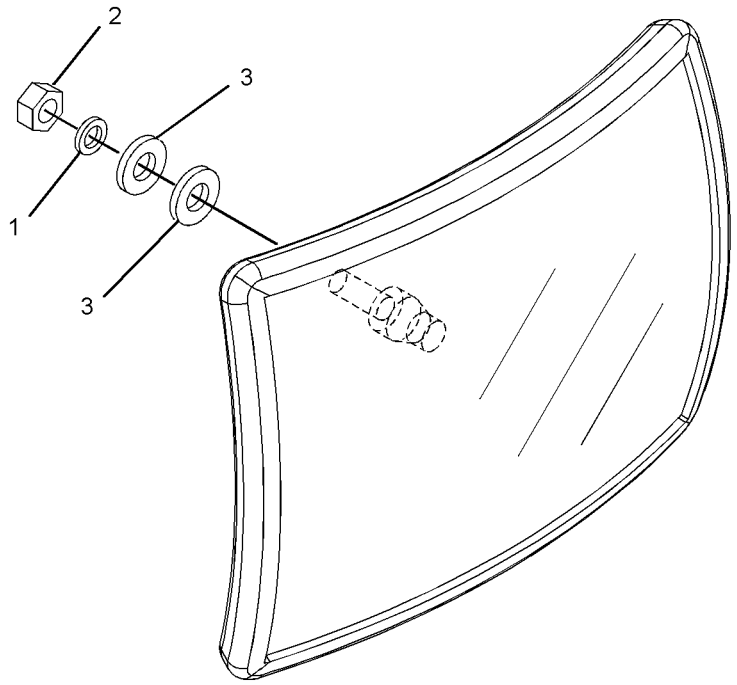

GRAPHIC #1 **<END>** g01105769

260-3556 MIRROR GP-REAR VIEW—INTERIOR

S/N: LMD1-UP

PART OF 295-5275, 295-5276 OPERATOR AR-ENCLOSED ROPS

AN ATTACHMENT

SMCS-7319 **i02739228**

NOTE	REF NO	GRAPHIC REF	PART NUMBER	QTY	PART NAME 1 2 3 4 5 6 (PRODUCT LEVEL)	SEE PAGE
Y	1	1	**257-8403**	1	MIRROR GP-REAR VIEW (INTERIOR)	398
	2	1	**275-8655**	1	PLATE	
M	3	1	**5C-2890**	2	NUT (M6X1-THD)	
	4	1	**9X-8256**	2	WASHER (6.6X12X2-MM THK)	

M-METRIC PART
Y-SEPARATE ILLUSTRATION

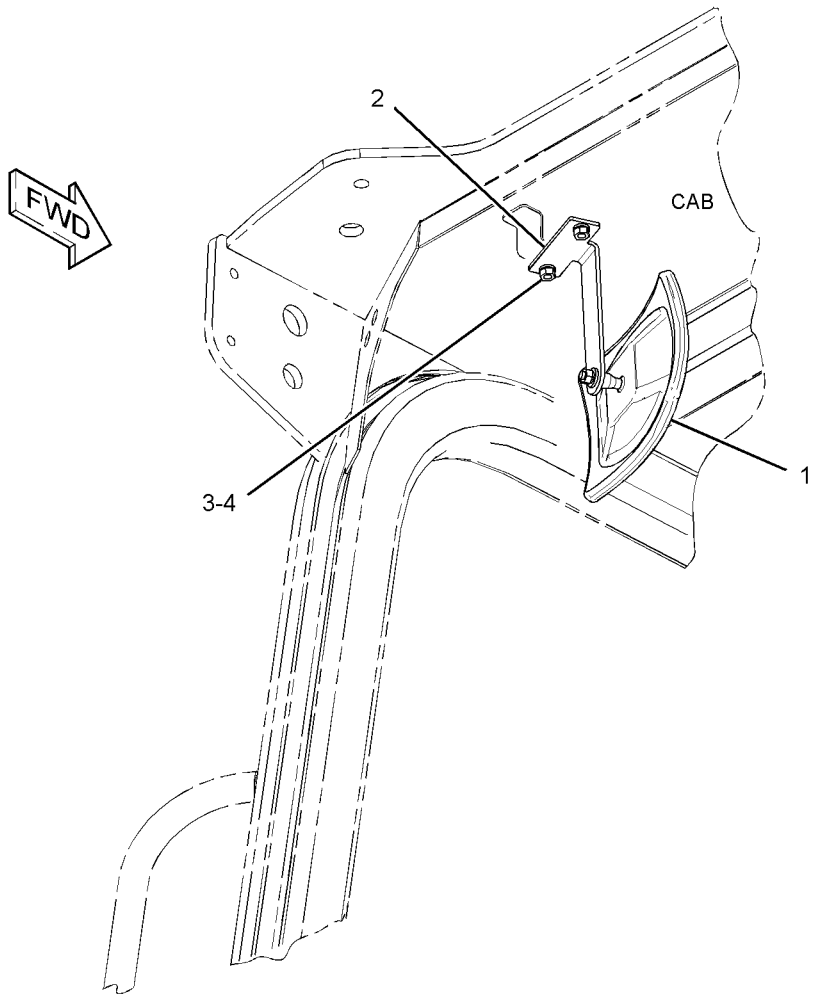

GRAPHIC #1 **<END>** g01378525

OPERATOR STATION

260-3558 MIRROR GP-REAR VIEW—EXTERIOR

S/N: LMD1-UP

PART OF 295-5275, 295-5276 OPERATOR AR-ENCLOSED ROPS, 322-5766 OPERATOR AR-OPEN ROPS

AN ATTACHMENT

SMCS-7319 **i02858230**

NOTE	REF NO	GRAPHIC REF	PART NUMBER	QTY	PART NAME 1 2 3 4 5 6 (PRODUCT LEVEL)	SEE PAGE
	1	1	**201-9985**	2	MIRROR (EXTERIOR)	
	2	1	**297-4353**	1	BRACKET AS (LH)	
	3	1	**297-4354**	1	BRACKET AS (RH)	
M	4	1	**8T-4138**	4	BOLT (M6X1X20-MM)	
	5	1	**9X-8256**	4	WASHER (6.6X12X2-MM THK)	

M-METRIC PART

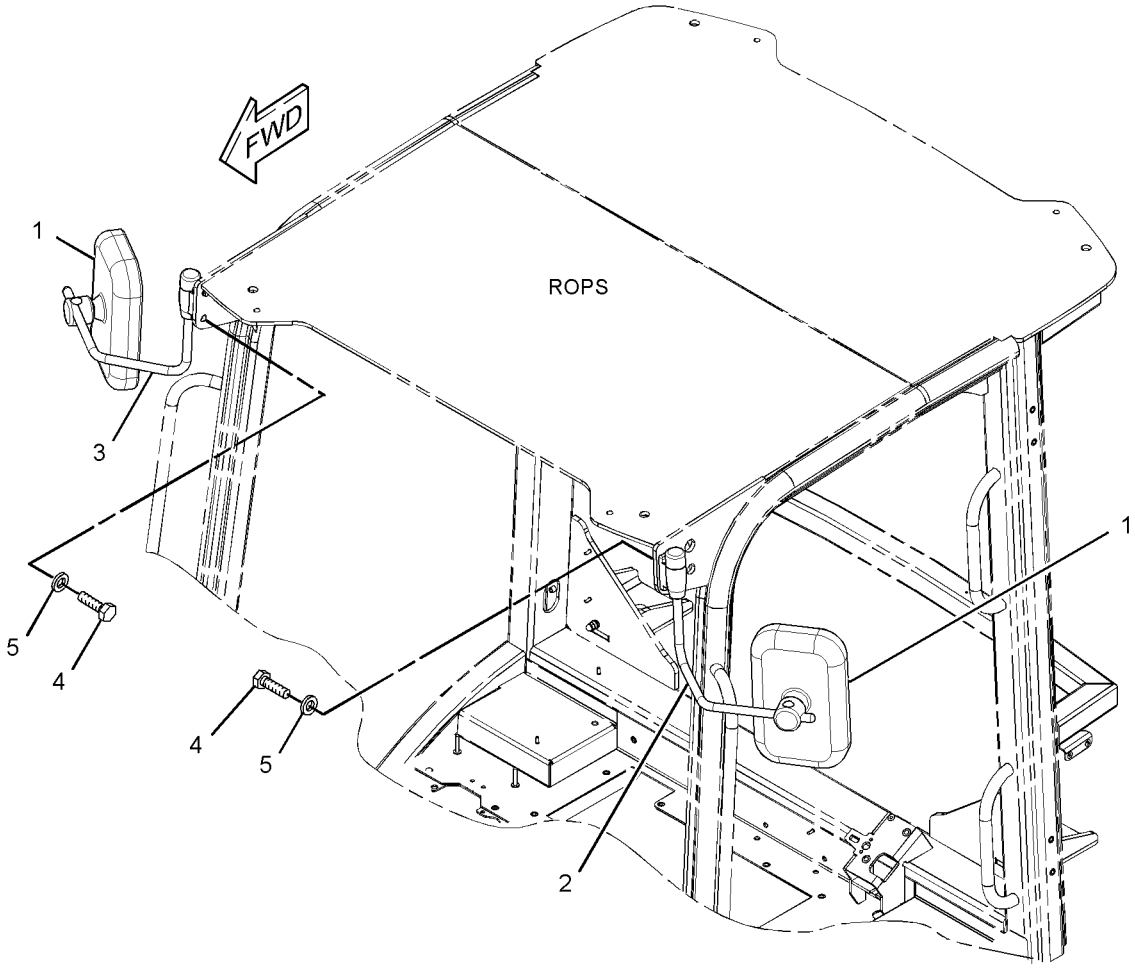

GRAPHIC #1 **<END>** g01364520

OPERATOR STATION

241-9102 MOTOR GP-WINDOW WIPER—FRONT

S/N: LMD1-UP
12-VOLT
PART OF 257-6375 WIPER GP-WINDOW
AN ATTACHMENT

SMCS-7305 **i02005910**

NOTE	REF NO	GRAPHIC REF	PART NUMBER	QTY	PART NAME 1 2 3 4 5 6 (PRODUCT LEVEL)	SEE PAGE
M	1	1	**5C-7261**	2	NUT (M8X1.25-THD)	
	2	1	**3F-9556**	2	LOCKWASHER	
	3	1	**102-8805**	1	KIT-RECEPTACLE (6-PIN)	
					(INCLUDES RECEPTACLE AS & WEDGE)	
	4	1	**186-3735**	5	PIN-CONNECTOR (16-GA TO 18-GA)	
	5	1	**8T-8737**	1	PLUG-SEAL	
	6	1	**206-5823**	2	CAP	
	7	1	**152-7691**	1	MOTOR GP-WINDOW WIPER	
		1	**9G-3695**	1	PLUG	
		1	**186-3735**	1	PIN-CONNECTOR (16-GA TO 18-GA)	
		1	**102-8805**	1	KIT-RECEPTACLE (6-PIN)	
					(INCLUDES RECEPTACLE AS & WEDGE)	

M-METRIC PART

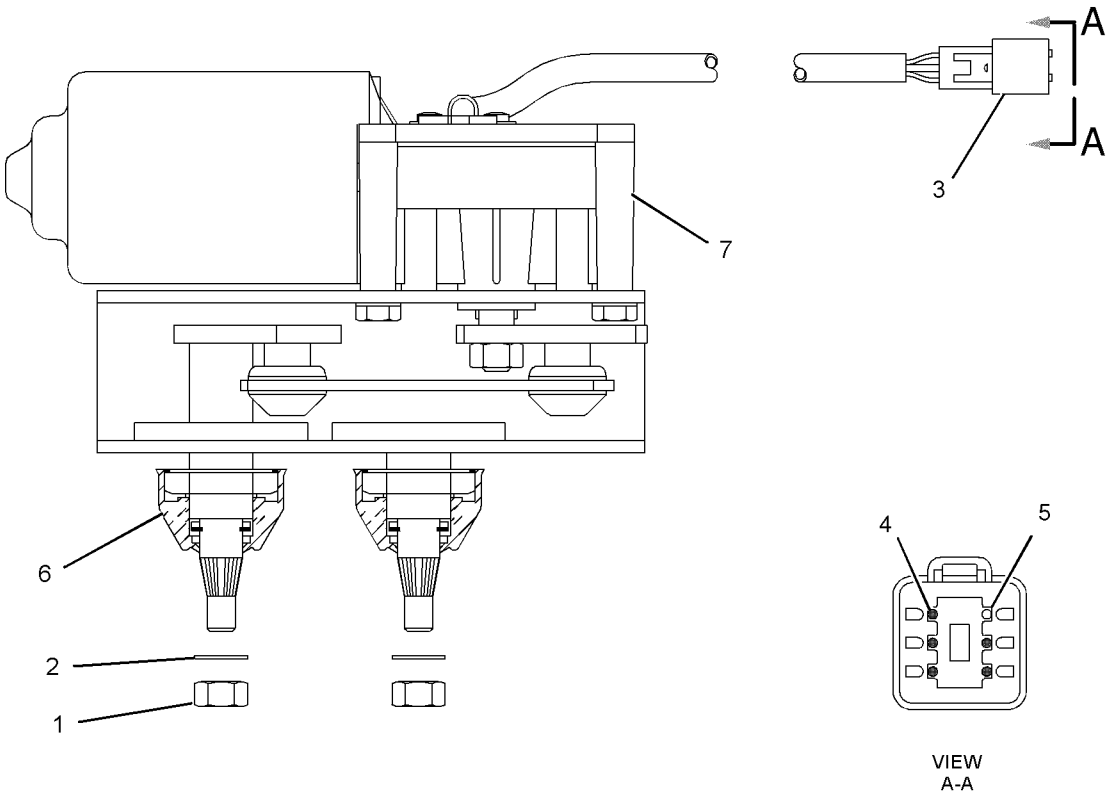

GRAPHIC #1 **<END>** g01038169

OPERATOR STATION

269-0416 MOTOR GP-WINDOW WIPER–REAR

S/N: LMD1-UP
PART OF 257-6375 WIPER GP-WINDOW
AN ATTACHMENT

SMCS-7305 **i02700442**

NOTE	REF NO	GRAPHIC REF	PART NUMBER	QTY	PART NAME 1 2 3 4 5 6 (PRODUCT LEVEL)	SEE PAGE
	1	1	**102-8804**	1	KIT-RECEPTACLE (4-PIN)	
					(INCLUDES RECEPTACLE AS & WEDGE)	
	2	1	**186-3735**	4	PIN-CONNECTOR (16-GA TO 18-GA)	
	3	1	**263-3823**	1	CAP-WIPER	
	4	1	**3F-9556**	1	LOCKWASHER	
M	5	1	**5C-7261**	1	NUT (M8X1.25-THD)	

M-METRIC PART

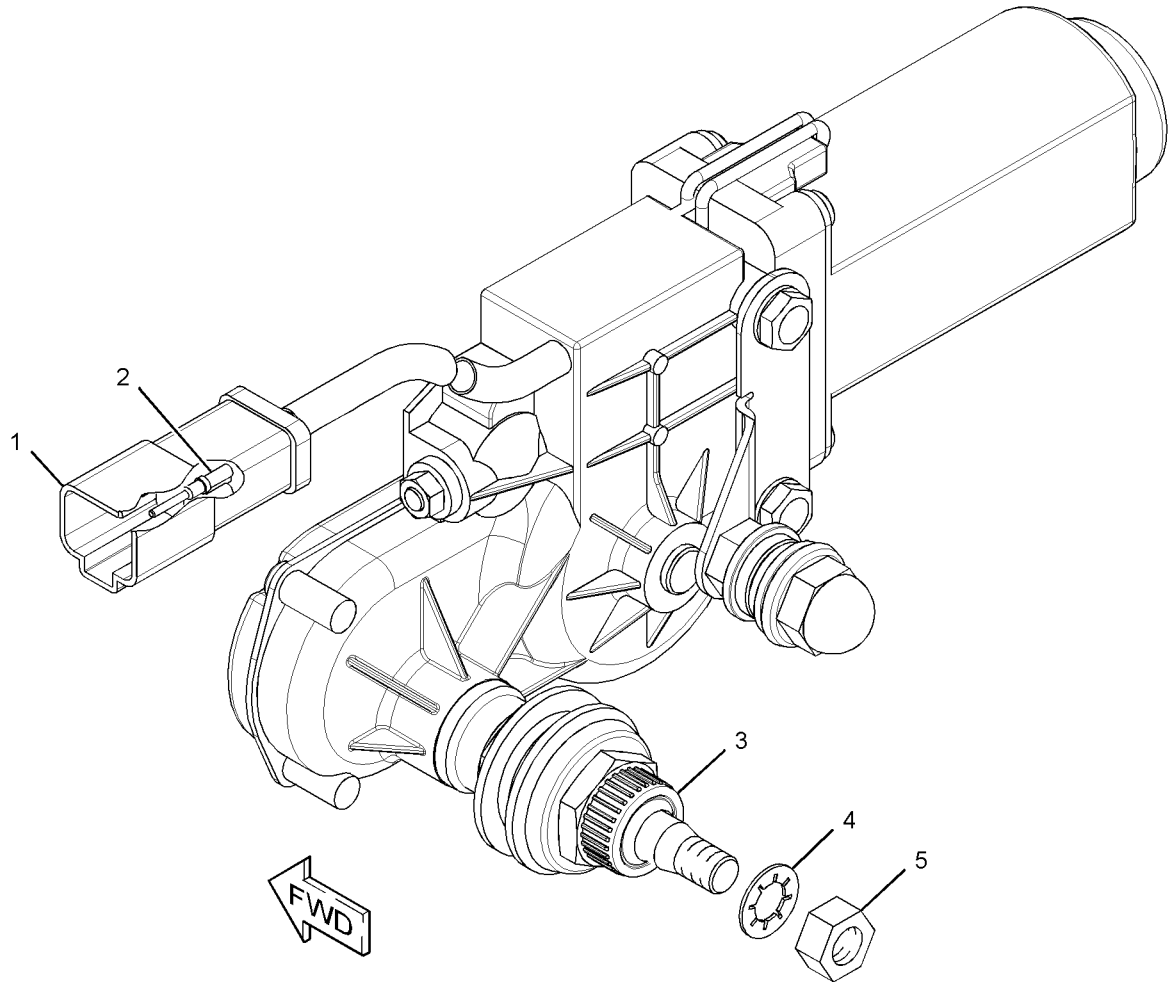

GRAPHIC #1 **<END>** g01357195

OPERATOR STATION

256-9635 MOUNTING GP-CAB

S/N: LMD1-UP

PART OF 322-4878 CHASSIS AR

SMCS-7301 **i02698788**

NOTE	REF NO	GRAPHIC REF	PART NUMBER	QTY	PART NAME 1 2 3 4 5 6 (PRODUCT LEVEL)	SEE PAGE
	1	1	**3E-4883**	4	SLEEVE	
	2	1	**9W-9931**	4	MOUNT AS	
	3	1	**217-2604**	4	WASHER (20.5X114X10-MM THK)	
M	4	1	**7X-2532**	4	BOLT (M20X2.5X130-MM)	
	5	1	**8T-4123**	8	WASHER (22X35X3.5-MM THK)	
M	6	1	**8T-4131**	4	NUT (M20X2.5-THD)	

M-METRIC PART

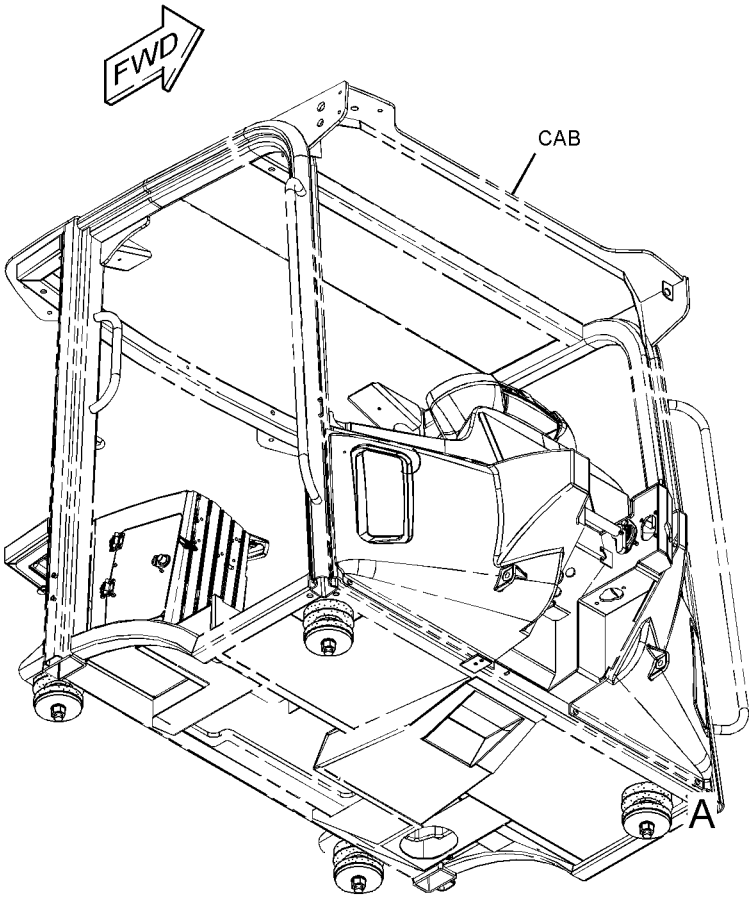

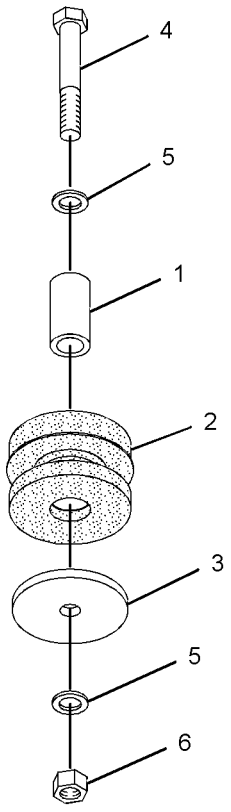

VIEW OF AREA A
(EXPLODED)

GRAPHIC #1 **<END>** g01369076

OPERATOR STATION

260-5499 MOUNTING GP-RADIO

S/N: LMD1-UP

PART OF 295-5275, 295-5276 OPERATOR AR-ENCLOSED ROPS

AN ATTACHMENT

SMCS-7338 **i02816679**

NOTE	REF NO	GRAPHIC REF	PART NUMBER	QTY	PART NAME 1 2 3 4 5 6 (PRODUCT LEVEL)	SEE PAGE
	1	1	**4E-1411**	1	BUSHING-TERMINAL	
	2	1	**8E-1118**	1	ANTENNA AS	
	3	1	**141-2759**	1	FUSE (5-AMPERE)	
	4	1	**154-6739**	1	CABLE AS	
	5	1	**206-1345**	1	STRAP-CABLE	
	6	1	**260-5498**	1	HARNESS AS-RADIO	
	7	1	**262-9567**	2	SPEAKER	
	8	1	**295-7730**	1	PLATE	
	9	1	**3K-8785**	1	GROMMET	
M	10	1	**5C-2890**	4	NUT (M6X1-THD)	
	11	1	**5P-4115**	4	WASHER-HARD (7.2X19X2-MM THK)	
	12	1	**5P-8524**	4	GROMMET	

M-METRIC PART

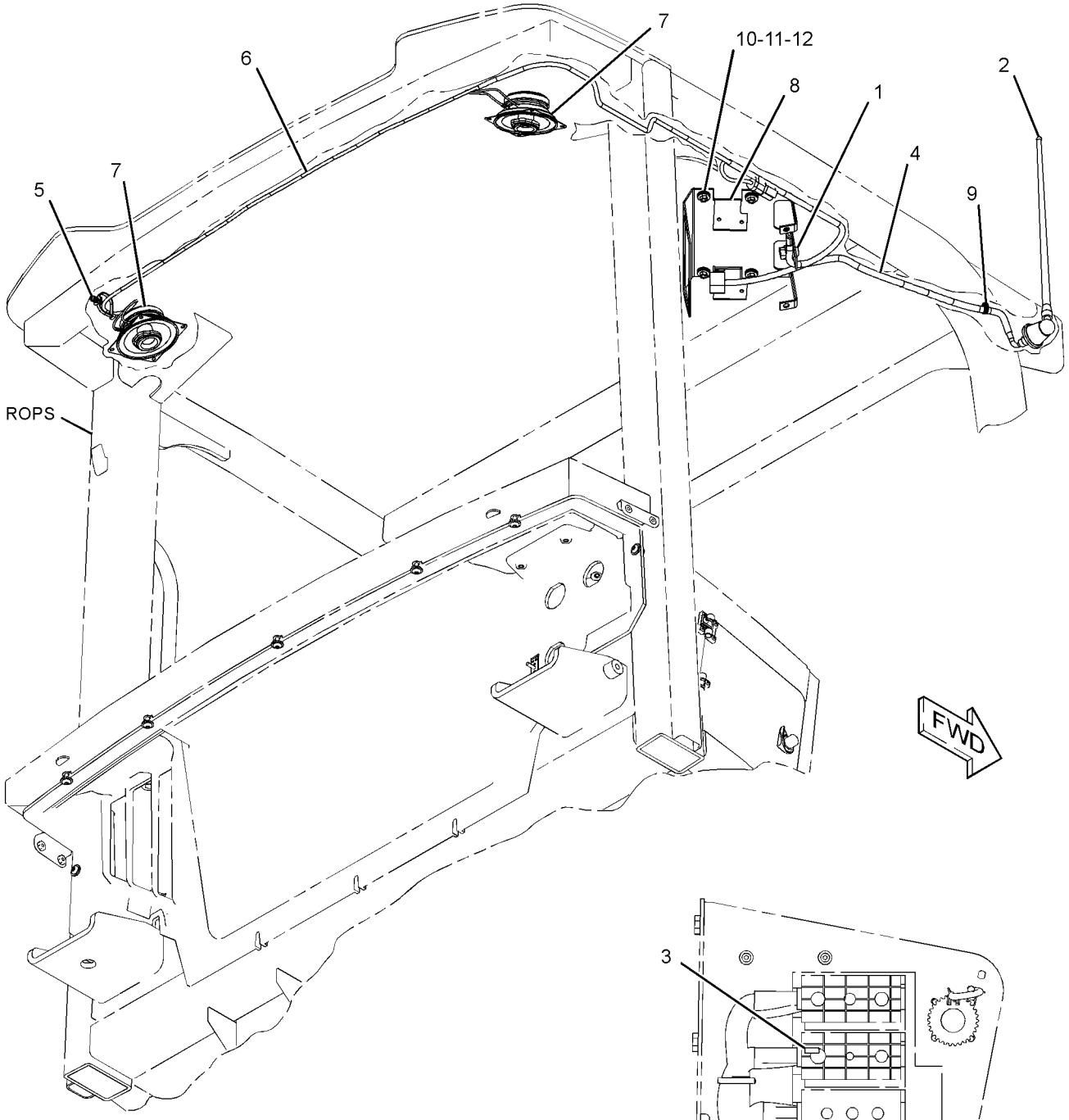

RIGHT SIDE VIEW
(FUSE PANEL)

GRAPHIC #1 **<END>** g01406257

OPERATOR STATION

295-5275 OPERATOR AR-ENCLOSED ROPS—COMFORT CAB

S/N: LMD1-UP

AN ATTACHMENT

SMCS-7301 **i03147242**

NOTE	PART NUMBER	QTY	PART NAME 1 2 3 4 5 6 (PRODUCT LEVEL)	SEE PAGE
Y	*295-5845*	1	CAB AR-ENCLOSED ROPS (COMFORT)	361
Y	*269-8472*	1	CONTROL GP-PARKING BRAKE	228
Y	*259-1644*	1	CONTROL GP-STEERING (ADJUSTABLE COLUMN)	375
Y	*260-3558*	1	MIRROR GP-REAR VIEW (EXTERIOR)	400
Y	*260-3556*	1	MIRROR GP-REAR VIEW (INTERIOR)	399
Y	*260-5499*	1	MOUNTING GP-RADIO	404
Y	*260-5186*	1	PANEL GP-INSTRUMENT (GAUGE CLUSTER, SWITCHES)	409
Y	*260-9830*	1	PLATE GP-SEAT	412
Y	*279-5724*	1	SEAT & MOUNTING GP	415
Y	*260-9827*	1	SUPPRESSION GP-SOUND (CAB)	425
Y	*266-7112*	1	SWITCH GP-WIPER	118
Y	*279-5068*	1	TANK GP-WINDOW WASHER	426
Y	*260-3545*	1	TRIM GP-CAB (ENCLOSED ROPS)	428
Y	*270-1901*	1	VISOR GP-CAB	435
Y	*257-6375*	1	WIPER GP-WINDOW	436
Y	*260-2594*	1	WIRING GP-CAB	121
Y	*260-5334*	1	WIRING GP-CAB (ROOF)	123

Y-SEPARATE ILLUSTRATION

<END>

295-5276 OPERATOR AR-ENCLOSED ROPS—DELUXE CAB

S/N: LMD1-UP

FOR USE WITH 260-3556—PAGE 399

AN ATTACHMENT

SMCS-7301 **i03147260**

NOTE	PART NUMBER	QTY	PART NAME 1 2 3 4 5 6 (PRODUCT LEVEL)	SEE PAGE
Y	*295-5846*	1	CAB AR-ENCLOSED ROPS (DELUXE)	361
Y	*269-8472*	1	CONTROL GP-PARKING BRAKE	228
Y	*259-1644*	1	CONTROL GP-STEERING (ADJUSTABLE COLUMN)	375
Y	*260-3558*	1	MIRROR GP-REAR VIEW (EXTERIOR)	400
Y	*260-3556*	1	MIRROR GP-REAR VIEW (INTERIOR)	399
Y	*260-5499*	1	MOUNTING GP-RADIO	404
Y	*260-5186*	1	PANEL GP-INSTRUMENT (GAUGE CLUSTER, SWITCHES)	409
Y	*260-9830*	1	PLATE GP-SEAT	412
Y	*279-5725*	1	SEAT & MOUNTING GP	416
Y	*260-9827*	1	SUPPRESSION GP-SOUND (CAB)	425
Y	*266-7112*	1	SWITCH GP-WIPER	118
Y	*279-5068*	1	TANK GP-WINDOW WASHER	426
Y	*260-3545*	1	TRIM GP-CAB (ENCLOSED ROPS)	428
Y	*270-1901*	1	VISOR GP-CAB	435
Y	*257-6375*	1	WIPER GP-WINDOW	436
Y	*260-2594*	1	WIRING GP-CAB	121
Y	*260-5334*	1	WIRING GP-CAB (ROOF)	123

Y-SEPARATE ILLUSTRATION

<END>

OPERATOR STATION

322-5766 OPERATOR AR-OPEN ROPS

S/N: LMD1-UP

AN ATTACHMENT

SMCS-7323 **i02987987**

NOTE	PART NUMBER	QTY	PART NAME 1 2 3 4 5 6 (PRODUCT LEVEL)	SEE PAGE
Y	*277-2528*	1	CANOPY AR-OPEN ROPS	363
Y	*269-8472*	1	CONTROL GP-PARKING BRAKE	228
Y	*259-1643*	1	CONTROL GP-STEERING (FIXED COLUMN)	374
Y	*255-5988*	1	COOLER & MTG GP-HYDRAULIC OIL	249
Y	*315-2631*	1	GUARD GP-BELT	18
Y	*257-3946*	1	LINES GP-HYDRAULIC OIL COOLER	290
Y	*260-3558*	1	MIRROR GP-REAR VIEW (EXTERIOR)	400
Y	*304-7708*	1	PANEL GP-FUSE (CONSOLE, RH)	103
Y	*260-5186*	1	PANEL GP-INSTRUMENT (GAUGE CLUSTER, SWITCHES)	409
Y	*260-9830*	1	PLATE GP-SEAT	412
Y	*279-5723*	1	SEAT & MOUNTING GP	414
Y	*260-3544*	1	TRIM GP-CAB (OPEN ROPS)	428
Y	*270-1901*	1	VISOR GP-CAB	435
Y	*260-2594*	1	WIRING GP-CAB	121
Y	*291-4622*	1	WIRING GP-CAB (ROOF)	128
	271-2175	1	BOLT GP-ENGINE MOUNTING	
M	**8T-4139**	3	BOLT (M12X1.75X30-MM)	
	8T-4223	3	WASHER-HARD (13.5X25.5X3-MM THK)	
	306-6024	1	COVER GP	
M	**8T-4200**	4	BOLT (M8X1.25X16-MM)	
	8T-4224	4	WASHER-HARD (8.8X16X2-MM THK)	
	288-3526	1	PLATE	
	297-8764	1	GASKET	

M-METRIC PART
Y-SEPARATE ILLUSTRATION

<END>

OPERATOR STATION

293-0547 PANEL GP-CAB–FRONT

S/N: LMD1-UP

PART OF 295-5845, 295-5846 CAB AR-ENCLOSED ROPS, 277-2528 CANOPY AR-OPEN ROPS AN ATTACHMENT

SMCS-7301 **i02738251**

NOTE	REF NO	GRAPHIC REF	PART NUMBER	QTY	PART NAME 1 2 3 4 5 6 (PRODUCT LEVEL)	SEE PAGE
	1	1	**293-0543**	1	GLASS	
	2	1	**293-0544**	1	PANEL AS	
	3	1	**293-0545**	1	GLASS	
	4	1	**293-0546**	1	PANEL AS	
	5	1	**295-0001**	2	GROMMET	
M	6	1	**9X-2044**	12	SCREW-TRUSS HEAD (M6X1X16-MM)	
	7	1	**9X-8267**	12	WASHER (6.6X12X2-MM THK)	

M-METRIC PART

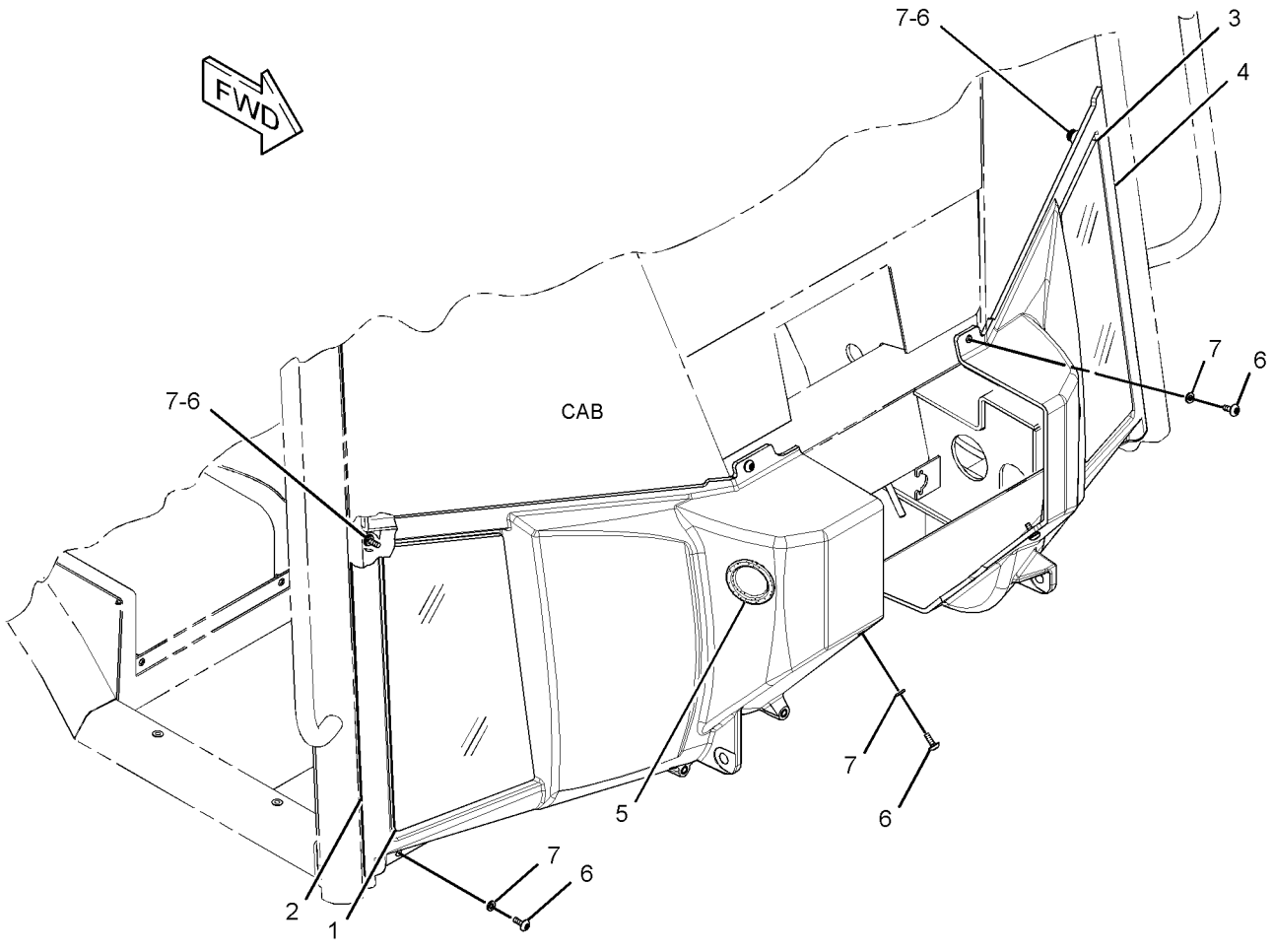

GRAPHIC #1 **<END>** g01381195

260-5186 PANEL GP-INSTRUMENT—GAUGE CLUSTER, SWITCHES

S/N: LMD1-UP

PART OF 295-5275, 295-5276 OPERATOR AR-ENCLOSED ROPS, 322-5766 OPERATOR AR-OPEN ROPS

AN ATTACHMENT

SMCS-7451 **i02993222**

NOTE	REF NO	GRAPHIC REF	PART NUMBER	QTY	PART NAME 1 2 3 4 5 6 (PRODUCT LEVEL)	SEE PAGE
	1	1	**2T-3360**	1	BUTTON AS-HORN	
	2	1	**109-2356**	4	PLUG	
	3	1	**261-5042**	1	SWITCH AS-ROCKER (ROADING LIGHTS, HEAD, SIDE)	
	4	1	**261-5043**	1	SWITCH AS-ROCKER (HAZARD WARNING LIGHTS)	
	5	1	**261-5048**	1	SWITCH AS-ROCKER (FOG LIGHT, REAR)	
	6	1	**261-5050**	1	SWITCH AS-ROCKER (WARNING BEACON)	
	7	1	**261-5051**	1	SWITCH AS-ROCKER (STARTING AID)	
	8	1	**269-5479**	1	MODULE GP-DISPLAY (INSTRUMENT CLUSTER)	
	9	1	**273-9190**	1	SWITCH AS-MULTIFUNCTION (HD LIGHT, TURN SIG, WDO WIPER) (COLUMN)	
B	10	1	**273-9191**	1	BRACKET-MOUNTING	
B	11	1	**273-9192**	1	COVER	
B	12	1	**298-6434**	2	SCREW (M5X0.8X12-MM)	
BM	13	1	**3E-4302**	1	SCREW-FLAT HEAD (M4X0.7X10-MM)	

B-USE AS REQUIRED
M-METRIC PART

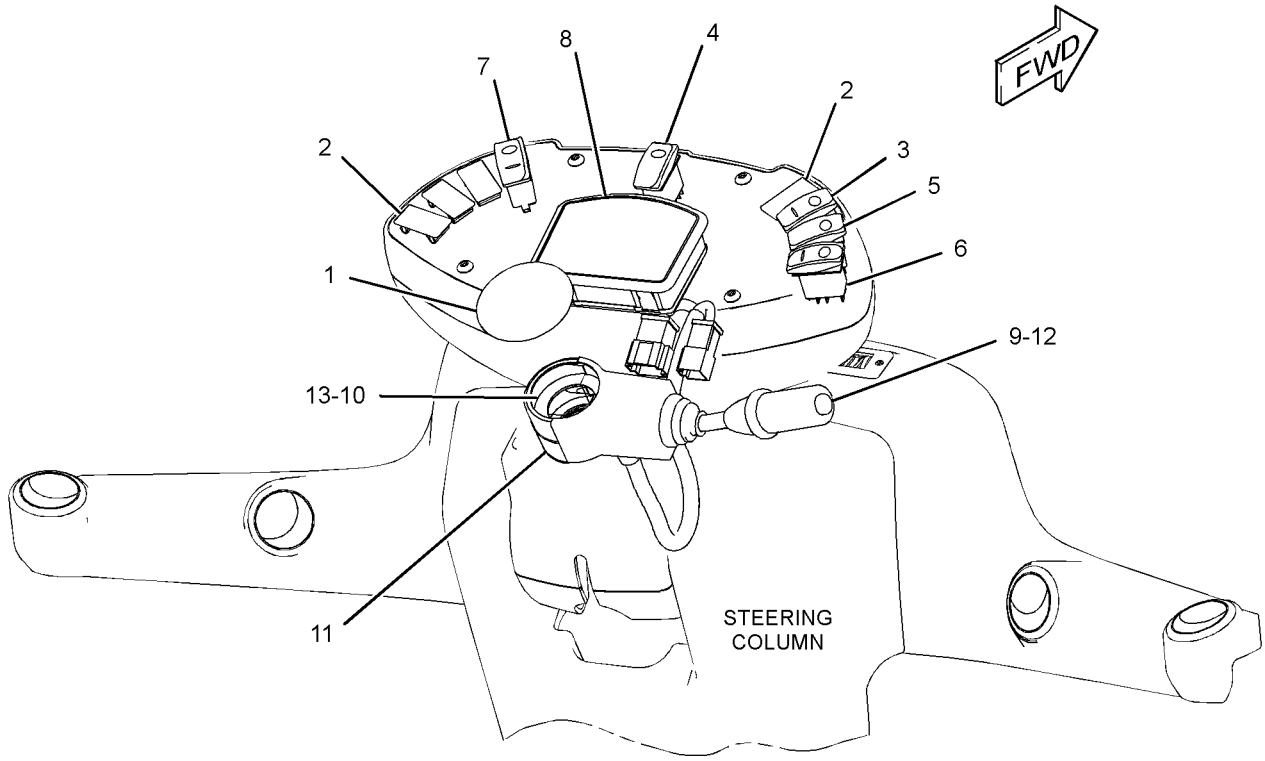

GRAPHIC #1 **<END>** g01360957

OPERATOR STATION

257-6370 PEDAL GP-GOVERNOR

S/N: LMD1-UP

PART OF 295-5535 CONTROL & MTG GP-PEDAL

AN ATTACHMENT

SMCS-1276 **i02980733**

NOTE	REF NO	GRAPHIC REF	PART NUMBER	QTY	PART NAME 1 2 3 4 5 6 (PRODUCT LEVEL)	SEE PAGE
	1	1	**233-7948**	1	BEARING	
	2	1	**266-1467**	1	SENSOR GP-POSITION (ROTARY) (THROTTLE)	
		1	**102-8803**	1	KIT-RECEPTACLE (3-PIN)	
					(INCLUDES RECEPTACLE AS & WEDGE)	
		1	**9X-3401**	3	PIN-CONNECTOR (16-GA TO 18-GA)	
					—OR—	
		1	**126-1767**	3	PIN-CONNECTOR (14-GA)	
	3	1	**267-1265**	1	PEDAL AS	
	4	1	**268-5309**	1	PIN	
	5	1	**275-1939**	1	BRACKET AS	
	6	1	**275-2201**	1	ACTUATOR AS	
	7	1	**275-5636**	1	PLATE AS	
	8	1	**295-5526**	1	SPRING	
	9	1	**1S-1125**	5	BEARING-SLEEVE	
	10	1	**4H-0094**	2	RING-RETAINING	
M	11	1	**5C-2890**	1	NUT (M6X1-THD)	
M	12	1	**5C-7261**	1	NUT (M8X1.25-THD)	
	13	1	**5P-4116**	1	WASHER-HARD (8.8X20.5X2-MM THK)	
M	14	1	**8T-4138**	2	BOLT (M6X1X20-MM)	
M	15	1	**8T-4154**	1	BOLT (M8X1.25X35-MM)	
M	16	1	**8T-4971**	1	BOLT (M6X1X30-MM)	
	17	1	**9X-8256**	2	WASHER (6.6X12X2-MM THK)	
	18	1	**8T-0328**	2	WASHER-HARD (5.5X10X1-MM THK)	
M	19	1	**6V-2314**	2	BOLT (M5X0.8X35-MM)	

M-METRIC PART

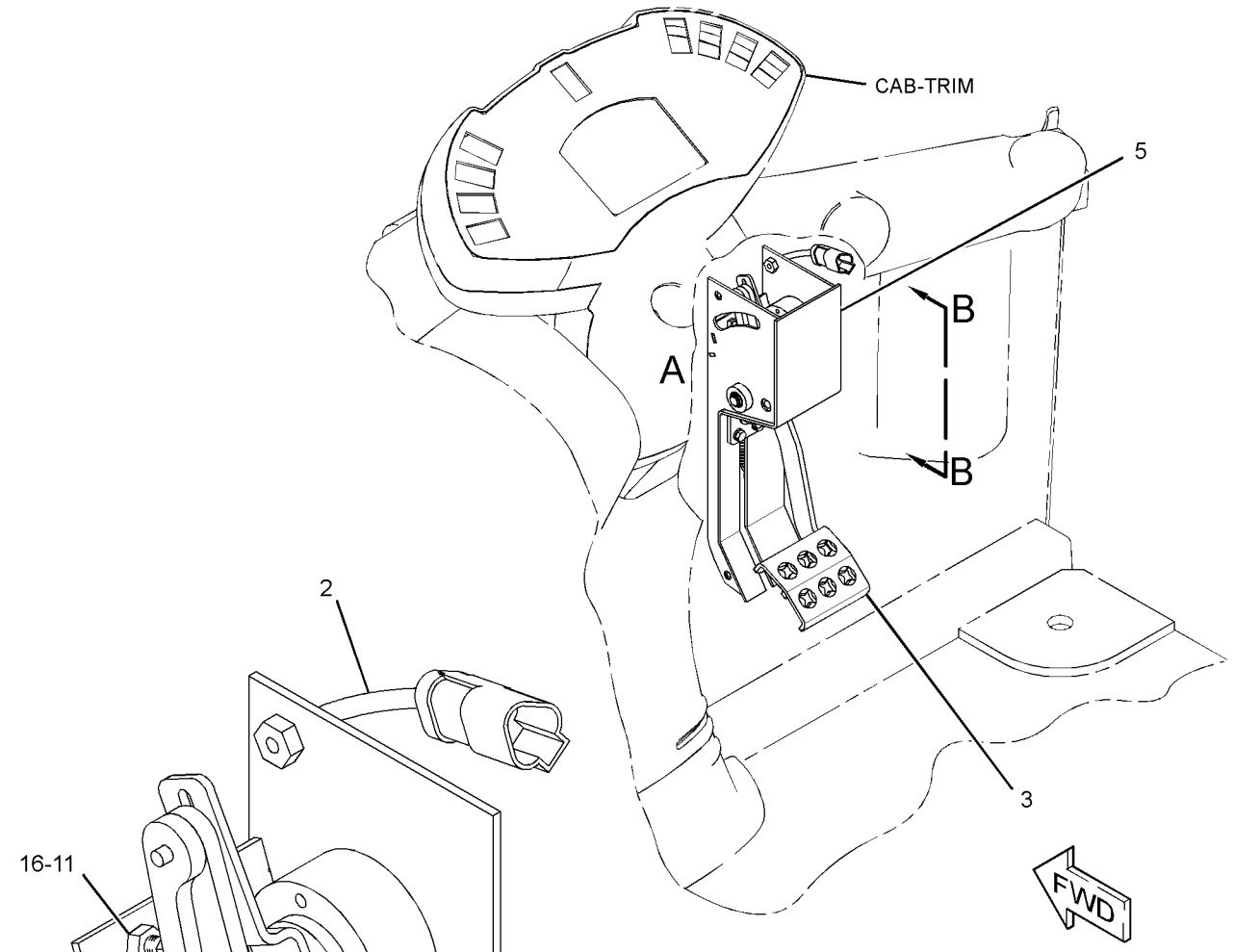

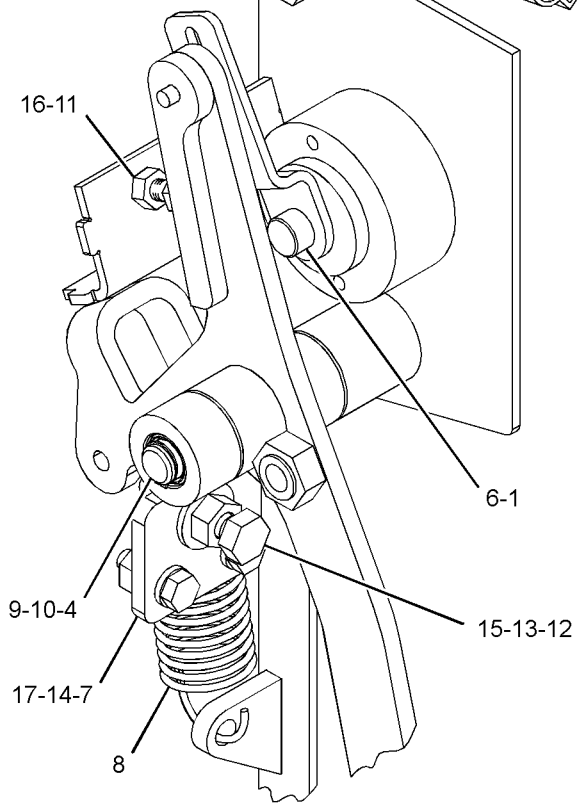

VIEW OF AREA A
(PLATE REMOVED FOR CLARITY)

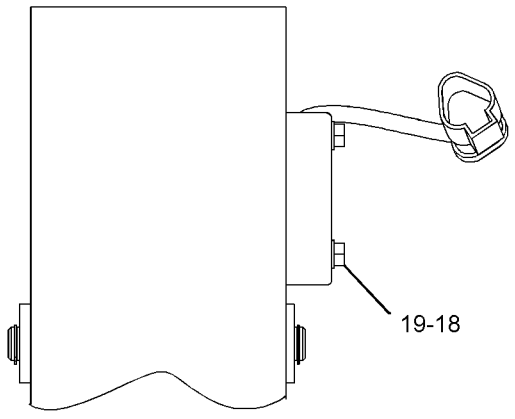

VIEW B-B

GRAPHIC #1 **<END>** g01526179

OPERATOR STATION

260-9830 PLATE GP-SEAT

S/N: LMD1-UP

PART OF 295-5275, 295-5276 OPERATOR AR-ENCLOSED ROPS, 322-5766 OPERATOR AR-OPEN ROPS

AN ATTACHMENT

SMCS-7265, 7324 **i02739591**

NOTE	REF NO	GRAPHIC REF	PART NUMBER	QTY	PART NAME 1 2 3 4 5 6 (PRODUCT LEVEL)	SEE PAGE
	1	1	**259-5491**	1	PLATE AS	
	2	1	**285-5053**	1	GASKET	
	3	1	**8T-4224**	12	WASHER-HARD (8.8X16X2-MM THK)	
M	4	1	**8T-4908**	12	BOLT (M8X1.25X25-MM)	

M-METRIC PART

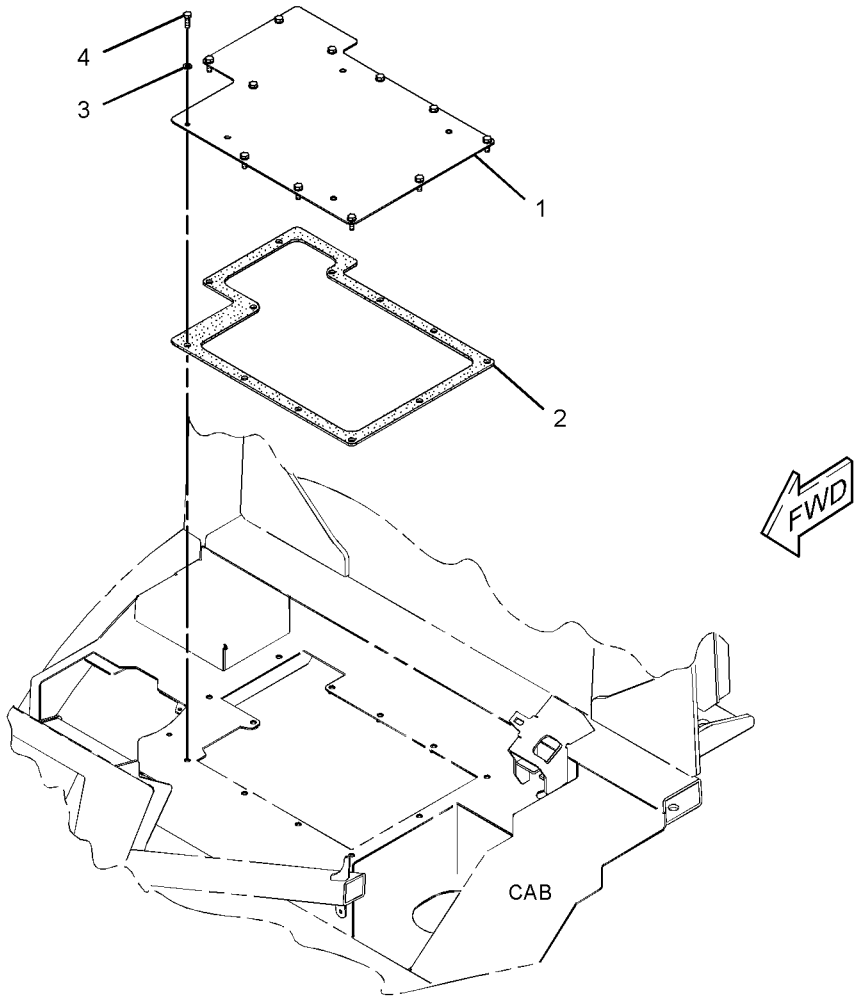

GRAPHIC #1

<END>

g01378962

OPERATOR STATION

279-0643 SCREEN GP-SUN

S/N: LMD1-UP

AN ATTACHMENT

SMCS-7165 **i02739661**

NOTE	REF NO	GRAPHIC REF	PART NUMBER	QTY	PART NAME 1 2 3 4 5 6 (PRODUCT LEVEL)	SEE PAGE
	1	1	**161-7620**	4	SCREW-PAN HEAD	
	2	1	**260-3555**	1	ROLLER AS	
	3	1	**262-6873**	2	SPACER (6.22X9.52X11-MM THK)	
M	4	1	**5C-2890**	2	NUT (M6X1-THD)	
	5	1	**9X-8256**	2	WASHER (6.6X12X2-MM THK)	

M-METRIC PART

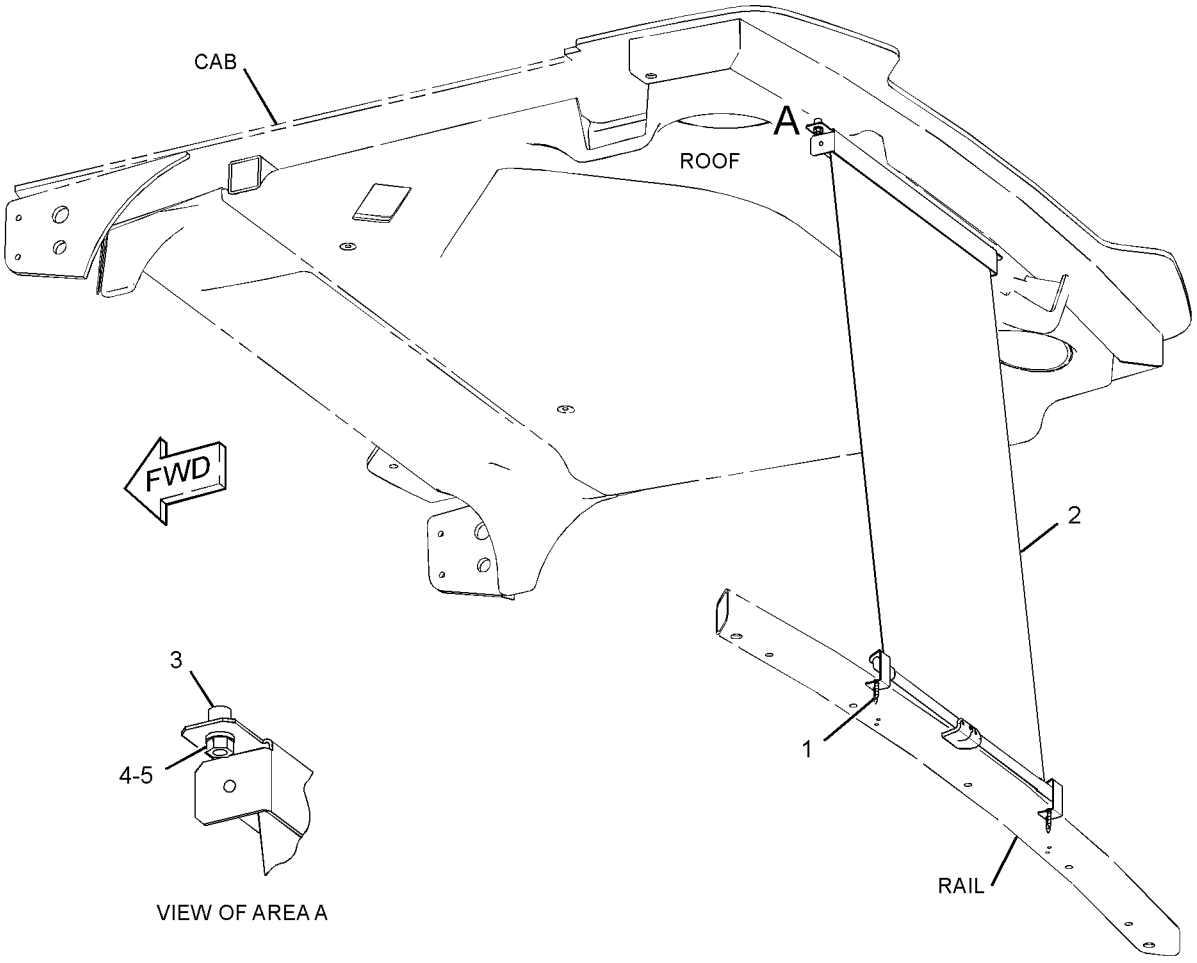

GRAPHIC #1 **<END>** g01378931

OPERATOR STATION

279-5723 SEAT & MOUNTING GP

S/N: LMD1-UP
PART OF 322-5766 OPERATOR AR-OPEN ROPS
AN ATTACHMENT

SMCS-7312 **i02700484**

NOTE	REF NO	GRAPHIC REF	PART NUMBER	QTY	PART NAME 1 2 3 4 5 6 (PRODUCT LEVEL)	SEE PAGE
Y	1	1	**259-1637**	1	SEAT GP-SUSPENSION (CLOTH)	423
M	2	1	**8T-4189**	4	BOLT (M8X1.25X20-MM)	
	3	1	**8T-4224**	4	WASHER-HARD (8.8X16X2-MM THK)	

M-METRIC PART
Y-SEPARATE ILLUSTRATION

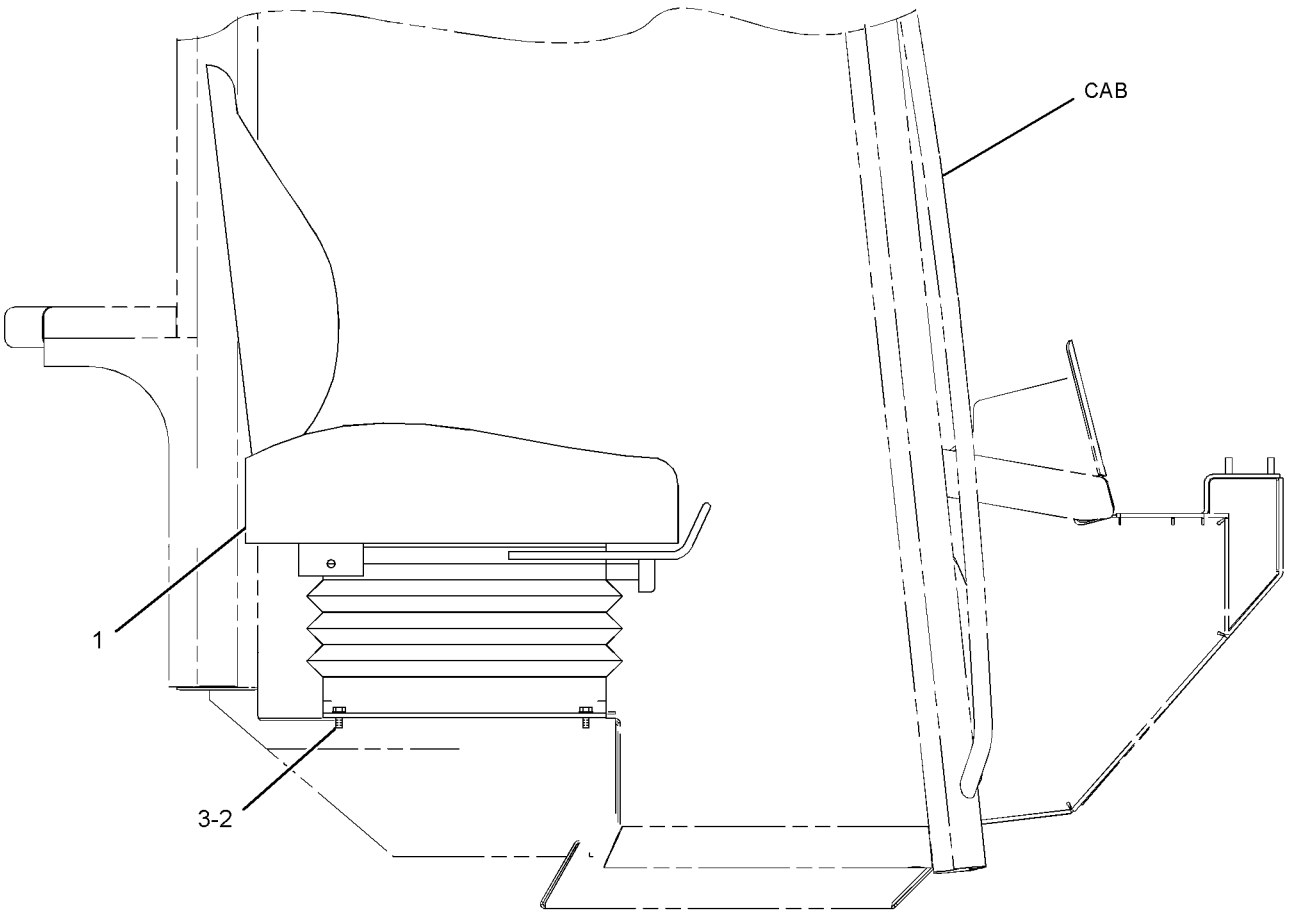

GRAPHIC #1 **<END>** g01373556

279-5724 SEAT & MOUNTING GP

S/N: LMD1-UP
PART OF 295-5275 OPERATOR AR-ENCLOSED ROPS
AN ATTACHMENT

SMCS-7312 **i02830462**

NOTE	REF NO	GRAPHIC REF	PART NUMBER	QTY	PART NAME 1 2 3 4 5 6 (PRODUCT LEVEL)	SEE PAGE
Y	1	1	**233-7391**	1	SEAT GP-SUSPENSION (DELUXE, CLOTH)	419
M	2	1	**8T-4189**	4	BOLT (M8X1.25X20-MM)	
	3	1	**8T-4224**	4	WASHER-HARD (8.8X16X2-MM THK)	

M-METRIC PART
Y-SEPARATE ILLUSTRATION

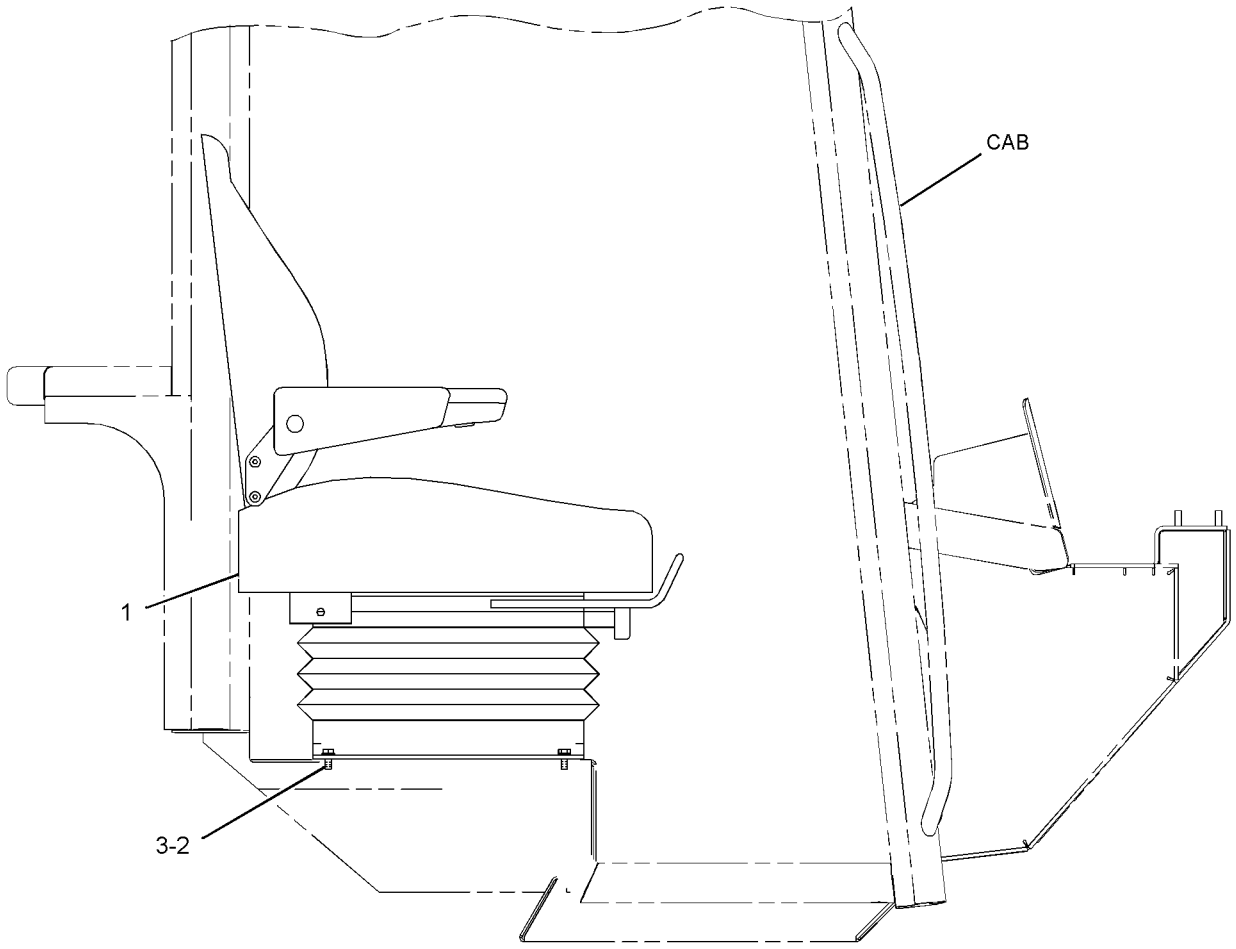

RIGHT SIDE VIEW

GRAPHIC #1 **<END>** g01373496

OPERATOR STATION

279-5725 SEAT & MOUNTING GP

S/N: LMD1-UP
PART OF 295-5276 OPERATOR AR-ENCLOSED ROPS
AN ATTACHMENT

SMCS-7312 **i02700487**

NOTE	REF NO	GRAPHIC REF	PART NUMBER	QTY	PART NAME 1 2 3 4 5 6 (PRODUCT LEVEL)	SEE PAGE
	1	1	**113-8491**	1	FUSE (15-AMPERE)	
	2	1	**141-2759**	1	FUSE (5-AMPERE)	
Y	3	1	**259-1635**	1	SEAT GP-SUSPENSION (AIR, DELUXE. CLOTH)	421
M	4	1	**8T-4189**	4	BOLT (M8X1.25X20-MM)	
	5	1	**8T-4224**	4	WASHER-HARD (8.8X16X2-MM THK)	

M-METRIC PART
Y-SEPARATE ILLUSTRATION

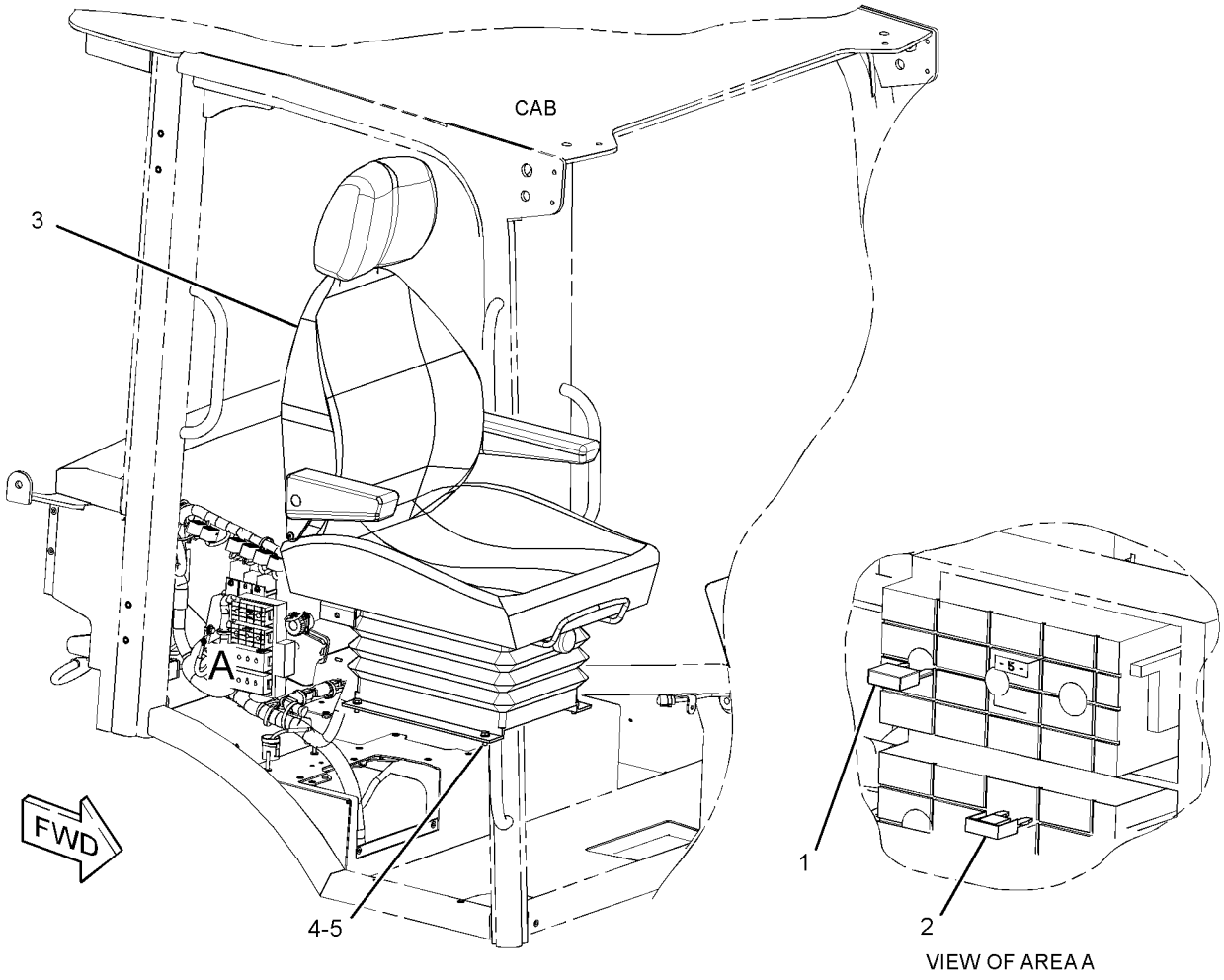

GRAPHIC #1 **<END>** g01373489

OPERATOR STATION

236-8015 SEAT BELT GP

S/N: LMD1-UP

CANNOT BE USED WITH 260-9831—PAGE 418

AN ATTACHMENT

SMCS-7327 **i02703091**

NOTE	REF NO	GRAPHIC REF	PART NUMBER	QTY	PART NAME 1 2 3 4 5 6 (PRODUCT LEVEL)	SEE PAGE
	1	1	**223-7937**	1	SEAT BELT GP	
	2	1	**8S-4726**	1	BOLT (7/16-20X3-IN)	
	3	1	**8T-5360**	2	WASHER (12X22.5X2.5-MM THK)	
	4	1	**8T-9381**	1	BOLT (7/16-20X1-IN)	

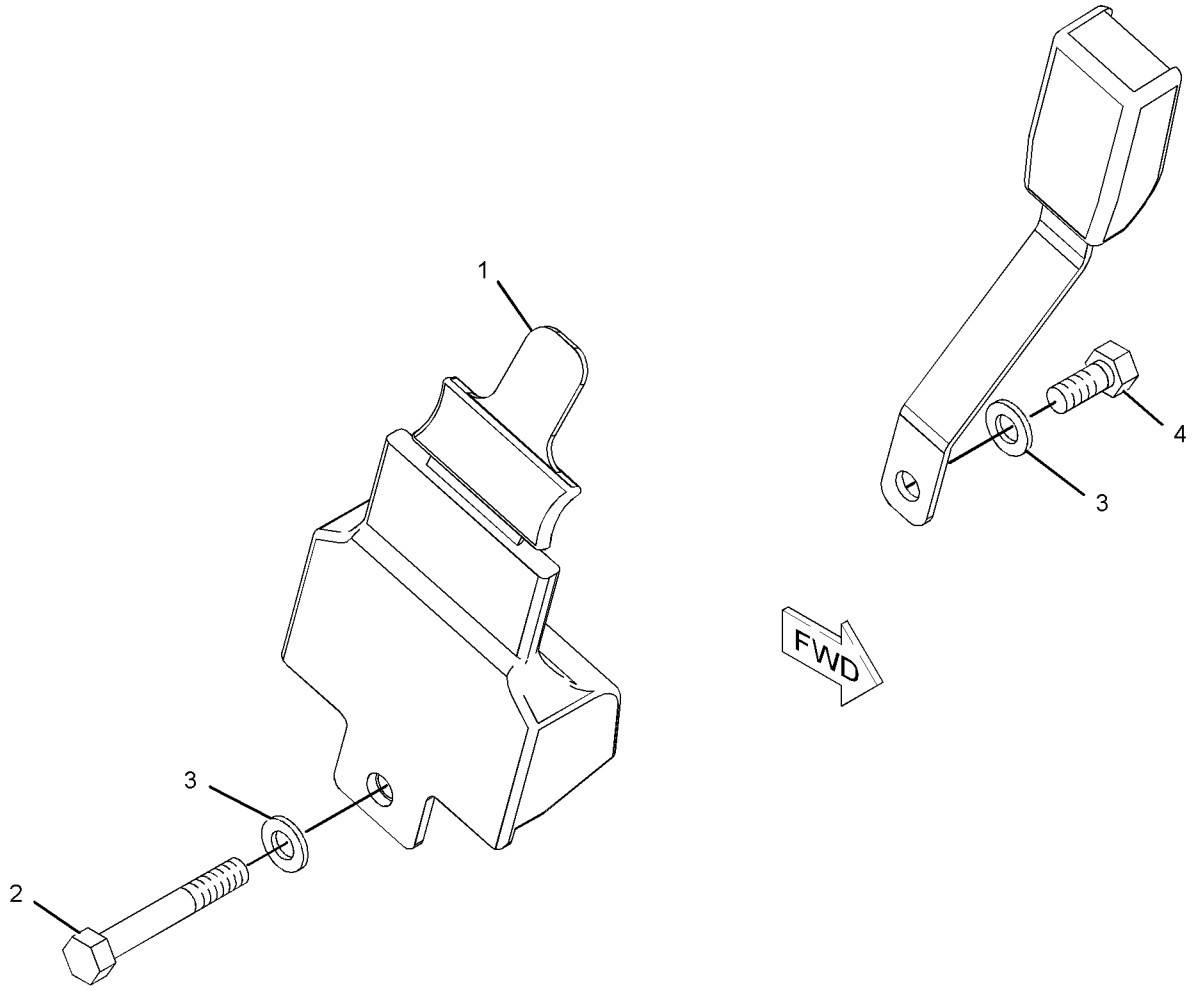

GRAPHIC #1 **<END>** g01012125

OPERATOR STATION

260-9831 SEAT BELT GP

S/N: LMD1-UP
CANNOT BE USED WITH 236-8015—PAGE 417
AN ATTACHMENT

SMCS-7327 **i02818977**

NOTE	REF NO	GRAPHIC REF	PART NUMBER	QTY	PART NAME 1 2 3 4 5 6 (PRODUCT LEVEL)	SEE PAGE
	1	1	**260-2985**	3	SPACER (11.5X19X7-MM THK)	
	2	1	**1L-9080**	2	BOLT (7/16-20X1.5-IN)	
	3	1	**2H-3920**	2	LOCKWASHER	
	4	1	**8T-4121**	1	WASHER-HARD (11X21X2.5-MM THK)	

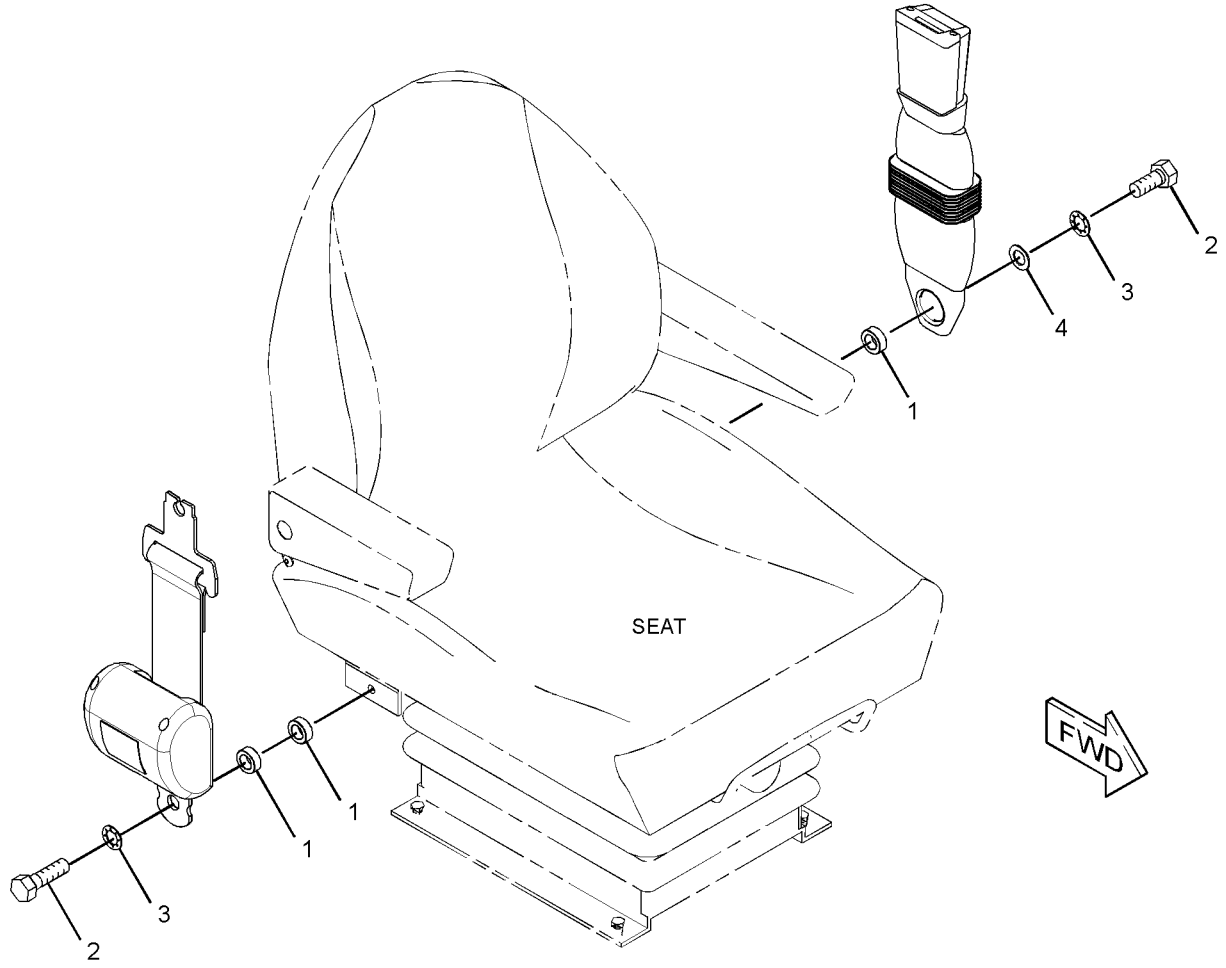

GRAPHIC #1 **<END>** g01407786

OPERATOR STATION

233-7391 SEAT GP-SUSPENSION—DELUXE, CLOTH

S/N: LMD1-UP

PART OF 279-5724 SEAT & MOUNTING GP

AN ATTACHMENT

SMCS-7324, 7336 **i02832626**

NOTE	REF NO	GRAPHIC REF	PART NUMBER	QTY	PART NAME 1 2 3 4 5 6 (PRODUCT LEVEL)	SEE PAGE
	1	1	**110-5056**	1	KIT-SEAT (BACK)	
	2	1	**110-5059**	1	KIT-SEAT (BOTTOM)	
	3	1	**155-4956**	1	KIT-ARMREST (SEAT)	
					(INCLUDES SCREWS, ARM REST ASSEMBLY, LOCKWASHERS, & SPACERS)	
	4	1	**156-1056**	1	KIT-ARMREST (LH) (SEAT)	
					(INCLUDES SCREWS, ARM REST ASSEMBLY, LOCKWASHERS, & SPACERS)	
	5	1	**156-1686**	1	KIT-COVER (SEAT)	
					(INCLUDES WIRE, CLIPS & COVER)	
	6	1	**156-1687**	1	KIT-COVER (BACK)	
					(INCLUDES TRIM BAR, RINGS AND COVER)	
	7	1	**202-4732**	1	KIT-FRAME (SEAT)	
					(INCLUDES HEADREST GUIDE, CLIPS, SCREWS & FRAME)	
	8	1	**202-4736**	1	KIT-DAMPER	
					(INCLUDES DAMPER BUSH, WASHERS, SPACER, DAMPER & PINS)	
	9	1	**202-4738**	1	KIT-SUSPENSION	
	10	1	**202-4739**	1	KIT-STOP (SUSPENSION SEAT)	
					(INCLUDES UPSTOPS & BUMPSTOP)	
	11	1	**204-1126**	1	KIT-PLATE (SEAT)	
					(INCLUDES INTERFACE PLATE, SCREWS & WASHERS)	
	12	1	**213-4574**	1	KIT-BOOT (SUSPENSION SEAT)	
	13	1	**213-4576**	1	KIT-RIDE CONTROL (SUSPENSION SEAT)	
	14	1	**213-4579**	1	KIT-WEIGHT ADJUSTER (SUSPENSION SEAT)	
	15	1	**250-6011**	1	KIT-STRAP (SEAT)	
	16	1	**250-6012**	1	KIT-SLIDE RAIL (SEAT)	
	17	1	**250-6013**	1	KIT-LEVER (SEAT)	

233-7391 SEAT GP-SUSPENSION *(contd.)* i02832626

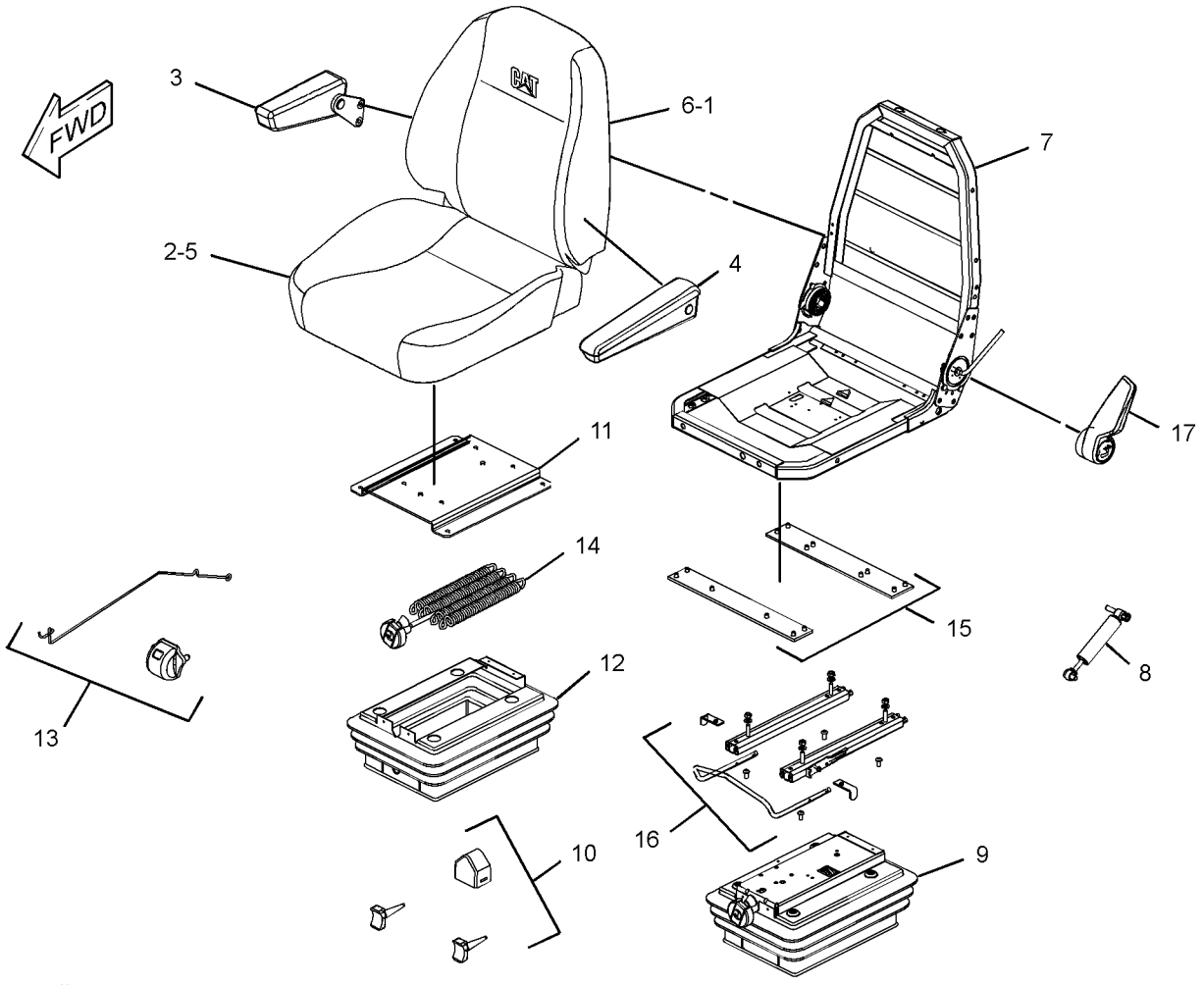

GRAPHIC #1 **<END>** g01183851

OPERATOR STATION

259-1635 SEAT GP-SUSPENSION—AIR, DELUXE, CLOTH

S/N: LMD1-UP

PART OF 279-5725 SEAT & MOUNTING GP

AN ATTACHMENT

SMCS-7324, 7336 **i02832654**

NOTE	REF NO	GRAPHIC REF	PART NUMBER	QTY	PART NAME 1 2 3 4 5 6 (PRODUCT LEVEL)	SEE PAGE
	1	1	**110-5056**	1	KIT-SEAT (BACK)	
	2	1	**110-5059**	1	KIT-SEAT (BOTTOM)	
	3	1	**155-4956**	1	KIT-ARMREST (SEAT)	
					(INCLUDES SCREWS, ARMREST, WASHERS & SPACERS)	
	4	1	**156-1056**	1	KIT-ARMREST (LH)	
	5	1	**156-1687**	1	KIT-COVER (BACK)	
					(INCLUDES BARS, RINGS & COVER)	
	6	1	**204-1126**	1	KIT-PLATE (SEAT)	
					(INCLUDES PLATE, SCREWS & WASHERS)	
	7	1	**210-8277**	1	KIT-SHOCK ABSORBER (SUSPENSION SEAT)	
	8	1	**210-8332**	1	KIT-AIR VALVE (SUSPENSION SEAT)	
					(INCLUDES TIE, NUT, VALVES & PIN)	
	9	1	**210-8333**	1	SPRING	
	10	1	**210-8334**	1	AIR COMPRESSOR GP (SUSPENSION SEAT)	
	11	1	**213-4568**	1	COVER-SEAT (BOTTOM, CLOTH)	
	12	1	**213-4575**	1	KIT-BOOT (SUSPENSION SEAT)	
	13	1	**213-4576**	1	KIT-RIDE CONTROL (SUSPENSION SEAT)	
	14	1	**213-4578**	1	KIT-SUSPENSION	
	15	1	**250-6011**	1	KIT-STRAP (SEAT)	
	16	1	**250-6012**	1	KIT-SLIDE RAIL (SEAT)	
	17	1	**250-6013**	1	KIT-LEVER (SEAT)	
	18	1	**292-7885**	1	KIT-LUMBAR SUPPORT	
	19	1	**292-7886**	1	KIT-HEATER	
	20	1	**292-7887**	1	KIT-STOP	
	21	1	**292-7888**	1	KIT-TETHER	
	22	1	**292-7889**	1	KIT-HARNESS	
	23	1	**292-7890**	1	KIT-HEADREST	
	24	1	**292-7891**	1	KIT-FRAME	

259-1635 SEAT GP-SUSPENSION *(contd.)* i02832654

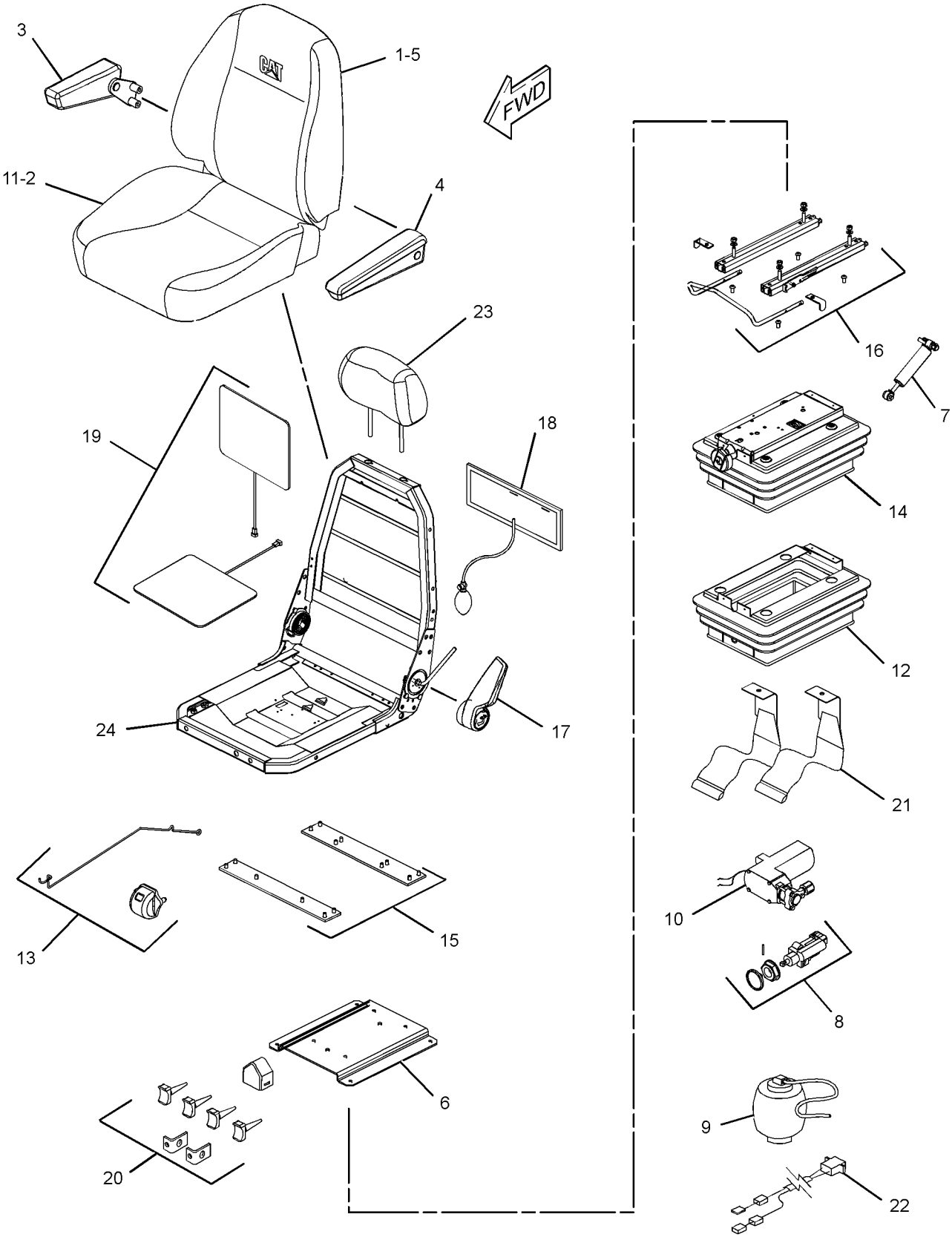

GRAPHIC #1 **<END>** g01412867

OPERATOR STATION

259-1637 SEAT GP-SUSPENSION–CLOTH

S/N: LMD1-UP

PART OF 279-5723 SEAT & MOUNTING GP

AN ATTACHMENT

SMCS-7324, 7336 **i02698882**

NOTE	REF NO	GRAPHIC REF	PART NUMBER	QTY	PART NAME 1 2 3 4 5 6 (PRODUCT LEVEL)	SEE PAGE
	1	1	**110-5056**	1	KIT-SEAT (BACK)	
	2	1	**110-5059**	1	KIT-SEAT (BOTTOM)	
	3	1	**156-1686**	1	KIT-COVER (SEAT)	
					(INCLUDES WIRE, CLIPS & SEAT COVER)	
	4	1	**156-1687**	1	KIT-COVER (BACK)	
					(INCLUDES TRIM BAR, RING, & BACK COVER)	
	5	1	**202-4732**	1	KIT-FRAME (SEAT)	
					(INCLUDES CLIPS, GUIDES, SCREWS, & FRAME PTD)	
	6	1	**202-4736**	1	KIT-DAMPER	
					(INCLUDES BUSH, WASHERS, NUT, DAMPER, PINS & SPACER)	
	7	1	**202-4738**	1	KIT-SUSPENSION	
					(INCLUDES SUSPENSION AS)	
	8	1	**202-4739**	1	KIT-STOP (SUSPENSION SEAT)	
					(INCLUDES STOPS)	
	9	1	**204-1126**	1	KIT-PLATE (SEAT)	
					(INCLUDES PLATE, SCREW, & WASHER)	
	10	1	**213-4574**	1	KIT-BOOT (SUSPENSION SEAT)	
	11	1	**213-4576**	1	KIT-RIDE CONTROL (SUSPENSION SEAT)	
	12	1	**213-4579**	1	KIT-WEIGHT ADJUSTER (SUSPENSION SEAT)	
	13	1	**250-6011**	1	KIT-STRAP (SEAT)	
	14	1	**250-6012**	1	KIT-SLIDE RAIL (SEAT)	
	15	1	**250-6013**	1	KIT-LEVER (SEAT)	

259-1637 SEAT GP-SUSPENSION *(contd.)* i02698882

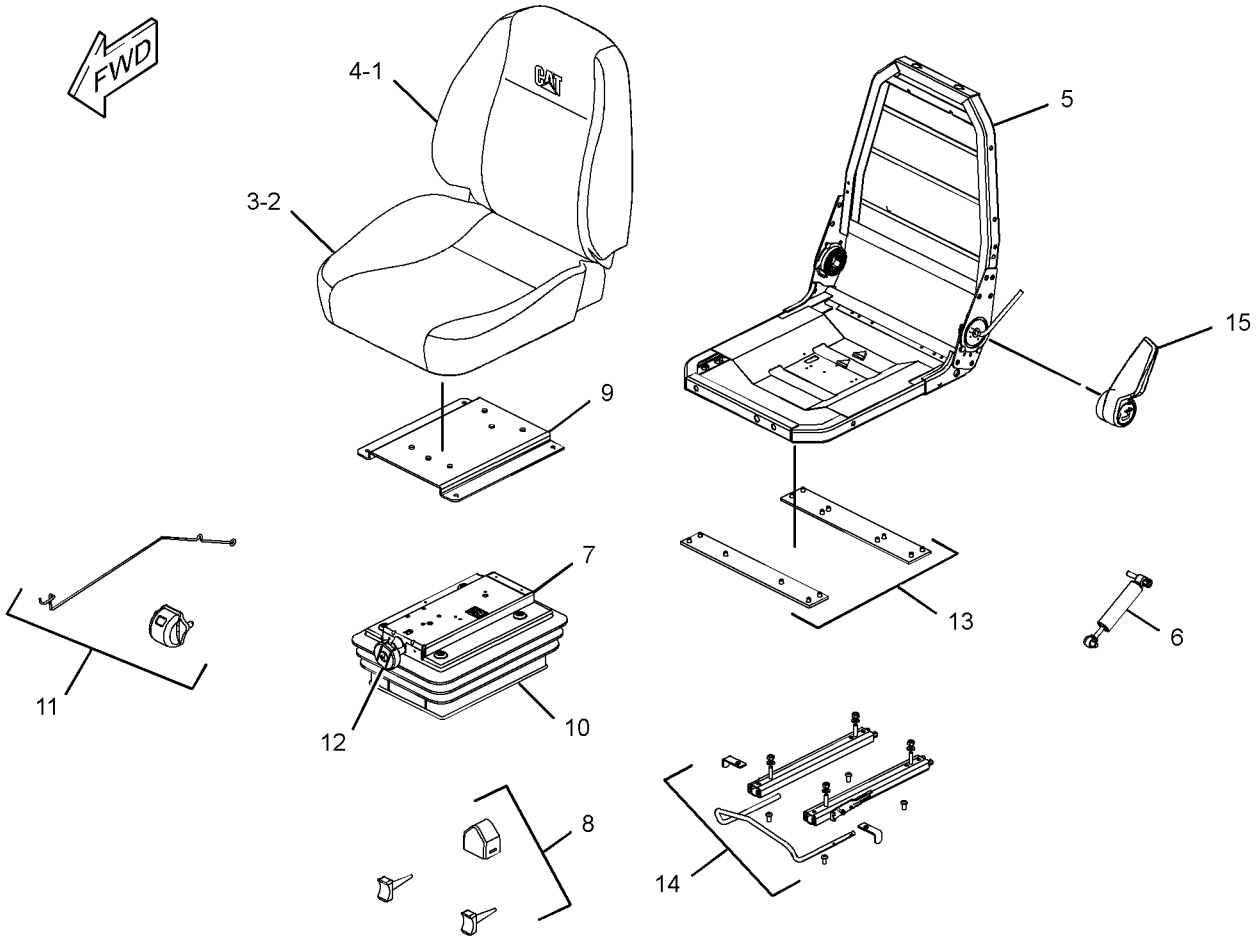

GRAPHIC #1 **<END>** g01382819

OPERATOR STATION

260-9827 SUPPRESSION GP-SOUND–CAB

S/N: LMD1-UP

PART OF 295-5275, 295-5276 OPERATOR AR-ENCLOSED ROPS

AN ATTACHMENT

SMCS-7329, 7330 **i02739670**

NOTE	REF NO	GRAPHIC REF	PART NUMBER	QTY	PART NAME 1 2 3 4 5 6 (PRODUCT LEVEL)	SEE PAGE
	1	1	**297-4355**	1	INSULATION	

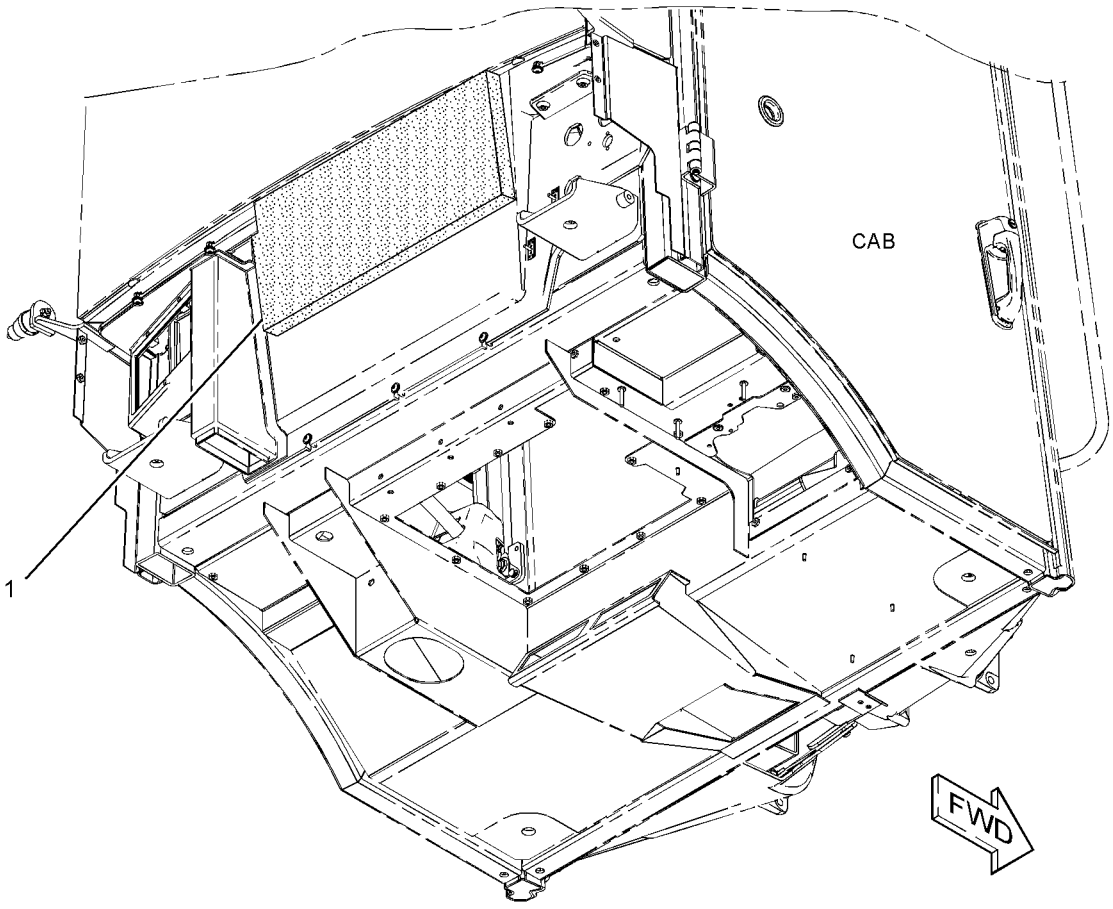

GRAPHIC #1 **<END>** g01378983

OPERATOR STATION

279-5068 TANK GP-WINDOW WASHER

S/N: LMD1-UP

PART OF 295-5275, 295-5276 OPERATOR AR-ENCLOSED ROPS

AN ATTACHMENT

SMCS-7306 **i02980729**

NOTE	REF NO	GRAPHIC REF	PART NUMBER	QTY	PART NAME 1 2 3 4 5 6 (PRODUCT LEVEL)	SEE PAGE
	1	1	**7K-1181**	2	STRAP-CABLE	
	2	1	**9R-3469**	2	DIAPHRAGM	
	4	1	**286-2758**	1	BRACKET AS	
Y	5	1	**299-6051**	1	TANK GP-WINDOW WASHER	427
	6	1	**5P-4116**	2	WASHER-HARD (8.8X20.5X2-MM THK)	
	7	1	**8T-4224**	5	WASHER-HARD (8.8X16X2-MM THK)	
M	8	1	**8T-4908**	2	BOLT (M8X1.25X25-MM)	
E	9	1	**144-0195**		HOSE (200.8-CM)	
E	9A	1	**144-0195**		HOSE (192.4-CM)	
E	9B	1	**144-0195**		HOSE (9.4-CM)	
E	9C	1	**144-0195**		HOSE (9-CM)	

E-ORDER BY THE CENTIMETER
M-METRIC PART
Y-SEPARATE ILLUSTRATION

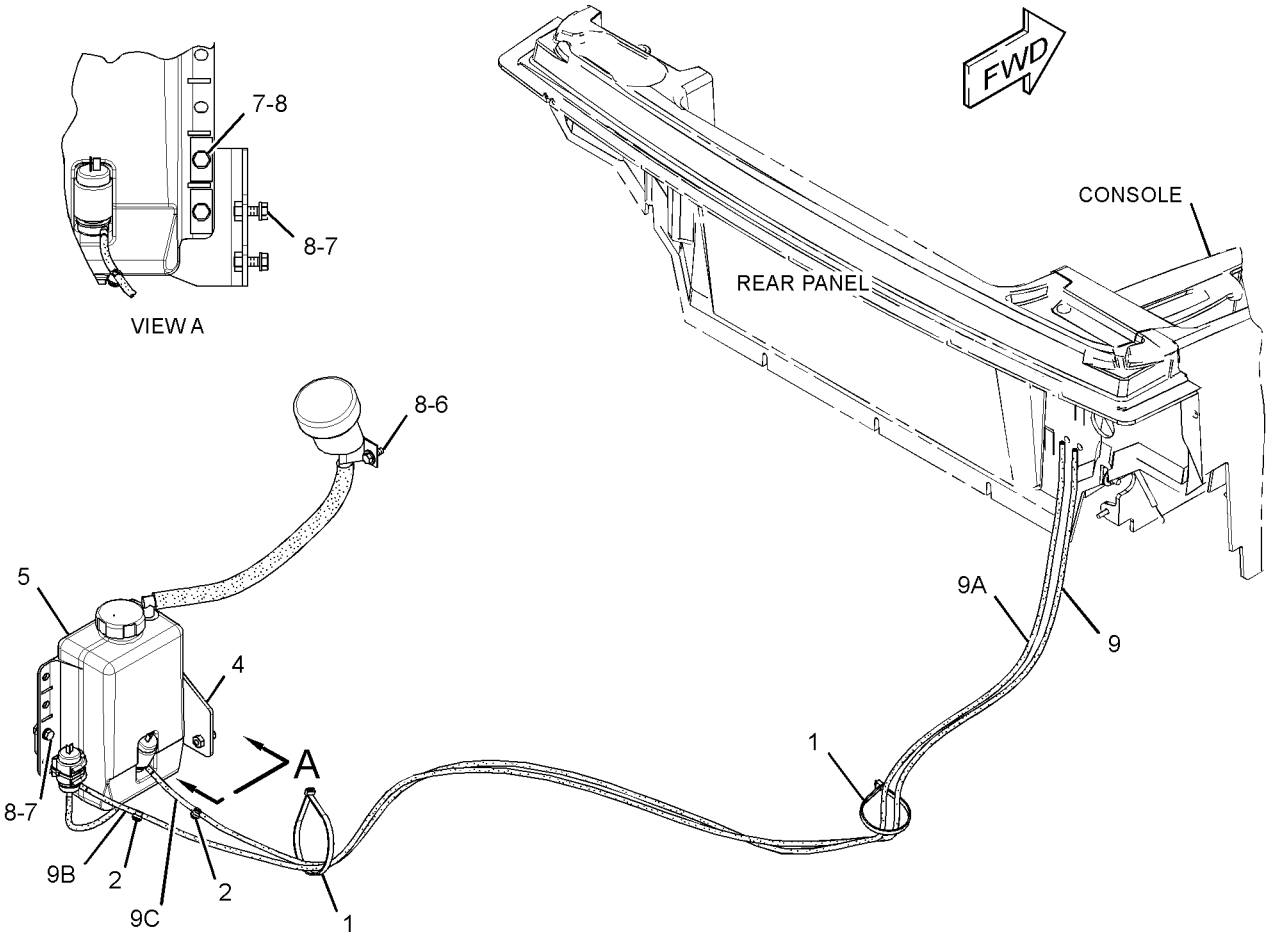

GRAPHIC #1 **<END>** g01523157

OPERATOR STATION

299-6051 TANK GP-WINDOW WASHER

S/N: LMD1-UP

PART OF 279-5068 TANK GP-WINDOW WASHER

AN ATTACHMENT

SMCS-7306 **i02741059**

NOTE	REF NO	GRAPHIC REF	PART NUMBER	QTY	PART NAME 1 2 3 4 5 6 (PRODUCT LEVEL)	SEE PAGE
	1	1	**302-4790**	1	TANK AS	
	2	1	**6T-1375**	2	PUMP AS-WASHER	
	3	1	**3S-2093**	1	STRAP-CABLE	
	4	1	**8E-8292**	1	CAP-VENTED (WINDOW WASHER)	
	5	1	**8E-8293**	1	GROMMET	
	6	1	**299-7836**	1	RESERVOIR	
E	7	1	**144-0195**		HOSE (18-CM)	
E	8	1	**5P-0743**		HOSE (40-CM)	

E-ORDER BY THE CENTIMETER

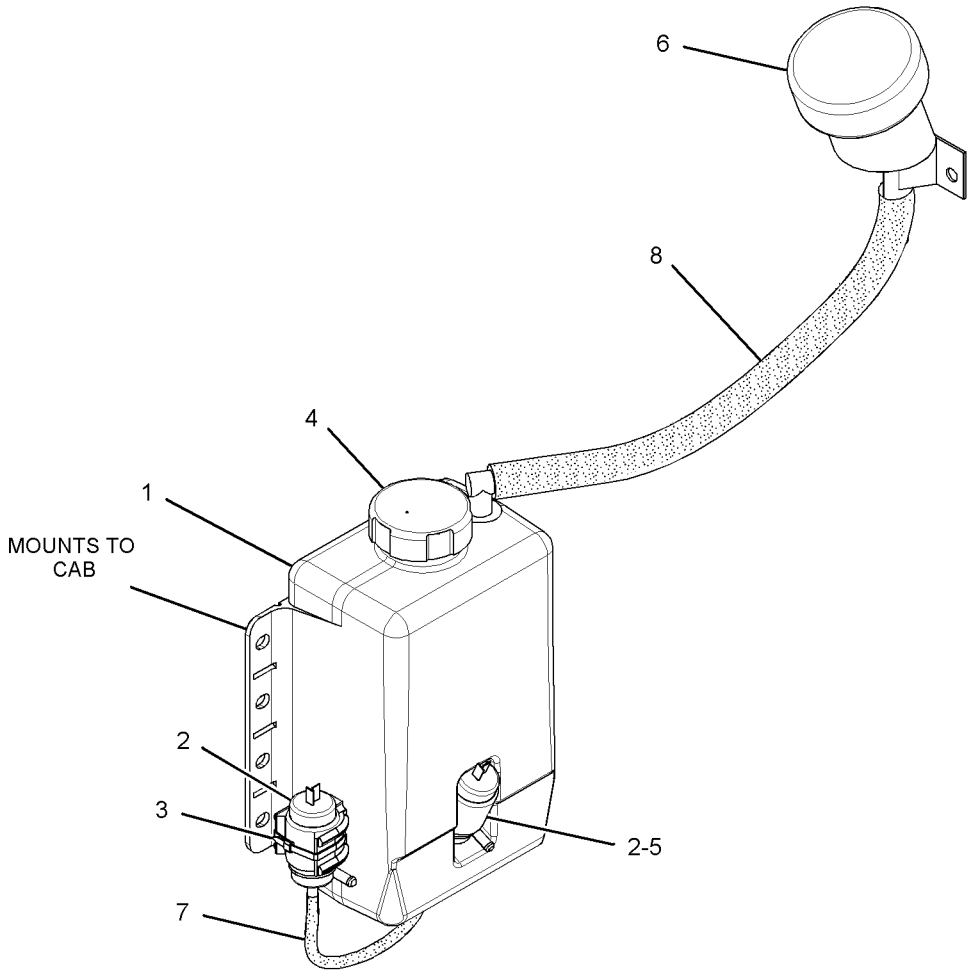

GRAPHIC #1 **<END>** g01378985

OPERATOR STATION

260-3544 TRIM GP-CAB—OPEN ROPS

S/N: LMD1-UP

PART OF 322-5766 OPERATOR AR-OPEN ROPS

AN ATTACHMENT

SMCS-7329 **i03195528**

NOTE	PART NUMBER	QTY	PART NAME 1 2 3 4 5 6 (PRODUCT LEVEL)	SEE PAGE
Y	*280-2370*	1	FLOOR MAT GP	384
Y	*269-0415*	1	TRIM GP-CAB (RH)	429
Y	*282-8636*	1	TRIM GP-CAB (FRONT)	433
	313-2419	1	PLATE AS	
M	**3E-4304**	1	INSERT-THREADED (M6X1-THD)	
M	**9X-2045**	2	SCREW-TRUSS HEAD (M6X1X20-MM)	
	280-7685	1	STEERING WHEEL GP	
	255-2743	1	STEERING WHEEL	
	255-2748	1	KNOB AS	
	9X-2038	2	WASHER (7X19X2-MM THK)	

M-METRIC PART
Y-SEPARATE ILLUSTRATION

<END>

260-3545 TRIM GP-CAB—ENCLOSED ROPS

S/N: LMD1-UP

PART OF 295-5275, 295-5276 OPERATOR AR-ENCLOSED ROPS

AN ATTACHMENT

SMCS-7329 **i02944492**

NOTE	PART NUMBER	QTY	PART NAME 1 2 3 4 5 6 (PRODUCT LEVEL)	SEE PAGE
Y	*257-6374*	1	DUCT & FILTER GP-CAB AIR	383
Y	*280-2370*	1	FLOOR MAT GP	384
Y	*257-6373*	1	LINER GP-CAB	392
Y	*269-0415*	1	TRIM GP-CAB (RH)	429
Y	*274-4287*	1	TRIM GP-CAB (FRONT)	431
	280-7685	1	STEERING WHEEL GP	
	255-2743	1	STEERING WHEEL	
	255-2748	1	KNOB AS (STEERING WHEEL)	
	2S-9727	1	GROMMET	

Y-SEPARATE ILLUSTRATION

<END>

OPERATOR STATION

269-0415 TRIM GP-CAB—RH

S/N: LMD1-UP

PART OF 260-3544, 260-3545 TRIM GP-CAB

AN ATTACHMENT

SMCS-7329 **i03195532**

NOTE	REF NO	GRAPHIC REF	PART NUMBER	QTY	PART NAME 1 2 3 4 5 6 (PRODUCT LEVEL)	SEE PAGE
	1	1	**160-4862**	2	INSULATION	
	2	1	**245-8334**	1	KNOB	
	3	1	**263-8064**	1	PANEL AS	
	4	1	**270-1652**	1	CONSOLE AS (RH)	
		1	**280-1938**	1	GASKET	
		1	**283-6289**	1	PLATE AS	
	5	1	*271-0112*	1	DOOR GP-ACCESS (CONSOLE)	
		1	**289-0362**	2	HINGE	
J		1	**206-1708**	1	LOCK AS	
M		1	**5C-2874**	4	NUT (M5X0.8-THD)	
		1	**270-1654**	1	PLATE	
	6	1	**271-5491**	1	ARMREST AS	
M		1	**9X-2043**	3	SCREW-TRUSS HEAD (M6X1X14-MM)	
		1	**287-5752**	1	PLATE AS	
	7	1	**276-8765**	1	LATCH	
	8	1	**280-4047**	1	PLATE AS	
	9	1	**284-1039**	3	SPACER (10X22X12.3-MM THK)	
	10	1	**284-4745**	1	HINGE AS	
M	11	1	**3E-8020**	5	SCREW-TRUSS HEAD (M6X1X25-MM)	
M	12	1	**5C-2874**	4	NUT (M5X0.8-THD)	
M	13	1	**5C-2890**	3	NUT (M6X1-THD)	
	14	1	**8T-4121**	5	WASHER-HARD (11X21X2.5-MM THK)	
M	15	1	**8T-4133**	4	NUT (M10X1.5-THD)	
	16	1	**9X-2038**	5	WASHER (7X19X2-MM THK)	
M	17	1	**9X-2043**	3	SCREW-TRUSS HEAD (M6X1X14-MM)	
E	18	1	**3E-6600**		SEAL (25-CM)	
E	18A	1	**3E-6600**		SEAL (36-CM)	

E-ORDER BY THE CENTIMETER
J-REQUIRES CORPORATE KEY
M-METRIC PART

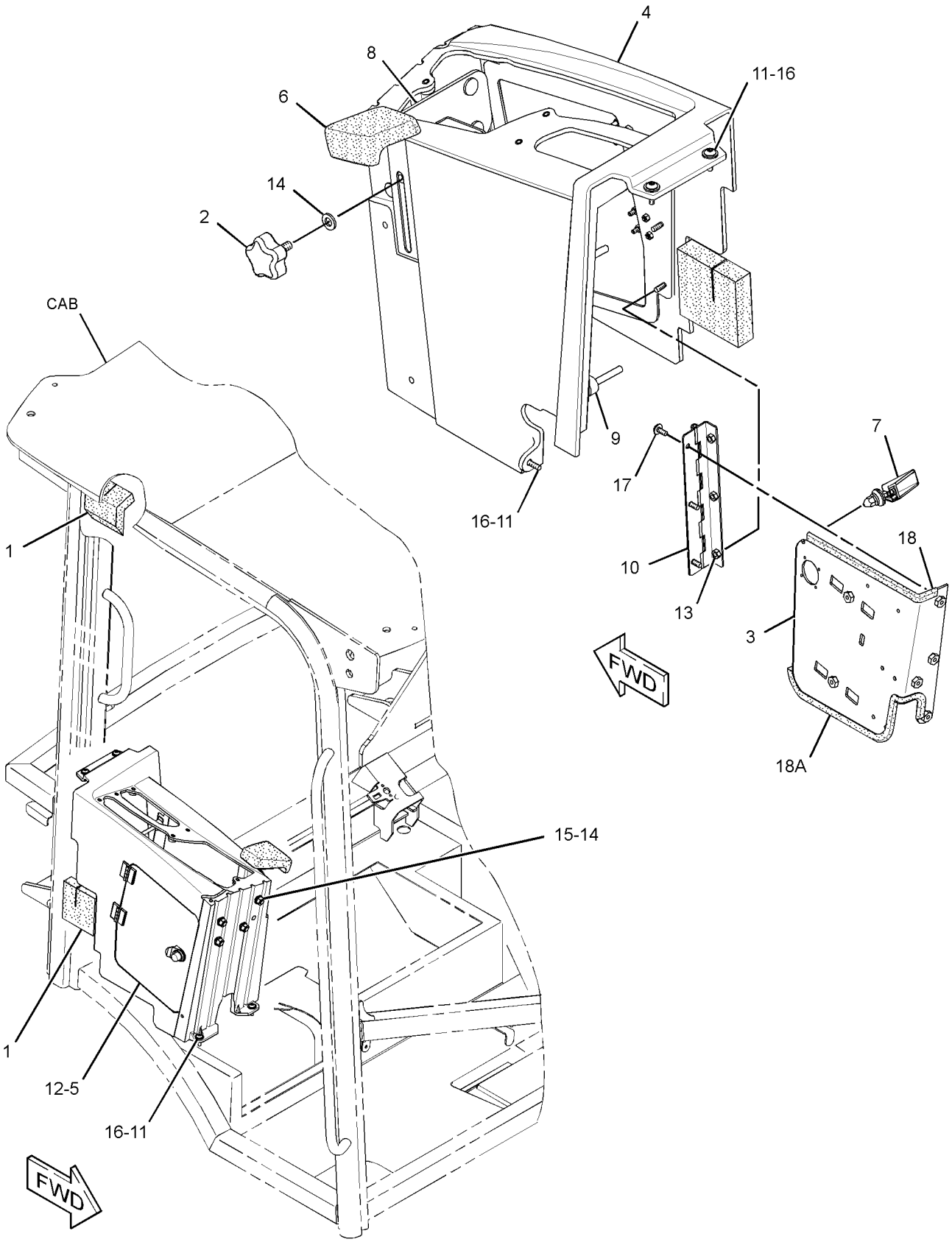

GRAPHIC #1 **<END>** g01407919

OPERATOR STATION

274-4287 TRIM GP-CAB—FRONT

S/N: LMD1-UP
PART OF 260-3545 TRIM GP-CAB
AN ATTACHMENT

SMCS-7329 **i02818983**

NOTE	REF NO	GRAPHIC REF	PART NUMBER	QTY	PART NAME 1 2 3 4 5 6 (PRODUCT LEVEL)	SEE PAGE
	1	1	**259-5490**	1	PLENUM AS	
	2	1	**263-4796**	1	PLENUM	
	3	1	**263-5755**	1	COVER AS-CONSOLE	
	4	1	**266-7071**	1	PLATE	
	5	1	**253-2417**	4	LOUVER AS	
	6	1	**280-1935**	1	GASKET	
	7	1	**280-1936**	2	GASKET	
	8	1	**160-4862**	2	INSULATION	
	9	1	**297-7892**	1	PLATE AS	
	10	1	**104-2091**	4	SCREW-FLAT HEAD (NO 6X0.5-IN)	
M	11	1	**127-2170**	4	SCREW-TRUSS HEAD (M8X1.25X20-MM)	
	12	1	**171-4047**	2	LOUVER AS-VENT	
M	13	1	**5C-2890**	2	NUT (M6X1-THD)	
	14	1	**9X-2038**	4	WASHER (7X19X2-MM THK)	
M	15	1	**9X-2045**	10	SCREW-TRUSS HEAD (M6X1X20-MM)	
D	16	1	**5P-5639**		SEAL (0.6-M)	
	17	1	**161-7620**	1	SCREW-PAN HEAD	

D-ORDER BY THE METER
M-METRIC PART

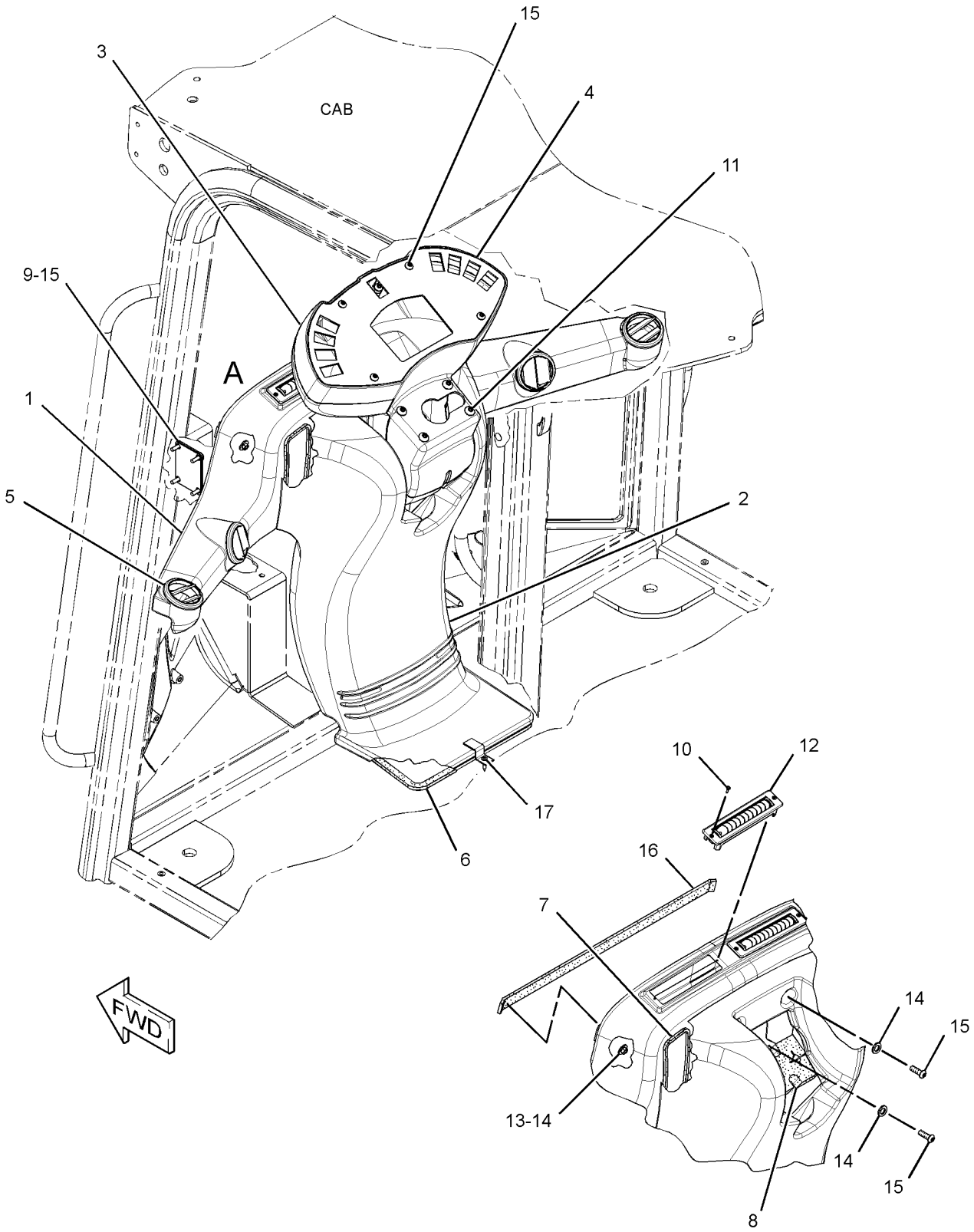

VIEW OF AREA A
(CONSOLE COVER REMOVED FOR CLARITY)

GRAPHIC #1 **<END>** g01408513

282-8636 TRIM GP-CAB—FRONT

S/N: LMD1-UP
PART OF 260-3544 TRIM GP-CAB
AN ATTACHMENT

SMCS-7329 **i02818980**

NOTE	REF NO	GRAPHIC REF	PART NUMBER	QTY	PART NAME 1 2 3 4 5 6 (PRODUCT LEVEL)	SEE PAGE
	1	1	**263-4796**	1	PLENUM	
	2	1	**263-5755**	1	COVER AS-CONSOLE	
	3	1	**266-7071**	1	PLATE	
	4	1	**280-1935**	1	GASKET	
	5	1	**280-1936**	2	GASKET	
	6	1	**280-9543**	1	PLENUM AS	
	7	1	**286-4727**	8	FASTENER	
	8	1	**160-4862**	2	INSULATION	
	9	1	**297-7892**	1	PLATE AS	
M	10	1	**127-2170**	4	SCREW-TRUSS HEAD (M8X1.25X20-MM)	
M	11	1	**5C-2890**	2	NUT (M6X1-THD)	
	12	1	**9X-2038**	4	WASHER (7X19X2-MM THK)	
M	13	1	**9X-2045**	10	SCREW-TRUSS HEAD (M6X1X20-MM)	
D	14	1	**5P-5639**		SEAL (0.51-M)	

D-ORDER BY THE METER
M-METRIC PART

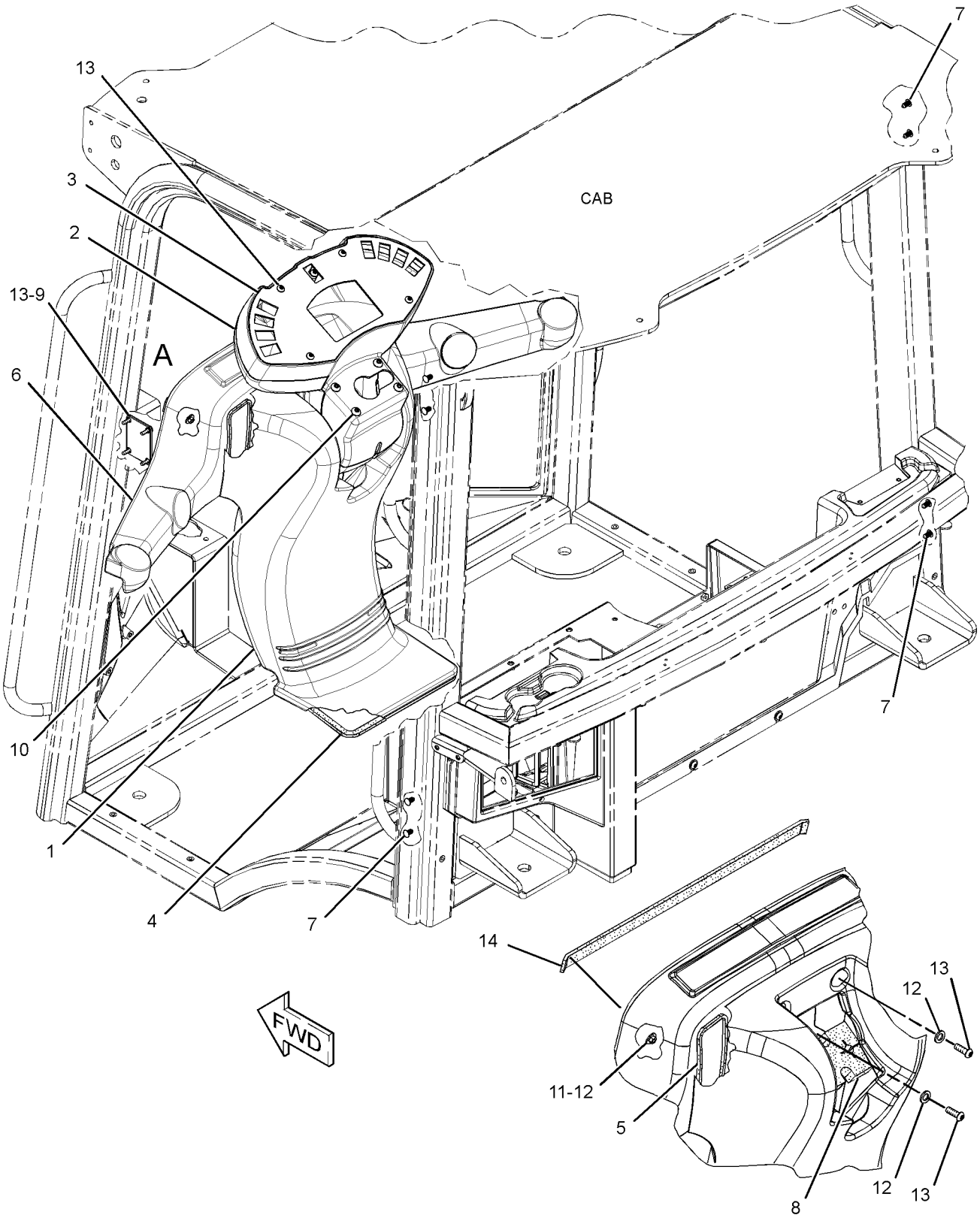

VIEW OF AREA A
(CONSOLE COVER REMOVED FOR CLARITY)

GRAPHIC #1 **<END>** g01373771

OPERATOR STATION

270-1901 VISOR GP-CAB

S/N: LMD1-UP

PART OF 295-5275, 295-5276 OPERATOR AR-ENCLOSED ROPS, 322-5766 OPERATOR AR-OPEN ROPS

AN ATTACHMENT

SMCS-7301 **i02980742**

NOTE	REF NO	GRAPHIC REF	PART NUMBER	QTY	PART NAME 1 2 3 4 5 6 (PRODUCT LEVEL)	SEE PAGE
	1	1	**9R-3203**	2	PLATE	
	2	1	**9R-3204**	1	PLATE AS	
M		1	**6V-9632**	2	NUT-WELD (M6X1-THD)	
	3	1	**9R-3205**	1	VISOR AS (CAB)	
M	4	1	**9X-2042**	2	SCREW-TRUSS HEAD (M6X1X12-MM)	
M	5	1	**5C-2890**	2	NUT (M6X1-THD)	
	6	1	**9X-8256**	2	WASHER (6.6X12X2-MM THK)	

M-METRIC PART

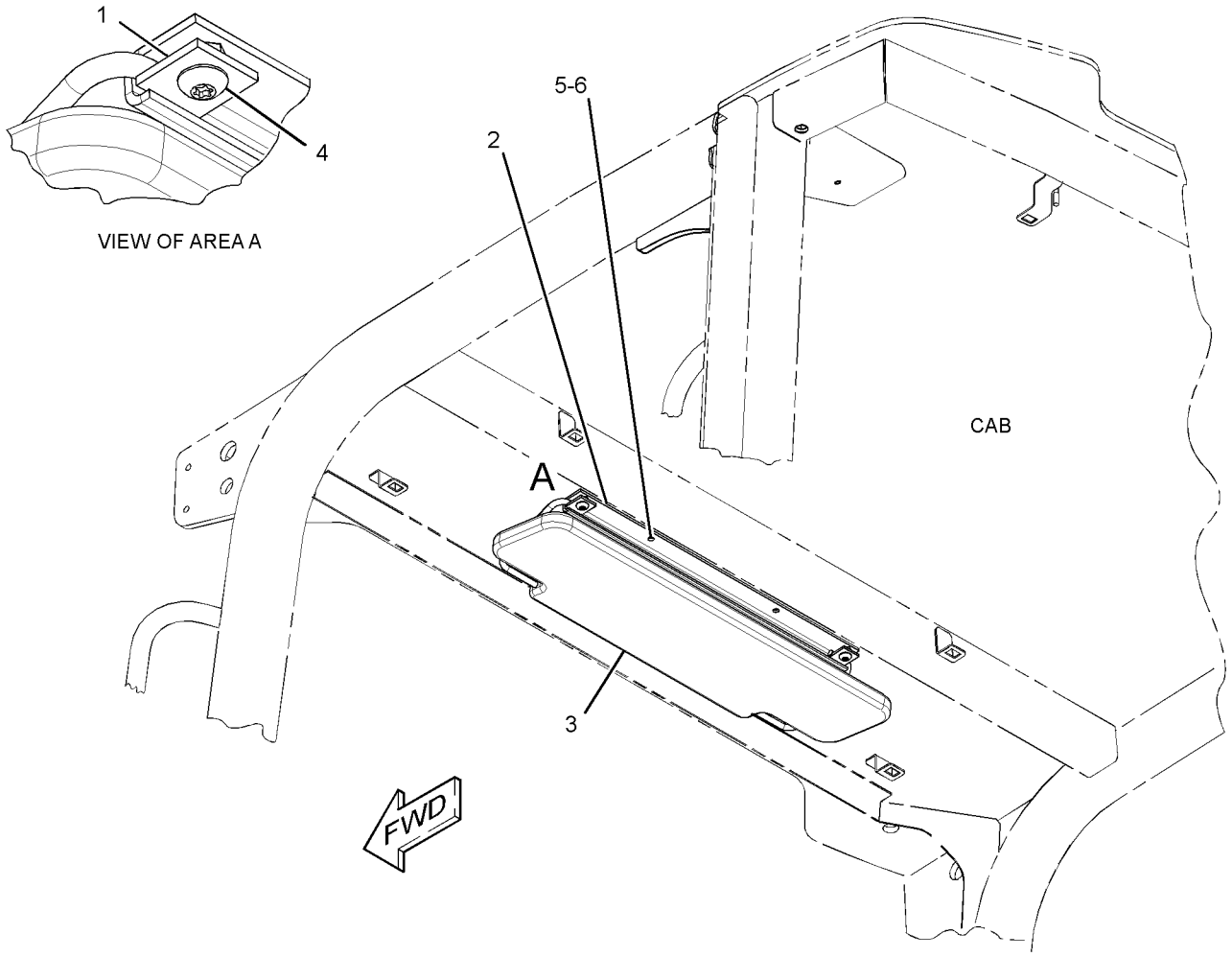

GRAPHIC #1 **<END>** g01523155

OPERATOR STATION

257-6375 WIPER GP-WINDOW

S/N: LMD1-UP
PART OF 295-5275, 295-5276 OPERATOR AR-ENCLOSED ROPS
AN ATTACHMENT

SMCS-7305 **i03133760**

NOTE	REF NO	GRAPHIC REF	PART NUMBER	QTY	PART NAME 1 2 3 4 5 6 (PRODUCT LEVEL)	SEE PAGE
	1	1	**6V-5853**	1	BLADE AS-WIPER (450-MM) (REAR)	
	2	1	**6V-7419**	1	BLADE AS-WIPER (700-MM) (FRONT)	
	3	1	**8T-5400**	4	CONNECTOR AS	
J	4	1	**134-1934**	1	ARM AS-WINDOW WIPER (FRONT)	
	5	1	**3F-9556**	1	LOCKWASHER	
	6	1	*269-0413*	1	ARM GP-WINDOW WIPER (REAR)	
		1	**136-3194**	1	NOZZLE AS-WASHER	
E		1	**194-5171**		HOSE (55-CM)	
Y	7	1	*269-0416*	1	MOTOR GP-WINDOW WIPER (REAR)	402
	8	1	**273-9579**	1	PLATE	
	9	1	**297-8764**	1	GASKET	
Y	10	1	**241-9102**	1	MOTOR GP-WINDOW WIPER (FRONT)	401
	11	1	**3S-2093**	7	STRAP-CABLE	
M	12	1	**8T-4200**	4	BOLT (M8X1.25X16-MM)	
	13	1	**8T-4224**	4	WASHER-HARD (8.8X16X2-MM THK)	
E	14	1	**144-0195**		HOSE (216-CM)	
E	14A	1	**144-0195**		HOSE (256-CM)	
	15	1	**146-6346**	2	CLIP	
					AVAILABLE REPAIR KIT(S):	
J			**163-4759**	1	KIT-REPAIR (WINDOW WIPER ARM)	
					(INCLUDES CONNECTOR AS, NOZZLE AS, CLIPS & NOZZLES)	

E-ORDER BY THE CENTIMETER
J-KIT MARKED J SERVICES PART MARKED J
M-METRIC PART
Y-SEPARATE ILLUSTRATION

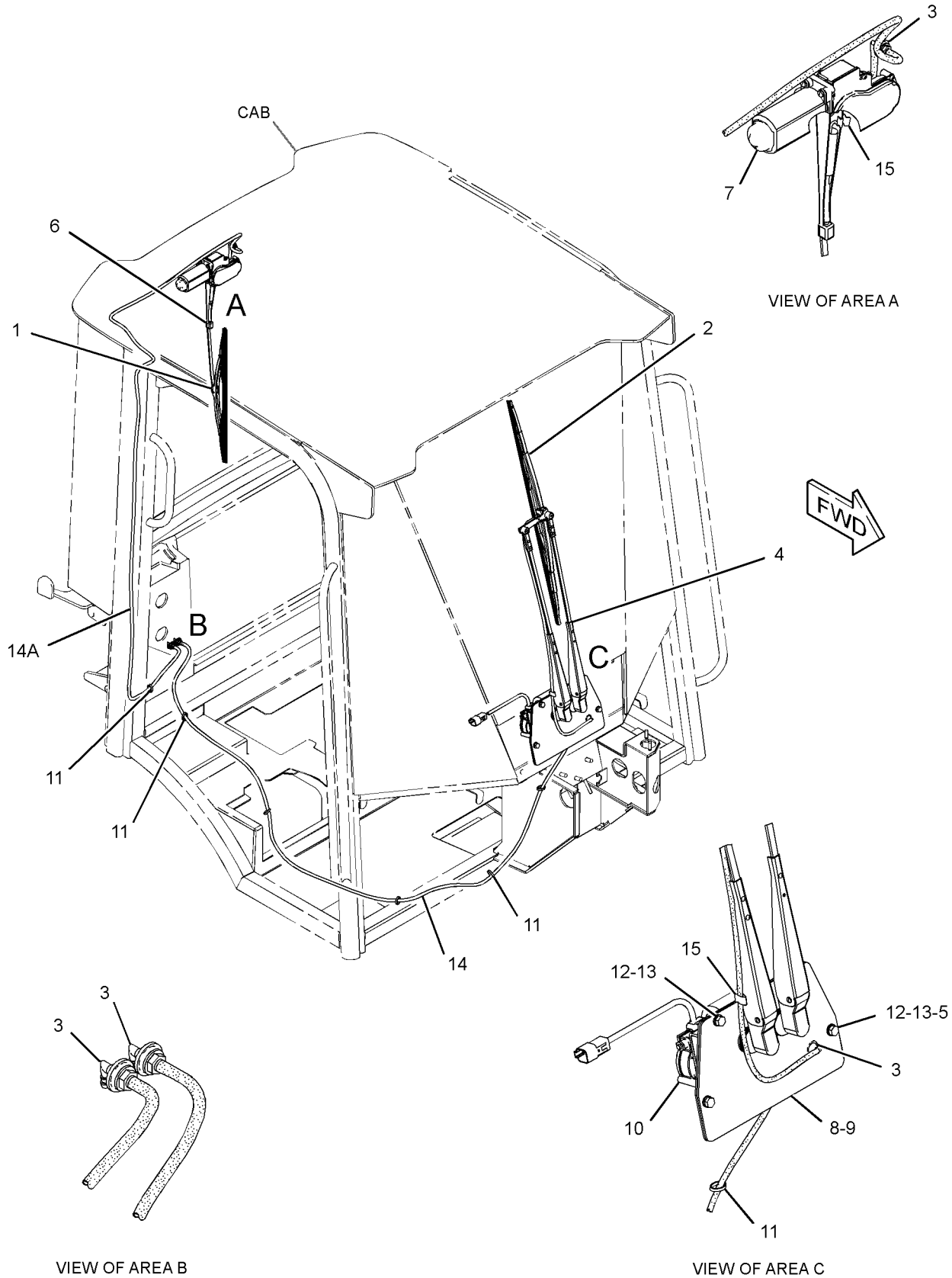

GRAPHIC #1 **<END>** g01618054

303-2126 CHOCK GP-WHEEL

S/N: LMD1-UP

PART OF 307-1559, 307-1560 CONVERSION AR-ROADING AN ATTACHMENT

SMCS-7000 **i03103121**

NOTE	REF NO	GRAPHIC REF	PART NUMBER	QTY	PART NAME 1 2 3 4 5 6 (PRODUCT LEVEL)	SEE PAGE
	1	1	**5P-7958**	3	SLEEVE-CABLE SPLICE (LITERATURE LANYARD)	
	2	1	**148-6596**	1	CHOCK-WHEEL	
	3	1	**179-8235**	1	LOCK PIN	
	4	1	**302-8754**	1	ROD	
	5	1	**303-0327**	1	INSULATION	
M	6	1	**5C-9553**	1	BOLT (M6X1X16-MM)	
	7	1	**8T-4205**	1	WASHER-HARD (7.2X14.5X2-MM THK)	
	8	1	**5P-7957**	1	LANYARD (LITERATURE)	

M-METRIC PART

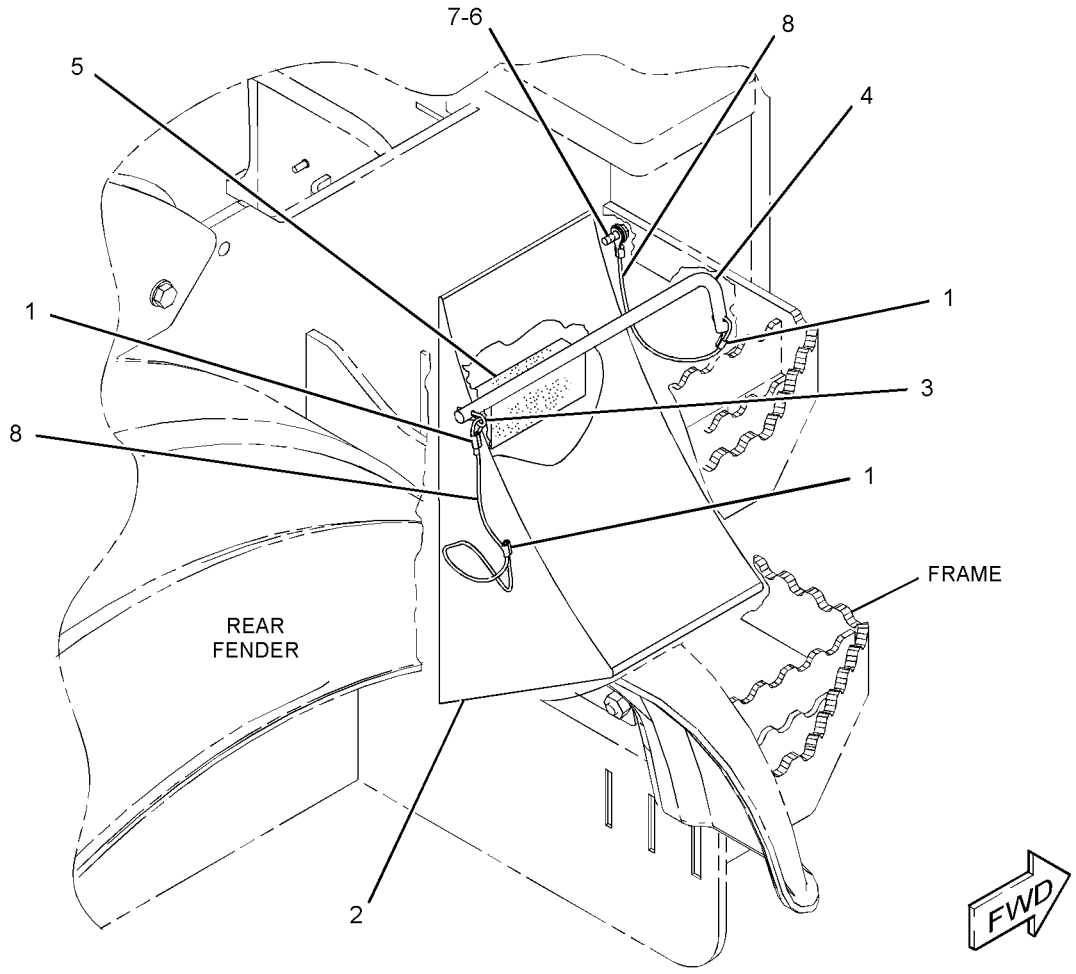

GRAPHIC #1 **<END>** g01408406

SERVICE EQUIPMENT AND SUPPLIES

300-4085 FILM GP–U.S.

S/N: LMD1-UP

AN ATTACHMENT

SMCS-7405, 7557 **i02841522**

NOTE	REF NO	GRAPHIC REF	PART NUMBER	QTY	PART NAME 1 2 3 4 5 6 (PRODUCT LEVEL)	SEE PAGE
	1	1	**224-8945**	1	FILM-WARNING (DO NOT USE ETHER, U.S)	
	2	1	**225-0313**	1	FILM-WARNING (JUMP START, READ OMM, U.S.)	
	3	1	**226-1275**	2	FILM-WARNING (CRUSH HAZARD, READ OMM, U.S.)	
	4	1	**239-4233**	1	FILM-WARNING (QUICK COUPLER, READ OMM)	
	5	1	**240-7956**	1	FILM-WARNING (DO NOT OPERATE, READ OMM)	
	6	1	**259-4401**	1	FILM-WARNING (HOT FLUID UND PRESS, READ OMM)	
	7	1	**300-6370**	2	FILM-WARNING (CRUSH HAZARD, STAY BACK)	
	8	1	**302-4389**	1	FILM-WARNING (CRUSH HAZARD, FASTEN SEAT BELT)	
	9	1	**228-3581**	1	FILM-WARNING (DO NOT OPERATE, READ OMM)	

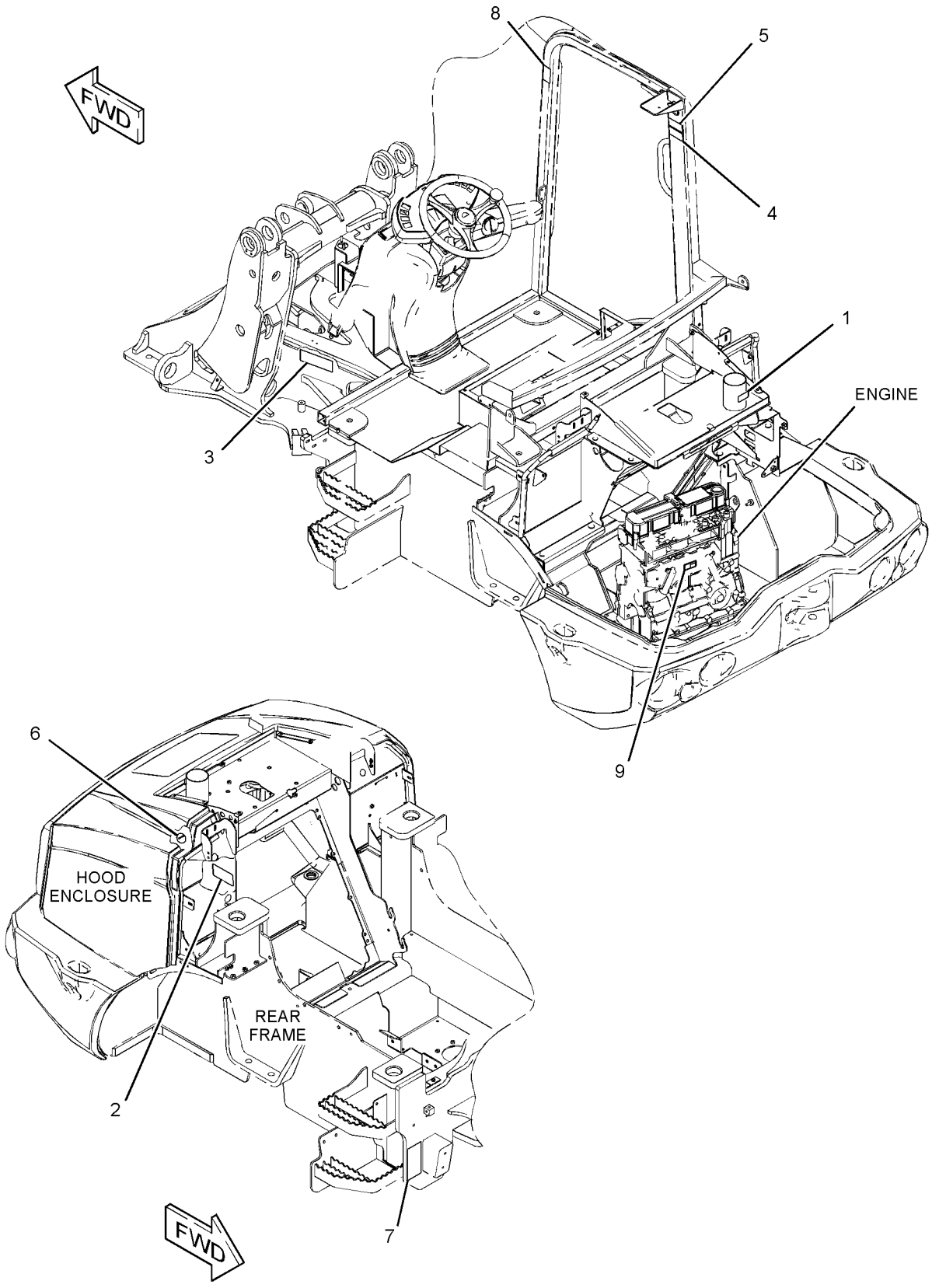

GRAPHIC #1 **<END>** g01427333

SERVICE EQUIPMENT AND SUPPLIES

300-4086 FILM GP—INTERNATIONAL

S/N: LMD1-UP

AN ATTACHMENT

SMCS-7405, 7557 **i02841266**

NOTE	REF NO	GRAPHIC REF	PART NUMBER	QTY	PART NAME 1 2 3 4 5 6 (PRODUCT LEVEL)	SEE PAGE
	1	1	**224-8946**	1	FILM-WARNING (NO ETHER SPRAY/AIR INTK, INTL)	
	2	1	**225-0312**	1	FILM-WARNING (JUMP START, READ OMM, INTL)	
	3	1	**240-7957**	1	FILM-WARNING (DO NOT OPERATE, READ OMM, INTL)	
	4	1	**259-4402**	1	FILM-WARNING (HOT FLUID UNDER PRESSURE)	
	5	1	**300-6371**	2	FILM-WARNING (CRUSH HAZARD, STAY BACK)	
	6	1	**302-4390**	1	FILM-WARNING (CRUSH HAZARD, FASTEN SEAT BELT)	
	7	1	**226-1274**	2	FILM-WARNING (CRUSH HAZARD, READ OMM, INTL)	
	8	1	**239-4234**	1	FILM-WARNING (QUICK COUPLER, READ OMM, INTL)	
	9	1	**222-7944**	1	FILM-WARNING (DO NOT OPERATE, READ OMM, INTL)	

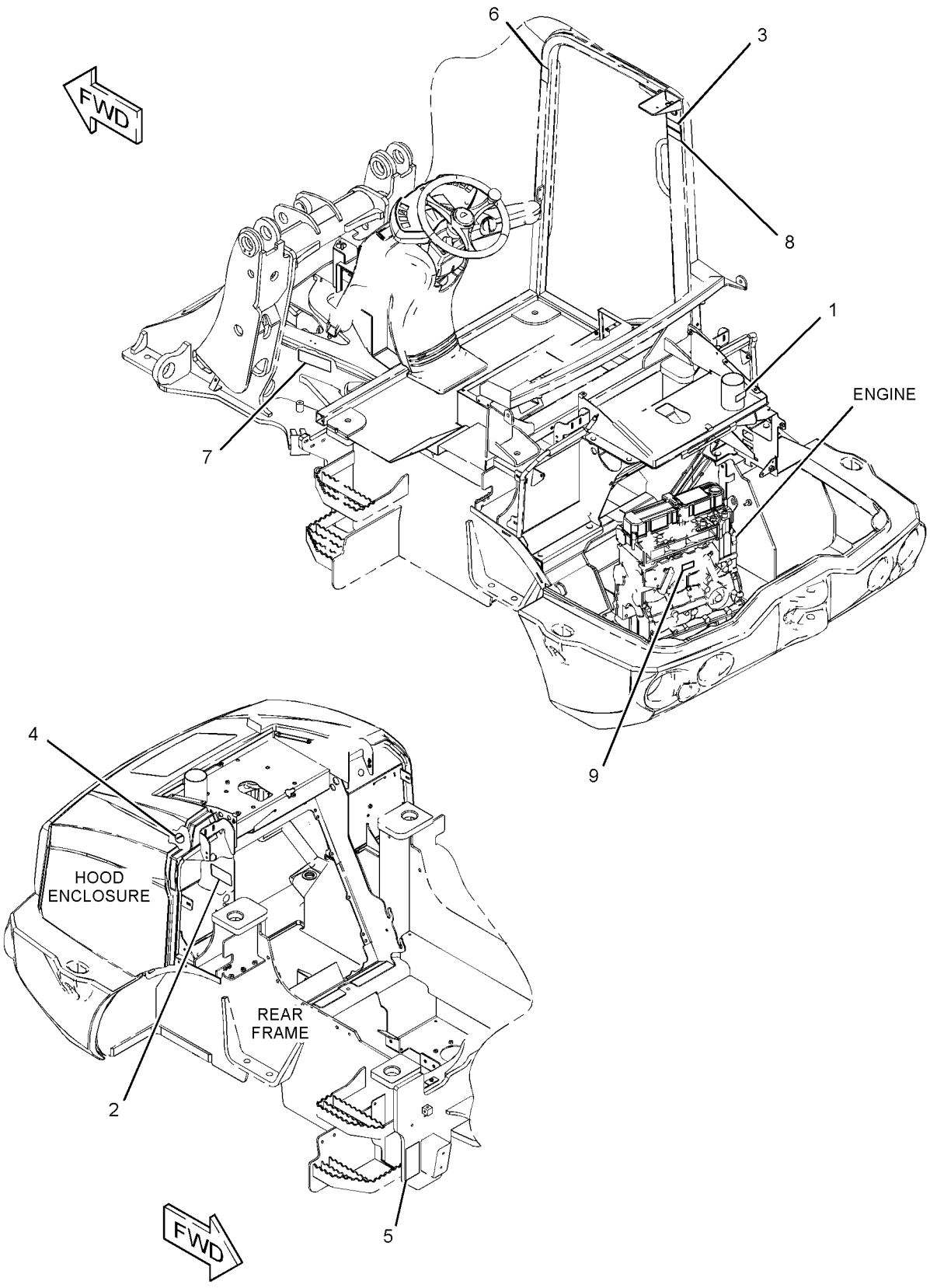

GRAPHIC #1 **<END>** g01427342

SERVICE EQUIPMENT AND SUPPLIES

293-9760 PLATE & FILM GP

S/N: LMD1-UP

PART OF 322-4878 CHASSIS AR

SMCS-7405, 7557 **i02817692**

NOTE	REF NO	GRAPHIC REF	PART NUMBER	QTY	PART NAME 1 2 3 4 5 6 (PRODUCT LEVEL)	SEE PAGE
	1	1	**159-8033**	1	FILM-IDENTIFICATION (12-VOLT)	
	2	1	**219-0305**	1	FILM-WARNING (NO WELD, NO DRILL, READ OMM)	
	3	1	**224-9855**	1	FILM-INSTRUCTION (START AID, READ OMM, INTL)	
	4	1	**225-4150**	1	PLATE-SERVICE INFORMATION (MACHINE)	
	6	1	**239-6989**	1	PLATE-SERIAL NUMBER (MACHINE)	
	7	1	**248-5245**	4	FILM-INFORMATION (LIFT EYE, TIE-DOWN LOCATION)	
	8	1	*311-7490*	1	FILM GP	
		1	**303-0319**	1	FILM-IDENTIFICATION (CAT, 908H, LH)	
		1	**303-0320**	1	FILM-IDENTIFICATION (CAT, 908H, RH)	
		1	**303-0321**	1	FILM-IDENTIFICATION (CAT, REAR)	
	12	1	**308-2642**	1	FILM-INSTRUCTION (OPERATOR CONTROLS, LOAD)	
	13	1	**236-7230**	1	TAG-WARNING (STEERING FRAME LOCK)	
	14	1	**312-8669**	1	FILM-CONTROL	

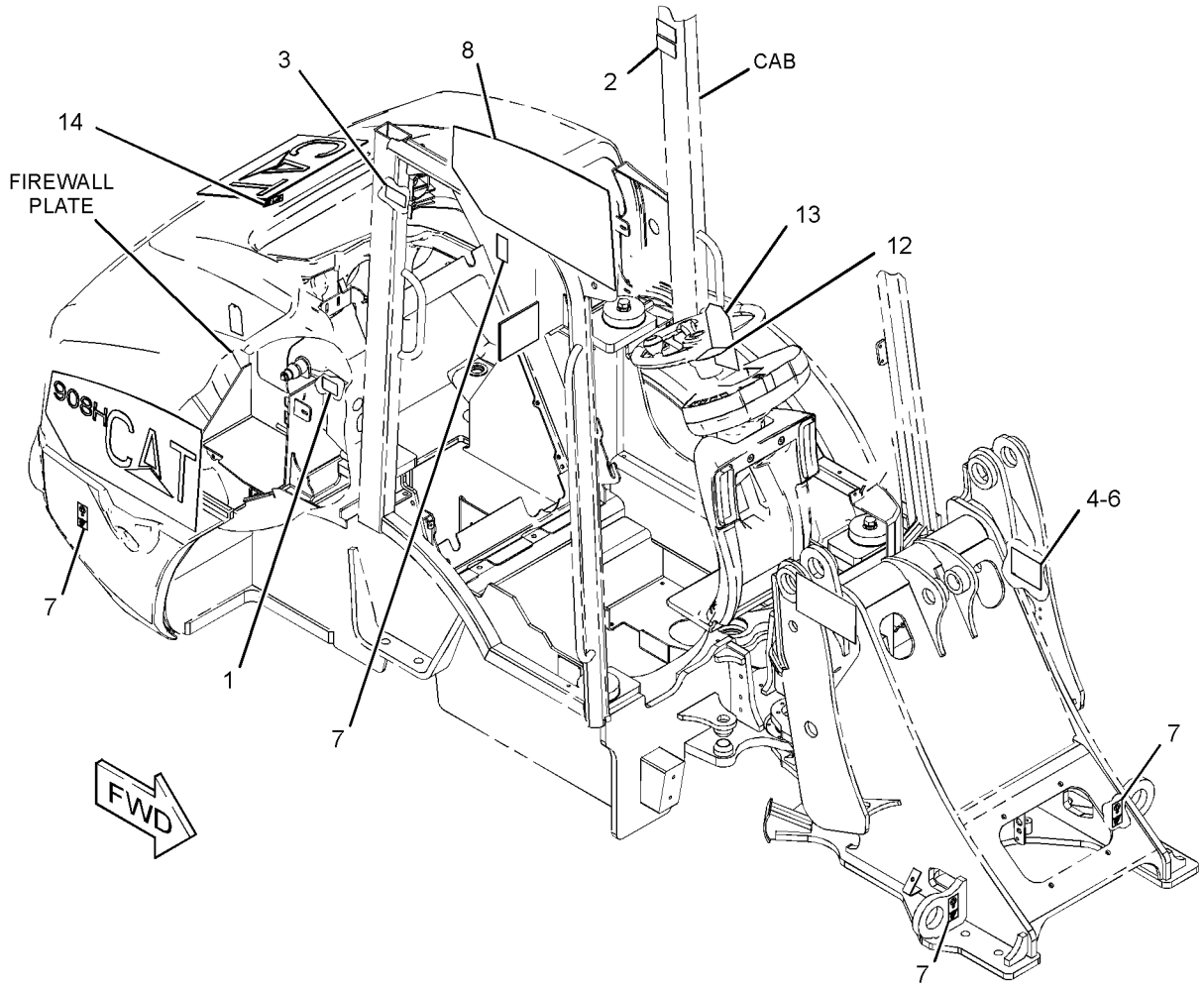

GRAPHIC #1 **<END>** g01406637

SERVICE EQUIPMENT AND SUPPLIES

304-9376 PLATE & FILM GP–ENVIRONMENTAL

S/N: LMD1-UP

AN ATTACHMENT

SMCS-7405, 7557 **i02735636**

NOTE	PART NUMBER	QTY	PART NAME 1 2 3 4 5 6 (PRODUCT LEVEL)	SEE PAGE
	169-3530	1	FILM-IDENTIFICATION (BIODEGRADABLE HYDRAULIC OIL)	

<END>

PART NUMBER INDEX

Part	Page
1	
1G-3176	312
1G-3410	314
1G-8597	230
1G-8878	163
1H-3244	75
1H-7339	235
	253
	254
1H-8128	255
1L-9080	418
1M-6119	78
1M-6120	78
1P-3702	168
	170
1P-3703	168
	170
1P-4278	44
	66
	172
	230
	232
	292
	294
	304
1P-4578	296
	298
1P-7009	66
	393
1R-0734	35
1S-0668	235
1S-0994	66
	316
1S-1125	410
1S-7251	78
	121
1S-7252	78
1S-9593	136
	139
1T-0994	157
2	
2C-9259	331
	332
2D-5658	159
2H-3920	418
2H-3922	113
2H-6338	253
2K-0512	255
2M-3432	130
2M-9780	166
	262
	265
	269
	270
	278
	279
	282
	284
	287
	304
2P-1279	279
2P-8104	109
2S-0480	164
2S-1074	78
2S-3440	48
2S-9727	428
2T-3360	409
2U-5115	357
2W-1145	306
2Y-5429	48
	66
3	
3B-4503	398
3B-4505	6
	20
	25
	33
	41
	56
	57
	68
	159
3B-4615	228
3B-5302	1
3B-5317	310
3B-6552	220
3B-8485	220
3B-8488	220
3B-8489	220
	310
	325
	341
	342
	348
3D-2824	166
	168
	170
	270
	278
	290
	291
	296
	298
	304
	312
3D-9871	123
	128
3E-2345	296
	298
3E-4051	393
3E-4052	393
3E-4053	393
3E-4057	393
3E-4058	393
3E-4302	409
3E-4304	383
	428
3E-4321	233
3E-4352	377
	379
	381
3E-4883	403
3E-5153	109
3E-5154	109
3E-6600	103
	429
3E-6749	40
3E-7675	130
3E-8008	347
3E-8020	292
	362
	364
	384
	429
3E-8320	78
3F-6166	220
3F-9556	401
	402
	436
3J-1907	130
	150
	152
	154
	163
	165
	168
	170
	172
	188
	230
	232
	236
	239
	262
	265
	266
	269
	270
	274
	276
	278
	284
	285
	287
	288
	292
	294
	296
	298
	302
	312
	322
3J-7354	39
	163
	257
	304
	312
3K-0360	13
	166
	232
	236
	239
	256
	265
	266
	269
	270
	276
	278
	282
	284
	287
	292
	304
3K-2518	157
	159
3K-7928	395
3K-8785	123
	404
3P-1896	10
3P-3743	159
3S-2093	87
	121
	125
	127
	130
	133
	135
	136
	139
	230
	311
	427
	436
3S-6050	78
4	
4B-2043	120
4B-4863	121
	132
	222
	230
4D-2297	146
4D-3107	150
	152
	154
4D-7388	48
4D-7735	393
4E-1384	217
4E-1411	404
4H-0094	410
4H-2558	133
4I-3038	121
4I-6287	285
	288
4I-9404	41
4J-0522	296
	298
4J-1888	341
	342
4J-5477	165
	172
	230
	232
	262
	263
	265
	266
	269
	270
	278

► **PRIMARY REFERENCE**

PART NUMBER INDEX

Part	Page
	279
	292
	294
4J-9219	255
4K-4284	159
4K-8864	64
	148
	149
4L-7711	159
4P-7581	133
	168
	170
	172
	393
4P-8134	133
4T-6780	254
4V-0611	236
	239
4V-0612	262
	269
	278
	282
	284
	287

5

Part	Page
5B-0651	348
5C-2874	103
	121
	429
5C-2890	17
	48
	61
	75
	85
	87
	98
	100
	202
	270
	352
	398
	399
	404
	410
	413
	429
	431
	433
	435
5C-7261	17
	18
	51
	53
	65
	66
	80
	90
	121
	123
	128
	159
	205
	207
	217
	230
	232
	236
	239
	248
	249
	279
	308
	391
	395
	401
	402
	410
5C-8312	121
	222
	230
5C-9553	48
	61
	98
	100
	120
	121
	132
	360
	383
	438
5D-1026	13
	290
	291
	304
	395
5E-6955	257
5G-5703	144
5H-2767	150
	152
	154
	159
5I-4376	130
5I-4993	25
5I-5077	61
5I-7505	27
5I-7525	10
5I-7623	61
5I-7625	32
5I-7628	19
	45
5I-7630	32
5I-7633	60
	61
5I-7678	55
5I-7689	61
5I-7719	32
5I-7728	45
5I-7833	25
5I-7931	56
5I-7933	61
5I-7937	58
	59
5I-8056	19
	45
5I-8109	61
5I-8110	61
5J-4561	235
	253
5K-5338	393
5K-8451	66
5K-9090	296
	298
5P-0597	61
	296
	298
5P-0599	279
	282
	284
	287
	311
5P-0743	13
	427
5P-0747	78
5P-0761	78
5P-0767	395
5P-1076	23
	343
	344
5P-1420	44
	66
5P-1442	48
	66
	172
	232
	249
	292
	294
	308
5P-1505	66
	316
5P-1717	236
	239
	278
	282
	284
	287
5P-2230	296
	298
5P-4115	17
	18
	98
	100
	393
	395
	404
5P-4116	17
	18
	43
	44
	47
	48
	51
	53
	65
	66
	73
	78
	201
	205
	220
	223
	248
	251
	316
	391
	393
	395
	410
	426
5P-4868	61
	296
	298
5P-5397	157
5P-5628	123
5P-5639	431
	433
5P-5677	87
5P-5755	383
5P-5874	247
5P-6442	230
	304
5P-7211	205
5P-7648	64
	230
5P-7814	65
5P-7957	438
5P-7958	397
	438
5P-8247	148
5P-8250	254
5P-8500	377
	381
	397
5P-8524	404
5P-8837	1
5P-9085	220
5P-9757	320
5S-1522	140
	142
	144
5T-9728	296
	298
5T-9771	220
5V-2545	179
	180

6

Part	Page
6C-7319	195
	197
6C-7320	195
	197
6D-1641	395
6D-3479	65
	230
	232
6D-4246	236
	239
6E-0122	254
6E-0725	314
6E-1607	50
6E-3283	306
6E-4240	312
6E-4701	302
6F-4718	306
6F-6672	304

PART NUMBER INDEX

Part	Page	Part	Page	Part	Page	Part	Page
6F-7037	254		296		256		270
6F-7045	113		298		262		276
6G-2263	44	6V-4249	144		263		278
	64		146		265		282
	66	6V-5192	159		266		284
	395		312		270		287
6I-1418	80	6V-5196	251		274	6V-8641	165
6J-1972	254	6V-5200	144		276		172
6J-2245	130		146		284		230
6J-5733	254		241		287		265
6J-7855	323	6V-5210	357		292		270
6K-0806	389		387		296		278
	390	6V-5215	22		298		292
	395		36		302		294
6K-8178	66	6V-5217	22	6V-8398	166	6V-8713	290
	393		37		236		291
6P-6590	130		70		239	6V-8721	166
6P-6591	133		77		253	6V-8723	236
	395		150		255		239
6R-2934	270		152		270	6V-8724	232
6R-3320	262		154		274		262
6S-8620	48		159		276		270
	66	6V-5221	33		278	6V-8757	215
	316		45		279	6V-8774	165
6T-1375	427	6V-5224	159		282		266
6V-0400	168	6V-5326	257		284	6V-8777	298
	170	6V-5586	50		285	6V-8787	232
6V-0467	265	6V-5839	37		287	6V-8801	121
6V-0852	163	6V-5843	142		288		130
	168		159		296	6V-8949	204
	170	6V-5853	436		298	6V-8978	312
	230	6V-6715	85		304	6V-8982	266
	232		87	6V-8625	236	6V-8996	263
	236	6V-7238	13		270		266
	239	6V-7357	17		282		270
	296		18		284	6V-9002	304
	298		20		287	6V-9007	168
6V-1250	322		263	6V-8626	304		170
6V-1355	304		270	6V-8627	165		296
6V-1970	1		377		172		298
	▶397		379		262	6V-9028	130
6V-2314	361		381		265		133
	363	6V-7418	256		294	6V-9169	279
	410	6V-7419	436	6V-8632	265		282
6V-2317	33	6V-7535	48	6V-8633	166		285
	41	6V-8200	306		270		288
	68	6V-8202	249		278	6V-9170	263
	90		308	6V-8634	232		266
	159		323		236		270
6V-2480	121	6V-8214	367		239	6V-9189	215
6V-2496	357	6V-8225	159		265		237
6V-3822	159	6V-8231	58		284		239
6V-3918	56		59		287	6V-9632	325
6V-3940	32		133	6V-8636	130		435
	35	6V-8337	251		232	6V-9669	359
	46	6V-8351	188		274	6V-9672	121
6V-3959	204	6V-8352	257		276		222
6V-3965	130	6V-8397	130		292	6V-9746	168
	163		165	6V-8638	274		170
	168		168		278		270
	170		170		284		278
	230		232		287		284
	232		235	6V-8639	166		296
	236		236		236		298
	239		239		239		304

▶ **PRIMARY REFERENCE**

PART NUMBER INDEX

Part	Page
6V-9831	290
6V-9832	291
6V-9835	172
	279
6V-9837	236
	287
6V-9838	270
6V-9843	168
	170
6V-9844	270
6V-9851	279
6V-9853	270
	284
6V-9877	278
6W-2463	232
6Y-6846	159
7	
7E-6710	78
7F-3400	397
7F-9223	121
7G-3228	168
	170
	290
	291
7G-7053	121
7H-7241	228
7I-2673	133
	136
	139
	395
7J-9108	262
	263
	265
	266
	269
	270
	290
	291
	296
	298
	304
7K-1181	78
	121
	125
	127
	130
	135
	136
	139
	168
	170
	230
	269
	290
	291
	371
	426
7K-6416	96
7M-3361	393
7N-0718	78
	▶113
7N-5274	78
7T-4848	121
7T-6087	109
7T-6088	109
7T-6090	109
7T-6092	109
7T-6093	109
7T-6099	109
7X-0510	13
	348
7X-0579	80
7X-0603	204
	236
	239
	249
	308
7X-0613	48
7X-0796	70
7X-0818	46
	65
7X-0872	262
7X-2459	168
	170
7X-2532	403
7X-2533	230
	232
7X-2534	230
	233
	360
7X-2535	266
7X-2537	46
	66
	73
	232
	393
7X-2539	285
	288
7X-2542	215
7X-2545	325
7X-2556	23
	148
7X-6312	84
7X-7729	43
	48
	63
	223
	285
	288
	365
	391
7X-7888	270
7X-8549	163
7Y-5219	50
8	
8B-5972	159
8C-3095	85
	87
8C-3445	39
8C-3446	39
	163
8C-3451	163
8C-3681	48
	65
8C-3756	357
	387
8C-5457	109
8C-5607	85
	87
8C-5608	85
	87
8C-6444	278
8C-6567	320
8C-7332	212
	213
	214
8C-7505	144
8C-8580	320
8C-8990	218
8C-9778	109
8C-9783	109
8C-9987	73
	207
	217
	218
8E-1118	404
8E-8292	427
8E-8293	427
8F-0212	320
8F-1434	109
8F-3469	159
8H-5303	113
8H-5306	113
8H-5352	157
8H-7521	255
8I-1362	48
8I-4641	133
8J-2574	253
	254
8J-4455	109
8L-2779	65
8L-9811	311
8M-2770	279
8N-0869	78
8S-3020	78
8S-4726	417
8S-7583	98
	100
8T-0120	290
	291
8T-0154	357
	387
8T-0164	263
	270
8T-0255	350
	351
8T-0267	130
8T-0271	157
8T-0276	45
8T-0328	121
	377
	379
	381
	410
8T-0337	227
8T-0338	322
8T-0341	157
	270
8T-0363	201
8T-0389	91
	92
	93
	94
	325
	348
	391
8T-0640	225
8T-0642	30
8T-0707	215
8T-0788	266
8T-1158	248
	302
8T-1686	239
8T-1887	274
	276
8T-1888	274
	276
8T-2563	223
8T-2922	247
8T-3311	230
	232
8T-3425	263
	266
	271
	274
	276
	279
	282
	285
	288
8T-3444	274
	276
8T-3490	195
	197
	208
8T-3647	270
8T-3998	121
	230
8T-4001	174
8T-4121	1
	44
	48
	58
	59
	64
	70
	73
	78
	98
	100
	109
	121
	130
	133
	135
	166
	168
	170
	172
	175
	207
	208
	209
	210

▶ PRIMARY REFERENCE

PART NUMBER INDEX

Part	Page	Part	Page	Part	Page	Part	Page
	215		288		205		68
	228		347		218		120
	232	8T-4137	70		223		133
	236		121		227		218
	239		133		230		248
	241		135		261		251
	263		166		346		393
	266		325		374		407
	270		393		375		436
	274		395		391	8T-4205	17
	276	8T-4138	17		395		48
	279		18		414		75
	282		204		415		98
	285		218		416		100
	288		360	8T-4190	347		120
	292		400	8T-4191	316		121
	296		410	8T-4192	58		132
	298	8T-4139	23		59		218
	304		210	8T-4193	175		263
	325		386		260		271
	347		407	8T-4195	19		352
	365	8T-4154	410		43		398
	393	8T-4167	174		48		438
	395		201		175	8T-4222	1
	418	8T-4171	352		208		316
	429	8T-4172	168		209	8T-4223	23
8T-4122	23		170		215		58
8T-4123	353		292		223		59
	403		395		263		168
8T-4127	121	8T-4176	23		266		170
8T-4131	403	8T-4177	57		271		202
8T-4132	23		263		279		210
8T-4133	48		266		282		260
	73	8T-4182	48		285		365
	78		64		288		407
	109		168		296	8T-4224	17
	121		170		298		18
	130		307		304		20
	133	8T-4183	202		325		43
	223		365	8T-4196	63		44
	230	8T-4184	168		195		46
	232		170		197		48
	236	8T-4185	44		210		51
	239		172		215		53
	262		207		263		65
	263		236		271		66
	265		239		279		73
	266		266		282		78
	271		393		285		90
	279	8T-4186	210		288		120
	365		285		296		121
	393		288		298		123
	429		365		316		128
8T-4136	1	8T-4187	201		347		130
	73	8T-4189	43		391		133
	98		47	8T-4197	8		148
	100		48	8T-4198	348		149
	236		51	8T-4199	47		201
	239		53	8T-4200	6		205
	241		73		17		207
	274		78		18		210
	276		130		20		215
	279		148		25		217
	282		149		33		218
	285		201		48		221

► **PRIMARY REFERENCE**

PART NUMBER INDEX

Part	Page
	227
	230
	232
	237
	239
	249
	261
	266
	271
	279
	285
	288
	294
	307
	308
	346
	347
	360
	374
	375
	391
	393
	407
	412
	414
	415
	416
	426
	436
8T-4226	208
	249
	307
	308
8T-4231	257
8T-4244	23
	343
	344
8T-4778	349
	354
8T-4815	230
	232
8T-4896	19
	70
	77
	121
	130
8T-4908	44
	66
	201
	205
	207
	210
	217
	218
	221
	249
	308
	316
	347
	393
	412
	426
8T-4910	168
	170
	343
	344
8T-4956	260
8T-4971	17
	18
	410
8T-4984	44
8T-5043	65
8T-5360	417
8T-5400	436
8T-5429	166
8T-5436	325
	365
8T-5439	191
	192
	193
	194
	201
8T-6338	236
	239
8T-6466	263
	271
	279
	393
8T-6685	348
8T-6699	320
8T-6703	44
8T-6726	51
	53
	278
	393
8T-6869	66
	263
	271
	279
	282
	285
	288
8T-6870	236
	239
	249
	294
	307
	308
8T-6876	236
	239
8T-6895	279
	282
8T-6912	236
	239
	395
8T-7329	20
8T-7547	17
	18
	43
	44
	46
	51
	53
	230
	232
	249
	308
	395
8T-7876	230
	232
8T-7971	265
8T-8442	225
8T-8737	91
	92
	93
	94
	107
	133
	401
8T-9007	210
8T-9381	417
8T-9402	51
	53
	296
	298
8T-9403	168
	170
8T-9405	371
8T-9515	159
8T-9655	80
8U-6970	348
8W-8909	139
8Y-4223	386
8Y-8081	78
9	
9D-7924	236
	239
9F-5599	121
9F-5644	113
9G-3695	401
9G-4191	311
9H-6761	159
9M-0164	263
	271
9M-1974	8
	22
	30
	32
	33
	35
	36
	37
	41
	45
	46
	68
	70
	77
9M-6738	278
9M-7958	304
9M-7961	316
9N-1756	40
9R-0390	23
9R-2052	236
	239
	282
	285
	288
9R-2053	311
9R-2806	230
	232
9R-2807	230
	232
9R-3203	435
9R-3204	435
9R-3205	435
9R-3469	426
9R-3545	184
9R-4668	▶310
	333
	334
9R-4675	345
9R-4676	341
	342
9R-4677	310
9R-4678	310
9R-5294	345
9R-5301	324
9R-5948	278
	282
	284
	287
9R-7941	123
	128
9R-7942	95
9R-7958	95
9R-7980	123
	128
9R-9110	228
9R-9111	228
9S-4185	266
9S-4191	284
	287
9S-8002	257
	312
9S-8004	150
	152
	154
	188
	312
	322
9S-8008	312
	320
9T-2212	254
9T-3726	312
9T-3853	322
9T-3928	312
9T-4007	254
9T-4008	254
9T-4009	254
9T-4367	322
9U-6992	296
	298
9U-6993	304
9U-8263	392
9W-0607	90
9W-0614	150
	152
	154
9W-3226	100
9W-3324	91
	92
	93
	94
9W-3326	98
	100
9W-6226	23

▶ **PRIMARY REFERENCE**

PART NUMBER INDEX

Part	Page
9W-8096	23
9W-9931	403
9X-1813	370
	373
9X-2032	357
	387
9X-2036	109
9X-2038	202
	362
	364
	366
	367
	376
	384
	428
	429
	431
	433
9X-2040	228
9X-2042	356
	366
	385
	435
9X-2043	429
9X-2044	85
	103
	105
	367
	383
	408
9X-2045	366
	376
	377
	379
	381
	384
	428
	431
	433
9X-2158	157
9X-2480	263
	266
	271
	395
9X-3401	410
9X-4244	90
9X-6165	85
	87
	204
9X-6381	159
9X-6383	103
9X-6772	84
9X-7298	255
9X-7377	247
9X-7378	365
9X-7380	393
9X-7381	393
9X-7382	13
	393
9X-7383	393
9X-8118	95
9X-8139	95
9X-8250	393
	395
9X-8256	20
9X-8257	175
9X-8267	408
9X-8477	174

0

Part	Page
032-8100	65
032-8139	14
033-5879	40
033-6033	247
033-6039	306
033-7849	65
034-1432	292
055-1990	159
061-7831	96
	128
069-4080	65
081-5930	121
084-4277	123
085-7329	285
	288
085-8091	168
	170
085-9513	9
087-4772	257
089-7338	44
091-1637	350
	351
091-1664	350
	351
091-1745	350
	351
093-2065	270
094-4628	6
	9
094-7235	68
095-0641	159
095-0658	157
095-0881	227
095-0924	176
095-0929	157
095-1513	41
095-1537	35
095-1671	35
095-2005	32
096-2500	20
	61
096-3321	41
096-3741	10
096-8475	45
096-9529	20
098-5623	148

1

Part	Page
098-5747	159
099-3600	159
099-3649	57
099-4420	10
099-7002	235
100-3253	91
	92
	93
	94
100-3254	91
	92
	93
	94
100-3255	91
	92
	93
	94
100-3685	109
100-4112	109
100-4113	109
100-4115	109
100-4118	109
100-4119	109
101-0333	230
101-4411	352
101-4412	352
101-4413	352
101-4414	352
101-4639	318
101-6544	37
102-8703	232
	269
102-8802	85
	87
	133
	371
102-8803	130
	361
	363
	370
	373
	410
102-8804	402
102-8805	91
	92
	93
	94
	401
103-2555	51
	53
103-5796	201
103-9083	37
103-9246	12
103-9276	10
103-9279	10
103-9280	19
103-9288	5
103-9289	5
103-9290	5
103-9680	7
103-9703	10
103-9725	38
103-9747	46
103-9750	46
104-2091	431
105-2814	▶75
	77
105-2954	60
106-0827	195
	199
106-3108	187
	301
106-5618	247
107-2502	324
107-3117	188
107-3120	312
107-3659	83
107-4749	230
	232
107-6032	▶89
	123
107-6826	179
	180
108-2989	269
108-3565	314
108-6941	232
108-7605	98
	100
109-1633	284
	287
	393
109-1634	284
	287
	393
109-2356	85
	103
	105
	409
109-3262	287
110-2556	52
110-5056	419
	421
	423
110-5059	419
	421
	423
110-6326	52
110-6331	52
110-6393	355
110-8760	311
111-7874	236
	239
111-7899	118
	125
112-0885	325
112-4630	312
112-4657	314
112-9401	72
112-9783	266
112-9861	266
113-0363	68
113-0364	68
113-1141	37
113-2378	270
113-4458	75
113-4459	75

▶ **PRIMARY REFERENCE**

PART NUMBER INDEX

Part	Page	Part	Page	Part	Page	Part	Page
113-4460	75	118-1348	324	134-7113	265		182
113-4461	75	118-6503	377	134-7114	265		183
113-4462	75		379	134-9911	301		184
113-4463	75		381	135-2221	395		185
113-4464	75	118-8118	72	135-9269	256		186
113-4465	75	119-9631	357	136-1419	52		▶189
113-4466	75	120-4394	257	136-1955	290	142-2928	121
113-4467	75		312		291	142-3391	43
113-4468	75	121-5327	66		304	142-8858	85
113-4469	75		393	136-3194	436		103
113-4470	75	121-6752	197	136-6811	279		105
113-8490	82		200		282	142-8937	316
	85	122-8948	68		284	143-0539	▶109
	96	122-8949	68		287		111
	103	122-9068	314	136-7808	150	143-1344	109
	105	122-9070	314		152	143-6020	247
	115	122-9071	314		154	143-7634	182
	118	122-9363	50	137-6645	133		183
	356	122-9718	312	137-7747	▶163	143-8170	52
113-8491	82	123-2341	40		166	143-9478	189
	85	123-5787	306	138-2172	215	143-9644	262
	103	123-7562	257	138-8454	265		265
	105		323	138-8896	▶350		269
	118	123-7575	312	138-8937	331	144-0195	426
	125	123-7583	312		332		427
	127	124-1479	165	139-0428	265		436
	416	124-3243	203	140-0249	255	144-0367	73
113-8492	82	124-9913	306	140-2310	235	144-3935	44
	85	124-9914	306	140-2377	235	145-2350	47
	103	125-2976	13	140-2380	235		202
	105	125-6701	52	140-2392	235		205
	118	125-7874	123	140-5217	19	145-3810	323
	356	125-7875	123		70	145-3811	323
	385	125-9134	314	140-7656	255	145-3812	323
113-8493	82	126-1767	410	140-9378	85	145-3813	323
114-4917	195	126-8842	314		103	146-0797	393
	197	126-9587	314		105	146-6346	436
115-1615	132	127-2170	203		115	146-6729	109
116-4410	269		377		118	146-7453	304
116-6161	107		379		127	147-1040	345
	133		381		356	148-6596	438
116-7471	82		431	141-0709	253	148-7925	262
117-1385	133		433	141-0888	301		269
117-2311	85	128-2955	7		303		292
	103	128-2956	7	141-2307	51	148-8318	232
	105	128-2958	7		53		236
117-5015	19	128-8614	72	141-2398	181		239
117-7235	312	129-1831	112	141-2759	82		265
117-7238	314		369		404		284
117-7239	314	129-3178	218		416		287
117-7240	314	129-3180	202	141-4999	328	148-8325	165
117-7241	314	129-3181	188		329		172
117-7245	314	130-3279	53		336		230
117-7246	314	130-4841	395		338		265
117-7247	314	130-7596	9		▶354		270
117-7248	314	130-7877	77	141-5004	327		278
117-7249	314	131-4798	395		330		292
117-7250	314	132-4720	354		331		294
117-7251	314	132-4725	349		332	148-8328	166
117-7252	314	132-5789	133		335		270
117-7273	323	133-3260	262		337		278
117-7279	257		265		▶349	148-8336	130
117-7280	257		269	141-8546	262		232
117-7282	257	134-1934	436		270		274
117-8929	383	134-3987	48	142-1273	181		276

PART NUMBER INDEX

Part	Page
	292
148-8340	166
	236
	239
	270
	276
	278
	282
	284
	287
148-8341	290
	291
148-8342	265
148-8345	278
	284
	287
148-8346	239
148-8347	168
	170
	296
	298
148-8354	304
148-8359	278
148-8364	236
	270
	282
	284
	287
148-8365	236
	239
148-8368	165
	172
	262
	265
	294
148-8370	278
148-8372	166
148-8374	236
	239
148-8378	232
	262
	270
148-8381	166
148-8390	304
148-8392	270
	284
148-8407	284
	287
148-8411	266
148-8420	236
	239
148-8423	230
	232
148-8427	279
	282
148-8434	168
	170
148-8438	232
148-8439	165
	266
148-8443	168
	170
148-8444	236
	287
148-8446	270
148-8447	262
148-9364	301
149-0231	235
149-0686	▶245
	292
150-3033	262
	270
150-3060	274
	276
150-3715	159
150-4037	270
150-4050	266
150-5968	172
	279
151-2628	144
151-4841	269
151-6856	144
152-1811	▶50
	257
152-5372	383
152-5717	263
	274
152-5718	263
	274
152-6144	140
	142
	144
	146
	157
	159
	176
152-6145	150
	152
	154
	159
152-7691	401
153-2994	274
153-2996	265
153-2997	265
	276
153-6232	290
	291
153-6245	279
	282
	284
	287
153-6259	298
154-1711	276
154-2302	63
	66
	393
154-2704	331
	332
	333
	334
	339
	340
154-2844	266
154-5232	266
154-6583	262
	269
	278
	282
	284
	287
154-6739	404
155-2270	96
	107
155-4426	40
155-4956	419
	421
156-1056	419
	421
156-1686	419
	423
156-1687	419
	421
	423
156-5726	266
157-0449	112
	369
	370
	373
157-0739	164
157-0740	225
157-0741	144
	146
157-4835	343
	344
158-2306	246
158-3049	278
158-3770	371
	372
159-2953	349
159-3727	318
159-8033	443
159-9540	218
160-0496	246
160-0614	65
160-2243	214
160-2246	212
	213
	214
160-2247	212
	213
	214
160-4862	228
	429
	431
	433
160-8746	140
	142
	144
	190
160-8748	140
160-9192	318
161-2539	120
161-2560	265
	276
161-2561	265
	276
161-4102	140
	142
	144
	146
161-6282	144
161-7147	235
161-7620	413
	431
162-3960	▶246
	284
	287
	289
	291
163-4759	436
163-8811	212
	213
	214
164-2108	40
164-5549	284
	287
164-5567	168
	170
	230
	232
	236
	239
	296
	298
164-7556	90
164-8346	148
164-9425	135
164-9639	262
	269
	292
165-2601	25
165-3071	266
165-7067	146
165-7068	225
165-7069	146
165-7095	23
165-8867	146
165-9104	17
	18
166-2560	353
167-0013	225
167-0014	225
167-1530	85
	103
167-2183	253
167-2186	254
167-2199	255
167-2294	254
167-2303	253
167-2306	255
167-6805	312
167-7713	257
168-7998	146
	225
168-7999	146
168-8389	331
	332
	333
	334
	339
	340
	343
	344
169-0908	307
169-2876	85
	103
	105
169-3530	444
169-5722	278
169-7404	266
169-7409	263
	266

▶ **PRIMARY REFERENCE**

PART NUMBER INDEX

Part	Page
	270
170-0503	246
170-1061	65
170-5632	132
170-5715	188
171-0524	284
	287
171-4047	431
171-8724	230
	232
171-8728	230
	232
172-0970	371
172-6301	40
173-0703	371
173-6205	331
	332
	339
	340
173-6572	341
	342
174-1077	249
	308
174-5414	53
174-5907	48
	66
	393
175-4291	90
175-4292	90
175-4614	44
176-2947	123
177-6915	314
177-7414	195
	197
178-1149	314
178-2176	236
	239
178-2594	391
178-3620	393
	395
178-3713	▶252
	346
178-3893	252
178-8608	164
178-9587	146
179-8235	438
180-4686	73
180-8144	389
	390
180-9286	296
	298
180-9339	361
	363
180-9872	252
183-5916	10
183-7107	172
184-1575	172
184-1687	253
184-6581	292
185-1463	262
185-1839	▶254
	333
	334
185-4253	40
185-4254	▶40
	300
185-7887	274
186-3735	87
	91
	92
	93
	94
	130
	370
	371
	373
	401
	402
187-5086	172
187-6076	184
187-8001	312
188-3034	304
188-7576	80
188-7677	276
188-7789	323
189-1707	393
189-5719	265
190-8121	306
190-8962	222
191-3206	61
191-8303	133
192-1172	247
192-2637	353
192-2640	353
192-2645	353
193-8334	262
193-8335	262
194-1983	314
194-5171	436
194-9363	182
	183
195-0189	▶91
	98
195-0190	▶92
	98
195-0191	▶93
	100
195-0192	▶94
	100
195-5830	292
195-8211	28
195-8222	41
	55
195-8260	56
195-8324	32
195-8364	68
195-9712	222
196-8356	68
197-1361	257
197-3695	157
197-5194	157
197-7499	377
	379
	381
197-8872	278
197-9155	144
	146
	157
198-5389	85
	87
198-7409	361
	363
199-0639	140
	142
	146
199-0667	144
	146
	157
199-0669	176
199-0681	225
199-0695	150
	152
	154
199-0701	225
199-0702	225
199-0703	225
199-2139	10
199-2182	8
199-2212	20
199-2256	70
199-2333	70
	2
200-1613	201
201-0330	73
201-1919	191
	192
	193
	194
201-9330	159
201-9985	400
202-4732	419
	423
202-4736	419
	423
202-4738	419
	423
202-4739	419
	423
202-5483	▶351
202-6614	90
202-7704	312
204-1126	419
	421
	423
204-3098	164
205-0826	85
	87
205-3324	269
205-5007	247
205-6455	133
205-7234	284
	287
205-8257	85
	87
205-9163	157
	159
205-9920	130
206-0828	353
206-0869	352
206-1345	98
	100
	120
	121
	123
	128
	130
	132
	135
	221
	404
206-1708	205
	359
	429
206-5162	85
	87
206-5203	85
	87
206-5823	401
206-6418	230
	232
206-8818	316
207-4255	146
	225
207-5271	87
208-0075	262
	269
208-0320	150
	152
	154
208-0321	140
	142
	144
	146
208-0322	150
	152
	154
208-5455	290
208-7797	150
	152
	154
208-7910	156
208-7914	160
208-7919	225
208-8978	146
	159
208-9007	157
208-9312	148
209-3476	352
209-3477	195
	197
	199
	200
	▶352
209-3565	247
209-4153	140
	142
	144
	190
209-4157	176
209-4158	140
	142
	144
	190
209-4159	140
	142
	144
	190

▶ PRIMARY REFERENCE

PART NUMBER INDEX

Part	Page	Part	Page	Part	Page	Part	Page
209-7454	150	214-4695	112	225-5249	70	232-5877	65
	152		369	225-5541	84		▶72
	154	214-4703	112	225-5642	84	232-6314	82
209-7459	140	214-4707	125	225-5927	87	232-6315	82
	142		127	226-0292	202	232-7305	78
	144	214-4709	118	226-1274	441	232-7405	132
	190	214-4710	115	226-1275	439	233-0619	253
209-7460	140	214-4718	369	226-3693	14	233-0625	255
	142	214-7091	276	226-4560	91	233-5457	10
	144	215-1402	176		92	233-5468	22
209-7462	150	215-3277	304		93		51
	152	215-7066	172		94		53
	154		232	226-4561	91	233-5469	32
209-7467	150		292		92	233-5470	32
	152		294		93	233-5471	32
	154	215-7067	172		94	233-5476	32
209-7474	150		232	226-7635	175	233-5477	32
	152		292	226-8202	254	233-5478	32
	154		294	227-1092	148	233-5480	3
209-9875	140	215-7488	176		▶224		▶8
	142	216-8693	156	227-1093	148	233-5483	8
	144	217-2604	403	227-3652	224	233-5485	6
	146	217-2880	150	227-3653	224	233-5486	5
210-5931	176		152	227-3654	224	233-5488	10
210-8277	421		154	227-3655	224	233-5494	36
210-8332	421	217-3875	247	227-3656	224	233-5496	38
210-8333	421		322	227-3657	224	233-5499	20
210-8334	421	217-5164	157	227-5509	303	233-5501	32
210-8354	152	218-0404	85	227-8807	245	233-5624	312
210-8469	150		87	228-3581	439	233-7391	415
	152	218-0942	▶84	228-6050	93		▶419
	154	218-2373	40		94	233-7850	316
210-8754	123	218-5842	269	228-6051	91	233-7888	316
211-0092	156	218-6855	312		92	233-7948	227
211-0093	156	219-0305	443	228-6052	91		410
211-0101	150	219-5442	150		92	233-9247	58
	152		152		93		59
	154		154		94	233-9856	72
211-1313	150	219-6314	85	228-6053	91	234-4790	8
	152		87		92	234-4791	14
	154	219-6607	87		93	234-4796	38
211-1314	150	219-8795	140		94	234-4797	41
	152		142	228-6054	91	234-4798	41
	154		144		92	234-4800	41
211-1316	144		146		93	234-4801	41
	146	220-6022	156		94	234-4802	41
211-1478	157	221-5245	32	228-6056	91	234-4803	41
212-4483	314	221-5250	32		92	234-4805	57
212-6679	257	221-9941	320		93	234-4806	57
212-8499	19	222-7136	159		94	234-4807	30
	60	222-7944	441	228-7090	274	234-4811	25
212-8510	19	222-9151	63	228-7105	247	234-4815	26
	70	222-9824	157	228-9132	72	234-4822	61
213-4568	421	223-3502	253	228-9240	304	234-4824	56
213-4574	419	223-5856	262	229-5468	269	234-4826	35
	423		269	229-5471	269	234-4827	35
213-4575	421	223-7937	417	229-5473	269	234-4832	46
213-4576	419	224-8945	439	229-8796	43	234-4835	70
	421	224-8946	441	230-0815	262	234-4837	33
	423	224-9855	443	230-6368	78	234-4838	33
213-4578	421	225-0312	441	230-9112	255	235-3606	270
213-4579	419	225-0313	439	231-9230	393	235-4942	33
	423	225-4150	443	232-1792	361	235-4948	33
214-2968	▶90	225-4174	357		363	235-4951	33
	96	225-4183	357	232-4703	84	235-4952	46

▶ **PRIMARY REFERENCE**

PART NUMBER INDEX

Part	Page
235-4955	35
235-4958	46
235-4959	45
235-4960	45
235-4973	77
235-5880	3
	▶32
235-5895	3
	▶37
235-5896	3
	▶41
235-5904	3
	▶83
236-6833	1
	▶209
236-6923	365
236-7230	443
236-8015	▶417
236-8152	215
237-4257	262
237-5537	1
237-5551	316
237-5560	347
237-5561	347
237-5562	347
237-5566	347
237-5567	347
237-8058	13
238-0112	130
	133
238-1844	232
	292
238-4625	301
238-4626	187
	301
238-4628	301
	303
238-4629	301
238-5081	274
238-6588	227
238-8278	42
238-8282	7
238-8283	7
238-8284	7
238-8285	7
239-4233	439
239-4234	441
239-6604	56
239-6773	3
239-6989	443
239-8429	20
239-8487	22
239-8488	22
239-8495	3
	▶22
239-8500	77
239-8513	36
	41
239-9833	236
	239
240-0635	395
240-6866	301
240-7956	439
240-7957	441
241-0037	246
241-4275	66
241-5985	3
	▶56
241-5986	45
241-6010	70
	77
241-9102	▶401
	436
242-0262	306
242-5593	325
242-5594	325
242-5595	325
242-5596	325
242-5597	325
242-5598	325
242-5599	325
242-5600	325
242-5602	325
242-5604	1
	▶325
242-5667	325
242-5760	1
	▶73
242-5761	73
242-5762	73
242-5763	73
242-5815	▶58
242-5898	4
	▶47
242-5899	4
	▶43
242-5900	▶51
242-6069	294
242-8716	4
	▶39
242-8717	39
243-1450	276
244-1370	73
244-6735	294
	▶300
244-7127	41
	70
245-1181	302
245-1912	302
245-8026	96
245-8334	429
245-8780	284
	287
	▶303
246-1259	20
246-1260	20
246-1270	60
246-1272	61
246-1275	61
246-4349	354
246-7854	210
246-8302	61
246-8303	61
246-8314	45
246-8315	45
247-1385	48
247-7054	247
248-2821	370
	373
248-5245	443
248-5882	353
248-7591	304
248-7696	269
	▶301
248-7959	121
249-3124	303
249-3125	303
249-5312	290
	291
249-5314	230
249-7160	187
249-7707	301
250-2910	172
250-4232	227
250-6011	419
	421
	423
250-6012	419
	421
	423
250-6013	419
	421
	423
250-7662	301
251-1478	395
251-1752	314
251-1803	314
251-3227	48
251-3251	294
252-1862	377
	379
	381
252-1863	377
	379
	381
252-5664	276
252-9197	175
253-0244	35
253-1817	377
	379
	381
253-2417	431
253-5024	140
	142
	159
253-5507	56
254-1098	316
254-7536	242
	243
255-1142	121
255-2743	428
255-2748	428
255-4732	278
255-5988	▶249
	386
	407
255-5989	4
	▶48
255-6009	4
	▶23
255-6012	4
	▶44
255-6014	4
	▶175
255-6050	316
256-5569	78
256-9635	1
	▶403
256-9638	379
256-9640	362
256-9643	362
257-3226	393
257-3922	260
257-3923	▶296
257-3925	▶166
	260
257-3927	▶242
	244
257-3930	▶262
	346
257-3931	260
	▶312
257-3936	177
	▶230
257-3940	▶265
	346
257-3942	259
	▶320
257-3944	259
	▶292
257-3946	▶290
	386
	407
257-3958	278
257-3959	278
257-3969	▶165
	177
257-3976	▶235
	260
257-3980	260
257-3989	278
	282
	285
	288
257-3990	278
	282
	285
	288
257-4004	▶229
	230
257-4009	304
257-4018	▶259
257-4019	▶259
257-4033	347
257-4048	236
	239
257-6370	367
	▶410
257-6371	▶227
	361
	363
257-6373	▶392
	428
257-6374	▶383
	428
257-6375	406
	▶436
257-7684	1
	▶316
257-7688	201

▶ PRIMARY REFERENCE

PART NUMBER INDEX

Part	Page	Part	Page	Part	Page	Part	Page
257-8389	33		342	260-5458	304		127
257-8390	83		▶345	260-5481	230	261-5057	96
257-8403	▶398	259-6044	345	260-5492	195	261-5112	364
	399	259-6045	▶274		197	262-1689	207
257-8471	243		333		▶221	262-1691	207
257-8738	26	259-6050	▶334	260-5498	404	262-2781	389
257-8739	45		337	260-5499	▶404		390
257-9657	201		338		406	262-4256	78
258-0129	306	259-6051	334	260-5500	▶96	262-4257	78
258-3661	52		▶342	260-5501	▶102	262-4726	98
258-3849	2	259-6052	342		195		100
	195	259-8001	1		197	262-4727	98
	197		▶130	260-5506	259		100
	199	260-0537	377	260-5507	▶116	262-4728	98
	200		381		346		100
258-8553	1	260-2594	▶121	260-5509	368	262-6873	413
	▶223		406		▶370	262-8652	▶144
259-1286	89		407	260-5510	▶117		149
259-1633	▶385	260-2985	418		177	262-8654	▶140
	386	260-3021	372		178		177
259-1634	355	260-3054	▶248	260-5512	259	262-8660	▶146
	▶356		308	260-5521	▶115		148
259-1635	416	260-3544	407		260	262-8662	▶142
	▶421		▶428	260-5524	▶125		177
259-1637	414	260-3545	406		138		178
	▶423		▶428	260-5526	▶127	262-8718	292
259-1643	▶374	260-3555	413		346		▶302
	407	260-3556	▶399	260-9103	227	262-8736	371
259-1644	▶375		406	260-9108	227	262-8738	371
	406	260-3558	▶400	260-9219	274	262-8739	372
259-2850	1		406	260-9825	364	262-8744	259
	▶241		407	260-9827	406		▶371
259-2858	215	260-5186	406		▶425	262-8745	259
259-2877	241		407	260-9830	406		▶372
259-2896	215		▶409		407	262-8759	372
259-2925	▶191	260-5331	1		▶412	262-8864	372
259-2926	▶181		▶135	260-9831	▶418	262-9567	404
	191	260-5333	123	261-0420	130	262-9568	392
259-2928	▶192	260-5334	▶123	261-1353	329	263-1368	175
259-2929	▶182		406		330	263-1369	175
	192	260-5335	139		▶339	263-3823	402
259-2930	▶183	260-5338	1	261-1354	339	263-4788	23
	192		▶78	261-1362	327	263-4795	392
259-2931	181	260-5349	▶105		328	263-4796	431
	185	260-5386	259		▶340		433
	186		▶311	261-1396	▶331	263-4832	51
259-2932	▶193	260-5389	▶138	261-1397	331		53
259-2933	▶184	260-5390	138	261-1404	▶332	263-5751	379
	193		▶139	261-1405	332	263-5752	377
259-4401	439	260-5391	1	261-1413	▶343		381
259-4402	441		▶260	261-1425	▶344	263-5755	431
259-5487	236	260-5406	177	261-4223	43		433
	239		178	261-5042	409	263-8064	429
259-5490	431		▶232	261-5043	409	264-1335	243
259-5491	412	260-5411	172	261-5044	118	264-1440	393
259-5493	362		▶187	261-5045	259	264-2745	44
259-5494	362	260-5415	▶253	261-5046	259	264-2746	44
259-6017	274		260	261-5048	409	265-3923	260
259-6040	▶333	260-5417	▶255	261-5050	409		▶307
	335		260	261-5051	409	265-4644	47
	336	260-5420	▶243	261-5052	117	265-5669	223
259-6041	333		244	261-5054	127	265-5670	223
	▶341	260-5435	▶304	261-5055	125	265-7240	232
259-6042	341	260-5456	166		127	265-7952	370
259-6043	341	260-5457	166	261-5056	125		373

▶ **PRIMARY REFERENCE**

PART NUMBER INDEX

Part	Page
265-8025	121
265-9401	383
266-1418	▶389
266-1420	▶390
266-1467	361
	363
	410
266-6123	253
266-7068	362
266-7069	362
266-7070	362
266-7071	431
	433
266-7112	▶118
	406
266-9382	235
266-9383	253
266-9387	255
266-9467	255
267-1265	410
267-3196	247
267-3197	247
267-4506	255
267-4508	255
267-4511	255
267-4672	253
267-4673	253
267-6458	235
267-6463	235
267-6469	235
267-8575	357
267-9382	361
	▶377
268-1007	78
	133
	136
	139
268-1168	58
268-1650	304
268-5309	410
268-7955	78
269-0407	374
269-0410	375
269-0413	436
269-0415	428
	▶429
269-0416	▶402
	436
269-3819	385
	▶387
269-3820	356
	▶357
269-4669	322
269-4676	306
269-5479	409
269-7537	384
269-7538	384
269-8472	▶228
	406
	407
269-8474	149
269-8908	260
	▶306
270-1652	429
270-1653	366
270-1654	429
270-1901	406
	407
	▶435
270-2502	348
270-2503	348
270-2513	348
270-2514	249
	308
270-2515	348
	▶353
270-2517	353
270-2538	347
270-4192	23
270-4193	23
270-4885	168
270-4886	168
270-4887	170
270-4888	170
270-5095	168
270-5114	292
270-5115	292
270-5116	292
270-5117	294
270-5143	87
	121
	130
	135
	136
	139
	221
	222
	311
270-6282	55
270-6729	269
270-8473	284
270-9018	383
271-0112	429
271-0885	210
271-2175	386
	407
271-2936	58
	59
271-3595	1
	▶201
271-3596	210
271-4251	383
271-4295	112
	369
271-5491	429
271-7193	355
	▶393
271-7653	384
271-8811	1
	▶210
272-0167	177
	▶179
272-0169	177
	178
	▶180
272-1370	359
272-1371	359
272-1386	359
272-2236	259
	▶294
272-2251	▶359
	360
272-2444	355
	▶365
272-2445	51
	▶52
	53
272-2782	292
272-6401	78
272-9800	95
273-0177	▶85
273-0610	168
	170
273-1705	227
273-1708	227
273-1945	227
273-3686	307
273-6167	377
273-6170	379
273-6171	381
273-6178	379
273-6180	377
	379
	381
273-6182	377
	379
	381
273-6184	379
273-6185	377
	381
273-6191	377
	379
	381
273-8755	210
273-9190	409
273-9191	409
273-9192	409
273-9577	51
273-9579	436
274-1321	346
	▶347
274-1323	346
	▶348
274-1325	353
274-1327	348
274-1346	379
274-1347	377
	381
274-1973	43
274-2062	393
274-2063	393
274-2064	393
274-2065	393
274-3774	107
	108
	130
274-3775	108
274-3776	107
	108
274-3778	108
274-3779	108
274-4287	428
	▶431
274-4288	202
274-4289	202
274-5160	249
	▶251
274-5246	140
	142
	144
274-5909	393
274-6113	168
	170
274-6558	236
	239
274-6561	236
	239
274-6572	▶236
	244
274-6589	377
	381
274-8254	▶112
	385
274-8255	356
	▶369
275-1939	410
275-2201	410
275-3990	357
	387
275-3991	357
	387
275-3992	357
275-3993	357
	387
275-3994	357
	387
275-3999	387
275-4003	357
275-5590	208
275-5591	1
	▶208
275-5636	410
275-7404	105
275-7406	85
	87
275-8188	361
	▶379
275-8189	361
	▶381
275-8655	399
275-9378	1
	▶174
275-9379	174
275-9381	174
276-2334	285
	288
	292
276-3191	168
	170
276-3917	112
	369
276-6744	136
276-6814	▶136
	346
276-8008	125
	127
276-8092	222
276-8690	296
	298
276-8702	▶172

▶ PRIMARY REFERENCE

PART NUMBER INDEX

Part	Page	Part	Page	Part	Page	Part	Page
	177		433	284-2834	210		▶36
	178	280-1936	431	284-2969	1	287-5665	3
276-8735	172		433		▶376		▶38
276-8765	429	280-1938	429	284-2970	376	287-5752	429
276-8773	376	280-2370	▶384	284-2972	376	287-6114	3
276-8774	376		428	284-3885	391		▶30
276-8872	296	280-2371	360	284-3887	377	287-6181	3
	298	280-4047	429		379		▶111
277-0487	228	280-7685	428		381	287-7254	168
277-0506	168	280-9177	259	284-3889	361		170
	170		▶366		▶391		▶256
277-2528	▶363	280-9202	357	284-4005	4	287-7257	65
	407		387		▶13	287-7328	278
277-5628	296	280-9542	▶360	284-4745	429		282
	298	280-9543	433	284-8648	368		284
277-5676	302	280-9764	73		▶373		287
277-6551	312	281-0384	232	284-9252	1	287-7329	278
	▶314	281-0648	73	284-9256	1		282
277-7313	165	281-8359	278	284-9265	▶269		284
277-7314	165	281-8519	296		346		287
277-7746	1		298	284-9275	▶276	287-7330	262
	▶80	282-2270	73		334		265
277-7747	80	282-4062	347	285-0465	366		269
	▶81	282-7680	265	285-2995	4	287-7331	262
278-1541	304	282-7689	51		▶65		265
278-2283	170		53	285-5053	412		269
278-4406	357	282-7699	265	285-5676	73	287-7336	285
	387	282-7702	265	285-6231	348		288
278-4414	387	282-7715	1	285-9066	20	287-7337	285
278-4418	387		▶207		46		288
278-4419	387	282-7717	207	286-0581	▶327	288-3521	208
278-4421	357	282-7718	207	286-0582	▶328	288-3526	407
	387	282-7720	73	286-0583	▶329	289-0362	429
278-4422	357	282-7722	▶244	286-0584	▶330	289-2136	362
	387	282-7723	▶244	286-0585	▶335	289-6364	306
278-4423	357	282-8636	428	286-0586	▶336		▶322
	387		▶433	286-0587	▶337	289-6366	▶188
278-4424	357	282-9343	248	286-0588	▶338		306
278-4425	357	282-9427	248	286-1016	319	289-9461	383
278-4427	357	282-9456	290	286-2479	168	290-2523	387
278-4428	357	282-9570	▶291		170	290-2524	357
278-4431	357		355	286-2758	426	290-2708	103
278-5121	232	282-9900	248	286-3549	▶168	290-2710	103
278-8716	304	283-1364	348		177	290-2711	103
279-0643	▶413	283-3213	98		178	290-5546	359
279-1124	17		100	286-3550	▶170	290-5549	359
	18	283-3214	98		177	290-6343	209
	204		100	286-4217	▶346	290-9634	292
279-1530	248	283-4295	265	286-4218	▶346	290-9635	292
279-1531	248	283-4748	251	286-4219	▶346	291-0799	375
279-2067	395	283-4749	251	286-4694	366	291-3803	357
279-3438	215	283-6289	429	286-4727	433		387
279-5068	406	283-6952	112	286-9548	202	291-4621	128
	▶426		369	287-0293	210	291-4622	▶128
279-5723	407	283-9123	112	287-0294	210		407
	▶414		369	287-1834	375	291-8132	282
279-5724	406	284-0055	389	287-2922	3		284
	▶415	284-0074	311		▶27		287
279-5725	406	284-0075	311	287-2983	3	291-8133	282
	▶416	284-0077	311		▶28		284
279-6392	296	284-0078	311	287-3617	260		287
	298	284-0079	311	287-3922	25	291-8345	269
280-0527	▶308	284-0080	311	287-4033	3	291-9903	210
	355	284-1039	429		▶7	291-9914	215
280-1935	431	284-1042	202	287-5377	3	291-9916	215

▶ **PRIMARY REFERENCE**

PART NUMBER INDEX

Part	Page
292-0913	63
292-0914	▶63
	368
292-1473	63
292-1474	63
292-1475	63
292-4041	3
	▶5
292-4754	63
292-4855	1
	▶215
292-4856	215
292-4872	325
292-4876	215
292-4877	209
292-5372	140
	142
	144
	190
292-5373	140
	142
	144
	146
	▶176
292-5377	140
	▶157
292-5378	142
	▶159
292-5381	150
292-5382	152
	154
292-5383	160
292-5384	160
292-5385	157
292-5386	157
292-5387	144
	146
292-5388	157
292-5389	160
292-5390	160
292-5391	152
292-5393	140
	142
	144
292-5394	154
292-5396	144
	146
	▶150
292-5397	150
	152
	154
	▶156
292-5398	160
292-5399	160
292-5400	160
292-5401	160
292-5402	140
	142
	144
	▶164
	190
292-5403	190
	▶225
292-5404	146
	▶190
292-5408	140
	▶152
292-5410	142
	▶154
292-5411	160
292-5423	146
292-5431	140
	142
	144
292-5432	140
	142
	144
292-5433	140
	142
	144
292-5435	146
292-5436	164
292-5437	150
292-5440	157
292-5441	157
292-5442	159
292-7885	421
292-7886	421
292-7887	421
292-7888	421
292-7889	421
292-7890	421
292-7891	421
293-0543	408
293-0544	408
293-0545	408
293-0546	408
293-0547	361
	363
	▶408
293-0548	202
293-0549	1
	▶202
293-2093	225
293-2095	160
293-2097	156
293-2098	176
293-2099	160
293-2100	160
293-2101	150
	152
	154
293-2146	159
293-2148	159
293-2149	146
293-2151	159
293-2153	160
293-2154	159
293-2155	159
293-2156	159
293-2157	159
293-2158	160
293-2159	160
293-3345	236
293-4316	236
	239
293-4351	▶239
	244
293-4807	375
293-4808	375
293-4875	146
293-6466	160
293-8266	82
293-8717	160
293-8718	160
293-8719	160
293-8720	160
293-8721	150
	152
	154
293-8722	150
	152
	154
293-8723	150
	152
	154
293-8724	150
	152
	154
293-8725	150
	152
	154
293-8726	160
293-8727	160
293-8728	156
293-8729	160
293-8730	160
293-8731	160
293-8732	160
293-8733	160
293-8734	160
293-8735	146
293-8736	160
293-8737	160
293-8738	150
	152
	154
293-8739	150
	152
	154
293-8740	160
293-8741	160
293-8742	146
293-8743	225
293-8744	225
293-8746	159
293-8747	159
293-8748	154
293-8749	225
293-8750	225
293-8754	159
293-8755	159
293-8756	159
293-8758	159
293-8763	140
	142
	144
	146
293-9645	159
293-9760	1
	▶443
293-9783	278
	282
	284
	287
293-9791	▶82
	85
	103
	105
293-9813	278
	282
	284
	287
294-0287	262
	265
	269
294-0884	215
294-0931	372
294-1767	38
294-4432	▶278
294-4864	262
	265
	269
294-4865	262
	265
	269
294-4866	262
	265
	269
294-4890	5
294-4891	5
294-4892	5
294-5060	70
294-5552	262
	265
	269
294-5579	215
294-7321	278
294-7381	265
294-7909	278
294-7922	9
294-8410	▶177
294-8411	▶177
294-8600	278
294-9770	160
294-9771	160
294-9772	160
294-9773	160
295-0001	361
	363
	408
295-0283	87
295-1293	296
295-1302	242
295-1303	242
295-1706	▶368
295-2199	249
	308
295-2200	249
	308
295-2201	249
	308
295-2202	249
	308
295-2203	249
	308
295-2242	361
	363
295-4000	▶194
295-4001	▶185

▶ PRIMARY REFERENCE

PART NUMBER INDEX

Part	Page
	194
295-4002	▶186
	194
295-4003	185
	186
295-4040	249
	308
295-4196	159
295-4211	159
295-4326	159
295-5275	▶406
295-5276	▶406
295-5308	367
295-5309	367
295-5526	410
295-5535	361
	363
	▶367
295-5845	▶361
	406
295-5846	▶361
	406
295-7713	278
295-7730	404
295-7921	361
	▶362
295-7928	363
	▶364
295-8141	311
295-8142	311
295-8143	311
296-0512	201
296-5746	159
296-5747	159
296-6482	232
296-6483	230
296-6713	247
297-0164	▶298
297-4352	227
297-4353	400
297-4354	400
297-4355	425
297-4356	51
	53
297-4855	232
297-5528	159
297-5581	159
297-7891	121
297-7892	431
	433
297-7931	276
297-8659	262
	265
	269
297-8764	407
	436
297-9676	218
297-9677	▶203
	206
297-9678	▶204
	206
297-9680	205
297-9681	205
297-9682	205
298-5572	218
298-5575	218
298-5576	218
298-5577	203
298-5578	203
298-6407	73
298-6434	409
298-6488	130
298-6759	204
298-6761	204
298-7711	148
298-7736	168
	237
	239
299-2158	206
	▶217
299-2242	262
	269
299-3074	205
299-3077	205
299-4445	3
	▶60
299-4511	56
299-4645	12
299-4696	218
299-5488	376
299-6051	426
	▶427
299-6064	▶206
299-7836	427
299-8024	312
299-9256	132
300-1618	77
300-2133	325
	347
300-3573	70
300-3865	210
300-3867	70
300-3988	70
300-4085	▶439
300-4086	▶441
300-4098	387
300-4477	65
300-4478	251
300-4479	47
300-4480	47
300-4506	393
300-4507	393
300-5383	204
300-5463	▶257
	312
300-6256	298
300-6370	439
300-6371	441
300-6575	121
300-7511	▶247
	312
300-7532	323
300-7541	312
	▶323
300-7542	312
300-8485	▶244
300-8583	241
	325
300-8809	251
300-8827	248
	251
301-1149	▶177
301-1150	▶178
301-1901	324
301-3069	195
	197
	▶324
301-3247	376
301-3274	41
301-3392	221
	▶222
301-3396	3
	▶29
301-3397	29
301-7890	306
301-8247	217
	▶218
301-8252	▶205
	206
302-1345	1
	▶220
302-4255	48
302-4389	439
302-4390	441
302-4750	48
302-4790	427
302-5541	215
302-7815	3
	▶57
302-8723	47
302-8724	47
302-8754	438
303-0319	443
303-0320	443
303-0321	443
303-0327	438
303-2126	199
	200
	▶438
303-3003	379
303-3004	381
303-4529	249
	308
304-2994	73
304-3988	269
304-3989	269
304-4010	365
304-5691	81
304-7708	▶103
	407
304-8544	85
	87
	103
	105
304-9376	▶444
305-0628	1
305-0629	1
305-1856	227
305-1934	▶148
	177
	178
305-2572	1
	▶3
305-3330	217
305-3331	217
305-4105	383
306-0356	348
306-5423	▶149
	177
306-6024	407
306-6038	353
306-6556	265
306-7218	320
306-7219	320
306-7220	320
306-7221	320
306-7222	320
306-9125	207
307-1429	103
	105
307-1556	▶195
307-1558	▶197
307-1559	▶199
307-1560	▶200
307-1561	▶2
307-1832	278
	282
	284
	287
307-1833	282
	284
	287
307-6925	384
307-8161	392
307-8162	392
307-8666	▶282
307-8667	260
	▶284
307-8668	260
	▶287
307-8673	278
	282
	284
	287
307-8675	262
	265
	269
308-0189	▶318
308-0190	▶319
308-0638	195
	197
308-0751	117
308-1192	377
	379
	381
308-1193	377
	379
	381
308-2642	443
308-3010	▶53
308-3012	53
308-6210	251
308-6459	204
308-6645	▶260
308-6646	▶260
308-7545	278

3

▶ PRIMARY REFERENCE

PART NUMBER INDEX

Part	Page
309-1325	▶95
	102
309-7530	377
	379
	381
309-7533	377
	381
309-8484	365
309-8908	25
310-1850	260
310-2682	10
310-5620	230
310-5637	236
	239
311-2529	150
311-2530	156
311-2532	176
311-2533	190
311-2534	152
	154
311-3642	379
311-6316	▶17
	355
311-6319	17
311-6320	17
311-6321	17
	18
311-7461	346
311-7474	346
311-7490	443
311-9634	390
312-6370	120
312-8371	218
312-8372	201
312-8451	▶261
312-8669	443
313-1722	▶98
313-1723	▶100
313-1724	1
	▶133
313-1725	133
313-1726	▶120
313-2419	383
	428
313-2430	391
313-2458	383
313-2521	98
	100
313-3812	215
313-5245	391
313-5246	391
313-9198	393
313-9330	366
314-4017	121
314-4019	121
314-4067	274
314-4068	274
314-4069	274
314-6019	218
314-6656	121
314-6658	130
	▶132
314-6659	132
314-6660	85
	103
314-6661	136
	139
314-6663	135
314-6664	132
314-9420	18
314-9835	3
	▶6
314-9852	3
	▶25
314-9855	3
	▶26
314-9860	3
	▶9
314-9861	3
	▶14
314-9901	3
	▶35
314-9918	3
	▶114
314-9925	6
314-9926	6
314-9927	6
314-9938	10
314-9947	20
314-9948	20
314-9949	20
314-9950	25
314-9951	25
314-9952	26
314-9959	26
314-9961	26
314-9962	26
314-9963	26
314-9964	26
314-9977	33
314-9979	46
314-9980	68
314-9981	68
314-9982	68
314-9983	68
314-9984	68
314-9985	68
314-9986	68
314-9987	68
314-9991	70
314-9992	70
314-9994	70
314-9995	70
314-9996	70
314-9997	70
314-9998	70
314-9999	70
315-0000	70
315-0001	114
315-2321	391
315-2340	55
315-2341	55
315-2342	55
315-2343	55
315-2631	▶18
	386
	407
315-3477	269
315-3478	262
315-4667	20
315-4668	20
315-4679	61
315-4680	15
315-4681	15
315-4682	15
315-4683	15
315-4684	15
315-4686	20
315-4687	20
315-6084	▶87
315-6538	269
315-6539	139
	269
315-6547	365
315-6548	365
315-7703	19
315-7705	269
315-7706	269
315-7707	269
315-7708	269
315-7709	269
315-7710	262
	269
315-7760	3
	▶12
315-7763	3
	▶42
315-7766	3
	▶15
315-7790	393
315-8326	70
315-8330	3
	▶10
315-8336	3
	▶20
316-0471	3
	▶55
316-1552	19
316-1621	3
	▶19
316-1930	179
316-1931	180
316-3179	262
	269
316-4744	3
	▶46
316-4794	64
316-4798	4
	▶64
316-7257	262
316-7258	262
317-2746	116
317-3576	222
318-3666	▶59
318-3667	59
318-8034	33
318-8035	33
318-8036	33
318-8418	265
319-6491	130
319-7262	12
319-7264	12
319-8499	31
319-8800	130
320-1316	241
320-6051	355
	386
	▶395
320-6534	4
	▶66
320-8422	▶212
320-8424	▶213
320-8425	▶214
321-5121	217
321-8198	▶1
321-8232	1
	▶4
322-3158	1
	▶107
322-3159	1
	▶108
322-4878	1
322-5766	▶407
322-5768	▶386
322-5769	▶355
323-3301	325
323-3302	325
323-4281	325
323-7410	274
324-5101	81
324-5102	81
324-9501	325
326-4033	42
326-4120	3
	▶31
326-4122	3
	▶77
327-0752	114
329-3957	320
329-3958	320
329-3959	320
329-3960	320
329-3961	320
329-3963	320
329-3964	320
329-3965	320
329-3966	320
329-3967	320
329-3968	320
329-3969	320
329-3970	320
329-3971	320
329-3972	320
329-3973	320
329-3974	320
329-3975	320
330-3667	17
	18
330-7720	10
331-1439	3
	▶45
331-1471	68
331-6308	3
	▶61
331-6309	61
331-6959	3
	▶33
331-7300	3
	▶68

▶ PRIMARY REFERENCE

PART NUMBER INDEX

Part	Page	Part	Page	Part	Page	Part	Page
331-7332	70						
331-7333	3						
	▶70						
332-3791	262						
	270						
332-6408	262						
	270						
	▶317						

▶ **PRIMARY REFERENCE**

MEMORANDA



© 2008 CATERPILLAR
ALL RIGHTS RESERVED

CAT, CATERPILLAR, THEIR RESPECTIVE LOGOS, “CATERPILLAR YELLOW” AND THE POWER EDGE TRADE DRESS, AS WELL AS CORPORATE AND PRODUCT IDENTITY USED HEREIN, ARE TRADEMARKS OF CATERPILLAR AND MAY NOT BE USED WITHOUT PERMISSION.

PRINTED IN U.S.A.