CATERPILLAR®

SEBP3977
January 2004

RUTHZIL TRATOR COMERCIAL DE PEÇAS LTDA 11 97083-6812 ROLANDO

Parts Manual



See "General Information" for New Parts Manual Features.

914G Wheel Loader

PDF1-Up (Machine)
CRS1-Up (Engine)

Powered By 3054C Engine
This Parts Manual is also Available in .PDF Format on Compact Disc (CD-ROM)-Caterpillar From No. SERP3977

Product and Dealer Information

Note: For product identification plate locations, see the section “Product Identification Information” in the Operation and Maintenance Manual.

Delivery Date: _____

Product Information

Model: _____

Product Identification Number: _____

Engine Serial Number: _____

Transmission Serial Number: _____

Generator Serial Number: _____

Attachment Serial Numbers: _____

Attachment Information: _____

Customer Equipment Number: _____

Dealer Equipment Number: _____

Dealer Information

Name: _____ Branch: _____

Address: _____

_____

_____

	Dealer Contact	Phone Number	Hours
Sales:	_____	_____	_____
Parts:	_____	_____	_____
Service:	_____	_____	_____

Informations produit et concessionnaire

Nota: Voir l'emplacement de la plaque signalétique du produit au chapitre "Informations produit" du guide d'utilisation et d'entretien.

Date de livraison: _____

Informations produit

Modèle: _____

Numéro d'identification produit: _____

Numéro de série du moteur: _____

Numéro de série de la boîte de vitesses: _____

Numéro de série de l'alternateur: _____

Numéros de série d'équipement: _____

Informations sur l'équipement: _____

Numéro matériel client: _____

Numéro matériel concessionnaire: _____

Informations concessionnaire

Nom: _____ Agence: _____

Adresse: _____

_____

_____

	Contact concessionnaire	Numéro de téléphone	Heures
Ventes:			
Pièces:			
Service:			

Información del Producto/Distribuidor

Nota: Para saber la ubicación de las placas de identificación del producto, ver la sección “Información sobre identificación del producto” en el Manual de Operación y Mantenimiento.

Fecha de entrega: _____

Información del producto

Modelo: _____

Número de identificación del producto: _____

Número de serie del motor: _____

Número de serie de la transmisión: _____

Número de serie del generador: _____

Números de serie de los accesorios: _____

Información sobre los accesorios: _____

Número del equipo del cliente: _____

Número del equipo del distribuidor: _____

Información del distribuidor

Nombre: _____ Sucursal: _____

Dirección: _____

_____

_____

	Comunicación con el distribuidor	Número de teléfono	Horas
Ventas:	_____	_____	_____
Piezas:	_____	_____	_____
Servicio:	_____	_____	_____

Informações Sobre Produto e Revendedor

Nota: Para localizações da placa de identificação do produto, consulte a seção, “Informações Sobre Identificação do Produto” no Manual de Operação e Manutenção.

Data de Entrega: _____

Informações Sobre o Produto

Modelo: _____

Número de Identificação do Produto: _____

Número de Série do Motor: _____

Número de Série da Transmissão: _____

Número de Série do Gerador: _____

Números de Série de Acessórios: _____

Informações Sobre Acessórios: _____

Número do Equipamento do Cliente: _____

Número do Equipamento do Revendedor: _____

Informações Sobre o Revendedor

Nome: _____ Filial: _____

Endereço: _____

_____

_____

	Contato do Revendedor	Telefone	Horas
Vendas:	_____	_____	_____
Peças:	_____	_____	_____
Serviço:	_____	_____	_____

Produkt- und Händlerinformation

Anmerkung: Für die Lage der Produkt-Identnummer und Seriennummern siehe Abschnitt "Produkt-Identinformation" im Betriebs- und Wartungshandbuch.

Lieferdatum: _____

Produkt-Identinformation

Modell: _____

Produkt-Identnummer: _____

Seriennummer des Motors: _____

Seriennummer des Getriebes: _____

Seriennummer des Generators: _____

Seriennummern der Arbeitsgeräte: _____

Arbeitsgeräteinformation: _____

Kundennummer: _____

Händlernummer: _____

Händlerinformation

Name: _____ Niederlassung: _____

Adresse: _____

_____

_____

	Kontaktperson beim Händler	Telefon	Dienststunden
Verkauf:	_____	_____	_____
Ersatzteile:	_____	_____	_____
Service:	_____	_____	_____

MEMORANDA

TABLE OF CONTENTS

Name	Page
GENERAL INFORMATION	A23
REPAIR ALTERNATIVES	A42
SUPPLEMENTAL COOLANT ADDITIVES	A47
MAINTENANCE PARTS	A52
INDEX	A75
MACHINE ARRANGEMENT	1
CHASSIS AR	1
COMMON AR	1
CONVERSION AR-CERTIFICATION	2
CONVERSION AR-MACHINE	3
ENGINE ARRANGEMENT	8
ENGINE AR-PRIMARY	8
INSTALLATION AR-ENGINE	9
BASIC ENGINE	10
CAMSHAFT GP	10
COVER GP-VALVE MECHANISM	11
CRANKSHAFT GP	13
CYLINDER BLOCK GP	15
CYLINDER HEAD GP	18
DRAIN GP-ENGINE OIL	20
DRIVE GP-FAN	21
FLYWHEEL GP	22
HOUSING GP-FLYWHEEL	23
HOUSING GP-FRONT	24
LIFTING GP-ENGINE	26
MOUNTING GP-ENGINE & TMSN	27
PAN GP-OIL	28
PISTON & ROD GP	29
PLUG GP-ENGINE	30
PULLEY GP-CRANKSHAFT	32
VALVE GP-OIL PAN DRAIN	33
VALVE MECHANISM GP	34
LUBRICATION SYSTEM	35
FILTER GP-ENGINE OIL	35
PUMP GP-ENGINE OIL	36
VALVE GP-FLUID SAMPLING	37
COOLING SYSTEM	38
CONNECTION GP-WATER	38
COOLER GP-FLTR BASE & ENG OIL	39
FAN GP-SUCTION	41
PUMP GP-WATER	42
RADIATOR & HYD OIL COOLER GP	44
RADIATOR GP	46
AIR INLET AND EXHAUST SYSTEM	48
AIR CLEANER GP	48
COVER GP-AIR INLET	50
EXTENSION GP-EXHAUST	51
LINES GP-AIR	53
MUFFLER GP	57
PRECLEANER GP	58
TURBOCHARGER GP	59
FUEL SYSTEM	61
CABLE GP-GOVERNOR CONTROL	61
CONTROL GP-GOVERNOR	62
FILTER & LINES GP-FUEL	65
FILTER GP-FUEL	68
GUARD GP-FUEL INJECTION PUMP	70
PUMP GP-FUEL INJECTION	71
TANK & MTG GP-FUEL	73
TANK GP-FUEL	75
WATER SEP & FUEL PRM PUMP GP	76
ELECTRICAL AND STARTING SYSTEM	77
ALTERNATOR GP-CHARGING	77
BATTERY GP	78
CONTROL & WIRING GP-PWR TRAIN	79
CONTROL GP-LIFT KICKOUT	81
CONTROL GP-POSITION	82
CONVERTER GP-ELECTRICAL	83
DISTRIBUTOR GP-ELECTRONIC	85
ELECTRONICS GP-MACHINE	86
GLOW PLUG GP	87
HEATER GP-JACKET WATER	89
INSTALLATION GP-SECURITY	91
LAMP GP-DOME	93
LAMP GP-FLOOD	94
LAMP GP-HEAD & SIGNAL	96
LAMP GP-REAR	103
LAMP GP-SIGNAL	104
LAMP GP-STOP & TAIL	110
LAMP GP-WARNING BEACON	111
LIGHTING AR-FLOOD & SIGNAL	112
LIGHTING AR-ROADING	112
LIGHTING GP-AUXILIARY	114
LIGHTING GP-FLOOD	115
LIGHTING GP-FLOOD & SIGNAL	120
LIGHTING GP-ROADING	122
LIGHTING GP-SIGNAL	126
LIGHTING GP-WARNING	128
MOTOR GP-ELECTRIC	130
ROADING AR	131
STARTING MOTOR GP-ELECTRIC	132
SWITCH GP-DISCONNECT	133
SWITCH GP-MAGNETIC	135
SWITCH GP-PRESSURE	137
SWITCH GP-TEMPERATURE	138
SWITCH GP-WIPER	139

TABLE OF CONTENTS

Name	Page
WARNING GP-BACKUP	140
WIRING GP-CAB	142
WIRING GP-CHASSIS	150
WIRING GP-ENGINE	153
WIRING GP-FRONT	157
WIRING GP-POWER TRAIN	159
WIRING GP-REAR	160
WIRING GP-RIDE CONTROL	162
WIRING GP-SECONDARY STEERING	163
POWER TRAIN	165
ACTUATOR GP-PUMP	165
AXLE AR-FIXED	167
AXLE AR-OSCILLATING	168
BRAKE & PLANETARY GP	170
CONTROL AR-SPEED	171
CONTROL GP-CREEPER	172
CONTROL GP-TMSN & JOYSTICK	174
CONTROL GP-TRANSMISSION	175
COVER GP-HYDROSTATIC	179
COVER GP-MOTOR	181
COVER GP-SHIPPING	182
DIFFERENTIAL GP	183
DIFFERENTIAL GP-LIMITED SLIP	184
DRIVE GP-TRANSFER	185
FILTER GP-OIL	187
GEAR GP-BEVEL	188
HEAD GP-MOTOR	192
HEAD GP-PUMP	196
HOUSING GP-FIXED AXLE	198
HOUSING GP-OSCILLATING AXLE	200
LINES GP-HYDROSTATIC	202
LINES GP-HYDROSTATIC PWR CASE	204
LINES GP-POWER TRAIN FILTER	208
MOTOR GP-PISTON	210
MOUNTING GP-AXLE	212
MOUNTING GP-MOTOR	214
MOUNTING GP-PUMP	216
POWER TRAIN AR	217
PUMP GP-CHARGE	218
PUMP GP-PISTON	220
RIM AR	222
RIM GP-DEMOUNTABLE	223
ROTATING GP-MOTOR	226
ROTATING GP-PUMP	230
SHAFT GP-DRIVE	232
SLIP JOINT GP	233
TIRE & RIM AR	234
TIRE & RIM GP	236
VALVE GP-PILOT	237
VALVE GP-PUMP CONTROL	243
VALVE GP-RELIEF	245
VALVE GP-ROTARY	246
VALVE GP-SOLENOID & MANIFOLD	247
VALVE GP-SPEED SENSING	248
VALVE GP-TIRE	249
FRAME AND BODY	250
BAFFLE GP-RADIATOR	250
CONVERSION AR-ROADING	252
COUNTERWEIGHT GP	259
FENDER GP-ROADING	262
FIREWALL GP	265
FRAME GP-LOADER	266
FRAME GP-REAR	267
GUARD GP-BOTTOM	269
GUARD GP-LINES	271
GUARD GP-POWER TRAIN	274
HITCH GP-ARTICULATING	275
HOOD & GUARD GP	277
HOOD GP	281
LADDER GP	286
LINES GP-GREASE	288
LINK GP-STEERING FRAME LOCK	289
REFLECTOR GP	290
SUPPRESSION AR-SOUND	291
SUPPRESSION GP-SOUND	292
BRAKING SYSTEM	293
ACCUMULATOR GP-BRAKE	293
CONTROL GP-PARKING BRAKE	296
CONTROL GP-SERVICE BRAKE	299
LINES GP-SERVICE BRAKE	301
MANIFOLD GP-BRAKE ACCUMULATOR	303
STEERING SYSTEM	304
CONTROL GP-STEERING	304
CONVERSION AR-SECONDARY STEER	308
CYLINDER & MTG GP-STEERING	309
CYLINDER GP-STEERING	310
LINES GP-SECONDARY STEERING	312
LINES GP-STEERING	314
LOCK GP-STEERING CYLINDER	318
PUMP & MOTOR GP-SEC STEERING	319
PUMP GP-GEAR	320
PUMP GP-METERING	321
STEERING AR	325
STEERING AR-SECONDARY	325
STEERING COLUMN GP	326
VALVE GP-SECONDARY STEERING	327
HYDRAULIC SYSTEM	328
ACCUMULATOR GP-HYDRAULIC	328
ACCUMULATOR GP-RIDE CONTROL	330
BLOCK GP-HYDRAULIC	331
CONTROL & LINES GP-RIDE	332
CONTROL AR-RIDE	334

TABLE OF CONTENTS

Name	Page
CONTROL GP-PILOT OPERATED HYD	335
CONVERSION AR-HYDRAULIC	341
CYLINDER GP-COUPLER	342
CYLINDER GP-LIFT	343
CYLINDER GP-TILT	344
DRAIN GP-ECOLOGY	345
HYDRAULIC AR	346
HYDRAULIC AR-2 VALVE	346
HYDRAULIC AR-3 VALVE	346
HYDRAULIC AR-4 VALVE	347
KICKOUT & POSITIONER GP	348
LINES GP-ACCUMULATOR	350
LINES GP-FRONT	352
LINES GP-HYDRAULIC	356
LINES GP-HYDRAULIC OIL COOLER	360
LINES GP-LIFT CYLINDER	361
LINES GP-PILOT	364
LINES GP-PUMP	376
LINES GP-TILT CYLINDER	379
LOCK GP-HYDRAULIC HAND CONTROL	381
PIVOT GP-PILOT VALVE	382
PLATE GP-PILOT VALVE	383
PUMP & MTG GP-IMPL & STEERING	387
TANK GP-EXPANSION	388
TANK GP-HYDRAULIC	390
VALVE & MTG GP-MAIN CONTROL	394
VALVE GP-BANK 2	400
VALVE GP-BANK 3	401
VALVE GP-BANK 4	402
VALVE GP-CONTROL	404
VALVE GP-DRAIN	406
VALVE GP-PILOT	407
VALVE GP-PILOT CARTRIDGE	415
VALVE GP-RELIEF	420
VALVE GP-SHUTOFF	423
VALVE GP-SOLENOID	425
IMPLEMENTS	427
BRACKET GP-TRANSPORT	427
CONTROL GP-BUCKET	428
WORK TOOLS	430
ADAPTER GP-TIP	430
BUCKET AS-PENETRATION	431
BUCKET GP-GENERAL PURPOSE	434
BUCKET GP-PENETRATION	436
BUCKET GP-ROCK	437
COUPLER GP-QUICK	438
EDGE GP-BIT & CUTTING	441
GUARD GP-BUCKET	443
KIT-QUICK COUPLER	444
TIP GP-LONG	445
OPERATOR STATION	447
ACCUMULATOR GP-REFRIGERANT	447
ADJUSTER GP-SEAT	449
AIR COMPRESSOR GP-SEAT	450
AIR CONDITIONER & MOUNTING GP	451
AIR CONDITIONER AR	453
AIR CONDITIONER GP	454
ARMREST GP	457
CAB AR	462
CAB AR-ENCLOSED ROPS	463
CAB GP-ENCLOSED ROPS	464
CANOPY AR-OPEN ROPS	466
CANOPY AR-SOFT	466
CANOPY GP-OPEN ROPS	467
CANOPY GP-SOFT	468
COMPRESSOR GP-REFRIGERANT	470
CONDENSER GP-REFRIGERANT	473
CONVERSION AR-AIR CONDITIONER	474
COVER GP-CONSOLE	475
DASH GP	476
DEFROSTER GP-CAB	477
DOOR GP-CAB	478
DUCT GP-AIR	491
EXTENSION GP-BACKREST	492
FILTER GP-CAB AIR	493
GUARD GP-WINDOW	494
HEATER & MTG GP-CAB	496
HEATER AR-CAB	497
HEATER GP-CAB	498
HOUSING GP-SEAT SUSPENSION	500
INSTALLATION GP-RADIO	503
KIT-SEAT AIR COMPRESSOR	507
LINER GP-CAB	508
LINES GP-AIR CONDITIONER	515
LINES GP-CAB HEATER	519
LINES GP-HEATER	521
LITERATURE GP	522
MIRROR GP-LH	523
MIRROR GP-REAR VIEW	524
MIRROR GP-RH	530
MODULE GP-WARNING INDICATOR	531
MOUNTING GP-CAB	533
OPERATOR AR	534
OPERATOR AR-OPEN ROPS	534
PAN GP-BACKREST	535
PAN GP-SEAT	538
PANEL GP-INSTRUMENT	540
PEDAL GP-BRAKE	552
PEDAL GP-GOVERNOR	553
PLATFORM AR	554
PLATFORM GP	555
PLATFORM GP-OPERATOR	557
RECLINER GP-SEAT	558
ROPS GP-ENCLOSED	559

TABLE OF CONTENTS

Name	Page	Name	Page
ROPS GP-OPEN	560		
SCREEN GP-SUN	562		
SEAT BELT GP	563		
SEAT GP	566		
SEAT GP-SUSPENSION	573		
SPEEDOMETER GP	584		
SUPPORT GP-SEAT	585		
SUPPRESSION GP-SOUND	586		
SUSPENSION GP-SEAT	587		
TANK GP-WINDOW WASHER	591		
VISOR GP-CAB	592		
WASHER GP-WINDOW	593		
WINDOW GP-DOOR	594		
WIPER GP-WINDOW	595		
SERVICE EQUIPMENT AND SUPPLIES	597		
TOOL BOX GP	597		
FILM GP	598		
PLATE & FILM GP	599		
PART NUMBER INDEX	B1		

TABLE DES MATIÈRES

Désignation	Page
GÉNÉRALITÉS	A26
OPTIONS DE RÉPARATION	A43
ADDITIFS POUR LIQUIDE DE REFROIDISSEMENT	A48
PIÈCES DE RECHANGE	A56
INDEX	A84
VERSION DE MACHINE	1
VERSION DE CHASSIS	1
VERSION NORMALE	1
VERSION DE TRANSFORMATION - HOMOLOGATION	2
VERSION DE TRANSFORMATION MACHINE	3
MOTEUR (VERSION)	8
MOTEUR (VERSION PRINCIPALE)	8
MONTAGE DE MOTEUR (VERSION)	9
MOTEUR STANDARD	10
ARBRE A CAMES (ASS)	10
CACHE-SOUPAPES (ASS)	11
VILEBREQUIN (ASS)	13
BLOC-CYLINDRES (ASS)	15
CULASSE (ASS)	18
VIDANGE-HUILE DE MOTEUR (ASS)	20
ENTRAÎNEMENT DE VENTILATEUR (ASS)	21
VOLANT MOTEUR (ASS)	22
CARTER DE VOLANT (ASS)	23
CARTER AV (ASS)	24
OEILLETONS DE LEVAGE MOTEUR (ASS)	26
MONTAGE DE MOTEUR ET BOÎTE (ASS)	27
HUILE MOTEUR - CARTER (ASS)	28
PISTON ET BIELLE (ASS)	29
BOUCHON DE MOTEUR (ASS)	30
VILEBREQUIN - POULIE (ASS)	32
SOUPAPE - VIDANGE DE CARTER D'HUILE (ASS)	33
CULBUTERIE (ASS)	34
CIRCUIT DE GRAISSAGE	35
FILTRE À HUILE MOTEUR (ASS)	35
POMPE A HUILE MOTEUR (ASS)	36
ROBINET-PRÉLÈVEMENT D'ÉCHANTILLON DE LIQUIDE (ASS)	37
CIRCUIT DE REFROIDISSEMENT	38
RACCORD D'EAU (ASS)	38
SUPPORT DE FILTRE ET REFROIDISSEUR D'HUILE MOTEUR	39
VENTILATEUR ASPIRANT (ASS)	41
POMPE A EAU (ASS)	42
RADIATEUR ET REFROIDISSEUR D'HUILE HYDRAULIQUE (ASS)	44
RADIATEUR (ASS)	46
CIRCUIT D'ADMISSION D'AIR ET D'ÉCHAPPEMENT	48
FILTRE A AIR (ASS)	48
COUVERCLE DE COLLECTEUR D'ADMISSION (ASS)	50
RALLONGE D'ÉCHAPPEMENT (ASS)	51
CANALISATIONS D'AIR (ASS)	53
SILENCIEUX (ASS)	57
PREFILTRE (ASS)	58
TURBOCOMPRESSEUR (ASS)	59
CIRCUIT DE CARBURANT	61
CÂBLE DE COMMANDE DU RÉGULATEUR (ASS)	61
COMMANDE DE RÉGULATEUR (ASS)	62
FILTRE ET CANALISATIONS DE CARBURANT (ASS)	65
FILTRE A CARBURANT (ASS)	68
PROTECTION DE POMPE D'INJECTION DE CARBURANT (ASS)	70
POMPE D'INJECTION DE CARBURANT (ASS)	71
RÉSERVOIR DE CARBURANT ET MONTAGE (ASS)	73
RÉSERVOIR DE CARBURANT (ASS)	75
POMPE DE SÉPARATEUR D'EAU ET D'AMORÇAGE DE CARBURANT (ASS)	76
CIRCUIT ELECTRIQUE ET DE DEMARRAGE	77
ALTERNATEUR DE CHARGE (ASS)	77
BATTERIE (ASS)	78
COMMANDE ET CÂBLAGE DE TRANSMISSION (ASS)	79
COMMANDE ELECTRONIQUE DE LIMITEUR DE LEVAGE (ASS)	81
COMMANDE DE POSITION (ASS)	82
TRANSFORMATION ELECTRIQUE (ASS)	83
DISTRIBUTEUR ELECTRONIQUE (ASS)	85
ÉLECTRONIQUE - MACHINE (ENS)	86

* TRADUCTION NON DISPONIBLE AU MOMENT DE LA PUBLICATION

TABLE DES MATIÈRES

Désignation	Page
BOUGIE DE PRÉCHAUFFAGE (ASS)	87
EAU DES CHEMISES - RECHAUFFEUR (ASS)	89
MONTAGE-SÉCURITÉ (ASS)	91
PLAFONNIER (ASS)	93
LAMPE - PHARE (ASS)	94
LAMPE - PHARE ET CLIGNOTANT	96
LAMPE AR (ASS)	103
LAMPE - CLIGNOTANT DE DIRECTION (ASS)	104
FEUX ARRIÈRE ET FEUX D'ARRÊT	110
LAMPE - GYROPHARE (ASS)	111
ÉCLAIRAGE (VERSION)-PROJECTEUR & SIGNAL	112
*LIGHTING AR-ROADING	112
ÉCLAIRAGE - FEUX DE ROUTE (VERSION)	113
ÉCLAIRAGE - AUXILIAIRE (ASS)	114
ÉCLAIRAGE - PROJECTEURS (ASS)	115
ÉCLAIRAGE - PROJECTEURS ET CLIGNOTANTS (ASS)	120
ÉCLAIRAGE - FEUX DE ROUTE (ASS)	122
ÉCLAIRAGE CLIGNOTANT	126
ÉCLAIRAGE - AVERTISSEUR (ASS)	128
MOTEUR ELECTRIQUE (ASS)	130
ÉQUIPEMENT POUR DÉPLACEMENT ROUTIER (VERSION)	131
DÉMARREUR ÉLECTRIQUE (ASS)	132
ROBINET DE BATTERIE (ASS)	133
CONTACTEUR MAGNETIQUE (ASS)	135
MANOCONTACT	137
BOUTON DE TEMPÉRATURE	138
INTERRUPTEUR D'ESSUIE-GLACE (ASS)	139
AVERTISSEUR DE RECUL (ASS)	140
CABLAGE DE CABINE (ASS)	142
CABLAGE DE CHASSIS (ASS)	150
CABLAGE DE MOTEUR (ASS)	153
CABLAGE AV (ASS)	157
CABLAGE DE TRANSMISSION (ASS)	159
CABLAGE AR (ASS)	160
CÂBLAGE DE COMMANDE DE TRANSLATION (ASS)	162
CABLAGE DE DIRECTION AUXILIAIRE (ASS)	163
TRANSMISSION	165
MECANISME DE COMMANDE DE POMPE (ASS)	165
ESSIEU FIXE (VERSION)	167
ESSIEU OSCILLANT (VERSION)	168
FREIN ET TRAINS PLANÉTAIRES (ASS)	170
COMMANDE DE VITESSE (VERSION)	171
COMMANDE D'APPROCHE LENTE (ASS)	172
*CONTROL GP-TMSN & JOYSTICK	174
COMMANDE DE BOITE DE VITESSES (ASS)	175
COUVERCLE HYDROSTATIQUE (ASS)	179
COUVERCLE DE MOTEUR (ASS)	181
COUVERCLES D'EXPEDITION (ASS)	182
DIFFERENTIEL (ASS)	183
DIFFÉRENTIEL - GLISSEMENT LIMITÉ (ASS)	184
ENGRENAGE DE TRANSFERT (ASS)	185
FILTRE A HUILE (ASS)	187
COURONNE CONIQUE (ASS)	188
TÊTE DE MOTEUR À PISTONS (ASS)	192
TÊTE DE POMPE (ASS)	196
CARTER D'ESSIEU FIXE	198
CARTER D'ESSIEU OSCILLANT	200
CANALISATIONS HYDROSTATIQUES (ASS)	202
CANALISATIONS DE CARTER HYDROST. DE TRANSMISSION	204
CANALISATIONS DE FILTRE DE TRANSMISSION (ASS)	208
GROUPE DE MOTEUR A PISTONS	210
MONTAGE D'ESSIEU (ASS)	212
MOTEUR - MONTAGE (ASS)	214
MONTAGE DE POMPE (ASS)	216
TRANSMISSION (VERSION)	217
POMPE DE GAVAGE (ASS)	218
POMPE A PISTONS (ASS)	220
JANTE (VERSION)	222
JANTE DÉMONTABLE (ASS)	223
GROUPE DE ROTATION DE MOTEUR	226
GROUPE DE ROTATION DE POMPE	230
ARBRE D'ENTRAÎNEMENT (ASS)	232
CARDAN COULISSANT (ASS)	233
PNEU ET JANTE (VERSION)	234
PNEU ET JANTE (ASS)	236
SOUPAPE PILOTE (ASS)	237
DISTRIBUTEUR DE POMPE (ASS)	243
CLAPET DE DECHARGE (ASS)	245
CLAPET ROTATIF (ASS)	246
SOUPAGE - SOLÉNOIDE ET COLLECTEUR	247
SOUPAPE DE CAPTEUR DE VITESSE (ASS)	248
PNEU - GROUPE DE VALVE	249
CHÂSSIS ET BENNE	250
DEFLECTEUR - RADIATEUR (ASS)	250

* TRADUCTION NON DISPONIBLE AU MOMENT DE LA PUBLICATION

TABLE DES MATIÈRES

Désignation	Page
VERSION DE TRANSFORMATION POUR DÉPLACEMENT ROUTIER	252
CONTREPOIDS (ASS)	259
GARDE-BOUE (ASS)	262
CLOISON PARE-FEU (ASS)	265
BATI - CHARGEUSE (ASS)	266
BÂTI AR (ASS)	267
BLINDAGE INFÉRIEUR (ASS)	269
PROTECTEUR DES CANALISATIONS (ASS)	271
BLINDAGE DE TRANSMISSION (ASS)	274
ATTELAGE D'ARTICULATION (ASS)	275
CAPOT ET PROTECTION (ASS)	277
CAPOT (ASS)	281
ECHELLE (ASS)	286
CANALISATIONS DE GRAISSAGE (ASS)	288
LIAISON - VERROUILLAGE DE CHÂSSIS DE DIRECTION (ASS)	289
RÉFLECTEUR (ASS)	290
INSONORISATION (VERSION)	291
INSONORISATION (ASS)	292
CIRCUIT DE FREINS	293
ACCUMULATEUR - FREIN	293
COMMANDE DE FREIN DE STATIONNEMENT (ASS)	296
FREIN DE MANOEUVRE - COMMANDE (ASS)	299
CANALISATIONS DU FREIN DE MANOEUVRE (ASS)	301
COLLECTEUR D'ACCUMULATEUR DE FREIN (ASS)	303
CIRCUIT DE DIRECTION	304
COMMANDE DE DIRECTION (ASS)	304
VERSION DE TRANSFORMATION DE DIRECTION AUXILIAIRE	308
VERIN DE DIRECTION ET MONTAGE (ASS)	309
VERIN DE DIRECTION (ASS)	310
CANALISATION DE DIRECTION AUXILIAIRE	312
CANALISATIONS DE DIRECTION (ASS)	314
VERROUILLAGE DE VÉRIN DE DIRECTION (ASS)	318
POMPE DE DIRECTION AUXILIAIRE ET MONTAGE (ASS)	319
POMPE A ENGRENAGES (ASS)	320
POMPE DE REGULARISATION DE DEBIT (ASS)	321
DIRECTION (ENS)	325
DIRECTION AUXILIAIRE (VERSION)	325
COLONNE DE DIRECTION (ASS)	326
SOUPAPE DE DIRECTION AUXILIAIRE (ASS)	327
CIRCUIT HYDRAULIQUE	328
ACCUMULATEUR HYDRAULIQUE (ASS)	328
ACCUMULATEUR - COMMANDE DE TRANSLATION (ASS)	330
BLOC - HYDRAULIQUE (ASS)	331
COMMANDE ET CANALIS. - TRANSLATION (ASS)	332
COMMANDE DE TRANSLATION (VERSION)	334
COMMANDE HYDRAULIQUE PILOTE (ASS)	335
VERSION DE TRANSFORMATION - HYDRAULIQUE	341
VÉRIN DE COUPLEUR (ASS)	342
VÉRIN DE LEVAGE (ASS)	343
VÉRIN D'INCLINAISON (ASS)	344
VIDANGE-ÉCOLOGIE (ASS)	345
VERSION HYDRAULIQUE	346
DISTRIBUTEUR - 2 VOIES (VERSION)	346
DISTRIBUTEUR - 3 VOIES (VERSION)	346
DISTRIBUTEUR QUADRUPLE CORPS (VERSION)	347
LIMITEUR DE LEVAGE ET RETOUR À L'ANGLE DE CAVAGE	348
CANALISATIONS D'ACCUMULATEUR (ASS)	350
CANALISATIONS AV	352
CANALISATIONS HYDRAULIQUES (ASS)	356
CANALISATIONS DE REFROIDISSEUR D'HUILE HYDR. (ASS)	360
CANALISATIONS DE VÉRIN DE LEVAGE (ASS)	361
CANALISATIONS A COMMANDE PILOTE (ASS)	364
CANALISATIONS DE POMPE (ASS)	376
CANALISATIONS DU VÉRIN D'INCLINAISON (ASS)	379
VERROUILLAGE DE COMMANDE MANUELLE HYDRAUL. (ASS)	381
ARTICULATION DE SOUPAPE PILOTE (ASS)	382
PLAQUE DE SOUPAPE PILOTE (ASS)	383
POMPE ET MONTAGE - ÉQUIPEMENT ET DIRECTION (ASS)	387
RESERVOIR D'EXPANSION (ASS)	388
RÉSERVOIR HYDRAULIQUE (ASS)	390

* TRADUCTION NON DISPONIBLE AU MOMENT DE LA PUBLICATION

TABLE DES MATIÈRES

Désignation	Page
COMMANDE PRINCIPALE DE SOUPAPE ET MONTAGE (ASS)	394
DISTRIBUTEUR DOUBLE ÉLÉMENT (ASS)	400
DISTRIBUTEUR TRIPLE ÉLÉMENT (ASS)	401
DISTRIBUTEUR 4 ÉLÉMENTS (ASS)	402
DISTRIBUTEUR (ASS)	404
SOUPAPE DE VIDANGE	406
SOUPAPE PILOTE (ASS)	407
SOUPAPE - CARTOUCHE PILOTE (ASS)	415
CLAPET DE DECHARGE (ASS)	420
SOUPAPE D'ARRÊT (ASS)	423
SOUPAPE - SOLÉNOÏDE (ASS)	425
ÉQUIPEMENTS	427
SUPPORT D'EXPÉDITION (ASS)	427
COMMANDE DE GODET (ASS)	428
OUTILS DE TRAVAIL	430
PORTE-POINTE (ASS)	430
GODET-PÉNÉTRATION (ENS)	431
GODET NORMAL (ASS)	434
GODET PÉNÉTRATION (ASS)	436
*BUCKET GP-ROCK	437
COUPLEUR EXPRESS (ASS)	438
EMBOUT ET LAME DE COUPE (ASS)	441
PROTECTION DE GODET (ASS)	443
KIT DE COUPLEUR EXPRESS	444
POINTE LONGUE (ASS)	445
POSTE DE CONDUITE	447
ACCUMULATEUR - CLIMATISEUR (ASS)	447
REGLAGE DE SIEGE (ASS)	449
SIÈGE - COMPRESSEUR D'AIR (ASS)	450
CLIMATISEUR ET MONTAGE (ASS)	451
CLIMATISEUR (VERSION)	453
CLIMATISEUR (ASS)	454
ACCOUDOIR (ASS)	457
CABINE (VERSION)	462
CABINE ROPS FERMÉE (VERSION)	463
FILTRE - ELECTRONIQUE (ASS)	464
VERSION DE TOIT - ROPS OUVERT	466
PAVILLON (VERSION)	466
TOIT-ROPS OUVERT (ASS)	467
PAVILLON (ASS)	468
COMPRESSEUR DE REFRIGERANT (ASS)	470
CONDENSEUR DE RÉFRIGÉRANT	473
VERSION DE TRANSFORMATION - CLIMATISEUR	474
COUVERCLE DE LA CONSOLE (ASS)	475
TABLEAU DE BORD (ASS)	476
DEGIVREUR (ASS)	477
PORTIÈRE DE CABINE (ASS)	478
GAINE D'AIR (ASS)	491
RALLONGE DU DOSSIER DE SIEGE	492
FILTRE À AIR DE CABINE (ASS)	493
PROTECTION DE GLACE (ASS)	494
CHAUFFAGE ET MONTAGE - CABINE (ASS)	496
CHAUFFAGE DE CABINE (VERSION)	497
CHAUFFAGE DE CABINE (ASS)	498
SUSPENSION DE SIEGE - CARTER (ASS)	500
MONTAGE DE RADIO (ASS)	503
KIT DE COMPRESSEUR PNEUMATIQUE DE SIÈGE	507
CABINE - REVÊTEMENT (ASS)	508
CANALISATIONS DE CLIMATISEUR (ASS)	515
CANALISATIONS DE CHAUFFAGE DE CABINE (ASS)	519
CANALISATIONS DE CHAUFFAGE (ASS)	521
LITTÉRATURE (ASS)	522
RÉTROVISEUR GAUCHE (ASS)	523
RÉTROVISEUR (ASS)	524
RÉTROVISEUR DROIT (ASS)	530
MODULE - TÉMOIN (ASS)	531
MONTAGE DE CABINE (ASS)	533
POSTE DE CONDUITE (VERSION)	534
CABINE ROPS OUVERTE (VERSION)	534
COUVERCLE INFÉRIEUR-DOSSIER (ASS)	535
SIEGE - COUVERCLE INFERIEUR (ASS)	538
TABLEAU DE BORD (ASS)	540
PEDALE DE FREIN (ASS)	552
RÉGULATEUR - PÉDALE (ASS)	553
PLATE-FORME (VERSION)	554
PLATE-FORME (ASS)	555
PLATE-FORME DE CABINE	557
SIÈGE INCLINABLE (ASS)	558
CABINE ROPS FERMÉE (ASS)	559
TOIT ROPS - OUVERT (ASS)	560
PARE-SOLEIL (ASS)	562
CEINTURE DE SECURITE (ASS)	563
SIÈGE (ASS)	566
SIÈGE AVEC SUSPENSION (ASS)	573
COMPTEUR DE VITESSE (ASS)	584
SUPPORT DE SIÈGE (ASS)	585
INSONORISATION (ASS)	586
SIÈGE AVEC SUSPENSION (ASS)	587

* TRADUCTION NON DISPONIBLE AU MOMENT DE LA PUBLICATION

TABLE DES MATIÈRES

Désignation	Page	Désignation	Page
RÉSERVOIR - LAVE-GLACE (ASS)	591		
RETROVISEUR - CABINE (ASS)	592		
LAVE-GLACE - VITRE (ASS)	593		
GLACE DE PORTIÈRE (ASS)	594		
ESSUIE-GLACE (ASS)	595		
MATÉRIEL ET FOURNITURES D'ENTRETIEN	597		
BOÎTE À OUTILS (ASS)	597		
PLAQUE SIGNALÉTIQUE (ASS)	598		
PLAQUES SIGNALETIQUES ET AUTOCOLLANTS (ASS)	599		
INDEX DE NUMÉROS DE PIÈCES	B1		

* TRADUCTION NON DISPONIBLE AU MOMENT DE LA PUBLICATION

CONTENIDO

Nombre	Página
INFORMACIÓN GENERAL	A30
ALTERNATIVAS DE REPARACIÓN	A44
ADITIVOS DE REFRIGERANTE SUPLEMENTARIOS	A49
PIEZAS DE MANTENIMIENTO	A61
INDICE	A94
CONFIGURACIÓN DE MÁQUINAS	1
CHASIS (CONFIG)	1
CONFIGURACIÓN COMÚN	1
CONFIGURACIÓN DE TRANSFORMACIÓN PARA CERTIFICACIÓN	2
MÁQUINA DE CONVERSIÓN (CONFIG)	3
CONFIGURACION DE MOTOR	8
MOTOR PRIMARIO (CONFIG)	8
CONFIGURACIÓN DE INSTALACIÓN DEL MOTOR	9
MOTOR BÁSICO	10
ÁRBOL DE LEVAS (GR)	10
TAPA DEL MECANISMO DE VÁLVULAS (GR)	11
CIGÜEÑAL (GR)	13
BLOQUE MOTOR (GR)	15
CULATA DE CILINDROS (GR)	18
DRENAJE DEL ACEITE DE MOTOR	20
IMPULSOR DE VENTILADOR (GR)	21
VOLANTE (GR)	22
VOLANTE - CAJA DE (GR)	23
CAJA DELANTERA (GR)	24
CÁNCAMOS DE LEVANTAMIENTO DEL MOTOR (GR)	26
MONTAJE DEL MOTOR Y LA TRANSMISIÓN (GR)	27
CÁRTER - COLECTOR DEL (GR)	28
PISTÓN Y BIELA (GR)	29
TAPÓN DEL MOTOR (GR)	30
CIGÜEÑAL - POLEA DE (GR)	32
VÁLVULA DE DRENAJE DEL COLECTOR DE ACEITE (GR)	33
MECANISMO DE VÁLVULAS (GR)	34
SISTEMA DE LUBRICACIÓN	35
FILTRO DE ACEITE DEL MOTOR (GR)	35
BOMBA DE ACEITE DEL MOTOR (GR)	36
VÁLVULA DE MUESTREO (GR)	37
SISTEMA DE ENFRIAMIENTO	38
AGUA - CONEXIÓN DE (GR)	38
ENFRIADOR DE ACEITE DEL MOTOR Y BASE DEL FILTRO	39
SUCCIÓN - VENTILADOR DE (GR)	41
BOMBA DE AGUA (GR)	42
RADIADOR Y ENFRIADOR DE ACEITE HIDRÁULICO (GR)	44
RADIADOR (GR)	46
SISTEMA DE AIRE DE ADMISIÓN Y ESCAPE	48
FILTRO DE AIRE (GR)	48
TAPA DE ADMISIÓN DE AIRE (GR)	50
EXTENSIÓN DEL ESCAPE (GR)	51
AIRE - TUBERÍAS DE (GR)	53
SILENCIADOR (GR)	57
ANTEFILTRO (GR)	58
TURBOCOMPRESOR (GR)	59
SISTEMA DE COMBUSTIBLE	61
CABLE DE CONTROL DE REGULADOR (GR)	61
CONTROL DE REGULADOR (GR)	62
FILTRO Y TUBERÍAS DE COMBUSTIBLE (GR)	65
FILTRO DE COMBUSTIBLE (GR)	68
PROTECTOR DE BOMBA DE INYECCION DE COMBUSTIBLE (GR)	70
BOMBA DE INYECCIÓN DE COMBUSTIBLE (GR)	71
TANQUE DE COMBUSTIBLE Y GRUPO DE MONTAJE	73
COMBUSTIBLE - TANQUE DE (GR)	75
SEPARADOR DE AGUA Y BOMBA DE CEBADO DE COMBUSTIBLE (GR)	76
SISTEMA ELECTRICO Y DE ARRANQUE	77
CARGA - ALTERNADOR DE (GR)	77
BATERÍA (GR)	78
CNTR Y CABLES DE LA TRANSM ELECTRÓNICA (GR)	79
CONTROL DE DESCONEXIÓN DE LEVANTAMIENTO (GR)	81
CONTROL DE POSICION (GR)	82
CONVERTIDOR ELÉCTRICO (GR)	83
DISTRIBUIDOR ELECTRÓNICO (GR)	85
ELECTRONICA DE LA MAQUINA (GR)	86
BUJÍA INCANDESCENTE (GR)	87
AGUA DE LAS CAMISAS - CALENTADOR DEL (GR)	89
INSTALACION DE SEGURIDAD (GR)	91

* NO HAY TRADUCCION DISPONIBLE EN EL MOMENTO DE LA IMPRESION

CONTENIDO

Nombre	Página
LÁMPARA DEL TECHO (GR)	93
REFLECTOR (GR)	94
LÁMPARA DE LUZ DELANTERA Y DE SEÑAL (GR)	96
LÁMPARA DE FARO TRASERO(GR)	103
LUZ DE SEÑAL DE GIRO (GR)	104
LUCES DE PARADA Y COLA (GR)	110
LÁMPARA DE BALIZA DE ADVERTENCIA (GR)	111
LUCES DE REFLECTOR Y SEÑAL (CONFIG)	112
*LIGHTING AR-ROADING	112
LUCES DE DESPLAZAMIENTO (CONFIG)	113
LUCES AUXILIARES (GR)	114
LUCES DE REFLECTOR (GR)	115
LUCES DE REFLECTOR Y CAMBIO DE DIRECCION (GR)	120
LUCES DE DESPLAZAMIENTO (GR)	122
LUCES DE GIRO (GR)	126
LUCES DE ADVERTENCIA (GR)	128
MOTOR ELÉCTRICO (GR)	130
CONFIGURACIÓN PARA CARRETERA	131
MOTOR DE ARRANQUE ELÉCTRICO (GR)	132
DISYUNTOR (GR)	133
INTERRUPTOR MAGNÉTICO (GR)	135
INTERRUPTOR DE PRESIÓN (GR)	137
INTERRUPTOR PARA LA TEMPERATURA (GR)	138
INTERRUPTOR DEL LIMPIADOR (GR)	139
RETROCESO - ALARMA DE (GR)	140
CABLES DE LA CABINA (GR)	142
CABLES DEL CHASIS (GR)	150
CABLES DEL MOTOR (GR)	153
CABLES DELANTEROS (GR)	157
CABLES DEL TREN DE FUERZA (GR)	159
CABLES POSTERIORES (GR)	160
CABLES DE CONTROL DE AMORTIGUACIÓN (GR)	162
CABLES DE LA DIRECCIÓN SECUNDARIA	163
TREN DE FUERZA	165
ACTIVADOR DE LA BOMBA (GR)	165
EJE FIJO (CONFIG)	167
EJE OSCILANTE (CONFIG)	168
FRENO Y PLANETARIOS (GR)	170
VELOCIDAD DE CONTROL (CONFIG)	171
CONTROL DE MARCHA ULTRALENTA (GR)	172
*CONTROL GP-TMSN & JOYSTICK	174
CONTROL DE LA TRANSMISIÓN (GR)	175
TAPA HIDROSTÁTICA (GR)	179
TAPA DEL MOTOR (GR)	181
TAPAS PROTECTORAS DE EMBARQUE (GR)	182
DIFERENCIAL (GR)	183
DIFERENCIAL DE DESLIZAMIENTO LIMITADO (GR)	184
MANDO DE TRANSFERENCIA (GR)	185
FILTRO DE ACEITE (GR)	187
CORONA (GR)	188
CABEZA DE MOTOR DE PISTONES (GR)	192
CABEZA DE BOMBA (GR)	196
CAJA DEL EJE OSCILANTE (GR)	198
CAJA DE EJE OSCILANTE (GR)	200
TUBERÍAS HIDROSTÁTICAS (GR)	202
TUBERÍAS HIDROSTÁTICAS DE LA CAJA DE TRANSMISIÓN (GR)	204
TUBERÍAS DEL FILTRO DEL TREN DE FUERZA (GR)	208
PISTONES DEL MOTOR (GR)	210
EJE - GRUPO DE MONTAJE	212
MONTAJE DEL MOTOR (GR)	214
MONTAJE DE LA BOMBA (GR)	216
TREN DE FUERZA (CONFIG)	217
BOMBA DE CARGA HIDRÁULICA (GR)	218
BOMBA DE PISTONES (GR)	220
LLANTA (CONFIG)	222
ARO DESMONTABLE (GR)	223
GRUPO DE ROTACIÓN DEL MOTOR (GR)	226
GRUPO GIRATORIO DE BOMBA	230
EJE DE MANDO (GR)	232
JUNTA DESLIZANTE (GR)	233
ARO Y RUEDA	234
ARO Y LLANTA (GR)	236
VÁLVULA PILOTO (GR)	237
VALVULA DE CONTROL DE LA BOMBA (GR)	243
VÁLVULA DE ALIVIO (GR)	245
VÁLVULA DE ROTACIÓN (GR)	246
VÁLVULA DE SOLENOIDE Y MÚLTIPLE (GR)	247
VÁLVULA DE DETECCIÓN DE VELOCIDAD (GR)	248
VÁLVULA DEL NEUMÁTICO (GR)	249
BASTIDOR Y CAJA	250
DEFLECTOR DEL RADIADOR	250
CONFIGURACIÓN DE TRANSFORMACIÓN PARA CARRETERA	252

* NO HAY TRADUCCION DISPONIBLE EN EL MOMENTO DE LA IMPRESION

CONTENIDO

Nombre	Página
CONTRAPESO (GR)	259
GUARDABARROS PARA DESPLAZAMIENTO EN CARRETERA (GR)	262
MAMPARA ANTITÉRMICA (GR)	265
BASTIDOR DEL CARGADOR (GR)	266
BASTIDOR TRASERO (GR)	267
PROTECTOR INFERIOR (GR)	269
PROTECTOR DE LAS TUBERÍAS (GR)	271
PROTECTOR DEL TREN DE FUERZA (GR)	274
ENGANCHE ARTICULADO (GR)	275
CAPO Y PROTECTOR (GR)	277
CAPÓ (GR)	281
ESCALERILLA (GR)	286
TUBERÍAS DE ENGRASE (GR)	288
TIRANTE DE TRABA DEL BASTIDOR DE DIRECCIÓN (GR)	289
REFLECTOR (GR)	290
INSONORIZADOR (CONFIG)	291
INSONORIZADOR (GR)	292
SISTEMA DE FRENOS	293
ACUMULADOR DEL FRENO (GR)	293
CONTROL DEL FRENO DE ESTACIONAMIENTO	296
FRENO DE SERVICIO - CONTROL (GR)	299
TUBERÍAS DEL FRENO DE SERVICIO (GR)	301
GRUPO DE MULTIPLE-ACUMULADOR DE FRENO	303
SISTEMA DE DIRECCIÓN	304
CONTROL DE DIRECCIÓN (GR)	304
CONVERSION DE DIRECCION SECUNDARIA (CONFIG)	308
CILINDRO DE DIRECCIÓN Y MONTAJE (GR)	309
CILINDRO DE DIRECCIÓN (GR)	310
TUBERÍAS DE LA DIRECCIÓN SECUNDARIA (GR)	312
TUBERÍAS DE DIRECCIÓN (GR)	314
TRABA DE CILINDRO DE DIRECCIÓN (GR)	318
BOMBA Y MOTOR DE DIRECCION SECUNDARIA (GR)	319
BOMBA DE ENGRANAJES (GR)	320
DOSIFICACIÓN - BOMBA DE (GR)	321
DIRECCIÓN (CONFIG)	325
DIRECCIÓN SECUNDARIA (CONFIG)	325
COLUMNA DE DIRECCIÓN (GR)	326
VALVULA DE DIRECCION SECUNDARIA (GR)	327
SISTEMA HIDRÁULICO	328
ACUMULADOR HIDRAULICO (GR)	328
ACUMULADOR DE CONTROL DE AMORTIGUACION (GR)	330
BLOQUE HIDRÁULICO (GR)	331
CONTROL DE DESPLAZAMIENTO Y TUBERÍAS (GR)	332
CONTROL DE AMORTIGUACIÓN (CONFIG)	334
CONTROL HIDRÁULICO DE OPERACIÓN PILOTO (GR)	335
CONVERSIÓN HIDRÁULICA (CONFIG)	341
CILINDRO DEL ACOPLADOR (GR)	342
CILINDRO DE LEVANTAMIENTO (GR)	343
INCLINACIÓN HORIZONTAL - CILINDRO DE (GR)	344
DRENAJE DE SEGURIDAD ECOLÓGICA (GR)	345
HIDRÁULICA (CONFIG)	346
CONFIGURACIÓN HIDRÁULICA DE 2 VÁLVULAS	346
VÁLVULA HIDRÁULICA DE 3 VÍAS (CONFIG)	346
VÁLVULA HIDRÁULICA DE 4 VÍAS (CONFIG)	347
POSICIONADOR DEL CUCHARÓN Y DESCONEXIÓN (GR)	348
TUBERÍAS DEL ACUMULADOR (GR)	350
TUBERÍAS DELANTERAS (GR)	352
TUBERÍAS HIDRÁULICAS (GR)	356
TUBERÍAS DEL ENFRIADOR DE ACEITE HIDRÁULICO (GR)	360
CILINDRO DE LEVANTAMIENTO - TUBERÍAS DEL (GR)	361
TUBERÍAS CON SERVOMANDO (GR)	364
BOMBA - TUBERÍAS DE (GR)	376
TUBERÍAS DEL CILINDRO DE INCLINACIÓN (GR)	379
TRABA DE CONTROL HIDRÁULICO MANUAL (GR)	381
GRUPO DE PIVOTE, VÁLVULA PILOTO	382
GRUPO DE PLANCHA, VÁLVULA PILOTO	383
BOMBA DE DIRECCIÓN E IMPLEMENTOS Y MONTAJE (GR)	387
TANQUE DE EXPANSIÓN (GR)	388
TANQUE HIDRÁULICO (GR)	390
MONTAJE Y VALVULA DEL CONTROL PRINCIPAL (GR)	394
VÁLVULAS HIDRÁULICAS - GRUPO DE 2	400

* NO HAY TRADUCCION DISPONIBLE EN EL MOMENTO DE LA IMPRESION

CONTENIDO

Nombre	Página
GRUPO DE 3 VÁLVULAS HIDRÁULICAS	401
GRUPO DE 4 VÁLVULAS HIDRÁULICAS	402
VÁLVULA DE CONTROL (GR)	404
VÁLVULA DE DRENAJE (GR)	406
VÁLVULA PILOTO (GR)	407
VALVULA PILOTO DE CARTUCHO (GR)	415
VÁLVULA DE ALIVIO (GR)	420
VÁLVULA DE CORTE (GR)	423
VÁLVULA DE SOLENOIDE (GR)	425
IMPLEMENTOS	427
SOPORTE DE TRANSPORTE (GR)	427
CONTROL DEL CUCHARÓN (GR)	428
HERRAMIENTAS	430
GRUPO DE PUNTA Y ADAPTADOR	430
CUCHARON PARA PENETRACIÓN (CONJ)	431
CUCHARÓN DE USO GENERAL (GR)	434
PENETRACIÓN DEL CUCHARÓN	436
*BUCKET GP-ROCK	437
ACOPLADOR RÁPIDO (GR)	438
GRUPO DE CANTONERA Y CUCHILLA	441
GRUPO DE PROTECTOR DEL CUCHARON	443
JUEGO DE ACOPLADOR RAPIDO	444
PUNTA LARGA (GR)	445
PUESTO DEL OPERADOR	447
ACUMULADOR DEL ACONDICIONADOR DE AIRE (GR)	447
AJUSTADOR DEL ASIENTO (GR)	449
COMPRESOR DE AIRE DEL ASIENTO (GR)	450
ACONDICIONADOR DE AIRE Y MONTAJE (GR)	451
ACONDICIONADOR DE AIRE (CONFIG)	453
ACONDICIONADOR DE AIRE (GR)	454
POSABRAZOS (GR)	457
CABINA (CONFIG)	462
SISTEMA ROPS DE CABINA CERRADA (CONFIG)	463
CABINA INCLUYE ROPS (GR)	464
TECHO ROPS ABIERTO (CONFIG)	466
PABELLÓN (CONFIG)	466
TECHO ROPS ABIERTO (GR)	467
TECHO TIPO TOLDO (GR)	468
COMPRESOR DE REFRIGERANTE (GR)	470
CONDENSADOR DE REFRIGERANTE (GR)	473
CONFIGURACIÓN DE LA TRANSFORMACIÓN DEL ACONDICIONADOR DE AIRE	474
TAPA DE LA CONSOLA (GR)	475
CONSOLA (GR)	476
DESCONGELADOR DE LA CABINA (GR)	477
PUERTA DE CABINA	478
CONDUCTO DE AIRE (GR)	491
EXTENSIÓN DEL RESPALDO (GR)	492
FILTRO DE AIRE DE LA CABINA (GR)	493
PROTECTOR DE LA VENTANA	494
CALEFACCIÓN Y MONTAJE DE LA CABINA (GR)	496
CALEFACCIÓN DE LA CABINA (CONFIG)	497
CALEFACCIÓN DE LA CABINA (GR)	498
CAJA DE LA SUSPENSIÓN DEL ASIENTO (GR)	500
INSTALACIÓN DE RADIO (GR)	503
JUEGO-ASIENTO DE COMPRESOR DE AIRE	507
REVESTIMIENTO DE LA CABINA (GR)	508
TUBERÍAS DE ACONDICIONADOR DE AIRE (GR)	515
TUBERÍAS DE CALEFACCIÓN DE LA CABINA	519
TUBERÍAS DE LA CALEFACCIÓN (GR)	521
PUBLICACIONES (GR)	522
RETROVISOR IZQUIERDO (GR)	523
RETROVISOR (GR)	524
RETROVISOR DERECHO (GR)	530
MÓDULO INDICADOR DE ADVERTENCIA (GR)	531
GRUPO DE MONTAJE DE LA CABINA	533
COMPARTIMIENTO DEL OPERADOR (CONFIG)	534
CABINA ROPS ABIERTA (CONFIG)	534
SOPORTE DEL RESPALDO (GR)	535
CUBIERTA INFERIOR DEL ASIENTO DEL OPERADOR (GR)	538
TABLERO DE INSTRUMENTOS (GR)	540
PEDAL DE FRENO (GR)	552
REGULADOR - PEDAL DEL (GR)	553
PLATAFORMA (CONFIG)	554
PLATAFORMA (GR)	555
PLATAFORMA DE LA CABINA	557
RECLINACION DE ASIENTO (GR)	558

* NO HAY TRADUCCION DISPONIBLE EN EL MOMENTO DE LA IMPRESION

CONTENIDO

Nombre	Página
CABINA ROPS CERRADA (GR)	559
ESTRUCTURA ROPS ABIERTA (GR)	560
PERSIANA PARA EL SOL (GR)	562
CINTURÓN DE SEGURIDAD (GR)	563
ASIENTO (GR)	566
SUSPENSIÓN - ASIENTO CON (GR)	573
VELOCÍMETRO (GR)	584
SOPORTE DEL ASIENTO (GR)	585
INSONORIZADOR (GR)	586
ASIENTO CON SUSPENSIÓN (GR)	587
TANQUE DEL LAVAPARABRISAS (GR)	591
VISERA (GR)	592
LAVAPARABRISAS DE LA VENTANA (GR)	593
VENTANA DE LA PUERTA (GR)	594
LIMPIAPARABRISAS DE LA VENTANA (GR)	595
EQUIPO DE SERVICIO Y SUMINISTROS	597
CAJA DE HERRAMIENTAS GR	597
ETIQUETA DE ADVERTENCIA (GR)	598
CALCOMANÍAS Y PLACAS DE IDENTIFICACIÓN (GR)	599
INDICE DE NUMEROS DE PIEZA	B1

* NO HAY TRADUCCION DISPONIBLE EN EL MOMENTO DE LA IMPRESION

ÍNDICE

Designação	Página
INFORMAÇÃO GERAL	A34
ALTERNATIVAS DE REPARO	A45
ADITIVOS SUPLEMENTARES DO LÍQUIDO ARREFECEDOR	A50
PEÇAS DE MANUTENÇÃO	A67
ÍNDICE	A105
MÁQUINA - ARRANJO	1
CHASSI	1
ARRANJO BÁSICO	1
GR. DE CONVERSÃO - CERTIFICADO	2
MÁQUINA - CONVERSÃO	3
MOTOR - ARRANJO	8
MOTOR PRIMÁRIO	8
GRUPO DE INSTALAÇÃO - MOTOR	9
MOTOR BÁSICO	10
EIXO-COMANDO DE VÁLVULA	10
TAMPA - MECANISMO DAS VÁLVULAS	11
VIRABREQUIM	13
BLOCO DO MOTOR	15
CABEÇOTE DO MOTOR	18
DRENO - ÓLEO DO MOTOR	20
COMANDO DO VENTILADOR	21
VOLANTE DO MOTOR	22
CAIXA DO VOLANTE DO MOTOR	23
CAIXA DIANTEIRA	24
LEVANTAMENTO DO MOTOR	26
MONTAGEM - MOTOR E TRANSMISSÃO	27
CÁRTER DO ÓLEO DO MOTOR	28
PISTÃO E BIELA	29
BUJÃO DO MOTOR	30
POLIA DO VIRABREQUIM	32
VÁLVULA DE DRENAGEM DO CÁRTER	33
MECANISMO DAS VÁLVULAS	34
SISTEMA DE LUBRIFICAÇÃO	35
FILTRO - ÓLEO DO MOTOR	35
BOMBA DE ÓLEO - MOTOR	36
VÁLVULA PARA TIRAR AMOSTRAS DE FLUIDOS	37
SISTEMA DE ARREFECIMENTO	38
CONEXÃO - TUBO D'ÁGUA	38
ARREFECEDOR DE ÓLEO DO MOTOR E BASE DO FILTRO	39
VENTILADOR DE SUCÇÃO	41
BOMBA DE ÁGUA	42
RADIADOR E ARREFECEDOR DO ÓLEO HIDRÁULICO	44
RADIADOR	46
SISTEMA DA ADMISSÃO DE AR E DE ESCAPE	48
PURIFICADOR DE AR	48
TAMPA - ADMISSÃO DE AR	50
EXTENSÃO DO TUBO DE ESCAPE	51
TUBOS - AR	53
SILENCIADOR	57
PRÉ-PURIFICADOR	58
TURBOALIMENTADOR	59
SISTEMA DE COMBUSTÍVEL	61
CABO - CONTROLE DO GOVERNADOR	61
CONTROLE DO GOVERNADOR	62
FILTRO E TUBOS - COMBUSTÍVEL	65
FILTRO - COMBUSTÍVEL	68
PROTEÇÃO - BOMBA DE INJEÇÃO DE COMBUSTÍVEL	70
BOMBA DE INJEÇÃO DO COMBUSTÍVEL	71
TANQUE DE COMBUSTÍVEL E MONTAGEM	73
TANQUE DE COMBUSTÍVEL	75
SEPARADOR DE ÁGUA E BOMBA DE ESCORVA DE COMBUSTÍVEL	76
SISTEMA ELÉTRICO E DE PARTIDA	77
ALTERNADOR DE CORRENTE	77
BATERIA	78
CONTROLE ELETRÔNICO DA TRANSMISSÃO E CABOS/FIOS ELÉTRICOS	79
CONTROLE - DESENGATE AUTOMÁTICO DE LEVANTAMENTO	81
CONTROLE - POSIÇÃO	82
CONVERSOR ELÉTRICO	83
DISTRIBUIDOR ELETRÔNICO	85
SISTEMA ELETRÔNICO - MÁQUINA	86
VELA DE AQUECIMENTO; VELA INCANDESCENTE	87
AQUECEDOR DA ÁGUA DO MOTOR	89
INSTALAÇÃO-SEGURANÇA	91
LÂMPADA - TETO	93
LÂMPADA - FAROL	94
LÂMPADA DIANTEIRA E DE SINAL	96

* TRADUÇÃO NÃO DISPONÍVEL NO MOMENTO DA IMPRESSÃO

ÍNDICE

Designação	Página
LUZ TRASEIRA	103
LÂMPADA - SINALIZAÇÃO	104
LUZ TRASEIRA E DE FREIO	110
LUZ GIRATÓRIA DE ALARME	111
ILUMINAÇÃO - FAROL E SINALIZAÇÃO	112
*LIGHTING AR-ROADING	112
ILUMINAÇÃO RODOVIÁRIA	113
ILUMINAÇÃO - AUXILIAR	114
SISTEMA DE ILUMINAÇÃO - FARÓIS	115
SISTEMA DE ILUMINAÇÃO - FARÓIS E SINAL	120
ILUMINAÇÃO - RODOVIÁRIA	122
ILUMINAÇÃO - SINALIZAÇÃO	126
SISTEMA DE ILUMINAÇÃO - ADVERTÊNCIA	128
MOTOR ELÉTRICO	130
ARRANJO RODOVIÁRIO	131
MOTOR ELÉTRICO DE PARTIDA	132
CHAVE GERAL	133
INTERRUPTOR - MAGNÉTICO	135
INTERRUPTOR - PRESSÃO	137
INTERRUPTOR - TEMPERATURA	138
INTERRUPTOR - LIMPADOR DO PÁRA-BRISA	139
ALARME DE MARCHA À RÉ	140
CABOS/FIOS ELÉTRICOS - CABINE	142
CABOS/FIOS ELÉTRICOS - CHASSI	150
CABOS/FIOS ELÉTRICOS - MOTOR	153
CABOS/FIOS ELÉTRICOS - DIANTEIROS	157
CABOS/FIOS ELÉTRICOS - TREM DE FORÇA	159
CABOS/FIOS ELÉTRICOS - TRASEIROS	160
CABOS/FIOS ELÉTRICOS - ABSORÇÃO DE IMPACTOS	162
CABOS/FIOS ELÉTRICOS - DIREÇÃO SECUNDÁRIA	163
TREM DE FORÇA	165
ACIONADOR DA BOMBA	165
EIXO FIXO	167
EIXO OSCILANTE	168
FREIOS E ENGRENAGENS PLANETARIAS	170
CONTROLE DE VELOCIDADE	171
CONTROLE - DESLIZADOR	172
*CONTROL GP-TMSN & JOYSTICK	174
CONTROLE DA TRANSMISSÃO	175
TAMPA HIDROSTÁTICA	179
TAMPA - MOTOR	181
TAMPA - EMBARQUE	182
DIFERENCIAL	183
DIFERENCIAL - DESLIZAMENTO LIMITADO	184
COMANDO DE TRANSFERÊNCIA	185
FILTRO - ÓLEO	187
ENGRENAGEM - COROA	188
CABEÇOTE DO MOTOR	192
CABEÇA DA BOMBA	196
CAIXA - EIXO FIXO	198
CAIXA - EIXO OSCILANTE	200
TUBOS - SISTEMA HIDROSTÁTICO	202
TUBOS - CAIXA DO SISTEMA HIDROSTÁTICO	204
TUBOS - FILTRO DO TREM DE FORÇA	208
MOTOR - PISTÃO	210
MONTAGEM DO EIXO	212
MONTAGEM DO MOTOR	214
MONTAGEM - BOMBA	216
TREM DE FORÇA	217
BOMBA DE CARGA	218
BOMBA DE PISTÃO	220
ARO	222
ARO DESMONTÁVEL	223
MOTOR DO GRUPO ROTATIVO	226
GRUPO ROTATIVO DA BOMBA	230
EIXO DE TRANSMISSÃO	232
JUNTA CORREDIÇA	233
PNEU E ARO	234
VÁLVULA DE CONTROLE PILOTO	237
VÁLVULA DE CONTROLE DA BOMBA	243
VÁLVULA DE ALÍVIO	245
VÁLVULA GIRATÓRIA	246
VÁLVULA - COLETOR E SOLENÓIDE	247
VÁLVULA - SENSOR DE VELOCIDADE	248
VÁLVULA DE PNEU	249
CHASSI E CARROCERIA	250
DEFLETOR DO RADIADOR	250
GRUPO DE CONVERSÃO - ARRANJO RODOVIÁRIO	252
CONTRAPESO	259
PÁRA-LAMA	262
PAINEL TRASEIRO DO MOTOR	265
CHASSI DIANTEIRO	266
CHASSI TRASEIRO	267
PROTETOR INFERIOR	269
PROTETOR - TUBOS	271
PROTETOR - TREM DE FORÇA	274
ENGATE - ARTICULAÇÃO	275
CAPÔ E PROTETOR	277
CAPÔ	281

* TRADUÇÃO NÃO DISPONÍVEL NO MOMENTO DA IMPRESSÃO

ÍNDICE

Designação	Página
ESCADA	286
TUBOS - GRAXA	288
ELO - TRAVA DA ARMAÇÃO DA DIREÇÃO	289
REFLETOR	290
RUÍDO - ARRANJO PARA SUPRESSÃO	291
REDUÇÃO DE RUÍDO	292
SISTEMA DE FREIO	293
ACUMULADOR - FREIO	293
CONTROLE DO FREIO DE ESTACIONAMENTO	296
CONTROLE DO FREIO DE SERVIÇO	299
TUBOS - FREIO DE SERVIÇO	301
COLETOR - ACUMULADOR DO FREIO	303
SISTEMA DE DIREÇÃO	304
CONTROLE DE DIREÇÃO	304
CONVERSÃO-DIREÇÃO SUPLEMENTAR	308
CILINDRO DE DIREÇÃO E MONTAGEM	309
CILINDRO DA DIREÇÃO	310
TUBOS - DIREÇÃO SECUNDÁRIA	312
TUBOS - DIREÇÃO	314
TRAVA - CILINDRO DA DIREÇÃO	318
BOMBA DE DIREÇÃO SECUNDÁRIA E MOTOR	319
BOMBA DE ENGRENAGENS	320
BOMBA REGULADORA	321
DIREÇÃO	325
DIREÇÃO SECUNDÁRIA	325
COLUNA DA DIREÇÃO	326
VÁLVULA DE DIREÇÃO SECUNDÁRIA	327
SISTEMA HIDRÁULICO	328
ACUMULADOR HIDRÁULICO	328
ACUMULADOR DO SISTEMA DE ABSORÇÃO DE IMPACTOS	330
BLOCO HIDRÁULICO	331
SISTEMA DE ABSORÇÃO DE IMPACTOS E TUBOS	332
SISTEMA DE ABSORÇÃO DE IMPACTOS	334
CONTROLE HIDRÁULICO DE OPERAÇÃO PILOTO	335
ARRANJO DE CONVERSÃO - HIDRÁULICO	341
CILINDRO - ACOPLADOR	342
CILINDRO DE LEVANTAMENTO	343
CILINDRO DE INCLINAÇÃO	344
DRENO - ECOLOGIA	345
COMANDO HIDRÁULICO	346
ARRANJO HIDRÁULICO - 2 VÁLVULAS	346
ARRANJO HIDRÁULICO - 3 VÁLVULAS	346
ARRANJO HIDRÁULICO - 4 VÁLVULAS	347
DESENGATE E POSICIONADOR DA CAÇAMBA	348
TUBOS - ACUMULADOR	350
TUBOS - DIANTEIROS	352
TUBOS - ÓLEO HIDRÁULICO	356
TUBOS - ARREFECEDOR DE ÓLEO HIDRÁULICO	360
TUBOS - CILINDRO DE LEVANTAMENTO	361
TUBOS - CIRCUITO PILOTO	364
TUBOS - BOMBA	376
TUBOS - CILINDRO DE INCLINAÇÃO	379
TRAVA - CONTROLE MANUAL HIDRÁULICO	381
ARTICULAÇÃO DA VÁLVULA PILOTO	382
PLACA DA VÁLVULA PILOTO	383
BOMBA DE DIREÇÃO E ACESSÓRIO E MONTAGEM	387
TANQUE DE EXPANSÃO	388
TANQUE HIDRÁULICO	390
VÁLVULA DO CONTROLE PRINCIPAL E MONTAGEM	394
GRUPO DE VÁLVULAS DE CONTROLE - DUPLO	400
GRUPO DE VÁLVULAS DE CONTROLE - TRIPLO	401
GRUPO DE VÁLVULAS DE CONTROLE - QUÁDRUPLO	402
VÁLVULA DE CONTROLE	404
VÁLVULA DE DRENAGEM	406
VÁLVULA DE CONTROLE PILOTO	407
VÁLVULA DO CARTUCHO PILOTO	415
VÁLVULA DE ALÍVIO	420
VÁLVULA DE PARADA	423
VÁLVULA SOLENÓIDE	425
ACESSÓRIOS	427
SUPORTE PARA TRANSPORTE	427
CONTROLE DA CAÇAMBA	428
FERRAMENTAS DE TRABALHO	430
ADAPTADOR DA PONTA	430
CAÇAMBA PARA PENETRAÇÃO	431
CAÇAMBA PARA APLICAÇÃO GERAL	434

* TRADUÇÃO NÃO DISPONÍVEL NO MOMENTO DA IMPRESSÃO

ÍNDICE

Designação	Página
CAÇAMBA PARA PENETRAÇÃO	436
*BUCKET GP-ROCK	437
ACOPLADOR RÁPIDO	438
BEIRA - PONTA CORTANTE	441
PROTETOR - CAÇAMBA	443
JOGO DE ACOPLAMENTO RÁPIDO	444
PONTA LONGA	445
ESTAÇÃO DO OPERADOR	447
ACUMULADOR - AR CONDICIONADO	447
AJUSTADOR DO ASSENTO	449
COMPRESSOR DE AR - ASSENTO	450
CONDICIONADOR DE AR E MONTAGEM	451
CONDICIONADOR DE AR	453
BRAÇO DO ASSENTO	457
CABINE	462
CABINE - ESTRUTURA ROPS COBERTA	463
CABINE - ESTRUTURA DE PROTEÇÃO CONTRA CAPOTAMENTO	464
TOLDO - ROPS ABERTA	466
TOLDO - FLEXÍVEL	466
TOLDO - ESTRUTURA ROPS ABERTA	467
TOLDO FLEXÍVEL	468
COMPRESSOR DE REFRIGERANTE	470
CONDENSADOR DE REFRIGERANTE	473
ARRANJO DE CONVERSÃO - AR CONDICIONADO	474
TAMPA - CONSOLO	475
PAINEL DE INSTRUMENTOS	476
DESEMBAÇADOR DA CABINE	477
PORTA DA CABINE	478
DUCTO DE AR	491
EXTENSÃO - ENCOSTO	492
FILTRO - AR DA CABINE	493
PROTETOR - JANELA	494
AQUECEDOR DA CABINE E MONTAGEM	496
AQUECEDOR DA CABINE	497
CAIXA - SUSPENSÃO DO ASSENTO	500
INSTALAÇÃO DO RÁDIO	503
JOGO - COMPRESSOR DE AR DO ASSENTO	507
REVESTIMENTO DA CABINE	508
TUBOS - AR CONDICIONADO	515
TUBOS - AQUECEDOR DA CABINE	519
TUBOS - AQUECEDOR	521
PUBLICAÇÃO	522
ESPELHO RETROVISOR - LADO ESQUERDO	523
ESPELHO RETROVISOR	524
ESPELHO RETROVISOR - LADO DIREITO	530
MÓDULO - INDICADOR DE ALARME	531
MONTAGEM - CABINE	533
CABINE	534
CABINE - ROPS ABERTA	534
FUNDO - ENCOSTO	535
ASSENTO - FUNDO	538
PAINEL DE INSTRUMENTOS	540
PEDAL DO FREIO	552
PEDAL DO GOVERNADOR	553
PISO	554
PLATAFORMA	555
PLATAFORMA DO OPERADOR	557
RECLINAÇÃO - ASSENTO	558
ROPS FECHADA	559
ROPS ABERTA	560
TELA PÁRA-SOL	562
CINTO DE SEGURANÇA	563
ASSENTO	566
ASSENTO COM SUSPENSÃO	573
VELOCÍMETRO	584
SUPORTE - ASSENTO	585
REDUÇÃO DE RUÍDO	586
SUSPENSÃO - ASSENTO	587
TANQUE - LAVADOR DE JANELA	591
PÁRA-SOL DA CABINE	592
LAVADOR DO VIDRO	593
VIDRO DA PORTA	594
LIMPADOR DO VIDRO	595
EQUIPAMENTOS DE SERVIÇO E SUPRIMENTOS	597
*TOOL BOX GP	597
DECALQUE	598
PLACA E DECALQUE	599
ÍNDICE DE NÚMERO DE PEÇA	B1

* TRADUÇÃO NÃO DISPONÍVEL NO MOMENTO DA IMPRESSÃO

INHALTSVERZEICHNIS

Bezeichnung	Seite
ALLGEMEINE HINWEISE	A38
REPARATURALTERNATIVEN	A46
KÜHLMITTELZUSATZ	A51
WARTUNGSTEILE	A71
STICHWORTVERZEICHNIS	A115
MASCHINE	1
FAHRWERK	1
GRUNDAUSFÜHRUNG	1
UMBAUSATZ - ZULASSUNG	2
MASCHINEN-UMBAUSATZ	3
MOTOR	8
MOTORAUSFÜHRUNG	8
MOTOR-EINBAUSATZ	9
MOTOR (GRUNDAUSFÜHRUNG)	10
NOCKENWELLE	10
VENTILDECKEL	11
KURBELWELLE	13
MOTORBLOCK	15
ZYLINDERKOPF	18
MOTORÖLABLASS	20
LÜFTERANTRIEB	21
SCHWUNGRAD	22
SCHWUNGRADGEHÄUSE	23
STIRNRADGEHÄUSE	24
MOTORHUBÖSE	26
MOTOR- UND GETRIEBEAUFLAGER	27
ÖLWANNE	28
PLEUELSTANGE UND KOLBEN	29
MOTORSTOPFEN	30
KURBELWELLEN-RIEMENSCHEIBE	32
ÖLWANNENABLASSVENTIL	33
VENTILSTEUERUNG	34
SCHMIERSYSTEM	35
ÖLFILTER	35
SCHMIERPUMPE	36
PROBEENTNAHMEVENTIL	37
KÜHLSYSTEM	38
KÜHLWASSERANSCHLUSS	38
MOTORÖLKÜHLER UND FILTER-SOCKEL	39
SAUGLÜFTER	41
KÜHLWASSERPUMPE	42
KÜHLER UND HYDRAULIKÖLKÜHLER	44
KÜHLER	46
LUFTANSAUG- UND ABGASSYSTEM	48
LUFTREINIGER	48
LUFTEINLASSDECKEL	50
AUSPUFFROHRVERLÄNGERUNG	51
DRUCKLUFTLEITUNGEN	53
SCHALLDÄMPFER	57
VORREINIGER	58
TURBOLADER	59
KRAFTSTOFFSYSTEM	61
DREHZAHLREGLERKABEL	61
REGLERSTEUERUNG	62
KRAFTSTOFFILTER UND LEITUNGEN	65
KRAFTSTOFFILTER	68
EINSPRITZPUMPENSCHUTZ	70
KRAFTSTOFFEINSPRITZPUMPE	71
KRAFTSTOFFTANK U. BEFESTIGUNG	73
KRAFTSTOFFTANK	75
WASSERABSCHEIDER U. KRAFTSTOFFENTLÜFTUNGSPUMPE	76
ELEKTRISCHE ANLAGE U. STARTSYSTEM	77
DREHSTROMGENERATOR	77
BATTERIE	78
GETRIEBESTEUERUNG U. VERDRAHTUNG	79
HUBENDAUSSCHALTE-REGELUNG	81
STELLUNGSSTEUERUNG	82
ELEKTR. UMFORMER	83
VERTEILER, ELEKTRON.	85
ELEKTRONIK - MASCHINE	86
GLÜHKERZE	87
UMLAUFKÜHLWASSERHEIZUNG	89
SICHERHEITSEINBAUSATZ	91
FAHRERHAUSBELEUCHTUNG	93
ARBEITSLEUCHTEN	94
SCHEINWERFER U. RICHTUNGSLEUCHTE	96
LEUCHTE, HINTEN	103
BLINKLEUCHTE	104
BREMS- UND RÜCKLEUCHTE	110
RUNDUM-KENNLEUCHTE	111
ARBEITS- U. SIGNALBELEUCHTUNG	112
*LIGHTING AR-ROADING	112
BELEUCHTUNGSANLAGE (STRASSENAUSRÜSTUNG)	113
ZUSATZBELEUCHTUNG	114
ARBEITSLEUCHTEN	115

* ÜBERSETZUNG ZUM ZEITPUNKT DER DRUCKLEGUNG NICHT VORHANDEN

INHALTSVERZEICHNIS

Bezeichnung	Seite
ARBEITS- U. SIGNALLEUCHTE	120
BELEUCHTUNGSANLAGE (STRASSENAUS-RÜSTUNG)	122
BLINKERLEUCHTEN	126
WARNLEUCHTEN	128
MOTOR, ELEKTR.	130
AUSRÜSTUNG FÜR STRASSEN-FAHRT	131
STARTERMOTOR	132
TRENNSCHALTER	133
MAGNETSCHALTER	135
DRUCKSCHALTER	137
TEMPERATURSCHALTER	138
SCHEIBENWISCHERSCHALTER	139
RÜCKFAHRWARNHORN	140
FAHRERHAUSVERDRAHTUNG	142
FAHRGESTELLVERDRAHTUNG	150
MOTORVERDRAHTUNG	153
VERDRAHTUNG, VORNE	157
KRAFTÜBERTRAGUNGSVERDRAH-TUNG	159
VERDRAHTUNG, HINTEN	160
SCHWINGUNGSDÄMPFUNGSVERDRAH-TUNG	162
NOTLENKUNGSVERDRAHTUNG	163
KRAFTÜBERTRAGUNG	165
PUMPENSTELLGLIED	165
STARRACHSE	167
PENDELACHSE	168
BREMSE UND PLANETENGETRIEBE	170
DREHZAHLSTEUERUNG	171
KRIECHGANGSTEUERUNG	172
*CONTROL GP-TMSN & JOYSTICK	174
GETRIEBESTEUERUNG	175
HYDROSTATIKDECKEL	179
MOTORABDECKUNG	181
VERSANDDECKEL	182
DIFFERENTIAL	183
DIFFERENTIAL (BEGRENZTER SCHLUPF)	184
VORGELEGEGETRIEBE	185
ÖLFILTER	187
TELLERRAD	188
MOTORDECKEL	192
PUMPENKOPF	196
GEHÄUSE - STARRACHSE	198
GEHÄUSE - PENDELACHSE	200
HYDROSTATIKLEITUNGEN	202
KRAFTÜBERTRAGUNGSFILTERLEITUN-GEN	208
KOLBENMOTOR	210
ACHSENANBAUSATZ	212
BEFESTIGUNG (MOTOR)	214
PUMPENAUFHÄNGUNG	216
KRAFTÜBERTRAGUNG	217
LADEPUMPE	218
KOLBENPUMPE	220
FELGE	222
FELGE (TEILBAR)	223
MOTORDREHVORRICHTUNG	226
KOLBENPUMPENUMLAUFSATZ	230
ANTRIEBSWELLE	232
ANTRIEBSWELLEN-KEILVERZAH-NUNG	233
REIFEN UND FELGE	234
VORSTEUERVENTIL	237
PUMPENSTEUERVENTIL	243
ÜBERDRUCKVENTIL	245
DREHSCHIEBERVENTIL	246
VENTILSOLENOID U. -KRÜMMER	247
DREHZAHLGEBERVENTIL	248
REIFENVENTIL	249
RAHMEN UND FAHRGESTELL	250
KÜHLERLEITPLATTE	250
UMBAUSATZ - FÜR STRASSENVER-KEHR	252
GEGENGEWICHT	259
SCHUTZBLECHE (STRASSENAUSRÜ-STUNG)	262
FEUERSCHUTZWAND	265
LADERRAHMEN	266
RAHMEN, HINTEN	267
PANZERWANNE	269
LEITUNGSVERKLEIDUNG	271
ANTRIEBSSCHUTZ	274
KNICKGELENK-ANHÄNGUNG	275
MOTORHAUBE UND VERKLEIDUNG	277
MOTORHAUBE	281
STEIGLEITER	286
SCHMIERLEITUNGEN	288
KNICKGELENKSPERRE	289
REFLEKTOR	290
SCHALLDÄMPFUNG	291
BREMSSYSTEM	293
BREMSDRUCKSPEICHER	293
FESTSTELLBREMSGESTÄNGE	296
BREMSGESTÄNGE	299
BETRIEBSBREMSLEITUNGEN	301
BREMSDRUCKSPEICHERKRÜMMER	303
LENKSYSTEM	304
LENKBETÄTIGUNG	304
UMRÜSTSATZ - NOTLENKUNG	308

* ÜBERSETZUNG ZUM ZEITPUNKT DER DRUCKLEGUNG NICHT VORHANDEN

INHALTSVERZEICHNIS

Bezeichnung	Seite
LENKZYLINDER UND AUFHÄNGUNG	309
LENKZYLINDER	310
NOTLENKUNGSLEITUNGEN	312
LENKÖLLEITUNGEN	314
LENKZYLINDERSPERRE	318
NOTLENKUNGSPUMPE UND -MOTOR	319
ZAHNRADPUMPE	320
ZUMESSPUMPE	321
LENKUNG	325
NOTLENKUNG	325
LENKSÄULE	326
NOTLENKUNGSVENTIL	327
HYDRAULIKSYSTEM	328
HYDRAULIKDRUCKSPEICHER	328
DRUCKSPEICHER, HYDRAULISCHE SCHWINGUNGSDÄMPFUNG	330
HYDRAULIKBLOCK	331
SCHWINGUNGSDÄMPFUNG U. LEITUNGEN	332
HYDRAULISCHE SCHWINGUNGSDÄMPFUNG	334
HYDRAULIKBEDIENUNG (MIT VORSTEUERUNG)	335
HYDRAULIK-UMBAUSATZ	341
SCHNELLWECHSELANSCHLUSSZYLINDER	342
HUBZYLINDER	343
KIPPZYLINDER	344
ABLASS (UMWELTFREUNDLICH)	345
HYDRAULIKSYSTEM	346
HYDRAULIKANORDNUNG (2-VENTIL-HYDRAULIK)	346
HYDRAULIKANORDNUNG (3-VENTIL-HYDRAULIK)	346
HYDRAULIKANORDNUNG (4-VENTIL-HYDRAULIK)	347
SCHAUFELAUSSCHALTER UND -EINSTELLER	348
DRUCKSPEICHERLEITUNGEN	350
LEITUNGEN, VORNE	352
HYDRAULIKLEITUNGEN	356
HYDRAULIKÖLKÜHLERLEITUNGEN	360
HUBZYLINDERLEITUNGEN	361
VORSTEUERLEITUNGEN	364
HYDRAULIKPUMPE UND LEITUNGEN	376
NEIGEZYLINDERLEITUNGEN	379
HYDRAULIKSPERRE (HANDBEDIENUNG)	381
VORSTEUERVENTIL	382
VORSTEUERVENTILPLATTE	383
ARBEITSGERÄTE- U. LENKPUMPE U. BEFESTIGUNGSTEILE	387
AUSGLEICHSBEHÄLTER	388
HYDRAULIKTANK	390
VENTIL UND BEFESTIGUNGSTEILE - HAUPTSTEUERUNG	394
VENTILSATZ (2-VENTIL)	400
VENTILSATZ (3-VENTIL)	401
VENTILSATZ (4-VENTIL)	402
STEUERVENTIL	404
ABLASSVENTIL	406
VORSTEUERVENTIL	407
EINBAUVORSTEUERVENTIL	415
ÜBERDRUCKVENTIL	420
ABSPERRVENTIL	423
MAGNETVENTIL	425
ARBEITSGERÄTE	427
TRANSPORTHALTERUNG	427
SCHAUFELSTEUERUNG	428
ARBEITSGERÄTE	430
ZAHNHALTER	430
ERDBAUSCHAUFEL	431
UNIVERSALSCHAUFEL	434
ERDBAUSCHAUFEL	436
*BUCKET GP-ROCK	437
SCHNELLWECHSELEINRICHTUNG	438
SCHNEIDMESSER UND EINSATZSTÜCK	441
SCHAUFELSCHUTZ	443
SCHNELLWECHSELEINRICHTUNG - EINBAUSATZ	444
ZAHNSPITZE, LANG	445
FAHRERHAUS	447
KLIMAANLAGENDRUCKSPEICHER	447
FAHRERSITZVERSTELLER	449
LUFTKOMPRESSORSITZ	450
KLIMAANLAGE UND AUFHÄNGUNG	451
KLIMAANLAGE	453
ARMLEHNE	457
FAHRERHAUS	462
FAHRERHAUS MIT ÜBERROLLSCHUTZ	463
OFFENES FAHRERHAUS MIT ÜBERROLLSCHUTZ	466
WETTERDACH	466
FAHRERHAUS M. OFFENEM ÜBERROLLSCHUTZ	467
WETTERDACH	468
KÄLTEMITTELKOMPRESSOR	470
KÄLTEMITTELKONDENSATOR	473

* ÜBERSETZUNG ZUM ZEITPUNKT DER DRUCKLEGUNG NICHT VORHANDEN

INHALTSVERZEICHNIS

Bezeichnung	Seite
KLIMAANLAGEN-UMBAUSATZ	474
STEUERKONSOLENABDECKUNG	475
ARMATURENBRETT	476
ENTFROSTER - FAHRERHAUS	477
FAHRERHAUSTÜR	478
LUFTKANAL	491
RÜCKLEHNENVERLÄNGERUNG	492
FAHRERHAUSLUFTFILTER	493
SCHEIBENSCHUTZ	494
FAHRERHAUSHEIZUNG U. BEFESTIGUNGSTEILE	496
FAHRERHAUSHEIZUNG	497
FAHRERSITZFEDERUNGSGEHÄUSE	500
RADIOEINBAUSATZ	503
LUFTKOMPRESSORSITZ	507
FAHRERHAUSAUSKLEIDUNG	508
KLIMAANLAGENLEITUNGEN	515
FAHRERHAUSHEIZUNGSLEITUNGEN	519
HEIZUNGSLEITUNGEN	521
DOKUMENTATION	522
SPIEGEL, LINKS	523
RÜCKSPIEGEL	524
SPIEGEL, RECHTS	530
WARNANZEIGEMODUL	531
FAHRERHAUSANBAUSATZ	533
FAHRERHAUSAUSRÜSTUNG	534
FAHRERHAUS - OFFEN MIT ÜBERROLLSCHUTZ	534
SCHALE - RÜCKENLEHNE	535
FAHRERSITZVERKLEIDUNG	538
INSTRUMENTENTAFEL	540
BREMSPEDAL	552
GASPEDAL	553
FAHRERPLATTFORM	554
PLATTFORM	555
FAHRERPLATTFORM	557
VERSTELLBARER SITZ	558
ÜBERROLL-SCHUTZKABINE	559
ÜBERROLL-SCHUTZDACH	560
SONNENBLENDE	562
SICHERHEITSGURT	563
FAHRERSITZ	566
SCHWINGSITZ	573
GESCHWINDIGKEITSMESSER	584
SITZUNTERBAU	585
SCHALLDÄMPFUNG	586
FAHRERSITZFEDERUNG	587
SCHEIBENWASCHMITTELBEHÄLTER	591
FAHRERHAUS, SONNENBLENDE	592
SCHEIBENWASCHANLAGE	593
TÜRFENSTER	594
SCHEIBENWISCHER	595
WARTUNGSAUSRÜSTUNG UND -ZUBEHÖR	597
WERKZEUGKASTEN	597
AUFKLEBER	598
SCHILD UND AUFKLEBER	599
ERSATZTEILNUMMERNINDEX	B1

* ÜBERSETZUNG ZUM ZEITPUNKT DER DRUCKLEGUNG NICHT VORHANDEN

GENERAL INFORMATION

1. MACHINE IDENTIFICATION

Caterpillar machines are identified by Product Identification Numbers (PIN). Some components included in a machine may be identified by Serial Numbers (S/N). Typical components that will be serialized include engines, transmissions, bulldozers, and rippers. The machine and engine are further identified by arrangement numbers and in some cases modification numbers. These numbers are shown on the product identification plate(s) and on the master plate in the operator's compartment.

Caterpillar dealers need all of these numbers to determine accurate parts identification.

SIS *New Feature*

Effective First Quarter 2001 the Caterpillar Product Identification Number (PIN) changed from 8 to 17 characters. In an effort to provide uniform equipment identification, Caterpillar and other construction equipment manufacturers are moving to comply with the latest version of the product identification numbering standard. Non-road machine PINs are defined by ISO 10261. The new PIN format will apply to all Caterpillar machines and generator sets. The PIN plates and frame marking will display the 17 character PIN. The new format will look like the following:

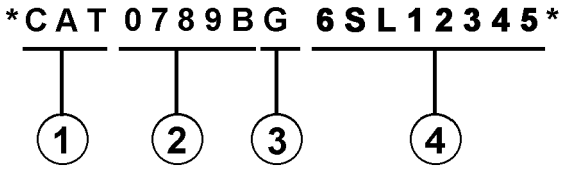

Where:

1. Caterpillar's World Manufacturing Code (characters 1-3)

2. Machine Descriptor (characters 4-8)

3. Check Character (character 9)

4. Machine Indicator Section (MIS) or Product Sequence Number (characters 10-17). These were previously referred to as the Serial Number.

Machines and generator sets produced before First Quarter 2001 will maintain their 8 character PIN format.

Components such as engines, transmissions, axles, etc. and work tools will continue to use an 8 character Serial Number (S/N).

2. ORDERING PARTS

⚠ WARNING

When replacement parts are required for this product Caterpillar recommends using Caterpillar replacement parts or parts with equivalent specifications including, but not limited to, physical dimensions, type, strength and material.

Failure to heed this warning can lead to premature failures, product damage, personal injury or death.

Quality Caterpillar replacement parts are available from Caterpillar dealers throughout the world. Their parts inventories are up to date and include all parts normally required to protect your investment in Caterpillar machines. Dealers may offer repair kits or remanufactured parts to allow selection of the most effective repair alternative for a particular situation. When ordering parts, your order should specify the quantity, part number, part name, and the serial number/product identification number of the machine for which the parts are needed.

3. PARTS MANUAL ORGANIZATION

Product information in this manual is presented as "information elements" that represent all of the components for the specific model. Engine Arrangement and Seat Group are examples of information elements. The information elements are organized alphabetically by part name and secondarily by part number within each major section of the manual.

4. TABLE OF CONTENTS

A table of contents (TOC) is found at the beginning of the manual. The TOC lists each section of the manual with a complete list of all information elements organized as they appear in the manual. Page numbers are provided for quick reference to detailed parts identification illustrations and serviceable consist lists.

5. MAINTENANCE PARTS INDEX

The Maintenance Parts Index, located near the beginning of the manual, references most frequently used maintenance part numbers, providing description, quantity, usage and page number. This information is organized alphabetically by part description.

6. INDEX

The index located near the front of the manual is an alphabetical listing of all information elements included in the manual. Page numbers are provided for quick reference to detailed parts identification illustrations and serviceable consist lists.

7. PART NUMBER INDEX

A numerical index listing all part numbers and the corresponding page number(s) appears at the back of the manual.

8. CAPTIONS

Captions located at the beginning of each information element identify the part number and part name along with additional descriptive information. PIN and S/N information found in each caption should be used to select correct information for a specific machine. Field replacement options, identification of optional attachment components, and where used ("part of") information is also provided.

The first line of a caption is shown in larger type font to indicate the beginning of an information element. Captions for additional pages that may be required to illustrate an information element will be shown in standard type font and will include the term *(contd.)* .

9. NON-SERVICED PARTS

In some instances it is necessary to display non-serviced parts that are a link to a lower level serviceable consist lists. These non-serviced part numbers are shown in *italic* type indicating that they are not available.

10. PARTS LIST REFERENCE NUMBERS

Numbers shown in the Ref No column correspond to numbers used in the associated graphic(s). An alphabetic suffix may be added to a reference number to identify lower level consist items. Numbers shown in the Graphic Ref column refer to the graphic number identifier displayed in the lower left corner of each illustration. The Graphic Ref number may be used in combination with the item Ref No to determine the correct part number. There may be intentional omission of a Ref No in a consist list as information is updated to reflect the latest serviceable part numbers.

11. INDENTED PART NAMES

When a part name is indented in a parts list, it is part of (included in) the group or assembly under which it is indented.

12. ILLUSTRATION REFERENCE LETTERS

When necessary, illustrations contain reference letters (A, B, C etc.) that are intended to track lines and harnesses from one point to another. They are also used to show where to reconnect illustrations that have been separated.

13. ABBREVIATIONS AND SYMBOLS

O.D. – Outside Diameter
I.D. – Inside Diameter
A – Not Part Of This Group
B – Use As Required
C – Change From Previous Type
D – Order By The Meter
E – Order By The Centimeter
F – Not Shown
G – Order By The Inch
I – See Hose Fabrication Guide
M – Metric Part
R – Remfg Part May Be Available
Y – Separate Illustration
Z – Not Serviced Separately

SIS *New Feature*

14.<END>

This symbol indicates the end of an information element.

NOTE:

Continuing improvement and advancement of product design may cause changes to your machine which may not be included in this publication. Whenever a question arises regarding your caterpillar product or this publication, please consult your caterpillar dealer for the latest available information.

FRAME AND BODY

8E-3299 PLATFORM GP-CAB

PIN 38K1-09999

SMCS-7253 100090751

NOTE	REF NO	GRAPHIC REF	PART NUMBER	QTY	PART NAME (1 2 3 4 5 6 PRODUCT LEVEL)	SEE PAGE
	1	1	3T-3953	1	PLATE AS	
	2	1	5B-2992	25	BOLT (3/8-16X.750IN)	
	3	1	5P-1075	41	WASHER-HARD (3MM THK)	
	4	1	9P-1444	2	SUPPORT AS-FOOT	
	5	1	9P-2229	19	BOLT (1/2-13X1IN)	
		1	5P-[illegible]4	19	WASHER-HARD (4MM THK)	
	6	1	9E-9136	1	COVER AS-LH	
		1	9F-2979	6	NUT-WELD (3/8-16 THD)	
		1	1P-0188	1	CLIP	
	7	1	7S-3411	4	COVER	
	8	1	6J-0488	18	SCREW-HEAD (3/8-16X.875IN)	
	9	1	[illegible]-4474	1	COVER	
		1	9E-9[illegible]7		GASKET	
	10	1	9E-3249	1	[illegible]	
		1	9E-3250	1	GASKET	
	11	1	3T-3935	1	HANDHOLD	
	12	1	9E-9078	1	COVER AS	
		1	9F-2979	8	NUT-WELD (3/8-16 THD)	
		1	9E-9079	1	GASKET	
	13	1	7T-0131	1	FLOORPLATE AS	
		1	1F-0748	4	NUT-WELD (1/2-13 THD)	
	14	1	7Y-9087	1	PLUG-BUTTON	
	15	1	7T-0136	1	PLATE AS	
		1	9F-2979	6	NUT-WELD (3/8-16 THD)	
	16	1	7T-9086	1	COVER	
		1	7T-9779	1	GASKET	
	17	1	3T-3981	1	PLATE AS	
	18	1	6T-9364	4	BOLT (1/4-20X.625IN)	
M		1	6T-4205	4	WASHER-HARD (2MM THK)	
	19	1	6L-9484	1	FLOOR MAT	
	20	1	9E-9946	1	MODULE AS-OPERATOR	
	21	1	3T-3934	1	HANDHOLD	
	22	1	9P-8571	2	PLUG	
	23	2	6T-9364	4	BOLT (1/4-20X.625IN)	
M		2	6T-4205	4	WASHER-HARD (2MM THK)	
	24	2	5B-3062	17	BOLT (3/8-16X.750IN)	
	26	2	5P-1075	21	WASHER-HARD (3MM THK)	
	26	2	7T-0135	1	SEAL	
	27	2	7X-0378	2	BOLT (3/4-10X5IN)	
		2	7X-0682	2	WASHER-HARD (6MM THK)	
	28	2	3T-3482	2	PLATE	
	29	2	3T-5290	1	PLATE AS	
		2	7S-0038	8	SPACER	
	30	2	3T-5281	1	SEAL	
	31	2	7S-0017	1	GASKET	
	32	2	7S-9016	1	COVER AS	
		2	2R-2276	2	WASHER	
		2	6P-9028	2	SCREW-KNURLED	
	33	2	9W-3429	1	COVER	
	34	2	9E-9097	1	COVER	
	35	2	9D-3031	8	SCREW-SOCKET HEAD	
	36	2	9W-3142	8	MOUNTING	
	37	2	9W-9027	2	PLATE	
	38	2	7X-0390	2	BOLT (7/8-9X5IN)	
		2	7X-0672	2	WASHER-HARD	
	39	2	4L-9454	4	BOLT (3/8-16X1.0IN)	
	40	2	3T-4788	1	COVER	

FRAME AND BODY

8E-3299 PLATFORM GP-CAB (contd.)

100090751

NOTE	REF NO	GRAPHIC REF	PART NUMBER	QTY	PART NAME (1 2 3 4 5 6 PRODUCT LEVEL)	SEE PAGE
	41	2	8E-3515	1	COVER	
	42	2	7T-0134	1	PLATE	
	43	2	7T-0139	1	GASKET	
	44	2	7S-9724	1	GASKET	
	45	2	7S-9723	1	COVER	
	46	2	6V-1969	2	PLUG-BUTTON	

M-METRIC PART

FRAME AND BODY

8E-3299 PLATFORM GP-CAB (contd.)

100090751

TOP VIEW

GRAPHIC #1 g00036729

FRAME AND BODY

8E-3299 PLATFORM GP-CAB (contd.)

100090751

SECTION A-A VIEW D-D SECTION G-G

SECTION B-B VIEW E-E SECTION H-H

SECTION C-C SECTION F-F SECTION J-J

GRAPHIC #2 g00105874

1. IDENTIFICATION DE LA MACHINE

Toutes les machines Caterpillar portent un numéro d'identification (PIN). Certains composants des machines peuvent porter des numéros de série (S/N). En général, parmi les composants qui portent des numéros de série il y a les moteurs, les transmissions, les bulldozers et les rippers. En plus, la machine et le moteur peuvent recevoir des numéros de version, et dans certains cas, de modification. Ces numéros figurent sur les plaques de numéro de série et sur la plaque signalétique principale qui se trouve dans le poste de conduite.

Les concessionnaires Caterpillar doivent connaître tous ces numéros pour identifier correctement les pièces.

SIS ***Nouvelle Caractéristique***

À partir du premier trimestre 2001, le numéro d'identification produit (PIN) Caterpillar passe de 8 à 17 caractères. Afin de permettre une identification uniforme des matériels, Caterpillar et d'autres constructeurs de machines de travaux publics s'efforcent de se conformer à la norme la plus récente portant sur les numéros d'identification des produits. Les numéros d'identification (PIN) de machines de chantier sont définis par la norme ISO 10261. Le nouveau format du numéro d'identification est valable pour toutes les machines et tous les groupes électrogènes Caterpillar. Le numéro d'identification produit (PIN) figurant sur la plaque et sur le châssis se composera de 17 caractères. Le nouveau format ressemblera à ceci:

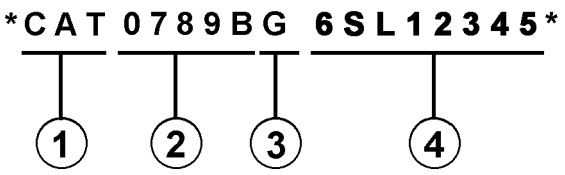

Il se décomposera de la façon suivante:

1. Code international de fabrication de Caterpillar (caractères 1 à 3)

2. Descriptif de la machine (caractères 4 à 8)

3. Contrôle (caractère 9)

4. Indicateur machine (MIS) ou numéro de séquence produit (caractères 10 à 17). Ceux-ci étaient auparavant désignés sous le terme de numéro de série.

Les machines et les groupes électrogènes construits avant le premier trimestre 2001 garderont le format à 8 caractères du numéro d'identification produit (PIN).

Les organes tels que les moteurs, les boîtes de vitesses, les essieux, etc., continueront d'être désignés par un numéro de série (S/N) à 8 caractères.

2. COMMANDE DE PIÈCES

⚠ DANGER

Lorsqu'il faut remplacer des pièces de rechange pour ce produit Caterpillar recommande d'utiliser les pièces de rechange Caterpillar ou les pièces qui ont des spécifications équivalentes dont les dimensions physiques, le type, la force et le matériau. Ces équivalences ne se limitent pas à l'énoncé précédent.

L'inobservation de cette mise en garde peut entraîner des défaillances prématurées, des dommages au produit, des blessures ou même la mort.

Les concessionnaires Caterpillar fournissent dans le monde entier des pièces de rechange de qualité Caterpillar. Leurs stocks de pièces sont constamment réapprovisionnés et comptent toutes les pièces nécessaires pour assurer la bonne marche de vos machines Caterpillar. Certains concessionnaires proposent également des kits de réparation ou des pièces rénovées, ce qui permet de choisir la solution la plus économique dans une situation donnée. Lors des commandes de pièces, mentionner la quantité, le numéro et la désignation des pièces ainsi que le numéro de série ou le numéro d'identification (PIN) de la machine pour laquelle ces pièces sont requises.

3. ORGANISATION DU CATALOGUE DE PIÈCES

Les renseignements sur les produits sont présentés sous forme de "Information element" (élément d'information) représentant tous les composants d'un modèle donné. "Engine Arrangement" (version de moteur) et "Seat Group" (assemblage de siège)" sont des exemples d'éléments d'information. Les éléments d'information sont classés par ordre alphabétique par la désignation standard des pièces et par numéros de pièces dans chaque partie importante du manuel.

4. TABLE DES MATIÈRES

Nouvelle Caractéristique

La table des matières se trouve au début du manuel. La table des matières fournit la liste de tous les chapitres du manuel avec une liste complète de tous les éléments d'information classés par ordre d'apparition dans le manuel. Les numéros de page sont fournis afin que l'utilisateur puisse trouver rapidement les illustrations détaillées concernant l'identification des pièces et les listes des pièces d'entretien.

5. INDEX DES PIÈCES D'ENTRETIEN

La rubrique "Index des pièces d'entretien" qui se trouve au début du manuel renvoie aux pièces d'entretien les plus fréquemment utilisées en précisant la désignation, la quantité, là où la pièce est utilisée et le numéro de page. Ces pièces sont classés par ordre alphabétique.

6. INDEX

L'index qui se trouve vers le début du manuel est une liste alphabétique de tous les éléments d'information du manuel. Les numéros de page sont fournis afin que l'utilisateur puisse trouver rapidement les illustrations détaillées concernant l'identification des pièces et les listes des pièces d'entretien.

7. INDEX DES NUMÉROS DE PIÈCES

Une liste numérique de tous les numéros de pièces et des pages correspondantes se trouve à la fin du manuel.

8. LÉGENDES

Les légendes qui se trouvent en haut de chaque page de chaque élément d'information fournissent le numéro de pièce, la désignation ainsi que des renseignements supplémentaires sur les pièces. Les renseignements concernant les numéros de série (S/N) qui se trouvent dans chaque légende doivent être utilisés pour sélectionner les informations correctes pour un moteur donné. Les informations concernant les options de remplacement sur le chantier, l'identification des composants des équipements offerts en option et les lieux d'application sont aussi fournies.

Nouvelle Caractéristique

Les lettres de la première ligne d'une légende sont présentées en police plus grande afin d'indiquer le début d'une unité d'information. Les légendes qui pourraient être requises pour des pages supplémentaires afin d'illustrer une unité d'information seront présentées en police standard et comprendront le terme (à suivre).

9. PIÈCES NON FOURNIES

Nouvelle Caractéristique

Dans certains cas, il est nécessaire d'indiquer les pièces non fournies qui sont en aval de la liste des pièces d'entretien. Les numéros des pièces non fournies dans la liste des pièces et les légendes seront en italique pour signaler qu'ils ne sont pas disponibles.

10. NUMÉROS DE RÉFÉRENCE DE LA LISTE DES PIÈCES

Nouvelle Caractéristique

Les numéros indiqués dans la colonne des numéros de références correspondent aux numéros utilisés dans les illustrations auxquelles ils sont associés. Un suffixe alphabétique peut être ajouté à un numéro de référence pour identifier la liste des articles en aval. Les numéros indiqués dans la colonne de référence de l'illustration renvoient à l'identification du numéro affiché dans le coin inférieur gauche de chaque illustration. Le numéro de référence de l'illustration pourrait être utilisé avec le numéro de référence de l'article pour déterminer le numéro de pièce correct. Il peut y avoir une omission intentionnelle d'un numéro de référence dans une liste de pièces suite à la mise à jour des informations en vue de refléter les numéros de pièces les plus récentes.

11. DÉSIGNATIONS DE PIÈCES EN RETRAIT

Lorsqu'une désignation de pièce est en retrait, cela veut dire que l'article en regard fait partie de l'ensemble sous lequel il figure.

12. LETTRES DE RÉFÉRENCE DES ILLUSTRATIONS

Quand cela est nécessaire, les illustrations comportent des lettres de référence (A, B, C, etc.) pour montrer le trajet des canalisations et faisceaux de câbles d'un point à l'autre. Elles sont utilisées également pour indiquer où relier les illustrations séparées auparavant.

13. ABRÉVIATIONS ET SYMBOLES

O.D. – Diamètre extérieur
I.D. – Diamètre intérieur
A – Ne fait pas partie de ce groupe
B – Utiliser selon besoin
C – Modification
D – Commander par mètre
E – Commander par centimètre
F – Non représenté
G – Commander par pouce
I – Voir "Hose Fabrication Guide"
M – Pièce métrique
R – Pièce rénovée éventuellement disponible
Y – Illustration séparée
Z – Non fourni séparément

NOTA:

En raison du progrès technique et des améliorations continuelles apportées au matériel, votre machine comporte peut-être des modifications qui n'apparaissent pas dans la présente publication. En cas de doute sur un détail de votre machine Caterpillar ou sur le texte de la présente publication, adressez-vous à votre concessionnaire Caterpillar.

FRAME AND BODY

8E-3299 PLATFORM GP-CAB

PIN 3SK1-09999

SMCS-7253 100090751

NOTE	REF NO	GRAPHIC REF	PART NUMBER	QTY	PART NAME (1 2 3 4 5 6 PRODUCT LEVEL)	SEE PAGE
	1	1	3T-3963	1	PLATE AS	
	2	1	5B-2992	25	BOLT (3/8-16X.750IN)	
	3	1	6P-1075	41	WASHER-HARD (3MM THK)	
	4	1	9P-1444	2	SUPPORT AS-FOOT	
	5	1	9P-2229	19	BOLT (1/2-13X1IN)	
		1	9P-[illegible]34	19	WASHER-HARD (4MM THK)	
	6	1	9E-9136	1	COVER AS-LH	
		1	9F-2979	6	NUT-WELD (3/8-16 THD)	
		1	1P-0188	1	CLIP	
	7	1	7S-3411	4	COVER	
	8	1	6J-0488	18	SCREW-HEAD (3/8-16X.875IN)	
	9	1	[illegible]-4474	1	COVER	
		1	9E-9[illegible]7	1	GASKET	
	10	1	9E-3249	1	[illegible]	
		1	9E-3250	1	GASKET	
	11	1	3T-3935	1	HANDHOLD	
	12	1	9E-9078	1	COVER AS	
		1	9F-2979	8	NUT-WELD (3/8-16 THD)	
		1	9E-9079	1	GASKET	
	13	1	7T-0131	1	FLOORPLATE AS	
		1	1F-0748	4	NUT-WELD (1/2-13 THD)	
	14	1	7Y-9087	1	PLUG-BUTTON	
	15	1	7T-0136	1	PLATE AS	
		1	9F-2979	6	NUT-WELD (3/8-16 THD)	
	16	1	7T-9096	1	COVER	
		1	7T-9779	1	GASKET	
	17	1	3T-3981	1	PLATE AS	
	18	1	6T-9364	4	BOLT (1/4-20X.625IN)	
M		1	6T-4205	4	WASHER-HARD (2MM THK)	
	19	1	6L-9484	1	FLOOR MAT	
	20	1	9E-9946	1	MODULE AS-OPERATOR	
	21	1	3T-3934	1	HANDHOLD	
	22	1	9P-8571	2	PLUG	
	23	2	6T-9364	4	BOLT (1/4-20X.625IN)	
M		2	6T-4205	4	WASHER-HARD (2MM THK)	
	24	2	5B-3062	17	BOLT (3/8-16X.750IN)	
	26	2	6P-1075	21	WASHER-HARD (3MM THK)	
	26	2	7T-9135	1	SEAL	
	27	2	7X-9378	2	BOLT (3/4-10X5IN)	
		2	7X-0662	2	WASHER-HARD (5MM THK)	
	28	2	3T-3462	2	PLATE	
	29	2	3T-5290	1	PLATE AS	
		2	7S-0038	8	SPACER	
	30	2	3T-5281	1	SEAL	
	31	2	7S-9017	1	GASKET	
	32	2	7S-9016	1	COVER AS	
		2	2R-2276	2	WASHER	
		2	6P-9028	2	SCREW-KNURLED	
	33	2	9W-3429	1	COVER	
	34	2	9E-9097	1	COVER	
	35	2	9D-3031	8	SCREW-SOCKET HEAD	
	36	2	9W-3142	8	MOUNTING	
	37	2	9W-9027	2	PLATE	
	38	2	7X-0390	2	BOLT (7/8-9X5IN)	
		2	7X-0672	2	WASHER-HARD	
	39	2	4L-9454	4	BOLT (3/8-16X1.0IN)	
	40	2	3T-4788	1	COVER	

12 FRAME AND BODY 1 of 4 SELP4570-01

FRAME AND BODY

8E-3299 PLATFORM GP-CAB (contd.)

100090751

NOTE	REF NO	GRAPHIC REF	PART NUMBER	QTY	PART NAME (1 2 3 4 5 6 PRODUCT LEVEL)	SEE PAGE
	41	2	8E-3515	1	COVER	
	42	2	7T-0134	1	PLATE	
	43	2	7T-0139	1	GASKET	
	44	2	7S-9724	1	GASKET	
	45	2	7S-9723	1	COVER	
	46	2	6Y-1969	2	PLUG-BUTTON	

M-METRIC PART

SELP4570-01 2 of 4 FRAME AND BODY 13

FRAME AND BODY

8E-3299 PLATFORM GP-CAB (contd.)

100090751

TOP VIEW

GRAPHIC #1 g00036729

14 FRAME AND BODY 3 of 4 SELP4570-01

FRAME AND BODY

8E-3299 PLATFORM GP-CAB (contd.)

100090751

SECTION A-A VIEW D-D SECTION G-G

SECTION B-B VIEW E-E SECTION H-H

SECTION C-C SECTION F-F SECTION J-J

GRAPHIC #2 g00105874

SELP4570-01 4 of 4 FRAME AND BODY 15

1. MÁQUINAS

Las máquinas Caterpillar se identifican con Números de Identificación del Producto (PIN). Algunos componentes incluídos en la máquina pueden estar identificados con Números de Serie (N/S). Los componentes que tienen típicamente esta identificación incluyen motores, transmisiones, hojas topadoras y desgarradores. La máquina y el motor se identifican además con Números de Configuración y en algunos casos, Números de Modificación. Estos números están en las placas de identificación del producto o en la placa principal en la cabina del operador.

Los distribuidores Caterpillar necesitan estos números para identificar con exactitud los números de piezas de repuesto.

SIS *Nueva Característica*

A partir del primer trimestre del 2001, el Número de Identificación de Producto (PIN) de Caterpillar cambió de 8 a 17 caracteres. Para hacer más uniforme el método de identificación de equipos, Caterpillar y otros fabricantes de equipo de construcción han tomado medidas para cumplir con la versión más reciente de la norma de numeración de identificación de productos. Los Números de Identificación de Producto para máquinas que no se operan en carreteras son definidos por la norma ISO 10261. El nuevo formato PIN corresponderá a todas las máquinas y grupos electrógenos Caterpillar. Las placas y los caracteres PIN estampados en el bastidor mostrarán el PIN de 17 caracteres. El nuevo formato tendrá la apariencia siguiente:

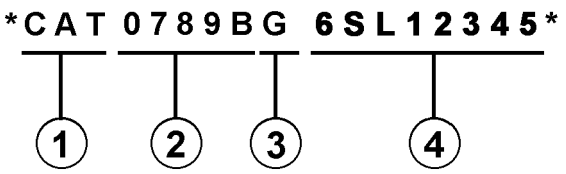

Significado de los caracteres:

1. Código de Fabricación Mundial de Caterpillar (caracteres 1-3)

2. Sección Descriptor de la Máquina (caracteres 4-8)

3. Carácter de Verificación (carácter 9)

4. Sección Indicador de la Máquina (MIS) o Número de Secuencia de Producto (caracteres 10-17). Anteriormente, estos caracteres constituían el Número de Serie.

Las máquinas y grupos electrógenos producidos antes del primer semestre del 2001 mantendrán su formato PIN de 8 caracteres.

Los componentes como motores, transmisiones, ejes, herramientas de trabajo, etc., continuarán usando un Número de Serie (S/N) de 8 caracteres.

2. COMO PEDIR REPUESTOS

⚠ ADVERTENCIA

Cuando se necesiten piezas de repuesto para este producto, Caterpillar recomienda usar piezas de repuesto Caterpillar o piezas que tengan especificaciones equivalentes incluyendo, pero sin estar limitadas a, dimensiones físicas, tipo, fortaleza y material.

El no hacer caso de esta advertencia puede llevar a fallas prematuras, daños al producto y lesiones graves o mortales.

Las piezas de repuesto Caterpillar de calidad están a la disposición de los distribuidores Caterpillar en todo el mundo. Sus existencias actualizadas incluyen todas las piezas normalmente requeridas para proteger su inversión en máquinas Caterpillar. Los distribuidores pueden tener juegos de reparación o piezas remanufacturadas para permitir la selección de la mejor alternativa de reparación en un caso en particular. Al pedir piezas de repuesto, especifique en su pedido la cantidad, el número de pieza, el nombre de la pieza y el número de serie/número de identificación del producto, de la máquina para la cual se necesitan estas piezas.

3. ORGANIZACION DEL MANUAL DE PIEZAS

La información sobre el producto, se presenta en este manual, como "elementos de información" que representan todos los componentes de un modelo específico. Las configuraciones de motores y los grupos de asientos son ejemplos de elementos de información. Los elementos de información están organizados primeramente por nombres de piezas en orden alfabético y en segundo lugar, por el número de pieza dentro de cada sección principal del manual.

4. CONTENIDO

La página de Contenido se encuentra al principio del manual. El Contenido indica cada sección del manual con una lista completa de todos los elementos de información organizados en el orden que aparecen en el manual. Los números de página proporcionan una referencia rápida a las ilustraciones detalladas de identificación de piezas y a las listas de componentes de repuesto de dichas piezas.

5. ÍNDICE DE PIEZAS DE MANTENIMIENTO

Al principio de este catálogo se encuentra un índice de los números de piezas utilizadas más frecuentemente para el mantenimiento, que incluye descripción, cantidad necesaria, lugar de utilización y número de página. Esta información está organizada alfabéticamente, por descripción de la pieza.

6. ÍNDICE

El Índice, ubicado cerca del principio del manual, es una lista en orden alfabético de todos los elementos de información incluídos en el manual. Los números de página proporcionan una referencia rápida a las ilustraciones detalladas de identificación de piezas y a las listas de componentes de repuesto de dichas piezas.

7. INDICE NUMÉRICO DE PIEZAS

Un índice numérico de piezas con el correspondiente número de página aparece al final de este catálogo.

8. TÍTULOS

Los títulos ubicados al principio de cada elemento de información identifican el número y el nombre de la pieza junto con información descriptiva. Se debe usar información sobre los Números de Identificación de Pieza (PIN) y los números de serie (S/N) para seleccionar la información que corresponda a una máquina en particular. También se suministra información sobre las opciones de reparación en el campo, la identificación de componentes de accesorios optativos y el lugar de ubicación de la pieza ("es parte de").

La primera línea del título se muestra con un tipo de letra más grande para indicar el comienzo de un elemento de información. Si se requieren páginas adicionales para ilustrar un elemento de información, los títulos se muestran con un tipo de letra normal y la continuación se indica entre paréntesis.

9. PIEZAS QUE NO SE SUMINISTRAN COMO REPUESTO

En algunos casos es necesario indicar piezas que no se suministran como repuesto pero que pueden estar conectadas a listas de componentes de otras piezas de repuesto. En tal caso, dichas piezas se muestran en cursiva para indicar que no son piezas disponibles.

10. NÚMEROS DE REFERENCIA

Los números en la columna de No. de Referencia corresponden a los números indicados en la ilustración que pertenece a ese número de pieza. Los números que tienen un sufijo alfabético identifican artículos de las listas de componentes de piezas. Los números en la columna de Referencia de la ilustración se identifican en la esquina inferior izquierda de cada ilustración. Para determinar el número de pieza correcto se puede utilizar tanto el No. de Referencia de la ilustración como el No. de Referencia del artículo. A medida que se actualiza la información para indicar los más recientes números de piezas de repuesto, puede omitirse intencionalmente un No. de Referencia en una lista de componentes de piezas.

11. NOMBRES DE PIEZA SANGRADOS

Cuando el nombre de una pieza está sangrado en una lista, significa que esta pieza forma parte del grupo o conjunto del renglón inmediatamente superior.

12. LETRAS DE REFERENCIA DE ILUSTRACIONES

Las ilustraciones contienen algunas veces letras de referencia (A, B, C etc.) cuyo propósito es seguir el trayecto de líneas y mazos de cables de un punto a otro. También se utilizan para mostrar dónde volver a unir ilustraciones que se habían separado.

13. ABREVIATURAS Y SIMBOLOS

O.D. – Diámetro exterior
I.D. – Diámetro interior
A – No es pieza de este grupo
B – Utilizado según la demanda
C – Indica cambio
D – Se pide por metro
E – Se pide por centímetro
F – No se muestra
G – Se pide por pulgada
I – Ver "Hose Fabrication Guide"
M – Pieza métrica
R – Puede estar disponible como pieza remanufacturada
Y – Ilustración separada
Z – No se suministra por separado

SIS *Nueva Característica*

14.<END>

Este símbolo indica el final de un elemento de información.

NOTA:

Las contínuas mejoras y adelantos en diseño podrían originar cambios a su máquina que no se incluyen en esta publicación. Cuando tenga alguna pregunta acerca de su producto Caterpillar o de esta publicación, consulte al distribuidor Caterpillar para obtener la información más reciente.

FRAME AND BODY

8E-3299 PLATFORM GP-CAB

PIN 38K1-09999

SMCS-7253 100090751

NOTE	REF NO	GRAPHIC REF	PART NUMBER	QTY	PART NAME (1 2 3 4 5 6 PRODUCT LEVEL)	SEE PAGE
	1	1	3T-3953	1	PLATE AS	
	2	1	5B-2992	25	BOLT (3/8-16X.750IN)	
	3	1	6P-1075	41	WASHER-HARD (3MM THK)	
	4	1	9P-1444	2	SUPPORT AS-FOOT	
	5	1	9P-2229	19	BOLT (1/2-13X1IN)	
		1	6P-[illegible]4	19	WASHER-HARD (4MM THK)	
	6	1	9E-9136		COVER AS-LH	
		1	9F-2979	6	NUT-WELD (3/8-16 THD)	
		1	1P-0188	1	CLIP	
	7	1	7S-3411	4	COVER	
	8	1	6J-0488	18	SCREW-HEAD (3/8-16X.875IN)	
	9	1	[illegible]-4474	1	COVER	
		1	9E-9[illegible]		GASKET	
	10	1	9E-3249	1	[illegible]	
		1	9E-3250	1	GASKET	
	11	1	3T-3935	1	HANDHOLD	
	12	1	9E-9078	1	COVER AS	
		1	9F-2979	8	NUT-WELD (3/8-16 THD)	
		1	9E-9079	1	GASKET	
	13	1	7T-0131	1	FLOORPLATE AS	
		1	1F-0748	4	NUT-WELD (1/2-13 THD)	
	14	1	7Y-9087	1	PLUG-BUTTON	
	15	1	7T-0136	1	PLATE AS	
		1	9F-2978	6	NUT-WELD (3/8-16 THD)	
	16	1	7T-9096	1	COVER	
		1	7T-9779	1	GASKET	
	17	1	3T-3981	1	PLATE AS	
	18	1	6T-9364	4	BOLT (1/4-20X.625IN)	
M		1	6T-4205	4	WASHER-HARD (2MM THK)	
	19	1	6L-9484	1	FLOOR MAT	
	20	1	9E-9946	1	MODULE AS-OPERATOR	
	21	1	3T-3934	1	HANDHOLD	
	22	1	9P-8571	2	PLUG	
	23	2	6T-9364	4	BOLT (1/4-20X.625IN)	
M		2	6T-4205	4	WASHER-HARD (2MM THK)	
	24	2	5B-3062	17	BOLT (3/8-16X.750IN)	
	26	2	6F-1075	21	WASHER-HARD (3MM THK)	
	26	2	7T-9126	1	SEAL	
	27	2	7X-9378	2	BOLT (3/4-10X5IN)	
		2	7X-0682	2	WASHER-HARD (6MM THK)	
	28	2	3T-3482	2	PLATE	
	29	2	3T-5290	1	PLATE AS	
		2	7S-0038	8	SPACER	
	30	2	3T-5281	1	SEAL	
	31	2	7S-9017	1	GASKET	
	32	2	7S-9016	1	COVER AS	
		2	2R-2276	2	WASHER	
		2	6P-9028	2	SCREW-KNURLED	
	33	2	9W-3429	1	COVER	
	34	2	9E-9697	1	COVER	
	35	2	9D-3031	8	SCREW-SOCKET HEAD	
	36	2	9W-3142	8	MOUNTING	
	37	2	9W-9027	2	PLATE	
	38	2	7X-0390	2	BOLT (7/8-9X5IN)	
		2	7X-0672	2	WASHER-HARD	
	39	2	4L-9454	4	BOLT (3/8-16X1.0IN)	
	40	2	3T-4788	1	COVER	

FRAME AND BODY

8E-3299 PLATFORM GP-CAB (contd.)

100090751

NOTE	REF NO	GRAPHIC REF	PART NUMBER	QTY	PART NAME (1 2 3 4 5 6 PRODUCT LEVEL)	SEE PAGE
	41	2	8E-3515	1	COVER	
	42	2	7T-0134	1	PLATE	
	43	2	7T-0139	1	GASKET	
	44	2	7S-9724	1	GASKET	
	45	2	7S-9723	1	COVER	
	46	2	6V-1969	2	PLUG-BUTTON	

M-METRIC PART

FRAME AND BODY

8E-3299 PLATFORM GP-CAB (contd.)

100090751

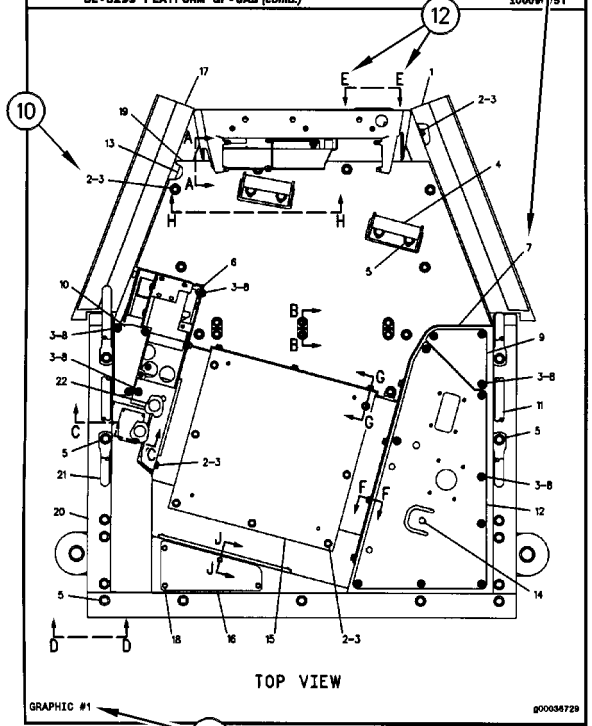

FRAME AND BODY

8E-3299 PLATFORM GP-CAB (contd.)

100090751

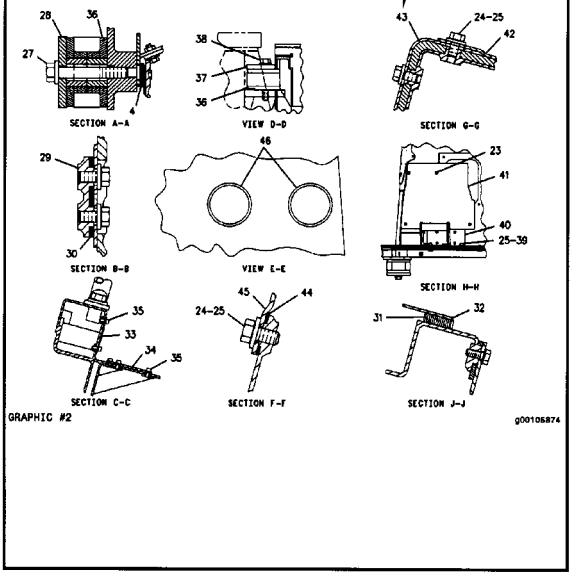

INFORMAÇÃO GERAL

1. IDENTIFICAÇÃO DA MÁQUINA

As máquinas Caterpillar são identificadas pelos Números de Informação do Produto (PIN). Alguns componentes incluídos numa máquina podem ser identificados por Números de Série (S/N). Componentes típicos que serão enumerados com números de série incluem motores, transmissões, lâminas e ríperes. Além do número de série, a máquina e o motor são ainda identificados por números de arranjo e, em alguns casos, números de modificações. Tais números encontram-se na(s) placa(s) de identificação do produto e na placa mestre no compartimento do operador.

SIS ***Novidades***

A partir do primeiro trimestre de 2001 o Número de Identificação de Produto da Caterpillar (PIN) precisa ser mudado de 8 para 17 caracteres. Esforçando-se para fornecer uma identificação uniforme de equipamentos, a Caterpillar e outros fabricantes de equipamento de construção estão mudando para atender a versão mais atualizada do padrão de identificação de produtos. Os números de PIN para produtos de aplicações não rodoviárias são definidos pela ISO 10261. O novo formato de número PIN será adotado em todas as máquinas e grupos geradores Caterpillar. As placas e as marcações do chassi mostrarão os 17 dígitos de PIN. O novo formato terá a seguinte disposição:

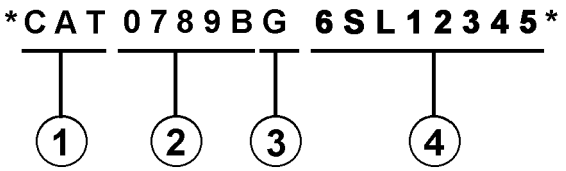

Onde:

1. Código de Fabricação Mundial da Caterpillar (dígitos 1-3)

2. Descrição da Máquina (dígitos 4-8)

3. Dígito de Verificação (dígito 9)

4. Seção de Indicador da Máquina (MIS) ou Número de Seqüência de Produto (dígitos 10-17). Estes eram anteriormente chamados de Número de Série.

Máquinas e grupos geradores produzidos antes do primeiro trimestre de 2001 manterão o formato de 8 caracteres de PIN.

Componentes como motores, transmissões, eixos, ferramentas de trabalho, etc. continuarão a usar Número de Série (S/N) com oito caracteres.

2. COMO OBTER PEÇAS

⚠ CUIDADO

Quando peças de substituição são exigidas para este produto, a Caterpillar recomenda a utilização de peças de substituição Caterpillar ou peças com as especificações equivalentes incluindo, mas não limitadas, à dimensões físicas, tipos, resistência e materiais.

A inobservância desta advertência poderá resultar em falhas prematuras, danos ao produto, ferimentos ou morte.

As Peças de Reposição de Qualidade Caterpillar encontram-se disponíveis nos revendedores Caterpillar no mundo inteiro. Seus estoques de peças são atualizados e incluem todas as peças normalmente necessárias para proteger seu investimento em máquinas Caterpillar. Alguns revendedores podem oferecer jogos de reparo ou peças de troca/remanufaturadas disponíveis como uma opção da alternativa de reparo mais eficaz para uma situação específica. Ao encomendar peças, seu pedido deve especificar a quantidade, o número e o nome da peça e o número de série/número de identificação do produto referentes à máquina para a qual as peças se destinam.

3. ORGANIZAÇÃO DO MANUAL DE PEÇAS

A informação do produto neste manual é apresentada em forma de "elementos de informação" que representam todos os componentes para o modelo específico. Arranjo de Motor e Grupo de Assento são exemplos de elementos de informação. Os elementos de informação são organizados em ordem alfabética por nome de peça ou secundariamente, por número de peça incluído em cada seção principal do manual.

4. LISTA DE CONTEÚDOS

A Lista de Conteúdos (TOC) se encontra no princípio do manual. A Lista de Conteúdos (TOC) relaciona em cada seção do manual uma lista completa com todos os elementos de informação organizados conforme aparecem no manual. Números de página são fornecidos para que se tenha referência rápida de ilustrações de peças detalhadas e listas de conteúdos que podem receber serviço de manutenção.

5. ÍNDICE DE PEÇAS DE MANUTENÇÃO

O Índice de Peças de Manutenção, localizado perto do princípio do manual, faz referência aos números de peça de manutenção usados com maior frequência, fornecendo uma descrição, a quantidade, o uso e o número de página. Esta informação é organizada com a descrição da peça em ordem alfabética.

6. ÍNDICE

O Índice localizado perto do princípio do manual, consiste de uma lista em ordem alfabética de todos os elementos de informação incluídos no manual. Números de página são fornecidos para que se tenha referência rápida de ilustrações de peças detalhadas e listas de conteúdos que podem receber serviço de manutenção.

7. ÍNDICE DE NÚMERO DE PEÇA

Um índice numérico relacionando todos os números de peça e a(s) página(s) correspondentes, aparece no final do manual.

8. LEGENDAS

As legendas localizadas no início de cada elemento de informação identificam o número e o nome de peça, juntamente com informação descritiva adicional. Informações sobre o Número de Informação do Produto (PIN) e o Número de Série (S/N) encontradas em cada legenda devem ser usadas para selecionar a informação correta sobre uma máquina específica. Opções de substituição no campo, identificação de componentes de acessórios opcionais e informações sobre onde são utilizados ("parte de") são também fornecidas.

A primeira linha de uma legenda é indicada em tipo maior para indicar o princípio de um elemento de informação. Legendas para páginas adicionais que podem ser necessárias para ilustrar um elemento de informação serão apresentadas em tipo padrão e incluirão o termo *(continua)* .

9. NÃO DISPONÍVEL SEPARADAMENTE

Em alguns casos, é necessário mostrar peças não disponíveis separadamente que têm uma ligação com listas de conteúdos de nível inferior que podem receber serviço de manutenção. Os números de peça destes componentes não disponíveis aparecerão em *itálico* , a fim de indicar que não estão disponíveis.

10. NÙMEROS DE REFERÊNCIA À LISTA DE PEÇAS

Os números indicados na coluna Ref No (No. de Referência) correspondem-se aos números usados no(s) gráfico(s) correspondente(s). Um sufixo com letras pode ser acrescentado a um número de referência para identificar itens de conteúdo de nível inferior. Os números indicados na coluna Graphic Ref (Referência de Gráfico) referem-se ao identificador de número de gráfico presente no canto esquerdo inferior de cada ilustração. O número de Referência de Gráfico pode ser usado em combinação com o item Ref No para determinar-se o número de peça correto. Poderá haver omissão intencional de um número de referência (Ref No) de uma lista de conteúdos uma vez que as informações são atualizadas para refletir os números de peça mais recentes que podem receber serviço de manutenção.

11. NOMES DE PEÇAS DESALINHADOS

Quando um nome de peça encontra-se desalinhado numa lista de peças, significa que tal item faz parte do (está incluído no) grupo ou conjunto sob o qual está relacionado.

12. LETRAS DE REFERÊNCIA NAS ILUSTRAÇÕES

Quando necessário, as ilustrações contêm letras de referência (A, B, C, etc.) que são utilizadas para seguir tubulações e cabos elétricos de um ponto a outro. Também foram utilizadas para indicar onde se pode reconectar as ilustrações que foram separadas.

13. ABREVIAÇÕES E SÍMBOLOS

O.D. – "Outside Diameter" (Diâmetro Externo)
I.D. – "Inside Diameter" (Diâmetro Interno)
A – Não faz parte deste grupo
B – Use conforme necessário
C – Indica modificação
D – Vendido por metro
E – Vendido por centímetro
F – Não ilustrado
G – Vendido por polegada
I – Consulte o seu revendedor quanto a mangueira
M – Peça métrica
R – Peça remanufaturada pode estar disponível; consulte o seu revendedor Cat
Y – Ilustração separada
Z – Não disponível separadamente

SIS *Novidades*

14. <END>

Este símbolo indica o final de um elemento de informação.

INFORMAÇÃO GERAL

NOTA:

Os contínuos aperfeiçoamentos e avanços no projeto do produto podem ocasionar modificações em sua máquina que talvez ainda não estejam incluídas nesta publicação. Sempre que surgirem dúvidas quanto a um produto Caterpillar ou quanto à presente publicação, consulte o seu revendedor Caterpillar para obter as informações mais recentes disponíveis.

FRAME AND BODY

8E-3299 PLATFORM GP-CAB

PIN 38K1-09999

SMCS-7253 100090751

NOTE	REF NO	GRAPHIC REF	PART NUMBER	QTY	PART NAME (1 2 3 4 5 6 PRODUCT LEVEL)	SEE PAGE
	1	1	3T-2953	1	PLATE AS	
	2	1	5B-2992	25	BOLT (3/8-16X.750IN)	
	3	1	5P-1075	41	WASHER-HARD (3MM THK)	
	4	1	9P-1444	2	SUPPORT AS-FOOT	
	5	1	9P-2229	19	BOLT (1/2-13X1IN)	
		1	5P-[illegible]4	19	WASHER-HARD (4MM THK)	
	6	1	8E-8136	1	COVER AS-LH	
		1	9F-2979	6	NUT-WELD (3/8-16 THD)	
		1	1P-8188	1	CLIP	
	7	1	7S-3411	4	COVER	
	8	1	6J-0488	18	SCREW-HEAD (3/8-16X.875IN)	
	9	1	[illegible]-4474	1	COVER	
		1	8E-8[illegible]7		GASKET	
	10	1	8E-3248	1	[illegible]	
		1	8E-3250	1	GASKET	
	11	1	3T-3635	1	HANDHOLD	
	12	1	8E-8878	1	COVER AS	
		1	9F-2979	8	NUT-WELD (3/8-16 THD)	
		1	8E-8078	1	GASKET	
	13	1	7T-0131	1	FLOORPLATE AS	
		1	1F-0748	4	NUT-WELD (1/2-13 THD)	
	14	1	7Y-8087	1	PLUG-BUTTON	
	15	1	7T-0136	1	PLATE AS	
		1	9F-2978	6	NUT-WELD (3/8-16 THD)	
	16	1	7T-8086	1	COVER	
		1	7T-0779	1	GASKET	
	17	1	3T-3981	1	PLATE AS	
	18	1	6T-9364	4	BOLT (1/4-20X.625IN)	
M		1	6T-4205	4	WASHER-HARD (2MM THK)	
	19	1	6L-8484	1	FLOOR MAT	
	20	1	9E-8946	1	MODULE AS-OPERATOR	
	21	1	3T-3634	1	HANDHOLD	
	22	1	9P-8571	2	PLUG	
	23	2	6T-9364	4	BOLT (1/4-20X.625IN)	
M		2	6T-4205	4	WASHER-HARD (2MM THK)	
	24	2	5B-3062	17	BOLT (3/8-16X.750IN)	
	26	2	5P-1075	21	WASHER-HARD (3MM THK)	
	26	2	7T-0135	1	SEAL	
	27	2	7X-0378	2	BOLT (3/4-10X5IN)	
		2	7X-0682	2	WASHER-HARD (6MM THK)	
	28	2	3T-3482	2	PLATE	
	29	2	3T-8280	1	PLATE AS	
		2	7S-0038	8	SPACER	
	30	2	3T-8281	1	SEAL	
	31	2	7S-0017	1	GASKET	
	32	2	7S-0016	1	COVER AS	
		2	2R-2276	2	WASHER	
		2	6P-0028	2	SCREW-KNURLED	
	33	2	9W-3429	1	COVER	
	34	2	8E-0697	1	COVER	
	35	2	9D-3031	8	SCREW-SOCKET HEAD	
	36	2	9W-3142	8	MOUNTING	
	37	2	9W-9027	2	PLATE	
	38	2	7X-0390	2	BOLT (7/8-9X5IN)	
		2	7X-0672	2	WASHER-HARD	
	39	2	4L-8454	4	BOLT (3/8-16X1.0IN)	
	40	2	3T-4788	1	COVER	

12 FRAME AND BODY 1 of 4 SELP4570-01

FRAME AND BODY

8E-3299 PLATFORM GP-CAB (contd.)

100090751

NOTE	REF NO	GRAPHIC REF	PART NUMBER	QTY	PART NAME (1 2 3 4 5 6 PRODUCT LEVEL)	SEE PAGE
	41	2	8E-3515	1	COVER	
	42	2	7T-0134	1	PLATE	
	43	2	7T-0139	1	GASKET	
	44	2	7S-0724	1	GASKET	
	45	2	7S-0723	1	COVER	
	46	2	6V-1969	2	PLUG-BUTTON	

M-METRIC PART

SELP4570-01 2 of 4 FRAME AND BODY 13

FRAME AND BODY

8E-3299 PLATFORM GP-CAB (contd.)

100090751

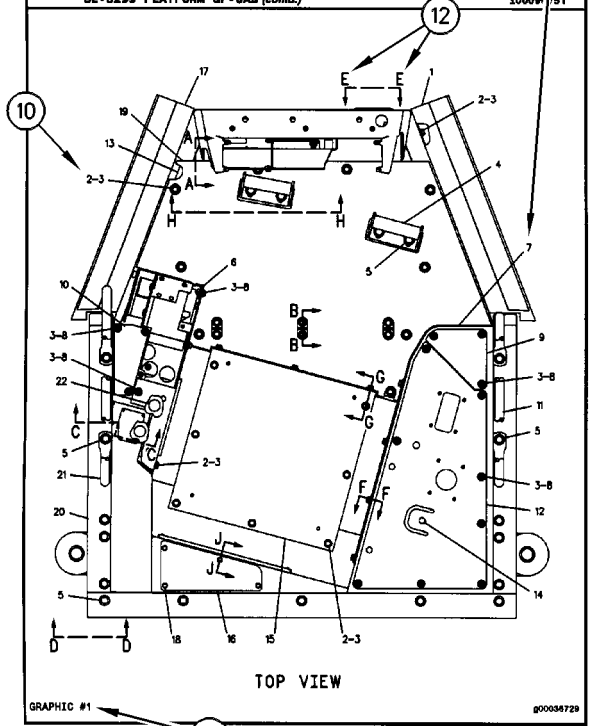

GRAPHIC #1 g00036729

14 FRAME AND BODY 3 of 4 SELP4570-01

FRAME AND BODY

8E-3299 PLATFORM GP-CAB (contd.)

100090751

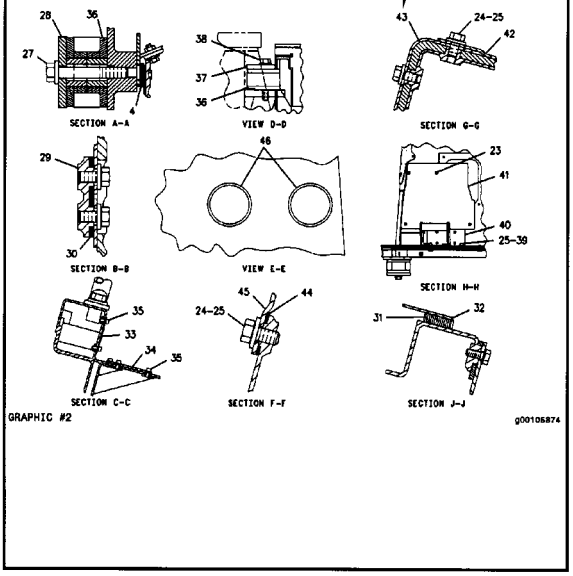

GRAPHIC #2 g00105874

SELP4570-01 4 of 4 FRAME AND BODY 15

ALLGEMEINE HINWEISE

1. MASCHINENKENNZEICHNUNG

Caterpillar-Maschinen sind mit PRODUCT IDENTIFICATION NUMBERS (PIN) (Produkt-Identnummern) gekennzeichnet. Einige Baugruppen, z.B. Motoren, Getriebe, Planierschilde und Aufreißer, sind mit SERIAL NUMBERS (S/N) (Seriennummern) gekennzeichnet. An der Maschine und am Motor befinden sich außerdem ARRANGEMENT NUMBERS (Ausrüstungsnummern) sowie in einigen Fällen MODIFICATION NUMBERS (Änderungsnummern). Sie befinden sich auf den PIN-Schildern und auf dem Typenschild im Fahrerhaus.

Bei Ersatzteilbestellungen müssen dem Händler alle diese Nummern zur Verfügung gestellt werden.

SIS ***Neu im Parts Manual***

Vom ersten Quartal 2001 ab wurde die Caterpillar Produkt-Identnummer (PIN) von 8 auf 17 Zeichen geändert. Um zur Standardisierung der Produkt-Identnummer beizutragen, sind Caterpillar und andere Baumaschinenhersteller bestrebt, die aktuellste Norm zur Produkt-Identnummerierung einzuführen. Produkt-Identnummern für Baumaschinen sind durch ISO 10261 definiert. Das neue Format der Produkt-Identnummern gilt für alle Caterpillar-Maschinen und -Stromaggregate. Die Produkt-Identschilder und -Identrahmenmarkierung enthalten die aus 17 Zeichen bestehende Identnummer. Das neue Format hat folgende Abschnitte:

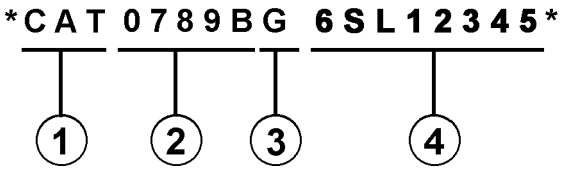

Abschnitte:

1. Caterpillars weltweiter Herstellungscode (Zeichen 1-3)

2. Modell (Zeichen 4-8)

3. Kontrollzeichen (Zeichen 9)

4. Maschinenspezifische Kennung (MIS) oder Produktsequenznummer (Zeichen 10-17). Diese wurde früher als Seriennummer bezeichnet.

Für vor dem ersten Quartal 2001 hergestellte Maschinen und Stromaggregate wird das aus 8 Zeichen bestehende PIN-Format beibehalten.

Bauteile wie z.B. Motoren, Getriebe, Achsen sowie Arbeitsgeräte werden weiterhin eine aus 8 Zeichen bestehende Seriennummer (S/N) aufweisen.

2. BESTELLEN VON ERSATZTEILEN

⚠ WARNUNG

Wenn für diese Maschine Ersatzteile benötigt werden, empfiehlt Caterpillar, ausschließlich Caterpillar-Ersatzteile oder solche zu verwenden, die die gleichen technischen Merkmale hinsichtlich Typ, Festigkeit, Werkzeugeigenschaften und die gleichen Maße aufweisen.

Bei Nichtbeachtung dieser Warnung besteht Verletzungs- oder sogar Lebensgefahr! Ferner kann Nichtbeachtung vorzeitige Ausfälle der Teile und Beschädigung der Maschine zur Folge haben.

Original Caterpillar-Ersatzteile können weltweit bei jedem Caterpillar-Händlern bestellt werden. Die umfangreichen Händlerlager enthalten normalerweise alle Teile, die Sie für Ihre Caterpillar-Maschine benötigen. Einige Händler bieten Reparatursätze, Austausch- oder werküberholte Teile an, so daß Sie eine Auswahl unter verschiedenen Reparaturmöglichkeiten treffen können. Ihre Bestellung muß folgende Angaben enthalten: Anzahl der benötigten Teile, Bestellnummer, Bezeichnung des Teils, Serien-Nr./Produkt-Ident-Nr., Ausrüstungs-Nr. und Änderungs-Nr. der Maschine, für die diese Teile benötigt werden.

3. AUFBAU DES PARTS MANUAL

Die Produktinformationen für alle Komponenten eines bestimmten Modells sind in INFORMATION ELEMENTS (Informationseinheiten) gegliedert. ENGINE ARRANGEMENT (Motorausführung) und SEAT GROUP (Fahrersitz) sind Beispiele für solche Informationseinheiten. Sie sind innerhalb jeder Gruppe alphabetisch, entsprechend der Ersatzteilbezeichnung, und zusätzlich numerisch, entsprechend der Ersatzteilnummer, geordnet.

4. INHALTSVERZEICHNIS

Das Inhaltsverzeichnis befindet sich am Anfang des Buches. Im Inhaltsverzeichnis werden die einzelnen Abschnitte des Buches aufgeführt. Die Abschnitte enthalten eine vollständige Aufstellung aller Informationseinheiten. Diese sind entsprechend ihrem Erscheinen im Buch geordnet. Das Inhaltsverzeichnis enthält Seitenangaben für Schnellverweise auf detaillierte Abbildungen und Teillisten.

5. INDEX FÜR WARTUNGSTEILE

Der Index für Wartungsteile vorn im Buch enthält die Bestellnummern, Seitenangaben, Mengenangaben und Informationen über den Einsatzbereich für die am häufigsten benötigten Ersatzteile. Die Angaben sind alphabetisch entsprechend der Teilebezeichnung geordnet.

6. INDEX

Der Index vorn im Buch enthält eine alphabetische Liste aller Informationseinheiten. Er enthält Seitenangaben für Schnellverweise auf detaillierte Abbildungen und Teillisten.

7. INDEX FÜR BESTELLNUMMERN

Hinten im Buch befindet sich ein numerischer Index, mit allen Bestellnummern und dem Hinweis auf die Seite, auf der sich die betreffende Abbildung befindet.

8. ÜBERSCHRIFTEN

Die Überschriften, die sich am Anfang jeder der Informationseinheiten befinden, enthalten Bestellnummern, Ersatzteilbezeichnungen und zusätzliche beschreibende Informationen. Produkt-Ident- und Seriennummern in den Überschriften sollten zur Auswahl der richtigen Informationen für die betreffende Maschine verwendet werden. Die Überschriften enthalten außerdem Informationen über möglichen Außendienstersatz, mögliche Baugerätekomponenten und die Baugruppe, zu der das Teil gehört.

Die erste Zeile einer Überschrift erscheint in einer größeren Schriftart, um den Anfang einer Informationseinheit zu kennzeichnen. Überschriften für zusätzliche Seiten, die zur Erläuterung einer Informationseinheit notwendig sind, erscheinen in normaler Schriftart und enthalten den Begriff "(contd.)".

9. NICHT EINZELN LIEFERBARE TEILE

In einigen Fällen ist es notwendig nicht lieferbare Teile, die selbst mit einer eigenen Teilliste im Buch vertreten sind, aufzuführen. Die Bestellnummern dieser nicht einzeln lieferbaren Teile erscheinen kursiv, wodurch angezeigt wird, daß sie nur in Verbindung mit anderen Teilen lieferbar sind.

10. REFERENZNUMMER FÜR ERSATZTEILE

Die Zahlen, die in der Spalte "Ref No" aufgeführt sind, stimmen mit den Zahlen in den beigefügten Abbildungen überein. Ein Buchstaben-Suffix kann zu einer Referenznummer hinzugefügt werden, um zu kennzeichnen, daß das Teil mit einer eigenen Teilliste im Buch aufgeführt ist. Die in der Spalte "Graphic Ref" angeführten Zahlen verweisen auf die Identifikationsnummer der Abbildung, die sich in der linken unteren Ecke der Abbildung befindet. Diese Nummer kann zusammen mit der Referenznummer des Teils angegeben werden, um die richtige Ersatzteilnummer zu ermitteln. Referenznummern können absichtlich weggelassen werden, da die Nummern der lieferbaren Ersatzteile ständig aktualisiert werden.

11. EINGERÜCKTE BEZEICHNUNGEN

Wenn eine Bezeichnung eingerückt ist, wird dadurch angezeigt, daß das Teil zu einer Baugruppe gehört, unter deren Bezeichnung es eingerückt ist.

12. REFERENZBUCHSTABEN

Falls erforderlich sind in den Abbildungen Referenzbuchstaben enthalten (z.B. A, B, C, usw.), die Leitungen und Kabelbäume von einem Punkt zum anderen verfolgen. Außerdem geben sie die Stelle an, an der getrennte Abbildungen fortgesetzt werden.

13. ABKÜRZUNGEN UND SYMBOLE

O.D. – Außendurchmesser
I.D. – Innendurchmesser
A – kein Teil dieser Gruppe
B – nach Bedarf verwenden
C – Hinweis auf eine Änderung
D – in Meter-Länge bestellen
E – in Zentimeter-Länge bestellen
F – nicht gezeigt
G – in Zoll-Länge bestellen
I – siehe "Hose Fabrication Guide"
M – metrisches Teil
R – werküberholtes Teil unter Umständen lieferbar
Y – separate Abbildung
Z – nicht einzeln lieferbar

SIS *Neu im Parts Manual*

14. <END>

Dieses Symbol zeigt das Ende eines Informationselements an.

ALLGEMEINE HINWEISE

ANMERKUNG:

Ständig vorgenommene Verbesserungen und Weiterentwicklungen an Ihrer Maschine können Änderungen verursachen, die in der vorliegenden Ausgabe noch nicht berücksichtigt sind. Fragen zu Ihrer Caterpillar-Maschine oder diesem Ersatzteilbuch beantwortet Ihr Caterpillar-Händler.

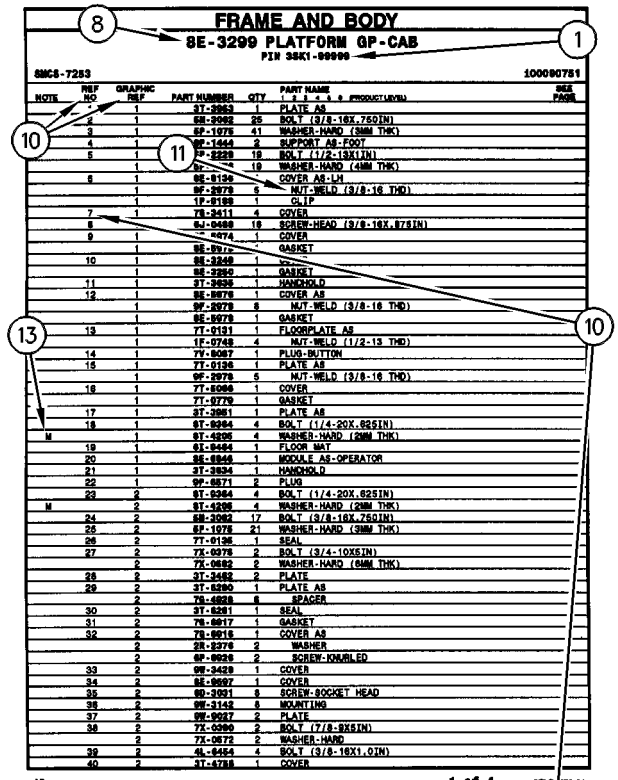

FRAME AND BODY

8E-3299 PLATFORM GP-CAB

PIN 38K1-09999

SMCS-7253 100090751

NOTE	REF NO	GRAPHIC REF	PART NUMBER	QTY	PART NAME (1 2 3 4 5 6 PRODUCT LEVEL)	SEE PAGE
	1	1	3T-2953	1	PLATE AS	
	2	1	5B-2992	25	BOLT (3/8-16X.750IN)	
	3	1	6P-1075	41	WASHER-HARD (3MM THK)	
	4	1	8P-1444	2	SUPPORT AS-FOOT	
	5	1	9P-2229	19	BOLT (1/2-13X1IN)	
		1	5C-[illegible]4	19	WASHER-HARD (4MM THK)	
	6	1	9E-9136	1	COVER AS-LH	
		1	9F-2979	6	NUT-WELD (3/8-16 THD)	
		1	1P-0188	1	CLIP	
	7	1	7S-3411	4	COVER	
	8	1	6J-0488	18	SCREW-HEAD (3/8-16X.875IN)	
	9	1	[illegible]-4474	1	COVER	
		1	9E-9[illegible]7		GASKET	
	10	1	9E-3249	1	[illegible]	
		1	9E-3250	1	GASKET	
	11	1	3T-3835	1	HANDHOLD	
	12	1	9E-9078	1	COVER AS	
		1	9F-2979	8	NUT-WELD (3/8-16 THD)	
		1	9E-9079	1	GASKET	
	13	1	7T-0131	1	FLOORPLATE AS	
		1	1F-0748	4	NUT-WELD (1/2-13 THD)	
	14	1	7Y-9087	1	PLUG-BUTTON	
	15	1	7T-0136	1	PLATE AS	
		1	9F-2979	6	NUT-WELD (3/8-16 THD)	
	16	1	7T-9096	1	COVER	
		1	7T-9779	1	GASKET	
	17	1	3T-3981	1	PLATE AS	
	18	1	6T-9364	4	BOLT (1/4-20X.625IN)	
M		1	6T-4205	4	WASHER-HARD (2MM THK)	
	19	1	6L-9484	1	FLOOR MAT	
	20	1	9E-9946	1	MODULE AS-OPERATOR	
	21	1	3T-3834	1	HANDHOLD	
	22	1	9P-8571	2	PLUG	
	23	2	6T-9364	4	BOLT (1/4-20X.625IN)	
M		2	6T-4205	4	WASHER-HARD (2MM THK)	
	24	2	5B-3062	17	BOLT (3/8-16X.750IN)	
	26	2	6P-1075	21	WASHER-HARD (3MM THK)	
	26	2	7T-0135	1	SEAL	
	27	2	7X-0378	2	BOLT (3/4-10X5IN)	
		2	7X-0682	2	WASHER-HARD (6MM THK)	
	28	2	3T-3482	2	PLATE	
	29	2	3T-5290	1	PLATE AS	
		2	7S-0038	8	SPACER	
	30	2	3T-5281	1	SEAL	
	31	2	7S-0017	1	GASKET	
	32	2	7S-9016	1	COVER AS	
		2	2R-2276	2	WASHER	
		2	6P-9028	2	SCREW-KNURLED	
	33	2	9W-3429	1	COVER	
	34	2	9E-9097	1	COVER	
	35	2	9D-3031	8	SCREW-SOCKET HEAD	
	36	2	9W-3142	8	MOUNTING	
	37	2	9W-9027	2	PLATE	
	38	2	7X-0390	2	BOLT (7/8-9X5IN)	
		2	7X-0672	2	WASHER-HARD	
	39	2	4L-9454	4	BOLT (3/8-16X1.0IN)	
	40	2	3T-4788	1	COVER	

12 FRAME AND BODY 1 of 4 SELP4570-01

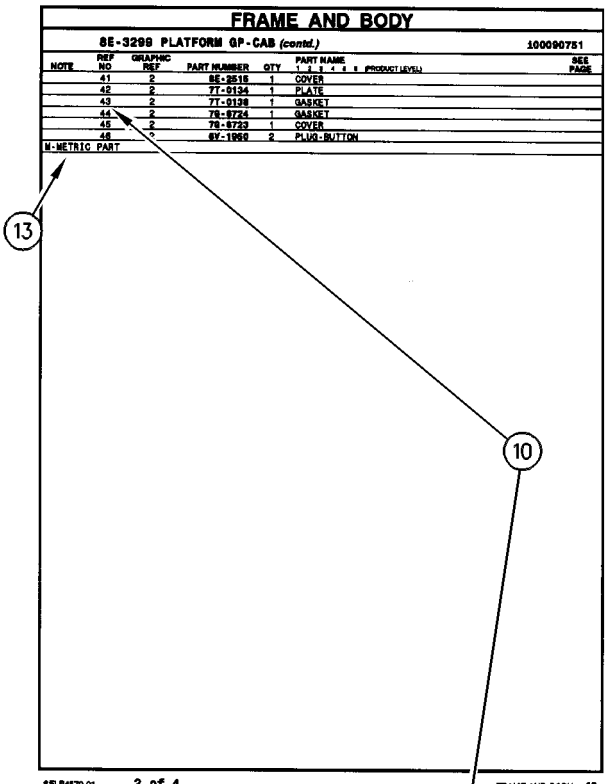

FRAME AND BODY

8E-3299 PLATFORM GP-CAB (contd.) 100090751

NOTE	REF NO	GRAPHIC REF	PART NUMBER	QTY	PART NAME (1 2 3 4 5 6 PRODUCT LEVEL)	SEE PAGE
	41	2	8E-3515	1	COVER	
	42	2	7T-0134	1	PLATE	
	43	2	7T-0139	1	GASKET	
	44	2	7S-9724	1	GASKET	
	45	2	7S-9723	1	COVER	
	46	2	6Y-1969	2	PLUG-BUTTON	

M-METRIC PART

SELP4570-01 2 of 4 FRAME AND BODY 13

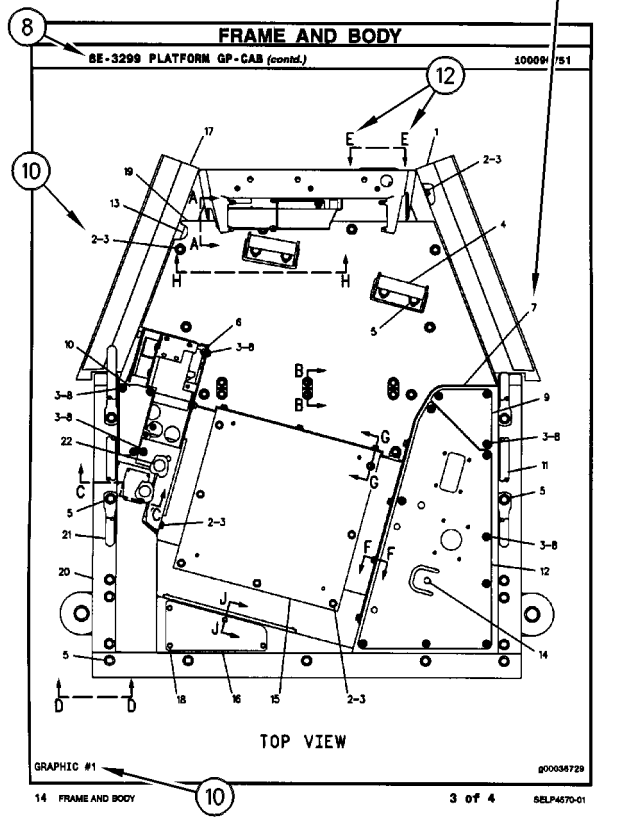

FRAME AND BODY

8E-3299 PLATFORM GP-CAB (contd.) 100090751

TOP VIEW

GRAPHIC #1 g00036729

14 FRAME AND BODY 3 of 4 SELP4570-01

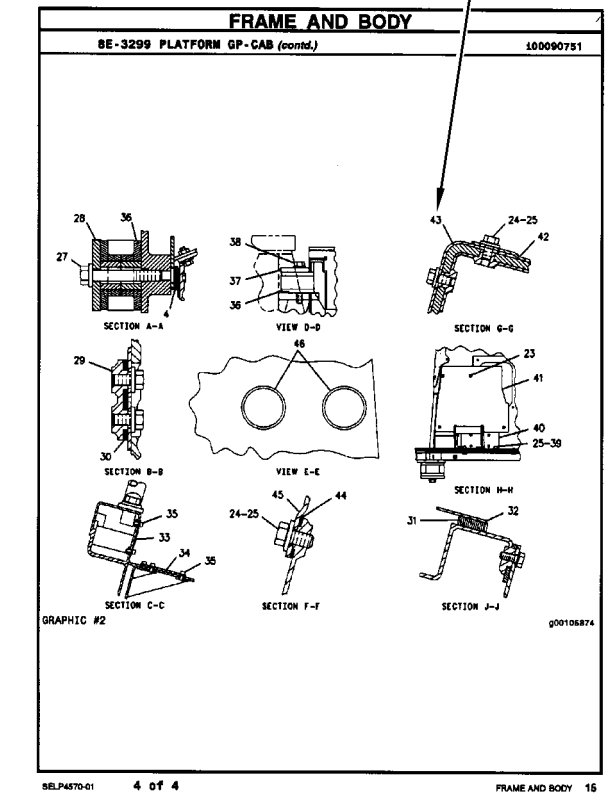

FRAME AND BODY

8E-3299 PLATFORM GP-CAB (contd.) 100090751

SECTION A-A VIEW D-D SECTION G-G

SECTION B-B VIEW E-E SECTION H-H

SECTION C-C SECTION F-F SECTION J-J

GRAPHIC #2 g00105874

SELP4570-01 4 of 4 FRAME AND BODY 15

REMANUFACTURED COMPONENTS

As an option when making repairs consider Caterpillar Remanufactured Components. Components that are available through the Caterpillar Remanufactured Program are identified three ways in the parts book:

- with the letter R in the note field of the parts list
- with an R* at the beginning of the first line of the caption
- with an *R at the end of the first line of the caption

Typical components included in the Remanufacturing Program include:

ALTERNATORS
CONNECTING RODS
CRANKSHAFTS - UNDERSIZE
CRANKSHAFTS - UPGRADE TO NEW
CYLINDER HEADS
ELECTRONIC CONTROL MODULES (ECM)
ELECTRONIC SENSORS
FUEL INJECTORS
FUEL NOZZLES
FUEL PUMPS
GOVERNORS
OIL PUMPS
PISTONS
SHORT BLOCKS
STARTERS
TURBOCHARGERS - COMPLETE
TURBOCHARGER CARTRIDGES
WATER PUMPS

Caterpillar Remanufactured engines for many engine arrangements are also available.

COMPOSANTS RÉNOVÉS

Comme option de réparation, considérer les composants rénovés Caterpillar. Les composants disponibles dans le cadre du programme Caterpillar de composants rénovés sont identifiés de trois façons dans le catalogue de pièces:

- avec la lettre "R" dans l'espace note de la liste des pièces
- avec R* au début de la première ligne des légendes
- avec *R à la fin de la première ligne des légendes

Les composants suivants figurent parmi les composants typiques du programme de rénovation:

ALTERNATEURS
BIELLES
VILEBREQUINS - SOUS-DIMENSIONNÉS
VILEBREQUINS - REMIS À NEUF
CULASSES
MODULES DE COMMANDE ÉLECTRONIQUE (ECM)
CAPTEURS ÉLECTRONIQUES
INJECTEURS
TÊTES D'INJECTEURS
POMPES À CARBURANT
RÉGULATEURS
POMPES À HUILE
PISTONS
BLOCS EMBIELLÉS
DÉMARREURS
TURBOCOMPRESSEURS - COMPLETS
CARTOUCHES DE TURBOCOMPRESSEUR
POMPES À EAU

Des moteurs rénovés sont aussi disponibles pour plusieurs versions de moteur.

COMPONENTES REMANUFACTURADOS

Al hacer reparaciones, tenga en cuenta la opción de Componentes Remanufacturados Caterpillar. Los componentes que están disponibles por medio del programa de Productos Remanufacturados Caterpillar se identifican de tres maneras en el manual de piezas:

- con la letra R en el espacio de Nota de la lista de piezas
- con una R* al comienzo de la primera línea de la leyenda
- con una *R al final de la primera línea de la leyenda

Los componentes que se incluyen típicamente en el Programa de Productos Remanufacturados son:

ALTERNADORES
BIELAS
CIGÜEÑALES - BAJOMEDIDA
CIGÜEÑALES - REMANUFACTURADOS A NUEVO
CULATAS
MÓDULOS DE CONTROL ELECTRÓNICO (ECM)
SENSORES ELECTRONICOS
INYECTORES
BOQUILLAS
BOMBAS DE COMBUSTIBLE
REGULADORES
BOMBAS DE ACEITE
PISTONES
MONOBLOQUES
MOTORES DE ARRANQUE
TURBOCOMPRESORES - COMPLETOS
NÚCLEOS DE TURBOCOMPRESOR
BOMBAS DE AGUA

También hay disponibles motores Remanufacturados Caterpillar para muchas de las configuraciones de motores.

COMPONENTES REMANUFATURADOS

Considere o uso de Componentes Remanufaturados Caterpillar ao efetuar reparos. Os componentes disponíveis através do Programa de Remanufatura Caterpillar são identificados de três formas no manual de peças:

- com um R na área da nota da lista de peças
- com um R* no princípio da primeira linha da legenda
- com um *R no final da primeira linha da legenda

Os componentes típicos que constam no Programa de Remanufatura incluem:

ALTERNADORES
BIELAS
VIRABREQUINS - SUBMEDIDAS
VIRABREQUINS - ATUALIZAÇÃO
CABEÇOTES
MÓDULOS DE CONTROLE ELETRÔNICO (ECM)
SENSORES ELETRÔNICOS
INJETORES DE COMBUSTÍVEL
BICOS DE ABASTECIMENTO DE COMBUSTÍVEL
BOMBAS DE COMBUSTÍVEL
GOVERNADORES
BOMBAS DE ÓLEO
PISTÕES
BLOCOS BÁSICOS DO MOTOR
MOTORES DE PARTIDA
TURBOALIMENTADORES - COMPLETOS
CARTUCHOS DE TURBOALIMENTADORES
BOMBAS D'ÁGUA

Motores Remanufaturados Caterpillar também encontram-se disponíveis para diversos arranjos de motor.

REPARATURALTERNATIVEN

WERKÜBERHOLTE AT-PRODUKTE

Bei Reparaturen sollten werküberholte AT-Produkte von Caterpillar in Betracht gezogen werden. Die durch das AT-Programm von Caterpillar erhältlichen Teile sind im Parts Book auf drei verschiedene Arten gekennzeichnet:

- mit dem Buchstaben R in der Spalte NOTE der Ersatzteilliste
- mit einem R* am Anfang der ersten Zeile der Überschrift
- mit einem *R am Ende der ersten Zeile der Überschrift

Das AT-Programm umfaßt u.a. folgende Produkte:

DREHSTROMGENERATOREN
PLEUELSTANGEN
KURBELWELLEN - MIT UNTERMASS
KURBELWELLEN - MIT ORIGINALMASS
ZYLINDERKÖPFE
ELEKTRONISCHE STEUEREINHEITEN (EMC)
ELEKTRONISCHE SENSOREN
PUMPENDÜSEN
EINSPRITZDÜSEN
KRAFTSTOFFPUMPEN
DREHZAHLREGLER
ÖLPUMPEN
KOLBEN
TEILMOTOREN
ANLASSER
TURBOLADER - KOMPLETT
TURBOLADERLAUFZEUGE
KÜHLWASSERPUMPEN

Viele Motoren können durch werküberholte AT-Motoren von Caterpillar ersetzt werden.

SUPPLEMENTAL COOLANT ADDITIVES

CUSTOMER BENEFITS:

Protects against cavitation, foam, erosion, corrosion, and scale buildup in cooling systems.

- Provides measured coolant conditioner.

DESCRIPTION:

Additives deplete from the coolant with normal operation. For this reason, Supplemental Coolant Additives (SCA) must be added to all heavy duty coolants at regular intervals. In addition, when not using a fully formulated, pre-charged antifreeze, like Caterpillar's DEAC, an initial charge of SCA must be added to the cooling system. The amount of SCA added to the system is dependent on the capacity of the system.

The SCA for initial fill is provided as a liquid. SCA's for maintenance intervals are available in liquid form and as a spin-on element. (No Spin-on available for 3600 Family of Engines)

NOTE:

The amount of SCA added at initial fill is not the same as the amount added at maintenance intervals.

The coolant additive elements can be used with any ethylene or propylene glycol type antifreeze which meets ASTM D4985 or ASTM D5345 Specifications.

NOTE:

For use with standard heavy duty coolant only, not for use with Extended Life Coolant.

PARTS NEEDED:

Cooling System Capacity		Liquid SCA at Initial Fill	Liquid SCA at Maintenance*	Spin-on SCA Maintenance Element*
Liters	Gallons			
22-30	(6-8)	3P-2044 (1)	6V-3542 (1)	111-2370 (1)
30-38	(8-10)	3P-2044 (1) 6V-3542 (1)	111-2372 (1)	111-2369 (1)
38-49	(10-13)	3P-2044 (1) 8T-1589 (1)	111-2372 (1)	111-2369 (1)
49-64	(13-17)	3P-2044 (2)	8T-1589 (1)	9N-3368 (1)
64-83	(17-22)	3P-2044 (2) 8T-1589 (1)	111-2372 (1) 6V-3542 (1)	111-2371 (1)
83-114	(22-30)	3P-2044 (3) 8T-1589 (1)	3P-2044 (1)	9N-3718 (1)
114-163	(30-43)	3P-2044 (5)	3P-2044 (1) 6V-3542 (1)	111-2371 (2)
163-242	(43-64)	3P-2044 (8)	3P-2044 (2)	9N-3718 (2)

** Normal maintenance period is 250 hrs. See your Operation and Maintenance Manual for complete coolant maintenance instructions.*

( ) Indicates quantity required.

ADDITIFS POUR LIQUIDE DE REFROIDISSEMENT

AVANTAGES POUR LE CLIENT

L'additif protège contre la cavitation, la mousse, l'érosion, la corrosion et l'accumulation de dépôts dans le circuit de refroidissement.

- L'additif complémentaire fournit une quantité mesurée d'additif.

DESCRIPTION:

Les additifs s'épuisent pendant l'utilisation du moteur. C'est pourquoi l'on doit ajouter de l'additif au liquide de refroidissement/antigel pour moteurs diesel à intervalles réguliers. En plus, si l'on n'utilise pas de l'antigel entièrement formulé et pré-chargé comme le liquide de refroidissement/antigel Caterpillar pour moteurs diesel, une quantité initiale d'additif doit être ajoutée au circuit de refroidissement. La quantité d'additif à ajouter au circuit dépend de la contenance du circuit.

L'additif pour le remplissage initial est fourni sous forme liquide. L'additif pour l'entretien ultérieur est disponible sous forme liquide et sous forme d'élément à visser. (Il n'y a pas d'élément à visser pour les moteurs de la famille 3600).

NOTA:

La quantité d'additif à ajouter au remplissage initial diffère de la quantité à ajouter aux intervalles d'entretien.

Les éléments d'additif peuvent être utilisés avec tout antigel de type éthylène ou propylène-glycol conforme à la norme ASTM D4985 ou ASTM D5345.

NOTA:

A utiliser uniquement avec du liquide de refroidissement pour moteurs diesel et non avec le liquide de refroidissement longue durée.

PIÈCES NÉCESSAIRES:

Contenance du circuit de refroidissement		Additif liquide au remplissage initial	Additif liquide aux intervalles d'entretien*	Elément d'additif à visser aux intervalles d'entretien*
Litres	Gallons U.S.			
22-30	(6-8)	3P-2044 (1)	6V-3542 (1)	111-2370 (1)
30-38	(8-10)	3P-2044 (1) 6V-3542 (1)	111-2372 (1)	111-2369 (1)
38-49	(10-13)	3P-2044 (1) 8T-1589 (1)	111-2372 (1)	111-2369 (1)
49-64	(13-17)	3P-2044 (2)	8T-1589 (1)	9N-3368 (1)
64-83	(17-22)	3P-2044 (2) 8T-1589 (1)	111-2372 (1) 6V-3542 (1)	111-2371 (1)
83-114	(22-30)	3P-2044 (3) 8T-1589 (1)	3P-2044 (1)	9N-3718 (1)
114-163	(30-43)	3P-2044 (5)	3P-2044 (1) 6V-3542 (1)	111-2371 (2)
163-242	(43-64)	3P-2044 (8)	3P-2044 (2)	9N-3718 (2)

** L'intervalle d'entretien normal est de 250 heures-service. Voir le Guide d'utilisation et d'entretien pour de plus amples renseignements concernant l'entretien du circuit de refroidissement.*

( ) Indique la quantité exigée.

ADITIVOS DE REFRIGERANTE SUPLEMENTARIOS

VENTAJAS PARA EL USUARIO:

Protegen contra la cavitación, la formación de espuma, la corrosión y la acumulación de escamas en los sistemas de enfriamiento.

- Suministra un acondicionador dosificado de refrigerante.

DESCRIPCIÓN:

Los aditivos en el refrigerante se agotan con la operación normal. Por esta razón, se debe agregar Aditivo de refrigerante suplementario (SCA) a todos los refrigerantes para servicio pesado, a intervalos regulares. Además, cuando no se usa un anticongelante de precarga completo, tal como el DEAC de Caterpillar, es necesario agregar una cantidad de aditivo de refrigerante suplementario inicial al sistema de enfriamiento. La cantidad de aditivo que se debe agregar depende de la capacidad del sistema.

El SCA de llenado inicial es líquido. El que se usa para el mantenimiento está disponible tanto en líquido como en un elemento enroscable. (No hay elemento enroscable disponible para la Familia de Motores 3600).

NOTA:

La cantidad de aditivo de llenado inicial no es la misma que se agrega en los intervalos de mantenimiento.

Los elementos de aditivo de refrigerante se pueden usar con cualquier anticongelante de tipo glicol etilénico o propílico que esté de acuerdo con las especificaciones de las normas ASTM D4985 o ASTM D5345.

NOTA:

Se debe utilizar únicamente con refrigerante estándar para servicio pesado; no se debe usar con Refrigerante de Larga Duración.

PIEZAS NECESARIAS:

Capacidad del Sistema de Enfriamiento		SCA líquido de llenado inicial	SCA líquido de mantenimiento*	Elemento de mantenimiento enroscable*
litros	gal EE.UU.			
22-30	6-8	3P-2044 (1)	6V-3542 (1)	111-2370 (1)
30-38	8-10	3P-2044 (1) 6V-3542 (1)	111-2372 (1)	111-2369 (1)
38-49	10-13	3P-2044 (1) 8T-1589 (1)	111-2372 (1)	111-2369 (1)
49-64	13-17	3P-2044 (2)	8T-1589 (1)	9N-3368 (1)
64-83	17-22	3P-2044 (2) 8T-1589 (1)	111-2372 (1) 6V-3542 (1)	111-2371 (1)
83-114	22-30	3P-2044 (3) 8T-1589 (1)	3P-2044 (1)	9N-3718 (1)
114-163	30-43	3P-2044 (5)	3P-2044 (1) 6V-3542 (1)	111-2371 (2)
163-242	43-64	3P-2044 (8)	3P-2044 (2)	9N-3718 (2)

** El período normal de mantenimiento es de 250 horas. Para ver las instrucciones completas sobre el mantenimiento del refrigerante, consulte el Manual de Operación y Mantenimiento.*

( ) Indica la cantidad necesaria.

ADITIVOS SUPLEMENTARES DO LÍQUIDO ARREFECEDOR

BENEFÍCIOS PARA O CLIENTE:

Protege contra cavitação, espuma, erosão, corrosão e acúmulo de crostas nos sistemas de arrefecimento.

- Fornece uma quantidade pré-determinada de condicionador de arrefecimento.

DESCRIÇÃO:

Com a operação normal, os aditivos se esgotam do líquido arrefecedor. Por isso, Aditivos Suplementares do Líquido Arrefecedor (SCA) devem ser acrescentados a todos os líquidos arrefecedores para serviço pesado em intervalos regulares. Além disso, quando um anticongelante pré-carregado, totalmente formulado não for usado, como o DEAC Caterpillar, uma carga inicial de SCA deve ser acrescentada ao sistema de arrefecimento. A quantidade de SCA acrescentada ao sistema depende da capacidade do sistema.

O SCA para abastecimento inicial é fornecido em forma de líquido. Os aditivos suplementares (SCA) para intervalos de manutenção estão à disposição em forma líquida e como um elemento com roscas. (Exceto os Motores da Família 3600)

NOTA:

A quantidade de SCA adicionada no abastecimento inicial não é a mesma que a acrescentada nos intervalos de manutenção.

Os elementos do aditivo do líquido arrefecedor podem ser usados com qualquer tipo de anticongelante etileno ou propileno que satisfaz as Especificações ASTM D4985 ou ASTM D5345.

NOTA:

Para uso apenas com líquido arrefecedor para serviço pesado padrão, não deve ser usado com Líquido Arrefecedor de Vida Longa.

PEÇAS NECESSÁRIAS:

Capacidade do Sistema de Arrefecimento		Líquido SCA Durante Abastecimento Inicial	Líquido SCA Durante Manutenção*	Elemento de Manutenção de SCA com Roscas*
Litros	Galões			
22-30	6-8	3P-2044 (1)	6V-3542 (1)	111-2370 (1)
30-38	8-10	3P-2044 (1) 6V-3542 (1)	111-2372 (1)	111-2369 (1)
38-49	10-13	3P-2044 (1) 8T-1589 (1)	111-2372 (1)	111-2369 (1)
49-64	13-17	3P-2044 (2)	8T-1589 (1)	9N-3368 (1)
64-83	17-22	3P-2044 (2) 8T-1589 (1)	111-2372 (1) 6V-3542 (1)	111-2371 (1)
83-114	22-30	3P-2044 (3) 8T-1589 (1)	3P-2044 (1)	9N-3718 (1)
114-163	30-43	3P-2044 (5)	3P-2044 (1) 6V-3542 (1)	111-2371 (2)
163-242	43-64	3P-2044 (8)	3P-2044 (2)	9N-3718 (2)

** O período normal de manutenção é de 250 horas. Consulte o Manual de Operação e Manutenção para obter instruções completas quanto à manutenção do líquido arrefecedor.*

( ) Indica a quantidade exigida.

KÜHLMITTELZUSATZ

VORTEILE FÜR DEN KUNDEN:

Schutz gegen Kavitation, Schaumbildung, Erosion, Korrosion und Kesselsteinbildung in Kühlsystemen.

- Richtig dosierter Kühlmittelzusatz

BESCHREIBUNG:

Additive erschöpfen sich während des Motorbetriebs. Deshalb muß allen HD-Kühlmitteln regelmäßig Kühlmittelzusatz beigefügt werden. Wenn bei Erstfüllung kein vollwertiges Fertigkühlmittel, wie das Frostschutz- und Kühlmittel für Dieselmotoren von Caterpiller (DEAC), verwendet wird, muß bei Erstfüllung Kühlmittelzusatz beigefügt werden. Wieviel Kühlmittelzusatz beigefügt werden muß, hängt vom Inhalt des Kühlsystems ab.

Für Erstfüllung ist Kühlmittelzusatz nur in flüssiger Form erhältlich. Für Wartungsintervalle ist Kühlmittelzusatz in flüssiger Form und als Zusatzelement erhältlich. (Für die Motorbaureihe 3600 sind keine Zusatzelemente erhältlich.)

ANMERKUNG:

Die Kühlmittelmenge bei Erstfüllung ist nicht die gleiche Menge, die bei Wartungsintervallen beigefügt werden muß.

Die Kühlmittelzusatzelemente können mit allen Frostschutzmitteln auf Ethylen- oder Propylenglykolbasis verwendet werden, die den Standards nach ASTM D4985 oder ASTM D5345 entsprechen.

ANMERKUNG:

Den Kühlmittelzusatz nicht mit Langzeitkühlmittel (ELC) von Caterpillar verwenden. Der Kühlmittelzusatz ist nur für HD-Kühlmittel bestimmt.

TEILEBEZEICHNUNG:

Kühlsysteminhalt		Kühlmittelzusatz bei Erstfüllung	Flüssiger Kühlmittelzusatz bei Wartung*	Kühlmittelzusatzelement bei Wartung*
Liter	US-Gall.			
22-30	(6-8)	3P-2044 (1)	6V-3542 (1)	111-2370 (1)
30-38	(8-10)	3P-2044 (1) 6V-3542 (1)	111-2372 (1)	111-2369 (1)
38-49	(10-13)	3P-2044 (1) 8T-1589 (1)	111-2372 (1)	111-2369 (1)
49-64	(13-17)	3P-2044 (2)	8T-1589 (1)	9N-3368 (1)
64-83	(17-22)	3P-2044 (2) 8T-1589 (1)	111-2372 (1) 6V-3542 (1)	111-2371 (1)
83-114	(22-30)	3P-2044 (3) 8T-1589 (1)	3P-2044 (1)	9N-3718 (1)
114-163	(30-43)	3P-2044 (5)	3P-2044 (1) 6V-3542 (1)	111-2371 (2)
163-242	(43-64)	3P-2044 (8)	3P-2044 (2)	9N-3718 (2)

** Der normale Wartungsintervall beträgt 250 Betriebsstunden. Für vollständige Anweisungen zur Wartung des Kühlsystems, siehe Betriebs- und Wartungshandbuch.*

( ) Erforderliche Anzahl

MAINTENANCE PARTS

DESCRIPTION	PART NUMBER	QTY	WHERE USED	PAGE
AIR INLET AND EXHAUST SYSTEM				
FILTER ELEMENT AS-AIR (PRIMARY)	110-6326	1	AIR CLEANER GP	49
FILTER ELEMENT AS-AIR (SECONDARY)	110-6331	1	AIR CLEANER GP	49
INDICATOR GP-AIR FILTER CHANGE	145-4212	1	LINES GP-AIR	53
		1	LINES GP-AIR	55
BASIC ENGINE				
CAP AS	130-9888	1	COVER GP-VALVE MECHANISM	11
GASKET (VALVE COVER)	225-6451	1	COVER GP-VALVE MECHANISM	11
HOSE (BREATHER)	198-8645	1	COVER GP-VALVE MECHANISM	11
PLUG-SUMP DRAIN	7C-0351	2	PAN GP-OIL	28
SEAL-O-RING (SUMP DRAIN PLUG)	5P-6718	2	PAN GP-OIL	28
SPRING (BREATHER HOSE)	162-1565	1	COVER GP-VALVE MECHANISM	11
V-BELT SET (INCLUDES 2 BELTS) (FAN)	9L-6128	1	DRIVE GP-FAN	21
COOLING SYSTEM				
PLUG (ENGINE OIL FILTER LINES)	225-7941	1	COOLER GP-FLTR BASE & ENG OIL	39
REGULATOR-WATER TEMPERATURE	225-6908	1	CONNECTION GP-WATER	38
SEAL-O-RING (WATER TEMPERATURE REGULATOR)	225-6909	1	CONNECTION GP-WATER	38
VALVE GP-RADIATOR DRAIN	225-4287	1	RADIATOR & HYD OIL COOLER GP	44
ELECTRICAL AND STARTING SYSTEM				
BATTERY-MAINTENANCE FREE (12V)(900 AMP)	9X-3404	2	BATTERY GP	78
CIRCUIT BREAKER AS (30-AMPERE) (AUXILIARY)	147-1773	1	WIRING GP-ENGINE	153
CIRCUIT BREAKER AS (90-AMPERE) (ALTERNATOR)	171-2211	1	WIRING GP-ENGINE	153
CIRCUIT BREAKER GP (60-AMPERE) (MAIN)	171-2208	1	WIRING GP-ENGINE	153
FLASHER AS (12/24-VOLT)	108-0358	1	LIGHTING GP-FLOOD & SIGNAL	120
GLOW PLUG GP	226-8770	4	GLOW PLUG GP	88
KEY (DISCONNECT)	8H-5306	1	SWITCH GP-DISCONNECT	133
LAMP	4Y-3415	1	LAMP GP-SIGNAL	105
		1	LAMP GP-SIGNAL	106
	4Y-3417	1	LAMP GP-SIGNAL	105
		1	LAMP GP-SIGNAL	106
LAMP AS	5C-8964	1	LIGHTING GP-FLOOD & SIGNAL	120
	5C-9029	1	LIGHTING GP-FLOOD & SIGNAL	120
LAMP AS (12-VOLT)	165-5655	1	INSTALLATION GP-SECURITY	91
LAMP GP-SIGNAL (24-VOLT)	3E-6466	2	LIGHTING GP-FLOOD & SIGNAL	120
LAMP-HALOGEN (24-VOLT, 65-WATT)	9X-3463	1	LAMP GP-FLOOD	94
		1	LAMP GP-FLOOD	95
		1	LIGHTING GP-FLOOD	118
		1	LIGHTING GP-FLOOD & SIGNAL	120
LAMP-HEAD (24 VOLT)	9X-3463	1	LIGHTING GP-FLOOD	115
LAMP (SINGLE FILAMENT)	9X-4493	1	LAMP GP-SIGNAL	104
LAMP (24 VOLT)	9X-4493	1	LAMP GP-SIGNAL	109
	115-1748	3	WIRING GP-CAB	142
LAMP (24-VOLT)	9X-3465	1	LAMP GP-HEAD & SIGNAL	96
		1	LAMP GP-HEAD & SIGNAL	98
		1	LAMP GP-HEAD & SIGNAL	100

MAINTENANCE PARTS

DESCRIPTION	PART NUMBER	QTY	WHERE USED	PAGE
		1	LAMP GP-HEAD & SIGNAL	101
	100-3245	1	LAMP GP-HEAD & SIGNAL	96
		1	LAMP GP-HEAD & SIGNAL	98
		2	LAMP GP-HEAD & SIGNAL	100
		2	LAMP GP-HEAD & SIGNAL	101
	115-1748	4	LIGHTING GP-ROADING	122
		4	LIGHTING GP-ROADING	124
		2	WIRING GP-SECONDARY STEERING	163
		4	WIRING GP-CAB	143
		2	WIRING GP-CAB	145
		2	WIRING GP-CAB	148
LAMP (24-VOLT, 10-WATT)	112-5219	1	LAMP GP-DOME	93
LAMP (24-VOLT, 21-WATT)	9X-4493	1	LAMP GP-HEAD & SIGNAL	98
		1	LAMP GP-HEAD & SIGNAL	100
		1	LAMP GP-HEAD & SIGNAL	101
		1	LAMP GP-HEAD & SIGNAL	96
		1	LAMP GP-SIGNAL	108
		1	LAMP GP-STOP & TAIL	110
		2	LIGHTING GP-FLOOD & SIGNAL	120
LAMP (24-VOLT, 25-WATT)	4Y-3415	1	LAMP GP-REAR	103
LAMP (24-VOLT, 3-WATT)	115-1748	2	LIGHTING GP-FLOOD & SIGNAL	120
LAMP (24-VOLT, 5-WATT)	9X-4492	1	LAMP GP-STOP & TAIL	110
		1	LAMP GP-SIGNAL	107
LAMP (24-VOLT, 70-WATT)	9X-7849	1	LAMP GP-WARNING BEACON	111
LENS	6S-7101	1	WIRING GP-REAR	160
LENS-AMBER	9X-3066	1	LAMP GP-SIGNAL	104
LENS (AMBER, RED)	146-2438	1	LAMP GP-STOP & TAIL	110
LENS (AMBER) (TURN SIGNAL)	100-3250	1	LAMP GP-HEAD & SIGNAL	98
		1	LAMP GP-HEAD & SIGNAL	96
		1	LAMP GP-HEAD & SIGNAL	100
		1	LAMP GP-HEAD & SIGNAL	101
LENS (AMBER, WARNING BEACON)	9X-8121	1	LAMP GP-WARNING BEACON	111
LENS AS (AMBER)	136-3848	1	LAMP GP-HEAD & SIGNAL	100
		1	LAMP GP-HEAD & SIGNAL	101
LENS AS (FLOODLIGHT)	9X-4174	1	LAMP GP-FLOOD	94
LENS AS (FLOODLIGHT) (FLOOD)	202-6614	1	LAMP GP-FLOOD	95
LENS AS (HEADLIGHT)	100-3248	1	LAMP GP-HEAD & SIGNAL	96
		1	LAMP GP-HEAD & SIGNAL	100
		1	LAMP GP-HEAD & SIGNAL	101
	100-3249	1	LAMP GP-HEAD & SIGNAL	98
LENS-LAMP	4Y-3450	1	LAMP GP-REAR	103
LENS-RED	9X-3064	1	LAMP GP-SIGNAL	108
	9X-3065	1	LAMP GP-SIGNAL	107
LENS-TURN SIGNAL LAMP	4Y-3418	1	LAMP GP-SIGNAL	105
		1	LAMP GP-SIGNAL	106
	4Y-3419	1	LAMP GP-SIGNAL	105
		1	LAMP GP-SIGNAL	106
PLUG AS-GLOW	226-8770	4	GLOW PLUG GP	87
FRAME AND BODY				
LAMP (24-VOLT, 10-WATT)	5C-8315	1	CONVERSION AR-ROADING	255
		1	CONVERSION AR-ROADING	257

MAINTENANCE PARTS

DESCRIPTION	PART NUMBER	QTY	WHERE USED	PAGE
FUEL SYSTEM				
CAP AS-FILLER (FUEL)	142-8828	1	TANK GP-FUEL	75
ELEMENT-FILTER (FUEL)	228-9130	1	WATER SEP & FUEL PRM PUMP GP	76
FILTER AS-FUEL (FILLER NECK SCREEN)	180-3730	1	TANK GP-FUEL	75
FILTER ELEMENT AS-FUEL	1R-1804	1	FILTER GP-FUEL	68
HYDRAULIC SYSTEM				
BREATHER (HYDRAULIC OIL)	130-4634	1	TANK GP-HYDRAULIC	390
CAP AS (RADIATOR)	227-4376	1	TANK GP-EXPANSION	388
CAP-DUST	6V-0852	1	VALVE & MTG GP-MAIN CONTROL	394
CAP-FILLER (HYDRAULIC TANK)	7H-1447	1	TANK GP-HYDRAULIC	392
KIT-SEAL	107-7491	1	VALVE GP-BANK 2	400
		1	VALVE GP-BANK 3	401
		1	VALVE GP-BANK 4	402
SCREEN AS	141-9236	1	VALVE GP-PILOT	407
		1	VALVE GP-PILOT	409
		1	VALVE GP-PILOT	412
STRAINER AS	110-3024	1	BLOCK GP-HYDRAULIC	331
STRAINER (HYDRAULIC TANK)	9J-3047	1	TANK GP-HYDRAULIC	392
IMPLEMENTS				
FITTING-GREASE (1/8-27 THD)	3B-8488	1	CONTROL GP-BUCKET	428
	3B-8489	12	CONTROL GP-BUCKET	428
LUBRICATION SYSTEM				
FILTER AS-ENGINE OIL	7W-2326	1	FILTER GP-ENGINE OIL	35
OPERATOR STATION				
BLADE AS-WIPER	6V-7419	1	WIPER GP-WINDOW	595
BLADE AS-WIPER (REAR)	5C-8811	1	WIPER GP-WINDOW	595
CAP	3W-6398	1	TANK GP-WINDOW WASHER	591
CAP AS (AIR CONDITIONER)	3E-4051	1	LINES GP-AIR CONDITIONER	515
	3E-4052	1	LINES GP-AIR CONDITIONER	515
CIRCUIT BREAKER AS (15-AMPERE) (MAIN)	3T-2662	1	PANEL GP-INSTRUMENT	544
		1	PANEL GP-INSTRUMENT	548
FILTER (CAB AIR)	111-8738	1	FILTER GP-CAB AIR	493
	180-7487	1	FILTER GP-CAB AIR	493
FILTER-SCREEN	8T-5913	2	TANK GP-WINDOW WASHER	591
LAMP (12-VOLT)	122-7137	1	SPEEDOMETER GP	584
LAMP (24-VOLT)	115-1748	1	PANEL GP-INSTRUMENT	540
		1	PANEL GP-INSTRUMENT	542
		1	PANEL GP-INSTRUMENT	544
SEAT BELT GP	222-0345	1	SEAT GP	571
V-BELT (COMPRESSOR)	7E-1362	1	COMPRESSOR GP-REFRIGERANT	471

MAINTENANCE PARTS

DESCRIPTION	PART NUMBER	QTY	WHERE USED	PAGE
POWER TRAIN				
CAP-DUST	6V-0852	1	FILTER GP-OIL	187
		2	LINES GP-HYDROSTATIC PWR CASE	204
		4	PUMP GP-PISTON	220
	8C-3451	1	FILTER GP-OIL	187
CAP (VALVE STEM)	2D-2633	1	VALVE GP-TIRE	249
FILTER AS-OIL	1G-8878	1	FILTER GP-OIL	187
FITTING-GREASE (1/8-27 THD)	3B-8489	1	HOUSING GP-OSCILLATING AXLE	200
PLUG-MAGNETIC	3S-9182	1	HOUSING GP-OSCILLATING AXLE	200
SERVICE EQUIPMENT AND SUPPLIES				
KEY	5P-8500	1	TOOL BOX GP	597
PADLOCK GP	5P-8502	1	TOOL BOX GP	597
SLEEVE	8Y-6364	1	TOOL BOX GP	597
STEERING SYSTEM				
FITTING-GREASE (1/8-27 THD)	3B-8489	4	CYLINDER & MTG GP-STEERING	309

PIÈCES DE RECHANGE

DESCRIPTION	NUMÉRO DE PIECÈS	QTÉ	DOMAINE D'APPLICATION	PAGE
CHÂSSIS ET BENNE				
AMPOULE (24V, 10W)	5C-8315	1	VERSION DE TRANSFORMATION POUR DÉPLACEMENT ROUTIER	255
		1	VERSION DE TRANSFORMATION POUR DÉPLACEMENT ROUTIER	257
CIRCUIT D'ADMISSION D'AIR ET D'ÉCHAPPEMENT				
ÉLÉMENT DE FILTRE À AIR (ENS) (PRINCIPAL)	110-6326	1	FILTRE A AIR (ASS)	49
ÉLÉMENT DE FILTRE À AIR (ENS) (SECONDAIRE)	110-6331	1	FILTRE A AIR (ASS)	49
INDICATEUR DE COLMATAGE DE FILTRE À AIR (ASS)	145-4212	1	CANALISATIONS D'AIR (ASS)	53
		1	CANALISATIONS D'AIR (ASS)	55
CIRCUIT DE CARBURANT				
BOUCHON DE GOULOTTE DE REMPLISSAGE (ENS) (CARBURANT)	142-8828	1	RÉSERVOIR DE CARBURANT (ASS)	75
ÉLÉMENT DE FILTRE (CARBURANT)	228-9130	1	POMPE DE SÉPARATEUR D'EAU ET D'AMORÇAGE DE CARBURANT (ASS)	76
ÉLÉMENT DE FILTRE (ENS)-CARBURANT	1R-1804	1	FILTRE A CARBURANT (ASS)	68
FILTRE A CARBURANT (ENS) (TAMIS DE GOULOTTE DE REMPLISSAGE)	180-3730	1	RÉSERVOIR DE CARBURANT (ASS)	75
CIRCUIT DE DIRECTION				
GRAISSEUR (FILET 1/8-27)	3B-8489	4	VERIN DE DIRECTION ET MONTAGE (ASS)	309
CIRCUIT DE GRAISSAGE				
FILTRE A HUILE MOTEUR (ENS)	7W-2326	1	FILTRE À HUILE MOTEUR (ASS)	35
CIRCUIT DE REFROIDISSEMENT				
BOUCHON FILETÉ (CANALISATIONS DE FILTRE À HUILE DE MOTEUR)	225-7941	1	SUPPORT DE FILTRE ET REFROIDISSEUR D'HUILE MOTEUR	39
JOINT TORIQUE (RÉGULATEUR DE TEMPÉRATURE D'EAU)	225-6909	1	RACCORD D'EAU (ASS)	38
ROBINET DE VIDANGE DE RADIATEUR (ASS)	225-4287	1	RADIATEUR ET REFROIDISSEUR D'HUILE HYDRAULIQUE (ASS)	44
THERMOSTAT-TEMPÉRATURE D'EAU	225-6908	1	RACCORD D'EAU (ASS)	38
CIRCUIT ELECTRIQUE ET DE DEMARRAGE				
AMPOULE	4Y-3415	1	LAMPE - CLIGNOTANT DE DIRECTION (ASS)	105
		1	LAMPE - CLIGNOTANT DE DIRECTION (ASS)	106
	4Y-3417	1	LAMPE - CLIGNOTANT DE DIRECTION (ASS)	105
		1	LAMPE - CLIGNOTANT DE DIRECTION (ASS)	106
AMPOULE (FILAMENT SIMPLE)	9X-4493	1	LAMPE - CLIGNOTANT DE DIRECTION (ASS)	104
AMPOULE (24 VOLTS)	9X-4493	1	LAMPE - CLIGNOTANT DE DIRECTION (ASS)	109

PIÈCES DE RECHANGE

DESCRIPTION	NUMÉRO DE PIECÈS	QTÉ	DOMAINE D'APPLICATION	PAGE
	100-3245	1	LAMPE - PHARE ET CLIGNOTANT	98
	115-1748	3	CABLAGE DE CABINE (ASS)	142
		4	CABLAGE DE CABINE (ASS)	143
		2	CABLAGE DE CABINE (ASS)	145
		2	CABLAGE DE CABINE (ASS)	148
		4	ÉCLAIRAGE - FEUX DE ROUTE (ASS)	122
		4	ÉCLAIRAGE - FEUX DE ROUTE (ASS)	124
	9X-3465	1	LAMPE - PHARE ET CLIGNOTANT	96
		1	LAMPE - PHARE ET CLIGNOTANT	98
		1	LAMPE - PHARE ET CLIGNOTANT	100
		1	LAMPE - PHARE ET CLIGNOTANT	101
	100-3245	1	LAMPE - PHARE ET CLIGNOTANT	96
		2	LAMPE - PHARE ET CLIGNOTANT	100
		2	LAMPE - PHARE ET CLIGNOTANT	101
	115-1748	2	CABLAGE DE DIRECTION AUXILIAIRE (ASS)	163
AMPOULE (24V, 10W)	112-5219	1	PLAFONNIER (ASS)	93
AMPOULE (24V, 21W)	9X-4493	2	ÉCLAIRAGE - PROJECTEURS ET CLIGNOTANTS (ASS)	120
		1	FEUX ARRIÈRE ET FEUX D'ARRÊT	110
		1	LAMPE - CLIGNOTANT DE DIRECTION (ASS)	108
		1	LAMPE - PHARE ET CLIGNOTANT	96
		1	LAMPE - PHARE ET CLIGNOTANT	98
		1	LAMPE - PHARE ET CLIGNOTANT	100
		1	LAMPE - PHARE ET CLIGNOTANT	101
AMPOULE (24V, 25W)	4Y-3415	1	LAMPE AR (ASS)	103
AMPOULE (24V, 3W)	115-1748	2	ÉCLAIRAGE - PROJECTEURS ET CLIGNOTANTS (ASS)	120
AMPOULE (24V, 5W)	9X-4492	1	FEUX ARRIÈRE ET FEUX D'ARRÊT	110
		1	LAMPE - CLIGNOTANT DE DIRECTION (ASS)	107
AMPOULE (24V, 70W)	9X-7849	1	LAMPE - GYROPHARE (ASS)	111
BATTERIE SANS ENTRETIEN (12 V)(900 A)	9X-3404	2	BATTERIE (ASS)	78
BOUGIE DE PRÉCHAUFFAGE	226-8770	4	BOUGIE DE PRÉCHAUFFAGE (ASS)	87
BOUGIE DE PRÉCHAUFFAGE (ASS)	226-8770	4	BOUGIE DE PRÉCHAUFFAGE (ASS)	88
CLÉ (ROBINET DE BATTERIE)	8H-5306	1	ROBINET DE BATTERIE (ASS)	133
CLIGNOTANT (ENS) (12/24V)	108-0358	1	ÉCLAIRAGE - PROJECTEURS ET CLIGNOTANTS (ASS)	120
DISJONCTEUR (ASS) (60A) (PRINCIPAL)	171-2208	1	CABLAGE DE MOTEUR (ASS)	153
DISJONCTEUR (ENS) (30A) (AUXILIAIRE)	147-1773	1	CABLAGE DE MOTEUR (ASS)	153
DISJONCTEUR (ENS) (90A) (ALTERNATEUR)	171-2211	1	CABLAGE DE MOTEUR (ASS)	153
LAMPE - CLIGNOTANT DE DIRECTION (ASS) (24 VOLTS)	3E-6466	2	ÉCLAIRAGE - PROJECTEURS ET CLIGNOTANTS (ASS)	120
LAMPE - FEUX AV (24 VOLTS)	9X-3463	1	ÉCLAIRAGE - PROJECTEURS (ASS)	115
LAMPE DE TÉMOIN DE CLIGNOTANT	4Y-3418	1	LAMPE - CLIGNOTANT DE DIRECTION (ASS)	105
		1	LAMPE - CLIGNOTANT DE DIRECTION (ASS)	106

PIÈCES DE RECHANGE

DESCRIPTION	NUMÉRO DE PIECÈS	QTÉ	DOMAINE D'APPLICATION	PAGE
	4Y-3419	1	LAMPE - CLIGNOTANT DE DIRECTION (ASS)	105
		1	LAMPE - CLIGNOTANT DE DIRECTION (ASS)	106
LAMPE (ENS)	5C-8964	1	ÉCLAIRAGE - PROJECTEURS ET CLIGNOTANTS (ASS)	120
	5C-9029	1	ÉCLAIRAGE - PROJECTEURS ET CLIGNOTANTS (ASS)	120
LAMPE (ENS) (12 VOLTS)	165-5655	1	MONTAGE-SÉCURITÉ (ASS)	91
LAMPE HALOGÈNE (24V, 65W)	9X-3463	1	ÉCLAIRAGE - PROJECTEURS (ASS)	118
		1	ÉCLAIRAGE - PROJECTEURS ET CLIGNOTANTS (ASS)	120
		1	LAMPE - PHARE (ASS)	94
		1	LAMPE - PHARE (ASS)	95
LENTILLE	6S-7101	1	CABLAGE AR (ASS)	160
LENTILLE DE LAMPE	4Y-3450	1	LAMPE AR (ASS)	103
LENTILLE (ENS) (JAUNE)	136-3848	1	LAMPE - PHARE ET CLIGNOTANT	100
		1	LAMPE - PHARE ET CLIGNOTANT	101
LENTILLE (ENS) (PHARE AVANT)	100-3248	1	LAMPE - PHARE ET CLIGNOTANT	96
		1	LAMPE - PHARE ET CLIGNOTANT	101
		1	LAMPE - PHARE ET CLIGNOTANT	100
LENTILLE (ENS) (PHARES)	100-3249	1	LAMPE - PHARE ET CLIGNOTANT	98
LENTILLE (ENS) (PLAFONNIER)	9X-4174	1	LAMPE - PHARE (ASS)	94
LENTILLE (ENS) (PLAFONNIER) (PROJECTEUR)	202-6614	1	LAMPE - PHARE (ASS)	95
LENTILLE (GYROPHARE JAUNE)	9X-8121	1	LAMPE - GYROPHARE (ASS)	111
LENTILLE (JAUNE) (CLIGNOTANT DE DIRECTION)	100-3250	1	LAMPE - PHARE ET CLIGNOTANT	96
		1	LAMPE - PHARE ET CLIGNOTANT	98
		1	LAMPE - PHARE ET CLIGNOTANT	100
		1	LAMPE - PHARE ET CLIGNOTANT	101
LENTILLE (JAUNE, ROUGE)	146-2438	1	FEUX ARRIÈRE ET FEUX D'ARRÊT	110
LENTILLE ORANGE	9X-3066	1	LAMPE - CLIGNOTANT DE DIRECTION (ASS)	104
LENTILLE ROUGE	9X-3064	1	LAMPE - CLIGNOTANT DE DIRECTION (ASS)	108
	9X-3065	1	LAMPE - CLIGNOTANT DE DIRECTION (ASS)	107

PIÈCES DE RECHANGE

DESCRIPTION	NUMÉRO DE PIECÈS	QTÉ	DOMAINE D'APPLICATION	PAGE
CIRCUIT HYDRAULIQUE				
BOUCHON DE GOULOTTE DE REMPLISSAGE (RÉSERVOIR HYDRAULIQUE)	7H-1447	1	RÉSERVOIR HYDRAULIQUE (ASS)	392
CHAPEAU (ENS) (RADIATEUR)	227-4376	1	RESERVOIR D'EXPANSION (ASS)	388
CREPINE (ENS)	110-3024	1	BLOC - HYDRAULIQUE (ASS)	331
CREPINE (RÉSERVOIR HYDRAULIQUE)	9J-3047	1	RÉSERVOIR HYDRAULIQUE (ASS)	392
ÉCRAN (ENS)	141-9236	1	SOUPAPE PILOTE (ASS)	407
		1	SOUPAPE PILOTE (ASS)	409
		1	SOUPAPE PILOTE (ASS)	412
KIT DE JOINTS	107-7491	1	DISTRIBUTEUR DOUBLE ÉLÉMENT (ASS)	400
		1	DISTRIBUTEUR TRIPLE ÉLÉMENT (ASS)	401
		1	DISTRIBUTEUR 4 ÉLÉMENTS (ASS)	402
PARE-POUSSIERE	6V-0852	1	COMMANDE PRINCIPALE DE SOUPAPE ET MONTAGE (ASS)	394
RENIFLARD (HUILE HYDRAULIQUE)	130-4634	1	RÉSERVOIR HYDRAULIQUE (ASS)	390
ÉQUIPEMENTS				
GRAISSEUR (FILET 1/8-27)	3B-8488	1	COMMANDE DE GODET (ASS)	428
	3B-8489	12	COMMANDE DE GODET (ASS)	428
MATÉRIEL ET FOURNITURES D'ENTRETIEN				
CADENAS (ASS)	5P-8502	1	BOÎTE À OUTILS (ASS)	597
CLÉ	5P-8500	1	BOÎTE À OUTILS (ASS)	597
MANCHON	8Y-6364	1	BOÎTE À OUTILS (ASS)	597
MOTEUR STANDARD				
BOUCHON-VIDANGE DU CARTER	7C-0351	2	HUILE MOTEUR - CARTER (ASS)	28
CHAPEAU (ENS)	130-9888	1	CACHE-SOUPAPES (ASS)	11
FLEXIBLE (RENIFLARD)	198-8645	1	CACHE-SOUPAPES (ASS)	11
JEU DE COURROIES TRAPEZOIDALES (COMPREND 2 COURROIES) (VENTILATEUR)	9L-6128	1	ENTRAÎNEMENT DE VENTILATEUR (ASS)	21
JOINT PLAT (CACHE-SOUPAPES)	225-6451	1	CACHE-SOUPAPES (ASS)	11
JOINT TORIQUE (BOUCHON DE VIDANGE DE CARTER)	5P-6718	2	HUILE MOTEUR - CARTER (ASS)	28
RESSORT (FLEXIBLE DE RENIFLARD)	162-1565	1	CACHE-SOUPAPES (ASS)	11

PIÈCES DE RECHANGE

DESCRIPTION	NUMÉRO DE PIECÈS	QTÉ	DOMAINE D'APPLICATION	PAGE
POSTE DE CONDUITE				
AMPOULE (12 VOLTS)	122-7137	1	COMPTEUR DE VITESSE (ASS)	584
AMPOULE (24 VOLTS)	115-1748	1	TABLEAU DE BORD (ASS)	544
		1	TABLEAU DE BORD (ASS)	540
		1	TABLEAU DE BORD (ASS)	542
BALAI D'ESSUIE-GLACE (ENS)	6V-7419	1	ESSUIE-GLACE (ASS)	595
BALAI D'ESSUIE-GLACE (ENS) (ARRIÈRE)	5C-8811	1	ESSUIE-GLACE (ASS)	595
CEINTURE DE SECURITE (ASS)	222-0345	1	SIÈGE (ASS)	571
CHAPEAU	3W-6398	1	RÉSERVOIR - LAVE-GLACE (ASS)	591
CHAPEAU (ENS) (CLIMATISEUR)	3E-4051	1	CANALISATIONS DE CLIMATISEUR (ASS)	515
	3E-4052	1	CANALISATIONS DE CLIMATISEUR (ASS)	515
COURROIE TRAPEZOIDALE (COMPRESSEUR)	7E-1362	1	COMPRESSEUR DE REFRIGERANT (ASS)	471
DISJONCTEUR (ENS) (15A) (PRINCIPAL)	3T-2662	1	TABLEAU DE BORD (ASS)	544
		1	TABLEAU DE BORD (ASS)	548
FILTRE (AÉRATION DE LA CABINE)	111-8738	1	FILTRE À AIR DE CABINE (ASS)	493
	180-7487	1	FILTRE À AIR DE CABINE (ASS)	493
TAMIS DE FILTRE	8T-5913	2	RÉSERVOIR - LAVE-GLACE (ASS)	591
TRANSMISSION				
BOUCHON AIMANTÉ	3S-9182	1	CARTER D'ESSIEU OSCILLANT	200
CHAPEAU (TIGE DE SOUPAPE)	2D-2633	1	PNEU - GROUPE DE VALVE	249
FILTRE À HUILE (ENS)	1G-8878	1	FILTRE A HUILE (ASS)	187
GRAISSEUR (FILET 1/8-27)	3B-8489	1	CARTER D'ESSIEU OSCILLANT	200
PARE-POUSSIERE	6V-0852	2	CANALISATIONS DE CARTER HYDROST. DE TRANSMISSION	204
		1	FILTRE A HUILE (ASS)	187
		4	POMPE A PISTONS (ASS)	220
	8C-3451	1	FILTRE A HUILE (ASS)	187

PIEZAS DE MANTENIMIENTO

DESCRIPCION	NUMERO DE PIEZA	CANT	SE UTILIZA EN	PAGINA
BASTIDOR Y CAJA				
LÁMPARA (24 VOLTIOS, 10 VATIOS)	5C-8315	1	CONFIGURACIÓN DE TRANSFORMACIÓN PARA CARRETERA	255
		1	CONFIGURACIÓN DE TRANSFORMACIÓN PARA CARRETERA	257
EQUIPO DE SERVICIO Y SUMINISTROS				
CANDADO (GR)	5P-8502	1	CAJA DE HERRAMIENTAS GR	597
LLAVE	5P-8500	1	CAJA DE HERRAMIENTAS GR	597
MANGUITO	8Y-6364	1	CAJA DE HERRAMIENTAS GR	597
IMPLEMENTOS				
CONEXIÓN DE ENGRASE (ROSCA DE 1/8-27)	3B-8488	1	CONTROL DEL CUCHARÓN (GR)	428
	3B-8489	12	CONTROL DEL CUCHARÓN (GR)	428
MOTOR BÁSICO				
EMPAQUETADURA (TAPA DE VÁLVULA)	225-6451	1	TAPA DEL MECANISMO DE VÁLVULAS (GR)	11
JUEGO DE CORREAS TRAPEZOIDALES (INCLUYE 2 CORREAS) (VENTILADOR)	9L-6128	1	IMPULSOR DE VENTILADOR (GR)	21
MANGUERA (RESPIRADERO)	198-8645	1	TAPA DEL MECANISMO DE VÁLVULAS (GR)	11
RESORTE (RESPIRADERO DE MANGUERA)	162-1565	1	TAPA DEL MECANISMO DE VÁLVULAS (GR)	11
SELLO ANULAR (TAPÓN DE DRENAJE DE SUMIDERO)	5P-6718	2	CÁRTER - COLECTOR DEL (GR)	28
TAPÓN (CONJ)	130-9888	1	TAPA DEL MECANISMO DE VÁLVULAS (GR)	11
TAPON DE DRENAJE DE SUMIDERO	7C-0351	2	CÁRTER - COLECTOR DEL (GR)	28

* NO HAY TRADUCCION DISPONIBLE EN EL MOMENTO DE LA IMPRESION

PIEZAS DE MANTENIMIENTO

DESCRIPCION	NUMERO DE PIEZA	CANT	SE UTILIZA EN	PAGINA
PUESTO DEL OPERADOR				
CINTURÓN DE SEGURIDAD (GR)	222-0345	1	ASIENTO (GR)	571
CORREA TRAPEZOIDAL (COMPRESOR)	7E-1362	1	COMPRESOR DE REFRIGERANTE (GR)	471
DISYUNTOR (CONJ) (15 AMPERIOS) (PRINCIPAL)	3T-2662	1	TABLERO DE INSTRUMENTOS (GR)	544
		1	TABLERO DE INSTRUMENTOS (GR)	548
FILTRO (AIRE DE LA CABINA)	111-8738	1	FILTRO DE AIRE DE LA CABINA (GR)	493
	180-7487	1	FILTRO DE AIRE DE LA CABINA (GR)	493
HOJA DE LIMPIAPARABRISAS (CONJ)	6V-7419	1	LIMPIAPARABRISAS DE LA VENTANA (GR)	595
HOJA DE LIMPIAPARABRISAS (CONJ) (TRASERO/A)	5C-8811	1	LIMPIAPARABRISAS DE LA VENTANA (GR)	595
LÁMPARA (12 VOLTIOS)	122-7137	1	VELOCÍMETRO (GR)	584
LÁMPARA (24 VOLTIOS)	115-1748	1	TABLERO DE INSTRUMENTOS (GR)	540
		1	TABLERO DE INSTRUMENTOS (GR)	542
		1	TABLERO DE INSTRUMENTOS (GR)	544
REJILLA DE FILTRO	8T-5913	2	TANQUE DEL LAVAPARABRISAS (GR)	591
TAPA	3W-6398	1	TANQUE DEL LAVAPARABRISAS (GR)	591
TAPÓN (CONJ) (ACONDICIONADOR DE AIRE)	3E-4051	1	TUBERÍAS DE ACONDICIONADOR DE AIRE (GR)	515
	3E-4052	1	TUBERÍAS DE ACONDICIONADOR DE AIRE (GR)	515
SISTEMA DE AIRE DE ADMISIÓN Y ESCAPE				
ELEMENTO DEL FILTRO DE AIRE (CONJ) (PRIMARIO)	110-6326	1	FILTRO DE AIRE (GR)	49
ELEMENTO DEL FILTRO DE AIRE (CONJ) (SECUNDARIO)	110-6331	1	FILTRO DE AIRE (GR)	49
INDICADOR DE CAMBIO DE FILTRO DE ACEITE (GR)	145-4212	1	AIRE - TUBERÍAS DE (GR)	53
		1	AIRE - TUBERÍAS DE (GR)	55
SISTEMA DE COMBUSTIBLE				
ELEMENTO DE FILTRO (COMBUSTIBLE)	228-9130	1	SEPARADOR DE AGUA Y BOMBA DE CEBADO DE COMBUSTIBLE (GR)	76
ELEMENTO DE FILTRO DE COMBUSTIBLE (CONJ)	1R-1804	1	FILTRO DE COMBUSTIBLE (GR)	68
FILTRO DE COMBUSTIBLE (CONJ) (REJILLA DE TUBO DE LLENADO)	180-3730	1	COMBUSTIBLE - TANQUE DE (GR)	75
TAPA DE LLENADO (CONJ) (COMBUSTIBLE)	142-8828	1	COMBUSTIBLE - TANQUE DE (GR)	75
SISTEMA DE DIRECCIÓN				
CONEXIÓN DE ENGRASE (ROSCA DE 1/8-27)	3B-8489	4	CILINDRO DE DIRECCIÓN Y MONTAJE (GR)	309

* NO HAY TRADUCCION DISPONIBLE EN EL MOMENTO DE LA IMPRESION

PIEZAS DE MANTENIMIENTO

DESCRIPCION	NUMERO DE PIEZA	CANT	SE UTILIZA EN	PAGINA
SISTEMA DE ENFRIAMIENTO				
REGULADOR DE TEMPERATURA DEL AGUA	225-6908	1	AGUA - CONEXIÓN DE (GR)	38
SELLO ANULAR (REGULADOR DE TEMPERATURA DEL AGUA)	225-6909	1	AGUA - CONEXIÓN DE (GR)	38
TAPÓN (TUBERIAS DE FILTRO DE ACEITE DEL MOTOR)	225-7941	1	ENFRIADOR DE ACEITE DEL MOTOR Y BASE DEL FILTRO	39
VÁLVULA DE DRENAJE DEL RADIADOR (GR)	225-4287	1	RADIADOR Y ENFRIADOR DE ACEITE HIDRÁULICO (GR)	44
SISTEMA DE LUBRICACIÓN				
FILTRO DE ACEITE DEL MOTOR (CONJ)	7W-2326	1	FILTRO DE ACEITE DEL MOTOR (GR)	35
SISTEMA ELECTRICO Y DE ARRANQUE				
BATERÍA LIBRE DE MANTENIMIENTO (12V) (900 AMP)	9X-3404	2	BATERÍA (GR)	78
BUJÍA INCANDESCENTE (CONJ)	226-8770	4	BUJÍA INCANDESCENTE (GR)	87
BUJÍA INCANDESCENTE (GR)	226-8770	4	BUJÍA INCANDESCENTE (GR)	88
CONJUNTO DE DESTELLADOR (12/24 VOLTIOS)	108-0358	1	LUCES DE REFLECTOR Y CAMBIO DE DIRECCION (GR)	120
CRISTAL	6S-7101	1	CABLES POSTERIORES (GR)	160
CRISTAL (AMBAR, BALIZA DE ADVERTENCIA)	9X-8121	1	LÁMPARA DE BALIZA DE ADVERTENCIA (GR)	111
CRISTAL (AMBAR) (SEÑAL DE VIRAJE)	100-3250	1	LÁMPARA DE LUZ DELANTERA Y DE SEÑAL (GR)	96
		1	LÁMPARA DE LUZ DELANTERA Y DE SEÑAL (GR)	98
		1	LÁMPARA DE LUZ DELANTERA Y DE SEÑAL (GR)	100
		1	LÁMPARA DE LUZ DELANTERA Y DE SEÑAL (GR)	101
CRISTAL (*AMBER, RED)	146-2438	1	LUCES DE PARADA Y COLA (GR)	110
DISYUNTOR (CONJ) (30-AMPERIOS) (AUXILIAR)	147-1773	1	CABLES DEL MOTOR (GR)	153
DISYUNTOR (CONJ) (90-AMPERIOS) (ALTERNADOR)	171-2211	1	CABLES DEL MOTOR (GR)	153
DISYUNTOR DE CIRCUITO (GR) (60 AMPERIOS) (PRINCIPAL)	171-2208	1	CABLES DEL MOTOR (GR)	153
LÁMPARA	4Y-3415	1	LUZ DE SEÑAL DE GIRO (GR)	105
		1	LUZ DE SEÑAL DE GIRO (GR)	106
	4Y-3417	1	LUZ DE SEÑAL DE GIRO (GR)	105
		1	LUZ DE SEÑAL DE GIRO (GR)	106
LÁMPARA (CONJ)	5C-8964	1	LUCES DE REFLECTOR Y CAMBIO DE DIRECCION (GR)	120
	5C-9029	1	LUCES DE REFLECTOR Y CAMBIO DE DIRECCION (GR)	120
LÁMPARA (CONJ) (12 VOLTIOS)	165-5655	1	INSTALACION DE SEGURIDAD (GR)	91
LÁMPARA DE FARO DELANTERO (24 VOLTIOS)	9X-3463	1	LUCES DE REFLECTOR (GR)	115
LÁMPARA (FILAMENTO SENCILLO)	9X-4493	1	LUZ DE SEÑAL DE GIRO (GR)	104
LÁMPARA (*24-VOLT, 5-WATT)	9X-4492	1	LUCES DE PARADA Y COLA (GR)	110
		1	LUZ DE SEÑAL DE GIRO (GR)	107

* NO HAY TRADUCCION DISPONIBLE EN EL MOMENTO DE LA IMPRESION

PIEZAS DE MANTENIMIENTO

DESCRIPCION	NUMERO DE PIEZA	CANT	SE UTILIZA EN	PAGINA
LÁMPARA (24 VOLTIOS)	9X-4493	1	LUZ DE SEÑAL DE GIRO (GR)	109
	115-1748	4	LUCES DE DESPLAZAMIENTO (GR)	122
		4	LUCES DE DESPLAZAMIENTO (GR)	124
		2	CABLES DE LA DIRECCIÓN SECUNDARIA	163
		3	CABLES DE LA CABINA (GR)	142
		4	CABLES DE LA CABINA (GR)	143
		2	CABLES DE LA CABINA (GR)	145
		2	CABLES DE LA CABINA (GR)	148
	9X-3465	1	LÁMPARA DE LUZ DELANTERA Y DE SEÑAL (GR)	96
		1	LÁMPARA DE LUZ DELANTERA Y DE SEÑAL (GR)	98
		1	LÁMPARA DE LUZ DELANTERA Y DE SEÑAL (GR)	100
		1	LÁMPARA DE LUZ DELANTERA Y DE SEÑAL (GR)	101
	100-3245	1	LÁMPARA DE LUZ DELANTERA Y DE SEÑAL (GR)	96
		1	LÁMPARA DE LUZ DELANTERA Y DE SEÑAL (GR)	98
		2	LÁMPARA DE LUZ DELANTERA Y DE SEÑAL (GR)	100
		2	LÁMPARA DE LUZ DELANTERA Y DE SEÑAL (GR)	101
LÁMPARA (24 VOLTIOS, 10 VATIOS)	112-5219	1	LÁMPARA DEL TECHO (GR)	93
LÁMPARA (24-VOLTIOS, 21 VATIOS)	9X-4493	1	LUCES DE PARADA Y COLA (GR)	110
		2	LUCES DE REFLECTOR Y CAMBIO DE DIRECCION (GR)	120
		1	LUZ DE SEÑAL DE GIRO (GR)	108
		1	LÁMPARA DE LUZ DELANTERA Y DE SEÑAL (GR)	96
		1	LÁMPARA DE LUZ DELANTERA Y DE SEÑAL (GR)	98
		1	LÁMPARA DE LUZ DELANTERA Y DE SEÑAL (GR)	100
		1	LÁMPARA DE LUZ DELANTERA Y DE SEÑAL (GR)	101
LÁMPARA (24-VOLTIOS, 25-VATIOS)	4Y-3415	1	LÁMPARA DE FARO TRASERO(GR)	103
LÁMPARA (24-VOLTIOS, 3-VATIOS)	115-1748	2	LUCES DE REFLECTOR Y CAMBIO DE DIRECCION (GR)	120
LÁMPARA (24-VOLTIOS, 70-VATIOS)	9X-7849	1	LÁMPARA DE BALIZA DE ADVERTENCIA (GR)	111
LENTE AMBAR	9X-3066	1	LUZ DE SEÑAL DE GIRO (GR)	104
LENTE-ROJO	9X-3064	1	LUZ DE SEÑAL DE GIRO (GR)	108
	9X-3065	1	LUZ DE SEÑAL DE GIRO (GR)	107
LLAVE (DESCONECTAR)	8H-5306	1	DISYUNTOR (GR)	133
LUCES DE ALÓGENO (24 VOLTIOS, 65 VATIOS)	9X-3463	1	LUCES DE REFLECTOR (GR)	118
		1	LUCES DE REFLECTOR Y CAMBIO DE DIRECCION (GR)	120
		1	REFLECTOR (GR)	94

* NO HAY TRADUCCION DISPONIBLE EN EL MOMENTO DE LA IMPRESION

PIEZAS DE MANTENIMIENTO

DESCRIPCION	NUMERO DE PIEZA	CANT	SE UTILIZA EN	PAGINA
		1	REFLECTOR (GR)	95
LUZ DE INDICADOR DE GIRO, LENTE	4Y-3418	1	LUZ DE SEÑAL DE GIRO (GR)	105
		1	LUZ DE SEÑAL DE GIRO (GR)	106
	4Y-3419	1	LUZ DE SEÑAL DE GIRO (GR)	105
		1	LUZ DE SEÑAL DE GIRO (GR)	106
LUZ DE SEÑAL DE GIRO (GR) (24 VOLTIOS)	3E-6466	2	LUCES DE REFLECTOR Y CAMBIO DE DIRECCION (GR)	120
VIDRIO (CONJ) (AMBAR)	136-3848	1	LÁMPARA DE LUZ DELANTERA Y DE SEÑAL (GR)	100
		1	LÁMPARA DE LUZ DELANTERA Y DE SEÑAL (GR)	101
VIDRIO (CONJ) (FARO DELANTERO)	100-3248	1	LÁMPARA DE LUZ DELANTERA Y DE SEÑAL (GR)	96
		1	LÁMPARA DE LUZ DELANTERA Y DE SEÑAL (GR)	100
		1	LÁMPARA DE LUZ DELANTERA Y DE SEÑAL (GR)	101
	100-3249	1	LÁMPARA DE LUZ DELANTERA Y DE SEÑAL (GR)	98
VIDRIO (CONJ) (REFLECTOR)	9X-4174	1	REFLECTOR (GR)	94
VIDRIO (CONJ) (REFLECTOR) (REFLECTOR)	202-6614	1	REFLECTOR (GR)	95
VIDRIO DE LA LÁMPARA	4Y-3450	1	LÁMPARA DE FARO TRASERO(GR)	103
SISTEMA HIDRÁULICO				
COLADOR (CONJ)	110-3024	1	BLOQUE HIDRÁULICO (GR)	331
COLADOR (TANQUE HIDRÁULICO)	9J-3047	1	TANQUE HIDRÁULICO (GR)	392
JUEGO DE SELLOS	107-7491	1	GRUPO DE 3 VÁLVULAS HIDRÁULICAS	401
		1	GRUPO DE 4 VÁLVULAS HIDRÁULICAS	402
		1	VÁLVULAS HIDRÁULICAS - GRUPO DE 2	400
PANTALLA (CONJ)	141-9236	1	VÁLVULA PILOTO (GR)	407
		1	VÁLVULA PILOTO (GR)	409
		1	VÁLVULA PILOTO (GR)	412
RESPIRADERO (ACEITE HIDRÁULICO)	130-4634	1	TANQUE HIDRÁULICO (GR)	390
TAPA CONTRA EL POLVO	6V-0852	1	MONTAJE Y VALVULA DEL CONTROL PRINCIPAL (GR)	394
TAPA DEL TUBO DE LLENADO (TANQUE HIDRÁULICO)	7H-1447	1	TANQUE HIDRÁULICO (GR)	392
TAPÓN (CONJ) (RADIADOR)	227-4376	1	TANQUE DE EXPANSIÓN (GR)	388

* NO HAY TRADUCCION DISPONIBLE EN EL MOMENTO DE LA IMPRESION

PIEZAS DE MANTENIMIENTO

DESCRIPCION	NUMERO DE PIEZA	CANT	SE UTILIZA EN	PAGINA
TREN DE FUERZA				
CONEXIÓN DE ENGRASE (ROSCA DE 1/8-27)	3B-8489	1	CAJA DE EJE OSCILANTE (GR)	200
FILTRO DE ACEITE (CONJ)	1G-8878	1	FILTRO DE ACEITE (GR)	187
TAPA CONTRA EL POLVO	6V-0852	4	BOMBA DE PISTONES (GR)	220
		1	FILTRO DE ACEITE (GR)	187
		2	TUBERÍAS HIDROSTÁTICAS DE LA CAJA DE TRANSMISIÓN (GR)	204
	8C-3451	1	FILTRO DE ACEITE (GR)	187
TAPA (VASTAGO DE LA VÁLVULA)	2D-2633	1	VÁLVULA DEL NEUMÁTICO (GR)	249
TAPÓN MAGNÉTICO	3S-9182	1	CAJA DE EJE OSCILANTE (GR)	200

* NO HAY TRADUCCION DISPONIBLE EN EL MOMENTO DE LA IMPRESION

PEÇAS DE MANUTENÇÃO

DESCRIÇÃO	NÚMERO DE PEÇA	QUANT	UTILIZADA EM	PÁGINA
ACESSÓRIOS				
GRAXEIRA (ROSCA 1/8-27 POL)	3B-8488	1	CONTROLE DA CAÇAMBA	428
	3B-8489	12	CONTROLE DA CAÇAMBA	428
CHASSI E CARROCERIA				
LÂMPADA (24 VOLTS, 10 WATTS)	5C-8315	1	GRUPO DE CONVERSÃO - ARRANJO RODOVIÁRIO	255
		1	GRUPO DE CONVERSÃO - ARRANJO RODOVIÁRIO	257
EQUIPAMENTOS DE SERVIÇO E SUPRIMENTOS				
CADEADO	5P-8502	1	*TOOL BOX GP	597
CHAVE	5P-8500	1	*TOOL BOX GP	597
LUVA	8Y-6364	1	*TOOL BOX GP	597
ESTAÇÃO DO OPERADOR				
CINTO DE SEGURANÇA	222-0345	1	ASSENTO	571
CORREIA EM V (COMPRESSOR)	7E-1362	1	COMPRESSOR DE REFRIGERANTE	471
DISJUNTOR AUTOMÁTICO DE CIRCUITO (15 AMPERES) (PRINCIPAL)	3T-2662	1	PAINEL DE INSTRUMENTOS	544
		1	PAINEL DE INSTRUMENTOS	548
FILTRO - TELA	8T-5913	2	TANQUE - LAVADOR DE JANELA	591
FILTRO (AR DA CABINE)	111-8738	1	FILTRO - AR DA CABINE	493
	180-7487	1	FILTRO - AR DA CABINE	493
LÂMINA DO LIMPADOR DE PÁRA-BRISA	6V-7419	1	LIMPADOR DO VIDRO	595
LÂMINA DO LIMPADOR DE PÁRA-BRISA (PARTE TRASEIRA)	5C-8811	1	LIMPADOR DO VIDRO	595
LÂMPADA (12-VOLTS)	122-7137	1	VELOCÍMETRO	584
LÂMPADA (24 VOLTS)	115-1748	1	PAINEL DE INSTRUMENTOS	540
		1	PAINEL DE INSTRUMENTOS	542
		1	PAINEL DE INSTRUMENTOS	544
TAMPA	3W-6398	1	TANQUE - LAVADOR DE JANELA	591
TAMPA (CONDICIONADOR DE AR)	3E-4051	1	TUBOS - AR CONDICIONADO	515
	3E-4052	1	TUBOS - AR CONDICIONADO	515
MOTOR BÁSICO				
BUJÃO - DRENAGEM DO RESERVATÓRIO	7C-0351	2	CÁRTER DO ÓLEO DO MOTOR	28
JOGO DE CORREIAS EM V (INCLUI 2 CORREIAS) (VENTILADOR)	9L-6128	1	COMANDO DO VENTILADOR	21
JUNTA (TAMPA DA VÁLVULA)	225-6451	1	TAMPA - MECANISMO DAS VÁLVULAS	11
MANGUEIRA (RESPIRO)	198-8645	1	TAMPA - MECANISMO DAS VÁLVULAS	11
MOLA (MANGUEIRA DO RESPIRO)	162-1565	1	TAMPA - MECANISMO DAS VÁLVULAS	11
RETENTOR DE ANEL-O (BUJÃO DE DRENAGEM DO RESERVATÓRIO)	5P-6718	2	CÁRTER DO ÓLEO DO MOTOR	28
TAMPA	130-9888	1	TAMPA - MECANISMO DAS VÁLVULAS	11
SISTEMA DA ADMISSÃO DE AR E DE ESCAPE				
ELEMENTO DO FILTRO DE AR (PRIMÁRIO)	110-6326	1	PURIFICADOR DE AR	49
ELEMENTO DO FILTRO DE AR (SECUNDÁRIO)	110-6331	1	PURIFICADOR DE AR	49
INDICADOR - TROCA DO FILTRO DE AR	145-4212	1	TUBOS - AR	53
		1	TUBOS - AR	55

PEÇAS DE MANUTENÇÃO

DESCRIÇÃO	NÚMERO DE PEÇA	QUANT	UTILIZADA EM	PÁGINA
SISTEMA DE ARREFECIMENTO				
REGULADOR DE TEMPERATURA DA ÁGUA	225-6908	1	CONEXÃO - TUBO D'ÁGUA	38
RETENTOR DE ANEL-O (REGULADOR DA TEMPERATURA DA ÁGUA)	225-6909	1	CONEXÃO - TUBO D'ÁGUA	38
TAMPÃO (TUBULAÇÕES DO FILTRO DE ÓLEO DO MOTOR)	225-7941	1	ARREFECEDOR DE ÓLEO DO MOTOR E BASE DO FILTRO	39
VÁLVULA DE DRENAGEM DO RADIADOR	225-4287	1	RADIADOR E ARREFECEDOR DO ÓLEO HIDRÁULICO	44
SISTEMA DE COMBUSTÍVEL				
ELEMENTO - FILTRANTE (COMBUSTÍVEL)	228-9130	1	SEPARADOR DE ÁGUA E BOMBA DE ESCORVA DE COMBUSTÍVEL	76
ELEMENTO - FILTRO DE COMBUSTÍVEL	1R-1804	1	FILTRO - COMBUSTÍVEL	68
FILTRO - COMBUSTÍVEL (TELA DO BOCAL DE ENCHIMENTO)	180-3730	1	TANQUE DE COMBUSTÍVEL	75
TAMPA - BOCAL DE ENCHIMENTO (COMBUSTÍVEL)	142-8828	1	TANQUE DE COMBUSTÍVEL	75
SISTEMA DE DIREÇÃO				
GRAXEIRA (ROSCA 1/8-27 POL)	3B-8489	4	CILINDRO DE DIREÇÃO E MONTAGEM	309
SISTEMA DE LUBRIFICAÇÃO				
FILTRO - ÓLEO DO MOTOR	7W-2326	1	FILTRO - ÓLEO DO MOTOR	35
SISTEMA ELÉTRICO E DE PARTIDA				
BATERIA - ISENTA DE MANUTENÇÃO (12 V)(900 A)	9X-3404	2	BATERIA	78
CHAVE (DESLIGAR)	8H-5306	1	CHAVE GERAL	133
DISJUNTOR AUTOMÁTICO DE CIRCUITO (30 AMPERES) (AUXILIAR)	147-1773	1	CABOS/FIOS ELÉTRICOS - MOTOR	153
DISJUNTOR AUTOMÁTICO DE CIRCUITO (90 AMPERES) (ALTERNADOR)	171-2211	1	CABOS/FIOS ELÉTRICOS - MOTOR	153
FAROL DIANTEIRO (24 V)	9X-3463	1	SISTEMA DE ILUMINAÇÃO - FARÓIS	115
INTERRUPTOR - CIRCUITO (60 AMPERES) (PRINCIPAL)	171-2208	1	CABOS/FIOS ELÉTRICOS - MOTOR	153
LÂMPADA	4Y-3415	1	LÂMPADA - SINALIZAÇÃO	105
		1	LÂMPADA - SINALIZAÇÃO	106
	4Y-3417	1	LÂMPADA - SINALIZAÇÃO	105
		1	LÂMPADA - SINALIZAÇÃO	106
	5C-8964	1	SISTEMA DE ILUMINAÇÃO - FARÓIS E SINAL	120
	5C-9029	1	SISTEMA DE ILUMINAÇÃO - FARÓIS E SINAL	120
LÂMPADA - HALOGÊNEO (24 VOLTS, 65 WATTS)	9X-3463	1	SISTEMA DE ILUMINAÇÃO - FARÓIS E SINAL	120
		1	LÂMPADA - FAROL	94
		1	LÂMPADA - FAROL	95
		1	SISTEMA DE ILUMINAÇÃO - FARÓIS	118
LÂMPADA - SINALIZAÇÃO (24 VOLTS)	3E-6466	2	SISTEMA DE ILUMINAÇÃO - FARÓIS E SINAL	120
LÂMPADA (FILAMENTO SIMPLES)	9X-4493	1	LÂMPADA - SINALIZAÇÃO	104
LÂMPADA (12-VOLTS)	165-5655	1	INSTALAÇÃO-SEGURANÇA	91

PEÇAS DE MANUTENÇÃO

DESCRIÇÃO	NÚMERO DE PEÇA	QUANT	UTILIZADA EM	PÁGINA
LÂMPADA (24 V)	9X-4493	1	LÂMPADA - SINALIZAÇÃO	109
	115-1748	3	CABOS/FIOS ELÉTRICOS - CABINE	142
LÂMPADA (24 VOLTS)	9X-3465	1	LÂMPADA DIANTEIRA E DE SINAL	96
		1	LÂMPADA DIANTEIRA E DE SINAL	98
		1	LÂMPADA DIANTEIRA E DE SINAL	100
		1	LÂMPADA DIANTEIRA E DE SINAL	101
	100-3245	1	LÂMPADA DIANTEIRA E DE SINAL	96
		1	LÂMPADA DIANTEIRA E DE SINAL	98
		2	LÂMPADA DIANTEIRA E DE SINAL	100
		2	LÂMPADA DIANTEIRA E DE SINAL	101
	115-1748	4	CABOS/FIOS ELÉTRICOS - CABINE	143
		2	CABOS/FIOS ELÉTRICOS - CABINE	145
		2	CABOS/FIOS ELÉTRICOS - CABINE	148
		2	CABOS/FIOS ELÉTRICOS - DIREÇÃO SECUNDÁRIA	163
		4	ILUMINAÇÃO - RODOVIÁRIA	122
		4	ILUMINAÇÃO - RODOVIÁRIA	124
LÂMPADA (24 VOLTS, 10 WATTS)	112-5219	1	LÂMPADA - TETO	93
LÂMPADA (24 VOLTS, 21 WATTS)	9X-4493	1	LÂMPADA DIANTEIRA E DE SINAL	96
		1	LÂMPADA DIANTEIRA E DE SINAL	98
		1	LÂMPADA DIANTEIRA E DE SINAL	100
		1	LÂMPADA DIANTEIRA E DE SINAL	101
		2	SISTEMA DE ILUMINAÇÃO - FARÓIS E SINAL	120
		1	LÂMPADA - SINALIZAÇÃO	108
		1	LUZ TRASEIRA E DE FREIO	110
LÂMPADA (24 VOLTS, 25 VOLTS)	4Y-3415	1	LUZ TRASEIRA	103
LÂMPADA (24 VOLTS, 3 WATTS)	115-1748	2	SISTEMA DE ILUMINAÇÃO - FARÓIS E SINAL	120
LÂMPADA (24 VOLTS, 5 WATTS)	9X-4492	1	LÂMPADA - SINALIZAÇÃO	107
		1	LUZ TRASEIRA E DE FREIO	110
LÂMPADA (24 VOLTS, 70 WATTS)	9X-7849	1	LUZ GIRATÓRIA DE ALARME	111
LENTE	6S-7101	1	CABOS/FIOS ELÉTRICOS - TRASEIROS	160
LENTE - LÂMPADA	4Y-3450	1	LUZ TRASEIRA	103
LENTE - LÂMPADA DO PISCA-PISCA	4Y-3418	1	LÂMPADA - SINALIZAÇÃO	105
		1	LÂMPADA - SINALIZAÇÃO	106
	4Y-3419	1	LÂMPADA - SINALIZAÇÃO	105
		1	LÂMPADA - SINALIZAÇÃO	106
LENTE ÂMBAR	9X-3066	1	LÂMPADA - SINALIZAÇÃO	104
LENTE (ÂMBAR, PISCA-ALERTA)	9X-8121	1	LUZ GIRATÓRIA DE ALARME	111
LENTE (AMBAR, VERMELHA)	146-2438	1	LUZ TRASEIRA E DE FREIO	110
LENTE (ÂMBER)	136-3848	1	LÂMPADA DIANTEIRA E DE SINAL	100
		1	LÂMPADA DIANTEIRA E DE SINAL	101
LENTE (ÂMBER) (SETA DE DIREÇÃO)	100-3250	1	LÂMPADA DIANTEIRA E DE SINAL	96
		1	LÂMPADA DIANTEIRA E DE SINAL	98
		1	LÂMPADA DIANTEIRA E DE SINAL	100
		1	LÂMPADA DIANTEIRA E DE SINAL	101
LENTE (FAROL DIANTEIRO)	100-3249	1	LÂMPADA DIANTEIRA E DE SINAL	98
LENTE (HOLOFOTE)	9X-4174	1	LÂMPADA - FAROL	94
LENTE (HOLOFOTE) (FAROL)	202-6614	1	LÂMPADA - FAROL	95
LENTE (LUZES DIANTEIRAS)	100-3248	1	LÂMPADA DIANTEIRA E DE SINAL	96
		1	LÂMPADA DIANTEIRA E DE SINAL	100
		1	LÂMPADA DIANTEIRA E DE SINAL	101

PEÇAS DE MANUTENÇÃO

DESCRIÇÃO	NÚMERO DE PEÇA	QUANT	UTILIZADA EM	PÁGINA
LENTE VERMELHA	9X-3064	1	LÂMPADA - SINALIZAÇÃO	108
	9X-3065	1	LÂMPADA - SINALIZAÇÃO	107
LUZ INTERMITENTE (12/24 VOLTS)	108-0358	1	SISTEMA DE ILUMINAÇÃO - FARÓIS E SINAL	120
VELA - AQUECIMENTO	226-8770	4	VELA DE AQUECIMENTO; VELA INCANDESCENTE	87
VELA DE AQUECIMENTO; VELA INCANDESCENTE	226-8770	4	VELA DE AQUECIMENTO; VELA INCANDESCENTE	88
SISTEMA HIDRÁULICO				
JOGO DE RETENTOR	107-7491	1	GRUPO DE VÁLVULAS DE CONTROLE - DUPLO	400
		1	GRUPO DE VÁLVULAS DE CONTROLE - QUÁDRUPLO	402
		1	GRUPO DE VÁLVULAS DE CONTROLE - TRIPLO	401
RESPIRO (ÓLEO HIDRÁULICO)	130-4634	1	TANQUE HIDRÁULICO	390
TAMPA - BOCAL DE ENCHIMENTO (TANQUE HIDRÁULICO)	7H-1447	1	TANQUE HIDRÁULICO	392
TAMPA CONTRA POEIRA	6V-0852	1	VÁLVULA DO CONTROLE PRINCIPAL E MONTAGEM	394
TAMPA (RADIADOR)	227-4376	1	TANQUE DE EXPANSÃO	388
TELA FILTRANTE	110-3024	1	BLOCO HIDRÁULICO	331
	141-9236	1	VÁLVULA DE CONTROLE PILOTO	407
		1	VÁLVULA DE CONTROLE PILOTO	409
		1	VÁLVULA DE CONTROLE PILOTO	412
TELA FILTRANTE (TANQUE HIDRÁULICO)	9J-3047	1	TANQUE HIDRÁULICO	392
TREM DE FORÇA				
BUJÃO MAGNÉTICO	3S-9182	1	CAIXA - EIXO OSCILANTE	200
FILTRO - ÓLEO	1G-8878	1	FILTRO - ÓLEO	187
GRAXEIRA (ROSCA 1/8-27 POL)	3B-8489	1	CAIXA - EIXO OSCILANTE	200
TAMPA CONTRA POEIRA	6V-0852	4	BOMBA DE PISTÃO	220
		1	FILTRO - ÓLEO	187
		2	TUBOS - CAIXA DO SISTEMA HIDROSTÁTICO	204
	8C-3451	1	FILTRO - ÓLEO	187
TAMPA (HASTE DA VALVULA)	2D-2633	1	VÁLVULA DE PNEU	249

WARTUNGSTEILE

BESCHREIBUNG	ERSATZTEIL-NUMMER	MENGE	VERWENDET IN	SEITE
ARBEITSGERÄTE				
SCHMIERNIPPEL (1/8-27-GEWINDE)	3B-8488	1	SCHAUFELSTEUERUNG	428
	3B-8489	12	SCHAUFELSTEUERUNG	428
ELEKTRISCHE ANLAGE U. STARTSYSTEM				
ABDECKGLAS	6S-7101	1	VERDRAHTUNG, HINTEN	160
ABDECKGLAS (*AMBER, RED)	146-2438	1	BREMS- UND RÜCKLEUCHTE	110
ABDECKGLAS (ARBEITSSCHEIN-WERFER)	9X-4174	1	ARBEITSLEUCHTEN	94
ABDECKGLAS (ARBEITSSCHEINWER-FER) (ARBEITSSCHEINWERFER)	202-6614	1	ARBEITSLEUCHTEN	95
ABDECKGLAS (FRONTSCHEINWER-FER)	100-3248	1	SCHEINWERFER U. RICHTUNGSLEUCHTE	96
		1	SCHEINWERFER U. RICHTUNGSLEUCHTE	100
		1	SCHEINWERFER U. RICHTUNGSLEUCHTE	101
	100-3249	1	SCHEINWERFER U. RICHTUNGSLEUCHTE	98
ABDECKGLAS (GELB)	9X-3066	1	BLINKLEUCHTE	104
	136-3848	1	SCHEINWERFER U. RICHTUNGSLEUCHTE	100
		1	SCHEINWERFER U. RICHTUNGSLEUCHTE	101
ABDECKGLAS (GELB) (FAHRTRICHTUNGSANZEIGER)	100-3250	1	SCHEINWERFER U. RICHTUNGSLEUCHTE	98
		1	SCHEINWERFER U. RICHTUNGSLEUCHTE	96
		1	SCHEINWERFER U. RICHTUNGSLEUCHTE	100
		1	SCHEINWERFER U. RICHTUNGSLEUCHTE	101
ABDECKGLAS (GELB, RUNDUM-KENNLEUCHTE)	9X-8121	1	RUNDUM-KENNLEUCHTE	111
BATTERIE - WARTUNGSFREI (12 V, 900 A)	9X-3404	2	BATTERIE	78
BELEUCHTUNGSANLAGE	5C-8964	1	ARBEITS- U. SIGNALLEUCHTE	120
	5C-9029	1	ARBEITS- U. SIGNALLEUCHTE	120
BELEUCHTUNGSANLAGE (12 V)	165-5655	1	SICHERHEITSEINBAUSATZ	91
BLINKER (12/24 VOLT)	108-0358	1	ARBEITS- U. SIGNALLEUCHTE	120
BLINKLEUCHTE (24 V)	3E-6466	2	ARBEITS- U. SIGNALLEUCHTE	120
GLÜHKERZE	226-8770	4	GLÜHKERZE	87
		4	GLÜHKERZE	88
HALOGENSCHINWERFER (24V)(65W)	9X-3463	1	ARBEITS- U. SIGNALLEUCHTE	120
		1	ARBEITSLEUCHTEN	94
		1	ARBEITSLEUCHTEN	95
		1	ARBEITSLEUCHTEN	118
LEUCHTE	4Y-3415	1	BLINKLEUCHTE	105
		1	BLINKLEUCHTE	106
	4Y-3417	1	BLINKLEUCHTE	105
		1	BLINKLEUCHTE	106
LEUCHTE (EINZELGLÜHFADEN)	9X-4493	1	BLINKLEUCHTE	104

* ÜBERSETZUNG ZUM ZEITPUNKT DER DRUCKLEGUNG NICHT VORHANDEN

WARTUNGSTEILE

BESCHREIBUNG	ERSATZTEIL-NUMMER	MENGE	VERWENDET IN	SEITE
LEUCHTE (24 V)	9X-3465	1	SCHEINWERFER U. RICHTUNGSLEUCHTE	96
		1	SCHEINWERFER U. RICHTUNGSLEUCHTE	98
		1	SCHEINWERFER U. RICHTUNGSLEUCHTE	100
		1	SCHEINWERFER U. RICHTUNGSLEUCHTE	101
	100-3245	1	SCHEINWERFER U. RICHTUNGSLEUCHTE	96
		1	SCHEINWERFER U. RICHTUNGSLEUCHTE	98
		2	SCHEINWERFER U. RICHTUNGSLEUCHTE	100
		2	SCHEINWERFER U. RICHTUNGSLEUCHTE	101
	115-1748	3	FAHRERHAUSVERDRAHTUNG	142
		4	FAHRERHAUSVERDRAHTUNG	143
		2	FAHRERHAUSVERDRAHTUNG	145
		2	FAHRERHAUSVERDRAHTUNG	148
		4	BELEUCHTUNGSANLAGE (STRASSENAUSRÜSTUNG)	122
		4	BELEUCHTUNGSANLAGE (STRASSENAUSRÜSTUNG)	124
		2	NOTLENKUNGSVERDRAHTUNG	163
	9X-4493	1	BLINKLEUCHTE	109
LEUCHTE (24 V, 25 W)	4Y-3415	1	LEUCHTE, HINTEN	103
LEUCHTE (24 V, 3 W)	115-1748	2	ARBEITS- U. SIGNALLEUCHTE	120
LEUCHTE (24 V, 70 W)	9X-7849	1	RUNDUM-KENNLEUCHTE	111
LEUCHTE (*24-VOLT, 5-WATT)	9X-4492	1	BLINKLEUCHTE	107
		1	BREMS- UND RÜCKLEUCHTE	110
LEUCHTE (24V, 10W)	112-5219	1	FAHRERHAUSBELEUCHTUNG	93
LEUCHTE (24V, 21W)	9X-4493	2	ARBEITS- U. SIGNALLEUCHTE	120
		1	BLINKLEUCHTE	108
		1	BREMS- UND RÜCKLEUCHTE	110
		1	SCHEINWERFER U. RICHTUNGSLEUCHTE	96
		1	SCHEINWERFER U. RICHTUNGSLEUCHTE	98
		1	SCHEINWERFER U. RICHTUNGSLEUCHTE	100
		1	SCHEINWERFER U. RICHTUNGSLEUCHTE	101
LEUCHTENLINSE	4Y-3450	1	LEUCHTE, HINTEN	103
LINSE - RICHTUNGSBLINKERLEUCHTE	4Y-3418	1	BLINKLEUCHTE	105
		1	BLINKLEUCHTE	106
	4Y-3419	1	BLINKLEUCHTE	105
		1	BLINKLEUCHTE	106
LINSE - ROT	9X-3064	1	BLINKLEUCHTE	108
	9X-3065	1	BLINKLEUCHTE	107
SCHEINWERFER (24 V)	9X-3463	1	ARBEITSLEUCHTEN	115
SCHLÜSSEL (TRENNSCHALTER)	8H-5306	1	TRENNSCHALTER	133

* ÜBERSETZUNG ZUM ZEITPUNKT DER DRUCKLEGUNG NICHT VORHANDEN

WARTUNGSTEILE

BESCHREIBUNG	ERSATZTEIL-NUMMER	MENGE	VERWENDET IN	SEITE
UNTERBRECHER (30 A) (ZUSATZ)	147-1773	1	MOTORVERDRAHTUNG	153
UNTERBRECHER (60 A) (HAUPTUNTERBRECHER)	171-2208	1	MOTORVERDRAHTUNG	153
UNTERBRECHER (90 A) (DREHSTROMGENERATOR)	171-2211	1	MOTORVERDRAHTUNG	153
FAHRERHAUS				
FILTER (FAHRERHAUSLUFT)	111-8738	1	FAHRERHAUSLUFTFILTER	493
	180-7487	1	FAHRERHAUSLUFTFILTER	493
FILTERSIEB	8T-5913	2	SCHEIBENWASCHMITTELBEHÄLTER	591
KAPPE	3W-6398	1	SCHEIBENWASCHMITTELBEHÄLTER	591
KAPPE (KLIMAANLAGE)	3E-4051	1	KLIMAANLAGENLEITUNGEN	515
	3E-4052	1	KLIMAANLAGENLEITUNGEN	515
KEILRIEMEN (KOMPRESSOR)	7E-1362	1	KÄLTEMITTELKOMPRESSOR	471
LEUCHTE (12 V)	122-7137	1	GESCHWINDIGKEITSMESSER	584
LEUCHTE (24 V)	115-1748	1	INSTRUMENTENTAFEL	540
		1	INSTRUMENTENTAFEL	542
		1	INSTRUMENTENTAFEL	544
SCHEIBENWISCHERBLATT	6V-7419	1	SCHEIBENWISCHER	595
SCHEIBENWISCHERBLATT (HINTEN)	5C-8811	1	SCHEIBENWISCHER	595
SICHERHEITSGURT	222-0345	1	FAHRERSITZ	571
UNTERBRECHER (15 A) (HAUPTUNTERBRECHER)	3T-2662	1	INSTRUMENTENTAFEL	544
		1	INSTRUMENTENTAFEL	548
HYDRAULIKSYSTEM				
DICHTUNGSSATZ	107-7491	1	VENTILSATZ (2-VENTIL)	400
		1	VENTILSATZ (3-VENTIL)	401
		1	VENTILSATZ (4-VENTIL)	402
EINFÜLLSTUTZENKAPPE (HYDRAULIKTANK)	7H-1447	1	HYDRAULIKTANK	392
ENTLÜFTER (HYDRAULIKÖL)	130-4634	1	HYDRAULIKTANK	390
FILTERSIEB	110-3024	1	HYDRAULIKBLOCK	331
KAPPE (KÜHLER)	227-4376	1	AUSGLEICHSBEHÄLTER	388
SIEB	141-9236	1	VORSTEUERVENTIL	407
		1	VORSTEUERVENTIL	409
		1	VORSTEUERVENTIL	412
SIEB (HYDRAULIKTANK)	9J-3047	1	HYDRAULIKTANK	392
STAUBKAPPE	6V-0852	1	VENTIL UND BEFESTIGUNGSTEILE - HAUPTSTEUERUNG	394
KRAFTSTOFFSYSTEM				
EINFÜLLKAPPE (KRAFTSTOFF)	142-8828	1	KRAFTSTOFFTANK	75
FILTER (KRAFTSTOFF)	228-9130	1	WASSERABSCHEIDER U. KRAFTSTOFFENTLÜFTUNGSPUMPE	76
KRAFTSTOFFFILTEREINSATZ	1R-1804	1	KRAFTSTOFFILTER	68
KRAFTSTOFFILTER (EINFÜLLSTURZENSIEB)	180-3730	1	KRAFTSTOFFTANK	75

* ÜBERSETZUNG ZUM ZEITPUNKT DER DRUCKLEGUNG NICHT VORHANDEN

WARTUNGSTEILE

BESCHREIBUNG	ERSATZTEIL-NUMMER	MENGE	VERWENDET IN	SEITE
KRAFTÜBERTRAGUNG				
KAPPE (VENTILSCHAFT)	2D-2633	1	REIFENVENTIL	249
MAGNETSTOPFEN	3S-9182	1	GEHÄUSE - PENDELACHSE	200
ÖLFILTER	1G-8878	1	ÖLFILTER	187
SCHMIERNIPPEL (1/8-27-GEWINDE)	3B-8489	1	GEHÄUSE - PENDELACHSE	200
STAUBKAPPE	6V-0852	2	HYDROSTATIKLEITUNGEN	204
		4	KOLBENPUMPE	220
		1	ÖLFILTER	187
	8C-3451	1	ÖLFILTER	187
KÜHLSYSTEM				
KÜHLERABLASSVENTIL	225-4287	1	KÜHLER UND HYDRAULIKÖLKÜHLER	44
O-RING-DICHTUNG (KÜHLWASSERTHERMOSTAT)	225-6909	1	KÜHLWASSERANSCHLUSS	38
SCHRAUBE (MOTORÖLFILTERLEITUNGEN)	225-7941	1	MOTORÖLKÜHLER UND FILTERSOCKEL	39
WASSERTEMPERATURREGLER	225-6908	1	KÜHLWASSERANSCHLUSS	38
LENKSYSTEM				
SCHMIERNIPPEL (1/8-27-GEWINDE)	3B-8489	4	LENKZYLINDER UND AUFHÄNGUNG	309
LUFTANSAUG- UND ABGASSYSTEM				
LUFTFILTER (HAUPTELEMENT)	110-6326	1	LUFTREINIGER	49
LUFTFILTER (SICHERHEITSELEMENT)	110-6331	1	LUFTREINIGER	49
LUFTFILTERWARTUNGSANZEIGE	145-4212	1	DRUCKLUFTLEITUNGEN	53
		1	DRUCKLUFTLEITUNGEN	55
MOTOR (GRUNDAUSFÜHRUNG)				
DICHTUNG (VENTILDECKEL)	225-6451	1	VENTILDECKEL	11
FEDER (ENTLÜFTERSCHLAUCH)	162-1565	1	VENTILDECKEL	11
KAPPE	130-9888	1	VENTILDECKEL	11
KEILRIEMENSATZ (EINSCHL. 2 RIEMEN) (LÜFTER)	9L-6128	1	LÜFTERANTRIEB	21
O-RING-DICHTUNG (SUMPFABLASSSCHRAUBE)	5P-6718	2	ÖLWANNE	28
ÖLWANNEN-ABLASSCHRAUBE	7C-0351	2	ÖLWANNE	28
SCHLAUCHLEITUNG (ENTLÜFTER)	198-8645	1	VENTILDECKEL	11
RAHMEN UND FAHRGESTELL				
LEUCHTE (24V, 10W)	5C-8315	1	UMBAUSATZ - FÜR STRASSENVERKEHR	255
		1	UMBAUSATZ - FÜR STRASSENVERKEHR	257
SCHMIERSYSTEM				
ÖLFILTER	7W-2326	1	ÖLFILTER	35
WARTUNGSAUSRÜSTUNG UND -ZUBEHÖR				
BUCHSE	8Y-6364	1	WERKZEUGKASTEN	597
SCHLÜSSEL	5P-8500	1	WERKZEUGKASTEN	597
VORHÄNGESCHLOSS	5P-8502	1	WERKZEUGKASTEN	597

* ÜBERSETZUNG ZUM ZEITPUNKT DER DRUCKLEGUNG NICHT VORHANDEN

INDEX

Name	Page
A	
ACCUMULATOR GP-BRAKE	293, 294, 295
ACCUMULATOR GP-HYDRAULIC–CHARGED	329, 330
ACCUMULATOR GP-HYDRAULIC–UNCHARGED	328
ACCUMULATOR GP-REFRIGERANT–CHARGED	448
ACCUMULATOR GP-REFRIGERANT–UNCHARGED	447
ACCUMULATOR GP-RIDE CONTROL–UNCHARGED	330
ACTUATOR GP-PUMP	165
ADAPTER GP-TIP	430
ADJUSTER GP-SEAT	449
AIR CLEANER GP	48, 49
AIR COMPRESSOR GP-SEAT	450
AIR CONDITIONER & MOUNTING GP	451, 452
AIR CONDITIONER AR	453
AIR CONDITIONER GP	454
ALARM AS-BACKUP	140
ALTERNATOR GP-CHARGING	77
ARMREST GP	458
ARMREST GP–LH	459, 460
ARMREST GP–RH	457, 461
ASHTRAY AS	544, 548
AXLE AR-FIXED–FRONT, LIMITED SLIP DIFFERENTIAL	167
AXLE AR-FIXED–FRONT, STANDARD DIFFERENTIAL	167
AXLE AR-OSCILLATING–REAR, LIMITED SLIP DIFFERENTIAL	168, 169
AXLE AR-OSCILLATING–REAR, STANDARD DIFFERENTIAL	168
B	
BAFFLE GP-RADIATOR	250
BATTERY GP	78
BATTERY-MAINTENANCE FREE (12V)(900 AMP)	78
BLADE AS-WIPER	595
BLADE AS-WIPER (REAR)	595
BLOCK GP-HYDRAULIC	331
BOWL AS-WATER COLLECTION	76
BRACKET GP-TRANSPORT	427
BRAKE & PLANETARY GP	170
BREATHER (HYDRAULIC OIL)	390
BUCKET AS-PENETRATION	431, 432
BUCKET AS-PENETRATION–QUICK COUPLER	433
BUCKET GP-GENERAL PURPOSE	434, 435
BUCKET GP-PENETRATION–QUICK COUPLER	436
BUCKET GP-ROCK	437
C	
CAB AR	462, 463
CAB AR-ENCLOSED ROPS	463
CAB GP-ENCLOSED ROPS	464
CABLE GP-GOVERNOR CONTROL	61
CAMSHAFT GP	10
CANOPY AR-OPEN ROPS	466
CANOPY AR-SOFT	466
CANOPY GP-OPEN ROPS	467
CANOPY GP-SOFT	468, 469
CAP	591
CAP AS	11
CAP AS (AIR CONDITIONER)	515
CAP AS-FILLER (FUEL)	75
CAP AS (RADIATOR)	388
CAP-DUST	187, 204, 220, 394
CAP-FILLER (HYDRAULIC TANK)	392
CAP (VALVE STEM)	249
CHASSIS AR	1
CIRCUIT BREAKER AS (15-AMPERE) (MAIN)	544
CIRCUIT BREAKER AS (15-AMPERE) (MAIN)	548
CIRCUIT BREAKER AS (30-AMPERE) (AUXILIARY)	153
CIRCUIT BREAKER AS (90-AMPERE) (ALTERNATOR)	153
CIRCUIT BREAKER GP (60-AMPERE) (MAIN)	153
COMMON AR	1
COMPRESSOR GP-REFRIGERANT	470, 471
CONDENSER GP-REFRIGERANT	473
CONNECTION GP-WATER	38
CONNECTOR GP	361
CONTROL & LINES GP-RIDE	332
CONTROL & WIRING GP-PWR TRAIN	79
CONTROL AR-RIDE	334

INDEX

Name	Page
CONTROL AR-SPEED	171
CONTROL AR-SPEED–CREEPER	171
CONTROL AR-SPEED–ENGINE	171
CONTROL GP-BUCKET	428
CONTROL GP-CREEPER	172
CONTROL GP-GOVERNOR	62
CONTROL GP-LIFT KICKOUT	81
	348
CONTROL GP-PARKING BRAKE	296
	298
CONTROL GP-PILOT OPERATED HYD	335
	337
	339
CONTROL GP-POSITION	82
	348
CONTROL GP-SERVICE BRAKE	299
CONTROL GP-STEERING	304
	306
CONTROL GP-TMSN & JOYSTICK	174
CONTROL GP-TRANSMISSION	175
	177
	178
CONTROL GP-UNPROGRAMMED (SECURITY)	86
CONVERSION AR-AIR CONDITIONER	474
CONVERSION AR-CERTIFICATION	2
CONVERSION AR-HYDRAULIC	341
CONVERSION AR-MACHINE	3
	7
CONVERSION AR-ROADING	255
CONVERSION AR-ROADING–ITALY	257
CONVERSION AR-ROADING–SPEED LIMITING	252
CONVERSION AR-SECONDARY STEER	308
CONVERTER GP-ELECTRICAL	83
	84
CONVERTER GP-ELECTRICAL (24-VOLT TO 12-VOLT)	83
	153
COOLANT HEATER LINES	519
	521
COOLER GP-ENGINE OIL	39
COOLER GP-FLTR BASE & ENG OIL	39
COUNTERWEIGHT GP	259
	260
	261
COUPLER GP-QUICK	438
COVER GP-AIR INLET	50
COVER GP-CONSOLE	475
COVER GP-HYDROSTATIC	179
COVER GP-MOTOR	181
COVER GP-SHIPPING	182
COVER GP-VALVE MECHANISM	11
CRANKSHAFT GP	13
CYLINDER & MTG GP-STEERING	309
CYLINDER BLOCK GP	15
	17
CYLINDER GP-COUPLER	342
CYLINDER GP-LIFT	343
CYLINDER GP-STEERING	310
CYLINDER GP-TILT	344
CYLINDER HEAD GP	18
	19

D

DASH GP	476
DEFROSTER GP-CAB	477
DIFFERENTIAL GP	183
DIFFERENTIAL GP-LIMITED SLIP	184
DISTRIBUTOR GP-ELECTRONIC	85
DOOR GP-CAB	478
	479
	482
	484
	487
	489
DRAIN GP-ECOLOGY–FUEL, HYDRAULIC	345
DRAIN GP-ENGINE OIL	20
DRIVE GP-FAN	21
DRIVE GP-TRANSFER	185
DUCT GP-AIR	491

E

EDGE GP-BIT & CUTTING	441
	442
ELBOW GP	205
ELECTRIC HYDRAULIC PUMP MOTOR	130
ELECTRONICS GP-MACHINE–SECURITY	86
ELEMENT-FILTER (FUEL)	76
ENGINE AR-PRIMARY	8
EXTENSION GP-BACKREST	492
EXTENSION GP-EXHAUST	51
	52

F

FAN GP-SUCTION	41
FENDER GP-ROADING	262
	263
	264
FILM-FIRE EXTINGUISHER	252
	255
FILM GP	598
FILM-IDENTIFICATION (EXTENDED LIFE COOLANT)	599
FILM-IDENTIFICATION (GROUP & SEQUENCE NO.)	473
FILM (IGNITION SWITCH)	91

INDEX

Name	Page
FILM-INSTRUCTION	81, 82, 587
FILM-INSTRUCTION (ENGINE START)	540, 542
FILM-INSTRUCTION (SEAT ADJUSTMENT)	589
FILM-INSTRUCTION (WASHER FILL)	599
FILM-INSTRUMENT (IMPLEMENT LOCKOUT)	335, 337, 339
FILM (NO TOW, NO PUSH)	599
FILM-NOTICE (FUEL PUMP)	70
FILM-OIL (BIODEGRADABLE) (HYDRAULIC)	341
FILM (PLATE-NAME)	328, 329
FILM (REFLECTOR)	257
FILM (ROADING HEIGHT)	2
FILM (SECURITY)	91
FILM-WARNING (HIGH PRESSURE CYLINDER)	600, 602
FILM-WARNING (STEERING)	252
FILM (12-VOLT)	83
FILM (20-KM/H)	252
FILM (24-VOLT)	600, 601, 602
FILTER & LINES GP-FUEL	65
FILTER AS-ENGINE OIL	35
FILTER AS-FUEL (FILLER NECK SCREEN)	75
FILTER AS-OIL	187
FILTER BASE & ENG OIL COOLER	39
FILTER (CAB AIR)	493
FILTER ELEMENT AS-AIR (PRIMARY)	49
FILTER ELEMENT AS-AIR (SECONDARY)	49
FILTER ELEMENT AS-FUEL	68
FILTER GP-CAB AIR	493
FILTER GP-ENGINE OIL	35
FILTER GP-FUEL	68
FILTER GP-OIL	187
FILTER-SCREEN	591
FIREWALL GP	265
FITTING-GREASE (1/8-27 THD)	200, 309, 428
FLASHER AS	142
FLASHER AS (12/24-VOLT)	120
FLYWHEEL GP	22
FRAME GP-LOADER	266
FRAME GP-REAR	267

G

Name	Page
GASKET (VALVE COVER)	11
GAUGE AS-OIL LEVEL (DIPSTICK)	28, 198
GAUGE AS-OIL LEVEL (DIPSTICK)	200
GAUGE GP-COOLANT TEMPERATURE	540, 542
GAUGE GP-FUEL LEVEL	540, 542
GAUGE GP-OIL LEVEL (DIPSTICK)	390
GAUGE GP-OIL TEMPERATURE (HYDRAULIC)	540, 542
GEAR GP-BEVEL	188, 189, 190, 191
GLOW PLUG GP	87, 88
GUARD GP-BOTTOM	269, 270
GUARD GP-BUCKET–TOOTH TIP	443
GUARD GP-FUEL INJECTION PUMP	70
GUARD GP-LINES	271, 272, 273
GUARD GP-POWER TRAIN	274
GUARD GP-WINDOW	494, 495

H

Name	Page
HARNESS AS-AIR CONDITIONER (CONDENSER FANS)	473
HARNESS AS-CAB	544, 548
HARNESS AS-HEATER & AIR COND	454
HARNESS AS-VALVE (AIR COMPRESSOR)	589
HEAD GP-MOTOR	192, 194
HEAD GP-PUMP	196
HEATER & MTG GP-CAB	496
HEATER AR-CAB	497
HEATER GP-CAB	498
HEATER GP-JACKET WATER	89, 90
HITCH GP-ARTICULATING	275
HOOD & GUARD GP	277, 279, 280
HOOD GP	281, 283
HORN AS (24 VOLT)(LOW TONE)	157
HOSE (BREATHER)	11
HOUSING GP-FIXED AXLE	198
HOUSING GP-FLYWHEEL	23
HOUSING GP-FRONT	24

INDEX

Name	Page
HOUSING GP-OSCILLATING AXLE	200
HOUSING GP-SEAT SUSPENSION	500
HYDRAULIC AR	346
HYDRAULIC AR-2 VALVE	346
HYDRAULIC AR-3 VALVE	346
HYDRAULIC AR-4 VALVE	347
I	
INDICATOR GP-AIR FILTER CHANGE	53
	55
INSTALLATION AR-ENGINE	9
INSTALLATION GP-RADIO	503
	504
	505
INSTALLATION GP-SECURITY	91
K	
KEY	597
KEY AS-ELECTRONIC (GRAY)	86
KEY AS-ELECTRONIC (GRAY)	91
KEY AS-ELECTRONIC (YELLOW)	86
KEY AS-ELECTRONIC (YELLOW)	91
KEY (DISCONNECT)	133
KICKOUT & POSITIONER GP	348
KIT-ACCUMULATOR SERVICE	293
	328
KIT-ADJUSTER	458
	538
	574
	576
	578
KIT-AIR VALVE (SUSPENSION SEAT)	589
KIT-ARMREST-LH	574
	576
	578
KIT-ARMREST-RH	574
	576
	578
KIT-BACK TILT	538
KIT-BEARING	501
KIT-BELT TETHER	587
KIT-BUMPER (WEIGHT ADJUSTMENT)	500
KIT-BUMPSTOP	574
KIT-CABLE ADJUSTER	574
	576
	578
KIT-CONNECTING PLUG (2 PIN)	136
	159
	473
	498
KIT-CONNECTING PLUG (3 PIN)	82
KIT-CONNECTING PLUG (8 PIN)	503
KIT-COVER	574
	576
	578
KIT-CUSHION	458
KIT-CUSHION (BACKREST)	492
KIT-DAMPER	574
	576
	578
KIT-DISC	184
KIT-FOAM	574
KIT-FOLLOWER	500
	501
KIT-FRAME AS	574
	576
	578
KIT-GASKET (TOP)	8
KIT-HANDLE	574
	576
	578
KIT-HEIGHT RISER	574
	576
	578
KIT-HORN	326
KIT-INDICATOR (WEIGHT ADJUSTMENT)	501
KIT-KNOB	326
KIT-LEVER AS	574
	576
	578
KIT-PIVOT	326
KIT-PLUG (4 PIN)	178
KIT-QUICK COUPLER	444
KIT-RECEPTACLE (12 PIN)	531
KIT-RECEPTACLE (12 PIN)	177
	178
KIT-RECEPTACLE (2 PIN)	104
	140
	159
	498
KIT-RECEPTACLE (2 PIN)	109
KIT-RECEPTACLE (2-PIN)	470
KIT-RECEPTACLE (3 PIN)	81
	473
	503
KIT-RECEPTACLE (4 PIN)	115
	175
KIT-RECEPTACLE (6 PIN)	498
	595
KIT-RECEPTACLE (8 PIN)	532
KIT-SEAL	89
	90
	321
	323
	342
	350
	358
	361

INDEX

Name	Page
	387
	400
	401
	402
	423
KIT-SEAL (PUMP HEAD RELIEF VALVE)	196
KIT-SEAL (SOLENOID VALVE)	426
KIT-SEAL (WATER SEPARATOR)	76
KIT-SEAT AIR COMPRESSOR	507
KIT-SEAT CUSHION	566
KIT-SEAT KNOB	566
KIT-SEAT TILT	538
KIT-SERVICE	420
	421
	422
	425
KIT-SERVICE METER	540
	542
KIT-SHIM (INCLUDES 8 SHIMS)	184
KIT-SHOCK ABSORBER (SUSPENSION SEAT)	589
KIT-SLIDE RAIL	574
	576
	578
KIT-SLIDER BLOCK	573
	580
KIT-SPIDER & BEARING	233
KIT-SPRING	321
	323
	500
	574
	576
	578
KIT-SPRING (HEIGHT ADJUSTMENT)	500
KIT-STOP	576
	578
KIT-SUSPENSION BEARING	574
	576
	578
KIT-SUSPENSION BOOT	587
KIT-SUSPENSION COVER	574
	576
	578
KIT-SUSPENSION KNOB (HEIGHT ADJUSTMENT)	500
KIT-SUSPENSION ROLLER	587
KIT-TETHER	574
	576
	578
KIT-TETHER (SUSPENSION SEAT)	589
KIT-TILT LEVER	326
KIT-TILT PAN	566
KIT-UPPER AS	574
KIT-WATER BASE	76
KNOB AS-WEIGHT	500

L

Name	Page
LADDER GP	286
LAMP	105
	106
LAMP AS	120
LAMP AS (12-VOLT)	91
LAMP GP-DOME	93
LAMP GP-FLOOD	94
	95
	115
	117
LAMP GP-HEAD & SIGNAL–LH	98
	100
LAMP GP-HEAD & SIGNAL–RH	96
	101
LAMP GP-REAR–BACKUP	103
LAMP GP-REAR (BACKUP)	160
LAMP GP-REGISTRATION PLATE	255
	257
LAMP GP-SIGNAL	104
	105
	106
	107
	108
	109
LAMP GP-SIGNAL (24-VOLT)	120
LAMP GP-STOP & TAIL	110
LAMP GP-WARNING BEACON	111
LAMP-HALOGEN (24-VOLT, 65-WATT)	94
	95
	118
	120
LAMP-HEAD (24 VOLT)	115
LAMP (SINGLE FILAMENT)	104
LAMP (12-VOLT)	584
LAMP (24 VOLT)	109
	142
LAMP (24-VOLT)	96
	98
	100
	101
	122
	124
	143
	145
	148
	163
	540
	542
	544
LAMP (24-VOLT, 10-WATT)	93
	255
	257
LAMP (24-VOLT, 21-WATT)	96

INDEX

Name	Page
	98
	100
	101
	120
LAMP (24-VOLT, 21-WATT)	108
	110
LAMP (24-VOLT, 25-WATT)	103
LAMP (24-VOLT, 3-WATT)	120
LAMP (24-VOLT, 5-WATT)	107
	110
LAMP (24-VOLT, 70-WATT)	111
LENS	160
LENS-AMBER	104
LENS (AMBER, RED)	110
LENS (AMBER) (TURN SIGNAL)	98
LENS (AMBER) (TURN SIGNAL)	96
	100
	101
LENS (AMBER, WARNING BEACON)	111
LENS AS (AMBER)	100
	101
LENS AS (FLOODLIGHT)	94
LENS AS (FLOODLIGHT) (FLOOD)	95
LENS AS (HEADLIGHT)	96
	98
	100
	101
LENS-LAMP	103
LENS-RED	107
	108
LENS-TURN SIGNAL LAMP	105
	106
LIFTING GP-ENGINE	26
LIGHTER AS (CIGAR, 24-VOLT)	148
LIGHTING AR-FLOOD & SIGNAL	112
LIGHTING AR-ROADING	112
	113
LIGHTING GP-AUXILIARY	114
LIGHTING GP-FLOOD	115
	117
	118
LIGHTING GP-FLOOD & SIGNAL	120
LIGHTING GP-ROADING	122
	124
LIGHTING GP-SIGNAL	126
LIGHTING GP-WARNING	128
	129
LINER GP-CAB	508
	510
	512
	514
LINES GP-ACCUMULATOR	350
LINES GP-AIR	53
	55
LINES GP-AIR CONDITIONER	515
LINES GP-CAB HEATER	519
LINES GP-FRONT	352
	354
LINES GP-GREASE	288
LINES GP-HEATER	521
LINES GP-HYDRAULIC	356
	358
LINES GP-HYDRAULIC OIL COOLER	360
LINES GP-HYDROSTATIC	202
LINES GP-HYDROSTATIC PWR CASE	204
LINES GP-LIFT CYLINDER	361
LINES GP-PILOT	364
	368
	372
LINES GP-POWER TRAIN FILTER	208
LINES GP-PUMP	376
LINES GP-SECONDARY STEERING	312
LINES GP-SERVICE BRAKE	301
LINES GP-STEERING	314
	317
LINES GP-TILT CYLINDER	379
LINK GP-STEERING FRAME LOCK	289
LITERATURE GP	522
LOCK GP-HYDRAULIC HAND CONTROL	381
LOCK GP-STEERING CYLINDER	318

M

Name	Page
MANIFOLD GP-BRAKE ACCUMULATOR	303
MIRROR GP-LH	523
MIRROR GP-REAR VIEW	524
	525
	526
	527
	528
	529
MIRROR GP-RH	530
MODULE GP-WARNING INDICATOR	531
	532
MOTOR GP-ELECTRIC	130
MOTOR GP-PISTON	211
MOTOR GP-PISTON–HYDROSTATIC	210
MOTOR GP-WINDOW WIPER (24 VOLT) (FRONT)	595
MOTOR GP-WINDOW WIPER (24 VOLT) (REAR)	595
MOUNTING GP-AXLE	212
MOUNTING GP-CAB	533
MOUNTING GP-ENGINE & TMSN	27
MOUNTING GP-MOTOR	214
	215
MOUNTING GP-PUMP	216
MUFFLER GP	57

INDEX

Name	Page
O	
OPERATOR AR	534
OPERATOR AR-OPEN ROPS	534
P	
PADLOCK GP	597
PAN GP-BACKREST	535
	536
	537
PAN GP-BACKREST (BACK)	566
PAN GP-OIL	28
PAN GP-SEAT	538
PAN GP-SEAT (BOTTOM)	566
PANEL GP-INSTRUMENT	540
	542
	544
	548
PEDAL GP-BRAKE	552
PEDAL GP-GOVERNOR	553
PISTON & ROD GP	29
PIVOT GP-PILOT VALVE	382
PLATE & FILM GP	599
	600
	601
PLATE & FILM GP–JAPANESE	602
PLATE GP-PILOT VALVE	383
	384
	385
	386
PLATE-INSTRUCTION	515
PLATFORM AR	554
PLATFORM GP	555
	556
PLATFORM GP-OPERATOR	557
PLUG AS-GLOW	87
PLUG (ENGINE OIL FILTER LINES)	39
PLUG GP-ENGINE	30
	31
PLUG-MAGNETIC	198
	200
PLUG-SUMP DRAIN	28
POWER TRAIN AR	217
PRECLEANER GP	58
PULLER-MINIFUSE	544
	548
PULLEY GP-CRANKSHAFT	32
PUMP & MOTOR GP-SEC STEERING	319
PUMP & MTG GP-IMPL & STEERING	387
PUMP GP-CHARGE	218
	219
PUMP GP-ENGINE OIL	36
PUMP GP-FUEL INJECTION	71
PUMP GP-FUEL PRM & WATER SEP	76
PUMP GP-GEAR–SECONDARY STEERING	320
PUMP GP-METERING	321
	323
PUMP GP-PISTON	220
PUMP GP-WATER	42
R	
RADIATOR & HYD OIL COOLER GP	44
RADIATOR GP	46
RECEPTACLE AS-POWER (24 VOLTS)	115
RECLINER GP-SEAT	558
REFLECTOR GP	290
REGULATOR-WATER TEMPERATURE	38
RELAY AS (24-VOLT)	163
RELAY AS (24-VOLT) (ALARM)	545
RELAY AS (24-VOLT) (AUDIBLE ALARM)	549
RELAY AS (24-VOLT) (BACKUP ALARM)	545
	549
RELAY AS (24-VOLT) (HORN)	545
	549
RELAY AS (24-VOLT) (HYD OIL TEMP)	163
RELAY AS (24-VOLT) (LIFT)	153
RELAY AS (24-VOLT) (MAIN)	79
RELAY AS (24-VOLT) (NEUTRAL START)	544
	548
RELAY AS (24-VOLT) (PARKING BRAKE)	549
RELAY AS (24-VOLT) (PARKING BRAKE)	545
RELAY AS (24-VOLT) (RIDE CONTROL)	162
RELAY AS (24-VOLT) (SUPPRESSOR)	3
RIM AR	222
RIM GP-DEMOUNTABLE	223
	224
	225
ROADING AR	131
ROPS GP-ENCLOSED	559
ROPS GP-OPEN	560
ROTATING GP-MOTOR	226
	228
ROTATING GP-PUMP	230
S	
SCREEN AS	407
	409
	412
SCREEN GP-SUN	562
SEAL-O-RING (SUMP DRAIN PLUG)	28
SEAL-O-RING (WATER TEMPERATURE REGULATOR)	38
SEAT BELT GP	563
	564
	565
	571
SEAT GP	566

INDEX

Name	Page
	568
	569
	571
	572
SEAT GP-SUSPENSION	573
	574
	576
	578
	580
	581
	582
	583
SENDER AS-TEMPERATURE (HYDRAULIC OIL)	150
SENDER GP-FUEL LEVEL	75
SENSOR AS-SPEED (ENGINE)	79
SHAFT GP-DRIVE	232
SHIM PACK (INCLUDES 12 SHIMS)	188
	191
SLEEVE	597
SLEEVE-CABLE SPLICE	522
SLIP JOINT GP	233
SOFTWARE GP-MACHINE (SECURITY)	86
SPEEDOMETER GP	584
SPRING (BREATHER HOSE)	11
STARTING MOTOR GP-ELECTRIC	132
STEERING AR	325
STEERING AR-SECONDARY	325
STEERING COLUMN GP	326
STRAINER AS	331
STRAINER (HYDRAULIC TANK)	392
SUPPORT GP-SEAT	585
SUPPRESSION AR-SOUND	291
SUPPRESSION GP-SOUND	292
	586
SUSPENSION GP-SEAT	587
	589
SWITCH AS (AIR CONDITIONER)	451
SWITCH AS-BALL	423
SWITCH AS (BEACON)	128
SWITCH AS (CONTROL)	3
SWITCH AS (DEFROSTER)	477
SWITCH AS (HIGH, LOW BEAM)	122
	124
SWITCH AS (HIGH/LOW BEAM)	142
SWITCH AS-KICKOUT (BUCKET/FORK)	335
SWITCH AS-KICKOUT (MOWER ENABLE)	544
	548
SWITCH AS-LIMIT	296
SWITCH AS-LIMIT (PARKING BRAKE)	544
	548
SWITCH AS-PRESSURE	187
SWITCH AS-PRESSURE (AIR CONDITIONER)	515
SWITCH AS-PRESSURE (HYDRAULIC TANK)	312
SWITCH AS (RIDE CONTROL)	162
SWITCH AS-ROTARY (LAMP)	143
	145
	148
SWITCH AS-ROTARY (REAR WIPER)	139
SWITCH AS-SECONDARY STEERING	163
SWITCH AS-SPEED SELECT	172
	475
SWITCH AS (START AID)	143
	145
	148
SWITCH AS-TEMPERATURE	454
SWITCH AS-TURN SIG & WARNING	142
SWITCH AS-TURN SIGNAL	122
	124
SWITCH AS (TURN SIGNAL, HAZARD)	120
SWITCH AS-WARNING BEACON	129
SWITCH AS-WIPER (FRONT)	139
SWITCH GP-DISCONNECT	134
SWITCH GP-DISCONNECT–BATTERY	133
SWITCH GP-MAGNETIC	135
	136
SWITCH GP-MAGNETIC (24-VOLT) (GLOW PLUG)	153
SWITCH GP-MAGNETIC (24-VOLT) (START RELAY)	154
SWITCH GP-PRESSURE	137
SWITCH GP-START (KEY)	540
	542
SWITCH GP-TEMPERATURE	138
SWITCH GP-WIPER	139
SWITCH (40-DEG) (TEMPERATURE)	71

T

TANK & MTG GP-FUEL	73
TANK GP-EXPANSION–COOLANT	388
TANK GP-FUEL	75
TANK GP-HYDRAULIC	390
	392
TANK GP-WINDOW WASHER	591
TEE GP	315
TIP GP-LONG	445
	446
TIRE & RIM AR	234
	235
TIRE & RIM GP	236
TOOL BOX GP	597
TOOL GP-HAND	252
	255
TURBOCHARGER GP	59

INDEX

Name	Page
V	
V-BELT (COMPRESSOR)	471
V-BELT SET (INCLUDES 2 BELTS) (FAN)	21
VALVE & MTG GP-MAIN CONTROL	394
	396
	398
VALVE AS-DRAIN (ECOLOGY)	345
VALVE AS-WATER	454
VALVE-FLUID SAMPLING	187
VALVE-GAS	293
	294
	329
VALVE GP-BALL	361
VALVE GP-BANK 2	400
VALVE GP-BANK 3	401
VALVE GP-BANK 4	402
VALVE GP-CONTROL	404
	405
VALVE GP-DRAIN–STANDARD	406
VALVE GP-FLUID SAMPLING	37
VALVE GP-OIL PAN DRAIN	33
VALVE GP-PILOT	237
	239
	241
	407
	409
VALVE GP-PILOT–JOYSTICK AND TWO LEVER	412
VALVE GP-PILOT CARTRIDGE	415
	416
	417
	418
	419
VALVE GP-PUMP CONTROL	243
	244
VALVE GP-RADIATOR DRAIN	44
VALVE GP-RELIEF	245
	420
	421
	422
VALVE GP-RELIEF (REFRIGERANT COMPRESSOR)	470
VALVE GP-ROTARY	246
VALVE GP-SECONDARY STEERING	327
VALVE GP-SHUTOFF	423
VALVE GP-SOLENOID	425
	426
VALVE GP-SOLENOID & MANIFOLD	247
VALVE GP-SPEED SENSING	248
VALVE GP-TIRE	249
VALVE MECHANISM GP	34
VALVE-SHUTOFF	20
VISOR GP-CAB	592

Name	Page
W	
WARNING GP-BACKUP	140
	141
WASHER GP-WINDOW	593
WATER SEP & FUEL PRM PUMP GP	76
WINDOW GP-DOOR	594
WIPER GP-WINDOW	595
WIRING GP-CAB	142
	143
	145
	148
WIRING GP-CHASSIS	150
WIRING GP-ENGINE	153
WIRING GP-FRONT	157
WIRING GP-POWER TRAIN	159
WIRING GP-REAR	160
	161
	255
	257
WIRING GP-RIDE CONTROL	162
WIRING GP-SECONDARY STEERING	163

INDEX

Désignation	Page

A

ACCOUDOIR (ASS)	457 458 459 460 461
ACCUMULATEUR - CLIMATISEUR (ASS)	447 448
ACCUMULATEUR - COMMANDE DE TRANSLATION (ASS)	330
ACCUMULATEUR - FREIN	293 294 295
ACCUMULATEUR HYDRAULIQUE (ASS)	328 330
ACCUMULATEUR HYDRAULIQUE (ASS)	329
ALLUME-CIGARE (ENS) (CIGARE, 24V)	148
ALTERNATEUR DE CHARGE (ASS)	77
AMPOULE	105 106
AMPOULE (FILAMENT SIMPLE)	104
AMPOULE (12 VOLTS)	584
AMPOULE (24 VOLTS)	98 109 122 124 142 143 145 148 163 540 542 544
AMPOULE (24 VOLTS)	96 98 100 101
AMPOULE (24V, 10W)	93 255 257
AMPOULE (24V, 21W)	108 120
AMPOULE (24V, 21W)	96 98 100 101 110
AMPOULE (24V, 25W)	103
AMPOULE (24V, 3W)	120
AMPOULE (24V, 5W)	107 110
AMPOULE (24V, 70W)	111
ARBRE A CAMES (ASS)	10
ARBRE D'ENTRAÎNEMENT (ASS)	232
ARTICULATION DE SOUPAPE PILOTE (ASS)	382
ATTELAGE D'ARTICULATION (ASS)	275
AUTOCOLLANT - EXTINTEUR D'INCENDIES	252 255
AUTOCOLLANT (CONTACTEUR D'ALLUMAGE)	91
AUTOCOLLANT DE MISE EN GARDE (DIRECTION)	252
AUTOCOLLANT DE MISE EN GARDE (VÉRIN HAUTE PRESSION)	600 602
AUTOCOLLANT (DÉGAGEMENT EN HAUTEUR SUR ROUTE)	2
AUTOCOLLANT D'IDENTIFICATION (ASSEMBLAGE ET NO DE SÉQUENCE)	473
AUTOCOLLANT D'IDENTIFICATION (LIQUIDE DE REFROIDISSEMENT LONGUE DURÉE)	599
AUTOCOLLANT-HUILE (BIODÉGRADABLE) (HYDRAULIQUE)	341
AUTOCOLLANT INSTRUMENTS (VERROUILLAGE D'ÉQUIPEMENT)	335 337 339
AUTOCOLLANT (PAS DE HALAGE, PAS DE REMORQUAGE)	599
AUTOCOLLANT (PLAQUE-NOM)	328 329
AUTOCOLLANT (RÉFLECTEUR)	257
AUTOCOLLANT (SÉCURITÉ)	91
AUTOCOLLANT (12 VOLTS)	83
AUTOCOLLANT (20 KM/H)	252
AUTOCOLLANT (24 VOLTS)	600 601 602
AVERTISSEUR DE RECUL (ASS)	140 141
AVERTISSEUR DE RECUL (ENS)	140

B

BAÏONNETTE- NIVEAU DE CARBURANT (ASS)	540 542
BALAI D'ESSUIE-GLACE (ENS)	595
BALAI D'ESSUIE-GLACE (ENS) (ARRIÈRE)	595
BATI - CHARGEUSE (ASS)	266
BÂTI AR (ASS)	267
BATTERIE (ASS)	78
BATTERIE SANS ENTRETIEN (12 V)(900 A)	78
BLINDAGE DE TRANSMISSION (ASS)	274
BLINDAGE INFÉRIEUR (ASS)	269 270
BLOC - HYDRAULIQUE (ASS)	331

INDEX

Désignation	Page
BLOC-CYLINDRES (ASS)	15
	17
BOÎTE À OUTILS (ASS)	597
BOUCHON AIMANTÉ	198
	200
BOUCHON DE GOULOTTE DE REMPLISSAGE (ENS) (CARBURANT)	75
BOUCHON DE GOULOTTE DE REMPLISSAGE (RÉSERVOIR HYDRAULIQUE)	392
BOUCHON DE MOTEUR (ASS)	30
	31
BOUCHON FILETÉ (CANALISATIONS DE FILTRE À HUILE DE MOTEUR)	39
BOUCHON-VIDANGE DU CARTER	28
BOUGIE DE PRÉCHAUFFAGE	87
BOUGIE DE PRÉCHAUFFAGE (ASS)	87
	88
BOUTON DE TEMPÉRATURE	138
BOUTON (ENS)-POIDS	500
*BUCKET GP-ROCK	437

C

CABINE - REVÊTEMENT (ASS)	508
	510
	512
	514
CABINE-FAISCEAU DE CÂBLES (ENS)	544
	548
CABINE ROPS FERMÉE (ASS)	559
CABINE ROPS FERMÉE (VERSION)	463
CABINE ROPS OUVERTE (VERSION)	534
CABINE (VERSION)	462
	463
CABLAGE AR (ASS)	160
	161
	255
	257
CABLAGE AV (ASS)	157
CABLAGE DE CABINE (ASS)	142
	143
	145
	148
CABLAGE DE CHASSIS (ASS)	150
CÂBLAGE DE COMMANDE DE TRANSLATION (ASS)	162
CABLAGE DE DIRECTION AUXILIAIRE (ASS)	163
CABLAGE DE MOTEUR (ASS)	153
CABLAGE DE TRANSMISSION (ASS)	159
CÂBLE DE COMMANDE DU RÉGULATEUR (ASS)	61
CACHE-SOUPAPES (ASS)	11
CADENAS (ASS)	597
CANALISATION DE DIRECTION AUXILIAIRE	312
CANALISATIONS A COMMANDE PILOTE (ASS)	364
	368
	372
CANALISATIONS AV	352
	354
CANALISATIONS D'ACCUMULATEUR (ASS)	350
CANALISATIONS D'AIR (ASS)	53
	55
CANALISATIONS DE CARTER HYDROST. DE TRANSMISSION	204
CANALISATIONS DE CHAUFFAGE (ASS)	521
CANALISATIONS DE CHAUFFAGE DE CABINE (ASS)	519
CANALISATIONS DE CLIMATISEUR (ASS)	515
CANALISATIONS DE DIRECTION (ASS)	314
	317
CANALISATIONS DE FILTRE DE TRANSMISSION (ASS)	208
CANALISATIONS DE GRAISSAGE (ASS)	288
CANALISATIONS DE POMPE (ASS)	376
CANALISATIONS DE RÉCHAUFFEUR DE LIQUIDE DE REFROIDISSEMENT	519
	521
CANALISATIONS DE REFROIDISSEUR D'HUILE HYDR. (ASS)	360
CANALISATIONS DE VÉRIN DE LEVAGE (ASS)	361
CANALISATIONS DU FREIN DE MANOEUVRE (ASS)	301
CANALISATIONS DU VÉRIN D'INCLINAISON (ASS)	379
CANALISATIONS HYDRAULIQUES (ASS)	356
	358
CANALISATIONS HYDROSTATIQUES (ASS)	202
CAPOT (ASS)	281
	283
CAPOT ET PROTECTION (ASS)	277
	279
	280
CAPTEUR DE TEMPÉRATURE (ENS) (HUILE HYDRAULIQUE)	150
CAPTEUR DE VITESSE (MOTEUR)	79
CARDAN COULISSANT (ASS)	233
CARTER AV (ASS)	24
CARTER DE VOLANT (ASS)	23
CARTER D'ESSIEU FIXE	198
CARTER D'ESSIEU OSCILLANT	200
CEINTURE DE SECURITE (ASS)	571
CEINTURE DE SECURITE (ASS)	563
	564
	565
CENDRIER (ENS)	544
	548
CHAPEAU	591

INDEX

Désignation	Page
CHAPEAU (ENS)	11
CHAPEAU (ENS) (CLIMATISEUR)	515
CHAPEAU (ENS) (RADIATEUR)	388
CHAPEAU (TIGE DE SOUPAPE)	249
CHAUFFAGE DE CABINE (ASS)	498
CHAUFFAGE DE CABINE (VERSION)	497
CHAUFFAGE ET MONTAGE - CABINE (ASS)	496
CLAPET DE DECHARGE (ASS)	245
	420
	421
	422
CLAPET DE DECHARGE (ASS) (COMPRESSEUR DE RÉFRIGÉRANT)	470
CLAPET ROTATIF (ASS)	246
CLÉ	597
CLÉ ÉLECTRONIQUE (ENS) (GRIS)	86
CLÉ ÉLECTRONIQUE (ENS) (GRIS)	91
CLÉ ÉLECTRONIQUE (ENS) (JAUNE)	86
CLÉ ÉLECTRONIQUE (ENS) (JAUNE)	91
CLÉ (ROBINET DE BATTERIE)	133
CLIGNOTANT (ENS)	142
CLIGNOTANT (ENS) (12/24V)	120
CLIMATISEUR (ASS)	454
CLIMATISEUR ET MONTAGE (ASS)	452
CLIMATISEUR ET MONTAGE (ASS)	451
CLIMATISEUR (VERSION)	453
CLOISON PARE-FEU (ASS)	265
COLLECTEUR D'ACCUMULATEUR DE FREIN (ASS)	303
COLONNE DE DIRECTION (ASS)	326
COMMANDE D'APPROCHE LENTE (ASS)	172
COMMANDE DE BOITE DE VITESSES (ASS)	175
	177
	178
COMMANDE DE DIRECTION (ASS)	304
	306
COMMANDE DE FREIN DE STATIONNEMENT (ASS)	296
	298
COMMANDE DE GODET (ASS)	428
COMMANDE DE POSITION (ASS)	82
	348
COMMANDE DE RÉGULATEUR (ASS)	62
COMMANDE DE TRANSLATION (VERSION)	334
COMMANDE DE VITESSE (VERSION)	171
COMMANDE ELECTRONIQUE DE LIMITEUR DE LEVAGE (ASS)	81
	348
COMMANDE ET CÂBLAGE DE TRANSMISSION (ASS)	79
COMMANDE ET CANALIS. - TRANSLATION (ASS)	332
COMMANDE HYDRAULIQUE PILOTE (ASS)	335
	337
	339
COMMANDE NON PROGRAMMEE (ASS) (SÉCURITÉ)	86
COMMANDE PRINCIPALE DE SOUPAPE ET MONTAGE (ASS)	394
	396
	398
COMPRESSEUR DE REFRIGERANT (ASS)	470
	471
COMPTEUR DE VITESSE (ASS)	584
CONDENSEUR DE RÉFRIGÉRANT	473
CONNEXION (ASS)	361
CONTACTEUR DE CLIGNOTANT DE DIRECTION ET AVERTISS.	142
CONTACTEUR DE CLIGNOTANT (ENS)	122
	124
CONTACTEUR (ENS) (AUXILIAIRE DE DÉMARRAGE)	143
	145
	148
CONTACTEUR (ENS) (CLIGNOTANTS, FEUX DE DÉTRESSE)	120
CONTACTEUR (ENS) (CLIMATISEUR)	451
CONTACTEUR (ENS) (COMMANDE)	3
CONTACTEUR (ENS) (COMMANDE DE TRANSLATION)	162
CONTACTEUR (ENS) (DÉGIVREUR)	477
CONTACTEUR (ENS) (FEUX DE ROUTE, DE CROISEMENT)	122
	124
CONTACTEUR (ENS) (FEUX DE ROUTE/CROISEMENT)	142
CONTACTEUR (ENS) (GYROPHARE)	128
CONTACTEUR MAGNETIQUE (ASS)	135
	136
CONTACTEUR MAGNETIQUE (ASS) (24 VOLTS) (BOUGIE DE PRÉCHAUFFAGE)	153
CONTACTEUR MAGNETIQUE (ASS) (24 VOLTS) (RELAIS DE DÉMARRAGE)	154
CONTREPOIDS (ASS)	259
	260
	261
*CONTROL GP-TMSN & JOYSTICK	174
COUDE (ASS)	205
COUPLEUR EXPRESS (ASS)	438
COURONNE CONIQUE (ASS)	189
	190
	191
COURONNE CONIQUE (ASS)	188
COURROIE TRAPEZOIDALE (COMPRESSEUR)	471
COUVERCLE DE COLLECTEUR D'ADMISSION (ASS)	50
COUVERCLE DE LA CONSOLE (ASS)	475
COUVERCLE DE MOTEUR (ASS)	181
COUVERCLE HYDROSTATIQUE (ASS)	179

INDEX

Désignation	Page
COUVERCLE INFÉRIEUR-DOSSIER (ASS)	535, 536, 537
COUVERCLE INFÉRIEUR-DOSSIER (ASS) (ARRIÈRE)	566
COUVERCLES D'EXPEDITION (ASS)	182
CREPINE (ENS)	331
CREPINE (RÉSERVOIR HYDRAULIQUE)	392
CULASSE (ASS)	18, 19
CULBUTERIE (ASS)	34
CUVETTE-ACCUMULATION D'EAU (ENS)	76
D	
DEFLECTEUR - RADIATEUR (ASS)	250
DEGIVREUR (ASS)	477
DÉMARREUR ÉLECTRIQUE (ASS)	132
DIFFÉRENTIEL - GLISSEMENT LIMITÉ (ASS)	184
DIFFERENTIEL (ASS)	183
DIRECTION AUXILIAIRE (VERSION)	325
DIRECTION (ENS)	325
DISJONCTEUR (ASS) (60A) (PRINCIPAL)	153
DISJONCTEUR DE SECURITE (ENS)	296
DISJONCTEUR DE SECURITE (ENS) (FREIN DE STATIONNEMENT)	544, 548
DISJONCTEUR (ENS) (15A) (PRINCIPAL)	544, 548
DISJONCTEUR (ENS) (30A) (AUXILIAIRE)	153
DISJONCTEUR (ENS) (90A) (ALTERNATEUR)	153
DISTRIBUTEUR - 2 VOIES (VERSION)	346
DISTRIBUTEUR - 3 VOIES (VERSION)	346
DISTRIBUTEUR (ASS)	404, 405
DISTRIBUTEUR DE POMPE (ASS)	243, 244
DISTRIBUTEUR DOUBLE ÉLÉMENT (ASS)	400
DISTRIBUTEUR ELECTRONIQUE (ASS)	85
DISTRIBUTEUR QUADRUPLE CORPS (VERSION)	347
DISTRIBUTEUR TRIPLE ÉLÉMENT (ASS)	401
DISTRIBUTEUR 4 ÉLÉMENTS (ASS)	402
E	
EAU DES CHEMISES - RECHAUFFEUR (ASS)	89, 90
ECHELLE (ASS)	286
ÉCLAIRAGE - AUXILIAIRE (ASS)	114
ÉCLAIRAGE - AVERTISSEUR (ASS)	128, 129
ÉCLAIRAGE - FEUX DE ROUTE (ASS)	122
ÉCLAIRAGE - FEUX DE ROUTE (ASS)	124
ÉCLAIRAGE - FEUX DE ROUTE (VERSION)	113
ÉCLAIRAGE - PROJECTEURS (ASS)	117, 118
ÉCLAIRAGE - PROJECTEURS (ASS)	115
ÉCLAIRAGE - PROJECTEURS ET CLIGNOTANTS (ASS)	120
ÉCLAIRAGE CLIGNOTANT	126
ÉCLAIRAGE (VERSION)-PROJECTEUR & SIGNAL	112
ÉCRAN (ENS)	407, 409, 412
ÉLECTRONIQUE - MACHINE (ENS)	86
ÉLÉMENT DE FILTRE À AIR (ENS) (PRINCIPAL)	49
ÉLÉMENT DE FILTRE À AIR (ENS) (SECONDAIRE)	49
ÉLÉMENT DE FILTRE (CARBURANT)	76
ÉLÉMENT DE FILTRE (ENS)-CARBURANT	68
EMBOUT ET LAME DE COUPE (ASS)	441, 442
ÉMETTEUR (ASS) - NIVEAU DE CARBURANT	75
ENGRENAGE DE TRANSFERT (ASS)	185
ENTRAÎNEMENT DE VENTILATEUR (ASS)	21
ÉQUIPEMENT POUR DÉPLACEMENT ROUTIER (VERSION)	131
ESSIEU FIXE (VERSION)	167
ESSIEU OSCILLANT (VERSION)	168, 169
ESSUIE-GLACE (ASS)	595
EXTRACTEUR DE MINI-FUSIBLE	544, 548
F	
FAISCEAU DE CABLES DU CLIMATISEUR (ENS) (VENTILATEURS DE CONDENSEUR)	473
FAISCEAU DE CHAUFFAGE ET CLIMATISATION	454
FAISCEAU DE SOUPAPE (ENS) (COMPRESSEUR D'AIR)	589
FEUX ARRIÈRE ET FEUX D'ARRÊT	110
FILTRE - ELECTRONIQUE (ASS)	464
FILTRE A AIR (ASS)	48, 49
FILTRE À AIR DE CABINE (ASS)	493
FILTRE A CARBURANT (ASS)	68
FILTRE A CARBURANT (ENS) (TAMIS DE GOULOTTE DE REMPLISSAGE)	75
FILTRE A HUILE (ASS)	187
FILTRE À HUILE (ENS)	187
FILTRE À HUILE MOTEUR (ASS)	35

INDEX

Désignation	Page
FILTRE A HUILE MOTEUR (ENS)	35
FILTRE (AÉRATION DE LA CABINE)	493
FILTRE ET CANALISATIONS DE CARBURANT (ASS)	65
FLEXIBLE (RENIFLARD)	11
FREIN DE MANOEUVRE - COMMANDE (ASS)	299
FREIN ET TRAINS PLANÉTAIRES (ASS)	170

G

GAINE D'AIR (ASS)	491
GARDE-BOUE (ASS)	262 263 264
GLACE DE PORTIÈRE (ASS)	594
GODET NORMAL (ASS)	434 435
GODET PÉNÉTRATION (ASS)	436
GODET-PÉNÉTRATION (ENS)	431 432 433
GRAISSEUR (FILET 1/8-27)	200 309
GRAISSEUR (FILET 1/8-27)	428
GROUPE DE MOTEUR A PISTONS	210 211
GROUPE DE ROTATION DE MOTEUR	226 228
GROUPE DE ROTATION DE POMPE	230

H

HUILE MOTEUR - CARTER (ASS)	28

I

INDICATEUR DE COLMATAGE DE FILTRE À AIR (ASS)	53 55
INSONORISATION (ASS)	292 586
INSONORISATION (VERSION)	291
INSTRUMENT DE TEMPÉRATURE DE LIQUIDE DE REFROIDISSEMENT (ASS)	540 542
INSTRUMENT DE TEMPÉRATURE D'HUILE (ASS) (HYDRAULIQUE)	540 542
INTERRUPTEUR - CONTACTEUR (40-DEG) (TEMPÉRATURE)	71
INTERRUPTEUR - RAPPEL (ENS) (ACTIVATION DE LA TONDEUSE)	544 548
INTERRUPTEUR - RAPPEL (ENS) (GODET/FOURCHE)	335
INTERRUPTEUR - SÉLECTEUR DE VITESSE (ENS)	172 475
INTERRUPTEUR DE DÉMARRAGE (ASS) (CLAVETTE)	540
INTERRUPTEUR DE DÉMARRAGE (ASS) (CLAVETTE)	542
INTERRUPTEUR D'ESSUIE-GLACE (ASS)	139
INTERRUPTEUR D'ESSUIE-GLACE (AVANT)	139
INTERRUPTEUR-DIRECTION AUXILIAIRE (VERSION)	163
INTERRUPTEUR-GYROPHARE (ENS)	129
INTERRUPTEUR ROTATIF (ENS) (ESSUIE-GLACE ARRIÈRE)	139
INTERRUPTEUR ROTATIF (ENS) (TÉMOIN)	143 145 148
INTERRUPTEUR SPHÉRIQUE (ENS)	423

J

JANTE DÉMONTABLE (ASS)	223 224 225
JANTE (VERSION)	222
JAUGE D'HUILE MOTEUR (BAIONNETTE) (ASS)	390
JAUGE D'HUILE MOTEUR (BAÏONNETTE) (ENS)	28 198 200
JEU DE COURROIES TRAPEZOIDALES (COMPREND 2 COURROIES) (VENTILATEUR)	21
JOINT PLAT (CACHE-SOUPAPES)	11
JOINT TORIQUE (BOUCHON DE VIDANGE DE CARTER)	28
JOINT TORIQUE (RÉGULATEUR DE TEMPÉRATURE D'EAU)	38

K

KIT - COUSSIN	458
KIT - COUSSIN (DOSSIER)	492
KIT - SUPÉRIEUR (ENS)	574
KIT D'ACCOUDOIR - DROITE	574 576 578
KIT D'ACCOUDOIR GAUCHE	574 576 578
KIT D'AMORTISSEUR DE VIBRATIONS	574 576

INDEX

Désignation	Page
	578
KIT D'AMORTISSEUR (SIEGE A SUSPENSION)	589
KIT D'ARTICULATION	326
KIT D'ATTACHE	574
	576
	578
KIT D'ATTACHE DE CEINTURE DE SECURITE	587
KIT D'ATTACHE (SIEGE A SUSPENSION)	589
KIT DE BLOC COULISSANT	573
	580
KIT DE BOUCHON (4 BROCHES)	178
KIT DE BOUGIE (2 BROCHES)	136
	159
	473
	498
KIT DE BOUGIE (3 BROCHES)	82
KIT DE BOUGIE (8 BROCHES)	503
KIT DE BOUTON	326
KIT DE BOUTON DE SIEGE	566
KIT DE BOUTON (REGLAGE DE HAUTEUR)	500
KIT DE BUTÉE	576
	578
KIT DE BUTÉE (SIÈGE)	574
KIT DE CALES (COMPREND 8 CALES)	184
KIT DE CALES D'ÉPAISSEUR (COMPREND 12 CALES D'ÉPAISSEUR)	188
	191
KIT DE CHÂSSIS (ENS)	574
	576
	578
KIT DE COMPRESSEUR PNEUMATIQUE DE SIÈGE	507
KIT DE COMPTEUR D'ENTRETIEN	540
	542
KIT DE COUPLEUR EXPRESS	444
KIT DE COUSSIN DE SIEGE	566
KIT DE COUSSINET	501
KIT DE COUSSINET DE SUSPENSION	574
	576
	578
KIT DE COUVERCLE DE SUSPENSION	574
	576
	578
KIT DE COUVERCLES	574
	576
	578
KIT DE CROISILLON ET ROULEMENT	233
KIT DE DISQUE	184
KIT DE GAINE	587
KIT DE HAUTEUR	574
	576
	578
KIT DE JOINTS	89
	90
	321
	323
	342
	350
	358
	361
	387
	400
	401
	402
	423
KIT DE JOINTS (CLAPET DE DÉCHARGE DE TÊTE DE POMPE)	196
KIT DE JOINTS (ÉLECTROVANNE)	426
KIT DE JOINTS (SÉPARATEUR D'EAU)	76
KIT DE KLAXON	326
KIT DE LEVIER D'INCLINAISON	326
KIT DE LEVIER (ENS)	574
	576
	578
KIT DE MOUSSE	574
KIT DE PANNEAU DU DOSSIER DU SIEGE	566
KIT DE PARE-CHOCS (RÉGLAGE DU POIDS)	500
KIT DE POIGNÉE	574
	576
	578
KIT DE POUSSOIR	500
	501
KIT DE PRISE FEMELLE (12 BROCHES)	177
	178
	531
KIT DE PRISE FEMELLE (2 BROCHES)	104
	109
	140
	159
	470
	498
KIT DE PRISE FEMELLE (3 BROCHES)	81
	473
	503
KIT DE PRISE FEMELLE (4 BROCHES)	115
	175
KIT DE PRISE FEMELLE (6 BROCHES)	595
KIT DE PRISE FEMELLE (6 BROCHES)	498
KIT DE PRISE FEMELLE (8 BROCHES)	532
KIT DE RAIL DE SIEGE COULISSANT	574
	576
	578
KIT DE REDRESSEMENT	538
KIT DE REGLAGE	458
	538
	574
	576
	578

INDEX

Désignation	Page
KIT DE RÉGLAGE DE CABLE	574, 576, 578
KIT DE REGLAGE DE SIEGE - INCLINAISON	538
KIT DE RESSORTS	321, 323, 500, 574, 576, 578
KIT DE RESSORTS (REGLAGE DE HAUTEUR)	500
KIT DE ROULEAU	587
KIT DE SOUPAPE PNEUMATIQUE (SIEGE A SUSPENSION)	589
KIT D'ENTRETIEN	420, 421, 422, 425
KIT D'ENTRETIEN D'ACCUMULATEUR	293, 328
KIT D'INDICATEUR (RÉGLAGE DU POIDS)	501
KIT (JOINT CHASSIS PORTEUR) (SUPÉRIEUR)	8
KLAXON (ENS) (24 VOLTS)(TON FAIBLE)	157
LAMPE - CLIGNOTANT DE DIRECTION (ASS)	104, 105, 106, 107, 108, 109
LAMPE - CLIGNOTANT DE DIRECTION (ASS) (24 VOLTS)	120
LAMPE - FEUX AV (24 VOLTS)	115
LAMPE - GYROPHARE (ASS)	111
LAMPE - PHARE (ASS)	95, 115, 117
LAMPE - PHARE (ASS)	94
LAMPE - PHARE ET CLIGNOTANT	96, 98, 100, 101
LAMPE AR (ASS)	103
LAMPE AR (ASS) (APPOINT)	160
LAMPE DE TÉMOIN DE CLIGNOTANT	105, 106
LAMPE (ENS)	120
LAMPE (ENS) (12 VOLTS)	91
LAMPE HALOGÈNE (24V, 65W)	118
LAMPE HALOGÈNE (24V, 65W)	120
LAMPE HALOGÈNE (24V, 65W)	95
LAMPE HALOGÈNE (24V, 65W)	94
LAMPE-PLAQUE D'IMMATRICULATION (ASS)	255, 257
LAVE-GLACE - VITRE (ASS)	593
LENTILLE	160
LENTILLE DE LAMPE	103
LENTILLE (ENS) (JAUNE)	100, 101
LENTILLE (ENS) (PHARE AVANT)	100, 101
LENTILLE (ENS) (PHARE AVANT)	96
LENTILLE (ENS) (PHARES)	98
LENTILLE (ENS) (PLAFONNIER)	94
LENTILLE (ENS) (PLAFONNIER) (PROJECTEUR)	95
LENTILLE (GYROPHARE JAUNE)	111
LENTILLE (JAUNE) (CLIGNOTANT DE DIRECTION)	96, 98, 100, 101
LENTILLE (JAUNE, ROUGE)	110
LENTILLE ORANGE	104
LENTILLE ROUGE	107, 108
LIAISON - VERROUILLAGE DE CHÂSSIS DE DIRECTION (ASS)	289
*LIGHTING AR-ROADING	112
LIMITEUR DE LEVAGE ET RETOUR À L'ANGLE DE CAVAGE	348
LITTÉRATURE (ASS)	522
LOGICIEL - MACHINE (ENS) (SÉCURITÉ)	86
MANCHON	597
MANCHON DE JONCTION DE CABLES	522
MANOCONTACT	137
MANOCONTACT (ENS)	187
MANOCONTACT (ENS) (CLIMATISEUR)	515
MANOCONTACT (ENS) (RÉSERVOIR HYDRAULIQUE)	312
MECANISME DE COMMANDE DE POMPE (ASS)	165
MODULE - TÉMOIN (ASS)	531, 532
MONTAGE DE CABINE (ASS)	533
MONTAGE DE MOTEUR ET BOÎTE (ASS)	27
MONTAGE DE MOTEUR (VERSION)	9
MONTAGE DE POMPE (ASS)	216
MONTAGE DE RADIO (ASS)	503, 504, 505

L

M

INDEX

Désignation	Page
MONTAGE D'ESSIEU (ASS)	212
MONTAGE-SÉCURITÉ (ASS)	91
MOTEUR - MONTAGE (ASS)	214
	215
MOTEUR D'ESSUIE-GLACE (ASS) (24 VOLTS) (ARRIÈRE)	595
MOTEUR D'ESSUIE-GLACE (ASS) (24 VOLTS) (AVANT)	595
MOTEUR ELECTRIQUE (ASS)	130
MOTEUR ÉLECTRIQUE DE POMPE HYDRAULIQUE	130
MOTEUR (VERSION PRINCIPALE)	8
O	
OEILLETONS DE LEVAGE MOTEUR (ASS)	26
OUTILS (ASS)	252
OUTILS (ASS)	255
P	
PARE-POUSSIERE	187
	204
	220
	394
PARE-SOLEIL (ASS)	562
PAVILLON (ASS)	468
	469
PAVILLON (VERSION)	466
PEDALE DE FREIN (ASS)	552
PISTON ET BIELLE (ASS)	29
PLAFONNIER (ASS)	93
PLAQUE DE SOUPAPE PILOTE (ASS)	383
	384
	385
	386
PLAQUE D'INSTRUCTIONS	515
PLAQUE SIGNALÉTIQUE (ASS)	598
PLAQUE SIGNALÉTIQUE (REMARQUE) (POMPE À CARBURANT)	70
PLAQUES SIGNALETIQUES ET AUTOCOLLANTS (ASS)	599
	600
	601
	602
PLATE-FORME (ASS)	555
	556
PLATE-FORME DE CABINE	557
PLATE-FORME (VERSION)	554
PNEU - GROUPE DE VALVE	249
PNEU ET JANTE (ASS)	236
PNEU ET JANTE (VERSION)	234
	235
POINTE LONGUE (ASS)	445
	446
POMPE A EAU (ASS)	42
POMPE A ENGRENAGES (ASS)	320
POMPE A HUILE MOTEUR (ASS)	36
POMPE A PISTONS (ASS)	220
POMPE D'AMORÇAGE DE CARBURANT ET SÉPARATEUR D'EAU (ASS)	76
POMPE DE DIRECTION AUXILIAIRE ET MONTAGE (ASS)	319
POMPE DE GAVAGE (ASS)	218
	219
POMPE DE REGULARISATION DE DEBIT (ASS)	321
	323
POMPE DE SÉPARATEUR D'EAU ET D'AMORÇAGE DE CARBURANT (ASS)	76
POMPE D'INJECTION DE CARBURANT (ASS)	71
POMPE ET MONTAGE - ÉQUIPEMENT ET DIRECTION (ASS)	387
PORTE-POINTE (ASS)	430
PORTIÈRE DE CABINE (ASS)	478
	479
	482
	484
	487
	489
POSTE DE CONDUITE (VERSION)	534
PREFILTRE (ASS)	58
PRISE DE COURANT (ENS) (24 VOLTS)	115
PROTECTEUR DES CANALISATIONS (ASS)	271
	272
	273
PROTECTION DE GLACE (ASS)	494
	495
PROTECTION DE GODET (ASS)	443
PROTECTION DE POMPE D'INJECTION DE CARBURANT (ASS)	70
R	
RACCORD D'EAU (ASS)	38
RACCORD EN T (ASS)	315
RADIATEUR (ASS)	46
RADIATEUR ET REFROIDISSEUR D'HUILE HYDRAULIQUE (ASS)	44
RALLONGE D'ÉCHAPPEMENT (ASS)	51
	52
RALLONGE DU DOSSIER DE SIEGE	492
RÉFLECTEUR (ASS)	290
REFROIDISSEUR D'HUILE MOTEUR (ASS)	39
REFROIDISSEUR HUILE MOTEUR ET SUPPORT DE FILTRE	39
REGLAGE DE SIEGE (ASS)	449
RÉGULATEUR - PÉDALE (ASS)	553
RELAIS (ENS) (24 VOLTS)	163

INDEX

Désignation	Page
RELAIS (ENS) (24 VOLTS) (ALARME SONORE)	549
RELAIS (ENS) (24 VOLTS) (AVERTISSEUR)	545
RELAIS (ENS) (24 VOLTS) (AVERTISSEUR DE RECUL)	545 549
RELAIS (ENS) (24 VOLTS) (COMMANDE DE TRANSLATION)	162
RELAIS (ENS) (24 VOLTS) (DÉMARRAGE AU POINT MORT)	544 548
RELAIS (ENS) (24 VOLTS) (FREIN DE STATIONNEMENT)	545 549
RELAIS (ENS) (24 VOLTS) (KLAXON)	545 549
RELAIS (ENS) (24 VOLTS) (LEVAGE)	153
RELAIS (ENS) (24 VOLTS) (PRINCIPAL)	79
RELAIS (ENS) (24 VOLTS) (SUPPRESSION)	3
RELAIS (ENS) (24 VOLTS) (TEMPÉRATURE D'HUILE HYDRAULIQUE)	163
RENIFLARD (HUILE HYDRAULIQUE)	390
RÉSERVOIR - LAVE-GLACE (ASS)	591
RÉSERVOIR DE CARBURANT (ASS)	75
RÉSERVOIR DE CARBURANT ET MONTAGE (ASS)	73
RESERVOIR D'EXPANSION (ASS)	388
RÉSERVOIR HYDRAULIQUE (ASS)	390 392
RESSORT (FLEXIBLE DE RENIFLARD)	11
RETROVISEUR - CABINE (ASS)	592
RÉTROVISEUR (ASS)	524 525 526 527 528 529
RÉTROVISEUR DROIT (ASS)	530
RÉTROVISEUR GAUCHE (ASS)	523
ROBINET DE BATTERIE (ASS)	133 134
ROBINET DE VIDANGE DE RADIATEUR (ASS)	44
ROBINET DE VIDANGE (ENS) (ÉCOLOGIE)	345
ROBINET-PRÉLÈVEMENT D'ÉCHANTILLON DE LIQUIDE	187
ROBINET-PRÉLÈVEMENT D'ÉCHANTILLON DE LIQUIDE (ASS)	37
ROTATION DE LA ROUE DU VENTILATEUR SOUFFLANT	81 82 587
ROTATION DE LA ROUE DU VENTILATEUR SOUFFLANT (DÉMARRAGE DU MOTEUR)	540 542
ROTATION DE LA ROUE DU VENTILATEUR SOUFFLANT (RÉGLAGE DU SIÈGE)	589
ROTATION DE LA ROUE DU VENTILATEUR SOUFFLANT (REMPLISSAGE DU RÉSERVOIR DE LAVE-GLACE)	599

S

Désignation	Page
SIÈGE - COMPRESSEUR D'AIR (ASS)	450
SIEGE - COUVERCLE INFERIEUR (ASS)	538
SIEGE - COUVERCLE INFERIEUR (ASS) (FOND)	566
SIÈGE (ASS)	566 568 569 571 572
SIÈGE AVEC SUSPENSION (ASS)	578 580 581 582 583 587 589
SIÈGE AVEC SUSPENSION (ASS)	573 574
SIÈGE AVEC SUSPENSION (ASS)	576
SIÈGE INCLINABLE (ASS)	558
SILENCIEUX (ASS)	57
SOUPAGE - SOLÉNOIDE ET COLLECTEUR	247
SOUPAPE - CARTOUCHE PILOTE (ASS)	415 416 417 418 419
SOUPAPE - EAU	454
SOUPAPE - GAZ (CIRCUIT DE FREINAGE)	293 294 329
SOUPAPE - SOLÉNOÏDE (ASS)	425 426
SOUPAPE - VIDANGE DE CARTER D'HUILE (ASS)	33
SOUPAPE D'ARRÊT	20
SOUPAPE D'ARRÊT (ASS)	423
SOUPAPE DE CAPTEUR DE VITESSE (ASS)	248
SOUPAPE DE DIRECTION AUXILIAIRE (ASS)	327
SOUPAPE DE VIDANGE	406
SOUPAPE PILOTE (ASS)	407 409 412
SOUPAPE PILOTE (ASS)	237 239 241

INDEX

Désignation	Page
SOUPAPE SPHÉRIQUE (ASS)	361
SUPPORT DE FILTRE ET REFROIDISSEUR D'HUILE MOTEUR	39
SUPPORT DE SÉPARATEUR D'EAU	76
SUPPORT DE SIÈGE (ASS)	585
SUPPORT D'EXPÉDITION (ASS)	427
SUSPENSION DE SIEGE - CARTER (ASS)	500
T	
TABLEAU DE BORD (ASS)	476
	540
	542
	544
TABLEAU DE BORD (ASS)	548
TAMIS DE FILTRE	591
TÊTE DE MOTEUR À PISTONS (ASS)	192
	194
TÊTE DE POMPE (ASS)	196
THERMOCONTACT (ENS)	454
THERMOSTAT-TEMPÉRATURE D'EAU	38
TOIT ROPS - OUVERT (ASS)	560
TOIT-ROPS OUVERT (ASS)	467
TRANSFORMATION ELECTRIQUE (ASS)	83
	84
TRANSFORMATION ELECTRIQUE (ASS) (24-VOLTS À 12-VOLTS)	83
	153
TRANSMISSION (VERSION)	217
TURBOCOMPRESSEUR (ASS)	59
V	
VENTILATEUR ASPIRANT (ASS)	41
VÉRIN DE COUPLEUR (ASS)	342
VERIN DE DIRECTION (ASS)	310
VERIN DE DIRECTION ET MONTAGE (ASS)	309
VÉRIN DE LEVAGE (ASS)	343
VÉRIN D'INCLINAISON (ASS)	344
VERROUILLAGE DE COMMANDE MANUELLE HYDRAUL. (ASS)	381
VERROUILLAGE DE VÉRIN DE DIRECTION (ASS)	318
VERSION DE CHASSIS	1
VERSION DE TOIT - ROPS OUVERT	466
VERSION DE TRANSFORMATION - CLIMATISEUR	474
VERSION DE TRANSFORMATION - HOMOLOGATION	2
VERSION DE TRANSFORMATION - HYDRAULIQUE	341
VERSION DE TRANSFORMATION DE DIRECTION AUXILIAIRE	308
VERSION DE TRANSFORMATION MACHINE	3
	7
VERSION DE TRANSFORMATION POUR DÉPLACEMENT ROUTIER	252
	255
	257
VERSION HYDRAULIQUE	346
VERSION NORMALE	1
VIDANGE-ÉCOLOGIE (ASS)	345
VIDANGE-HUILE DE MOTEUR (ASS)	20
VILEBREQUIN - POULIE (ASS)	32
VILEBREQUIN (ASS)	13
VOLANT MOTEUR (ASS)	22

INDICE

Nombre	Página

A

ACONDICIONADOR DE AIRE (CONFIG) 453
ACONDICIONADOR DE AIRE (GR) 454
ACONDICIONADOR DE AIRE Y MONTAJE (GR) 451, 452
ACOPLADOR RÁPIDO (GR) 438
ACTIVADOR DE LA BOMBA (GR) 165
ACUMULADOR DE CONTROL DE AMORTIGUACION (GR) 330
ACUMULADOR DEL ACONDICIONADOR DE AIRE (GR) 447, 448
ACUMULADOR DEL FRENO (GR) 293, 294, 295
ACUMULADOR HIDRAULICO (GR) 328, 329, 330
AGUA - CONEXIÓN DE (GR) 38
AGUA DE LAS CAMISAS - CALENTADOR DEL (GR) 89, 90
AIRE - TUBERÍAS DE (GR) 53, 55
AJUSTADOR DEL ASIENTO (GR) 449
ALARMA DE RETROCESO (CONJ) 140
ANTEFILTRO (GR) 58
ÁRBOL DE LEVAS (GR) 10
ARO DESMONTABLE (GR) 223, 224, 225
ARO Y LLANTA (GR) 236
ARO Y RUEDA 234, 235
ARRANQUE - INTERRUPTOR DE (GR) (LLAVE) 540, 542
ASIENTO CON SUSPENSIÓN (GR) 587, 589
ASIENTO (GR) 566, 568, 569, 571, 572

B

BASE DEL FILTRO Y ACEITE REFRIGERANTE DE MOTOR 39
BASTIDOR DEL CARGADOR (GR) 266
BASTIDOR TRASERO (GR) 267
BATERÍA (GR) 78
BATERÍA LIBRE DE MANTENIMIENTO (12V) (900 AMP) 78
BLOQUE DESLIZANTE-JUEGO 573, 580
BLOQUE HIDRÁULICO (GR) 331
BLOQUE MOTOR (GR) 15, 17
BOCINA (CONJ) (24 VOLTIOS)(TONO BAJO) . . . 157
BOLA DE VÁLVULA (GR) 361
BOMBA - TUBERÍAS DE (GR) 376
BOMBA DE ACEITE DEL MOTOR (GR) 36
BOMBA DE AGUA (GR) 42
BOMBA DE CARGA HIDRÁULICA (GR) 218, 219
BOMBA DE DIRECCIÓN E IMPLEMENTOS Y MONTAJE (GR) 387
BOMBA DE ENGRANAJES (GR) 320
BOMBA DE INYECCIÓN DE COMBUSTIBLE (GR) 71
BOMBA DE PISTONES (GR) 220
BOMBA DE SEPARADOR DE AGUA Y CEBADO DE COMBUSTIBLE (GR) 76
BOMBA Y MOTOR DE DIRECCION SECUNDARIA (GR) 319
*BUCKET GP-ROCK 437
BUJÍA INCANDESCENTE (CONJ) 87
BUJÍA INCANDESCENTE (GR) 87, 88

C

CABEZA DE BOMBA (GR) 196
CABEZA DE MOTOR DE PISTONES (GR) 192, 194
CABINA - MAZO DE CABLES DE LA 544, 548
CABINA (CONFIG) 462, 463
CABINA INCLUYE ROPS (GR) 464
CABINA ROPS ABIERTA (CONFIG) 534
CABINA ROPS CERRADA (GR) 559
CABLE DE CONTROL DE REGULADOR (GR) . . . 61
CABLES DE CONTROL DE AMORTIGUACIÓN (GR) 162
CABLES DE LA CABINA (GR) 142, 143, 145, 148
CABLES DE LA DIRECCIÓN SECUNDARIA 163
CABLES DEL CHASIS (GR) 150
CABLES DEL MOTOR (GR) 153
CABLES DEL TREN DE FUERZA (GR) 159
CABLES DELANTEROS (GR) 157

* NO HAY TRADUCCION DISPONIBLE EN EL MOMENTO DE LA IMPRESION

INDICE

Nombre	Página
CABLES POSTERIORES (GR)	160, 161, 255, 257
CAJA DE EJE OSCILANTE (GR)	200
CAJA DE HERRAMIENTAS GR	597
CAJA DE LA SUSPENSIÓN DEL ASIENTO (GR)	500
CAJA DEL EJE OSCILANTE (GR)	198
CAJA DELANTERA (GR)	24
CALCOMANÍA DE ADVERTENCIA	81, 82, 587
CALCOMANÍA DE ADVERTENCIA (ARRANQUE DEL MOTOR)	540, 542
CALCOMANÍA DE ADVERTENCIA (ASIENTO AJUSTABLE)	589
CALCOMANÍA DE ADVERTENCIA (BOMBA DE COMBUSTIBLE)	70
CALCOMANÍA DE ADVERTENCIA (CILINDRO PARA ALTA PRESION)	600, 602
CALCOMANÍA DE ADVERTENCIA (DIRECCIÓN)	252
CALCOMANÍA DE ADVERTENCIA (LLENADO DEL DEPÓSITO DEL LAVAPARABRISAS)	599
CALCOMANÍA DE EXTINTOR DE INCENDIOS	252, 255
CALCOMANÍA DE IDENTIFICACIÓN (NUMERO DE GRUPO Y SECUENCIA)	473
CALCOMANÍA DE IDENTIFICACIÓN (REFRIGERANTE DE VIDA UTIL EXTENDIDA)	599
CALCOMANÍA-INSTRUMENTO (DESCONEXIÓNN DE IMPLEMENTO)	335, 337, 339
CALCOMANÍA (INTERRUPTOR DE ENCENDIDO)	91
CALCOMANÍA (NO REMOLQUE, NO EMPUJE)	599
CALCOMANÍA (PLACA, NOMBRE)	328
CALCOMANÍA (PLACA, NOMBRE)	329
CALCOMANÍA (REFLECTOR)	257
CALCOMANÍA (*ROADING HEIGHT)	2
CALCOMANÍA (SEGURIDAD)	91
CALCOMANÍA (12 VOLTIOS)	83
CALCOMANÍA (*20-KM/H)	252
CALCOMANÍA (24 VOLTIOS)	600, 601, 602
CALCOMANÍAS Y PLACAS DE IDENTIFICACIÓN (GR)	600, 601, 602
CALCOMANÍAS Y PLACAS DE IDENTIFICACIÓN (GR)	599
CALEFACCIÓN DE LA CABINA (CONFIG)	497
CALEFACCIÓN DE LA CABINA (GR)	498
CALEFACCIÓN Y MONTAJE DE LA CABINA (GR)	496
CÁNCAMOS DE LEVANTAMIENTO DEL MOTOR (GR)	26
CANDADO (GR)	597
CAPÓ (GR)	281, 283
CAPO Y PROTECTOR (GR)	277, 279, 280
CAPTADOR DE TEMPERATURA (ACEITE HIDRÁULICO)	150
CARGA - ALTERNADOR DE (GR)	77
CÁRTER - COLECTOR DEL (GR)	28
CENICERO (CONJ)	544, 548
CHASIS (CONFIG)	1
CIGÜEÑAL - POLEA DE (GR)	32
CIGÜEÑAL (GR)	13
CILINDRO DE DIRECCIÓN (GR)	310
CILINDRO DE DIRECCIÓN Y MONTAJE (GR)	309
CILINDRO DE LEVANTAMIENTO - TUBERÍAS DEL (GR)	361
CILINDRO DE LEVANTAMIENTO (GR)	343
CILINDRO DEL ACOPLADOR (GR)	342
CINTURÓN DE SEGURIDAD (GR)	571
CINTURÓN DE SEGURIDAD (GR)	563, 564, 565
CNTR Y CABLES DE LA TRANSM ELECTRÓNICA (GR)	79
COLADOR (CONJ)	331
COLADOR (TANQUE HIDRÁULICO)	392
COLUMNA DE DIRECCIÓN (GR)	326
COMBUSTIBLE - TANQUE DE (GR)	75
COMPARTIMIENTO DEL OPERADOR (CONFIG)	534
COMPRESOR DE AIRE DEL ASIENTO (GR)	450
COMPRESOR DE REFRIGERANTE (GR)	470, 471
CONDENSADOR DE REFRIGERANTE (GR)	473
CONDUCTO DE AIRE (GR)	491
CONEXIÓN DE ENGRASE (ROSCA DE 1/8-27)	309, 428

* NO HAY TRADUCCION DISPONIBLE EN EL MOMENTO DE LA IMPRESION

INDICE

Nombre	Página
CONEXIÓN DE ENGRASE (ROSCA DE 1/8-27)	200
CONFIGURACIÓN COMÚN	1
CONFIGURACIÓN DE CABLERIA, CALENTADOR Y ACONDICIONADOR DE AIRE	454
CONFIGURACIÓN DE INSTALACIÓN DEL MOTOR	9
CONFIGURACIÓN DE LA TRANSFORMACIÓN DEL ACONDICIONADOR DE AIRE	474
CONFIGURACIÓN DE TRANSFORMACIÓN PARA CARRETERA	252 255 257
CONFIGURACIÓN DE TRANSFORMACIÓN PARA CERTIFICACIÓN	2
CONFIGURACIÓN HIDRÁULICA DE 2 VÁLVULAS	346
CONFIGURACIÓN PARA CARRETERA	131
CONJUNTO DE CABLES, ACONDICIONADOR DE AIRE (VENTILADORES DEL CONDENSADOR)	473
CONJUNTO DE CABLES, VÁLVULA (COMPRESOR DE AIRE)	589
CONJUNTO DE DESTELLADOR	142
CONJUNTO DE DESTELLADOR (12/24 VOLTIOS)	120
CONJUNTO DE INTERRUPTOR DE SEÑAL DE GIRO	122 124
CONJUNTO DE JUEGO SUPERIOR	574
CONJUNTO DE LLAVE, ELECTRONICA (AMARILLO)	86
CONJUNTO DE LLAVE, ELECTRONICA (AMARILLO)	91
CONJUNTO DE LLAVE, ELECTRONICA (*GRAY)	86 91
CONSOLA (GR)	476
CONTRAPESO (GR)	259 260 261
CONTROL DE AMORTIGUACIÓN (CONFIG)	334
CONTROL DE DESCONEXIÓN DE LEVANTAMIENTO (GR)	348
CONTROL DE DESCONEXIÓN DE LEVANTAMIENTO (GR)	81
CONTROL DE DESPLAZAMIENTO Y TUBERÍAS (GR)	332
CONTROL DE DIRECCIÓN (GR)	304 306
CONTROL DE LA TRANSMISIÓN (GR)	175 177 178
CONTROL DE MARCHA ULTRALENTA (GR)	172
CONTROL DE POSICION (GR)	82 348
CONTROL DE REGULADOR (GR)	62
CONTROL DEL CUCHARÓN (GR)	428
CONTROL DEL FRENO DE ESTACIONAMIENTO	296 298
*CONTROL GP-TMSN & JOYSTICK	174
CONTROL HIDRÁULICO DE OPERACIÓN PILOTO (GR)	337 339
CONTROL HIDRÁULICO DE OPERACIÓN PILOTO (GR)	335
CONTROL NO PROGRAMADO (GR) (SEGURIDAD)	86
CONVERSION DE DIRECCION SECUNDARIA (CONFIG)	308
CONVERSIÓN HIDRÁULICA (CONFIG)	341
CONVERTIDOR ELÉCTRICO (GR)	83 84
CONVERTIDOR ELÉCTRICO (GR) (24 VOLTIOS A 12 VOLTIOS)	83 153
CORONA (GR)	188 189 190 191
CORREA TRAPEZOIDAL (COMPRESOR)	471
CRISTAL	160
CRISTAL (AMBAR, BALIZA DE ADVERTENCIA)	111
CRISTAL (AMBAR) (SEÑAL DE VIRAJE)	96 98 100 101
CRISTAL (*AMBER, RED)	110
CUBIERTA INFERIOR DEL ASIENTO DEL OPERADOR (GR)	538
CUBIERTA INFERIOR DEL ASIENTO DEL OPERADOR (GR) (PARTE INFERIOR)	566
CUCHARÓN DE USO GENERAL (GR)	434 435
CUCHARON PARA PENETRACIÓN (CONJ)	431 432 433
CULATA DE CILINDROS (GR)	18 19

D

DEFLECTOR DEL RADIADOR	250

* NO HAY TRADUCCION DISPONIBLE EN EL MOMENTO DE LA IMPRESION

INDICE

Nombre	Página
DESCONGELADOR DE LA CABINA (GR)	477
DIFERENCIAL DE DESLIZAMIENTO LIMITADO (GR)	184
DIFERENCIAL (GR)	183
DIRECCIÓN (CONFIG)	325
DIRECCIÓN SECUNDARIA (CONFIG)	325
DISTRIBUIDOR ELECTRÓNICO (GR)	85
DISYUNTOR (CONJ) (15 AMPERIOS) (PRINCIPAL)	548
DISYUNTOR (CONJ) (15 AMPERIOS) (PRINCIPAL)	544
DISYUNTOR (CONJ) (30-AMPERIOS) (AUXILIAR)	153
DISYUNTOR (CONJ) (90-AMPERIOS) (ALTERNADOR)	153
DISYUNTOR DE CIRCUITO (GR) (60 AMPERIOS) (PRINCIPAL)	153
DISYUNTOR (GR)	133 134
DOSIFICACIÓN - BOMBA DE (GR)	321 323
DRENAJE DE SEGURIDAD ECOLÓGICA (GR)	345
DRENAJE DEL ACEITE DE MOTOR	20

E

Nombre	Página
EJE - GRUPO DE MONTAJE	212
EJE DE MANDO (GR)	232
EJE FIJO (CONFIG)	167
EJE OSCILANTE (CONFIG)	168 169
ELECTRONICA DE LA MAQUINA (GR)	86
ELEMENTO DE FILTRO (COMBUSTIBLE)	76
ELEMENTO DE FILTRO DE COMBUSTIBLE (CONJ)	68
ELEMENTO DEL FILTRO DE AIRE (CONJ) (PRIMARIO)	49
ELEMENTO DEL FILTRO DE AIRE (CONJ) (SECUNDARIO)	49
EMISOR DEL NIVEL DE COMBUSTIBLE (GR)	75
EMPAQUETADURA (TAPA DE VÁLVULA)	11
ENCENDEDOR (CONJ) (ENCENDEDOR, 24 VOLTIOS)	148
ENFRIADOR DE ACEITE DEL MOTOR (GR)	39
ENFRIADOR DE ACEITE DEL MOTOR Y BASE DEL FILTRO	39
ENGANCHE ARTICULADO (GR)	275
ESCALERILLA (GR)	286
ESTRUCTURA ROPS ABIERTA (GR)	560
ETIQUETA - ACEITE (BIODEGRADABLE) (HIDRÁULICO)	341
ETIQUETA DE ADVERTENCIA (GR)	598
EXTENSIÓN DEL ESCAPE (GR)	51 52
EXTENSIÓN DEL RESPALDO (GR)	492
EXTRACTOR DE MINIFUSIBLES	544 548

F

Nombre	Página
FILTRO (AIRE DE LA CABINA)	493
FILTRO DE ACEITE (CONJ)	187
FILTRO DE ACEITE DEL MOTOR (CONJ)	35
FILTRO DE ACEITE DEL MOTOR (GR)	35
FILTRO DE ACEITE (GR)	187
FILTRO DE AIRE DE LA CABINA (GR)	493
FILTRO DE AIRE (GR)	48 49
FILTRO DE COMBUSTIBLE (CONJ) (REJILLA DE TUBO DE LLENADO)	75
FILTRO DE COMBUSTIBLE (GR)	68
FILTRO Y TUBERÍAS DE COMBUSTIBLE (GR)	65
FRENO DE SERVICIO - CONTROL (GR)	299
FRENO Y PLANETARIOS (GR)	170

G

Nombre	Página
GRUPO DE CANTONERA Y CUCHILLA	441 442
GRUPO DE CODO	205
GRUPO DE CONEXIÓN	361
GRUPO DE MONTAJE DE LA CABINA	533
GRUPO DE MULTIPLE-ACUMULADOR DE FRENO	303
GRUPO DE PIVOTE, VÁLVULA PILOTO	382
GRUPO DE PLANCHA, VÁLVULA PILOTO	383 384 385 386
GRUPO DE PROTECTOR DEL CUCHARON	443
GRUPO DE PUNTA Y ADAPTADOR	430
GRUPO DE ROTACIÓN DEL MOTOR (GR)	226 228
GRUPO DE T	315
GRUPO DE 3 VÁLVULAS HIDRÁULICAS	401
GRUPO DE 4 VÁLVULAS HIDRÁULICAS	402
GRUPO GIRATORIO DE BOMBA	230
GUARDABARROS PARA DESPLAZAMIENTO EN CARRETERA (GR)	262 263 264

* NO HAY TRADUCCION DISPONIBLE EN EL MOMENTO DE LA IMPRESION

INDICE

Nombre	Página

H

HERRAMIENTAS (GR) 252, 255
HIDRÁULICA (CONFIG) 346
HOJA DE LIMPIAPARABRISAS (CONJ) 595
HOJA DE LIMPIAPARABRISAS (CONJ) (TRASERO/A) 595

I

IMPULSOR DE VENTILADOR (GR) 21
INCLINACIÓN HORIZONTAL - CILINDRO DE (GR) 344
INDICADOR DE CAMBIO DE FILTRO DE ACEITE (GR) 53, 55
INDICADOR DE TEMPERATURA DEL REFRIGERANTE (GR) 540, 542
INDICADOR DEL NIVEL DE ACEITE (GR) 540, 542
INDICADOR DEL NIVEL DE ACEITE (VARILLA) (GR) 390
INDICADOR DEL NIVEL DEL ACEITE (VARILLA) (CONJ) 28, 198, 200
INSONORIZADOR (CONFIG) 291
INSONORIZADOR (GR) 292, 586
INSTALACIÓN DE RADIO (GR) 503, 504, 505
INSTALACION DE SEGURIDAD (GR) 91
INTERRUPTOR (CONJ) (AIRE ACONDICIONADO) 451
INTERRUPTOR (CONJ) (AUXILIAR DE ARRANQUE) 143, 145, 148
INTERRUPTOR (CONJ) (BALIZA) 128
INTERRUPTOR (CONJ) (CONTROL) 3
INTERRUPTOR (CONJ) (CONTROL DE AMORTIGUADOR) 162
INTERRUPTOR (CONJ) (DESCONGELADOR) 477
INTERRUPTOR (CONJ) (*HIGH, LOW BEAM) . . . 122, 124
INTERRUPTOR (CONJ) (LUZ ALTA/BAJA) 142
INTERRUPTOR (CONJ) (LUZ DE GIRO, PELIGRO) 120
INTERRUPTOR DE BALIZA DE ADVERTENCIA (CONJ) 129
INTERRUPTOR DE BOLA (CONJ) 423
INTERRUPTOR DE DESCONEXIÓN (CONJ) (CUCHARÓN/HORQUILLA) 335
INTERRUPTOR DE DESCONEXIÓN (CONJ) (SEGADOR ACTIVADO) 544, 548
INTERRUPTOR DE DIRECCION SECUNDARIA (CONJ) 163
INTERRUPTOR DE LÍMITE (CONJ) 296
INTERRUPTOR DE LÍMITE (CONJ) (FRENO DE ESTACIONAMIENTO) 544, 548
INTERRUPTOR DE PRESIÓN (CONJ) 187
INTERRUPTOR DE PRESIÓN (CONJ) (AIRE ACONDICIONADO) 515
INTERRUPTOR DE PRESIÓN (CONJ) (TANQUE HIDRÁULICO) 312
INTERRUPTOR DE PRESIÓN (GR) 137
INTERRUPTOR DE SELECTOR DE VELOCIDAD (CONJ) 475
INTERRUPTOR DE SELECTOR DE VELOCIDAD (CONJ) 172
INTERRUPTOR DE SEÑAL DE GIRO Y ADVERTENCIA (CONJ) 142
INTERRUPTOR DE TEMPERATURA (CONJ) . . . 454
INTERRUPTOR DEL LIMPIADOR (GR) 139
INTERRUPTOR DEL LIMPIAPARABRISAS (CONJ) (FRENTE) 139
INTERRUPTOR MAGNÉTICO (GR) 135, 136
INTERRUPTOR MAGNÉTICO (GR) (24 VOLTIOS) (BUJÍA INCANDESCENTE) 153
INTERRUPTOR MAGNÉTICO (GR) (24 VOLTIOS) (RELÉ DE ARRANQUE) 154
INTERRUPTOR PARA LA TEMPERATURA (GR) 138
INTERRUPTOR ROTATIVO (CONJ) (LÁMPARA) 143, 145, 148
INTERRUPTOR ROTATIVO (CONJ) (LIMPIAPARABRISAS TRASERO) 139
INTERRUPTOR (40 GRADOS) (TEMPERATURA) 71

J

JUEGO ACOJINADO DE GOMA 574
JUEGO-ACUMULADOR DE SERVICIO 293, 328
JUEGO AJUSTADOR DE CABLE 574, 576, 578

* NO HAY TRADUCCION DISPONIBLE EN EL MOMENTO DE LA IMPRESION

INDICE

Nombre	Página
JUEGO-ASIENTO DE COMPRESOR DE AIRE	507
JUEGO DE ACOPLADOR RAPIDO	444
JUEGO DE AJUSTE DEL ASIENTO	458
	538
	574
	576
	578
JUEGO DE AMORTIGUADOR	458
	574
	576
	578
JUEGO DE AMORTIGUADOR (ASIENTO DE SUSPENSION)	589
JUEGO DE AMORTIGUADOR (RESPALDO)	492
JUEGO DE ATADURA	574
	576
	578
JUEGO DE ATADURA (ASIENTO DE SUSPENSION)	589
JUEGO DE BASE DEL SEPARADOR DE AGUA	76
JUEGO DE BASTIDOR (CONJ)	574
	576
	578
JUEGO DE BOCINA	326
JUEGO DE BOTÓN	326
JUEGO DE BOTÓN (AJUSTE DE ALTURA)	500
JUEGO DE BOTÓN DEL ASIENTO	566
JUEGO DE CALCES (*INCLUDES 8 SHIMS)	184
JUEGO DE CALCES (INCLUYE 12 CALCES)	188
	191
JUEGO DE COJÍN DEL ASIENTO	566
JUEGO DE COJINETE DE SUSPENSIÓN	574
	576
	578
JUEGO DE COJINETES	501
JUEGO DE CORREAS TRAPEZOIDALES (INCLUYE 2 CORREAS) (VENTILADOR)	21
JUEGO DE CRUCETA Y COJINETE	233
JUEGO DE DISCO	184
JUEGO DE ELEVADOR DE ALTURA	574
	576
	578
JUEGO DE EMPAQUETADURA (SUPERIOR)	8
JUEGO DE ENCHUFE (2 CLAVIJAS)	159
	473
	498
JUEGO DE ENCHUFE (2 CLAVIJAS)	136
JUEGO DE ENCHUFE (3 CLAVIJAS)	82
JUEGO DE ENCHUFE (8 CLAVIJAS)	503
JUEGO DE FUNDA DE LA SUSPENSIÓN DEL ASIENTO	587
JUEGO DE INCLINACIÓN DE ASIENTO	538
JUEGO DE INCLINACIÓN TRASERA	538
JUEGO DE INDICADOR (AJUSTE DE PESO)	501
JUEGO DE MANIJA	574
	576
	578
JUEGO DE MEDIDOR DE SERVICIO	540
	542
JUEGO DE PALANCA (CONJ)	574
	576
	578
JUEGO DE PALANCA DE INCLINACIÓN	326
JUEGO DE PANEL DEL RESPALDO DEL ASIENTO	566
JUEGO DE PARAGOLPES	574
JUEGO DE PARAGOLPES (AJUSTE DE PESO)	500
JUEGO DE POSABRAZOS DERECHO	574
	576
	578
JUEGO DE RECEPTÁCULO (12 CLAVIJAS)	531
JUEGO DE RECEPTÁCULO (12 CLAVIJAS)	177
	178
JUEGO DE RECEPTÁCULO (2 CLAVIJAS)	159
	470
	498
JUEGO DE RECEPTÁCULO (2 CLAVIJAS)	104
JUEGO DE RECEPTÁCULO (2 CLAVIJAS)	140
JUEGO DE RECEPTÁCULO (2 CLAVIJAS)	109
JUEGO DE RECEPTÁCULO (3 CLAVIJAS)	81
	473
	503
JUEGO DE RECEPTÁCULO (4 CLAVIJAS)	115
	175
JUEGO DE RECEPTÁCULO (6 CLAVIJAS)	498
	595
JUEGO DE RECEPTÁCULO (8 CLAVIJAS)	532
JUEGO DE RESORTES	321
	323
	500
	574
	576
	578
JUEGO DE RESORTES (AJUSTE DE ALTURA)	500
JUEGO DE RESTRICCIÓN DEL CINTURÓN	587
JUEGO DE RETÉN	576
	578
JUEGO DE RIEL DE DESLIZAMIENTO DEL ASIENTO	574
	576
	578
JUEGO DE RODILLO	587

* NO HAY TRADUCCION DISPONIBLE EN EL MOMENTO DE LA IMPRESION

INDICE

Nombre	Página
JUEGO DE SEGUIDOR	500
	501
JUEGO DE SELLOS	89
	90
	321
	323
	342
	350
	358
	361
	387
	400
	401
	402
	423
JUEGO DE SELLOS (SEPARADOR DE AGUA)	76
JUEGO DE SELLOS (VÁLVULA DE ALIVIO DEL CABEZAL DE LA BOMBA)	196
JUEGO DE SELLOS (VALVULA DE SOLENOIDE)	426
JUEGO DE SERVICIO	420
	421
	422
	425
JUEGO DE TAPA	574
	576
	578
JUEGO DE TAPA DE SUSPENSIÓN	574
	576
	578
JUEGO DE TAPÓN (4 CLAVIJAS)	178
JUEGO DE VALVULA DE AIRE (ASIENTO DE SUSPENSION)	589
JUEGO-PIVOTE	326
JUEGO-POSABRAZOS-LADO IZQUIERDO	574
	576
	578
JUNTA DESLIZANTE (GR)	233

L

Nombre	Página
LÁMPARA	105
	106
LÁMPARA (CONJ)	120
LÁMPARA (CONJ) (12 VOLTIOS)	91
LÁMPARA DE BALIZA DE ADVERTENCIA (GR)	111
LÁMPARA DE FARO DELANTERO (24 VOLTIOS)	115
LÁMPARA DE FARO TRASERO(GR)	103
LÁMPARA DE FARO TRASERO(GR) (RETROCESO)	160
LÁMPARA DE LUZ DELANTERA Y DE SEÑAL (GR)	96
LÁMPARA DE LUZ DELANTERA Y DE SEÑAL (GR)	98
	100
	101
LAMPARA DE PLACA DE REGISTRO (GR)	255
	257
LÁMPARA DEL TECHO (GR)	93
LÁMPARA (FILAMENTO SENCILLO)	104
LÁMPARA (12 VOLTIOS)	584
LÁMPARA (*24-VOLT, 5-WATT)	110
LÁMPARA (*24-VOLT, 5-WATT)	107
LÁMPARA (24 VOLTIOS)	109
	122
	124
	142
	143
	145
	148
	163
	540
	542
	544
LÁMPARA (24 VOLTIOS)	96
	98
	100
	101
LÁMPARA (24 VOLTIOS, 10 VATIOS)	93
	255
	257
LÁMPARA (24-VOLTIOS, 21 VATIOS)	108
	110
	120
LÁMPARA (24-VOLTIOS, 21 VATIOS)	96
	98
	100
	101
LÁMPARA (24-VOLTIOS, 25-VATIOS)	103
LÁMPARA (24-VOLTIOS, 3-VATIOS)	120
LÁMPARA (24-VOLTIOS, 70-VATIOS)	111
LAVAPARABRISAS DE LA VENTANA (GR)	593
LENTE AMBAR	104
LENTE-ROJO	107
	108
*LIGHTING AR-ROADING	112
LIMPIAPARABRISAS DE LA VENTANA (GR)	595
LLANTA (CONFIG)	222
LLAVE	597
LLAVE (DESCONECTAR)	133
LUCES AUXILIARES (GR)	114
LUCES DE ADVERTENCIA (GR)	128
	129

* NO HAY TRADUCCION DISPONIBLE EN EL MOMENTO DE LA IMPRESION

INDICE

Nombre	Página
LUCES DE ALÓGENO (24 VOLTIOS, 65 VATIOS)	118
LUCES DE ALÓGENO (24 VOLTIOS, 65 VATIOS)	120
LUCES DE ALÓGENO (24 VOLTIOS, 65 VATIOS)	94, 95
LUCES DE DESPLAZAMIENTO (CONFIG)	113
LUCES DE DESPLAZAMIENTO (GR)	122, 124
LUCES DE GIRO (GR)	126
LUCES DE PARADA Y COLA (GR)	110
LUCES DE REFLECTOR (GR)	115, 117, 118
LUCES DE REFLECTOR Y CAMBIO DE DIRECCION (GR)	120
LUCES DE REFLECTOR Y SEÑAL (CONFIG)	112
LUZ DE INDICADOR DE GIRO, LENTE	105, 106
LUZ DE SEÑAL DE GIRO (GR)	105, 108
LUZ DE SEÑAL DE GIRO (GR)	106, 107
LUZ DE SEÑAL DE GIRO (GR)	104, 109
LUZ DE SEÑAL DE GIRO (GR) (24 VOLTIOS)	120

M

Nombre	Página
MAMPARA ANTITÉRMICA (GR)	265
MANDO DE TRANSFERENCIA (GR)	185
MANGUERA (RESPIRADERO)	11
MANGUITO	597
MANGUITO DE EMPALME DE CABLE	522
MÁQUINA DE CONVERSIÓN (CONFIG)	3
MÁQUINA DE CONVERSIÓN (CONFIG)	7
MECANISMO DE VÁLVULAS (GR)	34
MÓDULO INDICADOR DE ADVERTENCIA (GR)	532
MÓDULO INDICADOR DE ADVERTENCIA (GR)	531
MONTAJE DE LA BOMBA (GR)	216
MONTAJE DEL MOTOR (GR)	214, 215
MONTAJE DEL MOTOR Y LA TRANSMISIÓN (GR)	27
MONTAJE Y VALVULA DEL CONTROL PRINCIPAL (GR)	394, 396, 398
MOTOR DE ARRANQUE ELÉCTRICO (GR)	132
MOTOR DE LA BOMBA ELECTROHIDRÁULICA	130
MOTOR ELÉCTRICO (GR)	130
MOTOR-LIMPIAPARABRISAS (GR) (24 VOLTIOS) (FRENTE)	595
MOTOR-LIMPIAPARABRISAS (GR) (24 VOLTIOS) (PARTE TRASERA)	595
MOTOR PRIMARIO (CONFIG)	8

P

Nombre	Página
PABELLÓN (CONFIG)	466
PANTALLA (CONJ)	407, 409, 412
PEDAL DE FRENO (GR)	552
PENETRACIÓN DEL CUCHARÓN	436
PERSIANA PARA EL SOL (GR)	562
PESO-PERILLA (CONJ)	500
PISTÓN Y BIELA (GR)	29
PISTONES DEL MOTOR (GR)	210, 211
PLACA DE INSTRUCCIONES	515
PLATAFORMA (CONFIG)	554
PLATAFORMA DE LA CABINA	557
PLATAFORMA (GR)	555, 556
POSABRAZOS (GR)	457, 458, 459, 460, 461
POSICIONADOR DEL CUCHARÓN Y DESCONEXIÓN (GR)	348
PROTECTOR DE BOMBA DE INYECCION DE COMBUSTIBLE (GR)	70
PROTECTOR DE LA VENTANA	494, 495
PROTECTOR DE LAS TUBERÍAS (GR)	271, 272, 273
PROTECTOR DEL TREN DE FUERZA (GR)	274
PROTECTOR INFERIOR (GR)	269, 270
PUBLICACIONES (GR)	522
PUERTA DE CABINA	478, 479, 482, 484, 487, 489
PUNTA LARGA (GR)	445, 446

* NO HAY TRADUCCION DISPONIBLE EN EL MOMENTO DE LA IMPRESION

INDICE

Nombre	Página
R	
RADIADOR (GR)	46
RADIADOR Y ENFRIADOR DE ACEITE HIDRÁULICO (GR)	44
RECEPTACULO DE POTENCIA (CONJ) (24 VOLTIOS)	115
RECIPIENTE DE RECOLECCION DE AGUA (CONJ)	76
RECLINACION DE ASIENTO (GR)	558
REFLECTOR (GR)	94 95 115 117 290
REGULADOR - PEDAL DEL (GR)	553
REGULADOR DE TEMPERATURA DEL AGUA	38
REJILLA DE FILTRO	591
RELÉ (CONJ) (24 VOLTIOS)	163
RELÉ (CONJ) (24 VOLTIOS) (ALARMA)	545
RELÉ (CONJ) (24 VOLTIOS) (ALARMA AUDIBLE)	549
RELÉ (CONJ) (24 VOLTIOS) (ALARMA DE RETROCESO)	545 549
RELÉ (CONJ) (24 VOLTIOS) (ARRANQUE EN PUNTO MUERTO)	544 548
RELÉ (CONJ) (24 VOLTIOS) (BOCINA)	545 549
RELÉ (CONJ) (24 VOLTIOS) (CONTROL DE AMORT.)	162
RELÉ (CONJ) (24 VOLTIOS) (FRENO DE ESTACIONAMIENTO)	545 549
RELÉ (CONJ) (24 VOLTIOS) (LEVANTAMIENTO)	153
RELÉ (CONJ) (24 VOLTIOS) (PRINCIPAL)	79
RELÉ (CONJ) (24 VOLTIOS) (SUPRESOR)	3
RELÉ (CONJ) (24 VOLTIOS) (TEMP DEL ACEITE HIDR)	163
RESORTE (RESPIRADERO DE MANGUERA)	11
RESPIRADERO (ACEITE HIDRÁULICO)	390
RETROCESO - ALARMA DE (GR)	140 141
RETROVISOR DERECHO (GR)	530
RETROVISOR (GR)	524 525 526 527 528 529
RETROVISOR IZQUIERDO (GR)	523
REVESTIMIENTO DE LA CABINA (GR)	508 510 512 514
S	
SELLO ANULAR (REGULADOR DE TEMPERATURA DEL AGUA)	38
SELLO ANULAR (TAPÓN DE DRENAJE DE SUMIDERO)	28
SENSOR DE VELOCIDAD (CONJ) (MOTOR)	79
SEPARADOR DE AGUA Y BOMBA DE CEBADO DE COMBUSTIBLE (GR)	76
SILENCIADOR (GR)	57
SISTEMA ROPS DE CABINA CERRADA (CONFIG)	463
SOFTWARE PARA LA MAQUINA (GR) (SEGURIDAD)	86
SOPORTE DE TRANSPORTE (GR)	427
SOPORTE DEL ASIENTO (GR)	585
SOPORTE DEL RESPALDO (GR)	535 536 537
SOPORTE DEL RESPALDO (GR) (PARTE TRASERA)	566
SUCCIÓN - VENTILADOR DE (GR)	41
SUSPENSIÓN - ASIENTO CON (GR)	573 574 576 578 580 581 582 583
T	
TABLERO DE INSTRUMENTOS (GR)	540 542 544 548
TANQUE DE COMBUSTIBLE Y GRUPO DE MONTAJE	73
TANQUE DE EXPANSIÓN (GR)	388
TANQUE DEL LAVAPARABRISAS (GR)	591
TANQUE HIDRÁULICO (GR)	390 392
TAPA	591
TAPA CONTRA EL POLVO	187 204 220 394

* NO HAY TRADUCCION DISPONIBLE EN EL MOMENTO DE LA IMPRESION

INDICE

Nombre	Página
TAPA DE ADMISIÓN DE AIRE (GR)	50
TAPA DE LA CONSOLA (GR)	475
TAPA DE LLENADO (CONJ) (COMBUSTIBLE)	75
TAPA DEL MECANISMO DE VÁLVULAS (GR)	11
TAPA DEL MOTOR (GR)	181
TAPA DEL TUBO DE LLENADO (TANQUE HIDRÁULICO)	392
TAPA HIDROSTÁTICA (GR)	179
TAPA (VASTAGO DE LA VÁLVULA)	249
TAPAS PROTECTORAS DE EMBARQUE (GR)	182
TAPÓN (CONJ)	11
TAPÓN (CONJ) (ACONDICIONADOR DE AIRE)	515
TAPÓN (CONJ) (RADIADOR)	388
TAPON DE DRENAJE DE SUMIDERO	28
TAPÓN DEL MOTOR (GR)	30 31
TAPÓN MAGNÉTICO	198 200
TAPÓN (TUBERIAS DE FILTRO DE ACEITE DEL MOTOR)	39
TECHO ROPS ABIERTO (CONFIG)	466
TECHO ROPS ABIERTO (GR)	467
TECHO TIPO TOLDO (GR)	468 469
TERMÓMETRO DE ACEITE (GR) (HIDRAULICO)	540 542
TIRANTE DE TRABA DEL BASTIDOR DE DIRECCIÓN (GR)	289
TRABA DE CILINDRO DE DIRECCIÓN (GR)	318
TRABA DE CONTROL HIDRÁULICO MANUAL (GR)	381
TREN DE FUERZA (CONFIG)	217
TUBERÍAS CON SERVOMANDO (GR)	364 368 372
TUBERÍAS DE ACONDICIONADOR DE AIRE (GR)	515
TUBERIAS DE CALEFACCION	519 521
TUBERÍAS DE CALEFACCIÓN DE LA CABINA	519
TUBERÍAS DE DIRECCIÓN (GR)	314 317
TUBERÍAS DE ENGRASE (GR)	288
TUBERÍAS DE LA CALEFACCIÓN (GR)	521
TUBERÍAS DE LA DIRECCIÓN SECUNDARIA (GR)	312
TUBERÍAS DEL ACUMULADOR (GR)	350
TUBERÍAS DEL CILINDRO DE INCLINACIÓN (GR)	379
TUBERÍAS DEL ENFRIADOR DE ACEITE HIDRÁULICO (GR)	360
TUBERÍAS DEL FILTRO DEL TREN DE FUERZA (GR)	208
TUBERÍAS DEL FRENO DE SERVICIO (GR)	301
TUBERÍAS DELANTERAS (GR)	352 354
TUBERÍAS HIDRÁULICAS (GR)	356 358
TUBERÍAS HIDROSTÁTICAS DE LA CAJA DE TRANSMISIÓN (GR)	204
TUBERÍAS HIDROSTÁTICAS (GR)	202
TURBOCOMPRESOR (GR)	59

V

VÁLVULA DE AGUA (CONJ)	454
VÁLVULA DE ALIVIO (GR)	245 420 421 422
VÁLVULA DE ALIVIO (GR) (COMPRESOR DEL REFRIGERANTE)	470
VALVULA DE CONTROL DE LA BOMBA (GR)	243 244
VÁLVULA DE CONTROL (GR)	404 405
VÁLVULA DE CORTE	20
VÁLVULA DE CORTE (GR)	423
VÁLVULA DE DETECCIÓN DE VELOCIDAD (GR)	248
VALVULA DE DIRECCION SECUNDARIA (GR)	327
VALVULA DE DRENAJE (CONJ) (ECOLOGÍA)	345
VÁLVULA DE DRENAJE DEL COLECTOR DE ACEITE (GR)	33
VÁLVULA DE DRENAJE DEL RADIADOR (GR)	44
VÁLVULA DE DRENAJE (GR)	406
VÁLVULA DE GAS	293 294 329
VÁLVULA DE MUESTREO	187
VÁLVULA DE MUESTREO (GR)	37
VÁLVULA DE ROTACIÓN (GR)	246
VÁLVULA DE SOLENOIDE (GR)	425 426
VÁLVULA DE SOLENOIDE Y MÚLTIPLE (GR)	247
VÁLVULA DEL NEUMÁTICO (GR)	249
VÁLVULA HIDRÁULICA DE 3 VÍAS (CONFIG)	346
VÁLVULA HIDRÁULICA DE 4 VÍAS (CONFIG)	347
VALVULA PILOTO DE CARTUCHO (GR)	415 416

* NO HAY TRADUCCION DISPONIBLE EN EL MOMENTO DE LA IMPRESION

INDICE

Nombre	Página
	417
	418
	419
VÁLVULA PILOTO (GR)	237
	239
	241
	407
	409
	412
VÁLVULAS HIDRÁULICAS - GRUPO DE 2	400
VELOCIDAD DE CONTROL (CONFIG)	171
VELOCÍMETRO (GR)	584
VENTANA DE LA PUERTA (GR)	594
VIDRIO (CONJ) (AMBAR)	100
	101
VIDRIO (CONJ) (FARO DELANTERO)	96
	98
	100
	101
VIDRIO (CONJ) (REFLECTOR)	94
VIDRIO (CONJ) (REFLECTOR) (REFLECTOR)	95
VIDRIO DE LA LÁMPARA	103
VISERA (GR)	592
VOLANTE - CAJA DE (GR)	23
VOLANTE (GR)	22

* NO HAY TRADUCCION DISPONIBLE EN EL MOMENTO DE LA IMPRESION

ÍNDICE

Designação	Página

A

ACENDEDOR (CIGARROS, 24 VOLTS) 148
ACIONADOR DA BOMBA 165
ACOPLADOR RÁPIDO 438
ACUMULADOR - AR CONDICIONADO 447
448
ACUMULADOR - FREIO 293
294
295
ACUMULADOR DO SISTEMA DE ABSORÇÃO DE IMPACTOS 330
ACUMULADOR HIDRÁULICO 328
329
330
ADAPTADOR DA PONTA 430
ADESIVO - ÓLEO (BIODEGRADÁVEL) (HIDRÁULICO) 341
AJUSTADOR DO ASSENTO 449
ALARME DE MARCHA À RÉ 140
141
ALTERNADOR DE CORRENTE 77
AQUECEDOR DA ÁGUA DO MOTOR 89
90
AQUECEDOR DA CABINE 497
498
AQUECEDOR DA CABINE E MONTAGEM 496
ARO 222
ARO DESMONTÁVEL 223
224
225
ARRANJO BÁSICO 1
ARRANJO DE CONVERSÃO - AR CONDICIONADO 474
ARRANJO DE CONVERSÃO - HIDRÁULICO . . . 341
ARRANJO HIDRÁULICO - 2 VÁLVULAS 346
ARRANJO HIDRÁULICO - 3 VÁLVULAS 346
ARRANJO HIDRÁULICO - 4 VÁLVULAS 347
ARRANJO RODOVIÁRIO 131
ARREFECEDOR - ÓLEO DO MOTOR 39
ARREFECEDOR DE ÓLEO DO MOTOR E BASE DO FILTRO 39
ARTICULAÇÃO DA VÁLVULA PILOTO 382
ASSENTO 566
568
569
571
572
ASSENTO - FUNDO 538
ASSENTO - FUNDO (INFERIOR) 566
ASSENTO COM SUSPENSÃO 573
574
576
578
580
581
582
583

B

BATERIA 78
BATERIA - ISENTA DE MANUTENÇÃO (12 V)(900 A) 78
BEIRA - PONTA CORTANTE 441
442
BLOCO DO MOTOR 15
17
BLOCO HIDRÁULICO 331
BOMBA - ESCORVA DE COMBUSTÍVEL E SEPARADOR DE ÁGUA 76
BOMBA DE ÁGUA 42
BOMBA DE CARGA 218
219
BOMBA DE DIREÇÃO E ACESSÓRIO E MONTAGEM 387
BOMBA DE DIREÇÃO SECUNDÁRIA E MOTOR 319
BOMBA DE ENGRENAGENS 320
BOMBA DE INJEÇÃO DO COMBUSTÍVEL 71
BOMBA DE ÓLEO - MOTOR 36
BOMBA DE PISTÃO 220
BOMBA REGULADORA 321
323
BOTÃO - PESO 500
BRAÇO DO ASSENTO 457
458
459
460
461
*BUCKET GP-ROCK 437
BUJÃO - DRENAGEM DO RESERVATÓRIO 28
BUJÃO DO MOTOR 30
31
BUJÃO MAGNÉTICO 198
200
BUZINA (24 VOLTS)(TONALIDADE BAIXA) 157

C

CABEÇA DA BOMBA 196
CABEÇOTE DO MOTOR 18
19
192
194
CABINE 462
463

* TRADUÇÃO NÃO DISPONÍVEL NO MOMENTO DA IMPRESSÃO

ÍNDICE

Designação	Página
	534
CABINE - ESTRUTURA DE PROTEÇÃO CONTRA CAPOTAMENTO	464
CABINE - ESTRUTURA ROPS COBERTA	463
CABINE - ROPS ABERTA	534
CABO - CONTROLE DO GOVERNADOR	61
CABOS/FIOS ELÉTRICOS - ABSORÇÃO DE IMPACTOS	162
CABOS/FIOS ELÉTRICOS - CABINE	142
	143
	145
	148
CABOS/FIOS ELÉTRICOS - CHASSI	150
CABOS/FIOS ELÉTRICOS - DIANTEIROS	157
CABOS/FIOS ELÉTRICOS - DIREÇÃO SECUNDÁRIA	163
CABOS/FIOS ELÉTRICOS - MOTOR	153
CABOS/FIOS ELÉTRICOS - TRASEIROS	160
	161
	255
	257
CABOS/FIOS ELÉTRICOS - TREM DE FORÇA	159
CAÇAMBA PARA APLICAÇÃO GERAL	434
	435
CAÇAMBA PARA PENETRAÇÃO	431
	432
	433
	436
CADEADO	597
CAIXA - EIXO FIXO	198
CAIXA - EIXO OSCILANTE	200
CAIXA - SUSPENSÃO DO ASSENTO	500
CAIXA DIANTEIRA	24
CAIXA DO VOLANTE DO MOTOR	23
CAPÔ	281
	283
CAPÔ E PROTETOR	277
	279
	280
CÁRTER DO ÓLEO DO MOTOR	28
CHASSI	1
CHASSI DIANTEIRO	266
CHASSI TRASEIRO	267
CHAVE	597
CHAVE - ELETRÔNICO (AMARELO)	86
	91
CHAVE - ELETRÔNICO (CINZA)	86
	91
CHAVE (DESLIGAR)	133
CHAVE GERAL	133
	134
CHICOTE - CABINE	544
	548
CHICOTE - CONDICIONADOR DE AR DA CABINE (VENTILADORES DO CONDENSADOR)	473
CHICOTE - VÁLVULA (COMPRESSOR DE AR)	589
CILINDRO - ACOPLADOR	342
CILINDRO DA DIREÇÃO	310
CILINDRO DE DIREÇÃO E MONTAGEM	309
CILINDRO DE INCLINAÇÃO	344
CILINDRO DE LEVANTAMENTO	343
CINTO DE SEGURANÇA	563
	564
	565
	571
CINZEIRO	544
	548
COLETOR - ACUMULADOR DO FREIO	303
COLUNA DA DIREÇÃO	326
COMANDO DE TRANSFERÊNCIA	185
COMANDO DO VENTILADOR	21
COMANDO HIDRÁULICO	346
COMPRESSOR DE AR - ASSENTO	450
COMPRESSOR DE REFRIGERANTE	470
	471
CONDENSADOR DE REFRIGERANTE	473
CONDICIONADOR DE AR	453
	454
CONDICIONADOR DE AR E MONTAGEM	451
	452
CONECTOR	361
CONEXÃO - TUBO D'ÁGUA	38
CONEXÃO EM T	315
CONTRAPESO	259
	260
	261
*CONTROL GP-TMSN & JOYSTICK	174
CONTROLE - DESENGATE AUTOMÁTICO DE LEVANTAMENTO	81
	348
CONTROLE - DESLIZADOR	172
CONTROLE - NÃO PROGRAMADO (SEGURANÇA)	86
CONTROLE - POSIÇÃO	82
	348
CONTROLE DA CAÇAMBA	428
CONTROLE DA TRANSMISSÃO	175
	177
	178
CONTROLE DE DIREÇÃO	304
	306
CONTROLE DE VELOCIDADE	171

* TRADUÇÃO NÃO DISPONÍVEL NO MOMENTO DA IMPRESSÃO

ÍNDICE

Designação	Página
CONTROLE DO FREIO DE ESTACIONAMENTO	296, 298
CONTROLE DO FREIO DE SERVIÇO	299
CONTROLE DO GOVERNADOR	62
CONTROLE ELETRÕNICO DA TRANSMISSÃO E CABOS/FIOS ELÉTRICOS	79
CONTROLE HIDRÁULICO DE OPERAÇÃO PILOTO	335, 337, 339
CONVERSÃO-DIREÇÃO SUPLEMENTAR	308
CONVERSOR ELÉTRICO	83, 84
CONVERSOR ELÉTRICO (24-VOLTS A 12-VOLTS)	83, 153
CORREIA EM V (COMPRESSOR)	471
COTOVELO	205

D

Designação	Página
DECALQUE	598
DECALQUE - ADVERTÊNCIA (CILINDRO DE ALTA PRESSÃO)	600, 602
DECALQUE - ADVERTÊNCIA (DIREÇÃO)	252
DECALQUE - AVISO (BOMBA DE COMBUSTÍVEL)	70
DECALQUE - EXTINTOR DE INCÊNDIO	252, 255
DECALQUE - IDENTIFICAÇÃO (LÍQUIDO ARREFECEDOR DE VIDA PROLONGADA)	599
DECALQUE - IDENTIFICAÇÃO (NO. DE SEQÜÊNCIA E GRUPO)	473
DECALQUE - INSTRUÇÃO	81, 82, 587
DECALQUE - INSTRUÇÃO (AJUSTE DO ASSENTO)	589
DECALQUE - INSTRUÇÃO (ENCHIMENTO DO LAVADOR DE PÁRA-BRISA)	599
DECALQUE - INSTRUÇÃO (PARTIDA DO MOTOR)	540, 542
DECALQUE - INSTRUMENTO (CONTRAPORCA DO IMPLEMENTO)	335, 337, 339
DECALQUE (ALTURA PARA TRANSPORTE)	2
DECALQUE (IGNIÇÃO)	91
DECALQUE (NÃO REBOQUE, NÃO EMPURRE)	599
DECALQUE (PLACA - NOME)	328, 329
DECALQUE (REFLETOR)	257
DECALQUE (SEGURANÇA)	91
DECALQUE (12-VOLTS)	83
DECALQUE (20-KM/H)	252
DECALQUE (24 VOLTS)	600, 601, 602
DEFLETOR DO RADIADOR	250
DESEMBAÇADOR DA CABINE	477
DESENGATE E POSICIONADOR DA CAÇAMBA	348
DIFERENCIAL	183
DIFERENCIAL - DESLIZAMENTO LIMITADO	184
DIREÇÃO	325
DIREÇÃO SECUNDÁRIA	325
DISJUNTOR AUTOMÁTICO DE CIRCUITO (15 AMPERES) (PRINCIPAL)	548
DISJUNTOR AUTOMÁTICO DE CIRCUITO (15 AMPERES) (PRINCIPAL)	544
DISJUNTOR AUTOMÁTICO DE CIRCUITO (30 AMPERES) (AUXILIAR)	153
DISJUNTOR AUTOMÁTICO DE CIRCUITO (90 AMPERES) (ALTERNADOR)	153
DISTRIBUIDOR ELETRÔNICO	85
DRENO - ECOLOGIA	345
DRENO - ÓLEO DO MOTOR	20
DUCTO DE AR	491

E

Designação	Página
EIXO-COMANDO DE VÁLVULA	10
EIXO DE TRANSMISSÃO	232
EIXO FIXO	167
EIXO OSCILANTE	168, 169
ELEMENTO - FILTRANTE (COMBUSTÍVEL)	76
ELEMENTO - FILTRO DE COMBUSTÍVEL	68
ELEMENTO DO FILTRO DE AR (PRIMÁRIO)	49
ELEMENTO DO FILTRO DE AR (SECUNDÁRIO)	49
ELO - TRAVA DA ARMAÇÃO DA DIREÇÃO	289
EMISSOR - NÍVEL DE COMBUSTÍVEL	75
EMISSOR DE TEMPERATURA (ÓLEO HIDRÁULICO)	150
ENGATE - ARTICULAÇÃO	275
ENGRENAGEM - COROA	188, 189, 190, 191
ESCADA	286
ESPELHO RETROVISOR	524

* TRADUÇÃO NÃO DISPONÍVEL NO MOMENTO DA IMPRESSÃO

ÍNDICE

Designação	Página
	525
	526
	527
	528
	529
ESPELHO RETROVISOR - LADO DIREITO	530
ESPELHO RETROVISOR - LADO ESQUERDO	523
EXTENSÃO - ENCOSTO	492
EXTENSÃO DO TUBO DE ESCAPE	51
	52

F

FAROL DIANTEIRO (24 V)	115
FERRAMENTAS	252
	255
FIAÇÃO - AQUECEDOR E AR CONDICIONADO	454
FILTRO - AR DA CABINE	493
FILTRO - COMBUSTÍVEL	68
FILTRO - COMBUSTÍVEL (TELA DO BOCAL DE ENCHIMENTO)	75
FILTRO - ÓLEO	187
FILTRO - ÓLEO DO MOTOR	35
FILTRO - TELA	591
FILTRO (AR DA CABINE)	493
FILTRO E TUBOS - COMBUSTÍVEL	65
FREIOS E ENGRENAGENS PLANETARIAS	170
FUNDO - ENCOSTO	535
	536
	537
FUNDO - ENCOSTO (PARTE TRASEIRA)	566

G

GR. DE CONVERSÃO - CERTIFICADO	2
GRAXEIRA (ROSCA 1/8-27 POL)	200
	309
	428
GRUPO DE CONVERSÃO - ARRANJO RODOVIÁRIO	252
	255
	257
GRUPO DE INSTALAÇÃO - MOTOR	9
GRUPO DE VÁLVULAS DE CONTROLE - DUPLO	400
GRUPO DE VÁLVULAS DE CONTROLE - QUÁDRUPLO	402
GRUPO DE VÁLVULAS DE CONTROLE - TRIPLO	401
GRUPO ROTATIVO DA BOMBA	230

I

ILUMINAÇÃO - AUXILIAR	114
ILUMINAÇÃO - FAROL E SINALIZAÇÃO	112
ILUMINAÇÃO - RODOVIÁRIA	122
	124
ILUMINAÇÃO - SINALIZAÇÃO	126
ILUMINAÇÃO RODOVIÁRIA	113
INDICADOR - NÍVEL DO ÓLEO (VARETA)	390
INDICADOR - TEMPERATURA DO ÓLEO (HIDRÁULICO)	540
	542
INDICADOR - TROCA DO FILTRO DE AR	53
	55
INDICADOR - VARETA DO NÍVEL DE ÓLEO	28
	198
	200
INSTALAÇÃO DO RÁDIO	503
	504
	505
INSTALAÇÃO-SEGURANÇA	91
INTERRUPTOR - CIRCUITO (60 AMPERES) (PRINCIPAL)	153
INTERRUPTOR - DESENGATE AUTOMÁTICO (CAÇAMBA/GARFO)	335
INTERRUPTOR - DESENGATE AUTOMÁTICO (SEGADOR - ATIVAR)	544
	548
INTERRUPTOR - DIREÇÃO SECUNDÁRIA	163
INTERRUPTOR - ESFERA	423
INTERRUPTOR - LIMITADOR	296
INTERRUPTOR - LIMITADOR (FREIO DE ESTACIONAMENTO)	544
	548
INTERRUPTOR - LIMPADOR (DIANTEIRO)	139
INTERRUPTOR - LIMPADOR DO PÁRA-BRISA	139
INTERRUPTOR - MAGNÉTICO	135
	136
INTERRUPTOR - MAGNÉTICO (24 VOLTS) (RELÉ DE PARTIDA)	154
INTERRUPTOR - MAGNÉTICO (24 VOLTS) (VELA DE AQUECIMENTO)	153
INTERRUPTOR - PARTIDA (CHAVE)	540
	542
INTERRUPTOR - PISCA-PISCA	122
	124
INTERRUPTOR - PRESSÃO	137
	187
INTERRUPTOR - PRESSÃO (AR CONDICIONADO)	515
INTERRUPTOR - PRESSÃO (TANQUE HIDRÁULICO)	312
INTERRUPTOR - ROTATIVO (LÂMPADA)	143

* TRADUÇÃO NÃO DISPONÍVEL NO MOMENTO DA IMPRESSÃO

ÍNDICE

Designação	Página
	145
	148
INTERRUPTOR - ROTATIVO (LIMPADOR TRASEIRO)	139
INTERRUPTOR - SELECIONAR A VELOCIDADE	172
	475
INTERRUPTOR - SINALIZAÇÃO DE DIREÇÃO / LUZ DE ALERTA	142
INTERRUPTOR - TEMPERATURA	138
	454
INTERRUPTOR (AR CONDICIONADO)	451
INTERRUPTOR (AUXILIAR DE PARTIDA)	143
INTERRUPTOR (AUXILIAR DE PARTIDA)	145
	148
INTERRUPTOR (CONTROLE)	3
INTERRUPTOR (DESCONGELADOR)	477
INTERRUPTOR DO PISCA-PISCA DE ADVERTÊNCIA	129
INTERRUPTOR (FACHO ALTO, BAIXO)	122
	124
INTERRUPTOR (FAROL ALTO/BAIXO)	142
INTERRUPTOR (PISCA-PISCA)	128
INTERRUPTOR (PISCA-PISCA, PISCA-ALERTA)	120
INTERRUPTOR (SISTEMA DE ABSORÇÃO DE IMPACTOS)	162
INTERRUPTOR (40 GRAUS) (TEMPERATURA)	71

J

Designação	Página
JOGO - BUZINA	326
JOGO - COMPRESSOR DE AR DO ASSENTO	507
JOGO - LIMITADOR	576
	578
JOGO - SERVIÇO DO ACUMULADOR	293
	328
JOGO - SUPERIOR	574
JOGO-ARTICULAÇÃO	326
JOGO DE ACOPLAMENTO RÁPIDO	444
JOGO DE AJUSTADOR	458
	538
	574
	576
	578
JOGO DE AJUSTADOR DE CABO	574
	576
	578
JOGO DE AJUSTE DA ALTURA	574
	576
	578
JOGO DE ALAVANCA	574
	576
	578
JOGO DE ALAVANCA DE INCLINAÇÃO	326
JOGO DE ALMOFADA	458
JOGO DE ALMOFADA DO ASSENTO	566
JOGO DE ALMOFADA (ENCOSTO)	492
JOGO DE AMORTECEDOR	574
	576
	578
JOGO DE AMORTECEDOR DE CHOQUES (ASSENTO DA SUSPENSÃO)	589
JOGO DE ARMAÇÃO	574
	576
	578
JOGO DE BASE DO SEPARADOR DE ÁGUA	76
JOGO DE BATENTE DO ASSENTO	574
JOGO DE BLOCO DESLIZADOR	573
	580
JOGO DE BOTÃO DE SUSPENSÃO (AJUSTE DE ALTURA)	500
JOGO DE BRAÇO DO ASSENTO - LADO ESQUERDO	574
	576
	578
JOGO DE BRAÇO DO ASSENTO DO OPERADOR - LADO DIREITO	574
	576
	578
JOGO DE BUJÃO (4 PINOS)	178
JOGO DE CALÇOS (INCLUI 12 CALÇOS)	188
	191
JOGO DE CALÇOS (INCLUI 8 CALÇOS)	184
JOGO DE CÁRTER DE INCLINAÇÃO	566
JOGO DE COIFA DE SUSPENSÃO	587
JOGO DE CORDÃO	574
	576
	578
JOGO DE CORDÃO (ASSENTO DA SUSPENSÃO)	589
JOGO DE CORREIAS EM V (INCLUI 2 CORREIAS) (VENTILADOR)	21
JOGO DE CRUZETA E MANCAL	233
JOGO DE DISCO	184
JOGO DE ESPUMA	574
JOGO DE FIXADOR DE CORREIA	587
JOGO DE INCLINAÇÃO DO ASSENTO	538
JOGO DE INCLINAÇÃO TRASEIRA	538
JOGO DE INDICADOR (AJUSTAGEM DO PESO)	501
JOGO DE JUNTAS (SUPERIOR)	8
JOGO DE MAÇANETA	326
JOGO DE MAÇANETA DO ASSENTO	566

* TRADUÇÃO NÃO DISPONÍVEL NO MOMENTO DA IMPRESSÃO

ÍNDICE

Designação	Página
JOGO DE MANCAL	501
JOGO DE MANCAL DA SUSPENSÃO	574, 576, 578
JOGO DE MANUTENÇÃO	420, 421, 422, 425
JOGO DE MARCADOR DE HORAS DE SERVIÇO	540, 542
JOGO DE MOLA	321, 323, 500, 574, 576, 578
JOGO DE MOLA (AJUSTE DE ALTURA)	500
JOGO DE PÁRA-CHOQUE (AJUSTAGEM DO PESO)	500
JOGO DE RECEPTÁCULO (12 PINOS)	531
JOGO DE RECEPTÁCULO (12 PINOS)	177, 178
JOGO DE RECEPTÁCULO (2 PINOS)	104, 140, 159, 470, 498
JOGO DE RECEPTÁCULO (2 PINOS)	109
JOGO DE RECEPTÁCULO (3 PINOS)	81, 473, 503
JOGO DE RECEPTÁCULO (4 PINOS)	115, 175
JOGO DE RECEPTÁCULO (6 PINOS)	498, 595
JOGO DE RECEPTÁCULO (8 PINOS)	532
JOGO DE RETENTOR	89, 90, 321, 323, 342, 350, 358, 361, 387, 400, 401, 402, 423
JOGO DE RETENTOR (SEPARADOR DE ÁGUA)	76
JOGO DE RETENTOR (VÁLVULA DE ALÍVIO DO CABEÇOTE DA BOMBA)	196
JOGO DE RETENTOR (VÁLVULA SOLENÓIDE)	426
JOGO DE ROLETE DE SUSPENSÃO	587
JOGO DE SEGUIDOR	500, 501
JOGO DE TAMPA	574, 576, 578
JOGO DE TAMPA DA SUSPENSÃO	574, 576, 578
JOGO DE TOMADA DE CONEXÃO (2 PINOS)	136, 159, 473, 498
JOGO DE TOMADA DE CONEXÃO (3 PINOS)	82
JOGO DE TOMADA DE CONEXÃO (8 PINOS)	503
JOGO DE TRILHO DESLIZANTE	574, 576, 578
JOGO DE VÁLVULA DE AR (ASSENTO DA SUSPENSÃO)	589
JUNTA CORREDIÇA	233
JUNTA (TAMPA DA VÁLVULA)	11

L

Designação	Página
LÂMINA DO LIMPADOR DE PÁRA-BRISA	595
LÂMINA DO LIMPADOR DE PÁRA-BRISA (PARTE TRASEIRA)	595
LÂMPADA	105, 106, 120
LÂMPADA - FAROL	94, 95, 115, 117
LÂMPADA - HALOGÊNEO (24 VOLTS, 65 WATTS)	120
LÂMPADA - HALOGÊNEO (24 VOLTS, 65 WATTS)	94, 95, 118
LÂMPADA - SINALIZAÇÃO	104, 105, 106, 107, 108, 109
LÂMPADA - SINALIZAÇÃO (24 VOLTS)	120
LÂMPADA - TETO	93

* TRADUÇÃO NÃO DISPONÍVEL NO MOMENTO DA IMPRESSÃO

ÍNDICE

Designação	Página
LÂMPADA DIANTEIRA E DE SINAL	96, 98, 100, 101
LÂMPADA (FILAMENTO SIMPLES)	104
LAMPADA-PLACA DE REGISTRO	255, 257
LÂMPADA (12-VOLTS)	91, 584
LÂMPADA (24 V)	109, 142
LÂMPADA (24 VOLTS)	96, 98, 100, 101, 122, 124, 143, 145, 148, 163, 540, 542, 544
LÂMPADA (24 VOLTS, 10 WATTS)	255, 257
LÂMPADA (24 VOLTS, 10 WATTS)	93
LÂMPADA (24 VOLTS, 21 WATTS)	96, 98, 100, 101, 120
LÂMPADA (24 VOLTS, 21 WATTS)	108, 110
LÂMPADA (24 VOLTS, 25 VOLTS)	103
LÂMPADA (24 VOLTS, 3 WATTS)	120
LÂMPADA (24 VOLTS, 5 WATTS)	107, 110
LÂMPADA (24 VOLTS, 70 WATTS)	111
LAVADOR DO VIDRO	593
LENTE	160
LENTE - LÂMPADA	103
LENTE - LÂMPADA DO PISCA-PISCA	105, 106
LENTE ÂMBAR	104
LENTE (ÂMBAR, PISCA-ALERTA)	111
LENTE (AMBAR, VERMELHA)	110
LENTE (ÂMBER)	100, 101
LENTE (ÂMBER) (SETA DE DIREÇÃO)	96, 98, 100, 101
LENTE (FAROL DIANTEIRO)	98
LENTE (HOLOFOTE)	94
LENTE (HOLOFOTE) (FAROL)	95
LENTE (LUZES DIANTEIRAS)	96, 100, 101
LENTE VERMELHA	107, 108
LEVANTAMENTO DO MOTOR	26
*LIGHTING AR-ROADING	112
LIMPADOR DO VIDRO	595
LUVA	597
LUVA DE JUNÇÃO DE CABO	522
LUZ GIRATÓRIA DE ALARME	111
LUZ INTERMITENTE	142
LUZ INTERMITENTE (12/24 VOLTS)	120
LUZ TRASEIRA	103
LUZ TRASEIRA E DE FREIO	110
LUZ TRASEIRA (RESERVA)	160

M

Designação	Página
MANGUEIRA (RESPIRO)	11
MÁQUINA - CONVERSÃO	3, 7
MECANISMO DAS VÁLVULAS	34
MEDIDOR - NÍVEL DE COMBUSTÍVEL	540, 542
MEDIDOR DE TEMPERATURA DO LÍQUIDO ARREFECEDOR	540, 542
MÓDULO - INDICADOR DE ALARME	531, 532
MOLA (MANGUEIRA DO RESPIRO)	11
MONTAGEM - BOMBA	216
MONTAGEM - CABINE	533
MONTAGEM - MOTOR E TRANSMISSÃO	27
MONTAGEM DO EIXO	212
MONTAGEM DO MOTOR	214, 215
MOTOR - LIMPADOR DO VIDRO (24 V) (DIANTEIRO)	595
MOTOR - LIMPADOR DO VIDRO (24 V) (TRASEIRO)	595
MOTOR - PISTÃO	210, 211
MOTOR DA BOMBA HIDRÁULICA ELÉTRICA	130
MOTOR DO GRUPO ROTATIVO	226, 228
MOTOR ELÉTRICO	130
MOTOR ELÉTRICO DE PARTIDA	132
MOTOR PRIMÁRIO	8

* TRADUÇÃO NÃO DISPONÍVEL NO MOMENTO DA IMPRESSÃO

ÍNDICE

Designação	Página
P	
PAINEL DE INSTRUMENTOS	476, 540, 542, 544, 548
PAINEL TRASEIRO DO MOTOR	265
PÁRA-LAMA	262, 263, 264
PÁRA-SOL DA CABINE	592
PEDAL DO FREIO	552
PEDAL DO GOVERNADOR	553
PISO	554
PISTÃO E BIELA	29
PLACA DA VÁLVULA PILOTO	383, 384, 385, 386
PLACA DE INSTRUÇÃO	515
PLACA E DECALQUE	599, 600, 601, 602
PLATAFORMA	555, 556
PLATAFORMA DO OPERADOR	557
PNEU E ARO	234, 235, 236
POLIA DO VIRABREQUIM	32
PONTA LONGA	445, 446
PORTA DA CABINE	478, 479, 482, 484, 487, 489
PRÉ-PURIFICADOR	58
PROTEÇÃO - BOMBA DE INJEÇÃO DE COMBUSTÍVEL	70
PROTETOR - CAÇAMBA	443
PROTETOR - JANELA	494, 495
PROTETOR - TREM DE FORÇA	274
PROTETOR - TUBOS	271, 272, 273
PROTETOR INFERIOR	269, 270
PUBLICAÇÃO	522
PURIFICADOR DE AR	48, 49
R	
RADIADOR	46
RADIADOR E ARREFECEDOR DO ÓLEO HIDRÁULICO	44
RECEPTÁCULO PARA ENERGIA (24 VOLTS)	115
RECLINAÇÃO - ASSENTO	558
REDUÇÃO DE RUÍDO	292, 586
REFLETOR	290
REGULADOR DE TEMPERATURA DA ÁGUA	38
RELÉ (CONJ) (24 VOLTS)	163
RELÉ (CONJ) (24 VOLTS) (ALARME)	545
RELÉ (CONJ) (24 VOLTS) (ALARME DE MARCHA-À-RÉ)	545, 549
RELÉ (CONJ) (24 VOLTS) (ALARME SONORO)	549
RELÉ (CONJ) (24 VOLTS) (BUZINA)	545, 549
RELÉ (CONJ) (24 VOLTS) (FREIO DE ESTACIONAMENTO)	545, 549
RELÉ (CONJ) (24 VOLTS) (LEVANTAMENTO)	153
RELÉ (CONJ) (24 VOLTS) (PARTIDA EM NEUTRO)	544, 548
RELÉ (CONJ) (24 VOLTS) (PRINCIPAL)	79
RELÉ (CONJ) (24 VOLTS) (SISTEMA DE ABSORÇÃO DE IMPACTOS)	162
RELÉ (CONJ) (24 VOLTS) (SUPRESSOR)	3
RELÉ (CONJ) (24 VOLTS) (TEMPERATURA DO ÓLEO HIDRÁULICO)	163
RESERVATÓRIO - ARMAZENAGEM DE ÁGUA	76
RESPIRO (ÓLEO HIDRÁULICO)	390
RETENTOR DE ANEL-O (BUJÃO DE DRENAGEM DO RESERVATÓRIO)	28
RETENTOR DE ANEL-O (REGULADOR DA TEMPERATURA DA ÁGUA)	38
REVESTIMENTO DA CABINE	508, 510, 512, 514
ROPS ABERTA	560
ROPS FECHADA	559
RUÍDO - ARRANJO PARA SUPRESSÃO	291
S	
SACADOR - MINIFUSÍVEL	544

* TRADUÇÃO NÃO DISPONÍVEL NO MOMENTO DA IMPRESSÃO

ÍNDICE

Designação	Página
	548
SENSOR - VELOCIDADE (MOTOR)	79
SEPARADOR DE ÁGUA E BOMBA DE ESCORVA DE COMBUSTÍVEL	76
SILENCIADOR	57
SISTEMA DE ABSORÇÃO DE IMPACTOS	334
SISTEMA DE ABSORÇÃO DE IMPACTOS E TUBOS	332
SISTEMA DE ILUMINAÇÃO - ADVERTÊNCIA	128
	129
SISTEMA DE ILUMINAÇÃO - FARÓIS	115
	117
	118
SISTEMA DE ILUMINAÇÃO - FARÓIS E SINAL	120
SISTEMA ELETRÔNICO - MÁQUINA	86
SOFTWARE - MÁQUINA (SEGURANÇA)	86
SUPORTE - ASSENTO	585
SUPORTE PARA TRANSPORTE	427
SUSPENSÃO - ASSENTO	587
	589

T

TAMPA	11
	591
TAMPA - ADMISSÃO DE AR	50
TAMPA - BOCAL DE ENCHIMENTO (COMBUSTÍVEL)	75
TAMPA - BOCAL DE ENCHIMENTO (TANQUE HIDRÁULICO)	392
TAMPA - CONSOLO	475
TAMPA - EMBARQUE	182
TAMPA - MECANISMO DAS VÁLVULAS	11
TAMPA - MOTOR	181
TAMPA (CONDICIONADOR DE AR)	515
TAMPA CONTRA POEIRA	187
	204
	220
	394
TAMPA (HASTE DA VALVULA)	249
TAMPA HIDROSTÁTICA	179
TAMPA (RADIADOR)	388
TAMPÃO (TUBULAÇÕES DO FILTRO DE ÓLEO DO MOTOR)	39
TANQUE - LAVADOR DE JANELA	591
TANQUE DE COMBUSTÍVEL	75
TANQUE DE COMBUSTÍVEL E MONTAGEM	73
TANQUE DE EXPANSÃO	388
TANQUE HIDRÁULICO	390
	392
TELA FILTRANTE	331
	407
	409
	412
TELA FILTRANTE (TANQUE HIDRÁULICO)	392
TELA PÁRA-SOL	562
TOLDO - ESTRUTURA ROPS ABERTA	467
TOLDO - FLEXÍVEL	466
TOLDO - ROPS ABERTA	466
TOLDO FLEXÍVEL	468
	469
*TOOL BOX GP	597
TRAVA - CILINDRO DA DIREÇÃO	318
TRAVA - CONTROLE MANUAL HIDRÁULICO	381
TREM DE FORÇA	217
TUBOS - ACUMULADOR	350
TUBOS - AQUECEDOR	521
TUBOS - AQUECEDOR DA CABINE	519
TUBOS - AR	53
	55
TUBOS - AR CONDICIONADO	515
TUBOS - ARREFECEDOR DE ÓLEO HIDRÁULICO	360
TUBOS - BOMBA	376
TUBOS - CAIXA DO SISTEMA HIDROSTÁTICO	204
TUBOS - CILINDRO DE INCLINAÇÃO	379
TUBOS - CILINDRO DE LEVANTAMENTO	361
TUBOS - CIRCUITO PILOTO	364
	368
	372
TUBOS - DIANTEIROS	352
	354
TUBOS - DIREÇÃO	314
	317
TUBOS - DIREÇÃO SECUNDÁRIA	312
TUBOS - FILTRO DO TREM DE FORÇA	208
TUBOS - FREIO DE SERVIÇO	301
TUBOS - GRAXA	288
TUBOS - ÓLEO HIDRÁULICO	356
	358
TUBOS - SISTEMA HIDROSTÁTICO	202
TUBOS DO AQUECEDOR	519
	521
TURBOALIMENTADOR	59

V

VÁLVULA - COLETOR E SOLENÓIDE	247
VÁLVULA - OBTENÇÃO DE AMOSTRAS DE FLUIDOS	187
VÁLVULA - SENSOR DE VELOCIDADE	248
VÁLVULA DE ÁGUA	454
VÁLVULA DE ALÍVIO	245
	420

* TRADUÇÃO NÃO DISPONÍVEL NO MOMENTO DA IMPRESSÃO

ÍNDICE

Designação	Página
	421
	422
VÁLVULA DE ALÍVIO (COMPRESSOR DO REFRIGERANTE)	470
VÁLVULA DE CONTROLE	404
	405
VÁLVULA DE CONTROLE DA BOMBA	243
	244
VÁLVULA DE CONTROLE PILOTO	237
	239
	241
	407
	409
	412
VÁLVULA DE DIREÇÃO SECUNDÁRIA	327
VÁLVULA DE DRENAGEM	406
VÁLVULA DE DRENAGEM DO CÁRTER	33
VÁLVULA DE DRENAGEM DO RADIADOR	44
VÁLVULA DE DRENAGEM (ECOLOGIA)	345
VÁLVULA DE GÁS	293
	294
	329
VÁLVULA DE PARADA	20
	423
VÁLVULA DE PNEU	249
VÁLVULA DO CARTUCHO PILOTO	415
	416
	417
	418
	419
VÁLVULA DO CONTROLE PRINCIPAL E MONTAGEM	394
	396
	398
VÁLVULA ESFÉRICA	361
VÁLVULA GIRATÓRIA	246
VÁLVULA PARA TIRAR AMOSTRAS DE FLUIDOS	37
VÁLVULA SOLENÓIDE	425
	426
VELA - AQUECIMENTO	87
VELA DE AQUECIMENTO; VELA INCANDESCENTE	87
	88
VELOCÍMETRO	584
VENTILADOR DE SUCÇÃO	41
VIDRO DA PORTA	594
VIRABREQUIM	13
VOLANTE DO MOTOR	22

* TRADUÇÃO NÃO DISPONÍVEL NO MOMENTO DA IMPRESSÃO

STICHWORTVERZEICHNIS

Bezeichnung	Seite
A	
ABDECKGLAS	160
ABDECKGLAS (*AMBER, RED)	110
ABDECKGLAS (ARBEITSSCHEINWERFER)	94
ABDECKGLAS (ARBEITSSCHEINWERFER) (ARBEITSSCHEINWERFER)	95
ABDECKGLAS (FRONTSCHEINWERFER)	96 98 100 101
ABDECKGLAS (GELB)	100 101 104
ABDECKGLAS (GELB) (FAHRTRICHTUNGSANZEIGER)	98
ABDECKGLAS (GELB) (FAHRTRICHTUNGSANZEIGER)	96 100 101
ABDECKGLAS (GELB, RUNDUMKENNLEUCHTE)	111
ABLASS (UMWELTFREUNDLICH)	345
ABLASSVENTIL	406
ABLASSVENTIL (UMWELTFREUNDLICH)	345
ABSPERRVENTIL	20 423
ACHSENANBAUSATZ	212
ANSCHLAG-EINBAUSATZ	574 576 578
ANTRIEBSSCHUTZ	274
ANTRIEBSWELLE	232
ANTRIEBSWELLEN-KEILVERZAHNUNG	233
ANZEIGEN-EINBAUSATZ (GEWICHTSEINSTELLUNG)	501
ANZUGSLEINE	574 576 578
ANZUGSLEINE (SCHWINGSITZ)	589
ARBEITS- U. SIGNALBELEUCHTUNG	112
ARBEITS- U. SIGNALLEUCHTE	120
ARBEITSGERÄTE- U. LENKPUMPE U. BEFESTIGUNGSTEILE	387
ARBEITSLEUCHTEN	94 95 115 117 118
ARMATURENBRETT	476
ARMLEHNE	457 458 459 460 461
ARMLEHNENEINBAUSATZ	574 576 578
ARMLEHNENEINBAUSATZ, RECHTS	574 576 578
ASCHENBECHER	544 548
AUFHÄNGUNGSVERKLEIDUNGS-EINBAUSATZ	574 576 578
AUFKLEBER	598
AUFKLEBER - FEUERLÖSCHER	252 255
AUFKLEBER - ÖL (BIOLOGISCH ABBAUBAR) (HYDRAULIK)	341
AUFKLEBER (HÖHE FÜR STRASSENFAHRT)	2
AUFKLEBER (KRAFTSTOFFPUMPE)	70
AUFKLEBER (NAMENSSCHILD)	328 329
AUFKLEBER (NICHT ZIEHEN, NICHT DRÜCKEN)	599
AUFKLEBER (REFLEKTIEREND)	257
AUFKLEBER (SICHERHEIT)	91
AUFKLEBER (STARTSCHLÜSSELSCHALTER)	91
AUFKLEBER (12 V)	83
AUFKLEBER (20 KM/H)	252
AUFKLEBER (24 V)	600 601 602
AUSGLEICHSBEHÄLTER	388
AUSPUFFROHRVERLÄNGERUNG	51 52
AUSRÜSTUNG FÜR STRASSENFAHRT	131
AUSSCHALTER (ANTRIEBSAGGREGAT EIN)	544 548
AUSSCHALTER (SCHAUFEL/GABEL)	335
B	
BATTERIE	78
BATTERIE - WARTUNGSFREI (12 V, 900 A)	78
BEFESTIGUNG (MOTOR)	214 215
BEILAGSCHEIBEN (EINSCHL. 12 UNTERLEGSCHEIBEN)	188 191
BELEUCHTUNGSANLAGE	120

* ÜBERSETZUNG ZUM ZEITPUNKT DER DRUCKLEGUNG NICHT VORHANDEN

STICHWORTVERZEICHNIS

Bezeichnung	Seite
BELEUCHTUNGSANLAGE (STRASSENAUSRÜSTUNG)	122, 124
BELEUCHTUNGSANLAGE (STRASSENAUSRÜSTUNG)	113
BELEUCHTUNGSANLAGE (12 V)	91
BETRIEBSBREMSLEITUNGEN	301
BLINKER	142
BLINKER (12/24 VOLT)	120
BLINKERLEUCHTEN	126
BLINKLEUCHTE	104, 105, 106, 107, 108, 109
BLINKLEUCHTE (24 V)	120
BREMS- UND RÜCKLEUCHTE	110
BREMSDRUCKSPEICHER	293, 294, 295
BREMSDRUCKSPEICHERKRÜMMER	303
BREMSE UND PLANETENGETRIEBE	170
BREMSGESTÄNGE	299
BREMSPEDAL	552
BUCHSE	597
BUCHSE - KABELSPLEISSUNG	522
*BUCKET GP-ROCK	437

C

*CONTROL GP-TMSN & JOYSTICK	174

D

DÄMPFER-EINBAUSATZ	574, 576, 578
DECKELSATZ	574, 576, 578
DICHTUNG (VENTILDECKEL)	11
DICHTUNGSSATZ	89, 90, 321, 323, 342, 350, 358, 361, 387, 400, 401, 402, 423
DICHTUNGSSATZ (OBEN)	8
DICHTUNGSSATZ (PUMPENKOPFÜBERDRUCKVENTIL)	196
DICHTUNGSSATZ (SOLENOIDVENTIL)	426
DICHTUNGSSATZ (WASSERABSCHEIDER)	76
DIFFERENTIAL	183
DIFFERENTIAL (BEGRENZTER SCHLUPF)	184
DOKUMENTATION	522
DREHKNOPFSCHALTER (HINTERER SCHEIBENWISCHER)	139
DREHKNOPFSCHALTER (LEUCHTE)	143, 145, 148
DREHSCHALTER	423
DREHSCHIEBERVENTIL	246
DREHSTROMGENERATOR	77
DREHZAHLGEBERVENTIL	248
DREHZAHLREGLERKABEL	61
DREHZAHLSENSOR (MOTOR)	79
DREHZAHLSTEUERUNG	171
DREHZAHLWÄHLSCHALTER	172, 475
DRUCKLUFTLEITUNGEN	53, 55
DRUCKLUFTVENTILSATZ (SCHWINGSITZ)	589
DRUCKSCHALTER	137, 187
DRUCKSCHALTER (HYDRAULIKTANK)	312
DRUCKSCHALTER (KLIMAANLAGE)	515
DRUCKSPEICHER, HYDRAULISCHE SCHWINGUNGSDÄMPFUNG	330
DRUCKSPEICHERLEITUNGEN	350
DRUCKSPEICHERWARTUNGSSATZ	293, 328

E

EINBAUVORSTEUERVENTIL	415, 416, 417, 418, 419
EINFÜLLKAPPE (KRAFTSTOFF)	75
EINFÜLLSTUTZENKAPPE (HYDRAULIKTANK)	392
EINSPRITZPUMPENSCHUTZ	70
EINSTELLER-EINBAUSATZ	458, 538, 574, 576, 578

* ÜBERSETZUNG ZUM ZEITPUNKT DER DRUCKLEGUNG NICHT VORHANDEN

STICHWORTVERZEICHNIS

Bezeichnung	Seite
ELEKTR. HYDRAULIKPUMPENMOTOR	130
ELEKTR. UMFORMER	83
	84
ELEKTR. UMFORMER (24V - 24V)	153
ELEKTR. UMFORMER (24V - 24V)	83
ELEKTRONIK - MASCHINE	86
ELEKTRONISCHER SCHLÜSSEL (GELB)	86
	91
ELEKTRONISCHER SCHLÜSSEL (GRAU)	86
	91
ENDSCHALTER	296
ENDSCHALTER (FESTSTELLBREMSE)	544
	548
ENTFROSTER - FAHRERHAUS	477
ENTLÜFTER (HYDRAULIKÖL)	390
ERDBAUSCHAUFEL	431
	432
	433
	436

F

FAHRERHAUS	462
	463
FAHRERHAUS - OFFEN MIT ÜBERROLL-SCHUTZ	534
FAHRERHAUS-KABELBAUM	544
	548
FAHRERHAUS M. OFFENEM ÜBERROLL-SCHUTZ	467
FAHRERHAUS MIT ÜBERROLLSCHUTZ	463
	464
FAHRERHAUS, SONNENBLENDE	592
FAHRERHAUSANBAUSATZ	533
FAHRERHAUSAUSKLEIDUNG	508
	510
	512
	514
FAHRERHAUSAUSRÜSTUNG	534
FAHRERHAUSBELEUCHTUNG	93
FAHRERHAUSHEIZUNG	497
	498
FAHRERHAUSHEIZUNG U. BEFESTIGUNGS-TEILE	496
FAHRERHAUSHEIZUNGSLEITUNGEN	519
FAHRERHAUSLUFTFILTER	493
FAHRERHAUSTÜR	478
	479
	482
	484
	487
	489
FAHRERHAUSVERDRAHTUNG	142
	143
	145
	148
FAHRERPLATTFORM	554
	557
FAHRERSITZ	566
	568
	569
	571
	572
FAHRERSITZ, KIPPVORRICHTUNG	538
FAHRERSITZFEDERUNG	587
	589
FAHRERSITZFEDERUNGSGEHÄUSE	500
FAHRERSITZVERKLEIDUNG	538
FAHRERSITZVERKLEIDUNG (SITZFLÄCHE)	566
FAHRERSITZVERSTELLER	449
FAHRGESTELLVERDRAHTUNG	150
FAHRWERK	1
FEDER-EINBAUSATZ	321
	323
	500
	574
	576
	578
FEDER-EINBAUSATZ (HÖHENEINSTEL-LUNG)	500
FEDER (ENTLÜFTERSCHLAUCH)	11
FEDERUNGS-EINBAUSATZ (EINSTELLKNOPF) (HÖHENEINSTELLUNG)	500
FEDERUNGS-EINBAUSATZ (MANSCHETTE)	587
FEDERUNGS-EINBAUSATZ (ROLLE)	587
FEDERUNGSLAGER-EINBAUSATZ	574
	576
	578
FELGE	222
FELGE (TEILBAR)	223
	224
	225
FESTSTELLBREMSGESTÄNGE	296
	298
FEUERSCHUTZWAND	265
FILTER (FAHRERHAUSLUFT)	493
FILTER (KRAFTSTOFF)	76
FILTERSIEB	331
	591
FILTERSOCKEL U. MOTORÖLKÜHLER	39
FLÜSSIGKEITSPROBEENTNAHMEVENTIL	187

G

GASPEDAL	553
GASVENTIL	293

* ÜBERSETZUNG ZUM ZEITPUNKT DER DRUCKLEGUNG NICHT VORHANDEN

STICHWORTVERZEICHNIS

Bezeichnung	Seite
	294
	329
GEGENGEWICHT	259
	260
	261
GEHÄUSE - PENDELACHSE	200
GEHÄUSE - STARRACHSE	198
GESCHWINDIGKEITSMESSER	584
GETRIEBESTEUERUNG	175
	177
	178
GETRIEBESTEUERUNG U. VERDRAHTUNG	79
GLEITSCHIENENBLOCK-EINBAUSATZ	573
	580
GLÜHKERZE	87
	88
GRUNDAUSFÜHRUNG	1

H

HALOGENSCHINWERFER (24V)(65W)	94
	95
	118
	120
HANDGRIFF-EINBAUSATZ	574
	576
	578
HANDWERKZEUGE	252
	255
HEBEL-EINBAUSATZ	574
	576
	578
HEIZUNGSLEITUNGEN	519
	521
HÖHENEINSTELLUNGSSATZ (FAHRER-SITZ)	574
	576
	578
HUBENDAUSSCHALTE-REGELUNG	81
	348
HUBZYLINDER	343
HUBZYLINDERLEITUNGEN	361
HYDRAULIK-UMBAUSATZ	341
HYDRAULIKANORDNUNG (2-VENTIL-HYDRAULIK)	346
HYDRAULIKANORDNUNG (3-VENTIL-HYDRAULIK)	346
HYDRAULIKANORDNUNG (4-VENTIL-HYDRAULIK)	347
HYDRAULIKBEDIENUNG (MIT VORSTEUERUNG)	335
	337
	339
HYDRAULIKBLOCK	331
HYDRAULIKDRUCKSPEICHER	328
	329
	330
HYDRAULIKLEITUNGEN	356
	358
HYDRAULIKÖLKÜHLERLEITUNGEN	360
HYDRAULIKPUMPE UND LEITUNGEN	376
HYDRAULIKSPERRE (HANDBEDIENUNG)	381
HYDRAULIKSYSTEM	346
HYDRAULIKTANK	390
	392
HYDRAULISCHE SCHWINGUNGSDÄMPFUNG	334
HYDROSTATIKDECKEL	179
HYDROSTATIKLEITUNGEN	202
	204

I

IDENTIFIZIERUNGS-AUFKLEBER (GRUPPEN- U. SEQUENZNR.)	473
IDENTIFIZIERUNGS-AUFKLEBER (LANGZEITKÜHLMITTEL)	599
INSTRUKTIONS-AUFKLEBER	81
	82
	587
INSTRUKTIONS-AUFKLEBER (FÜR SITZVERSTELLUNG)	589
INSTRUKTIONS-AUFKLEBER (MOTOR-START)	540
	542
INSTRUKTIONS-AUFKLEBER (SCHEIBEN-WASCHMITTEL)	599
INSTRUKTONSSCHILD	515
INSTRUMENTEN-AUFKLEBER (ARBEITSGERÄTESPERRE)	337
	339
INSTRUMENTEN-AUFKLEBER (ARBEITSGERÄTESPERRE)	335
INSTRUMENTENTAFEL	540
	542
	544
	548

K

KABELSTRANG - HEIZUNG U. KLIMAANLAGE	454
KÄLTEMITTELKOMPRESSOR	470
	471
KÄLTEMITTELKONDENSATOR	473
KAPPE	11

* ÜBERSETZUNG ZUM ZEITPUNKT DER DRUCKLEGUNG NICHT VORHANDEN

STICHWORTVERZEICHNIS

Bezeichnung	Seite
	591
KAPPE (KLIMAANLAGE)	515
KAPPE (KÜHLER)	388
KAPPE (VENTILSCHAFT)	249
KEILRIEMEN (KOMPRESSOR)	471
KEILRIEMENSATZ (EINSCHL. 2 RIEMEN) (LÜFTER)	21
KIPPHEBELSATZ	326
KIPPVORRICHTUNG NACH HINTEN, REPARATURSATZ	538
KIPPWANNENSATZ	566
KIPPZYLINDER	344
KLIMAANLAGE	453
	454
KLIMAANLAGE - KABELSTRANG (KONDESATORGEBLÄSE)	473
KLIMAANLAGE UND AUFHÄNGUNG	451
	452
KLIMAANLAGEN-UMBAUSATZ	474
KLIMAANLAGENDRUCKSPEICHER	447
	448
KLIMAANLAGENLEITUNGEN	515
KNICKGELENK-ANHÄNGUNG	275
KNICKGELENKSPERRE	289
KNIESTÜCK	205
KNOPF- GEWICHTSEINSTELLUNG	500
KOLBENMOTOR	210
	211
KOLBENPUMPE	220
KOLBENPUMPENUMLAUFSATZ	230
KRAFTSTOFFEINSPRITZPUMPE	71
KRAFTSTOFFFILTEREINSATZ	68
KRAFTSTOFFILTER	68
KRAFTSTOFFILTER (EINFÜLLSTURZEN-SIEB)	75
KRAFTSTOFFILTER UND LEITUNGEN	65
KRAFTSTOFFSTAND-GEBER	75
KRAFTSTOFFSTANDANZEIGE	540
	542
KRAFTSTOFFTANK	75
KRAFTSTOFFTANK U. BEFESTIGUNG	73
KRAFTÜBERTRAGUNG	217
KRAFTÜBERTRAGUNGSFILTERLEITUN-GEN	208
KRAFTÜBERTRAGUNGSVERDRAHTUNG	159
KREUZGELENKLAGER-EINBAUSATZ	233
KRIECHGANGSTEUERUNG	172
KUGELVENTIL	361
KÜHLER	46
KÜHLER UND HYDRAULIKÖLKÜHLER	44
KÜHLERABLASSVENTIL	44
KÜHLERLEITPLATTE	250
KÜHLMITTELTEMPERATURANZEIGE	540
	542
KÜHLWASSERANSCHLUSS	38
KÜHLWASSERPUMPE	42
KURBELWELLE	13
KURBELWELLEN-RIEMENSCHEIBE	32

L

LADEPUMPE	218
	219
LADERRAHMEN	266
LAGERSATZ	501
LEITUNGEN, VORNE	352
	354
LEITUNGSVERKLEIDUNG	271
	272
	273
LENKBETÄTIGUNG	304
	306
LENKÖLLEITUNGEN	314
	317
LENKSÄULE	326
LENKUNG	325
LENKZYLINDER	310
LENKZYLINDER UND AUFHÄNGUNG	309
LENKZYLINDERSPERRE	318
LEUCHTE	105
	106
LEUCHTE (EINZELGLÜHFADEN)	104
LEUCHTE, HINTEN	103
LEUCHTE, HINTEN (AUSFALLSCHUTZ)	160
LEUCHTE (12 V)	584
LEUCHTE (24 V)	96
	98
	100
	101
	122
	124
	142
	143
	145
	148
	163
	540
	542
	544
LEUCHTE (24 V)	109
LEUCHTE (24 V, 25 W)	103
LEUCHTE (24 V, 3 W)	120
LEUCHTE (24 V, 70 W)	111
LEUCHTE (*24-VOLT, 5-WATT)	107
	110
LEUCHTE (24V, 10W)	93

* ÜBERSETZUNG ZUM ZEITPUNKT DER DRUCKLEGUNG NICHT VORHANDEN

STICHWORTVERZEICHNIS

Bezeichnung	Seite
	255
	257
LEUCHTE (24V, 21W)	96
	98
	100
	101
	108
	110
	120
LEUCHTENLINSE	103
*LIGHTING AR-ROADING	112
LINSE - RICHTUNGSBLINKERLEUCHTE	105
	106
LINSE - ROT	107
	108
LUFTEINLASSDECKEL	50
LÜFTERANTRIEB	21
LUFTFILTER (HAUPTELEMENT)	49
LUFTFILTER (SICHERHEITSELEMENT)	49
LUFTFILTERWARTUNGSANZEIGE	53
	55
LUFTKANAL	491
LUFTKOMPRESSORSITZ	450
	507
LUFTREINIGER	48
	49

M

MAGNETSCHALTER	135
	136
MAGNETSCHALTER (24 V) (GLÜHKERZE)	153
MAGNETSCHALTER (24 V) (STARTRELAIS)	154
MAGNETSTOPFEN	198
	200
MAGNETVENTIL	425
	426
MASCHINEN-UMBAUSATZ	3
	7
MINISICHERUNGSZIEHER	544
	548
MOTOR- UND GETRIEBEAUFLAGER	27
MOTOR-EINBAUSATZ	9
MOTOR, ELEKTR.	130
MOTORABDECKUNG	181
MOTORAUSFÜHRUNG	8
MOTORBLOCK	15
	17
MOTORDECKEL	192
	194
MOTORDREHVORRICHTUNG	226
	228
MOTORHAUBE	281
	283
MOTORHAUBE UND VERKLEIDUNG	277
	279
	280
MOTORHUBÖSE	26
MOTORÖLABLASS	20
MOTORÖLKÜHLER	39
MOTORÖLKÜHLER UND FILTERSOCKEL	39
MOTORSTOPFEN	30
	31
MOTORVERDRAHTUNG	153

N

NEIGEZYLINDERLEITUNGEN	379
NOCKENWELLE	10
NOTLENKUNG	325
NOTLENKUNGSLEITUNGEN	312
NOTLENKUNGSPUMPE UND -MOTOR	319
NOTLENKUNGSSCHALTER	163
NOTLENKUNGSVENTIL	327
NOTLENKUNGSVERDRAHTUNG	163

O

O-RING-DICHTUNG (KÜHLWASSERTHERMOSTAT)	38
O-RING-DICHTUNG (SUMPFABLASSSCHRAUBE)	28
OBERER EINBAUSATZ	574
OFFENES FAHRERHAUS MIT ÜBERROLLSCHUTZ	466
ÖLFILTER	35
	187
ÖLMESSSTAB	28
	198
	200
	390
ÖLTEMPERATURANZEIGE (HYDRAULISCH)	540
	542
ÖLWANNE	28
ÖLWANNEN-ABLASSSCHRAUBE	28
ÖLWANNENABLASSVENTIL	33

P

PANZERWANNE	269
	270
PENDELACHSE	168
	169
PLATTFORM	555
	556
PLEUELSTANGE UND KOLBEN	29

* ÜBERSETZUNG ZUM ZEITPUNKT DER DRUCKLEGUNG NICHT VORHANDEN

STICHWORTVERZEICHNIS

Bezeichnung	Seite
POLSTEREINBAUSATZ	458
POLSTEREINBAUSATZ (RÜCKLEHNE)	492
PROBEENTNAHMEVENTIL	37
PUMPE FÜR KRAFTSTOFFENTLÜFTUNG U. WASSERABSCHEIDER	76
PUMPENAUFHÄNGUNG	216
PUMPENKOPF	196
PUMPENSTELLGLIED	165
PUMPENSTEUERVENTIL	243
	244

R

RADIOEINBAUSATZ	503
	504
	505
RAHMEN-EINBAUSATZ	574
	576
	578
RAHMEN, HINTEN	267
REFLEKTOR	290
REGLERSTEUERUNG	62
REIFEN UND FELGE	234
	235
	236
REIFENVENTIL	249
RELAIS (24 V)	163
RELAIS (24 V) (FESTSTELLBREMSE)	545
	549
RELAIS (24 V) (HAUPTUNTERBRECHER)	79
RELAIS (24 V) (HUB)	153
RELAIS (24 V) (HUPE)	545
	549
RELAIS (24 V) (HYDRAULIKÖLTEMPERATUR)	163
RELAIS (24 V) (NEUTRALSTART)	544
	548
RELAIS (24 V) (RÜCKFAHRALARM)	545
	549
RELAIS (24 V) (SCHWINGUNGSDÄMPFUNG)	162
RELAIS (24 V) (UNTERDRÜCKER)	3
RELAIS (24 V) (WARNEINRICHTUNG)	545
RELAIS (24 V) (WARNSUMMER)	549
RICHTUNGSBLINKER- UND WARNSCHALTER	142
RICHTUNGSBLINKERSCHALTER	122
	124
RÜCKFAHRWARNHORN	140
	141
RÜCKLEHNENVERLÄNGERUNG	492
RÜCKSPIEGEL	524
	525
	526
	527
	528
	529
RUNDUM-KENNLEUCHTE	111

S

SAUGLÜFTER	41
SCHALE - RÜCKENLEHNE	535
	536
	537
SCHALE - RÜCKENLEHNE (SITZLEHNE)	566
SCHALLDÄMPFER	57
SCHALLDÄMPFUNG	291
	292
	586
SCHALTER (ENTFROSTER)	477
SCHALTER (FERNLICHT/ABBLENDLICHT)	142
SCHALTER (FÜR STEUERUNG)	3
SCHALTER (*HIGH, LOW BEAM)	122
	124
SCHALTER (KLIMAANLAGE)	451
SCHALTER (RICHTUNGSBLINKER, WARNLEUCHTE)	120
SCHALTER (RUNDUMWARNLEUCHTE)	128
SCHALTER (SCHWINGUNGSDÄMPFUNG)	162
SCHALTER (STARTHILFE)	143
	145
	148
SCHALTER (40 GRAD) (TEMPERATUR)	71
SCHALTKNOPFEINBAUSATZ	326
SCHAUFELAUSSCHALTER UND -EINSTELLER	348
SCHAUFELSCHUTZ	443
SCHAUFELSTEUERUNG	428
SCHAUMSTOFF-EINBAUSATZ	574
SCHEIBENSATZ	184
SCHEIBENSCHUTZ	494
	495
SCHEIBENWASCHANLAGE	593
SCHEIBENWASCHMITTELBEHÄLTER	591
SCHEIBENWISCHER	595
SCHEIBENWISCHERBLATT	595
SCHEIBENWISCHERBLATT (HINTEN)	595
SCHEIBENWISCHERMOTOR (24 V) (HINTEN)	595
SCHEIBENWISCHERMOTOR (24 V) (VORNE)	595
SCHEIBENWISCHERSCHALTER	139
SCHEIBENWISCHERSCHALTER (VORNE)	139
SCHEINWERFER U. RICHTUNGSLEUCHTE	96
	98

* ÜBERSETZUNG ZUM ZEITPUNKT DER DRUCKLEGUNG NICHT VORHANDEN

STICHWORTVERZEICHNIS

Bezeichnung	Seite
	101
SCHEINWERFER U. RICHTUNGSLEUCHTE	100
SCHEINWERFER (24 V)	115
SCHIEBESCHIENE-EINBAUSATZ	574
	576
	578
SCHILD UND AUFKLEBER	599
	600
	601
	602
SCHLAUCHLEITUNG (ENTLÜFTER)	11
SCHLÜSSEL	597
SCHLÜSSEL (TRENNSCHALTER)	133
SCHMIERLEITUNGEN	288
SCHMIERNIPPEL (1/8-27-GEWINDE)	200
	309
SCHMIERNIPPEL (1/8-27-GEWINDE)	428
SCHMIERPUMPE	36
SCHNEIDMESSER UND EINSATZSTÜCK	441
	442
SCHNELLWECHSELANSCHLUSSZYLINDER	342
SCHNELLWECHSELEINRICHTUNG	438
SCHNELLWECHSELEINRICHTUNG - EINBAUSATZ	444
SCHRAUBE (MOTORÖLFILTERLEITUNGEN)	39
SCHUTZBLECHE (STRASSENAUSRÜSTUNG)	262
	263
	264
SCHWINGSITZ	573
	574
	576
	578
	580
	581
	582
	583
SCHWINGUNGSDÄMPFUNG U. LEITUNGEN	332
SCHWINGUNGSDÄMPFUNGSVERDRAHTUNG	162
SCHWUNGRAD	22
SCHWUNGRADGEHÄUSE	23
SEILEINSTELLVORRICHTUNGS-EINBAUSATZ	574
	576
	578
SENSORANSCHLUSSSATZ (2POLIG)	136
	159
	473
	498
SENSORANSCHLUSSSATZ (3POLIG)	82
SENSORANSCHLUSSSATZ (8POLIG)	503
SICHERHEITSEINBAUSATZ	91
SICHERHEITSGURT	563
	564
	565
	571
SIEB	407
	409
	412
SIEB (HYDRAULIKTANK)	392
SITZGURT-HALTESEIL	587
SITZHEBEL-EINBAUSATZ	566
SITZKISSENEINBAUSATZ	566
SITZUNTERBAU	585
SOFTWARE - MASCHINE (SICHERHEIT)	86
SONNENBLENDE	562
SPIEGEL, LINKS	523
SPIEGEL, RECHTS	530
STARRACHSE	167
STARTERMOTOR	132
STARTSCHALTER (TASTE)	540
	542
STAUBKAPPE	187
	204
	220
	394
STECKDOSEN - EINBAUSATZ (12POLIG)	177
	178
STECKDOSEN - EINBAUSATZ (12POLIG)	531
STECKDOSEN - EINBAUSATZ (2POLIG)	104
	109
	140
	159
	470
	498
STECKDOSEN - EINBAUSATZ (3POLIG)	81
	473
	503
STECKDOSEN - EINBAUSATZ (4 POLIG)	115
	175
STECKDOSEN - EINBAUSATZ (6POLIG)	498
	595
STECKDOSEN - EINBAUSATZ (8POLIG)	532
STEIGLEITER	286
STELLUNGSSTEUERUNG	82
	348
STEUERKONSOLENABDECKUNG	475
STEUERUNG - NICHT PROGRAMMIERT (SICHERHEIT)	86
STEUERVENTIL	404
	405
STIRNRADGEHÄUSE	24
STOPFENSATZ (4 POLIG)	178
STOSSDÄMPFER-REPARATURSATZ (SCHWINGSITZ)	589

* ÜBERSETZUNG ZUM ZEITPUNKT DER DRUCKLEGUNG NICHT VORHANDEN

STICHWORTVERZEICHNIS

Bezeichnung	Seite
STOSSSTANGEN-EINBAUSATZ (GEWICHTSEINSTELLUNG)	500
STROMANSCHLUSS-STECKDOSE (24 V)	115

T

T-STÜCK	315
TELLERRAD	188, 189, 190, 191
TEMPERATURGEBER (HYDRAULIKÖL)	150
TEMPERATURSCHALTER	138, 454
TRANSPORTHALTERUNG	427
TRENNSCHALTER	133, 134
TURBOLADER	59
TÜRFENSTER	594

U

ÜBERDRUCKVENTIL	245, 420, 421, 422
ÜBERDRUCKVENTIL (KÄLTEMITTELKOMPRESSOR)	470
ÜBERROLL-SCHUTZDACH	560
ÜBERROLL-SCHUTZKABINE	559
UMBAUSATZ - FÜR STRASSENVERKEHR	252, 255, 257
UMBAUSATZ - ZULASSUNG	2
UMLAUFKÜHLWASSERHEIZUNG	89, 90
UMRÜSTSATZ - NOTLENKUNG	308
UNIVERSALSCHAUFEL	434, 435
UNTERBRECHER (15 A) (HAUPTUNTERBRECHER)	544, 548
UNTERBRECHER (30 A) (ZUSATZ)	153
UNTERBRECHER (60 A) (HAUPTUNTERBRECHER)	153
UNTERBRECHER (90 A) (DREHSTROMGENERATOR)	153
UNTERLEGSCHEIBE (*INCLUDES 8 SHIMS)	184

V

VENTIL UND BEFESTIGUNGSTEILE - HAUPTSTEUERUNG	394, 396, 398
VENTILDECKEL	11
VENTILKABELSTRANG (LUFTKOMPRESSOR)	589
VENTILSATZ (2-VENTIL)	400
VENTILSATZ (3-VENTIL)	401
VENTILSATZ (4-VENTIL)	402
VENTILSOLENOID U. -KRÜMMER	247
VENTILSTEUERUNG	34
VENTILSTÖSSELSATZ	500, 501
VERBINDER	361
VERDRAHTUNG, HINTEN	160, 161, 255, 257
VERDRAHTUNG, VORNE	157
VERSANDDECKEL	182
VERSTELLBARER SITZ	558
VERTEILER, ELEKTRON.	85
VORGELEGEGETRIEBE	185
VORHÄNGESCHLOSS	597
VORREINIGER	58
VORSTEUERLEITUNGEN	364, 368, 372
VORSTEUERUNGSSATZ	326
VORSTEUERVENTIL	237, 239, 241, 382, 407, 409, 412
VORSTEUERVENTILPLATTE	383, 384, 385, 386

W

WARNANZEIGEMODUL	531, 532
WARNAUFKLEBER (HOCHDRUCKZYLINDER)	600, 602
WARNAUFKLEBER (LENKUNG)	252
WARNHORN	326
WARNHORN (24V)(NIEDERTON)	157
WARNLEUCHTEN	128, 129
WARNLEUCHTENSCHALTER	129

* ÜBERSETZUNG ZUM ZEITPUNKT DER DRUCKLEGUNG NICHT VORHANDEN

STICHWORTVERZEICHNIS

Bezeichnung	Seite
WARTUNGSMESSER	540
	542
WARTUNGSSATZ	420
	421
	422
	425
WASSERABSCHEIDER - EINBAUSATZ	76
WASSERABSCHEIDER U. KRAFTSTOFFENT-LÜFTUNGSPUMPE	76
WASSERAUFFANGSCHALE	76
WASSERTEMPERATURREGLER	38
WASSERVENTIL	454
WERKZEUGKASTEN	597
WETTERDACH	466
	468
	469

Z

Bezeichnung	Seite
ZAHNHALTER	430
ZAHNRADPUMPE	320
ZAHNSPITZE, LANG	445
	446
ZIGARETTENANZÜNDER (ZIGARETENANZÜNDER, 24 V)	148
ZULASSUNGSSCHILDLEUCHTE	255
	257
ZUMESSPUMPE	321
	323
ZUSATZBELEUCHTUNG	114
ZYLINDERKOPF	18
	19

* ÜBERSETZUNG ZUM ZEITPUNKT DER DRUCKLEGUNG NICHT VORHANDEN

MACHINE ARRANGEMENT

236-5635 CHASSIS AR

S/N: PDF1-UP

PART OF 236-5630 COMMON AR

SMCS-7000 **i02038801**

NOTE	PART NUMBER	QTY	PART NAME 1 2 3 4 5 6 (PRODUCT LEVEL)	SEE PAGE
Y	*112-7167*	1	BATTERY GP	78
Y	*107-4701*	1	CONTROL GP-BUCKET	428
Y	*236-5647*	1	CONTROL GP-GOVERNOR	62
Y	*241-3703*	1	CONTROL GP-PARKING BRAKE	298
Y	*107-4812*	1	COVER GP-HYDROSTATIC	179
Y	*107-4726*	1	CYLINDER & MTG GP-STEERING	309
Y	*234-5127*	1	FILTER & LINES GP-FUEL	65
Y	*107-4706*	1	FIREWALL GP	265
Y	*237-0395*	1	FRAME GP-LOADER	266
Y	*237-0390*	1	FRAME GP-REAR	267
Y	*107-4703*	1	GUARD GP-BOTTOM	269
Y	*107-4809*	1	GUARD GP-POWER TRAIN	274
Y	*236-4336*	1	HITCH GP-ARTICULATING	275
Y	*122-9140*	1	KICKOUT & POSITIONER GP	348
Y	*107-4712*	1	LADDER GP	286
Y	*242-1760*	1	LINES GP-GREASE	288
Y	*107-4815*	1	LINK GP-STEERING FRAME LOCK	289
Y	*6V-1970*	1	LITERATURE GP	522
Y	*236-5641*	1	PLATE & FILM GP	599
Y	*155-6487*	1	REFLECTOR GP	290
Y	*107-4825*	1	SWITCH GP-DISCONNECT (BATTERY)	134
Y	*234-9181*	1	TANK & MTG GP-FUEL	73
Y	*236-8856*	1	WIRING GP-CHASSIS	150
Y	*235-3394*	1	WIRING GP-ENGINE	153
Y	*237-5813*	1	WIRING GP-FRONT	157
Y	*107-4724*	1	WIRING GP-POWER TRAIN	159

Y-SEPARATE ILLUSTRATION

<END>

236-5630 COMMON AR

S/N: PDF1-UP

SMCS-7000 **i01998456**

NOTE	PART NUMBER	QTY	PART NAME 1 2 3 4 5 6 (PRODUCT LEVEL)	SEE PAGE
Y	*236-5635*	1	CHASSIS AR	1
Y	**179-1795**	1	ENGINE AR-PRIMARY	8
Y	*109-4811*	1	HYDRAULIC AR	346
Y	*234-9213*	1	INSTALLATION AR-ENGINE	9
Y	*237-6260*	1	POWER TRAIN AR	217

Y-SEPARATE ILLUSTRATION

<END>

MACHINE ARRANGEMENT

122-1978 CONVERSION AR-CERTIFICATION

S/N: PDF1-UP
EUROPEAN ECONOMIC COMMUNITY
AN ATTACHMENT

SMCS-7000 **i02021359**

NOTE	PART NUMBER	QTY	PART NAME 1 2 3 4 5 6 (PRODUCT LEVEL)	SEE PAGE
Y	*123-8032*	1	BOX GP-TOOL	597
Y	*160-6171*	1	MIRROR GP-REAR VIEW	528
Y	*107-6132*	1	SPEEDOMETER GP	584
Y	*107-4641*	1	VISOR GP-CAB	592

Y-SEPARATE ILLUSTRATION

<END>

154-1931 CONVERSION AR-CERTIFICATION

S/N: PDF1-UP
AN ATTACHMENT

SMCS-7000 **i02044128**

NOTE	PART NUMBER	QTY	PART NAME 1 2 3 4 5 6 (PRODUCT LEVEL)	SEE PAGE
	161-3316	1	FILM (ROADING HEIGHT)	
			(LOCATE ON LH WINDSHIELD PANE)	

<END>

MACHINE ARRANGEMENT

236-5666 CONVERSION AR-MACHINE

S/N: PDF1-UP

ENGINE SPEED CONTROL

PART OF 241-9557 CONTROL AR-SPEED, 241-9558 CONVERSION AR-MACHINE

AN ATTACHMENT

SMCS-7000 **i02021404**

NOTE	REF NO	GRAPHIC REF	PART NUMBER	QTY	PART NAME 1 2 3 4 5 6 (PRODUCT LEVEL)	SEE PAGE
	1	1	**3E-5239**	1	RELAY AS (24-VOLT) (SUPPRESSOR)	
	2	2	**7H-3937**	1	LOCKWASHER (TOOTH)	
	3	1	**106-8704**	1	SUPPRESSOR AS-ARC	
		1	**102-8802**	1	KIT-RECEPTACLE (2-PIN)	
		1	**3E-3365**	1	WEDGE-RECEPTACLE LOCK (2-PIN)	
		1	**186-3735**	2	PIN-CONNECTOR	
	4	2	*170-0966*	1	TEE AS	
		2	**3K-0360**	1	SEAL-O-RING	
		2	**6V-8397**	1	SEAL-O-RING	
		2	**8C-3415**	1	TEE	
	5	1	**171-5579**	1	PLATE	
	6	1	**178-0054**	1	CONTROL GP-ENGINE SPEED	
	7	1	**178-0057**	1	SWITCH AS (CONTROL)	
		1	**111-7899**	1	GASKET	
M	8	2	**179-4324**	1	LOCKNUT (M5X0.8-THD)	
	9	2	**183-5035**	1	SWITCH AS-PRESSURE (BRAKE)	
		2	**102-8802**	1	KIT-RECEPTACLE (2-PIN)	
		2	**3E-3365**	1	WEDGE-RECEPTACLE LOCK (2-PIN)	
		2	**186-3735**	2	PIN-CONNECTOR	
	10	2	**193-4318**	3	BRACKET	
	11	2	**193-4319**	1	LEVER	
	12	2	**193-4320**	1	STUD-BALL	
	13	2	**197-7257**	1	CLAMP	
	14	2	**197-7262**	1	WASHER-SPRING (10.5X17X0.75-MM THK)	
	15	2	**197-7263**	1	BUSHING	
B	16	1	**197-7264**	1	SHIM (0.25-MM THK)	
	17	2	**197-7265**	1	PIN-LINKAGE	
	18	2	**197-7266**	1	BOLT (M5X0.8X8-MM)	
	19	2	**197-7267**	1	CLAMP	
	20	1	**219-4208**	1	HARNESS AS-ENGINE	
		1	**102-8803**	1	KIT-RECEPTACLE (3-PIN)	
		1	**102-8806**	1	KIT-RECEPTACLE (8-PIN)	
		1	**155-2255**	1	KIT-CONNECTING PLUG (12-PIN)	
		1	**155-2265**	1	KIT-CONNECTING PLUG (8-PIN)	
		1	**155-2260**	1	KIT-CONNECTING PLUG (3-PIN)	
		1	**155-2270**	2	KIT-CONNECTING PLUG (2-PIN)	
	21	2	**236-6120**	1	BRACKET	
	22	2	**236-6121**	1	BRACKET	
	23	2	**109-6673**	1	KIT-CABLE CONTROL (INCLUDES CABLE AS, END SLEEVE, FERRULE AND DUST CAP)	
	24	2	**138-3366**	1	BRACKET-MOUNTING	
M	25	2	**142-6000**	2	NUT-HEX (M8X1-THD)	
Y	26	1	**155-2651**	1	DISTRIBUTOR GP-ELECTRONIC	85
M	27	2	**160-8503**	1	NUT (M10X1.5-THD)	
	28	2	**161-6987**	1	WASHER-HARD (5.2X16X1.5-MM THK)	
	29	2	**165-9104**	1	SPACER (6.5X9.5X10-MM THK)	
M	30	2	**170-5632**	6	BOLT (M4X0.7X16-MM)	
	31	2	**178-0055**	1	ACTUATOR GP-GOVERNOR	
		2	**7N-7779**	3	SOCKET-CONNECTOR	
		2	**7N-7780**	4	PIN-CONNECTOR	
		2	**9G-3670**	1	HOUSING-PLUG	
	32	2	**3B-4501**	8	LOCKWASHER (4.4X5.8X1-MM THK)	
	33	2	**3J-1907**	1	SEAL-O-RING	

236-5666 **CONVERSION AR-MACHINE** ***(contd.)*** **i02021404**

NOTE	REF NO	GRAPHIC REF	PART NUMBER	QTY	PART NAME 1 2 3 4 5 6 (PRODUCT LEVEL)	SEE PAGE
	34	2	**4P-7581**	1	CLIP	
M	35	2	**5C-2874**	1	NUT (M5X.8-THD)	
M	36	2	**5C-2890**	5	NUT (M6X1-THD)	
M	37	2	**5C-8312**	6	NUT (M4X0.7-THD)	
M	38	1,2	**5C-9553**	4	BOLT (M6X1X16-MM)	
	39	2	**5W-1453**	1	LOCKWASHER (5.1X6.7X3.2-MM THK)	
M	40	2	**6V-5683**	1	BOLT (M6X1X16-MM)	
M	41	2	**6V-7743**	1	LOCKNUT (M6X1-THD)	
B	42	2	**7K-1181**	6	STRAP-CABLE	
	43	2	**8T-3016**	1	WASHER (5.3X10X1-MM THK)	
M	44	2	**8T-3998**	2	BOLT (M4X0.7X12-MM)	
M	45	2	**8T-4138**	4	BOLT (M6X1X20-MM)	
	46	1,2	**8T-4205**	10	WASHER-HARD (7.2X14.5X2-MM THK)	
M	47	1	**8T-4224**	2	WASHER-HARD (8.8X16X2-MM THK)	
M	48	2	**8T-4971**	1	BOLT (M6X1X30-MM)	
	49	1	**8T-9043**	2	BOLT (5/16-18X.875-IN)	
	50	2	**9X-8256**	4	WASHER (6.6X12X2-MM THK)	
E	51	1	**121-0192**		FASTENER-HOOK (12CM EACH)	
E	52	1	**121-0191**		FASTENER-LOOP (12CM EACH)	

B-USE AS REQUIRED
E-ORDER BY THE CENTIMETER
M-METRIC PART
Y-SEPARATE ILLUSTRATION

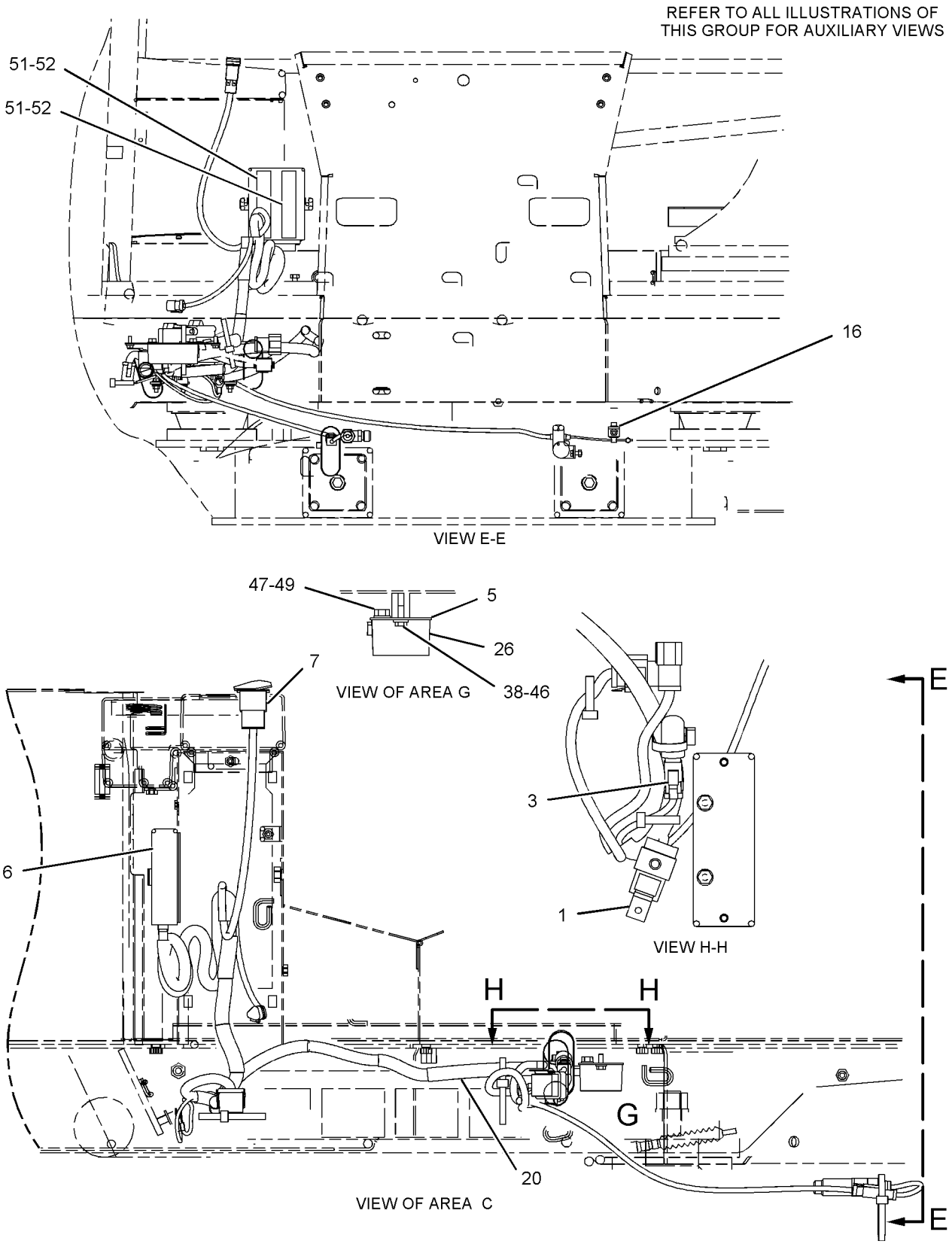

GRAPHIC #1

g01043841

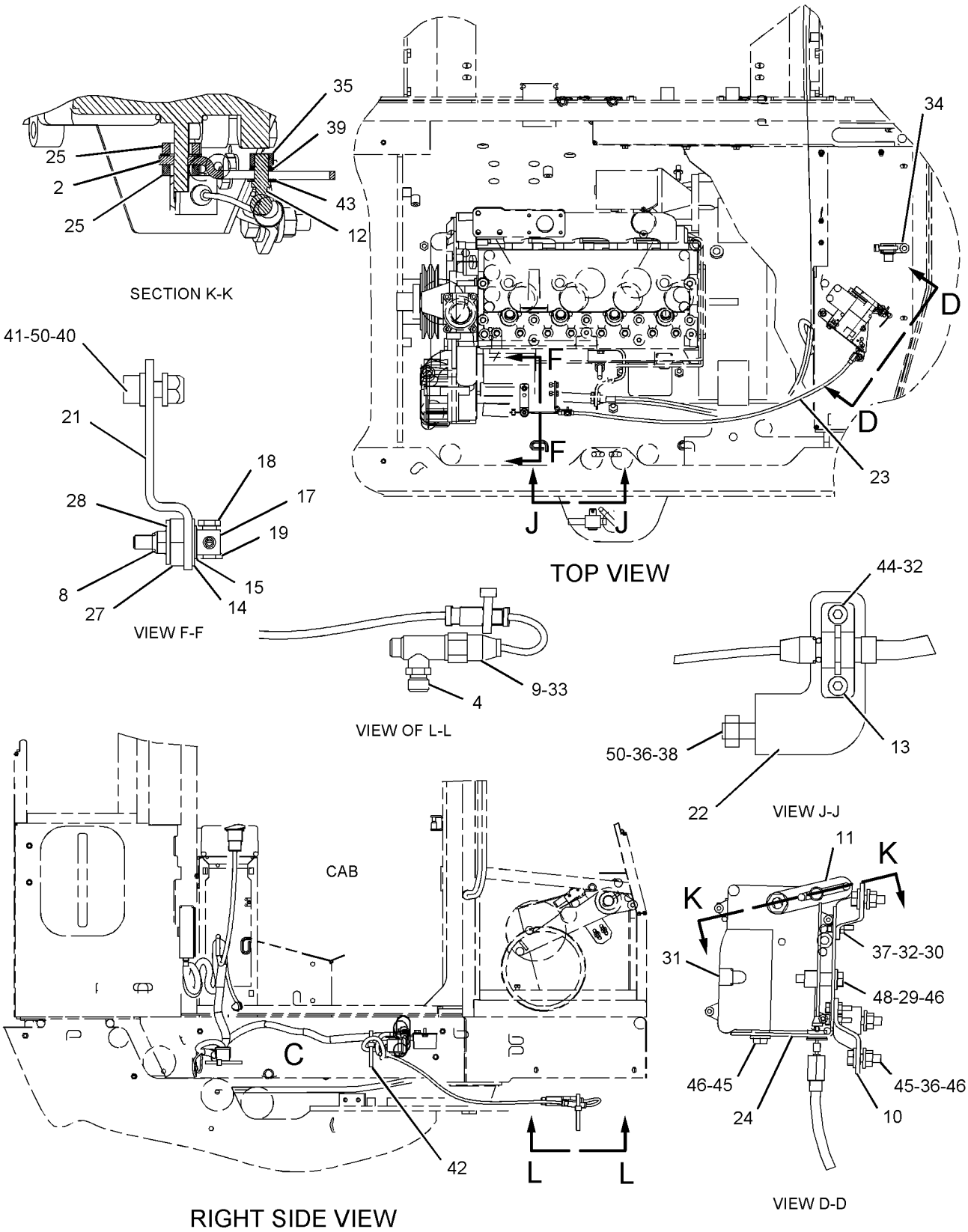

GRAPHIC #2 **<END>** g01043842

MACHINE ARRANGEMENT

241-9558 CONVERSION AR-MACHINE

S/N: PDF1-UP
ENGINE SPEED CONTROL
AN ATTACHMENT

SMCS-7000 **i02005310**

NOTE	PART NUMBER	QTY	PART NAME 1 2 3 4 5 6 (PRODUCT LEVEL)	SEE PAGE
Y	*236-5666*	1	CONVERSION AR-MACHINE	3
Y-SEPARATE ILLUSTRATION				

<END>

ENGINE ARRANGEMENT

179-1795 ENGINE AR-PRIMARY

S/N: CRS1-UP
75 BRAKE KW (121 BHP) AT 2200 RPM. ENGINE COOLANT
PART OF 236-5630 COMMON AR

SMCS-1000 **i02017192**

NOTE	PART NUMBER	QTY	PART NAME 1 2 3 4 5 6 (PRODUCT LEVEL)	SEE PAGE
Y	*237-8262*	1	ALTERNATOR GP-CHARGING	77
Y	*232-7528*	1	CAMSHAFT GP	10
Y	*231-0033*	1	CONNECTION GP-WATER	38
Y	*238-4448*	1	CONVERTER GP-ELECTRICAL	84
Y	*232-6177*	1	COOLER GP-FLTR BASE & ENG OIL	39
Y	*231-0149*	1	COVER GP-AIR INLET	50
Y	*237-8261*	1	COVER GP-VALVE MECHANISM	11
Y	*232-7439*	1	CRANKSHAFT GP	13
Y	*232-7606*	1	CYLINDER BLOCK GP	17
Y	*232-7524*	1	CYLINDER HEAD GP	19
Y	*234-9680*	1	DRIVE GP-FAN	21
Y	*232-7378*	1	FILTER GP-ENGINE OIL	35
Y	*233-9417*	1	FILTER GP-FUEL	68
Y	*230-7291*	1	FLYWHEEL GP	22
Y	*233-9834*	1	GLOW PLUG GP	87
Y	*236-8238*	1	HOUSING GP-FLYWHEEL	23
Y	*232-3670*	1	HOUSING GP-FRONT	24
Y	*233-7432*	1	LIFTING GP-ENGINE	26
Y	*238-0385*	1	LINES GP-HEATER	521
Y	*230-8144*	1	PAN GP-OIL	28
Y	*232-7442*	1	PISTON & ROD GP	29
Y	*230-7569*	1	PLUG GP-ENGINE	30
Y	*234-3542*	1	PLUG GP-ENGINE	31
Y	*230-7353*	1	PULLEY GP-CRANKSHAFT	32
Y	*230-7578*	1	PUMP GP-ENGINE OIL	36
Y	*237-8259*	1	PUMP GP-FUEL INJECTION	71
Y	*230-7355*	1	PUMP GP-WATER	42
Y	*230-7304*	1	STARTING MOTOR GP-ELECTRIC	132
Y	*237-4896*	1	SWITCH GP-PRESSURE	137
Y	*235-8749*	1	SWITCH GP-TEMPERATURE	138
Y	*237-8263*	1	TURBOCHARGER GP	59
Y	*232-7526*	1	VALVE MECHANISM GP	34
			AVAILABLE GASKET KIT(S):	
	233-0332	1	KIT-GASKET (TOP)	
	235-3556	1	KIT-GASKET (BOTTOM)	

Y-SEPARATE ILLUSTRATION

ENGINE ARRANGEMENT

234-9213 INSTALLATION AR-ENGINE

S/N: PDF1-UP

PART OF 236-5630 COMMON AR

SMCS-1000 **i01998152**

NOTE	PART NUMBER	QTY	PART NAME 1 2 3 4 5 6 (PRODUCT LEVEL)	SEE PAGE
Y	*233-4831*	1	AIR CLEANER GP	48
Y	*235-2734*	1	BAFFLE GP-RADIATOR	250
Y	*163-4461*	1	DRAIN GP-ENGINE OIL	20
Y	*234-0184*	1	FAN GP-SUCTION	41
Y	*234-5128*	1	GUARD GP-FUEL INJECTION PUMP	70
Y	*107-4851*	1	MOUNTING GP-ENGINE & TMSN	27
Y	*233-4838*	1	MUFFLER GP	57
Y	*121-3015*	1	PRECLEANER GP	58
Y	*234-9753*	1	RADIATOR GP	46
Y	*140-8911*	1	VALVE GP-FLUID SAMPLING	37

Y-SEPARATE ILLUSTRATION

BASIC ENGINE

232-7528 CAMSHAFT GP

S/N: CRS1-UP

PART OF 179-1795 ENGINE AR-PRIMARY

SMCS-1210, 1211, 1212 **i01998661**

NOTE	REF NO	GRAPHIC REF	PART NUMBER	QTY	PART NAME 1 2 3 4 5 6 (PRODUCT LEVEL)	SEE PAGE
	1	1	**1B-8736**	1	KEY-WOODRUFF	
	2	1	**225-5967**	1	CAMSHAFT	

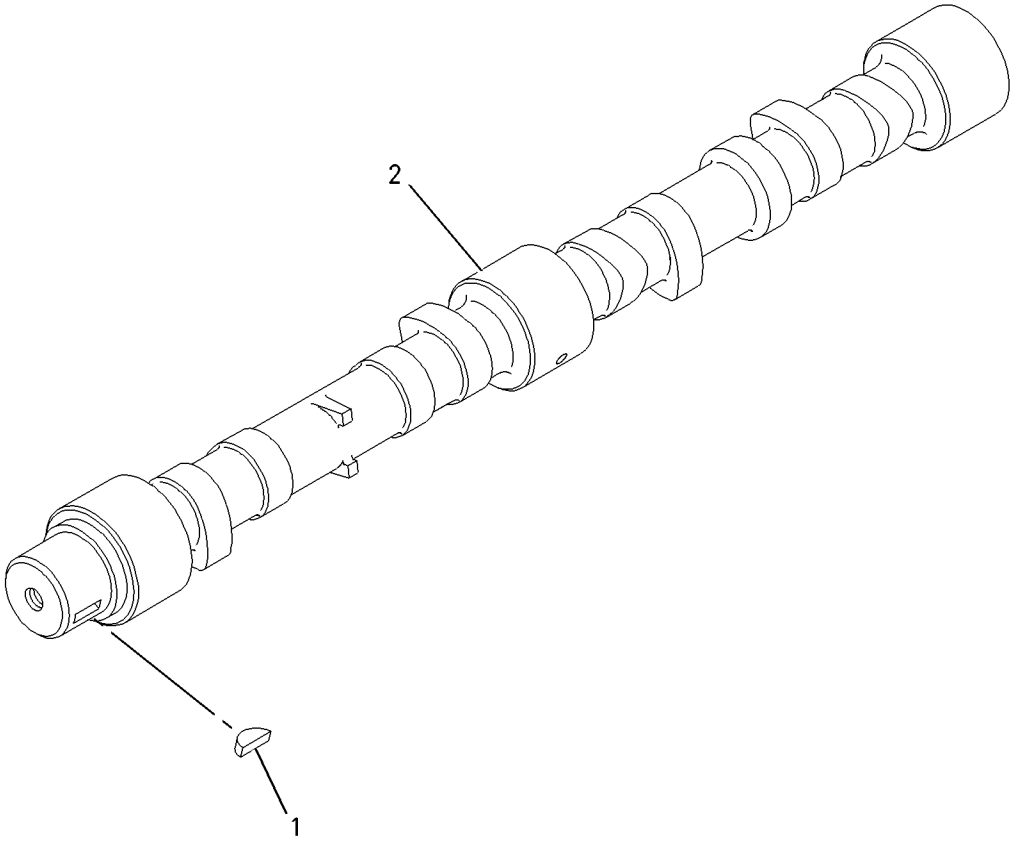

GRAPHIC #1 **<END>** g00911297

BASIC ENGINE

237-8261 COVER GP-VALVE MECHANISM

S/N: CRS1-UP

PART OF 179-1795 ENGINE AR-PRIMARY

SMCS-1107 **i02017699**

NOTE	REF NO	GRAPHIC REF	PART NUMBER	QTY	PART NAME 1 2 3 4 5 6 (PRODUCT LEVEL)	SEE PAGE
	1	1	**5D-1026**	1	CLAMP-HOSE	
	2	1	**6I-0254**	1	BOLT (M8X1.25X30-MM)	
	3	1	**6I-0846**	3	BOLT (M6X1.0X14-MM)	
	4	1	**6I-4374**	1	BOLT	
	5	1	**7C-1281**	1	BRACKET	
	6	1	**162-1565**	1	SPRING (BREATHER HOSE)	
	7	1	**198-8645**	1	HOSE (BREATHER)	
	8	1	**225-6524**	1	PLUG-CUP	
	9	1	**226-8763**	1	COVER AS-VALVE	
	9A	1	**225-6451**	1	GASKET (VALVE COVER)	
	9B	1	**225-6455**	10	BOLT	
	9C	1	**225-6456**	1	SPRING	
	9D	1	**225-6461**	1	CAP	
	9E	1	**225-6464**	1	DIAPHRAGM	
	9F	1	**225-6477**	1	PLATE	
	9G	1	**225-6478**	4	SCREW-MACHINE	
	9H	1	**225-6479**	1	CAP	
	10	1	**230-9127**	1	COVER	
	11	1	**230-9144**	1	CONNECTOR	
	11A	1	**150-7732**	1	SEAL-O-RING	
	11B	1	**225-6455**	2	BOLT	
	11C	1	**225-6517**	1	GASKET	
	12	1	**230-9152**	1	FILLER GP-ENGINE OIL	
	12A	1	**6I-1201**	1	SEAL-O-RING	
	12B	1	**130-9888**	1	CAP AS	
	12C	1	**113-1504**	1	SEAL-O-RING	

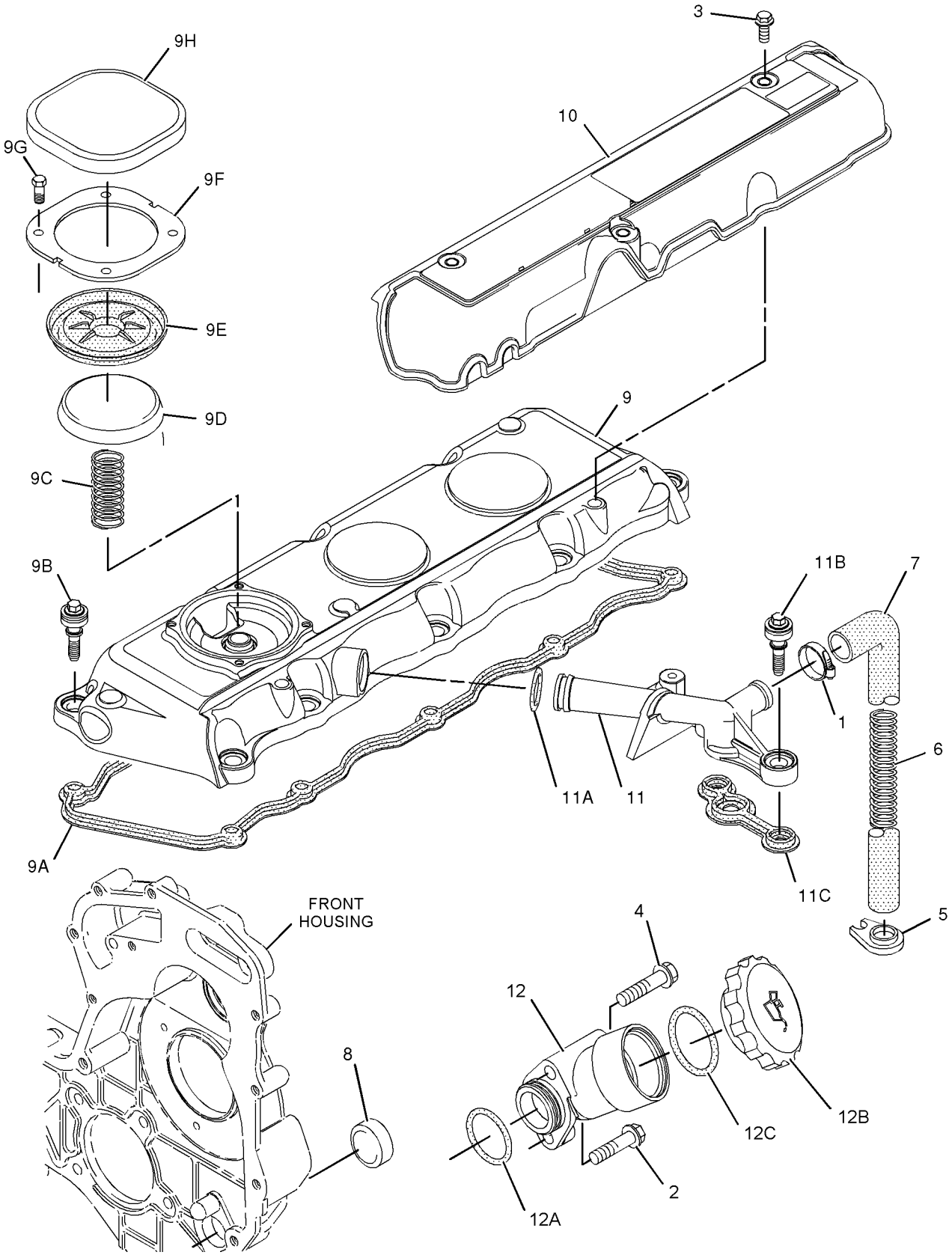

GRAPHIC #1 **<END>** g01045524

BASIC ENGINE

232-7439 CRANKSHAFT GP

S/N: CRS1-UP

PART OF 179-1795 ENGINE AR-PRIMARY

SMCS-1202 **i01998651**

NOTE	REF NO	GRAPHIC REF	PART NUMBER	QTY	PART NAME 1 2 3 4 5 6 (PRODUCT LEVEL)	SEE PAGE
	1	1	**1B-8736**	1	KEY-WOODRUFF	
	2	1	**216-8314**	1	GEAR-CRANKSHAFT (34 TEETH)	
	3	1	**232-7400**	1	CRANKSHAFT GP	
B	4	1	**225-7772**	1	BEARING SET-MAIN	
B		1	**233-3784**	1	KIT-CRANKSHAFT BEARING (.25MM US)	
B		1	**233-3785**	1	KIT-CRANKSHAFT BEARING (.50MM US)	
B		1	**233-3786**	1	KIT-CRANKSHAFT BEARING (.76MM US)	
B	5	1	**225-7781**	1	BEARING SET-ROD (STANDARD)	
B		1	**233-3788**	1	KIT-ROD BEARING (.25MM US)	
B		1	**233-3789**	1	KIT-ROD BEARING (.50MM US)	
B		1	**233-3790**	1	KIT-ROD BEARING (.76MM US)	
B	6	1	**032-9090**	2	WASHER-THRUST (STANDARD-UPPER)	
B		1	**067-6873**	2	WASHER-THRUST (.18MM OS)	
B	7	1	**032-9091**	2	WASHER-THRUST (STANDARD-LOWER)	
B		1	**067-6874**	2	WASHER-THRUST (.18MM OS)	

B-USE AS REQUIRED

232-7439 **CRANKSHAFT GP** ***(contd.)*** **i01998651**

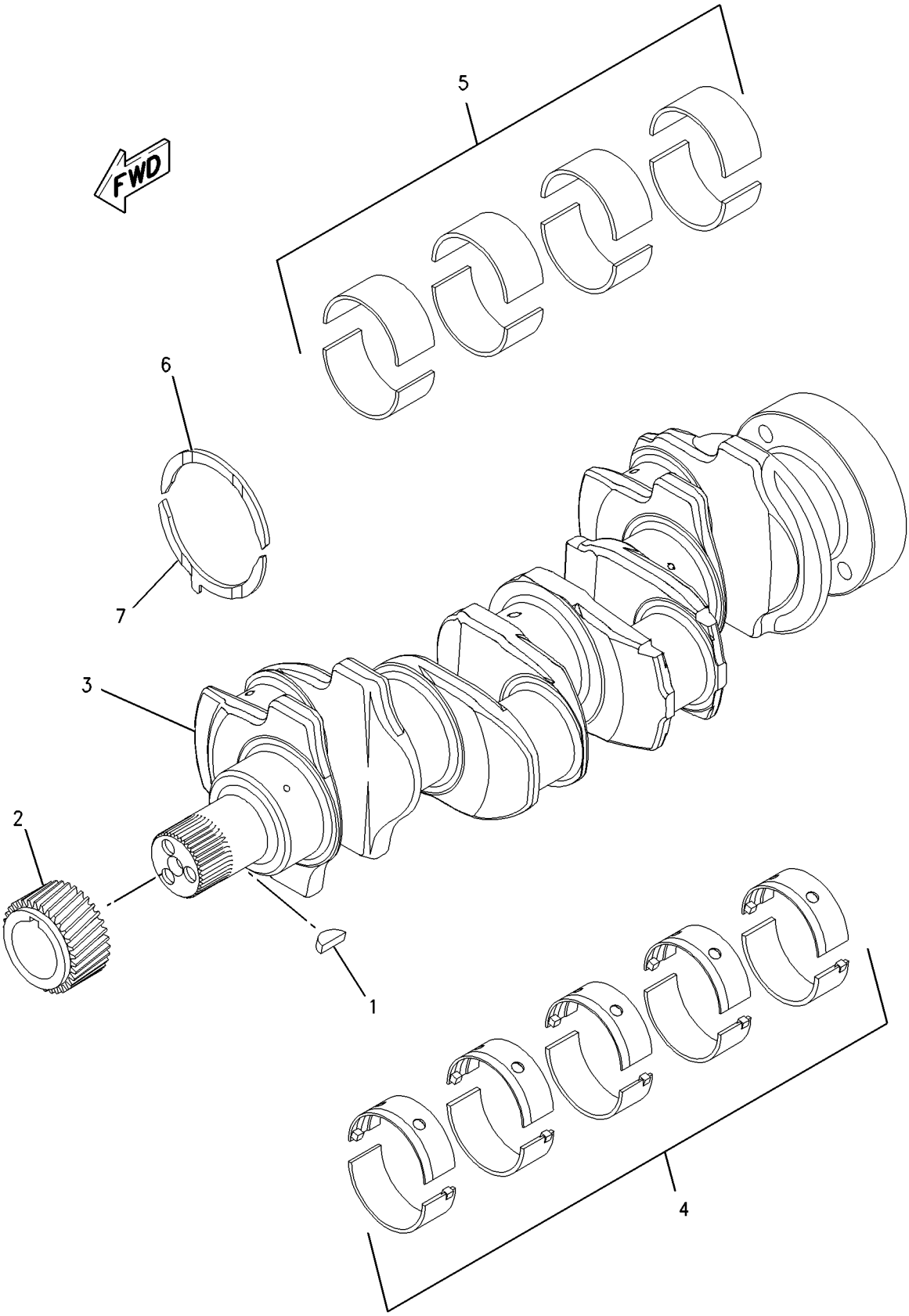

GRAPHIC #1 **<END>** g00950782

BASIC ENGINE

232-7604 CYLINDER BLOCK GP

S/N: CRS1-UP

PART OF 232-7606 CYLINDER BLOCK GP

SMCS-1201 **i01887247**

NOTE	REF NO	GRAPHIC REF	PART NUMBER	QTY	PART NAME 1 2 3 4 5 6 (PRODUCT LEVEL)	SEE PAGE
	1	1	**6I-0572**	4	BOLT (M8X1.25.20MM)	
	2	1	**035-8068**	10	BOLT	
	3	1	**067-6002**	10	DOWEL	
	4	1	**067-6006**	1	PLUG	
	5	1	**067-6043**	1	PLUG-SIDE	
	6	1	**100-4841**	4	BOLT (M6X1.0X10MM)	
	7	1	**185-0884**	2	DOWEL	
	8	1	**225-7944**	1	GASKET	
	9	1	**225-8858**	2	PLUG	
	10	1	**232-3751**	1	PLATE-BLANKING	
	11	1	**232-7440**	1	BEARING	
	12	1	**232-7454**	4	JET AS-PISTON COOLING	
	13	1	**232-7596**	1	PLUG	
	14	1	**232-7597**	2	PLUG	
	15	1	**232-7599**	1	PLUG	
	16	1	**232-7600**	1	PLUG-CUP	
	17	1	**232-7603**	1	PLUG	

232-7604 **CYLINDER BLOCK GP** ***(contd.)*** **i01887247**

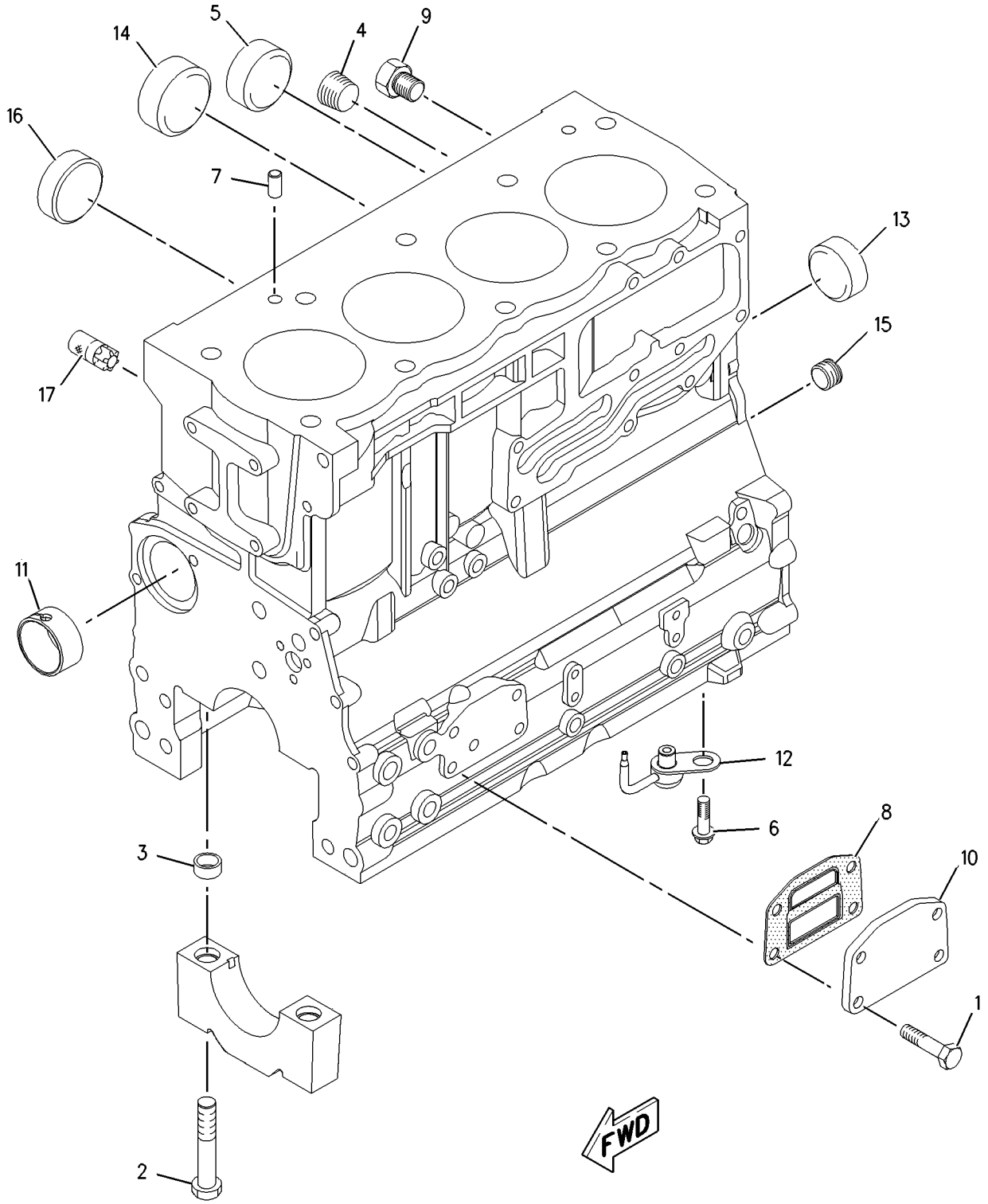

GRAPHIC #1 **<END>** g00951214

BASIC ENGINE

232-7606 CYLINDER BLOCK GP

S/N: CRS1-UP

PART OF 179-1795 ENGINE AR-PRIMARY

SMCS-1201 **i01998679**

NOTE	REF NO	GRAPHIC REF	PART NUMBER	QTY	PART NAME 1 2 3 4 5 6 (PRODUCT LEVEL)	SEE PAGE
	1	1	**209-9219**	10	BOLT (M8X1.25X16MM)	
	2	1	**232-7449**	1	HOUSING AS	
Y	3	1	**232-7604**	1	CYLINDER BLOCK GP	15

Y-SEPARATE ILLUSTRATION

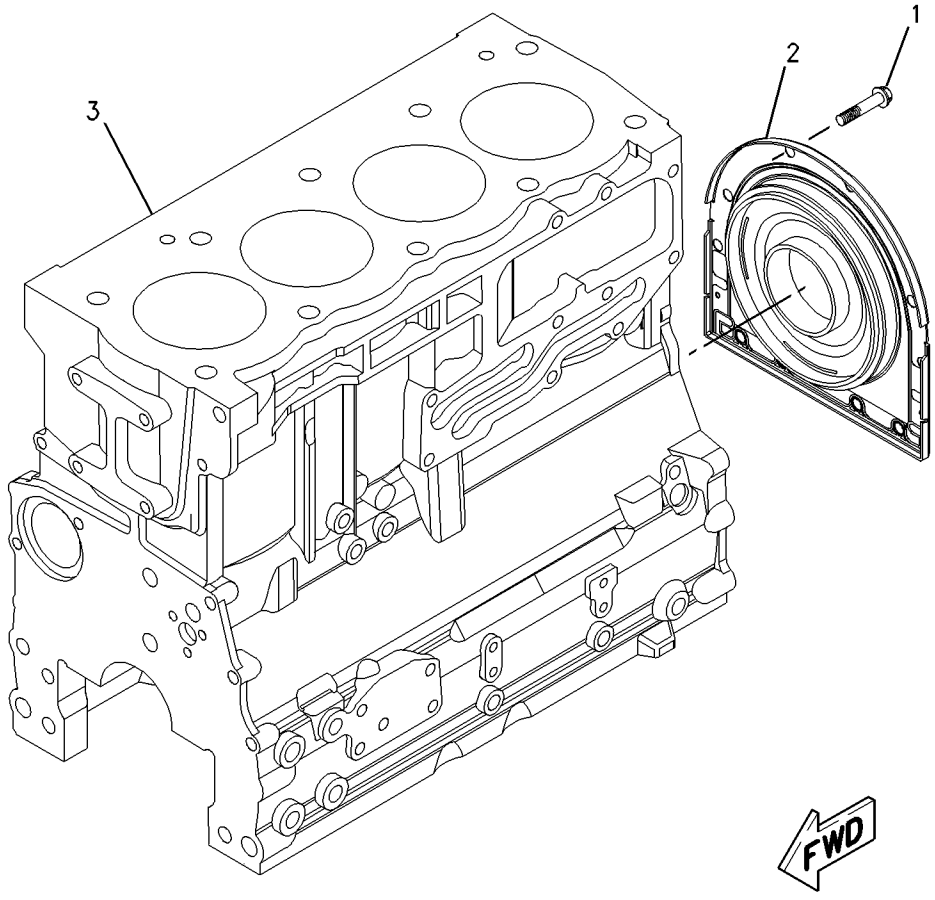

GRAPHIC #1 **<END>** g00952056

BASIC ENGINE

232-7519 CYLINDER HEAD GP

S/N: CRS1-UP

PART OF 232-7524 CYLINDER HEAD GP

SMCS-1100 **i02005443**

NOTE	REF NO	GRAPHIC REF	PART NUMBER	QTY	PART NAME 1 2 3 4 5 6 (PRODUCT LEVEL)	SEE PAGE
	1	1	**2B-0858**	1	PLUG-PIPE	
	2	1	**9Y-5015**	2	PLUG-FREEZE	
	3	1	**067-6006**	4	PLUG	
	4	1	**147-1979**	16	RETAINER	
	5	1	**185-0882**	8	GUIDE-VALVE (INTAKE)	
	6	1	**199-9751**	1	SEAL-O-RING	
	7	1	**225-5493**	4	INSERT-VALVE (INLET)	
	8	1	**225-5494**	4	INSERT-VALVE (EXHAUST)	
	9	1	**225-5495**	4	VALVE-INLET	
	10	1	**225-5496**	8	SPRING-VALVE	
	11	1	**225-5497**	8	SEAL-VALVE	
	12	1	**225-5498**	8	CAP	
	13	1	**225-5499**	4	VALVE-EXHAUST	
	14	1	**232-1322**	1	PLUG	

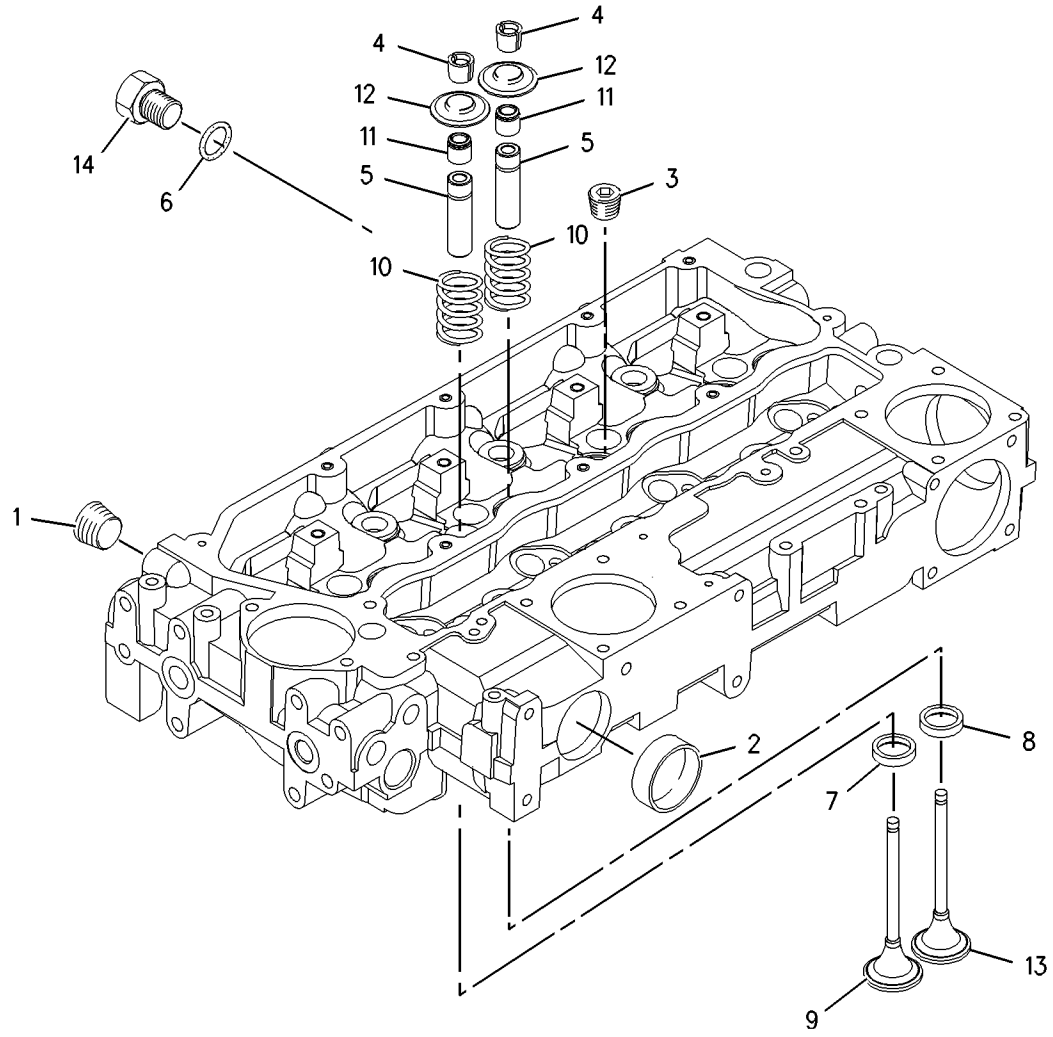

GRAPHIC #1 **<END>** g00951196

232-7524 CYLINDER HEAD GP

S/N: CRS1-UP

PART OF 179-1795 ENGINE AR-PRIMARY

SMCS-1100 **i01998641**

NOTE	REF NO	GRAPHIC REF	PART NUMBER	QTY	PART NAME 1 2 3 4 5 6 (PRODUCT LEVEL)	SEE PAGE
	1	1	**225-5501**	7	BOLT	
	2	1	**225-5502**	3	BOLT	
	3	1	**240-7194**	1	GASKET-HEAD	
Y	4	1	**232-7519**	1	CYLINDER HEAD GP	18

Y-SEPARATE ILLUSTRATION

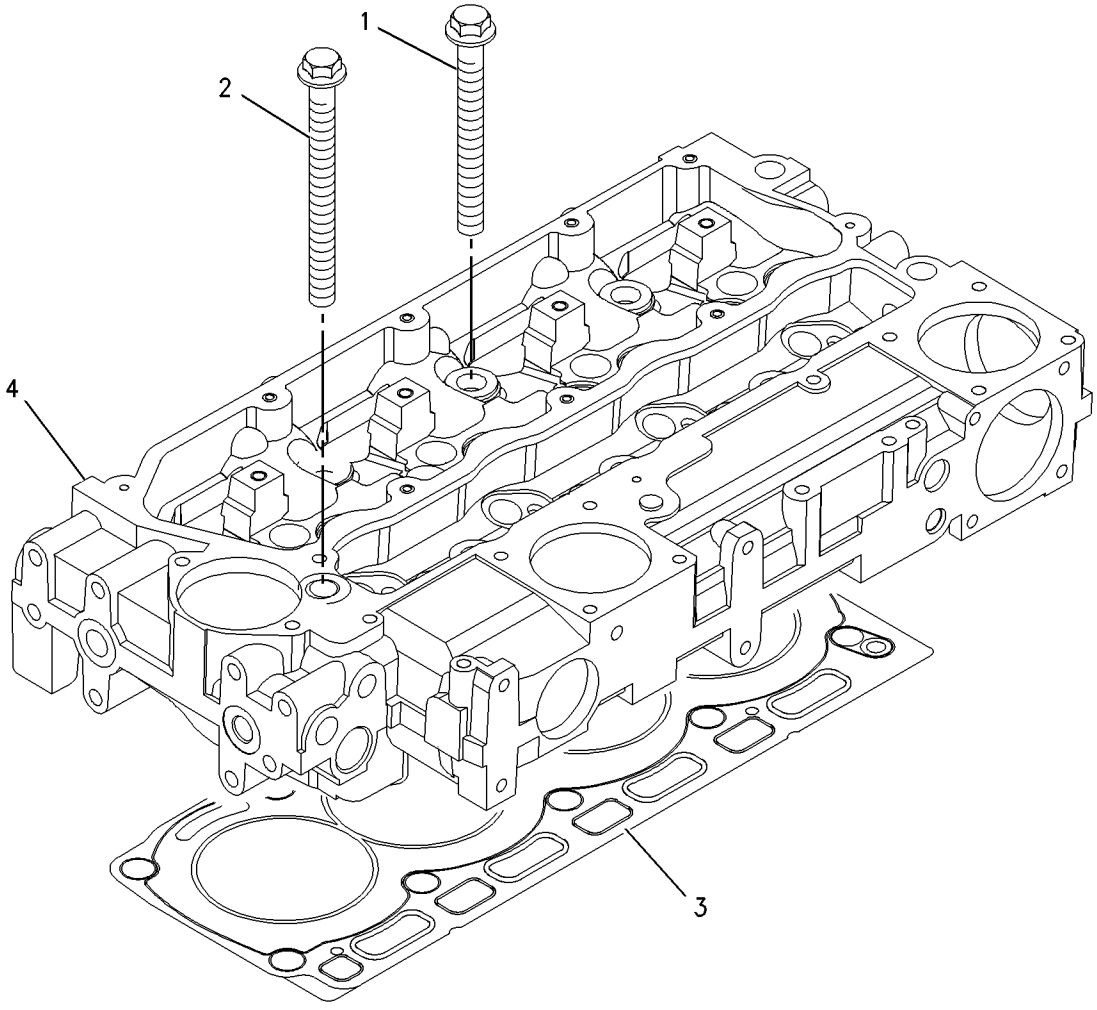

GRAPHIC #1 **<END>** g00909291

163-4461 DRAIN GP-ENGINE OIL

S/N: PDF1-UP

PART OF 234-9213 INSTALLATION AR-ENGINE

SMCS-1302 **i01092144**

NOTE	REF NO	GRAPHIC REF	PART NUMBER	QTY	PART NAME 1 2 3 4 5 6 (PRODUCT LEVEL)	SEE PAGE
	1	1	**3K-0360**	1	SEAL-O-RING (16.36MM ID)	
	2	1	**6V-7238**	1	VALVE-SHUTOFF	
	3	1	**159-5255**	1	ADAPTER	
	4	1	**5P-9186**	1	SEAL-O-RING (20.30MM ID)	

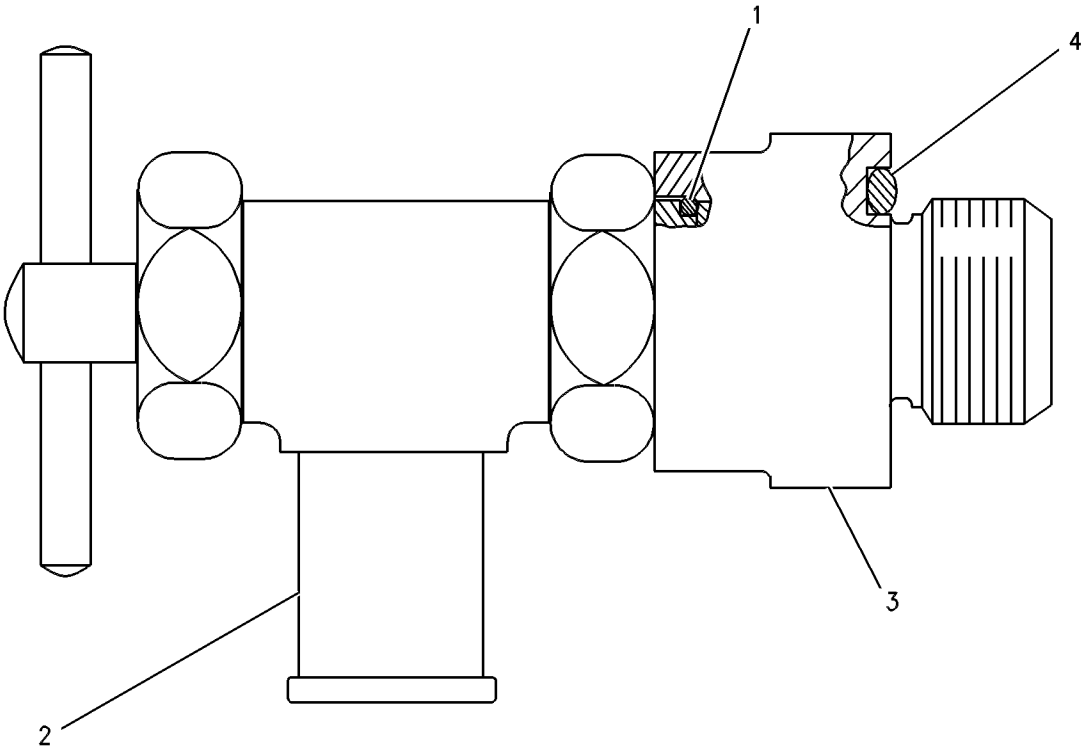

GRAPHIC #1 **<END>** g00572312

BASIC ENGINE

234-9680 DRIVE GP-FAN

S/N: CRS1-UP

PART OF 179-1795 ENGINE AR-PRIMARY

SMCS-1359 **i02017695**

NOTE	REF NO	GRAPHIC REF	PART NUMBER	QTY	PART NAME 1 2 3 4 5 6 (PRODUCT LEVEL)	SEE PAGE
	1	1	**111-0859**	4	BOLT (M10X1.5X35MM)	
	2	1	**130-3879**	1	PULLEY-FAN DRIVE	
	3	1	**230-8065**	1	HOUSING AS	
	4	1	**9L-6128**	1	V-BELT SET (INCLUDES 2 BELTS) (FAN)	

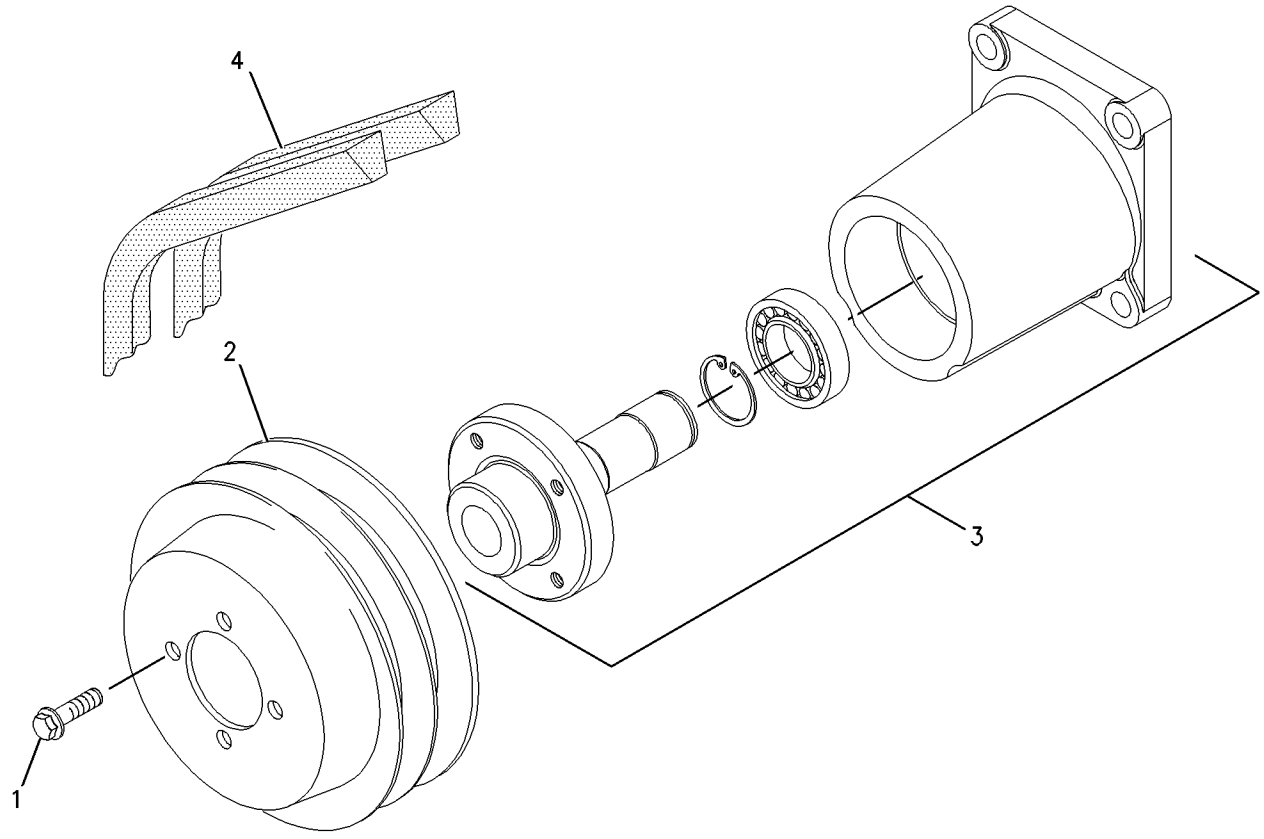

GRAPHIC #1 **<END>** g00956514

BASIC ENGINE

230-7291 FLYWHEEL GP

S/N: CRS1-UP

PART OF 179-1795 ENGINE AR-PRIMARY

SMCS-1156 **i02017670**

NOTE	REF NO	GRAPHIC REF	PART NUMBER	QTY	PART NAME 1 2 3 4 5 6 (PRODUCT LEVEL)	SEE PAGE
	1	1	**0S-1603**	6	BOLT (1/2-20X1.5IN)	
	2	1	**5P-8245**	6	WASHER-HARD (13.5X25.5X3MM THK)	
	3	1	**103-6131**	1	FLYWHEEL AS	
	3A	1	**033-7687**	1	RING (126 TEETH)	

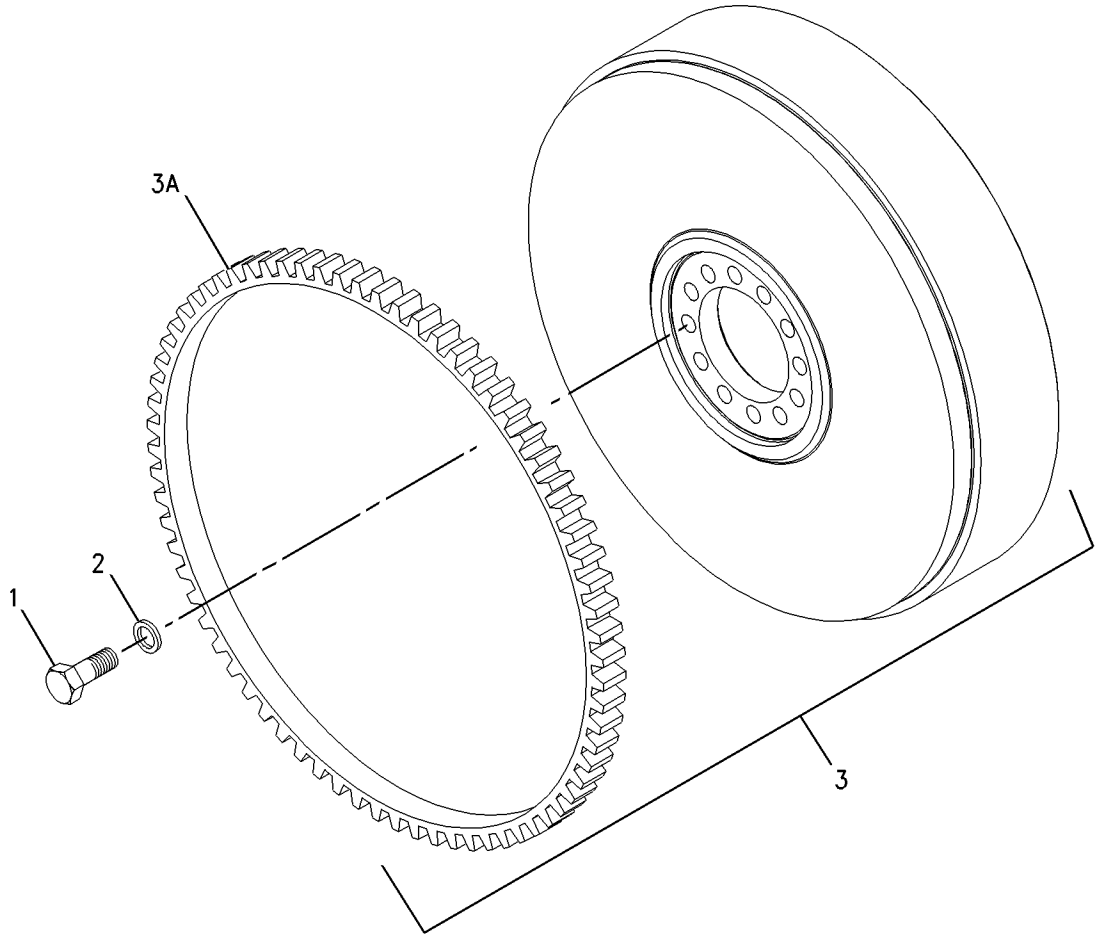

GRAPHIC #1 **<END>** g00933389

BASIC ENGINE

236-8238 HOUSING GP-FLYWHEEL

S/N: CRS1-UP

PART OF 179-1795 ENGINE AR-PRIMARY

SMCS-1157 **i01925938**

NOTE	REF NO	GRAPHIC REF	PART NUMBER	QTY	PART NAME 1 2 3 4 5 6 (PRODUCT LEVEL)	SEE PAGE
	1	1	**6I-0423**	2	BOLT (M12X1.75X30MM)	
	2	1	**6I-0847**	1	PLUG	
	3	1	**7W-1176**	1	PLATE-COVER	
	4	1	**7W-4642**	1	SHIELD-DUST	
	5	1	**067-6123**	2	DOWEL	
	6	1	**114-4363**	2	BOLT (M8X1.25X12MM)	
	7	1	**101-3617**	3	PLUG	
	8	1	**121-0883**	6	BOLT (M10X1.5X30MM)	
	9	1	**220-8631**	1	HOUSING-FLYWHEEL	

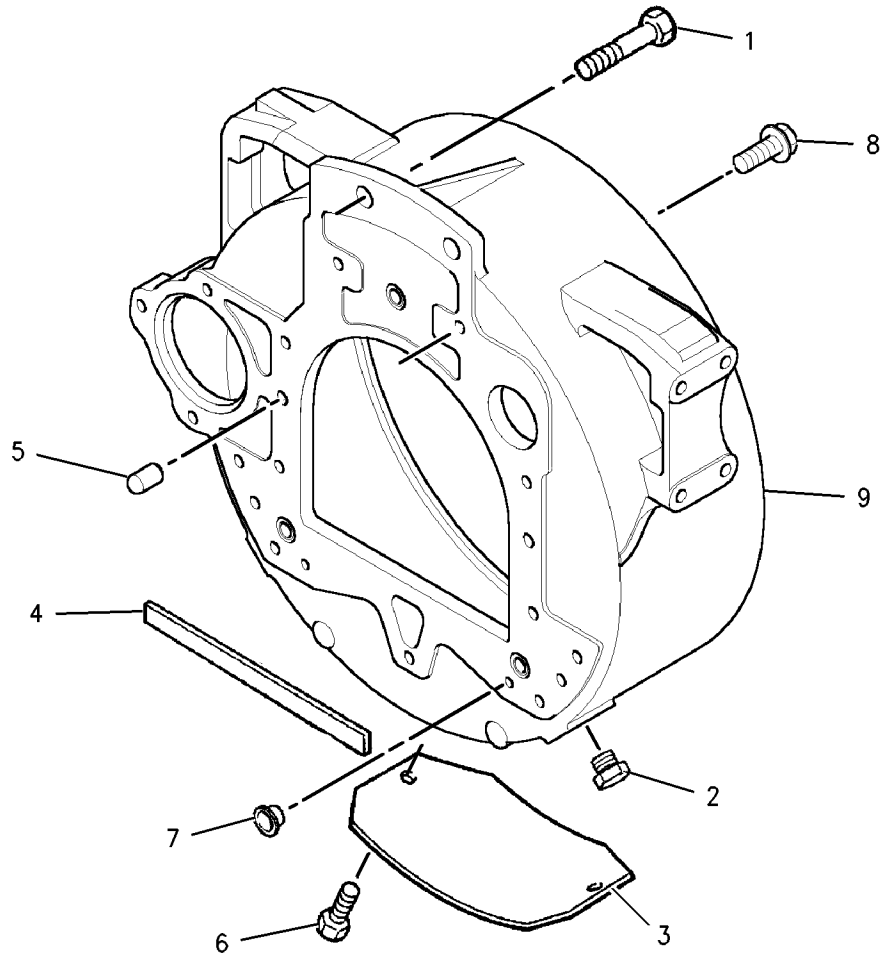

GRAPHIC #1 **<END>** g00902549

BASIC ENGINE

232-3670 HOUSING GP-FRONT

S/N: CRS1-UP

PART OF 179-1795 ENGINE AR-PRIMARY

SMCS-1151, 1162 **i01896798**

NOTE	REF NO	GRAPHIC REF	PART NUMBER	QTY	PART NAME 1 2 3 4 5 6 (PRODUCT LEVEL)	SEE PAGE
	1	1	**1B-8736**	1	KEY-WOODRUFF	
	2	1	**6I-0217**	8	BOLT (M8X1.25X20MM)	
	3	1	**6I-0645**	4	BOLT (M8X1.25X25MM)	
	4	1	**6I-0789**	3	BOLT (M10X1.5X60MM)	
	5	1	**7C-4616**	1	BOLT (M12X1.75X45MM)	
	6	1	**067-6179**	1	DOWEL	
	7	1	**067-6897**	1	HUB-IDLER GEAR	
	8	1	**067-6900**	1	PLATE-RETAINING	
	9	1	**100-3751**	5	BOLT (M8X1.25X65MM)	
	10	1	**124-3815**	10	BOLT (M8X16X1.25MM)	
	11	1	**133-1011**	1	WASHER	
	12	1	**216-8633**	1	GEAR AS-IDLER (73 TEETH)	
	12A	1	**067-6899**	2	BUSHING-IDLER GEAR	
	13	1	**216-8634**	1	GEAR-CAMSHAFT (68 TEETH)	
	14	1	**225-8278**	1	HOUSING-FRONT	
	15	1	**225-8280**	1	SEAL-CRANKSHAFT	
	16	1	**225-8281**	1	GASKET	
	17	1	**225-8282**	1	GASKET	
	18	1	**232-3657**	1	COVER AS-FRONT	
	19	1	**232-3666**	1	WASHER-THRUST	

232-3670 **HOUSING GP-FRONT** *(contd.)* **i01896798**

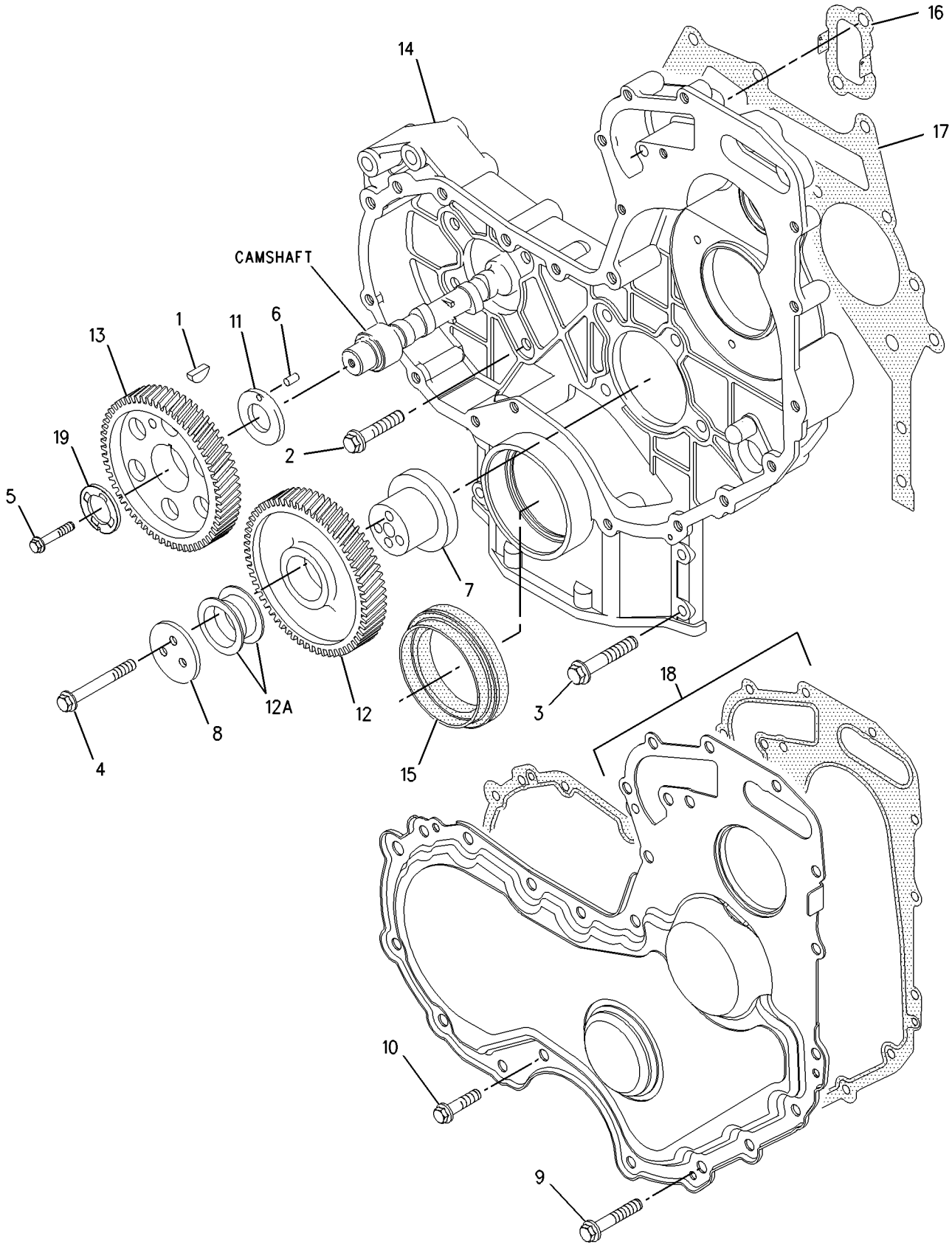

GRAPHIC #1 **<END>** g00985089

BASIC ENGINE

233-7432 LIFTING GP-ENGINE

S/N: CRS1-UP

PART OF 179-1795 ENGINE AR-PRIMARY

SMCS-1122 **i01998680**

NOTE	REF NO	GRAPHIC REF	PART NUMBER	QTY	PART NAME 1 2 3 4 5 6 (PRODUCT LEVEL)	SEE PAGE
	1	1	**100-4830**	4	BOLT (M10X1.5X20MM)	
	2	1	**225-8848**	2	PLATE	

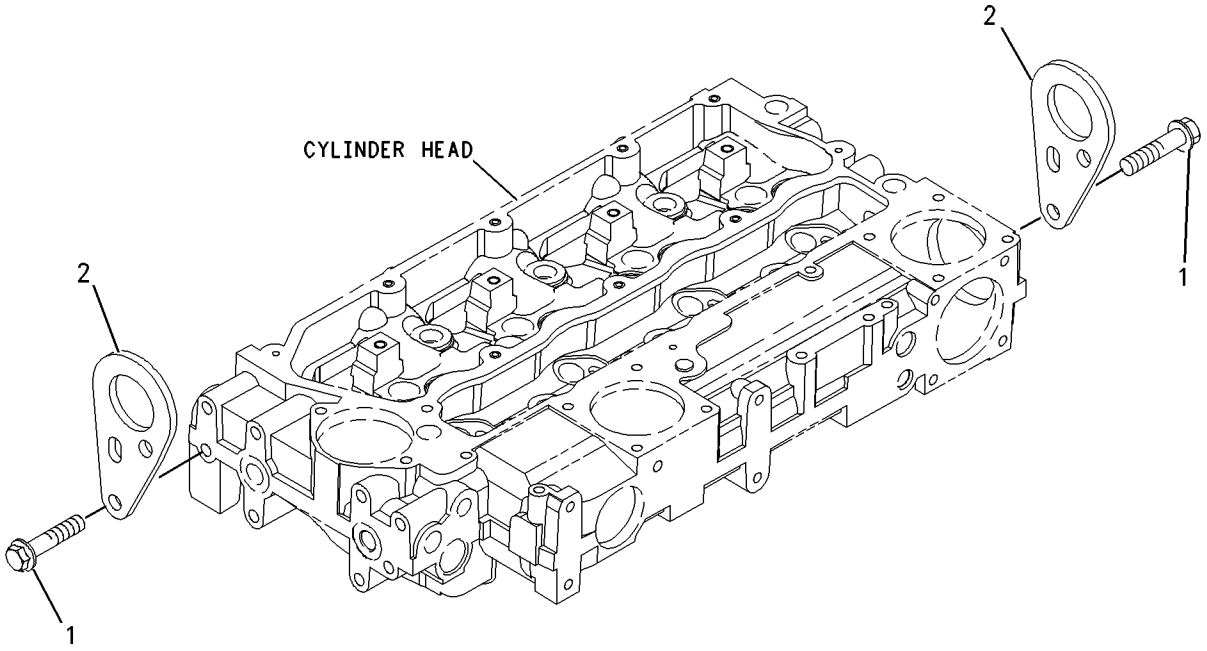

GRAPHIC #1 **<END>** g00955299

107-4851 MOUNTING GP-ENGINE & TMSN

S/N: PDF1-UP

PART OF 234-9213 INSTALLATION AR-ENGINE

SMCS-1152, 1154, 3082 **i00709737**

NOTE	REF NO	GRAPHIC REF	PART NUMBER	QTY	PART NAME 1 2 3 4 5 6 (PRODUCT LEVEL)	SEE PAGE
	1	1	**9W-9915**	3	MOUNT AS	
	2	1	**9W-9952**	1	WASHER (8.0MM THK)	
	3	1	**6Y-6882**	3	SLEEVE-TAPERED	
	4	1	**109-3756**	1	SUPPORT AS (ENGINE)	
	5	1	**109-3758**	1	SPACER	
	6	1	**120-4480**	1	SUPPORT AS-ENGINE	
M	7	1	**7X-2556**	1	BOLT (M16X2.0X100MM)	
	8	1	**8T-4122**	9	WASHER (3.5MM THK)	
M	9	1	**8T-4173**	2	BOLT (M16X2.0X110MM)	
	10	1	**8T-4223**	8	WASHER-HARD (3MM THK)	
M	11	1	**8T-4910**	4	BOLT (M12X1.75X60MM)	
M	12	1	**8T-4956**	4	BOLT (M12X1.75X35MM)	
M	13	1	**8T-7338**	4	BOLT (M16X2.0X45MM)	
	14	1	**099-7313**	2	CASE	
M	15	1	**8T-4132**	2	NUT (M16X2.0 THD)	
	16	1	**127-0928**	1	SUPPORT AS	

M-METRIC PART

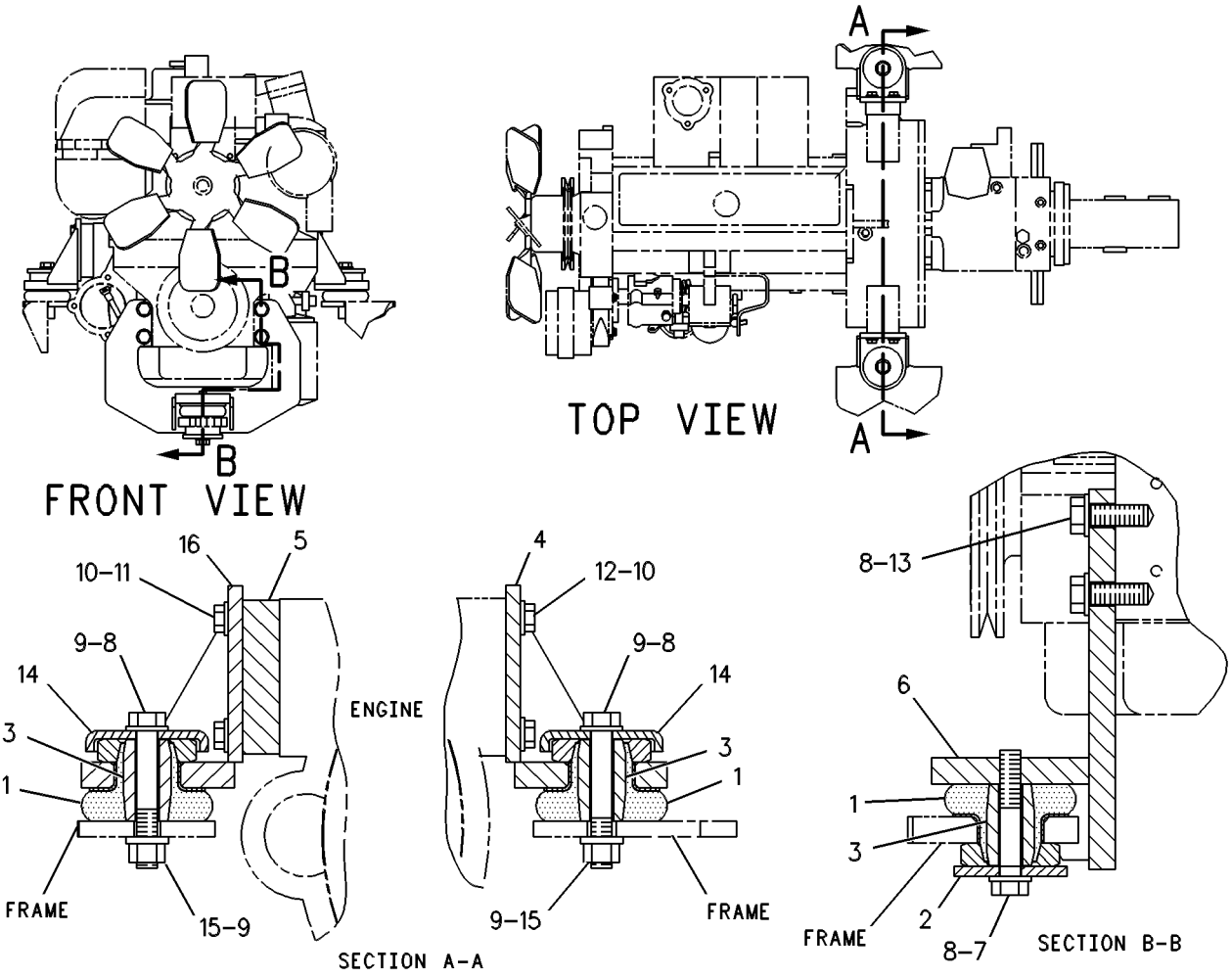

GRAPHIC #1 **<END>** g00258320

BASIC ENGINE

230-8144 PAN GP-OIL

S/N: CRS1-UP

PART OF 179-1795 ENGINE AR-PRIMARY

SMCS-1302 **i02017680**

NOTE	REF NO	GRAPHIC REF	PART NUMBER	QTY	PART NAME 1 2 3 4 5 6 (PRODUCT LEVEL)	SEE PAGE
	1	1	**5P-6718**	2	SEAL-O-RING (SUMP DRAIN PLUG)	
	2	1	**6I-0217**	12	BOLT (M8X1.25X20-MM)	
	3	1	**6I-0260**	2	BOLT (M8X1.25X25-MM)	
	4	1	**6I-0289**	1	PLUG	
	5	1	**6I-0363**	2	BOLT (M6X1.0X20-MM)	
	6	1	**6I-0572**	2	BOLT (M8X1.25X20-MM)	
	7	1	**6I-1497**	1	SEAL	
	8	1	**7C-0351**	2	PLUG-SUMP DRAIN	
	9	1	**067-6213**	1	GASKET	
	10	1	**101-3771**	6	BOLT	
	11	1	**124-7702**	1	TUBE AS	
	11A	1	**6I-4079**	1	NUT	
	12	1	**124-7703**	1	GAUGE AS-OIL LEVEL (DIPSTICK)	
	13	1	**225-6004**	1	PAN AS-OIL	
	13A	1	**7C-1224**	2	INSERT	
	14	1	**225-6005**	1	GASKET	
	15	1	**230-8094**	1	BRIDGE	
	16	1	**225-6041**	1	TUBE	

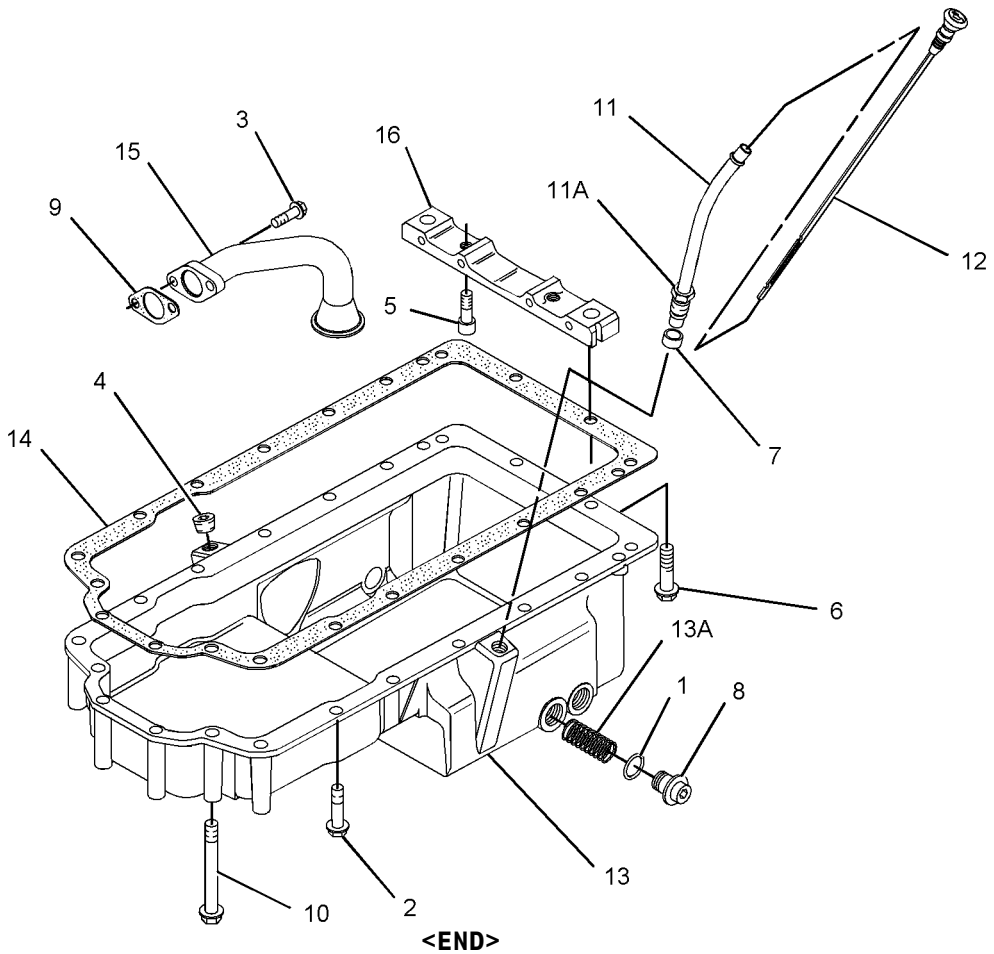

GRAPHIC #1 **<END>** g01022236

BASIC ENGINE

232-7442 PISTON & ROD GP

S/N: CRS1-UP

PART OF 179-1795 ENGINE AR-PRIMARY

SMCS-1225 **i01998628**

NOTE	REF NO	GRAPHIC REF	PART NUMBER	QTY	PART NAME 1 2 3 4 5 6 (PRODUCT LEVEL)	SEE PAGE
	1	1	**225-5437**	4	PISTON AS	
					(EACH PISTON AS INCLUDES)	
	2	1	**124-3536**	2	RING-RETAINING	
	3	1	**225-5436**	1	KIT-PISTON RING	
J	4	1	**225-5441**	4	ROD AS (L)	
					–OR–	
J		1	**225-5451**	4	ROD AS (K)	
					–OR–	
J		1	**225-5453**	4	ROD AS (J)	
					–OR–	
J		1	**225-5454**	4	ROD AS (H)	
					–OR–	
J		1	**225-5458**	4	ROD AS (G)	
					–OR–	
J		1	**225-5459**	4	ROD AS (F)	
					(EACH ROD AS INCLUDES)	
	5	1	**225-5438**	1	BUSHING	
	6	1	**225-5439**	2	BOLT	

J-ENSURE THAT CORRECT ROD LENGTH IS FITTED

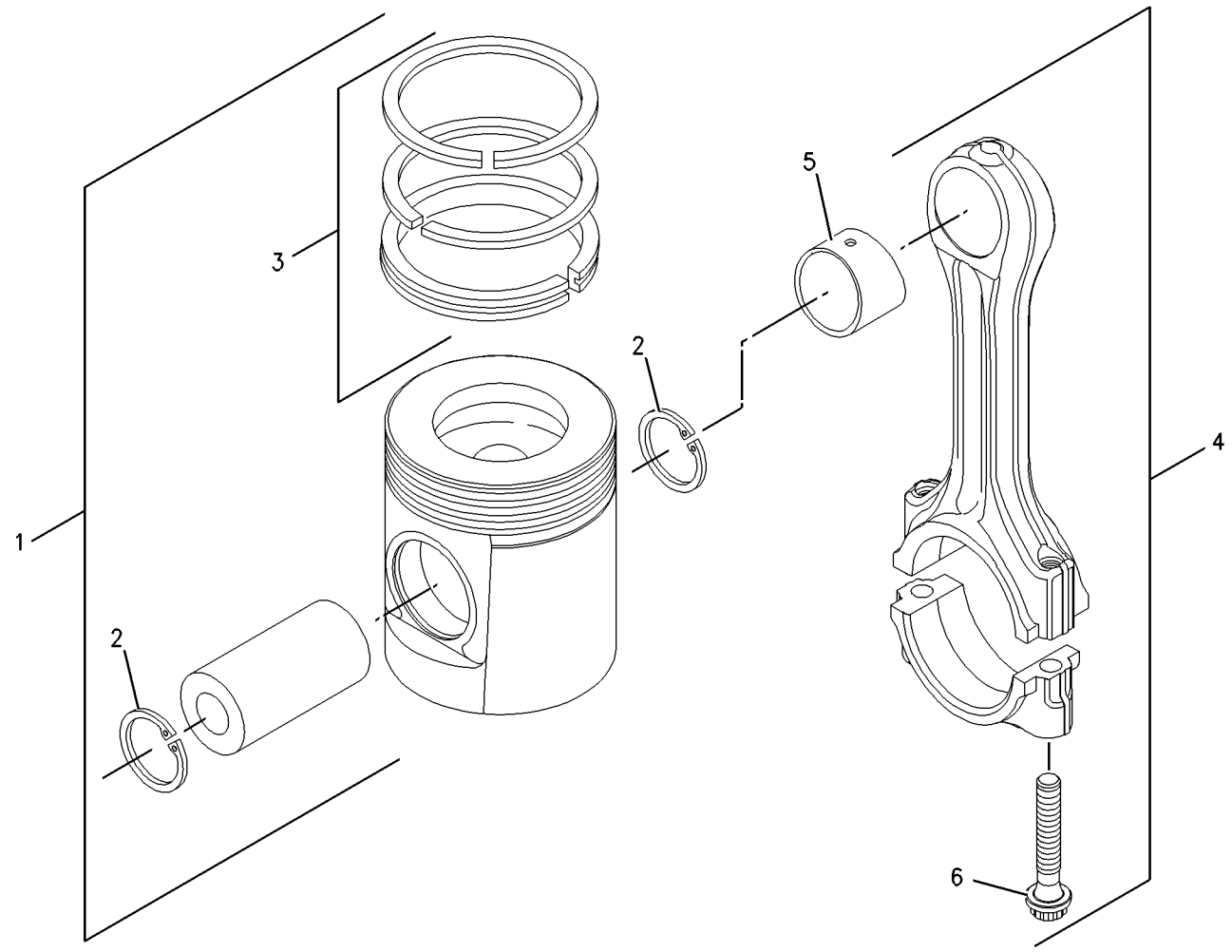

GRAPHIC #1 **<END>** g00909669

BASIC ENGINE

230-7569 PLUG GP-ENGINE

S/N: CRS1-UP

PART OF 179-1795 ENGINE AR-PRIMARY

SMCS-1000 **i01896487**

NOTE	REF NO	GRAPHIC REF	PART NUMBER	QTY	PART NAME 1 2 3 4 5 6 (PRODUCT LEVEL)	SEE PAGE
	1	1	**231-0046**	1	PLUG	

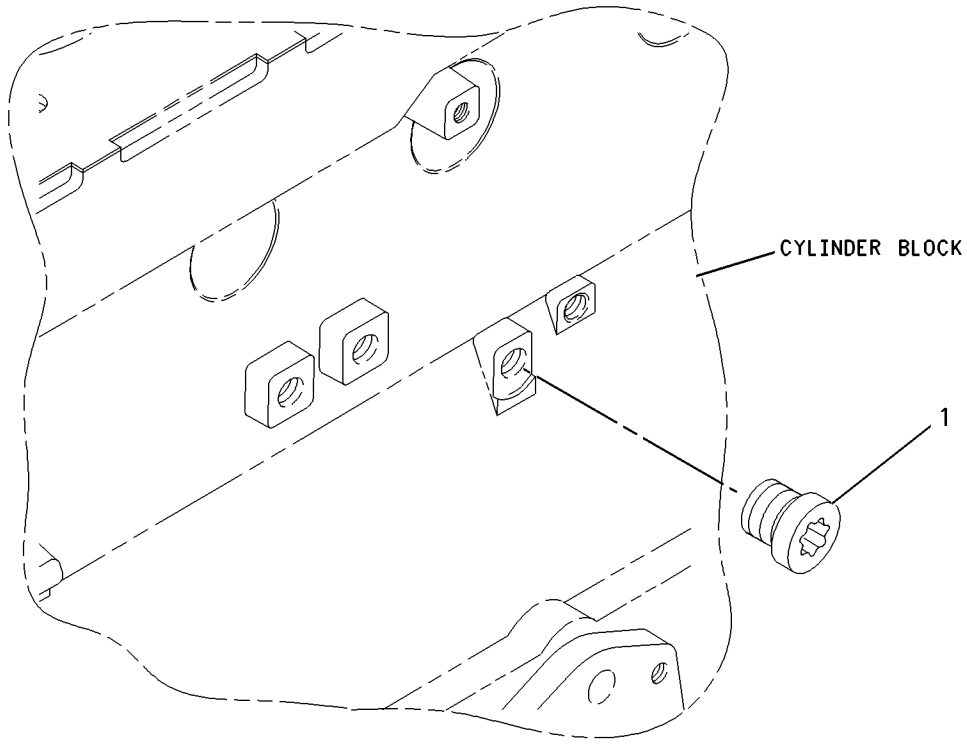

GRAPHIC #1 **<END>** g00911955

234-3542 PLUG GP-ENGINE

S/N: CRS1-UP

PART OF 179-1795 ENGINE AR-PRIMARY

SMCS-1000 **i02017692**

NOTE	REF NO	GRAPHIC REF	PART NUMBER	QTY	PART NAME 1 2 3 4 5 6 (PRODUCT LEVEL)	SEE PAGE
	1	1	**6H-3616**	10	PLUG-PROTECTION	
	2	1	**233-9436**	4	PLUG	

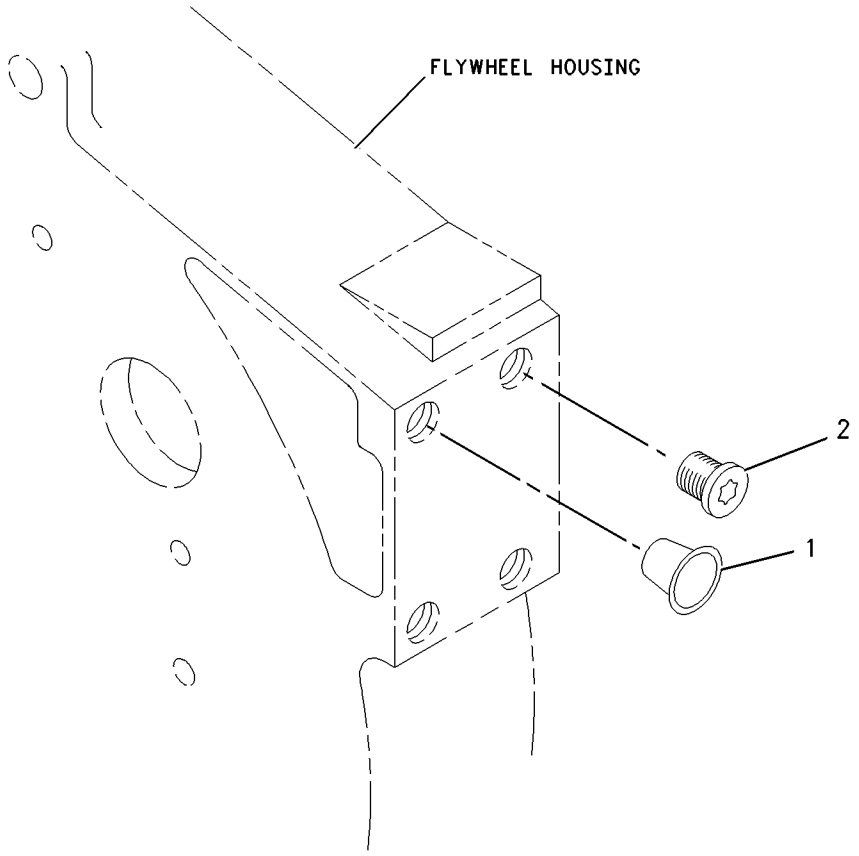

GRAPHIC #1 **<END>** g00984468

BASIC ENGINE

230-7353 PULLEY GP-CRANKSHAFT

S/N: CRS1-UP

PART OF 179-1795 ENGINE AR-PRIMARY

SMCS-1205 **i01998616**

NOTE	REF NO	GRAPHIC REF	PART NUMBER	QTY	PART NAME 1 2 3 4 5 6 (PRODUCT LEVEL)	SEE PAGE
	1	1	**6I-0501**	1	BLOCK	
	2	1	**6I-0502**	1	PULLEY	
	3	1	**7W-4634**	3	BOLT	

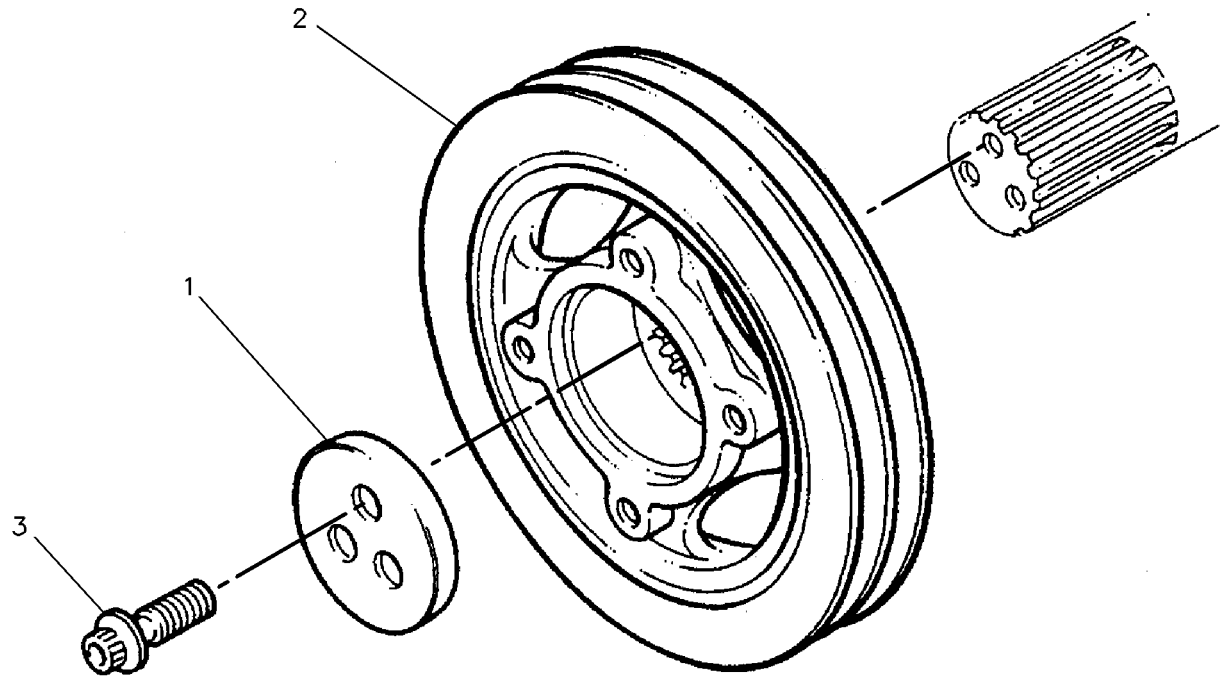

GRAPHIC #1 **<END>** g00130941

BASIC ENGINE

113-0985 VALVE GP-OIL PAN DRAIN

S/N: PDF1-UP

PART OF 108-6200 TANK GP-HYDRAULIC

SMCS-1302 **i00972556**

NOTE	PART NUMBER	QTY	PART NAME 1 2 3 4 5 6 (PRODUCT LEVEL)	SEE PAGE
	2M-9780	1	SEAL-O-RING (19.18MM ID)	
	101-4643	1	TUBE AS-ECOLOGY DRAIN	
	101-4639	1	VALVE-ECOLOGY DRAIN	

<END>

BASIC ENGINE

232-7526 VALVE MECHANISM GP

S/N: CRS1-UP

PART OF 179-1795 ENGINE AR-PRIMARY

SMCS-1102, 1121, 1123 **i02002526**

NOTE	REF NO	GRAPHIC REF	PART NUMBER	QTY	PART NAME 1 2 3 4 5 6 (PRODUCT LEVEL)	SEE PAGE
	1	1	**067-6095**	8	ROD	
	2	1	**138-2053**	8	TAPPET	
	3	1	**225-5963**	1	ROCKER ARM AS	
	4	1	**225-5625**	4	LEVER AS	
					(EACH INCLUDES)	
	5	1	**5B-9079**	1	NUT-JAM (3/8-24 THD)	
	6	1	**185-1546**	1	SCREW	
	7	1	**225-5634**	1	SHAFT AS	
	8	1	**225-5629**	2	PLUG	
	9	1	**225-5638**	3	SPRING	
	10	1	**225-5640**	4	LEVER AS	
					(EACH INCLUDES)	
	11	1	**5B-9079**	1	NUT-JAM (3/8-24 THD)	
	12	1	**185-1546**	1	SCREW	
	13	1	**225-5959**	2	CLIP	
	14	1	**225-5960**	1	BOLT	
	15	1	**225-5961**	2	WASHER	
	16	1	**225-5962**	3	BOLT	

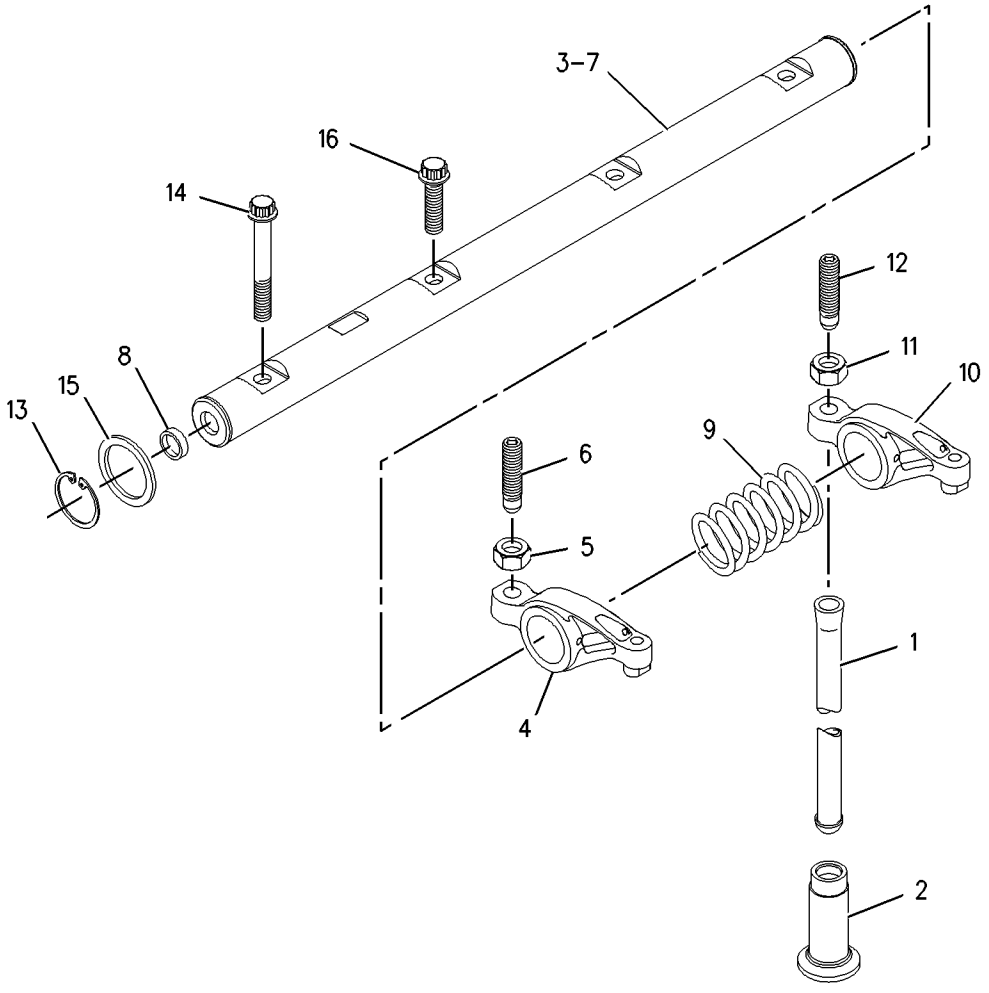

GRAPHIC #1 **<END>** g00910253

LUBRICATION SYSTEM

232-7378 FILTER GP-ENGINE OIL

S/N: CRS1-UP

PART OF 179-1795 ENGINE AR-PRIMARY

SMCS-1306, 1308 **i02017684**

NOTE	REF NO	GRAPHIC REF	PART NUMBER	QTY	PART NAME 1 2 3 4 5 6 (PRODUCT LEVEL)	SEE PAGE
	1	1	**7W-2326**	1	FILTER AS-ENGINE OIL	

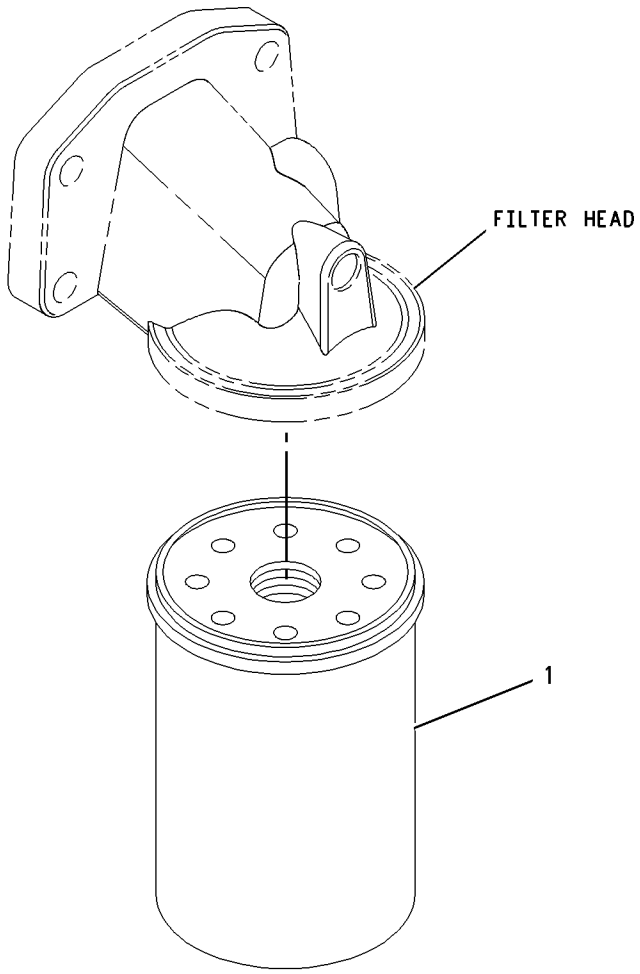

GRAPHIC #1 **<END>** g00950898

LUBRICATION SYSTEM

230-7578 PUMP GP-ENGINE OIL

S/N: CRS1-UP

PART OF 179-1795 ENGINE AR-PRIMARY

SMCS-1304, 1315 **i01896485**

NOTE	REF NO	GRAPHIC REF	PART NUMBER	QTY	PART NAME 1 2 3 4 5 6 (PRODUCT LEVEL)	SEE PAGE
	1	1	**100-4461**	5	BOLT (M10X50MM)	
	2	1	**225-8329**	1	PUMP AS-ENGINE OIL	

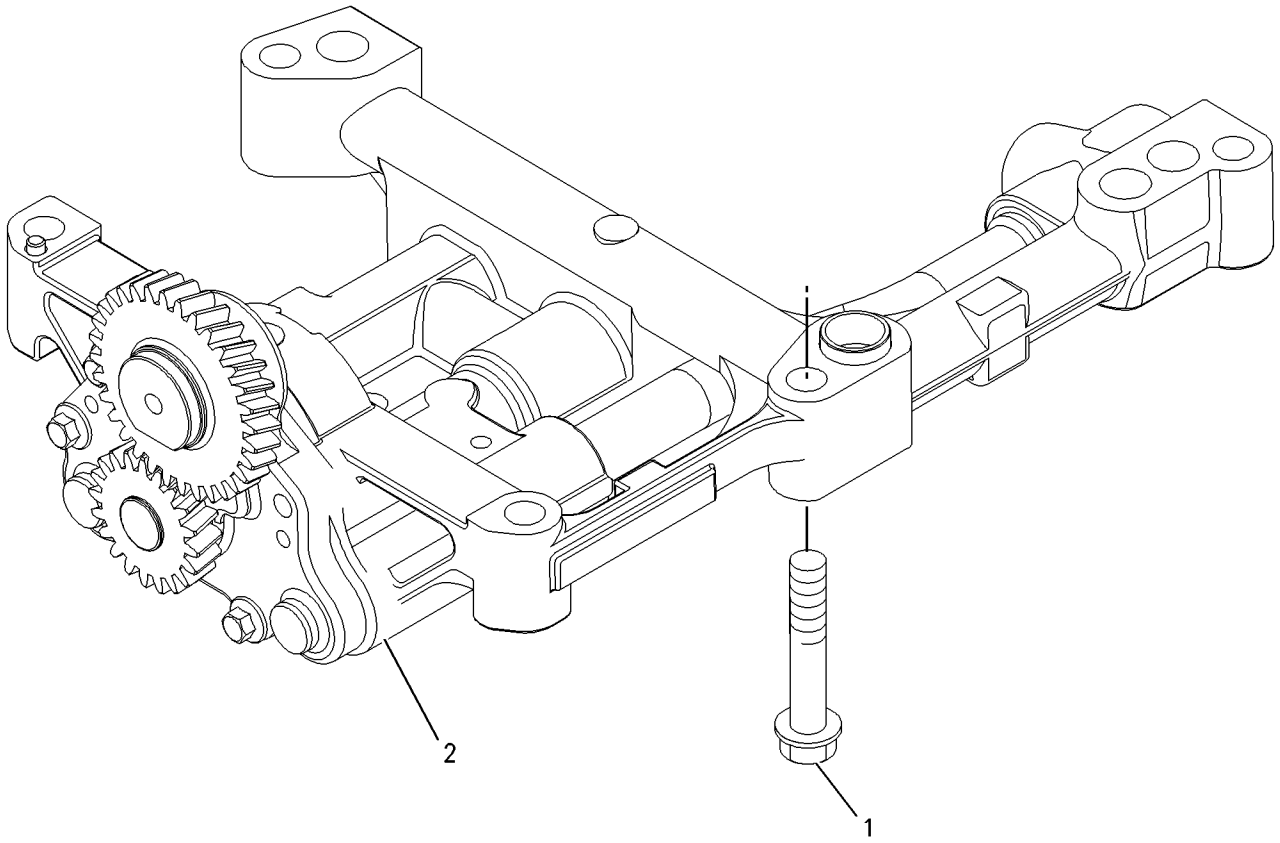

GRAPHIC #1 **<END>** g00911993

140-8911 VALVE GP-FLUID SAMPLING

S/N: PDF1-UP

PART OF 234-9213 INSTALLATION AR-ENGINE

SMCS-7542 **i02034060**

NOTE	REF NO	GRAPHIC REF	PART NUMBER	QTY	PART NAME 1 2 3 4 5 6 (PRODUCT LEVEL)	SEE PAGE
	1	1	**6V-7529**	1	ADAPTER	
	2	1	**8C-3445**	1	CAP-DUST	
	3	1	**8C-3446**	1	VALVE AS-FLUID SAMPLING (ENGINE OIL)	
	4	1	**3J-7354**	1	SEAL-O-RING	

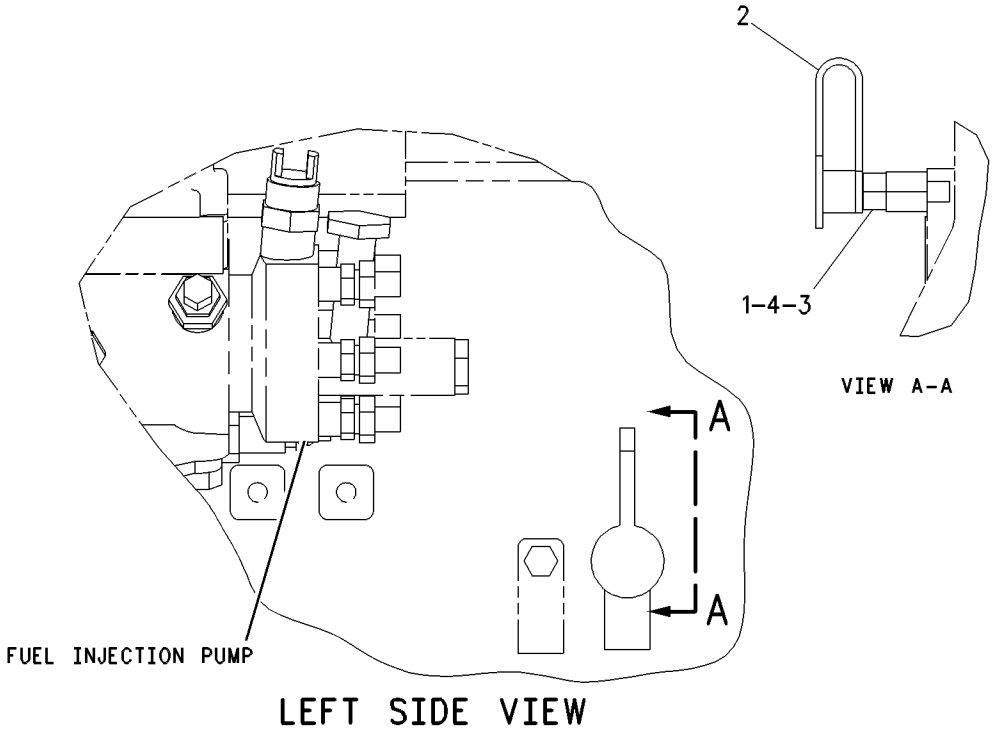

GRAPHIC #1 **<END>** g00328979

231-0033 CONNECTION GP-WATER

S/N: CRS1-UP

PART OF 179-1795 ENGINE AR-PRIMARY

SMCS-1380 **i01998620**

NOTE	REF NO	GRAPHIC REF	PART NUMBER	QTY	PART NAME 1 2 3 4 5 6 (PRODUCT LEVEL)	SEE PAGE
	1	1	**6I-0260**	2	BOLT (M8X1.25X25MM)	
	2	1	**231-0030**	1	CONNECTION AS	
	2A	1	**225-6908**	1	REGULATOR-WATER TEMPERATURE	
	2B	1	**225-6909**	1	SEAL-O-RING (WATER TEMPERATURE REGULATOR)	

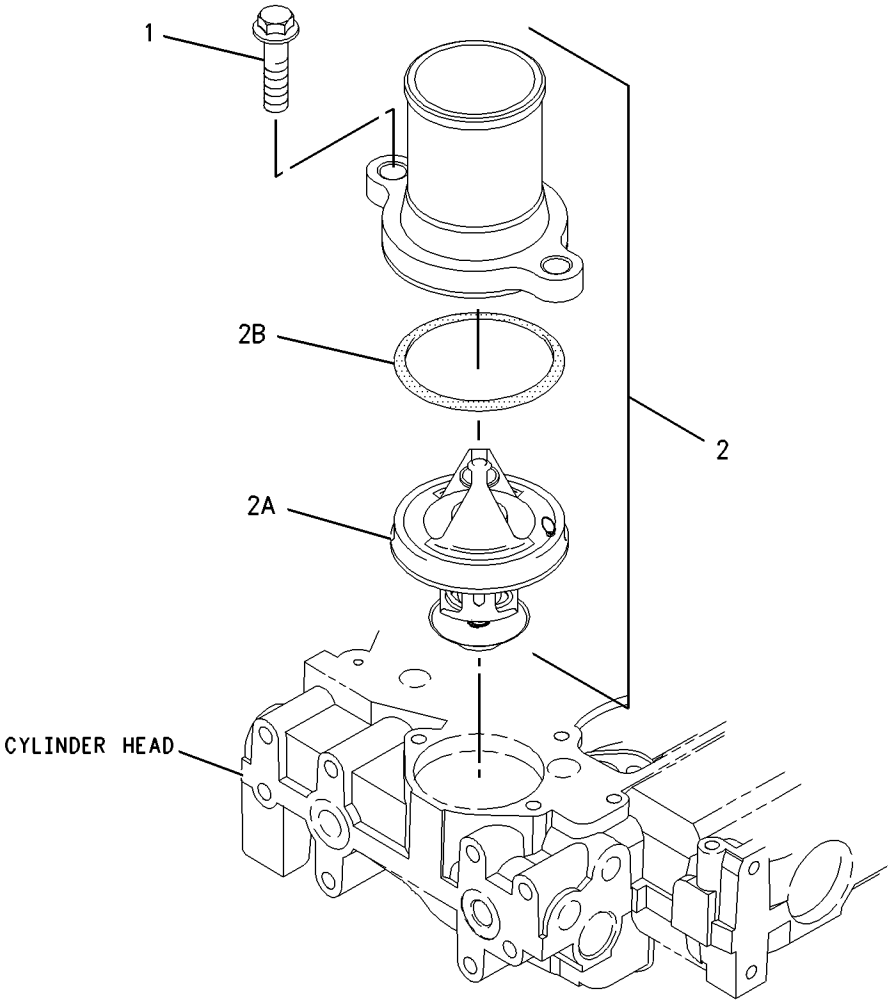

GRAPHIC #1 **<END>** g00950832

232-6177 COOLER GP-FLTR BASE & ENG OIL

S/N: CRS1-UP

PART OF 179-1795 ENGINE AR-PRIMARY

SMCS-1306, 1378 **i01998626**

NOTE	REF NO	GRAPHIC REF	PART NUMBER	QTY	PART NAME 1 2 3 4 5 6 (PRODUCT LEVEL)	SEE PAGE
	1	1	**6I-0572**	4	BOLT (M8X1.25.20MM)	
	2	1	**6I-0645**	4	BOLT (M8X1.25X25MM)	
	3	1	**199-9267**	1	SEAL-O-RING	
	4	1	**225-7941**	1	PLUG (ENGINE OIL FILTER LINES)	
	5	1	**225-7944**	2	GASKET	
	6	1	**230-8279**	1	HEAD AS-OIL FILTER	
	6A	1	**118-9145**	1	CONNECTOR	
	7	1	**232-3722**	1	COOLER GP-ENGINE OIL	
	7A	1	**6I-0260**	10	BOLT (M8X1.25X25MM)	
	7B	1	**6I-4374**	3	BOLT	
M	7C	1	**101-3895**	4	BOLT (M8X1.25X35MM)	
	7D	1	**225-6817**	1	COOLER-OIL	
	7E	1	**225-6818**	2	SEAL	
	7F	1	**225-6820**	1	GASKET	
	8	1	**232-3751**	1	PLATE	
	9	1	**232-3861**	1	PLUG	
	10	1	**8T-7876**	1	SEAL-O-RING	

M-METRIC PART

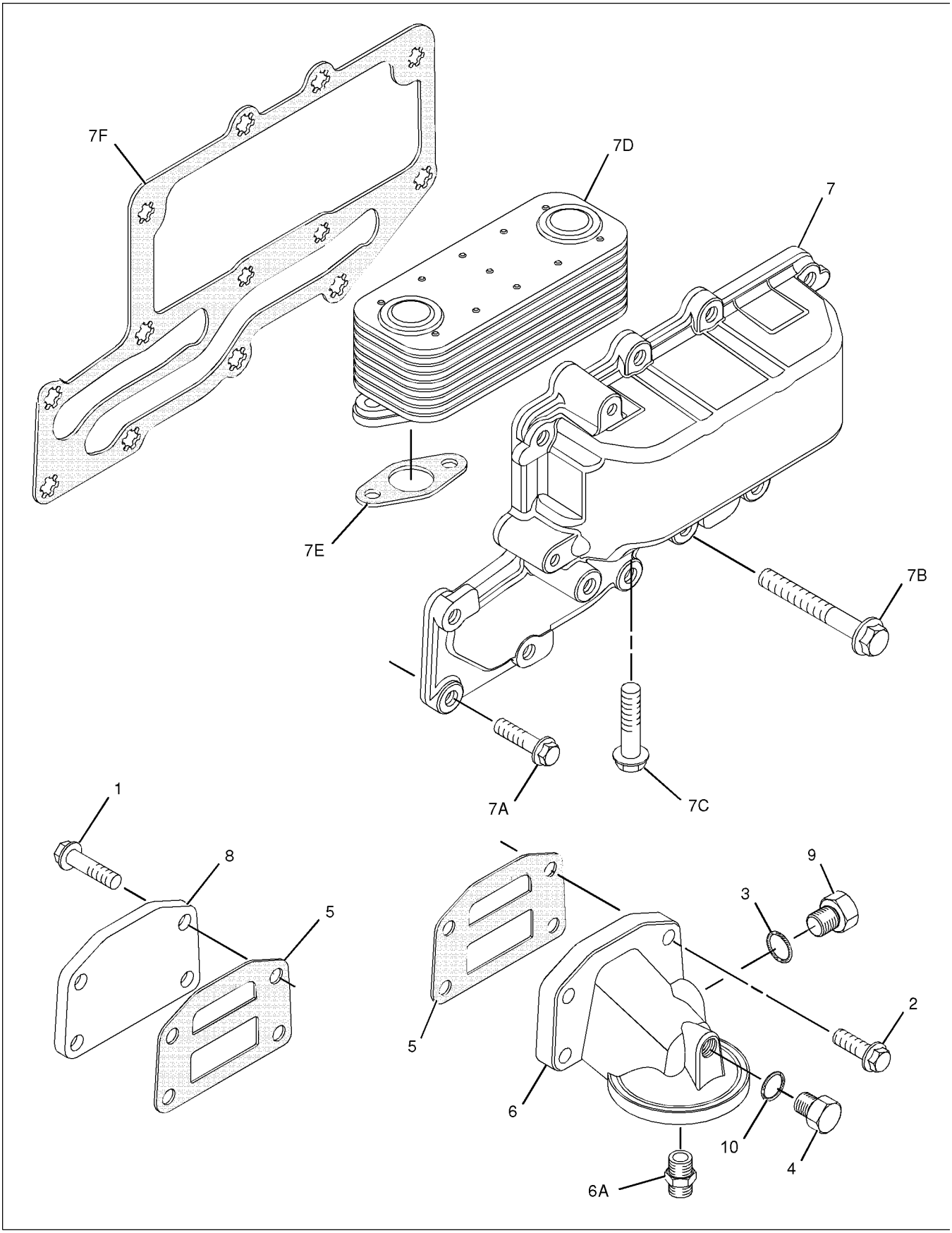

GRAPHIC #1 **<END>** g01029301

COOLING SYSTEM

234-0184 FAN GP-SUCTION

S/N: PDF1-UP

PART OF 234-9213 INSTALLATION AR-ENGINE

SMCS-1356 **i01998496**

NOTE	REF NO	GRAPHIC REF	PART NUMBER	QTY	PART NAME 1 2 3 4 5 6 (PRODUCT LEVEL)	SEE PAGE
	1	1	**130-7881**	1	SPACER	
	2	1	**142-3391**	1	SPIDER AS (9 BLADES)	
	3	1	**242-9751**	1	GUARD AS	
	4	1	**7X-0579**	4	WASHER-HARD (8.8X25.5X2-MM THK)	
M	5	1	**7X-2540**	4	BOLT (M8X1.25X120-MM)	
M	6	1	**8T-4189**	4	BOLT (M8X1.25X20-MM)	
M	7	1	**8T-4224**	4	WASHER-HARD (8.8X16X2-MM THK)	

M-METRIC PART

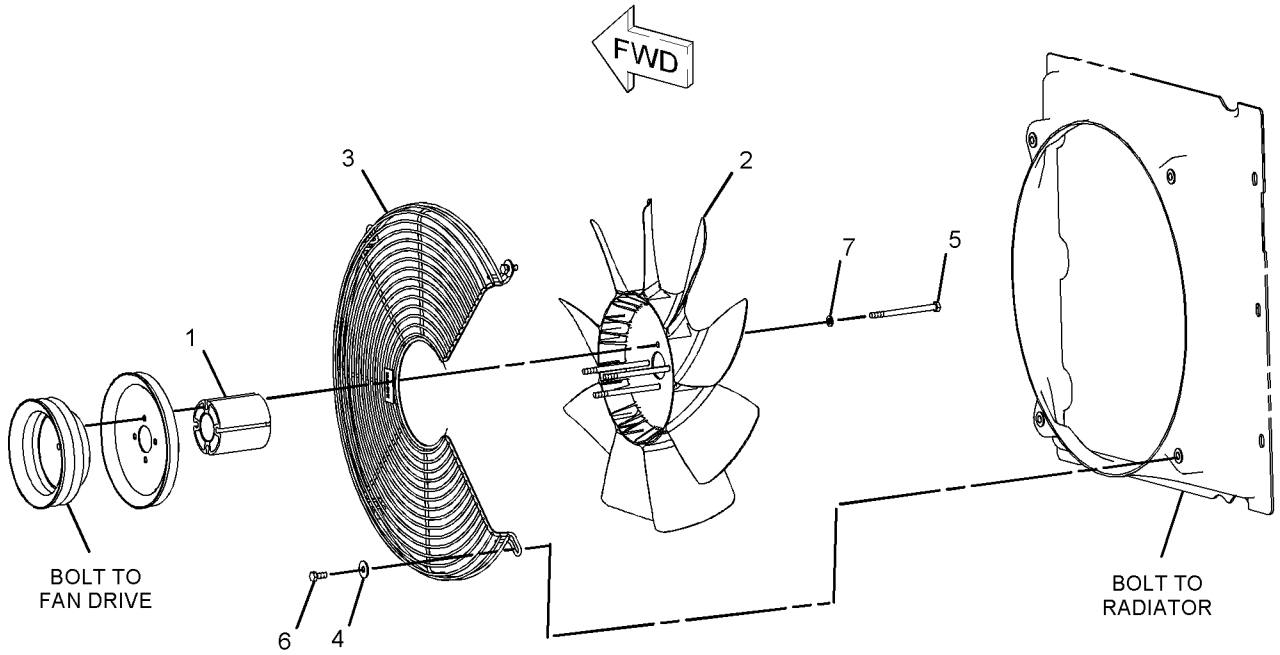

GRAPHIC #1 **<END>** g01034003

COOLING SYSTEM

230-7355 PUMP GP-WATER

S/N: CRS1-UP

PART OF 179-1795 ENGINE AR-PRIMARY

SMCS-1361 **i01896488**

NOTE	REF NO	GRAPHIC REF	PART NUMBER	QTY	PART NAME 1 2 3 4 5 6 (PRODUCT LEVEL)	SEE PAGE
	1	1	**6I-0217**	2	BOLT (M8X1.25X20MM)	
	2	1	**6I-0254**	2	BOLT (M8X1.25X30MM)	
	3	1	**100-3751**	5	BOLT (M8X1.25X65MM)	
	4	1	**113-8129**	2	BOLT (M8X75MM)	
	5	1	**225-7741**	1	CONNECTION AS	
	6	1	**225-7738**	1	SEAL-O-RING	
	7	1	**225-7739**	1	SEAL-O-RING	
	8	1	**225-8016**	1	PUMP GP-WATER	
	9	1	**225-8019**	1	GASKET	

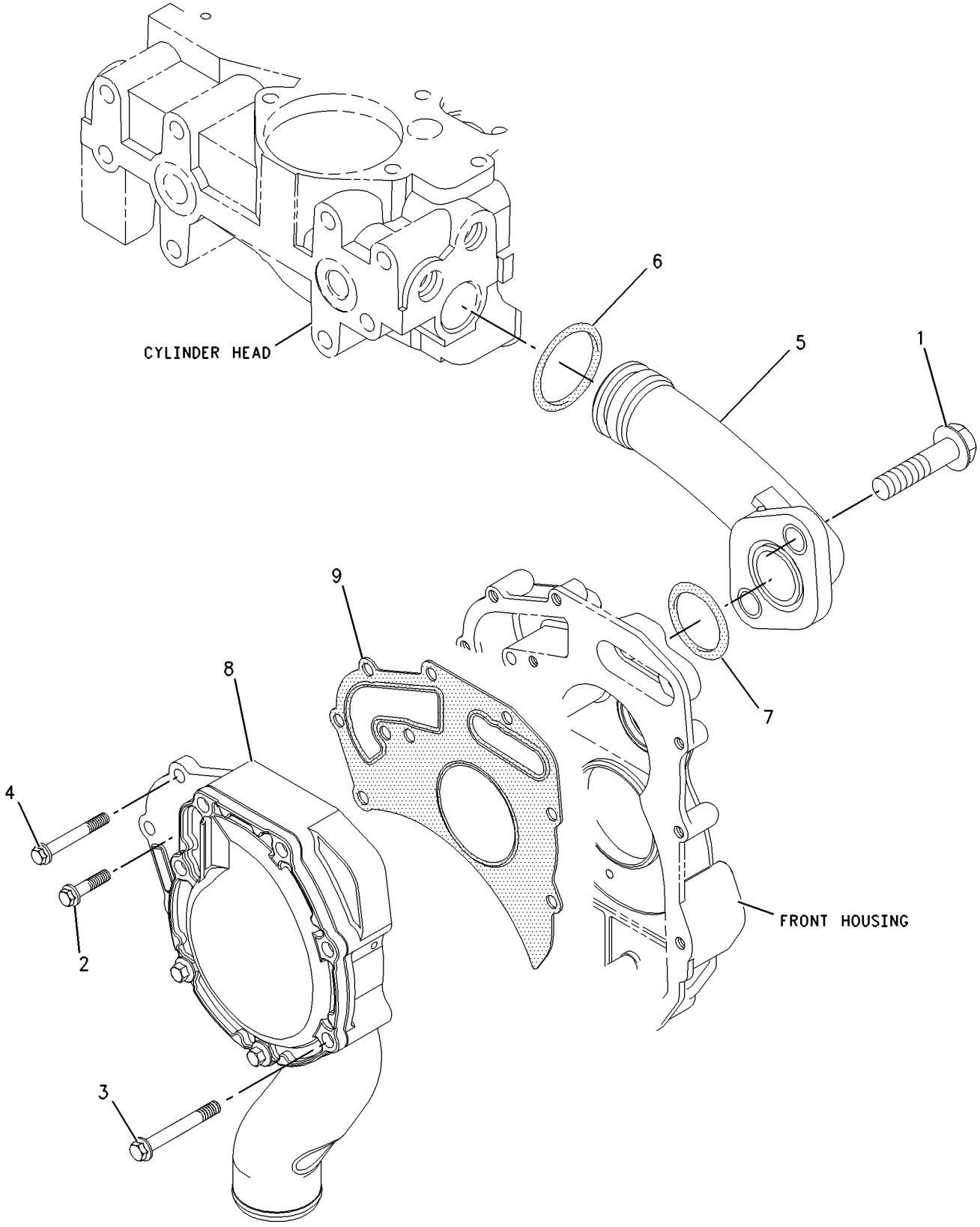

GRAPHIC #1 **<END>** g00912411

COOLING SYSTEM

234-0175 RADIATOR & HYD OIL COOLER GP

S/N: PDF1-UP

PART OF 234-9753 RADIATOR GP

SMCS-1353, 1374 **i01999630**

NOTE	REF NO	GRAPHIC REF	PART NUMBER	QTY	PART NAME 1 2 3 4 5 6 (PRODUCT LEVEL)	SEE PAGE
M	1	1	**8T-4171**	1	BOLT (M6X1X12MM)	
	2	1	*234-0176*	1	RADIATOR GP	
	2A	1	**148-9812**	1	CABLE AS	
	2B	1	**234-0179**	4	BRACKET	
	2C	1	**148-0369**	2	BUMPER	
	2D	1	**225-4287**	1	VALVE GP-RADIATOR DRAIN	
	3	1	*234-0177*	1	COOLER GP-HYDRAULIC OIL	
	3A	1	**3J-1907**	1	SEAL-O-RING	
	3B	1	**6V-0852**	1	CAP-DUST	
	3C	1	**6V-3965**	1	FITTING (QUICK DISCONNECT)	
	3D	1	**033-9412**	4	RIVET	
M	4	1	**8T-4183**	2	BOLT (M12X1.75X40MM)	
	5	1	**8T-4223**	6	WASHER-HARD (13.5X25.5X3MM THK)	
M	6	1	**8T-8549**	2	LOCKNUT (M12X1.75 THD)	
	7	1	**9X-8256**	1	WASHER (6.6X12X2MM THK)	

M-METRIC PART

234-0175 **RADIATOR & HYD OIL COOLER GP** ***(contd.)*** **i01999630**

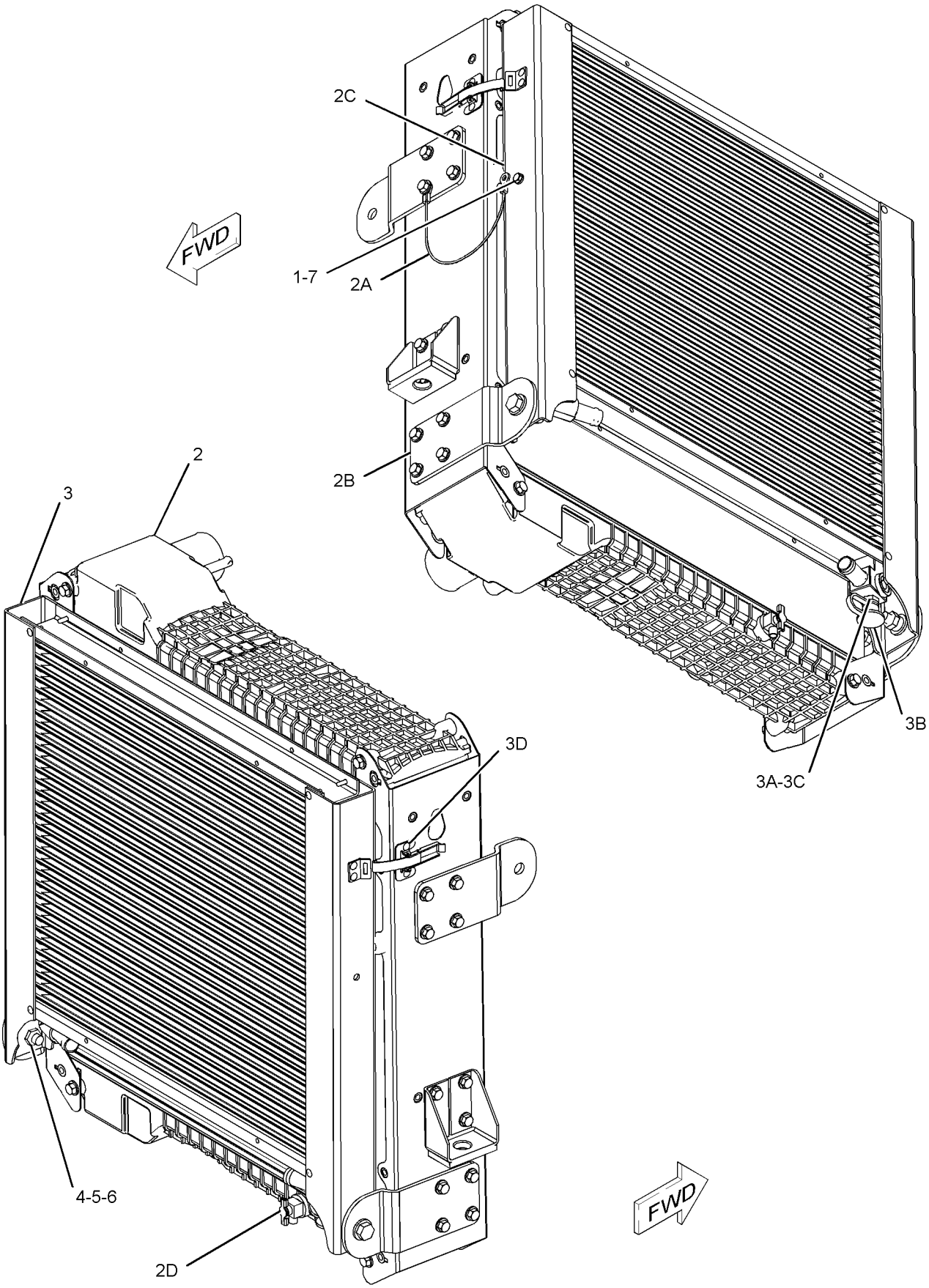

GRAPHIC #1 **<END>** g01037284

COOLING SYSTEM

234-9753 RADIATOR GP

S/N: PDF1-UP

PART OF 234-9213 INSTALLATION AR-ENGINE

SMCS-1353 **i02016485**

NOTE	REF NO	GRAPHIC REF	PART NUMBER	QTY	PART NAME 1 2 3 4 5 6 (PRODUCT LEVEL)	SEE PAGE
M	1	1	**5C-7261**	2	NUT (M8X1.25-THD)	
E	2	1	**8C-3681**		HOSE (50CM)	
	3	1	**9D-7924**	4	MOUNTING	
	4	1	**109-1198**	1	SUPPORT	
	5	1	**109-1199**	1	SUPPORT	
	6	1	**214-7457**	1	CLAMP-T'BOLT	
	7	1	**214-7458**	1	CLAMP-T'BOLT	
	8	1	**216-6945**	2	CLAMP	
Y	9	1	*234-0175*	1	RADIATOR & HYD OIL COOLER GP	44
	10	1	**234-0183**	1	SHROUD AS	
	11	1	**235-1304**	1	HOSE-RADIATOR	
	12	1	**235-1305**	1	HOSE-RADIATOR	
Y	13	1	*236-2403*	1	TANK GP-EXPANSION	388
	14	1	**5P-4116**	4	WASHER-HARD (8.8X20.5X2-MM THK)	
	15	1	**7X-0579**	4	WASHER-HARD (8.8X25.5X2-MM THK)	
	16	1	**7X-0603**	8	WASHER-HARD (9.9X35X2.5-MM THK)	
	17	1	**8T-4224**	4	WASHER-HARD (8.8X16X2-MM THK)	
M	18	1	**8T-5091**	4	BOLT (M8X1.25X20-MM)	
M	19	1	**8T-6869**	4	BOLT (M8X1.25X60-MM)	
M	20	1	**8T-7547**	2	BOLT (M8X1.25X30-MM)	

E-ORDER BY THE CENTIMETER
M-METRIC PART
Y-SEPARATE ILLUSTRATION

234-9753 **RADIATOR GP** *(contd.)* **i02016485**

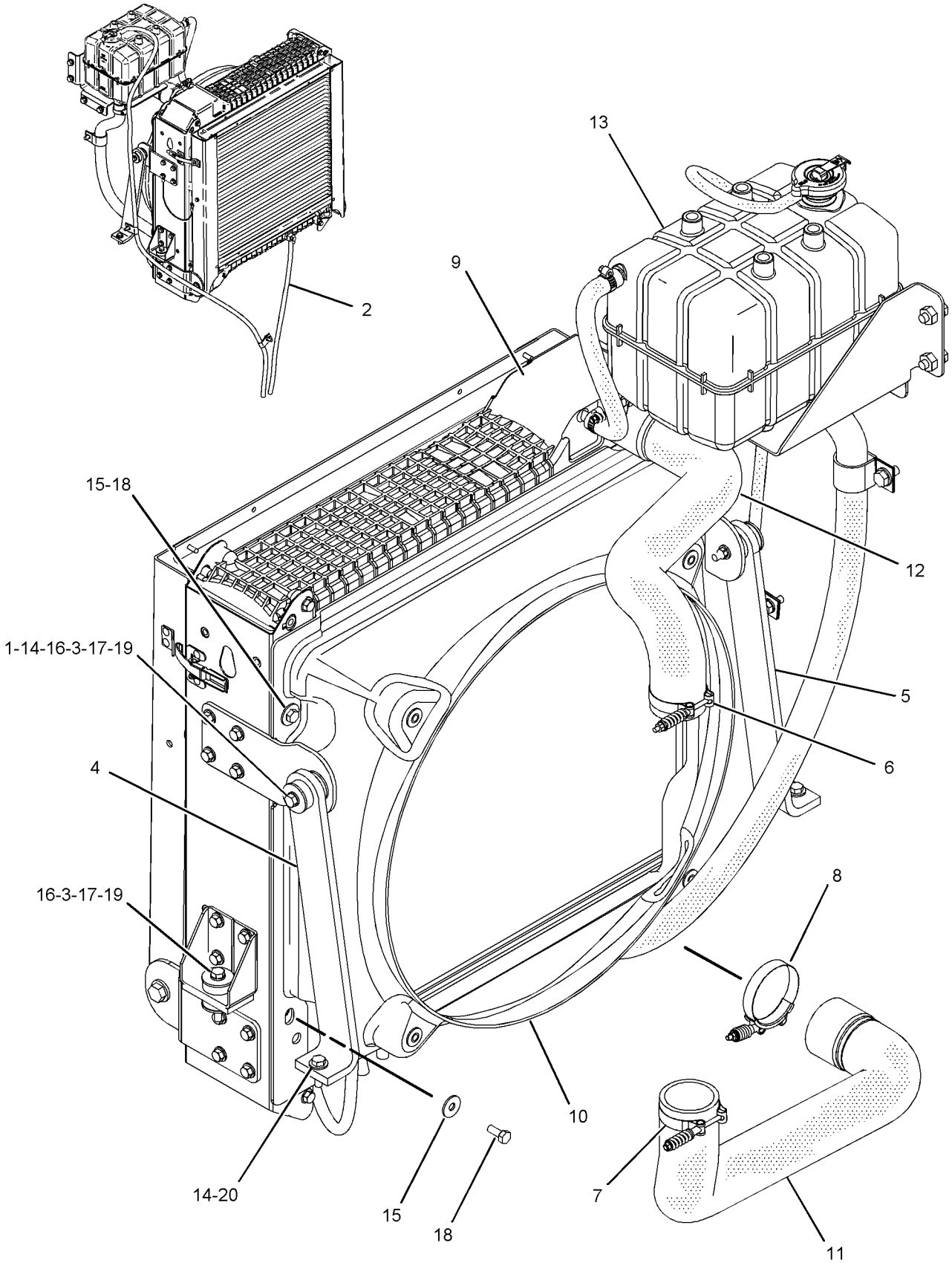

GRAPHIC #1 **<END>** g01042600

AIR INLET AND EXHAUST SYSTEM

233-4831 AIR CLEANER GP

S/N: PDF1-UP

PART OF 234-9213 INSTALLATION AR-ENGINE

SMCS-1051, 1054 **i01998492**

NOTE	REF NO	GRAPHIC REF	PART NUMBER	QTY	PART NAME 1 2 3 4 5 6 (PRODUCT LEVEL)	SEE PAGE
Y	1	1	*233-4834*	1	AIR CLEANER GP	49
M	2	1	**7X-2537**	2	BOLT (M8X1.25X35MM)	
	3	1	**8T-4224**	2	WASHER-HARD (8.8X16X2MM THK)	

M-METRIC PART
Y-SEPARATE ILLUSTRATION

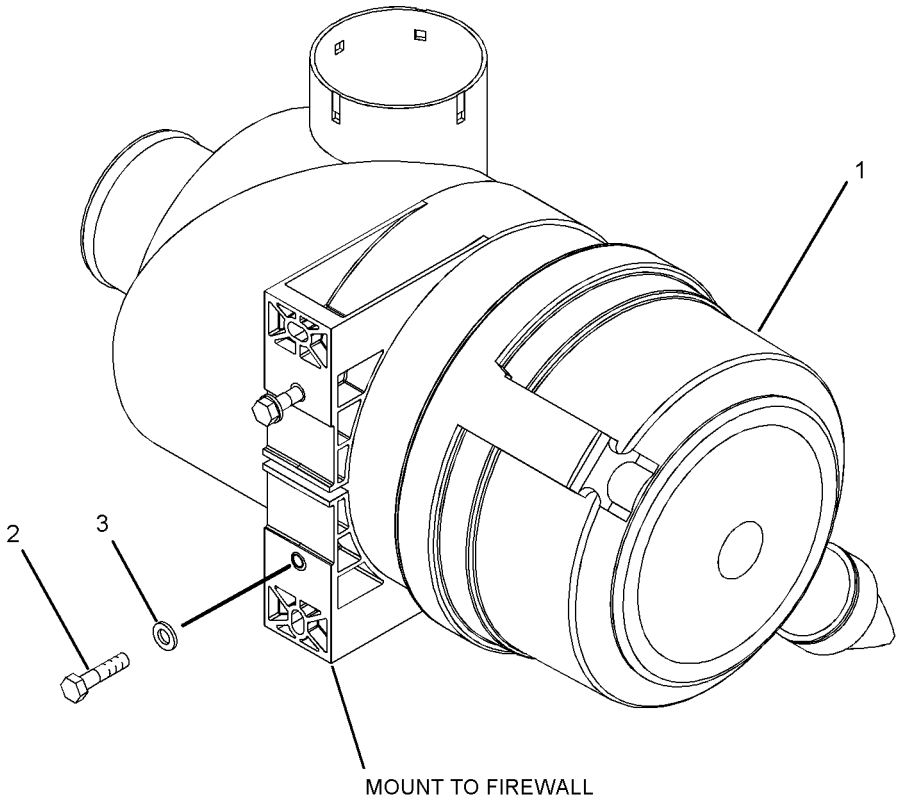

GRAPHIC #1

<END>

g01034680

AIR INLET AND EXHAUST SYSTEM

233-4834 AIR CLEANER GP

S/N: PDF1-UP

PART OF 233-4831 AIR CLEANER GP

SMCS-1051, 1054 **i01999624**

NOTE	REF NO	GRAPHIC REF	PART NUMBER	QTY	PART NAME 1 2 3 4 5 6 (PRODUCT LEVEL)	SEE PAGE
	1	1	**152-4898**	1	BAND-MOUNTING	
	2	1	**230-9299**	1	AIR CLEANER GP	
		1	**110-6326**	1	FILTER ELEMENT AS-AIR (PRIMARY)	
		1	**110-6331**	1	FILTER ELEMENT AS-AIR (SECONDARY)	
		1	**112-9717**	1	VALVE-VACUATOR	

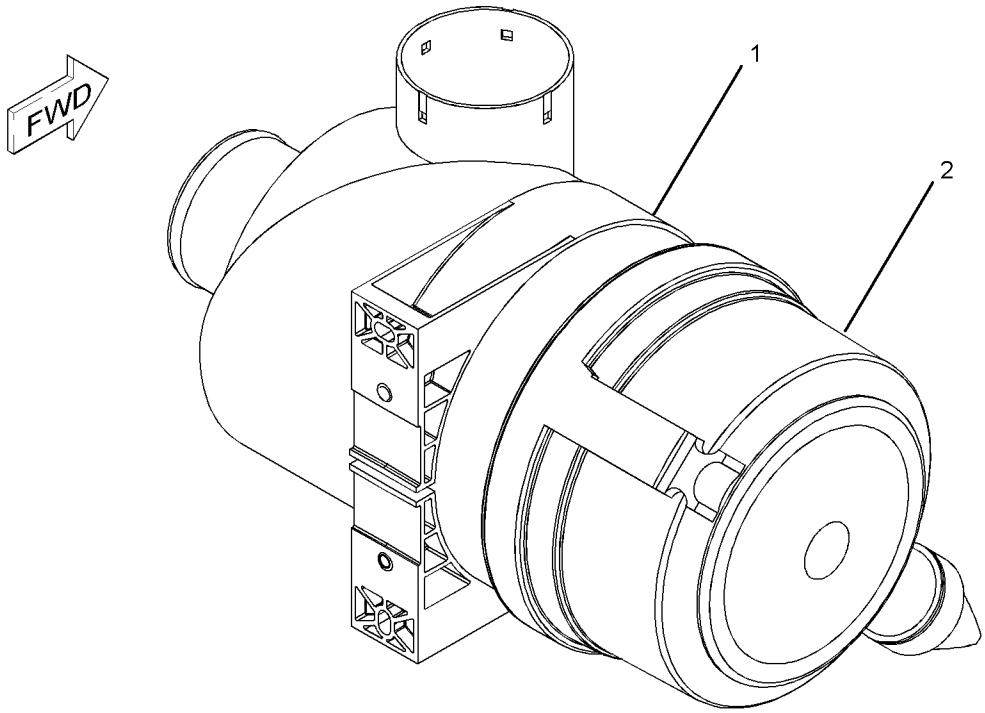

GRAPHIC #1 **<END>** g01035783

AIR INLET AND EXHAUST SYSTEM

231-0149 COVER GP-AIR INLET

S/N: CRS1-UP

PART OF 179-1795 ENGINE AR-PRIMARY

SMCS-1087 **i01892308**

NOTE	REF NO	GRAPHIC REF	PART NUMBER	QTY	PART NAME 1 2 3 4 5 6 (PRODUCT LEVEL)	SEE PAGE
	1	1	**6I-0572**	12	BOLT (M8X1.25.20MM)	
	2	1	**114-2579**	3	GASKET	
	3	1	**115-1162**	3	PLATE	

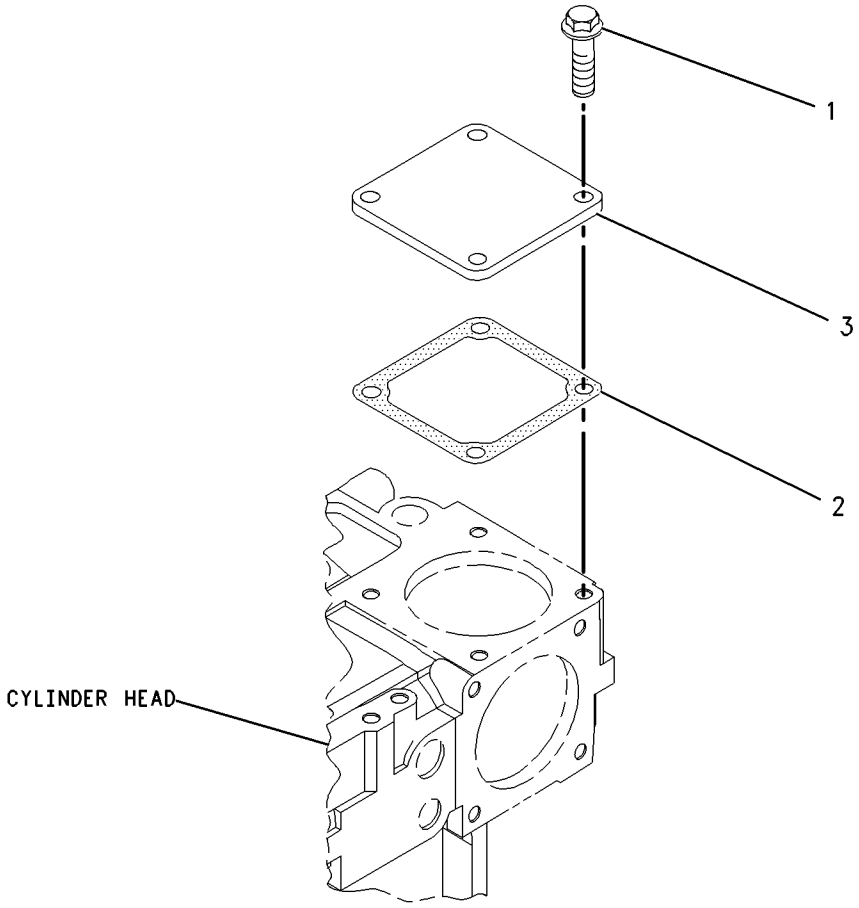

GRAPHIC #1 **<END>** g00986215

113-1514 EXTENSION GP-EXHAUST

S/N: PDF1-UP
SHORT
PART OF 239-1004, 239-1005 OPERATOR AR, 241-8643 PLATFORM AR
AN ATTACHMENT

SMCS-1061 **i00709735**

NOTE	REF NO	GRAPHIC REF	PART NUMBER	QTY	PART NAME 1 2 3 4 5 6 (PRODUCT LEVEL)	SEE PAGE
	1	1	**7N-0810**	1	CLAMP	
	2	1	**107-4728**	1	PIPE-EXTENSION	
M	3	1	**8T-4178**	1	BOLT (M10X1.50X90MM)	
	4	1	**8T-4121**	2	WASHER (2.5MM THK)	
M	5	1	**8T-4133**	1	NUT (M10X1.50 THD)	

M-METRIC PART

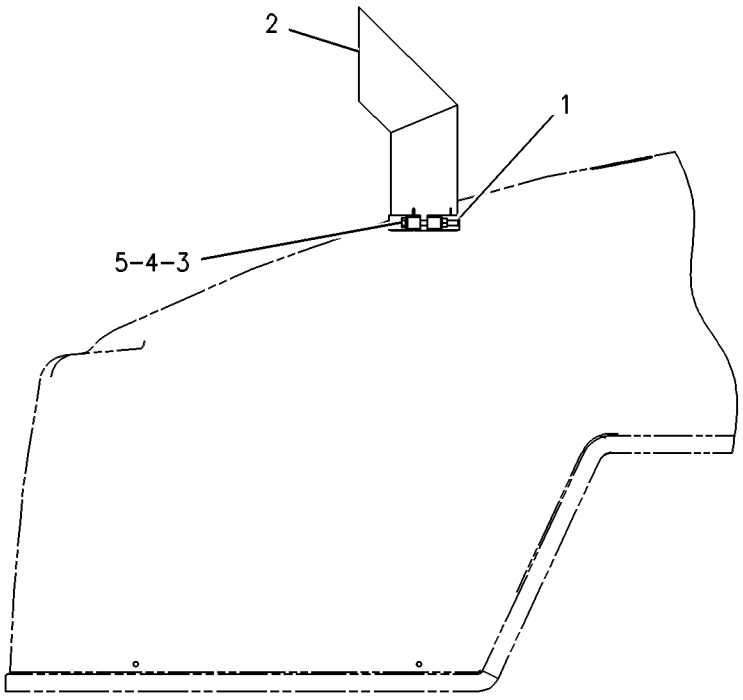

RIGHT SIDE VIEW

GRAPHIC #1 **<END>** g00263586

AIR INLET AND EXHAUST SYSTEM

113-1515 EXTENSION GP-EXHAUST

S/N: PDF1-UP
LONG
PART OF 241-8644 CANOPY AR-SOFT, 241-8840 OPERATOR AR-OPEN ROPS
AN ATTACHMENT

SMCS-1061 **i00709738**

NOTE	REF NO	GRAPHIC REF	PART NUMBER	QTY	PART NAME 1 2 3 4 5 6 (PRODUCT LEVEL)	SEE PAGE
	1	1	**5M-5856**	1	PIPE-EXTENSION	
	2	1	**7N-0810**	1	CLAMP	
M	3	1	**8T-4178**	1	BOLT (M10X1.50X90MM)	
	4	1	**8T-4121**	2	WASHER (2.5MM THK)	
M	5	1	**8T-4133**	1	NUT (M10X1.50 THD)	

M-METRIC PART

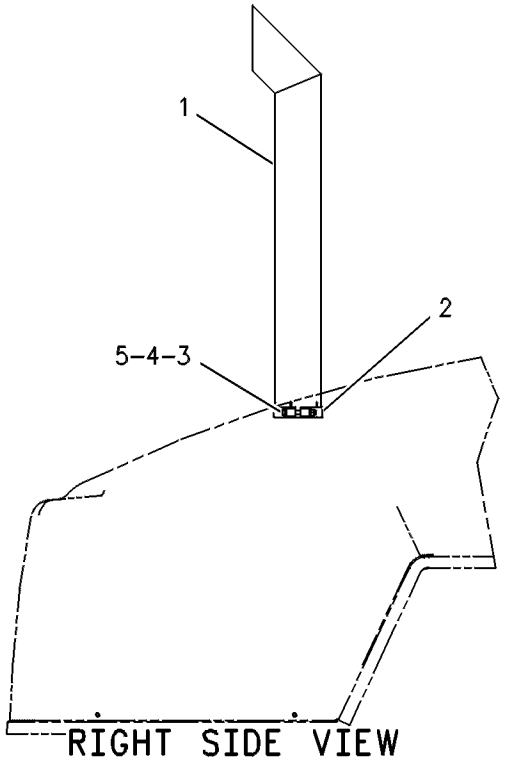

GRAPHIC #1

<END>

g00246005

AIR INLET AND EXHAUST SYSTEM

233-4832 LINES GP-AIR

S/N: PDF1-UP
AN ATTACHMENT

SMCS-1071 **i02038796**

NOTE	REF NO	GRAPHIC REF	PART NUMBER	QTY	PART NAME 1 2 3 4 5 6 (PRODUCT LEVEL)	SEE PAGE
	1	1	**2J-6540**	1	CLAMP	
	2	1	**6I-0364**	3	STUD (M10X1.5X30-MM)	
	3	1	**6V-3582**	3	CLAMP-HOSE	
	4	1	**123-0275**	1	FITTING (FILTER)	
	5	1	**132-3365**	1	HOSE	
	6	1	**138-4447**	1	BRACKET AS	
		1	**3B-6487**	1	COUPLING	
	7	1	**145-4212**	1	INDICATOR GP-AIR FILTER CHANGE	
	8	1	**216-0069**	1	FITTING	
	9	1	**233-4835**	1	TUBE AS	
	10	1	**233-4837**	1	HOSE	
	11	1	**235-1867**	1	TUBE AS	
	12	1	**145-4211**	1	ADAPTER-FILTER	
M	13	1	**6V-7744**	3	LOCKNUT (M10X1.5-THD)	
	14	1	**8T-4121**	7	WASHER-HARD (11X21X2.5-MM THK)	
M	15	1	**8T-4133**	1	NUT (M10X1.5-THD)	
M	16	1	**8T-4136**	3	BOLT (M10X1.5X25-MM)	
D	17	1	**6V-1363**		HOSE (0.5M)	

D-ORDER BY THE METER
M-METRIC PART

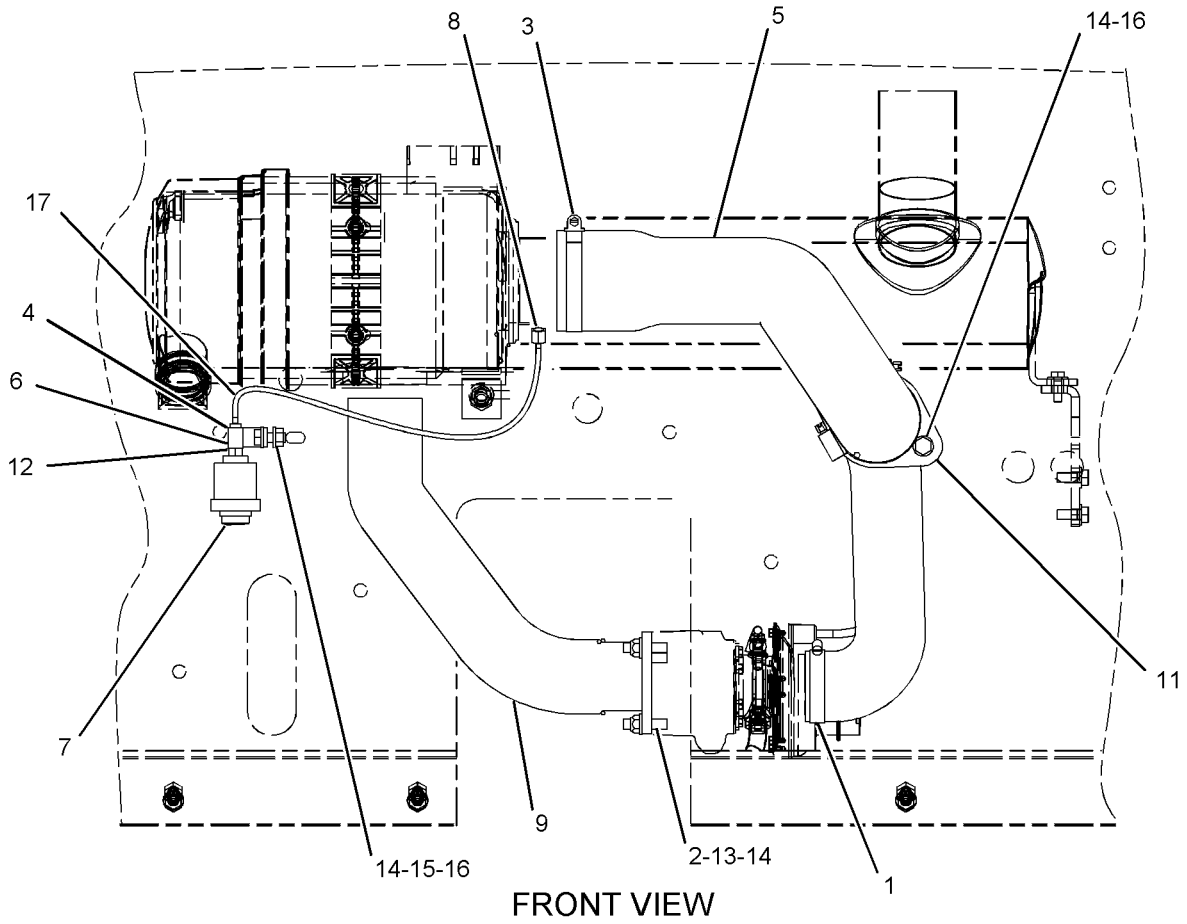

FRONT VIEW

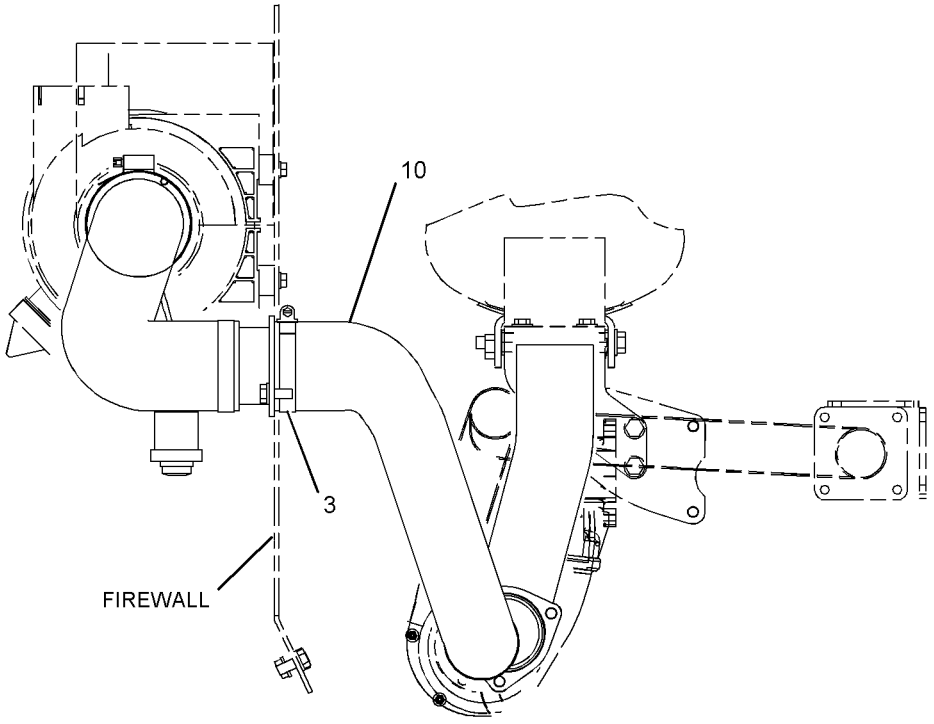

LEFT SIDE VIEW

GRAPHIC #1

<END>

g01034217

AIR INLET AND EXHAUST SYSTEM

234-9212 LINES GP-AIR

S/N: PDF1-UP
AN ATTACHMENT

SMCS-1071 **i02038800**

NOTE	REF NO	GRAPHIC REF	PART NUMBER	QTY	PART NAME 1 2 3 4 5 6 (PRODUCT LEVEL)	SEE PAGE
	1	1	**2J-6540**	1	CLAMP	
	2	1	**6I-0364**	3	STUD (M10X1.5X30-MM)	
	3	1	**6V-3582**	3	CLAMP-HOSE	
	4	1	**8T-9402**	3	CLAMP-HOSE	
	5	1	**123-0275**	1	FITTING (FILTER)	
	6	1	**132-3365**	1	HOSE	
	7	1	**138-4447**	1	BRACKET AS	
		1	**3B-6487**	1	COUPLING	
	8	1	**145-4212**	1	INDICATOR GP-AIR FILTER CHANGE	
	9	1	**216-0069**	1	FITTING	
	10	1	**233-4830**	1	HOSE-AIR	
	11	1	**233-4835**	1	TUBE AS	
	12	1	**234-2625**	1	TUBE	
	13	1	**235-1867**	1	TUBE AS	
	14	1	**145-4211**	1	ADAPTER-FILTER	
		1	**7J-0204**	1	SEAL-O-RING	
	15	1	**3S-8665**	1	CLIP	
	16	1	**4K-5824**	1	BOSS	
	17	1	**5P-4116**	1	WASHER-HARD (8.8X20.5X2-MM THK)	
M	18	1	**6V-7744**	3	LOCKNUT (M10X1.5-THD)	
	19	1	**7X-7729**	1	WASHER (11X25X3-MM THK)	
	20	1	**8F-8513**	1	CLIP	
	21	1	**8T-4121**	8	WASHER-HARD (11X21X2.5-MM THK)	
M	22	1	**8T-4133**	2	NUT (M10X1.5-THD)	
M	23	1	**8T-4136**	3	BOLT (M10X1.5X25-MM)	
M	24	1	**8T-4186**	1	BOLT (M10X1.5X40-MM)	
M	25	1	**8T-4908**	1	BOLT (M8X1.25X25-MM)	
E	26	1	**103-2555**		HOSE (20-CM)	
D	27	1	**6V-1363**		HOSE (0.5-M)	

D-ORDER BY THE METER
E-ORDER BY THE CENTIMETER
M-METRIC PART

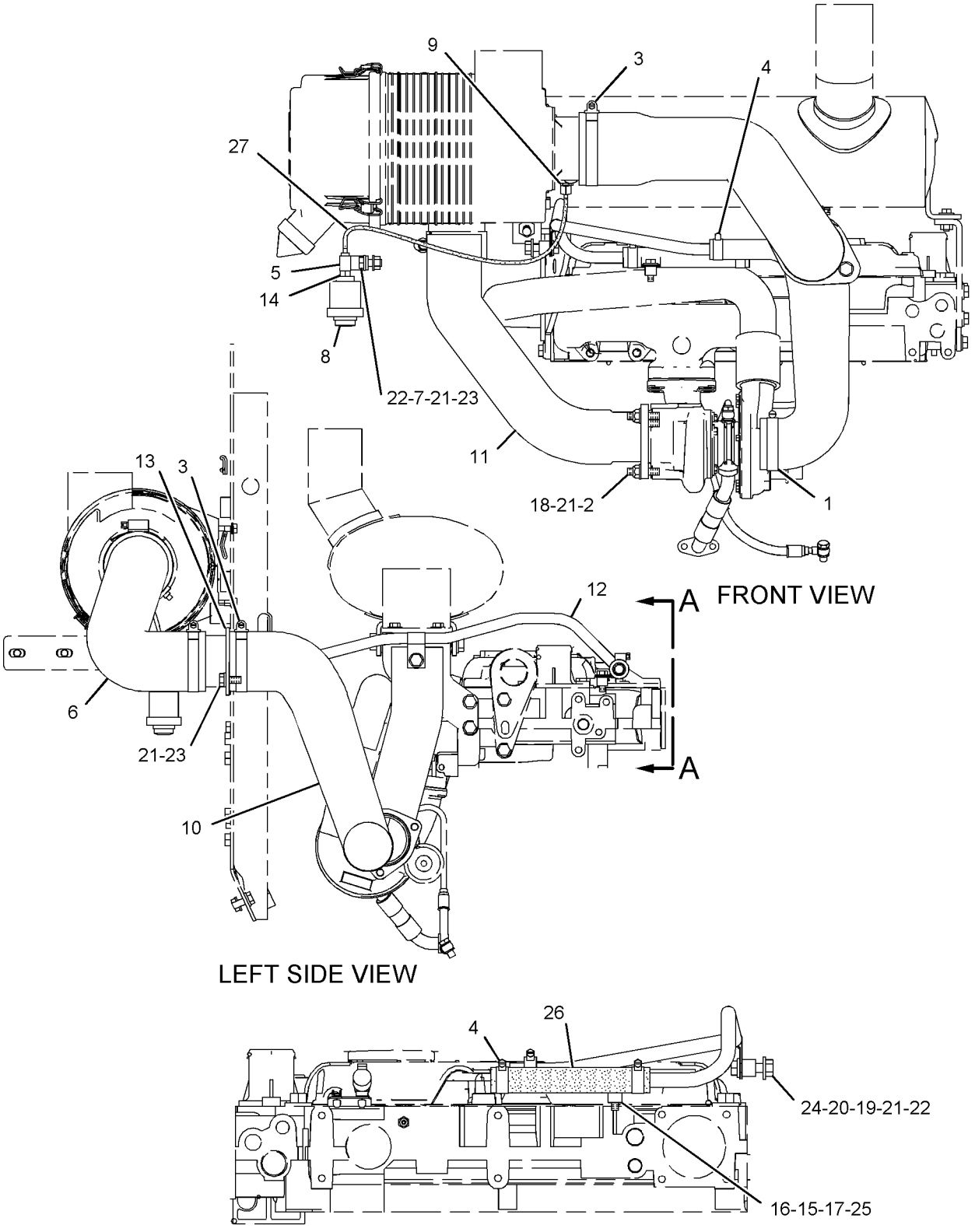

GRAPHIC #1

<END>

g01043839

AIR INLET AND EXHAUST SYSTEM

233-4838 MUFFLER GP

S/N: PDF1-UP

PART OF 234-9213 INSTALLATION AR-ENGINE

SMCS-1062 **i01998500**

NOTE	REF NO	GRAPHIC REF	PART NUMBER	QTY	PART NAME 1 2 3 4 5 6 (PRODUCT LEVEL)	SEE PAGE
	1	1	**133-9478**	1	MUFFLER AS	
		1	**134-1259**	1	CLAMP-BENT BOLT	
	2	1	**233-4833**	1	PLATE	
	3	1	**243-3207**	4	BRACKET AS	
	4	1	**243-3209**	1	BRACKET AS	
	5	1	**5P-4116**	2	WASHER-HARD (8.8X20.5X2-MM THK)	
	6	1	**8T-4121**	6	WASHER-HARD (11X21X2.5-MM THK)	
M	7	1	**8T-4136**	4	BOLT (M10X1.5X25-MM)	
M	8	1	**8T-4137**	2	BOLT (M10X1.5X20-MM)	
	9	1	**8T-4223**	1	WASHER-HARD (13.5X25.5X3-MM THK)	
M	10	1	**8T-4908**	2	BOLT (M8X1.25X25-MM)	
M	11	1	**8T-5412**	1	BOLT (M12X1.75X140-MM)	

M-METRIC PART

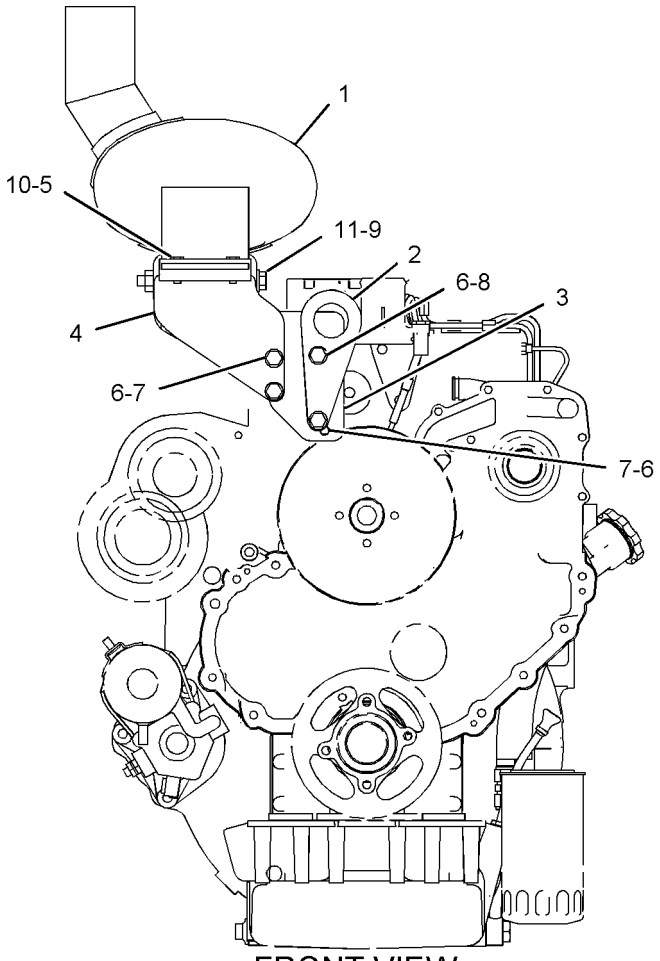

FRONT VIEW

GRAPHIC #1

<END>

g01035275

AIR INLET AND EXHAUST SYSTEM

121-3015 PRECLEANER GP

S/N: PDF1-UP

PART OF 234-9213 INSTALLATION AR-ENGINE

SMCS-1055 **i01133164**

NOTE	REF NO	GRAPHIC REF	PART NUMBER	QTY	PART NAME 1 2 3 4 5 6 (PRODUCT LEVEL)	SEE PAGE
	1	1	**4Y-6929**	1	CAP-RAIN	
	2	1	**5P-1717**	1	CLAMP-HOSE	
E	3	1	**120-5281**		SEAL (58CM)	
	4	1	**120-5302**	1	EXTENSION AS	
	5	1	**120-5303**	1	EXTENSION AS	
	6	1	**120-5335**	1	INSULATION	
	7	1	**8T-4121**	2	WASHER (2.5MM THK)	
M	8	1	**8T-4137**	2	BOLT (M10X1.50X20MM)	

E-ORDER BY THE CENTIMETER
M-METRIC PART

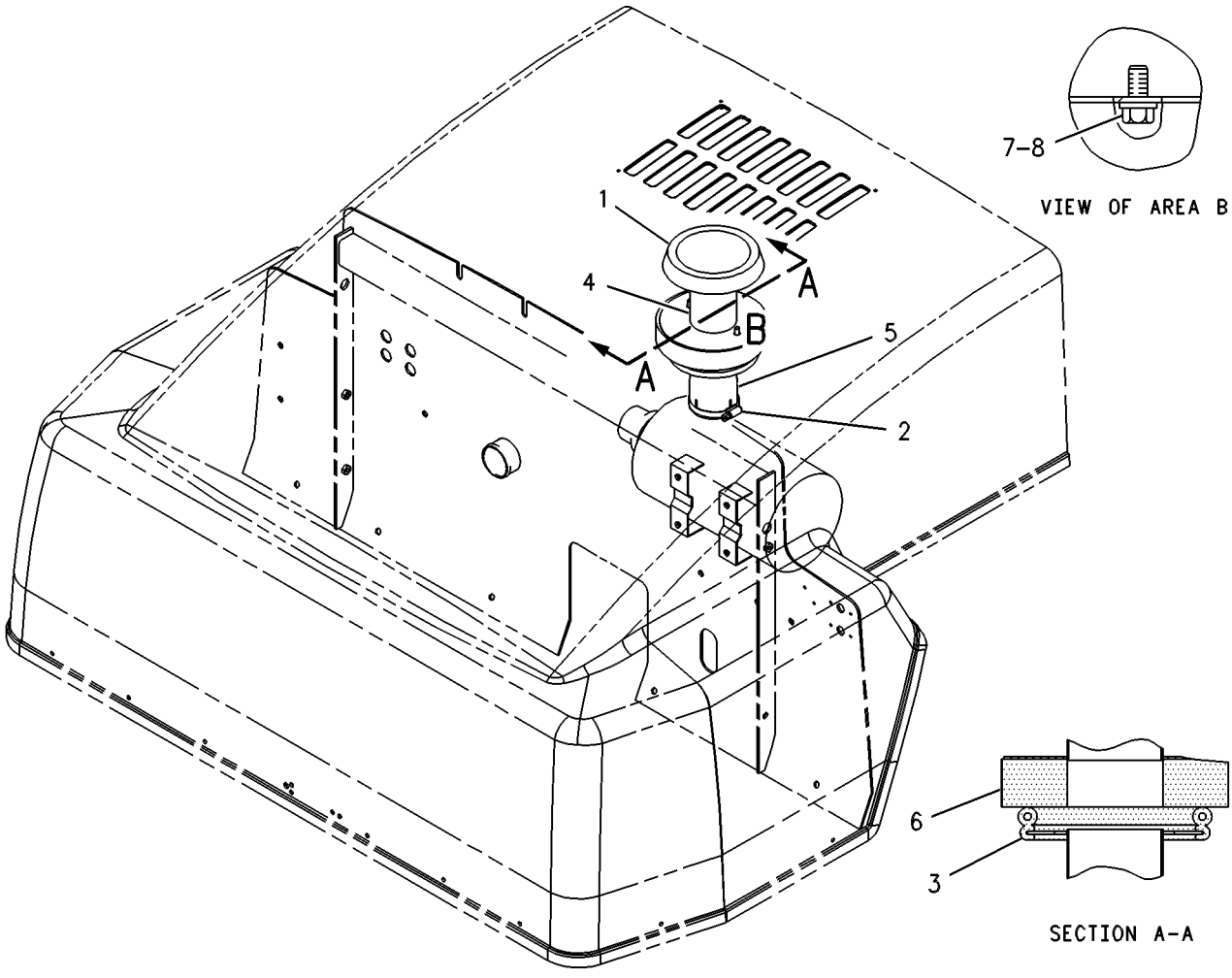

GRAPHIC #1 **<END>** g00264664

AIR INLET AND EXHAUST SYSTEM

237-8263 TURBOCHARGER GP

S/N: CRS1-UP

PART OF 179-1795 ENGINE AR-PRIMARY

SMCS-1052, 1053 **i02017704**

NOTE	REF NO	GRAPHIC REF	PART NUMBER	QTY	PART NAME 1 2 3 4 5 6 (PRODUCT LEVEL)	SEE PAGE
	1	1	**6I-0217**	2	BOLT (M8X1.25X20-MM)	
	2	1	**6I-0563**	4	NUT (M10)	
	3	1	**6I-0572**	4	BOLT (M8X1.25X20-MM)	
	4	1	**106-8916**	2	BOLT (M6X16-MM)	
	5	1	**141-1667**	2	CLAMP-HOSE	
	6	1	**147-5553**	4	STUD	
	7	1	**174-9638**	8	BOLT	
	8	1	**194-5390**	1	GASKET-MANIFOLD	
	9	1	**225-8530**	1	GASKET	
	10	1	**225-8533**	1	GASKET	
	11	1	**225-8534**	1	GASKET	
	12	1	**225-8536**	1	GASKET	
	13	1	**233-9536**	1	TUBE AS	
	13A	1	**225-8524**	3	BOLT	
	13B	1	**225-8526**	7	WASHER	
	14	1	**233-9537**	1	TUBE AS	
	15	1	**233-9538**	1	MANIFOLD-EXHAUST	
	16	1	**234-3029**	1	HOSE	
	17	1	**234-3030**	1	GASKET	
	18	1	**237-8265**	1	PIPE-EXHAUST	
	19	1	**237-4734**	1	TURBOCHARGER GP	

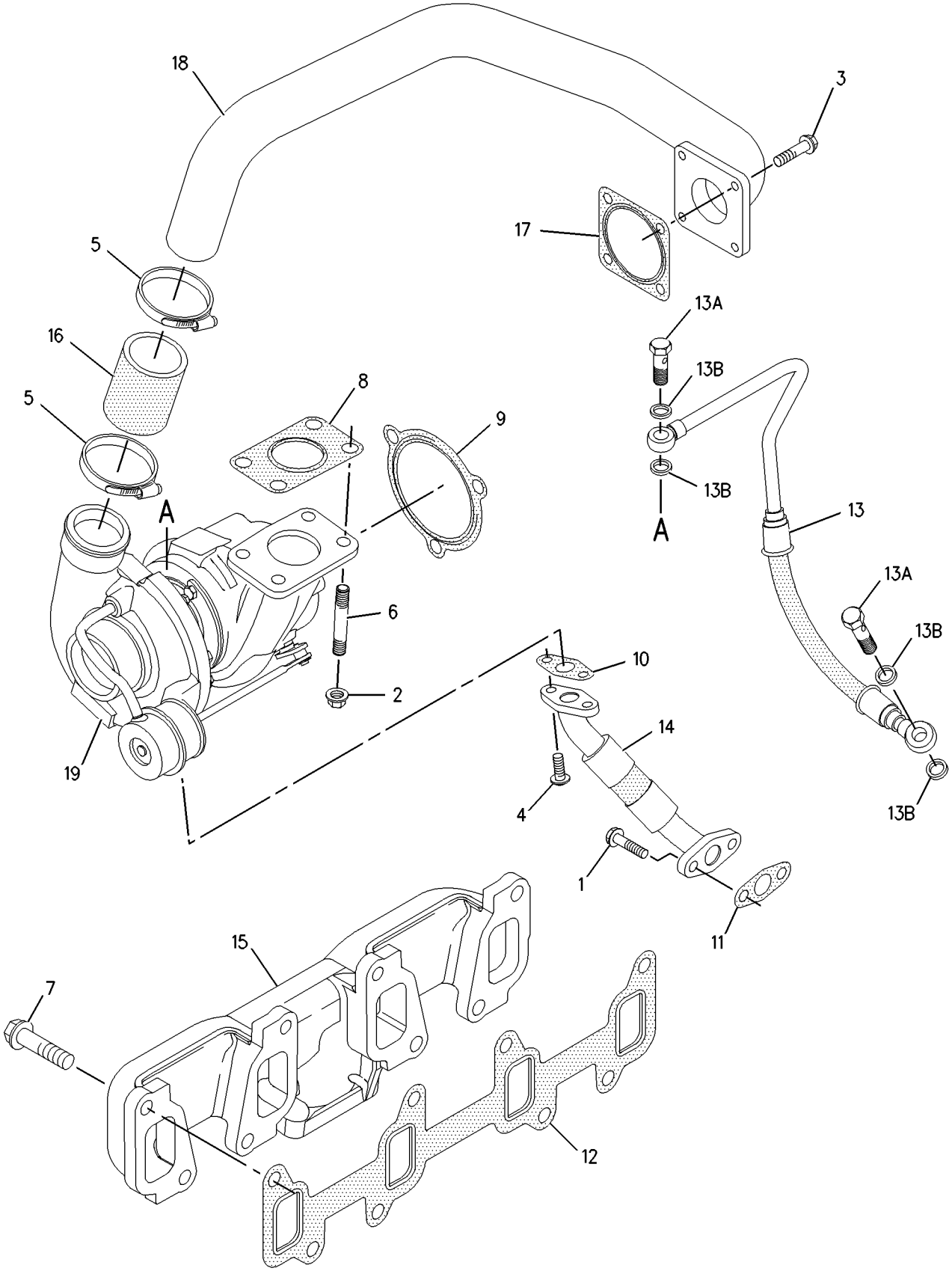

GRAPHIC #1 **<END>** g00999331

109-3759 CABLE GP-GOVERNOR CONTROL

S/N: PDF1-UP

PART OF 236-5647 CONTROL GP-GOVERNOR

SMCS-1265 **i02021618**

NOTE	REF NO	GRAPHIC REF	PART NUMBER	QTY	PART NAME 1 2 3 4 5 6 (PRODUCT LEVEL)	SEE PAGE
	1	1	**6V-8187**	1	NUT (1/4-28-THD)	
	2	1	**9S-1354**	2	NUT (5/8-18-THD)	
	3	1	**130-1121**	1	SEAL-UMBRELLA	
	4	1	**130-0847**	1	SPRING	
	5	1	**8T-4223**	1	WASHER-HARD (13.5X25.5X3-MM THK)	
	6	1	**6F-0253**	1	LOCKWASHER (16.6X26.9X1.2-MM THK)	

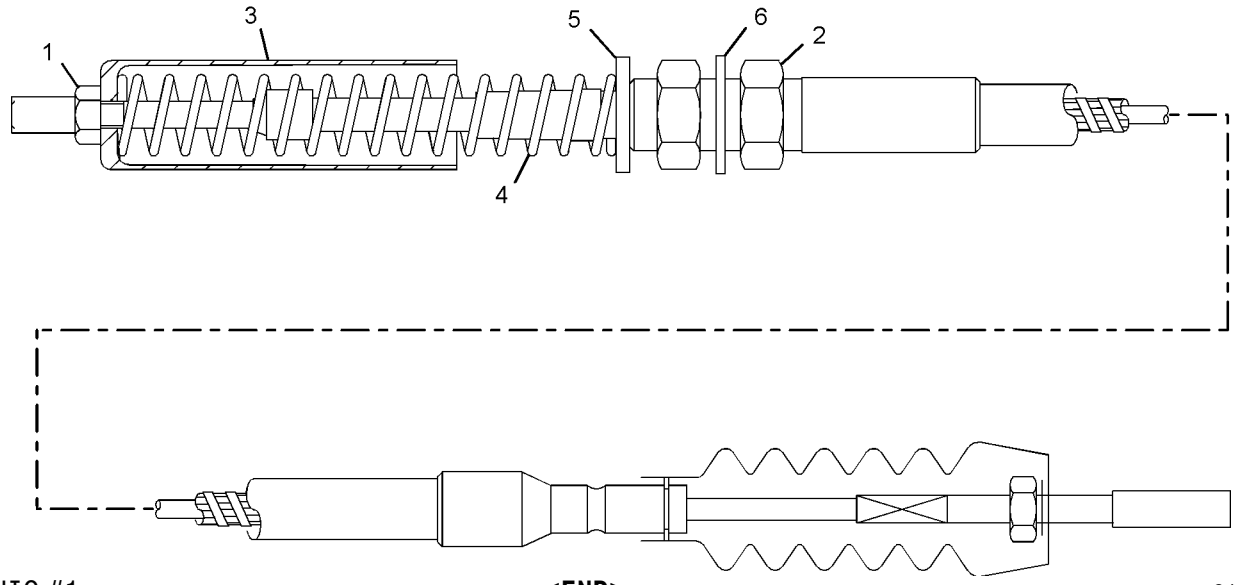

GRAPHIC #1 **<END>** g01044791

236-5647 CONTROL GP-GOVERNOR

S/N: PDF1-UP

PART OF 236-5635 CHASSIS AR

SMCS-1265, 1276 **i02044130**

NOTE	REF NO	GRAPHIC REF	PART NUMBER	QTY	PART NAME 1 2 3 4 5 6 (PRODUCT LEVEL)	SEE PAGE
	1	1	**6L-7751**	1	ROD END	
	2	1	**8T-4205**	3	WASHER-HARD (7.2X14.5X2-MM THK)	
Y	3	2	**109-3759**	1	CABLE GP-GOVERNOR CONTROL	61
	4	1	**236-6119**	1	BRACKET	
	5	1	**4B-0418**	1	CLIP	
M	6	1	**6V-7357**	1	BOLT (M6X1.0X25-MM)	
M	7	1	**6V-7743**	1	LOCKNUT (M6X1-THD)	
	8	2	**7B-1598**	2	CLIP	
M	9	1	**8T-4189**	3	BOLT (M8X1.25X20-MM)	
M	10	1	**8T-4197**	2	BOLT (M8X1.25X40-MM)	
	11	1	**8T-4224**	5	WASHER-HARD (8.8X16X2-MM THK)	
M	12	1	**8T-6912**	1	BOLT (M8X1.25X50-MM)	

M-METRIC PART
Y-SEPARATE ILLUSTRATION

236-5647 **CONTROL GP-GOVERNOR** ***(contd.)*** **i02044130**

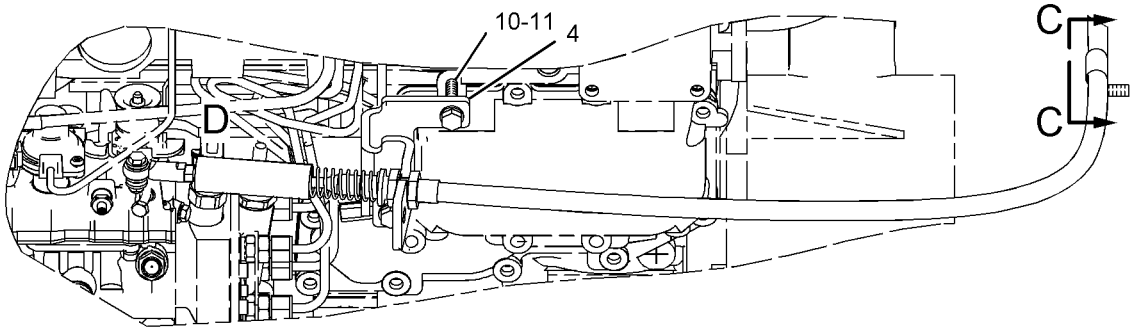

VIEW A-A

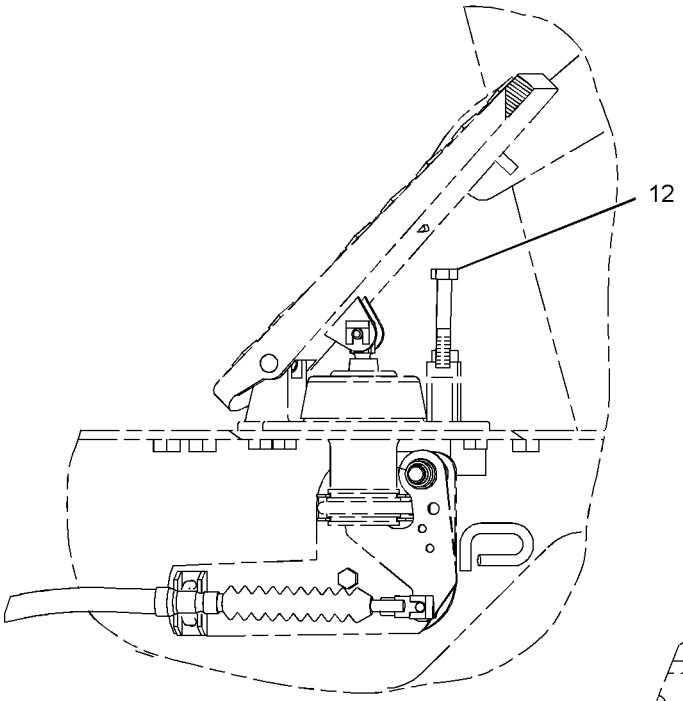

VIEW B-B

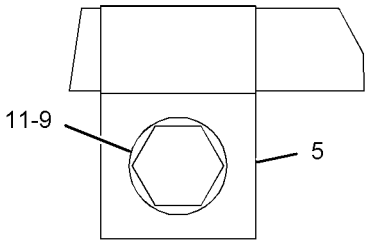

VIEW C-C

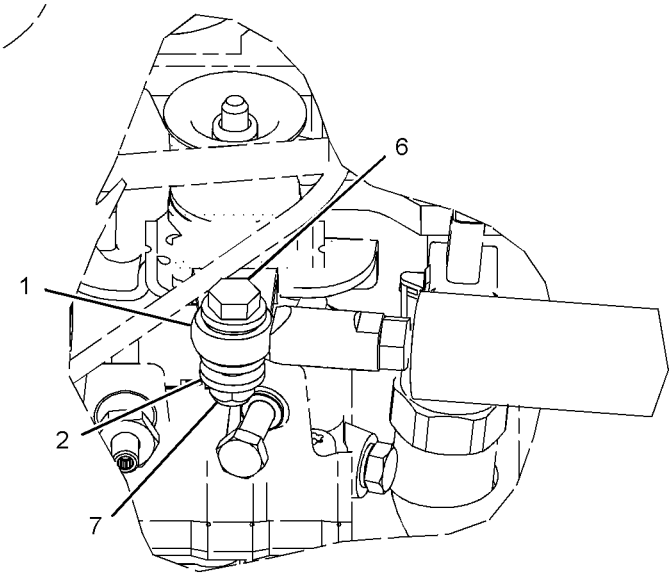

VIEW OF AREA D

GRAPHIC #1

g01049804

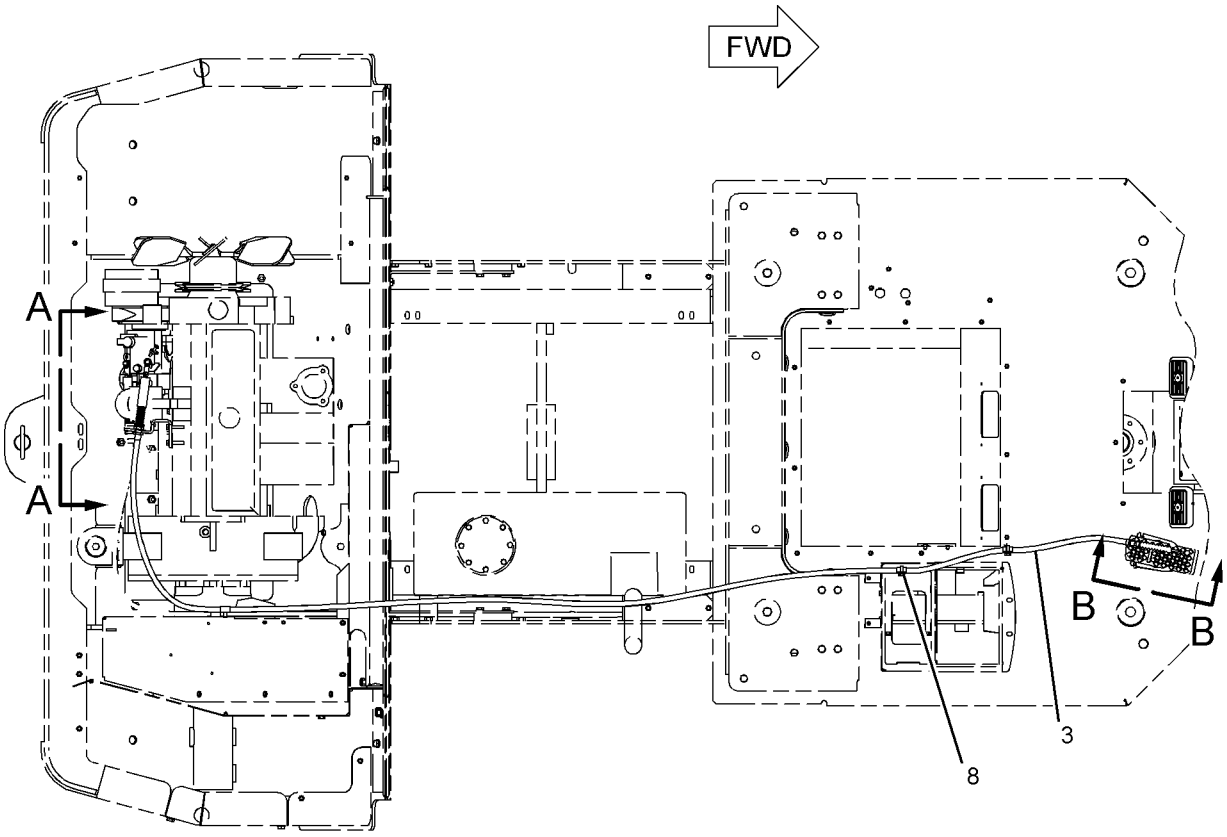

TOP VIEW

REFER TO ALL ILLUSTRATIONS OF
THIS GROUP FOR AUXILIARY VIEWS

GRAPHIC #2 **<END>** g01049805

FUEL SYSTEM

234-5127 FILTER & LINES GP-FUEL

S/N: PDF1-UP

PART OF 236-5635 CHASSIS AR

SMCS-1261, 1274 **i02005673**

NOTE	REF NO	GRAPHIC REF	PART NUMBER	QTY	PART NAME 1 2 3 4 5 6 (PRODUCT LEVEL)	SEE PAGE
	1	1,2	**1P-4278**	9	CLAMP-HOSE	
	2	1	**4D-6988**	2	CLIP	
	3	1	**4E-0724**	1	SPACER (9X20X28-MM THK)	
	4	2	**069-4080**	1	FITTING-COUPLING	
E	5	2	**121-0199**		WRAP-SPIRAL (3/8-IN OD) (22.5CM)	
	6	2	*148-8407*	2	PLUG GP	
					(EACH INCLUDES)	
		2	**3J-1907**	1	SEAL-O-RING	
		2	**9S-4191**	1	PLUG	
	7	2	*165-7951*	2	CONNECTOR AS	
					(EACH INCLUDES)	
		2	**3J-1907**	1	SEAL-O-RING	
		2	**157-1669**	1	CONNECTOR	
	8	2	**215-9513**	1	CONNECTOR	
	9	1	**222-3518**	1	TEE	
Y	10	1	*241-0230*	1	WATER SEP & FUEL PRM PUMP GP	76
	11	2	**241-6962**	1	LINE AS-FUEL	
		2	**1P-4278**	1	CLAMP-HOSE	
E		2	**5P-1420**		HOSE (58CM)	
		2	**215-9515**	1	CONNECTOR	
	12	2	**085-7356**	1	FITTING	
	13	1	**174-5907**	2	CLIP (LOOP)	
	14	2	**3J-1907**	1	SEAL-O-RING	
	15	1	**4S-1936**	1	CLIP	
	16	1	**5P-4116**	1	WASHER-HARD (8.8X20.5X2-MM THK)	
	17	1	**6V-1889**	1	CLIP	
M	18	1	**7X-0818**	1	BOLT (M8X1.25X45-MM)	
	19	1,2	**8T-4121**	3	WASHER-HARD (11X21X2.5-MM THK)	
M	20	1	**8T-4133**	1	NUT (M10X1.5-THD)	
M	21	1,2	**8T-4195**	3	BOLT (M10X1.5X30-MM)	
E	22	2	**8C-3681**		HOSE (15.8CM)	
E	23	1	**5P-1420**		HOSE (196.8CM)	
E	24	1	**5P-1420**		HOSE (161CM)	
E	25	2	**5P-1420**		HOSE (68.5CM)	
E	26	1	**5P-1420**		HOSE (32CM)	

E-ORDER BY THE CENTIMETER
M-METRIC PART
Y-SEPARATE ILLUSTRATION

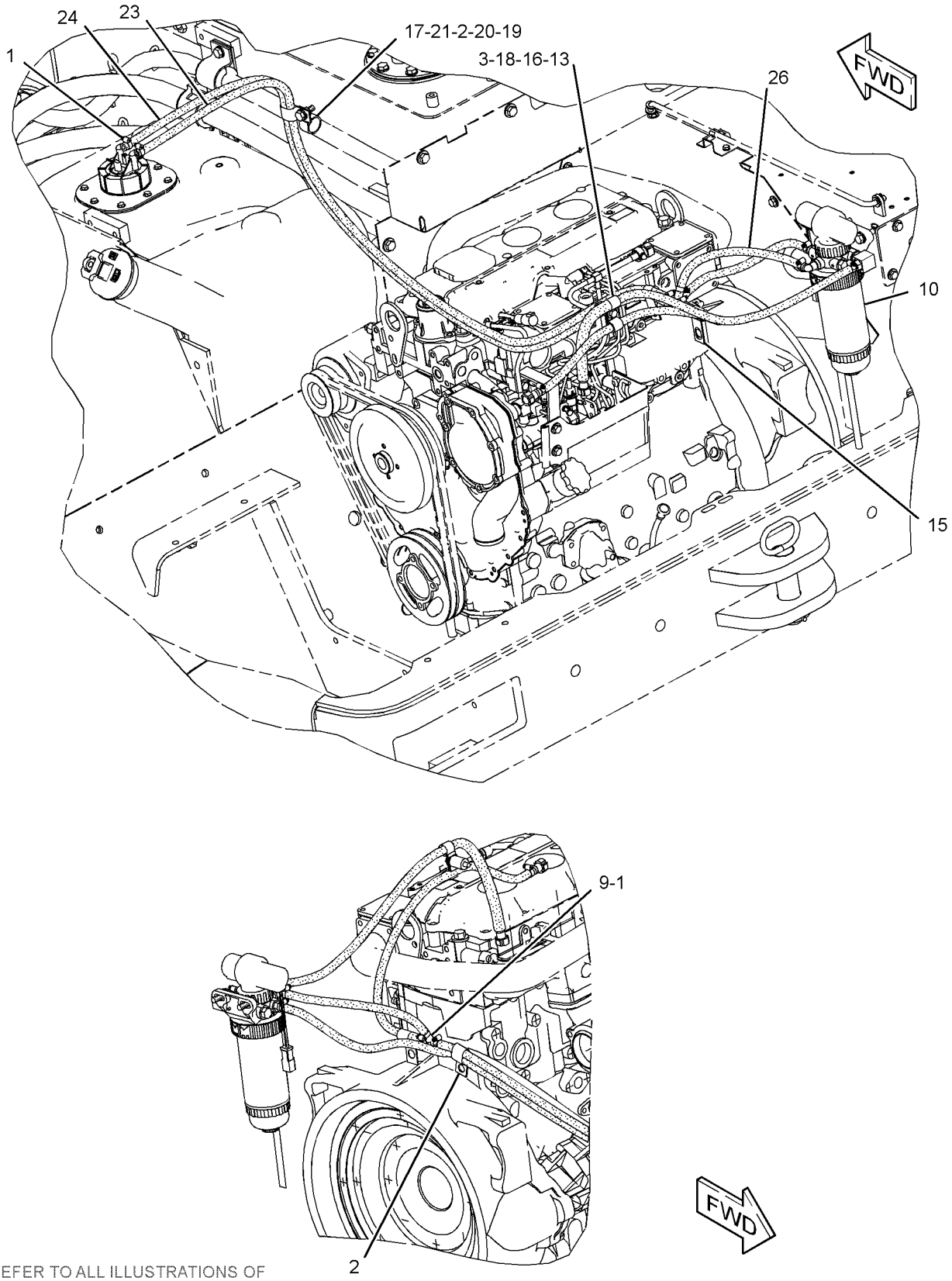

REFER TO ALL ILLUSTRATIONS OF
THIS GROUP FOR AUXILIARY VIEWS

GRAPHIC #1

g01041576

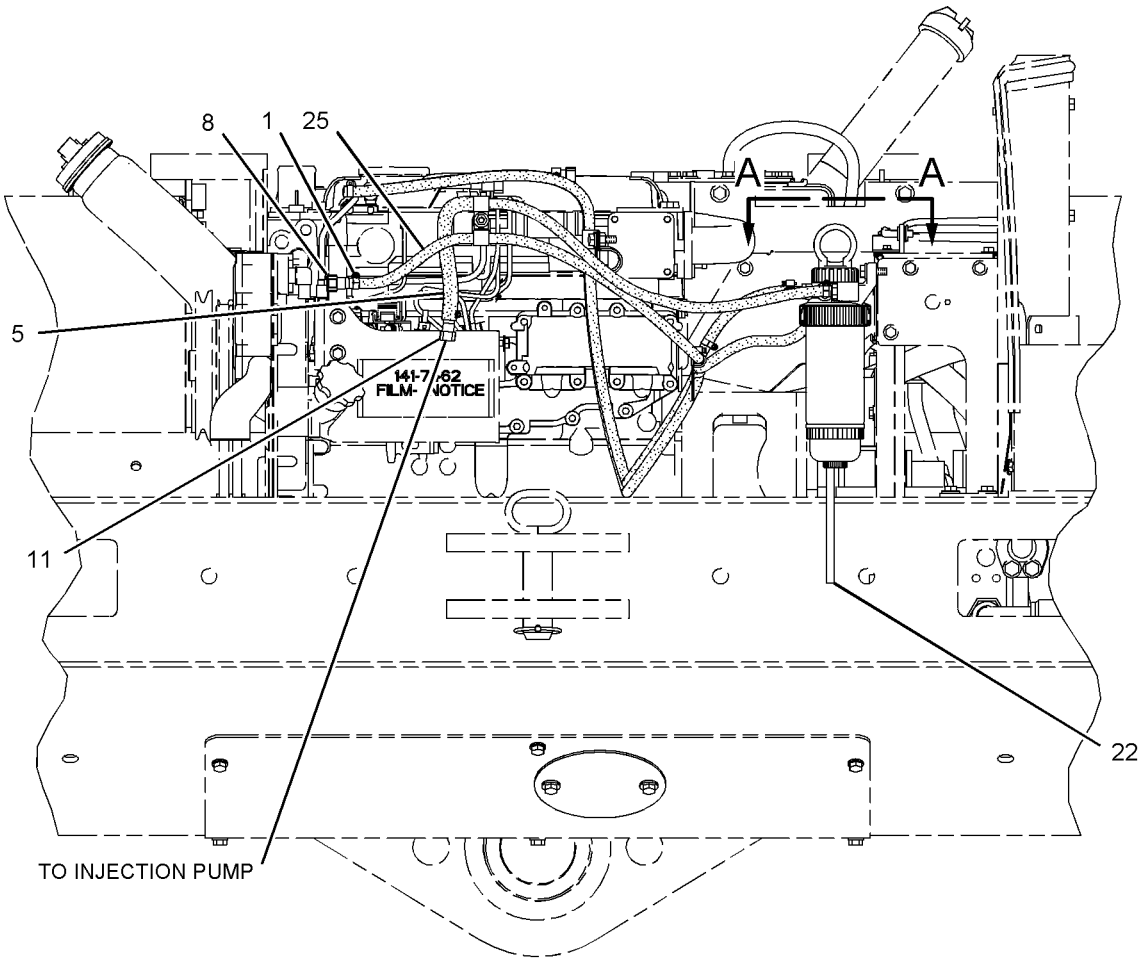

REAR VIEW

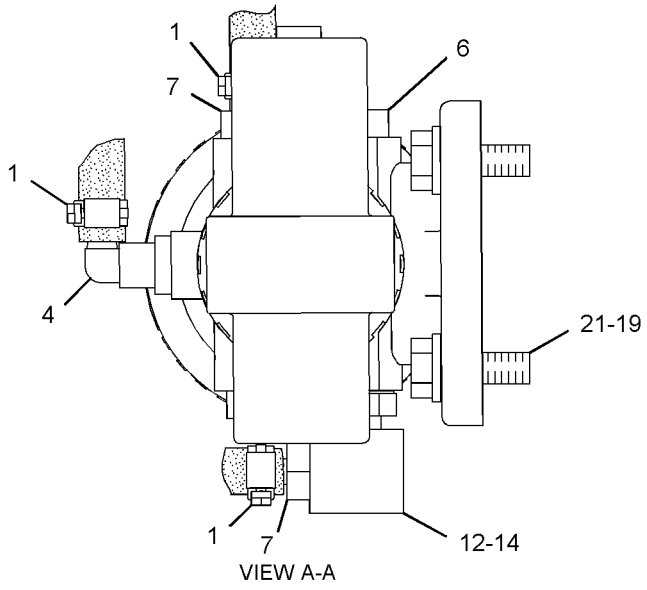

GRAPHIC #2

<END>

g01041578

233-9417 FILTER GP-FUEL

S/N: CRS1-UP

PART OF 179-1795 ENGINE AR-PRIMARY

SMCS-1261 **i01998681**

NOTE	REF NO	GRAPHIC REF	PART NUMBER	QTY	PART NAME 1 2 3 4 5 6 (PRODUCT LEVEL)	SEE PAGE
	1	1	**237-0285**	1	BRACKET	
J	2	1	**120-6872**	3	BOLT	
	3	1	**160-7197**	1	CLIP	
	4	1	**237-0286**	1	PLUG	
	5	1	**215-9508**	1	CONNECTOR-SPECIAL	
	6	1	**215-9509**	1	CONNECTOR-SPECIAL	
	7	1	**232-3126**	1	CLIP	
	8	1	**238-8864**	1	PUMP GP-FUEL PRIMING	
	8A	1	**1R-1804**	1	FILTER ELEMENT AS-FUEL	
J	9	1	**232-9758**	3	WASHER	
	10	1	**232-9759**	1	LINE AS-FUEL	
	11	1	**237-0284**	1	LINE AS-FUEL	
	12	1	**232-1115**	1	CLIP-PIPE	
					AVAILABLE REPAIR KIT(S):	
J			**240-9756**	1	MOUNTING GP-PRIMING PUMP	

J-KIT MARKED J CONTAINS PARTS MARKED J

233-9417 **FILTER GP-FUEL** ***(contd.)*** **i01998681**

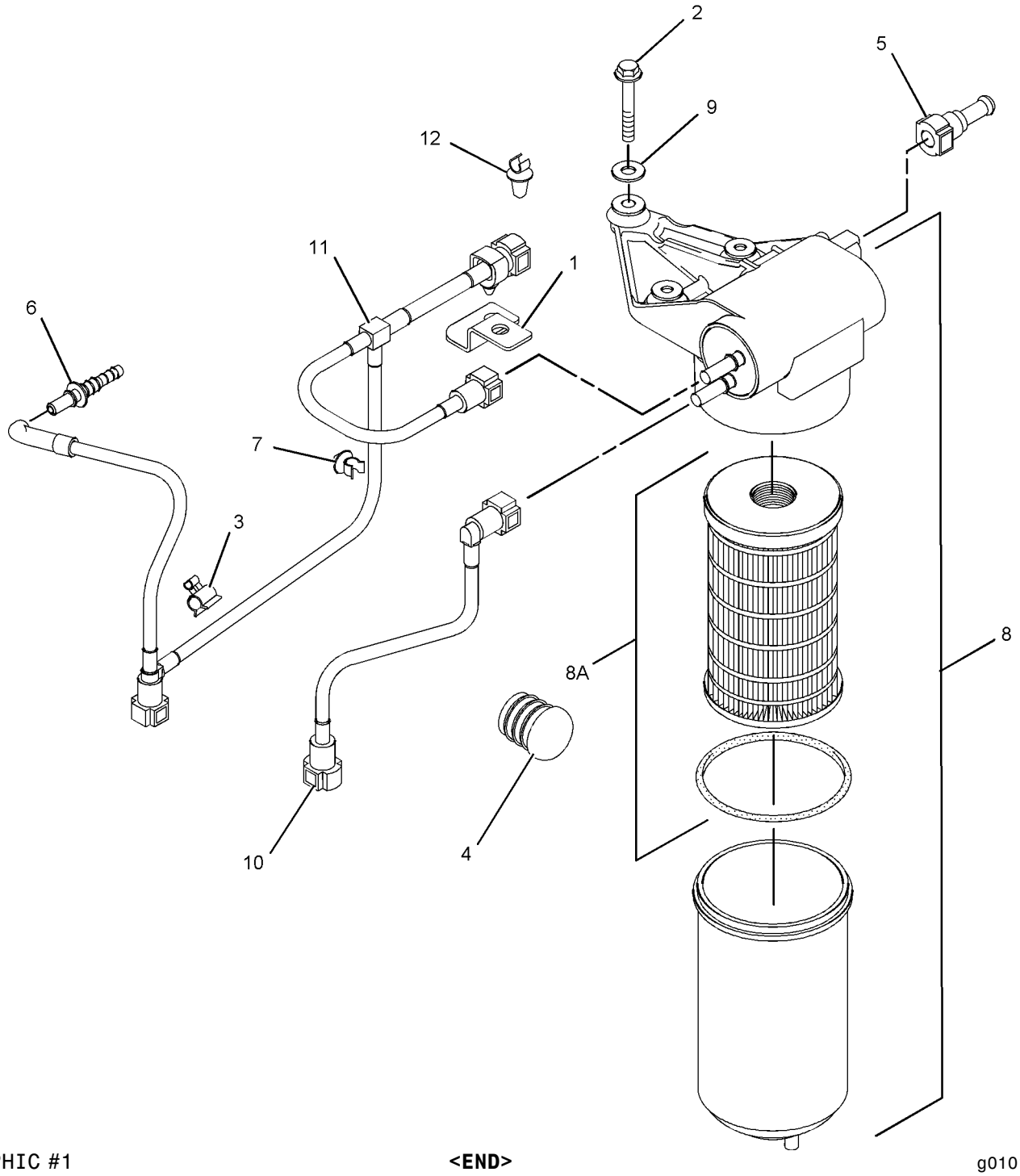

GRAPHIC #1 **<END>** g01011853

234-5128 GUARD GP-FUEL INJECTION PUMP

S/N: PDF1-UP

PART OF 234-9213 INSTALLATION AR-ENGINE

SMCS-1251, 7150 **i01998498**

NOTE	REF NO	GRAPHIC REF	PART NUMBER	QTY	PART NAME 1 2 3 4 5 6 (PRODUCT LEVEL)	SEE PAGE
	1	1	**141-7462**	1	FILM-NOTICE (FUEL PUMP)	
	2	1	**236-5913**	1	GUARD AS	
	3	1	**238-8634**	1	SUPPORT AS	
	4	1	**5P-4116**	4	WASHER-HARD (8.8X20.5X2MM THK)	
M	5	1	**8T-4189**	4	BOLT (M8X1.25X20MM)	
E	6	1	**7X-7877**		STRIP-EDGING (9CM)	

E-ORDER BY THE CENTIMETER
M-METRIC PART

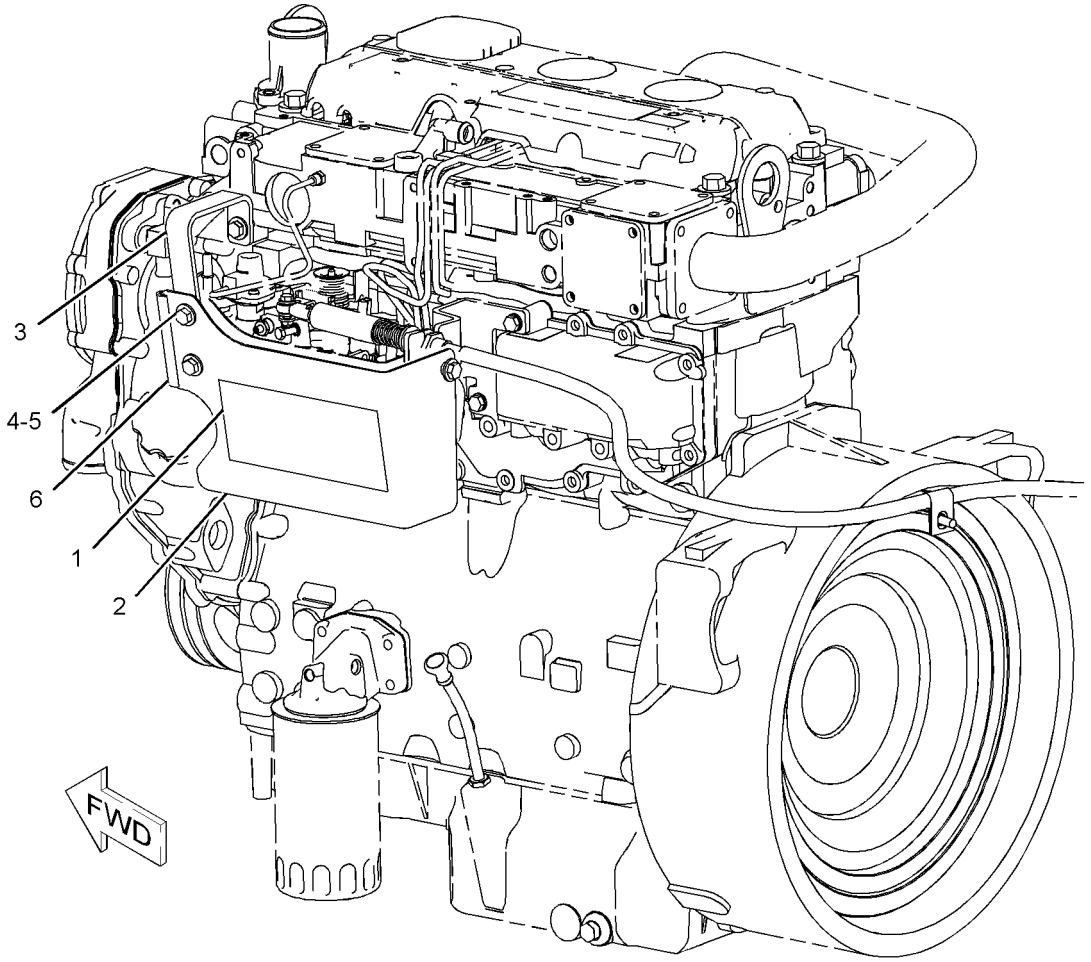

GRAPHIC #1 **<END>** g01034170

FUEL SYSTEM

237-8259 PUMP GP-FUEL INJECTION

S/N: CRS1-242

PART OF 179-1795 ENGINE AR-PRIMARY

SMCS-1251, 1290 **i02017697**

NOTE	REF NO	GRAPHIC REF	PART NUMBER	QTY	PART NAME 1 2 3 4 5 6 (PRODUCT LEVEL)	SEE PAGE
	1	1	**6I-0217**	1	BOLT (M8X1.25X20-MM)	
	2	1	**6I-0260**	3	BOLT (M8X1.25X25-MM)	
	3	1	**6I-0291**	1	NUT (M8X1.25)	
	4	1	**035-8017**	1	UNION	
	5	1	**067-6264**	1	FITTING-FLARED	
	6	1	**067-6265**	1	FITTING-BRASS	
	7	1	**100-4830**	1	BOLT (M10X1.5X20-MM)	
	8	1	**237-8185**	1	PUMP GP-FUEL INJECTION	
	9	1	**111-3422**	1	NUT	
	10	1	**111-3423**	1	WASHER	
	11	1	**124-3815**	1	BOLT (M8X16X1.25-MM)	
	12	1	**140-8714**	1	CLIP	
	13	1	**230-8989**	1	GEAR-FUEL PUMP	
	14	1	**230-8995**	1	TUBE AS (CYL NO.1)	
	15	1	**230-8996**	1	TUBE AS (CYL NO.2)	
	16	1	**230-8997**	1	TUBE AS (CYL NO.3)	
	17	1	**230-8998**	1	TUBE AS (CYL NO.4)	
	18	1	**240-5571**	1	BRACKET	
	19	1	**232-3126**	1	CLIP	
	20	1	**232-1323**	1	PLUG-CUP	
	21	1	**232-1328**	1	CAP	
	22	1	**232-1793**	1	CABLE	
	23	1	**232-1794**	3	HOSE	
	24	1	**232-2725**	2	CLIP	
	25	1	**232-2726**	1	CLIP	
	26	1	**232-3149**	3	WASHER	
	27	1	**232-3157**	1	BRACKET	
	28	1	**238-8671**	1	CLAMP-INJECTOR	
	29	1	**232-3274**	4	BOLT	
	30	1	**235-1790**	1	SWITCH (40-DEG) (TEMPERATURE)	
	31	1	**236-1674**	4	INJECTOR AS-FUEL	
	31A	1	**140-8718**	1	WASHER	
	31B	1	**236-1673**	1	NOZZLE	
	32	1	**236-2144**	1	TUBE AS	
	32A	1	**067-6999**	1	OLIVE	
	32B	1	**106-8835**	1	NUT	

237-8259 **PUMP GP-FUEL INJECTION** *(contd.)* **i02017697**

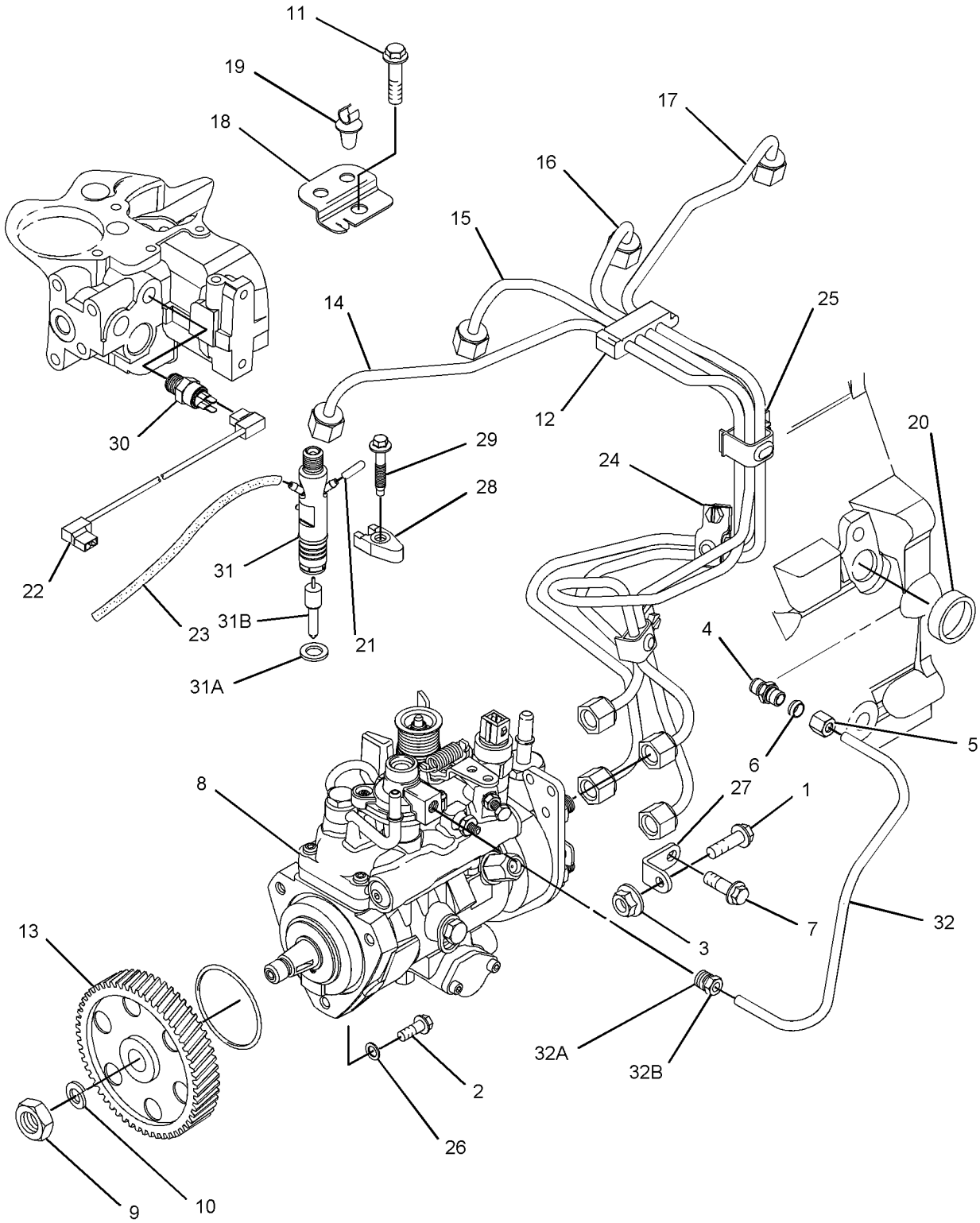

GRAPHIC #1 **<END>** g01021745

FUEL SYSTEM

234-9181 TANK & MTG GP-FUEL

S/N: PDF1-UP

PART OF 236-5635 CHASSIS AR

SMCS-1273 **i02043851**

NOTE	REF NO	GRAPHIC REF	PART NUMBER	QTY	PART NAME 1 2 3 4 5 6 (PRODUCT LEVEL)	SEE PAGE
	1	1	**234-9179**	1	STRAP AS	
Y	2	1	**234-9180**	1	TANK GP-FUEL	75
	3	1	**235-4886**	1	STRAP AS	
	4	1	**237-3756**	1	PLATE AS	
M	5	1	**151-8754**	1	BOLT (M10X1.5X40-MM)	
M	6	1	**180-4686**	1	BOLT	
	7	1	**198-4777**	1	WASHER-HARD (11X25X10-MM THK)	
	8	1	**7X-0632**	3	WASHER-HARD (11X36X6-MM THK)	
	9	1	**8T-4121**	8	WASHER-HARD (11X21X2.5-MM THK)	
M	10	1	**8T-4133**	3	NUT (M10X1.5-THD)	
M	11	1	**8T-4136**	2	BOLT (M10X1.5X25-MM)	
M	12	1	**8T-4186**	1	BOLT (M10X1.5X40-MM)	
M	13	1	**8T-4195**	3	BOLT (M10X1.5X30-MM)	
M	14	1	**9X-2040**	5	SCREW-TRUSS HEAD (M10X1.5X25-MM)	

M-METRIC PART
Y-SEPARATE ILLUSTRATION

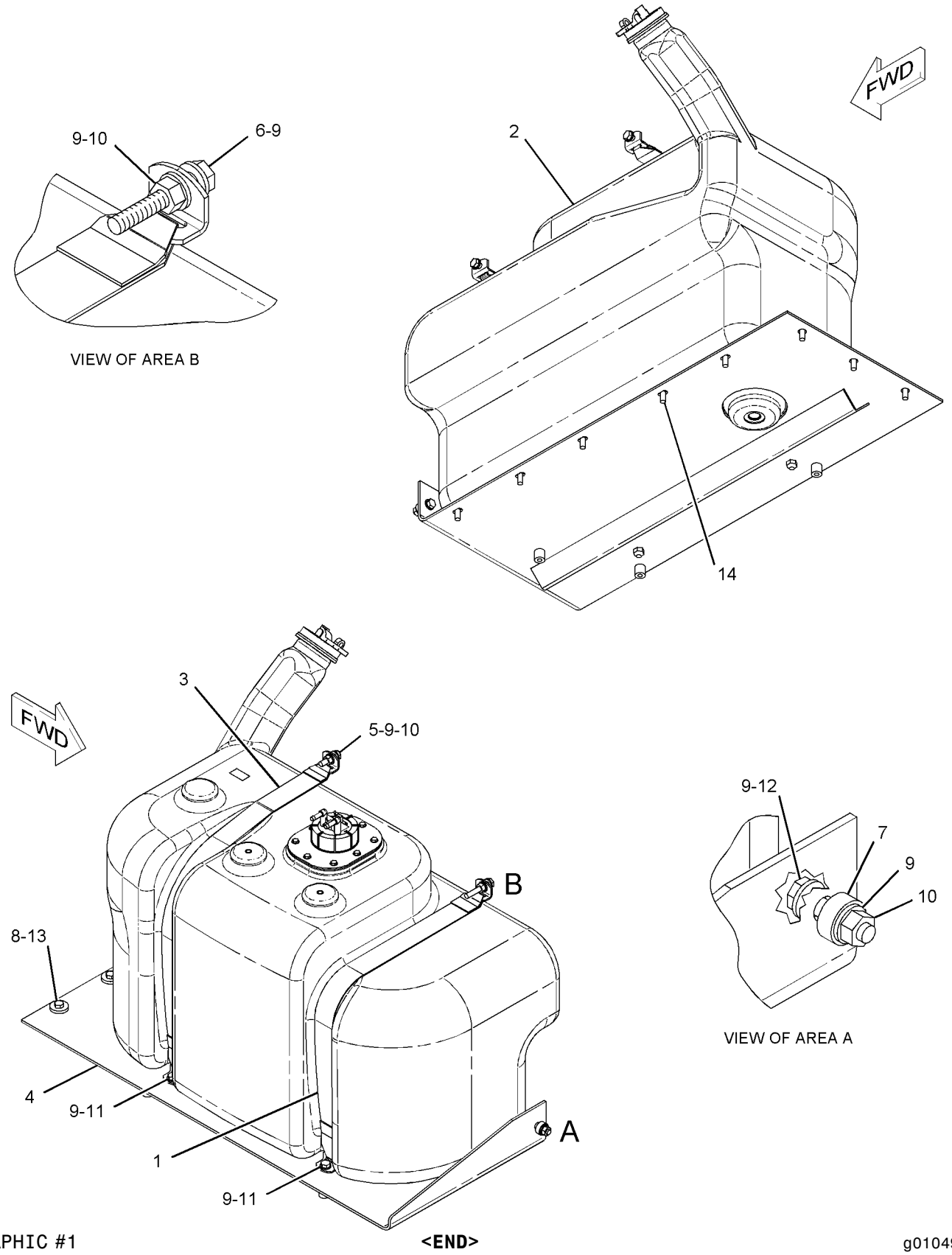

GRAPHIC #1

<END>

g01049875

FUEL SYSTEM

234-9180 TANK GP-FUEL

S/N: PDF1-UP

PART OF 234-9181 TANK & MTG GP-FUEL

SMCS-1273 **i02038798**

NOTE	REF NO	GRAPHIC REF	PART NUMBER	QTY	PART NAME 1 2 3 4 5 6 (PRODUCT LEVEL)	SEE PAGE
	1	1	**142-8828**	1	CAP AS-FILLER (FUEL)	
	2	1	**180-3730**	1	FILTER AS-FUEL (FILLER NECK SCREEN)	
	3	1	**204-1370**	1	GASKET	
	4	1	**231-1890**	1	TANK AS-FUEL	
	5	1	**242-8158**	1	SENDER GP-FUEL LEVEL	
	6	1	**242-8159**	1	PLATE AS	
M	7	1	**5C-9553**	8	BOLT (M6X1X16-MM)	
	8	1	**8T-4205**	8	WASHER-HARD (7.2X14.5X2-MM THK)	

M-METRIC PART

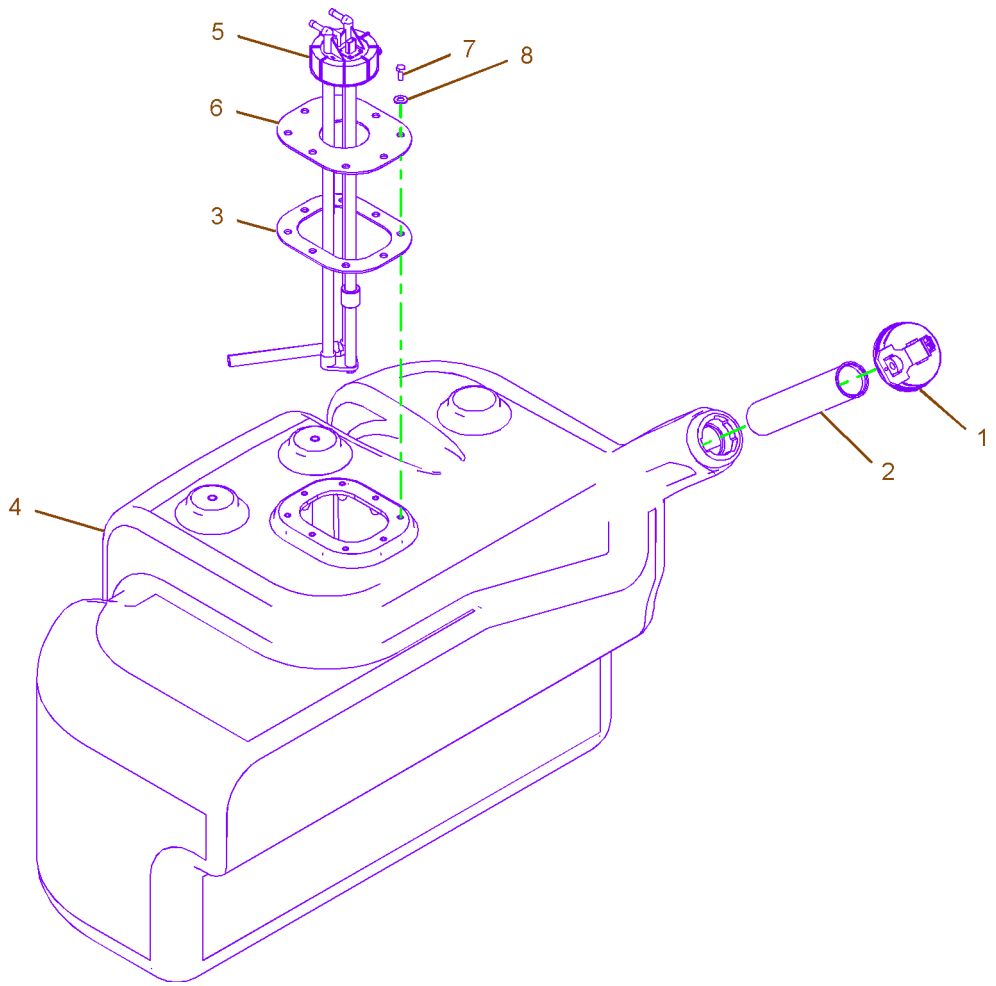

GRAPHIC #1 **<END>** g01040318

241-0230 WATER SEP & FUEL PRM PUMP GP

S/N: PDF1-UP
ELECTRIC
PART OF 234-5127 FILTER & LINES GP-FUEL

SMCS-1258, 1263 **i02006020**

NOTE	REF NO	GRAPHIC REF	PART NUMBER	QTY	PART NAME 1 2 3 4 5 6 (PRODUCT LEVEL)	SEE PAGE
	1	1	**112-9401**	1	BOWL AS-WATER COLLECTION	
		1	**128-8614**	1	KIT-SEAL (WATER SEPARATOR)	
					(INCLUDES SEALS)	
	2	1	**118-8118**	1	RING-RETAINING	
	3	1	**228-9130**	1	ELEMENT-FILTER (FUEL)	
	4	1	**228-9132**	1	FITTING	
					AVAILABLE REPAIR KIT(S):	
			121-4480	1	KIT-WATER BASE	
					(INCLUDES NUT, CAP, SEALS, PLUGS AND RING)	

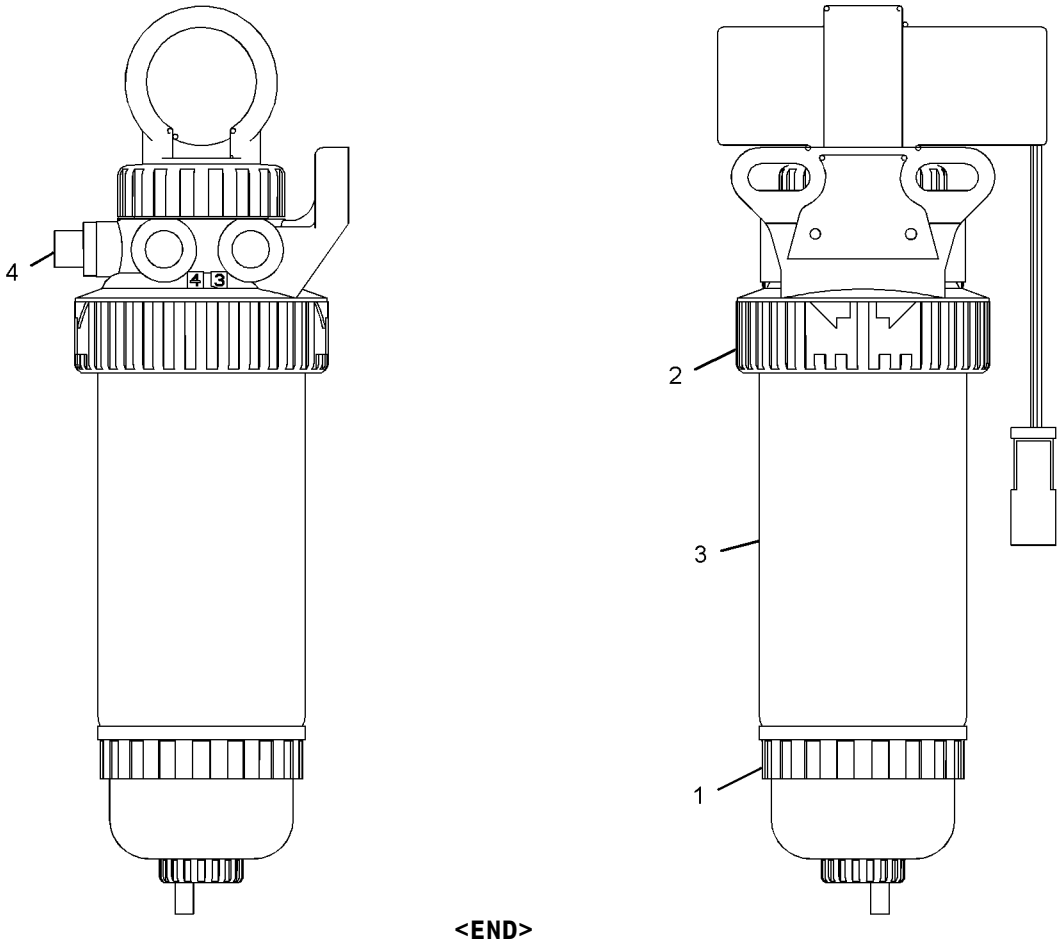

GRAPHIC #1 **<END>** g01040682

237-8262 ALTERNATOR GP-CHARGING

S/N: CRS1-UP

PART OF 179-1795 ENGINE AR-PRIMARY

SMCS-1405 **i02017701**

NOTE	REF NO	GRAPHIC REF	PART NUMBER	QTY	PART NAME 1 2 3 4 5 6 (PRODUCT LEVEL)	SEE PAGE
	1	1	**6B-0933**	1	SPACER (10.31X19.05X6.35-MM THK)	
	2	1	**6I-0260**	1	BOLT (M8X1.25X25-MM)	
	3	1	**6I-0454**	1	BOLT (M10X1.5X70-MM)	
	4	1	**6I-0594**	1	NUT (M10X1.5-THD)	
	5	1	**7W-2632**	1	WASHER (8.5X16.8X1.6-MM THK)	
	6	1	**067-6366**	1	WASHER (M8)	
	7	1	**100-8451**	1	BOLT	
	8	1	**113-6349**	1	NUT	
	9	1	**140-8783**	2	BOLT (M10X45-MM)	
	10	1	**225-3147**	1	ALTERNATOR GP-CHARGING	
	11	1	**233-9530**	1	BRACKET	
	12	1	**233-9531**	1	LEVER-ADJUSTING	
	13	1	**233-9532**	1	PULLEY-ALTERNATOR	

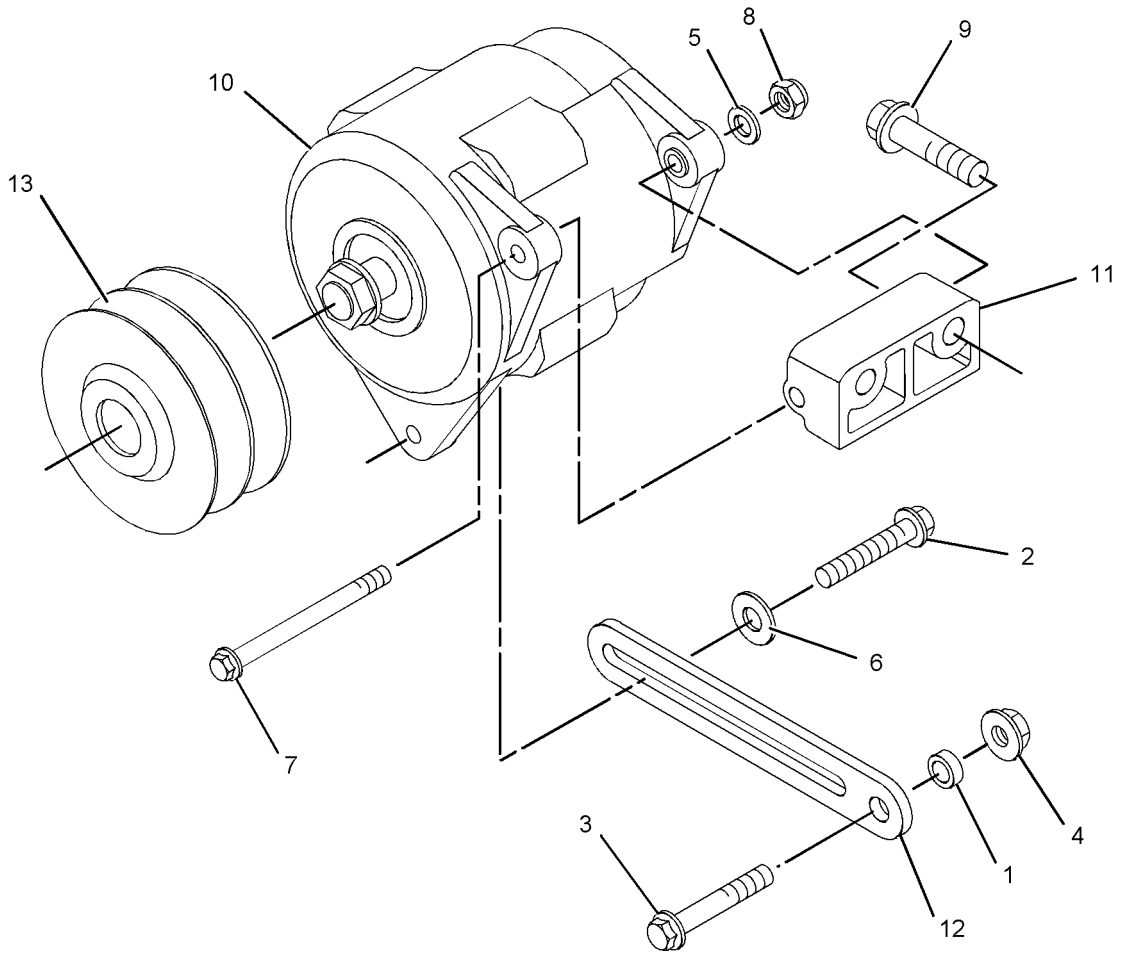

GRAPHIC #1 **<END>** g01039667

112-7167 BATTERY GP

S/N: PDF1-UP

PART OF 236-5635 CHASSIS AR

SMCS-1401 **i00526812**

NOTE	PART NUMBER	QTY	PART NAME 1 2 3 4 5 6 (PRODUCT LEVEL)	SEE PAGE
	9X-3404	2	BATTERY-MAINTENANCE FREE (12V)(900 AMP)	

<END>

118-8176 CONTROL & WIRING GP-PWR TRAIN

S/N: PDF1-UP

PART OF 237-6260 POWER TRAIN AR

SMCS-1408, 3168, 7610 **i02023163**

NOTE	REF NO	GRAPHIC REF	PART NUMBER	QTY	PART NAME 1 2 3 4 5 6 (PRODUCT LEVEL)	SEE PAGE
	1	1	**3E-8679**	1	DIODE AS-LIGHT	
	2	1	**116-4232**	1	PLUG AS	
		1	**8T-8737**	3	PLUG-SEAL	
		1	**102-8806**	1	KIT-RECEPTACLE (8-PIN)	
	3	1	**158-5089**	1	RELAY AS (24-VOLT) (MAIN)	
C	4	1	**222-0483**	1	PLUG AS-CODE	
C	5	1	**223-1687**	1	CONTROL GP-UNPROGRAMMED	
	6	1	**7K-1181**	1	STRAP-CABLE	
M	7	1	**8T-4138**	4	BOLT (M6X1X20-MM)	
	8	1	**8T-4205**	4	WASHER-HARD (7.2X14.5X2-MM THK)	
	9	1	**116-6680**	1	SENSOR AS-SPEED (ENGINE)	
		1	**102-8802**	1	KIT-RECEPTACLE (2-PIN)	
		1	**3E-3365**	1	WEDGE-RECEPTACLE LOCK (2-PIN)	
		1	**186-3735**	2	PIN-CONNECTOR	
E		1	**9X-1386**		SLEEVE (14CM)	
	10	1	**193-2550**	1	SENSOR GP-SPEED (POWER TRAIN)	
		1	**9X-1813**		SLEEVE (14CM)	
		1	**171-5349**	1	STRAP-MARKER	
		1	**102-8802**	1	KIT-RECEPTACLE (2-PIN)	
C	11	1	**155-2259**	1	WEDGE-PLUG LOCK (8-PIN)	
	12	1	**3S-2093**	1	STRAP-CABLE	

C-CHANGE FROM PREVIOUS TYPE
E-ORDER BY THE CENTIMETER
M-METRIC PART

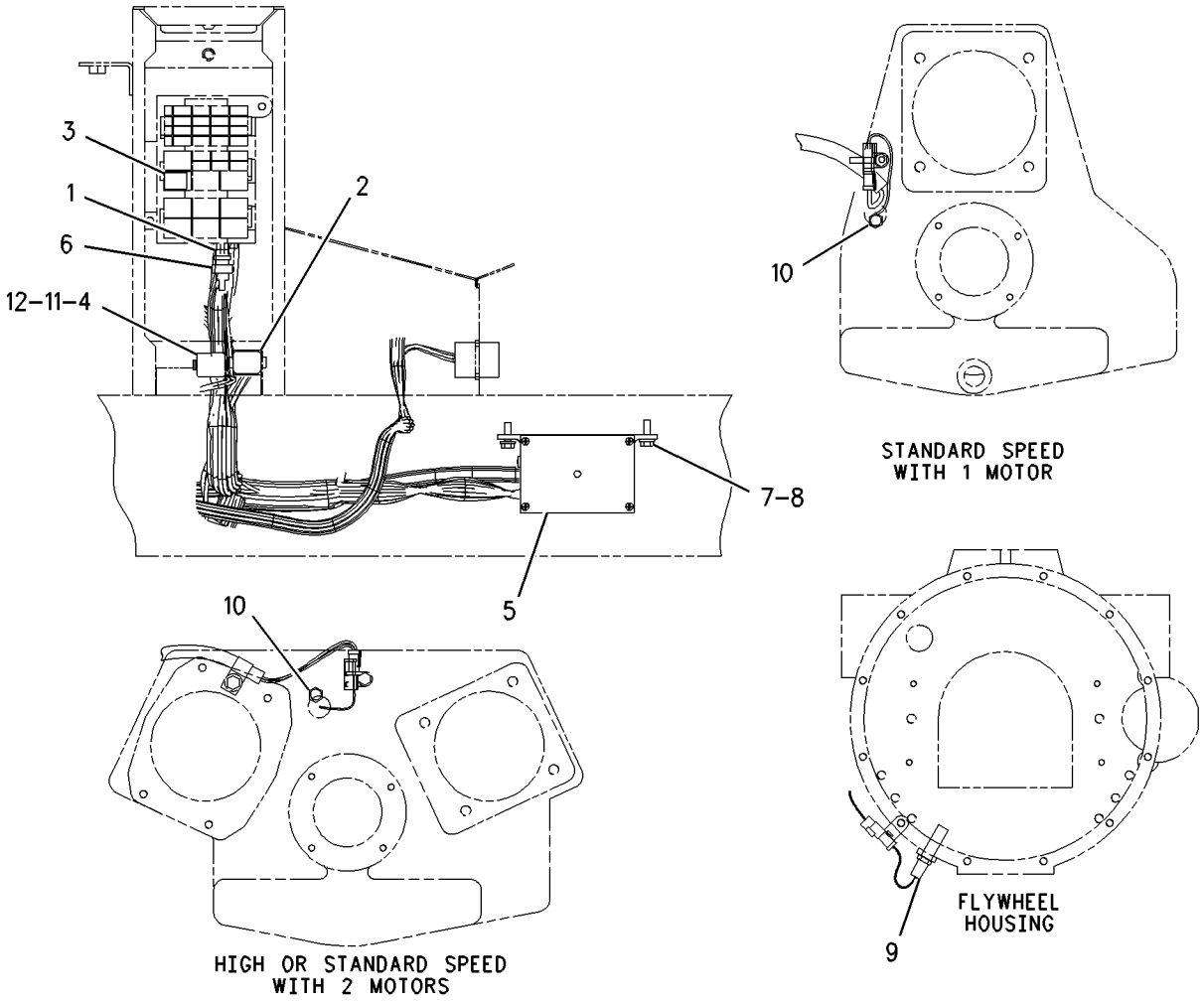

GRAPHIC #1 **<END>** g00837108

3E-7844 CONTROL GP-LIFT KICKOUT

S/N: PDF1-UP

PART OF 122-9140 KICKOUT & POSITIONER GP

SMCS-5109 **i01684777**

NOTE	REF NO	GRAPHIC REF	PART NUMBER	QTY	PART NAME 1 2 3 4 5 6 (PRODUCT LEVEL)	SEE PAGE
	1	1	**9X-5617**	1	FILM-INSTRUCTION	
	2	1	**102-8803**	1	KIT-RECEPTACLE (3 PIN)	
					(KIT SERVICES RECEPTACLE AS AND WEDGE)	
	3	1	**8T-8729**	3	PIN-CONNECTOR	

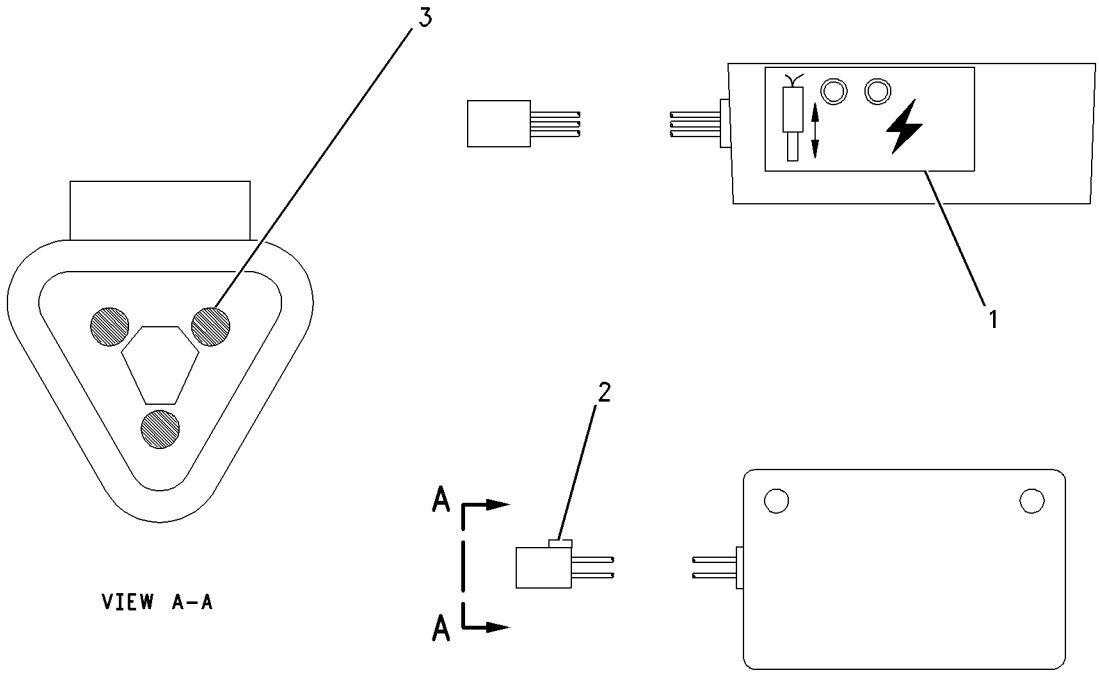

GRAPHIC #1 **<END>** g00868774

3E-7843 CONTROL GP-POSITION

S/N: PDF1-UP

PART OF 122-9140 KICKOUT & POSITIONER GP

SMCS-5112 **i01736277**

NOTE	REF NO	GRAPHIC REF	PART NUMBER	QTY	PART NAME 1 2 3 4 5 6 (PRODUCT LEVEL)	SEE PAGE
	1	1	**9X-5617**	1	FILM-INSTRUCTION	
	2	1	**8T-8730**	3	SOCKET-CONNECTOR	
	3	1	**155-2260**	1	KIT-CONNECTING PLUG (3 PIN)	
					(KIT SERVICES PLUG AS AND WEDGE)	

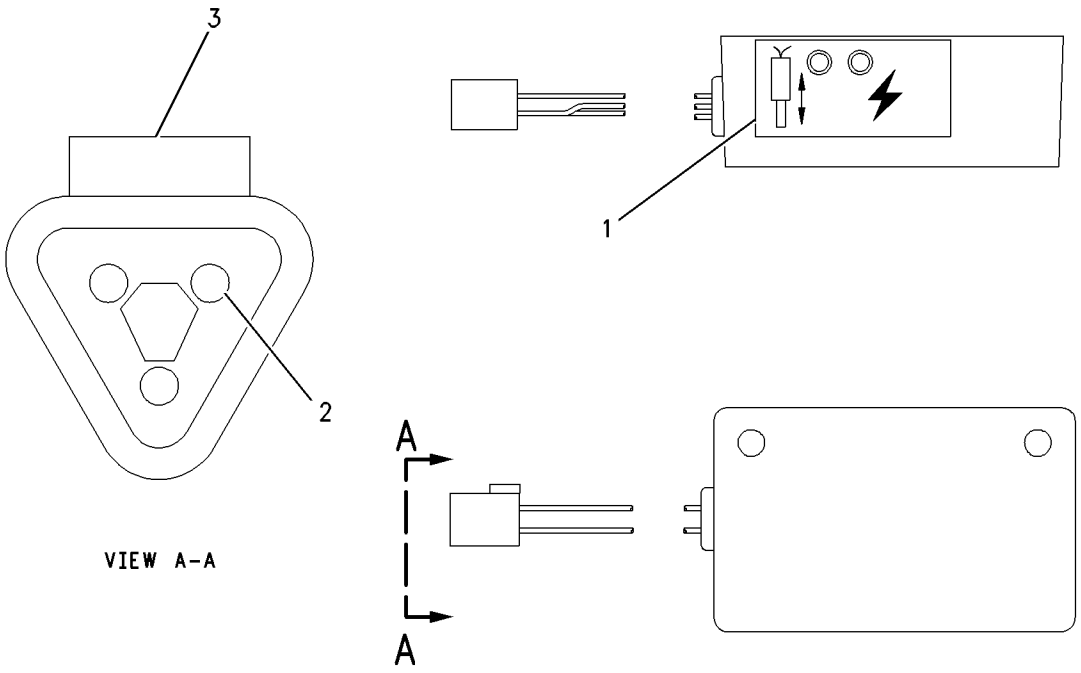

GRAPHIC #1 **<END>** g00868780

115-1317 CONVERTER GP-ELECTRICAL

S/N: PDF1-UP
PART OF 118-7244 INSTALLATION GP-RADIO
AN ATTACHMENT

SMCS-1421 **i02044127**

NOTE	REF NO	GRAPHIC REF	PART NUMBER	QTY	PART NAME 1 2 3 4 5 6 (PRODUCT LEVEL)	SEE PAGE
	1	1	**7K-1181**	1	STRAP-CABLE	
	2	1	**117-2311**	1	RECEPTACLE AS-POWER (12-VOLT)	
	3	1	**124-5638**	1	FILM (12-VOLT)	
	4	1	**205-4285**	1	CONVERTER GP-ELECTRICAL (24-VOLT TO 12-VOLT)	
	5	1	**222-1259**	1	HARNESS AS-WIRING (ELECTRICAL CONVERTER)	
		1	**102-8805**	1	KIT-RECEPTACLE (6-PIN)	
		1	**155-2274**	1	KIT-CONNECTING PLUG (6-PIN)	
	6	1	**3V-4791**	1	GROMMET	
M	7	1	**9X-1046**	2	SCREW (M4X0.7X18-MM)	

M-METRIC PART

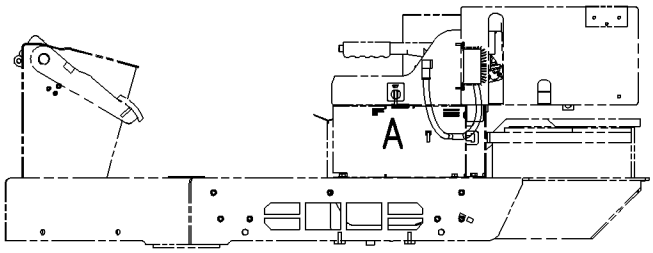

LEFT SIDE VIEW

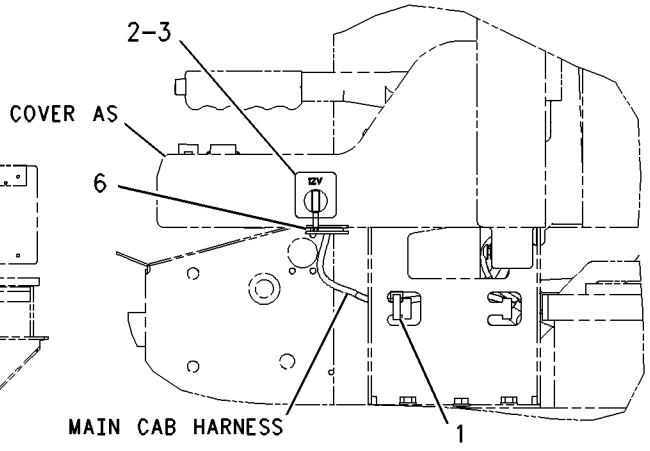

VIEW OF AREA A

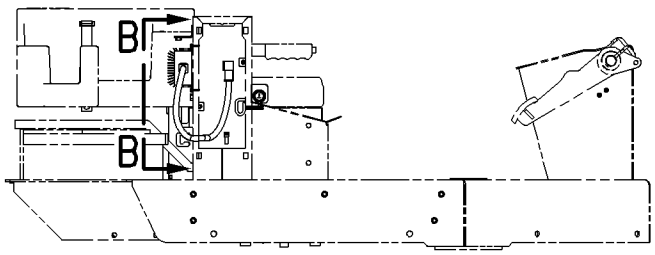

RIGHT SIDE VIEW

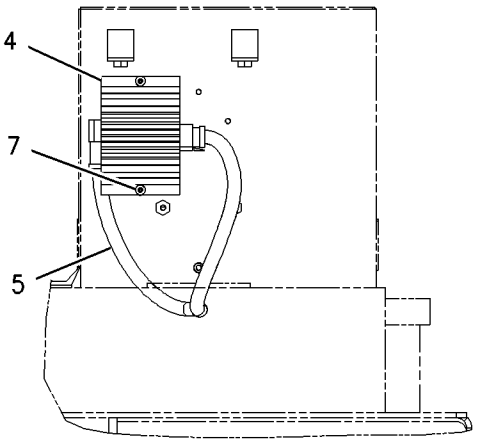

VIEW B-B

GRAPHIC #1 **<END>** g00927533

238-4448 CONVERTER GP-ELECTRICAL

S/N: CRS1-UP

PART OF 179-1795 ENGINE AR-PRIMARY

SMCS-1421 **i02017707**

NOTE	REF NO	GRAPHIC REF	PART NUMBER	QTY	PART NAME 1 2 3 4 5 6 (PRODUCT LEVEL)	SEE PAGE
	1	1	**147-2642**	1	RESISTOR (FUEL PUMP STOP)	
	2	1	**147-2642**	1	RESISTOR (COLD START ADVANCE)	
	3	1	**239-5818**	1	RESISTOR AS (24-VOLT) (ELECTRONIC FUEL PUMP MODULE)	

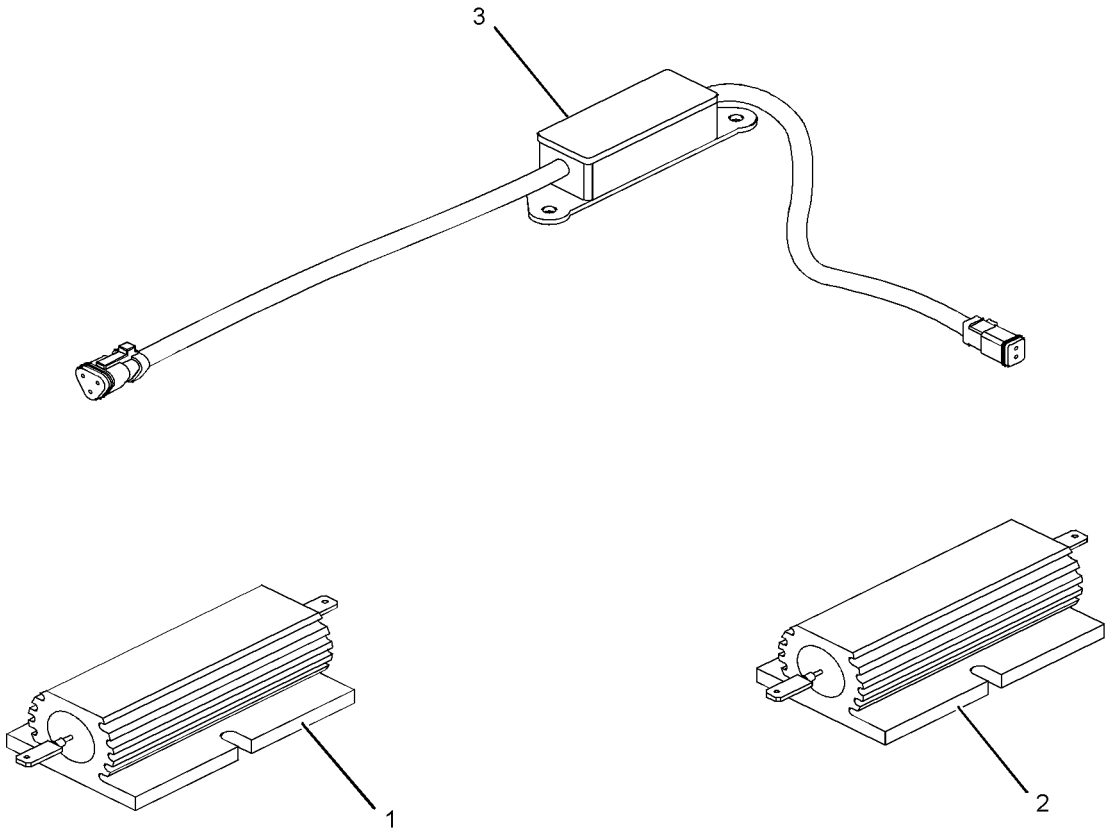

GRAPHIC #1 **<END>** g01045549

155-2651 DISTRIBUTOR GP-ELECTRONIC

S/N: PDF1-UP
PART OF 236-5666 CONVERSION AR-MACHINE
AN ATTACHMENT

SMCS-1907 **i02005400**

NOTE	REF NO	GRAPHIC REF	PART NUMBER	QTY	PART NAME 1 2 3 4 5 6 (PRODUCT LEVEL)	SEE PAGE
	1	1	**9G-3695**	1	PLUG (GROMMET SEALING)	
	2	1	**102-8806**	1	KIT-RECEPTACLE (8-PIN)	
	3	1	**186-3735**	7	PIN-CONNECTOR	
	4	1	**3E-3389**	1	WEDGE-RECEPTACLE LOCK	

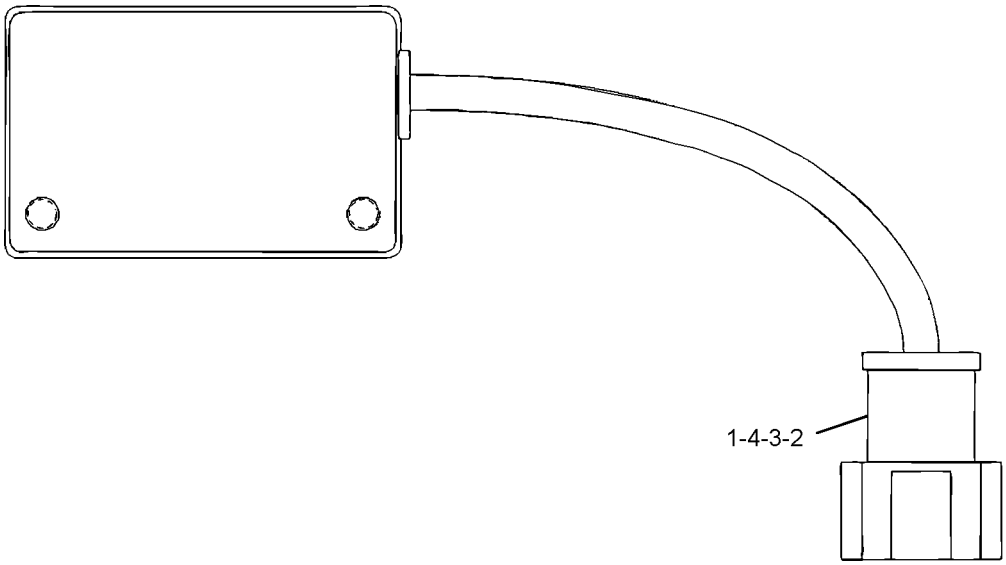

GRAPHIC #1 **<END>** g01037256

190-2446 ELECTRONICS GP-MACHINE–SECURITY

S/N: PDF1-UP
PART OF 239-3352 INSTALLATION GP-SECURITY
AN ATTACHMENT

SMCS-7610, 7620 **i02039940**

NOTE	PART NUMBER	QTY	PART NAME 1 2 3 4 5 6 (PRODUCT LEVEL)	SEE PAGE
	232-9737	1	SOFTWARE GP-MACHINE (SECURITY)	
			(SOFTWARE ONLY)	
			–OR–	
	207-5262	1	INSTALLATION GP-SECURITY	
			(INCLUDES SOFTWARE)	
	156-6155	1	CONTROL GP-UNPROGRAMMED (SECURITY)	
	7X-6315	1	STRAP AS-GROUND	
	134-4126	1	WASHER (4.52X8.28X.76-MM THK)	
	184-2472	1	SCREW-PAN HEAD (NO.8-32X9.52-MM)	
	206-5162	2	KEY AS-ELECTRONIC (YELLOW)	
			–OR–	
	206-5165	1	KEY AS-ELECTRONIC (GRAY)	

<END>

ELECTRICAL AND STARTING SYSTEM

233-9834 GLOW PLUG GP

S/N: CRS1-242

PART OF 179-1795 ENGINE AR-PRIMARY

SMCS-1412 **i02017687**

NOTE	REF NO	GRAPHIC REF	PART NUMBER	QTY	PART NAME 1 2 3 4 5 6 (PRODUCT LEVEL)	SEE PAGE
	1	1	**226-8770**	4	PLUG AS-GLOW	
	2	1	**232-7399**	1	SUPPORT-PLUG	

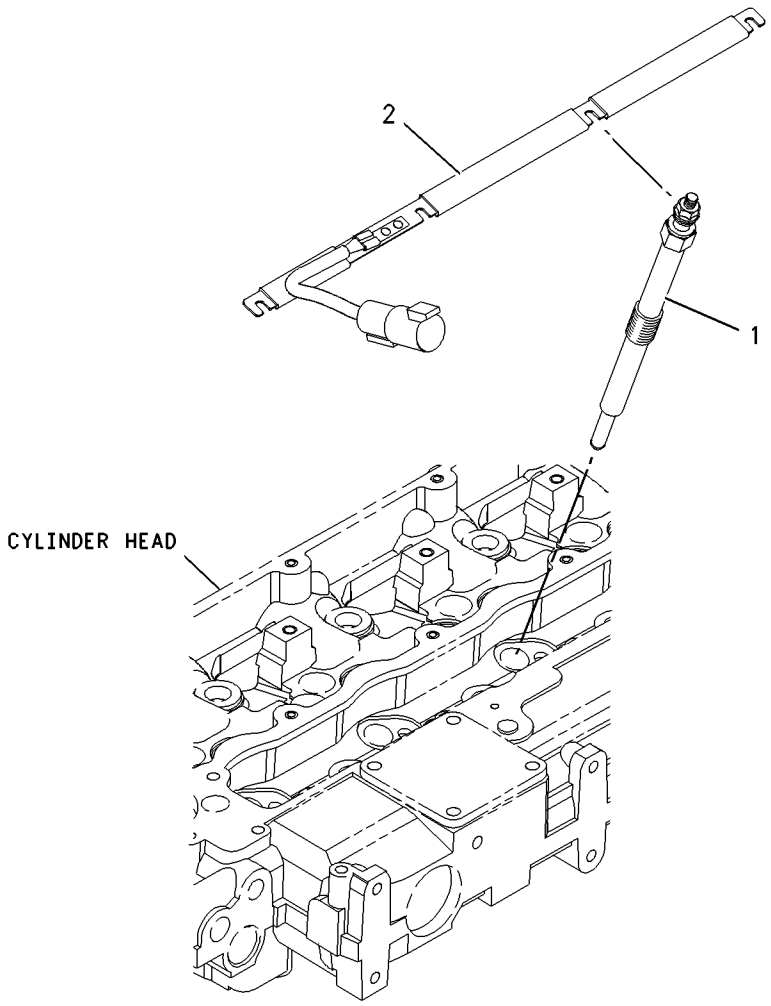

GRAPHIC #1 **<END>** g00976069

233-9834 GLOW PLUG GP

S/N: CRS243-UP

PART OF 179-1795 ENGINE AR-PRIMARY

SMCS-1412 **i02017689**

NOTE	REF NO	GRAPHIC REF	PART NUMBER	QTY	PART NAME 1 2 3 4 5 6 (PRODUCT LEVEL)	SEE PAGE
	1	1	**226-8770**	4	GLOW PLUG GP	
	2	1	**244-3316**	1	SUPPORT	

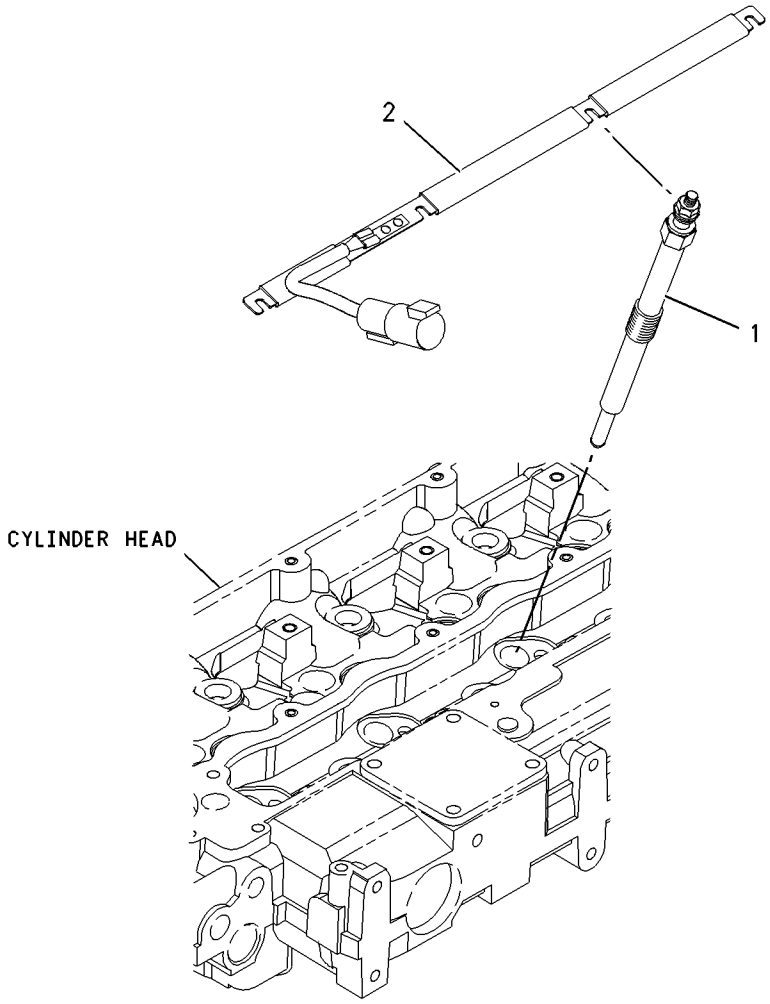

GRAPHIC #1 **<END>** g00976069

234-5118 HEATER GP-JACKET WATER

S/N: PDF1-UP
120-VOLT/1000-WATT
AN ATTACHMENT

SMCS-1383 **i01998261**

NOTE	REF NO	GRAPHIC REF	PART NUMBER	QTY	PART NAME 1 2 3 4 5 6 (PRODUCT LEVEL)	SEE PAGE
	1	1	**3S-2093**	2	STRAP-CABLE	
	2	1	**130-0165**	1	RECEPTACLE AS	
		1	**1M-1230**	2	NUT & LOCK AS	
		1	**168-4511**	1	SCREW-PAN HEAD (NO 10 X 25.4MM)	
	3	1	**235-8555**	1	BRACKET AS	
	4	1	**236-1775**	1	HEATER GP-JACKET WATER	
		1	**219-3273**	1	ELEMENT AS-JACKET WATER HEATER	
		1	**133-3413**	1	KIT-SEAL	
					(INCLUDES SEAL, SPACER AND RINGS)	
		1	**133-6517**	1	CAP AS-DUST	
		1	**236-1754**	1	CORD AS-HEATER	
	5	1	**4P-7428**	1	CLIP	
M	6	1	**8T-4189**	2	BOLT (M8X1.25X20MM)	
	7	1	**8T-4224**	2	WASHER-HARD (8.8X16X2MM THK)	

M-METRIC PART

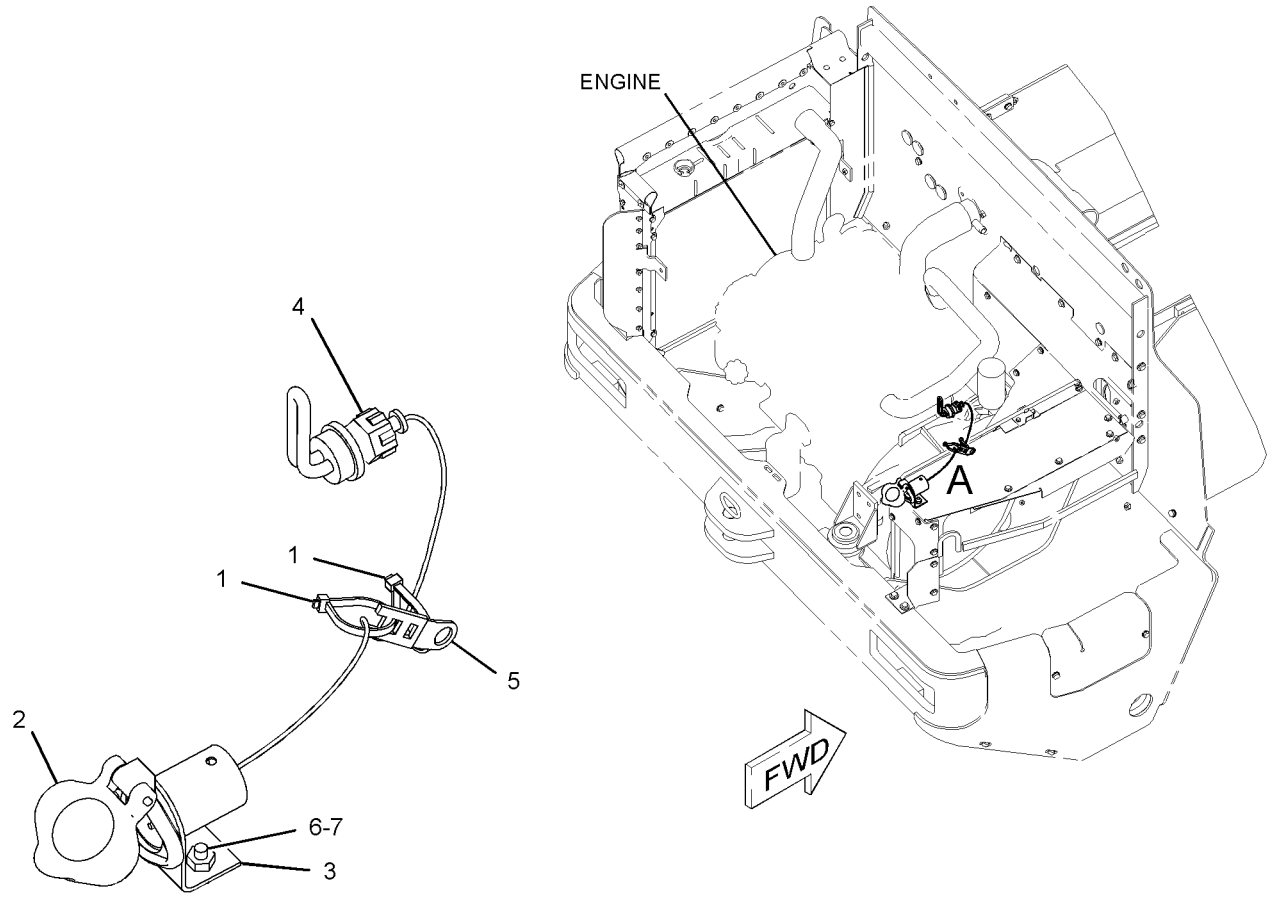

VIEW OF AREA A

GRAPHIC #1 **<END>** g01035006

234-5119 HEATER GP-JACKET WATER

S/N: PDF1-UP
240-VOLT
AN ATTACHMENT

SMCS-1383 **i01998262**

NOTE	REF NO	GRAPHIC REF	PART NUMBER	QTY	PART NAME 1 2 3 4 5 6 (PRODUCT LEVEL)	SEE PAGE
	1	1	**3S-2093**	2	STRAP-CABLE	
	2	1	**130-0165**	1	RECEPTACLE AS	
		1	**1M-1230**	2	NUT & LOCK AS	
		1	**168-4511**	1	SCREW-PAN HEAD (NO 10X25.4-MM)	
	3	1	**235-8555**	1	BRACKET AS	
	4	1	**236-1776**	1	HEATER GP-JACKET WATER	
	4A	1	**219-3271**	1	ELEMENT AS-JACKET WATER HEATER	
		1	**133-3413**	1	KIT-SEAL	
					(INCLUDES SEAL, SPACER AND RINGS)	
		1	**133-6517**	1	CAP AS-DUST	
	4B	1	**236-1752**	1	CORD AS-HEATER	
	5	1	**4P-7428**	1	CLIP	
M	6	1	**8T-4189**	2	BOLT (M8X1.25X20-MM)	
M	7	1	**8T-4224**	2	WASHER-HARD (8.8X16X2-MM THK)	

M-METRIC PART

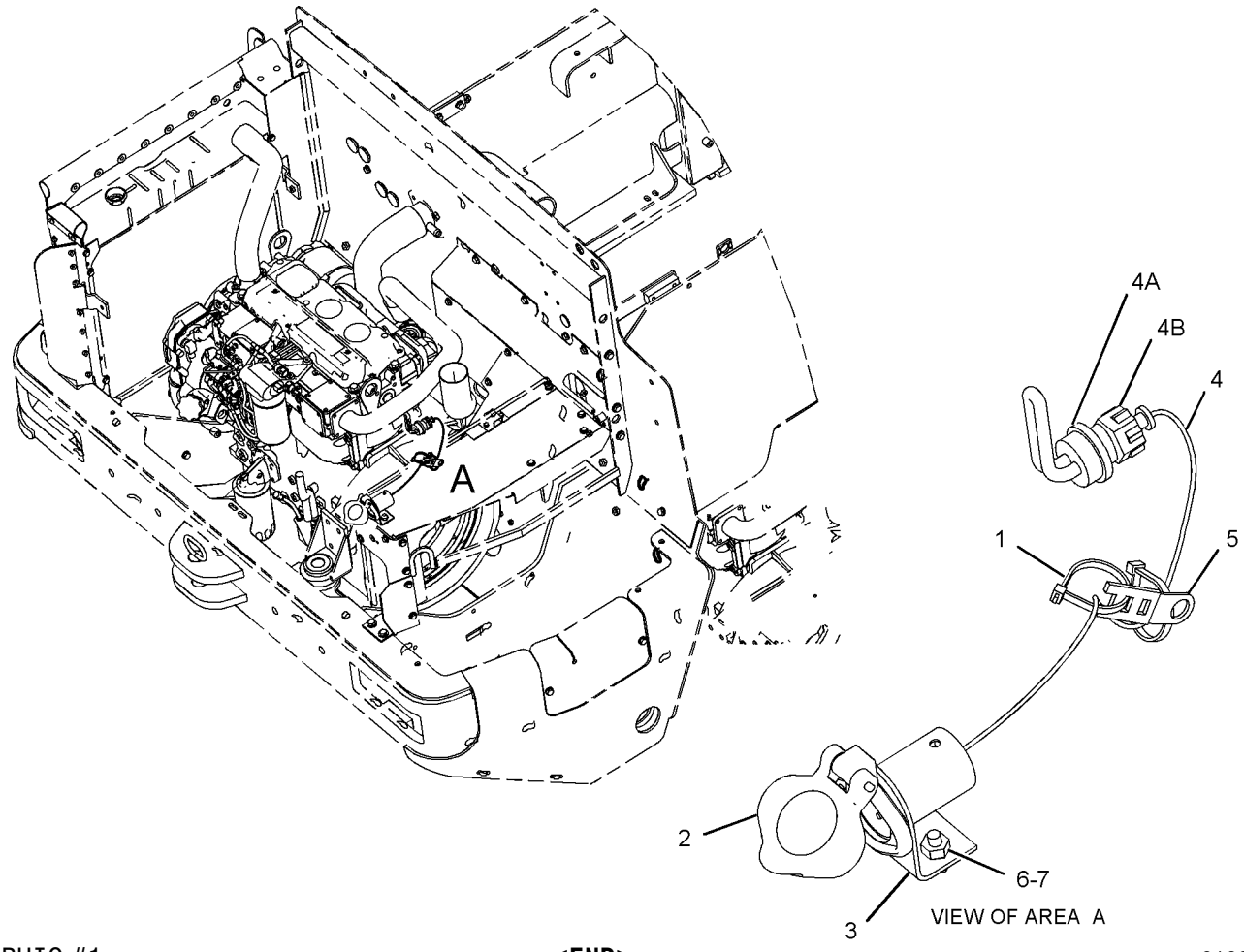

GRAPHIC #1 **<END>** g01034558

239-3352 INSTALLATION GP-SECURITY

S/N: PDF1-UP
AN ATTACHMENT

SMCS-7631 **i02021514**

NOTE	REF NO	GRAPHIC REF	PART NUMBER	QTY	PART NAME 1 2 3 4 5 6 (PRODUCT LEVEL)	SEE PAGE
	1	1	**3E-3371**	1	WEDGE-RECEPTACLE LOCK (3-PIN)	
	2	1	**6I-1418**	3	SPACER (8.2X12.7X28.7-MM THK)	
	3	1	**7K-1181**	3	STRAP-CABLE	
	4	1	**155-0576**	6	MOUNT-ISOLATION	
	5	1	**165-5655**	1	LAMP AS (12-VOLT)	
		1	**186-3735**	3	PIN-CONNECTOR	
	6	1	**205-0826**	1	FILM (SECURITY)	
	7	1	**206-5162**	2	KEY AS-ELECTRONIC (YELLOW)	
					—OR—	
			206-5165	1	KEY AS-ELECTRONIC (GRAY)	
	8	1	*206-5203*	1	COIL AS (EXCITER)	
		1	**102-8802**	2	KIT-RECEPTACLE (2-PIN)	
		1	**3E-3365**	1	WEDGE-RECEPTACLE LOCK (2-PIN)	
		1	**198-5389**	2	FILM (IGNITION SWITCH)	
		1	**205-8257**	2	COIL AS (EXCITER)	
	9	1	**102-8803**	1	KIT-RECEPTACLE (3-PIN)	
	10	1	**239-3351**	1	HARNESS AS-CONTROL	
		1	**102-8802**	1	KIT-RECEPTACLE (2-PIN)	
		1	**102-8804**	1	KIT-RECEPTACLE (4-PIN)	
		1	**102-8805**	2	KIT-RECEPTACLE (6-PIN)	
		1	**155-2260**	1	KIT-CONNECTING PLUG (3-PIN)	
		1	**155-2270**	4	KIT-CONNECTING PLUG (2-PIN)	
		1	**155-2274**	1	KIT-CONNECTING PLUG (6-PIN)	
M	11	1	**099-3649**	3	BOLT (M8X1.25X40-MM)	
	12	1	**170-9360**	1	GROMMET	
Y	13	1	*190-2446*	1	ELECTRONICS GP-MACHINE (SECURITY)	86
	14	1	**9N-0869**	3	WASHER-HARD (8.8X25.5X2.0-MM THK)	
	15	1	**222-3870**	1	COIL AS (FERRITE)	
		1	**102-8802**	2	KIT-RECEPTACLE (2-PIN)	
		1	**3E-3365**	2	WEDGE-RECEPTACLE LOCK (2-PIN)	
		1	**186-3735**	4	PIN-CONNECTOR	
E		1	**9X-1813**		SLEEVE (15CM)	

E-ORDER BY THE CENTIMETER
M-METRIC PART
Y-SEPARATE ILLUSTRATION

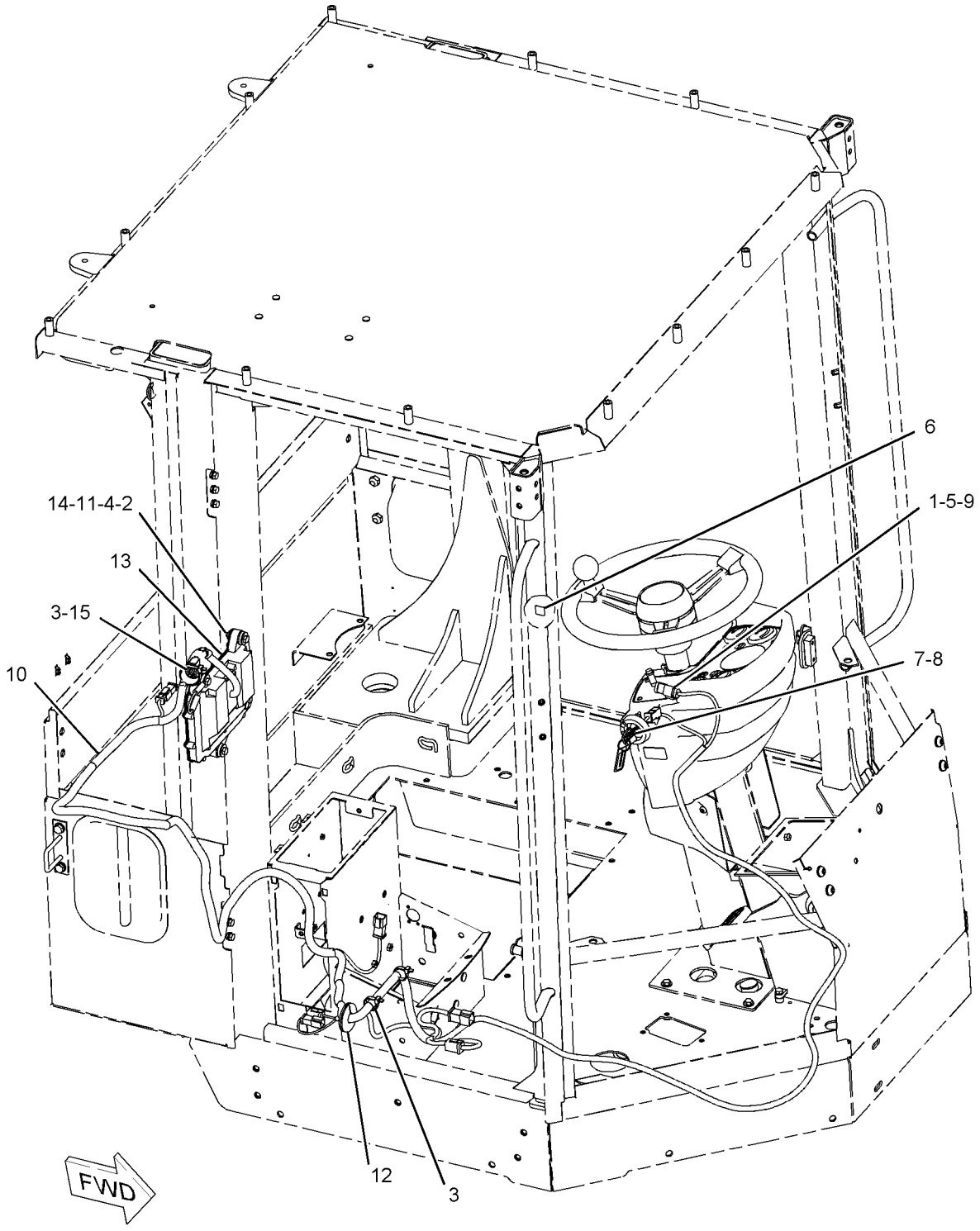

GRAPHIC #1 **<END>** g01043956

107-6032 LAMP GP-DOME

S/N: PDF1-UP
PART OF 241-8564 LINER GP-CAB
AN ATTACHMENT

SMCS-1433 **i02038780**

NOTE	REF NO	GRAPHIC REF	PART NUMBER	QTY	PART NAME 1 2 3 4 5 6 (PRODUCT LEVEL)	SEE PAGE
	1	1	**112-5219**	1	LAMP (24-VOLT, 10-WATT)	

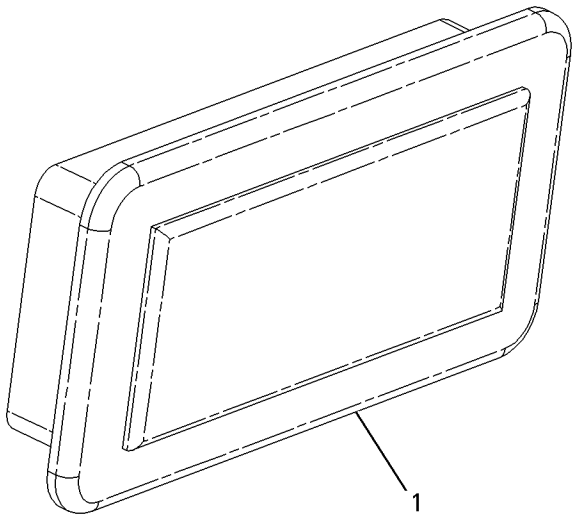

GRAPHIC #1 **<END>** g00866999

9X-1439 LAMP GP-FLOOD

S/N: PDF1-UP
24 VOLT. VERTICAL MOUNT
PART OF 119-9758 LIGHTING GP-FLOOD
AN ATTACHMENT

SMCS-1434 **i02038778**

NOTE	REF NO	GRAPHIC REF	PART NUMBER	QTY	PART NAME 1 2 3 4 5 6 (PRODUCT LEVEL)	SEE PAGE
	1	1	**9X-4244**	4	SCREW	
	2	1	**9X-4174**	1	LENS AS (FLOODLIGHT)	
		1	**9X-4243**	1	SEAL	
M	3	1	**8T-0337**	2	SCREW-MACHINE (M4X0.7X12-MM)	
	4	1	**9X-3455**	1	BODY AS-LAMP	
	5	1	**9X-3463**	1	LAMP-HALOGEN (24-VOLT, 65-WATT)	

M-METRIC PART

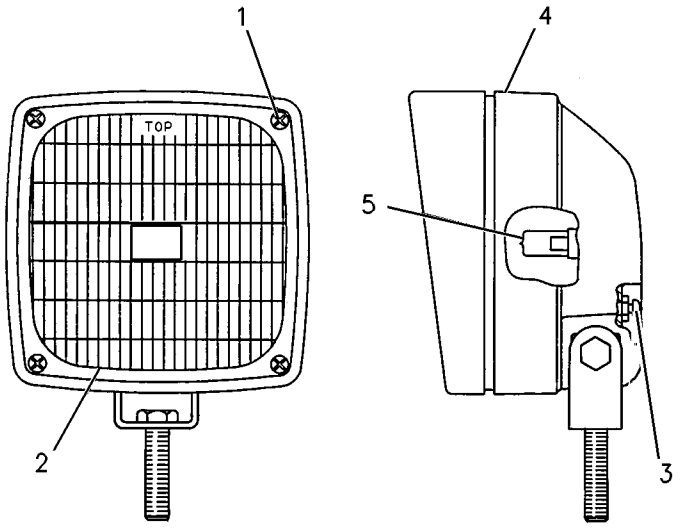

GRAPHIC #1 **<END>** g00795892

234-4325 LAMP GP-FLOOD

S/N: PDF1-UP
SUSPENDED
PART OF 115-1558 LIGHTING GP-AUXILIARY
AN ATTACHMENT

SMCS-1434 **i02038797**

NOTE	REF NO	GRAPHIC REF	PART NUMBER	QTY	PART NAME 1 2 3 4 5 6 (PRODUCT LEVEL)	SEE PAGE
	1	1	**9X-3463**	1	LAMP-HALOGEN (24-VOLT, 65-WATT)	
M	2	1	**8T-4133**	1	NUT (M10X1.5-THD)	
	3	1	**9X-4244**	2	SCREW	
	4	1	**202-6614**	1	LENS AS (FLOODLIGHT) (FLOOD)	
	5	1	**234-7730**	1	BODY AS	
	6	1	**164-7556**	1	CLIP	
	7	1	**234-7731**	1	BRACKET AS	

M-METRIC PART

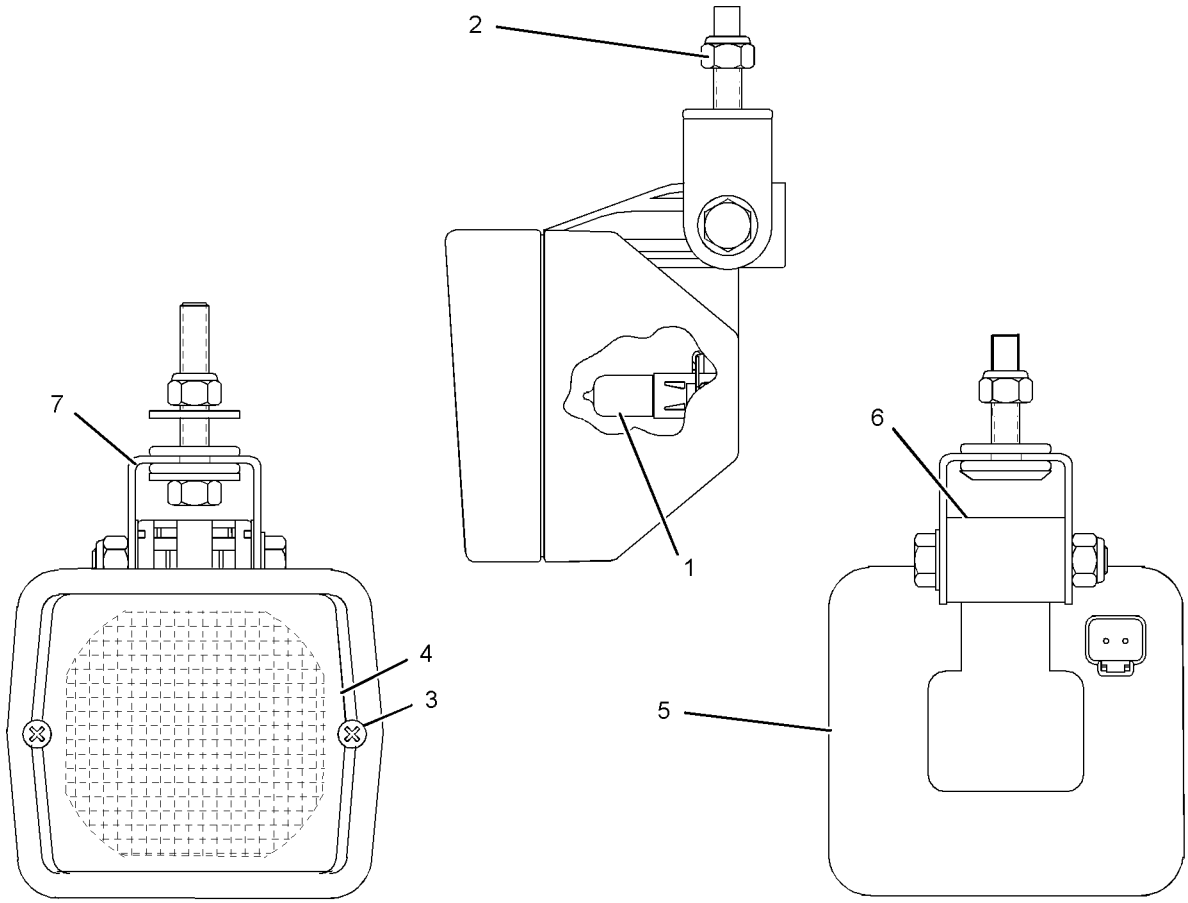

GRAPHIC #1 **<END>** g01044247

3E-7586 LAMP GP-HEAD & SIGNAL–RH

S/N: PDF1-UP
24-VOLT. DIPPED BEAM
PART OF 116-0924 LIGHTING AR-ROADING
AN ATTACHMENT

SMCS-1429, 1430 **i02035079**

NOTE	REF NO	GRAPHIC REF	PART NUMBER	QTY	PART NAME 1 2 3 4 5 6 (PRODUCT LEVEL)	SEE PAGE
	1	1	**9X-4244**	4	SCREW	
	2	1	**100-3251**	2	SCREW-LENS	
	3	1	**9X-9865**	1	SEAL	
	4	1	**100-3248**	1	LENS AS (HEADLIGHT)	
	5	1	**9X-3465**	1	LAMP (24-VOLT)	
	6	1	**100-3247**	1	BODY AS-LAMP	
M	7	1	**8T-5005**	1	BOLT (M10X1.50X70-MM)	
M	8	1	**8T-0389**	1	LOCKNUT (M10X1.5-THD)	
	9	1	**100-3253**	1	SPACER	
	10	1	**100-3254**	1	SPACER	
	11	1	**100-3255**	1	WASHER	
	12	1	**102-8805**	1	KIT-RECEPTACLE (6-PIN)	
	13	1	**8T-8729**	5	PIN-CONNECTOR	
	15	1	**8T-8737**	1	PLUG-SEAL	
	16	1	**100-3245**	1	LAMP (24-VOLT)	
	17	1	**9X-4493**	1	LAMP (24-VOLT, 21-WATT)	
	18	1	**100-3250**	1	LENS (AMBER) (TURN SIGNAL)	

M-METRIC PART

3E-7586 LAMP GP-HEAD & SIGNAL *(contd.)* **i02035079**

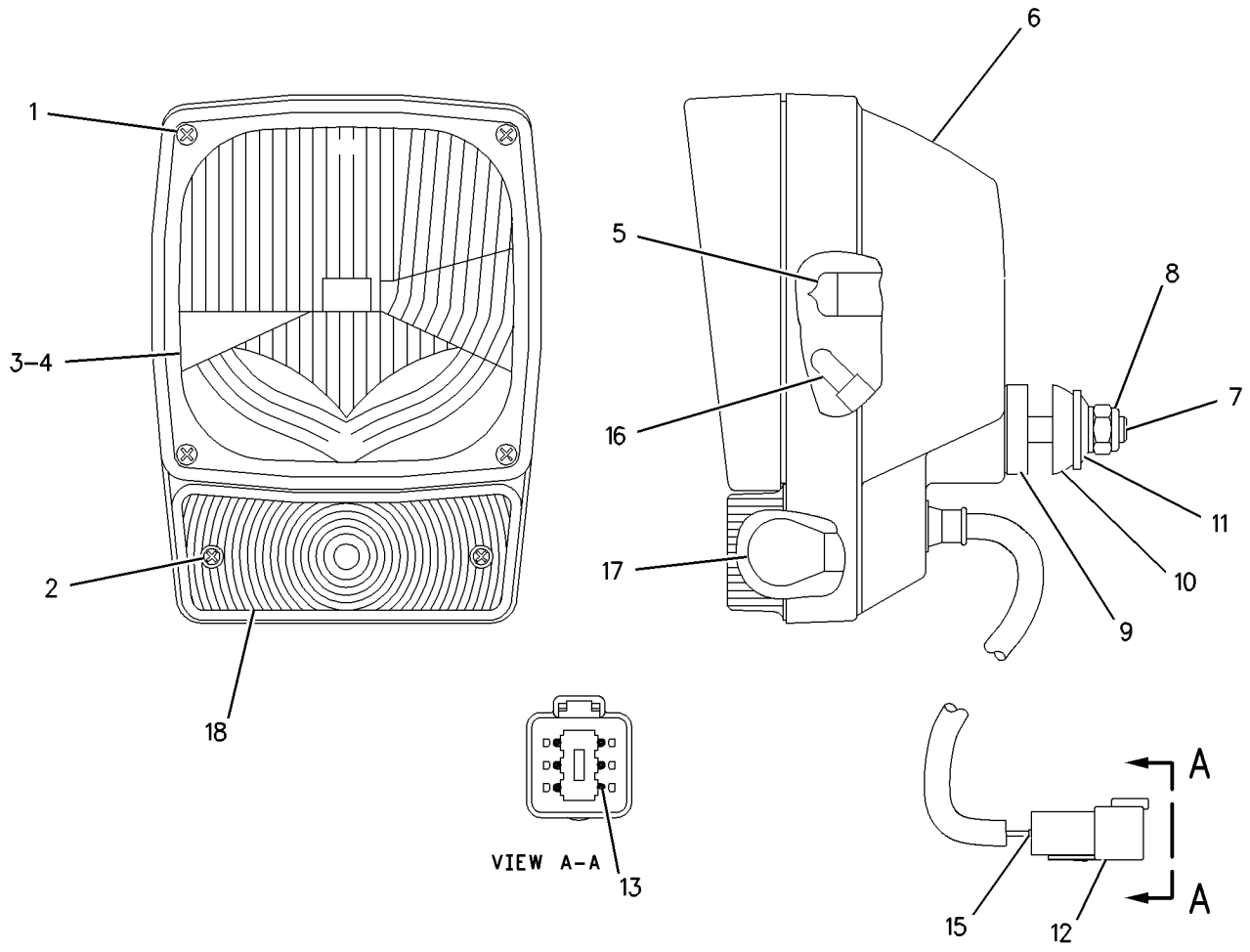

GRAPHIC #1 **<END>** g00795900

3E-7587 LAMP GP-HEAD & SIGNAL–LH

S/N: PDF1-UP
24-VOLT. DIPPED BEAM
PART OF 116-0926 LIGHTING AR-ROADING
AN ATTACHMENT

SMCS-1429, 1430 **i02035083**

NOTE	REF NO	GRAPHIC REF	PART NUMBER	QTY	PART NAME 1 2 3 4 5 6 (PRODUCT LEVEL)	SEE PAGE
	1	1	**9X-4244**	4	SCREW	
	2	1	**100-3251**	2	SCREW-LENS	
	3	1	**9X-9865**	1	SEAL	
	4	1	**100-3249**	1	LENS AS (HEADLIGHT)	
	5	1	**9X-3465**	1	LAMP (24-VOLT)	
	6	1	**100-3247**	1	BODY AS-LAMP	
M	7	1	**8T-5005**	1	BOLT (M10X1.50X70-MM)	
M	8	1	**8T-0389**	1	LOCKNUT (M10X1.5-THD)	
	9	1	**100-3253**	1	SPACER	
	10	1	**100-3254**	1	SPACER	
	11	1	**100-3255**	1	WASHER	
	12	1	**102-8805**	1	KIT-RECEPTACLE (6-PIN)	
	13	1	**100-3250**	1	LENS (AMBER) (TURN SIGNAL)	
	14	1	**8T-8729**	5	PIN-CONNECTOR	
	15	1	**8T-8737**	1	PLUG-SEAL	
	16	1	**100-3245**	1	LAMP (24-VOLT)	
	17	1	**9X-4493**	1	LAMP (24-VOLT, 21-WATT)	

M-METRIC PART

3E-7587 LAMP GP-HEAD & SIGNAL *(contd.)* **i02035083**

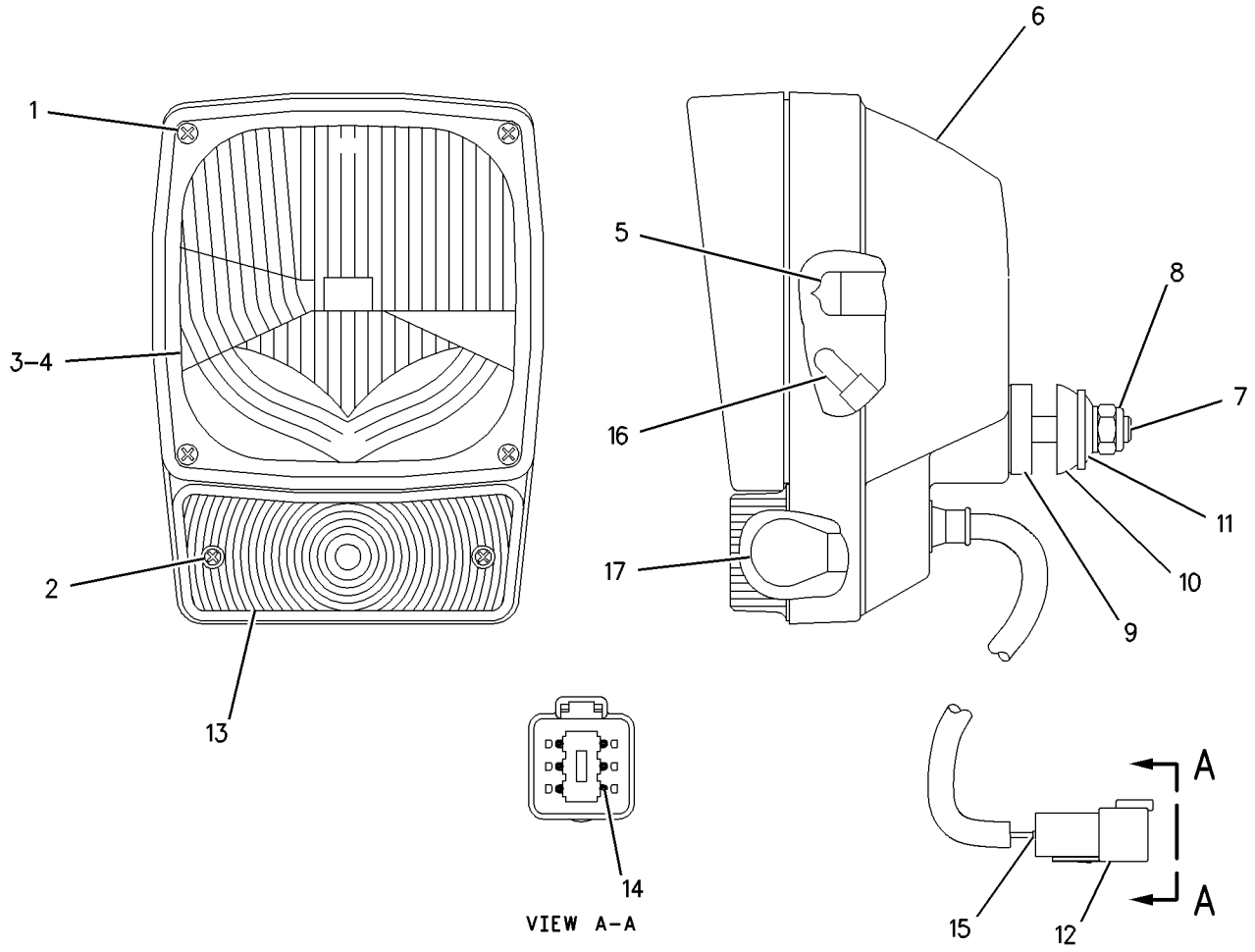

GRAPHIC #1 **<END>** g00868805

105-4849 LAMP GP-HEAD & SIGNAL–LH

S/N: PDF1-UP
PART OF 116-0925 LIGHTING AR-ROADING
AN ATTACHMENT

SMCS-1429, 1430 **i02035640**

NOTE	REF NO	GRAPHIC REF	PART NUMBER	QTY	PART NAME 1 2 3 4 5 6 (PRODUCT LEVEL)	SEE PAGE
	1	1	**9X-4244**	4	SCREW	
	2	1	**100-3251**	2	SCREW-LENS	
	3	1	**9X-9865**	1	SEAL	
	4	1	**100-3248**	1	LENS AS (HEADLIGHT)	
	5	1	**9X-3465**	1	LAMP (24-VOLT)	
	6	1	**136-3848**	1	LENS AS (AMBER)	
M	7	1	**8T-5005**	1	BOLT (M10X1.50X70-MM)	
M	8	1	**8T-0389**	1	LOCKNUT (M10X1.5-THD)	
	9	1	**100-3253**	1	SPACER	
	10	1	**100-3254**	1	SPACER	
	11	1	**100-3255**	1	WASHER	
	12	1	**102-8805**	1	KIT-RECEPTACLE (6-PIN)	
	13	1	**186-3735**	5	PIN-CONNECTOR	
	14	1	**3E-3383**	1	WEDGE-RECEPTACLE LOCK (6-PIN)	
	15	1	**8T-8737**	1	PLUG-SEAL	
	16	1	**100-3245**	2	LAMP (24-VOLT)	
	17	1	**9X-4493**	1	LAMP (24-VOLT, 21-WATT)	
	18	1	**100-3250**	1	LENS (AMBER) (TURN SIGNAL)	
	19	1	**136-3845**	1	BODY AS-LAMP	

M-METRIC PART

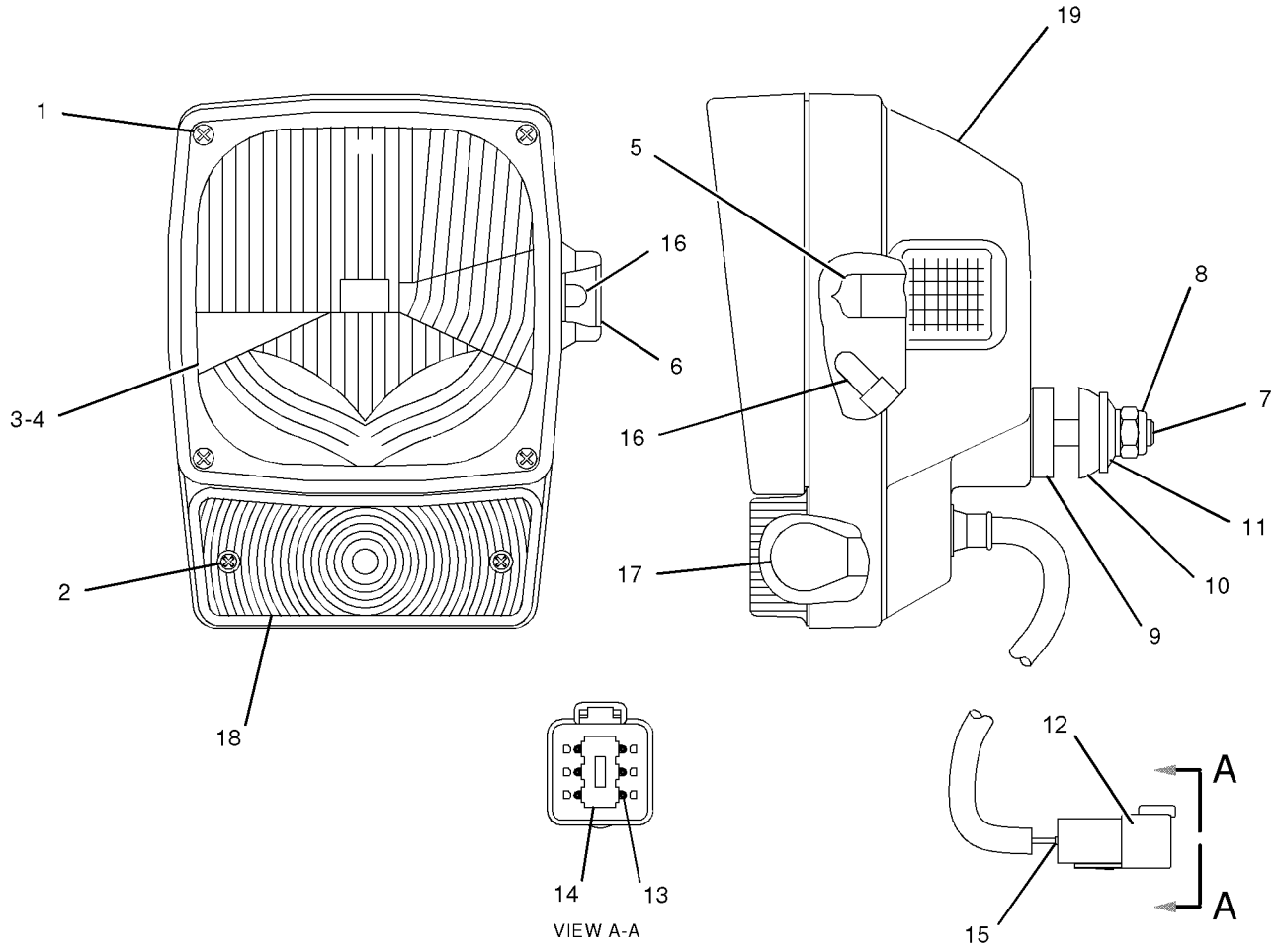

GRAPHIC #1

<END>

g01046627

105-4850 LAMP GP-HEAD & SIGNAL–RH

S/N: PDF1-UP
PART OF 116-0925 LIGHTING AR-ROADING
AN ATTACHMENT

SMCS-1429, 1430 **i02029902**

NOTE	REF NO	GRAPHIC REF	PART NUMBER	QTY	PART NAME 1 2 3 4 5 6 (PRODUCT LEVEL)	SEE PAGE
	1	1	**9X-4244**	4	SCREW	
	2	1	**100-3251**	2	SCREW-LENS	
	3	1	**9X-9865**	1	SEAL	
	4	1	**100-3248**	1	LENS AS (HEADLIGHT)	
	5	1	**9X-3465**	1	LAMP (24-VOLT)	
	6	1	**136-3846**	1	BODY AS-LAMP	
M	7	1	**8T-5005**	1	BOLT (M10X1.50X70-MM)	
M	8	1	**8T-0389**	1	LOCKNUT (M10X1.5-THD)	
	9	1	**100-3253**	1	SPACER	
	10	1	**100-3254**	1	SPACER	
	11	1	**100-3255**	1	WASHER	
	12	1	**102-8805**	1	KIT-RECEPTACLE (6-PIN)	
	13	1	**136-3848**	1	LENS AS (AMBER)	
	14	1	**8T-8729**	5	PIN-CONNECTOR	
	15	1	**8T-8737**	1	PLUG-SEAL	
	16	1	**100-3245**	2	LAMP (24-VOLT)	
	17	1	**9X-4493**	1	LAMP (24-VOLT, 21-WATT)	
	18	1	**100-3250**	1	LENS (AMBER) (TURN SIGNAL)	

M-METRIC PART

105-4850 LAMP GP-HEAD & SIGNAL *(contd.)* **i02029902**

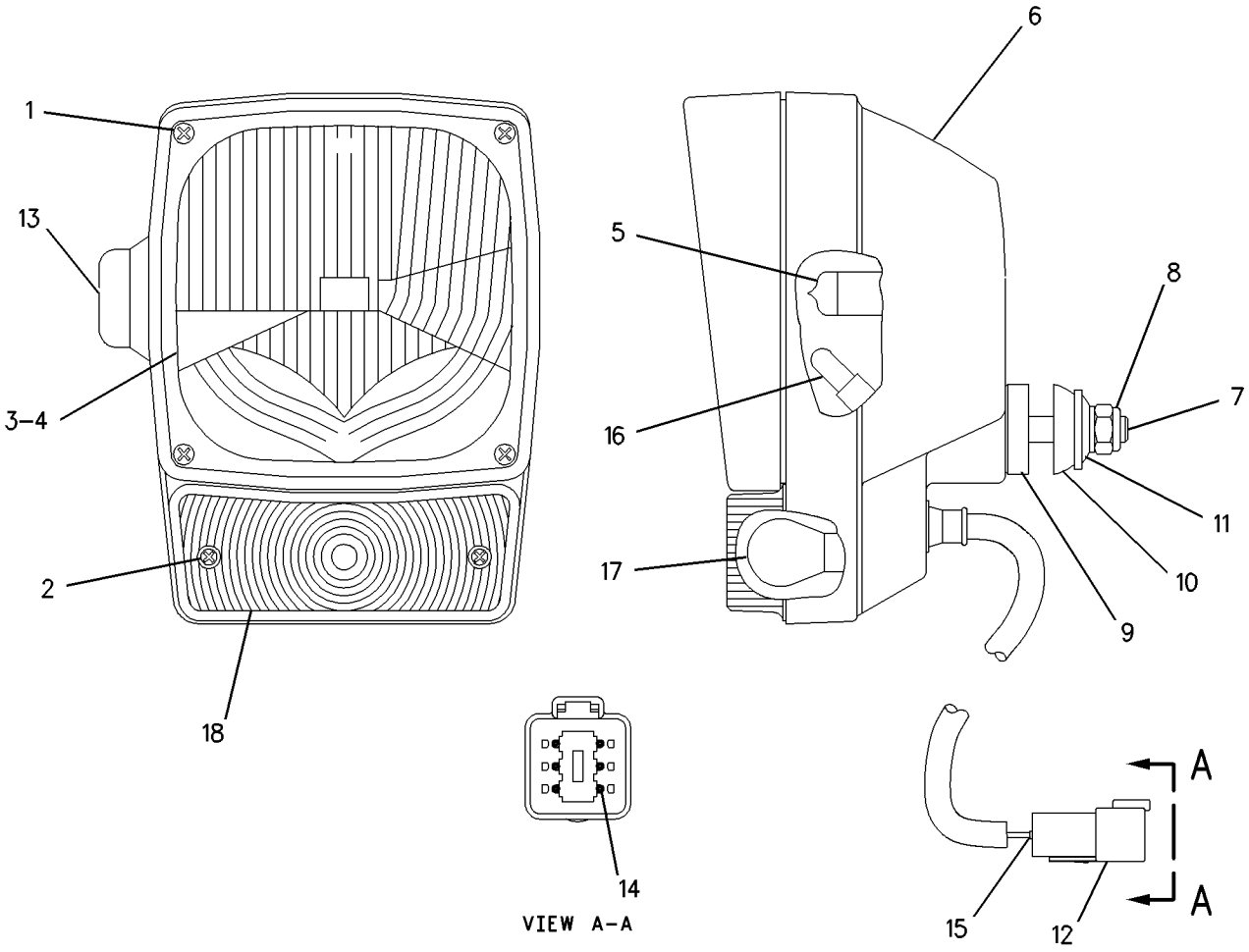

GRAPHIC #1 **<END>** g00868810

221-4192 LAMP GP-REAR–BACKUP

S/N: PDF1-UP
PART OF 117-6039 WIRING GP-REAR
AN ATTACHMENT

SMCS-1429, 1432 **i02037106**

NOTE	REF NO	GRAPHIC REF	PART NUMBER	QTY	PART NAME 1 2 3 4 5 6 (PRODUCT LEVEL)	SEE PAGE
	1	1	**155-2270**	1	KIT-CONNECTING PLUG (2-PIN)	
	2	1	**155-2261**	1	WEDGE-PLUG LOCK (2-PIN)	
	3	1	**126-1768**	2	SOCKET-CONNECTOR	
	4	1	**4Y-3415**	1	LAMP (24-VOLT, 25-WATT)	
	5	1	**4Y-3450**	1	LENS-LAMP	
M	6	1	**8T-4127**	2	SCREW-MACHINE (M5X0.8X20-MM)	

M-METRIC PART

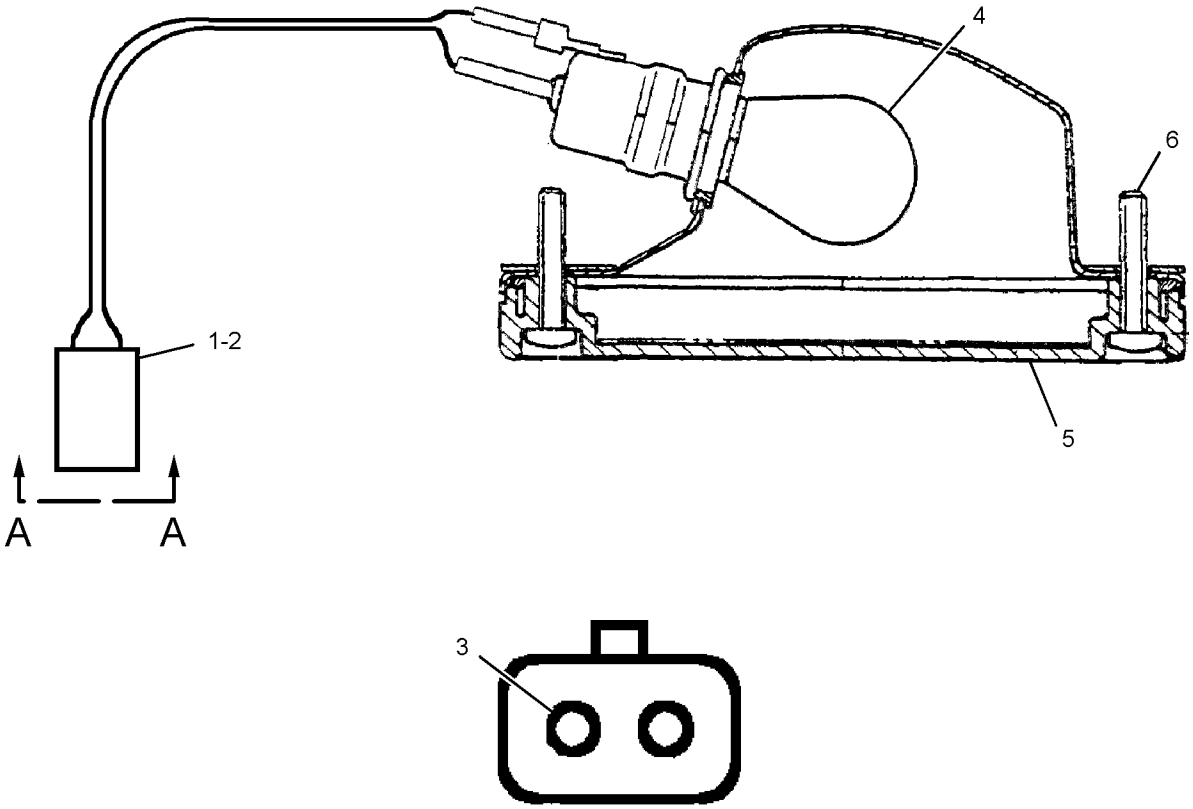

VIEW A-A

GRAPHIC #1 **<END>** g01047973

3E-6466 LAMP GP-SIGNAL

S/N: PDF1-UP
24 VOLT
PART OF 107-4636 LIGHTING GP-FLOOD & SIGNAL
AN ATTACHMENT

SMCS-1430 **i01684839**

NOTE	REF NO	GRAPHIC REF	PART NUMBER	QTY	PART NAME 1 2 3 4 5 6 (PRODUCT LEVEL)	SEE PAGE
	1	1	**9X-3066**	1	LENS-AMBER	
	2	1	**9X-4493**	1	LAMP (SINGLE FILAMENT)	
	3	1	**102-8802**	1	KIT-RECEPTACLE (2 PIN)	
					(KIT SERVICES RECEPTACLE AS AND WEDGE)	
	4	1	**8T-8729**	2	PIN-CONNECTOR	

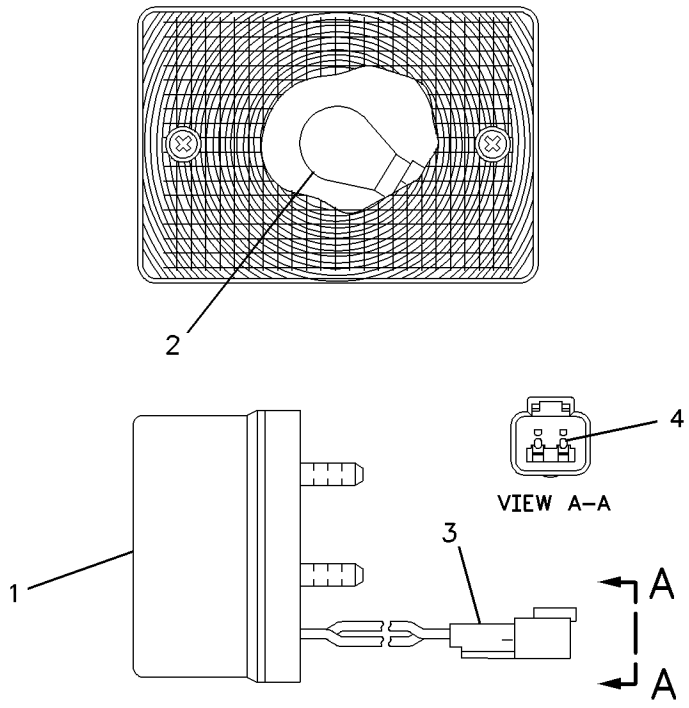

GRAPHIC #1 **<END>** g00868818

4Y-3263 LAMP GP-SIGNAL

S/N: PDF1-UP
FRONT RH
PART OF 117-6033 LIGHTING GP-SIGNAL
AN ATTACHMENT

SMCS-1430 **i01812036**

NOTE	REF NO	GRAPHIC REF	PART NUMBER	QTY	PART NAME 1 2 3 4 5 6 (PRODUCT LEVEL)	SEE PAGE
	1	1	**4Y-3415**	1	LAMP	
	2	1	**4Y-3417**	1	LAMP	
	3	1	**4Y-3418**	1	LENS-TURN SIGNAL LAMP	
	4	1	**4Y-3419**	1	LENS-TURN SIGNAL LAMP	

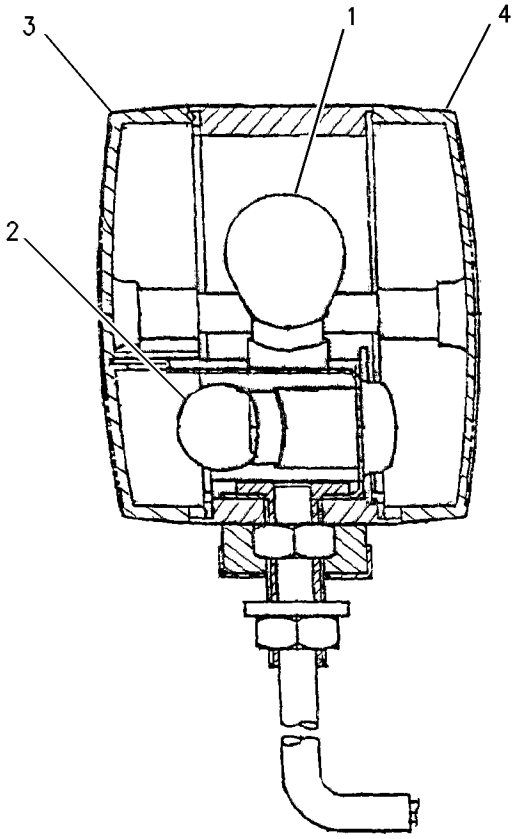

SECTION VIEW

GRAPHIC #1 **<END>** g00926455

4Y-3580 LAMP GP-SIGNAL

S/N: PDF1-UP
FRONT LH
PART OF 117-6033 LIGHTING GP-SIGNAL
AN ATTACHMENT

SMCS-1430 **i01812040**

NOTE	REF NO	GRAPHIC REF	PART NUMBER	QTY	PART NAME 1 2 3 4 5 6 (PRODUCT LEVEL)	SEE PAGE
	1	1	**4Y-3415**	1	LAMP	
	2	1	**4Y-3417**	1	LAMP	
	3	1	**4Y-3418**	1	LENS-TURN SIGNAL LAMP	
	4	1	**4Y-3419**	1	LENS-TURN SIGNAL LAMP	

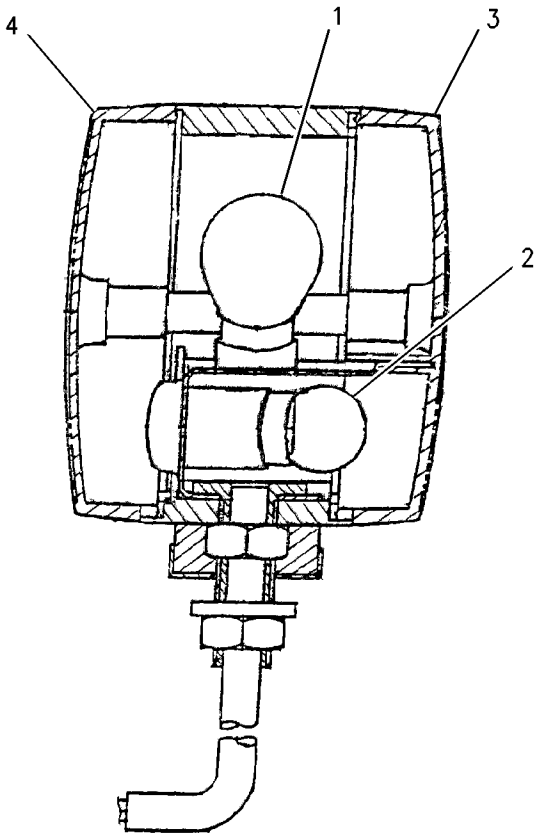

SECTION VIEW

GRAPHIC #1 **<END>** g00926452

107-4401 LAMP GP-SIGNAL

S/N: PDF1-UP
STOP/TAIL-24 VOLT
PART OF 112-7189 LIGHTING GP-ROADING
AN ATTACHMENT

SMCS-1430 **i02029903**

NOTE	REF NO	GRAPHIC REF	PART NUMBER	QTY	PART NAME 1 2 3 4 5 6 (PRODUCT LEVEL)	SEE PAGE
	1	1	**9X-4492**	1	LAMP (24-VOLT, 5-WATT)	
	2	1	**102-8803**	1	KIT-RECEPTACLE (3-PIN)	
	3	1	**9X-3065**	1	LENS-RED	
	4	1	**186-3735**	3	PIN-CONNECTOR	

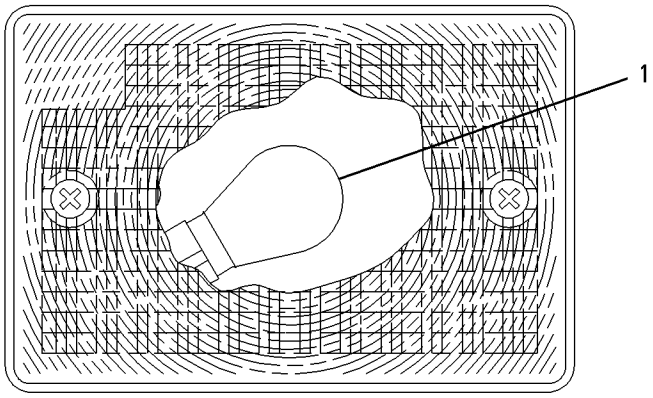

VIEW A-A

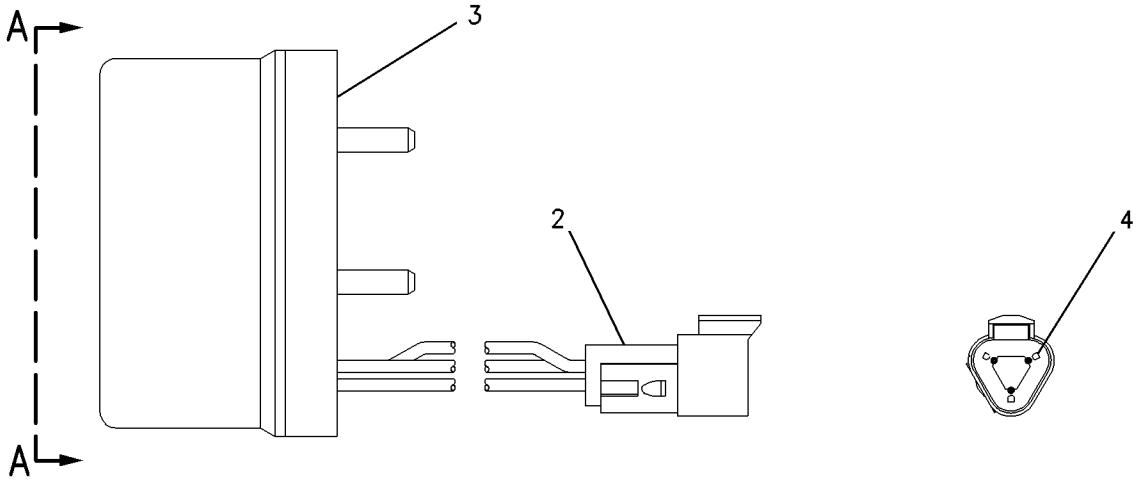

GRAPHIC #1 **<END>** g00868825

130-3453 LAMP GP-SIGNAL

S/N: PDF1-UP
24 VOLT
PART OF 107-4636 LIGHTING GP-FLOOD & SIGNAL
AN ATTACHMENT

SMCS-1430 **i02029904**

NOTE	REF NO	GRAPHIC REF	PART NUMBER	QTY	PART NAME 1 2 3 4 5 6 (PRODUCT LEVEL)	SEE PAGE
	1	1	**9X-3064**	1	LENS-RED	
	2	1	**9X-4493**	1	LAMP (24-VOLT, 21-WATT)	
	3	1	**102-8803**	1	KIT-RECEPTACLE (3-PIN)	
	4	1	**186-3735**	3	PIN-CONNECTOR	

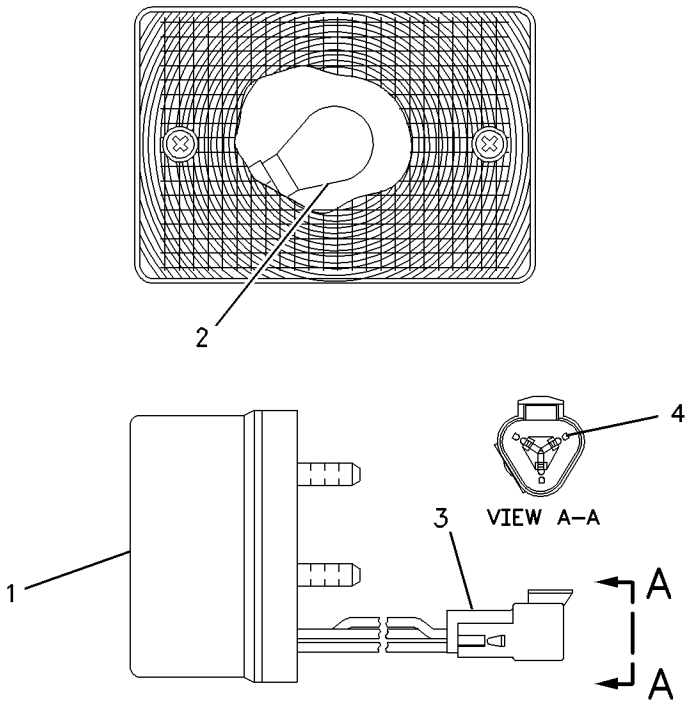

GRAPHIC #1 **<END>** g00868836

162-2073 LAMP GP-SIGNAL

S/N: PDF1-UP
PART OF 112-7189 LIGHTING GP-ROADING
AN ATTACHMENT

SMCS-1430 **i01448422**

NOTE	REF NO	GRAPHIC REF	PART NUMBER	QTY	PART NAME 1 2 3 4 5 6 (PRODUCT LEVEL)	SEE PAGE
	1	1	**3E-3365**	1	WEDGE-RECEPTACLE LOCK (2 PIN)	
	2	1	**186-3735**	2	PIN-CONNECTOR	
	3	1	**162-2074**	1	LENS-AMBER	
	4	1	**9X-4493**	1	LAMP (24 VOLT)	
	5	1	**102-8802**	1	KIT-RECEPTACLE (2 PIN)	
					(KIT SERVICES RECEPTACLE AS. AND WEDGE)	
FJM		1	**5C-2890**	3	NUT (M6X1 THD)	
FJ		1	**8T-4205**	3	WASHER-HARD (7.2X14.5X2MM THK)	

F-NOT SHOWN
J-USE FOR SERVICE REPAIR
M-METRIC PART

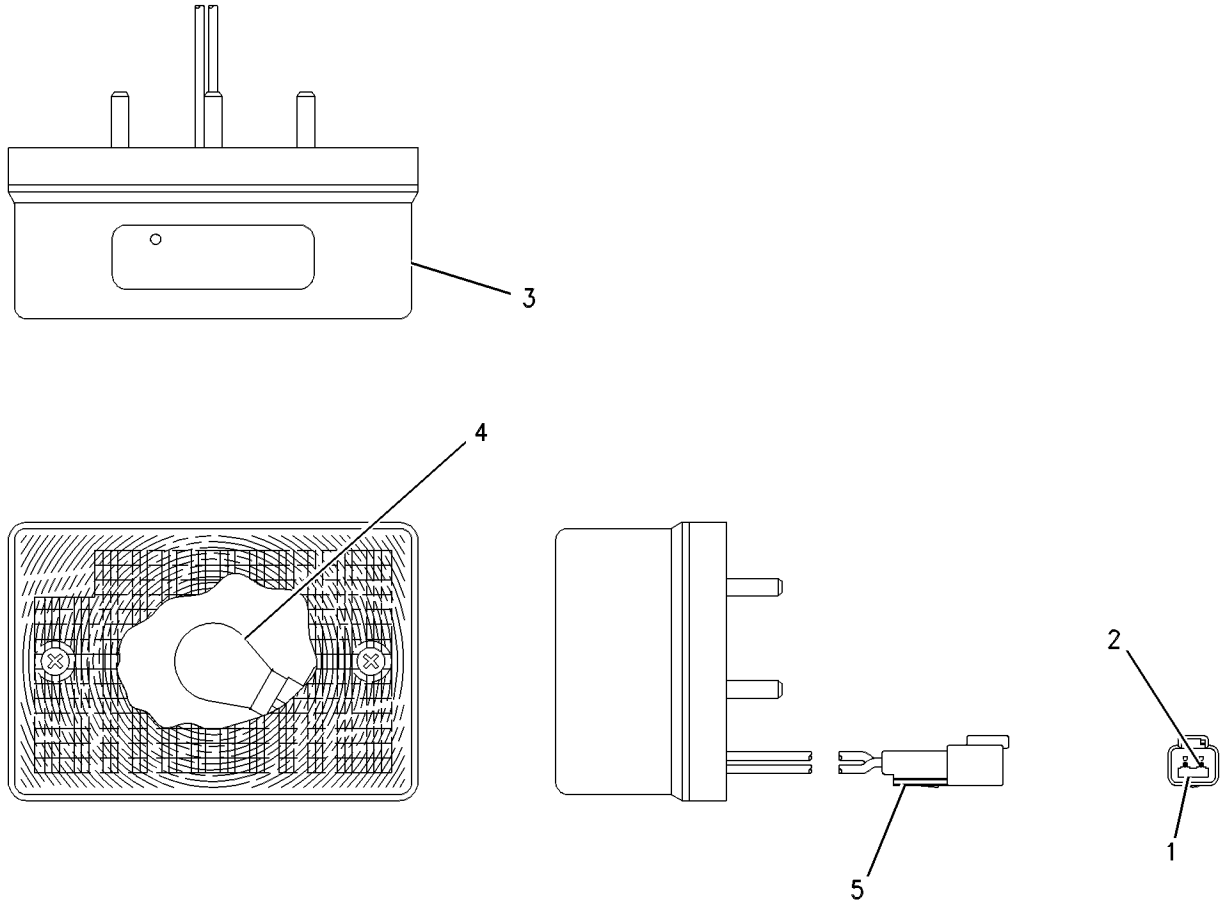

GRAPHIC #1 **<END>** g00517617

145-6929 LAMP GP-STOP & TAIL

S/N: PDF1-UP

PART OF 145-6871 LIGHTING GP-ROADING, 117-6039 WIRING GP-REAR

AN ATTACHMENT

SMCS-1432 **i02029912**

NOTE	REF NO	GRAPHIC REF	PART NUMBER	QTY	PART NAME 1 2 3 4 5 6 (PRODUCT LEVEL)	SEE PAGE
	1	1	**3E-3365**	1	WEDGE-RECEPTACLE LOCK (2-PIN)	
	2	1	**3E-3371**	1	WEDGE-RECEPTACLE LOCK (3-PIN)	
	3	1	**8T-8729**	5	PIN-CONNECTOR	
	4	1	**9X-4492**	1	LAMP (24-VOLT, 5-WATT)	
	5	1	**9X-4493**	1	LAMP (24-VOLT, 21-WATT)	
	6	1	**102-8802**	1	KIT-RECEPTACLE (2-PIN)	
	7	1	**102-8803**	1	KIT-RECEPTACLE (3-PIN)	
	8	1	**146-2438**	1	LENS (AMBER, RED)	

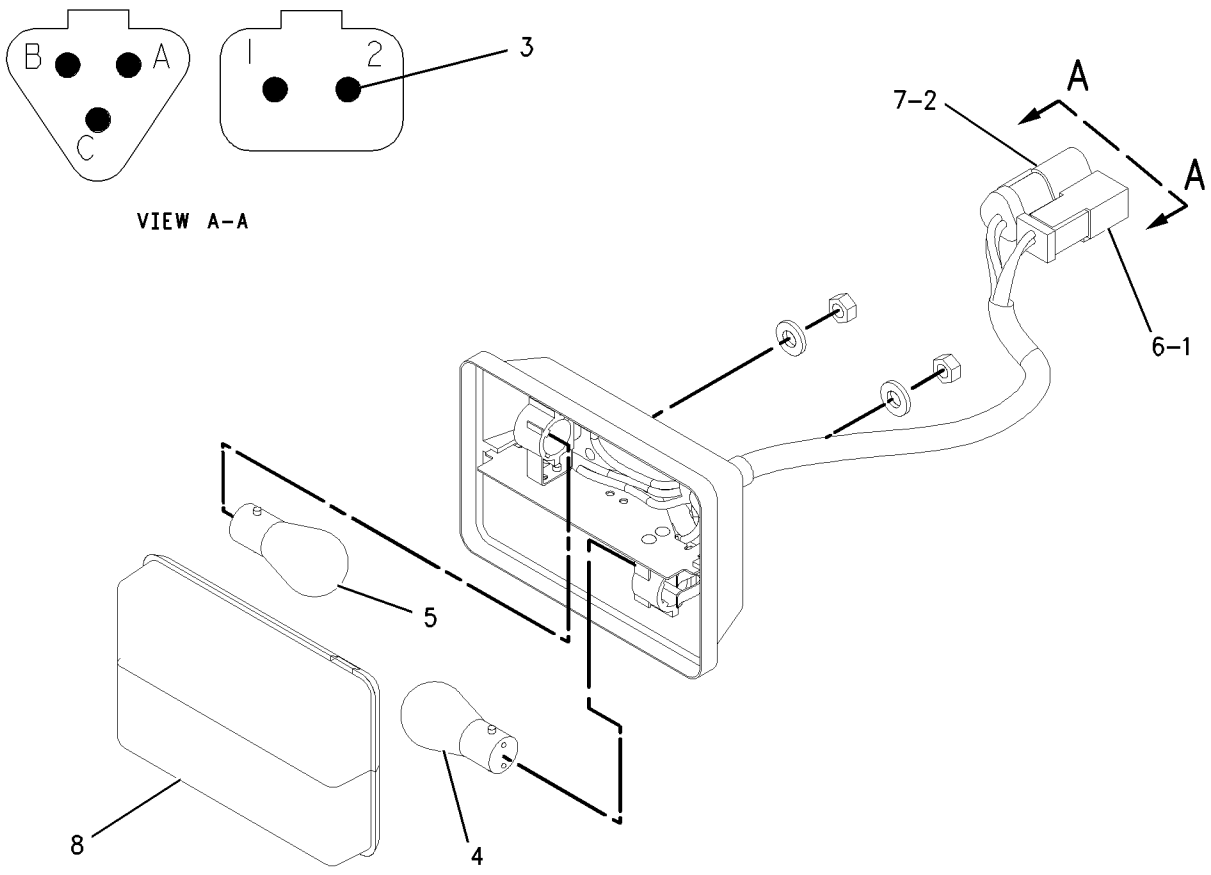

GRAPHIC #1 **<END>** g00728005

108-1029 LAMP GP-WARNING BEACON

S/N: PDF1-UP
PART OF 107-6142, 122-6465 LIGHTING GP-WARNING
AN ATTACHMENT

SMCS-1431 **i02029921**

NOTE	REF NO	GRAPHIC REF	PART NUMBER	QTY	PART NAME 1 2 3 4 5 6 (PRODUCT LEVEL)	SEE PAGE
	1	1	**9X-8121**	1	LENS (AMBER, WARNING BEACON)	
	2	1	**9X-7849**	1	LAMP (24-VOLT, 70-WATT)	
	3	1	**9X-8139**	1	BELT-DRIVE (WARNING BEACON)	
	4	1	**9R-7958**	1	CORD AS	
	5	1	**9R-7942**	1	PLUG AS	

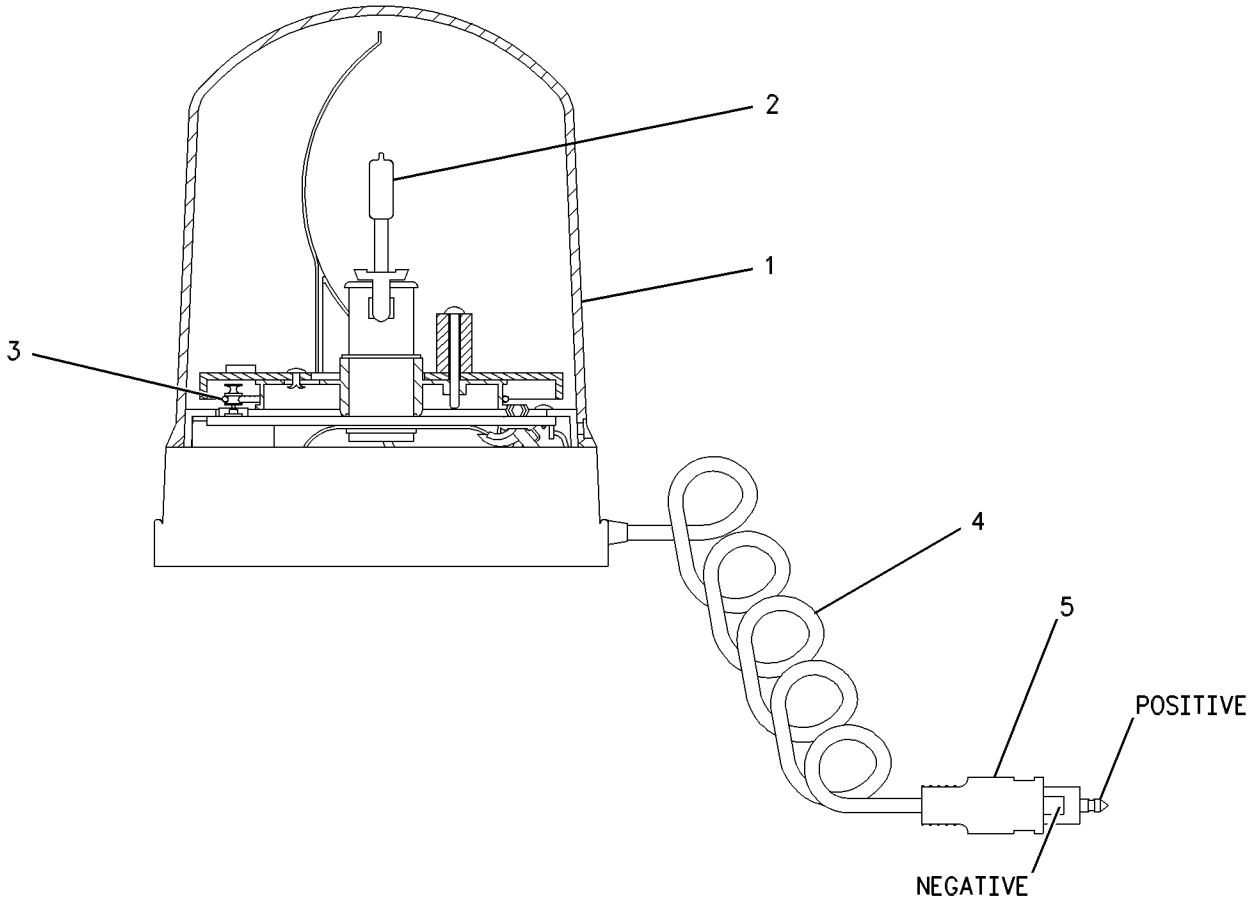

GRAPHIC #1 **<END>** g00600509

177-2035 LIGHTING AR-FLOOD & SIGNAL

S/N: PDF1-UP
U.S. MARKET
AN ATTACHMENT

SMCS-1430, 1434 **i01534093**

NOTE	PART NUMBER	QTY	PART NAME 1 2 3 4 5 6 (PRODUCT LEVEL)	SEE PAGE
Y	*107-4636*	1	LIGHTING GP-FLOOD & SIGNAL	120
Y	*107-4619*	1	PANEL GP-INSTRUMENT	540

Y-SEPARATE ILLUSTRATION

<END>

116-0924 LIGHTING AR-ROADING

S/N: PDF1-UP
RIGHT HAND DIPPED
AN ATTACHMENT

SMCS-1429 **i00916482**

NOTE	PART NUMBER	QTY	PART NAME 1 2 3 4 5 6 (PRODUCT LEVEL)	SEE PAGE
Y	**3E-7586**	2	LAMP GP-HEAD	96

Y-SEPARATE ILLUSTRATION

<END>

116-0925 LIGHTING AR-ROADING

S/N: PDF1-UP
RIGHT HAND DIPPED, SIDE REPEAT. ITALY
AN ATTACHMENT

SMCS-1429 **i01584672**

NOTE	PART NUMBER	QTY	PART NAME 1 2 3 4 5 6 (PRODUCT LEVEL)	SEE PAGE
Y	**105-4849**	1	LAMP GP-HEAD & SIGNAL (LH)	100
Y	**105-4850**	1	LAMP GP-HEAD & SIGNAL (RH)	101

Y-SEPARATE ILLUSTRATION

<END>

116-0926 LIGHTING AR-ROADING

S/N: PDF1-UP
LEFT HAND DIPPED
AN ATTACHMENT

SMCS-1429 **i00916491**

NOTE	PART NUMBER	QTY	PART NAME 1 2 3 4 5 6 (PRODUCT LEVEL)	SEE PAGE
Y	**3E-7587**	2	LAMP GP-HEAD	98

Y-SEPARATE ILLUSTRATION

<END>

177-2034 LIGHTING AR-ROADING

S/N: PDF1-UP
EAME
AN ATTACHMENT

SMCS-1429 **i01504422**

NOTE	PART NUMBER	QTY	PART NAME 1 2 3 4 5 6 (PRODUCT LEVEL)	SEE PAGE
Y	*112-7189*	1	LIGHTING GP-ROADING	122
Y	*176-7596*	1	PANEL GP-INSTRUMENT	542
Y-SEPARATE ILLUSTRATION				

<END>

177-2036 LIGHTING AR-ROADING

S/N: PDF1-UP
MOTOR, JAPAN
AN ATTACHMENT

SMCS-1429 **i01528633**

NOTE	PART NUMBER	QTY	PART NAME 1 2 3 4 5 6 (PRODUCT LEVEL)	SEE PAGE
Y	*107-4619*	1	PANEL GP-INSTRUMENT	540
Y	*117-6032*	1	ROADING AR	131
Y-SEPARATE ILLUSTRATION				

<END>

177-2037 LIGHTING AR-ROADING

S/N: PDF1-UP
ITALY
AN ATTACHMENT

SMCS-1429 **i01528607**

NOTE	PART NUMBER	QTY	PART NAME 1 2 3 4 5 6 (PRODUCT LEVEL)	SEE PAGE
Y	*145-6871*	1	LIGHTING GP-ROADING	124
Y	*176-7596*	1	PANEL GP-INSTRUMENT	542
Y-SEPARATE ILLUSTRATION				

<END>

ELECTRICAL AND STARTING SYSTEM

115-1558 LIGHTING GP-AUXILIARY

S/N: PDF1-UP
AN ATTACHMENT

SMCS-1429 **i02021358**

NOTE	REF NO	GRAPHIC REF	PART NUMBER	QTY	PART NAME 1 2 3 4 5 6 (PRODUCT LEVEL)	SEE PAGE
	1	1	**115-1559**	2	PLATE	
CY	2	1	**234-4325**	2	LAMP GP-FLOOD	95
C	3	1	**235-5762**	2	WIRE AS	
M	4	1	**5C-2890**	4	NUT (M6X1-THD)	
M	5	1	**8T-4189**	4	BOLT (M8X1.25X20-MM)	
M	6	1	**8T-4224**	4	WASHER-HARD (8.8X16X2-MM THK)	
D	7	1	**5P-6039**		WRAP-SPIRAL (0.2M EACH)	

C-CHANGE FROM PREVIOUS TYPE
D-ORDER BY THE METER
M-METRIC PART
Y-SEPARATE ILLUSTRATION

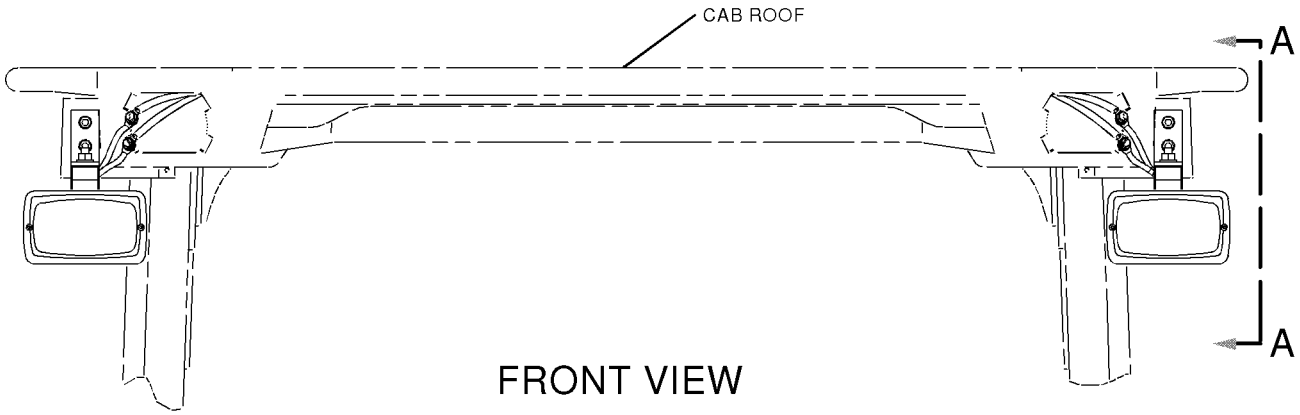

FRONT VIEW

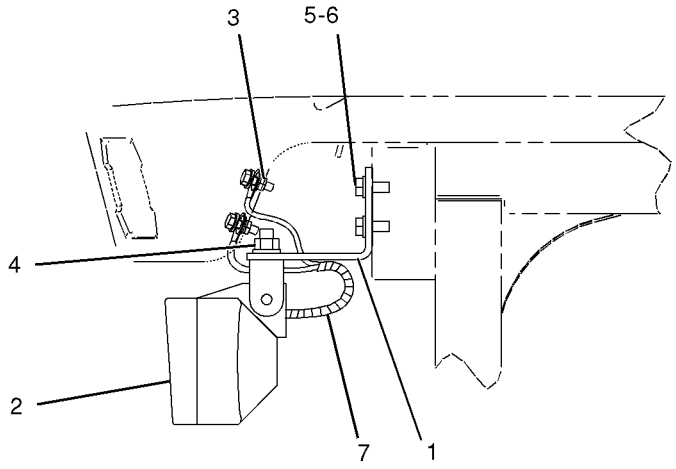

VIEW A-A

GRAPHIC #1 **<END>** g01043820

117-9622 LIGHTING GP-FLOOD

S/N: PDF1-UP
PART OF 205-0522 CAB AR, 205-0524 CAB AR-ENCLOSED ROPS
AN ATTACHMENT

SMCS-1434 **i01684864**

NOTE	REF NO	GRAPHIC REF	PART NUMBER	QTY	PART NAME 1 2 3 4 5 6 (PRODUCT LEVEL)	SEE PAGE
	1	1	**8E-1118**	1	ANTENNA AS	
	2	1	**9R-7941**	1	RECEPTACLE AS-POWER (24 VOLTS)	
		1	**9R-7980**	1	COVER	
	3	1	**109-7041**	4	LAMP GP-FLOOD	
					(EACH INCLUDES)	
		1	**9X-3463**	1	LAMP-HEAD (24 VOLT)	
		1	**142-5789**	4	SCREW	
	4	1	**109-8981**	1	CABLE AS-COAXIAL	
	5	1	**111-0157**	1	HARNESS AS-LIGHTING (FLOOD)	
		1	**102-8804**	1	KIT-RECEPTACLE (4 PIN)	
					(KIT SERVICES RECEPTACLE AND WEDGE)	
	6	1	**114-6604**	16	NUT-SPEED	
	7	1	**164-5509**	1	BLOCK	
	8	1	**180-5100**	1	ROOF	
	9	1	**119-0781**	1	ADHESIVE	
M	10	1	**5C-2890**	4	NUT (M6X1 THD)	
M	11	1	**6V-7357**	4	BOLT (M6X1.0X25MM)	
M	12	1	**8T-4137**	12	BOLT (M10X1.5X20MM)	
	13	1	**8T-4205**	8	WASHER-HARD (7.2X14.5X2MM THK)	
	14	1	**8T-4226**	12	WASHER-PLATED (10.5X45X3MM THK)	
D	15	1	**5P-0806**		SEAL (0.051M)	
D	16	1	**5P-0806**	2	SEAL (0.032M)	
D	17	1	**5P-0806**	3	SEAL (0.027M)	

D-ORDER BY THE METER
M-METRIC PART

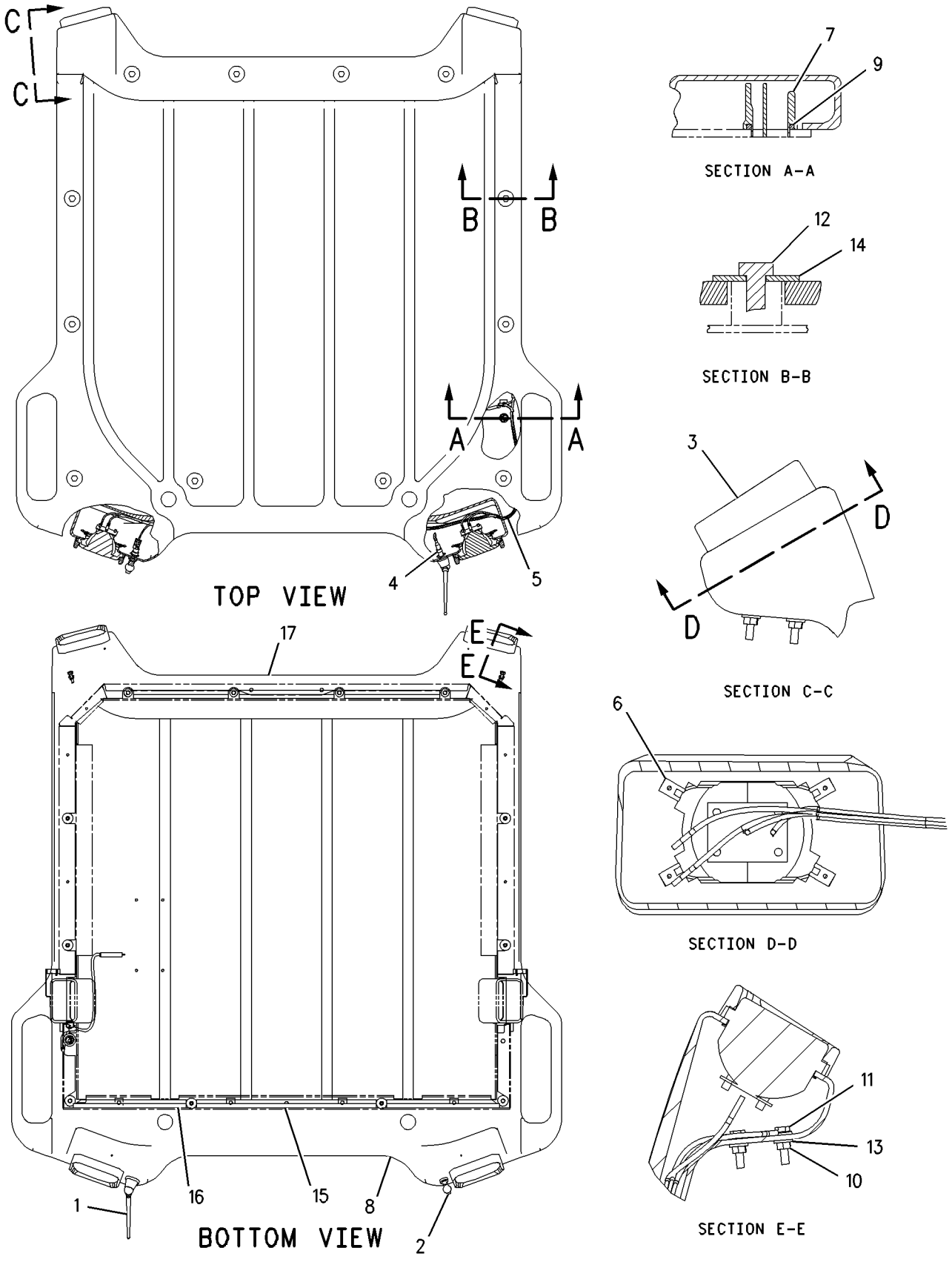

GRAPHIC #1 **<END>** g00829075

119-9758 LIGHTING GP-FLOOD

S/N: PDF1-UP
PART OF 241-8644 CANOPY AR-SOFT
AN ATTACHMENT

SMCS-1434 **i01046117**

NOTE	REF NO	GRAPHIC REF	PART NUMBER	QTY	PART NAME 1 2 3 4 5 6 (PRODUCT LEVEL)	SEE PAGE
Y	1	1	**9X-1439**	2	LAMP GP-FLOOD	94
M	2	1	**8T-4133**	2	NUT (M10X1.50 THD)	
	3	1	**8T-4121**	2	WASHER (2.5MM THK)	
	4	1	**119-9810**	1	HARNESS AS	
	5	1	**7K-1181**	12	STRAP-CABLE (4.00IN DIA)	
	6	1	**5P-8438**	2	GROMMET	

M-METRIC PART
Y-SEPARATE ILLUSTRATION

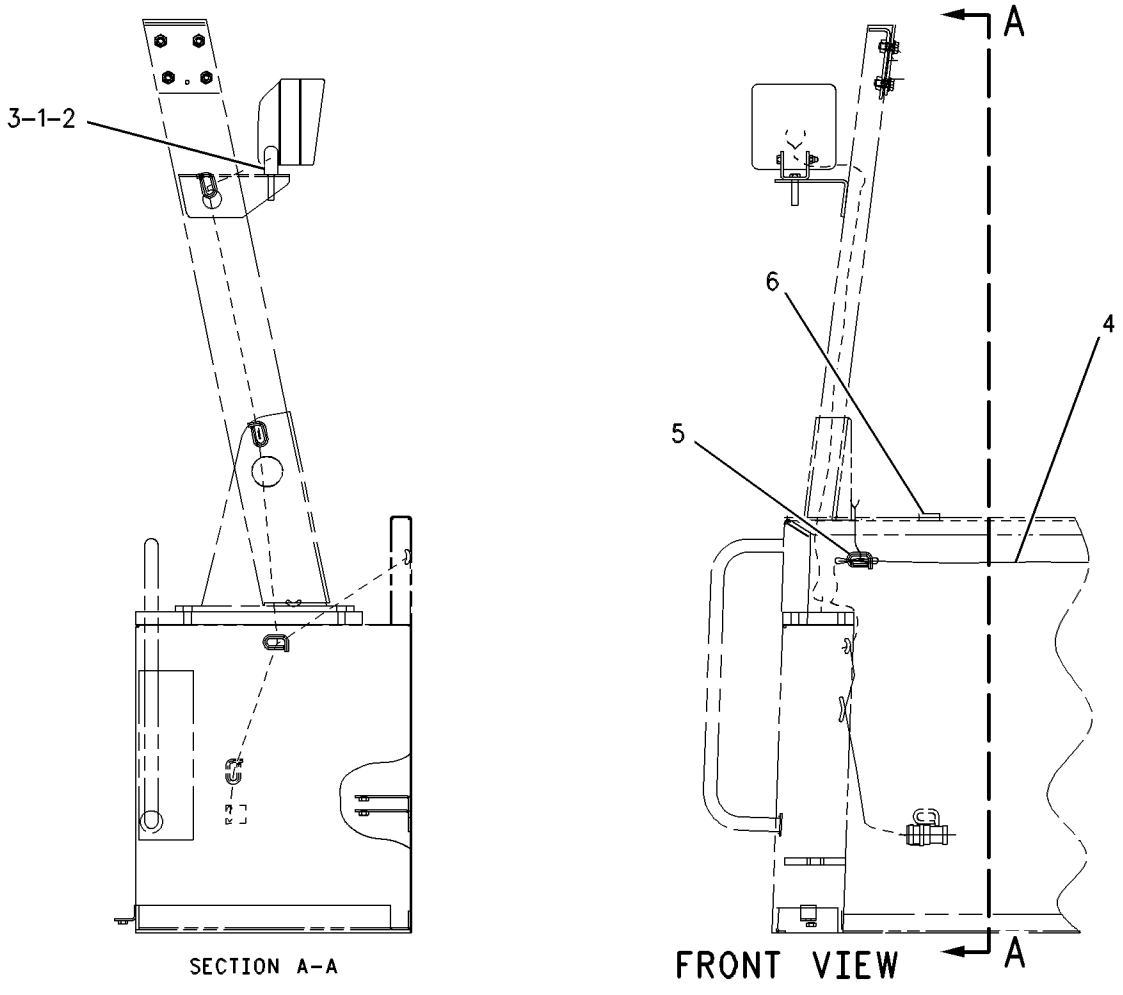

GRAPHIC #1 **<END>** g00541716

120-6668 LIGHTING GP-FLOOD

S/N: PDF1-UP
PART OF 205-0520 CANOPY GP-OPEN ROPS
AN ATTACHMENT

SMCS-1434 **i02029926**

NOTE	REF NO	GRAPHIC REF	PART NUMBER	QTY	PART NAME 1 2 3 4 5 6 (PRODUCT LEVEL)	SEE PAGE
	1	1	**5P-5774**	1	PLUG	
	2	1	**9R-7941**	1	SOCKET AS	
		1	**9R-7980**	1	COVER	
	3	1	**109-7041**	4	LAMP GP-FLOOD (24V)	
		1	**9X-3463**	1	LAMP-HALOGEN (24-VOLT, 65-WATT)	
		1	**142-5789**	4	SCREW	
	4	1	**111-0157**	1	HARNESS AS-LIGHTING (FLOOD)	
		1	**102-8804**	1	KIT-RECEPTACLE (4-PIN)	
	5	1	**114-6604**	16	NUT-SPEED	
	6	1	**180-5100**	1	ROOF	
M	7	1	**5C-2890**	4	NUT (M6X1-THD)	
M	8	1	**6V-7357**	4	BOLT (M6X1.0X25-MM)	
M	9	1	**8T-4137**	12	BOLT (M10X1.5X20-MM)	
	10	1	**8T-4205**	8	WASHER-HARD (7.2X14.5X2-MM THK)	
	11	1	**8T-4226**	12	WASHER-PLATED (10.5X45X3-MM THK)	
D	12	1	**5P-5639**		SEAL (0.51-M)	
D	13	1	**5P-5639**		SEAL (0.32-M EACH)	
D	14	1	**5P-5639**		SEAL (0.27-M EACH)	

D-ORDER BY THE METER
M-METRIC PART

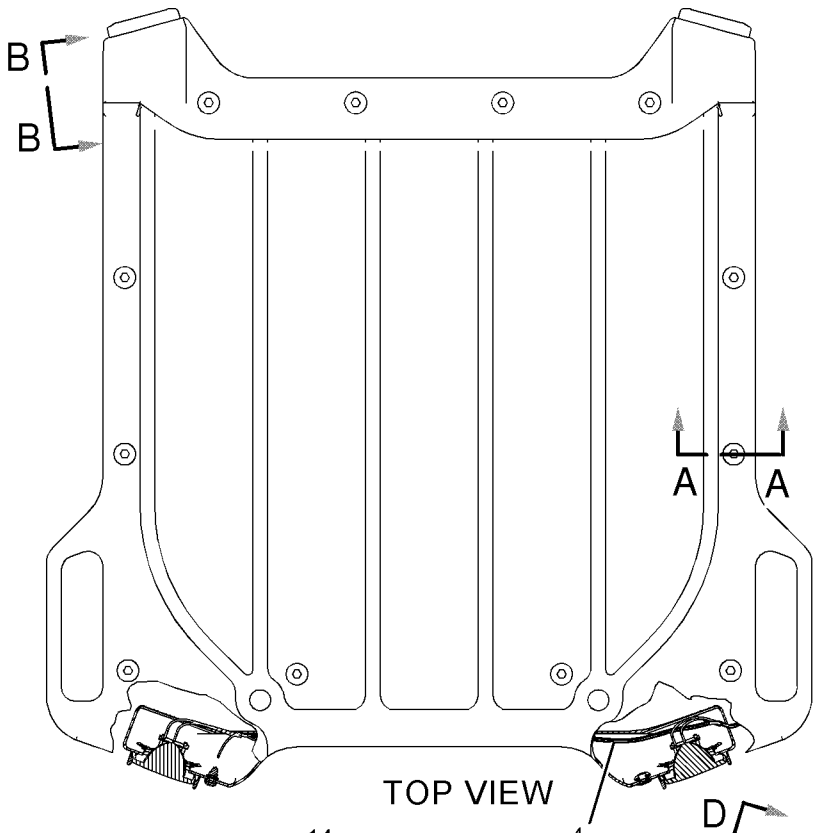

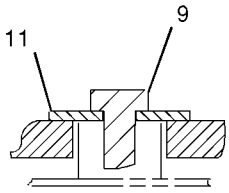

SECTION A-A

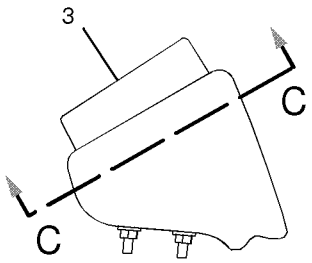

SECTION B-B

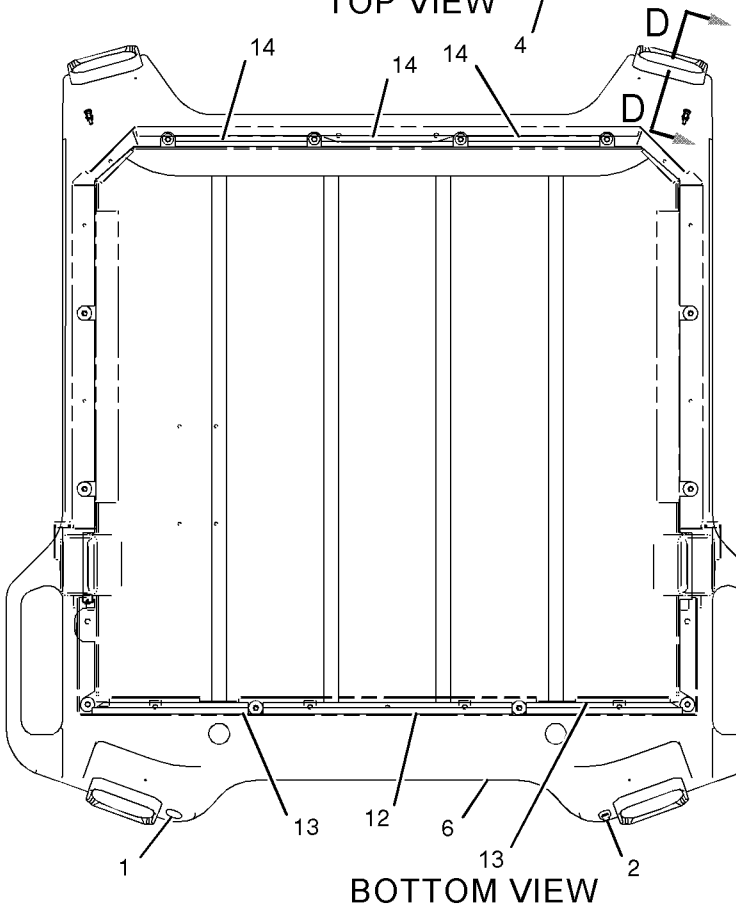

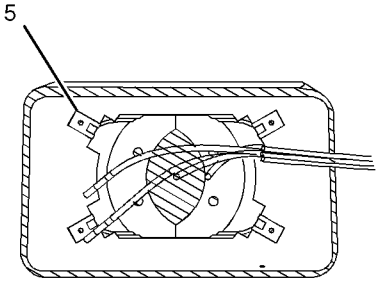

SECTION C-C

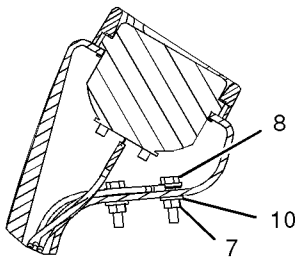

SECTION D-D

GRAPHIC #1

<END>

g01047641

ELECTRICAL AND STARTING SYSTEM

107-4636 LIGHTING GP-FLOOD & SIGNAL

S/N: PDF1-UP
U.S. MARKET
PART OF 177-2035 LIGHTING AR-FLOOD & SIGNAL
AN ATTACHMENT

SMCS-1430, 1434 **i02038779**

NOTE	REF NO	GRAPHIC REF	PART NUMBER	QTY	PART NAME 1 2 3 4 5 6 (PRODUCT LEVEL)	SEE PAGE
	1	1	**4Y-5283**	1	PLATE	
	2	1	**5C-8964**	1	LAMP AS	
	3	1	**5C-9029**	1	LAMP AS	
D	4	1	**5P-7657**		SEAL (0.1M)	
	5	1	**8N-2622**	1	LEVER	
	6	1	**9X-4493**	2	LAMP (24-VOLT, 21-WATT)	
C	7	1	**108-0358**	1	FLASHER AS (12/24-VOLT)	
	8	1	**108-2504**	2	PLATE	
	9	1	**109-7041**	2	LAMP GP-FLOOD (24V)	
					(EACH INCLUDES)	
		1	**9X-3463**	1	LAMP-HALOGEN (24-VOLT, 65-WATT)	
		1	**142-5789**	1	SCREW	
	10	1	**111-0161**	2	HOUSING	
	11	1	**111-5042**	2	FASTENER	
	12	1	**112-7294**	2	HOUSING-LAMP	
	13	1	**114-3947**	2	PLATE	
	14	1	**114-6604**	8	NUT-SPEED	
	15	1	**115-1748**	2	LAMP (24-VOLT, 3-WATT)	
	16	1	**117-0811**	2	BRACKET AS	
	17	1	**119-0489**	2	PLATE AS	
	18	1	**173-3064**	1	SWITCH AS (TURN SIGNAL, HAZARD)	
		1	**5L-7200**	1	SCREW (8-32X0.375-IN)	
		1	**9B-7233**	1	LOCKWASHER	
M	19	1	**104-3601**	4	SCREW-MACHINE (M5X0.8X25-MM)	
Y	20	1	**130-3453**	2	LAMP GP-SIGNAL (24-VOLT)	108
	21	1	**155-2270**	2	KIT-CONNECTING PLUG (2-PIN)	
	22	1	**1H-4393**	5	LOCKWASHER	
C	23	1	**102-8802**	2	KIT-RECEPTACLE (2-PIN)	
Y	24	1	**3E-6466**	2	LAMP GP-SIGNAL (24-VOLT)	104
M	25	1	**5C-2874**	4	NUT (M5X.8-THD)	
CM	26	1	**5C-2890**	13	NUT (M6X1-THD)	
M	27	1	**5C-8312**	5	NUT (M4X0.7-THD)	
	28	1	**7K-1181**	2	STRAP-CABLE	
	29	1	**7X-0620**	4	WASHER-HARD (5.5X13X1.6-MM THK)	
	30	1	**8T-4121**	14	WASHER-HARD (11X21X2.5-MM THK)	
M	31	1	**8T-4191**	8	BOLT (M10X1.5X16-MM)	
M	32	1	**8T-4195**	6	BOLT (M10X1.5X30-MM)	
C	33	1	**8T-4205**	1	WASHER-HARD (7.2X14.5X2-MM THK)	
BC	34	1	**8T-8737**	8	PLUG-SEAL	
CM	35	1	**9X-2044**	1	SCREW-TRUSS HEAD (M6X1X16-MM)	
C	36	1	**9X-8256**	12	WASHER (6.6X12X2-MM THK)	
	37	1	**112-7292**	2	HARNESS AS-LIGHTING (FRONT)	
					(EACH INCLUDES)	
		1	**102-8805**	1	KIT-RECEPTACLE (6-PIN)	

B-USE AS REQUIRED
C-CHANGE FROM PREVIOUS TYPE
D-ORDER BY THE METER
M-METRIC PART
Y-SEPARATE ILLUSTRATION

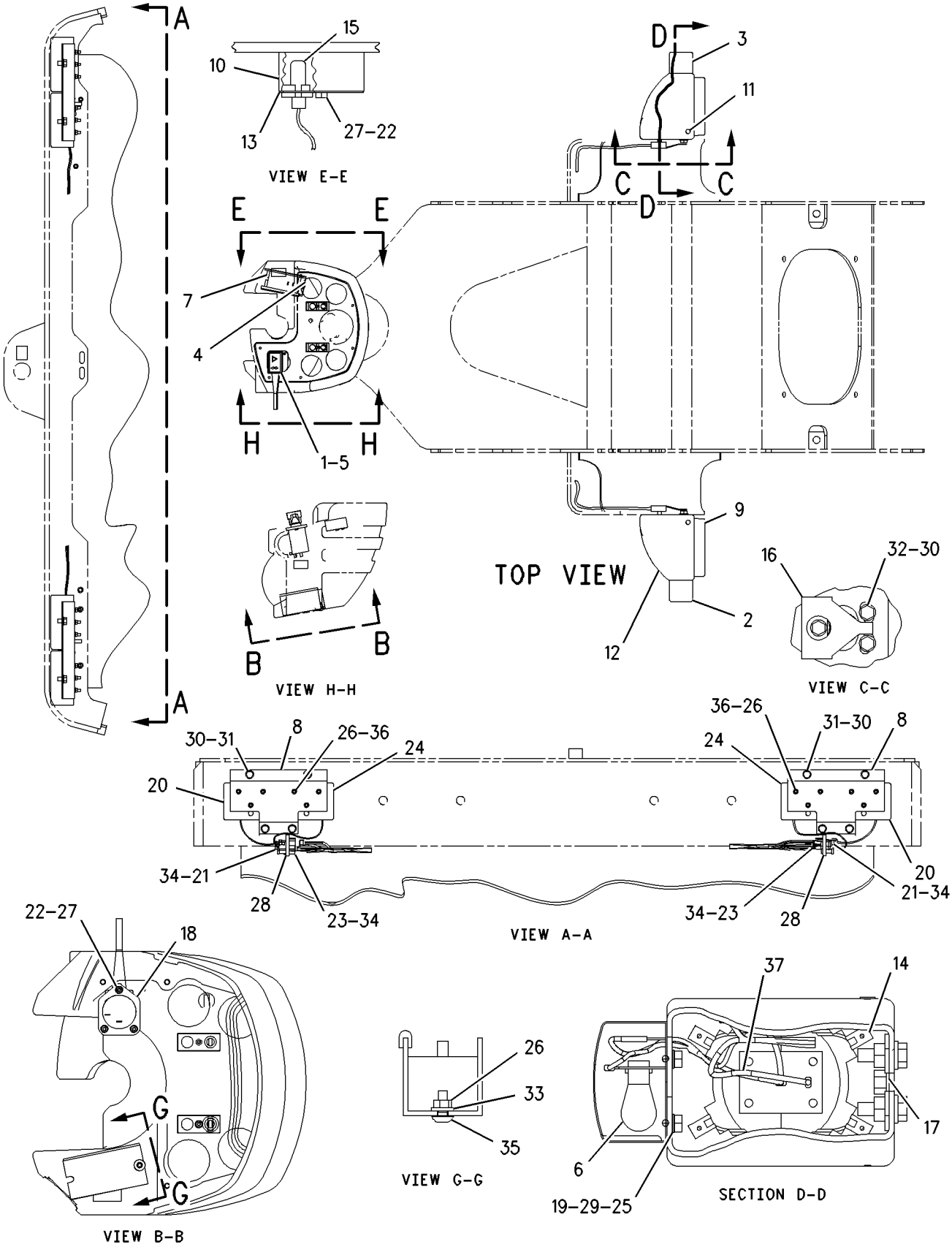

GRAPHIC #1 **<END>** g00830217

112-7189 LIGHTING GP-ROADING

S/N: PDF1-UP
PART OF 177-2034 LIGHTING AR-ROADING
AN ATTACHMENT

SMCS-1429 **i02029932**

NOTE	REF NO	GRAPHIC REF	PART NUMBER	QTY	PART NAME 1 2 3 4 5 6 (PRODUCT LEVEL)	SEE PAGE
	1	1	**1H-4393**	5	LOCKWASHER	
	2	1	**8N-2622**	1	LEVER	
	3	1	**106-8704**	3	SUPPRESSOR AS-ARC	
					(EACH INCLUDES)	
		1	**8T-8729**	2	PIN-CONNECTOR	
		1	**102-8802**	1	KIT-RECEPTACLE (2-PIN)	
		1	**3E-3365**	1	WEDGE-RECEPTACLE LOCK (2-PIN)	
	4	1	**108-2504**	2	PLATE	
	5	1	**111-0161**	2	HOUSING	
	6	1	**111-7897**	1	SWITCH AS (HIGH, LOW BEAM)	
		1	**111-7899**	1	GASKET	
	7	1	**114-3947**	2	PLATE	
	8	1	**115-1748**	4	LAMP (24-VOLT)	
	9	1	**117-0811**	2	BRACKET AS	
	10	1	**127-5345**	2	PLATE	
	11	1	**131-0738**	1	BRACKET AS	
	12	1	**131-0739**	1	BRACKET AS	
	13	1	**131-3205**	2	HARNESS AS-LIGHTING	
					(EACH INCLUDES)	
		1	**155-2274**	1	KIT-CONNECTING PLUG (6-PIN)	
		1	**102-8805**	1	KIT-RECEPTACLE (6-PIN)	
Y	14	1	**162-2073**	2	LAMP GP-SIGNAL (24-VOLT, REAR TURN)	109
	15	1	**171-6568**	1	SWITCH AS (HAZARD)	
Y	16	1	**107-4401**	2	LAMP GP-SIGNAL (24-VOLT, STOP, TAIL)	107
	17	1	**120-4537**	1	FLASHER AS	
	18	1	**134-9569**	1	SWITCH AS-TURN SIGNAL	
		1	**5L-7200**	1	SCREW (8-32X0.375-IN)	
		1	**9B-7233**	1	LOCKWASHER	
	19	1	**155-2105**	1	PLATE-INSTRUCTION (TURN SIGNAL)	
	20	1	**155-2270**	2	KIT-CONNECTING PLUG (2-PIN)	
	21	1	**3S-2093**	2	STRAP-CABLE	
M	22	1	**5C-2890**	12	NUT (M6X1-THD)	
M	23	1	**5C-8312**	5	NUT (M4X0.7-THD)	
M	24	1	**5C-9553**	4	BOLT (M6X1X16-MM)	
	25	1	**5F-9757**	2	GROMMET	
	26	1	**7K-1181**	6	STRAP-CABLE	
	27	1	**8T-4121**	14	WASHER-HARD (11X21X2.5-MM THK)	
M	28	1	**8T-4191**	8	BOLT (M10X1.5X16-MM)	
M	29	1	**8T-4195**	6	BOLT (M10X1.5X30-MM)	
	30	1	**8T-4205**	16	WASHER-HARD (7.2X14.5X2-MM THK)	
	31	1	**8T-8737**	4	PLUG-SEAL	

M-METRIC PART
Y-SEPARATE ILLUSTRATION

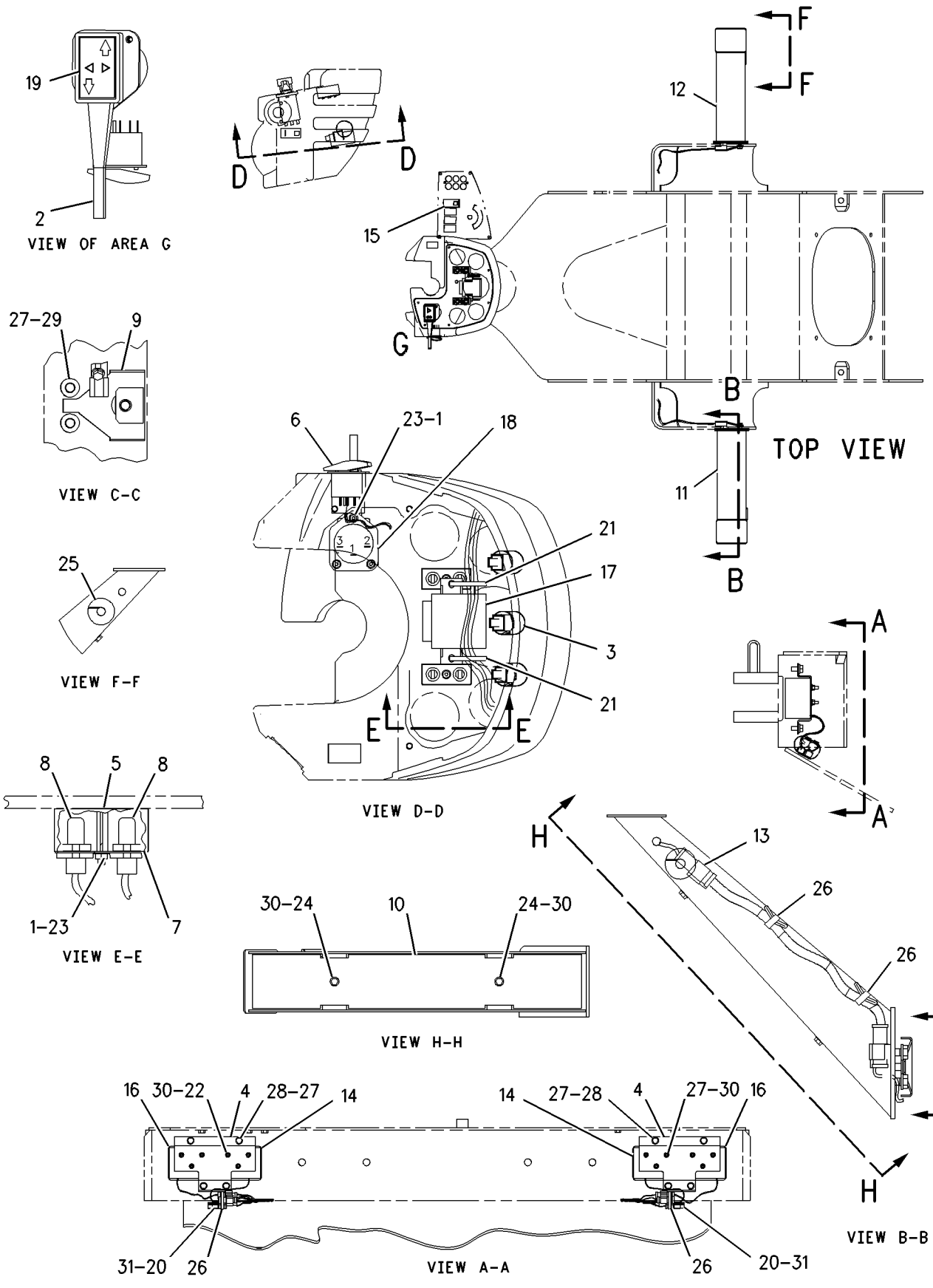

GRAPHIC #1

<END>

g00802274

ELECTRICAL AND STARTING SYSTEM

145-6871 LIGHTING GP-ROADING

S/N: PDF1-UP
ITALY
PART OF 177-2037 LIGHTING AR-ROADING
AN ATTACHMENT

SMCS-1429 **i02029943**

NOTE	REF NO	GRAPHIC REF	PART NUMBER	QTY	PART NAME 1 2 3 4 5 6 (PRODUCT LEVEL)	SEE PAGE
	1	1	**8N-2622**	1	LEVER	
	2	1	**106-8704**	3	SUPPRESSOR AS-ARC	
					(EACH INCLUDES)	
		1	**102-8802**	1	KIT-RECEPTACLE (2-PIN)	
		1	**8T-8729**	2	PIN-CONNECTOR	
	3	1	**111-0161**	2	HOUSING	
	4	1	**111-7897**	1	SWITCH AS (HIGH, LOW BEAM)	
		1	**111-7899**	1	GASKET	
	5	1	**114-3947**	2	PLATE	
	6	1	**115-1748**	4	LAMP (24-VOLT)	
	7	1	**117-0811**	2	BRACKET AS	
	8	1	**127-5345**	2	PLATE	
	9	1	**131-0738**	1	BRACKET AS	
	10	1	**131-0739**	1	BRACKET AS	
	11	1	**131-3205**	2	HARNESS AS-LIGHTING	
					(EACH INCLUDES)	
		1	**155-2274**	1	KIT-CONNECTING PLUG (6-PIN)	
		1	**102-8805**	1	KIT-RECEPTACLE (6-PIN)	
	12	1	**145-6849**	2	PLATE	
	13	1	**145-6850**	2	PLATE AS	
Y	14	1	**145-6929**	2	LAMP GP-STOP & TAIL (24-VOLT)	110
	15	1	**171-6568**	1	SWITCH AS (HAZARD)	
	16	1	**120-4537**	1	FLASHER AS	
	17	1	**134-9569**	1	SWITCH AS-TURN SIGNAL	
	18	1	**155-2105**	1	PLATE-INSTRUCTION (TURN SIGNAL)	
	19	1	**155-2270**	2	KIT-CONNECTING PLUG (2-PIN)	
	20	1	**1H-4393**	5	LOCKWASHER	
	21	1	**3S-2093**	2	STRAP-CABLE	
M	22	1	**5C-2890**	4	NUT (M6X1-THD)	
M	23	1	**5C-8312**	5	NUT (M4X0.7-THD)	
M	24	1	**5C-9553**	4	BOLT (M6X1X16-MM)	
	25	1	**5F-9757**	2	GROMMET	
	26	1	**7K-1181**	6	STRAP-CABLE	
	27	1	**8T-4121**	14	WASHER-HARD (11X21X2.5-MM THK)	
M	28	1	**8T-4138**	4	BOLT (M6X1X20-MM)	
M	29	1	**8T-4191**	8	BOLT (M10X1.5X16-MM)	
M	30	1	**8T-4195**	6	BOLT (M10X1.5X30-MM)	
	31	1	**8T-4205**	12	WASHER-HARD (7.2X14.5X2-MM THK)	
	32	1	**8T-8737**	4	PLUG-SEAL	

M-METRIC PART
Y-SEPARATE ILLUSTRATION

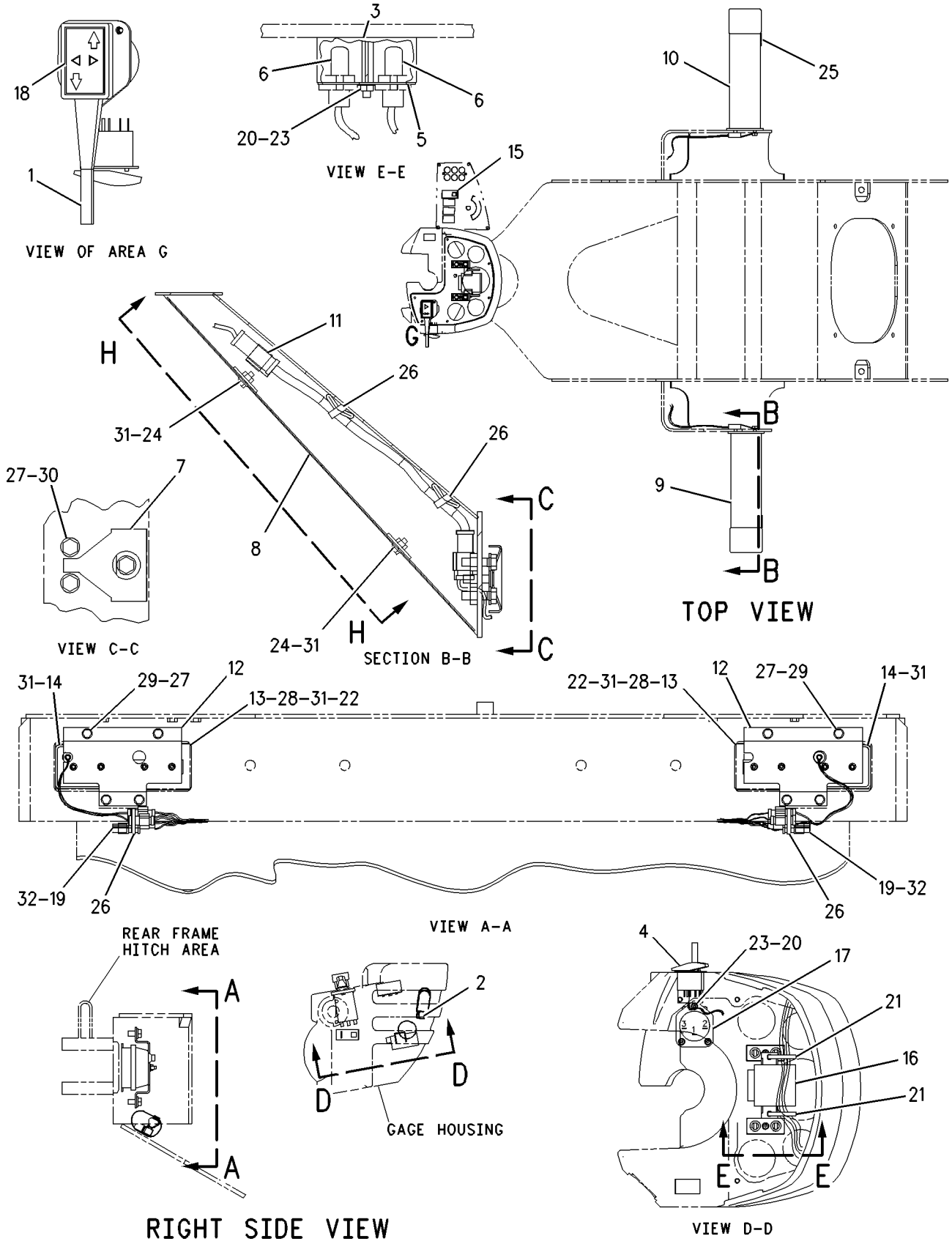

GRAPHIC #1 **<END>** g00857596

117-6033 LIGHTING GP-SIGNAL

S/N: PDF1-UP
PART OF 117-6032 ROADING AR
AN ATTACHMENT

SMCS-1430 **i02029948**

NOTE	REF NO	GRAPHIC REF	PART NUMBER	QTY	PART NAME 1 2 3 4 5 6 (PRODUCT LEVEL)	SEE PAGE
	1	1	**117-6034**	1	BRACKET AS	
	2	1	**117-6035**	1	BRACKET AS	
	3	1	**117-6037**	1	COVER AS	
	4	1	**117-6038**	1	COVER AS	
Y	5	1	**4Y-3263**	1	LAMP GP-SIGNAL (24-VOLT)	105
Y	6	1	**4Y-3580**	1	LAMP GP-SIGNAL (24-VOLT)	106
	7	1	**4Y-7551**	2	LAMP GP-FLOOD	
					(EACH INCLUDES)	
		1	**4Y-4829**	1	BULB-HALOGEN (24 VOLT, 70 WATT)	
C	8	1	**117-6036**	1	HARNESS AS-LIGHTING	
		1	**8T-8737**	1	PLUG-SEAL	
		1	**155-2260**	1	KIT-CONNECTING PLUG (3-PIN)	
		1	**102-8805**	1	KIT-RECEPTACLE (6-PIN)	
M	9	1	**5C-9553**	12	BOLT (M6X1X16-MM)	
	10	1	**9X-8256**	12	WASHER (6.6X12X2-MM THK)	
	11	1	**8T-4121**	6	WASHER-HARD (11X21X2.5-MM THK)	
M	12	1	**8T-4195**	6	BOLT (M10X1.5X30-MM)	
	13	1	**7K-1181**	6	STRAP-CABLE	
	14	1	**5P-6264**	2	GROMMET	
	15	1	**127-5345**	2	PLATE	
	16	1	**117-0811**	2	BRACKET AS	
C	17	1	**143-2868**	1	HARNESS AS-LIGHTING	
		1	**155-2260**	1	KIT-CONNECTING PLUG (3-PIN)	
		1	**102-8805**	1	KIT-RECEPTACLE (6-PIN)	

C-CHANGE FROM PREVIOUS TYPE
M-METRIC PART
Y-SEPARATE ILLUSTRATION

117-6033 **LIGHTING GP-SIGNAL** ***(contd.)*** **i02029948**

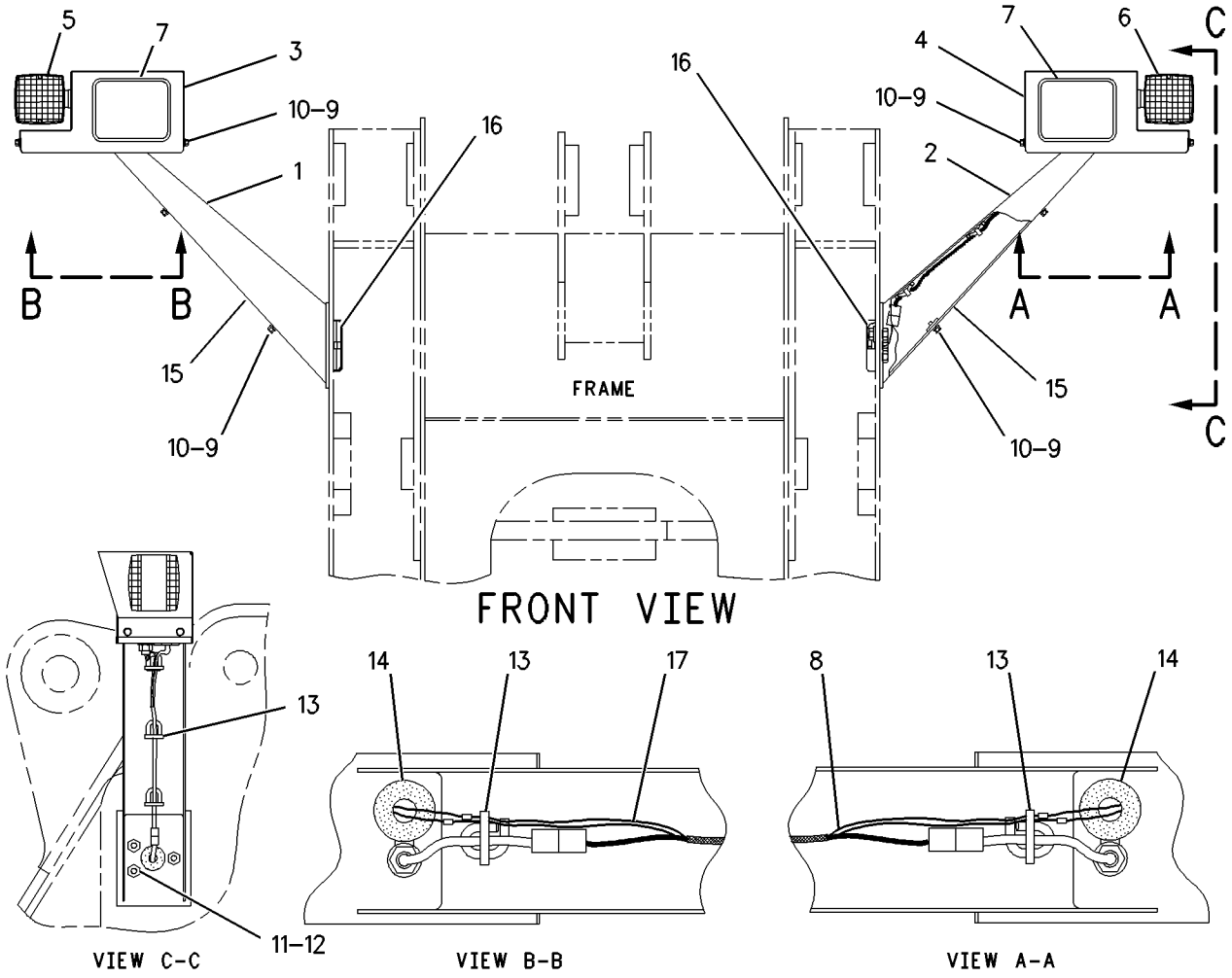

GRAPHIC #1 **<END>** g00807130

107-6142 LIGHTING GP-WARNING

S/N: PDF1-UP
AN ATTACHMENT

SMCS-1431 **i00523744**

NOTE	REF NO	GRAPHIC REF	PART NUMBER	QTY	PART NAME 1 2 3 4 5 6 (PRODUCT LEVEL)	SEE PAGE
	1	1	**6V-6635**	4	SCREW-PAN HEAD	
Y	2	1	**108-1029**	1	LAMP GP-WARNING BEACON	111
	3	1	**129-0336**	1	PLATE	
	4	1	**107-6033**	1	SWITCH AS (BEACON)	
		1	**111-7899**	1	GASKET	

Y-SEPARATE ILLUSTRATION

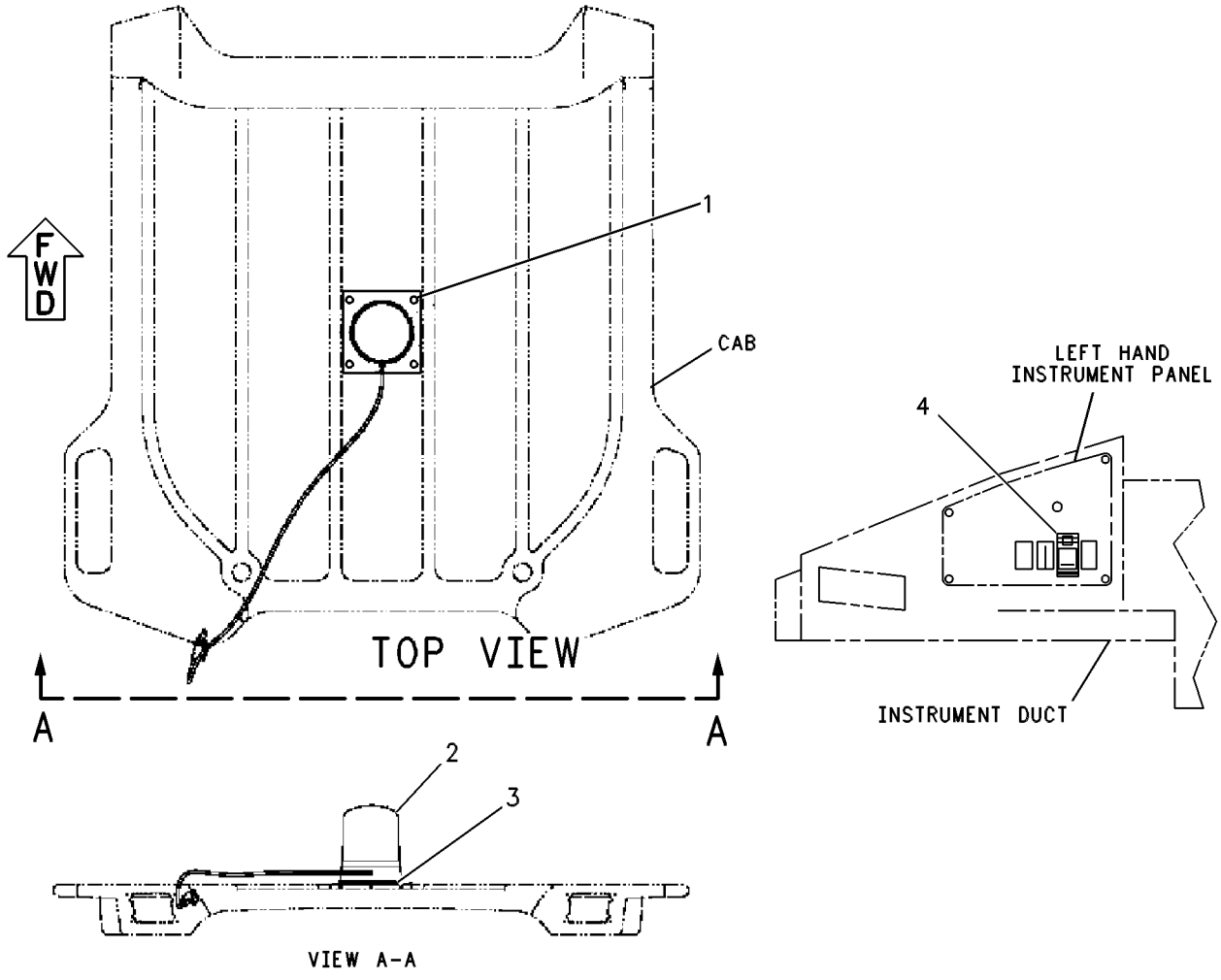

GRAPHIC #1 **<END>** g00132033

122-6465 LIGHTING GP-WARNING

S/N: PDF1-UP
PART OF 236-5638 CONVERSION AR-ROADING
CANNOT BE USED WITH 122-6414 ANGLE, 107-6142 LIGHTING GP-WARNING
AN ATTACHMENT

SMCS-1431 **i01551513**

NOTE	REF NO	GRAPHIC REF	PART NUMBER	QTY	PART NAME 1 2 3 4 5 6 (PRODUCT LEVEL)	SEE PAGE
	1	1	**129-0337**	1	PLATE AS	
	2	1	**107-6033**	1	SWITCH AS-WARNING BEACON	
		1	**111-7899**	1	GASKET	
Y	3	1	**108-1029**	1	LAMP GP-WARNING BEACON	111
	4	1	**6V-6635**	4	SCREW-PAN HEAD	

Y-SEPARATE ILLUSTRATION

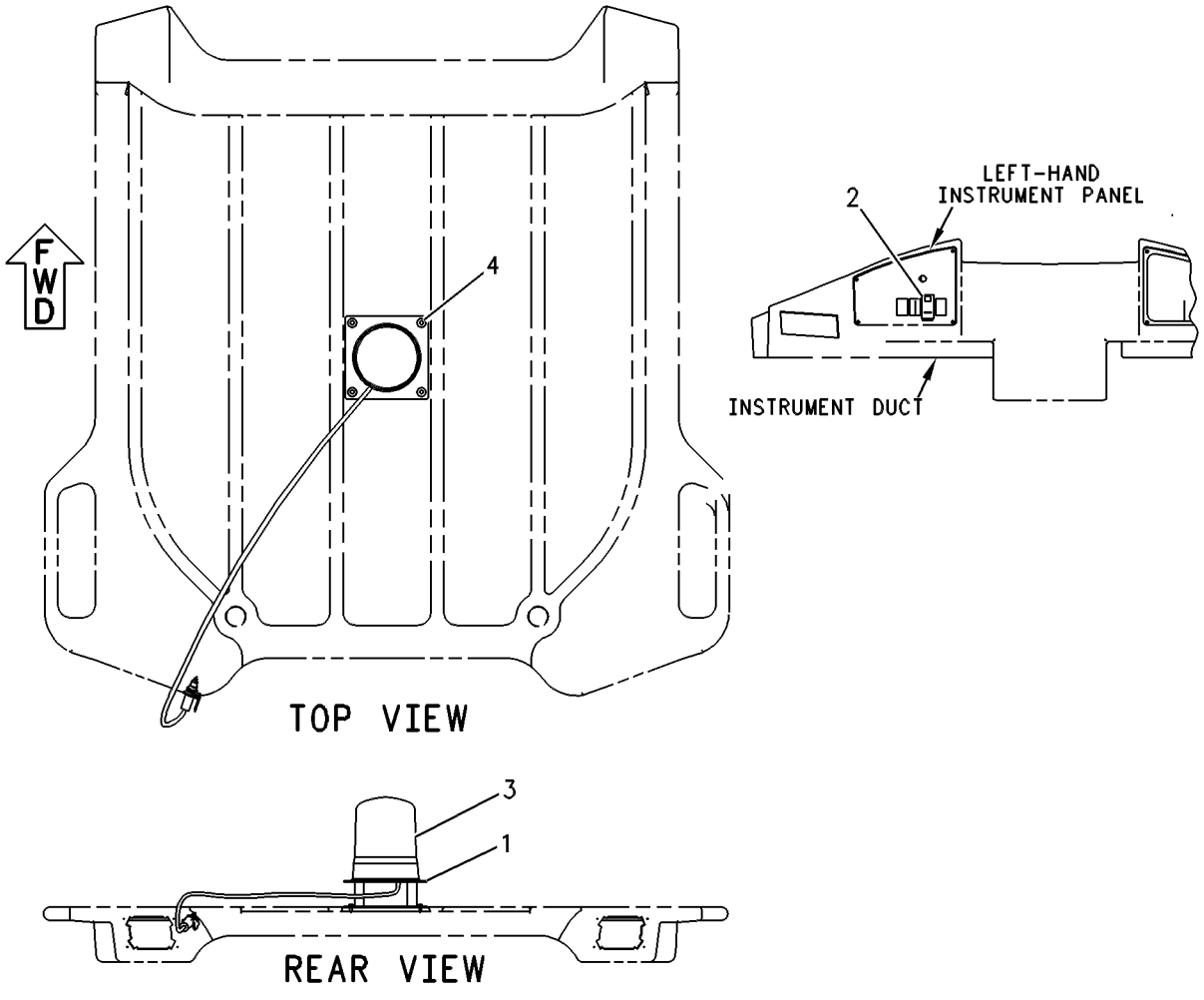

GRAPHIC #1 **<END>** g00266664

117-3915 MOTOR GP-ELECTRIC

S/N: PDF1-UP
PART OF 240-0803 PUMP & MOTOR GP-SEC STEERING
AN ATTACHMENT

SMCS-5703 **i00791442**

NOTE	REF NO	GRAPHIC REF	PART NUMBER	QTY	PART NAME 1 2 3 4 5 6 (PRODUCT LEVEL)	SEE PAGE
	1	1	**6V-8801**	2	NUT (3/8-16 THD)	
	2	1	**7X-0608**	2	WASHER-HARD (2.0MM THK)	

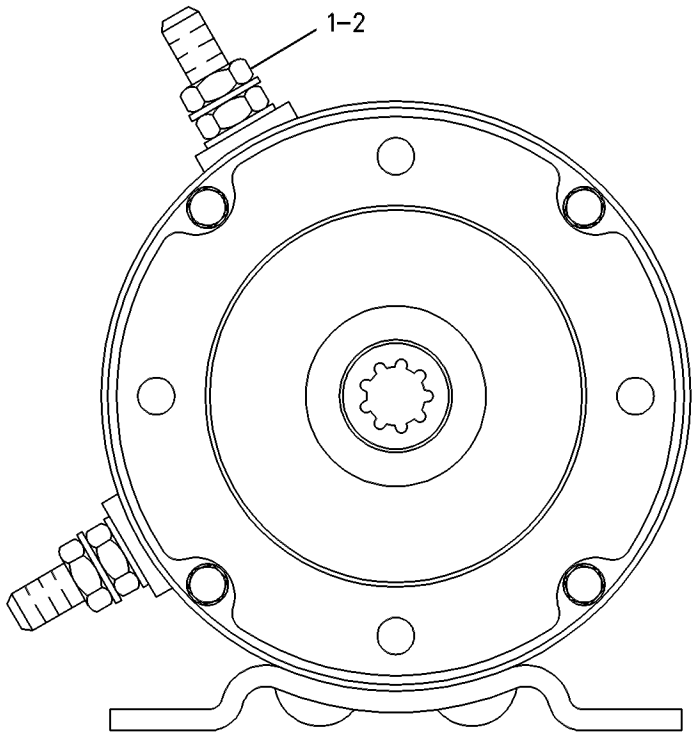

GRAPHIC #1 **<END>** g00085784

117-6032 ROADING AR

S/N: PDF1-UP

PART OF 177-2036 LIGHTING AR-ROADING

AN ATTACHMENT

SMCS-1408, 1429 **i00718546**

NOTE	PART NUMBER	QTY	PART NAME 1 2 3 4 5 6 (PRODUCT LEVEL)	SEE PAGE
Y	*117-6033*	1	LIGHTING GP-SIGNAL	126
Y	*117-6045*	1	MIRROR GP-REAR VIEW	526
Y	*107-6132*	1	SPEEDOMETER GP	584
Y	*117-6050*	1	WIRING GP-CAB	142
Y	*117-6039*	1	WIRING GP-REAR	160

Y-SEPARATE ILLUSTRATION

<END>

230-7304 STARTING MOTOR GP-ELECTRIC

S/N: CRS1-UP

PART OF 179-1795 ENGINE AR-PRIMARY

SMCS-1453 **i02017677**

NOTE	REF NO	GRAPHIC REF	PART NUMBER	QTY	PART NAME 1 2 3 4 5 6 (PRODUCT LEVEL)	SEE PAGE
	1	1	**6I-0364**	3	STUD (M10X1.5X30-MM)	
	2	1	**6I-0594**	3	NUT (M10X1.5-THD)	
	3	1	**225-3150**	1	STARTING MOTOR GP-ELECTRIC	

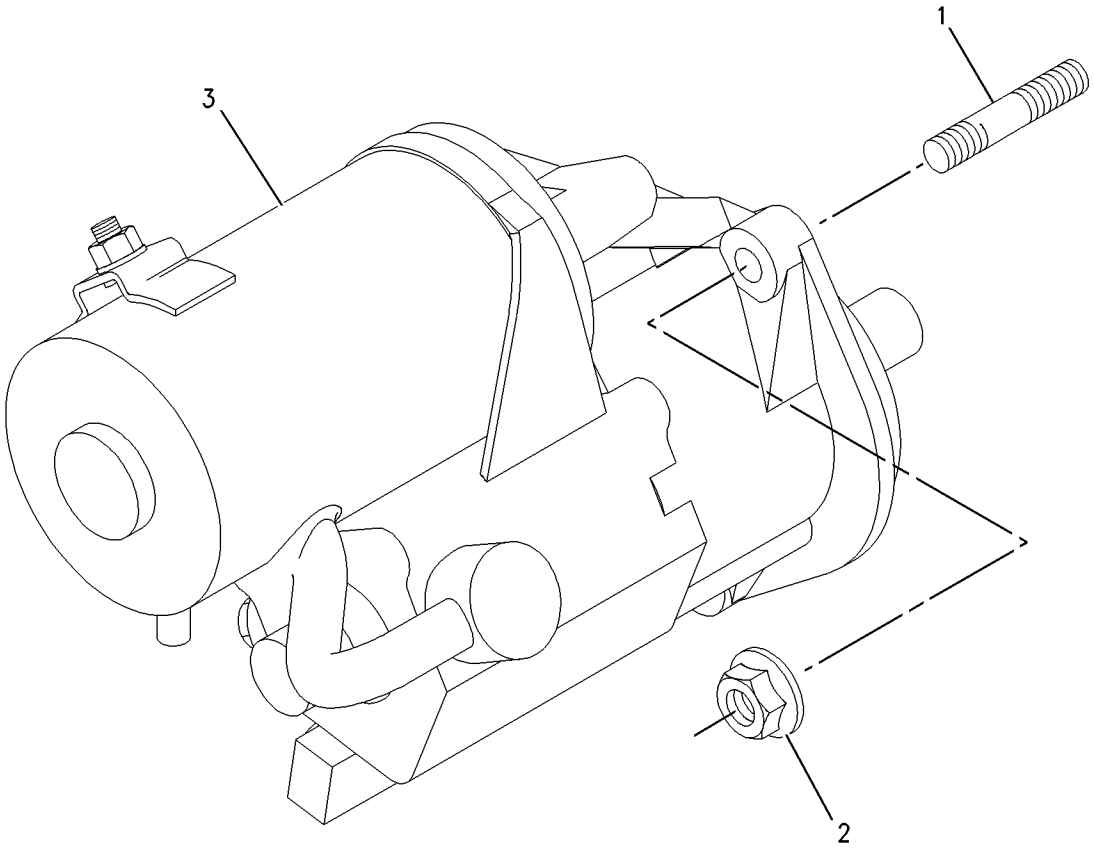

GRAPHIC #1 **<END>** g00933413

7N-0718 SWITCH GP-DISCONNECT–BATTERY

S/N: PDF1-UP

PART OF 107-4825 SWITCH GP-DISCONNECT

SMCS-1411 **i01927922**

NOTE	REF NO	GRAPHIC REF	PART NUMBER	QTY	PART NAME 1 2 3 4 5 6 (PRODUCT LEVEL)	SEE PAGE
	1	1	**8H-5306**	1	KEY (DISCONNECT)	
	2	1	**8H-5303**	1	NUT (3/4-16 THD)	
	3	1	**2H-3922**	2	LOCKWASHER	
	4	1	**9F-5644**	2	LOCKWASHER	
	5	1	**6F-7045**	2	NUT-FULL (3/8X24 THD)	

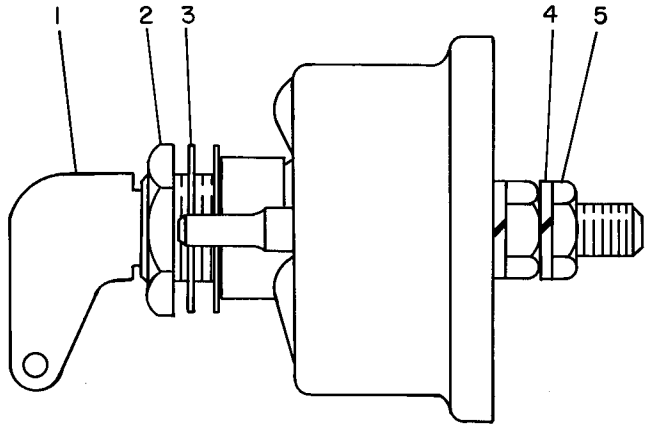

GRAPHIC #1 **<END>** g00084912

107-4825 SWITCH GP-DISCONNECT

S/N: PDF1-UP

PART OF 236-5635 CHASSIS AR

SMCS-1411 **i01096602**

NOTE	REF NO	GRAPHIC REF	PART NUMBER	QTY	PART NAME 1 2 3 4 5 6 (PRODUCT LEVEL)	SEE PAGE
	1	1	**8H-8648**	1	PLATE-INSTRUCTION (DISCONNECT SWITCH)	
Y	2	1	**7N-0718**	1	SWITCH GP-DISCONNECT	133
	3	1	**8T-4121**	1	WASHER (2.5MM THK)	
M	4	1	**8T-4133**	1	NUT (M10X1.50 THD)	
	5	1	**122-8097**	1	CABLE AS	
E		1	**5P-0746**		CABLE (00GA) (17CM)	
		1	**7N-5274**	1	COVER (BLACK)(BATTERY)	
		1	**030-1707**	1	TERMINAL (FOR 3/8IN BOLT)	
		1	**7X-1169**	1	TERMINAL AS-BATTERY (NEG)	
		1	**1M-6119**	1	BOLT (5/16-18X1.375IN)	
		1	**1M-6120**	1	NUT-BATTERY TERMINAL (5/16-18 THD)	
	6	1	**116-5283**	1	CABLE AS	
Y		1	**7N-0718**	1	SWITCH GP-DISCONNECT	133
E		1	**5P-0746**		CABLE (00GA) (3.5CM)	
		1	**030-1707**	1	TERMINAL (FOR 3/8IN BOLT)	

E-ORDER BY THE CENTIMETER
M-METRIC PART
Y-SEPARATE ILLUSTRATION

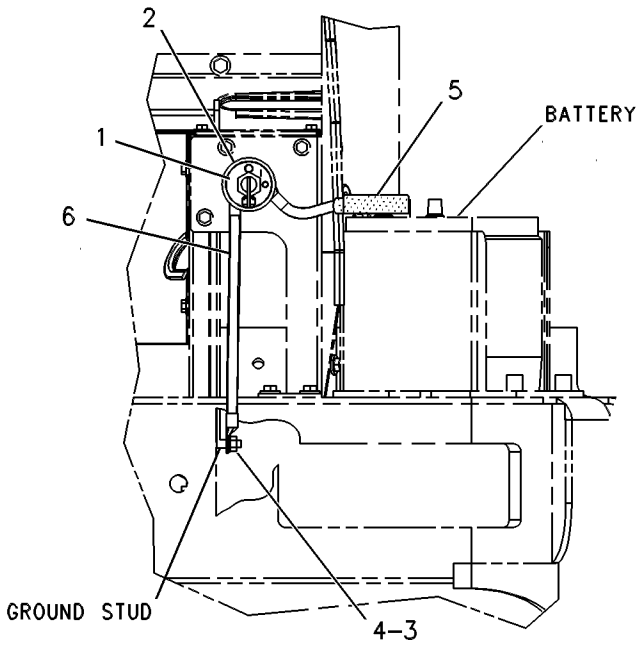

REAR VIEW

GRAPHIC #1 **<END>** g00250907

3E-0154 SWITCH GP-MAGNETIC

S/N: PDF1-UP
PART OF 110-1329 WIRING GP-SECONDARY STEERING
AN ATTACHMENT

SMCS-7499 **i01676970**

NOTE	REF NO	GRAPHIC REF	PART NUMBER	QTY	PART NAME 1 2 3 4 5 6 (PRODUCT LEVEL)	SEE PAGE
	1	1	**7X-0620**	2	WASHER-HARD (5.5X13X1.6MM THK)	
	2	1	**8F-1434**	2	LOCKWASHER	
	3	1	**6V-8378**	2	NUT (10-32 THD)	
	4	1	**6V-8801**	2	NUT (3/8-16 THD)	
	5	1	**7X-0608**	2	WASHER-HARD (10.2X16X2.0MM THK)	
	6	1	**4D-1326**	2	LOCKWASHER	

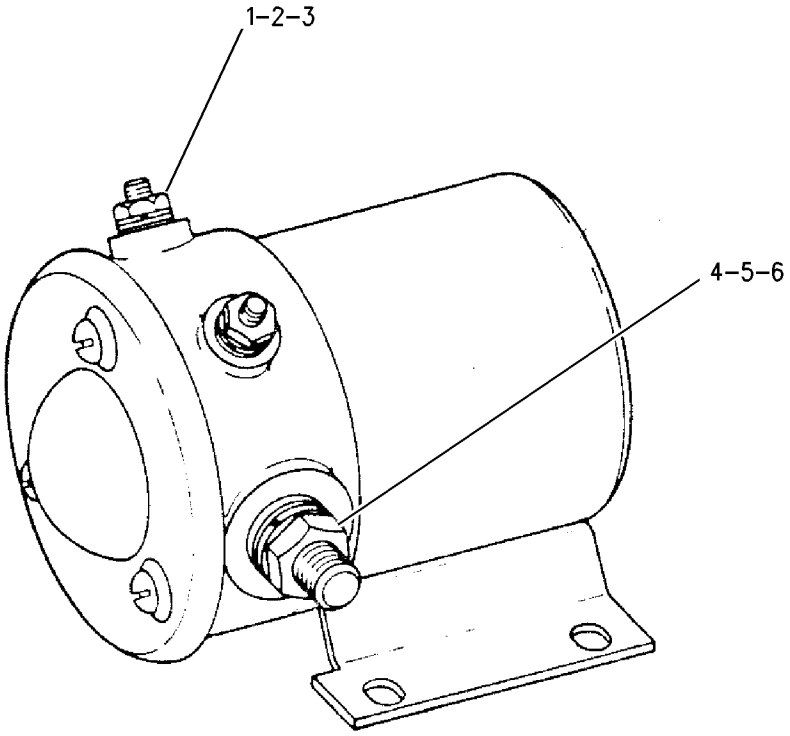

GRAPHIC #1 **<END>** g00726410

167-0138 SWITCH GP-MAGNETIC

S/N: PDF1-UP
PART OF 237-5820, 240-0656 PANEL GP-INSTRUMENT
AN ATTACHMENT

SMCS-7499 **i01215899**

NOTE	REF NO	GRAPHIC REF	PART NUMBER	QTY	PART NAME 1 2 3 4 5 6 (PRODUCT LEVEL)	SEE PAGE
	1	1	**4F-2294**	2	NUT-JAM (5/16-24 THD)	
	2	1	**6V-8186**	2	NUT-FULL (5/16-24 THD)	
J	3	1	**155-2270**	1	KIT-CONNECTING PLUG (2 PIN)	
	4	1	**8T-8730**	2	SOCKET-CONNECTOR	
J	5	1	**155-2261**	1	WEDGE-PLUG LOCK	

J-PART MARKED J INCLUDED IN KIT MARKED J

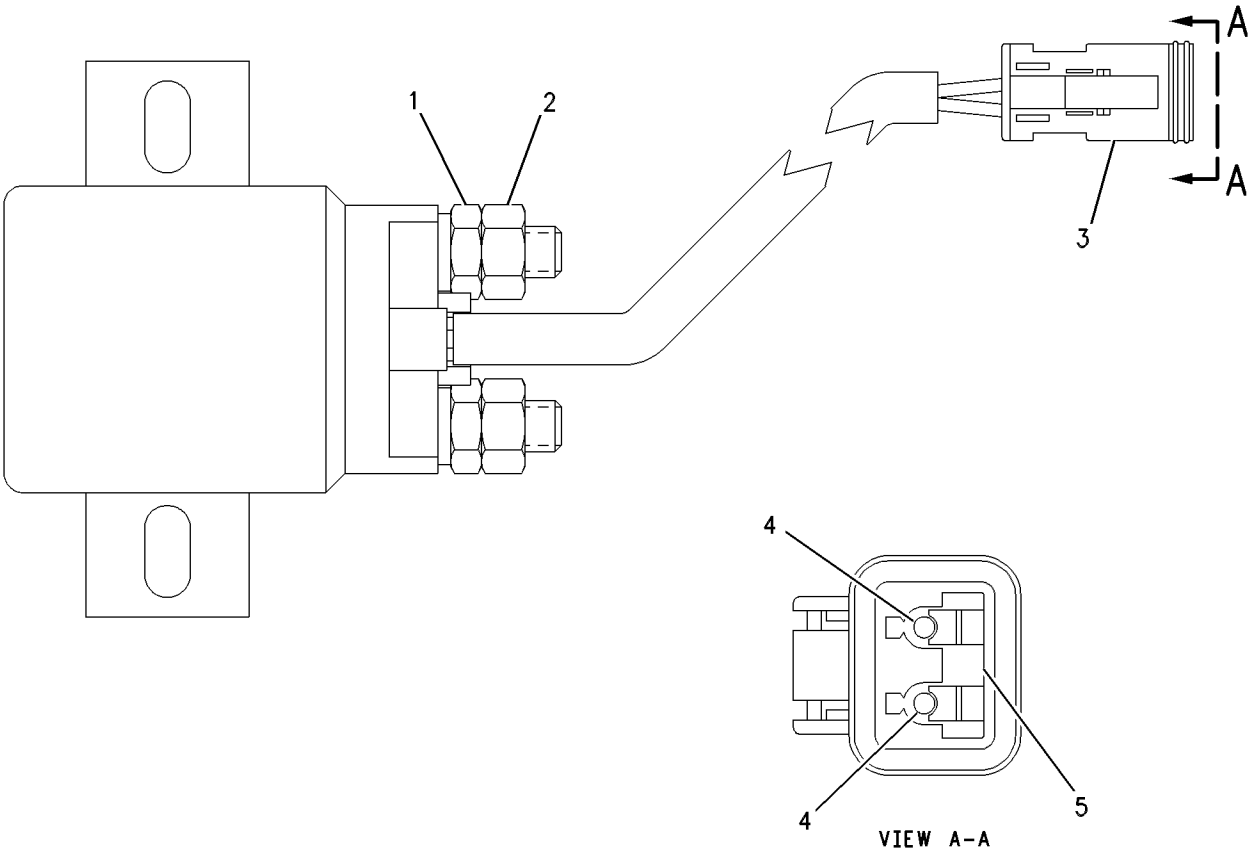

GRAPHIC #1 **<END>** g00659655

237-4896 SWITCH GP-PRESSURE

S/N: CRS1-UP

PART OF 179-1795 ENGINE AR-PRIMARY

SMCS-1435 **i01991988**

NOTE	REF NO	GRAPHIC REF	PART NUMBER	QTY	PART NAME 1 2 3 4 5 6 (PRODUCT LEVEL)	SEE PAGE
	1	1	**237-4894**	1	SWITCH-OIL PRESS (ENGINE)	

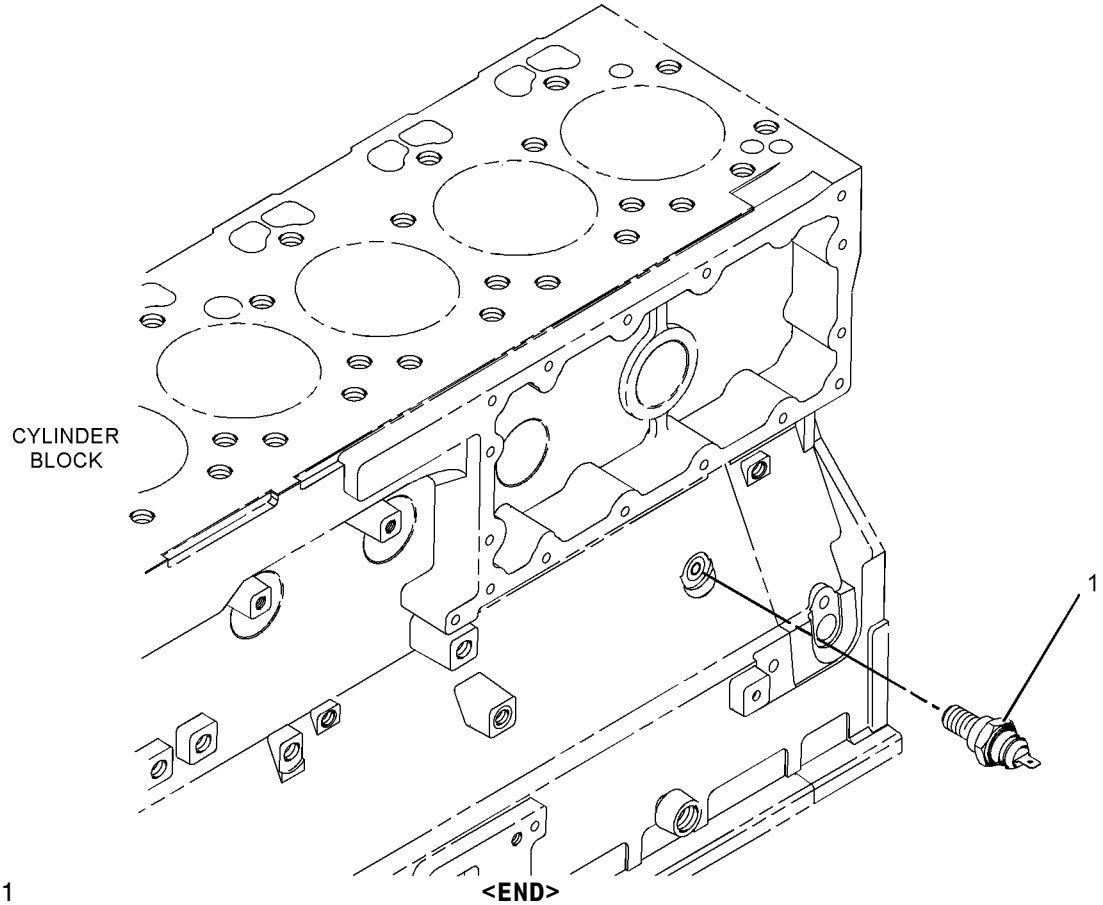

GRAPHIC #1

<END>

g01039594

235-8749 SWITCH GP-TEMPERATURE

S/N: CRS1-UP

PART OF 179-1795 ENGINE AR-PRIMARY

SMCS-1435, 7400, 7417 **i01998673**

NOTE	REF NO	GRAPHIC REF	PART NUMBER	QTY	PART NAME 1 2 3 4 5 6 (PRODUCT LEVEL)	SEE PAGE
	1	1	**199-9751**	1	SEAL-O-RING	
	2	1	**235-8747**	1	SWITCH-WATER TEMPERATURE	

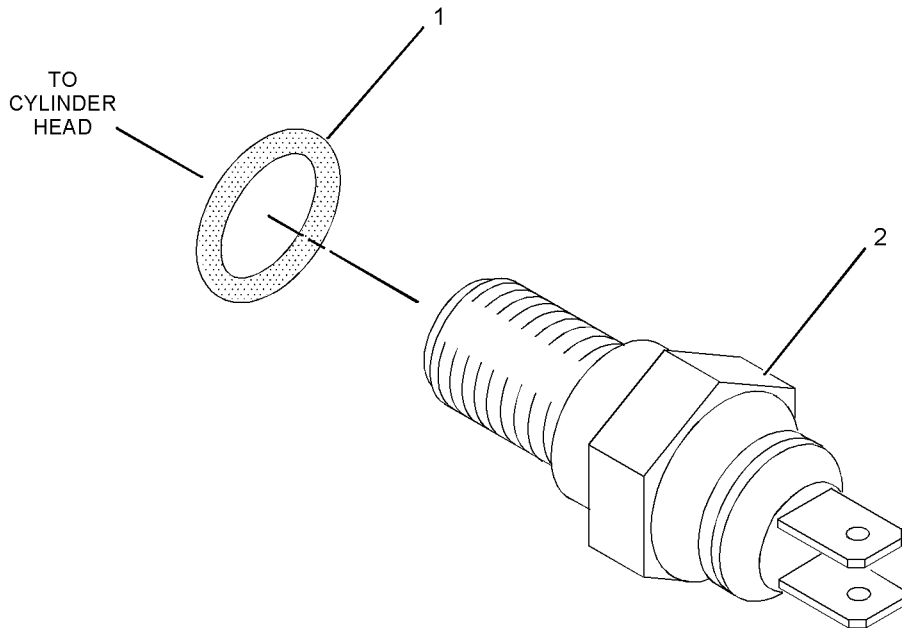

GRAPHIC #1 **<END>** g01036068

107-6133 SWITCH GP-WIPER

S/N: PDF1-UP
INTERMITTENT WIPER
PART OF 239-1006, 239-1007 CAB AR
AN ATTACHMENT

SMCS-7332 **i02041000**

NOTE	REF NO	GRAPHIC REF	PART NUMBER	QTY	PART NAME 1 2 3 4 5 6 (PRODUCT LEVEL)	SEE PAGE
	1	1	**110-7886**	1	SWITCH AS-WIPER (FRONT)	
	1A	1	**2H-3920**	1	LOCKWASHER	
	1B	1	**3E-3389**	1	WEDGE-RECEPTACLE LOCK	
	1C	1	**6V-8369**	1	NUT (7/16-28-THD)	
	1D	1	**8T-8737**	1	PLUG-SEAL	
	1E	1	**9W-0852**	4	PIN-CONNECTOR	
	1F	1	**102-8806**	1	KIT-RECEPTACLE (8-PIN)	
	1G	1	**186-3735**	3	PIN-CONNECTOR	
	2	1	**112-6174**	1	SWITCH AS-ROTARY (REAR WIPER)	
	2A	1	**2H-3920**	1	LOCKWASHER	
	2B	1	**3E-3389**	1	WEDGE-RECEPTACLE LOCK	
	2C	1	**6V-8369**	1	NUT (7/16-28-THD)	
	2D	1	**186-3735**	6	PIN-CONNECTOR	
	2E	1	**8T-8737**	2	PLUG-SEAL	
	2F	1	**102-8806**	1	KIT-RECEPTACLE (8-PIN)	

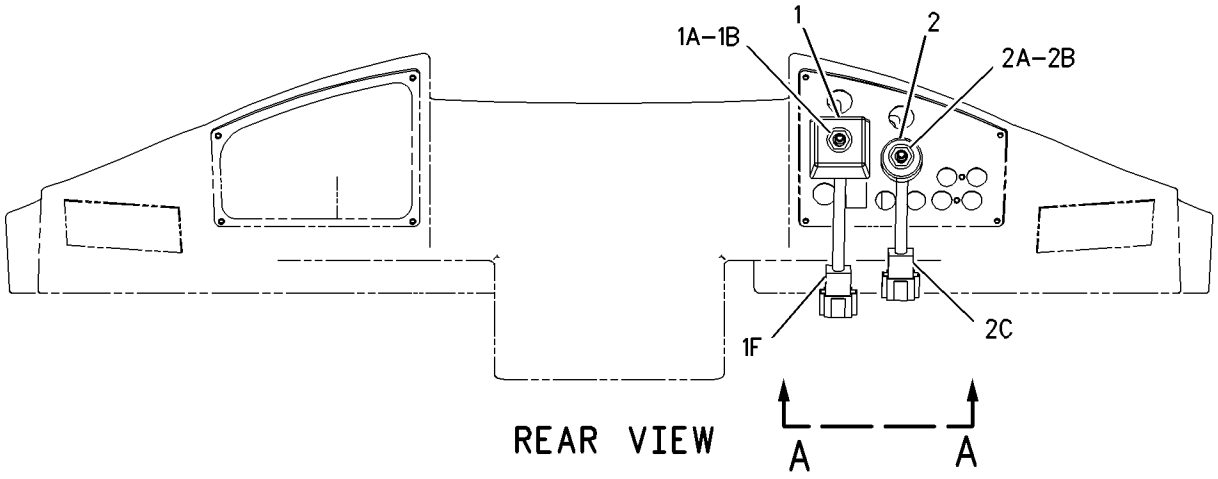

REAR VIEW

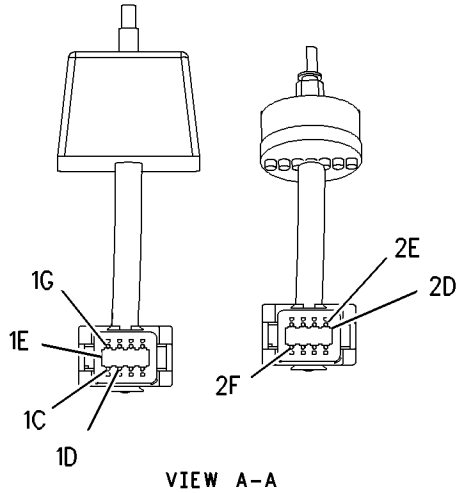

VIEW A–A

GRAPHIC #1 **<END>** g00995127

112-7192 WARNING GP-BACKUP

S/N: PDF1-UP
AN ATTACHMENT

SMCS-7406 **i01531983**

NOTE	REF NO	GRAPHIC REF	PART NUMBER	QTY	PART NAME 1 2 3 4 5 6 (PRODUCT LEVEL)	SEE PAGE
C	1	1	**123-6449**	1	ALARM AS-BACKUP	
		1	**102-8802**	1	KIT-RECEPTACLE (2 PIN)	
					(KIT SERVICES RECEPTACLE AS AND WEDGE)	
C	2	1	**4P-8134**	1	CLIP	
	3	1	**2D-2751**	1	GROMMET	
	4	1	**8T-4224**	2	WASHER-HARD (8.8X16X2MM THK)	
M	5	1	**7X-2538**	2	BOLT (M8X1.25X100MM)	
	6	1	**3S-2093**	1	STRAP-CABLE	
CM	7	1	**8T-4133**	1	NUT (M10X1.5 THD)	
C	8	1	**8T-4121**	1	WASHER-HARD (11X21X2.5MM THK)	

C-CHANGE FROM PREVIOUS TYPE
M-METRIC PART

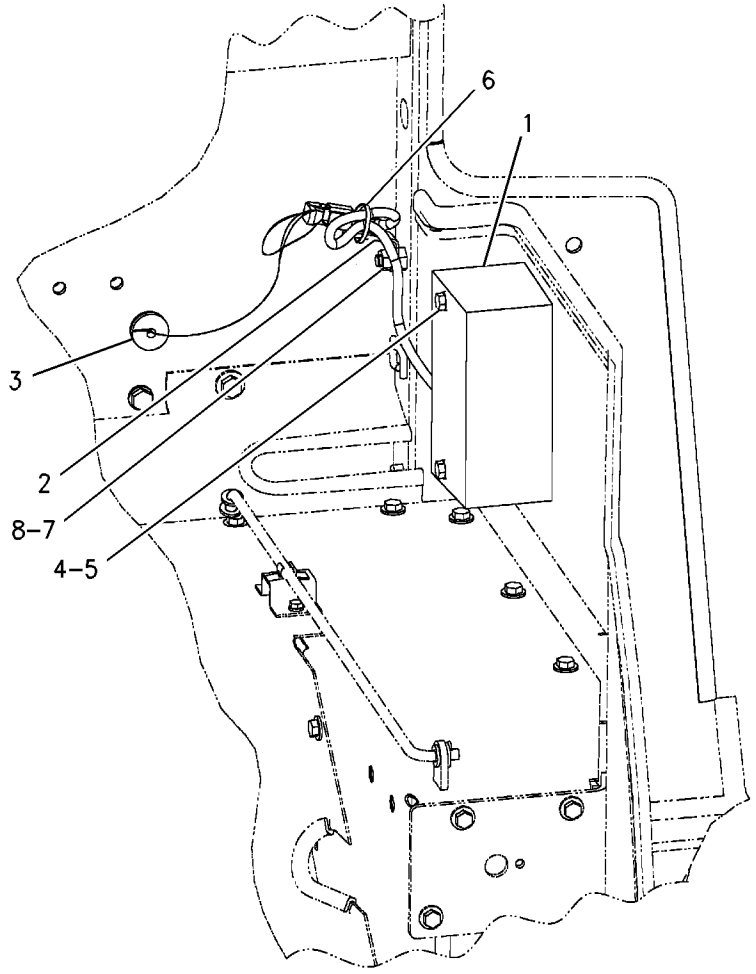

GRAPHIC #1 **<END>** g00799325

242-9456 WARNING GP-BACKUP

S/N: PDF1-UP
AN ATTACHMENT

SMCS-7406 **i02005462**

NOTE	REF NO	GRAPHIC REF	PART NUMBER	QTY	PART NAME 1 2 3 4 5 6 (PRODUCT LEVEL)	SEE PAGE
	1	1	**3S-2093**	2	STRAP-CABLE	
	2	1	**213-9100**	1	WARNING GP-BACKUP	
		1	**102-8802**	1	KIT-RECEPTACLE (2-PIN)	
		1	**3E-3365**	1	WEDGE-RECEPTACLE LOCK (2-PIN)	
		1	**5P-5623**	4	WIRE (16 GA)	
		1	**186-3735**	2	PIN-CONNECTOR	
E		1	**9X-1813**		SLEEVE (31CM)	
	3	1	**2D-2751**	1	GROMMET	
	4	1	**4P-8134**	1	CLIP	
	5	1	**8T-4121**	1	WASHER-HARD (11X21X2.5MM THK)	
M	6	1	**8T-4133**	1	NUT (M10X1.5 THD)	
M	7	1	**8T-4189**	2	BOLT (M8X1.25X20MM)	
	8	1	**8T-4224**	2	WASHER-HARD (8.8X16X2MM THK)	

E-ORDER BY THE CENTIMETER
M-METRIC PART

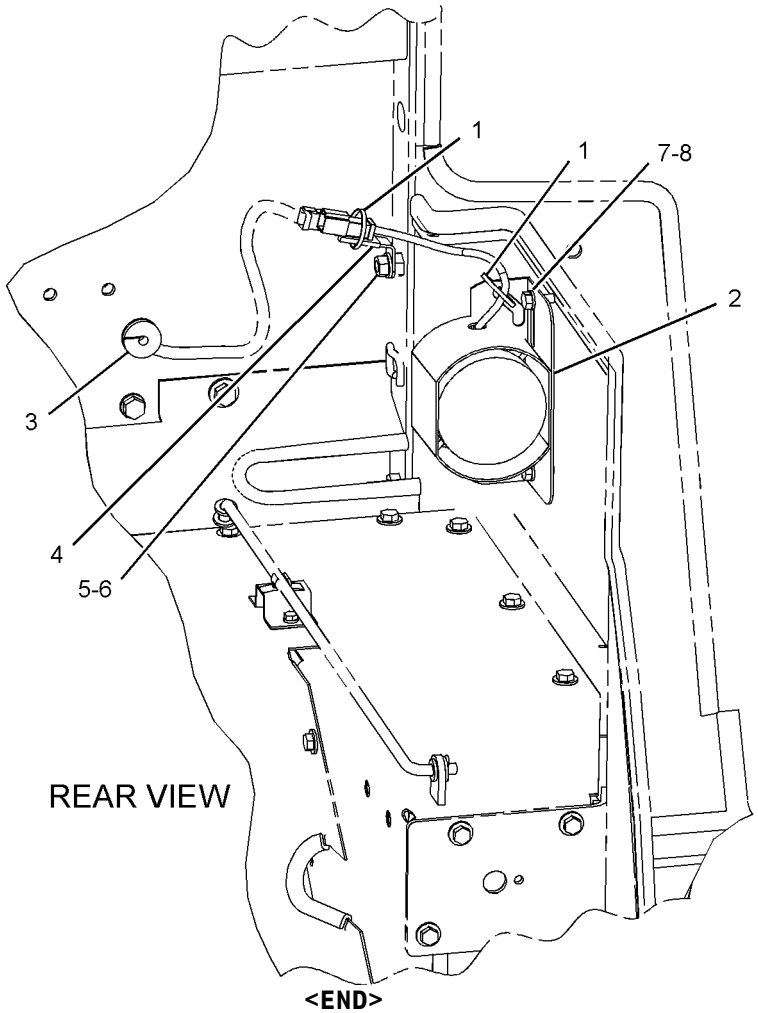

GRAPHIC #1

<END>

g01038299

117-6050 WIRING GP-CAB

S/N: PDF1-UP
PART OF 117-6032 ROADING AR
AN ATTACHMENT

SMCS-1408, 7301 **i01806554**

NOTE	REF NO	GRAPHIC REF	PART NUMBER	QTY	PART NAME 1 2 3 4 5 6 (PRODUCT LEVEL)	SEE PAGE
	1	1	**1H-4393**	5	LOCKWASHER	
	2	1	**3S-2093**	2	STRAP-CABLE	
	3	1	**3Y-9287**	1	FLASHER AS	
	4	1	**4Y-5283**	1	PLATE	
	5	1	**8N-2622**	1	LEVER	
	6	1	**111-0161**	2	HOUSING	
	7	1	**111-7897**	1	SWITCH AS (HIGH/LOW BEAM)	
		1	**111-7899**	1	GASKET	
	8	1	**114-3947**	2	PLATE	
	9	1	**115-1748**	3	LAMP (24 VOLT)	
	10	1	**173-3064**	1	SWITCH AS-TURN SIG & WARNING	
		1	**5L-7200**	1	SCREW (8-32X0.375 IN)	
		1	**9B-7233**	1	LOCKWASHER	
M	11	1	**5C-8312**	5	NUT (M4X0.7 THD)	

M-METRIC PART

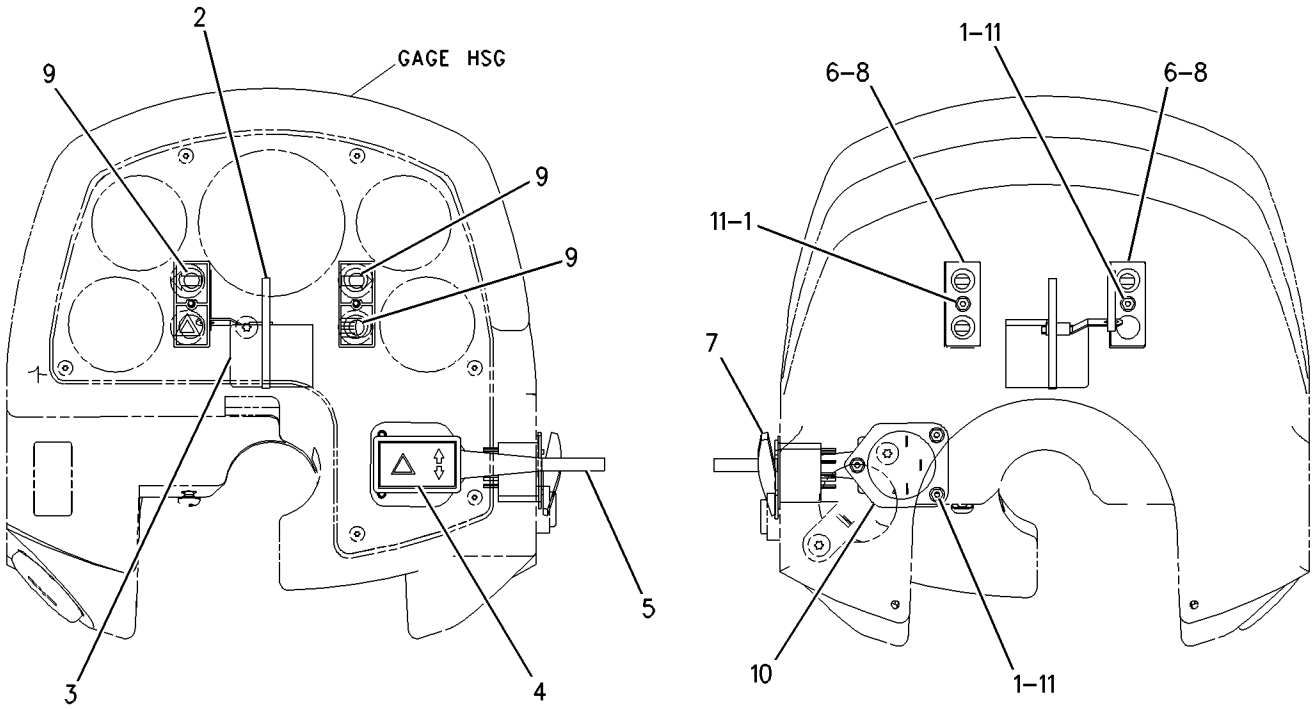

GRAPHIC #1 **<END>** g00925261

238-6848 WIRING GP-CAB

S/N: PDF1-UP
ENCLOSED
PART OF 239-1006, 239-1007 CAB AR
AN ATTACHMENT

SMCS-1408, 7301 **i02000907**

NOTE	REF NO	GRAPHIC REF	PART NUMBER	QTY	PART NAME 1 2 3 4 5 6 (PRODUCT LEVEL)	SEE PAGE
	1	1	**7K-1181**	21	STRAP-CABLE	
	2	1	**107-6036**	1	SWITCH AS (START AID)	
		1	**111-7899**	1	GASKET	
	3	1	**108-3320**	1	SWITCH AS-ROTARY (LAMP)	
		1	**3E-3389**	1	WEDGE-RECEPTACLE LOCK	
		1	**9W-0852**	8	PIN-CONNECTOR	
		1	**102-8806**	1	KIT-RECEPTACLE (8-PIN)	
B	4	1	**109-2356**	4	PLUG	
	5	1	**110-6109**	3	KNOB-CONTROL	
B	6	1	**111-7899**	4	GASKET	
	7	1	**115-1748**	4	LAMP (24-VOLT)	
	8	1	**156-7183**	1	PLATE AS (LH)	
	9	1	**156-7184**	1	PLATE AS (RH)	
	10	1	**156-9225**	1	FILM-INSTRUCTION	
	11	1	**157-1997**	4	SPACER (4.34X15.88X6.34-MM THK)	
	12	1	**172-2307**	1	HARNESS AS-CAB (SHELL)	
		1	**102-8802**	1	KIT-RECEPTACLE (2-PIN)	
		1	**102-8803**	1	KIT-RECEPTACLE (3-PIN)	
		1	**102-8801**	1	KIT-RECEPTACLE (12-PIN)	
		1	**155-2260**	1	KIT-CONNECTING PLUG (3-PIN)	
		1	**155-2270**	1	KIT-CONNECTING PLUG (2-PIN)	
		1	**155-2271**	1	KIT-CONNECTING PLUG (4-PIN)	
		1	**155-2274**	1	KIT-CONNECTING PLUG (6-PIN)	
	13	1	**202-1129**	8	SCREW-TRUSS HEAD	
	14	1	**238-6849**	1	HARNESS AS-CAB	
		1	**102-8802**	1	KIT-RECEPTACLE (2-PIN)	
		1	**102-8804**	2	KIT-RECEPTACLE (4-PIN)	
		1	**102-8806**	1	KIT-RECEPTACLE (8-PIN)	
		1	**102-8801**	1	KIT-RECEPTACLE (12-PIN)	
		1	**155-2255**	2	KIT-CONNECTING PLUG (12-PIN)	
		1	**155-2265**	5	KIT-CONNECTING PLUG (8-PIN)	
		1	**155-2270**	1	KIT-CONNECTING PLUG (2-PIN)	
		1	**155-2271**	1	KIT-CONNECTING PLUG (4-PIN)	
		1	**155-2274**	1	KIT-CONNECTING PLUG (6-PIN)	
Y	15	1	**148-0641**	1	MODULE GP-WARNING INDICATOR (WITH ALARM)	531
Y	16	1	**148-0642**	1	MODULE GP-WARNING INDICATOR	532
	17	1	**178-3986**	1	FILM-PANEL	
	18	1	**1P-7326**	4	WASHER (4.32X4.52X1.52-MM THK)	
	19	1	**4P-7581**	1	CLIP	
	20	1	**4P-8134**	2	CLIP	
M	21	1	**8T-2659**	4	LOCKNUT (M4X6H THD)	
	22	1	**8T-4121**	1	WASHER-HARD (11X21X2.5-MM THK)	
M	23	1	**8T-4133**	1	NUT (M10X1.5-THD)	
M	24	1	**8T-4199**	3	BOLT (M8X1.25X12-MM)	
M	25	1	**8T-4224**	3	WASHER-HARD (8.8X16X2-MM THK)	
	26	1	**9W-0335**	1	LIGHTER AS (CIGAR)(24-VOLT)	

B-USE AS REQUIRED
M-METRIC PART
Y-SEPARATE ILLUSTRATION

238-6848 **WIRING GP-CAB** ***(contd.)*** **i02000907**

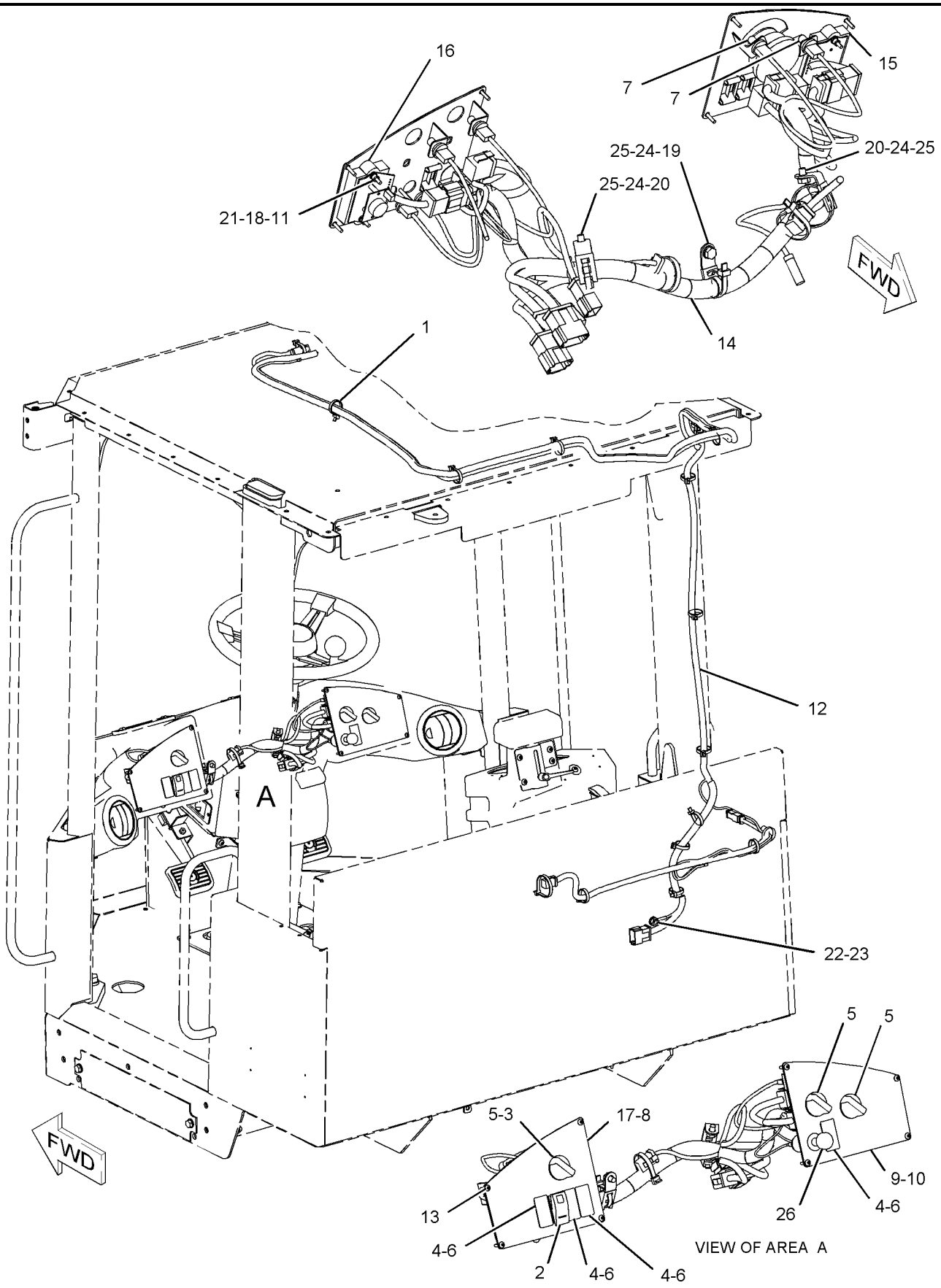

GRAPHIC #1 **<END>** g01037869

238-8386 WIRING GP-CAB

S/N: PDF1-UP
OPEN ROPS
PART OF 241-8807 CANOPY AR-OPEN ROPS
AN ATTACHMENT

SMCS-1408, 7301 **i02005114**

NOTE	REF NO	GRAPHIC REF	PART NUMBER	QTY	PART NAME 1 2 3 4 5 6 (PRODUCT LEVEL)	SEE PAGE
	1	1	**7K-1181**	12	STRAP-CABLE	
	2	2	**8T-8737**	22	PLUG-SEAL	
	3	2	**107-6036**	1	SWITCH AS (START AID)	
		2	**111-7899**	1	GASKET	
	4	2	**108-3320**	1	SWITCH AS-ROTARY (LAMP)	
		2	**3E-3389**	1	WEDGE-RECEPTACLE LOCK	
		2	**9W-0852**	8	PIN-CONNECTOR	
		2	**102-8806**	1	KIT-RECEPTACLE (8-PIN)	
B	5	2	**109-2356**	4	PLUG	
	6	2	**110-6109**	1	KNOB-CONTROL	
B	7	2	**111-7899**	4	GASKET	
	8	2	**115-1748**	2	LAMP (24-VOLT)	
	9	2	**156-7183**	1	PLATE AS (LH)	
	10	2	**156-7184**	1	PLATE AS (RH)	
	11	2	**157-1997**	4	SPACER (4.34X15.88X6.34-MM THK)	
	12	1	**172-2309**	1	HARNESS AS-CAB (LOWER ROPS TO ROOF)	
		1	**102-8801**	1	KIT-RECEPTACLE (12-PIN)	
		1	**155-2271**	1	KIT-CONNECTING PLUG (4-PIN)	
	13	2	**172-6557**	1	FILM-INSTRUCTION	
	14	2	**202-1129**	8	SCREW-TRUSS HEAD (M 4X0.7MM)	
	15	2	**238-6849**	1	HARNESS AS-CAB	
		2	**102-8802**	1	KIT-RECEPTACLE (2-PIN)	
		2	**102-8804**	2	KIT-RECEPTACLE (4-PIN)	
		2	**102-8806**	1	KIT-RECEPTACLE (8-PIN)	
		2	**102-8801**	1	KIT-RECEPTACLE (12-PIN)	
		2	**155-2255**	2	KIT-CONNECTING PLUG (12-PIN)	
		2	**155-2265**	5	KIT-CONNECTING PLUG (8-PIN)	
		2	**155-2270**	1	KIT-CONNECTING PLUG (2-PIN)	
		2	**155-2271**	1	KIT-CONNECTING PLUG (4-PIN)	
		2	**155-2274**	1	KIT-CONNECTING PLUG (6-PIN)	
Y	16	2	**148-0641**	1	MODULE GP-WARNING INDICATOR (WITH ALARM)	531
Y	17	2	**148-0642**	1	MODULE GP-WARNING INDICATOR	532
	18	2	**178-3986**	1	FILM-PANEL	
	19	2	**1P-7326**	4	WASHER (4.32X4.52X1.52-MM THK)	
	20	2	**102-8805**	1	KIT-RECEPTACLE (6-PIN)	
	21	2	**102-8806**	2	KIT-RECEPTACLE (8-PIN)	
	22	2	**4P-7581**	1	CLIP	
	23	2	**4P-8134**	2	CLIP	
M	24	2	**8T-2659**	4	LOCKNUT (M4X6H THD)	
	25	1	**8T-4121**	1	WASHER-HARD (11X21X2.5-MM THK)	
M	26	1	**8T-4133**	1	NUT (M10X1.5-THD)	
M	27	2	**8T-4199**	3	BOLT (M8X1.25X12-MM)	
M	28	2	**8T-4224**	3	WASHER-HARD (8.8X16X2-MM THK)	
	29	2	**9W-0335**	1	LIGHTER AS (CIGAR)(24-VOLT)	

B-USE AS REQUIRED
M-METRIC PART
Y-SEPARATE ILLUSTRATION

238-8386 **WIRING GP-CAB** ***(contd.)*** **i02005114**

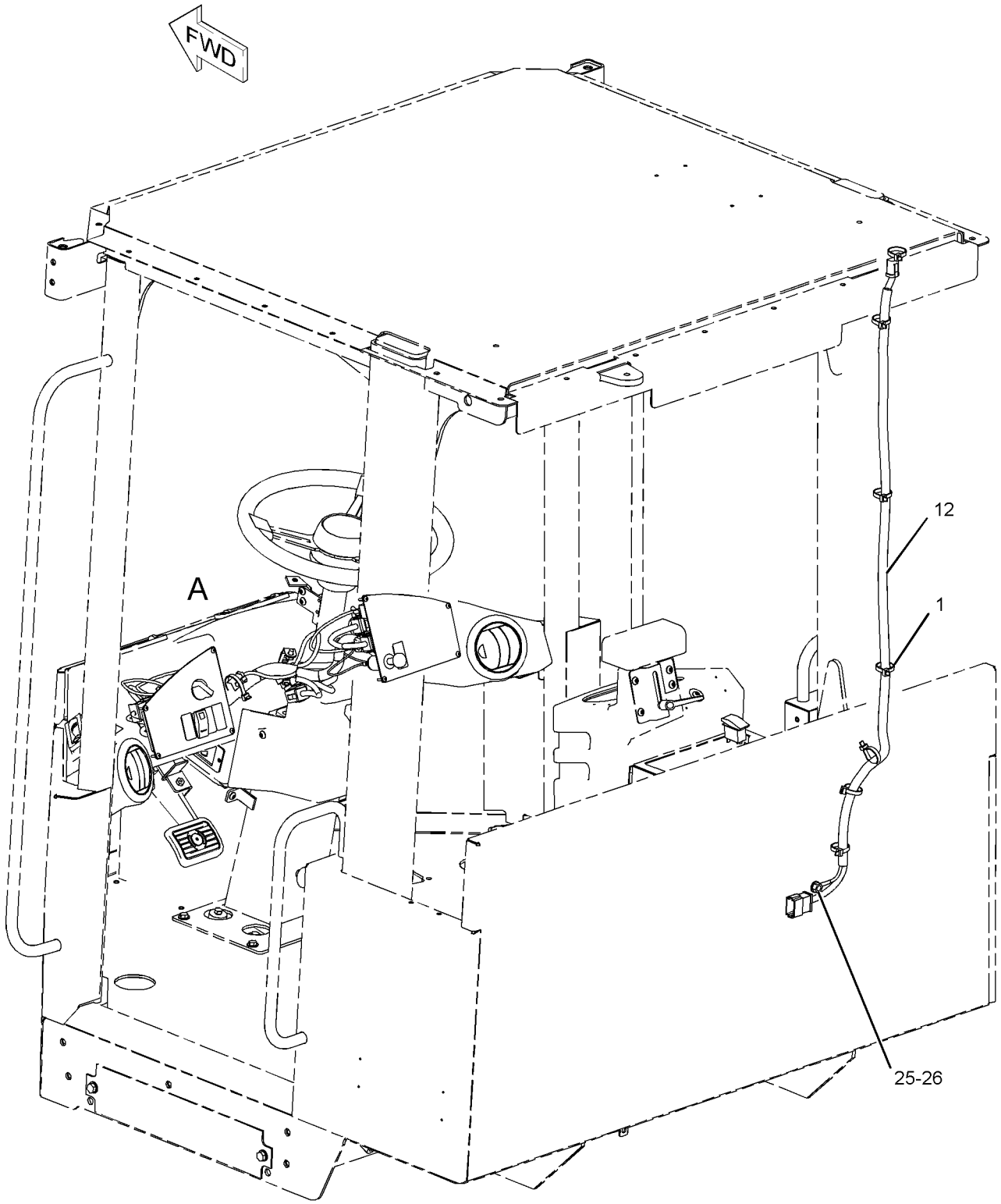

GRAPHIC #1 g01040066

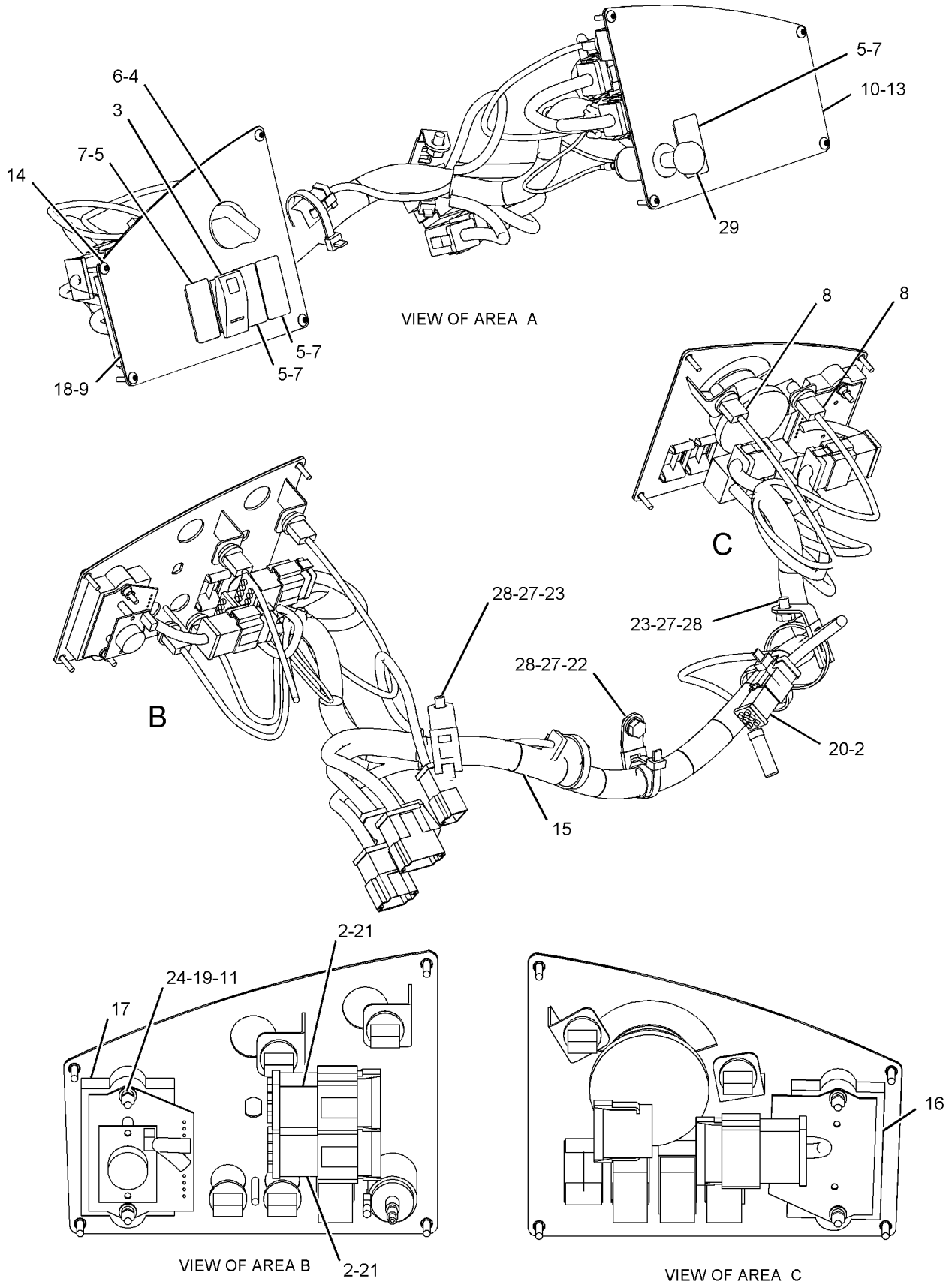

GRAPHIC #2 **<END>** g01040067

238-8387 WIRING GP-CAB

S/N: PDF1-UP
PLATFORM
PART OF 241-8644 CANOPY AR-SOFT, 241-8643 PLATFORM AR
AN ATTACHMENT

SMCS-1408, 7301 **i02003759**

NOTE	REF NO	GRAPHIC REF	PART NUMBER	QTY	PART NAME 1 2 3 4 5 6 (PRODUCT LEVEL)	SEE PAGE
	1	1	**7K-1181**	5	STRAP-CABLE	
	2	1	**8T-8737**	22	PLUG-SEAL	
	3	1	**107-6036**	1	SWITCH AS (START AID)	
		1	**111-7899**	1	GASKET	
	4	1	**108-3320**	1	SWITCH AS-ROTARY (LAMP)	
		1	**3E-3389**	1	WEDGE-RECEPTACLE LOCK	
		1	**9W-0852**	8	PIN-CONNECTOR	
		1	**102-8806**	1	KIT-RECEPTACLE (8-PIN)	
B	5	1	**109-2356**	4	PLUG	
	6	1	**110-6109**	1	KNOB-CONTROL	
B	7	1	**111-7899**	4	GASKET	
	8	1	**115-1748**	2	LAMP (24-VOLT)	
	9	1	**156-7183**	1	PLATE AS (LH)	
	10	1	**156-7184**	1	PLATE AS (RH)	
	11	1	**157-1997**	4	SPACER (4.34X15.88X6.34-MM THK)	
	12	1	**172-6557**	1	FILM-INSTRUCTION	
	13	1	**202-1129**	8	SCREW-TRUSS HEAD (M 4X0.7MM)	
	14	1	**238-6849**	1	HARNESS AS-CAB	
		1	**102-8802**	1	KIT-RECEPTACLE (2-PIN)	
		1	**102-8804**	2	KIT-RECEPTACLE (4-PIN)	
		1	**102-8806**	1	KIT-RECEPTACLE (8-PIN)	
		1	**102-8801**	1	KIT-RECEPTACLE (12-PIN)	
		1	**155-2255**	2	KIT-CONNECTING PLUG (12-PIN)	
		1	**155-2265**	5	KIT-CONNECTING PLUG (8-PIN)	
		1	**155-2270**	1	KIT-CONNECTING PLUG (2-PIN)	
		1	**155-2271**	1	KIT-CONNECTING PLUG (4-PIN)	
		1	**155-2274**	1	KIT-CONNECTING PLUG (6-PIN)	
Y	15	1	**148-0641**	1	MODULE GP-WARNING INDICATOR (WITH ALARM)	531
Y	16	1	**148-0642**	1	MODULE GP-WARNING INDICATOR	532
	17	1	**178-3986**	1	FILM-PANEL	
	18	1	**1P-7326**	4	WASHER (4.32X4.52X1.52-MM THK)	
	19	1	**102-8805**	1	KIT-RECEPTACLE (6-PIN)	
	20	1	**102-8806**	2	KIT-RECEPTACLE (8-PIN)	
	21	1	**4P-7581**	1	CLIP	
	22	1	**4P-8134**	2	CLIP	
M	23	1	**8T-2659**	4	LOCKNUT (M4X6H THD)	
M	24	1	**8T-4199**	3	BOLT (M8X1.25X12-MM)	
M	25	1	**8T-4224**	3	WASHER-HARD (8.8X16X2-MM THK)	
	26	1	**9W-0335**	1	LIGHTER AS (CIGAR, 24-VOLT)	

B-USE AS REQUIRED
M-METRIC PART
Y-SEPARATE ILLUSTRATION

238-8387 **WIRING GP-CAB** ***(contd.)*** **i02003759**

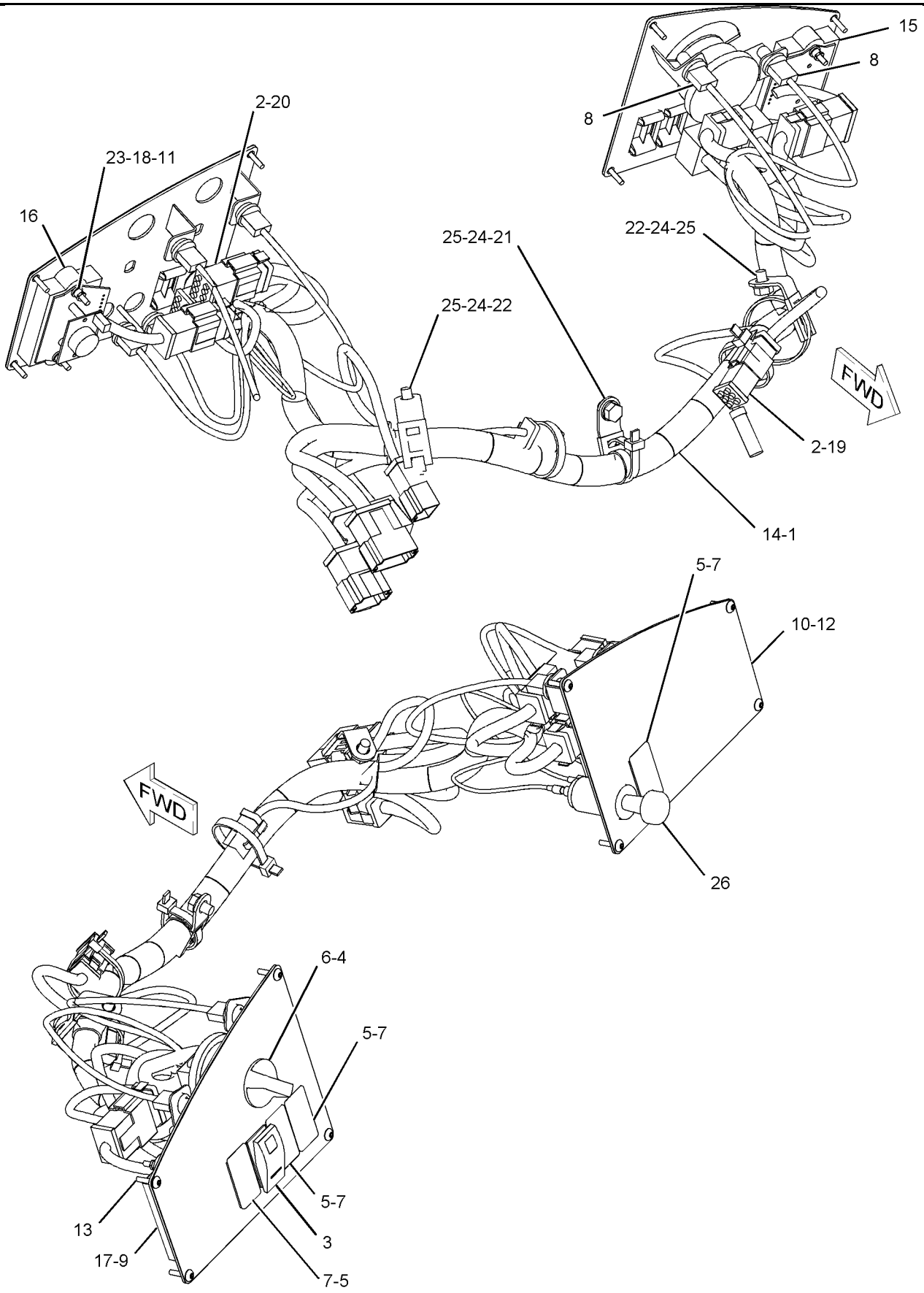

GRAPHIC #1 **<END>** g01040051

ELECTRICAL AND STARTING SYSTEM

236-8856 WIRING GP-CHASSIS

S/N: PDF1-UP

PART OF 236-5635 CHASSIS AR

SMCS-1408 **i02005686**

NOTE	REF NO	GRAPHIC REF	PART NUMBER	QTY	PART NAME 1 2 3 4 5 6 (PRODUCT LEVEL)	SEE PAGE
	1	1	**3K-0360**	1	SEAL-O-RING	
	2	1	**7K-1181**	48	STRAP-CABLE	
	3	1	**8T-8799**	1	BOOT	
D	4	1	**8T-3425**		CHANNEL-TRIM (0.1M)	
	5	1	**093-2065**	1	GROMMET	
	6	1	**108-2503**	1	PLATE AS	
		1	**9R-2672**	3	BOSS (M10X20-MM)	
	7	1	**111-3760**	1	CABLE AS-BATTERY (POSITIVE)	
		1	**1M-4986**	1	TERMINAL	
		1	**2L-8065**	1	TERMINAL	
		1	**9G-4343**	1	TERMINAL	
E		1	**5P-0760**		CABLE (0 GA) (140CM)	
		1	**8N-0869**	1	COVER-TERMINAL (RED)	
		1	**8N-1725**	1	COVER-TERMINAL (RED)	
		1	**8T-8799**	2	BOOT	
		1	**3S-6049**	1	TERMINAL AS-BATTERY (POSITIVE)	
		1	**1M-6119**	1	BOLT (5/16-18X1.375-IN)	
		1	**1M-6120**	1	NUT (5/16-18-THD)	
	8	1	**112-7291**	1	CABLE AS-BATTERY (NEGATIVE)	
E		1	**5P-0760**		CABLE (0 GA) (20CM)	
		1	**7N-5274**	1	COVER-TERMINAL (BLACK)	
		1	**8N-1725**	1	COVER-TERMINAL (RED)	
		1	*9W-3961*	1	TERMINAL AS (POS)	
		1	**1M-6119**	1	BOLT (5/16-18X1.375-IN)	
		1	**1M-6120**	1	NUT (5/16-18-THD)	
		1	**8T-9758**	1	TERMINAL AS (POSITIVE)	
		1	*9W-3962*	1	TERMINAL AS (NEG)	
		1	**1M-6119**	1	BOLT (5/16-18X1.375-IN)	
		1	**1M-6120**	1	NUT (5/16-18-THD)	
		1	**7X-1169**	1	TERMINAL AS-BATTERY (NEG)	
	9	1	**120-9336**	2	BRACKET AS	
	10	1	**131-3201**	1	BOOT	
	11	1	**133-3260**	1	SPACER (10.0-MM)	
	12	1	**236-8857**	1	HARNESS AS-CHASSIS	
		1	**102-8802**	3	KIT-RECEPTACLE (2-PIN)	
		1	**102-8804**	1	KIT-RECEPTACLE (4-PIN)	
		1	**102-8805**	1	KIT-RECEPTACLE (6-PIN)	
		1	**102-8801**	1	KIT-RECEPTACLE (12-PIN)	
		1	**155-2255**	1	KIT-CONNECTING PLUG (12-PIN)	
		1	**155-2260**	2	KIT-CONNECTING PLUG (3-PIN)	
		1	**155-2270**	7	KIT-CONNECTING PLUG (2-PIN)	
		1	**155-2271**	1	KIT-CONNECTING PLUG (4-PIN)	
	13	1	**236-8858**	1	HARNESS AS-FUEL TANK	
		1	**102-8802**	1	KIT-RECEPTACLE (2-PIN)	
		1	**102-8803**	2	KIT-RECEPTACLE (3-PIN)	
		1	**102-8805**	1	KIT-RECEPTACLE (6-PIN)	
		1	**102-8806**	1	KIT-RECEPTACLE (8-PIN)	
		1	**102-8801**	1	KIT-RECEPTACLE (12-PIN)	
		1	**155-2255**	1	KIT-CONNECTING PLUG (12-PIN)	
		1	**155-2260**	3	KIT-CONNECTING PLUG (3-PIN)	
		1	**155-2270**	6	KIT-CONNECTING PLUG (2-PIN)	
		1	**155-2274**	1	KIT-CONNECTING PLUG (6-PIN)	
	14	1	**104-3008**	1	SENDER AS-TEMPERATURE (HYDRAULIC OIL)	
		1	**102-8802**	1	KIT-RECEPTACLE (2-PIN)	
		1	**3E-3365**	1	WEDGE-RECEPTACLE LOCK (2-PIN)	
		1	**186-3735**	2	PIN-CONNECTOR	

236-8856 **WIRING GP-CHASSIS** ***(contd.)*** **i02005686**

NOTE	REF NO	GRAPHIC REF	PART NUMBER	QTY	PART NAME 1 2 3 4 5 6 (PRODUCT LEVEL)	SEE PAGE
	15	1	**3P-5414**	1	GROMMET	
	16	1	**4P-7581**	9	CLIP	
	17	1	**4P-8134**	6	CLIP	
	18	1	**5P-9299**	4	CLIP	
	19	1	**7X-7729**	5	WASHER (11X25X3-MM THK)	
	20	1	**8T-4121**	4	WASHER-HARD (11X21X2.5-MM THK)	
M	21	1	**8T-4133**	2	NUT (M10X1.5-THD)	
M	22	1	**8T-4182**	2	BOLT (M10X1.5X45-MM)	
M	23	1	**8T-4186**	1	BOLT (M10X1.5X40-MM)	
M	24	1	**8T-4191**	4	BOLT (M10X1.5X16-MM)	
M	25	1	**8T-4195**	2	BOLT (M10X1.5X30-MM)	

D-ORDER BY THE METER
E-ORDER BY THE CENTIMETER
M-METRIC PART

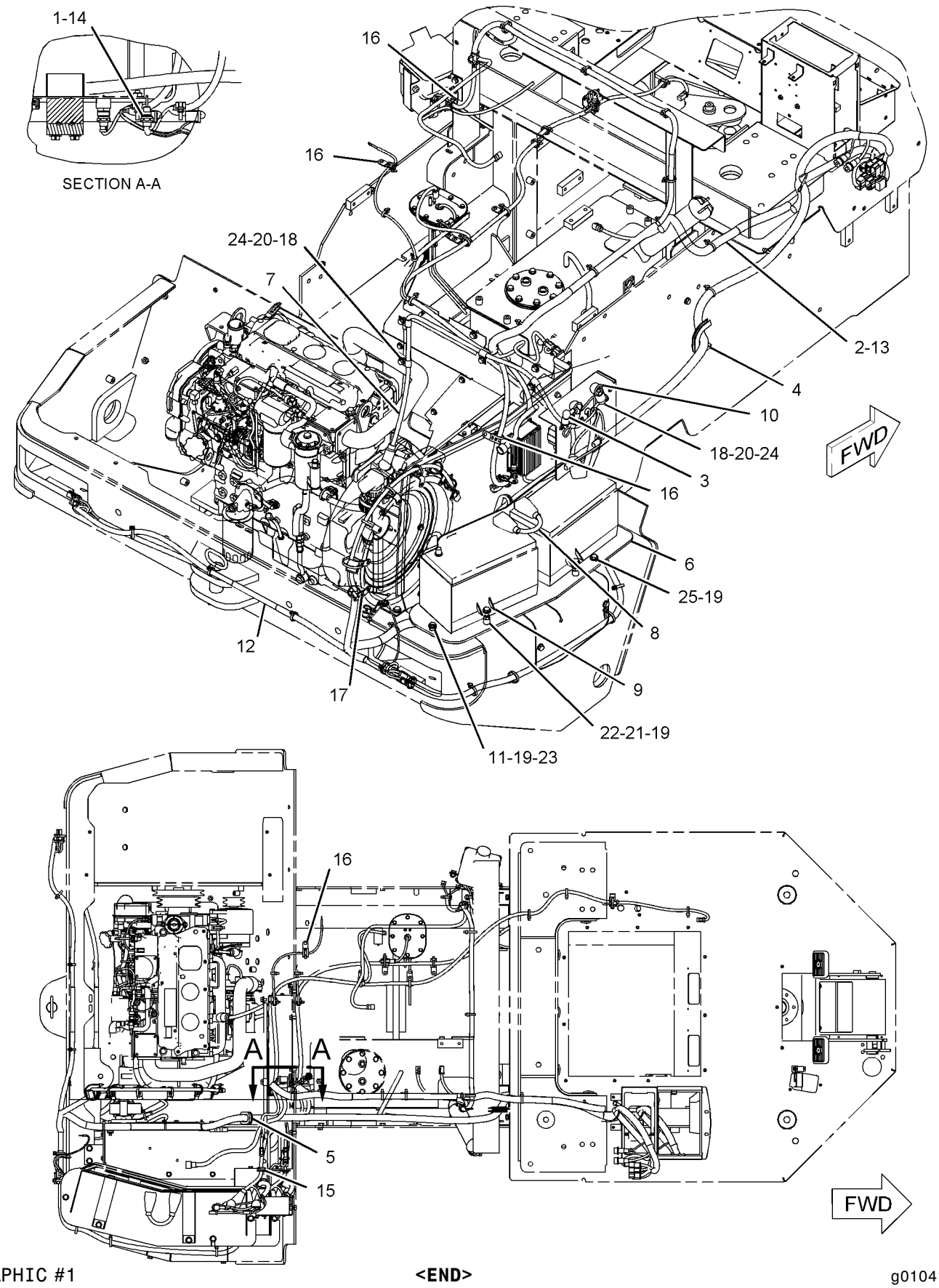

GRAPHIC #1 **<END>** g01041129

ELECTRICAL AND STARTING SYSTEM

235-3394 WIRING GP-ENGINE

S/N: PDF1-UP

PART OF 236-5635 CHASSIS AR

SMCS-1403, 1408 **i02005675**

NOTE	REF NO	GRAPHIC REF	PART NUMBER	QTY	PART NAME 1 2 3 4 5 6 (PRODUCT LEVEL)	SEE PAGE
	1	2	**3E-5239**	1	RELAY AS (24-VOLT) (LIFT)	
	2	1	**7K-1181**	15	STRAP-CABLE	
	3	1	**8R-1461**	1	CABLE AS	
		1	**1M-4986**	2	TERMINAL	
		1	**5P-0746**	32	CABLE (0-GA)	
	4	2	**8T-8799**	2	BOOT	
	5	2	**106-8704**	1	SUPPRESSOR AS-ARC	
		2	**102-8802**	1	KIT-RECEPTACLE (2-PIN)	
		2	**3E-3365**	1	WEDGE-RECEPTACLE LOCK (2-PIN)	
		2	**186-3735**	2	PIN-CONNECTOR	
	6	2	**118-3534**	1	SWITCH GP-MAGNETIC (24-VOLT) (GLOW PLUG)	
	7	2	**171-2208**	1	CIRCUIT BREAKER GP (60-AMPERE) (MAIN)	
		2	**1H-3244**	2	LOCKWASHER	
		2	**6V-8187**	2	NUT (1/4-28-THD)	
		2	**8T-4205**	2	WASHER-HARD (7.2X14.5X2-MM THK)	
	8	2	**171-2211**	1	CIRCUIT BREAKER AS (90-AMPERE) (ALTERNATOR)	
		2	**1H-3244**	2	LOCKWASHER	
		2	**6V-8187**	2	NUT (1/4-28-THD)	
		2	**8T-4205**	2	WASHER-HARD (7.2X14.5X2-MM THK)	
	9	2	**175-3089**	1	SENDER GP-TEMPERATURE (COOLANT)	
		2	**3E-3365**	1	WEDGE-RECEPTACLE LOCK (2-PIN)	
		2	**186-3735**	2	PIN-CONNECTOR	
		2	**102-8802**	1	KIT-RECEPTACLE (2-PIN)	
	10	1	**200-1898**	1	SUPRESSOR-ARC	
	11	1	**205-4285**	1	CONVERTER GP-ELECTRICAL (24-VOLT TO 12-VOLT)	
	12	1	**235-3393**	1	HARNESS AS-ENGINE	
		1	**102-8802**	1	KIT-RECEPTACLE (2-PIN)	
		1	**102-8801**	1	KIT-RECEPTACLE (12-PIN)	
		1	**155-2270**	5	KIT-CONNECTING PLUG (2-PIN)	
		1	**155-2271**	1	KIT-CONNECTING PLUG (4-PIN)	
		1	**155-2274**	1	KIT-CONNECTING PLUG (6-PIN)	
	13	2	**235-3496**	1	BRACKET AS	
	14	1	**239-4013**	1	BRACKET AS	
	15	1	**241-9021**	1	CABLE AS	
E		1	**125-7876**		TUBE-HEAT SHRINK (5CM)	
E		1	**6V-9023**		TUBE (4CM)	
		1	**9G-4343**	1	TERMINAL	
D		1	**6V-2369**		WIRE (4-GA)(BLACK) (4M)	
	17	1	**096-6166**	4	WASHER-HARD (4.5X9X1-MM THK)	
	18	2	**147-1773**	1	CIRCUIT BREAKER AS (30-AMPERE) (AUXILIARY)	
		2	**6V-8378**	2	NUT (10-32-THD)	
		2	**8F-1434**	2	LOCKWASHER (INTERNAL TOOTH)	
		2	**8T-0328**	2	WASHER-HARD (5.5X10X1-MM THK)	
	19	2	**4B-4274**	4	WASHER (5.5X13X1.2-MM THK)	
	20	2	**4B-4863**	2	WASHER (4.7X11X1.2-MM THK)	
	21	2	**4K-5824**	1	BOSS	
	22	1,2	**4P-7581**	3	CLIP	
	23	1,2	**4P-8134**	6	CLIP	
M	24	1	**5C-8312**	2	NUT (M4X0.7-THD)	
	25	2	**5P-4965**	4	SCREW-MACHINE (10-32-THD)	
	26	2	**6V-7345**	2	SCREW-MACHINE (8-32X.875-IN)	
M	27	1	**8T-0337**	2	SCREW-MACHINE (M4X0.7X12-MM)	
	28	1,2	**8T-4121**	6	WASHER-HARD (11X21X2.5-MM THK)	
M	29	1	**8T-4133**	1	NUT (M10X1.5-THD)	
M	30	1,2	**8T-4137**	5	BOLT (M10X1.5X20-MM)	
M	31	2	**8T-4138**	4	BOLT (M6X1X20-MM)	

235-3394 **WIRING GP-ENGINE** ***(contd.)*** **i02005675**

NOTE	REF NO	GRAPHIC REF	PART NUMBER	QTY	PART NAME 1 2 3 4 5 6 (PRODUCT LEVEL)	SEE PAGE
M	32	2	**8T-4171**	1	BOLT (M6X1X12-MM)	
M	33	1,2	**8T-4189**	5	BOLT (M8X1.25X20-MM)	
	34	1,2	**8T-4224**	6	WASHER-HARD (8.8X16X2-MM THK)	
M	35	2	**8T-4908**	1	BOLT (M8X1.25X25-MM)	
	36	2	**9X-8256**	5	WASHER (6.6X12X2-MM THK)	
	37	2	**118-3534**	1	SWITCH GP-MAGNETIC (24-VOLT) (START RELAY)	

D-ORDER BY THE METER
E-ORDER BY THE CENTIMETER
M-METRIC PART

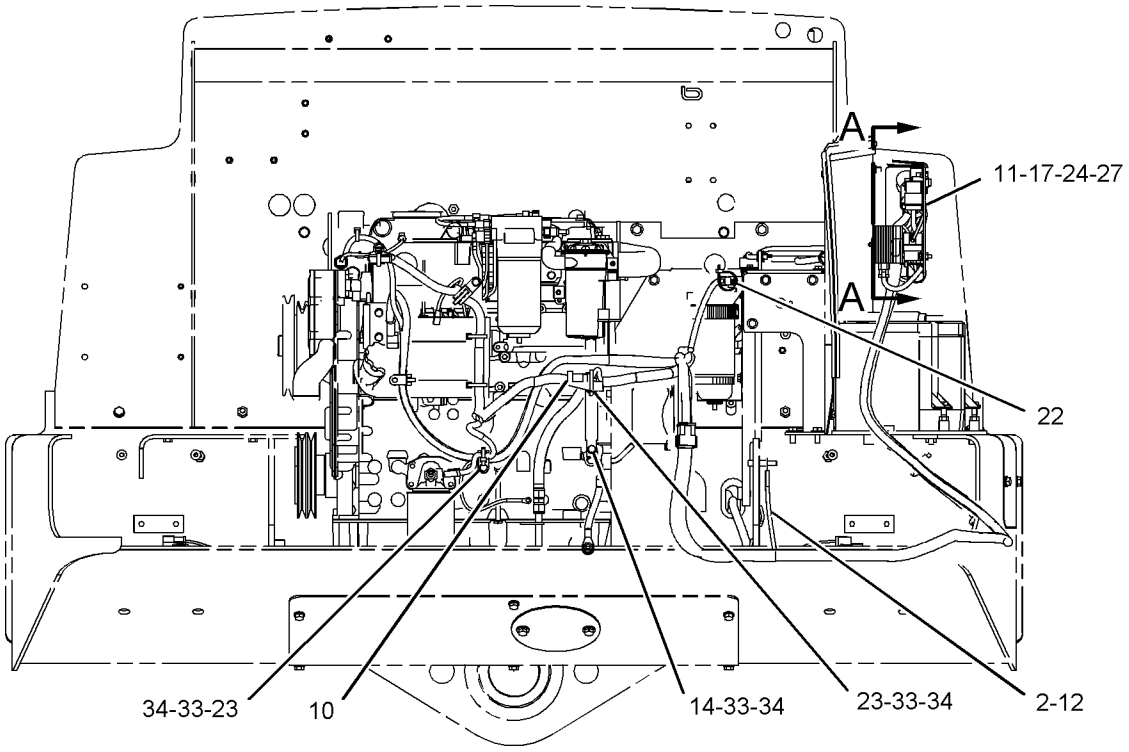

REAR VIEW

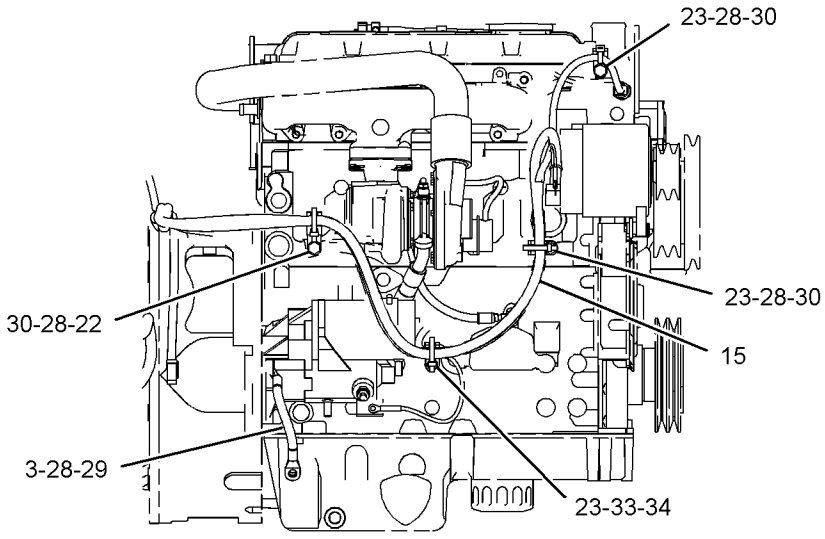

FRONT VIEW

GRAPHIC #1 g01041880

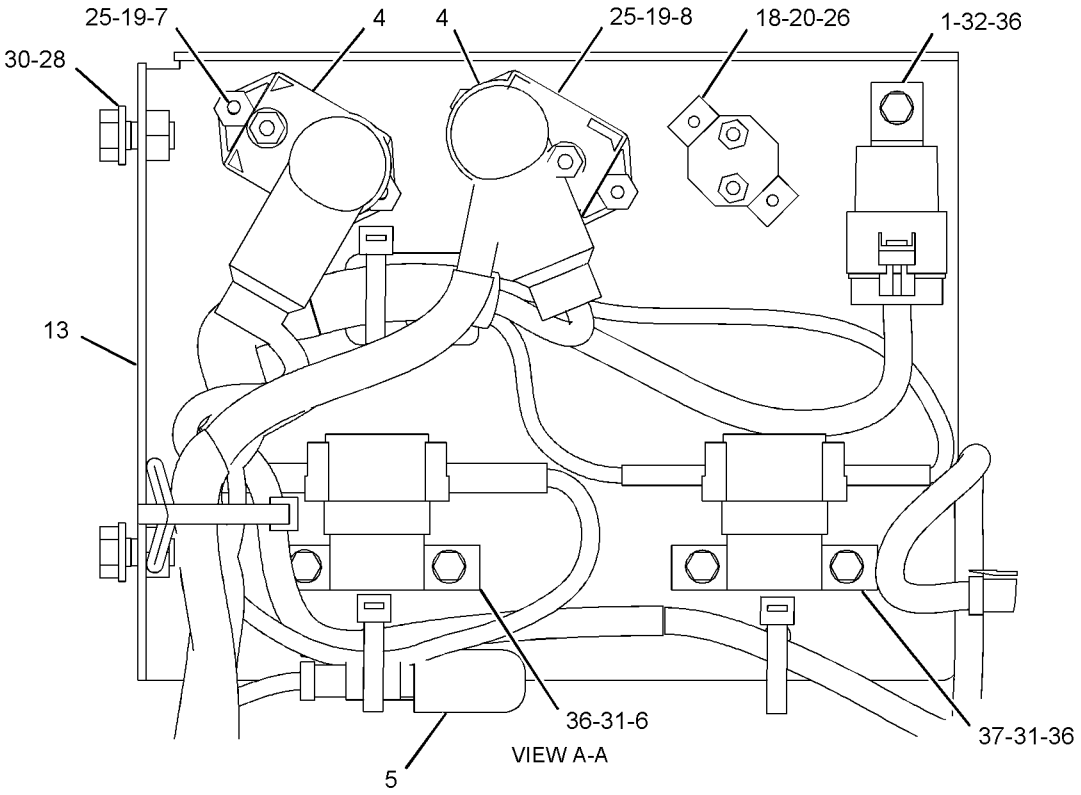

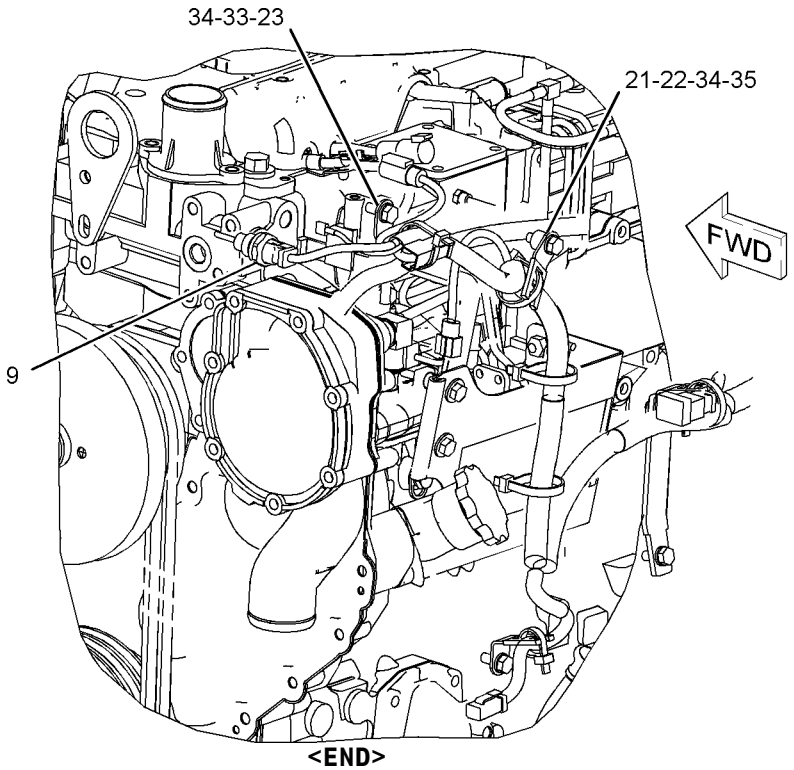

GRAPHIC #2

<END>

g01041881

237-5813 WIRING GP-FRONT

S/N: PDF1-UP

PART OF 236-5635 CHASSIS AR

SMCS-5734 **i02005689**

NOTE	REF NO	GRAPHIC REF	PART NUMBER	QTY	PART NAME 1 2 3 4 5 6 (PRODUCT LEVEL)	SEE PAGE
	1	1	**7K-1181**	17	STRAP-CABLE	
	2	1	**7V-5628**	2	PLATE	
	3	1	**7V-6089**	4	CLAMP	
	4	1	**163-1201**	1	HORN AS (24 VOLT)(LOW TONE)	
	5	1	**237-5818**	1	HARNESS AS-FRONT CHASSIS	
		1	**102-8802**	2	KIT-RECEPTACLE (2-PIN)	
		1	**102-8804**	2	KIT-RECEPTACLE (4-PIN)	
		1	**102-8806**	1	KIT-RECEPTACLE (8-PIN)	
		1	**102-8801**	1	KIT-RECEPTACLE (12-PIN)	
		1	**155-2255**	1	KIT-CONNECTING PLUG (12-PIN)	
		1	**155-2265**	2	KIT-CONNECTING PLUG (8-PIN)	
		1	**155-2260**	1	KIT-CONNECTING PLUG (3-PIN)	
		1	**155-2270**	3	KIT-CONNECTING PLUG (2-PIN)	
		1	**155-2271**	3	KIT-CONNECTING PLUG (4-PIN)	
		1	**155-2274**	2	KIT-CONNECTING PLUG (6-PIN)	
M	6	1	**8T-4195**	1	BOLT (M10X1.5X30MM)	
	7	1	**5G-3676**	2	GROMMET	
	8	1	**5P-4115**	2	WASHER-HARD (7.2X19X2MM THK)	
	9	1	**7B-1251**	2	GROMMET	
M	10	1	**7X-2534**	2	BOLT (M6X1X50MM)	
	11	1	**8T-4121**	1	WASHER-HARD (11X21X2.5MM THK)	

M-METRIC PART

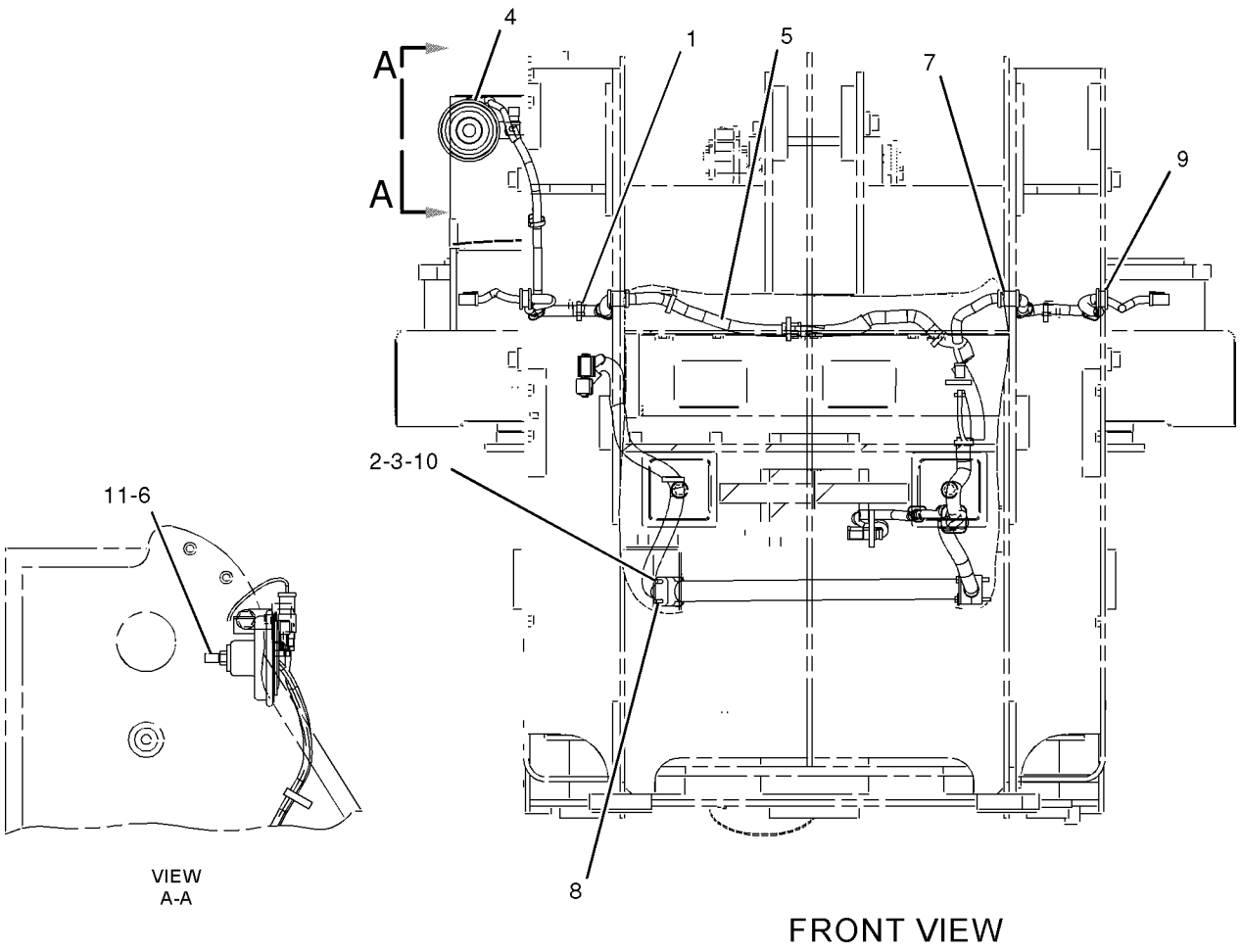

GRAPHIC #1 **<END>** g01037527

107-4724 WIRING GP-POWER TRAIN

S/N: PDF1-UP
35 KM/HR
PART OF 236-5635 CHASSIS AR

SMCS-1634 **i01531672**

NOTE	REF NO	GRAPHIC REF	PART NUMBER	QTY	PART NAME 1 2 3 4 5 6 (PRODUCT LEVEL)	SEE PAGE
C	1	1	**7K-1181**	3	STRAP-CABLE	
C	2	1	**176-7602**	1	HARNESS AS	
		1	**102-8802**	1	KIT-RECEPTACLE (2 PIN)	
					(KIT SERVICES RECEPTACLE AS AND WEDGE)	
		1	**155-2270**	1	KIT-CONNECTING PLUG (2 PIN)	
					(KIT SERVICES RECEPTACLE AS AND WEDGE)	
	3	1	**4K-8302**	2	CLIP	
	4	1	**4P-7581**	1	CLIP	
	5	1	**8T-4121**	2	WASHER-HARD (11X21X2.5MM THK)	
M	6	1	**8T-4137**	1	BOLT (M10X1.5X20MM)	
	7	1	**9M-8406**	1	CLIP	

C-CHANGE FROM PREVIOUS TYPE
M-METRIC PART

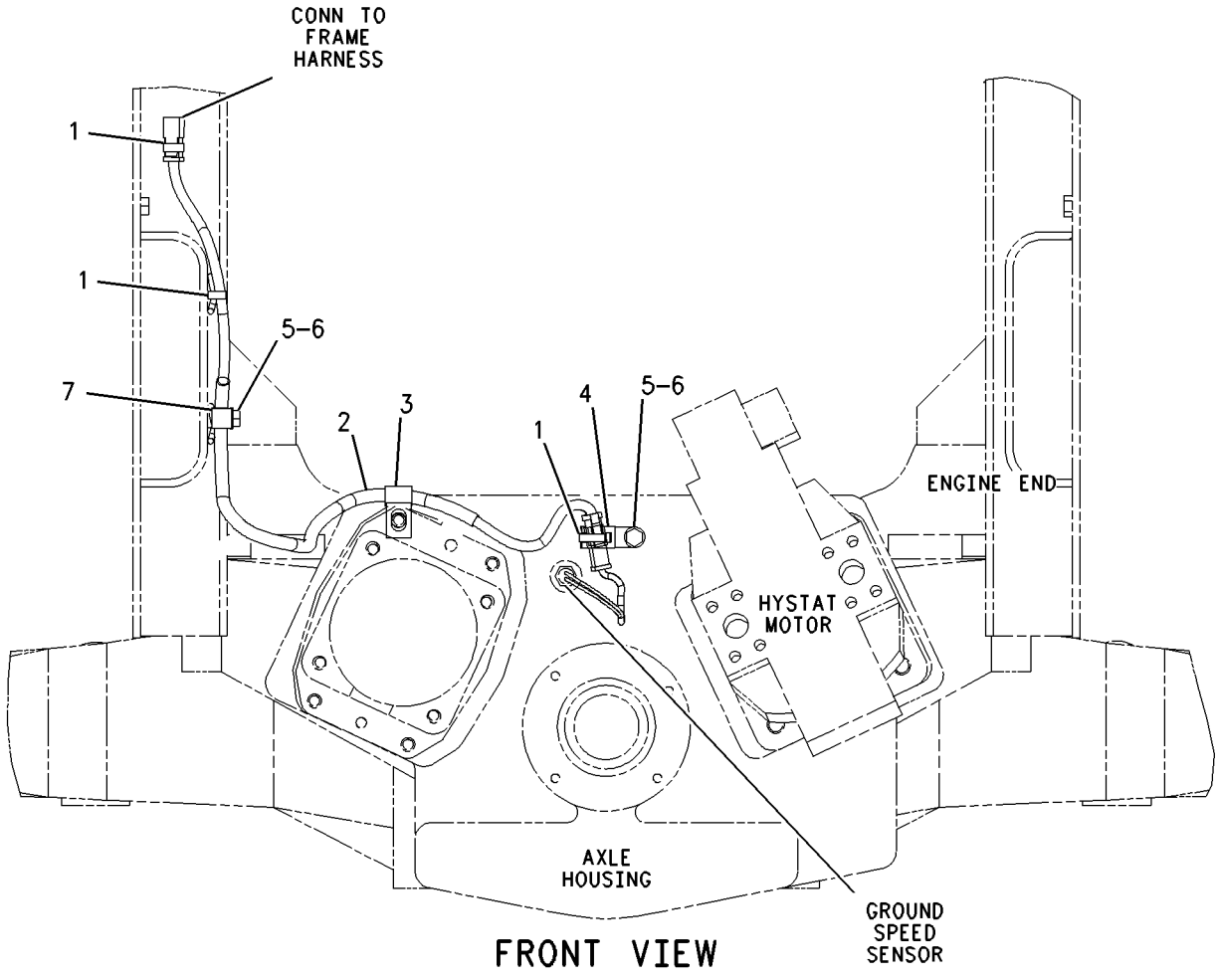

GRAPHIC #1 **<END>** g00802334

117-6039 WIRING GP-REAR

S/N: PDF1-UP
PART OF 117-6032 ROADING AR
AN ATTACHMENT

SMCS-1408 **i02029954**

NOTE	PART NUMBER	QTY	PART NAME 1 2 3 4 5 6 (PRODUCT LEVEL)	SEE PAGE
M	**8T-4137**	8	BOLT (M10X1.5X20-MM)	
M	**7X-2619**	1	BOLT (M6X1.0X20-MM)	
M	**8T-4136**	2	BOLT (M10X1.5X25-MM)	
	117-6040	2	BRACKET AS	
			—OR—	
C	**221-4193**	2	BRACKET AS	
	9H-5156	1	GROMMET	
	5A-3808	1	LAMP AS	
	6S-7101	1	LENS	
CY	**221-4192**	2	LAMP GP-REAR (BACKUP)	103
CY	**145-6929**	2	LAMP GP-STOP & TAIL (24-VOLT)	110
	117-6043	1	PLATE AS	
	117-6044	1	PLATE AS	
	9R-1499	2	REFLECTOR	
	7K-1181	1	STRAP-CABLE	
	9X-8256	1	WASHER (6.6X12X2-MM THK)	
	7X-7729	8	WASHER (11X25X3-MM THK)	
	8T-4121	2	WASHER-HARD (11X21X2.5-MM THK)	
	8T-4205	4	WASHER-HARD (7.2X14.5X2-MM THK)	
Y	*176-3389*	1	WIRING GP-REAR	161

C-CHANGE FROM PREVIOUS TYPE
M-METRIC PART
Y-SEPARATE ILLUSTRATION

<END>

176-3389 WIRING GP-REAR

S/N: PDF1-UP
PART OF 117-6039 WIRING GP-REAR
AN ATTACHMENT

SMCS-1408 **i02029963**

NOTE	REF NO	GRAPHIC REF	PART NUMBER	QTY	PART NAME 1 2 3 4 5 6 (PRODUCT LEVEL)	SEE PAGE
	1	1	**117-6048**	1	HARNESS AS-LIGHTING	
		1	**102-8802**	1	KIT-RECEPTACLE (2-PIN)	
	2	1	**7K-1181**	8	STRAP-CABLE	
	3	1	**4P-7581**	8	CLIP	
	4	1	**031-5644**	3	CLIP	

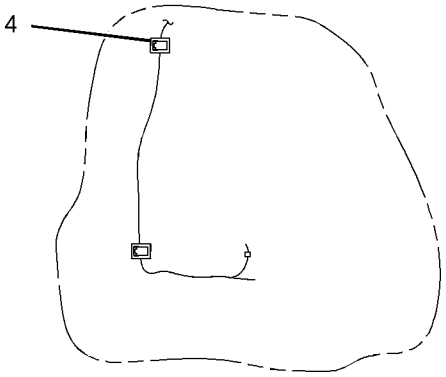

VIEW A-A

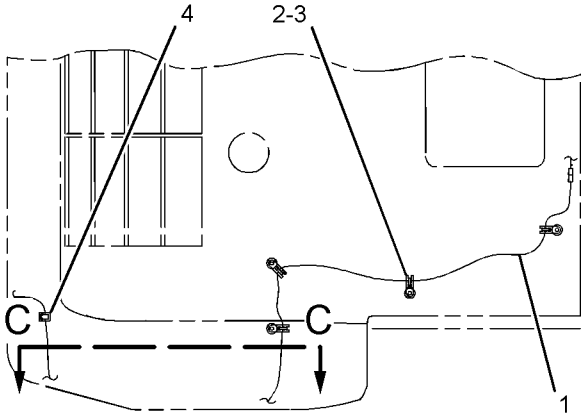

VIEW B-B

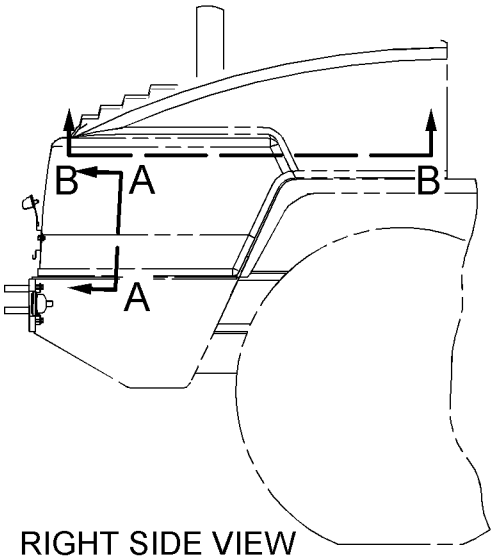

RIGHT SIDE VIEW

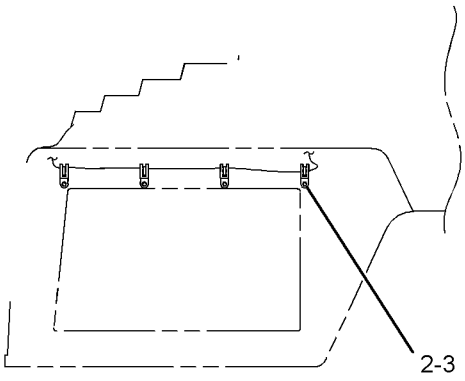

VIEW C-C

GRAPHIC #1 **<END>** g01014536

116-4928 WIRING GP-RIDE CONTROL

S/N: PDF1-UP
PART OF 167-7692 CONTROL AR-RIDE
AN ATTACHMENT

SMCS-5004, 5734 **i02029970**

NOTE	REF NO	GRAPHIC REF	PART NUMBER	QTY	PART NAME 1 2 3 4 5 6 (PRODUCT LEVEL)	SEE PAGE
	1	1	**106-8704**	1	SUPPRESSOR AS-ARC	
		1	**102-8802**	1	KIT-RECEPTACLE (2-PIN)	
		1	**3E-3365**	1	WEDGE-RECEPTACLE LOCK (2-PIN)	
		1	**8T-8729**	2	PIN-CONNECTOR	
	2	1	**107-6030**	1	SWITCH AS (RIDE CONTROL)	
		1	**111-7899**	1	GASKET	
	3	1	**125-8232**	1	HARNESS AS-RIDE CONTROL	
		1	**102-8802**	1	KIT-RECEPTACLE (2-PIN)	
		1	**155-2270**	2	KIT-CONNECTING PLUG (2-PIN)	
	4	1	**158-5089**	1	RELAY AS (24-VOLT) (RIDE CONTROL)	
	5	1	**7K-1181**	4	STRAP-CABLE	

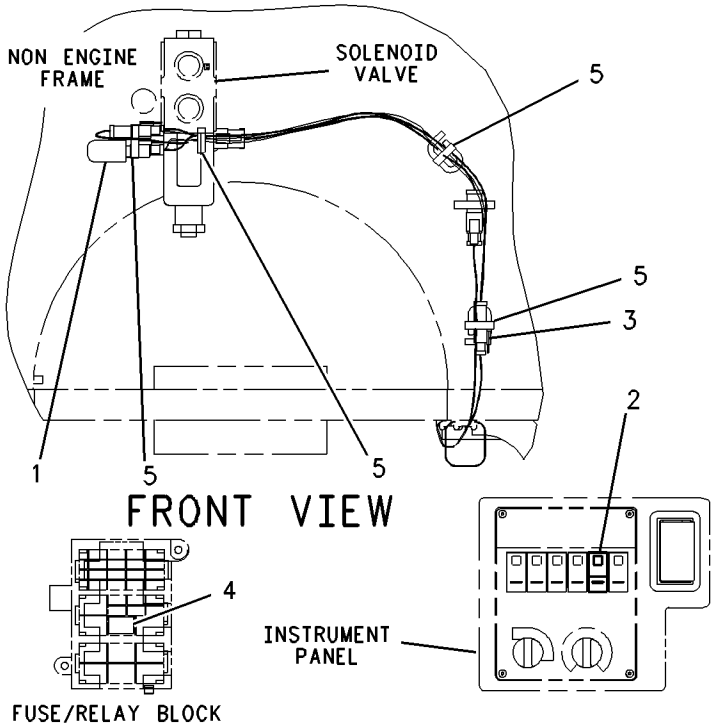

GRAPHIC #1 **<END>** g00679277

110-1329 WIRING GP-SECONDARY STEERING

S/N: PDF1-UP

PART OF 243-5009 CONVERSION AR-SECONDARY STEER, 237-9936 STEERING AR-SECONDARY AN ATTACHMENT

SMCS-1408, 4334 **i02029973**

NOTE	REF NO	GRAPHIC REF	PART NUMBER	QTY	PART NAME 1 2 3 4 5 6 (PRODUCT LEVEL)	SEE PAGE
	1	1	**1H-4393**	1	LOCKWASHER	
Y	2	1	**3E-0154**	1	SWITCH GP-MAGNETIC (MAIN RELAY)	135
	3	1	**3E-5239**	1	RELAY AS (24-VOLT) (HYD OIL TEMP)	
	4	1	**3T-2702**	1	BRACKET	
	5	1	**111-0161**	1	HOUSING	
	6	1	**114-3947**	1	PLATE	
	7	1	**115-1560**	1	SWITCH AS-SECONDARY STEERING	
		1	**111-7899**	1	GASKET	
	8	1	**115-1748**	2	LAMP (24-VOLT)	
	9	1	**158-5089**	1	RELAY AS (24-VOLT)	
	10	1	**108-8872**	2	CABLE AS	
	11	1	**118-5597**	1	DIODE AS	
	12	1	**121-2487**	1	HARNESS AS-STEERING	
		1	**9X-1054**	1	PLUG AS-CONNECTOR (4-PIN)	
		1	**102-8805**	1	KIT-RECEPTACLE (6-PIN)	
M	13	1	**5C-8312**	1	NUT (M4X0.7-THD)	
	14	1	**7X-4780**	1	GROMMET	
	15	1	**8M-2770**	2	CLIP	
	16	1	**8R-1460**	1	CABLE AS	
	17	1	**8T-4121**	4	WASHER-HARD (11X21X2.5-MM THK)	
M	18	1	**8T-4133**	1	NUT (M10X1.5-THD)	
M	19	1	**8T-4137**	2	BOLT (M10X1.5X20-MM)	
M	20	1	**8T-4138**	4	BOLT (M6X1X20-MM)	
M	21	1	**8T-4191**	3	BOLT (M10X1.5X16-MM)	
	22	1	**8T-4205**	4	WASHER-HARD (7.2X14.5X2-MM THK)	

M-METRIC PART
Y-SEPARATE ILLUSTRATION

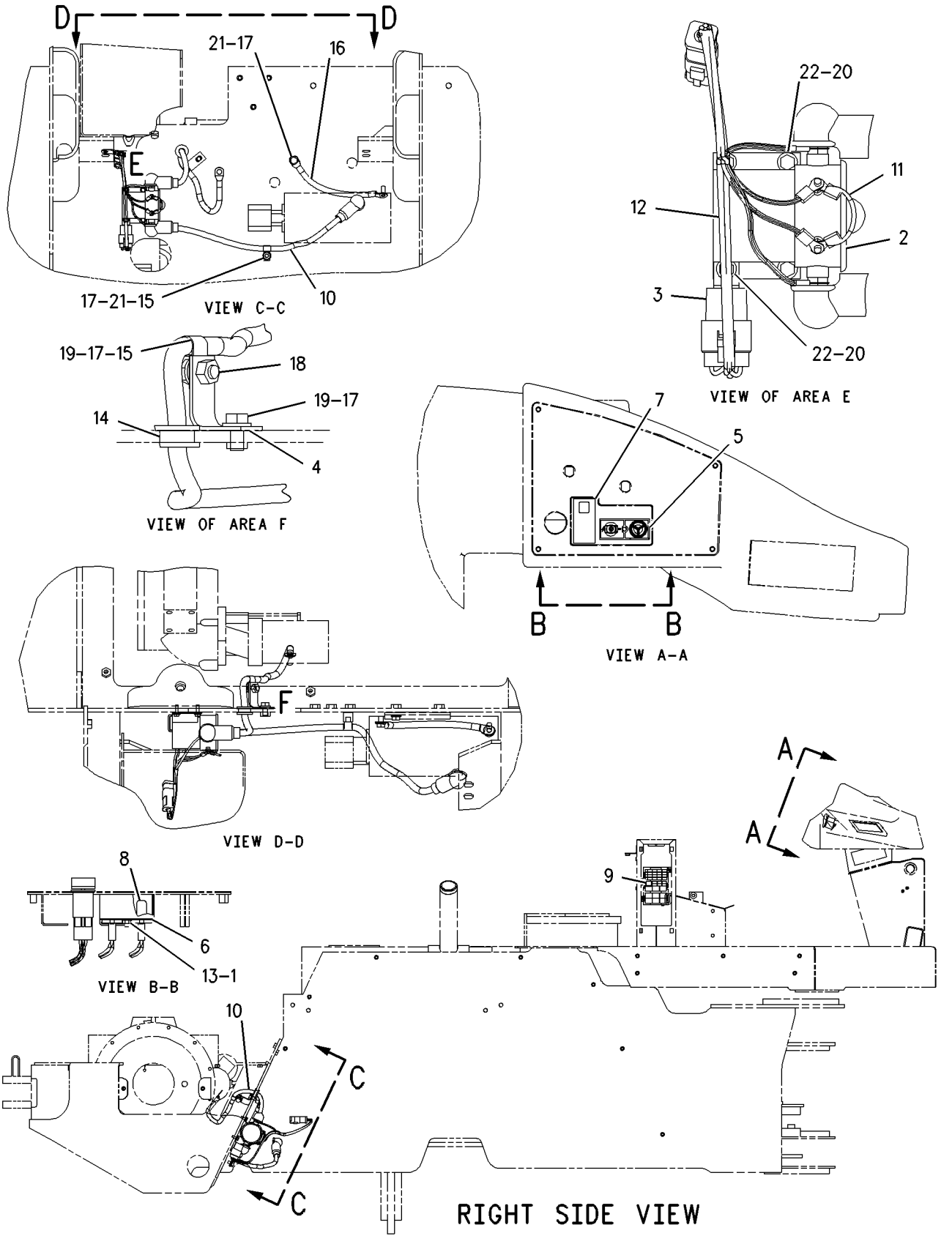

GRAPHIC #1 **<END>** g00802262

187-4511 ACTUATOR GP-PUMP

S/N: PDF1-UP

PART OF 156-7205 PUMP GP-PISTON

SMCS-5078 **i02029974**

NOTE	REF NO	GRAPHIC REF	PART NUMBER	QTY	PART NAME 1 2 3 4 5 6 (PRODUCT LEVEL)	SEE PAGE
M	1	1	**8T-1158**	8	BOLT-SOCKET HEAD (M8X1.25X20-MM)	
	2	1	**4D-1736**	2	RING-RETAINING	
	3	1	**153-2158**	1	PISTON	
	4	1	**6V-8398**	1	SEAL-O-RING	
	5	1	**126-1581**	1	ROD	
B	6	1	**183-8418**	2	SPACER (8-MM)	
B	7	1	**183-8419**	2	SPACER (7.85-MM)	
B	8	1	**183-8420**	2	SPACER (7.9-MM)	
B	9	1	**183-8421**	2	SPACER (7.95-MM)	
B	10	1	**183-8423**	2	SPACER (8.05-MM)	
B	11	1	**183-8424**	2	SPACER (8.1-MM)	
M	12	1	**161-7614**	1	NUT	
	13	1	**126-1587**	2	RETAINER	
	14	1	**119-7844**	4	SEAL-O-RING	
	15	1	**153-2783**	2	RETAINER-SPRING	
	16	1	**126-1584**	2	SPRING	
	17	1	**126-1585**	2	SPRING	
	18	1	**153-2162**	2	RING	
	19	1	**187-4515**	1	COVER	
	20	1	**179-4920**	1	COVER	
	21	1	**183-8429**	2	RING	
	22	1	**153-2163**	2	RING	
B	23	1	**183-8425**	2	SPACER (7.75-MM)	
B	24	1	**183-8426**	2	SPACER (7.80-MM)	

B-USE AS REQUIRED
M-METRIC PART

187-4511 **ACTUATOR GP-PUMP** ***(contd.)*** **i02029974**

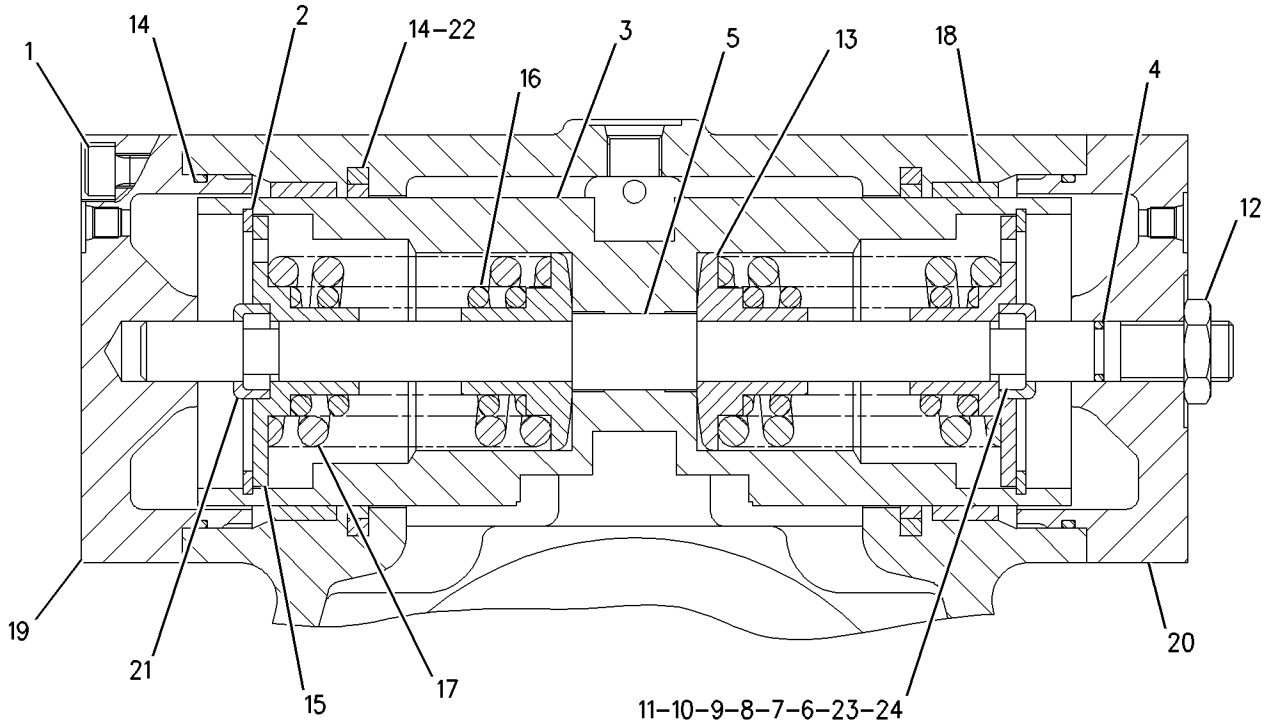

GRAPHIC #1 **<END>** g00774933

151-6328 AXLE AR-FIXED—FRONT, STANDARD DIFFERENTIAL

S/N: PDF1-UP
PART OF 239-6149 AXLE AR-FIXED
AN ATTACHMENT

SMCS-3013, 3278 **i00945532**

NOTE	PART NUMBER	QTY	PART NAME 1 2 3 4 5 6 (PRODUCT LEVEL)	SEE PAGE
Y	*152-2760*	2	BRAKE & PLANETARY GP	170
Y	*123-3225*	1	COVER GP-SHIPPING	182
Y	*109-4717*	1	DIFFERENTIAL GP	183
Y	*109-1029*	1	GEAR GP-BEVEL	188
Y	*110-5417*	1	HOUSING GP-FIXED AXLE	198

Y-SEPARATE ILLUSTRATION

<END>

151-6335 AXLE AR-FIXED—FRONT, LIMITED SLIP DIFFERENTIAL

S/N: PDF1-UP
PART OF 239-6150 AXLE AR-FIXED
AN ATTACHMENT

SMCS-3013, 3278 **i00945536**

NOTE	PART NUMBER	QTY	PART NAME 1 2 3 4 5 6 (PRODUCT LEVEL)	SEE PAGE
Y	*152-2760*	2	BRAKE & PLANETARY GP	170
Y	**118-5025**	1	DIFFERENTIAL GP-LIMITED SLIP	184
Y	*118-4905*	1	GEAR GP-BEVEL	191
Y	*110-5417*	1	HOUSING GP-FIXED AXLE	198

Y-SEPARATE ILLUSTRATION

<END>

239-6149 AXLE AR-FIXED—FRONT, STANDARD DIFFERENTIAL

S/N: PDF1-UP
AN ATTACHMENT

SMCS-3013, 3278 **i02003583**

NOTE	PART NUMBER	QTY	PART NAME 1 2 3 4 5 6 (PRODUCT LEVEL)	SEE PAGE
Y	*151-6328*	1	AXLE AR-FIXED (FRONT, STANDARD DIFFERENTIAL)	167

Y-SEPARATE ILLUSTRATION

<END>

239-6150 AXLE AR-FIXED—FRONT, LIMITED SLIP DIFFERENTIAL

S/N: PDF1-UP
AN ATTACHMENT

SMCS-3013, 3278 **i02003584**

NOTE	PART NUMBER	QTY	PART NAME 1 2 3 4 5 6 (PRODUCT LEVEL)	SEE PAGE
Y	*151-6335*	1	AXLE AR-FIXED (FRONT, LIMITED SLIP DIFF)	167

Y-SEPARATE ILLUSTRATION

<END>

151-6336 AXLE AR-OSCILLATING–REAR, STANDARD DIFFERENTIAL

S/N: PDF1-UP
PART OF 239-6151 AXLE AR-OSCILLATING
AN ATTACHMENT

SMCS-3013, 3278 **i00945537**

NOTE	PART NUMBER	QTY	PART NAME 1 2 3 4 5 6 (PRODUCT LEVEL)	SEE PAGE
Y	*152-2760*	2	BRAKE & PLANETARY GP	170
Y	*109-4717*	1	DIFFERENTIAL GP	183
Y	*110-6116*	1	GEAR GP-BEVEL	189
Y	*110-5426*	1	HOUSING GP-OSCILLATING AXLE	200

Y-SEPARATE ILLUSTRATION

<END>

151-6337 AXLE AR-OSCILLATING–REAR, LIMITED SLIP DIFFERENTIAL

S/N: PDF1-UP
PART OF 239-6152 AXLE AR-OSCILLATING
AN ATTACHMENT

SMCS-3013, 3278 **i00945538**

NOTE	PART NUMBER	QTY	PART NAME 1 2 3 4 5 6 (PRODUCT LEVEL)	SEE PAGE
Y	*152-2760*	2	BRAKE & PLANETARY GP	170
Y	**118-5025**	1	DIFFERENTIAL GP-LIMITED SLIP	184
Y	*118-4648*	1	GEAR GP-BEVEL	190
Y	*110-5426*	1	HOUSING GP-OSCILLATING AXLE	200

Y-SEPARATE ILLUSTRATION

<END>

239-6151 AXLE AR-OSCILLATING–REAR, STANDARD DIFFERENTIAL

S/N: PDF1-UP
AN ATTACHMENT

SMCS-3013, 3278 **i02003585**

NOTE	PART NUMBER	QTY	PART NAME 1 2 3 4 5 6 (PRODUCT LEVEL)	SEE PAGE
Y	*151-6336*	1	AXLE AR-OSCILLATING (REAR, STANDARD DIFFERENTIAL)	168

Y-SEPARATE ILLUSTRATION

<END>

239-6152 AXLE AR-OSCILLATING–
REAR, LIMITED SLIP DIFFERENTIAL
S/N: PDF1-UP
AN ATTACHMENT

SMCS-3013, 3278 **i02003588**

NOTE	PART NUMBER	QTY	PART NAME 1 2 3 4 5 6 (PRODUCT LEVEL)	SEE PAGE
Y	*151-6337*	1	AXLE AR-OSCILLATING (REAR, LIMITED SLIP DIFF)	168

Y-SEPARATE ILLUSTRATION

<END>

152-2760 BRAKE & PLANETARY GP

S/N: PDF1-UP

PART OF 151-6328, 151-6335 AXLE AR-FIXED, 151-6336, 151-6337 AXLE AR-OSCILLATING AN ATTACHMENT

SMCS-4011, 4255 **i02018778**

NOTE	REF NO	GRAPHIC REF	PART NUMBER	QTY	PART NAME 1 2 3 4 5 6 (PRODUCT LEVEL)	SEE PAGE
	1	1	**110-5187**	1	CARRIER-PLANETARY (41-TEETH)	
	2	1	**108-8770**	1	GEAR-RING (72-TEETH)	
	3	1	**152-2761**	1	PLATE-REACTION	
	4	1	**128-9522**	1	DISC-FRICTION	
	5	1	**152-4533**	1	SEAL	
	6	1	**123-3172**	1	SEAL	
	7	1	**236-1868**	1	GEAR-SUN (18-TEETH)	
	8	1	**162-5238**	1	PISTON	
	9	1	**4M-1677**	3	DOWEL-REACTION	
	10	1	**108-8769**	3	GEAR-PLANET (26-TEETH)	
	11	1	**109-0707**	3	BEARING-SLEEVE	
	12	1	**110-5190**	6	WASHER-THRUST (1.6-MM THK)	
	13	1	**095-0889**	3	PIN-SPRING	
	14	1	**109-0292**	3	SHAFT-PLANETARY	
	15	1	**151-4009**	3	SPRING	
	16	1	**8T-0255**	3	PIN-SPRING	

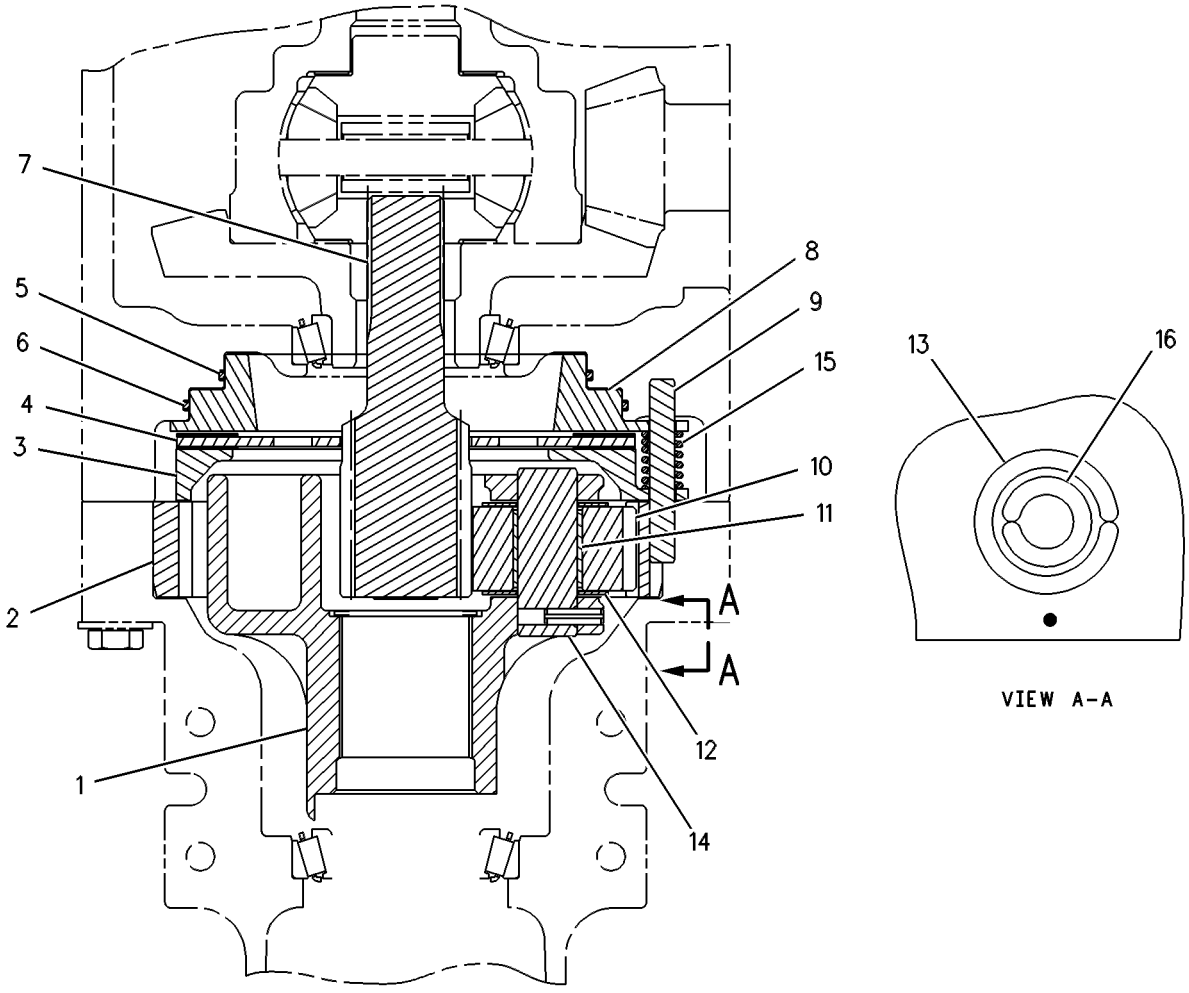

GRAPHIC #1 **<END>** g00370162

107-4841 CONTROL AR-SPEED

S/N: PDF1-UP
AN ATTACHMENT

SMCS-3162 **i00758132**

NOTE	PART NUMBER	QTY	PART NAME 1 2 3 4 5 6 (PRODUCT LEVEL)	SEE PAGE
Y	*118-0820*	1	COVER GP-CONSOLE	475
Y-SEPARATE ILLUSTRATION				

<END>

107-4842 CONTROL AR-SPEED—CREEPER

S/N: PDF1-UP
PART OF 241-9557 CONTROL AR-SPEED
AN ATTACHMENT

SMCS-3162 **i00709938**

NOTE	PART NUMBER	QTY	PART NAME 1 2 3 4 5 6 (PRODUCT LEVEL)	SEE PAGE
Y	*107-4639*	1	CONTROL GP-CREEPER	172
Y	*112-9267*	1	LINES GP-HYDRAULIC	356
Y-SEPARATE ILLUSTRATION				

<END>

241-9557 CONTROL AR-SPEED—ENGINE

S/N: PDF1-UP
AN ATTACHMENT

SMCS-3162 **i02005309**

NOTE	PART NUMBER	QTY	PART NAME 1 2 3 4 5 6 (PRODUCT LEVEL)	SEE PAGE
Y	*107-4842*	1	CONTROL AR-SPEED	171
Y	*236-5666*	1	CONVERSION AR-MACHINE	3
Y-SEPARATE ILLUSTRATION				

<END>

107-4639 CONTROL GP-CREEPER

S/N: PDF1-UP
PART OF 107-4842 CONTROL AR-SPEED
AN ATTACHMENT

SMCS-3162 **i02014364**

NOTE	REF NO	GRAPHIC REF	PART NUMBER	QTY	PART NAME 1 2 3 4 5 6 (PRODUCT LEVEL)	SEE PAGE
	1	1	**4E-1062**	1	CUSHION AS-ARMREST	
D	2	1	**5P-5670**		SEAL (0.8-M)	
M	3	1	**8C-4982**	1	BOLT-SOCKET HEAD (M4X0.7X20-MM)	
Y	4	1	**107-3255**	1	VALVE GP-ROTARY	246
	5	1	**107-6035**	1	SWITCH AS-SPEED SELECT	
		1	**111-7899**	1	GASKET	
	6	1	**111-0149**	1	SUPPORT AS	
	7	1	**111-7875**	1	PLATE	
	8	1	**128-1040**	1	PLUG	
	9	1	**170-2111**	1	BRACKET AS	
	10	1	**170-2112**	1	BRACKET AS	
	11	1	**170-2113**	1	LEVER	
	12	1	**170-2114**	1	CAP	
	13	1	**170-2115**	1	COVER AS	
	14	1	**187-2082**	1	LEVER-CONTROL	
	15	1	**3V-5349**	2	PLUG-BUTTON	
M	16	1	**5C-7261**	2	NUT (M8X1.25-THD)	
M	17	1	**7X-2619**	1	BOLT (M6X1.0X20-MM)	
	18	1	**8T-4121**	2	WASHER-HARD (11X21X2.5-MM THK)	
M	19	1	**8T-4138**	2	BOLT (M6X1X20-MM)	
	20	1	**8T-4205**	3	WASHER-HARD (7.2X14.5X2-MM THK)	
M	21	1	**8T-4224**	2	WASHER-HARD (8.8X16X2-MM THK)	
M	22	1	**9X-2042**	6	SCREW-TRUSS HEAD (M6X1X12-MM)	
M	23	1	**9X-2045**	2	SCREW-TRUSS HEAD (M6X1X20-MM)	
D	24	1	**5P-5670**		SEAL (1.2-M)	

D-ORDER BY THE METER
M-METRIC PART
Y-SEPARATE ILLUSTRATION

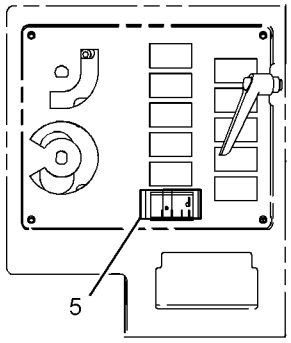

VIEW OF AREA F

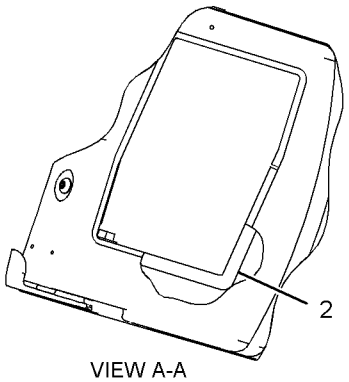

VIEW A-A

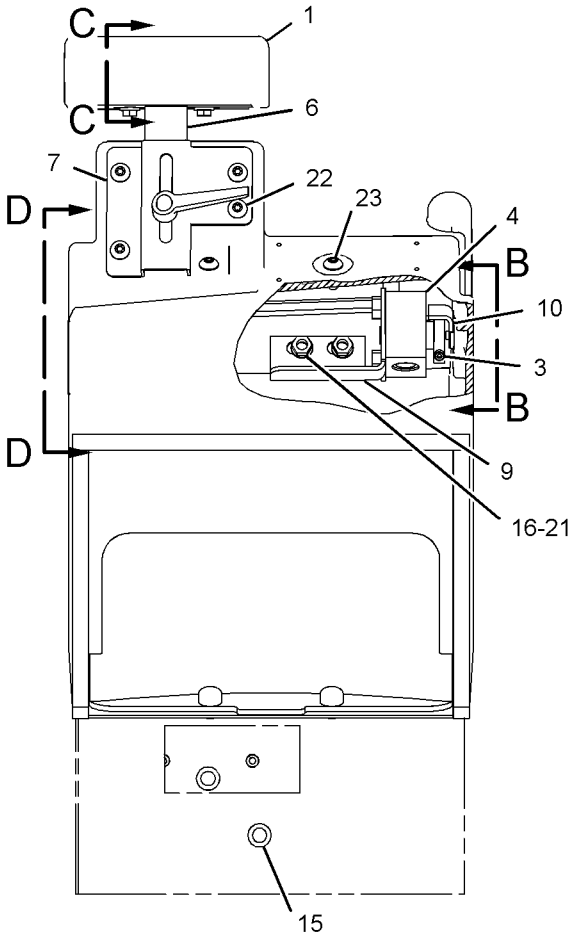

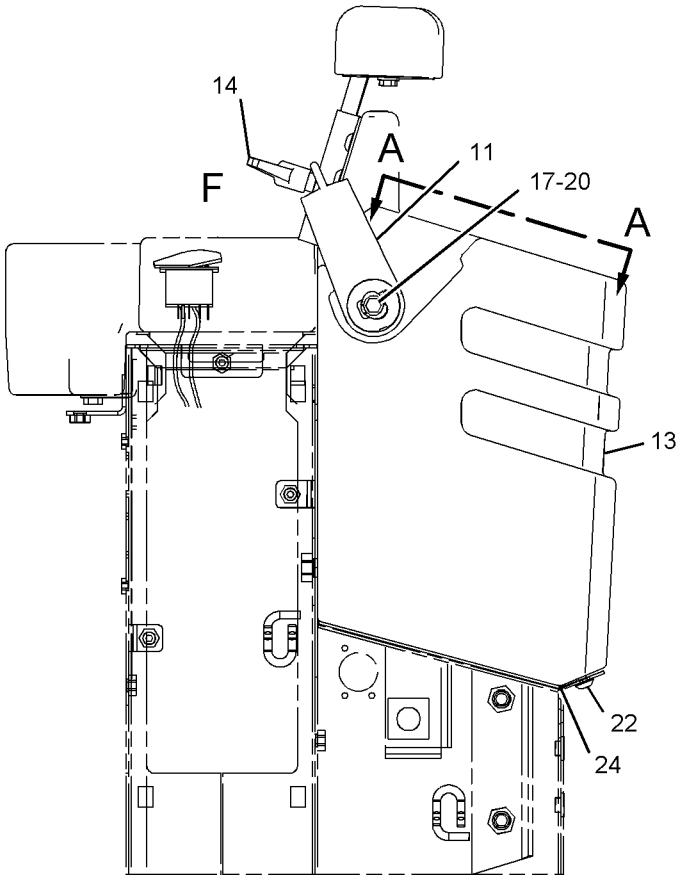

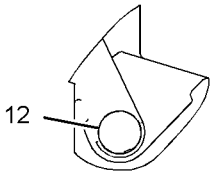

VIEW B-B

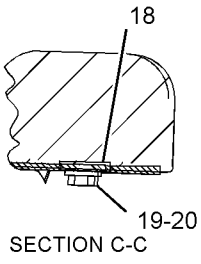

SECTION C-C

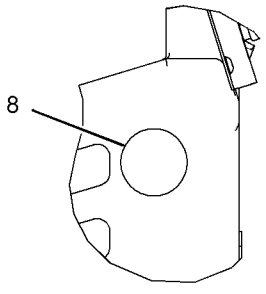

VIEW D-D

GRAPHIC #1

<END>

g01041995

107-4626 CONTROL GP-TMSN & JOYSTICK

S/N: PDF1-UP
AN ATTACHMENT

SMCS-3065, 5705 **i01605108**

NOTE	REF NO	GRAPHIC REF	PART NUMBER	QTY	PART NAME 1 2 3 4 5 6 (PRODUCT LEVEL)	SEE PAGE
	1	1	**7K-4357**	2	STRIP	
M	2	1	**7Y-3173**	1	SCREW-BUTTON HEAD (M4X0.7X12MM)	
Y	3	1	**106-8984**	1	CONTROL GP-TRANSMISSION	177
	4	1	**114-3936**	1	ROD	
	5	1	**120-2134**	1	KNOB AS	
M	6	1	**134-1374**	4	BOLT-SOCKET HEAD (M5X.8X20MM)	
	7	1	**1H-4393**	1	LOCKWASHER	
M	8	1	**8T-4244**	1	NUT (M12X1.75 THD)	

M-METRIC PART
Y-SEPARATE ILLUSTRATION

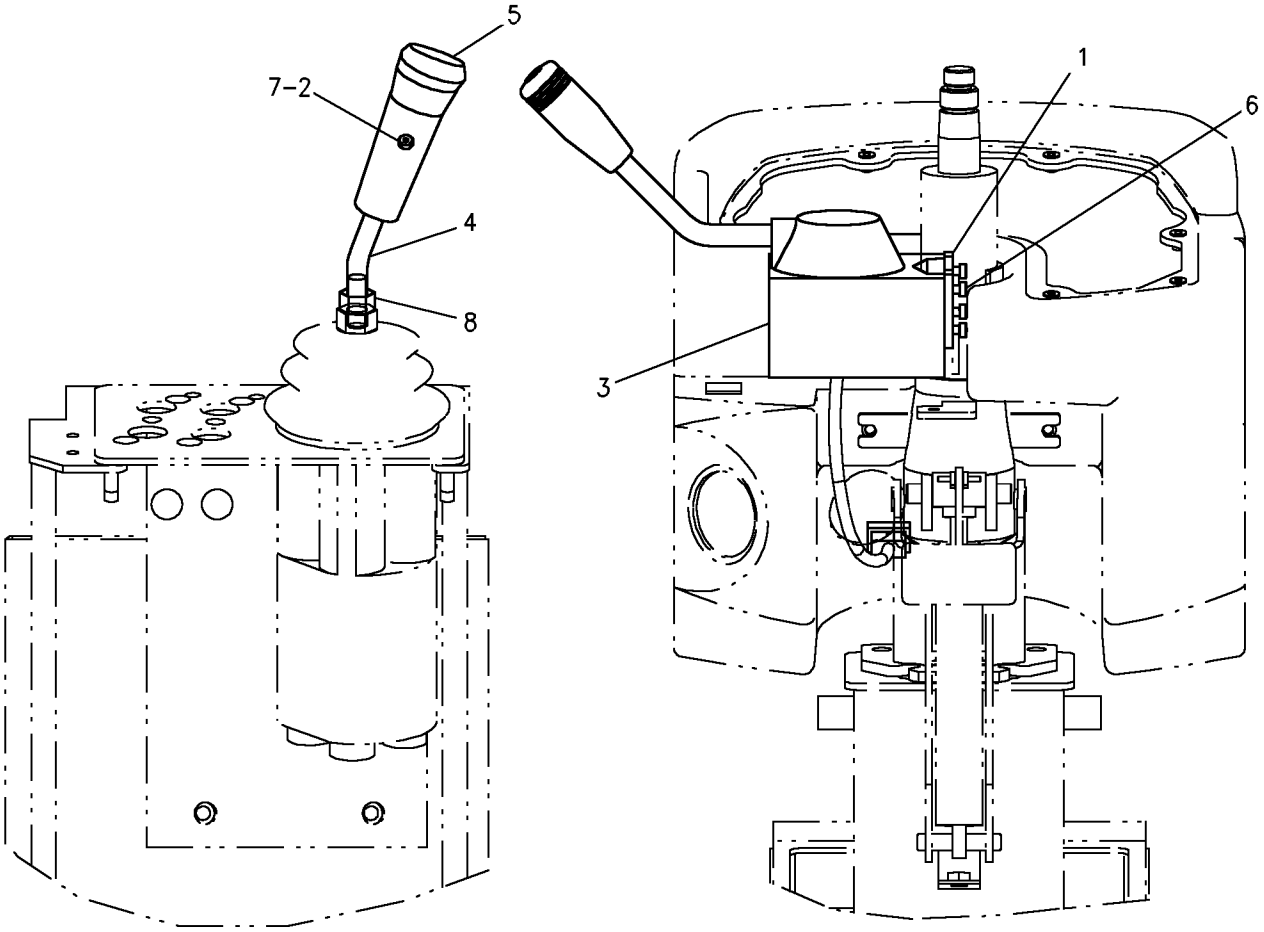

GRAPHIC #1 **<END>** g00831301

150-3716 CONTROL GP-TRANSMISSION

S/N: PDF1-UP
AN ATTACHMENT

SMCS-3065, 5705 **i01934476**

NOTE	REF NO	GRAPHIC REF	PART NUMBER	QTY	PART NAME 1 2 3 4 5 6 (PRODUCT LEVEL)	SEE PAGE
M	1	1	**150-1293**	2	SCREW-BUTTON HEAD (M4X0.7X12MM)	
	2	1	**102-8804**	1	KIT-RECEPTACLE (4 PIN)	
					(INCLUDES RECEPTACLE AS AND WEDGE)	
M	3	1	**134-1374**	4	BOLT-SOCKET HEAD (M5X.8X20MM)	
	4	1	**148-0643**	1	LAMP GP-INDICATOR	
Y	5	1	**149-2331**	1	CONTROL GP-TRANSMISSION	178
	6	1	**149-4359**	1	ROD-CONTROL	
	7	1	**208-6098**	1	HANDLE GP-MODULAR	
		1	**186-3735**	4	PIN-CONNECTOR	
	8	1	**3E-3377**	1	WEDGE-RECEPTACLE LOCK	
M	9	1	**8T-2659**	2	LOCKNUT	
M	10	1	**8T-4244**	1	NUT (M12X1.75 THD)	

M-METRIC PART
Y-SEPARATE ILLUSTRATION

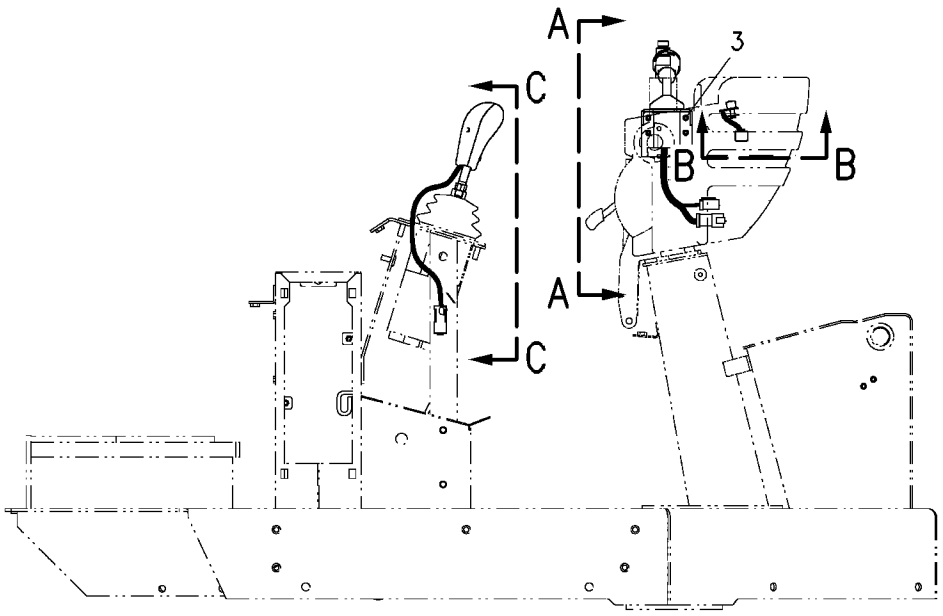

RIGHT SIDE VIEW

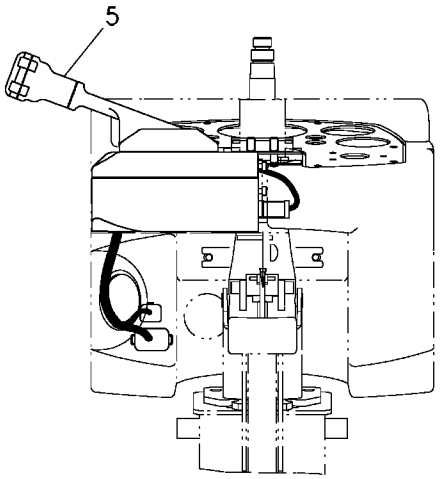

VIEW A-A

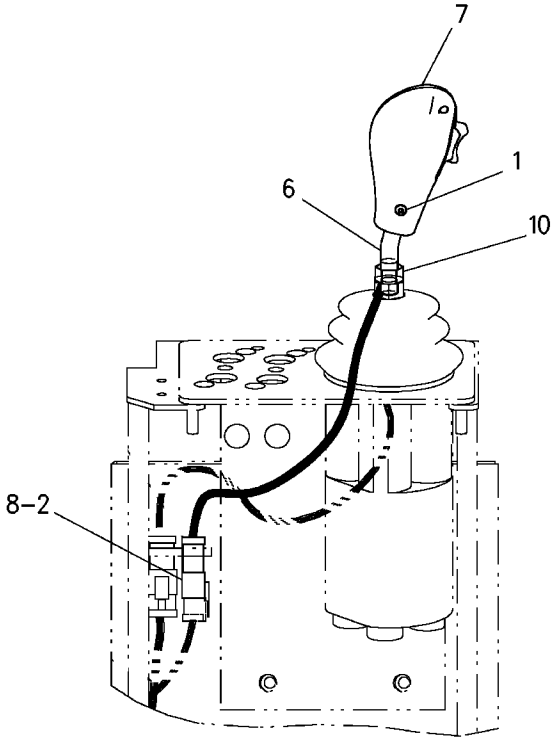

VIEW C-C

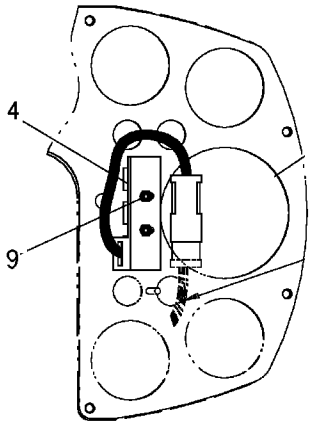

VIEW B-B

GRAPHIC #1 **<END>** g01006831

106-8984 CONTROL GP-TRANSMISSION

S/N: PDF1-UP
PART OF 107-4626 CONTROL GP-TMSN & JOYSTICK
AN ATTACHMENT

SMCS-3065 **i01597691**

NOTE	REF NO	GRAPHIC REF	PART NUMBER	QTY	PART NAME 1 2 3 4 5 6 (PRODUCT LEVEL)	SEE PAGE
	1	1	**102-8801**	1	KIT-RECEPTACLE (12 PIN)	
	2	1	**186-3735**	10	PIN-CONNECTOR	
	3	1	**3E-5180**	1	WEDGE-RECEPTACLE LOCK	

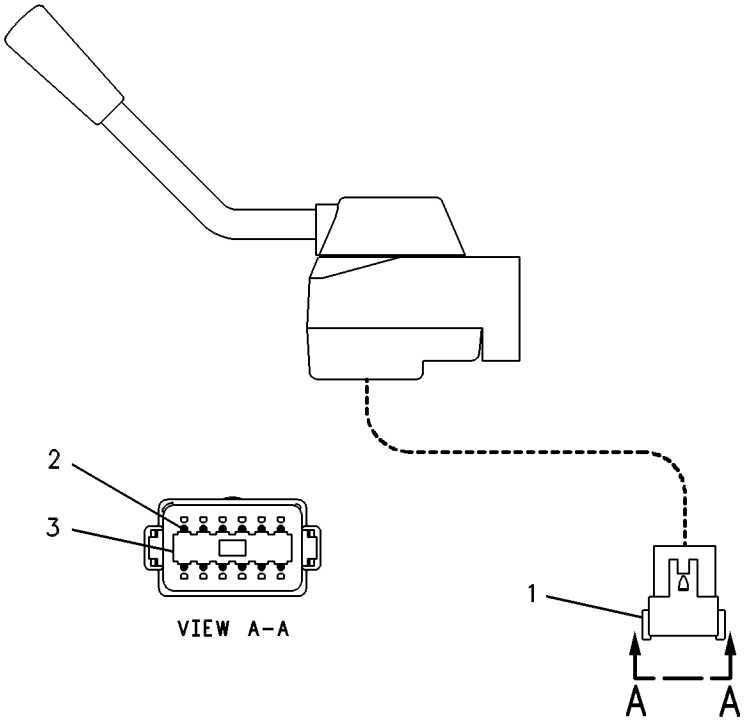

GRAPHIC #1 **<END>** g00269366

149-2331 CONTROL GP-TRANSMISSION

S/N: PDF1-UP
PART OF 150-3716 CONTROL GP-TMSN & JOYSTICK
AN ATTACHMENT

SMCS-3065 **i01066395**

NOTE	REF NO	GRAPHIC REF	PART NUMBER	QTY	PART NAME 1 2 3 4 5 6 (PRODUCT LEVEL)	SEE PAGE
	1	1	**8T-8729**	12	PIN-CONNECTOR	
J	2	1	**102-8801**	1	KIT-RECEPTACLE (12 PIN)	
J	3	1	**3E-5180**	1	WEDGE-RECEPTACLE LOCK	
L	4	1	**102-8809**	1	KIT-PLUG (4 PIN)	
L	5	1	**3E-3374**	1	WEDGE-PLUG LOCK	
	6	1	**8T-8730**	4	SOCKET-CONNECTOR	
	7	1	**9G-3695**	2	PLUG-SEAL	

J-KIT MARKED J INCLUDES PART MARKED J
L-KIT MARKED L INCLUDES PART MARKED L

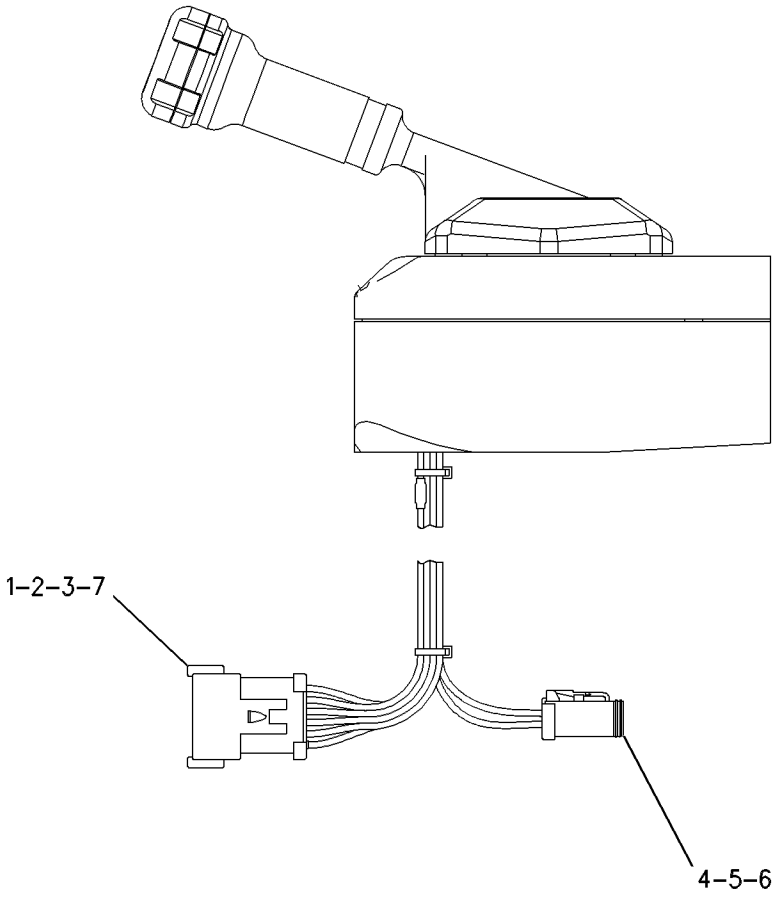

GRAPHIC #1 **<END>** g00569784

107-4812 COVER GP-HYDROSTATIC

S/N: PDF1-UP

PART OF 236-5635 CHASSIS AR

SMCS-3203 **i01551522**

NOTE	REF NO	GRAPHIC REF	PART NUMBER	QTY	PART NAME 1 2 3 4 5 6 (PRODUCT LEVEL)	SEE PAGE
D	1	1	**5P-5643**		SEAL (0.581M)	
E	2	1	**7X-7877**		STRIP-EDGING (0.335M)	
	3	1	**9R-8084**	1	BEARING	
	4	1	**107-4747**	1	COVER AS	
	5	1	**107-4748**	1	WALL AS	
	6	1	**116-4809**	1	SUPPORT AS	
	7	1	**116-4810**	1	SHEET AS	
	8	1	**116-4812**	1	SHEET	
	9	1	**116-4813**	1	COVER AS	
	10	1	**116-4814**	1	BAFFLE	
E	11	1	**124-3243**		SEAL (125.1CM)	
	12	1	**128-6874**	1	ROD AS	
		1	**5M-2894**	3	WASHER-HARD (10.2X18.5X2.5MM THK)	
	13	1	**138-2075**	1	KEEPER	
	14	1	**138-2076**	1	PLATE	
	15	1	**3B-4610**	1	COTTER	
	16	1	**5P-4116**	17	WASHER-HARD (8.8X20.5X2MM THK)	
M	17	1	**6V-7357**	2	BOLT (M6X1.0X25MM)	
	18	1	**7X-7729**	12	WASHER (11X25X3MM THK)	
	19	1	**8T-4121**	1	WASHER-HARD (11X21X2.5MM THK)	
M	20	1	**8T-4136**	2	BOLT (M10X1.5X25MM)	
M	21	1	**8T-4137**	9	BOLT (M10X1.5X20MM)	
M	22	1	**8T-4189**	4	BOLT (M8X1.25X20MM)	
M	23	1	**8T-4196**	1	BOLT (M10X1.5X35MM)	
M	24	1	**8T-4200**	13	BOLT (M8X1.25X16MM)	
	25	1	**9X-8256**	2	WASHER (6.6X12X2MM THK)	
D	26	1	**7X-7877**		STRIP-EDGING (0.22M)	
D	27	1	**7X-7877**		STRIP-EDGING (0.106M)	
D	28	1	**7X-7877**		STRIP-EDGING (0.178M)	

D-ORDER BY THE METER
E-ORDER BY THE CENTIMETER
M-METRIC PART

107-4812 **COVER GP-HYDROSTATIC** *(contd.)* **i01551522**

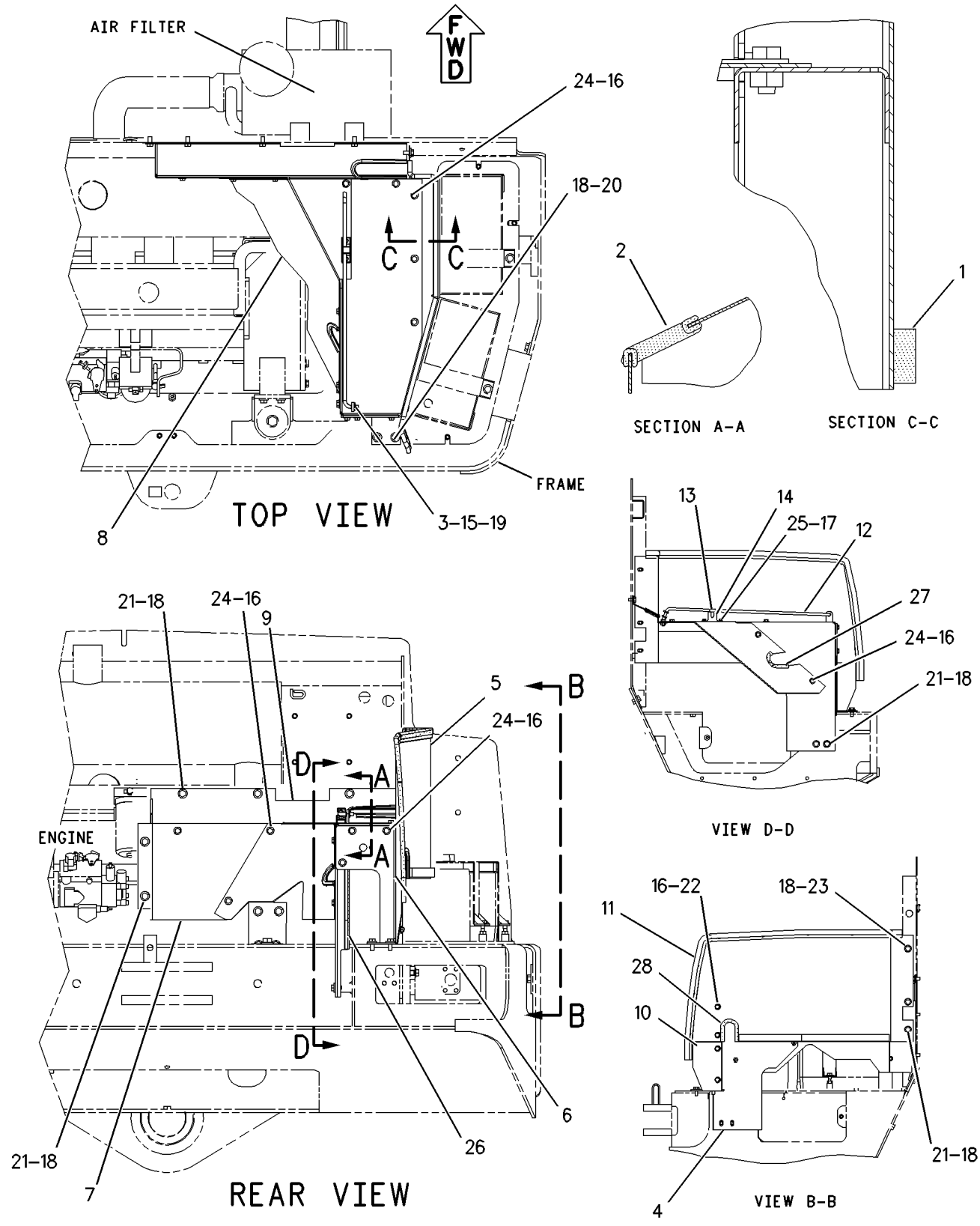

GRAPHIC #1 **<END>** g00808288

123-5746 COVER GP-MOTOR

S/N: PDF1-UP

PART OF 135-0785 HEAD GP-MOTOR

SMCS-4351 **i02018264**

NOTE	REF NO	GRAPHIC REF	PART NUMBER	QTY	PART NAME 1 2 3 4 5 6 (PRODUCT LEVEL)	SEE PAGE
	1	1	**123-5796**	1	PIN	
	2	1	**123-5797**	1	COVER	
	3	1	**123-5798**	1	SEAT	
	4	1	**123-5799**	1	SEAT	
M	5	1	**3E-9856**	4	BOLT-SOCKET HEAD (M10X1.5-THD)	
	6	1	**215-3198**	1	SEAL-O-RING	
	7	1	**6V-3965**	1	FITTING (QUICK DISCONNECT)	
	8	1	**3J-1907**	1	SEAL-O-RING	

M-METRIC PART

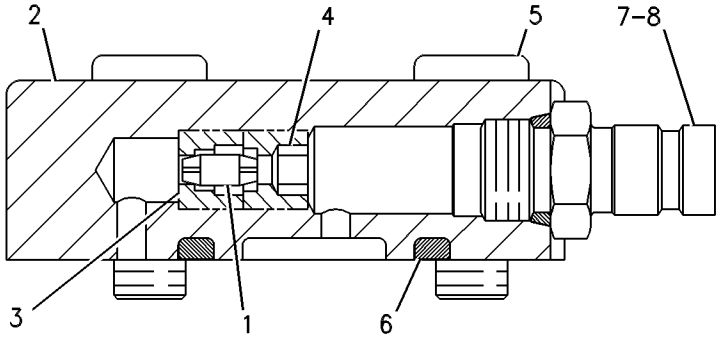

GRAPHIC #1 **<END>** g00267974

123-3225 COVER GP-SHIPPING

S/N: PDF1-UP
PART OF 151-6328 AXLE AR-FIXED
AN ATTACHMENT

SMCS-3064 **i00718898**

NOTE	REF NO	GRAPHIC REF	PART NUMBER	QTY	PART NAME 1 2 3 4 5 6 (PRODUCT LEVEL)	SEE PAGE
	1	1	**9S-4182**	2	PLUG (7/16-20 THD)	
	2	1	**8T-5360**	2	WASHER (2.5MM THK)	

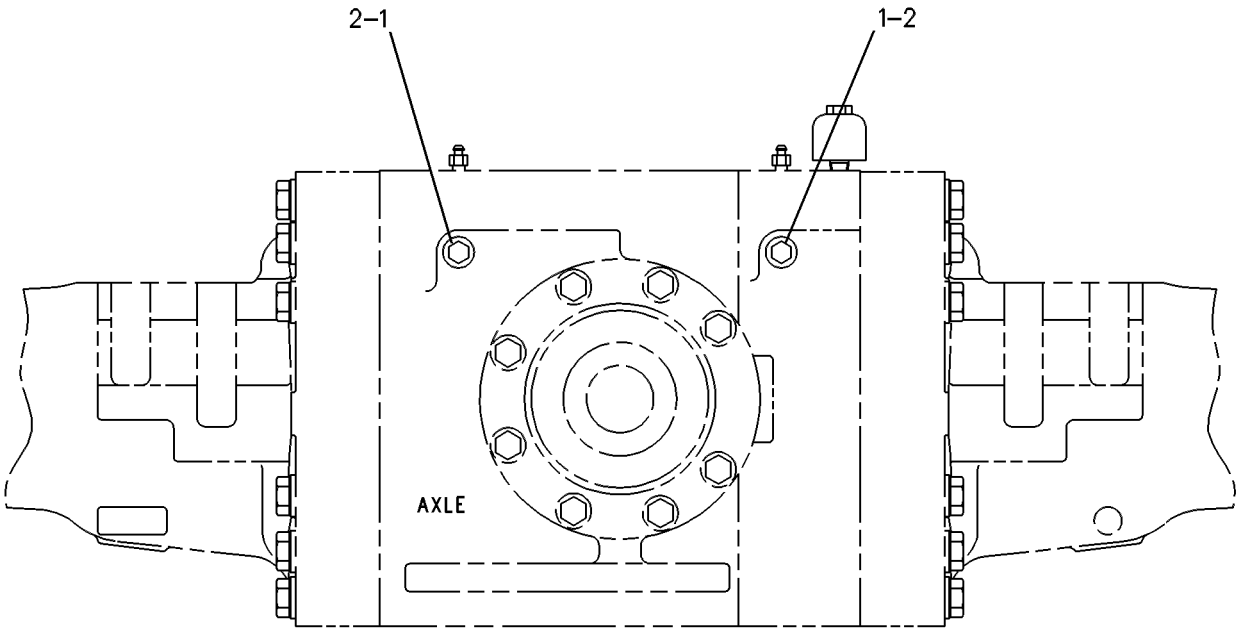

GRAPHIC #1 **<END>** g00250882

109-4717 DIFFERENTIAL GP

S/N: PDF1-UP

PART OF 151-6328 AXLE AR-FIXED, 151-6336 AXLE AR-OSCILLATING AN ATTACHMENT

SMCS-3258 **i00716641**

NOTE	REF NO	GRAPHIC REF	PART NUMBER	QTY	PART NAME 1 2 3 4 5 6 (PRODUCT LEVEL)	SEE PAGE
	1	1	**109-4726**	1	CASE-DIFFERENTIAL	
	2	1	**109-4719**	2	GEAR-DIFFERENTIAL (20 TEETH)	
	3	1	**109-4720**	2	WASHER-THRUST (1.5MM THK)	
	4	1	**109-4718**	4	PINION-DIFFERENTIAL (12 TEETH)	
	5	1	**126-9529**	3	DOWEL	
	6	1	**109-4725**	1	CONNECTOR	
	7	1	**109-4723**	1	SHAFT	
	8	1	**109-4722**	4	WASHER-THRUST	
	9	1	**109-4724**	2	SHAFT	

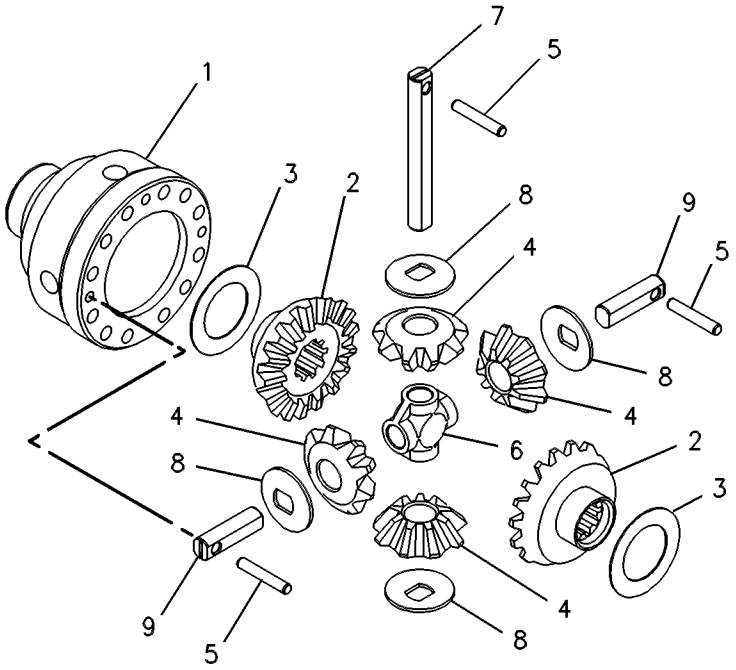

GRAPHIC #1 **<END>** g00250703

118-5025 DIFFERENTIAL GP-LIMITED SLIP

S/N: PDF1-UP

PART OF 151-6335 AXLE AR-FIXED, 151-6337 AXLE AR-OSCILLATING AN ATTACHMENT

SMCS-3263 **i02029979**

NOTE	REF NO	GRAPHIC REF	PART NUMBER	QTY	PART NAME 1 2 3 4 5 6 (PRODUCT LEVEL)	SEE PAGE
	1	1	**118-5031**	1	CASE-HOUSING	
	2	1	**118-5026**	2	KIT-DISC	
B	3	1	**118-5027**	2	KIT-SHIM (INCLUDES 8 SHIMS)	
	4	1	**126-9529**	3	DOWEL	
	5	1	**109-4724**	2	SHAFT	
	6	1	**109-4725**	1	CONNECTOR	
	7	1	**109-4718**	4	PINION-DIFFERENTIAL (12-TEETH)	
	8	1	**109-4723**	1	SHAFT	
	9	1	**109-4722**	4	WASHER-THRUST	
	10	1	**120-1347**	2	GEAR-DIFFERENTIAL BEVEL	

B-USE AS REQUIRED

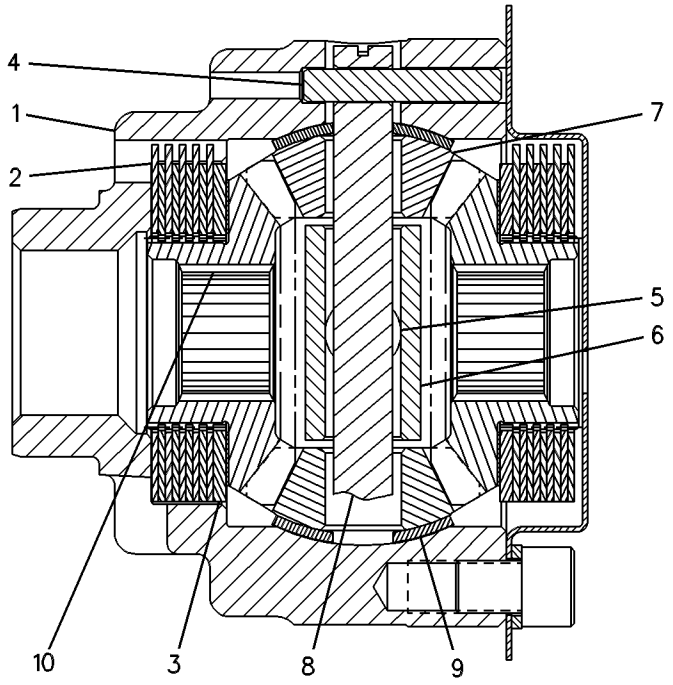

GRAPHIC #1 **<END>** g00251744

POWER TRAIN

109-0535 DRIVE GP-TRANSFER

S/N: PDF1-UP

PART OF 237-6260 POWER TRAIN AR

SMCS-3159, 4350 **i00908188**

NOTE	REF NO	GRAPHIC REF	PART NUMBER	QTY	PART NAME 1 2 3 4 5 6 (PRODUCT LEVEL)	SEE PAGE
	1	1	**109-0609**	1	HOUSING-COVER	
	2	1	**110-3015**	1	GEAR (27 TEETH)	
	3	1	**8B-5972**	1	BALL BEARING	
	4	1	**108-5732**	1	YOKE AS	
		1	**108-5735**	1	GUARD	
	5	1	**4F-7389**	1	SEAL-O-RING (37.47MM ID)	
	6	1	**7G-5220**	1	RETAINER	
M	7	1	**6V-5696**	1	BOLT (M12X1.75X80MM)	
	8	1	**133-4295**	1	SEAL-LIP TYPE	
	9	1	**109-0613**	1	RETAINER-BEARING & SEAL	
	10	1	**112-6605**	1	BAFFLE AS	
	11	1	**9X-8256**	3	WASHER (2MM THK)	
M	12	1	**8T-4171**	3	BOLT (M6X1.0X12MM)	
M	13	1	**6V-8675**	10	BOLT (M12X1.75X35MM)	
	14	1	**5P-8245**	10	WASHER (3MM THK)	
M	15	1	**8T-4195**	4	BOLT (M10X1.50X30MM)	
B	16	1	**1U-8846**		SEALANT	
	17	1	**8T-4121**	4	WASHER (2.5MM THK)	
	18	1	**3S-9182**	1	PLUG-MAGNETIC	
	19	1	**1B-5174**	1	PLUG-PIPE (3/4-14 NPTF)	
	20	1	**130-8187**	1	BLOCK	
M	21	1	**8T-6912**	2	BOLT (M8X1.50X50MM)	
	22	1	**8T-4224**	2	WASHER-HARD (2MM THK)	

B-USE AS REQUIRED
M-METRIC PART

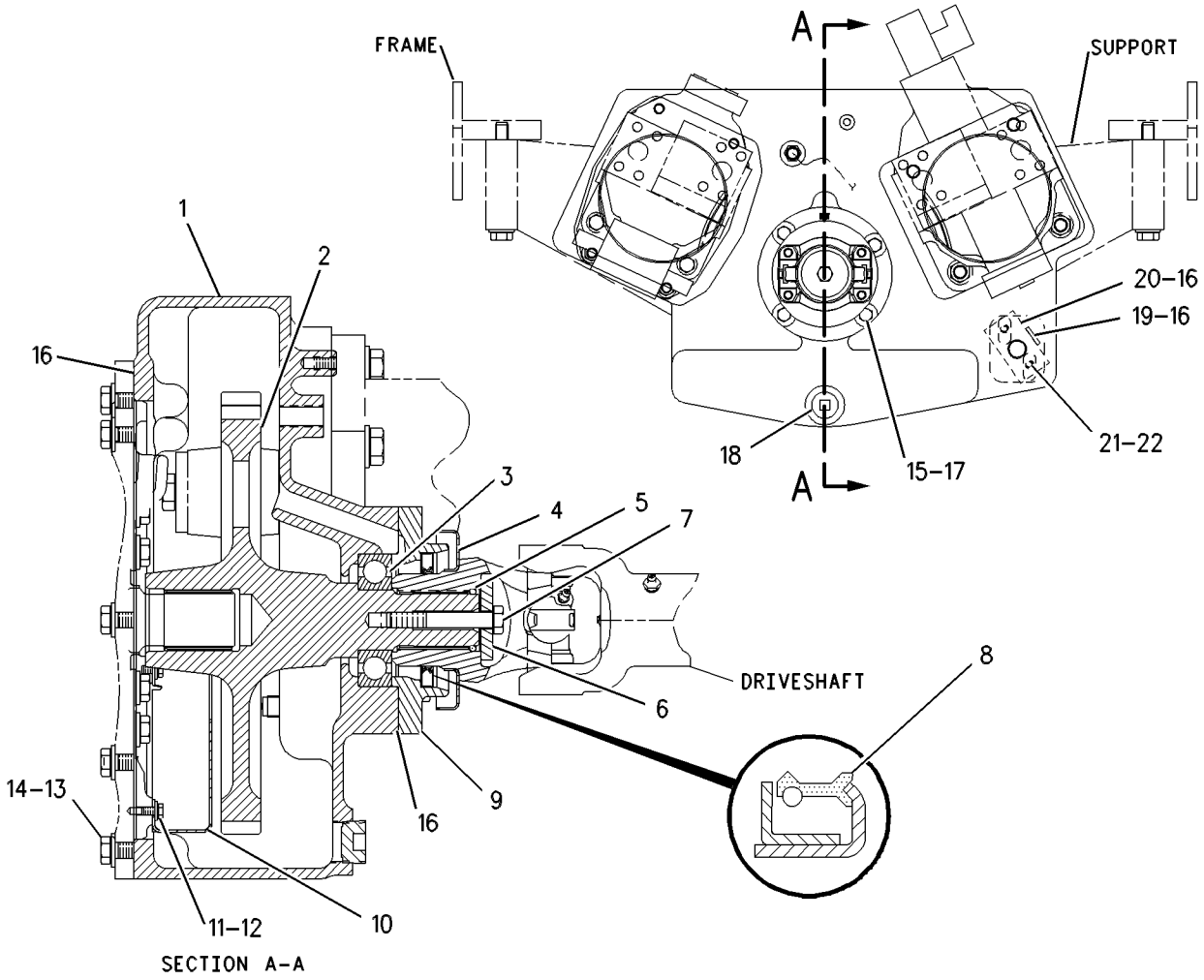

GRAPHIC #1 **<END>** g00283492

137-7747 FILTER GP-OIL

S/N: PDF1-UP

PART OF 242-4043 LINES GP-POWER TRAIN FILTER

SMCS-3004, 3067 **i01349832**

NOTE	REF NO	GRAPHIC REF	PART NUMBER	QTY	PART NAME 1 2 3 4 5 6 (PRODUCT LEVEL)	SEE PAGE
	1	1	**1G-8878**	1	FILTER AS-OIL	
	2	1	**6V-0852**	1	CAP-DUST	
	3	1	**6V-3965**	1	FITTING AS	
	4	1	**7X-8549**	1	SWITCH AS-PRESSURE	
	5	1	**8C-3446**	1	VALVE-FLUID SAMPLING	
	6	1	**8C-3451**	1	CAP-DUST	
	7	1	**3J-1907**	2	SEAL-O-RING (11.89MM ID)	
	8	1	**3J-7354**	1	SEAL-O-RING (8.92MM ID)	

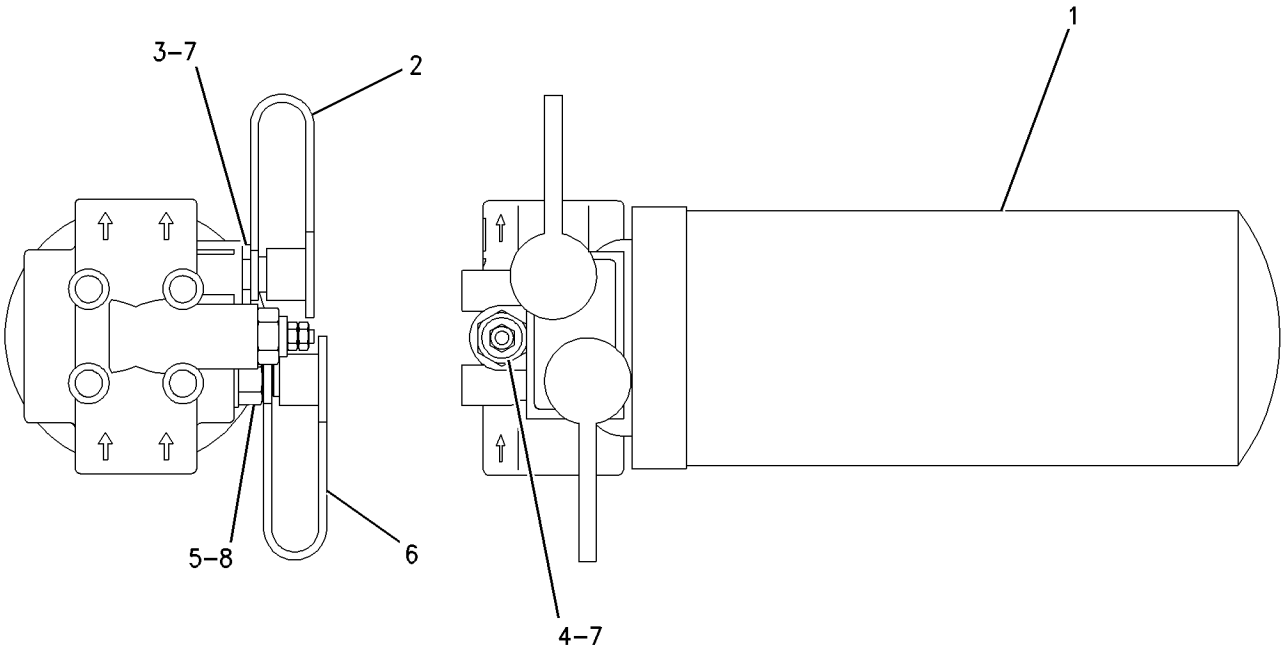

GRAPHIC #1 **<END>** g00712433

109-1029 GEAR GP-BEVEL

S/N: PDF1-UP
PART OF 151-6328 AXLE AR-FIXED
AN ATTACHMENT

SMCS-3256 **i02029992**

NOTE	REF NO	GRAPHIC REF	PART NUMBER	QTY	PART NAME 1 2 3 4 5 6 (PRODUCT LEVEL)	SEE PAGE
	1	1	**9S-7949**	2	CUP-BEARING	
	2	1	**9S-7950**	2	CONE-BEARING	
	3	1	**9C-7292**	1	NUT-BEARING	
M	4	1	**6V-8210**	1	BOLT (M8X1.25X16-MM)	
	5	1	**109-5502**	1	LOCK-BEARING	
	6	1	**2D-9190**	1	CUP-BEARING	
	7	1	**2D-9191**	1	CONE-BEARING	
	8	1	**170-8522**	1	GEAR SET-BEVEL (13 TEETH)	
	9	1	**4D-8648**	1	CUP-BEARING	
	10	1	**4D-8649**	1	CONE-BEARING	
	11	1	**108-5734**	1	YOKE-BRAKE	
M	12	1	**134-2634**	12	BOLT	
B	13	1	**7I-3003**	1	SHIM PACK (INCLUDES 12 SHIMS)	
	14	1	**4F-7389**	1	SEAL-O-RING	
	15	1	**7G-5220**	1	RETAINER	
M	16	1	**6V-5696**	1	BOLT (M12X1.75X80-MM)	

B-USE AS REQUIRED
M-METRIC PART

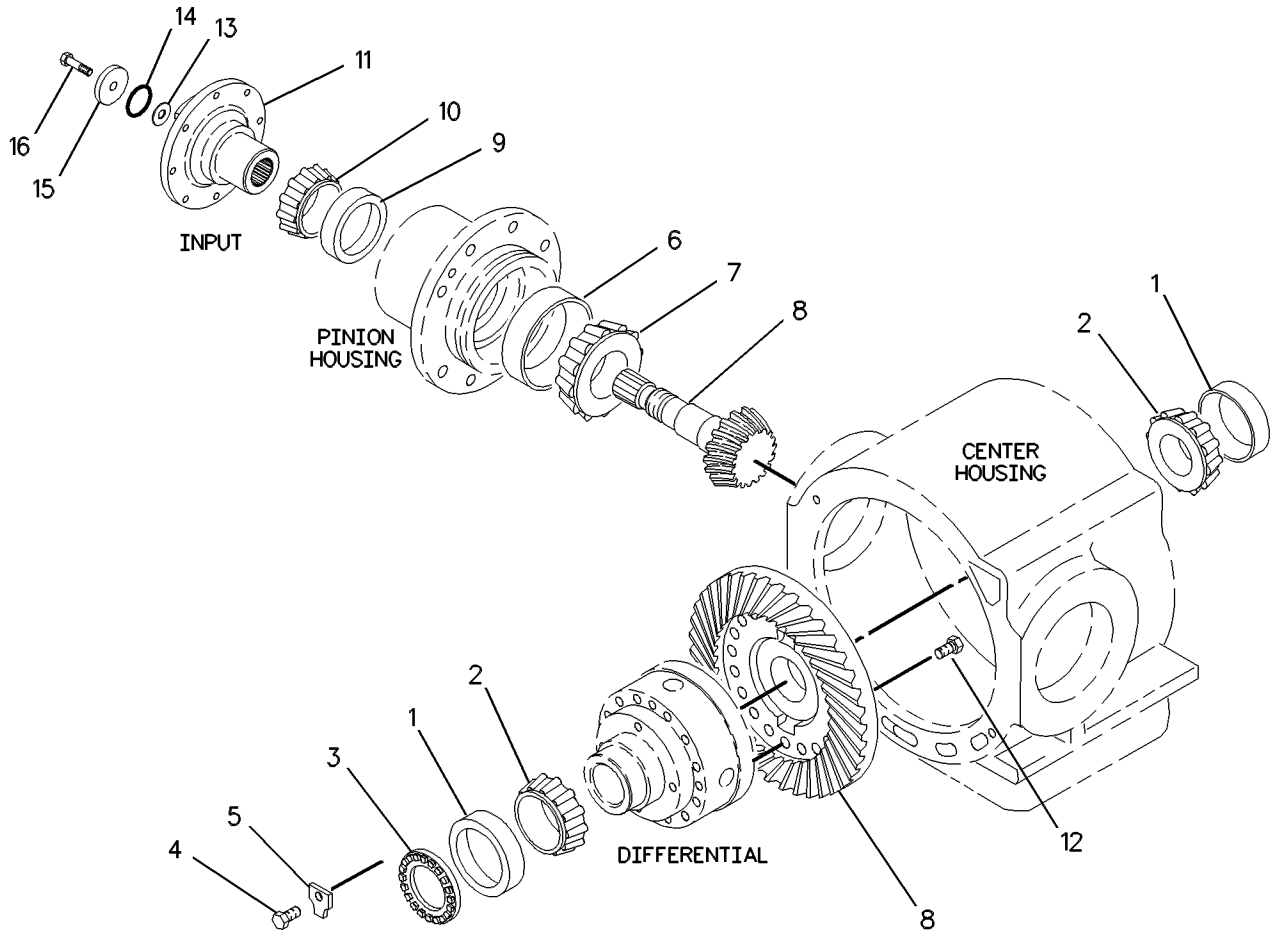

GRAPHIC #1 **<END>** g00571656

110-6116 GEAR GP-BEVEL

S/N: PDF1-UP
PART OF 151-6336 AXLE AR-OSCILLATING
AN ATTACHMENT

SMCS-3256 **i02030001**

NOTE	REF NO	GRAPHIC REF	PART NUMBER	QTY	PART NAME 1 2 3 4 5 6 (PRODUCT LEVEL)	SEE PAGE
M	1	1	**6V-8210**	1	BOLT (M8X1.25X16-MM)	
	2	1	**109-5502**	1	LOCK-BEARING	
	3	1	**9C-7292**	1	NUT-BEARING	
	4	1	**9S-7949**	2	CUP-BEARING	
	5	1	**9S-7950**	2	CONE-BEARING	
	6	1	**2D-9190**	1	CUP-BEARING	
	7	1	**112-8008**	1	CONE-BEARING	
	8	1	**7X-4802**	1	SEAL-LIP TYPE	
	9	1	**4D-8648**	1	CUP-BEARING	
	10	1	**112-8009**	1	CONE-BEARING	
	11	1	**170-8520**	1	GEAR SET-BEVEL	
M	12	1	**9C-5206**	1	NUT-STAKE	
	13	1	**8R-2236**	1	WASHER (4-MM THK)	
M	14	1	**134-2634**	12	BOLT	

M-METRIC PART

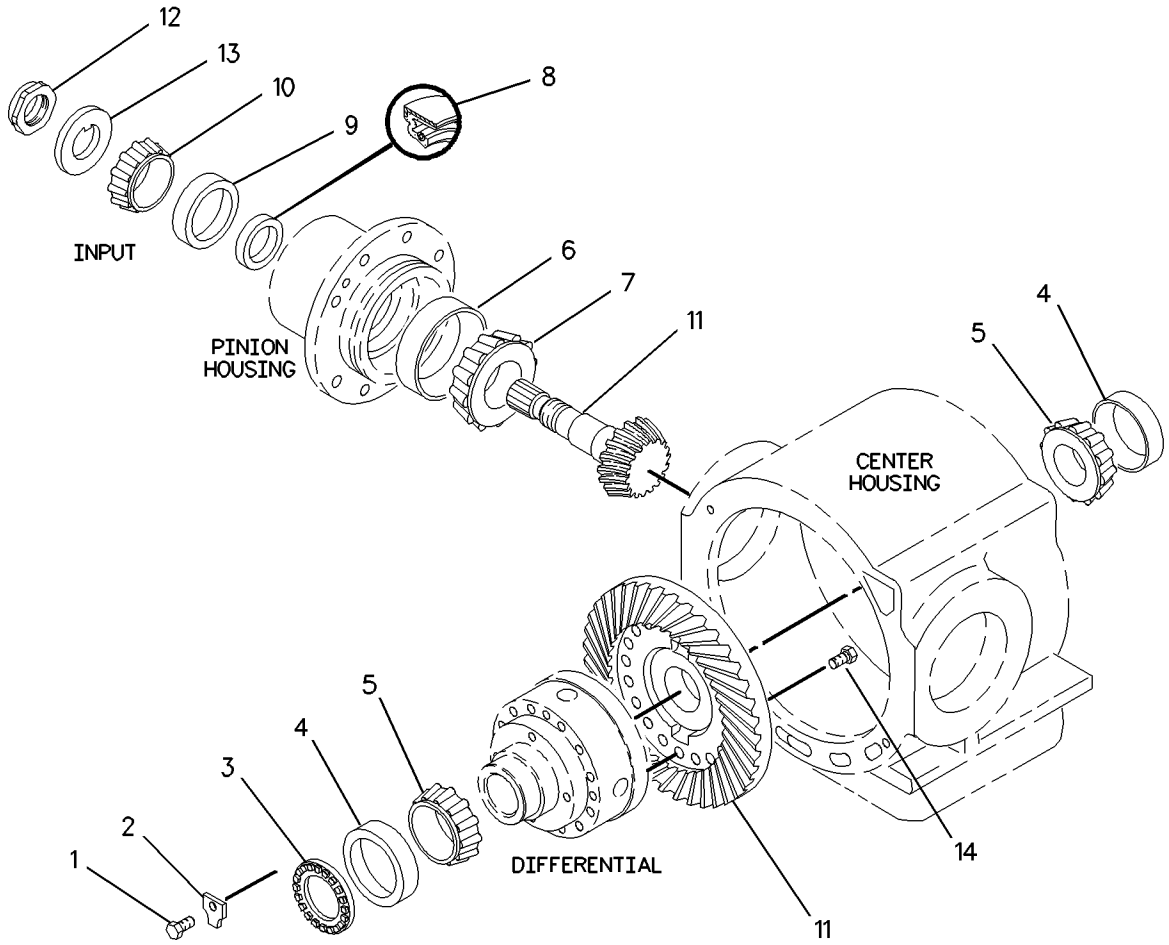

GRAPHIC #1 **<END>** g00795952

118-4648 GEAR GP-BEVEL

S/N: PDF1-UP
PART OF 151-6337 AXLE AR-OSCILLATING
AN ATTACHMENT

SMCS-3256 **i02030067**

NOTE	REF NO	GRAPHIC REF	PART NUMBER	QTY	PART NAME 1 2 3 4 5 6 (PRODUCT LEVEL)	SEE PAGE
M	1	1	**6V-8210**	1	BOLT (M8X1.25X16-MM)	
	2	1	**109-5502**	1	LOCK-BEARING	
	3	1	**9C-7292**	1	NUT-BEARING	
	4	1	**9S-7949**	2	CUP-BEARING	
	5	1	**9S-7950**	2	CONE-BEARING	
	6	1	**2D-9190**	1	CUP-BEARING	
	7	1	**112-8008**	1	CONE-BEARING	
	8	1	**7X-4802**	1	SEAL-LIP TYPE	
	9	1	**4D-8648**	1	CUP-BEARING	
	10	1	**112-8009**	1	CONE-BEARING	
	11	1	**170-8524**	1	GEAR SET-BEVEL	
M	12	1	**9C-5206**	1	NUT-STAKE	
	13	1	**8R-2236**	1	WASHER (4-MM THK)	
M	14	1	**6V-5686**	12	BOLT (M16X2X50-MM)	

M-METRIC PART

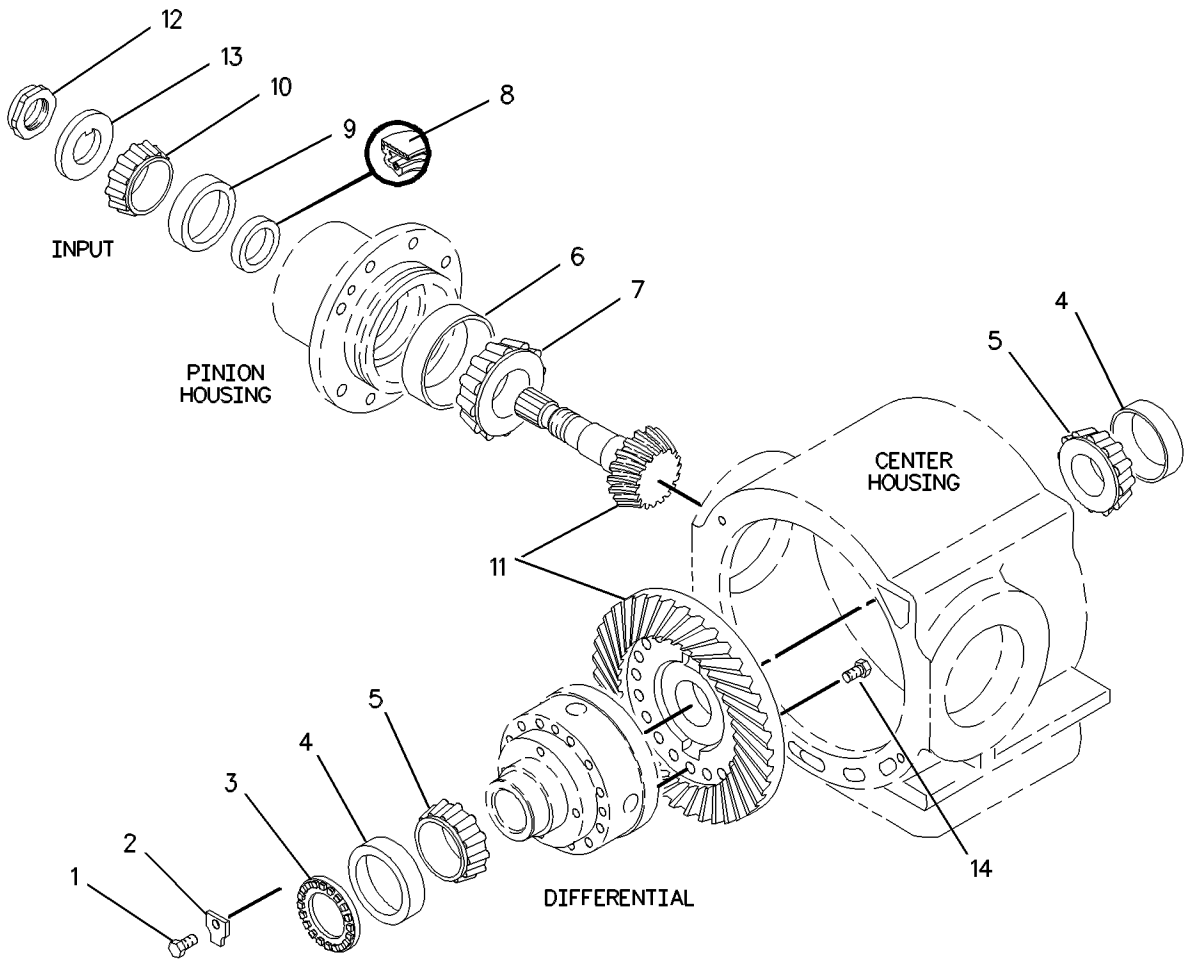

GRAPHIC #1 **<END>** g00574470

118-4905 GEAR GP-BEVEL

S/N: PDF1-UP
PART OF 151-6335 AXLE AR-FIXED
AN ATTACHMENT

SMCS-3256 **i02030069**

NOTE	REF NO	GRAPHIC REF	PART NUMBER	QTY	PART NAME 1 2 3 4 5 6 (PRODUCT LEVEL)	SEE PAGE
	1	1	**9S-7949**	2	CUP-BEARING	
	2	1	**9S-7950**	2	CONE-BEARING	
	3	1	**9C-7292**	1	NUT-BEARING	
M	4	1	**6V-8210**	1	BOLT (M8X1.25X16-MM)	
	5	1	**109-5502**	1	LOCK-BEARING	
	6	1	**2D-9190**	1	CUP-BEARING	
	7	1	**2D-9191**	1	CONE-BEARING	
	8	1	**170-8523**	1	GEAR SET-BEVEL	
	9	1	**4D-8648**	1	CUP-BEARING	
	10	1	**4D-8649**	1	CONE-BEARING	
	11	1	**108-5734**	1	YOKE-BRAKE	
M	12	1	**6V-5686**	12	BOLT (M16X2X50-MM)	
M	13	1	**6V-5696**	1	BOLT (M12X1.75X80-MM)	
B	14	1	**7I-3003**	1	SHIM PACK (INCLUDES 12 SHIMS)	
	15	1	**4F-7389**	1	SEAL-O-RING	
	16	1	**7G-5220**	1	RETAINER	

B-USE AS REQUIRED
M-METRIC PART

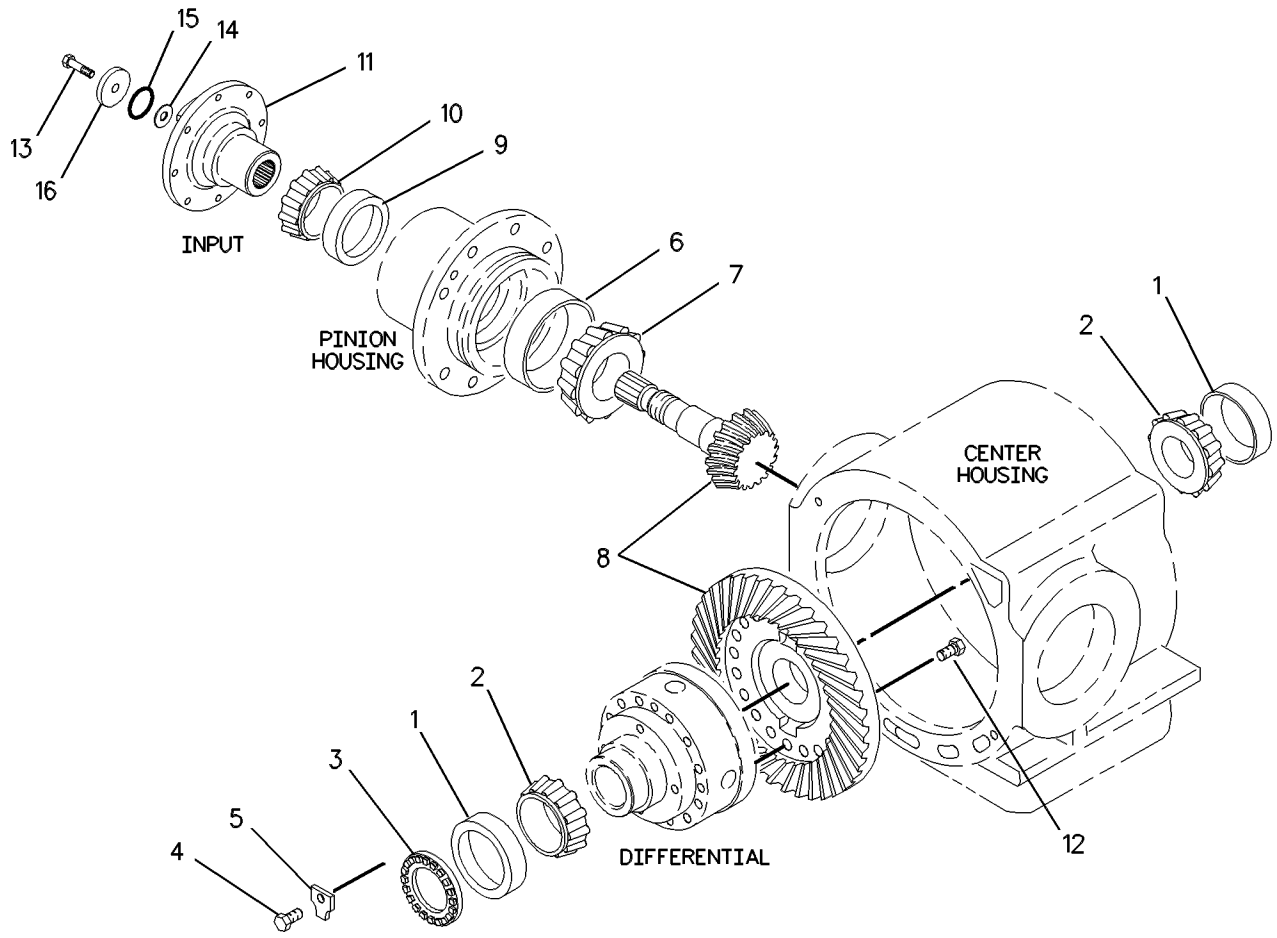

GRAPHIC #1 **<END>** g00573250

124-9911 HEAD GP-MOTOR

S/N: PDF1-UP

PART OF 168-1837 MOTOR GP-PISTON

SMCS-3202, 5058 **i02018530**

NOTE	REF NO	GRAPHIC REF	PART NUMBER	QTY	PART NAME 1 2 3 4 5 6 (PRODUCT LEVEL)	SEE PAGE
Y	1	1	**124-9976**	1	VALVE GP-PILOT	239
	2	1	**124-9939**	1	HEAD	
Y	3	1	**124-9977**	1	VALVE GP-PILOT	241
	4	1	**124-9941**	1	TRUNNION	
	5	1	**124-9940**	1	PISTON	
	6	1	**138-4181**	1	PISTON	
M	7	1	**123-4953**	1	BOLT-SOCKET HEAD	
	8	1	**123-2016**	1	PIN	
	9	1	**9X-7680**	6	SEAL-O-RING	
M	10	1	**6V-8200**	8	BOLT-HEX SOCKET (M12X1.75X35-MM)	
	11	1	**120-4394**	2	PLUG-BREAK OFF	
	12	1	**123-5800**	2	PLUG	
	13	1	**123-5787**	2	SEAT	
	14	1	**123-5786**	2	VALVE	
	15	1	**242-8004**	2	GUIDE-VALVE	
	16	1	**033-6039**	2	SEAL-O-RING	
	17	1	**107-3116**	2	SEAL-O-RING	
	18	1	**138-4182**	3	SEAL	
	19	1	**8C-3336**	2	DOWEL	
	20	1	**242-0262**	2	RING-BACKUP	

M-METRIC PART
Y-SEPARATE ILLUSTRATION

124-9911 **HEAD GP-MOTOR** ***(contd.)*** **i02018530**

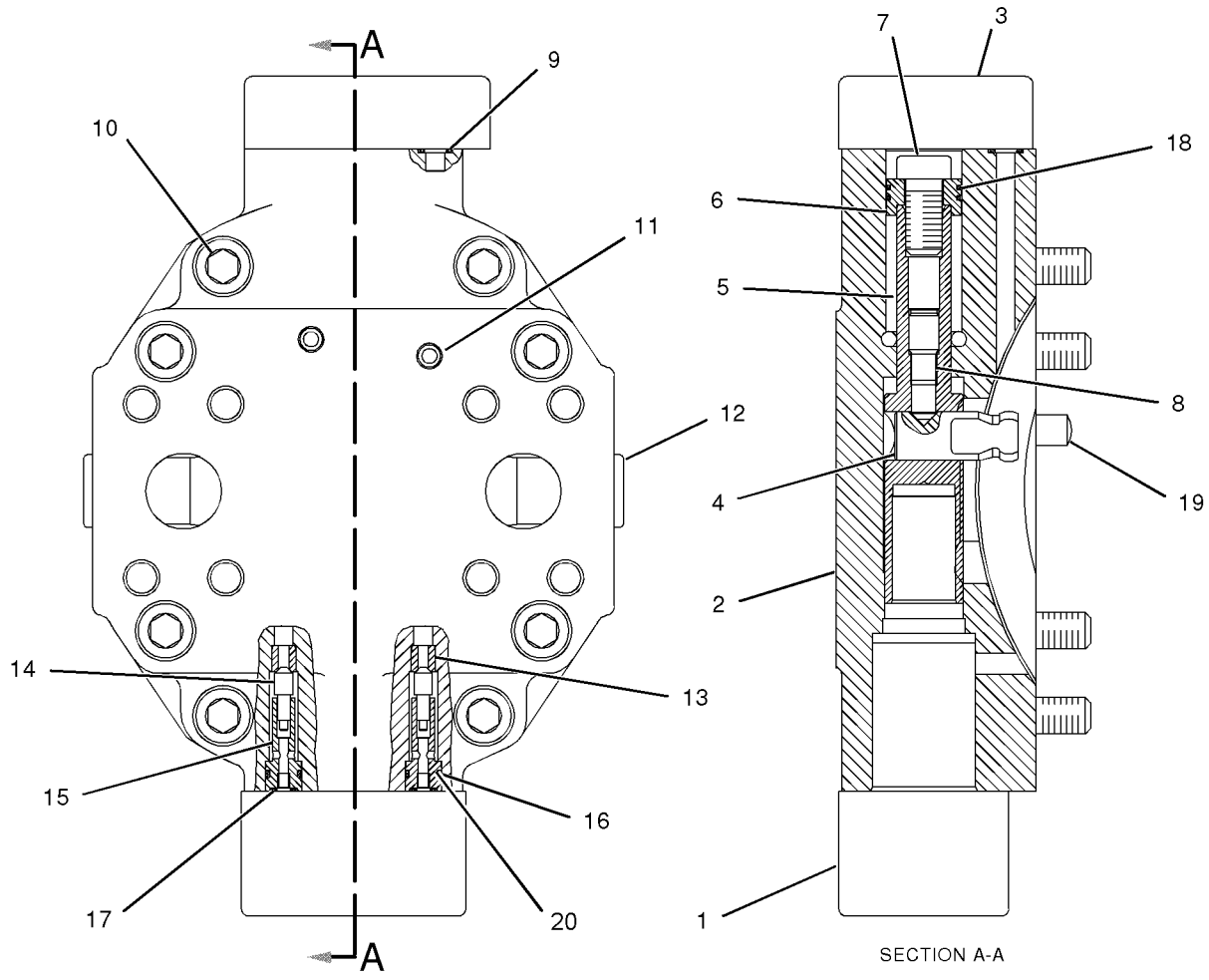

GRAPHIC #1 **<END>** g01043041

135-0785 HEAD GP-MOTOR

S/N: PDF1-UP

PART OF 134-7307 MOTOR GP-PISTON

SMCS-3202, 5058 **i02018531**

NOTE	REF NO	GRAPHIC REF	PART NUMBER	QTY	PART NAME 1 2 3 4 5 6 (PRODUCT LEVEL)	SEE PAGE
Y	1	1	**123-5743**	1	VALVE GP-PILOT	237
	2	1	**135-0780**	1	HEAD	
Y	3	1	**123-5746**	1	COVER GP-MOTOR	181
	4	1	**123-5782**	1	PIN	
	5	1	**123-5781**	1	PISTON	
	6	1	**135-7420**	1	PISTON	
M	7	1	**123-4953**	1	BOLT-SOCKET HEAD	
	8	1	**123-5784**	1	SETSCREW	
	9	1	**8C-3336**	2	DOWEL	
	10	1	**9X-7680**	3	SEAL-O-RING	
M	11	1	**095-0674**	8	BOLT-SOCKET HEAD (M12X1.75X65-MM)	
	12	1	**120-4394**	1	PLUG-BREAK OFF	
	13	1	**123-5800**	2	PLUG	
	14	1	**123-5787**	2	SEAT	
	15	1	**123-5786**	2	VALVE	
	16	1	**242-8004**	2	GUIDE-VALVE	
	17	1	**033-6039**	6	SEAL-O-RING	
	18	1	**107-3116**	2	SEAL-O-RING	
	19	1	**135-7421**	3	SEAL	
	20	1	**242-0262**	2	RING-BACKUP	

M-METRIC PART
Y-SEPARATE ILLUSTRATION

135-0785 **HEAD GP-MOTOR** ***(contd.)*** **i02018531**

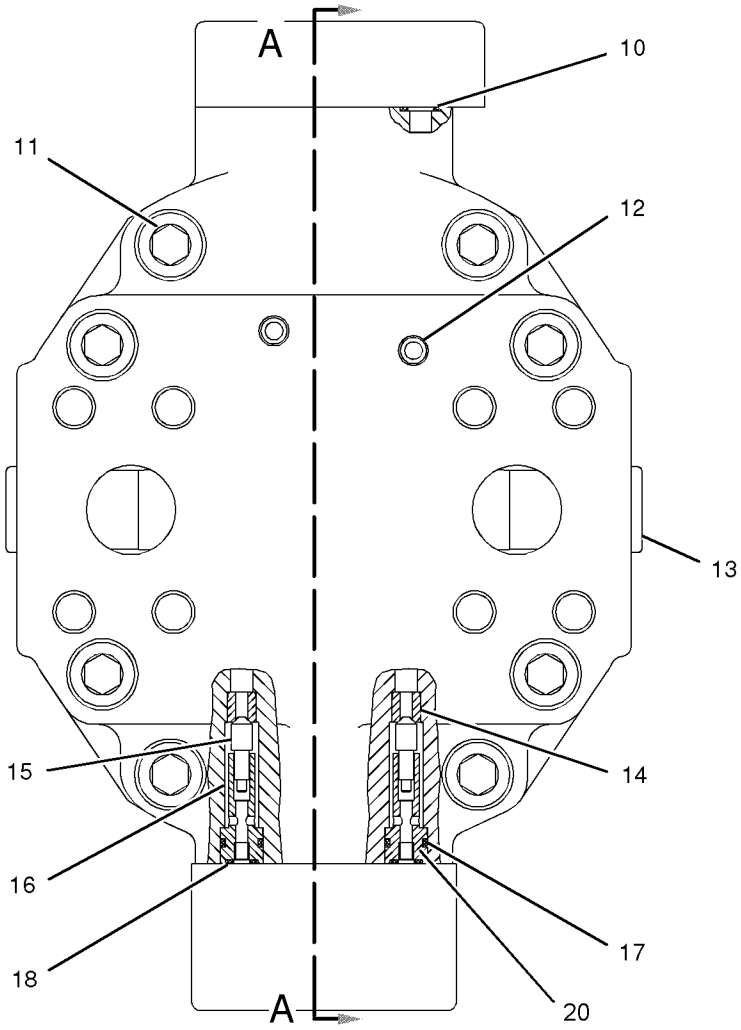

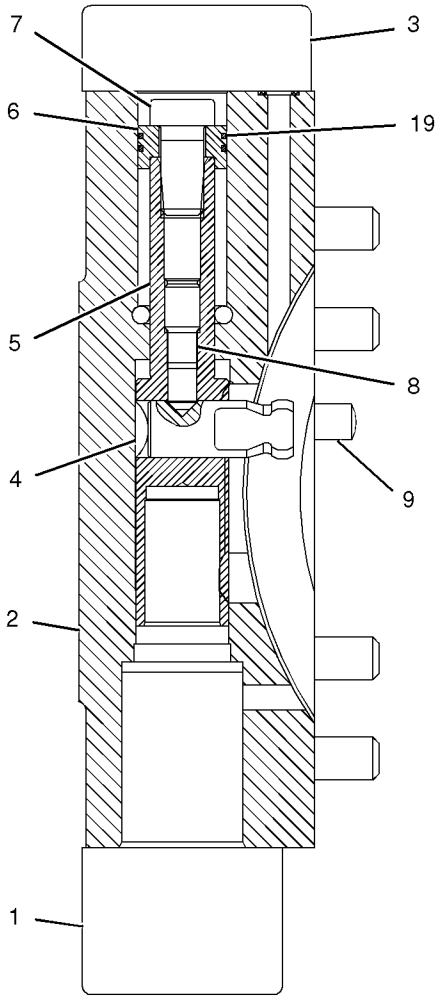

SECTION A-A

GRAPHIC #1 **<END>** g01043032

133-1858 HEAD GP-PUMP

S/N: PDF1-UP

PART OF 156-7205 PUMP GP-PISTON

SMCS-3202, 3203, 3222, 5069, 5070, 7428 **i02018495**

NOTE	REF NO	GRAPHIC REF	PART NUMBER	QTY	PART NAME 1 2 3 4 5 6 (PRODUCT LEVEL)	SEE PAGE
	1	1	**152-9143**	2	VALVE GP-RELIEF	
					(EACH INCLUDES)	
		1	**123-7556**	1	CAP	
		1	**145-0905**	1	KIT-SEAL (PUMP HEAD RELIEF VALVE)	
	2	1	**9S-8002**	2	PLUG	
	3	1	**3J-7354**	2	SEAL-O-RING	
	4	1	**6V-8398**	2	SEAL-O-RING	
M	5	1	**3E-8008**	4	BOLT-SOCKET HEAD (M16X2X90-MM)	
Y	6	1	**6E-4402**	1	VALVE GP-RELIEF (CHARGE)	245
	7	1	**144-9101**	1	PLUG-BREAK OFF	
	8	1	**133-1855**	1	HEAD	
	9	1	**2P-1692**	1	SEAL-O-RING	
	10	1	**126-1598**	1	BUSHING	
	11	1	**126-1597**	1	BEARING	
	12	1	**126-1477**	1	BUSHING-COUPLING	
Y	13	1	**126-1424**	1	VALVE GP-PUMP CONTROL (PRESSURE COMPENSATOR)	243
M	14	1	**123-2017**	1	PLUG	
M	15	1	**152-9144**	4	PLUG	

M-METRIC PART
Y-SEPARATE ILLUSTRATION

133-1858 **HEAD GP-PUMP** ***(contd.)*** **i02018495**

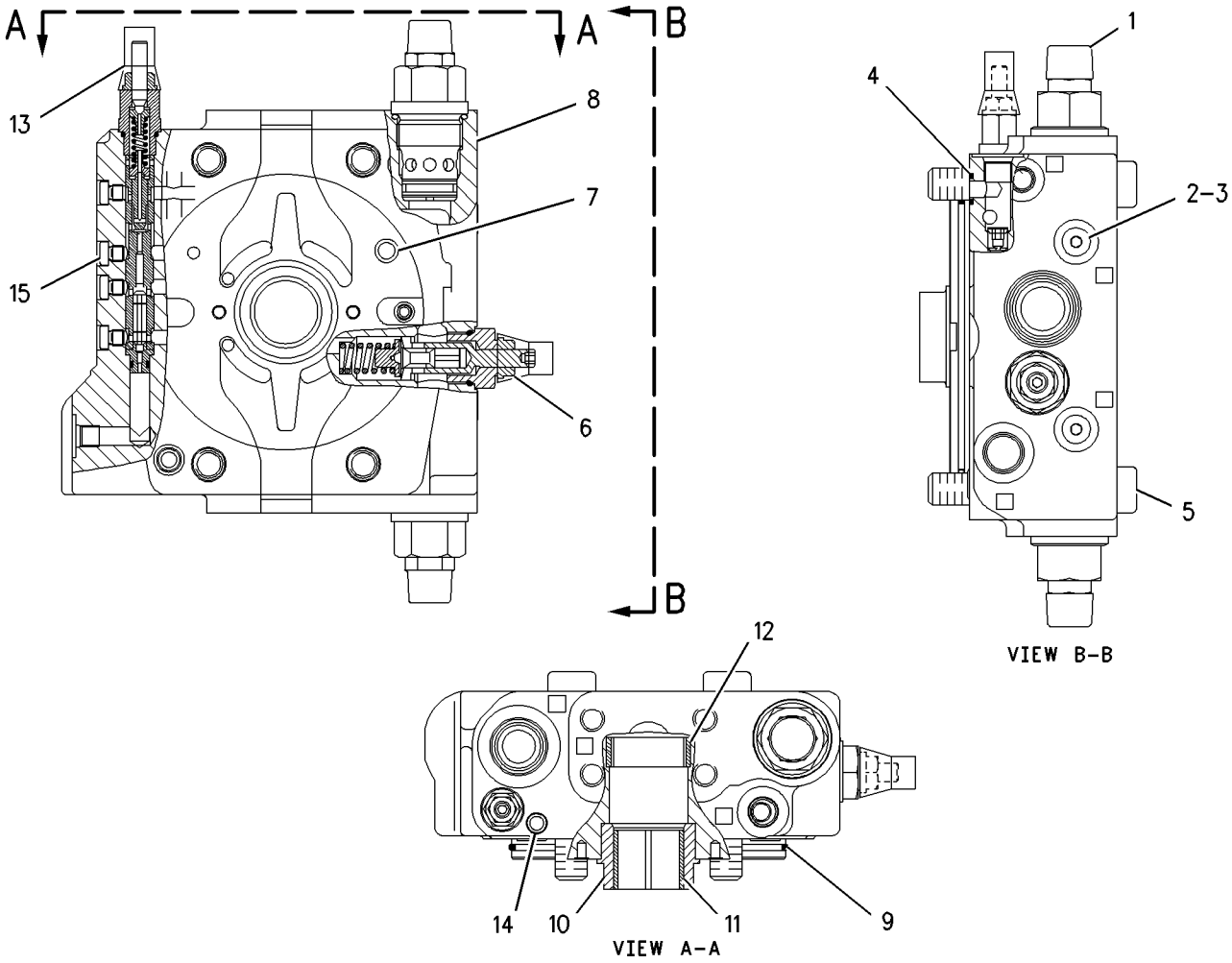

GRAPHIC #1 **<END>** g00744860

110-5417 HOUSING GP-FIXED AXLE

S/N: PDF1-UP

PART OF 151-6328, 151-6335 AXLE AR-FIXED

AN ATTACHMENT

SMCS-3260 **i02030072**

NOTE	REF NO	GRAPHIC REF	PART NUMBER	QTY	PART NAME 1 2 3 4 5 6 (PRODUCT LEVEL)	SEE PAGE
	1	1	**110-5418**	1	HOUSING-PINION	
M	2	1	**8T-4956**	12	BOLT (M12X1.75X35-MM)	
	3	1	**8T-4223**	20	WASHER-HARD (13.5X25.5X3-MM THK)	
B	4	1	**9C-6014**	1	SHIM PACK (INCLUDES 10 SHIMS)	
	5	1	**5F-3999**	1	SEAL-O-RING	
	6	1	**114-9469**	1	SEAL-LIP TYPE	
	7	1	**154-3035**	1	HOUSING-CENTER	
	8	1	**154-3073**	1	HOUSING	
	9	1	**3S-9182**	1	PLUG-MAGNETIC	
	10	1	**3B-0551**	2	PLUG-PIPE	
	11	1	**3B-6768**	1	BUSHING-REDUCER	
	12	1	**5H-3701**	2	SCREW-PURGE	
	13	1	**117-3290**	1	HOUSING-AXLE	
	14	1	**8R-0512**	1	GAUGE AS-OIL LEVEL (DIPSTICK)	
M	15	1	**8T-0358**	12	BOLT (M16X2.0X90-MM)	
M	16	1	**8T-5002**	12	BOLT (M16X180-MM)	
	17	1	**5P-8247**	24	WASHER-HARD (17X32X3.5-MM THK)	
	18	1	**110-5424**	2	SHAFT-AXLE	
	19	1	**3P-0896**	2	RING-RETAINING	
	20	1	**110-5425**	2	NUT-BEARING	
	21	1	**9S-7950**	2	CONE-BEARING	
	22	1	**9S-7949**	2	CUP-BEARING	
	23	1	**2K-5097**	2	CONE-BEARING	
	24	1	**1H-5338**	2	CUP-BEARING	
R	25	1	**5P-9121**	2	SEAL GP-DUO-CONE	
	26	1	**8V-7623**	1	DRUM-BRAKE	
	27	1	**9U-1991**	1	BRAKE GP-PARKING	
M	28	1	**8T-4139**	8	BOLT (M12X1.75X30-MM)	
	29	1	**107-4757**	1	LEVER AS	
	30	1	**117-3291**	1	HOUSING-AXLE	
B	31	1	**1U-8846**		SEALANT-GASKET (50-ML (1.69-FL OZ))	
M	32	1	**108-1782**	2	BOLT-SOCKET HEAD (M12X1.75X90-MM)	
	33	1	**8T-0336**	1	FITTING-PRESSURE RELIEF	

B-USE AS REQUIRED
M-METRIC PART
R-REMFG PART MAY BE AVAILABLE

110-5417 **HOUSING GP-FIXED AXLE** ***(contd.)*** **i02030072**

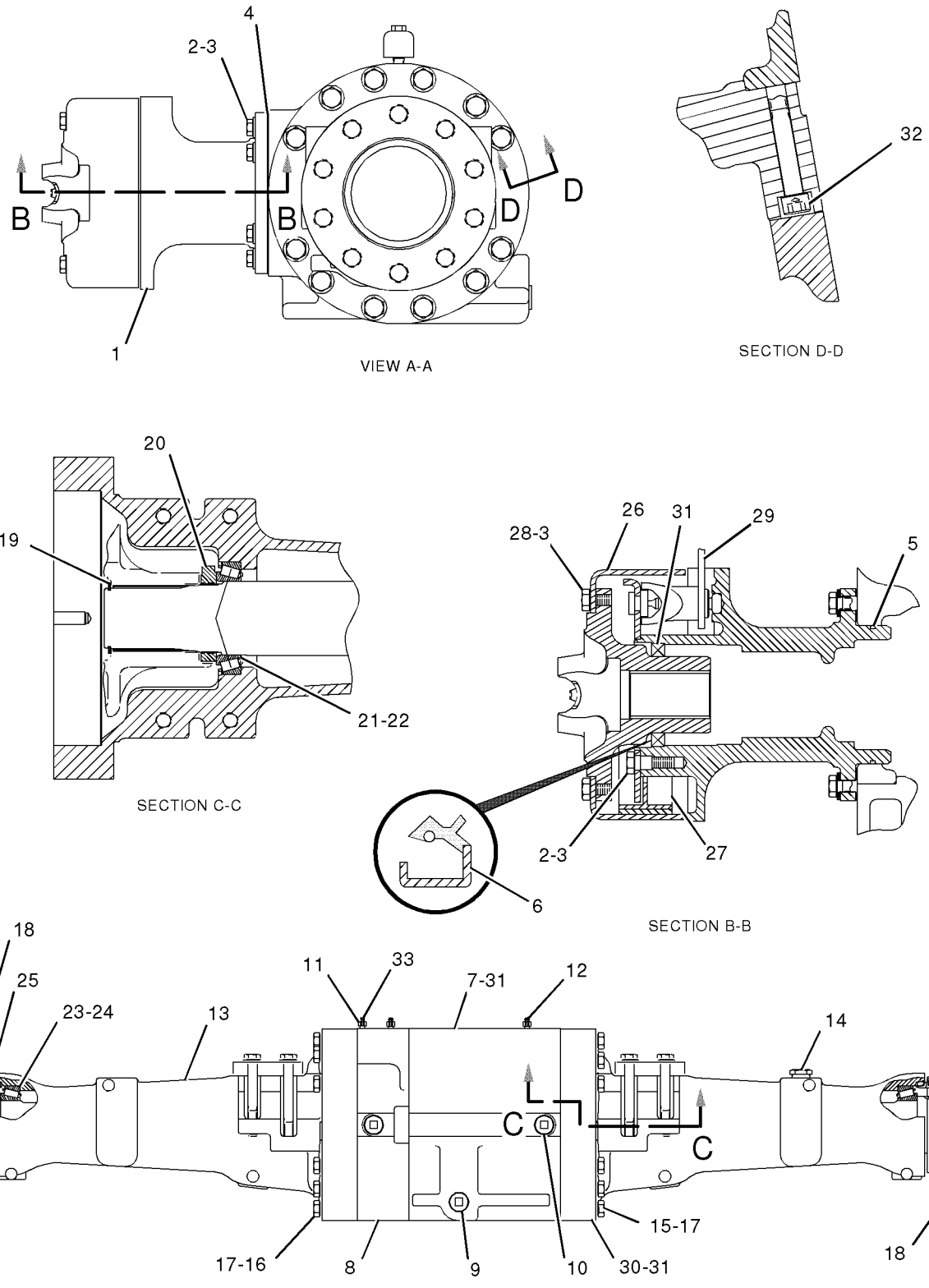

GRAPHIC #1

<END>

g01009605

110-5426 HOUSING GP-OSCILLATING AXLE

S/N: PDF1-UP

PART OF 151-6336, 151-6337 AXLE AR-OSCILLATING

AN ATTACHMENT

SMCS-3260, 3268 **i01667158**

NOTE	REF NO	GRAPHIC REF	PART NUMBER	QTY	PART NAME 1 2 3 4 5 6 (PRODUCT LEVEL)	SEE PAGE
C	1	1	**3B-6768**	1	BUSHING-REDUCER	
	2	1	**5H-3701**	2	SCREW-PURGE	
M	3	1	**8T-0358**	12	BOLT (M16X2.0X90MM)	
	4	1	**5P-8247**	24	WASHER-HARD (17X32X3.5MM THK)	
	5	1	**3B-0551**	2	PLUG-PIPE	
	6	1	**3S-9182**	1	PLUG-MAGNETIC	
CM	7	1	**8T-5002**	12	BOLT (M16X180MM)	
	8	1	**3B-8489**	1	FITTING-GREASE (1/8-27 THD)	
M	9	1	**8T-5041**	8	BOLT (M12X1.75X120MM)	
	10	1	**8T-4223**	16	WASHER-HARD (13.5X25.5X3MM THK)	
B	11	1	**9C-6014**	1	SHIM PACK (INCLUDES 10 SHIMS)	
	12	1	**2M-0338**	2	SEAL-O-RING	
	13	1	**110-5883**	1	BEARING-SLEEVE	
	14	1	**183-1109**	1	SUPPORT-TRUNNION	
	15	1	**110-5424**	2	SHAFT-AXLE	
R	16	1	**5P-9121**	2	SEAL GP-DUO-CONE	
					(EACH INCLUDES)	
		1	**5P-9120**	2	RING-SEALING	
	17	1	**2K-5097**	2	CONE-BEARING	
	18	1	**1H-5338**	2	CUP-BEARING	
	19	1	**8R-0512**	1	GAUGE AS-OIL LEVEL (DIPSTICK)	
	20	1	**9S-7950**	2	CONE-BEARING	
	21	1	**9S-7949**	2	CUP-BEARING	
	22	1	**117-3292**	1	HOUSING-AXLE	
	23	1	**110-5425**	2	NUT-BEARING	
	24	1	**3P-0896**	2	RING-RETAINING	
M	25	1	**6V-8675**	8	BOLT (M12X1.75X35MM)	
C	26	1	**154-3034**	1	HOUSING-CENTER	
	27	1	**4E-3159**	1	TRUNNION	
C	28	1	**154-3036**	1	HOUSING	
	29	1	**117-3293**	1	HOUSING-AXLE	
	30	1	**5F-3999**	1	SEAL-O-RING	
	31	1	**109-0616**	1	HOUSING-PINION	
M	32	1	**108-1782**	2	BOLT-SOCKET HEAD (M12X1.75X90MM)	
	33	1	**1U-8846**	1	SEALANT-GASKET	
C	34	1	**8T-0336**	2	FITTING-RELIEF	

B-USE AS REQUIRED
C-CHANGE FROM PREVIOUS TYPE
M-METRIC PART
R-REMFG PART MAY BE AVAILABLE

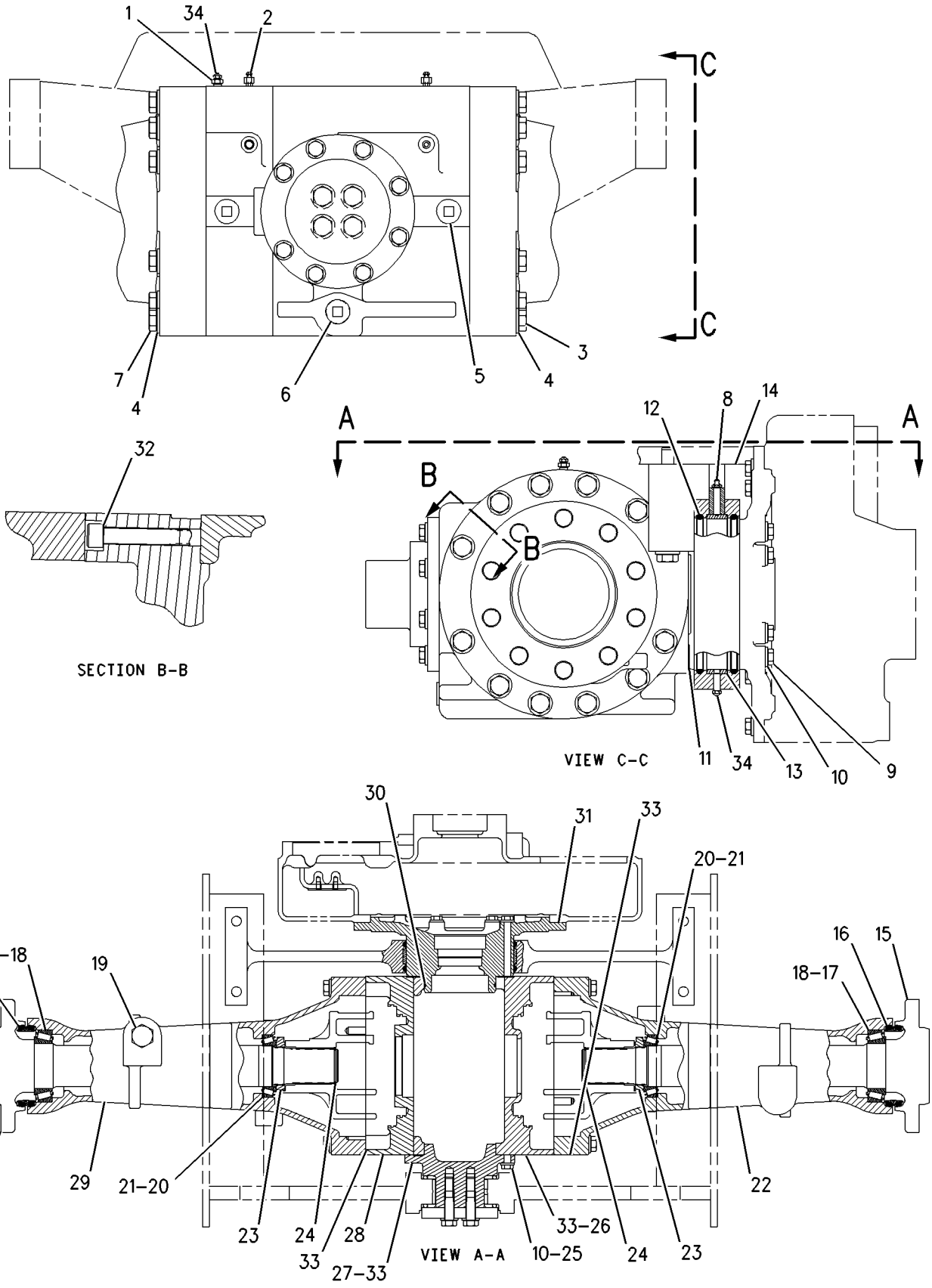

GRAPHIC #1 **<END>** g00861061

111-4102 LINES GP-HYDROSTATIC

S/N: PDF1-UP

PART OF 237-6260 POWER TRAIN AR

SMCS-3154 **i01953148**

NOTE	REF NO	GRAPHIC REF	PART NUMBER	QTY	PART NAME 1 2 3 4 5 6 (PRODUCT LEVEL)	SEE PAGE
	1	1	**119-6944**	1	BRACKET AS	
I	2	1	**228-7224**	1	HOSE AS	
I	3	1	**228-7225**	1	HOSE AS	
I	4	1	**237-9728**	1	HOSE AS	
I	5	1	**237-9729**	1	HOSE AS	
I	6	1	**237-9730**	1	HOSE AS	
I	7	1	**237-9731**	1	HOSE AS	
	8	1	**119-6940**	1	ELBOW	
	9	1	**131-8600**	1	MANIFOLD	
	10	1	*148-8408*	1	PLUG AS	
		1	**3D-2824**	1	SEAL-O-RING	
		1	**9S-4183**	1	PLUG	
	11	1	**1P-3702**	2	SEAL-RECTANGULAR	
	12	1	**1P-3703**	10	SEAL-RECTANGULAR	
	13	1	**1P-3704**	2	SEAL-RECTANGULAR	
	14	1	**5P-7468**	2	CLIP (SLOT)	
	15	1	**5P-7469**	2	CLIP (TAB)	
	16	1	**6V-0400**	20	FLANGE-HALF	
	17	1	**8T-2525**	2	GROMMET	
	18	1	**8T-4121**	15	WASHER-HARD (11X21X2.5MM THK)	
M	19	1	**8T-4137**	2	BOLT (M10X1.5X20MM)	
M	20	1	**8T-4182**	8	BOLT (M10X1.5X45MM)	
M	21	1	**8T-4194**	32	BOLT (M12X1.75X50MM)	
M	22	1	**8T-4195**	5	BOLT (M10X1.5X30MM)	
	23	1	**8T-4223**	40	WASHER-HARD (13.5X25.5X3MM THK)	
M	24	1	**8T-5041**	8	BOLT (M12X1.75X120MM)	
	25	1	**8T-9403**	4	FLANGE-HALF	

I-SEE HOSE FABRICATION GUIDE
M-METRIC PART

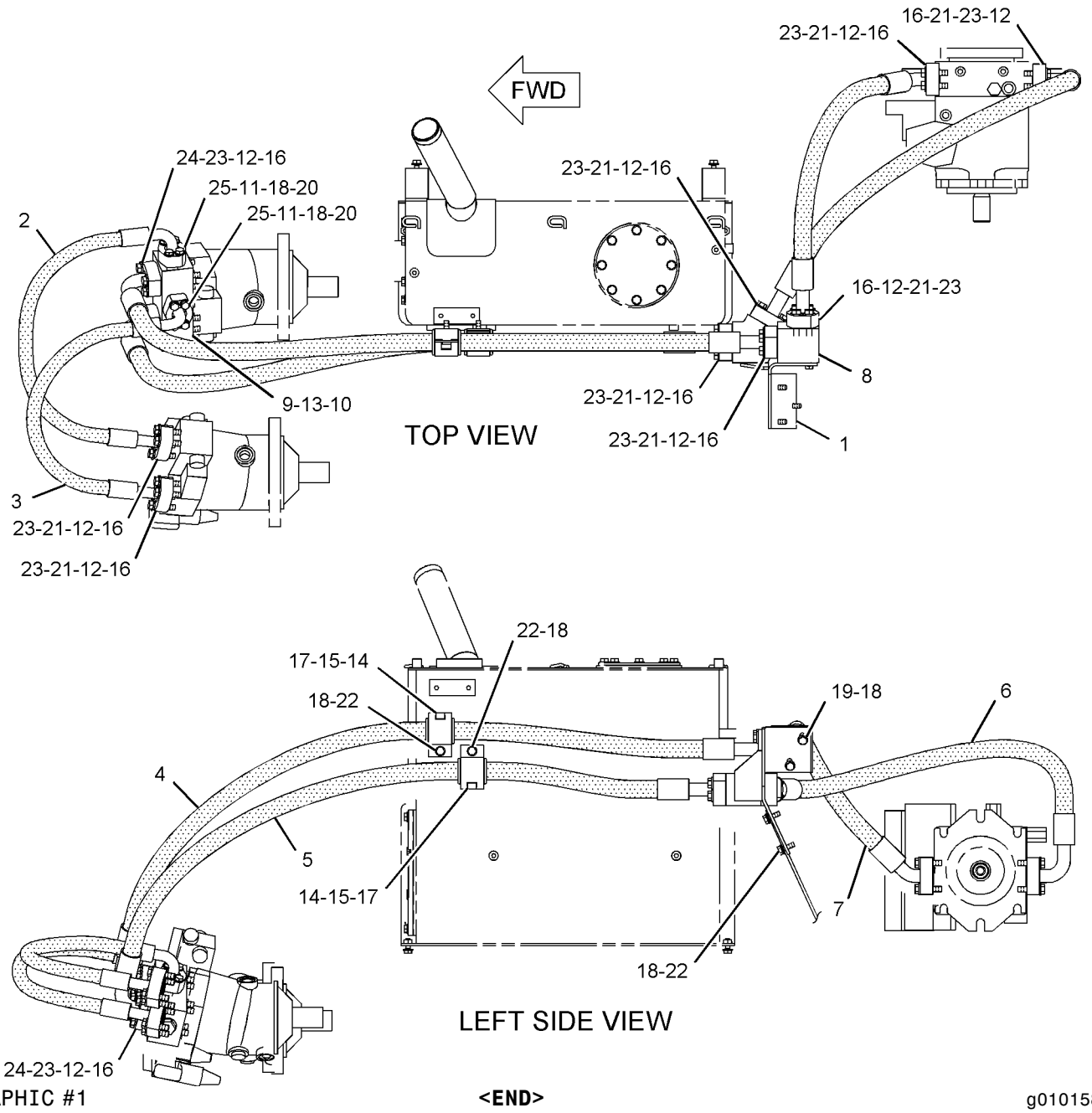

GRAPHIC #1

<END>

g01015814

POWER TRAIN

233-9931 LINES GP-HYDROSTATIC PWR CASE

S/N: PDF1-UP

PART OF 237-6260 POWER TRAIN AR

SMCS-3154 **i02014530**

NOTE	REF NO	GRAPHIC REF	PART NUMBER	QTY	PART NAME 1 2 3 4 5 6 (PRODUCT LEVEL)	SEE PAGE
	1	1	**6V-0852**	2	CAP-DUST	
M	2	2	**8T-4186**	2	BOLT (M10X1.5X40-MM)	
M	3	1	**8T-4137**	5	BOLT (M10X1.5X20-MM)	
I	4	1	**112-9443**	1	HOSE AS	
I	5	1	**113-6379**	1	HOSE AS	
I	6	1	**113-6380**	1	HOSE AS	
I	7	1	**124-6101**	1	HOSE AS	
I	8	2	**124-6102**	1	HOSE AS	
	9	1	**126-7664**	1	TUBE AS	
	10	2	*164-5549*	1	COUPLING GP	
		2	**3J-1907**	1	SEAL-O-RING	
		2	**4I-6287**	1	COUPLING AS	
I	11	1	**188-9840**	1	HOSE AS	
Y	12	2	*196-5862*	1	VALVE GP-SOLENOID & MANIFOLD	247
I	13	1	**197-6863**	1	HOSE AS	
I	14	1	**213-7437**	1	HOSE AS	
I	15	1	**232-2577**	1	HOSE AS	
	16	1	*148-8315*	1	CONNECTOR GP	
		1	**2M-9780**	1	SEAL-O-RING	
		1	**6V-8642**	1	CONNECTOR	
		1	**7J-9108**	1	SEAL-O-RING	
	17	1	*148-8317*	2	CONNECTOR GP	
					(EACH INCLUDES)	
		1	**3D-2824**	1	SEAL-O-RING	
		1	**5K-9090**	1	SEAL-O-RING	
		1	**6V-8714**	1	CONNECTOR	
	18	2	*148-8326*	2	CONNECTOR GP	
					(EACH INCLUDES)	
		2	**3J-7354**	1	SEAL-O-RING	
		2	**6V-8397**	1	SEAL-O-RING	
		2	**6V-9872**	1	CONNECTOR	
	19	2	*148-8327*	2	CONNECTOR AS	
					(EACH INCLUDES)	
		2	**3D-2824**	1	SEAL-O-RING	
		2	**6V-8637**	1	CONNECTOR	
		2	**6V-9746**	1	SEAL-O-RING	
	20	1,2	*148-8336*	3	CONNECTOR AS	
					(EACH INCLUDES)	
		1,2	**3J-1907**	1	SEAL-O-RING	
		1,2	**6V-8397**	1	SEAL-O-RING	
		1,2	**6V-8636**	1	CONNECTOR	
	21	1	*148-8339*	1	CONNECTOR AS	
		1	**6V-8716**	1	CONNECTOR	
		1	**6V-9746**	1	SEAL-O-RING	
		1	**7M-8485**	1	SEAL-O-RING	
	22	2	*148-8342*	1	CONNECTOR GP	
		2	**3K-0360**	1	SEAL-O-RING	
		2	**6V-8632**	1	CONNECTOR	
		2	**7J-9108**	1	SEAL-O-RING	
	23	1	*148-8353*	1	ELBOW GP	
		1	**3J-1907**	1	SEAL-O-RING	
		1	**6V-8397**	1	SEAL-O-RING	
		1	**6V-9001**	1	ELBOW	
	24	1,2	*148-8367*	3	ELBOW GP	
					(EACH INCLUDES)	
		1,2	**6V-8397**	1	SEAL-O-RING	

233-9931 LINES GP-HYDROSTATIC PWR CASE *(contd.)* i02014530

NOTE	REF NO	GRAPHIC REF	PART NUMBER	QTY	PART NAME 1 2 3 4 5 6 (PRODUCT LEVEL)	SEE PAGE
		1,2	**6V-9850**	1	ELBOW (SWIVEL)	
	25	2	*148-8378*	1	ELBOW AS	
		2	**3J-1907**	1	SEAL-O-RING	
		2	**6V-8397**	1	SEAL-O-RING	
		2	**6V-8724**	1	ELBOW	
	26	1	*148-8392*	1	ELBOW GP	
		1	**6V-9746**	1	SEAL-O-RING	
		1	**6V-9853**	1	ELBOW	
	27	1	*148-8434*	1	TEE AS	
		1	**6V-8397**	2	SEAL-O-RING	
		1	**6V-9843**	1	TEE-SWIVEL	
	28	1	*148-8443*	1	TEE GP	
		1	**3J-1907**	1	SEAL-O-RING	
		1	**6V-8397**	1	SEAL-O-RING	
		1	**7X-2459**	1	TEE-O-RING	
	29	1,2	*148-8449*	2	TEE GP-SWIVEL	
					(EACH INCLUDES)	
		1,2	**6V-9746**	2	SEAL-O-RING	
		1,2	**6V-9839**	1	TEE-SWIVEL	
	30	2	*150-4031*	1	TEE AS	
		2	**6V-9845**	1	TEE-SWIVEL	
		2	**7J-9108**	3	SEAL-O-RING	
	31	2	*150-4048*	1	ELBOW GP	
		2	**3K-0360**	1	SEAL-O-RING	
		2	**6V-8722**	1	ELBOW	
		2	**7J-9108**	1	SEAL-O-RING	
	32	1	**3J-1907**	2	SEAL-O-RING	
	33	2	**4K-8302**	2	CLIP	
	34	1	**5K-5338**	4	CLIP	
	35	1	**5K-9090**	1	SEAL-O-RING	
	36	1	**6V-3965**	2	FITTING (QUICK DISCONNECT)	
	37	1	**7K-1181**	4	STRAP-CABLE	
	38	2	**8M-2773**	1	CLIP	
	39	1	**8T-1889**	1	CLIP (SLOT)	
	40	1	**8T-1890**	1	CLIP (TAB)	
	41	1,2	**8T-4121**	7	WASHER-HARD (11X21X2.5-MM THK)	

I-REFER TO HYDRAULIC INFORMATION SYSTEM
M-METRIC PART
Y-SEPARATE ILLUSTRATION

REFER TO ALL ILLUSTRATIONS OF THIS GROUP FOR AUXILIARY VIEWS

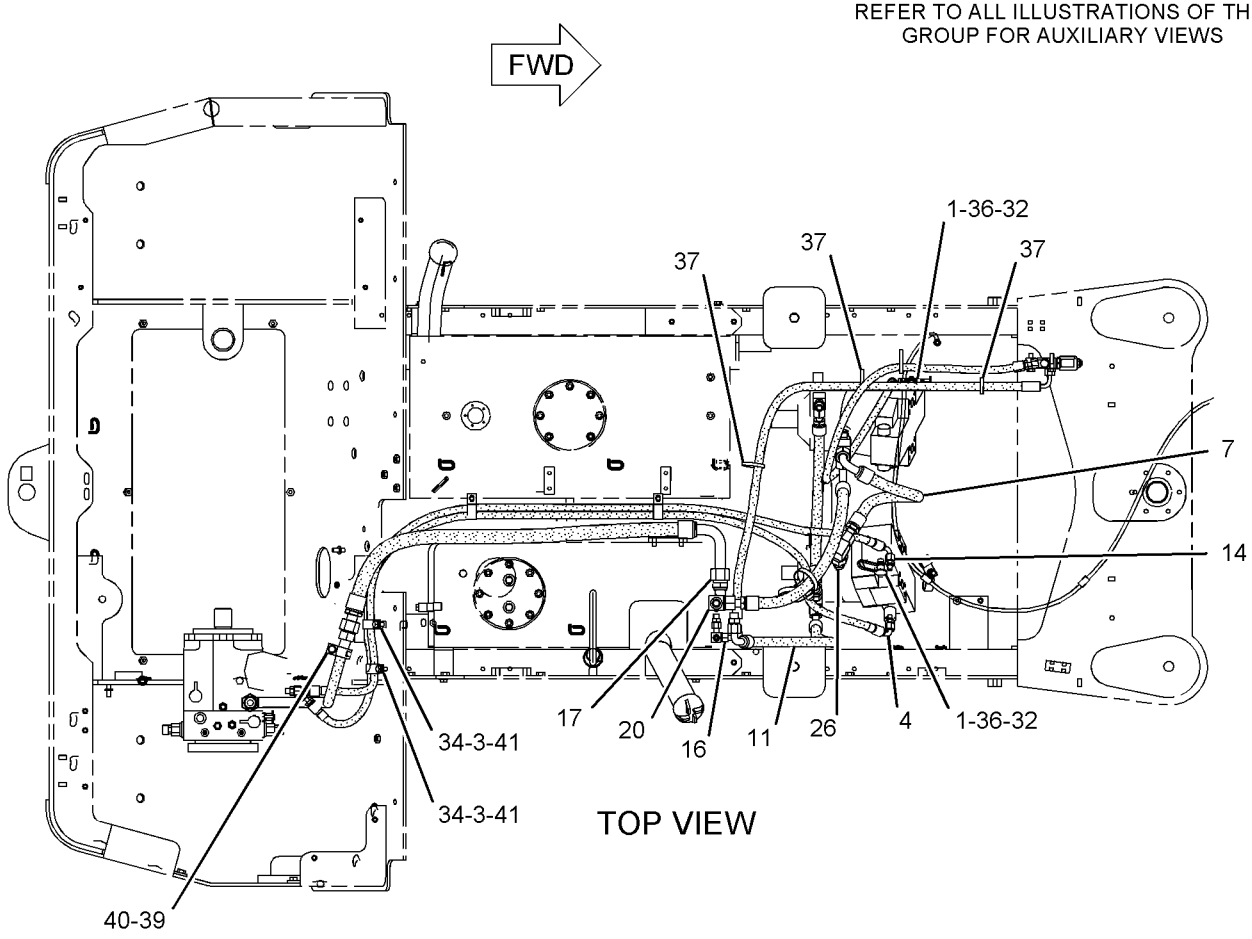

TOP VIEW

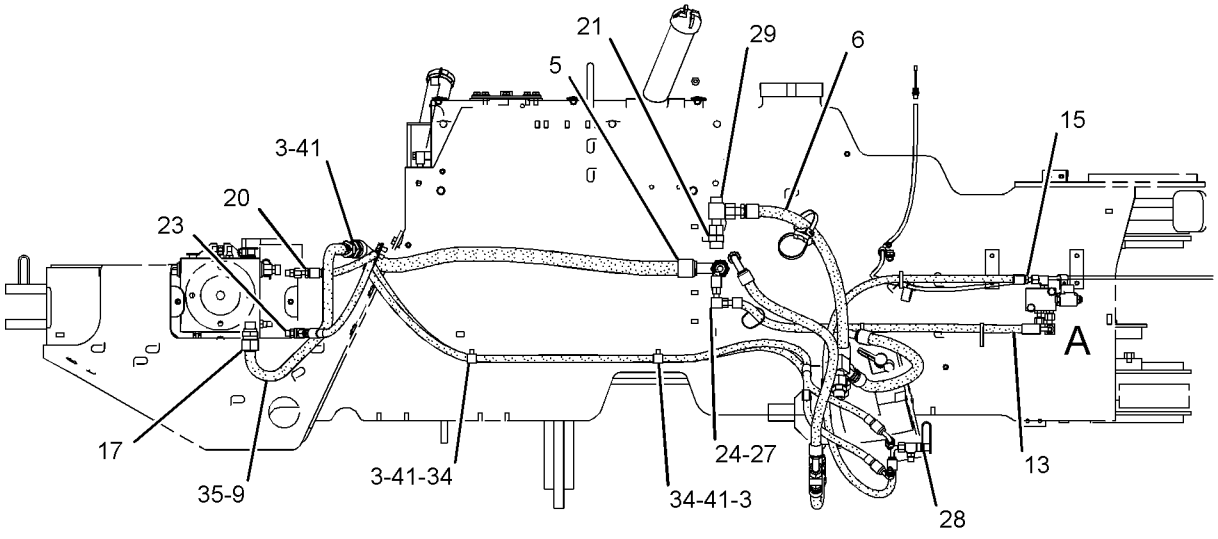

RIGHT SIDE VIEW

GRAPHIC #1 g01042568

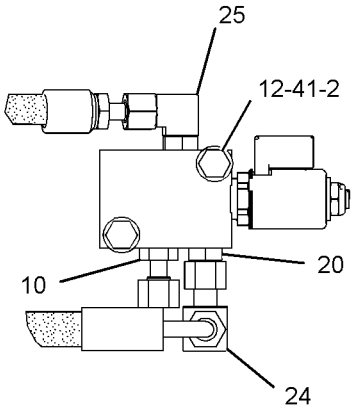

VIEW OF AREA A

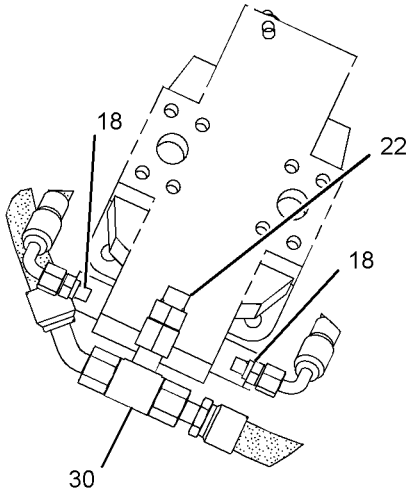

VIEW OF AREA B

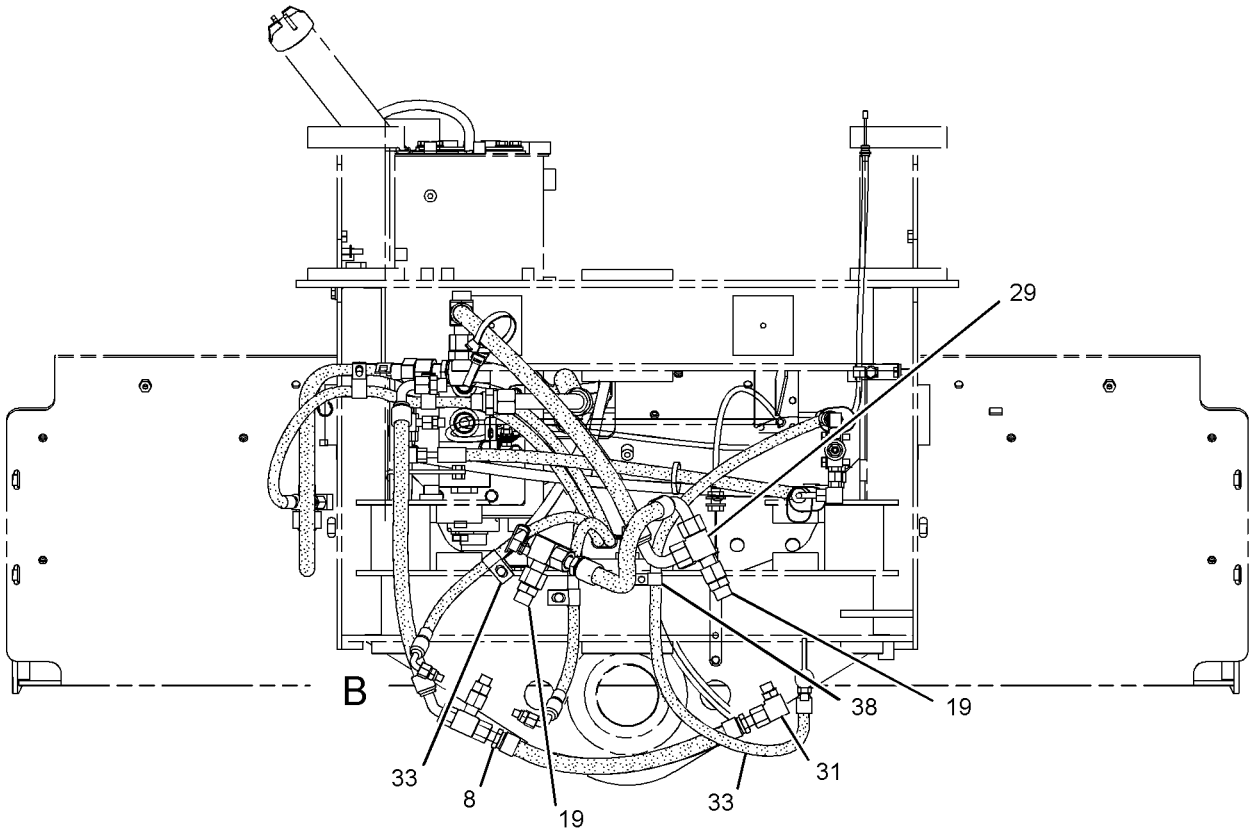

FRONT VIEW

GRAPHIC #2

<END>

g01045526

242-4043 LINES GP-POWER TRAIN FILTER

S/N: PDF1-UP

PART OF 237-6260 POWER TRAIN AR

SMCS-3016, 3067 **i01999628**

NOTE	REF NO	GRAPHIC REF	PART NUMBER	QTY	PART NAME 1 2 3 4 5 6 (PRODUCT LEVEL)	SEE PAGE
	1	1	**7K-1181**	2	STRAP-CABLE	
I	2	1	**8E-9459**	1	HOSE AS	
	3	1	**110-3029**	1	BRACKET AS	
Y	4	1	**137-7747**	1	FILTER GP-OIL (POWER TRAIN)	187
I	5	1	**145-2342**	1	HOSE AS	
I	6	1	**148-6976**	1	HOSE AS	
I	7	1	**148-6977**	1	HOSE AS	
	8	1	*148-8327*	2	CONNECTOR AS	
					(EACH INCLUDES)	
		1	**6V-8637**	1	CONNECTOR	
		1	**3D-2824**	1	SEAL-O-RING	
		1	**6V-9746**	1	SEAL-O-RING	
	9	1	*148-8347*	1	ELBOW GP	
		1	**6V-9007**	1	ELBOW	
		1	**3D-2824**	1	SEAL-O-RING	
		1	**6V-9746**	1	SEAL-O-RING	
	10	1	*148-8376*	2	ELBOW AS	
					(EACH INCLUDES)	
		1	**6V-8983**	1	ELBOW	
		1	**6V-9746**	2	SEAL-O-RING	
	11	1	*148-8388*	1	ELBOW GP	
		1	**6V-8629**	1	ELBOW	
		1	**2M-9780**	1	SEAL-O-RING	
		1	**6V-9746**	1	SEAL-O-RING	
	12	1	**2P-1293**	2	LOCKNUT (1 3/16-12-THD)	
	13	1	**7X-7729**	2	WASHER (11X25X3-MM THK)	
	14	1	**8T-4121**	6	WASHER-HARD (11X21X2.5-MM THK)	
M	15	1	**8T-4133**	1	NUT (M10X1.5-THD)	
M	16	1	**8T-4136**	3	BOLT (M10X1.5X25-MM)	
M	17	1	**8T-4137**	4	BOLT (M10X1.5X20-MM)	

I-REFER TO HYDRAULIC INFORMATION SYSTEM
M-METRIC PART
Y-SEPARATE ILLUSTRATION

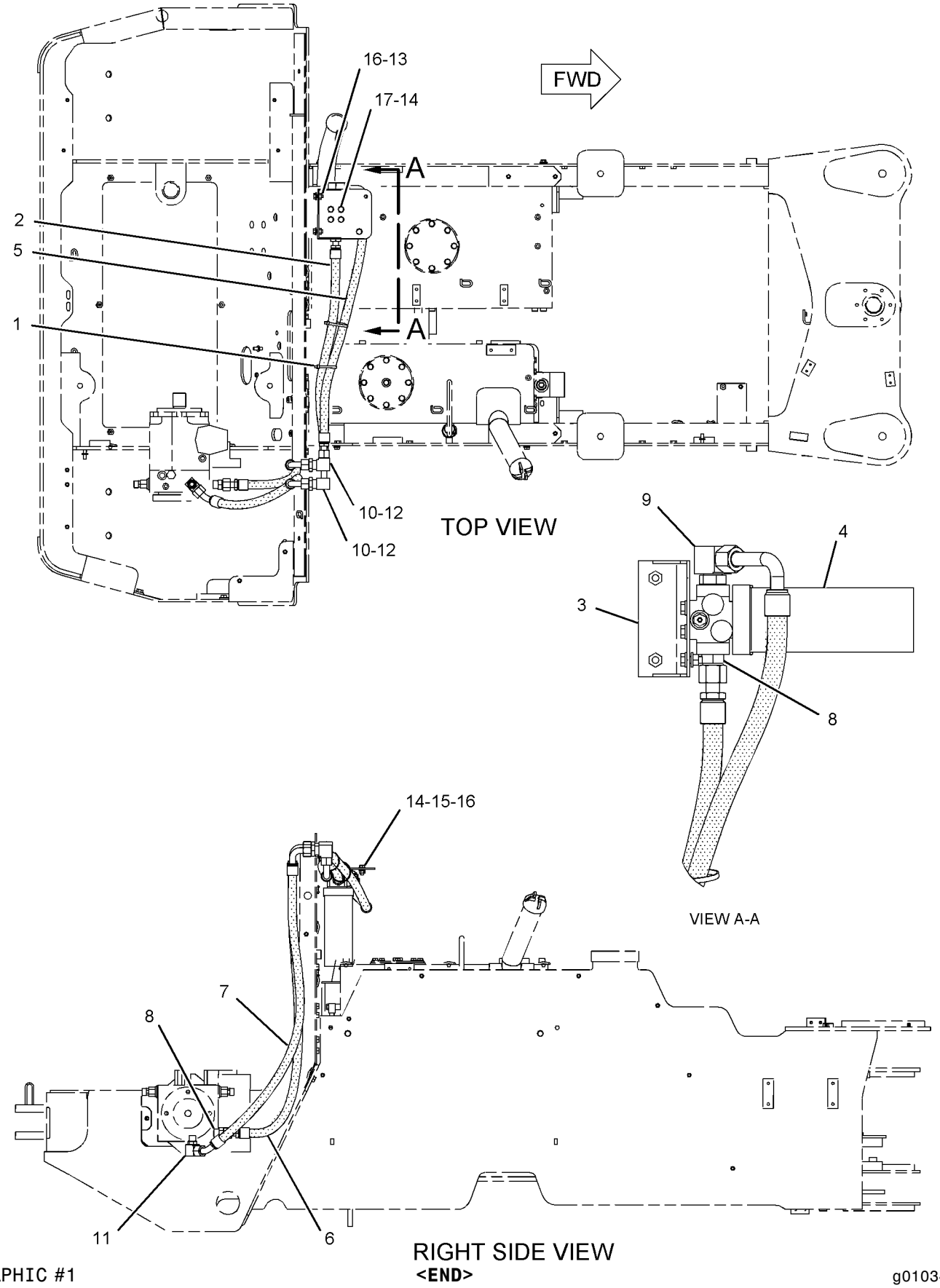

GRAPHIC #1

<END>

g01034565

134-7307 MOTOR GP-PISTON–HYDROSTATIC*R

S/N: PDF1-UP

PART OF 237-6260 POWER TRAIN AR

SMCS-4351 **i02030073**

NOTE	REF NO	GRAPHIC REF	PART NUMBER	QTY	PART NAME 1 2 3 4 5 6 (PRODUCT LEVEL)	SEE PAGE
Y	1	1	**123-5741**	1	ROTATING GP-MOTOR	226
	2	1	**123-5747**	1	HOUSING	
	3	1	**9S-8008**	1	PLUG	
	4	1	**3D-2824**	1	SEAL-O-RING	
	5	1	**6E-3283**	2	LOCKNUT	
M	6	1	**9X-8483**	1	SETSCREW-SOCKET (M12X1.75X80-MM)	
	7	1	**2K-8257**	1	SEAL-O-RING	
Y	8	1	**135-0785**	1	HEAD GP-MOTOR	194
	9	1	**123-5748**	1	SEAL-SHAFT	
	10	1	**9T-3743**	1	SHIM (1-MM THK)	
	11	1	**095-0942**	1	RING-RETAINING	
M	12	1	**123-4954**	1	SETSCREW (M12X1.75-THD)	

M-METRIC PART
Y-SEPARATE ILLUSTRATION

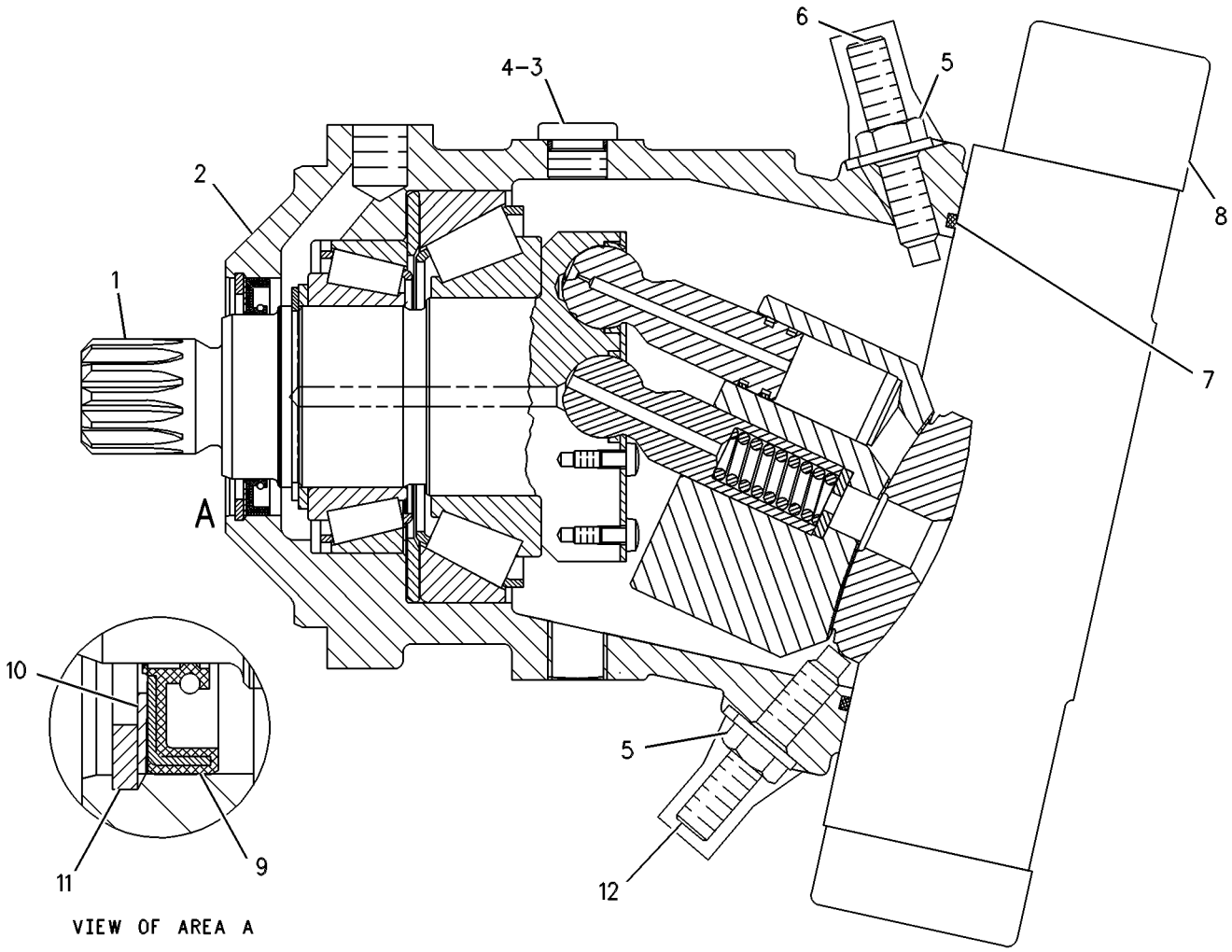

GRAPHIC #1 **<END>** g00269819

168-1837 MOTOR GP-PISTON*R

S/N: PDF1-UP

PART OF 237-6260 POWER TRAIN AR

SMCS-4351 **i02045067**

NOTE	REF NO	GRAPHIC REF	PART NUMBER	QTY	PART NAME 1 2 3 4 5 6 (PRODUCT LEVEL)	SEE PAGE
Y	1	1	**124-9911**	1	HEAD GP-MOTOR	192
	2	1	**6E-3283**	2	LOCKNUT	
	3	1	**128-8981**	2	CAP	
M	4	1	**9X-8482**	1	SETSCREW-SOCKET (M12X1.75X70-MM)	
	5	1	**9S-8008**	1	PLUG	
	6	1	**3D-2824**	1	SEAL-O-RING	
	7	1	**126-1298**	1	HOUSING	
Y	8	1	**124-9909**	1	ROTATING GP-MOTOR	228
	9	1	**2W-1145**	1	RING-RETAINING	
B	10	1	**124-9914**	1	SHIM (3-MM THK)	
	11	1	**124-9913**	1	SEAL-SHAFT	
M	12	1	**123-4954**	1	SETSCREW (M12X1.75-THD)	
	13	1	**6F-4718**	1	SEAL-O-RING	

B-USE AS REQUIRED
M-METRIC PART
Y-SEPARATE ILLUSTRATION

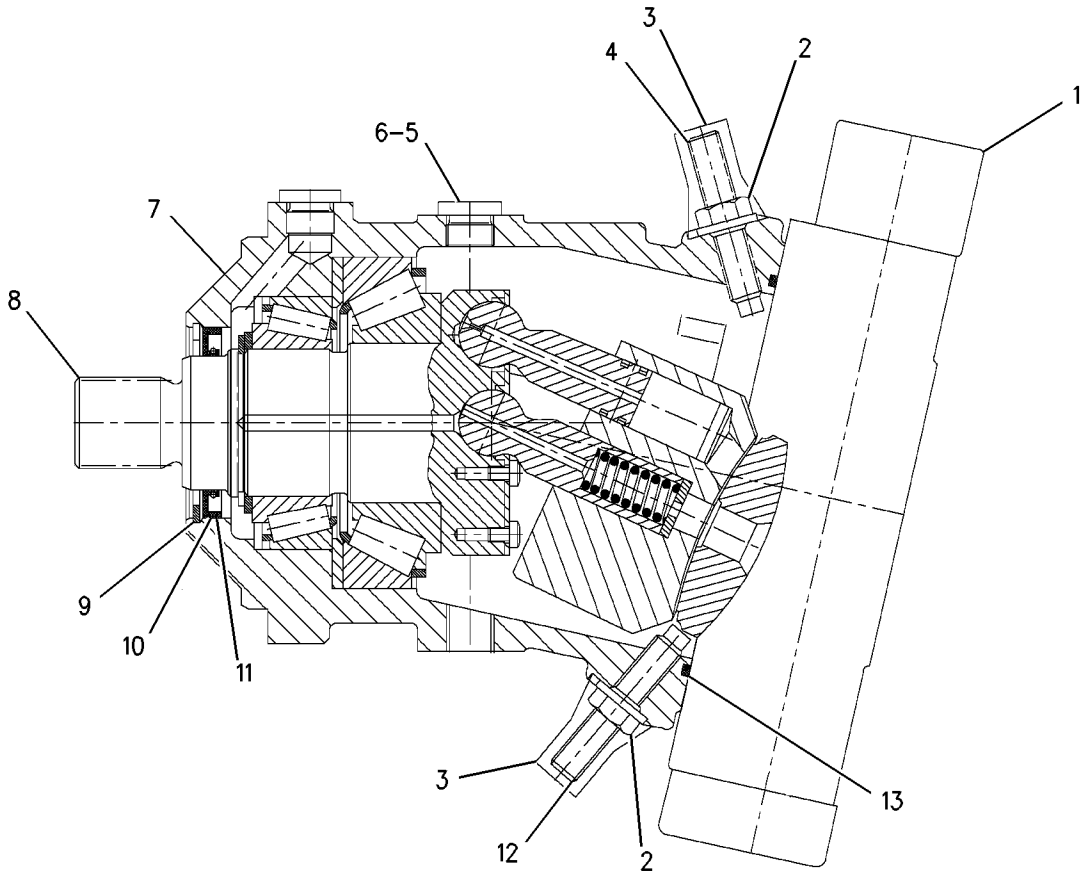

GRAPHIC #1 **<END>** g00804320

109-5500 MOUNTING GP-AXLE

S/N: PDF1-UP

PART OF 237-6260 POWER TRAIN AR

SMCS-3268, 3278 **i02030074**

NOTE	REF NO	GRAPHIC REF	PART NUMBER	QTY	PART NAME 1 2 3 4 5 6 (PRODUCT LEVEL)	SEE PAGE
M	1	1	**7X-2475**	4	BOLT (M16X2X130-MM)	
	2	1	**7X-0515**	16	WASHER-HARD (17X35X5-MM THK)	
M	3	1	**7X-2559**	4	BOLT (M16X2X160-MM)	
M	4	1	**7X-2558**	4	BOLT (M16X2X150-MM)	
	5	1	**9C-8000**	1	BEARING-SLEEVE	
	6	1	**9S-3888**	2	SEAL-O-RING	
	7	1	**4E-3160**	1	PLATE	
M	8	1	**7X-2555**	4	BOLT (M16X2X80-MM)	
	9	1	**9C-7999**	2	WASHER-THRUST	

M-METRIC PART

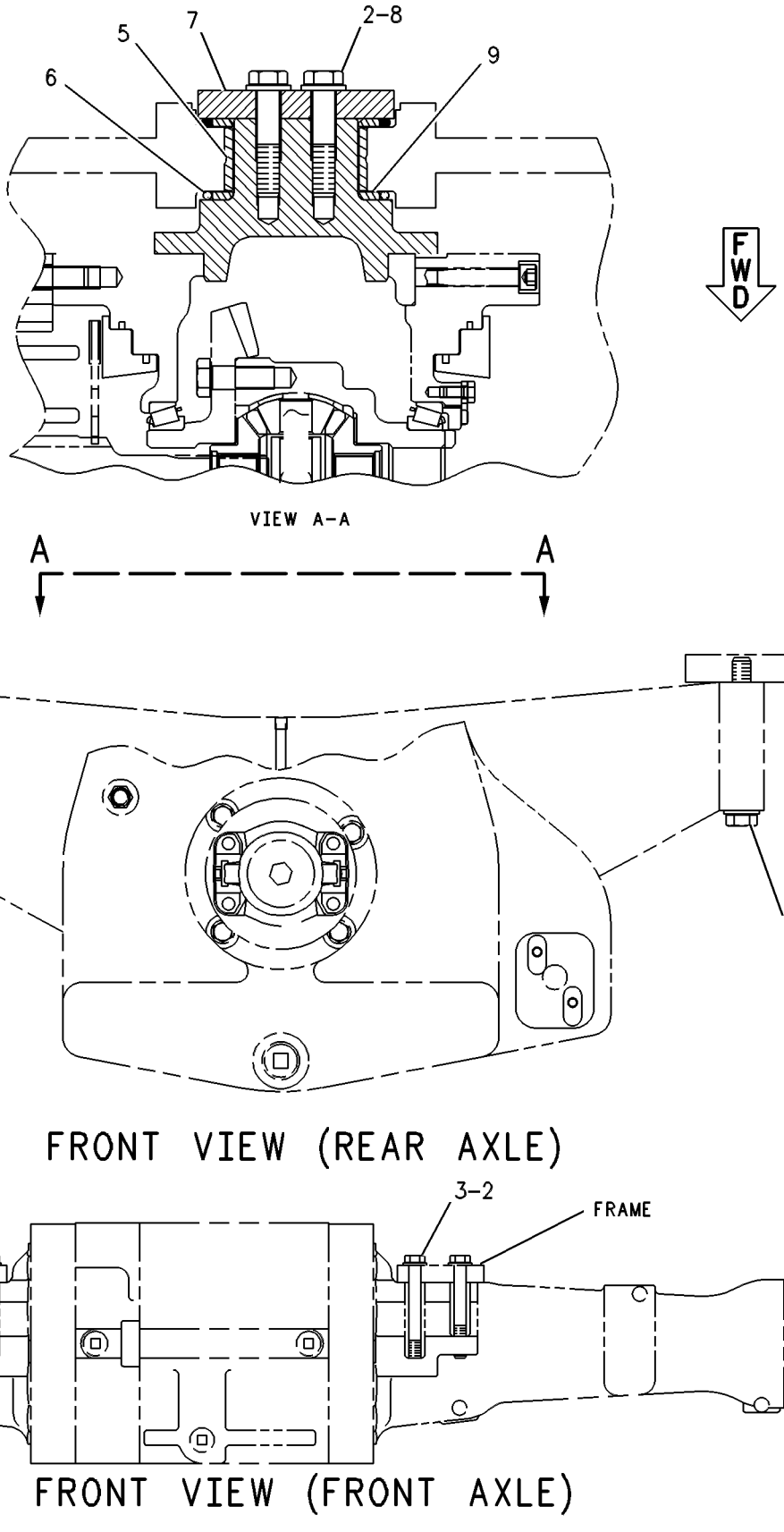

GRAPHIC #1 **<END>** g00269185

111-4668 MOUNTING GP-MOTOR

S/N: PDF1-UP

PART OF 237-6260 POWER TRAIN AR

SMCS-4351 **i00717272**

NOTE	REF NO	GRAPHIC REF	PART NUMBER	QTY	PART NAME 1 2 3 4 5 6 (PRODUCT LEVEL)	SEE PAGE
M	1	1	**9X-2021**	1	BOLT-LOCKING (M16X2.0X45MM)	
	2	1	**109-1212**	1	RETAINER	
	3	1	**110-3013**	1	GEAR (44 TEETH)	
B	4	1	**1U-8846**		GASKET-LIQUID	
	5	1	**109-0615**	1	ADAPTER-MOTOR	
M	6	1	**095-0670**	8	BOLT (M12X1.75X45MM)	
	7	1	**2M-0849**	8	WASHER (5MM THK)	

B-USE AS REQUIRED
M-METRIC PART

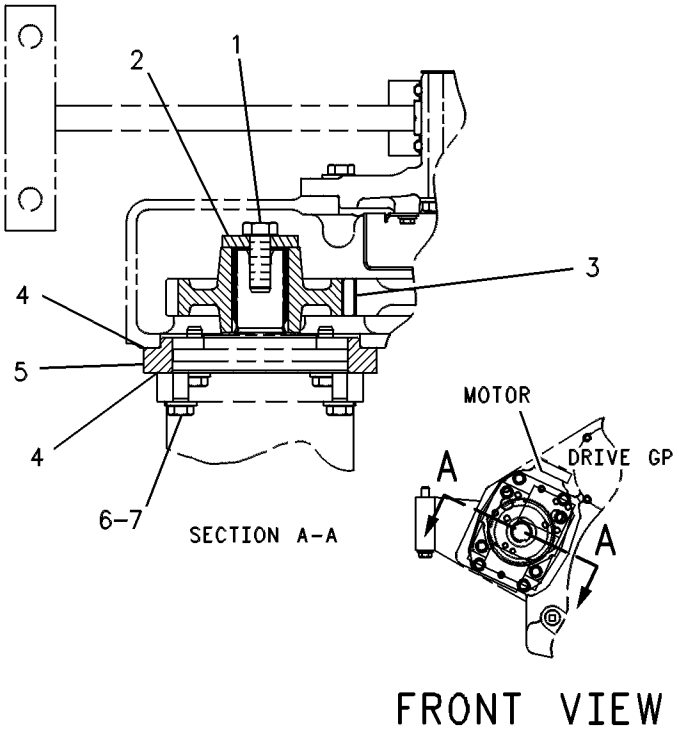

GRAPHIC #1 **<END>** g00246015

111-4670 MOUNTING GP-MOTOR

S/N: PDF1-UP

PART OF 237-6260 POWER TRAIN AR

SMCS-4351 **i00717286**

NOTE	REF NO	GRAPHIC REF	PART NUMBER	QTY	PART NAME 1 2 3 4 5 6 (PRODUCT LEVEL)	SEE PAGE
M	1	1	**9X-2021**	1	BOLT-LOCKING (M16X2.0X45MM)	
	2	1	**109-1212**	1	RETAINER	
	3	1	**110-3013**	1	GEAR (44 TEETH)	
B	4	1	**1U-8846**		GASKET-LIQUID	
M	5	1	**8T-0348**	4	BOLT-SOCKET HEAD (M16X2X50MM)	
	6	1	**9X-8268**	4	WASHER (3.0MM THK)	

B-USE AS REQUIRED
M-METRIC PART

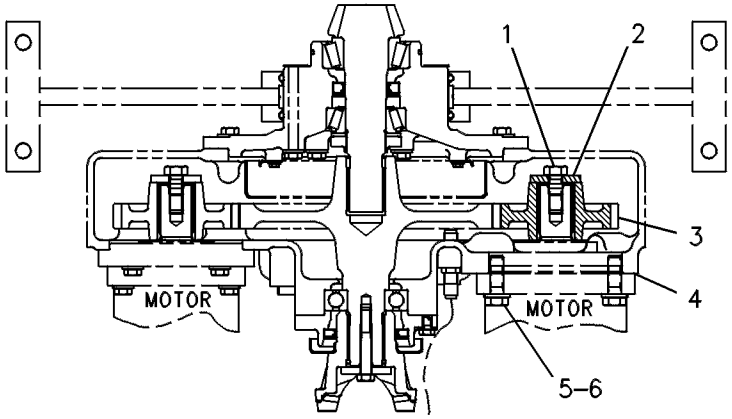

TOP VIEW

GRAPHIC #1 **<END>** g00246581

107-4831 MOUNTING GP-PUMP

S/N: PDF1-UP

PART OF 237-6260 POWER TRAIN AR

SMCS-3203 **i02030077**

NOTE	REF NO	GRAPHIC REF	PART NUMBER	QTY	PART NAME 1 2 3 4 5 6 (PRODUCT LEVEL)	SEE PAGE
	1	1	**0T-0924**	8	BOLT (3/8-24X1.5-IN)	
	2	1	**3E-4915**	1	HUB-COUPLING	
	3	1	**3E-4917**	1	PLATE-ADAPTER	
	4	1	**102-1733**	1	FLANGE-NYLON	
	5	1	**8T-4121**	12	WASHER-HARD (11X21X2.5-MM THK)	
	6	1	**8T-4123**	2	WASHER-PLATED (22X35X3.5-MM THK)	
M	7	1	**8T-4196**	12	BOLT (M10X1.5X35-MM)	
M	8	1	**8T-6430**	2	BOLT (M20X2.5X50-MM)	

M-METRIC PART

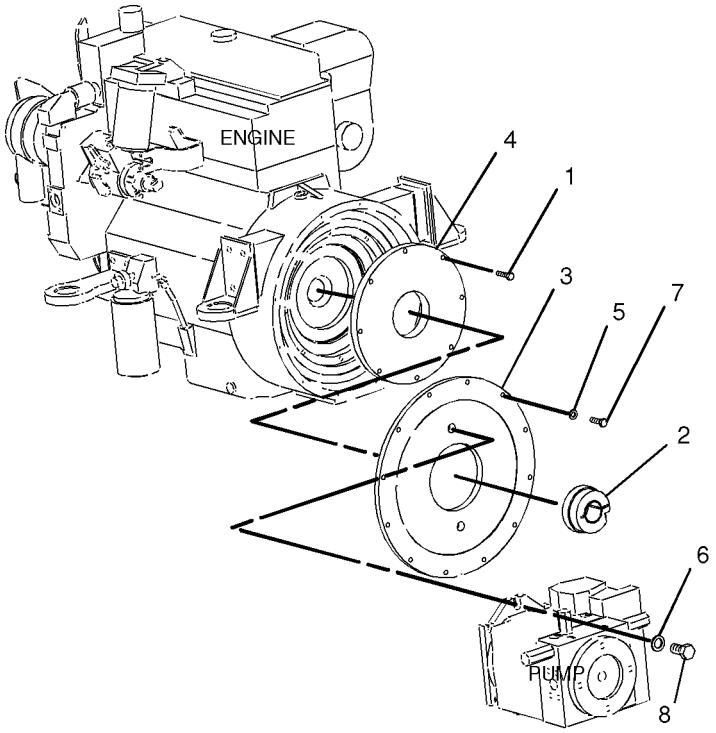

GRAPHIC #1 **<END>** g01046693

237-6260 POWER TRAIN AR

S/N: PDF1-UP

PART OF 236-5630 COMMON AR

SMCS-3000, 4000 **i01998502**

NOTE	PART NUMBER	QTY	PART NAME 1 2 3 4 5 6 (PRODUCT LEVEL)	SEE PAGE
Y	*233-7817*	1	ACCUMULATOR GP-BRAKE	295
Y	*118-8176*	1	CONTROL & WIRING GP-PWR TRAIN (HYDROSTATIC)	79
Y	*147-8607*	1	CONTROL GP-SERVICE BRAKE	299
Y	*109-0535*	1	DRIVE GP-HYDROSTATIC	185
Y	*233-7900*	1	LINES GP-ACCUMULATOR (BRAKE)	350
Y	*234-3203*	1	LINES GP-SERVICE BRAKE	301
Y	*148-2572*	1	LINES GP-HYDRAULIC	358
Y	*237-7233*	1	LINES GP-HYDRAULIC OIL COOLER	360
Y	*111-4102*	1	LINES GP-HYDROSTATIC	202
Y	*233-9931*	1	LINES GP-HYDROSTATIC PWR CASE	204
Y	*242-4043*	1	LINES GP-POWER TRAIN FILTER	208
YR	**134-7307**	1	MOTOR GP-PISTON (80-CC) (HYDROSTATIC)	210
YR	**168-1837**	1	MOTOR GP-PISTON (107-CC) (HYDROSTATIC)	211
Y	*109-5500*	1	MOUNTING GP-AXLE	212
Y	*111-4668*	1	MOUNTING GP-MOTOR (RH, 80-CC MOTOR)	214
Y	*111-4670*	1	MOUNTING GP-MOTOR (LH, 107-CC MOTOR)	215
Y	*107-4831*	1	MOUNTING GP-PUMP	216
YR	**156-7205**	1	PUMP GP-PISTON (HYDROSTATIC)	220
Y	*108-5731*	1	SHAFT GP-DRIVE	232

R-REMFG PART MAY BE AVAILABLE
Y-SEPARATE ILLUSTRATION

<END>

126-2486 PUMP GP-CHARGE

S/N: PDF1-UP

PART OF 127-5674 PUMP GP-CHARGE

SMCS-3203 **i02018514**

NOTE	REF NO	GRAPHIC REF	PART NUMBER	QTY	PART NAME 1 2 3 4 5 6 (PRODUCT LEVEL)	SEE PAGE
	1	1	**126-1477**	1	BUSHING-COUPLING	
	2	1	**186-6596**	1	COUPLING	
	3	1	**117-7296**	1	SPRING	
M	4	1	**8T-0273**	4	BOLT-SOCKET HEAD (M12X1.75X40-MM)	
	5	1	**8H-7521**	1	SEAL-O-RING	
	6	1	**8T-5049**	1	SEAL-O-RING	
	7	1	**145-0909**	1	RING	

M-METRIC PART

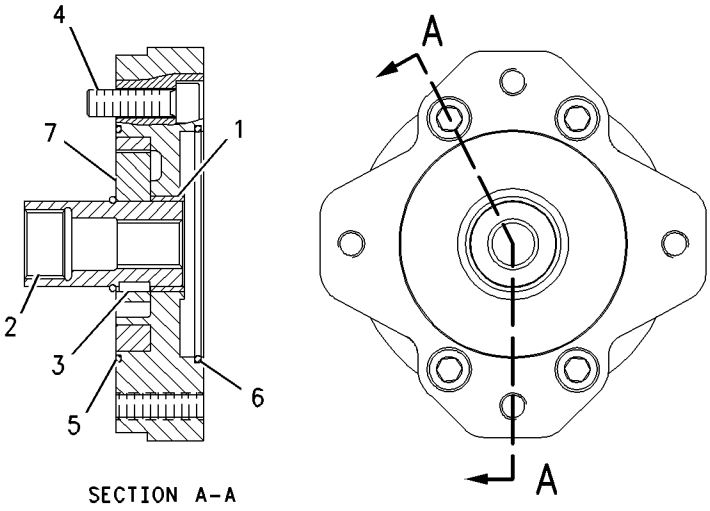

SECTION A-A

GRAPHIC #1 **<END>** g00782242

127-5674 PUMP GP-CHARGE

S/N: PDF1-UP

PART OF 156-7205 PUMP GP-PISTON

SMCS-3203 **i02030082**

NOTE	PART NUMBER	QTY	PART NAME 1 2 3 4 5 6 (PRODUCT LEVEL)	SEE PAGE
Y	**126-2486**	1	PUMP GP-CHARGE	218
	127-5677	1	PLATE-WEAR	
	8H-7521	1	SEAL-O-RING	

Y-SEPARATE ILLUSTRATION

<END>

156-7205 PUMP GP-PISTON

S/N: PDF1-UP
SLIPPER
PART OF 237-6260 POWER TRAIN AR

SMCS-3203 **i01464186**

NOTE	REF NO	GRAPHIC REF	PART NUMBER	QTY	PART NAME 1 2 3 4 5 6 (PRODUCT LEVEL)	SEE PAGE
	1	1	**126-1661**	1	PLUG	
	2	1	**081-3801**	2	PLUG	
M	3	1	**9T-3928**	4	PLUG AS	
					(EACH INCLUDES)	
		1	**187-8001**	1	SEAL	
Y	4	1	**187-4511**	1	VALVE GP-SERVO	165
	5	1	**9S-8004**	5	PLUG	
	6	1	**3J-1907**	5	SEAL-O-RING	
	7	1	**126-1645**	1	ORIFICE	
Y	8	1	**126-1460**	1	VALVE GP-SPEED SENSING	248
	9	1	**3J-7354**	5	SEAL-O-RING	
	10	1	**9S-8002**	5	PLUG-O-RING	
	11	1	**3K-0360**	1	SEAL-O-RING	
	12	1	**9S-8005**	1	PLUG	
	13	1	**126-1639**	1	CONNECTOR	
	14	1	**3D-2824**	1	SEAL-O-RING	
	15	1	**126-1640**	1	ORIFICE	
	16	1	**6V-0852**	4	CAP-DUST	
	17	1	**110-6349**	3	FITTING AS	
	18	1	**6V-3965**	1	FITTING	
Y	19	1	**148-6930**	1	VALVE GP-PUMP CONTROL	244
	20	1	**126-1638**	2	PIN-JOINT	
Y	21	1	**133-1849**	1	ROTATING GP-PUMP	230
	22	1	**6E-4614**	2	PIN	
	23	1	**153-2152**	1	HOUSING	
Y	24	1	**133-1858**	1	HEAD GP-PUMP	196
Y	25	1	**127-5674**	1	PUMP GP-CHARGE	219
	26	1	**126-1643**	1	SCREW-ECCENTRIC	
M	27	1	**6E-4385**	1	LOCKNUT (M12 X 1.5 THD)	

M-METRIC PART
Y-SEPARATE ILLUSTRATION

156-7205 PUMP GP-PISTON *(contd.)* **i01464186**

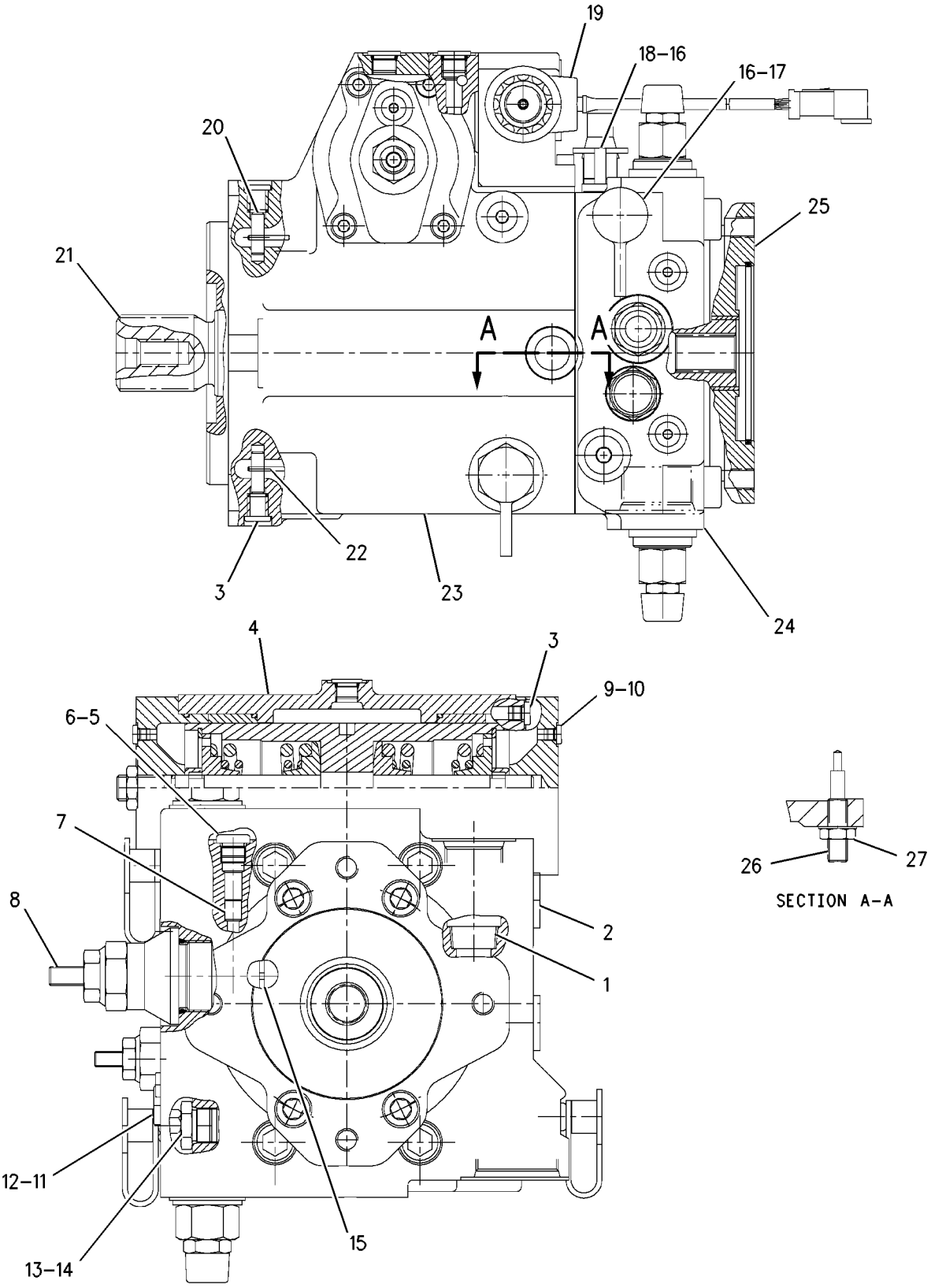

GRAPHIC #1 **<END>** g00802339

9Z-8513 RIM AR

S/N: PDF1-UP
12/1.3X25. 3 PIECE
PART OF 232-0682 TIRE & RIM GP
AN ATTACHMENT

SMCS-4209 **i01997913**

NOTE	PART NUMBER	QTY	PART NAME 1 2 3 4 5 6 (PRODUCT LEVEL)	SEE PAGE
	166-0126	1	MOUNTING GP-RIM	
	8T-4167	32	WASHER-HARD (26X44X4MM THK)	
M	**8T-5379**	32	BOLT (M24X3X50MM)	
Y	*2Q-6002*	4	RIM GP-DEMOUNTABLE	223

M-METRIC PART
Y-SEPARATE ILLUSTRATION

<END>

119-6627 RIM AR

S/N: PDF1-UP
13X25
PART OF 112-0964, 112-3448, 9Z-8536 TIRE & RIM AR
AN ATTACHMENT

SMCS-4209 **i02030083**

NOTE	PART NUMBER	QTY	PART NAME 1 2 3 4 5 6 (PRODUCT LEVEL)	SEE PAGE
Y	*119-6633*	4	RIM GP-DEMOUNTABLE	224
	166-0126	1	MOUNTING GP-RIM	
	8T-4167	32	WASHER-HARD (26X44X4-MM THK)	
M	**8T-5379**	32	BOLT (M24X3X50-MM)	

M-METRIC PART
Y-SEPARATE ILLUSTRATION

<END>

133-4782 RIM AR

S/N: PDF1-UP
14X25. 3 PIECE
PART OF 133-4777, 133-4778, 133-4779, 133-4780, 133-4781 TIRE & RIM AR
AN ATTACHMENT

SMCS-4209 **i01403071**

NOTE	PART NUMBER	QTY	PART NAME 1 2 3 4 5 6 (PRODUCT LEVEL)	SEE PAGE
	166-0126	1	MOUNTING GP-RIM	
	8T-4167	8	WASHER-HARD (26X44X4MM THK)	
M	**8T-5379**	8	BOLT (M24X3.0X50MM)	
Y	*133-4783*	4	RIM GP-DEMOUNTABLE	225

M-METRIC PART
Y-SEPARATE ILLUSTRATION

<END>

2Q-6002 RIM GP-DEMOUNTABLE

S/N: PDF1-UP
12X25
PART OF 9Z-8513 RIM AR
AN ATTACHMENT

SMCS-4209 **i01998218**

NOTE	REF NO	GRAPHIC REF	PART NUMBER	QTY	PART NAME 1 2 3 4 5 6 (PRODUCT LEVEL)	SEE PAGE
	1	1	*2Q-6003*	1	RIM GP-DEMOUNTABLE	
		1	**2Q-6004**	1	FLANGE AS	
		1	**2Q-6005**	1	RIM AS	
		1	**4K-4881**	1	RING-LOCK	
	2	1	**4K-4879**	1	SEAL-O-RING	
Y	3	1	**6D-0337**	1	VALVE GP-TIRE	249

Y-SEPARATE ILLUSTRATION

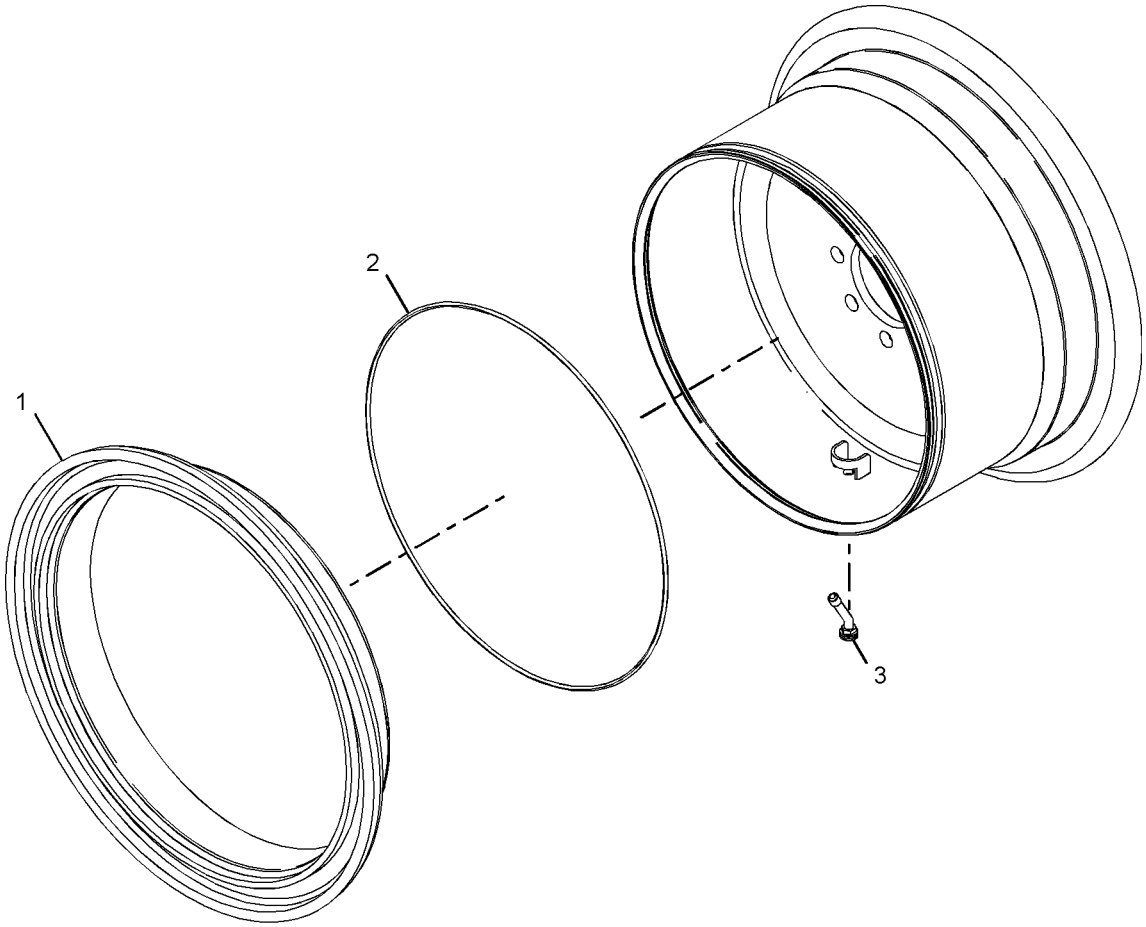

GRAPHIC #1 **<END>** g01044547

119-6633 RIM GP-DEMOUNTABLE

S/N: PDF1-UP

PART OF 119-6627 RIM AR, 232-0670, 232-0671, 232-0672 TIRE & RIM GP

AN ATTACHMENT

SMCS-4209 **i02030084**

NOTE	REF NO	GRAPHIC REF	PART NUMBER	QTY	PART NAME 1 2 3 4 5 6 (PRODUCT LEVEL)	SEE PAGE
	1	1	**112-0969**	1	RIM AS (13X25)	
	2	1	**118-9648**	1	VALVE AS-TIRE	

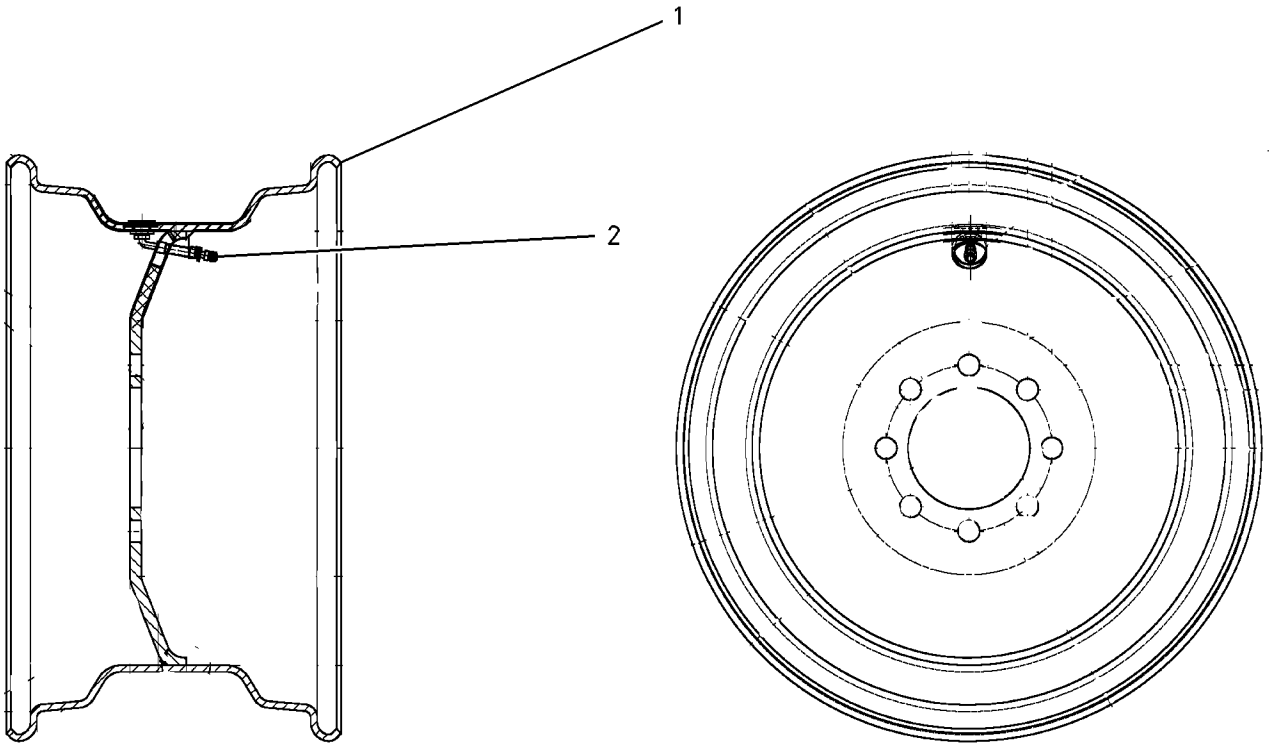

GRAPHIC #1 **<END>** g00865676

133-4783 RIM GP-DEMOUNTABLE

S/N: PDF1-UP
14X25. 3 PIECE
PART OF 133-4782 RIM AR
AN ATTACHMENT

SMCS-4209 **i02030086**

NOTE	REF NO	GRAPHIC REF	PART NUMBER	QTY	PART NAME 1 2 3 4 5 6 (PRODUCT LEVEL)	SEE PAGE
	1	1	*133-4784*	1	RIM GP-DEMOUNTABLE	
		1	**4K-4881**	1	RING-LOCK	
		1	**8X-9925**	1	FLANGE	
		1	**133-4785**	1	RIM AS	
	2	1	**4K-4879**	1	SEAL-O-RING	
Y	3	1	**6D-0337**	1	VALVE GP-TIRE	249

Y-SEPARATE ILLUSTRATION

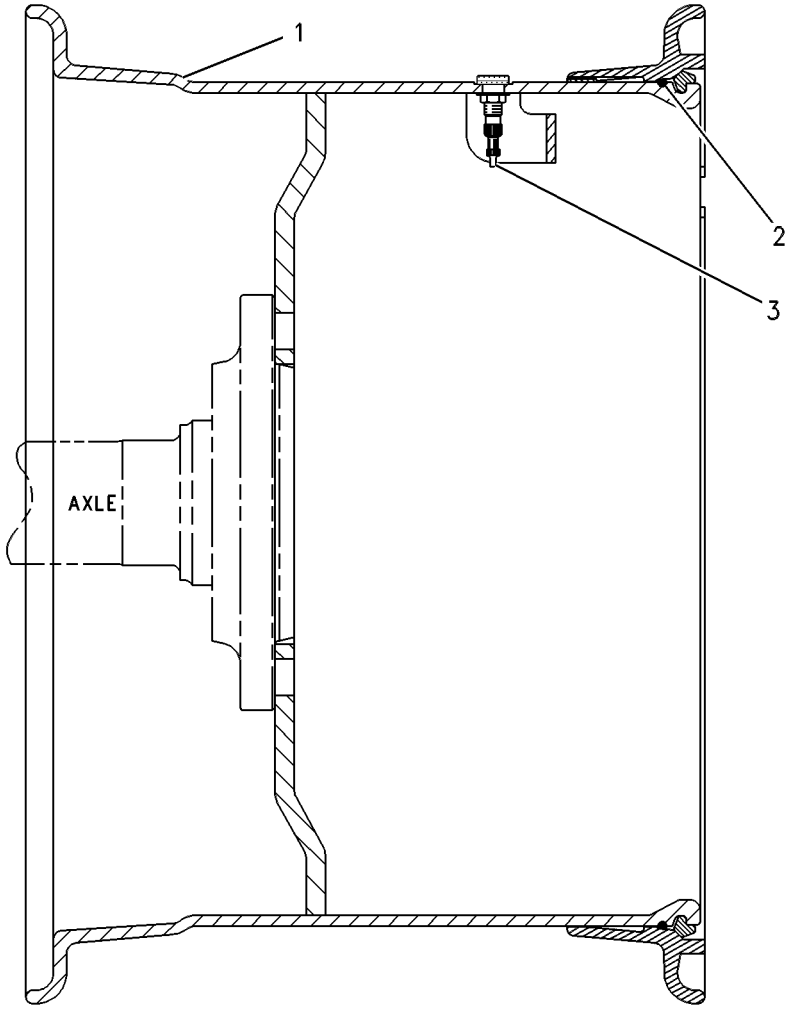

GRAPHIC #1 **<END>** g00269438

123-5741 ROTATING GP-MOTOR

S/N: PDF1-UP

PART OF 134-7307 MOTOR GP-PISTON

SMCS-4351 **i02030087**

NOTE	REF NO	GRAPHIC REF	PART NUMBER	QTY	PART NAME 1 2 3 4 5 6 (PRODUCT LEVEL)	SEE PAGE
	1	1	**096-5516**	1	RING-RETAINING	
B	2	1	**123-5763**	1	PLATE (2.65-MM THK)	
B		1	**123-5764**	1	PLATE (2.70-MM THK)	
B		1	**123-5765**	1	PLATE (2.75-MM THK)	
B		1	**123-5766**	1	PLATE (2.80-MM THK)	
B		1	**123-5767**	1	PLATE (2.85-MM THK)	
B		1	**123-5768**	1	PLATE (2.90-MM THK)	
B		1	**123-5769**	1	PLATE (2.95-MM THK)	
B		1	**123-5770**	1	PLATE (3.00-MM THK)	
B	3	1	**123-5773**	1	SHIM (3.50-MM THK)	
B		1	**123-5774**	1	SHIM (3.60-MM THK)	
B		1	**123-5775**	1	SHIM (3.70-MM THK)	
B		1	**123-5776**	1	SHIM (3.80-MM THK)	
B		1	**123-5777**	1	SHIM (3.90-MM THK)	
B		1	**123-5778**	1	SHIM (4.00-MM THK)	
	4	1	**123-5771**	1	SPRING	
	5	1	**124-1411**	1	PLATE-CONTROL	
	6	1	**123-5813**	1	BARREL	
	7	1	**165-6975**	7	PISTON AS	
	8	1	**9T-1581**	14	RING	
M	9	1	**113-4419**	14	SCREW (M5)	
	10	1	**9W-2103**	1	CONE-BEARING	
	11	1	**9W-2104**	1	CUP-BEARING	
B	12	1	**123-5754**	1	SHIM (3.80-MM THK)	
B		1	**123-5755**	1	SHIM (3.85-MM THK)	
B		1	**124-6459**	1	SHIM (3.90-MM THK)	
B		1	**123-5757**	1	SHIM (3.95-MM THK)	
B		1	**123-5758**	1	SHIM (4.00-MM THK)	
	13	1	**135-3242**	1	BEARING AS	
	14	1	**123-5753**	1	SHAFT-DRIVE	
	15	1	**123-5760**	1	PIN-CENTER	
	16	1	**123-5772**	1	PLATE-RETAINING	

B-USE AS REQUIRED
M-METRIC PART

123-5741 ROTATING GP-MOTOR ***(contd.)*** **i02030087**

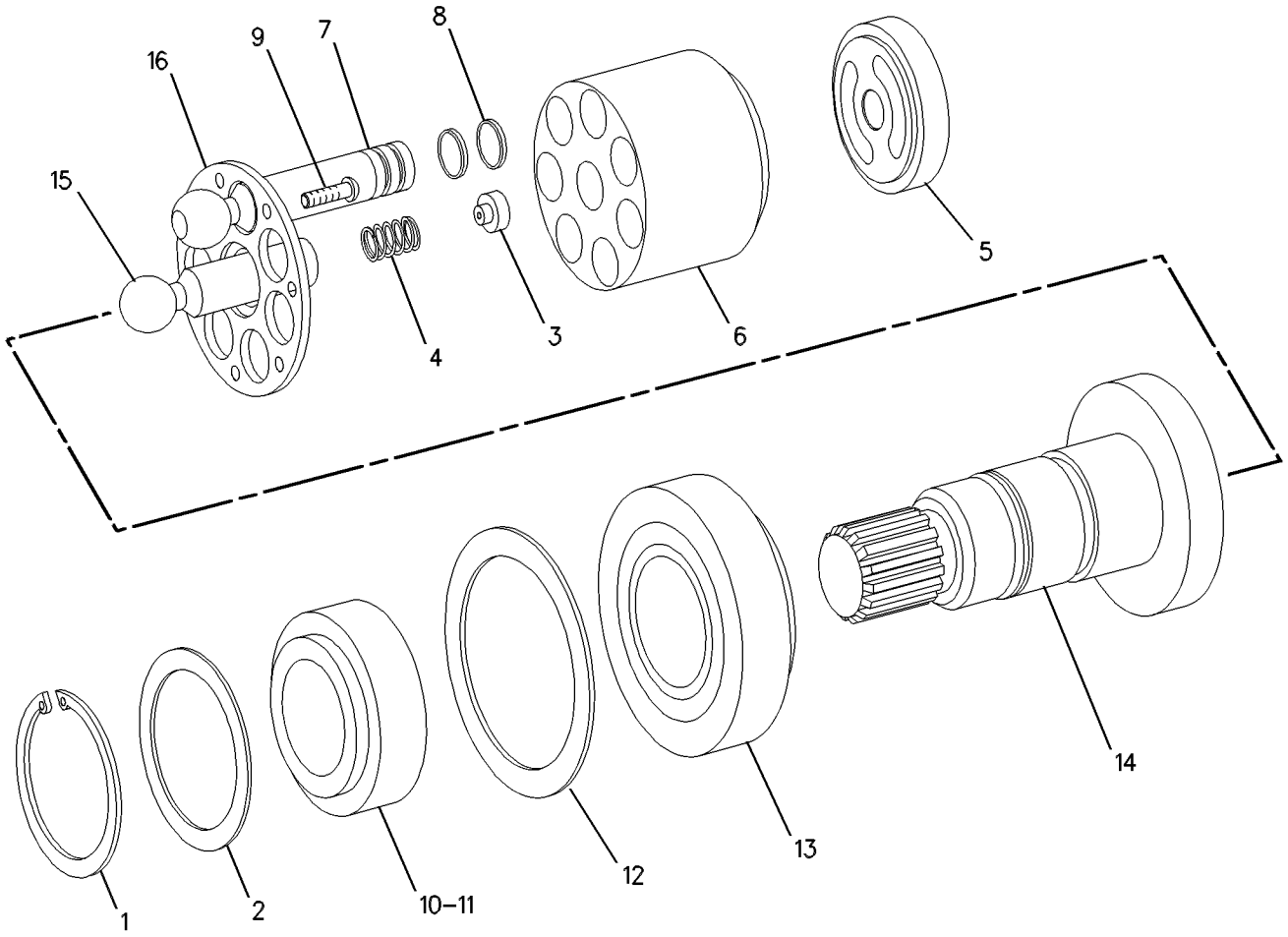

GRAPHIC #1 **<END>** g00572587

124-9909 ROTATING GP-MOTOR

S/N: PDF1-UP

PART OF 168-1837 MOTOR GP-PISTON

SMCS-4351 **i02030088**

NOTE	REF NO	GRAPHIC REF	PART NUMBER	QTY	PART NAME 1 2 3 4 5 6 (PRODUCT LEVEL)	SEE PAGE
	1	1	**095-0929**	1	RING-RETAINING	
	2	1	**124-9870**	1	PLATE (3.50-MM THK)	
		1	**124-9871**	1	PLATE (3.45-MM THK)	
		1	**124-9872**	1	PLATE (3.40-MM THK)	
		1	**124-9873**	1	PLATE (3.35-MM THK)	
		1	**124-9874**	1	PLATE (3.30-MM THK)	
		1	**124-9875**	1	PLATE (3.25-MM THK)	
		1	**124-9876**	1	PLATE (3.20-MM THK)	
		1	**124-9877**	1	PLATE (3.15-MM THK)	
B	3	1	**124-9932**	1	SHIM (3.5-MM THK)	
B		1	**124-9933**	1	SHIM (3.6-MM THK)	
B		1	**124-9934**	1	SHIM (3.7-MM THK)	
B		1	**124-9935**	1	SHIM (3.8-MM THK)	
B		1	**124-9936**	1	SHIM (3.9-MM THK)	
B		1	**124-9937**	1	SHIM (4-MM THK)	
	4	1	**124-9938**	1	SPRING	
	5	1	**124-9929**	1	PLATE-CONTROL	
	6	1	**9T-3370**	1	BARREL-CYLINDER	
	7	1	**165-6976**	7	PISTON AS	
	8	1	**9T-3745**	14	RING	
M	9	1	**113-4419**	14	SCREW (M5)	
	10	1	**6E-1692**	1	BEARING AS	
B	11	1	**124-9865**	1	SHIM (5.8-MM THK)	
B		1	**124-9866**	1	SHIM (5.85-MM THK)	
B		1	**124-9867**	1	SHIM (5.90-MM THK)	
B		1	**124-9868**	1	SHIM (5.95-MM THK)	
B		1	**124-9869**	1	SHIM (6.00-MM THK)	
	12	1	**167-6701**	1	PLATE-RETAINING	
	13	1	**124-9930**	1	PIN-CENTER	
	14	1	**124-9864**	1	SHAFT-DRIVE	
	15	1	**6E-1691**	1	BEARING AS	

B-USE AS REQUIRED
M-METRIC PART

124-9909 ROTATING GP-MOTOR *(contd.)* **i02030088**

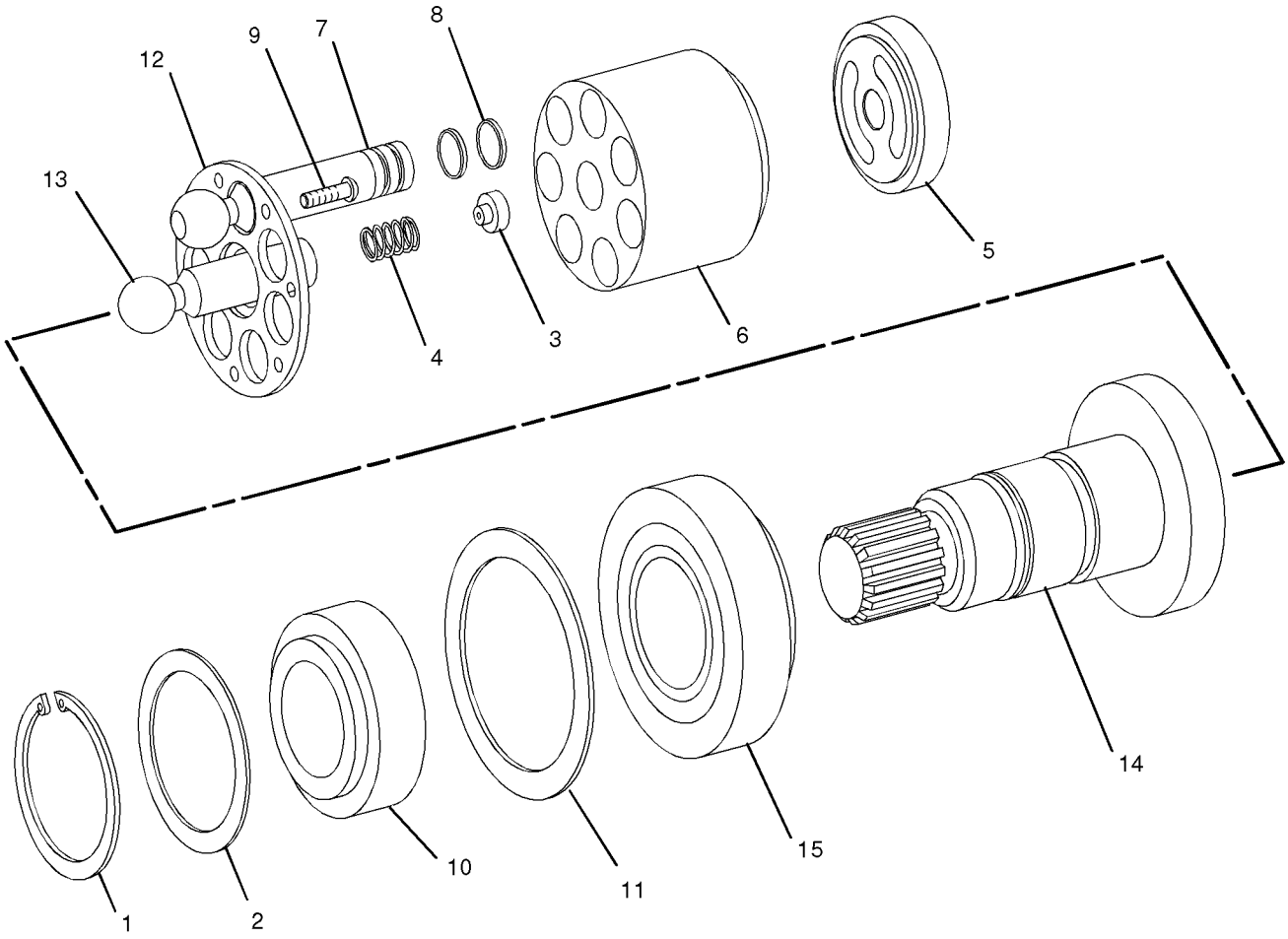

GRAPHIC #1 **<END>** g01046697

133-1849 ROTATING GP-PUMP

S/N: PDF1-UP

PART OF 156-7205 PUMP GP-PISTON

SMCS-3203 **i02030090**

NOTE	REF NO	GRAPHIC REF	PART NUMBER	QTY	PART NAME 1 2 3 4 5 6 (PRODUCT LEVEL)	SEE PAGE
	1	1	**8J-8322**	1	RING-RETAINING	
	2	1	**126-1415**	2	WASHER	
	3	1	**114-4270**	1	RING-RETAINING	
	4	1	**126-1404**	1	SHAFT-DRIVE	
	5	1	**2W-1145**	2	RING-RETAINING	
	6	1	**126-1410**	1	RETAINER-BALL	
	7	1	**126-1402**	1	SWASHPLATE	
	8	1	**126-1409**	1	PLATE-RETAINING	
	9	1	**126-1400**	9	PISTON AS	
	10	1	**133-1848**	1	BARREL AS	
B	11	1	**126-1405**	1	SHIM (1.2-MM THK)	
B	12	1	**126-1406**	1	SHIM (1.0-MM THK)	
B	13	1	**126-1407**	1	SHIM (0.8-MM THK)	
B	14	1	**126-1408**	1	SHIM (0.6-MM THK)	
	15	1	**126-1416**	1	SPRING	
	16	1	**126-1401**	1	SPRING	
	17	1	**6E-0719**	2	ROD	
	18	1	**126-1413**	1	LINER-BEARING	
	19	1	**126-1420**	1	SEAL-SHAFT	
	20	1	**126-1403**	1	PLATE-ADJUSTMENT	
	21	1	**126-1419**	1	BEARING-CRADLE	
	22	1	**126-3295**	1	BEARING AS	
	23	1	**6V-5201**	1	RING-RETAINING	

B-USE AS REQUIRED

133-1849 ROTATING GP-PUMP *(contd.)* **i02030090**

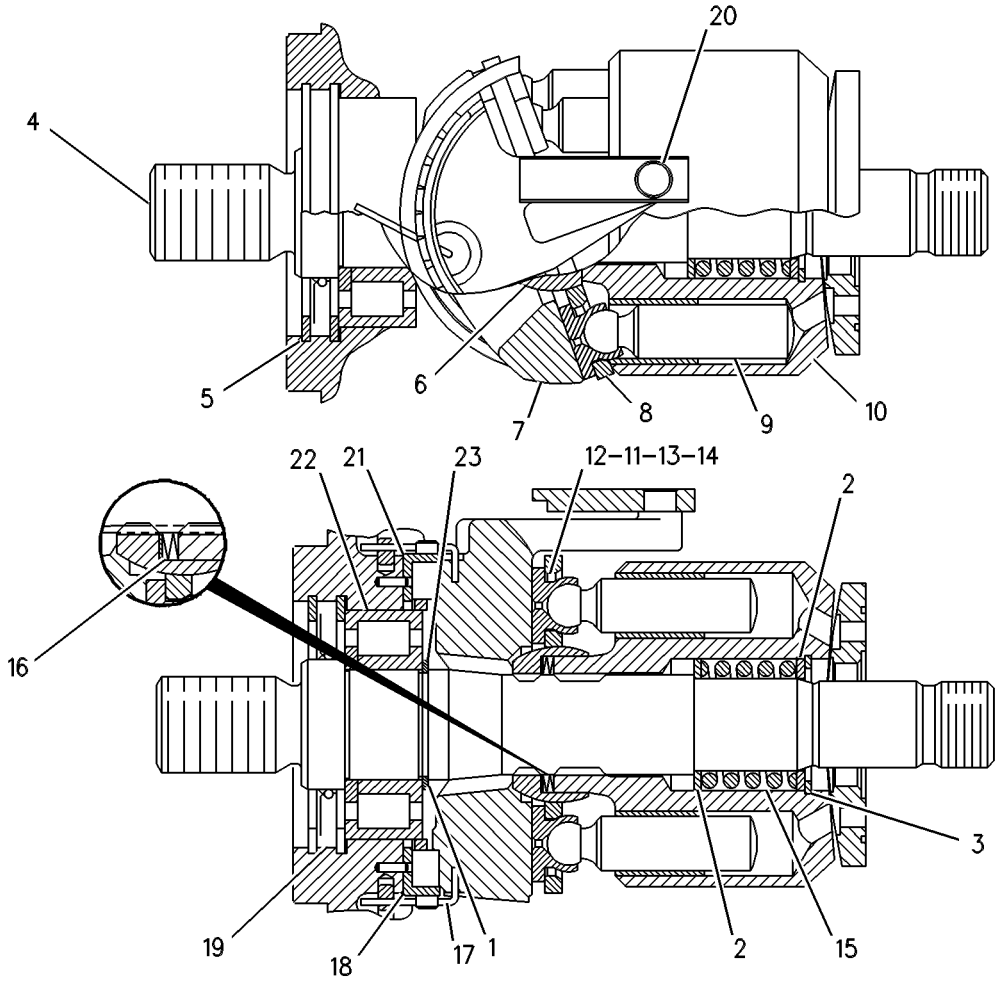

GRAPHIC #1 **<END>** g00268844

108-5731 SHAFT GP-DRIVE

S/N: PDF1-UP

PART OF 237-6260 POWER TRAIN AR

SMCS-3253 **i00709504**

NOTE	REF NO	GRAPHIC REF	PART NUMBER	QTY	PART NAME 1 2 3 4 5 6 (PRODUCT LEVEL)	SEE PAGE
Y	1	1	**108-5733**	1	SLIP JOINT GP	233
M	2	1	**4E-5985**	8	BOLT-12 POINT HEAD (M10X1.25X20MM)	
	3	1	**4E-5984**	4	STRAP	

M-METRIC PART
Y-SEPARATE ILLUSTRATION

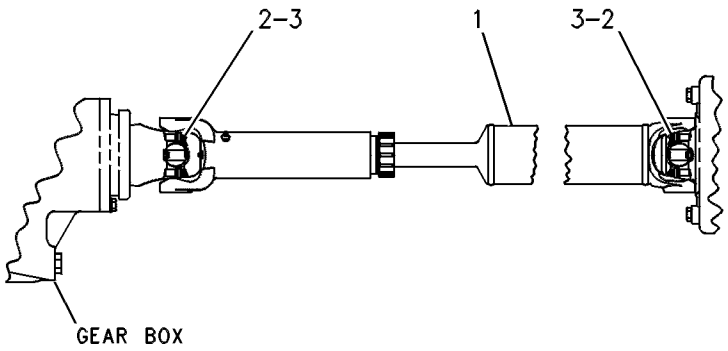

GRAPHIC #1 **<END>** g00245136

108-5733 SLIP JOINT GP

S/N: PDF1-UP

PART OF 108-5731 SHAFT GP-DRIVE

SMCS-3251 **i02030091**

NOTE	REF NO	GRAPHIC REF	PART NUMBER	QTY	PART NAME 1 2 3 4 5 6 (PRODUCT LEVEL)	SEE PAGE
	1	1	**116-8539**	2	KIT-SPIDER & BEARING	
					(EACH INCLUDES)	
	2	1	**8V-7315**	2	RING	
	3	1	**1K-6853**	1	FITTING	
	4	1	**3B-8488**	1	FITTING-GREASE	
	5	1	**8R-2946**	1	SEAL	

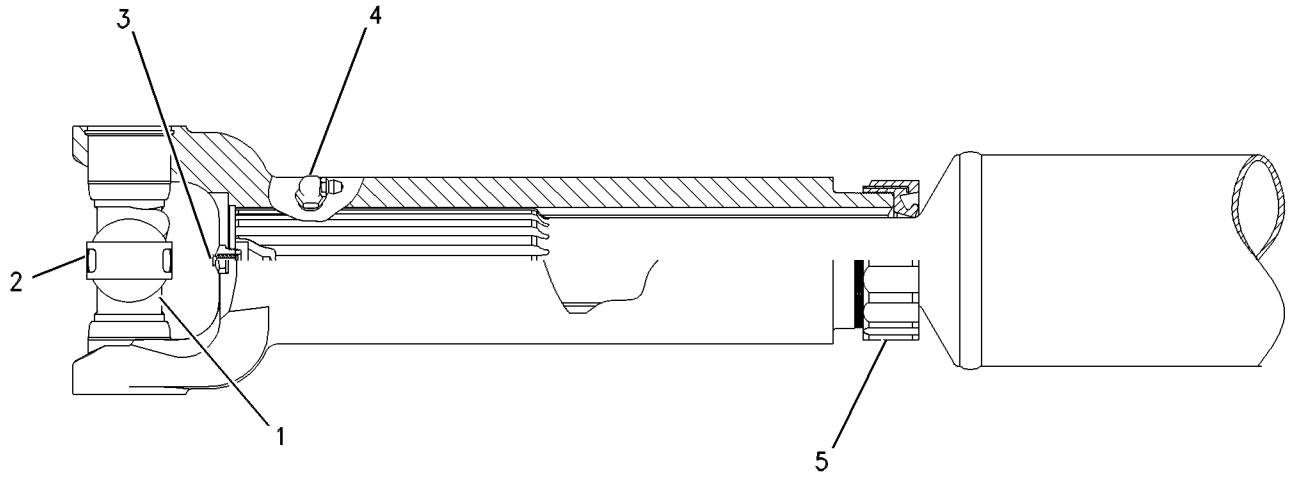

GRAPHIC #1 **<END>** g00546135

9Z-8536 TIRE & RIM AR

S/N: PDF1-UP
13X25, 17.5-25 12PR. SNOW
AN ATTACHMENT

SMCS-4202 **i01996650**

NOTE	PART NUMBER	QTY	PART NAME 1 2 3 4 5 6 (PRODUCT LEVEL)	SEE PAGE
Y	*119-6627*	1	RIM AR	222
	190-8986	4	TIRE (17.5-25)	

Y-SEPARATE ILLUSTRATION

<END>

112-0964 TIRE & RIM AR

S/N: PDF1-UP
13X25
AN ATTACHMENT

SMCS-4202 **i02034004**

NOTE	PART NUMBER	QTY	PART NAME 1 2 3 4 5 6 (PRODUCT LEVEL)	SEE PAGE
Y	*119-6627*	1	RIM AR	222
	128-5450	4	TIRE (17.5X25 12PR L-2)	

Y-SEPARATE ILLUSTRATION

<END>

112-3448 TIRE & RIM AR

S/N: PDF1-UP
13X25
AN ATTACHMENT

SMCS-4202 **i02034010**

NOTE	PART NUMBER	QTY	PART NAME 1 2 3 4 5 6 (PRODUCT LEVEL)	SEE PAGE
Y	*119-6627*	1	RIM AR	222
	6C-7366	4	TIRE (17.5 R25 * GP2B6S)	

Y-SEPARATE ILLUSTRATION

<END>

133-4777 TIRE & RIM AR

S/N: PDF1-UP
14X25
AN ATTACHMENT

SMCS-4202 **i02034012**

NOTE	PART NUMBER	QTY	PART NAME 1 2 3 4 5 6 (PRODUCT LEVEL)	SEE PAGE
Y	*133-4782*	1	RIM AR	222
	128-5450	4	TIRE (17.5X25 12PR L-2)	

Y-SEPARATE ILLUSTRATION

<END>

133-4778 TIRE & RIM AR

S/N: PDF1-UP
14X25, 17.5-25 16PR L-3
AN ATTACHMENT

SMCS-4202 **i02034033**

NOTE	PART NUMBER	QTY	PART NAME 1 2 3 4 5 6 (PRODUCT LEVEL)	SEE PAGE
Y	*133-4782*	1	RIM AR	222
	6W-6807	4	TIRE (17.5-25 16PR L-3)	

Y-SEPARATE ILLUSTRATION

<END>

133-4779 TIRE & RIM AR

S/N: PDF1-UP
14X25, 17.5 R25 L-2
AN ATTACHMENT

SMCS-4202 **i02034040**

NOTE	PART NUMBER	QTY	PART NAME 1 2 3 4 5 6 (PRODUCT LEVEL)	SEE PAGE
Y	*133-4782*	1	RIM AR	222
	106-4835	4	TIRE (17.5 R25*L-2)	

Y-SEPARATE ILLUSTRATION

<END>

133-4780 TIRE & RIM AR

S/N: PDF1-UP
14X25, 17.5 R25 L-3
AN ATTACHMENT

SMCS-4202 **i02034042**

NOTE	PART NUMBER	QTY	PART NAME 1 2 3 4 5 6 (PRODUCT LEVEL)	SEE PAGE
Y	*133-4782*	1	RIM AR	222
	6C-3246	4	TIRE (17.5 R25*L-3)	

Y-SEPARATE ILLUSTRATION

<END>

133-4781 TIRE & RIM AR

S/N: PDF1-UP
14X25, 17.5 R25 L-2/L-3
AN ATTACHMENT

SMCS-4202 **i02034050**

NOTE	PART NUMBER	QTY	PART NAME 1 2 3 4 5 6 (PRODUCT LEVEL)	SEE PAGE
Y	*133-4782*	1	RIM AR	222
	6C-7366	4	TIRE (17.5 R25 * GP2B6S)	

Y-SEPARATE ILLUSTRATION

<END>

232-0670 TIRE & RIM GP

S/N: PDF1-UP
13X25. SPARE
AN ATTACHMENT

SMCS-4202 **i02034054**

NOTE	PART NUMBER	QTY	PART NAME 1 2 3 4 5 6 (PRODUCT LEVEL)	SEE PAGE
Y	*119-6633*	1	RIM GP-DEMOUNTABLE	224
	107-0497	1	TIRE (15.5R25*L-2)	

Y-SEPARATE ILLUSTRATION

<END>

232-0671 TIRE & RIM GP

S/N: PDF1-UP
13X25. SPARE
AN ATTACHMENT

SMCS-4202 **i02034056**

NOTE	PART NUMBER	QTY	PART NAME 1 2 3 4 5 6 (PRODUCT LEVEL)	SEE PAGE
Y	*119-6633*	1	RIM GP-DEMOUNTABLE	224
	106-4835	1	TIRE (17.5 R25*L-2)	

Y-SEPARATE ILLUSTRATION

<END>

232-0672 TIRE & RIM GP

S/N: PDF1-UP
13X25
AN ATTACHMENT

SMCS-4202 **i01997877**

NOTE	PART NUMBER	QTY	PART NAME 1 2 3 4 5 6 (PRODUCT LEVEL)	SEE PAGE
Y	*119-6633*	1	RIM GP-DEMOUNTABLE	224
	6C-3246	1	TIRE (17.5 R25*L-3)	

Y-SEPARATE ILLUSTRATION

<END>

232-0682 TIRE & RIM GP

S/N: PDF1-UP
12X25
AN ATTACHMENT

SMCS-4202 **i01997872**

NOTE	PART NUMBER	QTY	PART NAME 1 2 3 4 5 6 (PRODUCT LEVEL)	SEE PAGE
Y	*9Z-8513*	1	RIM AR	222
	6W-6379	4	TIRE (15.5R25)	

Y-SEPARATE ILLUSTRATION

<END>

123-5743 VALVE GP-PILOT

S/N: PDF1-UP

PART OF 135-0785 HEAD GP-MOTOR

SMCS-5059 **i02018327**

NOTE	REF NO	GRAPHIC REF	PART NUMBER	QTY	PART NAME 1 2 3 4 5 6 (PRODUCT LEVEL)	SEE PAGE
	1	1	**123-5744**	1	HOUSING	
M	2	1	**123-2017**	2	PLUG	
	3	1	**123-9769**	14	PLUG	
	4	1	**124-1402**	1	SHIM	
	5	1	**123-5793**	2	FITTING	
M	6	1	**8T-9534**	4	BOLT (M6X1X50-MM)	
	7	1	**9X-7734**	1	SEAL-O-RING	
	8	1	**123-5791**	1	SPRING	
	9	1	**123-5790**	1	RETAINER-SPRING	
	10	1	**123-5789**	1	RETAINER-SPRING	
	11	1	**095-0933**	1	RING-RETAINING	
M	12	1	**096-3218**	1	SETSCREW-SOCKET (M4X0.4X6-MM)	
	13	1	**124-1401**	1	PISTON-CONTROL	
	14	1	**123-5745**	1	BUSHING-CONTROL	
	15	1	**125-3552**	1	DOWEL	
M	16	1	**6V-9677**	1	SETSCREW-SOCKET (M6X1X30-MM)	
	17	1	**9T-3853**	1	LOCKNUT (M6-THD)	
	18	1	**9S-8004**	2	PLUG	
	19	1	**3J-1907**	2	SEAL-O-RING	
	20	1	**123-5792**	1	SPRING	
	21	1	**123-9770**	4	PLUG	

M-METRIC PART

123-5743 **VALVE GP-PILOT** *(contd.)* **i02018327**

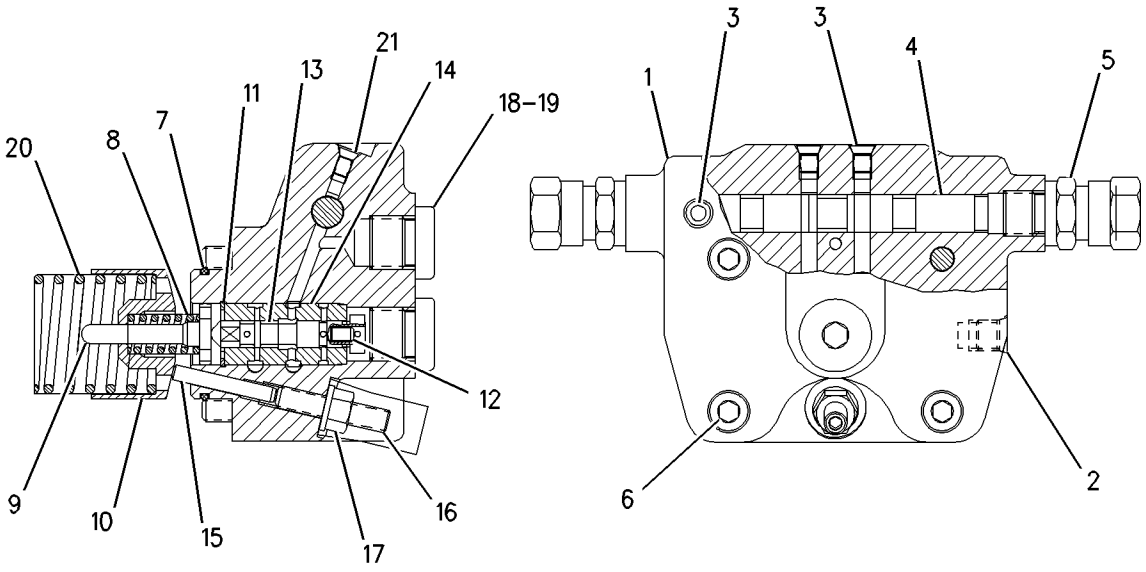

GRAPHIC #1 **<END>** g00682577

124-9976 VALVE GP-PILOT

S/N: PDF1-UP

PART OF 124-9911 HEAD GP-MOTOR

SMCS-5059 **i02034062**

NOTE	REF NO	GRAPHIC REF	PART NUMBER	QTY	PART NAME 1 2 3 4 5 6 (PRODUCT LEVEL)	SEE PAGE
	1	1	**122-5334**	1	CAP	
	2	1	**123-9769**	1	PLUG	
	3	1	**138-4272**	1	HOUSING	
M	4	1	**096-0001**	4	BOLT-SOCKET HEAD (M8X1.25X40-MM)	
M	5	1	**096-3218**	1	SETSCREW-SOCKET (M4X0.4X6-MM)	
	6	1	**9S-8004**	1	PLUG	
	7	1	**3J-1907**	1	SEAL-O-RING	
	8	1	**124-9946**	1	PISTON	
	9	1	**124-9945**	1	BUSHING	
	10	1	**124-9887**	1	BUSHING	
	11	1	**124-9948**	1	RETAINER	
M	12	1	**6V-9677**	1	SETSCREW-SOCKET (M6X1X30-MM)	
	13	1	**9T-3853**	1	LOCKNUT (M6-THD)	
	14	1	**095-0933**	1	RING-RETAINING	
	15	1	**6V-1250**	1	SEAL-O-RING	
	16	1	**125-3553**	1	DOWEL	
	17	1	**124-9950**	1	SPRING	
	18	1	**124-9888**	1	SPRING (OUTER)	
	19	1	**124-9951**	1	SPRING (INNER)	
	20	1	**124-9949**	1	RETAINER	

M-METRIC PART

124-9976 VALVE GP-PILOT *(contd.)* **i02034062**

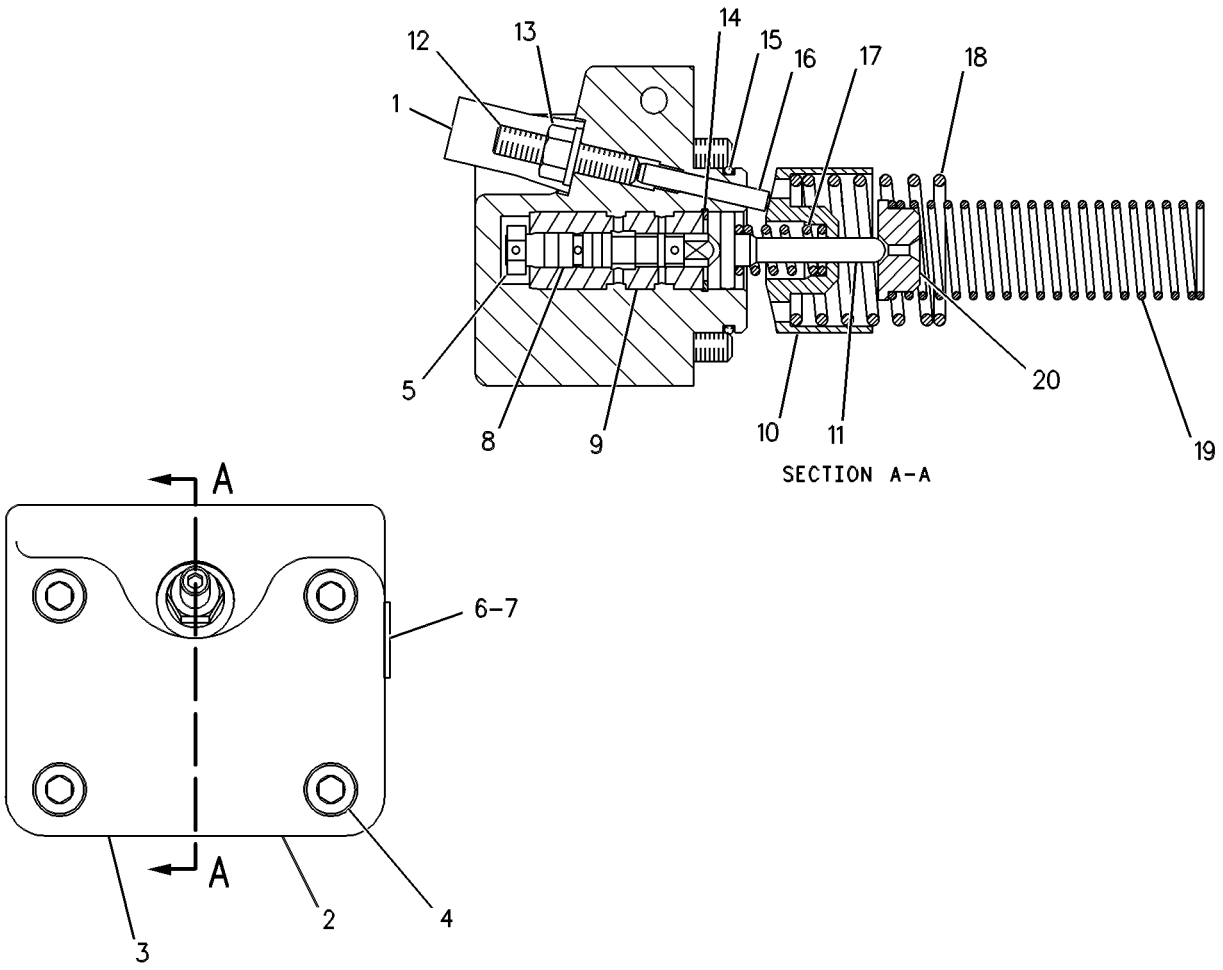

GRAPHIC #1 **<END>** g00268658

124-9977 VALVE GP-PILOT

S/N: PDF1-UP

PART OF 124-9911 HEAD GP-MOTOR

SMCS-5059 **i02018483**

NOTE	REF NO	GRAPHIC REF	PART NUMBER	QTY	PART NAME 1 2 3 4 5 6 (PRODUCT LEVEL)	SEE PAGE
	1	1	**125-4572**	1	RING-RETAINING	
	2	1	**124-9898**	1	PLUG	
	3	1	**124-9901**	1	SPRING	
B	4	1	**124-9904**	1	SHIM (1-MM)	
B	5	1	**124-9905**	1	SHIM (.3-MM)	
B	6	1	**124-9906**	1	SHIM (.5-MM)	
	7	1	**6V-8351**	1	SEAL-O-RING	
	8	1	**124-9896**	1	VALVE-PISTON	
	9	1	**124-9908**	1	ORIFICE	
M	10	1	**129-3181**	4	BOLT-HEX SOCKET (M10X1.5X55-MM)	
	11	1	**124-9959**	1	HOUSING	
	12	1	**124-9960**	1	PISTON	
	13	1	**124-9899**	2	SPACER	
	14	1	**107-3117**	2	SEAL-O-RING	
	15	1	**124-9900**	2	SPRING	
	16	1	**124-9891**	2	PLUG	
	17	1	**6V-3965**	1	FITTING (QUICK DISCONNECT)	
	18	1	**3J-1907**	1	SEAL-O-RING	
	19	1	**124-9957**	1	PIN	
	20	1	**123-5798**	1	SEAT	
	21	1	**123-5799**	1	SEAT	
	22	1	**170-5715**	1	SEAL-O-RING	

B-USE AS REQUIRED
M-METRIC PART

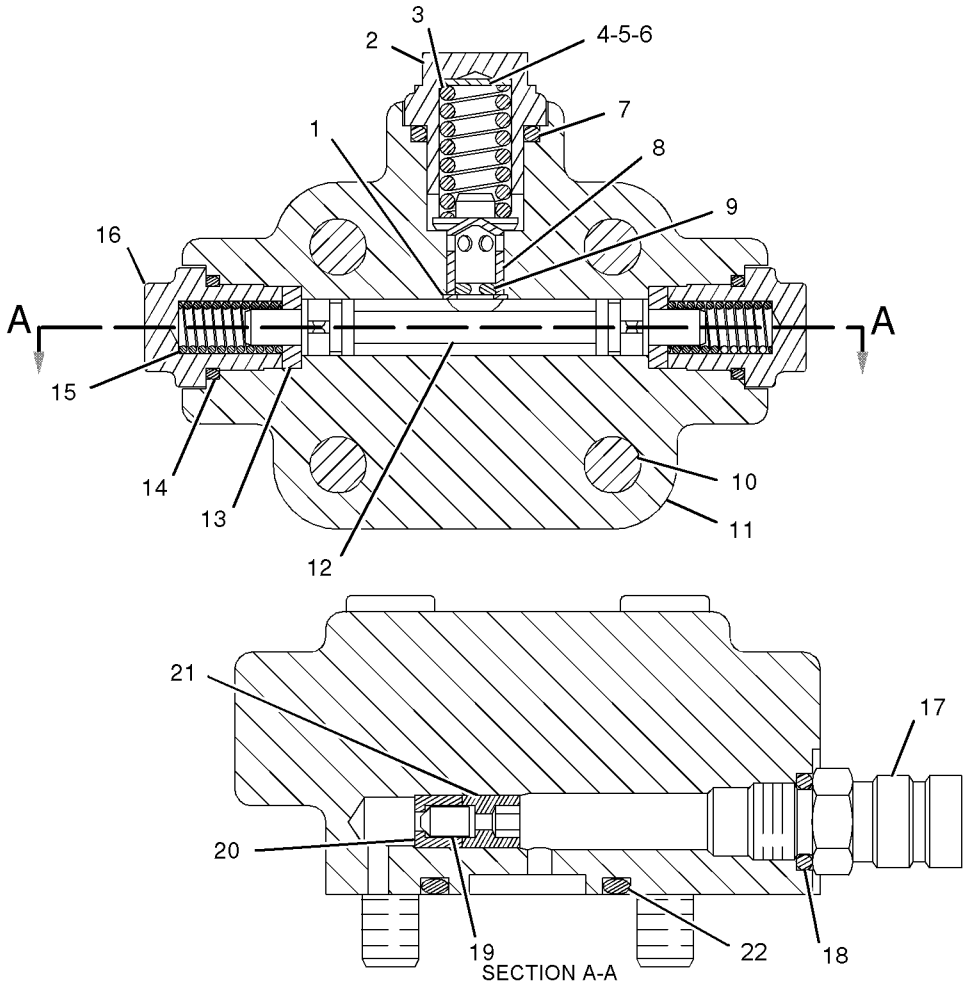

GRAPHIC #1 **<END>** g01043356

126-1424 VALVE GP-PUMP CONTROL

S/N: PDF1-UP

PART OF 133-1858 HEAD GP-PUMP

SMCS-5455 **i02018505**

NOTE	REF NO	GRAPHIC REF	PART NUMBER	QTY	PART NAME 1 2 3 4 5 6 (PRODUCT LEVEL)	SEE PAGE
M	1	1	**6E-4401**	1	SETSCREW-ADJUSTMENT	
	2	1	**123-7591**	1	SEAL-O-RING	
M	3	1	**6E-1607**	1	LOCKNUT-SEALING	
	4	1	**112-4718**	1	SEAL-O-RING	

M-METRIC PART

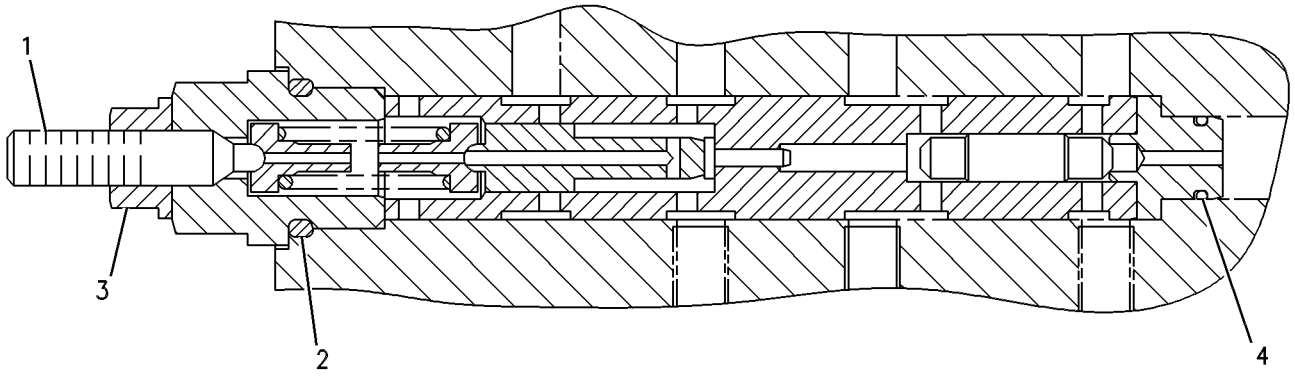

GRAPHIC #1 **<END>** g00280542

148-6930 VALVE GP-PUMP CONTROL

S/N: PDF1-UP

PART OF 156-7205 PUMP GP-PISTON

SMCS-5455 **i02034065**

NOTE	REF NO	GRAPHIC REF	PART NUMBER	QTY	PART NAME 1 2 3 4 5 6 (PRODUCT LEVEL)	SEE PAGE
	1	1	**160-1800**	1	HOUSING	
	2	1	**126-1434**	1	PISTON-CONTROL	
	3	1	**126-1435**	2	RETAINER-SPRING	
	4	1	**1G-3455**	2	SPRING	
M	5	1	**8T-9534**	4	BOLT (M6X1X50-MM)	
M	6	1	**8T-0269**	2	BOLT-SOCKET HEAD (M6X1X20-MM)	
	7	1	**160-1757**	3	PLUG	
	8	1	**120-4394**	1	PLUG-BREAK OFF	
M	9	1	**123-2017**	1	PLUG	
	10	1	**6V-0894**	1	SEAL-O-RING	
	11	1	**6M-5062**	3	SEAL-O-RING	
	12	1	**112-4642**	1	SEAL-O-RING	
	13	1	**148-6931**	1	SOLENOID AS	
	14	1	**126-1644**	1	SCREW-THROTTLE	
	15	1	**148-6933**	1	SCREEN	

M-METRIC PART

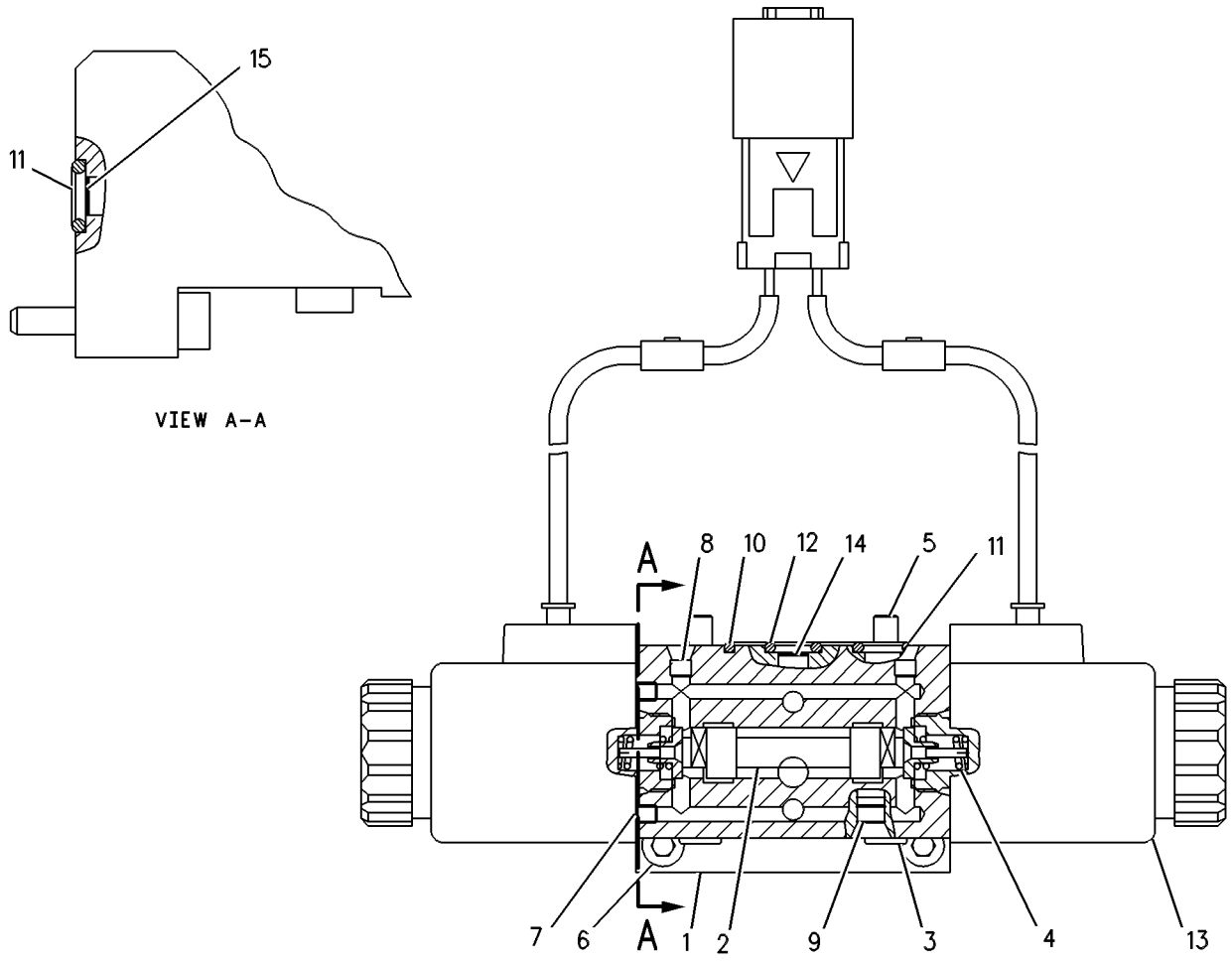

GRAPHIC #1 **<END>** g00287860

6E-4402 VALVE GP-RELIEF

S/N: PDF1-UP

PART OF 133-1858 HEAD GP-PUMP

SMCS-3133, 3182, 3210, 3213 **i02018509**

NOTE	REF NO	GRAPHIC REF	PART NUMBER	QTY	PART NAME 1 2 3 4 5 6 (PRODUCT LEVEL)	SEE PAGE
	1	1	**202-2342**	1	SPRING	
	2	1	**6E-4404**	1	VALVE-POPPET	
	3	1	**183-8410**	1	SCREW	
	4	1	**6E-4403**	1	PLUG	
M	5	1	**6E-4240**	1	NUT-SEALING (M10X1-THD)	
	6	1	**6V-8352**	1	SEAL-O-RING	
	7	1	**6E-4388**	1	RETAINER-SPRING	

M-METRIC PART

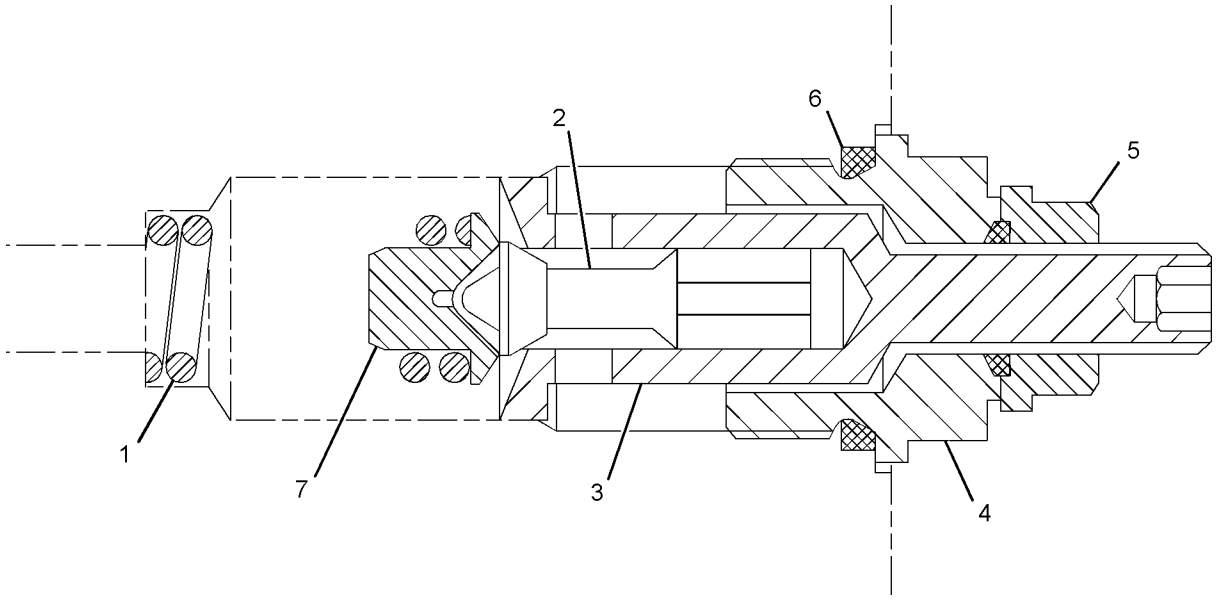

GRAPHIC #1 **<END>** g01043246

107-3255 VALVE GP-ROTARY

S/N: PDF1-UP
PART OF 107-4639 CONTROL GP-CREEPER
AN ATTACHMENT

SMCS-3162 **i02019652**

NOTE	REF NO	GRAPHIC REF	PART NUMBER	QTY	PART NAME 1 2 3 4 5 6 (PRODUCT LEVEL)	SEE PAGE
	1	1	**136-3753**	1	LEVER	
M	2	1	**6V-5192**	2	BOLT-SOCKET HEAD (M8X1.25X30-MM)	
M	3	1	**096-4833**	1	BOLT-SOCKET HEAD (M5X0.8X20-MM)	
	4	1	**3C-8388**	3	PIN-ROLL	
	5	1	**5H-6005**	1	SEAL-O-RING	
	6	1	**8F-3469**	1	SEAL-O-RING	
	7	1	**7X-0562**	1	WASHER-HARD (13.5X19X0.8-MM THK)	
	8	1	**5C-5306**	1	RING-RETAINING	

M-METRIC PART

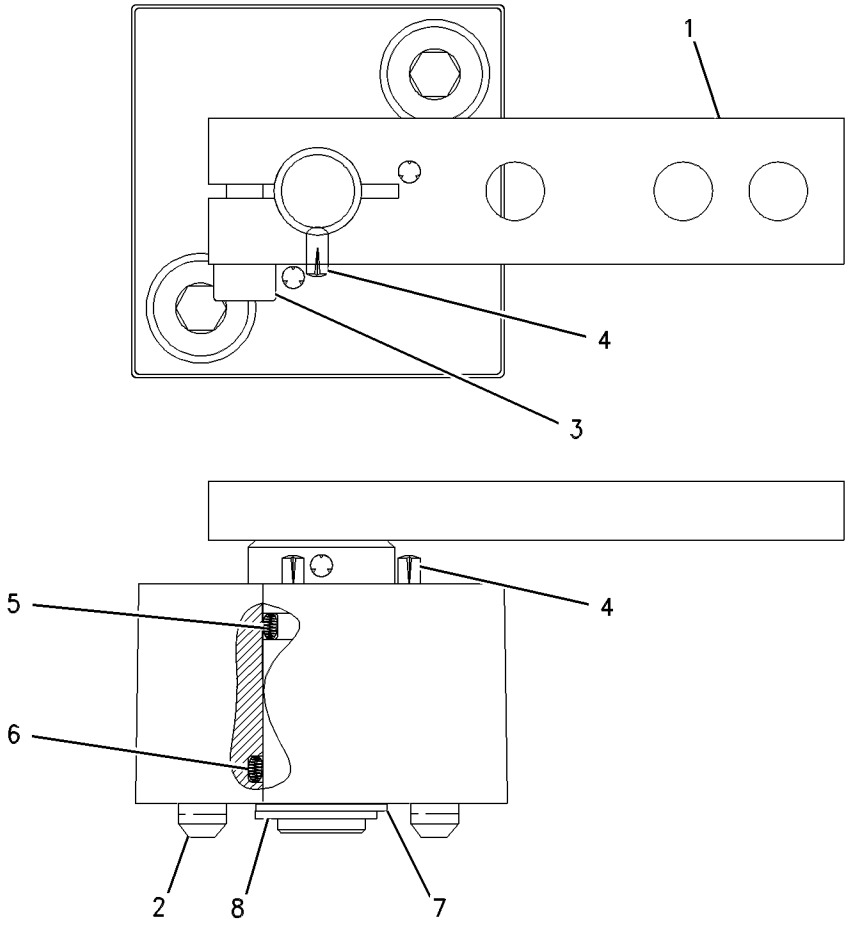

GRAPHIC #1 **<END>** g00448744

196-5862 VALVE GP-SOLENOID & MANIFOLD

S/N: PDF1-UP

PART OF 233-9931 LINES GP-HYDROSTATIC PWR CASE

SMCS-4805 **i02014897**

NOTE	REF NO	GRAPHIC REF	PART NUMBER	QTY	PART NAME 1 2 3 4 5 6 (PRODUCT LEVEL)	SEE PAGE
	1	1	**121-5927**	1	MANIFOLD	
Y	2	1	**195-3739**	1	VALVE GP-SOLENOID	426

Y-SEPARATE ILLUSTRATION

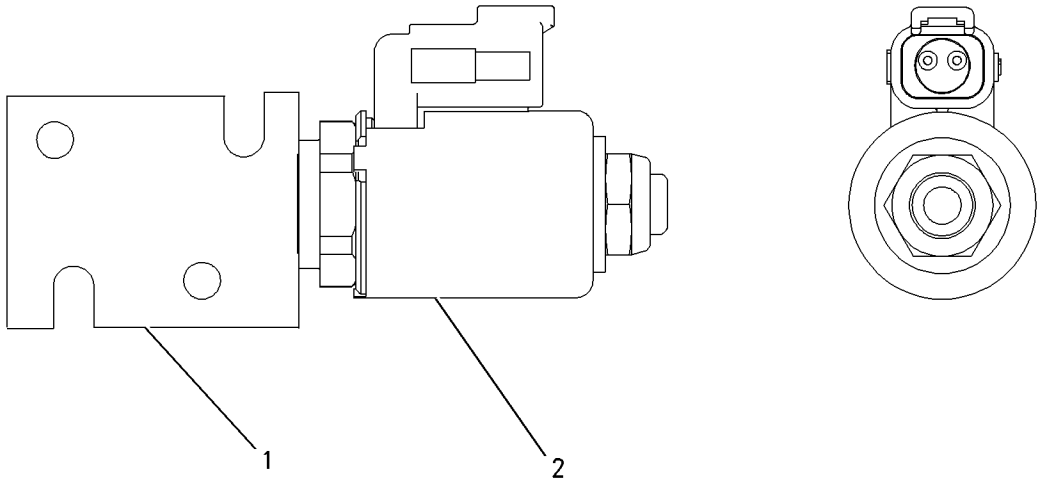

GRAPHIC #1 **<END>** g00885045

126-1460 VALVE GP-SPEED SENSING

S/N: PDF1-UP

PART OF 156-7205 PUMP GP-PISTON

SMCS-3205 **i02018525**

NOTE	REF NO	GRAPHIC REF	PART NUMBER	QTY	PART NAME 1 2 3 4 5 6 (PRODUCT LEVEL)	SEE PAGE
	1	1	**126-1640**	1	ORIFICE	
	2	1	**140-3588**	1	VALVE GP-SPEED SENSING	
M	2A	1	**6E-1607**	1	LOCKNUT-SEALING	
	2B	1	**123-7576**	1	SEAL-O-RING	
	2C	1	**126-1473**	1	NUT	
	2D	1	**126-8882**	1	RING-RETAINING	
	2E	1	**126-8883**	1	RING-RETAINING	

M-METRIC PART

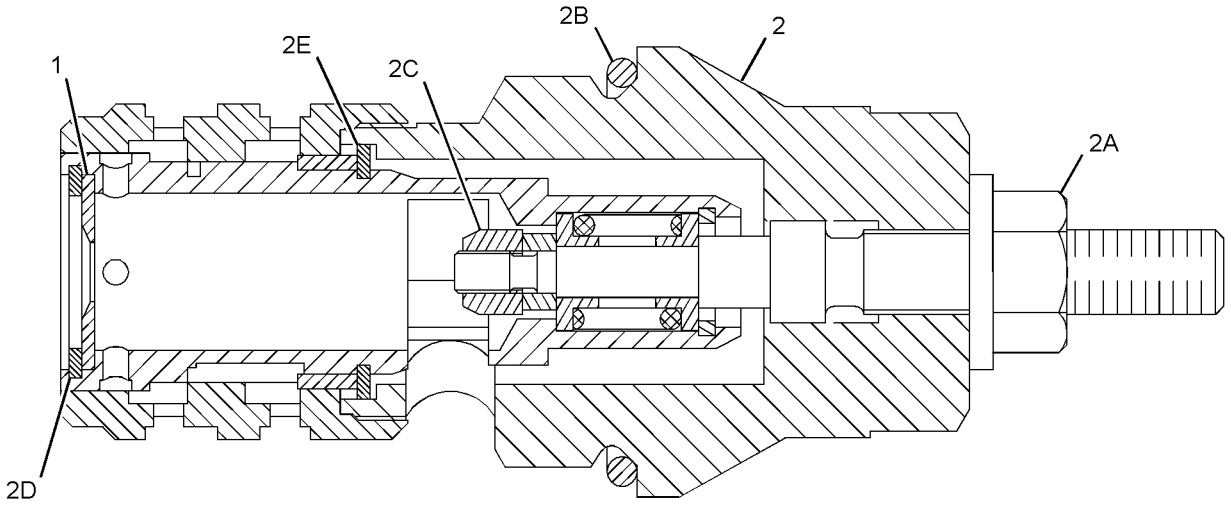

GRAPHIC #1 **<END>** g01043228

6D-0337 VALVE GP-TIRE

S/N: PDF1-UP

PART OF 133-4783, 2Q-6002 RIM GP-DEMOUNTABLE

AN ATTACHMENT

SMCS-4203 **i01954585**

NOTE	REF NO	GRAPHIC REF	PART NUMBER	QTY	PART NAME 1 2 3 4 5 6 (PRODUCT LEVEL)	SEE PAGE
	1	1	**6D-0443**	1	HOUSING AS-CORE	
	2	1	**2D-2628**	1	CORE-VALVE	
	3	1	**2D-2633**	1	CAP (VALVE STEM)	
	4	1	**8D-2707**	2	SPUD AS	
					(EACH INCLUDES)	
	5	1	**2D-2629**	1	GROMMET	
	6	1	**2D-2630**	1	WASHER	
	7	1	**2D-2631**	1	NUT (.482-26 THD)	

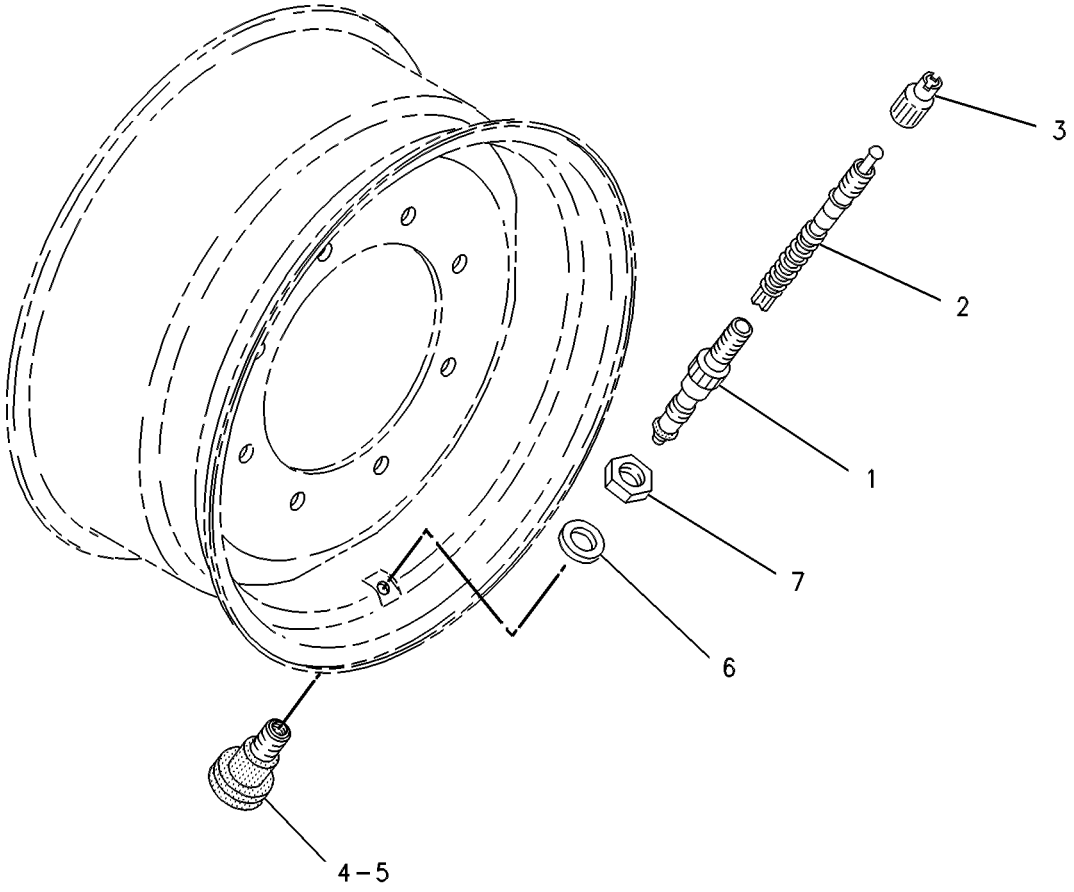

GRAPHIC #1 **<END>** g00121904

235-2734 BAFFLE GP-RADIATOR

S/N: PDF1-UP

PART OF 234-9213 INSTALLATION AR-ENGINE

SMCS-1353, 1806 **i01998493**

NOTE	REF NO	GRAPHIC REF	PART NUMBER	QTY	PART NAME 1 2 3 4 5 6 (PRODUCT LEVEL)	SEE PAGE
	1	1	**145-3684**	1	BAFFLE AS	
		1	**6S-6657**	6	WASHER (.19X1X.06-IN THK)	
M		1	**8T-3612**	2	NUT-WELD (M8X1.25-THD)	
		1	**033-9412**	2	RIVET	
	2	1	**235-1970**	1	BAFFLE AS	
BD		1	**5P-7211**		SEAL	
		1	**6S-6657**	26	WASHER (.19X1X.06-IN THK)	
		1	**033-9412**	13	RIVET	
	3	1	**235-1971**	1	PLATE AS	
	4	1	**235-1973**	1	BAFFLE AS	
		1	**7X-7926**	7	RIVET	
	5	1	**235-2724**	1	BAFFLE AS	
		1	**033-9412**	7	RIVET	
	6	1	**7X-0579**	2	WASHER-HARD (8.8X25.5X2-MM THK)	
	7	1	**8T-4121**	3	WASHER-HARD (11X21X2.5-MM THK)	
M	8	1	**8T-4195**	3	BOLT (M10X1.5X30-MM)	
M	9	1	**8T-4200**	6	BOLT (M8X1.25X16-MM)	
M	10	1	**8T-4224**	6	WASHER-HARD (8.8X16X2-MM THK)	
M	11	1	**8T-4908**	2	BOLT (M8X1.25X25-MM)	
BD	12	1	**5P-7211**		SEAL	

B-USE AS REQUIRED
D-ORDER BY THE METER
M-METRIC PART

235-2734 **BAFFLE GP-RADIATOR** *(contd.)* **i01998493**

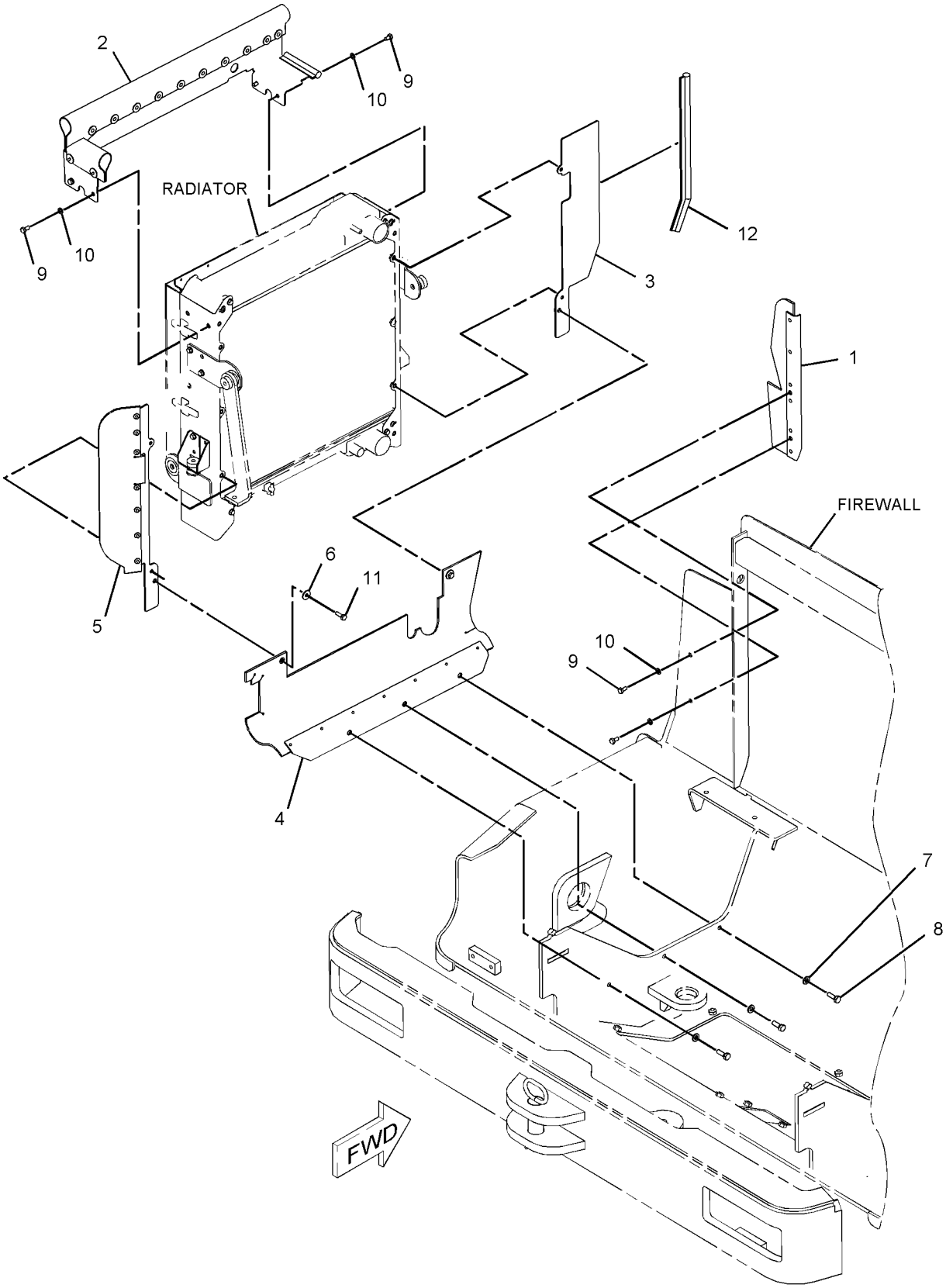

GRAPHIC #1 **<END>** g01034011

236-5629 CONVERSION AR-ROADING—SPEED LIMITING

S/N: PDF1-UP

AN ATTACHMENT

SMCS-7000, 7153 **i01998372**

NOTE	REF NO	GRAPHIC REF	PART NUMBER	QTY	PART NAME 1 2 3 4 5 6 (PRODUCT LEVEL)	SEE PAGE
	1	1	**6C-7227**	2	CHOCK-WHEEL	
J	2	1	**6C-7607**	2	CHAIN AS	
					(EACH INCLUDES)	
		1	**6C-7606**	2	ROD	
	3	2	**9R-1499**	2	REFLECTOR	
	4	1,2	**106-0827**	3	FILM (20-KM/H)	
J	5	1	**106-7743**	2	PLATE AS	
	6	1	**106-9000**	1	FILM-FIRE EXTINGUISHER	
	7	1	**109-7669**	1	PLATE AS	
M		1	**5C-2890**	2	NUT (M6X1-THD)	
M		1	**5C-9553**	2	BOLT (M6X1X16-MM)	
		1	**5P-4115**	4	WASHER-HARD (7.2X19X2-MM THK)	
	8	2	**113-7634**	1	FILM-WARNING (STEERING)	
M	9	2	**9X-8483**	1	SETSCREW-SOCKET (M12X1.75X80-MM)	
	10	2	**170-8650**	1	CAP-TAMPERPROOF	
	11	1	**236-4339**	2	PLATE	
JM	12	1	**8T-4196**	4	BOLT (M10X1.5X35-MM)	
	13	1	**5P-4116**	16	WASHER-HARD (8.8X20.5X2-MM THK)	
	14	1	**6C-7224**	2	BRACKET AS	
M	15	1	**6V-9189**	8	LOCKNUT (M8X1.25-THD)	
	16	1	**7X-7729**	8	WASHER (11X25X3-MM THK)	
M	17	1	**8T-4189**	8	BOLT (M8X1.25X20-MM)	
M	18	1	**8T-4195**	8	BOLT (M10X1.5X30-MM)	
FJ			**101-4761**	1	TOOL GP-HAND	

F-NOT SHOWN
J-BOXED TOGETHER AND SHIPPED INSIDE MACHINE
M-METRIC PART

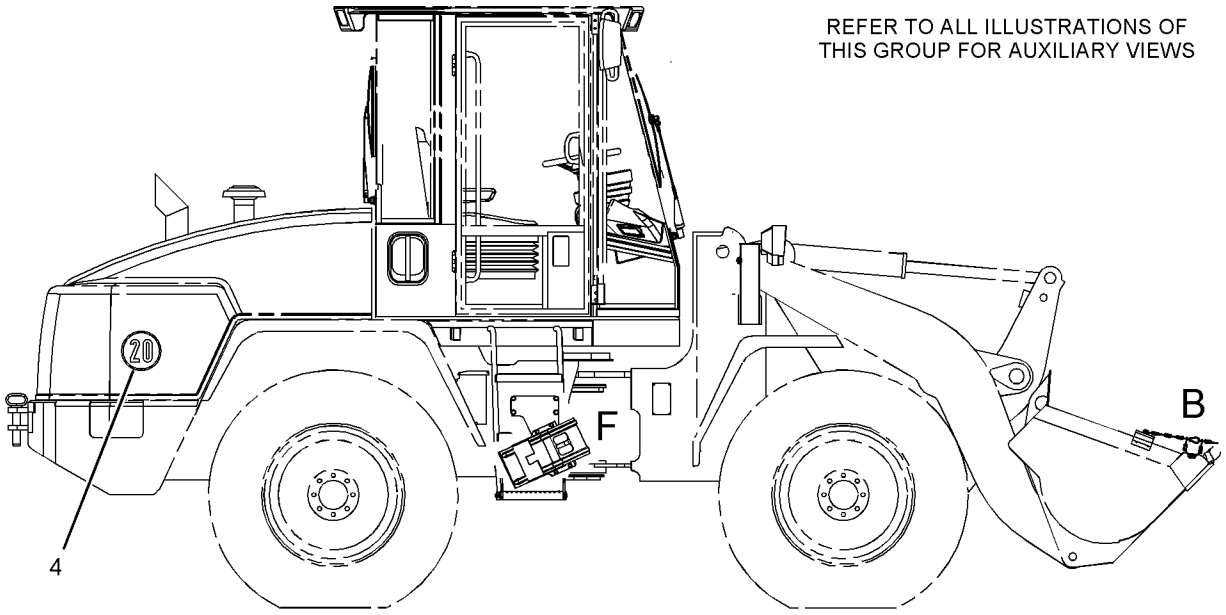

RIGHT SIDE VIEW

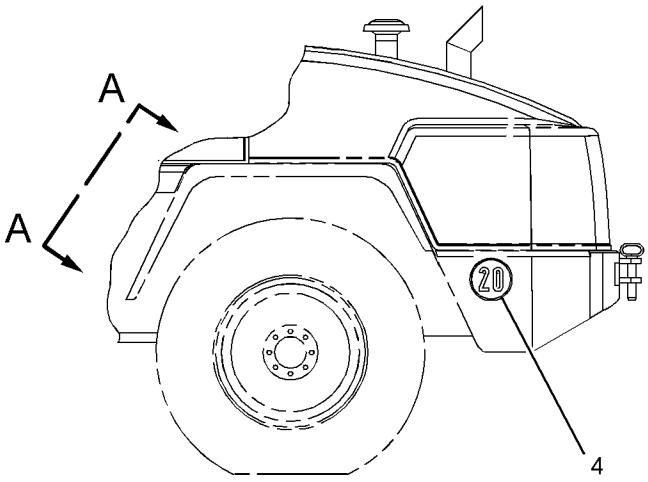

LEFT SIDE VIEW

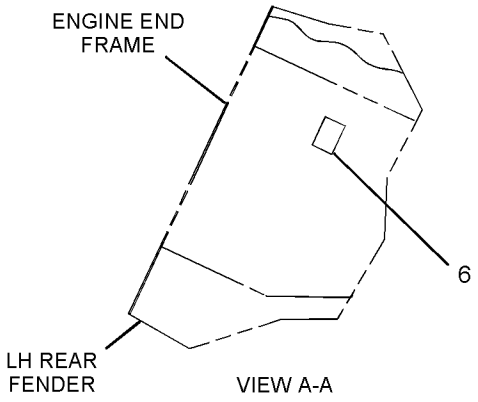

VIEW A-A

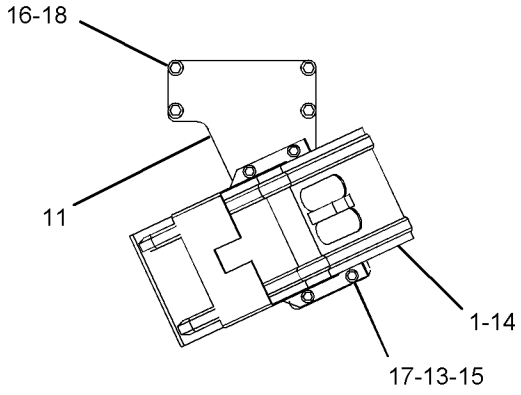

VIEW OF AREA F

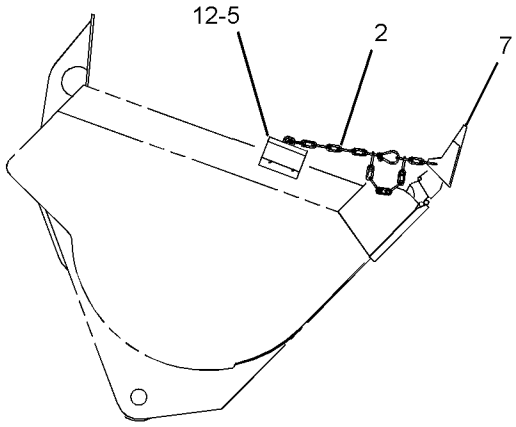

VIEW OF AREA B

GRAPHIC #1

g01034910

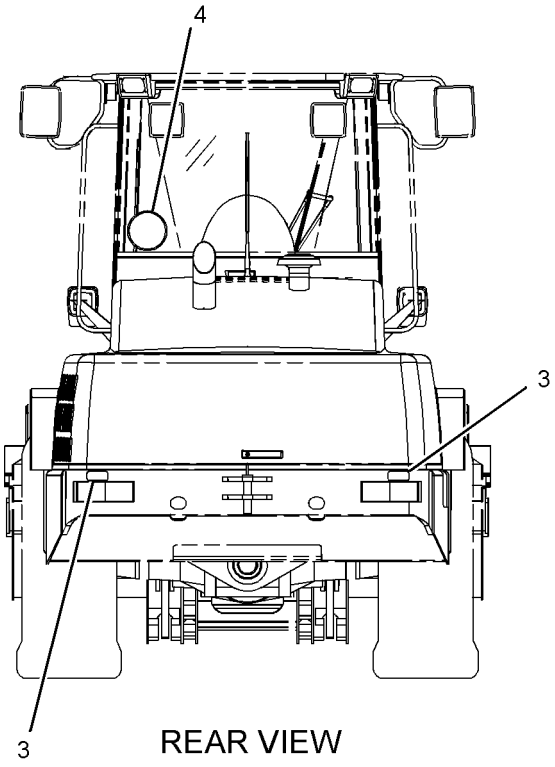

REAR VIEW

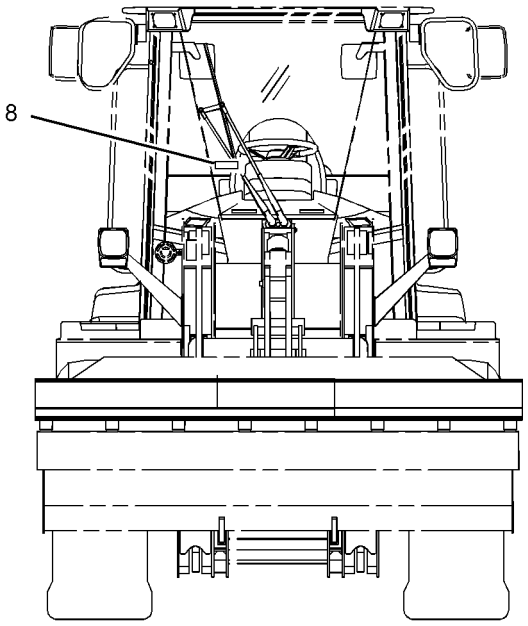

FRONT VIEW

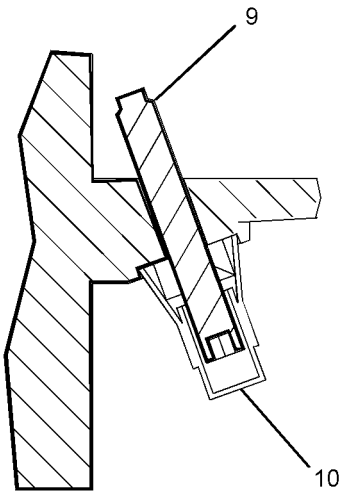

VIEW OF AREA C

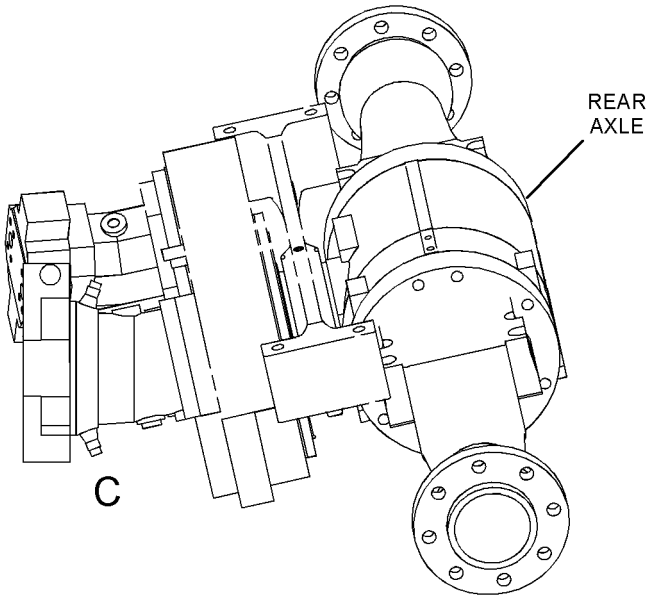

GRAPHIC #2 **<END>** g01034911

236-5636 CONVERSION AR-ROADING

S/N: PDF1-UP
FAST TRAVEL
AN ATTACHMENT

SMCS-7000, 7153 **i01999760**

NOTE	REF NO	GRAPHIC REF	PART NUMBER	QTY	PART NAME 1 2 3 4 5 6 (PRODUCT LEVEL)	SEE PAGE
	1	1	**6C-7227**	2	CHOCK-WHEEL	
	2	1	**6C-7581**	1	LAMP GP-REGISTRATION PLATE	
		1	**5C-8315**	1	LAMP (24-VOLT, 10-WATT)	
J	3	1	**6C-7607**	2	CHAIN AS	
					(EACH INCLUDES)	
		1	**6C-7606**	2	ROD	
	4	1	**9R-1499**	2	REFLECTOR	
J	5	1	**106-7743**	2	PLATE AS	
	6	1	**106-9000**	1	FILM-FIRE EXTINGUISHER	
	7	1	**109-7669**	1	PLATE AS	
M		1	**5C-2890**	2	NUT (M6X1-THD)	
M		1	**5C-9553**	2	BOLT (M6X1X16-MM)	
		1	**5P-4115**	4	WASHER-HARD (7.2X19X2-MM THK)	
	8	1	**121-6752**	3	PLATE (35 KM, HR)	
JM	9	1	**8T-4196**	4	BOLT (M10X1.5X35-MM)	
	10	1	*176-3388*	1	WIRING GP-REAR	
	10A	1	**1V-3593**	4	CLIP	
	10B	1	**8M-2770**	4	CLIP	
	10C	1	**125-6239**	1	HARNESS AS (LIGHTING)	
		1	**102-8802**	1	KIT-RECEPTACLE (2-PIN)	
		1	**3S-2093**	2	STRAP-CABLE	
	11	1	**236-4339**	2	PLATE	
M	12	1	**8T-4195**	8	BOLT (M10X1.5X30-MM)	
	13	1	**4B-4863**	2	WASHER (4.7X11X1.2-MM THK)	
M	14	1	**5C-8312**	2	NUT (M4X0.7-THD)	
	15	1	**5P-4116**	16	WASHER-HARD (8.8X20.5X2-MM THK)	
	16	1	**6C-7224**	2	BRACKET AS	
M	17	1	**6V-9189**	8	LOCKNUT (M8X1.25-THD)	
M	18	1	**6V-9491**	2	SCREW-MACHINE (M4X0.7X20-MM)	
	19	1	**7X-7729**	8	WASHER (11X25X3-MM THK)	
M	20	1	**8T-4189**	8	BOLT (M8X1.25X20-MM)	
FJ			**101-4761**	1	TOOL GP-HAND	

F-NOT SHOWN
J-BOXED TOGETHER AND SHIPPED INSIDE MACHINE
M-METRIC PART

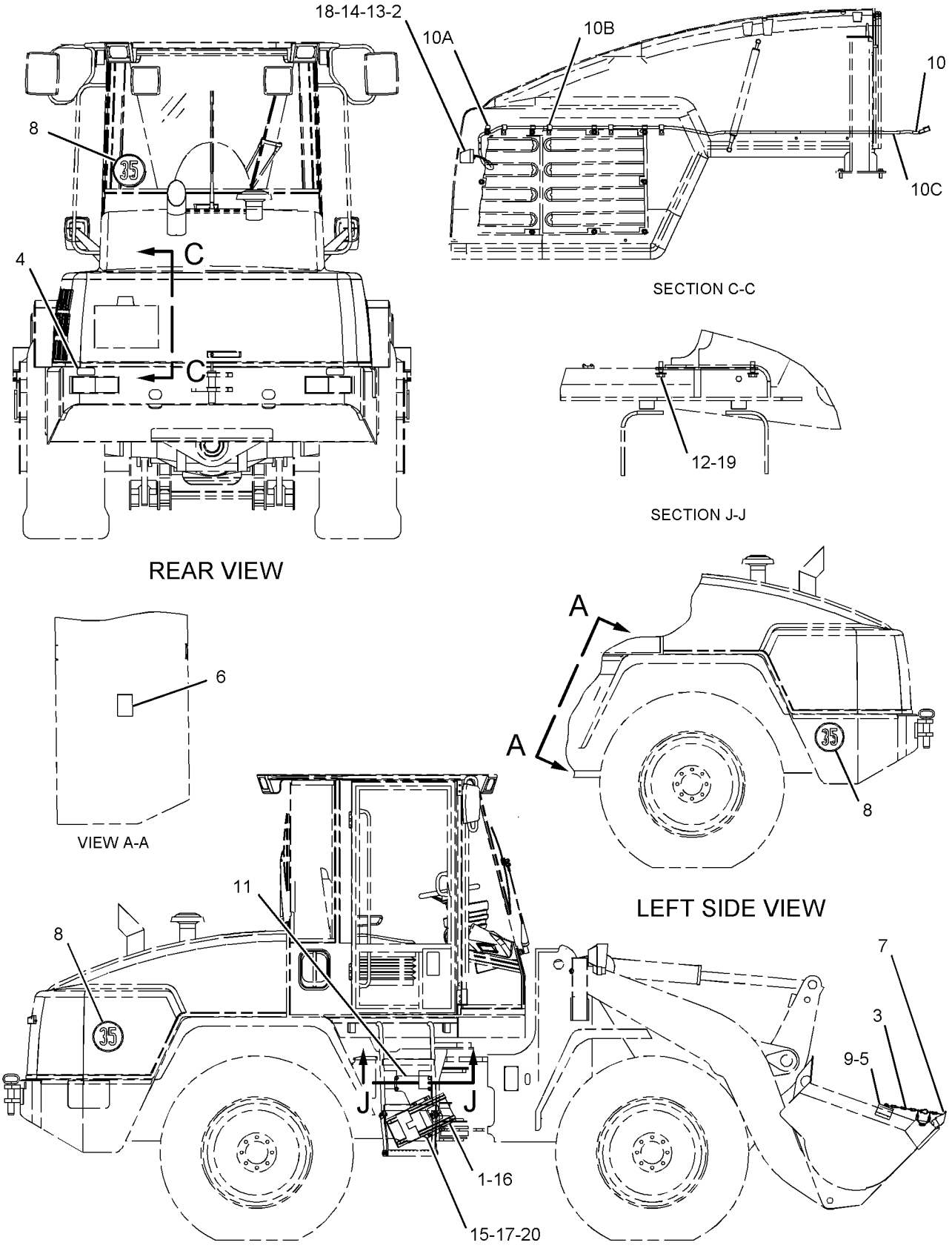

GRAPHIC #1

<END>

g01037840

236-5638 CONVERSION AR-ROADING—ITALY

S/N: PDF1-UP

AN ATTACHMENT

SMCS-7000, 7153 **i02038802**

NOTE	REF NO	GRAPHIC REF	PART NUMBER	QTY	PART NAME 1 2 3 4 5 6 (PRODUCT LEVEL)	SEE PAGE
Y	1	1	*122-6465*	1	LIGHTING GP-WARNING	129
	2	1	**135-4445**	1	PLATE GP	
		1	**124-7576**	2	FILM (REFLECTOR)	
J	3	1	**6C-7607**	2	CHAIN AS	
					(EACH INCLUDES)	
J		1	**6C-7606**	2	ROD	
J	4	1	**6C-7319**	2	PLATE AS	
J	5	1	**6C-7320**	2	FILM (REFLECTOR)	
J	6	1	**107-2503**	1	RETAINER	
J	7	1	**131-1001**	2	BRACKET AS	
JM	8	1	**8T-4198**	2	BOLT (M10X1.5X100-MM)	
J	9	1	**8T-4121**	2	WASHER-HARD (11X21X2.5-MM THK)	
JM	10	1	**8T-4196**	4	BOLT (M10X1.5X35-MM)	
	11	1	**6C-7581**	1	LAMP GP-REGISTRATION PLATE	
		1	**5C-8315**	1	LAMP (24-VOLT, 10-WATT)	
M	12	1	**6V-9491**	2	SCREW-MACHINE (M4X0.7X20-MM)	
	13	1	**4B-4863**	2	WASHER (4.7X11X1.2-MM THK)	
M	14	1	**5C-8312**	2	NUT (M4X0.7-THD)	
	15	1	**144-3679**	4	COVER-WORK LIGHT	
	16	1	**144-0695**	4	PLATE	
D	17	1	**8T-5372**		SEAL (0.48M EACH)	
	18	1	*176-3388*	1	WIRING GP-REAR	
	18A	1	**1V-3593**	4	CLIP	
	18B	1	**8M-2770**	4	CLIP	
	18C	1	**125-6239**	1	HARNESS AS-REAR LIGHTING	
		1	**102-8802**	1	KIT-RECEPTACLE (2-PIN)	
	18D	1	**3S-2093**	2	STRAP-CABLE	

D-ORDER BY THE METER
J-BOXED TOGETHER AND SHIPPED INSIDE CAB
M-METRIC PART
Y-SEPARATE ILLUSTRATION

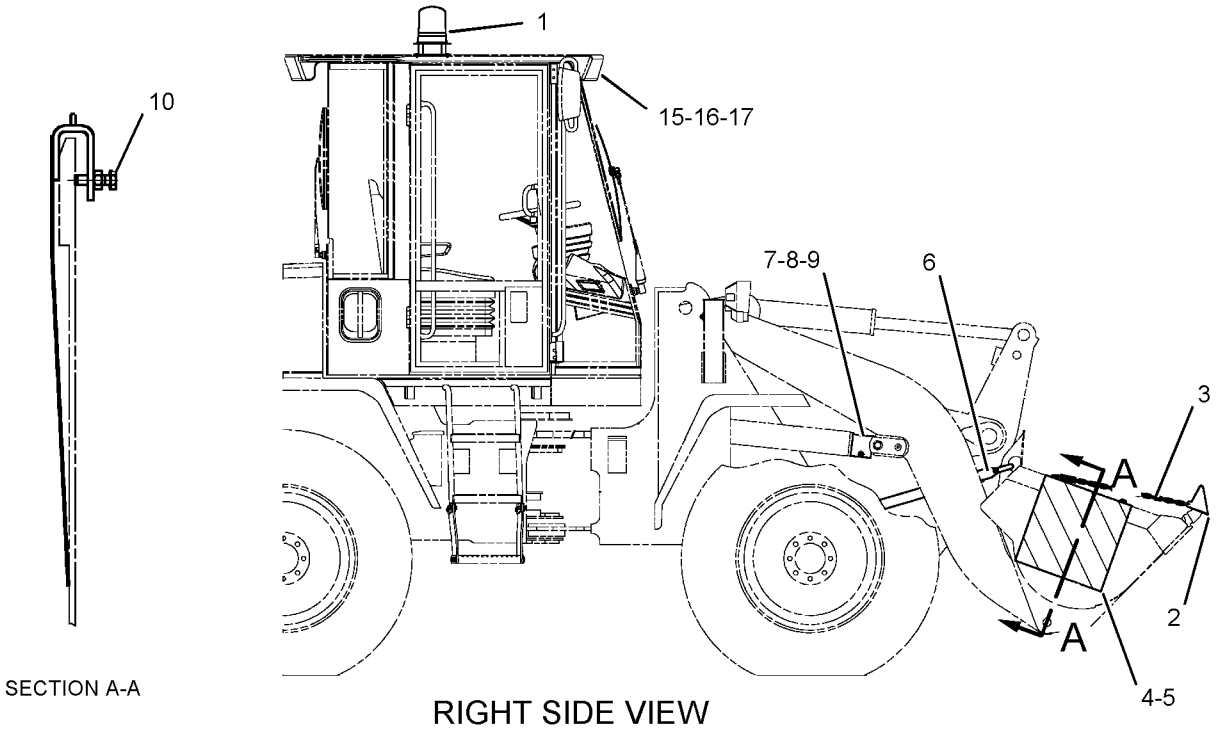

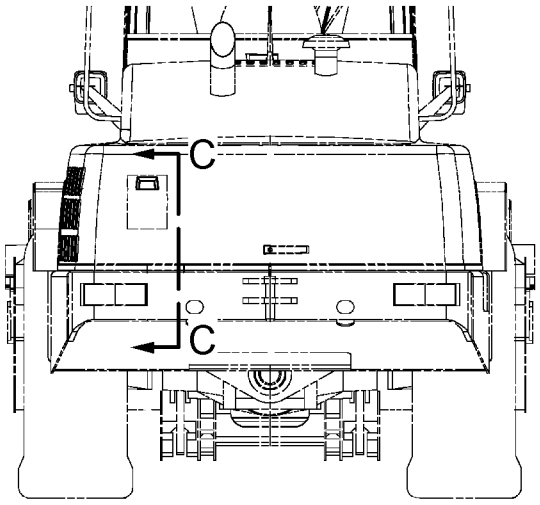

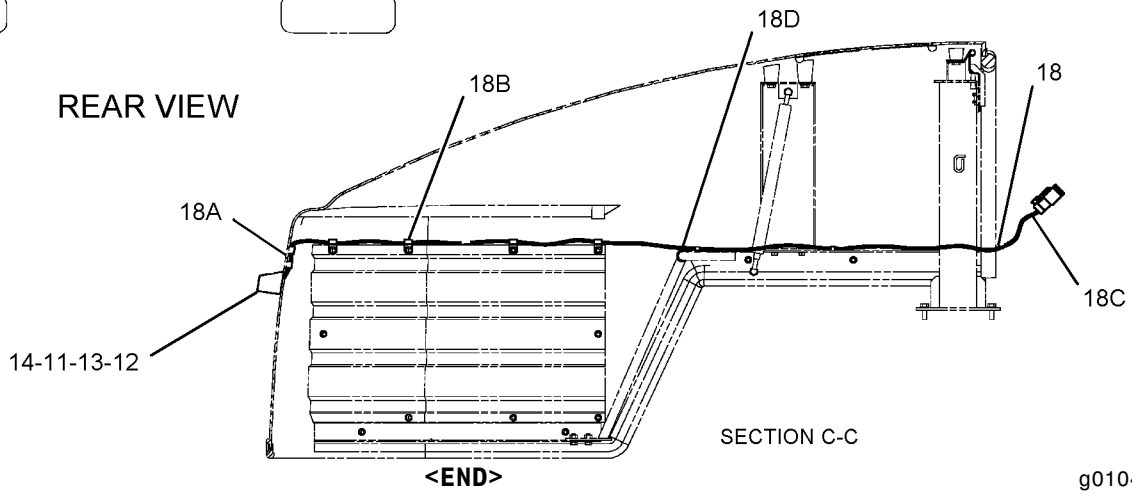

GRAPHIC #1

<END>

g01041790

107-4737 COUNTERWEIGHT GP

S/N: PDF1-UP
100KG (220 LBS)
PART OF 109-3738 COUNTERWEIGHT GP
AN ATTACHMENT

SMCS-7056 **i00716292**

NOTE	REF NO	GRAPHIC REF	PART NUMBER	QTY	PART NAME 1 2 3 4 5 6 (PRODUCT LEVEL)	SEE PAGE
	1	1	**109-3737**	2	COUNTERWEIGHT	
M	2	1	**7X-2566**	4	BOLT (M20X2.5X110MM)	
	3	1	**8T-4123**	8	WASHER-PLATED (3.5MM THK)	
M	4	1	**8T-4131**	4	NUT (M20X2.50 THD)	

M-METRIC PART

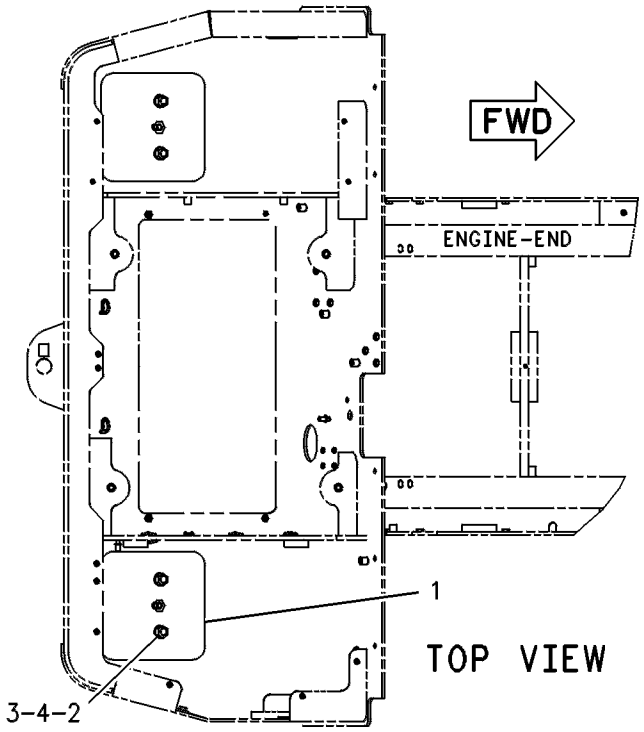

GRAPHIC #1 **<END>** g00246102

107-4738 COUNTERWEIGHT GP

S/N: PDF1-UP
150KG
PART OF 109-3738 COUNTERWEIGHT GP
AN ATTACHMENT

SMCS-7056 **i00709902**

NOTE	REF NO	GRAPHIC REF	PART NUMBER	QTY	PART NAME 1 2 3 4 5 6 (PRODUCT LEVEL)	SEE PAGE
	1	1	**109-3736**	2	COUNTERWEIGHT	
M	2	1	**7X-2489**	4	BOLT (M24X3X100MM)	
	3	1	**8T-4167**	4	WASHER (4.0MM THK)	

M-METRIC PART

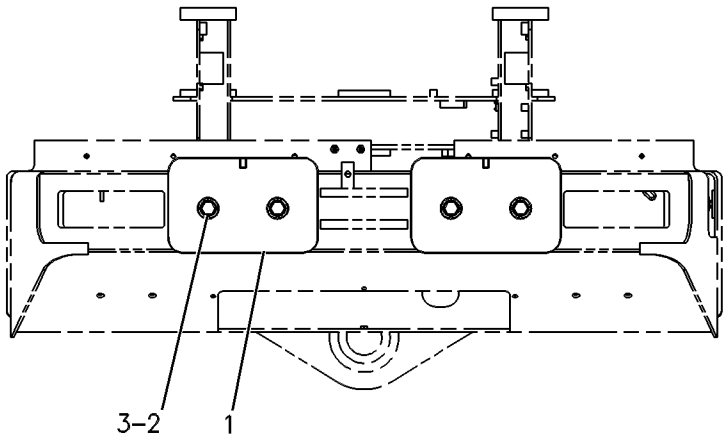

REAR VIEW

GRAPHIC #1 **<END>** g00250903

FRAME AND BODY

109-3738 COUNTERWEIGHT GP

S/N: PDF1-UP
250KG (552 LBS)
AN ATTACHMENT

SMCS-7056 **i00720385**

NOTE	PART NUMBER	QTY	PART NAME 1 2 3 4 5 6 (PRODUCT LEVEL)	SEE PAGE
Y	*107-4737*	1	COUNTERWEIGHT GP	259
Y	*107-4738*	1	COUNTERWEIGHT GP	260

Y-SEPARATE ILLUSTRATION

<END>

107-4705 FENDER GP-ROADING

S/N: PDF1-UP
AN ATTACHMENT

SMCS-7252 **i02021387**

NOTE	REF NO	GRAPHIC REF	PART NUMBER	QTY	PART NAME 1 2 3 4 5 6 (PRODUCT LEVEL)	SEE PAGE
B	1	1	**2V-3726**	4	BUMPER	
	2	1	**8T-4222**	4	WASHER-PLATED (11X32X2.5-MM THK)	
Y	3	1	*126-8547*	1	FENDER GP-ROADING	264
	4	1	**7X-7729**	18	WASHER (11X25X3-MM THK)	
M	5	1	**8T-4195**	22	BOLT (M10X1.5X30-MM)	

B-USE AS REQUIRED
M-METRIC PART
Y-SEPARATE ILLUSTRATION

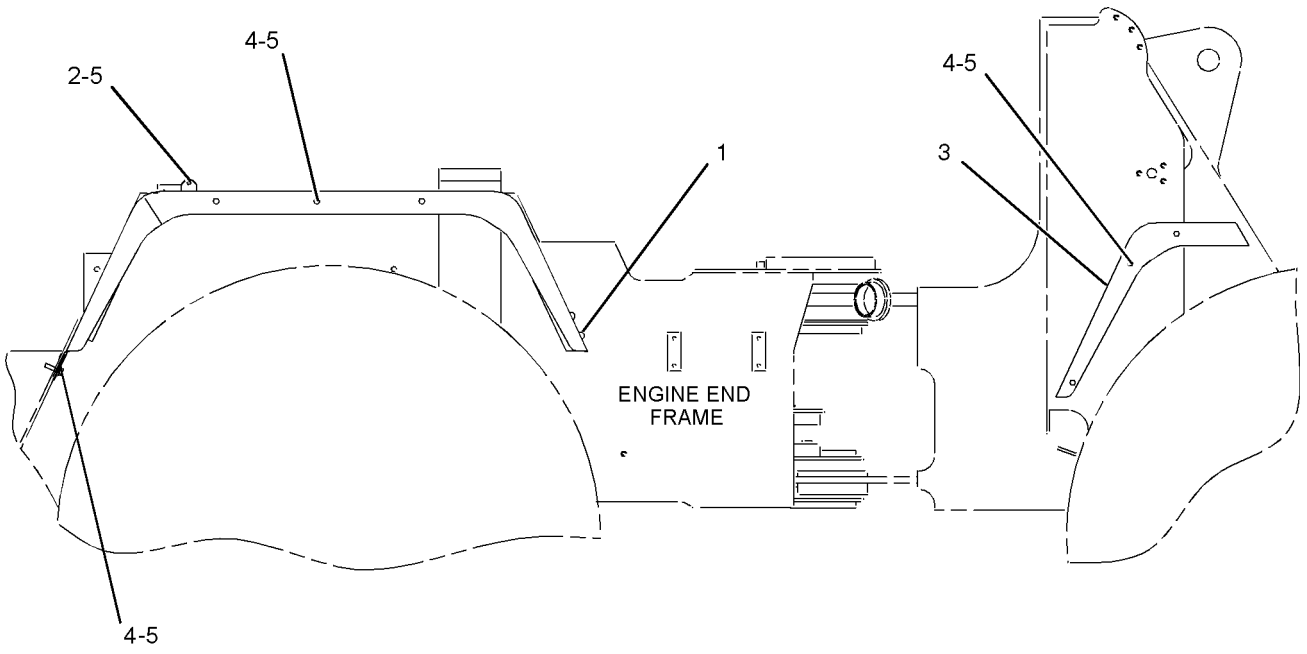

RIGHT SIDE VIEW

GRAPHIC #1

<END>

g01043826

FRAME AND BODY

111-3750 FENDER GP-ROADING

S/N: PDF1-UP
EUROPE
AN ATTACHMENT

SMCS-7252 **i02021383**

NOTE	REF NO	GRAPHIC REF	PART NUMBER	QTY	PART NAME 1 2 3 4 5 6 (PRODUCT LEVEL)	SEE PAGE
B	1	1	**2V-3726**	4	BUMPER	
BD	2	1	**5P-5897**		TREAD-NONSKID	
	3	1	**111-3755**	2	EXTENSION-FENDER	
	4	1	**111-8853**	2	PLATE	
Y	5	1	*126-8552*	1	FENDER GP-ROADING	264
M	6	1	**5C-2890**	2	NUT (M6X1-THD)	
	7	1	**7X-0586**	2	WASHER-HARD (M7.2X32.0X2-MM THK)	
	8	1	**7X-7729**	24	WASHER (11X25X3-MM THK)	
M	9	1	**8T-4195**	26	BOLT (M10X1.5X30-MM)	
	10	1	**8T-4222**	2	WASHER-PLATED (11X32X2.5-MM THK)	
M	11	1	**8T-6412**	2	SCREW-MACHINE (M6X1X20-MM)	

B-USE AS REQUIRED
D-ORDER BY THE METER
M-METRIC PART
Y-SEPARATE ILLUSTRATION

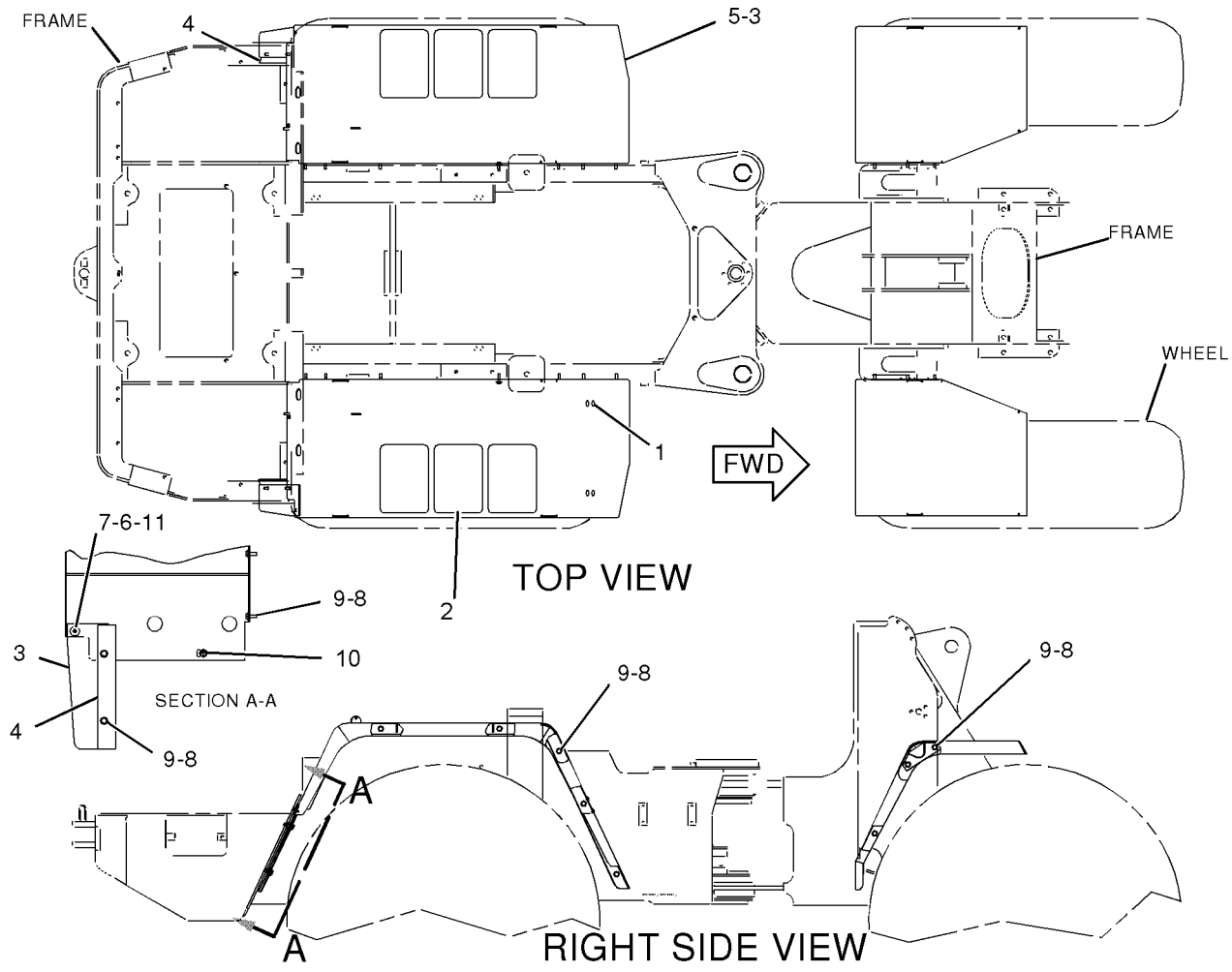

GRAPHIC #1

<END>

g01043822

126-8547 FENDER GP-ROADING

S/N: PDF1-UP
PART OF 107-4705 FENDER GP-ROADING
AN ATTACHMENT

SMCS-7252 **i02034068**

NOTE	PART NUMBER	QTY	PART NAME 1 2 3 4 5 6 (PRODUCT LEVEL)	SEE PAGE
	109-4796	1	FENDER AS-FRONT (RH)	
	109-4797	1	FENDER AS-FRONT (LH)	
	109-4794	1	FENDER AS-REAR (RH)	
	109-4795	1	FENDER AS-REAR (LH)	

<END>

126-8552 FENDER GP-ROADING

S/N: PDF1-UP
PART OF 111-3750 FENDER GP-ROADING
AN ATTACHMENT

SMCS-7252 **i02034069**

NOTE	PART NUMBER	QTY	PART NAME 1 2 3 4 5 6 (PRODUCT LEVEL)	SEE PAGE
	111-3753	1	FENDER AS-FRONT (RH)	
	111-3754	1	FENDER AS-FRONT (LH)	
	111-3751	1	FENDER AS-REAR (RH)	
	111-3752	1	FENDER AS-REAR (LH)	

<END>

FRAME AND BODY

107-4706 FIREWALL GP

S/N: PDF1-UP

PART OF 236-5635 CHASSIS AR

SMCS-7262 **i02016238**

NOTE	REF NO	GRAPHIC REF	PART NUMBER	QTY	PART NAME 1 2 3 4 5 6 (PRODUCT LEVEL)	SEE PAGE
	1	1	**110-6471**	2	PLATE AS	
C	2	1	**147-1907**	1	FIREWALL AS	
B	3	1	**5P-9212**	4	PLUG	
B	4	1	**8P-6363**	1	PLUG	
	5	1	**8T-4121**	12	WASHER-HARD (11X21X2.5-MM THK)	
M	6	1	**8T-4136**	8	BOLT (M10X1.5X25-MM)	
M	7	1	**8T-4137**	4	BOLT (M10X1.5X20-MM)	
D	8	1	**5P-7211**		SEAL (1.7M)	
D	9	1	**5P-6120**		TRIM-EDGE (0.73M EACH)	

B-USE AS REQUIRED
C-CHANGE FROM PREVIOUS TYPE
D-ORDER BY THE METER
M-METRIC PART

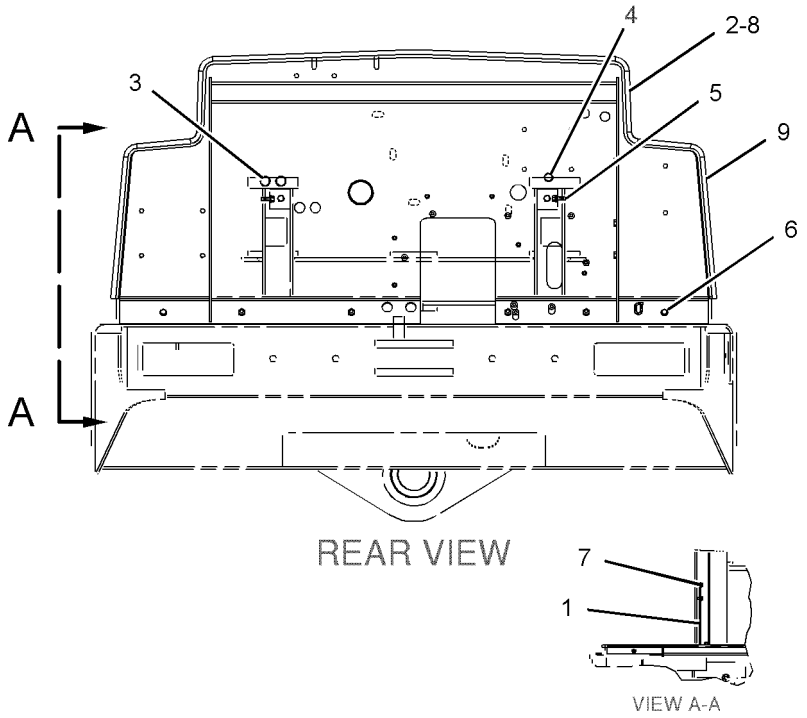

GRAPHIC #1 **<END>** g01042441

FRAME AND BODY

237-0395 FRAME GP-LOADER

S/N: PDF1-UP

PART OF 236-5635 CHASSIS AR

SMCS-7054 **i02038804**

NOTE	REF NO	GRAPHIC REF	PART NUMBER	QTY	PART NAME 1 2 3 4 5 6 (PRODUCT LEVEL)	SEE PAGE
	1	1	**107-3697**	1	PLATE	
	2	1	**237-0396**	1	FRAME AS-LOADER	
		1	**7T-1099**	18	LINK	
		1	**9C-6809**	8	BLOCK	
		1	**9R-2672**	2	BOSS (M10X20-MM)	
		1	**092-1136**	1	BAR	
	3	1	**8T-4121**	4	WASHER-HARD (11X21X2.5-MM THK)	
M	4	1	**8T-4195**	4	BOLT (M10X1.5X30-MM)	

M-METRIC PART

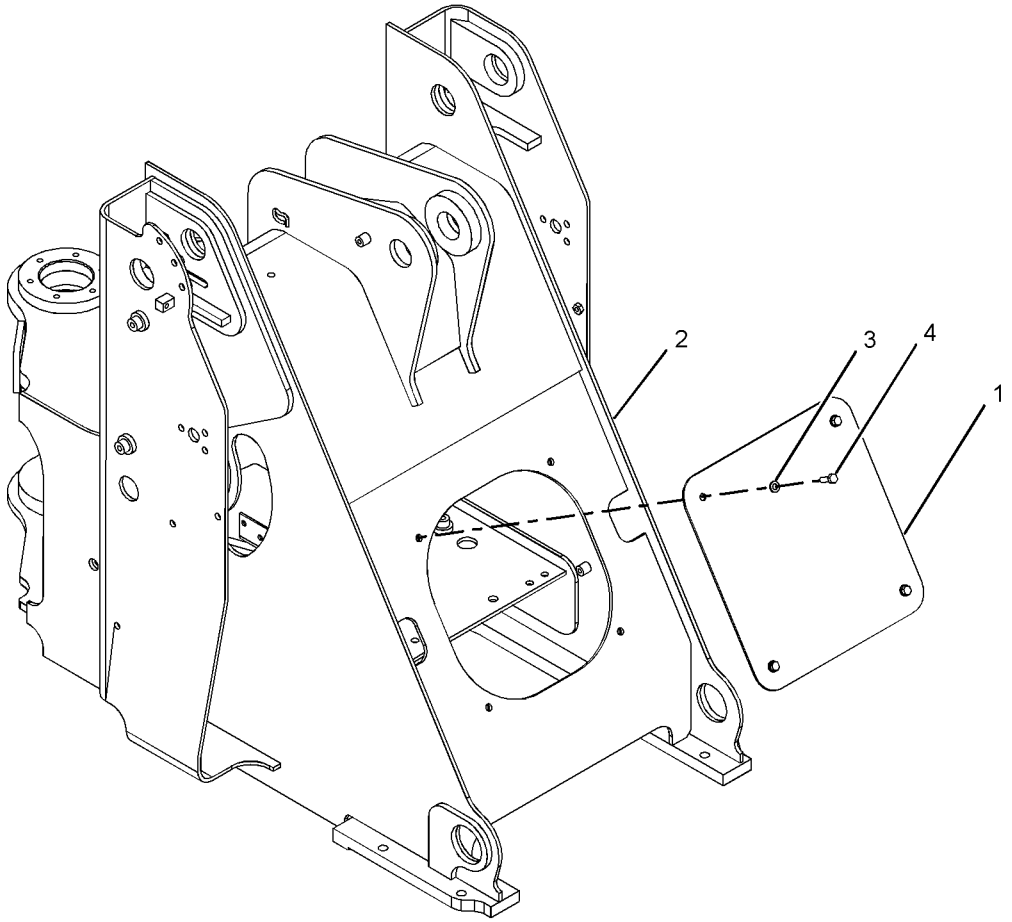

GRAPHIC #1 **<END>** g01040077

FRAME AND BODY

237-0390 FRAME GP-REAR

S/N: PDF1-UP

PART OF 236-5635 CHASSIS AR

SMCS-7051 **i02038803**

NOTE	REF NO	GRAPHIC REF	PART NUMBER	QTY	PART NAME 1 2 3 4 5 6 (PRODUCT LEVEL)	SEE PAGE
	1	1	**8R-4892**	1	PLATE	
	2	1	**103-5796**	1	PIN-KEEPER	
	3	1	**109-3708**	1	COVER	
	4	1	**112-0885**	2	PAD AS-RESILIENT	
	5	1	**129-8087**	2	SPACER (13.9X17.1X14-MM THK)	
	6	1	**132-2558**	1	PIN AS	
	7	1	**132-3337**	1	PLATE AS	
	8	1	**237-0391**	1	FRAME AS	
		1	**7T-1099**	25	LINK	
M		1	**8T-5413**	2	STUD-WELD (M10X1.5X25-MM OAL)	
		1	**9C-6809**	6	BLOCK	
		1	**9R-2672**	38	BOSS (M10X20-MM)	
		1	**9T-3598**	18	LUG	
	9	1	**7X-7729**	4	WASHER (11X25X3-MM THK)	
	10	1	**8T-4121**	8	WASHER-HARD (11X21X2.5-MM THK)	
M	11	1	**8T-4136**	6	BOLT (M10X1.5X25-MM)	
M	12	1	**8T-4137**	2	BOLT (M10X1.5X20-MM)	
M	13	1	**8T-4195**	2	BOLT (M10X1.5X30-MM)	
M	14	1	**8T-4196**	2	BOLT (M10X1.5X35-MM)	

M-METRIC PART

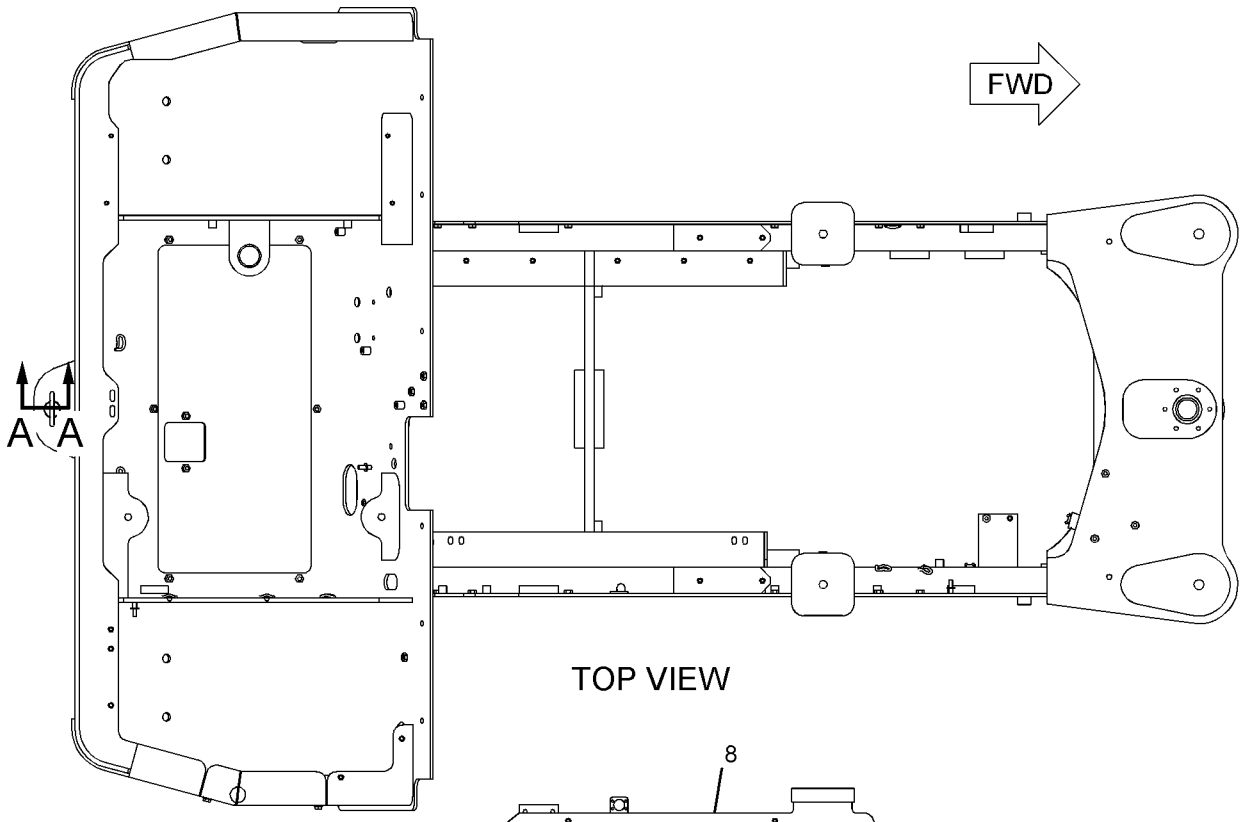

TOP VIEW

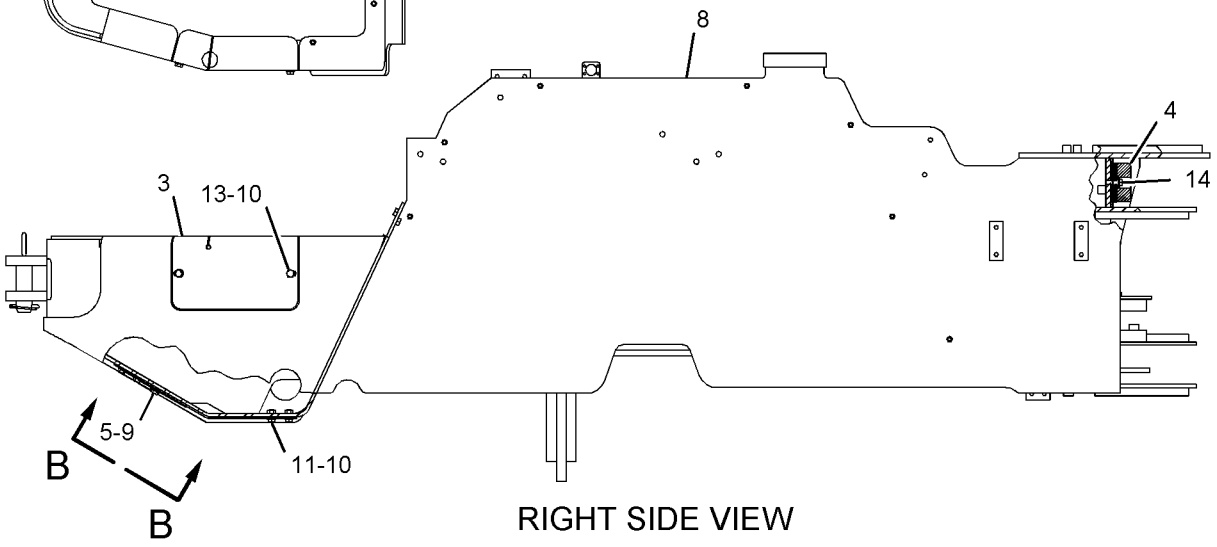

RIGHT SIDE VIEW

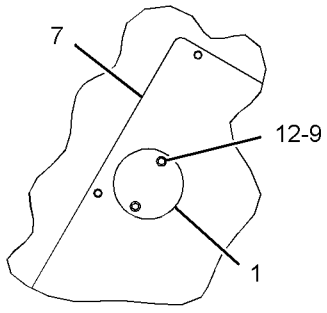

VIEW B-B

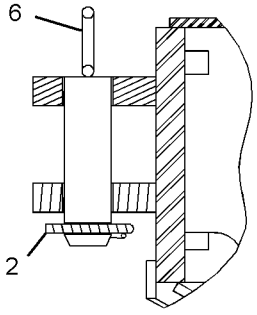

SECTION A-A

GRAPHIC #1 **<END>** g01041056

FRAME AND BODY

107-4703 GUARD GP-BOTTOM

S/N: PDF1-UP

PART OF 236-5635 CHASSIS AR

SMCS-7153 **i00709372**

NOTE	REF NO	GRAPHIC REF	PART NUMBER	QTY	PART NAME 1 2 3 4 5 6 (PRODUCT LEVEL)	SEE PAGE
	1	1	**112-3357**	1	PLATE AS	
M		1	**8T-3490**	2	NUT-WELD (M10X1.5 THD)	
	2	1	**8T-4121**	6	WASHER (2.5MM THK)	
M	3	1	**8T-4137**	6	BOLT (M10X1.50X20MM)	
	4	1	**8R-4892**	1	PLATE	

M-METRIC PART

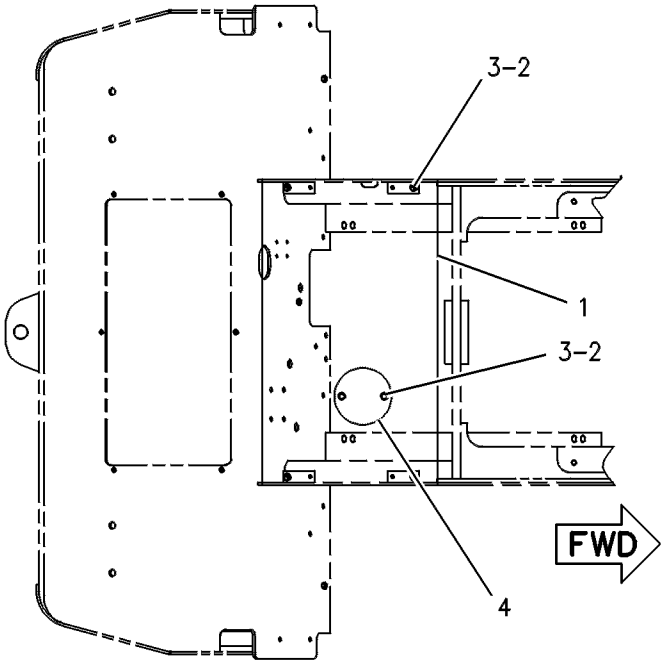

BOTTOM VIEW

GRAPHIC #1 **<END>** g00246579

FRAME AND BODY

120-3352 GUARD GP-BOTTOM

S/N: PDF1-UP
AN ATTACHMENT

SMCS-7153 **i00710440**

NOTE	REF NO	GRAPHIC REF	PART NUMBER	QTY	PART NAME 1 2 3 4 5 6 (PRODUCT LEVEL)	SEE PAGE
	1	1	**112-3358**	1	GUARD AS-BOTTOM	
	2	1	**8T-4121**	8	WASHER (2.5MM THK)	
M	3	1	**8T-4137**	8	BOLT (M10X1.50X20MM)	

M-METRIC PART

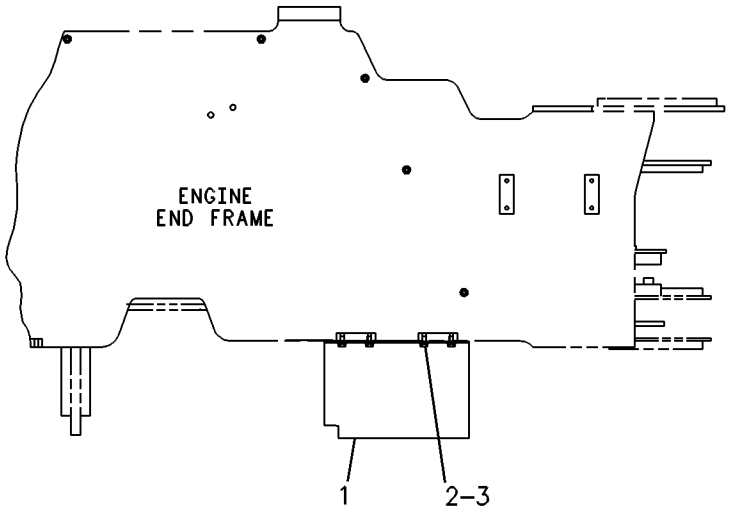

RIGHT SIDE VIEW

GRAPHIC #1 **<END>** g00250926

FRAME AND BODY

120-4612 GUARD GP-LINES

S/N: PDF1-UP
4TH VALVE
AN ATTACHMENT

SMCS-7167 **i01677842**

NOTE	REF NO	GRAPHIC REF	PART NUMBER	QTY	PART NAME 1 2 3 4 5 6 (PRODUCT LEVEL)	SEE PAGE
G	1	1	**130-3161**		SLEEVE-ABRASION (177.2 INCH)	
	2	1	**7K-1181**	24	STRAP-CABLE	

G-ORDER BY THE INCH

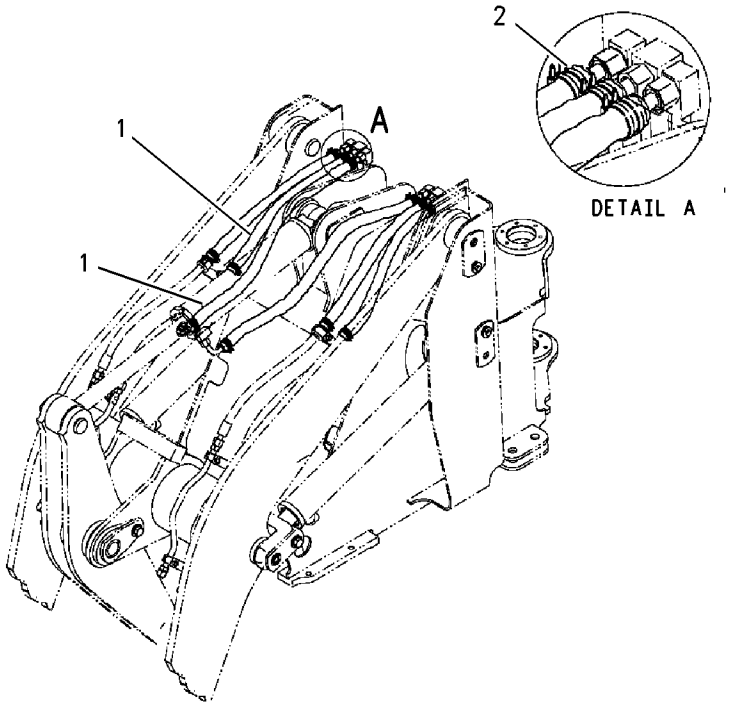

GRAPHIC #1 **<END>** g00865868

120-6854 GUARD GP-LINES

S/N: PDF1-UP
TILT
AN ATTACHMENT

SMCS-7167 **i02034107**

NOTE	REF NO	GRAPHIC REF	PART NUMBER	QTY	PART NAME 1 2 3 4 5 6 (PRODUCT LEVEL)	SEE PAGE
E	1	1	**130-3161**		SLEEVE-ABRASION (93.5-CM EACH)	
	2	1	**7K-1181**	8	STRAP-CABLE	

E-ORDER BY THE CENTIMETER

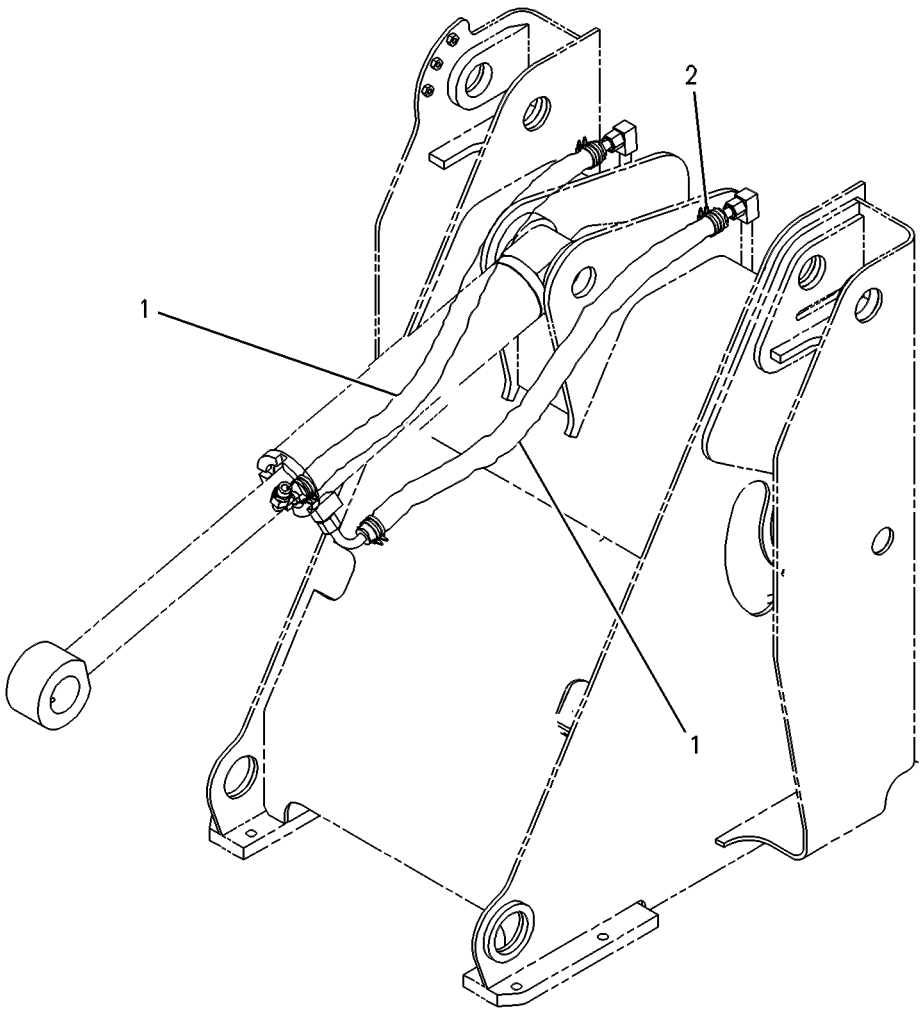

GRAPHIC #1 **<END>** g00246727

FRAME AND BODY

120-6855 GUARD GP-LINES

S/N: PDF1-UP
3RD VALVE
AN ATTACHMENT

SMCS-7167 **i02034108**

NOTE	REF NO	GRAPHIC REF	PART NUMBER	QTY	PART NAME 1 2 3 4 5 6 (PRODUCT LEVEL)	SEE PAGE
E	1	1	**130-3161**		SLEEVE-ABRASION (66-CM EACH)	
	2	1	**7K-1181**	16	STRAP-CABLE	
E	3	1	**130-3161**		SLEEVE-ABRASION (93.5-CM EACH)	

E-ORDER BY THE CENTIMETER

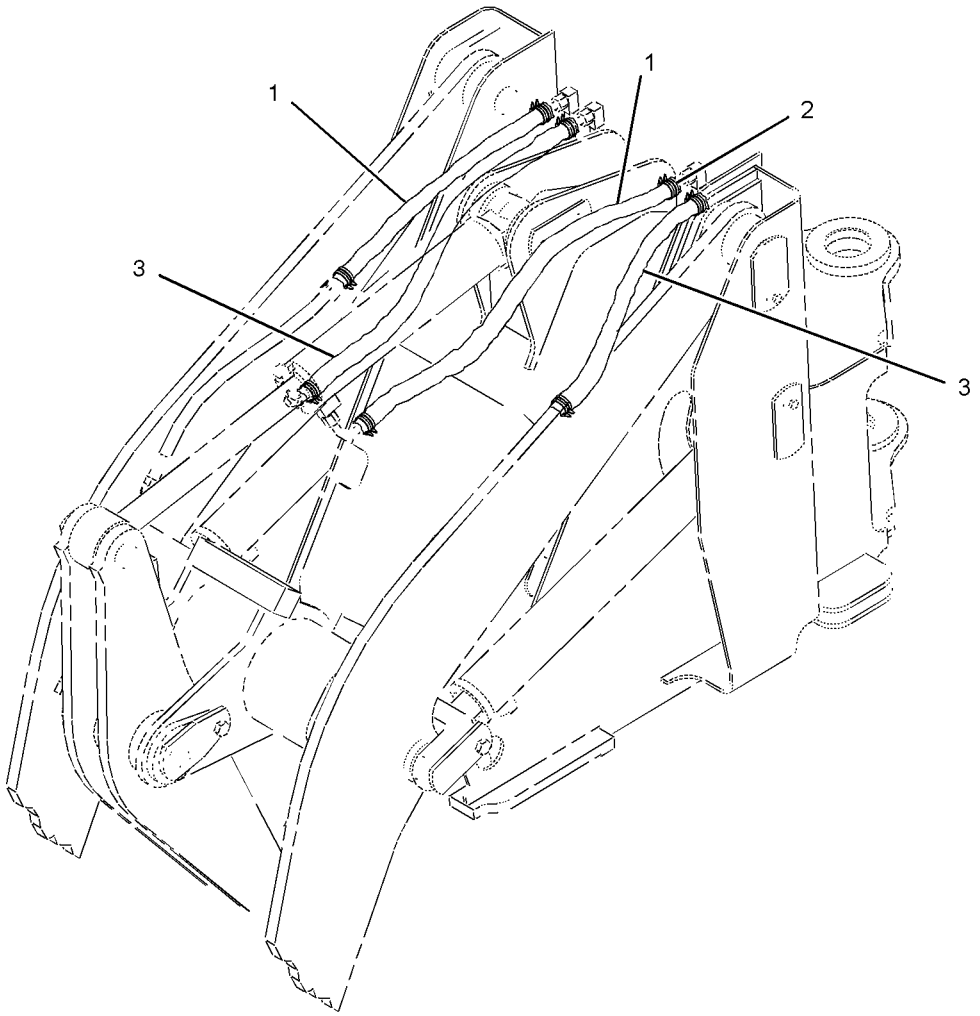

GRAPHIC #1 **<END>** g01047413

107-4809 GUARD GP-POWER TRAIN

S/N: PDF1-UP

PART OF 236-5635 CHASSIS AR

SMCS-7153 **i00709395**

NOTE	REF NO	GRAPHIC REF	PART NUMBER	QTY	PART NAME 1 2 3 4 5 6 (PRODUCT LEVEL)	SEE PAGE
	1	1	**118-0932**	1	GUARD-POWER TRAIN	
	2	1	**7X-7729**	4	WASHER (3MM THK)	
M	3	1	**8T-4195**	4	BOLT (M10X1.50X30MM)	

M-METRIC PART

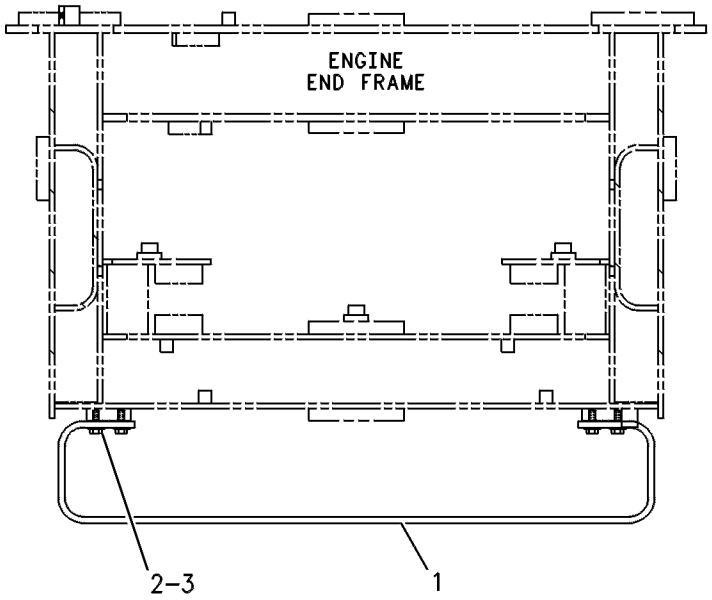

REAR VIEW

GRAPHIC #1 **<END>** g00246895

FRAME AND BODY

236-4336 HITCH GP-ARTICULATING

S/N: PDF1-UP

PART OF 236-5635 CHASSIS AR

SMCS-7057, 7100 **i02005677**

NOTE	REF NO	GRAPHIC REF	PART NUMBER	QTY	PART NAME 1 2 3 4 5 6 (PRODUCT LEVEL)	SEE PAGE
	1	2	**3B-8485**	1	FITTING-GREASE	
	2	2	**109-3739**	1	SHIM (3-MM THK)	
	3	2	**113-3794**	2	SHIM PACK (INCLUDES 19 SHIMS)	
	4	2	**236-4337**	1	PIN AS	
	5	2	**236-4338**	1	CAP	
	6	2	**236-4340**	1	SPACER (60X75X29.6-MM THK)	
	7	2	**236-5295**	1	PIN AS	
	8	2	**236-5299**	1	SPACER (60X75X68.9-MM THK)	
	9	2	**109-7317**	1	PLATE	
	10	2	**236-8151**	2	BEARING AS-TAPERED ROLLER	
	11	2	**236-8152**	1	BEARING-SELF-ALIGNING	
	12	2	**237-4916**	2	SEAL-LIP TYPE	
	13	2	**1J-6472**	1	RING-RETAINING	
	14	2	**3B-8489**	1	FITTING-GREASE	
	15	2	**3F-6166**	1	EXTENSION	
	16	2	**6K-2701**	1	SHIM PACK (INCLUDES 18 SHIMS)	
	17	2	**7X-0618**	1	WASHER-HARD (13.5X40X5-MM THK)	
M	18	2	**8T-4139**	1	BOLT (M12X1.75X30-MM)	
	19	2	**8T-4223**	16	WASHER-HARD (13.5X25.5X3-MM THK)	
M	20	2	**8T-4956**	15	BOLT (M12X1.75X35-MM)	

M-METRIC PART

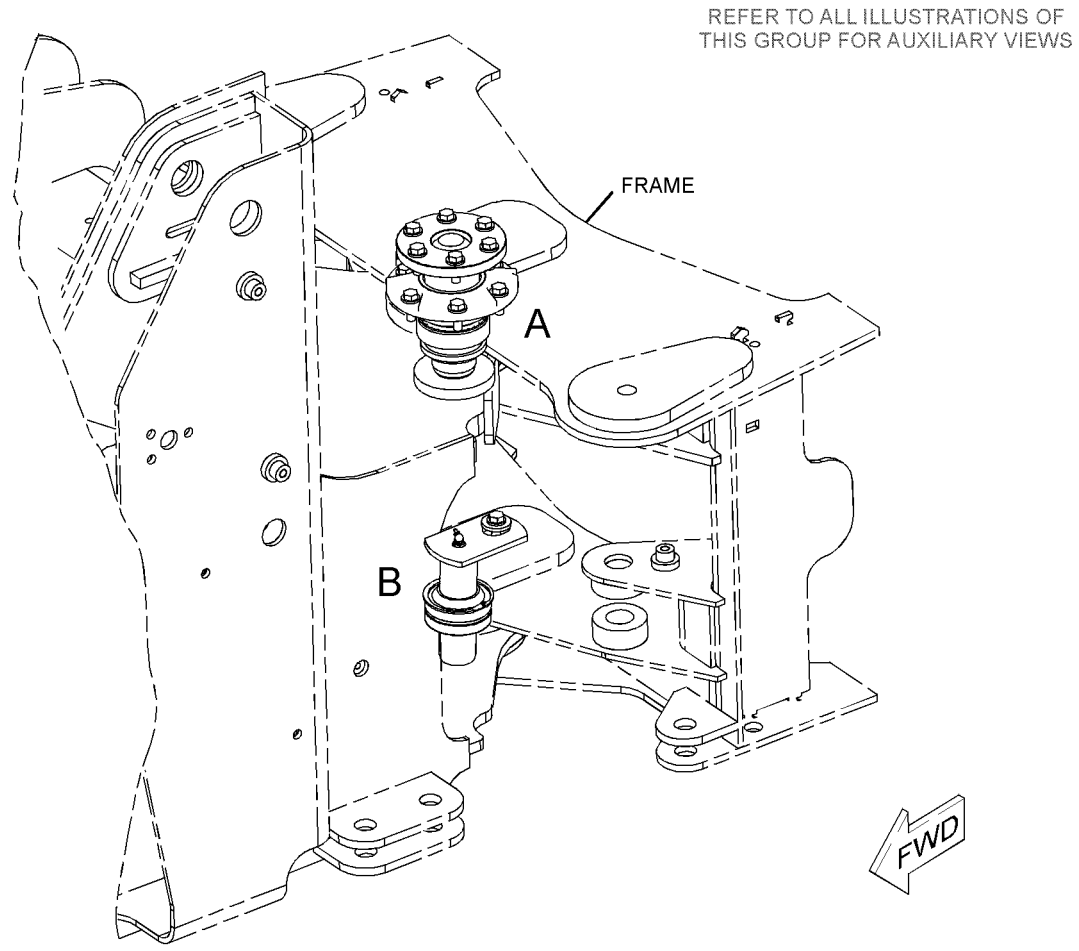

GRAPHIC #1 g01041208

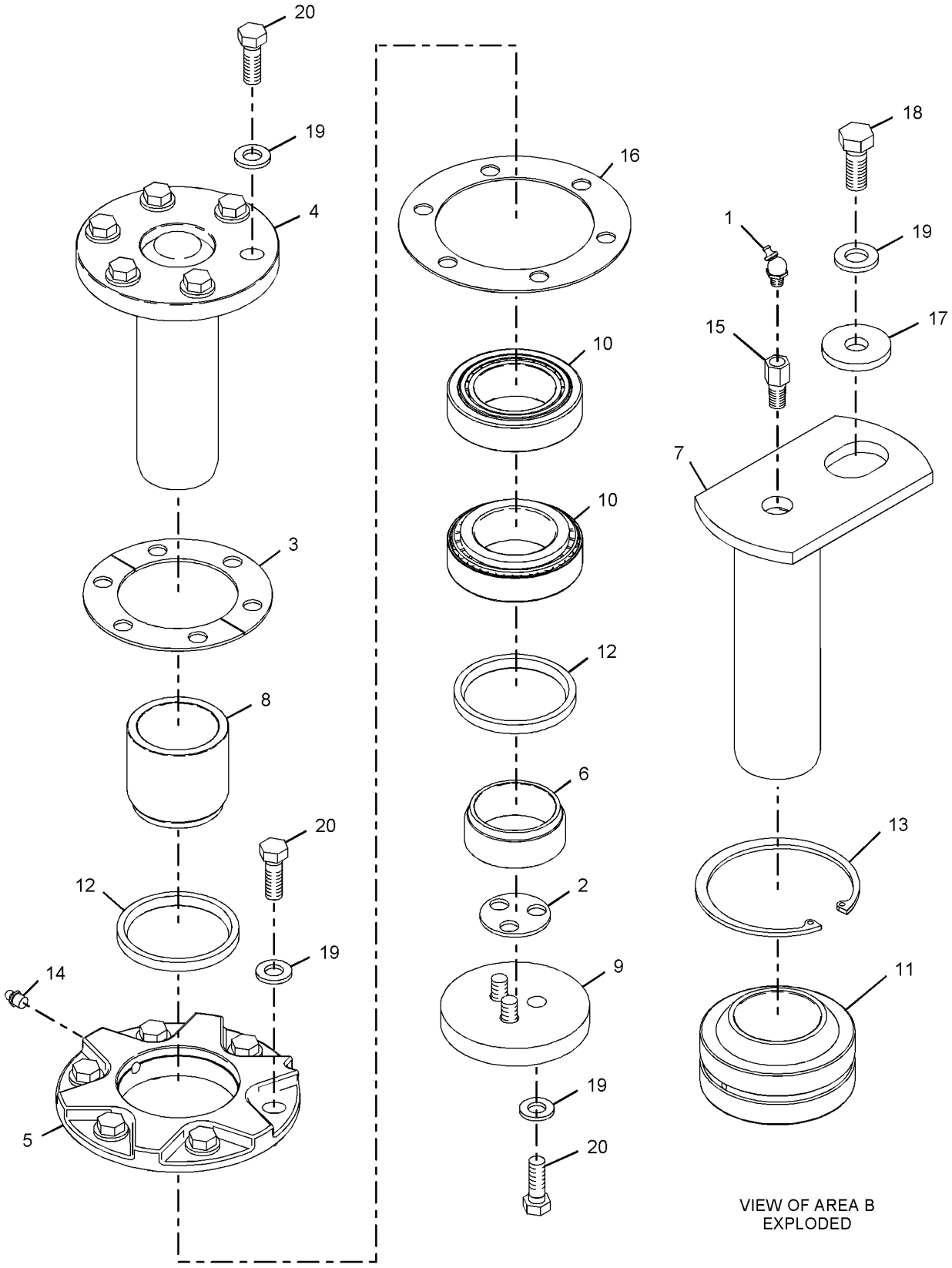

VIEW OF AREA A
EXPLODED

VIEW OF AREA B
EXPLODED

GRAPHIC #2

<END>

g01041209

128-6868 HOOD & GUARD GP

S/N: PDF1-UP
PART OF 242-9950, 242-9952 HOOD GP
AN ATTACHMENT

SMCS-7251 **i01677906**

NOTE	REF NO	GRAPHIC REF	PART NUMBER	QTY	PART NAME 1 2 3 4 5 6 (PRODUCT LEVEL)	SEE PAGE
	1	1	**107-3676**	1	HOOD-SHELL	
	2	1	**109-7009**	2	HINGE AS	
	3	1	**111-7048**	2	BRACKET AS	
	4	1	**119-3101**	1	ANGLE AS	
	5	1	**119-3111**	1	ANGLE AS	
	6	1	**119-3114**	1	PLATE AS	
	7	1	**122-0251**	1	ANGLE AS	
	8	1	**122-0254**	1	SUPPORT AS	
	9	1	**122-0256**	1	SUPPORT AS	
M	10	1	**128-6866**	26	BOLT-ROUND HEAD	
M	11	1	**5C-7261**	16	NUT (M8X1.25 THD)	
M	12	1	**7X-2619**	2	BOLT (M6X1.0X20MM)	
	13	1	**8T-4121**	16	WASHER-HARD (11X21X2.5MM THK)	
M	14	1	**8T-4133**	4	NUT (M10X1.5 THD)	
M	15	1	**8T-4137**	12	BOLT (M10X1.5X20MM)	
M	16	1	**8T-4189**	10	BOLT (M8X1.25X20MM)	
	17	1	**8T-4224**	26	WASHER-HARD (8.8X16X2MM THK)	
	18	1	**9X-8256**	2	WASHER (6.6X12X2MM THK)	

M-METRIC PART

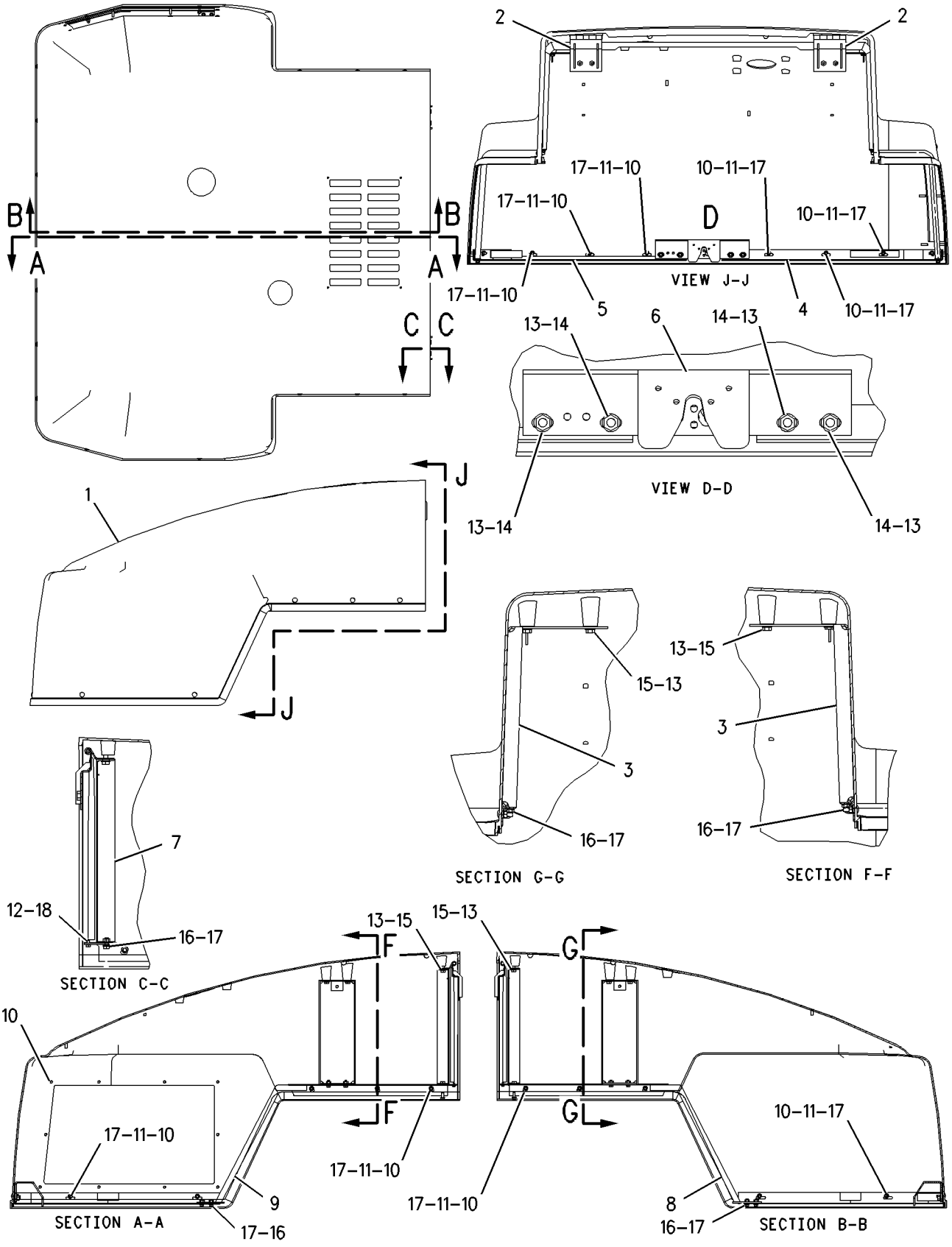

GRAPHIC #1 **<END>** g00867430

FRAME AND BODY

242-9949 HOOD & GUARD GP

S/N: PDF1-UP
PART OF 241-9560 SUPPRESSION AR-SOUND
AN ATTACHMENT

SMCS-7251 **i02005324**

NOTE	REF NO	GRAPHIC REF	PART NUMBER	QTY	PART NAME 1 2 3 4 5 6 (PRODUCT LEVEL)	SEE PAGE
B	1	1	**8B-3115**	12	SHIM (.25-MM THK)	
	2	1	**108-8572**	1	SUPPORT AS	
	3	1	**110-4463**	1	STRIKER AS	
	4	1	**123-5710**	1	PLATE AS	
	5	1	**160-6154**	2	SPRING AS-GAS	
					(EACH INCLUDES)	
		1	**130-1916**	2	STUD-BALL	
Y	6	1	*242-9950*	1	HOOD GP	281
M	7	1	**5C-7261**	4	NUT (M8X1.25-THD)	
	8	1	**8T-4121**	12	WASHER-HARD (11X21X2.5-MM THK)	
M	9	1	**8T-4133**	2	NUT (M10X1.5-THD)	
M	10	1	**8T-4136**	4	BOLT (M10X1.5X25-MM)	
M	11	1	**8T-4195**	6	BOLT (M10X1.5X30-MM)	
	12	1	**8T-4223**	1	WASHER-HARD (13.5X25.5X3-MM THK)	
M	13	1	**8T-4224**	4	WASHER-HARD (8.8X16X2-MM THK)	
M	14	1	**8T-4244**	1	NUT (M12X1.75-THD)	

B-USE AS REQUIRED
M-METRIC PART
Y-SEPARATE ILLUSTRATION

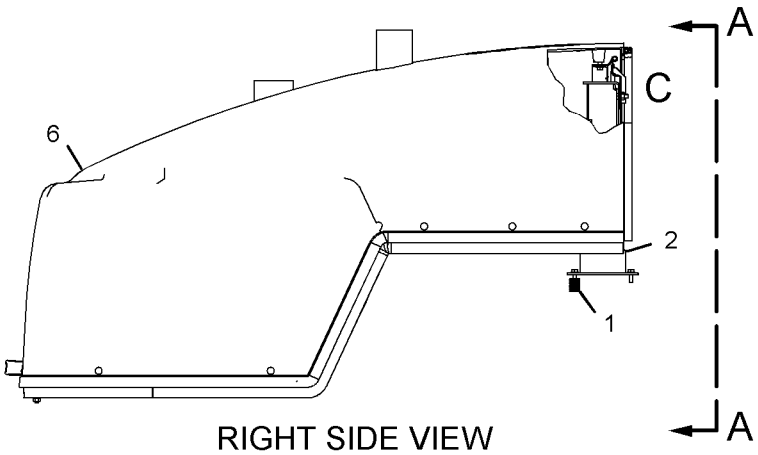

RIGHT SIDE VIEW

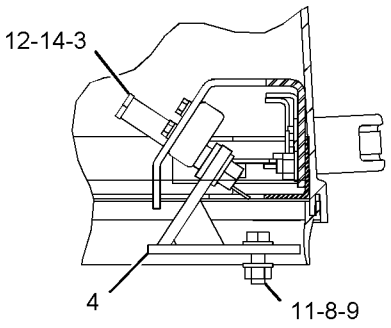

SECTION B-B

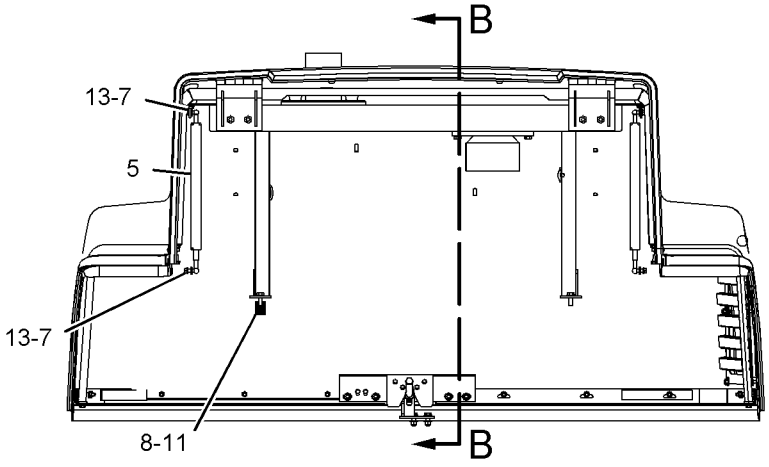

VIEW A-A

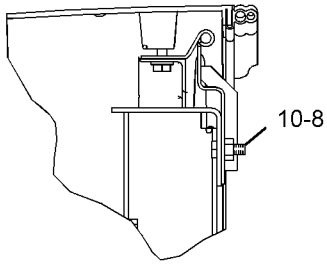

VIEW OF AREA C

GRAPHIC #1 **<END>** g01040882

FRAME AND BODY

242-9951 HOOD & GUARD GP

S/N: PDF1-UP
PART OF 241-9561 SUPPRESSION AR-SOUND
AN ATTACHMENT

SMCS-7251 **i02005326**

NOTE	REF NO	GRAPHIC REF	PART NUMBER	QTY	PART NAME 1 2 3 4 5 6 (PRODUCT LEVEL)	SEE PAGE
B	1	1	**8B-3115**	12	SHIM (.25-MM THK)	
	2	1	**108-8572**	1	SUPPORT AS	
	3	1	**110-4463**	1	STRIKER AS	
	4	1	**123-5710**	1	PLATE AS	
	5	1	**160-6154**	2	SPRING AS-GAS	
					(EACH INCLUDES)	
		1	**130-1916**	2	STUD-BALL	
Y	6	1	*242-9952*	1	HOOD GP	283
M	7	1	**5C-7261**	4	NUT (M8X1.25-THD)	
	8	1	**8T-4121**	12	WASHER-HARD (11X21X2.5-MM THK)	
M	9	1	**8T-4133**	2	NUT (M10X1.5-THD)	
M	10	1	**8T-4136**	4	BOLT (M10X1.5X25-MM)	
M	11	1	**8T-4195**	6	BOLT (M10X1.5X30-MM)	
	12	1	**8T-4223**	1	WASHER-HARD (13.5X25.5X3-MM THK)	
M	13	1	**8T-4224**	4	WASHER-HARD (8.8X16X2-MM THK)	
M	14	1	**8T-4244**	1	NUT (M12X1.75-THD)	

B-USE AS REQUIRED
M-METRIC PART
Y-SEPARATE ILLUSTRATION

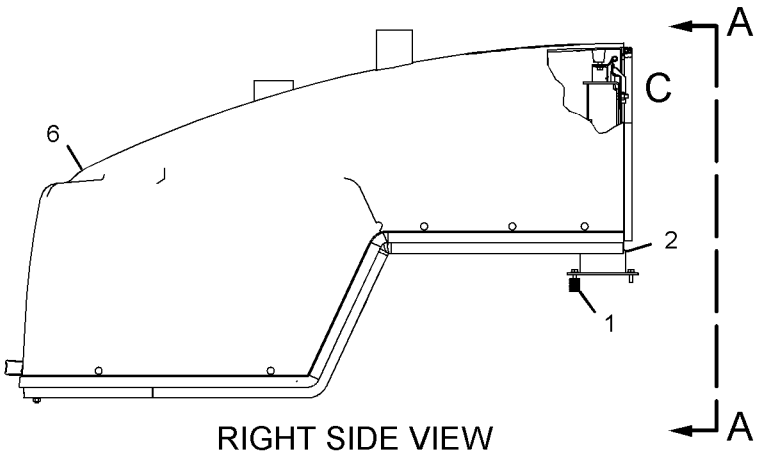

RIGHT SIDE VIEW

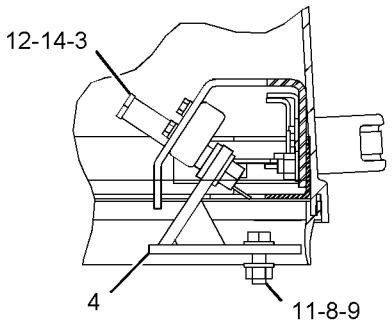

SECTION B-B

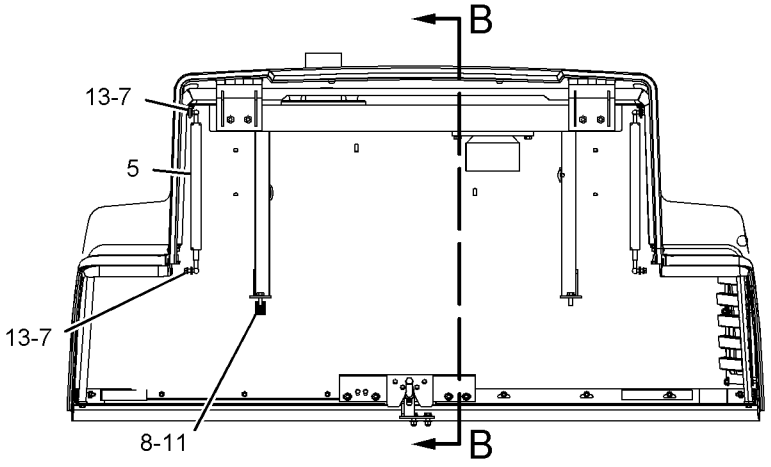

VIEW A-A

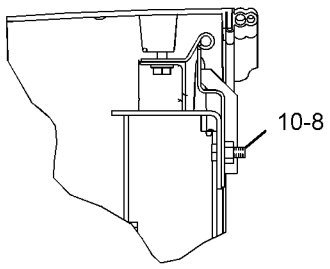

VIEW OF AREA C

GRAPHIC #1 **<END>** g01040882

FRAME AND BODY

242-9950 HOOD GP

S/N: PDF1-UP
PART OF 242-9949 HOOD & GUARD GP
AN ATTACHMENT

SMCS-7251 **i02005398**

NOTE	REF NO	GRAPHIC REF	PART NUMBER	QTY	PART NAME 1 2 3 4 5 6 (PRODUCT LEVEL)	SEE PAGE
	1	2	**118-3146**	1	LATCH AS-ROTARY	
	2	2	**118-3147**	1	LINKAGE AS	
	3	2	**118-3149**	1	HANDLE AS	
	4	2	**120-5302**	1	EXTENSION AS	
	5	2	**120-5335**	1	INSULATION	
Y	6	1	**128-6868**	1	HOOD & GUARD GP	277
	7	2	**134-1261**	1	BRACKET AS	
	8	2	**136-2633**	1	GRILL AS	
M	9	2	**5C-7261**	10	NUT (M8X1.25-THD)	
	10	2	**5P-4116**	10	WASHER-HARD (8.8X20.5X2-MM THK)	
M	11	2	**6V-7357**	4	BOLT (M6X1.0X25-MM)	
M	12	2	**7X-2533**	4	BOLT (M6X1X35-MM)	
	13	2	**8T-4121**	6	WASHER-HARD (11X21X2.5-MM THK)	
M	14	2	**8T-4137**	6	BOLT (M10X1.5X20-MM)	
	15	2	**9X-8256**	6	WASHER (6.6X12X2-MM THK)	
D	16	2	**136-7728**		SEAL-COMPOSITE (6.2M)	
E	17	2	**132-8502**		SEAL (250CM)	

D-ORDER BY THE METER
E-ORDER BY THE CENTIMETER
M-METRIC PART
Y-SEPARATE ILLUSTRATION

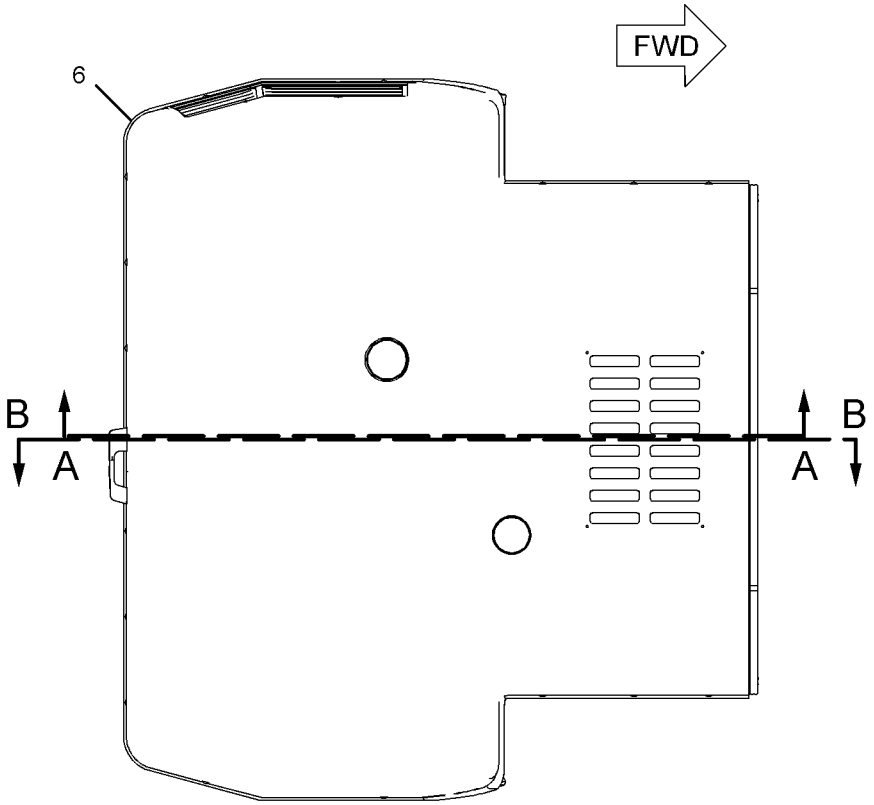

TOP VIEW

REFER TO ALL ILLUSTRATIONS OF THIS GROUP FOR AUXILIARY VIEWS

GRAPHIC #1 g01041010

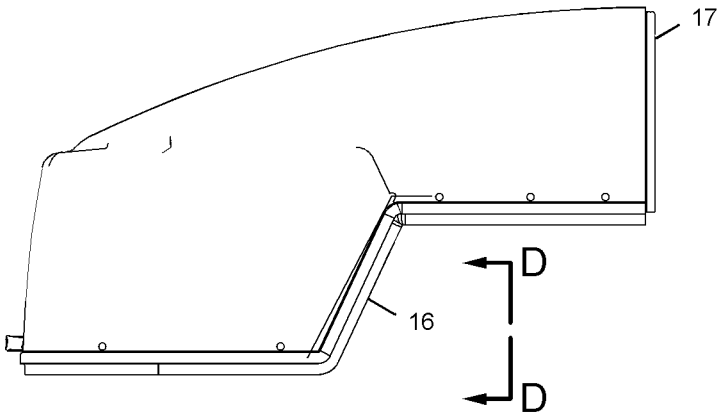

RIGHT SIDE VIEW

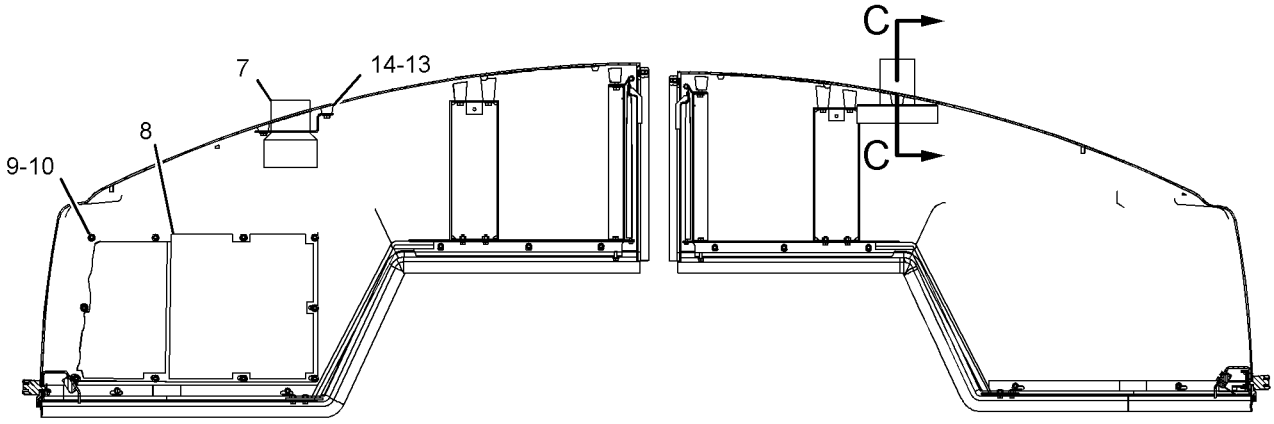

SECTION A-A

SECTION B-B

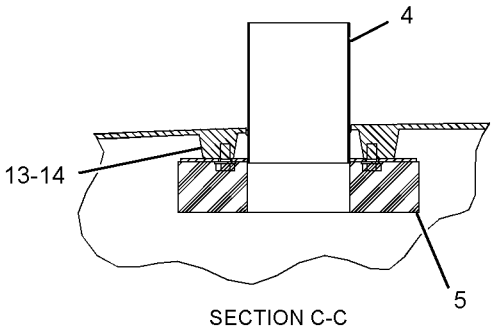

SECTION C-C

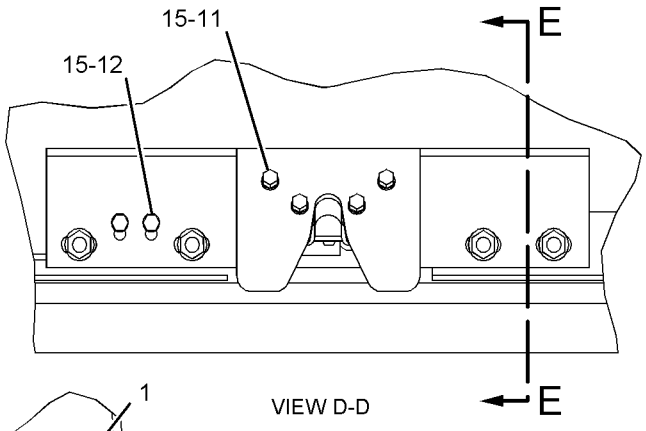

VIEW D-D

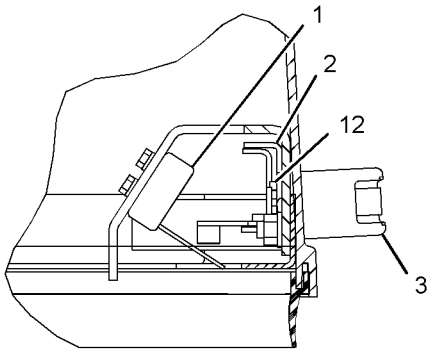

SECTION E-E

GRAPHIC #2

<END>

g01041011

242-9952 HOOD GP

S/N: PDF1-UP
PART OF 242-9951 HOOD & GUARD GP
AN ATTACHMENT

SMCS-7251 **i02005399**

NOTE	REF NO	GRAPHIC REF	PART NUMBER	QTY	PART NAME 1 2 3 4 5 6 (PRODUCT LEVEL)	SEE PAGE
	1	2	**118-3146**	1	LATCH AS-ROTARY	
	2	2	**118-3147**	1	LINKAGE AS	
	3	2	**118-3149**	1	HANDLE AS	
	4	2	**120-5302**	1	EXTENSION AS	
	5	2	**120-5335**	1	INSULATION	
Y	6	1	**128-6868**	1	HOOD & GUARD GP	277
	7	2	*128-6873*	1	GRILL AS	
		2	**125-5745**	1	GRILL AS	
		2	**128-6872**	6	INSULATION	
	8	2	**134-1261**	1	BRACKET AS	
M	9	2	**5C-7261**	10	NUT (M8X1.25-THD)	
	10	2	**5P-4116**	10	WASHER-HARD (8.8X20.5X2-MM THK)	
M	11	2	**6V-7357**	4	BOLT (M6X1.0X25-MM)	
M	12	2	**7X-2533**	4	BOLT (M6X1X35-MM)	
	13	2	**8T-4121**	6	WASHER-HARD (11X21X2.5-MM THK)	
M	14	2	**8T-4137**	6	BOLT (M10X1.5X20-MM)	
	15	2	**9X-8256**	6	WASHER (6.6X12X2-MM THK)	
D	16	2	**136-7728**		SEAL-COMPOSITE (6.2M)	
E	17	2	**132-8502**		SEAL (250CM)	

D-ORDER BY THE METER
E-ORDER BY THE CENTIMETER
M-METRIC PART
Y-SEPARATE ILLUSTRATION

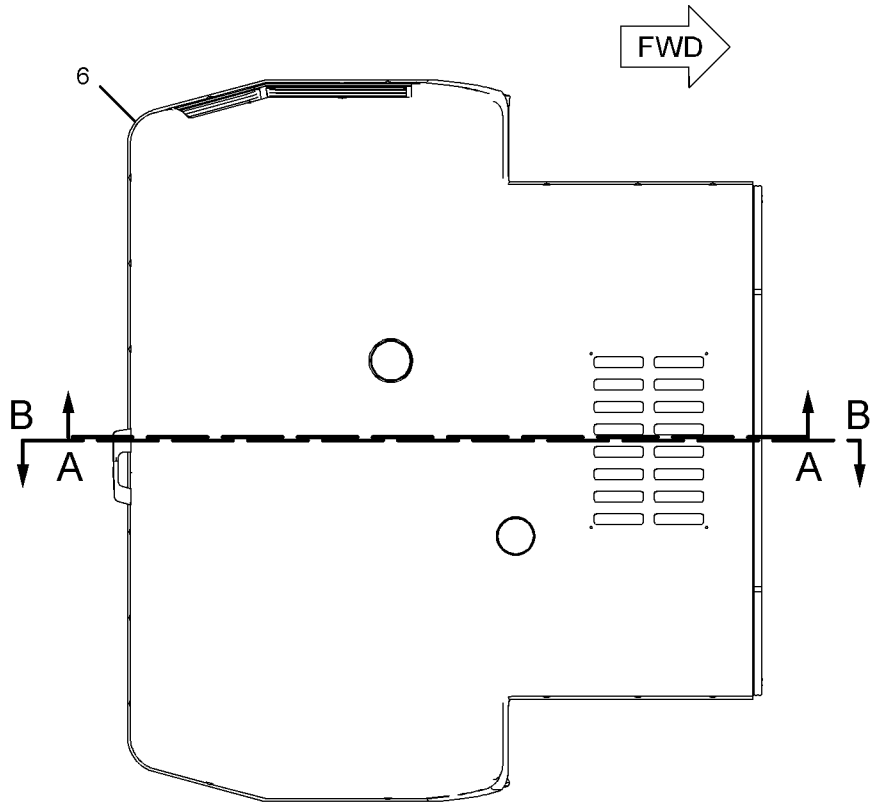

TOP VIEW

REFER TO ALL ILLUSTRATIONS OF
THIS GROUP FOR AUXILIARY VIEWS

GRAPHIC #1

g01041025

242-9952 **HOOD GP** *(contd.)* **i02005399**

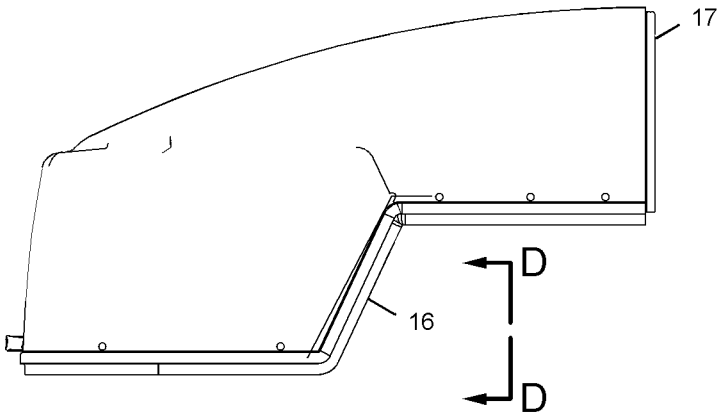

RIGHT SIDE VIEW

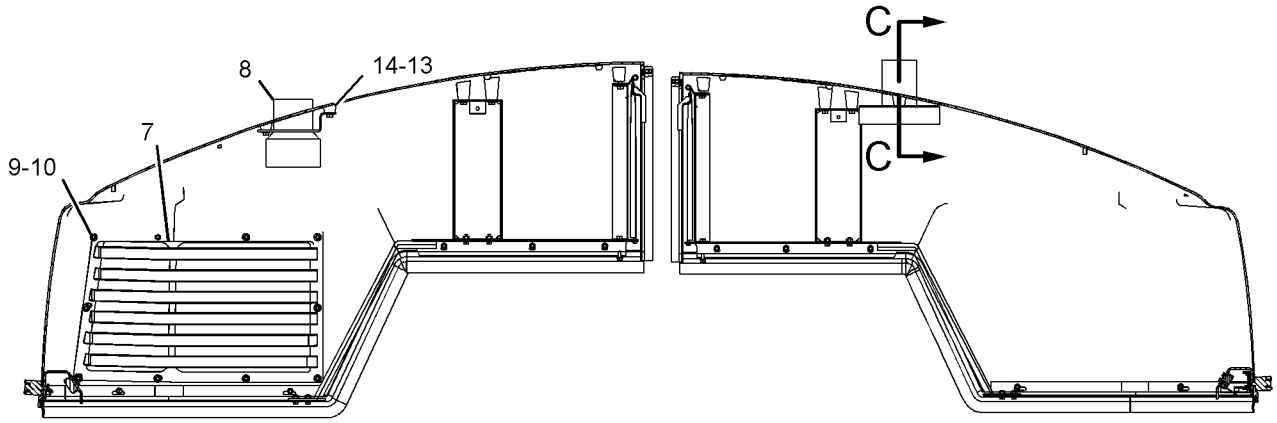

SECTION A-A

SECTION B-B

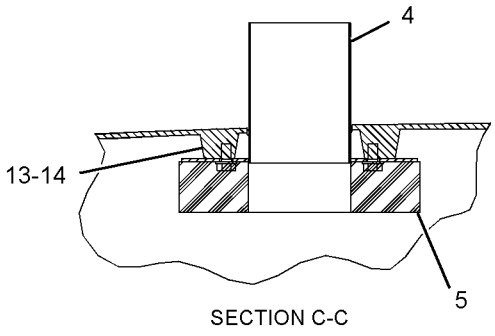

SECTION C-C

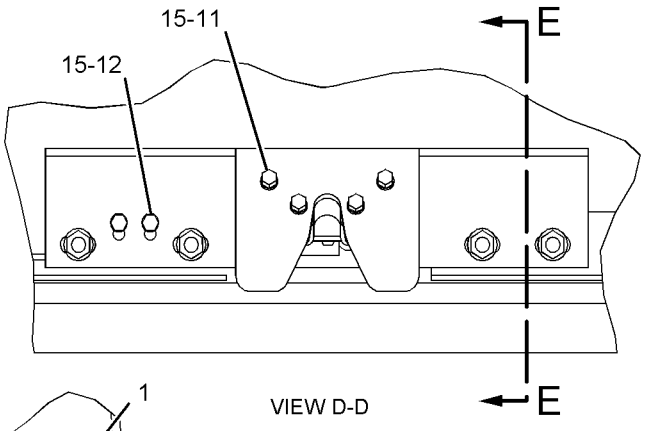

VIEW D-D

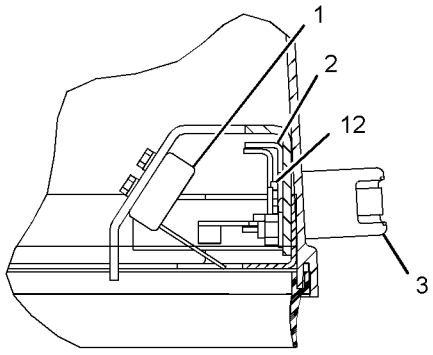

SECTION E-E

GRAPHIC #2 **<END>** g01041027

107-4712 LADDER GP

S/N: PDF1-UP

PART OF 236-5635 CHASSIS AR

SMCS-7254 **i02016251**

NOTE	REF NO	GRAPHIC REF	PART NUMBER	QTY	PART NAME 1 2 3 4 5 6 (PRODUCT LEVEL)	SEE PAGE
	1	1	**112-1384**	1	STEP AS-PLATFORM-LH	
	2	1	**112-1385**	1	STEP AS-PLATFORM-RH	
	3	1	**129-2820**	4	STRAP-STEP	
	4	1	**129-3939**	1	LADDER AS-RH	
	5	1	**129-3940**	1	LADDER AS-LH	
	6	1	**153-9706**	8	PLATE	
	7	1	**215-3886**	2	STEP	
M	8	1	**6V-7744**	8	LOCKNUT (M10X1.5-THD)	
	9	1	**7X-7729**	26	WASHER (11X25X3-MM THK)	
M	10	1	**8T-0722**	8	BOLT-LOCKING (M10X1.5X30-MM)	
	11	1	**8T-4121**	16	WASHER-HARD (11X21X2.5-MM THK)	
M	12	1	**8T-4136**	18	BOLT (M10X1.5X25-MM)	
M	13	1	**8T-4196**	8	BOLT (M10X1.5X35-MM)	

M-METRIC PART

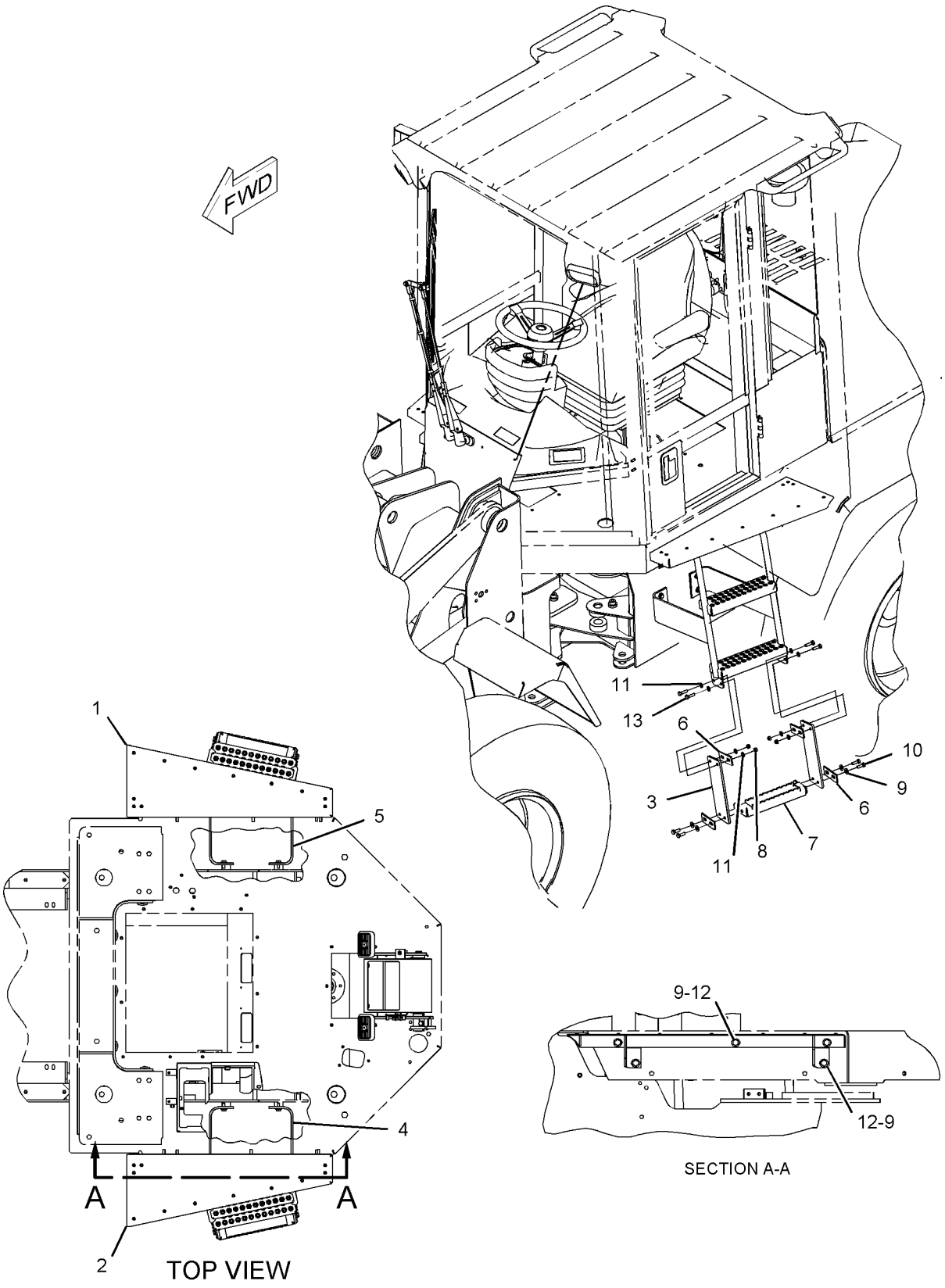

GRAPHIC #1 **<END>** g01042646

FRAME AND BODY

242-1760 LINES GP-GREASE

S/N: PDF1-UP

PART OF 236-5635 CHASSIS AR

SMCS-7510 **i01999626**

NOTE	REF NO	GRAPHIC REF	PART NUMBER	QTY	PART NAME 1 2 3 4 5 6 (PRODUCT LEVEL)	SEE PAGE
	1	1	**3B-6552**	1	ELBOW	
	2	1	**3B-8485**	2	FITTING-GREASE	
	3	1	**8N-9394**	2	HOSE AS	
	4	1	**120-9751**	1	TUBE AS	
	5	1	**120-9752**	1	TUBE AS	
	6	1	*148-8320*	2	CONNECTOR AS	
					(EACH INCLUDES)	
		1	**8C-6865**	1	CONNECTOR	
		1	**4J-5477**	1	SEAL-O-RING	
	7	1	*148-8389*	2	ELBOW AS	
					(EACH INCLUDES)	
		1	**7X-0492**	1	ELBOW	
		1	**4J-5477**	1	SEAL-O-RING	
	8	1	**3B-8489**	2	FITTING-GREASE	
	9	1	**8M-2772**	2	CLIP	
	10	1	**8T-4121**	1	WASHER-HARD (11X21X2.5-MM THK)	
M	11	1	**8T-4137**	1	BOLT (M10X1.5X20-MM)	

M-METRIC PART

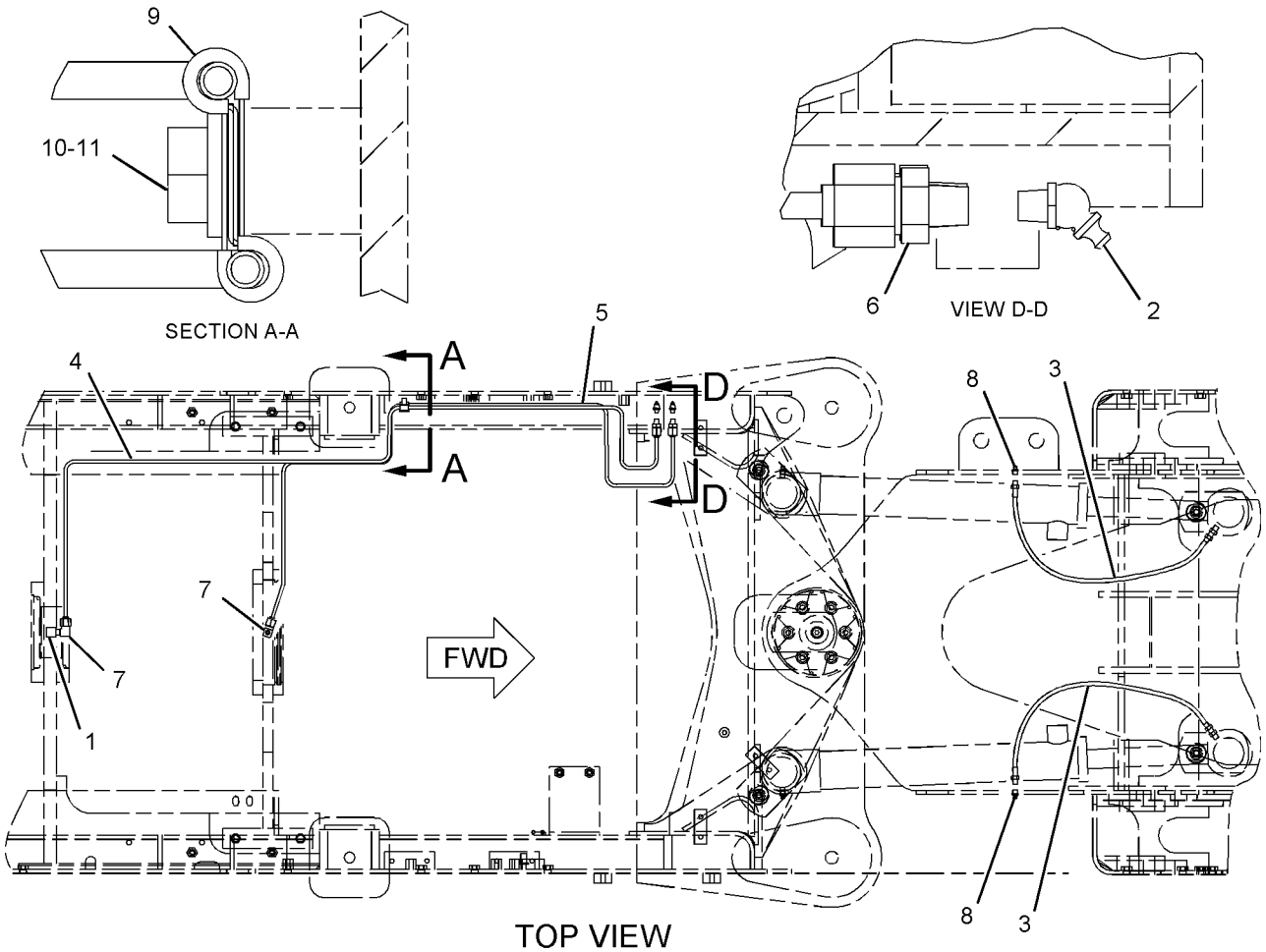

GRAPHIC #1

<END>

g01037281

107-4815 LINK GP-STEERING FRAME LOCK

S/N: PDF1-UP

PART OF 236-5635 CHASSIS AR

SMCS-7506 **i01479648**

NOTE	REF NO	GRAPHIC REF	PART NUMBER	QTY	PART NAME 1 2 3 4 5 6 (PRODUCT LEVEL)	SEE PAGE
	1	1	**5P-8837**	2	LOCKPIN	
	2	1	**5V-4999**	2	PIN	
	3	1	**109-3721**	1	LINK	

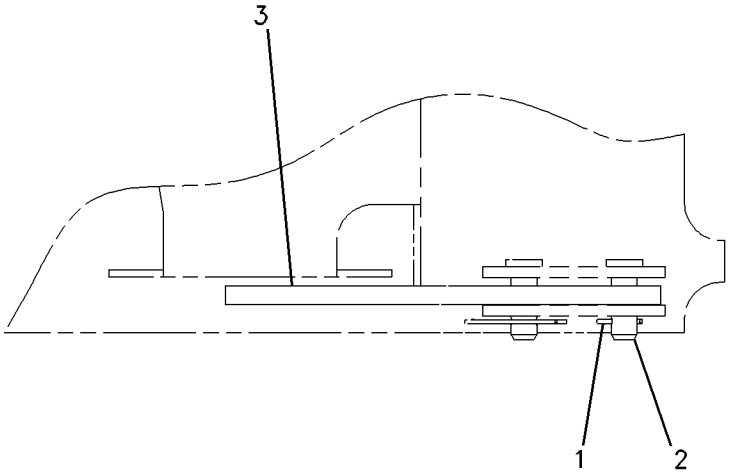

LEFT SIDE VIEW

GRAPHIC #1 **<END>** g00770486

155-6487 REFLECTOR GP

S/N: PDF1-UP

PART OF 236-5635 CHASSIS AR

SMCS-1429 **i00820779**

NOTE	REF NO	GRAPHIC REF	PART NUMBER	QTY	PART NAME 1 2 3 4 5 6 (PRODUCT LEVEL)	SEE PAGE
	1	1	**9R-2404**	4	REFLECTOR-AMBER	
	2	1	**9R-1499**	2	REFLECTOR	

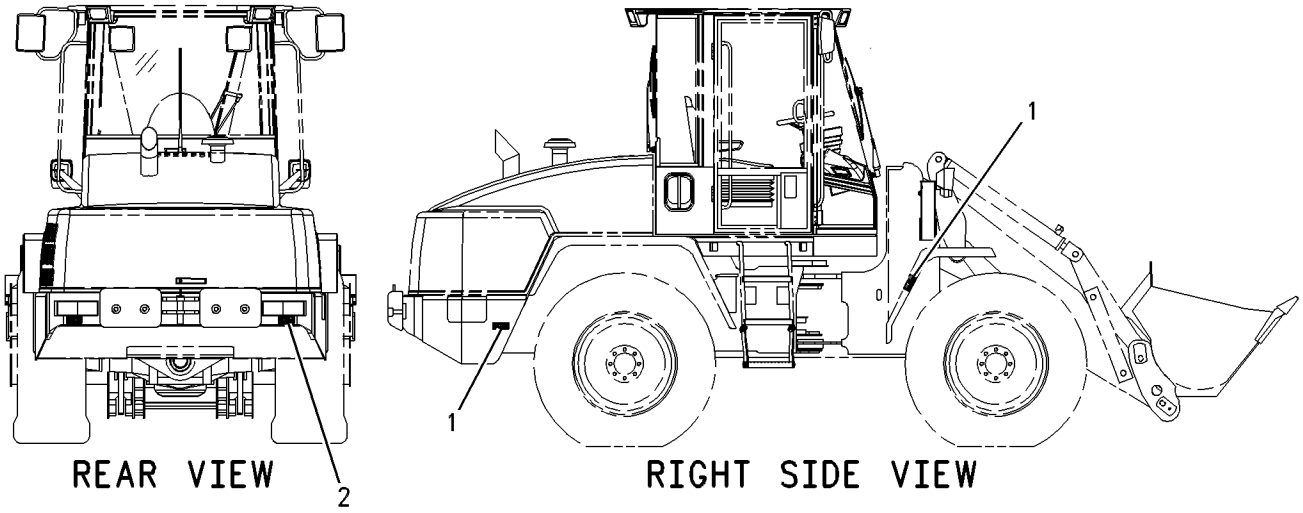

GRAPHIC #1 **<END>** g00421244

241-9560 SUPPRESSION AR-SOUND

S/N: PDF1-UP
AN ATTACHMENT

SMCS-7261 **i02005311**

NOTE	PART NUMBER	QTY	PART NAME 1 2 3 4 5 6 (PRODUCT LEVEL)	SEE PAGE
Y	*242-9949*	1	HOOD & GUARD GP	279
Y-SEPARATE ILLUSTRATION				

<END>

241-9561 SUPPRESSION AR-SOUND

S/N: PDF1-UP
AN ATTACHMENT

SMCS-7261 **i02005312**

NOTE	PART NUMBER	QTY	PART NAME 1 2 3 4 5 6 (PRODUCT LEVEL)	SEE PAGE
Y	*242-9951*	1	HOOD & GUARD GP	280
Y	*130-8754*	1	SUPPRESSION GP-SOUND	292
Y-SEPARATE ILLUSTRATION				

<END>

130-8754 SUPPRESSION GP-SOUND

S/N: PDF1-UP
PART OF 241-9561 SUPPRESSION AR-SOUND
AN ATTACHMENT

SMCS-7076, 7261 **i01321710**

NOTE	REF NO	GRAPHIC REF	PART NUMBER	QTY	PART NAME 1 2 3 4 5 6 (PRODUCT LEVEL)	SEE PAGE
	1	1	**126-3669**	1	INSULATION	
	2	1	**126-3677**	1	INSULATION	
	3	1	**126-3681**	1	INSULATION	
	4	1	*176-3387*	1	LINER GP-SOUND SUPPRESSION	
		1	**126-3667**	1	INSULATION	
		1	**126-3671**	1	INSULATION	
		1	**126-3672**	2	INSULATION	
		1	**126-3675**	1	INSULATION	
		1	**126-3676**	1	INSULATION	
		1	**126-3679**	2	INSULATION	

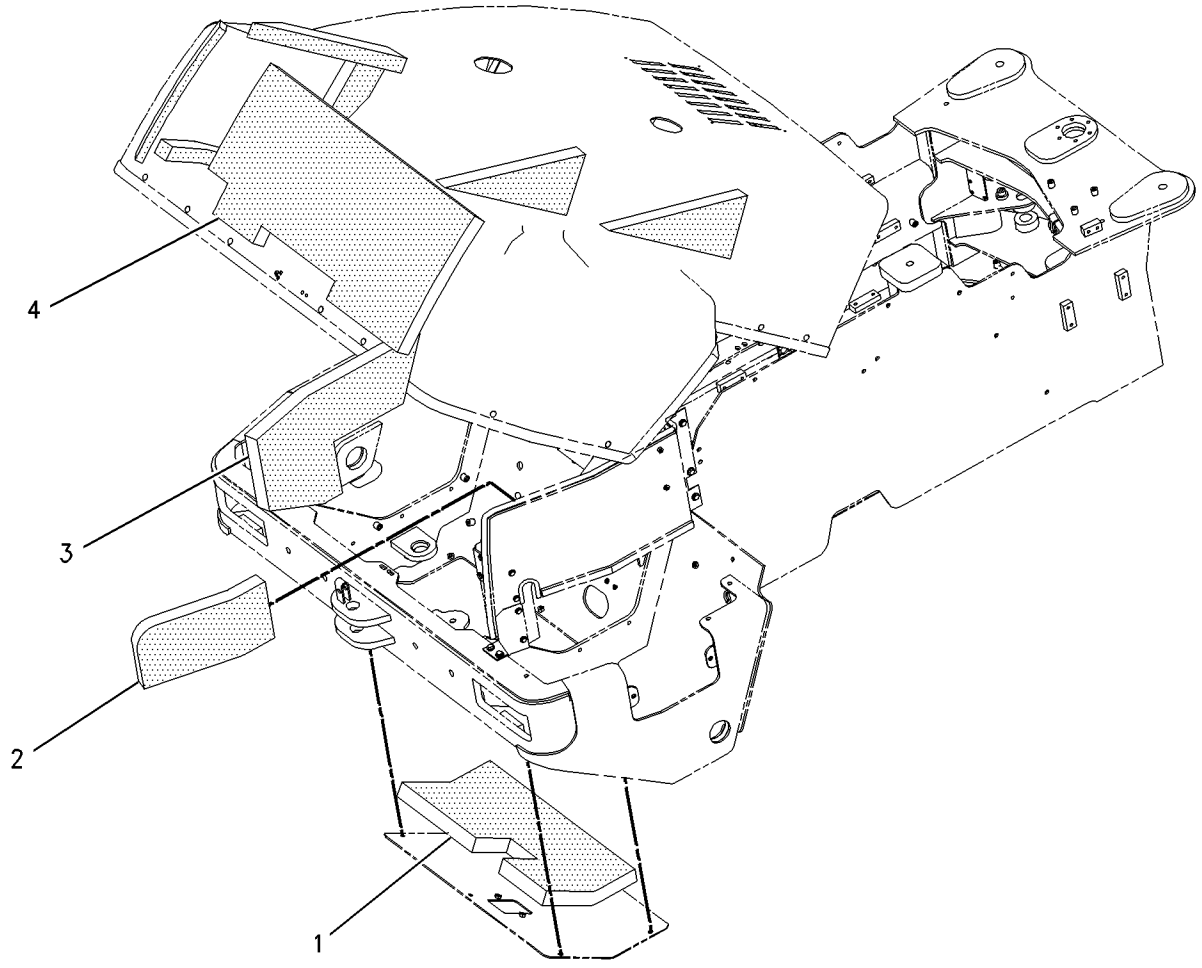

GRAPHIC #1 **<END>** g00699666

144-8520 ACCUMULATOR GP-BRAKE

S/N: PDF1-UP

FIELD REPLACEMENT FOR 149-5533—PAGE 294

SMCS-4263 **i02029749**

NOTE	REF NO	GRAPHIC REF	PART NUMBER	QTY	PART NAME 1 2 3 4 5 6 (PRODUCT LEVEL)	SEE PAGE
	1	1	**030-9613**	2	SCREW-FORMING (10-24X0.37-IN)	
	2	1	**1J-9671**	1	SEAL-O-RING	
	3	1	**069-2535**	1	VALVE-GAS	
	4	1	**069-2536**	1	PROTECTOR-GAS VALVE	
					AVAILABLE REPAIR KIT(S):	
			160-0496	1	KIT-ACCUMULATOR SERVICE	

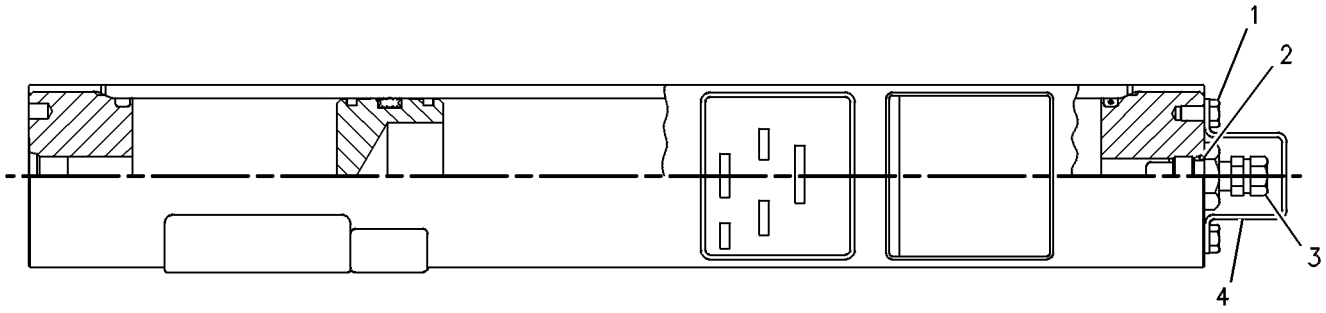

GRAPHIC #1 **<END>** g00120611

149-5533 ACCUMULATOR GP-BRAKE

S/N: PDF1-UP
PART OF 233-7817 ACCUMULATOR GP-BRAKE
FIELD REPLACEMENT ORDER 144-8520—PAGE 293

SMCS-4263 **i01671042**

NOTE	REF NO	GRAPHIC REF	PART NUMBER	QTY	PART NAME 1 2 3 4 5 6 (PRODUCT LEVEL)	SEE PAGE
	1	1	**030-9613**	2	SCREW-FORMING (10-24X0.37 IN)	
	2	1	**1J-9671**	1	SEAL-O-RING	
	3	1	**069-2535**	1	VALVE-GAS	
	4	1	**069-2536**	1	PROTECTOR-GAS VALVE	
					AVAILABLE REPAIR KIT(S):	
			160-0496	1	KIT-ACCUMULATOR SERVICE	

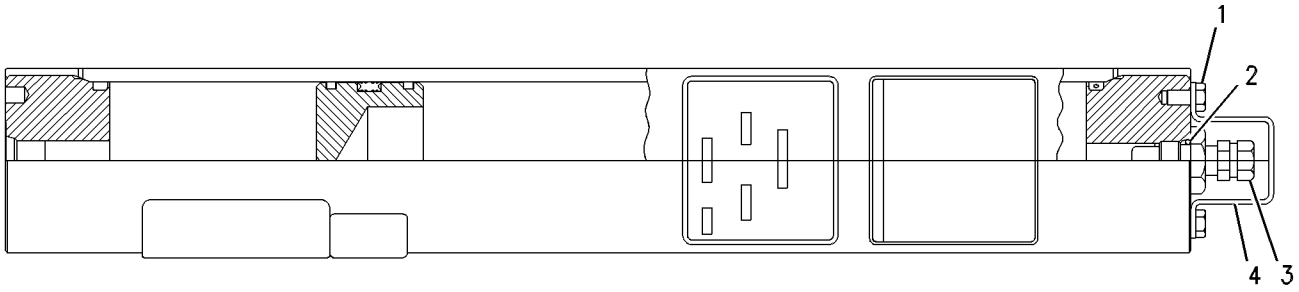

GRAPHIC #1 **<END>** g00467180

233-7817 ACCUMULATOR GP-BRAKE

S/N: PDF1-UP

PART OF 237-6260 POWER TRAIN AR

SMCS-4263 **i02014542**

NOTE	REF NO	GRAPHIC REF	PART NUMBER	QTY	PART NAME 1 2 3 4 5 6 (PRODUCT LEVEL)	SEE PAGE
Y	1	1	*149-5533*	2	ACCUMULATOR GP-BRAKE	294
	2	1	**233-7818**	1	BRACKET AS	
	3	1	**236-5376**	1	BRACKET AS	
	4	1	**104-3173**	5	CLIP	
	5	1	*148-8378*	2	ELBOW AS	
					(EACH INCLUDES)	
		1	**3J-1907**	1	SEAL-O-RING	
		1	**6V-8397**	1	SEAL-O-RING	
		1	**6V-8724**	1	ELBOW	
	6	1	**8T-4121**	4	WASHER-HARD (11X21X2.5-MM THK)	
M	7	1	**8T-4136**	4	BOLT (M10X1.5X25-MM)	

M-METRIC PART
Y-SEPARATE ILLUSTRATION

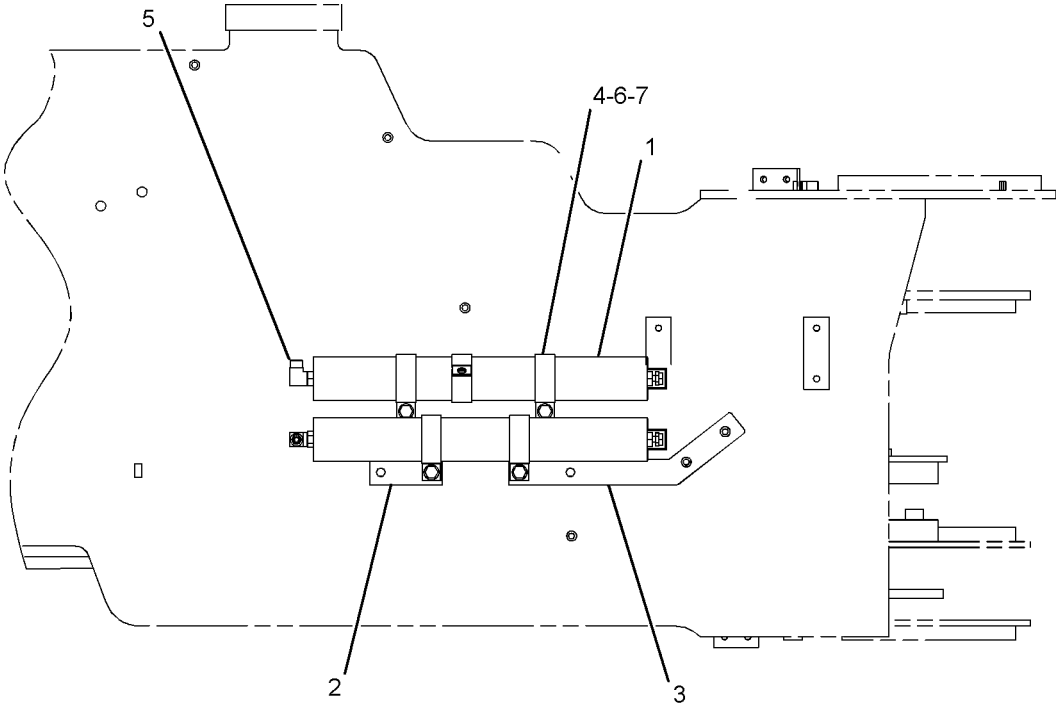

RIGHT SIDE VIEW

GRAPHIC #1

<END>

g01041838

BRAKING SYSTEM

107-4621 CONTROL GP-PARKING BRAKE

S/N: PDF1-UP

PART OF 239-1006, 239-1007 CAB AR, 241-8807 CANOPY AR-OPEN ROPS, 241-8644 CANOPY AR-SOFT, 241-8643 PLATFORM AR

AN ATTACHMENT

SMCS-4282, 4284 **i01115165**

NOTE	REF NO	GRAPHIC REF	PART NUMBER	QTY	PART NAME 1 2 3 4 5 6 (PRODUCT LEVEL)	SEE PAGE
	1	1	**6G-4195**	1	SWITCH AS-LIMIT	
		1	**3L-8187**	1	LOCKWASHER (NO.6-INT)	
		1	**6V-8373**	3	SCREW-MACHINE (6-32X.187IN)	
	2	1	**2N-3477**	2	SCREW-MACHINE (6-32X1.25IN)	
	3	1	**9U-0710**	1	CLIP	
	4	1	**9U-3439**	1	LEVER AS	
	5	1	**9U-3440**	1	COUPLER	
	6	1	**111-0136**	1	BRACKET AS	
	7	1	**114-3939**	1	BRACKET AS	
	8	1	**116-9764**	1	CABLE AS-BRAKE	
	9	1	**7D-6922**	2	LOCKNUT (6-32 THD)	
	10	1	**4B-5324**	4	WASHER (1.19MM THK)	
M	11	1	**5C-2890**	2	NUT (M6X1.00 THD)	
M	12	1	**8T-4138**	2	BOLT (M6X1.0X20MM)	
M	13	1	**8T-4189**	4	BOLT (M8X1.25X20MM)	
	14	1	**8T-4205**	2	WASHER-HARD (2MM THK)	
	15	1	**8T-4224**	4	WASHER-HARD (2MM THK)	
	16	1	**9X-8256**	1	WASHER (2MM THK)	

M-METRIC PART

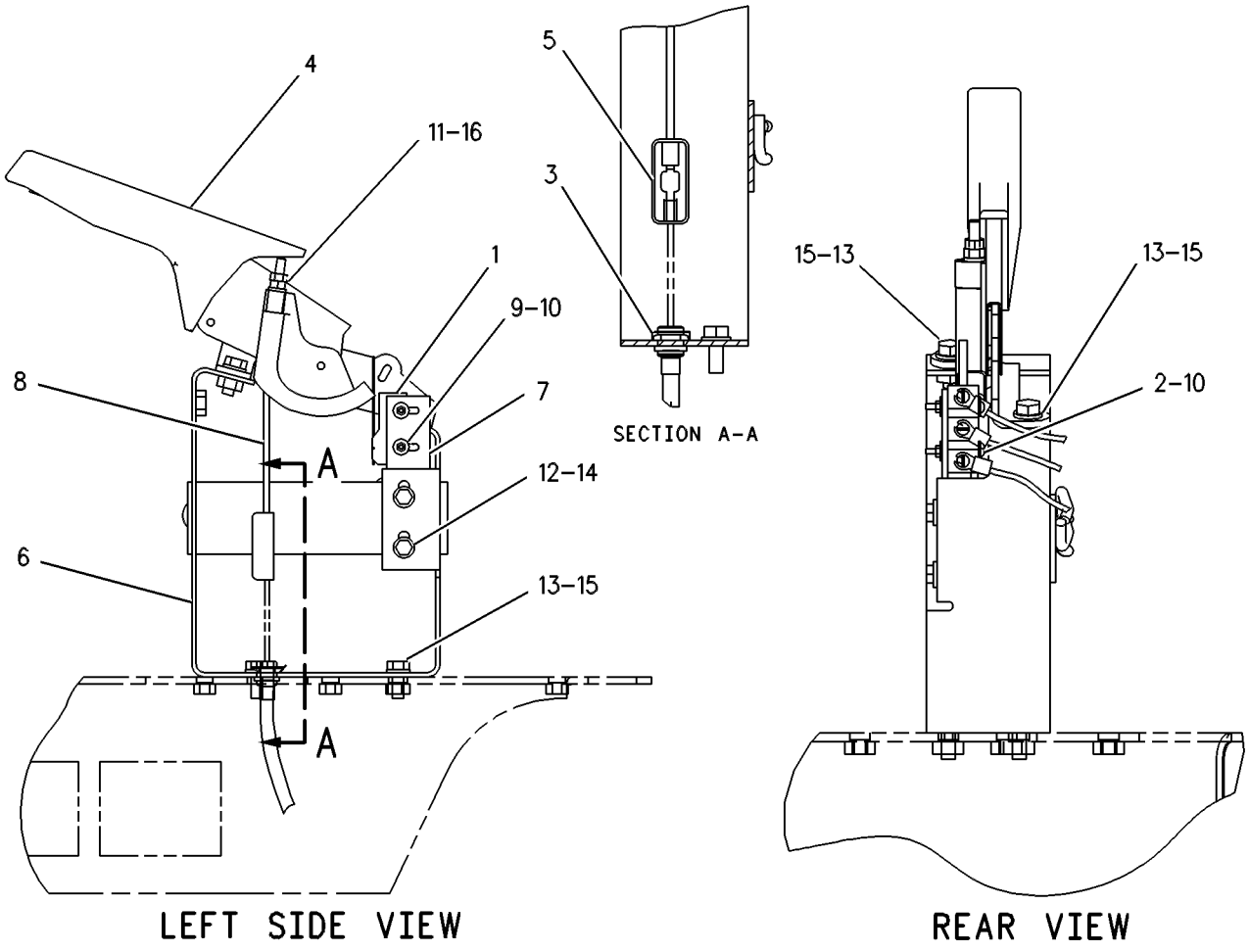

GRAPHIC #1 **<END>** g00131402

241-3703 CONTROL GP-PARKING BRAKE

S/N: PDF1-UP

PART OF 236-5635 CHASSIS AR

SMCS-4282, 4284 **i01999625**

NOTE	REF NO	GRAPHIC REF	PART NUMBER	QTY	PART NAME 1 2 3 4 5 6 (PRODUCT LEVEL)	SEE PAGE
	1	1	**3B-4610**	1	PIN-COTTER	
	2	1	**6V-8758**	1	PIN-CLEVIS	
	3	1	**8C-6160**	1	CLEVIS AS	
	4	1	**112-4807**	1	CABLE AS	
	5	1	**4D-7735**	1	CLIP	
M	6	1	**5C-7261**	1	NUT (M8X1.25-THD)	
	7	1	**5P-9297**	3	CLIP	
	8	1	**6V-1889**	1	CLIP	
	9	1	**8M-2770**	1	CLIP	
	10	1	**8T-4121**	4	WASHER-HARD (11X21X2.5-MM THK)	
	11	1	**8T-4122**	2	WASHER-HARD (17X32X3.5-MM THK)	
M	12	1	**8T-4133**	2	NUT (M10X1.5-THD)	
M	13	1	**8T-4137**	1	BOLT (M10X1.5X20-MM)	
M	14	1	**8T-4186**	1	BOLT (M10X1.5X40-MM)	

M-METRIC PART

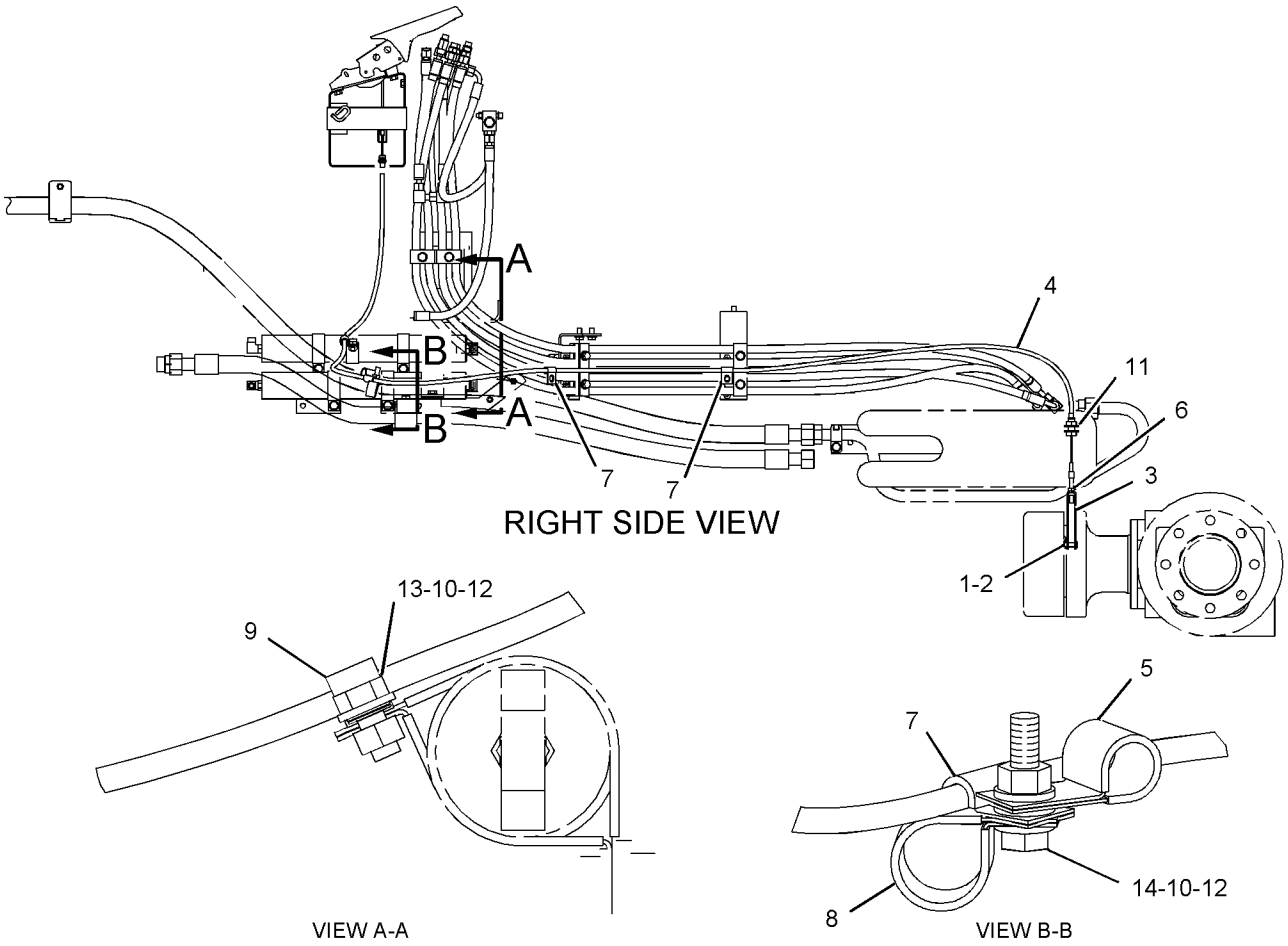

GRAPHIC #1 **<END>** g01037288

147-8607 CONTROL GP-SERVICE BRAKE

S/N: PDF1-UP

PART OF 237-6260 POWER TRAIN AR

SMCS-4257, 4258, 4263, 4265, 4269, 4280 **i02034115**

NOTE	REF NO	GRAPHIC REF	PART NUMBER	QTY	PART NAME 1 2 3 4 5 6 (PRODUCT LEVEL)	SEE PAGE
	1	1	**3B-4617**	2	PIN-COTTER	
	2	1	**6G-0233**	1	BOOT	
	3	1	**8E-8296**	2	DISC-THRUST	
	4	1	**8T-6431**	1	ROD END	
M	5	1	**9X-2065**	1	NUT (M10X1.5)	
	6	1	**128-0168**	1	ROD	
	7	1	**128-0169**	1	ROLLER	
	8	1	**132-0988**	1	BRACKET AS	
		1	**5G-6973**	2	LUG	
	9	1	**132-0994**	1	END-BEARING ROD	
	10	1	**132-3789**	1	PLATE	
	11	1	**133-7675**	1	SPRING	
M	12	1	**134-0673**	2	BOLT (M10X1.5X50-MM)	
	13	1	**146-6822**	1	LEVER AS	
	14	1	*149-4139*	1	VALVE AS-BRAKE CONTROL	
	15	1	**5V-4410**	2	BEARING-SLEEVE	
M	16	1	**8T-0389**	2	LOCKNUT (M10X1.5-THD)	
	17	1	**8T-4121**	15	WASHER-HARD (11X21X2.5-MM THK)	
M	18	1	**8T-4133**	1	NUT (M10X1.5-THD)	
M	19	1	**8T-4137**	6	BOLT (M10X1.5X20-MM)	
M	20	1	**8T-4196**	2	BOLT (M10X1.5X35-MM)	
	21	1	**9R-2807**	1	CLIP	
	22	1	**9R-3067**	1	PIN	

M-METRIC PART

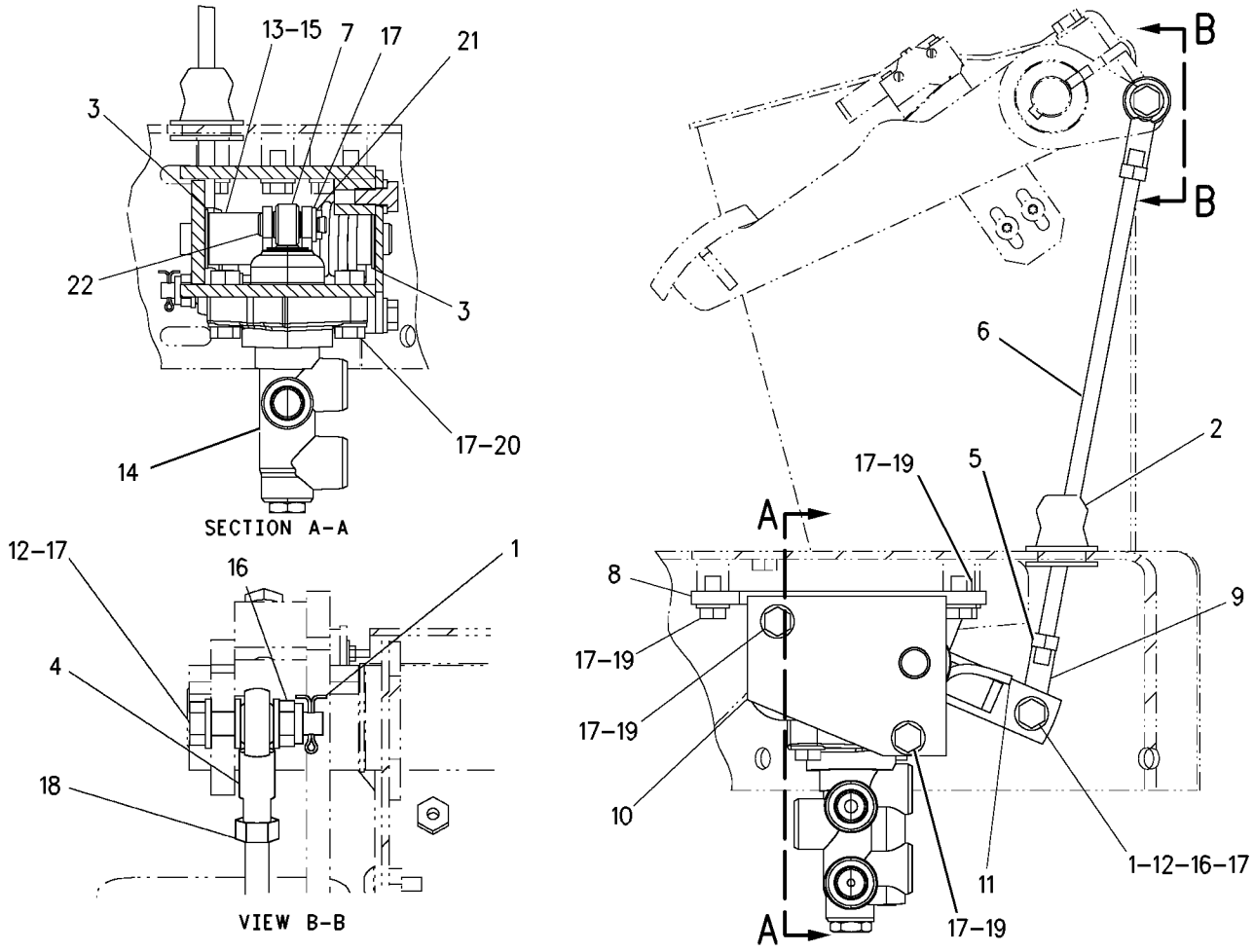

GRAPHIC #1 **<END>** g00796561

BRAKING SYSTEM

234-3203 LINES GP-SERVICE BRAKE

S/N: PDF1-UP

PART OF 237-6260 POWER TRAIN AR

SMCS-4257 **i02014545**

NOTE	REF NO	GRAPHIC REF	PART NUMBER	QTY	PART NAME 1 2 3 4 5 6 (PRODUCT LEVEL)	SEE PAGE
	1	1	**6V-0852**	1	CAP-DUST	
	2	1	**110-6349**	1	FITTING AS (QUICK DISCONNECT)	
	3	1	**116-6188**	1	TUBE AS	
	4	1	**116-6211**	2	TUBE AS	
I	5	1	**120-6086**	1	HOSE AS	
I	6	1	**148-6988**	1	HOSE AS	
	7	1	**150-9230**	1	TUBE AS	
I	8	1	**150-9232**	1	HOSE AS	
	9	1	**232-5854**	1	TUBE AS	
I	10	1	**232-5856**	1	HOSE AS	
	11	1	**123-7412**	4	CLAMP-HALF	
	12	1	*148-8361*	3	ELBOW GP	
					(EACH INCLUDES)	
		1	**3J-7354**	1	SEAL-O-RING	
		1	**6V-8397**	1	SEAL-O-RING	
		1	**6V-9200**	1	ELBOW	
	13	1	*148-8364*	2	ELBOW AS	
					(EACH INCLUDES)	
		1	**3K-0360**	1	SEAL-O-RING	
		1	**6V-8398**	1	SEAL-O-RING	
		1	**6V-8625**	1	ELBOW	
	14	1	*148-8367*	2	ELBOW GP	
					(EACH INCLUDES)	
		1	**6V-8397**	1	SEAL-O-RING	
		1	**6V-9850**	1	ELBOW (SWIVEL)	
	15	1	*148-8383*	1	ELBOW AS	
		1	**3K-0360**	1	SEAL-O-RING	
		1	**6V-8397**	1	SEAL-O-RING	
		1	**8T-1683**	1	ELBOW	
	16	1	*148-8433*	3	TEE GP	
					(EACH INCLUDES)	
		1	**6V-8397**	2	SEAL-O-RING	
		1	**6V-9836**	1	TEE-SWIVEL	
	17	1	*149-5452*	1	UNION GP	
		1	**6V-8397**	2	SEAL-O-RING	
		1	**6V-8994**	1	UNION-BULKHEAD	
	18	1	*150-4040*	1	TEE AS	
		1	**3J-7354**	1	SEAL-O-RING	
		1	**6V-8397**	1	SEAL-O-RING	
		1	**128-8588**	1	TEE	
	19	1	**3J-7354**	1	SEAL-O-RING	
	20	1	**4D-7735**	1	CLIP	
	21	1	**5P-9297**	4	CLIP	
	22	1	**107-4749**	2	PLATE	
	23	1	**6D-4244**	1	CLIP	
	24	1	**6V-8397**	2	SEAL-O-RING	
	25	1	**6V-8398**	1	SEAL-O-RING	
	26	1	**6V-9168**	1	NUT (11/16-16-THD)	
M	27	1	**7X-2534**	4	BOLT (M6X1X50-MM)	
	28	1	**8M-2770**	2	CLIP	
	29	1	**8M-2773**	1	CLIP	
	30	1	**8T-4121**	7	WASHER-HARD (11X21X2.5-MM THK)	
M	31	1	**8T-4137**	7	BOLT (M10X1.5X20-MM)	

I-REFER TO HYDRAULIC INFORMATION SYSTEM
M-METRIC PART

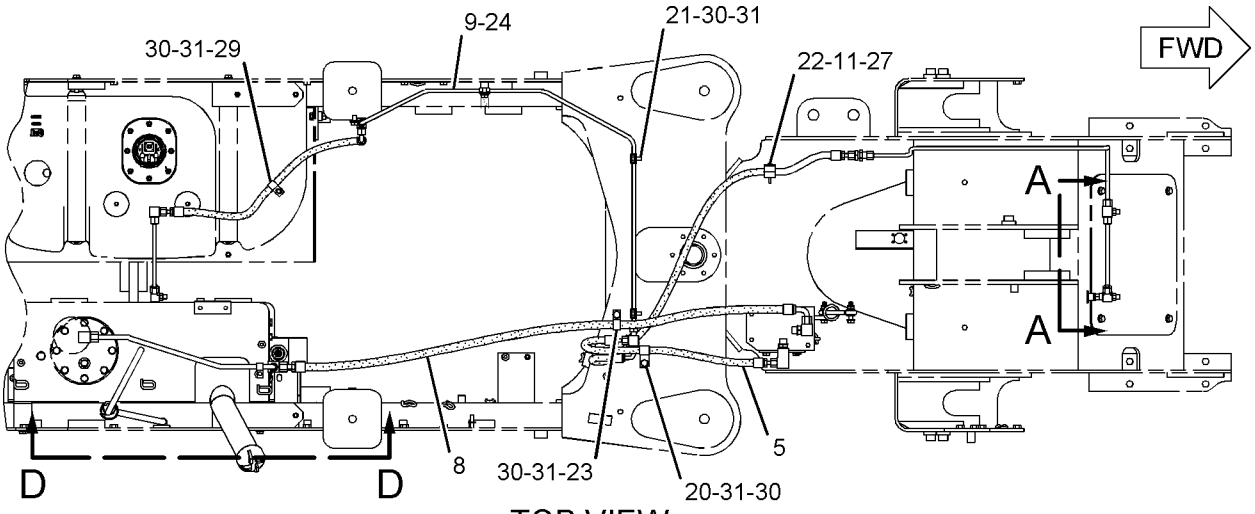

TOP VIEW

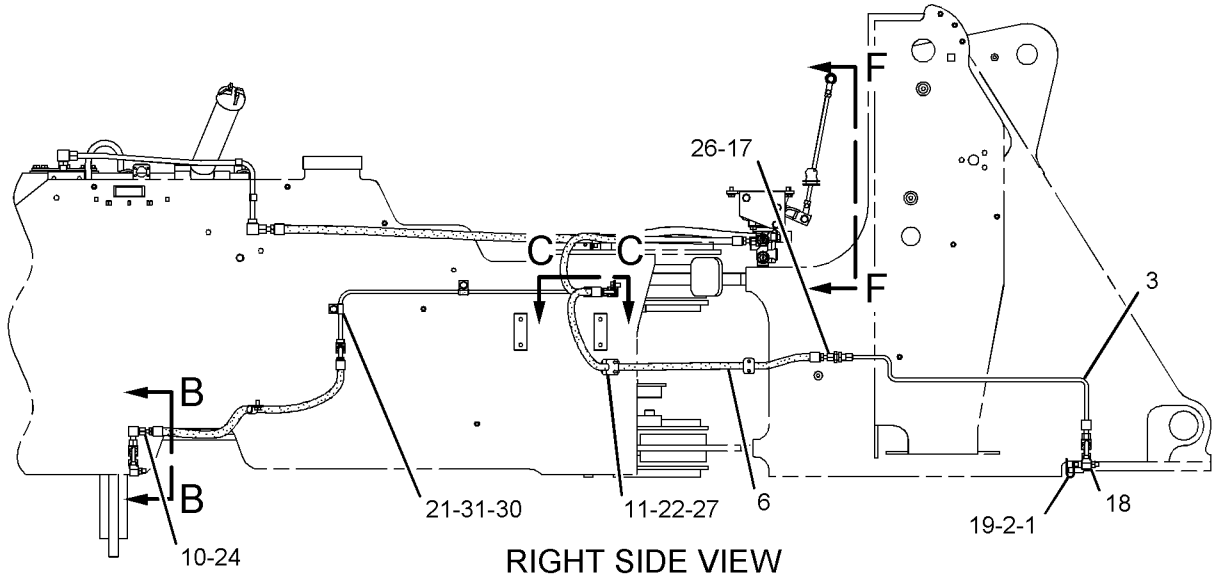

RIGHT SIDE VIEW

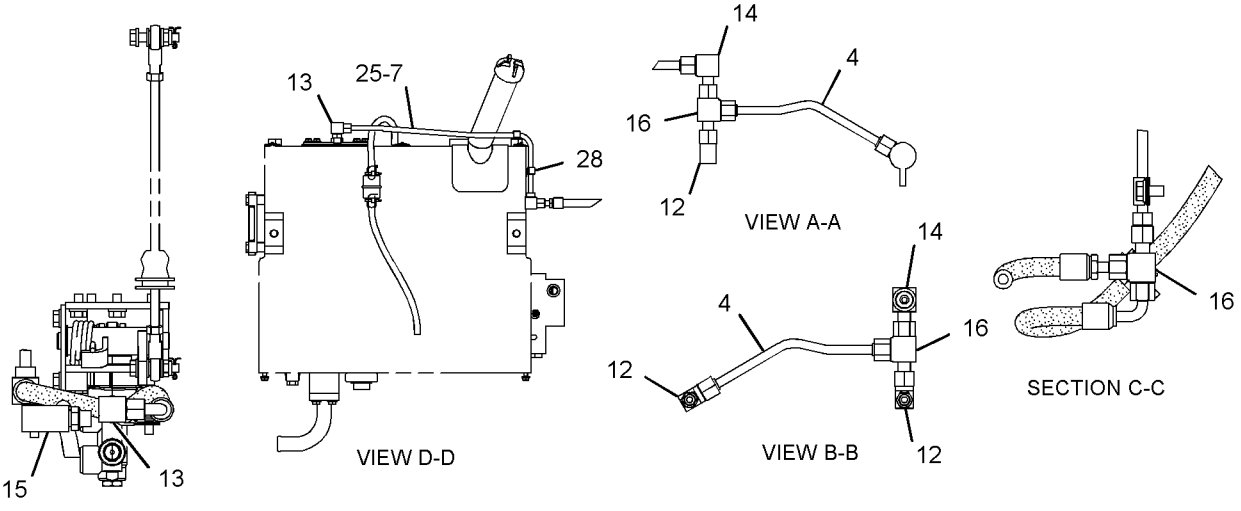

GRAPHIC #1 **<END>** g01041975

152-1110 MANIFOLD GP-BRAKE ACCUMULATOR

S/N: PDF1-UP

PART OF 233-7900 LINES GP-ACCUMULATOR

SMCS-4263, 5264 **i02014894**

NOTE	REF NO	GRAPHIC REF	PART NUMBER	QTY	PART NAME 1 2 3 4 5 6 (PRODUCT LEVEL)	SEE PAGE
	1	1	**6V-0852**	1	CAP-DUST	
	2	1	**6V-3965**	1	FITTING (QUICK DISCONNECT)	
	3	1	**150-3754**	1	SWITCH AS-PRESSURE (BRAKE OIL)	
		1	**102-8803**	1	KIT-RECEPTACLE (3-PIN)	
		1	**3E-3371**	1	WEDGE-RECEPTACLE LOCK (3-PIN)	
		1	**186-3735**	3	PIN-CONNECTOR	
	4	1	**152-1105**	1	MANIFOLD	
	5	1	**3J-1907**	2	SEAL-O-RING	

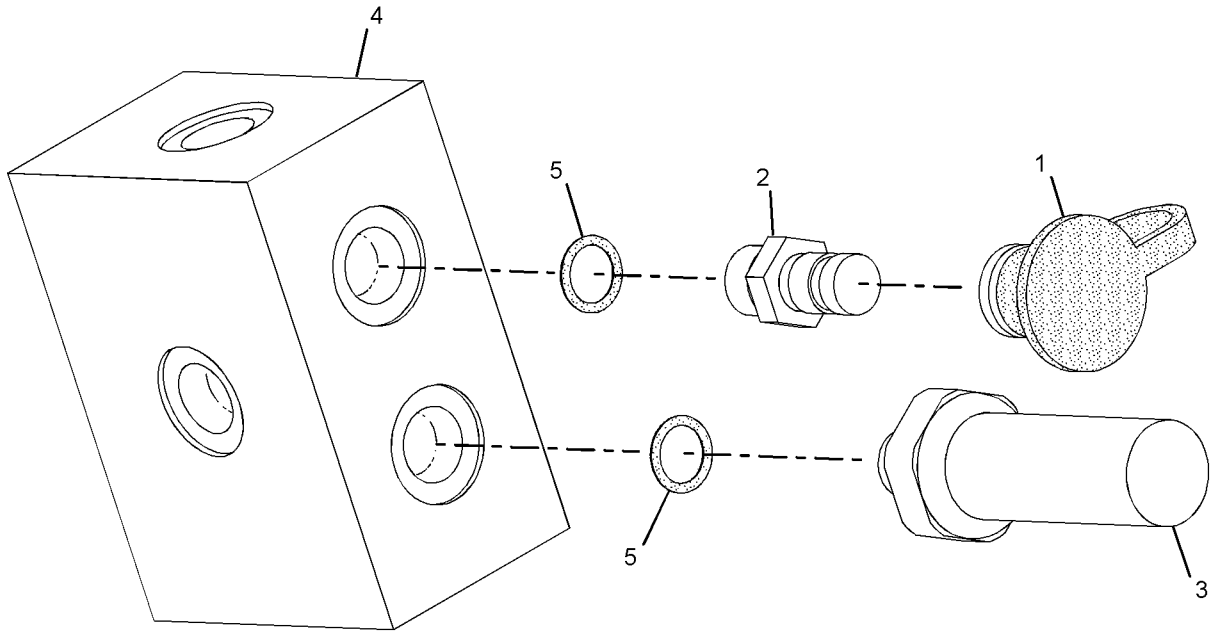

GRAPHIC #1 **<END>** g01041769

STEERING SYSTEM

149-4189 CONTROL GP-STEERING

S/N: PDF1-UP

PART OF 239-1006, 239-1007 CAB AR, 241-8643 PLATFORM AR

AN ATTACHMENT

SMCS-4304, 4309, 4310, 4338 **i01916114**

NOTE	REF NO	GRAPHIC REF	PART NUMBER	QTY	PART NAME 1 2 3 4 5 6 (PRODUCT LEVEL)	SEE PAGE
	1	1	**2T-3360**	1	BUTTON AS-HORN	
	2	1	**8R-2918**	1	KNOB AS	
	3	1	**9D-7924**	4	MOUNTING	
	4	1	**107-6007**	1	SUPPORT AS	
	5	1	**107-6141**	1	COVER	
	6	1	**111-7874**	1	SEAL	
	7	1	**111-7878**	1	COVER	
	8	1	**129-3270**	1	WHEEL AS-STEERING	
	9	1	**134-4735**	1	PLATE AS	
	10	1	**149-4191**	1	ANGLE AS	
Y	11	1	**204-7147**	1	STEERING COLUMN GP (TILT)	326
	12	1	**5P-4116**	5	WASHER-HARD (8.8X20.5X2MM THK)	
	13	1	**7X-0603**	4	WASHER-HARD (9.9X35X2.5MM THK)	
M	14	1	**8T-4189**	5	BOLT (M8X1.25X20MM)	
M	15	1	**8T-4191**	4	BOLT (M10X1.5X16MM)	
M	16	1	**8T-6869**	4	BOLT (M8X1.25X60MM)	
M	17	1	**8T-8894**	4	BOLT-SOCKET HEAD (M10X1.5X20MM)	
M	18	1	**9X-2045**	8	SCREW-TRUSS HEAD (M6X1X20MM)	

M-METRIC PART
Y-SEPARATE ILLUSTRATION

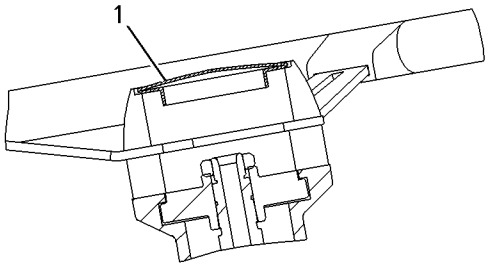

SECTION B-B

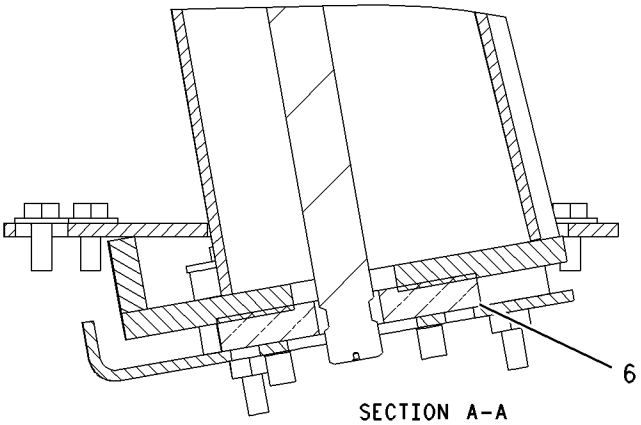

SECTION A-A

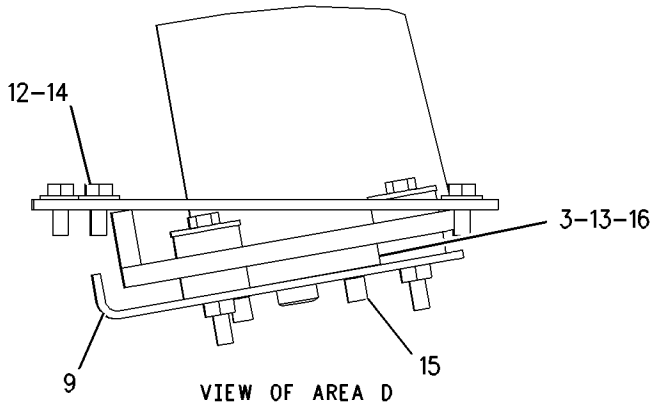

VIEW OF AREA D

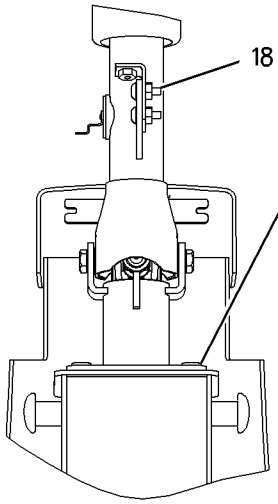

VIEW C-C

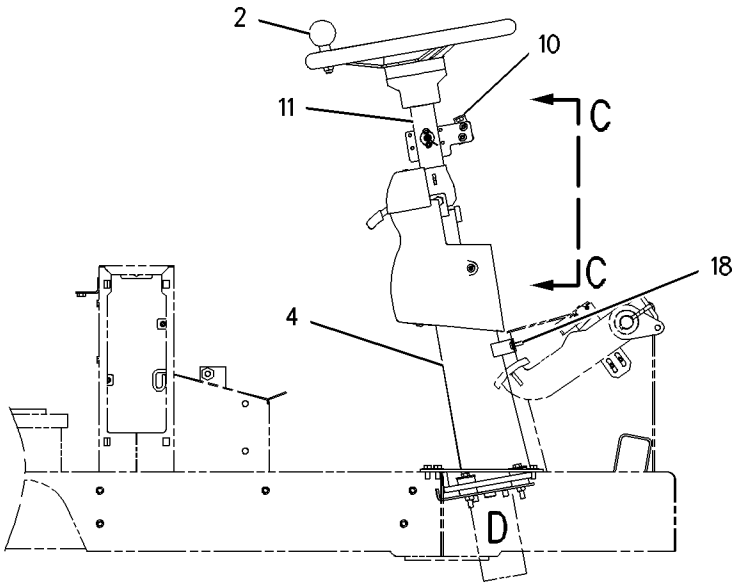

RIGHT SIDE VIEW

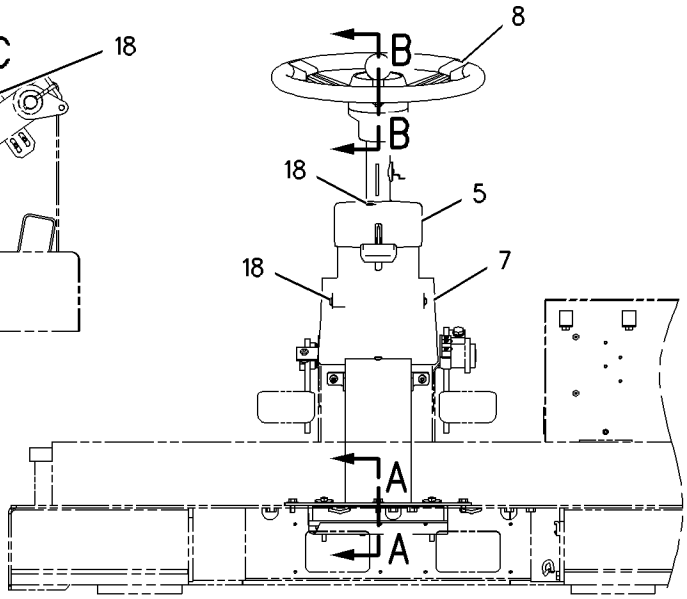

REAR VIEW

GRAPHIC #1 **<END>** g00927595

STEERING SYSTEM

149-4190 CONTROL GP-STEERING

S/N: PDF1-UP

PART OF 241-8807 CANOPY AR-OPEN ROPS, 241-8644 CANOPY AR-SOFT

AN ATTACHMENT

SMCS-4304, 4309, 4310, 4338 **i01953192**

NOTE	REF NO	GRAPHIC REF	PART NUMBER	QTY	PART NAME 1 2 3 4 5 6 (PRODUCT LEVEL)	SEE PAGE
	1	1	**2T-3360**	1	BUTTON AS-HORN	
	3	1	**8R-2918**	1	KNOB AS	
	4	1	**9D-7924**	4	MOUNTING	
	5	1	**107-6007**	1	SUPPORT AS	
	6	1	**107-6141**	1	COVER	
	7	1	**111-7878**	1	COVER	
	8	1	**129-3270**	1	WHEEL AS-STEERING	
	9	1	**134-4735**	1	PLATE AS	
	10	1	**149-4191**	1	ANGLE AS	
Y	11	1	*204-7147*	1	STEERING COLUMN GP (TILT)	326
	12	1	**5P-4116**	5	WASHER-HARD (8.8X20.5X2-MM THK)	
	13	1	**7X-0603**	4	WASHER-HARD (9.9X35X2.5-MM THK)	
M	14	1	**8T-4189**	5	BOLT (M8X1.25X20-MM)	
M	15	1	**8T-4191**	4	BOLT (M10X1.5X16-MM)	
M	16	1	**8T-6869**	4	BOLT (M8X1.25X60-MM)	
M	17	1	**8T-8894**	4	BOLT-SOCKET HEAD (M10X1.5X20-MM)	
M	18	1	**9X-2045**	8	SCREW-TRUSS HEAD (M6X1X20-MM)	

M-METRIC PART
Y-SEPARATE ILLUSTRATION

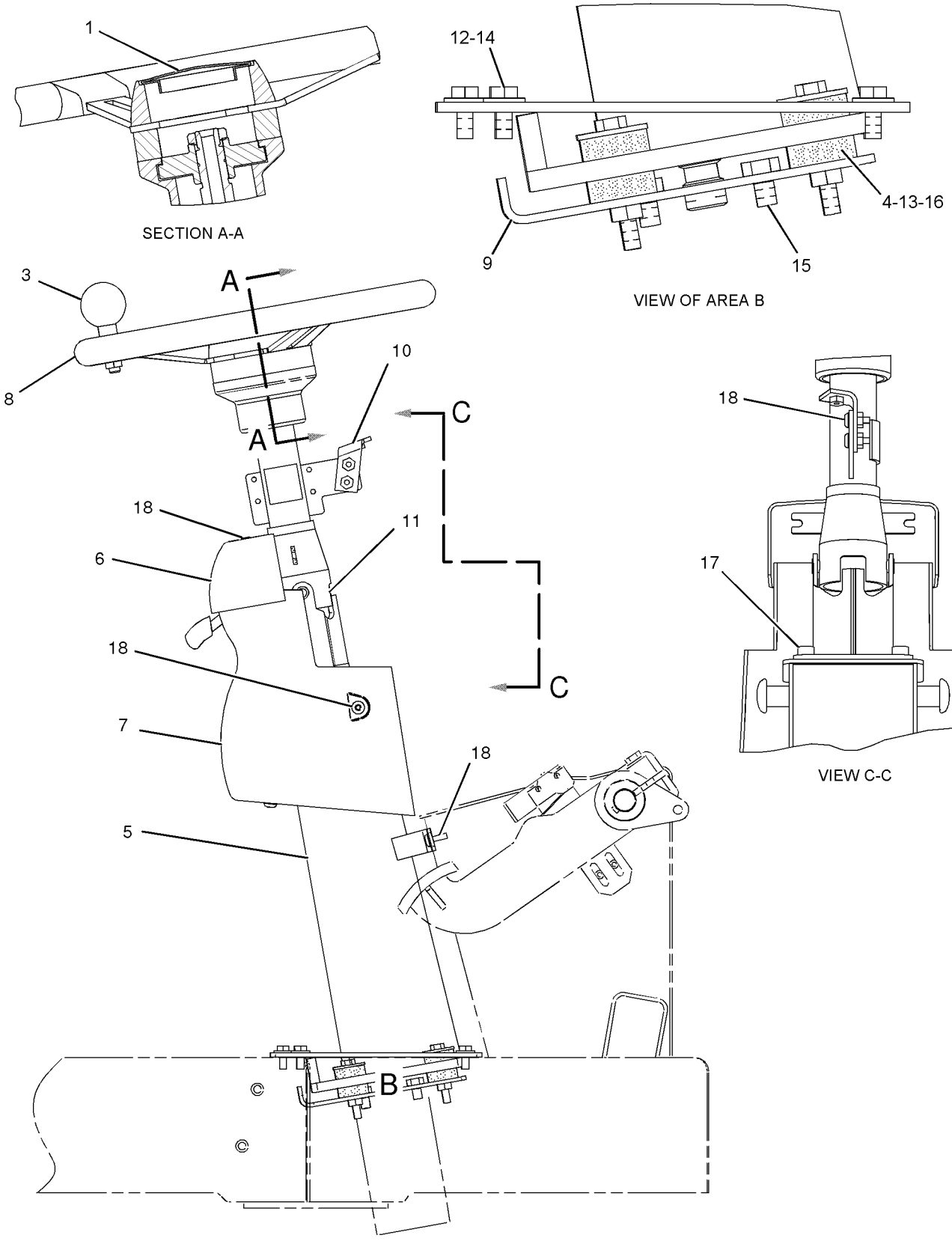

GRAPHIC #1

<END>

g01044308

STEERING SYSTEM

243-5009 CONVERSION AR-SECONDARY STEER

S/N: PDF1-UP

AN ATTACHMENT

SMCS-4300 **i02005488**

NOTE	PART NUMBER	QTY	PART NAME 1 2 3 4 5 6 (PRODUCT LEVEL)	SEE PAGE
Y	*238-7831*	1	LINES GP-SECONDARY STEERING	312
Y	*110-1329*	1	WIRING GP-SECONDARY STEERING	163

Y-SEPARATE ILLUSTRATION

<END>

STEERING SYSTEM

107-4726 CYLINDER & MTG GP-STEERING

S/N: PDF1-UP

PART OF 236-5635 CHASSIS AR

SMCS-4303 **i01096733**

NOTE	REF NO	GRAPHIC REF	PART NUMBER	QTY	PART NAME 1 2 3 4 5 6 (PRODUCT LEVEL)	SEE PAGE
	1	1	**1S-5891**	4	WASHER-THRUST (M38.9X76.2X0.8MM THK)	
	2	1	**109-3731**	4	PIN AS	
Y	3	1	**104-4187**	2	CYLINDER GP-STEERING	310
	4	1	**3B-8489**	4	FITTING-GREASE (1/8-27 THD)	
	5	1	**7X-0618**	4	WASHER-HARD (5.0MM THK)	
M	6	1	**8T-4179**	4	BOLT (M12X1.75X20MM)	

M-METRIC PART
Y-SEPARATE ILLUSTRATION

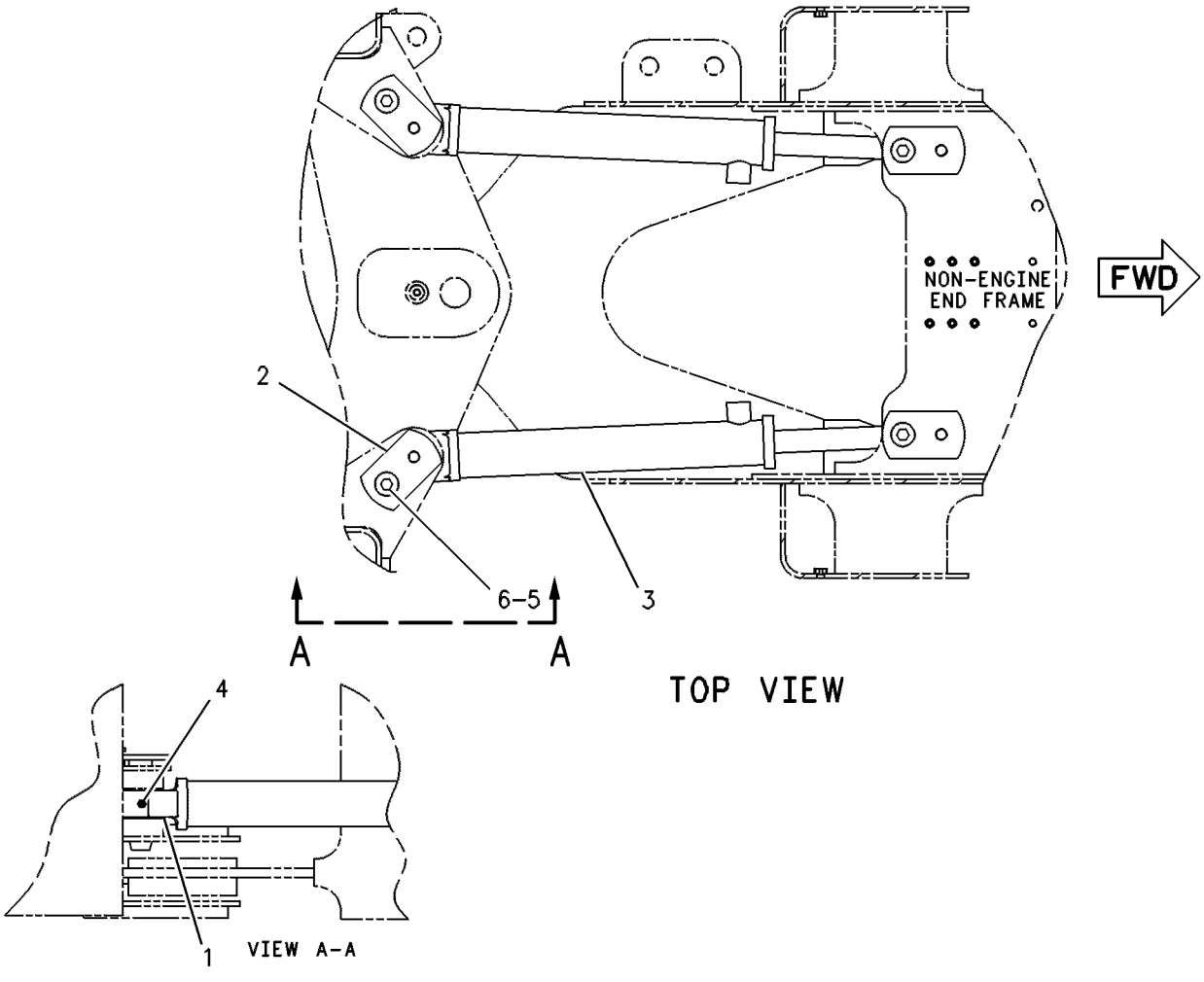

GRAPHIC #1 **<END>** g00247097

STEERING SYSTEM

104-4187 CYLINDER GP-STEERING

S/N: PDF1-UP

64MM (3 IN) BORE X 382MM (15 IN) STROKE

PART OF 107-4726 CYLINDER & MTG GP-STEERING

SMCS-4303 **i00709328**

NOTE	REF NO	GRAPHIC REF	PART NUMBER	QTY	PART NAME 1 2 3 4 5 6 (PRODUCT LEVEL)	SEE PAGE
	1	1	**108-9325**	1	CYLINDER AS	
	2	1	**4D-0298**	1	BEARING	
	3	1	**8T-3282**	1	WASHER-HARD (3.5MM THK)	
	4	1	**8J-6213**	1	SEAL AS	
	5	1	**8J-6212**	1	RING-WEAR	
	6	1	**110-7351**	1	PISTON	
	7	1	**1H-8720**	1	SEAL-O-RING	
	8	1	**7J-6287**	1	RING-BACKUP	
	9	1	**110-7352**	1	HEAD	
	10	1	**108-9329**	1	ROD AS	
	11	1	**4D-0298**	1	BEARING	
	12	1	**8C-9131**	1	SEAL-LIP	
	13	1	**5J-8150**	1	SEAL-U-CUP	
	14	1	**8C-9122**	1	SEAL AS	
	15	1	**4T-6780**	1	RING-WEAR	
M	16	1	**6V-3532**	1	BOLT (M20X2.5X60MM)	
	17	1	**006-8663**	1	RING	

M-METRIC PART

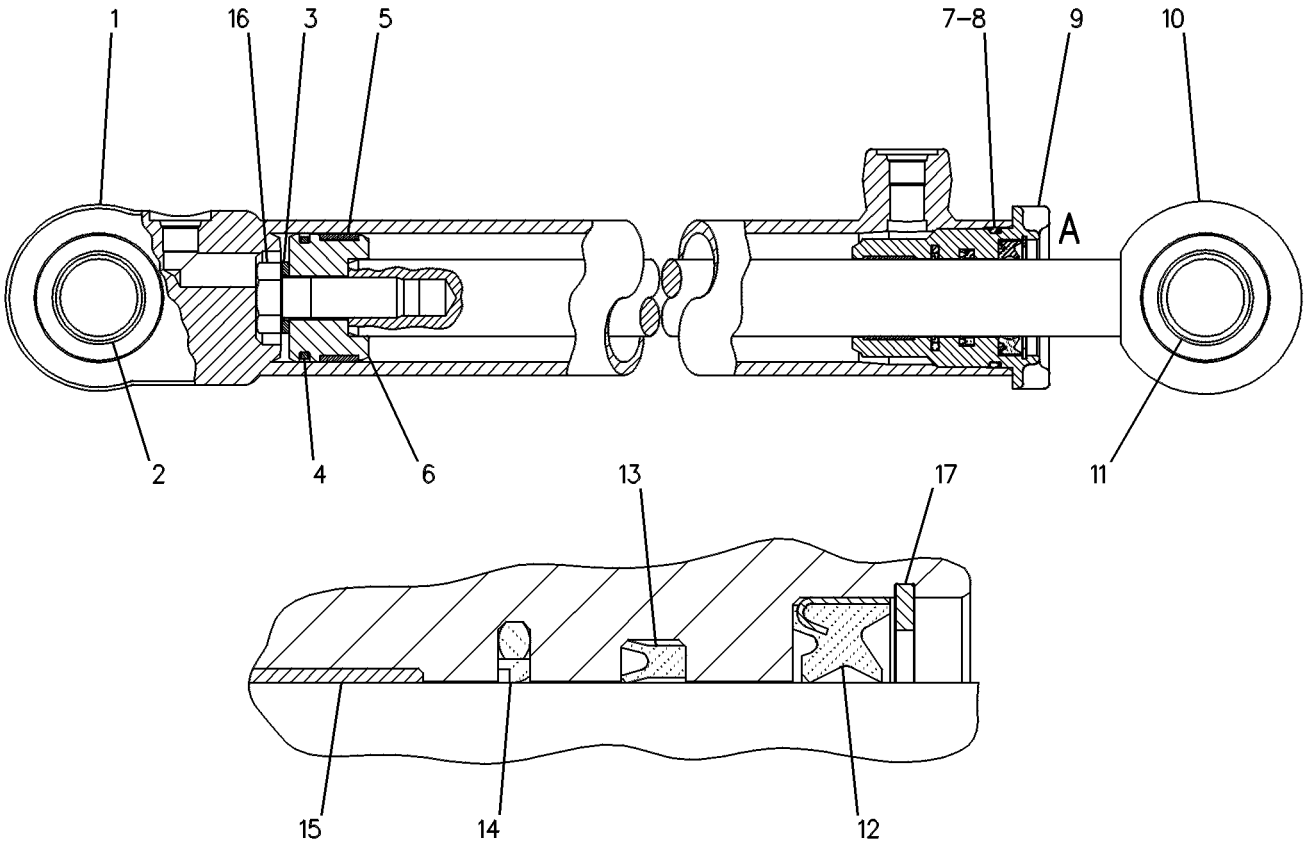

VIEW OF AREA A

GRAPHIC #1 **<END>** g00247071

STEERING SYSTEM

238-7831 LINES GP-SECONDARY STEERING

S/N: PDF1-UP

PART OF 243-5009 CONVERSION AR-SECONDARY STEER, 237-9936 STEERING AR-SECONDARY AN ATTACHMENT

SMCS-4304 **i02045074**

NOTE	REF NO	GRAPHIC REF	PART NUMBER	QTY	PART NAME 1 2 3 4 5 6 (PRODUCT LEVEL)	SEE PAGE
	1	1	**6V-0852**	1	CAP-DUST	
	2	1	**6V-3965**	1	FITTING (QUICK DISCONNECT)	
	3	1	**9T-3096**	1	VALVE GP-CHECK (STEERING PILOT)	
Y	4	1	**113-7863**	1	VALVE GP-SECONDARY STEERING	327
I	5	1	**129-8498**	1	HOSE AS	
I	6	1	**153-9968**	1	HOSE AS	
I	7	1	**160-0363**	1	HOSE AS	
I	8	1	**176-1379**	1	HOSE AS	
	9	1	*185-8833*	1	ELBOW AS	
		1	**2M-9780**	1	SEAL-O-RING	
		1	**129-2327**	1	ELBOW	
	10	1	**230-5771**	1	SWITCH AS-PRESSURE (HYDRAULIC TANK)	
		1	**102-8803**	1	KIT-RECEPTACLE (3-PIN)	
		1	**3E-3371**	1	WEDGE-RECEPTACLE LOCK (3-PIN)	
E		1	**9X-1813**		SLEEVE (30CM)	
		1	**186-3735**	3	PIN-CONNECTOR	
Y	11	1	**240-0803**	1	PUMP & MOTOR GP-SEC STEERING	319
	12	1	**240-9473**	1	PLATE	
	13	1	*241-6202*	1	ADAPTER AS	
		1	**2M-9780**	2	SEAL-O-RING	
		1	**219-8136**	2	ADAPTER	
	14	1	*148-8347*	1	ELBOW AS	
		1	**3D-2824**	1	SEAL-O-RING	
		1	**6V-9007**	1	ELBOW	
		1	**6V-9746**	1	SEAL-O-RING	
	15	1	*148-8421*	1	TEE AS	
		1	**3D-2824**	1	SEAL-O-RING	
		1	**6V-8397**	1	SEAL-O-RING	
		1	**6V-9746**	1	SEAL-O-RING	
		1	**8T-2883**	1	TEE	
	16	1	*150-4046*	1	ADAPTER GP	
		1	**2M-9780**	1	SEAL-O-RING	
		1	**5P-1404**	1	ADAPTER-O-RING	
	17	1	*153-6237*	2	ELBOW GP	
					(EACH INCLUDES)	
		1	**3D-2824**	1	SEAL-O-RING	
		1	**6V-9004**	1	ELBOW	
		1	**6V-9746**	1	SEAL-O-RING	
	18	1	**1S-0994**	1	CLIP	
	19	1	**3J-1907**	2	SEAL-O-RING	
	20	1	**3K-0360**	2	SEAL-O-RING	
	21	1	**6V-8397**	1	SEAL-O-RING	
	22	1	**8T-0119**	1	ELBOW	
	23	1	**8T-4121**	7	WASHER-HARD (11X21X2.5-MM THK)	
M	24	1	**8T-4133**	2	NUT (M10X1.5-THD)	
M	25	1	**8T-4137**	1	BOLT (M10X1.5X20-MM)	
M	26	1	**8T-4195**	2	BOLT (M10X1.5X30-MM)	
M	27	1	**8T-6466**	2	BOLT (M10X1.50X60-MM)	

E-ORDER BY THE CENTIMETER
I-REFER TO HYDRAULIC INFORMATION SYSTEM
M-METRIC PART
Y-SEPARATE ILLUSTRATION

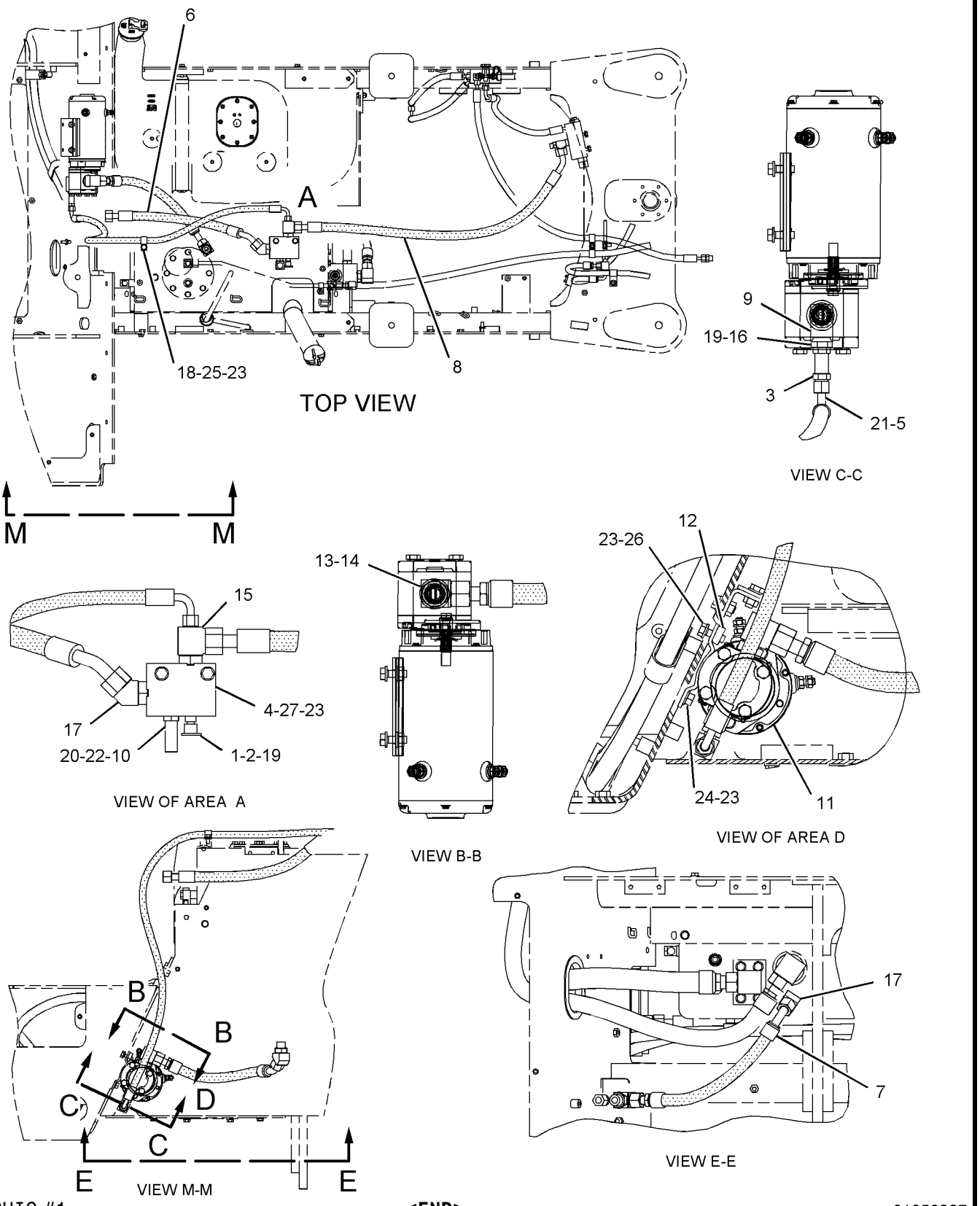

GRAPHIC #1

<END>

g01050327

STEERING SYSTEM

148-2579 LINES GP-STEERING

S/N: PDF1-UP

PART OF 109-4811 HYDRAULIC AR

SMCS-4304 **i02034124**

NOTE	REF NO	GRAPHIC REF	PART NUMBER	QTY	PART NAME 1 2 3 4 5 6 (PRODUCT LEVEL)	SEE PAGE
	1	1	**6V-0852**	1	CAP-DUST	
	2	1	**6V-3965**	1	FITTING (QUICK DISCONNECT)	
	3	1	**8R-1496**	2	SPACER (10X20X29-MM THK)	
	4	1	**9X-6581**	1	NUT (1-14 THD)	
I	5	1	**108-0917**	2	HOSE AS	
I	6	1	**113-7149**	1	HOSE AS	
I	7	1	**113-7150**	1	HOSE AS	
I	8	1	**113-7152**	2	HOSE AS	
	9	1	**118-0530**	4	TUBE AS	
I	10	1	**148-6976**	1	HOSE AS	
I	11	1	**148-6981**	1	HOSE AS	
I	12	1	**148-6986**	1	HOSE AS	
I	13	1	**148-6987**	1	HOSE AS	
	14	1	*164-5586*	1	TEE GP	
		1	**7X-0871**	1	TEE	
		1	**6V-8398**	1	SEAL-O-RING	
	15	1	*148-8336*	1	CONNECTOR AS	
		1	**3J-1907**	1	SEAL-O-RING	
		1	**6V-8397**	1	SEAL-O-RING	
		1	**6V-8636**	1	CONNECTOR	
	16	1	*148-8340*	3	CONNECTOR GP	
					(EACH INCLUDES)	
		1	**3K-0360**	1	SEAL-O-RING	
		1	**6V-8398**	1	SEAL-O-RING	
		1	**6V-8639**	1	CONNECTOR	
	17	1	*148-8354*	1	ELBOW GP	
		1	**3K-0360**	1	SEAL-O-RING	
		1	**6V-8398**	1	SEAL-O-RING	
		1	**6V-9002**	1	ELBOW	
	18	1	*148-8361*	1	ELBOW GP	
		1	**3J-7354**	1	SEAL-O-RING	
		1	**6V-8397**	1	SEAL-O-RING	
		1	**6V-9200**	1	ELBOW	
	19	1	*148-8364*	2	ELBOW AS	
					(EACH INCLUDES)	
		1	**3K-0360**	1	SEAL-O-RING	
		1	**6V-8398**	1	SEAL-O-RING	
		1	**6V-8625**	1	ELBOW	
	20	1	*148-8370*	2	ELBOW GP	
					(EACH INCLUDES)	
		1	**6V-8398**	1	SEAL-O-RING	
		1	**6V-9851**	1	ELBOW	
	21	1	*148-8374*	4	ELBOW GP	
					(EACH INCLUDES)	
		1	**3K-0360**	1	SEAL-O-RING	
		1	**6V-8398**	1	SEAL-O-RING	
		1	**6V-8625**	1	ELBOW	
	22	1	*148-8416*	1	REDUCER AS	
		1	**6V-8398**	1	SEAL-O-RING	
		1	**6V-8939**	1	REDUCER	
	23	1	*148-8441*	2	TEE AS	
					(EACH INCLUDES)	
		1	**2M-9780**	1	SEAL-O-RING	
		1	**6V-9032**	1	TEE-O-RING	
		1	**6V-9746**	1	SEAL-O-RING	
		1	**7J-9108**	1	SEAL-O-RING	

148-2579 **LINES GP-STEERING** ***(contd.)*** **i02034124**

NOTE	REF NO	GRAPHIC REF	PART NUMBER	QTY	PART NAME 1 2 3 4 5 6 (PRODUCT LEVEL)	SEE PAGE
	24	1	*148-8454*	2	TEE GP	
					(EACH INCLUDES)	
		1	**6V-8398**	3	SEAL-O-RING	
		1	**6V-8789**	1	TEE	
	25	1	**3J-1907**	1	SEAL-O-RING	
	26	1	**5G-3676**	2	GROMMET	
	27	1	**6V-8398**	4	SEAL-O-RING	
	28	1	**8T-1885**	4	CLIP (SLOT)	
	29	1	**8T-1886**	4	CLIP (TAB)	
	30	1	**8T-1889**	2	CLIP (SLOT)	
	31	1	**8T-1890**	2	CLIP (TAB)	
	32	1	**8T-4121**	6	WASHER-HARD (11X21X2.5-MM THK)	
M	33	1	**8T-4137**	4	BOLT (M10X1.5X20-MM)	
M	34	1	**8T-4185**	2	BOLT (M10X1.5X50-MM)	

I-REFER TO HYDRAULIC INFORMATION SYSTEM
M-METRIC PART

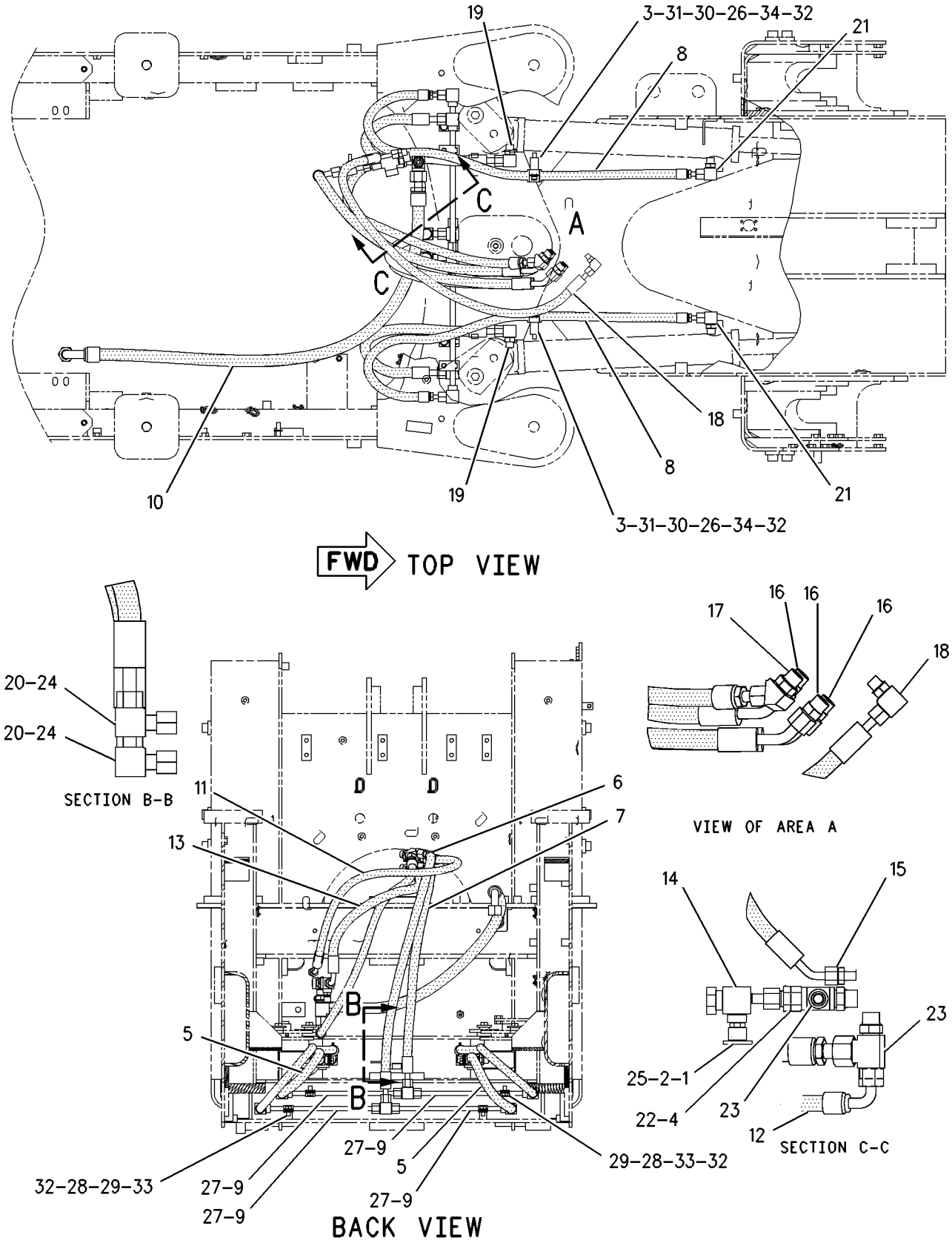

GRAPHIC #1 **<END>** g01006949

STEERING SYSTEM

150-9234 LINES GP-STEERING

S/N: PDF1-UP
PART OF 237-9935 STEERING AR
AN ATTACHMENT

SMCS-4304 **i00793134**

NOTE	REF NO	GRAPHIC REF	PART NUMBER	QTY	PART NAME 1 2 3 4 5 6 (PRODUCT LEVEL)	SEE PAGE
	1	1	**152-1100**	1	HOSE AS	
	2	1	**5P-7466**	1	CLIP (SLOT)	
	3	1	**5P-7467**	1	CLIP (TAB)	
	4	1	**5P-8112**	1	GROMMET	
	5	1	**8T-4121**	1	WASHER (2.5MM THK)	
M	6	1	**8T-4136**	1	BOLT (M10X1.50X25MM)	

M-METRIC PART

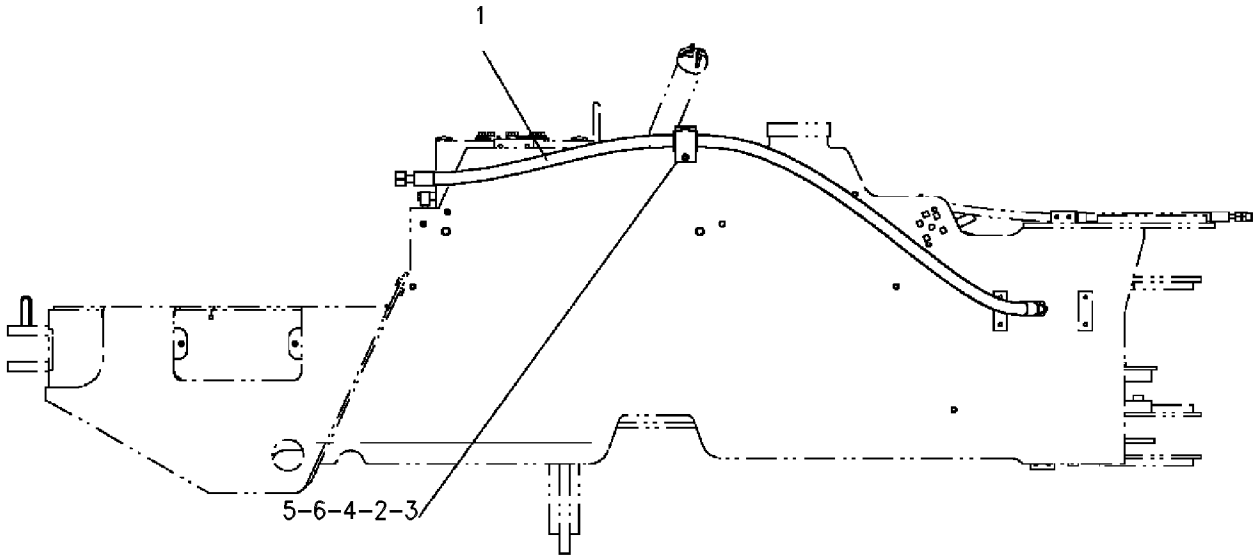

GRAPHIC #1 **<END>** g00503684

149-4103 LOCK GP-STEERING CYLINDER

S/N: PDF1-UP

AN ATTACHMENT

SMCS-4303, 7430 **i00811606**

NOTE	REF NO	GRAPHIC REF	PART NUMBER	QTY	PART NAME 1 2 3 4 5 6 (PRODUCT LEVEL)	SEE PAGE
	1	1	**149-4117**	1	SLEEVE-STEERING LOCK	
	2	1	**149-4118**	1	PIN	
	3	1	**149-4119**	1	PADLOCK	

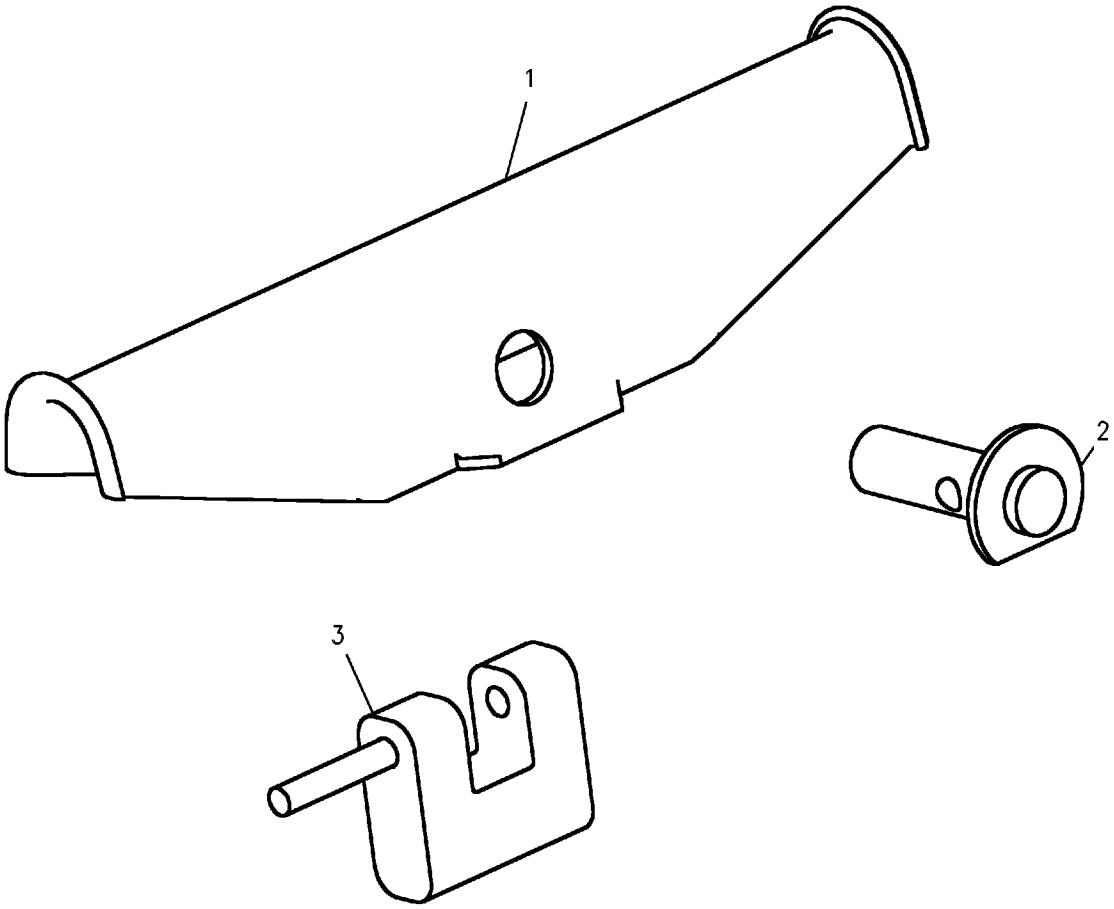

GRAPHIC #1 **<END>** g00413563

240-0803 PUMP & MOTOR GP-SEC STEERING

S/N: PDF1-UP

PART OF 238-7831 LINES GP-SECONDARY STEERING

AN ATTACHMENT

SMCS-4324, 4325 **i02034126**

NOTE	REF NO	GRAPHIC REF	PART NUMBER	QTY	PART NAME 1 2 3 4 5 6 (PRODUCT LEVEL)	SEE PAGE
Y	1	1	**117-3915**	1	MOTOR GP-ELECTRIC (SECONDARY STEERING)	130
	2	1	**169-6714**	1	GASKET	
Y	3	1	**240-9137**	1	PUMP GP-GEAR (SECONDARY STEERING)	320
	4	1	**1A-2209**	2	BOLT (3/8-24X1.25-IN)	
	5	1	**8T-4896**	2	WASHER-HARD (10.2X18.5X2.5-MM THK)	

Y-SEPARATE ILLUSTRATION

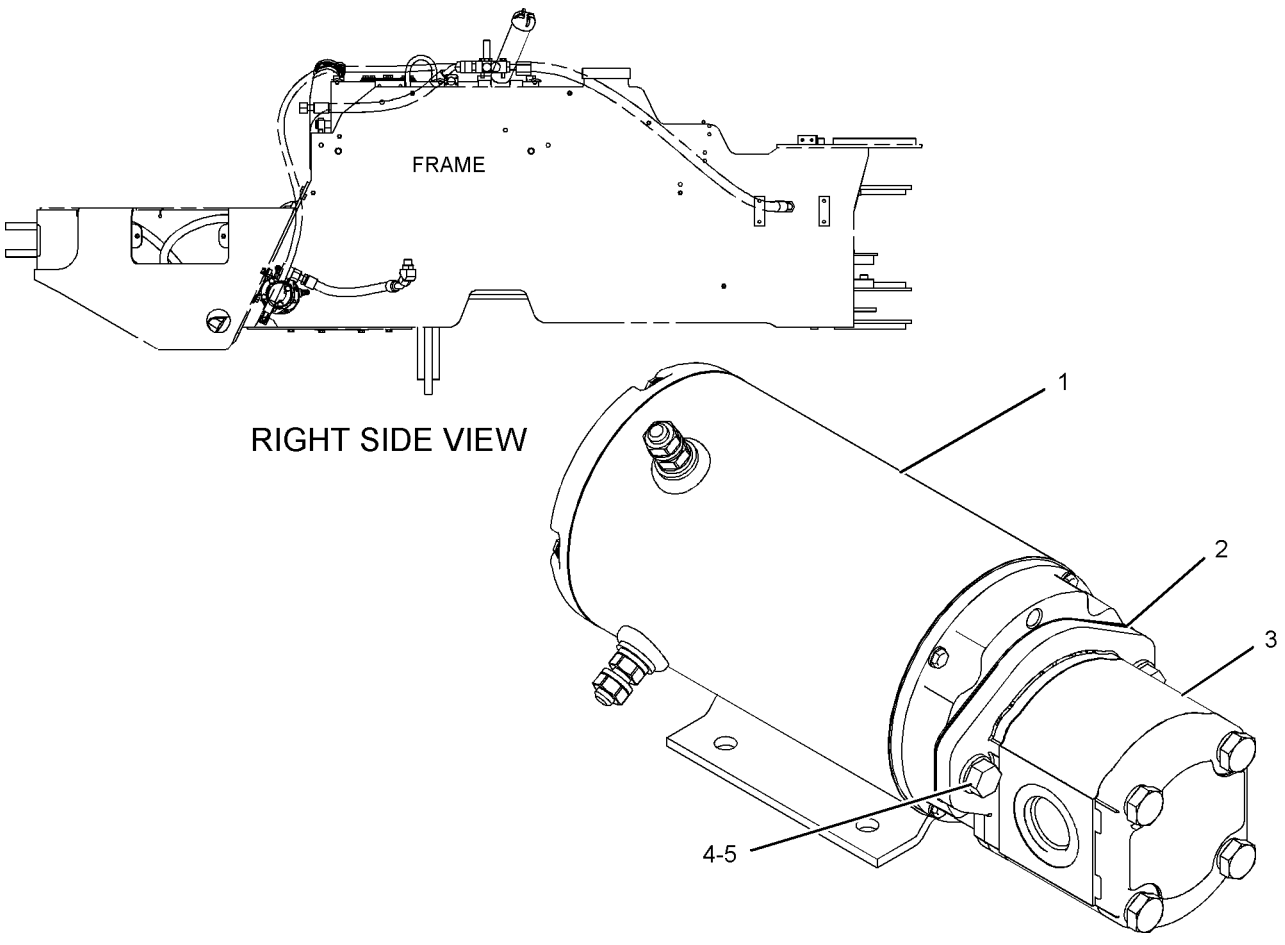

GRAPHIC #1 **<END>** g01047418

STEERING SYSTEM

240-9137 PUMP GP-GEAR–SECONDARY STEERING

S/N: PDF1-UP

PART OF 240-0803 PUMP & MOTOR GP-SEC STEERING

AN ATTACHMENT

SMCS-4268, 4306, 5073 **i02034911**

NOTE	REF NO	GRAPHIC REF	PART NUMBER	QTY	PART NAME 1 2 3 4 5 6 (PRODUCT LEVEL)	SEE PAGE
	1	1	**230-3726**	1	SEAL-SHAFT	
	2	1	**096-0194**	1	RING-RETAINING	

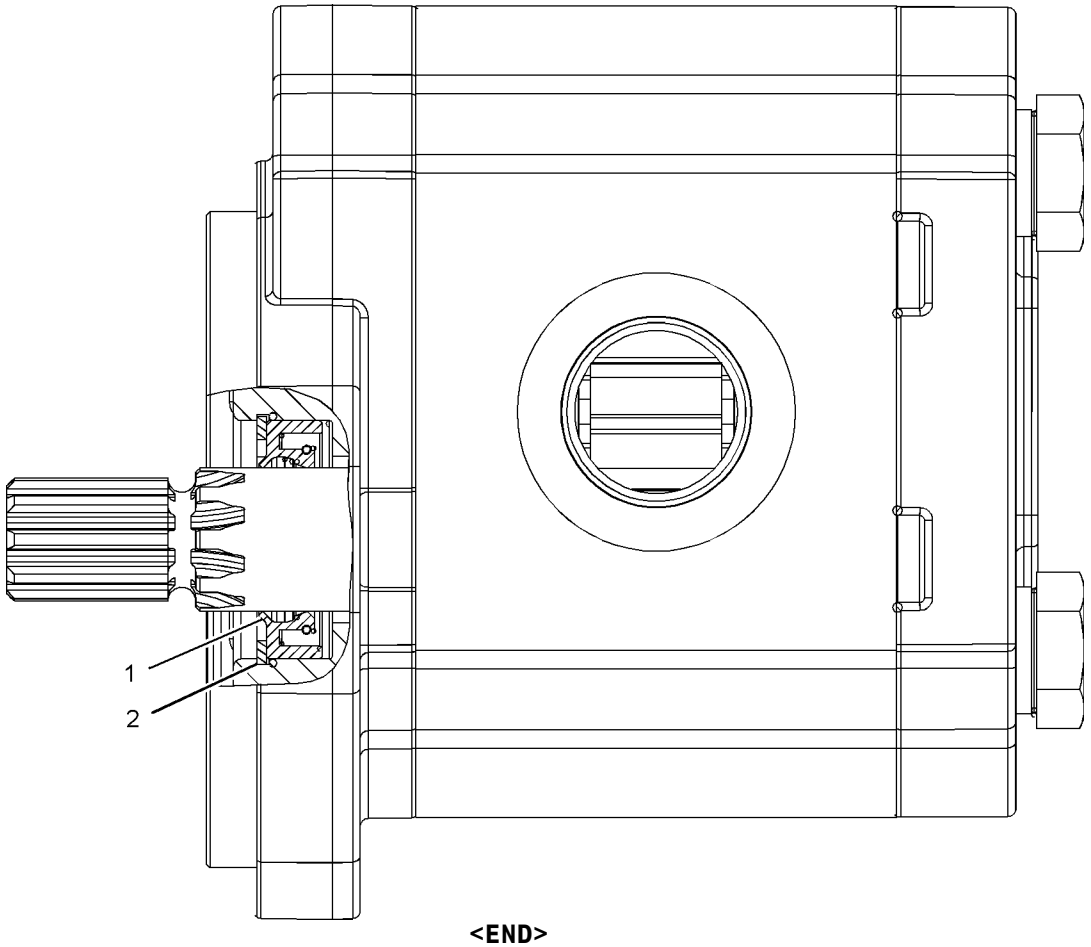

GRAPHIC #1 **<END>** g01047704

STEERING SYSTEM

149-4830 PUMP GP-METERING

S/N: PDF1-UP
PART OF 237-9935 STEERING AR
AN ATTACHMENT

SMCS-4312 **i02034135**

NOTE	REF NO	GRAPHIC REF	PART NUMBER	QTY	PART NAME 1 2 3 4 5 6 (PRODUCT LEVEL)	SEE PAGE
	1	1	**3G-6906**	1	SCREW (9/16-18X0.559-IN)	
	2	1	**1H-1023**	1	SEAL-O-RING	
	3	1	**3G-6907**	1	SEAT	
	4	1	**5F-9144**	1	SEAL-O-RING	
	5	1	**6S-7827**	1	BALL	
	6	1	**6S-7826**	1	RETAINER-BALL	
	7	1	**114-5132**	1	VALVE AS-CHECK	
	8	1	**8F-5340**	1	SEAL-LIP TYPE	
	9	1	**9T-9010**	1	BUSHING-TERMINAL	
	10	1	**9J-5442**	1	RING-RETAINING	
	11	1	**7F-8267**	1	SEAL-O-RING	
	12	1	**5L-1100**	1	BEARING-THRUST	
	13	1	**7J-8009**	1	PIN	
	14	1	**114-5190**	1	SPACER (23.8X55.9X4-MM THK)	
	15	1	**9J-5686**	3	SEAL-O-RING	
	16	1	**118-5201**	1	GEROTOR AS	
	17	1	**114-5180**	1	CAP	
	18	1	**118-1304**	7	BOLT (5/16-24X3.13-IN)	
	19	1	**101-1277**	1	SPACER	
	20	1	**7J-6839**	1	DRIVE-CONTROL END	
	21	1	**101-1276**	1	KIT-SPRING	
					(INCLUDES SPRINGS)	
	22	1	**3G-6891**	2	RACE	
	23	1	**102-2804**	1	SEAL	
					AVAILABLE REPAIR KIT(S):	
			118-4660	1	KIT-SEAL	

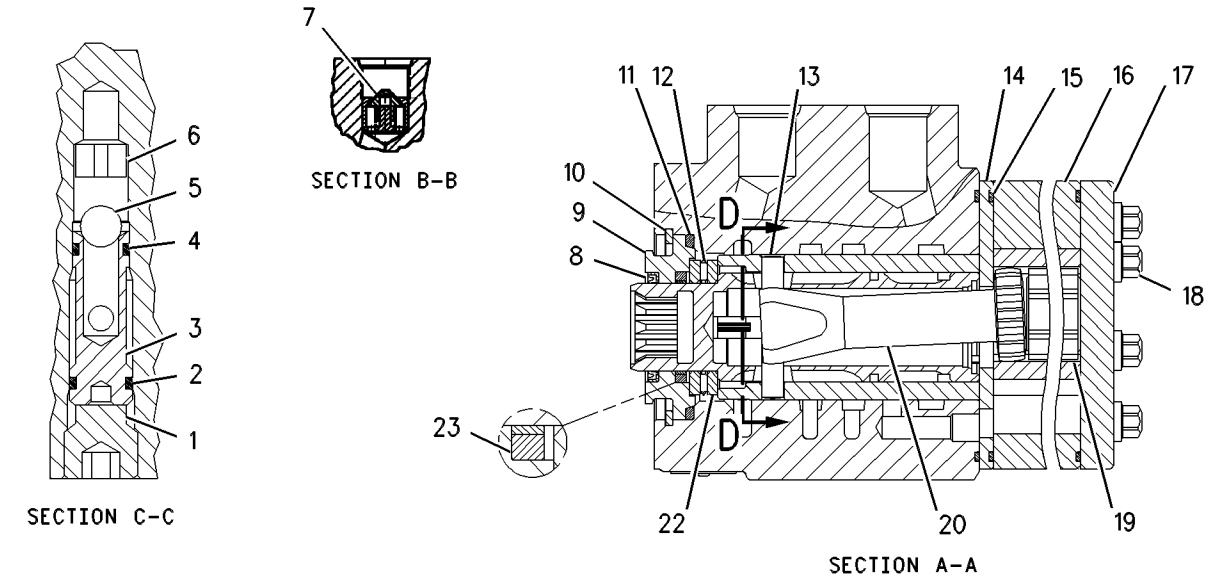

GRAPHIC #1 **<END>** g00488420

STEERING SYSTEM

150-5405 PUMP GP-METERING

S/N: PDF1-UP
PART OF 237-9936 STEERING AR-SECONDARY
AN ATTACHMENT

SMCS-4312 **i02034142**

NOTE	REF NO	GRAPHIC REF	PART NUMBER	QTY	PART NAME 1 2 3 4 5 6 (PRODUCT LEVEL)	SEE PAGE
	1	1	**3G-6906**	1	SCREW (9/16-18X0.559-IN)	
	2	1	**1H-1023**	3	SEAL-O-RING	
	3	1	**3G-6907**	1	SEAT	
	4	1	**5F-9144**	1	SEAL-O-RING	
	5	1	**6S-7827**	1	BALL	
	6	1	**6S-7826**	1	RETAINER-BALL	
	7	1	**114-5325**	2	SPRING	
	8	1	**114-5326**	2	PLUG	
	9	1	**114-5332**	2	BALL	
	10	1	**8F-5340**	1	SEAL-LIP TYPE	
	11	1	**9T-9010**	1	BUSHING-TERMINAL	
	12	1	**9J-5442**	1	RING-RETAINING	
	13	1	**7F-8267**	1	SEAL-O-RING	
	14	1	**5L-1100**	1	BEARING-THRUST	
	15	1	**7J-8009**	1	PIN	
	16	1	**114-5190**	1	SPACER (23.8X55.9X4-MM THK)	
	17	1	**9J-5686**	3	SEAL-O-RING	
	18	1	**114-5180**	1	CAP	
	19	1	**118-1304**	7	BOLT (5/16-24X3.13-IN)	
	20	1	**101-1277**	1	SPACER	
	21	1	**7J-6839**	1	DRIVE-CONTROL END	
	22	1	**101-1276**	1	KIT-SPRING	
	23	1	**3G-6891**	2	RACE	
	24	1	**102-2804**	1	SEAL	
	25	1	**118-5423**	2	SEAT-VALVE	
	26	1	**118-6378**	2	POPPET	
	27	1	**118-5208**	2	SPRING	
	28	1	**118-5206**	2	PLUG	
	29	1	**118-5201**	1	GEROTOR AS	
	30	1	**114-5132**	1	VALVE AS-CHECK	
					AVAILABLE REPAIR KIT(S):	
			118-4660	1	KIT-SEAL	

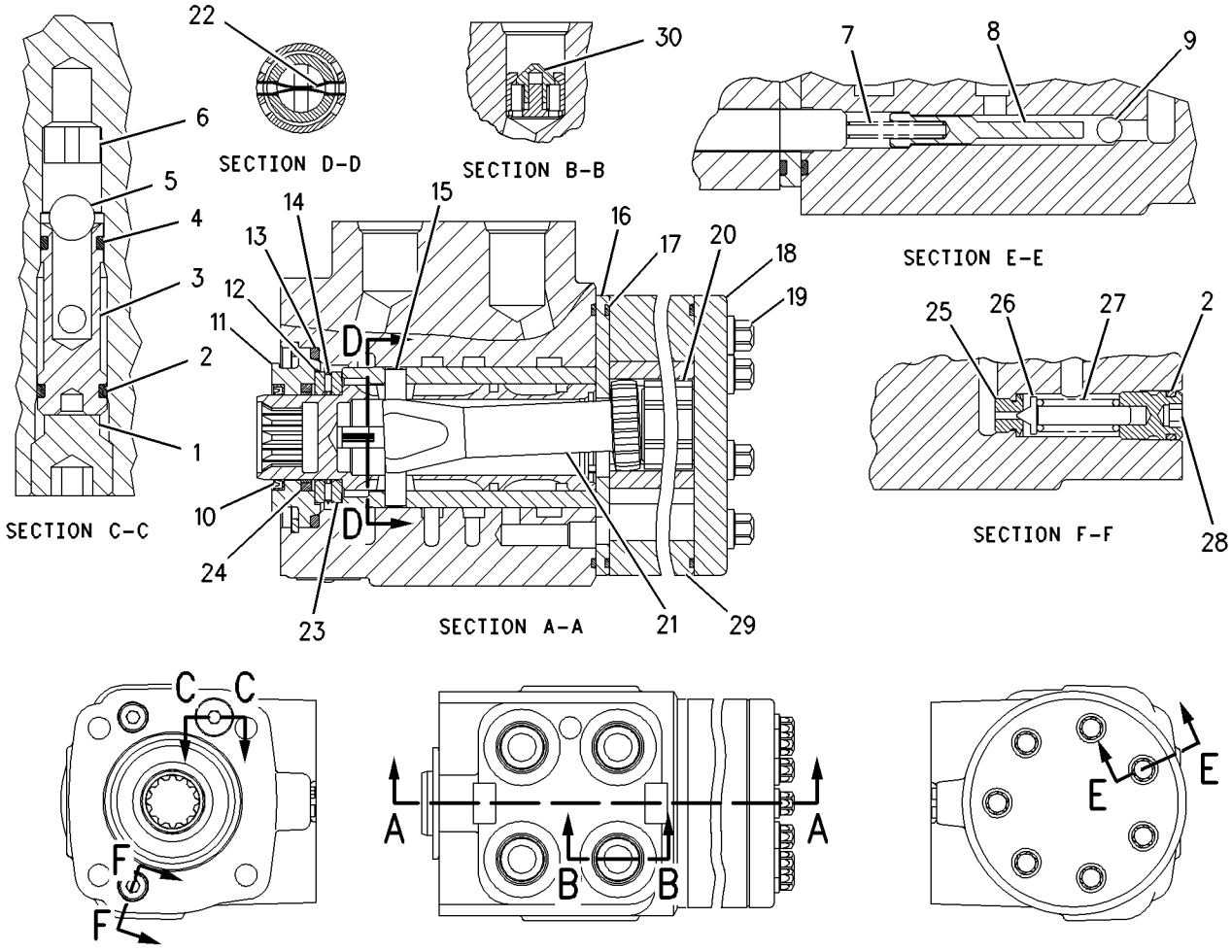

GRAPHIC #1 **<END>** g00797752

STEERING SYSTEM

237-9935 STEERING AR

S/N: PDF1-UP

AN ATTACHMENT

SMCS-4300 **i02000248**

NOTE	PART NUMBER	QTY	PART NAME 1 2 3 4 5 6 (PRODUCT LEVEL)	SEE PAGE
Y	*150-9234*	1	LINES GP-STEERING	317
Y	**149-4830**	1	PUMP GP-METERING (HMU)	321

Y-SEPARATE ILLUSTRATION

<END>

237-9936 STEERING AR-SECONDARY

S/N: PDF1-UP

AN ATTACHMENT

SMCS-4300 **i02000247**

NOTE	PART NUMBER	QTY	PART NAME 1 2 3 4 5 6 (PRODUCT LEVEL)	SEE PAGE
Y	*238-7831*	1	LINES GP-SECONDARY STEERING	312
Y	**150-5405**	1	PUMP GP-METERING (HMU)	323
Y	*110-1329*	1	WIRING GP-SECONDARY STEERING	163

Y-SEPARATE ILLUSTRATION

<END>

204-7147 STEERING COLUMN GP

S/N: PDF1-UP
PART OF 149-4189, 149-4190 CONTROL GP-STEERING
AN ATTACHMENT

SMCS-4310 **i02038787**

NOTE	REF NO	GRAPHIC REF	PART NUMBER	QTY	PART NAME 1 2 3 4 5 6 (PRODUCT LEVEL)	SEE PAGE
	1	1	**149-0777**	1	KIT-KNOB	
	2	1	**222-1241**	1	KIT-HORN	
					(INCLUDES HORN CONTACT AS AND SCREW)	
M	3	1	**6V-8227**	1	NUT (M18X1.5-6-THD)	
	4	1	**217-4154**	1	SPRING AS-GAS	
	5	1	**217-4155**	1	KIT-TILT LEVER	
	6	1	**224-9929**	1	KIT-PIVOT	
					(INCLUDES BUSHING AND PIN)	

M-METRIC PART

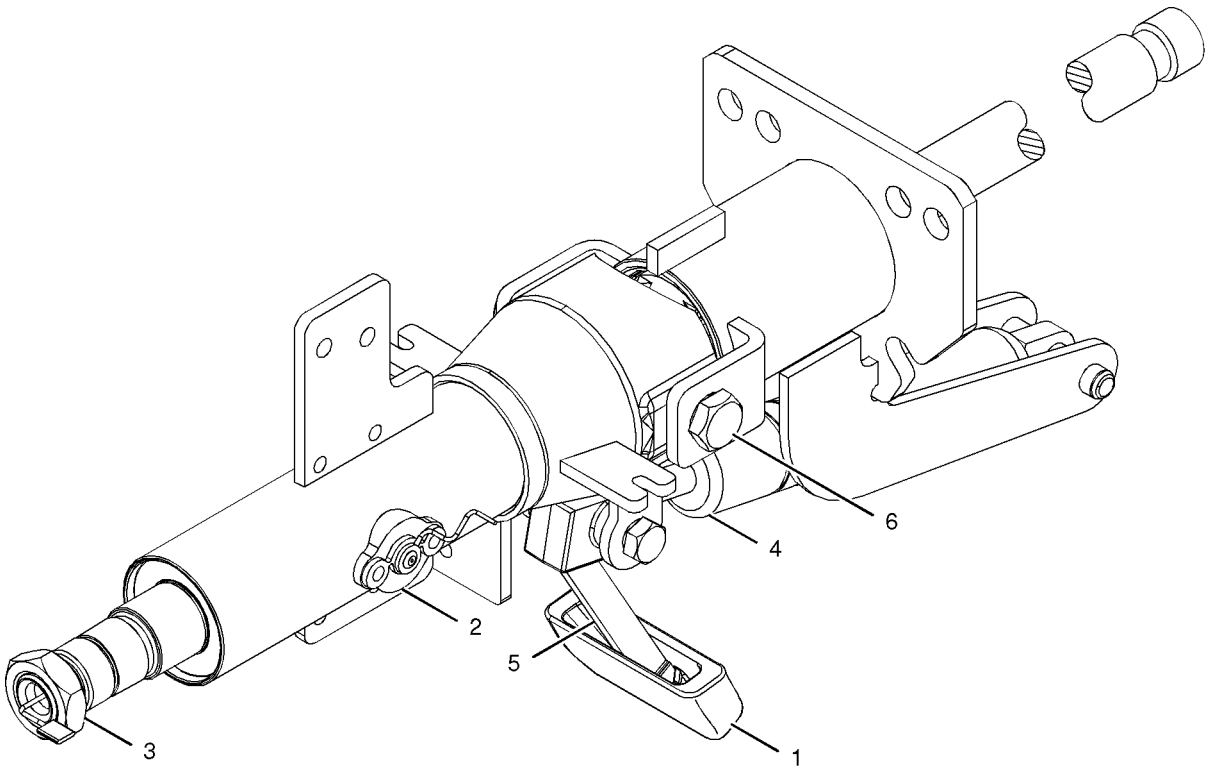

GRAPHIC #1 **<END>** g01043169

113-7863 VALVE GP-SECONDARY STEERING

S/N: PDF1-UP
PART OF 238-7831 LINES GP-SECONDARY STEERING
AN ATTACHMENT

SMCS-4339 **i02034154**

NOTE	REF NO	GRAPHIC REF	PART NUMBER	QTY	PART NAME 1 2 3 4 5 6 (PRODUCT LEVEL)	SEE PAGE
Z	1	1		1	BODY	
	2	1	**4T-3147**	1	PLUG AS	
		1	**4T-3181**	1	BEARING-SLEEVE	
	3	1	**4T-3148**	1	SPRING	
	4	1	**4T-3151**	1	VALVE	
	5	1	**6V-3922**	1	SEAL-O-RING	

Z-NOT SERVICED SEPARATELY

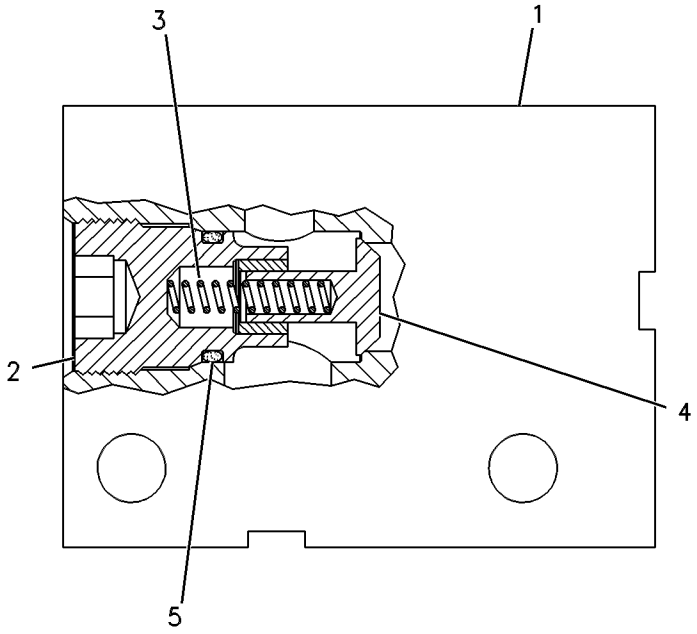

GRAPHIC #1 **<END>** g00250621

157-5544 ACCUMULATOR GP-HYDRAULIC—UNCHARGED

S/N: PDF1-UP

FIELD REPLACEMENT FOR 228-0788—PAGE 329

SMCS-5077 **i02023806**

NOTE	PART NUMBER	QTY	PART NAME 1 2 3 4 5 6 (PRODUCT LEVEL)	SEE PAGE
	113-1050	1	ACCUMULATOR GP-HYDRAULIC (PILOT OIL)	
	158-2336	1	VALVE-GAS	
	160-0496	1	KIT-ACCUMULATOR SERVICE	
			(INCLUDES SEALS)	
	170-0503	1	FILM (PLATE-NAME)	
	183-7600	1	PISTON	

<END>

228-0788 ACCUMULATOR GP-HYDRAULIC—CHARGED

S/N: PDF1-UP
PART OF 233-1440, 233-4048, 233-6846 LINES GP-PILOT
FIELD REPLACEMENT ORDER 157-5544—PAGE 328
AN ATTACHMENT

SMCS-5077 **i02021619**

NOTE	REF NO	GRAPHIC REF	PART NUMBER	QTY	PART NAME 1 2 3 4 5 6 (PRODUCT LEVEL)	SEE PAGE
	1	1	**170-0503**	1	FILM (PLATE-NAME)	
	2	1	**069-2535**	1	VALVE-GAS	

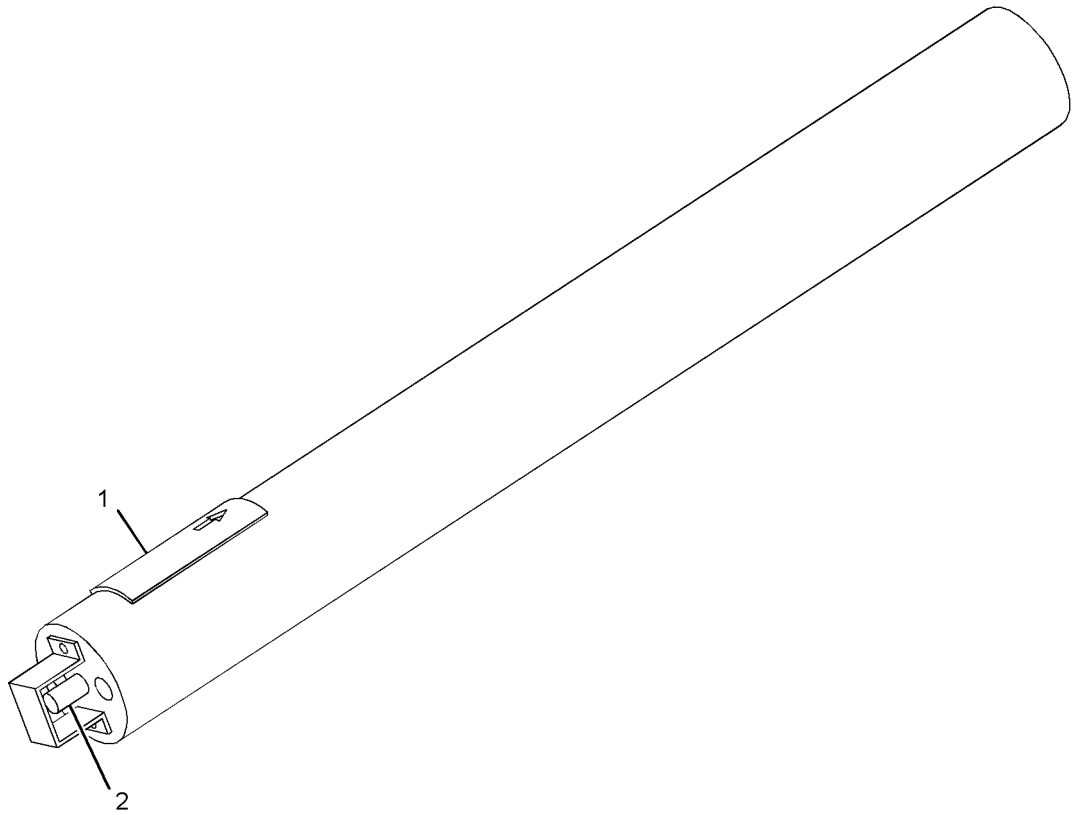

GRAPHIC #1 **<END>** g01044773

228-0790 ACCUMULATOR GP-HYDRAULIC—CHARGED

S/N: PDF1-UP
PART OF 169-5824 CONTROL & LINES GP-RIDE
FIELD REPLACEMENT ORDER 189-5768—PAGE 330
AN ATTACHMENT

SMCS-5077 **i02025475**

NOTE	PART NUMBER	QTY	PART NAME 1 2 3 4 5 6 (PRODUCT LEVEL)	SEE PAGE
			(NO SERVICED PARTS)	

<END>

189-5768 ACCUMULATOR GP-RIDE CONTROL—UNCHARGED

S/N: PDF1-UP
FIELD REPLACEMENT FOR 228-0790—PAGE 330

SMCS-5077 **i02036017**

NOTE	PART NUMBER	QTY	PART NAME 1 2 3 4 5 6 (PRODUCT LEVEL)	SEE PAGE
			(NO SERVICED PARTS)	

<END>

HYDRAULIC SYSTEM

204-2585 BLOCK GP-HYDRAULIC

S/N: PDF1-UP

PART OF 141-7557 TANK GP-HYDRAULIC

SMCS-5056 **i01753884**

NOTE	REF NO	GRAPHIC REF	PART NUMBER	QTY	PART NAME 1 2 3 4 5 6 (PRODUCT LEVEL)	SEE PAGE
	1	1	**5P-7234**	3	RING-RETAINING	
	2	1	**6V-1842**	1	PLUG	
	3	1	**105-4593**	3	POPPET	
	4	1	**105-4596**	1	SPRING	
	5	1	**125-6669**	1	SPRING	
M	6	1	**8T-1159**	5	BOLT-SOCKET HEAD (M10X1.5X25MM)	
	7	1	**200-8088**	1	SPRING	
	8	1	**110-3024**	1	STRAINER AS	
	9	1	**7M-8485**	1	SEAL-O-RING	
	10	1	**5F-9657**	3	SEAL-O-RING	
	11	1	**5L-4758**	5	SEAL-O-RING	

M-METRIC PART

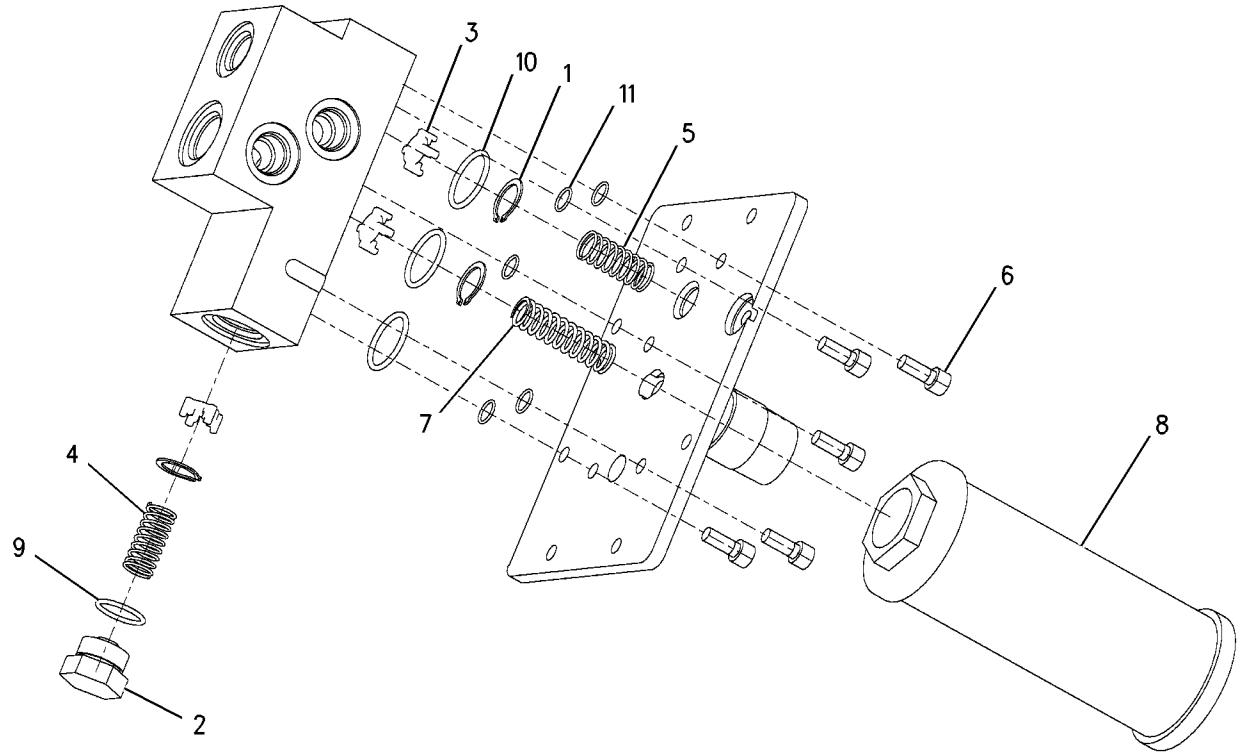

GRAPHIC #1 **<END>** g00849713

HYDRAULIC SYSTEM

169-5824 CONTROL & LINES GP-RIDE

S/N: PDF1-UP
PART OF 167-7692 CONTROL AR-RIDE
AN ATTACHMENT

SMCS-5004 **i02019624**

NOTE	REF NO	GRAPHIC REF	PART NUMBER	QTY	PART NAME 1 2 3 4 5 6 (PRODUCT LEVEL)	SEE PAGE
	1	1	**188-9828**	4	BRACKET	
	2	1	**9X-6581**	2	NUT (1-14 THD)	
Y	3	1	**111-0350**	1	VALVE GP-SOLENOID (RIDE CONTROL)	425
	4	1	**120-6184**	1	BRACKET AS (LH)	
	5	1	**120-8541**	1	PLATE AS (LH)	
	6	1	**120-8542**	1	PLATE AS (RH)	
	7	1	**120-8543**	1	BRACKET AS (RH)	
	8	1	**120-9606**	1	BRACKET AS	
	9	1	**120-9608**	1	TUBE AS	
	10	1	**120-9611**	1	TUBE AS	
	11	1	**120-9612**	1	TUBE AS	
I	12	1	**125-9481**	2	HOSE AS	
CY	13	1	**228-0790**	2	ACCUMULATOR GP-HYDRAULIC	330
	14	1	*148-8319*	2	CONNECTOR GP	
					(EACH INCLUDES)	
		1	**6V-8715**	1	CONNECTOR	
		1	**2M-9780**	1	SEAL-O-RING	
		1	**6V-8397**	1	SEAL-O-RING	
	15	1	*148-8345*	2	CONNECTOR GP	
					(EACH INCLUDES)	
		1	**6V-8638**	1	CONNECTOR	
		1	**2M-9780**	1	SEAL-O-RING	
		1	**6V-8398**	1	SEAL-O-RING	
	16	1	*148-8378*	2	ELBOW AS	
					(EACH INCLUDES)	
		1	**6V-8724**	1	ELBOW	
		1	**3J-1907**	1	SEAL-O-RING	
		1	**6V-8397**	1	SEAL-O-RING	
	17	1	*148-8410*	2	PLUG AS	
					(EACH INCLUDES)	
		1	**9S-4190**	1	PLUG	
		1	**2M-9780**	1	SEAL-O-RING	
	18	1	*148-8416*	2	REDUCER AS	
					(EACH INCLUDES)	
		1	**6V-8939**	1	REDUCER	
		1	**6V-8398**	1	SEAL-O-RING	
	19	1	*148-8433*	1	TEE GP	
		1	**6V-9836**	1	TEE-SWIVEL	
		1	**6V-8397**	2	SEAL-O-RING	
M	20	1	**8T-3647**	3	BOLT (M8X1.25X80-MM)	
	21	1	**8T-4121**	18	WASHER-HARD (11X21X2.5-MM THK)	
M	22	1	**8T-4136**	18	BOLT (M10X1.5X25-MM)	
M	23	1	**8T-4224**	3	WASHER-HARD (8.8X16X2-MM THK)	
BD	24	1	**5P-5924**		SEAL	

B-USE AS REQUIRED
C-CHANGE FROM PREVIOUS TYPE
D-ORDER BY THE METER
I-REFER TO HYDRAULIC INFORMATION SYSTEM
M-METRIC PART
Y-SEPARATE ILLUSTRATION

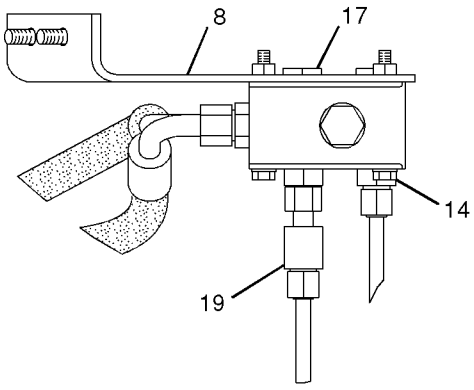

VIEW C-C

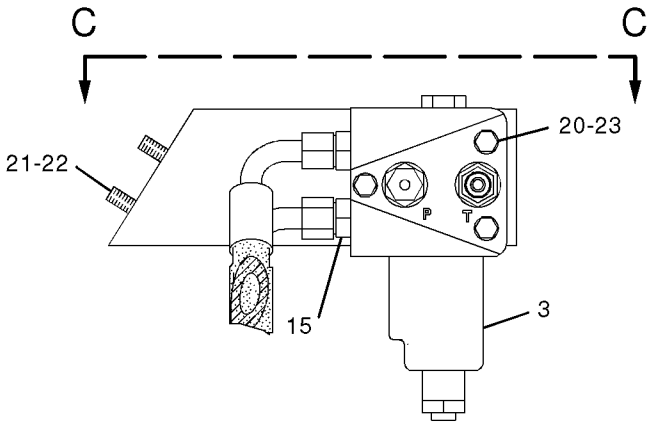

SECTION A-A

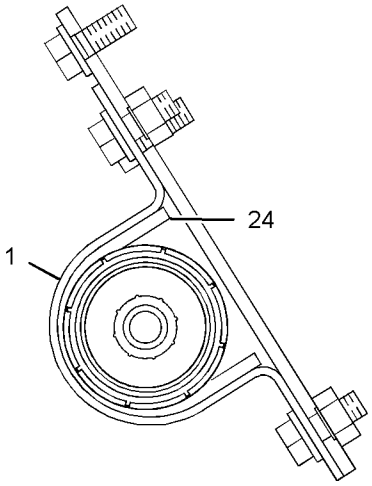

SECTION B-B

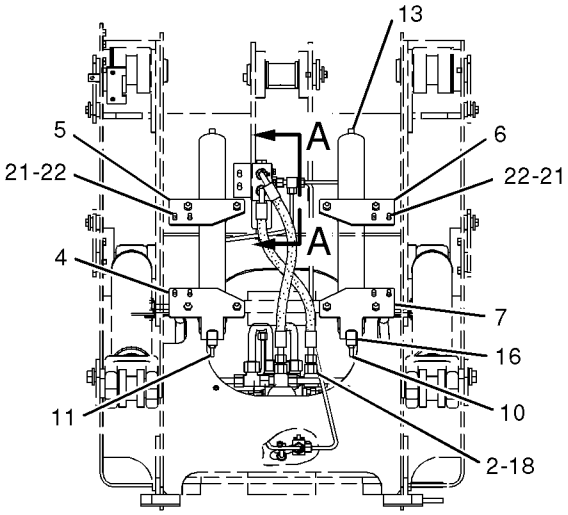

VIEW D-D

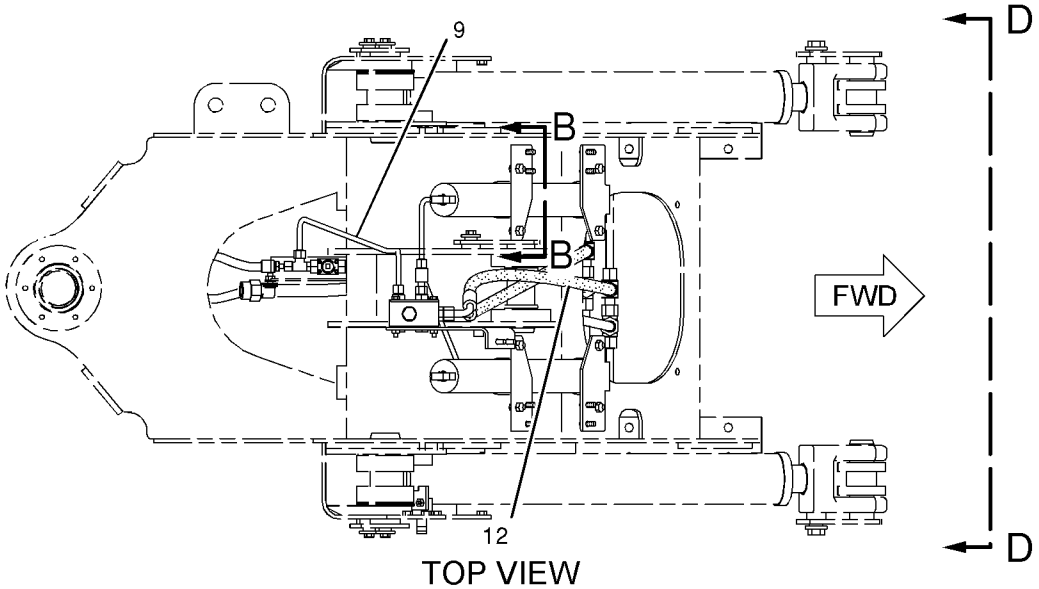

TOP VIEW

<END>

GRAPHIC #1

g01043369

HYDRAULIC SYSTEM

167-7692 CONTROL AR-RIDE

S/N: PDF1-UP
PART OF 237-6271 CONTROL AR-RIDE
AN ATTACHMENT

SMCS-5004 **i01135020**

NOTE	PART NUMBER	QTY	PART NAME 1 2 3 4 5 6 (PRODUCT LEVEL)	SEE PAGE
Y	*169-5824*	1	CONTROL & LINES GP-RIDE	332
Y	*116-4928*	1	WIRING GP-RIDE CONTROL	162

Y-SEPARATE ILLUSTRATION

<END>

237-6271 CONTROL AR-RIDE

S/N: PDF1-UP
AN ATTACHMENT

SMCS-5004 **i02000223**

NOTE	PART NUMBER	QTY	PART NAME 1 2 3 4 5 6 (PRODUCT LEVEL)	SEE PAGE
Y	*167-7692*	1	CONTROL AR-RIDE	334

Y-SEPARATE ILLUSTRATION

<END>

HYDRAULIC SYSTEM

119-2223 CONTROL GP-PILOT OPERATED HYD

S/N: PDF1-UP
PART OF 241-9262 HYDRAULIC AR-4 VALVE
AN ATTACHMENT

SMCS-5063 **i01630462**

NOTE	REF NO	GRAPHIC REF	PART NUMBER	QTY	PART NAME 1 2 3 4 5 6 (PRODUCT LEVEL)	SEE PAGE
	1	1	**9R-1948**	2	RIVET	
	2	1	**103-2006**	4	SCREW-PAN HEAD	
	3	1	**107-6037**	1	SWITCH AS-KICKOUT (BUCKET/FORK)	
		1	**111-7899**	1	GASKET	
	4	1	**107-6050**	1	SUPPORT AS	
	5	1	**114-3937**	1	ROD	
	6	1	**114-3940**	1	ROD	
	7	1	**124-4401**	2	KNOB	
	8	1	**141-9188**	1	FILM-INSTRUMENT (IMPLEMENT LOCKOUT)	
	9	1	**141-9189**	1	PLATE-INSTRUCTION	
Y	10	1	*143-9354*	1	VALVE GP-SHUTOFF	423
Y	11	1	**163-3121**	1	VALVE GP-PILOT	412
M	12	1	**5C-7261**	4	NUT (M8X1.25 THD)	
	13	1	**8T-4121**	4	WASHER-HARD (11X21X2.5MM THK)	
M	14	1	**8T-4137**	4	BOLT (M10X1.5X20MM)	
	15	1	**8T-4224**	4	WASHER-HARD (8.8X16X2MM THK)	
M	16	1	**8T-4244**	2	NUT (M12X1.75 THD)	
M	17	1	**9X-2041**	2	SCREW-TRUSS HEAD (M10X1.5X20MM)	

M-METRIC PART
Y-SEPARATE ILLUSTRATION

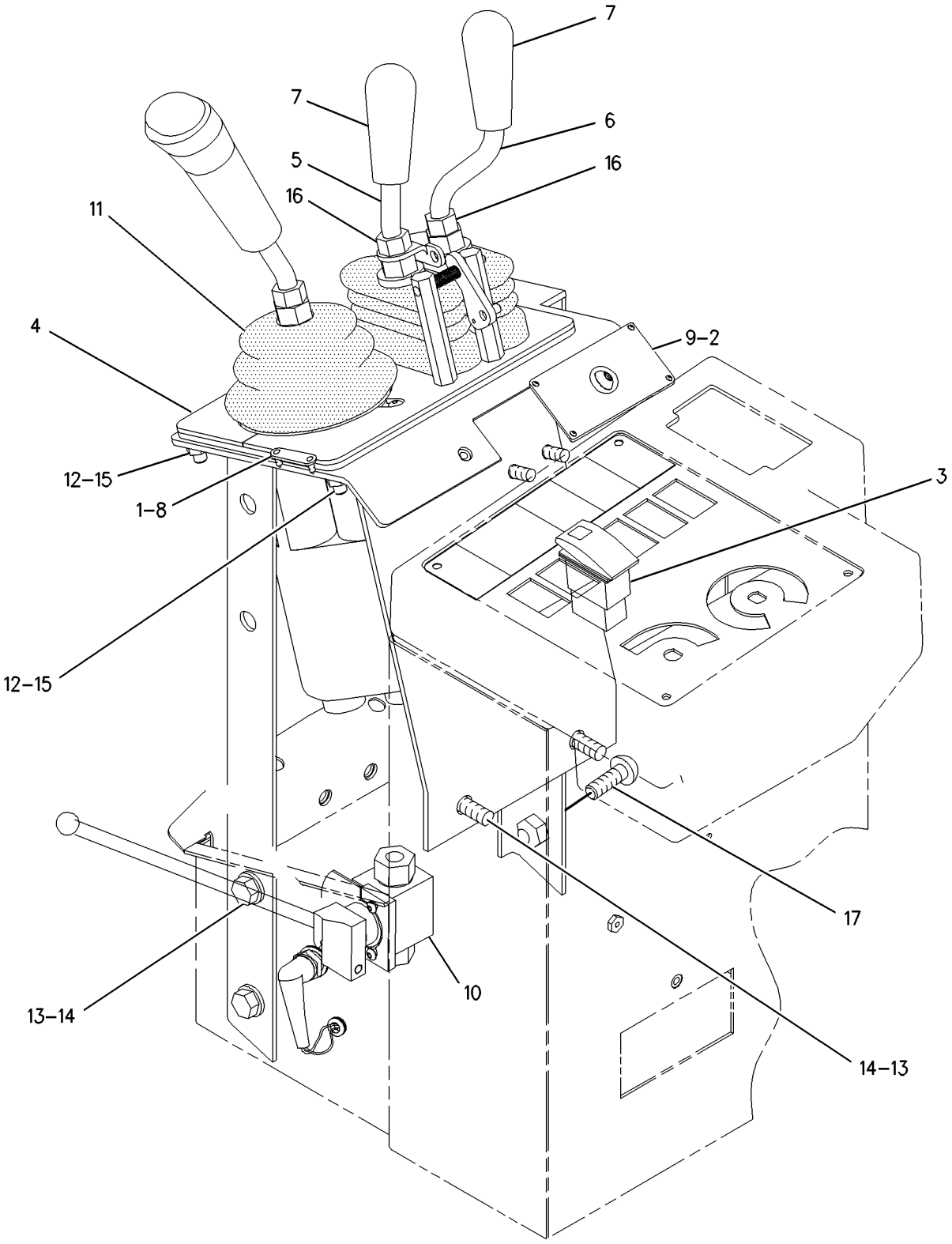

GRAPHIC #1 **<END>** g00844813

119-2224 CONTROL GP-PILOT OPERATED HYD

S/N: PDF1-UP
PART OF 241-9258 HYDRAULIC AR-2 VALVE
AN ATTACHMENT

SMCS-5063 **i01671440**

NOTE	REF NO	GRAPHIC REF	PART NUMBER	QTY	PART NAME 1 2 3 4 5 6 (PRODUCT LEVEL)	SEE PAGE
	1	1	**9R-1948**	2	RIVET	
	2	1	**103-2006**	4	SCREW-PAN HEAD	
	3	1	**107-6050**	1	SUPPORT AS	
	4	1	**141-9188**	1	FILM-INSTRUMENT (IMPLEMENT LOCKOUT)	
	5	1	**141-9189**	1	PLATE-INSTRUCTION	
CY	6	1	*143-9354*	1	VALVE GP-SHUTOFF (IMPLEMENT LOCKOUT CONTROL)	423
	7	1	**146-3765**	1	COVER	
Y	8	1	**163-3118**	1	VALVE GP-PILOT	407
M	9	1	**5C-7261**	4	NUT (M8X1.25 THD)	
	10	1	**8T-4121**	4	WASHER-HARD (11X21X2.5MM THK)	
M	11	1	**8T-4137**	4	BOLT (M10X1.5X20MM)	
	12	1	**8T-4224**	4	WASHER-HARD (8.8X16X2MM THK)	
M	13	1	**9X-2041**	2	SCREW-TRUSS HEAD (M10X1.5X20MM)	

C-CHANGE FROM PREVIOUS TYPE
M-METRIC PART
Y-SEPARATE ILLUSTRATION

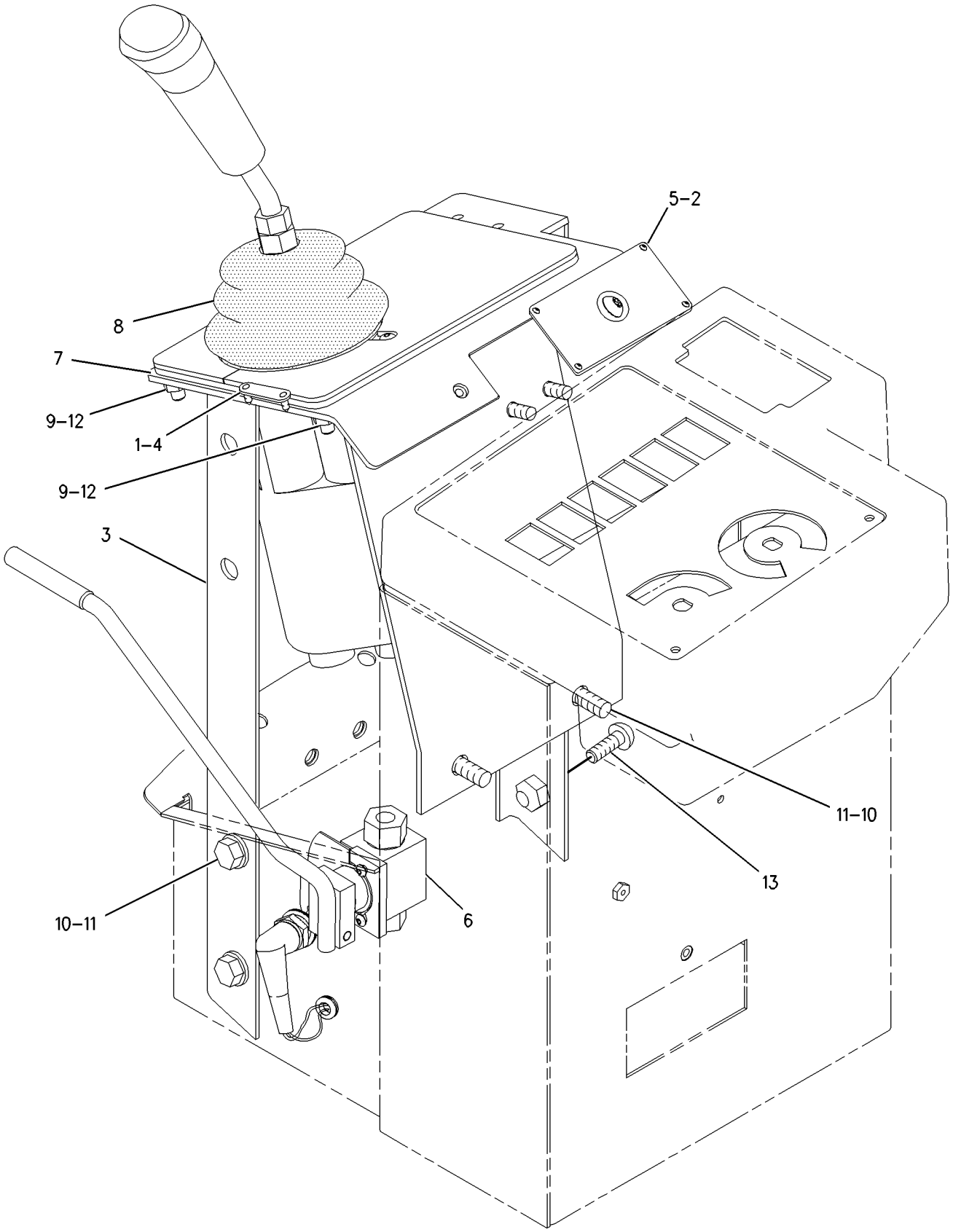

GRAPHIC #1 **<END>** g00863909

119-2225 CONTROL GP-PILOT OPERATED HYD

S/N: PDF1-UP
PART OF 241-9260 HYDRAULIC AR-3 VALVE
AN ATTACHMENT

SMCS-5063 **i01629969**

NOTE	REF NO	GRAPHIC REF	PART NUMBER	QTY	PART NAME 1 2 3 4 5 6 (PRODUCT LEVEL)	SEE PAGE
	1	1	**9R-1948**	2	RIVET	
	2	1	**103-2006**	4	SCREW-PAN HEAD	
	3	1	**107-6050**	1	SUPPORT AS	
	4	1	**114-3937**	1	ROD	
	5	1	**124-4401**	1	KNOB	
	6	1	**141-9188**	1	FILM-INSTRUMENT (IMPLEMENT LOCKOUT)	
	7	1	**141-9189**	1	PLATE-INSTRUCTION	
CY	8	1	*143-9354*	1	VALVE GP-SHUTOFF	423
CY	9	1	**163-3120**	1	VALVE GP-PILOT	409
C	10	1	**164-4111**	1	COVER	
M	11	1	**5C-7261**	4	NUT (M8X1.25 THD)	
C	12	1	**8T-4121**	4	WASHER-HARD (11X21X2.5MM THK)	
M	13	1	**8T-4137**	4	BOLT (M10X1.5X20MM)	
	14	1	**8T-4224**	4	WASHER-HARD (8.8X16X2MM THK)	
M	15	1	**8T-4244**	2	NUT (M12X1.75 THD)	
M	16	1	**9X-2041**	2	SCREW-TRUSS HEAD (M10X1.5X20MM)	

C-CHANGE FROM PREVIOUS TYPE
M-METRIC PART
Y-SEPARATE ILLUSTRATION

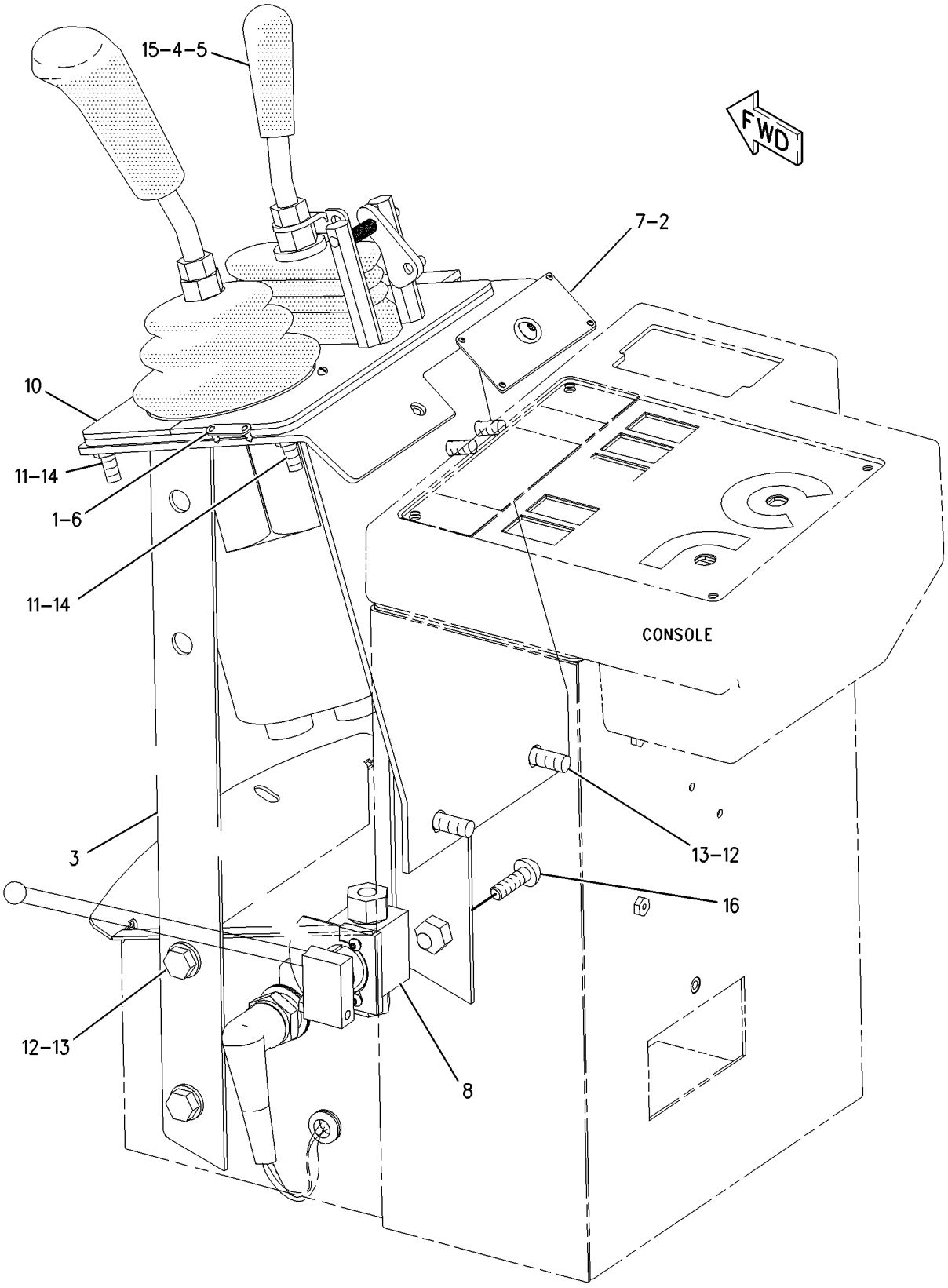

GRAPHIC #1 **<END>** g00844478

HYDRAULIC SYSTEM

159-9543 CONVERSION AR-HYDRAULIC

S/N: PDF1-UP

AN ATTACHMENT

SMCS-5051, 5057, 5059, 5117, 5479 **i02044129**

NOTE	PART NUMBER	QTY	PART NAME 1 2 3 4 5 6 (PRODUCT LEVEL)	SEE PAGE
	139-6810	1	FILM-OIL (BIODEGRADABLE) (HYDRAULIC)	
			(LOCATE ON HYDRAULIC TANK FILL TUBE)	

<END>

HYDRAULIC SYSTEM

9T-8823 CYLINDER GP-COUPLER

S/N: PDF1-UP
51MM (2 IN) X 158MM (6 IN) STROKE
PART OF 147-0500 COUPLER GP-QUICK
AN ATTACHMENT

SMCS-5133 **i01144591**

NOTE	REF NO	GRAPHIC REF	PART NUMBER	QTY	PART NAME 1 2 3 4 5 6 (PRODUCT LEVEL)	SEE PAGE
	1	1	**6E-5394**	2	ROD-PISTON	
					AVAILABLE REPAIR KIT(S):	
			9T-0418	1	KIT-SEAL	

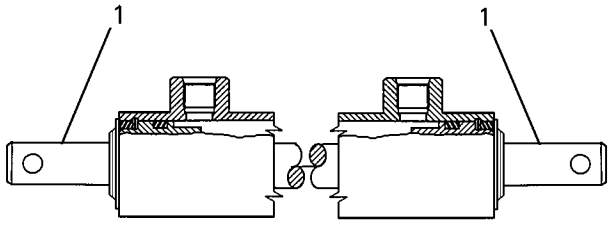

GRAPHIC #1 **<END>** g00127507

109-1334 CYLINDER GP-LIFT

S/N: PDF1-UP
89MM (3.5 IN) BORE X 672MM (26 IN) STROKE
PART OF 109-4811 HYDRAULIC AR

SMCS-5102 **i01904335**

NOTE	REF NO	GRAPHIC REF	PART NUMBER	QTY	PART NAME 1 2 3 4 5 6 (PRODUCT LEVEL)	SEE PAGE
	1	1	**109-1335**	1	CYLINDER AS	
	2	1	**9V-4975**	1	BEARING-SLEEVE	
M	3	1	**173-9683**	1	BOLT (M30X3.5X90MM)	
	4	1	**9X-8399**	1	WASHER (33X56X6MM THK)	
	5	1	**9T-8043**	1	PISTON	
	6	1	**2H-6338**	1	SEAL-O-RING	
	7	1	**2J-4066**	1	RING-BACKUP	
	8	1	**6E-4975**	1	HEAD	
	9	1	**6E-5897**	1	ROD AS	
	10	1	**7J-9885**	1	RING-WEAR	
	11	1	**4T-8054**	1	SEAL AS	
	12	1	**8T-4958**	1	RING-WEAR	
	13	1	**231-3538**	1	SEAL-WIPER	
	14	1	**167-2307**	1	SEAL-U-CUP	
	15	1	**167-2200**	1	SEAL AS	

M-METRIC PART

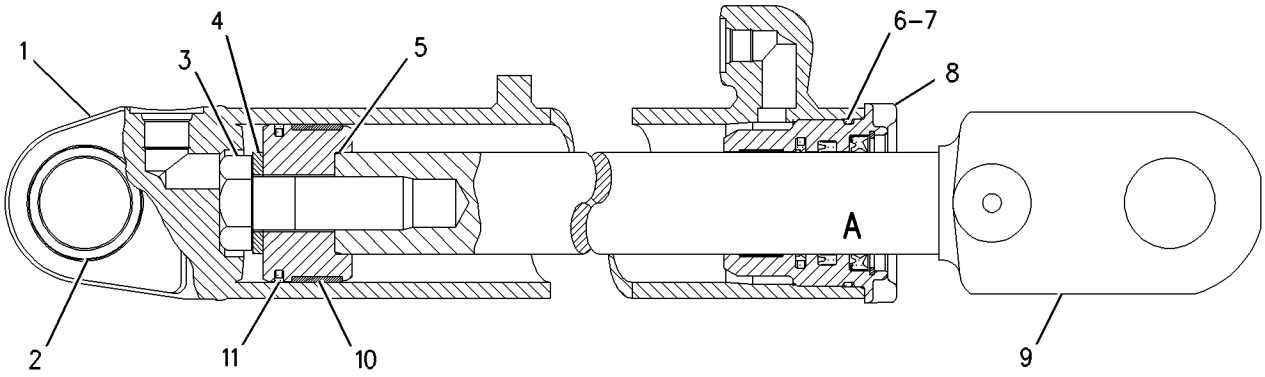

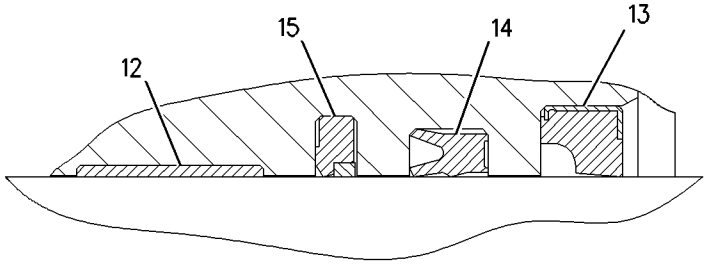

VEIW OF AREA A

GRAPHIC #1 **<END>** g01006614

HYDRAULIC SYSTEM

6E-5918 CYLINDER GP-TILT

S/N: PDF1-UP
102MM (4 IN) BORE X 400MM (16 IN) STROKE
PART OF 109-4811 HYDRAULIC AR

SMCS-5104 **i02016322**

NOTE	REF NO	GRAPHIC REF	PART NUMBER	QTY	PART NAME 1 2 3 4 5 6 (PRODUCT LEVEL)	SEE PAGE
	1	1	**6E-5917**	1	CYLINDER AS	
		1	**4V-4444**	1	BEARING-SLEEVE	
M	2	1	**173-9683**	1	BOLT (M30X3.5X90-MM)	
	3	1	**9X-8399**	1	WASHER (33X56X6-MM THK)	
	4	1	**5J-5402**	1	SEAL AS	
	5	1	**6J-2797**	1	RING-WEAR	
	6	1	**8T-4958**	1	RING-WEAR	
	7	1	**167-2200**	1	SEAL AS	
	8	1	**167-2307**	1	SEAL-U-CUP	
	9	1	**6E-4977**	1	HEAD	
	10	1	**6E-5914**	1	ROD AS	
		1	**9T-5599**	1	BEARING-SLEEVE	
	11	1	**231-3538**	1	SEAL-WIPER	
	12	1	**2K-6830**	1	RING-BACKUP	
	13	1	**175-7900**	1	SEAL-O-RING	
	14	1	**9T-5927**	1	PISTON	

M-METRIC PART

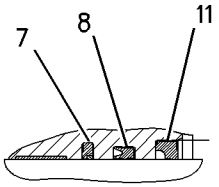

VIEW OF AREA A

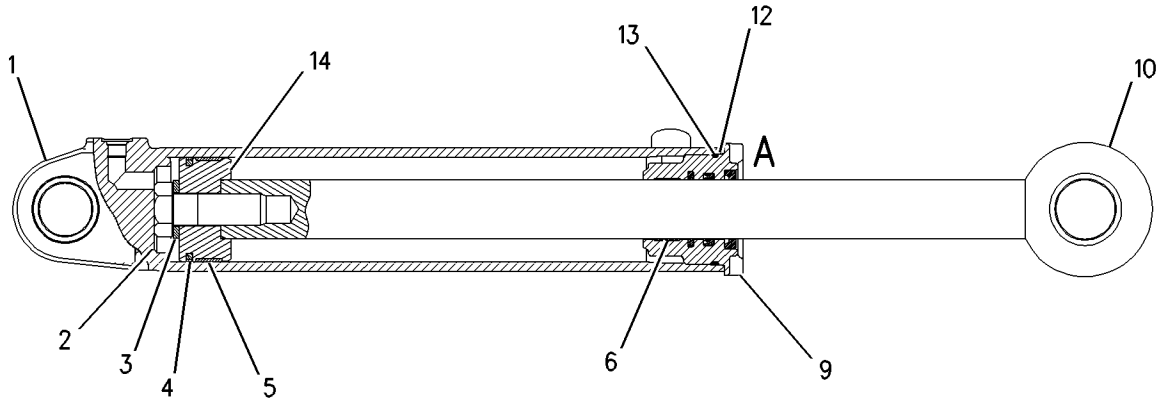

GRAPHIC #1 **<END>** g00689172

HYDRAULIC SYSTEM

239-2229 DRAIN GP-ECOLOGY–FUEL, HYDRAULIC

S/N: PDF1-UP
AN ATTACHMENT

SMCS-1273, 5056 **i02001299**

NOTE	REF NO	GRAPHIC REF	PART NUMBER	QTY	PART NAME 1 2 3 4 5 6 (PRODUCT LEVEL)	SEE PAGE
	1	1	**101-4639**	2	VALVE AS-DRAIN (ECOLOGY)	
	2	1	**159-3727**	1	TUBE AS-DRAIN	
	3	1	**2M-9780**	2	SEAL-O-RING	

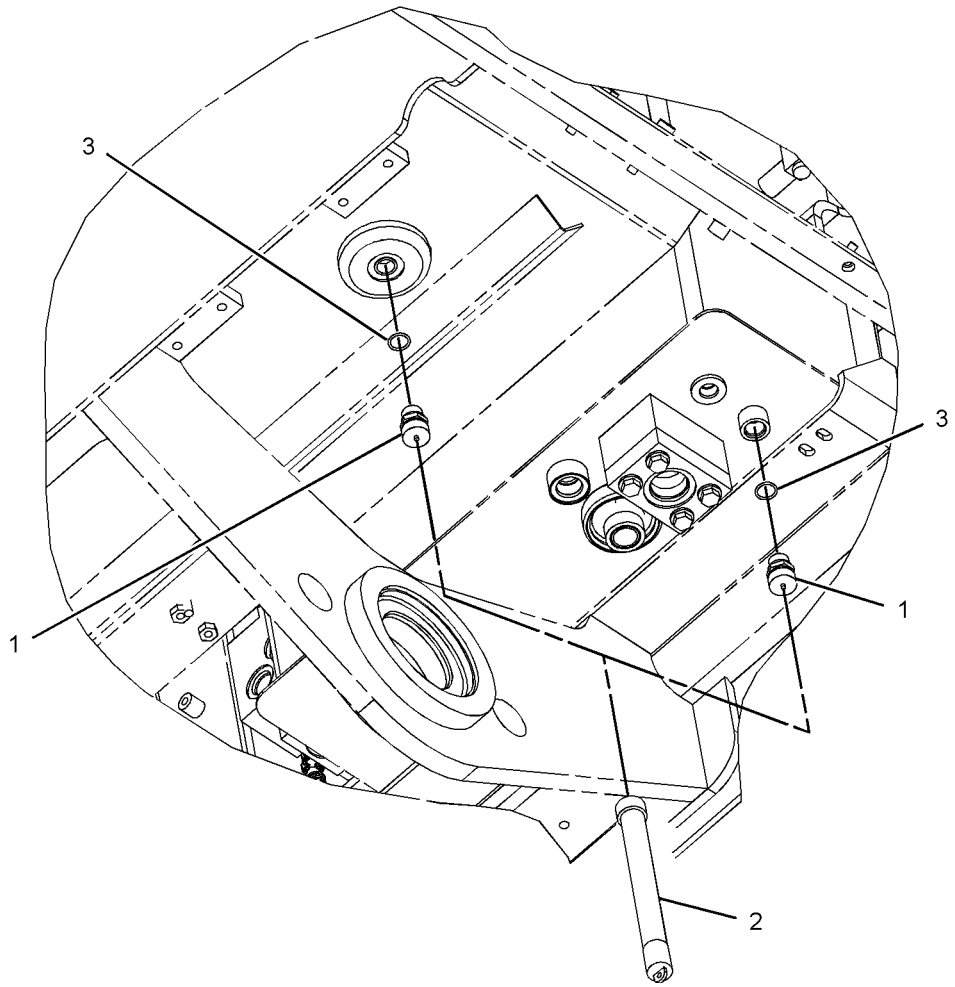

GRAPHIC #1 **<END>** g01038295

HYDRAULIC SYSTEM

109-4811 HYDRAULIC AR

S/N: PDF1-UP

PART OF 236-5630 COMMON AR

SMCS-5051 **i01348619**

NOTE	PART NUMBER	QTY	PART NAME 1 2 3 4 5 6 (PRODUCT LEVEL)	SEE PAGE
Y	**109-1334**	2	CYLINDER GP-LIFT	343
Y	**6E-5918**	1	CYLINDER GP-TILT	344
Y	*111-4255*	1	LINES GP-LIFT CYLINDER	361
Y	*148-2577*	1	LINES GP-PUMP	376
Y	*148-2579*	1	LINES GP-STEERING	314
Y	*111-4256*	1	LINES GP-TILT CYLINDER	379
Y	*111-4268*	1	PUMP & MTG GP-IMPL & STEERING	387
Y	*108-6200*	1	TANK GP-HYDRAULIC	390

Y-SEPARATE ILLUSTRATION

<END>

241-9258 HYDRAULIC AR-2 VALVE

S/N: PDF1-UP

AN ATTACHMENT

SMCS-5051 **i02005229**

NOTE	PART NUMBER	QTY	PART NAME 1 2 3 4 5 6 (PRODUCT LEVEL)	SEE PAGE
Y	*119-2224*	1	CONTROL GP-PILOT OPERATED HYD (JOYSTICK, 2-FUNCTION)	337
Y	*233-6846*	1	LINES GP-PILOT	372
Y	*111-4251*	1	VALVE & MTG GP-MAIN CONTROL (2-FUNCTION)	394

Y-SEPARATE ILLUSTRATION

<END>

241-9260 HYDRAULIC AR-3 VALVE

S/N: PDF1-UP

AN ATTACHMENT

SMCS-5051 **i02005230**

NOTE	PART NUMBER	QTY	PART NAME 1 2 3 4 5 6 (PRODUCT LEVEL)	SEE PAGE
Y	*119-2225*	1	CONTROL GP-PILOT OPERATED HYD (JOYSTICK, 3-FUNCTION)	339
Y	*107-4753*	1	LINES GP-FRONT	352
Y	*233-4048*	1	LINES GP-PILOT	368
Y	*111-4252*	1	VALVE & MTG GP-MAIN CONTROL (3-FUNCTION)	396

Y-SEPARATE ILLUSTRATION

<END>

HYDRAULIC SYSTEM

241-9262 HYDRAULIC AR-4 VALVE

S/N: PDF1-UP

AN ATTACHMENT

SMCS-5051 **i02005231**

NOTE	PART NUMBER	QTY	PART NAME 1 2 3 4 5 6 (PRODUCT LEVEL)	SEE PAGE
Y	*119-2223*	1	CONTROL GP-PILOT OPERATED HYD	335
Y	*107-4753*	1	LINES GP-FRONT	352
Y	*121-0513*	1	LINES GP-FRONT	354
Y	*233-1440*	1	LINES GP-PILOT	364
Y	*121-0514*	1	VALVE & MTG GP-MAIN CONTROL (4-FUNCTION)	398

Y-SEPARATE ILLUSTRATION

<END>

HYDRAULIC SYSTEM

122-9140 KICKOUT & POSITIONER GP

S/N: PDF1-UP

PART OF 236-5635 CHASSIS AR

SMCS-5109, 5112 **i02034155**

NOTE	REF NO	GRAPHIC REF	PART NUMBER	QTY	PART NAME 1 2 3 4 5 6 (PRODUCT LEVEL)	SEE PAGE
Y	1	1	*3E-7844*	1	CONTROL GP-LIFT KICKOUT	81
	2	1	**4P-7581**	1	CLIP	
	3	1	**5D-4822**	2	RING-RETAINING	
	4	1	**5G-7820**	1	MAGNET AS	
B	5	1	**2B-0941**	2	SPACER (10.5X19X19MM THK)	
	6	1	**5G-7823**	1	PLATE AS	
	7	1	**6V-8519**	1	CLAMP-HALF	
	8	1	**8R-4269**	1	SHAFT AS	
	9	1	**8R-7395**	1	PLATE	
	10	1	**101-3470**	1	CLAMP-HALF	
	11	1	**106-6394**	1	CLAMP	
	12	1	**111-6259**	1	CLAMP AS	
	13	1	**111-6260**	1	CLAMP AS	
	14	1	**112-9599**	1	HARNESS AS-HYD ELEK CONTROL	
		1	**102-8803**	1	KIT-RECEPTACLE (3-PIN)	
		1	**102-8804**	1	KIT-RECEPTACLE (4-PIN)	
Y	15	1	**3E-7843**	1	CONTROL GP-POSITION	82
	16	1	**116-4752**	1	TUBE	
	17	1	**4P-8134**	1	CLIP	
	18	1	**7K-1181**	5	STRAP-CABLE	
M	19	1	**7X-0818**	2	BOLT (M8X1.25X45-MM)	
	20	1	**8M-2773**	2	CLIP	
	21	1	**8T-4121**	8	WASHER-HARD (11X21X2.5-MM THK)	
M	22	1	**8T-4133**	2	NUT (M10X1.5-THD)	
M	23	1	**8T-4136**	2	BOLT (M10X1.5X25-MM)	
M	24	1	**8T-4137**	2	BOLT (M10X1.5X20-MM)	
M	25	1	**8T-4139**	2	BOLT (M12X1.75X30-MM)	
M	26	1	**8T-4195**	2	BOLT (M10X1.5X30-MM)	
M	27	1	**8T-4189**	6	BOLT (M8X1.25X20-MM)	
	28	1	**8T-4223**	4	WASHER-HARD (13.5X25.5X3-MM THK)	
M	29	1	**8T-4224**	10	WASHER-HARD (8.8X16X2-MM THK)	
M	30	1	**8T-4244**	2	NUT (M12X1.75-THD)	
M	31	1	**8T-4908**	2	BOLT (M8X1.25X25-MM)	
	32	1	**9G-4191**	1	GROMMET	

B-USE AS REQUIRED
M-METRIC PART
Y-SEPARATE ILLUSTRATION

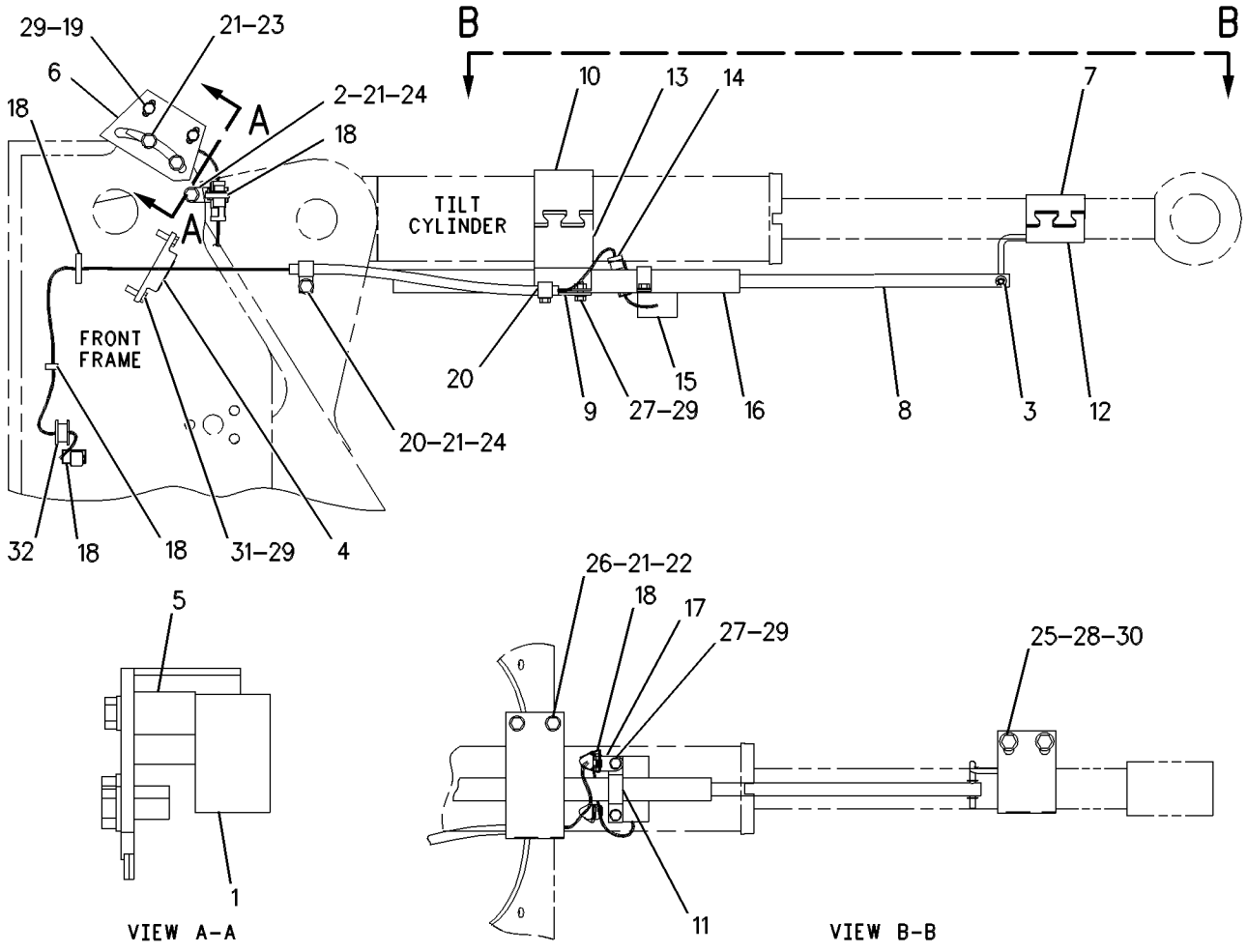

GRAPHIC #1 **<END>** g00285549

HYDRAULIC SYSTEM

233-7900 LINES GP-ACCUMULATOR

S/N: PDF1-UP

PART OF 237-6260 POWER TRAIN AR

SMCS-5057, 5077 **i02042767**

NOTE	REF NO	GRAPHIC REF	PART NUMBER	QTY	PART NAME 1 2 3 4 5 6 (PRODUCT LEVEL)	SEE PAGE
I	1	1	**152-1103**	1	HOSE AS	
Y	2	1	*152-1110*	1	MANIFOLD GP-BRAKE ACCUMULATOR	303
	3	1	**156-5314**	1	VALVE GP-STEER & BRK MANIFOLD	
		1	**160-3801**	1	KIT-SEAL	
I	4	1	**232-4902**	1	HOSE AS	
I	5	1	**232-4903**	1	HOSE AS	
I	6	1	**232-4904**	1	HOSE AS	
	7	1	*148-8318*	1	CONNECTOR GP	
		1	**6V-8634**	1	CONNECTOR	
		1	**3K-0360**	1	SEAL-O-RING	
		1	**6V-8397**	1	SEAL-O-RING	
	8	1	*148-8336*	2	CONNECTOR AS	
					(EACH INCLUDES)	
		1	**6V-8636**	1	CONNECTOR	
		1	**3J-1907**	1	SEAL-O-RING	
		1	**6V-8397**	1	SEAL-O-RING	
	9	1	*148-8353*	1	ELBOW GP	
		1	**3J-1907**	1	SEAL-O-RING	
		1	**6V-8397**	1	SEAL-O-RING	
	10	1	*148-8378*	2	ELBOW AS	
					(EACH INCLUDES)	
		1	**6V-8724**	1	ELBOW	
		1	**3J-1907**	1	SEAL-O-RING	
		1	**6V-8397**	1	SEAL-O-RING	
	11	1	**6D-4244**	1	CLIP	
	12	1	**8T-4121**	5	WASHER-HARD (11X21X2.5-MM THK)	
M	13	1	**8T-4136**	2	BOLT (M10X1.5X25-MM)	
M	14	1	**8T-4137**	3	BOLT (M10X1.5X20-MM)	

I-REFER TO HYDRAULIC INFORMATION SYSTEM
M-METRIC PART
Y-SEPARATE ILLUSTRATION

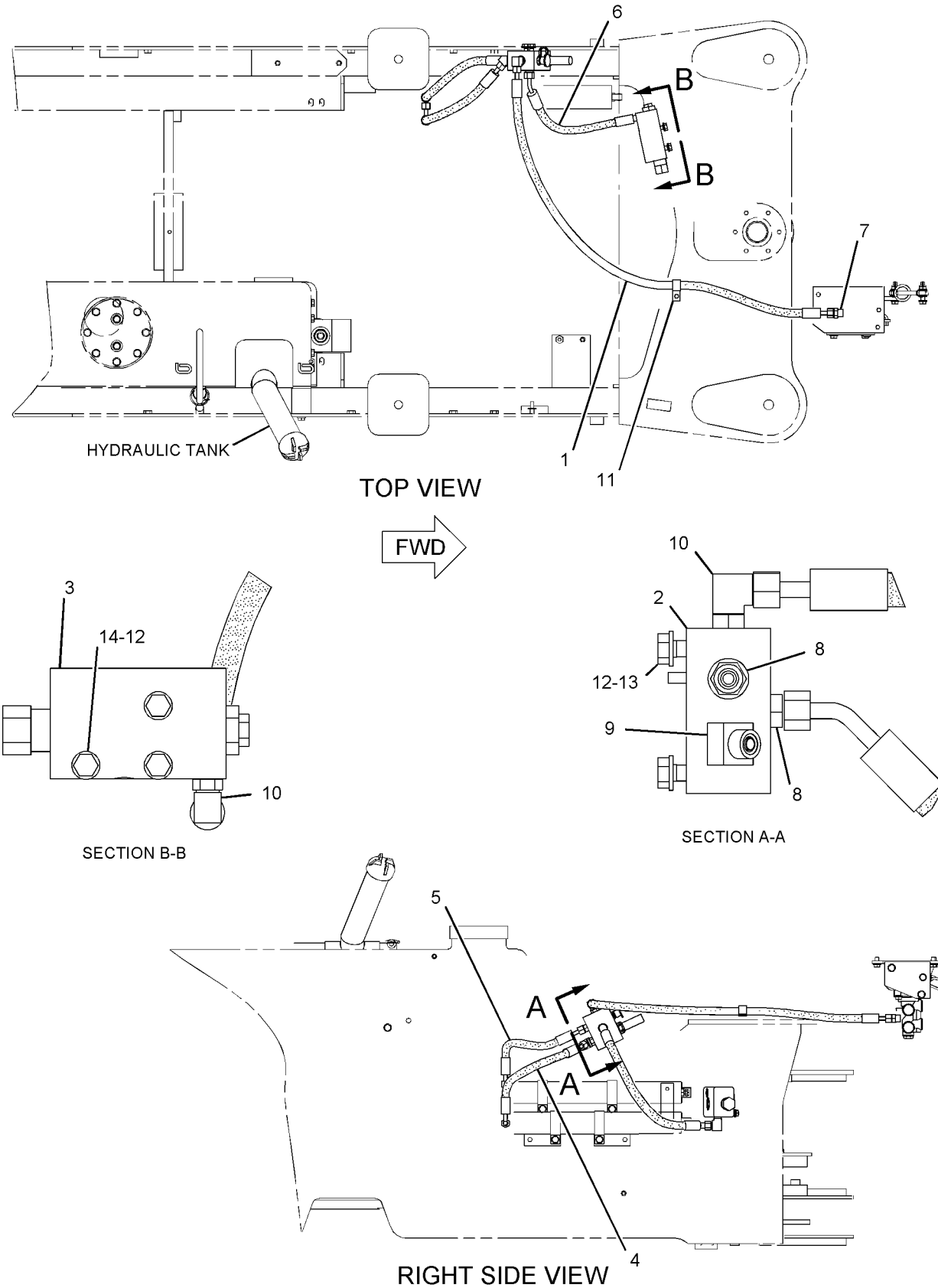

GRAPHIC #1

<END>

g01050169

HYDRAULIC SYSTEM

107-4753 LINES GP-FRONT

S/N: PDF1-UP

PART OF 241-9260 HYDRAULIC AR-3 VALVE, 241-9262 HYDRAULIC AR-4 VALVE AN ATTACHMENT

SMCS-5057 **i02034157**

NOTE	REF NO	GRAPHIC REF	PART NUMBER	QTY	PART NAME 1 2 3 4 5 6 (PRODUCT LEVEL)	SEE PAGE
	1	1	**6V-9831**	2	CAP AS	
	2	1	**7J-9108**	6	SEAL-O-RING	
	3	1	**8T-1887**	6	CLIP (SLOT)	
	4	1	**8T-1888**	6	CLIP (TAB)	
	5	1	**114-4820**	1	TUBE AS-RH	
	6	1	**114-4821**	1	TUBE AS-LH	
	7	1	**114-4822**	2	TUBE AS	
I	8	1	**120-4614**	2	HOSE AS	
	9	1	*148-8322*	2	CONNECTOR GP	
					(EACH INCLUDES)	
		1	**2M-9780**	1	SEAL-O-RING	
		1	**6V-9746**	1	SEAL-O-RING	
		1	**6V-8640**	1	CONNECTOR	
	10	1	**6V-3341**	2	GROMMET	
	11	1	**8T-1899**	2	CLIP (SLOT)	
	12	1	**8T-1900**	2	CLIP (TAB)	
	13	1	**8T-4121**	8	WASHER-HARD (11X21X2.5-MM THK)	
M	14	1	**8T-4137**	8	BOLT (M10X1.5X20-MM)	

I-REFER TO HYDRAULIC INFORMATION SYSTEM
M-METRIC PART

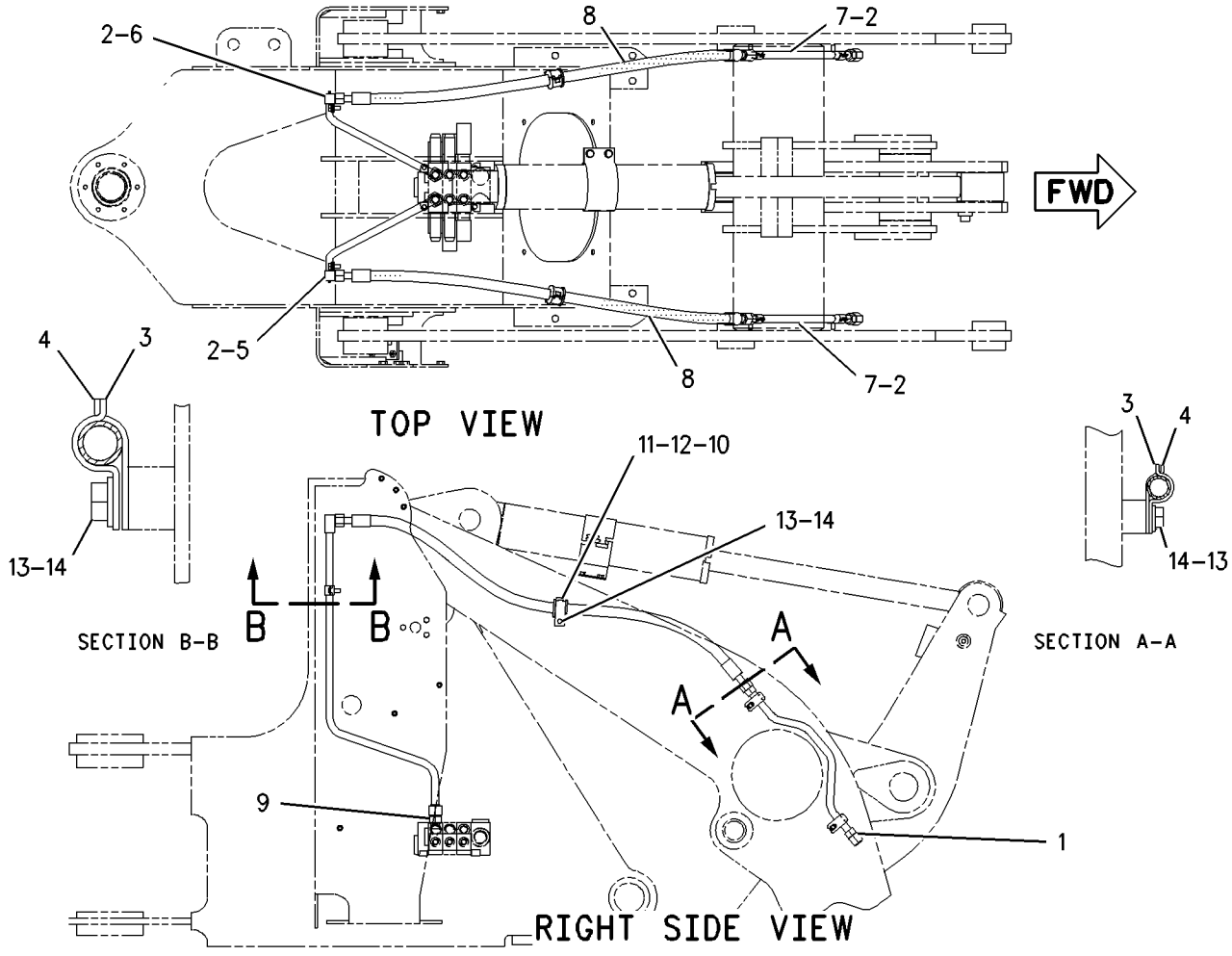

GRAPHIC #1 **<END>** g00695588

HYDRAULIC SYSTEM

121-0513 LINES GP-FRONT

S/N: PDF1-UP
PART OF 241-9262 HYDRAULIC AR-4 VALVE
AN ATTACHMENT

SMCS-5057 **i02034159**

NOTE	REF NO	GRAPHIC REF	PART NUMBER	QTY	PART NAME 1 2 3 4 5 6 (PRODUCT LEVEL)	SEE PAGE
	1	1	**6V-9831**	2	CAP AS	
	2	1	**114-4822**	2	TUBE AS	
I	3	1	**120-4614**	2	HOSE AS	
	4	1	**131-2666**	6	BRACKET AS	
	5	1	**131-2667**	1	TUBE AS-RH	
	6	1	**131-2668**	1	TUBE AS-LH	
	7	1	**131-2669**	2	PLATE	
M	8	1	**8T-4133**	2	NUT (M10X1.5-THD)	
	9	1	**3E-7420**	2	CONNECTOR	
	10	1	**2M-9780**	2	SEAL-O-RING	
	11	1	**6V-9746**	2	SEAL-O-RING	
	12	1	**7J-9108**	6	SEAL-O-RING	
	13	1	**8T-1887**	6	CLIP (SLOT)	
	14	1	**8T-1888**	6	CLIP (TAB)	
	15	1	**8T-1899**	2	CLIP (SLOT)	
	16	1	**8T-1900**	2	CLIP (TAB)	
	17	1	**8T-4121**	8	WASHER-HARD (11X21X2.5-MM THK)	
M	18	1	**8T-4136**	8	BOLT (M10X1.5X25-MM)	
	19	1	**6V-3341**	2	GROMMET	

I-REFER TO HYDRAULIC INFORMATION SYSTEM
M-METRIC PART

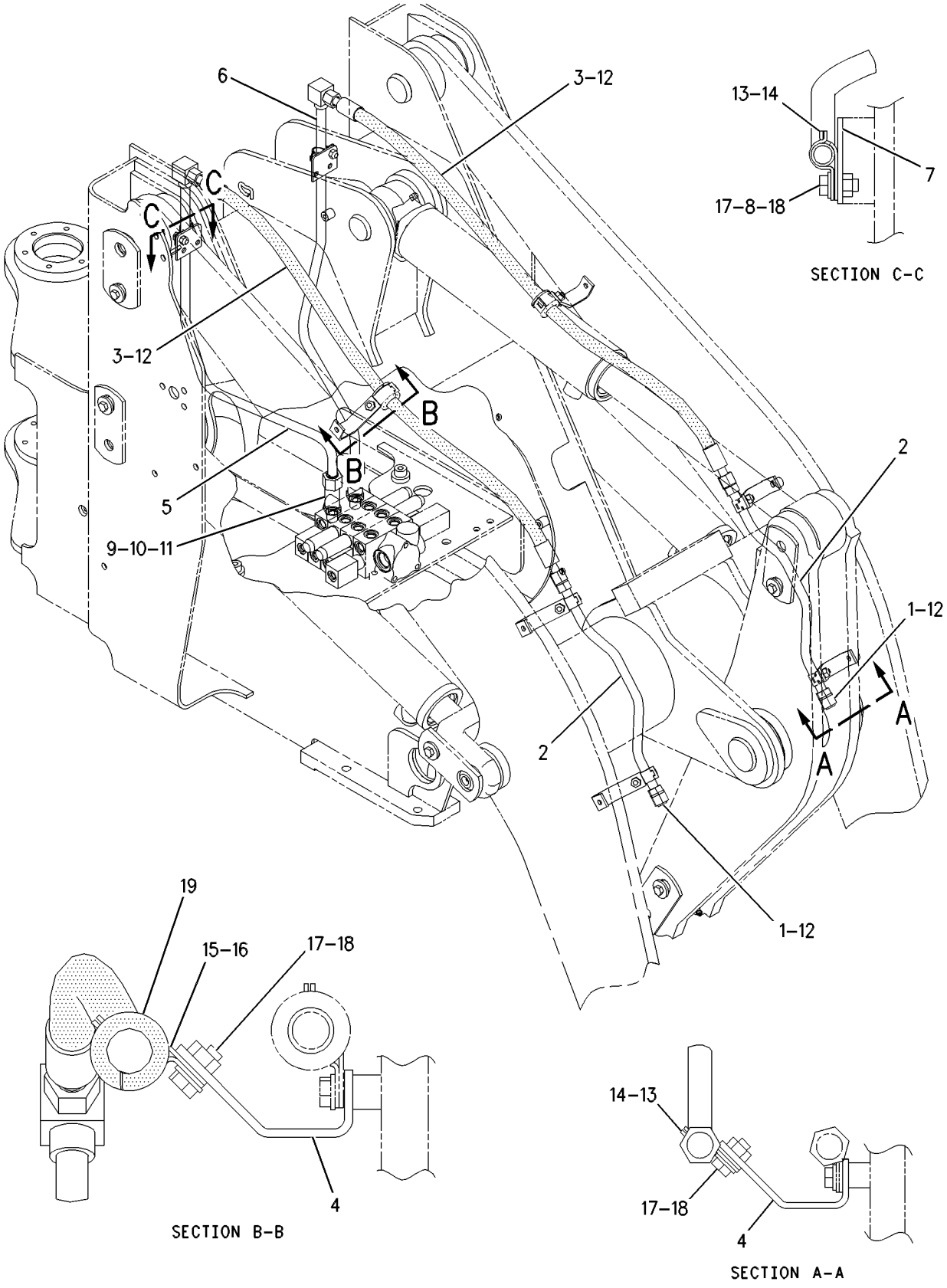

GRAPHIC #1 **<END>** g00524535

HYDRAULIC SYSTEM

112-9267 LINES GP-HYDRAULIC

S/N: PDF1-UP
GROUND SPEED
PART OF 107-4842 CONTROL AR-SPEED
AN ATTACHMENT

SMCS-5057 **i01685410**

NOTE	REF NO	GRAPHIC REF	PART NUMBER	QTY	PART NAME 1 2 3 4 5 6 (PRODUCT LEVEL)	SEE PAGE
	1	1	**112-9264**	1	TUBE AS	
CI	2	1	**112-9269**	2	HOSE AS	
	3	1	**119-5708**	1	CLIP	
I	4	1	**138-3797**	1	HOSE AS	
	5	1	*148-8336*	2	CONNECTOR GP	
					(EACH INCLUDES)	
		1	**3J-1907**	2	SEAL-O-RING	
		1	**6V-8397**	2	SEAL-O-RING	
		1	**6V-8636**	2	CONNECTOR	
	6	1	*148-8458*	1	UNION GP	
		1	**6V-8397**	1	SEAL-O-RING	
		1	**6V-9807**	1	UNION	
	7	1	**1F-7567**	1	CLIP	
	8	1	**5P-9297**	1	CLIP	
C	9	1	**6V-8397**	1	SEAL-O-RING	
	10	1	**8T-4121**	1	WASHER-HARD (11X21X2.5MM THK)	
M	11	1	**8T-4137**	1	BOLT (M10X1.5X20MM)	

C-CHANGE FROM PREVIOUS TYPE
I-SEE HOSE FABRICATION GUIDE
M-METRIC PART

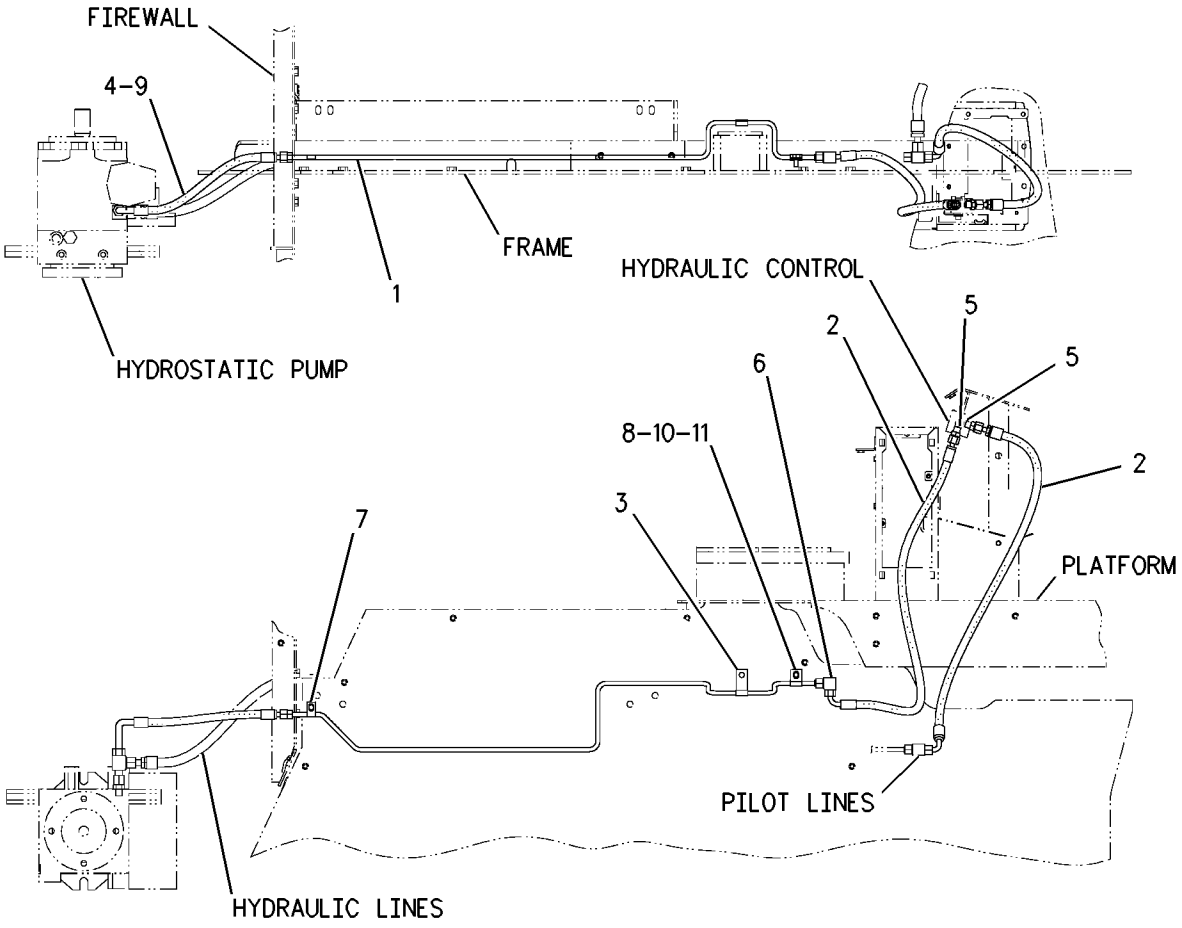

RIGHT SIDE VIEW

GRAPHIC #1 **<END>** g00869125

HYDRAULIC SYSTEM

148-2572 LINES GP-HYDRAULIC

S/N: PDF1-UP

PART OF 237-6260 POWER TRAIN AR

SMCS-5057 **i02018532**

NOTE	REF NO	GRAPHIC REF	PART NUMBER	QTY	PART NAME 1 2 3 4 5 6 (PRODUCT LEVEL)	SEE PAGE
M	1	1	**8T-3998**	4	BOLT (M4X0.7X12-MM)	
	2	1	**202-0671**	1	VALVE GP-BALL	
		1	**112-9861**	1	KIT-SEAL	
					(INCLUDES SEALS, O-RINGS, AND THRUST RING)	
I	3	1	**148-6982**	1	HOSE AS	
I	4	1	**148-6983**	1	HOSE AS	
	5	1	**150-9231**	1	TUBE AS	
	6	1	**153-9974**	1	TUBE AS	
I	7	1	**159-9545**	1	HOSE AS	
	8	1	*148-8340*	1	CONNECTOR GP	
		1	**3K-0360**	1	SEAL-O-RING	
		1	**6V-8398**	1	SEAL-O-RING	
		1	**6V-8639**	1	CONNECTOR	
	9	1	*148-8364*	2	ELBOW AS	
					(EACH INCLUDES)	
		1	**3K-0360**	1	SEAL-O-RING	
		1	**6V-8398**	1	SEAL-O-RING	
		1	**6V-8625**	1	ELBOW	
	10	1	*148-8365*	2	ELBOW GP	
					(EACH INCLUDES)	
		1	**3J-1907**	1	SEAL-O-RING	
		1	**6V-8398**	1	SEAL-O-RING	
		1	**8T-6876**	1	ELBOW	
	11	1	*148-8444*	1	TEE GP	
		1	**6V-8398**	2	SEAL-O-RING	
		1	**6V-9837**	1	TEE-SWIVEL	
	12	1	*150-4043*	1	CONNECTOR GP	
		1	**3J-1907**	1	SEAL-O-RING	
		1	**6V-8398**	1	SEAL-O-RING	
		1	**6V-9873**	1	CONNECTOR	
	13	1	**1S-0994**	1	CLIP	
	14	1	**6D-4244**	2	CLIP	
	15	1	**6V-8398**	1	SEAL-O-RING	
	16	1	**6V-9830**	1	CAP AS	
	17	1	**8M-2770**	4	CLIP	
	18	1	**8T-4121**	4	WASHER-HARD (11X21X2.5-MM THK)	
M	19	1	**8T-4137**	4	BOLT (M10X1.5X20-MM)	

I-REFER TO HYDRAULIC INFORMATION SYSTEM
M-METRIC PART

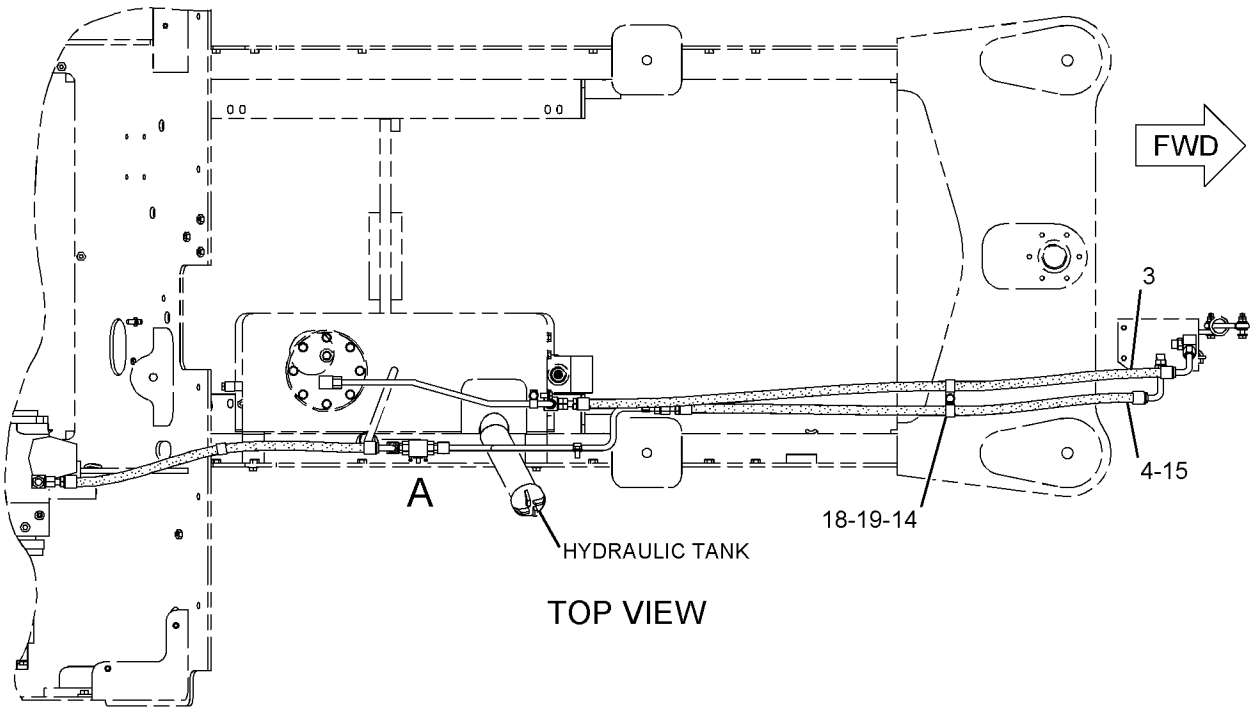

TOP VIEW

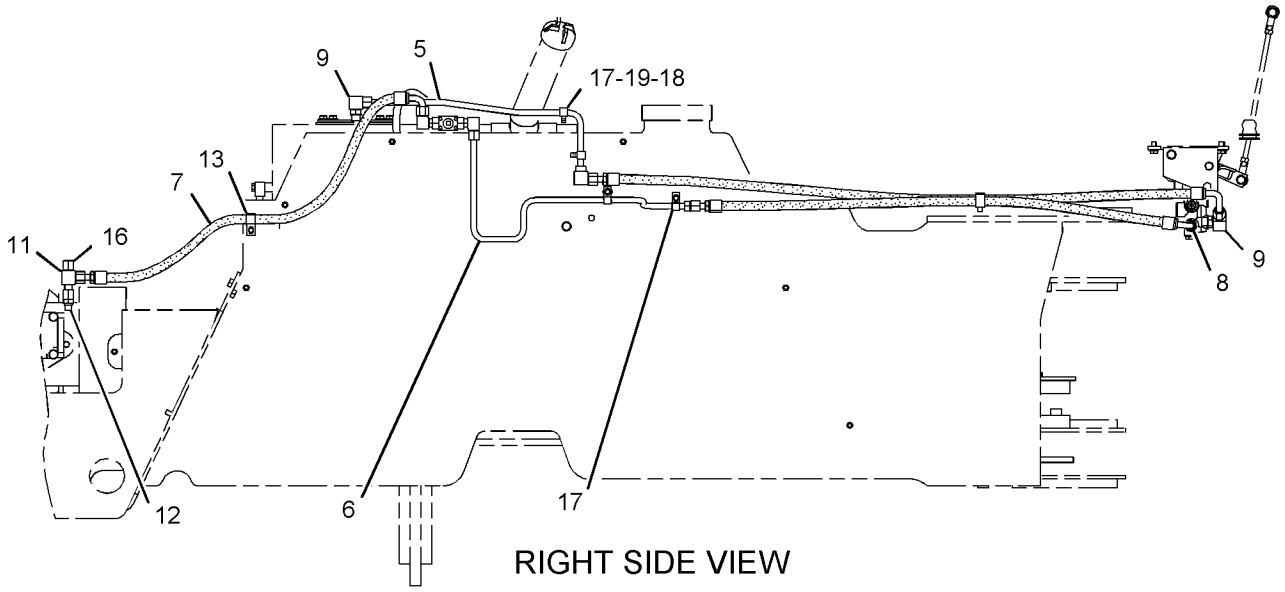

RIGHT SIDE VIEW

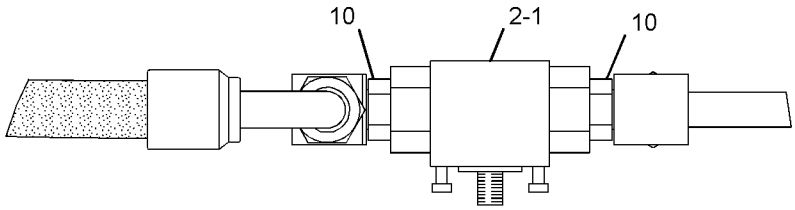

VIEW OF AREA A

GRAPHIC #1

<END>

g01043000

HYDRAULIC SYSTEM

237-7233 LINES GP-HYDRAULIC OIL COOLER

S/N: PDF1-UP

PART OF 237-6260 POWER TRAIN AR

SMCS-1374, 5057 **i02014547**

NOTE	REF NO	GRAPHIC REF	PART NUMBER	QTY	PART NAME 1 2 3 4 5 6 (PRODUCT LEVEL)	SEE PAGE
	1	1	**130-9984**	5	CLIP	
	2	1	**237-7503**	1	HOSE AS	
	3	1	**237-7504**	1	HOSE AS	
	4	1	*148-8344*	1	CONNECTOR GP	
		1	**3D-2824**	1	SEAL-O-RING	
		1	**6V-9162**	1	CONNECTOR	
		1	**6V-9746**	1	SEAL-O-RING	
	5	1	*148-8347*	1	ELBOW GP	
		1	**3D-2824**	1	SEAL-O-RING	
		1	**6V-9007**	1	ELBOW	
		1	**6V-9746**	1	SEAL-O-RING	
	6	1	**159-1503**	2	CLAMP-HOSE	
	7	1	**8T-4121**	5	WASHER-HARD (11X21X2.5-MM THK)	
M	8	1	**8T-4136**	1	BOLT (M10X1.5X25-MM)	
M	9	1	**8T-4137**	4	BOLT (M10X1.5X20-MM)	
D	10	1	**8T-3425**		CHANNEL-TRIM (0.34M)	
D	11	1	**8T-3425**		CHANNEL-TRIM (0.17M)	

D-ORDER BY THE METER
M-METRIC PART

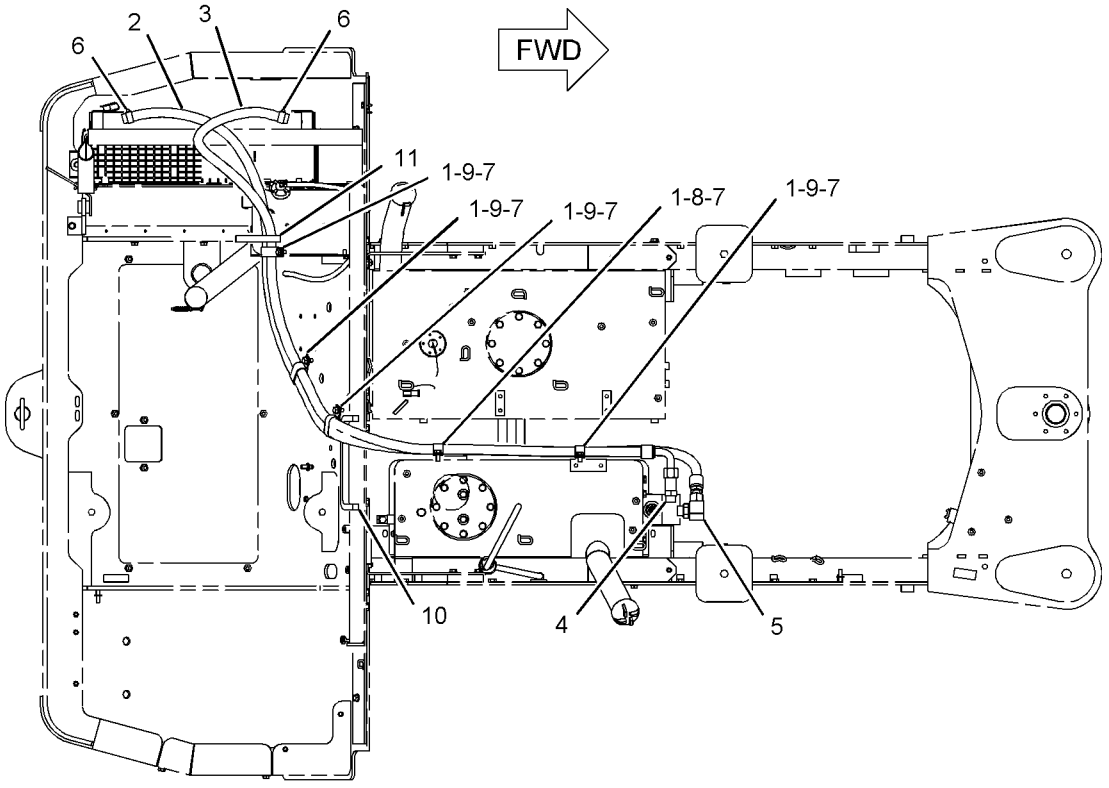

TOP VIEW

GRAPHIC #1

<END>

g01041953

HYDRAULIC SYSTEM

111-4255 LINES GP-LIFT CYLINDER

S/N: PDF1-UP

PART OF 109-4811 HYDRAULIC AR

SMCS-5057, 5102 **i01686526**

NOTE	REF NO	GRAPHIC REF	PART NUMBER	QTY	PART NAME 1 2 3 4 5 6 (PRODUCT LEVEL)	SEE PAGE
M	1	1	**095-0641**	4	BOLT-SOCKET HEAD (M4X0.7X10MM)	
	2	1	**107-4797**	1	TUBE AS	
	3	1	**112-1817**	1	VALVE GP-BALL	
		1	**112-9861**	1	KIT-SEAL	
	4	1	**112-5203**	2	PLATE AS	
	5	1	**112-5204**	1	TUBE AS-RH	
	6	1	**112-5205**	1	TUBE AS-RH	
	7	1	**112-5206**	2	BRACKET AS	
I	8	1	**112-9439**	1	HOSE AS	
	9	1	**115-4984**	1	TUBE AS-LH	
	10	1	**116-4799**	1	TUBE AS	
	11	1	**116-4800**	1	TUBE AS	
	12	1	**116-4802**	1	TUBE AS	
I	13	1	**116-4816**	4	HOSE AS	
	14	1	**116-4817**	1	TUBE AS-LH	
	15	1	**118-9411**	1	TUBE AS	
	16	1	**120-6185**	1	TUBE AS	
	17	1	**120-9630**	1	TUBE AS	
	18	1	*148-8322*	2	CONNECTOR GP	
					(EACH INCLUDES)	
		1	**2M-9780**	2	SEAL-O-RING	
		1	**6V-8640**	2	CONNECTOR-SEAL	
		1	**6V-9746**	2	SEAL-O-RING	
	19	1	*148-8336*	1	CONNECTOR GP	
		1	**3J-1907**	1	SEAL-O-RING	
		1	**6V-8397**	1	SEAL-O-RING	
		1	**6V-8636**	1	CONNECTOR	
	20	1	*148-8340*	2	CONNECTOR GP	
					(EACH INCLUDES)	
		1	**3K-0360**	2	SEAL-O-RING	
		1	**6V-8398**	2	SEAL-O-RING	
		1	**6V-8639**	2	CONNECTOR	
	21	1	*148-8381*	2	ELBOW GP	
					(EACH INCLUDES)	
		1	**3D-2824**	2	SEAL-O-RING	
		1	**6V-8398**	2	SEAL-O-RING	
		1	**8T-5429**	2	ELBOW	
	22	1	*148-8435*	1	TEE GP	
		1	**3J-1907**	1	SEAL-O-RING	
		1	**6V-8397**	2	SEAL-O-RING	
		1	**6V-8781**	1	TEE-FACE SEAL	
	23	1	*148-8446*	2	TEE AS-SWIVEL	
					(EACH INCLUDES)	
		1	**3K-0360**	2	SEAL-O-RING	
		1	**6V-8398**	4	SEAL-O-RING	
		1	**6V-8775**	2	TEE-FACE SEAL	
	24	1	*150-4038*	2	TEE AS	
					(EACH INCLUDES)	
		1	**6V-9746**	2	SEAL-O-RING	
		1	**7J-9108**	4	SEAL-O-RING	
		1	**7X-7703**	2	TEE-UNION ORIFICE	
	25	1	**6V-8397**	1	SEAL-O-RING	
	26	1	**6V-8398**	8	SEAL-O-RING	
	27	1	**6V-9829**	1	CAP AS	
	28	1	**6V-9831**	2	CAP AS	
	29	1	**7X-7729**	8	WASHER (11X25X3MM THK)	

111-4255 LINES GP-LIFT CYLINDER *(contd.)* i01686526

NOTE	REF NO	GRAPHIC REF	PART NUMBER	QTY	PART NAME 1 2 3 4 5 6 (PRODUCT LEVEL)	SEE PAGE
	30	1	**8T-1885**	4	CLIP (SLOT)	
	31	1	**8T-1886**	4	CLIP (TAB)	
	32	1	**8T-4121**	6	WASHER-HARD (11X21X2.5MM THK)	
M	33	1	**8T-4136**	14	BOLT (M10X1.5X25MM)	
	34	1	**9R-1005**	2	CLIP (SLOT)	
	35	1	**9R-7802**	2	CLIP (SLOT)	
	36	1	**9R-7803**	2	CLIP	

I-SEE HOSE FABRICATION GUIDE
M-METRIC PART

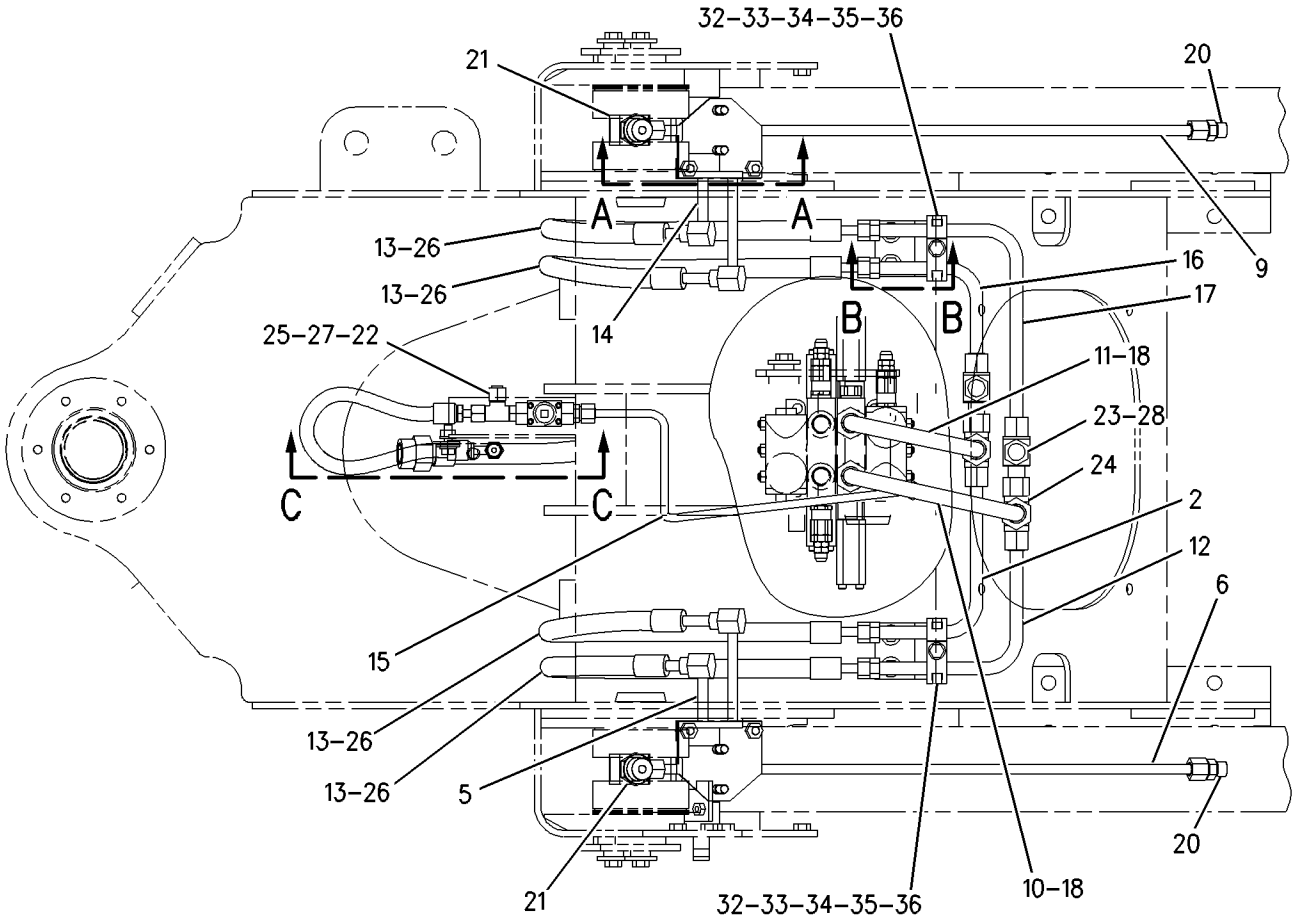

TOP VIEW

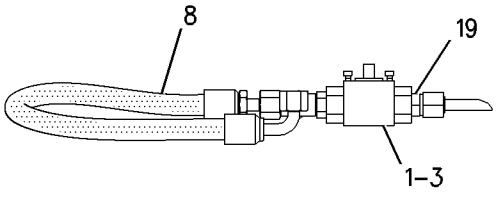

VIEW C-C

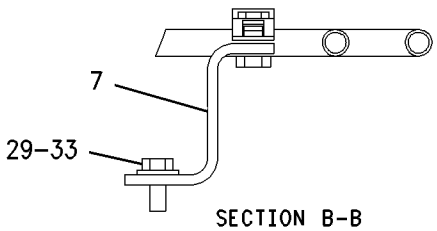

SECTION B-B

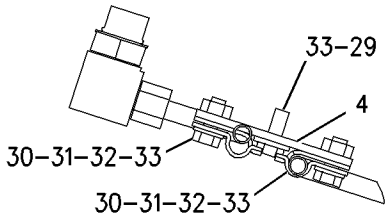

SECTION A-A

GRAPHIC #1 **<END>** g00869508

HYDRAULIC SYSTEM

233-1440 LINES GP-PILOT

S/N: PDF1-UP
PART OF 241-9262 HYDRAULIC AR-4 VALVE
AN ATTACHMENT

SMCS-5057, 5059 **i02043507**

NOTE	REF NO	GRAPHIC REF	PART NUMBER	QTY	PART NAME 1 2 3 4 5 6 (PRODUCT LEVEL)	SEE PAGE
M	1	1,2	**8T-5005**	6	BOLT (M10X1.50X70-MM)	
M	2	2	**8T-4195**	2	BOLT (M10X1.5X30-MM)	
	3	2	**5P-5148**	1	STRAP-TIE	
M	4	1,2	**8T-4137**	10	BOLT (M10X1.5X20-MM)	
	5	1,2	**8T-4121**	18	WASHER-HARD (11X21X2.5-MM THK)	
	6	1	**6V-9829**	1	CAP AS	
	7	1	**6V-8397**	2	SEAL-O-RING	
	8	1	**5P-9297**	5	CLIP	
	9	1	**9T-3096**	1	VALVE GP-CHECK (HYDROSTATIC PUMP)	
	10	2	**104-3173**	2	CLIP	
I	11	1	**112-9434**	1	HOSE AS	
	12	1	**112-9435**	1	TUBE AS	
	13	1	**112-9436**	1	TUBE AS	
	14	1	**112-9438**	1	TUBE AS	
I	15	2	**112-9445**	1	HOSE AS	
	16	1	**112-9446**	1	BRACKET AS	
	17	2	**115-9497**	1	BRACKET AS	
	18	1	**115-9498**	1	BRACKET AS	
I	19	2	**146-0108**	1	HOSE AS	
	20	2	*165-6365*	1	FITTING AS	
		2	**7W-7381**	1	FITTING-OUTLET	
		2	**3J-1907**	1	SEAL-O-RING	
I	21	2	**173-1739**	7	HOSE AS	
I	22	2	**173-1740**	1	HOSE AS	
I	23	2	**173-1741**	1	HOSE AS	
Y	24	1	*228-0788*	1	ACCUMULATOR GP-HYDRAULIC (CHARGED)	329
I	25	1	**197-6863**	1	HOSE AS	
	26	1,2	**112-9437**	6	BLOCK	
	27	1,2	**112-9449**	12	BLOCK	
	28	1,2	**112-9450**	6	PLATE	
	29	1	*148-8313*	1	ADAPTER GP	
		1	**5P-6944**	1	ADAPTER	
		1	**3K-0360**	1	SEAL-O-RING	
	30	1	*148-8321*	4	CONNECTOR AS	
					(EACH INCLUDES)	
		1	**8C-0564**	1	CONNECTOR	
		1	**3J-1907**	1	SEAL-O-RING	
		1	**6V-8397**	1	SEAL-O-RING	
	31	1,2	*148-8336*	13	CONNECTOR AS	
					(EACH INCLUDES)	
		1,2	**6V-8636**	1	CONNECTOR	
		1,2	**3J-1907**	1	SEAL-O-RING	
		1,2	**6V-8397**	1	SEAL-O-RING	
	32	2	*148-8378*	2	ELBOW AS	
					(EACH INCLUDES)	
		2	**6V-8724**	1	ELBOW	
		2	**3J-1907**	1	SEAL-O-RING	
		2	**6V-8397**	1	SEAL-O-RING	
	33	2	*148-8439*	1	TEE AS	
		2	**6V-8774**	1	TEE	
		2	**3J-1907**	1	SEAL-O-RING	
		2	**6V-8397**	2	SEAL-O-RING	
	34	2	*148-8458*	1	UNION GP	
		2	**6V-9807**	1	UNION	
		2	**6V-8397**	2	SEAL-O-RING	

233-1440 **LINES GP-PILOT** ***(contd.)*** **i02043507**

NOTE	REF NO	GRAPHIC REF	PART NUMBER	QTY	PART NAME 1 2 3 4 5 6 (PRODUCT LEVEL)	SEE PAGE
	35	1	*150-3056*	2	TEE AS	
					(EACH INCLUDES)	
		1	**6V-8788**	1	TEE	
		1	**6V-8397**	3	SEAL-O-RING	
	36	1	**2P-0449**	1	CLIP	
	37	1	**3J-1907**	1	SEAL-O-RING	
	38	1	*148-8371*	1	ELBOW AS	
		1	**8C-8988**	1	ELBOW	
		1	**6V-8397**	1	SEAL-O-RING	

I-REFER TO HYDRAULIC INFORMATION SYSTEM
M-METRIC PART
Y-SEPARATE ILLUSTRATION

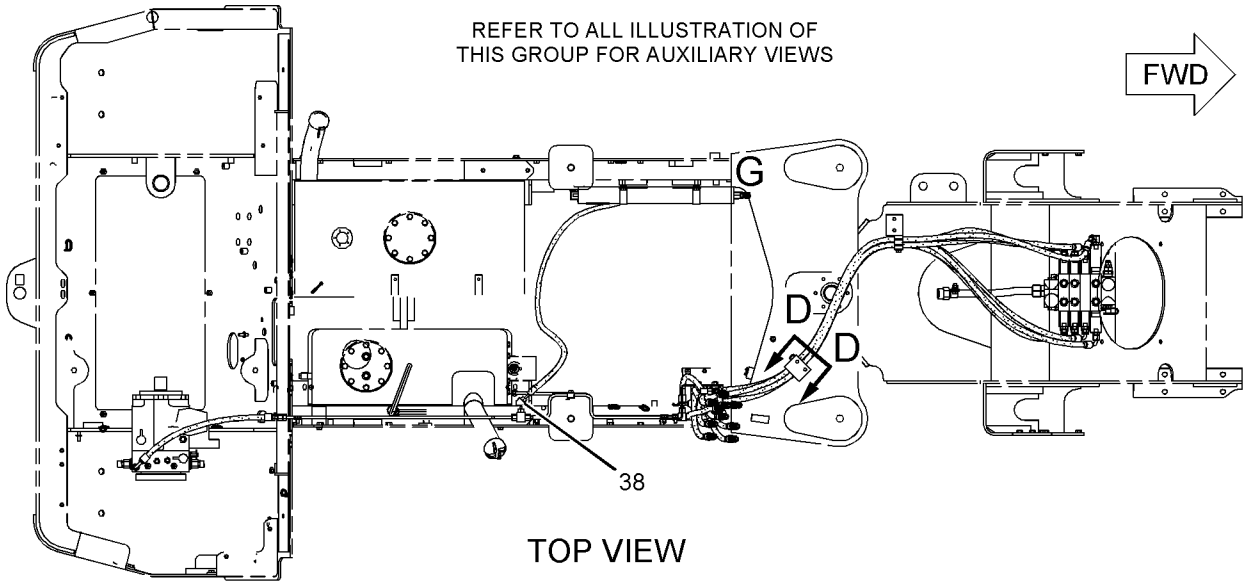

TOP VIEW

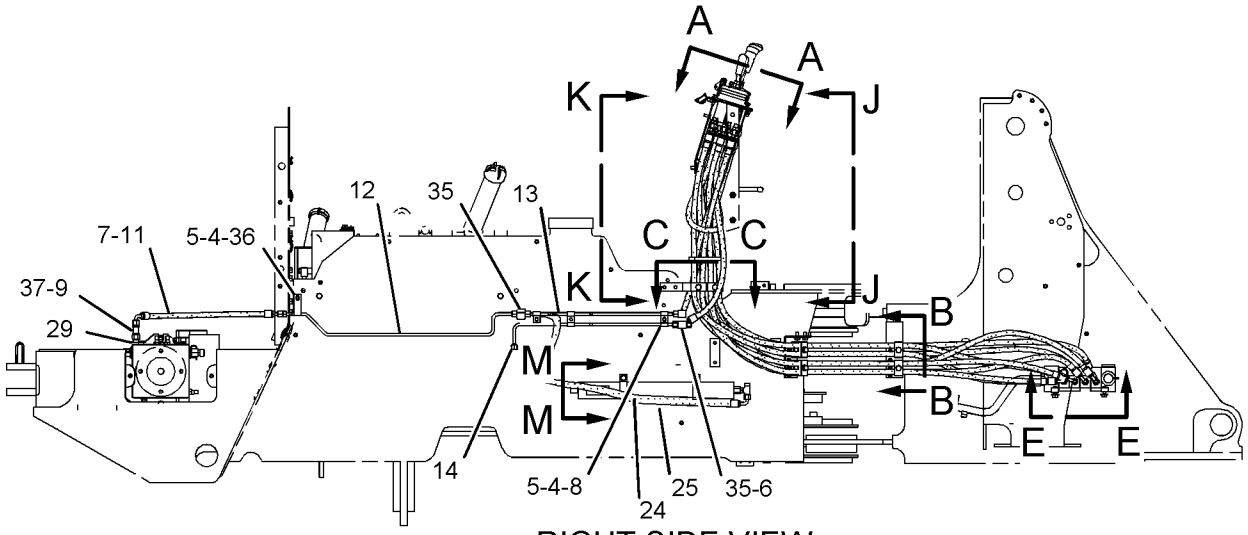

RIGHT SIDE VIEW

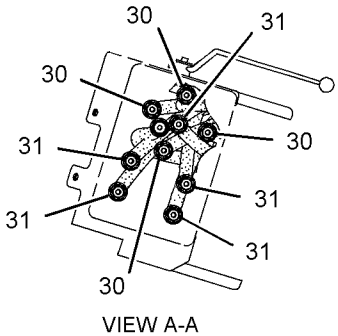

VIEW A-A

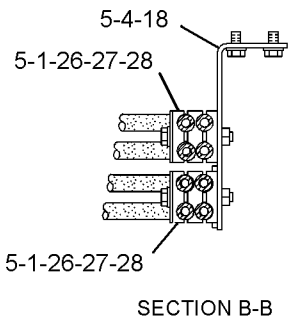

SECTION B-B

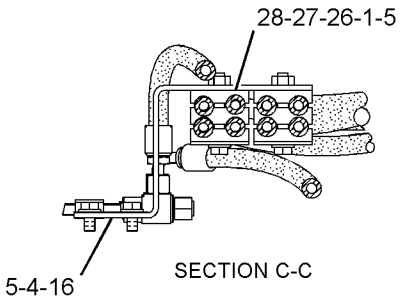

SECTION C-C

GRAPHIC #1

g01050231

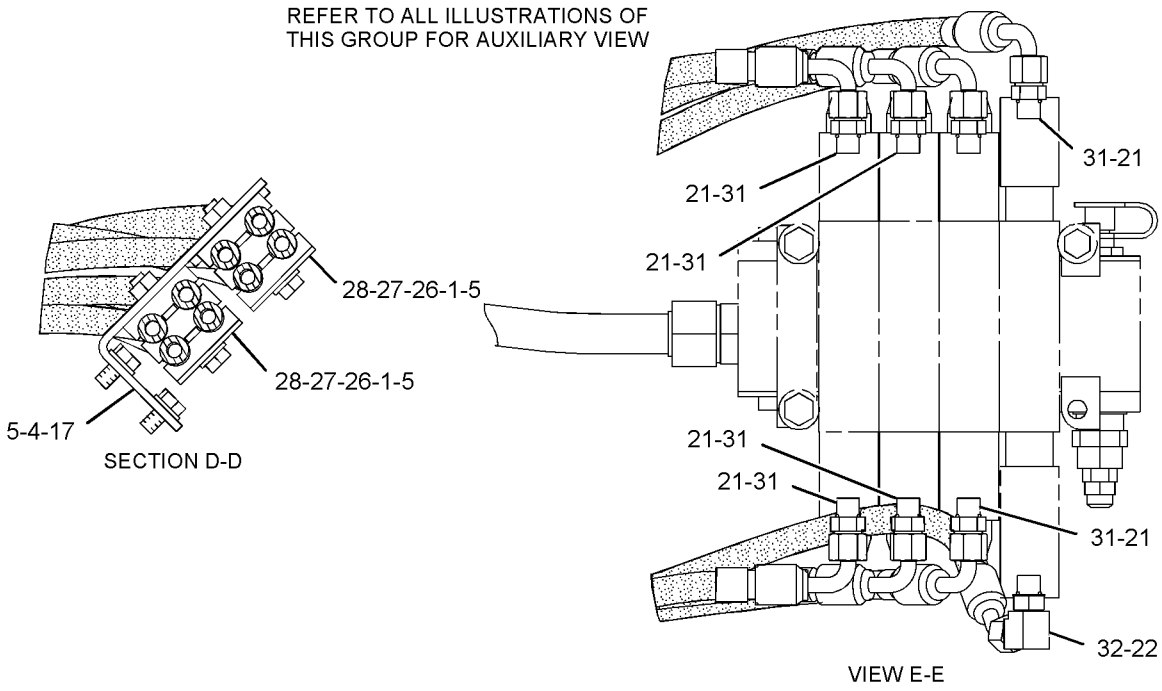

GRAPHIC #2

<END>

g01050232

HYDRAULIC SYSTEM

233-4048 LINES GP-PILOT

S/N: PDF1-UP
PART OF 241-9260 HYDRAULIC AR-3 VALVE
AN ATTACHMENT

SMCS-5057, 5059 **i02005265**

NOTE	REF NO	GRAPHIC REF	PART NUMBER	QTY	PART NAME 1 2 3 4 5 6 (PRODUCT LEVEL)	SEE PAGE
M	1	1,2	**8T-5005**	3	BOLT (M10X1.50X70-MM)	
M	2	2	**8T-4195**	2	BOLT (M10X1.5X30-MM)	
	3	2	**5P-5148**	1	STRAP-TIE	
M	4	1,2	**8T-4185**	3	BOLT (M10X1.5X50-MM)	
M	5	1,2	**8T-4137**	10	BOLT (M10X1.5X20-MM)	
	6	1,2	**8T-4121**	18	WASHER-HARD (11X21X2.5-MM THK)	
	7	1	**6V-9829**	1	CAP AS	
	8	1	**9T-3096**	1	VALVE GP-CHECK (PUMP)	
I	9	1	**112-9434**	1	HOSE AS	
	10	1	**112-9435**	1	TUBE AS	
	11	1	**112-9436**	1	TUBE AS	
	12	1	**112-9438**	1	TUBE AS	
I	13	2	**112-9445**	1	HOSE AS	
	14	1	**112-9446**	1	BRACKET AS	
	15	2	**115-9497**	1	BRACKET AS	
	16	1	**115-9498**	1	BRACKET AS	
I	17	2	**146-0108**	1	HOSE AS	
	18	2	*165-6365*	1	FITTING AS	
		2	**3J-1907**	1	SEAL-O-RING	
		2	**7W-7381**	1	FITTING-OUTLET	
I	19	2	**173-1739**	5	HOSE AS	
I	20	2	**173-1740**	1	HOSE AS	
I	21	2	**173-1741**	1	HOSE AS	
I	22	1	**197-6863**	1	HOSE AS	
Y	23	1	*228-0788*	1	ACCUMULATOR GP-HYDRAULIC	329
	24	2	**104-3173**	2	CLIP	
	25	1,2	**112-9437**	3	BLOCK	
	26	1,2	**112-9449**	12	BLOCK	
	27	1,2	**112-9450**	6	PLATE	
	28	1	*148-8313*	1	ADAPTER GP	
		1	**3K-0360**	1	SEAL-O-RING	
		1	**5P-6944**	1	ADAPTER	
	29	1	*148-8321*	4	CONNECTOR AS	
					(EACH INCLUDES)	
		1	**3J-1907**	1	SEAL-O-RING	
		1	**6V-8397**	1	SEAL-O-RING	
		1	**8C-0564**	1	CONNECTOR	
	30	1,2	*148-8336*	9	CONNECTOR AS	
					(EACH INCLUDES)	
		1,2	**3J-1907**	1	SEAL-O-RING	
		1,2	**6V-8397**	1	SEAL-O-RING	
		1,2	**6V-8636**	1	CONNECTOR	
	31	1	*148-8371*	1	ELBOW AS	
		1	**6V-8397**	1	SEAL-O-RING	
		1	**8C-8988**	1	ELBOW	
	32	2	*148-8378*	2	ELBOW AS	
					(EACH INCLUDES)	
		2	**3J-1907**	1	SEAL-O-RING	
		2	**6V-8397**	1	SEAL-O-RING	
		2	**6V-8724**	1	ELBOW	
	33	2	*148-8439*	1	TEE AS	
		2	**3J-1907**	1	SEAL-O-RING	
		2	**6V-8397**	2	SEAL-O-RING	
		2	**6V-8774**	1	TEE	
	34	2	*148-8458*	1	UNION GP	

233-4048 **LINES GP-PILOT** ***(contd.)*** **i02005265**

NOTE	REF NO	GRAPHIC REF	PART NUMBER	QTY	PART NAME 1 2 3 4 5 6 (PRODUCT LEVEL)	SEE PAGE
		2	**6V-8397**	2	SEAL-O-RING	
		2	**6V-9807**	1	UNION	
	35	1	*150-3056*	2	TEE AS	
					(EACH INCLUDES)	
		1	**6V-8397**	3	SEAL-O-RING	
		1	**6V-8788**	1	TEE	
	36	1	**2P-0449**	1	CLIP	
	37	1	**3J-1907**	1	SEAL-O-RING	
	38	1	**5P-9297**	5	CLIP	
	39	1	**6V-8397**	2	SEAL-O-RING	

I-REFER TO HYDRAULIC INFORMATION SYSTEM
M-METRIC PART
Y-SEPARATE ILLUSTRATION

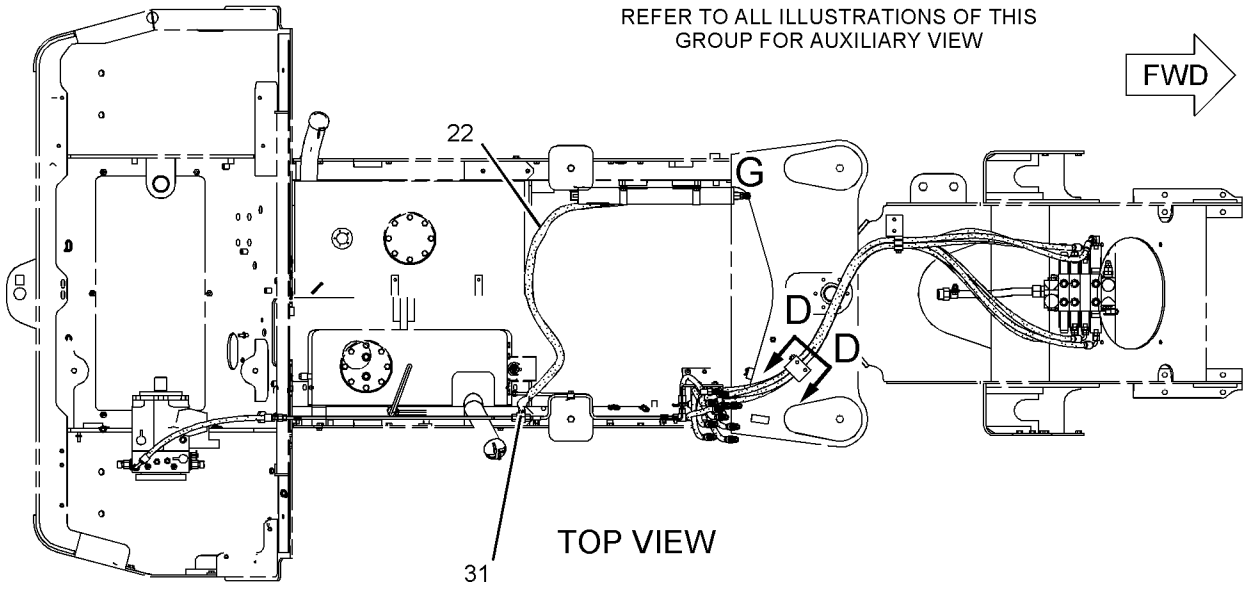

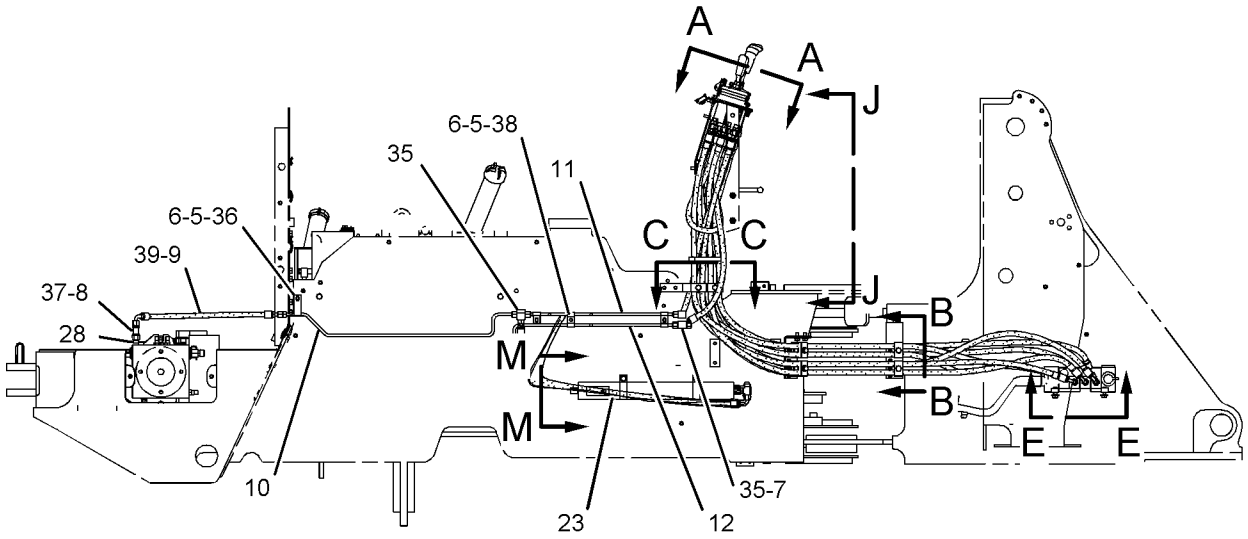

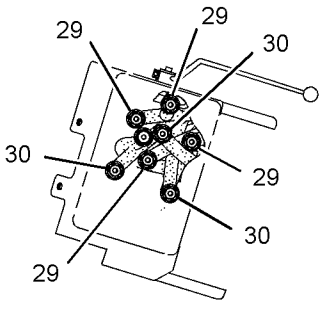

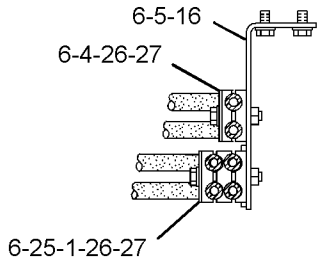

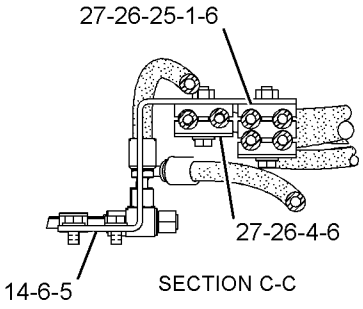

GRAPHIC #1

g01040880

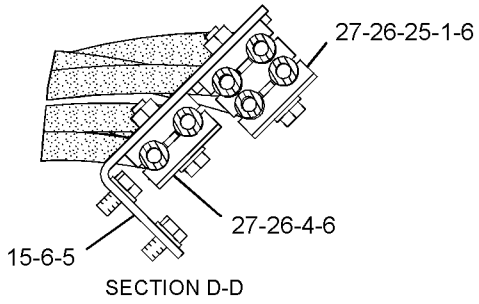

SECTION D-D

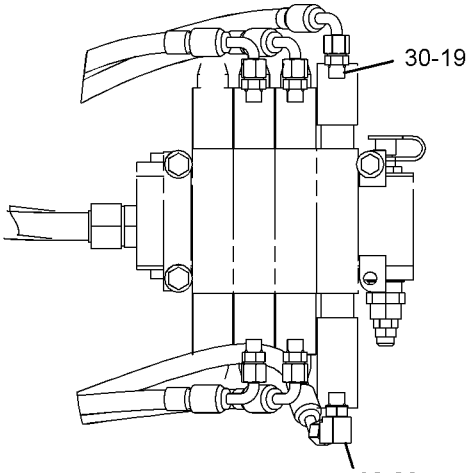

VIEW E-E

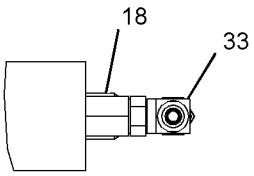

VIEW OF AREA G

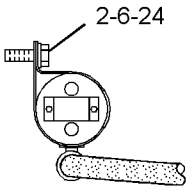

VIEW M-M

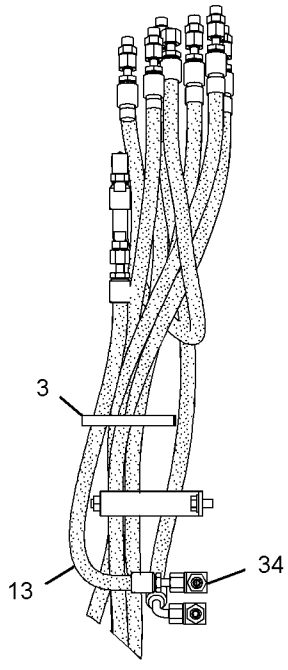

VIEW K-K

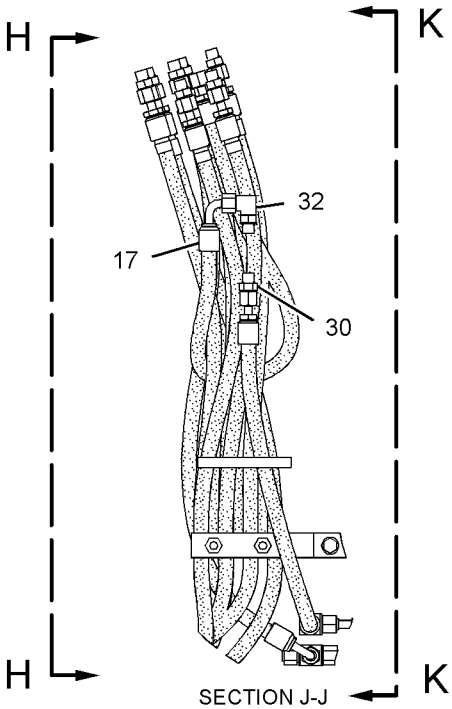

SECTION J-J

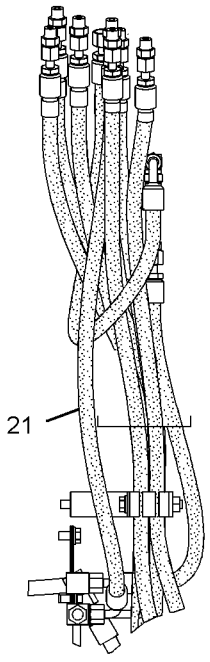

VIEW H-H

GRAPHIC #2

<END>

g01040881

HYDRAULIC SYSTEM

233-6846 LINES GP-PILOT

S/N: PDF1-UP
PART OF 241-9258 HYDRAULIC AR-2 VALVE
AN ATTACHMENT

SMCS-5057, 5059 **i02042780**

NOTE	REF NO	GRAPHIC REF	PART NUMBER	QTY	PART NAME 1 2 3 4 5 6 (PRODUCT LEVEL)	SEE PAGE
	1	2	**5P-5148**	1	STRAP-TIE	
M	2	1	**8T-5005**	1	BOLT (M10X1.50X70-MM)	
M	3	1	**8T-4195**	2	BOLT (M10X1.5X30-MM)	
M	4	1	**8T-4185**	4	BOLT (M10X1.5X50-MM)	
M	5	1,2	**8T-4137**	10	BOLT (M10X1.5X20-MM)	
	6	1	**9T-3096**	1	VALVE GP-CHECK (HYDROSTATIC PUMP)	
I	7	1	**112-9434**	1	HOSE AS	
	8	1	**112-9435**	1	TUBE AS	
	9	1	**112-9436**	1	TUBE AS	
	10	1	**112-9438**	1	TUBE AS	
I	11	2	**112-9445**	1	HOSE AS	
	12	1	**112-9446**	1	BRACKET AS	
	13	1	**115-9497**	1	BRACKET AS	
	14	1	**115-9498**	1	BRACKET AS	
I	15	2	**146-0108**	1	HOSE AS	
	16	1	*165-6365*	1	FITTING AS	
		1	**3J-1907**	1	SEAL-O-RING	
		1	**7W-7381**	1	FITTING-OUTLET	
I	17	2	**173-1739**	3	HOSE AS	
I	18	2	**173-1740**	1	HOSE AS	
I	19	2	**173-1741**	1	HOSE AS	
Y	20	1	*228-0788*	1	ACCUMULATOR GP-HYDRAULIC (CHARGED)	329
I	21	1	**197-6863**	1	HOSE AS	
	22	1	**104-3173**	2	CLIP	
	23	1	**112-9437**	1	BLOCK	
	24	1	**112-9449**	10	BLOCK	
	25	1	**112-9450**	5	PLATE	
	26	1	*148-8313*	1	ADAPTER GP	
		1	**5P-6944**	1	ADAPTER	
		1	**3K-0360**	1	SEAL-O-RING	
	27	1	*148-8321*	4	CONNECTOR AS	
					(EACH INCLUDES)	
		1	**8C-0564**	1	CONNECTOR	
		1	**3J-1907**	1	SEAL-O-RING	
		1	**6V-8397**	1	SEAL-O-RING	
	28	1,2	*148-8336*	5	CONNECTOR AS	
					(EACH INCLUDES)	
		1,2	**6V-8636**	1	CONNECTOR	
		1,2	**3J-1907**	1	SEAL-O-RING	
		1,2	**6V-8397**	1	SEAL-O-RING	
	29	2	*148-8378*	2	ELBOW AS	
					(EACH INCLUDES)	
		2	**6V-8724**	1	ELBOW	
		2	**3J-1907**	1	SEAL-O-RING	
		2	**6V-8397**	1	SEAL-O-RING	
	30	1	*148-8439*	1	TEE AS	
		1	**6V-8774**	1	TEE	
		1	**3J-1907**	1	SEAL-O-RING	
		1	**6V-8397**	2	SEAL-O-RING	
	31	2	*148-8458*	1	UNION GP	
		2	**6V-9807**	1	UNION	
		2	**6V-8397**	2	SEAL-O-RING	
	32	1,2	*150-3056*	2	TEE AS	
					(EACH INCLUDES)	
		1,2	**6V-8788**	1	TEE	

233-6846 **LINES GP-PILOT** ***(contd.)*** **i02042780**

NOTE	REF NO	GRAPHIC REF	PART NUMBER	QTY	PART NAME 1 2 3 4 5 6 (PRODUCT LEVEL)	SEE PAGE
		1,2	**6V-8397**	3	SEAL-O-RING	
	33	1	**2P-0449**	1	CLIP	
	34	1	**3J-1907**	1	SEAL-O-RING	
	35	1,2	**5P-9297**	5	CLIP	
	36	1	**6V-8397**	2	SEAL-O-RING	
	37	2	**6V-9829**	1	CAP AS	
	38	1,2	**8T-4121**	17	WASHER-HARD (11X21X2.5-MM THK)	
	39	1	*148-8371*	1	ELBOW AS	
		1	**6V-8988**	1	ELBOW	
		1	**6V-8397**	1	SEAL-O-RING	

I-REFER TO HYDRAULIC INFORMATION SYSTEM
M-METRIC PART
Y-SEPARATE ILLUSTRATION

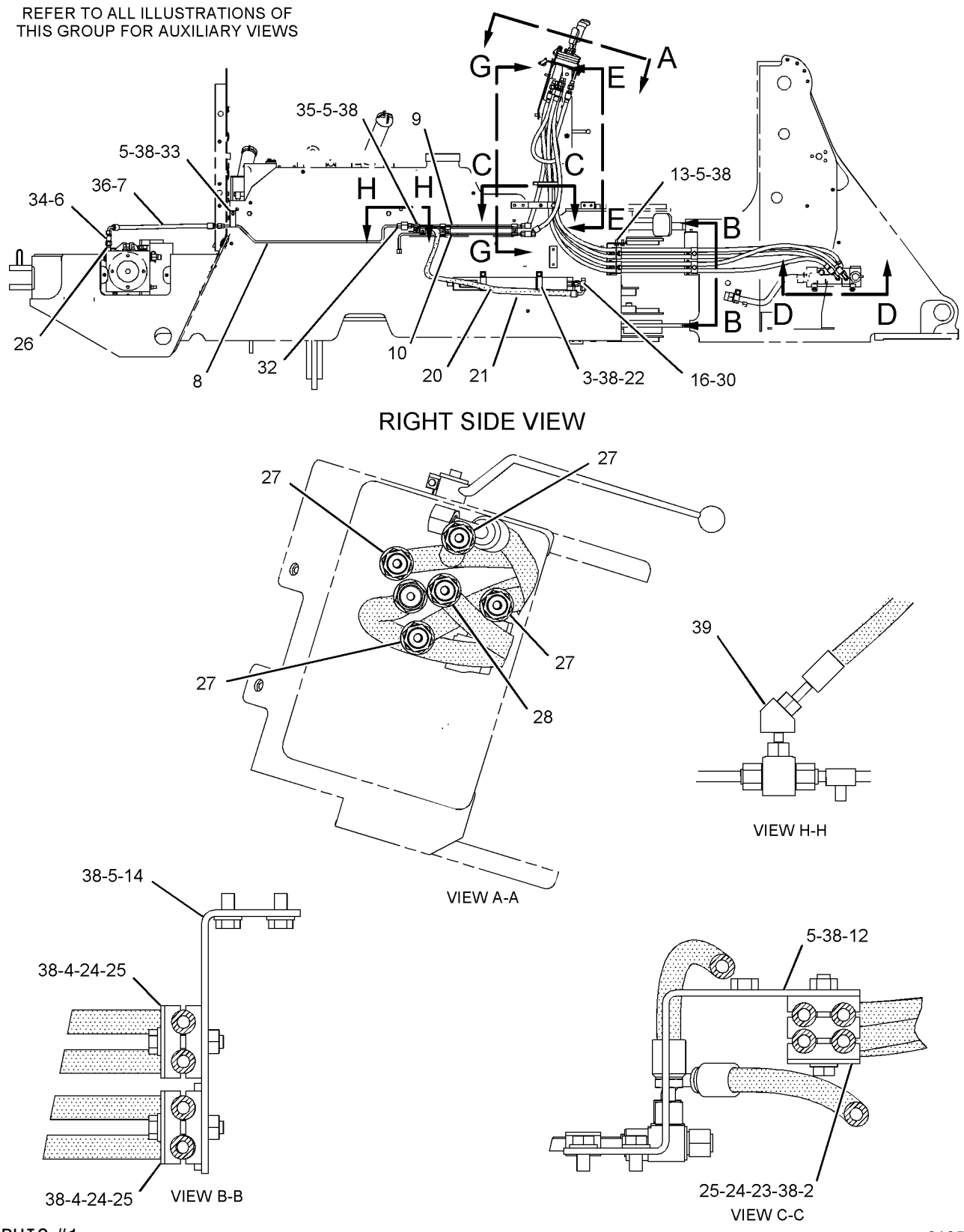

GRAPHIC #1

g01050304

REFER TO ALL ILLUSTRATIONS OF
THIS GROUP FOR AUXILIARY VIEWS

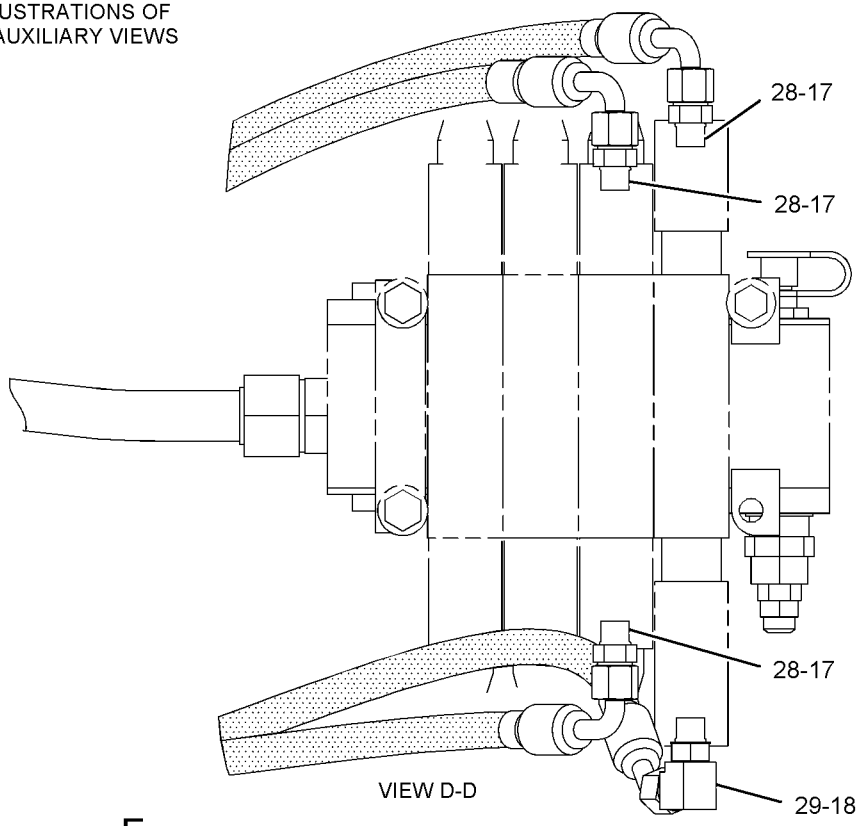

VIEW D-D

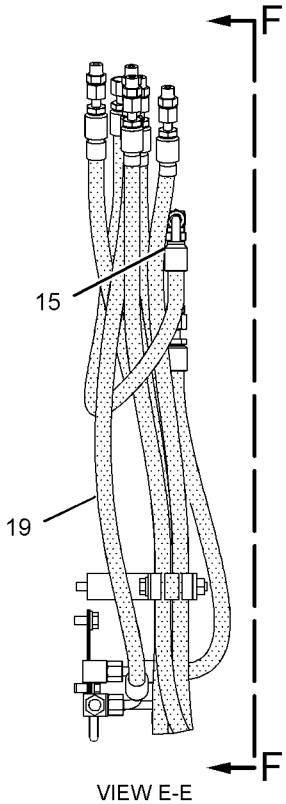

VIEW E-E

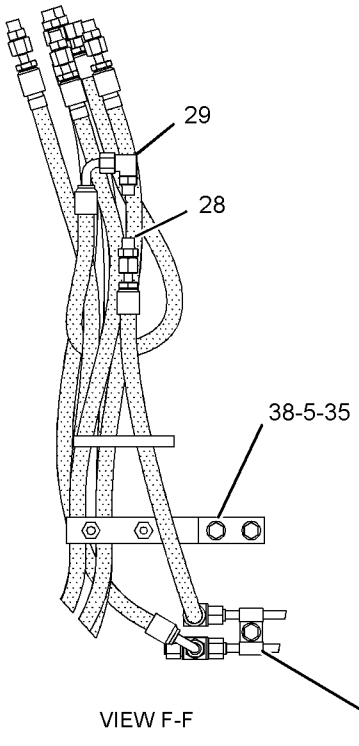

VIEW F-F

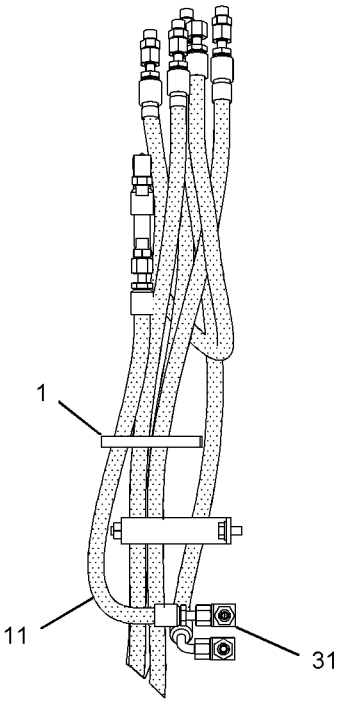

VIEW G-G

GRAPHIC #2

<END>

g01050305

HYDRAULIC SYSTEM

148-2577 LINES GP-PUMP

S/N: PDF1-UP

PART OF 109-4811 HYDRAULIC AR

SMCS-5057 **i01628568**

NOTE	REF NO	GRAPHIC REF	PART NUMBER	QTY	PART NAME 1 2 3 4 5 6 (PRODUCT LEVEL)	SEE PAGE
	1	1	**112-5121**	1	TUBE AS	
I	2	1	**113-6367**	1	HOSE AS	
	3	1	**120-7717**	1	TUBE AS	
	4	1	**128-2433**	1	TUBE AS	
I	5	1	**128-2434**	1	HOSE AS	
	6	1	**148-6989**	1	TUBE AS	
	7	1	*163-1057*	1	TEE AS	
		1	**6V-8400**	2	SEAL-O-RING	
		1	**7X-2429**	1	TEE-SWIVEL	
I	8	1	**163-4525**	1	HOSE AS	
	9	1	*164-4058*	1	REDUCER GP	
		1	**5K-9090**	1	SEAL-O-RING	
		1	**6V-8948**	1	REDUCER AS	
	10	1	**175-6475**	1	TUBE AS	
I	11	1	**175-6476**	1	HOSE AS	
I	12	1	**175-6478**	1	HOSE AS	
I	13	1	**175-6480**	2	HOSE AS	
	14	1	*148-8323*	1	CONNECTOR GP	
		1	**2S-4078**	1	SEAL-O-RING	
		1	**5K-9090**	1	SEAL-O-RING	
		1	**6V-9875**	1	CONNECTOR	
	15	1	*148-8334*	1	CONNECTOR GP	
		1	**2S-4078**	1	SEAL-O-RING	
		1	**6V-8400**	1	SEAL-O-RING	
		1	**8T-3611**	1	CONNECTOR	
	16	1	*148-8335*	2	CONNECTOR GP	
					(EACH INCLUDES)	
		1	**5K-9090**	1	SEAL-O-RING	
		1	**6V-8635**	1	CONNECTOR	
		1	**7M-8485**	1	SEAL-O-RING	
	17	1	*148-8387*	2	ELBOW GP	
					(EACH INCLUDES)	
		1	**6V-8400**	1	SEAL-O-RING	
		1	**6V-9855**	1	ELBOW	
	18	1	**4J-0520**	1	SEAL-O-RING	
	19	1	**4J-0522**	1	SEAL-O-RING	
	20	1	**4J-5267**	2	SEAL-O-RING	
	21	1	**5G-3676**	4	GROMMET	
	22	1	**5K-9090**	2	SEAL-O-RING	
	23	1	**5P-7466**	2	CLIP (SLOT)	
	24	1	**5P-7467**	2	CLIP (TAB)	
	25	1	**5P-7468**	1	CLIP (SLOT)	
	26	1	**5P-7469**	1	CLIP (TAB)	
	27	1	**5P-8112**	2	GROMMET	
	28	1	**5P-8444**	1	GROMMET	
	29	1	**6V-8400**	3	SEAL-O-RING	
	30	1	**6V-9746**	3	SEAL-O-RING	
	31	1	**8C-3205**	4	FLANGE-HALF	
	32	1	**8T-1889**	5	CLIP (SLOT)	
	33	1	**8T-1890**	5	CLIP (TAB)	
	34	1	**8T-4121**	19	WASHER-HARD (11X21X2.5MM THK)	
M	35	1	**8T-4133**	1	NUT (M10X1.5 THD)	
M	36	1	**8T-4136**	4	BOLT (M10X1.5X25MM)	
M	37	1	**8T-4137**	1	BOLT (M10X1.5X20MM)	
M	38	1	**8T-4186**	4	BOLT (M10X1.5X40MM)	
M	39	1	**8T-4195**	3	BOLT (M10X1.5X30MM)	

148-2577 **LINES GP-PUMP** ***(contd.)*** **i01628568**

NOTE	REF NO	GRAPHIC REF	PART NUMBER	QTY	PART NAME 1 2 3 4 5 6 (PRODUCT LEVEL)	SEE PAGE
M	40	1	**8T-4196**	8	BOLT (M10X1.5X35MM)	
D	41	1	**8T-3425**		CHANNEL-TRIM (0.33M)	
D	42	1	**8T-3425**		CHANNEL-TRIM (0.17M)	

D-ORDER BY THE METER
I-SEE HOSE FABRICATION GUIDE
M-METRIC PART

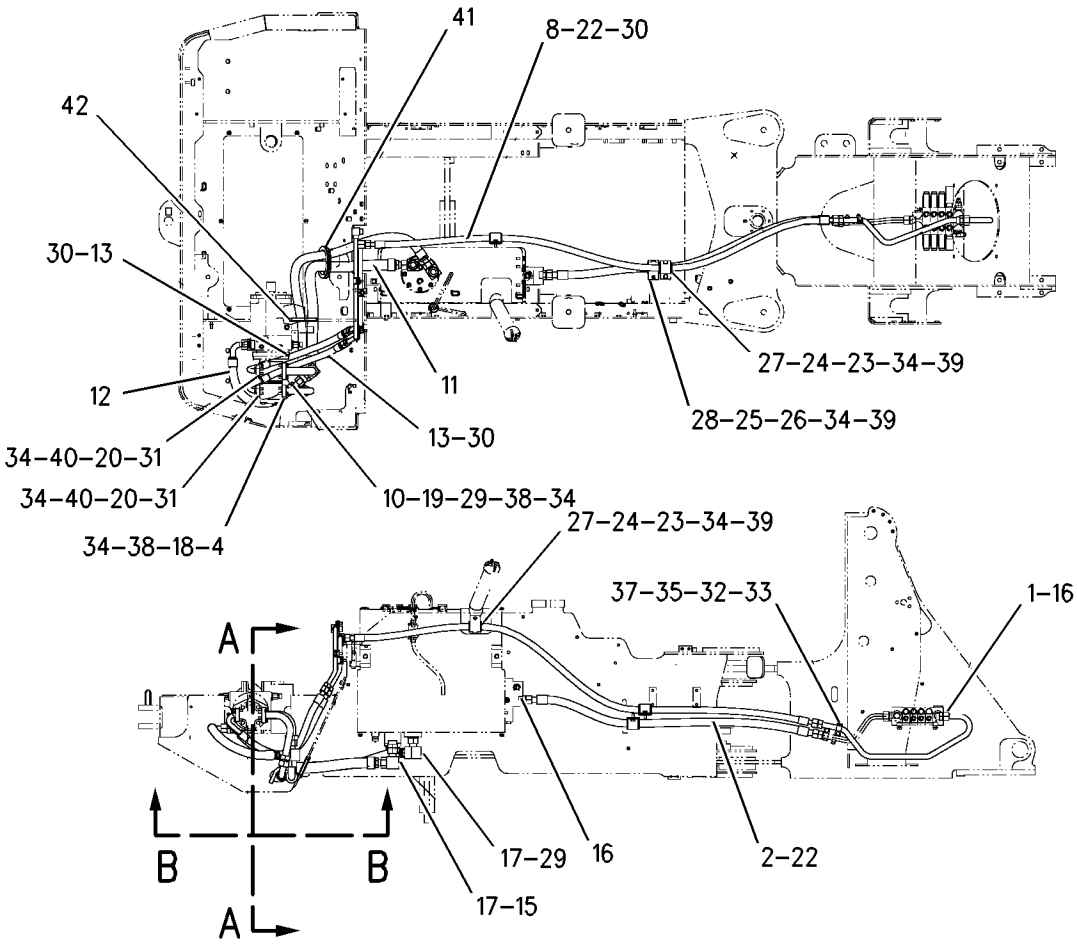

RIGHT SIDE VIEW

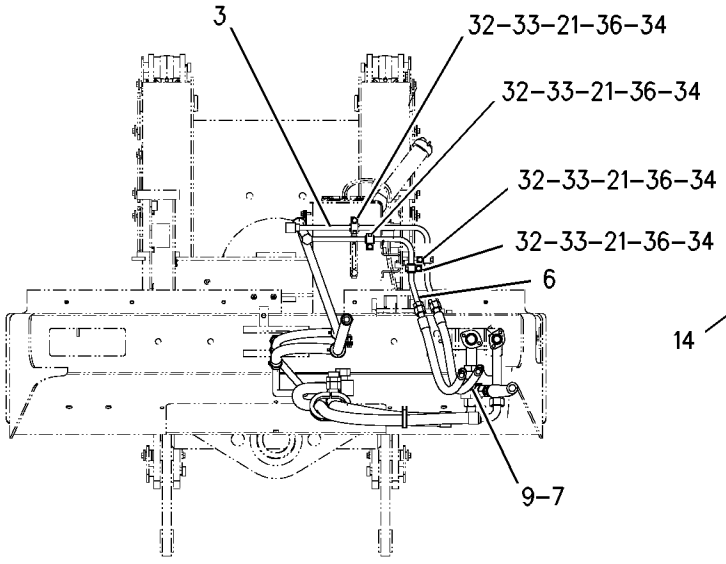

VIEW A-A

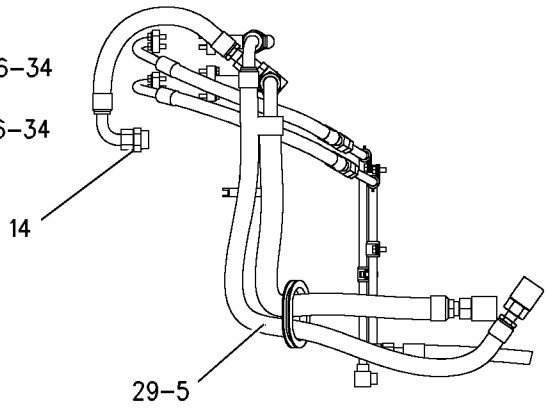

VIEW B-B

GRAPHIC #1 **<END>** g00844068

HYDRAULIC SYSTEM

111-4256 LINES GP-TILT CYLINDER

S/N: PDF1-UP

PART OF 109-4811 HYDRAULIC AR

SMCS-5057, 5104 **i02016481**

NOTE	REF NO	GRAPHIC REF	PART NUMBER	QTY	PART NAME 1 2 3 4 5 6 (PRODUCT LEVEL)	SEE PAGE
	1	1	**8T-1887**	3	CLIP (SLOT)	
	2	1	**8T-1888**	3	CLIP (TAB)	
I	3	1	**109-5836**	2	HOSE AS	
	4	1	**112-5211**	1	TUBE AS	
	5	1	**113-6296**	1	TUBE AS	
	6	1	**113-6297**	1	TUBE AS	
	7	1	*148-8315*	1	CONNECTOR GP	
		1	**2M-9780**	1	SEAL-O-RING	
		1	**6V-8642**	1	CONNECTOR	
		1	**7J-9108**	1	SEAL-O-RING	
	8	1	*148-8388*	1	ELBOW GP	
		1	**2M-9780**	1	SEAL-O-RING	
		1	**6V-8629**	1	ELBOW	
		1	**6V-9746**	1	SEAL-O-RING	
	9	1	*150-4041*	2	CONNECTOR AS	
					(EACH INCLUDES)	
		1	**2M-9780**	1	SEAL-O-RING	
		1	**3E-7420**	1	CONNECTOR	
		1	**6V-9746**	1	SEAL-O-RING	
	10	1	**7J-9108**	3	SEAL-O-RING	
	11	1	**8T-4121**	3	WASHER-HARD (11X21X2.5-MM THK)	
M	12	1	**8T-4136**	3	BOLT (M10X1.5X25-MM)	

I-REFER TO HYDRAULIC INFORMATION SYSTEM
M-METRIC PART

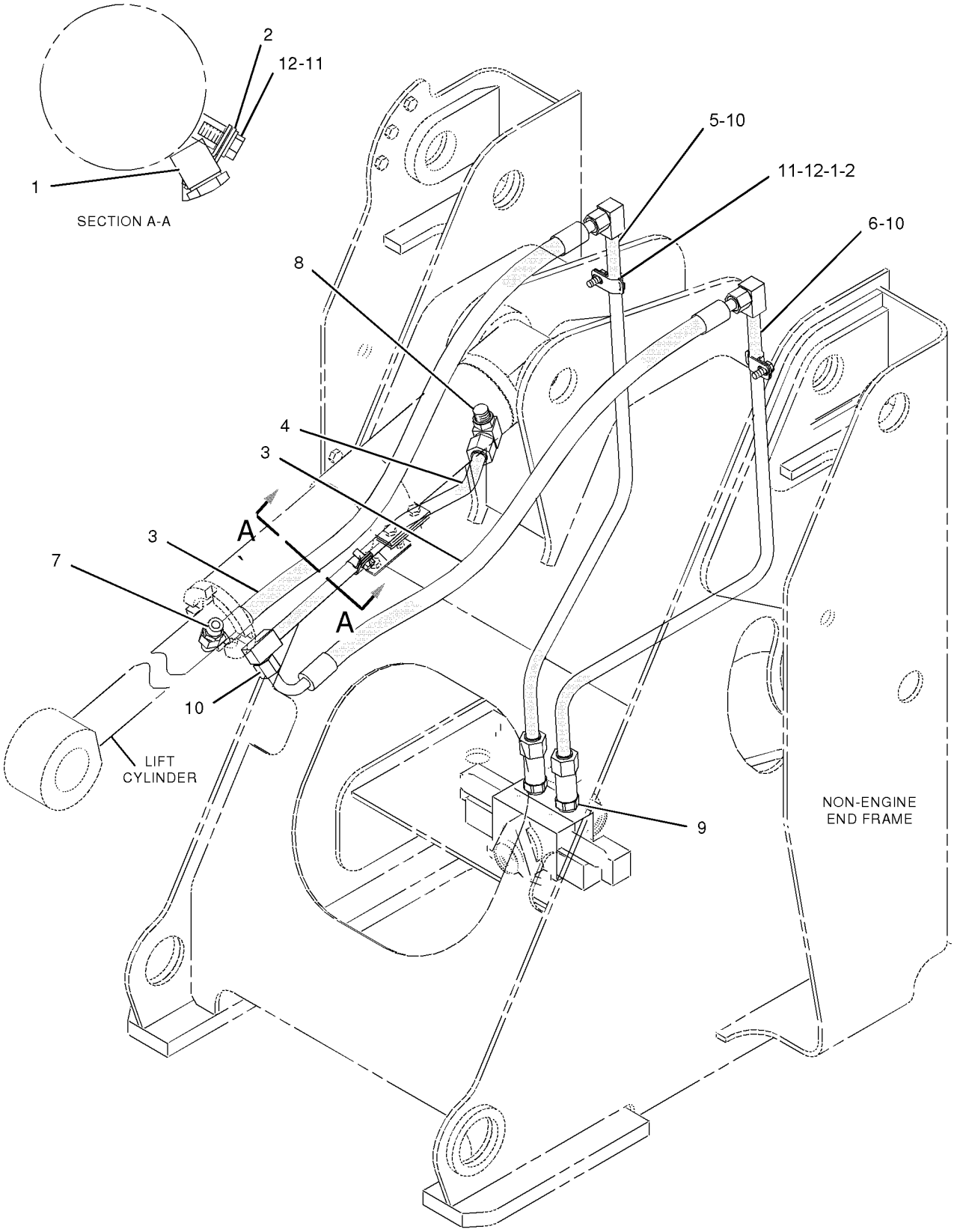

GRAPHIC #1

<END>

g01042606

HYDRAULIC SYSTEM

209-7763 LOCK GP-HYDRAULIC HAND CONTROL

S/N: PDF1-UP
AN ATTACHMENT

SMCS-5001 **i01899518**

NOTE	REF NO	GRAPHIC REF	PART NUMBER	QTY	PART NAME 1 2 3 4 5 6 (PRODUCT LEVEL)	SEE PAGE
	1	1	**4M-2381**	1	SPRING	
	2	1	**114-3949**	1	LOCK AS	
	3	1	**143-9069**	2	ROD	
	4	1	**209-7295**	1	PLATE	
	5	1	**209-7296**	1	TAB	
M	6	1	**6V-5683**	2	BOLT (M6X1X16MM)	
M	7	1	**9X-2042**	4	SCREW-TRUSS HEAD (M6X1X12MM)	
	8	1	**9X-8256**	2	WASHER (6.6X12X2MM THK)	

M-METRIC PART

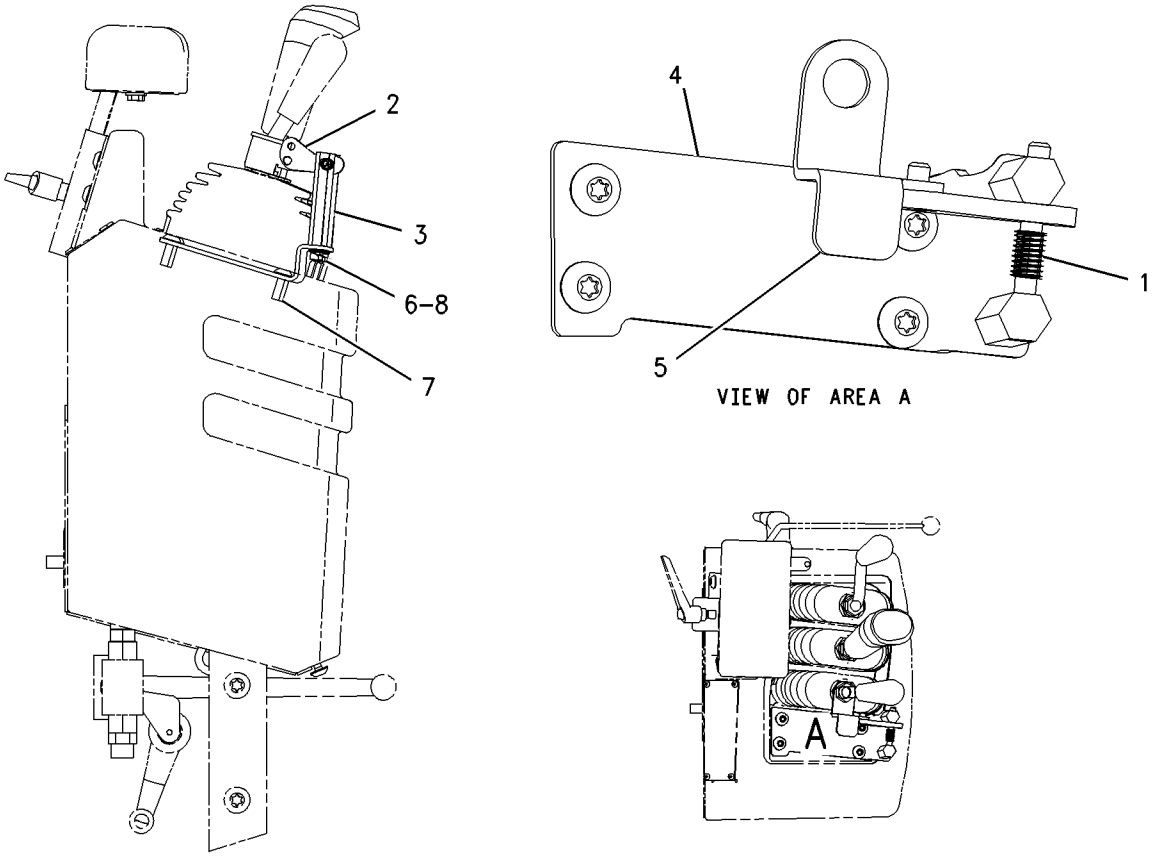

GRAPHIC #1 **<END>** g00867000

HYDRAULIC SYSTEM

202-2564 PIVOT GP-PILOT VALVE

S/N: PDF1-UP
PART OF 163-3120, 163-3121 VALVE GP-PILOT
AN ATTACHMENT

SMCS-5059 **i02034161**

NOTE	REF NO	GRAPHIC REF	PART NUMBER	QTY	PART NAME 1 2 3 4 5 6 (PRODUCT LEVEL)	SEE PAGE
	1	1	**139-4189**	1	PLATE	
	2	1	**141-7481**	1	SPACER	
	3	1	**146-6315**	1	PIN-ADJUSTMENT	
	4	1	**146-6317**	1	RETAINER	
	5	1	**146-8479**	1	SWIVEL	
	6	1	**159-3781**	1	SPRING	
M	7	1	**178-7877**	1	SETSCREW (M6X1X25-MM)	
M	8	1	**5C-2890**	2	NUT (M6X1-THD)	

M-METRIC PART

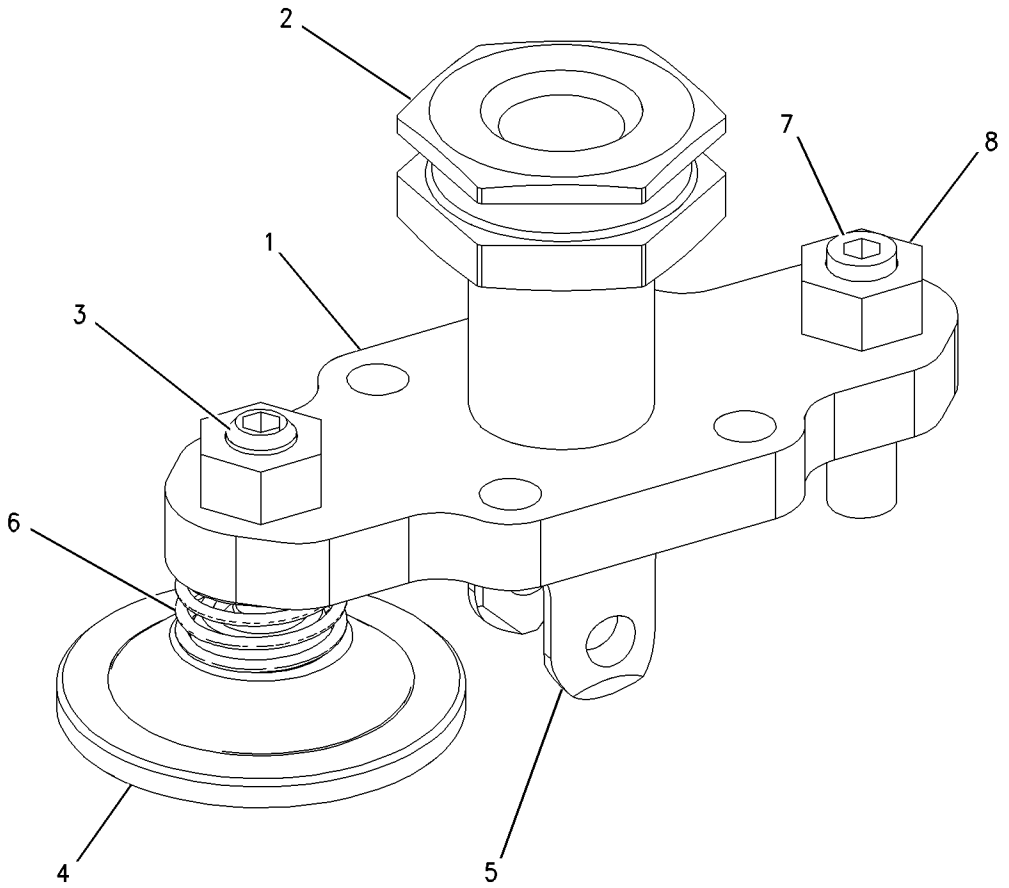

GRAPHIC #1 **<END>** g00803469

147-3322 PLATE GP-PILOT VALVE

S/N: PDF1-UP
PART OF 163-3118, 163-3120, 163-3121 VALVE GP-PILOT
AN ATTACHMENT

SMCS-5059 **i02036865**

NOTE	REF NO	GRAPHIC REF	PART NUMBER	QTY	PART NAME 1 2 3 4 5 6 (PRODUCT LEVEL)	SEE PAGE
M	1	1	**5C-2890**	4	NUT (M6X1-THD)	
	2	1	**146-6315**	3	PIN-ADJUSTMENT	
	3	1	**153-8945**	3	PLUNGER AS	
					(EACH INCLUDES)	
		1	**3H-7180**	1	SETSCREW (1/4-28X.25-IN)	
		1	**6J-9996**	1	SPRING	
M	4	1	**178-7877**	1	SETSCREW (M6X1X25-MM)	
	5	1	**146-6317**	3	RETAINER	
	6	1	**159-3781**	3	SPRING	

M-METRIC PART

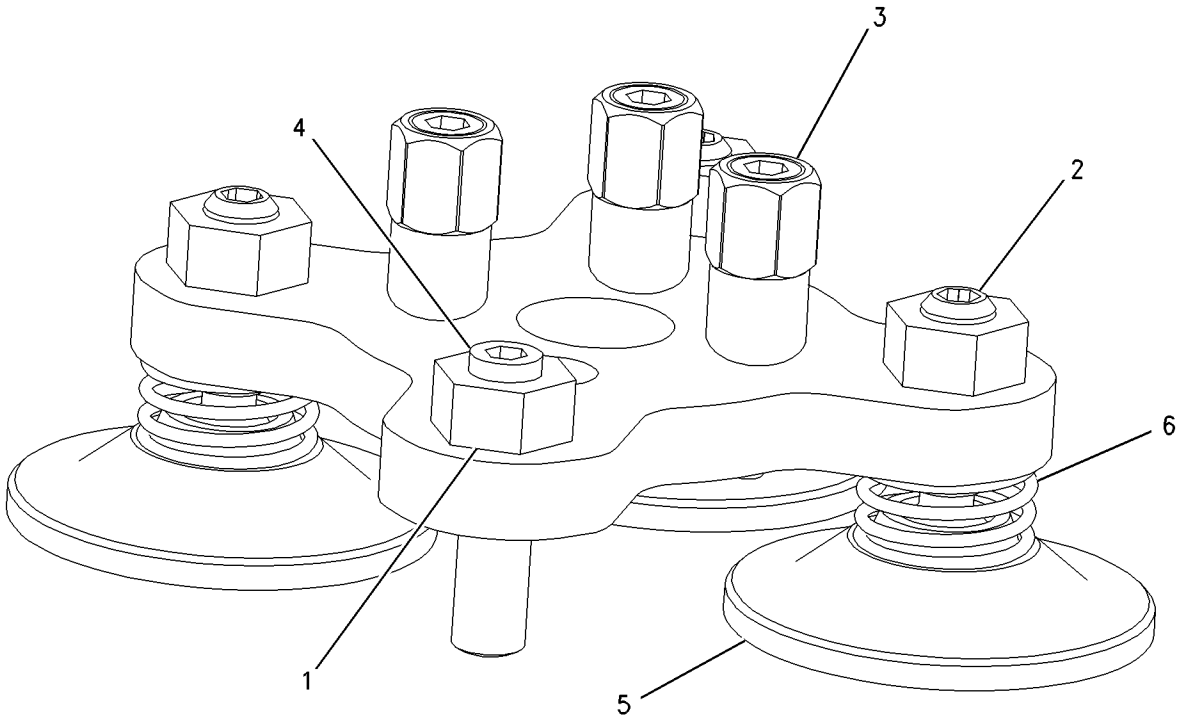

GRAPHIC #1 **<END>** g00810224

163-4635 PLATE GP-PILOT VALVE

S/N: PDF1-UP
PART OF 163-3121 VALVE GP-PILOT
AN ATTACHMENT

SMCS-5059 **i01786105**

NOTE	REF NO	GRAPHIC REF	PART NUMBER	QTY	PART NAME 1 2 3 4 5 6 (PRODUCT LEVEL)	SEE PAGE
	1	1	**136-9297**	1	PLATE	
	2	1	**136-9298**	1	RETAINER	
	3	1	**141-1556**	2	RETAINER	
	4	1	**141-2032**	2	PLATE	
	5	1	**142-2651**	1	PLATE AS	
	6	1	**145-2334**	2	ADAPTER	
	7	1	**148-7922**	2	PLATE	
	8	1	**149-5470**	1	PLATE	
	9	1	**153-8952**	1	ADAPTER	
	10	1	**163-5512**	9	GROMMET	
	11	1	**145-8428**	4	COIL AS	
					(EACH INCLUDES)	
		1	**186-3735**	2	PIN-CONNECTOR	
M	12	1	**191-8920**	12	BOLT-SOCKET HEAD (M6X1X12MM)	
	13	1	**3K-0360**	3	SEAL-O-RING	

M-METRIC PART

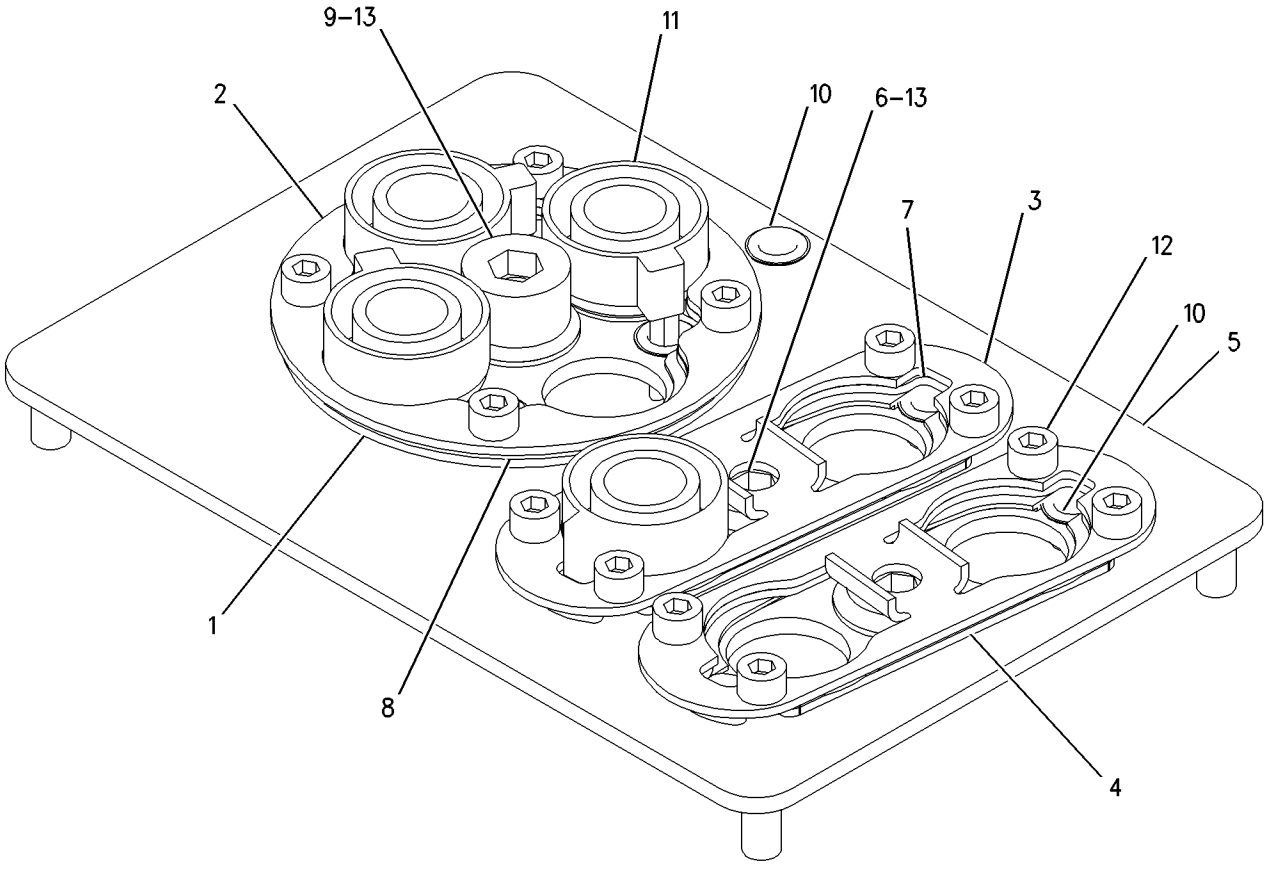

GRAPHIC #1 **<END>** g00913530

HYDRAULIC SYSTEM

163-4636 PLATE GP-PILOT VALVE

S/N: PDF1-UP
PART OF 163-3120 VALVE GP-PILOT
AN ATTACHMENT

SMCS-5059 **i02021398**

NOTE	REF NO	GRAPHIC REF	PART NUMBER	QTY	PART NAME 1 2 3 4 5 6 (PRODUCT LEVEL)	SEE PAGE
	1	1	**136-9297**	1	PLATE	
	2	1	**136-9298**	1	RETAINER	
	3	1	**141-1556**	1	RETAINER	
	4	1	**141-2032**	1	PLATE	
	5	1	**142-2651**	1	PLATE AS	
	6	1	**145-2334**	1	ADAPTER	
	7	1	**148-7922**	1	PLATE	
	8	1	**149-5470**	1	PLATE	
	9	1	**153-8952**	1	ADAPTER	
	10	1	**163-5512**	7	GROMMET	
	11	1	**145-8428**	4	COIL AS-DETENT	
					(EACH INCLUDES)	
BD		1	**6V-2689**		TUBE-HEAT SHRINK	
		1	**186-3735**	2	PIN-CONNECTOR	
M	12	1	**191-8920**	8	BOLT-SOCKET HEAD (M6X1X12-MM)	
	13	1	**3K-0360**	2	SEAL-O-RING	

B-USE AS REQUIRED
D-ORDER BY THE METER
M-METRIC PART

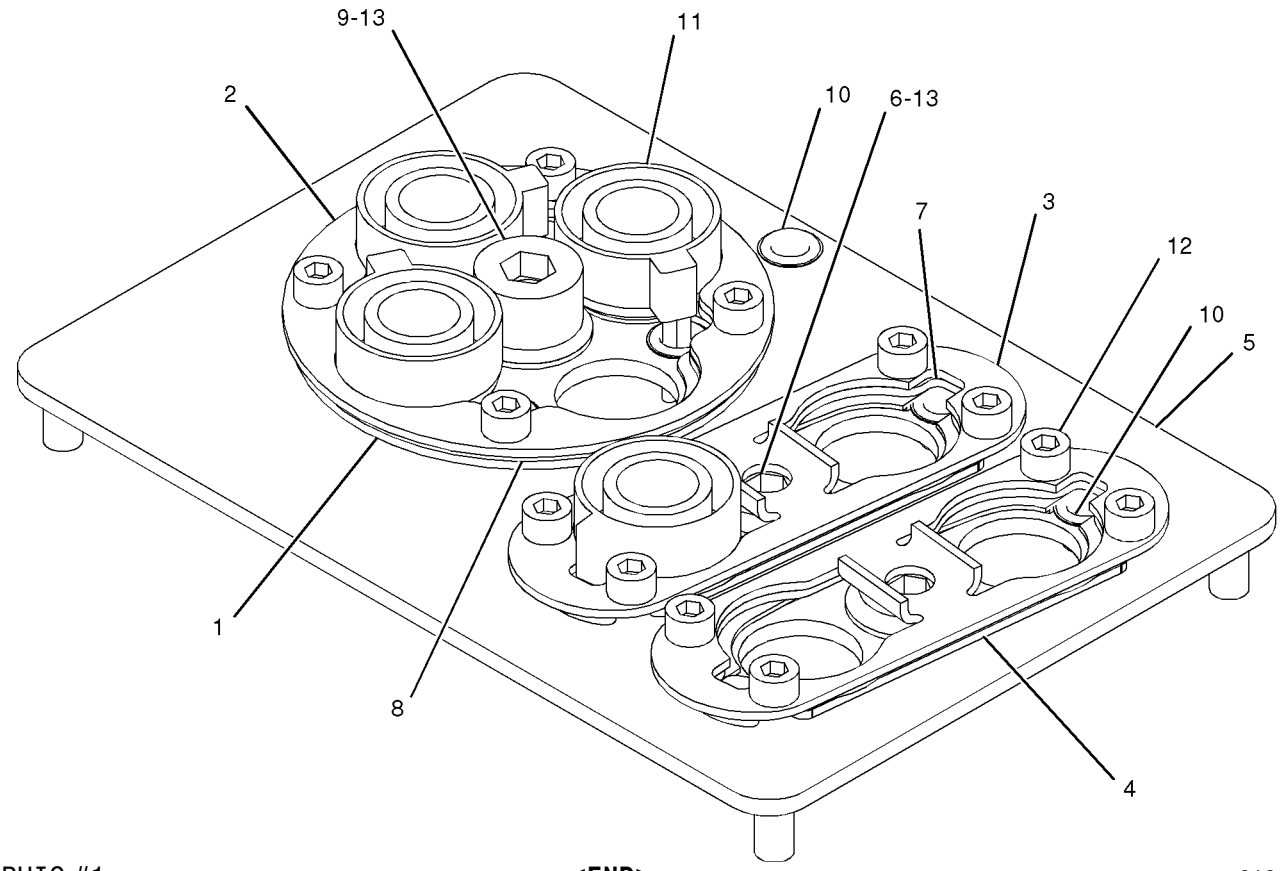

GRAPHIC #1 **<END>** g01043835

HYDRAULIC SYSTEM

163-4637 PLATE GP-PILOT VALVE

S/N: PDF1-UP
PART OF 163-3118 VALVE GP-PILOT
AN ATTACHMENT

SMCS-5059 **i02021397**

NOTE	REF NO	GRAPHIC REF	PART NUMBER	QTY	PART NAME 1 2 3 4 5 6 (PRODUCT LEVEL)	SEE PAGE
	1	1	**136-9297**	1	PLATE	
	2	1	**136-9298**	1	RETAINER	
	3	1	**142-2651**	1	PLATE AS	
	4	1	**149-5470**	1	PLATE	
	5	1	**153-8952**	1	ADAPTER	
	6	1	**163-5512**	5	GROMMET	
	7	1	**145-8428**	3	COIL AS-DETENT	
					(EACH INCLUDES)	
BD		1	**6V-2689**		TUBE-HEAT SHRINK	
		1	**186-3735**	2	PIN-CONNECTOR	
M	8	1	**191-8920**	4	BOLT-SOCKET HEAD (M6X1X12-MM)	
	9	1	**3K-0360**	1	SEAL-O-RING	

B-USE AS REQUIRED
D-ORDER BY THE METER
M-METRIC PART

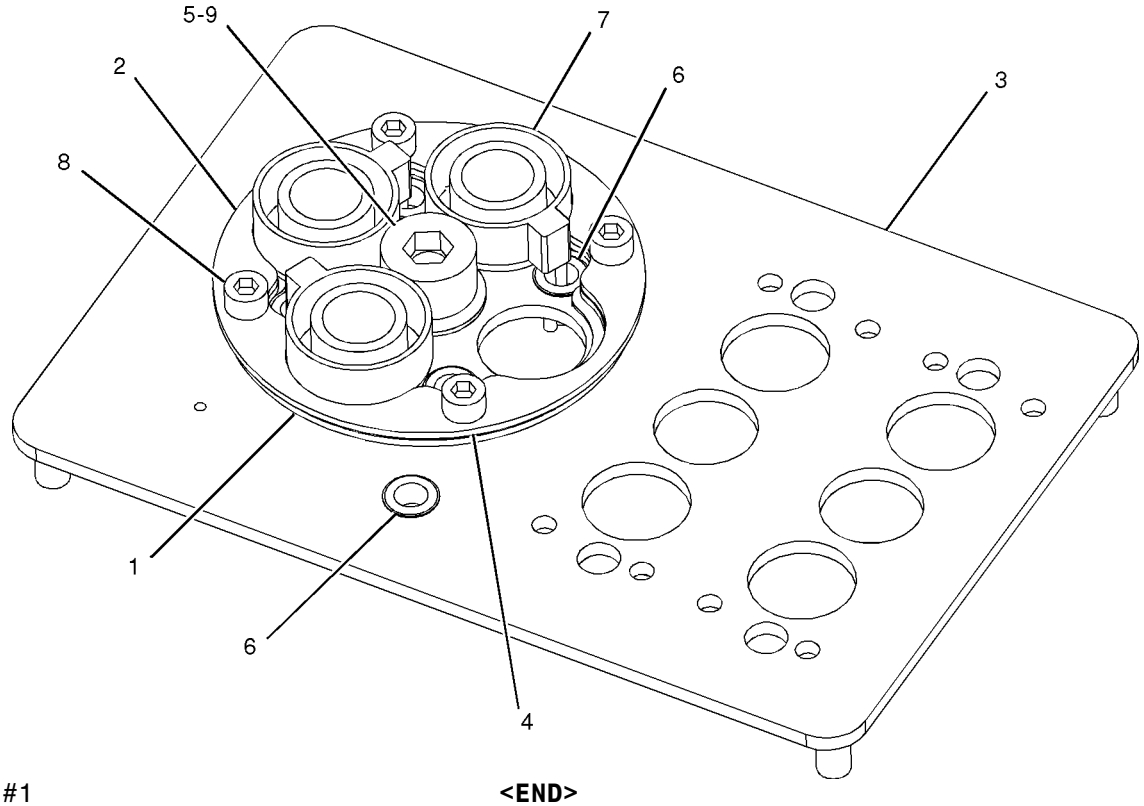

GRAPHIC #1 **<END>** g01043834

HYDRAULIC SYSTEM

111-4268 PUMP & MTG GP-IMPL & STEERING

S/N: PDF1-UP

PART OF 109-4811 HYDRAULIC AR

SMCS-4306, 5055, 5070, 5084 **i02038783**

NOTE	REF NO	GRAPHIC REF	PART NUMBER	QTY	PART NAME 1 2 3 4 5 6 (PRODUCT LEVEL)	SEE PAGE
C	1	1	**157-2630**	1	PUMP GP-GEAR (IMPLEMENT, STEERING, BRAKE)	
		1	**246-0919**	1	KIT-SEAL	
					(INCLUDES SEALS, O-RINGS & BACKUP RINGS)	
	2	1	**8T-4223**	2	WASHER-HARD (13.5X25.5X3-MM THK)	
M	3	1	**8T-4956**	2	BOLT (M12X1.75X35-MM)	

C-CHANGE FROM PREVIOUS TYPE
M-METRIC PART

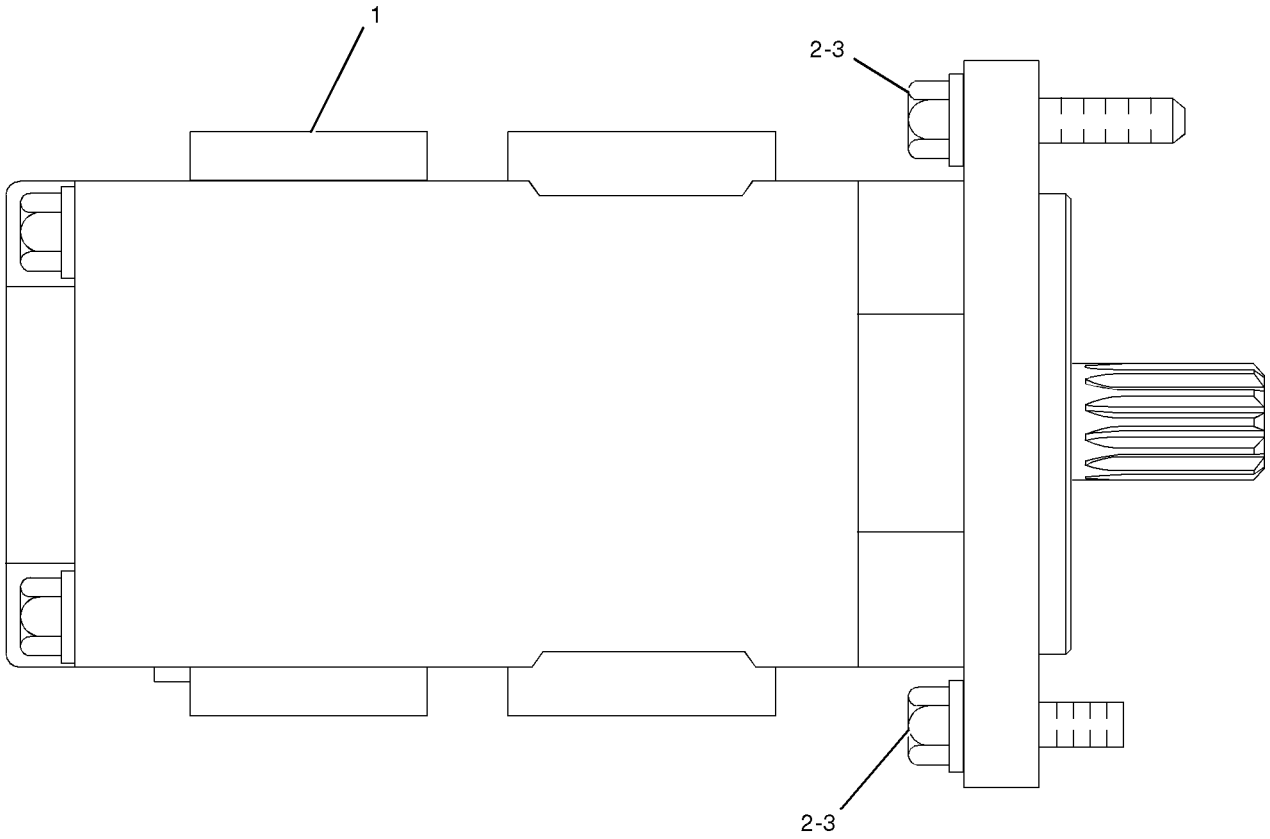

GRAPHIC #1 **<END>** g01042535

HYDRAULIC SYSTEM

236-2403 TANK GP-EXPANSION—COOLANT

S/N: PDF1-UP

PART OF 234-9753 RADIATOR GP

SMCS-5056, 5505 **i01999631**

NOTE	REF NO	GRAPHIC REF	PART NUMBER	QTY	PART NAME 1 2 3 4 5 6 (PRODUCT LEVEL)	SEE PAGE
	1	1	**6S-8620**	2	CLAMP-HOSE	
E	2	1	**8C-3681**		HOSE (169-CM)	
E	3	1	**8I-1362**		HOSE (92-CM)	
	4	1	**9M-7958**	2	CLAMP-HOSE	
E	5	1	**9X-2133**		HOSE (40-CM)	
	6	1	**227-0104**	1	TANK GP-COOLANT	
	6A	1	**227-0103**	1	TANK AS-COOLANT	
	6B	1	**227-4376**	1	CAP AS (RADIATOR)	
	7	1	**236-2593**	1	BRACKET AS	
	8	1	**1B-3057**	2	CLIP	
	9	1	**4D-7388**	1	CLIP	
	10	1	**8T-4121**	5	WASHER-HARD (11X21X2.5-MM THK)	
M	11	1	**8T-4136**	4	BOLT (M10X1.5X25-MM)	
M	12	1	**8T-4137**	1	BOLT (M10X1.5X20-MM)	
M	13	1	**8T-4189**	2	BOLT (M8X1.25X20-MM)	
M	14	1	**8T-4200**	4	BOLT (M8X1.25X16-MM)	
M	15	1	**8T-4224**	6	WASHER-HARD (8.8X16X2-MM THK)	

E-ORDER BY THE CENTIMETER
M-METRIC PART

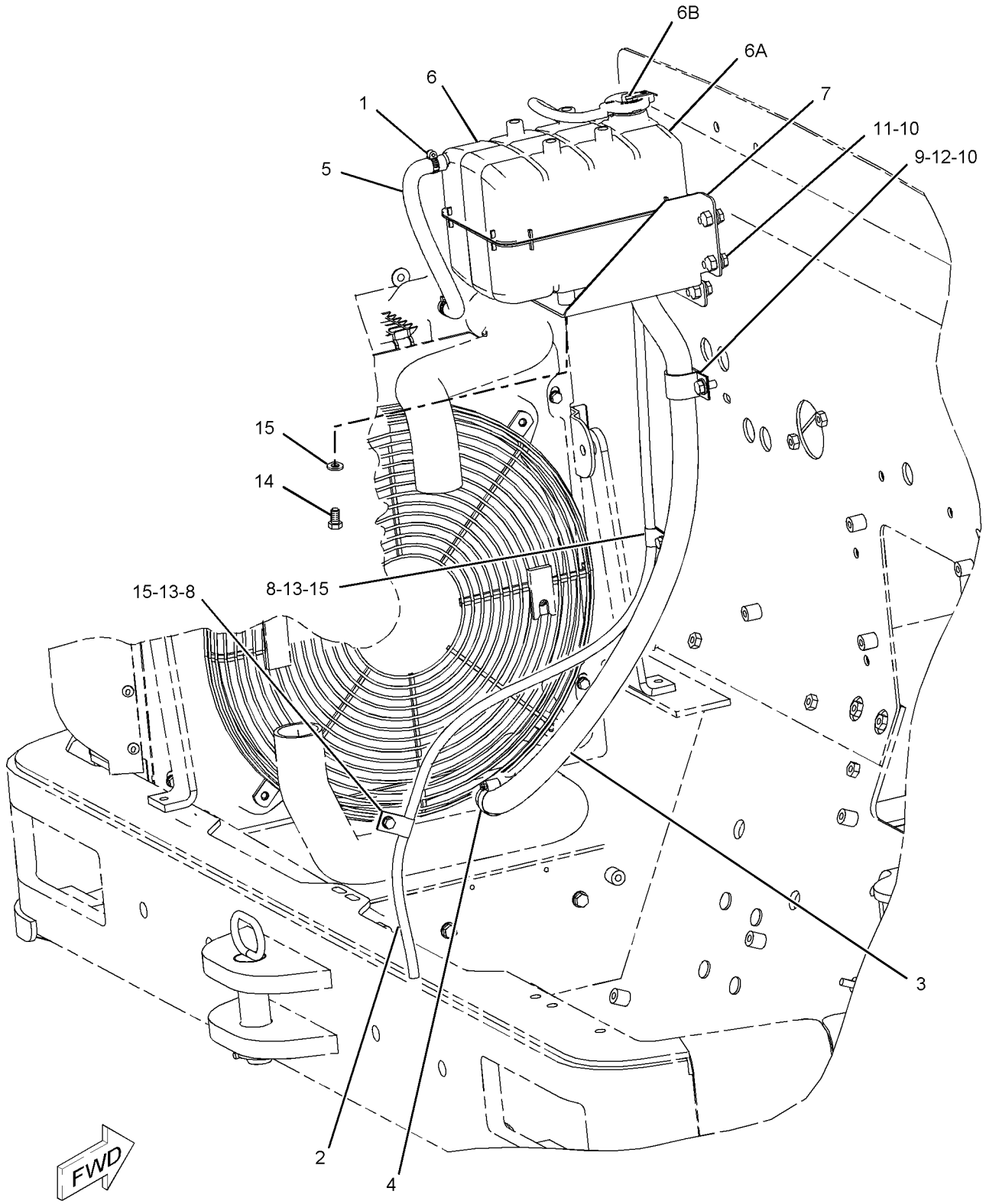

GRAPHIC #1 **<END>** g01035836

HYDRAULIC SYSTEM

108-6200 TANK GP-HYDRAULIC

S/N: PDF1-UP

PART OF 109-4811 HYDRAULIC AR

SMCS-5056 **i02038781**

NOTE	REF NO	GRAPHIC REF	PART NUMBER	QTY	PART NAME 1 2 3 4 5 6 (PRODUCT LEVEL)	SEE PAGE
	1	1	**7K-1181**	2	STRAP-CABLE	
Y	2	1	*113-0985*	1	VALVE GP-OIL PAN DRAIN	33
	3	1	**130-4634**	1	BREATHER (HYDRAULIC OIL)	
Y	4	1	*141-7557*	1	TANK GP-HYDRAULIC	392
	5	1	*174-3163*	1	GAUGE GP-OIL LEVEL (DIPSTICK)	
		1	**5J-2974**	4	SEAL-O-RING	
		1	**122-8353**	2	BOLT (M12X46.5-MM)	
	6	1	*148-8408*	1	PLUG AS	
		1	**3D-2824**	1	SEAL-O-RING	
		1	**9S-4183**	1	PLUG	
	7	1	**8T-4121**	4	WASHER-HARD (11X21X2.5-MM THK)	
M	8	1	**8T-4136**	2	BOLT (M10X1.5X25-MM)	
M	9	1	**8T-4195**	2	BOLT (M10X1.5X30-MM)	
E	10	1	**5P-1442**		HOSE (37.48CM)	
E	11	1	**5P-1442**		HOSE (34.03CM)	

E-ORDER BY THE CENTIMETER
M-METRIC PART
Y-SEPARATE ILLUSTRATION

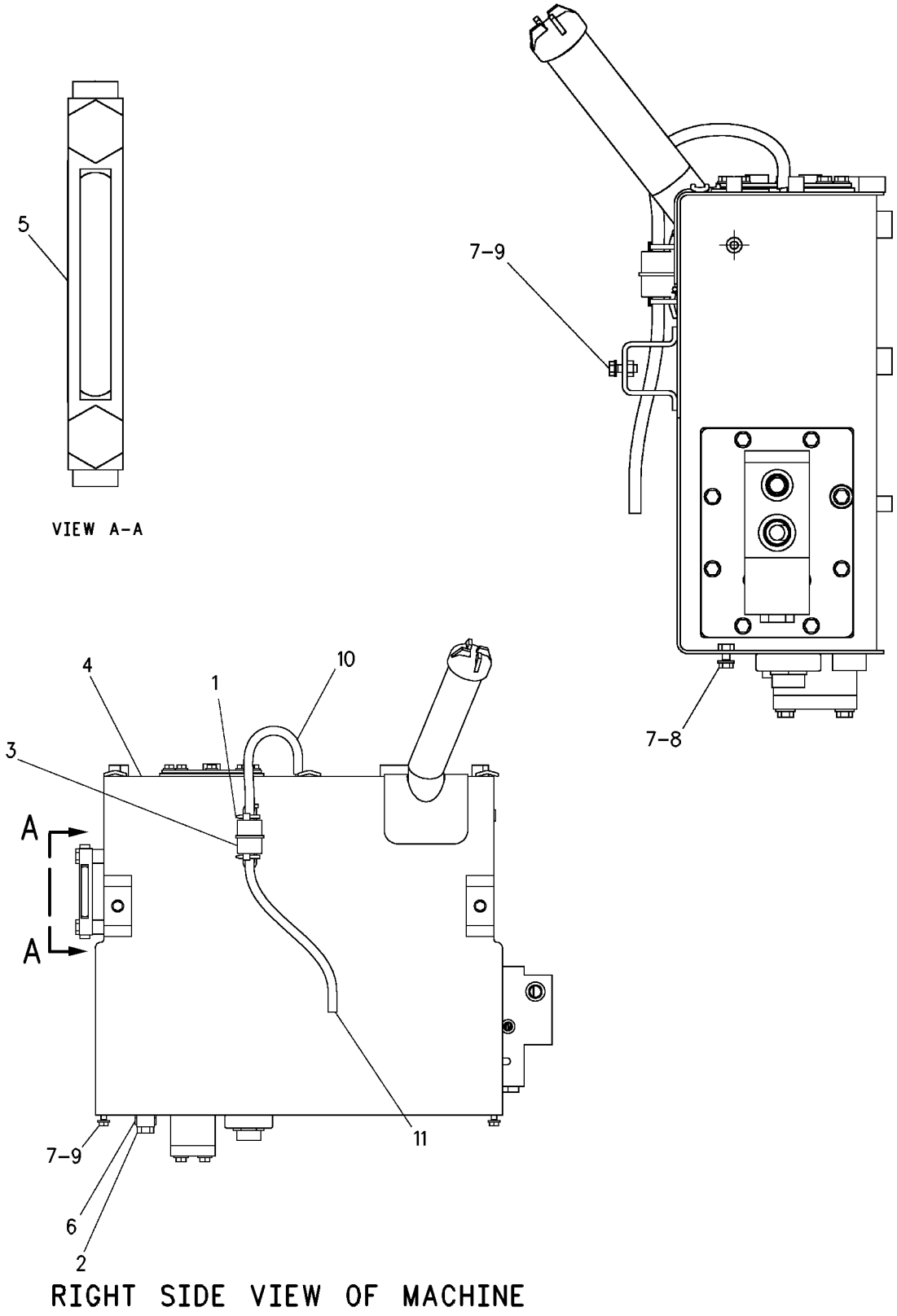

GRAPHIC #1 **<END>** g00696690

HYDRAULIC SYSTEM

141-7557 TANK GP-HYDRAULIC

S/N: PDF1-UP

PART OF 108-6200 TANK GP-HYDRAULIC

SMCS-5056 **i02034169**

NOTE	REF NO	GRAPHIC REF	PART NUMBER	QTY	PART NAME 1 2 3 4 5 6 (PRODUCT LEVEL)	SEE PAGE
	1	1	**9H-6454**	1	GASKET	
	2	1	**9J-3047**	1	STRAINER (HYDRAULIC TANK)	
	3	1	**108-4883**	1	TANK AS (HYDRAULIC)	
	4	1	**110-3023**	1	GASKET	
	5	1	**128-2435**	1	STRAINER AS	
	6	1	**148-6978**	1	COVER AS	
		1	**7J-5544**	2	FITTING (3/4X16-THD)	
	7	1	**175-6473**	1	STRAINER AS	
Y	8	1	**204-2585**	1	BLOCK GP-HYDRAULIC	331
	9	1	**2D-4202**	1	PLATE	
	10	1	**2S-4078**	1	SEAL-O-RING	
	11	1	**3P-0439**	1	SEAL-O-RING	
	12	1	**6S-6514**	1	GASKET	
	13	1	**7H-1447**	1	CAP-FILLER (HYDRAULIC TANK)	
	14	1	**8T-2275**	1	BALL	
	15	1	**8T-4121**	16	WASHER-HARD (11X21X2.5-MM THK)	
M	16	1	**8T-4136**	7	BOLT (M10X1.5X25-MM)	
M	17	1	**8T-4137**	9	BOLT (M10X1.5X20-MM)	
M	18	1	**8T-4183**	4	BOLT (M12X1.75X40-MM)	
	19	1	**8T-4223**	4	WASHER-HARD (13.5X25.5X3-MM THK)	

M-METRIC PART
Y-SEPARATE ILLUSTRATION

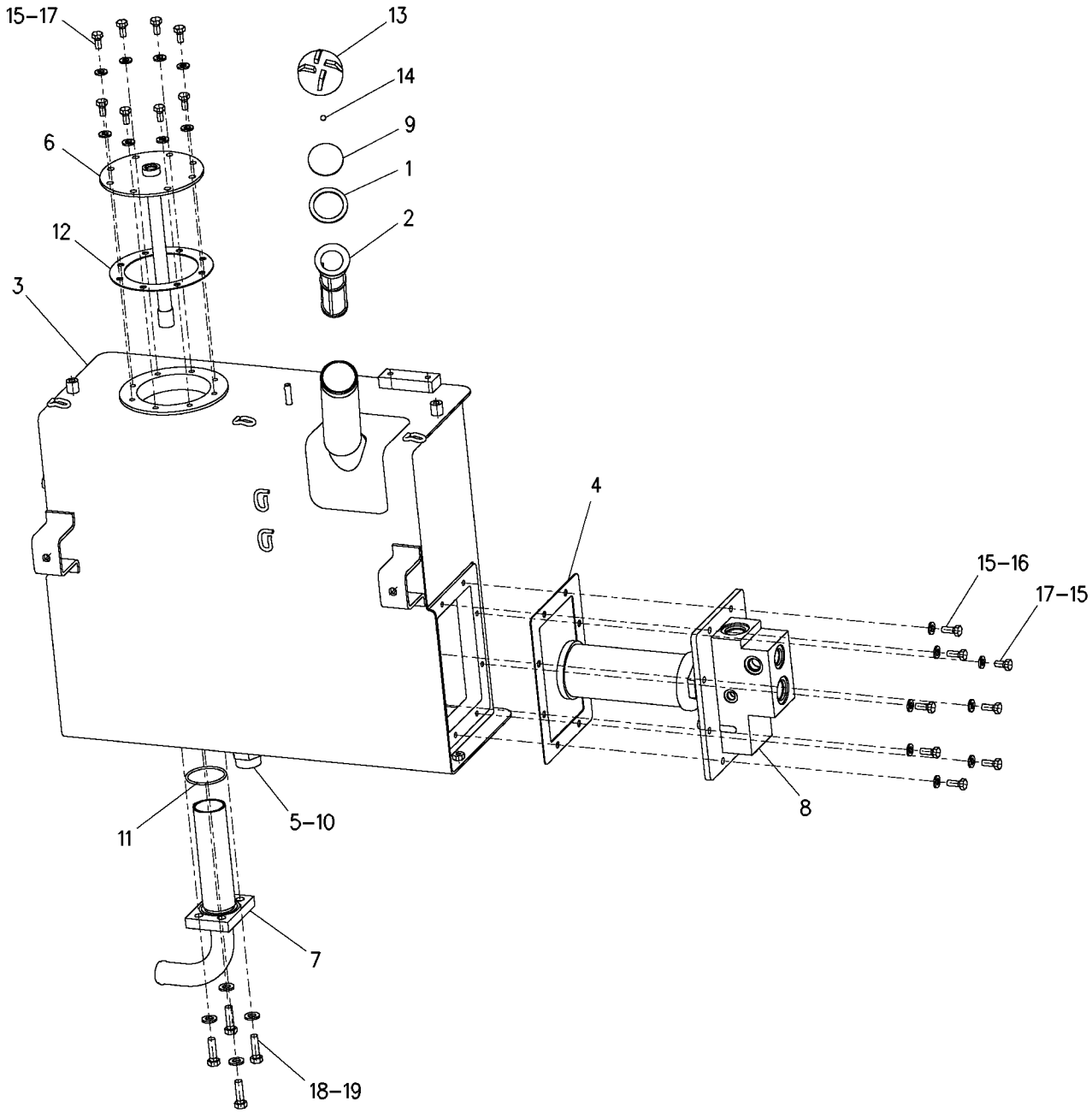

GRAPHIC #1 **<END>** g00897124

HYDRAULIC SYSTEM

111-4251 VALVE & MTG GP-MAIN CONTROL

S/N: PDF1-UP
PART OF 241-9258 HYDRAULIC AR-2 VALVE
AN ATTACHMENT

SMCS-5051 **i01678177**

NOTE	REF NO	GRAPHIC REF	PART NUMBER	QTY	PART NAME 1 2 3 4 5 6 (PRODUCT LEVEL)	SEE PAGE
YC	1	1	**133-3823**	1	VALVE GP-BANK 2	400
	2	1	**137-9787**	1	TUBE AS	
	3	1	*148-8335*	1	CONNECTOR GP	
		1	**5K-9090**	1	SEAL-O-RING	
		1	**6V-8635**	1	CONNECTOR	
		1	**7M-8485**	1	SEAL-O-RING	
	4	1	**8T-1890**	1	CLIP (TAB)	
	5	1	**8T-4121**	2	WASHER-HARD (11X21X2.5MM THK)	
M	6	1	**8T-4195**	2	BOLT (M10X1.5X30MM)	
CM	7	1	**8T-4139**	2	BOLT (M12X1.75X30MM)	
	8	1	**8T-1889**	1	CLIP (SLOT)	
	9	1	**3J-1907**	1	SEAL-O-RING	
	10	1	*150-4046*	1	ADAPTER GP	
		1	**2M-9780**	1	SEAL-O-RING	
		1	**5P-1404**	1	ADAPTER-O-RING (STRAIGHT THREAD)	
	11	1	**6V-0852**	1	CAP-DUST	
	12	1	**6V-3965**	1	FITTING AS	
M	13	1	**8T-4133**	1	NUT (M10X1.5 THD)	
C	14	1	**8T-4223**	2	WASHER-HARD (13.5X25.5X3MM THK)	
	15	1	**7X-7729**	1	WASHER (11X25X3MM THK)	

C-CHANGE FROM PREVIOUS TYPE
M-METRIC PART
Y-SEPARATE ILLUSTRATION

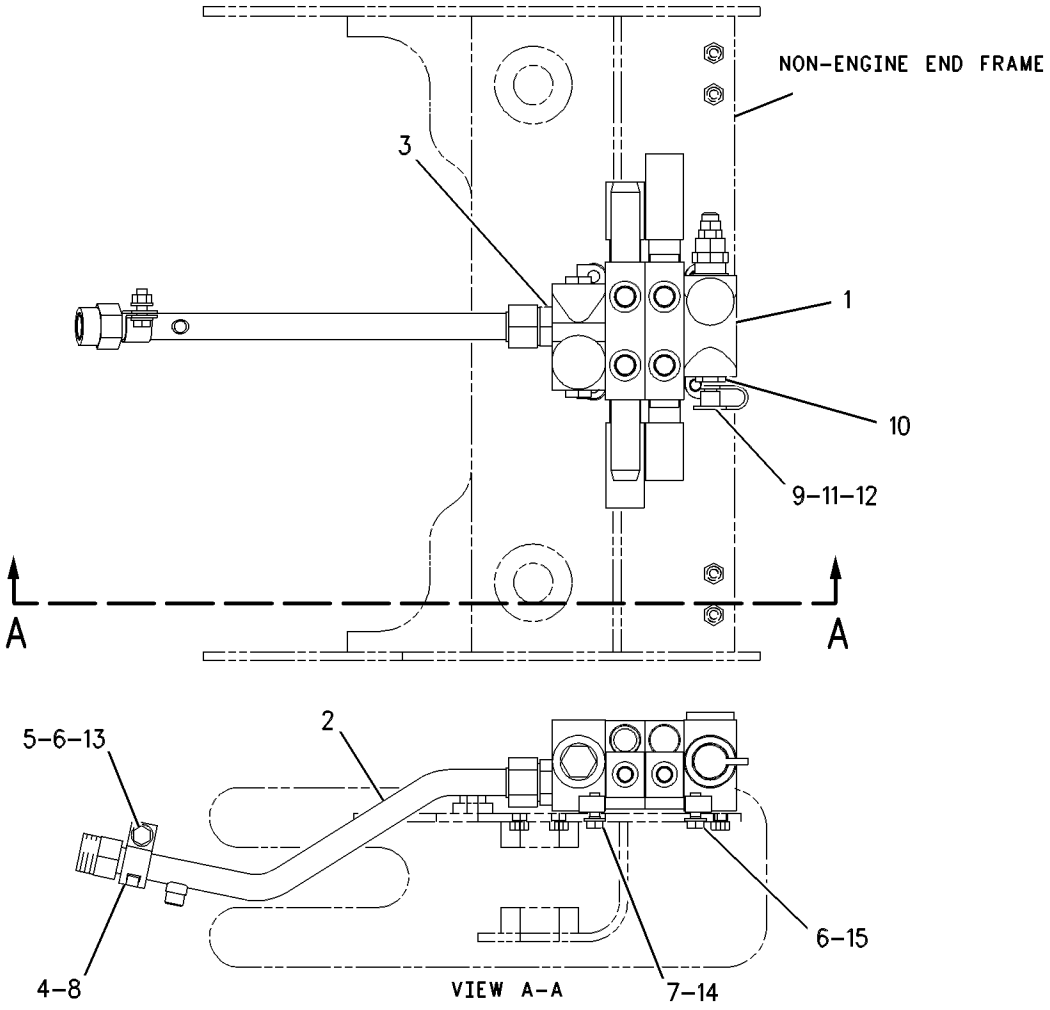

GRAPHIC #1 **<END>** g00483562

HYDRAULIC SYSTEM

111-4252 VALVE & MTG GP-MAIN CONTROL

S/N: PDF1-UP
PART OF 241-9260 HYDRAULIC AR-3 VALVE
AN ATTACHMENT

SMCS-5051 **i02034171**

NOTE	REF NO	GRAPHIC REF	PART NUMBER	QTY	PART NAME 1 2 3 4 5 6 (PRODUCT LEVEL)	SEE PAGE
Y	1	1	**133-3824**	1	VALVE GP-BANK 3	401
	2	1	**137-9789**	1	TUBE AS	
	3	1	**5K-9090**	1	SEAL-O-RING	
	4	1	**6V-8635**	1	CONNECTOR	
	5	1	**7M-8485**	1	SEAL-O-RING	
	6	1	**8T-1889**	1	CLIP (SLOT)	
	7	1	**8T-1890**	1	CLIP (TAB)	
	8	1	**8T-4121**	2	WASHER-HARD (11X21X2.5-MM THK)	
M	9	1	**8T-4195**	2	BOLT (M10X1.5X30-MM)	
M	10	1	**8T-4139**	2	BOLT (M12X1.75X30-MM)	
	11	1	**2M-9780**	1	SEAL-O-RING	
	12	1	**5P-1404**	1	ADAPTER-O-RING	
	13	1	**3J-1907**	1	SEAL-O-RING	
	14	1	**6V-0852**	1	CAP-DUST	
	15	1	**6V-3965**	1	FITTING (QUICK DISCONNECT)	
M	16	1	**8T-4133**	1	NUT (M10X1.5-THD)	
	17	1	**8T-4223**	2	WASHER-HARD (13.5X25.5X3-MM THK)	
	18	1	**7X-7729**	1	WASHER (11X25X3-MM THK)	

M-METRIC PART
Y-SEPARATE ILLUSTRATION

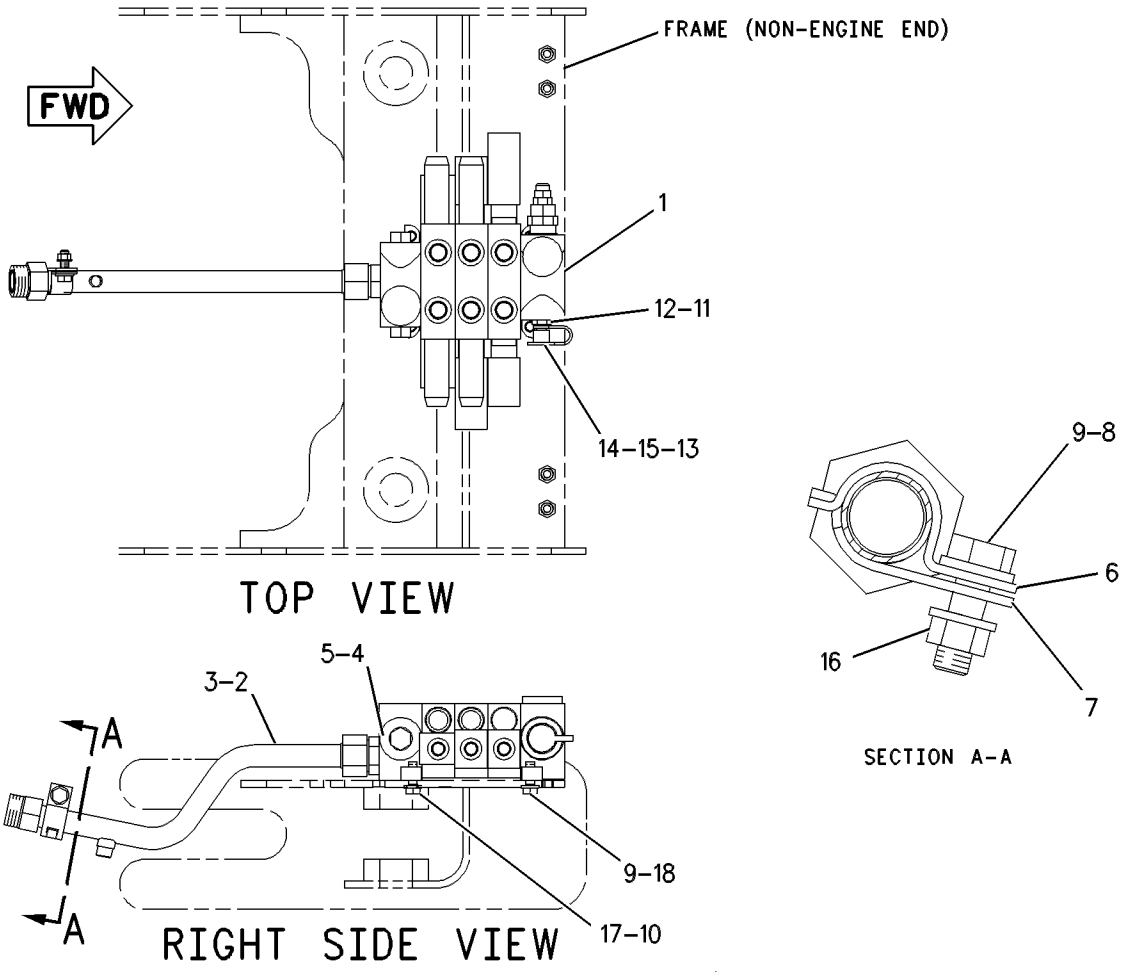

GRAPHIC #1 **<END>** g00513834

HYDRAULIC SYSTEM

121-0514 VALVE & MTG GP-MAIN CONTROL

S/N: PDF1-UP
PART OF 241-9262 HYDRAULIC AR-4 VALVE
AN ATTACHMENT

SMCS-5051 **i02034175**

NOTE	REF NO	GRAPHIC REF	PART NUMBER	QTY	PART NAME 1 2 3 4 5 6 (PRODUCT LEVEL)	SEE PAGE
	1	1	**6V-0852**	1	CAP-DUST	
	2	1	**6V-3965**	1	FITTING (QUICK DISCONNECT)	
Y	3	1	**133-3825**	1	VALVE GP-BANK 4	402
	4	1	**137-9790**	1	TUBE AS	
	5	1	**2M-9780**	1	SEAL-O-RING	
	6	1	**3J-1907**	1	SEAL-O-RING	
	7	1	**5K-9090**	1	SEAL-O-RING	
	8	1	**5P-1404**	1	ADAPTER-O-RING	
	9	1	**6V-8635**	1	CONNECTOR	
	10	1	**7M-8485**	1	SEAL-O-RING	
	11	1	**7X-7729**	1	WASHER (11X25X3-MM THK)	
	12	1	**8T-1889**	1	CLIP (SLOT)	
	13	1	**8T-1890**	1	CLIP (TAB)	
	14	1	**8T-4121**	2	WASHER-HARD (11X21X2.5-MM THK)	
M	15	1	**8T-4133**	1	NUT (M10X1.5-THD)	
M	16	1	**8T-4139**	2	BOLT (M12X1.75X30-MM)	
M	17	1	**8T-4195**	2	BOLT (M10X1.5X30-MM)	
	18	1	**8T-4223**	2	WASHER-HARD (13.5X25.5X3-MM THK)	

M-METRIC PART
Y-SEPARATE ILLUSTRATION

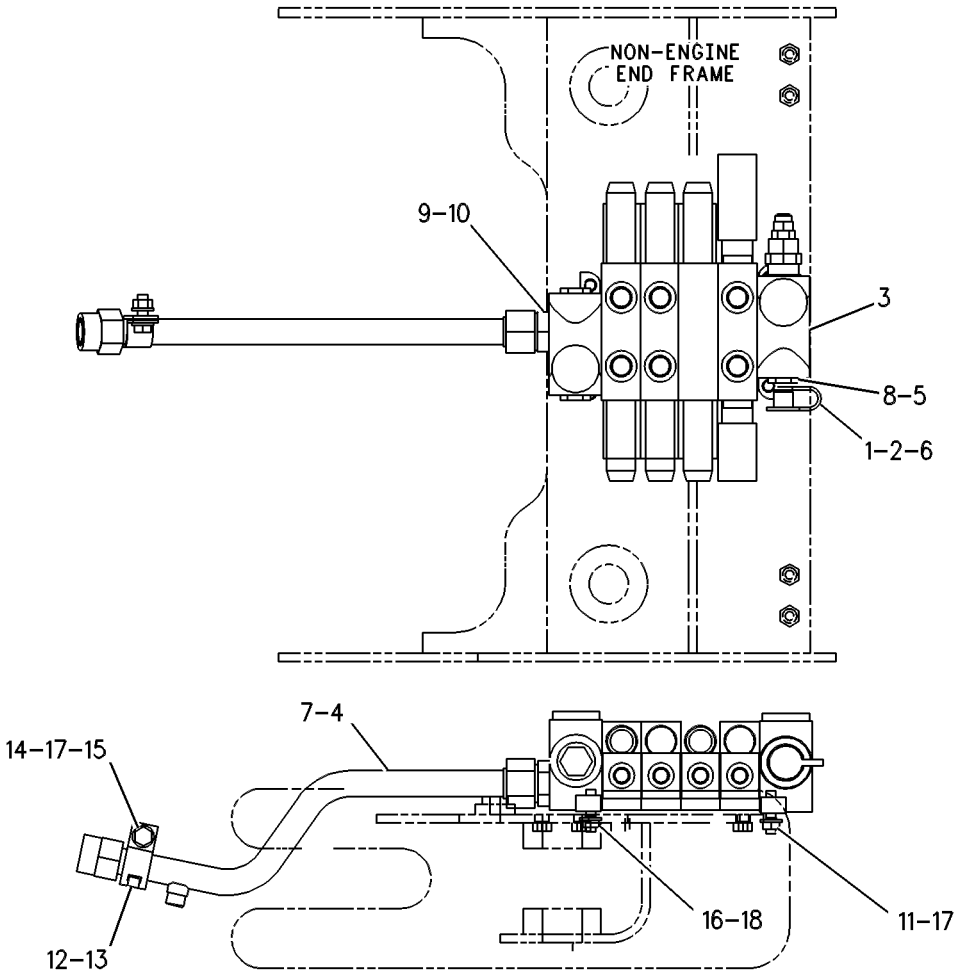

GRAPHIC #1 **<END>** g00269509

133-3823 VALVE GP-BANK 2

S/N: PDF1-UP
PART OF 111-4251 VALVE & MTG GP-MAIN CONTROL
AN ATTACHMENT

SMCS-5051 **i02034181**

NOTE	REF NO	GRAPHIC REF	PART NUMBER	QTY	PART NAME 1 2 3 4 5 6 (PRODUCT LEVEL)	SEE PAGE
CY	1	1	**186-0909**	1	VALVE GP-RELIEF	421
	2	1	**121-9226**	2	ROD	
	3	1	**6V-8189**	4	NUT (5/16-18-THD)	
	4	1	**121-9227**	1	ROD-THREADED	
	5	1	**3S-2713**	2	NUT-FULL (3/8-24-THD)	
	6	1	**121-5860**	1	HOUSING-OUTLET	
Y	7	1	**117-3636**	1	VALVE GP-CONTROL (LIFT)	404
Y	8	1	**117-3637**	1	VALVE GP-CONTROL (BUCKET)	405
	9	1	**127-0384**	1	HOUSING AS-INLET	
		1	**4J-0527**	1	SEAL-O-RING	
	10	1	**9T-7634**	1	VALVE GP-CHECK	
		1	**033-6027**	1	SEAL-O-RING	
		1	**107-7491**	1	KIT-SEAL	
CY	11	1	**186-0911**	2	VALVE GP-RELIEF	422

C-CHANGE FROM PREVIOUS TYPE
Y-SEPARATE ILLUSTRATION

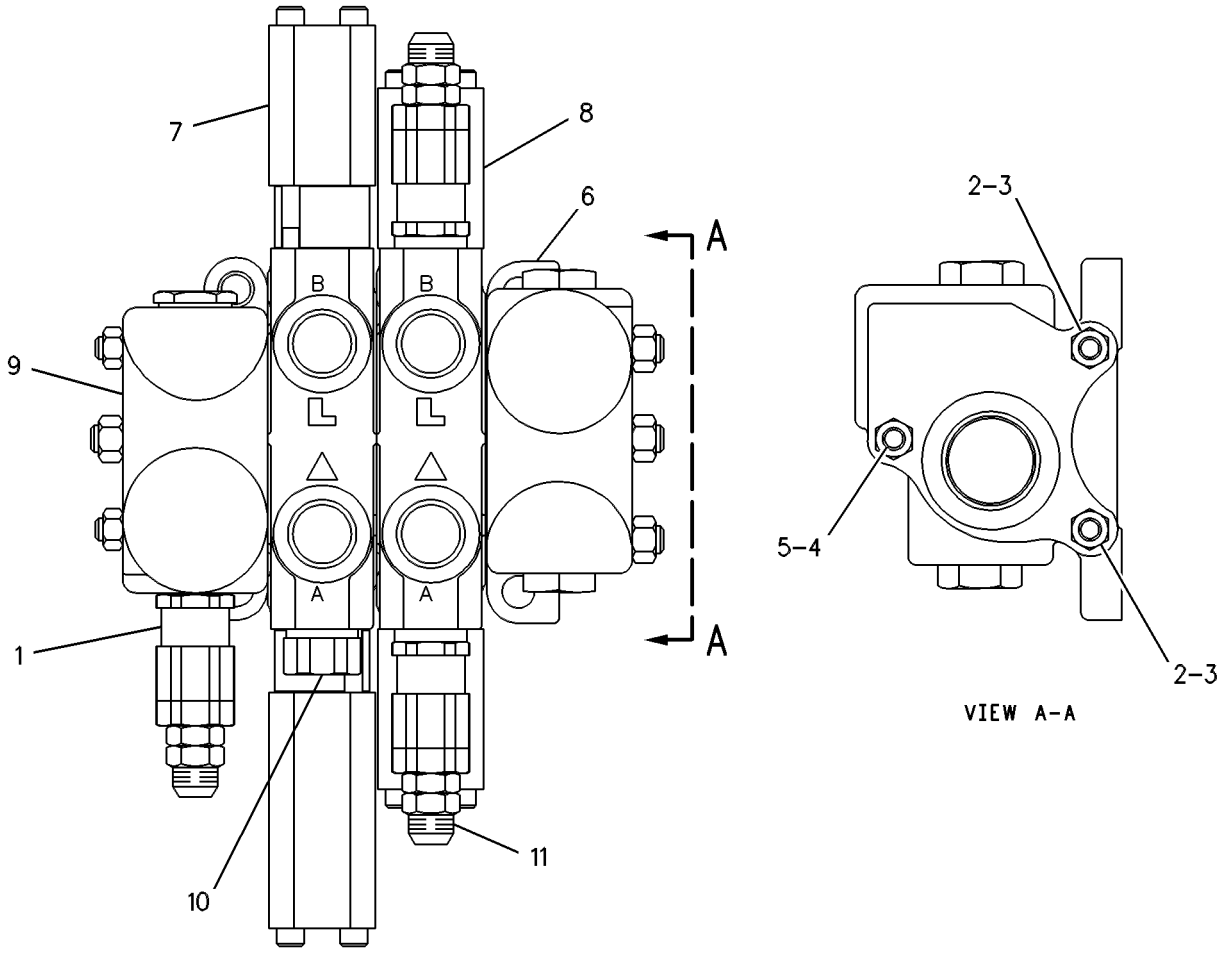

GRAPHIC #1 **<END>** g00275937

133-3824 VALVE GP-BANK 3

S/N: PDF1-UP
PART OF 111-4252 VALVE & MTG GP-MAIN CONTROL
AN ATTACHMENT

SMCS-5051 **i02034183**

NOTE	REF NO	GRAPHIC REF	PART NUMBER	QTY	PART NAME 1 2 3 4 5 6 (PRODUCT LEVEL)	SEE PAGE
CY	1	1	**186-0909**	1	VALVE GP-RELIEF	421
	2	1	**121-9228**	2	ROD	
	3	1	**6V-8189**	4	NUT (5/16-18-THD)	
	4	1	**121-9229**	1	ROD	
	5	1	**3S-2713**	2	NUT-FULL (3/8-24-THD)	
	6	1	**121-5860**	1	HOUSING-OUTLET	
Y	7	1	**117-3636**	1	VALVE GP-CONTROL (LIFT)	404
Y	8	1	**117-3637**	2	VALVE GP-CONTROL (BUCKET)	405
	9	1	**127-0384**	1	HOUSING AS-INLET	
		1	**4J-0527**	1	SEAL-O-RING	
	10	1	**9T-7634**	1	VALVE GP-CHECK	
		1	**033-6027**	1	SEAL-O-RING	
		1	**107-7491**	1	KIT-SEAL	
CY	11	1	**186-0911**	2	VALVE GP-RELIEF	422
CY	12	1	**186-0906**	2	VALVE GP-RELIEF	420

C-CHANGE FROM PREVIOUS TYPE
Y-SEPARATE ILLUSTRATION

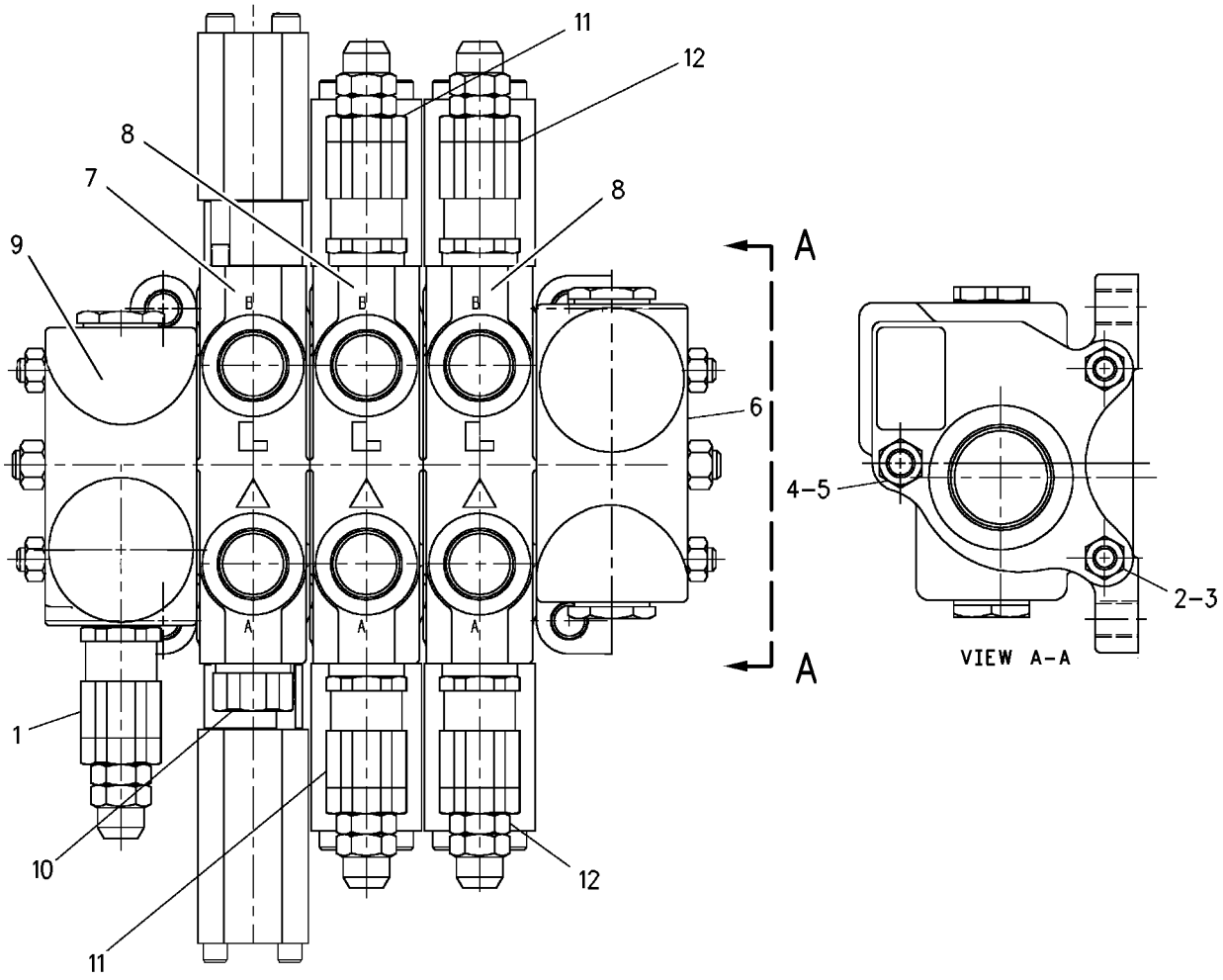

GRAPHIC #1 **<END>** g00828842

HYDRAULIC SYSTEM

133-3825 VALVE GP-BANK 4

S/N: PDF1-UP

PART OF 121-0514 VALVE & MTG GP-MAIN CONTROL

AN ATTACHMENT

SMCS-5051 **i02034190**

NOTE	REF NO	GRAPHIC REF	PART NUMBER	QTY	PART NAME 1 2 3 4 5 6 (PRODUCT LEVEL)	SEE PAGE
CY	1	1	**186-0911**	2	VALVE GP-RELIEF	422
CY	2	1	**186-0906**	4	VALVE GP-RELIEF	420
	3	1	**9S-4190**	2	PLUG	
	4	1	**2M-9780**	2	SEAL-O-RING	
	5	1	**107-1001**	2	ROD	
	6	1	**6V-8189**	4	NUT (5/16-18-THD)	
	7	1	**107-1002**	1	ROD	
	8	1	**3S-2713**	2	NUT-FULL (3/8-24-THD)	
	9	1	**121-5860**	1	HOUSING-OUTLET	
	10	1	**127-0384**	1	HOUSING AS-INLET	
		1	**4J-0527**	1	SEAL-O-RING	
Y	11	1	**117-3636**	1	VALVE GP-CONTROL (LIFT)	404
	12	1	**9T-7634**	1	VALVE GP-CHECK	
		1	**033-6027**	1	SEAL-O-RING	
		1	**107-7491**	1	KIT-SEAL	
Y	13	1	**117-3637**	3	VALVE GP-CONTROL (BUCKET)	405
CY	14	1	**186-0909**	1	VALVE GP-RELIEF	421

C-CHANGE FROM PREVIOUS TYPE
Y-SEPARATE ILLUSTRATION

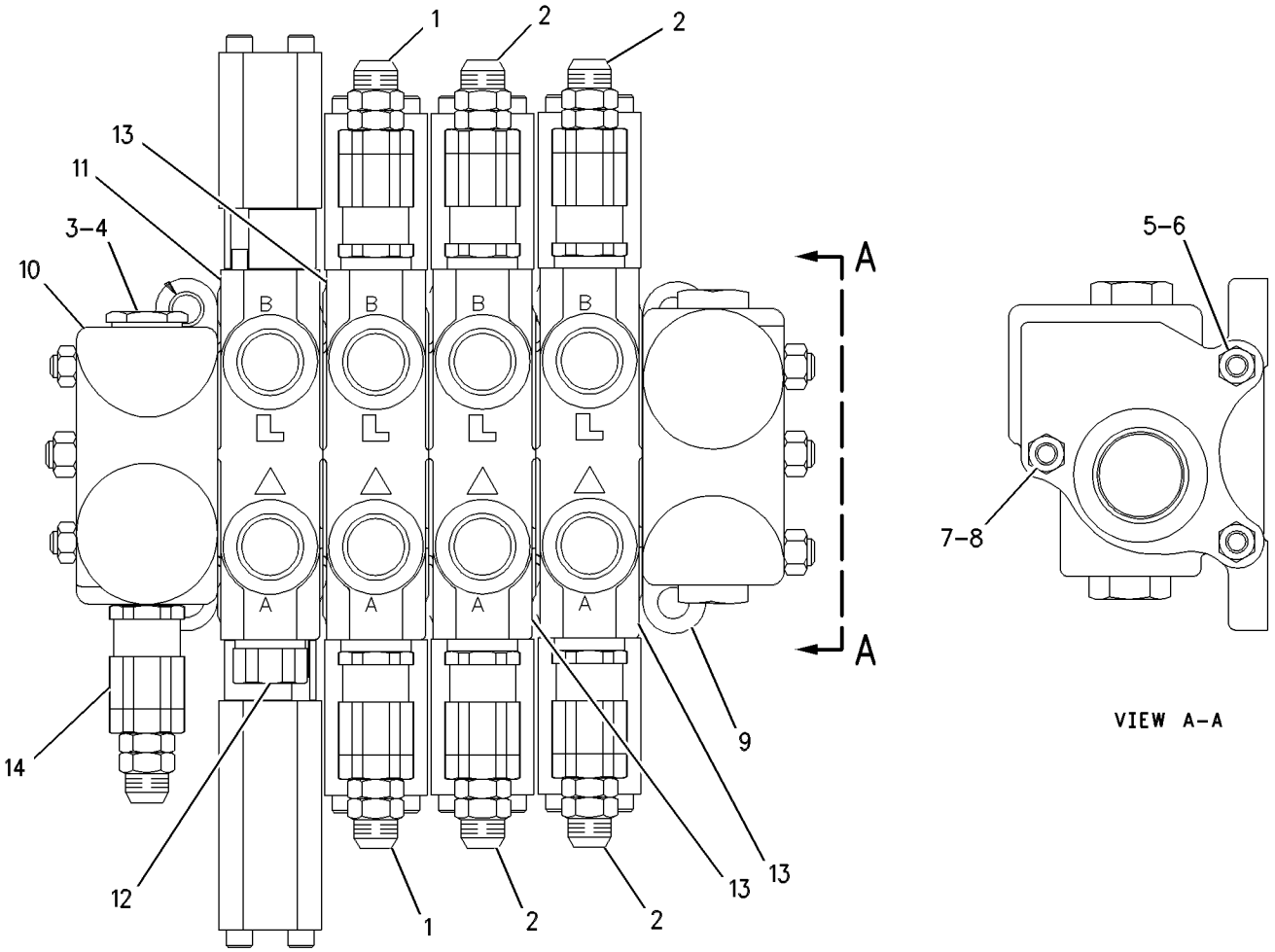

GRAPHIC #1 **<END>** g00565052

HYDRAULIC SYSTEM

117-3636 VALVE GP-CONTROL

S/N: PDF1-UP
PART OF 133-3823 VALVE GP-BANK 2, 133-3824 VALVE GP-BANK 3, 133-3825 VALVE GP-BANK 4
AN ATTACHMENT

SMCS-5051 **i01599399**

NOTE	REF NO	GRAPHIC REF	PART NUMBER	QTY	PART NAME 1 2 3 4 5 6 (PRODUCT LEVEL)	SEE PAGE
	1	1	**9T-0546**	1	SPRING	
	2	1	**9T-0553**	1	VALVE	
	3	1	**4J-0527**	1	SEAL-O-RING	
	4	1	**127-6347**	2	RETAINER	
	5	1	**6V-9178**	4	SEAL-O-RING	
	6	1	**127-6320**	1	SPRING	
	7	1	**8S-4711**	2	BOLT (1/4-20X4.5IN)	
	8	1	**127-6344**	1	CAP-END	
	9	1	**127-6319**	1	SEAT-SPRING	
	10	1	**127-6316**	1	BOLT-SHOULDER	
	11	1	**114-6406**	1	CAP-END	
	12	1	**127-6355**	1	SPRING	
	13	1	**3B-8695**	2	BOLT (1/4-20X3.5IN)	
	14	1	**127-9333**	2	RING-BACKUP	

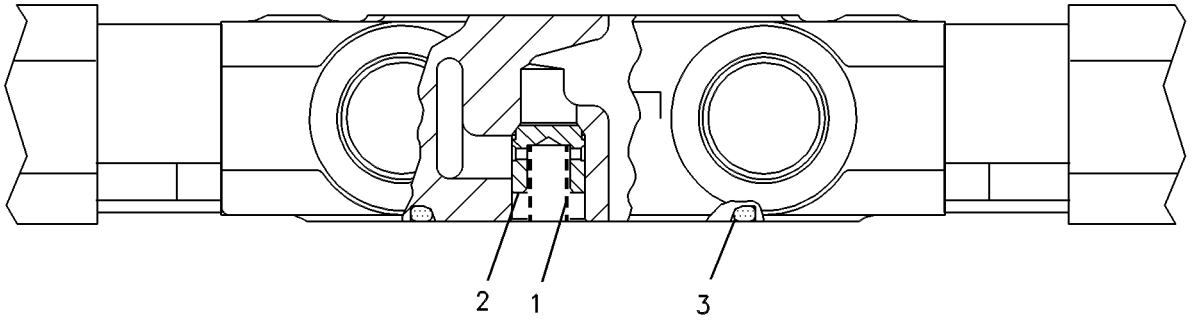

VIEW A-A

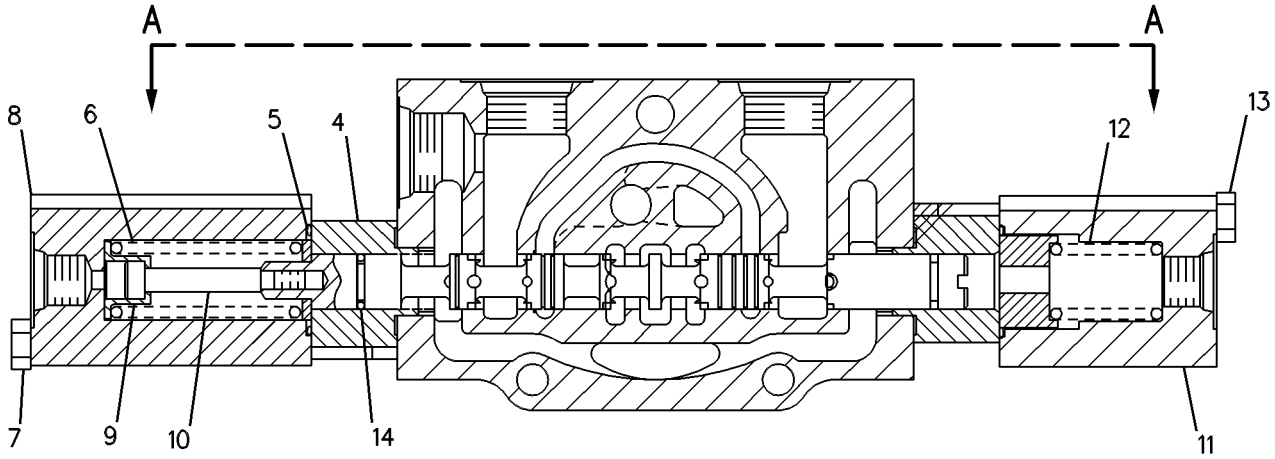

GRAPHIC #1 **<END>** g00252029

117-3637 VALVE GP-CONTROL

S/N: PDF1-UP
BUCKET
PART OF 133-3823 VALVE GP-BANK 2, 133-3824 VALVE GP-BANK 3, 133-3825 VALVE GP-BANK 4
AN ATTACHMENT

SMCS-5051 **i02034192**

NOTE	REF NO	GRAPHIC REF	PART NUMBER	QTY	PART NAME 1 2 3 4 5 6 (PRODUCT LEVEL)	SEE PAGE
	1	1	**9T-0546**	1	SPRING	
	2	1	**9T-0553**	1	VALVE	
	3	1	**4J-0527**	1	SEAL-O-RING	
	4	1	**114-4233**	2	SPRING	
	5	1	**114-6406**	2	CAP-END	
	6	1	**1B-2714**	4	BOLT (1/4-20X2.5-IN)	
	7	1	**114-4234**	2	SEAT-SPRING	
	8	1	**6V-9178**	2	SEAL-O-RING	

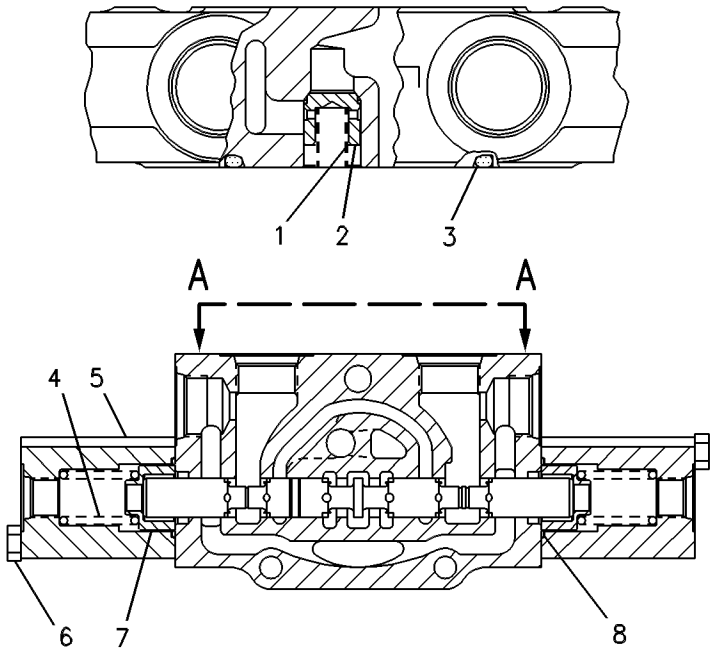

GRAPHIC #1 **<END>** g00252042

239-2228 VALVE GP-DRAIN–STANDARD

S/N: PDF1-UP

AN ATTACHMENT

SMCS-5076 **i02001297**

NOTE	REF NO	GRAPHIC REF	PART NUMBER	QTY	PART NAME 1 2 3 4 5 6 (PRODUCT LEVEL)	SEE PAGE
	1	1	*148-8410*	2	PLUG AS	
					(EACH INCLUDES)	
		1	**9S-4190**	1	PLUG	
		1	**2M-9780**	1	SEAL-O-RING	

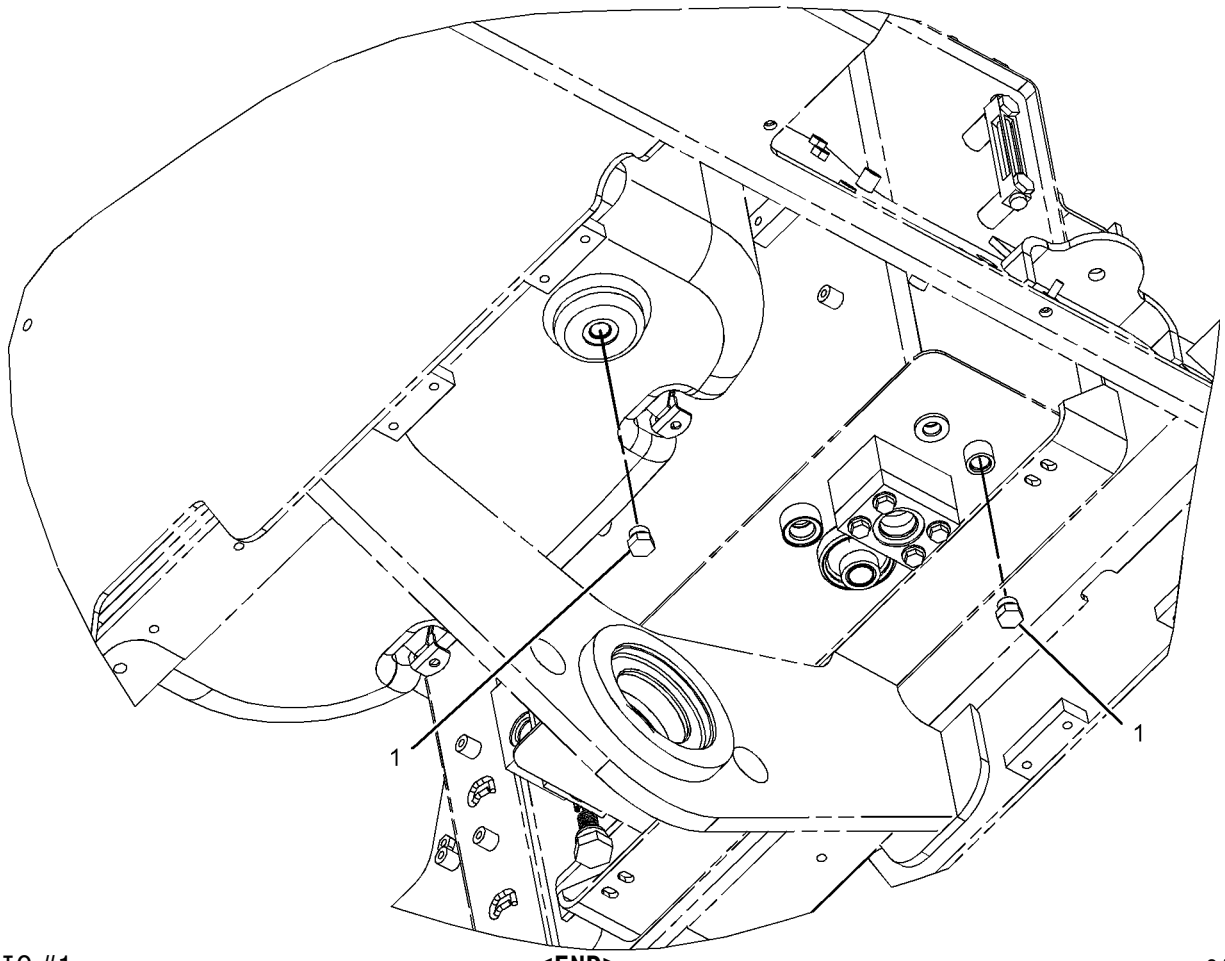

GRAPHIC #1 **<END>** g01038292

HYDRAULIC SYSTEM

163-3118 VALVE GP-PILOT

S/N: PDF1-UP
PART OF 119-2224 CONTROL GP-PILOT OPERATED HYD
AN ATTACHMENT

SMCS-5059 **i02034209**

NOTE	REF NO	GRAPHIC REF	PART NUMBER	QTY	PART NAME 1 2 3 4 5 6 (PRODUCT LEVEL)	SEE PAGE
	3	1	**141-4852**	1	BOOT	
	4	1	**141-7481**	1	SPACER	
	5	1	**141-9236**	1	SCREEN AS	
	6	1	**146-8478**	1	CUP	
Y	7	1	**163-4637**	1	PLATE GP-PILOT VALVE	386
	8	1	**102-8806**	1	KIT-RECEPTACLE (8-PIN)	
Y	9	1	**147-3322**	1	PLATE GP-PILOT VALVE (JOYSTICK)	383
	10	1	**153-8947**	1	SWIVEL AS	
		1	**146-8479**	1	SWIVEL	
Y	11	1	**163-3107**	1	VALVE GP-PILOT CARTRIDGE (RAISE)	415
Y	12	1	**163-3108**	1	VALVE GP-PILOT CARTRIDGE (RACK BACK)	416
Y	13	1	**163-3109**	1	VALVE GP-PILOT CARTRIDGE (LOWER)	417
Y	14	1	**163-3110**	1	VALVE GP-PILOT CARTRIDGE (DUMP)	418
	16	1	**3J-1907**	1	SEAL-O-RING	
	17	1	**3J-7354**	8	SEAL-O-RING	
	18	1	**6V-8397**	1	SEAL-O-RING	
	19	1	**6V-8636**	1	CONNECTOR	
	20	1	**8T-8737**	2	PLUG-SEAL	
	21	1	**9S-8002**	8	PLUG	

Y-SEPARATE ILLUSTRATION

163-3118 VALVE GP-PILOT *(contd.)* i02034209

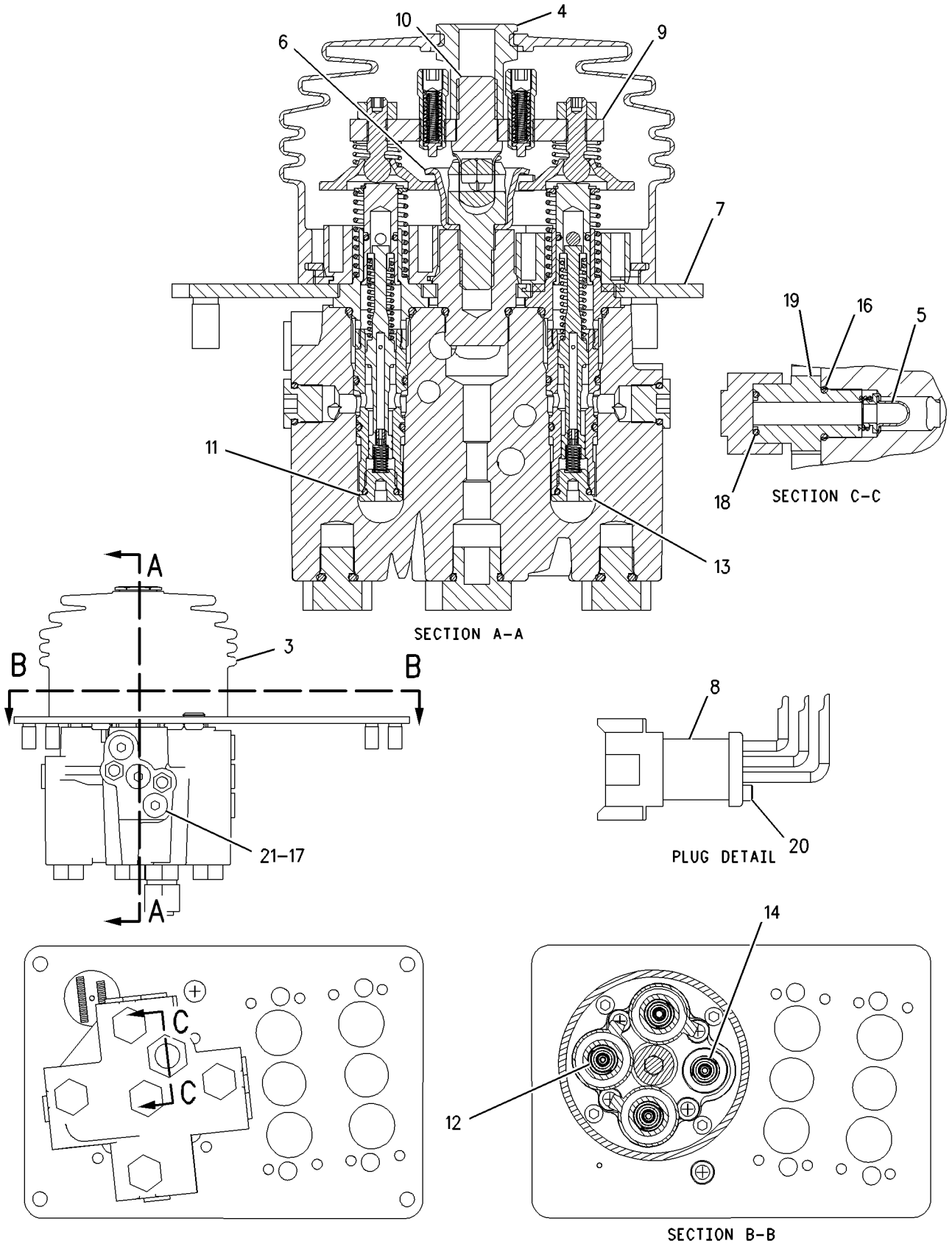

GRAPHIC #1 **<END>** g00784560

HYDRAULIC SYSTEM

163-3120 VALVE GP-PILOT

S/N: PDF1-UP
PART OF 119-2225 CONTROL GP-PILOT OPERATED HYD
AN ATTACHMENT

SMCS-5059 **i02034211**

NOTE	REF NO	GRAPHIC REF	PART NUMBER	QTY	PART NAME 1 2 3 4 5 6 (PRODUCT LEVEL)	SEE PAGE
	1	1,2	**9S-8002**	12	PLUG	
	2	2	**9S-4191**	2	PLUG	
	3	2	**6V-8636**	1	CONNECTOR	
	4	1	**141-1095**	2	ADAPTER	
	5	1	**141-4852**	1	BOOT	
	6	1	**141-7481**	1	SPACER	
	7	2	**141-9236**	1	SCREEN AS	
	8	2	**146-8477**	1	BRACKET	
	9	1	**146-8478**	1	CUP	
	10	1	**146-8981**	1	PIN	
Y	11	1	**163-4636**	1	PLATE GP-PILOT VALVE	385
Y	12	2	**202-2564**	1	PIVOT GP-PILOT VALVE	382
	13	1	**033-9139**	2	RING-RETAINING	
	14	2	**102-8806**	1	KIT-RECEPTACLE (8-PIN)	
M	15	1	**105-3481**	1	BOLT-HEX SOCKET (M8X1.25X20-MM)	
	16	1	**136-9292**	1	BOOT	
M	17	1	**140-9926**	2	BOLT-SOCKET HEAD	
Y	18	1	**147-3322**	1	PLATE GP-PILOT VALVE (JOYSTICK)	383
	19	1	**153-8947**	1	SWIVEL AS	
		1	**146-8479**	1	SWIVEL	
Y	20	2	**163-3107**	1	VALVE GP-PILOT CARTRIDGE (RAISE)	415
Y	21	1	**163-3108**	1	VALVE GP-PILOT CARTRIDGE (RACK BACK)	416
Y	22	2	**163-3109**	1	VALVE GP-PILOT CARTRIDGE (LOWER)	417
Y	23	1	**163-3110**	1	VALVE GP-PILOT CARTRIDGE (DUMP)	418
Y	24	2	**163-3111**	2	VALVE GP-PILOT CARTRIDGE (AUXILIARY)	419
	25	2	**6V-8397**	1	SEAL-O-RING	
	26	2	**3J-1907**	3	SEAL-O-RING	
	27	1,2	**3J-7354**	16	SEAL-O-RING	
M	28	2	**5C-2890**	2	NUT (M6X1-THD)	

M-METRIC PART
Y-SEPARATE ILLUSTRATION

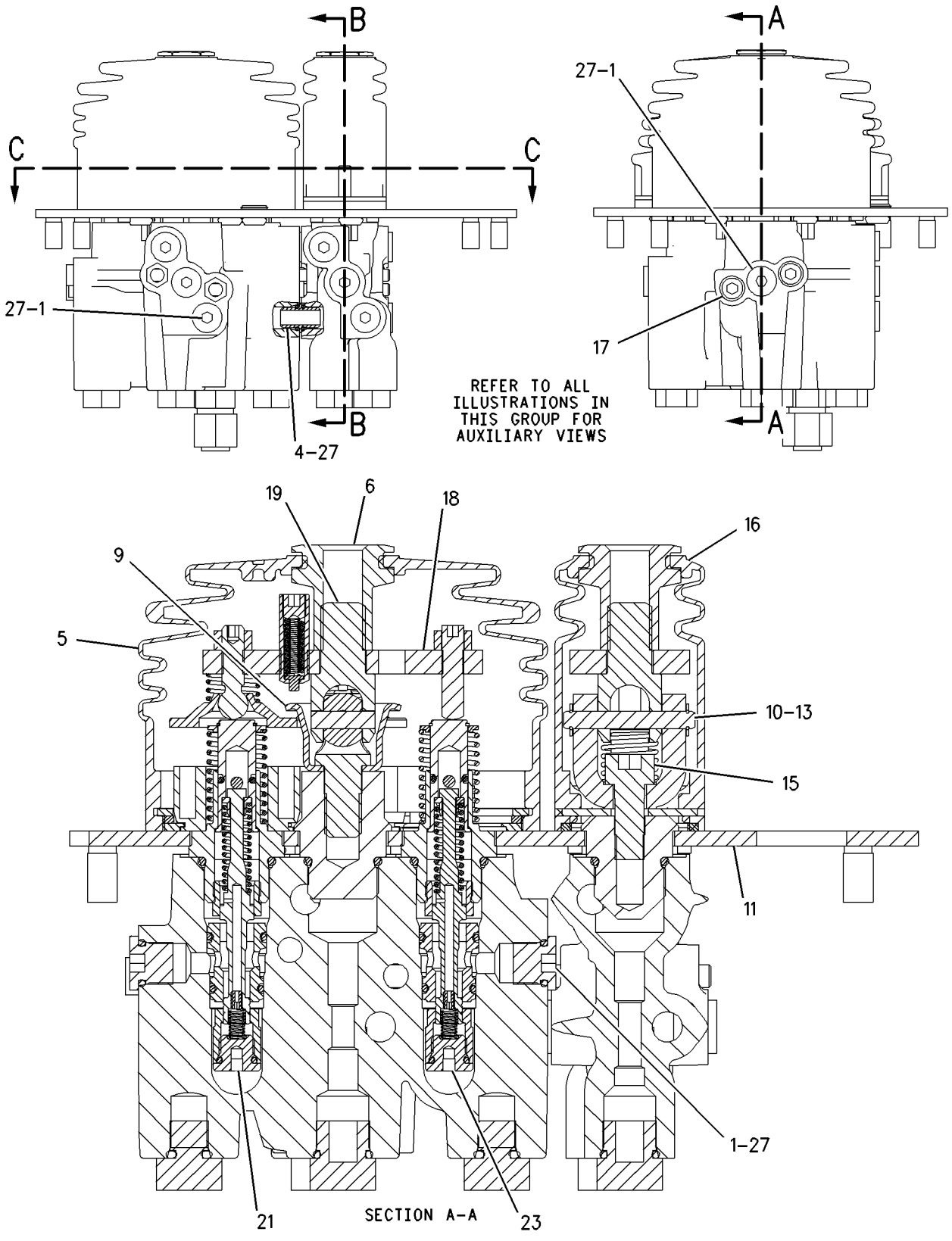

GRAPHIC #1 g00845617

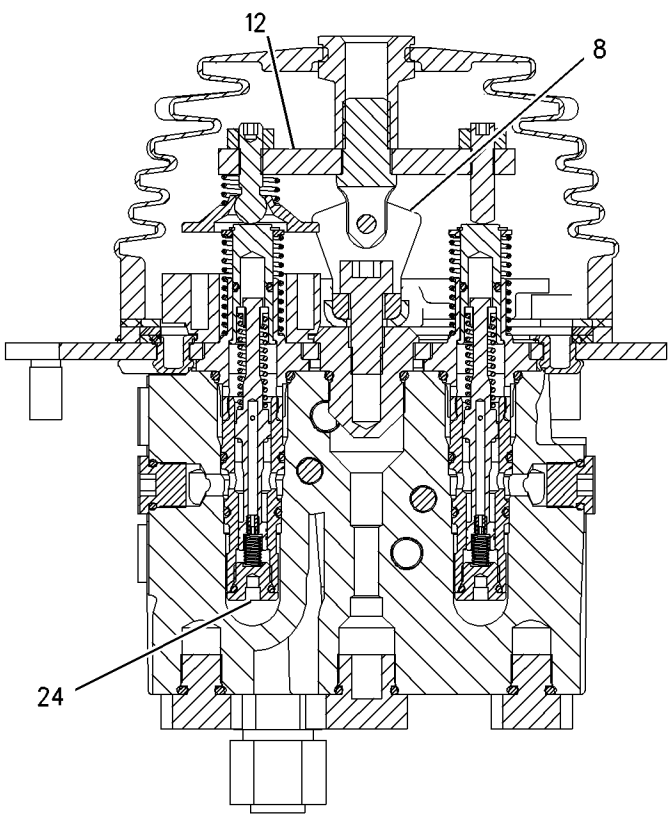

SECTION B-B

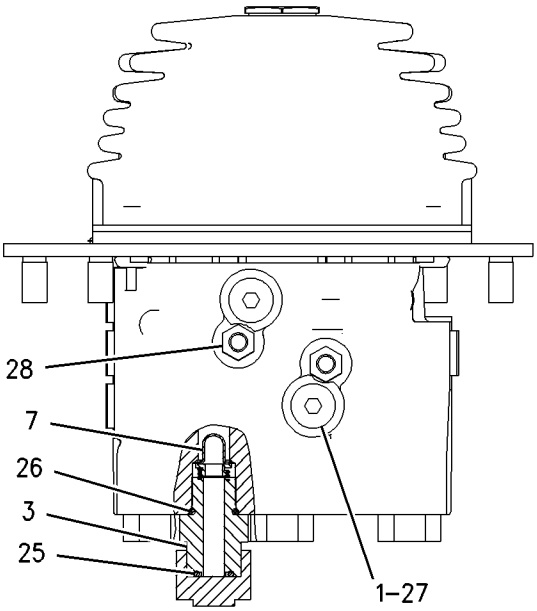

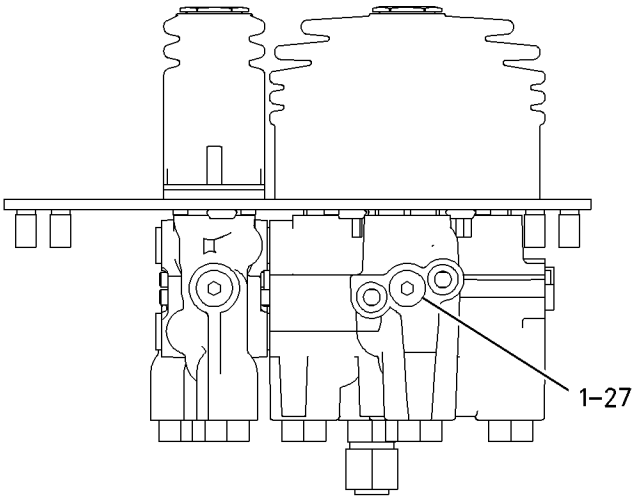

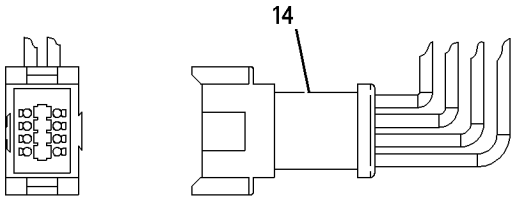

PLUG DETAIL

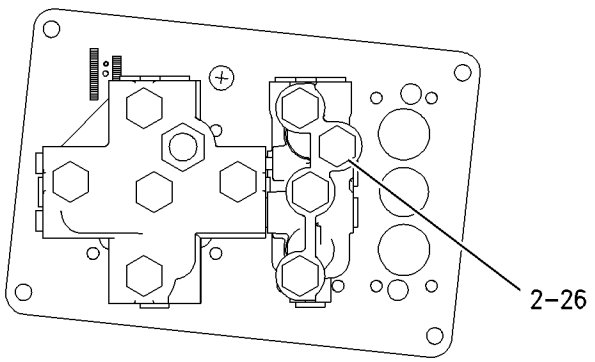

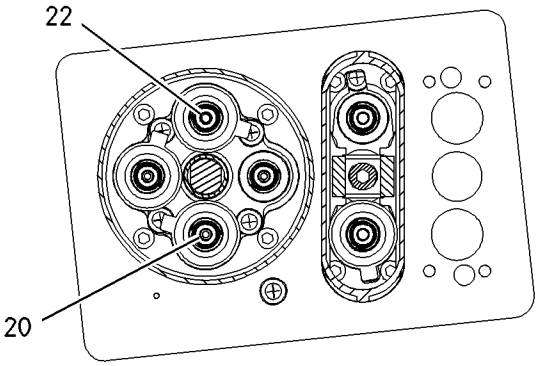

SECTION C-C

GRAPHIC #2 **<END>** g00845621

HYDRAULIC SYSTEM

163-3121 VALVE GP-PILOT—JOYSTICK AND TWO LEVER

S/N: PDF1-UP

PART OF 119-2223 CONTROL GP-PILOT OPERATED HYD

AN ATTACHMENT

SMCS-5059 **i02034215**

NOTE	REF NO	GRAPHIC REF	PART NUMBER	QTY	PART NAME 1 2 3 4 5 6 (PRODUCT LEVEL)	SEE PAGE
	1	1,2	**9S-8002**	16	PLUG	
	2	1	**6V-8397**	1	SEAL-O-RING	
	3	1	**9S-4191**	4	PLUG	
	4	1	**141-1095**	2	ADAPTER	
	5	1	**141-4852**	1	BOOT	
	6	2	**141-7481**	1	SPACER	
	7	1	**141-9236**	1	SCREEN AS	
	8	2	**146-8477**	2	BRACKET	
	9	2	**146-8478**	1	CUP	
	10	2	**146-8981**	2	PIN	
	11	2	**147-3114**	1	PIVOT GP-PILOT VALVE (AUXILIARY)	
M		2	**5C-2890**	2	NUT (M6X1-THD)	
		2	**139-4189**	1	PLATE	
		2	**141-7481**	1	SPACER	
		2	**146-8479**	1	SWIVEL	
M		2	**178-7877**	2	SETSCREW (M6X1X25-MM)	
Y	12	2	**163-4635**	1	PLATE GP-PILOT VALVE	384
Y	13	2	**202-2564**	1	PIVOT GP-PILOT VALVE	382
	14	2	**033-9139**	4	RING-RETAINING	
	15	2	**102-8806**	1	KIT-RECEPTACLE (8-PIN)	
M	16	2	**105-3481**	2	BOLT-HEX SOCKET (M8X1.25X20-MM)	
	17	1	**136-9292**	2	BOOT	
Y	18	2	**147-3322**	1	PLATE GP-PILOT VALVE (JOYSTICK)	383
	19	2	**153-8947**	1	SWIVEL AS	
	20	1	**157-6144**	2	ADAPTER	
M	21	1	**157-6155**	2	BOLT-SOCKET HEAD	
Y	22	1	**163-3107**	1	VALVE GP-PILOT CARTRIDGE (RAISE)	415
Y	23	1	**163-3108**	1	VALVE GP-PILOT CARTRIDGE (ROCK BACK)	416
Y	24	1	**163-3109**	1	VALVE GP-PILOT CARTRIDGE (LOWER)	417
Y	25	1	**163-3110**	1	VALVE GP-PILOT CARTRIDGE (DUMP)	418
Y	26	2	**163-3111**	4	VALVE GP-PILOT CARTRIDGE (AUXILIARY)	419
	27	1	**6V-8636**	1	CONNECTOR	
	28	1	**3J-1907**	5	SEAL-O-RING	
	29	1,2	**3J-7354**	24	SEAL-O-RING	
M	30	1	**5C-2890**	2	NUT (M6X1-THD)	

M-METRIC PART
Y-SEPARATE ILLUSTRATION

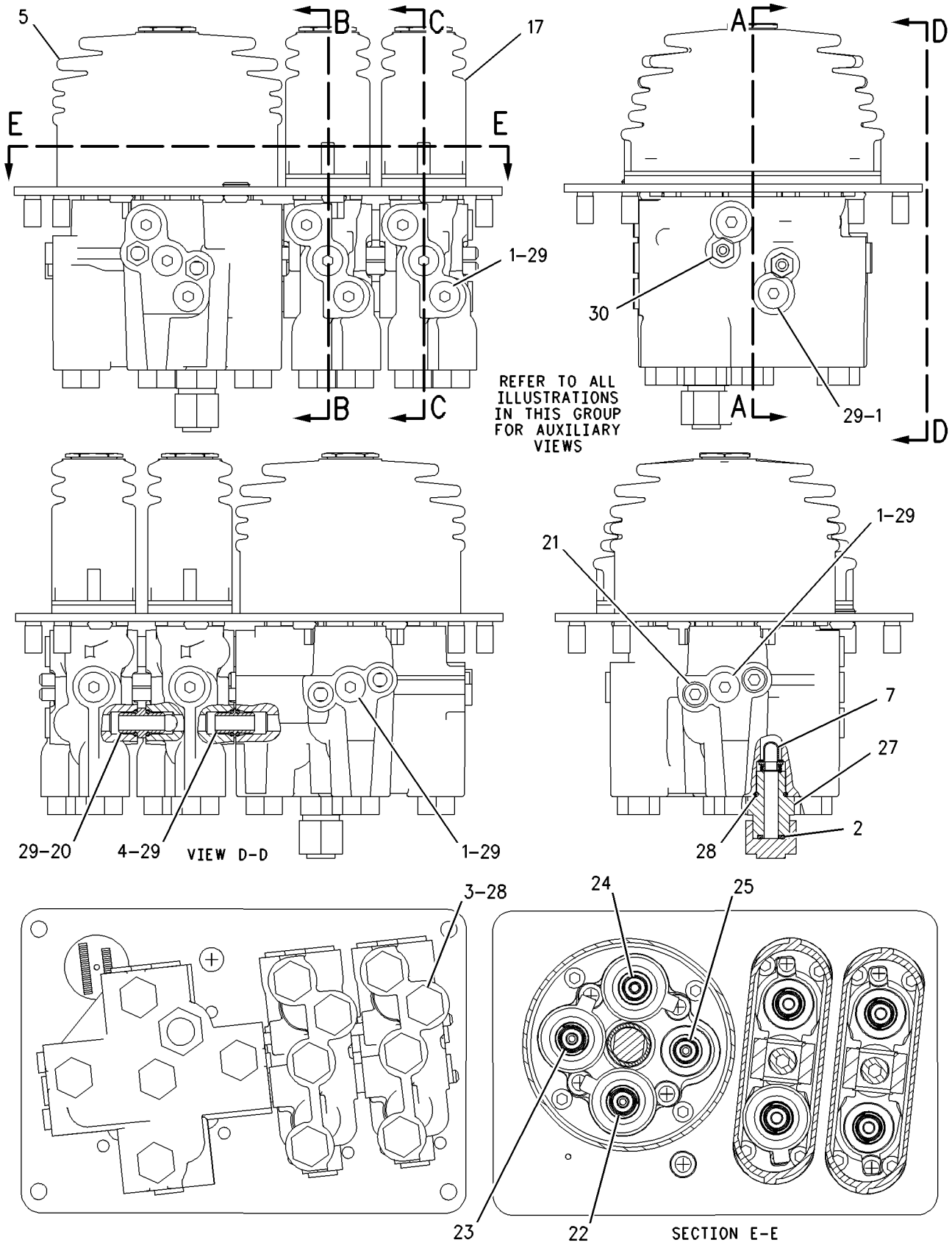

GRAPHIC #1 g00845591

163-3121 VALVE GP-PILOT *(contd.)* i02034215

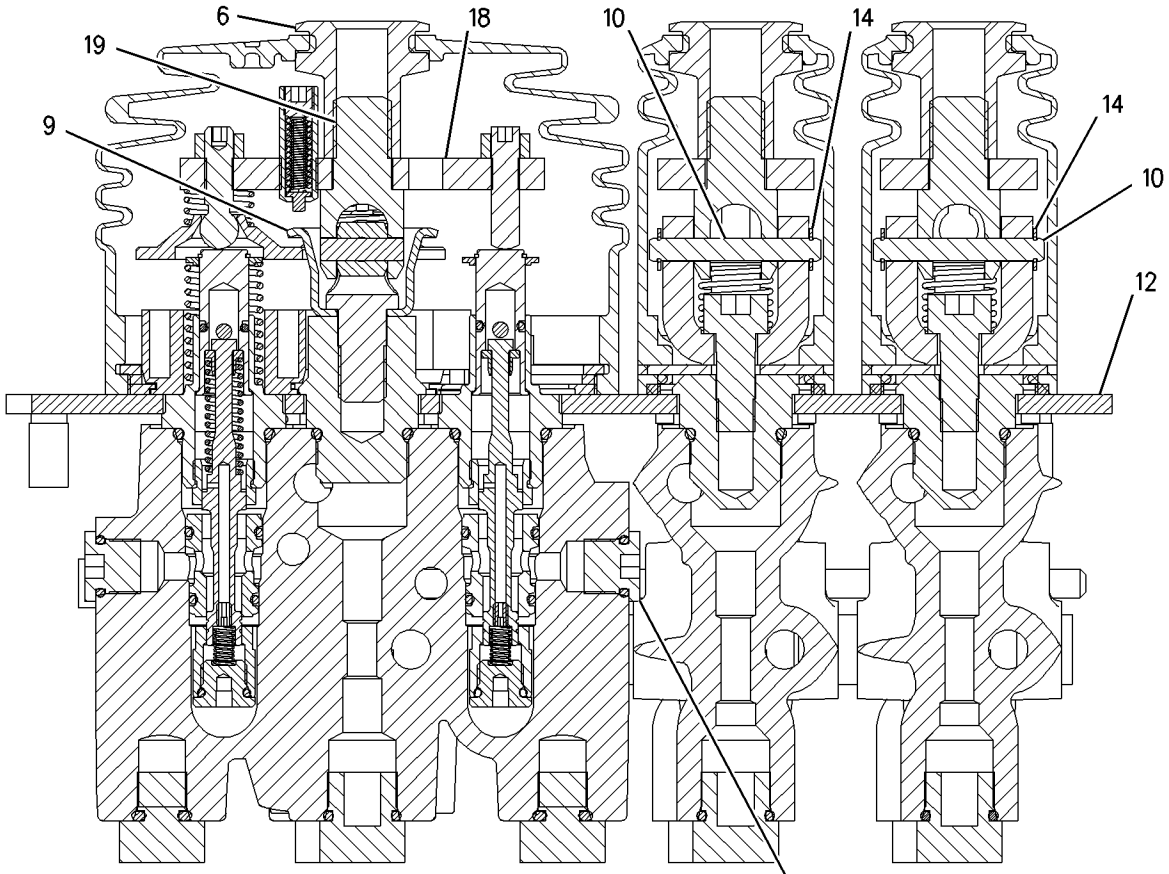

SECTION A-A

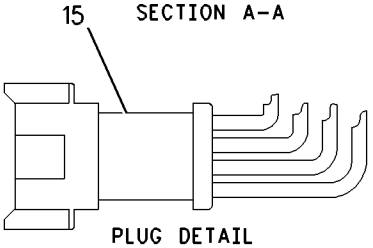

PLUG DETAIL

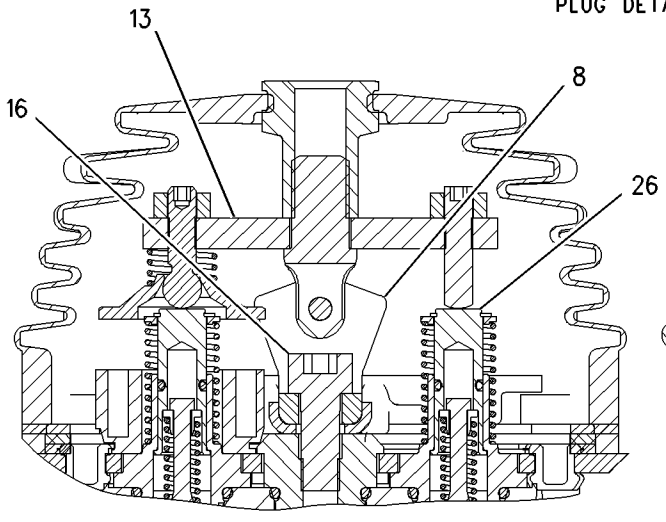

SECTION B-B

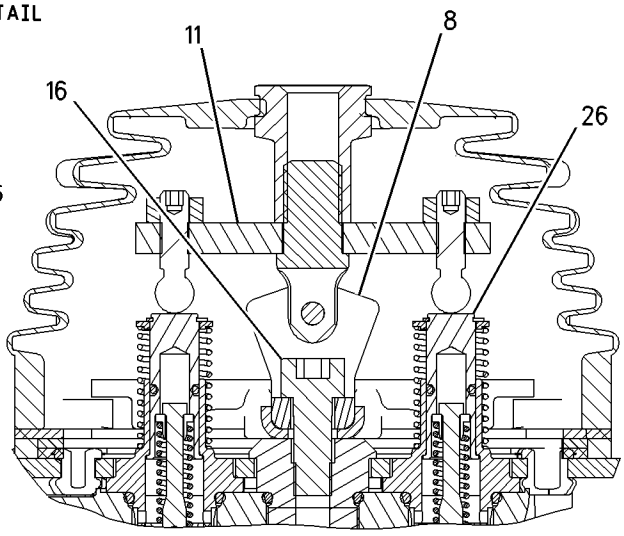

SECTION C-C

GRAPHIC #2 **<END>** g00845597

163-3107 VALVE GP-PILOT CARTRIDGE

S/N: PDF1-UP

PART OF 163-3118, 163-3120, 163-3121 VALVE GP-PILOT

AN ATTACHMENT

SMCS-5059 **i02021376**

NOTE	REF NO	GRAPHIC REF	PART NUMBER	QTY	PART NAME 1 2 3 4 5 6 (PRODUCT LEVEL)	SEE PAGE
	1	1	**116-4527**	1	ORIFICE	
	2	1	**7J-0204**	1	SEAL-O-RING	
	3	1	**146-6316**	2	RETAINER	
	4	1	**7I-6601**	1	SEAL-O-RING	
	5	1	**146-6319**	1	RETAINER	
	6	1	**153-8925**	1	STOP	
	7	1	**153-8926**	1	SPRING (INNER)	
	8	1	**191-3028**	1	CAGE	
	9	1	**191-3029**	1	SPOOL	
	10	1	**201-4274**	1	SPRING (MIDDLE)	
	11	1	**157-2152**	1	SPRING (OUTER)	
	12	1	**1M-6718**	1	BALL	
	13	1	**2H-3429**	1	RING-RETAINING	
	14	1	**3K-0360**	1	SEAL-O-RING	
	15	1	**4K-2039**	1	SEAL-O-RING	
	16	1	**6M-5062**	1	SEAL-O-RING	

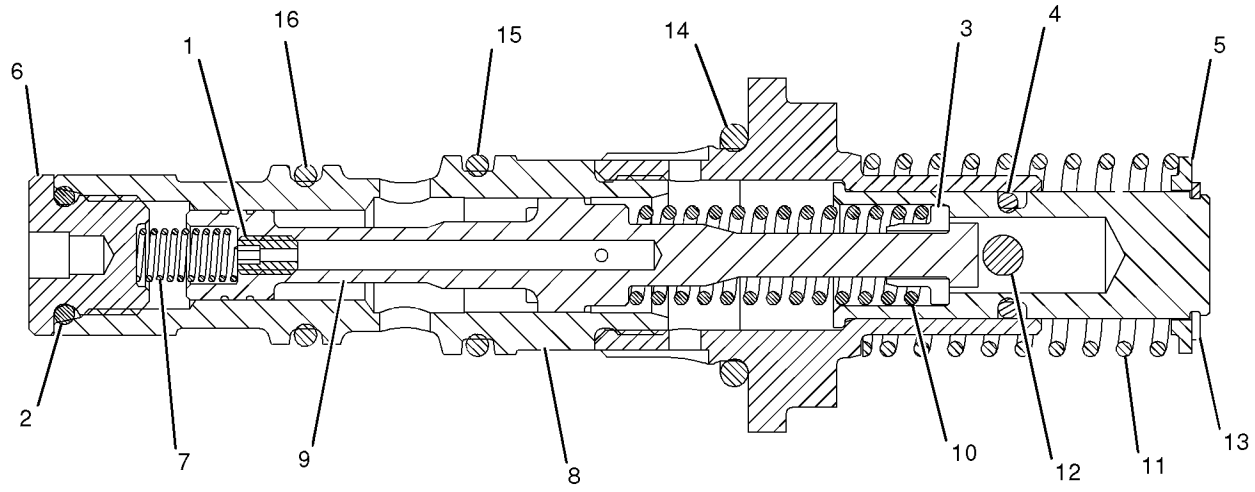

GRAPHIC #1 **<END>** g01043817

163-3108 VALVE GP-PILOT CARTRIDGE

S/N: PDF1-UP

PART OF 163-3118, 163-3120, 163-3121 VALVE GP-PILOT

AN ATTACHMENT

SMCS-5059 **i02021375**

NOTE	REF NO	GRAPHIC REF	PART NUMBER	QTY	PART NAME 1 2 3 4 5 6 (PRODUCT LEVEL)	SEE PAGE
	1	1	**116-4527**	1	ORIFICE	
	2	1	**7J-0204**	1	SEAL-O-RING	
	3	1	**146-6316**	2	RETAINER	
	4	1	**7I-6601**	1	SEAL-O-RING	
	5	1	**146-6319**	1	RETAINER	
	6	1	**153-8925**	1	STOP	
	7	1	**153-8926**	1	SPRING (INNER)	
	8	1	**157-2153**	1	SPRING (OUTER)	
	9	1	**162-8534**	1	SPRING (MIDDLE)	
	10	1	**191-3028**	1	CAGE	
	11	1	**191-3029**	1	SPOOL	
	12	1	**1M-6718**	1	BALL	
	13	1	**2H-3429**	1	RING-RETAINING	
	14	1	**3K-0360**	1	SEAL-O-RING	
	15	1	**4K-2039**	1	SEAL-O-RING	
	16	1	**6M-5062**	1	SEAL-O-RING	

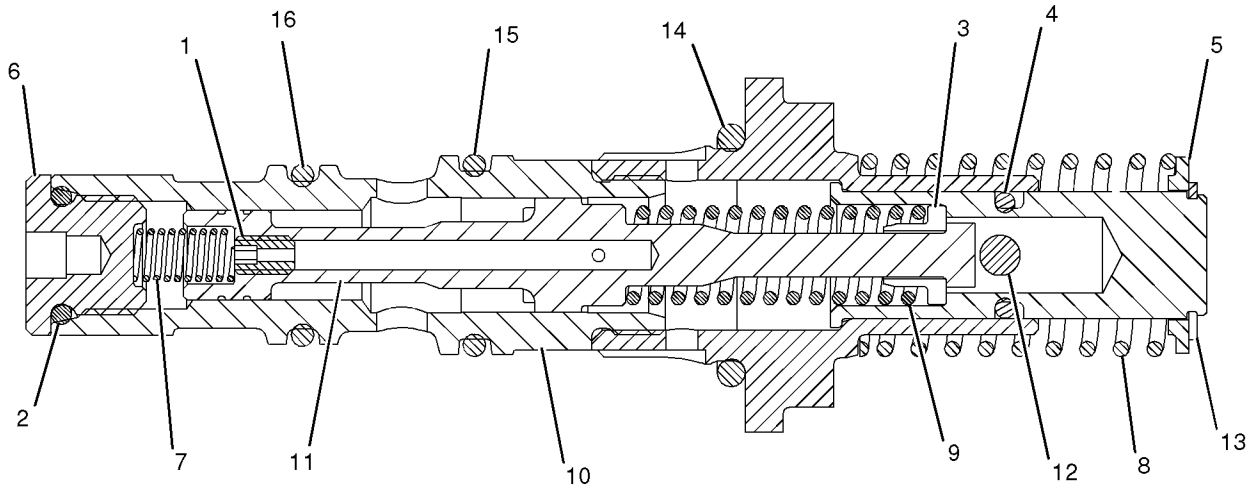

GRAPHIC #1 **<END>** g01043816

163-3109 VALVE GP-PILOT CARTRIDGE

S/N: PDF1-UP

PART OF 163-3118, 163-3120, 163-3121 VALVE GP-PILOT

AN ATTACHMENT

SMCS-5059 **i02021372**

NOTE	REF NO	GRAPHIC REF	PART NUMBER	QTY	PART NAME 1 2 3 4 5 6 (PRODUCT LEVEL)	SEE PAGE
	1	1	**116-4527**	1	ORIFICE	
	2	1	**7I-6601**	1	SEAL-O-RING	
	3	1	**146-6316**	2	RETAINER	
	4	1	**7J-0204**	1	SEAL-O-RING	
	5	1	**146-6319**	1	RETAINER	
	6	1	**153-8925**	1	STOP	
	7	1	**153-8926**	1	SPRING (INNER)	
	8	1	**162-8532**	1	SPRING (MIDDLE)	
	9	1	**191-3028**	1	CAGE	
	10	1	**191-3029**	1	SPOOL	
	11	1	**157-2152**	1	SPRING (OUTER)	
	12	1	**1M-6718**	1	BALL	
	13	1	**2H-3429**	1	RING-RETAINING	
	14	1	**3K-0360**	1	SEAL-O-RING	
	15	1	**4K-2039**	1	SEAL-O-RING	
	16	1	**6M-5062**	1	SEAL-O-RING	

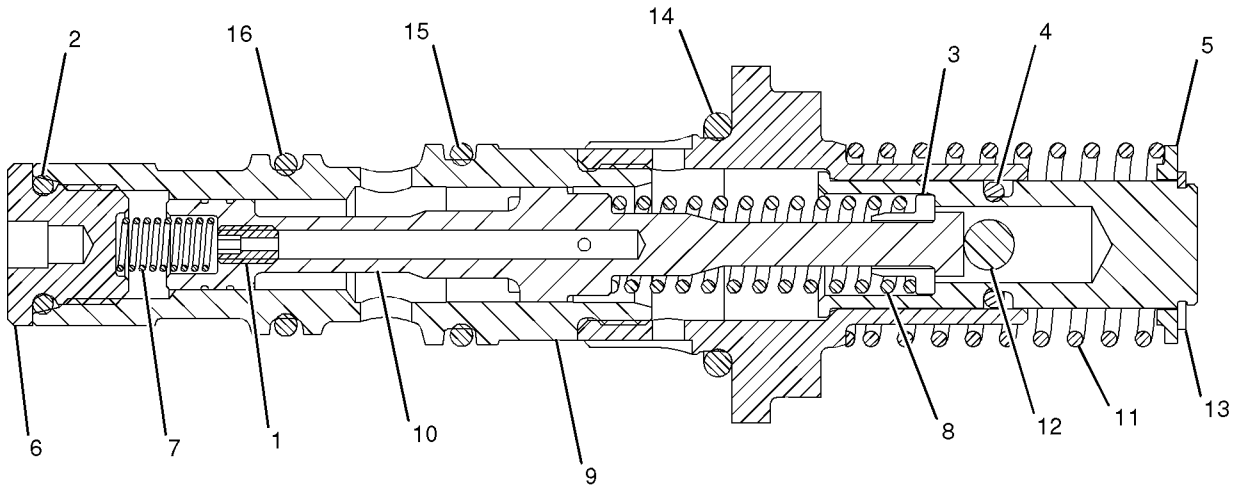

GRAPHIC #1 **<END>** g01043815

163-3110 VALVE GP-PILOT CARTRIDGE

S/N: PDF1-UP

PART OF 163-3118, 163-3120, 163-3121 VALVE GP-PILOT

AN ATTACHMENT

SMCS-5059 **i01616445**

NOTE	REF NO	GRAPHIC REF	PART NUMBER	QTY	PART NAME 1 2 3 4 5 6 (PRODUCT LEVEL)	SEE PAGE
	1	1	**116-4527**	1	ORIFICE	
	2	1	**136-9304**	1	ADAPTER	
	3	1	**141-5151**	1	SPRING	
	4	1	**146-6316**	2	RETAINER	
	5	1	**146-6318**	1	PLUNGER	
	6	1	**146-6319**	1	RETAINER	
	7	1	**153-8924**	1	SPOOL	
	8	1	**153-8925**	1	STOP	
	9	1	**153-8926**	1	SPRING	
	10	1	**153-8929**	1	CAGE	
	11	1	**157-2153**	1	SPRING	
	12	1	**2H-3429**	1	RING-RETAINING	
	13	1	**3E-4354**	1	BALL	
	14	1	**3K-0360**	1	SEAL-O-RING	
	15	1	**4K-2039**	1	SEAL-O-RING	
	16	1	**6M-5062**	1	SEAL-O-RING	
	17	1	**7I-6601**	1	SEAL-O-RING	
	18	1	**7J-0204**	1	SEAL-O-RING	

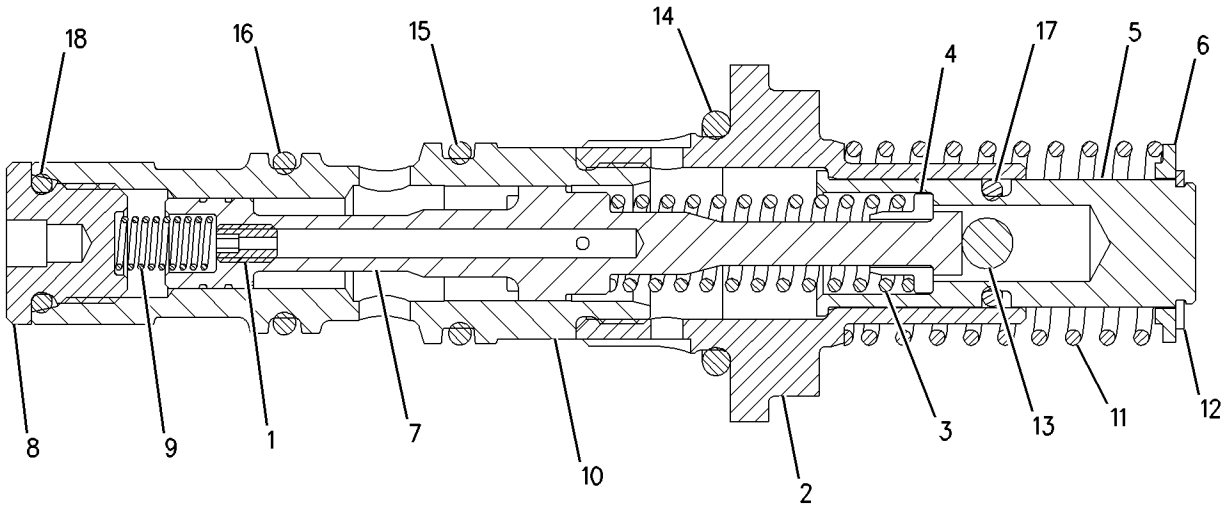

GRAPHIC #1 **<END>** g00839977

163-3111 VALVE GP-PILOT CARTRIDGE

S/N: PDF1-UP
PART OF 163-3120, 163-3121 VALVE GP-PILOT
AN ATTACHMENT

SMCS-5059 **i02021370**

NOTE	REF NO	GRAPHIC REF	PART NUMBER	QTY	PART NAME 1 2 3 4 5 6 (PRODUCT LEVEL)	SEE PAGE
	1	1	**116-4527**	1	ORIFICE	
	2	1	**136-9301**	1	SPRING (OUTER)	
	3	1	**7J-0204**	1	SEAL-O-RING	
	4	1	**146-6316**	2	RETAINER	
	5	1	**146-6318**	1	PLUNGER	
	6	1	**7I-6601**	1	SEAL-O-RING	
	7	1	**153-8925**	1	STOP	
	8	1	**153-8926**	1	SPRING (INNER)	
	9	1	**162-8537**	1	SPRING (MIDDLE)	
	10	1	**191-3028**	1	CAGE	
	11	1	**191-3029**	1	SPOOL	
	12	1	**2H-3429**	1	RING-RETAINING	
	13	1	**3K-0360**	1	SEAL-O-RING	
	14	1	**4K-2039**	1	SEAL-O-RING	
	15	1	**6M-5062**	1	SEAL-O-RING	

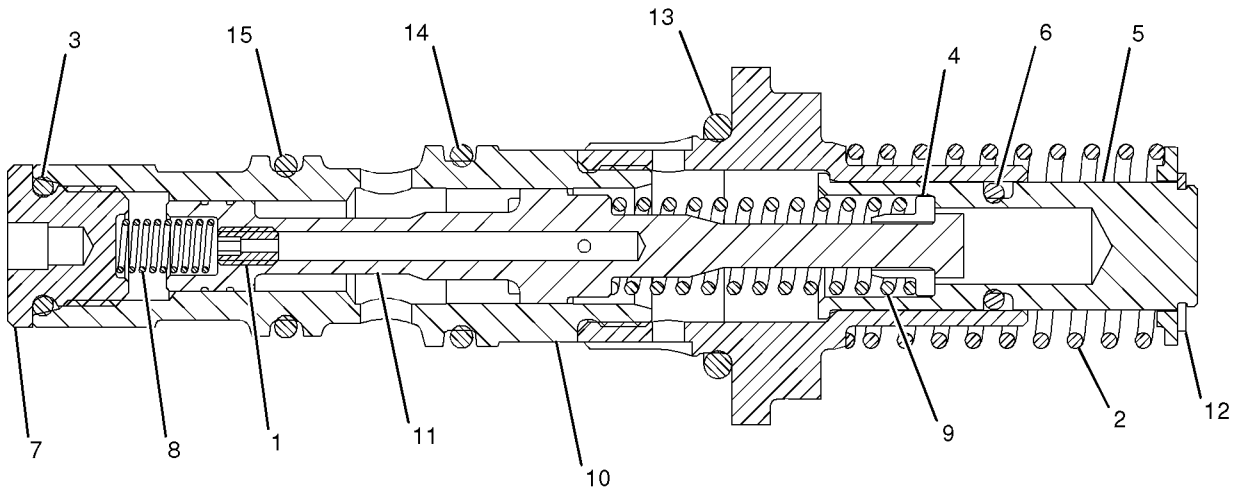

GRAPHIC #1 **<END>** g01043814

HYDRAULIC SYSTEM

186-0906 VALVE GP-RELIEF

S/N: PDF1-UP

PART OF 133-3824 VALVE GP-BANK 3, 133-3825 VALVE GP-BANK 4

AN ATTACHMENT

SMCS-5069, 5117 **i02021394**

NOTE	REF NO	GRAPHIC REF	PART NUMBER	QTY	PART NAME 1 2 3 4 5 6 (PRODUCT LEVEL)	SEE PAGE
	1	1	**186-2488**	1	RING-BACKUP	
	2	1	**033-5879**	2	SEAL-O-RING	
	3	1	**202-0042**	1	NUT (3/8-24-THD)	
	4	1	**186-2487**	1	RING-BACKUP	
	5	1	**033-6027**	2	SEAL-O-RING	
	6	1	**9N-1756**	1	SEAL-O-RING	
					AVAILABLE REPAIR KIT(S):	
			151-4003	1	KIT-SERVICE	
					(INCLUDES SPRINGS, SEALS, RINGS)	

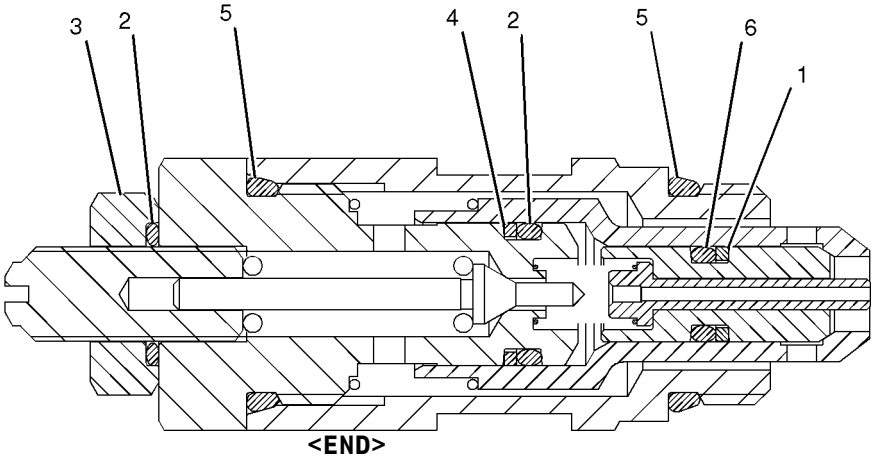

GRAPHIC #1 g01043830

<END>

186-0909 VALVE GP-RELIEF

S/N: PDF1-UP

PART OF 133-3823 VALVE GP-BANK 2, 133-3824 VALVE GP-BANK 3, 133-3825 VALVE GP-BANK 4

AN ATTACHMENT

SMCS-5069, 5117 **i02021393**

NOTE	REF NO	GRAPHIC REF	PART NUMBER	QTY	PART NAME 1 2 3 4 5 6 (PRODUCT LEVEL)	SEE PAGE
	1	1	**186-2488**	1	RING-BACKUP	
	2	1	**033-5879**	2	SEAL-O-RING	
	3	1	**202-0042**	1	NUT (3/8-24-THD)	
	4	1	**186-2487**	1	RING-BACKUP	
	5	1	**033-6027**	2	SEAL-O-RING	
	6	1	**9N-1756**	1	SEAL-O-RING	
					AVAILABLE REPAIR KIT(S):	
			151-4003	1	KIT-SERVICE	
					(INCLUDES SPRINGS, SEALS, & RINGS)	

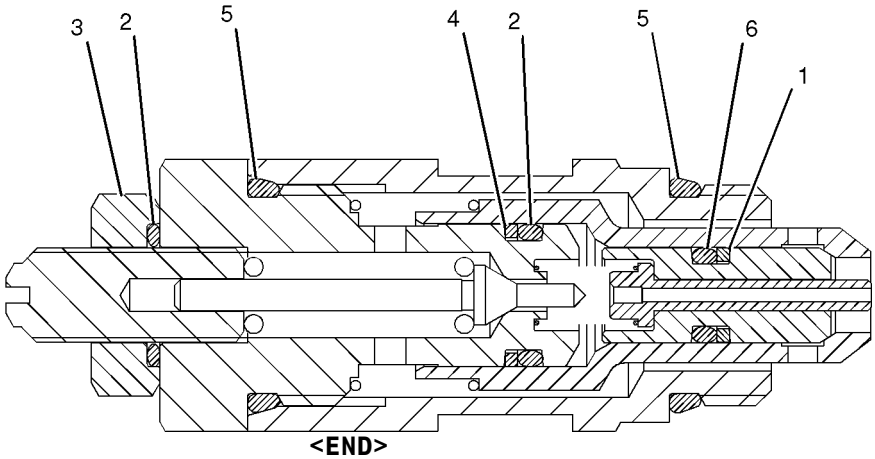

GRAPHIC #1

<END>

g01043830

186-0911 VALVE GP-RELIEF

S/N: PDF1-UP
PART OF 133-3823 VALVE GP-BANK 2, 133-3824 VALVE GP-BANK 3, 133-3825 VALVE GP-BANK 4
AN ATTACHMENT

SMCS-5069, 5117 **i02021391**

NOTE	REF NO	GRAPHIC REF	PART NUMBER	QTY	PART NAME 1 2 3 4 5 6 (PRODUCT LEVEL)	SEE PAGE
	1	1	**186-2488**	1	RING-BACKUP	
	2	1	**033-5879**	2	SEAL-O-RING	
	3	1	**202-0042**	1	NUT (3/8-24-THD)	
	4	1	**186-2487**	1	RING-BACKUP	
	5	1	**033-6027**	2	SEAL-O-RING	
	6	1	**9N-1756**	1	SEAL-O-RING	
					AVAILABLE REPAIR KIT(S):	
			151-4003	1	KIT-SERVICE	
					(INCLUDES SPRINGS, SEALS, RINGS)	

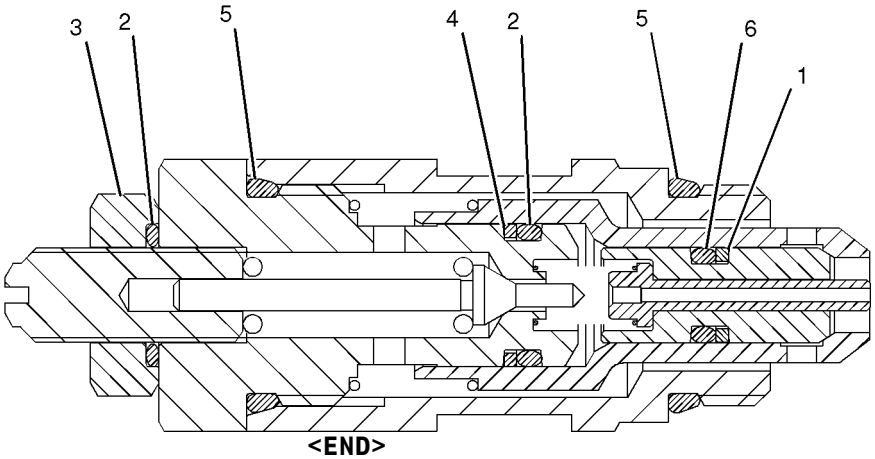

GRAPHIC #1 g01043830

<END>

143-9354 VALVE GP-SHUTOFF

S/N: PDF1-UP

PART OF 119-2223, 119-2224, 119-2225 CONTROL GP-PILOT OPERATED HYD

AN ATTACHMENT

SMCS-5059, 5130 **i01551530**

NOTE	REF NO	GRAPHIC REF	PART NUMBER	QTY	PART NAME 1 2 3 4 5 6 (PRODUCT LEVEL)	SEE PAGE
	1	1	**2Y-5671**	3	WASHER (33X19.43X0.91MM THK)	
	2	1	**6R-3354**	1	BOOT-PROTECTION	
	3	1	**7X-1886**	1	SWITCH AS-BALL	
		1	**9B-7233**	2	LOCKWASHER	
		1	**141-4859**	2	SCREW-MACHINE	
M	4	1	**7Y-3173**	3	SCREW-BUTTON HEAD (M4X0.7X12MM)	
J	5	1	**156-5726**	1	VALVE-BALL	
		1	**112-9861**	1	KIT-SEAL	
	6	1	**121-0254**	1	PLATE (6MM THK)	
	7	1	**121-0256**	1	PLATE (4MM THK)	
	8	1	**140-1344**	1	SPACER (4MM THK)	
	9	1	**148-8867**	1	LEVER AS	
	10	1	**9G-5687**	1	GROMMET	
M	11	1	**8T-5432**	1	BOLT (M5X0.8X16MM)	
	12	1	**9X-6165**	1	WASHER (6.5X22X2.5MM THK)	
					AVAILABLE REPAIR KIT(S):	
J			**112-9861**	1	KIT-SEAL	

J-REPAIR KIT MARKED J AVAILABLE FOR PART MARKED J
M-METRIC PART

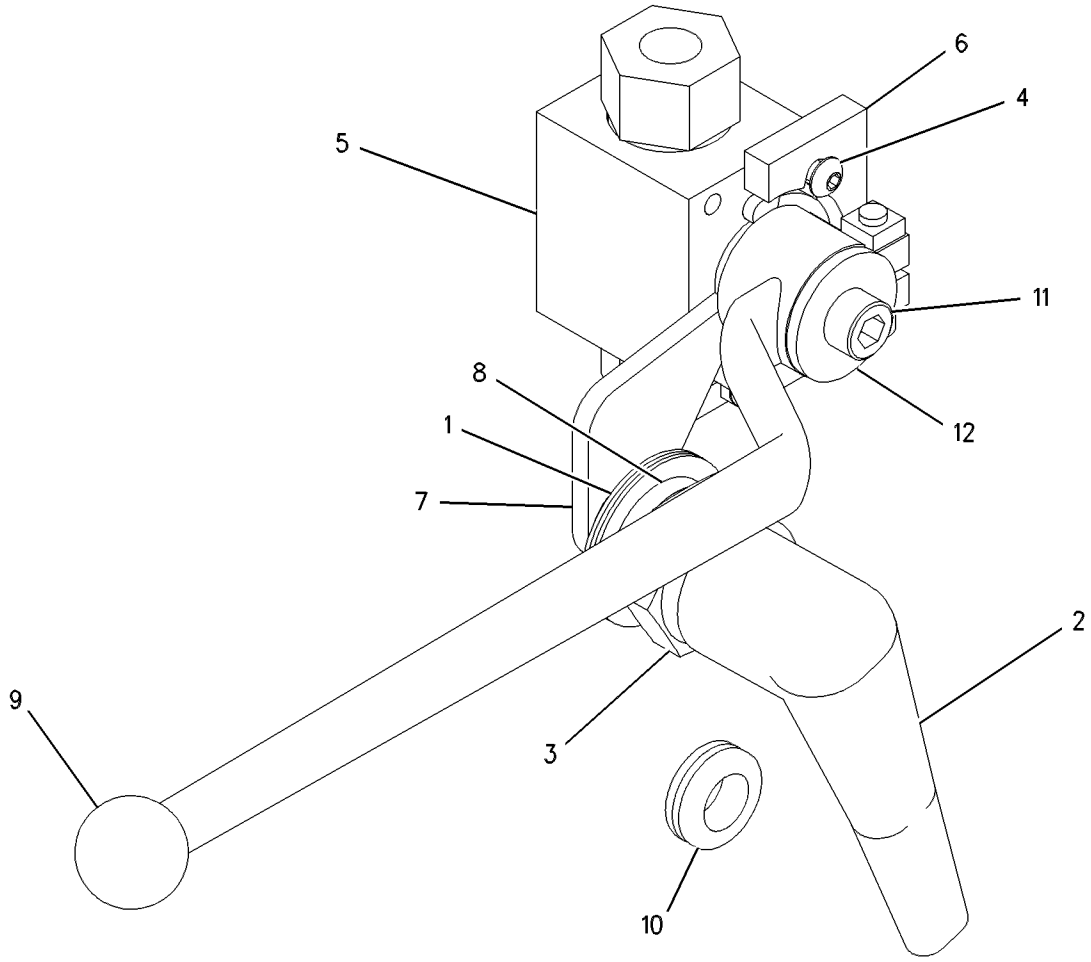

GRAPHIC #1 **<END>** g00564567

HYDRAULIC SYSTEM

111-0350 VALVE GP-SOLENOID

S/N: PDF1-UP
PART OF 169-5824 CONTROL & LINES GP-RIDE
AN ATTACHMENT

SMCS-5132, 5479 **i02038782**

NOTE	REF NO	GRAPHIC REF	PART NUMBER	QTY	PART NAME 1 2 3 4 5 6 (PRODUCT LEVEL)	SEE PAGE
J	1	1	**157-2284**	1	LOCKNUT-SPECIAL (5/8-18-THD)	
J	2	1	**160-4953**	1	SPACER (20.8-MM THK)	
	3	1	**3E-8583**	1	COIL AS	
	4	1	**1S-9593**	2	STRAP-CABLE	
	5	1	**102-8802**	2	KIT-RECEPTACLE (2-PIN)	
		1	**3E-3365**	1	WEDGE-RECEPTACLE LOCK (2-PIN)	
		1	**8T-8729**	2	PIN-CONNECTOR	
					AVAILABLE REPAIR KIT(S):	
J			**160-4957**	1	KIT-SERVICE	

J-KIT MARKED J SERVICES PARTS MARKED J

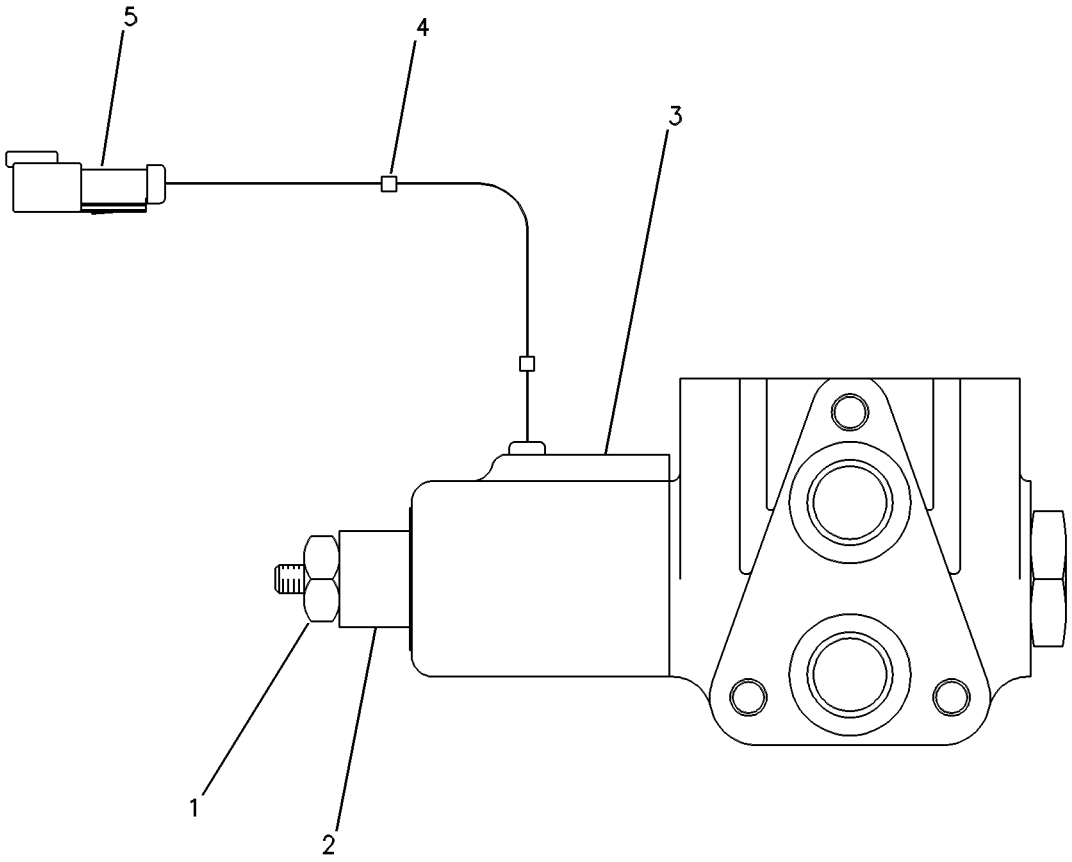

GRAPHIC #1 **<END>** g00250607

HYDRAULIC SYSTEM

195-3739 VALVE GP-SOLENOID

S/N: PDF1-UP
24-VOLT
PART OF 196-5862 VALVE GP-SOLENOID & MANIFOLD

SMCS-5132, 5479 **i02014953**

NOTE	REF NO	GRAPHIC REF	PART NUMBER	QTY	PART NAME 1 2 3 4 5 6 (PRODUCT LEVEL)	SEE PAGE
	1	1	**145-1144**	1	COIL AS	
	2	1	**164-2108**	1	WASHER (13.03X25.4X2.38-MM THK)	
	3	1	**167-9524**	1	NUT-SELF LOCKING (1/2-28-THD)	
Z	4	1		1	CARTRIDGE AS	
JZ	5	1		1	SEAL-O-RING	
JZ	6	1		1	SEAL-O-RING	
JZ	7	1		1	SEAL-O-RING	
					AVAILABLE REPAIR KIT(S):	
J			**175-3892**	1	KIT-SEAL (SOLENOID VALVE)	

J-KIT MARKED J SERVICES PARTS MARKED J
Z-NOT SERVICED SEPARATELY

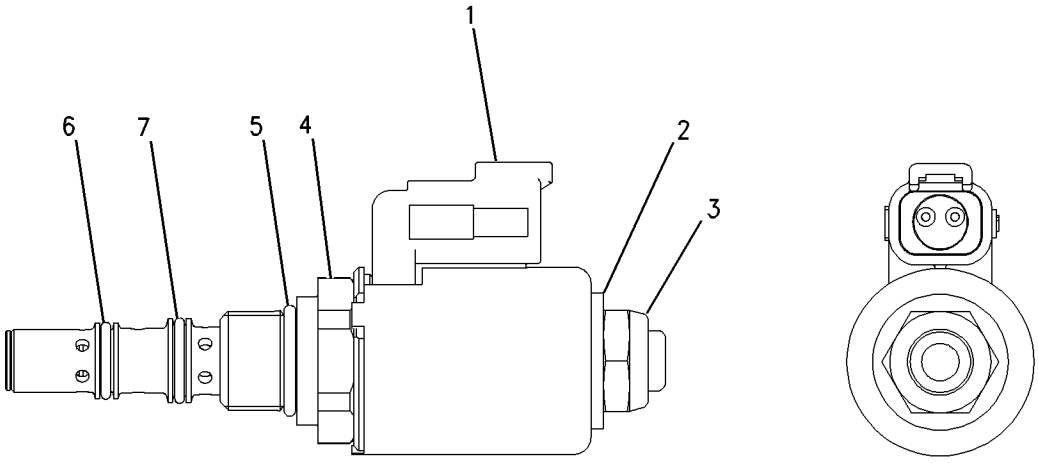

GRAPHIC #1 **<END>** g00742665

142-8464 BRACKET GP-TRANSPORT

S/N: PDF1-UP
AN ATTACHMENT

SMCS-7505 **i01349928**

NOTE	REF NO	GRAPHIC REF	PART NUMBER	QTY	PART NAME 1 2 3 4 5 6 (PRODUCT LEVEL)	SEE PAGE
	1	1	**107-2503**	1	RETAINER	
	2	1	**140-3024**	2	BRACKET AS	
		1	**140-3025**	1	BRACKET	
	3	1	**8T-4121**	2	WASHER-HARD (2.5MM THK)	
M	4	1	**8T-6685**	2	BOLT (M10X1.50X110MM)	

M-METRIC PART

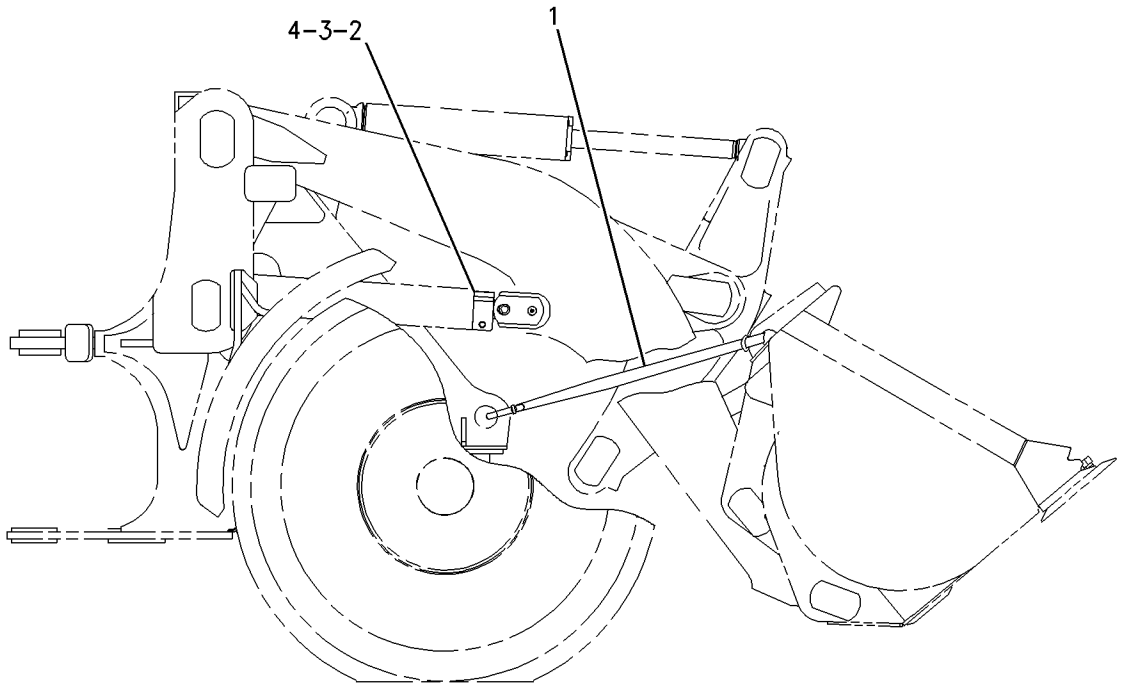

GRAPHIC #1 **<END>** g00712541

107-4701 CONTROL GP-BUCKET

S/N: PDF1-UP

PART OF 236-5635 CHASSIS AR

SMCS-6107 **i01599395**

NOTE	REF NO	GRAPHIC REF	PART NUMBER	QTY	PART NAME 1 2 3 4 5 6 (PRODUCT LEVEL)	SEE PAGE
	1	1	**3B-8488**	1	FITTING-GREASE (1/8-27 THD)	
	2	1	**9C-7907**	3	SPACER (14MM THK)	
	3	1	**5G-8599**	2	PIN AS	
	4	1	**4E-1799**	1	PIN AS	
	5	1	**7K-9209**	2	SEAL-LIP	
	6	1	**7K-9205**	4	SEAL-LIP	
	7	1	**7K-9203**	12	SEAL-LIP	
	8	1	**7K-9204**	8	SEAL-LIP	
	9	1	**8Y-7186**	1	LINK AS	
	9A	1	**4V-8643**	4	BEARING-SLEEVE	
M	10	1	**8T-6430**	3	BOLT (M20X2.5X50MM)	
	11	1	**107-3704**	1	ARM AS-LIFT	
	11A	1	**1V-3342**	2	BEARING-SLEEVE	
	11B	1	**4V-8629**	2	BEARING-SLEEVE	
	11C	1	**9V-4975**	2	BEARING-SLEEVE	
		1	**9R-2672**	6	BOSS (M10X20MM)	
	12	1	**107-3706**	1	LEVER AS	
	12A	1	**4V-8639**	2	BEARING-SLEEVE	
	13	1	**109-3732**	2	PIN AS	
	14	1	**109-3733**	4	PIN AS	
	15	1	**109-3734**	1	PIN AS	
	16	1	**109-3735**	2	PIN AS	
	17	1	**109-3744**	3	SPACER (25MM THK)	
B	18	1	**2G-5672**	6	WASHER (1.6MM THK)	
	19	1	**3B-8489**	12	FITTING-GREASE (1/8-27 THD)	
B	20	1	**5G-2318**	4	WASHER (1.6MM THK)	
B	21	1	**6K-2274**	4	SPACER (3.0MM THK)	
B	22	1	**6S-3461**	4	WASHER (3.0MM THK)	
	23	1	**7X-0618**	10	WASHER-HARD (13.5X40X5MM THK)	
M	24	1	**8T-4179**	7	BOLT (M12X1.75X20MM)	
M	25	1	**8T-4194**	3	BOLT (M12X1.75X50MM)	
	26	1	**8T-5439**	3	WASHER (21.5X45X6MM THK)	
	27	1	**128-3474**	1	PIN AS	

B-USE AS REQUIRED
M-METRIC PART

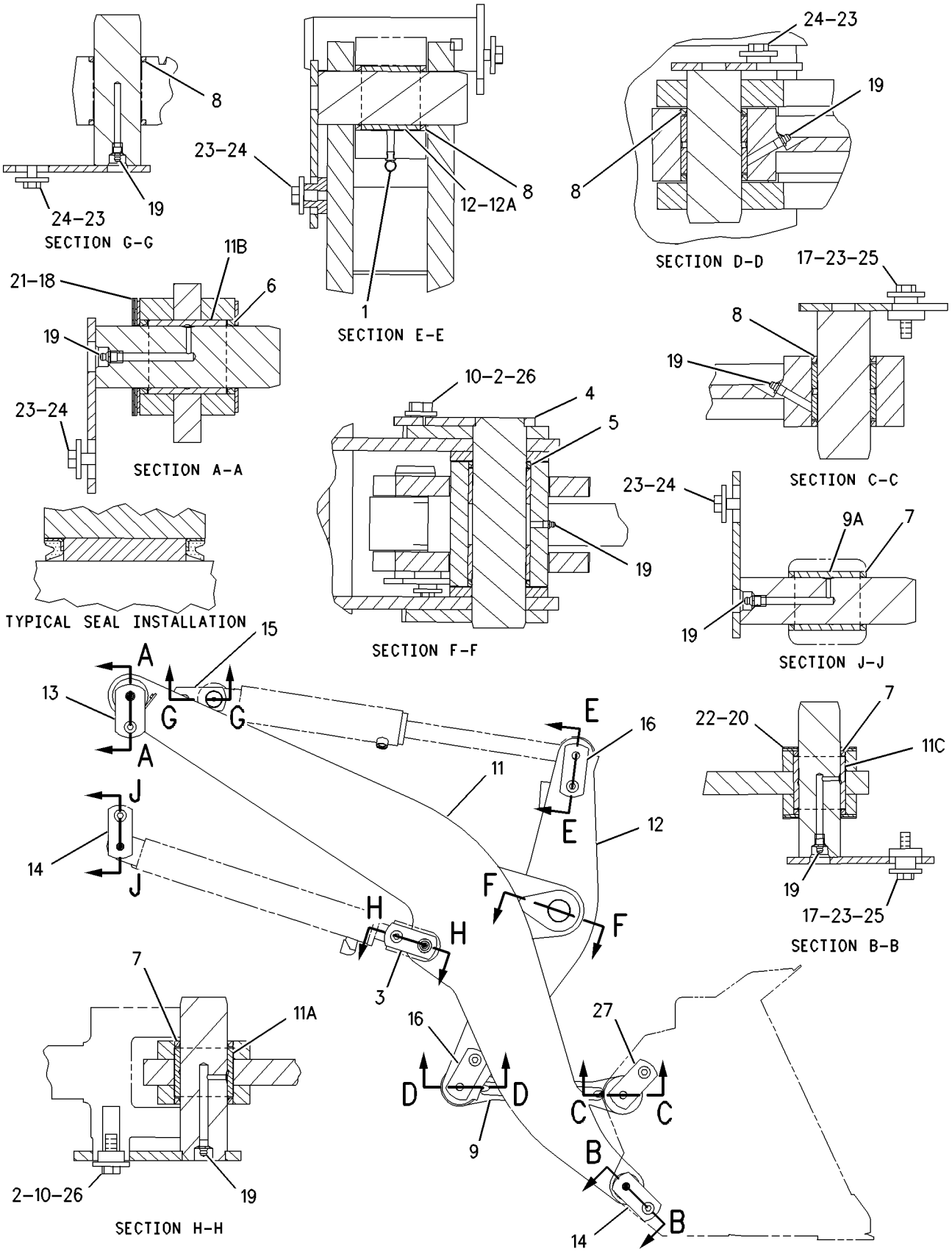

GRAPHIC #1 **<END>** g00828843

WORK TOOLS

9W-9642 ADAPTER GP-TIP

S/N: PDF1-UP

AN ATTACHMENT

SMCS-6803 **i02034234**

NOTE	PART NUMBER	QTY	PART NAME 1 2 3 4 5 6 (PRODUCT LEVEL)	SEE PAGE
	9J-4207	6	ADAPTER-STRAP	
	1U-2208	1	ADAPTER-STRAP-LH	
	1U-2209	1	ADAPTER-STRAP-RH	
	6F-0196	2	BOLT-PLOW (7/8-9X2.75-IN)	
	5J-4771	12	BOLT-PLOW (3/4-10X2.75-IN)	
	2J-3505	2	NUT-FULL (7/8-9-THD)	
	2J-3506	12	NUT-FULL (3/4-10-THD)	

<END>

112-1258 BUCKET AS-PENETRATION

S/N: PDF1-UP
1.3 CU M (1.7 CU YD). FLUSH MOUNTED WELD-ON TEETH
AN ATTACHMENT

SMCS-6131 **i01098255**

NOTE	REF NO	GRAPHIC REF	PART NUMBER	QTY	PART NAME 1 2 3 4 5 6 (PRODUCT LEVEL)	SEE PAGE
	1	1	**5G-5770**	1	PLATE	
	2	1	**5G-5769**	1	PLATE	
	3	1	**5G-8760**	4	BOSS	
	4	1	**5G-8911**	1	EDGE AS	
	5	1	**9V-5705**	2	PLATE	
	6	1	**130-7471**	1	PLATE-INSTRUCTION	

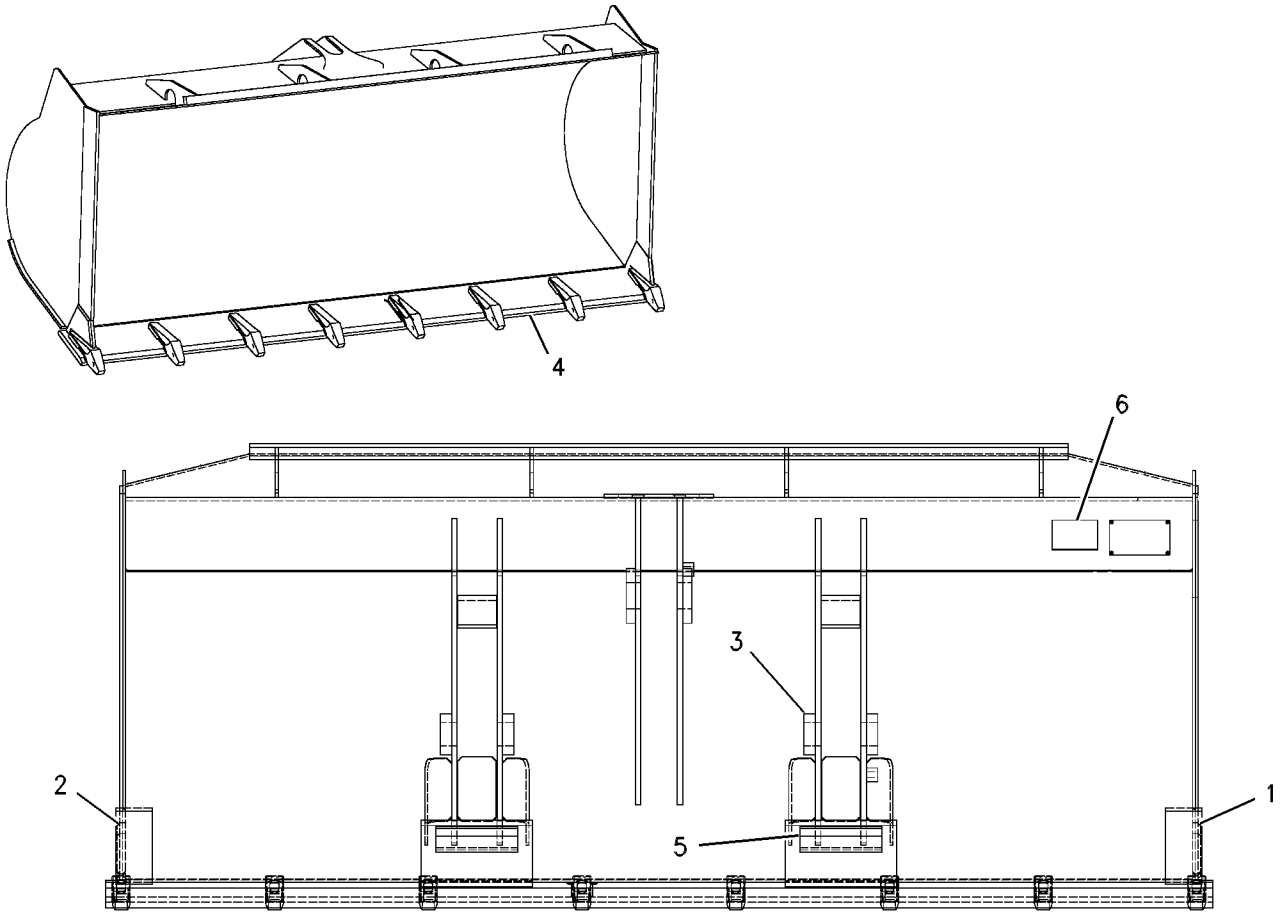

REAR VIEW

GRAPHIC #1 **<END>** g00577436

128-1481 BUCKET AS-PENETRATION

S/N: PDF1-UP

AN ATTACHMENT

SMCS-6131 **i01094820**

NOTE	REF NO	GRAPHIC REF	PART NUMBER	QTY	PART NAME 1 2 3 4 5 6 (PRODUCT LEVEL)	SEE PAGE
	1	1	**8P-9770**	2	PLATE	
	2	1	**1U-1254**	8	ADAPTER	
	3	1	**5G-8760**	4	BOSS	
	4	1	**128-1490**	2	PLATE-WEAR	
	5	1	**130-7475**	1	PLATE-INSTRUCTION	

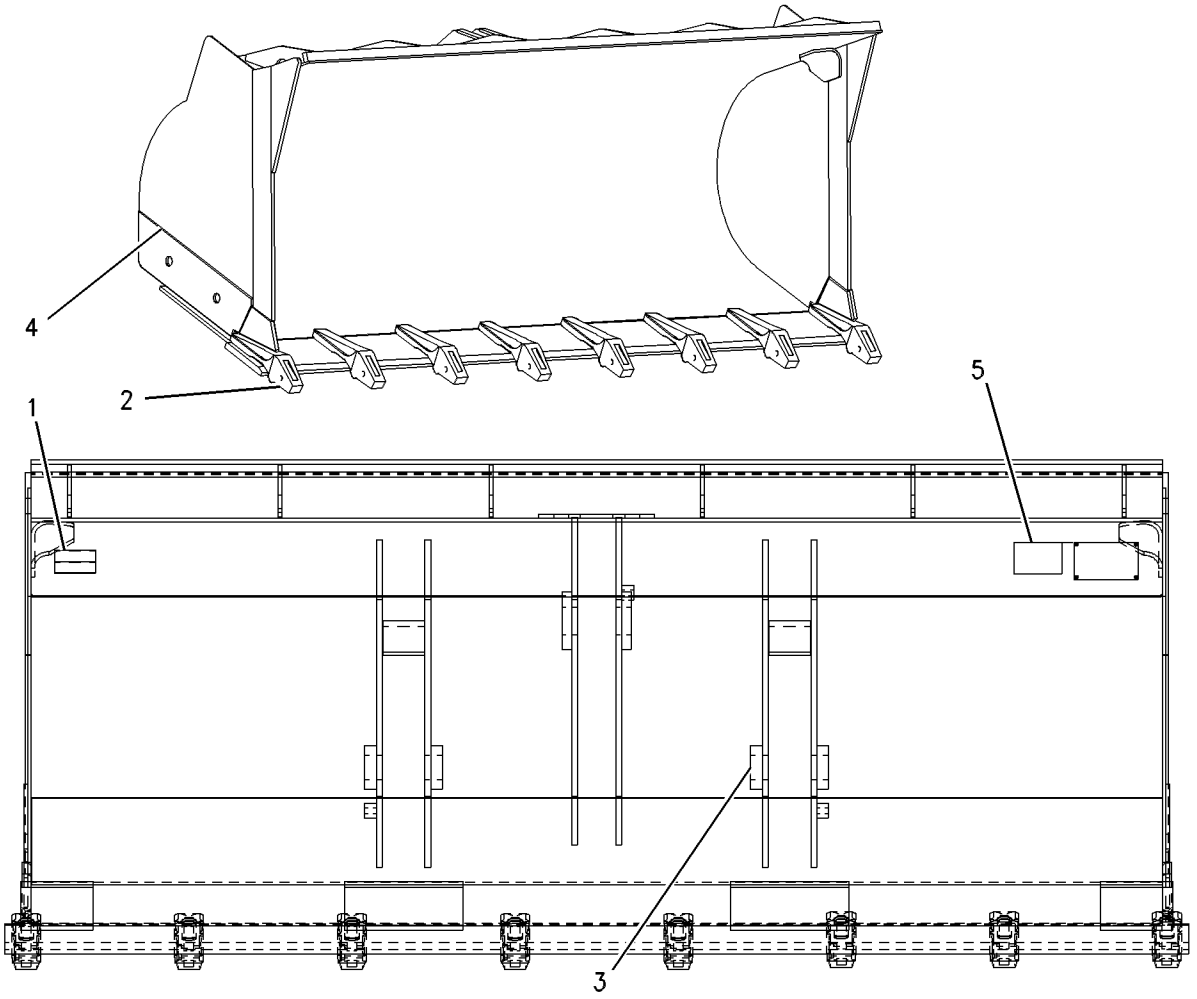

GRAPHIC #1 **<END>** g00575098

128-1482 BUCKET AS-PENETRATION—QUICK COUPLER

S/N: PDF1-UP
PART OF 134-5457 BUCKET GP-PENETRATION
AN ATTACHMENT

SMCS-6131 **i01091551**

NOTE	REF NO	GRAPHIC REF	PART NUMBER	QTY	PART NAME 1 2 3 4 5 6 (PRODUCT LEVEL)	SEE PAGE
	1	1	**8P-9770**	2	PLATE	
	2	1	**1U-1254**	8	ADAPTER	
	3	1	**112-3116**	1	PLATE AS	
		1	**6K-4076**	1	BEARING-SLEEVE	
	4	1	**112-3113**	1	PLATE AS	
		1	**6K-4076**	1	BEARING-SLEEVE	
	5	1	**128-1490**	2	PLATE-WEAR	

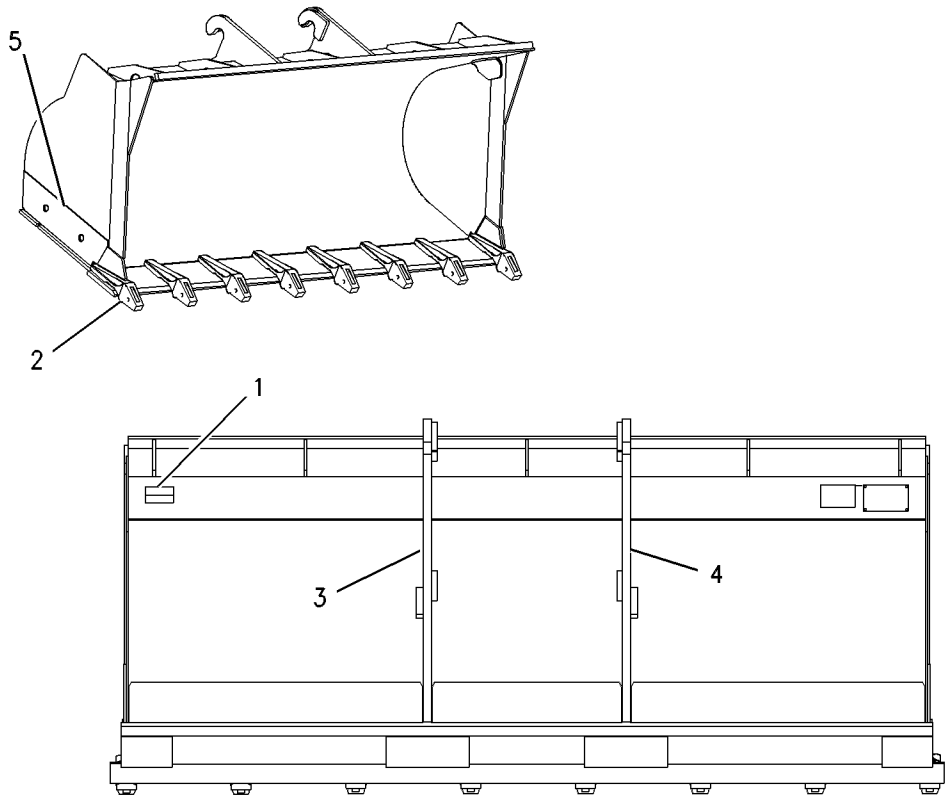

GRAPHIC #1 **<END>** g00573297

112-1256 BUCKET GP-GENERAL PURPOSE

S/N: PDF1-UP
1.2 CU M (1.6 CU YD) WITH TEETH, 1.3 CU M (1.7 CU YD) WITH TEETH & SEGMENTS.
GENERAL PURPOSE-EXCAVATING
AN ATTACHMENT

SMCS-6101 **i01564611**

NOTE	REF NO	GRAPHIC REF	PART NUMBER	QTY	PART NAME 1 2 3 4 5 6 (PRODUCT LEVEL)	SEE PAGE
	1	1	**5G-2807**	1	PLATE	
	2	1	**5G-2806**	1	PLATE	
	3	1	**5G-8760**	4	BOSS	
	4	1	**9V-5705**	2	PLATE	
	5	1	**5G-8342**	1	EDGE	
	6	1	**130-7469**	2	PLATE-INSTRUCTION	

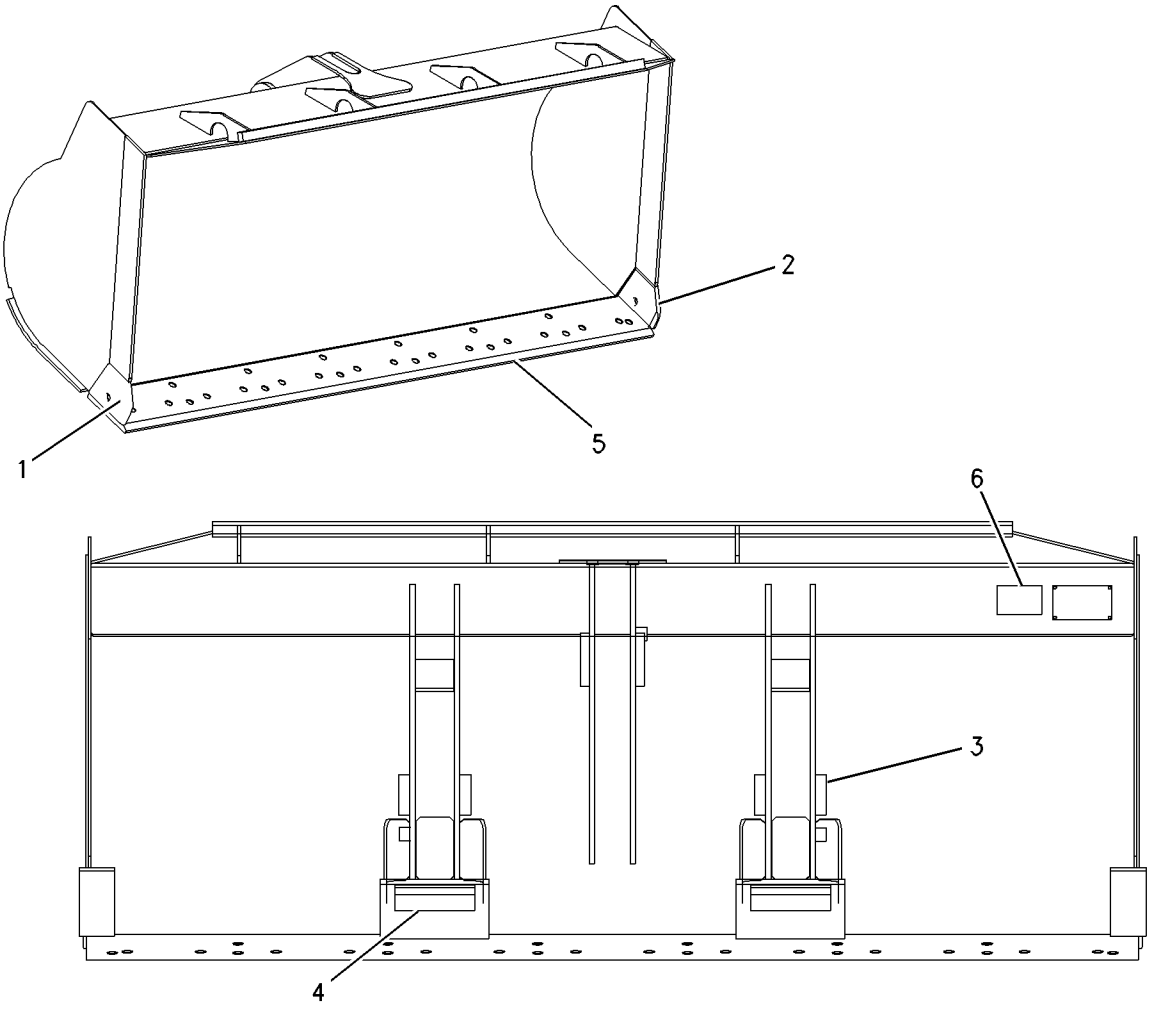

GRAPHIC #1 **<END>** g00812942

122-6096 BUCKET GP-GENERAL PURPOSE

S/N: PDF1-UP

1.4 CU. M (1.8 CU. YD) WITH TEETH & 1.5 CU. M (2.0 CU. YD) WITH SEGMENTS OR WITH BOLT ON CUTTING EDGES

AN ATTACHMENT

SMCS-6101 **i01153925**

NOTE	REF NO	GRAPHIC REF	PART NUMBER	QTY	PART NAME 1 2 3 4 5 6 (PRODUCT LEVEL)	SEE PAGE
	1	1	**5G-2807**	1	PLATE	
	2	1	**5G-2806**	1	PLATE	
	3	1	**5G-8760**	4	BOSS	
	4	1	**5G-8342**	1	EDGE	
	5	1	**9V-5705**	2	PLATE	

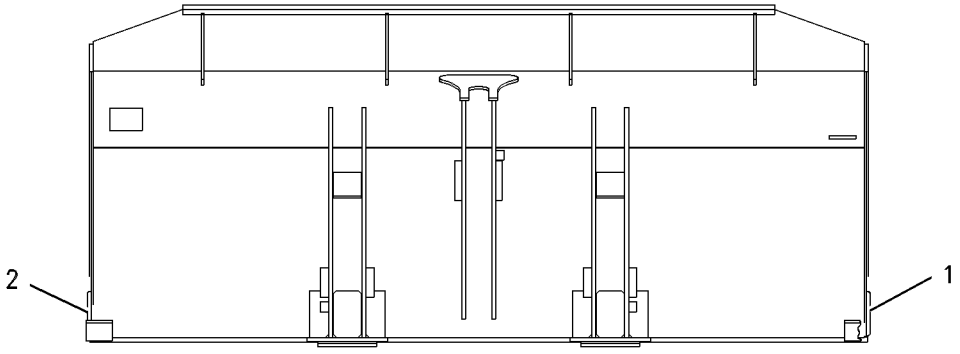

BACK VIEW

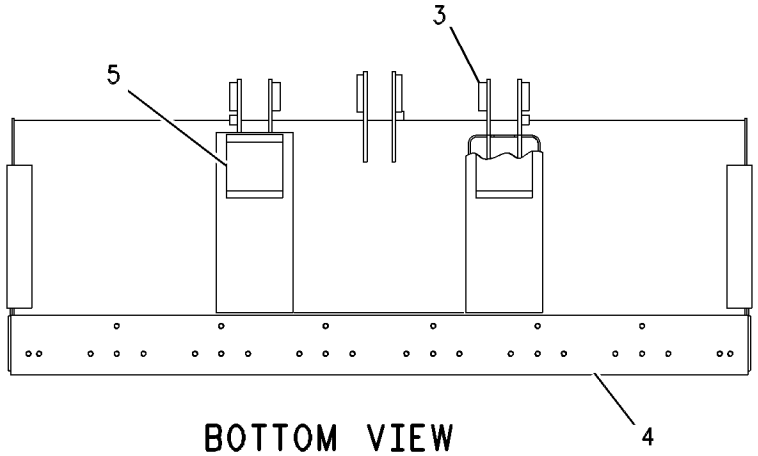

BOTTOM VIEW

GRAPHIC #1 **<END>** g00634588

WORK TOOLS

134-5457 BUCKET GP-PENETRATION—QUICK COUPLER

S/N: PDF1-UP
2454MM (96.6 IN)
AN ATTACHMENT

SMCS-6131 **i01997624**

NOTE	PART NUMBER	QTY	PART NAME 1 2 3 4 5 6 (PRODUCT LEVEL)	SEE PAGE
Y	**128-1482**	1	BUCKET AS-PENETRATION	433
Y	**9J-3169**	1	TIP GP-LONG	445

Y-SEPARATE ILLUSTRATION

<END>

WORK TOOLS

112-1257 BUCKET GP-ROCK

S/N: PDF1-UP
1.3 CU M (1.7 CU YD) WITH TEETH, 1.4 CU M (1.75 CU YD) WITH TEETH & SEGMENTS OR BOLT-ON CUTTING EDGES
AN ATTACHMENT

SMCS-6102 **i01098128**

NOTE	REF NO	GRAPHIC REF	PART NUMBER	QTY	PART NAME 1 2 3 4 5 6 (PRODUCT LEVEL)	SEE PAGE
	1	1	**5G-2807**	1	PLATE	
	2	1	**5G-2806**	1	PLATE	
	3	1	**5G-8760**	4	BOSS	
	4	1	**5G-8342**	1	EDGE	
	5	1	**9V-5705**	2	PLATE	
	6	1	**130-7470**	1	PLATE-INSTRUCTION	

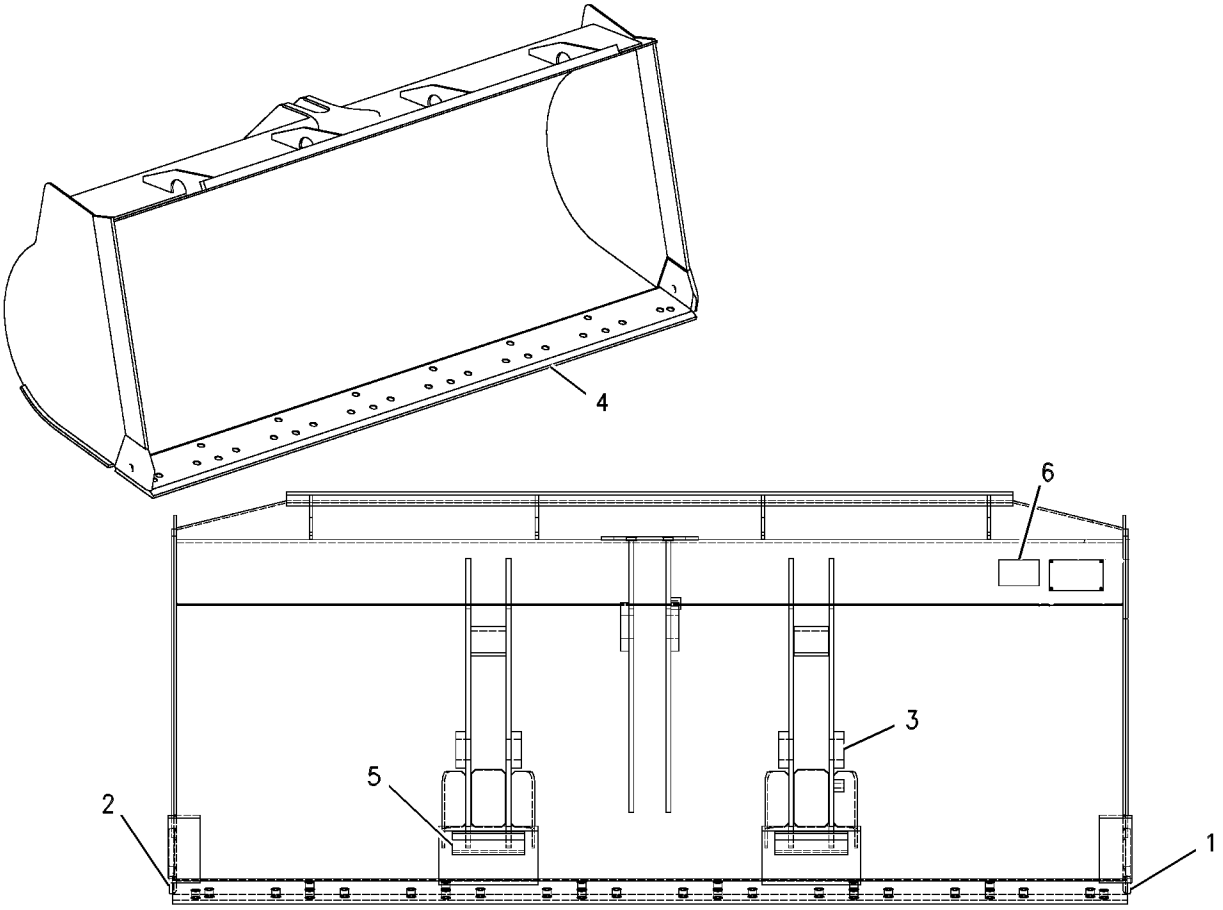

REAR VIEW

GRAPHIC #1 **<END>** g00578144

WORK TOOLS

147-0500 COUPLER GP-QUICK

S/N: PDF1-UP
AN ATTACHMENT

SMCS-6129 **i02034240**

NOTE	REF NO	GRAPHIC REF	PART NUMBER	QTY	PART NAME 1 2 3 4 5 6 (PRODUCT LEVEL)	SEE PAGE
	1	1	**147-0501**	1	COUPLER AS-QUICK	
Y	2	1	**9T-8823**	1	CYLINDER GP-COUPLER	342
	3	1	**6W-5760**	2	DOWEL	
	4	1	**6W-5761**	2	PIN	
	5	1	**144-6881**	1	COVER	
M	6	1	**8T-4189**	4	BOLT (M8X1.25X20-MM)	
M	7	1	**8T-4224**	4	WASHER-HARD (8.8X16X2-MM THK)	
	8	2	**6W-2888**	2	FITTING AS	
	9	2	**6V-0408**	2	SEAL-BONDED	
	10	2	**8T-7915**	2	ADAPTER	
	11	2	**6Y-2349**	2	CONNECTOR	
	12	2	**3D-2824**	6	SEAL-O-RING	
	13	2	**6W-2890**	2	CAP AS-DUST	
	14	2	**6W-8221**	1	VALVE-BALL	
	15	2	**6V-8627**	4	ELBOW	
	16	2	**3J-1907**	5	SEAL-O-RING	
	17	2	**4J-5477**	8	SEAL-O-RING	
	18	2	**8T-0788**	1	ELBOW	
	19	2	**8C-6781**	2	ADAPTER	
	20	2	**6V-8397**	2	SEAL-O-RING	
	21	2	**6V-0406**	2	SEAL-BONDED	
	22	2	**6W-8448**	2	BLOCK	
M	23	2	**8T-4133**	8	NUT (M10X1.5-THD)	
M	24	2	**8T-4172**	4	BOLT (M10X1.50X80-MM)	
	25	2	**6V-9842**	1	TEE-SWIVEL	
I	26	2	**144-2537**	1	HOSE AS	
I	27	2	**144-2538**	1	HOSE AS	
I	28	2	**144-2539**	1	HOSE AS	
	29	2	**8T-4121**	16	WASHER-HARD (11X21X2.5-MM THK)	
	30	2	**145-9377**	1	PLATE-INSTRUCTION	
	31	2	**4B-4158**	4	SCREW-DRIVE (3/16X0.25-IN)	
	32	2	**6V-9007**	2	ELBOW	
	33	2	**6V-9746**	4	SEAL-O-RING	
	34	2	**147-0517**	2	BRACKET	
	35	2	**8T-1718**	2	ELBOW	
M	36	2	**8T-4185**	4	BOLT (M10X1.5X50-MM)	
	37	2	**6V-9510**	2	PLUG-FACE SEAL (1-14-THD)	
	38	2	**7J-9108**	2	SEAL-O-RING	
I	39	2	**142-6017**	2	HOSE AS	
	40	1	**141-9190**	1	PLATE-INSTRUCTION	

I-REFER TO HYDRAULIC INFORMATION SYSTEM
M-METRIC PART
Y-SEPARATE ILLUSTRATION

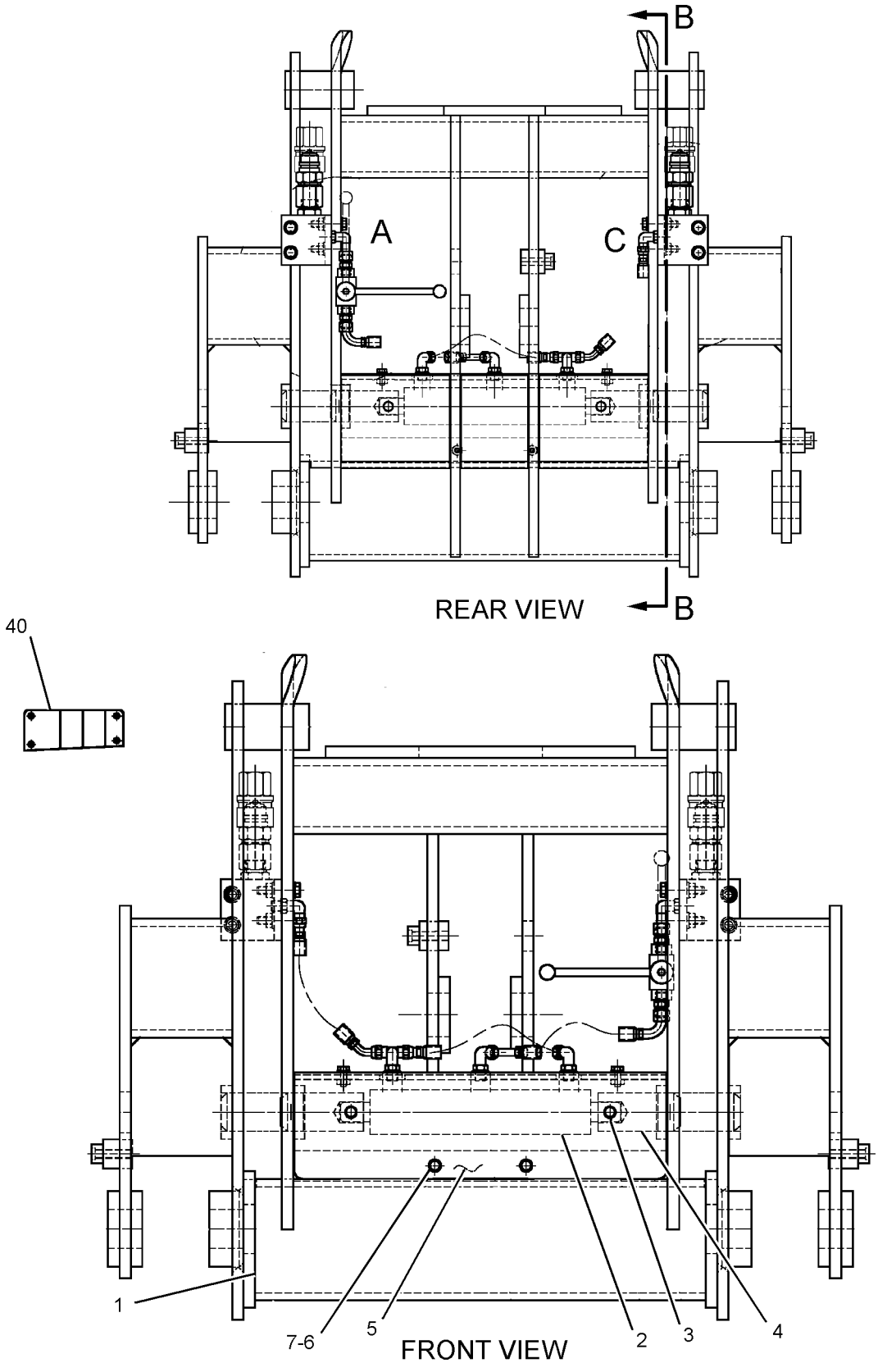

GRAPHIC #1

g01047464

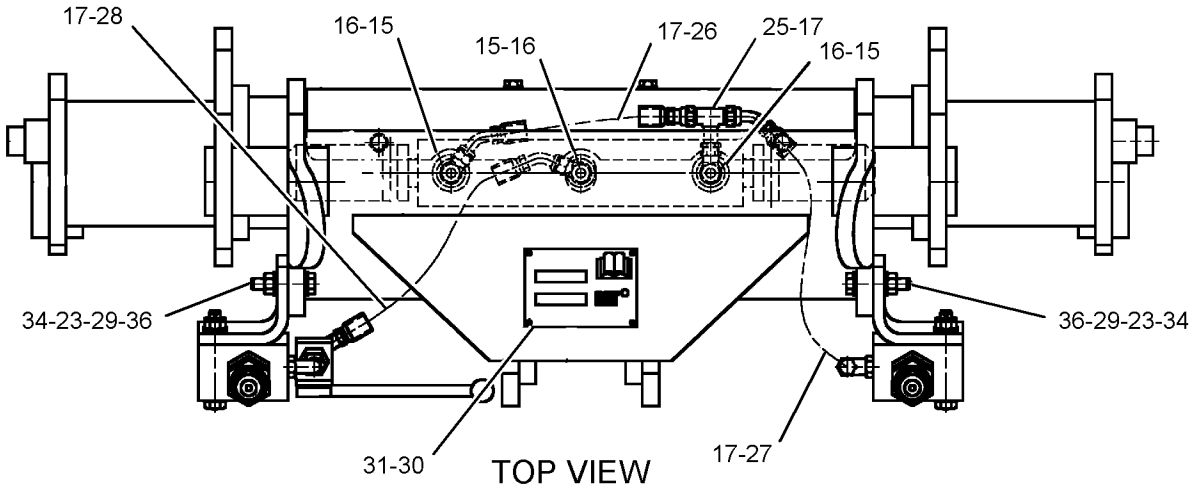

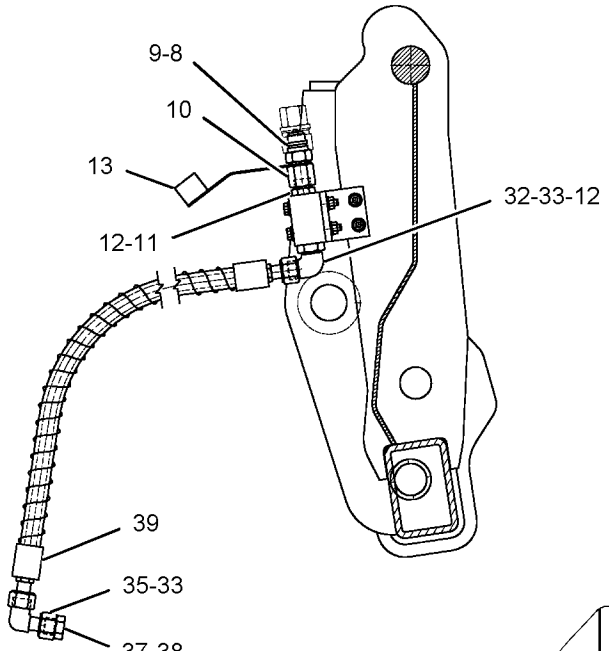

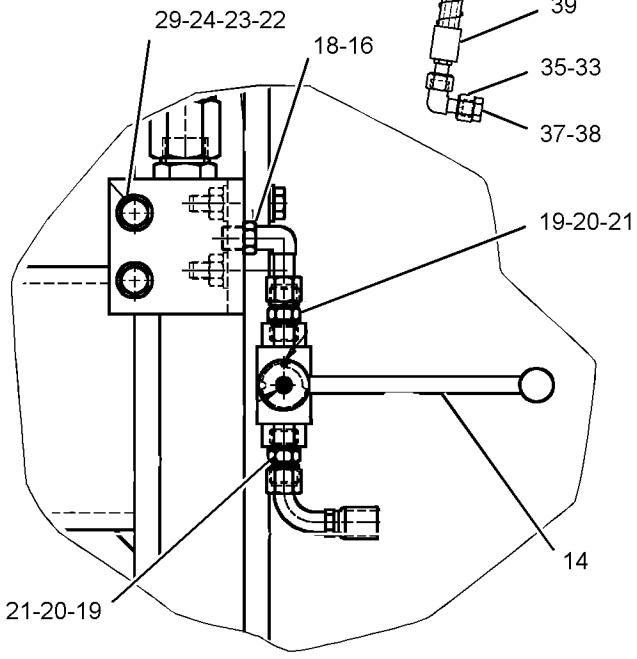

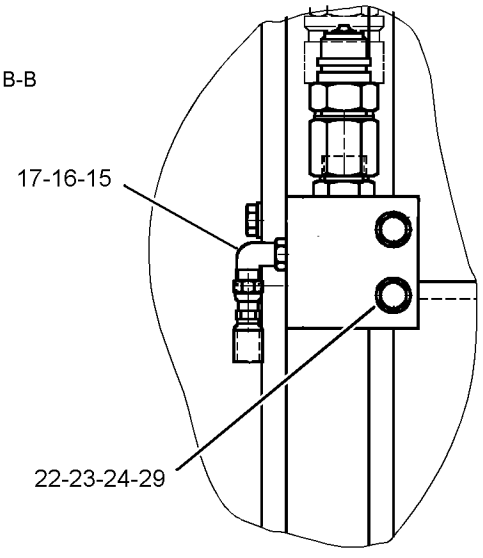

GRAPHIC #2 **<END>** g01047554

WORK TOOLS

9W-8618 EDGE GP-BIT & CUTTING

S/N: PDF1-UP

AN ATTACHMENT

SMCS-6801 **i00787266**

NOTE	REF NO	GRAPHIC REF	PART NUMBER	QTY	PART NAME 1 2 3 4 5 6 (PRODUCT LEVEL)	SEE PAGE
	1	1	**4T-2914**	2	EDGE-CUTTING	
	2	1	**9W-8620**	1	EDGE-CUTTING	
	3	1	**4F-7827**	8	BOLT-PLOW (3/4-10X57.15MM)	
		1	**2J-3506**	8	NUT-FULL (3/4-10 THD)	

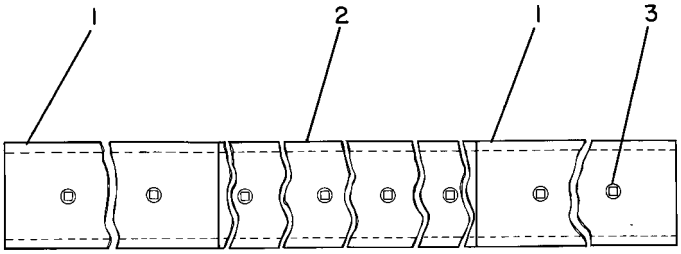

GRAPHIC #1 **<END>** g00125780

WORK TOOLS

9W-8619 EDGE GP-BIT & CUTTING

S/N: PDF1-UP
AN ATTACHMENT

SMCS-6801 **i00710639**

NOTE	REF NO	GRAPHIC REF	PART NUMBER	QTY	PART NAME 1 2 3 4 5 6 (PRODUCT LEVEL)	SEE PAGE
	1	1	**4F-7827**	14	BOLT-PLOW (3/4-10X57.15MM)	
		1	**2J-3506**	14	NUT-FULL (3/4-10 THD)	
	2	1	**128-2873**	7	EDGE-SEGMENT	

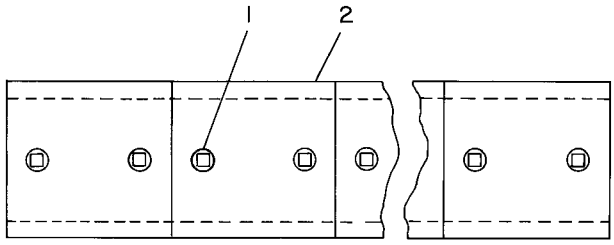

GRAPHIC #1 **<END>** g00125782

142-8463 GUARD GP-BUCKET—TOOTH TIP

S/N: PDF1-UP
AN ATTACHMENT

SMCS-6800, 6805 **i01403357**

NOTE	REF NO	GRAPHIC REF	PART NUMBER	QTY	PART NAME 1 2 3 4 5 6 (PRODUCT LEVEL)	SEE PAGE
	1	1	**6C-7607**	2	CHAIN AS	
		1	**6C-7606**	2	ROD	
	2	1	**106-7743**	2	PLATE AS	
M		1	**8T-3490**	2	NUT-WELD (M10X1.5 THD)	
	3	1	**109-7669**	1	PLATE AS	
M		1	**5C-9553**	4	BOLT (M6X1X16MM)	
		1	**5P-4115**	4	WASHER-HARD (7.2X19X2MM THK)	
M		1	**6V-9632**	4	NUT-WELD (M6X1 THD)	
M	4	1	**8T-4196**	4	BOLT (M10X1.5X35MM)	

M-METRIC PART

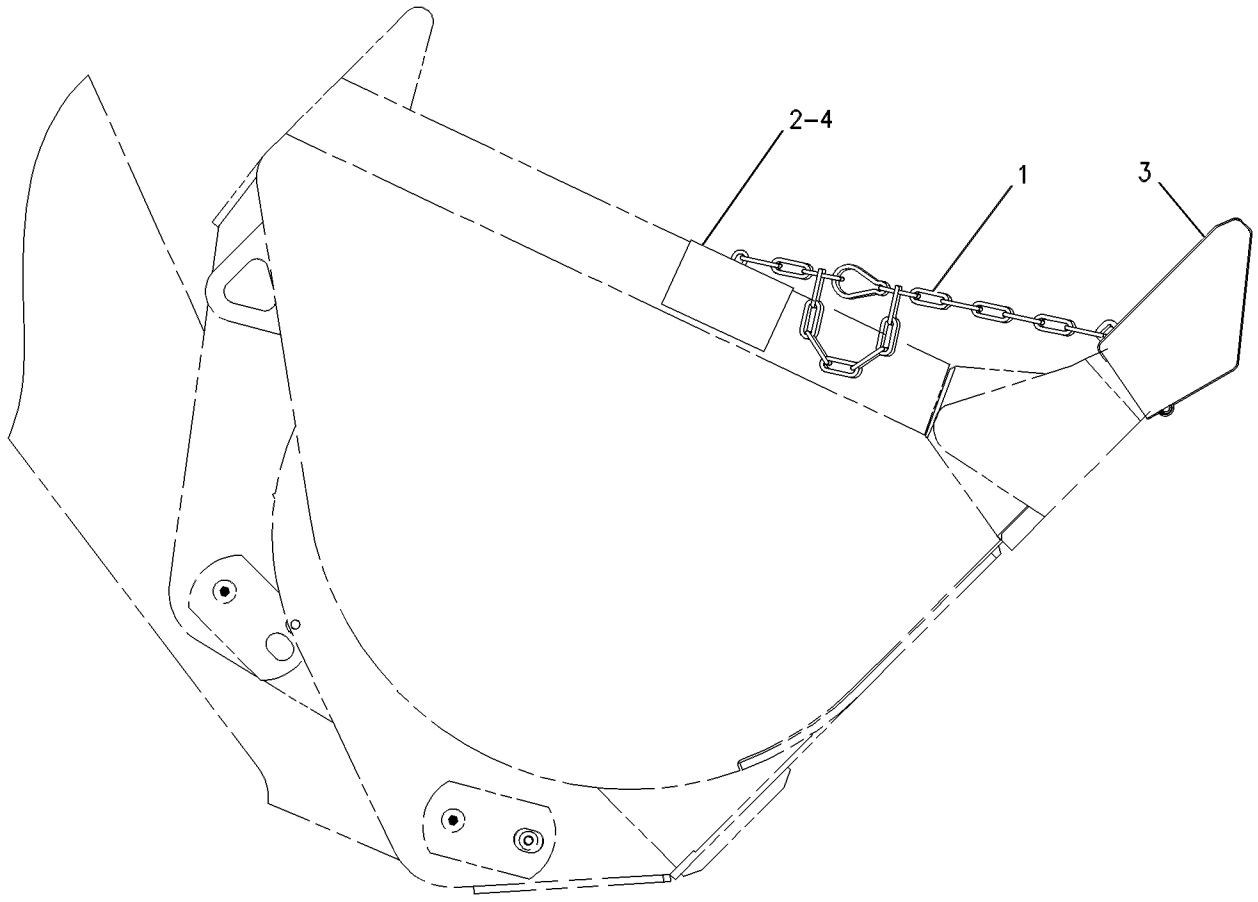

GRAPHIC #1 **<END>** g00636685

WORK TOOLS

196-4191 KIT-QUICK COUPLER

S/N: PDF1-UP
AN ATTACHMENT

SMCS-6129 **i01997857**

NOTE	REF NO	GRAPHIC REF	PART NUMBER	QTY	PART NAME 1 2 3 4 5 6 (PRODUCT LEVEL)	SEE PAGE
	1	1	**3D-2824**	2	SEAL-O-RING	
	2	1	**6V-0408**	2	SEAL-BONDED	
	3	1	**195-6525**	1	COUPLING	
	4	1	**195-6527**	1	COUPLING	
	5	1	**196-4196**	2	ADAPTER	
F			**152-5717**	1	CAP-DUST	
F			**195-9878**	1	CAP-DUST	

F-NOT SHOWN

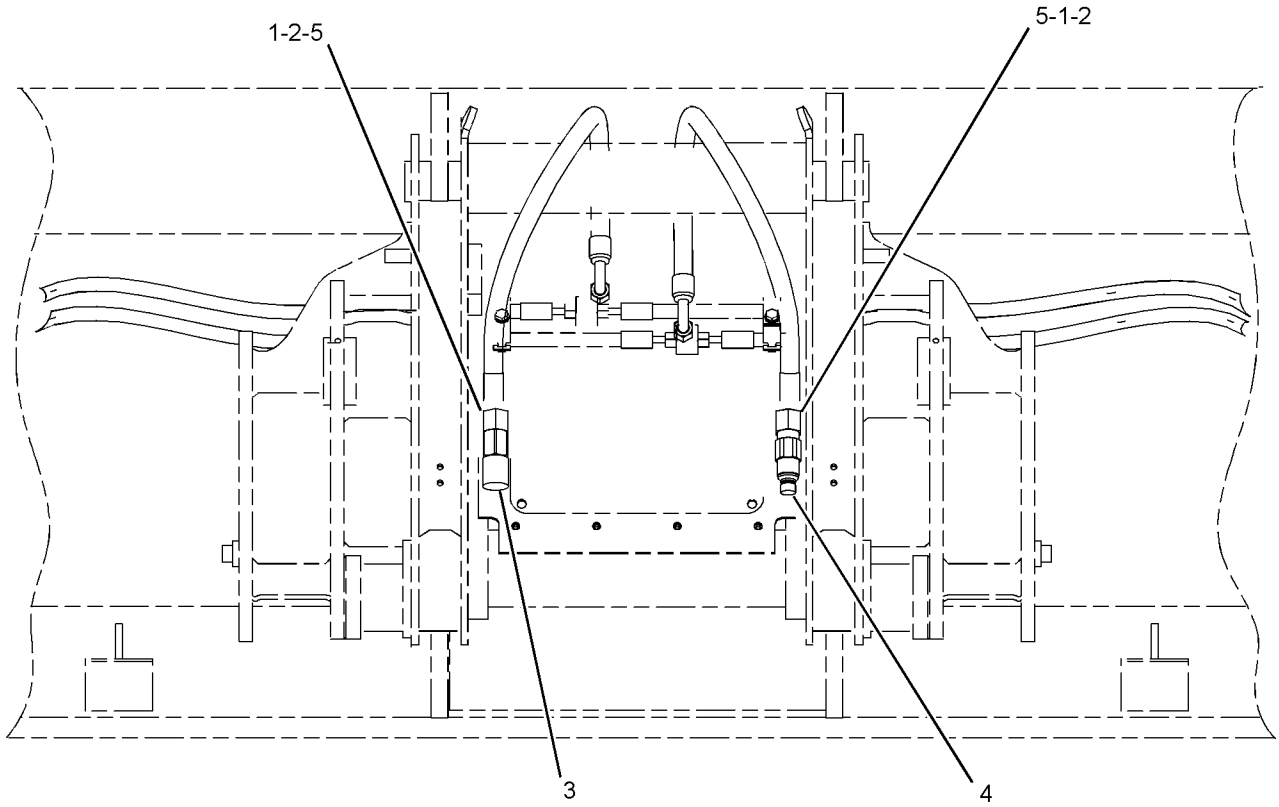

REAR VIEW

GRAPHIC #1

<END>

g01034141

WORK TOOLS

9J-3169 TIP GP-LONG

S/N: PDF1-UP

PART OF 134-5457 BUCKET GP-PENETRATION, 9W-8142 TIP GP-LONG

AN ATTACHMENT

SMCS-6805 **i01669223**

NOTE	REF NO	GRAPHIC REF	PART NUMBER	QTY	PART NAME 1 2 3 4 5 6 (PRODUCT LEVEL)	SEE PAGE
	1	1	**132-4763**	1	PIN-G.E.T.	
		1	**149-5733**	1	RETAINER AS-G.E.T.	
C	2	1	**1U-3252**	1	TIP-LONG	

C-CHANGE FROM PREVIOUS TYPE

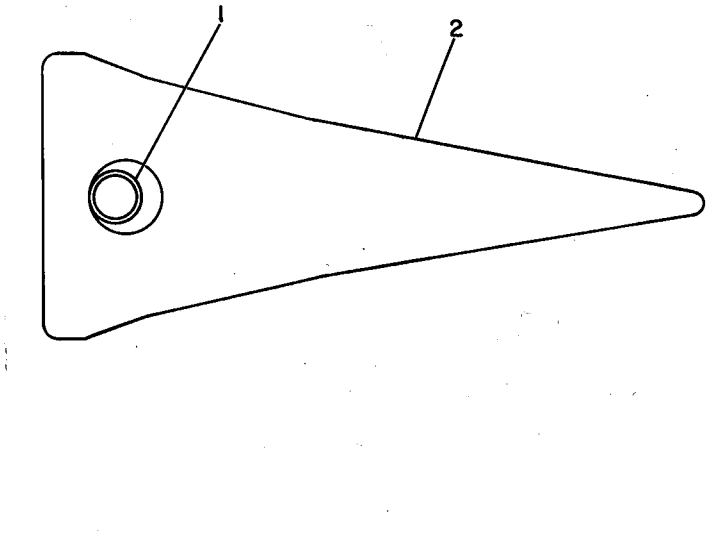

GRAPHIC #1 **<END>** g00115584

9W-8142 TIP GP-LONG

S/N: PDF1-UP
AN ATTACHMENT

SMCS-6805 **i00533404**

NOTE	PART NUMBER	QTY	PART NAME 1 2 3 4 5 6 (PRODUCT LEVEL)	SEE PAGE
Y	*9J-3169*	8	TIP GP-LONG	445

Y-SEPARATE ILLUSTRATION

<END>

100-7924 TIP GP-LONG

S/N: PDF1-UP
AN ATTACHMENT

SMCS-6805 **i01678671**

NOTE	PART NUMBER	QTY	PART NAME 1 2 3 4 5 6 (PRODUCT LEVEL)	SEE PAGE
	3G-6127	8	TIP GP-LONG	
			(EACH INCLUDES)	
	8E-6209	1	RETAINER AS-G.E.T.	
	8E-6208	1	PIN-G.E.T.	
	1U-3202	1	TIP-LONG	

<END>

OPERATOR STATION

176-3900 ACCUMULATOR GP-REFRIGERANT–UNCHARGED

S/N: PDF1-UP

FIELD REPLACEMENT FOR 186-6190 ACCUMULATOR GP-REFRIGERANT, 152-2823 ACCUMULATOR-REFRIGERANT

SMCS-7320 **i02029798**

NOTE	REF NO	GRAPHIC REF	PART NUMBER	QTY	PART NAME 1 2 3 4 5 6 (PRODUCT LEVEL)	SEE PAGE
					(NO SERVICED PARTS)	

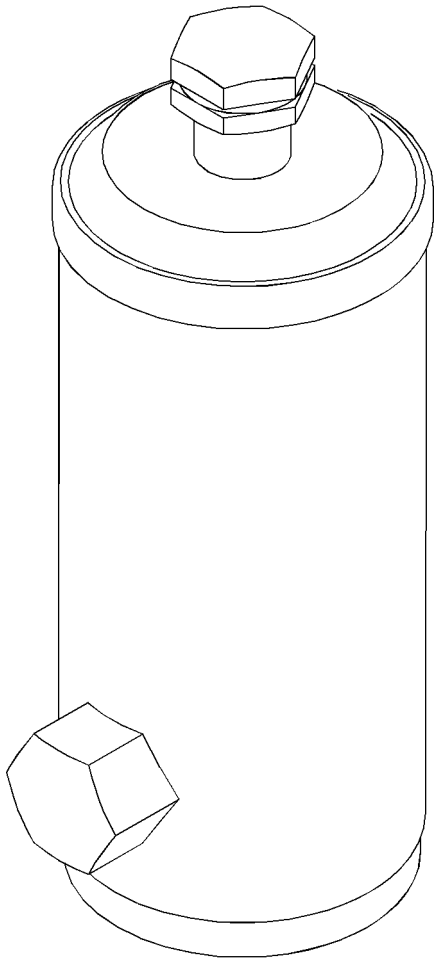

GRAPHIC #1

<END>

g01047725

OPERATOR STATION

186-6190 ACCUMULATOR GP-REFRIGERANT—CHARGED

S/N: PDF1-UP
PART OF 236-5648 LINES GP-AIR CONDITIONER
FIELD REPLACEMENT ORDER 176-3900—PAGE 447
AN ATTACHMENT

SMCS-7320 **i02029799**

NOTE	REF NO	GRAPHIC REF	PART NUMBER	QTY	PART NAME 1 2 3 4 5 6 (PRODUCT LEVEL)	SEE PAGE
					(NO SERVICED PARTS)	

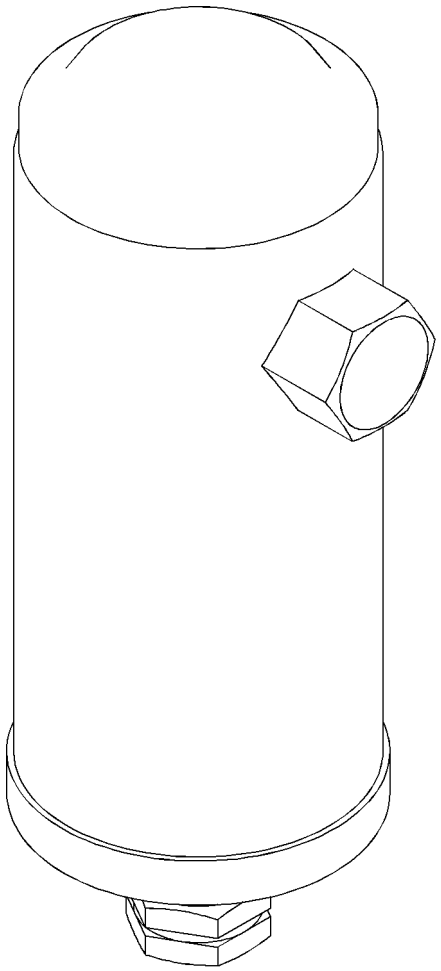

GRAPHIC #1

<END>

g01047622

173-1028 ADJUSTER GP-SEAT

S/N: PDF1-UP
PART OF 178-0603 SEAT GP
AN ATTACHMENT

SMCS-7321 **i02003284**

NOTE	REF NO	GRAPHIC REF	PART NUMBER	QTY	PART NAME 1 2 3 4 5 6 (PRODUCT LEVEL)	SEE PAGE
	1	1	**4V-8256**	4	SPRING	
	2	1	**117-4492**	1	ROD	
	3	1	**136-1544**	1	LATCH AS-LH	
	4	1	**156-5545**	1	LATCH AS-RH	
	5	1	**164-4531**	1	ROD	
	6	1	**170-1112**	1	PLATE AS	
	7	1	**170-1114**	1	HANDLE (SLIDE ADJUSTMENT)	
	8	1	**170-1115**	1	HANDLE (TILT ADJUSTMENT)	
	9	1	**132-0338**	2	WASHER-PLASTIC (13X31.7X.8MM THK)	
	10	1	**2K-4973**	2	LOCKNUT (3/8-16 THD)	
	11	1	**7X-0608**	2	WASHER-HARD (10.2X16X2.0MM THK)	

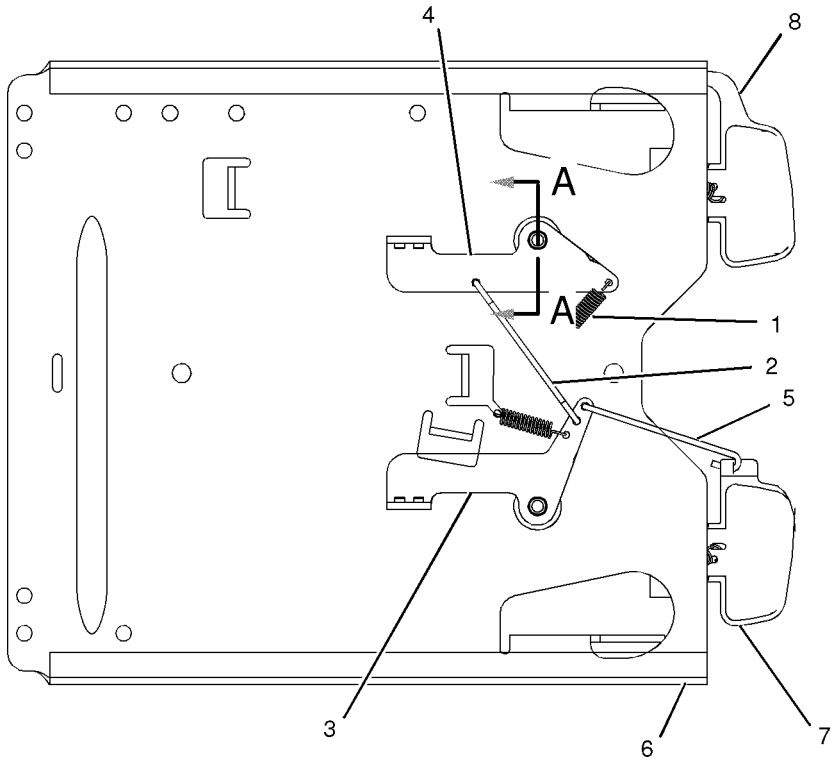

BOTTOM VIEW

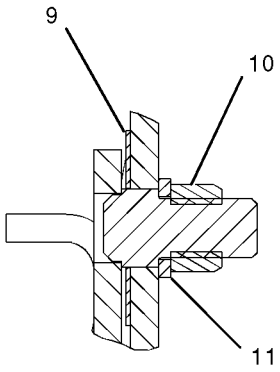

SECTION A-A

GRAPHIC #1 **<END>** g01040300

OPERATOR STATION

237-3970 AIR COMPRESSOR GP-SEAT

S/N: PDF1-UP
PART OF 191-2933 SUSPENSION GP-SEAT
FIELD REPLACEMENT ORDER 214-0783—PAGE 507
AN ATTACHMENT

SMCS-731S, 7324 **i02012093**

NOTE	REF NO	GRAPHIC REF	PART NUMBER	QTY	PART NAME 1 2 3 4 5 6 (PRODUCT LEVEL)	SEE PAGE
					(NO SERVICED PARTS)	

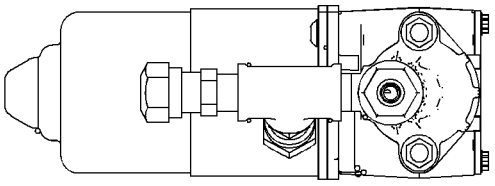

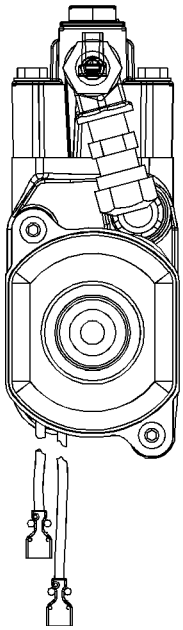

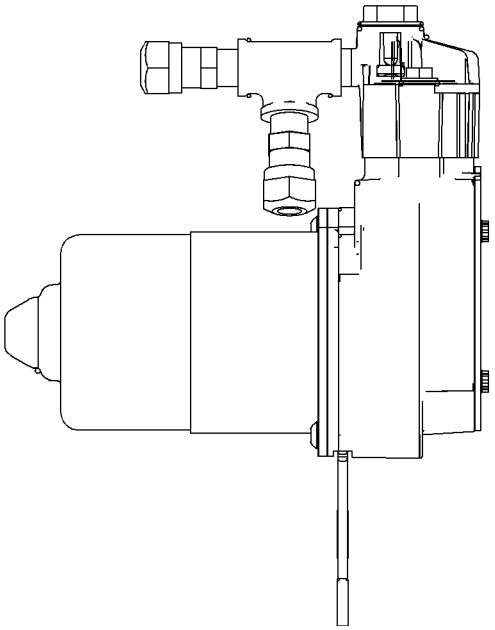

GRAPHIC #1 **<END>** g01040577

OPERATOR STATION

107-5980 AIR CONDITIONER & MOUNTING GP

S/N: PDF1-UP
PART OF 241-8643 PLATFORM AR
AN ATTACHMENT

SMCS-7320 **i02007050**

NOTE	REF NO	GRAPHIC REF	PART NUMBER	QTY	PART NAME 1 2 3 4 5 6 (PRODUCT LEVEL)	SEE PAGE
D	1	1	**5P-5643**		SEAL (1.6M)	
	2	1	**107-6070**	1	SWITCH AS (AIR CONDITIONER)	
		1	**111-7899**	1	GASKET	
	3	1	**118-7259**	1	GASKET	
	4	1	**156-4449**	1	CABLE AS	
		1	**2H-3920**	2	LOCKWASHER	
		1	**6V-8369**	1	NUT (7/16-28 THD)	
		1	**143-8874**	1	BOOT	
CY	5	1	**180-9873**	1	AIR CONDITIONER GP	454
	6	1	**236-2295**	2	TUBE AS	
	7	1	**7X-0579**	11	WASHER-HARD (8.8X25.5X2MM THK)	
M	8	1	**8T-4908**	11	BOLT (M8X1.25X25MM)	

C-CHANGE FROM PREVIOUS TYPE
D-ORDER BY THE METER
M-METRIC PART
Y-SEPARATE ILLUSTRATION

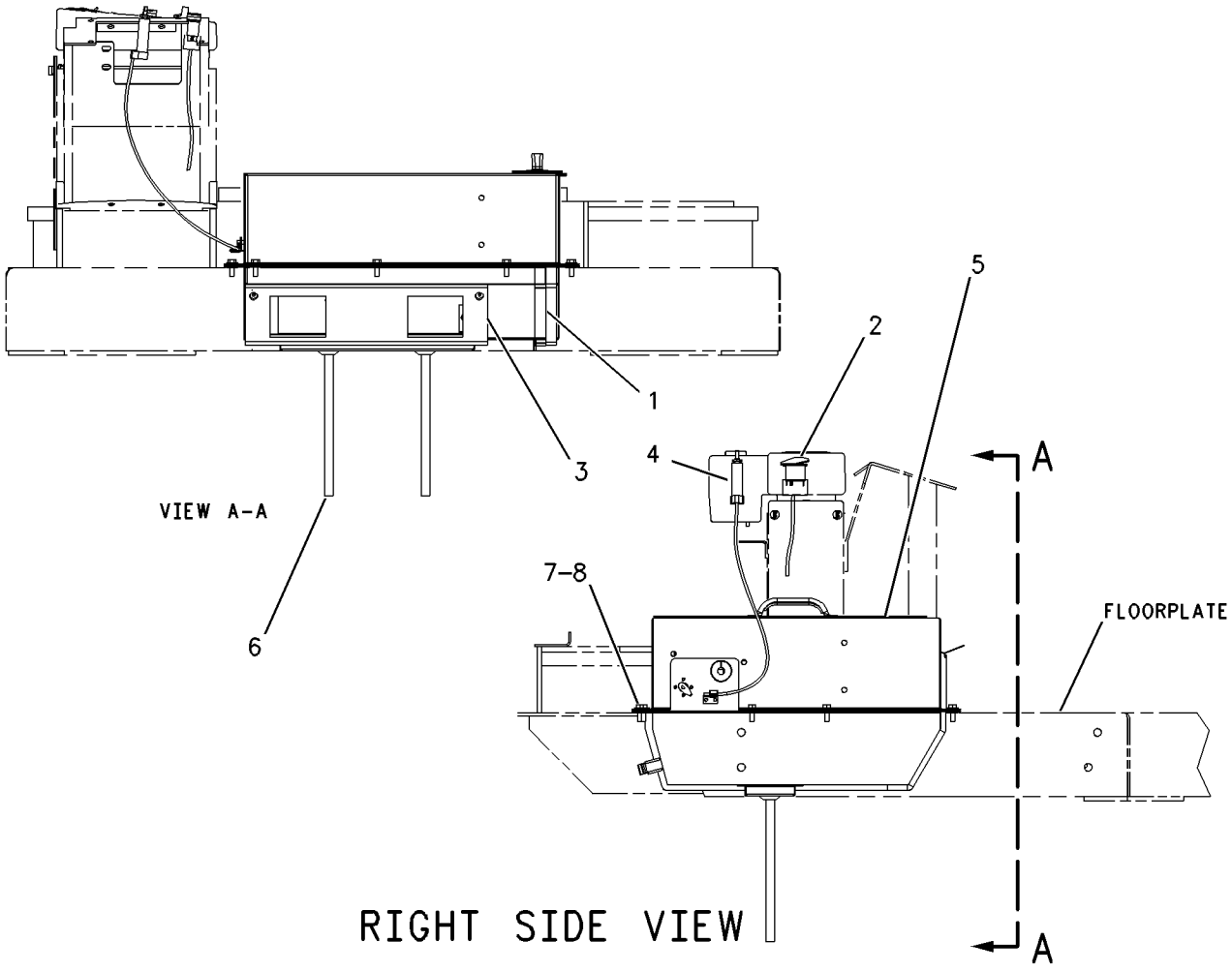

GRAPHIC #1 **<END>** g01001967

OPERATOR STATION

239-8104 AIR CONDITIONER & MOUNTING GP

S/N: PDF1-UP
WITH CABLE CONTROL
PART OF 239-1009 AIR CONDITIONER AR
AN ATTACHMENT

SMCS-7320 **i02000909**

NOTE	REF NO	GRAPHIC REF	PART NUMBER	QTY	PART NAME 1 2 3 4 5 6 (PRODUCT LEVEL)	SEE PAGE
D	1	1	**5P-5643**		SEAL (0.2M)	
	2	1	**118-7259**	1	GASKET	
	3	1	**156-4449**	1	CABLE AS	
		1	**2H-3920**	2	LOCKWASHER	
		1	**6V-8369**	1	NUT (7/16-28 THD)	
		1	**143-8874**	1	BOOT	
Y	4	1	**180-9873**	1	AIR CONDITIONER GP	454
	5	1	**236-2295**	2	TUBE AS	
	6	1	**236-4233**	1	SWITCH AS-ROCKER (AIR CONDITIONER)	
		1	**111-7899**	1	GASKET	
	7	1	**7X-0579**	11	WASHER-HARD (8.8X25.5X2MM THK)	
M	8	1	**8T-4908**	11	BOLT (M8X1.25X25MM)	

D-ORDER BY THE METER
M-METRIC PART
Y-SEPARATE ILLUSTRATION

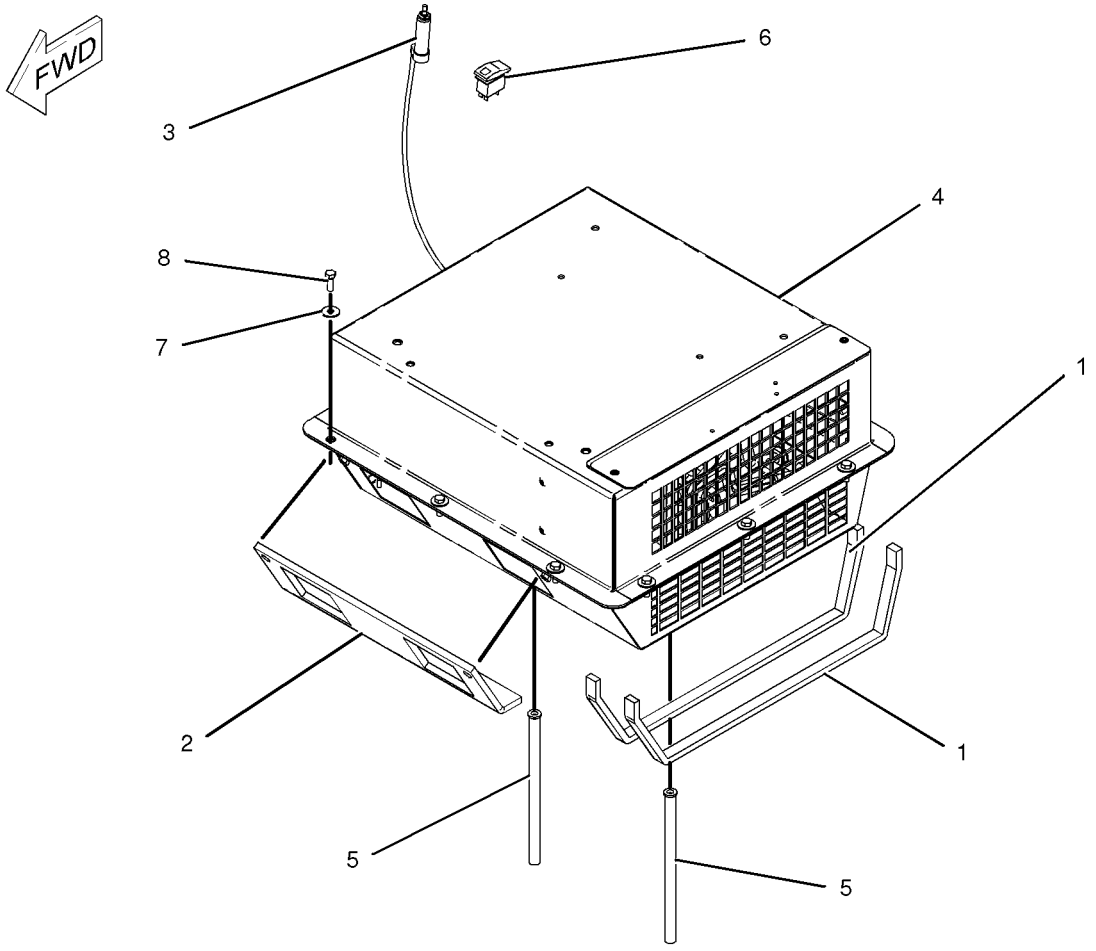

GRAPHIC #1 **<END>** g01035510

OPERATOR STATION

239-1009 AIR CONDITIONER AR

S/N: PDF1-UP

AN ATTACHMENT

SMCS-7320 **i02000803**

NOTE	PART NUMBER	QTY	PART NAME 1 2 3 4 5 6 (PRODUCT LEVEL)	SEE PAGE
Y	*239-8104*	1	AIR CONDITIONER & MOUNTING GP	452
Y	*234-9211*	1	COMPRESSOR GP-REFRIGERANT	471
Y	*236-5648*	1	LINES GP-AIR CONDITIONER	515
Y	*236-5649*	1	LINES GP-CAB HEATER	519

Y-SEPARATE ILLUSTRATION

<END>

OPERATOR STATION

180-9873 AIR CONDITIONER GP

S/N: PDF1-UP

PART OF 107-5980, 239-8104 AIR CONDITIONER & MOUNTING GP, 243-3713 CONVERSION AR-AIR CONDITIONER

AN ATTACHMENT

SMCS-7320 **i02034245**

NOTE	REF NO	GRAPHIC REF	PART NUMBER	QTY	PART NAME 1 2 3 4 5 6 (PRODUCT LEVEL)	SEE PAGE
D	1	1	**5P-5908**		SEAL (0.1M)	
	2	1	**1P-6522**	1	GROMMET	
	3	1	**2H-3922**	1	LOCKWASHER	
	4	1	**2H-3923**	1	LOCKWASHER	
	5	1	**2S-3745**	6	SCREW-TAPPING (10-16X.5-IN)	
	6	1	**3B-4501**	2	LOCKWASHER (4.4X5.8X1-MM THK)	
	7	1	**3E-1841**	1	LEVER	
	8	1	**3E-5464**	1	SWITCH AS-TEMPERATURE	
	9	1	**3S-2093**	1	STRAP-CABLE	
M	10	1	**5C-9553**	4	BOLT (M6X1X16-MM)	
	11	1	**6V-1668**	2	WASHER (6.5X29.1X3-MM THK)	
	12	1	**7F-2050**	1	LOCKNUT (3/4-16-THD)	
	13	1	**7F-2060**	1	LOCKNUT (7/8-14-THD)	
	14	1	**8C-4586**	2	CLAMP	
M	15	1	**8C-8457**	1	SCREW-MACHINE (M5X0.8X14-MM)	
	16	1	**8T-0154**	6	CLAMP-HOSE	
M	17	1	**8T-4171**	4	BOLT (M6X1X12-MM)	
	18	1	**8T-4205**	13	WASHER-HARD (7.2X14.5X2-MM THK)	
	19	1	**8T-6631**	2	SCREW-MACHINE (8-32X0.5-IN)	
	20	1	**8Y-5737**	1	CLAMP	
	21	1	**9G-1950**	1	RESISTOR	
M	22	1	**9X-2044**	1	SCREW-TRUSS HEAD (M6X1X16-MM)	
	23	1	**9X-2185**	4	SCREW (8-15X0.44-IN)	
	24	1	**037-4426**	1	RETAINER	
	25	1	**100-3143**	2	PLATE-ORIFICE	
	26	1	**100-3426**	2	WHEEL-BLOWER	
					(EACH INCLUDES)	
		1	**037-4838**		CLAMP	
	27	1	**102-0341**	1	CLIP (TAB)	
	28	1	**114-3140**	1	GROMMET	
	29	1	**118-5044**	1	HARNESS AS-HEATER & AIR COND	
		1	**155-2270**	1	KIT-CONNECTING PLUG (2-PIN)	
		1	**102-8805**	1	KIT-RECEPTACLE (6-PIN)	
	30	1	**118-5046**	1	HOUSING AS	
	31	1	**123-8851**	1	CASE AS	
	32	1	**124-8494**	2	GASKET	
	33	1	**124-8495**	1	VALVE AS-WATER	
M	34	1	**129-3178**	3	LOCKNUT (M6X1-THD)	
M	35	1	**141-9784**	1	BOLT (M6X1X190-MM)	
	36	1	**151-0894**	1	COVER AS	
	37	1	**174-1486**	1	MOTOR AS-BLOWER (A/C, HEATER, 24-VOLT)	
		1	**9W-0852**	2	PIN-CONNECTOR	
		1	**102-8802**	1	KIT-RECEPTACLE (2-PIN)	
	38	1	**180-3528**	1	COIL AS	
		1	**189-1707**	1	ORIFICE AS-AIR CONDITIONER	
	39	1	**183-7528**	1	COIL AS-HEATER	
M	40	1	**6V-7728**	1	BOLT (M6X1.0X45-MM)	
D	41	1	**6V-1392**		SEAL (1.7M EACH)	
E	42	1	**136-1953**		HOSE (17.8CM)	
D	43	1	**8T-5372**		SEAL (0.15M)	
D	44	1	**5P-7070**		INSULATION-STRIP (0.61M EACH)	
D	45	1	**5P-5643**		SEAL (0.4M)	
D	46	1	**6V-1392**		SEAL (0.6M)	
E	47	1	**136-1953**		HOSE (15.2CM)	

180-9873 **AIR CONDITIONER GP** ***(contd.)*** **i02034245**

NOTE	REF NO	GRAPHIC REF	PART NUMBER	QTY	PART NAME 1 2 3 4 5 6 (PRODUCT LEVEL)	SEE PAGE
E	48	1	**136-1953**		HOSE (22.9CM)	
D	49	1	**8T-5372**		SEAL (0.12M EACH)	

D-ORDER BY THE METER
E-ORDER BY THE CENTIMETER
M-METRIC PART

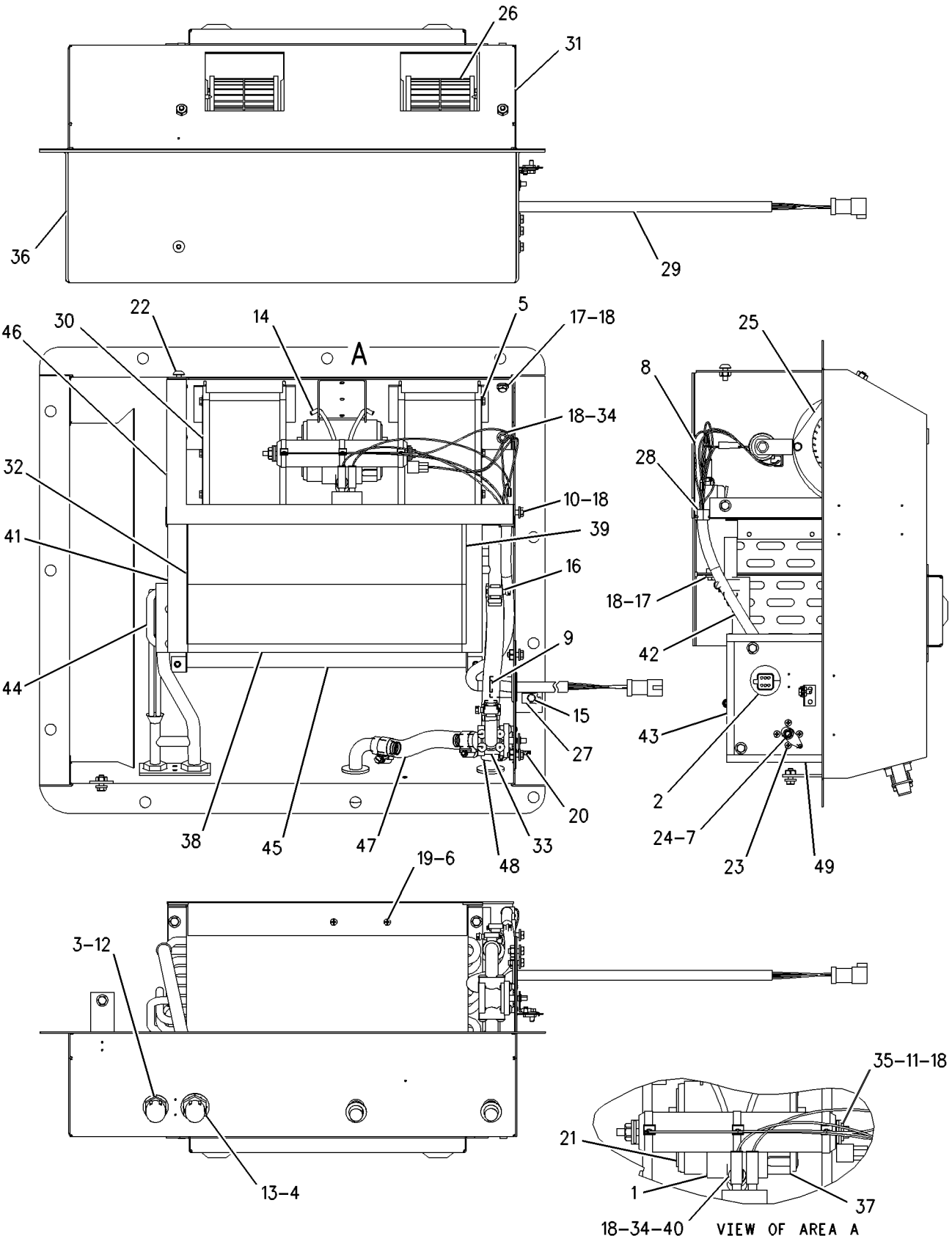

GRAPHIC #1 **<END>** g00663048

OPERATOR STATION

8Y-4200 ARMREST GP–RH

S/N: PDF1-UP
PART OF 8Y-6977 SEAT GP-SUSPENSION
AN ATTACHMENT

SMCS-7307, 7312 **i02021390**

NOTE	REF NO	GRAPHIC REF	PART NUMBER	QTY	PART NAME 1 2 3 4 5 6 (PRODUCT LEVEL)	SEE PAGE
Y	1	1	**8Y-5904**	1	ARMREST GP	458
	2	1	**8Y-5897**	1	BRACKET AS	
	3	1	**9X-8873**	1	BOLT (1/2-13X2.25-IN)	
	4	1	**1K-6872**	1	LOCKNUT (1/2-13-THD)	
	5	1	**7X-0456**	1	BOLT (7/16-14X4.5-IN)	
	6	1	**0S-1594**	1	BOLT (3/8-16X25.4-IN)	
	7	1	**5V-1498**	1	LOCKNUT (3/8-16-THD)	
	8	1	**2M-0849**	1	WASHER-HARD (13.5X25.5X5-MM THK)	
Y-SEPARATE ILLUSTRATION						

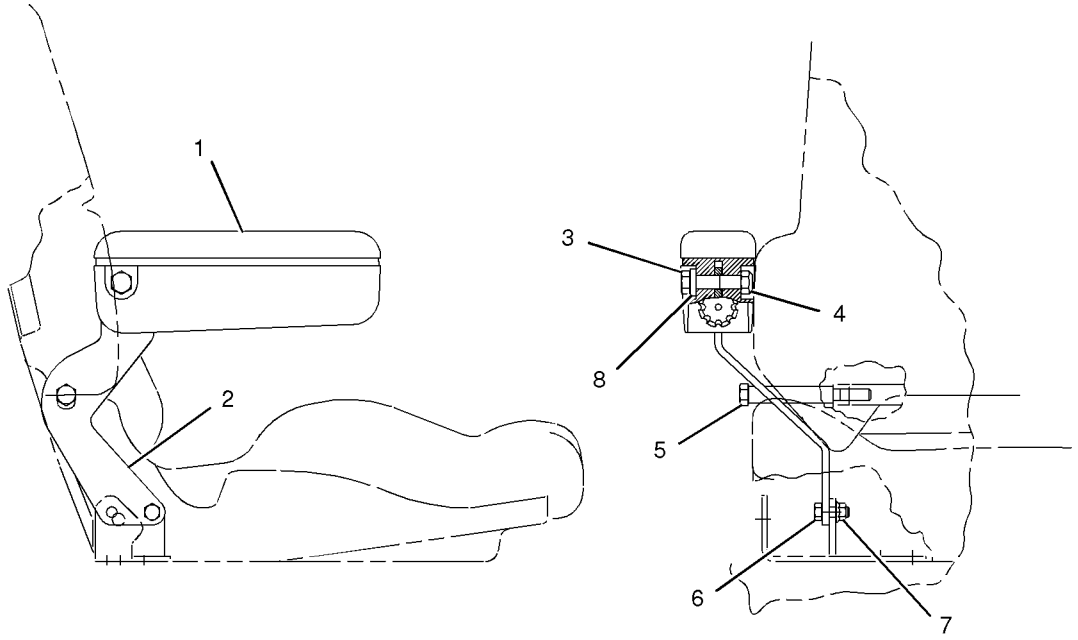

GRAPHIC #1 **<END>** g01043828

OPERATOR STATION

8Y-5904 ARMREST GP

S/N: PDF1-UP

PART OF 162-8447, 162-8448, 8Y-4200, 8Y-6000 ARMREST GP

AN ATTACHMENT

SMCS-7307, 7312 **i01097001**

NOTE	REF NO	GRAPHIC REF	PART NUMBER	QTY	PART NAME 1 2 3 4 5 6 (PRODUCT LEVEL)	SEE PAGE
	1	1	**8Y-5906**	1	BASE-ARMREST	
L	2	1	**8S-7803**	1	RING-RETAINING	
J	3	1	**6V-2687**	4	SCREW-PAN HEAD (10-24X1IN)	
L	4	1	**8T-8641**	1	WASHER (M9.8X16.0X0.8MM THK)	
L	5	1	**3E-4312**	1	NUT-SQUARE	
					AVAILABLE REPAIR KIT(S):	
J			**8Y-5988**	1	KIT-CUSHION	
L			**8Y-6028**	1	KIT-ADJUSTER	

J-KIT MARKED J INCLUDES PART MARKED J
L-KIT MARKED L INCLUDES PARTS MARKED L

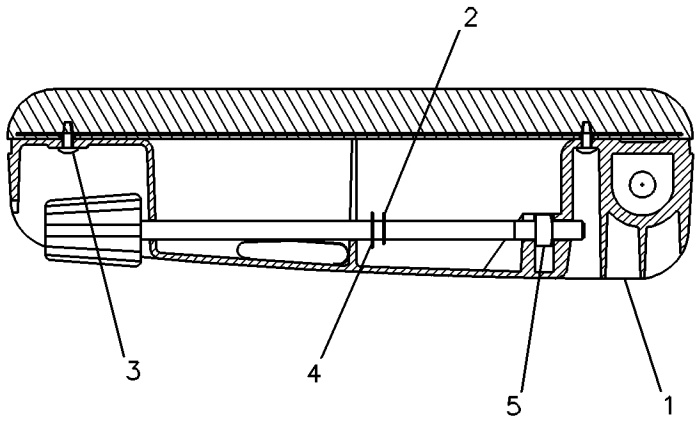

GRAPHIC #1 **<END>** g00083048

OPERATOR STATION

8Y-6000 ARMREST GP–LH

S/N: PDF1-UP
PART OF 8Y-6977 SEAT GP-SUSPENSION
AN ATTACHMENT

SMCS-7307, 7312 **i01167188**

NOTE	REF NO	GRAPHIC REF	PART NUMBER	QTY	PART NAME 1 2 3 4 5 6 (PRODUCT LEVEL)	SEE PAGE
Y	1	1	**8Y-5904**	1	ARMREST GP	458
	2	1	**8Y-5898**	1	BRACKET AS	
	3	1	**9X-8873**	1	BOLT (1/2-13X2.25IN)	
	4	1	**1K-6872**	1	LOCKNUT (1/2-13 THD)	
	5	1	**7X-0456**	1	BOLT (7/16-14X4.5IN)	
	6	1	**0S-1594**	1	BOLT (3/8-16X1 IN)	
	7	1	**5V-1498**	1	LOCKNUT (3/8-16 THD)	
	8	1	**2M-0849**	1	WASHER-HARD (5MM THK)	
Y-SEPARATE ILLUSTRATION						

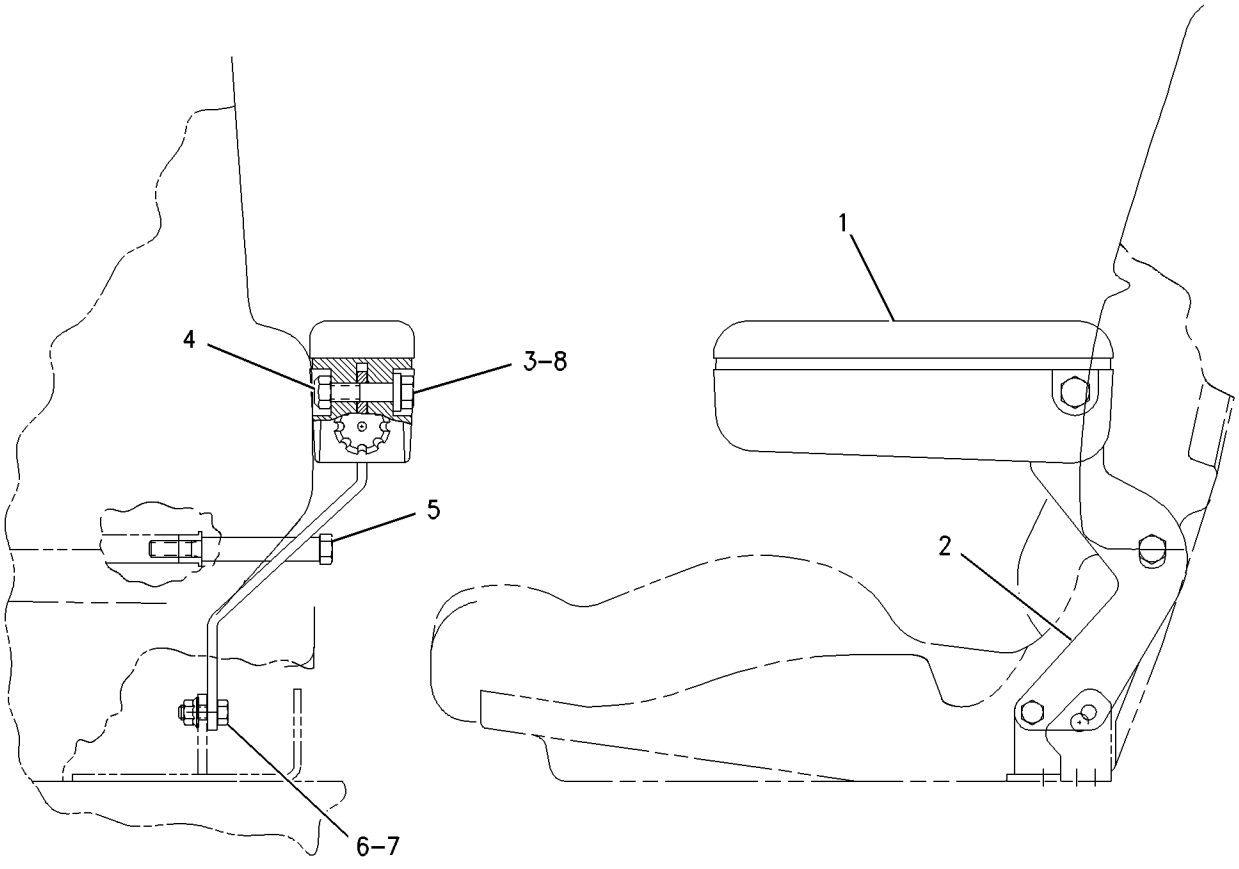

GRAPHIC #1 **<END>** g00631012

OPERATOR STATION

162-8447 ARMREST GP–LH

S/N: PDF1-UP
PART OF 178-7914 SEAT GP
AN ATTACHMENT

SMCS-7307, 7312 **i02003246**

NOTE	REF NO	GRAPHIC REF	PART NUMBER	QTY	PART NAME 1 2 3 4 5 6 (PRODUCT LEVEL)	SEE PAGE
Y	1	1	**8Y-5904**	1	ARMREST GP	458
	2	1	**143-1288**	1	LOCKNUT-FLANGE (3/8-16 THD)	
	3	1	**163-1149**	1	BRACKET AS	
	4	1	**1K-6872**	1	LOCKNUT (1/2-13 THD)	
	5	1	**4L-6454**	1	BOLT (3/8-16X1 IN)	
	6	1	**5P-8245**	1	WASHER-HARD (13.5X25.5X3MM THK)	
	7	1	**9X-8873**	1	BOLT (1/2-13X2.25 IN)	

Y-SEPARATE ILLUSTRATION

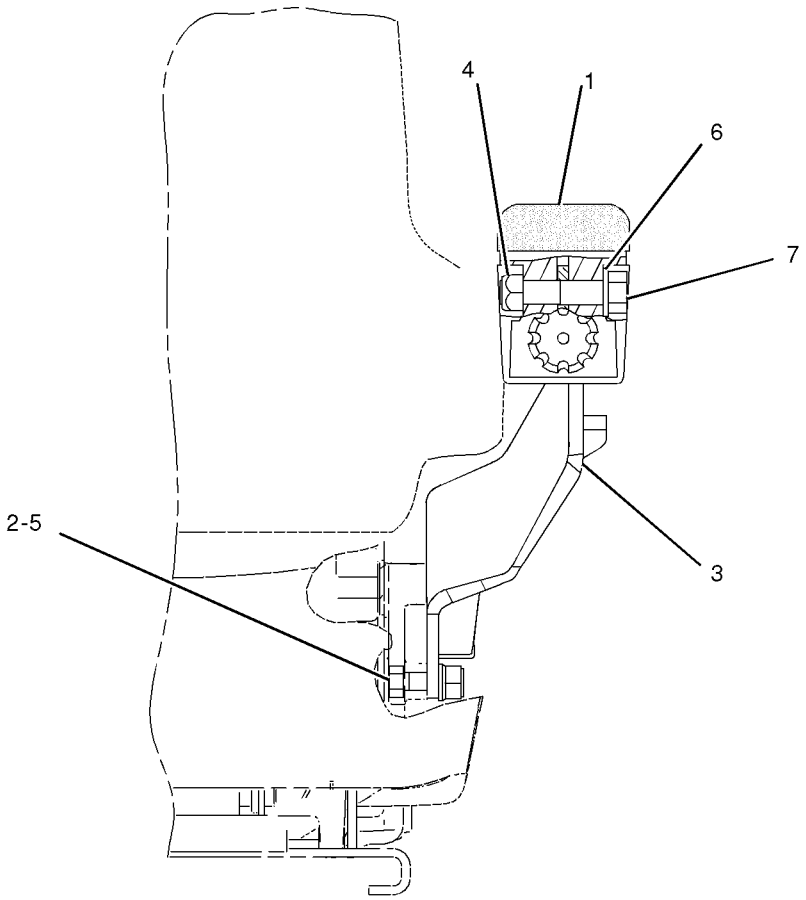

GRAPHIC #1 **<END>** g01040321

OPERATOR STATION

162-8448 ARMREST GP–RH

S/N: PDF1-UP
PART OF 178-7914 SEAT GP
AN ATTACHMENT

SMCS-7307, 7312 **i02003247**

NOTE	REF NO	GRAPHIC REF	PART NUMBER	QTY	PART NAME 1 2 3 4 5 6 (PRODUCT LEVEL)	SEE PAGE
Y	1	1	**8Y-5904**	1	ARMREST GP	458
	2	1	**143-1288**	1	LOCKNUT-FLANGE (3/8-16 THD)	
	3	1	**163-1148**	1	BRACKET AS	
	4	1	**1K-6872**	1	LOCKNUT (1/2-13 THD)	
	5	1	**4L-6454**	1	BOLT (3/8-16X1 IN)	
	6	1	**5P-8245**	1	WASHER-HARD (13.5X25.5X3MM THK)	
	7	1	**9X-8873**	1	BOLT (1/2-13X2.25 IN)	

Y-SEPARATE ILLUSTRATION

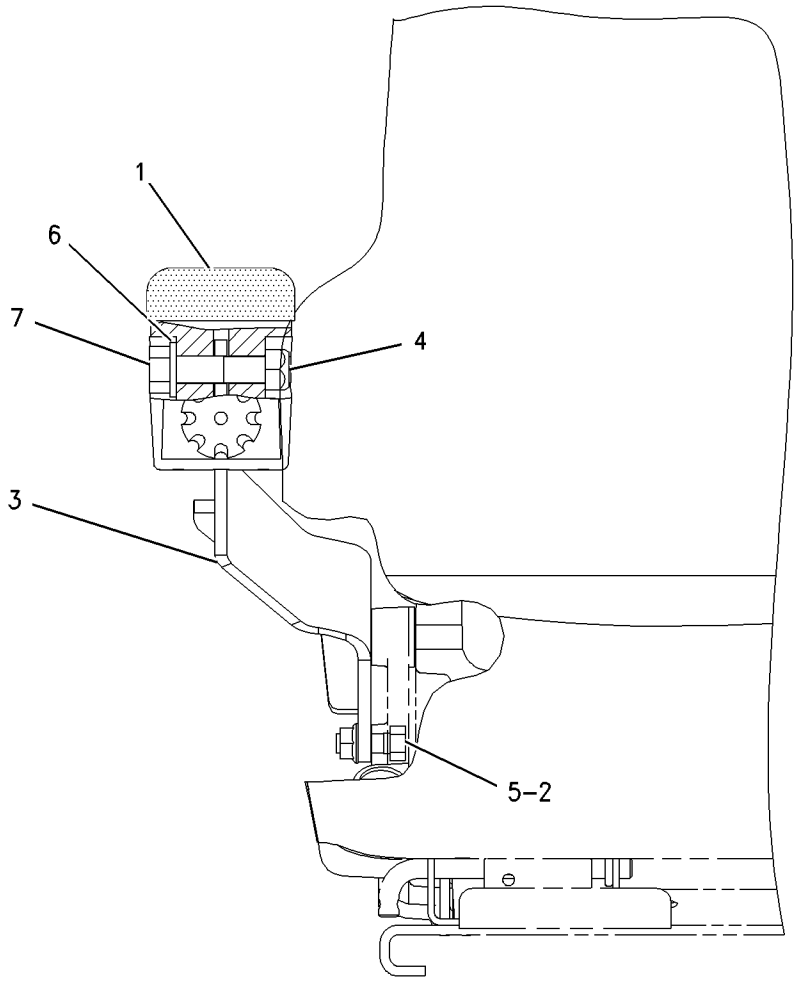

GRAPHIC #1 **<END>** g00801340

OPERATOR STATION

205-0522 CAB AR

S/N: PDF1-UP
PART OF 239-1006 CAB AR
AN ATTACHMENT

SMCS-7301 **i01812018**

NOTE	PART NUMBER	QTY	PART NAME 1 2 3 4 5 6 (PRODUCT LEVEL)	SEE PAGE
Y	*137-7602*	1	DOOR GP-CAB	478
Y	*117-9622*	1	LIGHTING GP-FLOOD	115
Y	*174-9749*	1	ROPS GP-ENCLOSED	559

Y-SEPARATE ILLUSTRATION

<END>

239-1006 CAB AR

S/N: PDF1-UP
PART OF 239-1004 OPERATOR AR
AN ATTACHMENT

SMCS-7301 **i02021366**

NOTE	PART NUMBER	QTY	PART NAME 1 2 3 4 5 6 (PRODUCT LEVEL)	SEE PAGE
Y	*205-0522*	1	CAB AR	462
Y	*107-4621*	1	CONTROL GP-PARKING BRAKE	296
Y	*149-4189*	1	CONTROL GP-STEERING	304
Y	*107-4630*	1	DUCT GP-AIR	491
Y	*119-4769*	1	FILTER GP-CAB AIR	493
Y	*117-9624*	1	LINER GP-CAB	508
Y	*241-8564*	1	LINER GP-CAB	514
Y	*107-4643*	1	MIRROR GP-REAR VIEW	525
Y	*107-4647*	1	MOUNTING GP-CAB	533
Y	*237-5820*	1	PANEL GP-INSTRUMENT	544
Y	*107-4627*	1	PEDAL GP-GOVERNOR	553
Y	*107-6133*	1	SWITCH GP-WIPER (INTERMITTENT)	139
Y	*107-4628*	1	WIPER GP-WINDOW	595
Y	*238-6848*	1	WIRING GP-CAB	143
	118-0626	1	FILM-WINDOW (FRONT)	

Y-SEPARATE ILLUSTRATION

<END>

OPERATOR STATION

239-1007 CAB AR

S/N: PDF1-UP
PART OF 239-1005 OPERATOR AR
AN ATTACHMENT

SMCS-7301 **i02021368**

NOTE	PART NUMBER	QTY	PART NAME 1 2 3 4 5 6 (PRODUCT LEVEL)	SEE PAGE
Y	*205-0524*	1	CAB AR-ENCLOSED ROPS	463
Y	*107-4621*	1	CONTROL GP-PARKING BRAKE	296
Y	*149-4189*	1	CONTROL GP-STEERING	304
Y	*107-4630*	1	DUCT GP-AIR	491
Y	*119-4769*	1	FILTER GP-CAB AIR	493
Y	*117-9624*	1	LINER GP-CAB	508
Y	*241-8564*	1	LINER GP-CAB	514
Y	*107-4643*	1	MIRROR GP-REAR VIEW	525
Y	*107-4647*	1	MOUNTING GP-CAB	533
Y	*237-5820*	1	PANEL GP-INSTRUMENT	544
Y	*107-4627*	1	PEDAL GP-GOVERNOR	553
Y	*107-6133*	1	SWITCH GP-WIPER (INTERMITTENT)	139
Y	*107-4628*	1	WIPER GP-WINDOW	595
Y	*238-6848*	1	WIRING GP-CAB	143
	118-0626	1	FILM-WINDOW (FRONT)	

Y-SEPARATE ILLUSTRATION

<END>

205-0524 CAB AR-ENCLOSED ROPS

S/N: PDF1-UP
PART OF 239-1007 CAB AR
AN ATTACHMENT

SMCS-7301 **i01781122**

NOTE	PART NUMBER	QTY	PART NAME 1 2 3 4 5 6 (PRODUCT LEVEL)	SEE PAGE
Y	*137-7603*	1	DOOR GP-CAB	478
Y	*117-9622*	1	LIGHTING GP-FLOOD	115
Y	*174-9749*	1	ROPS GP-ENCLOSED	559

Y-SEPARATE ILLUSTRATION

<END>

OPERATOR STATION

174-9755 CAB GP-ENCLOSED ROPS

S/N: PDF1-UP
PART OF 174-9749 ROPS GP-ENCLOSED
AN ATTACHMENT

SMCS-7301 **i01942341**

NOTE	REF NO	GRAPHIC REF	PART NUMBER	QTY	PART NAME 1 2 3 4 5 6 (PRODUCT LEVEL)	SEE PAGE
	1	1	**8Y-6377**	2	STRIKER	
	2	1	**107-6144**	1	GLASS-FRONT (LH)	
	3	1	**107-6145**	1	GLASS-FRONT	
	4	1	**107-6146**	1	GLASS-CAB CORNER (LH REAR)	
	5	1	**108-4311**	2	SCREW-MACHINE	
	6	1	**111-0177**	1	GLASS-FRONT (RH)	
	7	1	**111-0178**	1	GLASS-CAB CORNER (RH REAR)	
	8	1	**111-0204**	1	PLATE AS	
	9	1	**111-0209**	1	PLATE AS	
	10	1	**161-8042**	1	GLASS AS-REAR	
	11	1	**161-9645**	2	STRIKER AS	
	12	1	**174-9753**	1	CAB AS	
	13	1	**198-3393**	4	INSERT	
	14	1	**5P-4116**	4	WASHER-HARD (8.8X20.5X2-MM THK)	
	15	1	**8T-4121**	12	WASHER-HARD (11X21X2.5-MM THK)	
M	16	1	**8T-4137**	4	BOLT (M10X1.5X20-MM)	
M	17	1	**8T-4189**	16	BOLT (M8X1.25X20-MM)	
M	18	1	**8T-4224**	12	WASHER-HARD (8.8X16X2-MM THK)	
M	19	1	**9X-2041**	8	SCREW-TRUSS HEAD (M10X1.5X20-MM)	

M-METRIC PART

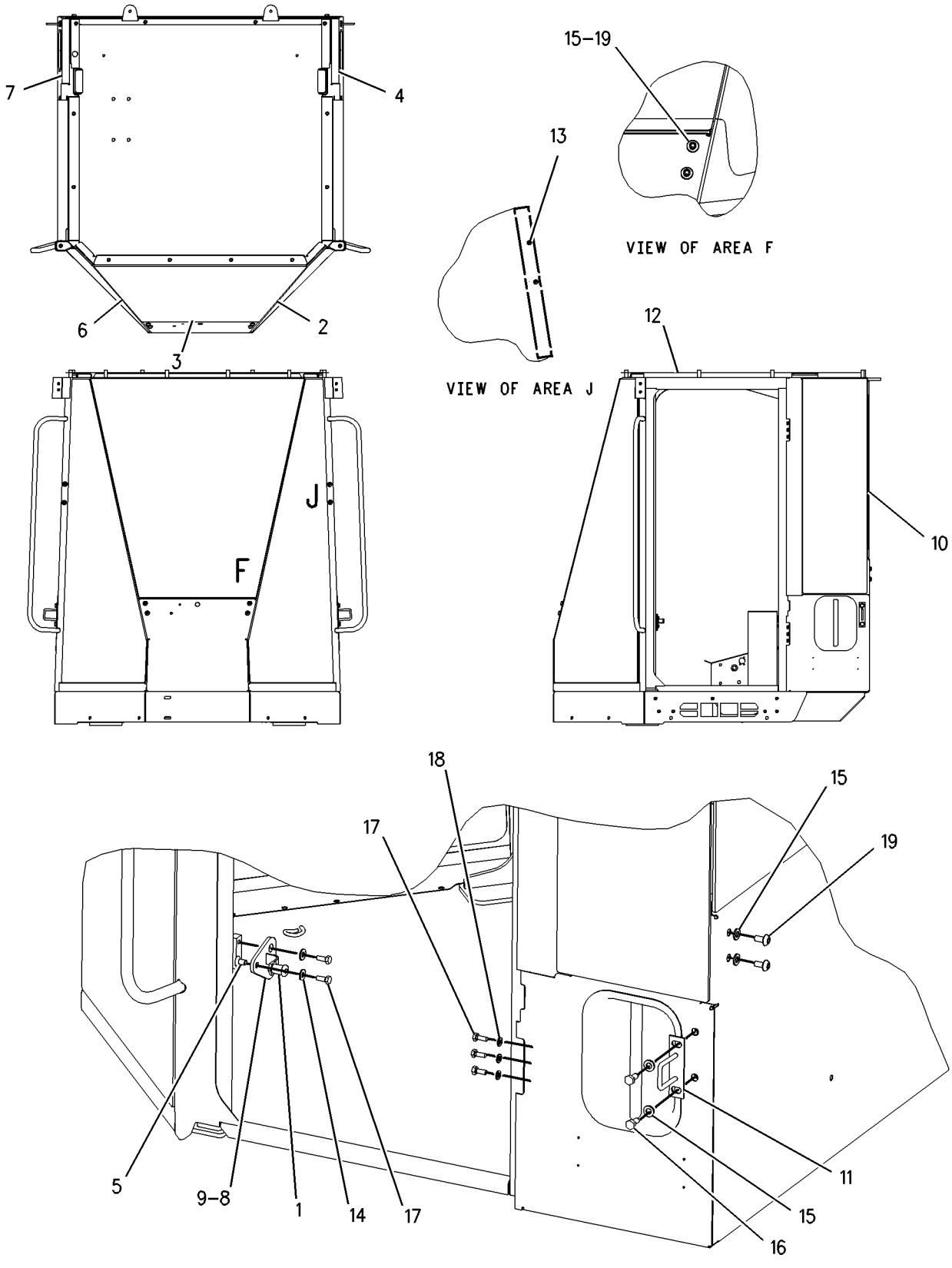

GRAPHIC #1 **<END>** g00839137

OPERATOR STATION

241-8807 CANOPY AR-OPEN ROPS

S/N: PDF1-UP
PART OF 241-8840 OPERATOR AR-OPEN ROPS
AN ATTACHMENT

SMCS-7302, 7323 **i02005100**

NOTE	PART NUMBER	QTY	PART NAME 1 2 3 4 5 6 (PRODUCT LEVEL)	SEE PAGE
Y	*205-0520*	1	CANOPY GP-OPEN ROPS	467
Y	*107-4621*	1	CONTROL GP-PARKING BRAKE	296
Y	*149-4190*	1	CONTROL GP-STEERING	306
Y	*118-0809*	1	DASH GP	476
Y	*118-0807*	1	LINER GP-CAB	510
Y	*107-4643*	1	MIRROR GP-REAR VIEW	525
Y	*107-4647*	1	MOUNTING GP-CAB	533
Y	*240-0656*	1	PANEL GP-INSTRUMENT	548
Y	*107-4627*	1	PEDAL GP-GOVERNOR	553
Y	*118-0808*	1	SUPPORT GP-SEAT	585
Y	*238-8386*	1	WIRING GP-CAB	145
	9X-2433	1	FILM-CATERPILLAR	
			(LOCATE ON UPPER REAR OF CANOPY SHEET METAL)	

Y-SEPARATE ILLUSTRATION

<END>

241-8644 CANOPY AR-SOFT

S/N: PDF1-UP
AN ATTACHMENT

SMCS-7302 **i02003684**

NOTE	PART NUMBER	QTY	PART NAME 1 2 3 4 5 6 (PRODUCT LEVEL)	SEE PAGE
Y	*119-9755*	1	CANOPY GP-SOFT	468
Y	*133-8496*	1	CANOPY GP-SOFT	469
Y	*107-4621*	1	CONTROL GP-PARKING BRAKE	296
Y	*149-4190*	1	CONTROL GP-STEERING	306
Y	*118-0809*	1	DASH GP	476
Y	*113-1515*	1	EXTENSION GP-EXHAUST	52
Y	*119-9758*	1	LIGHTING GP-FLOOD	117
Y	*118-0813*	1	LINER GP-CAB	512
Y	*119-9757*	1	MIRROR GP-REAR VIEW	527
Y	*107-4647*	1	MOUNTING GP-CAB	533
Y	*240-0656*	1	PANEL GP-INSTRUMENT	548
Y	*107-4627*	1	PEDAL GP-GOVERNOR	553
Y	*119-9818*	1	PLATFORM GP	556
Y	*118-0808*	1	SUPPORT GP-SEAT	585
Y	*238-8387*	1	WIRING GP-CAB	148

Y-SEPARATE ILLUSTRATION

<END>

OPERATOR STATION

205-0520 CANOPY GP-OPEN ROPS

S/N: PDF1-UP
PART OF 241-8807 CANOPY AR-OPEN ROPS
AN ATTACHMENT

SMCS-7323 **i01668723**

NOTE	PART NUMBER	QTY	PART NAME 1 2 3 4 5 6 (PRODUCT LEVEL)	SEE PAGE
Y	*120-6668*	1	LIGHTING GP-FLOOD	118
Y	*174-9764*	1	ROPS GP-OPEN	560

Y-SEPARATE ILLUSTRATION

<END>

OPERATOR STATION

119-9755 CANOPY GP-SOFT

S/N: PDF1-UP
PART OF 241-8644 CANOPY AR-SOFT
AN ATTACHMENT

SMCS-7302 **i02034263**

NOTE	REF NO	GRAPHIC REF	PART NUMBER	QTY	PART NAME 1 2 3 4 5 6 (PRODUCT LEVEL)	SEE PAGE
	1	1	**119-9763**	1	POST AS	
		1	**7T-1099**	3	LINK	
	2	1	**119-9764**	1	POST AS	
		1	**7T-1099**	3	LINK	
	3	1	**119-9765**	1	BRACKET AS	
	4	1	**119-9766**	1	BRACKET AS	
M	5	1	**8T-4136**	16	BOLT (M10X1.5X25-MM)	
	6	1	**8T-4121**	16	WASHER-HARD (11X21X2.5-MM THK)	
M	7	1	**8T-4139**	6	BOLT (M12X1.75X30-MM)	
	8	1	**9T-4223**	6	WASHER	
	9	1	**4Y-4796**	1	CHANNEL AS	
	10	1	**4Y-4790**	2	TUBE AS	

M-METRIC PART

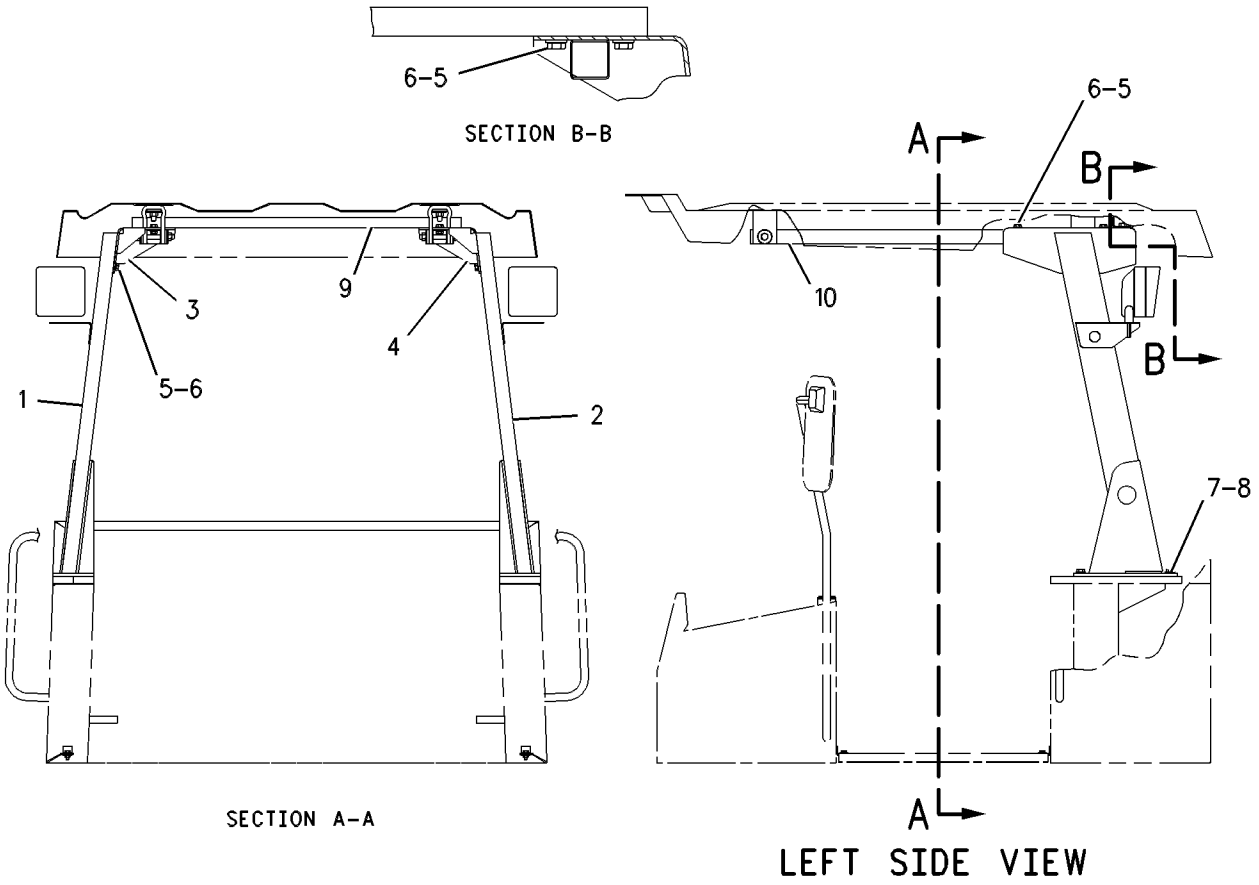

GRAPHIC #1 **<END>** g00541741

OPERATOR STATION

133-8496 CANOPY GP-SOFT

S/N: PDF1-UP
PART OF 241-8644 CANOPY AR-SOFT
AN ATTACHMENT

SMCS-7302 **i02038784**

NOTE	REF NO	GRAPHIC REF	PART NUMBER	QTY	PART NAME 1 2 3 4 5 6 (PRODUCT LEVEL)	SEE PAGE
	1	1	**4Y-4327**	1	ROOF	
M	2	1	**8T-4176**	4	BOLT (M12X1.75X90-MM)	
	3	1	**4Y-3046**	12	WASHER (13.5X38.0X3-MM THK)	
	4	1	**4Y-3048**	12	SPACER (13.5X40.0X6-MM THK)	
M	5	1	**8T-4244**	8	NUT (M12X1.75-THD)	
	6	1	**4Y-3630**	4	STRAP	

M-METRIC PART

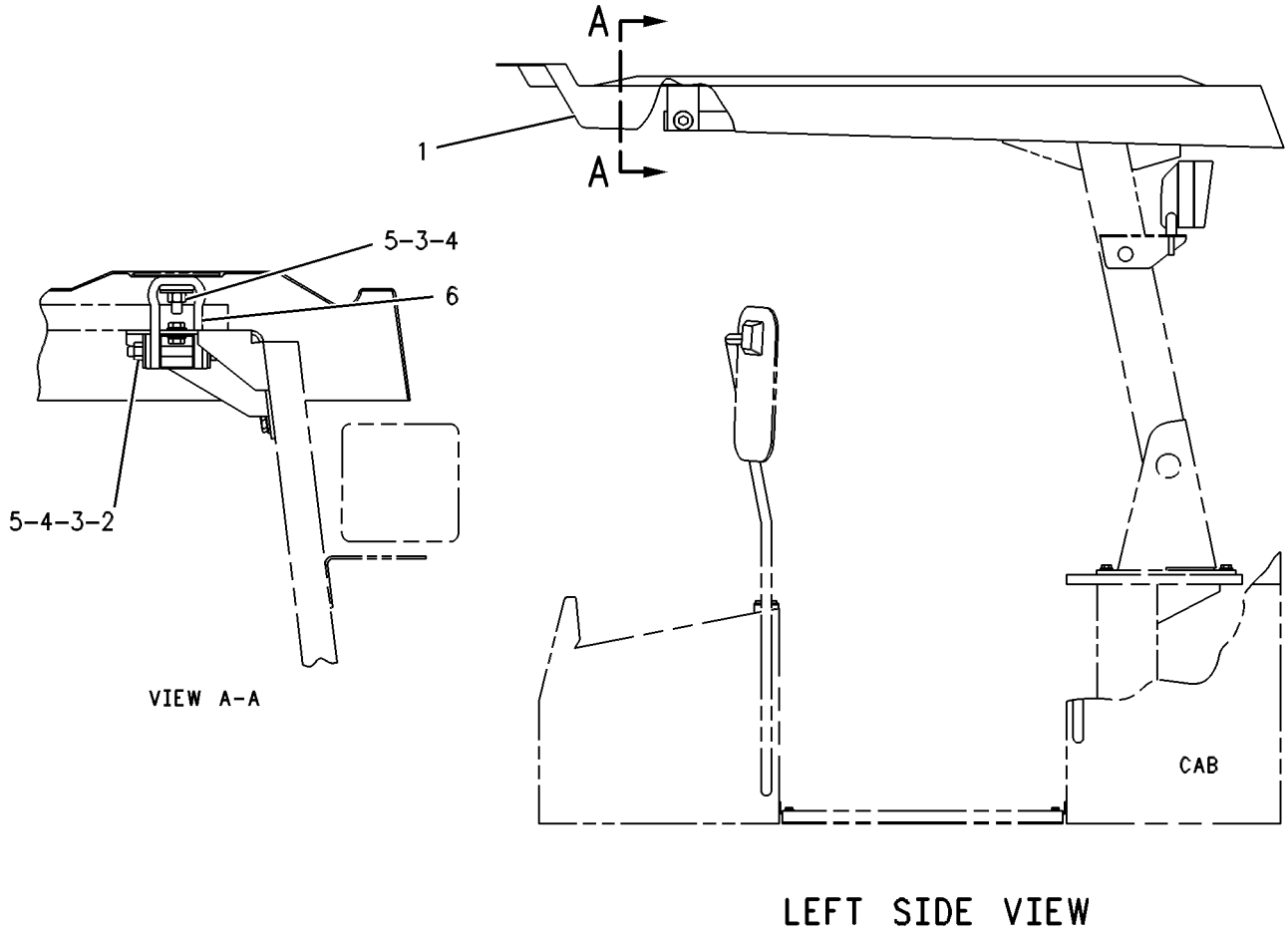

LEFT SIDE VIEW

GRAPHIC #1 **<END>** g00131752

OPERATOR STATION

3E-1906 COMPRESSOR GP-REFRIGERANT

S/N: PDF1-UP

PART OF 234-9211 COMPRESSOR GP-REFRIGERANT

AN ATTACHMENT

SMCS-1802 **i02038777**

NOTE	REF NO	GRAPHIC REF	PART NUMBER	QTY	PART NAME 1 2 3 4 5 6 (PRODUCT LEVEL)	SEE PAGE
C	1	1	**7T-4532**	1	PLUG AS	
C	2	1	**9X-7385**	2	SEAL-O-RING	
	3	1	**114-3469**	1	VALVE GP-RELIEF (REFRIGERANT COMPRESSOR)	
		1	**9X-7378**	1	SEAL-O-RING	
	4	1	**102-8802**	1	KIT-RECEPTACLE (2-PIN)	

C-CHANGE FROM PREVIOUS TYPE

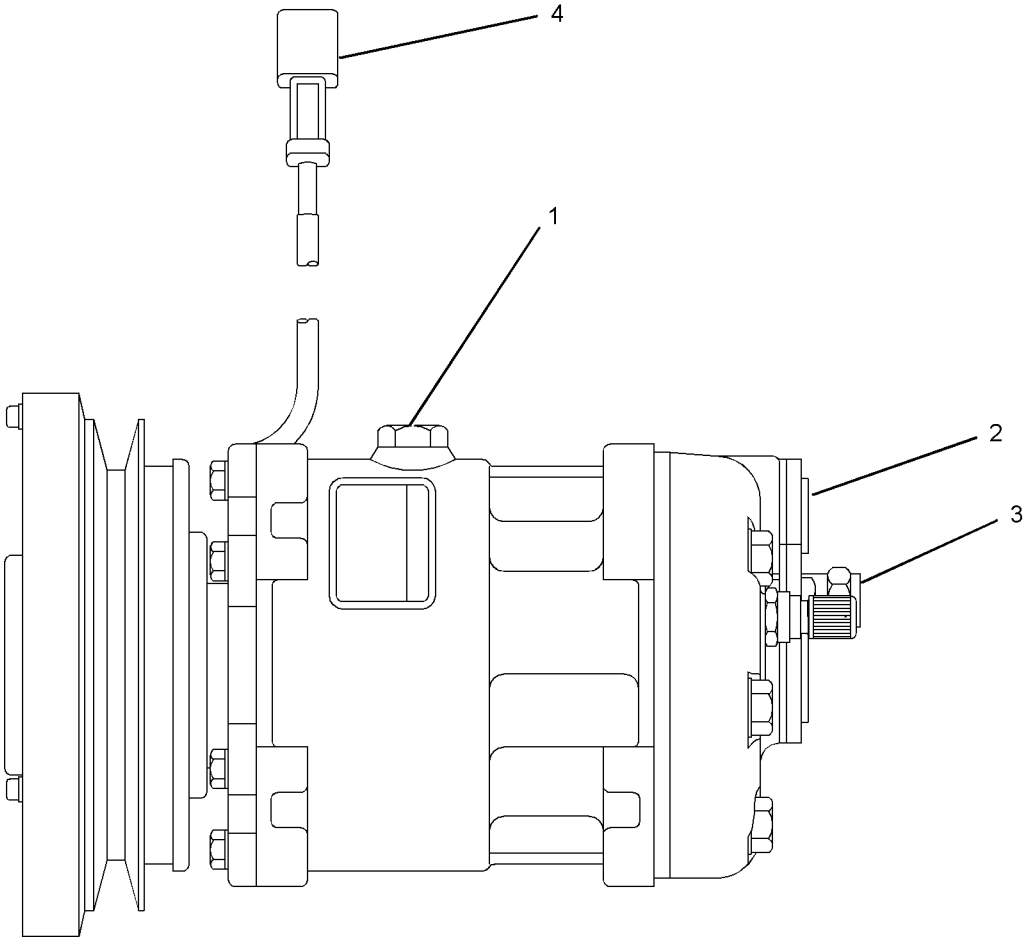

GRAPHIC #1 **<END>** g01008728

234-9211 COMPRESSOR GP-REFRIGERANT

S/N: PDF1-UP

PART OF 239-1009 AIR CONDITIONER AR, 243-3713 CONVERSION AR-AIR CONDITIONER, 241-8643 PLATFORM AR

AN ATTACHMENT

SMCS-1802 **i02038799**

NOTE	REF NO	GRAPHIC REF	PART NUMBER	QTY	PART NAME 1 2 3 4 5 6 (PRODUCT LEVEL)	SEE PAGE
Y	1	1	**3E-1906**	1	COMPRESSOR GP-REFRIGERANT	470
	2	1	**7E-1362**	1	V-BELT (COMPRESSOR)	
	3	1	**124-6524**	1	SPACER (11X25X10.5-MM THK)	
	4	1	**130-3881**	1	PULLEY-FAN	
	5	1	**234-9430**	1	PLATE AS	
	6	1	**234-9554**	1	PLATE	
	7	1	**235-1056**	1	PLATE	
	8	1	**239-0602**	1	PLATE	
	9	1	**244-2104**	1	PLATE	
	10	1	**7X-7729**	1	WASHER (11X25X3-MM THK)	
	11	1	**8T-4121**	11	WASHER-HARD (11X21X2.5-MM THK)	
M	12	1	**8T-4133**	5	NUT (M10X1.5-THD)	
M	13	1	**8T-4185**	1	BOLT (M10X1.5X50-MM)	
M	14	1	**8T-4186**	5	BOLT (M10X1.5X40-MM)	
M	15	1	**8T-4195**	1	BOLT (M10X1.5X30-MM)	
	16	1	**8T-4223**	2	WASHER-HARD (13.5X25.5X3-MM THK)	
M	17	1	**8T-4224**	4	WASHER-HARD (8.8X16X2-MM THK)	
M	18	1	**8T-4244**	1	NUT (M12X1.75-THD)	
M	19	1	**8T-4908**	4	BOLT (M8X1.25X25-MM)	
M	20	1	**8T-5001**	1	BOLT (M12X1.75X130-MM)	

M-METRIC PART
Y-SEPARATE ILLUSTRATION

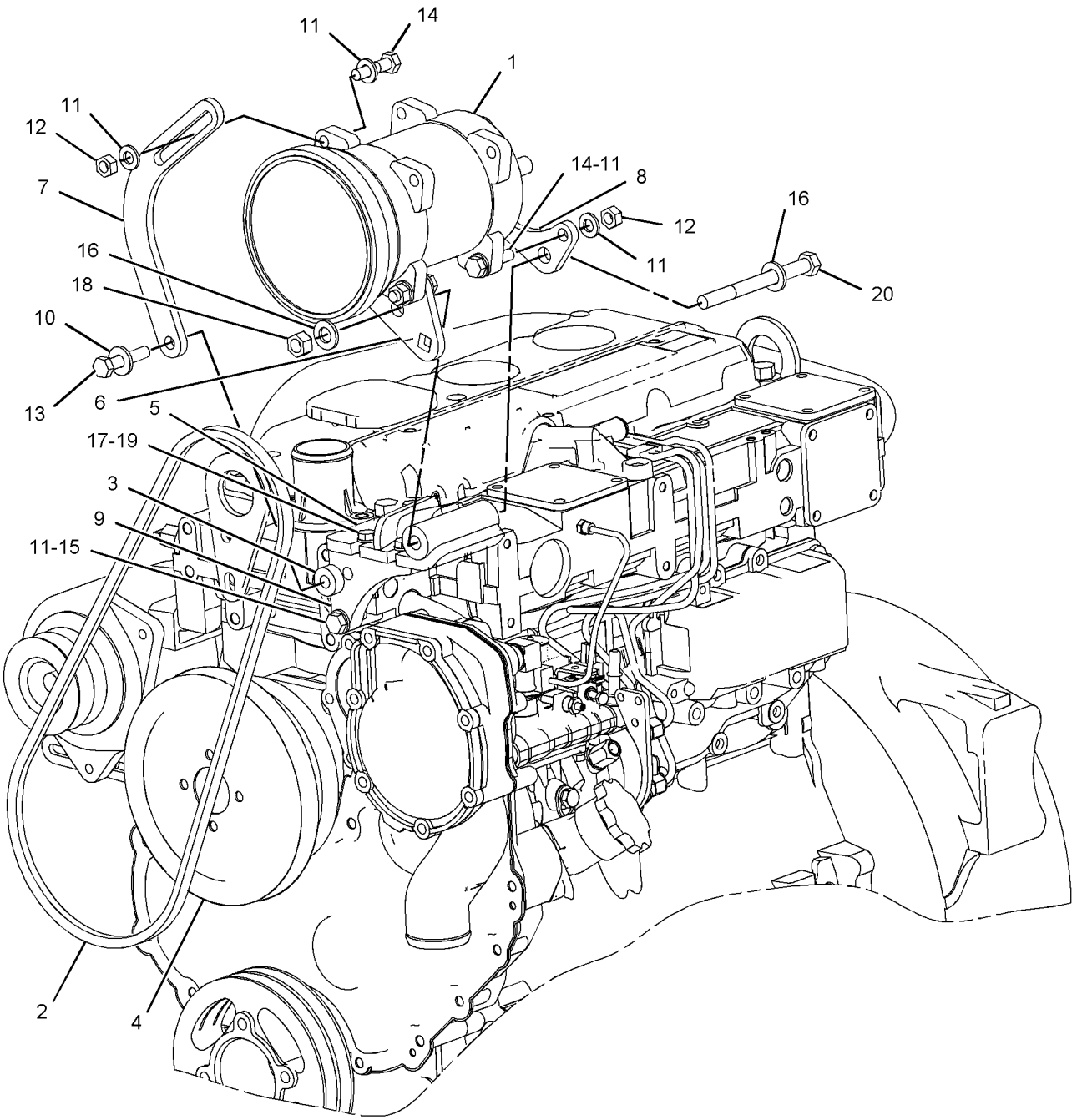

GRAPHIC #1 **<END>** g01043250

OPERATOR STATION

199-7041 CONDENSER GP-REFRIGERANT

S/N: PDF1-UP
PART OF 236-5648 LINES GP-AIR CONDITIONER
AN ATTACHMENT

SMCS-1805 **i01823506**

NOTE	REF NO	GRAPHIC REF	PART NUMBER	QTY	PART NAME 1 2 3 4 5 6 (PRODUCT LEVEL)	SEE PAGE
	1	1	**3E-5239**	1	RELAY AS (24 VOLT)	
	2	1	**3S-2093**	1	STRAP-CABLE	
	3	1	**8C-3756**	1	FILM-IDENTIFICATION (GROUP & SEQUENCE NO.)	
	4	1	**169-7434**	2	FAN AS	
	5	1	**169-7435**	1	HARNESS AS-AIR CONDITIONER (CONDENSER FANS)	
		1	**102-8803**	1	KIT-RECEPTACLE (3 PIN)	
		1	**155-2270**	1	KIT-CONNECTING PLUG (2 PIN)	
	6	1	**179-0589**	2	GUARD-FAN	
	7	1	**199-7042**	1	CASE AS	
	8	1	**199-7043**	1	COIL AS-CONDENSER	
	9	1	**4P-7581**	2	CLIP	
M	10	1	**5C-9553**	1	BOLT (M6X1X16MM)	
	11	1	**8T-4205**	1	WASHER-HARD (7.2X14.5X2MM THK)	
	12	1	**8T-4224**	12	WASHER-HARD (8.8X16X2MM THK)	
M	13	1	**8T-4908**	4	BOLT (M8X1.25X25MM)	
M	14	1	**8T-5093**	8	BOLT-LOCKING (M8X1.25X25MM)	

M-METRIC PART

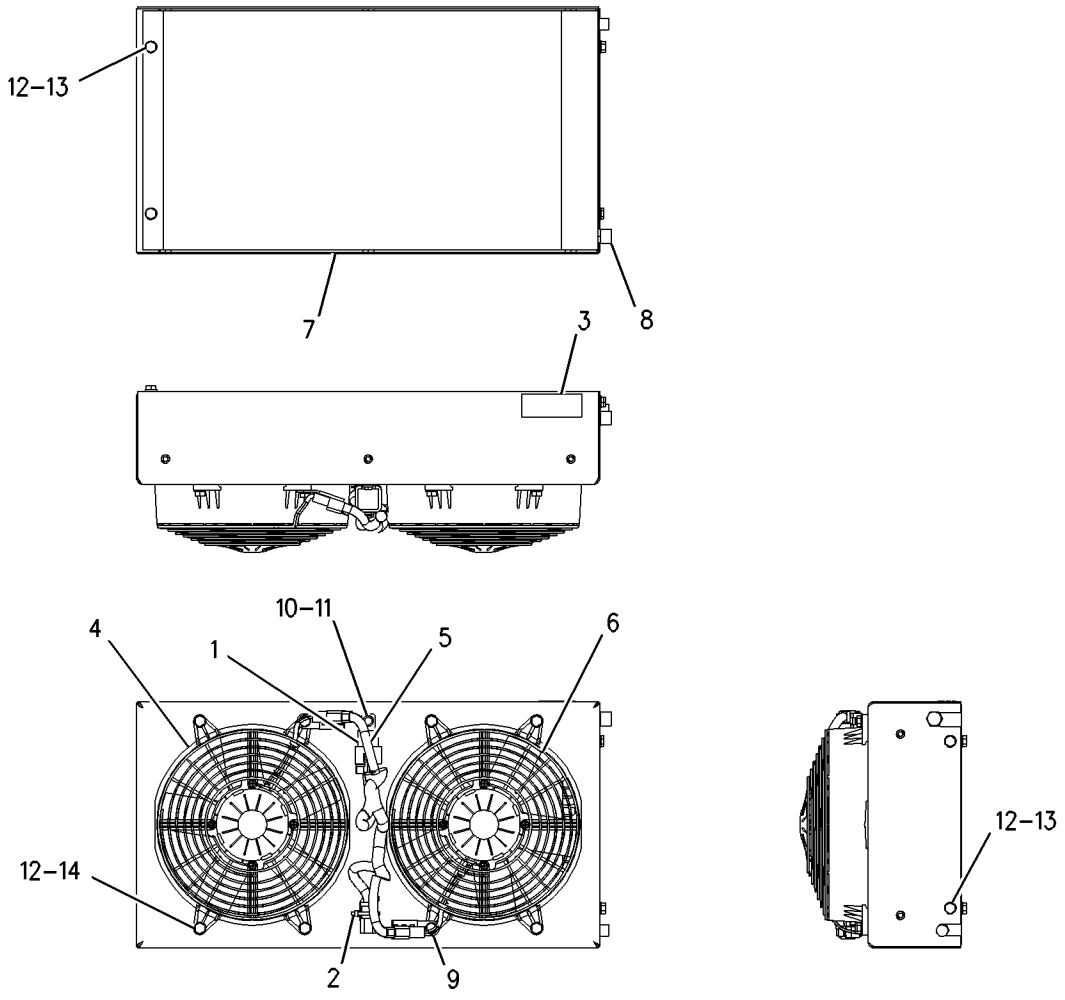

GRAPHIC #1 **<END>** g00925964

OPERATOR STATION

243-3713 CONVERSION AR-AIR CONDITIONER

S/N: PDF1-UP

AN ATTACHMENT

SMCS-7320 **i02005487**

NOTE	PART NUMBER	QTY	PART NAME 1 2 3 4 5 6 (PRODUCT LEVEL)	SEE PAGE
Y	**180-9873**	1	AIR CONDITIONER GP	454
Y	*234-9211*	1	COMPRESSOR GP-REFRIGERANT	471
Y	*236-5648*	1	LINES GP-AIR CONDITIONER	515
	118-7259	1	GASKET	
D	**5P-5643**		SEAL (1.6M)	
	236-4233	1	SWITCH AS-ROCKER (AIR CONDITIONER)	
	111-7899	1	GASKET	
	236-2295	2	TUBE AS	

D-ORDER BY THE METER
Y-SEPARATE ILLUSTRATION

<END>

OPERATOR STATION

118-0820 COVER GP-CONSOLE

S/N: PDF1-UP
PART OF 107-4841 CONTROL AR-SPEED
AN ATTACHMENT

SMCS-5258 **i02020720**

NOTE	REF NO	GRAPHIC REF	PART NUMBER	QTY	PART NAME 1 2 3 4 5 6 (PRODUCT LEVEL)	SEE PAGE
D	1	1	**5P-5670**		SEAL (0.76M)	
	2	1	**4E-1062**	1	CUSHION AS-ARMREST	
	3	1	**107-6035**	1	SWITCH AS-SPEED SELECT	
		1	**111-7899**	1	GASKET	
	4	1	**111-0149**	1	SUPPORT AS	
	5	1	**111-7875**	1	PLATE	
	6	1	**187-2082**	1	LEVER-CONTROL	
	7	1	**226-1832**	1	COVER AS	
	8	1	**3V-5349**	2	PLUG-BUTTON	
M	9	1	**8T-4138**	2	BOLT (M6X1X20-MM)	
	10	1	**8T-4205**	2	WASHER-HARD (7.2X14.5X2-MM THK)	
M	11	1	**9X-2042**	6	SCREW-TRUSS HEAD (M6X1X12-MM)	
M	12	1	**9X-2045**	2	SCREW-TRUSS HEAD (M6X1X20-MM)	
D	13	1	**5P-5670**		SEAL (1.2M)	

D-ORDER BY THE METER
M-METRIC PART

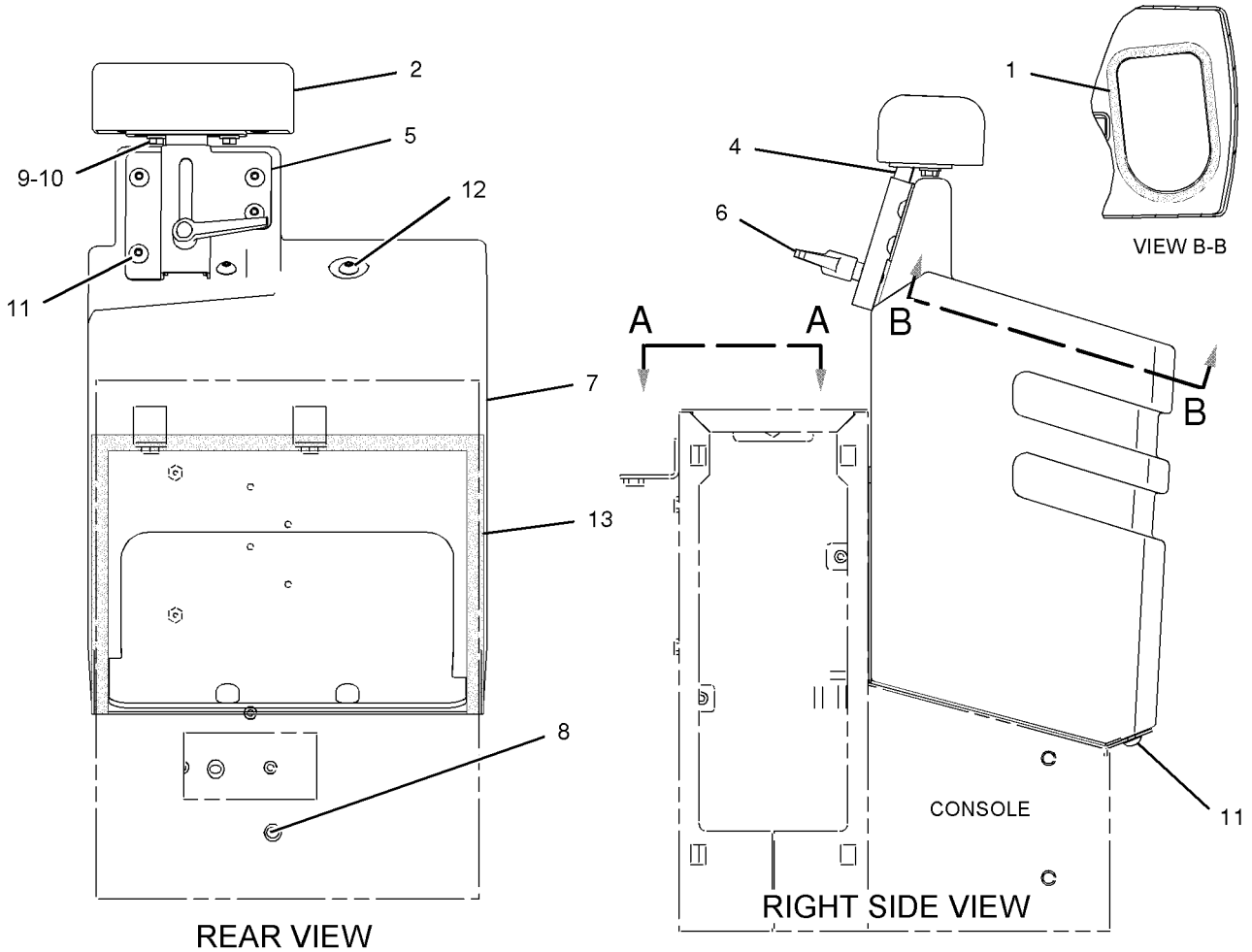

GRAPHIC #1 **<END>** g01043584

OPERATOR STATION

118-0809 DASH GP

S/N: PDF1-UP

PART OF 241-8807 CANOPY AR-OPEN ROPS, 241-8644 CANOPY AR-SOFT AN ATTACHMENT

SMCS-7314 **i01094306**

NOTE	REF NO	GRAPHIC REF	PART NUMBER	QTY	PART NAME 1 2 3 4 5 6 (PRODUCT LEVEL)	SEE PAGE
C	1	1	**166-9287**	1	DASH AS	
M	2	1	**8T-4908**	4	BOLT (M8X1.25X25MM)	
	3	1	**5P-4116**	4	WASHER (2MM THK)	

C-CHANGE FROM PREVIOUS TYPE
M-METRIC PART

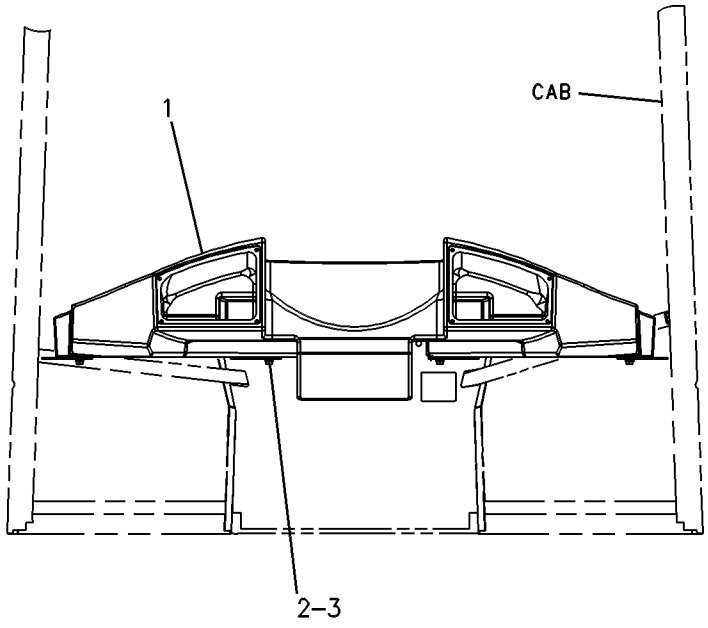

REAR VIEW

GRAPHIC #1 **<END>** g00250924

OPERATOR STATION

107-6137 DEFROSTER GP-CAB

S/N: PDF1-UP
PART OF 239-1004, 239-1005 OPERATOR AR
AN ATTACHMENT

SMCS-7304, 7316 **i01945551**

NOTE	REF NO	GRAPHIC REF	PART NUMBER	QTY	PART NAME 1 2 3 4 5 6 (PRODUCT LEVEL)	SEE PAGE
	1	1	**107-6034**	1	SWITCH AS (DEFROSTER)	
		1	**111-7899**	1	GASKET	

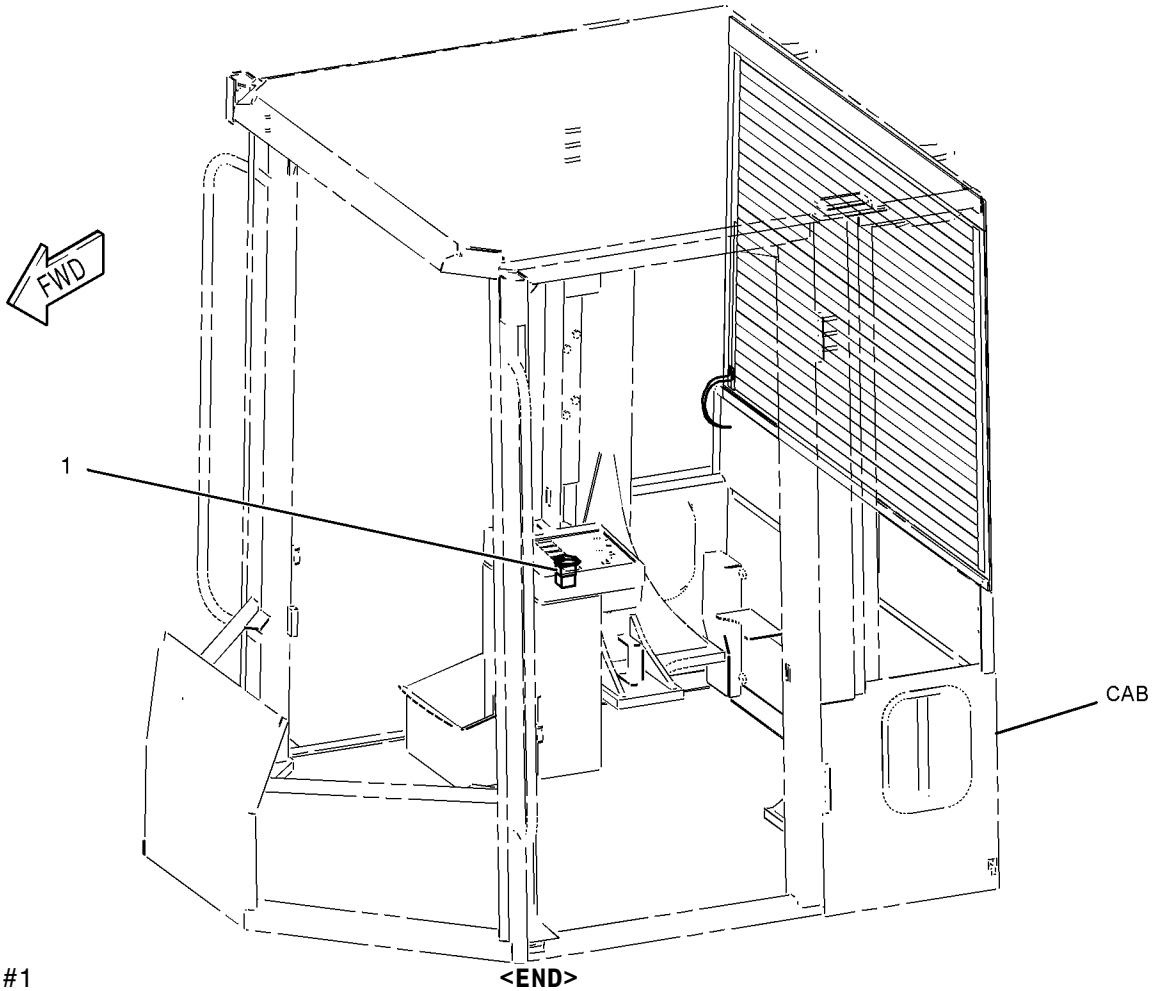

GRAPHIC #1

<END>

g01012801

OPERATOR STATION

137-7602 DOOR GP-CAB

S/N: PDF1-UP
PART OF 205-0522 CAB AR
AN ATTACHMENT

SMCS-7308 **i02021362**

NOTE	PART NUMBER	QTY	PART NAME 1 2 3 4 5 6 (PRODUCT LEVEL)	SEE PAGE
Y	**233-8013**	1	DOOR GP-CAB (LH, FIXED GLASS)	489
Y	**231-0320**	1	DOOR GP-CAB (RH, FIXED GLASS)	484

Y-SEPARATE ILLUSTRATION

<END>

137-7603 DOOR GP-CAB

S/N: PDF1-UP
SLIDING WINDOW
PART OF 205-0524 CAB AR-ENCLOSED ROPS
AN ATTACHMENT

SMCS-7308 **i02038675**

NOTE	PART NUMBER	QTY	PART NAME 1 2 3 4 5 6 (PRODUCT LEVEL)	SEE PAGE
Y	**233-8012**	1	DOOR GP-CAB (LH)	487
Y	**231-0319**	1	DOOR GP-CAB (RH)	482

Y-SEPARATE ILLUSTRATION

<END>

OPERATOR STATION

231-0318 DOOR GP-CAB

S/N: PDF1-UP

PART OF 231-0319, 231-0320 DOOR GP-CAB

AN ATTACHMENT

SMCS-7308 **i01968422**

NOTE	REF NO	GRAPHIC REF	PART NUMBER	QTY	PART NAME 1 2 3 4 5 6 (PRODUCT LEVEL)	SEE PAGE
	1	1	**107-6104**	2	INSERT	
	2	2	**107-6120**	1	PLATE AS	
M		2	**159-9539**	2	NUT-WELD	
	3	1	**107-6125**	2	HINGE AS	
		1	**096-2323**	2	RING-RETAINING	
	4	1	**111-0201**	1	HANDHOLD	
	5	1	**115-1552**	1	HANDLE-PULL	
	6	2	**120-6125**	1	PLATE AS	
M		2	**159-9539**	1	NUT-WELD	
	7	2	**161-9639**	1	PLATE AS	
M		2	**159-9539**	2	NUT-WELD	
	8	2	**164-4557**	1	BRACKET AS	
M		2	**159-9539**	4	NUT-WELD	
	9	1	**231-0299**	1	SHEET AS	
M		1	**159-9539**	4	NUT-WELD	
	10	1	**231-0308**	1	PLATE AS	
M		1	**159-9539**	2	NUT-WELD	

M-METRIC PART

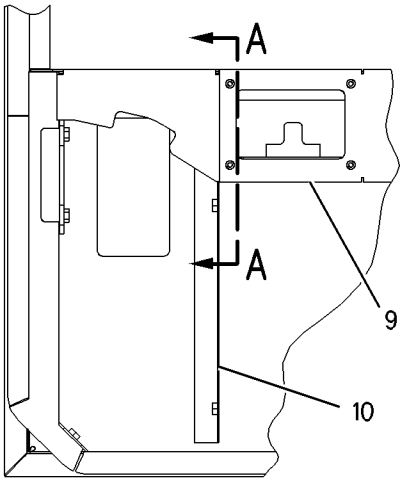

VIEW OF AREA G

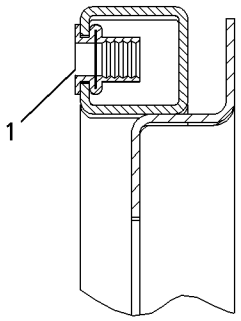

SECTION E-E

REFER TO ALL ILLUSTRATIONS OF THIS GROUP FOR AUXILIARY VIEWS

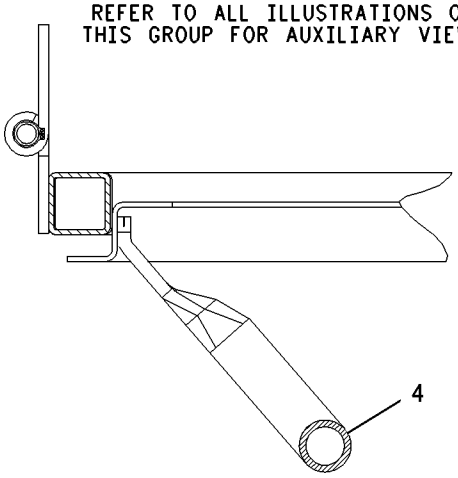

SECTION B-B

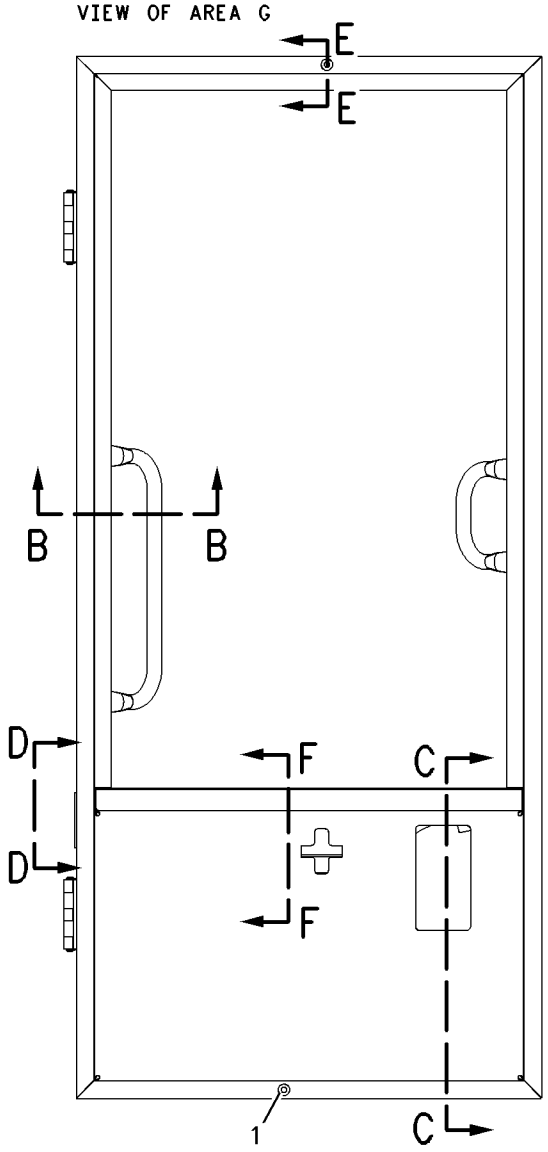

RIGHT SIDE VIEW

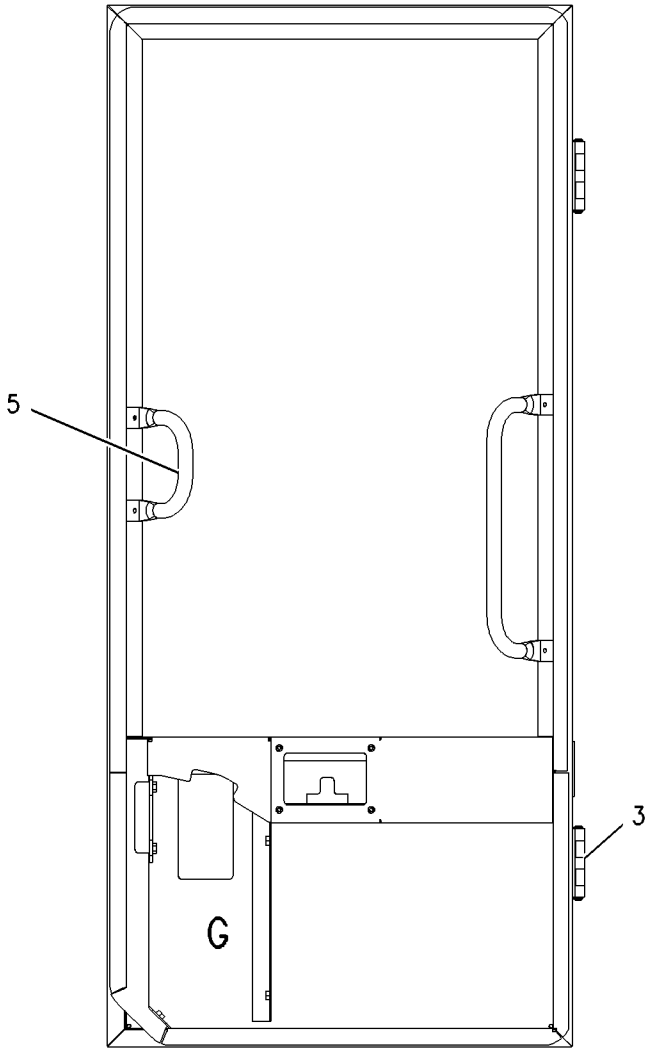

INSIDE VIEW

GRAPHIC #1

g00988409

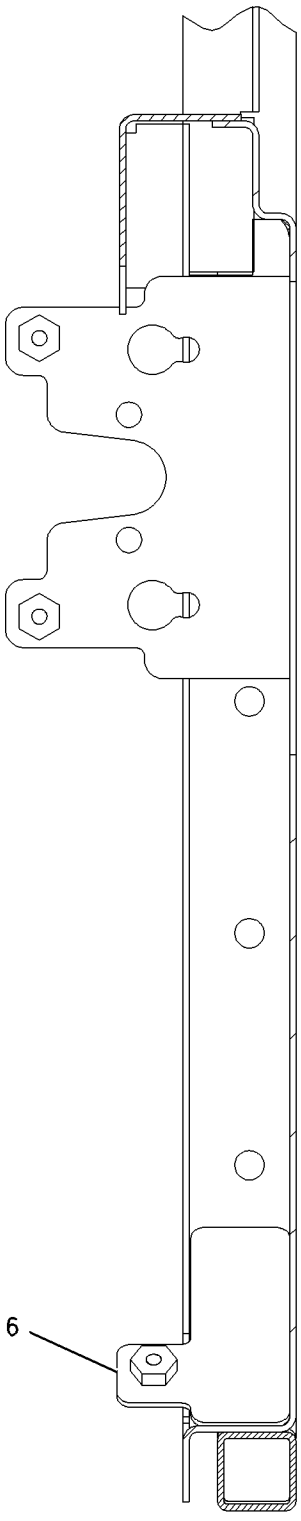

SECTION C-C

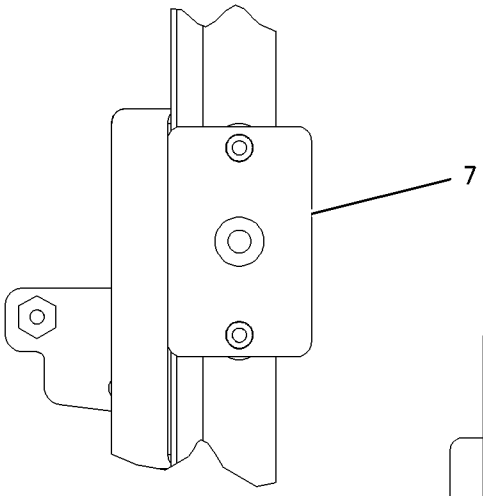

VIEW D-D

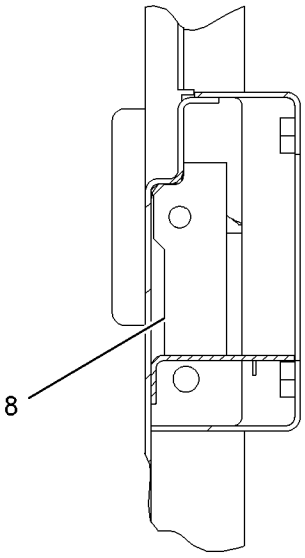

SECTION F-F

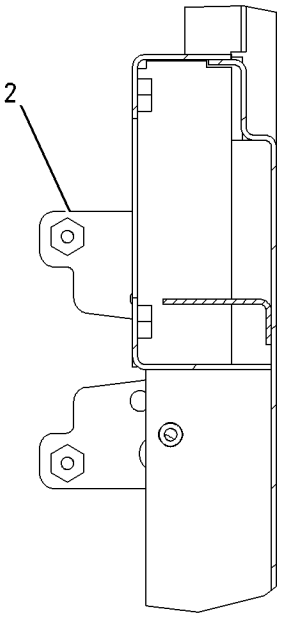

SECTION A-A

GRAPHIC #2 **<END>** g00988410

OPERATOR STATION

231-0319 DOOR GP-CAB

S/N: PDF1-UP
WITH SLIDING WINDOWS
PART OF 137-7603 DOOR GP-CAB
AN ATTACHMENT

SMCS-7308 **i01957731**

NOTE	REF NO	GRAPHIC REF	PART NUMBER	QTY	PART NAME 1 2 3 4 5 6 (PRODUCT LEVEL)	SEE PAGE
E	1	1	**3E-3805**		SEAL (420-CM)	
	2	1	**3T-5201**	1	BEARING	
	3	1	**4E-1384**	1	BUMPER-CONICAL	
	4	1	**7W-2108**	1	SPRING-BYPASS VALVE	
	5	1	**7X-2497**	1	HANDLE-DOOR	
	6	1	**8T-4742**	1	END-YOKE ROD	
	7	1	**8T-4747**	2	BRACKET	
	8	1	**8Y-6386**	1	SEAL-HANDLE	
	9	1	**9G-2759**	1	LATCH AS-DOOR	
	10	1	**111-0202**	1	COVER	
	11	1	**112-1528**	1	HANDLE AS	
		1	**8Y-4501**	1	SPRING-HANDLE	
	12	1	**141-8580**	1	RING-RETAINING	
	13	1	**161-9640**	1	COVER	
	14	1	**161-9641**	1	PLATE	
	15	1	**161-9642**	1	ROD AS	
	16	1	**161-9647**	1	PLATE	
	17	1	**168-2458**	1	LATCH AS	
	18	1	**169-3995**	1	SEAL	
	19	1	**178-2593**	1	BUMPER	
Y	20	1	**180-2535**	1	WINDOW GP-DOOR (CAB)	594
Y	21	1	**231-0318**	1	DOOR GP-CAB (RH)	479
M	22	1	**5C-2890**	1	NUT (M6X1-THD)	
M	23	1	**5C-7261**	2	NUT (M8X1.25-THD)	
M	24	1	**8T-4180**	4	SCREW-MACHINE (M5X0.8X20-MM)	
M	25	1	**8T-4181**	5	BOLT (M6X1X20-MM)	
	26	1	**8T-4205**	6	WASHER-HARD (7.2X14.5X2-MM THK)	
M	27	1	**8T-4971**	4	BOLT (M6X1X30-MM)	
M	28	1	**9X-2042**	11	SCREW-TRUSS HEAD (M6X1X12-MM)	

E-ORDER BY THE CENTIMETER
M-METRIC PART
Y-SEPARATE ILLUSTRATION

231-0319 **DOOR GP-CAB** *(contd.)* **i01957731**

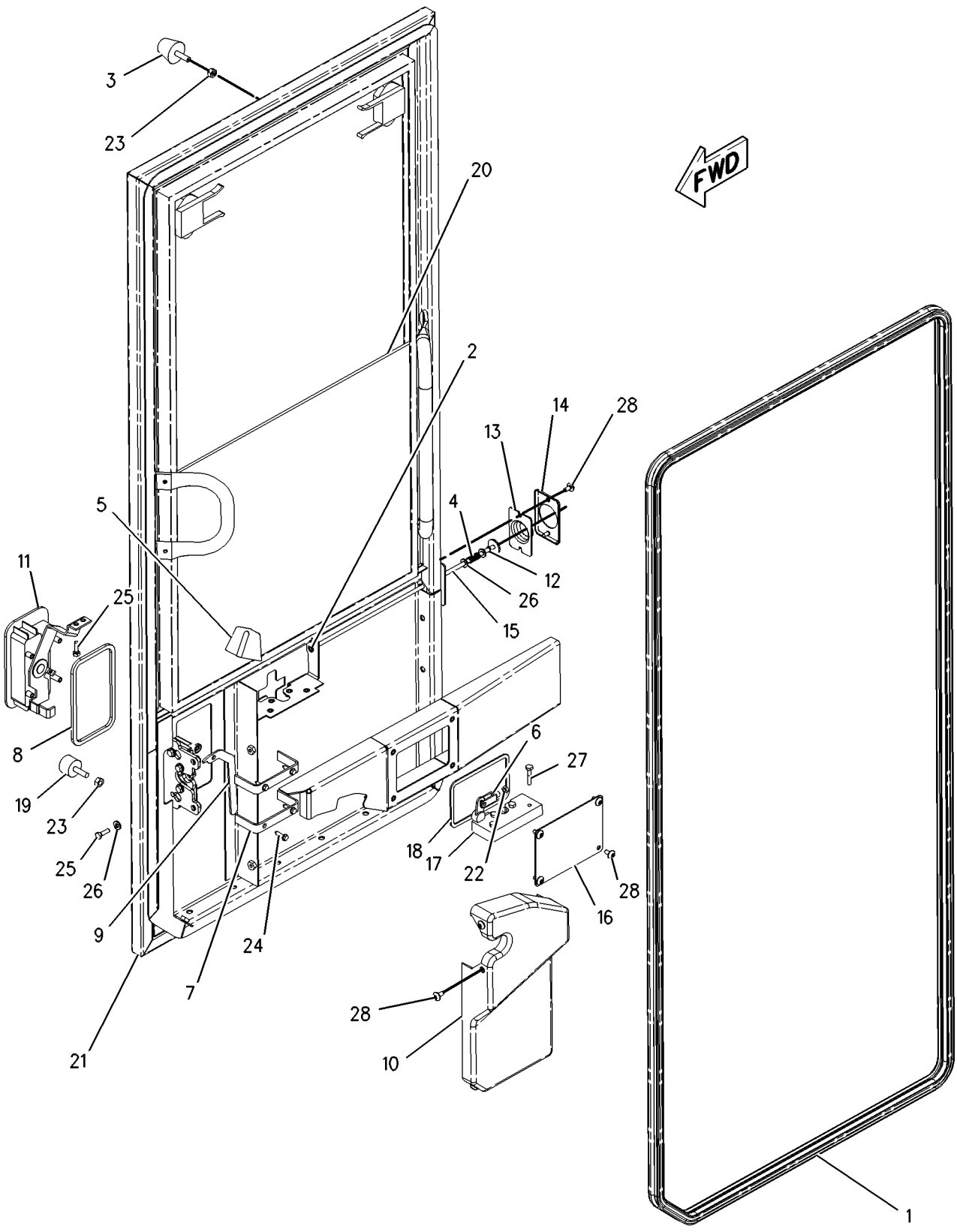

GRAPHIC #1 **<END>** g00988680

OPERATOR STATION

231-0320 DOOR GP-CAB

S/N: PDF1-UP
PART OF 137-7602 DOOR GP-CAB
AN ATTACHMENT

SMCS-7308 **i01965922**

NOTE	REF NO	GRAPHIC REF	PART NUMBER	QTY	PART NAME 1 2 3 4 5 6 (PRODUCT LEVEL)	SEE PAGE
	1	2	**3T-5201**	1	BEARING	
	2	1	**4E-1384**	1	BUMPER-CONICAL	
	3	2	**7W-2108**	1	SPRING-BYPASS VALVE	
	4	1	**7X-2497**	1	HANDLE-DOOR	
M	5	2	**8T-4180**	4	SCREW-MACHINE (M5X0.8X20-MM)	
	6	2	**8T-4742**	1	END-YOKE ROD	
	7	2	**8T-4747**	2	BRACKET	
	8	1	**8Y-6386**	1	SEAL-HANDLE	
	9	2	**9G-2759**	1	LATCH AS-DOOR	
	10	2	**111-0202**	1	COVER	
	11	1	**112-1528**	1	HANDLE AS	
		1	**8Y-4501**	1	SPRING-HANDLE	
	12	2	**141-8580**	1	RING-RETAINING	
	13	2	**161-9640**	1	COVER	
	14	2	**161-9641**	1	PLATE	
	15	2	**161-9642**	1	ROD AS	
	16	2	**161-9647**	1	PLATE	
	17	1	**162-2189**	1	GLASS-CAB DOOR (UPPER)	
Y	18	1	**231-0318**	1	DOOR GP-CAB	479
	20	2	**168-2458**	1	LATCH AS	
	21	2	**169-3995**	1	SEAL	
M	22	2	**5C-2890**	1	NUT (M6X1-THD)	
M	23	1	**5C-7261**	2	NUT (M8X1.25-THD)	
M	24	1,2	**8T-4181**	5	BOLT (M6X1X20-MM)	
	25	2	**8T-4205**	6	WASHER-HARD (7.2X14.5X2-MM THK)	
M	26	2	**8T-4971**	4	BOLT (M6X1X30-MM)	
M	27	2	**9X-2042**	11	SCREW-TRUSS HEAD (M6X1X12-MM)	
E	28	2	**3E-3805**		SEAL (420CM)	
	29	1	**178-2593**	1	BUMPER	

E-ORDER BY THE CENTIMETER
M-METRIC PART
Y-SEPARATE ILLUSTRATION

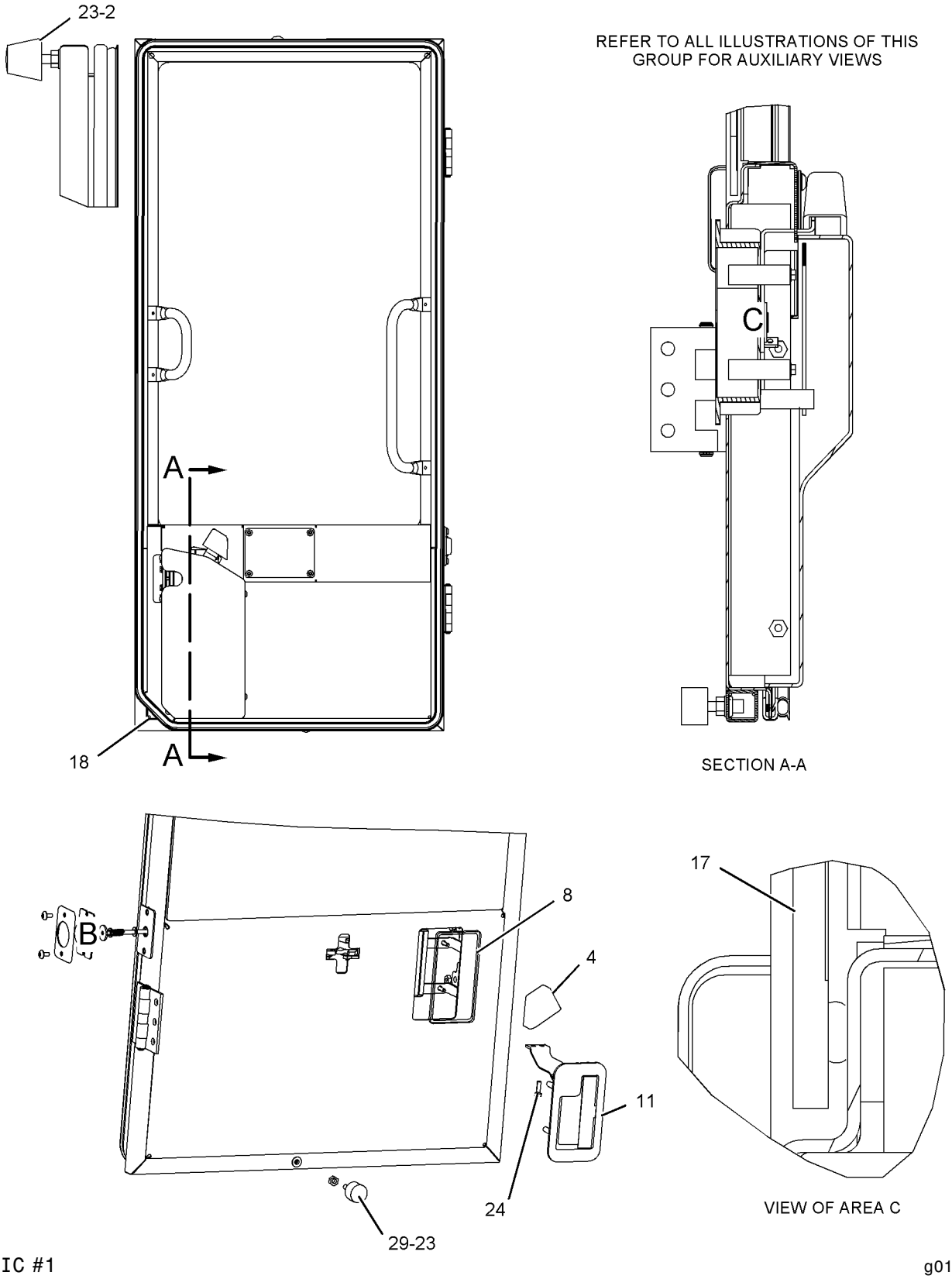

GRAPHIC #1

g01047634

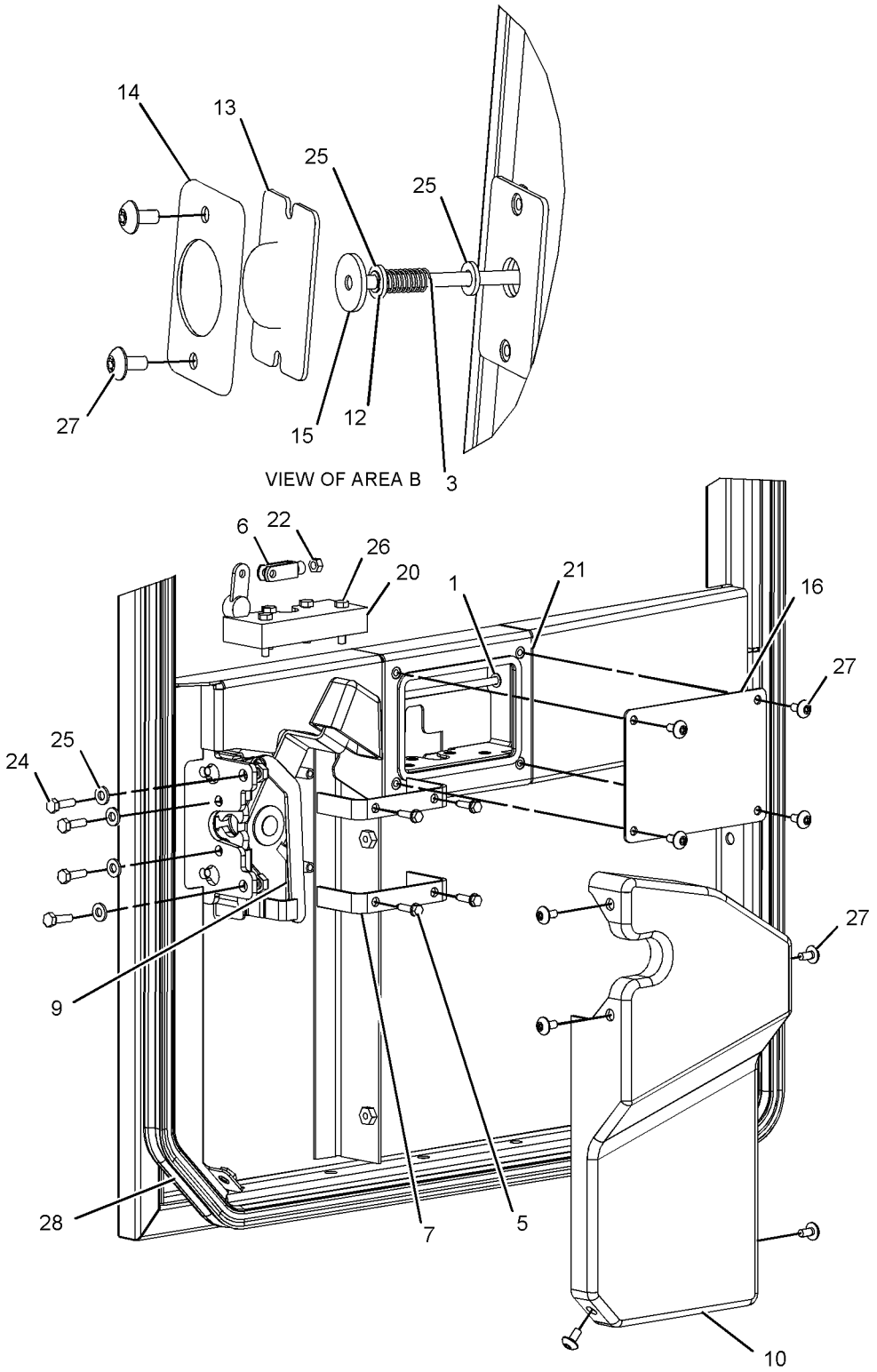

GRAPHIC #2 **<END>** g01047667

OPERATOR STATION

233-8012 DOOR GP-CAB

S/N: PDF1-UP
WITH SLIDING WINDOW
PART OF 137-7603 DOOR GP-CAB
AN ATTACHMENT

SMCS-7308 **i01899363**

NOTE	REF NO	GRAPHIC REF	PART NUMBER	QTY	PART NAME 1 2 3 4 5 6 (PRODUCT LEVEL)	SEE PAGE
E	1	1	**3E-3805**		SEAL (420CM)	
	2	1	**3T-5201**	1	BEARING	
	3	1	**4E-1384**	1	BUMPER-CONICAL	
	4	1	**7W-2108**	1	SPRING-BYPASS VALVE	
	5	1	**7X-2497**	1	HANDLE-DOOR	
	6	1	**8T-4742**	1	END-YOKE ROD	
	7	1	**8T-4747**	2	BRACKET	
	8	1	**8Y-4807**	1	HANDLE AS	
		1	**8Y-4501**	1	SPRING-HANDLE	
	9	1	**8Y-6386**	1	SEAL-HANDLE	
	10	1	**9G-2761**	1	LATCH AS-DOOR	
	11	1	**107-6117**	1	COVER	
	12	1	**141-8580**	1	RING-RETAINING	
	13	1	**161-9640**	1	COVER	
	14	1	**161-9641**	1	PLATE	
	15	1	**161-9642**	1	ROD AS	
	16	1	**161-9647**	1	PLATE	
	17	1	**168-2457**	1	LATCH AS	
	18	1	**169-3995**	1	SEAL	
	19	1	**178-2593**	1	BUMPER	
Y	20	1	**180-2535**	1	WINDOW GP-DOOR (CAB)	594
	21	1	**233-8008**	1	DOOR AS (LH)	
		1	**107-6104**	2	INSERT	
		1	**107-6125**	2	HINGE AS	
		1	**096-2323**	2	RING-RETAINING	
		1	**111-0200**	1	HANDHOLD	
M	22	1	**5C-2890**	1	NUT (M6X1 THD)	
M	23	1	**5C-7261**	2	NUT (M8X1.25 THD)	
M	24	1	**8T-4180**	4	SCREW-MACHINE (M5X0.8X20MM)	
M	25	1	**8T-4181**	5	BOLT (M6X1X20MM)	
	26	1	**8T-4205**	6	WASHER-HARD (7.2X14.5X2MM THK)	
M	27	1	**8T-4971**	4	BOLT (M6X1X30MM)	
M	28	1	**9X-2042**	11	SCREW-TRUSS HEAD (M6X1X12MM)	

E-ORDER BY THE CENTIMETER
M-METRIC PART
Y-SEPARATE ILLUSTRATION

233-8012 DOOR GP-CAB *(contd.)*

i01899363

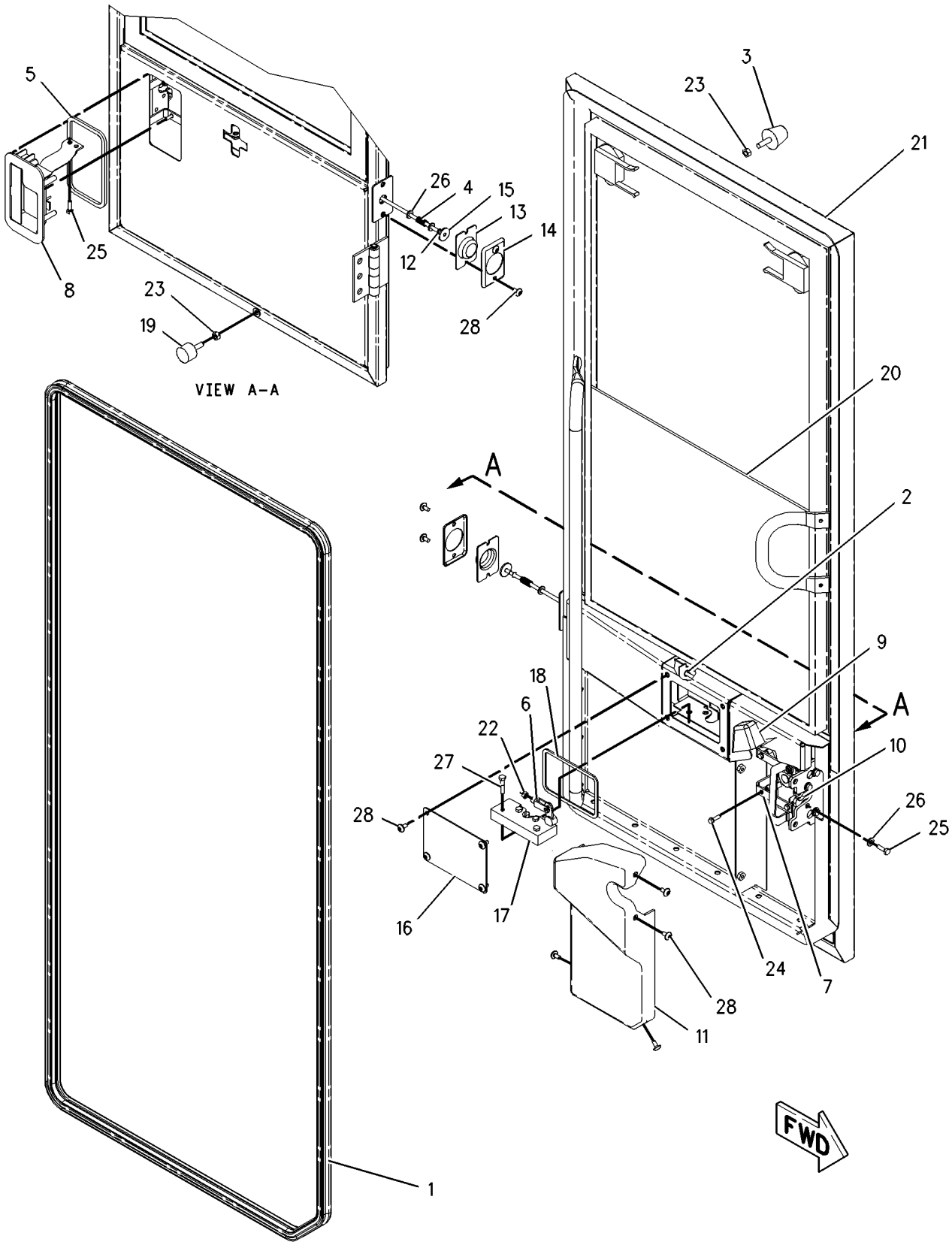

GRAPHIC #1

<END>

g00988550

OPERATOR STATION

233-8013 DOOR GP-CAB

S/N: PDF1-UP
PART OF 137-7602 DOOR GP-CAB
AN ATTACHMENT

SMCS-7308 **i01965946**

NOTE	REF NO	GRAPHIC REF	PART NUMBER	QTY	PART NAME 1 2 3 4 5 6 (PRODUCT LEVEL)	SEE PAGE
	1	1	**3T-5201**	1	BEARING	
	2	1	**4E-1384**	1	BUMPER-CONICAL	
	3	1	**7W-2108**	1	SPRING-BYPASS VALVE	
	4	1	**7X-2497**	1	HANDLE-DOOR	
M	5	1	**8T-4180**	4	SCREW-MACHINE (M5X0.8X20-MM)	
	6	1	**8T-4742**	1	END-YOKE ROD	
	7	1	**8T-4747**	2	BRACKET	
	8	1	**8Y-4807**	1	HANDLE AS	
		1	**8Y-4501**	1	SPRING-HANDLE	
	9	1	**8Y-6386**	1	SEAL-HANDLE	
	10	1	**9G-2761**	1	LATCH AS-DOOR	
	11	1	**107-6117**	1	COVER	
	12	1	**141-8580**	1	RING-RETAINING	
	13	1	**161-9640**	1	COVER	
	14	1	**161-9641**	1	PLATE	
	15	1	**161-9642**	1	ROD AS	
	16	1	**161-9647**	1	PLATE	
	17	1	**233-8008**	1	DOOR AS (LH)	
		1	**107-6104**	2	INSERT	
		1	**107-6120**	1	PLATE AS	
		1	**107-6125**	2	HINGE AS	
					(EACH INCLUDES)	
		1	**096-2323**	2	RING-RETAINING	
		1	**111-0200**	1	HANDHOLD	
		1	**115-1552**	1	HANDLE-PULL	
		1	**161-9639**	1	PLATE AS	
M		1	**159-9539**	2	NUT-WELD	
	18	1	**162-2189**	1	GLASS-CAB DOOR (UPPER)	
	20	1	**168-2457**	1	LATCH AS	
	21	1	**169-3995**	1	SEAL	
M	22	1	**5C-2890**	1	NUT (M6X1-THD)	
M	23	1	**5C-7261**	2	NUT (M8X1.25-THD)	
M	24	1	**8T-4181**	5	BOLT (M6X1X20-MM)	
	25	1	**8T-4205**	6	WASHER-HARD (7.2X14.5X2-MM THK)	
M	26	1	**8T-4971**	4	BOLT (M6X1X30-MM)	
M	27	1	**9X-2042**	11	SCREW-TRUSS HEAD (M6X1X12-MM)	
E	28	1	**3E-3805**		SEAL (420CM)	
	29	1	**178-2593**	1	BUMPER	

E-ORDER BY THE CENTIMETER
M-METRIC PART

233-8013 DOOR GP-CAB *(contd.)*

i01965946

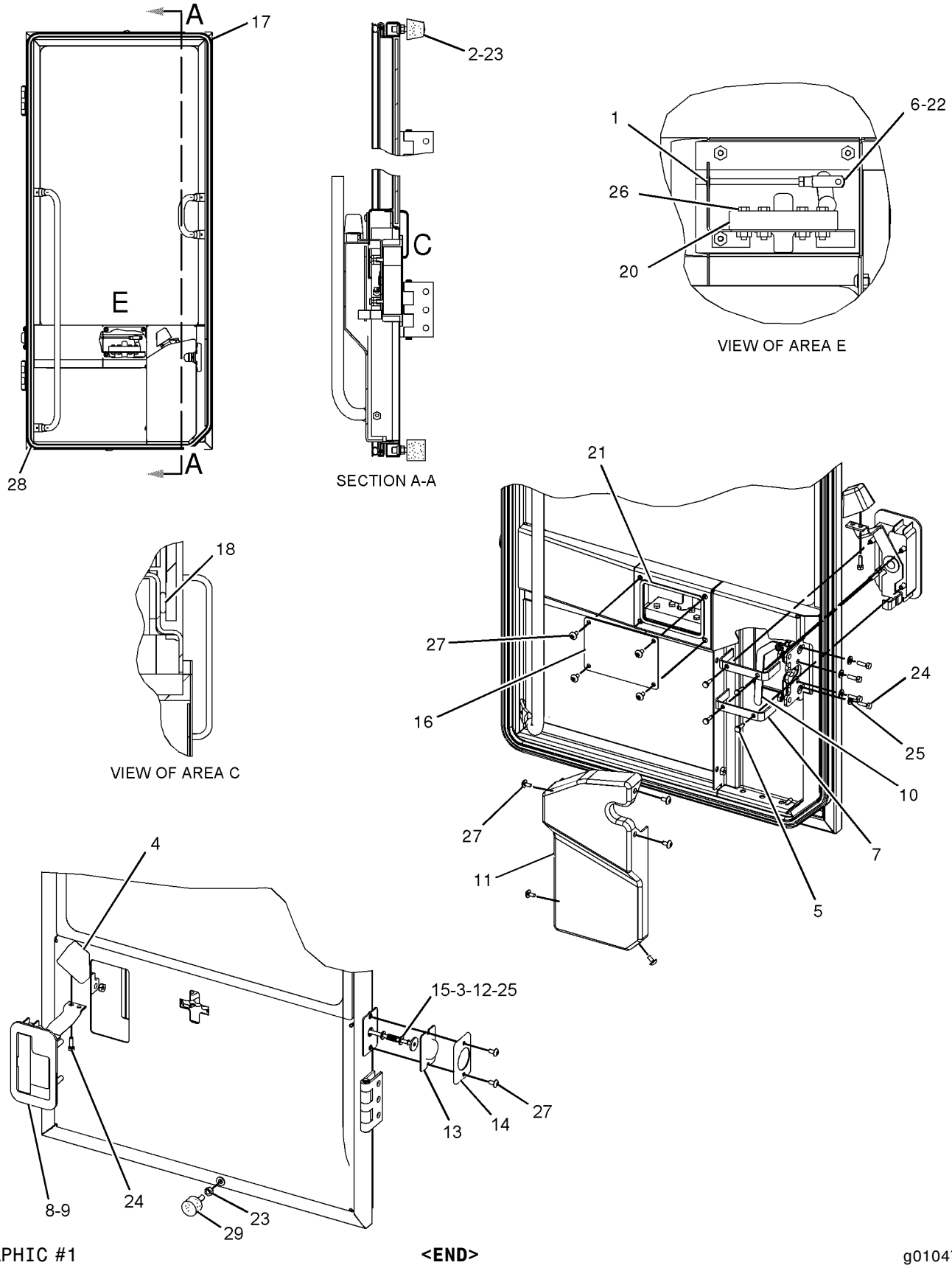

GRAPHIC #1

<END>

g01047349

OPERATOR STATION

107-4630 DUCT GP-AIR

S/N: PDF1-UP
PART OF 239-1006, 239-1007 CAB AR, 241-8643 PLATFORM AR
AN ATTACHMENT

SMCS-734D **i02034264**

NOTE	REF NO	GRAPHIC REF	PART NUMBER	QTY	PART NAME 1 2 3 4 5 6 (PRODUCT LEVEL)	SEE PAGE
D	1	1	**5P-5927**		SEAL (3.2M)	
	2	1	**8Y-6388**	2	LOUVER AS	
	3	1	**104-2091**	12	SCREW-FLAT HEAD (6-20X0.5-IN)	
	4	1	**166-9286**	1	DUCT AS	
	5	1	**107-6079**	1	DUCT	
	6	1	**161-7620**	12	SCREW-PAN HEAD	
	7	1	**5P-4116**	4	WASHER-HARD (8.8X20.5X2-MM THK)	
M	8	1	**8T-4908**	4	BOLT (M8X1.25X25-MM)	
	9	1	**151-5715**	4	LOUVER AS	
	10	1	**8Y-6391**	2	LOUVER AS	
	11	1	**148-3626**	8	SCREW-FLAT HEAD (NO 6 X 0.75-IN)	

D-ORDER BY THE METER
M-METRIC PART

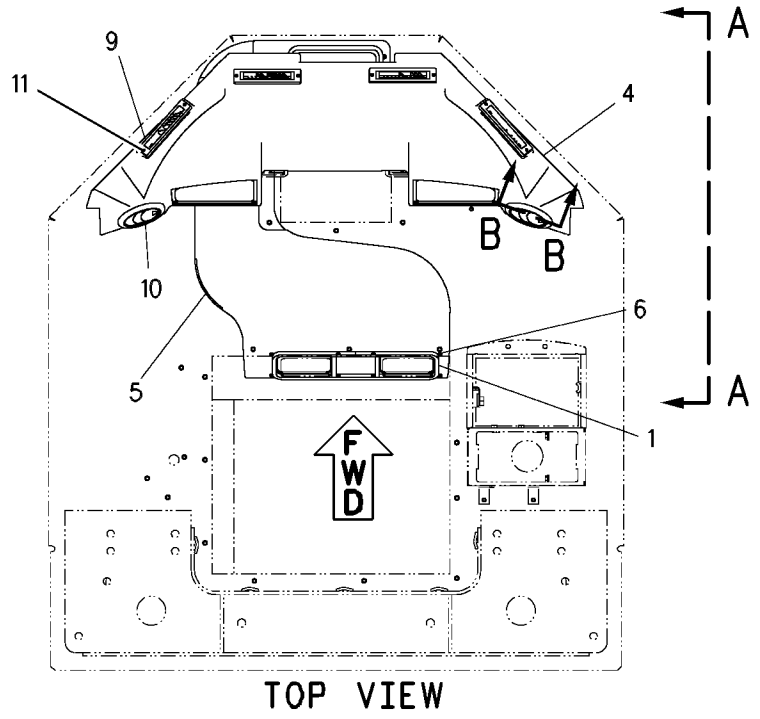

TOP VIEW

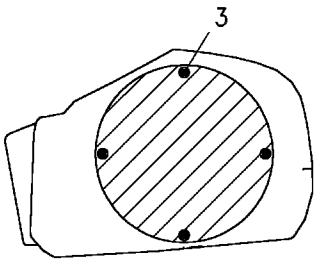

SECTION B-B

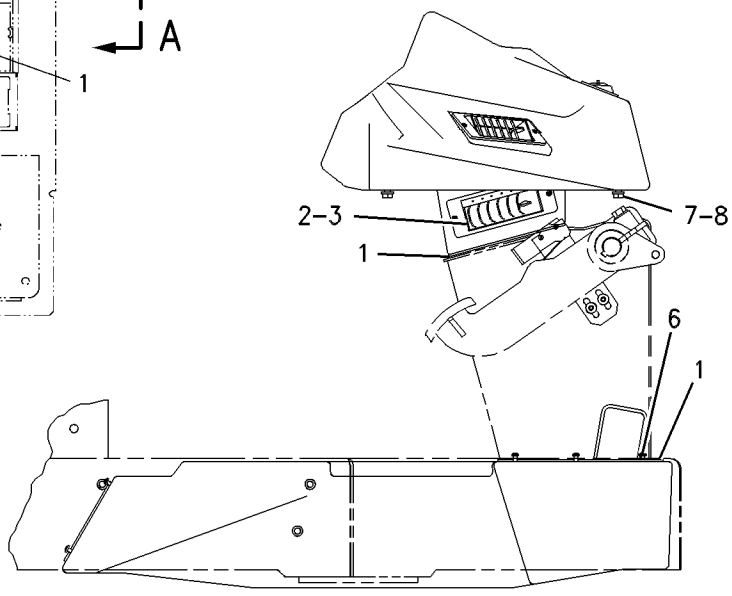

VIEW A-A

GRAPHIC #1 **<END>** g00623383

OPERATOR STATION

8Y-6883 EXTENSION GP-BACKREST

S/N: PDF1-UP
FABRIC
PART OF 8Y-6977 SEAT GP-SUSPENSION
AN ATTACHMENT

SMCS-7312 **i01047153**

NOTE	REF NO	GRAPHIC REF	PART NUMBER	QTY	PART NAME 1 2 3 4 5 6 (PRODUCT LEVEL)	SEE PAGE
L	1	1	**8Y-5947**	2	FASTENER	
	2	1	**8Y-5877**	1	PAN AS-EXTENSION	
					AVAILABLE REPAIR KIT(S):	
L			**119-7130**	1	KIT-CUSHION (BACKREST)	
					(INCLUDES CUSHION AS)	

L-KIT MARKED L INCLUDES PART MARKED L

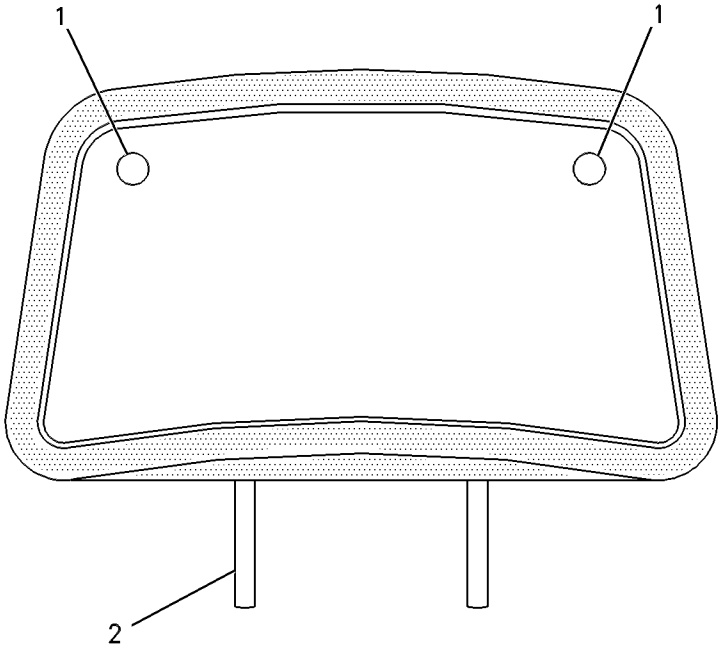

REAR VIEW

GRAPHIC #1 **<END>** g00086580

OPERATOR STATION

119-4769 FILTER GP-CAB AIR

S/N: PDF1-UP

PART OF 239-1006, 239-1007 CAB AR, 241-8643 PLATFORM AR

AN ATTACHMENT

SMCS-7342 **i02034267**

NOTE	REF NO	GRAPHIC REF	PART NUMBER	QTY	PART NAME 1 2 3 4 5 6 (PRODUCT LEVEL)	SEE PAGE
	1	1	**111-8738**	1	FILTER (CAB AIR)	
	2	1	**180-7487**	1	FILTER (CAB AIR)	
	3	1	**114-3944**	1	COVER	
	4	1	**116-7856**	4	KNOB	
	5	1	**127-8613**	1	GASKET	
	6	1	**180-7486**	1	COVER AS	

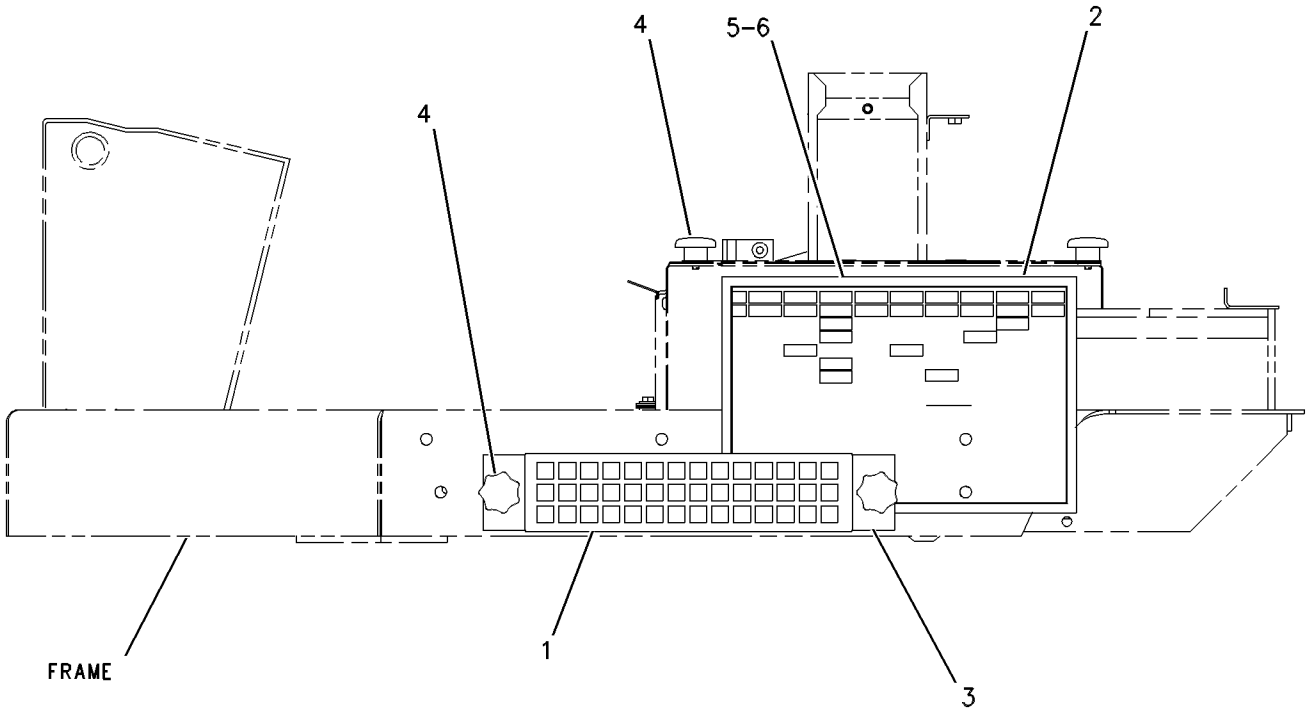

LEFT SIDE VIEW

GRAPHIC #1 **<END>** g00661567

OPERATOR STATION

175-6750 GUARD GP-WINDOW

S/N: PDF1-UP
FIELD INSTALLED
AN ATTACHMENT

SMCS-7165 **i01452823**

NOTE	PART NUMBER	QTY	PART NAME 1 2 3 4 5 6 (PRODUCT LEVEL)	SEE PAGE
Y	*175-6760*	1	GUARD GP-WINDOW	495

Y-SEPARATE ILLUSTRATION

<END>

OPERATOR STATION

175-6760 GUARD GP-WINDOW

S/N: PDF1-UP
PART OF 175-6750 GUARD GP-WINDOW
AN ATTACHMENT

SMCS-7165 **i01671110**

NOTE	REF NO	GRAPHIC REF	PART NUMBER	QTY	PART NAME 1 2 3 4 5 6 (PRODUCT LEVEL)	SEE PAGE
	1	1	**2G-9524**	2	LATCH	
	2	1	**4E-1384**	4	BUMPER-CONICAL	
	3	1	**175-6746**	1	SCREEN AS	
	4	1	**175-6749**	2	PLATE	
	5	1	**175-6754**	1	SCREEN AS	
	6	1	**175-6759**	1	SCREEN AS	
M	7	1	**5C-7261**	4	NUT (M8X1.25 THD)	
M	8	1	**5C-9553**	4	BOLT (M6X1X16MM)	
	9	1	**6C-3679**	8	RIVET-POP	
M	10	1	**6V-9189**	4	LOCKNUT (M8X1.25 THD)	
B	11	1	**8T-4121**	8	WASHER-HARD (11X21X2.5MM THK)	
	12	1	**8T-4224**	12	WASHER-HARD (8.8X16X2MM THK)	
M	13	1	**8T-7547**	8	BOLT (M8X1.25X30MM)	
M	14	1	**9X-2040**	4	SCREW-TRUSS HEAD (M10X1.5X25MM)	
	15	1	**9X-8256**	4	WASHER (6.6X12X2MM THK)	

B-USE AS REQUIRED
M-METRIC PART

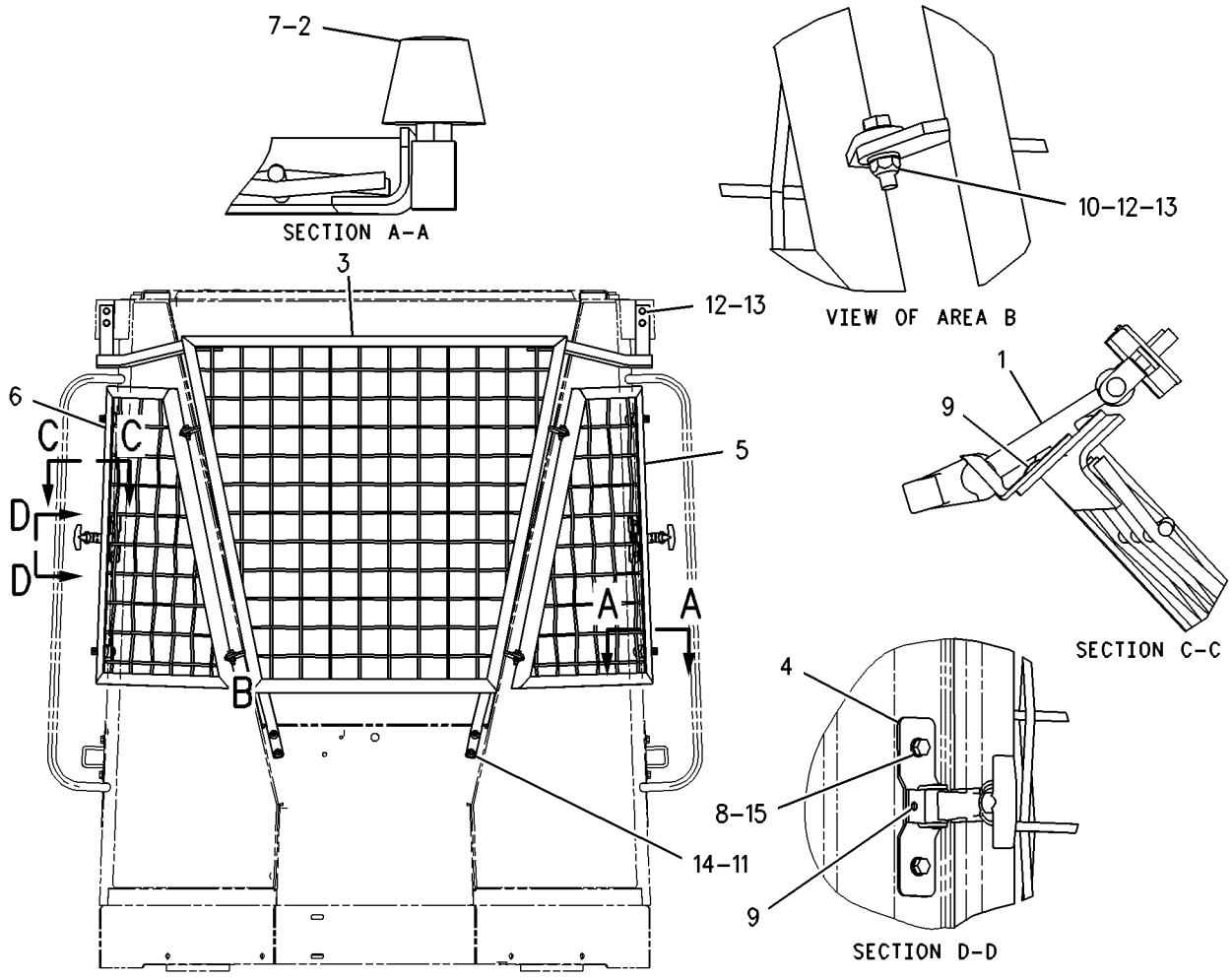

GRAPHIC #1 **<END>** g00863543

OPERATOR STATION

239-8103 HEATER & MTG GP-CAB

S/N: PDF1-UP
WITH CABLE CONTROL
PART OF 239-1008 HEATER AR-CAB
AN ATTACHMENT

SMCS-7304 **i02000908**

NOTE	REF NO	GRAPHIC REF	PART NUMBER	QTY	PART NAME 1 2 3 4 5 6 (PRODUCT LEVEL)	SEE PAGE
BD	1	1	**5P-5643**		SEAL (1.6M)	
	2	1	**118-7259**	1	GASKET	
	3	1	**156-4449**	1	CABLE AS	
		1	**2H-3920**	2	LOCKWASHER	
		1	**6V-8369**	1	NUT (7/16-28-THD)	
		1	**143-8874**	1	BOOT	
Y	4	1	**180-9874**	1	HEATER GP-CAB	498
	5	1	**236-4238**	1	SWITCH AS-ROCKER (HEATER)	
		1	**111-7899**	1	GASKET	
	6	1	**7X-0579**	11	WASHER-HARD (8.8X25.5X2-MM THK)	
M	7	1	**8T-4908**	11	BOLT (M8X1.25X25-MM)	

B-USE AS REQUIRED
D-ORDER BY THE METER
M-METRIC PART
Y-SEPARATE ILLUSTRATION

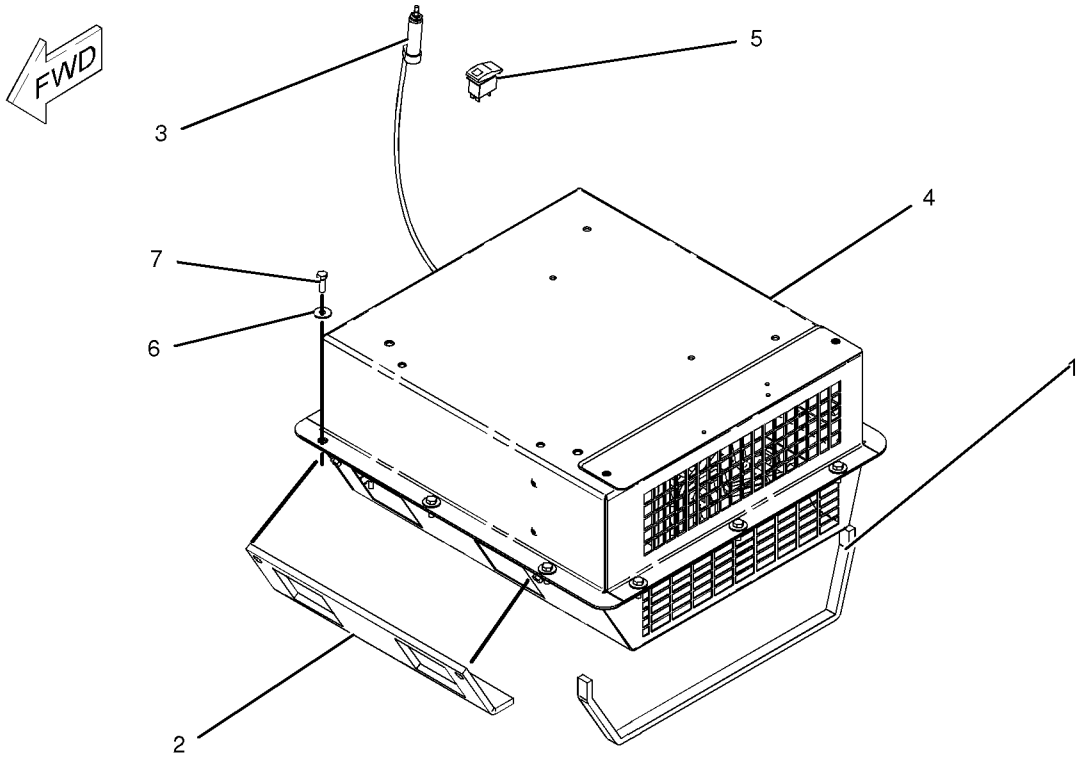

GRAPHIC #1 **<END>** g01035519

OPERATOR STATION

239-1008 HEATER AR-CAB

S/N: PDF1-UP

AN ATTACHMENT

SMCS-7304 **i02000802**

NOTE	REF NO	GRAPHIC REF	PART NUMBER	QTY	PART NAME 1 2 3 4 5 6 (PRODUCT LEVEL)	SEE PAGE
Y	1	1	*236-5649*	1	LINES GP-CAB HEATER	519
Y	2	1	*239-8103*	1	HEATER & MTG GP-CAB	496

Y-SEPARATE ILLUSTRATION

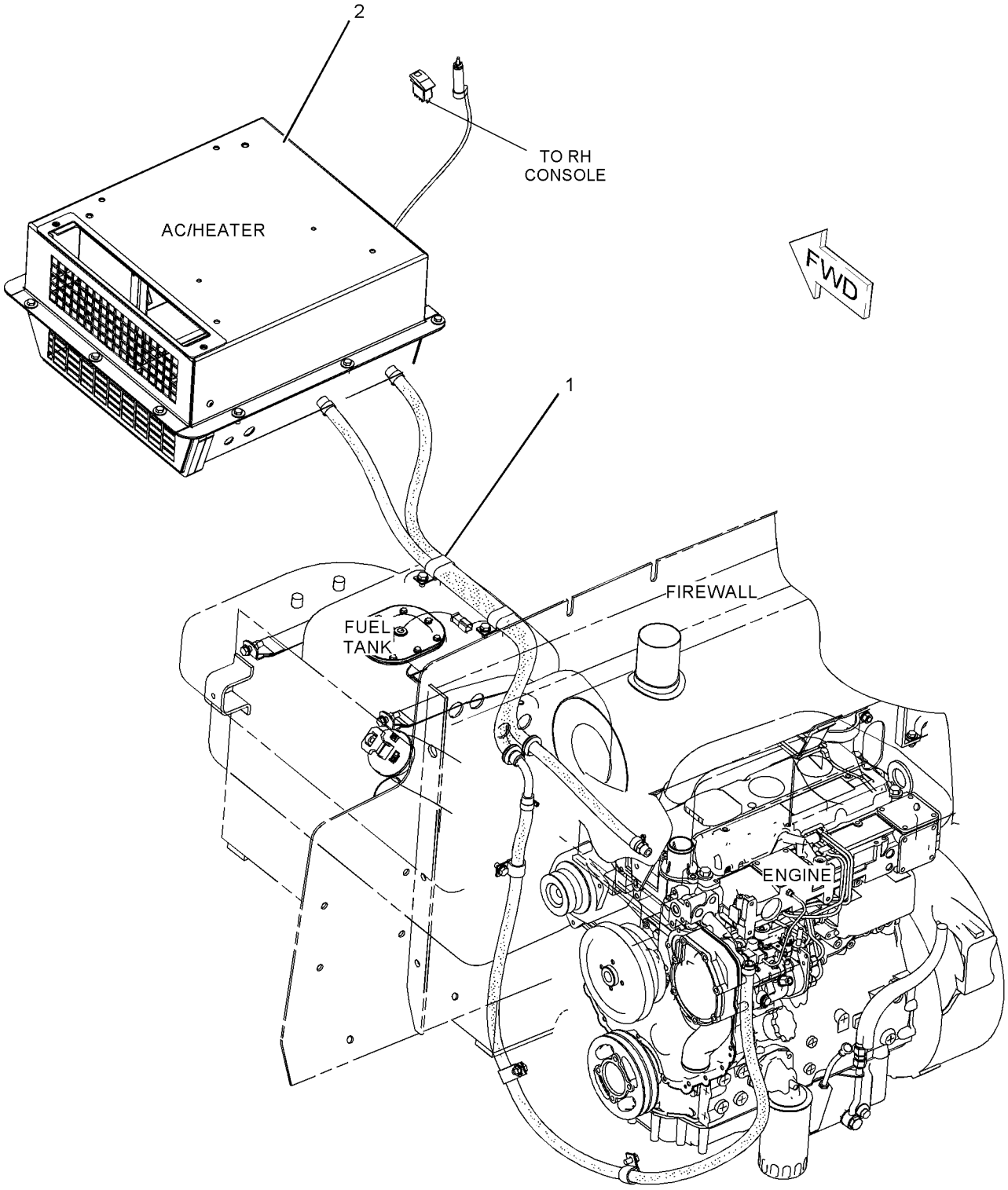

GRAPHIC #1 **<END>** g01037905

OPERATOR STATION

180-9874 HEATER GP-CAB

S/N: PDF1-UP
PART OF 239-8103 HEATER & MTG GP-CAB
AN ATTACHMENT

SMCS-7304 **i01836029**

NOTE	REF NO	GRAPHIC REF	PART NUMBER	QTY	PART NAME 1 2 3 4 5 6 (PRODUCT LEVEL)	SEE PAGE
D	1	1	**5P-5908**		SEAL (1M)	
	2	1	**1P-6522**	1	GROMMET	
	3	1	**2S-3745**	6	SCREW-TAPPING (10-16X.5 IN)	
	4	1	**3E-1841**	1	LEVER	
	5	1	**3S-2093**	2	STRAP-CABLE	
M	6	1	**5C-9553**	4	BOLT (M6X1X16MM)	
	7	1	**6V-1668**	2	WASHER (6.5X29.1X3MM THK)	
	8	1	**8C-4586**	2	CLAMP	
M	9	1	**8C-8457**	1	SCREW-MACHINE	
	10	1	**8T-0154**	6	CLAMP-HOSE	
M	11	1	**8T-4171**	2	BOLT (M6X1X12MM)	
	12	1	**8T-4205**	11	WASHER-HARD (7.2X14.5X2MM THK)	
	13	1	**8Y-5737**	1	CLIP	
	14	1	**9G-1950**	1	RESISTOR	
M	15	1	**9X-2044**	1	SCREW-TRUSS HEAD (M6X1X16MM)	
	16	1	**9X-2185**	4	SCREW (8-15X0.44 IN)	
	17	1	**037-4426**	1	RETAINER	
	18	1	**100-3143**	2	PLATE-ORIFICE	
	19	1	**037-4838**	2	CLAMP	
	20	1	**102-0341**	1	CLIP (TAB)	
	21	1	**114-3140**	1	GROMMET	
	22	1	**118-5044**	1	HARNESS AS-HEATER (CAB)	
		1	**102-8805**	1	KIT-RECEPTACLE (6 PIN)	
		1	**155-2270**	1	KIT-CONNECTING PLUG (2 PIN)	
	23	1	**118-5046**	1	HOUSING AS	
M		1	**6V-9632**	1	NUT-WELD (M6X1 THD)	
	24	1	**124-8494**	1	GASKET	
	25	1	**124-8495**	1	VALVE AS-WATER	
M	26	1	**129-3178**	3	LOCKNUT (M6X1 THD)	
M	27	1	**141-9784**	1	BOLT-HEX HEAD (M6X190MM)	
	28	1	**151-0894**	1	COVER AS	
M		1	**8T-3490**	4	NUT-WELD (M10X1.5 THD)	
	29	1	**156-6819**	1	CASE AS	
M		1	**6V-9632**	9	NUT-WELD (M6X1 THD)	
	30	1	**174-1486**	1	MOTOR AS-BLOWER	
		1	**3E-3365**	1	WEDGE-RECEPTACLE LOCK (2 PIN)	
		1	**9W-0852**	2	PIN-CONNECTOR	
		1	**102-8802**	1	KIT-RECEPTACLE (2 PIN)	
	31	1	**183-7528**	1	COIL AS	
M	32	1	**6V-7728**	1	BOLT (M6X1.0X45MM)	
E	33	1	**136-1953**		HOSE (56CM)	
D	34	1	**8T-5372**		SEAL (.4M)	
D	35	1	**6V-1392**		SEAL (.8M)	

D-ORDER BY THE METER
E-ORDER BY THE CENTIMETER
M-METRIC PART

180-9874 HEATER GP-CAB *(contd.)* i01836029

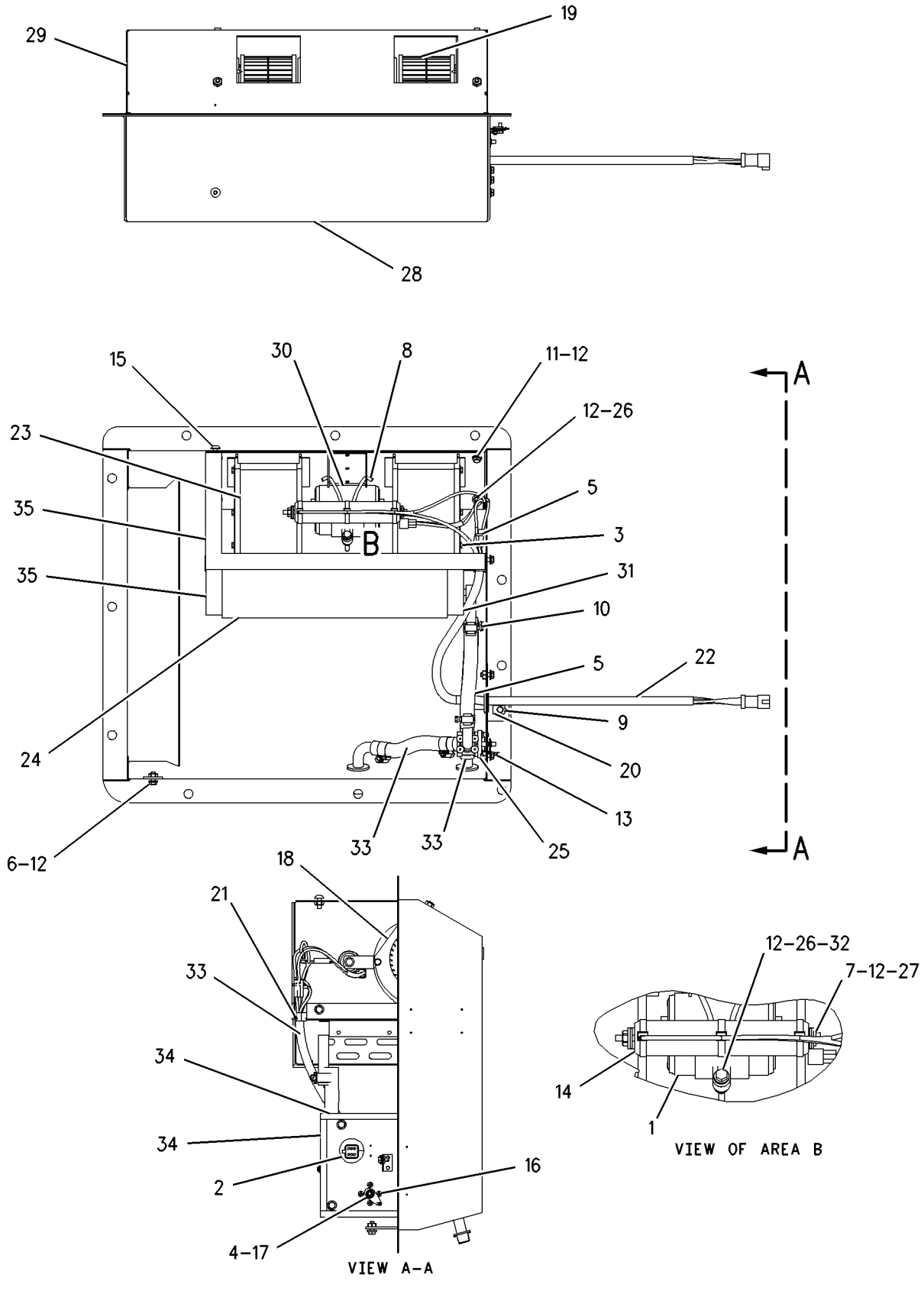

GRAPHIC #1 **<END>** g00660004

OPERATOR STATION

108-4582 HOUSING GP-SEAT SUSPENSION

S/N: PDF1-UP

PART OF 108-4082 SUSPENSION GP-SEAT

AN ATTACHMENT

SMCS-7321, 7324 **i01599396**

NOTE	REF NO	GRAPHIC REF	PART NUMBER	QTY	PART NAME 1 2 3 4 5 6 (PRODUCT LEVEL)	SEE PAGE
	1	1	**161-5967**	1	SHAFT	
	2	1	**8Y-6066**	1	SPRING	
	3	1	**8Y-6069**	1	ADJUSTER AS	
	4	1	**8Y-6068**	1	NUT (3/8 X 16 THD)	
	5	1	**8Y-6029**	1	HOUSING AS-UPPER	
	6	1	**8Y-6047**	2	PIN	
	7	1	**2M-7819**	4	RING-RETAINING	
	8	1	**8Y-6041**	1	ARM AS	
	9	1	**8Y-6045**	1	CAM	
	10	1	**8Y-6046**	1	PIN	
	11	1	**8S-7803**	4	RING-RETAINING	
	12	1	**131-4242**	1	BOLT (3/8-16X5.18 IN)	
	13	1	**7M-7219**	1	BEARING-THRUST	
		1	**4N-2927**	2	RACE-THRUST BEARING	
	14	1	**3D-2975**	2	RING-RETAINING	
	15	1	**095-0878**	1	PIN-SPRING	
	16	1	**9X-8918**	3	SCREW-FLAT HEAD (8-32X0.50 IN)	
	17	1	**5P-8445**	4	RING-RETAINING	
	18	1	**4B-5059**	6	WASHER (29.5X15X2.5MM THK)	
	19	1	**8Y-6060**	2	ROLLER	
	20	1	**1Y-7927**	1	PIN	
	21	1	**7V-5191**	2	SPACER (28X10X7.1MM THK)	
	22	1	**5D-4822**	2	RING-RETAINING	
	23	1	**8Y-6062**	1	LINK-ACTUATOR-RH	
	24	1	**8Y-6063**	1	LINK-ACTUATOR-LH	
	25	1	**5V-0770**	2	BOLT-CARRIAGE	
		1	**2D-6235**	2	LOCKNUT (1/4-20 THD)	
	26	1	**8Y-6064**	2	ROLLER-SLIDER	
	27	1	**131-5167**	1	KNOB AS-WEIGHT	
	28	1	**8Y-6067**	1	SPACER (10.54MM THK)	
	29	1	**8L-8413**	2	STRAP-CABLE	
LZ	30	1		1	KNOB-HEIGHT	
LZ	31	1		1	KNOB-HEIGHT	
JZ	32	1		3	BUMPER	
PZ	33	1		2	BUSHING-GUIDE	
PZ	34	1		2	SPRING	
PZ	35	1		2	ROD	
PZ	36	1		2	SPACER	
QZ	37	1		2	SPRING	
QZ	38	1		2	BUSHING	
SZ	39	1		1	PIN	
SZ	40	1		1	FOLLOWER-CAM	
TZ	41	1		1	GUIDE	
TZ	42	1		1	TAPE-INDICATOR	
UZ	43	1		1	FOLLOWER-CAM	
UZ	44	1		1	PIN	
VZ	45	1		1	ROLLER AS	
VZ	46	1		2	ROLLER AS	
					AVAILABLE REPAIR KIT(S):	
J			**100-5179**	1	KIT-BUMPER (WEIGHT ADJUSTMENT)	
L			**8Y-5945**	1	KIT-SUSPENSION KNOB (HEIGHT ADJUSTMENT)	
P			**8Y-6860**	1	KIT-SPRING (HEIGHT ADJUSTMENT)	
Q			**8Y-6859**	1	KIT-SPRING	
S			**108-4086**	1	KIT-FOLLOWER	

108-4582 HOUSING GP-SEAT SUSPENSION *(contd.)* i01599396

NOTE	REF NO	GRAPHIC REF	PART NUMBER	QTY	PART NAME 1 2 3 4 5 6 (PRODUCT LEVEL)	SEE PAGE
T			**100-3224**	1	KIT-INDICATOR (WEIGHT ADJUSTMENT)	
U			**108-4087**	1	KIT-FOLLOWER	
V			**108-4103**	1	KIT-BEARING	

J-KIT MARKED J INCLUDES PART MARKED J
L-KIT MARKED L INCLUDES PARTS MARKED L
P-KIT MARKED P INCLUDES PARTS MARKED P
Q-KIT MARKED Q INCLUDES PARTS MARKED Q
S-KIT MARKED S INCLUDES PARTS MARKED S
T-KIT MARKED T INCLUDES PARTS MARKED T
U-KIT MARKED U INCLUDES PARTS MARKED U
V-KIT MARKED V INCLUDES PARTS MARKED V
Z-NOT SERVICED SEPARATELY

108-4582 HOUSING GP-SEAT SUSPENSION *(contd.)* i01599396

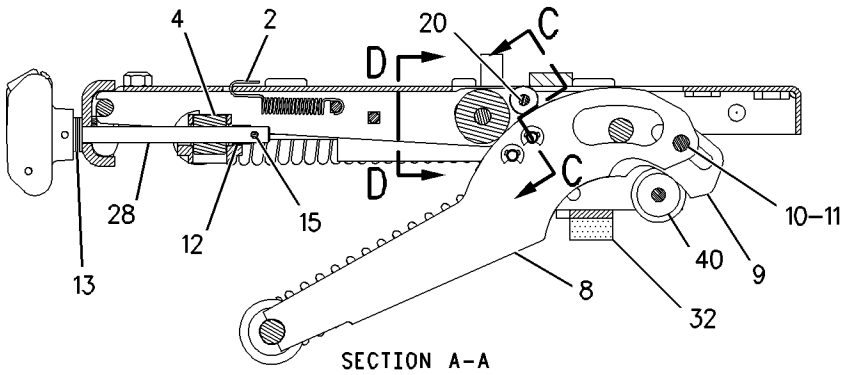

SECTION A-A

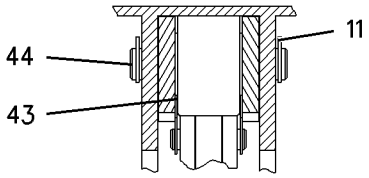

SECTION D-D

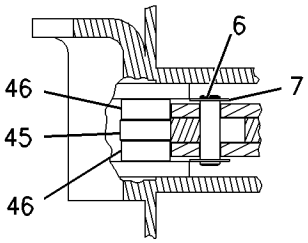

SECTION C-C

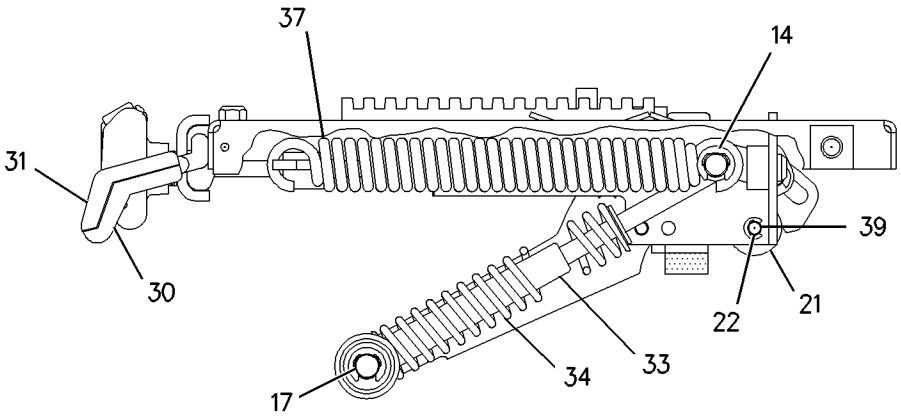

VIEW B-B

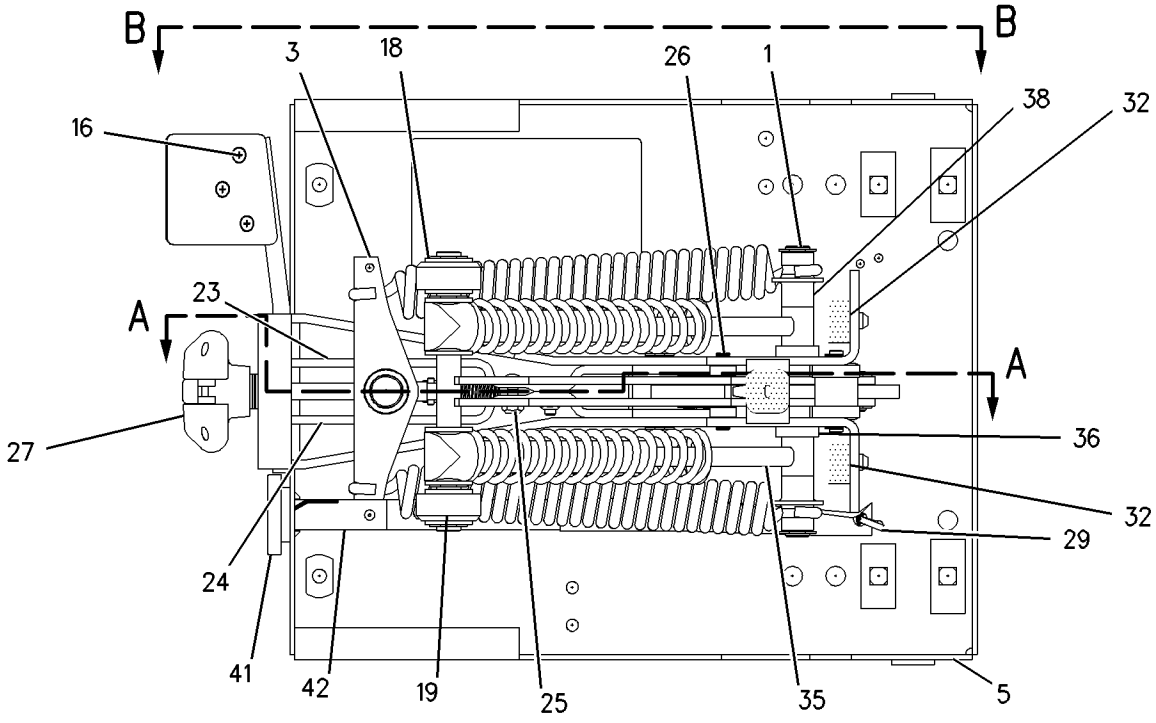

BOTTOM VIEW

GRAPHIC #1 **<END>** g00828846

OPERATOR STATION

107-4645 INSTALLATION GP-RADIO

S/N: PDF1-UP
12 VOLT
PART OF 118-7244 INSTALLATION GP-RADIO
AN ATTACHMENT

SMCS-7338 **i01823531**

NOTE	REF NO	GRAPHIC REF	PART NUMBER	QTY	PART NAME 1 2 3 4 5 6 (PRODUCT LEVEL)	SEE PAGE
	1	1	**4E-1411**	1	BUSHING-TERMINAL	
	2	1	**8C-6440**	8	SCREW-PAN HEAD (10-16X0.50 IN)	
M	3	1	**9X-2042**	4	SCREW-TRUSS HEAD (M6X1X12MM)	
	4	1	**168-8772**	2	SPEAKER AS	
	5	1	**174-6491**	1	HARNESS AS-RADIO	
		1	**102-8803**	1	KIT-RECEPTACLE (3 PIN)	
		1	**155-2265**	1	KIT-CONNECTING PLUG (8 PIN)	
	6	1	**114-3953**	1	BRACKET AS	
	7	1	**114-3954**	1	COVER	
	8	1	**9U-8263**	1	COVER	
	9	1	**5P-4115**	4	WASHER-HARD (7.2X19X2MM THK)	
	10	1	**5P-8524**	4	GROMMET	
	11	1	**7K-1181**	4	STRAP-CABLE	
M	12	1	**8T-4134**	4	NUT (M6X1 THD)	

M-METRIC PART

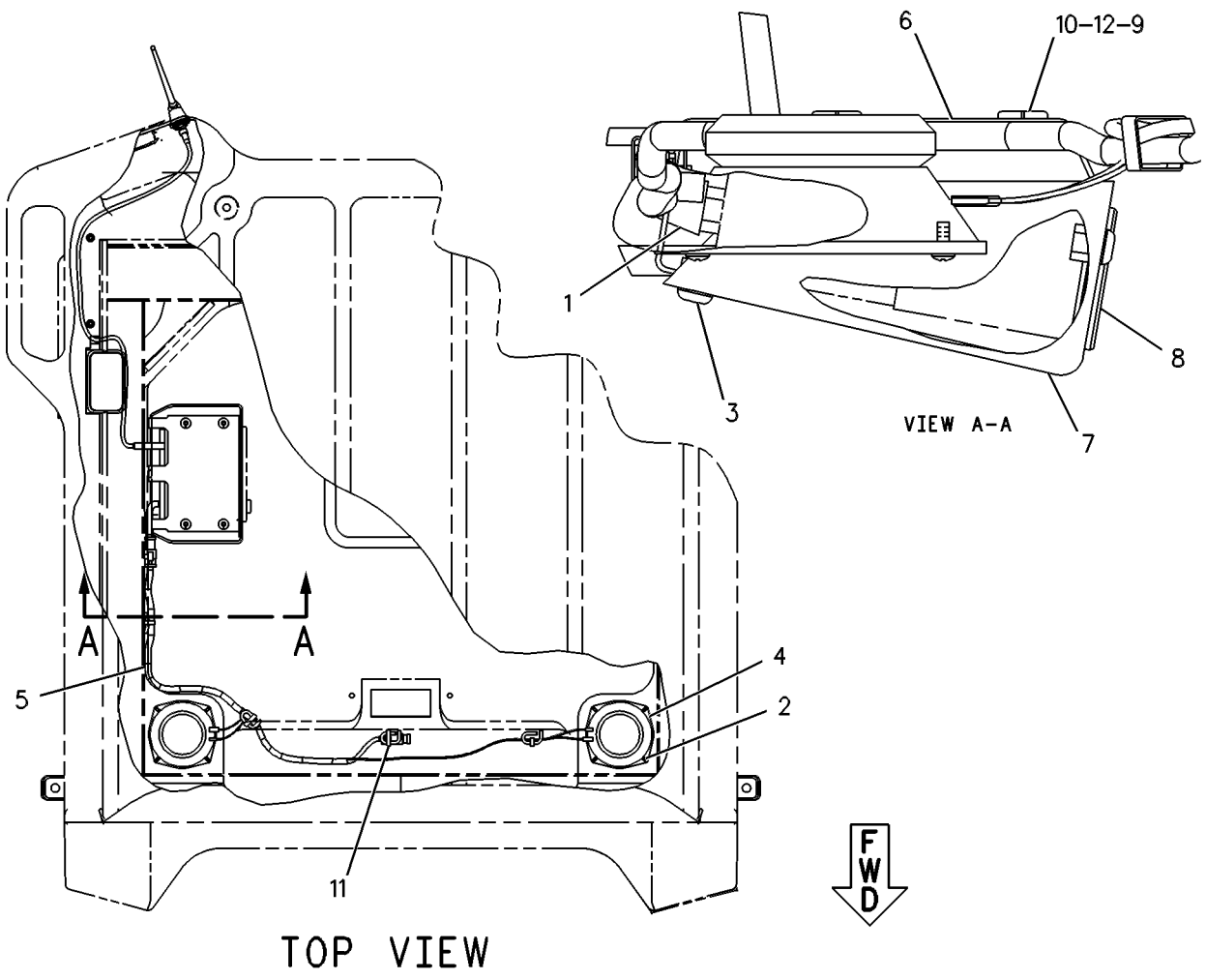

GRAPHIC #1 **<END>** g00132022

OPERATOR STATION

118-7244 INSTALLATION GP-RADIO

S/N: PDF1-UP
12 VOLT
AN ATTACHMENT

SMCS-7338 **i00710690**

NOTE	PART NUMBER	QTY	PART NAME 1 2 3 4 5 6 (PRODUCT LEVEL)	SEE PAGE
Y	*115-1317*	1	CONVERTER GP-ELECTRICAL	83
Y	*107-4645*	1	INSTALLATION GP-RADIO	503

Y-SEPARATE ILLUSTRATION

<END>

OPERATOR STATION

124-2482 INSTALLATION GP-RADIO

S/N: PDF1-UP

AN ATTACHMENT

SMCS-7338 **i01857876**

NOTE	REF NO	GRAPHIC REF	PART NUMBER	QTY	PART NAME 1 2 3 4 5 6 (PRODUCT LEVEL)	SEE PAGE
M	1	1	**8T-0286**	6	BOLT (M5X0.8X8-MM)	
	2	1	**114-3954**	1	COVER	
	3	1	**117-3274**	1	PLUG AS-CONNECTOR (6-PIN, JUMPER)	
	4	1	**124-4324**	1	BRACKET AS	
	5	1	**124-5314**	1	HARNESS AS	
		1	**102-8806**	1	KIT-RECEPTACLE (8-PIN)	
C	6	1	**168-8772**	2	SPEAKER AS-RADIO	
C	7	1	**174-6491**	1	HARNESS AS-RADIO	
		1	**155-2265**	1	KIT-CONNECTING PLUG (8-PIN)	
		1	**102-8803**	1	KIT-RECEPTACLE (3-PIN)	
	8	1	**5P-4115**	4	WASHER-HARD (7.2X19X2-MM THK)	
	9	1	**5P-8524**	4	GROMMET	
	10		**7K-1181**	4	STRAP-CABLE	
	11	1	**8C-6440**	8	SCREW-PAN HEAD (10-16X0.50-IN)	
M	12	1	**8T-4134**	4	NUT (M6X1-THD)	
M	13	1	**9X-2042**	4	SCREW-TRUSS HEAD (M6X1X12-MM)	

C-CHANGE FROM PREVIOUS TYPE
M-METRIC PART

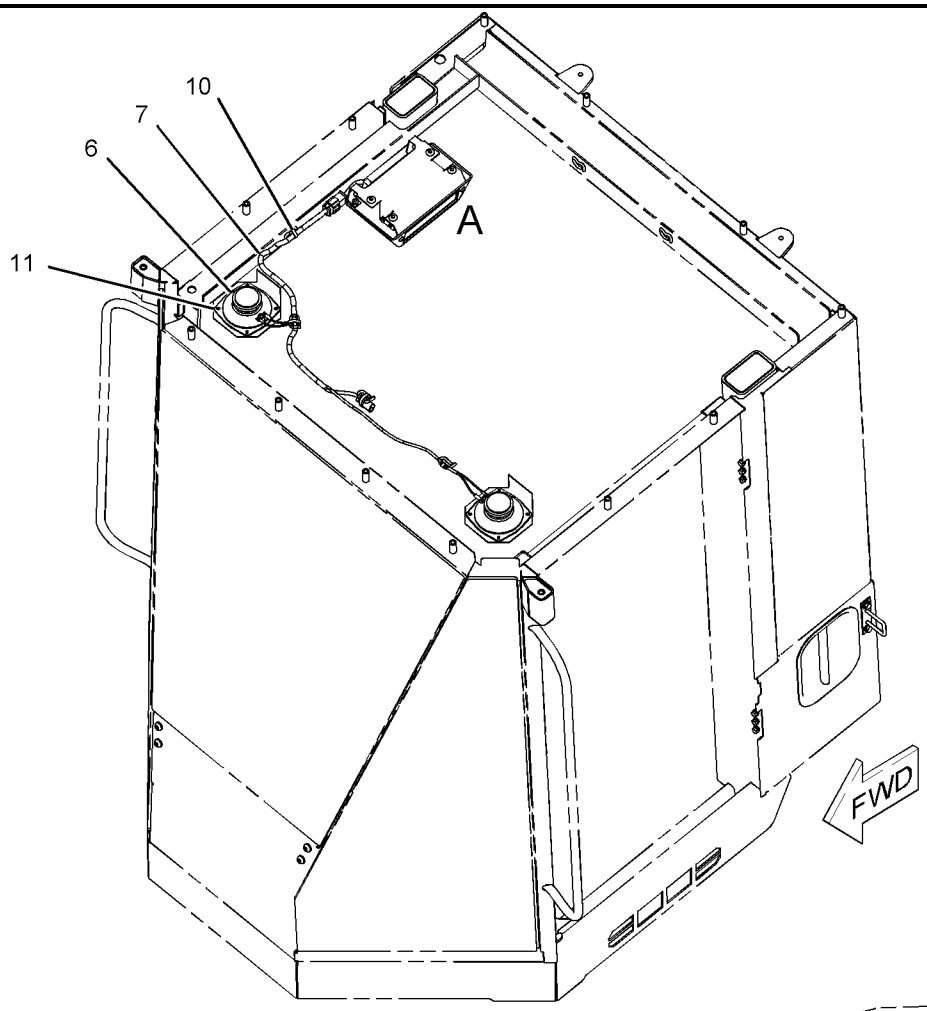

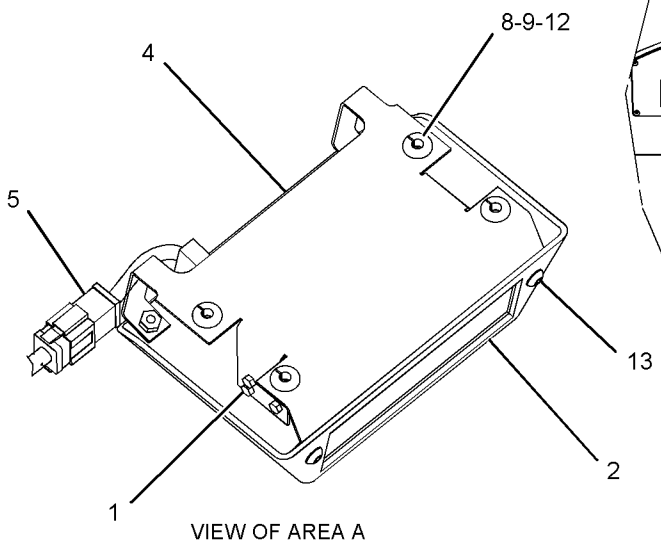

VIEW OF AREA A

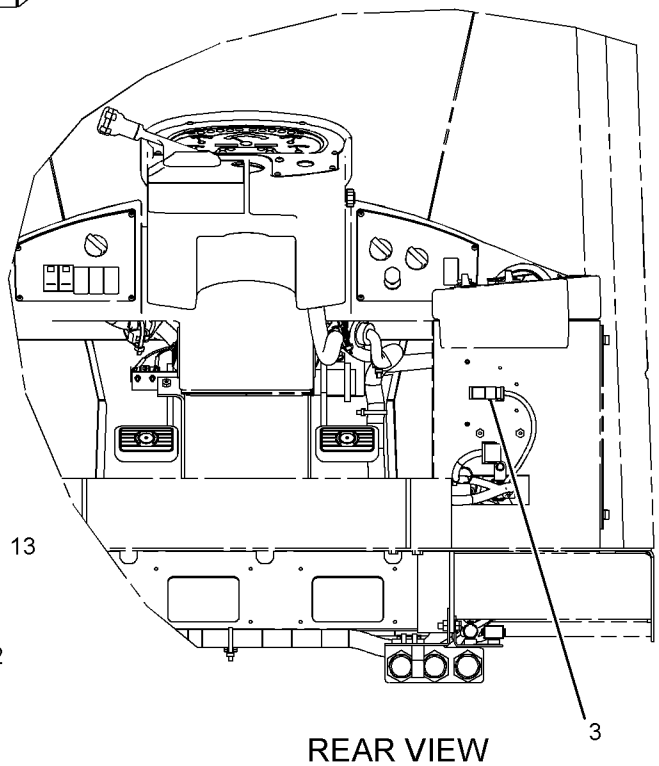

REAR VIEW

GRAPHIC #1 **<END>** g01011859

OPERATOR STATION

214-0783 KIT-SEAT AIR COMPRESSOR

S/N: PDF1-UP

PROVIDES OPTIONAL FIELD REPLACEMENT FOR AIR COMPRESSOR

FIELD REPLACEMENT FOR 237-3970—PAGE 450

SMCS-731K, 7324 **i02012094**

NOTE	REF NO	GRAPHIC REF	PART NUMBER	QTY	PART NAME 1 2 3 4 5 6 (PRODUCT LEVEL)	SEE PAGE
	1	1	**5P-4423**	1	ELBOW	
	2	1	**5P-4432**	1	ELBOW-AIR BRAKE	
	3	1	**175-5058**	1	MOUNT	
	4	1	**186-5107**	3	SCREW (NO 8 X 1.25 IN)	
	5	1	**214-0784**	1	COMPRESSOR AS	
AEF			**211-5358**		CONDUIT (100CM)	
ADF			**5P-6010**		TUBE (1M)	

A-NOT PART OF THIS GROUP
D-ORDER BY THE METER
E-ORDER BY THE CENTIMETER
F-NOT SHOWN

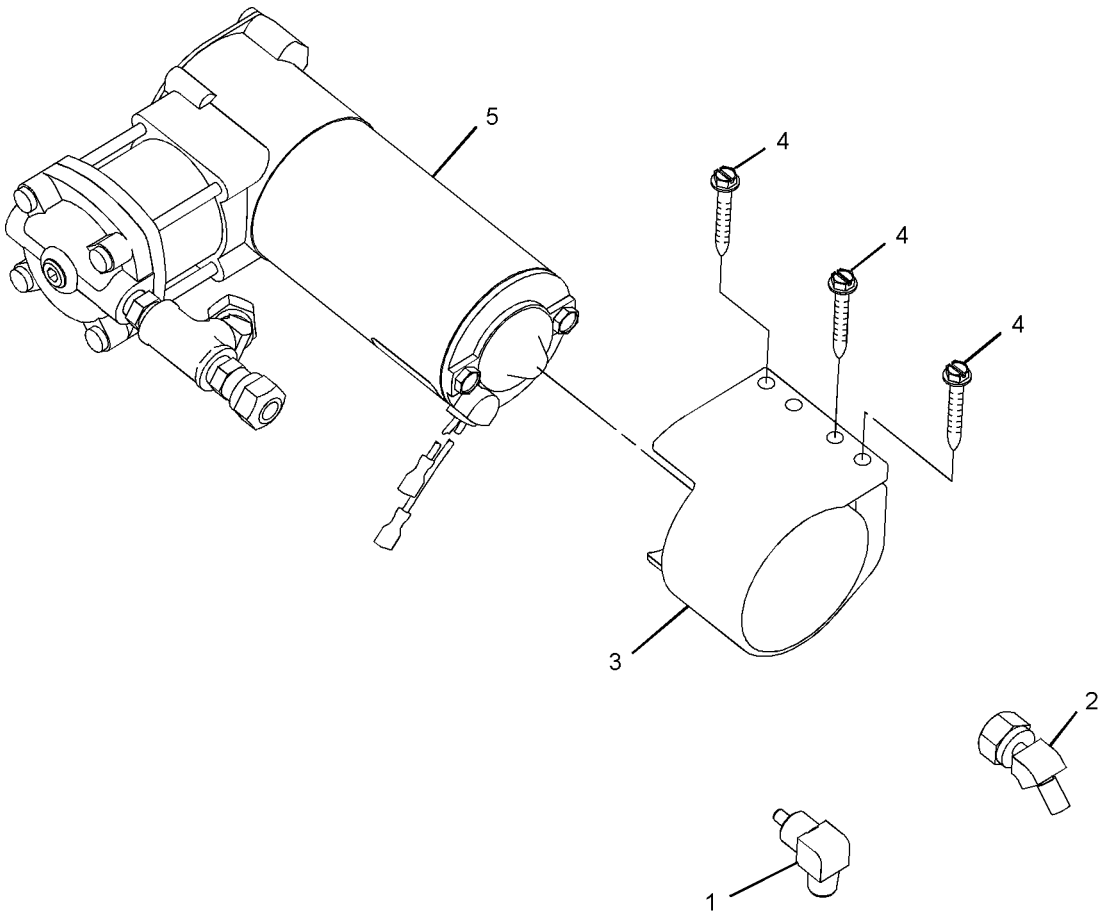

GRAPHIC #1 **<END>** g01040572

OPERATOR STATION

117-9624 LINER GP-CAB

S/N: PDF1-UP

PART OF 239-1006, 239-1007 CAB AR, 241-8643 PLATFORM AR

AN ATTACHMENT

SMCS-7329 **i01488197**

NOTE	REF NO	GRAPHIC REF	PART NUMBER	QTY	PART NAME 1 2 3 4 5 6 (PRODUCT LEVEL)	SEE PAGE
	1	1	**4E-2161**	1	STRAP	
D	2	1	**5P-5637**		SEAL (0.8M)	
CJ	3	1	**8C-3426**	1	LOCK AS-CYLINDER	
		1	**7F-9223**	1	LOCKWASHER	
		1	**8T-5004**	1	SCREW-MACHINE (1/4-28X0.375 IN)	
C	4	1	**8N-9033**	2	PLUG	
	5	1	**8T-3995**	5	NUT (M6X1 THD)	
	6	1	**111-0125**	1	COVER AS	
		1	**9R-2620**	1	PLUG	
		1	**128-0899**	4	RIVET	
		1	**4S-8264**	3	RIVET-POP	
		1	**120-0596**	1	BRACKET	
		1	**122-4993**	1	KIT-BRUSH SEAL	
	7	1	**111-7881**	1	COVER AS	
	8	1	**112-5214**	1	INSULATION	
	9	1	**115-1561**	1	COVER	
C	10	1	**125-7043**	1	BOX AS	
C	11	1	**125-7045**	1	COVER AS	
	12	1	**125-7046**	1	PLATE AS	
C	13	1	**127-6510**	2	COVER	
	14	1	**154-4370**	1	FLOOR MAT	
CM	16	1	**5C-2890**	2	NUT (M6X1 THD)	
CM	17	1	**8T-4189**	3	BOLT (M8X1.25X20MM)	
CM	18	1	**8T-4200**	2	BOLT (M8X1.25X16MM)	
C	19	1	**8T-4205**	2	WASHER-HARD (7.2X14.5X2MM THK)	
	20	1	**8T-4224**	5	WASHER-HARD (8.8X16X2MM THK)	
CM	21	1	**9X-2042**	7	SCREW-TRUSS HEAD (M6X1X12MM)	
M	22	1	**9X-2045**	2	SCREW-TRUSS HEAD (M6X1X20MM)	

C-CHANGE FROM PREVIOUS TYPE
D-ORDER BY THE METER
J-REQUIRES 5P8500 KEY
M-METRIC PART

117-9624 **LINER GP-CAB** ***(contd.)*** **i01488197**

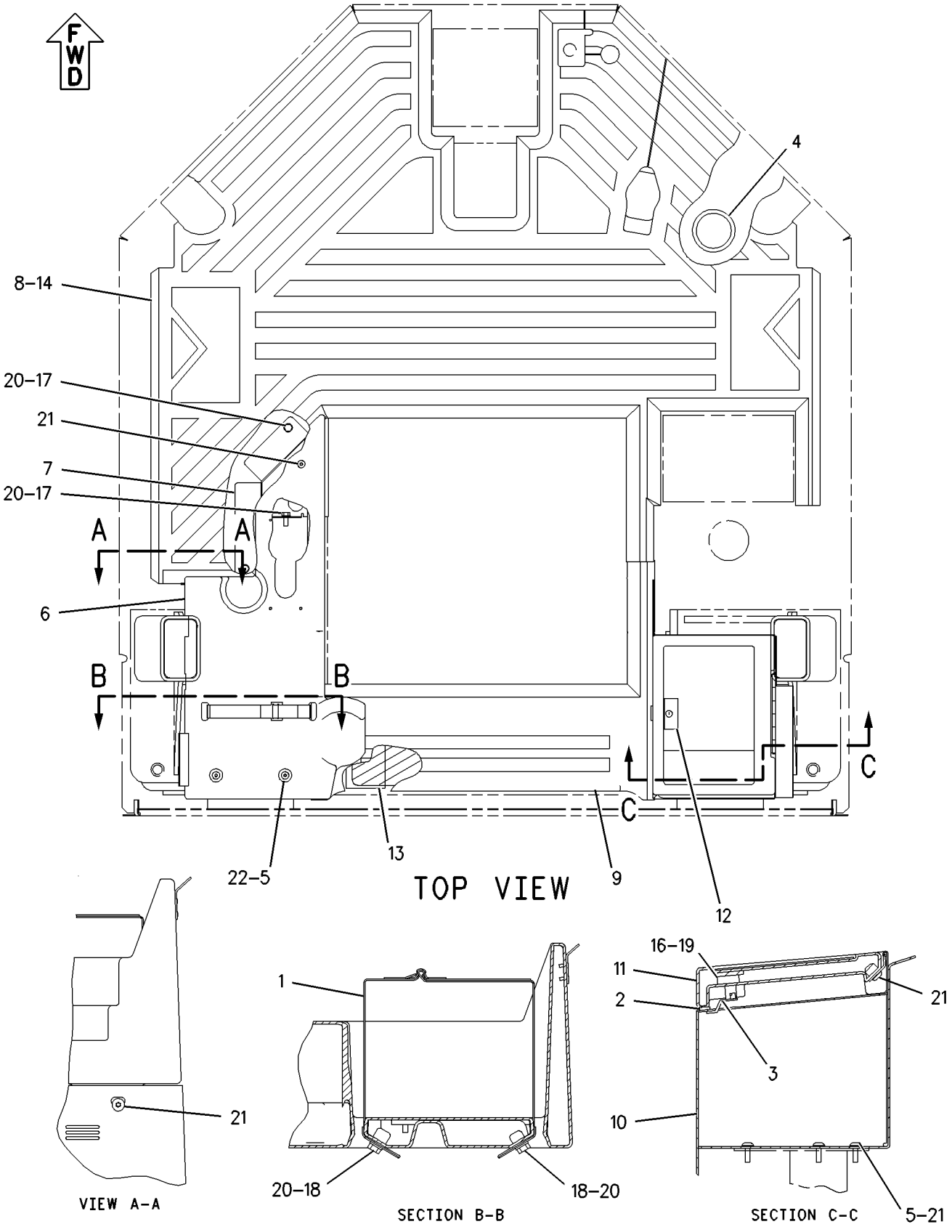

GRAPHIC #1 **<END>** g00773295

OPERATOR STATION

118-0807 LINER GP-CAB

S/N: PDF1-UP
PART OF 241-8807 CANOPY AR-OPEN ROPS
AN ATTACHMENT

SMCS-7329 **i01600660**

NOTE	REF NO	GRAPHIC REF	PART NUMBER	QTY	PART NAME 1 2 3 4 5 6 (PRODUCT LEVEL)	SEE PAGE
	1	1	**4E-2161**	1	STRAP	
D	2	1	**5P-5637**		SEAL (0.8M)	
J	3	1	**8C-3426**	1	LOCK AS-CYLINDER	
		1	**7F-9223**	1	LOCKWASHER	
		1	**8T-5004**	1	SCREW-MACHINE (1/4-28X0.375 IN)	
	4	1	**8T-3995**	5	NUT (M6X1 THD)	
	5	1	**111-0125**	1	COVER AS	
		1	**4S-8264**	3	RIVET-POP	
		1	**9R-2620**	1	PLUG	
		1	**120-0596**	1	BRACKET	
		1	**122-4993**	1	KIT-BRUSH SEAL	
		1	**128-0899**	4	RIVET	
	6	1	**111-7881**	1	COVER AS	
	7	1	**112-5214**	1	INSULATION	
	8	1	**125-7043**	1	BOX AS	
	9	1	**125-7045**	1	COVER AS	
	10	1	**125-7046**	1	PLATE AS	
	11	1	**126-1034**	1	HEADLINER AS	
	12	1	**126-1035**	1	PLATE AS	
	13	1	**126-1036**	1	PLATE AS	
	14	1	**126-1367**	1	INSULATION	
	15	1	**127-7457**	1	INSULATION	
	16	1	**154-4370**	1	FLOOR MAT	
M	17	1	**5C-2890**	2	NUT (M6X1 THD)	
M	18	1	**8T-4189**	3	BOLT (M8X1.25X20MM)	
M	19	1	**8T-4200**	2	BOLT (M8X1.25X16MM)	
	20	1	**8T-4205**	2	WASHER-HARD (7.2X14.5X2MM THK)	
	21	1	**8T-4224**	5	WASHER-HARD (8.8X16X2MM THK)	
	22	1	**9D-3769**	1	GROMMET	
M	23	1	**9X-2042**	11	SCREW-TRUSS HEAD (M6X1X12MM)	
M	24	1	**9X-2045**	4	SCREW-TRUSS HEAD (M6X1X20MM)	

D-ORDER BY THE METER
J-REQUIRES 5P5800 KEY
M-METRIC PART

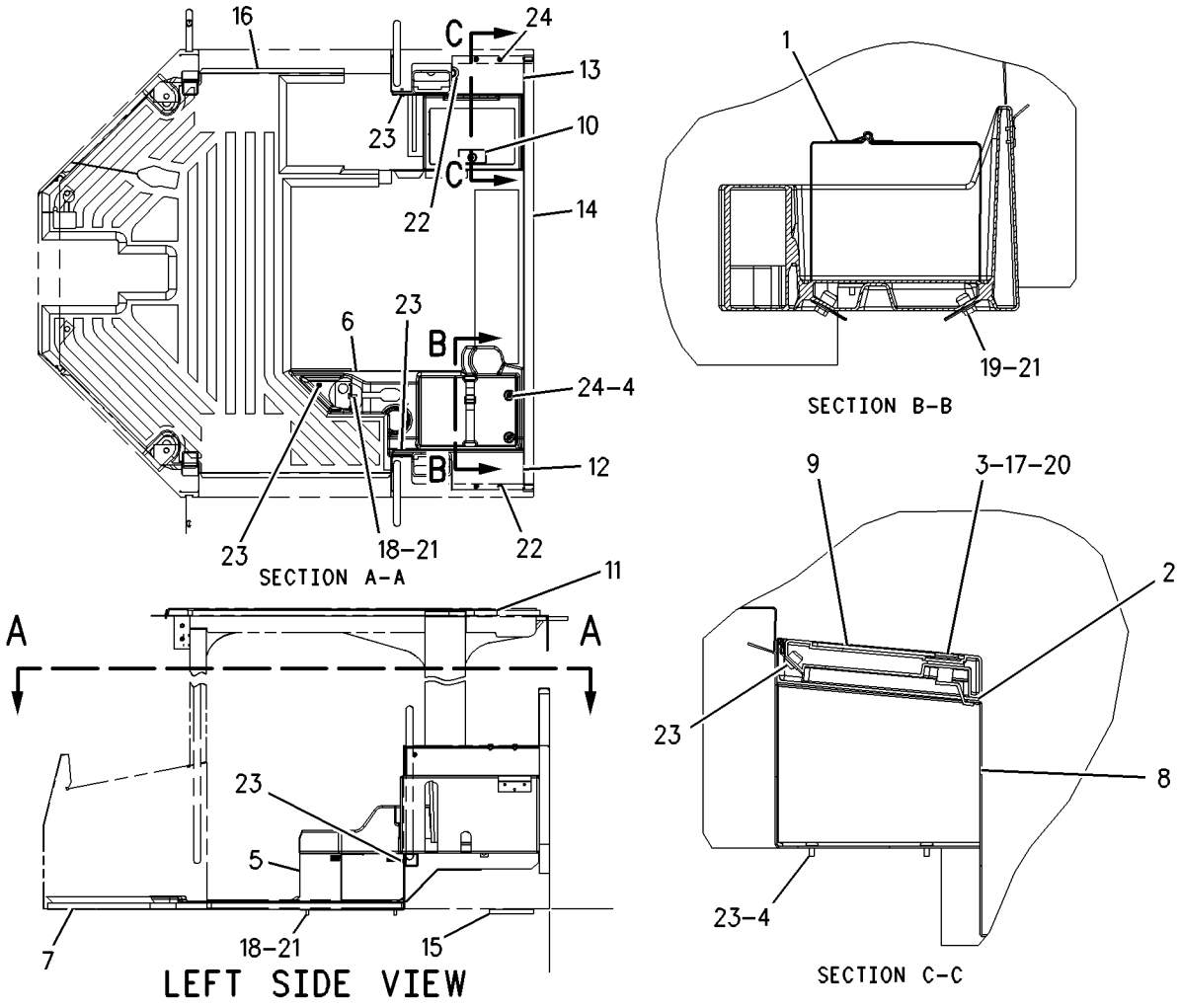

GRAPHIC #1 **<END>** g00829423

OPERATOR STATION

118-0813 LINER GP-CAB

S/N: PDF1-UP
PART OF 241-8644 CANOPY AR-SOFT
AN ATTACHMENT

SMCS-7329 **i01474268**

NOTE	REF NO	GRAPHIC REF	PART NUMBER	QTY	PART NAME 1 2 3 4 5 6 (PRODUCT LEVEL)	SEE PAGE
	1	1	**4E-2161**	1	STRAP	
	2	1	**8C-3426**	1	LOCK AS-CYLINDER	
J		1	**7F-9223**	1	LOCKWASHER	
		1	**8T-5004**	1	SCREW-MACHINE (1/4-28X0.375 IN)	
	3	1	**8T-3995**	5	NUT (M6X1 THD)	
	4	1	**111-0125**	1	COVER AS	
		1	**4S-8264**	3	RIVET-POP	
		1	**9R-2620**	1	PLUG	
		1	**120-0596**	1	BRACKET	
		1	**122-4993**	1	KIT-BRUSH SEAL	
		1	**128-0899**	4	RIVET	
	5	1	**111-7881**	1	COVER AS	
	6	1	**112-5214**	1	INSULATION	
	7	1	**125-7043**	1	BOX AS	
	8	1	**125-7045**	1	COVER AS	
	9	1	**125-7046**	1	PLATE AS	
	10	1	**126-1367**	1	INSULATION	
	11	1	**127-7457**	1	INSULATION	
	12	1	**154-4370**	1	FLOOR MAT	
M	13	1	**5C-2890**	2	NUT (M6X1 THD)	
M	14	1	**8T-4189**	3	BOLT (M8X1.25X20MM)	
M	15	1	**8T-4200**	2	BOLT (M8X1.25X16MM)	
	16	1	**8T-4205**	2	WASHER-HARD (7.2X14.5X2MM THK)	
	17	1	**8T-4224**	5	WASHER-HARD (8.8X16X2MM THK)	
M	18	1	**9X-2042**	7	SCREW-TRUSS HEAD (M6X1X12MM)	
M	19	1	**9X-2045**	2	SCREW-TRUSS HEAD (M6X1X20MM)	

J-REQUIRES A 5P8500 KEY
M-METRIC PART

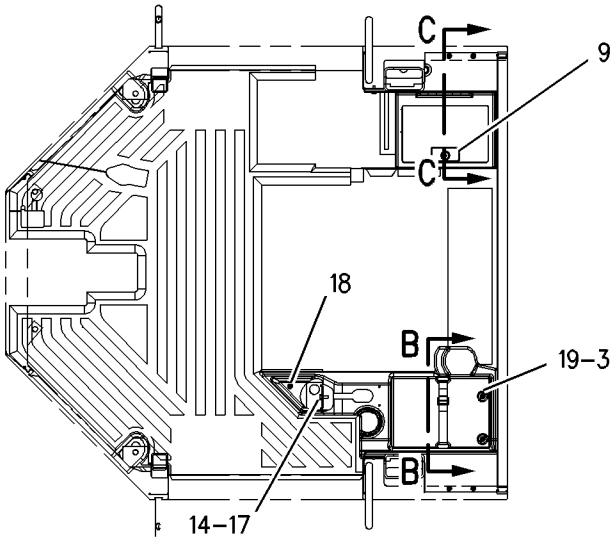

SECTION A-A

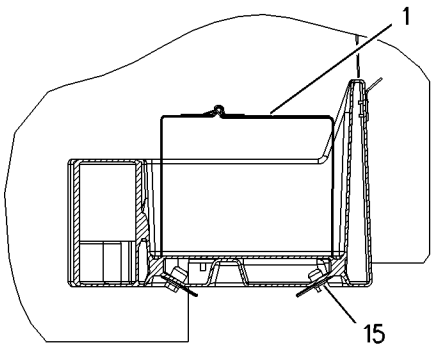

SECTION B-B

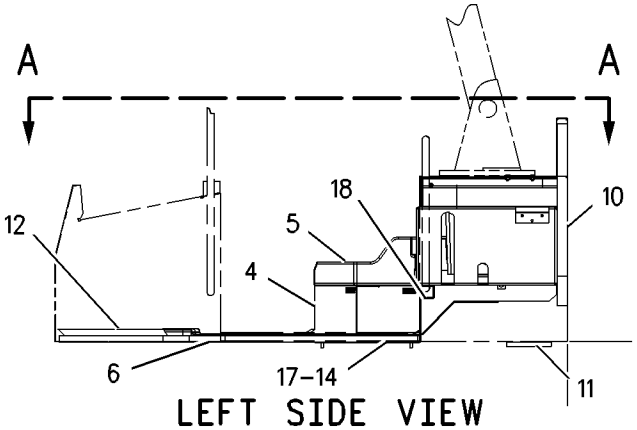

LEFT SIDE VIEW

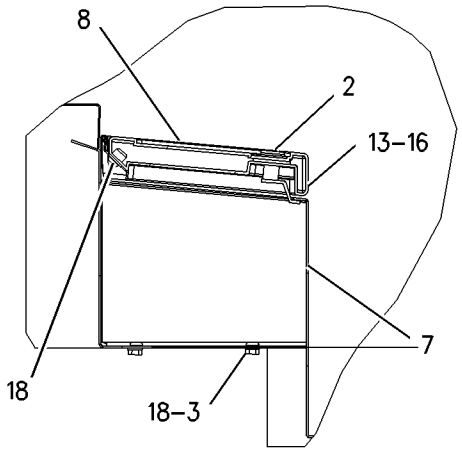

SECTION C-C

GRAPHIC #1 **<END>** g00768883

OPERATOR STATION

241-8564 LINER GP-CAB

S/N: PDF1-UP
PART OF 239-1006, 239-1007 CAB AR
AN ATTACHMENT

SMCS-7329 **i02021624**

NOTE	REF NO	GRAPHIC REF	PART NUMBER	QTY	PART NAME 1 2 3 4 5 6 (PRODUCT LEVEL)	SEE PAGE
	1	1	**6V-8928**	1	HOOK-COAT	
Y	2	1	**107-6032**	1	LAMP GP-DOME	93
	3	1	**145-5307**	1	PLATE	
	4	1	**180-5098**	1	INSULATION	
	5	1	**240-2562**	1	HEADLINER	
	6	1	**240-2563**	1	COVER	
	7	1	**240-2564**	1	COVER AS	
E		1	**121-0192**		FASTENER-HOOK (104-CM)	
E		1	**129-1854**		FASTENER-LOOP (104-CM)	
	8	1	**240-2565**	1	COVER AS	
E		1	**121-0192**		FASTENER-HOOK (104-CM)	
E		1	**129-1854**		FASTENER-LOOP (104-CM)	
M	9	1	**6V-8490**	4	BOLT (M6X1X25-MM)	
M	10	1	**9X-2045**	1	SCREW-TRUSS HEAD (M6X1X20-MM)	

E-ORDER BY THE CENTIMETER
M-METRIC PART
Y-SEPARATE ILLUSTRATION

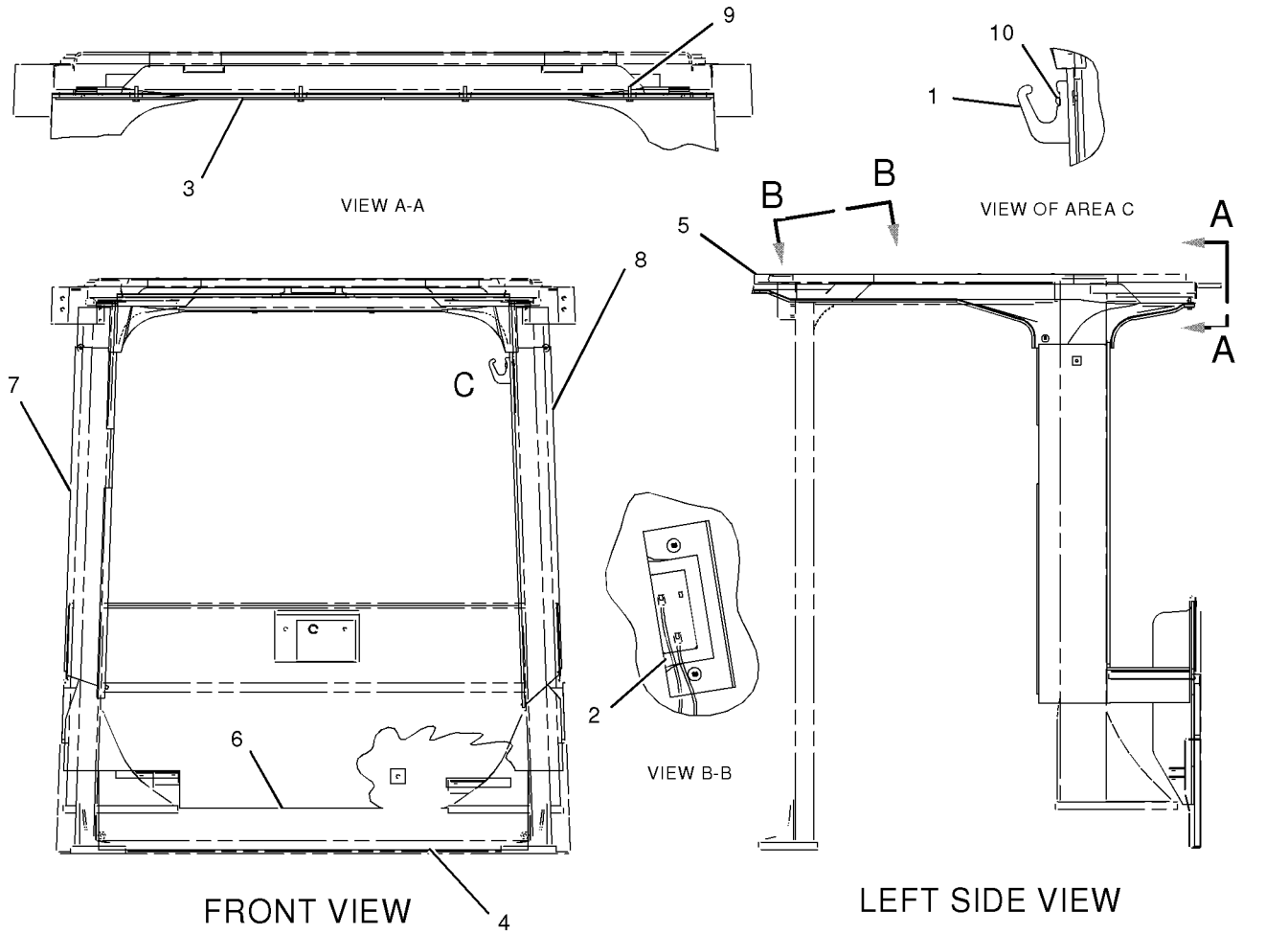

GRAPHIC #1 **<END>** g01044245

OPERATOR STATION

236-5648 LINES GP-AIR CONDITIONER

S/N: PDF1-UP

PART OF 239-1009 AIR CONDITIONER AR, 243-3713 CONVERSION AR-AIR CONDITIONER, 241-8643 PLATFORM AR

AN ATTACHMENT

SMCS-1808 **i02034270**

NOTE	REF NO	GRAPHIC REF	PART NUMBER	QTY	PART NAME 1 2 3 4 5 6 (PRODUCT LEVEL)	SEE PAGE
	1	1	**1P-6356**	1	PLATE	
	2	1	**2D-0388**	1	GROMMET	
	3	1,2	**3S-2093**	5	STRAP-CABLE	
	4	1	**3V-4791**	1	GROMMET	
	5	1	**7K-1181**	1	STRAP-CABLE	
B	6	1	**111-1513**	1	U-BOLT AS	
	7	1	**111-5838**	1	SUPPORT	
I	8	1	**112-3252**	1	HOSE AS	
	9	2	**120-6836**	1	PLATE AS	
	10	1	**163-9324**	1	PLATE-INSTRUCTION	
I	11	1	**178-0062**	1	HOSE AS	
Y	12	1	*186-6190*	1	ACCUMULATOR GP-REFRIGERANT (CHARGED)	448
Y	13	2	**199-7041**	1	CONDENSER GP-REFRIGERANT	473
	14	2	**200-6345**	1	MOUNT (DUAL SWIVEL)	
	15	2	**204-2281**	2	TIE	
	16	1	**236-6923**	1	SWITCH AS-PRESSURE (AIR CONDITIONER)	
I	17	1	**237-4383**	1	HOSE AS	
	18	1	**239-2160**	1	HARNESS AS-HEATER & AIR COND	
		1	**155-2270**	2	KIT-CONNECTING PLUG (2-PIN)	
I	19	1	**241-2528**	1	HOSE AS	
	20	2	**241-2530**	1	PLATE	
	21	2	**241-2532**	1	PLATE AS	
	22	2	**241-2534**	1	BAFFLE (REAR)	
	23	2	**241-2535**	1	BAFFLE (LH)	
	24	2	**241-2536**	1	BAFFLE (RH)	
	25	2	**241-2537**	1	BAFFLE (FRONT)	
	26	1	**190-6012**	1	FITTING AS-AIR CONDITIONER	
		1	**3E-4051**	1	CAP AS (AIR CONDITIONER)	
		1	**3E-4057**	1	VALVE AS (AIR CONDITIONER)	
	27	1	**3E-4053**	1	FITTING AS-AIR CONDITIONER	
		1	**3E-4052**	1	CAP AS (AIR CONDITIONER)	
		1	**3E-4058**	1	VALVE AS (AIR CONDITIONER)	
	28	1	**4P-7581**	1	CLIP	
	29	1	**7C-4354**	1	CLIP	
	30	2	**7X-7729**	3	WASHER (11X25X3-MM THK)	
	31	1	**8S-0948**	1	CLIP	
	32	1	**8T-4121**	4	WASHER-HARD (11X21X2.5-MM THK)	
M	33	1	**8T-4133**	1	NUT (M10X1.5-THD)	
M	34	2	**8T-4136**	3	BOLT (M10X1.5X25-MM)	
M	35	2	**8T-4189**	6	BOLT (M8X1.25X20-MM)	
M	36	1	**8T-4195**	1	BOLT (M10X1.5X30-MM)	
M	37	2	**8T-4224**	10	WASHER-HARD (8.8X16X2-MM THK)	
M	38	2	**8T-4908**	4	BOLT (M8X1.25X25-MM)	
M	39	1	**8T-6466**	1	BOLT (M10X1.50X60-MM)	
M	40	2	**9X-2042**	4	SCREW-TRUSS HEAD (M6X1X12-MM)	
	41	1	**9X-7378**	1	SEAL-O-RING	
	42	1	**9X-7380**	1	SEAL-O-RING	
	43	1	**9X-7381**	3	SEAL-O-RING	
	44	1	**9X-7382**	2	SEAL-O-RING	
	45	1	**9X-7383**	2	SEAL-O-RING	
E	46	2	**112-9736**		SEAL (197-CM)	

B-USE AS REQUIRED
E-ORDER BY THE CENTIMETER
I-REFER TO HYDRAULIC INFORMATION SYSTEM
M-METRIC PART
Y-SEPARATE ILLUSTRATION

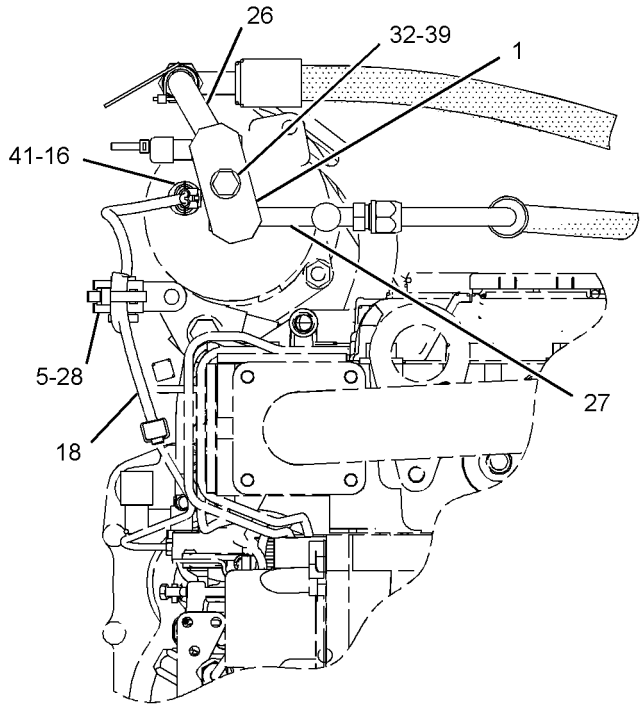

VIEW A-A

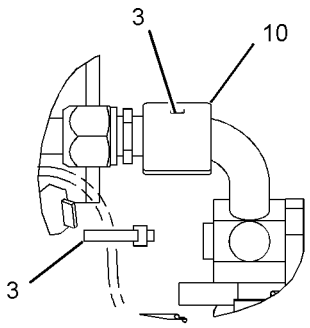

VIEW OF AREA C

REFER TO ALL ILLUSTRATIONS OF
THIS GROUP FOR AUXILIARY VIEWS

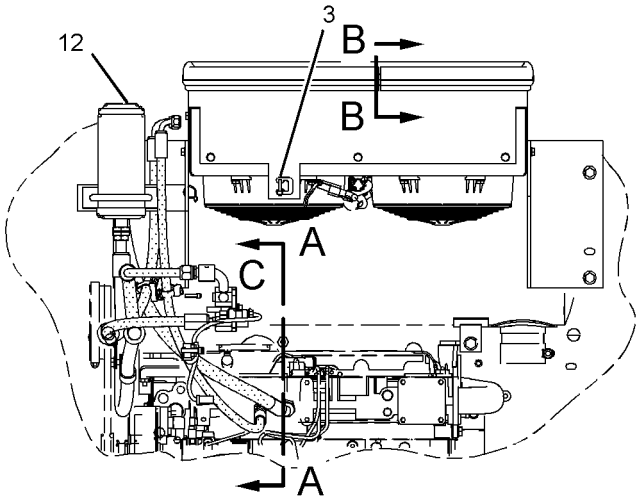

REAR VIEW

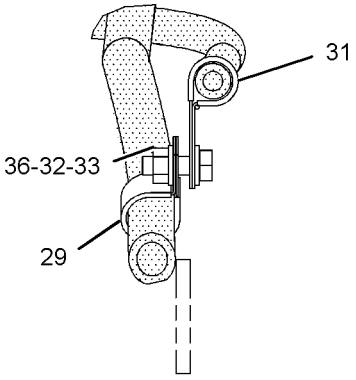

SECTION D-D

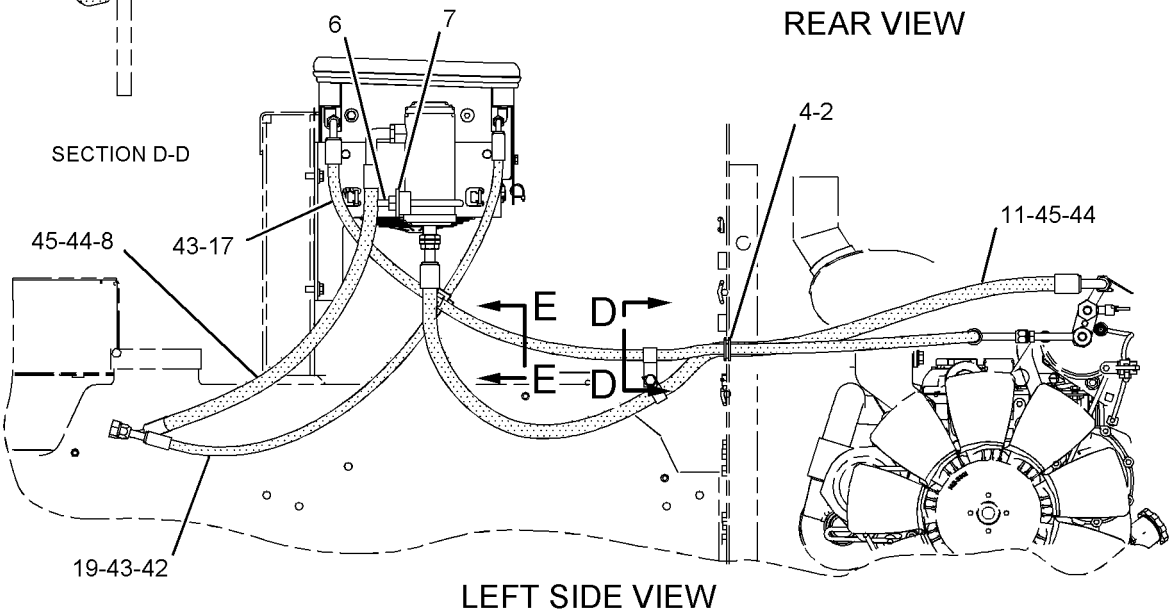

LEFT SIDE VIEW

GRAPHIC #1

g01039439

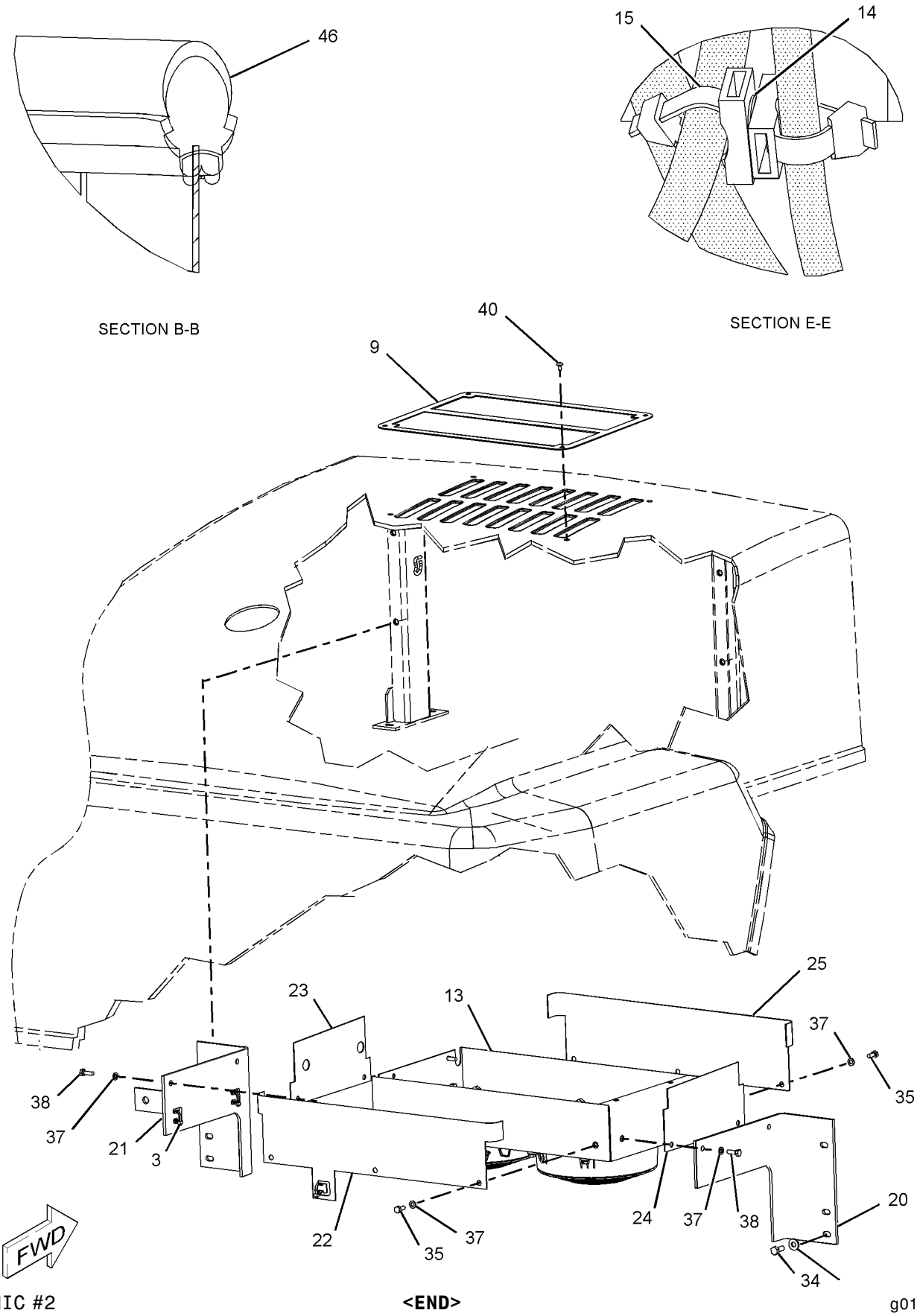

GRAPHIC #2 **<END>** g01039440

OPERATOR STATION

236-5649 LINES GP-CAB HEATER

S/N: PDF1-UP

PART OF 239-1009 AIR CONDITIONER AR, 239-1008 HEATER AR-CAB, 241-8643 PLATFORM AR AN ATTACHMENT

SMCS-7304 **i02000903**

NOTE	REF NO	GRAPHIC REF	PART NUMBER	QTY	PART NAME 1 2 3 4 5 6 (PRODUCT LEVEL)	SEE PAGE
	1	1	**2D-0388**	2	GROMMET	
	2	1	**5D-1026**	6	CLAMP-HOSE	
	3	1	**9M-4814**	1	CONNECTOR-HOSE	
	4	1	**237-4790**	1	TUBE	
	5	1	**4S-1962**	3	CLIP	
	6	1	**6D-1641**	2	CLIP	
	7	1	**8T-4121**	5	WASHER-HARD (11X21X2.5-MM THK)	
M	8	1	**8T-4137**	5	BOLT (M10X1.5X20-MM)	
E	9	1	**5P-0767**		HOSE (178.9-CM)	
E	10	1	**5P-0767**		HOSE (135.4-CM)	
E	11	1	**5P-0767**		HOSE (165-CM)	

E-ORDER BY THE CENTIMETER
M-METRIC PART

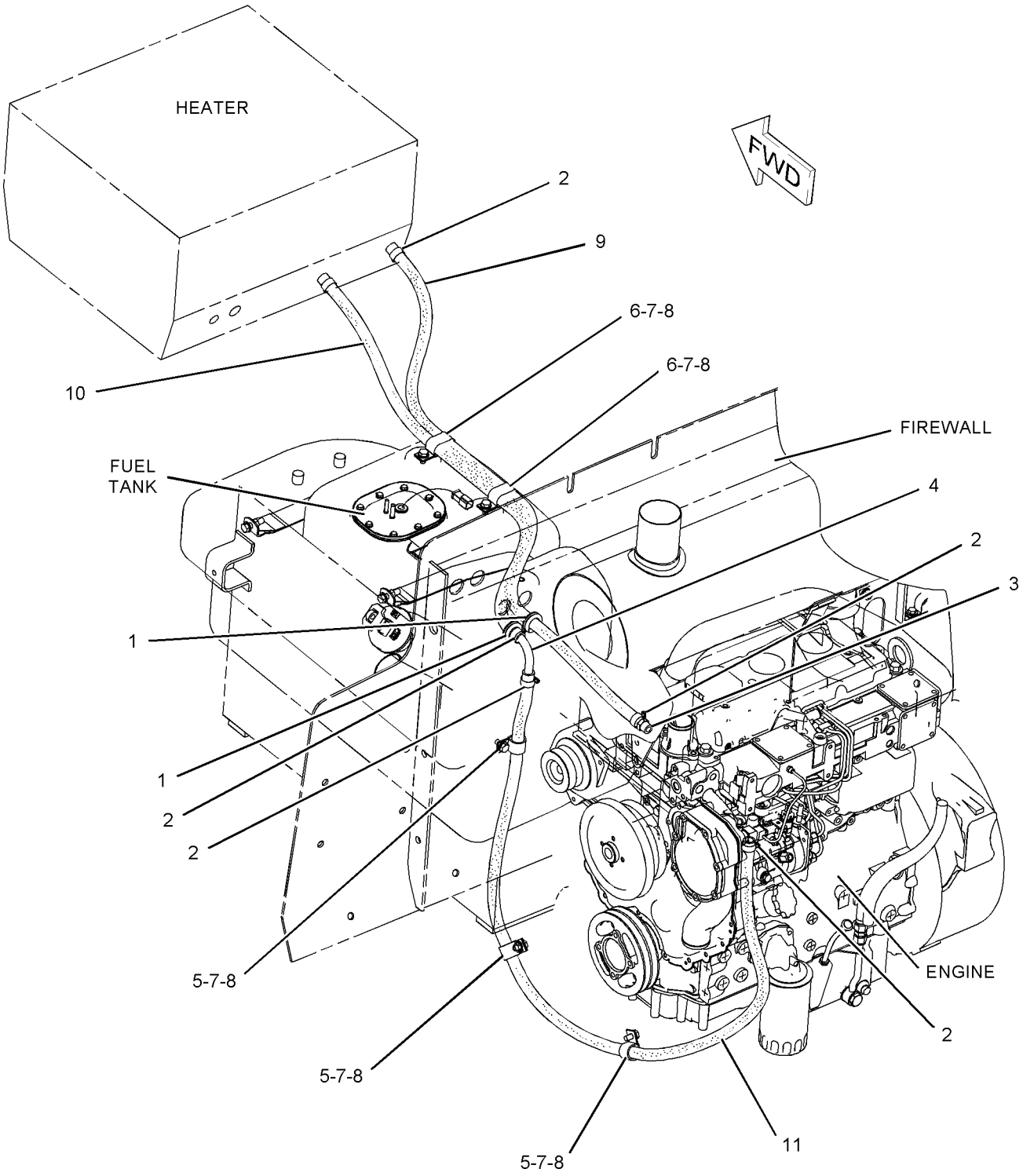

GRAPHIC #1 **<END>** g01037881

OPERATOR STATION

238-0385 LINES GP-HEATER

S/N: CRS1-UP

PART OF 179-1795 ENGINE AR-PRIMARY

SMCS-7304 **i02017705**

NOTE	REF NO	GRAPHIC REF	PART NUMBER	QTY	PART NAME 1 2 3 4 5 6 (PRODUCT LEVEL)	SEE PAGE
	1	1	**2B-0858**	2	PLUG-PIPE	
	2	1	**134-3856**	1	ELBOW	
	3	1	**173-0418**	1	ADAPTER	

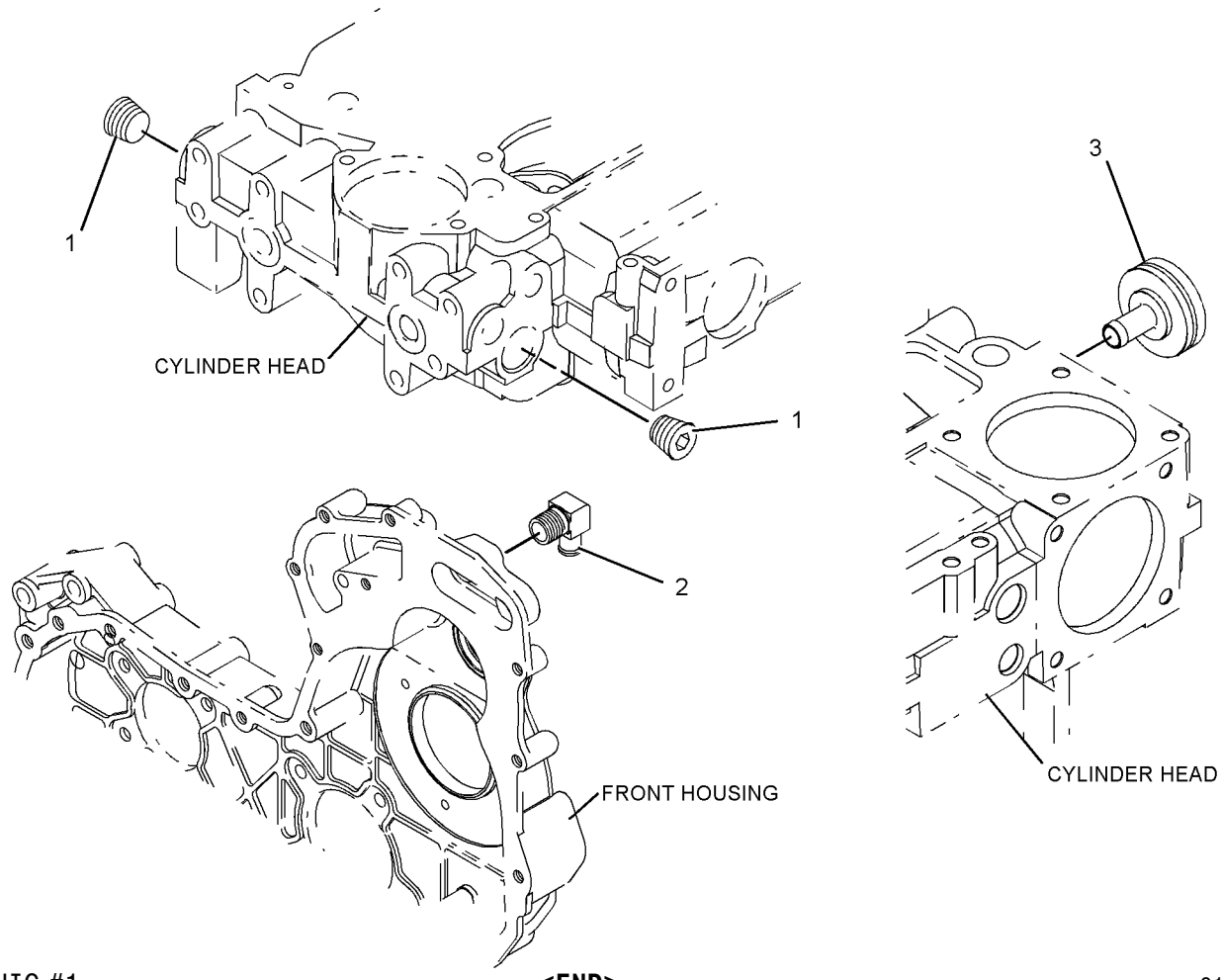

GRAPHIC #1 **<END>** g01045700

OPERATOR STATION

6V-1970 LITERATURE GP

S/N: PDF1-UP

PART OF 236-5635 CHASSIS AR

SMCS-7300, 7400 **i02036003**

NOTE	PART NUMBER	QTY	PART NAME 1 2 3 4 5 6 (PRODUCT LEVEL)	SEE PAGE
	7F-3400	1	BAG-POLYETHYLENE	
	5P-8500	2	KEY	
	5P-7958	1	SLEEVE-CABLE SPLICE	

<END>

OPERATOR STATION

237-0068 MIRROR GP-LH

S/N: PDF1-UP
PART OF 242-1239 MIRROR GP-REAR VIEW
AN ATTACHMENT

SMCS-7319 **i02005472**

NOTE	REF NO	GRAPHIC REF	PART NUMBER	QTY	PART NAME 1 2 3 4 5 6 (PRODUCT LEVEL)	SEE PAGE
	1	1	**168-7089**	1	TUBE AS	
	2	1	**6C-1496**	1	MIRROR	
	3	1	**8T-1889**	2	CLIP (SLOT)	
	4	1	**8T-1890**	2	CLIP (TAB)	
	5	1	**8T-4121**	4	WASHER-HARD (11X21X2.5-MM THK)	
M	6	1	**8T-4133**	2	NUT (M10X1.5-THD)	
M	7	1	**8T-4195**	2	BOLT (M10X1.5X30-MM)	
M	8	1	**8T-4224**	4	WASHER-HARD (8.8X16X2-MM THK)	
M	9	1	**8T-4908**	4	BOLT (M8X1.25X25-MM)	

M-METRIC PART

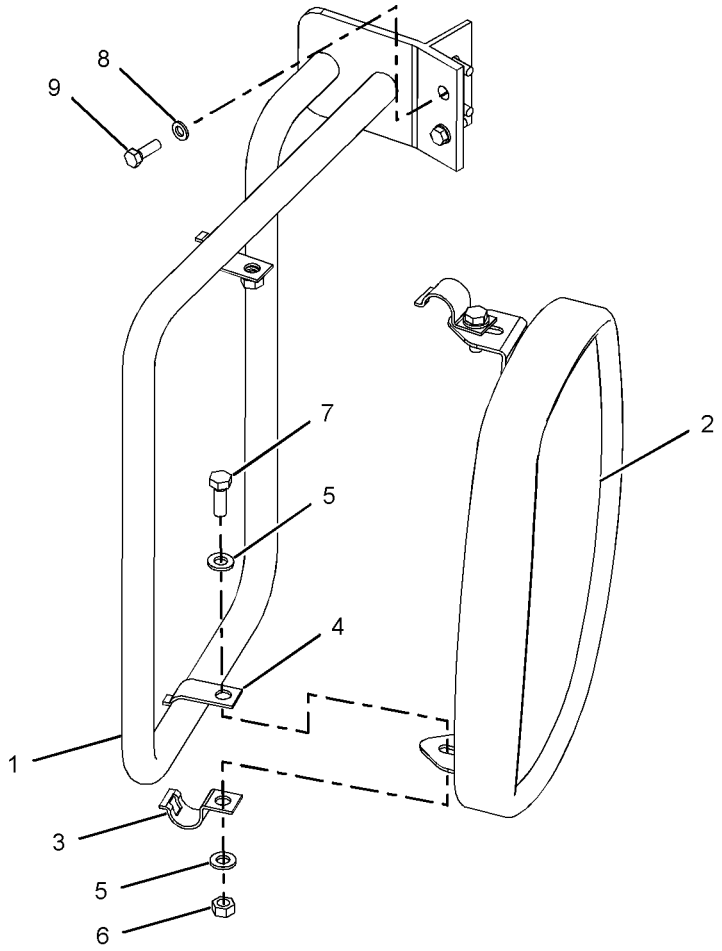

GRAPHIC #1 **<END>** g01040289

OPERATOR STATION

107-4642 MIRROR GP-REAR VIEW

S/N: PDF1-UP
EXTERIOR-CAB
AN ATTACHMENT

SMCS-7319 **i01155961**

NOTE	REF NO	GRAPHIC REF	PART NUMBER	QTY	PART NAME 1 2 3 4 5 6 (PRODUCT LEVEL)	SEE PAGE
	1	1	**150-6582**	2	MIRROR AS	
	2	1	**123-6621**	1	BRACKET AS-LH	
	3	1	**123-6622**	1	BRACKET AS-RH	
M	4	1	**8T-4189**	4	BOLT (M8X1.25X20MM)	
	5	1	**8T-4224**	4	WASHER-HARD (2MM THK)	

M-METRIC PART

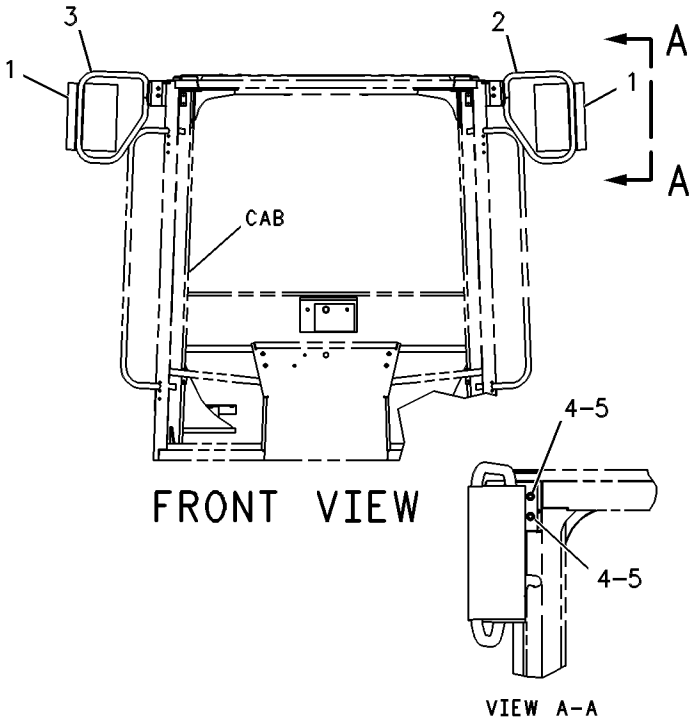

GRAPHIC #1 **<END>** g00131410

OPERATOR STATION

107-4643 MIRROR GP-REAR VIEW

S/N: PDF1-UP

PART OF 239-1006, 239-1007 CAB AR, 241-8807 CANOPY AR-OPEN ROPS

AN ATTACHMENT

SMCS-7319 **i00523538**

NOTE	REF NO	GRAPHIC REF	PART NUMBER	QTY	PART NAME 1 2 3 4 5 6 (PRODUCT LEVEL)	SEE PAGE
	1	1	**5P-6872**	2	MIRROR	
	2	1	**114-3956**	2	PLATE	
M	3	1	**8T-4138**	4	BOLT (M6X1.0X20MM)	
	4	1	**8T-4205**	4	WASHER-HARD (2MM THK)	

M-METRIC PART

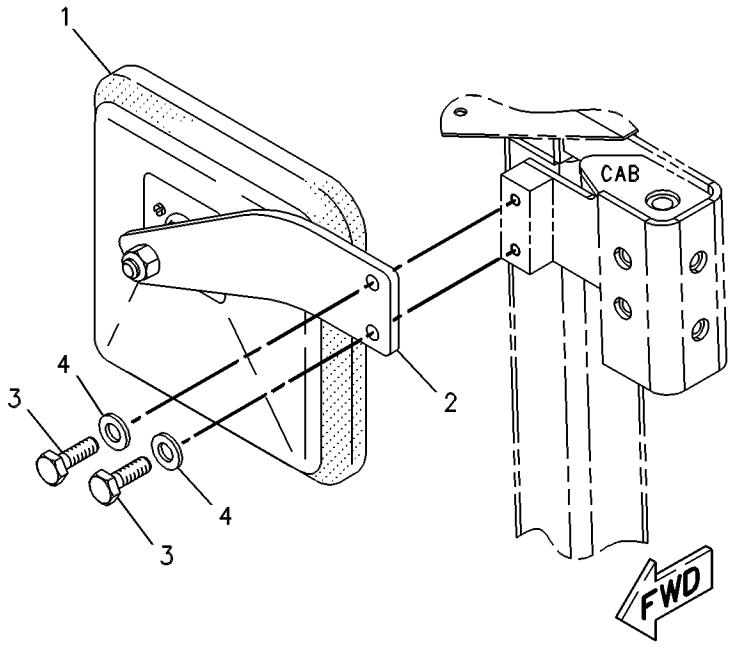

GRAPHIC #1 **<END>** g00131407

117-6045 MIRROR GP-REAR VIEW

S/N: PDF1-UP
PART OF 117-6032 ROADING AR
AN ATTACHMENT

SMCS-7319 **i00523714**

NOTE	REF NO	GRAPHIC REF	PART NUMBER	QTY	PART NAME 1 2 3 4 5 6 (PRODUCT LEVEL)	SEE PAGE
	1	1	**117-6046**	1	STAY AS-RH	
	2	1	**117-6047**	1	STAY AS-LH	
	3	1	**4Y-3307**	1	MIRROR-UNDER VIEW	
	4	1	**4Y-3306**	2	MIRROR-REAR VIEW	
	5	1	**5P-4116**	4	WASHER (2MM THK)	
M	6	1	**8T-4133**	6	NUT (M10X1.50 THD)	
	7	1	**4Y-8003**	2	U-BOLT	
	8	1	**119-9853**	1	ANGLE	
	9	1	**119-9854**	1	ANGLE	
	10	1	**7X-7729**	8	WASHER (3MM THK)	
M	11	1	**8T-4189**	4	BOLT (M8X1.25X20MM)	
M	12	1	**8T-4195**	2	BOLT (M10X1.50X30MM)	

M-METRIC PART

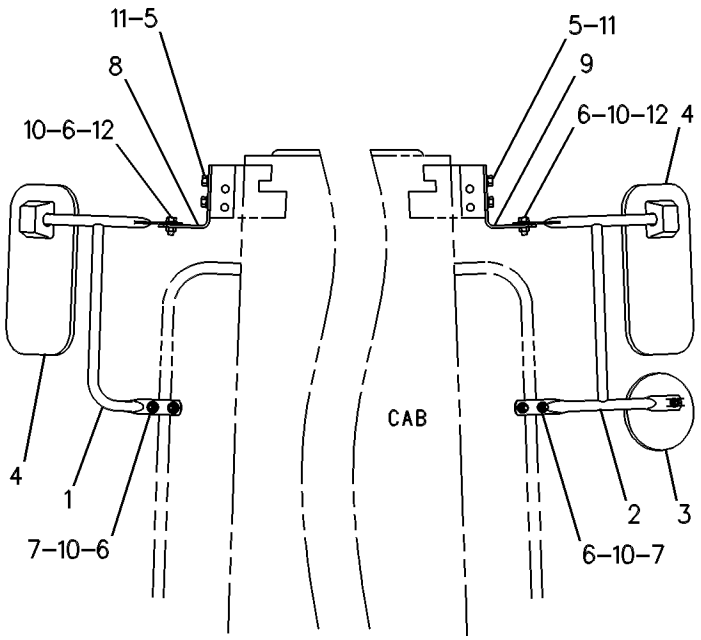

FRONT VIEW

GRAPHIC #1 **<END>** g00267431

OPERATOR STATION

119-9757 MIRROR GP-REAR VIEW

S/N: PDF1-UP
PART OF 241-8644 CANOPY AR-SOFT
AN ATTACHMENT

SMCS-7319 **i00533833**

NOTE	REF NO	GRAPHIC REF	PART NUMBER	QTY	PART NAME 1 2 3 4 5 6 (PRODUCT LEVEL)	SEE PAGE
	1	1	**4Y-3306**	2	MIRROR-REAR VIEW	
	2	1	**119-9770**	1	STAY AS-RH	
	3	1	**119-9771**	1	STAY AS-LH	
M	4	1	**8T-4137**	4	BOLT (M10X1.50X20MM)	
	5	1	**8T-4121**	4	WASHER (2.5MM THK)	

M-METRIC PART

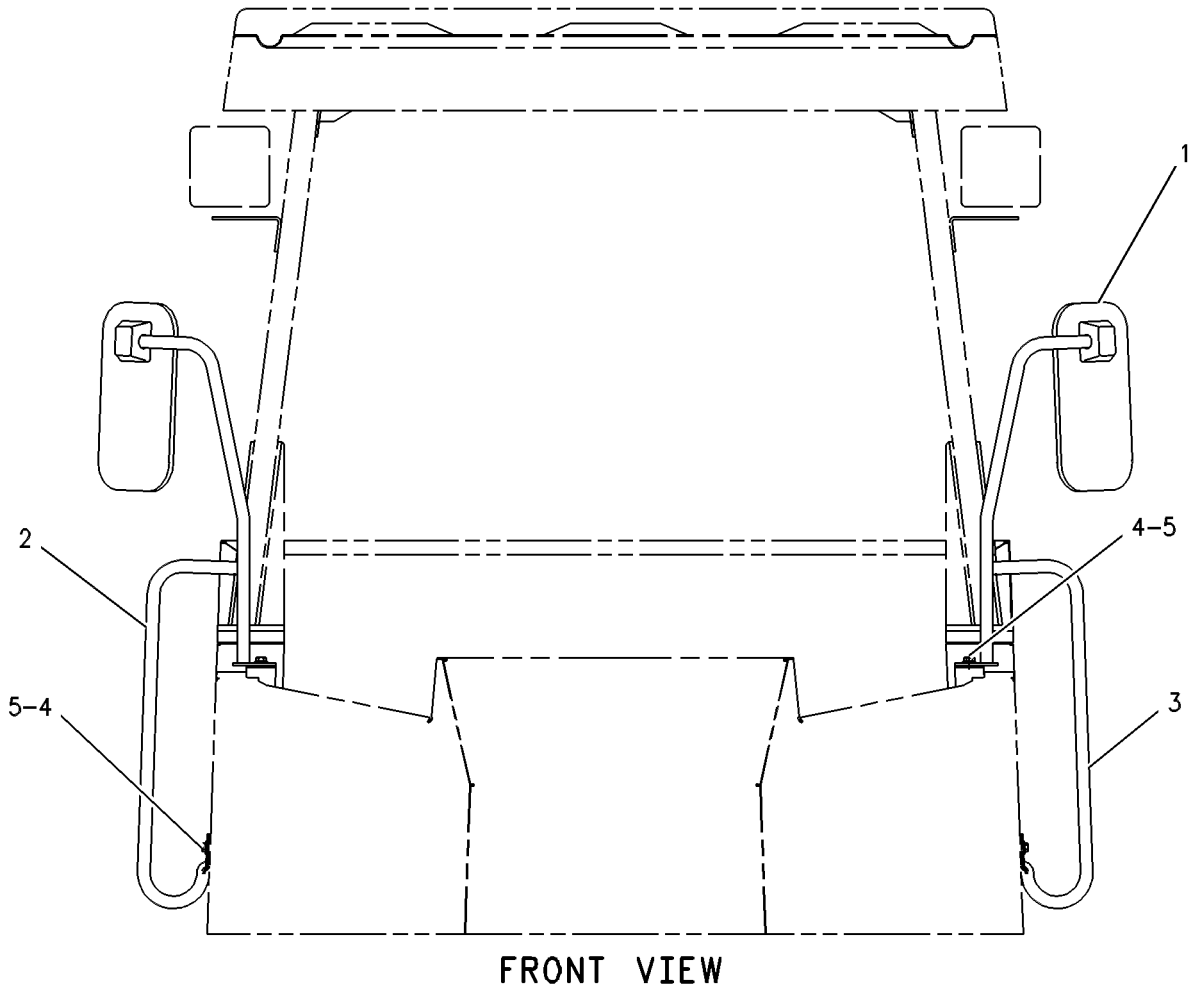

FRONT VIEW

GRAPHIC #1 **<END>** g00261088

OPERATOR STATION

160-6171 MIRROR GP-REAR VIEW

S/N: PDF1-UP
EXTERIOR CAB
AN ATTACHMENT

SMCS-7319 **i00911801**

NOTE	REF NO	GRAPHIC REF	PART NUMBER	QTY	PART NAME 1 2 3 4 5 6 (PRODUCT LEVEL)	SEE PAGE
	1	1	**123-6620**	2	MIRROR AS	
	2	1	**123-6621**	1	BRACKET AS-LH	
	3	1	**123-6622**	1	BRACKET AS-RH	
M	4	1	**8T-4189**	4	BOLT (M8X1.25X20MM)	
	5	1	**8T-4224**	4	WASHER-HARD (2MM THK)	

M-METRIC PART

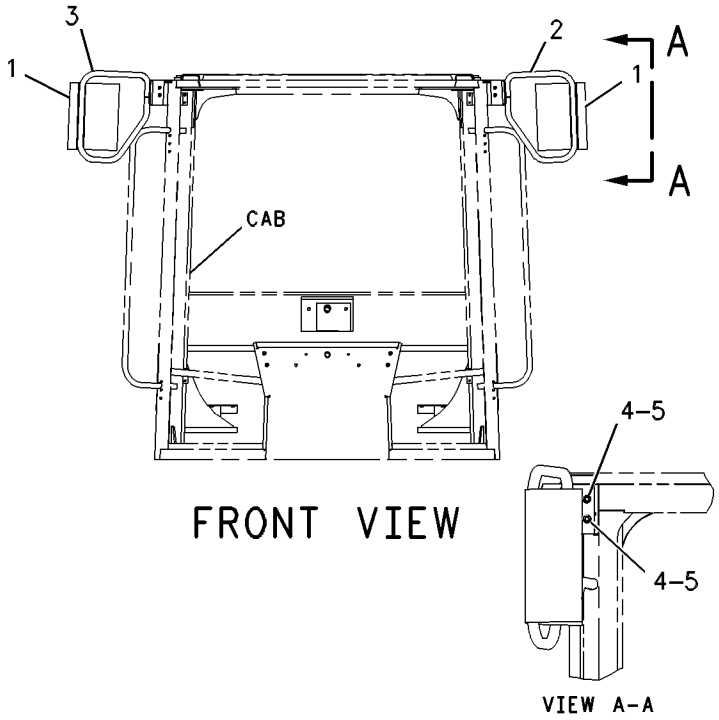

GRAPHIC #1 **<END>** g00465632

OPERATOR STATION

242-1239 MIRROR GP-REAR VIEW

S/N: PDF1-UP

AN ATTACHMENT

SMCS-7319 **i02005461**

NOTE	PART NUMBER	QTY	PART NAME 1 2 3 4 5 6 (PRODUCT LEVEL)	SEE PAGE
Y	*237-0068*	1	MIRROR GP-LH	523
Y	*239-2198*	1	MIRROR GP-RH	530

Y-SEPARATE ILLUSTRATION

<END>

OPERATOR STATION

239-2198 MIRROR GP-RH

S/N: PDF1-UP
PART OF 242-1239 MIRROR GP-REAR VIEW
AN ATTACHMENT

SMCS-7319 **i02005473**

NOTE	REF NO	GRAPHIC REF	PART NUMBER	QTY	PART NAME 1 2 3 4 5 6 (PRODUCT LEVEL)	SEE PAGE
	1	1	**168-7090**	1	TUBE AS	
	2	1	**6C-1496**	1	MIRROR	
	3	1	**8T-1889**	2	CLIP (SLOT)	
	4	1	**8T-1890**	2	CLIP (TAB)	
	5	1	**8T-4121**	4	WASHER-HARD (11X21X2.5-MM THK)	
M	6	1	**8T-4133**	2	NUT (M10X1.5-THD)	
M	7	1	**8T-4195**	2	BOLT (M10X1.5X30-MM)	
M	8	1	**8T-4224**	4	WASHER-HARD (8.8X16X2-MM THK)	
M	9	1	**8T-4908**	4	BOLT (M8X1.25X25-MM)	

M-METRIC PART

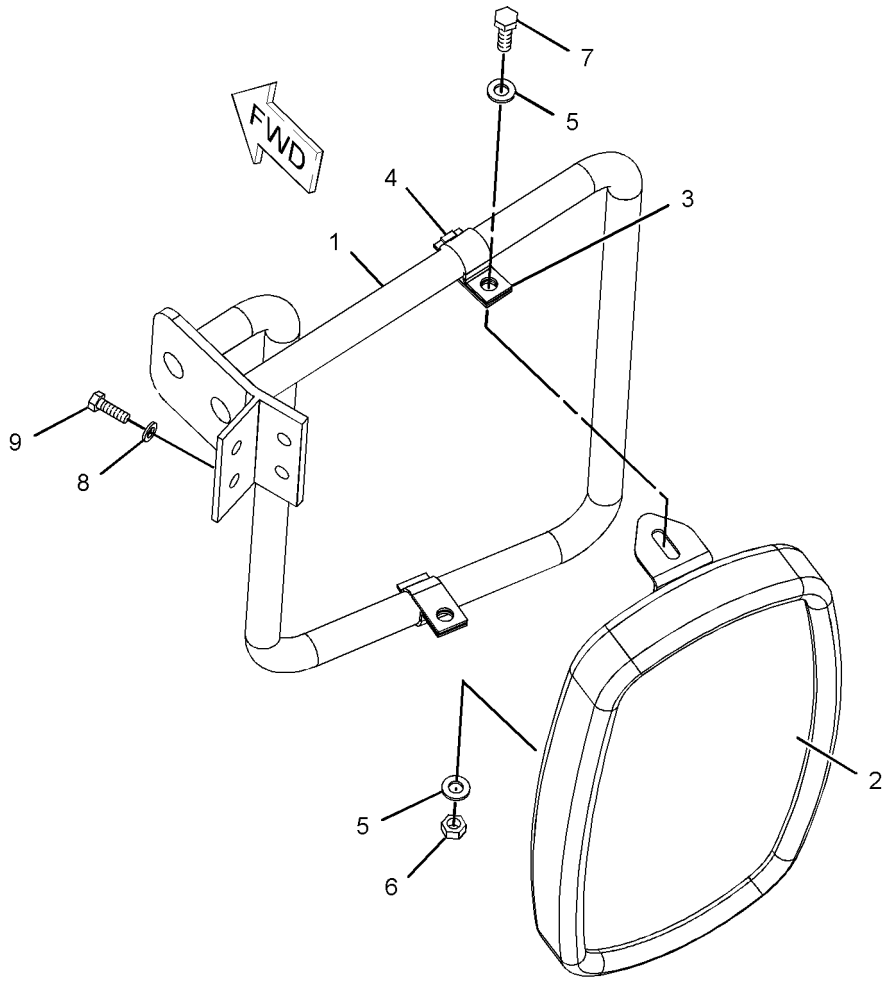

GRAPHIC #1 **<END>** g01039774

OPERATOR STATION

148-0641 MODULE GP-WARNING INDICATOR

S/N: PDF1-UP
6 LED-24V. ALARM
PART OF 238-6848, 238-8386, 238-8387 WIRING GP-CAB
AN ATTACHMENT

SMCS-7407, 7431 **i01097958**

NOTE	REF NO	GRAPHIC REF	PART NUMBER	QTY	PART NAME 1 2 3 4 5 6 (PRODUCT LEVEL)	SEE PAGE
	1	1	**3E-5180**	1	WEDGE-RECEPTACLE LOCK	
	2	1	**8T-8737**	1	PLUG-SEAL	
	3	1	**102-8801**	1	KIT-RECEPTACLE (12 PIN)	
	4	1	**144-9934**	1	GASKET	
	5	1	**8T-8729**	11	PIN-CONNECTOR	

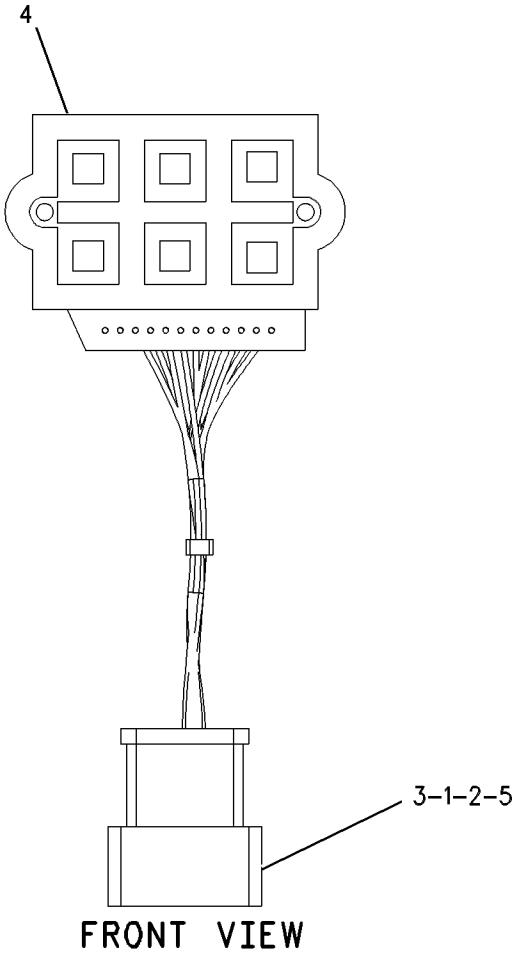

GRAPHIC #1 **<END>** g00578088

OPERATOR STATION

148-0642 MODULE GP-WARNING INDICATOR

S/N: PDF1-UP
6 LED-24V
PART OF 238-6848, 238-8386, 238-8387 WIRING GP-CAB
AN ATTACHMENT

SMCS-7407, 7431 **i01097963**

NOTE	REF NO	GRAPHIC REF	PART NUMBER	QTY	PART NAME 1 2 3 4 5 6 (PRODUCT LEVEL)	SEE PAGE
	1	1	**102-8806**	1	KIT-RECEPTACLE (8 PIN)	
	2	1	**144-9934**	1	GASKET	
	3	1	**3E-3389**	1	WEDGE-RECEPTACLE LOCK	
	4	1	**8T-8729**	8	PIN-CONNECTOR	

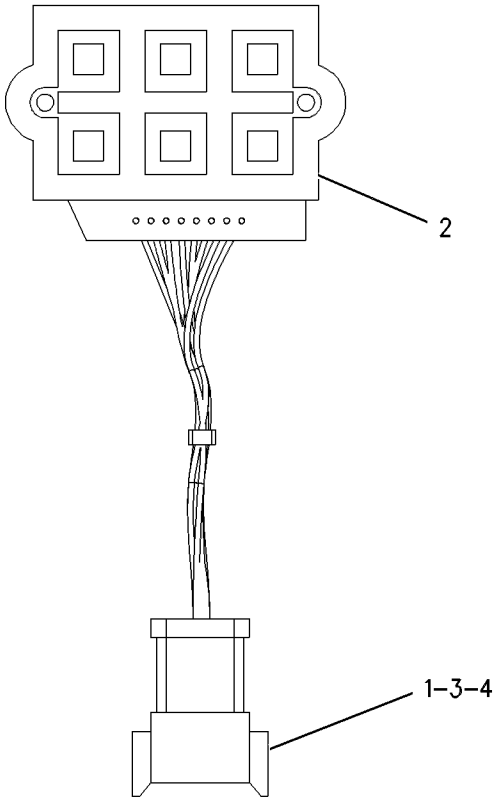

FRONT VIEW

GRAPHIC #1 **<END>** g00578093

107-4647 MOUNTING GP-CAB

S/N: PDF1-UP

PART OF 239-1006, 239-1007 CAB AR, 241-8807 CANOPY AR-OPEN ROPS, 241-8644 CANOPY AR-SOFT, 241-8643 PLATFORM AR

AN ATTACHMENT

SMCS-7301 **i00799344**

NOTE	REF NO	GRAPHIC REF	PART NUMBER	QTY	PART NAME 1 2 3 4 5 6 (PRODUCT LEVEL)	SEE PAGE
	1	1	**6Y-2525**	4	SLEEVE-ROPS	
	2	1	**8Y-7119**	4	WASHER (12MM THK)	
	3	1	**9W-9940**	4	MOUNT AS	
M	4	1	**7X-2567**	4	BOLT (M24X3X160 MM)	
M	5	1	**8T-4001**	2	NUT (M24X3.00 THD)	
	6	1	**8T-4167**	6	WASHER (4.0MM THK)	
	7	1	**8T-4121**	2	WASHER (2.5MM THK)	
M	8	1	**8T-4137**	2	BOLT (M10X1.50X20MM)	
	9	1	**128-0995**	1	COVER AS	
		1	**7T-1099**	1	LINK	
M		1	**8T-3490**	2	NUT-WELD (M10X1.5 THD)	

M-METRIC PART

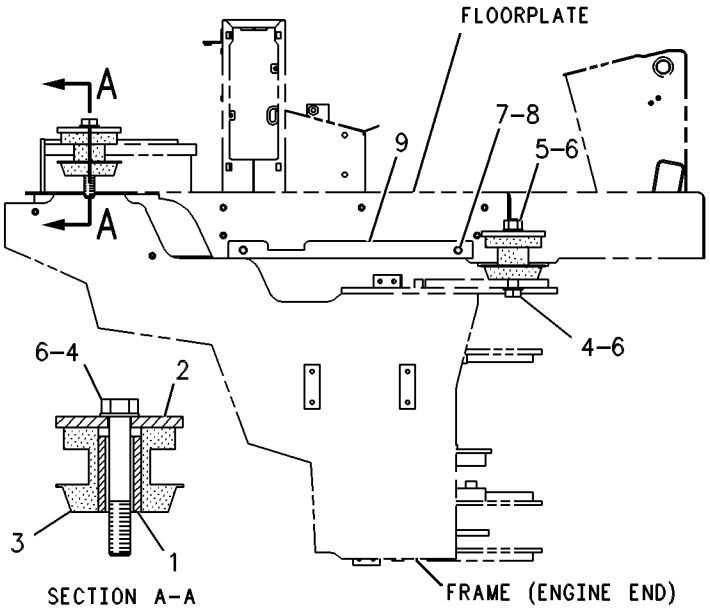

RIGHT SIDE VIEW

GRAPHIC #1 **<END>** g00269522

OPERATOR STATION

239-1004 OPERATOR AR

S/N: PDF1-UP
AN ATTACHMENT

SMCS-7301 **i02000794**

NOTE	PART NUMBER	QTY	PART NAME 1 2 3 4 5 6 (PRODUCT LEVEL)	SEE PAGE
Y	*239-1006*	1	CAB AR	462
Y	*107-6137*	1	DEFROSTER GP-CAB	477
Y	*113-1514*	1	EXTENSION GP-EXHAUST	51
Y	*117-9623*	1	WASHER GP-WINDOW	593

Y-SEPARATE ILLUSTRATION

<END>

239-1005 OPERATOR AR

S/N: PDF1-UP
AN ATTACHMENT

SMCS-7301 **i02001068**

NOTE	PART NUMBER	QTY	PART NAME 1 2 3 4 5 6 (PRODUCT LEVEL)	SEE PAGE
Y	*239-1007*	1	CAB AR	463
Y	*107-6137*	1	DEFROSTER GP-CAB	477
Y	*113-1514*	1	EXTENSION GP-EXHAUST	51
Y	*117-9623*	1	WASHER GP-WINDOW	593

Y-SEPARATE ILLUSTRATION

<END>

241-8840 OPERATOR AR-OPEN ROPS

S/N: PDF1-UP
AN ATTACHMENT

SMCS-7323 **i02005076**

NOTE	PART NUMBER	QTY	PART NAME 1 2 3 4 5 6 (PRODUCT LEVEL)	SEE PAGE
Y	*241-8807*	1	CANOPY AR-OPEN ROPS	466
Y	*113-1515*	1	EXTENSION GP-EXHAUST	52

Y-SEPARATE ILLUSTRATION

<END>

OPERATOR STATION

108-8421 PAN GP-BACKREST

S/N: PDF1-UP
PART OF 8Y-6882 SEAT GP
AN ATTACHMENT

SMCS-7312 **i02034274**

NOTE	REF NO	GRAPHIC REF	PART NUMBER	QTY	PART NAME 1 2 3 4 5 6 (PRODUCT LEVEL)	SEE PAGE
	1	1	*8Y-6002*	1	PAN AS	
	2	1	**8Y-6006**	1	LID AS	
	3	1	**8Y-6010**	1	LANYARD	
	4	1	**4S-8287**	8	RIVET-POP	
	5	1	**8Y-5972**	1	LATCH	
	6	1	**108-8423**	1	SHAFT AS-LUMBAR	
	7	1	**3E-4336**	1	STUD-BALL	
	8	1	**3E-4335**	1	CLIP	
	9	1	**2F-7306**	1	SCREW-MACHINE (6-32X.25-IN)	
	10	1	**8F-1462**	1	WASHER-PLATED	
E	11	1	**3E-6575**		SEAL (76CM)	
	12	1	**108-8424**	1	PAN-LUMBAR	
	13	1	**8Y-5903**	2	CAM	
	14	1	**3E-4362**	2	PIN-SPRING	
	15	1	**9M-5733**	2	RIVET-POP	

E-ORDER BY THE CENTIMETER

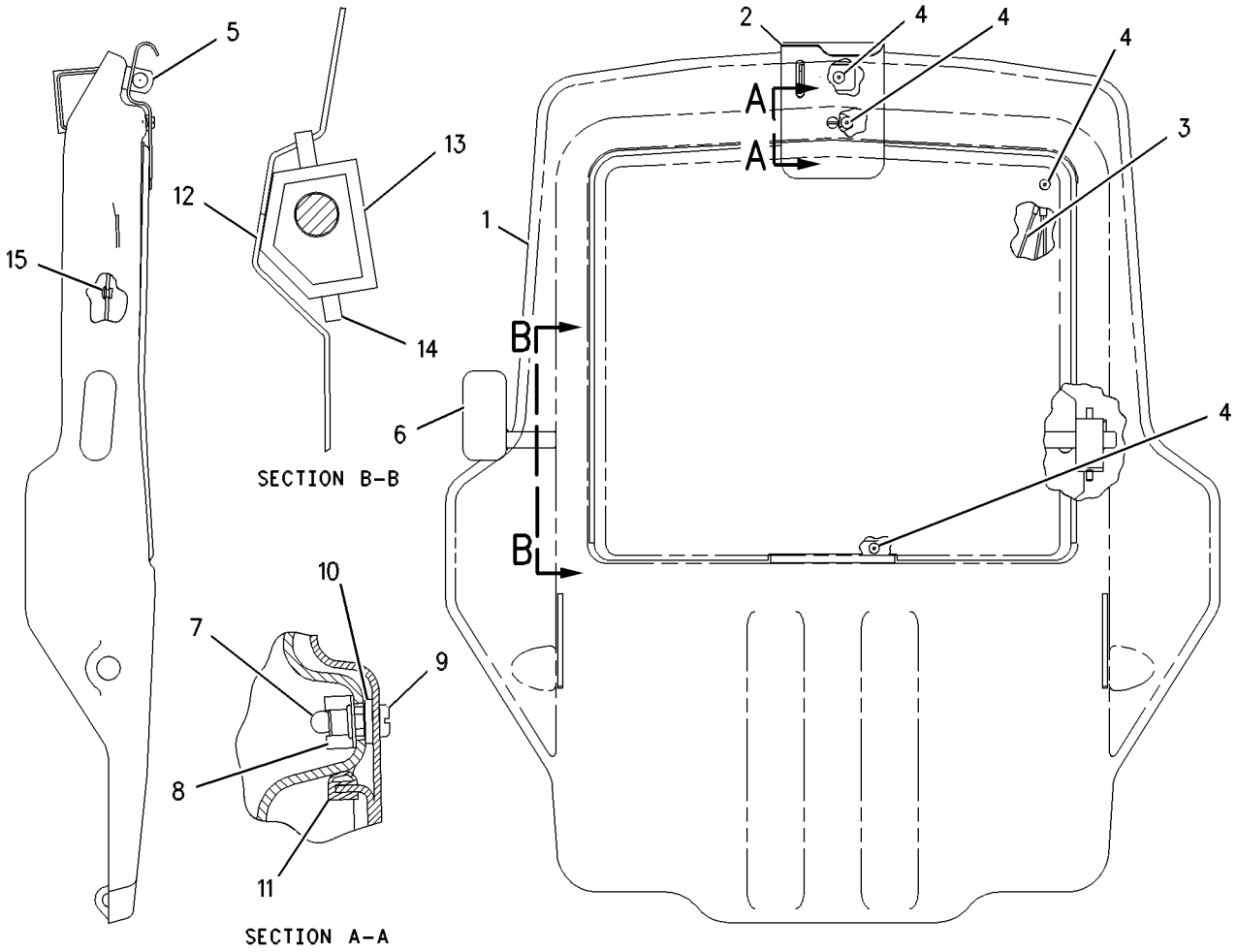

GRAPHIC #1 **<END>** g00658994

OPERATOR STATION

178-0604 PAN GP-BACKREST

S/N: PDF1-UP
PART OF 178-0603 SEAT GP
AN ATTACHMENT

SMCS-7312 **i02003286**

NOTE	REF NO	GRAPHIC REF	PART NUMBER	QTY	PART NAME 1 2 3 4 5 6 (PRODUCT LEVEL)	SEE PAGE
	1	1	**164-4883**	1	KNOB-LUMBAR	
	2	1	**233-6745**	1	CUSHION AS (CLOTH)	
Y	3	1	*178-0605*	1	PAN GP-BACKREST	537
	4	1	**8T-7566**	1	PIN-SPRING	

Y-SEPARATE ILLUSTRATION

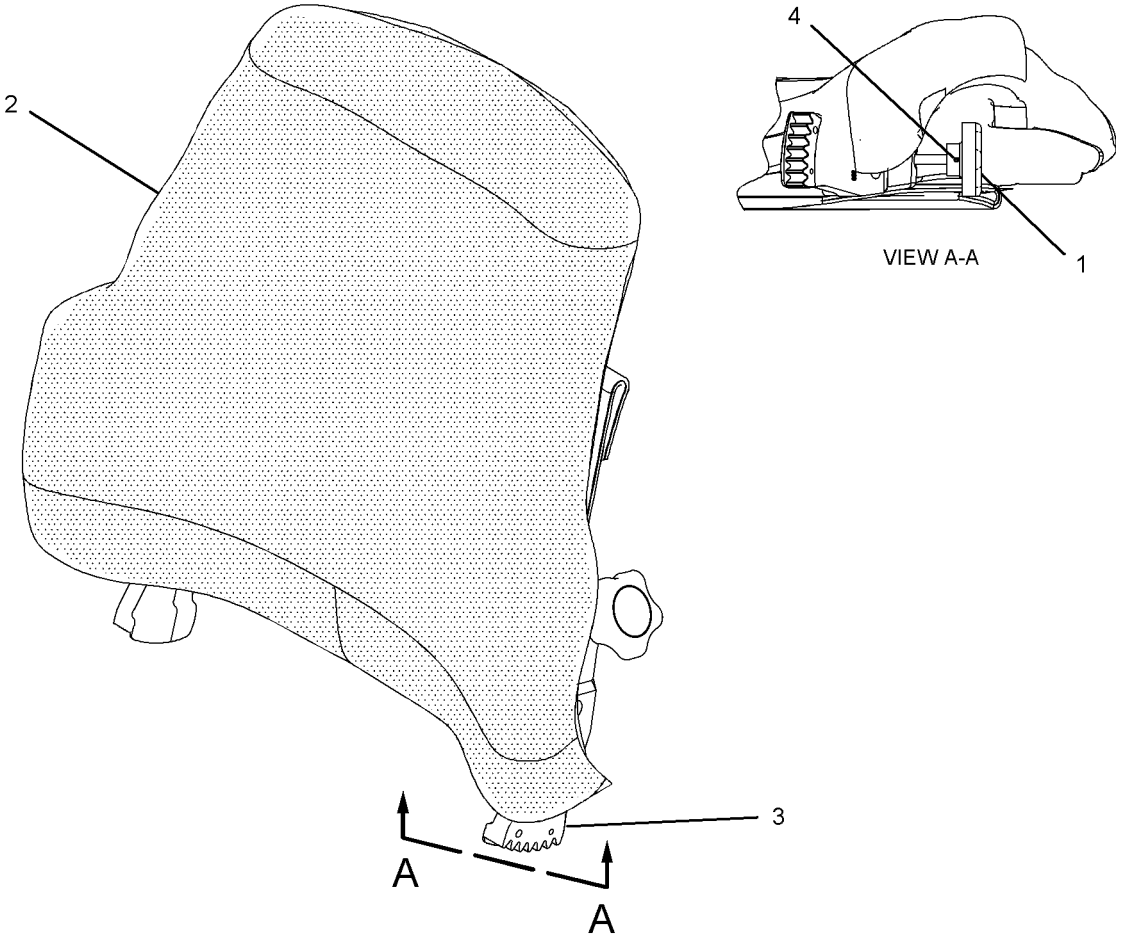

GRAPHIC #1 **<END>** g01023445

OPERATOR STATION

178-0605 PAN GP-BACKREST

S/N: PDF1-UP
PART OF 178-0604 PAN GP-BACKREST
AN ATTACHMENT

SMCS-7312 **i02003334**

NOTE	REF NO	GRAPHIC REF	PART NUMBER	QTY	PART NAME 1 2 3 4 5 6 (PRODUCT LEVEL)	SEE PAGE
	1	1	**4K-9429**	8	RIVET-POP	
	2	1	**5P-7957**	1	LANYARD	
	3	1	**136-1543**	1	PLATE AS-LUMBAR	
	4	1	**173-2052**	1	RETAINER	
	5	1	**178-7907**	1	HOLDER	
	6	1	**177-4930**	1	PAN AS-BACK	

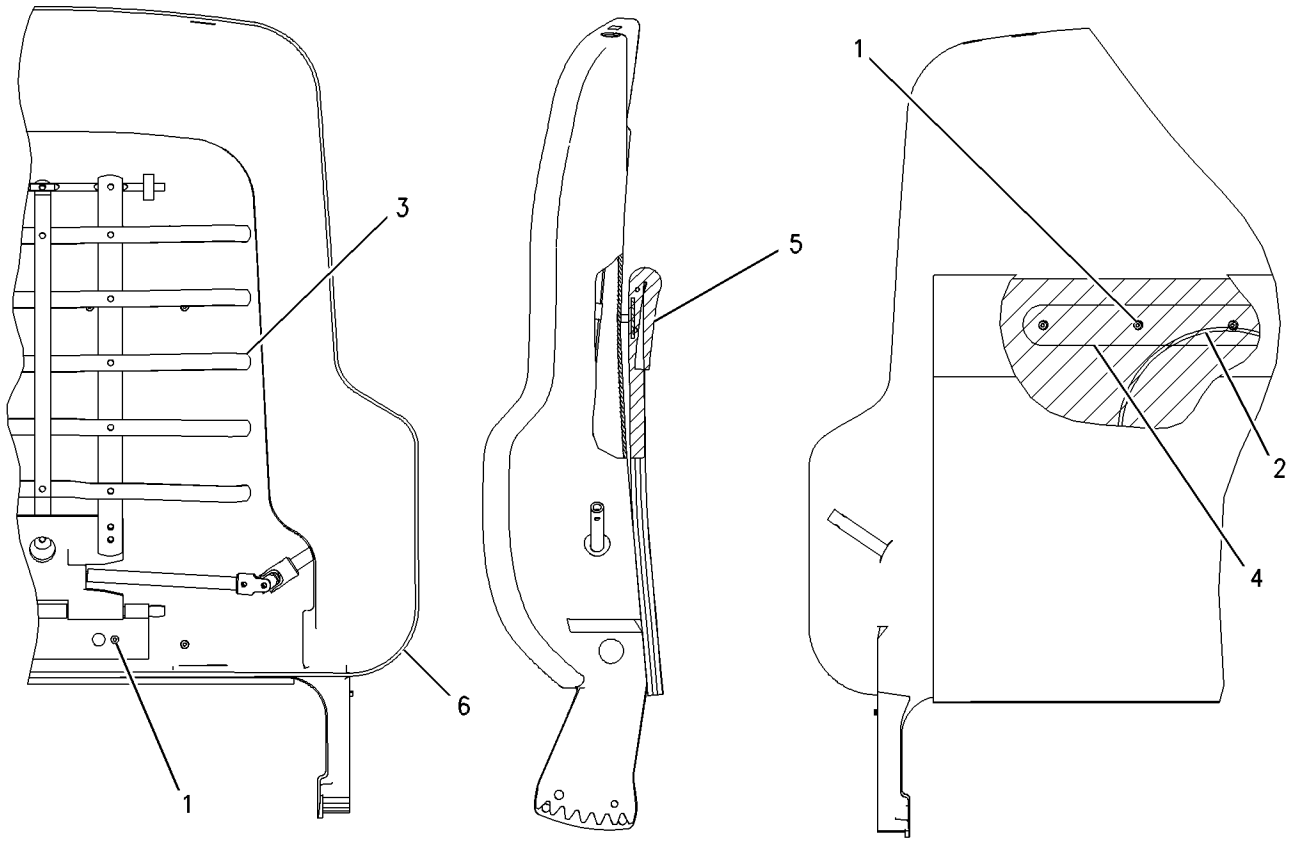

GRAPHIC #1 **<END>** g00716497

OPERATOR STATION

8Y-5992 PAN GP-SEAT

S/N: PDF1-UP
PART OF 8Y-6882 SEAT GP
AN ATTACHMENT

SMCS-7312 **i01057197**

NOTE	REF NO	GRAPHIC REF	PART NUMBER	QTY	PART NAME 1 2 3 4 5 6 (PRODUCT LEVEL)	SEE PAGE
	1	1	**8Y-5892**	1	PAN AS-SEAT	
JL	2	1	**3K-4897**	4	PIN-SPRING	
N	3	1	**9M-5733**	1	RIVET-POP (4.78MM DIA)	
N	4	1	**6V-2456**	2	RING-RETAINING	
JZ	5	1		1	ROD AS	
JLZ	6	1		2	SPRING	
LZ	7	1		1	ROD AS	
LZ	8	1		1	BUSHING	
NZ	9	1		1	BRACKET	
NZ	10	1		1	CABLE AS	
NZ	11	1		1	PIN	
NZ	12	1		1	ADJUSTER AS	
					AVAILABLE REPAIR KIT(S):	
J			**8Y-5995**	1	KIT-SEAT TILT	
					(INCLUDES BUSHING & LOCKPIN)	
L			**8Y-5998**	1	KIT-BACK TILT	
					(INCLUDES BUSHING)	
N			**8Y-5999**	1	KIT-ADJUSTER	

J-KIT MARKED J INCLUDES PARTS MARKED J
L-KIT MARKED L INCLUDES PARTS MARKED L
N-KIT MARKED N INCLUDES PARTS MARKED N
Z-NOT SERVICED SEPARATELY

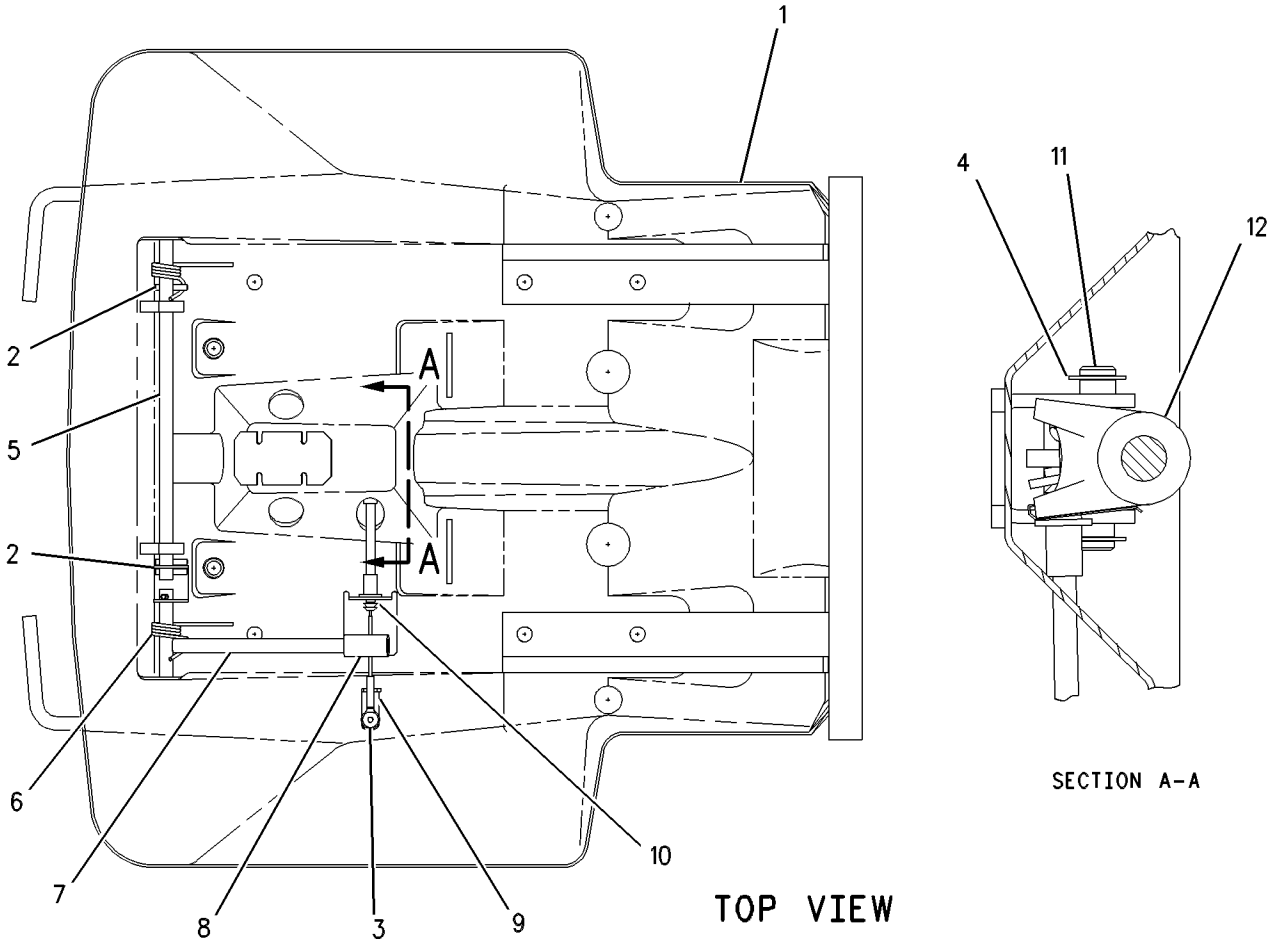

GRAPHIC #1 **<END>** g00315615

OPERATOR STATION

107-4619 PANEL GP-INSTRUMENT

S/N: PDF1-UP

PART OF 177-2035 LIGHTING AR-FLOOD & SIGNAL, 177-2036 LIGHTING AR-ROADING AN ATTACHMENT

SMCS-7451 **i02034282**

NOTE	REF NO	GRAPHIC REF	PART NUMBER	QTY	PART NAME 1 2 3 4 5 6 (PRODUCT LEVEL)	SEE PAGE
B	1	1	**104-6216**	1	PLUG	
B	2	1	**109-2356**	3	PLUG	
	3	1	**110-7887**	1	SWITCH GP-START (KEY)	
		1	**7T-6799**	1	NUT-MOUNTING (1-32-THD)	
		1	**8T-8729**	4	PIN-CONNECTOR	
		1	**102-8804**	1	KIT-RECEPTACLE (4-PIN)	
	4	1	**111-7872**	1	PLATE AS	
B	5	1	**111-7899**	3	GASKET	
B	6	1	**129-7184**	1	FILM-INSTRUCTION (ENGINE START)	
	7	1	**148-2762**	1	PLATE AS	
	8	1	**155-5231**	1	VOLTMETER GP	
		1	**115-1748**	1	LAMP (24-VOLT)	
		1	**4B-2043**	3	NUT (8-32-THD)	
		1	**9B-7233**	3	LOCKWASHER	
	9	1	**155-5232**	1	GAUGE GP-COOLANT TEMPERATURE	
		1	**4B-2043**	3	NUT (8-32-THD)	
		1	**9B-7233**	3	LOCKWASHER	
		1	**115-1748**	1	LAMP (24-VOLT)	
	10	1	**155-5233**	1	GAUGE GP-OIL TEMPERATURE (HYDRAULIC)	
		1	**4B-2043**	3	NUT (8-32-THD)	
		1	**9B-7233**	3	LOCKWASHER	
		1	**115-1748**	1	LAMP (24-VOLT)	
	11	1	**155-5234**	1	GAUGE GP-FUEL LEVEL	
		1	**4B-2043**	3	NUT (8-32-THD)	
		1	**9B-7233**	3	LOCKWASHER	
		1	**115-1748**	1	LAMP (24-VOLT)	
	12	1	**168-2365**	1	HARNESS AS-INSTRUMENT PANEL	
		1	**102-8804**	1	KIT-RECEPTACLE (4-PIN)	
		1	**102-8806**	1	KIT-RECEPTACLE (8-PIN)	
		1	**155-2255**	1	KIT-CONNECTING PLUG (12-PIN)	
		1	**155-2271**	1	KIT-CONNECTING PLUG (4-PIN)	
	13	1	**169-0153**	1	FILM-INSTRUCTION (INSTRUMENT PANEL)	
B	14	1	**184-5293**	1	PLUG	
	15	1	**185-5629**	1	PLATE AS	
	16	1	**185-5640**	1	HOUSING AS	
	17	1	**205-7700**	1	KIT-SERVICE METER	
	18	1	**202-1129**	6	SCREW-TRUSS HEAD (M 4X0.7-MM)	
M	19	1	**5C-2890**	2	NUT (M6X1-THD)	
	20	1	**8T-4205**	2	WASHER-HARD (7.2X14.5X2-MM THK)	
M	21	1	**9X-2042**	4	SCREW-TRUSS HEAD (M6X1X12-MM)	
M	22	1	**9X-2045**	1	SCREW-TRUSS HEAD (M6X1X20-MM)	

B-USE AS REQUIRED
M-METRIC PART

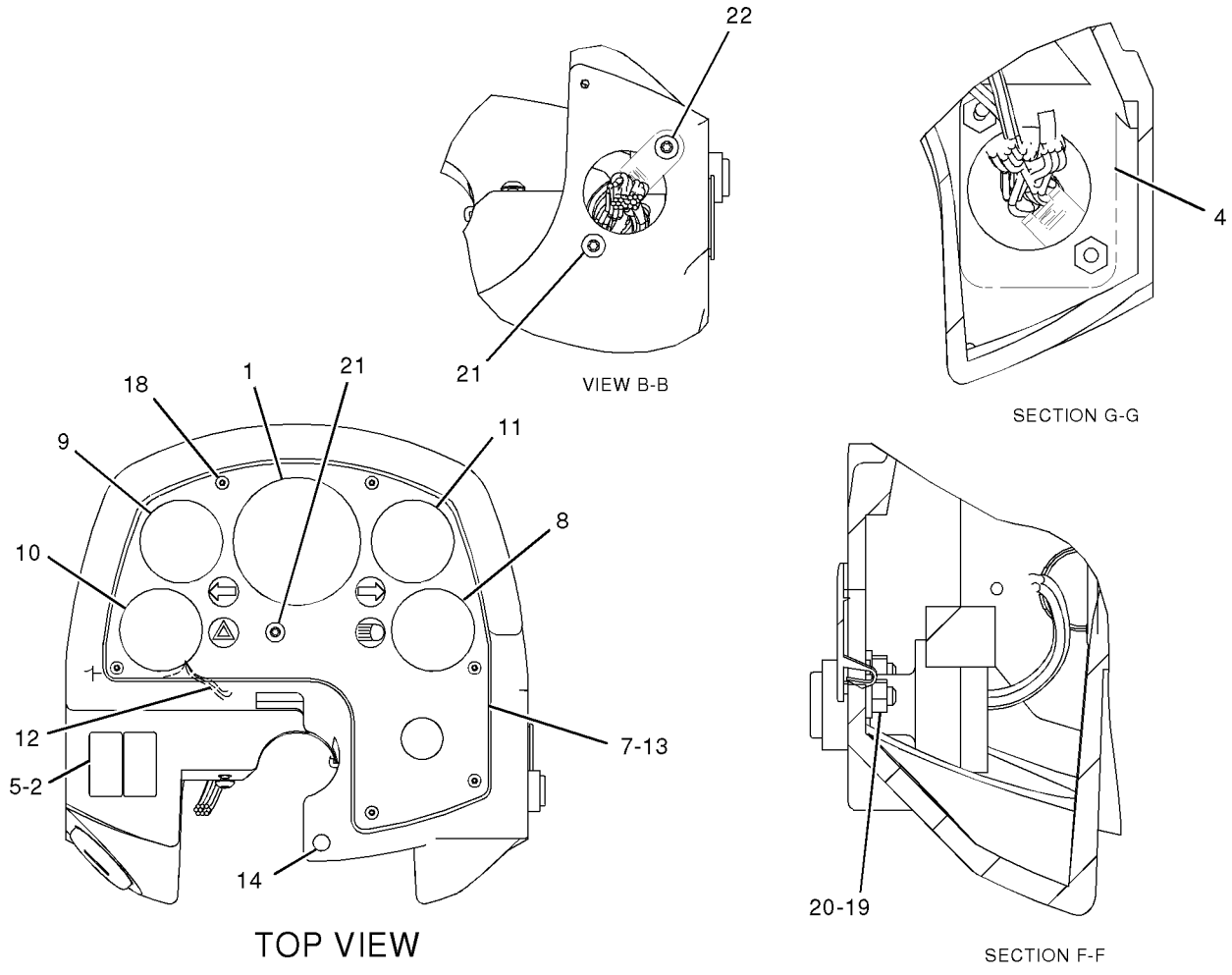

GRAPHIC #1 **<END>** g01043827

OPERATOR STATION

176-7596 PANEL GP-INSTRUMENT

S/N: PDF1-UP
PART OF 177-2034, 177-2037 LIGHTING AR-ROADING
AN ATTACHMENT

SMCS-7451 **i02034285**

NOTE	REF NO	GRAPHIC REF	PART NUMBER	QTY	PART NAME 1 2 3 4 5 6 (PRODUCT LEVEL)	SEE PAGE
B	1	1	**104-6216**	1	PLUG	
B	2	1	**109-2356**	2	PLUG	
J	3	1	**110-7887**	1	SWITCH GP-START (KEY)	
		1	**7T-6799**	1	NUT-MOUNTING (1-32-THD)	
		1	**186-3735**	4	PIN-CONNECTOR	
		1	**102-8804**	1	KIT-RECEPTACLE (4-PIN)	
	4	1	**111-7872**	1	PLATE AS	
B	5	1	**111-7899**	2	GASKET	
B	6	1	**129-7184**	1	FILM-INSTRUCTION (ENGINE START)	
	7	1	**148-2762**	1	PLATE AS	
	8	1	**155-5231**	1	VOLTMETER GP	
		1	**4B-2043**	3	NUT (8-32-THD)	
		1	**9B-7233**	3	LOCKWASHER	
		1	**115-1748**	1	LAMP (24-VOLT)	
	9	1	**155-5232**	1	GAUGE GP-COOLANT TEMPERATURE	
		1	**4B-2043**	3	NUT (8-32-THD)	
		1	**9B-7233**	3	LOCKWASHER	
		1	**115-1748**	1	LAMP (24-VOLT)	
	10	1	**155-5233**	1	GAUGE GP-OIL TEMPERATURE (HYDRAULIC)	
		1	**4B-2043**	3	NUT (8-32-THD)	
		1	**9B-7233**	3	LOCKWASHER	
		1	**115-1748**	1	LAMP (24-VOLT)	
	11	1	**155-5234**	1	GAUGE GP-FUEL LEVEL	
		1	**4B-2043**	3	NUT (8-32-THD)	
		1	**9B-7233**	3	LOCKWASHER	
		1	**115-1748**	1	LAMP (24-VOLT)	
	12	1	**169-0153**	1	FILM-INSTRUCTION (INSTRUMENT PANEL)	
B	13	1	**184-5293**	1	PLUG	
	14	1	**185-5629**	1	PLATE AS	
	15	1	**185-5640**	1	HOUSING AS	
	16	1	**205-7700**	1	KIT-SERVICE METER	
B	17	1	**202-1129**	6	SCREW-TRUSS HEAD (M 4X0.7-MM)	
	18	1	**168-2364**	1	HARNESS AS-INSTRUMENT PANEL	
		1	**102-8804**	1	KIT-RECEPTACLE (4-PIN)	
		1	**102-8806**	1	KIT-RECEPTACLE (8-PIN)	
		1	**155-2255**	1	KIT-CONNECTING PLUG (12-PIN)	
		1	**155-2270**	3	KIT-CONNECTING PLUG (2-PIN)	
		1	**155-2271**	1	KIT-CONNECTING PLUG (4-PIN)	
M	19	1	**5C-2890**	2	NUT (M6X1-THD)	
	20	1	**8T-4205**	2	WASHER-HARD (7.2X14.5X2-MM THK)	
M	21	1	**9X-2042**	4	SCREW-TRUSS HEAD (M6X1X12-MM)	
M	22	1	**9X-2045**	1	SCREW-TRUSS HEAD (M6X1X20-MM)	

B-USE AS REQUIRED
J-REQUIRES 5P8500 KEY
M-METRIC PART

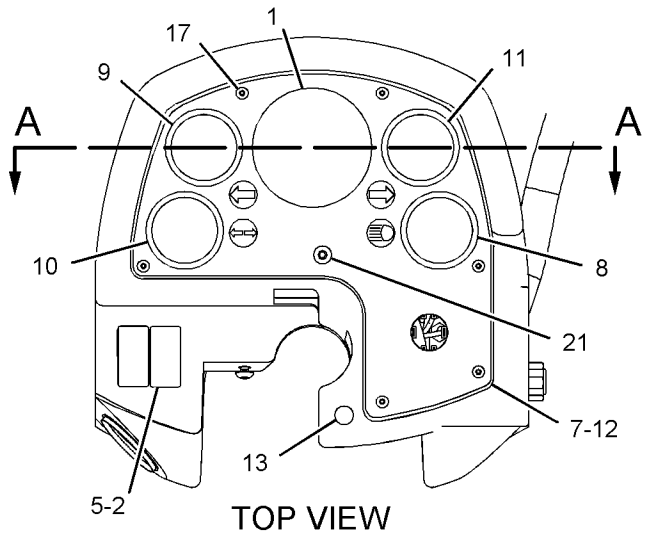

TOP VIEW

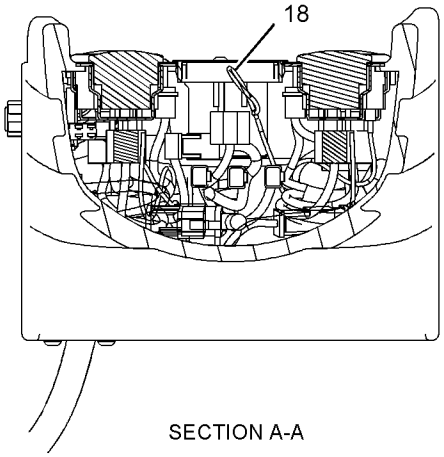

SECTION A-A

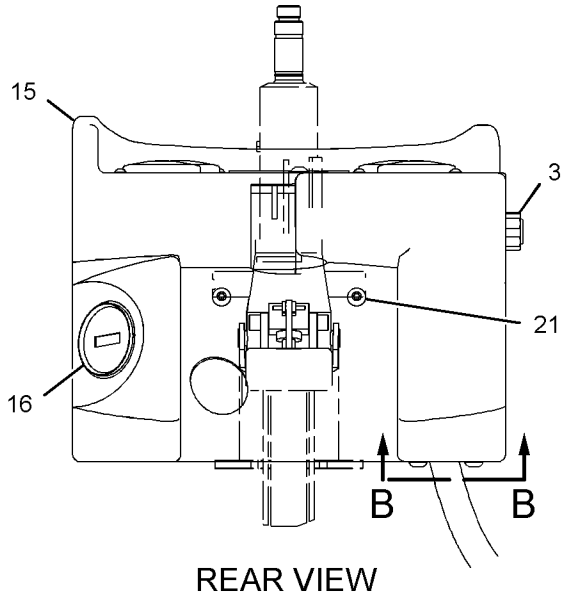

REAR VIEW

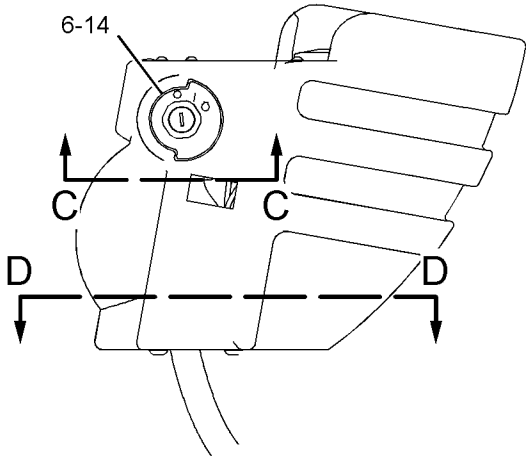

RIGHT SIDE VIEW

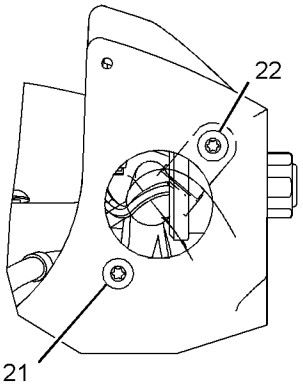

VIEW B-B

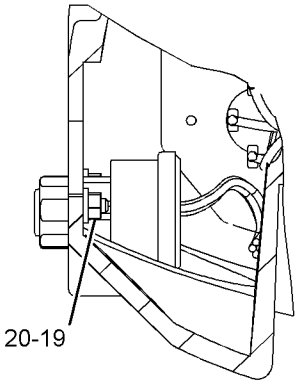

VIEW C-C

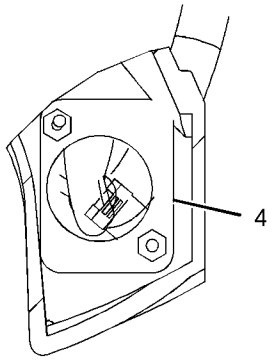

SECTION D-D

GRAPHIC #1

<END>

g01043831

OPERATOR STATION

237-5820 PANEL GP-INSTRUMENT

S/N: PDF1-UP

PART OF 239-1006, 239-1007 CAB AR, 241-8643 PLATFORM AR

AN ATTACHMENT

SMCS-7451 **i02000905**

NOTE	REF NO	GRAPHIC REF	PART NUMBER	QTY	PART NAME 1 2 3 4 5 6 (PRODUCT LEVEL)	SEE PAGE
E	1	1	**103-2543**		SEAL (3CM)	
	2	1	**154-5629**	1	ASHTRAY AS	
	3	2	**3T-2662**	1	CIRCUIT BREAKER AS (15-AMPERE) (MAIN)	
		2	**6V-8376**	2	SCREW-MACHINE (8-32X0.25-IN)	
		2	**9B-7233**	2	LOCKWASHER (4.4X8.4X0.5-MM THK)	
	4	2	**4I-3038**	4	WASHER (3.3X8X0.5-MM THK)	
	5	1	**7K-1181**	31	STRAP-CABLE	
	6	2	**9C-9785**	1	BUMPER	
	7	2	**068-4209**	2	SCREW (8-32X0.75-IN)	
	8	2	**105-8034**	1	SWITCH AS-LIMIT (PARKING BRAKE)	
	9	2	**106-8704**	1	SUPPRESSOR AS-ARC	
		2	**102-8802**	1	KIT-RECEPTACLE (2-PIN)	
		2	**3E-3365**	1	WEDGE-RECEPTACLE LOCK (2-PIN)	
		2	**186-3735**	2	PIN-CONNECTOR	
	10	1	**107-6013**	1	SEAL	
	11	1	**107-6021**	1	HOUSING AS	
	12	1	**107-6031**	1	SWITCH AS-KICKOUT (MOWER ENABLE)	
		1	**111-7899**	1	GASKET	
B	13	1	**109-2356**	10	PLUG	
	14	1	**110-6109**	1	KNOB-CONTROL	
B	15	1	**111-7899**	10	GASKET	
	16	2	**114-3951**	1	PLATE	
	17	1	**115-1748**	1	LAMP (24-VOLT)	
	18	1	**116-7471**	1	PULLER-MINIFUSE	
	19	2	**117-3274**	1	PLUG AS-CONNECTOR (6-PIN, JUMPER)	
	20	2	**117-3787**	4	KNOB	
	21	2	**117-3788**	4	RECEPTACLE	
	22	2	**117-3789**	4	RETAINER	
	23	1	**118-7362**	1	GROMMET-SPLIT	
	24	2	**148-5689**	1	GROMMET-SPLIT	
	25	2	**158-5089**	1	RELAY AS (24-VOLT) (NEUTRAL START)	
B	26	1	**165-0312**	2	WIRE AS	
Y	27	2	**167-0138**	1	SWITCH GP-MAGNETIC (24-VOLT) (MAIN)	136
	28	1	**202-1129**	4	SCREW-TRUSS HEAD (M 4X0.7MM)	
	29	1	**236-4232**	1	PLATE AS	
	30	1	**236-4234**	1	SWITCH AS-ROCKER (BLOWER)	
		1	**111-7899**	1	GASKET	
	31	1	**237-5821**	1	HARNESS AS-CAB	
		1	**102-8802**	1	KIT-RECEPTACLE (2-PIN)	
		1	**102-8804**	1	KIT-RECEPTACLE (4-PIN)	
		1	**102-8805**	1	KIT-RECEPTACLE (6-PIN)	
		1	**102-8806**	4	KIT-RECEPTACLE (8-PIN)	
		1	**102-8801**	4	KIT-RECEPTACLE (12-PIN)	
		1	**155-2255**	5	KIT-CONNECTING PLUG (12-PIN)	
		1	**155-2265**	6	KIT-CONNECTING PLUG (8-PIN)	
		1	**155-2260**	1	KIT-CONNECTING PLUG (3-PIN)	
		1	**155-2270**	5	KIT-CONNECTING PLUG (2-PIN)	
		1	**155-2271**	5	KIT-CONNECTING PLUG (4-PIN)	
		1	**155-2274**	4	KIT-CONNECTING PLUG (6-PIN)	
		1	**102-8804**	1	KIT-RECEPTACLE (4-PIN)	
	32	2	**238-4864**	1	BRACKET AS	
	33	1	**107-6072**	1	PLATE	
	34	2	**142-2928**	4	LOCKNUT	
B	35	2	**184-5224**	1	PLUG AS-CONNECTOR (8-PIN, JUMPER)	
	36	1	**237-9350**	1	FILM-CONTROL	

237-5820 **PANEL GP-INSTRUMENT** ***(contd.)*** **i02000905**

NOTE	REF NO	GRAPHIC REF	PART NUMBER	QTY	PART NAME 1 2 3 4 5 6 (PRODUCT LEVEL)	SEE PAGE
	37	1	**239-6069**	1	FILM-IDENTIFICATION	
	38	1	**4P-7581**	1	CLIP	
	39	1,2	**4P-8134**	4	CLIP	
	40	1	**5P-4115**	4	WASHER-HARD (7.2X19X2-MM THK)	
M	41	1	**6V-8837**	1	BOLT (M6X1X16-MM)	
	42	2	**7G-1060**	1	STRAP AS-GROUND	
	43	2	**7X-3308**	4	BOLT-SOCKET HEAD	
	44	2	**8T-4121**	2	WASHER-HARD (11X21X2.5-MM THK)	
M	45	2	**8T-4133**	2	NUT (M10X1.5-THD)	
M	46	1,2	**8T-4189**	3	BOLT (M8X1.25X20-MM)	
M	47	2	**8T-4199**	2	BOLT (M8X1.25X12-MM)	
	48	1,2	**8T-4205**	3	WASHER-HARD (7.2X14.5X2-MM THK)	
M	49	1,2	**8T-4224**	5	WASHER-HARD (8.8X16X2-MM THK)	
M	50	1,2	**9X-2042**	6	SCREW-TRUSS HEAD (M6X1X12-MM)	
M	51	2	**9X-2045**	2	SCREW-TRUSS HEAD (M6X1X20-MM)	
	52	2	**158-5089**	1	RELAY AS (24-VOLT) (HORN)	
	53	2	**158-5089**	1	RELAY AS (24-VOLT) (ALARM)	
	54	2	**158-5089**	1	RELAY AS (24-VOLT) (BACKUP ALARM)	
	55	2	**158-5089**	1	RELAY AS (24-VOLT) (PARKING BRAKE)	

B-USE AS REQUIRED
E-ORDER BY THE CENTIMETER
M-METRIC PART
Y-SEPARATE ILLUSTRATION

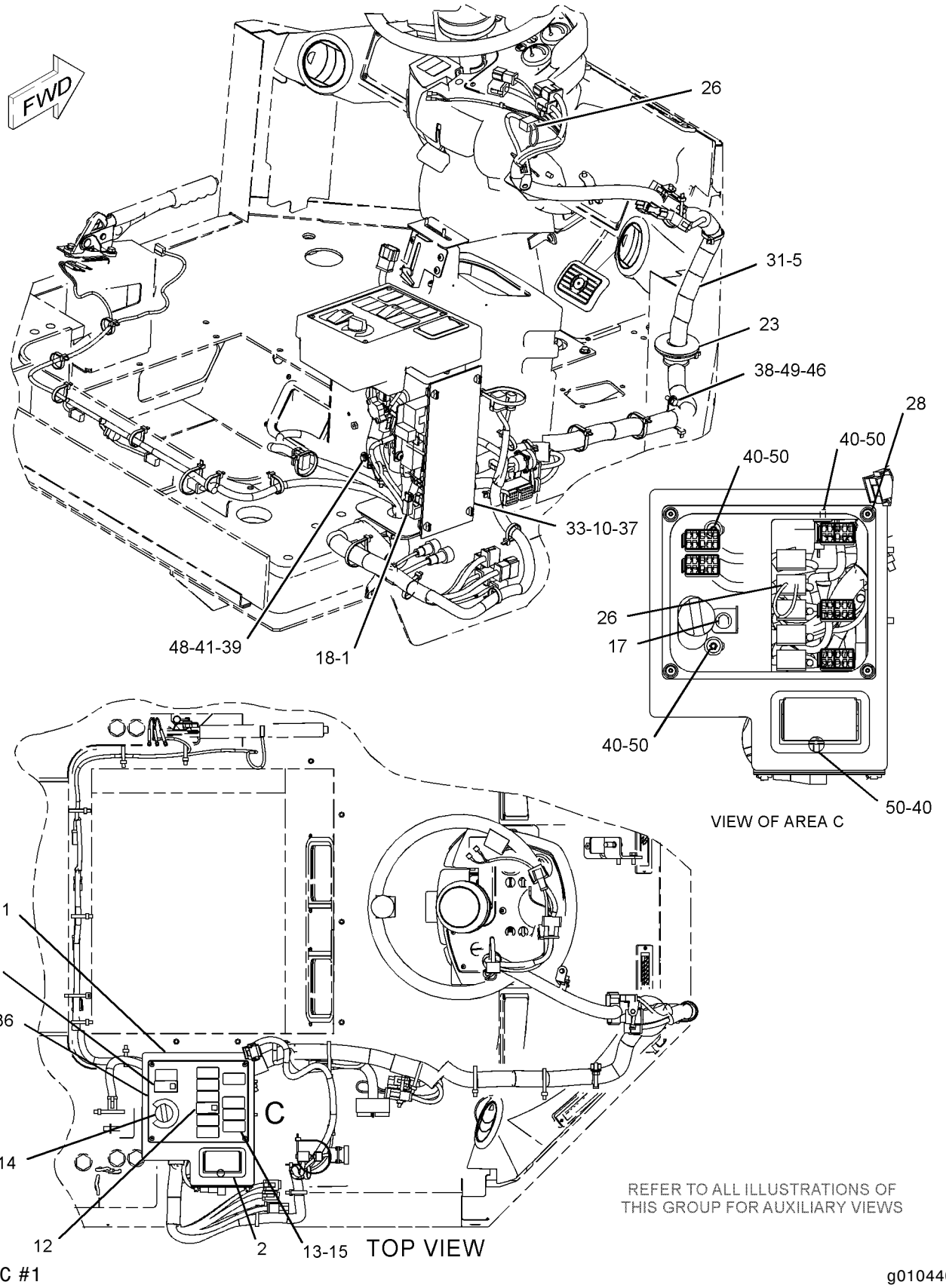

GRAPHIC #1 g01044002

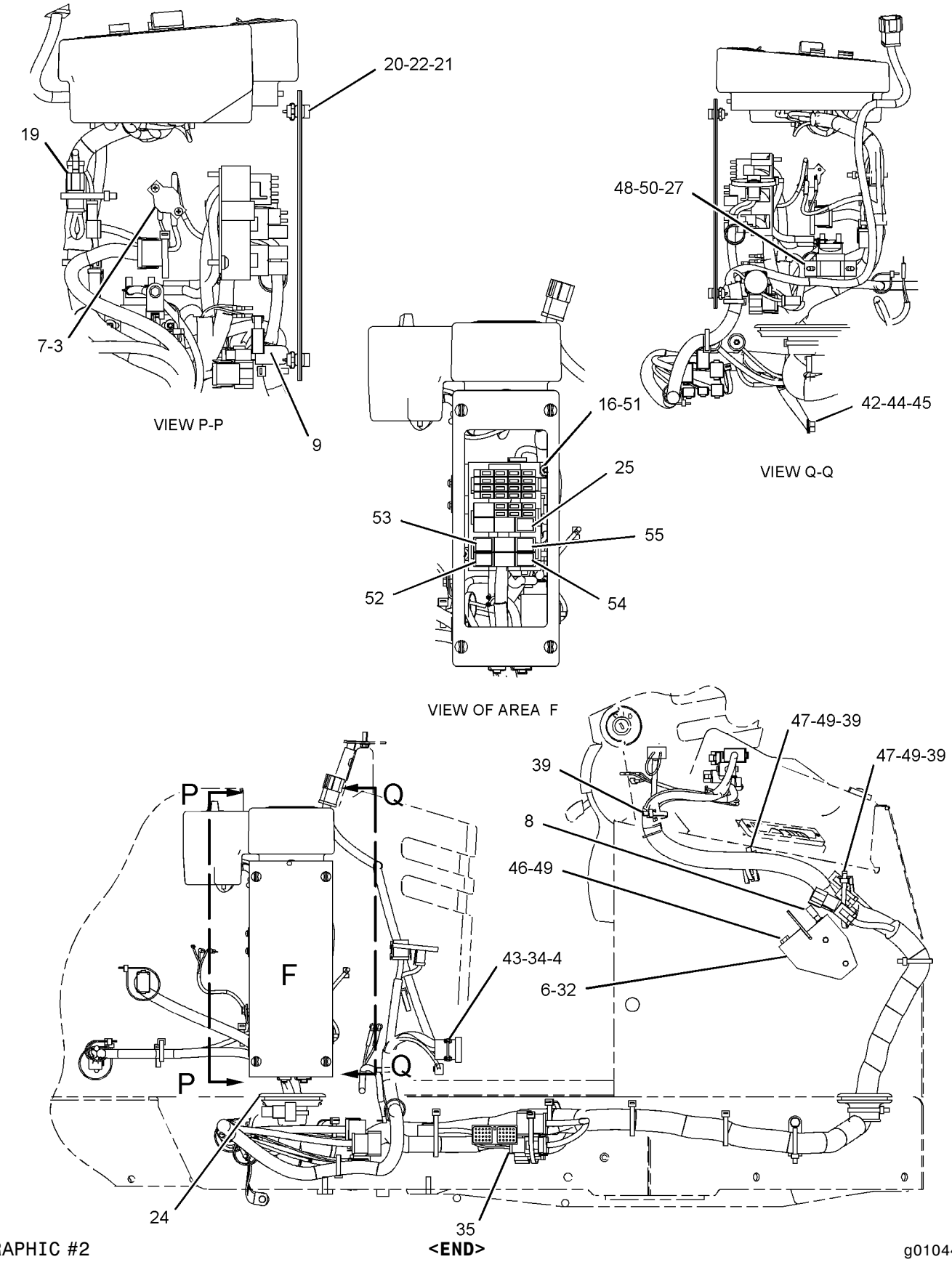

GRAPHIC #2

<END>

g01044003

OPERATOR STATION

240-0656 PANEL GP-INSTRUMENT

S/N: PDF1-UP

PART OF 241-8807 CANOPY AR-OPEN ROPS, 241-8644 CANOPY AR-SOFT AN ATTACHMENT

SMCS-7451 **i02003761**

NOTE	REF NO	GRAPHIC REF	PART NUMBER	QTY	PART NAME 1 2 3 4 5 6 (PRODUCT LEVEL)	SEE PAGE
E	1	1	**103-2543**		SEAL (3CM)	
E	2	2	**126-8472**		SEAL (14CM)	
	3	1	**154-5629**	1	ASHTRAY AS	
	4	2	**3T-2662**	1	CIRCUIT BREAKER AS (15-AMPERE) (MAIN)	
		2	**6V-8376**	2	SCREW-MACHINE (8-32X0.25-IN)	
		2	**9B-7233**	2	LOCKWASHER (4.4X8.4X0.5-MM THK)	
	5	2	**4I-3038**	4	WASHER (3.3X8X0.5-MM THK)	
	6	1	**7K-1181**	31	STRAP-CABLE	
	7	2	**9C-9785**	1	BUMPER	
	8	2	**068-4209**	2	SCREW (8-32X0.75-IN)	
	9	2	**105-8034**	1	SWITCH AS-LIMIT (PARKING BRAKE)	
	10	2	**106-8704**	1	SUPPRESSOR AS-ARC	
		2	**102-8802**	1	KIT-RECEPTACLE (2-PIN)	
		2	**3E-3365**	1	WEDGE-RECEPTACLE LOCK (2-PIN)	
		2	**186-3735**	2	PIN-CONNECTOR	
	11	1	**107-6013**	1	SEAL	
	12	1	**107-6021**	1	HOUSING AS	
	13	1	**107-6031**	1	SWITCH AS-KICKOUT (MOWER ENABLE)	
		1	**111-7899**	1	GASKET	
B	14	1	**109-2356**	9	PLUG	
B	15	1	**111-7899**	9	GASKET	
	16	1	**116-7471**	1	PULLER-MINIFUSE	
	17	2	**117-3787**	4	KNOB	
	18	2	**117-3788**	4	RECEPTACLE	
	19	2	**117-3789**	4	RETAINER	
	20	1	**118-7362**	1	GROMMET-SPLIT	
	21	2	**148-5689**	1	GROMMET-SPLIT	
	22	2	**158-5089**	1	RELAY AS (24-VOLT) (NEUTRAL START)	
	23	2	**160-6520**	1	PLATE	
	24	1	**165-0312**	2	WIRE AS	
Y	25	2	**167-0138**	1	SWITCH GP-MAGNETIC (24-VOLT) (MAIN)	136
	26	1	**202-1129**	4	SCREW-TRUSS HEAD (M 4X0.7MM)	
	27	1	**236-4232**	1	PLATE AS	
	28	1	**237-5821**	1	HARNESS AS-CAB	
		1	**102-8802**	1	KIT-RECEPTACLE (2-PIN)	
		1	**102-8804**	1	KIT-RECEPTACLE (4-PIN)	
		1	**102-8805**	1	KIT-RECEPTACLE (6-PIN)	
		1	**102-8806**	4	KIT-RECEPTACLE (8-PIN)	
		1	**102-8801**	4	KIT-RECEPTACLE (12-PIN)	
		1	**155-2255**	5	KIT-CONNECTING PLUG (12-PIN)	
		1	**155-2265**	6	KIT-CONNECTING PLUG (8-PIN)	
		1	**155-2260**	1	KIT-CONNECTING PLUG (3-PIN)	
		1	**155-2270**	5	KIT-CONNECTING PLUG (2-PIN)	
		1	**155-2271**	5	KIT-CONNECTING PLUG (4-PIN)	
		1	**155-2274**	4	KIT-CONNECTING PLUG (6-PIN)	
		1	**102-8804**	1	KIT-RECEPTACLE (4-PIN)	
	29	2	**238-4864**	1	BRACKET AS	
	30	1	**107-6072**	1	PLATE	
	31	2	**142-2928**	4	LOCKNUT	
B	32	2	**184-5224**	1	PLUG AS-CONNECTOR (8-PIN, JUMPER)	
	33	1	**239-6069**	1	FILM-IDENTIFICATION	
	34	1	**240-7738**	1	FILM-CONTROL	
	35	1	**4P-7581**	1	CLIP	
	36	1,2	**4P-8134**	4	CLIP	
	37	1	**5P-4115**	4	WASHER-HARD (7.2X19X2-MM THK)	

240-0656 **PANEL GP-INSTRUMENT** ***(contd.)*** **i02003761**

NOTE	REF NO	GRAPHIC REF	PART NUMBER	QTY	PART NAME 1 2 3 4 5 6 (PRODUCT LEVEL)	SEE PAGE
M	38	1	**6V-8837**	1	BOLT (M6X1X16-MM)	
	39	2	**7G-1060**	1	STRAP AS-GROUND	
	40	2	**7X-3308**	4	BOLT-SOCKET HEAD	
	41	2	**8T-4121**	2	WASHER-HARD (11X21X2.5-MM THK)	
M	42	2	**8T-4133**	2	NUT (M10X1.5-THD)	
M	43	1,2	**8T-4189**	3	BOLT (M8X1.25X20-MM)	
M	44	2	**8T-4199**	2	BOLT (M8X1.25X12-MM)	
	45	1,2	**8T-4205**	3	WASHER-HARD (7.2X14.5X2-MM THK)	
M	46	1,2	**8T-4224**	5	WASHER-HARD (8.8X16X2-MM THK)	
M	47	1,2	**9X-2042**	6	SCREW-TRUSS HEAD (M6X1X12-MM)	
M	48	2	**9X-2045**	2	SCREW-TRUSS HEAD (M6X1X20-MM)	
	49	2	**158-5089**	1	RELAY AS (24-VOLT) (PARKING BRAKE)	
	50	2	**158-5089**	1	RELAY AS (24-VOLT) (BACKUP ALARM)	
	51	2	**158-5089**	1	RELAY AS (24-VOLT) (AUDIBLE ALARM)	
	52	2	**158-5089**	1	RELAY AS (24-VOLT) (HORN)	

B-USE AS REQUIRED
E-ORDER BY THE CENTIMETER
M-METRIC PART
Y-SEPARATE ILLUSTRATION

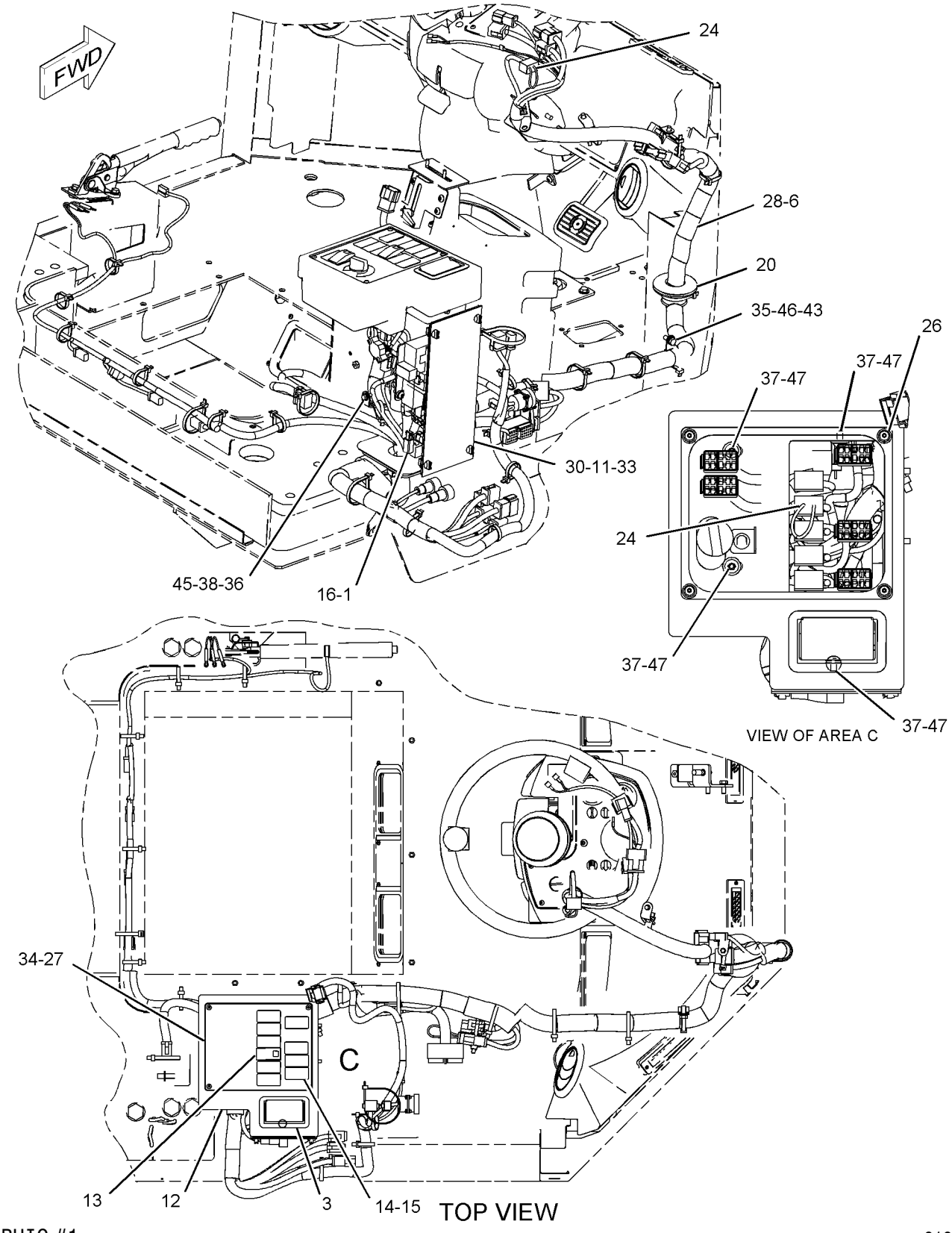

GRAPHIC #1

g01040054

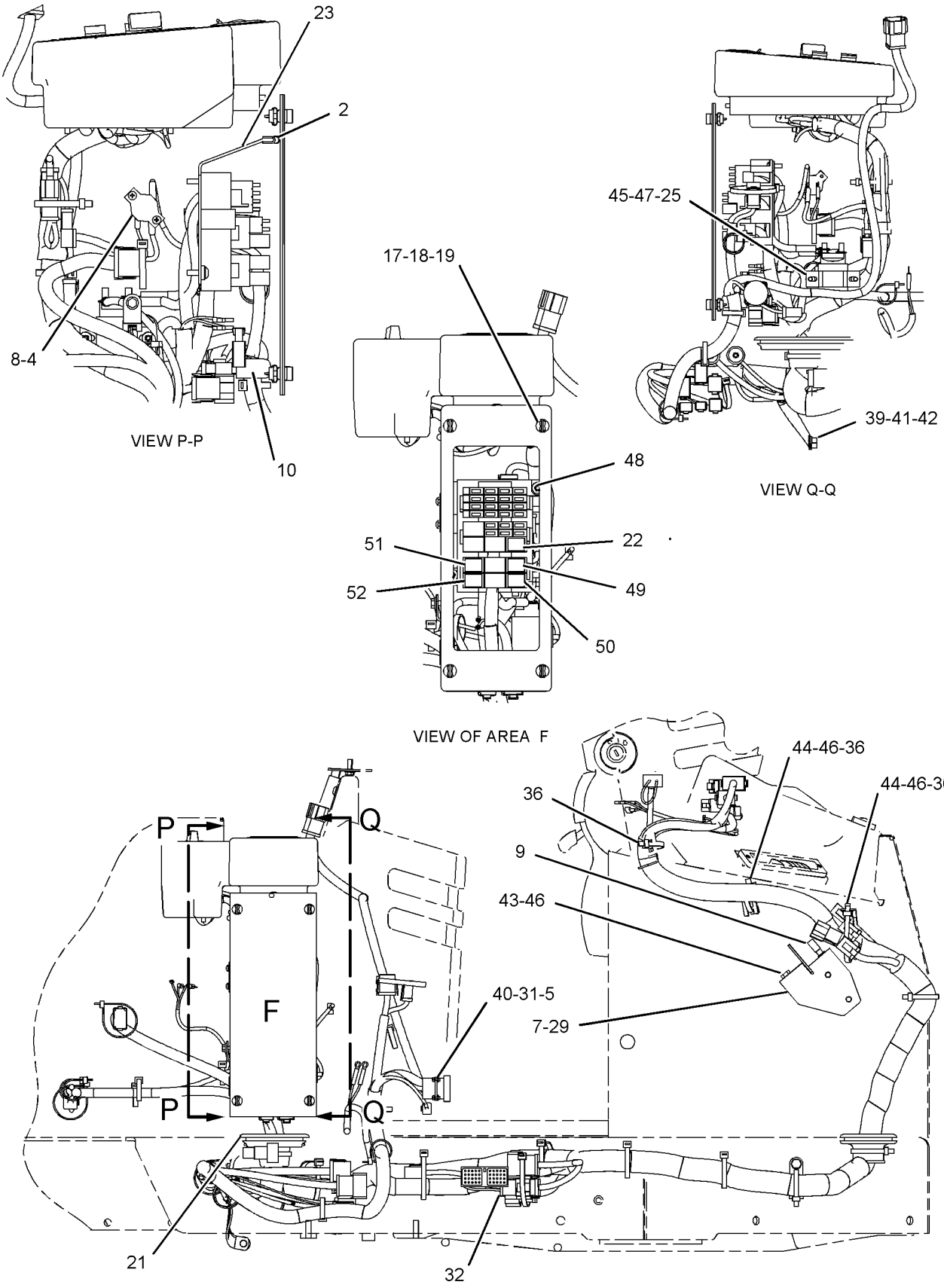

GRAPHIC #2

<END>

g01040055

OPERATOR STATION

174-9730 PEDAL GP-BRAKE

S/N: PDF1-UP
PART OF 219-2849 PLATFORM GP-OPERATOR, 174-9749 ROPS GP-ENCLOSED, 174-9764 ROPS GP-OPEN
AN ATTACHMENT

SMCS-4269, 4290 **i01487453**

NOTE	REF NO	GRAPHIC REF	PART NUMBER	QTY	PART NAME 1 2 3 4 5 6 (PRODUCT LEVEL)	SEE PAGE
	1	1	**1B-8723**	1	KEY-WOODRUFF	
	2	1	**6K-8088**	4	BEARING-ROLLER	
	3	1	**8E-8300**	2	DISC-THRUST	
	4	1	**8R-6904**	2	TREAD-RUBBER	
	5	1	**107-6056**	1	PEDAL AS-LH	
	6	1	**111-0132**	1	PEDAL AS-RH	
	7	1	**174-9725**	1	SUPPORT AS	
	8	1	**8T-4121**	1	WASHER-HARD (11X21X2.5MM THK)	
M	9	1	**8T-4185**	1	BOLT (M10X1.5X50MM)	

M-METRIC PART

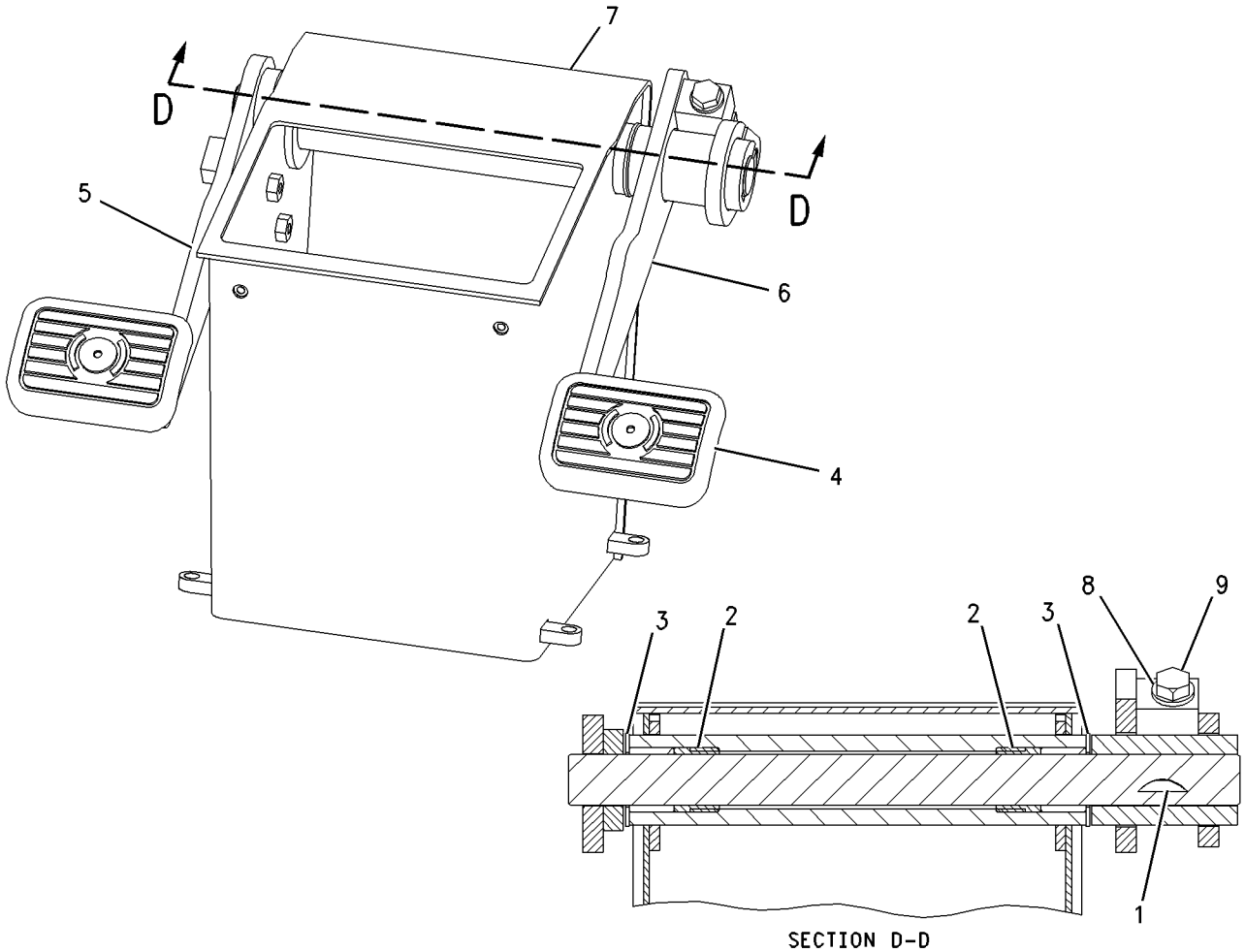

GRAPHIC #1 **<END>** g00773035

OPERATOR STATION

107-4627 PEDAL GP-GOVERNOR

S/N: PDF1-UP

PART OF 239-1006, 239-1007 CAB AR, 241-8807 CANOPY AR-OPEN ROPS, 241-8644 CANOPY AR-SOFT, 241-8643 PLATFORM AR

AN ATTACHMENT

SMCS-1276 **i01697370**

NOTE	REF NO	GRAPHIC REF	PART NUMBER	QTY	PART NAME 1 2 3 4 5 6 (PRODUCT LEVEL)	SEE PAGE
	1	1	**154-0263**	1	PEDAL AS	
M		1	**3C-3364**	1	NUT-HALF	
M		1	**3C-4922**	1	SCREW-HEX HEAD	
		1	**175-3976**	1	KIT-HARDWARE	
M	2	1	**9X-2045**	3	SCREW-TRUSS HEAD (M6X1X20MM)	

M-METRIC PART

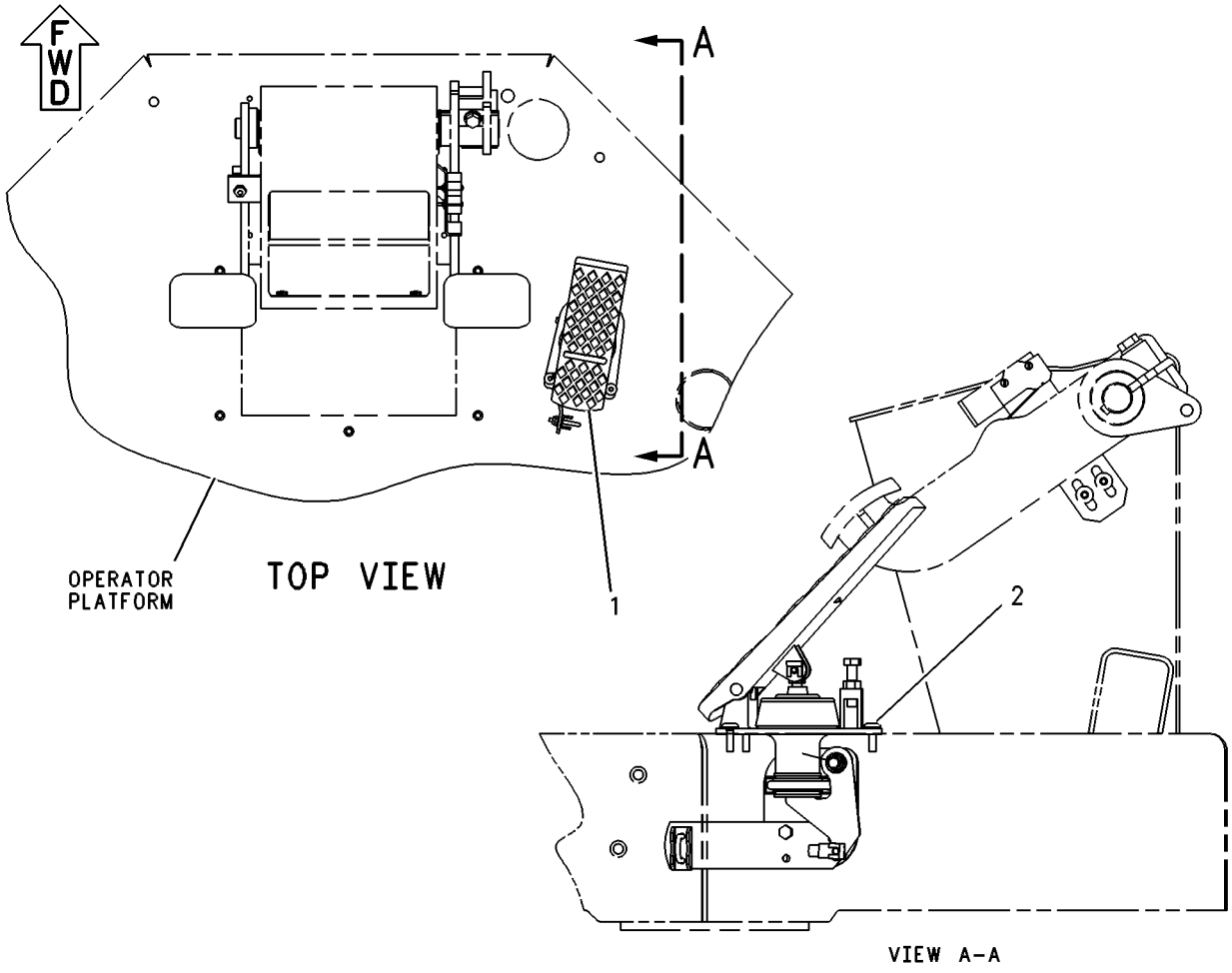

GRAPHIC #1 **<END>** g00131413

OPERATOR STATION

241-8643 PLATFORM AR

S/N: PDF1-UP
2-MAN PREP
AN ATTACHMENT

SMCS-7253 **i02003680**

NOTE	PART NUMBER	QTY	PART NAME 1 2 3 4 5 6 (PRODUCT LEVEL)	SEE PAGE
Y	*107-5980*	1	AIR CONDITIONER & MOUNTING GP	451
M	**8T-6430**	2	BOLT (M20X2.5X50MM)	
Y	*234-9211*	1	COMPRESSOR GP-REFRIGERANT	471
Y	*107-4621*	1	CONTROL GP-PARKING BRAKE	296
Y	*149-4189*	1	CONTROL GP-STEERING	304
Y	*107-4630*	1	DUCT GP-AIR	491
Y	*113-1514*	1	EXTENSION GP-EXHAUST	51
Y	*119-4769*	1	FILTER GP-CAB AIR	493
Y	*117-9624*	1	LINER GP-CAB	508
Y	*236-5648*	1	LINES GP-AIR CONDITIONER	515
Y	*236-5649*	1	LINES GP-CAB HEATER	519
Y	*107-4647*	1	MOUNTING GP-CAB	533
M	**8T-4131**	2	NUT (M20X2.5 THD)	
Y	*237-5820*	1	PANEL GP-INSTRUMENT	544
Y	*107-4627*	1	PEDAL GP-GOVERNOR	553
	119-9759	1	PLATFORM AS	
Y	*219-2849*	1	PLATFORM GP-OPERATOR	557
Y	*117-9623*	1	WASHER GP-WINDOW	593
	8T-4123	4	WASHER-PLATED (22X35X3.5MM THK)	
Y	*238-8387*	1	WIRING GP-CAB	148

M-METRIC PART
Y-SEPARATE ILLUSTRATION

<END>

OPERATOR STATION

119-9756 PLATFORM GP

S/N: PDF1-UP
PART OF 119-9818 PLATFORM GP
AN ATTACHMENT

SMCS-7253 **i00719333**

NOTE	REF NO	GRAPHIC REF	PART NUMBER	QTY	PART NAME 1 2 3 4 5 6 (PRODUCT LEVEL)	SEE PAGE
	1	1	**119-9759**	1	PLATFORM AS	
		1	**7T-1099**	1	LINK	
	2	1	**119-9760**	1	PLATFORM AS	
		1	**7T-1099**	5	LINK	
	3	1	**119-9762**	2	STRIP	
M	4	1	**8T-4189**	4	BOLT (M8X1.25X20MM)	
	5	1	**5P-4116**	4	WASHER (2MM THK)	
M	6	1	**8T-6430**	8	BOLT (M20X2.5X50MM)	
	7	1	**8T-4123**	10	WASHER-PLATED (3.5MM THK)	
M	8	1	**8T-4131**	2	NUT (M20X2.50 THD)	

M-METRIC PART

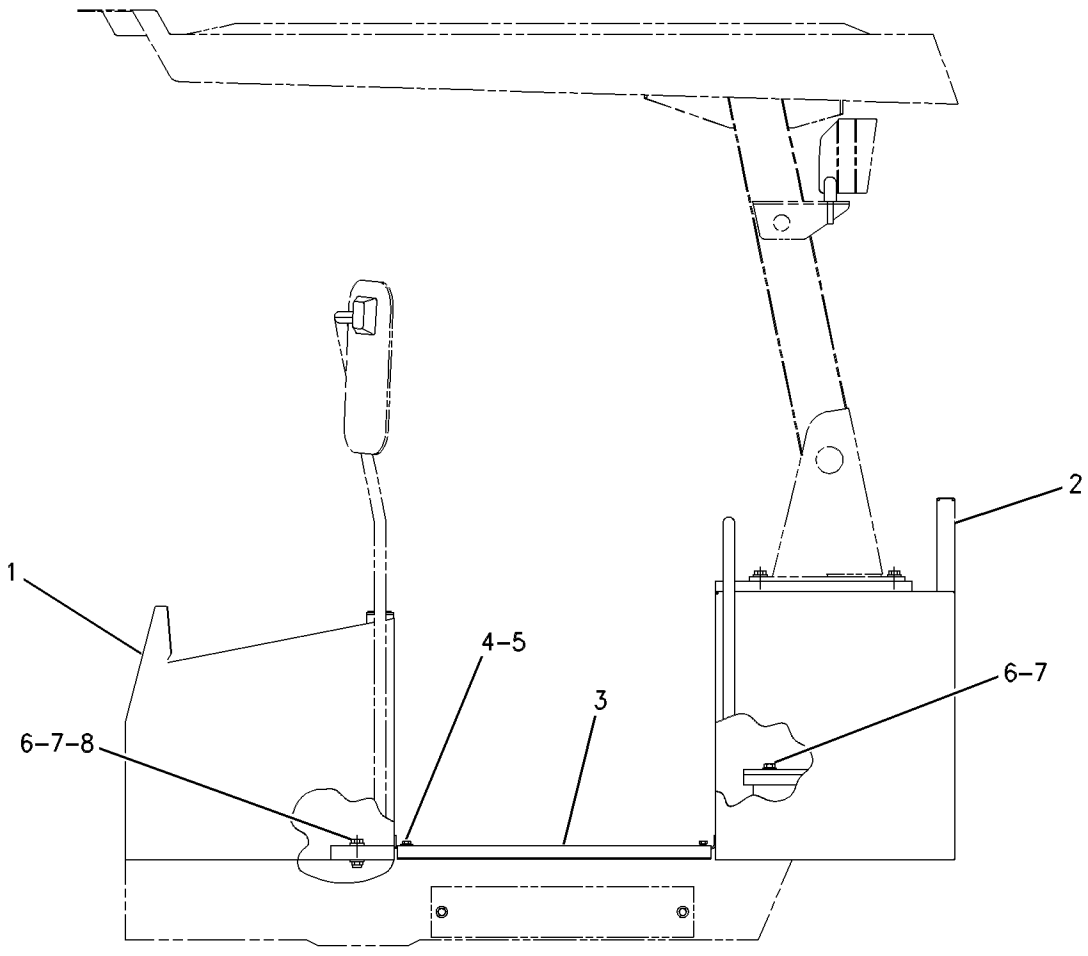

LEFT SIDE VIEW

GRAPHIC #1 **<END>** g00311609

OPERATOR STATION

119-9818 PLATFORM GP

S/N: PDF1-UP
PART OF 241-8644 CANOPY AR-SOFT
AN ATTACHMENT

SMCS-7253 **i01838128**

NOTE	REF NO	GRAPHIC REF	PART NUMBER	QTY	PART NAME 1 2 3 4 5 6 (PRODUCT LEVEL)	SEE PAGE
Y	1	1	*119-9756*	1	PLATFORM GP	555
Y	2	1	*219-2849*	1	PLATFORM GP-OPERATOR	557
M	3	1	**8T-4137**	2	BOLT (M10X1.5X20MM)	
	4	1	**8T-4121**	2	WASHER-HARD (11X21X2.5MM THK)	
	5	1	**118-7255**	1	COVER	
M	6	1	**8T-4131**	2	NUT (M20X2.5 THD)	
D	7	1	**5P-5943**		SEAL (3.2M)	
	8	1	**8T-4123**	10	WASHER-PLATED (22X35X3.5MM THK)	
M	9	1	**7X-2563**	8	BOLT (M20X2.5X60MM)	

D-ORDER BY THE METER
M-METRIC PART
Y-SEPARATE ILLUSTRATION

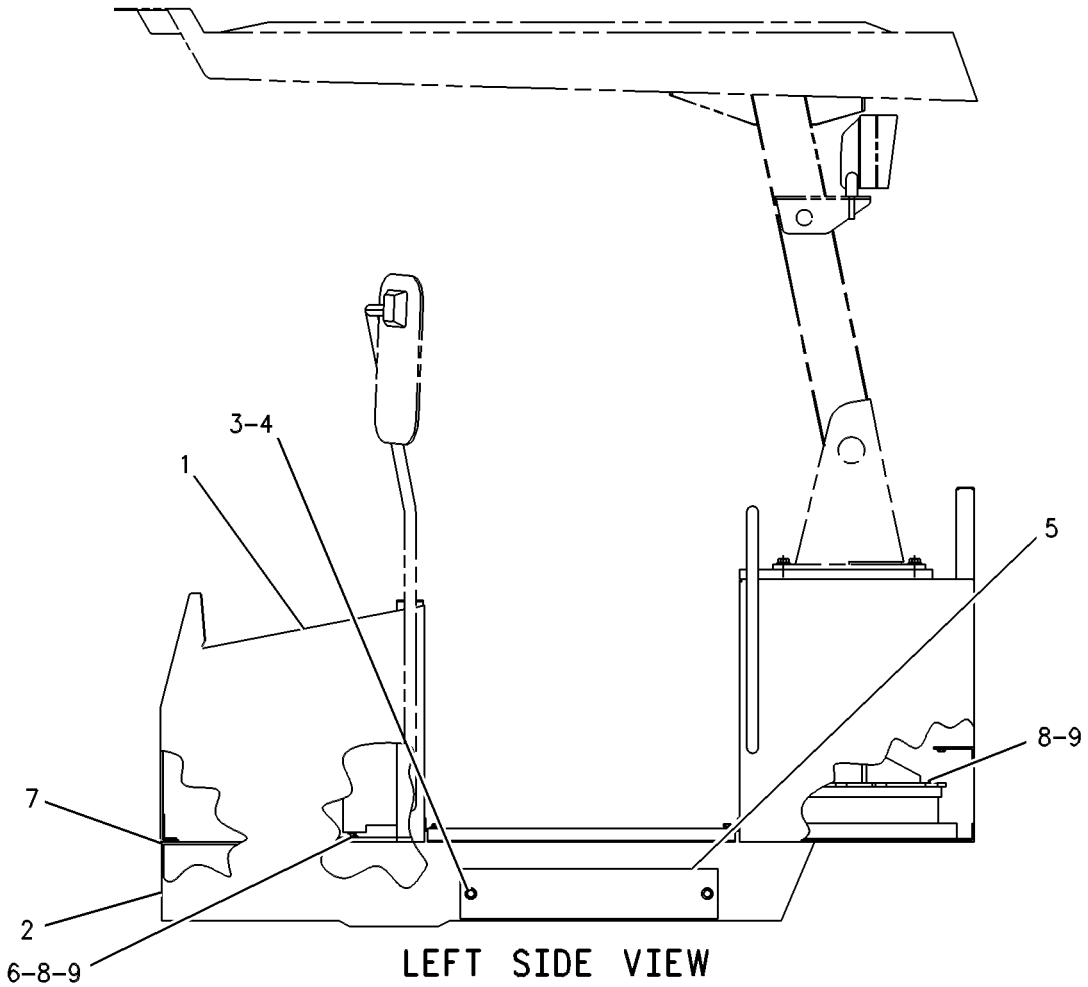

LEFT SIDE VIEW

GRAPHIC #1 **<END>** g00261222

OPERATOR STATION

219-2849 PLATFORM GP-OPERATOR

S/N: PDF1-UP
WITH BRAKES
PART OF 241-8643 PLATFORM AR, 119-9818 PLATFORM GP
AN ATTACHMENT

SMCS-7253 **i01786810**

NOTE	REF NO	GRAPHIC REF	PART NUMBER	QTY	PART NAME 1 2 3 4 5 6 (PRODUCT LEVEL)	SEE PAGE
Y	1	1	*174-9730*	1	PEDAL GP-BRAKE	552
	2	1	**219-2850**	1	FLOORPLATE AS	
		1	**5G-8871**	8	BOSS (M6X1-6H THD)	
		1	**7T-1099**	22	LINK	
		1	**9G-9155**	2	CLIP	
		1	**9R-2672**	12	BOSS (M10X20MM)	
M	3	1	**8T-4189**	4	BOLT (M8X1.25X20MM)	
	4	1	**8T-4224**	4	WASHER-HARD (8.8X16X2MM THK)	

M-METRIC PART
Y-SEPARATE ILLUSTRATION

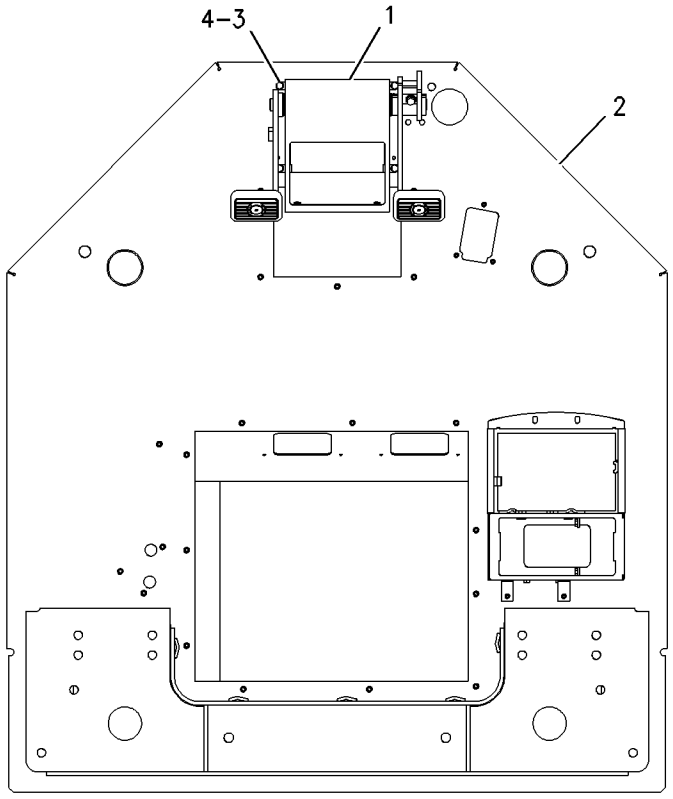

TOP VIEW

GRAPHIC #1 **<END>** g00923886

OPERATOR STATION

210-2270 RECLINER GP-SEAT

S/N: PDF1-UP
PART OF 178-0603 SEAT GP
AN ATTACHMENT

SMCS-7312 **i02003287**

NOTE	REF NO	GRAPHIC REF	PART NUMBER	QTY	PART NAME 1 2 3 4 5 6 (PRODUCT LEVEL)	SEE PAGE
	1	1	**177-1862**	1	BRACKET	
	2	1	**210-2262**	1	BRACKET AS	
	3	1	**210-2263**	1	BRACKET AS	
	4	1	**210-2266**	1	GEAR (14 TEETH)	
	5	1	**210-2268**	1	SHAFT AS	
	6	1	**217-7933**	1	LATCH	
	7	1	**236-5197**	1	SPRING	
	8	1	**031-0214**	1	BOLT-LOCKING (1/4-20X0.5 IN)	
	9	1	**101-2867**	1	WASHER-HARD (7.2X25X2MM THK)	
	10	1	**4M-6425**	1	BOLT (5/16-18X1 IN)	
	11	1	**5M-2894**	1	WASHER-HARD (10.2X18.5X2.5MM THK)	
	12	1	**5S-7383**	1	BOLT (3/8-16X1.75 IN)	
	13	1	**8T-4224**	1	WASHER-HARD (8.8X16X2MM THK)	

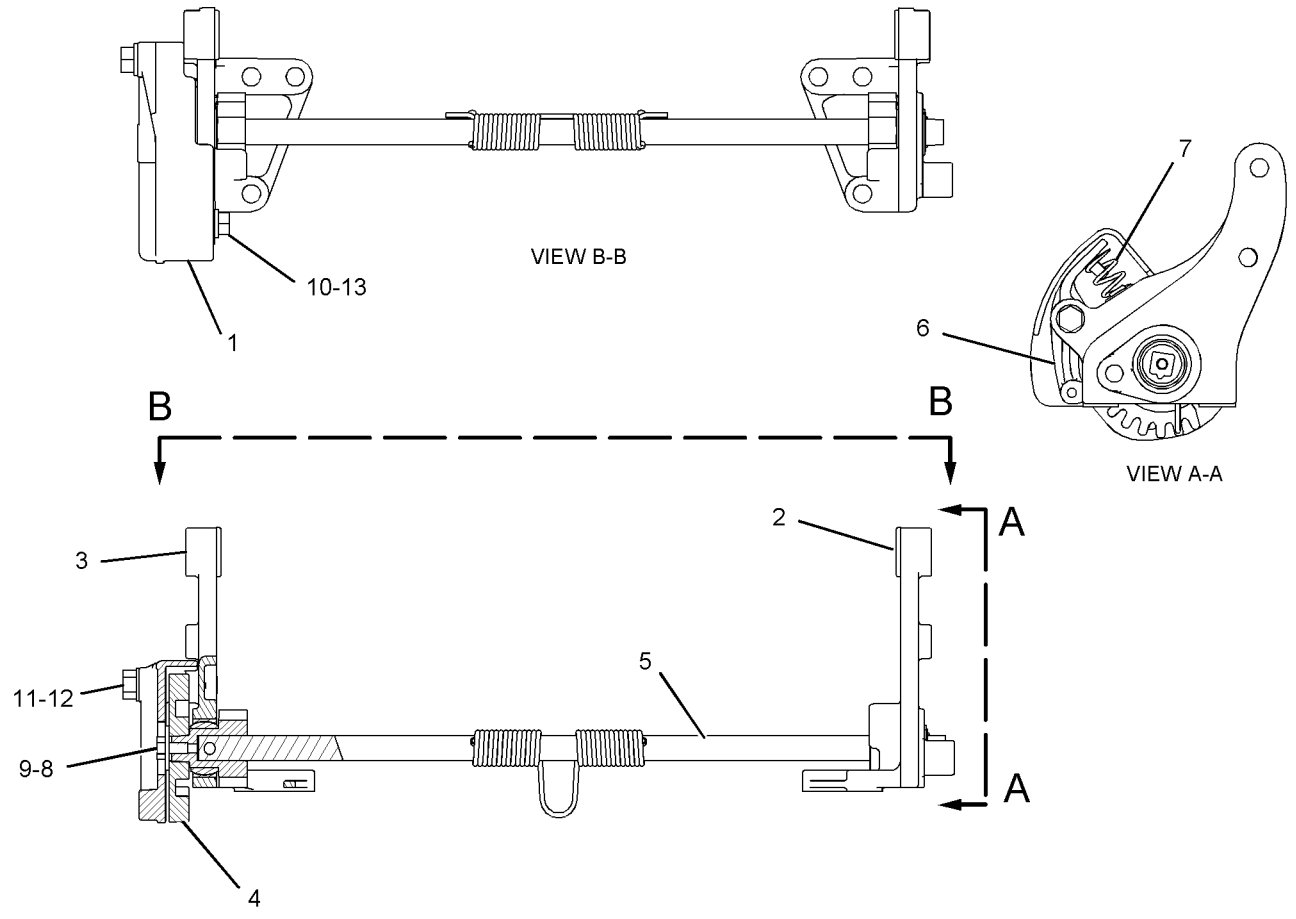

GRAPHIC #1 **<END>** g01040293

OPERATOR STATION

174-9749 ROPS GP-ENCLOSED

S/N: PDF1-UP

PART OF 205-0522 CAB AR, 205-0524 CAB AR-ENCLOSED ROPS AN ATTACHMENT

SMCS-7301 **i02021396**

NOTE	REF NO	GRAPHIC REF	PART NUMBER	QTY	PART NAME 1 2 3 4 5 6 (PRODUCT LEVEL)	SEE PAGE
	1	1	**091-0079**	7	PLUG	
Y	2	1	*174-9730*	1	PEDAL GP-BRAKE	552
Y	3	1	**174-9755**	1	CAB GP-ENCLOSED ROPS	464
	4	1	**5P-5774**	4	PLUG	
M	5	1	**8T-4189**	4	BOLT (M8X1.25X20-MM)	
M	6	1	**8T-4224**	4	WASHER-HARD (8.8X16X2-MM THK)	

M-METRIC PART
Y-SEPARATE ILLUSTRATION

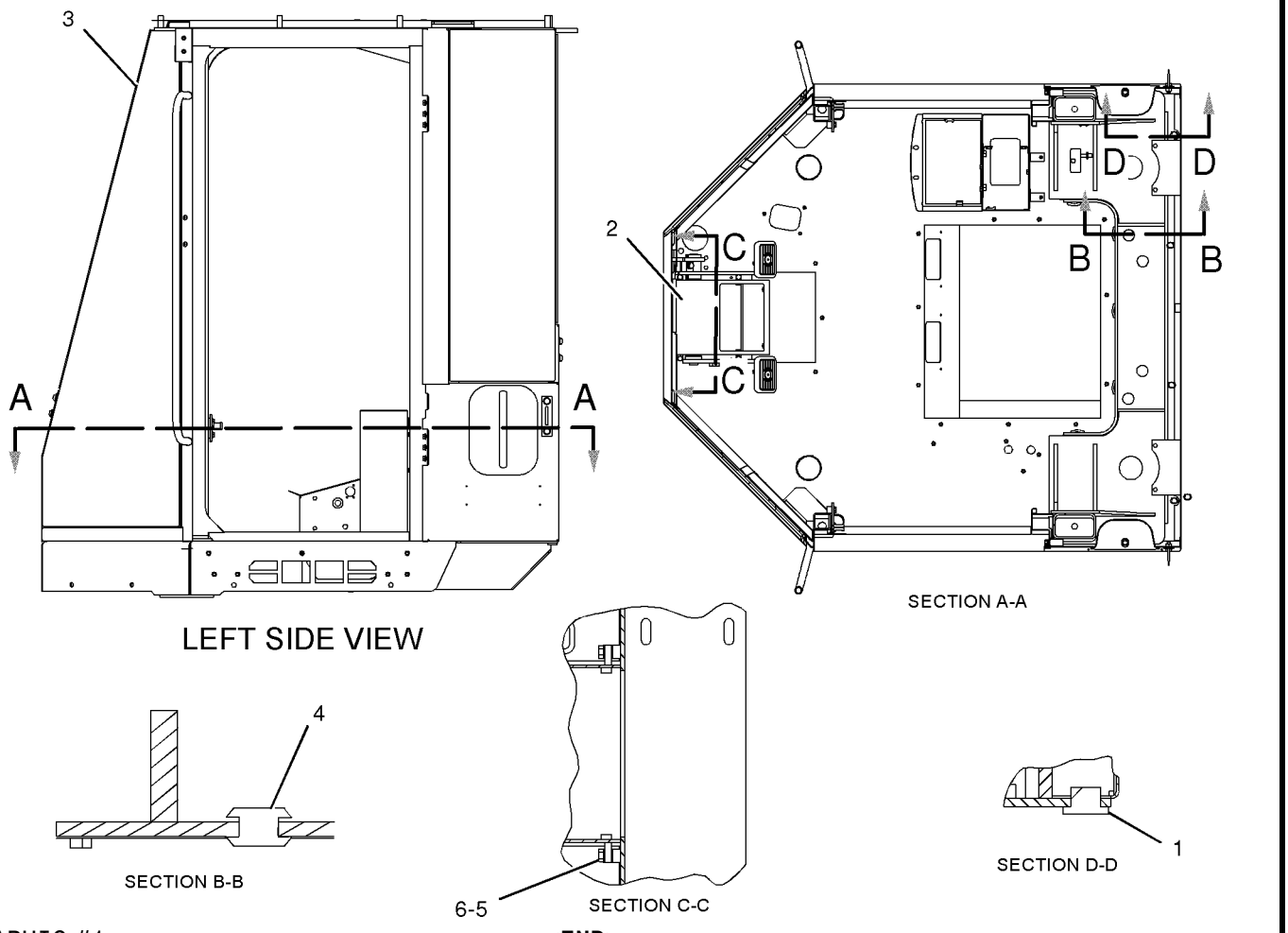

GRAPHIC #1 **<END>** g01043833

OPERATOR STATION

174-9764 ROPS GP-OPEN

S/N: PDF1-UP
PART OF 205-0520 CANOPY GP-OPEN ROPS
AN ATTACHMENT

SMCS-7323 **i02034287**

NOTE	REF NO	GRAPHIC REF	PART NUMBER	QTY	PART NAME 1 2 3 4 5 6 (PRODUCT LEVEL)	SEE PAGE
	1	1	**118-7255**	1	COVER	
Y	2	1	*174-9730*	1	PEDAL GP-BRAKE	552
	3	1	**174-9763**	1	CANOPY AS	
	4	1	**8T-4121**	2	WASHER-HARD (11X21X2.5-MM THK)	
M	5	1	**8T-4137**	2	BOLT (M10X1.5X20-MM)	
M	6	1	**8T-4189**	4	BOLT (M8X1.25X20-MM)	
M	7	1	**8T-4224**	4	WASHER-HARD (8.8X16X2-MM THK)	

M-METRIC PART
Y-SEPARATE ILLUSTRATION

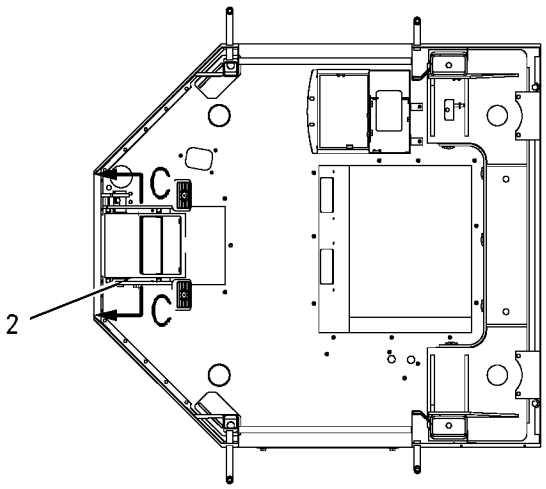

SECTION A-A

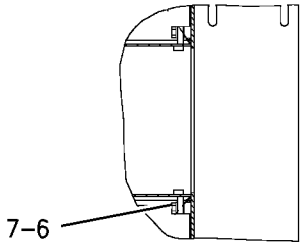

SECTION C-C

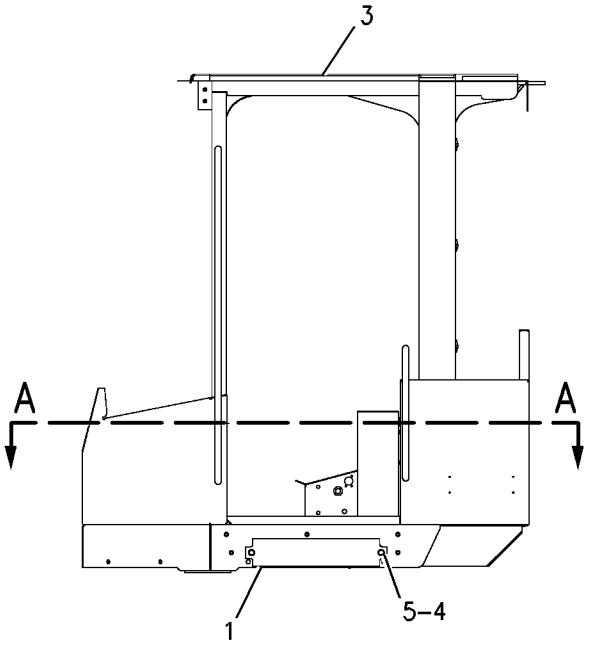

GRAPHIC #1 **<END>** g00669466

OPERATOR STATION

118-7250 SCREEN GP-SUN

S/N: PDF1-UP

AN ATTACHMENT

SMCS-7165 **i01679748**

NOTE	REF NO	GRAPHIC REF	PART NUMBER	QTY	PART NAME 1 2 3 4 5 6 (PRODUCT LEVEL)	SEE PAGE
F			**119-2073**	2	HOOK-RETAINER	

F-NOT SHOWN

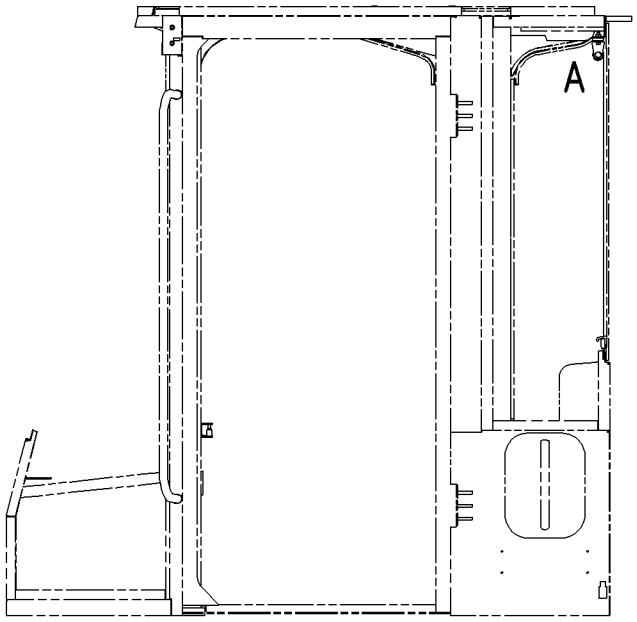

LEFT SIDE VIEW

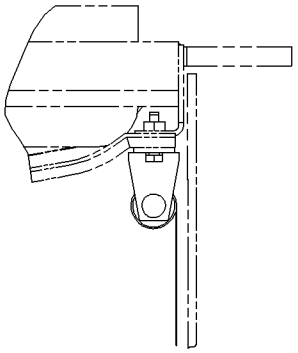

VIEW OF AREA A

GRAPHIC #1 **<END>** g00869480

OPERATOR STATION

156-1148 SEAT BELT GP

S/N: PDF1-UP
3-IN
PART OF 8Y-6977 SEAT GP-SUSPENSION
AN ATTACHMENT

SMCS-7327 **i01224999**

NOTE	REF NO	GRAPHIC REF	PART NUMBER	QTY	PART NAME 1 2 3 4 5 6 (PRODUCT LEVEL)	SEE PAGE
	1	1	**8Y-5953**	1	BOLT-HEX (7/16-20X1.5IN)	
	2	1	**8T-5360**	1	WASHER (2.5MM THK)	
	3	1	**1A-4350**	1	BOLT (7/16-20X1.75IN)	
	4	1	**4D-6432**	1	LOCKNUT (7/16-20 THD)	

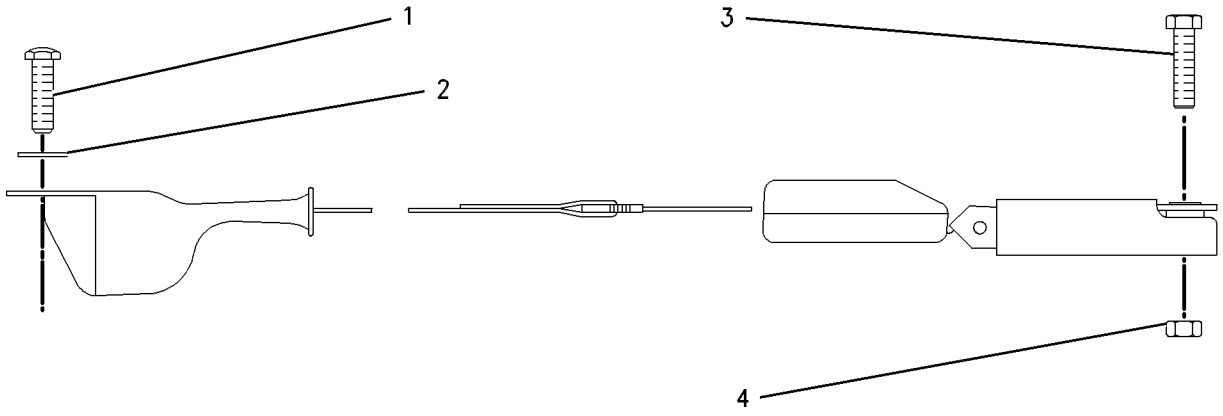

GRAPHIC #1 **<END>** g00465110

OPERATOR STATION

226-4082 SEAT BELT GP

S/N: PDF1-UP
2-IN
AN ATTACHMENT

SMCS-7327 **i01833392**

NOTE	REF NO	GRAPHIC REF	PART NUMBER	QTY	PART NAME 1 2 3 4 5 6 (PRODUCT LEVEL)	SEE PAGE
	1	1	**1J-6298**	1	BOLT (7/16-20X3.5IN)	
	2	1	**3K-6113**	2	WASHER-HARD (12X18.5X3MM THK)	
	3	1	**8S-0934**	1	LOCKNUT-FLANGE (7/16-20 THD)	
	4	1	**8T-9381**	1	BOLT (7/16-20X1IN)	

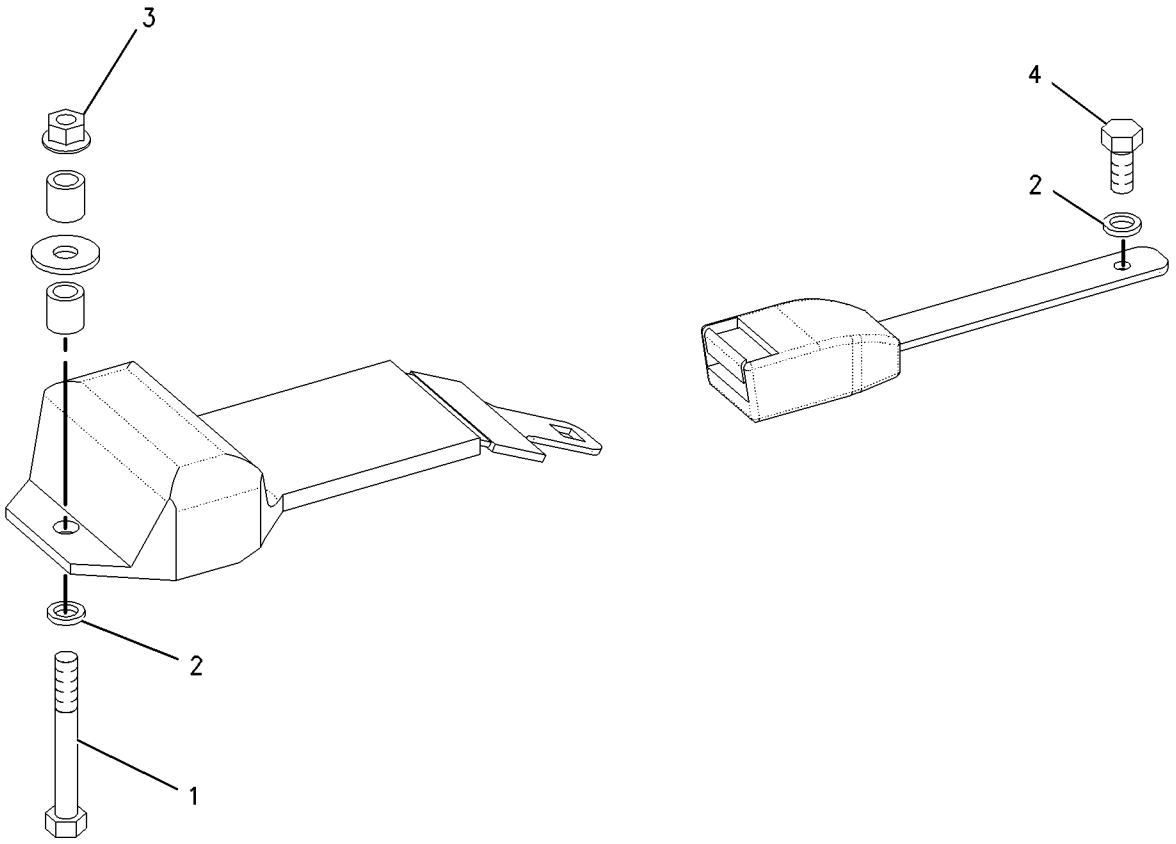

GRAPHIC #1 **<END>** g00937658

OPERATOR STATION

226-4083 SEAT BELT GP

S/N: PDF1-UP
3-IN
AN ATTACHMENT

SMCS-7327 **i01833400**

NOTE	REF NO	GRAPHIC REF	PART NUMBER	QTY	PART NAME 1 2 3 4 5 6 (PRODUCT LEVEL)	SEE PAGE
	1	1	**1J-6298**	1	BOLT (7/16-20X3.5IN)	
	2	1	**3K-6113**	2	WASHER-HARD (12X18.5X3MM THK)	
	3	1	**8S-0934**	1	LOCKNUT-FLANGE (7/16-20 THD)	
	4	1	**8T-9381**	1	BOLT (7/16-20X1IN)	

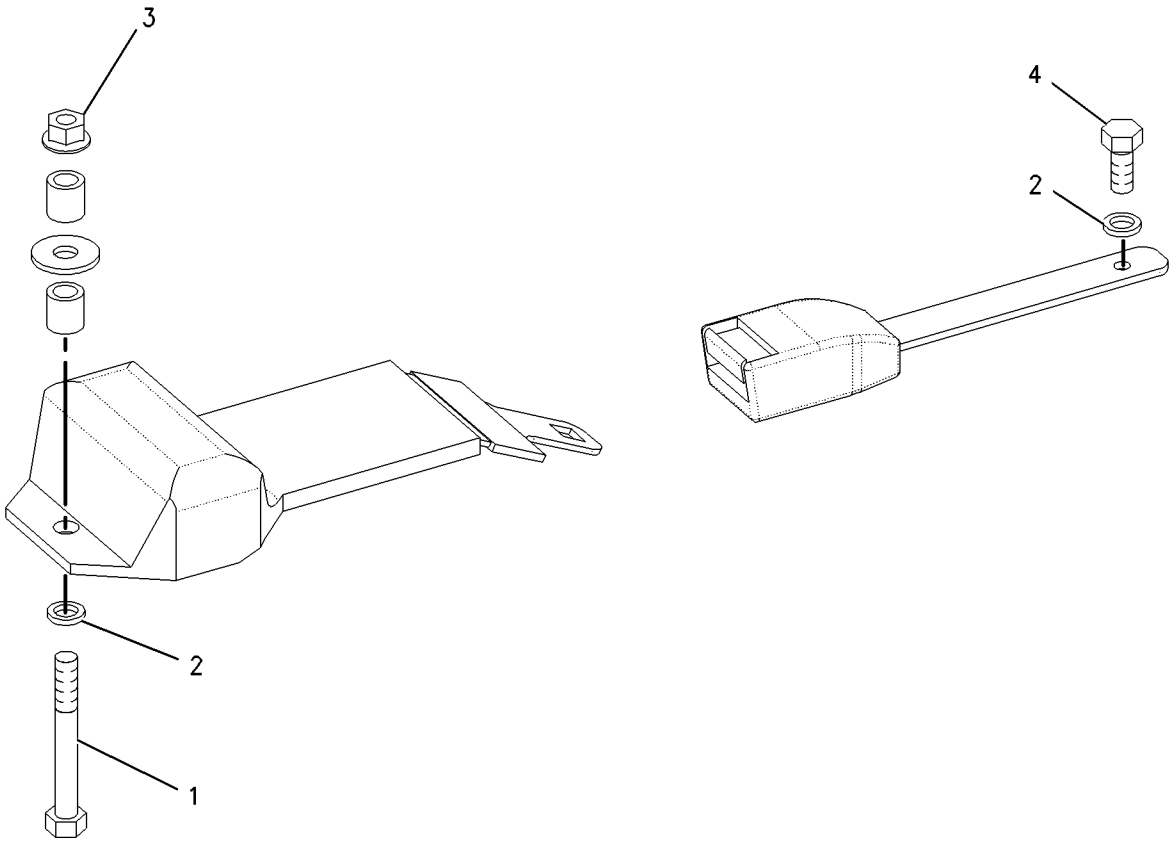

GRAPHIC #1 **<END>** g00937583

OPERATOR STATION

8Y-6882 SEAT GP

S/N: PDF1-UP
PART OF 8Y-6977 SEAT GP-SUSPENSION
AN ATTACHMENT

SMCS-7312 **i01224214**

NOTE	REF NO	GRAPHIC REF	PART NUMBER	QTY	PART NAME 1 2 3 4 5 6 (PRODUCT LEVEL)	SEE PAGE
Y	1	1	**108-8421**	1	PAN GP-BACKREST (BACK)	535
Y	2	1	*8Y-5992*	1	PAN GP-SEAT (BOTTOM)	538
	3	1	**113-0899**	10	SCREW-FLAT HEAD (6-20X.5IN)	
	4	1	**119-7127**	1	CUSHION AS (BACK)	
N	5	1	*119-7126*	1	CUSHION AS (SEAT)	
L	6	1	*112-4580*	1	KNOB-SEAT TILT	
	7	1	**8Y-5929**	1	PLATE AS-SLIDE	
	8	1	**8Y-5930**	1	BAR AS-SLIDE	
	9	1	**8Y-5931**	1	BAR AS-LATCH	
	10	1	**8S-7803**	2	RING-RETAINING	
	11	1	**8Y-5932**	1	LATCH AS	
	12	1	**8Y-5936**	1	SPRING	
	13	1	**095-0878**	1	PIN-SPRING	
L	14	1	*112-4582*	1	KNOB-SLIDE (UPPER)	
L	15	1	*112-4583*	1	KNOB-SLIDE (LOWER)	
L	16	1	*112-4578*	1	KNOB-BACK TILT	
	17	1	**8Y-5937**	1	BRACKET AS-RH	
	18	1	**8Y-5938**	1	BRACKET AS-LH	
	19	1	**7U-4898**	6	SCREW (3/8-16X0.75IN)	
	20	1	**2K-4973**	6	LOCKNUT (3/8-16 THD)	
	21	1	**8Y-5979**	1	PIN	
	22	1	**6V-2456**	2	RING-RETAINING	
L	23	1	*112-4579*	1	KNOB-BACK TILT	
L	24	1	*112-4581*	1	KNOB-SEAT TILT	
	25	1	**8Y-5947**	4	FASTENER	
	26	1	**8Y-6833**	1	SPRING-RH	
	27	1	**8Y-6834**	1	SPRING-LH	
	28	1	**1C-0569**	2	BOLT (5/16-18X.5IN)	
	29	1	**2B-2695**	4	BOLT (5/16-18X.875IN)	
J	30	1	*8Y-5878*	1	PAN AS	
	31	1	**8Y-5928**	2	SPRING	
	32	1	**8Y-5981**	2	BUSHING-BACKREST	
	33	1	**7B-7525**	2	BOLT-SOCKET HEAD (7/16-14X1.25IN)	
	34	1	**8Y-6051**	2	SPACER (14.24MM THK)	
	35	1	**9L-7469**	2	LOCKPIN	
P	36	1	**061-8803**	4	SHIM (1.52MM THK)	
					AVAILABLE REPAIR KIT(S):	
J			**8Y-6933**	1	KIT-TILT PAN	
L			**112-4577**	1	KIT-SEAT KNOB	
N			**119-7141**	1	KIT-SEAT CUSHION	

J-PARTS MARKED 'J' SERVICED BY KIT MARKED 'J'
L-PARTS MARKED 'L' SERVICED BY KIT MARKED 'L'
N-PARTS MARKED 'N' SERVICED BY KIT MARKED 'N'
P-USE AS REQUIRED TO LOCATE BAR AS
Y-SEPARATE ILLUSTRATION

8Y-6882 SEAT GP *(contd.)*

i01224214

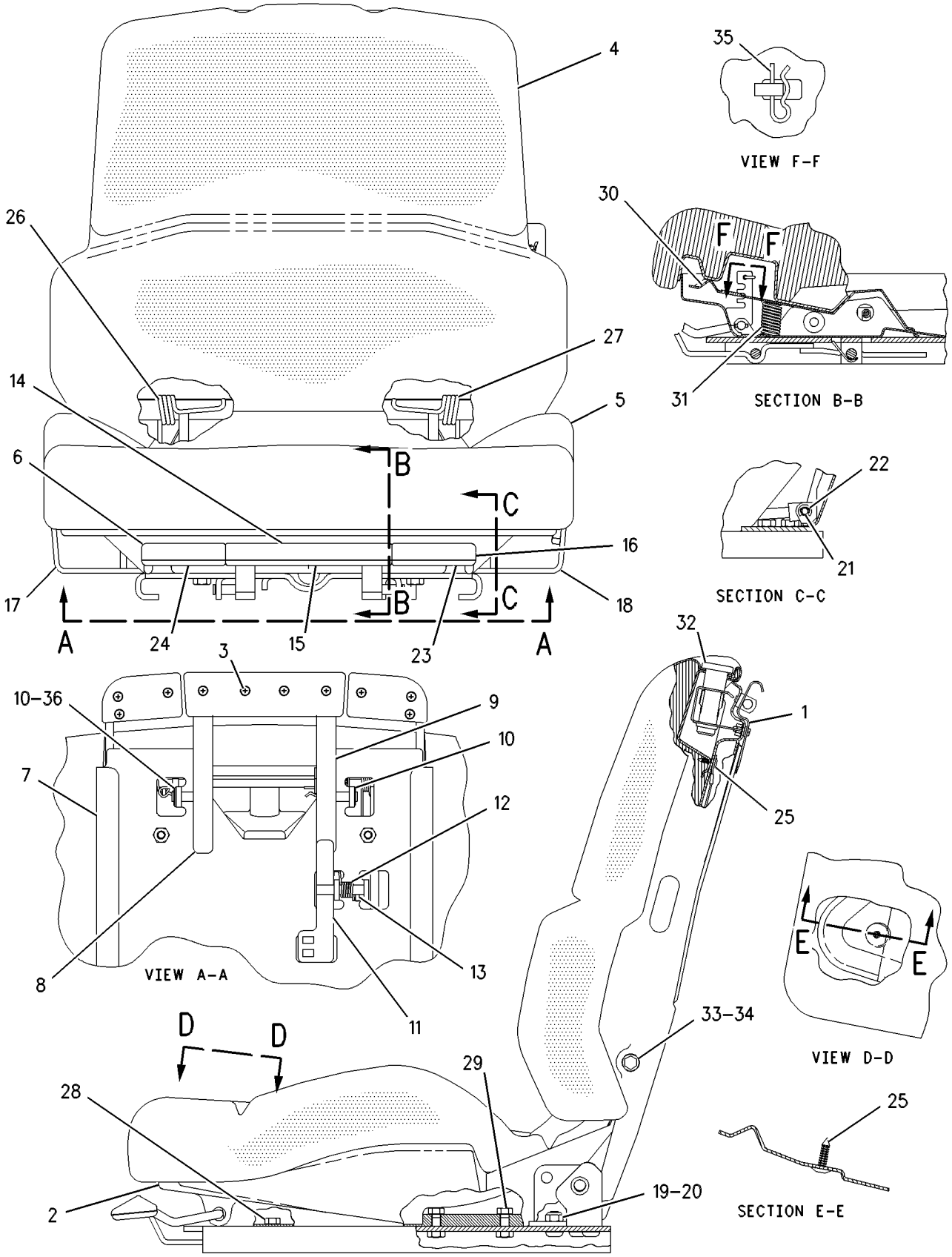

GRAPHIC #1 **<END>** g00659038

OPERATOR STATION

107-5978 SEAT GP

S/N: PDF1-UP

AN ATTACHMENT

SMCS-7312 **i00523603**

NOTE	REF NO	GRAPHIC REF	PART NUMBER	QTY	PART NAME 1 2 3 4 5 6 (PRODUCT LEVEL)	SEE PAGE
Y	1	1	**8Y-6977**	1	SEAT GP-SUSPENSION	573
M	2	1	**113-9232**	2	BOLT-HEX HEAD (8X1.25X30 MM)	
	3	1	**8T-4121**	4	WASHER (2.5MM THK)	
M	4	1	**9X-2125**	4	BOLT-LOCKING (M10X1.5X25MM)	

M-METRIC PART
Y-SEPARATE ILLUSTRATION

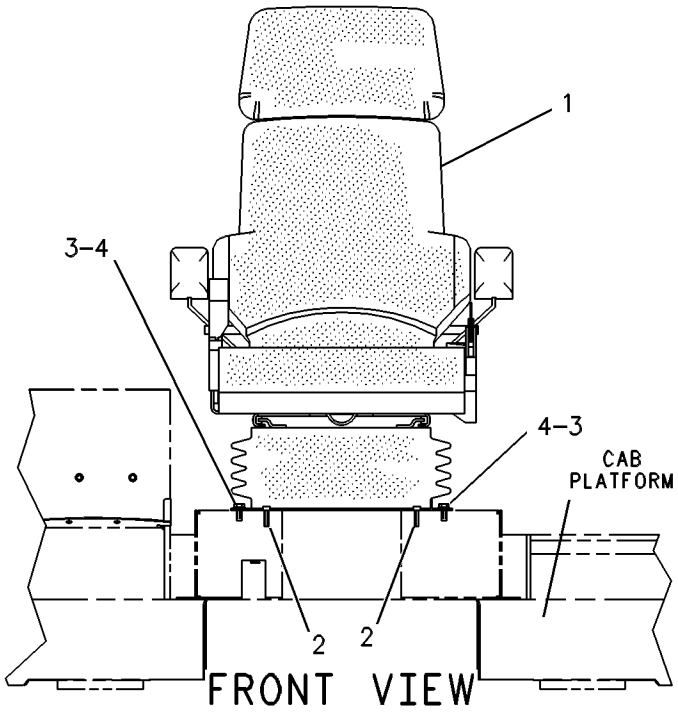

GRAPHIC #1 **<END>** g00131404

OPERATOR STATION

178-0603 SEAT GP

S/N: PDF1-UP
CLOTH
PART OF 178-7914 SEAT GP
AN ATTACHMENT

SMCS-7312 **i02003248**

NOTE	REF NO	GRAPHIC REF	PART NUMBER	QTY	PART NAME 1 2 3 4 5 6 (PRODUCT LEVEL)	SEE PAGE
	1	1	**218-0861**	1	PAN AS	
		1	**8T-9082**	5	RIVET-POP	
		1	**217-9049**	1	CUSHION AS	
	2	1	**143-1288**	8	LOCKNUT-FLANGE (3/8-16 THD)	
	3	1	**171-1230**	6	SCREW-BUTTON HEAD (3/8-16X1 IN)	
	4	1	**171-6682**	1	BAR	
	5	1	**172-2416**	2	PIN	
Y	6	1	*173-1028*	1	ADJUSTER GP-SEAT	449
	7	1	**177-1863**	2	BOLT-PIVOT (3/8-16X2.89 IN)	
Y	8	1	*210-2270*	1	RECLINER GP-SEAT	558
Y	9	1	*178-0604*	1	PAN GP-BACKREST (CLOTH)	536
	10	1	**184-2298**	1	ROD	
	11	1	**184-2299**	4	WASHER (7X25.4X2.54MM THK)	
	12	1	**095-0843**	2	PIN-COTTER	
	13	1	**5V-1496**	2	RETAINER	
	14	1	**6V-7646**	2	WASHER-HARD (7.2X25X2MM THK)	
	15	1	**8T-0328**	1	WASHER-HARD (5.5X10X1MM THK)	
	16	1	**8T-4205**	1	WASHER-HARD (7.2X14.5X2MM THK)	
	17	1	**8Y-6277**	2	SPACER (10.5X28.6X10MM THK)	

Y-SEPARATE ILLUSTRATION

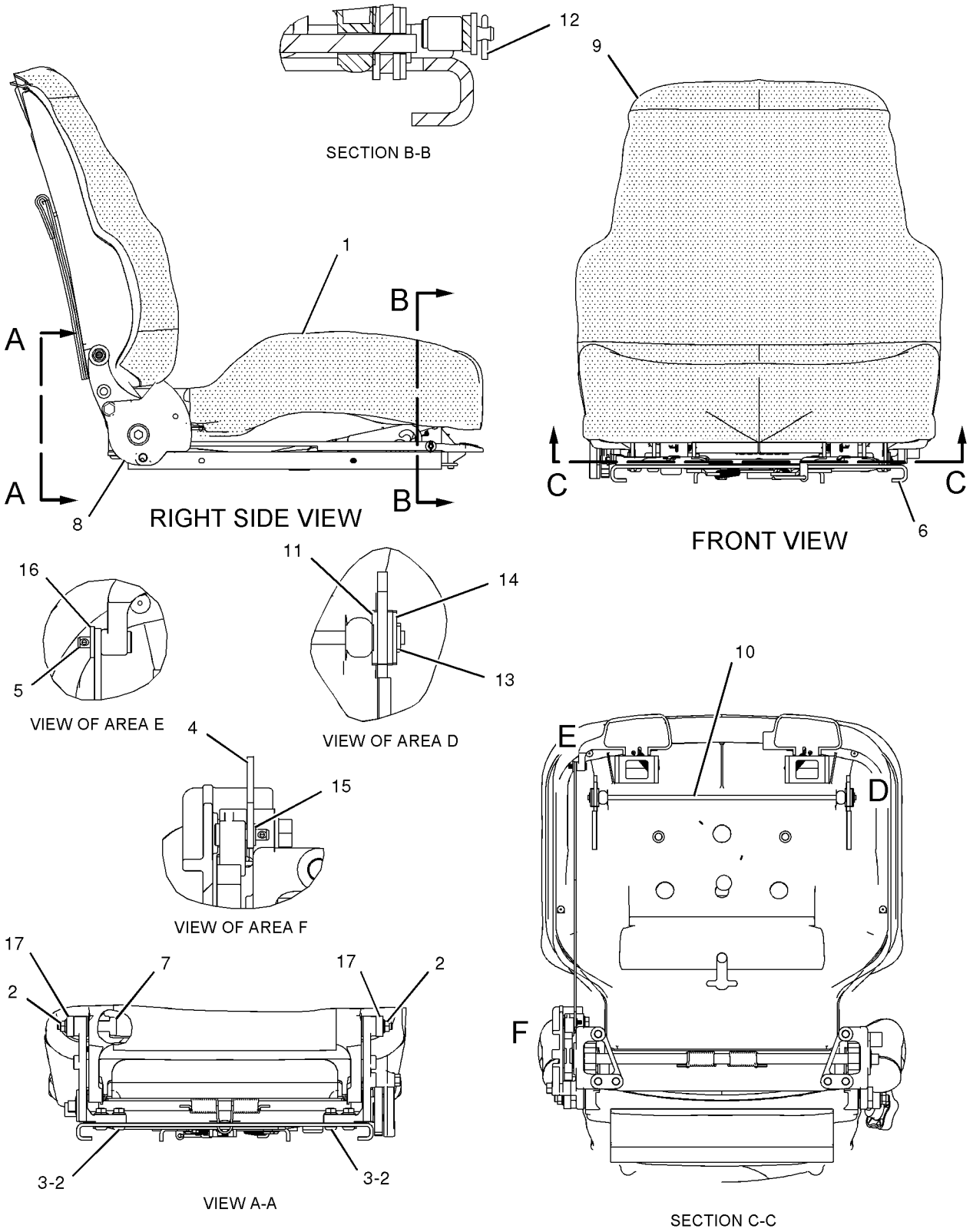

GRAPHIC #1 **<END>** g01023456

178-7914 SEAT GP

S/N: PDF1-UP
CLOTH
PART OF 219-8096 SEAT GP-SUSPENSION
AN ATTACHMENT

SMCS-7312 **i02002711**

NOTE	REF NO	GRAPHIC REF	PART NUMBER	QTY	PART NAME 1 2 3 4 5 6 (PRODUCT LEVEL)	SEE PAGE
Y	1	1	**162-8447**	1	ARMREST GP (LH)	460
Y	2	1	**162-8448**	1	ARMREST GP (RH)	461
	3	1	**177-4937**	1	SPACER (11.7X19.8X20.3MM THK)	
Y	4	1	**178-0603**	1	SEAT GP (CLOTH)	569
	5	1	**222-0345**	1	SEAT BELT GP	
	5A	1	**0T-0244**	1	BOLT (7/16-20X1.25 IN)	
	5B	1	**205-6388**	1	BOLT (7/16-20X44.45MM)	
	6	1	**229-1494**	1	EXTENSION GP-BACKREST (CLOTH)	
		1	**117-4491**	1	ROD	

Y-SEPARATE ILLUSTRATION

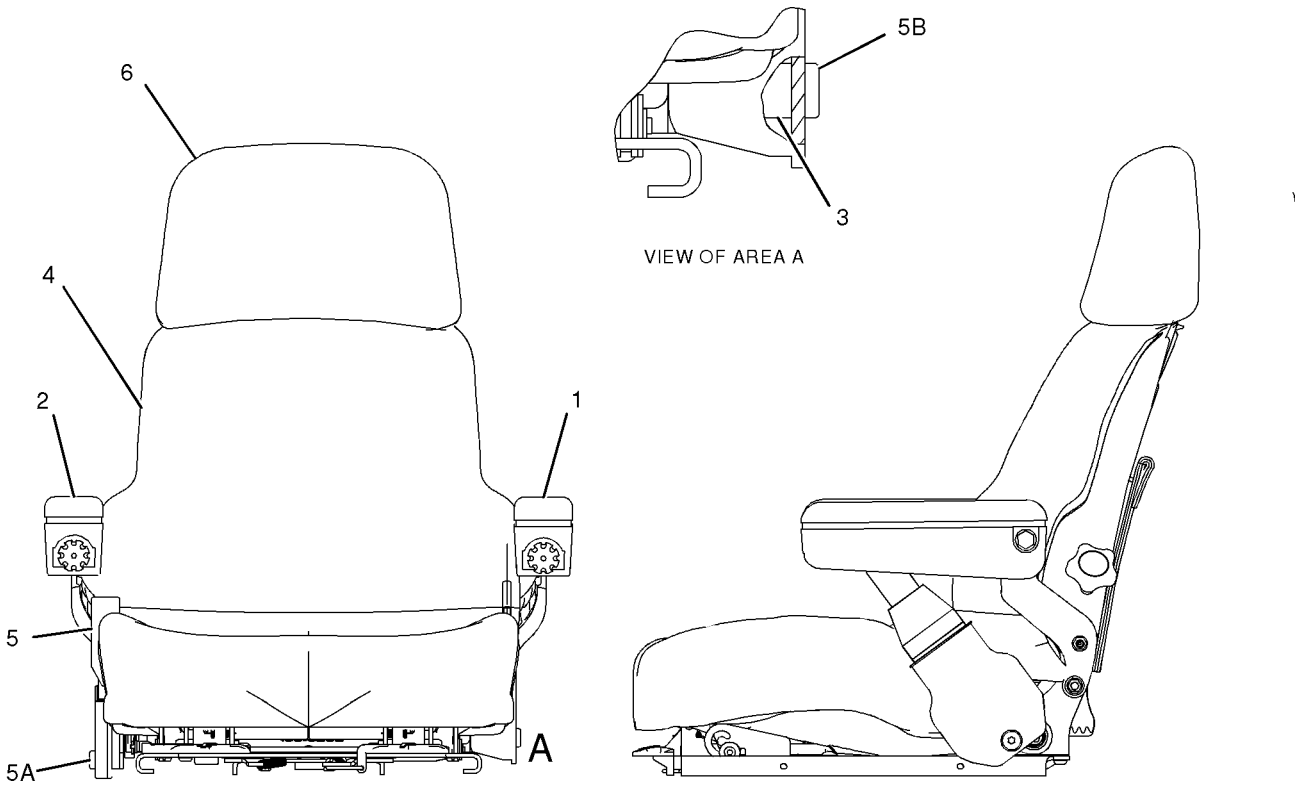

FRONT VIEW LEFT SIDE VIEW

GRAPHIC #1 **<END>** g01035958

OPERATOR STATION

239-5814 SEAT GP

S/N: PDF1-UP
AN ATTACHMENT

SMCS-7312 **i02001460**

NOTE	REF NO	GRAPHIC REF	PART NUMBER	QTY	PART NAME 1 2 3 4 5 6 (PRODUCT LEVEL)	SEE PAGE
Y	1	1	**219-8096**	1	SEAT GP-SUSPENSION	580
M	2	1	**113-9232**	2	BOLT (8X1.25X30 MM)	
	3	1	**8T-4121**	4	WASHER-HARD (11X21X2.5MM THK)	
M	4	1	**9X-2125**	4	BOLT-LOCKING (M10X1.5X25MM)	

M-METRIC PART
Y-SEPARATE ILLUSTRATION

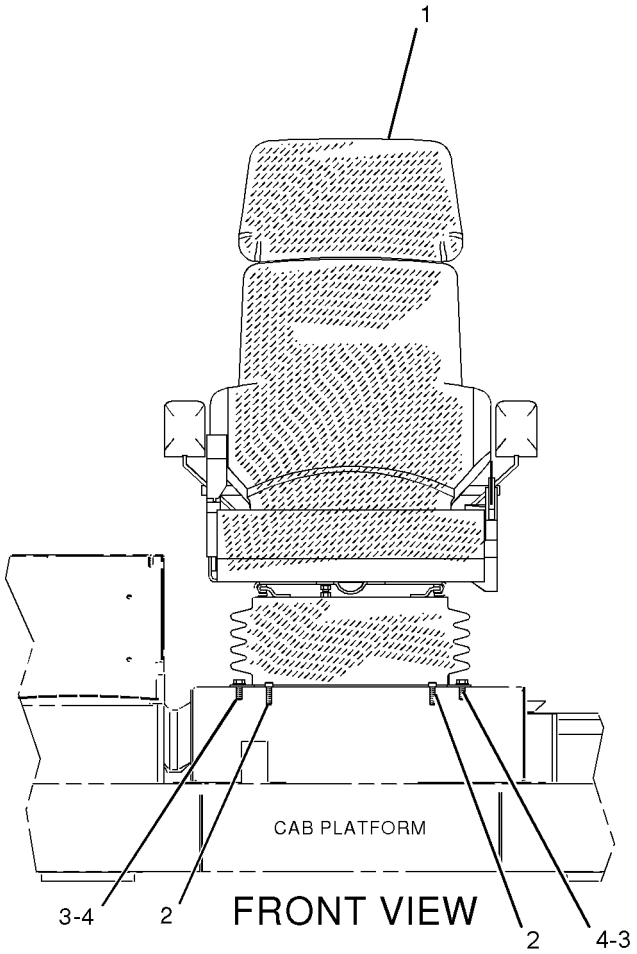

GRAPHIC #1

<END>

g01035894

8Y-6977 SEAT GP-SUSPENSION

S/N: PDF1-UP
CLOTH
PART OF 107-5978 SEAT GP
AN ATTACHMENT

SMCS-7324, 7336 **i00891822**

NOTE	REF NO	GRAPHIC REF	PART NUMBER	QTY	PART NAME 1 2 3 4 5 6 (PRODUCT LEVEL)	SEE PAGE
Y	1	1	**8Y-6883**	1	EXTENSION GP-BACKREST	492
Y	2	1	**8Y-6882**	1	SEAT GP	566
Y	3	1	**8Y-6000**	1	ARMREST GP	459
Y	4	1	**8Y-4200**	1	ARMREST GP	457
Y	5	1	**108-4082**	1	SUSPENSION GP-SEAT	587
CY	6	1	**156-1148**	1	SEAT BELT GP	563
J	7	1	**4F-4879**	1	BOLT (3/8-16X.5IN)	
					AVAILABLE REPAIR KIT(S):	
J			**149-4745**	1	KIT-SLIDER BLOCK	

C-CHANGE FROM PREVIOUS TYPE
J-KIT MARKED J INCLUDES PART MARKED J
Y-SEPARATE ILLUSTRATION

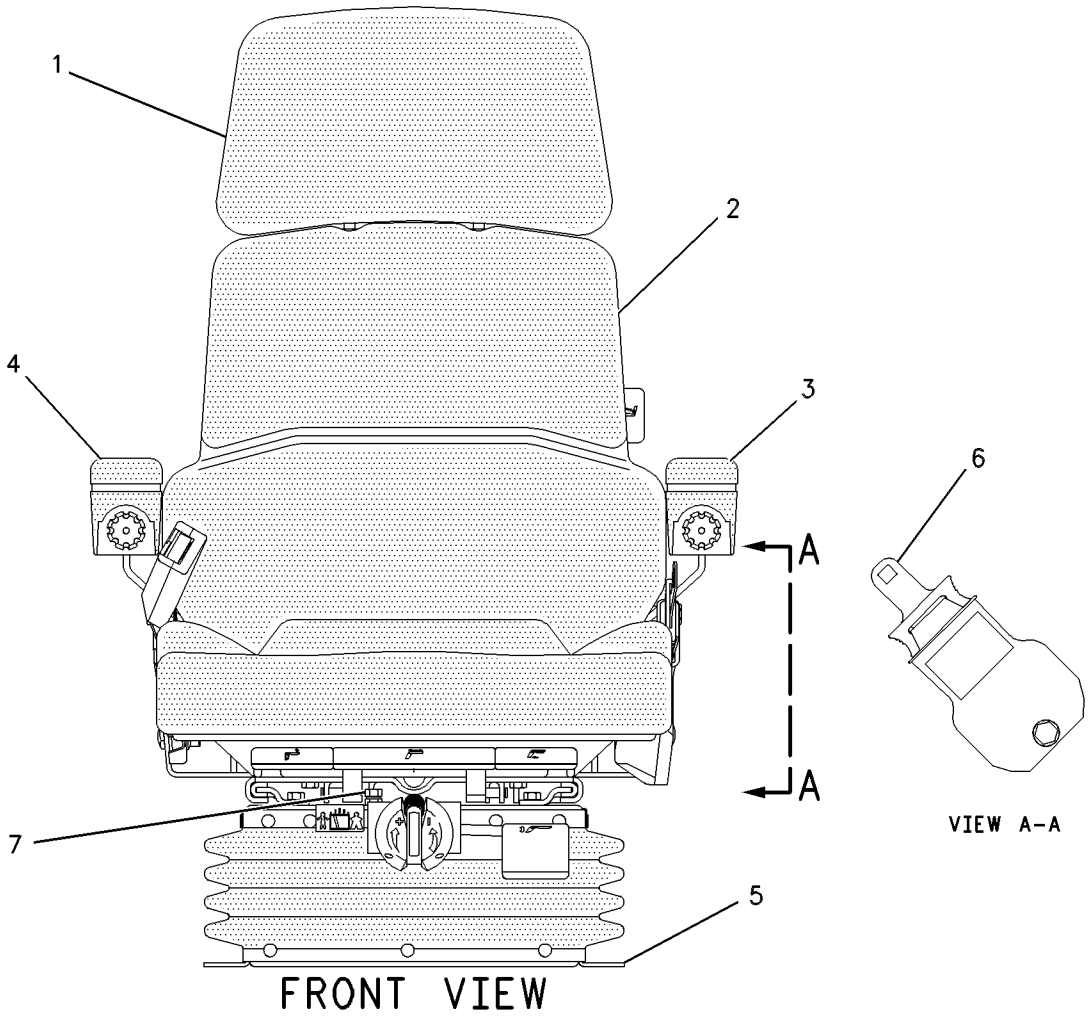

GRAPHIC #1

<END>

g00460334

OPERATOR STATION

108-2192 SEAT GP-SUSPENSION

S/N: PDF1-UP
VINYL
PART OF 226-1843 SEAT GP-SUSPENSION
AN ATTACHMENT

SMCS-7324, 7336 **i01057124**

NOTE	REF NO	GRAPHIC REF	PART NUMBER	QTY	PART NAME 1 2 3 4 5 6 (PRODUCT LEVEL)	SEE PAGE
J	1	1	**110-5054**	1	KIT-COVER	
J	2	1	**110-5058**	1	KIT-COVER	
J	3	1	**110-5059**	1	KIT-FOAM	
J	4	1	**110-5056**	1	KIT-FOAM	
	5	1	**110-5060**	1	KIT-ARMREST-LH	
	6	1	**110-5061**	1	KIT-ARMREST-RH	
J	7	1	**110-5052**	1	KIT-FRAME AS	
	8	1	**7I-6756**	1	KIT-CABLE ADJUSTER	
	9	1	**110-5062**	1	KIT-SPRING	
	10	1	**110-5064**	1	KIT-LEVER AS	
	11	1	**110-5067**	1	KIT-HANDLE	
	12	1	**110-5074**	1	KIT-SUSPENSION BEARING	
	13	1	**110-5063**	1	KIT-HEIGHT RISER	
	14	1	**110-5072**	1	KIT-SLIDE RAIL	
	15	1	**110-5065**	1	KIT-DAMPER	
	16	1	**110-5073**	1	SUSPENSION AS	
	17	1	**128-2678**	1	KIT-TETHER	
	18	1	**110-5068**	1	KIT-ADJUSTER	
	19	1	**110-5066**	1	KIT-BUMPSTOP	
	20	1	**110-5071**	1	KIT-SUSPENSION COVER	
					AVAILABLE REPAIR KIT(S):	
J			**110-5051**	1	KIT-UPPER AS	

J-KIT MARKED J INCLUDES PARTS MARKED J

108-2192 SEAT GP-SUSPENSION *(contd.)* i01057124

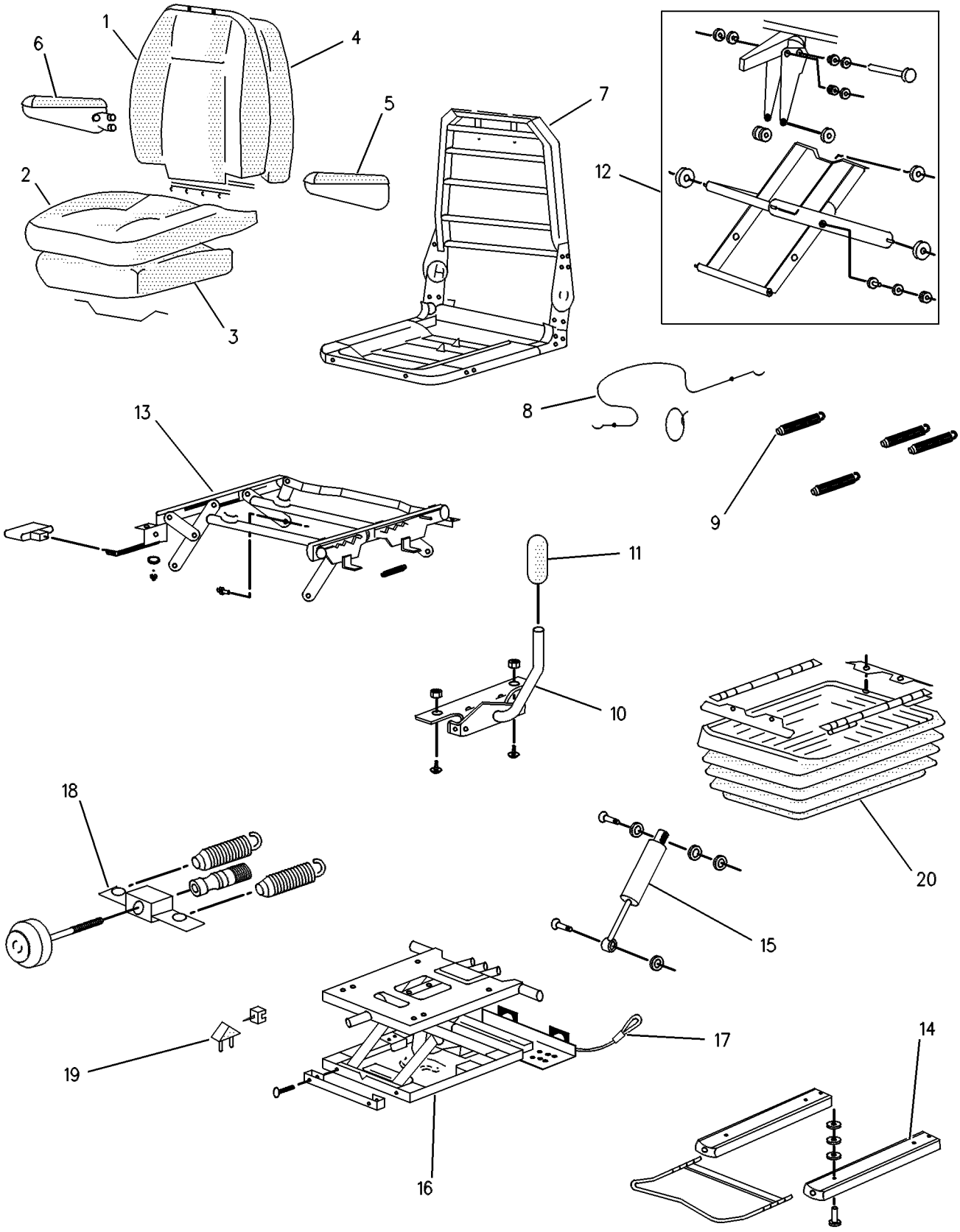

GRAPHIC #1 **<END>** g00120293

OPERATOR STATION

119-8263 SEAT GP-SUSPENSION

S/N: PDF1-UP
CLOTH-GRAY
PART OF 226-1842 SEAT GP-SUSPENSION
AN ATTACHMENT

SMCS-7324, 7336 **i02034289**

NOTE	REF NO	GRAPHIC REF	PART NUMBER	QTY	PART NAME 1 2 3 4 5 6 (PRODUCT LEVEL)	SEE PAGE
	1	1	**120-7733**	1	KIT-COVER	
	2	1	**120-7734**	1	KIT-COVER	
	3	1	**110-5059**	1	FOAM-SEAT	
	4	1	**110-5056**	1	FOAM-SEAT	
	5	1	**110-5060**	1	KIT-ARMREST-LH	
	6	1	**110-5061**	1	KIT-ARMREST-RH	
	7	1	**110-5052**	1	KIT-FRAME AS	
	8	1	**7I-6756**	1	KIT-CABLE ADJUSTER	
					(INCLUDES CABLE AS AND STRAP)	
	9	1	**110-5062**	1	KIT-SPRING	
	10	1	**110-5064**	1	KIT-LEVER AS	
	11	1	**120-7732**	1	KIT-HANDLE	
	12	1	**110-5074**	1	KIT-SUSPENSION BEARING	
	13	1	**110-5063**	1	KIT-HEIGHT RISER	
	14	1	**110-5072**	1	KIT-SLIDE RAIL	
	15	1	**110-5065**	1	KIT-DAMPER	
	16	1	**110-5073**	1	SUSPENSION AS	
	17	1	**128-2678**	1	KIT-TETHER	
	18	1	**110-5068**	1	KIT-ADJUSTER	
	19	1	**110-5066**	1	KIT-STOP	
	20	1	**110-5071**	1	KIT-SUSPENSION COVER	

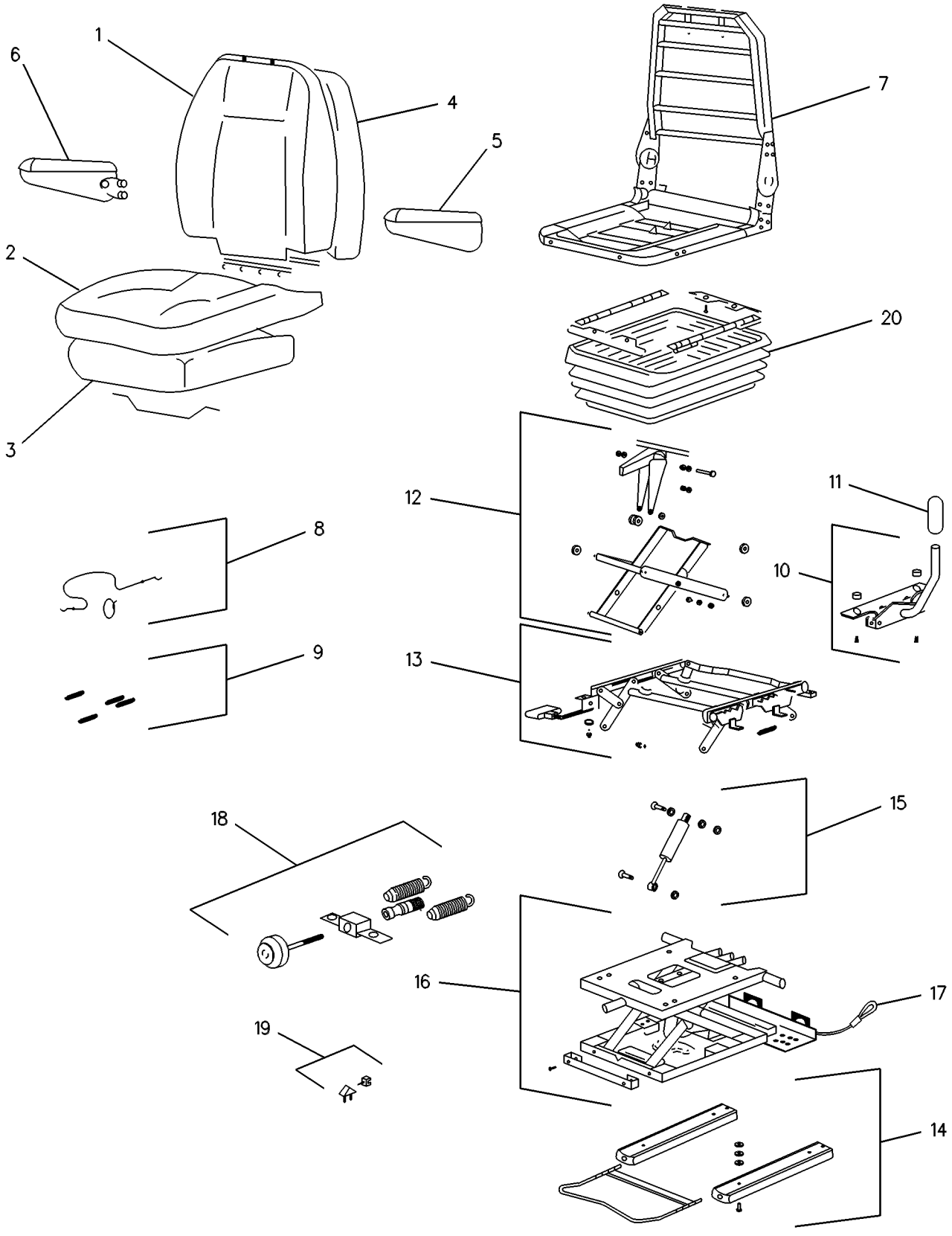

GRAPHIC #1 **<END>** g00131422

OPERATOR STATION

119-8264 SEAT GP-SUSPENSION

S/N: PDF1-UP
PART OF 226-1844 SEAT GP-SUSPENSION
AN ATTACHMENT

SMCS-7324, 7336 **i02034299**

NOTE	REF NO	GRAPHIC REF	PART NUMBER	QTY	PART NAME 1 2 3 4 5 6 (PRODUCT LEVEL)	SEE PAGE
	1	1	**120-7734**	1	KIT-COVER	
	2	1	**110-5059**	1	FOAM-SEAT	
	3	1	**110-5056**	1	FOAM-SEAT	
	4	1	**110-5060**	1	KIT-ARMREST-LH	
	5	1	**110-5061**	1	KIT-ARMREST-RH	
	6	1	**110-5052**	1	KIT-FRAME AS	
	7	1	**7I-6756**	1	KIT-CABLE ADJUSTER	
					(INCLUDES CABLE AS AND STRAP)	
	8	1	**110-5062**	1	KIT-SPRING	
	9	1	**110-5064**	1	KIT-LEVER AS	
	10	1	**120-7732**	1	KIT-HANDLE	
	11	1	**110-5074**	1	KIT-SUSPENSION BEARING	
	12	1	**110-5063**	1	KIT-HEIGHT RISER	
	13	1	**110-5072**	1	KIT-SLIDE RAIL	
	14	1	**110-5065**	1	KIT-DAMPER	
	15	1	**110-5073**	1	SUSPENSION AS	
	16	1	**128-2678**	1	KIT-TETHER	
	17	1	**110-5068**	1	KIT-ADJUSTER	
	18	1	**110-5066**	1	KIT-STOP	
	19	1	**110-5071**	1	KIT-SUSPENSION COVER	
	20	1	**109-6680**	1	KIT-SWITCH AS (SEAT SENSOR)	
					(INCLUDES PINS AND RECEPTACLE)	
	21	1	**109-6681**	1	KIT-HEATER AS	
					(INCLUDES PINS AND RECEPTACLE)	
	22	1	**120-7733**	1	KIT-COVER	

119-8264 SEAT GP-SUSPENSION *(contd.)* i02034299

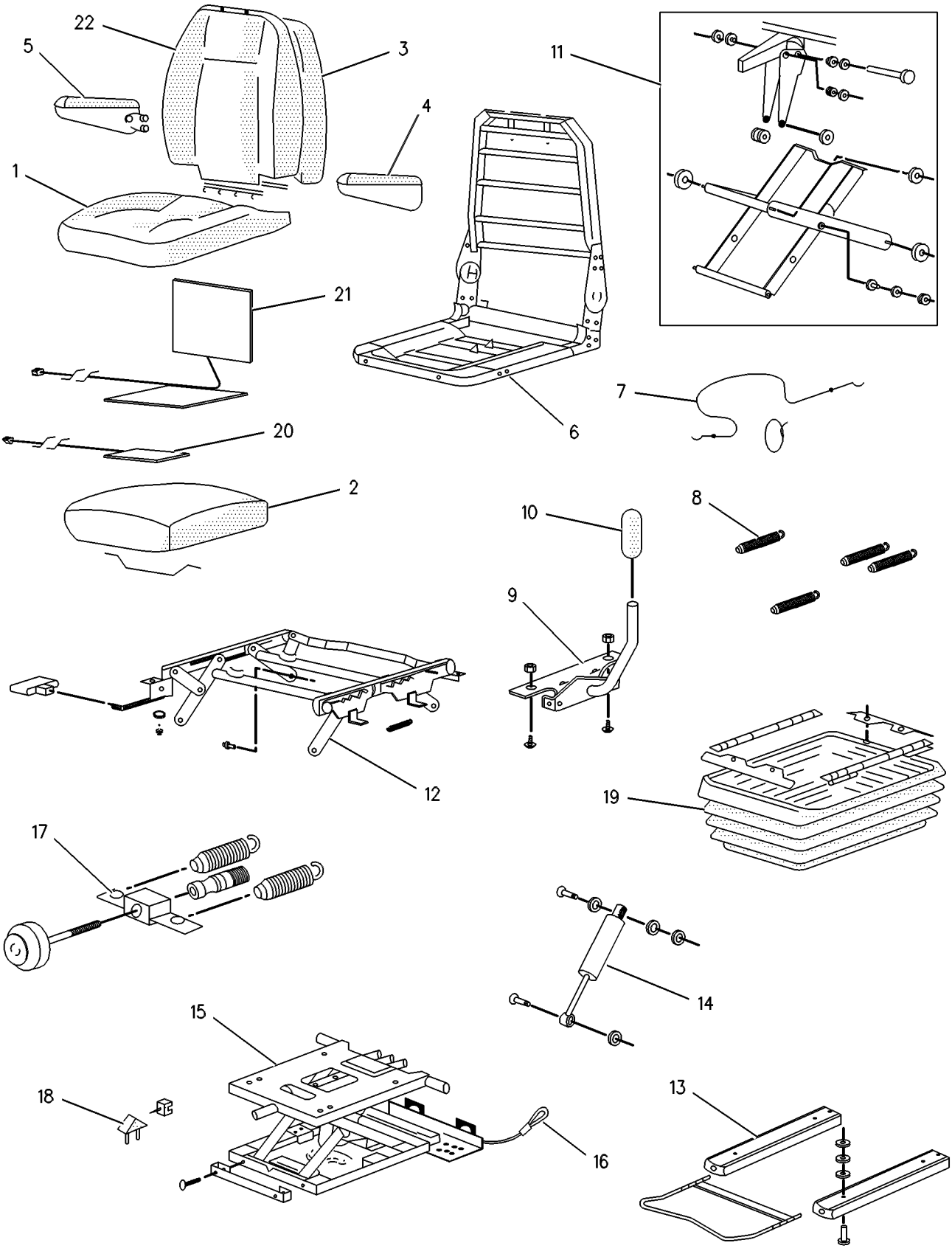

GRAPHIC #1 **<END>** g00261531

OPERATOR STATION

219-8096 SEAT GP-SUSPENSION

S/N: PDF1-UP
PART OF 239-5814 SEAT GP
AN ATTACHMENT

SMCS-7324, 7336 **i02002454**

NOTE	REF NO	GRAPHIC REF	PART NUMBER	QTY	PART NAME 1 2 3 4 5 6 (PRODUCT LEVEL)	SEE PAGE
JZ	1	1		4	BLOCK-SLIDER	
J	2	1	**173-5787**	4	SETSCREW (1/4-20-THD)	
Y	3	1	**178-7914**	1	SEAT GP	571
Y	4	1	**191-2933**	1	SUSPENSION GP-SEAT	589
J	5	1	**203-7703**	2	WASHER-HARD (10.2X22.22X2.38-MM THK)	
J	6	1	**4F-4879**	1	BOLT (3/8-16X.5-IN)	
					AVAILABLE REPAIR KIT(S):	
J			**173-7035**	1	KIT-SLIDER BLOCK	

J-KIT MARKED J INCLUDES PARTS MARKED J
Y-SEPARATE ILLUSTRATION
Z-NOT SERVICED SEPARATELY

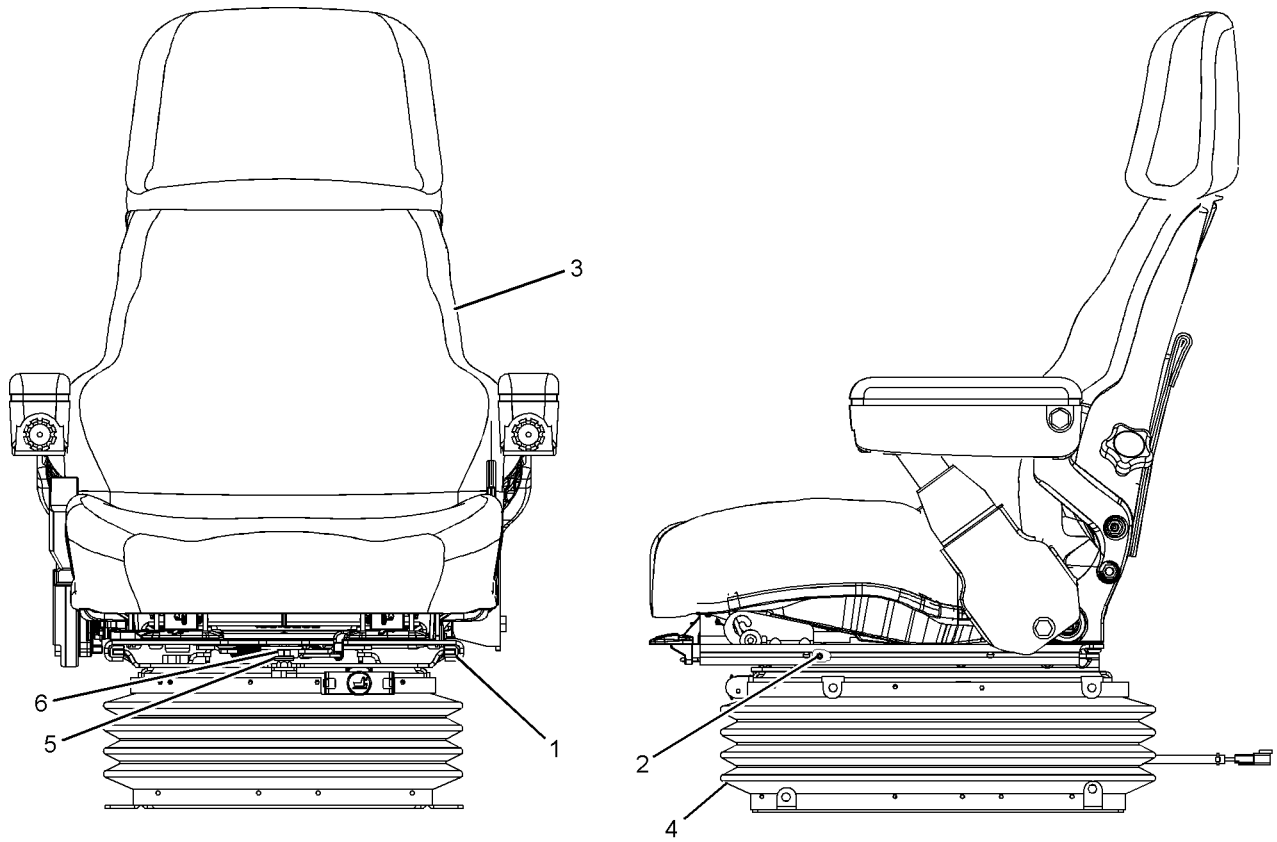

GRAPHIC #1 **<END>** g01021091

OPERATOR STATION

226-1842 SEAT GP-SUSPENSION

S/N: PDF1-UP
AN ATTACHMENT

SMCS-7324, 7336 **i01821160**

NOTE	REF NO	GRAPHIC REF	PART NUMBER	QTY	PART NAME 1 2 3 4 5 6 (PRODUCT LEVEL)	SEE PAGE
Y	1	1	**119-8263**	1	SEAT GP-SUSPENSION	576
M	2	1	**113-9232**	4	BOLT-HEX HEAD (8X1.25X30 MM)	
	3	1	**118-7236**	1	PLATE	
M	4	1	**9X-2041**	4	SCREW-TRUSS HEAD (M10X1.5X20MM)	

M-METRIC PART
Y-SEPARATE ILLUSTRATION

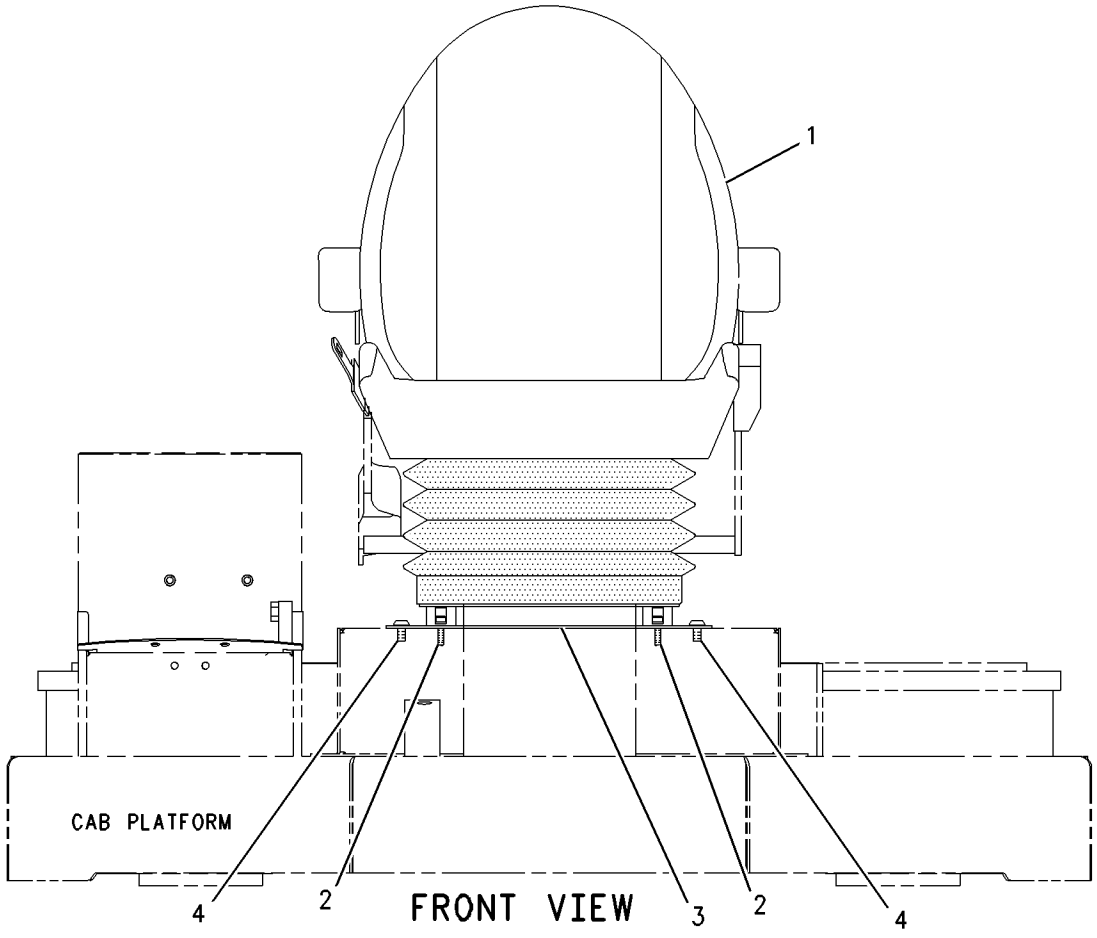

GRAPHIC #1 **<END>** g00931407

OPERATOR STATION

226-1843 SEAT GP-SUSPENSION

S/N: PDF1-UP
AN ATTACHMENT

SMCS-7324, 7336 **i01821161**

NOTE	REF NO	GRAPHIC REF	PART NUMBER	QTY	PART NAME 1 2 3 4 5 6 (PRODUCT LEVEL)	SEE PAGE
Y	1	1	**108-2192**	1	SEAT GP-SUSPENSION (VINYL)	574
M	2	1	**113-9232**	4	BOLT-HEX HEAD (8X1.25X30 MM)	
	3	1	**118-7236**	1	PLATE	
M	4	1	**9X-2041**	4	SCREW-TRUSS HEAD (M10X1.5X20MM)	

M-METRIC PART
Y-SEPARATE ILLUSTRATION

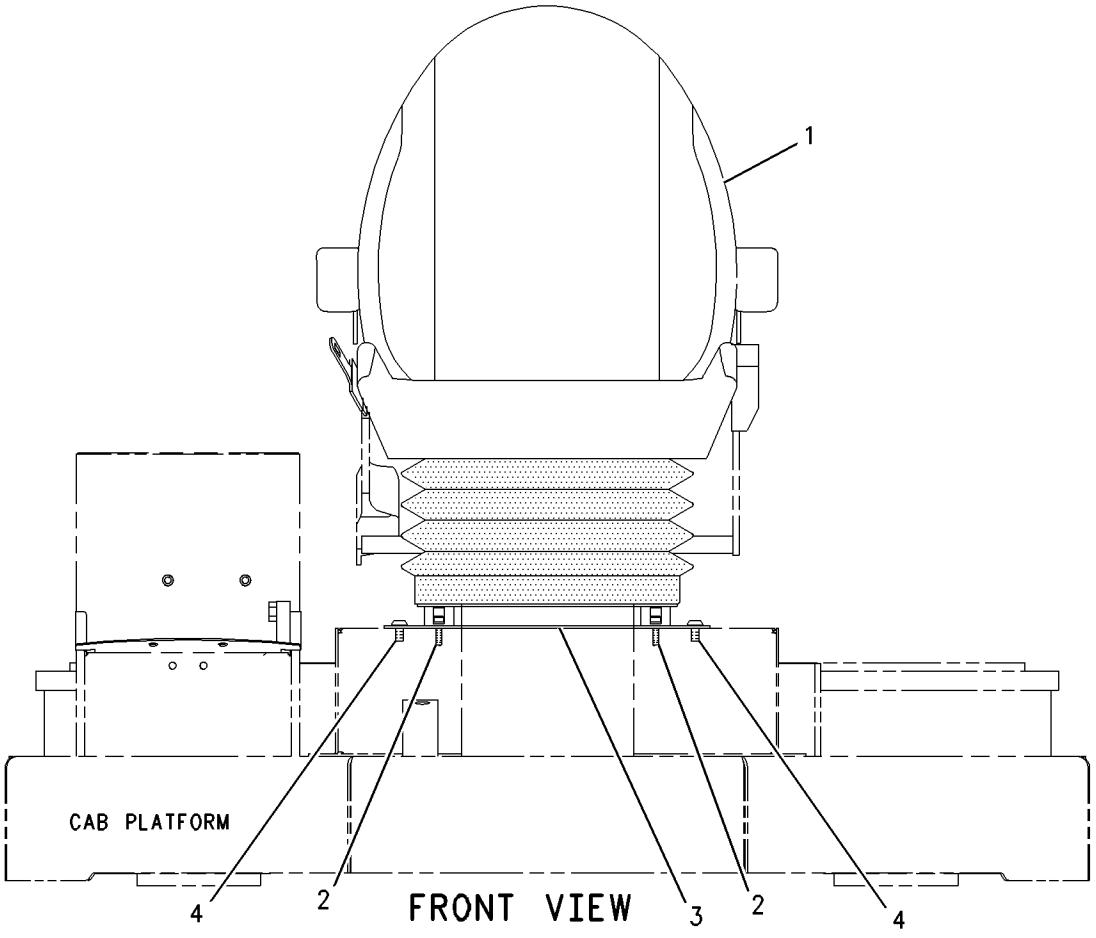

GRAPHIC #1 **<END>** g00931381

OPERATOR STATION

226-1844 SEAT GP-SUSPENSION

S/N: PDF1-UP
AN ATTACHMENT

SMCS-7324, 7336 **i01979385**

NOTE	REF NO	GRAPHIC REF	PART NUMBER	QTY	PART NAME 1 2 3 4 5 6 (PRODUCT LEVEL)	SEE PAGE
M	1	1	**113-9232**	4	BOLT (8X1.25X30 MM)	
	2	1	**118-7236**	1	PLATE	
Y	3	1	**119-8264**	1	SEAT GP-SUSPENSION	578
	4	1	**3S-2093**	1	STRAP-CABLE	
M	5	1	**9X-2041**	4	SCREW-TRUSS HEAD (M10X1.5X20MM)	

M-METRIC PART
Y-SEPARATE ILLUSTRATION

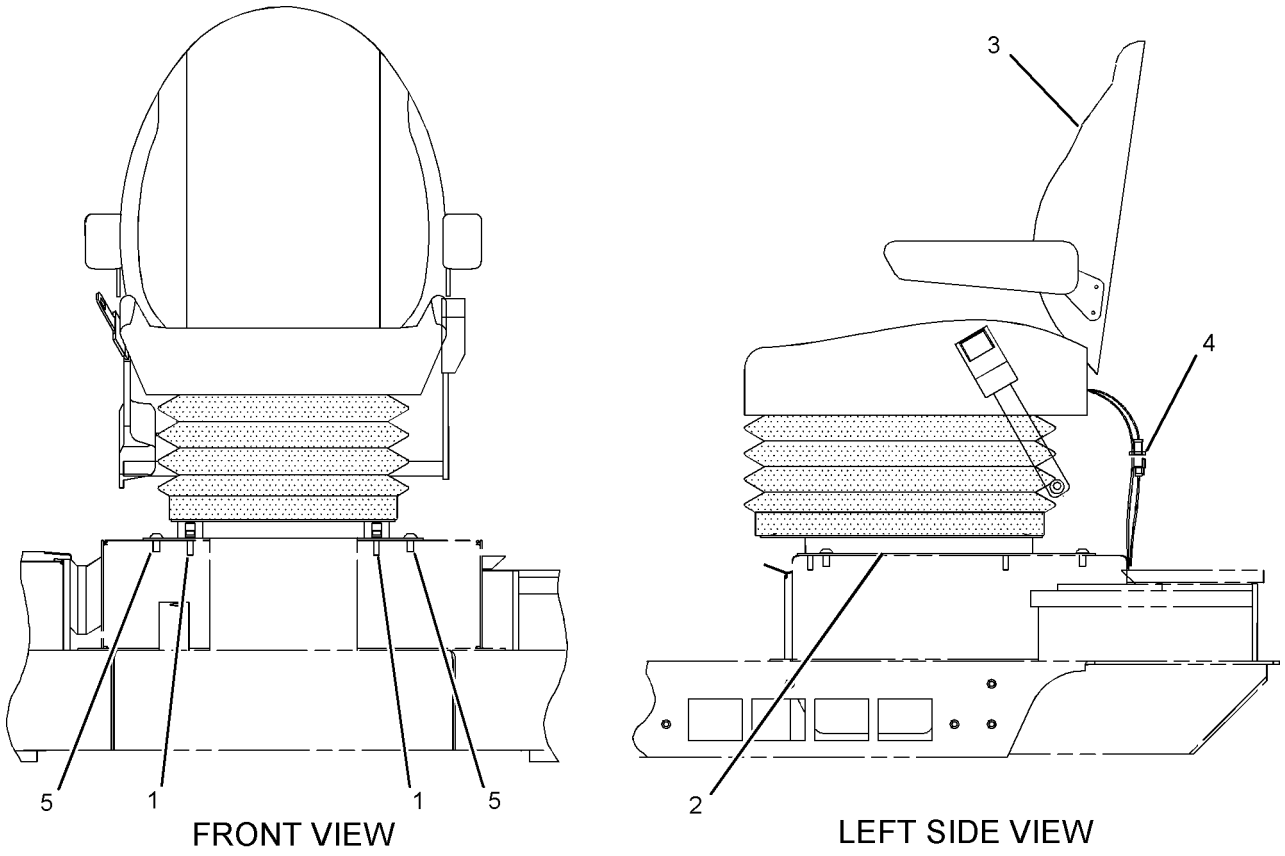

GRAPHIC #1 **<END>** g01018216

OPERATOR STATION

107-6132 SPEEDOMETER GP

S/N: PDF1-UP

PART OF 122-1978 CONVERSION AR-CERTIFICATION, 117-6032 ROADING AR AN ATTACHMENT

SMCS-7463 **i02021384**

NOTE	REF NO	GRAPHIC REF	PART NUMBER	QTY	PART NAME 1 2 3 4 5 6 (PRODUCT LEVEL)	SEE PAGE
	1	1	**239-3877**	1	SPEEDOMETER GP	
	2	1	**4B-2043**	6	NUT (8-32-THD)	
	3	1	**9B-7233**	6	LOCKWASHER (4.4X8.4X0.5-MM THK)	
	4	1	**122-7137**	1	LAMP (12-VOLT)	
	5	1	**131-1424**	1	SEAL	

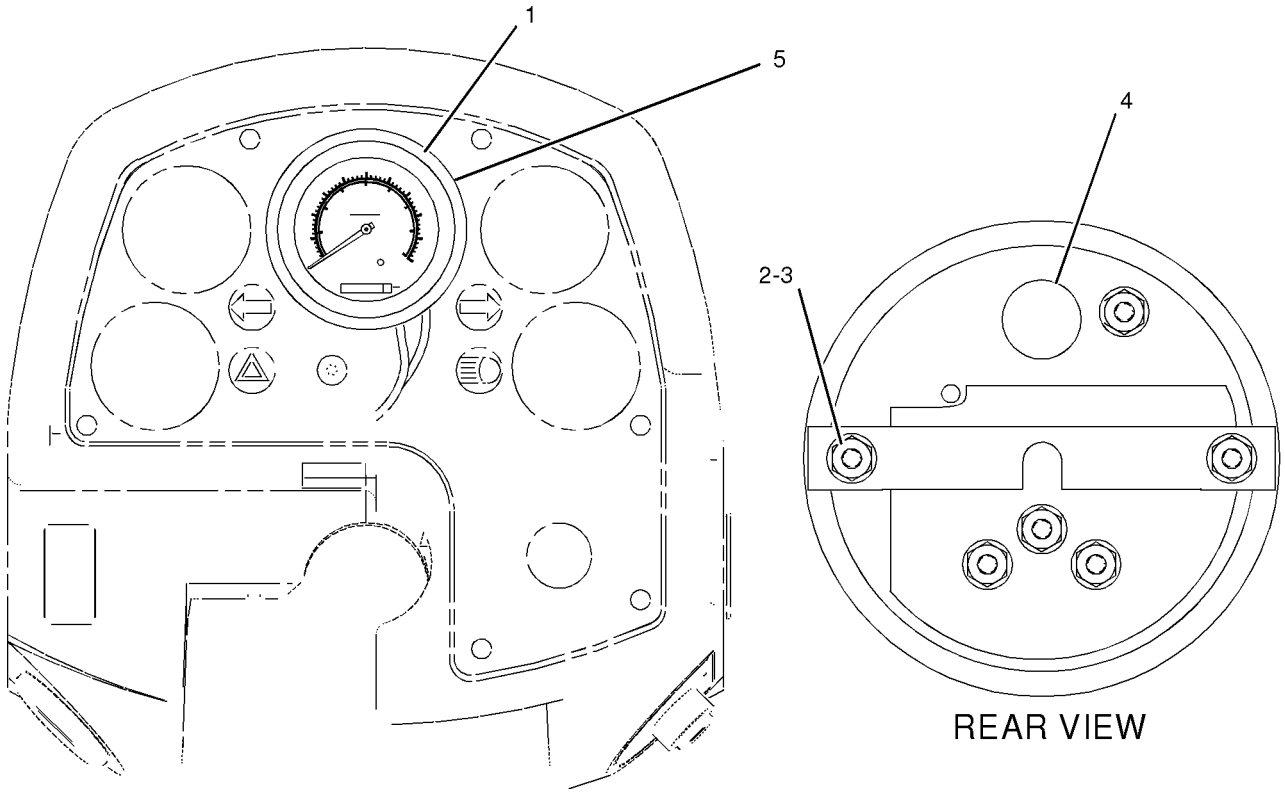

GRAPHIC #1 **<END>** g01043823

OPERATOR STATION

118-0808 SUPPORT GP-SEAT

S/N: PDF1-UP

PART OF 241-8807 CANOPY AR-OPEN ROPS, 241-8644 CANOPY AR-SOFT AN ATTACHMENT

SMCS-7321 **i00526880**

NOTE	REF NO	GRAPHIC REF	PART NUMBER	QTY	PART NAME 1 2 3 4 5 6 (PRODUCT LEVEL)	SEE PAGE
	1	1	**119-8310**	1	COVER AS	
M		1	**8T-3490**	2	NUT-WELD (M10X1.5 THD)	
M		1	**8T-3612**	2	NUT-WELD (M8X1.25 THD)	
	2	1	**7X-0579**	11	WASHER-HARD (2.0MM THK)	
M	3	1	**8T-4908**	11	BOLT (M8X1.25X25MM)	

M-METRIC PART

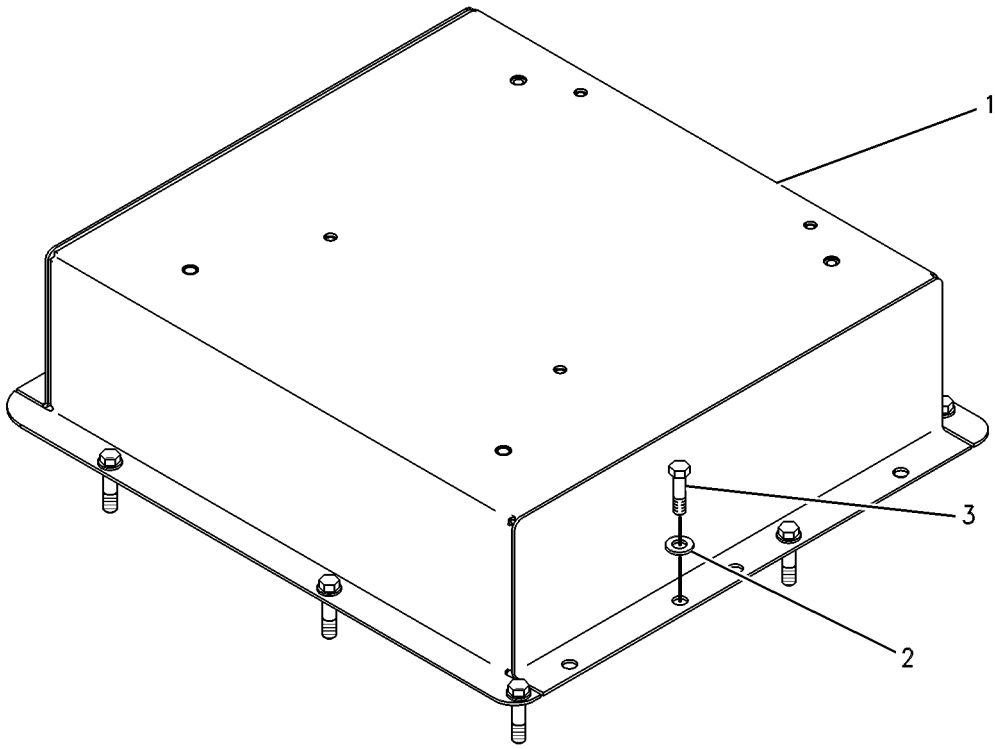

GRAPHIC #1 **<END>** g00131738

OPERATOR STATION

128-6870 SUPPRESSION GP-SOUND

S/N: PDF1-UP

AN ATTACHMENT

SMCS-7329, 7330 **i00719129**

NOTE	PART NUMBER	QTY	PART NAME 1 2 3 4 5 6 (PRODUCT LEVEL)	SEE PAGE
	126-3667	1	INSULATION	
	126-3671	1	INSULATION	
	126-3672	1	INSULATION	
	126-3675	1	INSULATION	

<END>

OPERATOR STATION

108-4082 SUSPENSION GP-SEAT

S/N: PDF1-UP
PART OF 8Y-6977 SEAT GP-SUSPENSION
AN ATTACHMENT

SMCS-7324 **i01059010**

NOTE	REF NO	GRAPHIC REF	PART NUMBER	QTY	PART NAME 1 2 3 4 5 6 (PRODUCT LEVEL)	SEE PAGE
	1	1	**8Y-6022**	1	PLATE-SLIDE	
	2	1	**8Y-6023**	1	PLATE-SLIDE	
	3	1	**5M-3062**	2	BOLT (3/8-16X.75IN)	
	4	1	**5P-1075**	4	WASHER-HARD (3MM THK)	
	5	1	**2K-4973**	6	LOCKNUT (3/8-16 THD)	
	6	1	**1D-4677**	4	BOLT-ROUND HEAD (3/8X1 IN.)	
	7	1	**8Y-6014**	1	HOUSING AS-LOWER	
	8	1	**8Y-6012**	1	ARM AS-SUSPENSION	
J	9	1	**101-0003**	23	FASTENER	
Y	10	1	**108-4582**	1	HOUSING GP-SEAT SUSPENSION	500
J	11	1	**108-4878**	3	NUT-PUSH	
	12	1	**8Y-5965**	1	ABSORBER-SHOCK	
	13	1	**5V-1497**	1	RETAINER	
	14	1	**4V-7884**	2	BEARING	
	15	1	**4V-8577**	4	BEARING	
	16	1	**8Y-6024**	2	SHAFT AS	
J	17	1	**111-5042**	3	FASTENER	
	18	1	**145-0326**	1	FILM-INSTRUCTION	
					AVAILABLE REPAIR KIT(S):	
			101-4194	1	KIT-BELT TETHER	
					(INCLUDES 2 BELTS)	
			101-4195	1	KIT-SUSPENSION ROLLER	
					(INCLUDES 4 ROLLERS)	
J			**8Y-5944**	1	KIT-SUSPENSION BOOT	
					(INCLUDES BOOT, 2 RETAINERS)	

J-KIT MARKED J INCLUDES PART(S) MARKED J
Y-SEPARATE ILLUSTRATION

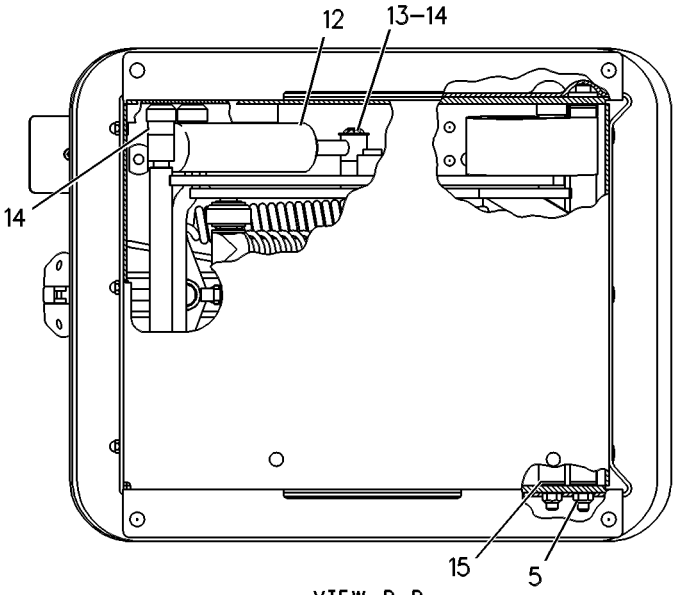

VIEW B-B

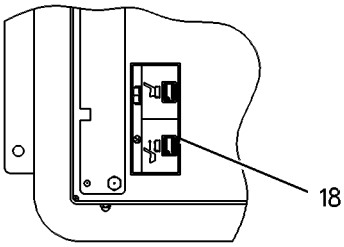

VIEW C-C

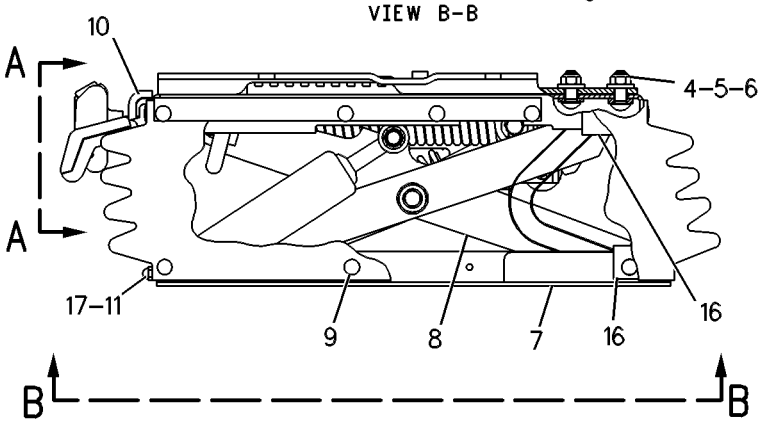

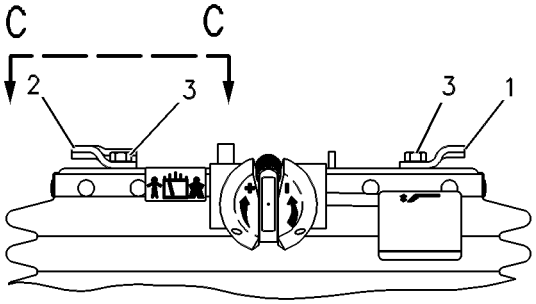

VIEW A-A

GRAPHIC #1 **<END>** g00424533

OPERATOR STATION

191-2933 SUSPENSION GP-SEAT

S/N: PDF1-UP
AIR
PART OF 219-8096 SEAT GP-SUSPENSION
AN ATTACHMENT

SMCS-7324 **i02002720**

NOTE	REF NO	GRAPHIC REF	PART NUMBER	QTY	PART NAME 1 2 3 4 5 6 (PRODUCT LEVEL)	SEE PAGE
	1	1	**3P-9900**	5	WASHER (10.5X30X3MM THK)	
	2	1	**4B-4278**	2	WASHER (10.2X20.5X1.6MM THK)	
	3	1	**4V-8577**	12	BEARING	
	4	1	**8L-8413**	1	STRAP-CABLE	
	5	1	**145-0326**	1	FILM-INSTRUCTION (SEAT ADJUSTMENT)	
	6	1	**164-1234**	1	PLATE	
	7	1	**164-1270**	33	FASTENER	
	8	1	**169-7380**	1	BOLT-SOCKET HEAD (3/8-16X0.375 IN)	
	9	1	**186-5107**	2	SCREW (NO 8 X 1.25 IN)	
	10	1	**192-7752**	4	SHAFT AS	
	11	1	**192-7755**	1	HOUSING AS	
	12	1	**192-7760**	1	SHAFT	
	13	1	**192-7767**	1	SCISSORS AS	
	14	1	**192-7783**	1	TOGGLE AS	
	15	1	**192-7787**	1	TOGGLE AS	
	16	1	**192-7790**	1	HOUSING AS	
	17	1	**192-7795**	1	BOOT	
	18	1	**192-7805**	1	HARNESS AS-VALVE (AIR COMPRESSOR)	
		1	**102-8802**	1	KIT-RECEPTACLE (2-PIN)	
	19	1	**192-7810**	1	SPRING AS-AIR	
		1	**5P-4423**	1	ELBOW	
		1	**163-1135**	1	SPRING	
	20	1	**192-7812**	1	BOLT-SHOULDER	
	21	1	**192-7820**	3	BUMPER	
	22	1	**192-7822**	1	SHAFT	
	23	1	**237-3943**	1	BRACKET	
Y	24	1	**237-3970**	1	AIR COMPRESSOR GP-SEAT	450
	25	1	**1H-8296**	1	SCREW-MACHINE	
	26	1	**2K-4973**	8	LOCKNUT (3/8-16 THD)	
	27	1	**3J-4818**	1	LOCKWASHER	
M	28	1	**5C-2890**	3	NUT (M6X1 THD)	
	29	1	**8T-9371**	1	BOLT (3/8-16X0.5 IN)	
E	30	1	**211-5358**		CONDUIT (100CM)	
D	31	1	**5P-6010**		TUBE (1M)	
					AVAILABLE REPAIR KIT(S):	
			192-7799	1	KIT-AIR VALVE (SUSPENSION SEAT)	
					(INCLUDES KNOB AS, NUT, VALVE, LOCKWASHER AND FITTING)	
			192-7848	1	KIT-SHOCK ABSORBER (SUSPENSION SEAT)	
					(INCLUDES LOCKNUT, LOCKWASHER, SHOCK ABSORBER, BEARING, WASHER, AND BOLTS)	
			211-9294	1	KIT-TETHER (SUSPENSION SEAT)	

D-ORDER BY THE METER
E-ORDER BY THE CENTIMETER
M-METRIC PART
Y-SEPARATE ILLUSTRATION

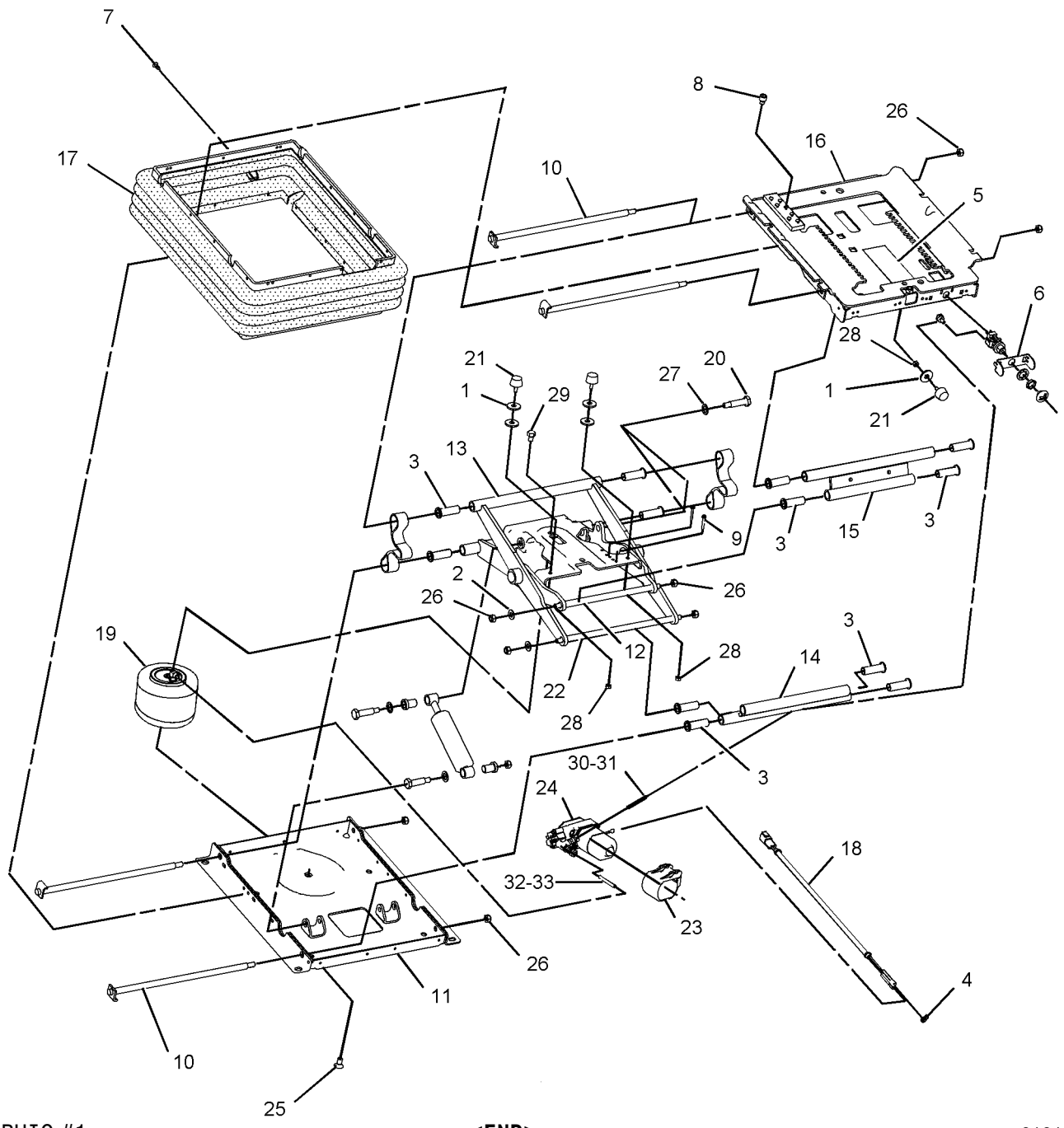

GRAPHIC #1 **<END>** g01011847

OPERATOR STATION

8R-1774 TANK GP-WINDOW WASHER

S/N: PDF1-UP
PART OF 117-9623 WASHER GP-WINDOW
AN ATTACHMENT

SMCS-7306 **i00974189**

NOTE	REF NO	GRAPHIC REF	PART NUMBER	QTY	PART NAME 1 2 3 4 5 6 (PRODUCT LEVEL)	SEE PAGE
	1	1	**3W-6399**	1	PACKING	
	2	1	**3W-6398**	1	CAP	
	3	1	**8T-5913**	2	FILTER-SCREEN	
	4	1	**8T-5914**	2	GROMMET	
	5	1	**7T-8890**	2	PUMP AS-WASHER	

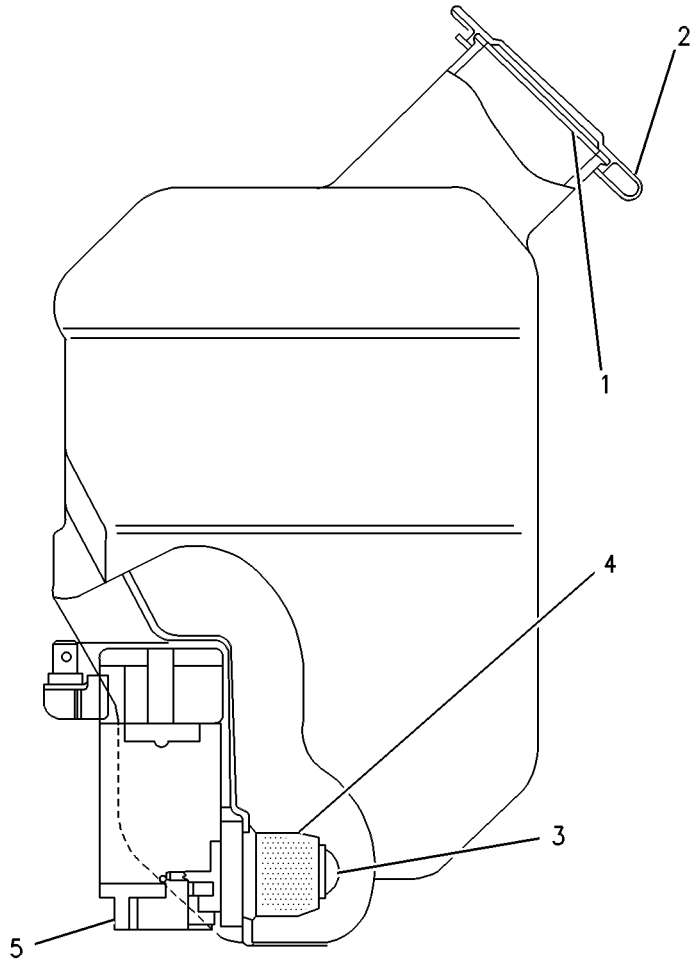

GRAPHIC #1 **<END>** g00250715

OPERATOR STATION

107-4641 VISOR GP-CAB

S/N: PDF1-UP
PART OF 122-1978 CONVERSION AR-CERTIFICATION
AN ATTACHMENT

SMCS-7301 **i00523513**

NOTE	REF NO	GRAPHIC REF	PART NUMBER	QTY	PART NAME 1 2 3 4 5 6 (PRODUCT LEVEL)	SEE PAGE
	1	1	**9R-3203**	2	PLATE	
	2	1	**9R-3204**	1	PLATE AS	
M		1	**6V-9632**	2	NUT-WELD (M6X1 THD)	
	3	1	**9R-3205**	1	VISOR AS	
M	4	1	**9X-2042**	2	SCREW-TRUSS HEAD (M6X1.0X12MM)	
M	5	1	**9X-2045**	2	SCREW-TRUSS HEAD (M6X1X20MM)	

M-METRIC PART

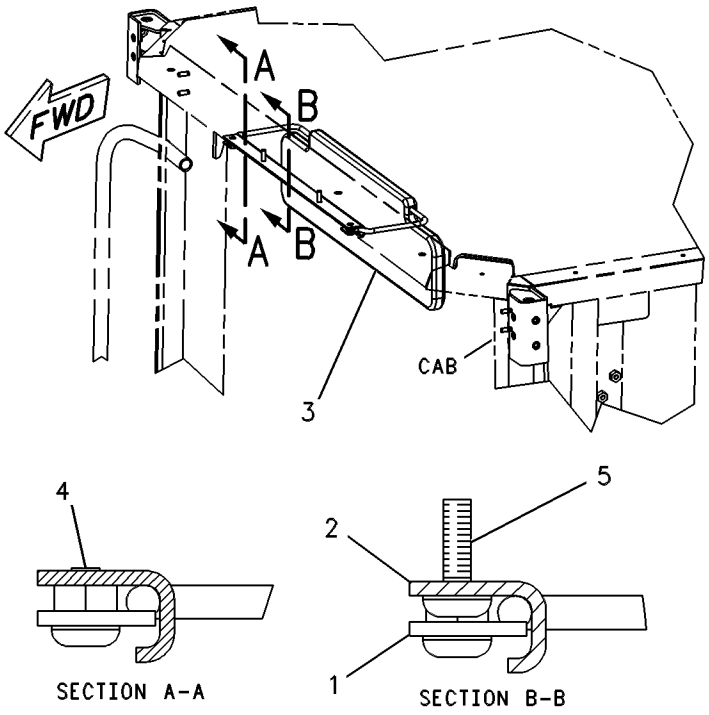

GRAPHIC #1 **<END>** g00131409

117-9623 WASHER GP-WINDOW

S/N: PDF1-UP

PART OF 239-1004, 239-1005 OPERATOR AR, 241-8643 PLATFORM AR

AN ATTACHMENT

SMCS-7306 **i00710482**

NOTE	REF NO	GRAPHIC REF	PART NUMBER	QTY	PART NAME 1 2 3 4 5 6 (PRODUCT LEVEL)	SEE PAGE
	1	1	**3S-2093**	1	STRAP-CABLE (1.75IN DIA)	
BD	2	1	**5P-5992**		HOSE	
Y	3	1	**8R-1774**	1	TANK GP-WINDOW WASHER	591
	4	1	**118-7260**	1	BRACKET AS	
	5	1	**120-3844**	1	BRACKET AS	
	6	1	**8T-4121**	4	WASHER (2.5MM THK)	
M	7	1	**8T-4137**	2	BOLT (M10X1.50X20MM)	
M	8	1	**8T-4195**	2	BOLT (M10X1.50X30MM)	

B-USE AS REQUIRED
D-ORDER BY THE METER
M-METRIC PART
Y-SEPARATE ILLUSTRATION

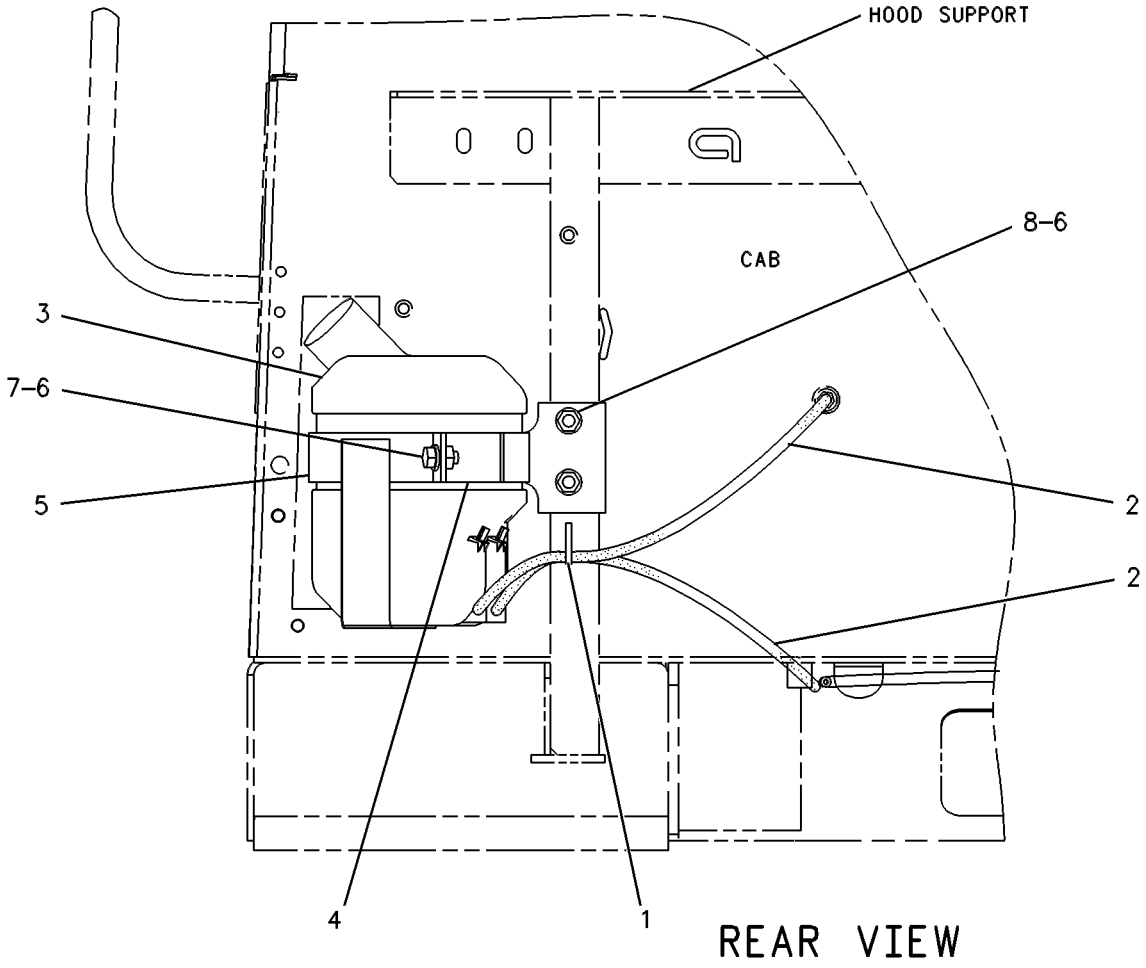

GRAPHIC #1 **<END>** g00250705

OPERATOR STATION

180-2535 WINDOW GP-DOOR

S/N: PDF1-UP
PART OF 231-0319, 233-8012 DOOR GP-CAB
AN ATTACHMENT

SMCS-7310 **i01988760**

NOTE	REF NO	GRAPHIC REF	PART NUMBER	QTY	PART NAME 1 2 3 4 5 6 (PRODUCT LEVEL)	SEE PAGE
	1	1	**144-1569**	1	STOP	
	2	1	**187-5122**	1	FRAME	
	3	1	**187-5123**	1	RAIL	
	4	1	**187-5124**	1	GLASS-SLIDING	
	5	1	**187-5125**	1	GLASS-FIXED	
	6	1	**187-5126**	1	RAIL AS	
	7	1	**187-5127**	1	CATCH AS (LH)	
		1	**150-8015**	1	GASKET	
	8	1	**187-5128**	1	CATCH AS (RH)	
		1	**150-8015**	1	GASKET	
M	9	1	**8T-0306**	6	SCREW-MACHINE (M5X0.8X10MM)	
D	10	1	**9X-2532**	1	SEAL (0.1M)	
E	11	1	**137-2170**		SEAL (250CM)	

D-ORDER BY THE METER
E-ORDER BY THE CENTIMETER
M-METRIC PART

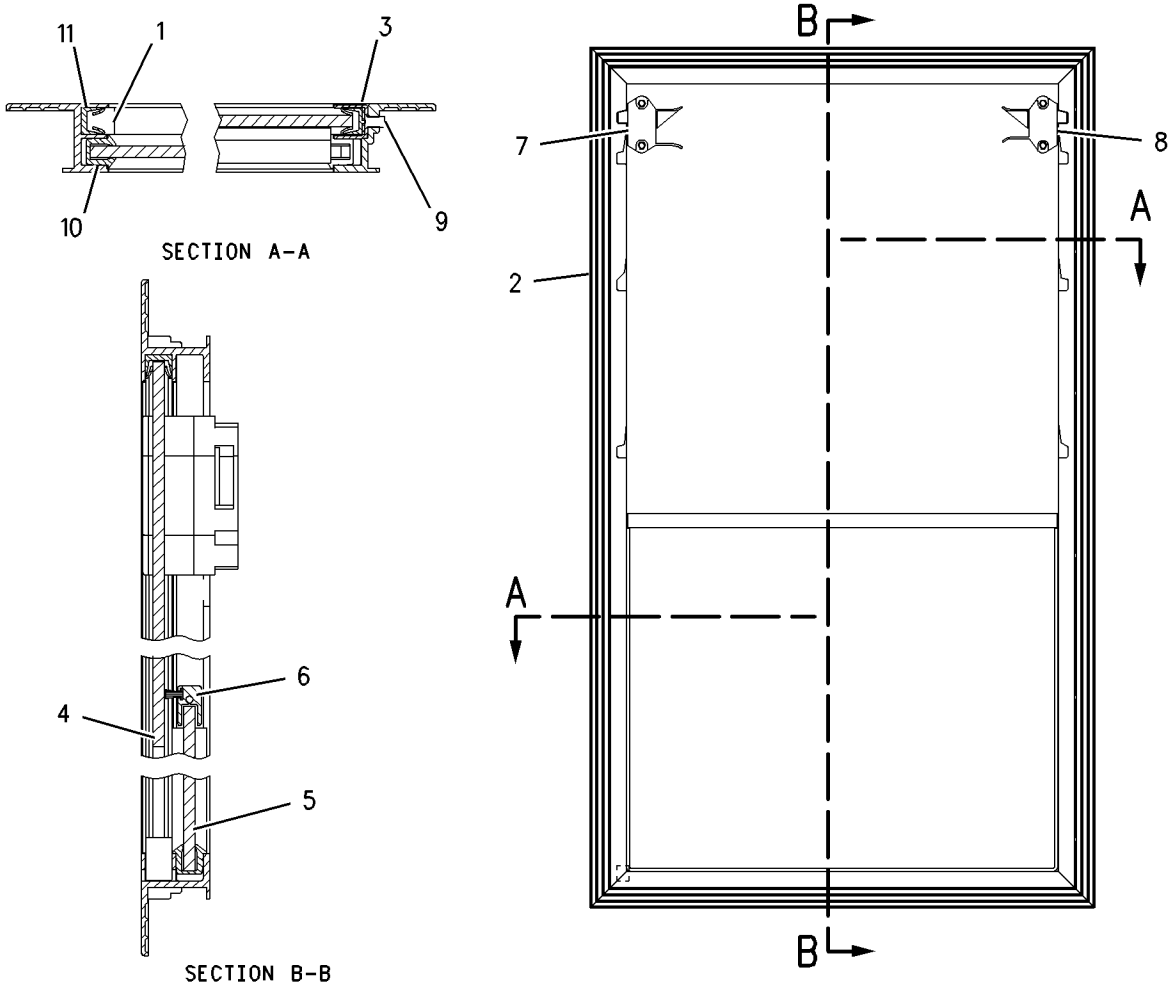

GRAPHIC #1 **<END>** g00762052

OPERATOR STATION

107-4628 WIPER GP-WINDOW

S/N: PDF1-UP
PART OF 239-1006, 239-1007 CAB AR
AN ATTACHMENT

SMCS-7305 **i01857843**

NOTE	REF NO	GRAPHIC REF	PART NUMBER	QTY	PART NAME 1 2 3 4 5 6 (PRODUCT LEVEL)	SEE PAGE
C	1	1	**5C-8811**	1	BLADE AS-WIPER (REAR)	
	2	1	**6V-6210**	1	GASKET-SHAFT	
	3	1	**6V-7419**	1	BLADE AS-WIPER	
	4	1	**8T-5400**	4	CONNECTOR	
	5	1	**9R-2596**	1	PLATE	
C	6	1	**155-5779**	1	WIPER PIVOT AS	
C	7	1	**155-5781**	1	ARM AS-WIPER (REAR)	
C	8	1	**214-7636**	1	ARM AS	
M		1	**6V-8225**	4	NUT (M6X1 THD)	
		1	**136-3188**	3	CLIP	
		1	**136-3190**	1	NOZZLE AS-WASHER	
M		1	**191-8921**	1	BOLT-SOCKET HEAD (M6X1X25MM)	
		1	**227-7392**	4	WASHER	
C	9	1	**155-5783**	1	MOTOR GP-WINDOW WIPER (24 VOLT) (FRONT)	
		1	**186-3735**	5	PIN-CONNECTOR	
		1	**8T-8737**	1	PLUG-SEAL	
		1	**102-8805**	1	KIT-RECEPTACLE (6 PIN)	
					(INCLUDES RECEPTACLE AS. AND WEDGE)	
C	10	1	**155-5784**	1	MOTOR GP-WINDOW WIPER (24 VOLT) (REAR)	
		1	**186-3735**	5	PIN-CONNECTOR	
		1	**8T-8737**	1	PLUG-SEAL	
		1	**102-8805**	1	KIT-RECEPTACLE (6 PIN)	
					(INCLUDES RECEPTACLE AS. AND WEDGE)	
	11	1	**3S-2093**	7	STRAP-CABLE	
	12	1	**4M-7470**	1	GROMMET	
M	13	1	**9X-2045**	2	SCREW-TRUSS HEAD (M6X1X20MM)	
E	14	1	**144-0195**		HOSE (267CM)	
E	15	1	**144-0195**		HOSE (7CM)	

C-CHANGE FROM PREVIOUS TYPE
E-ORDER BY THE CENTIMETER
M-METRIC PART

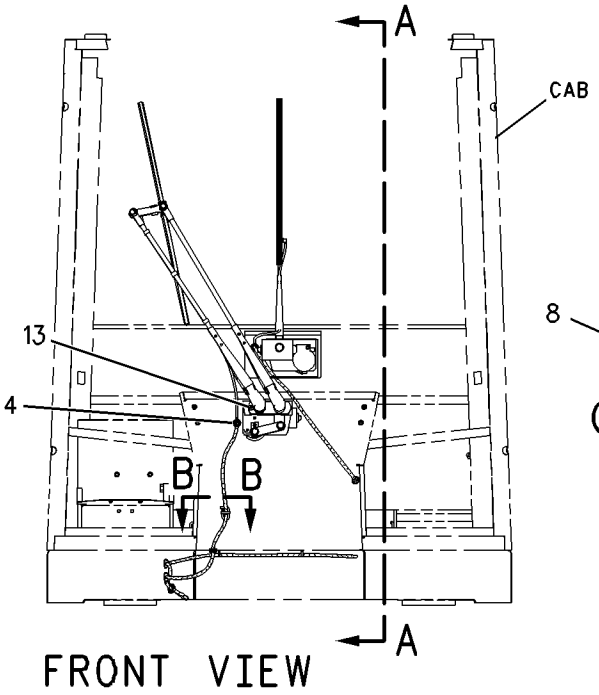

FRONT VIEW

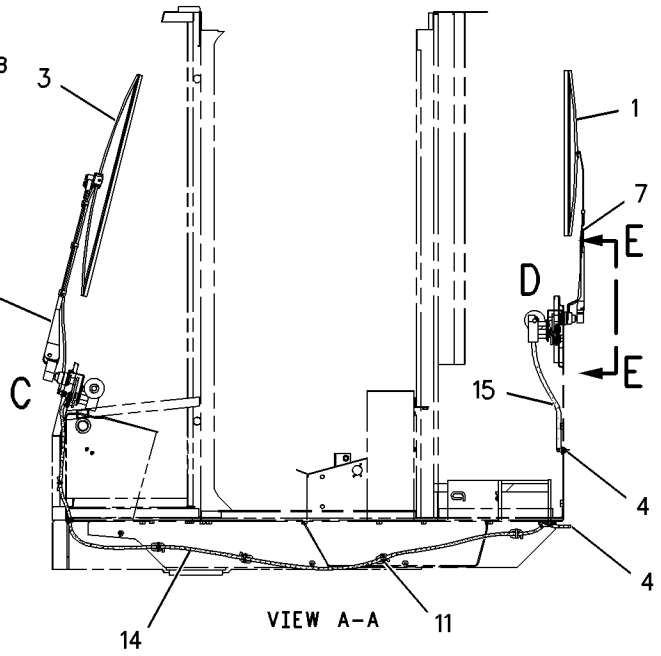

VIEW A-A

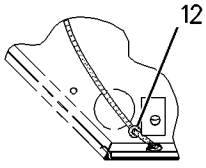

SECTION B-B

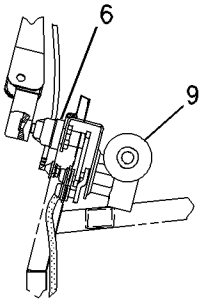

VIEW OF AREA C

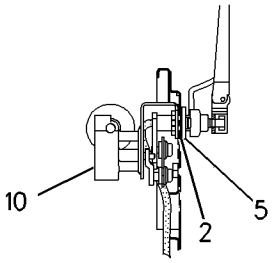

VIEW OF AREA D

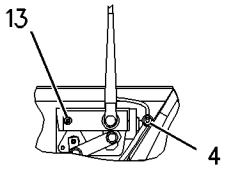

VIEW E-E

GRAPHIC #1 **<END>** g00851880

SERVICE EQUIPMENT AND SUPPLIES

123-8032 TOOL BOX GP

S/N: PDF1-UP
PART OF 122-1978 CONVERSION AR-CERTIFICATION
AN ATTACHMENT

SMCS-7259 **i01053940**

NOTE	REF NO	GRAPHIC REF	PART NUMBER	QTY	PART NAME 1 2 3 4 5 6 (PRODUCT LEVEL)	SEE PAGE
BD	1	1	**5P-6120**		TRIM-EDGE	
	2	1	**5P-8502**	1	PADLOCK GP	
		1	**5P-8500**	1	KEY	
		1	**8Y-6364**	1	SLEEVE	
	3	1	**107-4754**	1	TOOL BOX AS	
M	4	1	**6V-7744**	4	LOCKNUT (M10X1.50 THD)	
	5	1	**7X-7729**	8	WASHER (3MM THK)	
M	6	1	**8T-4136**	4	BOLT (M10X1.50X25MM)	

B-USE AS REQUIRED
D-ORDER BY THE METER
M-METRIC PART

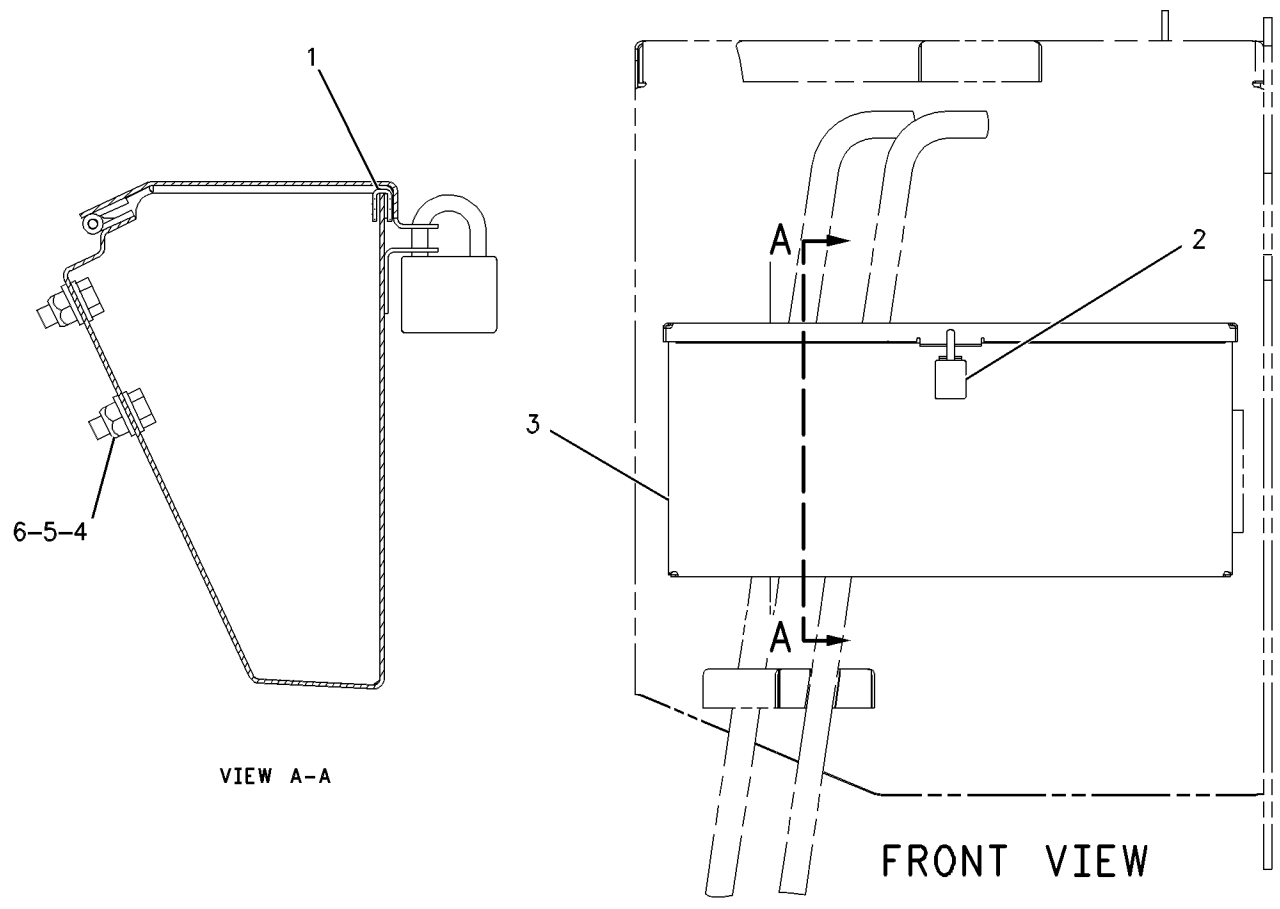

GRAPHIC #1 **<END>** g00564915

SERVICE EQUIPMENT AND SUPPLIES

119-1032 FILM GP

S/N: PDF1-UP

PART OF 236-5641 PLATE & FILM GP

SMCS-7405, 7557 **i00719182**

NOTE	REF NO	GRAPHIC REF	PART NUMBER	QTY	PART NAME 1 2 3 4 5 6 (PRODUCT LEVEL)	SEE PAGE
	1	1	**126-9026**	2	FILM-914G	
	2	1	**126-9027**	2	FILM-CAT	
	3	1	**122-9569**	1	FILM-CAT	
BE	4	1	**101-2473**		FILM-STRIPE (RED ACCENT 23MM WIDE)	

B-USE AS REQUIRED
E-ORDER BY THE CENTIMETER

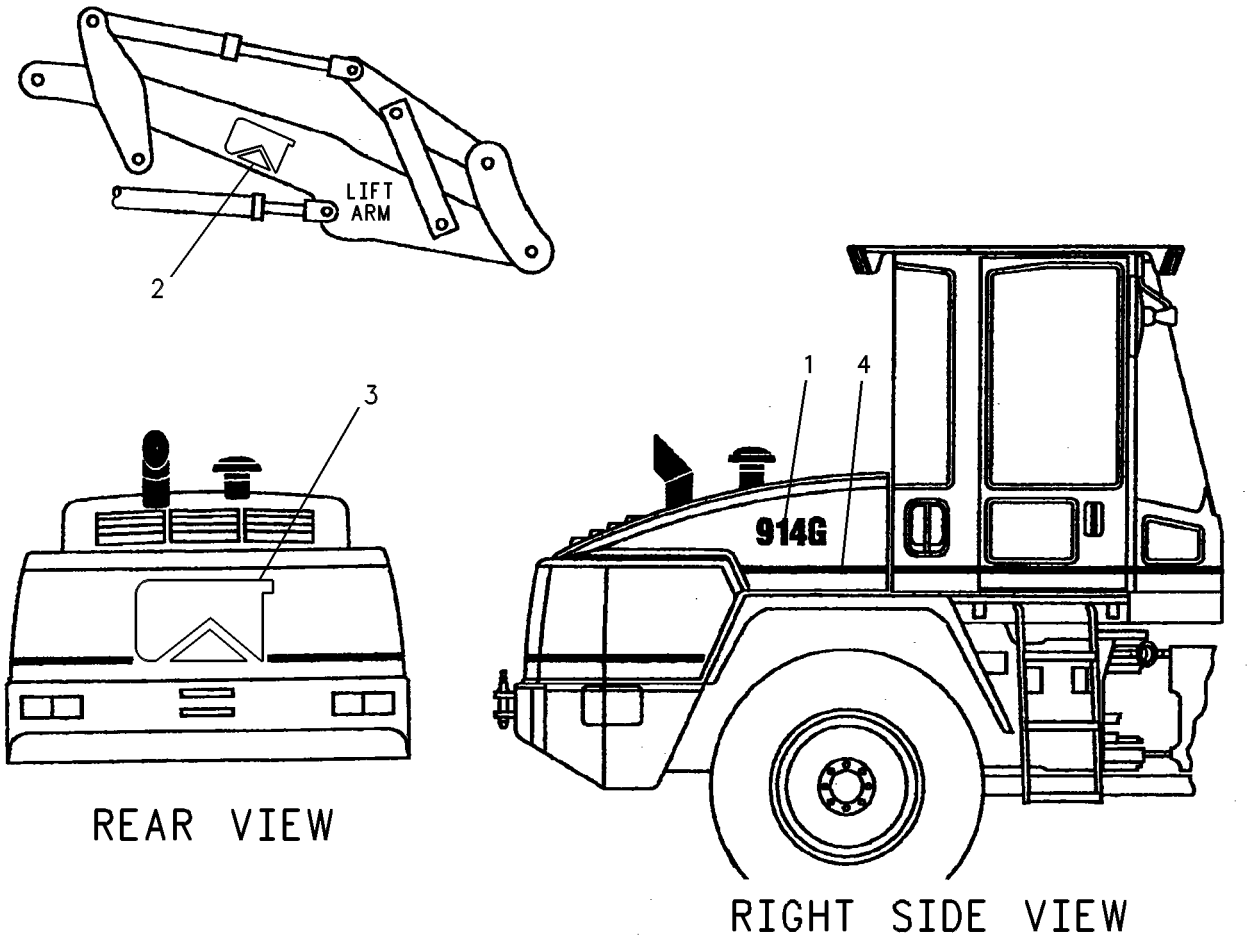

GRAPHIC #1 **<END>** g00251718

132-3391 PLATE & FILM GP

S/N: PDF1-UP
MACHINE CERTIFICATION
AN ATTACHMENT

SMCS-7405, 7557 **i00987087**

NOTE	PART NUMBER	QTY	PART NAME 1 2 3 4 5 6 (PRODUCT LEVEL)	SEE PAGE
	132-3392	1	FORM-CERTIFICATION	
	103-2532	1	PLATE GP-CERTIFICATION (MACHINE)	
	4B-4158	1	SCREW-DRIVE	
	082-2817	4	TACK	
	9X-6562	4	TACK-FASTENER	

<END>

236-5641 PLATE & FILM GP

S/N: PDF1-UP
PART OF 236-5635 CHASSIS AR

SMCS-7405, 7557 **i02034381**

NOTE	PART NUMBER	QTY	PART NAME 1 2 3 4 5 6 (PRODUCT LEVEL)	SEE PAGE
Y	*119-1032*	1	FILM GP	598
	239-4236	1	FILM (NO TOW, NO PUSH)	
			(LOCATE IN UPPER RH CORNER OF SPRAY COVER)	
	134-7258	1	FILM-IDENTIFICATION (EXTENDED LIFE COOLANT)	
			(LOCATE ON FIREWALL TO THE RH SIDE OF THE SHUNT TANK BRACKET)	
A	**8T-6656**	1	FILM-IDENTIFICATION (OIL FILTER)	
	9X-8372	1	FILM-INSTRUCTION (WASHER FILL)	
			(LOCATE ON WASHER BOTTLE)	
	7X-3229	4	FILM-LIFT & TIE DOWN	
			(LOCATE NEAR LIFT/TIE DOWN HOLES ON ENGINE END AND NON-ENGINE END FRAMES)	
	219-0305	1	FILM-WARNING (NO WELD, NO DRILL)	
			(LOCATE ON EXTERIOR CAB PANEL BEHIND LH CAB DOOR UNDER GRAB HANDLE)	
A	**4P-6422**	1	FILM-WARNING (NO ETHER SPRAY/AIR INTAKE)	
A	**4P-6396**	1	PLATE-CAT	
A	**4P-6236**	1	PLATE-SERIAL NUMBER (ENGINE)	
B	**193-5914**	10	PLUG	
B	**193-5916**	2	PLUG	
B	**193-5918**	4	PLUG	

A-NOT PART OF THIS GROUP
B-USE AS REQUIRED
Y-SEPARATE ILLUSTRATION

<END>

SERVICE EQUIPMENT AND SUPPLIES

236-5651 PLATE & FILM GP

S/N: PDF1-UP

AN ATTACHMENT

SMCS-7405, 7557 **i02027453**

NOTE	PART NUMBER	QTY	PART NAME 1 2 3 4 5 6 (PRODUCT LEVEL)	SEE PAGE
	146-6747	1	FILM (24-VOLT)	
			(LOCATE ON REAR FACE OF BATTERY HOLDER)	
	224-9855	1	FILM (STARTING AID)	
			(LOCATE ON BRACKET ON RH "B" POST INSIDE OF CAB)	
	224-8946	2	FILM-WARNING (ETHER)	
			(1 - LOCATE ON RH SIDE OF AIR INTAKE TUBE ABOVE HOOD)	
			(1 - LOCATE ON FIREWALL NEXT TO AIR CLEANER COVER)	
	225-0312	1	FILM-WARNING (JUMP START)	
			(LOCATE ON REAR FACE OF BATTERY HOLDER)	
	226-1240	2	FILM-WARNING (STAY BACK)	
			(LOCATE ON SHEET METAL FLANGE BELOW THE LH & RH FRONT QUARTER PANEL WINDOWS OF THE CAB)	
	226-1274	2	FILM-WARNING (ARTICULATION JOINT)	
			(LOCATE ON SHEET METAL FLANGE BELOW THE LH & RH FRONT QUARTER PANEL WINDOWS OF THE CAB)	
	239-4234	1	FILM-WARNING (QUICK COUPLER)	
			(LOCATE ON BRACKET ON RH "B" POST INSIDE OF CAB)	
	224-9022	1	FILM-WARNING (SEAT BELT)	
			(LOCATE ON BRACKET ON RH "B" POST INSIDE OF CAB)	
	240-7957	1	FILM-WARNING (UNIVERSAL)	
			(LOCATE ON BRACKET ON RH "B" POST INSIDE OF CAB)	
	224-0672	1	FILM-WARNING (HIGH PRESSURE CYLINDER)	
			(LOCATE ON INSIDE OF FRAME AT END OF ACCUMULATORS)	
	225-4257	1	FILM-WARNING (HOT FLUID)	
			(LOCATE ON FIREWALL NEXT TO RH SIDE OF SHUNT TANK)	

<END>

SERVICE EQUIPMENT AND SUPPLIES

236-5652 PLATE & FILM GP

S/N: PDF1-UP

AN ATTACHMENT

SMCS-7405, 7557 **i02000174**

NOTE	PART NUMBER	QTY	PART NAME 1 2 3 4 5 6 (PRODUCT LEVEL)	SEE PAGE
	146-6747	1	FILM (24-VOLT)	
			(LOCATE ON REAR FACE OF BATTERY HOLDER)	
	224-9855	1	FILM (STARTING AID)	
			(LOCATE ON BRACKET ON RH "B" POST INSIDE OF CAB)	
	224-8945	2	FILM-WARNING (ETHER)	
			(1 - LOCATE ON RH SIDE OF AIR INTAKE ABOVE HOOD)	
			(1 - LOCATE ON FIREWALL NEXT TO AIR CLEANER COVER)	
	225-0313	1	FILM-WARNING (JUMP START)	
			(LOCATE ON REAR FACE OF BATTERY HOLDER)	
	226-1242	2	FILM-WARNING (STAY BACK)	
			(LOCATE ON SHEET METAL FLANGE BELOW THE LH & RH FRONT QUARTER PANEL WINDOWS OF THE CAB)	
	226-1275	2	FILM-WARNING (ARTICULATION JOINT)	
			(LOCATE ON SHEET METAL FLANGE BELOW THE LH & RH FRONT QUARTER PANEL WINDOWS OF THE CAB)	
	239-4233	1	FILM-WARNING (QUICK COUPLER)	
			(LOCATE ON BRACKET ON RH "B" POST INSIDE OF CAB)	
	224-9021	1	FILM-WARNING (SEATBELT)	
			(LOCATE ON BRACKET ON RH "B" POST INSIDE OF CAB)	
	240-7956	1	FILM-WARNING (UNIVERSAL)	
			(LOCATE ON BRACKET ON RH "B" POST INSIDE OF CAB)	
	224-7830	1	FILM-WARNING (HIGH PRESSURE CYLINDER)	
			(LOCATE ON INSIDE OF FRAME AT END OF ACCUMULATORS)	
	225-4256	1	FILM-WARNING (HOT FLUID)	
			(LOCATE ON FIREWALL NEXT TO RH SIDE OF SHUNT TANK)	

<END>

SERVICE EQUIPMENT AND SUPPLIES

236-5653 PLATE & FILM GP–JAPANESE

S/N: PDF1-UP

AN ATTACHMENT

SMCS-7405, 7557 **i02027450**

NOTE	PART NUMBER	QTY	PART NAME 1 2 3 4 5 6 (PRODUCT LEVEL)	SEE PAGE
	146-6747	1	FILM (24-VOLT)	
			(LOCATE ON REAR FACE OF BATTERY HOLDER)	
	224-9855	1	FILM (STARTING AID)	
			(LOCATE ON BRACKET ON RH "B" POST INSIDE OF CAB)	
	124-9555	1	FILM-EMISSION	
			(LOCATE ON LH SIDE OF HOOD IN UPPER LH CORNER OF BLACK AREA)	
	134-2625	1	FILM-NOTICE (NO KEROSENE)	
			(LOCATE ON FIREWALL FACING FUEL FILL)	
	224-8946	2	FILM-WARNING (ETHER)	
			(1 - LOCATE ON RH SIDE OF AIR INTAKE TUBE ABOVE HOOD)	
			(1 - LOCATE ON FIREWALL NEXT TO AIR CLEANER COVER)	
	224-9022	1	FILM-WARNING (SEAT BELT)	
			(LOCATE ON BRACKET ON RH "B" POST INSIDE OF CAB)	
	225-0312	1	FILM-WARNING (JUMP START)	
			(LOCTAE ON REAR FACE OF BATTERY HOLDER)	
	239-4234	1	FILM-WARNING (QUICK COUPLER)	
			(LOCATE ON BRACKET ON RH "B" POST INSIDE OF CAB)	
	240-7957	1	FILM-WARNING (UNIVERSAL)	
			(LOCATE ON BRACKET ON RH "B" POST INSIDE OF CAB)	
	224-0672	1	FILM-WARNING (HIGH PRESSURE CYLINDER)	
			(LOCATE ON INSIDE OF FRAME AT END OF ACCUMULATORS)	
	225-4257	1	FILM-WARNING (HOT FLUID)	
			(LOCATE ON FIREWALL NEXT TO RH SIDE OF SHUNT TANK)	

<END>

PART NUMBER INDEX

Part	Page
0	
0S-1594	457
	459
0S-1603	22
0T-0244	571
0T-0924	216
1	
1A-2209	319
1A-4350	563
1B-2714	405
1B-3057	388
1B-5174	185
1B-8723	552
1B-8736	10
	13
	24
1C-0569	566
1D-4677	587
1F-7567	356
1G-3455	244
1G-8878	187
1H-1023	321
	323
1H-3244	153
1H-4393	120
	122
	124
	142
	163
	174
1H-5338	198
	200
1H-8296	589
1H-8720	310
1J-6298	564
	565
1J-6472	275
1J-9671	293
	294
1K-6853	233
1K-6872	457
	459
	460
	461
1M-1230	89
	90
1M-4986	150
	153
1M-6119	134
	150
1M-6120	134
	150
1M-6718	415
	416
	417
1P-3702	202
1P-3703	202
1P-3704	202
1P-4278	65
1P-6356	515
1P-6522	454
1P-7326	143
	145
	148
1R-1804	68
1S-0994	312
	358
1S-5891	309
1S-9593	425
1U-1254	432
	433
1U-2208	430
1U-2209	430
1U-3202	446
1U-3252	445
1U-8846	185
	198
	200
	214
	215
1V-3342	428
1V-3593	255
	257
1Y-7927	500
2	
2B-0858	18
	521
2B-0941	348
2B-2695	566
2D-0388	515
	519
2D-2628	249
2D-2629	249
2D-2630	249
2D-2631	249
2D-2633	249
2D-2751	140
	141
2D-4202	392
2D-6235	500
2D-9190	188
	189
	190
	191
2D-9191	188
	191
2F-7306	535
2G-5672	428
2G-9524	495
2H-3429	415
	416
	417
	418
	419
2H-3920	139
	451
	452
	496
2H-3922	133
	454
2H-3923	454
2H-6338	343
2J-3505	430
2J-3506	430
	441
	442
2J-4066	343
2J-6540	53
	55
2K-4973	449
	566
	587
	589
2K-5097	198
	200
2K-6830	344
2K-8257	210
2L-8065	150
2M-0338	200
2M-0849	214
	457
	459
2M-7819	500
2M-9780	33
	204
	208
	312
	314
	332
	345
	352
	354
	361
	379
	394
	396
	398
	402
	406
2N-3477	296
2P-0449	365
	369
	373
2P-1293	208
2P-1692	196
2Q-6002	222
	▶223
2Q-6003	223
2Q-6004	223
2Q-6005	223
2S-3745	454
	498
2S-4078	376
	392
2T-3360	304
	306
2V-3726	262
	263
2W-1145	211
	230
2Y-5671	423
3	
3B-0551	198
	200
3B-4501	3
	454
3B-4610	179
	298
3B-4617	299
3B-6487	53
	55
3B-6552	288
3B-6768	198
	200
3B-8485	275
	288
3B-8488	233
	428
3B-8489	200
	275
	288
	309
	428
3B-8695	404
3C-3364	553
3C-4922	553
3C-8388	246
3D-2824	202
	204
	208
	210
	211
	220
	312
	360
	361
	390
	438
	444
3D-2975	500
3E-0154	▶135
	163
3E-1841	454
	498
3E-1906	▶470
	471
3E-3365	3
	79
	91
	109
	110
	122
	141
	150
	153
	162
	425
	498
	544
	548
3E-3371	91
	110
	303
	312
3E-3374	178
3E-3377	175
3E-3383	100
3E-3389	85
	139

▶ **PRIMARY REFERENCE**

PART NUMBER INDEX

Part	Page
	143
	145
	148
	532
3E-3805	482
	484
	487
	489
3E-4051	515
3E-4052	515
3E-4053	515
3E-4057	515
3E-4058	515
3E-4312	458
3E-4335	535
3E-4336	535
3E-4354	418
3E-4362	535
3E-4915	216
3E-4917	216
3E-5180	177
	178
	531
3E-5239	3
	153
	163
	473
3E-5464	454
3E-6466	▶104
	120
3E-6575	535
3E-7420	354
	379
3E-7586	▶96
	112
3E-7587	▶98
	112
3E-7843	▶82
	348
3E-7844	▶81
	348
3E-8008	196
3E-8583	425
3E-8679	79
3E-9856	181
3F-6166	275
3G-6127	446
3G-6891	321
	323
3G-6906	321
	323
3G-6907	321
	323
3H-7180	383
3J-1907	3
	44
	65
	181
	187
	204
	205
	220
	237
	239
	241
	295
	303
	312
	314
	315
	332
	350
	356
	358
	361
	364
	365
	368
	369
	372
	373
	394
	396
	398
	407
	409
	412
	438
3J-4818	589
3J-7354	37
	187
	196
	204
	220
	301
	314
	407
	409
	412
3K-0360	3
	20
	150
	204
	205
	220
	301
	312
	314
	350
	358
	361
	364
	368
	372
	384
	385
	386
	415
	416
	417
	418
	419
3K-4897	538
3K-6113	564
	565
3L-8187	296
3P-0439	392
3P-0896	198
	200
3P-5414	151
3P-9900	589
3S-2093	79
	89
	90
	122
	124
	140
	141
	142
	255
	257
	454
	473
	498
	515
	583
	593
	595
3S-2713	400
	401
	402
3S-6049	150
3S-8665	55
3S-9182	185
	198
	200
3T-2662	544
	548
3T-2702	163
3T-5201	482
	484
	487
	489
3V-4791	83
	515
3V-5349	172
	475
3W-6398	591
3W-6399	591
3Y-9287	142
4	
4B-0418	62
4B-2043	540
	542
	584
4B-4158	438
	599
4B-4274	153
4B-4278	589
4B-4863	153
	255
	257
4B-5059	500
4B-5324	296
4D-0298	310
4D-1326	135
4D-1736	165
4D-6432	563
4D-6988	65
4D-7388	388
4D-7735	298
	301
4D-8648	188
	189
	190
	191
4D-8649	188
	191
4E-0724	65
4E-1062	172
	475
4E-1384	482
	484
	487
	489
	495
4E-1411	503
4E-1799	428
4E-2161	508
	510
	512
4E-3159	200
4E-3160	212
4E-5984	232
4E-5985	232
4F-2294	136
4F-4879	573
	580
4F-7389	185
	188
	191
4F-7827	441
	442
4I-3038	544
	548
4I-6287	204
4J-0520	376
4J-0522	376
4J-0527	400
	401
	402
	404
	405
4J-5267	376
4J-5477	288
	438
4K-2039	415
	416
	417
	418
	419
4K-4879	223
	225
4K-4881	223
	225
4K-5824	55
	153
4K-8302	159
	205
4K-9429	537
4L-6454	460
	461
4M-1677	170
4M-2381	381
4M-6425	558
4M-7470	595
4N-2927	500

▶ **PRIMARY REFERENCE**

PART NUMBER INDEX

Part	Page
4P-6236	599
4P-6396	599
4P-6422	599
4P-7428	89
	90
4P-7581	4
	143
	145
	148
	151
	153
	159
	161
	348
	473
	515
	545
	548
4P-8134	140
	141
	143
	145
	148
	151
	153
	348
	545
	548
4S-1936	65
4S-1962	519
4S-8264	508
	510
	512
4S-8287	535
4T-2914	441
4T-3147	327
4T-3148	327
4T-3151	327
4T-3181	327
4T-6780	310
4T-8054	343
4V-4444	344
4V-7884	587
4V-8256	449
4V-8577	587
	589
4V-8629	428
4V-8639	428
4V-8643	428
4Y-3046	469
4Y-3048	469
4Y-3263	▶105
	126
4Y-3306	526
	527
4Y-3307	526
4Y-3415	103
	105
	106
4Y-3417	105
	106
4Y-3418	105
	106
4Y-3419	105
	106
4Y-3450	103
4Y-3580	▶106
	126
4Y-3630	469
4Y-4327	469
4Y-4790	468
4Y-4796	468
4Y-4829	126
4Y-5283	120
	142
4Y-6929	58
4Y-7551	126
4Y-8003	526
5A-3808	160
5B-9079	34
5C-2874	4
	120
5C-2890	4
	109
	114
	115
	118
	120
	122
	124
	252
	255
	263
	296
	382
	383
	409
	412
	482
	484
	487
	489
	508
	510
	512
	540
	542
	589
5C-5306	246
5C-7261	46
	172
	277
	279
	280
	281
	283
	298
	335
	337
	339
	482
	484
	487
	489
	495
5C-8312	4
	120
	122
	124
	126
	252
	255
	443
	454
	473
	495
	498
5D-1026	11
	519
5D-4822	348
	500
5F-3999	198
	200
5F-9144	321
	323
5F-9657	331
5F-9757	122
	124
5G-2318	428
5G-2806	434
	435
	437
5G-2807	434
	435
	437
5G-3676	157
	315
	376
5G-5769	431
5G-5770	431
5G-6973	299
5G-7820	348
5G-7823	348
5G-8342	434
	435
	437
5G-8599	428
5G-8760	431
	432
	434
	435
	437
5G-8871	557
5G-8911	431
5H-3701	198
	200
5H-6005	246
5J-2974	390
5J-4771	430
5J-5402	344
5J-8150	310
5K-5338	205
5K-9090	204
	205
	376
	394
	396
	398
5L-1100	321
	323
5L-4758	331
5L-7200	120
	122
	142
5M-2894	179
	558
5M-3062	587
5M-5856	52
5P-0746	134
	153
5P-0760	150
5P-0767	519
5P-0806	115
5P-1075	587
5P-1404	312
	394
	396
	398
5P-1420	65
5P-1442	390
5P-1717	58
5P-4115	157
	252
	255
	443
	503
	505
	545
	548
5P-4116	46
	55
	57
	65
	70
	179
	252
	255
	281
	283
	304
	306
	464
	476
	491
	526
	555
5P-4423	507
	589
5P-4432	507
5P-4965	153
5P-5148	364
	368

5

▶ **PRIMARY REFERENCE**

PART NUMBER INDEX

Part	Page
	372
5P-5623	141
5P-5637	508
	510
5P-5639	118
5P-5643	179
	451
	452
	454
	474
	496
5P-5670	172
	475
5P-5774	118
	559
5P-5897	263
5P-5908	454
	498
5P-5924	332
5P-5927	491
5P-5943	556
5P-5992	593
5P-6010	507
	589
5P-6039	114
5P-6120	265
	597
5P-6264	126
5P-6718	28
5P-6872	525
5P-6944	364
	368
	372
5P-7070	454
5P-7211	250
	265
5P-7234	331
5P-7466	317
	376
5P-7467	317
	376
5P-7468	202
	376
5P-7469	202
	376
5P-7657	120
5P-7957	537
5P-7958	522
5P-8112	317
	376
5P-8245	22
	185
	460
	461
5P-8247	198
	200
5P-8438	117
5P-8444	376
5P-8445	500
5P-8500	522
	597
5P-8502	597
5P-8524	503
	505
5P-8837	289
5P-9120	200
5P-9121	198
	200
5P-9186	20
5P-9212	265
5P-9297	298
	301
	356
	364
	369
	373
5P-9299	151
5S-7383	558
5V-0770	500
5V-1496	569
5V-1497	587
5V-1498	457
	459
5V-4410	299
5V-4999	289
5W-1453	4

6

Part	Page
6B-0933	77
6C-1496	523
	530
6C-3246	235
	236
6C-3679	495
6C-7224	252
	255
6C-7227	252
	255
6C-7319	257
6C-7320	257
6C-7366	234
	235
6C-7581	255
	257
6C-7606	252
	255
	257
6C-7607	252
	255
	257
	443
6D-0337	223
	225
	▶249
6D-0443	249
6D-1641	519
6D-4244	301
	350
	358
6E-0719	230
6E-1607	243
	248
6E-1691	228
6E-1692	228
6E-3283	210
	211
6E-4240	245
6E-4385	220
6E-4388	245
6E-4401	243
6E-4402	196
	▶245
6E-4403	245
6E-4404	245
6E-4614	220
6E-4975	343
6E-4977	344
6E-5394	342
6E-5897	343
6E-5914	344
6E-5917	344
6E-5918	▶344
	346
6F-0196	430
6F-0253	61
6F-4718	211
6F-7045	133
6G-0233	299
6G-4195	296
6H-3616	31
6I-0217	24
	28
	42
	59
	71
6I-0254	11
	42
6I-0260	28
	38
	39
	71
	77
6I-0289	28
6I-0291	71
6I-0363	28
6I-0364	53
	55
	132
6I-0423	23
6I-0454	77
6I-0501	32
6I-0502	32
6I-0563	59
6I-0572	15
	28
	39
	50
	59
6I-0594	77
	132
6I-0645	24
	39
6I-0789	24
6I-0846	11
6I-0847	23
6I-1201	11
6I-1418	91
6I-1497	28
6I-4079	28
6I-4374	11
	39
6J-2797	344
6J-9996	383
6K-2274	428
6K-2701	275
6K-4076	433
6K-8088	552
6L-7751	62
6M-5062	244
	415
	416
	417
	418
	419
6R-3354	423
6S-3461	428
6S-6514	392
6S-6657	250
6S-7101	160
6S-7826	321
	323
6S-7827	321
	323
6S-8620	388
6V-0400	202
6V-0406	438
6V-0408	438
	444
6V-0852	44
	187
	204
	220
	301
	303
	312
	314
	394
	396
	398
6V-0894	244
6V-1250	239
6V-1363	53
	55
6V-1392	454
	498
6V-1668	454
	498
6V-1842	331
6V-1889	65
	298
6V-1970	1
	▶522
6V-2369	153
6V-2456	538
	566
6V-2687	458
6V-2689	385
	386
6V-3341	352
	354
6V-3532	310
6V-3582	53
	55
6V-3922	327
6V-3965	44
	181
	187

▶ **PRIMARY REFERENCE**

PART NUMBER INDEX

Part	Page
	205
	220
	241
	303
	312
	314
	394
	396
	398
6V-5192	246
6V-5201	230
6V-5683	4
	381
6V-5686	190
	191
6V-5696	185
	188
	191
6V-6210	595
6V-6635	128
	129
6V-7238	20
6V-7345	153
6V-7357	62
	115
	118
	179
	281
	283
6V-7419	595
6V-7529	37
6V-7646	569
6V-7728	454
	498
6V-7743	4
	62
6V-7744	53
	55
	286
	597
6V-8186	136
6V-8187	61
	153
6V-8189	400
	401
	402
6V-8200	192
6V-8210	188
	189
	190
	191
6V-8225	595
6V-8227	326
6V-8351	241
6V-8352	245
6V-8369	139
	451
	452
	496
6V-8373	296
6V-8376	544
	548
6V-8378	135
	153
6V-8397	3
	204
	205
	295
	301
	312
	314
	332
	350
	356
	361
	364
	365
	368
	369
	372
	373
	407
	409
	412
	438
6V-8398	165
	196
	301
	314
	315
	332
	358
	361
6V-8400	376
6V-8490	514
6V-8519	348
6V-8625	301
	314
	358
6V-8627	438
6V-8629	208
	379
6V-8632	204
6V-8634	350
6V-8635	376
	394
	396
	398
6V-8636	204
	314
	350
	356
	361
	364
	368
	372
	407
	409
	412
6V-8637	204
	208
6V-8638	332
6V-8639	314
	358
	361
6V-8640	352
	361
6V-8642	204
	379
6V-8675	185
	200
6V-8714	204
6V-8715	332
6V-8716	204
6V-8722	205
6V-8724	205
	295
	332
	350
	364
	368
	372
6V-8758	298
6V-8774	364
	368
	372
6V-8775	361
6V-8781	361
6V-8788	365
	369
	372
6V-8789	315
6V-8801	130
	135
6V-8837	545
	549
6V-8928	514
6V-8939	314
	332
6V-8948	376
6V-8983	208
6V-8988	373
6V-8994	301
6V-9001	204
6V-9002	314
6V-9004	312
6V-9007	208
	312
	360
	438
6V-9023	153
6V-9032	314
6V-9162	360
6V-9168	301
6V-9178	404
	405
6V-9189	252
	255
	495
6V-9200	301
	314
6V-9491	255
	257
6V-9510	438
6V-9632	443
	498
	592
6V-9677	237
	239
6V-9746	204
	205
	208
	312
	314
	352
	354
	360
	361
	376
	379
	438
6V-9807	356
	364
	369
	372
6V-9829	361
	364
	368
6V-9830	358
6V-9831	352
	354
	361
6V-9836	301
	332
6V-9837	358
6V-9839	205
6V-9842	438
6V-9843	205
6V-9845	205
6V-9850	205
	301
6V-9851	314
6V-9853	205
6V-9855	376
6V-9872	204
6V-9873	358
6V-9875	376
6W-2888	438
6W-2890	438
6W-5760	438
6W-5761	438
6W-6379	236
6W-6807	235
6W-8221	438
6W-8448	438
6Y-2349	438
6Y-2525	533
6Y-6882	27
	7
7B-1251	157
7B-1598	62
7B-7525	566
7C-0351	28
7C-1224	28
7C-1281	11
7C-4354	515
7C-4616	24
7D-6922	296
7E-1362	471
7F-2050	454
7F-2060	454
7F-3400	522
7F-8267	321
	323
7F-9223	508
	510

► **PRIMARY REFERENCE**

PART NUMBER INDEX

Part	Page
	512
7G-1060	545
	549
7G-5220	185
	188
	191
7H-1447	392
7H-3937	3
7I-3003	188
	191
7I-6601	415
	416
	417
	418
	419
7I-6756	574
	576
	578
7J-0204	55
	415
	416
	417
	418
	419
7J-5544	392
7J-6287	310
7J-6839	321
	323
7J-8009	321
	323
7J-9108	204
	205
	314
	352
	354
	361
	379
	438
7J-9885	343
7K-1181	4
	79
	83
	91
	117
	120
	122
	124
	126
	143
	145
	148
	150
	153
	157
	159
	160
	161
	162
	205
	208
	271
	272
	273
	348
	390
	503
	505
	515
	544
	548
7K-4357	174
7K-9203	428
7K-9204	428
7K-9205	428
7K-9209	428
7M-7219	500
7M-8485	204
	331
	376
	394
	396
	398
7N-0718	►133
	134
7N-0810	51
	52
7N-5274	134
	150
7N-7779	3
7N-7780	3
7T-1099	266
	267
	468
	533
	555
	557
7T-4532	470
7T-6799	540
	542
7T-8890	591
7U-4898	566
7V-5191	500
7V-5628	157
7V-6089	157
7W-1176	23
7W-2108	482
	484
	487
	489
7W-2326	35
7W-2632	77
7W-4634	32
7W-4642	23
7W-7381	364
	368
	372
7X-0456	457
	459
7X-0492	288
7X-0515	212
7X-0562	246
7X-0579	41
	46
	250
	451
	452
	496
	585
7X-0586	263
7X-0603	46
	304
	306
7X-0608	130
	135
	449
7X-0618	275
	309
	428
7X-0620	120
	135
7X-0632	73
7X-0818	65
	348
7X-0871	314
7X-1169	134
	150
7X-1886	423
7X-2429	376
7X-2459	205
7X-2475	212
7X-2489	260
7X-2497	482
	484
	487
	489
7X-2533	281
	283
7X-2534	157
	301
7X-2537	48
7X-2538	140
7X-2540	41
7X-2555	212
7X-2556	27
7X-2558	212
7X-2559	212
7X-2563	556
7X-2566	259
7X-2567	533
7X-2619	160
	172
	277
7X-3229	599
7X-3308	545
	549
7X-4780	163
7X-4802	189
	190
7X-6315	86
7X-7703	361
7X-7729	55
	151
	160
	179
	208
	252
	255
	262
	263
	267
	274
	286
	361
	394
	396
7X-7877	70
	179
7X-7926	250
7X-8549	187
7Y-3173	174
	423

8

Part	Page
8B-3115	279
	280
8B-5972	185
8C-0564	364
	368
	372
8C-3205	376
8C-3336	192
	194
8C-3415	3
8C-3426	508
	510
	512
8C-3445	37
8C-3446	37
	187
8C-3451	187
8C-3681	46
	65
	388
8C-3756	473
8C-4586	454
	498
8C-4982	172
8C-6160	298
8C-6440	503
	505
8C-6781	438
8C-6865	288
8C-8457	454
	498
8C-8988	365
	368
8C-9122	310
8C-9131	310
8D-2707	249
8E-1118	115
8E-6208	446
8E-6209	446
8E-8296	299
8E-8300	552
8E-9459	208
8F-1434	135
	153
8F-1462	535
8F-3469	246
8F-5340	321
	323
8F-8513	55
8H-5303	133

► **PRIMARY REFERENCE**

PART NUMBER INDEX

Part	Page	Part	Page	Part	Page	Part	Page
8H-5306	133	8T-0336	198	8T-3611	376		339
8H-7521	218		200	8T-3612	250		348
	219	8T-0337	94		585		350
8H-8648	134		153	8T-3647	332		352
8I-1362	388	8T-0348	215	8T-3995	508		354
8J-6212	310	8T-0358	198		510		356
8J-6213	310		200		512		358
8J-8322	230	8T-0389	96	8T-3998	4		360
8L-8413	500		98		358		362
	589		100	8T-4001	533		364
8M-2770	163		101	8T-4121	51		368
	255		299		52		373
	257	8T-0722	286		53		376
	298	8T-0788	438		55		379
	301	8T-1158	165		57		388
	358	8T-1159	331		58		390
8M-2772	288	8T-1683	301		65		392
8M-2773	205	8T-1718	438		73		394
	301	8T-1885	315		117		396
	348		362		120		398
8N-0869	150	8T-1886	315		122		427
8N-1725	150		362		124		438
8N-2622	120	8T-1887	352		126		464
	122		354		134		468
	124		379		140		471
	142	8T-1888	352		141		495
8N-9033	508		354		143		515
8N-9394	288		379		145		519
8P-6363	265	8T-1889	205		151		523
8P-9770	432		315		153		527
	433		376		157		530
8R-0512	198		394		159		533
	200		396		160		545
8R-1460	163		398		163		549
8R-1461	153		523		172		552
8R-1496	314		530		179		556
8R-1774	▶591	8T-1890	205		185		560
	593		315		202		568
8R-2236	189		376		205		572
	190		394		208		593
8R-2918	304		396		216	8T-4122	27
	306		398		250		298
8R-2946	233		523		257	8T-4123	216
8R-4269	348		530		265		259
8R-4892	267	8T-1899	352		266		554
	269		354		267		555
8R-6904	552	8T-1900	352		269		556
8R-7395	348		354		270	8T-4127	103
8S-0934	564	8T-2275	392		277	8T-4131	259
	565	8T-2525	202		279		554
8S-0948	515	8T-2659	143		280		555
8S-4711	404		145		281		556
8S-7803	458		148		283	8T-4132	27
	500		175		286	8T-4133	51
	566	8T-2883	312		288		52
8T-0119	312	8T-3016	4		295		53
8T-0154	454	8T-3282	310		298		55
	498	8T-3425	150		299		65
8T-0255	170		360		301		73
8T-0269	244		377		312		95
8T-0273	218	8T-3490	269		315		117
8T-0286	505		443		317		134
8T-0306	594		498		332		140
8T-0328	153		533		335		141
	569		585		337		143

▶ **PRIMARY REFERENCE**

PART NUMBER INDEX

Part	Page
	145
	151
	153
	163
	208
	277
	279
	280
	298
	299
	312
	348
	354
	376
	394
	396
	398
	438
	471
	515
	523
	526
	530
	545
	549
8T-4134	503
	505
8T-4136	53
	55
	57
	73
	160
	179
	208
	265
	267
	279
	280
	286
	295
	317
	332
	348
	350
	354
	360
	362
	376
	379
	388
	390
	392
	468
	515
	597
8T-4137	57
	58
	115
	118
	153
	159
	160
	163
	179
	202
	204
	208
	265
	267
	269
	270
	277
	281
	283
	288
	298
	299
	301
	312
	315
	335
	337
	339
	348
	350
	352
	356
	358
	360
	364
	368
	372
	376
	388
	392
	464
	519
	527
	533
	556
	560
	593
8T-4138	4
	79
	124
	153
	163
	172
	296
	475
	525
8T-4139	198
	275
	348
	394
	396
	398
	468
8T-4167	222
	260
	533
8T-4171	44
	154
	185
	454
	498
8T-4172	438
8T-4173	27
8T-4176	469
8T-4178	51
	52
8T-4179	309
	428
8T-4180	482
	484
	487
	489
8T-4181	482
	484
	487
	489
8T-4182	151
	202
8T-4183	44
	392
8T-4185	315
	368
	372
	438
	471
	552
8T-4186	55
	73
	151
	204
	298
	376
	471
8T-4189	41
	62
	70
	89
	90
	114
	141
	154
	179
	252
	255
	277
	296
	304
	306
	348
	388
	438
	464
	508
	510
	512
	515
	524
	526
	528
	545
	549
	555
	557
	559
	560
8T-4191	120
	122
	124
	151
	163
	304
	306
8T-4194	202
	428
8T-4195	65
	73
	120
	122
	124
	126
	151
	157
	185
	202
	250
	252
	255
	262
	263
	266
	267
	274
	279
	280
	312
	348
	364
	368
	372
	376
	390
	394
	396
	398
	471
	515
	523
	526
	530
	593
8T-4196	179
	216
	252
	255
	257
	267
	286
	299
	377
	443
8T-4197	62
8T-4198	257
8T-4199	143
	145
	148
	545
	549
8T-4200	179
	250
	388
	508
	510
	512
8T-4205	4
	62

► **PRIMARY REFERENCE**

PART NUMBER INDEX

Part	Page	Part	Page	Part	Page	Part	Page
	75		250		585		495
	79		277	8T-4910	27	8T-7566	536
	109		279	8T-4956	27	8T-7876	39
	115		280		198	8T-7915	438
	118		296		275	8T-8549	44
	120		332		387	8T-8641	458
	122		335	8T-4958	343	8T-8729	81
	124		337		344		96
	153		339	8T-4971	4		98
	160		348		482		101
	163		388		484		104
	172		438		487		110
	296		464		489		122
	454		471	8T-5001	471		124
	473		473	8T-5002	198		162
	475		495		200		178
	482		508	8T-5004	508		425
	484		510		510		531
	487		512		512		532
	489		515	8T-5005	96		540
	498		523		98	8T-8730	82
	508		524		100		136
	510		528		101		178
	512		530		364	8T-8737	79
	525		545		368		96
	540		549		372		98
	542		557	8T-5041	200		100
	545		558		202		101
	549		559	8T-5049	218		120
	569		560	8T-5091	46		122
8T-4222	262	8T-4226	115	8T-5093	473		124
	263		118	8T-5360	182		126
8T-4223	27	8T-4244	174		563		139
	44		175	8T-5372	257		145
	57		279		454		148
	61		280		455		407
	198		335		498		531
	200		339	8T-5379	222		595
	202		348	8T-5400	595	8T-8799	150
	275		469	8T-5412	57		153
	279		471	8T-5413	267	8T-8894	304
	280	8T-4742	482	8T-5429	361		306
	348		484	8T-5432	423	8T-9043	4
	387		487	8T-5439	428	8T-9082	569
	392		489	8T-5913	591	8T-9371	589
	394	8T-4747	482	8T-5914	591	8T-9381	564
	396		484	8T-6412	263		565
	398		487	8T-6430	216	8T-9402	55
	471		489		428	8T-9403	202
8T-4224	4	8T-4896	319		554	8T-9534	237
	41	8T-4908	55		555		244
	46		57	8T-6431	299	8T-9758	150
	48		154	8T-6466	312	8V-7315	233
	62		250		515	8V-7623	198
	89		348	8T-6631	454	8X-9925	225
	90		451	8T-6656	599	8Y-4200	▶457
	114		452	8T-6685	427		573
	140		471	8T-6869	46	8Y-4501	482
	141		473		304		484
	143		476		306		487
	145		491	8T-6876	358		489
	148		496	8T-6912	62	8Y-4807	487
	154		515		185		489
	172		523	8T-7338	27	8Y-5737	454
	185		530	8T-7547	46		498

▶ **PRIMARY REFERENCE**

PART NUMBER INDEX

Part	Page
8Y-5877	492
8Y-5878	566
8Y-5892	538
8Y-5897	457
8Y-5898	459
8Y-5903	535
8Y-5904	457
	▶458
	459
	460
	461
8Y-5906	458
8Y-5928	566
8Y-5929	566
8Y-5930	566
8Y-5931	566
8Y-5932	566
8Y-5936	566
8Y-5937	566
8Y-5938	566
8Y-5944	587
8Y-5945	500
8Y-5947	492
	566
8Y-5953	563
8Y-5965	587
8Y-5972	535
8Y-5979	566
8Y-5981	566
8Y-5988	458
8Y-5992	▶538
	566
8Y-5995	538
8Y-5998	538
8Y-5999	538
8Y-6000	▶459
	573
8Y-6002	535
8Y-6006	535
8Y-6010	535
8Y-6012	587
8Y-6014	587
8Y-6022	587
8Y-6023	587
8Y-6024	587
8Y-6028	458
8Y-6029	500
8Y-6041	500
8Y-6045	500
8Y-6046	500
8Y-6047	500
8Y-6051	566
8Y-6060	500
8Y-6062	500
8Y-6063	500
8Y-6064	500
8Y-6066	500
8Y-6067	500
8Y-6068	500
8Y-6069	500
8Y-6277	569
8Y-6364	597
8Y-6377	464
8Y-6386	482
	484
	487
	489
8Y-6388	491
8Y-6391	491
8Y-6833	566
8Y-6834	566
8Y-6859	500
8Y-6860	500
8Y-6882	▶566
	573
8Y-6883	▶492
	573
8Y-6933	566
8Y-6977	568
	▶573
8Y-7119	533
8Y-7186	428

9

Part	Page
9B-7233	120
	122
	142
	423
	540
	542
	544
	548
	584
9C-5206	189
	190
9C-6014	198
	200
9C-6809	266
	267
9C-7292	188
	189
	190
	191
9C-7907	428
9C-7999	212
9C-8000	212
9C-9785	544
	548
9D-3769	510
9D-7924	46
	304
	306
9F-5644	133
9G-1950	454
	498
9G-2759	482
	484
9G-2761	487
	489
9G-3670	3
9G-3695	85
	178
9G-4191	348
9G-4343	150
	153
9G-5687	423
9G-9155	557
9H-5156	160
9H-6454	392
9J-3047	392
9J-3169	436
	▶445
	446
9J-4207	430
9J-5442	321
	323
9J-5686	321
	323
9L-6128	21
9L-7469	566
9M-4814	519
9M-5733	535
	538
9M-7958	388
9M-8406	159
9N-0869	91
9N-1756	420
	421
	422
9R-1005	362
9R-1499	160
	252
	255
	290
9R-1948	335
	337
	339
9R-2404	290
9R-2596	595
9R-2620	508
	510
	512
9R-2672	150
	266
	267
	428
	557
9R-2807	299
9R-3067	299
9R-3203	592
9R-3204	592
9R-3205	592
9R-7802	362
9R-7803	362
9R-7941	115
	118
9R-7942	111
9R-7958	111
9R-7980	115
	118
9R-8084	179
9S-1354	61
9S-3888	212
9S-4182	182
9S-4183	202
	390
9S-4190	332
	402
	406
9S-4191	65
	409
	412
9S-7949	188
	189
	190
	191
	198
	200
9S-8002	196
	220
	407
	409
	412
9S-8004	220
	237
	239
9S-8005	220
9S-8008	210
	211
9T-0418	342
9T-0546	404
	405
9T-0553	404
	405
9T-1581	226
9T-3096	312
	364
	368
	372
9T-3370	228
9T-3598	267
9T-3743	210
9T-3745	228
9T-3853	237
	239
9T-3928	220
9T-4223	468
9T-5599	344
9T-5927	344
9T-7634	400
	401
	402
9T-8043	343
9T-8823	▶342
	438
9T-9010	321
	323
9U-0710	296
9U-1991	198
9U-3439	296
9U-3440	296
9U-8263	503
9V-4975	343
	428
9V-5705	431
	434
	435
	437
9W-0335	143
	145
	148
9W-0852	139

▶ **PRIMARY REFERENCE**

PART NUMBER INDEX

Part	Page
	143
	145
	148
	454
	498
9W-2103	226
9W-2104	226
9W-3961	150
9W-3962	150
9W-8142	▶446
9W-8618	▶441
9W-8619	▶442
9W-8620	441
9W-9642	▶430
9W-9915	27
9W-9940	533
9W-9952	27
9X-1046	83
9X-1054	163
9X-1386	79
9X-1439	▶94
	117
9X-1813	79
	91
	141
	312
9X-2021	214
	215
9X-2040	73
	495
9X-2041	335
	337
	339
	464
	581
	582
	583
9X-2042	172
	381
	475
	482
	484
	487
	489
	503
	505
	508
	510
	512
	515
	540
	542
	545
	549
9X-2044	120
	454
	498
9X-2045	172
	304
	306
	475
	508
	510
	512
	514
	540
	542
	545
	549
	553
	592
	595
9X-2065	299
9X-2125	568
	572
9X-2133	388
9X-2185	454
	498
9X-2433	466
9X-2532	594
9X-3064	108
9X-3065	107
9X-3066	104
9X-3404	78
9X-3455	94
9X-3463	94
	95
	115
	118
	120
9X-3465	96
	98
	100
	101
9X-4174	94
9X-4243	94
9X-4244	94
	95
	96
	98
	100
	101
9X-4492	107
	110
9X-4493	96
	98
	100
	101
	104
	108
	109
	110
	120
9X-5617	81
	82
9X-6165	423
9X-6562	599
9X-6581	314
	332
9X-7378	470
	515
9X-7380	515
9X-7381	515
9X-7382	515
9X-7383	515
9X-7385	470
9X-7680	192
9X-7734	237
9X-7849	111
9X-8121	111
9X-8139	111
9X-8256	4
	44
	120
	126
	154
	160
	179
	185
	277
	281
	283
	296
	381
	495
9X-8268	215
9X-8372	599
9X-8399	343
	344
9X-8482	211
9X-8483	210
	252
9X-8873	457
	459
	460
	461
9X-8918	500
9X-9865	96
	98
	100
	101
9Y-5015	18
9Z-8513	▶222
	236
9Z-8536	▶234
006-8663	310
030-1707	134
030-9613	293
	294
031-0214	558
031-5644	161
032-9090	13
032-9091	13
033-5879	420
	421
	422
033-6027	400
	401
	402
	420
	421
	422
033-6039	192
	194
033-7687	22
033-9139	409
	412
033-9412	44
	250
035-8017	71
035-8068	15
037-4426	454
	498
037-4838	454
	498
061-8803	566
067-6002	15
067-6006	15
	18
067-6043	15
067-6095	34
067-6123	23
067-6179	24
067-6213	28
067-6264	71
067-6265	71
067-6366	77
067-6873	13
067-6874	13
067-6897	24
067-6899	24
067-6900	24
067-6999	71
068-4209	544
	548
069-2535	293
	294
	329
069-2536	293
	294
069-4080	65
081-3801	220
082-2817	599
085-7356	65
091-0079	559
092-1136	266
093-2065	150
095-0641	361
095-0670	214
095-0674	194
095-0843	569
095-0878	500
	566
095-0889	170
095-0929	228
095-0933	237
	239
095-0942	210
096-0001	239
096-0194	320
096-2323	479
	487
	489
096-3218	237
	239
096-4833	246
096-5516	226
096-6166	153
099-3649	91
099-7313	27

0

▶ **PRIMARY REFERENCE**

PART NUMBER INDEX

Part	Page
1	
100-3143	454
	498
100-3224	501
100-3245	96
	98
	100
	101
100-3247	96
	98
100-3248	96
	100
	101
100-3249	98
100-3250	96
	98
	100
	101
100-3251	96
	98
	100
	101
100-3253	96
	98
	100
	101
100-3254	96
	98
	100
	101
100-3255	96
	98
	100
	101
100-3426	454
100-3751	24
	42
100-4461	36
100-4830	26
	71
100-4841	15
100-5179	500
100-7924	▶446
100-8451	77
101-0003	587
101-1276	321
	323
101-1277	321
	323
101-2473	598
101-2867	558
101-3470	348
101-3617	23
101-3771	28
101-3895	39
101-4194	587
101-4195	587
101-4639	33
	345
101-4643	33
101-4761	252
	255
102-0341	454
	498
102-1733	216
102-2804	321
	323
102-8801	143
	145
	148
	150
	153
	157
	177
	178
	531
	544
	548
102-8802	3
	79
	91
	104
	109
	110
	120
	122
	124
	140
	141
	143
	145
	148
	150
	153
	157
	159
	161
	162
	255
	257
	425
	454
	470
	498
	544
	548
	589
102-8803	3
	81
	91
	107
	108
	110
	143
	150
	303
	312
	348
	473
	503
	505
102-8804	91
	115
	118
	143
	145
	148
	150
	157
	175
	348
	540
	542
	544
	548
102-8805	83
	91
	96
	98
	100
	101
	120
	122
	124
	126
	145
	148
	150
	163
	454
	498
	544
	548
	595
102-8806	3
	79
	85
	139
	143
	145
	148
	150
	157
	407
	409
	412
	505
	532
	540
	542
	544
	548
102-8809	178
103-2006	335
	337
	339
103-2532	599
103-2543	544
	548
103-2555	55
103-5796	267
103-6131	22
104-2091	491
104-3008	150
104-3173	295
	364
	368
	372
104-3601	120
104-4187	309
	▶310
104-6216	540
	542
105-3481	409
	412
105-4593	331
105-4596	331
105-4849	▶100
	112
105-4850	▶101
	112
105-8034	544
	548
106-0827	252
106-4835	235
	236
106-6394	348
106-7743	252
	255
	443
106-8704	3
	122
	124
	153
	162
	544
	548
106-8835	71
106-8916	59
106-8984	174
	▶177
106-9000	252
	255
107-0497	236
107-1001	402
107-1002	402
107-2503	257
	427
107-3116	192
	194
107-3117	241
107-3255	172
	▶246
107-3676	277
107-3697	266
107-3704	428
107-3706	428
107-4401	▶107
	122
107-4619	112
	113
	▶540
107-4621	▶296
	462
	463
	466
	554
107-4626	▶174
107-4627	462
	463
	466
	▶553
	554
107-4628	462
	463
	▶595
107-4630	462
	463
	▶491

PART NUMBER INDEX

Part	Page
	554
107-4636	112
	▶120
107-4639	171
	▶172
107-4641	2
	▶592
107-4642	▶524
107-4643	462
	463
	466
	▶525
107-4645	▶503
	504
107-4647	462
	463
	466
	▶533
	554
107-4701	1
	▶428
107-4703	1
	▶269
107-4705	▶262
107-4706	1
	▶265
107-4712	1
	▶286
107-4724	1
	▶159
107-4726	1
	▶309
107-4728	51
107-4737	▶259
	261
107-4738	▶260
	261
107-4747	179
107-4748	179
107-4749	301
107-4753	346
	347
	▶352
107-4754	597
107-4757	198
107-4797	361
107-4809	1
	▶274
107-4812	1
	▶179
107-4815	1
	▶289
107-4825	1
	▶134
107-4831	▶216
	217
107-4841	▶171
107-4842	171
107-4851	9
	▶27
107-5978	▶568
107-5980	▶451
	554
107-6007	304
	306
107-6013	544
	548
107-6021	544
	548
107-6030	162
107-6031	544
	548
107-6032	▶93
	514
107-6033	128
	129
107-6034	477
107-6035	172
	475
107-6036	143
	145
	148
107-6037	335
107-6050	335
	337
	339
107-6056	552
107-6070	451
107-6072	544
	548
107-6079	491
107-6104	479
	487
	489
107-6117	487
	489
107-6120	479
	489
107-6125	479
	487
	489
107-6132	2
	131
	▶584
107-6133	▶139
	462
	463
107-6137	▶477
	534
107-6141	304
	306
107-6142	▶128
107-6144	464
107-6145	464
107-6146	464
107-7491	400
	401
	402
108-0358	120
108-0917	314
108-1029	▶111
	128
	129
108-1782	198
	200
108-2192	▶574
	582
108-2503	150
108-2504	120
	122
108-3320	143
	145
	148
108-4082	573
	▶587
108-4086	500
108-4087	501
108-4103	501
108-4311	464
108-4582	▶500
	587
108-4878	587
108-4883	392
108-5731	217
	▶232
108-5732	185
108-5733	232
	▶233
108-5734	188
	191
108-5735	185
108-6200	346
	▶390
108-8421	▶535
	566
108-8423	535
108-8424	535
108-8572	279
	280
108-8769	170
108-8770	170
108-8872	163
108-9325	310
108-9329	310
109-0292	170
109-0535	▶185
	217
109-0609	185
109-0613	185
109-0615	214
109-0616	200
109-0707	170
109-1029	167
	▶188
109-1198	46
109-1199	46
109-1212	214
	215
109-1334	▶343
	346
109-1335	343
109-2356	143
	145
	148
	540
	542
	544
	548
109-3708	267
109-3721	289
109-3731	309
109-3732	428
109-3733	428
109-3734	428
109-3735	428
109-3736	260
109-3737	259
109-3738	▶261
109-3739	275
109-3744	428
109-3756	27
109-3758	27
109-3759	▶61
	62
109-4717	167
	168
	▶183
109-4718	183
	184
109-4719	183
109-4720	183
109-4722	183
	184
109-4723	183
	184
109-4724	183
	184
109-4725	183
	184
109-4726	183
109-4794	264
109-4795	264
109-4796	264
109-4797	264
109-4811	1
	▶346
109-5500	▶212
	217
109-5502	188
	189
	190
	191
109-5836	379
109-6673	3
109-6680	578
109-6681	578
109-7009	277
109-7041	115
	118
	120
109-7317	275
109-7669	252
	255
	443
109-8981	115
110-1329	▶163
	308
	325
110-3013	214
	215
110-3015	185
110-3023	392
110-3024	331
110-3029	208
110-4463	279
	280
110-5051	574
110-5052	574
	576
	578

▶ **PRIMARY REFERENCE**

PART NUMBER INDEX

Part	Page
110-5054	574
110-5056	574
	576
	578
110-5058	574
110-5059	574
	576
	578
110-5060	574
	576
	578
110-5061	574
	576
	578
110-5062	574
	576
	578
110-5063	574
	576
	578
110-5064	574
	576
	578
110-5065	574
	576
	578
110-5066	574
	576
	578
110-5067	574
110-5068	574
	576
	578
110-5071	574
	576
	578
110-5072	574
	576
	578
110-5073	574
	576
	578
110-5074	574
	576
	578
110-5187	170
110-5190	170
110-5417	167
	▶198
110-5418	198
110-5424	198
	200
110-5425	198
	200
110-5426	168
	▶200
110-5883	200
110-6109	143
	145
	148
	544
110-6116	168
	▶189
110-6326	49
110-6331	49
110-6349	220
	301
110-6471	265
110-7351	310
110-7352	310
110-7886	139
110-7887	540
	542
111-0125	508
	510
	512
111-0132	552
111-0136	296
111-0149	172
	475
111-0157	115
	118
111-0161	120
	122
	124
	142
	163
111-0177	464
111-0178	464
111-0200	487
	489
111-0201	479
111-0202	482
	484
111-0204	464
111-0209	464
111-0350	332
	▶425
111-0859	21
111-1513	515
111-3422	71
111-3423	71
111-3750	▶263
111-3751	264
111-3752	264
111-3753	264
111-3754	264
111-3755	263
111-3760	150
111-4102	▶202
	217
111-4251	346
	▶394
111-4252	346
	▶396
111-4255	346
	▶361
111-4256	346
	▶379
111-4268	346
	▶387
111-4668	▶214
	217
111-4670	▶215
	217
111-5042	120
	587
111-5838	515
111-6259	348
111-6260	348
111-7048	277
111-7872	540
	542
111-7874	304
111-7875	172
	475
111-7878	304
	306
111-7881	508
	510
	512
111-7897	122
	124
	142
111-7899	3
	122
	124
	128
	129
	142
	143
	145
	148
	162
	163
	172
	335
	451
	452
	474
	475
	477
	496
	540
	542
	544
	548
111-8738	493
111-8853	263
112-0885	267
112-0964	▶234
112-0969	224
112-1256	▶434
112-1257	▶437
112-1258	▶431
112-1384	286
112-1385	286
112-1528	482
	484
112-1817	361
112-3113	433
112-3116	433
112-3252	515
112-3357	269
112-3358	270
112-3448	▶234
112-4577	566
112-4578	566
112-4579	566
112-4580	566
112-4581	566
112-4582	566
112-4583	566
112-4642	244
112-4718	243
112-4807	298
112-5121	376
112-5203	361
112-5204	361
112-5205	361
112-5206	361
112-5211	379
112-5214	508
	510
	512
112-5219	93
112-6174	139
112-6605	185
112-7167	1
	▶78
112-7189	113
	▶122
112-7192	▶140
112-7291	150
112-7292	120
112-7294	120
112-8008	189
	190
112-8009	189
	190
112-9264	356
112-9267	171
	▶356
112-9269	356
112-9401	76
112-9434	364
	368
	372
112-9435	364
	368
	372
112-9436	364
	368
	372
112-9437	364
	368
	372
112-9438	364
	368
	372
112-9439	361
112-9443	204
112-9445	364
	368
	372
112-9446	364
	368
	372
112-9449	364
	368
	372
112-9450	364
	368
	372
112-9599	348
112-9717	49
112-9736	515
112-9861	358
	361
	423

▶ **PRIMARY REFERENCE**

PART NUMBER INDEX

Part	Page
113-0899	566
113-0985	▶33
	390
113-1050	328
113-1504	11
113-1514	▶51
	534
	554
113-1515	▶52
	466
	534
113-3794	275
113-4419	226
	228
113-6296	379
113-6297	379
113-6349	77
113-6367	376
113-6379	204
113-6380	204
113-7149	314
113-7150	314
113-7152	314
113-7634	252
113-7863	312
	▶327
113-8129	42
113-9232	568
	572
	581
	582
	583
114-2579	50
114-3140	454
	498
114-3469	470
114-3936	174
114-3937	335
	339
114-3939	296
114-3940	335
114-3944	493
114-3947	120
	122
	124
	142
	163
114-3949	381
114-3951	544
114-3953	503
114-3954	503
	505
114-3956	525
114-4233	405
114-4234	405
114-4270	230
114-4363	23
114-4820	352
114-4821	352
114-4822	352
	354
114-5132	321
	323
114-5180	321
	323
114-5190	321
	323
114-5325	323
114-5326	323
114-5332	323
114-6406	404
	405
114-6604	115
	118
	120
114-9469	198
115-1162	50
115-1317	▶83
	504
115-1552	479
	489
115-1558	▶114
115-1559	114
115-1560	163
115-1561	508
115-1748	120
	122
	124
	142
	143
	145
	148
	163
	540
	542
	544
115-4984	361
115-9497	364
	368
	372
115-9498	364
	368
	372
116-0924	▶112
116-0925	▶112
116-0926	▶112
116-4232	79
116-4527	415
	416
	417
	418
	419
116-4752	348
116-4799	361
116-4800	361
116-4802	361
116-4809	179
116-4810	179
116-4812	179
116-4813	179
116-4814	179
116-4816	361
116-4817	361
116-4928	▶162
	334
116-5283	134
116-6188	301
116-6211	301
116-6680	79
116-7471	544
	548
116-7856	493
116-8539	233
116-9764	296
117-0811	120
	122
	124
	126
117-2311	83
117-3274	505
	544
117-3290	198
117-3291	198
117-3292	200
117-3293	200
117-3636	400
	401
	402
	▶404
117-3637	400
	401
	402
	▶405
117-3787	544
	548
117-3788	544
	548
117-3789	544
	548
117-3915	▶130
	319
117-4491	571
117-4492	449
117-6032	113
	▶131
117-6033	▶126
	131
117-6034	126
117-6035	126
117-6036	126
117-6037	126
117-6038	126
117-6039	131
	▶160
117-6040	160
117-6043	160
117-6044	160
117-6045	131
	▶526
117-6046	526
117-6047	526
117-6048	161
117-6050	131
	▶142
117-7296	218
117-9622	▶115
	462
	463
117-9623	534
	554
	▶593
117-9624	462
	463
	▶508
	554
118-0530	314
118-0626	462
	463
118-0807	466
	▶510
118-0808	466
	▶585
118-0809	466
	▶476
118-0813	466
	▶512
118-0820	171
	▶475
118-0932	274
118-1304	321
	323
118-3146	281
	283
118-3147	281
	283
118-3149	281
	283
118-3534	153
	154
118-4648	168
	▶190
118-4660	321
	323
118-4905	167
	▶191
118-5025	167
	168
	▶184
118-5026	184
118-5027	184
118-5031	184
118-5044	454
	498
118-5046	454
	498
118-5201	321
	323
118-5206	323
118-5208	323
118-5423	323
118-5597	163
118-6378	323
118-7236	581
	582
	583
118-7244	▶504
118-7250	▶562
118-7255	556
	560
118-7259	451
	452
	474
	496
118-7260	593
118-7362	544
	548
118-8118	76
118-8176	▶79
	217
118-9145	39

▶ **PRIMARY REFERENCE**

PART NUMBER INDEX

Part	Page	Part	Page	Part	Page	Part	Page
118-9411	361	120-2134	174		402	123-5773	226
118-9648	224	120-3352	▶270	121-5927	247	123-5774	226
119-0489	120	120-3844	593	121-6752	255	123-5775	226
119-0781	115	120-4394	192	121-9226	400	123-5776	226
119-1032	▶598		194	121-9227	400	123-5777	226
	599		244	121-9228	401	123-5778	226
119-2073	562	120-4480	27	121-9229	401	123-5781	194
119-2223	▶335	120-4537	122	122-0251	277	123-5782	194
	347		124	122-0254	277	123-5784	194
119-2224	▶337	120-4612	▶271	122-0256	277	123-5786	192
	346	120-4614	352	122-1978	▶2		194
119-2225	▶339		354	122-4993	508	123-5787	192
	346	120-5281	58		510		194
119-3101	277	120-5302	58		512	123-5789	237
119-3111	277		281	122-5334	239	123-5790	237
119-3114	277		283	122-6096	▶435	123-5791	237
119-4769	462	120-5303	58	122-6465	▶129	123-5792	237
	463	120-5335	58		257	123-5793	237
	▶493		281	122-7137	584	123-5796	181
	554		283	122-8097	134	123-5797	181
119-5708	356	120-6086	301	122-8353	390	123-5798	181
119-6627	▶222	120-6125	479	122-9140	1		241
	234	120-6184	332		▶348	123-5799	181
119-6633	222	120-6185	361	122-9569	598		241
	▶224	120-6668	▶118	123-0275	53	123-5800	192
	236		467		55		194
119-6940	202	120-6836	515	123-2016	192	123-5813	226
119-6944	202	120-6854	▶272	123-2017	196	123-6449	140
119-7126	566	120-6855	▶273		237	123-6620	528
119-7127	566	120-6872	68		244	123-6621	524
119-7130	492	120-7717	376	123-3172	170		528
119-7141	566	120-7732	576	123-3225	167	123-6622	524
119-7844	165		578		▶182		528
119-8263	▶576	120-7733	576	123-4953	192	123-7412	301
	581		578		194	123-7556	196
119-8264	▶578	120-7734	576	123-4954	210	123-7576	248
	583		578		211	123-7591	243
119-8310	585	120-8541	332	123-5710	279	123-8032	2
119-9755	466	120-8542	332		280		▶597
	▶468	120-8543	332	123-5741	210	123-8851	454
119-9756	▶555	120-9336	150		▶226	123-9769	237
	556	120-9606	332	123-5743	194		239
119-9757	466	120-9608	332		▶237	123-9770	237
	▶527	120-9611	332	123-5744	237	124-1401	237
119-9758	▶117	120-9612	332	123-5745	237	124-1402	237
	466	120-9630	361	123-5746	▶181	124-1411	226
119-9759	554	120-9751	288		194	124-2482	▶505
	555	120-9752	288	123-5747	210	124-3243	179
119-9760	555	121-0191	4	123-5748	210	124-3536	29
119-9762	555	121-0192	4	123-5753	226	124-3815	24
119-9763	468		514	123-5754	226		71
119-9764	468	121-0199	65	123-5755	226	124-4324	505
119-9765	468	121-0254	423	123-5757	226	124-4401	335
119-9766	468	121-0256	423	123-5758	226		339
119-9770	527	121-0513	347	123-5760	226	124-5314	505
119-9771	527		▶354	123-5763	226	124-5638	83
119-9810	117	121-0514	347	123-5764	226	124-6101	204
119-9818	466		▶398	123-5765	226	124-6102	204
	▶556	121-0883	23	123-5766	226	124-6459	226
119-9853	526	121-2487	163	123-5767	226	124-6524	471
119-9854	526	121-3015	9	123-5768	226	124-7576	257
120-0596	508		▶58	123-5769	226	124-7702	28
	510	121-4480	76	123-5770	226	124-7703	28
	512	121-5860	400	123-5771	226	124-8494	454
120-1347	184		401	123-5772	226		498

▶ **PRIMARY REFERENCE**

PART NUMBER INDEX

Part	Page
124-8495	454
	498
124-9555	602
124-9864	228
124-9865	228
124-9866	228
124-9867	228
124-9868	228
124-9869	228
124-9870	228
124-9871	228
124-9872	228
124-9873	228
124-9874	228
124-9875	228
124-9876	228
124-9877	228
124-9887	239
124-9888	239
124-9891	241
124-9896	241
124-9898	241
124-9899	241
124-9900	241
124-9901	241
124-9904	241
124-9905	241
124-9906	241
124-9908	241
124-9909	211
	▶228
124-9911	▶192
	211
124-9913	211
124-9914	211
124-9929	228
124-9930	228
124-9932	228
124-9933	228
124-9934	228
124-9935	228
124-9936	228
124-9937	228
124-9938	228
124-9939	192
124-9940	192
124-9941	192
124-9945	239
124-9946	239
124-9948	239
124-9949	239
124-9950	239
124-9951	239
124-9957	241
124-9959	241
124-9960	241
124-9976	192
	▶239
124-9977	192
	▶241
125-3552	237
125-3553	239
125-4572	241
125-5745	283
125-6239	255
125-6669	331
125-7043	508
125-7045	508
125-7046	508
125-7876	153
125-8232	162
125-9481	332
126-1034	510
126-1035	510
126-1036	510
126-1298	211
126-1367	510
126-1400	230
126-1401	230
126-1402	230
126-1403	230
126-1404	230
126-1405	230
126-1406	230
126-1407	230
126-1408	230
126-1409	230
126-1410	230
126-1413	230
126-1415	230
126-1416	230
126-1419	230
126-1420	230
126-1424	196
	▶243
126-1434	244
126-1435	244
126-1460	220
	▶248
126-1473	248
126-1477	196
	218
126-1581	165
126-1584	165
126-1585	165
126-1587	165
126-1597	196
126-1598	196
126-1638	220
126-1639	220
126-1640	220
	248
126-1643	220
126-1644	244
126-1645	220
126-1661	220
126-1768	103
126-2486	▶218
	219
126-3295	230
126-3667	292
	586
126-3669	292
126-3671	292
	586
126-3672	292
	586
126-3675	292
	586
126-3676	292
126-3677	292
126-3679	292
126-3681	292
126-7664	204
126-8472	548
126-8547	262
	▶264
126-8552	263
	▶264
126-8882	248
126-8883	248
126-9026	598
126-9027	598
126-9529	183
	184
127-0384	400
	401
	402
127-0928	27
127-5345	122
	124
	126
127-5674	▶219
	220
127-5677	219
127-6316	404
127-6319	404
127-6320	404
127-6344	404
127-6347	404
127-6355	404
127-6510	508
127-7457	510
	512
127-8613	493
127-9333	404
128-0168	299
128-0169	299
128-0899	508
	510
	512
128-0995	533
128-1040	172
128-1481	▶432
128-1482	▶433
	436
128-1490	432
	433
128-2433	376
128-2434	376
128-2435	392
128-2678	574
	576
	578
128-2873	442
128-3474	428
128-5450	234
128-6866	277
128-6868	▶277
	281
	283
128-6870	▶586
128-6872	283
128-6873	283
128-6874	179
128-8588	301
128-8614	76
128-8981	211
128-9522	170
129-0336	128
129-0337	129
129-1854	514
129-2327	312
129-2820	286
129-3178	454
	498
129-3181	241
129-3270	304
	306
129-3939	286
129-3940	286
129-7184	540
	542
129-8087	267
129-8498	312
130-0165	89
	90
130-0847	61
130-1121	61
130-1916	279
	280
130-3161	271
	272
	273
130-3453	▶108
	120
130-3879	21
130-3881	471
130-4634	390
130-7469	434
130-7470	437
130-7471	431
130-7475	432
130-7881	41
130-8187	185
130-8754	291
	▶292
130-9888	11
130-9984	360
131-0738	122
	124
131-0739	122
	124
131-1001	257
131-1424	584
131-2666	354
131-2667	354
131-2668	354
131-2669	354
131-3201	150
131-3205	122
	124

▶ **PRIMARY REFERENCE**

PART NUMBER INDEX

Part	Page	Part	Page	Part	Page	Part	Page
131-4242	500	134-7258	599	140-8718	71		▶423
131-5167	500	134-7307	▶210	140-8783	77	144-0195	595
131-8600	202		217	140-8911	9	144-0695	257
132-0338	449	134-9569	122		▶37	144-1569	594
132-0988	299		124	140-9926	409	144-2537	438
132-0994	299	135-0780	194	141-1095	409	144-2538	438
132-2558	267	135-0785	▶194		412	144-2539	438
132-3337	267		210	141-1556	384	144-3679	257
132-3365	53	135-3242	226		385	144-6881	438
	55	135-4445	257	141-1667	59	144-8520	▶293
132-3391	▶599	135-7420	194	141-2032	384	144-9101	196
132-3392	599	135-7421	194		385	144-9934	531
132-3789	299	136-1543	537	141-4852	407		532
132-4763	445	136-1544	449		409	145-0326	587
132-8502	281	136-1953	454		412		589
	283		455	141-4859	423	145-0905	196
133-1011	24		498	141-5151	418	145-0909	218
133-1848	230	136-2633	281	141-7462	70	145-1144	426
133-1849	220	136-3188	595	141-7481	382	145-2334	384
	▶230	136-3190	595		407		385
133-1855	196	136-3753	246		409	145-2342	208
133-1858	▶196	136-3845	100		412	145-3684	250
	220	136-3846	101	141-7557	390	145-4211	53
133-3260	150	136-3848	100		▶392		55
133-3413	89		101	141-8580	482	145-4212	53
	90	136-7728	281		484		55
133-3823	394		283		487	145-5307	514
	▶400	136-9292	409		489	145-6849	124
133-3824	396		412	141-9188	335	145-6850	124
	▶401	136-9297	384		337	145-6871	113
133-3825	398		385		339		▶124
	▶402		386	141-9189	335	145-6929	▶110
133-4295	185	136-9298	384		337		124
133-4777	▶234		385		339		160
133-4778	▶235		386	141-9190	438	145-8428	384
133-4779	▶235	136-9301	419	141-9236	407		385
133-4780	▶235	136-9304	418		409		386
133-4781	▶235	137-2170	594		412	145-9377	438
133-4782	▶222	137-7602	462	141-9784	454	146-0108	364
	234		▶478		498		368
	235	137-7603	463	142-2651	384		372
133-4783	222		▶478		385	146-2438	110
	▶225	137-7747	▶187		386	146-3765	337
133-4784	225		208	142-2928	544	146-6315	382
133-4785	225	137-9787	394		548		383
133-6517	89	137-9789	396	142-3391	41	146-6316	415
	90	137-9790	398	142-5789	115		416
133-7675	299	138-2053	34		118		417
133-8496	466	138-2075	179		120		418
	▶469	138-2076	179	142-6000	3		419
133-9478	57	138-3366	3	142-6017	438	146-6317	382
134-0673	299	138-3797	356	142-8463	▶443		383
134-1259	57	138-4181	192	142-8464	▶427	146-6318	418
134-1261	281	138-4182	192	142-8828	75		419
	283	138-4272	239	143-1288	460	146-6319	415
134-1374	174	138-4447	53		461		416
	175		55		569		417
134-2625	602	139-4189	382	143-2868	126		418
134-2634	188		412	143-8874	451	146-6747	600
	189	139-6810	341		452		601
134-3856	521	140-1344	423		496		602
134-4126	86	140-3024	427	143-9069	381	146-6822	299
134-4735	304	140-3025	427	143-9354	335	146-8477	409
	306	140-3588	248		337		412
134-5457	▶436	140-8714	71		339	146-8478	407

▶ **PRIMARY REFERENCE**

PART NUMBER INDEX

Part	Page	Part	Page	Part	Page	Part	Page
	409		379	148-8392	205	150-4043	358
	412	148-8317	204	148-8407	65	150-4046	312
146-8479	382	148-8318	350	148-8408	202		394
	407	148-8319	332		390	150-4048	205
	409	148-8320	288	148-8410	332	150-5405	▶323
	412	148-8321	364		406		325
146-8981	409		368	148-8416	314	150-6582	524
	412		372		332	150-7732	11
147-0500	▶438	148-8322	352	148-8421	312	150-8015	594
147-0501	438		361	148-8433	301	150-9230	301
147-0517	438	148-8323	376		332	150-9231	358
147-1773	153	148-8326	204	148-8434	205	150-9232	301
147-1907	265	148-8327	204	148-8435	361	150-9234	▶317
147-1979	18		208	148-8439	364		325
147-2642	84	148-8334	376		368	151-0894	454
147-3114	412	148-8335	376		372		498
147-3322	▶383		394	148-8441	314	151-4003	420
	407	148-8336	204	148-8443	205		421
	409		314	148-8444	358		422
	412		350	148-8446	361	151-4009	170
147-5553	59		356	148-8449	205	151-5715	491
147-8607	217		361	148-8454	315	151-6328	167
	▶299		364	148-8458	356	151-6335	▶167
148-0369	44		368		364	151-6336	▶168
148-0641	143		372		368	151-6337	▶168
	145	148-8339	204		372		169
	148	148-8340	314	148-8867	423	151-8754	73
	▶531		358	148-9812	44	152-1100	317
148-0642	143		361	149-0777	326	152-1103	350
	145	148-8342	204	149-2331	175	152-1105	303
	148	148-8344	360		▶178	152-1110	▶303
	▶532	148-8345	332	149-4103	▶318		350
148-0643	175	148-8347	208	149-4117	318	152-2760	167
148-2572	217		312	149-4118	318		168
	▶358		360	149-4119	318		▶170
148-2577	346	148-8353	204	149-4139	299	152-2761	170
	▶376		350	149-4189	▶304	152-4533	170
148-2579	▶314	148-8354	314		462	152-4898	49
	346	148-8361	301		463	152-5717	444
148-2762	540		314		554	152-9143	196
	542	148-8364	301	149-4190	▶306	152-9144	196
148-3626	491		314		466	153-2152	220
148-5689	544		358	149-4191	304	153-2158	165
	548	148-8365	358		306	153-2162	165
148-6930	220	148-8367	204	149-4359	175	153-2163	165
	▶244		301	149-4745	573	153-2783	165
148-6931	244	148-8370	314	149-4830	▶321	153-6237	312
148-6933	244	148-8371	365		325	153-8924	418
148-6976	208		368	149-5452	301	153-8925	415
	314		373	149-5470	384		416
148-6977	208	148-8374	314		385		417
148-6978	392	148-8376	208		386		418
148-6981	314	148-8378	205	149-5533	▶294		419
148-6982	358		295		295	153-8926	415
148-6983	358		332	149-5733	445		416
148-6986	314		350	150-1293	175		417
148-6987	314		364	150-3056	365		418
148-6988	301		368		369		419
148-6989	376		372		372	153-8929	418
148-7922	384	148-8381	361	150-3716	▶175	153-8945	383
	385	148-8383	301	150-3754	303	153-8947	407
148-8313	364	148-8387	376	150-4031	205		409
	368	148-8388	208	150-4038	361		412
	372		379	150-4040	301	153-8952	384
148-8315	204	148-8389	288	150-4041	379		385

▶ **PRIMARY REFERENCE**

PART NUMBER INDEX

Part	Page	Part	Page	Part	Page	Part	Page
	386		473		145	161-9647	482
153-9706	286		498		148		484
153-9968	312		515	157-2152	415		487
153-9974	358		542		417		489
154-0263	553		544	157-2153	416	162-1565	11
154-1931	▶2		548		418	162-2073	▶109
154-3034	200	155-2271	143	157-2284	425		122
154-3035	198		145	157-2630	387	162-2074	109
154-3036	200		148	157-5544	▶328	162-2189	484
154-3073	198		150	157-6144	412		489
154-4370	508		153	157-6155	412	162-5238	170
	510		157	158-2336	328	162-8447	▶460
	512		540	158-5089	79		571
154-5629	544		542		162	162-8448	▶461
	548		544		163		571
155-0576	91		548		544	162-8532	417
155-2105	122	155-2274	83		545	162-8534	416
	124		91		548	162-8537	419
155-2255	3		122		549	163-1057	376
	143		124	159-1503	360	163-1135	589
	145		143	159-3727	345	163-1148	461
	148		145	159-3781	382	163-1149	460
	150		148		383	163-1201	157
	157		150	159-5255	20	163-3107	407
	540		153	159-9539	479		409
	542		157		489		412
	544		544	159-9543	▶341		▶415
	548		548	159-9545	358	163-3108	407
155-2259	79	155-2651	3	160-0363	312		409
155-2260	3		▶85	160-0496	293		412
	82	155-5231	540		294		▶416
	91		542		328	163-3109	407
	126	155-5232	540	160-1757	244		409
	143		542	160-1800	244		412
	150	155-5233	540	160-3801	350		▶417
	157		542	160-4953	425	163-3110	407
	544	155-5234	540	160-4957	425		409
	548		542	160-6154	279		412
155-2261	103	155-5779	595		280		▶418
	136	155-5781	595	160-6171	2	163-3111	409
155-2265	3	155-5783	595		▶528		412
	143	155-5784	595	160-6520	548		▶419
	145	155-6487	1	160-7197	68	163-3118	337
	148		▶290	160-8503	3		▶407
	157	156-1148	▶563	161-3316	2	163-3120	339
	503		573	161-5967	500		▶409
	505	156-4449	451	161-6987	3	163-3121	335
	544		452	161-7614	165		▶412
	548		496	161-7620	491	163-4461	9
155-2270	3	156-5314	350	161-8042	464		▶20
	91	156-5545	449	161-9639	479	163-4525	376
	103	156-5726	423		489	163-4635	▶384
	120	156-6155	86	161-9640	482		412
	122	156-6819	498		484	163-4636	▶385
	124	156-7183	143		487		409
	136		145		489	163-4637	▶386
	143		148	161-9641	482		407
	145	156-7184	143		484	163-5512	384
	148		145		487		385
	150		148		489		386
	153	156-7205	217	161-9642	482	163-9324	515
	157		▶220		484	164-1234	589
	159	156-9225	143		487	164-1270	589
	162	157-1669	65		489	164-2108	426
	454	157-1997	143	161-9645	464	164-4058	376

▶ **PRIMARY REFERENCE**

PART NUMBER INDEX

Part	Page	Part	Page	Part	Page	Part	Page
164-4111	339	170-2113	172	175-3892	426	180-3528	454
164-4531	449	170-2114	172	175-3976	553	180-3730	75
164-4557	479	170-2115	172	175-5058	507	180-4686	73
164-4883	536	170-5632	3	175-6473	392	180-5098	514
164-5509	115	170-5715	241	175-6475	376	180-5100	115
164-5549	204	170-8520	189	175-6476	376		118
164-5586	314	170-8522	188	175-6478	376	180-7486	493
164-7556	95	170-8523	191	175-6480	376	180-7487	493
165-0312	544	170-8524	190	175-6746	495	180-9873	451
	548	170-8650	252	175-6749	495		452
165-5655	91	170-9360	91	175-6750	▶494		▶454
165-6365	364	171-1230	569	175-6754	495		474
	368	171-2208	153	175-6759	495	180-9874	496
	372	171-2211	153	175-6760	494		▶498
165-6975	226	171-5349	79		▶495	183-1109	200
165-6976	228	171-5579	3	175-7900	344	183-5035	3
165-7951	65	171-6568	122	176-1379	312	183-7528	454
165-9104	3		124	176-3387	292		498
166-0126	222	171-6682	569	176-3388	255	183-7600	328
166-9286	491	172-2307	143		257	183-8410	245
166-9287	476	172-2309	145	176-3389	160	183-8418	165
167-0138	▶136	172-2416	569		▶161	183-8419	165
	544	172-6557	145	176-3900	▶447	183-8420	165
	548		148	176-7596	113	183-8421	165
167-2200	343	173-0418	521		▶542	183-8423	165
	344	173-1028	▶449	176-7602	159	183-8424	165
167-2307	343		569	177-1862	558	183-8425	165
	344	173-1739	364	177-1863	569	183-8426	165
167-6701	228		368	177-2034	▶113	183-8429	165
167-7692	▶334		372	177-2035	▶112	184-2298	569
167-9524	426	173-1740	364	177-2036	▶113	184-2299	569
168-1837	▶211		368	177-2037	▶113	184-2472	86
	217		372	177-4930	537	184-5224	544
168-2364	542	173-1741	364	177-4937	571		548
168-2365	540		368	178-0054	3	184-5293	540
168-2457	487		372	178-0055	3		542
	489	173-2052	537	178-0057	3	185-0882	18
168-2458	482	173-3064	120	178-0062	515	185-0884	15
	484		142	178-0603	▶569	185-1546	34
168-4511	89	173-5787	580		571	185-5629	540
	90	173-7035	580	178-0604	▶536		542
168-7089	523	173-9683	343		569	185-5640	540
168-7090	530		344	178-0605	536		542
168-8772	503	174-1486	454		▶537	185-8833	312
	505		498	178-2593	482	186-0906	401
169-0153	540	174-3163	390		484		402
	542	174-5907	65		487		▶420
169-3995	482	174-6491	503		489	186-0909	400
	484		505	178-3986	143		401
	487	174-9638	59		145		402
	489	174-9725	552		148		▶421
169-5824	▶332	174-9730	▶552	178-7877	382	186-0911	400
	334		557		383		401
169-6714	319		559		412		402
169-7380	589		560	178-7907	537		▶422
169-7434	473	174-9749	462	178-7914	▶571	186-2487	420
169-7435	473		463		580		421
170-0503	328		▶559	179-0589	473		422
	329	174-9753	464	179-1795	1	186-2488	420
170-0966	3	174-9755	▶464		▶8		421
170-1112	449		559	179-4324	3		422
170-1114	449	174-9763	560	179-4920	165	186-3735	3
170-1115	449	174-9764	467	180-2535	482		79
170-2111	172		▶560		487		85
170-2112	172	175-3089	153		▶594		91

▶ **PRIMARY REFERENCE**

PART NUMBER INDEX

Part	Page	Part	Page	Part	Page	Part	Page
	100	192-7790	589		544	217-4154	326
	107	192-7795	589		548	217-4155	326
	108	192-7799	589	202-2342	245	217-7933	558
	109	192-7805	589	202-2564	▶382	217-9049	569
	139	192-7810	589		409	218-0861	569
	141	192-7812	589		412	219-0305	599
	150	192-7820	589	202-6614	95	219-2849	554
	153	192-7822	589	203-7703	580		556
	175	192-7848	589	204-1370	75		▶557
	177	193-2550	79	204-2281	515	219-2850	557
	303	193-4318	3	204-2585	▶331	219-3271	90
	312	193-4319	3		392	219-3273	89
	384	193-4320	3	204-7147	304	219-4208	3
	385	193-5914	599		306	219-8096	572
	386	193-5916	599		▶326		▶580
	542	193-5918	599	205-0520	466	219-8136	312
	544	194-5390	59		▶467	220-8631	23
	548	195-3739	247	205-0522	▶462	221-4192	▶103
	595		▶426	205-0524	▶463		160
186-5107	507	195-6525	444	205-0826	91	221-4193	160
	589	195-6527	444	205-4285	83	222-0345	571
186-6190	▶448	195-9878	444		153	222-0483	79
	515	196-4191	▶444	205-6388	571	222-1241	326
186-6596	218	196-4196	444	205-7700	540	222-1259	83
187-2082	172	196-5862	204		542	222-3518	65
	475		▶247	205-8257	91	222-3870	91
187-4511	▶165	197-6863	204	206-5162	86	223-1687	79
	220		364		91	224-0672	600
187-4515	165		368	206-5165	86		602
187-5122	594		372		91	224-7830	601
187-5123	594	197-7257	3	206-5203	91	224-8945	601
187-5124	594	197-7262	3	207-5262	86	224-8946	600
187-5125	594	197-7263	3	208-6098	175		602
187-5126	594	197-7264	3	209-7295	381	224-9021	601
187-5127	594	197-7265	3	209-7296	381	224-9022	600
187-5128	594	197-7266	3	209-7763	▶381		602
187-8001	220	197-7267	3	209-9219	17	224-9855	600
188-9828	332	198-3393	464	210-2262	558		601
188-9840	204	198-4777	73	210-2263	558		602
189-1707	454	198-5389	91	210-2266	558	224-9929	326
189-5768	▶330	198-8645	11	210-2268	558	225-0312	600
190-2446	▶86	199-7041	▶473	210-2270	▶558		602
	91		515		569	225-0313	601
190-6012	515	199-7042	473	211-5358	507	225-3147	77
190-8986	234	199-7043	473		589	225-3150	132
191-2933	580	199-9267	39	211-9294	589	225-4256	601
	▶589	199-9751	18	213-7437	204	225-4257	600
191-3028	415		138	213-9100	141		602
	416			214-0783	▶507	225-4287	44
	417			214-0784	507	225-5436	29
	419	**2**		214-7457	46	225-5437	29
191-3029	415			214-7458	46	225-5438	29
	416	200-1898	153	214-7636	595	225-5439	29
	417	200-6345	515	215-3198	181	225-5441	29
	419	200-8088	331	215-3886	286	225-5451	29
191-8920	384	201-4274	415	215-9508	68	225-5453	29
	385	202-0042	420	215-9509	68	225-5454	29
	386		421	215-9513	65	225-5458	29
191-8921	595		422	215-9515	65	225-5459	29
192-7752	589	202-0671	358	216-0069	53	225-5493	18
192-7755	589	202-1129	143		55	225-5494	18
192-7760	589		145	216-6945	46	225-5495	18
192-7767	589		148	216-8314	13	225-5496	18
192-7783	589		540	216-8633	24	225-5497	18
192-7787	589		542	216-8634	24	225-5498	18

▶ **PRIMARY REFERENCE**

PART NUMBER INDEX

Part	Page	Part	Page	Part	Page	Part	Page
225-5499	18	226-8763	11	232-0671	▶236		▶364
225-5501	19	226-8770	87	232-0672	▶236	233-3784	13
225-5502	19		88	232-0682	▶236	233-3785	13
225-5625	34	227-0103	388	232-1115	68	233-3786	13
225-5629	34	227-0104	388	232-1322	18	233-3788	13
225-5634	34	227-4376	388	232-1323	71	233-3789	13
225-5638	34	227-7392	595	232-1328	71	233-3790	13
225-5640	34	228-0788	▶329	232-1793	71	233-4048	346
225-5959	34		364	232-1794	71		▶368
225-5960	34		368	232-2577	204	233-4830	55
225-5961	34		372	232-2725	71	233-4831	9
225-5962	34	228-0790	▶330	232-2726	71		▶48
225-5963	34		332	232-3126	68	233-4832	▶53
225-5967	10	228-7224	202		71	233-4833	57
225-6004	28	228-7225	202	232-3149	71	233-4834	48
225-6005	28	228-9130	76	232-3157	71		▶49
225-6041	28	228-9132	76	232-3274	71	233-4835	53
225-6451	11	229-1494	571	232-3657	24		55
225-6455	11	230-3726	320	232-3666	24	233-4837	53
225-6456	11	230-5771	312	232-3670	8	233-4838	9
225-6461	11	230-7291	8		▶24		▶57
225-6464	11		▶22	232-3722	39	233-6745	536
225-6477	11	230-7304	8	232-3751	15	233-6846	346
225-6478	11		▶132		39		▶372
225-6479	11	230-7353	8	232-3861	39	233-7432	8
225-6517	11		▶32	232-4902	350		▶26
225-6524	11	230-7355	8	232-4903	350	233-7817	217
225-6817	39		▶42	232-4904	350		▶295
225-6818	39	230-7569	8	232-5854	301	233-7818	295
225-6820	39		▶30	232-5856	301	233-7900	217
225-6908	38	230-7578	8	232-6177	8		▶350
225-6909	38		▶36		▶39	233-8008	487
225-7738	42	230-8065	21	232-7378	8		489
225-7739	42	230-8094	28		▶35	233-8012	478
225-7741	42	230-8144	8	232-7399	87		▶487
225-7772	13		▶28	232-7400	13	233-8013	478
225-7781	13	230-8279	39	232-7439	8		▶489
225-7941	39	230-8989	71		▶13	233-9417	8
225-7944	15	230-8995	71	232-7440	15		▶68
	39	230-8996	71	232-7442	8	233-9436	31
225-8016	42	230-8997	71		▶29	233-9530	77
225-8019	42	230-8998	71	232-7449	17	233-9531	77
225-8278	24	230-9127	11	232-7454	15	233-9532	77
225-8280	24	230-9144	11	232-7519	▶18	233-9536	59
225-8281	24	230-9152	11		19	233-9537	59
225-8282	24	230-9299	49	232-7524	8	233-9538	59
225-8329	36	231-0030	38		▶19	233-9834	8
225-8524	59	231-0033	8	232-7526	8		▶87
225-8526	59		▶38		▶34		▶88
225-8530	59	231-0046	30	232-7528	8	233-9931	▶204
225-8533	59	231-0149	8		▶10		217
225-8534	59		▶50	232-7596	15	234-0175	▶44
225-8536	59	231-0299	479	232-7597	15		46
225-8848	26	231-0308	479	232-7599	15	234-0176	44
225-8858	15	231-0318	▶479	232-7600	15	234-0177	44
226-1240	600		482	232-7603	15	234-0179	44
226-1242	601		484	232-7604	▶15	234-0183	46
226-1274	600	231-0319	478		17	234-0184	9
226-1275	601		▶482	232-7606	8		▶41
226-1832	475	231-0320	478		▶17	234-2625	55
226-1842	▶581		▶484	232-9737	86	234-3029	59
226-1843	▶582	231-1890	75	232-9758	68	234-3030	59
226-1844	▶583	231-3538	343	232-9759	68	234-3203	217
226-4082	▶564		344	233-0332	8		▶301
226-4083	▶565	232-0670	▶236	233-1440	347	234-3542	8

▶ **PRIMARY REFERENCE**

PART NUMBER INDEX

Part	Page
	▶31
234-4325	▶95
	114
234-5118	▶89
234-5119	▶90
234-5127	1
	▶65
234-5128	9
	▶70
234-7730	95
234-7731	95
234-9179	73
234-9180	73
	▶75
234-9181	1
	▶73
234-9211	453
	▶471
	474
	554
234-9212	▶55
234-9213	1
	▶9
234-9430	471
234-9554	471
234-9680	8
	▶21
234-9753	9
	▶46
235-1056	471
235-1304	46
235-1305	46
235-1790	71
235-1867	53
	55
235-1970	250
235-1971	250
235-1973	250
235-2724	250
235-2734	9
	▶250
235-3393	153
235-3394	1
	▶153
235-3496	153
235-3556	8
235-4886	73
235-5762	114
235-8555	89
	90
235-8747	138
235-8749	8
	▶138
236-1673	71
236-1674	71
236-1752	90
236-1754	89
236-1775	89
236-1776	90
236-1868	170
236-2144	71
236-2295	451
	452
	474
236-2403	46
	▶388
236-2593	388
236-4232	544
	548
236-4233	452
	474
236-4234	544
236-4238	496
236-4336	1
	▶275
236-4337	275
236-4338	275
236-4339	252
	255
236-4340	275
236-5197	558
236-5295	275
236-5299	275
236-5376	295
236-5629	▶252
236-5630	▶1
236-5635	▶1
236-5636	▶255
236-5638	▶257
236-5641	1
	▶599
236-5647	1
	▶62
236-5648	453
	474
	▶515
	554
236-5649	453
	497
	▶519
	554
236-5651	▶600
236-5652	▶601
236-5653	▶602
236-5666	▶3
	7
	171
236-5913	70
236-6119	62
236-6120	3
236-6121	3
236-6923	515
236-8151	275
236-8152	275
236-8238	8
	▶23
236-8856	1
	▶150
236-8857	150
236-8858	150
237-0068	▶523
	529
237-0284	68
237-0285	68
237-0286	68
237-0390	1
	▶267
237-0391	267
237-0395	1
	▶266
237-0396	266
237-3756	73
237-3943	589
237-3970	▶450
	589
237-4383	515
237-4734	59
237-4790	519
237-4894	137
237-4896	8
	▶137
237-4916	275
237-5813	1
	▶157
237-5818	157
237-5820	462
	463
	▶544
	554
237-5821	544
	548
237-6260	1
	▶217
237-6271	▶334
237-7233	217
	▶360
237-7503	360
237-7504	360
237-8185	71
237-8259	8
	▶71
237-8261	8
	▶11
237-8262	8
	▶77
237-8263	8
	▶59
237-8265	59
237-9350	544
237-9728	202
237-9729	202
237-9730	202
237-9731	202
237-9935	▶325
237-9936	▶325
238-0385	8
	▶521
238-4448	8
	▶84
238-4864	544
	548
238-6848	▶143
	462
	463
238-6849	143
	145
	148
238-7831	308
	▶312
	325
238-8386	▶145
	466
238-8387	▶148
	466
	554
238-8634	70
238-8671	71
238-8864	68
239-0602	471
239-1004	▶534
239-1005	▶534
239-1006	▶462
	534
239-1007	▶463
	534
239-1008	▶497
239-1009	▶453
239-2160	515
239-2198	529
	▶530
239-2228	▶406
239-2229	▶345
239-3351	91
239-3352	▶91
239-3877	584
239-4013	153
239-4233	601
239-4234	600
	602
239-4236	599
239-5814	▶572
239-5818	84
239-6069	545
	548
239-6149	▶167
239-6150	▶167
239-6151	▶168
239-6152	▶169
239-8103	▶496
	497
239-8104	▶452
	453
240-0656	466
	▶548
240-0803	312
	▶319
240-2562	514
240-2563	514
240-2564	514
240-2565	514
240-5571	71
240-7194	19
240-7738	548
240-7956	601
240-7957	600
	602
240-9137	319
	▶320
240-9473	312
240-9756	68
241-0230	65
	▶76
241-2528	515
241-2530	515
241-2532	515
241-2534	515
241-2535	515
241-2536	515
241-2537	515
241-3703	1

▶ **PRIMARY REFERENCE**

PART NUMBER INDEX

Part	Page	Part	Page	Part	Page	Part	Page
	▶298						
241-6202	312						
241-6962	65						
241-8564	462						
	463						
	▶514						
241-8643	▶554						
241-8644	▶466						
241-8807	▶466						
	534						
241-8840	▶534						
241-9021	153						
241-9258	▶346						
241-9260	▶346						
241-9262	▶347						
241-9557	▶171						
241-9558	▶7						
241-9560	▶291						
241-9561	▶291						
242-0262	192						
	194						
242-1239	▶529						
242-1760	1						
	▶288						
242-4043	▶208						
	217						
242-8004	192						
	194						
242-8158	75						
242-8159	75						
242-9456	▶141						
242-9751	41						
242-9949	▶279						
	291						
242-9950	279						
	▶281						
242-9951	▶280						
	291						
242-9952	280						
	▶283						
243-3207	57						
243-3209	57						
243-3713	▶474						
243-5009	▶308						
244-2104	471						
244-3316	88						
246-0919	387						

▶ **PRIMARY REFERENCE**

MEMORANDA



© 2004 Caterpillar
All Rights Reserved

Printed in U.S.A.