924G CATERPILLAR

RUTHZIL TRATOR COMERCIAL DE PEÇAS LTDA 11 97083-6812 ROLANDO

JANEIRO 2011

Gmmco Power Perkins®

1006 TG 2A

YB 35013

GMMCO POWER

Perkins Engine Parts Catalogue

Engine Model :- 1006 TG 2A
BUILD LIST No :- YB 35013

GMMCO
22/01/2011

Contents

1.	Introduction	Pg. 4
2.	How To Use Your Parts Book	Pg. 4
3.	Engine Breakdown	Pg. 5
4.	Symbol Descriptions	Pg. 9
5.	Parts Lists & Illustrations	Pg. 11
6.	Parts Index	Pg. 176

Introduction

The build list of your engine, found on the front page of this parts book, provides a unique reference to the components fitted to your engine; therefore this parts book is only applicable to this particular engine

Always quote your build list and engine serial number when contacting your Perkins outlet.

How to use your Parts Book

This parts book has been designed to provide you with all the information you need to identify parts to service your engine. There are several features within the book to make it easy to find the parts you require.

Front Page

This lists your build list number and the date of publication of this book

Symbol Descriptions

Provides a quick reference guide to the symbols used within the book.

Engine Breakdown

Use this to identify all the major sections of your engine and the relevant pages within the book.

Parts Lists & Illustrations

This section shows each major section of your engine broken down into individual part numbers along with an associated illustration for identifying the parts you require.

The illustrations used in this parts book are representational only and should only be used for identification purposes.

For fitting instructions please refer to your engine Service Manual.

Parts Index

Using either the part number or description of the part you require this section will help you locate the page within the **Parts Lists & Illustrations** section where the part appears.

Section	Page
Long Engine ACEY8113	11
Short Engine ACEY8113	13
Long Engine ACEY3748	15
Engine Overhaul Kit ACKY2007	17
Thrust Washer Kit ACKY2007	21
Valve Train Kit ACKY2007	23
Valve Train Kit ACKY2007	25
Cylinder Block ACHY0022	27
Cylinder Block ACHY0022	31
Crankshaft, Pistons & Connecting Rods ACHY0022	33
Crankshaft, Pistons & Connecting Rods ACHY0022	37
Crankshaft, Pistons & Connecting Rods ACHY0022	39
Crankshaft, Pistons & Connecting Rods ACHY0022	41

Section	Page
Crankshaft, Pistons & Connecting Rods ACHY0022	43
Cylinder Head ACHY0022	45
Cylinder Head ACHY0022	47
Rocker Shaft ACHY0022	49
Timing Gear & Camshaft ACHY0022	51
Lubricating Oil Pump & Delivery Housing ACHY0022	55
Fuel Injection Equipment (Diesel) AFH02630	57
Flywheel Housing CDH00705	61
Flywheel & Starter Ring DDH00889	63
Starter Motor EDH00936	65
Fan Drive FBH00423	67
Lubricating Oil Sump GBH01780	69

Engine Breakdown

Section	Page
Lubricating Oil Sump GBH01780	**71**
Lubricating Oil Filler & Breather HBH01342	**73**
Lubricating Oil Filler & Breather HBH01342	**75**
Lubricating Oil Filter & Integral Oil Cooler JBH01331	**77**
Lubricating Oil Filter & Integral Oil Cooler JBH01331	**79**
Front End Drive Input KBH00517	**83**
Water Pump, Thermostat & Heat Exchanger LBH01967	**85**
Water Pump, Thermostat & Heat Exchanger LBH01967	**87**
Water Outlet & Inlet LDH00519	**89**
Fan & Extension MDH00957	**91**
Fan & Extension MDH01094	**93**
Alternator & Generator NDH01961	**95**

Section	Page
Alternator & Generator NDH01961	**97**
Alternator NDHY2916	**99**
Alternator Bracket & Fixings NDHY2916	**101**
Alternator Bracket & Fixings NDHY2916	**103**
Alternator Bracket & Fixings NDHY2916	**105**
Pulleys NDHY2916	**107**
Blanking Plates QDHY0729	**109**
Blanking Plugs QDHY0729	**111**
Miscellaneous QDHY0729	**113**
Turbocharger, Manifolds & Air Charge Cooler SBH00688	**115**
Turbocharger, Manifolds & Air Charge Cooler SBH00688	**117**
Turbocharger, Manifolds & Air Charge Cooler SBH00688	**119**

Section	Page
Turbocharger, Manifolds & Air Charge Cooler SBH00688	121
Turbocharger, Manifolds & Air Charge Cooler SBH00688	123
Remote Air Charge Cooler SDH00161	125
Air Filters SDH00426	127
Air Filters SDH00426	129
Pipework SDH00426	131
Low Pressure Fuel System VBH01600	133
Low Pressure Fuel System VBH01600	135
Low Pressure Fuel System VBH01600	137
Low Pressure Fuel System VBH01600	139
Cold Start System WDH00013	141
Engine Lifting XBH00393	143

Section	Page
Engine Mounts ZCHY1236	145
Heater/Starter Switch ZEH01293	147
Lub. Oil Pressure Switch & Gauge ZJH00479	149
Temperature Gauge & Sender ZLH00008	151
Temperature Gauge & Sender ZLH00276	153
Radiator & Cowling ZMH00006	155
Radiator & Cowling ZMH00534	157
Radiator Bracket & Fixings ZMH00534	159

Engine Breakdown

Section	Page
Radiator & Hoses **ZMH00534**	**161**
Guards **ZMH00534**	**163**
Radiator Bracket & Fixings **ZMH00534**	**165**
Fuel Pre-Lift Pump **ZVH00405**	**167**
Fuel Pre-Lift Pump **ZVH00405**	**169**
Application Miscellaneous & Auxiliaries **ZZH00338**	**171**
Joints & Gaskets - Top Service Kit **SACY0309**	**173**
Joints & Gaskets - Bottom Service Kit **SGBY0318**	**175**

Symbols and Notes

Symbol	Description
	From Engine Number
	Upto Engine Number
	Repairs and Replaces
	See Appropriate Section - Reference Number
	Alternative
	Order
	Remanufactured Part
	New for Old Part
	Number of Teeth
	Thickness
	Bottom
	Top
	Left Hand
	Right Hand
	Reference for Detailed Breakdown
	Other Service Options Available
	Cylinder Number
	See History Section

ACEY8113

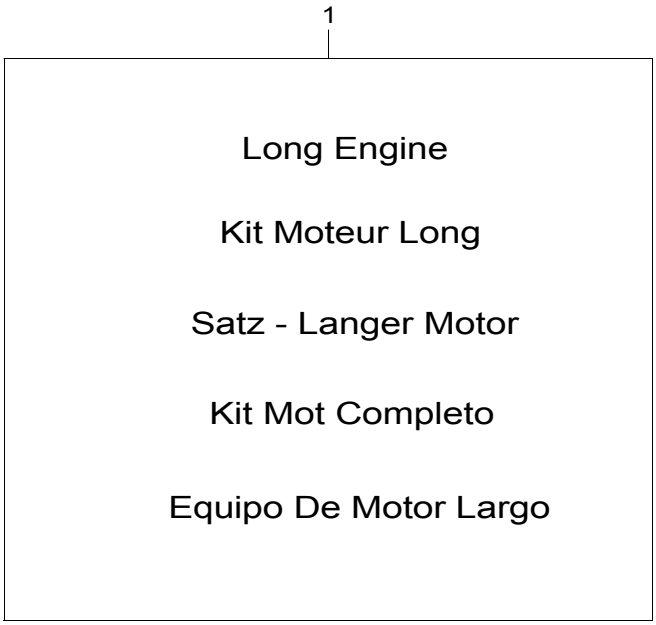
1
Long Engine
Kit Moteur Long
Satz - Langer Motor
Kit Mot Completo
Equipo De Motor Largo

Long Engine	Plate A
	ACEY8113

Item	Part No.	References	Qty.	Description	Notes
1	U5MK8113	→ U786029J	1	LONG ENGINE - KIT	
2	YD39860		1	SHORT ENGINE	(A)
3	3774A004	↦ 01/08/2001	6	PLUG	
4			1	LEAFLET	
5			1	LEAFLET	
7			1	CRANKSHAFT	
6		⇨ ZZ90230	1	CRANKSHAFT	
8	U5ME0025		1	BIG END BEARING KIT	
9			12	BEARING	
10		⇨ 4181A026	1	PISTON RING	
11		⇨ 4181A026	1	PISTON RING	
12		⇨ 4181A026	1	PISTON RING	
13	ZZ80228		1	CYLINDER HEAD KIT	
14	U5MK0385		1	BOLT KIT	
15	U5LT1179		1	GASKET KIT - TOP	
16	3311A042		6	SEAL	
17	U5LB1168		1	GASKET KIT - BOTTOM	
18	3688C003		1	GASKET - IND MANIFOLD	
19	3681M005		1	GASKET - SUMP	
20	3681P029		1	GASKET - TIMING CASE COVER	
21	2418F436		1	SEAL - FRONT END OIL	
22	U5MK0633		1	OIL COOLER KIT	
Service Options					
1	U5MK8113P		1	LONG ENGINE - KIT	
2	YD39860R		1	SHORT ENGINE - EXCHANGE	(A)
2	YD39860P		1	SHORT ENGINE - EXCHANGE	(A)
13	ZZ80228P		1	CYLINDER HEAD KIT - EXCH	

Footnotes	
(A)	ORDER PARTS BOOK YD39860PB FOR COMPLETE BREAKDOWN

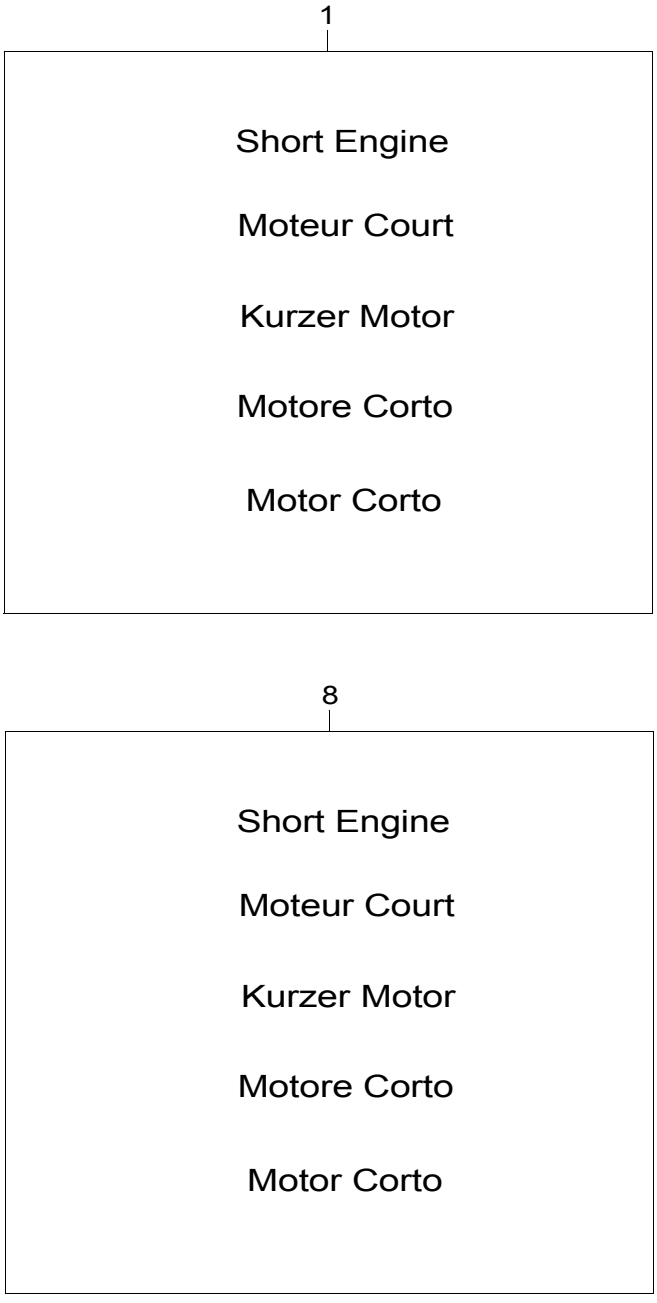
1
Short Engine
Moteur Court
Kurzer Motor
Motore Corto
Motor Corto
8
Short Engine
Moteur Court
Kurzer Motor
Motore Corto
Motor Corto

Short Engine	Plate A
	ACEY8113

Item	Part No.	References	Qty.	Description	Notes
1	YD39860	→| U786029J	1	SHORT ENGINE	(A)
2	ZZ50295		1	CYLINDER BLOCK KIT	
3	ZZ90230		1	CRANKSHAFT ASSEMBLY	
4	U5LL0016		6	PISTON KIT	
5	4181A026		6	PISTON RING KIT	
6	4115C321		6	CON ROD ASSEMBLY	
7	2418F703		1	SEAL - REOS HOUSING	
8	YD39864	|→ U786030J	1	SHORT ENGINE	(B)
9	ZZ50310		1	CYLINDER BLOCK ASSEMBLY	
10	ZZ90230		1	CRANKSHAFT ASSEMBLY	
11	U5LL0016		6	PISTON KIT	
12	4181A026		6	PISTON RING KIT	
13	4115C321		6	CON ROD ASSEMBLY	
14	2418F703		1	SEAL - REOS HOUSING	
Service Options					
1	YD39860R		1	SHORT ENGINE - EXCHANGE	(A)
1	YD39860P		1	SHORT ENGINE - EXCHANGE	(A)
2	ZZ50295R		1	CYLINDER BLOCK ASSEMBLY	

Footnotes	
(A)	ORDER PARTS BOOK YD39860PB FOR COMPLETE BREAKDOWN
(B)	ORDER PARTS BOOK YD39864PB FOR COMPLETE BREAKDOWN

Parts kit instruction 218

Power Exchange Long Engines

This power exchange long engine is shipped with a sump, timing case and cover, cylinder hea valve train with a protective cover and oil pump. The long engine is shipped with the number c cylinder at top dead centre. This is to allow easier fuel pump assembly and timing. In all applic the fuel pump drive gear will need to be transferred to the new long engine.

In some applications the original engine will have a different sump and oil pickup tube. These be transferred to the new long engine and the components supplied shall be returned on the c engine. A complete upper and lower gasket kit are supplied with each long engine to ease ass

A plate on the side of the block is stamped to indicate the crankshaft and bore size of the long Crankshaft identification is also marked on the first lobe. The following suffixes apply: A = 0.0 undersize, B = 0.020 undersize, C = 0.030 undersize.

The assembled long engine is built to the latest specification and may have improved internal features when compared to the original engine. To identify components, the long engine numb stamped on the engine serial number plate and must be used when the long engine compone ordered.

To ensure that components moved from the original engine to the new long engine continue t correctly identified, it is important that the original engine serial number and TPL number are stamped onto the long engine serial number plate when the engine is fully assembled.

For 1000 series engines; the 1.6mm sump joint must only be used with pressed steel sumps. 0.8mm joint must only be used with cast sumps.

For 1000 series engines; the rocker cover joint, part number 3681 A021, must only be used w aluminium top covers.The rocker cover joint, part number 3681 A032, must only be used with top covers.

Some timing cases do not allow adjustment of the front seal position. If the crankshaft pulley h groove worn in the spigot, it can be reconditioned with a speedi-sleeve. For 1000 series, use s sleeve part number 21820104, refer to the workshop manual.

End

Issued by Perkins Engines Company Limited 2005, Peterborough PE1 SNA, England. (c) Proprietary information of Perkins Engines Company Limited 2005, all rights reserved. The information is correct at the time of going to press. This Intruction is for technical information only and cannot be used as a basis for a warranty claim.

Long Engine	Plate A
	ACEY3748

Item	Part No.	References	Qty.	Description	Notes
1	YDL3748R		1	ENGINE - EXCHANGE	
2	└─YD39860R		1	SHORT ENGINE - EXCHANGE	(A)
3	└─ZZ80228R		1	CYLINDER HEAD KIT - EXCH	
4	└─ZZ90057		1	ROCKER SHAFT ASSEMBLY	
5	└─3716C522		1	TIMING CASE	
6	└─4142A171		1	TIMING COVER	
7	└─4142X026		1	CYLINDER HEAD COVER	
8	└─4145H079		1	SUMP	
9	└─31416307		1	CAMSHAFT	

Footnotes	
(A)	ORDER PARTS BOOK YD39860PB FOR COMPLETE BREAKDOWN

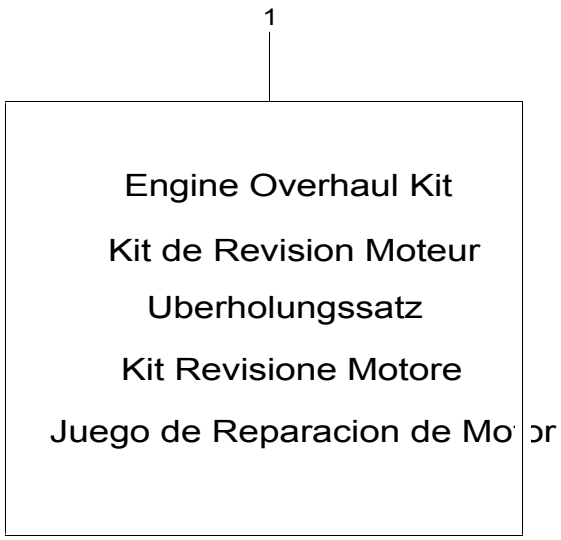
1
Engine Overhaul Kit
Kit de Revision Moteur
Uberholungssatz
Kit Revisione Motore
Juego de Reparacion de Mo or

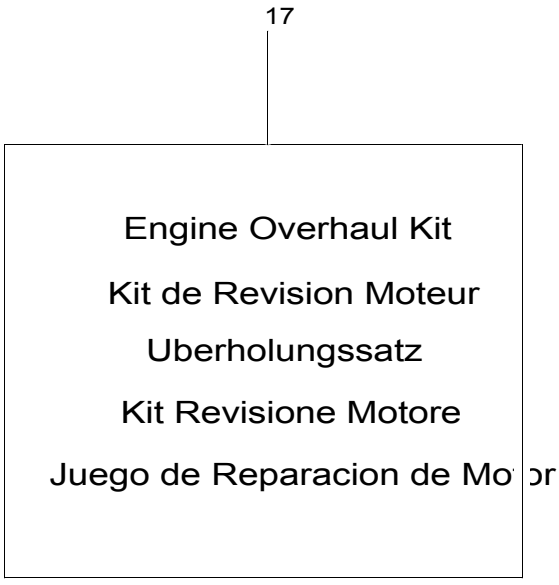
17
Engine Overhaul Kit
Kit de Revision Moteur
Uberholungssatz
Kit Revisione Motore
Juego de Reparacion de Mo or

Engine Overhaul Kit **Plate A**

ACKY2007

Item	Part No.	References	Qty.	Description	Notes
1	U5MK0712	→ U764751H a.	1	ENGINE OVERHAUL KIT	(A,B,C,D)
2	U5LL0016		6	PISTON KIT	
3	4181A026	a.	6	PISTON RING KIT	
4		4181A026	1	PISTON RING	
5		4181A026	1	PISTON RING	
6		4181A026	1	PISTON RING	
7	3135X042		6	LINER - SLIP FIT	(E)
8	U5LT1179		1	GASKET KIT - TOP	
9	3311A042		6	SEAL	
10	U5LB1167		1	GASKET KIT - BOTTOM	
11	2418F436		1	SEAL - FRONT END OIL	
12	2418F475		1	SEAL - REAR END OIL	
13	3681C003		1	GASKET - CYL. HEAD COVER	
14	3681M007		1	GASKET - SUMP	
15	U5MK0633		1	OIL COOLER KIT	
16	33221328		12	CON ROD NUT	
17	U5MK0712K	→ U764751H	1	ENGINE OVERHAUL KIT	(F,B,C,D)
18	U5LL0016		6	PISTON KIT	
19	4181A026	b.	6	PISTON RING KIT	
20		4181A026	1	PISTON RING	
21		4181A026	1	PISTON RING	
22		4181A026	1	PISTON RING	
23	3135X041	Ⓢ	6	LINER - PRESS FIT	(G)
24	U5LT1179		1	GASKET KIT - TOP	
25	3311A042		6	SEAL	
26	U5LB1167		1	GASKET KIT - BOTTOM	
27	2418F436		1	SEAL - FRONT END OIL	
28	2418F475		1	SEAL - REAR END OIL	
29	3681C003		1	GASKET - CYL. HEAD COVER	
30	3681M007		1	GASKET - SUMP	
31	U5MK0633		1	OIL COOLER KIT	
32	33221328		12	CON ROD NUT	
Service Options					
23	3135X042		6	LINER - SLIP FIT	(E)
23	3135X045	(+) 0.010"	6	LINER - OVERSIZE	(E)
23	3135X046	(+)0.020"	6	LINER - OVERSIZE	(G,H)

History

a.

1	U5MK0712	→ U764751H	1	ENGINE OVERHAUL KIT	(A,B,C,D)
3	4181A021		6	PISTON RING KIT	

b. General History Section

19	4181A021		6	PISTON RING KIT	

Footnotes

(A)	IN FRAME OVERHAUL KIT

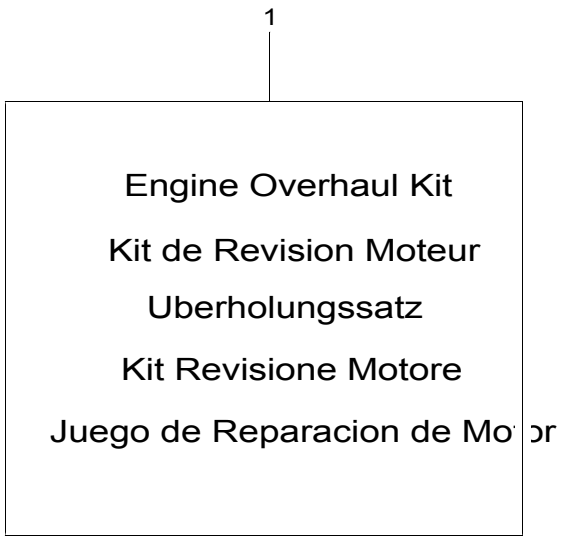
1
Engine Overhaul Kit
Kit de Revision Moteur
Uberholungssatz
Kit Revisione Motore
Juego de Reparacion de Mo or

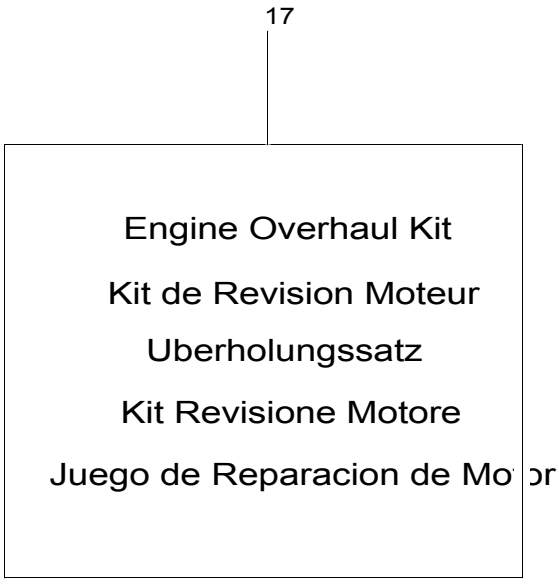
17
Engine Overhaul Kit
Kit de Revision Moteur
Uberholungssatz
Kit Revisione Motore
Juego de Reparacion de Mo or

Engine Overhaul Kit	Plate A
	ACKY2007

Footnotes	
(B)	SERVICE OPTIONS ARE AVAILABLE AND MAY BE REQUIRED FOR YOUR SPECIFICATION, BUT ARE NOT CONTAINED WITHIN THIS OVERHAUL KIT
(C)	FOR ENGINES POST U764752H CHANGE REOS BY REMOVING 2418F475 AND REPLACING WITH 2418F701
(D)	FOR ENGINES POST U786029J CHANGE THE OIL COOLER KIT U5MK0633 TO U5MK0642
(E)	SLIP FIT
(F)	OUT OF FRAME OVERHAUL KIT
(G)	PRESS FIT
(H)	UNFINISHED

ACKY2007

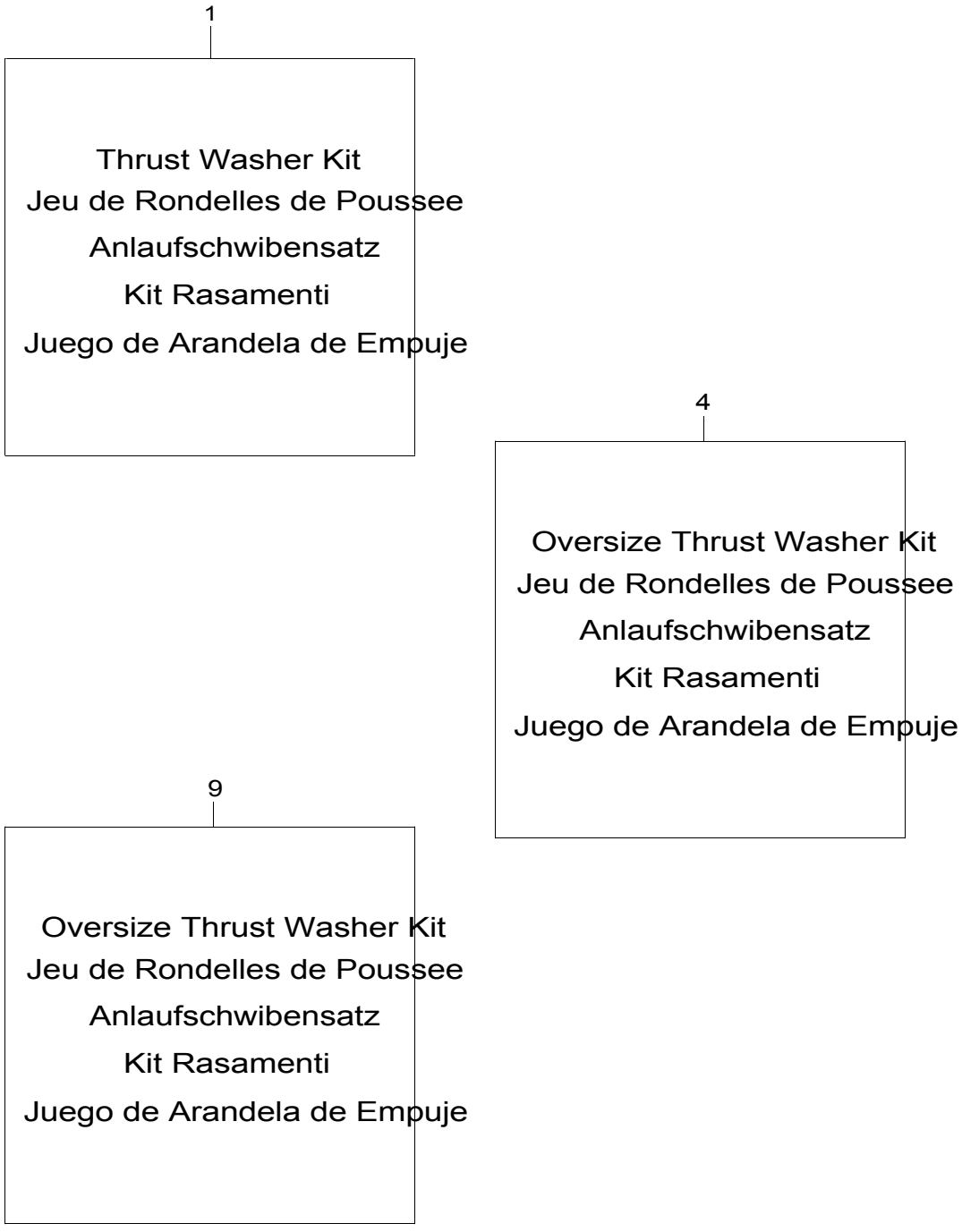
1
Thrust Washer Kit
Jeu de Rondelles de Poussee
Anlaufschwibensatz
Kit Rasamenti
Juego de Arandela de Empuje
4
Oversize Thrust Washer Kit
Jeu de Rondelles de Poussee
Anlaufschwibensatz
Kit Rasamenti
Juego de Arandela de Empuje
9
Oversize Thrust Washer Kit
Jeu de Rondelles de Poussee
Anlaufschwibensatz
Kit Rasamenti
Juego de Arandela de Empuje

Thrust Washer Kit	Plate A
	ACKY2007

Item	Part No.	References	Qty.	Description	Notes
1	U5TW0002		1	THRUST WASHER KIT	(A)
2	└─31137551	Ⓢ	2	THRUST WASHER	
3	└─31137561	Ⓢ	2	THRUST WASHER	
4	U5TW0002A		1	THRUST WASHER KIT - O/S	(B)
5	├─31137551	Ⓢ	1	THRUST WASHER	
6	├─31137561	Ⓢ	1	THRUST WASHER	
7	├─31137312	≑ (+)0.007"	1	THRUST WASHER	
8	└─31137322	≑ (+)0.007"	1	THRUST WASHER	
9	U5TW0002B		1	THRUST WASHER KIT - O/S	(C)
10	├─31137312	≑ (+)0.007"	2	THRUST WASHER	
11	└─31137322	≑ (+)0.007"	2	THRUST WASHER	
Service Options					
2	31137312	≑ (+)0.007"	2	THRUST WASHER	
3	31137322	≑ (+)0.007"	2	THRUST WASHER	
5	31137312	≑ (+)0.007"	1	THRUST WASHER	
6	31137322	≑ (+)0.007"	1	THRUST WASHER	

Footnotes	
(A)	STANDARD
(B)	STANDARD / OVERSIZE
(C)	OVERSIZE

ACKY2007


1
Valve Train Kit
Kit Soupapes
Ventilsatz
Kits Treno Valvole
Juego de Valvulas


11
Valve Train Kit
Kit Soupapes
Ventilsatz
Kits Treno Valvole
Juego de Valvulas

Valve Train Kit	Plate A
	ACKY2007

Item	Part No.	References	Qty.	Description	Notes
1	U5VK0180	→ U557976X	1	VALVETRAIN KIT	(A)
2	—3142L071		1	INTAKE VALVE	
3	—3343F041		1	VALVE GUIDE	
4	—3142A051		1	EXHAUST VALVE	
5	—3343J021		1	VALVE GUIDE	
6	—31745122		2	VALVE SPRING OUTER	
7	—31744133		2	VALVE SPRING INNER	
8	—33424107		2	CAP	
9	—33173108		4	VALVE COLLET	(B)
10	—33415118		2	VALVE SPRING WASHER	
11	U5VK0182	→ U557976X	1	VALVETRAIN KIT	
12	—3142L071		6	INTAKE VALVE	
13	—3343F041		6	VALVE GUIDE	
14	—3142A051		6	EXHAUST VALVE	
15	—3343J021		6	VALVE GUIDE	
16	—31745122		12	VALVE SPRING OUTER	
17	—31744133		12	VALVE SPRING INNER	
18	—33424107		12	CAP	
19	—33173108		24	VALVE COLLET	(B)
20	—33415118		12	VALVE SPRING WASHER	

Footnotes	
(A)	SINGLE CYLINDER ONLY
(B)	SERVICED IN PAIRS

ACKY2007


1
Valve Train Kit
Kit Soupapes
Ventilsatz
Kits Treno Valvole
Juego de Valvulas


11
Valve Train Kit
Kit Soupapes
Ventilsatz
Kits Treno Valvole
Juego de Valvulas

Valve Train Kit	Plate B
	ACKY2007

Item	Part No.	References	Qty.	Description	Notes
1	U5VK0190	↦ U557977X	1	VALVETRAIN KIT	(A)
2	└3142L072		1	INTAKE VALVE	
3	└3343F041		1	VALVE GUIDE	
4	└3142A051		1	EXHAUST VALVE	
5	└3343J021		1	VALVE GUIDE	
6	└31745122		2	VALVE SPRING OUTER	
7	└31744133		2	VALVE SPRING INNER	
8	└33424107		2	CAP	
9	└33173108		4	VALVE COLLET	(B)
10	└33415118		2	VALVE SPRING WASHER	
11	U5VK0192	↦ U557977X	1	VALVETRAIN KIT	
12	└3142L072		6	INTAKE VALVE	
13	└3343F041		6	VALVE GUIDE	
14	└3142A051		6	EXHAUST VALVE	
15	└3343J021		6	VALVE GUIDE	
16	└31745122		12	VALVE SPRING OUTER	
17	└31744133		12	VALVE SPRING INNER	
18	└33424107		12	CAP	
19	└33173108		24	VALVE COLLET	(B)
20	└33415118		12	VALVE SPRING WASHER	

Footnotes	
(A)	SINGLE CYLINDER ONLY
(B)	SERVICED IN PAIRS

Cylinder Block	Plate B
	ACHY0022

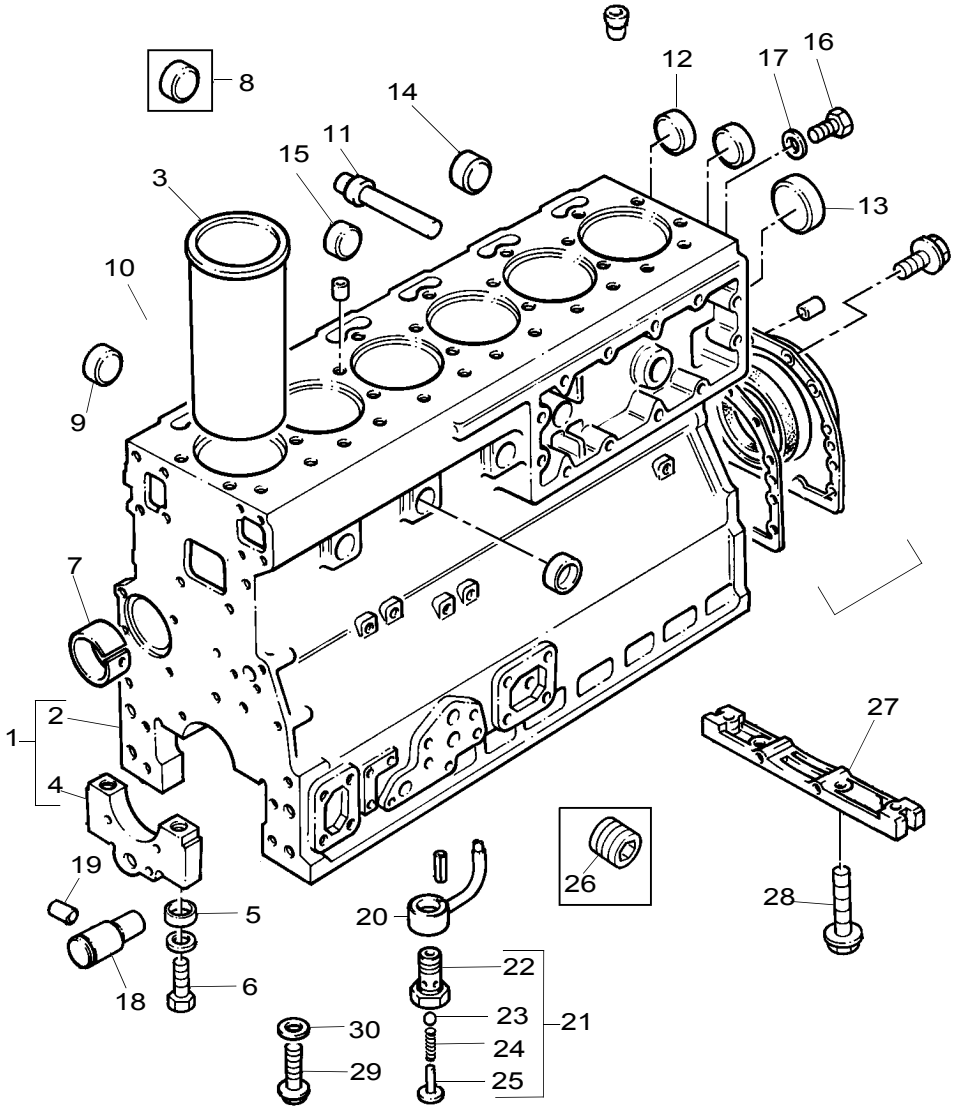

Cylinder Block	Plate B
	ACHY0022

Item	Part No.	References	Qty.	Description	Notes
1	ZZ50295	a.	1	CYLINDER BLOCK ASSEMBLY	
2		ZZ50295	1	CYLINDER BLOCK	
3	3135X041	S	6	LINER - PRESS FIT	(A)
4			1	BEARING CAP	
5	33142111		14	THIMBLE	
6	32166329		14	SCREW	
7	31134165		1	CAMSHAFT BUSH	
8	32418122		5	PLUG	
9	32416119		1	PLUG	
10	32417134		1	PLUG	
11	2485A204		1	PLUG	
12	32418122		3	PLUG	
13	32418122		1	PLUG	
14	0650710		3	PLUG	
15	3774A004	01/08/2001	6	PLUG	
16	32168212		1	PLUG	
17	2415D108		1	WASHER	
18	3271H004	S	1	SHAFT	
19	2116087		1	PIN	
20	3861A027		6	PISTON COOLING JET	
21	4138A017		6	RELIEF VALVE	
22		4138A017	1	VALVE BODY	
23		4138A017	1	BALL	
24		4138A017	1	SPRING	
25		4138A017	1	RETAINER	
26	3211A005		2	PLUG	
27	3627P043		1	BRIDGE PIECE	
28	2311D039		2	SCREW	
29	2182110		6	SCREW	
30	0920469		6	SPACER	
Service Options					
1	ZZ50295R		1	CYLINDER BLOCK ASSEMBLY	
3	3135X042		6	LINER - SLIP FIT	(B)
3	3135X045	(+) 0.010"	6	LINER - OVERSIZE	(B)
3	3135X046	(+)0.020"	6	LINER - OVERSIZE	(A,C)
18	3271H005	(+) 1.33MM	1	SHAFT	(D,E)

History					
a.					
1	ZZ50295		1	CYLINDER BLOCK ASSEMBLY	
	3627P023		1	BRIDGE PIECE	

Footnotes	
(A)	PRESS FIT
(B)	SLIP FIT
(C)	UNFINISHED

Cylinder Block	Plate B
	ACHY0022

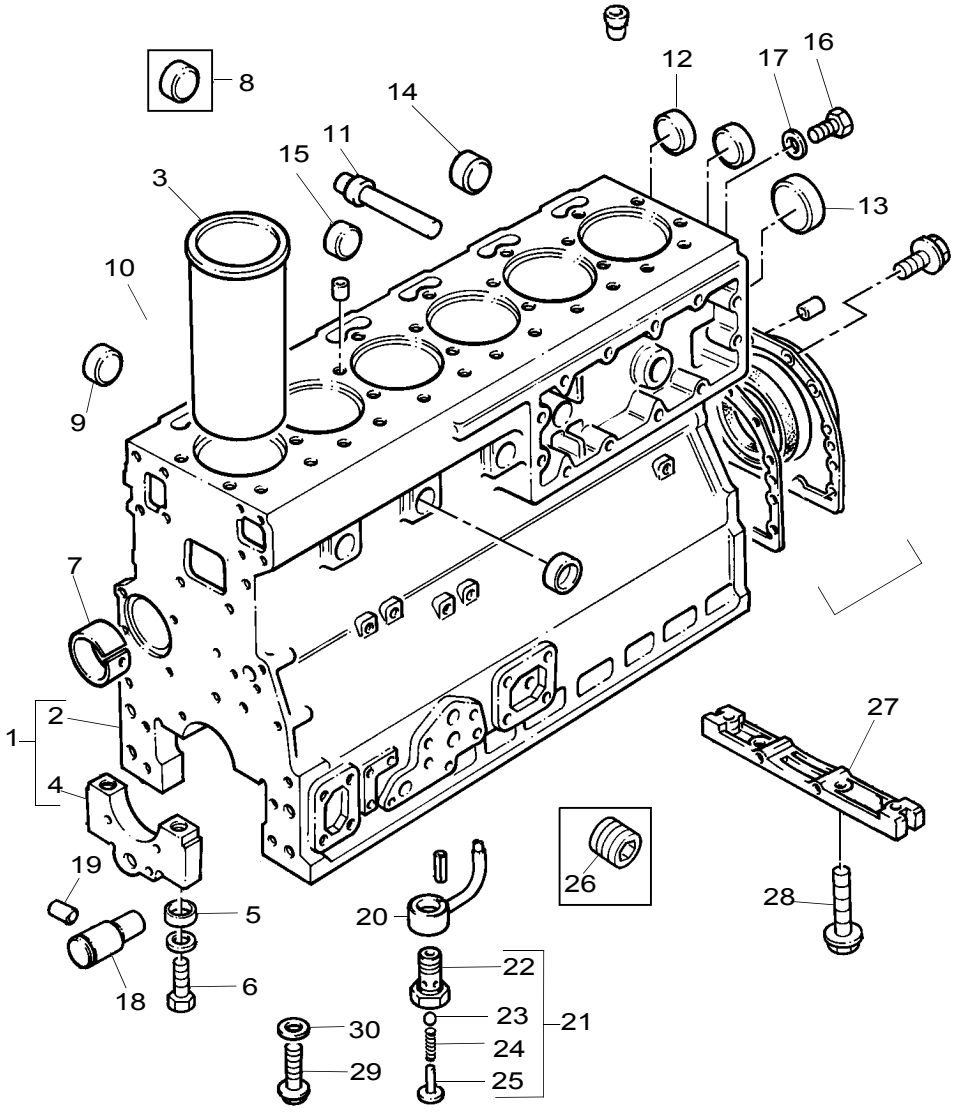

Cylinder Block	Plate B
	ACHY0022

Footnotes	
(D)	ALTERNATIVE APPLIES TO 4 CYLINDER ENGINES ONLY
(E)	REFER TO SERVICE BULLETIN NO.163

ACHY0022

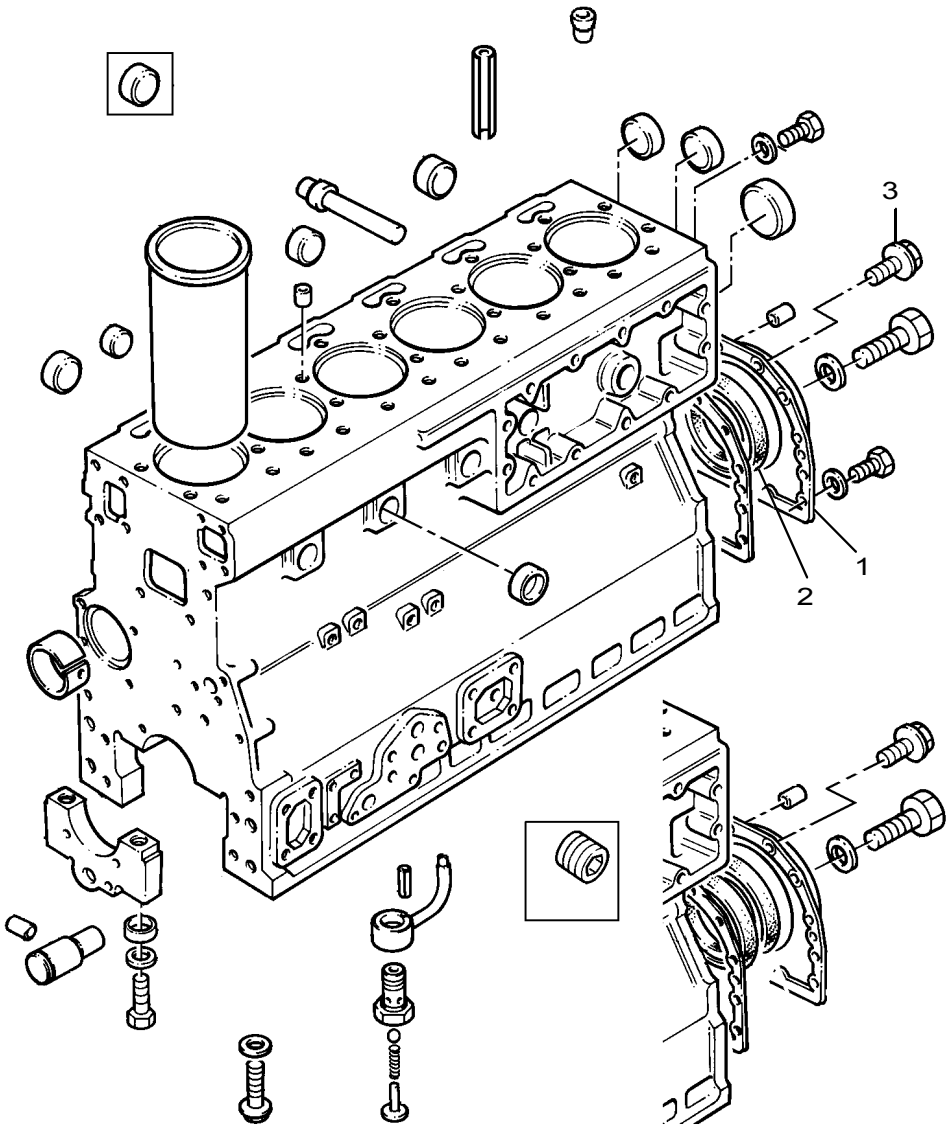

Cylinder Block	Plate A
	ACHY0022

Item	Part No.	References	Qty.	Description	Notes
1	2418F701	→ U764752H a.	1	SEAL - REOS HOUSING	
2	└	⇨ 2418F701 a.	1	REAR OIL SEAL	
3	3211C002	→ U764752H a.	10	METRIC BOLT	

History

a. →| U764751H

1	4142V066		1	SEAL - REOS HOUSING	
2	└2418F475		1	SEAL - REAR END OIL	
3	2314H003		12	SCREW	
	3681T018	●○ 36817181 ●○ 3681T013 ●○ 36817157	1	GASKET - OIL SEAL HOUSING	
	0350009		2	DOWEL	
	3212V002	→ U573634Y	2	SCREW	

b.

	ZZ50270	●○ ZZ50239 ●○ ZZ50237 ●○ ZZ50229	1	CYLINDER BLOCK ASSEMBLY	(A)

c.

	ZZ50270	●○ ZZ50239 ●○ ZZ50237 ●○ ZZ50229	1	CYLINDER BLOCK ASSEMBLY	(A)
	└3311R003	●○ 0920130	1	WASHER	(B)

Footnotes

(A)	REFER TO PLATE "B"
(B)	LUBRICATING OIL PRESSURE RAIL,REAR END

ACHY0022

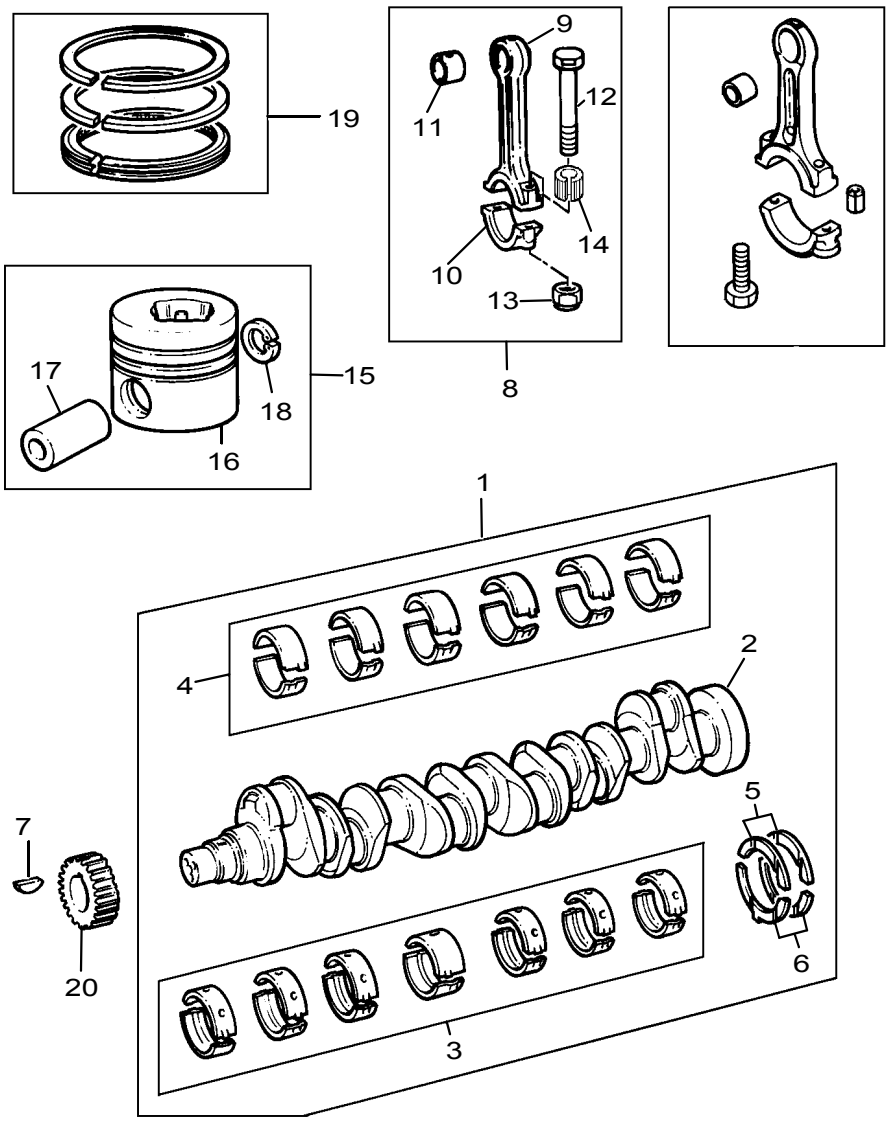

ACHY0022

Item	Part No.	References	Qty.	Description	Notes
1	ZZ90229	→ U847730M a. b. c. d.	1	CRANKSHAFT KIT	
2	└	ZZ90229	1	CRANKSHAFT	
3	└U5MB0007	Ⓢ	1	MAIN BEARING KIT	(A)
4	└U5ME0025	a. b. c.	1	BIG END BEARING KIT	
5	└31137551	Ⓢ	2	THRUST WASHER	
6	└31137561	Ⓢ	2	THRUST WASHER	
7	└0500012		1	WOODRUFF KEY	
8	ZZ90013	→ U801517J → 14/08/2002	6	CON ROD ASSEMBLY	
9	└	ZZ90013	1	CON ROD	
10	└	ZZ90013	1	BEARING CAP	
11	└31134131		1	SMALL END BUSH	
12	└32762145	●○ 32762144	2	CON ROD BOLT	
13	└33221328		2	CON ROD NUT	
14	└2135A001		2	THIMBLE	
15	U5LL0039	→ U557977X e.	6	PISTON KIT	
16	└	U5LL0039	1	PISTON	
17	└	U5LL0039	1	PIN	
18	└2721A029	e.	1	CIRCLIP	
19	4181A026	→ U557977X e.	6	PISTON RING KIT	
20	3117C061		1	CRANKSHAFT GEAR	
Service Options					
3	U5MB0007A	(-)0.010"	1	MAIN BEARING KIT - U/S	(A)
3	U5MB0007B	(-)0.020"	1	MAIN BEARING KIT - U/S	(A)
3	U5MB0007C	(-)0.030"	1	MAIN BEARING KIT - U/S	(A)
5	31137312	(+)0.007"	2	THRUST WASHER	
6	31137322	(+)0.007"	2	THRUST WASHER	

History

a. → U847729M

1	ZZ90218	→ U801519J ↻	1	CRANKSHAFT KIT	
4	└U5ME0003	Ⓢ	1	BIG END BEARING KIT	PRE-FINISHED

b. → U801518J

1	ZZ90229	→ U801518J	1	CRANKSHAFT ASSEMBLY	
4	└U5ME0014	Ⓢ	1	BIG END BEARING KIT	

c. → U801517J

1	ZZ90218	↻	1	CRANKSHAFT KIT	
4	└U5ME0003	Ⓢ	1	BIG END BEARING KIT	PRE-FINISHED

d.

1	ZZ90085	●○ U5BG0033 ↻	1	CRANKSHAFT KIT	

ACHY0022

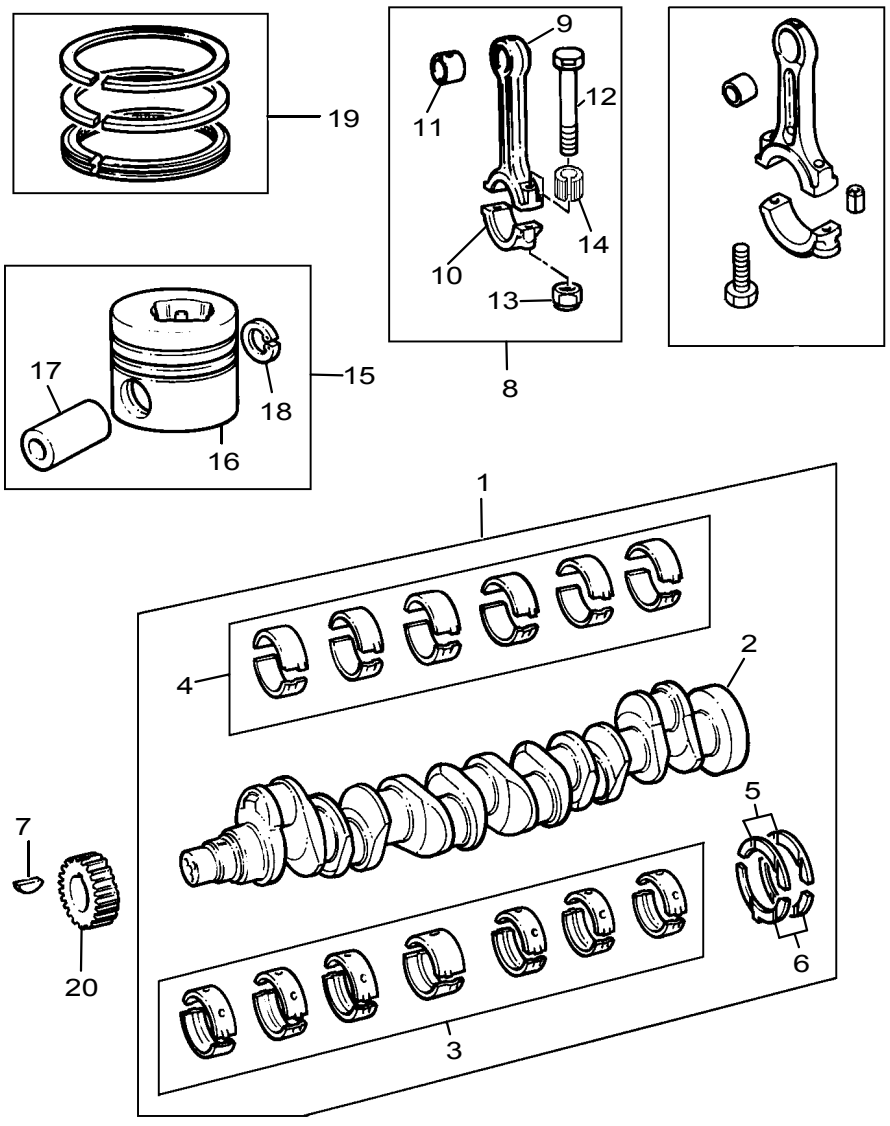

Crankshaft, Pistons & Connecting Rods	Plate A
	ACHY0022

Item	Part No.	References	Qty.	Description	Notes
e. General History Section					
15	U5LL0013	→I U557976X ●○ U5LL0012 ●○ U5LL0009	6	PISTON KIT	
18	└2721A029		2	CIRCLIP	
19	4181A021	●○ 4181A016 →I U557976X	6	PISTON RING KIT	

Footnotes	
(A)	PRE-FINISHED

↦ U801518J →| U801518J	ACHY0022

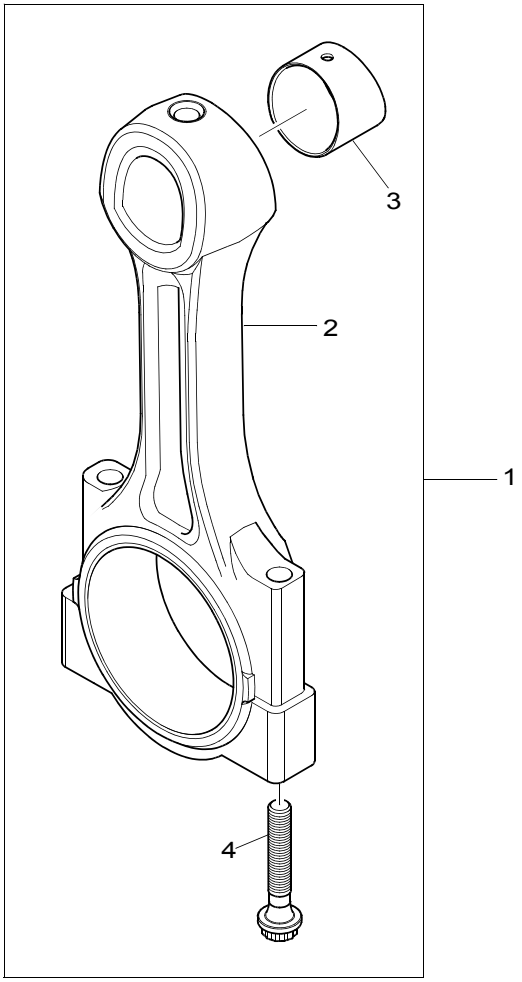

Crankshaft, Pistons & Connecting Rods **Plate B**

↦ **U801518J** ⇥ **U801518J**	**ACHY0022**

Item	Part No.	References	Qty.	Description	Notes
1	4115C321		6	CON ROD ASSEMBLY	
2	┗	✏ 4115C321	1	CON ROD	
3	┗3112A006		1	SMALL END BUSH	
4	┗3212V003		2	CON ROD BOLT	

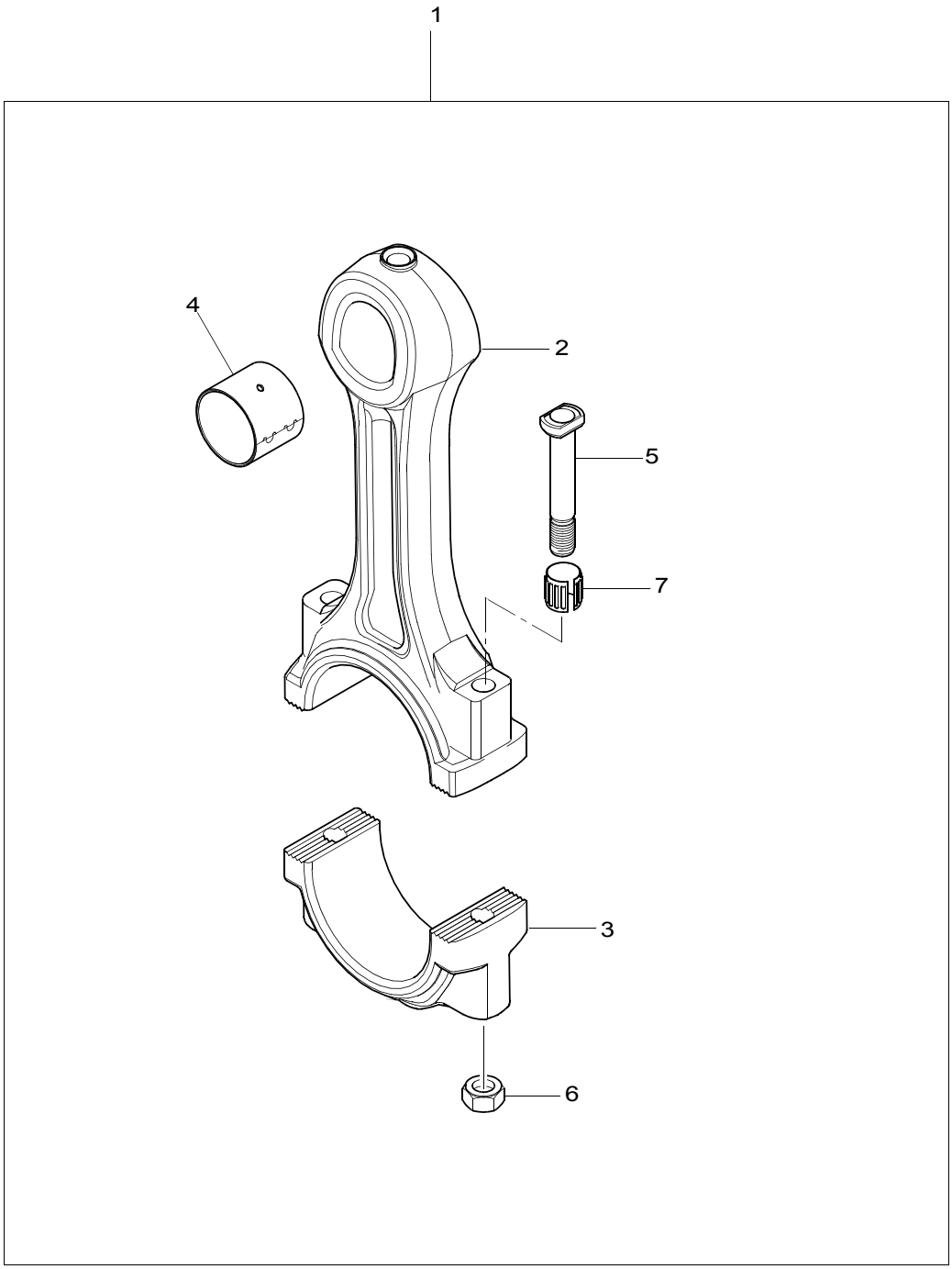
1
4
2
5
7
3
6

Crankshaft, Pistons & Connecting Rods	Plate C
↦ U801519J ↠ U847729M	ACHY0022

Item	Part No.	References	Qty.	Description	Notes
1	ZZ90013		6	CON ROD ASSEMBLY	
2		✏ ZZ90013	1	CON ROD	
3		✏ ZZ90013	1	BEARING CAP	
4	31134131		1	SMALL END BUSH	
5	32762145		2	CON ROD BOLT	
6	33221328		2	CON ROD NUT	
7	2135A001		2	THIMBLE	

↦ **U847730M**	**ACHY0022**

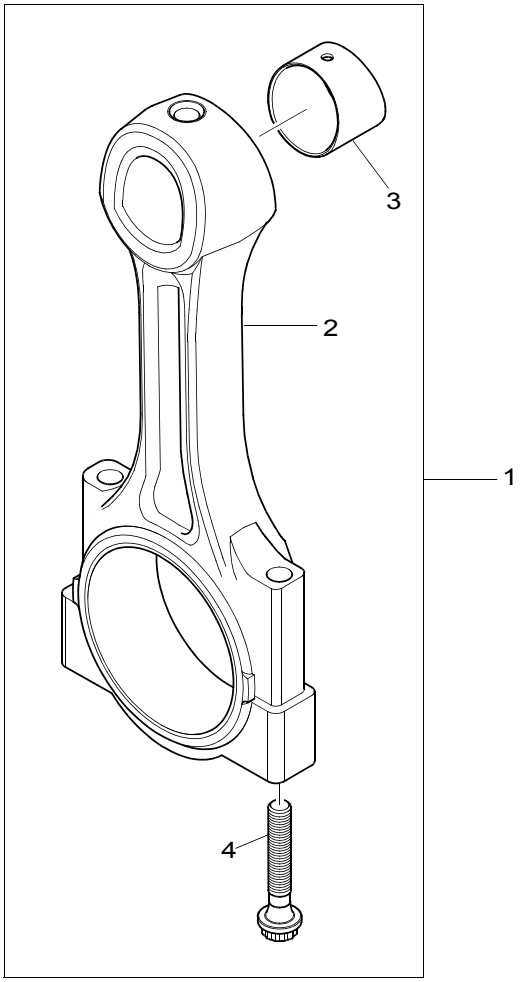

Crankshaft, Pistons & Connecting Rods	Plate D
↦ **U847730M**	**ACHY0022**

Item	Part No.	References	Qty.	Description	Notes
1	4115C321		6	CON ROD ASSEMBLY	
2	⌊	✏ 4115C321	1	CON ROD	
3	⌊—3112A006		1	SMALL END BUSH	
4	⌊—3212V003		2	CON ROD BOLT	

ACHY0022

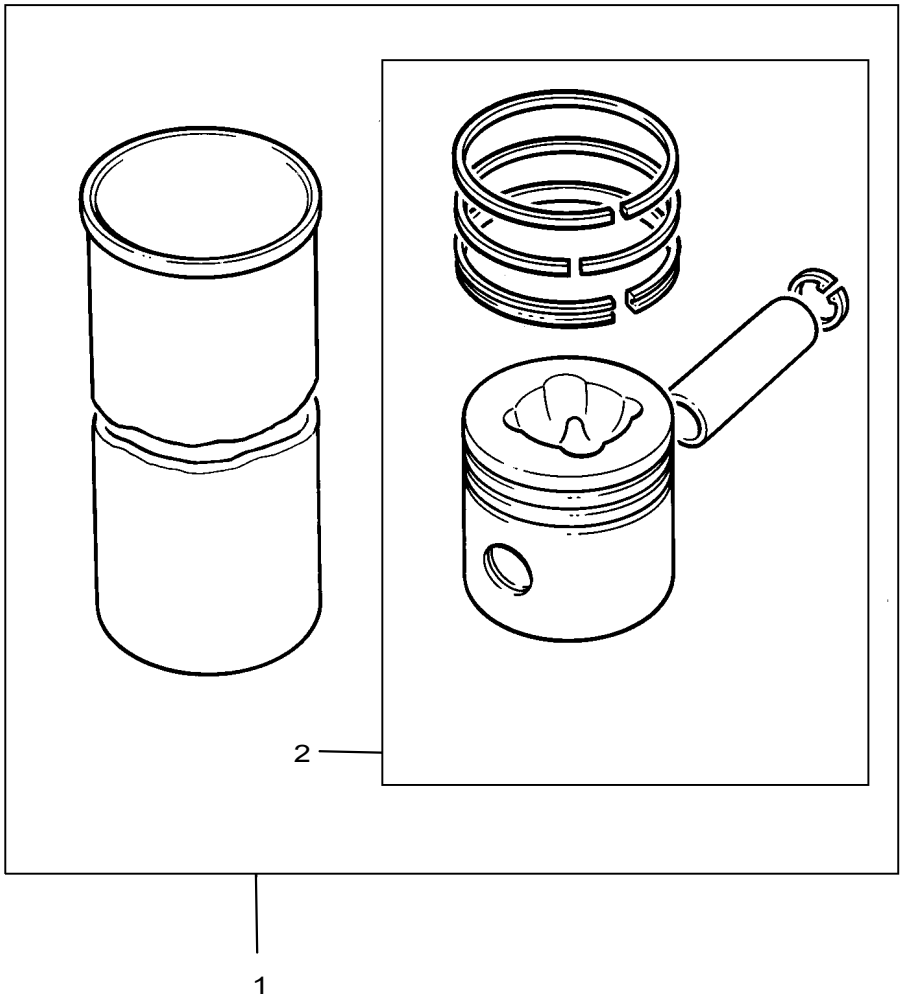

Crankshaft, Pistons & Connecting Rods	Plate B
	ACHY0022

Item	Part No.	References	Qty.	Description	Notes
1	U5MK0245		X	LINER KIT	(A)

Footnotes	
(A)	SLIP FIT

Cylinder Head	Plate A
	ACHY0022

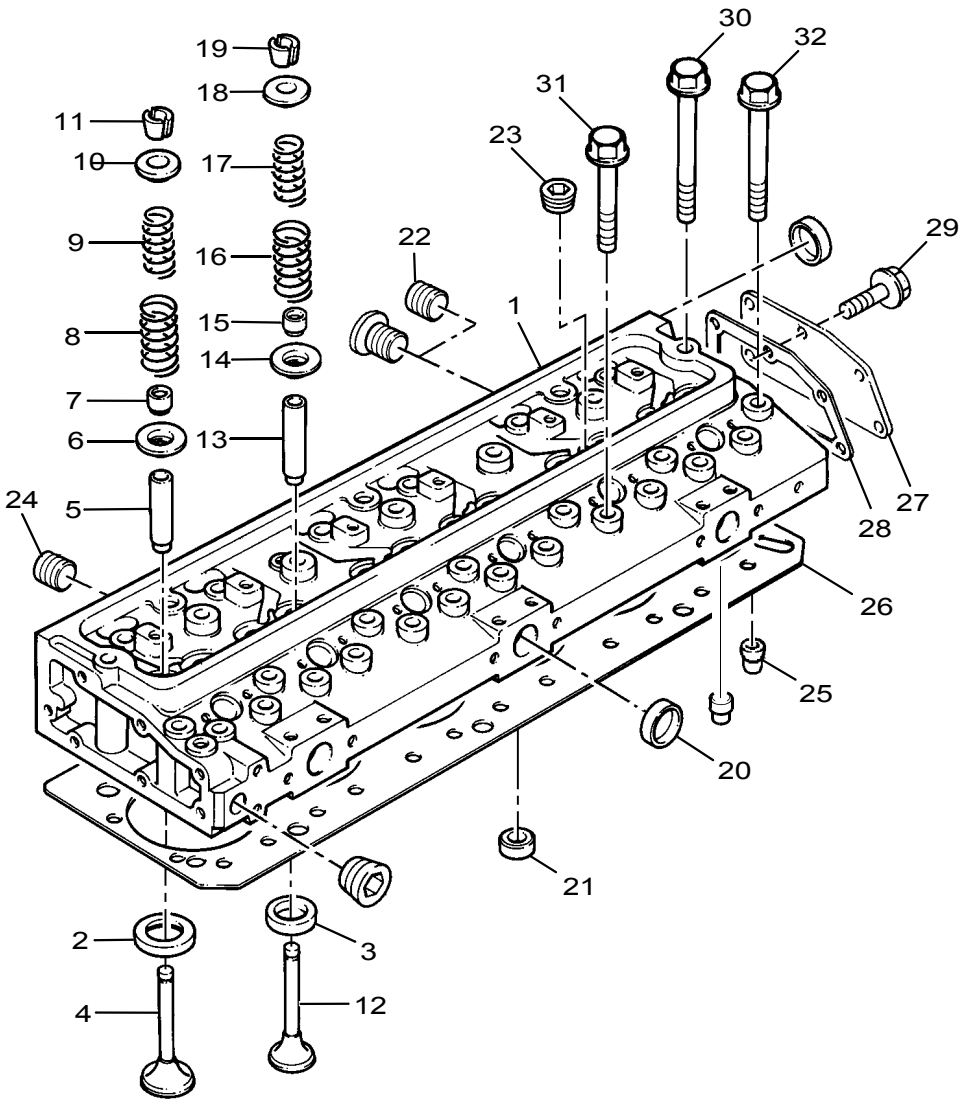

Cylinder Head	Plate A
	ACHY0022

Item	Part No.	References	Qty.	Description	Notes
1	ZZ80228	↦ U557977X ●○ ZZ80188 ●○ ZZ80171	1	CYLINDER HEAD KIT	
2	3324E002		6	INSERT	
3	3314A121		6	INSERT	
4	3142L072		6	INTAKE VALVE	
5	3343F041		6	VALVE GUIDE	
6	33415118		6	VALVE SPRING WASHER	
7	33817117		6	SEAL - VALVE STEM	
8	31745122		6	VALVE SPRING OUTER	
9	31744133		6	VALVE SPRING INNER	
10	33424107		6	CAP	
11	33173108		12	VALVE COLLET	(A)
12	3142A051		6	EXHAUST VALVE	
13	3343J021		6	VALVE GUIDE	
14	33415118		6	VALVE SPRING WASHER	
15	33817117		6	SEAL - VALVE STEM	
16	31745122		6	VALVE SPRING OUTER	
17	31744133		6	VALVE SPRING INNER	
18	33424107		6	CAP	
19	33173108		12	VALVE COLLET	(A)
20	0650710		3	PLUG	
21	32417156		6	PLUG	
22	3212P002		1	PLUG	
23	2431A054		6	PLUG	
24	0650540		1	PLUG	
25	29990001		2	DOWEL	(B)
26	3681H208		1	GASKET - CYLINDER HEAD	
27		⇜ LBH	1	COVER	
28		⇜ LBH	1	JOINT	
29			6	SCREW	(C)
30	32166222		2	SCREW	
31	32166219		12	SCREW	
32	32166221		18	SCREW	
Service Options					
1	ZZ80228P		1	CYLINDER HEAD KIT - EXCH	

Footnotes	
(A)	SERVICED IN PAIRS
(B)	LOCATING DOWELS
(C)	ASSEMBLY COMPONENT PARTS MAY NOT APPLY TO YOUR APPLICATION-REFER TO RELEVANT OPTION/ACCESSORY PACKS.

Cylinder Head	Plate B
	ACHY0022

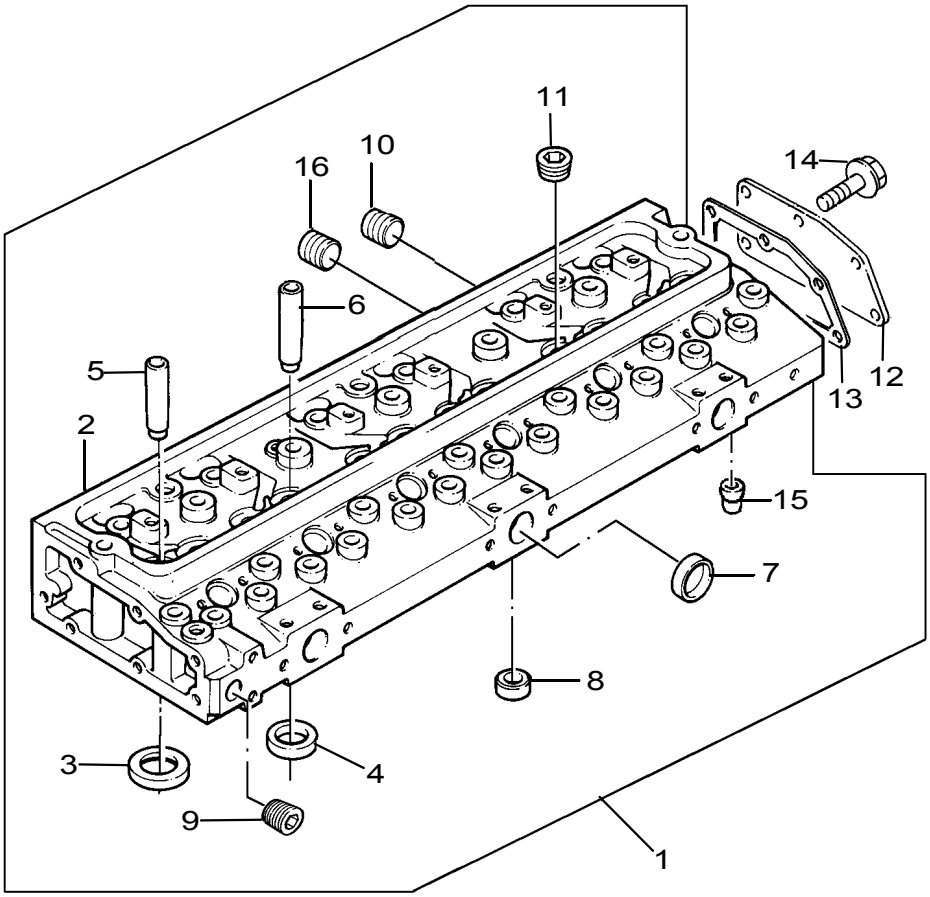

Cylinder Head	Plate B
	ACHY0022

Item	Part No.	References	Qty.	Description	Notes
1	ZZ80227	→ U557976X ●○ ZZ80185 ●○ ZZ80111	1	CYLINDER HEAD KIT	(A,B)
2	└	⇨ REF.1	1	HEAD	
3	└3314A011		6	INSERT	
4	└3314A004		6	INSERT	
5	└3343F002		6	VALVE GUIDE	
6	└3343J002		6	VALVE GUIDE	
7	└0650710		3	PLUG	
8	└32417156		6	PLUG	
9	└2431154		1	PLUG	
10	└2487A510		1	PLUG	
11	└2431A054		6	PLUG	
15	└29990001		2	DOWEL	(C)
12		⇦ LBH	1	COVER	
13		⇦ LBH	1	JOINT	
14			6	SCREW	(D)

Footnotes	
(A)	MINOR ASSEMBLY - FOR MAJOR SEE PLATE 'A'
(B)	CYLINDER HEADS FITTED AFTER ENGINE SERIAL NUMBER U647452C MUST BE USED WITH LOCATING DOWELS
(C)	LOCATING DOWELS
(D)	ASSEMBLY COMPONENT PARTS MAY NOT APPLY TO YOUR APPLICATION-REFER TO RELEVANT OPTION/ACCESSORY PACKS.

Rocker Shaft	Plate A
	ACHY0022

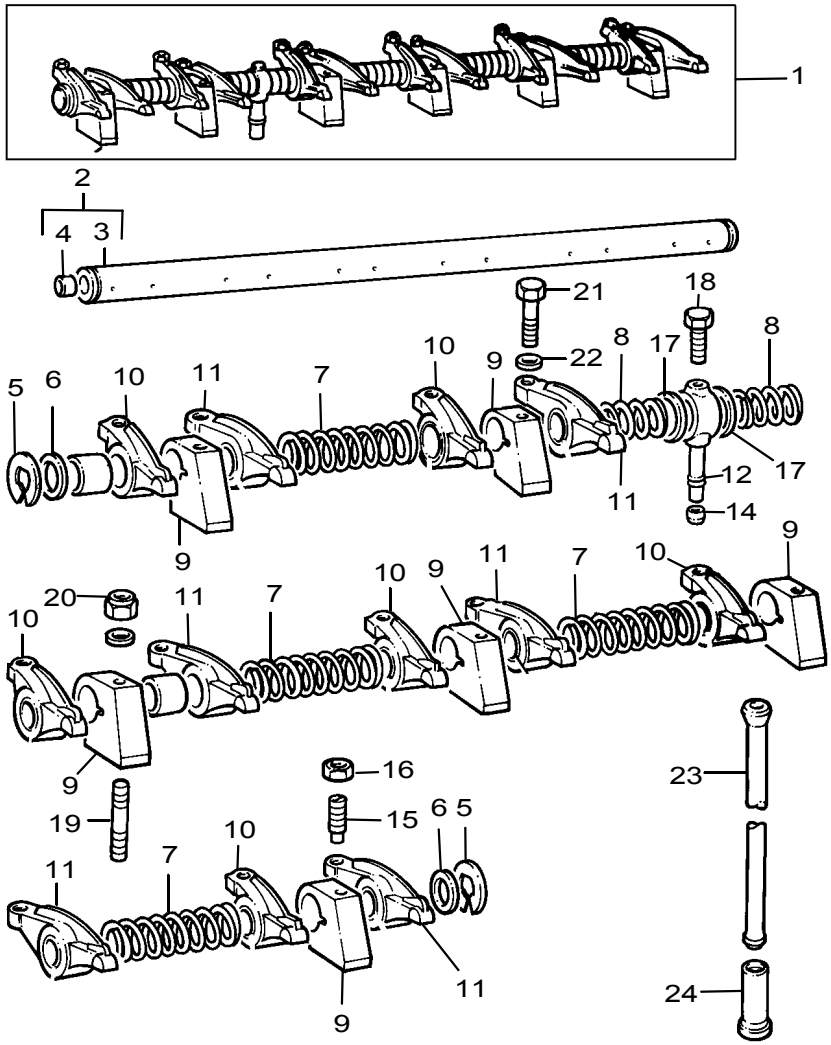

Rocker Shaft	Plate A
	ACHY0022

Item	Part No.	References	Qty.	Description	Notes
1	ZZ90057	●○ ZZ90040	1	ROCKER SHAFT ASSEMBLY	
2	U7LR0003		1	ROCKER SHAFT ASSY - MINOR	
3		⇛ U7LR0003	1	SHAFT	
4	0650507		2	PLUG	
5	0170151		2	CIRCLIP	
6	33117434		2	WASHER	
7	31744123		4	ROCKER SHAFT SPRING	
8	31743108		2	ROCKER SHAFT SPRING	
9	3818X901		6	BRACKET	
10	4115R305		6	ROCKER ARM ASSEMBLY	
11	4115R306		6	ROCKER ARM ASSEMBLY	
12	3775E012		1	CONNECTION	
13	2233022		1	SCREW	
14	33811113		1	OLIVE	
15	32114145		12	SCREW	
16	0576052		12	NUT	
17	3311K015		2	SHIM	
18	2233022		1	SCREW	
19	2313H331	●○ 2313H305	4	STUD	
20	2318A605	●○ 2318A210	4	NUT	
21	2314J607	●○ 2314J608	2	SCREW	
22	3311K009		2	WASHER	
23	31434307		12	PUSHROD	
24	3142U031	●○ 31434163	12	TAPPET	

ACHY0022

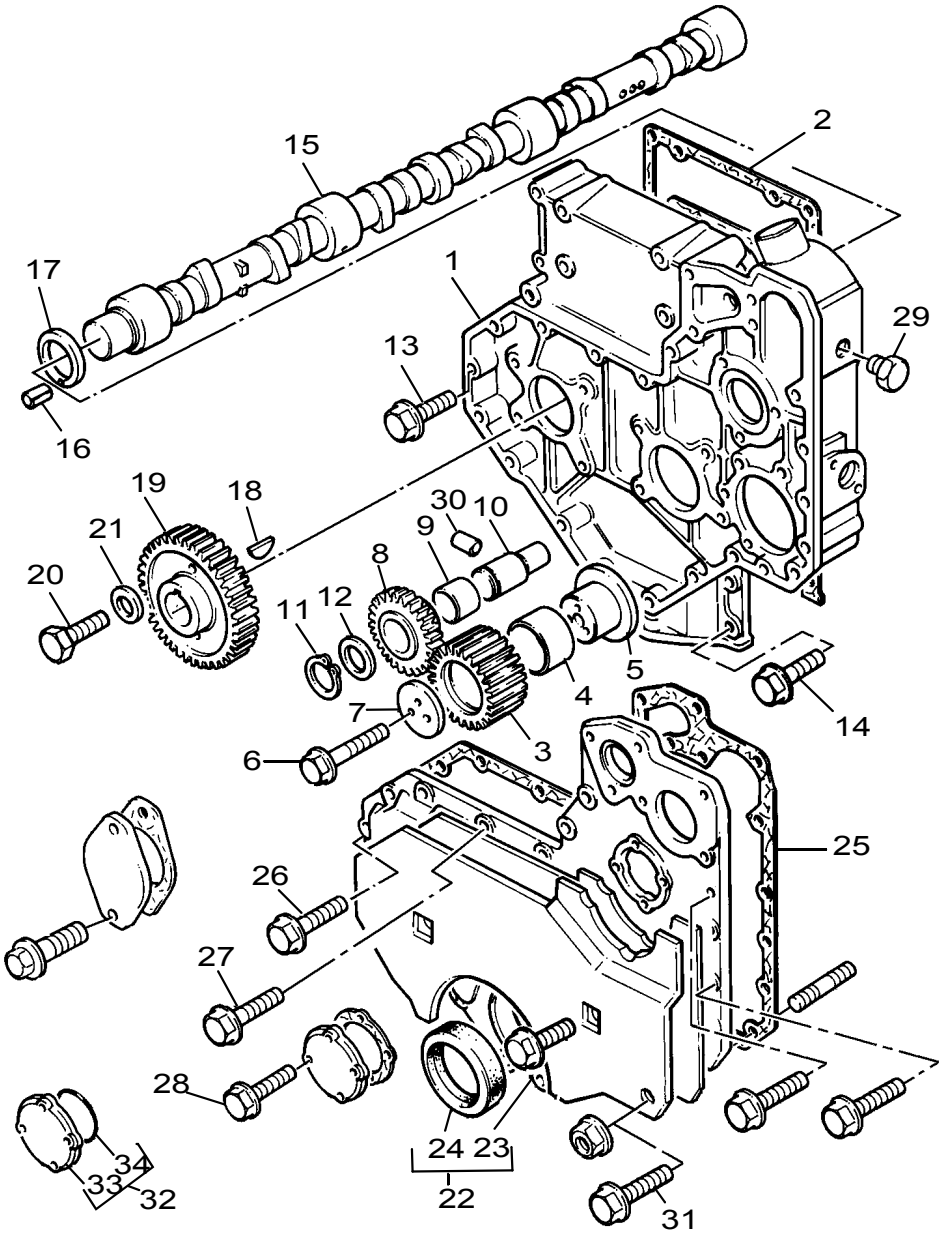
15
2
17
1
29
13
16
19
18
30
10
21
9
8
20
12
11
5
4
14
7
3
6
25
26
27
28
24 23
22
34
33
32
31

ACHY0022

Item	Part No.	References	Qty.	Description	Notes
1	3716C522	e.	1	TIMING CASE	
2	3681P002		1	GASKET - TIMING CASE	
3	4111A013		1	IDLER GEAR	
4	└0050345		2	IDLER GEAR BUSH	
5	33426161		1	HUB	
6	2314J011	f.	3	SCREW	
7	3272A033	a. c. f.	1	PLATE	(A)
8	4111A008		1	IDLER GEAR	
9	└2511437		1	BUSH	
10	3271H004	3271H002 32716117 S	1	SHAFT	
11	2722A206		1	CIRCLIP	
12	33123125		1	WASHER	
13	2314H003		8	SCREW	
14	2314H004		4	SCREW	
15	31416307	31416305	1	CAMSHAFT	
16	2116053		1	DOWEL	
17	33153121		1	THRUST PLATE	
18	0500012		1	WOODRUFF KEY	
19	3117L023	3117L021	1	CAMSHAFT GEAR	
20	2314J606		1	SCREW	
21	3321A003		1	WASHER	
22	4142A171	4142A143 d.	1	TIMING COVER	
23	┌	4142A171	1	TIMINGGEAR COVER	
24	└2418F437	d.	1	SEAL - FRONT END OIL	
25		3681P003	1	GASKET - TIMING COVER	
26	2314H004		7	SCREW	
27	2314H013		6	SCREW	
28	2314F036		4	SCREW	
29	2487Y005		1	PLUG	
30	2116087		1	PIN	
31	2314H034		2	SCREW	(B)
32	4152A002	3753R111	1	INSPECTION COVER	
33	┌	4152A002	1	VALVE COVER	
34	└2415A093		1	SEAL - O RING	
Service Options					
10	3271H005	(+) 1.33MM	1	SHAFT	(C,D)

History

a.

7	3241A025		1	PLATE	(E)

b. →| **U891998S**

	3781N042		1	DAMPER	
	3781N043		1	SHIELD	
	2314F003	2314E003	2	SCREW	

Timing Gear & Camshaft	Plate A
	ACHY0022

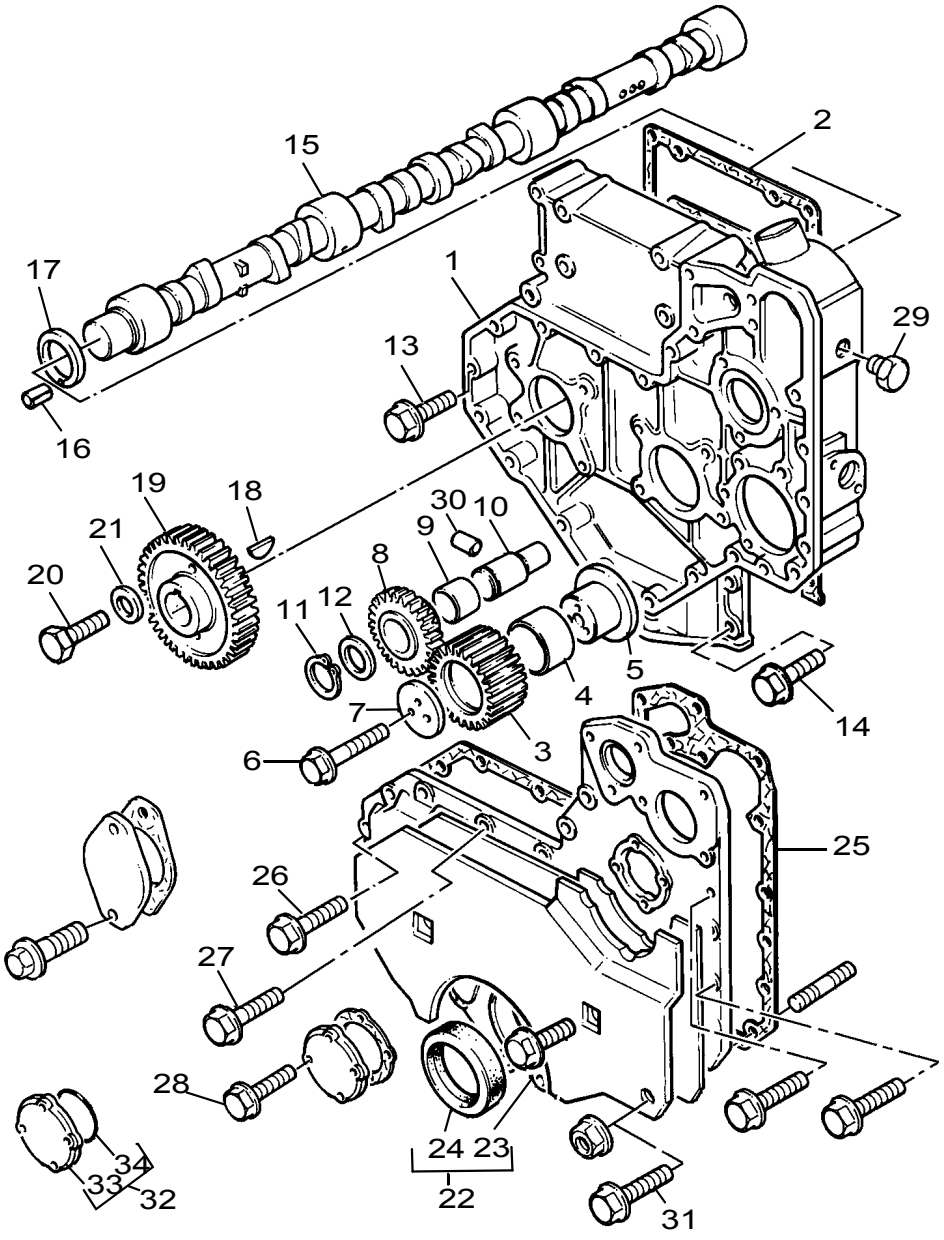

Timing Gear & Camshaft	Plate A
	ACHY0022

Item	Part No.	References	Qty.	Description	Notes
c.					
7	3241A021		1	PLATE	
d.					
22	4142A171	●○ 4142A143	1	TIMING COVER	
24	└2418F436		1	SEAL - FRONT END OIL	
e.					
1	3716C242	●○ 3716C032 ●○ 3716C033	1	TIMING CASE	
f.					
6	2314J010		3	SCREW	
7	3241H009	●○ 0941082	1	PLATE	
g.					
	3781N005		1	DAMPER	
	3781N013	●○ 3781N006	1	SHIELD	

Footnotes	
(A)	USED ONLY WITH 3117N061
(B)	BOTTOM TWO HOLES
(C)	ALTERNATIVE APPLIES TO 4 CYLINDER ENGINES ONLY
(D)	REFER TO SERVICE BULLETIN NO.163
(E)	USED ONLY WITH 4111A034

Lubricating Oil Pump & Delivery Housing	Plate A
	ACHY0022

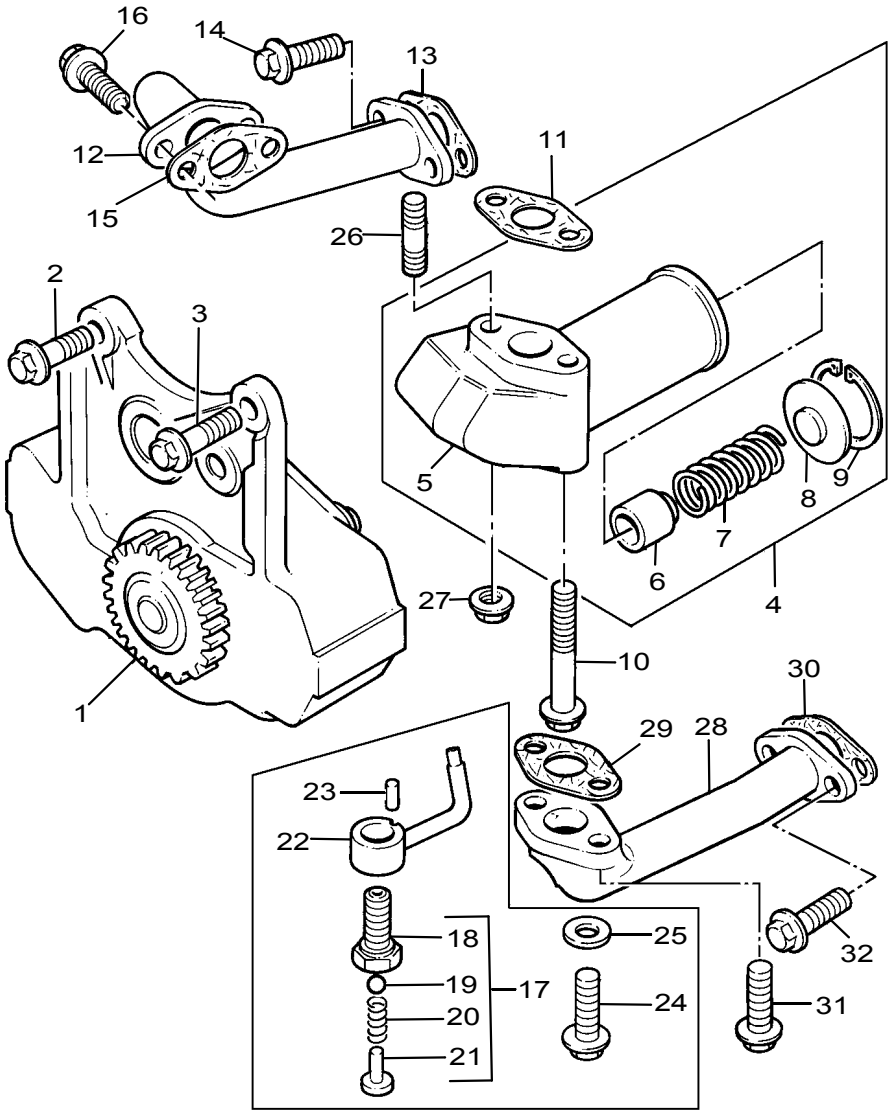

Lubricating Oil Pump & Delivery Housing **Plate A**

ACHY0022

Item	Part No.	References	Qty.	Description	Notes
1	4132F057	●○ 4132F044 ●○ 4132F029 ●○ 4132F023	1	OIL PUMP	
2	2314H004		2	SCREW	
3	2314H002		1	SCREW	
4	4138A033	●○ 4138A023	1	RELIEF VALVE	
5	┣	⇨ REF.4	1	BODY	
6	┣32712726		1	PLUNGER	
7	┣31744151		1	SPRING	
8	┣32712111		1	SEAT	
9	┗2721130	●○ 0170024	1	CIRCLIP	
10	2314K161	●○ 2314H011 ●○ 2314H010	2	SCREW	
11	36831122		1	GASKET	
12	3571C045	●○ 3572V012	1	PIPE - OIL	(A,B)
14	2314H008		2	SCREW	(C)
14	2314H004		2	SCREW	(D,E)
16	2314H004	●○ 2314H002	2	SCREW	
17			6	VALVE	(F)
18	┣		1	BODY	(F)
19	┣		1	BALL	(F)
20	┣		1	SPRING	(F)
21	┗		1	RETAINER	(F)
22			6	JET	(F)
23			6	DOWEL	(F)
26	2313H231	●○ 2313H213	1	STUD	
27	2318A603		1	NUT	

Footnotes

(A)	WAS 3572A009 USE 3572V012 WITH 2314H004 (2)
(B)	WAS 3572V012 USE 3571C045 WITH 2314H004 (2)
(C)	USED ONLY WITH 3572A009
(D)	USED ONLY WITH 3572V012
(E)	USED ONLY WITH 3572V012/3571C045
(F)	SEE CYLINDER BLOCK SECTION

AFH02630

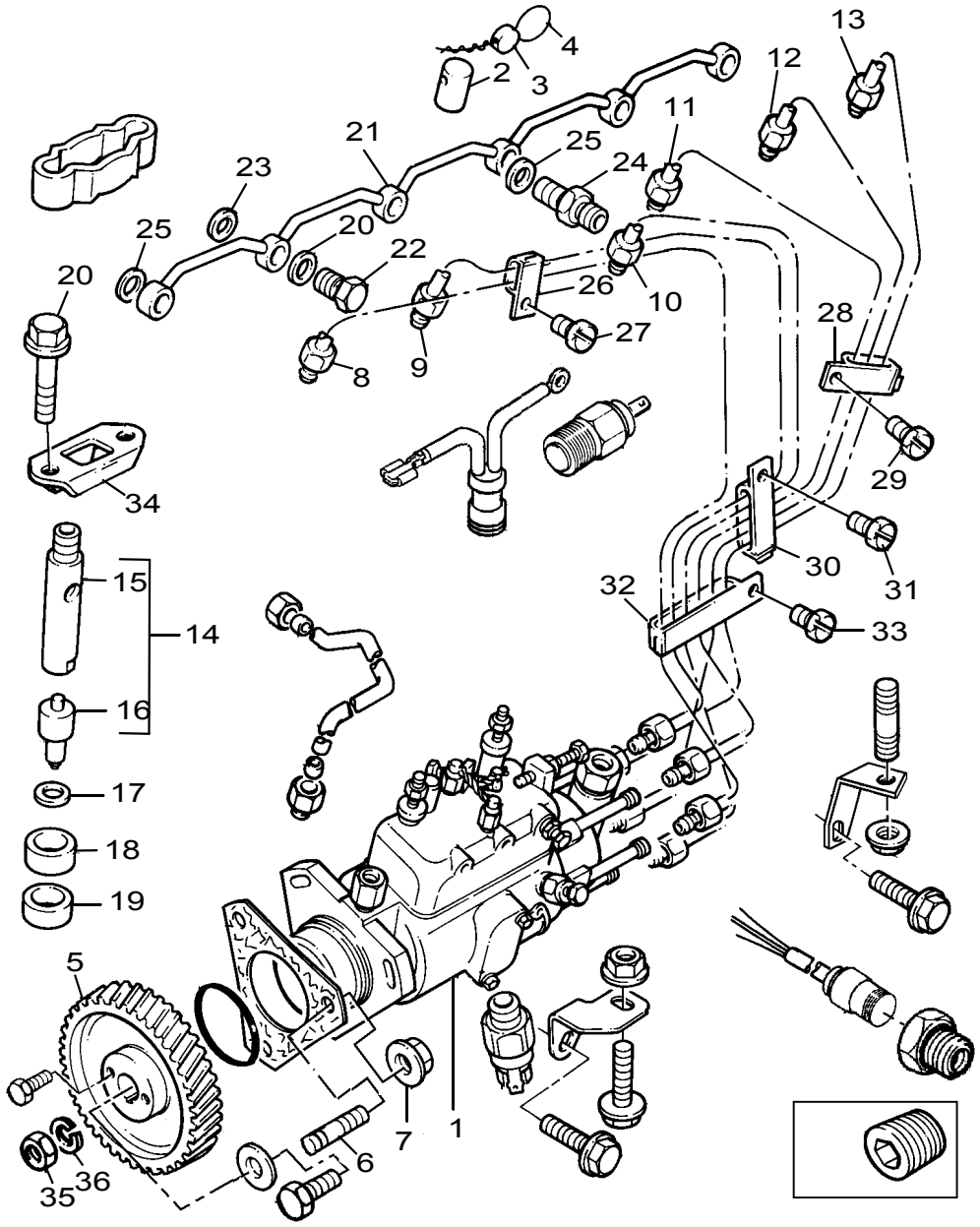
1
2
3
4
5
6
7
8
9
10
11
12
13
14
15
16
17
18
19
20
21
22
23
24
25
26
27
28
29
30
31
32
33
34
35
36

AFH02630

Item	Part No.	References	Qty.	Description	Notes
1	2643U609	↻	1	FUEL INJECTION PUMP	(A)
2	3281M002		1	SLEEVE	
3	31718104		1	SEAL	
4	31718143		1	WIRE	
5	3117L052		1	FUEL INJECTION PUMP GEAR	
6	2313M059	c.	3	STUD	
7	2318A603		3	NUT	
8	3522N014	1	1	FUEL INJECTION PIPE	
9	3522N015	2	1	FUEL INJECTION PIPE	
10	3522N016	3	1	FUEL INJECTION PIPE	
11	3522N017	4	1	FUEL INJECTION PIPE	
12	3522N018	5	1	FUEL INJECTION PIPE	
13	3522N019	6	1	FUEL INJECTION PIPE	
14	2645L017	↻	6	INJECTOR	
15	├2645L304		1	HOLDER	
16	└2645L615		1	INJECTOR NOZZLE	
17	0921173		6	INJECTOR WASHER	
18	33813129		6	SPACER	
19	33813131		6	SEAL	
20	2314H006		12	SCREW	
21	3558X021		1	PIPE - LEAK OFF	
22	3218R039	→ 01/06/2003 b.	5	BANJO BOLT	
23	2411D007	→ 01/06/2003 b. d.	10	WASHER	
24	3355E005	→ 01/06/2003 b.	1	CONNECTION	
25	2411D007	→ 01/06/2003 b. d.	2	WASHER	
26	2646E072		1	CLIP	
27	2646E152		1	SCREW	
28	2646E073		1	CLIP	
29	2646E152		1	SCREW	
30	2646E075		1	CLIP	
31	2646E152		1	SCREW	
32	2646E076		1	CLIP	
33	2646E152		1	SCREW	
34	3662K002		6	CLAMP	
35	2318A108		1	NUT	
36	K134AF01		1	WASHER	
Service Options					
1	2643U609R		1	FUEL INJ PUMP - EXCH	
14	2645L017R		6	INJECTOR - EXCHANGE	

History

a. →| **U886679P**

	2431131		1	PLUG	(B)

AFH02630

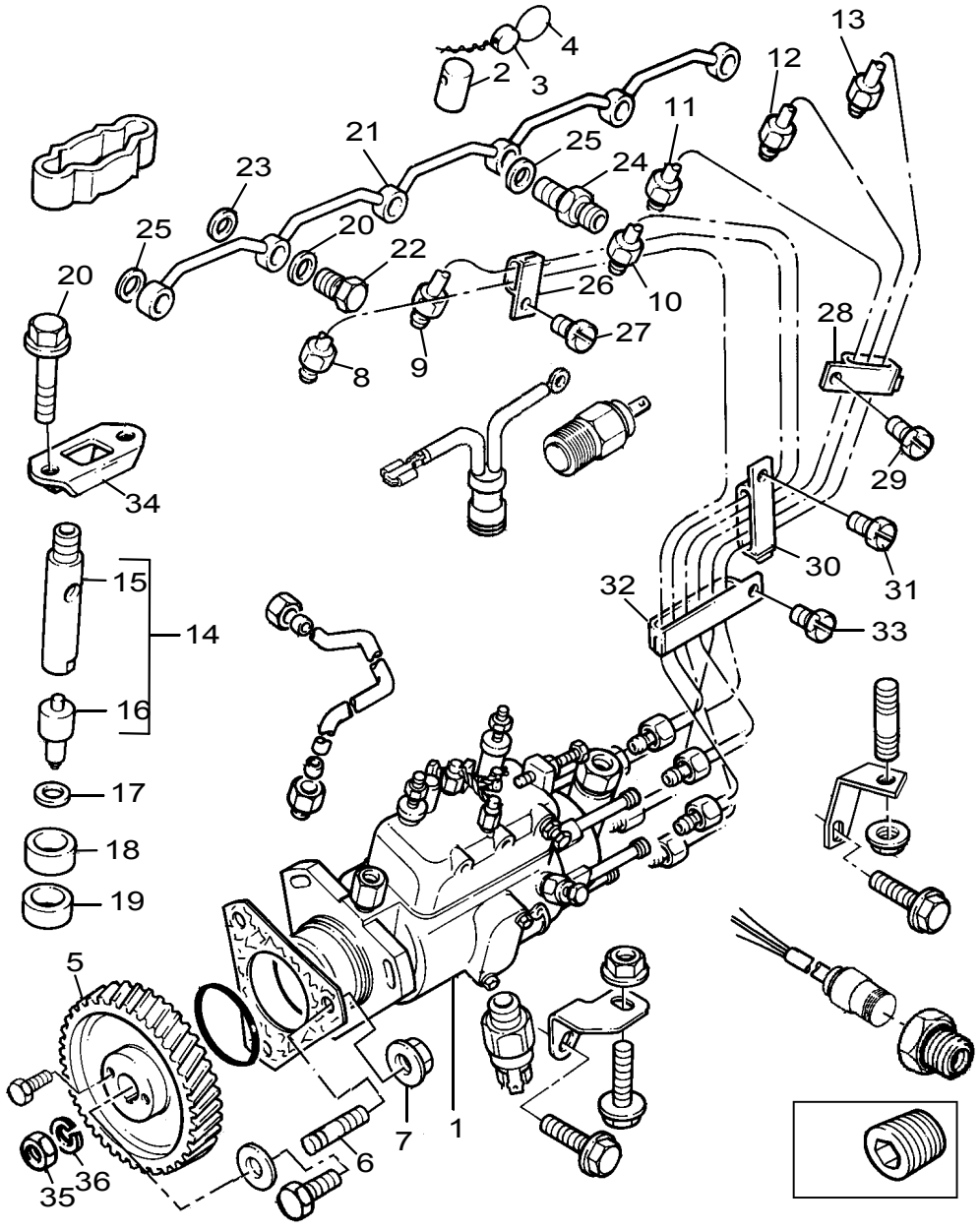
1
2
3
4
5
6
7
8
9
10
11
12
13
14
15
16
17
18
19
20
21
22
23
24
25
26
27
28
29
30
31
32
33
34
35
36

AFH02630

Item	Part No.	References	Qty.	Description	Notes
b. →| **31/05/2003**					
22	0095315		5	BANJO BOLT	
23	2415D052		10	WASHER	
24	0201526		1	UNION	
25	2415D052		2	WASHER	
c.					
6	3211P004	●○ 2313M059	3	STUD	
d.					
23	0921176		10	WASHER	
25	0921176		2	WASHER	

Footnotes

(A)	PLEASE ALSO REFER TO CFL FOR FUEL INJECTION PUMP IDLER SPEED SETTING.
(B)	LOCATES IN INDUCTION MANIFOLD

Flywheel Housing	Plate B
	CDH00705

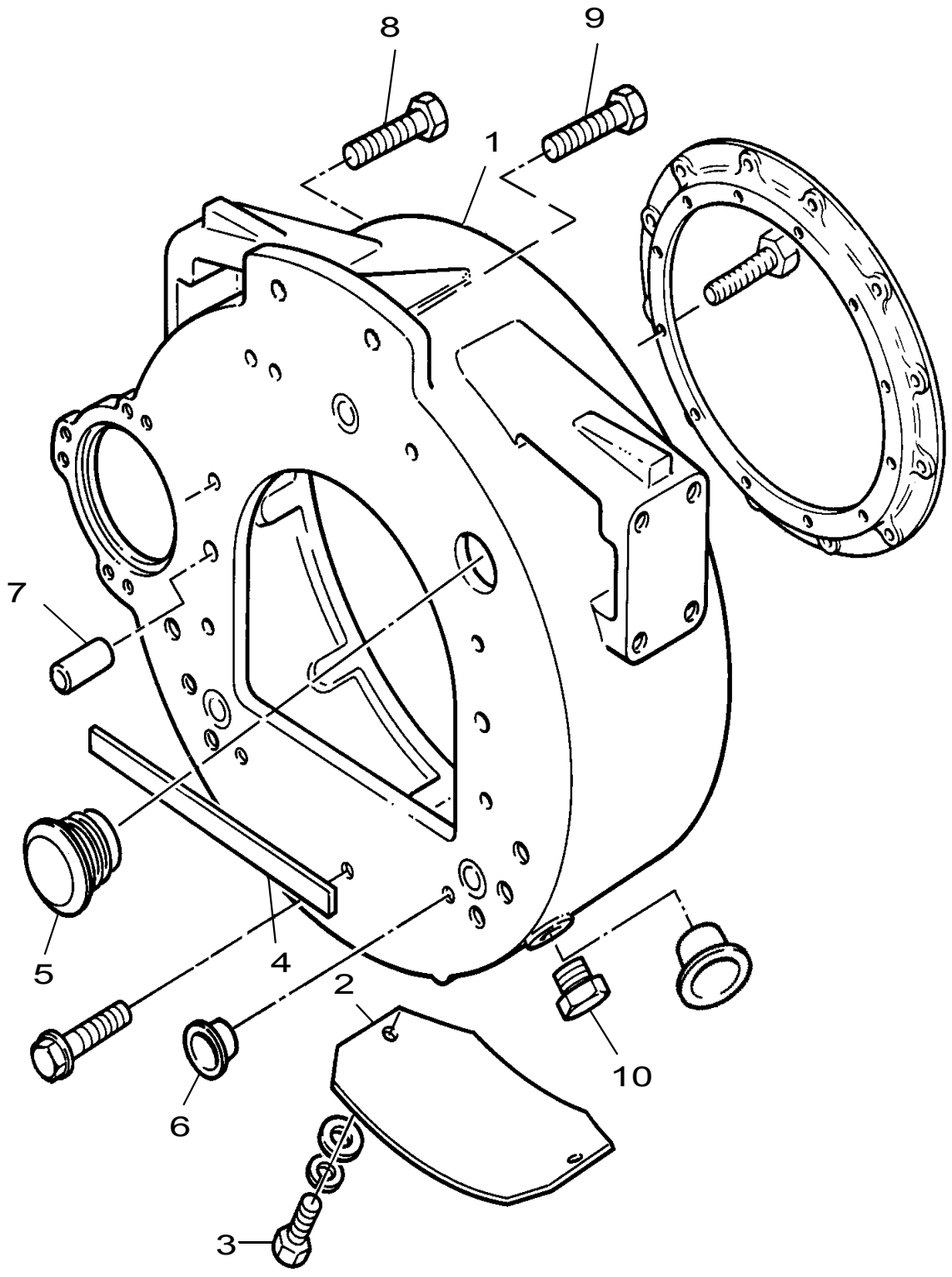

Flywheel Housing	Plate B
	CDH00705

Item	Part No.	References	Qty.	Description	Notes
1	3713M049	a.	1	FLYWHEEL HOUSING	(A)
2	36212132		1	PLATE	
3	2314H102	2314H101	2	SCREW	
4	36843154		1	SEAL	
5	2487A452		1	PLUG	
6	2487204		3	PLUG	
7	0350025		2	DOWEL	
8	2314J204	2314J004	6	SCREW	(A)
9	2314J603		2	SCREW	
10	2487Y005		1	PLUG	

History

a.

1	3713M042		1	FLYWHEEL HOUSING	(A)

Footnotes

(A)	REFER TO SERVICE BULLETIN NO.52

DDH00889

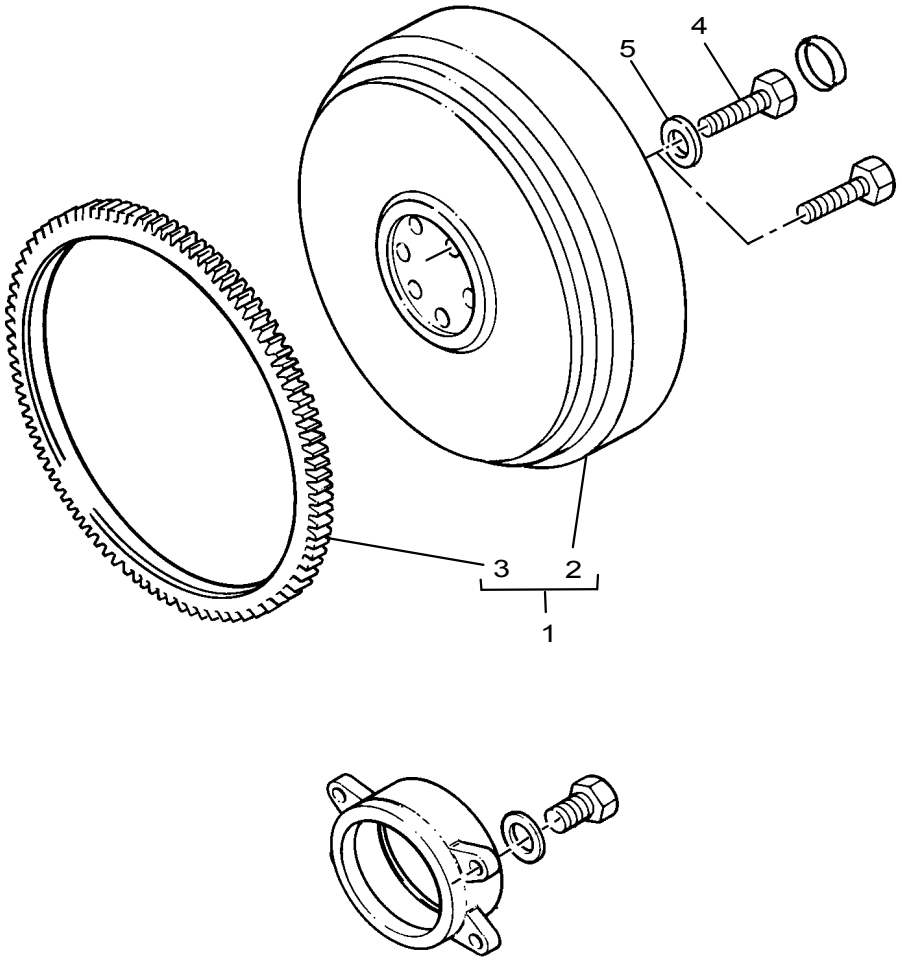

Flywheel & Starter Ring **Plate B**

DDH00889

Item	Part No.	References	Qty.	Description	Notes
1	4111D128		1	FLYWHEEL ASSEMBLY	
2	├	✏ 4111D128	1	FLYWHEEL	
3	└31162121		1	STARTER RING GEAR	
4	0096803	a.	10	SCREW	
5	33117127	a.	10	WASHER	

History

a.

4	0096803	12	SCREW	
5	33117127	12	WASHER	

Starter Motor	Plate A
●○ EDH00527	EDH00936

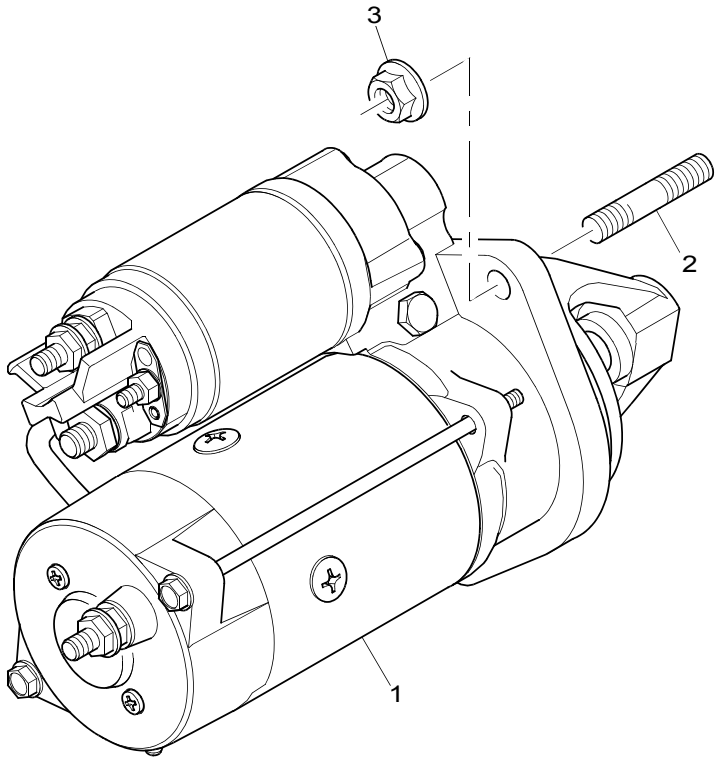

Starter Motor	Plate A

●○ EDH00527	EDH00936

Item	Part No.	References	Qty.	Description	Notes
1	2873K621		1	STARTER MOTOR	
2	2313C078		3	STUD	
3	2318A604		3	NUT	

Fan Drive	Plate C
	FBH00423

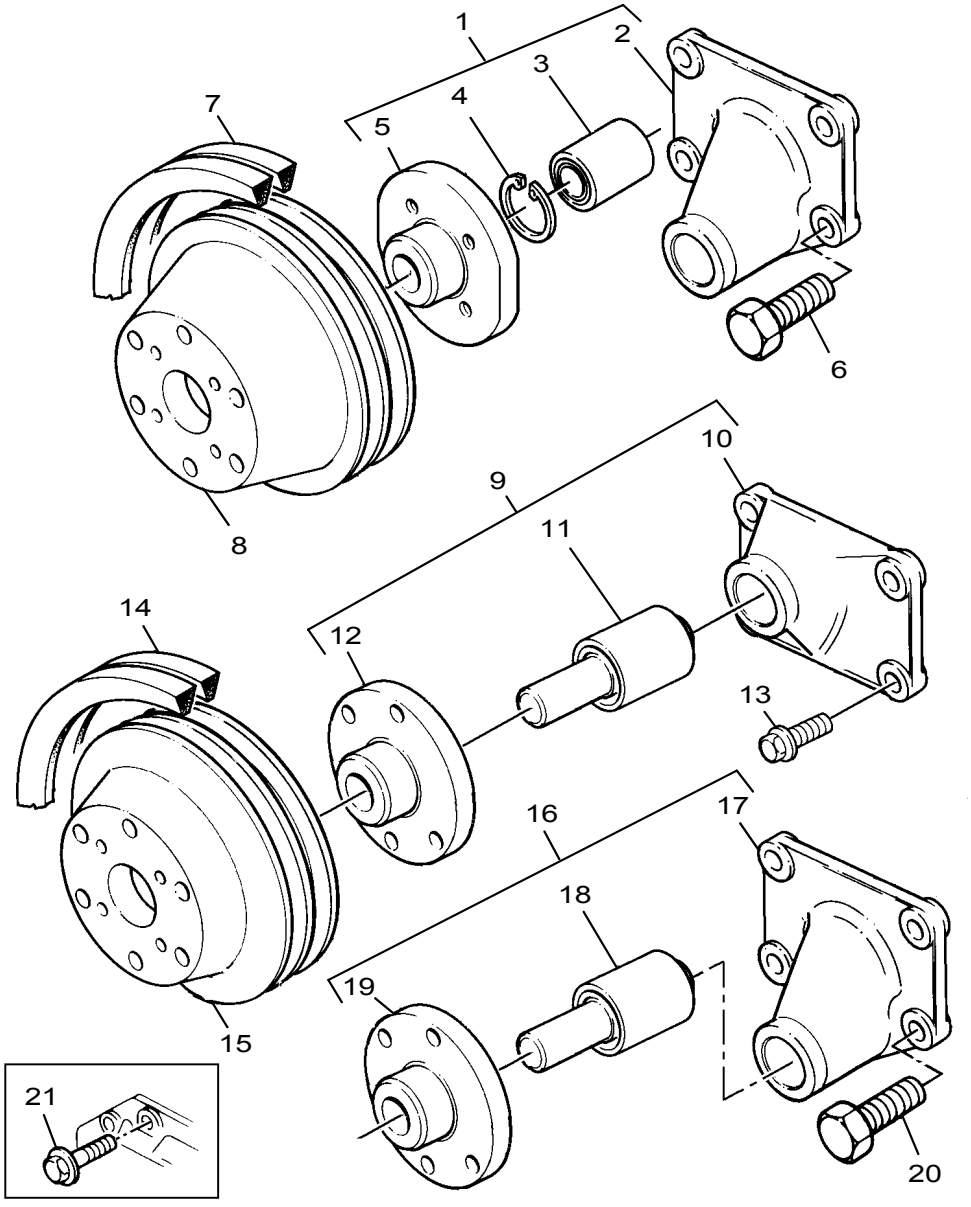

Fan Drive	Plate C
	FBH00423

Item	Part No.	References	Qty.	Description	Notes
15	3115C113		1	FAN DRIVE PULLEY	
16	4113H074		1	FAN DRIVE HOUSING	
17		✏ REF 16	1	HOUSING	
18		✏ REF 16	1	BEARING	
19		✏ REF 16	1	HUB	
20	2314J015		4	SCREW	

Lubricating Oil Sump	Plate L
	GBH01780

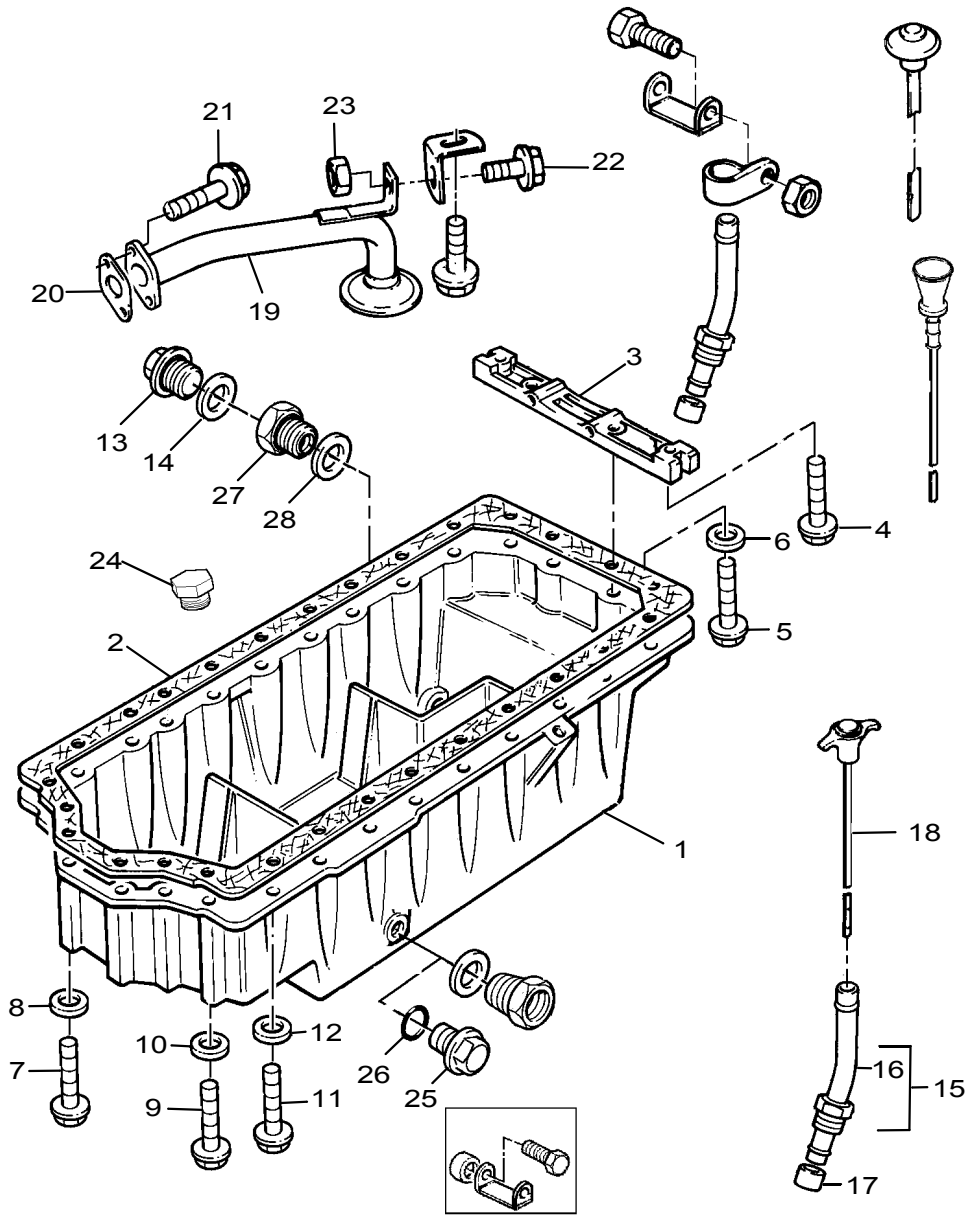

Lubricating Oil Sump **Plate L**

GBH01780

Item	Part No.	References	Qty.	Description	Notes
1	3787H403		1	SUMP	
2	3681M005		1	GASKET - SUMP	
3	3627P043	↦ U764752H c.	1	BRIDGE PIECE	
4	2311D039		2	SCREW	
5	2314H034		2	SCREW	
6	33134113		2	WASHER	
7	2314H020		4	SCREW	
8	33134113		4	WASHER	
9	2314H020		2	SCREW	
10	33134113		2	WASHER	
11	2314H004		20	SCREW	
12	33134113		20	WASHER	
13	32186405		1	PLUG	
14	0920156		1	WASHER	
15	3577A125		1	TUBE ASSEMBLY	
16	└	⇨ 3577A125	1	TUBE	
17	33812116		1	OLIVE	
18	3178C074		1	DIPSTICK	
19	3575K015	b.	1	PIPE - OIL SUCTION	
20	3683H005		1	GASKET	
21	2314H004		2	SCREW	
22	2314H002	e.	1	SCREW	
23	2318A603		1	NUT	
24	2487A018	a.	1	PLUG	
25	2487096		1	PLUG	
26	2415715		1	SEAL - O RING	
27	33534131		1	ADAPTOR	
28	0920156		1	WASHER	

History

a.

24	2431A016		1	PLUG

b.

19	3575K006		1	OIL PIPE

c. ⇥ U764751H

3	3627P023		1	BRIDGE PIECE

d.

	3645A004		1	CLIP
	2314H002		1	SCREW

e. General History Section

22	2314H002		1	SCREW

Lubricating Oil Sump	Plate Z
	GBH01780

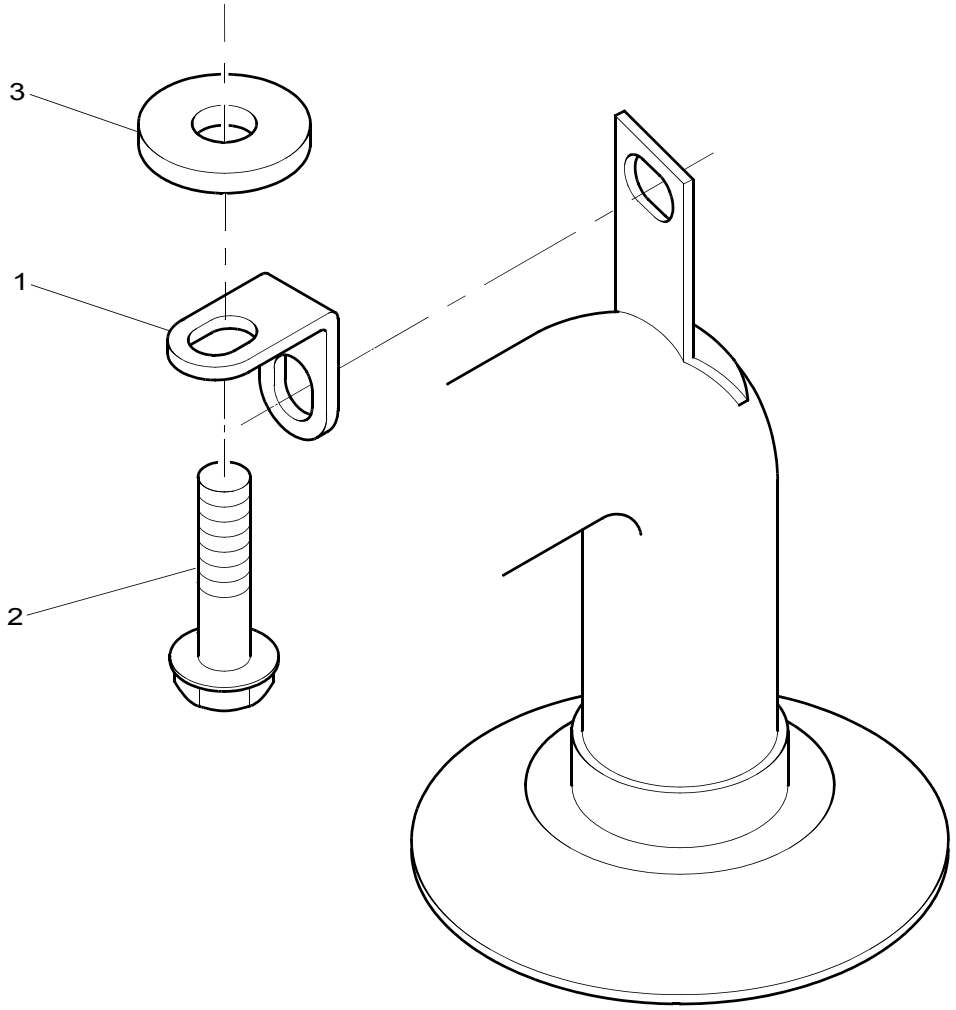

Lubricating Oil Sump	Plate Z
	GBH01780

Item	Part No.	References	Qty.	Description	Notes
1	3641A005		1	BRACKET	
2	2314H003		1	SCREW	
3	0920433		1	WASHER	

Lubricating Oil Filler & Breather	Plate B
	HBH01342

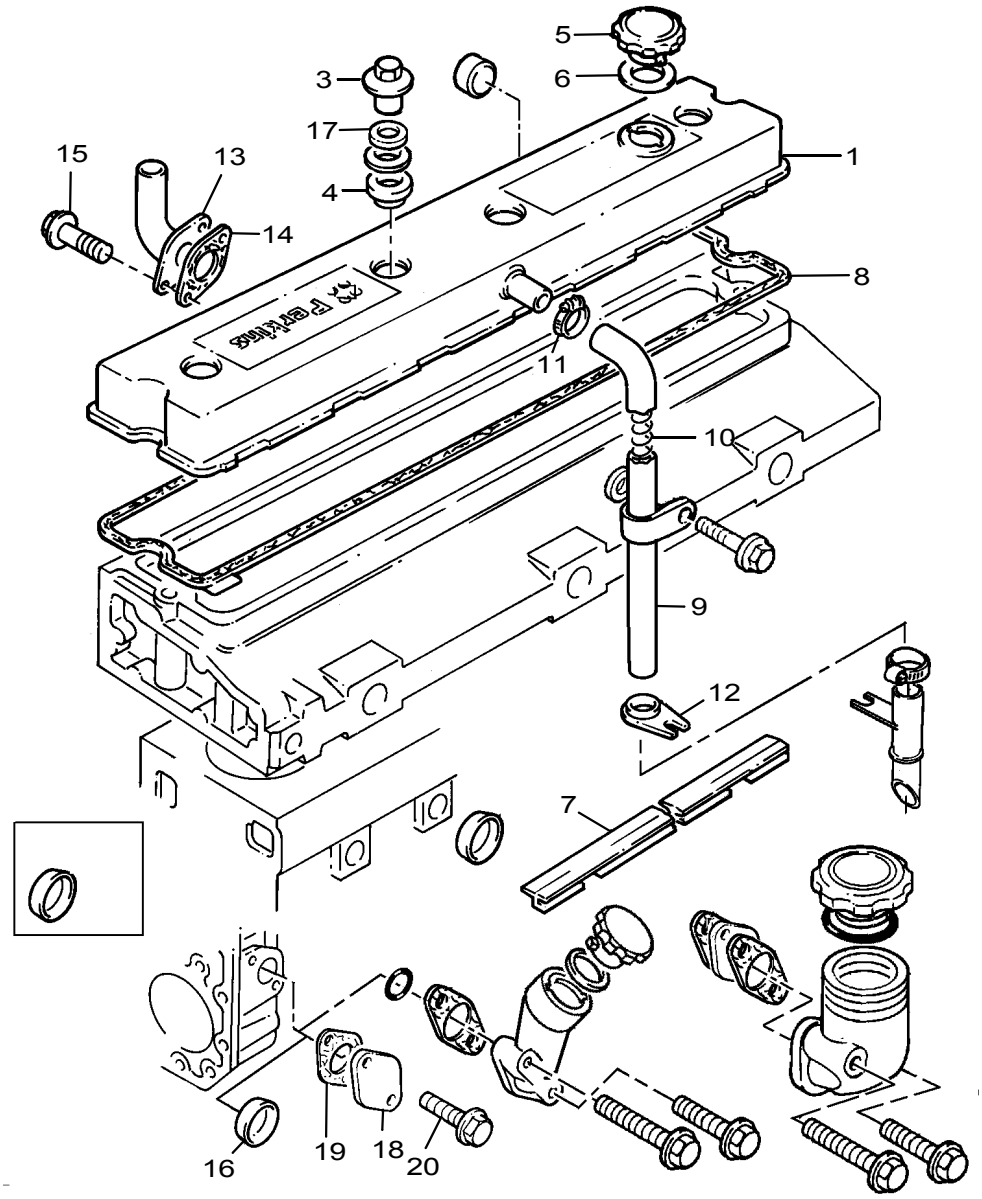

Lubricating Oil Filler & Breather **Plate B**

HBH01342

Item	Part No.	References	Qty.	Description	Notes
1	4142X026	●○ 3718X715	1	CYLINDER HEAD COVER	
2	└3681C003		1	GASKET - CYL. HEAD COVER	
3	3274A003		4	NUT	
4	33817135	●○ 33817132	4	SEAL	
5	4142X099	●○ 3781A011	1	OIL FILLER CAP	
6	└2415A131		1	SEAL - O RING	
7	3687A508		1	GASKET - IND MANIFOLD	
8	3681C003		1	GASKET - CYL. HEAD COVER	
9	33872519		1	PIPE - BREATHER	
10	31754119		1	SPRING	
11	21825195	●○ 2481863	1	CLIP	
12	36241123		1	SUPPORT BRACKET	
13	3571C014		1	OIL PIPE	
14	36833152		1	GASKET	
15	2314H003		2	SCREW	
16		●○ 3317M001	1	STRAINER	
17	0920009		4	WASHER	
18	3617A001	→| U741030G	1	PLATE	
19	3683H006	→| U741030G	1	GASKET	
20	2314H002	●○ 2314H003	2	SCREW	

History

a. →| 31/07/2001

32416118	●○ 32418122 ●○ 0650577	1	PLUG	

Lubricating Oil Filler & Breather	Plate X
↦ U741031G	HBH01342

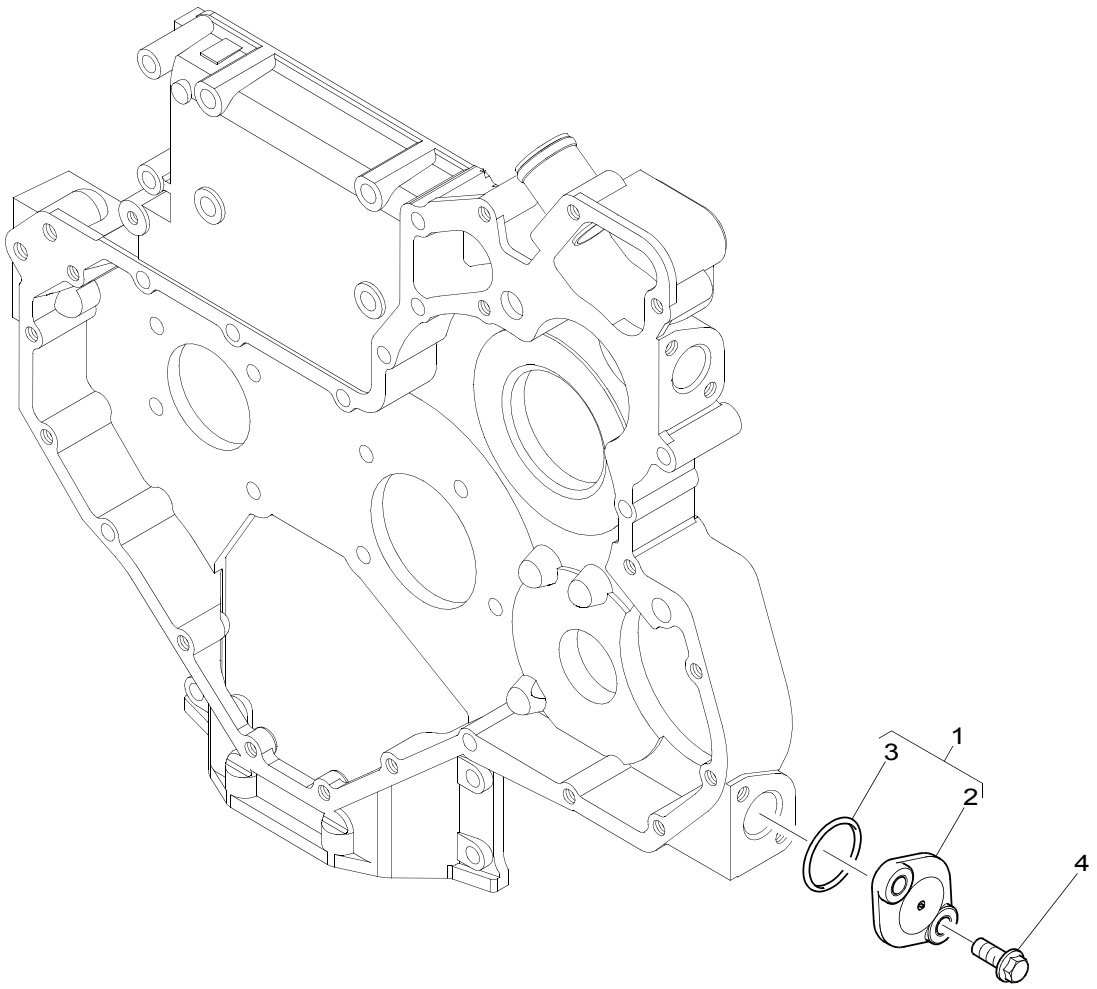

Lubricating Oil Filler & Breather **Plate X**

↦ **U741031G**	**HBH01342**

Item	Part No.	References	Qty.	Description	Notes
1	4148K002		1	BLANKING PLATE	
2	┣	✏ 4148K002	1	BLANKING PLATE	
3	┗2415B121		1	SEAL - O RING	
4	2314H003		2	SCREW	

Lubricating Oil Filter & Integral Oil Cooler	Plate A
	JBH01331

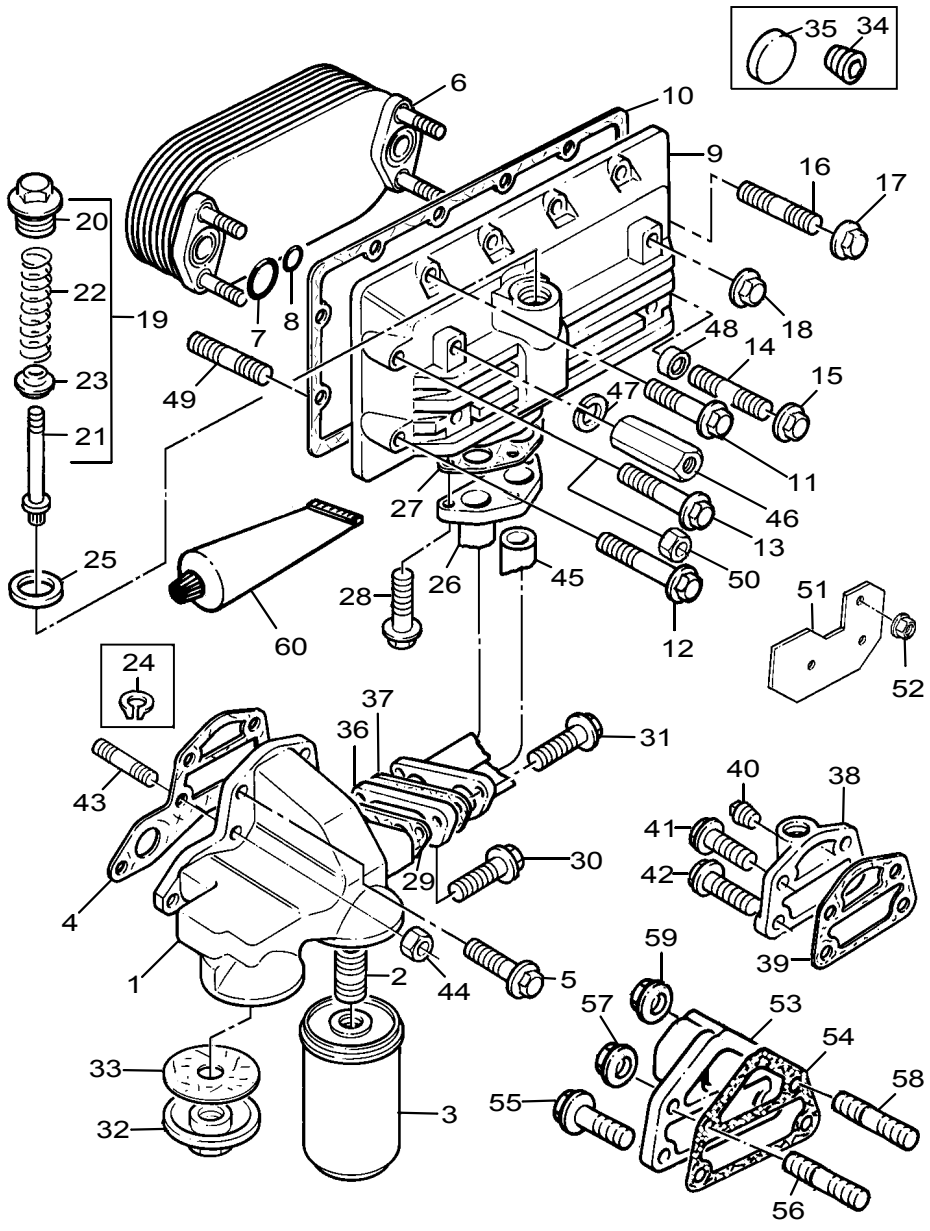

Lubricating Oil Filter & Integral Oil Cooler **Plate A**

JBH01331

Item	Part No.	References	Qty.	Description	Notes
1	4134E031	●○ 3773P172	1	OIL FILTER HEAD	
2	└33554128		2	CONNECTION	(A)
2	33286139		2	CONNECTION	(B)
3	2654403		2	OIL FILTER	
4	3687W006		1	GASKET - OIL FILTER HEAD	
5	2314J003		5	SCREW	
6	2486A971	→I U647520C	1	OIL COOLER	
7	2415H031	→I U647520C	2	SEAL - O RING	
8	2415B402	→I U647520C	4	SEAL - O RING	
9	3771X141	→I U647520C ●○ 3771X103	1	HOUSING	
10	3684R011	●○ 3684R006	1	GASKET - OIL COOLER	
11	2314H003	→I U647520C	9	SCREW	
12	2314K159	→I U647520C	1	SCREW	
14	2313M058	→I U647520C	1	STUD	
15	2318A603	→I U647520C	1	NUT	
16	2313M058	→I U647520C	1	STUD	
17	2318A603	→I U647520C	1	NUT	
19	4138A035		1	RELIEF VALVE	(C)
20	├3218V005		1	CAP	
21	├3212V001		1	SCREW	
22	├31744151		1	SPRING	
23	└3342A303		1	PLUNGER	
25	2411A024		1	WASHER	(C)
26	2483A007	→I U647520C ●○ 2483A005	1	OIL PIPE	
27	3686A511	→I U647520C	1	GASKET	
28	2314J010	→I U647520C	3	SCREW	
29	3686A511		1	GASKET	
31	2314H004		3	SCREW	
38	3766P092		1	ADAPTOR	
39	3686T006		1	GASKET - OIL FILTER HEAD	
41	2314J007		1	SCREW	
42	2314J003		3	SCREW	
45	2483A006	→I U647520C	1	OIL PIPE	
60	1861135		1	LOCTITE	

Footnotes

(A)	USED ONLY WITH 4134E031
(B)	USED ONLY WITH 3773P172
(C)	USED ONLY WITH 3771X103

Lubricating Oil Filter & Integral Oil Cooler	Plate V
	JBH01331

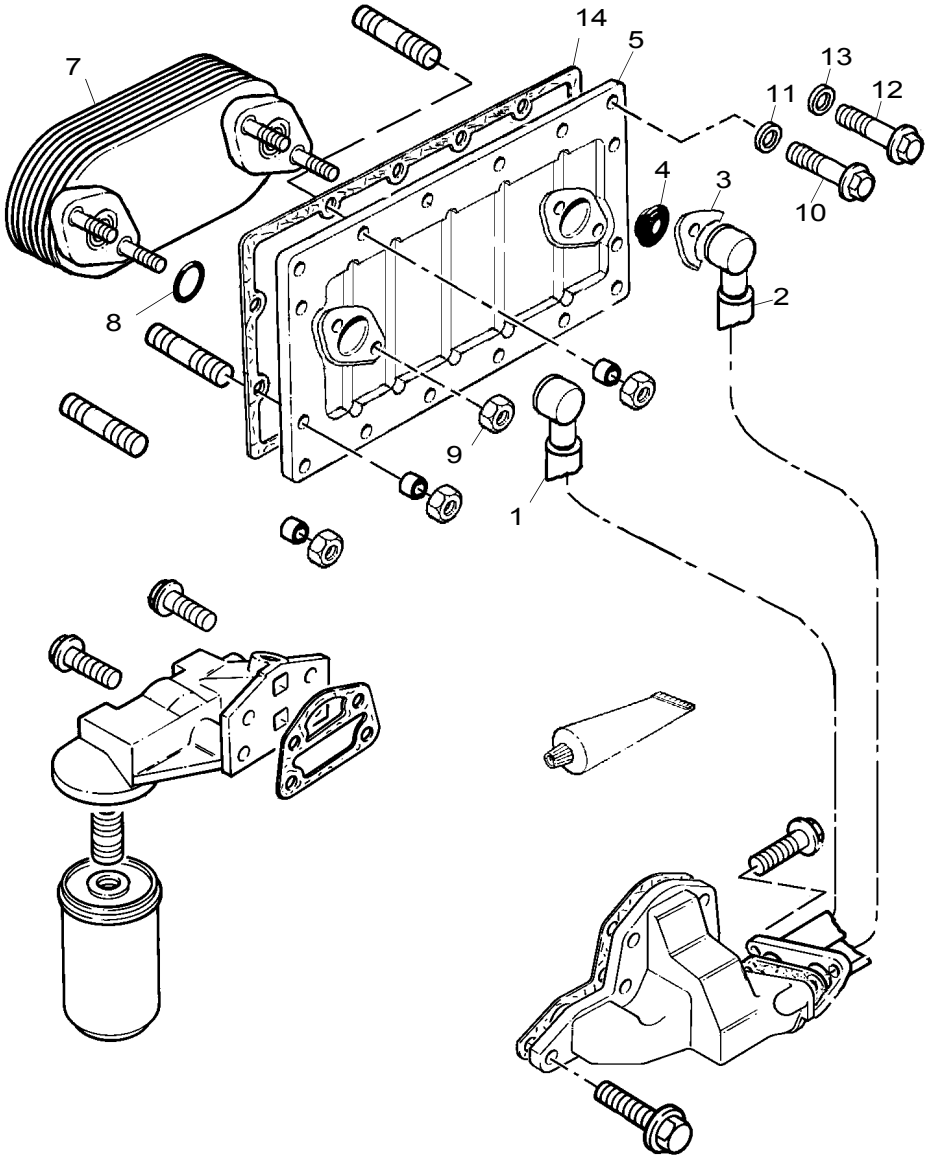

Lubricating Oil Filter & Integral Oil Cooler **Plate V**

JBH01331

Item	Part No.	References	Qty.	Description	Notes
1	2483A032	e. g.	1	FLEXIBLE PIPE	
2	2483A033	e. g.	1	FLEXIBLE PIPE	
3	3751K121	→ U647521C	4	FLANGE	
4	2418F603	e.	2	SEAL - O RING	
5	2486A989	→ U786029J c. d.	1	HOUSING	
6	2486A993	a.	1	OIL COOLER	
7	2486A992	b.	1	OIL COOLER	
8	3688X008	→ U647521C	2	SEAL - O RING	
9	2318A603	→ U647521C	4	NUT	
10	2314H002	→ U786029J d. f.	11	SCREW	
11	2415D002		13	WASHER	
12	2314H002	→ U786029J d. f. f. f.	3	SCREW	
13	2415D002		3	WASHER	
14	3684N028	→ U786029J h.	1	GASKET - OIL COOLER	

History

a.

6	2486A980	→ U714389E	1	OIL COOLER

b.

7	2486A981	→ U647521C ●○ 2486A977	1	OIL COOLER

c.

5	2486A984	→ U786029J	1	HOUSING

d. →| **U786028J**

5	2486A976	→ U647521C	1	HOUSING
10	2314H032		13	SCREW
12	2314H032		3	SCREW

e.

1	2483A115		1	FLEXIBLE PIPE
2	2483A116		1	FLEXIBLE PIPE
4	2418F602	→ U647521C	2	SEAL

f.

10	2314H002	→ U647521C	13	SCREW
12	2313M058	→ U647521C	3	STUD
12	2318A603	→ U647521C	3	NUT
12	33134418	→ U647521C	3	SPACER

g.

1	2483A015	→ U647521C	1	OIL PIPE
2	2483A016	→ U647521C	1	OIL PIPE

Lubricating Oil Filter & Integral Oil Cooler	Plate V
	JBH01331

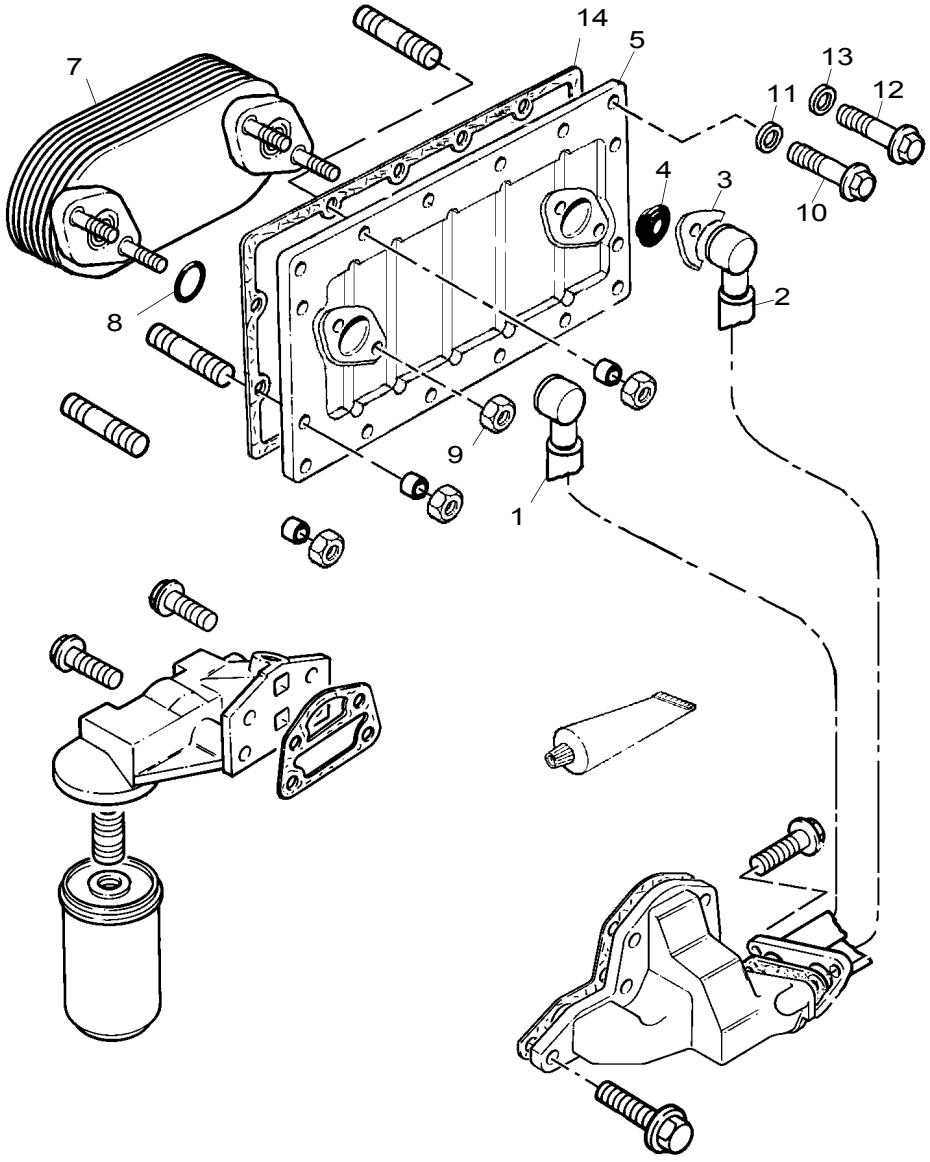

Lubricating Oil Filter & Integral Oil Cooler **Plate V**

JBH01331

Item	Part No.	References	Qty.	Description	Notes
h. General History Section					
14	3684R012	↦ U647521C ⇥ 21826038	1	GASKET - OIL COOLER	

Front End Drive Input	Plate A
	KBH00517

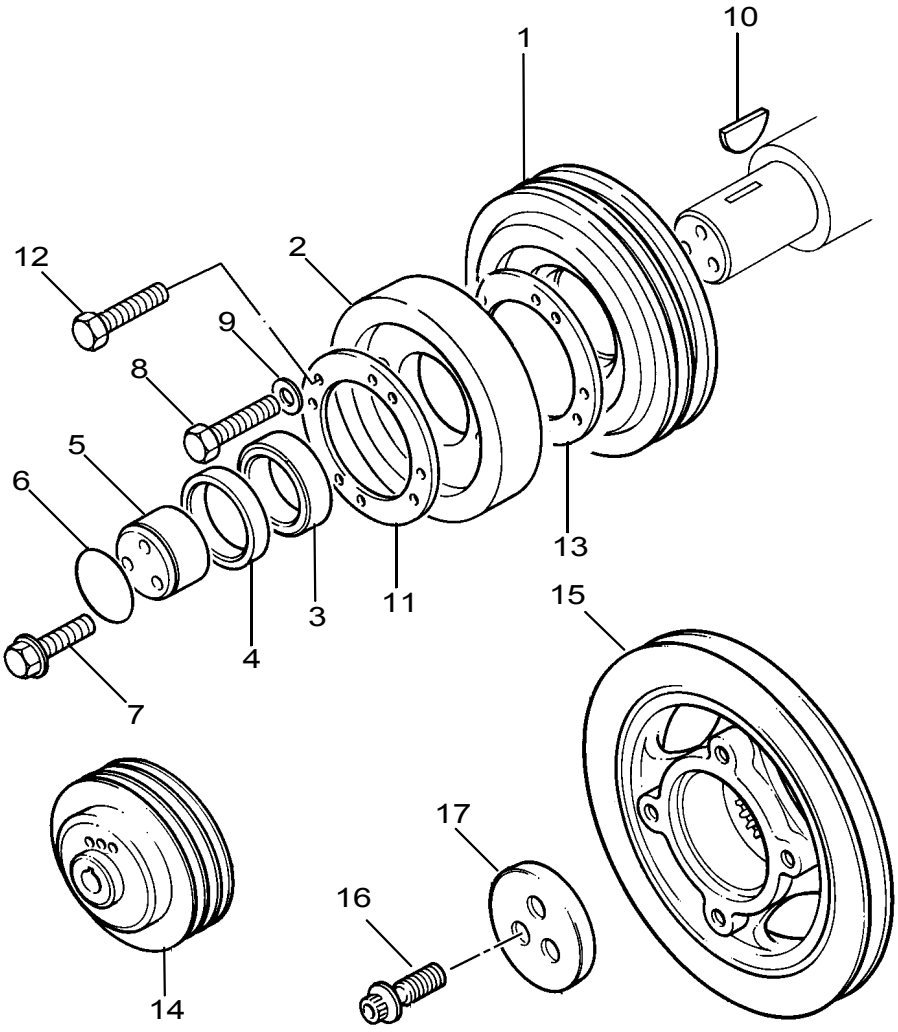

Front End Drive Input	Plate A
	KBH00517

Item	Part No.	References	Qty.	Description	Notes
1	3115T043		1	CRANKSHAFT PULLEY	
3	3311X002		1	SPACER	
4	2417711		1	RING	
5	32418313		1	THRUST PLATE	
6	2415638		1	SEAL - O RING	
7	32186137		3	BOLT	
10	0500005		1	WOODRUFF KEY	

Water Pump, Thermostat & Heat Exchanger	Plate B
	LBH01967

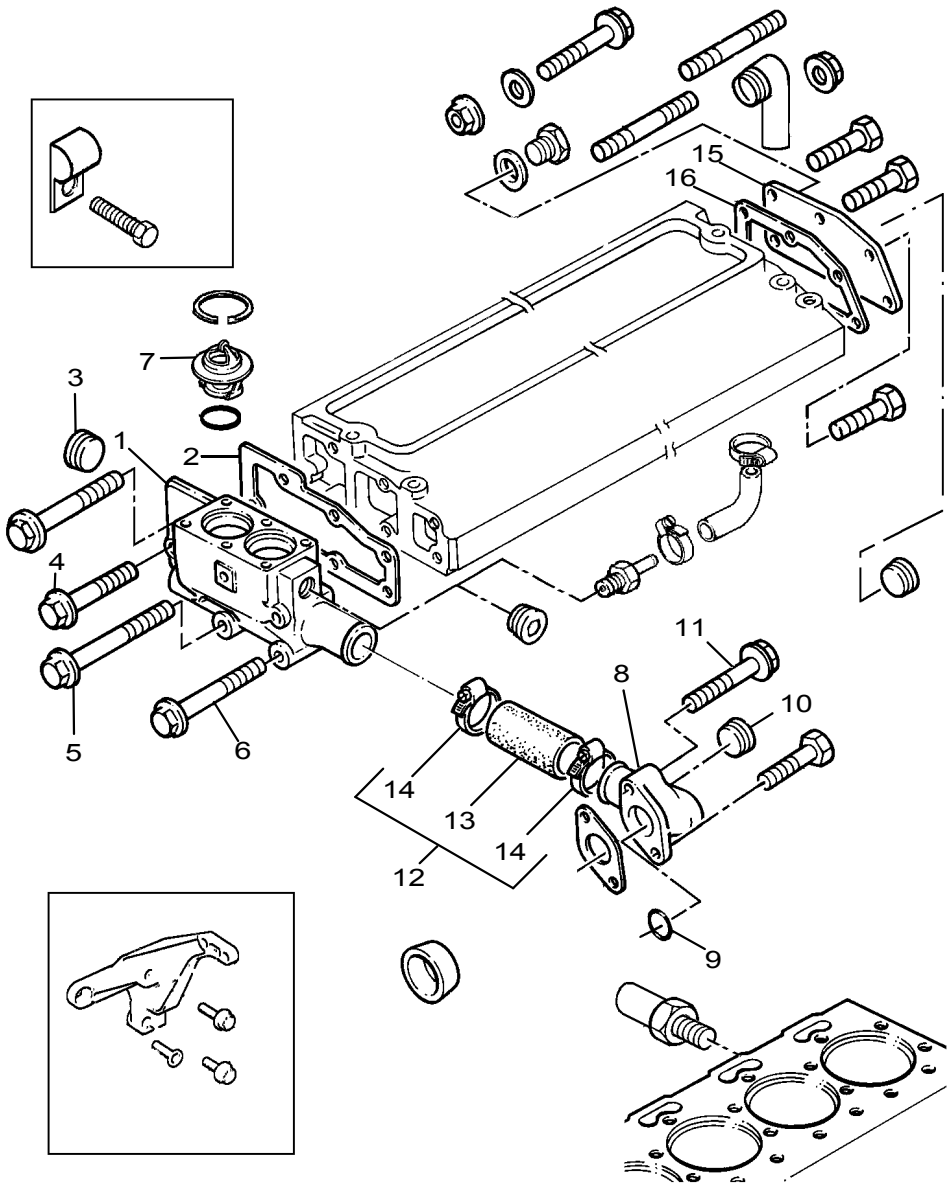

Water Pump, Thermostat & Heat Exchanger **Plate B**

LBH01967

Item	Part No.	References	Qty.	Description	Notes
1	3771K121		1	THERMOSTAT HOUSING	
2	3685F005		1	GASKET - THERMOSTAT HSG	
3	2431154		2	PLUG	
4	2314H015		1	SCREW	
5	2314H008		2	SCREW	
6	2314J013		2	SCREW	
7	2485613		2	THERMOSTAT	
8	4133L012	a. b.	1	CONNECTION	
9	└2415A076	b.	1	SEAL - O RING	
10	└4148K011	a.	1	PLUG	
11	2314H004		2	SCREW	
12	U5MH0050		1	HOSE KIT	
13	├		1	HOSE	
14	└0180067		1	CLIP	
15	3623K007		1	PLATE	
16	3687M018		1	GASKET	

History

a.

8	4133L012		1	CONNECTION
10	└3781A504		2	BLANKING PLUG

b.

8	4133L012		1	CONNECTION
9	└2415A050		1	SEAL - O RING

LBH01967

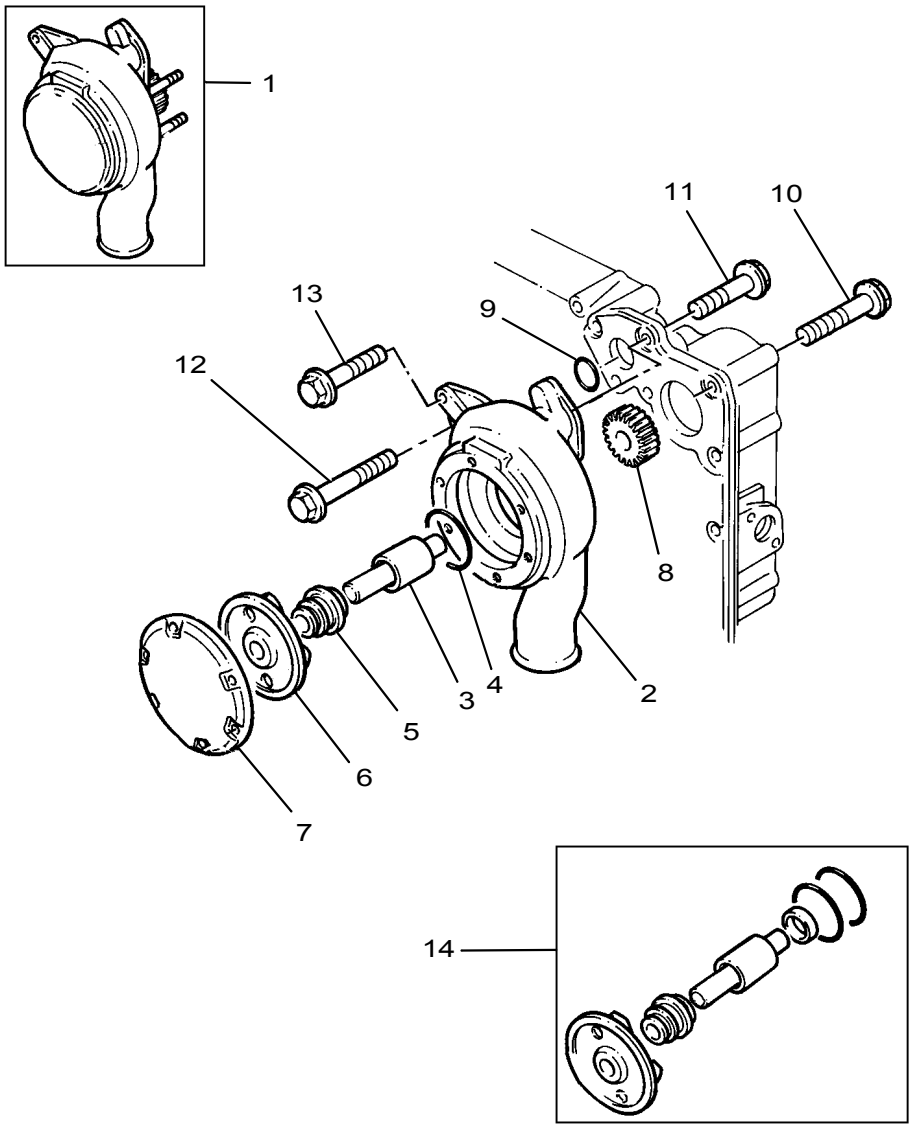

Water Pump, Thermostat & Heat Exchanger	Plate AC
	LBH01967

Item	Part No.	References	Qty.	Description	Notes
1	U5MW0160		1	WATER PUMP	
2	—	✏ REF.1	1	BODY	
3	—	✏ REF.14	1	SHAFT	
4	—2415B155		1	SEAL - O RING	(A)
5	—	✏ REF.14	1	SEAL	
6	—	✏ REF.14	1	IMPELLER	
7	—	✏ REF.1	1	COVER	
8	—		1	WATER PUMP GEAR	
9	—2415B152		1	O RING	(A)
9	—2415H494		1	SEAL - O RING	(A)
10	2314H006		1	SCREW	
11	2314N043		3	SCREW	
12	2314H006		1	SCREW	
13	2314H015		1	SCREW	
14	U7LW0151		X	REPAIR KIT - WATER PUMP	
Service Options					
1	U5MW0160R		1	WATER PUMP - EXCHANGE	

Footnotes	
(A)	ALSO INCLUDED IN REPAIR KIT

Water Outlet & Inlet	Plate A
	LDH00519

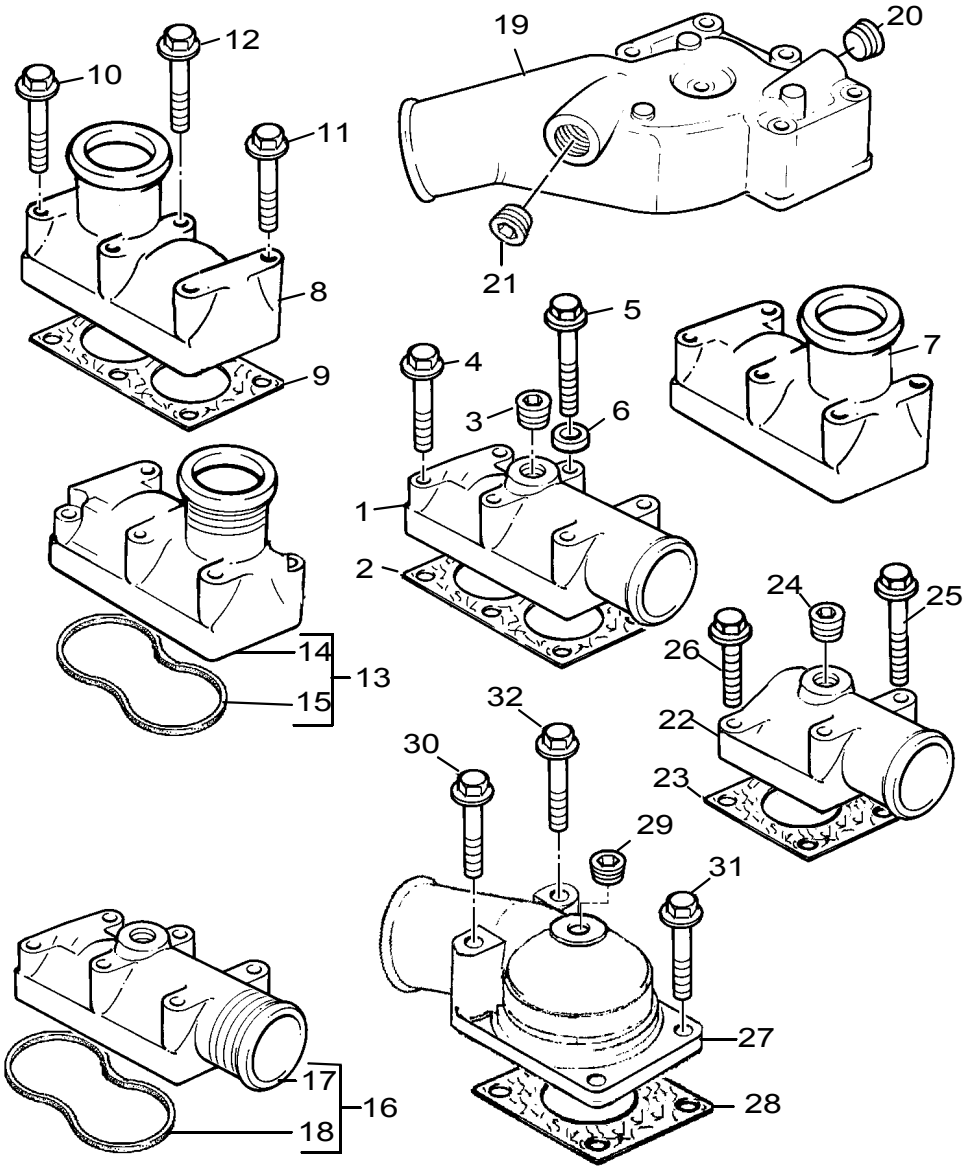

Water Outlet & Inlet	Plate A
	LDH00519

Item	Part No.	References	Qty.	Description	Notes
9	3684A004		1	GASKET - THERMOSTAT HSG	(A)
11	2314H008		1	SCREW	
12	2314H010		3	SCREW	
13	4133L011	●○ 3771K044	1	CONNECTION	(B)
14	└	⇨ REF.13	1	CONNECTION	
15	3687W017	●○ 3684A004	1	SEAL - WATER OUTLET	(C)

Footnotes	
(A)	USED ONLY WITH 3771K044
(B)	WAS 3771K044.USE 4133L011,3687W017
(C)	USED ONLY WITH 4133L011

Fan & Extension	Plate B
	MDH00957

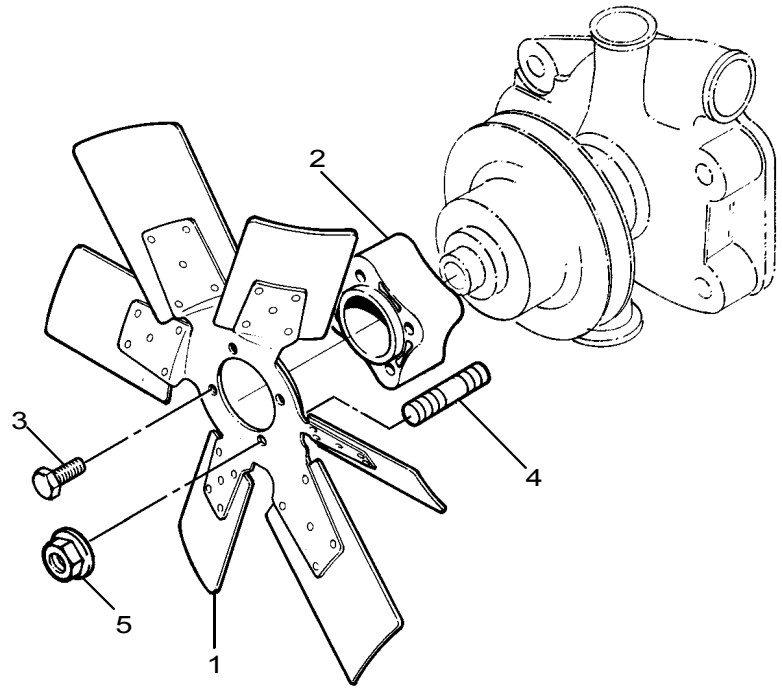

Fan & Extension	Plate B
	MDH00957

Item	Part No.	References	Qty.	Description	Notes
1	2485C520		1	FAN	

Fan & Extension	Plate C
	MDH01094

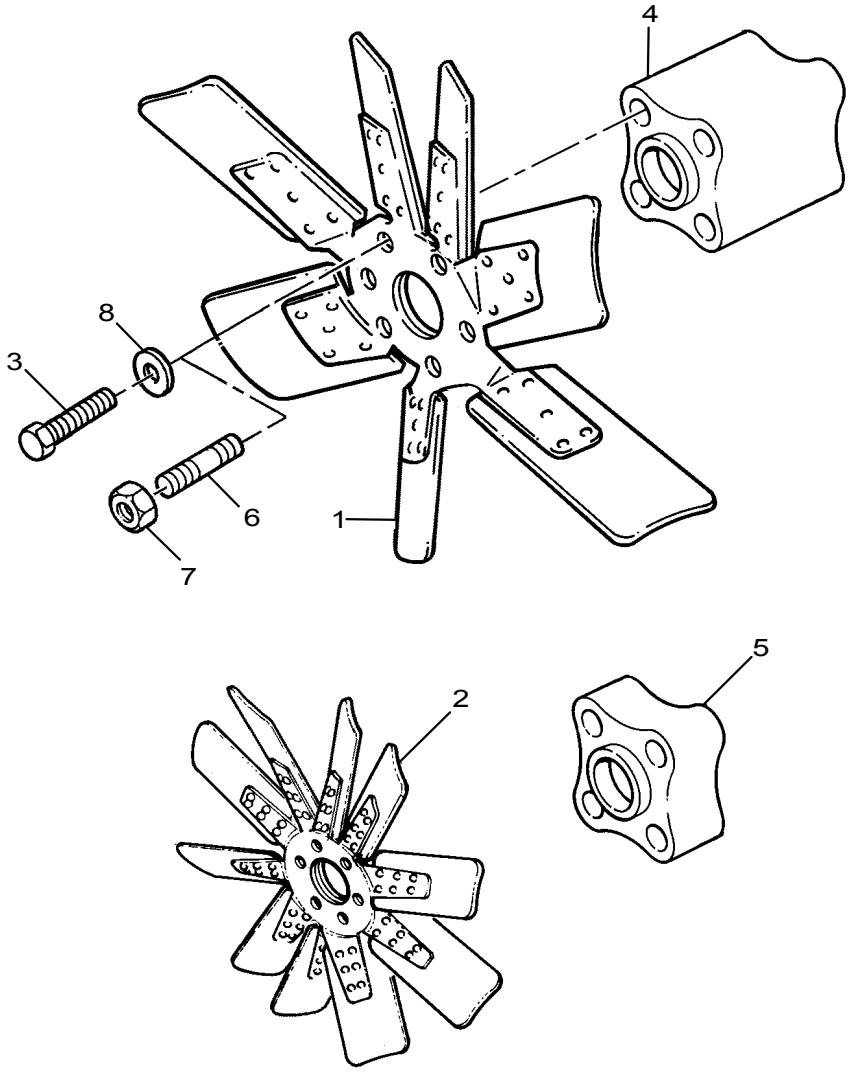

Fan & Extension	Plate C
	MDH01094

Item	Part No.	References	Qty.	Description	Notes
4	3748W251		1	EXTENSION	
6	2313H242		4	STUD	
7	2318D208		4	NUT	

Alternator & Generator	Plate A
→ U856358N	NDH01961

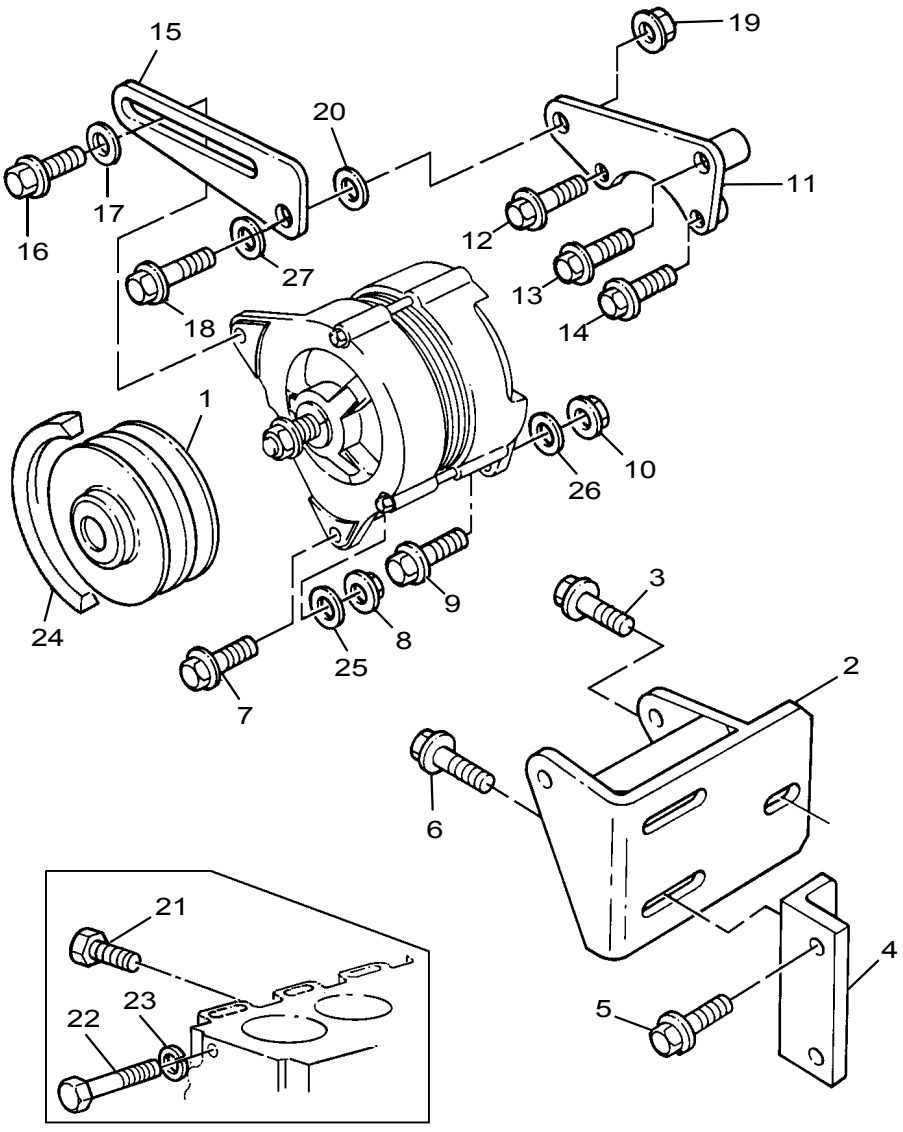

Alternator & Generator	Plate A
→| U856358N	NDH01961

Item	Part No.	References	Qty.	Description	Notes
1	3115A041		1	ALTERNATOR PULLEY	
2	3827H021		1	BRACKET	
3	2314J003		1	SCREW	
4	3822A021		1	BRACKET	
5	2314H013		2	SCREW	
6	2314H003		2	SCREW	
7	2314H006	●○ 2314H005	1	SCREW	(A)
8	2318D208	●○ 2318A663	1	NUT	(B)
9	2314H008	●○ 2314H007	1	SCREW	(C)
10	2318D208	●○ 2318A663	1	NUT	(D)
11	3861A013		1	BRACKET	
12	2314H008		1	SCREW	
13	2314H017		1	SCREW	
16	2314H004		1	SCREW	
17	0920497		1	WASHER	
18	2314J004	●○ 2314J003	1	SCREW	(E)
19	2318D240	●○ 2318A664	1	NUT	(F)
20	0920497		1	WASHER	
21	2314H005		1	SCREW	
22	2314J004		2	SCREW	
24	2614B658		1	BELT	(G)
25	2131A008		1	WASHER	
26	2131A008		1	WASHER	
27	2131A010		1	WASHER	

Footnotes	
(A)	WAS 2314H005.USE 2314H006,2318D208,2131A008
(B)	WAS 2318A663.USE 2314H006,2318D208,2131A008
(C)	WAS 2314H007.USE 2314H008,2318D208,2131A008
(D)	WAS 2318A663 USE 2314H008 , 2318D208 , 2131A008
(E)	WAS 2314J003 - USE 2314J004/2318D240/2131A010
(F)	WAS 2318A664 - USE 2314J004/2318D240/2131A010
(G)	SERVICED IN PAIRS

Alternator & Generator	Plate C
→| U856358N	NDH01961

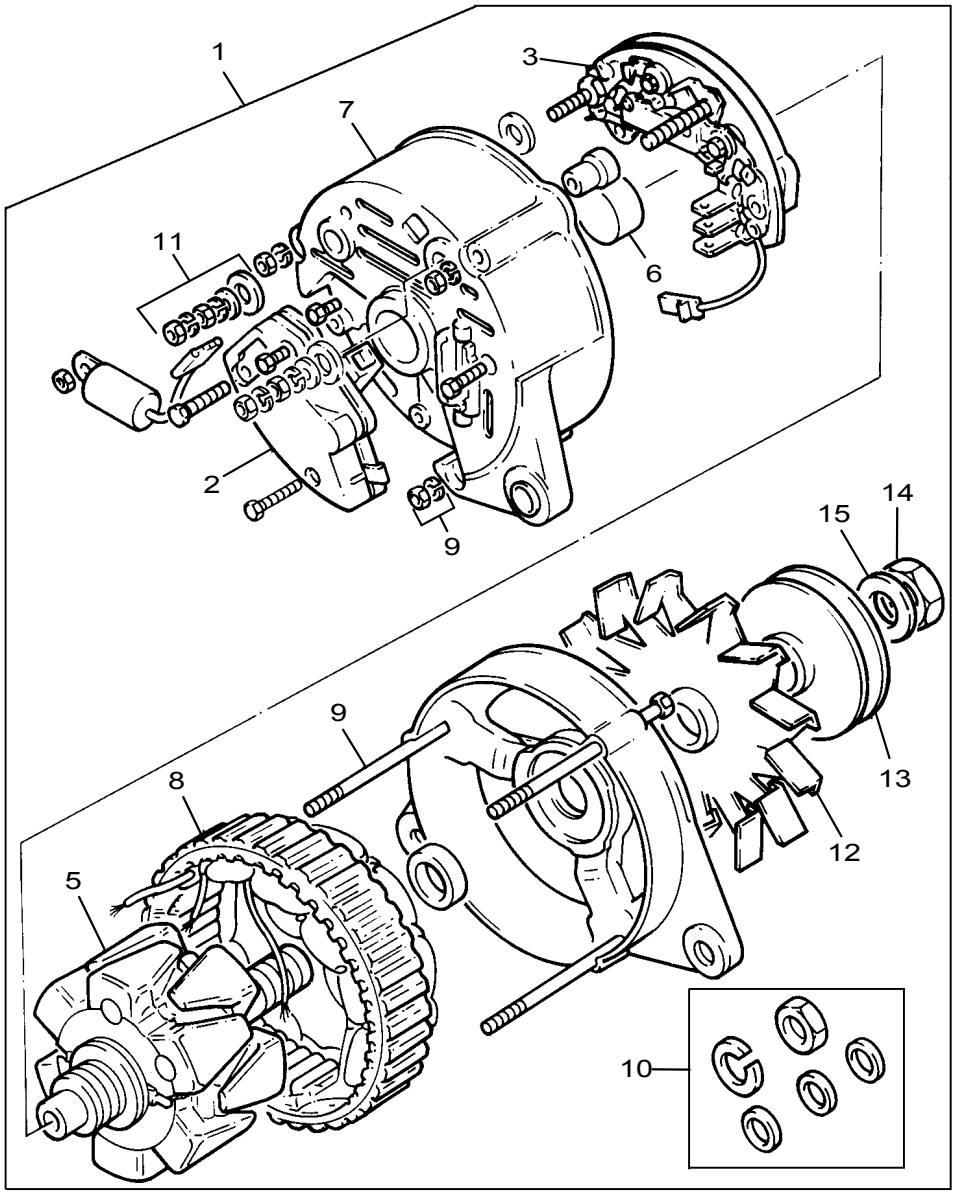

Alternator & Generator	Plate C
→| U856358N	NDH01961

Item	Part No.	References	Qty.	Description	Notes
1	2871A141	↻	1	ALTERNATOR	
2	28710252		1	REGULATOR	
3	28710355	●○ 28710253	1	RECTIFIER	
4	28710254		1	BRACKET	
5	28710255		1	ROTOR - ELECTRIC REPAIR	
6		✏ REF.5	1	BEARING	
7		✏ REF.1	1	COVER	
8	28710258		1	STATOR	(A)
8	28710353		1	STATOR	(B)
9	28710259		1	BOLT KIT	
10	28710260		1	SUNDRY KIT	
14		✏ REF.10	1	NUT	
15		✏ REF.10	1	WASHER	
11	28710261		1	TERMINAL KIT	
12	28710364		1	FAN	
13			1	PULLEY	(C)
Service Options					
1	2871A141R		1	ALTERNATOR	

Footnotes	
(A)	USED ONLY WITH 2871A141/2871A154
(B)	USED ONLY WITH 2871A163
(C)	NOT PART OF ALTERNATOR ASSEMBLY - REFER TO PLATE "B" FOR PULLEY PART NUMBER

Alternator	Plate A
↦ U856359N	NDHY2916

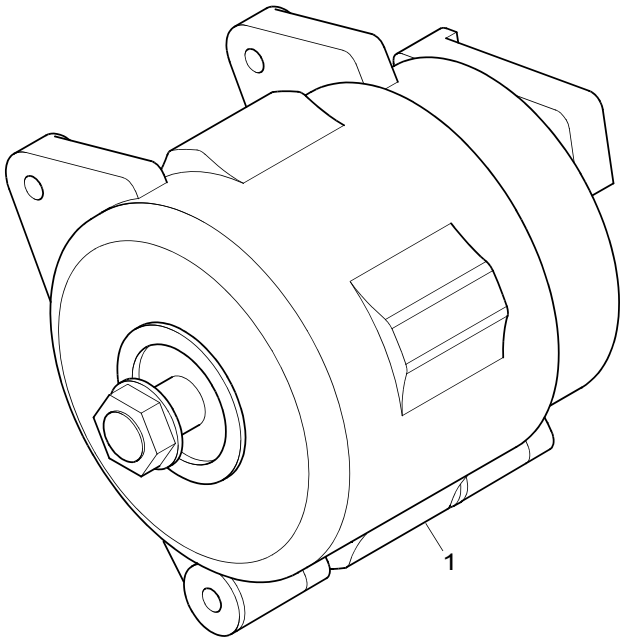

Alternator	Plate A
↦ **U856359N**	**NDHY2916**

Item	Part No.	References	Qty.	Description	Notes
1	2871A306	a.	1	ALTERNATOR	(A)

History					
a.					
1	2871A301		1	ALTERNATOR	(A)

Footnotes	
(A)	BREAKDOWN OF 2871A301 NOT AVAILABLE.

Alternator Bracket & Fixings	Plate A
↦ U856359N	NDHY2916

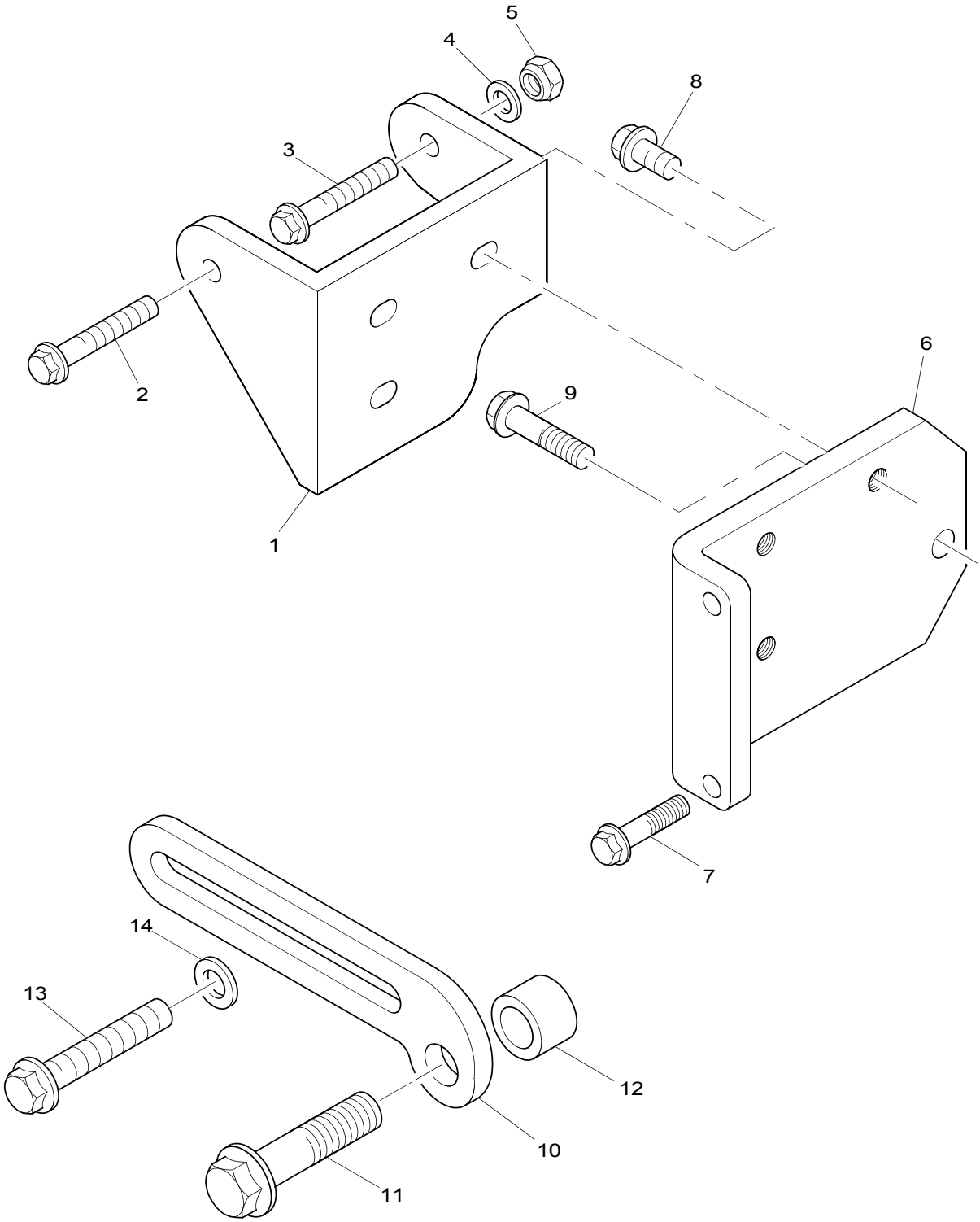

Alternator Bracket & Fixings	Plate A
↦ U856359N	NDHY2916

Item	Part No.	References	Qty.	Description	Notes
1	3828D019		1	ALTERNATOR BRACKET	
2	2314H007		1	SCREW	
3	2314H008		1	SCREW	
4	2131A008		2	WASHER	
5	2318D208		2	NUT	
6	3641V014		1	ALTERNATOR BRACKET	
7	2314H013		2	SCREW	
8	2314H002		3	SCREW	
9	2314J003		1	SCREW	
10	3615A015		1	LEVER	
11	2314J603		1	SCREW	
12	3312K305		1	SPACER	
13	2314H004		1	SCREW	
14	2131A008		1	WASHER	

Alternator Bracket & Fixings	Plate B
↦ U856359N	NDHY2916

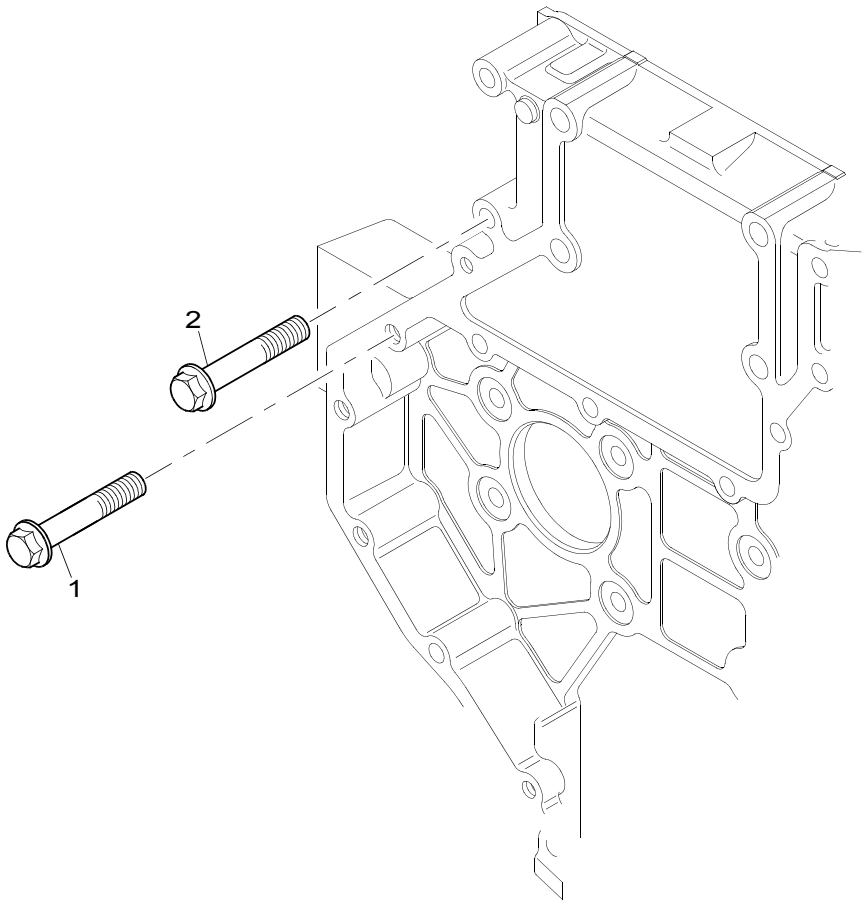

Alternator Bracket & Fixings	Plate B
↦ **U856359N**	**NDHY2916**

Item	Part No.	References	Qty.	Description	Notes
1	2314H005		2	SCREW	
2	2314H013		1	SCREW	

Alternator Bracket & Fixings	Plate C
↦ U856359N	NDHY2916

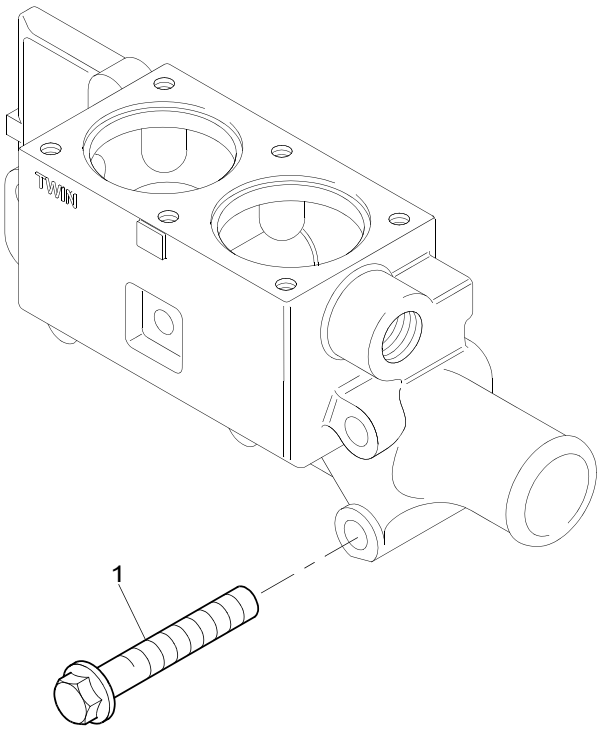

Alternator Bracket & Fixings	Plate C
↦ **U856359N**	**NDHY2916**

Item	Part No.	References	Qty.	Description	Notes
1	2314J004		2	SCREW	

Pulleys	Plate A
↦ U856359N	NDHY2916

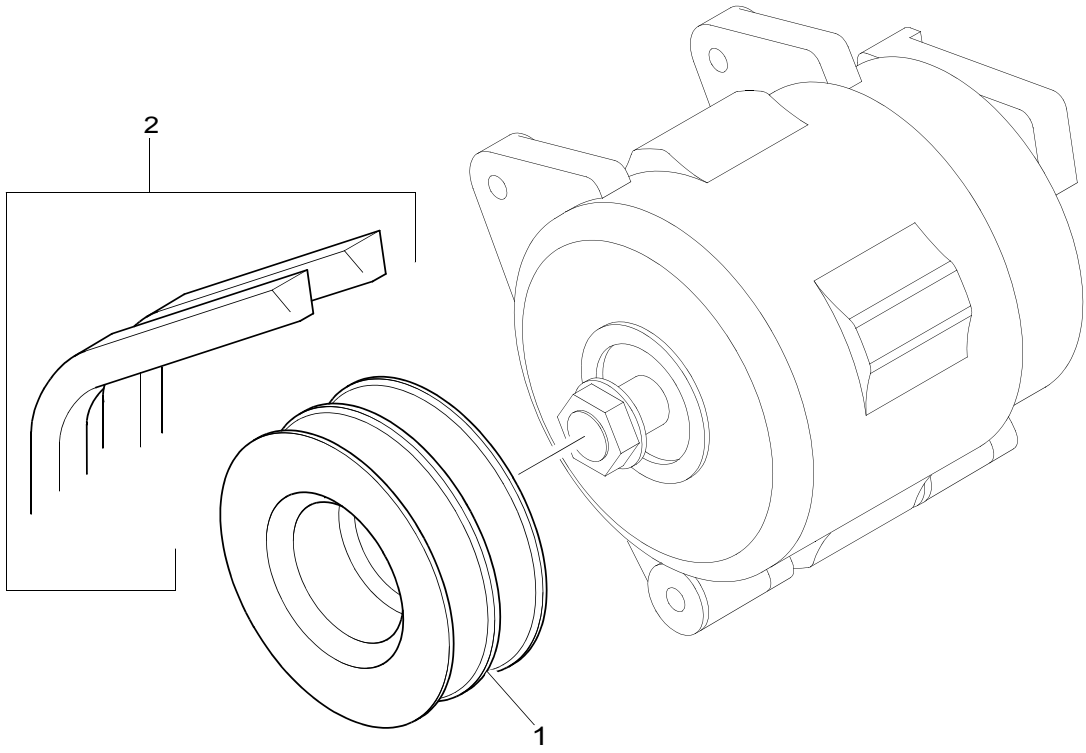

Pulleys	Plate A
↦ **U856359N**	**NDHY2916**

Item	Part No.	References	Qty.	Description	Notes
1	3115A049		1	2 GROOVE ALTERNATOR PUL-	
2	2614B660	a.	1	BELT	(A)

History					
a.					
2	2614B658		1	BELT	(A)

Footnotes	
(A)	SERVICED IN PAIRS

Blanking Plates	Plate A
	QDHY0729

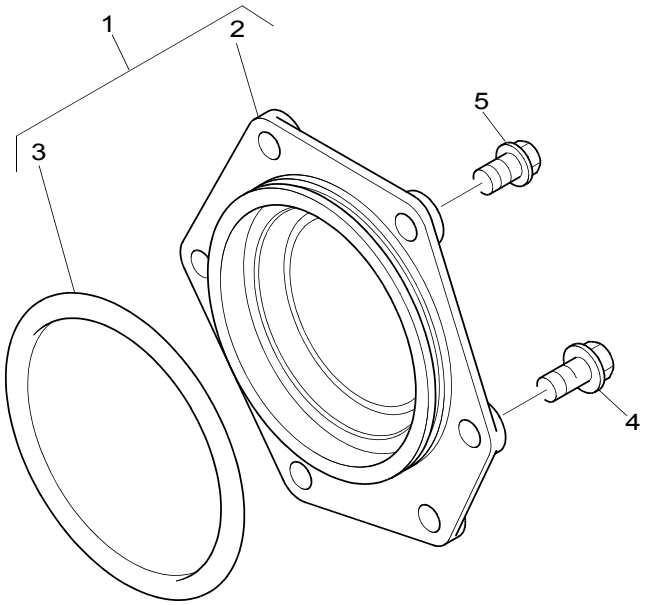

Blanking Plates	Plate A
	QDHY0729

Item	Part No.	References	Qty.	Description	Notes
1	4148K016	a.	1	PLATE	
2	└	4148K016	1	BLANKING PLATE	
3	└2415H549		1	SEAL - O RING	
4	2314H032		5	SCREW	
5	2314J002		1	SCREW	

History

a.

1	4148K006	1	BLANKING PLATE
	└2415H503	1	SEAL - O RING

Blanking Plugs	Plate A
	QDHY0729

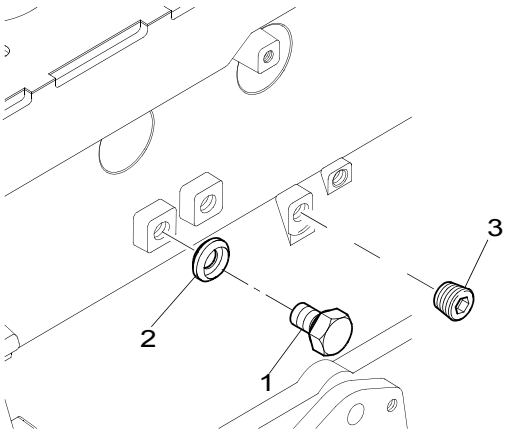

Blanking Plugs	Plate A
	QDHY0729

Item	Part No.	References	Qty.	Description	Notes
1	2314C049		1	SCREW	(A)
2	2415D053		1	WASHER	
3	0650586		1	PLUG	

Footnotes	
(A)	LOCATES IN COMPRESSOR/EXHAUSTER OIL FEED HOLE

Miscellaneous	Plate A
	QDHY0729

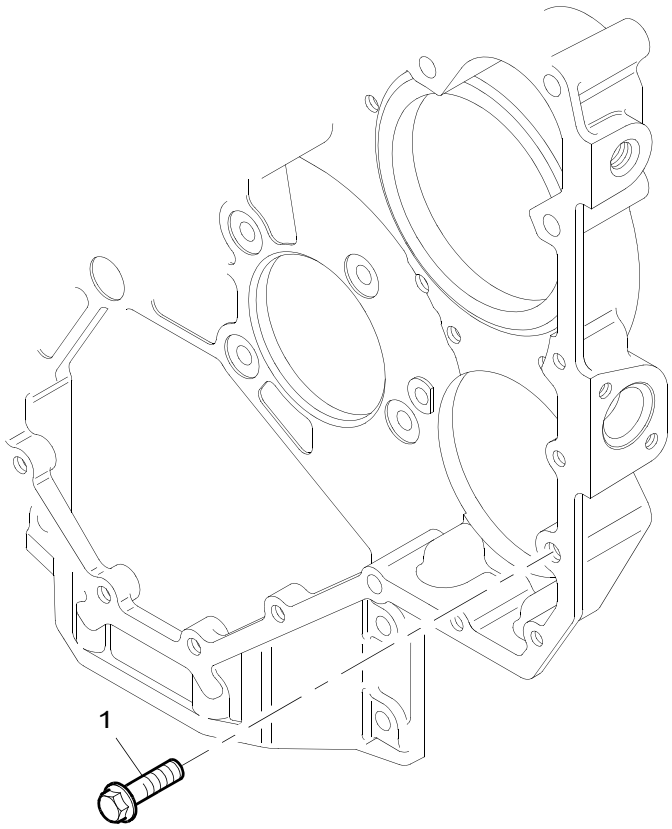

Miscellaneous	Plate A
	QDHY0729

Item	Part No.	References	Qty.	Description	Notes
1	2314J004		1	SCREW	

SBH00688

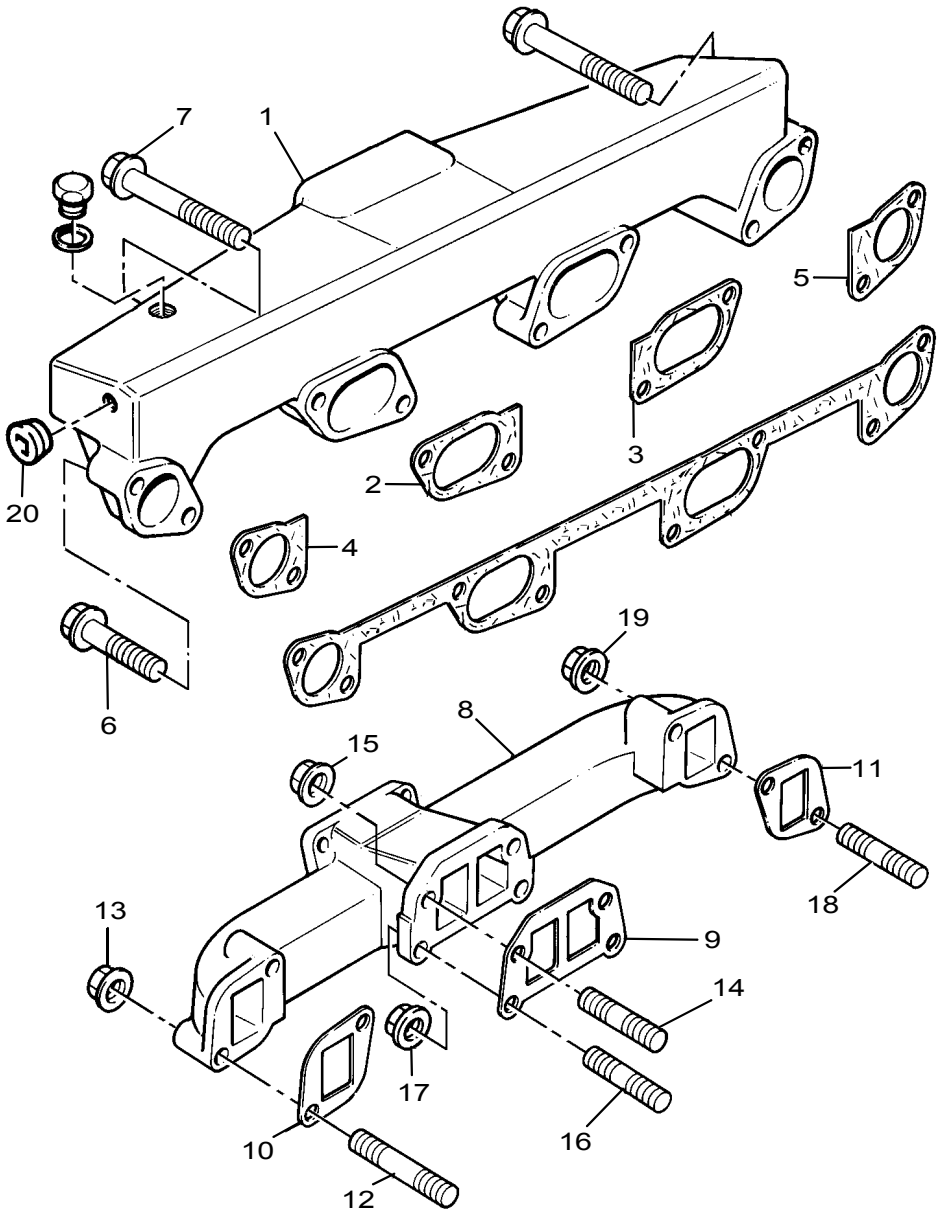

Turbocharger, Manifolds & Air Charge Cooler **Plate B**

SBH00688

Item	Part No.	References	Qty.	Description	Notes
1	3777U038	a. b.	1	INTAKE MANIFOLD	
2	37467104		1	GASKET - IND MANIFOLD	
3	37467104		1	GASKET - IND MANIFOLD	
4	37467105		1	GASKET - IND MANIFOLD	
5	37467105		1	GASKET - IND MANIFOLD	
6	2314J039		6	SCREW	
7	2314J049		2	SCREW	
8	3778P051	3778P031	1	EXHAUST MANIFOLD	
9	3688C017		1	GASKET - EXHAUST MANIFOLD	
10	36862191		1	GASKET - EXHAUST MANIFOLD	
11	36862191		1	GASKET - EXHAUST MANIFOLD	
12	2313M387	2313M287	2	STUD	
13	2318A634		2	NUT	
14	2313M380	2313M280	2	STUD	
15	2318A634		2	NUT	
16	2313M378	2313M278	2	STUD	
17	2318A634		2	NUT	
18	2313M387	2313M287	2	STUD	
19	2318A634		2	NUT	
20	2431131		1	PLUG	

History

a.

1	3777U036		1	INTAKE MANIFOLD

b.

1	3777U031		1	INTAKE MANIFOLD

SBH00688

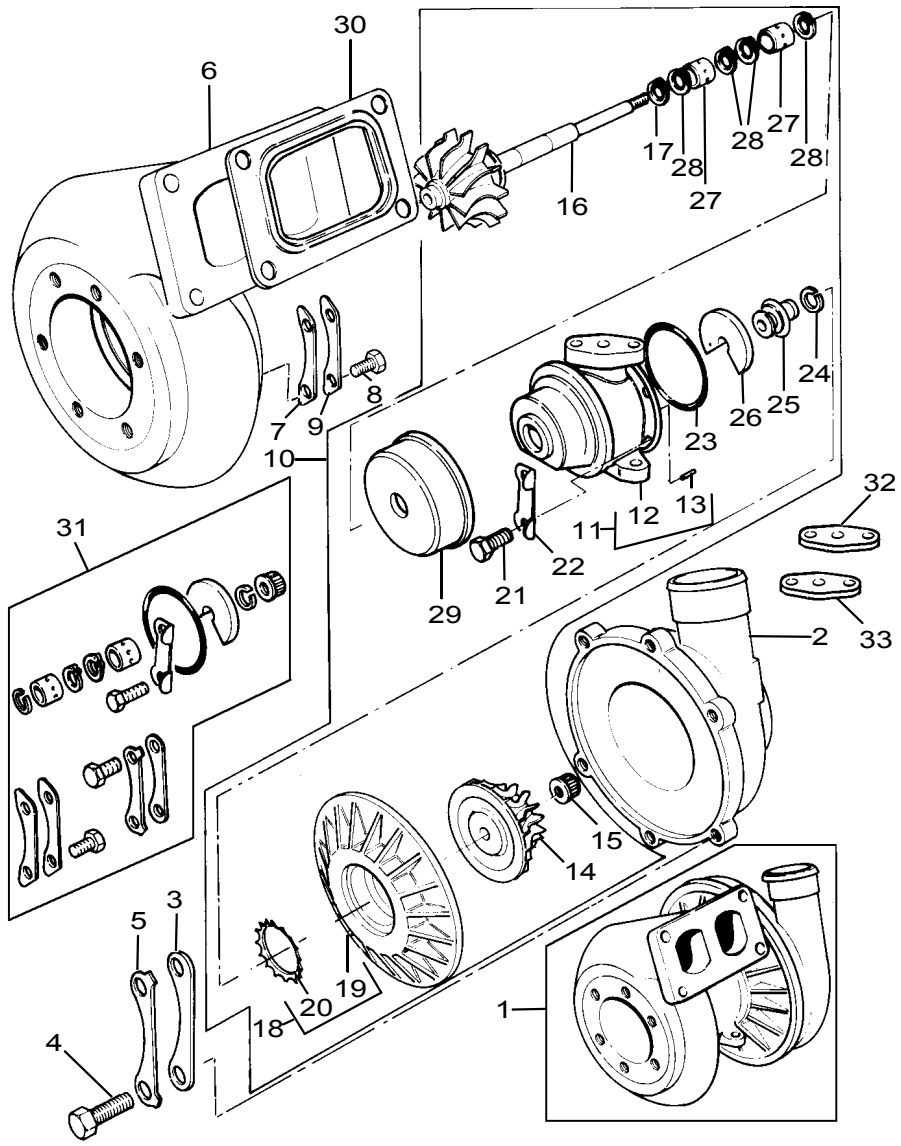
30
6
17
28
27
28
28
27
16
24
25
26
23
8
7
9
10
12
13
11
22
21
29
32
31
33
2
15
14
5
3
19
20
18
4
1

Turbocharger, Manifolds & Air Charge Cooler	Plate F
	SBH00688

Item	Part No.	References	Qty.	Description	Notes
1	2674A121		1	TURBOCHARGER	(A)
2		⇨ REF.1	1	HOUSING	
3	26741029	⇨ REF.1	3	CLAMP	(B)
4	26741038	⇨ REF.1	6	BOLT	(B)
5	26741030		3	PLATE	(B)
6		⇨ REF.1	1	HOUSING	
7	26741164	⇨ REF.1	3	CLAMP	(B)
8	26741038	⇨ REF.1	6	BOLT	(B)
9	26741023	⇨ REF.1	3	PLATE	(B)
10	26741152		1	HOUSING	
11	26741123		1	HOUSING	
12		⇨ REF.11	1	HOUSING	
13		⇨ REF.11	1	PIN	
14	26741042		1	IMPELLER	
15		⇨ REF.10	1	NUT	(B)
16	26741026	⇨ REF.10	1	WHEEL	(B)
17		⇨ REF.10	1	RING	(B)
18	26741008	⇨ REF.10	1	PLATE	
19		⇨ REF.18	1	PLATE	(B)
20		⇨ REF.18	1	WASHER	(B)
21		⇨ REF.10	1	BOLT	(B)
23		⇨ REF.10	1	O RING	(B)
24		⇨ REF.10	1	RING	(B)
25	26741011	⇨ REF.10	1	COLLAR	
26	26741012	⇨ REF.10	1	THRUST BEARING	(B)
27	26741087	●○ 26741013	2	TURBOCHARGER - BUSH	(B)
28		⇨ REF.10	4	RING	(B)
29		⇨ REF.10	1	SHROUD	
30	3688A006	●○ 2674922	1	GASKET - TURBOCHARGER	
31	26741060		X	REPAIR KIT - TURBOCHARGER	

Footnotes

(A)	NO LONGER AVAILABLE USE 2674A080 SEE PLATE X
(B)	ALSO INCLUDED IN REPAIR KIT

SBH00688

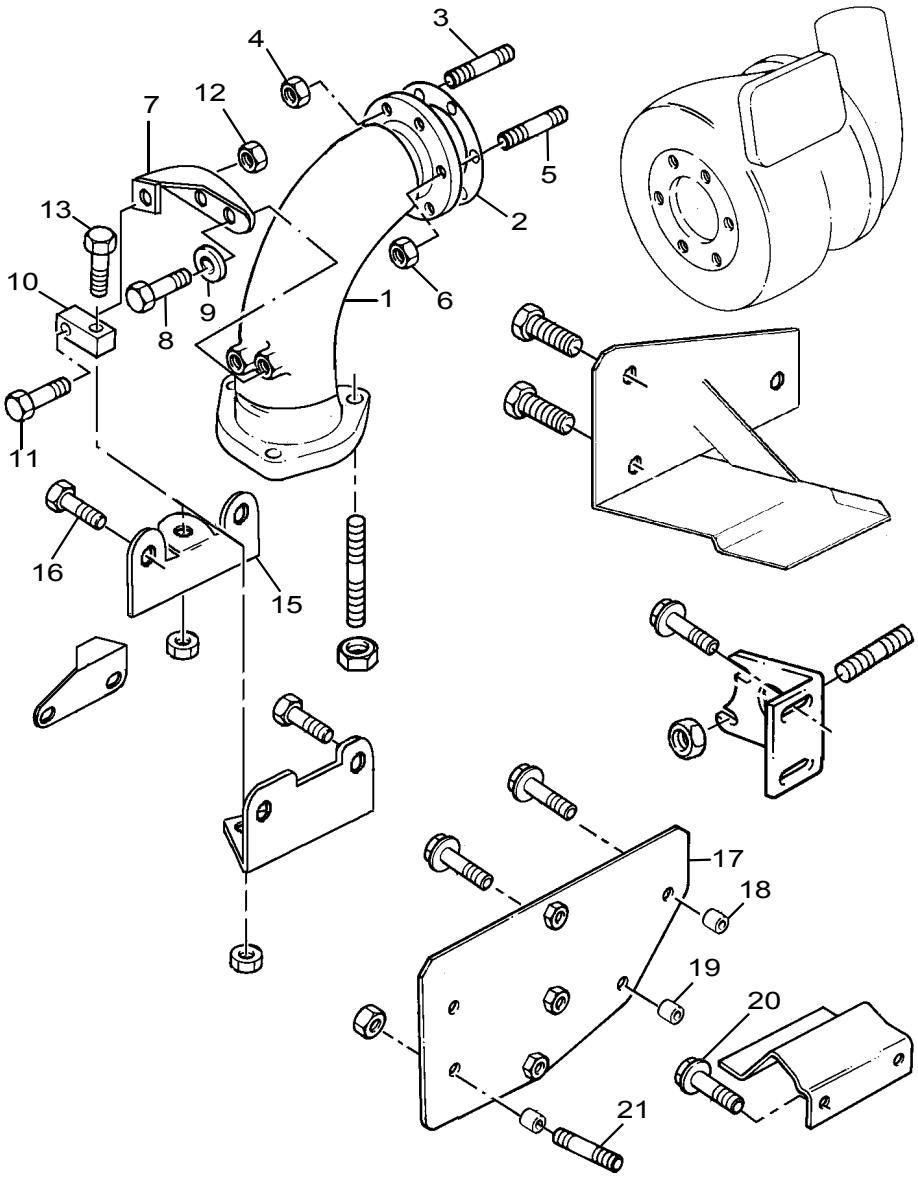

Turbocharger, Manifolds & Air Charge Cooler **Plate N**

SBH00688

Item	Part No.	References	Qty.	Description	Notes
1	3767H071		1	ELBOW	
2	3688C011		1	GASKET - TURBOCHARGER	
3	2313F059		4	STUD	
4	2318A633		4	NUT	
5	2313F068		2	STUD	
6	2318A633		2	NUT	
7	3651H003		1	BRACKET	
8	2314J002		2	SCREW	
9	0920497		2	WASHER	
10	36136122		1	CONNECTION	
11	3218H006		1	SCREW	
12	2318A633		1	NUT	
13	3218H006		1	SCREW	
14	2318A633		1	NUT	
15	3651K017		1	BRACKET	
16	2314H001		2	SCREW	
17	3661A067	↦ U608264A a. b.	1	HEATSHIELD	
18	2131508	↦ U608264A b.	2	SPACER	
19	2131508	↦ U608264A b.	2	SPACER	
20	2314H002		2	SCREW	
21	2313C063	↦ U608264A	3	STUD	

History

a.

17	3813P001	↦ U608264A	1	HEATSHIELD
	33246117		2	SPACER

b. ⇥ U608263A

17	3753H011		1	HEATSHIELD
18	33247125		1	SPACER
19	33247125		1	SPACER
	2314J008		1	SCREW
	2314K159		1	SCREW
	38116132		1	HEATSHIELD
	2314H008		2	SCREW

c.

	2131508		2	SPACER

SBH00688

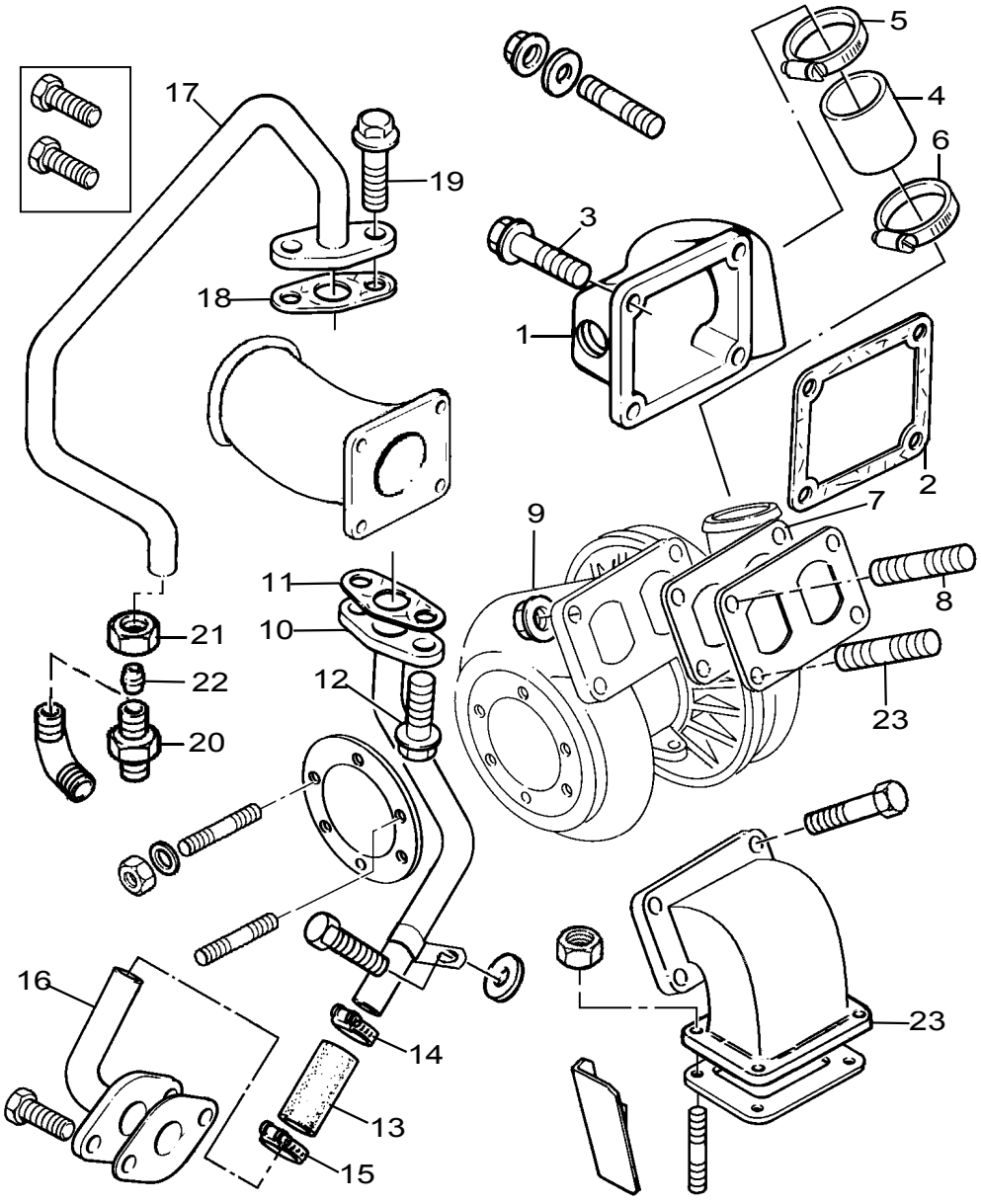

Turbocharger, Manifolds & Air Charge Cooler **Plate P**

SBH00688

Item	Part No.	References	Qty.	Description	Notes
1	3766P122		1	ELBOW	
2	3684N008		1	GASKET	
3	2314J014		4	SCREW	
4	3383E005	●○ 3383E003	1	HOSE	
5	21825199		1	CLIP	
6	21825199		1	CLIP	
7		◈ SBHY-F	1	JOINT	
8	2313M277		2	STUD	
9	2318A634		4	NUT	
10	3571F016		1	OIL PIPE	
11	3683D006		1	GASKET	
12	2314H003		2	SCREW	
13	3383A024	🕮 b.	1	HOSE	
14	21825195		1	CLIP	
15	21825195		1	CLIP	
16		◈ HBH	1	PIPE	
17	4126X106	●○ 4126X077 ●○ 4126X062	1	OIL PIPE	
18	36832138		1	GASKET	
19	2314H003	🕮 a.	2	SCREW	
20	0206008		1	UNION	
21	0576116		1	NUT	
22	0566007		1	OLIVE	
23	2313M280		2	STUD	

History

a.

19	2314H004		2	SCREW

b.

13	3385N001		1	HOSE

SBH00688

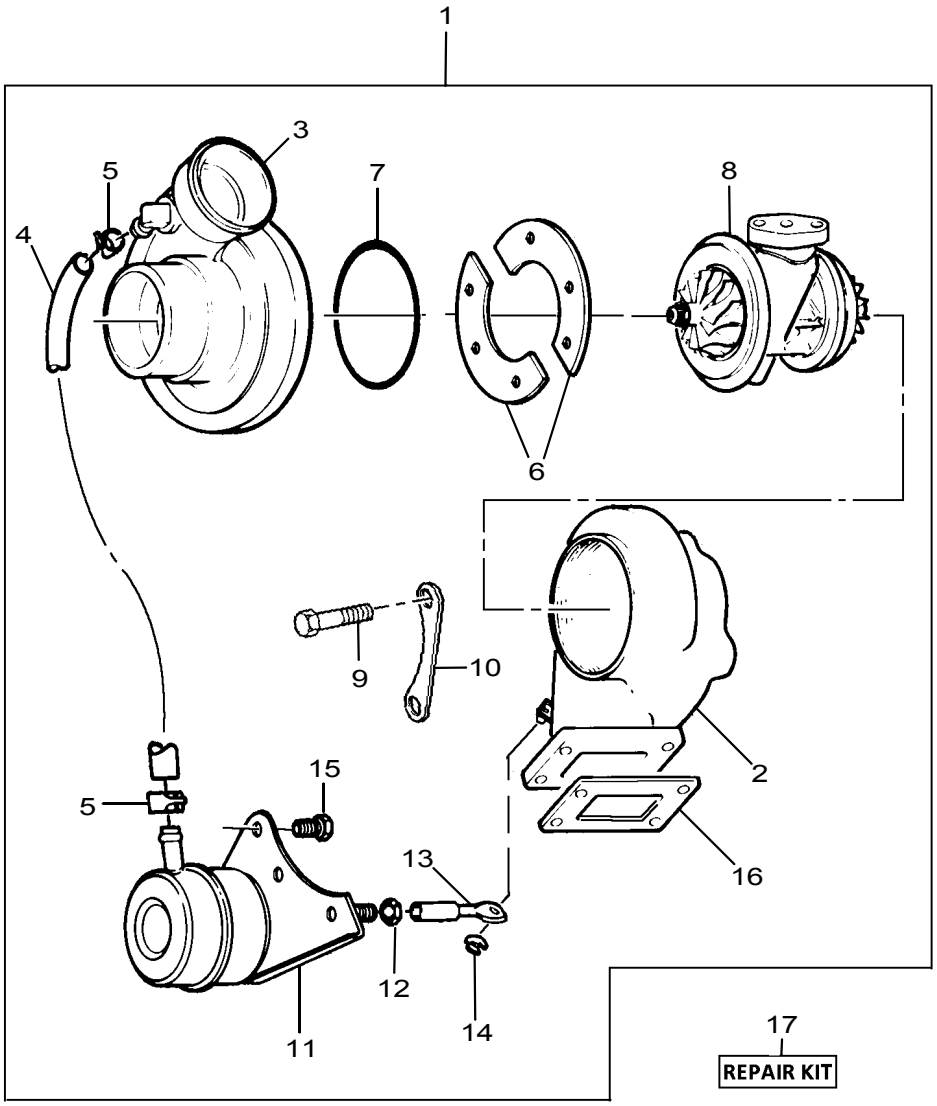

Turbocharger, Manifolds & Air Charge Cooler **Plate X**

SBH00688

Item	Part No.	References	Qty.	Description	Notes
1	2674A080	↻	1	TURBOCHARGER	
2	┣ 26741300		1	TURBINE HOUSING	
3	┣ 26741265		1	HOUSING	
6	┣ 26741168		2	CLAMP	
7	┣	✏ REF 17	1	O RING	
8	┣ 26741301		1	HOUSING	
9	┣ 26741164		3	CLAMP	
10	┣ 26741038		6	BOLT	
15	┗ 26741167		6	BOLT	
16	3688A006		1	GASKET - TURBOCHARGER	
17	26741166		1	REPAIR KIT - TURBOCHARGER	
Service Options					
1	2674A080P		1	TURBOCHARGER - EXCHANGE	

Remote Air Charge Cooler	Plate A
	SDH00161

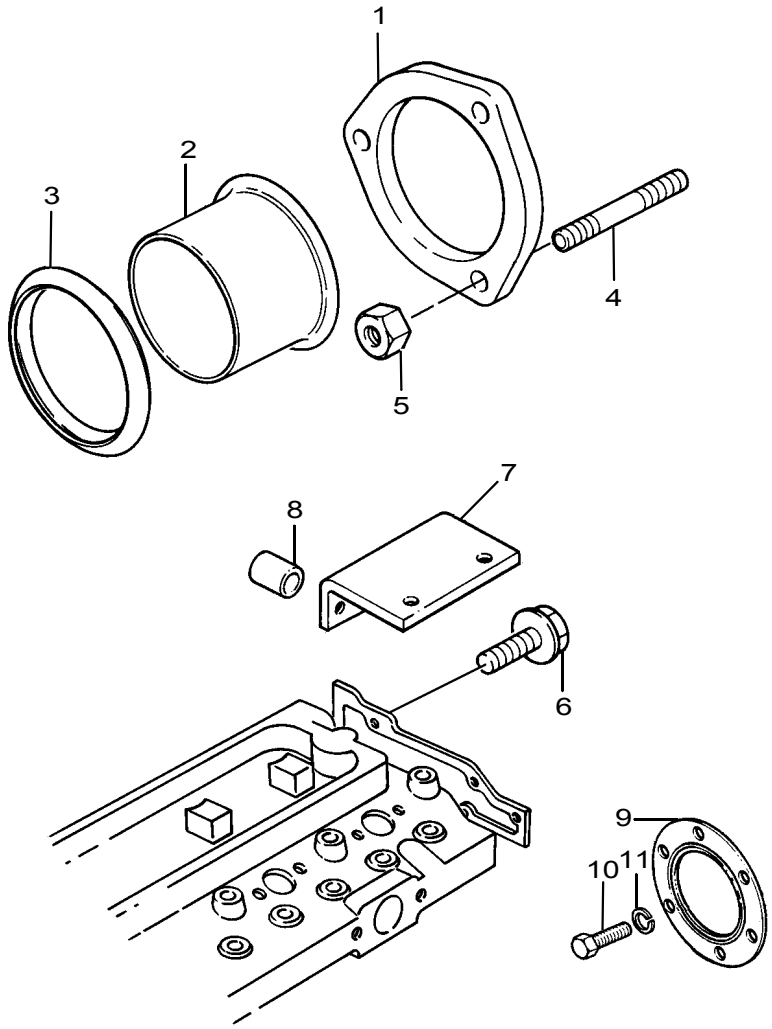

Remote Air Charge Cooler	Plate A
	SDH00161

Item	Part No.	References	Qty.	Description	Notes
1	3743C001		1	FLANGE	
2	33427431		1	ADAPTOR	
3	33415356		1	RING	
4	2313F079		3	STUD	
5	2318A634		3	NUT	

Air Filters	Plate A
●○ SDH00320	SDH00426

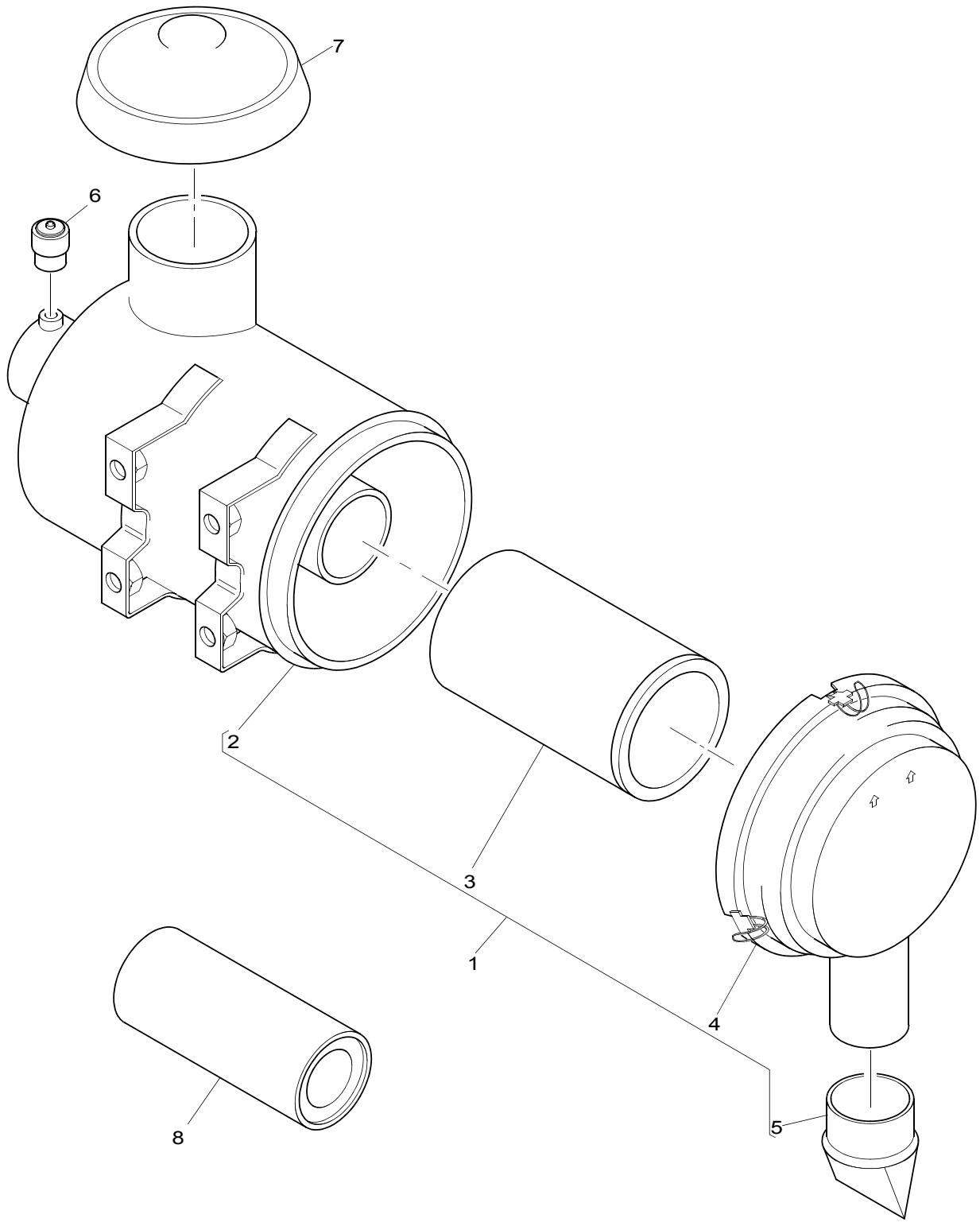

Air Filters	Plate A

●○ SDH00320	SDH00426

Item	Part No.	References	Qty.	Description	Notes
1	2652C149		1	AIR FILTER ASSEMBLY	
2	┣	✏ 2652C149	1	BODY	
3	┣ 26510353		1	MAIN AIR FILTER	
4	┣ 26510355		1	COVER	
5	┗ 26510350		1	VALVE	
6	2652C814		1	INDICATOR	
7	2652C810		1	CAP	
8	26510354		1	SAFETY AIR FILTER	(A)

Footnotes	
(A)	SERVICE PART ONLY

Air Filters	Plate B
●○ SDH00320	SDH00426

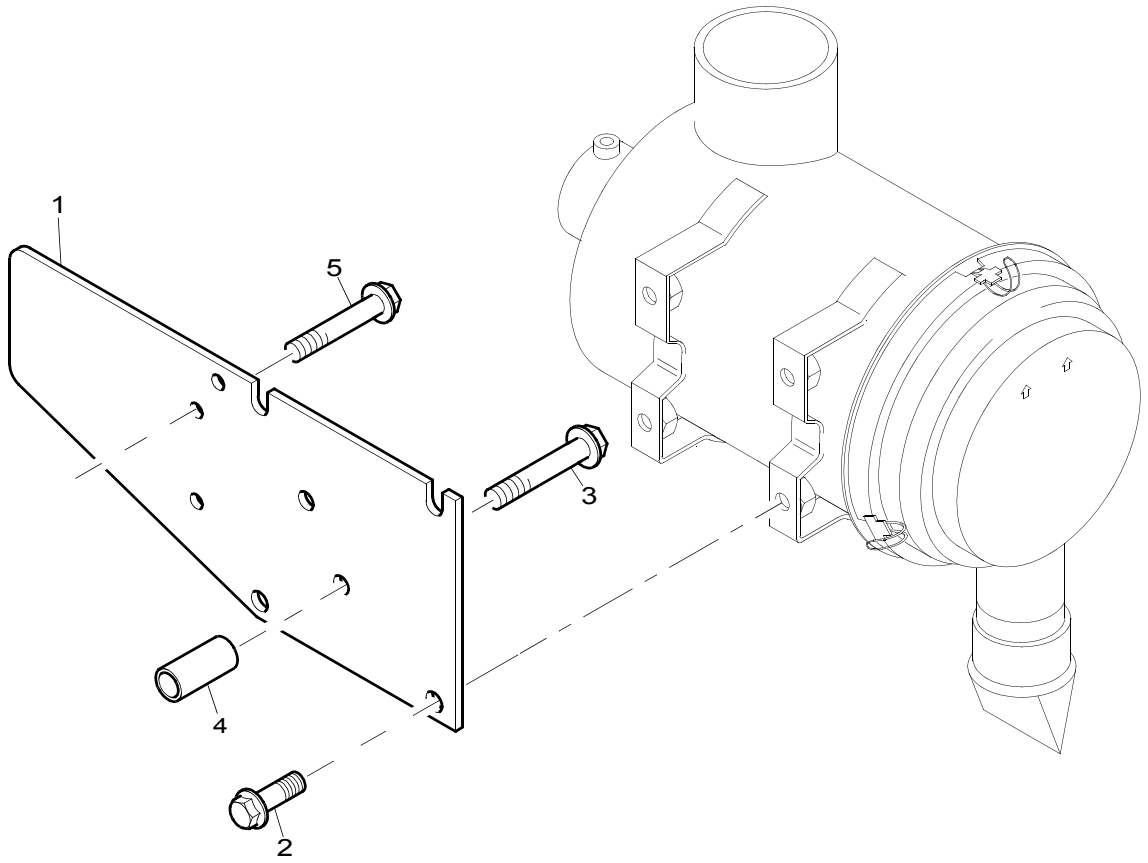

Air Filters	Plate B
●○ SDH00320	SDH00426

Item	Part No.	References	Qty.	Description	Notes
1	3621A005		1	BRACKET	
2	2314J002		4	SCREW	
3	2314J009		2	SCREW	
4	33246117		5	SPACER	
5	2314H010		3	SCREW	

Pipework	Plate A
●○ SDH00320	SDH00426

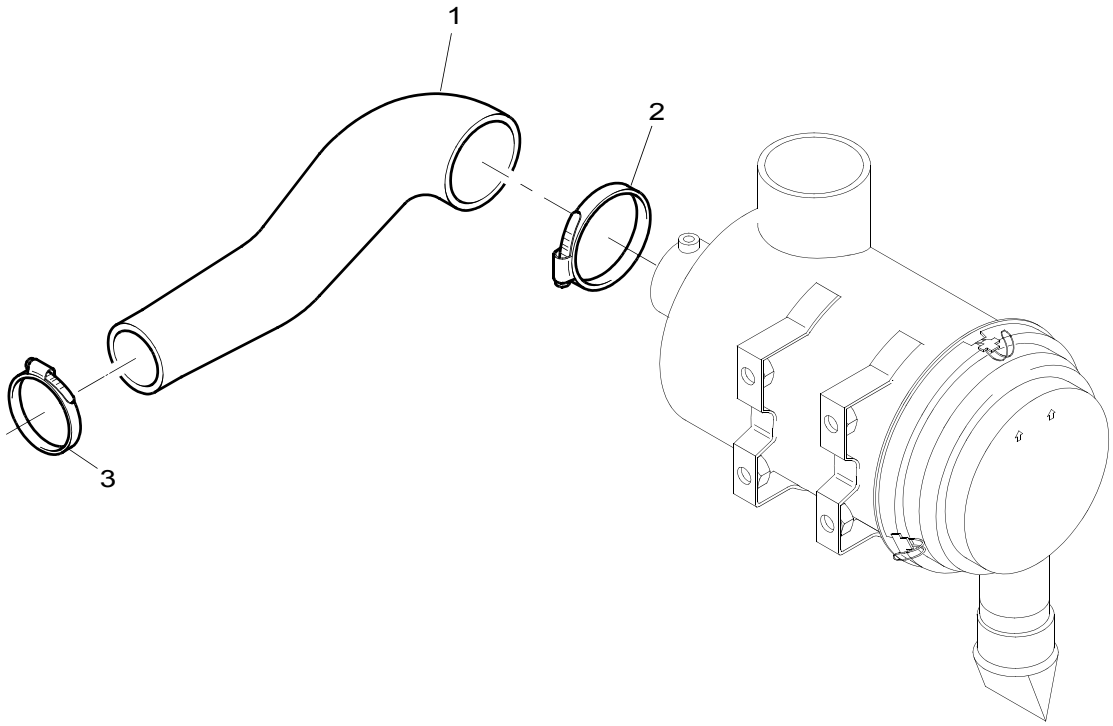

Pipework	Plate A
●○ SDH00320	SDH00426

Item	Part No.	References	Qty.	Description	Notes
1	3783R034		1	HOSE - AIR	
2	2481873		1	HOSE CLIP	
3	2481D076		1	HOSE CLIP	

VBH01600

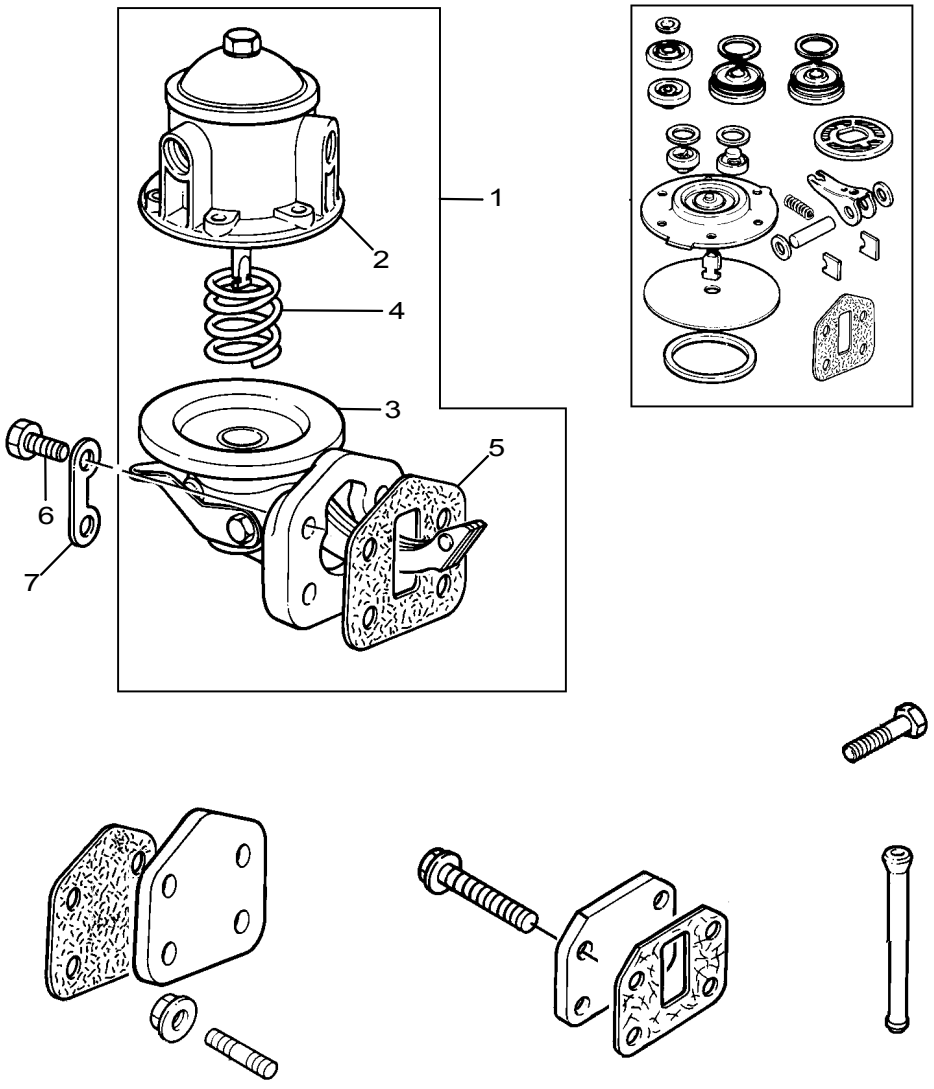

Low Pressure Fuel System	Plate A
	VBH01600

Item	Part No.	References	Qty.	Description	Notes
1	ULPK0002	●○ 2641A070	1	LIFT PUMP KIT	
2	┣	✏ ULPK0002	1	BODY	
3	┣	✏ ULPK0002	1	BODY	
4	┣	✏ ULPK0002	1	SPRING	
5	┗3685R007		1	GASKET - LIFT PUMP	
6	2314H005		4	SCREW	
7	36241316		2	PLATE	

History

a. General History Section

ULPR0002	●○ 26412505	X	REPAIR KIT - LIFT PUMP	
ULPR0013	●○ 26410149	X	REPAIR KIT - LIFT PUMP	

Low Pressure Fuel System	Plate B
	VBH01600

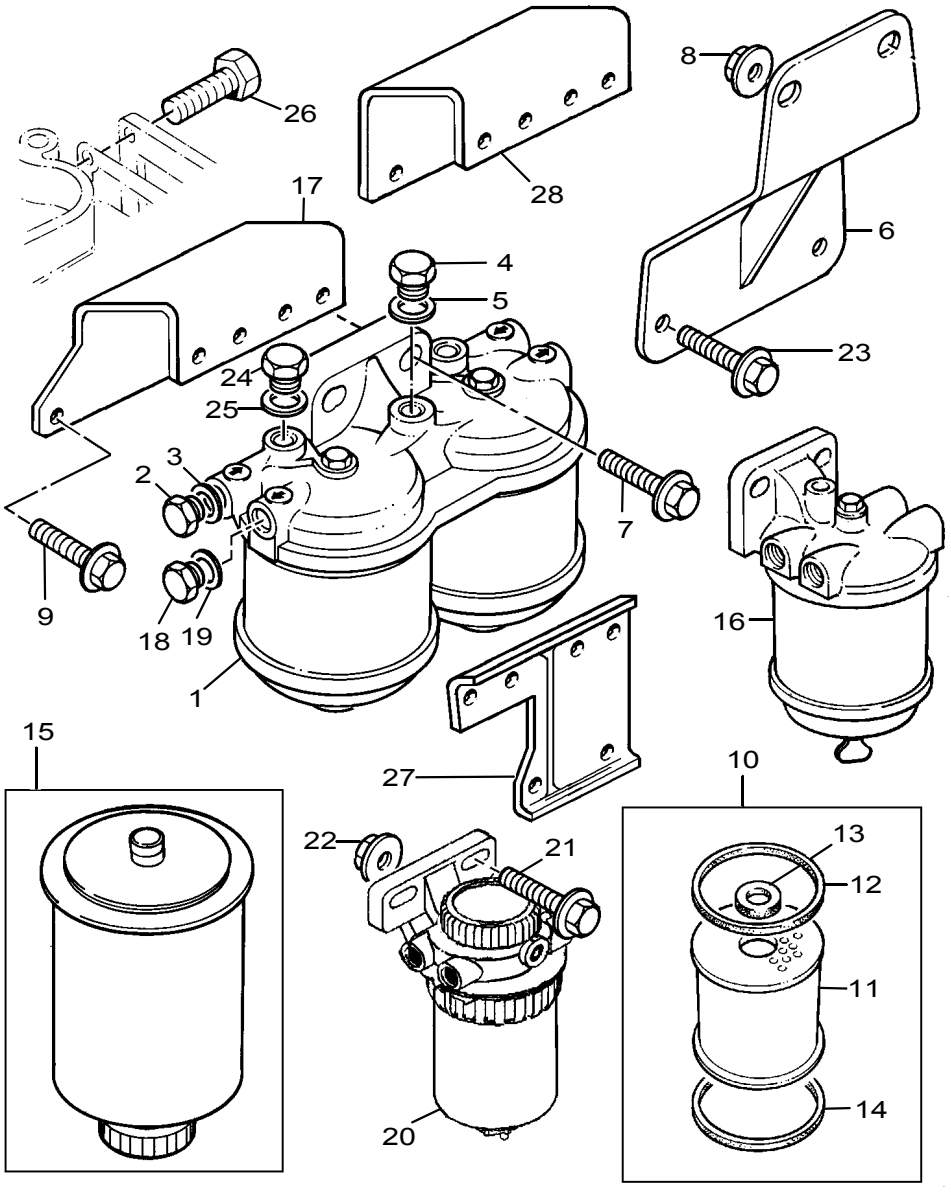

Low Pressure Fuel System	Plate B
	VBH01600

Item	Part No.	References	Qty.	Description	Notes
9	2314J002		3	SCREW	
20	2656F808		1	FUEL FILTER KIT	
21	2314J004		2	SCREW	(A)
21	2314J003		2	SCREW	(B)
28	3818D018		1	BRACKET	(C)

Footnotes	
(A)	USED ONLY WITH 3818J002
(B)	USED ONLY WITH 3818D018
(C)	WAS 3818J002 USE 3818D018, 2314J003 (4)

Low Pressure Fuel System	Plate J
	VBH01600

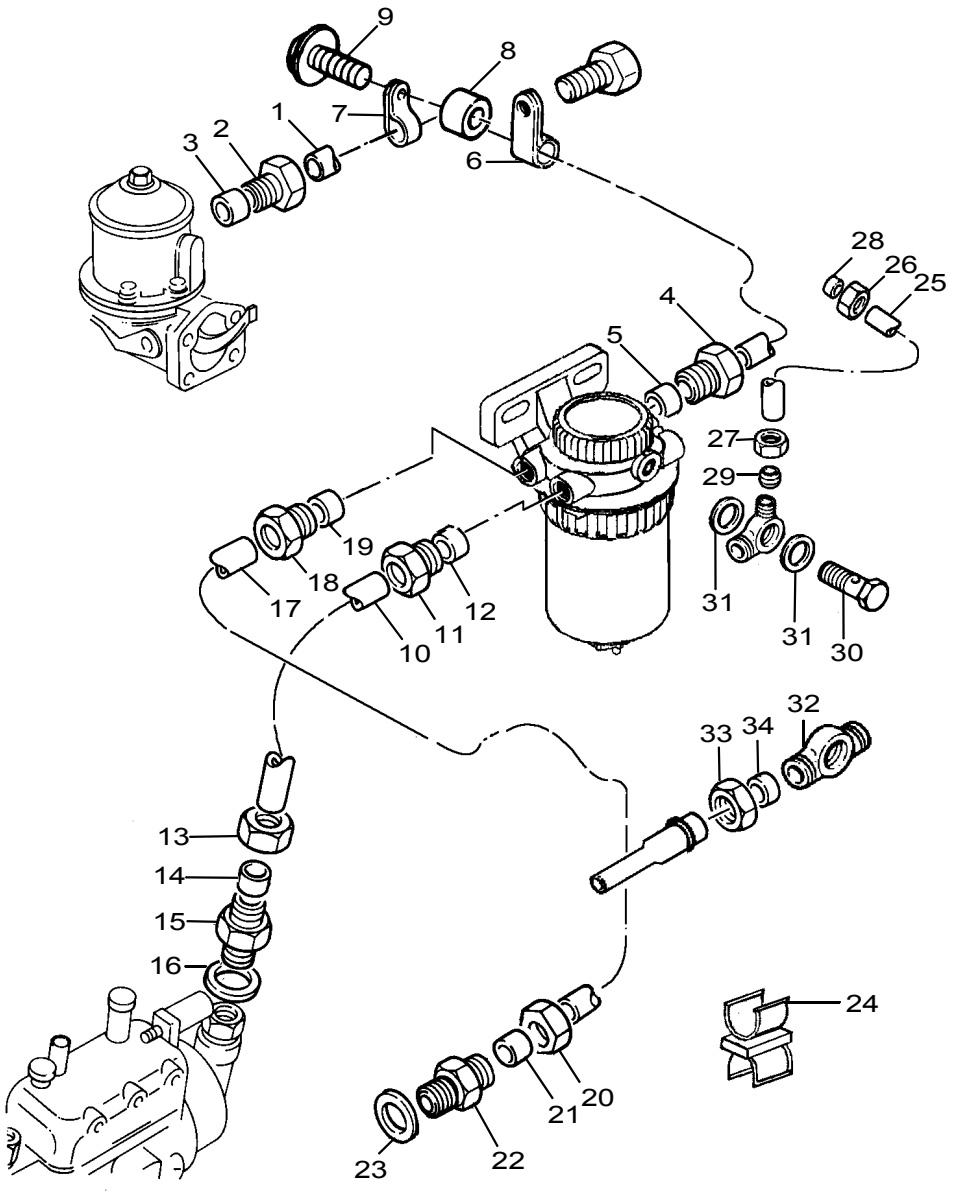

Low Pressure Fuel System **Plate J**

VBH01600

Item	Part No.	References	Qty.	Description	Notes
1	4125V012		1	PIPE - LIFT PUMP TO FILTER	
2	33532129		1	NUT	
3	33811114		1	OLIVE	
4	33532129		1	NUT	
5	33811114		1	OLIVE	
6	3656P003		1	CLIP	
7	3656P002		1	CLIP	
8	33135413		1	SPACER	
9	2314H005		1	SCREW	
10	4122C033		1	FUEL PIPE	
11	33532129		1	NUT	
12	33811114		1	OLIVE	
13	33225414		1	NUT	
14	33811114		1	OLIVE	
15	0201502		1	UNION	
16	2411154		1	WASHER	
17	4122C034		1	FUEL PIPE	
18	33532129		1	NUT	
19	33811114		1	OLIVE	
20	33225414		1	NUT	
21	33811114		1	OLIVE	
22	0201502		1	UNION	
23	2411154		1	WASHER	
24	2481D302	●○ 2136A001	1	CLIP	
25	3435H012		1	FUEL PIPE	
26	33225412		1	UNION NUT	
27	33225412		1	UNION NUT	
28	33811112		1	OLIVE	
29	33811112		1	OLIVE	
30	3218R037	↦ 01/06/03 a.	1	BANJO BOLT	
31	2411D010	↦ 01/06/03 a.	2	WASHER	
32	31726241		1	CONNECTION	
33	0576112		1	NUT	
34	0566003		1	OLIVE	

History

a. →| 31/05/03

30	3218R013		1	BANJO BOLT
31	2415928		2	WASHER

VBH01600

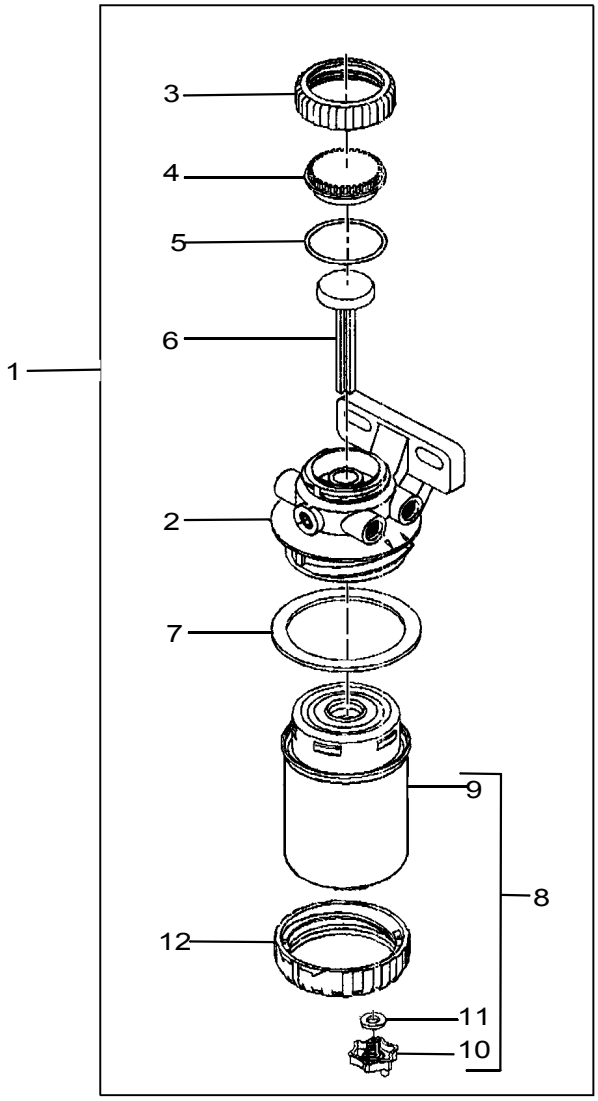

Low Pressure Fuel System	Plate L
	VBH01600

Item	Part No.	References	Qty.	Description	Notes
1	2656F815	●○ 2656F808	1	FUEL FILTER ASSEMBLY	(A)
2	⌐	✏ REF.1	1	FILTER HEAD	
3	├─26560904		1	NUT	
4	├─26560906		1	CAP	
5	├─26560905		1	SEAL - O RING	
6	├─26560907		1	PLUG	
7	├─26560903		1	SEAL - O RING	
8	├─26560143	●○ 26560919	1	FUEL FILTER	
9	│ ⌐	✏ REF.8	1	FILTER	
10	│ ├─26560912		1	DRAIN PLUG	
11	│ └─26560911		1	WASHER	
12	└─26560902		1	RING	

Footnotes	
(A)	REFS 2-8,10-12 APPLY ONLY TO 2656F808.COMPONENT BREAKDOWN OF 2486F815 HAS YET TO BE ADVISED

Cold Start System	Plate A
	WDH00013

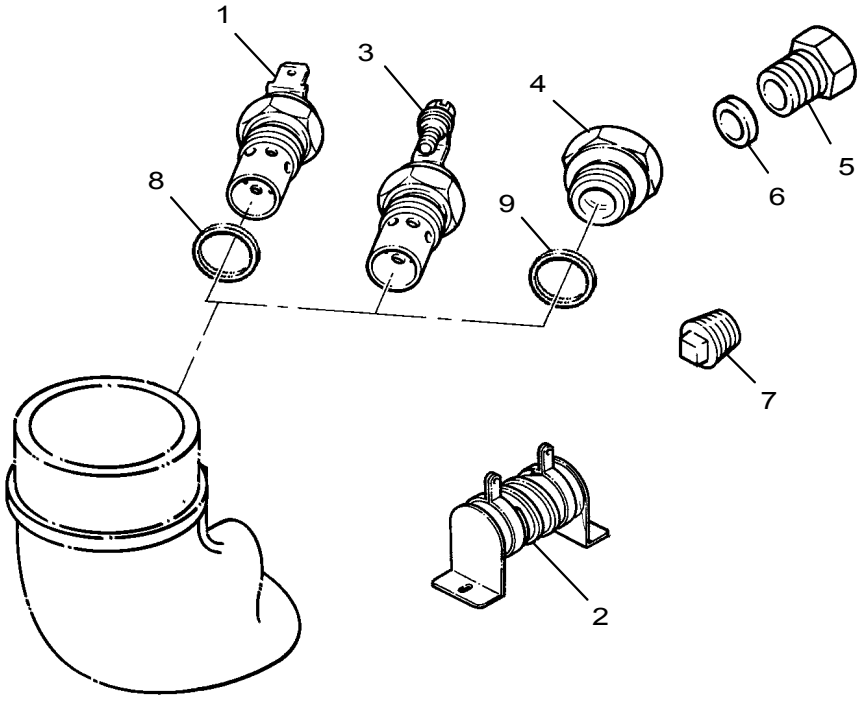

Cold Start System	Plate A
	WDH00013

Item	Part No.	References	Qty.	Description	Notes
1	2666108		1	INTAKE HEATER	

Engine Lifting	Plate A
	XBH00393

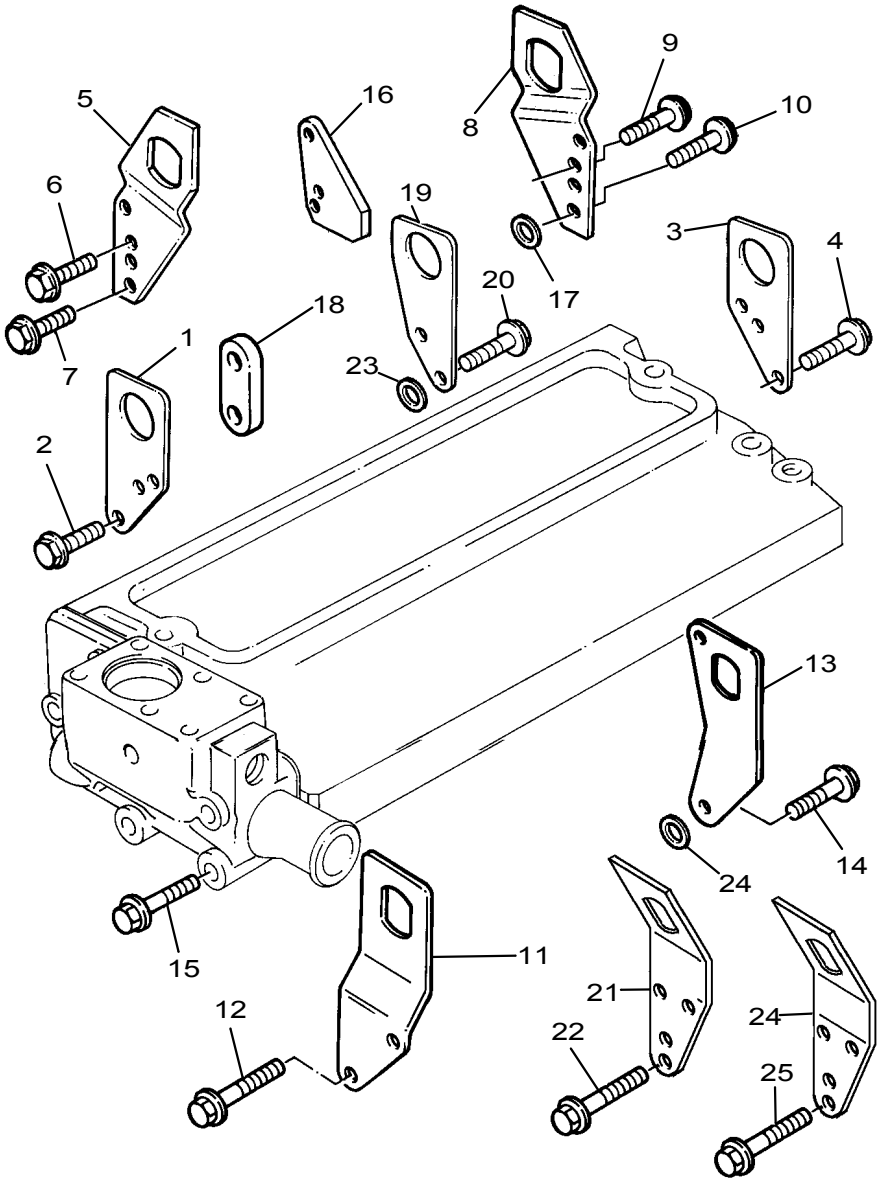

Engine Lifting	Plate A
	XBH00393

Item	Part No.	References	Qty.	Description	Notes
5	3621X007		1	PLATE	
6	2314J003		2	SCREW	
8	3654W003		1	PLATE	
9	2314J003		2	SCREW	

Engine Mounts	Plate A
	ZCHY1236

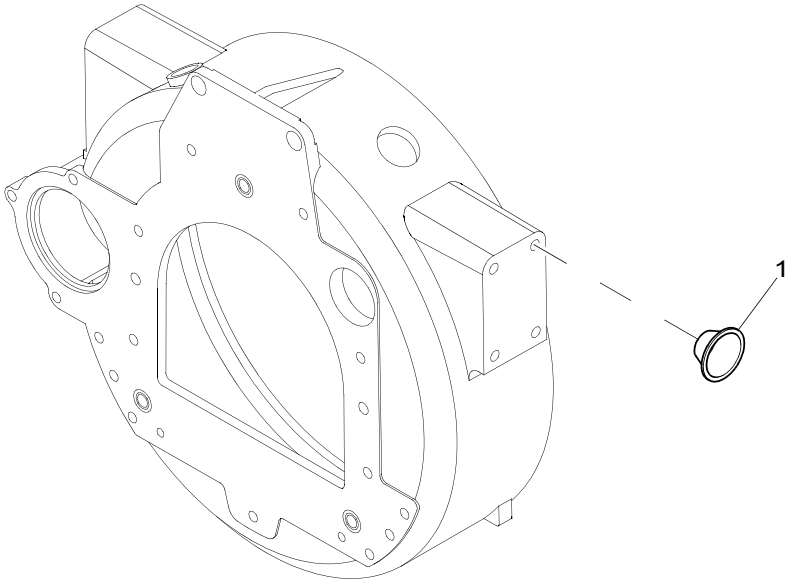

Engine Mounts	Plate A
	ZCHY1236

Item	Part No.	References	Qty.	Description	Notes
1	2487207		10	PLUG	

Heater/Starter Switch	Plate C
	ZEH01293

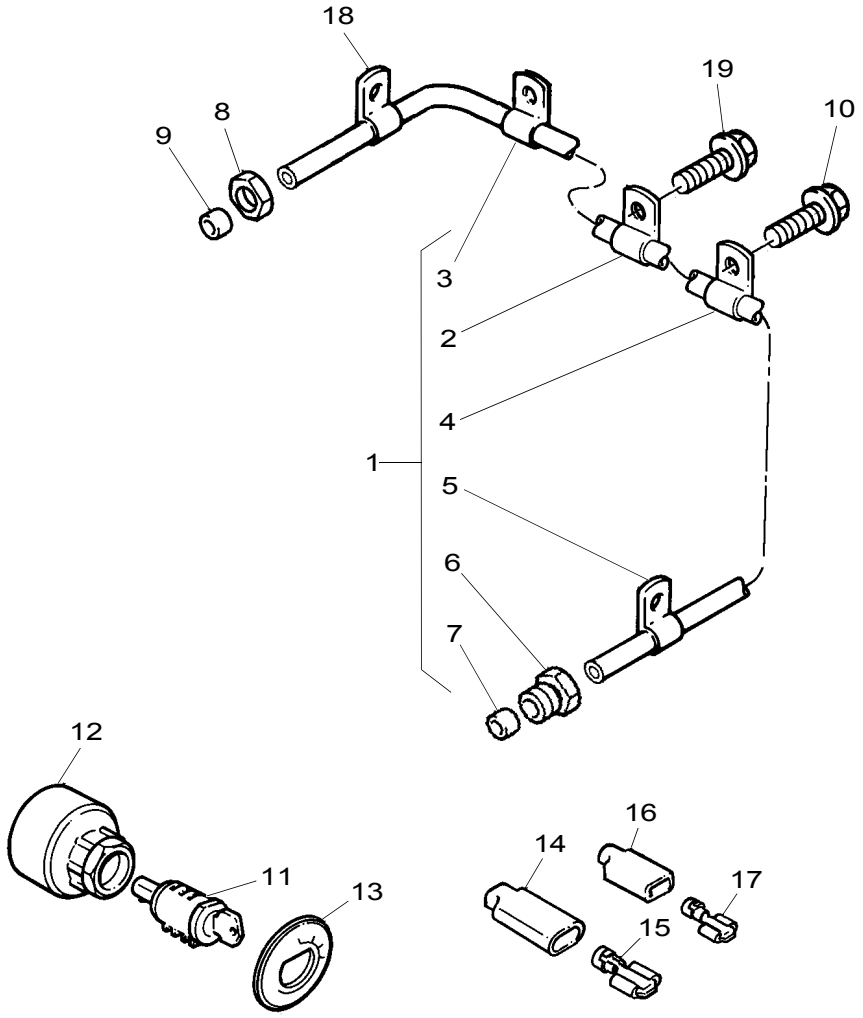

Heater/Starter Switch	Plate C
	ZEH01293

Item	Part No.	References	Qty.	Description	Notes
1	4124E085		1	FUEL PIPE	
2	└─3656M001		1	CLIP	
3	└─3656M001		1	CLIP	
4	└─3656M002		1	CLIP	
5	└─3656M002		1	CLIP	
6	└─33532148		1	NUT	
7	└─3381A002		1	OLIVE	
8	33225412		1	UNION NUT	
9	33811112		1	OLIVE	
10	2314H002		1	SCREW	

Lub. Oil Pressure Switch & Gauge	Plate A
	ZJH00479

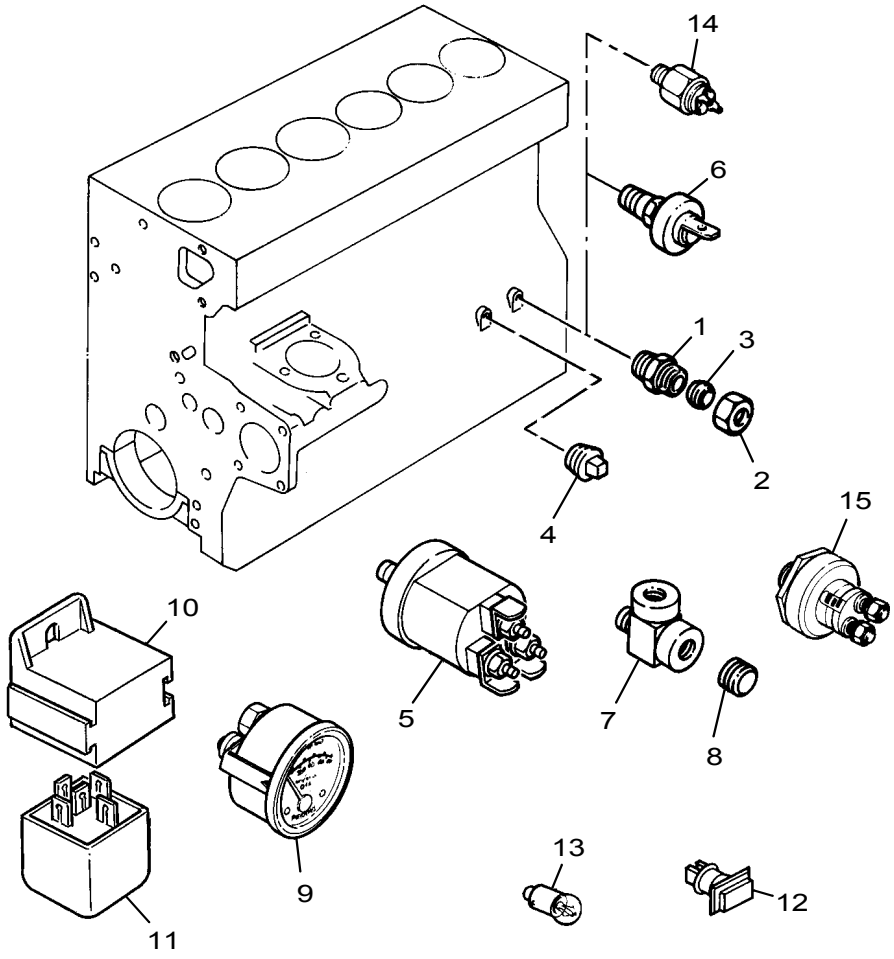

Lub. Oil Pressure Switch & Gauge	Plate A
	ZJH00479

Item	Part No.	References	Qty.	Description	Notes
4	0650594		1	PLUG	
6	2848A013		1	OIL PRESSURE SWITCH	

Temperature Gauge & Sender	Plate A
	ZLH00008

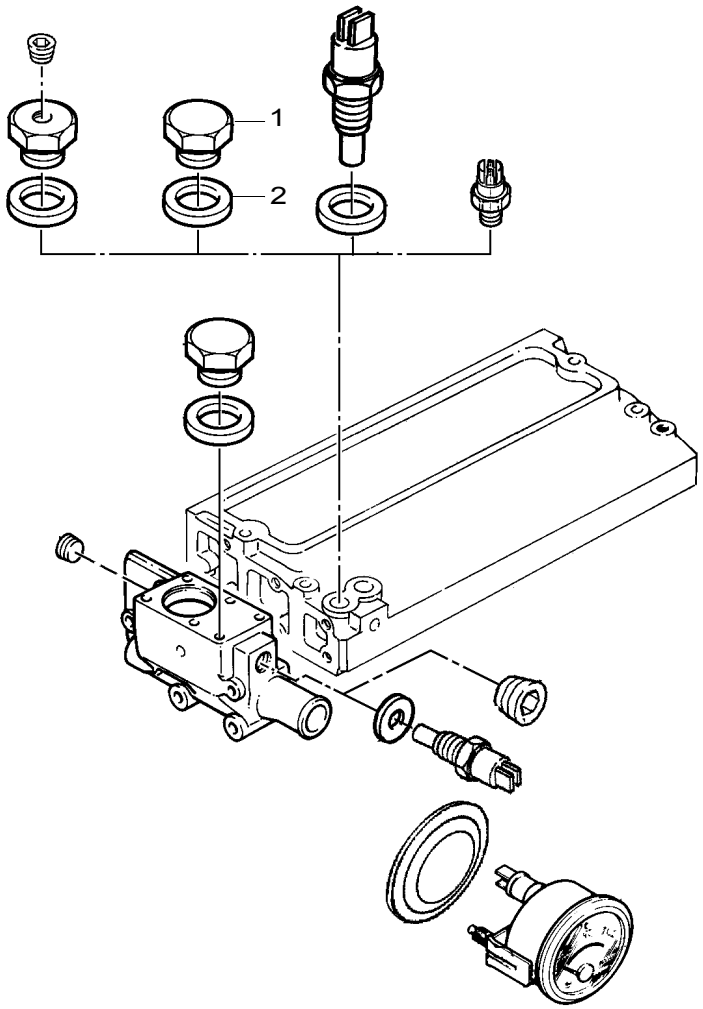

Temperature Gauge & Sender **Plate A**

ZLH00008

Item	Part No.	References	Qty.	Description	Notes
1	0650203		1	PLUG	
2	2411D016	↦ 01/06/2003 a.	1	WASHER	

History

a. →| 31/05/2003

2	2411157		1	WASHER	

Temperature Gauge & Sender	Plate A
	ZLH00276

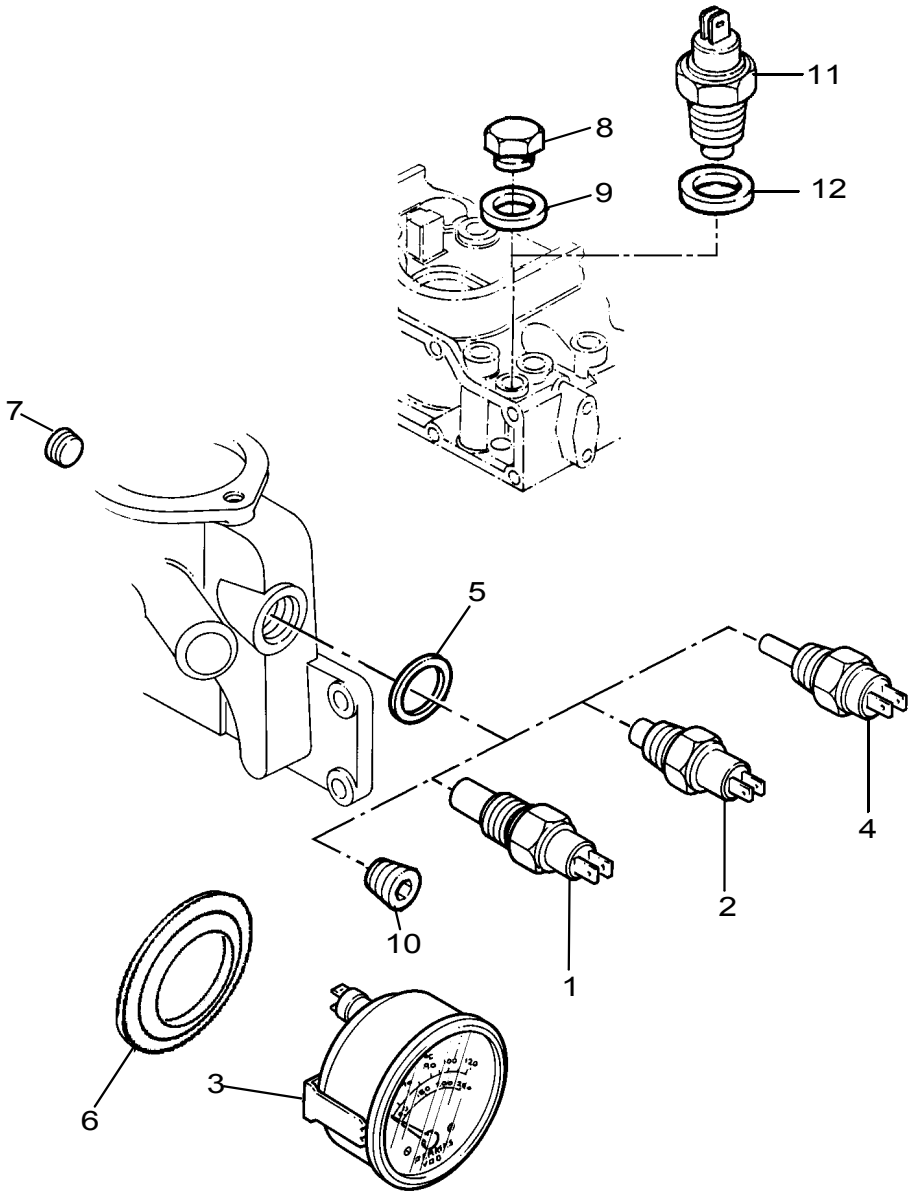

Temperature Gauge & Sender	Plate A
	ZLH00276

Item	Part No.	References	Qty.	Description	Notes
4	2848A102		1	SENDER	

Radiator & Cowling	Plate A
	ZMH00006

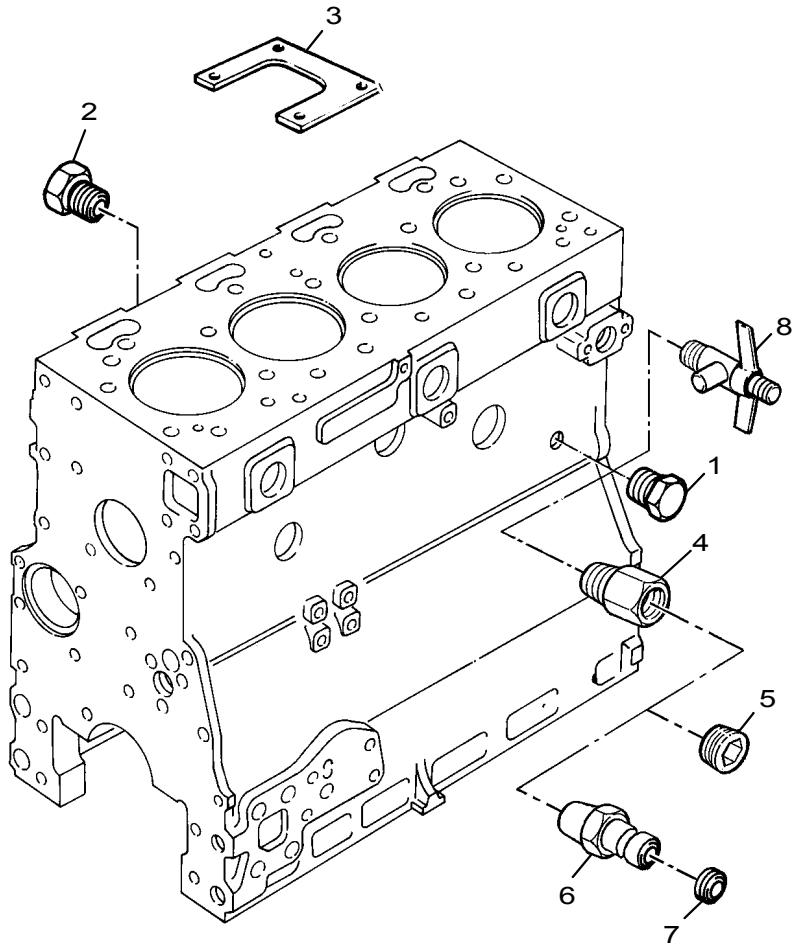

Radiator & Cowling	Plate A
	ZMH00006

Item	Part No.	References	Qty.	Description	Notes
1	32161114		1	PLUG	
2	32161114		1	PLUG	

ZMH00534

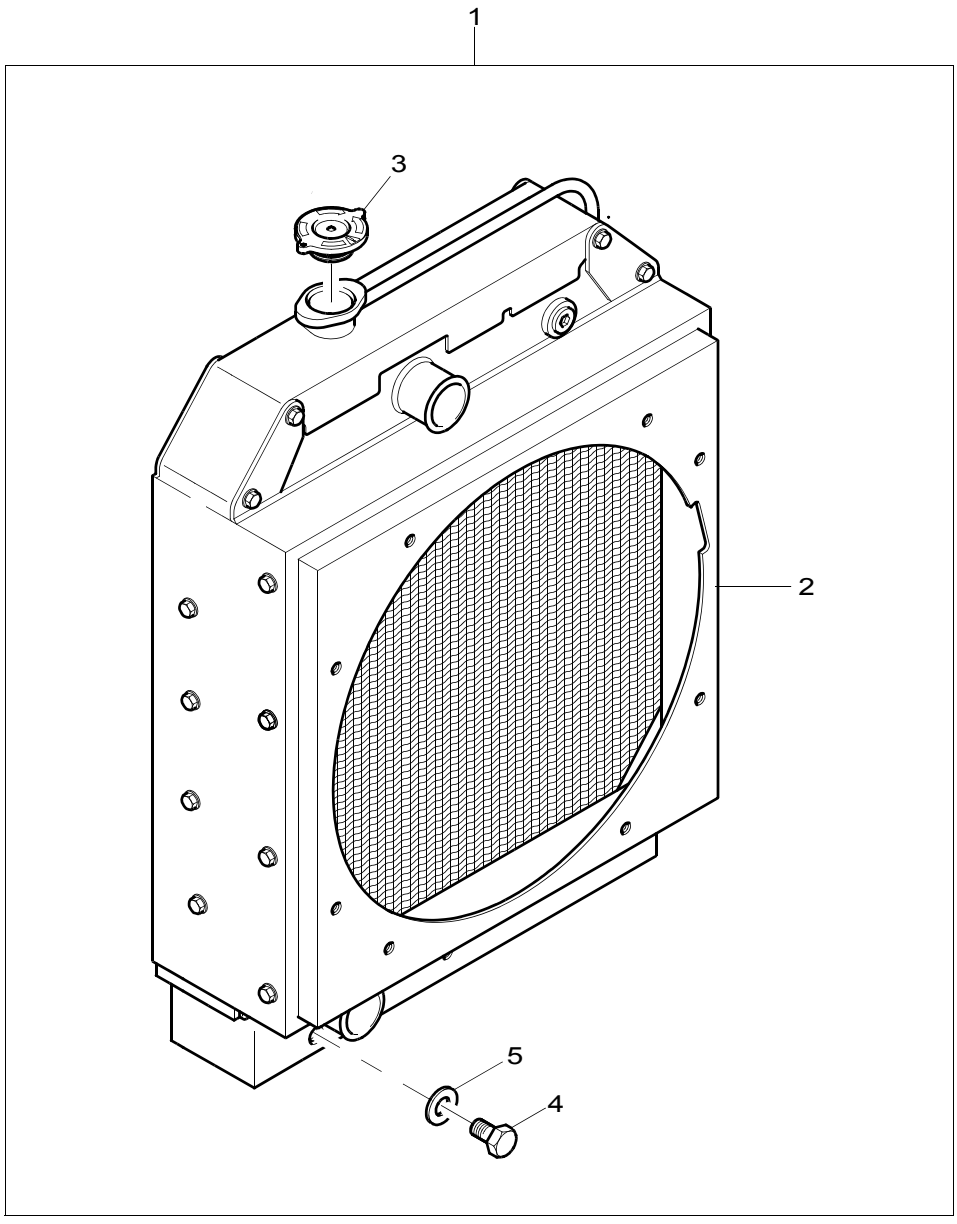

Radiator & Cowling	Plate A
	ZMH00534

Item	Part No.	References	Qty.	Description	Notes
1	2485B283	↦ U847979M a.	1	RADIATOR	
2	┬	✏ 2485B283	1	RADIATOR	
3	├ 24864003		1	RADIATOR CAP	
4	├ 24864005		1	PLUG	
5	└ 24864006		1	WASHER	

History

a. ⇥ U847978M

1	2485B266		1	RADIATOR	

Radiator Bracket & Fixings	Plate A
	ZMH00534

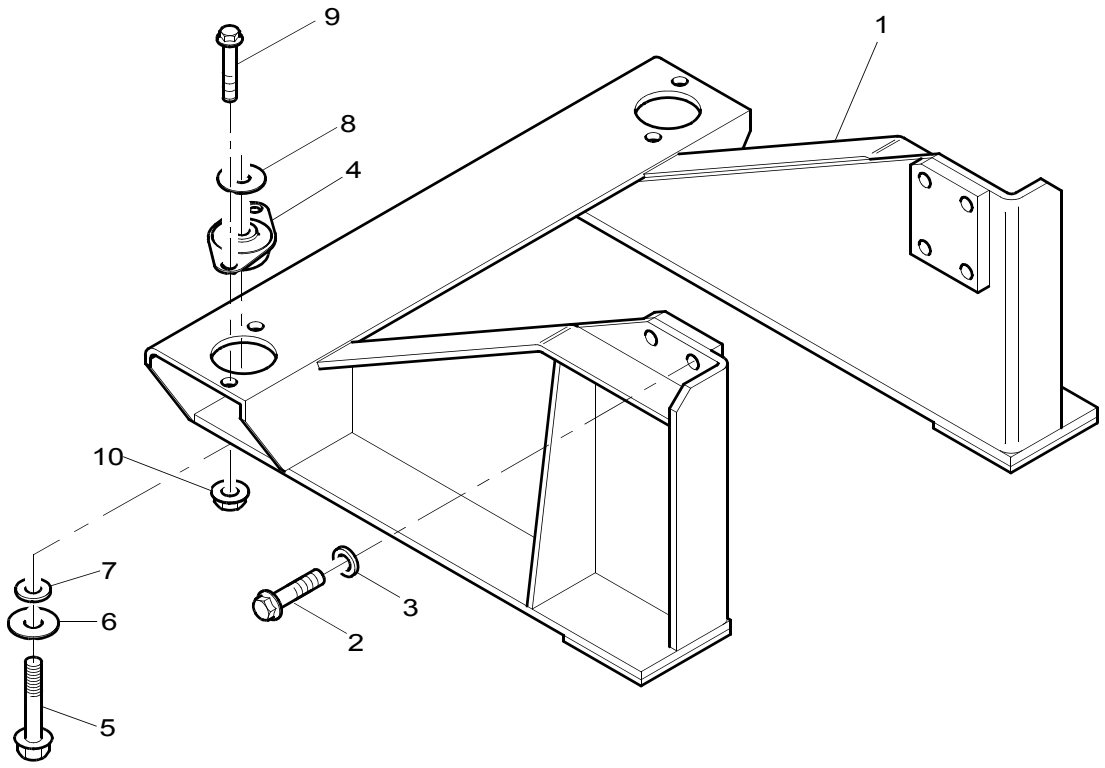

Radiator Bracket & Fixings	Plate A
	ZMH00534

Item	Part No.	References	Qty.	Description	Notes
1	3828H006		1	BRACKET	
2	2314C369		8	SCREW	
3	0920009		8	WASHER	
4	33546		2	RUBBER	
5	2314J008		2	SCREW	
6	0920471		2	WASHER	
7	33115117		2	SPACER	
8	33124118		2	WASHER	
9	2311F055		4	SCREW	
10	2318A603		4	NUT	

Radiator & Hoses	Plate A
	ZMH00534

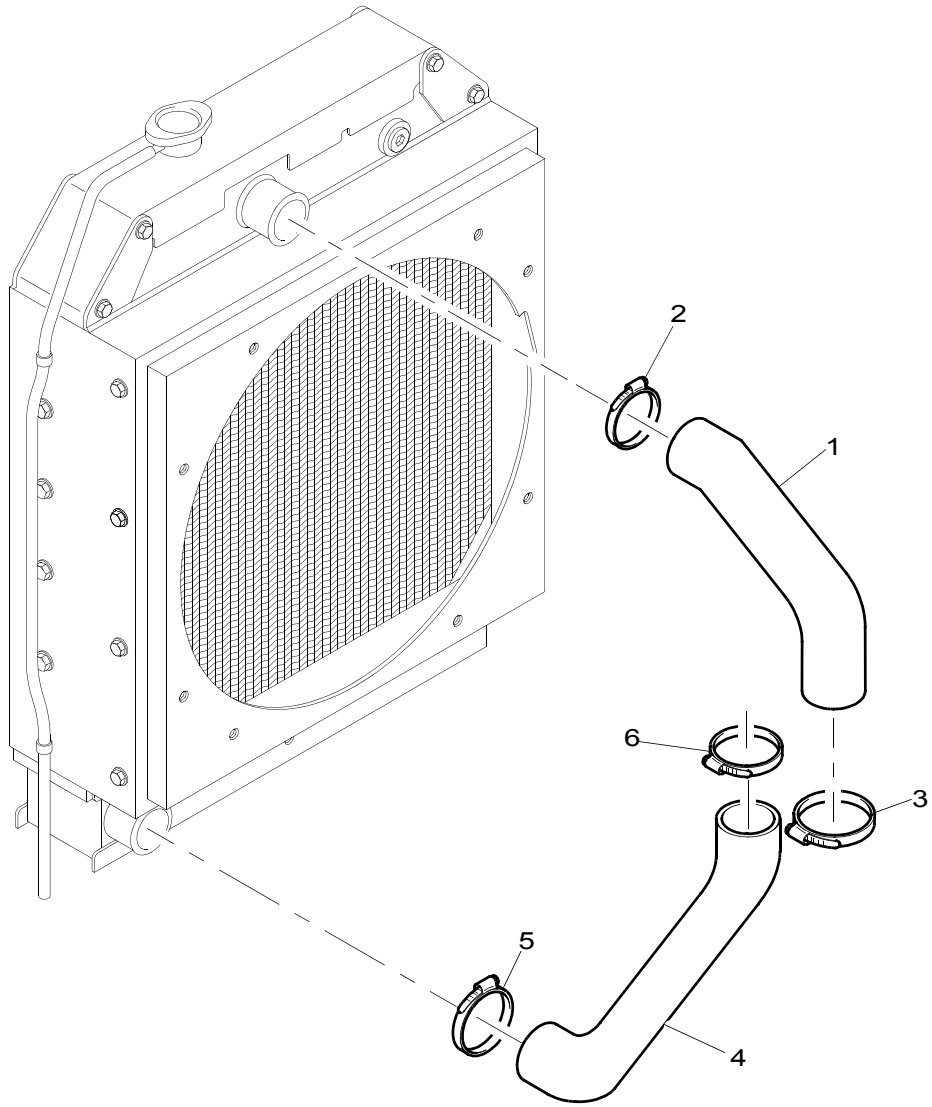

Radiator & Hoses **Plate A**

ZMH00534

Item	Part No.	References	Qty.	Description	Notes
1	3482E045	↦ U847979M a.	1	HOSE	
2	0180070		1	CLIP	
3	0180070		1	CLIP	
4	3482E046	↦ U847979M a.	1	HOSE	
5	0180070		1	CLIP	
6	0180070		1	CLIP	

History

a. →| U847978M

1	3482E018		1	HOSE
4	3482E017		1	HOSE

Guards	Plate A
	ZMH00534

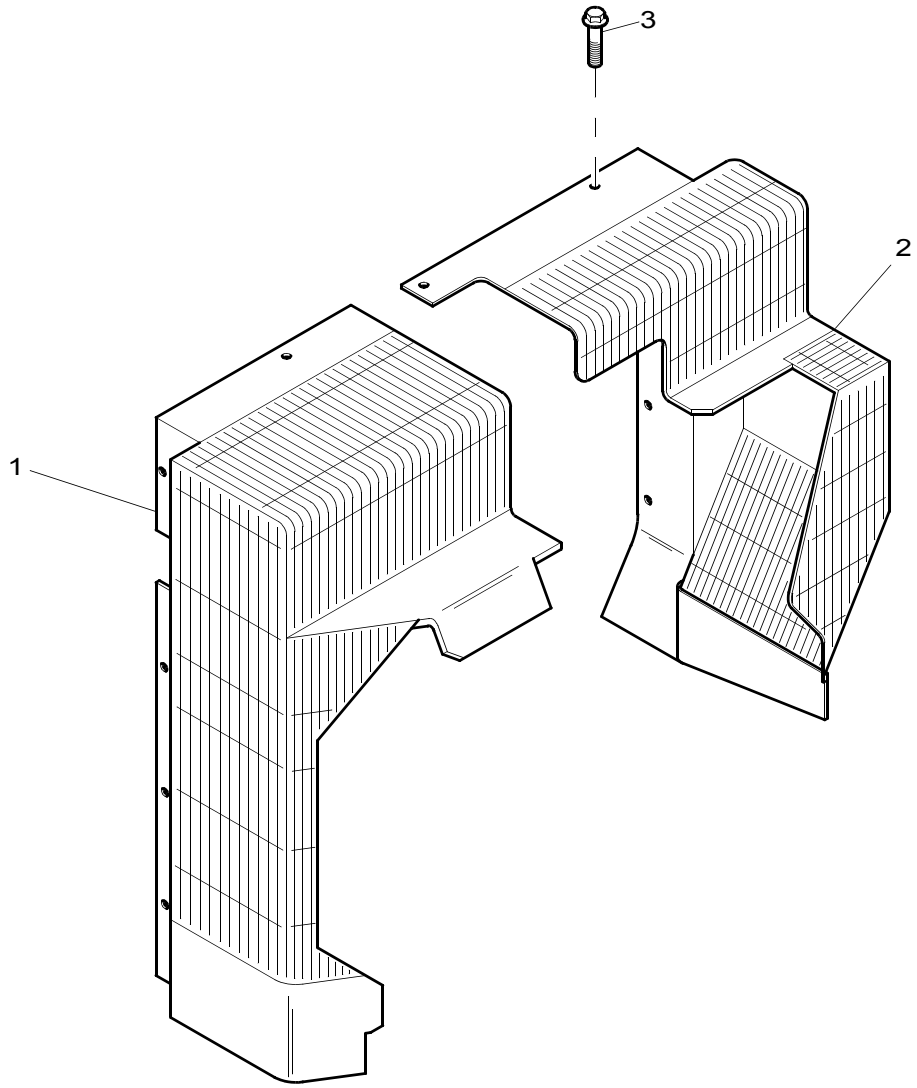

Guards	Plate A
	ZMH00534

Item	Part No.	References	Qty.	Description	Notes
1	3756V051		1	GUARD	
2	3756V046		1	GUARD	
3	2314F003	a.	10	SCREW	

History					
a.					
3	2314F002		10	SCREW	

Radiator Bracket & Fixings	Plate B
	ZMH00534

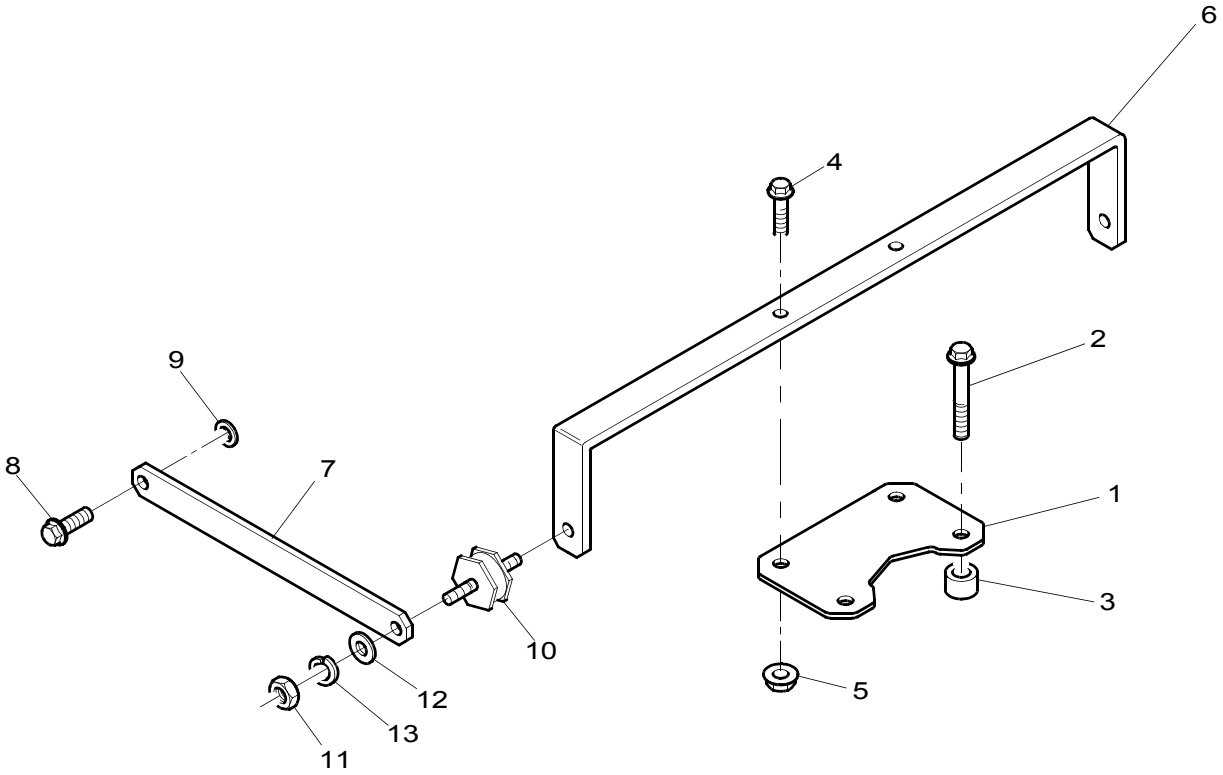

Radiator Bracket & Fixings	Plate B
	ZMH00534

Item	Part No.	References	Qty.	Description	Notes
1	3621X011		1	BRACKET	
2	2314K161		2	SCREW	
3	33135115		1	SPACER	
4	2314H004		2	SCREW	
5	2318A603		2	NUT	
6	3651A004		1	STAY	
7	3612T006		2	STAY	
8	2314H003		2	SCREW	
9	2131A008		2	WASHER	
10	2634A115		2	MOUNTING	
11	2318A209		4	NUT	
12	2131A010		4	WASHER	
13	2134A010		4	WASHER	

Fuel Pre-Lift Pump	Plate A
	ZVH00405

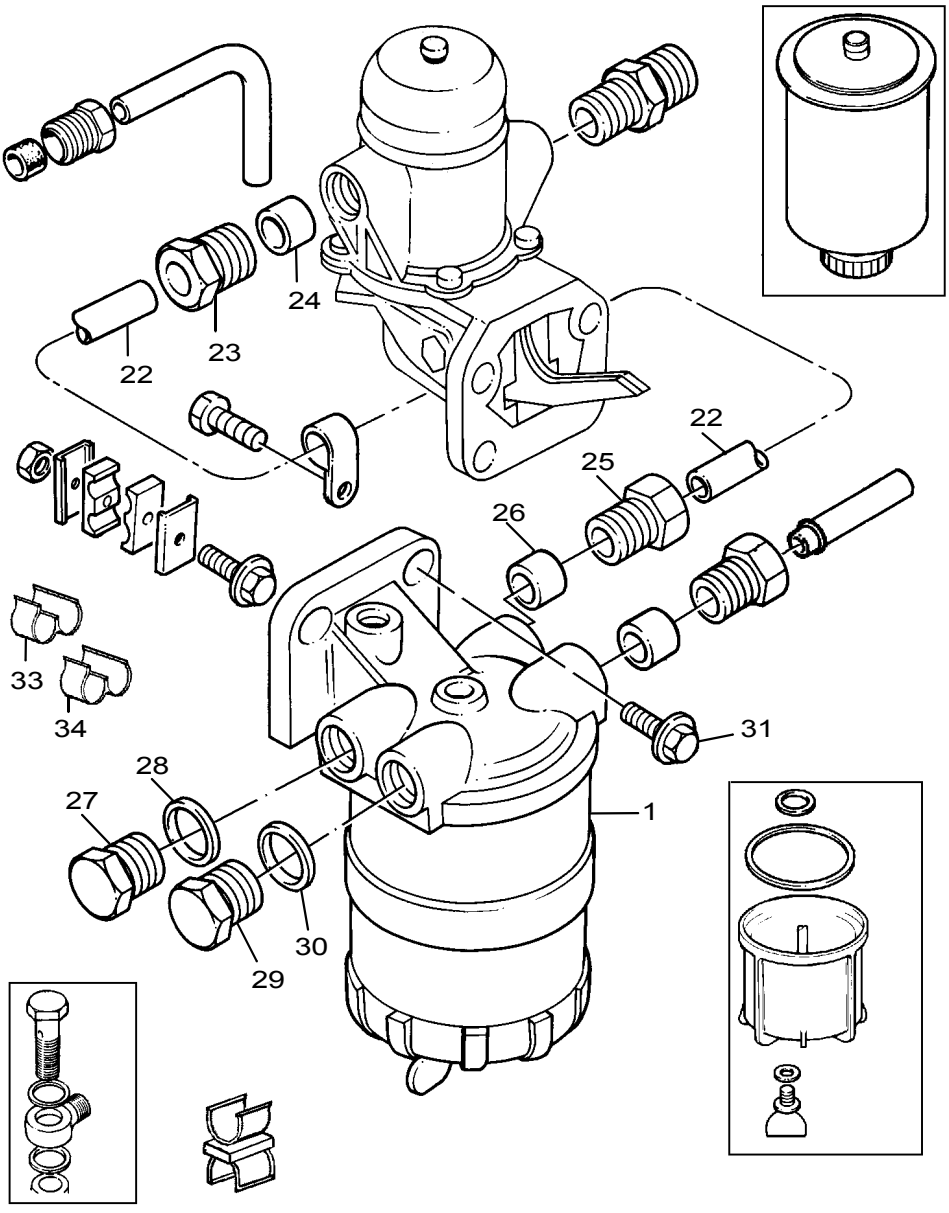

Fuel Pre-Lift Pump	Plate A
	ZVH00405

Item	Part No.	References	Qty.	Description	Notes
1	2656F810	2656F807	1	PRE-FUEL FILTER ASSY	
2		2656F810	1	FILTER HEAD	
3	26560904		1	NUT	
4	26560906		1	CAP	
5	26560905		1	SEAL - O RING	
6	26560907		1	PLUG	
7	26560909		1	PLUG	
8	26560923		1	SEAL - O RING	
9	26560903		1	SEAL - O RING	
11		26560145	1	ELEMENT	
12		26560145	1	VALVE	(A)
13		26560145	1	WASHER	(A)
14	26560924		1	KIT	
15		26560924	1	RING	
16		26560924	1	SEAL	
17		26560924	1	RING	
18		26560924	1	SEAL	
19		26560924	1	BOWL	
20		26560924	1	SEAL	
21		26560924	1	BOLT	
22	4122X004		1	FUEL PIPE	
23	33532129	0571346	1	NUT	
24	33811114		1	OLIVE	
25	33532129		1	NUT	
26	33811114		1	OLIVE	
27	0650204		1	PLUG	
28	2411D013	01/06/2003 a.	1	WASHER	
29	0650204		1	PLUG	
30	2411D013	01/06/2003 a.	1	WASHER	
31	2314J004		2	SCREW	
32	2314J003		2	SCREW	
33	2136A001		1	CLIP	
34	2481D302		1	CLIP	

History

a. 31/05/2003

28	0920154	1	WASHER
30	0920154	1	WASHER

Footnotes

(A)	REMOVE FROM ELEMENT WHEN BOWL IS FITTED

Fuel Pre-Lift Pump	Plate F
	ZVH00405

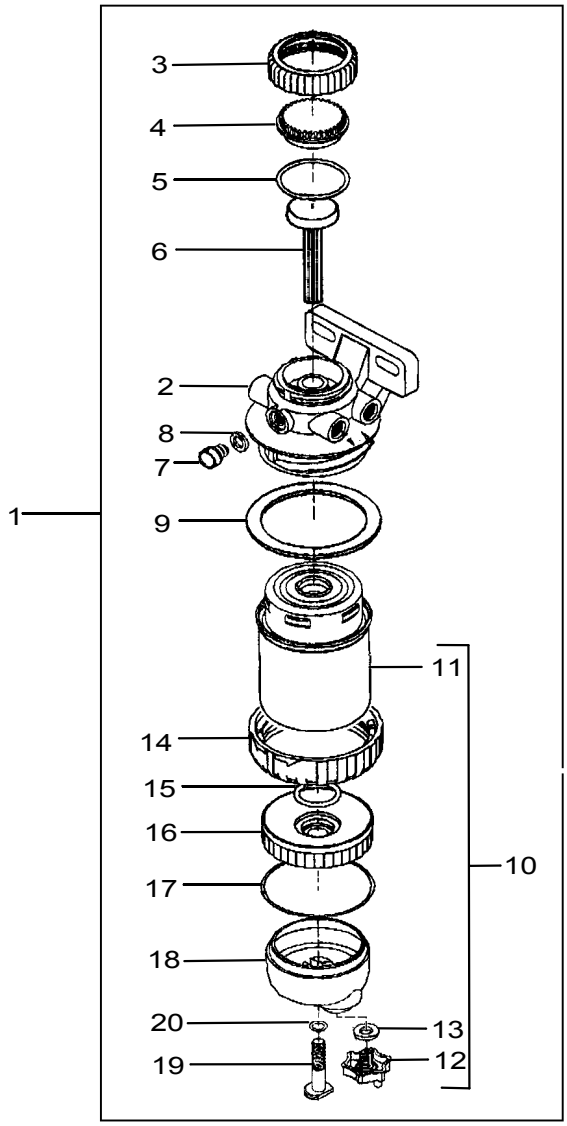

Fuel Pre-Lift Pump	Plate F
	ZVH00405

Item	Part No.	References	Qty.	Description	Notes
1	2656F810	●○ 2656F807	1	PRE-FUEL FILTER ASSY	(A)
2	┗	✏ REF.1	1	FILTER HEAD	
3	┣26560904		1	NUT	
4	┣26560906		1	CAP	
5	┣26560905		1	SEAL - O RING	
6	┣26560907		1	PLUG	
7	┣26560909		1	PLUG	
8	┣26560923		1	SEAL - O RING	
9	┣26560903		1	SEAL - O RING	
10	┣26560145	●○ 26560920	1	PRE-FUEL FILTER KIT	
11	┃┗	✏ REF.10	1	FILTER	
12	┃┣26560912		1	DRAIN PLUG	
13	┃┗26560911		1	WASHER	
14	┣26560902		1	RING	
15	┣26560918		1	SEAL - O RING	
16	┣26560914		1	FUEL FILTER HEAD	
17	┣26560917		1	SEAL - O RING	
18	┣26560913		1	BOWL	
19	┣26560915		1	BOLT	
20	┗26560916		1	SEAL	

Footnotes	
(A)	REFS 2-9,11-20 APPLY ONLY TO 2656F807.COMPONENT BREAKDOWN OF 2656F810 HAS YET TO BE ADVISED

	ZZH00338

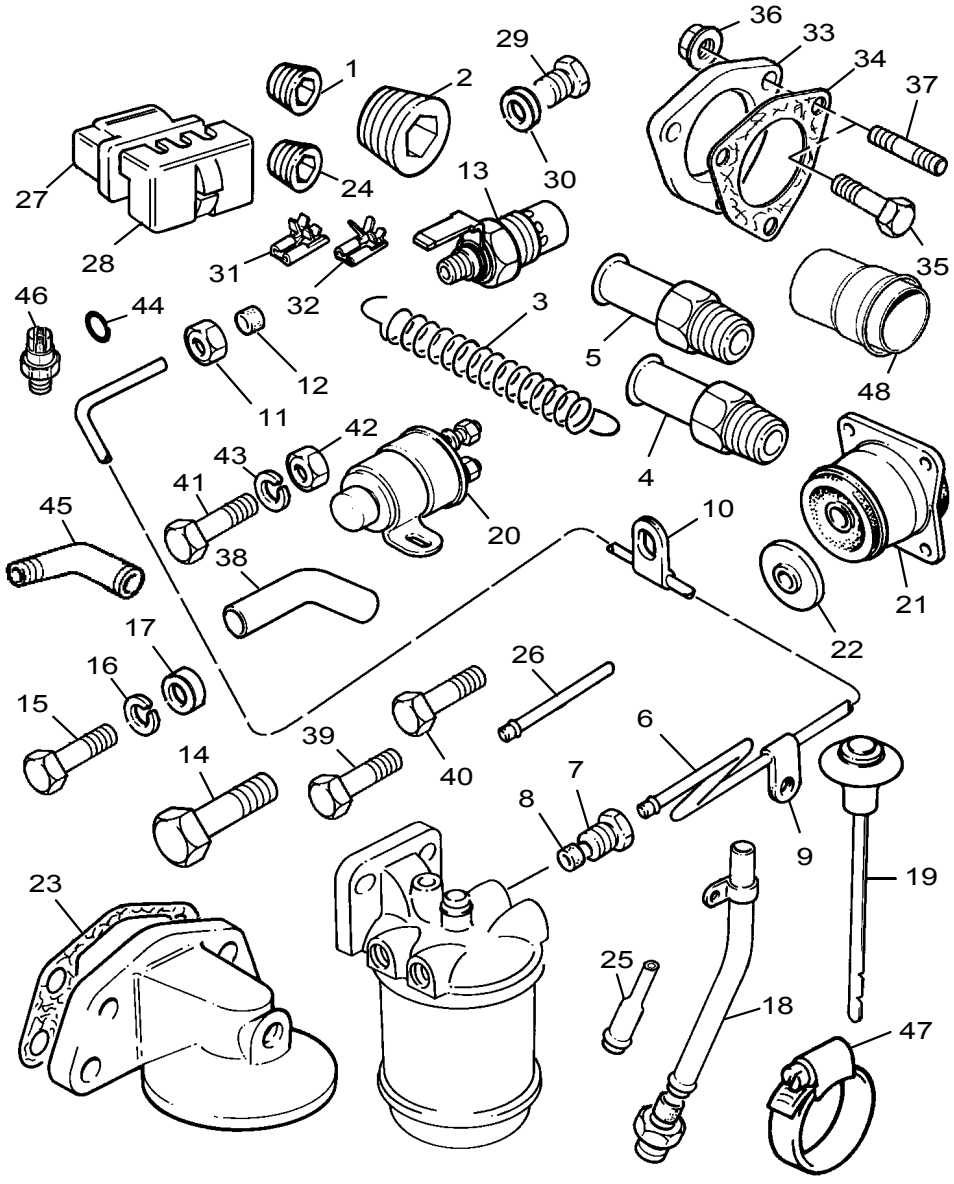
36
33
34
37
29
1
2
30
27
24
13
28
31
32
35
46
44
3
5
12
11
48
42
43
4
41
45
20
10
38
21
22
17
16
26
15
6
39
14
40
7
8
9
19
23
25
18
47

Application Miscellaneous & Auxiliaries	Plate A
	ZZH00338

Item	Part No.	References	Qty.	Description	Notes
1	2431A054		1	PLUG	

SACY0309

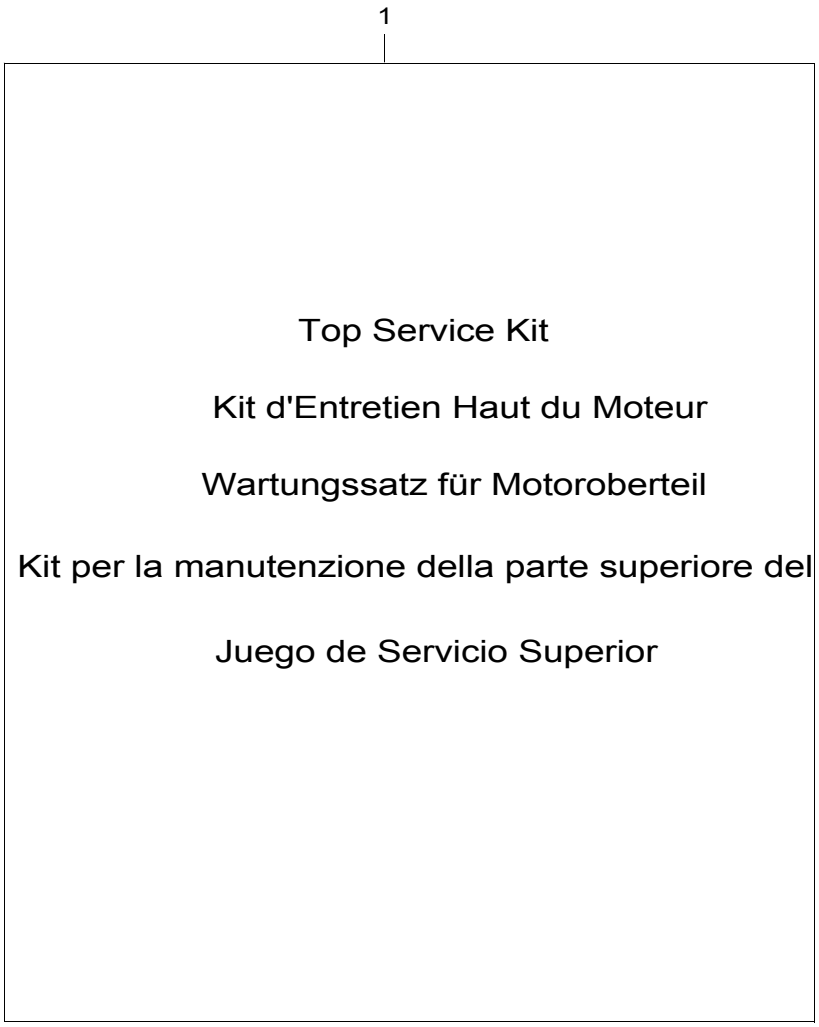
1
Top Service Kit
Kit d'Entretien Haut du Moteur
Wartungssatz für Motoroberteil
Kit per la manutenzione della parte superiore del motore
Juego de Servicio Superior

Joints & Gaskets - Top Service Kit **Plate A**

SACY0309

Item	Part No.	References	Qty.	Description	Notes
1	U5LT1309	a.	1	GASKET KIT - TOP	
2	3681H208		1	GASKET - CYLINDER HEAD	
3	3681C003		1	GASKET - CYL. HEAD COVER	
4	3688C028		1	GASKET - IND MANIFOLD	
5	36862191		2	GASKET - EXHAUST MANIFOLD	
6	3688C017		1	GASKET - EXHAUST MANIFOLD	
7	3687M018		1	GASKET	
8	3685F005		1	GASKET - THERMOSTAT HSG	
9	3684A004		1	GASKET - THERMOSTAT HSG	
10	3687W017		1	SEAL - WATER OUTLET	
11	3684N008		1	GASKET	
12	3685M002		1	GASKET - TURBOCHARGER	
13	3683N004		1	GASKET	
14	36832138		1	GASKET	
15	3683D006		1	GASKET	
16	3688A006		1	GASKET - TURBOCHARGER	
17	33817117		12	SEAL - VALVE STEM	
18	33813129		6	SPACER	
19	3311A042	a.	6	SEAL	
20	0921173		6	INJECTOR WASHER	
21	2415D051		12	WASHER	
22	33811113		1	OLIVE	
23	33811112		2	OLIVE	
24	33811114		6	OLIVE	
25	0566003		1	OLIVE	
26	0920146		2	WASHER	

History

a.

1	U5LT1309	1	GASKET KIT - TOP
19	33813131	6	SEAL

SGBY0318

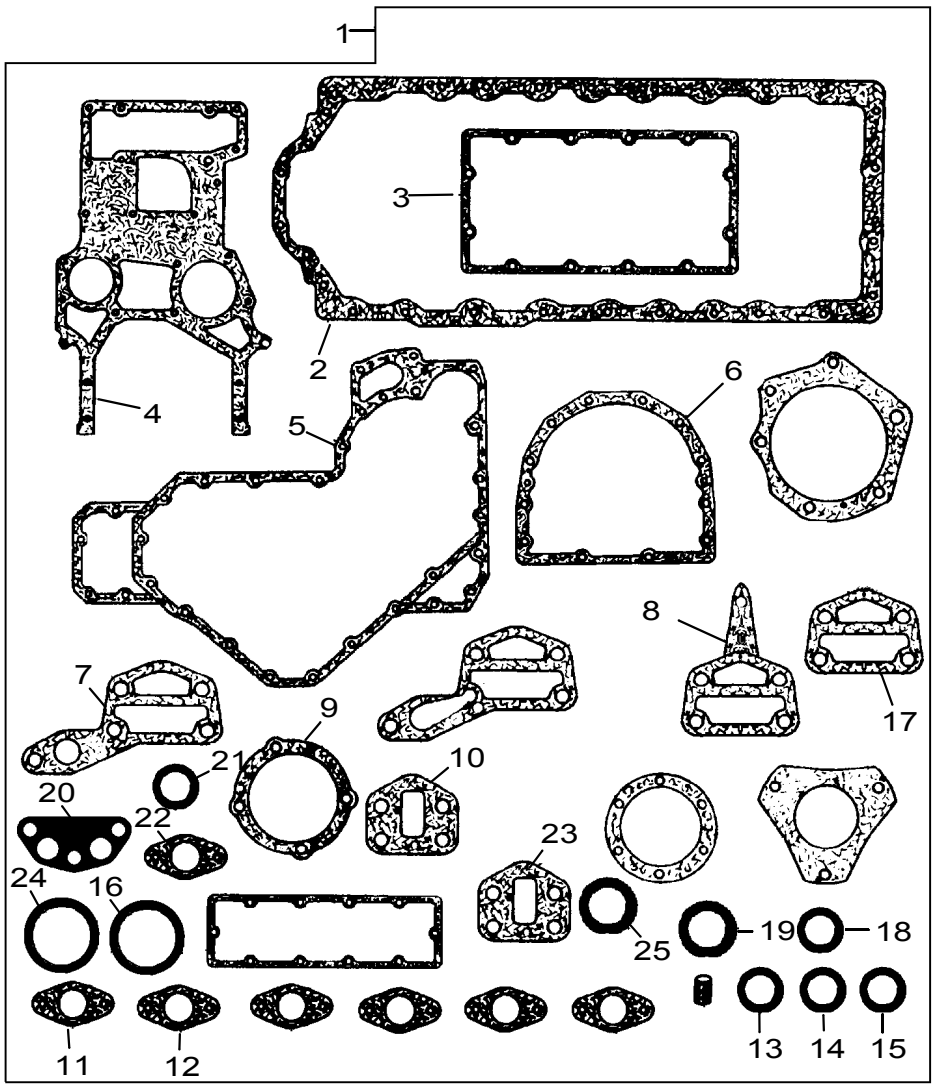

Joints & Gaskets - Bottom Service Kit **Plate A**

SGBY0318

Item	Part No.	References	Qty.	Description	Notes
1	U5LB0318	a.	1	JOINTS AND GASKET KIT	
2	3681M005		1	GASKET - SUMP	
3	21826394		1	GASKET - OIL COOLER	
4	3681P009	S	1	GASKET - TIMING CASE	
5			1	GASKET - TIMING COVER	
6	3681T018		1	GASKET - OIL SEAL HOUSING	
7	3687W006		1	GASKET - OIL FILTER HEAD	
8	3687W003		1	GASKET - OIL FILTER HEAD	
9	3682H003		1	GASKET	
10	3685R007	a.	1	GASKET - LIFT PUMP	
11	3683H002		1	GASKET	
12	3683H006		1	GASKET	
13	2415715		1	SEAL - O RING	
14	2415B436		2	SEAL - O RING	
15	2415B402		4	SEAL - O RING	
16	2415633		1	SEALING RING	
17	3686T004		1	GASKET - OIL FILTER HEAD	
18	2415H031		2	SEAL - O RING	
19	2415B152		1	O RING	
20	3686A511		1	GASKET	
21	2418F602		2	SEAL	
22	3688X008		2	SEAL - O RING	
23	3683H005		1	GASKET	
24	26435712		1	SEAL - O RING	
25	2415A093		1	SEAL - O RING	
Service Options					
4	21826405		X	GASKET - TIMING CASE	(A)

History

a.

1	U5LB0318	1	JOINTS AND GASKET KIT
10	36856104	1	GASKET - LIFT PUMP

Footnotes

(A)	ALTERNATIVE APPLIES TO 4 CYLINDER ENGINES ONLY

Parts Index

Description	Part No.	Page
2 GROOVE ALTERNATOR PULLEY	3115A049	107
ADAPTOR	33427431	125
	33534131	69
	3766P092	77
AIR FILTER ASSEMBLY	2652C149	127
ALTERNATOR	2871A141	97
	2871A141R	97
	2871A301	99
	2871A306	99
ALTERNATOR BRACKET	3641V014	101
	3828D019	101
ALTERNATOR PULLEY	3115A041	95
BANJO BOLT	0095315	59
	3218R013	137
	3218R037	137
	3218R039	57
BELT	2614B658	95, 107
	2614B660	107
BIG END BEARING KIT	U5ME0003	33, 33
	U5ME0014	33
	U5ME0025	11, 33
BLANKING PLATE	4148K002	75
	4148K006	109
BLANKING PLUG	3781A504	85

Description	Part No.	Page
BOLT	26560915	169
	26741038	117, 117, 123
	26741167	123
	32186137	83
BOLT KIT	28710259	97
	U5MK0385	11
BOWL	26560913	169
BRACKET	28710254	97
	3621A005	129
	3621X011	165
	3641A005	71
	3651H003	119
	3651K017	119
	3818D018	135
	3818X901	49
	3822A021	95
	3827H021	95
	3828H006	159
	3861A013	95
BRIDGE PIECE	3627P023	27, 69
	3627P043	27, 69
BUSH	2511437	51
CAMSHAFT	31416307	15, 51
CAMSHAFT BUSH	31134165	27
CAMSHAFT GEAR	3117L023	51
CAP	2652C810	127

Description	Part No.	Page
	26560906	139, 167, 169
	3218V005	77
	33424107	23, 23, 25, 25, 45, 45
CIRCLIP	0170151	49
	2721130	55
	2721A029	33, 35
	2722A206	51
CLAMP	26741029	117
	26741164	117, 123
	26741168	123
	3662K002	57
CLIP	0180067	85
	0180070	161, 161, 161, 161
	2136A001	167
	21825195	73, 121, 121
	21825199	121, 121
	2481D302	137, 167
	2646E072	57
	2646E073	57
	2646E075	57
	2646E076	57
	3645A004	69
	3656M001	147, 147
	3656M002	147, 147
	3656P002	137
	3656P003	137
COLLAR	26741011	117
CON ROD ASSEMBLY	4115C321	13, 13, 37, 41
	ZZ90013	33, 39
CON ROD BOLT	3212V003	37, 41
	32762145	33, 39
CON ROD NUT	33221328	17, 17, 33, 39
CONNECTION	31726241	137
	33286139	77
	33554128	77
	3355E005	57
	36136122	119
	3775E012	49
	4133L011	89
	4133L012	85, 85, 85
COVER	26510355	127
CRANKSHAFT ASSEMBLY	ZZ90229	33
	ZZ90230	13, 13
CRANKSHAFT GEAR	3117C061	33
CRANKSHAFT KIT	ZZ90085	33
	ZZ90218	33, 33
CRANKSHAFT PULLEY	3115T043	83
CYLINDER BLOCK ASSEMBLY	ZZ50270	31, 31
	ZZ50295	27, 27

Description	Part No.	Page
	ZZ50295R	13, 27
	ZZ50310	13
CYLINDER HEAD COVER	4142X026	15, 73
CYLINDER HEAD KIT	ZZ80227	47
	ZZ80228	11, 45
CYLINDER HEAD KIT - EXCH	ZZ80228P	11, 45
	ZZ80228R	15
DAMPER	3781N005	53
	3781N042	51
DIPSTICK	3178C074	69
DOWEL	0350009	31
	0350025	61
	2116053	51
	29990001	45, 47
DRAIN PLUG	26560912	139, 169
ELBOW	3766P122	121
	3767H071	119
ENGINE - EXCHANGE	YDL3748R	15
ENGINE OVERHAUL KIT	U5MK0712	17, 17
	U5MK0712K	17
EXHAUST MANIFOLD	3778P051	115
EXHAUST VALVE	3142A051	23, 23, 25, 25, 45
EXTENSION	3748W251	93

Description	Part No.	Page
FAN	2485C520	91
	28710364	97
FAN DRIVE HOUSING	4113H074	67
FAN DRIVE PULLEY	3115C113	67
FLANGE	3743C001	125
	3751K121	79
FLEXIBLE PIPE	2483A032	79
	2483A033	79
	2483A115	79
	2483A116	79
FLYWHEEL ASSEMBLY	4111D128	63
FLYWHEEL HOUSING	3713M042	61
	3713M049	61
FUEL FILTER	26560143	139
FUEL FILTER ASSEMBLY	2656F815	139
FUEL FILTER HEAD	26560914	169
FUEL FILTER KIT	2656F808	135
FUEL INJ PUMP - EXCH	2643U609R	57
FUEL INJECTION PIPE	3522N014	57
	3522N015	57
	3522N016	57
	3522N017	57
	3522N018	57

Description	Part No.	Page
	3522N019	57
FUEL INJECTION PUMP	2643U609	57
FUEL INJECTION PUMP GEAR	3117L052	57
FUEL PIPE	3435H012	137
	4122C033	137
	4122C034	137
	4122X004	167
	4124E085	147
GASKET	3682H003	175
	36831122	55
	36832138	121, 173
	36833152	73
	3683D006	121, 173
	3683H002	175
	3683H005	69, 175
	3683H006	73, 175
	3683N004	173
	3684N008	121, 173
	3686A511	77, 77, 175
	3687M018	85, 173
GASKET - CYL. HEAD COVER	3681C003	17, 17, 73, 73, 173
GASKET - CYLINDER HEAD	3681H208	45, 173
GASKET - EXHAUST MANIFOLD	36862191	115, 115, 173

Description	Part No.	Page
	3688C017	115, 173
GASKET - IND MANIFOLD	3687A508	73
	3688C003	11
	3688C028	173
	37467104	115, 115
	37467105	115, 115
GASKET - LIFT PUMP	36856104	175
	3685R007	133, 175
GASKET - OIL COOLER	21826394	175
	3684N028	79
	3684R011	77
	3684R012	81
GASKET - OIL FILTER HEAD	3686T004	175
	3686T006	77
	3687W003	175
	3687W006	77, 175
GASKET - OIL SEAL HOUSING	3681T018	31, 175
GASKET - SUMP	3681M005	11, 69, 175
	3681M007	17, 17
GASKET - THERMOSTAT HSG	3684A004	89, 173
	3685F005	85, 173
GASKET - TIMING CASE	21826405	175
	3681P002	51

Description	Part No.	Page
	3681P009	175
GASKET - TIMING CASE COVER	3681P029	11
GASKET - TURBOCHARGER	3685M002	173
	3688A006	117, 123, 173
	3688C011	119
GASKET KIT - BOTTOM	U5LB1167	17, 17
	U5LB1168	11
GASKET KIT - TOP	U5LT1179	11, 17, 17
	U5LT1309	173, 173
GUARD	3756V046	163
	3756V051	163
HEATSHIELD	3661A067	119
	3753H011	119
	38116132	119
	3813P001	119
HOLDER	2645L304	57
HOSE	3383A024	121
	3383E005	121
	3385N001	121
	3482E017	161
	3482E018	161
	3482E045	161
	3482E046	161
HOSE - AIR	3783R034	131
HOSE CLIP	2481873	131
	2481D076	131
HOSE KIT	U5MH0050	85
HOUSING	2486A976	79
	2486A984	79
	2486A989	79
	26741123	117
	26741152	117
	26741265	123
	26741301	123
	3771X141	77
HUB	33426161	51
IDLER GEAR	4111A008	51
	4111A013	51
IDLER GEAR BUSH	0050345	51
IMPELLER	26741042	117
INDICATOR	2652C814	127
INJECTOR	2645L017	57
INJECTOR - EXCHANGE	2645L017R	57
INJECTOR NOZZLE	2645L615	57
INJECTOR WASHER	0921173	57, 173
INSERT	3314A004	47
	3314A011	47
	3314A121	45
	3324E002	45
INSPECTION COVER	4152A002	51
INTAKE HEATER	2666108	141

Description	Part No.	Page
INTAKE MANIFOLD	3777U031	115
	3777U036	115
	3777U038	115
INTAKE VALVE	3142L071	23, 23
	3142L072	25, 25, 45
JOINTS AND GASKET KIT	U5LB0318	175, 175
KIT	26560924	167
LEVER	3615A015	101
LIFT PUMP KIT	ULPK0002	133
LINER - OVERSIZE	3135X045	17, 27
	3135X046	17, 27
LINER - PRESS FIT	3135X041	17, 27
LINER - SLIP FIT	3135X042	17, 17, 27
LINER KIT	U5MK0245	43
LOCTITE	1861135	77
LONG ENGINE - KIT	U5MK8113	11
	U5MK8113P	11
MAIN AIR FILTER	26510353	127
MAIN BEARING KIT	U5MB0007	33
MAIN BEARING KIT - U/S	U5MB0007A	33
	U5MB0007B	33
	U5MB0007C	33
METRIC BOLT	3211C002	31
MOUNTING	2634A115	165
NUT	0576052	49
	0576112	137
	0576116	121
	2318A108	57
	2318A209	165
	2318A603	55, 57, 69, 77, 77, 79, 79, 159, 165
	2318A604	65
	2318A605	49
	2318A633	119, 119, 119, 119
	2318A634	115, 115, 115, 115, 121, 125
	2318D208	93, 95, 95, 101
	2318D240	95
	26560904	139, 167, 169
	3274A003	73
	33225414	137, 137
	33532129	137, 137, 137, 137, 167, 167
	33532148	147
O RING	2415B152	87, 175
OIL COOLER	2486A971	77
	2486A980	79
	2486A981	79
	2486A992	79
	2486A993	79

Description	Part No.	Page
OIL COOLER KIT	U5MK0633	11, 17, 17
OIL FILLER CAP	4142X099	73
OIL FILTER	2654403	77
OIL FILTER HEAD	4134E031	77
OIL PIPE	2483A006	77
	2483A007	77
	2483A015	79
	2483A016	79
	3571C014	73
	3571F016	121
	3575K006	69
	4126X106	121
OIL PRESSURE SWITCH	2848A013	149
OIL PUMP	4132F057	55
OLIVE	0566003	137, 173
	0566007	121
	33811112	137, 137, 147, 173
	33811113	49, 173
	33811114	137, 137, 137, 137, 137, 137, 167, 167, 173
	33812116	69
	3381A002	147
PIN	2116087	27, 51
PIPE - BREATHER	33872519	73
PIPE - LEAK OFF	3558X021	57

Description	Part No.	Page
PIPE - LIFT PUMP TO FILTER	4125V012	137
PIPE - OIL	3571C045	55
PIPE - OIL SUCTION	3575K015	69
PISTON COOLING JET	3861A027	27
PISTON KIT	U5LL0013	35
	U5LL0016	13, 13, 17, 17
	U5LL0039	33
PISTON RING KIT	4181A021	17, 17, 35
	4181A026	13, 13, 17, 17, 33
PLATE	26741008	117
	26741023	117
	26741030	117
	3241A021	53
	3241A025	51
	3241H009	53
	3272A033	51
	3617A001	73
	36212132	61
	3621X007	143
	3623K007	85
	36241316	133
	3654W003	143
	4148K016	109
PLUG	0650203	151
	0650204	167, 167

Description	Part No.	Page
	0650507	49
	0650540	45
	0650586	111
	0650594	149
	0650710	27, 45, 47
	2431131	57, 115
	2431154	47, 85
	2431A016	69
	2431A054	45, 47, 171
	2485A204	27
	24864005	157
	2487096	69
	2487204	61
	2487207	145
	2487A018	69
	2487A452	61
	2487A510	47
	2487Y005	51, 61
	26560907	139, 167, 169
	26560909	167, 169
	3211A005	27
	3212P002	45
	32161114	155, 155
	32168212	27
	32186405	69
	32416118	73

Description	Part No.	Page
	32416119	27
	32417134	27
	32417156	45, 47
	32418122	27, 27, 27
	3774A004	11, 27
	4148K011	85
PLUNGER	32712726	55
	3342A303	77
PRE-FUEL FILTER ASSY	2656F810	167, 169
PRE-FUEL FILTER KIT	26560145	169
PUSHROD	31434307	49
RADIATOR	2485B266	157
	2485B283	157
RADIATOR CAP	24864003	157
RECTIFIER	28710355	97
REGULATOR	28710252	97
RELIEF VALVE	4138A017	27
	4138A033	55
	4138A035	77
REPAIR KIT - LIFT PUMP	ULPR0002	133
	ULPR0013	133
REPAIR KIT - TURBOCHARGER	26741060	117
	26741166	123
REPAIR KIT - WATER PUMP	U7LW0151	87
RING	2417711	83

Description	Part No.	Page
	26560902	139, 169
	33415356	125
ROCKER ARM ASSEMBLY	4115R305	49
	4115R306	49
ROCKER SHAFT ASSEMBLY	ZZ90057	15, 49
ROCKER SHAFT ASSY - MINOR	U7LR0003	49
ROCKER SHAFT SPRING	31743108	49
	31744123	49
ROTOR - ELECTRIC REPAIR	28710255	97
RUBBER	33546	159
SAFETY AIR FILTER	26510354	127
SCREW	0096803	63, 63
	2182110	27
	2233022	49, 49
	2311D039	27, 69
	2311F055	159
	2314C049	111
	2314C369	159
	2314F002	163
	2314F003	51, 163
	2314F036	51
	2314H001	119
	2314H002	55, 69, 69, 69, 73, 79, 79, 79, 101, 119, 147
	2314H003	31, 51, 71, 73, 75, 77, 95, 121, 121, 165
	2314H004	51, 51, 55, 55, 55, 69, 69, 77, 85, 95, 101, 121, 165
	2314H005	95, 103, 133, 137
	2314H006	57, 87, 87, 95
	2314H007	101
	2314H008	55, 85, 89, 95, 95, 101, 119
	2314H010	89, 129
	2314H013	51, 95, 101, 103
	2314H015	85, 87
	2314H017	95
	2314H020	69, 69
	2314H032	79, 79, 109
	2314H034	51, 69
	2314H102	61

Description	Part No.	Page
	2314J002	109, 119, 129, 135
	2314J003	77, 77, 95, 101, 135, 143, 143, 167
	2314J004	95, 95, 105, 113, 135, 167
	2314J007	77
	2314J008	119, 159
	2314J009	129
	2314J010	53, 77
	2314J011	51
	2314J013	85
	2314J014	121
	2314J015	67
	2314J039	115
	2314J049	115
	2314J204	61
	2314J603	61, 101
	2314J606	51
	2314J607	49
	2314K159	77, 119
	2314K161	55, 165
	2314N043	87
	2646E152	57, 57, 57, 57
	32114145	49
	3212V001	77
	3212V002	31
	32166219	45
	32166221	45
	32166222	45
	32166329	27
	3218H006	119, 119
SEAL	2418F602	79, 175
	26560916	169
	31718104	57
	3311A042	11, 17, 17, 173
	33813131	57, 173
	33817135	73
	36843154	61
SEAL - FRONT END OIL	2418F436	11, 17, 17, 53
	2418F437	51
SEAL - O RING	2415638	83
	2415715	69, 175
	2415A050	85
	2415A076	85
	2415A093	51, 175
	2415A131	73
	2415B121	75
	2415B155	87
	2415B402	77, 175
	2415B436	175
	2415H031	77, 175
	2415H494	87

Description	Part No.	Page
	2415H503	109
	2415H549	109
	2418F603	79
	26435712	175
	26560903	139, 167, 169
	26560905	139, 167, 169
	26560917	169
	26560918	169
	26560923	167, 169
	3688X008	79, 175
SEAL - REAR END OIL	2418F475	17, 17, 31
SEAL - REOS HOUSING	2418F701	31
	2418F703	13, 13
	4142V066	31
SEAL - VALVE STEM	33817117	45, 45, 173
SEAL - WATER OUTLET	3687W017	89, 173
SEALING RING	2415633	175
SEAT	32712111	55
SENDER	2848A102	153
SHAFT	3271H004	27, 51
	3271H005	27, 51
SHIELD	3781N013	53
	3781N043	51
SHIM	3311K015	49

Description	Part No.	Page
SHORT ENGINE	YD39860	11, 13
	YD39864	13
SHORT ENGINE - EXCHANGE	YD39860P	11, 13
	YD39860R	11, 13, 15
SLEEVE	3281M002	57
SMALL END BUSH	3112A006	37, 41
	31134131	33, 39
SPACER	0920469	27
	2131508	119, 119, 119
	33115117	159
	3311X002	83
	3312K305	101
	33134418	79
	33135115	165
	33135413	137
	33246117	119, 129
	33247125	119, 119
	33813129	57, 173
SPRING	31744151	55, 77
	31754119	73
STARTER MOTOR	2873K621	65
STARTER RING GEAR	31162121	63
STATOR	28710258	97
	28710353	97
STAY	3612T006	165
	3651A004	165

Description	Part No.	Page
STUD	2313C063	119
	2313C078	65
	2313F059	119
	2313F068	119
	2313F079	125
	2313H231	55
	2313H242	93
	2313H331	49
	2313M058	77, 77, 79
	2313M059	57
	2313M277	121
	2313M280	121
	2313M378	115
	2313M380	115
	2313M387	115, 115
	3211P004	59
SUMP	3787H403	69
	4145H079	15
SUNDRY KIT	28710260	97
SUPPORT BRACKET	36241123	73
TAPPET	3142U031	49
TERMINAL KIT	28710261	97
THERMOSTAT	2485613	85
THERMOSTAT HOUSING	3771K121	85
THIMBLE	2135A001	33, 39
	33142111	27
THRUST BEARING	26741012	117
THRUST PLATE	32418313	83
	33153121	51
THRUST WASHER	31137312	21, 21, 21, 21, 33
	31137322	21, 21, 21, 21, 33
	31137551	21, 21, 33
	31137561	21, 21, 33
THRUST WASHER KIT	U5TW0002	21
THRUST WASHER KIT - O/S	U5TW0002A	21
	U5TW0002B	21
TIMING CASE	3716C242	53
	3716C522	15, 51
TIMING COVER	4142A171	15, 51, 53
TUBE ASSEMBLY	3577A125	69
TURBINE HOUSING	26741300	123
TURBOCHARGER	2674A080	123
	2674A121	117
TURBOCHARGER - BUSH	26741087	117
TURBOCHARGER - EXCHANGE	2674A080P	123
UNION	0201502	137, 137
	0201526	59
	0206008	121
UNION NUT	33225412	137, 137, 147
VALVE	26510350	127

Description	Part No.	Page
VALVE COLLET	33173108	23, 23, 25, 25, 45, 45
VALVE GUIDE	3343F002	47
	3343F041	23, 23, 25, 25, 45
	3343J002	47
	3343J021	23, 23, 25, 25, 45
VALVE SPRING INNER	31744133	23, 23, 25, 25, 45, 45
VALVE SPRING OUTER	31745122	23, 23, 25, 25, 45, 45
VALVE SPRING WASHER	33415118	23, 23, 25, 25, 45, 45
VALVETRAIN KIT	U5VK0180	23
	U5VK0182	23
	U5VK0190	25
	U5VK0192	25
WASHER	0920009	73, 159
	0920146	173
	0920154	167, 167
	0920156	69, 69
	0920433	71
	0920471	159
	0920497	95, 95, 119
	0921176	59, 59

Description	Part No.	Page
	2131A008	95, 95, 101, 101, 165
	2131A010	95, 165
	2134A010	165
	2411154	137, 137
	2411157	151
	2411A024	77
	2411D007	57, 57
	2411D010	137
	2411D013	167, 167
	2411D016	151
	2415928	137
	2415D002	79, 79
	2415D051	173
	2415D052	59, 59
	2415D053	111
	2415D108	27
	24864006	157
	26560911	139, 169
	33117127	63, 63
	33117434	49
	3311K009	49
	3311R003	31
	33123125	51
	33124118	159
	33134113	69, 69, 69, 69

Description	Part No.	Page
	3321A003	51
	K134AF01	57
WATER PUMP	U5MW0160	87
WATER PUMP - EXCHANGE	U5MW0160R	87
WHEEL	26741026	117
WIRE	31718143	57
WOODRUFF KEY	0500005	83
	0500012	33, 51