RUTHZIL TRATOR COMERCIAL DE PEÇAS LTDA 11 97083-6812 ROLANDO CITRANGULO

CATERPILLAR®

SEBU7645-06
February 2010

Operation and Maintenance Manual

IT28G Integrated Toolcarrier and 924G, 924GZ, 928G and 930G Wheel Loaders

DDA1-Up (Machine)
RTA1-Up (Machine)
RBB1-Up (Machine)
WMB1-Up (Machine)
WAC1-Up (Machine)
DJD1-Up (Machine)
WLG1-Up (Machine)
TWR1-Up (Machine)
DBT1-Up (Machine)
TFW1-Up (Machine)
WGX1-Up (Machine)
DFZ1-Up (Machine)

SAFETY.CAT.COM

Important Safety Information

Most accidents that involve product operation, maintenance and repair are caused by failure to observe basic safety rules or precautions. An accident can often be avoided by recognizing potentially hazardous situations before an accident occurs. A person must be alert to potential hazards. This person should also have the necessary training, skills and tools to perform these functions properly.

Improper operation, lubrication, maintenance or repair of this product can be dangerous and could result in injury or death.

Do not operate or perform any lubrication, maintenance or repair on this product, until you have read and understood the operation, lubrication, maintenance and repair information.

Safety precautions and warnings are provided in this manual and on the product. If these hazard warnings are not heeded, bodily injury or death could occur to you or to other persons.

The hazards are identified by the "Safety Alert Symbol" and followed by a "Signal Word" such as "DANGER", "WARNING" or "CAUTION". The Safety Alert "WARNING" label is shown below.

⚠ WARNING

The meaning of this safety alert symbol is as follows:

Attention! Become Alert! Your Safety is Involved.

The message that appears under the warning explains the hazard and can be either written or pictorially presented.

A non-exhaustive list of operations that may cause product damage are identified by "NOTICE" labels on the product and in this publication.

Caterpillar cannot anticipate every possible circumstance that might involve a potential hazard. The warnings in this publication and on the product are, therefore, not all inclusive. You must not use this product in any manner different from that considered by this manual without first satisfying yourself that you have considered all safety rules and precautions applicable to the operation of the product in the location of use, including site-specific rules and precautions applicable to the worksite. If a tool, procedure, work method or operating technique that is not specifically recommended by Caterpillar is used, you must satisfy yourself that it is safe for you and for others. You should also ensure that the product will not be damaged or become unsafe by the operation, lubrication, maintenance or repair procedures that you intend to use.

The information, specifications, and illustrations in this publication are on the basis of information that was available at the time that the publication was written. The specifications, torques, pressures, measurements, adjustments, illustrations, and other items can change at any time. These changes can affect the service that is given to the product. Obtain the complete and most current information before you start any job. Caterpillar dealers have the most current information available.

⚠ WARNING

When replacement parts are required for this product Caterpillar recommends using Caterpillar replacement parts or parts with equivalent specifications including, but not limited to, physical dimensions, type, strength and material.

Failure to heed this warning can lead to premature failures, product damage, personal injury or death.

In the United States, the maintenance, replacement, or repair of the emission control devices and systems may be performed by any repair establishment or individual of the owner's choosing.

Table of Contents

Foreword 4

Safety Section

Safety Messages 6

General Hazard Information 13

Crushing Prevention and Cutting Prevention 15

Burn Prevention 16

Fire Prevention and Explosion Prevention 16

Fire Extinguisher Location 19

Tire Information 20

Electrical Storm Injury Prevention 21

Before Starting Engine 21

Visibility Information 21

Engine Starting 22

Before Operation 22

Operation 22

Engine Stopping 23

Parking 23

Slope Operation 23

Work Tools 24

Equipment Lowering with Engine Stopped 24

Sound Information and Vibration Information 25

Operator Station 27

Product Information Section

General Information 28

Identification Information 52

Operation Section

Before Operation 55

Machine Operation 57

Engine Starting 88

Operation 90

Adjustments 93

Parking 96

Transportation Information 99

Towing Information 101

Engine Starting (Alternate Methods) 104

Maintenance Section

Tire Inflation Information 106

Lubricant Viscosities and Refill Capacities 109

Maintenance Support 113

Maintenance Interval Schedule 114

Reference Information Section

Reference Materials 158

Index Section

Index 161

Foreword

Literature Information

This manual should be stored in the operator's compartment in the literature holder or seat back literature storage area.

This manual contains safety information, operation instructions, transportation information, lubrication information and maintenance information.

Some photographs or illustrations in this publication show details or attachments that can be different from your machine. Guards and covers might have been removed for illustrative purposes.

Continuing improvement and advancement of product design might have caused changes to your machine which are not included in this publication. Read, study and keep this manual with the machine.

Whenever a question arises regarding your machine, or this publication, please consult your Caterpillar dealer for the latest available information.

Safety

The safety section lists basic safety precautions. In addition, this section identifies the text and locations of warning signs and labels used on the machine.

Read and understand the basic precautions listed in the safety section before operating or performing lubrication, maintenance and repair on this machine.

Operation

The operation section is a reference for the new operator and a refresher for the experienced operator. This section includes a discussion of gauges, switches, machine controls, attachment controls, transportation and towing information.

Photographs and illustrations guide the operator through correct procedures of checking, starting, operating and stopping the machine.

Operating techniques outlined in this publication are basic. Skill and techniques develop as the operator gains knowledge of the machine and its capabilities.

Maintenance

The maintenance section is a guide to equipment care. The Maintenance Interval Schedule (MIS) lists the items to be maintained at a specific service interval. Items without specific intervals are listed under the "When Required" service interval. The Maintenance Interval Schedule lists the page number for the step-by-step instructions required to accomplish the scheduled maintenance. Use the Maintenance Interval Schedule as an index or "one safe source" for all maintenance procedures.

Maintenance Intervals

Use the service hour meter to determine servicing intervals. Calendar intervals shown (daily, weekly, monthly, etc.) can be used instead of service hour meter intervals if they provide more convenient servicing schedules and approximate the indicated service hour meter reading. Recommended service should always be performed at the interval that occurs first.

Under extremely severe, dusty or wet operating conditions, more frequent lubrication than is specified in the maintenance intervals chart might be necessary.

Perform service on items at multiples of the original requirement. For example, at every 500 service hours or 3 months, also service those items listed under every 250 service hours or monthly and every 10 service hours or daily.

California Proposition 65 Warning

Diesel engine exhaust and some of its constituents are known to the State of California to cause cancer, birth defects, and other reproductive harm.

Battery posts, terminals and related accessories contain lead and lead compounds. **Wash hands after handling.**

Certified Engine Maintenance

Proper maintenance and repair is essential to keep the engine and machine systems operating correctly. As the heavy duty off-road diesel engine owner, you are responsible for the performance of the required maintenance listed in the Owner Manual, Operation and Maintenance Manual, and Service Manual.

It is prohibited for any person engaged in the business of repairing, servicing, selling, leasing, or trading engines or machines to remove, alter, or render inoperative any emission related device or element of design installed on or in an engine or machine that is in compliance with the regulations (40 CFR Part 89). Certain elements of the machine and engine such as the exhaust system, fuel system, electrical system, intake air system and cooling system may be emission related and should not be altered unless approved by Caterpillar.

Machine Capacity

Additional attachments or modifications may exceed machine design capacity which can adversely affect performance characteristics. Included would be stability and system certifications such as brakes, steering, and rollover protective structures (ROPS). Contact your Caterpillar dealer for further information.

Caterpillar Product Identification Number

Effective First Quarter 2001 the Caterpillar Product Identification Number (PIN) has changed from 8 to 17 characters. In an effort to provide uniform equipment identification, Caterpillar and other construction equipment manufacturers are moving to comply with the latest version of the product identification numbering standard. Non-road machine PINs are defined by ISO 10261. The new PIN format will apply to all Caterpillar machines and generator sets. The PIN plates and frame marking will display the 17 character PIN. The new format will look like the following:

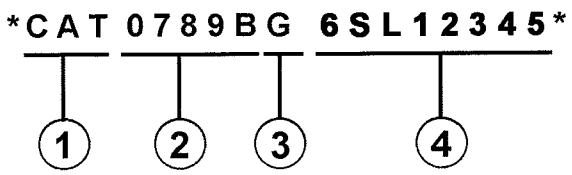

Illustration 1 g00751314

Where:

1. Caterpillar's World Manufacturing Code (characters 1-3)

2. Machine Descriptor (characters 4-8)

3. Check Character (character 9)

4. Machine Indicator Section (MIS) or Product Sequence Number (characters 10-17). These were previously referred to as the Serial Number.

Machines and generator sets produced before First Quarter 2001 will maintain their 8 character PIN format.

Components such as engines, transmissions, axles, etc. and work tools will continue to use an 8 character Serial Number (S/N).

Safety Section

i03652328

Safety Messages

SMCS Code: 7000

There are several specific safety messages on this machine. The exact location of the hazards and the description of the hazards are reviewed in this section. Please become familiarized with all safety messages.

Make sure that all of the safety messages are legible. Clean the safety messages or replace the safety messages if you cannot read the words. Replace the illustrations if the illustrations are not legible. When you clean the safety messages, use a cloth, water and soap. Do not use solvent, gasoline, or other harsh chemicals to clean the safety messages. Solvents, gasoline, or harsh chemicals could loosen the adhesive that secures the safety message. Loose adhesive will allow the safety message to fall.

Replace any safety message that is damaged, or missing. If a safety message is attached to a part that is replaced, install a safety message on the replacement part. Any Caterpillar dealer can provide new safety messages.

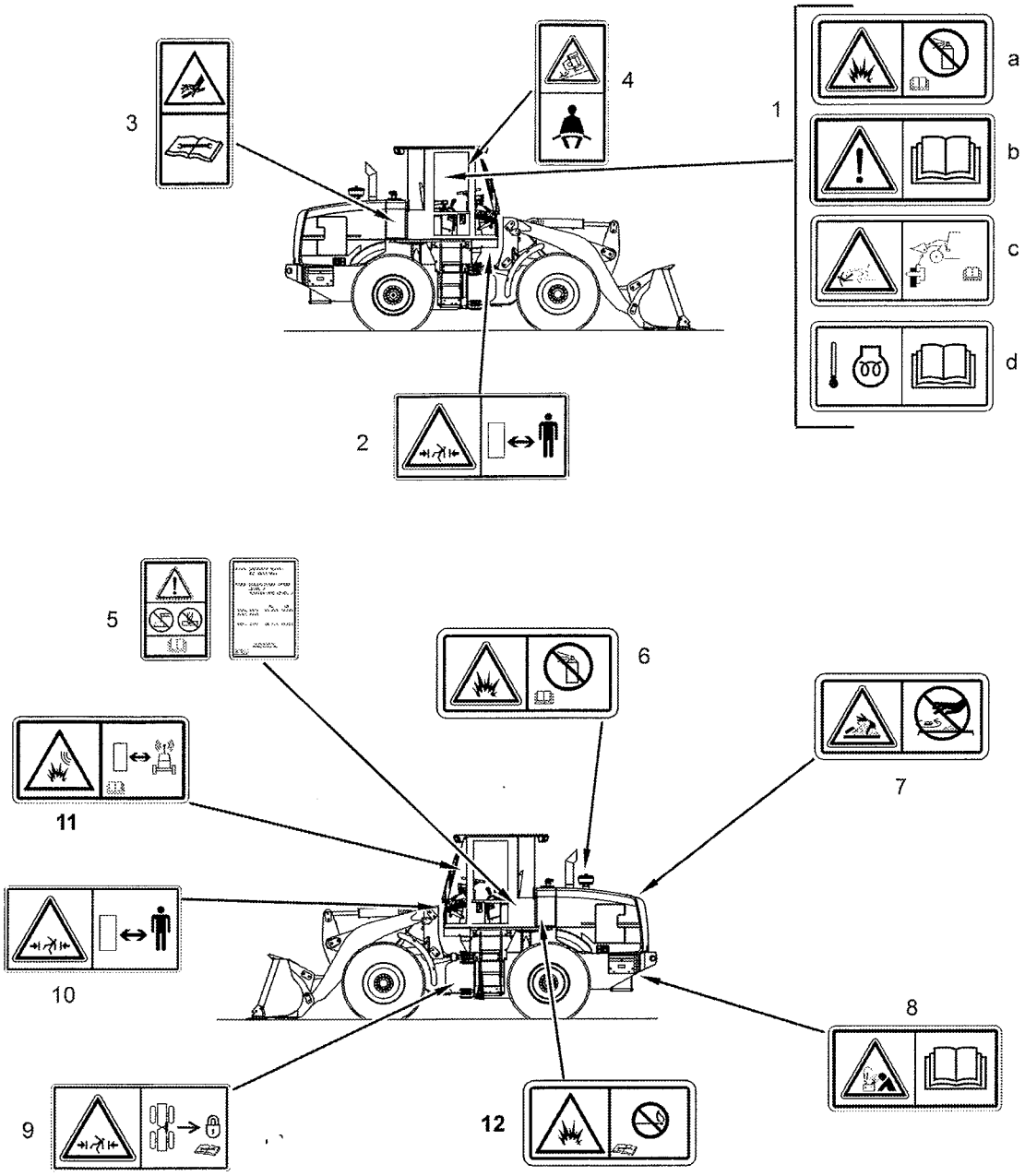

Illustration 2

g01507858

Do Not Operate (1b)

This warning message is positioned in the cab on the right side.

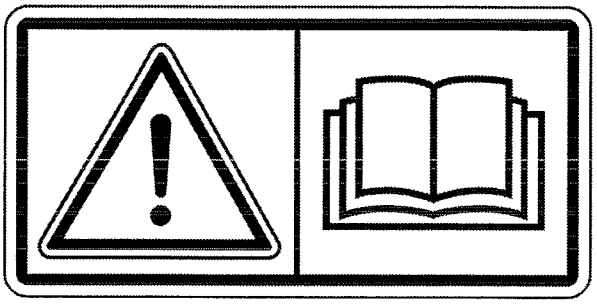

g01370904

⚠ WARNING

Do not operate or work on the machine unless you have read and understand the instructions and warnings in the Operation and Maintenance manuals. Failure to follow the instruction or heed the warnings could result in injury or death. Contact any Caterpillar dealer for replacement manuals. proper care is your responsibility.

For machines equipped with quick coupler, improper attachment of implements could result in injury or death.

Do not operate this machine until you have positive indication that the coupler pins are fully engaged. Follow recommended procedure in Operation and Maintenance manual.

If machine is radio equipped, radio must be fastened securely. Failure to do so could allow the radio to fall out during rough machine operation or roll over and result in injury. Refer to Operation and Maintenance manual for specific fastening and latching requirements.

Do not spray ether into engine when using thermal starting aid to start engine. Personal injury and machine damage could result.

Ether (1a)

This warning message is positioned in the cab on the right side.

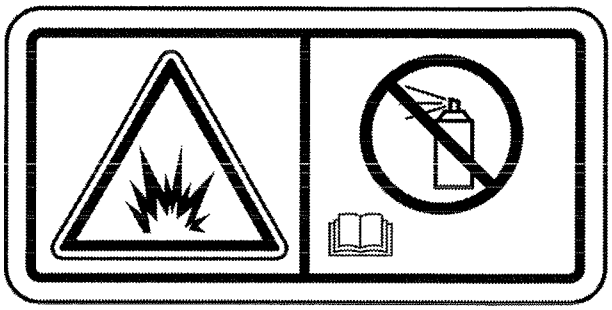

g01372254

⚠ WARNING

Do not use aerosol types of starting aids such as ether. Such use could result in an explosion and personal injury.

Stay Away From Work Tool (1c)

This warning message is positioned in the cab on the right side.

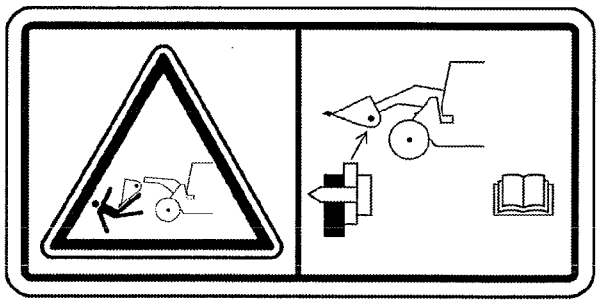

g01377715

⚠ WARNING

No clearance for person in this area during operation. Severe injury or death from crushing could occur. Stay away from the work tool while it is in operation.

No Clearance (2 & 10)

This warning label is positioned on the machine at the center pivot on both sides.

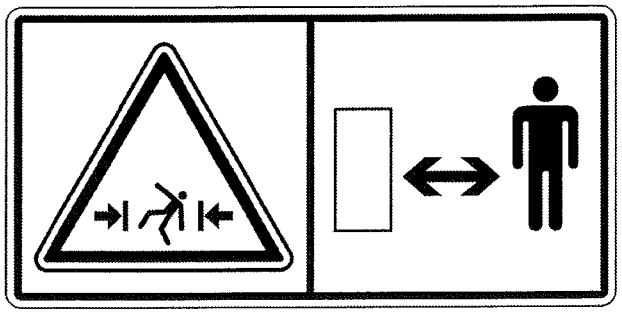

g01371644

⚠ WARNING

No clearance for person in this area when machine turns. Severe injury or death from crushing could occur.

High Pressure Accumulator (3)

This warning label is positioned on the left side inside the frame rail under the ladder. This warning label is positioned on the right side in the engine compartment behind the cab.

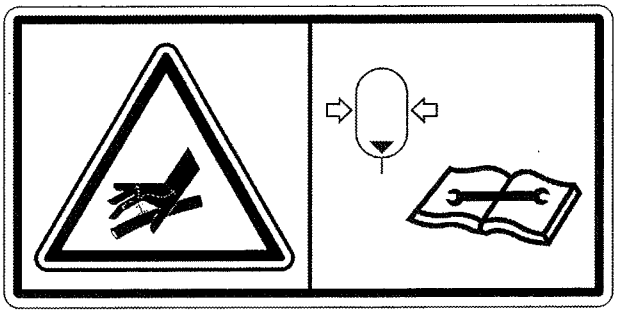

g01370912

⚠ WARNING

This system contains high pressure gas. Failure to follow the instructions and warnings could cause an explosion, resulting in possible injury or death.

Do not expose to fire. Do not weld. Do not drill. Relieve pressure before discharging.

See Operation and Maintenance Manual for charging and discharging. See your Caterpillar Dealer for tools and detailed information.

Seat Belt (4)

This warning message is positioned in the cab on the right side.

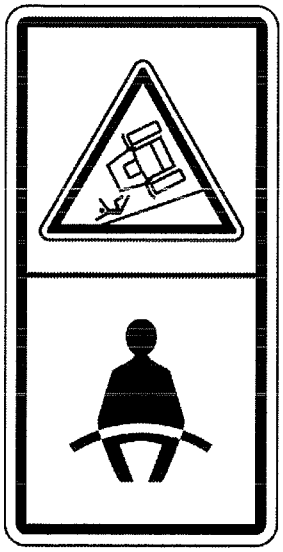

g01371636

⚠ WARNING

A seat belt should be worn at all times during machine operation to prevent serious injury or death in the event of an accident or machine overturn. Failure to wear a seat belt during machine operation may result in serious injury or death.

ROPS (5)

This warning message is positioned on the outside of the cab on the left rear side.

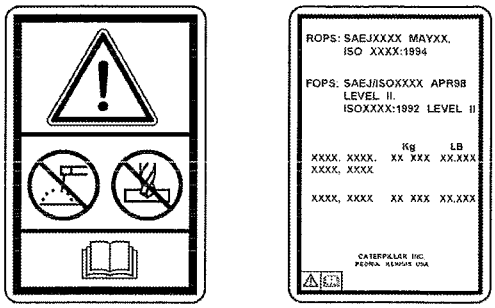

g01211895

⚠ WARNING

Structural damage, an overturn, modification, alteration, or improper repair can impair this structure's protection capability thereby voiding this certification. Do not weld on or drill holes in the structure. Consult a Caterpillar dealer to determine this structure's limitations without voiding its certification.

This machine has been certified to the standards that are listed on the certification plate. The maximum mass of the machine, which includes the operator and the attachments without a payload, should not exceed the mass on the certification film.

Do Not Use Ether Starting Aid (6)

This warning message is positioned on the hood on the right side of the machine.

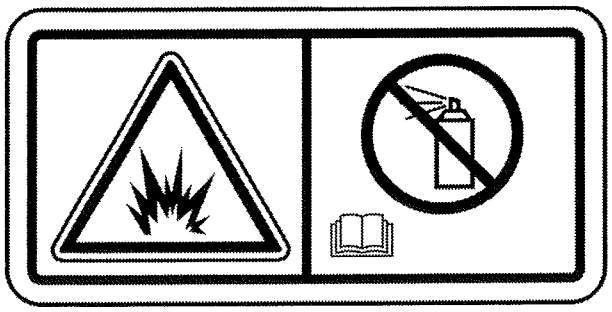

g01372254

⚠ WARNING

Do not use aerosol types of starting aids such as ether. Such use could result in an explosion and personal injury.

Pressurized Cooling System (7)

Open the access panel. The warning is positioned on the radiator on the left side of the machine.

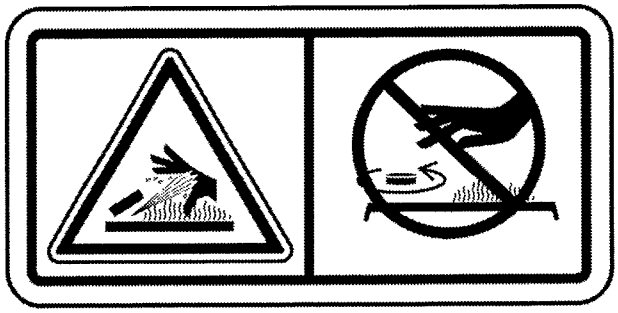

g01371640

⚠ WARNING

Pressurized system! Hot coolant can cause serious burns, injury or death. To open the cooling system filler cap, stop the engine and wait until the cooling system components are cool. Loosen the cooling system pressure cap slowly in order to relieve the pressure. Read and understand the Operation and Maintenance Manual before performing any cooling system maintenance.

Improper Connections of the Jump Start Cables (8)

Remove the access panel on either side of the machine. The warning is positioned on the inside of the compartments.

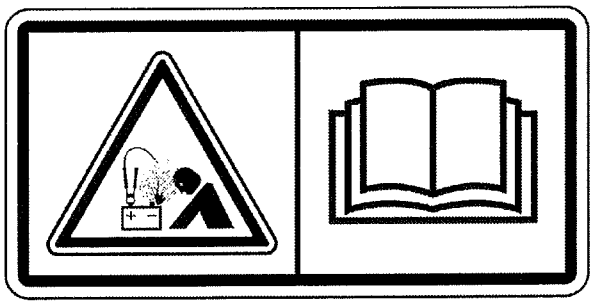

g01370909

⚠ WARNING

Explosion Hazard! Improper jumper cable connections can cause an explosion resulting in serious injury or death. Batteries may be located in separate compartments. Refer to the Operation and Maintenance Manual for the correct jump starting procedure.

Articulation Lock (9)

This warning label is positioned on the machine at the articulation joint on the left side.

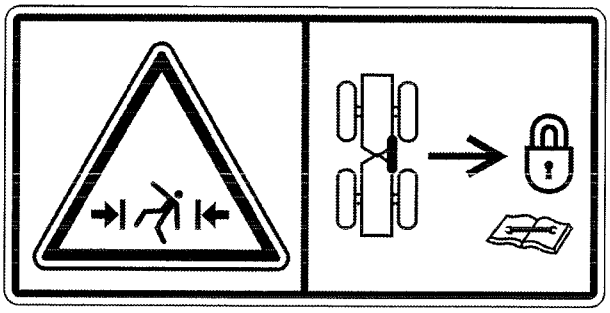

g01371647

⚠ WARNING

Connect the steering frame lock between the front and the rear frames before lifting, transporting, or servicing the machine in the articulation area. Disconnect the steering frame lock and secure the steering frame lock before resuming operation. Severe injury or death could occur.

Product Link (11)

This safety message is located inside the cab on the right hand window.

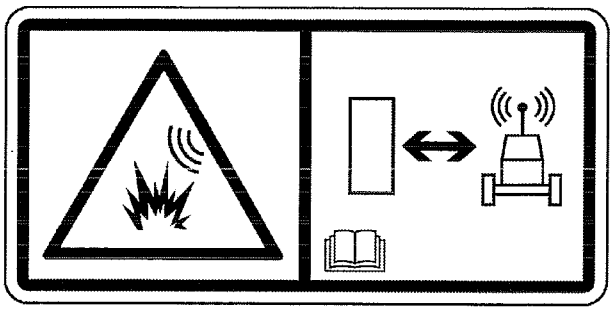

g01370917

⚠ WARNING

This machine is equipped with a Caterpillar Product Link communication device. When electric/electronic detonators are used, this communication device should be deactivated within 12 m (40 ft) of a blast site, or within the distance mandated under applicable legal requirements. Failure to do so could cause interference with blasting operations and result in serious injury or death.

Dryer for the Refrigerant (12)

This safety message is located behind the cab under the panel on the left side of the machine.

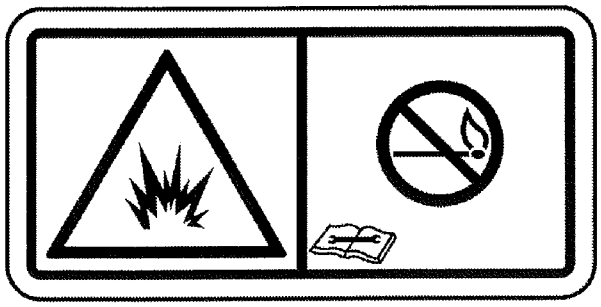

g01507713

⚠ WARNING

Inhaling air conditioner refrigerant gas through a lit cigarette or other smoking method or inhaling fumes released from a flame contacting air conditioner refrigerant gas can cause personal injury or death. Do not smoke when servicing air conditioners or wherever refrigerant gas may be present.

i03559343

General Hazard Information

SMCS Code: 7000

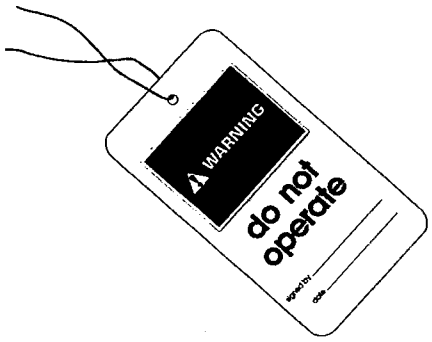

Illustration 3 g00104545

Attach a "Do Not Operate" warning tag or a similar warning tag to the start switch or to the controls before you service the equipment or before you repair the equipment. These warning tags (Special Instruction, SEHS7332) are available from your Caterpillar dealer.

Know the width of your equipment in order to maintain proper clearance when you operate the equipment near fences or near boundary obstacles.

Be aware of high voltage power lines and power cables that are buried. If the machine comes in contact with these hazards, serious injury or death may occur from electrocution.

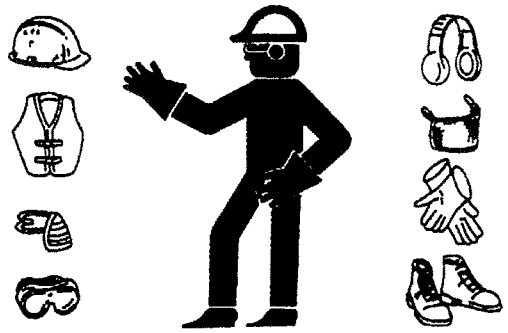

Illustration 4 g00702020

Wear a hard hat, protective glasses, and other protective equipment, as required.

Do not wear loose clothing or jewelry that can snag on controls or on other parts of the equipment.

Make sure that all protective guards and all covers are secured in place on the equipment.

Keep the equipment free from foreign material. Remove debris, oil, tools, and other items from the deck, from walkways, and from steps.

Secure all loose items such as lunch boxes, tools, and other items that are not a part of the equipment.

Know the appropriate work site hand signals and the personnel that are authorized to give the hand signals. Accept hand signals from one person only.

Do not smoke when you service an air conditioner. Also, do not smoke if refrigerant gas may be present. Inhaling the fumes that are released from a flame that contacts air conditioner refrigerant can cause bodily harm or death. Inhaling gas from air conditioner refrigerant through a lighted cigarette can cause bodily harm or death.

Never put maintenance fluids into glass containers. Drain all liquids into a suitable container.

Obey all local regulations for the disposal of liquids.

Use all cleaning solutions with care. Report all necessary repairs.

Do not allow unauthorized personnel on the equipment.

Unless you are instructed otherwise, perform maintenance with the equipment in the servicing position. Refer to Operation and Maintenance Manual for the procedure for placing the equipment in the servicing position.

When you perform maintenance above ground level use appropriate devices such as ladders or man lift machines. If equipped, use the machine anchorage points and use approved fall arrest harnesses and lanyards.

Pressurized Air and Water

Pressurized air and/or water can cause debris and/or hot water to be blown out. This could result in personal injury.

When pressurized air and/or pressurized water is used for cleaning, wear protective clothing, protective shoes, and eye protection. Eye protection includes goggles or a protective face shield.

The maximum air pressure for cleaning purposes must be reduced to 205 kPa (30 psi) when the nozzle is deadheaded and the nozzle is used with an effective chip deflector and personal protective equipment. The maximum water pressure for cleaning purposes must be below 275 kPa (40 psi).

Trapped Pressure

Pressure can be trapped in a hydraulic system. Releasing trapped pressure can cause sudden machine movement or attachment movement. Use caution if you disconnect hydraulic lines or fittings. High pressure oil that is released can cause a hose to whip. High pressure oil that is released can cause oil to spray. Fluid penetration can cause serious injury and possible death.

Fluid Penetration

Pressure can be trapped in the hydraulic circuit long after the engine has been stopped. The pressure can cause hydraulic fluid or items such as pipe plugs to escape rapidly if the pressure is not relieved correctly.

Do not remove any hydraulic components or parts until pressure has been relieved or personal injury may occur. Do not disassemble any hydraulic components or parts until pressure has been relieved or personal injury may occur. Refer to the Service Manual for any procedures that are required to relieve the hydraulic pressure.

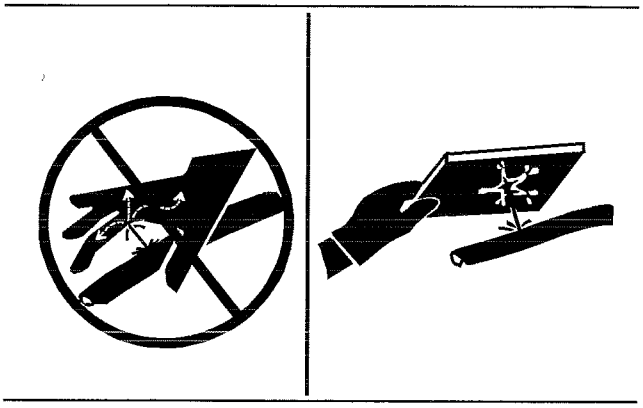

Illustration 5 g00687600

Always use a board or cardboard when you check for a leak. Leaking fluid that is under pressure can penetrate body tissue. Fluid penetration can cause serious injury and possible death. A pin hole leak can cause severe injury. If fluid is injected into your skin, you must get treatment immediately. Seek treatment from a doctor that is familiar with this type of injury.

Containing Fluid Spillage

Care must be taken in order to ensure that fluids are contained during performance of inspection, maintenance, testing, adjusting and repair of the equipment. Prepare to collect the fluid with suitable containers before opening any compartment or disassembling any component that contains fluids.

Refer to Special Publication, NENG2500, "Caterpillar Dealer Service Tool Catalog" for the following items:

- Tools that are suitable for collecting fluids and equipment that is suitable for collecting fluids
- Tools that are suitable for containing fluids and equipment that is suitable for containing fluids

Obey all local regulations for the disposal of liquids.

Asbestos Information

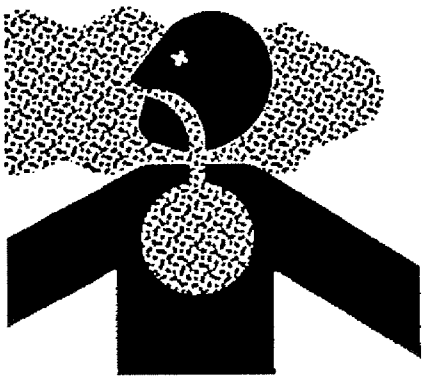

Illustration 6 g00702022

Caterpillar equipment and replacement parts that are shipped from Caterpillar are asbestos free. Caterpillar recommends the use of only genuine Caterpillar replacement parts. Use the following guidelines when you handle any replacement parts that contain asbestos or when you handle asbestos debris.

Use caution. Avoid inhaling dust that might be generated when you handle components that contain asbestos fibers. Inhaling this dust can be hazardous to your health. The components that may contain asbestos fibers are brake pads, brake bands, lining material, clutch plates, and some gaskets. The asbestos that is used in these components is usually bound in a resin or sealed in some way. Normal handling is not hazardous unless airborne dust that contains asbestos is generated.

If dust that may contain asbestos is present, there are several guidelines that should be followed:

- Never use compressed air for cleaning.
- Avoid brushing materials that contain asbestos.
- Avoid grinding materials that contain asbestos.
- Use a wet method in order to clean up asbestos materials.
- A vacuum cleaner that is equipped with a high efficiency particulate air filter (HEPA) can also be used.
- Use exhaust ventilation on permanent machining jobs.
- Wear an approved respirator if there is no other way to control the dust.
- Comply with applicable rules and regulations for the work place. In the United States, use Occupational Safety and Health Administration (OSHA) requirements. These OSHA requirements can be found in "29 CFR 1910.1001".
- Obey environmental regulations for the disposal of asbestos.
- Stay away from areas that might have asbestos particles in the air.

Dispose of Waste Properly

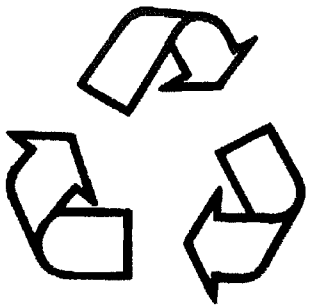

Illustration 7 g00706404

Improperly disposing of waste can threaten the environment. Potentially harmful fluids should be disposed of according to local regulations.

Always use leakproof containers when you drain fluids. Do not pour waste onto the ground, down a drain, or into any source of water.

i01359664

Crushing Prevention and Cutting Prevention

SMCS Code: 7000

Support the equipment properly before you perform any work or maintenance beneath that equipment. Do not depend on the hydraulic cylinders to hold up the equipment. Equipment can fall if a control is moved, or if a hydraulic line breaks.

Do not work beneath the cab of the machine unless the cab is properly supported.

Unless you are instructed otherwise, never attempt adjustments while the machine is moving or while the engine is running.

Never jump across the starter solenoid terminals in order to start the engine. Unexpected machine movement could result.

Whenever there are equipment control linkages the clearance in the linkage area will change with the movement of the equipment or the machine. Stay clear of areas that may have a sudden change in clearance with machine movement or equipment movement.

Stay clear of all rotating and moving parts.

If it is necessary to remove guards in order to perform maintenance, always install the guards after the maintenance is performed.

Keep objects away from moving fan blades. The fan blade will throw objects or cut objects.

Do not use a kinked wire cable or a frayed wire cable. Wear gloves when you handle wire cable.

When you strike a retainer pin with force, the retainer pin can fly out. The loose retainer pin can injure personnel. Make sure that the area is clear of people when you strike a retainer pin. To avoid injury to your eyes, wear protective glasses when you strike a retainer pin.

Chips or other debris can fly off an object when you strike the object. Make sure that no one can be injured by flying debris before striking any object.

i01329099

Burn Prevention

SMCS Code: 7000

Do not touch any part of an operating engine. Allow the engine to cool before any maintenance is performed on the engine. Relieve all pressure in the air system, in the oil system, in the lubrication system, in the fuel system, or in the cooling system before any lines, fittings or related items are disconnected.

Coolant

When the engine is at operating temperature, the engine coolant is hot. The coolant is also under pressure. The radiator and all lines to the heaters or to the engine contain hot coolant.

Any contact with hot coolant or with steam can cause severe burns. Allow cooling system components to cool before the cooling system is drained.

Check the coolant level only after the engine has been stopped.

Ensure that the filler cap is cool before removing the filler cap. The filler cap must be cool enough to touch with a bare hand. Remove the filler cap slowly in order to relieve pressure.

Cooling system conditioner contains alkali. Alkali can cause personal injury. Do not allow alkali to contact the skin, the eyes, or the mouth.

Oils

Hot oil and hot components can cause personal injury. Do not allow hot oil to contact the skin. Also, do not allow hot components to contact the skin.

Remove the hydraulic tank filler cap only after the engine has been stopped. The filler cap must be cool enough to touch with a bare hand. Follow the standard procedure in this manual in order to remove the hydraulic tank filler cap.

Batteries

Electrolyte is an acid. Electrolyte can cause personal injury. Do not allow electrolyte to contact the skin or the eyes. Always wear protective glasses for servicing batteries. Wash hands after touching the batteries and connectors. Use of gloves is recommended.

i03659986

Fire Prevention and Explosion Prevention

SMCS Code: 7000

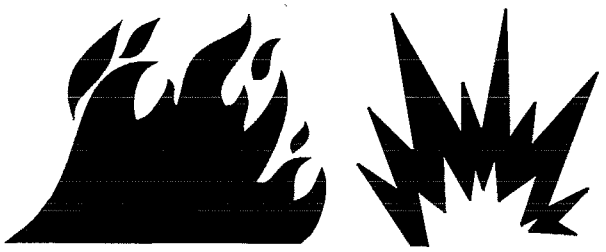

Illustration 8 g00704000

General

All fuels, most lubricants, and some coolant mixtures are flammable.

To minimize the risk of fire or explosion, Caterpillar recommends the following actions.

Always perform a Walk-Around Inspection, which may help you identify a fire hazard. Do not operate a machine when a fire hazard exists. Contact your Caterpillar dealer for service.

Understand the use of the primary exit and alternative exit on the machine. Refer to Operation and Maintenance Manual, "Alternative Exit".

Do not operate a machine with a fluid leak. Repair leaks and clean up fluids before resuming machine operation. Fluids that are leaking or spilled onto hot surfaces or onto electrical components can cause a fire. A fire may cause personal injury or death.

Remove flammable material such as leaves, twigs, papers, trash, etc. These items may accumulate in the engine compartment or around other hot areas and hot parts on the machine.

Keep the access doors to major machine compartments closed and access doors in working condition in order to permit the use of fire suppression equipment, in case a fire should occur.

Clean all accumulations of flammable materials such as fuel, oil and debris from the machine.

Do not operate the machine near any flame.

Keep shields in place. Exhaust shields (if equipped) protect hot exhaust components from oil spray or fuel spray in case of a break in a line, in a hose, or in a seal. Exhaust shields must be installed correctly.

Do not weld or flame cut on tanks or lines that contain flammable fluids or flammable material. Empty and purge the lines and tanks. Then clean the lines and tanks with a nonflammable solvent prior to welding or flame cutting. Ensure that the components are properly grounded in order to avoid unwanted arcs.

Dust that is generated from repairing nonmetallic hoods or fenders may be flammable and/or explosive. Repair such components in a well ventilated area away from open flames or sparks. Use suitable Personal Protection Equipment (PPE).

Inspect all lines and hoses for wear or deterioration. Replace damaged lines and hoses. The lines and the hoses should have adequate support and secure clamps. Tighten all connections to the recommended torque. Damage to the protective cover or insulation may provide fuel for fires.

Store fuels and lubricants in properly marked containers away from unauthorized personnel. Store oily rags and flammable materials in protective containers. Do not smoke in areas that are used for storing flammable materials.



Illustration 9 g00704059

Use caution when you are fueling a machine. Do not smoke while you are fueling a machine. Do not fuel a machine near open flames or sparks. Always stop the engine before fueling. Fill the fuel tank outdoors. Properly clean areas of spillage.

Follow practices for safe fueling that are described in the "Operation" section of the Operation and Maintenance Manual section and follow local regulations. Never store flammable fluids in the operator compartment of the machine.

Battery and Battery Cables

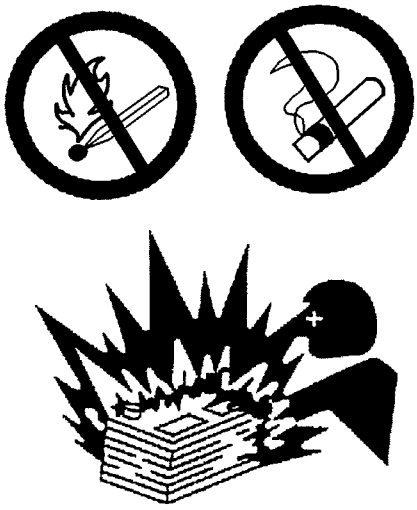

Illustration 10 g00704135

Caterpillar recommends the following in order to minimize the risk of fire or an explosion related to the battery.

Do not operate a machine if battery cables or related parts show signs of wear or damage. Contact your Caterpillar dealer for service.

Follow safe procedures for engine starting with jump start cables. Improper jumper cable connections can cause an explosion that may result in injury. Refer to Operation and Maintenance Manual, "Engine Starting with Jump Start Cables" for specific instructions.

Do not charge a frozen battery. This may cause an explosion.

Gases from a battery can explode. Keep any open flames or sparks away from the top of a battery. Do not smoke in battery charging areas.

Never check the battery charge by placing a metal object across the terminal posts. Use a voltmeter in order to check the battery charge.

Daily inspect battery cables that are in areas that are visible. Inspect cables, clips, straps, and other restraints for damage. Replace any damaged parts. Check for signs of the following, which can occur over time due to use and environmental factors:

- Fraying
- Abrasion
- Cracking
- Discoloration
- Cuts on the insulation of the cable
- Fouling
- Corroded terminals, damaged terminals, and loose terminals

Replace damaged battery cable(s) and replace any related parts. Eliminate any fouling, which may have caused insulation failure or related component damage or wear. Ensure that all components are reinstalled correctly.

An exposed wire on the battery cable may cause a short to ground if the exposed area comes into contact with a grounded surface. A battery cable short produces heat from the battery current, which may be a fire hazard.

An exposed wire on the ground cable between the battery and the disconnect switch may cause the disconnect switch to be bypassed if the exposed area comes into contact with a grounded surface. This may result in an unsafe condition for servicing the machine. Repair components or replace components before servicing the machine.

⚠ WARNING

Fire on a machine can result in personal injury or death. Exposed battery cables that come into contact with a grounded connection can result in fires. Replace cables and related parts that show signs of wear or damage. Contact your Caterpillar dealer.

Wiring

Check electrical wires daily. If any of the following conditions exist, replace parts before you operate the machine.

- Fraying
- Signs of abrasion or wear
- Cracking
- Discoloration
- Cuts on insulation
- Other damage

Make sure that all clamps, guards, clips, and straps are reinstalled correctly. This will help to prevent vibration, rubbing against other parts, and excessive heat during machine operation.

Attaching electrical wiring to hoses and tubes that contain flammable fluids or combustible fluids should be avoided.

Consult your Caterpillar dealer for repair or for replacement parts.

Keep wiring and electrical connections free of debris.

Lines, Tubes and Hoses

Do not bend high pressure lines. Do not strike high pressure lines. Do not install any lines that are bent or damaged. Use the appropriate backup wrenches in order to tighten all connections to the recommended torque.

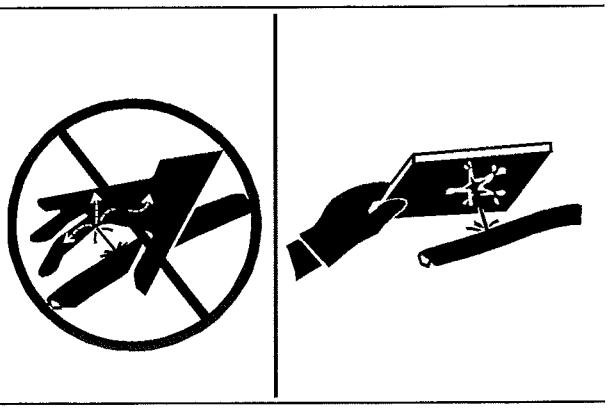

Illustration 11 g00687600

Check lines, tubes and hoses carefully. Wear Personal Protection Equipment (PPE) in order to check for leaks. Always use a board or cardboard when you check for a leak. Leaking fluid that is under pressure can penetrate body tissue. Fluid penetration can cause serious injury and possible death. A pin hole leak can cause severe injury. If fluid is injected into your skin, you must get treatment immediately. Seek treatment from a doctor that is familiar with this type of injury.

Replace the affected parts if any of the following conditions are present:

- End fittings are damaged or leaking.
- Outer coverings are chafed or cut.
- Wires are exposed.
- Outer coverings are swelling or ballooning.
- Flexible parts of the hoses are kinked.
- Outer covers have exposed embedded armoring.
- End fittings are displaced.

Make sure that all clamps, guards, and heat shields are installed correctly. During machine operation, this will help to prevent vibration, rubbing against other parts, excessive heat, and failure of lines, tubes and hoses.

Do not operate a machine when a fire hazard exists. Repair any lines that are corroded, loose or damaged. Leaks may provide fuel for fires. Consult your Caterpillar dealer for repair or for replacement parts. Use genuine Caterpillar parts or the equivalent, for capabilities of both the pressure limit and temperature limit.

Ether

Ether (if equipped) is commonly used in cold weather applications. Ether is flammable and poisonous.

Follow the correct cold engine starting procedures. Refer to the section in the Operation and Maintenance Manual with the label "Engine Starting".

Do not spray ether manually into an engine if the machine is equipped with a thermal starting aid for cold weather starting.

Use ether in well ventilated areas. Do not smoke while you are replacing an ether cylinder or while you are using an ether spray.

Do not store ether cylinders in living areas or in the operator compartment of a machine. Do not store ether cylinders in direct sunlight or in temperatures above 49° C (120.2° F). Keep ether cylinders away from open flames or sparks.

Dispose of used ether cylinders properly. Do not puncture an ether cylinder. Keep ether cylinders away from unauthorized personnel.

Fire Extinguisher

As an additional safety measure, keep a fire extinguisher on the machine.

Be familiar with the operation of the fire extinguisher. Inspect the fire extinguisher and service the fire extinguisher regularly. Follow the recommendations on the instruction plate.

Consider installation of an aftermarket Fire Suppression System, if the application and working conditions warrant the installation.

i02813883

Fire Extinguisher Location

SMCS Code: 7000

Make sure that a fire extinguisher is on the machine. Make sure that you are familiar with the operation of the fire extinguisher. Inspect the fire extinguisher and service the fire extinguisher. Obey the recommendations on the instruction plate.

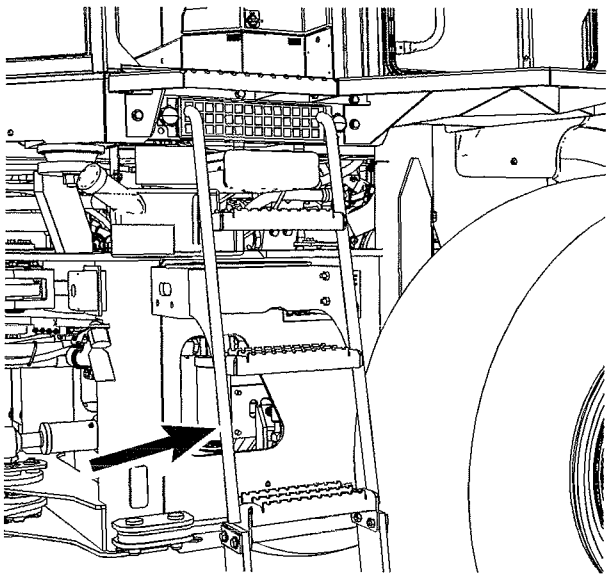

Illustration 12 g01403012

Mount the fire extinguisher on the left side of the machine on one of the legs of the ladder. This is the recommended location. Do not weld the ROPS in order to install the fire extinguisher. Also, do not drill holes in the ROPS in order to mount the fire extinguisher on the ROPS.

Strap the mounting plate to a leg of the ladder in order to mount the fire extinguisher. If the weight of the fire extinguisher is more than 4.5 kg (10 lb), mount the fire extinguisher as low as possible on one leg. Do not mount the fire extinguisher on the upper one-third area of the leg.

i01557411

Tire Information

SMCS Code: 7000

Explosions of air inflated tires have resulted from heat-induced gas combustion inside the tires. Explosions can be caused by heat that is generated by welding, by heating rim components, by external fire, or by excessive use of brakes.

A tire explosion is much more violent than a blowout. The explosion can propel the tire, the rim components, and the axle components as far as 500 m (1500 ft) or more from the machine. Both the force of the explosion and the flying debris can cause property damage, personal injury, or death.

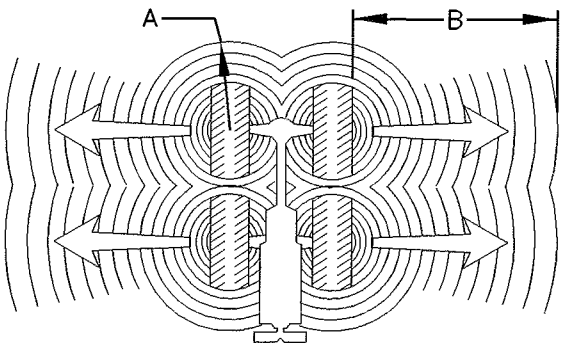

Illustration 13 g00337832

(A) At least 15 m (50 ft)
(B) At least 500 m (1500 ft)

Do not approach a warm tire. Maintain a minimum distance, as shown. Stay outside the shaded area in Illustration 13.

Do not use water or calcium as a ballast for the tires. Dry nitrogen gas is recommended for inflation of tires. If the tires were originally inflated with air, nitrogen is still preferred for adjusting the pressure. Nitrogen mixes properly with air.

Nitrogen inflated tires reduce the potential of a tire explosion because nitrogen does not aid combustion. Nitrogen helps to prevent oxidation of the rubber, deterioration of rubber, and corrosion of rim components.

To avoid overinflation, proper nitrogen inflation equipment and training in the usage of the equipment are necessary. A tire blowout or a rim failure can result from improper equipment or from misused equipment.

When you inflate a tire, stand behind the tread and use a self-attaching chuck.

Servicing tires and rims can be dangerous. Only trained personnel that use proper tools and proper procedures should perform this maintenance. If correct procedures are not used for servicing tires and rims, the assemblies could burst with explosive force. This explosive force can cause serious personal injury or death. Carefully obey the specific instructions from your tire dealer.

i01122596

Electrical Storm Injury Prevention

SMCS Code: 7000

When lightning is striking in the vicinity of the machine, the operator should never attempt the following procedures:

- Mount the machine.
- Dismount the machine.

If you are in the operator's station during an electrical storm, stay in the operator's station. If you are on the ground during an electrical storm, stay away from the vicinity of the machine.

i02813885

Before Starting Engine

SMCS Code: 1000; 7000

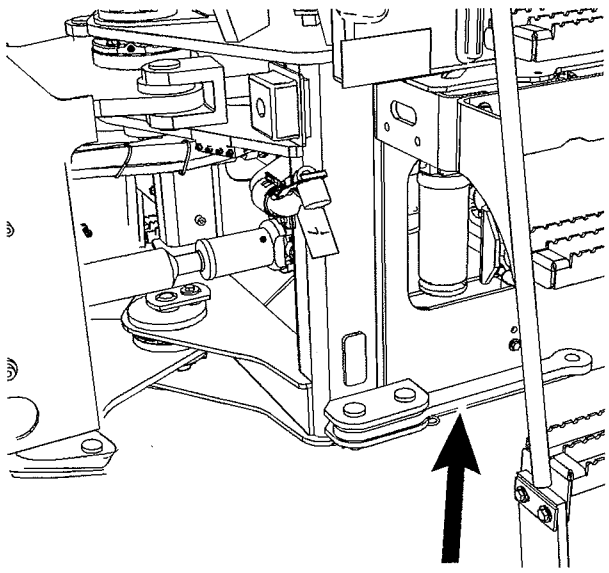

Illustration 14 g01403011

Make sure that the steering frame lock link is stored in the unlocked position. The steering frame lock link must be unlocked in order to steer the machine.

Start the engine only from the operator's compartment. Never short across the starter terminals or across the batteries. Shorting could bypass the engine neutral start system. Shorting could also damage the electrical system.

Inspect the condition of the seat belt and the condition of mounting hardware. Replace any damaged parts or worn parts. Regardless of appearance, replace the seat belt after three years of use. Do not use an extension for a seat belt on a retractable seat belt.

Adjust the seat so that full pedal travel can be achieved. Make sure that the operator's back is against the back of the seat.

Make sure that the machine is equipped with a lighting system that is adequate for the job conditions. Ensure that all lights are in proper working condition.

Make sure that there are no personnel in the area before you start the engine. Make sure that there are no personnel in the area before you move the machine. Make sure that there are no personnel on the machine, underneath the machine, or around the machine.

i03162317

Visibility Information

SMCS Code: 7000

Before you start the machine, perform a walk-around inspection in order to ensure that there are no hazards around the machine.

While the machine is in operation, constantly survey the area around the machine in order to identify potential hazards as hazards become visible around the machine.

Your machine may be equipped with visual aids. Some examples of visual aids are Closed Circuit Television (CCTV) and mirrors. Before operating the machine, ensure that the visual aids are in proper working condition and that the visual aids are clean. Adjust the visual aids using the procedures that are located in this Operation and Maintenance Manual. If equipped, the Work Area Vision System shall be adjusted according to Operation and Maintenance Manual, SEBU8157, "Work Area Vision System".

It may not be possible to provide direct visibility on large machines to all areas around the machine. Appropriate job site organization is required in order to minimize hazards that are caused by restricted visibility. Job site organization is a collection of rules and procedures that coordinates machines and people that work together in the same area. Examples of job site organization include the following:

- Safety instructions
- Controlled patterns of machine movement and vehicle movement

- Workers that direct traffic to move when it is safe
- Restricted areas
- Operator training
- Warning symbols or warning signs on machines or on vehicles
- A system of communication
- Communication between workers and operators prior to approaching the machine

Modifications of the machine configuration by the user that result in a restriction of visibility shall be evaluated.

i00861042

Engine Starting

SMCS Code: 1000; 7000

If a warning tag is attached to the start switch or to the controls, do not start the engine. Also, do not move any controls.

Move all hydraulic controls to the HOLD position before you start the engine.

Move the direction control lever and the directional control switch (if equipped) to the NEUTRAL position. On a machine that is equipped with the remote directional control switch, the neutral light on the instrument panel should be lighted.

Engage the parking brake.

Diesel engine exhaust contains products of combustion which can be harmful to your health. Always start the engine in a well ventilated area. Always operate the engine in a well ventilated area. If you are in an enclosed area, vent the exhaust to the outside.

i01665258

Before Operation

SMCS Code: 7000

Clear all personnel from the machine and from the area.

Clear all obstacles from the path of the machine. Beware of hazards such as wires, ditches, etc.

Make sure that all windows are clean. Secure the doors in the open position or in the shut position. Secure the windows in the open position or in the shut position.

For the best vision of the area that is close to the machine, adjust the rear view mirrors (if equipped).

Make sure that the machine horn, the backup alarm (if equipped) and all other warning devices are working properly.

Fasten the seat belt securely.

i03738622

Operation

SMCS Code: 7000

The machine will function satisfactorily in the anticipated ambient temperature limits that are encountered during operation. For operation in extreme temperatures, refer to Special Publication, SEBU5898, "Cold Weather Recommendations".

Only operate the machine while you are in a seat. The seat belt must be fastened while you operate the machine. Only operate the controls while the engine is running.

While you operate the machine slowly in an open area, check for proper operation of all controls and all protective devices.

Before you move the machine, you must make sure that no one will be endangered.

Do not allow riders on the machine unless the machine has the following equipment:

- additional seat
- additional seat belt
- Rollover Protective Structure (ROPS)

Never use the work tool for a work platform.

Note any needed repairs during machine operation. Report any needed repairs.

Carry work tools approximately 40 cm (15 inches) above ground level. Do not go close to the edge of a cliff, an excavation, or an overhang.

If the machine begins to sideslip downward on a grade, immediately remove the load and turn the machine downhill.

Avoid any conditions that can lead to tipping the machine. The machine can tip when you work on hills, on banks and on slopes. Also, the machine can tip when you cross ditches, ridges or other unexpected obstructions.

Avoid operating the machine across the slope. When possible, operate the machine up the slopes and down the slopes.

Maintain control of the machine. Do not overload the machine beyond the machine capacity.

Never straddle a wire cable. Never allow other personnel to straddle a wire cable.

Know the maximum dimensions of your machine.

Always keep the Rollover Protective Structure (ROPS) installed during machine operation.

i02624835

Engine Stopping

SMCS Code: 1000; 7000

Do not stop the engine immediately after the machine has been operated under load. This can cause overheating and accelerated wear of engine components.

After the machine is parked and the parking brake is engaged, allow the engine to run for two minutes before shutdown. This allows hot areas of the engine to cool gradually.

i01665341

Parking

SMCS Code: 7000

Park on a level surface. If you must park on a grade, chock the machine.

Apply the service brake in order to stop the machine. Move the transmission control lever and the transmission direction control switch (if equipped) to the NEUTRAL position. Engage the parking brake.

Lower all work tools to the ground.

Stop the engine.

Turn the engine start switch key to OFF position and remove the key.

Turn the key for the battery disconnect switch to the OFF position. Remove the key when you get off the machine for an extended period of time.

When you turn the battery disconnect switch to the OFF position, you can avoid battery discharge due to the following causes:

- battery short circuit
- current draw via some components
- vandalism

i03745198

Slope Operation

SMCS Code: 7000

Machines that are operating safely in various applications depend on these criteria: the machine model, configuration, machine maintenance, operating speed of the machine, conditions of the terrain, fluid levels, and tire inflation pressures. The most important criteria are the skill and judgment of the operator.

A well trained operator that follows the instructions in the Operation and Maintenance Manual has the greatest impact on stability. Operator training provides a person with the following abilities: observation of working and environmental conditions, feel for the machine, identification of potential hazards, and operating the machine safely by making appropriate decisions.

When you work on side hills and when you work on slopes, consider the following important points:

Speed of travel – At higher speeds, forces of inertia tend to make the machine less stable.

Roughness of terrain or surface – The machine may be less stable with uneven terrain.

Direction of travel – Avoid operating the machine across the slope. When possible, operate the machine up the slopes and operate the machine down the slopes. Place the heaviest end of the machine uphill when you are working on an incline.

Mounted equipment – Balance of the machine may be impeded by the following components: equipment that is mounted on the machine, machine configuration, weights, and counterweights.

Nature of surface – Ground that has been newly filled with earth may collapse from the weight of the machine.

Surface material – Rocks and moisture of the surface material may drastically affect the machine's traction and machine's stability. Rocky surfaces may promote side slipping of the machine.

Slippage due to excessive loads – This may cause downhill tracks or downhill tires to dig into the ground, which will increase the angle of the machine.

Width of tracks or tires – Narrower tracks or narrower tires further increase the digging into the ground which causes the machine to be less stable.

Implements attached to the drawbar – This may decrease the weight on the uphill tracks. This may also decrease the weight on the uphill tires. The decreased weight will cause the machine to be less stable.

Height of the working load of the machine – When the working loads are in higher positions, the stability of the machine is reduced.

Operated equipment – Be aware of performance features of the equipment in operation and the effects on machine stability.

Operating techniques – Keep all attachments or pulled loads low to the ground for optimum stability.

Machine systems have limitations on slopes – Slopes can affect the proper function and operation of the various machine systems. These machine systems are needed for machine control.

Note: Safe operation on steep slopes may require special machine maintenance. Excellent skill of the operator and proper equipment for specific applications are also required. Consult the Operation and Maintenance Manual sections for the proper fluid level requirements and intended machine use.

i03562303

Work Tools

SMCS Code: 6700

Only use work tools that are recommended by Caterpillar for use on Caterpillar machines.

Work tools and work tool control systems, that are compatible with your Caterpillar machine, are required for safe machine operation and/or reliable machine operation. If you are in doubt about the compatibility of a particular work tool with your machine, consult your Caterpillar dealer.

Make sure that all necessary guarding is in place on the host machine and on the work tool.

Keep all windows and doors closed on the host machine. A polycarbonate shield must be used when the host machine is not equipped with windows and when a work tool could throw debris.

Do not exceed the maximum operating weight that is listed on the ROPS certification.

If your machine is equipped with an extendable stick, install the transport pin when you are using the following work tools: hydraulic hammers, augers, and compactors

Always wear protective glasses. Always wear the protective equipment that is recommended in the work tool's operation manual. Wear any other protective equipment that is required for the operating environment.

To prevent personnel from being struck by flying objects, ensure that all personnel are out of the work area.

While you are performing any maintenance, any testing, or any adjustments to the work tool stay clear of the following areas: cutting edges, pinching surfaces, and crushing surfaces.

Never use the work tool for a work platform.

i01329161

Equipment Lowering with Engine Stopped

SMCS Code: 7000

Before lowering any equipment with the engine stopped, clear the area around the equipment of all personnel. The procedure to use will vary with the type of equipment to be lowered. Keep in mind most systems use a high pressure fluid or air to raise or lower equipment. The procedure will cause high pressure air, hydraulic, or some other media to be released in order to lower the equipment. Wear appropriate personal protective equipment and follow the established procedure in the Operation and Maintenance Manual, "Equipment Lowering with Engine Stopped" in the Operation Section of the manual.

i03001254

Sound Information and Vibration Information

SMCS Code: 7000

Sound Level Information

The operator Equivalent Sound Pressure Level (Leq) is 73 dB(A) when "ANSI/SAE J1166 OCT 98" is used to measure the value for an enclosed cab. This is a work cycle sound exposure level. The cab was properly installed and maintained. The test was conducted with the cab doors and the cab windows closed.

Hearing protection may be needed when the machine is operated with an open operator station for extended periods or in a noisy environment. Hearing protection may be needed when the machine is operated with a cab that is not properly maintained or when the doors and windows are open for extended periods or in a noisy environment.

The average exterior sound pressure level is 103 dB(A) when the "SAE J88Apr95 - Constant Speed Moving Test" procedure is used to measure the value for the standard machine. The measurement was conducted under the following conditions: distance of 15 m (49.2 ft) and "the machine moving forward in an intermediate gear ratio".

Sound Level Information for Machines in European Union Countries and in Countries that Adopt the "EU Directives"

The dynamic operator sound pressure level is 73 dB(A) when "ISO 6396:1992" is used to measure the value for an enclosed cab. The cab was properly installed and maintained. The test was conducted with the cab doors and the cab windows closed.

"The European Union Physical Agents (Vibration) Directive 2002/44/EC"

Vibration Data for Wheel Loaders

Information Concerning Hand/Arm Vibration Level

When the machine is operated according to the intended use, the hand/arm vibration of this machine is below 2.5 meter per second squared.

Information Concerning Whole Body Vibration Level

This section provides vibration data and a method for estimating the vibration level for wheel loaders.

Note: Vibration levels are influenced by many different parameters. Many items are listed below.

- Operator training, behavior, mode, and stress
- Job site organization, preparation, environment, weather, and material
- Machine type, quality of the seat, quality of the suspension system, attachments, and condition of the equipment

It is not possible to get precise vibration levels for this machine. The expected vibration levels can be estimated with the information in Table 1 in order to calculate the daily vibration exposure. A simple evaluation of the machine application can be used.

Estimate the vibration levels for the three vibration directions. For typical operating conditions, use the average vibration levels as the estimated level. With an experienced operator and smooth terrain, subtract the Scenario Factors from the average vibration level in order to obtain the estimated vibration level. For aggressive operations and severe terrain, add the Scenario Factors to the average vibration level in order to obtain the estimated vibration level.

Note: All vibration levels are in meter per second squared.

Table 1

"ISO Reference Table A - Equivalent vibration levels of whole body vibration emission for earthmoving equipment."							
Machine Type	Typical Operating Activity	Vibration Levels			Scenario Factors		
		X axis	Y axis	Z axis	X axis	Y axis	Z axis
Wheel Loader	load and carry motion	0,84	0,81	0,52	0,23	0,20	0,14
	mining application(1)	1,27	0,97	0,81	0,47	0,31	0,47
	transfer(2)	0,76	0,91	0,49	0,33	0,35	0,17
	V-shape motion(3)	0,99	0,84	0,54	0,29	0,32	0,14

(1) Loading at the face
(2) Travel at high speed on the job site or on public roads
(3) Loading a truck in short cycles

Note: Refer to "ISO/TR 25398 Mechanical Vibration - Guideline for the assessment of exposure to whole body vibration of ride on operated earthmoving machines" for more information about vibration. This publication uses data that is measured by international institutes, organizations and manufacturers. This document provides information about the whole body exposure of operators of earthmoving equipment. Refer to Operation and Maintenance Manual, SEBU8257, "The European Union Physical Agents (Vibration) Directive 2002/44/EC" for more information about machine vibration levels.

The Caterpillar suspension seat meets the criteria of "ISO 7096". This represents vertical vibration level under severe operating conditions. This seat is tested with the input "spectral class EM3". The seat has a transmissibility factor of "SEAT<1.0".

The whole body vibration level of the machine varies. There is a range of values. The low value is 0.5 meter per second squared. The machine meets the short term level for the design of the seat in "ISO 7096". The value is 1.13 meter per second squared for this machine.

Guidelines for Reducing Vibration Levels on Earthmoving Equipment

Properly adjust machines. Properly maintain machines. Operate machines smoothly. Maintain the conditions of the terrain. The following guidelines can help reduce the whole body vibration level:

1. Use the right type and size of machine, equipment, and attachments.
2. Maintain machines according to the manufacturer's recommendations.
   a. Tire pressures
   b. Brake and steering systems
   c. Controls, hydraulic system and linkages
3. Keep the terrain in good condition.
   a. Remove any large rocks or obstacles.
   b. Fill any ditches and holes.
   c. Provide machines and schedule time in order to maintain the conditions of the terrain.
4. Use a seat that meets "ISO 7096". Keep the seat maintained and adjusted.
   a. Adjust the seat and suspension for the weight and the size of the operator.
   b. Inspect and maintain the seat suspension and adjustment mechanisms.
5. Perform the following operations smoothly.
   a. Steer
   b. Brake
   c. Accelerate.
   d. Shift the gears.
6. Move the attachments smoothly.
7. Adjust the machine speed and the route in order to minimize the vibration level.
   a. Drive around obstacles and rough terrain.
   b. Slow down when it is necessary to go over rough terrain.
8. Minimize vibrations for a long work cycle or a long travel distance.
   a. Use machines that are equipped with suspension systems.
   b. Use the ride control system on wheel loaders.

c. If no ride control system is available, reduce speed in order to prevent bounce.

d. Haul the machines between workplaces.

9. Less operator comfort may be caused by other risk factors. The following guidelines can be effective in order to provide better operator comfort:

   a. Adjust the seat and adjust the controls in order to achieve a good posture.

   b. Adjust the mirrors in order to minimize a twisted posture.

   c. Provide breaks in order to reduce long periods of sitting.

   d. Avoid jumping from the cab.

   e. Minimize repeated handling of loads and lifting of loads.

   f. Minimize any shocks and impacts during sports and leisure activities.

Sources

The vibration information and calculation procedure is based on "ISO/TR 25398 Mechanical Vibration - Guideline for the assessment of exposure to whole body vibration of ride on operated earthmoving machines". Harmonized data is measured by international institutes, organizations and manufacturers.

This literature provides information about assessing the whole body vibration exposure of operators of earthmoving equipment. The method is based on measured vibration emission under real working conditions for all machines.

You should check the original directive. This document summarizes part of the content of the applicable law. This document is not meant to substitute the original sources. Other parts of these documents are based on information from the United Kingdom Health and Safety Executive.

Refer to Operation and Maintenance Manual, SEBU8257, "The European Union Physical Agents (Vibration) Directive 2002/44/EC" for more information about vibration.

Consult your local Caterpillar dealer for more information about machine features that minimize vibration levels. Consult your local Caterpillar dealer about safe machine operation.

Use the following web site in order to find your local dealer:

Caterpillar, Inc.
www.cat.com

i03634321

Operator Station

SMCS Code: 7000

Any modifications to the inside of the operator station should not project into the operator space or into the space for the companion seat (if equipped). The addition of a radio, fire extinguisher, and other equipment must be installed so that the defined operator space and the space for the companion seat (if equipped) is maintained. Any item that is brought into the cab should not project into the defined operator space or the space for the companion seat (if equipped). A lunch box or other loose items must be secured. Objects must not pose an impact hazard in rough terrain or in the event of a rollover.

Product Information Section

General Information

i02471523

Specifications

SMCS Code: 7000

Intended Use

This machine is classified as a Wheel Loader as described in "ISO 6165:2001". This machine normally has a front mounted bucket or another work tool for the principal intended functions of digging, loading, lifting, carrying, and moving material such as earth, crushed rock or gravel. Additional work tools allow this machine to perform other specific tasks.

Application/Configuration Restrictions

Refer to Operation and Maintenance Manual, "Machine Data" below for information about maximum machine weight.

Refer to Operation and Maintenance Manual, "Caterpillar Approved Work Tools" for information about acceptable work tools.

Lift arm height restrictions will be found in the Operation and Maintenance Manual for the appropriate work tool.

The maximum fore and aft slope for proper lubrication is 25 degrees continuous and 35 degrees intermittent.

This machine is approved for use in environments with no explosive gases.

Machine Data

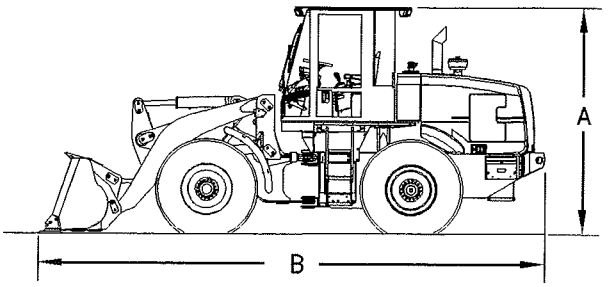

Illustration 15 g00915025

Basic machine specifications with a General Purpose Bucket are listed below.

Table 2

924Gz Wheel Loader	
Approximate Weight	9907 kg (21841 lb)
Maximum Length (B)	6890 mm (22 ft 7 inches)
Width Across Tires	2356 mm (7 ft 9 inches)
Height to Top of ROPS (A)	3160 mm (10 ft 5 inches)

Table 3

924G Wheel Loader	
Approximate Weight	10360 kg (22840 lb)
Maximum Length (B)	7179 mm (23 ft 7 inches)
Width Across Tires	2356 mm (7 ft 9 inches)
Height to Top of ROPS (A)	3159 mm (10 ft 5 inches)

Table 4

928G Wheel Loader	
Approximate Weight	11405 kg (25143 lb)
Maximum Length (B)	7255 mm (23 ft 10 inches)
Width Across Tires	2439 mm (8 ft 1 inches)
Height to Top of ROPS (A)	3269 mm (10 ft 9 inches)

Table 5

IT28G Integrated Toolcarrier	
Approximate Weight	11718 kg (25834 lb)
Maximum Length (B)	7283 mm (23 ft 11 inches)
Width Across Tires	2439 mm (8 ft 1 inches)
Height to Top of ROPS (A)	3269 mm (10 ft 9 inches)

Table 6

930G Wheel Loader	
Approximate Weight	13027 kg (28720 lb)
Maximum Length (B)	7390 mm (24.25 ft)
Width Across Tires	2420 mm (95.2 inches)
Height to Top of ROPS (A)	3277 mm (129 inches)

i02358665

Rated Load

SMCS Code: 6700

Bucket Rated Load

⚠ WARNING

Failure to comply to the rated load can cause possible personal injury or property damage. Review the rated load of a particular work tool before performing any operation. Make adjustments to the rated load as necessary for non-standard configurations.

Note: Rated loads should be used as a guide. The operator must be aware of the following conditions:

- Work tools
- Uneven ground
- Soft ground
- Other poor ground conditions

⚠ WARNING

Machine stability is affected by many factors, including the type of work tool and the position of a work tool.

Machine stability and machine control can be significantly affected if a work tool is not installed. Operating a machine without a work tool can lead to loss of control or tipping of the machine which could result in serious injury or death.

When you operate a machine without a work tool, avoid the following conditions:

- **excessive speed**
- **sharp turns**
- **abrupt implement movement**
- **slopes and uneven ground**

The rated operating load is defined by the SAE standard "J818" (May 1987) and by the "ISO 5998" (1986) as 50 % of the full turn static tipping load.

The corresponding dump clearance is given for each bucket at maximum lift height and at a 45 degree dump angle. The reach is given for each bucket at maximum lift height and at a 45 degree dump angle. Clearance is measured from the ground to the bucket edge or to the tip of the bucket teeth. The reach is measured from the front tire to the bucket edge or to the tip of the bucket teeth.

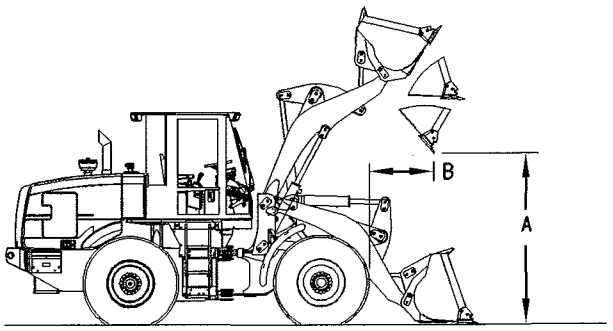

Illustration 16 g00628152

Dimension (A) represents the dump clearance. Dimension (B) represents the reach.

924G

Rated loads are based upon a standard machine with the following conditions:

- Implements

- Full fuel tank
- ROPS Cab
- 80 kg (176 lb) operator
- 17.5-25 12 PR L2 or equivalent tires
- Counterweight

All rated loads conform to the SAE standard "J732".

Rated loads will vary with different work tools. Contact your Caterpillar dealer regarding the rated load for your specific machine configuration.

Table 7

924Gz RATED BUCKET LOAD(1)					
Bucket Part Number	**Ground Engaging Tools**	**Rated Volume**	**Rated Operating Load**	**Dump Clearance (A)**	**Reach (B)**
172-8568	Bolt-on Cutting Edge	1.8 m^3 (2.3 yd^3)	3443 kg (7575 lb)	2760 mm (9 ft 1 inch)	865 mm (2 ft 10 inches)
	Teeth	1.7 m^3 (2.2 yd^3)	3436 kg (7559 lb)	2656 mm (8 ft 9 inches)	969 mm (3 ft 2 inches)
	Teeth and Segments	1.8 m^3 (2.3 yd^3)	3358 kg (7388 lb)	2656 mm (8 ft 9 inches)	969 mm (3 ft 2 inches)
173-3635	Bolt-on Cutting Edge	2.1 m^3 (2.7 yd^3)	3403 kg (7487 lb)	2691 mm (8 ft 10 inches)	934 mm (3 ft 1 inch)
	Teeth	2.0 m^3 (2.6 yd^3)	3406 kg (7493 lb)	2587 mm (8 ft 6 inches)	1037 mm (3 ft 5 inches)
	Teeth and Segments	2.1 m^3 (2.7 yd^3)	3318 kg (7300 lb)	2587 mm (8 ft 6 inches)	1037 mm (3 ft 5 inches)
173-3634	Bolt-on Cutting Edge	1.8 m^3 (2.3 yd^3)	3449 kg (7588 lb)	2760 mm (9 ft 1 inch)	865 mm (2 ft 10 inches)
	Teeth	1.7 m^3 (2.2 yd^3)	3444 kg (1722 lb)	2656 mm (8 ft 9 inches)	969 mm (3 ft 2 inches)
	Teeth and Segments	1.8 m^3 (2.3 yd^3)	3362 kg (7396 lb)	2656 mm (8 ft 9 inches)	969 mm (3 ft 2 inches)

(1) Rated loads are based upon a standard machine with the following conditions: Implements, Full fuel tank, ROPS Cab, 80 kg (176 lb) operator, 17.5-25 12 PR L2 or equivalent tires, and Counterweight

Table 8

924G RATED BUCKET LOAD (STANDARD BOOM AND COUPLER)[1]					
Bucket Part Number	**Ground Engaging Tools**	**Rated Volume**	**Rated Operating Load**	**Dump Clearance (A)**	**Reach (B)**
167-3966	Bolt-on Cutting Edge	1.8 m^3 (2.3 yd^3)	3253 kg (7158 lb)	2760 mm (9 ft 1 inch)	1067 mm (3 ft 6 inches)
	Teeth	1.7 m^3 (2.2 yd^3)	3255 kg (7162 lb)	2656 mm (8 ft 9 inches)	1170 mm (3 ft 10 inches)
	Teeth and Segments	1.8 m^3 (2.3 yd^3)	3171 kg (6976 lb)	2656 mm (8 ft 9 inches)	1170 mm (3 ft 10 inches)
167-3965	Bolt-on Cutting Edge	2.1 m^3 (2.7 yd^3)	3210 kg (7063 lb)	2691 mm (8 ft 10 inches)	1135 mm (3 ft 9 inches)
	Teeth	2.0 m^3 (2.6 yd^3)	3180 kg (6996 lb)	2587 mm (8 ft 6 inches)	1238 mm (4 ft 1 inch)
	Teeth and Segments	2.1 m^3 (2.7 yd^3)	3126 kg (6892 lb)	2587 mm (8 ft 6 inches)	1238 mm (4 ft 1 inch)
167-3967	Flush Mounted Teeth	1.7 m^3 (2.2 yd^3)	3284 kg (7225 lb)	2676 mm (8 ft 9 inches)	1185 mm (3 ft 11 inches)
178-4663	Bolt-on Cutting Edge	2.8 m^3 (3.6 yd^3)	3094 kg (6805 lb)	2555 mm (8 ft 5 inches)	1273 mm (4 ft 2 inches)
160-8370	Bolt-on Cutting Edge	5.0 m^3 (6.5 yd^3)	2958 kg (6506 lb)	2444 mm (8 ft)	1233 mm (4 ft 1 inch)

(1) Rated loads are based upon a standard machine with the following conditions: Implements, Full fuel tank, ROPS Cab, 80 kg (176 lb) operator, 17.5-25 12 PR L2 or equivalent tires, and Counterweight

Table 9

924G RATED BUCKET LOAD (STANDARD BOOM AND NO COUPLER)[1]					
Bucket Part Number	**Ground Engaging Tools**	**Rated Volume**	**Rated Operating Load**	**Dump Clearance (A)**	**Reach (B)**
167-3963	Bolt-on Cutting Edge	1.8 m^3 (2.3 yd^3)	3437 kg (7562 lb)	2850 mm (9 ft 4 inches)	960 mm (3 ft 2 inches)
	Teeth	1.7 m^3 (2.2 yd^3)	3442 kg (7572 lb)	2746 mm (9 ft)	1063 mm (3 ft 6 inches)
	Teeth and Segments	1.8 m^3 (2.3 yd^3)	3354 kg (7379 lb)	2746 mm (9 ft)	1063 mm (3 ft 6 inches)
167-3962	Bolt-on Cutting Edge	2.1 m^3 (2.7 yd^3)	3403 kg (7487 lb)	2781 mm (9 ft 2 inches)	1028 mm (3 ft 4 inches)
	Teeth	2.0 m^3 (2.6 yd^3)	3372 kg (7418 lb)	2677 mm (8 ft 9 inches)	1131 mm (3 ft 8 inches)
	Teeth and Segments	2.1 m^3 (2.7 yd^3)	3318 kg (7315 lb)	2677 mm (8 ft 9 inches)	1131 mm (3 ft 8 inches)
167-3964	Flush Mounted Teeth	1.7 m^3 (2.2 yd^3)	3481 kg (7658 lb)	2766 mm (9 ft 1 inch)	1078 mm (3 ft 6 inches)
178-4661	Bolt-on Cutting Edge	2.8 m^3 (3.6 yd^3)	3279 kg (7214 lb)	2645 mm (8 ft 8 inches)	1166 mm (3 ft 10 inches)
141-6272	Bolt-on Cutting Edge	5.0 m^3 (6.5 yd^3)	3112 kg (6845 lb)	2518 mm (8 ft 3 inches)	1123 mm (3 ft 8 inches)

(1) Rated loads are based upon a standard machine with the following conditions: Implements, Full fuel tank, ROPS Cab, 80 kg (176 lb) operator, 17.5-25 12 PR L2 or equivalent tires, and Counterweight

Table 10

924G RATED BUCKET LOAD (HIGH LIFT BOOM AND COUPLER)[1]					
Bucket Part Number	**Ground Engaging Tools**	**Rated Volume**	**Rated Operating Load**	**Dump Clearance (A)**	**Reach (B)**
167-3966	Bolt-on Cutting Edge	1.8 m^3 (2.3 yd^3)	2634 kg (5795 lb)	3267 mm (10 ft 9 inches)	1068 mm (3 ft 6 inches)
	Teeth	1.7 m^3 (2.2 yd^3)	2626 kg (5778 lb)	3163 mm (10 ft 5 inches)	1171 mm (3 ft 10 inches)
	Teeth and Segments	1.8 m^3 (2.3 yd^3)	2554 kg (5619 lb)	3163 mm (10 ft 5 inches)	1171 mm (3 ft 10 inches)
167-3965	Bolt-on Cutting Edge	2.1 m^3 (2.7 yd^3)	2596 kg (5712 lb)	3198 mm (10 ft 6 inches)	1136 mm (3 ft 9 inches)
	Teeth	2.0 m^3 (2.6 yd^3)	2566 kg (5646 lb)	3094 mm (10 ft 2 inches)	1240 mm (4 ft 1 inch)
	Teeth and Segments	2.1 m^3 (2.7 yd^3)	2515 kg (5545 lb)	3094 mm (10 ft 2 inches)	1240 mm (4 ft 1 inch)
167-3967	Flush Mounted Teeth	1.7 m^3 (2.2 yd^3)	2656 kg (5844 lb)	3183 mm (10 ft 5 inches)	1186 mm (3 ft 11 inches)
178-4663	Bolt-on Cutting Edge	2.8 m^3 (3.6 yd^3)	2498 kg (5494 lb)	3062 mm (10 ft)	1274 mm (4 ft 2 inches)
160-8370	Bolt-on Cutting Edge	5.0 m^3 (6.5 yd^3)	2350 kg (5169 lb)	2951 mm (9 ft 8 inches)	1233 mm (4 ft)

(1) Rated loads are based upon a standard machine with the following conditions: Implements, Full fuel tank, ROPS Cab, 80 kg (176 lb) operator, 17.5-25 12 PR L2 or equivalent tires, and Counterweight

Table 11

924G RATED BUCKET LOAD (HIGH LIFT BOOM AND NO COUPLER)[1]					
Bucket Part Number	**Ground Engaging Tools**	**Rated Volume**	**Rated Operating Load**	**Dump Clearance (A)**	**Reach (B)**
167-3963	Bolt-on Cutting Edge	1.8 m^3 (2.3 yd^3)	2778 kg (6113 lb)	3358 mm (11 ft)	961 mm (3 ft 2 inches)
	Teeth	1.7 m^3 (2.2 yd^3)	2772 kg (6100 lb)	3254 mm (10 ft 8 inches)	1064 mm (3 ft 6 inches)
	Teeth and Segments	1.8 m^3 (2.3 yd^3)	2698 kg (5934 lb)	3254 mm (10 ft 8 inches)	1064 mm (3 ft 6 inches)
167-3962	Bolt-on Cutting Edge	2.1 m^3 (2.7 yd^3)	2750 kg (6050 lb)	3290 mm (10 ft 9 inches)	1029 mm (3 ft 4 inches)
	Teeth	2.0 m^3 (2.6 yd^3)	2720 kg (5984 lb)	3185 mm (10 ft 5 inches)	1132 mm (3 ft 8 inches)
	Teeth and Segments	2.1 m^3 (2.7 yd^3)	2668 kg (5882 lb)	3185 mm (10 ft 5 inches)	1132 mm (3 ft 8 inches)
167-3964	Flush Mounted Teeth	1.7 m^3 (2.2 yd^3)	2814 kg (6190 lb)	3274 mm (10 ft 9 inches)	1079 mm (3 ft 6 inches)
178-4661	Bolt-on Cutting Edge	2.8 m^3 (3.6 yd^3)	2646 kg (5821 lb)	3153 mm (10 ft 4 inches)	1168 mm (3 ft 10 inches)
141-6272	Bolt-on Cutting Edge	5.0 m^3 (6.5 yd^3)	2480 kg (5456 lb)	3025 mm (9 ft 11 inches)	1124 mm (3 ft 8 inches)

(1) Rated loads are based upon a standard machine with the following conditions: Implements, Full fuel tank, ROPS Cab, 80 kg (176 lb) operator, 17.5-25 12 PR L2 or equivalent tires, and Counterweight

928G

Rated loads are based upon a standard machine with the following conditions:

- Implements
- Full fuel tank
- ROPS Cab
- 80 kg (176 lb) operator
- 20.5-25 12 PR L2 or equivalent tires
- Counterweight

All rated loads conform to the SAE standard "J732C" and "J742".

Rated loads will vary with different work tools. Contact your Caterpillar dealer regarding the rated load for your specific machine configuration.

Table 12

928G RATED BUCKET LOAD(1)					
Bucket Part Number	**Ground Engaging Tools**	**Rated Volume**	**Rated Operating Load**	**Dump Clearance (A)**	**Reach (B)**
119-1799	Bolt-on Cutting Edge	2.0 m^3 (2.6 yd^3)	3800 kg (8378 lb)	2879 mm (9 ft 5 inches)	927 mm (3 ft)
	Teeth	1.9 m^3 (2.5 yd^3)	3760 kg (8291 lb)	2947 mm (9 ft 8 inches)	893 mm (2 ft 11 inches)
	Teeth and Segments	2.0 m^3 (2.6 yd^3)	3800 kg (8378 lb)	2879 mm (9 ft 5 inches)	927 mm (3 ft)
119-1800	Bolt-on Cutting Edge	2.2 m^3 (2.9 yd^3)	3728 kg (8220 lb)	2842 mm (9 ft 4 inches)	964 mm (3 ft 2 inches)
	Teeth	2.1 m^3 (2.75 yd^3)	3728 kg (8220 lb)	2910 mm (9 ft 7 inches)	930 mm (3 ft)
	Teeth and Segments	2.2 m^3 (2.9 yd^3)	3644 kg (8035 lb)	2842 mm (9 ft 4 inches)	964 mm (3 ft 2 inches)
122-0162	Flush Mounted Teeth	2.1 m^3 (2.75 yd^3)	3724 kg (8210 lb)	2910 mm (9 ft 7 inches)	930 mm (3 ft)

(1) Rated loads are based upon a standard machine with the following conditions: Implements, Full fuel tank, ROPS Cab, 80 kg (176 lb) operator, 20.5-25 12 PR L2 or equivalent tires, and Counterweight

IT28G

Rated loads are based upon a standard machine with the following conditions:

- Implements
- Full fuel tank
- ROPS Cab
- 80 kg (176 lb) operator
- 20.5-25 12 PR L2 or equivalent tires
- Counterweight

Rated loads conform to the SAE standard "J742B".

Note: Long tooth options do not conform to the SAE standard "J742B".

Rated loads will vary with different work tools. Contact your Caterpillar dealer regarding the rated load for your specific machine configuration.

Table 13

IT28G RATED BUCKET LOAD[1]					
Bucket Part Number	**Ground Engaging Tools**	**Rated Volume**	**Rated Operating Load**	**Dump Clearance (A)**	**Reach (B)**
132-2258	Bolt-on Cutting Edge	2.0 m^3 (2.6 yd^3)	3477 kg (7667 lb)	2911 mm (9 ft 7 inches)	1014 mm (3 ft 4 inches)
	Teeth	1.9 m^3 (2.5 yd^3)	3521 kg (7764 lb)	2979 mm (9 ft 9 inches)	981 mm (3 ft 3 inches)
	Teeth and Segments	2.0 m^3 (2.6 yd^3)	3440 kg (7584 lb)	2911 mm (9 ft 7 inches)	1014 mm (3 ft 4 inches)
132-2256	Bolt-on Cutting Edge	1.8 m^3 (2.35 yd^3)	3518 kg (7756 lb)	2967 mm (9 ft 9 inches)	958 mm (3 ft 2 inches)
	Teeth	1.7 m^3 (2.25 yd^3)	3558 kg (7845 lb)	3036 mm (9 ft 11 inches)	924 mm (3 ft)
	Teeth and Segments	1.8 m^3 (2.35 yd^3)	3466 kg (7643 lb)	2967 mm (9 ft 9 inches)	958 mm (3 ft 2 inches)
4E-2473	Flush Mounted Teeth	1.7 m^3 (2.25 yd^3)	3575 kg (7883 lb)	3035 mm (9 ft 11 inches)	923 mm (3 ft)

(1) Rated loads are based upon a standard machine with the following conditions: Implements, Full fuel tank, ROPS Cab, 80 kg (176 lb) operator, 20.5-25 12 PR L2 or equivalent tires, and Counterweight

930G

Rated loads are based upon a standard machine with the following conditions:

- Implements
- Full fuel tank
- ROPS Cab
- 80 kg (176 lb) operator
- 600/65 R25 L3 or equivalent tires
- Optional Counterweight
- Limited Slip
- HD Rear Axle
- Guards
- Blue Angel

Rated loads conform to the SAE standard "J732".

Note: Long tooth options do not conform to the SAE standard "J732".

Rated loads will vary with different work tools. Contact your Caterpillar dealer regarding the rated load for your specific machine configuration.

Table 14

930G RATED BUCKET LOAD (quick coupler)[1]					
Bucket Part Number	**Ground Engaging Tools**	**Rated Volume**	**Rated Operating Load**	**Dump Clearance (A)**	**Reach (B)**
241-0935	Bolt-on Cutting Edge	2.1 m^3 (2.75 yd^3)	4172 kg (9198 lb)	2936 mm (116.6 inches)	1073 mm (42.2 inches)
	Teeth	2.0 m^3 (2.6 yd^3)	4142 kg (9132 lb)	3002 mm (118 inches)	1034 mm (40.7 inches)
	Teeth and Segments	2.1 m^3 (2.75 yd^3)	4089 kg (9014 lb)	2936 mm (116 inches)	1073 mm (42.2 inches)
256-8889	Bolt-on Cutting Edge	2.1 m^3 (2.75 yd^3)	4008 kg (8836 lb)	2843 mm (112 inches)	936 mm (36.8 inches)
	Teeth	1.9 m^3 (2.6 yd^3)	3978 kg (8770 lb)	2912 mm (115 inches)	903 mm (35.5 inches)
	Teeth and Segments	2.1 m^3 (2.75 yd^3)	3926 kg (8655 lb)	2843 mm (112 inches)	936 mm (36.8 inches)
251-9878	Flat Mounted Teeth	1.7 m^3 (2.25 yd^3)	4163 kg (9178 lb)	3003 mm (118 inches)	874 mm (34.4 inches)
239-7002	Bolt-on Cutting Edge	2.3 m^3 (3.0 yd^3)	4128 kg (9101 lb)	2902 mm (114 inches)	1114 mm (43.9 inches)
	Teeth	2.1 m^3 (2.75 yd^3)	4098 kg (9035 lb)	2967 mm (117 inches)	1075 mm (42.3 inches)
	Teeth and Segments	2.3 m^3 (3.0 yd^3)	4045 kg (8918 lb)	2902 mm (114 inches)	1114 mm (43.9 inches)
256-8882	Bolt-on Cutting Edge	2.3 m^3 (3.0 yd^3)	3952 kg (8713 lb)	2783 mm (110 inches)	997 mm (39.3 inches)
	Teeth	2.1 m^3 (2.75 yd^3)	3922 kg (8647 lb)	2851 mm (112 inches)	963 mm (37.9 inches)
	Teeth and Segments	2.3 m^3 (3.0 yd^3)	3869 kg (8530 lb)	2783 mm (110 inches)	997 mm (39.3 inches)
256-8863	Bolt-on Cutting Edge	2.5 m^3 (3.3 yd^3)	3911 kg (8622 lb)	2737 mm (108 inches)	1042 mm (41.0 inches)
	Teeth	2.3 m^3 (3.0 yd^3)	3881 kg (8556 lb)	2806 mm (110 inches)	1009 mm (39.7 inches)
	Teeth and Segments	2.5 m^3 (3.3 yd^3)	3828 kg (8439 lb)	2737 mm (108 inches)	1042 mm (41.0 inches)

(1) Rated loads are based upon a standard machine with the following conditions: Implements, Full fuel tank, ROPS Cab, 80 kg (176 lb) operator, 600/65 R25 L3 or equivalent tires, Optional Counterweight, Limited Slip, HD Rear Axle, Guards, and Blue Angel

Table 15

930G RATED BUCKET LOAD (pin coupler)[1]					
Bucket Part Number	**Ground Engaging Tools**	**Rated Volume**	**Rated Operating Load**	**Dump Clearance (A)**	**Reach (B)**
252-6909	Bolt-on Cutting Edge	2.1 m^3 (2.75 yd^3)	4397 kg (9694 lb)	3027 mm (119 inches)	966 mm (38.0 inches)
	Teeth	2.0 m^3 (2.6 yd^3)	4366 kg (9625 lb)	3093 mm (122 inches)	927 mm (36.5 inches)
	Teeth and Segments	2.1 m^3 (2.75 yd^3)	4313 kg (9509 lb)	3027 mm (119 inches)	966 mm (38.0 inches)
239-7004	Bolt-on Cutting Edge	2.3 m^3 (3.0 yd^3)	4370 kg (9634 lb)	2992 mm (118 inches)	1007 mm (39.6 inches)
	Teeth	2.1 m^3 (2.75 yd^3)	4339 kg (9566 lb)	3057 mm (120 inches)	968 mm (38.1 inches)
	Teeth and Segments	2.3 m^3 (3.0 yd^3)	4285 kg (9447 lb)	2992 mm (118 inches)	1007 mm (39.6 inches)
256-8898	Bolt-on Cutting Edge	2.3 m^3 (3.0 yd^3)	4264 kg (9401 lb)	2917 mm (115 inches)	925 mm (36.4 inches)
	Teeth	2.1 m^3 (2.75 yd^3)	4233 kg (9332 lb)	2985 mm (118 inches)	892 mm (35.1 inches)
	Teeth and Segments	2.3 m^3 (3.0 yd^3)	4180 kg (9215 lb)	2917 mm (115 inches)	925 mm (36.4 inches)
251-6600	Flat Mounted Teeth	2.4 m^3 (3.1 yd^3)	4278 kg (9431 lb)	2999 mm (118 inches)	878 mm (34.6 inches)
256-8911	Bolt-on Cutting Edge	2.5 m^3 (3.3 yd^3)	4219 kg (9301 lb)	2871 mm (113 inches)	971 mm (38.2 inches)
	Teeth	2.3 m^3 (3.0 yd^3)	4188 kg (9233 lb)	2939 mm (116 inches)	938 mm (36.9 inches)
	Teeth and Segments	2.5 m^3 (3.3 yd^3)	4135 kg (9116 lb)	2871 mm (113 inches)	971 mm (38.2 inches)
244-3674	Ejector with Bolt-on Cutting Edge	3.1 m^3 (4.1 yd^3)	3939 kg (8684 lb)	2738 mm (116 inches)	980 mm (38.6 inches)

(1) Rated loads are based upon a standard machine with the following conditions: Implements, Full fuel tank, ROPS Cab, 80 kg (176 lb) operator, 600/65 R25 L3 or equivalent tires, Optional Counterweight, Limited Slip, HD Rear Axle, Guards, and Blue Angel

Table 16

930G RATED LOAD (PENETRATION BUCKET)[1]					
Bucket Part Number	**Ground Engaging Tools**	**Rated Volume**	**Rated Operating Load**	**Dump Clearance (A)**	**Reach (B)**
251-9880 (quick coupler)	Flush Mounted Teeth	2.3 m^3 (3.0 yd^3)	4084 kg (9004 lb)	2983 mm (114 inches)	984 mm (38.7 inches)
251-9879 (pin coupler)	Flush Mounted Teeth	2.3 m^3 (3.0 yd^3)	4297 kg (9473 lb)	2999 mm (118 inches)	878 mm (34.6 inches)

(1) Rated loads are based upon a standard machine with the following conditions: Implements, Full fuel tank, ROPS Cab, 80 kg (176 lb) operator, 600/65 R25 L3 or equivalent tires, Optional Counterweight, Limited Slip, HD Rear Axle, Guards, and Blue Angel

Table 17

930G RATED BUCKET LOAD[1]					
Bucket Part Number	**Ground Engaging Tools**	**Rated Volume**	**Rated Operating Load**	**Dump Clearance (A)**	**Reach (B)**
251-5412	Bolt-on Cutting Edge	2.8 m^3 (3.7 yd^3)	4103 kg (9646 lb)	2800 mm (110 inches)	1210 mm (47.6 inches)
	Teeth	2.7 m^3 (3.5 yd^3)	4028 kg (8890 lb)	2866 mm (113 inches)	1172 mm (46.1 inches)
	Teeth and Segments	2.8 m^3 (3.7 yd^3)	3973 kg (8759 lb)	2800 mm (110 inches)	1210 mm (47.6 inches)
241-0916	Bolt-on Cutting Edge	3.1 m^3 (4.1 yd^3)	4015 kg (8852 lb)	2756 mm (109 inches)	1252 mm (49.3 inches)
	Teeth	2.9 m^3 (3.8 yd^3)	3994 kg (8805 lb)	2822 mm (111 inches)	1213 mm (47.8 inches)
	Teeth and Segments	3.1 m^3 (4.1 yd^3)	3940 kg (8686 lb)	2756 mm (109 inches)	1252 mm (49.3 inches)
252-6903	Bolt-on Cutting Edge	2.8 m^3 (3.5 yd^3)	4266 kg (9405 lb)	2891 mm (114 inches)	1104 mm (43.5 inches)
	Teeth	2.7 m^3 (3.5 yd^3)	4235 kg (9337 lb)	2957 mm (116 inches)	1065 mm (41.9 inches)
	Teeth and Segments	2.8 m^3 (3.7 yd^3)	4180 kg (9215 lb)	2891 mm (114 inches)	1104 mm (43.5 inches)
160-8370	Bolt-on Cutting Edge	5.0 m^3 (6.5 yd^3)	3922 kg (8647 lb)	2671 mm (105 inches)	1189 mm (46.8 inches)
141-6272	Bolt-on Cutting Edge	5.0 m^3 (6.5 yd^3)	4290 kg (9458 lb)	2777 mm (109 inches)	1071 mm (42.2 inches)

(1) Rated loads are based upon a standard machine with the following conditions: Implements, Full fuel tank, ROPS Cab, 80 kg (176 lb) operator, 600/65 R25 L3 or equivalent tires, Optional Counterweight, Limited Slip, HD Rear Axle, Guards, and Blue Angel

Table 18

930G RATED BUCKET LOAD (HIGH LIFT) (quick coupler)[1]					
Bucket Part Number	**Ground Engaging Tools**	**Rated Volume**	**Rated Operating Load**	**Dump Clearance (A)**	**Reach (B)**
241-0935	Bolt-on Cutting Edge	2.1 m^3 (2.75 yd^3)	3331 kg (7344 lb)	3436 mm (135 inches)	1073 mm (42.2 inches)
	Teeth	2.0 m^3 (2.6 yd^3)	3302 kg (7280 lb)	3502 mm (133 inches)	1034 mm (40.7 inches)
	Teeth and Segments	2.1 m^3 (2.75 yd^3)	3251 kg (7167 lb)	3436 mm (135 inches)	1073 mm (42.2 inches)
256-8889	Bolt-on Cutting Edge	2.1 m^3 (2.75 yd^3)	3206 kg (7068 lb)	3343 mm (132 inches)	936 mm (36.8 inches)
	Teeth	1.9 m^3 (2.6 yd^3)	3177 kg (7004 lb)	3412 mm (134 inches)	903 mm (35.5 inches)
	Teeth and Segments	2.1 m^3 (2.75 yd^3)	3127 kg (6894 lb)	3343 mm (132 inches)	936 mm (36.8 inches)
251-9878	Flat Mounted Teeth	2.2 m^3 (2.9 yd^3)	3295 kg (7264 lb)	3503 mm (138 inches)	874 mm (34.4 inches)
239-7002	Bolt-on Cutting Edge	2.3 m^3 (3.0 yd^3)	3291 kg (7255 lb)	3402 mm (134 inches)	1114 mm (43.9 inches)
	Teeth	2.1 m^3 (2.75 yd^3)	3262 kg (7191 lb)	3402 mm (134 inches)	1114 mm (43.9 inches)
	Teeth and Segments	2.3 m^3 (3.0 yd^3)	3210 kg (7077 lb)	3402 mm (134 inches)	1114 mm (43.9 inches)
256-8882	Bolt-on Cutting Edge	2.3 m^3 (3.0 yd^3)	3145 kg (6934 lb)	3283 mm (129 inches)	996 mm (39.2 inches)
	Teeth	2.1 m^3 (2.75 yd^3)	3126 kg (6892 lb)	3351 mm (132 inches)	963 mm (37.9 inches)
	Teeth and Segments	2.3 m^3 (3.0 yd^3)	3075 kg (6779 lb)	3283 mm (129 inches)	996 mm (39.2 inches)
256-8863	Bolt-on Cutting Edge	2.5 m^3 (3.3 yd^3)	3118 kg (6874 lb)	3237 mm (127 inches)	1042 mm (41.0 inches)
	Teeth	2.3 m^3 (3.0 yd^3)	3089 kg (6810 lb)	3306 mm (130 inches)	1009 mm (39.7 inches)
	Teeth and Segments	2.5 m^3 (3.3 yd^3)	3037 kg (6695 lb)	3237 mm (127 inches)	1042 mm (41.0 inches)

(1) Rated loads are based upon a standard machine with the following conditions: Implements, Full fuel tank, ROPS Cab, 80 kg (176 lb) operator, 600/65 R25 L3 or equivalent tires, Optional Counterweight, Limited Slip, HD Rear Axle, Guards, and Blue Angel

Table 19

930G RATED BUCKET LOAD (HIGH LIFT) (pin coupler)[1]					
Bucket Part Number	**Ground Engaging Tools**	**Rated Volume**	**Rated Operating Load**	**Dump Clearance (A)**	**Reach (B)**
252-6909	Bolt-on Cutting Edge	2.1 m^3 (2.75 yd^3)	3518 kg (7756 lb)	3527 mm (139 inches)	965 mm (38.0 inches)
	Teeth	2.0 m^3 (2.6 yd^3)	3488 kg (7690 lb)	3593 mm (141 inches)	927 mm (36.5 inches)
	Teeth and Segments	2.1 m^3 (2.75 yd^3)	3437 kg (7577 lb)	3527 mm (139 inches)	965 mm (38.0 inches)
239-7004	Bolt-on Cutting Edge	2.3 m^3 (3.0 yd^3)	3497 kg (7710 lb)	3492 mm (137 inches)	1006 mm (39.6 inches)
	Teeth	2.1 m^3 (2.75 yd^3)	3467 kg (7643 lb)	3557 mm (140 inches)	967 mm (38.0 inches)
	Teeth and Segments	2.3 m^3 (3.0 yd^3)	3415 kg (7529 lb)	3492 mm (137 inches)	1006 mm (39.6 inches)
256-8898	Bolt-on Cutting Edge	2.3 m^3 (3.0 yd^3)	3405 kg (7507 lb)	3417 mm (135 inches)	925 mm (36.4 inches)
	Teeth	2.1 m^3 (2.75 yd^3)	3375 kg (7441 lb)	3485 mm (137 inches)	892 mm (35.1 inches)
	Teeth and Segments	2.3 m^3 (3.0 yd^3)	3324 kg (7328 lb)	3417 mm (135 inches)	925 mm (36.4 inches)
251-6600	Flat Mounted Teeth	2.4 m^3 (3.1 yd^3)	3402 kg (7500 lb)	3499 mm (138 inches)	877 mm (34.5 inches)
256-8911	Bolt-on Cutting Edge	2.5 m^3 (3.3 yd^3)	3365 kg (7719 lb)	3371 mm (133 inches)	971 mm (38.2 inches)
	Teeth	2.3 m^3 (3.0 yd^3)	3336 kg (7355 lb)	3439 mm (135 inches)	938 mm (36.9 inches)
	Teeth and Segments	2.5 m^3 (3.3 yd^3)	3284 kg (7240 lb)	3371 mm (133 inches)	971 mm (38.2 inches)
244-3674	Ejector with Bolt-on Cutting Edge	3.1 m^3 (4.1 yd^3)	3100 kg (6834 lb)	3238 mm (127 inches)	980 mm (38.6 inches)

(1) Rated loads are based upon a standard machine with the following conditions: Implements, Full fuel tank, ROPS Cab, 80 kg (176 lb) operator, 600/65 R25 L3 or equivalent tires, Optional Counterweight, Limited Slip, HD Rear Axle, Guards, and Blue Angel

Table 20

930G RATED LOAD (HIGH LIFT) (PENETRATION BUCKET)[1]					
Bucket Part Number	**Ground Engaging Tools**	**Rated Volume**	**Rated Operating Load**	**Dump Clearance (A)**	**Reach (B)**
251-9880 (quick coupler)	Flush Mounted Teeth	2.3 m^3 (3.0 yd^3)	3237 kg (7136 lb)	3393 mm (134 inches)	984 mm (38.7 inches)
251-9879 (pin coupler)	Flush Mounted Teeth	2.3 m^3 (3.0 yd^3)	3438 kg (7579 lb)	3499 mm (138 inches)	877 mm (34.5 inches)

(1) Rated loads are based upon a standard machine with the following conditions: Implements, Full fuel tank, ROPS Cab, 80 kg (176 lb) operator, 600/65 R25 L3 or equivalent tires, Optional Counterweight, Limited Slip, HD Rear Axle, Guards, and Blue Angel

Table 21

930G RATED BUCKET LOAD (HIGH LIFT)[1]					
Bucket Part Number	**Ground Engaging Tools**	**Rated Volume**	**Rated Operating Load**	**Dump Clearance (A)**	**Reach (B)**
251-5412	Bolt-on Cutting Edge	2.8 m^3 (3.7 yd^3)	3219 kg (7097 lb)	3300 mm (130 inches)	1210 mm (47.6 inches)
	Teeth	2.7 m^3 (3.5 yd^3)	3198 kg (7050 lb)	3366 mm (133 inches)	1171 mm (46.1 inches)
	Teeth and Segments	2.8 m^3 (3.7 yd^3)	3146 kg (6936 lb)	3300 mm (130 inches)	1210 mm (47.6 inches)
241-0916	Bolt-on Cutting Edge	3.1 m^3 (4.1 yd^3)	3180 kg (7011 lb)	3256 mm (128 inches)	1252 mm (49.3 inches)
	Teeth	2.9 m^3 (3.8 yd^3)	3162 kg (6971 lb)	3322 mm (131 inches)	1213 mm (47.8 inches)
	Teeth and Segments	3.1 m^3 (4.1 yd^3)	3109 kg (6854 lb)	3256 mm (128 inches)	1252 mm (49.3 inches)
252-6903	Bolt-on Cutting Edge	2.8 m^3 (3.5 yd^3)	3400 kg (7496 lb)	3391 mm (134 inches)	1103 mm (43.4 inches)
	Teeth	2.7 m^3 (3.5 yd^3)	3370 kg (7430 lb)	3457 mm (136 inches)	1064 mm (41.9 inches)
	Teeth and Segments	2.8 m^3 (3.7 yd^3)	3317 kg (7313 lb)	3391 mm (134 inches)	1103 mm (43.4 inches)
160-8370	Bolt-on Cutting Edge	5.0 m^3 (6.5 yd^3)	3051 kg (6726 lb)	3171 mm (125 inches)	1188 mm (46.8 inches)
141-6272	Bolt-on Cutting Edge	5.0 m^3 (6.5 yd^3)	3361 kg (7410 lb)	3377 mm (129 inches)	1071 mm (42.2 inches)

(1) Rated loads are based upon a standard machine with the following conditions: Implements, Full fuel tank, ROPS Cab, 80 kg (176 lb) operator, 600/65 R25 L3 or equivalent tires, Optional Counterweight, Limited Slip, HD Rear Axle, Guards, and Blue Angel

Rated Load for Pallet Forks

⚠ WARNING

Failure to comply to the rated load can cause possible personal injury or property damage. Review the rated load of a particular work tool before performing any operation. Make adjustments to the rated load as necessary for non-standard configurations.

Note: Rated loads should be used as a guide. The operator must be aware of the following conditions:

- Work tools
- Uneven ground
- Soft ground
- Other poor ground conditions

For European applications, the rated load is defined by "EN 474-3". The rated operating load for a firm, level surface is defined by the least amount of weight of the following conditions.

- 80% of the full turn static tipping load
- The minimum lifting capacity

The rated operating load for rough terrain is defined by the least amount of weight of the following conditions.

- 60% of the full turn static tipping load
- The minimum lifting capacity

For North American applications, the rated operating load is defined by "SAE J1197 Feb 91" as 50% of the full turn static tipping load.

The maximum height from the ground to the top face of the forks is given for forks that are horizontal at maximum lift height. The reach from the front tires to the front face of the forks is given for the forks that are horizontal at maximum lift height.

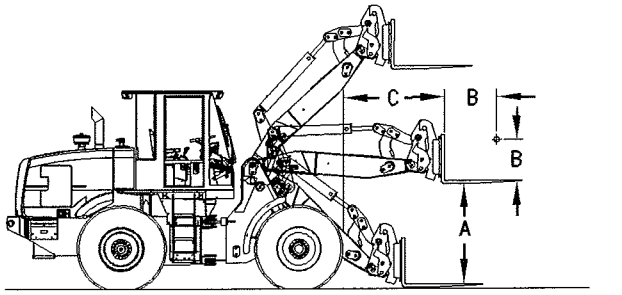

g00628195

Illustration 17

Dimension (A) represents the placement height. Dimension (B) represents the load center. Dimension (C) represents the reach.

Rated loads are based upon a standard machine with the following conditions:

- Implements
- Full fuel tank
- ROPS Cab
- 80 kg (176 lb) operator
- 17.5-25 PR L2 or equivalent tires
- Counterweight

Table 22

924G RATED LOADS FOR PALLET FORKS FOR ALL NORTH AMERICAN CONDITIONS ("SAE J1197 FEB 91") STANDARD BOOM (50% of Full Turn Static Tipping Load)					
Fork Part Number	**Fork Tine Length**	**Load Center (B)**	**Rated Operating Load**	**Placement Height (A)**	**Reach (C)**
6W-8900	1200 mm (3 ft 11 inches)	600 mm (2 ft)	2462 kg (5416 lb)	3569 mm (11 ft 8 inches)	837 mm (2 ft 9 inches)
6W-8935	1350 mm (4 ft 5 inches)	675 mm (2 ft 3 inches)	2361 kg (5194 lb)	3584 mm (11 ft 9 inches)	852 mm (2 ft 10 inches)

Table 23

924G RATED LOADS FOR PALLET FORKS FOR EUROPEAN OPERATION ON ROUGH TERRAIN ("EN 474-3") STANDARD BOOM (60% of Full Turn Static Tipping Load)					
Fork Part Number	**Fork Tine Length**	**Load Center (B)**	**Rated Operating Load**	**Placement Height (A)**	**Reach (C)**
6W-8900	1200 mm (3 ft 11 inches)	600 mm (2 ft)	2954 kg (6499 lb)	3569 mm (11 ft 8 inches)	837 mm (2 ft 9 inches)
6W-8935	1350 mm (4 ft 5 inches)	675 mm (2 ft 3 inches)	2833 kg (6232 lb)	3584 mm (11 ft 9 inches)	852 mm (2 ft 10 inches)

Table 24

924G RATED LOADS FOR PALLET FORKS FOR EUROPEAN OPERATION ON A FIRM AND LEVEL SURFACE ("EN 474-3") STANDARD BOOM (80% of Full Turn Static Tipping Load)					
Fork Part Number	**Fork Tine Length**	**Load Center (B)**	**Rated Operating Load**	**Placement Height (A)**	**Reach (C)**
6W-8900	1200 mm (3 ft 11 inches)	600 mm (2 ft)	3938 kg (8664 lb)	3569 mm (11 ft 8 inches)	837 mm (2 ft 9 inches)
6W-8935	1350 mm (4 ft 5 inches)	675 mm (2 ft 3 inches)	3778 kg (8312 lb)	3584 mm (11 ft 9 inches)	852 mm (2 ft 10 inches)

Table 25

924G RATED LOADS FOR PALLET FORKS FOR ALL NORTH AMERICAN CONDITIONS ("SAE J1197 FEB 91") HIGH LIFT BOOM (50% of Full Turn Static Tipping Load)					
Fork Part Number	**Fork Tine Length**	**Load Center (B)**	**Rated Operating Load**	**Placement Height (A)**	**Reach (C)**
6W-8900	1200 mm (3 ft 11 inches)	600 mm (2 ft)	2098 kg (4616 lb)	4076 mm (13 ft 4 inches)	837 mm (2 ft 9 inches)
6W-8935	1350 mm (4 ft 5 inches)	675 mm (2 ft 3 inches)	2015 kg (4433 lb)	4091 mm (13 ft 5 inches)	852 mm (2 ft 10 inches)

Table 26

924G RATED LOADS FOR PALLET FORKS FOR EUROPEAN OPERATION ON ROUGH TERRAIN ("EN 474-3") HIGH LIFT BOOM (60% of Full Turn Static Tipping Load)					
Fork Part Number	**Fork Tine Length**	**Load Center (B)**	**Rated Operating Load**	**Placement Height (A)**	**Reach (C)**
6W-8900	1200 mm (3 ft 11 inches)	600 mm (2 ft)	2518 kg (5540 lb)	4076 mm (13 ft 4 inches)	837 mm (2 ft 9 inches)
6W-8935	1350 mm (4 ft 5 inches)	675 mm (2 ft 3 inches)	2418 kg (5320 lb)	4091 mm (13 ft 5 inches)	852 mm (2 ft 10 inches)

Table 27

924G RATED LOADS FOR PALLET FORKS FOR EUROPEAN OPERATION ON A FIRM AND LEVEL SURFACE ("EN 474-3") HIGH LIFT BOOM (80% of Full Turn Static Tipping Load)					
Fork Part Number	**Fork Tine Length**	**Load Center (B)**	**Rated Operating Load**	**Placement Height (A)**	**Reach (C)**
6W-8900	1200 mm (3 ft 11 inches)	600 mm (2 ft)	3357 kg (7385 lb)	4076 mm (13 ft 4 inches)	837 mm (2 ft 9 inches)
6W-8935	1350 mm (4 ft 5 inches)	675 mm (2 ft 3 inches)	3224 kg (7093 lb)	4091 mm (13 ft 5 inches)	852 mm (2 ft 10 inches)

Table 28

928G RATED LOADS FOR PALLET FORKS FOR ALL NORTH AMERICAN CONDITIONS ("SAE J1197 FEB 91")					
Fork Part Number	**Fork Tine Length**	**Load Center (B)**	**Rated Operating Load**	**Placement Height (A)**	**Reach (C)**
6W-8933	1050 mm (3 ft 5 inches)	525 mm (21 inches)	2827 kg (6232 lb)	3589 mm (11 ft 9 inches)	710 mm (2 ft 4 inches)
6W-8900	1200 mm (3 ft 11 inches)	600 mm (24 inches)	2746 kg (6054 lb)	3589 mm (11 ft 9 inches)	710 mm (2 ft 4 inches)
6W-9739	1350 mm (4 ft 5 inches)	675 mm (27 inches)	2669 kg (5884 lb)	3589 mm (11 ft 9 inches)	710 mm (2 ft 4 inches)

Table 29

IT28G RATED LOADS FOR PALLET FORKS FOR ALL NORTH AMERICAN CONDITIONS ("SAE J1197 FEB 91")					
Fork Part Number	**Fork Tine Length**	**Load Center (B)**	**Rated Operating Load**	**Placement Height (A)**	**Reach (C)**
6W-8933	1050 mm (3 ft 5 inches)	525 mm (21 inches)	2953 kg (6510 lb)	3843 mm (12 ft 7 inches)	703 mm (2 ft 4 inches)
6W-8900	1200 mm (3 ft 11 inches)	600 mm (24 inches)	2867 kg (6321 lb)	3843 mm (12 ft 7 inches)	703 mm (2 ft 4 inches)
6W-9739	1350 mm (4 ft 5 inches)	675 mm (27 inches)	2786 kg (6142 lb)	3843 mm (12 ft 7 inches)	703 mm (2 ft 4 inches)

Table 30

IT28G RATED LOADS FOR PALLET FORKS FOR EUROPEAN OPERATION ON ROUGH TERRAIN ("CEN 474-3")					
Fork Part Number	**Fork Tine Length**	**Load Center (B)**	**Rated Operating Load**	**Placement Height (A)**	**Reach (C)**
6W-8933	1050 mm (3 ft 5 inches)	525 mm (21 inches)	3544 kg (7813 lb)	3843 mm (12 ft 7 inches)	703 mm (2 ft 4 inches)
6W-8900	1200 mm (3 ft 11 inches)	600 mm (24 inches)	3440 kg (7584 lb)	3843 mm (12 ft 7 inches)	703 mm (2 ft 4 inches)
6W-9739	1350 mm (4 ft 5 inches)	675 mm (27 inches)	3343 kg (7370 lb)	3843 mm (12 ft 7 inches)	703 mm (2 ft 4 inches)

Table 31

IT28G RATED LOADS FOR PALLET FORKS FOR EUROPEAN OPERATION ON A FIRM AND LEVEL SURFACE ("CEN 474-3")					
Fork Part Number	**Fork Tine Length**	**Load Center (B)**	**Rated Operating Load**	**Placement Height (A)**	**Reach (C)**
6W-8933	1050 mm (3 ft 5 inches)	525 mm (21 inches)	4725 kg (10417 lb)	3843 mm (12 ft 7 inches)	703 mm (2 ft 4 inches)
6W-8900	1200 mm (3 ft 11 inches)	600 mm (24 inches)	4586 kg (10110 lb)	3843 mm (12 ft 7 inches)	703 mm (2 ft 4 inches)
6W-9739	1350 mm (4 ft 5 inches)	675 mm (27 inches)	4457 kg (9826 lb)	3843 mm (12 ft 7 inches)	703 mm (2 ft 4 inches)

Table 32

930G RATED LOADS FOR PALLET FORKS							
Fork Part Number	**Fork Tine Length**	**Load Center (B)**	**Rated Operating Load ("SAE J1197 FEB 91" 50% FTSTL)**	**Rated Operating Load for Rough Terrain ("EN 474-3" 60% FTSTL)**	**Rated Operating Load for Firm & Level Ground ("EN 474-3" 80% FTSTL)**	**Placement Height (A)**	**Reach (C)**
6W-8900	1200 mm (47.2 inches)	600 mm (23.6 inches)	3208 kg (7072 lb)	3850 kg (8488 lb)	5133 kg (11316 lb)	3899 mm (154 inches)	774 mm (30.5 inches)
6W-8935	1350 mm (53.1 inches)	675 mm (26.6 inches)	3042 kg (6706 lb)	3650 kg (8047 lb)	4866 kg (10728 lb)	3913 mm (154 inches)	784 mm (30.9 inches)
172-3228	1524 mm (60.0 inches)	762 mm (30.0 inches)	2946 kg (6495 lb)	3535 kg (7793 lb)	4713 kg (10390 lb)	3899 mm (154 inches)	774 mm (30.5 inches)

Table 33

930G RATED LOADS FOR PALLET FORKS (High Lift)							
Fork Part Number	**Fork Tine Length**	**Load Center (B)**	**Rated Operating Load ("SAE J1197 FEB 91" 50% FTSTL)**	**Rated Operating Load for Rough Terrain ("EN 474-3" 60% FTSTL)**	**Rated Operating Load for Firm & Level Ground ("EN 474-3" 80% FTSTL)**	**Placement Height (A)**	**Reach (C)**
6W-8900	1200 mm (47.2 inches)	600 mm (23.6 inches)	2761 kg (6087 lb)	3313 kg (7304 lb)	4418 kg (9740 lb)	4399 mm (173 inches)	774 mm (30.5 inches)
6W-8935	1350 mm (53.1 inches)	675 mm (26.6 inches)	2627 kg (5792 lb)	3152 kg (6949 lb)	4202 kg (9264 lb)	4413 mm (174 inches)	784 mm (30.9 inches)
172-3228	1524 mm (60.0 inches)	762 mm (30.0 inches)	2550 kg (5622 lb)	3059 kg (6744 lb)	4079 kg (8993 lb)	4399 mm (173 inches)	774 mm (30.5 inches)

Rated Load for Material Handling Arm

⚠ WARNING

Failure to comply to the rated load can cause possible personal injury or property damage. Review the rated load of a particular work tool before performing any operation. Make adjustments to the rated load as necessary for non-standard configurations.

Note: Rated loads should be used as a guide. The operator must be aware of the following conditions:

- Work tools
- Uneven ground
- Soft ground
- Other poor ground conditions

The rated operating load is defined by the least amount of weight of the minimum lift capacity, minimum tilt capacity, and 50 percent of the full turn static tipping load.

The placement height (ground line to the chain hook) and reach (front tire to the chain hook) are given for the highest position of the material handling arm and for the lowest position of the material handling arm.

Rated loads will vary with different work tools. Contact your Caterpillar dealer regarding the rated load for your specific machine configuration.

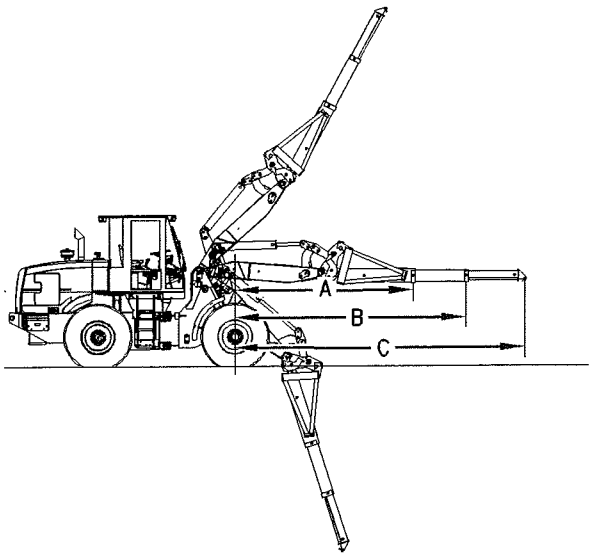

Illustration 18 g00628217

Position (A) represents the retracted position. Position (B) represents the mid-position. Position (C) represents the extended position.

924G

Rated loads will vary with different work tools. Contact your Caterpillar dealer regarding the rated load for your specific machine configuration.

Table 34

924G RATED LOAD FOR 9V-1795 MATERIAL HANDLING ARM ON A STANDARD BOOM(1)			
Position of Material Handling Arm	**Retracted (A)**	**Mid-Position (B)**	**Extended (C)**
Rated Operating Load	1790 kg (3938 lb)	1419 kg (3122 lb)	1178 kg (2592 lb)
Placement Below Ground at Lowest Position	2206 mm (7 ft 3 inches)	3156 mm (10 ft 4 inches)	4107 mm (13 ft 6 inches)
Reach at Lowest Position	933 mm (3 ft 1 inch)	1241 mm (4 ft 1 inch)	1550 mm (5 ft 1 inch)
Placement Height at Highest Position	5370 mm (17 ft 7 inches)	6249 mm (20 ft 6 inches)	7129 mm (23 ft 5 inches)
Reach at Highest Position	1482 mm (4 ft 10 inches)	1956 mm (6 ft 5 inches)	2430 mm (8 ft)

(1) Rated loads are based upon a standard machine with the following conditions: Implements, Full fuel tank, ROPS Cab, 80 kg (176 lb) operator, 17.5-25 12 PR L2 or equivalent tires, and Counterweight

Table 35

924G RATED LOAD FOR 9V-1795 MATERIAL HANDLING ARM ON A HIGH LIFT BOOM(1)			
Position of Material Handling Arm	**Retracted (A)**	**Mid-Position (B)**	**Extended (C)**
Rated Operating Load	1576 kg (3467 lb)	1272 kg (2798 lb)	1068 kg (2350 lb)
Placement Below Ground at Lowest Position	2131 mm (7 ft)	3035 mm (9 ft 11 inches)	3939 mm (12 ft 11 inches)
Reach at Lowest Position	1706 mm (5 ft 7 inches)	2133 mm (7 ft)	2560 mm (8 ft 5 inches)
Placement Height at Highest Position	5959 mm (19 ft 7 inches)	6872 mm (22 ft 6 inches)	7785 mm (25 ft 6 inches)
Reach at Highest Position	1339 mm (4 ft 5 inches)	1745 mm (5 ft 9 inches)	2152 mm (7 ft 1 inches)

(1) Rated loads are based upon a standard machine with the following conditions: Implements, Full fuel tank, ROPS Cab, 80 kg (176 lb) operator, 17.5-25 12 PR L2 or equivalent tires, and Counterweight

IT28G

Rated loads will vary with different work tools. Contact your Caterpillar dealer regarding the rated load for your specific machine configuration.

Table 36

IT28G RATED LOAD FOR MATERIAL HANDLING ARM(1)			
Position of Material Handling Arm	**Retracted (A)**	**Mid-Position (B)**	**Extended (C)**
Rated Operating Load	2095 kg (4619 lb)	1660 kg (3660 lb)	1377 kg (3036 lb)
Placement Height at Lowest Position	−1502 mm (−4 ft 11 inches)	−2306 mm (−7 ft 7 inches)	−3111 mm (−10 ft 2 inches)
Reach at Lowest Position	1529 mm (5 ft)	2122 mm (7 ft)	2715 mm (8 ft 11 inches)
Placement Height at Highest Position	5574 mm (18 ft 2 inches)	6379 mm (20 ft 11 inches)	7185 mm (23 ft 7 inches)
Reach at Highest Position	1608 mm (5 ft 3 inches)	2199 mm (7 ft 2 inches)	2791 mm (9 ft 2 inches)

(1) Rated loads are based upon a standard machine with the following conditions: Implements, Full fuel tank, ROPS Cab, 80 kg (176 lb) operator, 20.5-25 12 PR L2 or equivalent tires, and Counterweight

930G

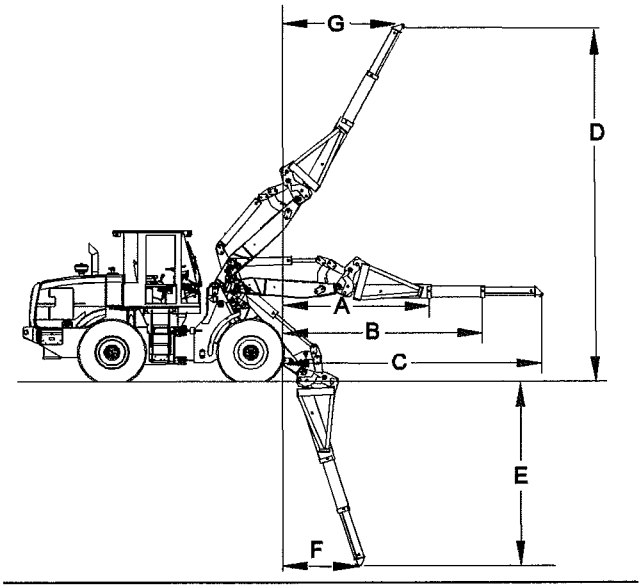

Illustration 19 g01116915

930G Material Handling Arm

Rated loads will vary with different work tools. Contact your Caterpillar dealer regarding the rated load for your specific machine configuration.

Table 37

930G Material Handling Arm[1]		
Dimension	**Standard**	**High Lift**
(A)	3354 mm (132 inches)	3748 mm (148 inches)
(B)	4353 mm (171 inches)	4747 mm (187 inches)
(C)	5353 mm (211 inches)	5747 mm (226 inches)
(D)	7746 mm (305 inches)	8303 mm (327 inches)
(E)	3730 mm (147 inches)	3560 mm (140 inches)
(F)	1886 mm (74.3 inches)	2820 mm (111 inches)
(G)	2217 mm (87.3 inches)	2107 mm (82.9 inches)

(1) Rated loads are based upon a standard machine with the following conditions: Implements, Full fuel tank, ROPS Cab, 80 kg (176 lb) operator, 600/65 R25 L3 or equivalent tires, Optional Counterweight, Limited Slip, HD Rear Axle, Guards, and Blue Angel

Table 38

930G Rated Load for Material Handling Arm[1]		
Dimension	**Standard**	**High Lift**
(A)	2363 kg (5216 pounds)	2096.5 kg (4622 pounds)
(B)	1889.5 kg (4166 pounds)	1705 kg (3759 pounds)
(C)	1576 kg (3474 pounds)	1438.5 kg (3171 pounds)

(1) Rated loads are based upon a standard machine with the following conditions: Implements, Full fuel tank, ROPS Cab, 80 kg (176 lb) operator, 600/65 R25 L3 or equivalent tires, Optional Counterweight, Limited Slip, HD Rear Axle, Guards, and Blue Angel

Logging Fork Rated Load

⚠ WARNING

Failure to comply to the rated load can cause possible personal injury or property damage. Review the rated load of a particular work tool before performing any operation. Make adjustments to the rated load as necessary for non-standard configurations.

Note: Rated loads should be used as a guide. The operator must be aware of the following conditions:

- Work tools
- Uneven ground
- Soft ground
- Other poor ground conditions

In European applications, the rated load is defined by "EN 474-3". The rated operating load for a firm, level surface is defined by the least amount of weight of the following conditions.

- 85% of the full turn static tipping load
- The minimum lifting capacity
- The minimum tilt capacity

The rated operating load for rough terrain is defined by the least amount of weight of the following conditions.

- 75% of the full turn static tipping load
- The minimum lifting capacity
- The minimum tilt capacity

For North American applications, the rated operating load is defined by "SAE J1197 Feb 91" as 50% of the full turn static tipping load.

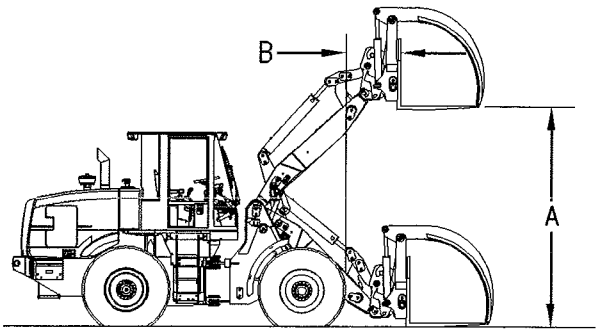

Illustration 20 g00630434

Position (A) represents the placement height. Position (B) represents the reach.

The maximum height from the ground to the top face of the forks is given for forks that are horizontal at maximum lift height. The reach from the front tires to the front face of the forks is given for forks that are horizontal at maximum lift height.

Rated loads are based upon a standard machine with the following conditions:

- Lubricants
- Full fuel tank
- Enclosed ROPS
- 80 kg (176 lb) operator
- 17.5 R25 12 L2 or equivalent tires
- Optional 175 kg (386 lb) counterweight

NOTICE
Log and lumber forks should not be used with the high lift boom.

Table 39

RATED LOADS FOR LOG AND LUMBER FORKS WITH A STANDARD BOOM AND COUPLER FOR ALL NORTH AMERICAN CONDITIONS ("SAE J1197 FEB 91")				
Fork Part Number	**Fork Tine Length**	**Rated Operating Load**	**Placement Height (A)**	**Reach (B)**
154-8708	1220 mm (4 ft)	2126 kg (4677 lb)	3582 mm (121 ft 9 inches)	873 mm (2 ft 10 inches)

Table 40

RATED LOADS FOR LOG AND LUMBER FORKS WITH A STANDARD BOOM AND COUPLER FOR EUROPEAN OPERATION ON ROUGH TERRAIN ("EN 474-3")				
Fork Part Number	**Fork Tine Length**	**Rated Operating Load**	**Placement Height (A)**	**Reach (B)**
154-8708	1220 mm (4 ft)	3189 kg (7016 lb)	3582 mm (11 ft 9 inches)	873 mm (2 ft 10 inches)

Table 41

RATED LOADS FOR LOG AND LUMBER FORKS WITH A STANDARD BOOM AND COUPLER FOR EUROPEAN OPERATION ON A FIRM AND LEVEL SURFACE ("EN 474-3")				
Fork Part Number	**Fork Tine Length**	**Rated Operating Load**	**Placement Height (A)**	**Reach (B)**
154-8708	1220 mm (4 ft)	3614 kg (7951 lb)	3582 mm (11 ft 9 inches)	873 mm (2 ft 10 inches)

Table 42

RATED LOADS FOR LOG AND LUMBER FORKS WITH A STANDARD BOOM AND NO COUPLER FOR ALL NORTH AMERICAN CONDITIONS ("SAE J1197 FEB 91")				
Fork Part Number	**Fork Tine Length**	**Rated Operating Load**	**Placement Height (A)**	**Reach (B)**
141-6271	1220 mm (4 ft)	2336 kg (5139 lb)	3515 mm (11 ft 6 inches)	712 mm (2 ft 4 inches)

Table 43

RATED LOADS FOR LOG AND LUMBER FORKS WITH STANDARD BOOM AND NO COUPLER FOR EUROPEAN OPERATION ON ROUGH TERRAIN ("EN 474-3")				
Fork Part Number	**Fork Tine Length**	**Rated Operating Load**	**Placement Height (A)**	**Reach (B)**
141-6271	1220 mm (4 ft)	3505 kg (7711 lb)	3515 mm (11 ft 6 inches)	712 mm (2 ft 4 inches)

Table 44

RATED LOADS FOR LOG AND LUMBER FORK WITH STANDARD BOOM AND NO COUPLER FOR EUROPEAN OPERATION ON A FIRM AND LEVEL SURFACE ("EN 474-3")				
Fork Part Number	**Fork Tine Length**	**Rated Operating Load**	**Placement Height (A)**	**Reach (B)**
141-6271	1220 mm (4 ft)	3972 kg (8738 lb)	3515 mm (11 ft 6 inches)	712 mm (2 ft 4 inches)

Table 45

930G RATED LOADS FOR LOG AND LUMBER FORK WITH STANDARD BOOM ON A FIRM AND LEVEL SURFACE				
Fork Part Number	**Fork Tine Length**	**Rated Operating Load**	**Placement Height A**	**Reach B**
141-6271	1220 mm (48 inches)	5215 kg (11497 lb)	3761 mm (148 inches)	676 mm (26.6 inches)
154-8708	1220 mm (48 inches)	4857 kg (10708 lb)	3828 mm (151 inches)	837 mm (33 inches)

Rated Load for all other Work Tools

WARNING

When this machine is equipped with front attachments other than a bucket, lifting a load that is greater than shown in the chart below could cause the attachment to rotate downward, allowing the load to slide or pitch forward resulting in personal injury or death.

The combined weight of the work tool and the applied load must not be greater than the maximum allowable load at the point of load application.

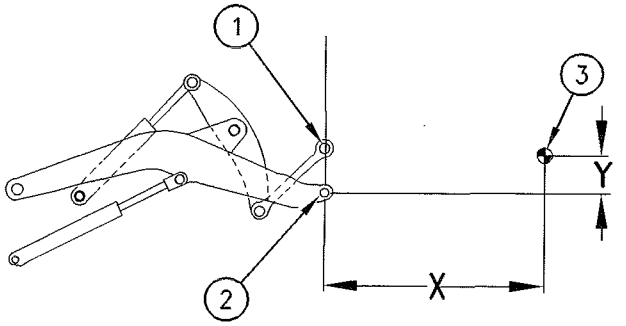

Illustration 21 g00460008

(1) Bucket Tilt link
(2) Lift arm pin
(3) Load application point
(X) Distance to load center

Consult your local Caterpillar dealer regarding any questions about work tools.

Table 46

928G Rated Loads with the 141-5967 Coupler Assembly											
(X)(mm/ft)											
Lifting Point From Ground			**400/ 1.3**	**600/ 2.0**	**800/ 2.6**	**1000/ 3.3**	**1200/ 3.9**	**1400/ 4.6**	**1600/ 5.2**	**1800/ 5.9**	**2000/ 6.6**
(Y)(mm/ft)	1000/ 3.3	kg/lb	2767/ 6087	2684/ 5905	2586/ 5689	2483/ 5463	2374/ 5223	2258/ 4967	2063/ 4538	1897/ 4174	1742/ 3832
	800/2.6		2948/ 6486	2838/ 6243	2715/ 5972	2585/ 5686	2459/ 5409	2340/ 5148	2178/ 4792	1976/ 4346	1807/ 3975
	600/2.0		3141/ 6909	2993/ 6585	2836/ 6238	2680/ 5895	2535/ 5576	2400/ 5280	2277/ 5009	2058/ 4528	1876/ 4127
	400/1.3		3336/ 7338	3135/ 6896	2940/ 6468	2761/ 6073	2596/ 5710	2449/ 5387	2316/ 5094	2133/ 4692	1932/ 4250
	200/0.7		3500/ 7700	3244/ 7136	3016/ 6635	2814/ 6190	2637/ 5801	2480/ 5456	2340/ 5147	2204/ 4850	1990/ 4378
	0		3574/ 7862	3288/ 7233	3044/ 6697	2834/ 6235	2652/ 5833	2491/ 5479	2349/ 5167	2222/ 4887	2047/ 4504
	-200/-.07		3510/ 7721	3250/ 7150	3020/ 6643	2818/ 6199	2639/ 5806	2482/ 5459	2342/ 5152	2216/ 4875	2090/ 4598
	-400/-1.3		3349/ 7368	3146/ 6920	2948/ 6486	2766/ 6085	2601/ 5721	2453/ 5396	2318/ 5100	2198/ 4835	2089/ 4595
	-600/-2.0		3156/ 6943	3005/ 6610	2845/ 6258	2689/ 5915	2542/ 5591	2406/ 5293	2282/ 5019	2130/ 4685	1971/ 4336
	-800/-2.6		2964/ 6520	2851/ 6272	2725/ 5994	2595/ 5708	2467/ 5427	2290/ 5037	2107/ 4636	1951/ 4293	1818/ 3999
	-1000/-3.3		2790/ 6137	2699/ 5938	2599/ 5718	2476/ 5447	2264/ 4980	2085/ 4587	1993/ 4253	1801/ 3962	1686/ 3709

The wide coupler is designed to pick up tools with a Volvo Quick Coupler. The combined weight of the tool and applied working load must not exceed the maximum load at the load application point for the tool. The chart below shows the maximum load:

Table 47

930G Rated Load with the Wide Coupler Assembly										
Dimension (X)										
Linkage	**400 mm (15.7 inches)**	**800 mm (31.5 inches)**	**1200 mm (47.2 inches)**	**1600 mm (63 inches)**	**2000 mm (78.7 inches)**	**2400 mm (94.5 inches)**	**2800 mm (110 inches)**	**3200 mm (126 inches)**	**3600 mm (142 inches)**	**4000 mm (157 inches)**
Standard	3686 kg (8126 lb)	3225 kg (7110 lb)	2866 kg (6318 lb)	2579 kg (5686 lb)	2345 kg (5170 lb)	2149 kg (4738 lb)	1984 kg (4374 lb)	1842 kg (4061 lb)	1719 kg (3790 lb)	1611 kg (3552 lb)
High Lift	3179 kg (7008 lb)	2820 kg (6217 lb)	2537 kg (5593 lb)	2305 kg (5082 lb)	2113 kg (4658 lb)	1950 kg (4299 lb)	1811 kg (3993 lb)	1690 kg (3726 lb)	1584 kg (3492 lb)	1491 kg (3287 lb)

Identification Information

i03734907

Plate Locations and Film Locations

SMCS Code: 1000; 7000

The Product Identification Number (PIN) will be used to identify a powered machine that is designed for an operator to ride.

Caterpillar products such as engines, transmissions and work tools that are not designed for an operator to ride are identified by Serial Numbers.

For quick reference, record the identification numbers in the spaces that are provided below the illustration.

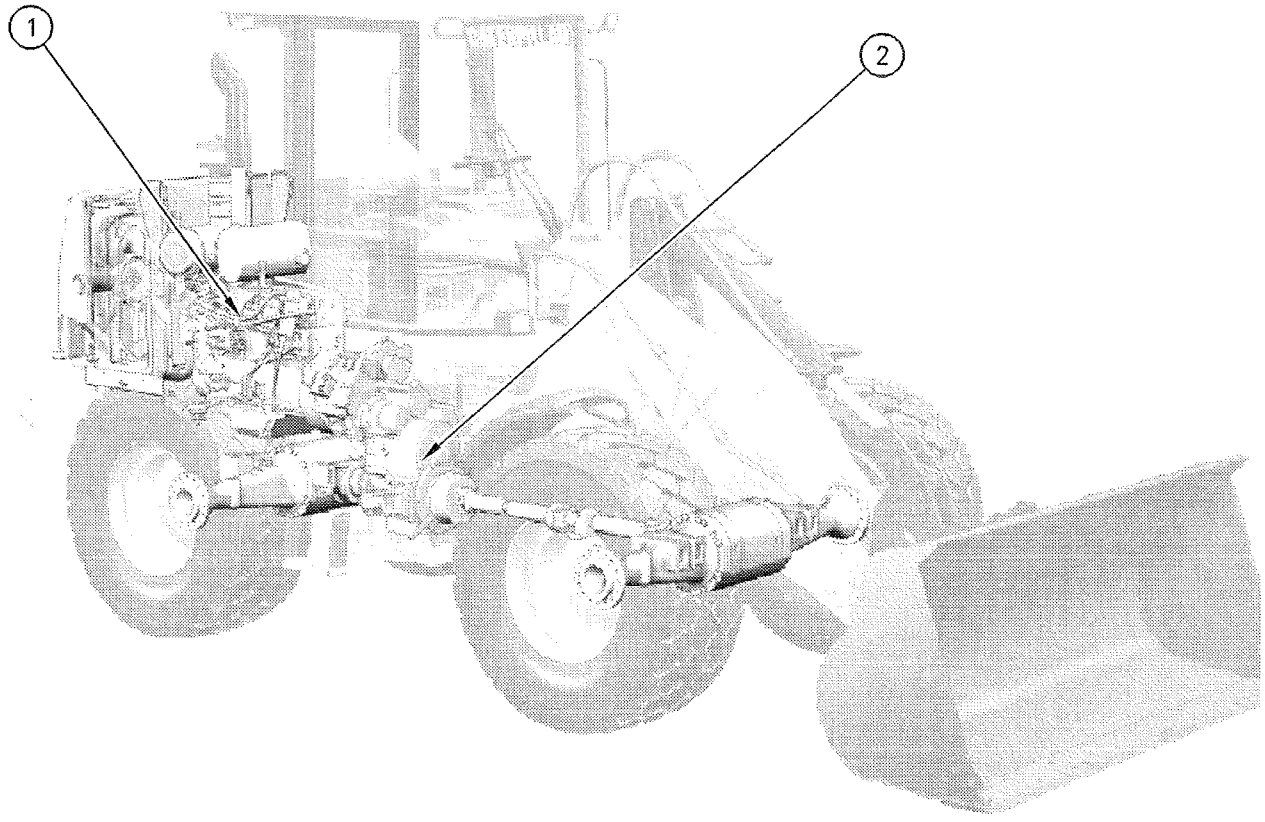

Illustration 22 g00921760

(1) Engine Serial Number (2) Transmission Serial Number

Transmission Serial Number _____

Engine Serial Number _____

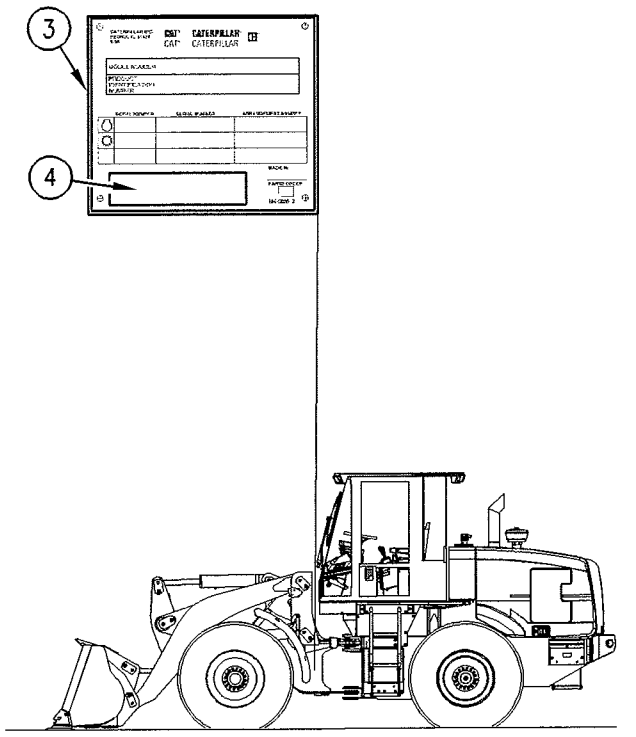

Illustration 23 g00921761

(3) PIN Plate
(4) CE Mark

Machine PIN _____

CE Mark

This plate is located on the bottom left side of the Identification Plate.

Note: The CE plate is on machines that are certified to the European Union requirements that are listed on the "Document of Conformity". If the machine is equipped with the plate for the European Union, the plate is attached to the PIN plates.

Information is stamped onto the CE plate. For quick reference, record this information in the spaces that are provided below.

- Engine Power for primary engine (kW) _____
- Engine Power for additional engine (if equipped) (kW) _____
- Typical machine operating weight for European market (kg) _____
- Year of construction _____
- Machine Type _____

For machines compliant to "1998/37/EC", the following information is stamped onto the CE plate. For quick reference, record this information in the spaces that are provided below.

- Engine Power for primary engine (kW) _____
- Typical machine operating weight for European market (kg) _____
- Year _____

For the name of the manufacturer, the address of the manufacturer, and the country of origin, refer to the PIN plate.

i01727292

Emissions Certification Film

SMCS Code: 1000; 7000; 7405

The certification label (if equipped) is used to verify an engine's conformance to the emissions requirements of the EPA.

This label is located on the engine.

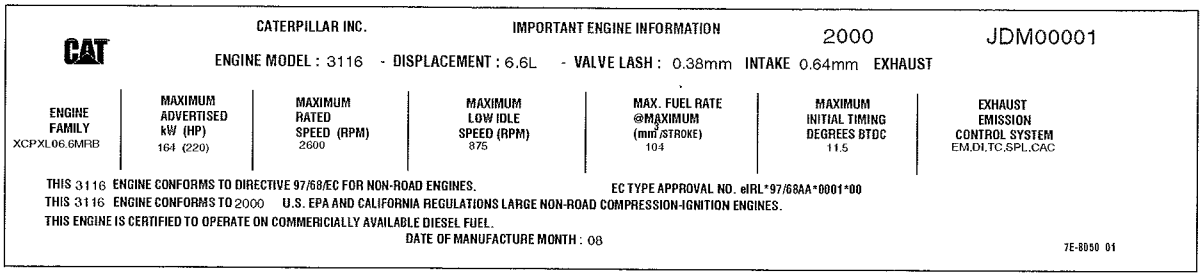

CATERPILLAR INC. IMPORTANT ENGINE INFORMATION 2000 JDM00001

ENGINE MODEL : 3116 - DISPLACEMENT : 6.6L - VALVE LASH : 0.38mm INTAKE 0.64mm EXHAUST

ENGINE FAMILY	MAXIMUM ADVERTISED kW (HP)	MAXIMUM RATED SPEED (RPM)	MAXIMUM LOW IDLE SPEED (RPM)	MAX. FUEL RATE @MAXIMUM (mm^3/STROKE)	MAXIMUM INITIAL TIMING DEGREES BTDC	EXHAUST EMISSION CONTROL SYSTEM
XCPXL06.6MRB	164 (220)	2600	875	104	11.5	EM,DI,TC,SPL,CAC

THIS 3116 ENGINE CONFORMS TO DIRECTIVE 97/68/EC FOR NON-ROAD ENGINES. EC TYPE APPROVAL NO. eIRL*97/68AA*0001*00

THIS 3116 ENGINE CONFORMS TO 2000 U.S. EPA AND CALIFORNIA REGULATIONS LARGE NON-ROAD COMPRESSION-IGNITION ENGINES.

THIS ENGINE IS CERTIFIED TO OPERATE ON COMMERICIALLY AVAILABLE DIESEL FUEL.

DATE OF MANUFACTURE MONTH : 08

7E-8050 01

FMT:3500

Illustration 24 g00638668

Typical Example (English)

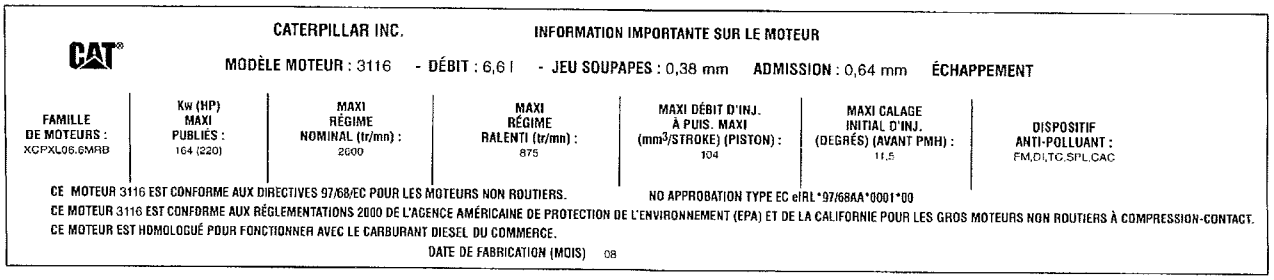

CATERPILLAR INC. INFORMATION IMPORTANTE SUR LE MOTEUR

MODÈLE MOTEUR : 3116 - DÉBIT : 6,6 l - JEU SOUPAPES : 0,38 mm ADMISSION : 0,64 mm ÉCHAPPEMENT

FAMILLE DE MOTEURS :	Kw (HP) MAXI PUBLIÉS :	MAXI RÉGIME NOMINAL (tr/mn) :	MAXI RÉGIME RALENTI (tr/mn) :	MAXI DÉBIT D'INJ. À PUIS. MAXI (mm^3/STROKE) (PISTON) :	MAXI CALAGE INITIAL D'INJ. (DEGRÉS) (AVANT PMH) :	DISPOSITIF ANTI-POLLUANT :
XCPXL06.6MRB	164 (220)	2600	875	104	11.5	EM,DI,TC,SPL,CAC

CE MOTEUR 3116 EST CONFORME AUX DIRECTIVES 97/68/EC POUR LES MOTEURS NON ROUTIERS. NO APPROBATION TYPE EC eIRL*97/68AA*0001*00

CE MOTEUR 3116 EST CONFORME AUX RÉGLEMENTATIONS 2000 DE L'AGENCE AMÉRICAINE DE PROTECTION DE L'ENVIRONNEMENT (EPA) ET DE LA CALIFORNIE POUR LES GROS MOTEURS NON ROUTIERS À COMPRESSION-CONTACT.

CE MOTEUR EST HOMOLOGUÉ POUR FONCTIONNER AVEC LE CARBURANT DIESEL DU COMMERCE.

DATE DE FABRICATION (MOIS) 08

Étiquette d'homologation anti-pollution

Illustration 25 g00638373

Typical Example (French)

Operation Section

Before Operation

i02189821

Mounting and Dismounting

SMCS Code: 7000

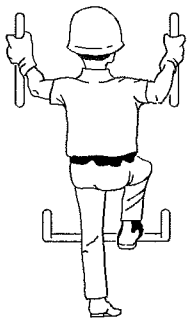

Illustration 26 g00037860

Typical example

Mount the machine and dismount the machine only at locations that have steps and/or handholds. Before you mount the machine, clean the steps and the handholds. Inspect the steps and handholds. Make all necessary repairs.

Face the machine whenever you get on the machine and whenever you get off the machine.

Maintain a three-point contact with the steps and with the handholds.

Note: Three-point contact can be two feet and one hand. Three-point contact can also be one foot and two hands.

Do not mount a moving machine. Do not dismount a moving machine. Never jump off the machine. Do not carry tools or supplies when you try to mount the machine or when you try to dismount the machine. Use a hand line to pull equipment onto the platform. Do not use any controls as handholds when you enter the operator compartment or when you exit the operator compartment.

Alternate Exit

Machines that are equipped with cabs have alternate exits. For additional information, see Operation and Maintenance Manual, "Alternate Exit".

i02363025

Daily Inspection

SMCS Code: 1000; 7000

⚠ WARNING

Hot oil and hot components can cause personal injury. Do not allow hot oil or hot components to contact skin.

At operating temperature, the engine coolant is hot and under pressure.

Steam can cause personal injury.

Check the coolant level only after the engine has been stopped and the cooling system pressure cap is cool enough to touch with your bare hand.

Remove the cooling system pressure cap slowly to relieve pressure.

Cooling system conditioner contains alkali. Avoid contact with the skin and eyes to prevent personal injury.

NOTICE

Accumulated grease and oil on a machine is a fire hazard. Remove this debris with steam cleaning or high pressure water, at least every 1000 hours or each time any significant quantity of oil is spilled on a machine.

Note: For maximum service life of the machine, make a thorough daily inspection before you operate the machine. Inspect the machine for leaks. Remove any debris from the engine compartment and the undercarriage. Ensure that all guards, covers, and caps are secured. Inspect all hoses and belts for damage. Inspect all lights and mirrors for damage.

Note: If any leaks are noted on the axles, perform the oil level check. Refer to Operation and Maintenance Manual, "Differential and Final Drive Oil Level - Check" for the proper procedure to check the axles.

Make the needed repairs before you operate the machine.

Perform the following procedures on a daily basis.

- Operation and Maintenance Manual, "Backup Alarm - Test"
- Operation and Maintenance Manual, "Cooling System Level - Check"
- Operation and Maintenance Manual, "Engine Oil Level - Check"

- Operation and Maintenance Manual, "Fuel System Primary Filter (Water Seperator) - Drain"
- Operation and Maintenance Manual, "Hydraulic System Oil Level - Check"
- Operation and Maintenance Manual, "Seat Belt - Inspect"
- Operation and Maintenance Manual, "Tire Inflation - Check"
- Operation and Maintenance Manual, "Transmission Oil Level - Check"
- Operation and Maintenance Manual, "Windows - Clean"

Refer to the Maintenance Section for the detailed procedures. Refer to the Maintenance Interval Schedule for a complete list of scheduled maintenance.

i02832513

Steering Frame Lock

SMCS Code: 7506

⚠ WARNING

No clearance for person in this area when machine turns. Severe injury or death from crushing could occur.

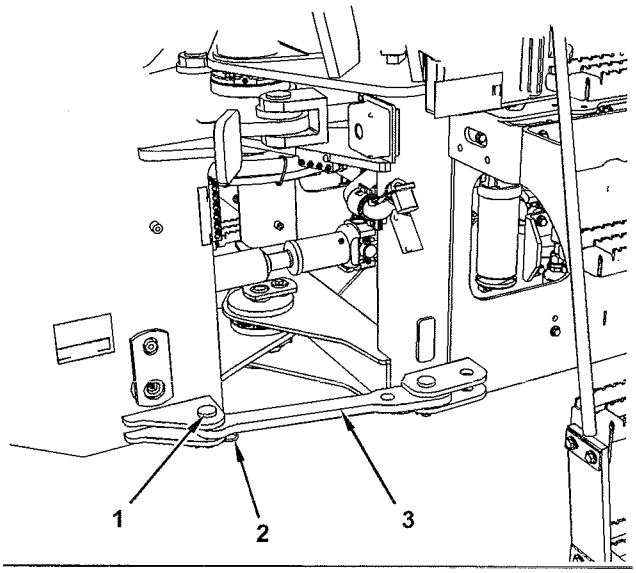

Illustration 27 g01412699

In order to lift the machine, connect the steering frame lock link (3). In order to transport the machine, connect the steering frame lock link (3). The pins (1) should be secured in place by the locking pins (2).

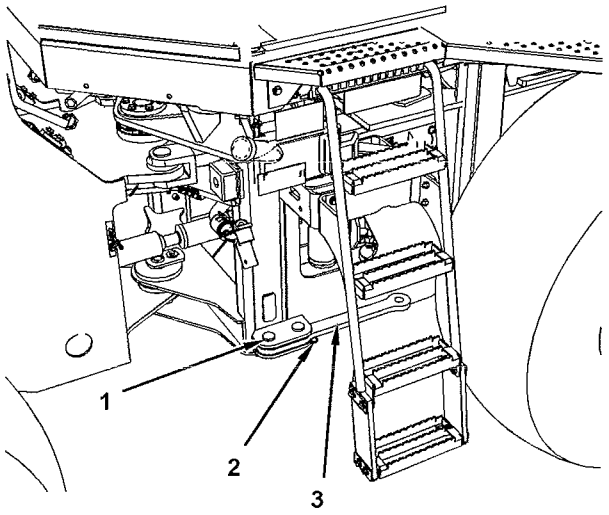

Illustration 28 g01412700

Disconnect the steering frame lock link before the machine is operated. Use the pins in order to secure the steering frame lock link in the STORED position. The pins should be secured in place by the locking pins.

Machine Operation

i01683593

Alternate Exit

SMCS Code: 7310

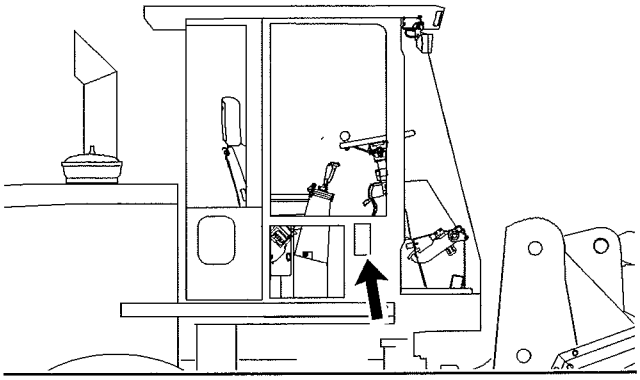

g00865960

Illustration 29

Outside door latch

The right cab door can be used as an alternative exit. The door can be opened from the inside of the cab or from the outside of the cab. Release the latch in order to open the door.

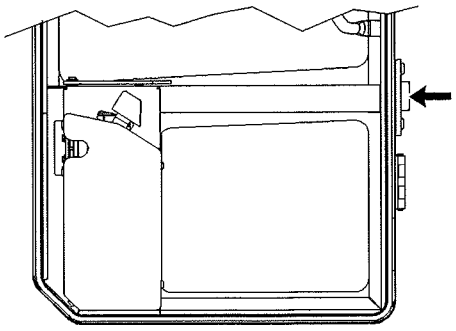

g00884872

Illustration 30

To release the right cab door from the fully open position, press the release button on the side of the door.

Opening the door will eliminate the pressurization of the cab.

i03732462

Cab Door

SMCS Code: 7308

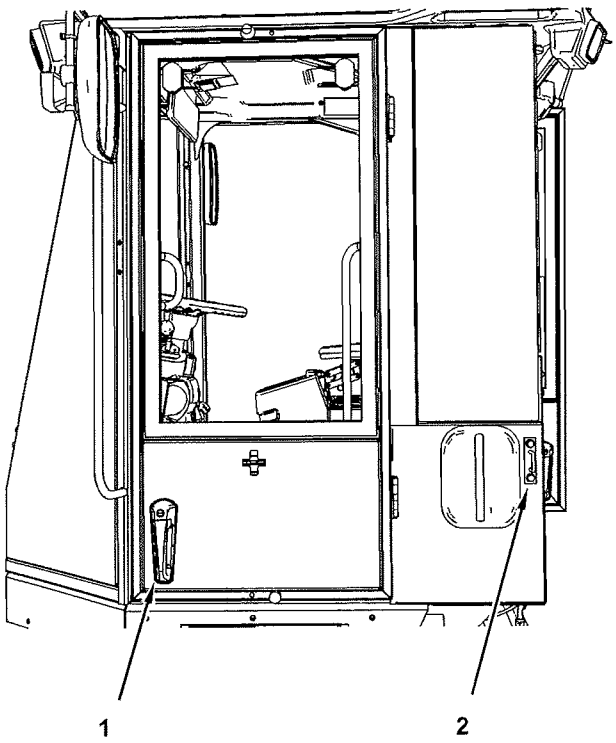

g01402910

Illustration 31

(1) Door Handle
(2) Catch

In order to open the cab door from the outside of the cab, pull outward on the door handle.

In order to open the cab door from the inside of the cab, push the release lever (3) on the door.

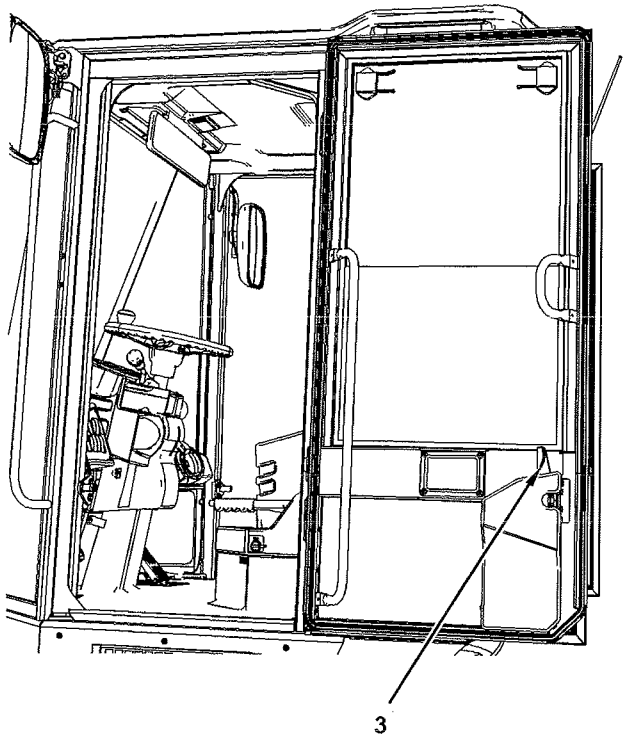

Illustration 32 g01402911

(3) Release Lever

For additional ventilation, open the cab door all the way in order to engage the catch on the exterior of the cab.

In order to release the cab door from the catch, push the button (4) on the frame of the door.

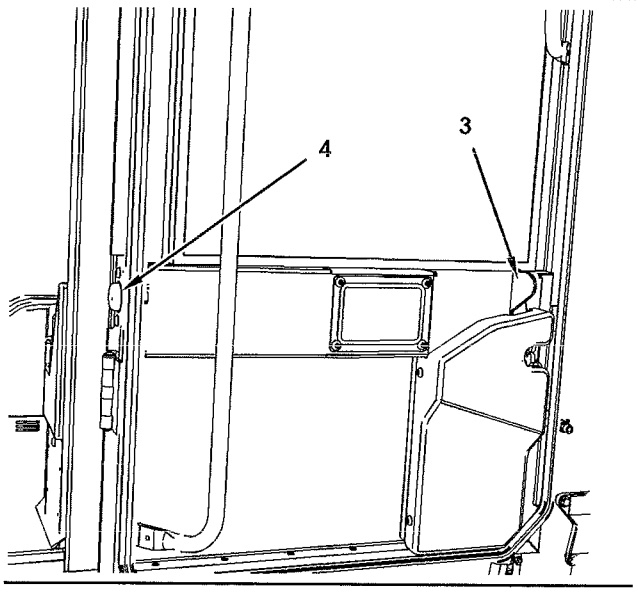

Illustration 33 g01412066

i02310088

Seat

SMCS Code: 7312

The operator's seat that is provided with this machine is in compliance with the appropriate class of ISO 7096.

Note: Adjust the seat at the beginning of each work period and adjust the seat when you are changing operators.

The seat should be adjusted so that full pedal travel is allowed with an operator that is seated against the back of the seat.

Suspension Seat

Adjustable Armrest

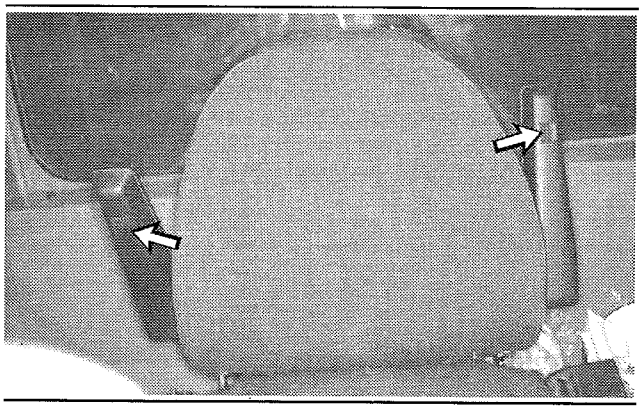

Illustration 34 g00102664

Rotate the knob in order to adjust the angle of the armrest. Make this adjustment when you are in the operating position.

Seat Adjustment

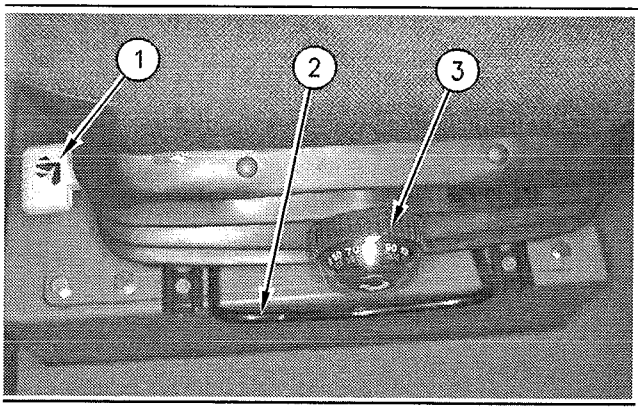

Illustration 35 g00102665

Pull up on the back cushion angle lever (1). Hold the back cushion angle lever and adjust the back seat cushion to the desired angle. Release the back cushion angle lever in order to lock the back seat cushion.

Pull up on the fore/aft lever (2). Hold the fore/aft lever. Slide the seat forward to the desired position or slide the seat backward to the desired position. Release the fore/aft lever in order to lock the seat into position.

Turn knob (3) clockwise in order to increase the stiffness of the suspension. Turning the knob counterclockwise decreases the stiffness of the suspension. Set the weight to the approximate weight setting. Do not turn the knob past the maximum weight setting or past the minimum weight setting.

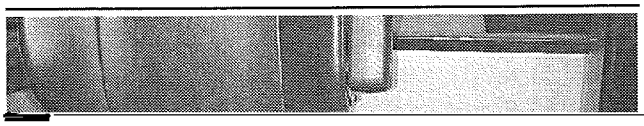

Pull up headrest (1) in order to remove the headrest.

Adjustable Armrest

Rotate knob (2) in order to adjust the angle of the armrest. Make this adjustment when you are in the operating position.

Seat Adjustment

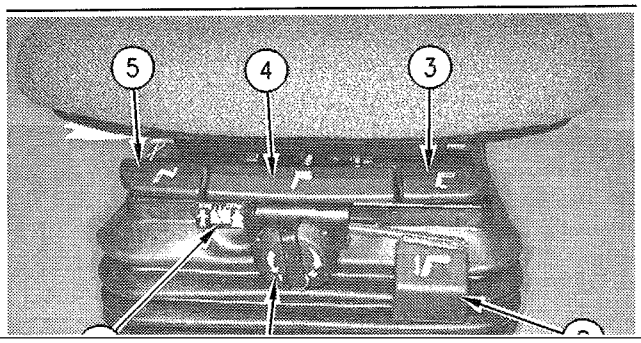

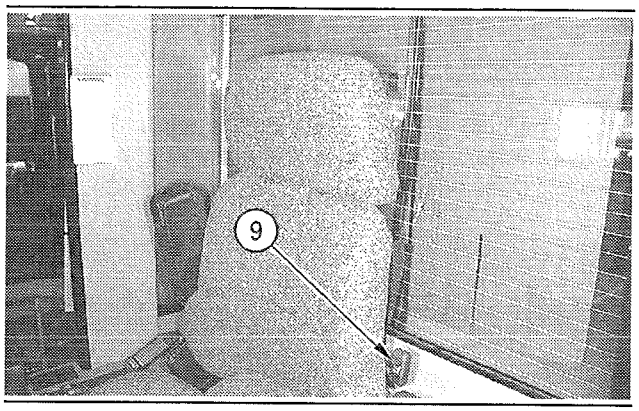

Illustration 39 g00621804

Turn the lumbar support lever (9) clockwise to a horizontal position in order to utilize the lumbar support. If lumbar support is not desired, turn the lumbar support lever counterclockwise to a vertical position.

Contour Series Air Seat

Headrest

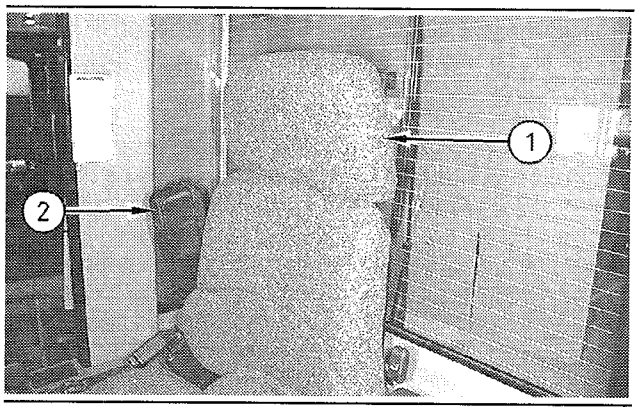

Illustration 40 g00102519

Pull up headrest (1) in order to remove the headrest.

Adjustable Armrest

Rotate knob (2) in order to adjust the angle of the armrest. Make this adjustment when you are in the operating position.

Seat Adjustment

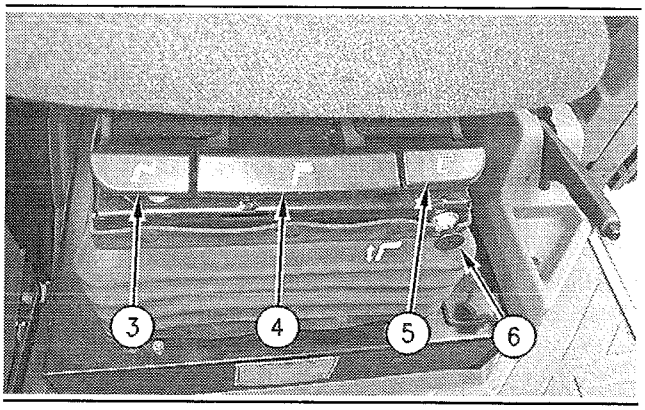

Illustration 41 g00102512

Pull up the lever (3) for the back cushion angle. Hold up the lever and adjust the seat cushion to the desired angle. Release the lever in order to lock the seat cushion.

Pull up the fore/aft lever (4). Hold up the lever and slide the seat to the desired position. Release the lever in order to lock the seat into position.

Pull up the lever (5) for the angle of seat cushion and raise the front of the seat cushion to the desired angle. To lower the cushion into the desired position, pull up the lever and push down the front of the seat cushion. Release the lever in order to lock the seat cushion into one of three positions.

Push in the knob (6) in order to decrease the seat height. Pull the knob in order to increase the seat height.

Note: The engine start switch key must be in the ON position in order to increase the stiffness of the seat.

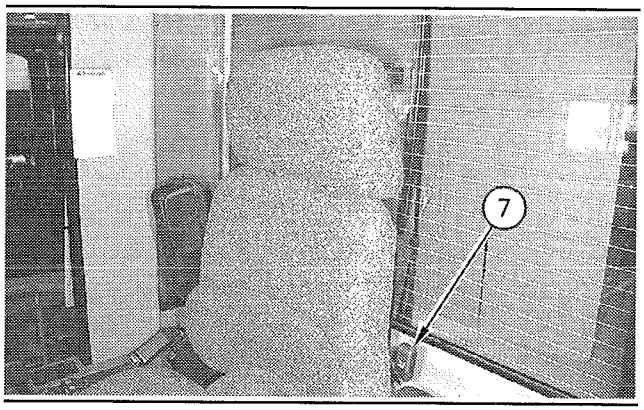

Illustration 42 g00102520

Turn the lumbar support lever (7) clockwise to a horizontal position in order to utilize the lumbar support. If lumbar support is not desired, turn the lumbar support lever counterclockwise to a vertical position.

Heated Seat (If Equipped)

The heating element for the heated seat is controlled by a thermostat. The thermostat opens the circuit for the heating element at 26.5° ± 5°C (79.7° ± 9°F). The thermostat closes the circuit for the heating element when the temperature drops below 15°C (59°F). The start switch key must be in the ON position for the heated seat to work.

i03415082

Seat Belt

SMCS Code: 7327

Note: This machine was equipped with a seat belt when the machine was shipped from Caterpillar. At the time of installation, the seat belt and the instructions for installation of the seat belt meet the SAE J386 and ISO 6683 standards. See your Caterpillar dealer for all replacement parts.

Always check the condition of the seat belt and the condition of the mounting hardware before you operate the machine.

Seat Belt Adjustment for Non-Retractable Seat Belts

Adjust both ends of the seat belt. The seat belt should be snug but comfortable.

Lengthening the Seat Belt

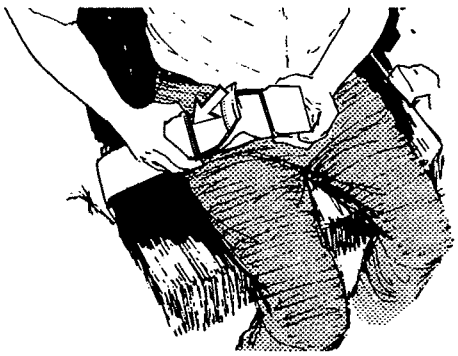

Illustration 43 g00100709

1. Unfasten the seat belt.

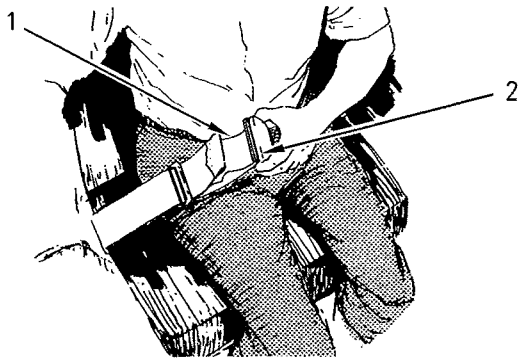

Illustration 44 g00932817

2. To remove the slack in outer loop (1), rotate buckle (2). This will free the lock bar. This permits the seat belt to move through the buckle.

3. Remove the slack from the outer belt loop by pulling on the buckle.

4. Loosen the other half of the seat belt in the same manner. If the seat belt does not fit snugly with the buckle in the center, readjust the seat belt.

Shortening the Seat Belt

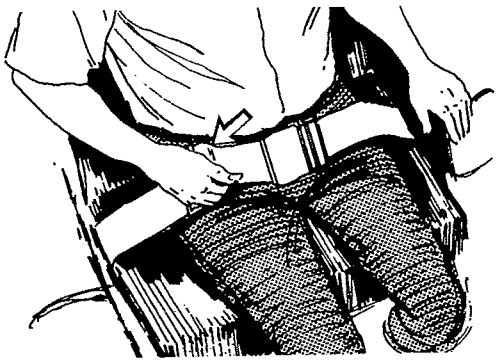

Illustration 45 g00100713

1. Fasten the seat belt. Pull out on the outer belt loop in order to tighten the seat belt.

2. Adjust the other half of the seat belt in the same manner.

3. If the seat belt does not fit snugly with the buckle in the center, readjust the seat belt.

Fastening The Seat Belt

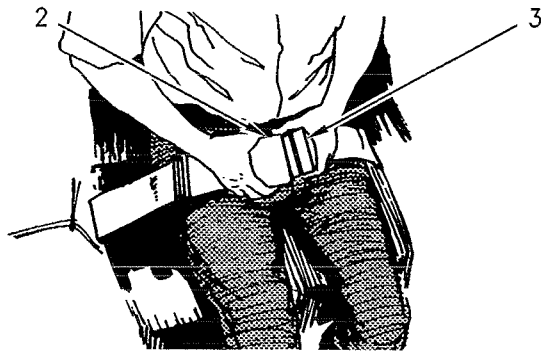

Illustration 46 g00932818

Fasten the seat belt catch (3) into the buckle (2). Make sure that the seat belt is placed low across the lap of the operator.

Releasing The Seat Belt

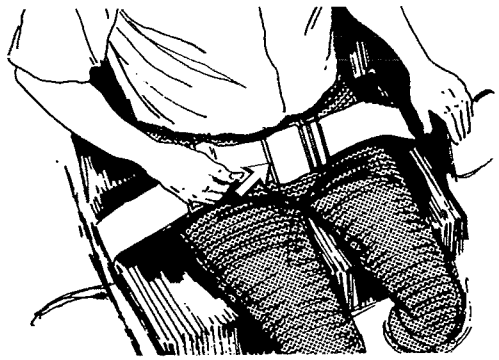

Illustration 47 g00100717

Pull up on the release lever. This will release the seat belt.

Seat Belt Adjustment for Retractable Seat Belts

Fastening The Seat Belt

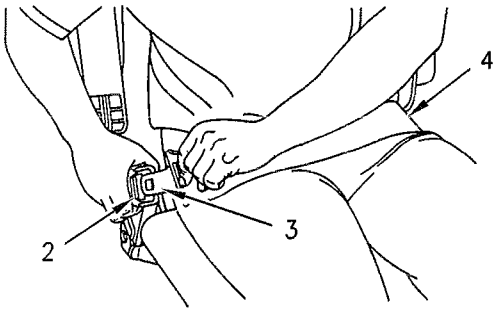

Illustration 48 g00867598

Pull seat belt (4) out of the retractor in a continuous motion.

Fasten seat belt catch (3) into buckle (2). Make sure that the seat belt is placed low across the lap of the operator.

The retractor will adjust the belt length and the retractor will lock in place. The comfort ride sleeve will allow the operator to have limited movement.

Releasing The Seat Belt

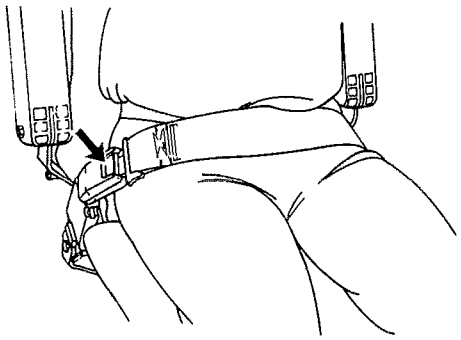

Illustration 49 g00039113

Push the release button on the buckle in order to release the seat belt. The seat belt will automatically retract into the retractor.

Extension of the Seat Belt

⚠ WARNING

When using retractable seat belts, do not use seat belt extensions, or personal injury or death can result.

The retractor system may or may not lock up depending on the length of the extension and the size of the person. If the retractor does not lock up, the seat belt will not retain the person.

Longer, non-retractable seat belts and extensions for the non-retractable seat belts are available.

Caterpillar requires only non-retractable seat belts to be used with a seat belt extension.

Consult your Caterpillar dealer for longer seat belts and for information on extending the seat belts.

i02247485

Operator Controls

SMCS Code: 7300; 7301; 7451

The following information briefly identifies the components of the cab. More information on the operation of each item is covered separately in this manual.

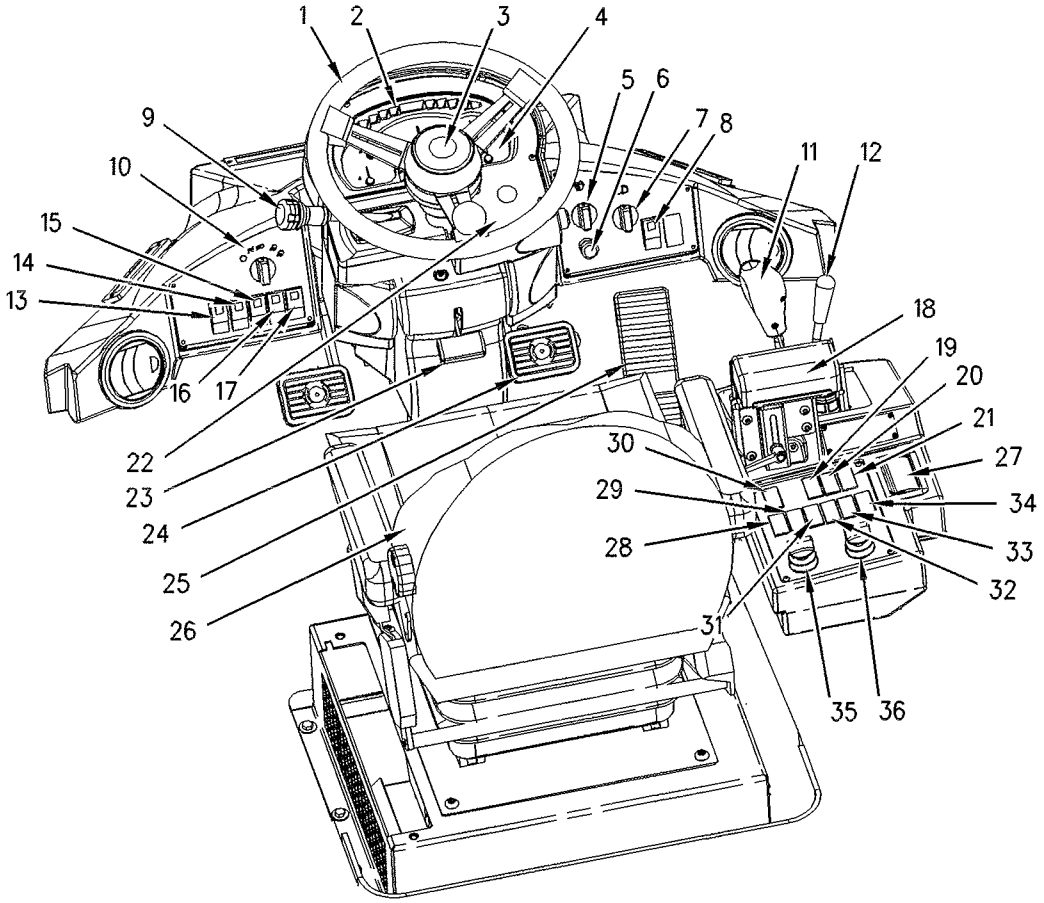

Illustration 50 g00929557

Typical cab arrangement

(1) Steering Control
(2) Alert Indicators
(3) Horn
(4) Gauges
(5) Front Windshield Wiper/Washer
(6) Lighter
(7) Rear Windshield Wiper/Washer
(8) Secondary Steering Control
(9) Transmission Control
(10) Lights
(11) Loader Control
(12) Auxiliary Control
(13) Transmission Neutralizer Control
(14) Autoshift
(15) Rotating Beacon
(16) Hazard Flasher Control
(17) Dimmer Switch
(18) Hydraulic Control Support
(19) Throttle Lock (ON/OFF)
(20) Throttle (Set/Resume Switch)
(21) Quick Coupler Control
(22) Indicator Light for Machine Security System
(23) Steering Column Tilt Control
(24) Service Brakes
(25) Governor Control
(26) Seat
(27) Ashtray
(28) Air Conditioning Control
(29) Defrost
(30) Hydraulic Lockout Switch
(31) Bucket/Fork Selector Control
(32) Kickout Control
(33) Ride Control
(34) Reversible Fan Control
(35) Blower Fan Switch
(36) Temperature Control

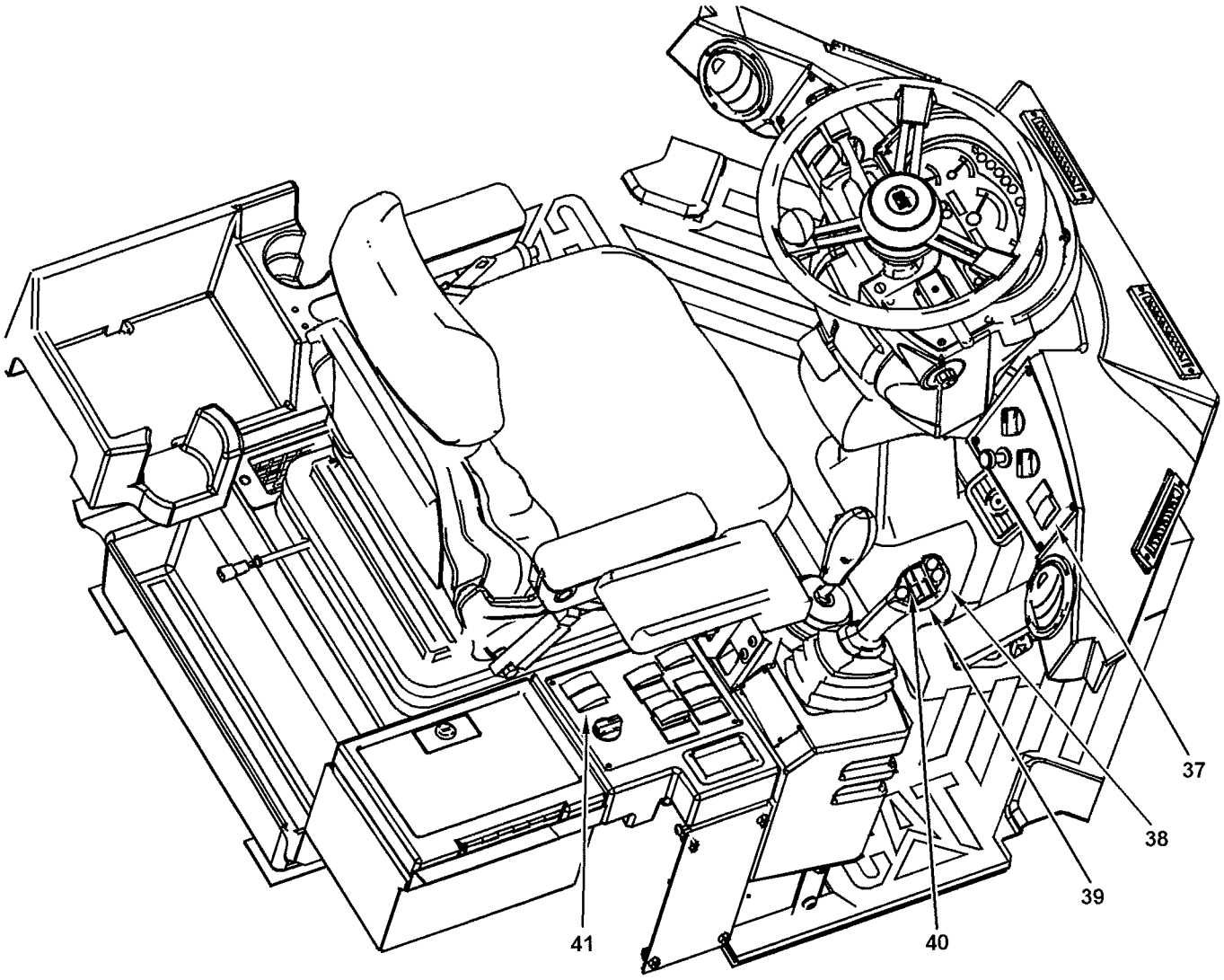

g01110131

Illustration 51

930G Cab arrangement

(37) Quick Steering switch
(38) 3rd and 4th Joystick Control
(39) 6th Auxiliary Hydraulic Control
(40) 5th Auxiliary Hydraulic Control
(41) Blower Fan Switch

Autoshift Control

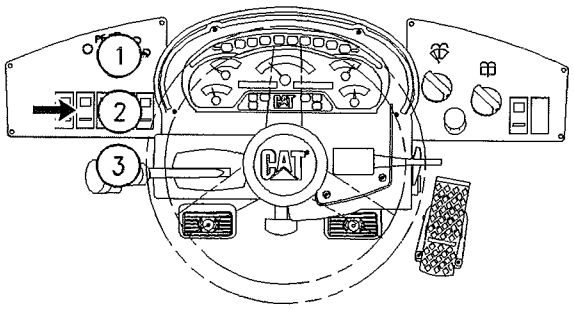

Illustration 52 g00885085

Manual Mode (3) – Push the bottom of the switch for the manual mode of the transmission control.

The operator selects the desired speed and the desired direction in the manual mode with the transmission shift lever.

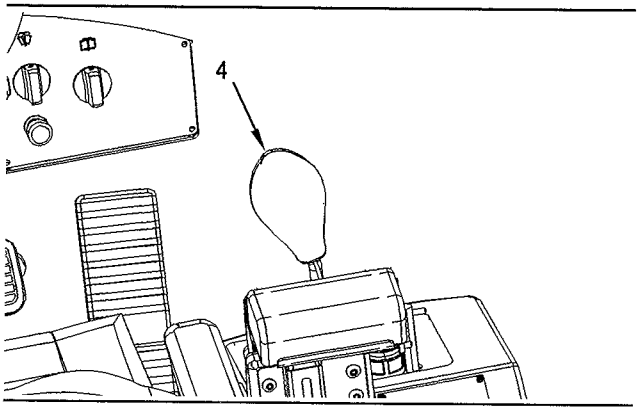

Illustration 53 g00886126

The downshift switch (4) that is located on the lift lever is only active when the speed selector is in second gear.

Press the downshift switch and release the downshift switch (4) with the machine in second gear. The transmission will downshift to first gear.

The transmission will remain in first gear until a speed change or a direction change is made.

Automatic Mode (2) – Move the switch to position (2) for the autoshift function in the automatic mode. Move the switch to position (2) prior to shifting the transmission into forward or reverse in order to activate the autoshift function. The operator selects the highest desired operating speed. The control selects the proper transmission gear according to the ground speed of the machine.

Automatic downshifts into first gear are not allowed. Press the downshift switch and release the downshift switch (4).

Note: The initial transmission downshift will always respond. Subsequent downshifts will occur provided that an engine overspeed would not occur.

Press the downshift switch and hold down the downshift switch (4) for continued downshifts until the machine is in first gear. The normal autoshift function continues in three seconds after the downshift switch is released.

Economy Mode (1) – The economy mode allows the transmission to operate in the same way as the autoshift mode, except that the transmission will shift at a lower engine rpm.

Loader Controls

Control Console

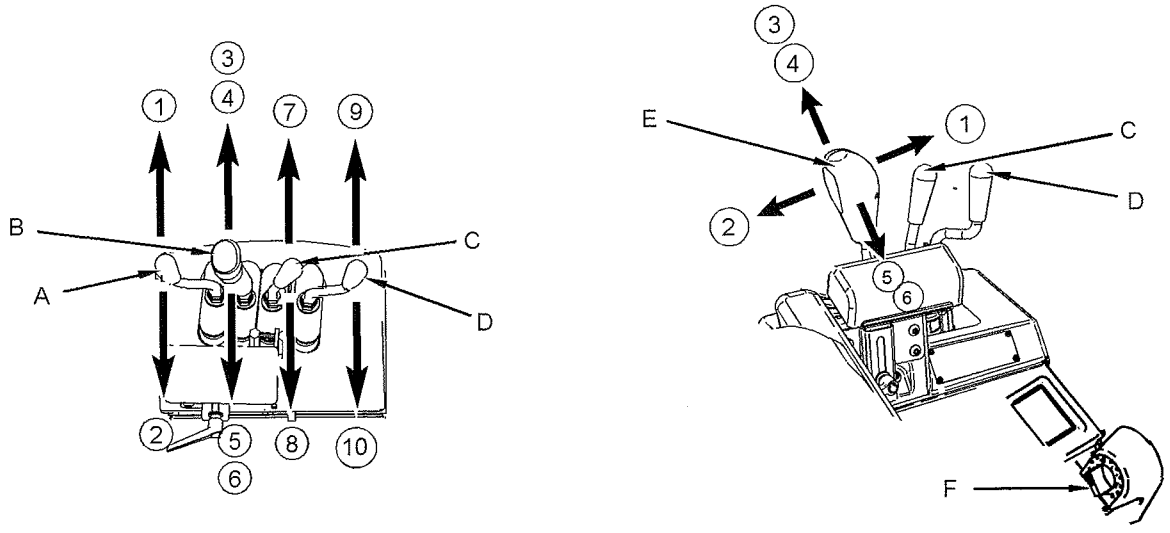

g01118936

Illustration 54

Standard Lever Controls and Optional Joystick Control

(A) Dump Control Lever
(B) Lift Control Lever
(C) 3rd Auxiliary Hydraulic Control Lever
(D) 4th Auxiliary Hydraulic Control Lever
(E) Joystick Control
(F) Flow Control

DUMP (1) – Push the control to this position in order to tilt the work tool.

TILT BACK (2) – Push the control to this position in order to tilt the work tool backward.

The control is detented in the maximum tilt back position. The control will stay in the detent and the work tool will continue to tilt back until the work tool reaches the preset location for the tilt kickout. Then, the control will return to the HOLD position.

FLOAT (3) – Push the control forward into the detent. The work tool will lower to the ground. The work tool will float with the contour of the ground.

The control will remain in the FLOAT position until the control is pulled out of the detent. The control will return to the HOLD position when the control is released.

NOTICE

Never use the FLOAT position to lower a loaded bucket.

Machine damage can result from a bucket that falls too fast.

LOWER (4) – Push the control forward in order to lower the work tool. The control will return to the HOLD position when the control is released.

RAISE (5) – Pull the control backward in order to raise the work tool. Release the control in order to stop lifting the work tool. The control will return to the HOLD position when the control is released.

The control is detented in the fully raised position (6). The control will stay in the detent and the work tool will continue to rise until the work tool reaches the lift kickout height. Then, the control will return to the HOLD position.

HOLD – When you release the control, the control will return to the center for the HOLD position. The work tool will remain in the selected position.

3rd Auxiliary Hydraulic Control Lever (C) (If Equipped)

Move the control to position (7) in order to pressurize the left supply line.

Move the control to position (8) in order to pressurize the right supply line. Position (8) also has a detent.

Move the control to the center for the HOLD position.

While the control is in position (8), turn the auxiliary flow control (F) clockwise in order to increase the flow. Turn the continuous flow control (F) counterclockwise in order to decrease the flow.

4th Auxiliary Hydraulic Control Lever (D) (If Equipped)

Move the control to position (9) in order to pressurize the left supply line.

Move the control to position (10) in order to pressurize the right supply line.

Move the control to the center for the HOLD position.

Hydraulic Control Support (If Equipped)

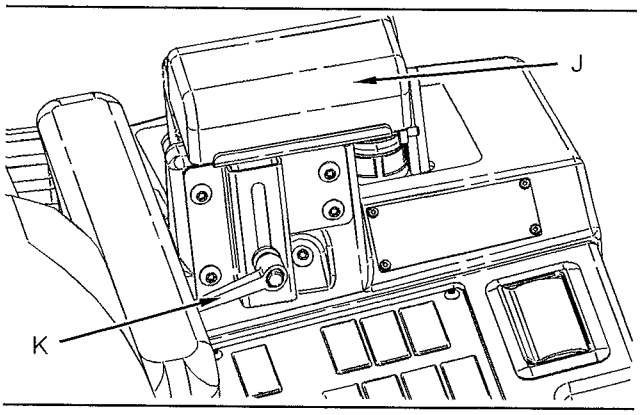

Illustration 55 g01119120

(J) Hydraulic Control Support
(K) Adjustment for Hydraulic Control Support

The hydraulic control support (I) can be raised or lowered for operator comfort.

In order to adjust the height of the support, pull out on the lever (J) and turn the lever counterclockwise. Pull up on the support in order to raise the support. Push down on the support in order to lower the support. Turn the lever clockwise in order to secure the support in the desired position.

Optional Work Tool Joystick Control

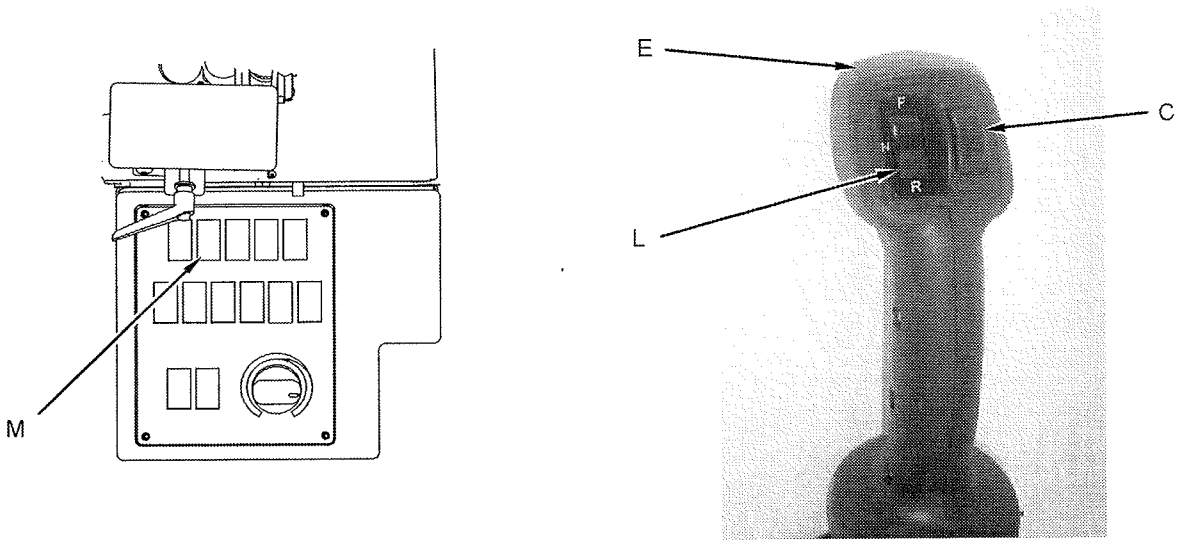

g01126364

Illustration 56

(C) Auxiliary Hydraulic Control (thumb wheel)
(E) Joystick Control
(L) Transmission Direction Control Switch (If Equipped)
(M) Auxiliary Operating Mode Switch (Third function)

Standard Work Tool Mode – With the Auxiliary Operating Mode Switch (M) in this position, the system provides intermittent flow for the auxiliary hydraulic function. In this mode, the detent function is disabled. The oil flow is proportional to the displacement of the thumb wheel (C). Move the thumb wheel (C) upward in order to provide flow to the left supply line. Move the control switch farther in order to increase the flow. Move the thumb wheel (C) downward in order to provide flow to the right supply line. Move the control switch farther in order to increase the flow.

Continuous Flow Mode – With the Auxiliary Operating Mode Switch (M) in this position, the system provides continuous flow for the right hand auxiliary hydraulic function. In this mode, the detent function is engaged. The thumb wheel (C) is an on/off switch. Move the thumb wheel (C) downward in order to provide continuous flow to the right supply line. Move the thumb wheel (C) in either direction in order to stop the flow.

The flow control (F) will control the oil flow in Standard Work Tool Mode and in Continuous Flow Mode. Adjust the flow with the flow control (F). Turn the flow control (F) clockwise in order to increase the flow. Turn the flow control (F) counterclockwise in order to decrease the flow.

930G Optional Control Console

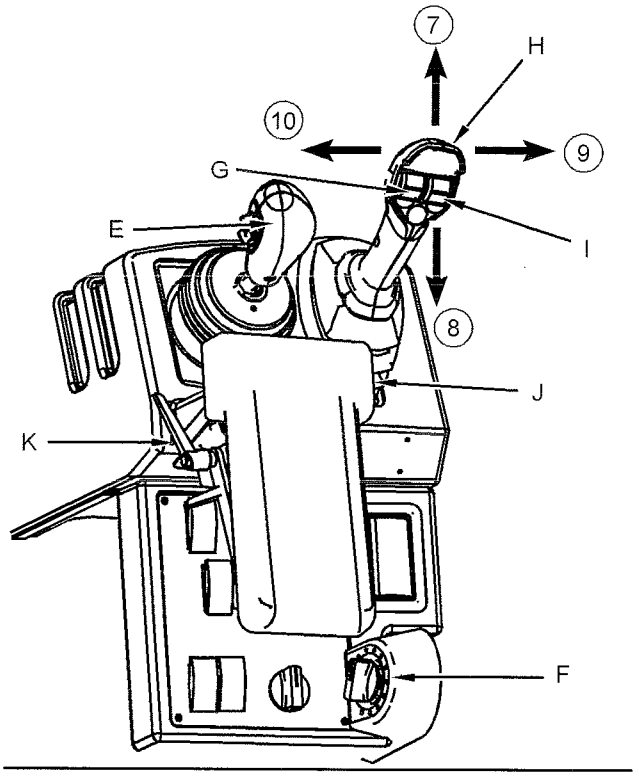

Illustration 57 g01118645

930G Right Hand Console with 5th and 6th buttons

(E) Joystick Control
(F) Flow Control
(G) 5th Auxiliary Hydraulic Control
(H) 3rd and 4th Auxiliary Hydraulic Joystick Control
(I) 6th Auxiliary Hydraulic Control
(J) Hydraulic Control Support
(K) Adjustment for Hydraulic Control Support

Hydraulic Controls

The new hydraulic controls affect the following serial numbers:

- 924G VL DDA02592-Up
- 928GZ DJD02294-Up
- 930G VL TWR01521-Up

Continuous Flow Control

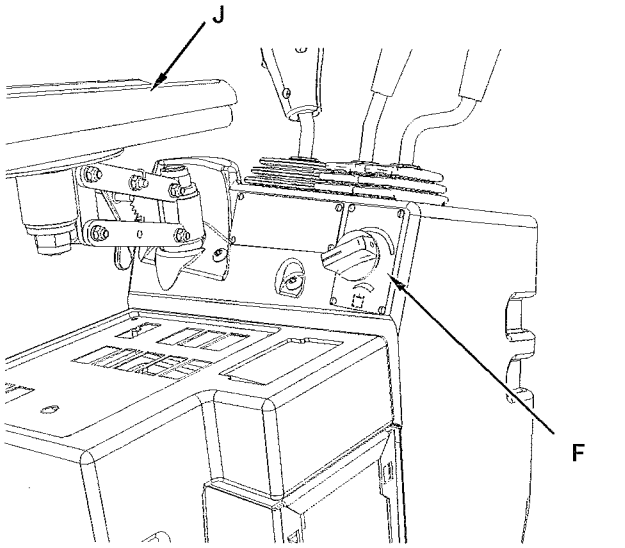

Illustration 58 g01182786

(F) Flow Control
(J) Hydraulic Control Support
(K) Adjustment for Hydraulic Control Support

Move the 5th auxiliary hydraulic control (G) upward in order to pressurize the left upper supply line. Move the 5th auxiliary hydraulic control (G) downward in order to pressurize the right upper supply line.

Move the 6th auxiliary hydraulic control (I) upward in order to pressurize the left lower supply line. Move the 6th auxiliary hydraulic control (I) downward in order to pressurize the right lower supply line.

Note: The left hand joystick function is described in illustration 54.

Hydraulic Control Support (If Equipped)

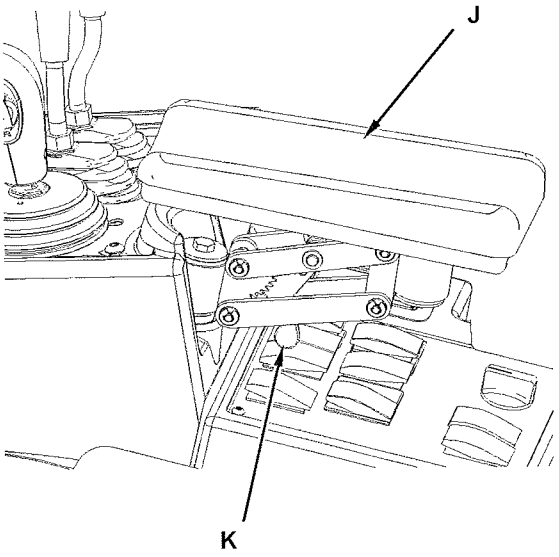

Illustration 59 g01182293

(J) Hydraulic Control Support
(K) Adjustment for Hydraulic Control Support

The armrest is adjustable in all directions. Push the armrest or pull the armrest to the desired position. Lift the armrest in order to raise the armrest. Pull back on the lever (K) in order to lower the armrest.

Backup alarm (If Equipped)

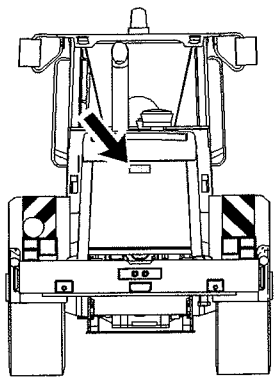

Illustration 60 g00892330

Backup Alarm – The alarm will sound when the transmission direction control lever is in the REVERSE position. The alarm is used to alert people behind the machine that the machine is backing up.

The backup alarm is mounted at the rear of the machine behind the grill.

Directional Turn Signal and Hazard Flasher Control

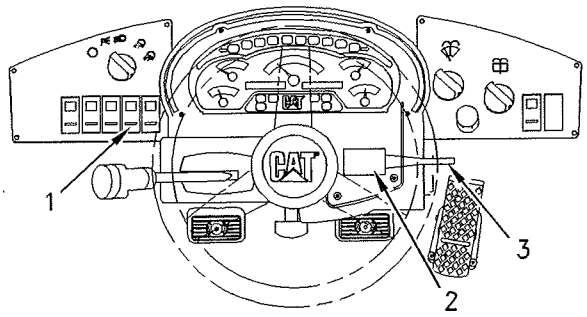

Illustration 61 g00884718

Hazard Flashers (1) (If Equipped) – The hazard flasher may be activated by the switch on the left side of the steering console.

The turn signal indicators on the front dash panel will flash when the hazard flasher is activated.

Hazard Flashers (2) (If Equipped) – Pull the turn signal lever upward in order to activate the hazard flashers. Both turn signal lights will flash.

The turn signal indicators on the front dash panel will flash when the hazard flasher is activated.

Directional Turn Signals (3) – The directional turn signal lever is on the right side of the steering column.

An indicator light on the front dash panel will flash when the turn signal is activated.

Engine Start Switch

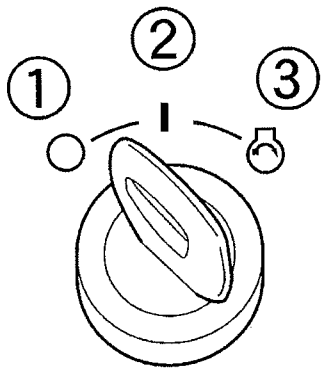

Illustration 62 g00679565

(1) OFF position. (2) ON position. (3) START position.

For details, see the Operation and Maintenance Manual, "Engine Starting".

Gauges

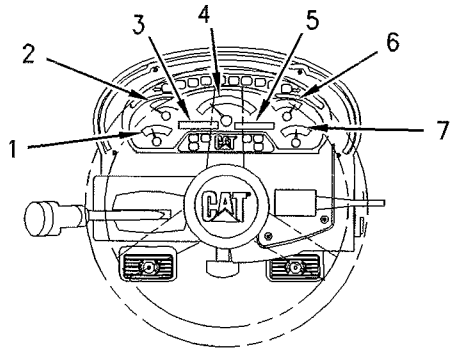

Illustration 63 g00884120

Hydraulic Oil Temperature (1) – This gauge indicates the temperature of the hydraulic oil. If the needle is in the red range, the hydraulic oil temperature is too high.

Coolant Temperature (2) – This gauge indicates the temperature of the engine coolant. If the needle is in the red range, the coolant temperature is too high.

Digital Display(3) – The digital display shows the gear and direction of the transmission. The digital display also shows the RPM of the machine.

Speedometer (4) – This gauge indicates the ground speed of the machine.

Digital Display (5) – The digital display shows the hour meter of the machine until you put the machine into gear. The display shows the odometer after the transmission is put into gear.

Note: The digital displays can be changed from English to Metric units. Contact your Caterpillar Dealer in order to change the digital display.

Transmission Oil Temperature (6) – This gauge indicates the temperature of the transmission oil. If the needle is in the red range, the transmission oil temperature is too high.

Fuel Level (7) – This gauge indicates the amount of fuel that remains in the fuel tank. If the needle is in the red range, the fuel level is low.

Governor Control

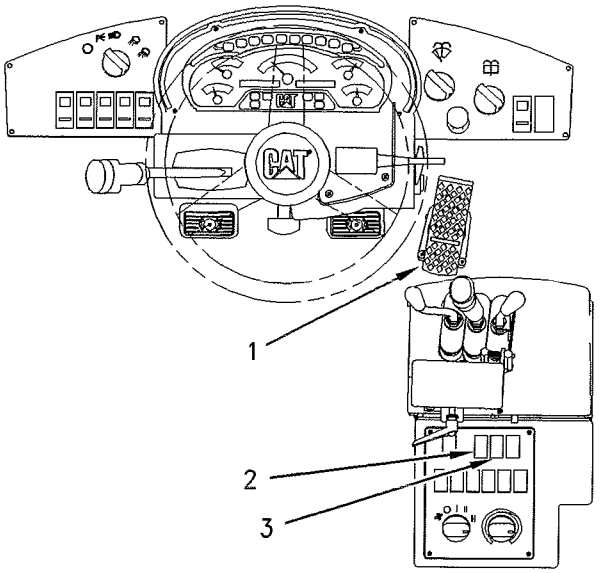

Illustration 64 g00884921

The governor pedal (1) is located on the floor of the operator's compartment.

Push down on the pedal in order to increase the engine speed.

Release the pedal in order to decrease the engine speed.

Engine Speed Control

Push in the top half of switch (2) in order to activate the engine speed control. When the desired speed is reached, push the top of the switch (3) in order to set the machine speed. In order to increase the desired speed, push in the bottom of the switch (3). In order to decrease the desired speed, push the top of the switch (3).

Press the service brake pedal in order to disengage the engine speed control temporarily. Push in the bottom half of switch (3) in order to resume the preset speed that was set by the operator.

Push in the bottom half of switch (2) in order to disengage the engine speed control. This will erase the preset speed that was set by the operator.

Gear changes can be initiated by changing the set speed for the engine speed control or by increasing the load on the machine.

The engine speed control will activate in all forward gears and all reverse gears. The engine speed control will remain active during automatic upshifts and downshifts.

Ground Speed Limiter (If Equipped)

The optional software for the speed limiter allows the operator to set the maximum ground speed for a machine that is operating on a level surface. The software uses the following inputs to control the ground speed of the machine: engine speed, machine acceleration, and ground speed.

Note: The software will not prevent a machine from exceeding the speed limit during downhill travel.

Heating and Air Conditioning Control

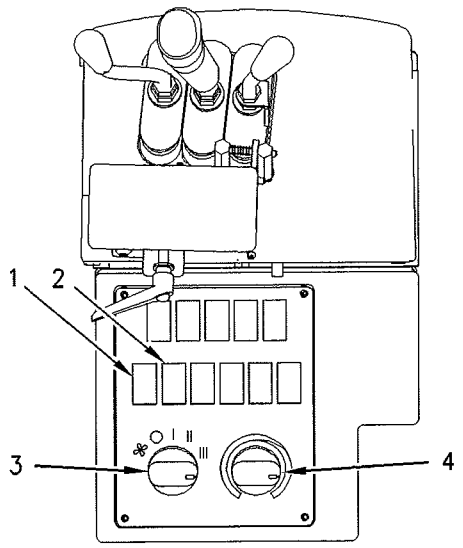

Illustration 65 g00865858

The heating and air conditioning system performs four functions:

Heating – Turn the blower fan switch control to the desired speed (LOW, MEDIUM, or HIGH). Adjust the temperature control knob for the desired temperature.

Cooling – Press the top of the switch (1) in order to turn the air conditioner to the ON position. Turn the blower fan switch control to the desired speed (LOW, MEDIUM, or HIGH). Adjust the temperature control knob for the desired temperature.

Pressurizing – When heating or cooling is not desired, pressure inside the cab will help keep dust out.

Turn the temperature control knob for the desired temperature. To produce the volume of air that is needed to keep dust out, set the blower fan switch control to LOW, to MEDIUM, or to HIGH.

Defogging – Press the top of the switch (1) in order to turn the air conditioner to the ON position. Turn the blower fan switch control to the desired speed (LOW, MEDIUM, or HIGH). Adjust the temperature control knob until the moisture level is lowered and the windshield and side windows are free of moisture.

Rear Window Defroster (2) (if equipped) – Press the top of the switch in order to activate the rear window defroster. The defroster is set on a timer. The defroster will automatically turn off after the timer expires.

Air Conditioner Switch (If Equipped)

Air Conditioner Switch (1) – Press the top of the switch in order to turn the air conditioner to the ON position.

Press the bottom of the switch in order to turn the air conditioner to the OFF position.

Fan Control

Fan Speed (3) – This knob controls the three-speed blower fan motor.

OFF – Move the knob to this position in order to stop the blower fan motor.

LOW – Move the knob to this position for the lowest fan speed.

MEDIUM – Move the knob to this position for a medium fan speed.

HIGH – Move the knob to this position for the highest fan speed.

930G Heating and Air Conditioning Control

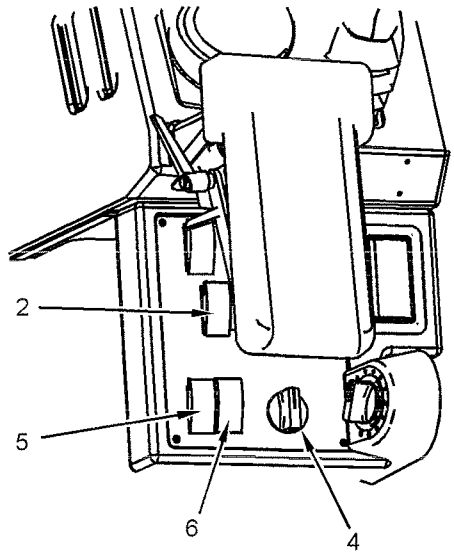

Illustration 66 g01120656

930G Control Console

(2) **Rear Window Defroster**
(4) **Temperature Control Knob**
(5) **Heater/Air Conditioner**
(6) **Fan Speed Switch**

Temperature Control

Temperature Control Knob (4) – Turn the knob clockwise to COOL. Turn the knob counterclockwise to WARM.

Hydraulic Lockout Control

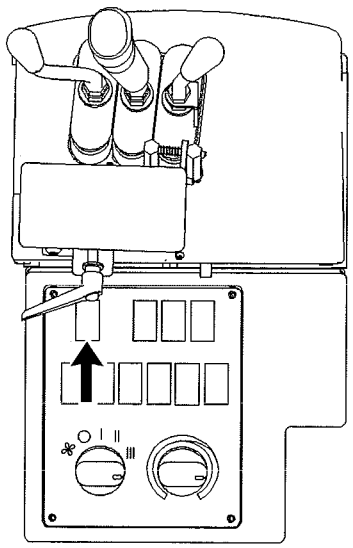

Illustration 67 g00887319

LOCK – Press the top of the switch in order to lock the hydraulic control levers.

UNLOCK – Press the bottom of the switch in order to unlock the hydraulic control levers.

Kickout and Positioner Control

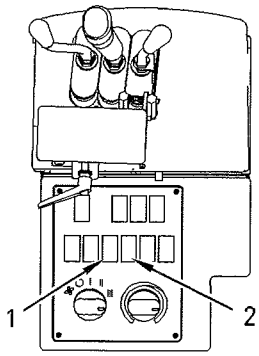

Illustration 68 g00885572

Kickout Control (2) – Push the top of the switch to the ON position. The bucket lift kickout and the tilt kickout will be activated. Push the bottom of the switch to the OFF position. This will affect the kickout controls, the float detent, and the auxiliary detents.

Note: The detents for the hydraulic control lever do not operate when the kickout control is in the OFF position.

Bucket/fork Selector Control

This switch selects the tilt kickout that is operational.

Press the bottom of the switch (1) in order to select the preset angle for the tilt kickout of the bucket.

Press the top of the switch (1) in order to select the preset angle for the tilt kickout of the forks.

Light Switches

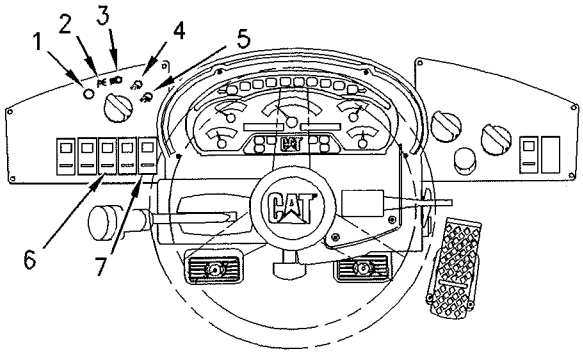

Illustration 69 g00884694

OFF (1)

Parking Lights and Interior Cab Lights (2)

Roading Lights (3)

Front Floodlights (4)

Front Floodlights and Rear Floodlights (5)

Rotating Beacon (6) (if equipped)

Dimmer Switch (7) (if equipped)

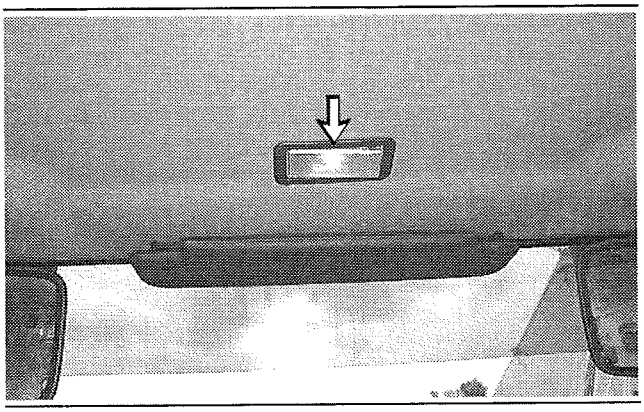

Illustration 70 g00101732

Interior Dome Light – Press on either side of the lens in order to turn on the dome light. Press on the other side of the lens in order to turn off the dome light.

Machine Security System (If Equipped)

NOTICE
This machine is equipped with a Caterpillar Machine Security System (MSS) and may not start under certain conditions. Read the following information and know your machine's settings. Your Caterpillar Dealer can identify your machine settings.

Machine Security System (MSS) – Machines that are equipped with a Caterpillar Machine Security System (MSS) can be identified by a decal in the operator station. MSS is designed to prevent theft of the machine or unauthorized operation.

Basic Operation

MSS may be programmed to read a standard Caterpillar key or an electronic key. The electronic key contains an electronic chip within the plastic housing for the key. Each key emits a unique signal to the MSS. The keys can be identified by a gray housing or a yellow housing. MSS can have programmed settings to require an electronic key or a standard Caterpillar key for starting during certain periods of time.

When the key start switch of the machine is turned to the ON position, the ECM will read the unique ID that is stored in the electronic key. The ECM will then compare this ID to the list of authorized keys. The following table tells the operator the status for starting the machine. The status light is located near the key start switch.

Table 48

Green light	The machine will start.
Red light	The key is not authorized.

Note: MSS will not shut down the machine after the machine has started.

Security Management

The MSS has the capability to allow you to program the system to automatically activate at different time periods with different keys. The MSS can also be programmed to reject a specific electronic key after a selected date and time. When you turn the key to the OFF position and the MSS is active, you have a 30 second interval in order to restart the machine with an unauthorized key. Also if the machine stalls, there is a 30 second interval for restarting the machine. This 30 second interval is counted from the time of turning the key to the OFF position.

Note: Know your machine's settings because the use of an electronic key is no guarantee that the machine can be restarted.

An expiration date can be set for each electronic key that is contained in the list of keys for the machine. The key will no longer start the machine when the internal clock in the security system passes the expiration date. Each entry in the list of keys can have a different expiration date.

Spare keys are available from your dealer. Before a key can operate the machine, the MSS must be set to accept that particular key. Contact your Caterpillar dealer for information on additional features of the MSS.

Operator Programmable Transmission Neutralizer

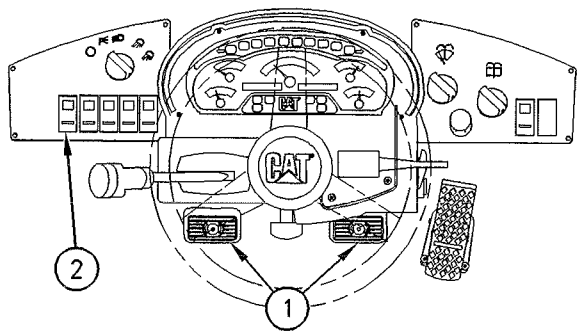

Illustration 71 g00887347

Brake Pedals (1) – Use the left brake pedal or the right brake pedal to slow down the machine's ground speed for normal braking.

930G Transmission Neutralizer Override Switch (2) – The switch overrides the transmission neutralizer. The light in the switch comes on when the transmission neutralizer is disabled.

The transmission neutralizer is enabled when the switch is in the CENTER position. The transmission neutralizer defaults to the enabled position after the machine is started. Press the bottom of the switch in order to disable the transmission neutralizer. Press the top of the switch in order to enable the transmission neutralizer.

The service brakes will interrupt power to the transmission solenoids. This causes the transmission to be shifted into neutral. The brake pedal will also slow the ground speed of the machine. The service brake pressure that is needed to neutralize the transmission can be adjusted by the operator. The switch is a momentary switch in order to set the brake pressure. Refer to the Operation and Maintenance Manual, "Programmable Transmission Neutralizer - Adjust" for information about adjusting the brake pressure.

When the transmission is in the neutral position, this permits a faster engine speed. A faster engine speed creates a better hydraulic response. A better hydraulic response may be desired in order to raise the bucket while you position the bucket at the same time.

Release the brake pedal in order to engage the transmission. Release the brake pedal in order to release the brake.

Parking Brake Control

NOTICE
Do not engage the parking brake while the machine is moving unless the primary service brake fails. The use of the parking brake as a service brake in regular operation will cause severe damage to the brake system.

When the parking brake lever is engaged the transmission is neutralized. The machine will not move.

Switching the direction control lever or the direction control switch (if equipped) from NEUTRAL to either direction will not cause the machine to move until the parking brake lever is disengaged. Switching the direction control lever or the direction control switch from either direction to NEUTRAL back to either direction may cause the machine to move while the parking brake lever is engaged. Refer to Operation and Maintenance Manual, "Braking System - Test" for more information.

NOTICE
Moving the machine with the parking brake engaged can cause excessive wear or damage to the brake. If necessary, have the brake repaired before operating the machine.

Parking Brake – The parking brake lever is located on the left side of the seat. Use the parking brake after the machine is stopped.

Note: The following applies only to the 930G (S/N: TWR1-up; TFW1-up). An elevated low idle strategy is used for the 930G when the parking brake is engaged. With the parking brake disengaged, the engine low idle will be elevated to 950 rpm. With the parking brake engaged, the engine low idle will be lowered to 830 rpm.

The change in the engine idle will provide the following benefits:

- When the parking brake is released, the change in the low idle prevents a low idle stall condition.
- When the parking brake is engaged, the change provides improved fuel economy.

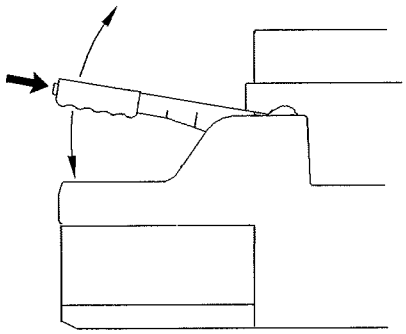

Illustration 72 g00866050

Parking Brake Engaged – Pull up on the parking brake lever in order to engage the parking brake. The transmission will shift to neutral. The alert indicator for the parking brake will come on. The alert indicator is located on the right side of the steering column.

Parking Brake Disengaged – Push the button on the top of the parking brake lever. Lower the parking brake lever in order to release the parking brake.

Note: If the direction control lever or the direction control switch (if equipped) is put in the FORWARD position or the REVERSE position before the parking brake is disengaged, then the machine will not move. Move the direction control lever or the direction control switch (if equipped) to NEUTRAL. Release the parking brake. Then, move the direction control lever or the direction control switch (if equipped) to the desired direction in order for the transmission to be engaged.

Secondary Brake – The secondary brake uses the same lever as the parking brake. If the service brakes fail to stop the machine, use the secondary brake.

Quick Coupler Control

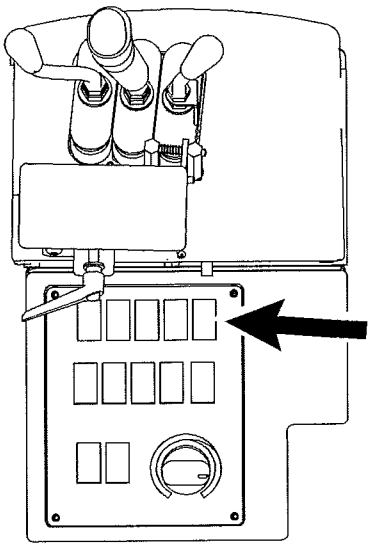

Illustration 73 g01395269



Disengage – The switch has a locking tab. Pull the red button downward and press the bottom of the switch. Hold the switch in the downward position until the coupler pins disengage.



Engage – Press the top of the switch and hold the switch for 3 seconds in order to engage the pins for the quick coupler.

Visually ensure that both coupler pins are extending out of the holes in the work tool mounting bracket.

Note: Operating instructions for specific work tools are not provided. The function of the control lever is dependent upon the installation of an Auxiliary Equipment Manufacturer's work tool.

Reference: Refer to the Operation and Maintenance Manual, "Operation Information" "Quick Coupler Function" topic for more information about the quick coupler.

Reversing Fan Control (If Equipped)

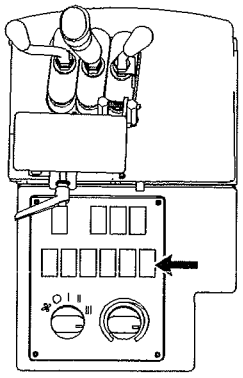

Illustration 74 g00890679

The switch is located on the switch panel on the right side of the cab. The switch is a three-position switch.

The direction of the cooling fan can be reversed for 10 seconds by momentarily depressing the top of the switch. The fan will return to the normal direction after 10 seconds.

Press the bottom of the switch in order to select the automatic feature. The automatic mode will reverse the fan for 10 seconds after every 30 minutes.

Note: The light is illuminated when the fan is in reverse mode.

Ride Control (If Equipped)

Travel at high speeds over rough terrain causes bucket movement and a swinging motion. The ride control system acts as a shock absorber by dampening forces from the bucket. This helps to stabilize the entire machine.

Note: To load the bucket most efficiently, place the ride control switch in the position for automatic ride control or in the OFF position during the loading cycle. When the ride control switch is in the manual position, the lift circuit is spongy and there are no capabilities for powering down. Failure to move the switch to the recommended position could result in damage to the machine.

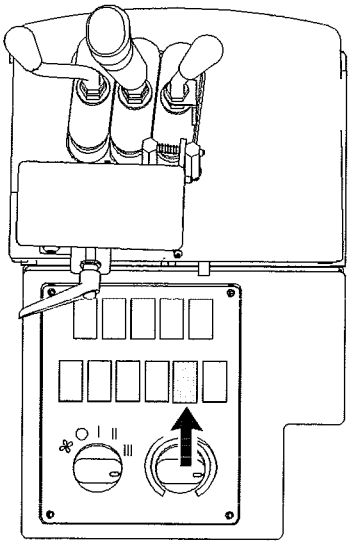

Illustration 75 g00866588

Move the switch to the middle position in order to turn off the ride control system.

Manual Ride Control – Push the bottom of the switch in order to turn on the ride control system.

When the ride control switch is in the manual position, the ride control system will be operational at all times.

Automatic Ride Control – Push the top of the switch in order to turn on the automatic ride control.

The ride control system will automatically turn on if the ground speed exceeds 9.6 km/h (6 mph). The ride control system will automatically turn off if the ground speed is less than 9.6 km/h (6 mph) and if the bucket tilt function is being operated.

Service Brake Control

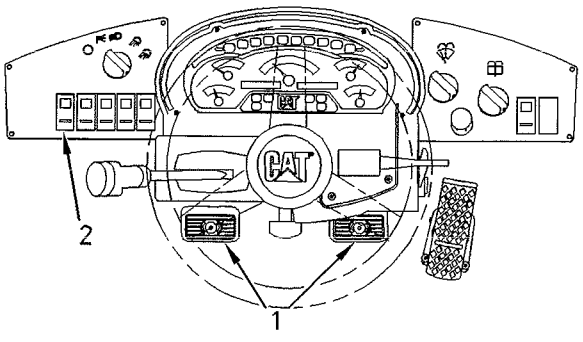

Illustration 76 g00884903

Brake Pedals (1) – Use the left brake pedal or the right brake pedal to slow down the machine's ground speed for normal braking.

Steering Column Tilt Control

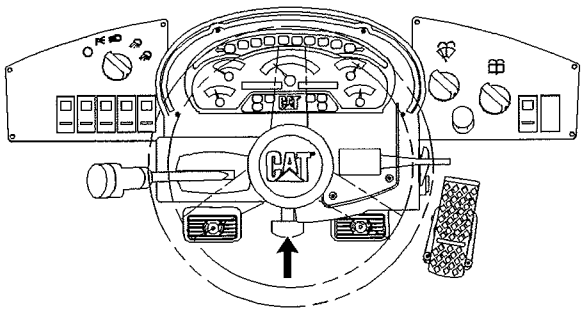

Illustration 77 g00885264

To adjust the steering column, pull up the steering column tilt lever and move the steering column to the desired position. Release the steering column tilt lever. The steering column will remain in the desired position.

Steering Control

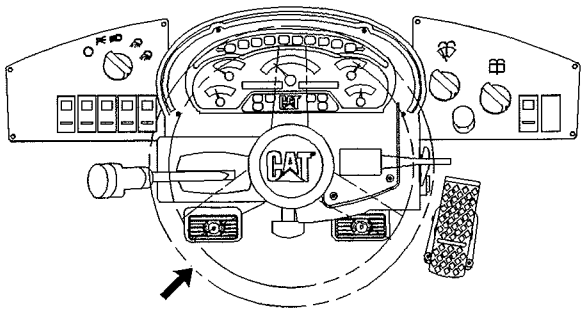

Illustration 78 g00885256

Note: The steering frame lock must be separated in order to steer the machine.

The steering wheel controls the directional steering of the machine. The machine will turn in the same direction as the steering wheel.

LEFT TURN – Move the steering wheel counterclockwise in order to steer the machine to the left. Turn the steering wheel farther in order to achieve a more acute turn.

RIGHT TURN – Move the steering wheel clockwise in order to steer the machine to the right. Turn the steering wheel farther in order to achieve a more acute turn.

Dual Mode Steering (If Equipped)

Dual mode steering is used to minimize operator fatigue in loading applications. The steering modes are "Regular Steer" and "Quick Steer". Quick Steer allows the operator to select full steering action with minimal steering wheel action. The Quick Steer mode should only be used at lower speeds.

Note: Quick Steer cannot be used at higher speeds. It is important to limit the machine speed when Quick Steer mode is used. You cannot change steering modes while the machine is moving.

In order to change to Quick Steer mode, complete the following steps:

1. Stop the machine.
2. Place the transmission in neutral.
3. Depress the dual mode steering switch. The Quick Steer indicator light should come on indicating that the machine is in Quick Steer mode.

When the machine is in Quick Steer mode, the machine will operate only in first gear or second gear.

Note: The steering mode will not change if secondary steering is activated.

In order to change to regular steering mode, complete the following steps:

1. Stop the machine.
2. Place the transmission in neutral.
3. Depress the dual mode steering switch. The Quick Steer indicator light should go off indicating that the machine is in regular steering mode.

Note: When the parking brake is set, the Quick Steer will be disabled. If the transmission is in NEUTRAL for 5 minutes, the Quick Steer will be disabled.

Transmission Control

Direction Selector

Note: If the machine is equipped with a transmission direction control switch, both the transmission lever and the transmission switch must be in the NEUTRAL position before putting the machine into FORWARD or REVERSE. When you are using one of the controls, you cannot use the other control until both the transmission lever and the transmission switch are in NEUTRAL.

Transmission and Direction Control Lever

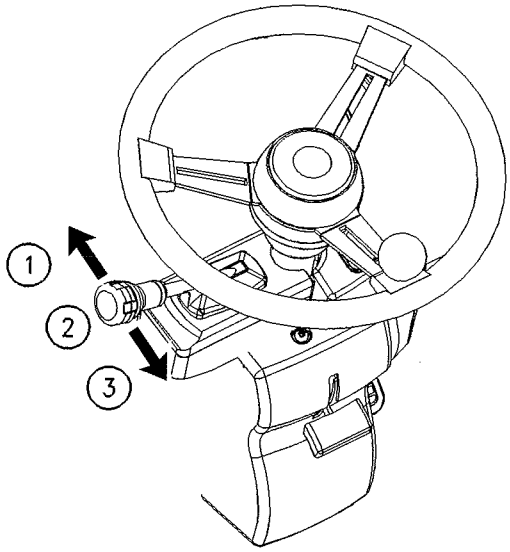

Illustration 79 g00866220

The transmission direction control lever is located on the steering console.

F **FORWARD (1)** – Move the transmission lever upward. The machine will move forward.

N **NEUTRAL (2)** – The machine should not move when the transmission lever and the transmission switch (if equipped) are in neutral.

R **REVERSE (3)** – Move the transmission lever downward. The machine will move in reverse.

Transmission Direction Control Switch (If Equipped)

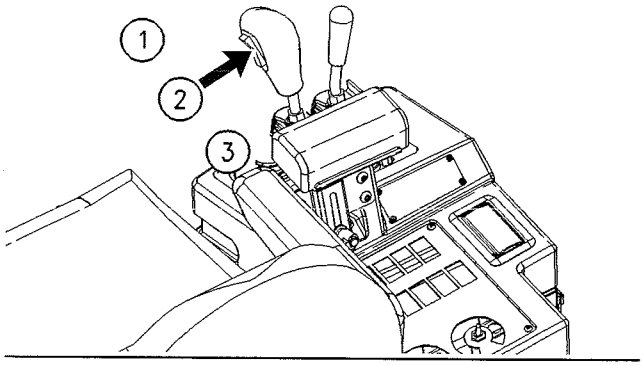

Illustration 80 g00885046

The transmission direction control switch (if equipped) is located on the single lever control.

F **FORWARD (1)** – Move the transmission switch (if equipped) upward. The machine will move forward.

N **NEUTRAL (2)** – The machine should not move when the transmission lever and the transmission switch (if equipped) are in neutral.

R **REVERSE (3)** – Move the transmission switch (if equipped) downward. The machine will move in reverse.

Speed Selector

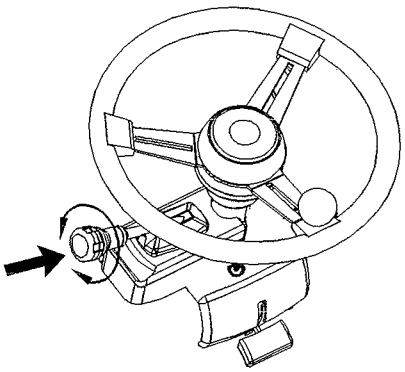

Illustration 81 g00866252

Rotate the transmission lever to the desired gear speed:

"1" – First Speed

"2" – Second Speed

"3" – Third Speed

"4" – Fourth Speed

Window Wiper and Window Washer

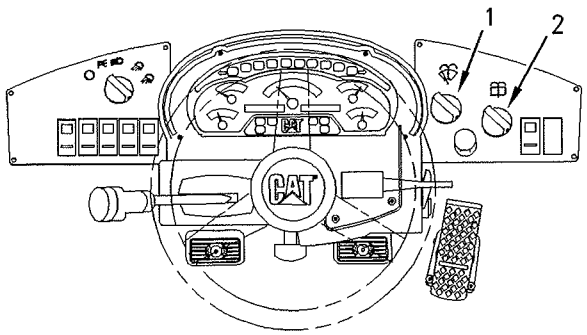

Illustration 82 g00884707

Front Window Wiper and Washer (1) – Turn the knob in order to turn on the window wiper. Push the knob in order to activate the window washer.

Rear Window Wiper and Washer (2) – Turn the knob in order to turn on the window wiper. Push the knob in order to activate the window washer.

Note: The machine is equipped with intermittent wipers. There are several positions that will affect the wipers.

Turn knob (1) or knob (2) clockwise from the OFF position for the desired setting (INTERMITTENT, LOW or HIGH). The delay speed of the wipers can be adjusted by turning the knob clockwise through the INTERMITTENT position.

i03646558

Battery Disconnect Switch

SMCS Code: 1411

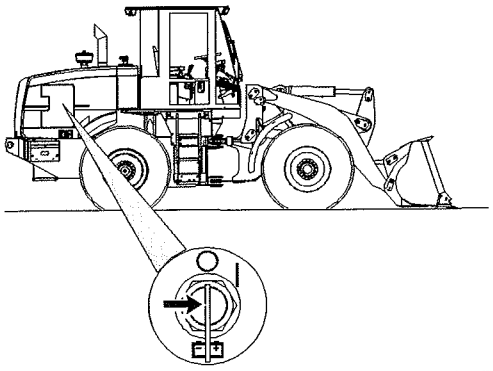

Illustration 83 g00883587

Open the access cover on the right side of the machine. The battery disconnect switch is located in the engine compartment.

ON – Insert the battery disconnect switch key, and turn the battery disconnect switch key clockwise in order to activate the electrical system. The switch must be ON before you start the engine.

OFF – Turn the battery disconnect switch key counterclockwise in order to shut off the entire electrical system.

The battery disconnect switch and the engine start switch serve different functions. When the battery disconnect switch is turned off, the entire electrical system is disabled. When only the engine start switch is turned off, the battery remains connected to the electrical system.

Turn the battery disconnect switch key to the OFF position and remove the battery disconnect switch key when you service the electrical system or you service any other components of the machine.

Turn the battery disconnect switch key to the OFF position and remove the battery disconnect switch key when the machine is left for an extended period of one month or longer. This procedure will prevent a short circuit from draining the battery. This procedure will also prevent the components from draining the battery. This procedure will also prevent the battery from being drained by vandalism.

NOTICE
Never turn the battery disconnect switch key to OFF with the engine running. Electrical system damage could result.

To ensure that no damage to the engine occurs, verify that the engine is fully operational before cranking the engine. Do not crank an engine that is not fully operational.

Perform the following procedure in order to check the battery disconnect switch for proper operation:

1. With the battery disconnect switch in the ON position, verify that electrical components in the operator compartment are functioning. Verify that the hour meter is displaying information. Verify that the engine will crank.
2. Turn the battery disconnect switch to the OFF position.
3. Verify that the following items are not functioning: electrical components in the operator compartment, hour meter, and engine cranking. If any of the items continue to function with the battery disconnect switch in the OFF position, consult your Caterpillar dealer.

i01683537

Backup Alarm (If Equipped)

SMCS Code: 7406

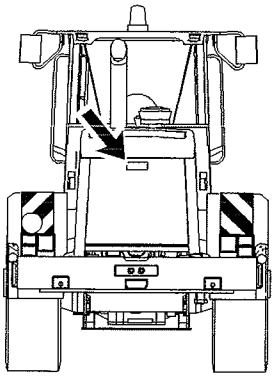

Illustration 84 g00892330

Backup Alarm – The alarm will sound when the transmission direction control lever is in the REVERSE position. The alarm is used to alert people behind the machine that the machine is backing up.

The backup alarm is mounted at the rear of the machine behind the grill.

i01765287

Alert Indicators

SMCS Code: 7450; 7451

Table 49

WARNING OPERATION		
Warning Level	**Alarm**	**Action Lamp**
Level 1	OFF	OFF
Level 2	OFF	Flashing
Level 2-Special	ON	Flashing
Level 3	Pulsating	Flashing

The monitoring system has the following four warning levels for events:

Level 1 – This warning level is identified by the illumination of a respective warning lamp. This warning level is used in order to indicate that the machine needs attention soon. No harm to the machine has occurred at this point.

Level 2 – This warning level is used to indicate that the operation of the machine should be changed. Possible severe damage to components on the machine may occur.

Level 2-Special – This warning level is used to indicate that the operation of the machine should be changed as soon as possible. Possible severe damage to components on the machine may occur. The warning light may flash either red or yellow.

Level 3 – This warning level is used in order to indicate that the machine needs to have a safe emergency engine shutdown. Possible injury to the operator or severe damage to components may occur.

As an automatic lamp test, all of the alert indicators will light when the engine start switch key is turned to the ON position. The lamps should stay on for three to five seconds. The action alarm should sound also. If all of the alert indicators do not come on or if the action alarm does not come on, investigate the cause.

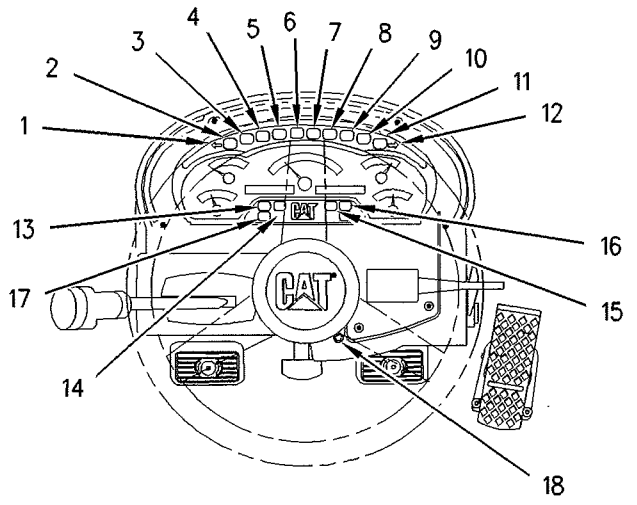

Illustration 85 g00904717

Left Turn Signal (1)

Secondary Steering (2) (If Equipped) – The alert indicator will light when the electrical secondary steering motor is active.

Do not operate the machine until the cause has been corrected.

Primary Steering Failure (3) – The alert indicator will light and the action alarm will sound when the primary steering flow is not functioning. The alarm will only sound when the engine is running.

Do not operate the machine until the cause has been corrected.

Low Brake Pressure (4) – The alert indicator will light when the brake oil pressure is low. If this alert indicator comes on, stop the machine immediately. Engage the parking brake and stop the engine. Investigate the cause.

Low Engine Oil Pressure (5) – The alert indicator will light when the engine oil pressure is low. If this alert indicator comes on, stop the machine immediately. Stop the engine and investigate the cause.

Action Lamp (6) – If the lamp comes on the machine needs to be serviced soon. If the lamp comes on and an action alarm comes on stop the machine immediately.

Starting Aid (7) – Starting aid is active. This function is controlled automatically. The indicator should go off after the engine is warmed up.

Parking Brake (8) – The alert indicator will light when the parking brake is engaged. The alert indicator should come on during start-up when the parking brake is applied. The alert indicator should go out when the parking brake is released.

Electrical System (9) – The alert indicator will light when there is a malfunction in the electrical system. If this alert indicator comes on, the system voltage is too high for normal machine operation or too low for normal machine operation.

If electrical loads (air conditioning and/or lighting) are high and the engine speed is near idle, increase the engine speed to high idle. This will generate more output from the alternator. If the alert indicator for the electrical system turns off within one minute, the electrical system is probably operating in a normal manner. However, the electrical system may be overloaded during periods of low engine speeds.

Modify the operating cycle in order to prevent overloading the electrical system and discharging the batteries.

Low idle must be set correctly. Adjust for the high side of the Low Idle specification while the most often used electrical loads are turned on. In order to reduce the loads, use the Medium fan speed instead of the High fan speed.

If this procedure does not cause the alert indicator to turn off, move to a convenient location. Investigate the cause (loose alternator belt, broken alternator belt, damaged batteries, etc).

If the engine speed is near operating speeds and if the electrical loads are light, the alert indicator may remain on. If the alert indicator remains on, move to a convenient location. Investigate the cause (loose alternator belt, broken alternator belt, damaged batteries, etc).



Transmission Oil Filter (10) – The transmission oil filter has been bypassed. The lamp will come on at start-up. When the machine reaches normal operating temperature and the lamp does not turn off change your filter.



Axle Oil Pressure (11) – The alert indicator will light when the oil pressure in the axle oil cooler (if equipped) is low. If this alert indicator comes on, stop the machine immediately. Engage the parking brake and stop the engine. Investigate the cause.



Right Turn Signal (12)



Work Lights (13) – The work lights are on.



High Beams (14) (if equipped) – The high beams are on.



Hydraulic Oil Filter Bypass (15) – The hydraulic oil filter has been bypassed. The lamp will come on at start-up. When the machine reaches normal operating temperature and the lamp does not turn off change your filter.



Air Filter restriction (16) – The air filter is restricted. Check the air cleaner indicator and clean out the air filter.



Ride Control (17) – The ride control is active.

Machine Security System (18) (If Equipped) – If the light is green you can start the engine. If the light is red the engine will not start.

i03555467

Product Link (If Equipped)

SMCS Code: 7606

The Product Link PL121SR is a satellite communication device that transmits information regarding the machine to Caterpillar, Caterpillar dealers, and Caterpillar customers. The unit contains a Global Positioning System receiver (GPS receiver) and a satellite transceiver.

The Product Link PL121SR is capable of two-way communication between the machine and a remote user. The remote user can be a dealer or a customer. At any time, a user can request updated information from a machine such as hours of use or the location of the machine. Also, the system parameters for Product Link PL121SR can be changed. Data is transmitted from the machine to a satellite. Next, the data is transmitted to a ground station. The receiving station transmits the data to Caterpillar Inc. The data can then be sent to a Caterpillar dealer and to the customer.

Data Broadcasts

Machine data about the machine's condition and operation is being transmitted by Product Link to Caterpillar and/or Caterpillar dealers in order to better serve the customer and to improve Caterpillar products and services. The information that is transmitted may include the following data: machine serial number, location of the machine, fault codes, emissions data, fuel usage, service meter hours, version numbers for software and hardware, and installed attachments.

Caterpillar and/or Caterpillar dealers may use this information for various purposes: providing services to the customer and/or the machine, checking or maintaining Product Link equipment, monitoring the machine's health or performance, helping to maintain the machine, improving the machine's efficiency, evaluating or improving Caterpillar products and services, complying with legal requirements and valid court orders, performing market research, and offering the customer new products and services.

Caterpillar may share some or all of the collected information with Caterpillar affiliated companies, dealers, and authorized representatives. Caterpillar will not sell or rent collected information to any other third party and will exercise reasonable efforts to keep the information secure. Caterpillar recognizes and respects customer privacy. For more information, please contact your local Caterpillar dealer.

Operation in a Blast Site

If the machine is required to work within 12 m (40 ft) of a blast site, then Product Link PL121SR must be disabled. In order to disable theProduct Link PL121SR install a Product Link Disconnect Switch in the machine cab that will allow the Product Link PL121SR module to be shut off. Refer to Special Instruction, REHS2365, "An Installation Guide for the Product Link PL121SR and for the PL300" for more details and installation instructions. You may also disconnect the Product Link PL121SR module from the main power source by disconnecting the wiring harness at the Product Link module.

This blast site warning does not supersede the published requirements or regulations found in "Title 30 of the Code of Federal Regulations (CFR)". This warning does not allow deviation from the published requirements or regulations found in "Title 30 of the Code of Federal Regulations (CFR)". A hazard assessment should be conducted by each customer. Every customer should meet all of the requirements of "Title 30 of the Code of Federal Regulations (CFR)" in order to ensure the safe storage, transportation, loading, and blasting of any explosive.

The following Product Link PL121SR specifications are provided in order to aid in conducting any related hazard assessment and to ensure compliance with all local regulations:

- The transmit power rating for the Product Link PL121SR transmitter is five to ten watts
- The operating frequency range for the Product Link PL121SR module is 148 MHz to 150 MHz.

Consult your Caterpillar dealer if there are any questions.

Information for the initial installation of the Product Link PL121SR is available in Special Instruction, REHS2365, "Installation Guide for the Product Link PL121SR".

Operation, configuration, and troubleshooting information for the Product Link PL121SR can be found in System Operation Troubleshooting Testing and Adjusting, RENR7911.

Regulatory Compliance

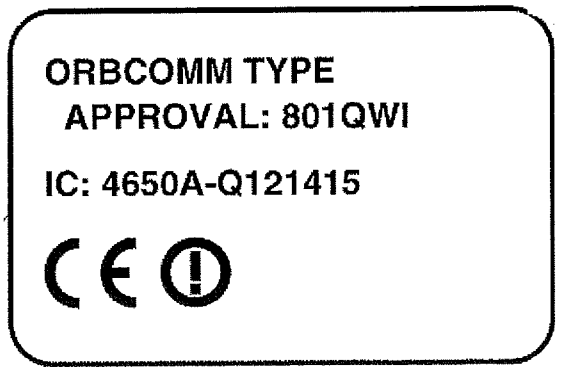

Illustration 86 g01131982

NOTICE

Transmission of information using Product Link is subject to legal requirements that may vary from location to location, including, but not limited to, radio frequency use authorization. The use of Product Link must be limited to those locations where all legal requirements for the use of the Product Link communication network have been satisfied.

In the event that a machine outfitted with Product Link is located in or relocated to a location where (i) legal requirements are not satisfied or (ii) transmitting or processing of such information across multiple locations would not be legal, Caterpillar disclaims any and all liability related to such failure to comply and Caterpillar may discontinue the transmission of information from that machine.

Consult your Caterpillar dealer with any questions that concern the operation of the Product Link in a specific country.

QUAKE GLOBAL

DECLARATION OF CONFORMITY

We, **Quake Global Inc (Previously Quake Wireless, Inc. up to January 2001)**

of **9765 Clairemont Mesa Blvd, Suite A (Previously 5575 Ruffin Road, Suite 100 up to March 2002)**

San Diego

CA 92124, USA (Previously 92123)

declare under our sole responsibility that the product

QHE2500, Q2000, Q1500, Q1400, Q1200S, Q1200SG, Q1200SH, Q1200SM and Q1200SV

to which this declaration relates, is in conformity with the following standards and/or other normative documents.

EN 301 721 V1.2.1 (June 2001)

EN 300 489-20 V1.2.1 (November 2002)

EN 60950-1/A11:2004, 1st Edition

We hereby declare that all essential radio test suites have been carried out and that the above named product is in conformity to all the essential requirements of Directive 1999/5/EC.

The conformity assessment procedure referred to in Article 10 and detailed in Annex [IV] of Directive 1999/5/EC has been followed with the involvement of the following Notified Body:

BABT, Claremont House, 34 Molesey Road, Walton-on-Thames, KT12 4RQ, UK

Identification mark: **0168** The equipment will also carry the Class 2 equipment identifier

The technical documentation relevant to the above equipment will be held at:

Quake Global Inc (Previously Quake Wireless, Inc. up to January 2001)

9765 Clairemont Mesa Blvd, Suite A

San Diego, CA 92124, USA

(name)

President

(title)

(signature of authorised person) *(date)*

Illustration 87 g01435306

Note: A translated extract of the above document is provided below.

Table 50

DECLARATION OF CONFORMITY

We, **Quake Global, Inc (Previously Quake Wireless, Inc up to January 2001)**

of **9765 Clairemont Mesa Blvd, Suite A (Previously 5575 Ruffin Road, Suite 100 up to March 2002)**
San Diego
CA 92124, Usa (Previously 92123)

declare under our sole responsibility that the product

QHE2500, Q2000,Q1500, Q1400, Q1200S, Q1200SG, Q1200SH, Q1200SM and Q1200SV

to which this declaration relates, is in conformity with the following standards and / or other normative documents.

EN 301 721 V1.2.1 (June 2001)

EN 300 489-20V1.2.1 (November 2002)

EN 60950-1/A11:2004, 1st Edition

We hereby declare that all essential radio test suites have been carried out and that the above named product is in conformity to all the essential requirements of Directive "1999/5/EC".

The conformity assessment procedure referred to in Article 10 and detailed in Annex [IV] of Directive "1999/5/EC" has been followed with the involvement of the following Notified Body:

BABT, Claremont House, 34 Molesey Foad, Walton-on-Thames, KT12 4RQ, UK

Identification mark: **0168**

The equipment will also carry the Class 2 Equipment identifier.

The technical documentation relevant to the above equipment will be held at:

Quake Global Inc (Previously Quake Wireless, Inc. up to January 2001)

9765 Clairemont Mesa Blvd, Suite A

San Diego, CA 92124, USA

Polina Braunstein

President

(signature of authorized person) (date)

Class 2 equipment identifier

Engine Starting

i03822196

Engine Starting

SMCS Code: 1000; 7000

Start the Engine

The following table lists the limits for temperature range:

Table 51

Package	Details	Starting Temperature	Operating Temperature Range
1	10W30 engine	−9 °C (15.8 °F)	0 °C (32 °F) to 35 °C (95 °F)
	10W hydraulics		
	30W Transmission		
2	10W30 engine	−9 °C (15.8 °F) to −18 °C (−0.4 °F)	−18 °C (−0.4 °F) to 10 °C (50 °F)
	10W hydraulics		
	10W Transmission		
3	0W30 engine	−18 °C (−0.4 °F) to −40 °C (−40 °F)	−40 °C (−40 °F) to −10 °C (14 °F)
	0W hydraulics		
	0W Transmission		

1. Move both the transmission direction control lever and the direction control switch (if equipped) into NEUTRAL.
2. Lift the steering column release lever and move the steering column to the desired position. Release the steering column release lever in order to lock the steering column into position.
3. Engage the parking brake.
4. Move the control levers to the HOLD position.
5. Before the engine is started, check for the presence of bystanders or maintenance personnel. Ensure that all personnel are clear of the machine. Briefly sound the forward horn before you start the engine.
6. Turn the engine start switch to the ON position. Pause for three seconds so that the secondary steering (if equipped) can test.

Note: In applications for cold weather, pause until the indicator lamp for the starting aid turns off.

7. Do not push down on the throttle pedal. Turn the engine start switch key in order to engage the starter. Release the key when the engine starts.

NOTICE
Do not crank the engine for more than 30 seconds. Allow the starter to cool for two minutes before cranking again.

Turbocharger damage can result, if the engine is not kept low until the engine oil light/gauge verifies the oil pressure is sufficient.

Warm up the Engine and Machine

Keep engine speed low until the engine oil pressure indicator light goes out. If the engine oil pressure indicator light does not go out within ten seconds, stop the engine. Investigate the cause of the problem before you start the engine again.

Note: The hydraulic lockout must be in the Unlocked position before the hydraulic controls will function.

1. Allow the engine to warm up at low idle for at least five minutes. Engage the work tool controls and disengage the work tool controls. This will speed up the warm-up of the hydraulic components.
2. Look at the indicators and the gauges frequently during operation.

Also, to help the hydraulic oil to warm up faster, hold the bucket control in the CLOSE position for short periods of ten seconds or less. This will allow the hydraulic oil to reach relief pressure, which causes the hydraulic oil to warm up more rapidly.

NOTICE
The hydraulic control valve may become overheated if the bucket is operated continuously under relief conditions.

Cycle all controls in order to allow warm hydraulic oil to circulate through all hydraulic cylinders and through all hydraulic lines.

When you idle the machine for warm-up, heed the following recommendations:

- If the temperature is greater than 0° C (32° F), warm up the engine for approximately 15 minutes.
- If the temperature is less than 0° C (32° F), warm up the engine for approximately 30 minutes.
- If the temperature is less than − 18°C (0°F) or if hydraulic functions are sluggish, additional time may be required.

Operation

i03001287

Operation Information

SMCS Code: 7000

To prevent injury, make sure that no people are working on the machine or near the machine. To prevent injury, keep the machine under control at all times.

Reduce engine speed when you maneuver in tight quarters or when you are going over a hill.

Select the necessary gear speed before you start downgrade. Do not change gears while you are going downhill.

When you go downgrade, use the same gear speed that would be used to go upgrade.

Do not allow the engine to overspeed when you go downhill. Use the service brake pedal to reduce engine overspeed when you are going downhill.

When the load will be pushing the machine, put the transmission selector lever in FIRST speed before you start downhill.

Changing Direction and Speed

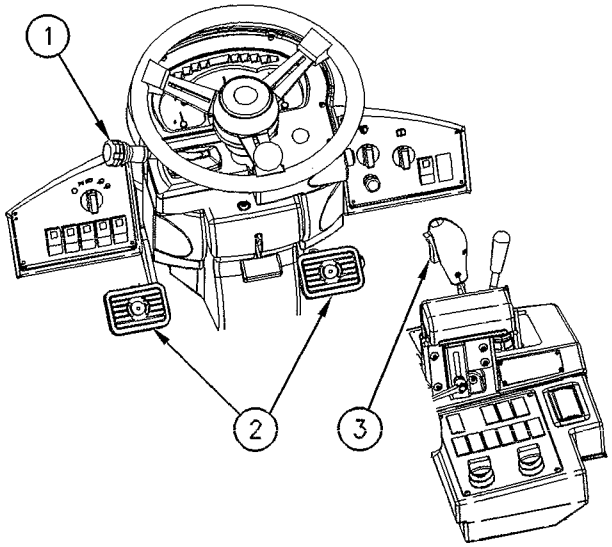

Illustration 88 g00886442

(1) Transmission Direction Control Lever
(2) Service Brake Pedals
(3) Transmission Direction Control Switch (If Equipped)

Changing from low speed to high speed at full engine speed is possible. Directional changes at full engine speed are possible. However, if you are changing direction, reducing the machine speed and/or braking the machine is recommended. This will provide operator comfort and the maximum service life of the power train components. Keep a loaded bucket low to the ground. Stop the machine in order to avoid an unstable machine.

1. Lower the engine speed with the governor pedal.
2. Push the brake pedals (2) downward in order to slow the machine. Push the brake pedals (2) downward in order to stop the machine.
3. Move the transmission direction control lever (1) or move the direction control switch (3) (if equipped) to the desired direction. Rotate the transmission lever to the desired speed.
4. Release the brake pedals.
5. Increase the engine speed with the governor pedal.

Secondary Steering (If Equipped)

The purpose of the secondary steering system is providing steering control if the following conditions are met.

- The engine has been started and the start switch key is in the ON position.
- The steering oil pressure is low or the steering oil pressure is not available.

The secondary steering indicator will come on for three seconds when the engine start switch key is in the ON position. During this time, the operator can determine if the pump motor for the secondary steering is engaged and the operator should try to steer the machine.

If the alert indicator does not come on or you are unable to steer the machine, do not operate the machine. Correct the cause of the failure before you operate the machine again.

The secondary steering indicator will come on and the electric pump motor will activate when the secondary steering control senses a lack of oil pressure.

The secondary steering system will be deactivated when oil pressure has returned to the system.

If the primary steering indicator comes on and/or the action alarm sounds, steer the machine to a convenient location and stop the machine.

Make any necessary repairs before you return the machine to operation.

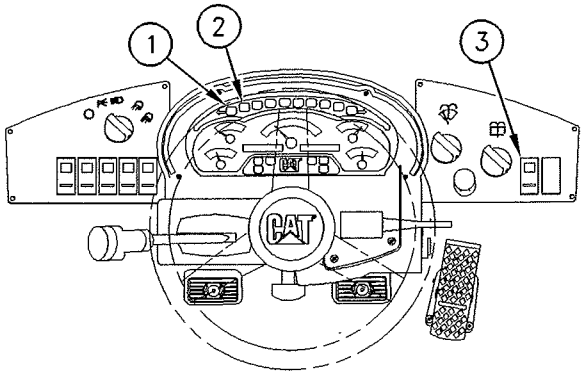

Illustration 89 g00886474

(1) Secondary Steering is activated.
(2) Primary Steering has failed.
(3) Secondary Steering Switch

The primary steering indicator (2) indicates that the primary steering has failed. The alarm will also sound when the engine is running. The secondary steering indicator (1) indicates that the secondary steering system is activated.

Push the secondary steering switch (3) to the ON position and hold the secondary steering switch in the ON position in order to articulate the machine when the machine is stopped. Push the secondary steering switch to the ON position and hold the secondary steering switch in the ON position in order to articulate the machine when the machine is being towed.

Push the secondary steering switch in order to determine if the secondary steering and the alert indicator are functional.

When the alert indicators come on, steer the machine immediately to a convenient location and stop the machine. Stop the engine and investigate the cause. Do not operate the machine until the cause has been corrected.

Note: If the hydraulic system functions are used at low engine speeds, the alert indicator may come on momentarily.

Quick Coupler Function (if Equipped)

⚠ WARNING

Disengaging the coupler pins will release the work tool from control of the operator.

Serious injury or death may result from disengaging the work tool when it is in an unstable position or carrying a load.

Place the work tool in a safe position before disengaging the coupler pins.

Front Work Tool Coupler for Tools That Do Not Require Hydraulics

1. Slide the red button backward and push down on the top of the quick coupler pin switch in order to disengage the coupler pins.

2. Tilt the coupler assembly forward.

   Make sure that the coupler assembly is below the level of the hooks on the work tool that will be attached.

3. Slowly, drive the machine forward. Align the hooks on the work tool with the coupler assembly.

4. Pull back on the lift lever in order to slightly raise the coupler. Raise the coupler until the coupler assembly contacts the hooks on the work tool and the work tool is lifted up slightly.

   Make sure that the work tool is level from one side to the other side.

5. Tilt back the coupler assembly until the alignment bar of the work tool contacts the coupler.

6. Press the top of the switch and hold the switch for 3 seconds in order to engage the pins for the quick coupler.

Note: Visually ensure that both coupler pins are extending out of the holes in the work tool mounting bracket. Ensure that the tool is firmly attached and continue with steps 7 through 9.

7. Push the tilt lever in order to tilt the work tool downward.

8. Push the lift lever forward in order to put down pressure on the work tool.

9. Back up the machine and make sure that there is no movement between the work tool and the coupler.

Steps 7 through 9 indicate that the coupler pins have fully engaged into the retainer holes for the work tool.

Work Tools That Require Hydraulics

Follow the procedure that is described in Operation and Maintenance Manual, "Front Work Tool Coupler for Tools That Do Not Require Hydraulics".

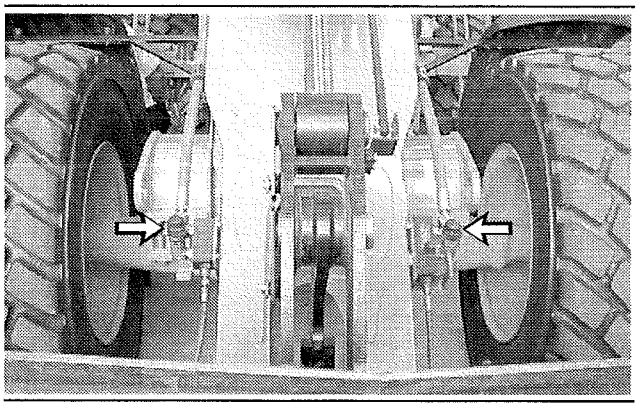

Illustration 90 g00641175

Quick disconnect fittings for the third valve operation 924G

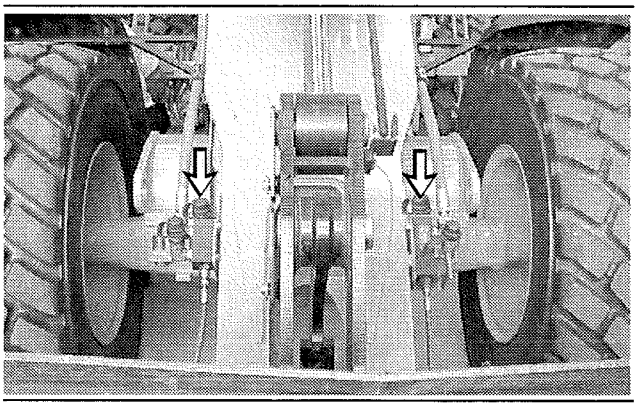

Illustration 91 g00641249

Quick disconnect fittings for the fourth valve operation 924G

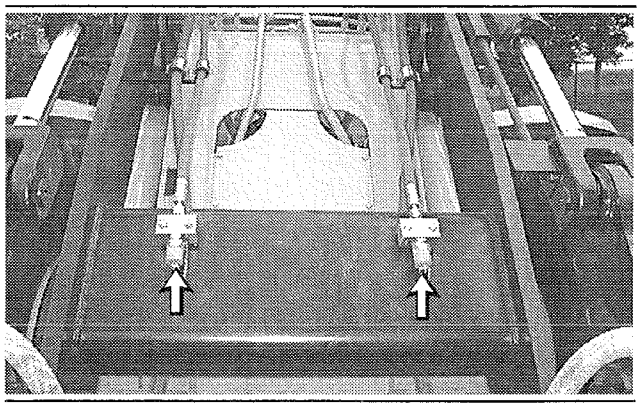

Illustration 92 g00104402

Auxiliary quick connectors for fourth valve function IT28G

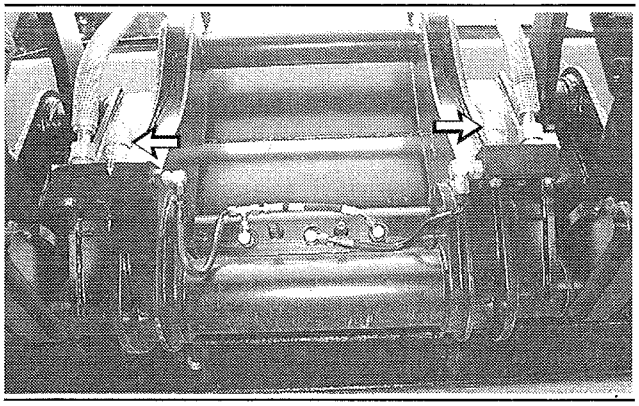

Illustration 93 g00921719

Auxiliary quick connectors for the IT28G

Before you connect the quick disconnect plugs or before you disconnect the quick disconnect plugs, follow the steps below.

- Stop the engine.
- Move all of the control levers for the work tool in order to relieve the pressure in the hydraulic lines.
- Return all of the levers to the HOLD position.

Disconnecting Lines

- Disconnect the hydraulic lines of the tool that will be used. Wipe off all foreign material.
- Install plugs on any unused connectors.

Adjustments

i01727272

Lift Kickout - Adjust

SMCS Code: 5109-025

⚠ WARNING

Use caution to avoid possible personal injury when adjusting the attachment lift kickout.

Keep personnel off the machine. Clear the area when working under or around the attachment linkage.

With the attachment raised, proper support must be provided for the attachment and/or the linkage.

1. Start the engine. Raise the bucket to the desired height and stop the engine.
2. Block up the bucket and the linkage.

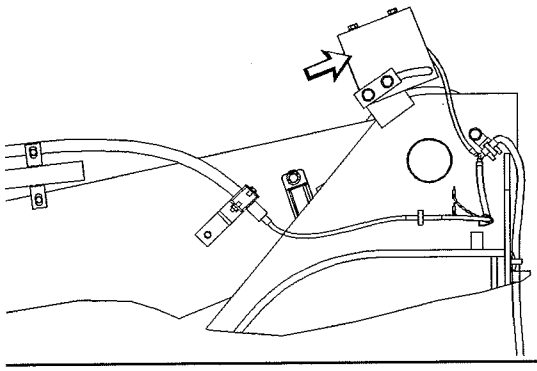

g00103806

Illustration 94
Typical Example

3. Loosen the magnet clamp. Align the magnet with the switch assembly.
4. To increase the lift kickout height for the bucket, move the magnet counterclockwise. To decrease the lift kickout height for the bucket, move the magnet clockwise.
5. Tighten the magnet clamp.
6. Start the engine. To check the adjustment, move the bucket lift lever to the RAISE detent position.
7. When the bucket reaches the preset lift height, the bucket lift lever should return to the HOLD position.

i01821584

Work Tool Positioner - Adjust

SMCS Code: 5112-025

⚠ WARNING

Use caution to avoid possible personal injury when adjusting the bucket positioner.

Stop the engine and lower all equipment to relieve the hydraulic pressure.

Engage the parking brake and block the tires to prevent sudden movement of the machine.

Keep unauthorized personnel off the machine.

1. Start the engine. Lower the bucket to the ground.
2. Position the bucket at the desired angle to the ground. Turn the engine start switch key to the OFF position and remove the engine start switch key. Move the bucket tilt lever to the TILT BACK detent position.

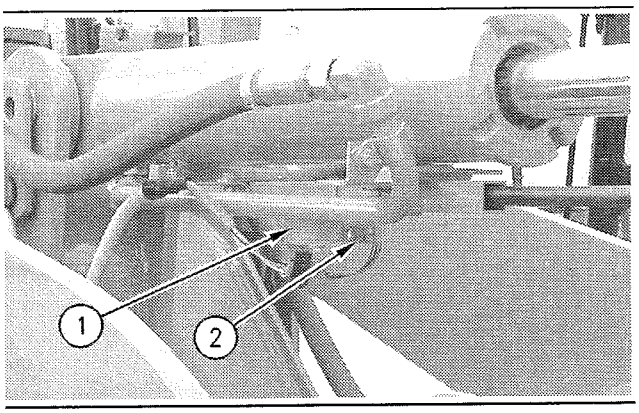

g00612503

Illustration 95
924Gz

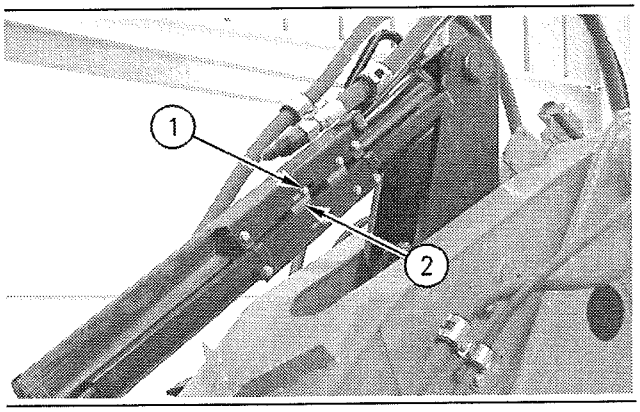

g00612564

Illustration 96
924G/IT28G
Typical Example

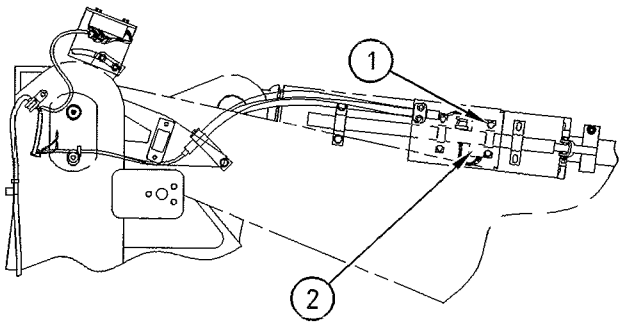

Illustration 97 g00887587
928G

3. Loosen the two bolts that clamp the switch (1) to the tube. Move the switch until the orange light (2) comes on. Move the switch down the cylinder in order to increase the digging angle. Move the switch up the cylinder in order to decrease the digging angle.

Note: Do not adjust the work tool postioner by adjusting the tube assembly.

4. To test the adjustment, start the engine. Raise the bucket. Move the bucket tilt lever to the TILT BACK detent position.

5. When the bucket reaches the preset digging angle, the bucket tilt lever should return to the HOLD position.

i02185740

Programmable Transmission Neutralizer - Adjust

SMCS Code: 4269-025

S/N: TWR1-Up

S/N: TFW1-Up

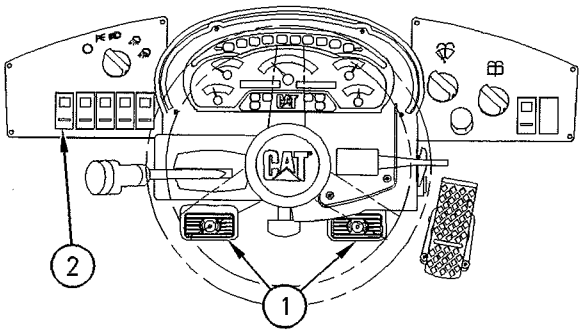

Illustration 98 g00887347

The transmission neutralizer function puts the transmission in neutral when the brake pressure reaches the pressure setting. The transmission is held in neutral until the brake is released. The transmission neutralizer switch (2) is used to disable the transmission neutralizer function. The same switch is used in order to change the brake pressure of the transmission neutralizer function. The light on the transmission neutralizer switch is illuminated when the feature is disabled.

Note: The bottom position is the DISABLED position. The center position is the ENABLED position. The top is the SET position. Depress the top of the transmission neutralizer switch and release the top of the transmission neutralizer switch in order to display the current transmission neutralizer value on the instrument cluster.

1. Start the engine.

2. Depress the top of the transmission neutralizer switch longer than 3 seconds. The display on the instrument cluster displays the brake pressure.

3. Push on the service brake pedal (1) until the desired pressure is achieved. The pressure may be set to any level in the range of 400 kPa (58 psi) and 1999 kPa (290 psi).

4. Release the transmission neutralizer switch.

5. The switch will return to the center position. The transmission neutralizer function will be enabled at the current brake pressure.

The instrument cluster will display the transmission neutralizer value.

Note: Hold the switch in the SET position for 15 seconds without touching the brake pedal in order to reset the factory default value. The factory default value is 903 kPa (131 psi). If the switch is released in less than 15 seconds, the transmission neutralizer value will not change.

Note: If the brake pressure is less than 175 kPa (25 psi), the display will read 0(zero).

Depress the bottom of the transmission neutralizer switch in order to deactivate the transmission neutralizer function.

Parking

i01696079

Stopping the Machine

SMCS Code: 7000

NOTICE
Park on a level surface. If it is necessary to park on a grade, block the wheels securely.

Engage the parking brake. Do not engage the secondary brake while the machine is moving unless the primary service brakes fail.

1. Apply the service brakes in order to stop the machine.
2. Move the transmission control lever and the transmission control switch (if equipped) to the NEUTRAL position.
3. Engage the parking brake.
4. Lower the work tool to the ground and apply slight downward pressure.

i01696083

Stopping the Engine

SMCS Code: 1000; 7000

NOTICE
Stopping the engine immediately after it has been working under load, can result in overheating and accelerated wear of the engine components.

Refer to the following procedure, to allow the engine to cool, and to prevent excessive temperatures in the turbocharger housing (if equipped), which could cause oil coking problems.

1. Operate the engine for five minutes at low idle with no load.

   This allows hot areas in the engine to cool gradually. This will extend the engine life.
2. Turn the engine start switch key to the OFF position in order to stop the engine.
3. Move all hydraulic control levers back and forth in order to relieve hydraulic pressure.
4. Move all hydraulic control levers into the HOLD position.

i01788133

Stopping the Engine if an Electrical Malfunction Occurs

SMCS Code: 1000; 7000

Turn the engine start switch key to OFF. If the engine does not stop, perform the following procedure.

1. Open the engine access door that is located on the right side of the machine.

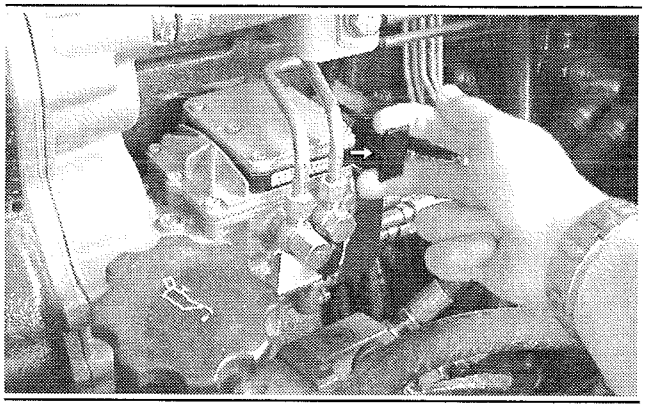

Illustration 99 g00915144

2. Pull outward on the connector that is located on the solenoid for the fuel pump.

Note: Do not operate the machine again until the malfunction has been corrected.

i01696164

Equipment Lowering with Engine Stopped

SMCS Code: 7000

⚠ WARNING

Personal injury or death can result from boom lowering.

The boom can drop when lowering it with the engine stopped.

Keep all personnel away from the boom drop area when lowering the boom with the engine stopped.

Be sure no one is under or near the front linkage before manually lowering the boom.

Lowering the Equipment with the Accumulator Charged

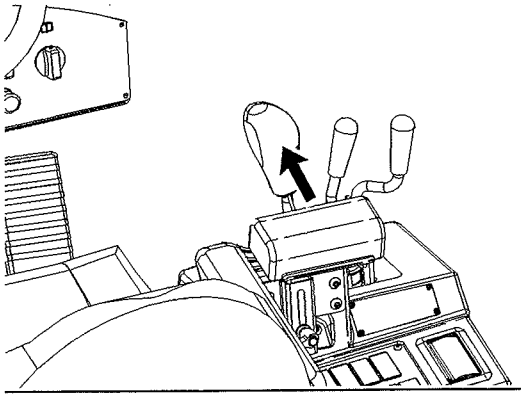

Illustration 100 g00887108

If electrical power is available and the accumulator is charged, the boom can be lowered from the operator station with the boom control lever.

1. Turn the engine start switch key to the ON position.
2. Unlock the work tool lockout control.
3. Slowly, move the lift lever to the LOWER position in order to lower the boom slowly.

If the boom does not lower, the accumulator is not charged. If the engine has been off for more than ten minutes and the engine is operable, start the engine and move the lift lever to the LOWER position.

If there is no electrical power the boom must be lowered manually. See Operation and Maintenance Manual, "Lowering the Equipment with the Accumulator Discharged" for more details.

Lowering the Equipment with the Accumulator Discharged

If there is no electrical power or the accumulator is not charged, the boom cannot be lowered with the boom control lever. The boom must be lowered manually.

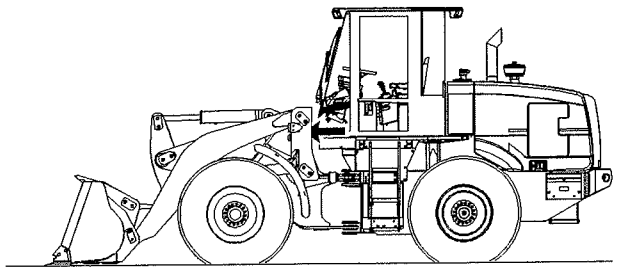

Illustration 101 g00887145

The bypass valve is located at the center of the machine.

The lift arms will start lowering when the bypass valve is opened.

Keep personnel away from the front of the machine.

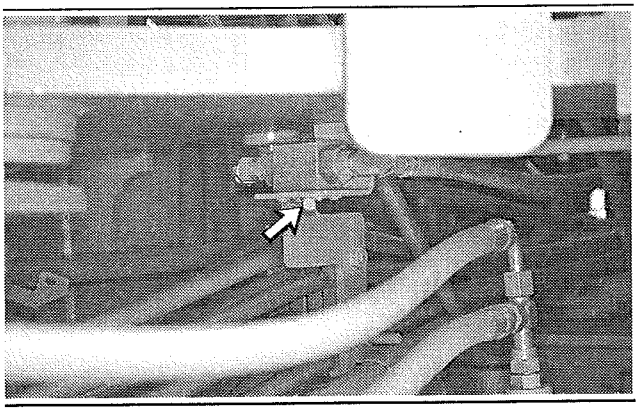

Illustration 102 g00102432

Slowly turn the square stem of the bypass valve in a clockwise direction. The square stem should be rotated 90 degrees.

The lift arms will lower to the ground.

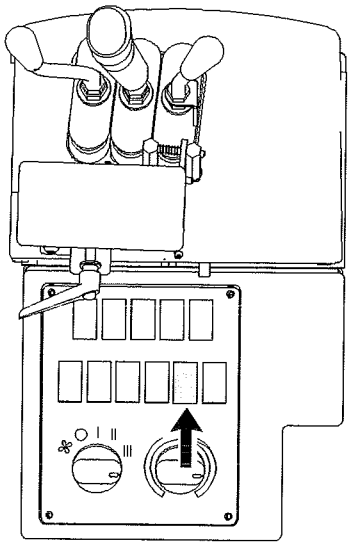

Illustration 103 g00866588

Note: On a machine that is equipped with load check valves, press the top of the bucket lower switch in order to allow the bucket to lower when the bypass valve is opened.

Slowly turn the square stem of the bypass valve in a counterclockwise direction. The square stem should be rotated 90 degrees.

i01727031

Leaving the Machine

SMCS Code: 7000

1. Use the steps and the handholds when you get off the machine. Face the machine and use both hands. Make sure that the steps are clear of debris before you dismount.

2. Inspect the engine compartment for debris. Clean out any debris and paper in order to avoid a fire.

3. Remove all flammable debris from the front bottom guard in order to reduce the fire hazard. Dispose of the debris properly.

4. Turn the battery disconnect switch to the OFF position. If the machine will not be operated for an extended period of a month or more, remove the battery disconnect switch key.

5. Install all covers and all vandalism protection locks.

Transportation Information

i01902809

Lifting and Tying Down the Machine

SMCS Code: 7000; 7500

NOTICE
Improper lifting or tie-downs can allow the load to shift and cause injury or damage. Install the steering frame lock link before lifting.

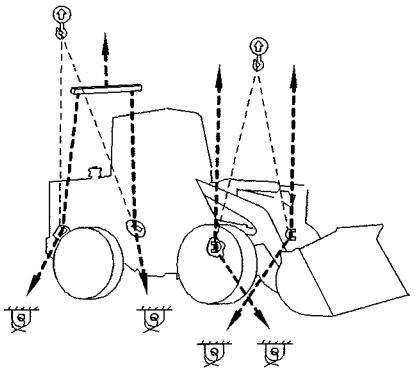

Illustration 104 g00285597

Proper lifting points are marked on the machine by this decal.

Proper tie-down points are marked on the machine by this decal.

Reference: Refer to Operation and Maintenance Manual, "Specifications" for the dimensions of the machine.

Use proper rated cables and proper rated slings for lifting the machine. Position the crane in order to lift the machine in a level plane.

The spreader bar widths must be sufficient in order to prevent contact with the machine.

Install tie-downs at several locations. Place blocks in front of the wheels and behind the wheels.

Obey the appropriate laws that govern the dimensions of the load (weight, width and length).

Consult your Caterpillar dealer for shipping instructions for your machine.

i01902782

Roading the Machine

SMCS Code: 7000

Before you road a machine, consult your tire dealer for recommended tire pressures and for speed limitations.

Limitations for TON-kilometers per hour (TON-miles per hour) must be obeyed. Consult your tire dealer for the speed limit of the tires that are used.

When you travel for long distances, schedule stops in order to allow the tires and the components to cool. Stop for 30 minutes after every 40 km (25 miles) or stop for 30 minutes after every hour.

Inflate the tires to the correct air pressure.

Use a self-attaching inflation chuck and stand behind the tire tread during the inflation. See Tire Inflation Information.

Perform the Daily Inspection and measure the fluid levels in the various compartments.

Check with the proper officials in order to obtain the required licenses and other similar items.

Travel at a moderate speed. Observe all speed limitations when you road the machine.

Disable the controls for the work tool when the machine is roaded.

Note: Refer to Operation and Maintenance Manual, "Operator Controls" for more information on disabling the controls for the work tool.

i01696169

Shipping the Machine

SMCS Code: 7000; 7500

Investigate the travel route for overpass clearances. Make sure that there will be adequate clearance if the machine that is transported is equipped with a ROPS, with a cab, or with a canopy.

Before loading, remove ice, snow, or other slippery material from the loading dock and from the truck bed. This is done in order to prevent slippage of the machine. This should also be done in order to prevent a shift while the machine is moving in transit.

NOTICE

Obey all state and local laws governing the weight, width and length of a load.

Make sure the cooling system has proper antifreeze if moving machine to a colder climate.

Observe all regulations governing wide loads.

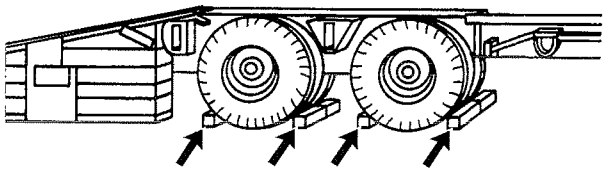

Illustration 105 g00040011

1. Chock the trailer or rail car wheels before you load the machine. (The trailer is shown.)

2. After the machine is positioned, connect the steering frame lock link in order to hold the front frame and the rear frame in place.

3. Lower the work tool to the floor of the transport vehicle. Move the transmission control lever to NEUTRAL.

4. Engage the parking brake.

5. Turn the engine start switch key to OFF in order to stop the engine. Remove the engine start switch key.

6. Move all of the hydraulic control levers in order to relieve any trapped pressure.

7. Move the switch for the hydraulic lever lock to the LOCKED position.

8. Turn the battery disconnect switch key to OFF and remove the battery disconnect switch key.

9. Lock the door and the access covers and attach any vandalism protection.

10. Secure the machine with tie-downs when you are transporting the machine on a rail car or on the tractor-trailer.

11. Cover the exhaust opening. The turbocharger should not rotate when the engine is not operating. Damage to the turbocharger can result.

Towing Information

i02975089

Machine Retrieval

SMCS Code: 7000

⚠ WARNING

Personal injury or death could result when towing a disabled machine incorrectly.

Block the machine to prevent movement before releasing the brakes. The machine can roll free if it is not blocked.

Follow the recommendations below, to properly perform the towing procedure.

These towing instructions are for moving a disabled machine for a short distance at low speed. Move the machine at a speed of 2 km/h (1.2 mph) or less to a convenient location for repair. These instructions are only for emergencies. Always haul the machine if long distance moving is required.

Shields must be provided on both machines. This will protect the operator if the tow line breaks or the tow bar breaks.

Do not allow an operator to be on the machine that is being towed unless the operator can control the steering and/or the brakes.

Before you tow the machine, make sure that the tow line or the tow bar is in good condition. Make sure that the tow line or the tow bar has enough strength for the conditions that are involved. The strength of the tow line or of the tow bar should be at least 150 percent of the gross weight of the towing machine. This pertains to a disabled machine that is stuck in the mud and to towing a disabled machine on a grade.

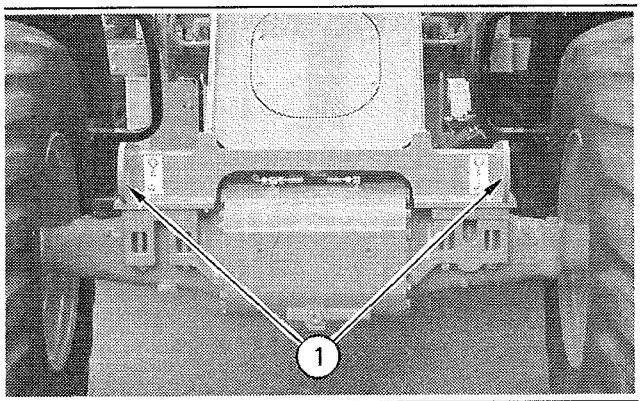

Illustration 106 g00612930

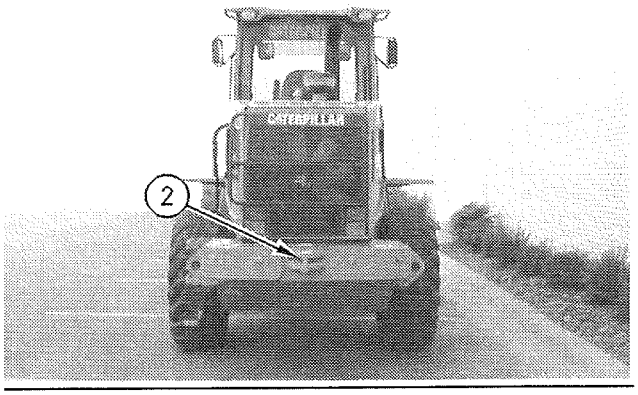

Illustration 107 g00612933

When you tow the machine from the front, attach the tow line to the tow eyes on the frame (1). When you tow the machine from the rear, attach the tow line to the recovery hitch (2).

Note: The recovery hitch is only for machine retrieval. Do not use the recovery hitch for any of the following:

- a lifting point
- a tie down point
- towing a trailer
- towing another vehicle

Do not use a chain for pulling a disabled machine. A chain link can break. This may cause personal injury. Use a wire cable with ends that have loops or rings. Place an observer in a safe position in order to watch the pulling procedure. The observer can stop the procedure, if necessary. The procedure should be stopped if the cable starts to break. Also, stop the procedure if the cable starts to unravel. Stop pulling whenever the towing machine moves without moving the towed machine.

Keep the tow line angle to a minimum. Do not exceed a 30 degree angle from the straight ahead position.

Quick machine movement could overload the tow line or the tow bar. This could cause the tow line or the tow bar to break. Gradual, steady machine movement will be more effective.

Normally, the towing machine should be as large as the disabled machine. Make sure that the towing machine has enough brake capacity, enough weight, and enough power. The towing machine must be able to control both machines for the grade that is involved and for the distance that is involved.

You must provide sufficient control and sufficient braking when you are moving a disabled machine downhill. This may require a larger towing machine or additional machines that are connected to the rear of the disabled machine. This will prevent the machine from rolling away out of control.

All situation requirements cannot be listed. Minimal towing machine capacity is required on smooth, level surfaces. On inclines, maximum towing machine capacity is required.

When any towed machine is loaded, this machine must be equipped with a brake system that is operable from the operator compartment.

Consult your Caterpillar dealer for the equipment that is necessary for towing a disabled machine.

Towing with a Running Engine

If the engine is running, the machine can be towed for a short distance under certain conditions. The power train and the steering system must be operable. **Tow the machine for a short distance only.** For example, pull the machine out of mud or pull the machine to the side of the road.

The operator on the towed machine must steer the machine in the direction of the tow line.

Comply with all of the instructions that are outlined in this topic.

Towing with a Stopped Engine

When the disabled machine's engine is stopped, perform the following steps before you tow the machine.

1. Reverse the hydraulic steering hose connections on one cylinder only.

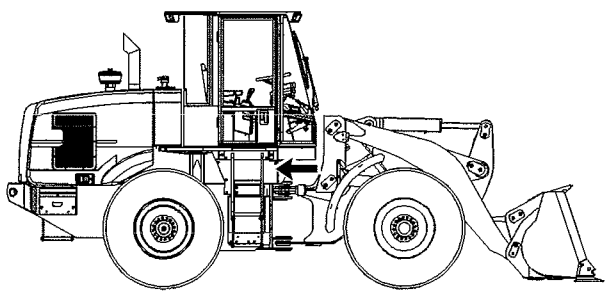

Illustration 108 g00887223

a. Remove the side panels.

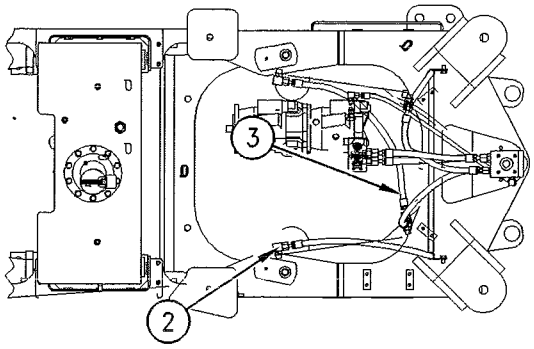

Illustration 109 g00613913
924G and 924Gz

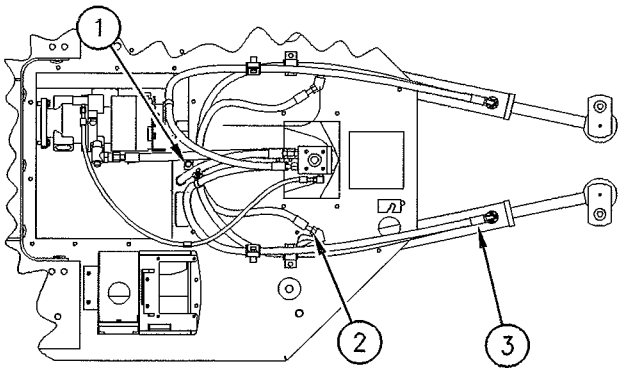

Illustration 110 g00101794
928G and IT28G

b. Remove the clamp (1) in order to allow free movement of the hose for the head end of the steering cylinder on the 928G and the IT28G machine.

c. Disconnect the hydraulic hose from the fitting (2) on the head end of the steering cylinder.

d. Disconnect the hydraulic hose from the fitting (3) on the rod end of the steering cylinder.

e. Reconnect the hose for the rod end to the fitting for the head end and reconnect the hose for the head end to the bottom rod end fitting.

This will allow the steering cylinders to move freely.

NOTICE
Be sure the cylinder hoses are connected correctly before operating the machine. With the hoses reversed, the steering system will not function.

2. If failure of the internal transmission or of the drive train is suspected, remove the drive shafts.

Consult your Caterpillar dealer or refer to the Service Manual for the removal procedures and for the installation procedures.

⚠ WARNING

When the drive shafts are removed, the machine has NO parking or secondary brakes. The machine can roll and cause personal injury or death.

Block the wheels securely so that the machine cannot move.

The towing connection must be rigid, or towing must be done by two machines of the same size or larger than the towed machine. Connect a machine on each end of towed machine.

3. Release the parking brake.

Note: For operation of the parking brake, refer to Operation and Maintenance Manual, "Operator Controls - Parking Brake Control".

4. Inspect the machine for power train damage. Remove all four axle shafts if any damage is suspected.

5. Fasten the tow bar to the disabled machine.

6. Remove the wheel blocks. Tow the machine slowly. Do not exceed 2 km/h (1.2 mph).

⚠ WARNING

Personal injury or death can result from a brake malfunction.

Be sure all necessary repairs and adjustments have been made before a machine that has been towed to a service area, is put back into operation.

Engine Starting (Alternate Methods)

i03735183

Engine Starting with Jump Start Cables

SMCS Code: 1000; 7000

⚠ WARNING

Failure to properly service the batteries may cause peronal injury.

Prevent sparks near the batteries. They could cause vapors to explode. Do not allow the jump start cable ends to contact each other or the machine.

Do not smoke when checking battery electrolyte levels.

Electrolyte is an acid and can cause personal injury if it contacts skin or eyes.

Always wear eye protection when starting a machine with jump start cables.

Improper jump start procedures can cause an explosion resulting in personal injury.

Always connect the battery positive (+) to battery positive (+) and the battery negative (−) to battery negative (−).

Jump start only with an energy source with the same voltage as the stalled machine.

Turn off all lights and accessories on the stalled machine. Otherwise, they will operate when the energy source is connected.

NOTICE
When starting from another machine, make sure that the machines do not touch. This can prevent damage to engine bearings and electrical circuits.

Turn on (close) the battery disconnect switch prior to the boost connection to prevent damage to electrical components on the stalled machine.

Severely discharged maintenance free batteries do not fully recharge from the alternator after jump starting. The batteries must be charged to proper voltage with a battery charger. Many batteries thought to be unusable are still rechargeable.

This machine has a 24 volt starting system. Use only the same voltage for jump starting. Use of a higher voltage damages the electrical system.

Use of Jump Start Cables

When the auxiliary starting receptacles are not available, use the following procedure.

1. Determine the failure of the engine to start.
2. Place the direction control lever and the direction control switch (if equipped) in the NEUTRAL position on the stalled machine. Engage the parking brake. Lower all attachments to the ground. Move all controls to the HOLD position.
3. On a stalled machine, turn the start switch key to the OFF position. Turn off the accessories.
4. On a stalled machine, turn on the battery disconnect switch.
5. Move the machines together in order for the cables to reach. **DO NOT ALLOW THE MACHINES TO CONTACT.**
6. Stop the engine on the machine that is the electrical source. When you use an auxiliary power source, turn off the charging system.
7. Check the battery caps for correct placement and for correct tightness. Make these checks on both machines. Make sure that the batteries in the stalled machine are not frozen. Check the batteries for low electrolyte.
8. Connect the positive jump start cable to the positive cable terminal of the discharged battery.

   Do not allow positive cable clamps to contact any metal except for battery terminals.

Note: The batteries are connected in series. Use the terminal that is connected to the starter solenoid. This battery is normally on the same side of the machine as the starter.

9. Connect the positive jump start cable to the positive terminal of the electrical source. Use the procedure from Step 8 in order to determine the correct terminal.

10. Connect one end of the negative jump start cable to the negative terminal of the electrical source.

11. Make the final connection. Connect the negative cable to the frame of the stalled machine. Make this connection away from the battery, the fuel, the hydraulic lines, or moving parts.

12. Start the engine on the machine that is the electrical source. Also, you can energize the charging system on the auxiliary power source.

13. Allow the electrical source to charge the batteries for two minutes.

14. Attempt to start the stalled engine. Refer to Operation and Maintenance Manual, "Engine Starting".

15. Immediately after the stalled engine starts, disconnect the jump start cables in reverse order.

16. Conclude with a failure analysis on the starting charging system. Check the stalled machine, as required. Check the machine when the engine is running and the charging system is in operation.

Maintenance Section

Tire Inflation Information

i00095080

Tire Inflation with Air

SMCS Code: 4203

⚠ WARNING

Use a self-attaching inflation chuck and stand behind the tread when inflating a tire.

Proper inflation equipment, and training in using the equipment, are necessary to avoid overinflation. A tire blowout or rim failure can result from improper or misused equipment.

Before inflating tire, install on the machine or put tire in restraining device.

NOTICE
Set the tire inflation equipment regulator at no more than 140 kPa (20 psi) over the recommended tire pressure.

Consult your Caterpillar dealer for operating pressures.

i02358629

Tire Inflation Pressure

SMCS Code: 4203; 7500

The tire inflation pressures that are shown in the following table are cold inflation pressures for tires on Caterpillar machines and shipping pressures for tires on Caterpillar machines.

Tire Inflation with Nitrogen

Caterpillar recommends the use of dry nitrogen gas for tire inflation and for tire pressure adjustments. This includes all machines with rubber tires. Nitrogen is an inert gas that will not aid combustion inside the tire.

⚠ WARNING

Proper nitrogen inflation equipment, and training in using the equipment, are necessary to avoid over inflation. A tire blowout or rim failure can result from improper or misused equipment and personal injury or death can occur.

A tire blowout and/or rim failure can occur if the inflation equipment is not used correctly, due to the fact that a fully charged nitrogen cylinder's pressure is approximately 15000 kPa (2200 psi).

There are other benefits to using nitrogen in addition to reducing the risk of an explosion. The use of nitrogen for tire inflation lessens the slow oxidation of the rubber. Use of nitrogen also slows gradual tire deterioration. This is especially important for tires that are expected to have a long service life of at least four years. Nitrogen reduces the corrosion of rim components. Nitrogen also reduces problems that result from disassembly.

⚠ WARNING

A tire blowout or a rim failure can cause personal injury.

Use a self-attaching inflation chuck and stand behind the tread when inflating a tire, to prevent personal injury.

NOTICE
Set the tire inflation equipment regulator at no more than 140 kPa (20 psi) over the recommended tire pressure.

Use 6V-4040 Inflation Group or an equivalent inflation group to inflate tires with a nitrogen gas cylinder.

Reference: For tire inflation instructions, refer to Special Instruction, SMHS7867, "Nitrogen Tire Inflation Group".

For nitrogen inflation, use the same tire pressures that are used for air inflation. Consult your tire dealer for operating pressures.

Operating Pressure

The operating inflation pressure is based on the following conditions.

- The weight of a ready-to-work machine without work tools
- The rated payload

- Average operating conditions.

Tire inflation pressures for each application may vary. These tire inflation pressures should be obtained from your tire supplier.

924G and 924Gz

Table 52

Size	Ply Rating or Strength Index	Pressure	
		kPa	psi
17.5-25 (Front)	12 PR	300	44
17.5-25 (Rear)	12 PR	200	29
17.5-25 (Front)	16 PR	300	44
17.5-25 (Rear)	16 PR	200	29
17.5R25 Michelin (Front) (1)	One Star	350	51
17.5R25 Michelin (Rear) (1)	One Star	175	25
17.5R25 Goodyear (Front) (1)	One Star	400	58
17.5R25 Goodyear (Rear) (1)	One Star	300	44
555/65R25 (Front)	One Star	250	36
555/65R25 (Rear)	One Star	175	25
20.5-25 (Front)	12 PR	250	36
20.5-25 (Rear)	12 PR	175	25
20.5R25 (Front)	16 PR	250	36
20.5R25 (Rear)	16 PR	175	25
20.5R25 Michelin (Front) (1)	One Star	250	36
20.5R25 Michelin (Rear) (1)	One Star	175	25
20.5R25 Goodyear (Front) (1)	One Star	400	58
20.5R25 Goodyear (Rear) (1)	One Star	300	44

(1) The "R" in the tire size signifies radial construction.

928G and IT28G

Table 53

Size	Ply Rating or Strength Index	Pressure	
		kPa	psi
17.5-25 (Front)	12 PR	325	47
17.5-25 (Rear)	12 PR	225	33
17.5R25 Michelin (Front)(1)	One Star	375	54
17.5R25 Michelin (Rear)(1)	One Star	200	29
17.5R25 Goodyear (Front)(1)	One Star	400	58
17.5R25 Goodyear (Rear)(1)	One Star	300	44
20.5-25 (Front)	12 PR	225	33
20.5-25 (Rear)	12 PR	175	25
20.5R25 Michelin (Front)(1)	One Star	250	36
20.5R25 Michelin (Rear)(1)	One Star	175	25
20.5R25 Goodyear (Front)(1)	One Star	400	58
20.5R25 Goodyear (Rear)(1)	One Star	300	44

(1) The "R" in the tire size signifies radial construction.

930G

Table 54

Manufacturer	Size	Rating	kPa Front/ Rear	psi Front/ Rear
Bridgestone	17.5-25	*	400/250	58.0/36.3
Firestone	17.5-25	12PR	400/250	58.0/36.3
	20.5-25	12 PR	275/200	39.9/29.0
Goodyear	17.5-R25	*	400/250	58.0/36.3
	17.5-25	12PR	375/250	54.4/36.3
	550/65 R25	*	350/200	50.8/29.0
	20.5-25	12 PR	275/200	39.9/29.0
	20.5-R25	*	325/200	47.1/29.0
	600/65R25	*	300/200	43.5/29.0
	17.5-25	16PR	400/250	58.0/36.3
Michelin	17.5-R25	*	400/250	58.0/36.3
	550/65 R25	*	350/200	50.8/29.0
	20.5-R25	*	325/200	47.1/29.0
	600/65R25	*	300/200	43.5/29.0
	20.5-25	*	275/200	39.9/29.0
	650/65R25	*	225/200	32.6/29.0
	17.5-25	*	400/250	58.0/36.3
Nokian	20.5-25	*	Contact Nokian	
Pirelli	17.5-25	*	Contact Prelli	
	20.5-25	*	contact Prelli	

i02610518

Tire Inflation Pressure Adjustment

SMCS Code: 4203

Always obtain the proper tire inflation pressures and maintenance recommendations for the tires on your machine from your tire supplier. The tire pressure in a warm shop area 18° to 21°C (65° to 70°F) will significantly change when you move the machine into freezing temperatures. If you inflate the tire to the correct pressure in a warm shop, the tire will be underinflated in freezing temperatures. Low pressure shortens the life of a tire.

Reference: When you operate the machine in freezing temperatures, refer to Special Publication, SEBU5898, "Cold Weather Recommendations for All Caterpillar Machines" in order to adjust tire inflation pressures.

Lubricant Viscosities and Refill Capacities

i02975262

Lubricant Viscosities

SMCS Code: 7581

The proper oil viscosity grade is determined by the minimum outside temperature when the machine is started. The proper oil viscosity grade is also determined by the maximum outside temperature while the machine is operated. Use the column that is called "Min" on the table to determine the oil viscosity grade that is required for starting a cold machine and for operating a cold machine. Use the column that is called "Max" on the table to select the oil viscosity grade for operating the machine at the highest temperature that is anticipated. Use the oil that has the highest viscosity for the ambient temperature when you start the machine.

Machines that are continuously operated should use oils that have a higher viscosity in the final drives and differentials in order to maintain the highest possible oil film thickness. Consult your dealer if additional information is needed.

Note: When operating in conditions below −20 °C (−4 °F), refer to Special Publication, SEBU5898, "Cold Weather Recommendations" for information.

Table 55

Lubricant Viscosities for Ambient Temperatures						
Compartment or System	**Oil Type and Classification**	**Oil Viscosities**	**°C**		**°F**	
			Min	**Max**	**Min**	**Max**
Engine Crankcase for all Machines[1][2]	**Cat DEO Multigrade Cat DEO SYN Cat Arctic DEO SYN**[3]** Cat ECF-1**[4]** API CG-4 Multigrade**[5]	SAE 0W-20	−40	10	−40	50
		SAE 0W-30	−40	30	−40	86
		SAE 0W-40	−40	40	−40	104
		SAE 5W-30	−30	30	−22	86
		SAE 5W-40	−30	50	−22	122
		SAE 10W-30[6]	−18	40	0	104
		SAE 10W-40	−18	50	0	122
		SAE 15W-40	−9.5	50	15	122

(continued)

(Table 55, contd)

Lubricant Viscosities for Ambient Temperatures						
Compartment or System	**Oil Type and Classification**	**Oil Viscosities**	**°C**		**°F**	
			Min	**Max**	**Min**	**Max**
Hydraulic Systems Hydrostatic Transmission	**Cat HYDO Advanced 10[7][8] Cat HYDO[7][8] Cat MTO[7][8] Cat DEO[7][8] Cat DEO-ULS[7][8] Cat TDTO[7][8] Cat Arctic TDTO[7][8] Cat TDTO-TMS[7][8] Cat DEO SYN[7][8] Cat Arctic DEO SYN[7][8] Cat ECF-1-a, Cat ECF-2, Cat ECF-3, Cat TO-4, Cat TO-4M, Cat BF-1[7][8]**	SAE 0W-20	−40	40	−40	104
		SAE 0W-30	−40	40	−40	104
		SAE 0W-40	−40	40	−40	104
		SAE 5W-30	−30	40	−22	104
		SAE 5W-40	−30	40	−22	104
		SAE 10W	−20	40	−4	104
		SAE 30	10	50	50	122
		SAE 10W-30	−20	40	−4	104
		SAE 15W-40	−15	50	5	122
		Cat MTO	−25	40	−13	104
		Cat TDTO-TMS[9]	−20	50	−4	122
Power Shift Transmission	**Cat TDTO Cat TDTO-TMS commercial TO-4**	SAE 0W20[10]	−40	+10	−40	+50
		SAE 0W30[11]	−40	+20	−40	+68
		SAE 5W30[11]	−30	+20	−22	+68
		SAE 10W	−20	+10	−4	+50
		SAE 30[11]	0	+35	32	+95
		SAE 50[11][12]	+10	+50	+50	+122
		TDTO-TMS[11][13]	−20	+43	−4	+110
Final Drive Differential Gearbox	**Cat TDTO Cat TDTO-TMS Cat Arctic TDTO commercial TO-4**	SAE 0W-20 [14]	−40	0	−40	32
		SAE 0W-30 [15]	−40	10	−40	50
		SAE 5W-30	−35	10	−31	50
		SAE 10W	−25	15	−13	59
		SAE 30	−20	43	−4	110
		SAE 50	10	50	50	122
		Cat TDTO-TMS [16]	−30	43	−22	110
External Lubrication Points	**Advanced 3Moly**	NLGI Grade 2	−20	40	−4	104

(continued)

(Table 55, contd)

Lubricant Viscosities for Ambient Temperatures						
Compartment or System	**Oil Type and Classification**	**Oil Viscosities**	**°C**		**°F**	
			Min	**Max**	**Min**	**Max**
Steering Column	**Multipurpose Grease**	NLGI Grade 2	−30	40	−22	104

(1) Supplemental heat is recommended for cold-soaked starts when the ambient temperature is below the minimum. Supplemental heat may be required for cold starts that are above the stated minimum temperature. This will be affected by the parasitic load and other factors. Cold-soaked starts occur when the engine has not been operated for a period of time. The oil will become more viscous due to cooler ambient temperatures.

(2) API CF oils are not recommended for Caterpillar's 3500 Series and smaller Direct Injection (DI) diesel engines. API CF-4 oils are not recommended for Caterpillar's diesel engines.

(3) Cat Arctic DEO SYN is an SAE 0W-30 viscosity oil.

(4) API CI-4, API CI-4 PLUS oils are acceptable if the requirements of Caterpillar's Engine Crankcase Fluid specification - 1 (ECF-1) are met. API CI-4 and API CI-4 PLUS oils that have not met the requirements of Caterpillar's ECF-1 specification may cause reduced engine life.

(5) API CG-4 oils are acceptable for use in all Caterpillar diesel engines. When API CG-4 oils are used, the oil change interval should not exceed 250 hours. API CG-4 oils that also meet API CI-4 or API CI-4 PLUS must also meet the requirements of the Caterpillar ECF-1 specification.

(6) SAE 10W-30 is the preferred viscosity grade for the 3116, 3126, C7, C-9, and C9 diesel engines when the ambient temperature is between−18 °C (−0 °F) and 40 °C (104 °F).

(7) Cat HYDO Advanced 10 is the preferred oil for use in most Caterpillar machine hydraulic and hydrostatic transmission systems when ambient temperature is between −20 °C (−4 °F) and 40 °C (104 °F). Cat HYDO Advanced 10 has an SAE viscosity grade of 10W. **Cat HYDO Advanced 10 has a 50% increase in the standard oil drain interval** (up to 3000 hours) for machine hydraulic systems over second and third choice oils when you follow the maintenance interval schedule for oil filter changes and for oil sampling that is stated in the Operation and Maintenance Manual for your particular machine. 6000 hour oil drain intervals are possible when using S·O·S Services oil analysis. Consult your Cat dealer for details. In order to gain the most benefit from the improved performance designed into Cat HYDO Advanced 10, when switching to Cat HYDO Advanced 10, cross contamination with the previous oil should be kept to less than 10%.

(8) **Second choice** oils are Cat HYDO, Cat MTO, Cat DEO, Cat DEO-ULS, Cat TDTO, Cat Arctic TDTO, Cat TDTO-TMS, Cat DEO SYN, Cat Arctic DEO SYN. **Third choice** oils are commercial oils that meet Cat ECF-1-a, Cat ECF-2, Cat ECF-3, Cat TO-4, or the Cat TO-4M specifications, and that have a minimum zinc additive level of 0.09 percent (900 ppm). Commercial biodegradable hydraulic oil must meet the Cat BF-1 specification. Refer to the machine Operation and Maintenance Manual and/or contact your local Caterpillar dealer before using commercial oils that meet Cat BF-1 in Cat Hydraulic Excavators. The minimum viscosity for commercial alternative oils used in most Cat machine hydraulic and hydrostatic transmission systems is 6.6 cSt at 100 °C (212 °F) ("ASTM D445").

(9) Cat TDTO-TMS (Transmission Multi-Season) (synthetic blend that exceeds the Cat TO-4M multigrade specification requirements)

(10) First Choice: Oils of full synthetic base stock without viscosity index improvers that meet the performance requirements of the TO-4 specification for the SAE 30 viscosity grade. Typical viscosity grades are SAE 0W20, SAE 0W30, and SAE 5W30. Second choice: Oils with a TO-4 type additive package and a lubricant viscosity grade of SAE 0W20, SAE 0W30, or of SAE 5W30.

(11) Except for the gear case for the hydraulic driven winch, use SAE 30 viscosity grade for 0 °C (32 °F) to 43 °C (110 °F) or TMS for −10 °C (14 °F) to 50 °C (122 °F).

(12) Do not use SAE 50 viscosity grade oil in ICM controlled transmissions. Do not use SAE 50 viscosity grade for the gear case of the hydraulic driven winch.

(13) This oil exceeds the requirements of the TO-4/TO-4M specification.

(14) First Choice: Cat Arctic TDTO SAE 0W-20. Second Choice: Oils of full synthetic base stock that do not have viscosity index improvers and do meet the performance requirements of the TO-4 specification for the SAE 30 viscosity grade. Typical lubricant viscosity grades are SAE 0W-20, SAE 0W-30, and SAE 5W-30. Third Choice: Oils that contain a TO-4 additive package and a lubricant viscosity grade of SAE 0W-20, SAE 0W-30, and SAE 5W-30.

(15) First Choice: Oils of full synthetic base stock that do not have viscosity index improvers and do meet the performance requirements of the TO-4 specification for the SAE 30 viscosity grade. Typical lubricant viscosity grades are SAE 0W-20, SAE 0W-30, and SAE 5W-30. Second Choice: Oils that contain a TO-4 additive package and a lubricant viscosity grade of SAE 0W-20, SAE 0W-30, and SAE 5W-30.

(16) TDTO-TMS (Transmission Multi Season) synthetic blend that exceeds the TO-4M multigrade specification requirements.

i03001527

Capacities (Refill)

SMCS Code: 7560

Table 56

APPROXIMATE REFILL CAPACITIES 924G and 924Gz			
Compartment or System	**Liters**	**US Gallons**	**Imperial Gallons**
Cooling System	42	11.1	9.2
Hydraulic Tank	70	18.5	15.4
Fuel Tank	225	59.4	49.5
Engine Crankcase	16	4.2	3.5
Transmission	23	6.1	5.1
Front Differential	21	5.5	4.6
Rear Differential	21	5.5	4.6

Table 57

APPROXIMATE REFILL CAPACITIES 928G and IT28G			
Compartment or System	**Liters**	**US Gallons**	**Imperial Gallons**
Cooling System	42	11.1	9.2
Hydraulic Tank	70	18.5	15.4
Fuel Tank	225	59.4	49.5
Engine Crankcase	16	4.2	3.5
Transmission	34	8.9	7.5
Front Differential	21	5.5	4.6
Rear Differential	21	5.5	4.6

Table 58

APPROXIMATE REFILL CAPACITIES 930G			
Compartment or System	**Liters**	**US Gallons**	**Imperial Gallons**
Cooling System	42	11.1	9.2
Hydraulic Tank	70	18.5	15.4
Fuel Tank	225	59.4	49.5
Engine Crankcase	16	4.2	3.5
Transmission	34.5	9.1	7.6
Front Differential	26	6.9	5.7
Rear Differential	25	6.6	5.5

i01822901

S·O·S Information

SMCS Code: 1348; 3080; 4070; 5050; 7542

S·O·S Services is a highly recommended process for Caterpillar customers to use in order to minimize owning and operating cost. Customers provide oil samples, coolant samples, and other machine information. The dealer uses the data in order to provide the customer with recommendations for management of the equipment. In addition, S·O·S Services can help determine the cause of an existing product problem.

Refer to Special Publication, SEBU6250, "Caterpillar Machine Fluid Recommendations" for detailed information concerning S·O·S Services.

Refer to the Operation and Maintenance Manual, "Maintenance Interval Schedule" for a specific sampling location and a service hour maintenance interval.

Consult your Caterpillar dealer for complete information and assistance in establishing an S·O·S program for your equipment.

Maintenance Support

i03636245

Welding on Machines and Engines with Electronic Controls

SMCS Code: 1000; 7000

Do not weld on any protective structure. If it is necessary to repair a protective structure, contact your Caterpillar dealer.

Proper welding procedures are necessary in order to avoid damage to the electronic controls and to the bearings. When possible, remove the component that must be welded from the machine or the engine and then weld the component. If you must weld near an electronic control on the machine or the engine, temporarily remove the electronic control in order to prevent heat related damage. The following steps should be followed in order to weld on a machine or an engine with electronic controls.

1. Turn off the engine. Place the engine start switch in the OFF position.

2. If equipped, turn the battery disconnect switch to the OFF position. If there is no battery disconnect switch, remove the negative battery cable at the battery.

NOTICE
Do NOT use electrical components (ECM or ECM sensors) or electronic component grounding points for grounding the welder.

3. Clamp the ground cable from the welder to the component that will be welded. Place the clamp as close as possible to the weld. Make sure that the electrical path from the ground cable to the component does not go through any bearing. Use this procedure in order to reduce the possibility of damage to the following components:

   - Bearings of the drive train
   - Hydraulic components
   - Electrical components
   - Other components of the machine

4. Protect any wiring harnesses and components from the debris and the spatter which is created from welding.

5. Use standard welding procedures in order to weld the materials together.

i03862689

Maintenance Interval Schedule

SMCS Code: 7000

Ensure that all safety information, warnings and instructions are read and understood before any operation or any maintenance procedures are performed.

The user is responsible for the performance of maintenance, including all adjustments, the use of proper lubricants, fluids, filters, and the replacement of components due to normal wear and aging. Failure to adhere to proper maintenance intervals and procedures may result in diminished performance of the product and/or accelerated wear of components.

Use mileage, fuel consumption, service hours, or calendar time, WHICH EVER OCCURS FIRST, in order to determine the maintenance intervals. Products that operate in severe operating conditions may require more frequent maintenance.

Note: Before each consecutive interval is performed, all maintenance from the previous interval must be performed.

Note: If Cat HYDO Advanced 10 hydraulic oil is used, the hydraulic oil change interval will change. The normal interval may be extended to 3000 hours for machine hydraulic systems over second and third choice oils when you follow the maintenance interval schedule for oil filter changes and for oil sampling that is stated in the Operation and Maintenance Manual . S·O·S services may extend the oil change even longer. Consult your Caterpillar dealer for details.

When Required

Battery or Battery Cable - Inspect/Replace 117
Bucket Cutting Edges - Inspect/Replace 121
Bucket Tips - Inspect/Replace 123
Bucket Wear Plates - Inspect/Replace 125
Circuit Breakers and Fuses - Reset/Replace 126
Engine Air Filter Primary Element - Clean/ Replace 136
Engine Air Filter Secondary Element - Replace .. 136
Engine Air Filter Service Indicator - Inspect 137
Engine Air Precleaner - Clean 138
Fuel System - Prime 141
Fuel System Primary Filter (Water Separator) - Drain 143
Fuel Tank Cap and Strainer - Clean 144
Oil Filter - Inspect 148
Quick Coupler - Check 148
Radiator Core - Clean 148
Window Washer Reservoir - Fill 156
Window Wipers - Inspect/Replace 156

Every 10 Service Hours or Daily

Backup Alarm - Test 117
Cooling System Coolant Level - Check 130
Engine Oil Level - Check 139
Hydraulic System Oil Level - Check 147
Seat Belt - Inspect 149
Tire Inflation - Check 153
Transmission Oil Level - Check 155
Windows - Clean 157

Every 50 Service Hours or Weekly

Articulation Bearings - Lubricate 116
Bucket Lower Pivot Bearings - Lubricate 122
Cab Air Filter - Clean/Replace 126
Tire Inflation - Check 153

Every 100 Service Hours or 2 Weeks

Axle Oscillation Bearings - Lubricate 116
Bucket Linkage and Loader Cylinder Bearings - Lubricate 122
Steering Cylinder Bearings - Lubricate 152

Every 250 Service Hours

Cooling System Coolant Sample (Level 1) - Obtain 131
Engine Oil Sample - Obtain 140

Every 250 Service Hours or Monthly

Belts - Inspect/Adjust/Replace 118
Brake Accumulator - Check 119
Braking System - Test 120
Drive Shaft Spline (Center) - Lubricate 135
Drive Shaft Support Bearing - Lubricate 135

Every 250 Service Hours or 3 Months

Steering Column Play - Check 150

Every 500 Service Hours

Differential and Final Drive Oil Level - Check 134
Differential and Final Drive Oil Sample - Obtain .. 134
Fuel System Secondary Filter - Replace 144
Hydraulic System Oil Sample - Obtain 147
Transmission Oil Sample - Obtain 156

Every 500 Service Hours or 3 Months

Engine Crankcase Breather (Closed Circuit) - Replace 139
Engine Oil and Filter - Change 140
Fuel System Primary Filter (Water Separator) Element - Replace 143
Transmission Oil Filter - Replace 155

Every 500 Service Hours or 1 Year

Cooling System Coolant Sample (Level 2) - Obtain 132

Every 1000 Service Hours

Hydraulic System Oil Filter - Replace 146

Every 1000 Service Hours or 6 Months

Engine Crankcase Breather - Clean 138
Engine Valve Lash - Check 141
Rollover Protective Structure (ROPS) - Inspect .. 149
Transmission Magnetic Screen - Clean 153
Transmission Oil - Change 153

Every 2000 Service Hours or 1 Year

Axle Oil Cooler Screen - Clean/Replace 116
Brake Discs - Check 119
Differential and Final Drive Oil - Change 133
Hydraulic System Oil - Change 144
Hydraulic Tank Breather - Replace 147

Every 3000 Service Hours

Steering Column Spline (HMU Steering) - Lubricate 151

Every 3000 Service Hours or 2 Years

Cooling System Water Temperature Regulator - Replace 132

Every 3 Years After Date of Installation or Every 5 Years After Date of Manufacture

Seat Belt - Replace 150

Every 6000 Service Hours or 4 Years

Cooling System Coolant Extender (ELC) - Add .. 130

Every 12 000 Service Hours or 6 Years

Cooling System Coolant (ELC) - Change 128

i01698389

Articulation Bearings - Lubricate

SMCS Code: 7057-086-BD; 7065-086-BD; 7066-086-BD

Wipe the grease fittings before you lubricate the grease fittings.

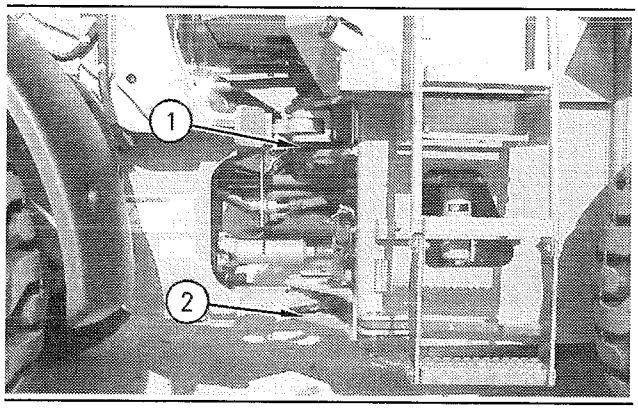

Illustration 111 g00614530

Apply lubricant to one grease fitting on the upper pivot bearing (1).

Apply lubricant to one grease fitting on the lower pivot bearing (2).

i02154820

Axle Oil Cooler Screen - Clean/Replace

SMCS Code: 1365-070-Z3; 1365-510-Z3

Reference: For information about containing fluid spillage, refer to Operation and Maintenance Manual, "General Hazard Information".

Clean the screens after any maintenance on the brake system.

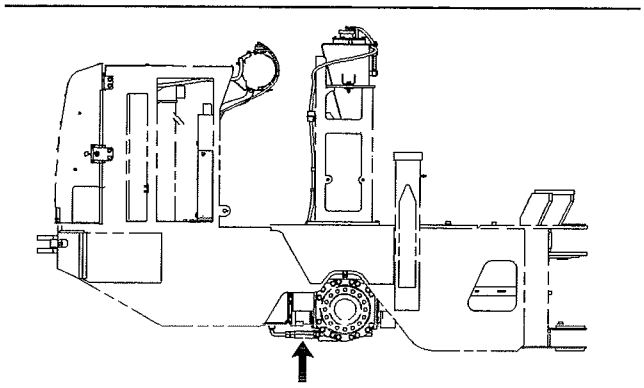

Illustration 112 g00916582

1. Make sure that there is no pressure in the lines for the axle oil. Loosen the fitting on the hose and drain the oil from the line into a suitable container. Dispose of the oil properly.
2. Remove the screen from the rear of the axle housing. Clean the screen in a clean, nonflammable solvent.
3. Install the screen and the hose.
4. Check for leaks. Make any necessary repairs.

i01767868

Axle Oscillation Bearings - Lubricate

SMCS Code: 3268-086-BD; 3278-086-BD

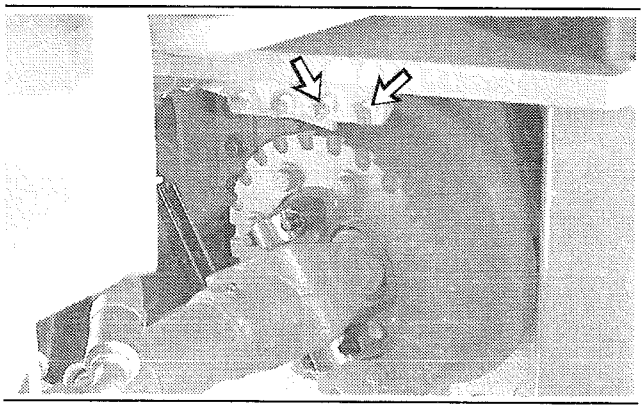

Illustration 113 g00614728
924G\924Gz

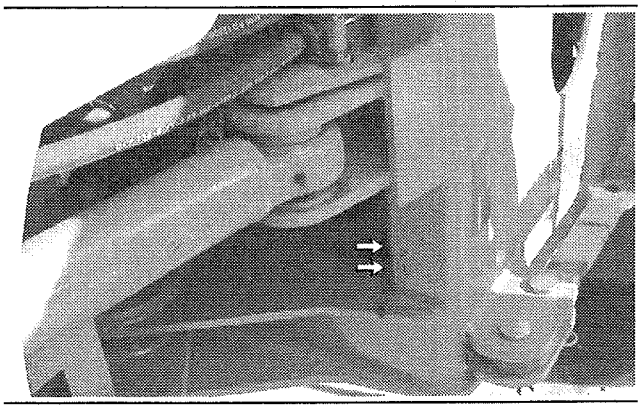

Illustration 114 g00904205
928G\IT28G

Apply grease to the remote grease fittings for the trunnion bearings. The grease fittings are located on the left side of the machine near the articulation joint.

i01698523

Backup Alarm - Test

SMCS Code: 7406-081

Turn the engine start switch key to ON in order to perform the test.

Apply the service brake. Move the transmission direction control lever to REVERSE position.

The backup alarm should immediately sound. The backup alarm will continue to sound until the transmission direction control lever is moved to the NEUTRAL position or to the FORWARD position.

The backup alarm is mounted in the back of the machine behind the rear grill.

i02164378

Battery or Battery Cable - Inspect/Replace

SMCS Code: 1401-040; 1401-510; 1401-561; 1402-040; 1402-510

1. Turn the engine start switch to the OFF position. Turn all switches to the OFF position.

2. Open the engine access door on the right side of the machine.

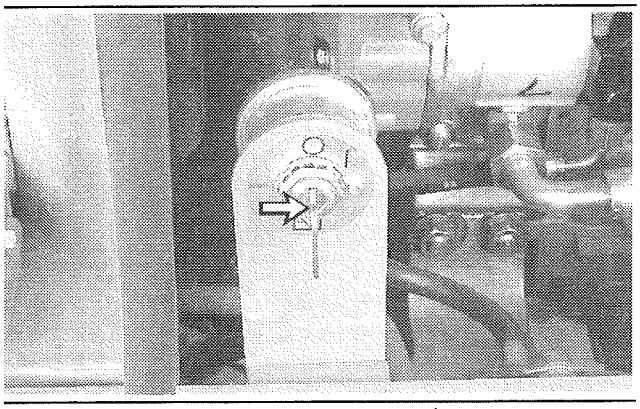

Illustration 115 g00614315

3. Turn the battery disconnect switch to the OFF position. Remove the battery disconnect switch key.

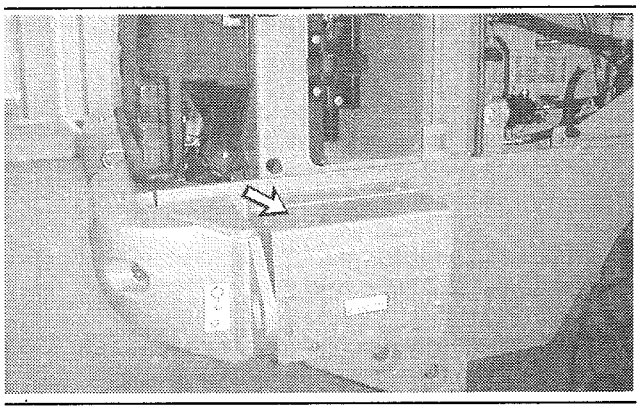

Illustration 116 g00614313

4. Remove the access panel for the battery on the right side and on the left side of the machine.

NOTICE
Do not allow the disconnected battery cable to contact the disconnect switch.

5. Disconnect the negative battery cable at the battery.

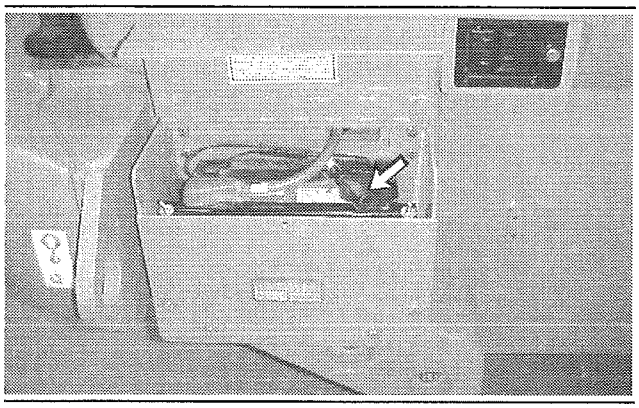

Illustration 117 g00614317

6. At the battery disconnect switch, disconnect the negative battery cable that is connected to the frame.

7. Perform the necessary repairs. Replace the cable or the battery, as needed.

8. Connect the battery cable at the battery disconnect switch, if equipped. If the machine is not equipped with a battery disconnect switch, connect the negative cable to the frame.

9. Connect the negative battery cable at the battery. Replace the battery cover.

10. Install the battery disconnect switch key. Turn the battery disconnect switch to the ON position.

i01783036

Belts - Inspect/Adjust/Replace

SMCS Code: 1357-025; 1357-040; 1357-510

Alternator Belt

1. Open the engine access door on the left side of the machine.

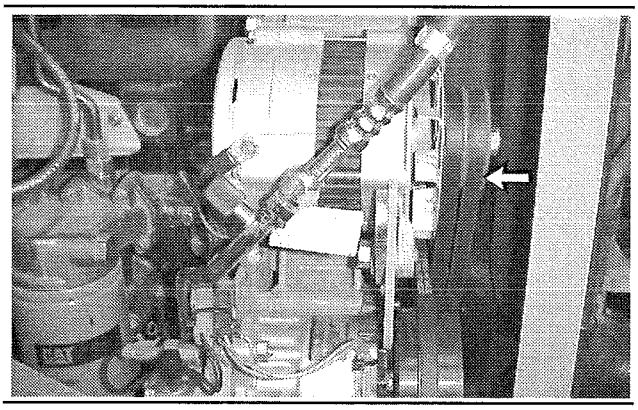

Illustration 118 g00912368

2. Inspect the condition of the alternator belts and the adjustment of the alternator belts. The alternator belts should deflect 14 to 20 mm (0.55 to 0.79 inch) under 110 N (25 lb) of force.

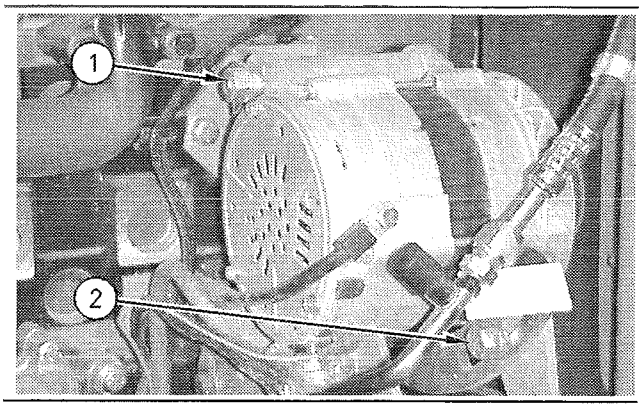

Illustration 119 g00912370

3. Loosen mounting bolt (1). Loosen adjusting locknut (2).

4. Move the alternator until the correct tension is reached.

5. Tighten adjusting locknut (2). Tighten the mounting bolt (1).

6. Recheck the belt deflection. If the amount of deflection is incorrect, repeat Step 3 to Step 5.

7. Close the engine access door.

Air Conditioner Belt (If Equipped)

1. Stop the engine in order to inspect the air conditioner belt.

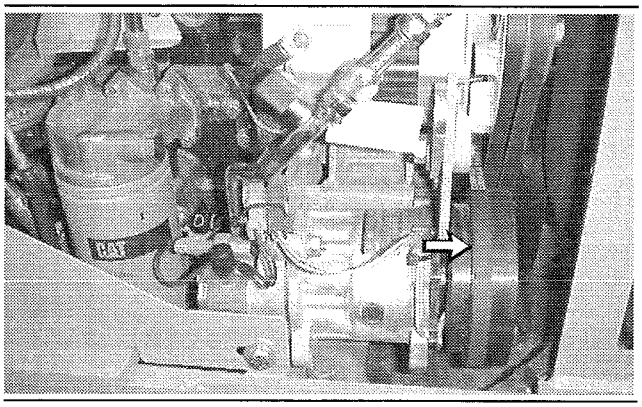

Illustration 120 g00912371

2. Inspect the condition of the air conditioner belt and the adjustment of the air conditioner belt. The air conditioner belt should deflect 14 to 20 mm (0.55 to 0.79 inch) under 110 N (25 lb) of force.

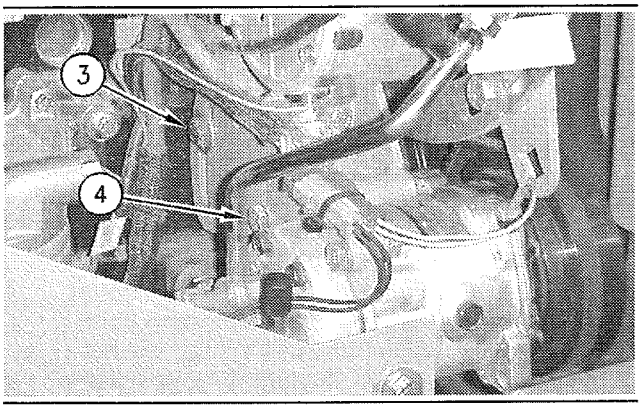

Illustration 121 g00912373

3. Loosen compressor bracket mounting bolt (4). Loosen adjusting locknut (3).

4. Move the compressor until the correct belt tension is reached.

5. Move the compressor until the correct belt tension is reached. Tighten adjusting locknut (3). Tighten the compressor bracket mounting bolt (4).

6. Recheck the belt deflection. If the amount of deflection is incorrect, repeat Step 3 to Step 5.

7. Start the engine. If poor cooling is still experienced, turn off the air conditioner. Stop the engine. Notify your Caterpillar dealer for air conditioner system service, if necessary.

i01792954

Brake Accumulator - Check

SMCS Code: 4263-535

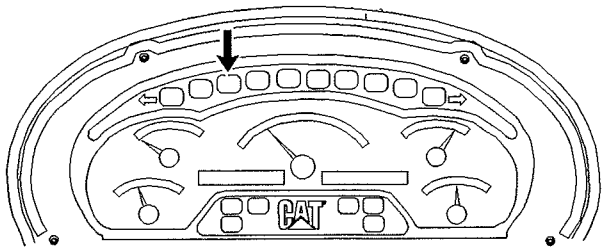

Illustration 122 g00917016

1. Turn the engine start switch to the ON position. The alert indicator for brake oil pressure should come on if the braking system is not at normal operating pressure.

2. Start the engine. Run the engine at half speed for two minutes in order to increase the accumulator pressure. The alert indicator for brake oil pressure should go off.

3. Stop the engine. Apply the service brake pedal and release the service brake pedal until the alert indicator for brake oil pressure comes on. This will decrease the accumulator pressure. A minimum of five applications of the service brake pedal are required.

4. If the alert indicator comes on after less than five applications of the brake, measure the accumulator precharge pressure. An authorized Caterpillar dealer can measure the nitrogen gas pressure in the accumulator. Use only dry nitrogen gas for recharging.

i02158515

Brake Discs - Check

SMCS Code: 4255-535

Inspect the Wear of Brake Discs

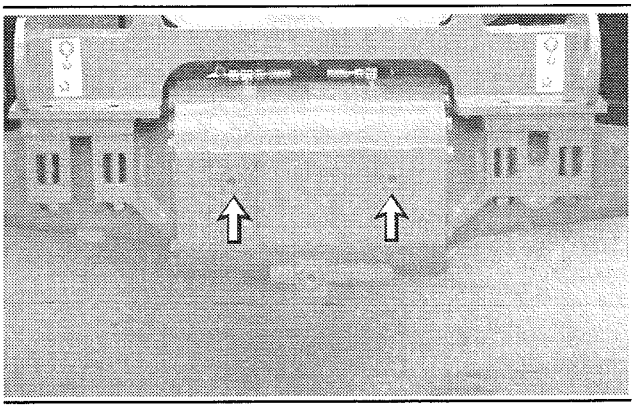

Illustration 123 g00614322

1. Remove the inspection port plugs on the front axle.

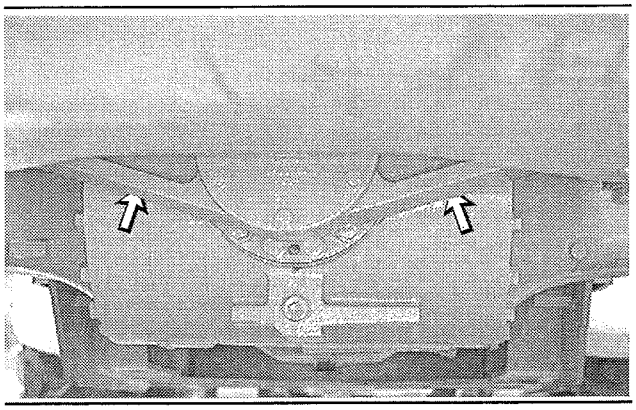

Illustration 124 g00101853

2. Remove the inspection port plugs on the rear axle.

3. Insert a 221-6893 Brake Wear Gauge for 924G and 924Gz machines that are equipped with a single brake disc. Insert 221-6894 Brake Wear Gauge for 924G and 924Gz machines that are equipped with dual brake discs. Insert 221-6892 Brake Wear Gauge for 928G and IT28G machines.

   Measure the thickness of the brake disc. Refer to the following table in order to determine the remaining brake disc life according to disc thickness.

Table 59

FRICTION DISC WEAR CHART	
Percent of Remaining Life	**Thickness of the Friction Disc**
100	7.80 mm (0.31 inch)
90	7.65 mm (0.30 inch)
80	7.51 mm (0.30 inch)
70	7.36 mm (0.29 inch)
60	7.22 mm (0.29 inch)
50	7.07 mm (0.28 inch)
40	6.92 mm (0.27 inch)
30	6.78 mm (0.27 inch)
20	6.63 mm (0.26 inch)
10	6.47 mm (0.26 inch)
0	6.34 mm (0.25 inch)

4. Install the inspection port plugs.

Consult your Caterpillar dealer for the replacement of brake discs.

i00058445

Braking System - Test

SMCS Code: 4011-081; 4267-081

Service Brake Holding Ability Test

⚠ WARNING

Personal injury can result if the machine moves while testing.

If the machine begins to move during test, reduce the engine speed immediately and engage the parking brake.

Check the area around the machine. Make sure that the machine is clear of personnel and clear of obstacles.

Make sure that the steering frame lock link is in the stored position.

Test the brakes on a dry, level surface.

Fasten the seat belt before you test the brakes.

The following tests are used to determine if the service brake is functional. These tests are not intended to measure the maximum brake holding effort. The brake holding effort that is required to sustain a machine at a specific engine rpm varies depending on the machine. The variations are the differences in the engine setting, in the power train efficiency, and in the brake holding ability, etc.

1. Start the engine. Raise the bucket slightly.

2. Apply the service brake. Release the parking brake.

3. Press the top of the transmission neutralizer override switch.

4. Move the transmission control lever to THIRD SPEED FORWARD while the AUTO shift switch is in the OFF position.

5. Gradually increase the engine speed to high idle. The machine should not move.

6. Reduce the engine speed to low idle. Move the transmission to NEUTRAL. Engage the parking brake. Lower the blade to the ground. Stop the engine.

NOTICE

If the machine moved while testing the brakes, contact your Caterpillar dealer. Have the dealer inspect and, if necessary, repair the service brake before returning the machine to operation.

Refer to the Operations and Maintenance Manual, "Disk Brakes - Inspect" for the requirements of the disc thickness.

Secondary Brake Holding Ability Test

Check the area around the machine. Make sure that the machine is clear of personnel and clear of obstacles.

Make sure that the steering frame lock link is in the stored position.

Test the brakes on a dry, level surface.

Fasten the seat belt before you test the brakes.

The following tests are used to determine if the parking brake is functional. These tests are not intended to measure the maximum brake holding effort. The brake holding effort that is required to sustain a machine at a specific engine rpm varies depending on the machine. The variations are the differences in the engine setting, in the power train efficiency, and in the brake holding ability, etc.

1. Start the engine. Raise the bucket slightly.
2. Engage the parking brake.
3. Move the transmission control lever to THIRD SPEED FORWARD, to NEUTRAL, and back to THIRD SPEED FORWARD. This is done in order to override the transmission neutralizer for this test.

Note: The parking brake indicator light should come on and the parking brake alarm should sound.

4. Gradually increase the engine speed to high idle. The machine should not move.

⚠ WARNING

If the machine begins to move, reduce the engine speed immediately and apply the service brake pedal.

5. Reduce the engine speed. Move the transmission to NEUTRAL. Lower the blade to the ground. Stop the engine.

NOTICE
If the machine moved while testing the brakes, contact your Caterpillar dealer.

Have the dealer inspect and, if necessary, repair the parking brakes before returning the machine to operation.

i01920076

Bucket Cutting Edges - Inspect/Replace

SMCS Code: 6801-040; 6801-510

⚠ WARNING

Personal injury or death can result from bucket falling.

Block the bucket before changing bucket cutting edges.

1. Raise the bucket. Place a block under the bucket.
2. Lower the bucket to the blocking.

   Do not block up the bucket too high. Block up the bucket so that the bucket is high enough to remove the cutting edges and the end bits.
3. Remove the bolts. Remove the cutting edge and the end bits.
4. Clean the contact surfaces.
5. Use the opposite side of the cutting edge, if this side is not worn.
6. Install a new cutting edge, if both edges are worn.
7. Install the bolts. Tighten the bolts to the specified torque.
8. Raise the bucket. Remove the blocks.
9. Lower the bucket to the ground.
10. After a few hours of operation, check the bolts for proper torque.

i01821685

Bucket Linkage and Loader Cylinder Bearings - Lubricate

SMCS Code: 5102-086-BD; 5104-086-BD; 6107-086-BD

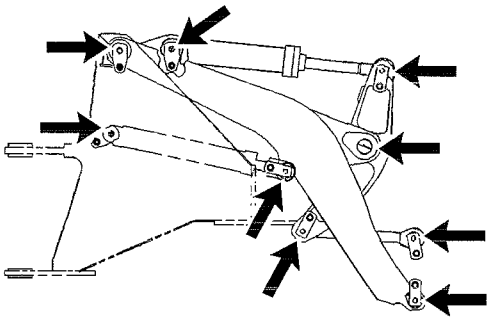

Illustration 125 g00873076

Z-Bar

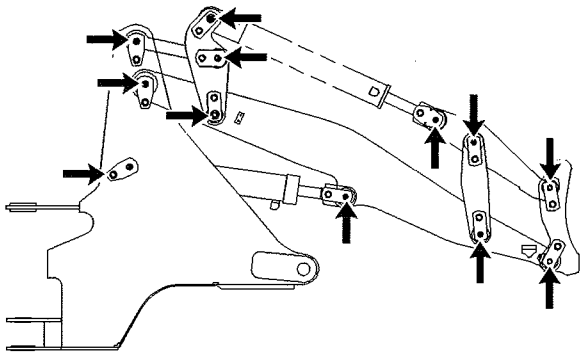

Illustration 126 g00890923

Integrated Toolcarrier

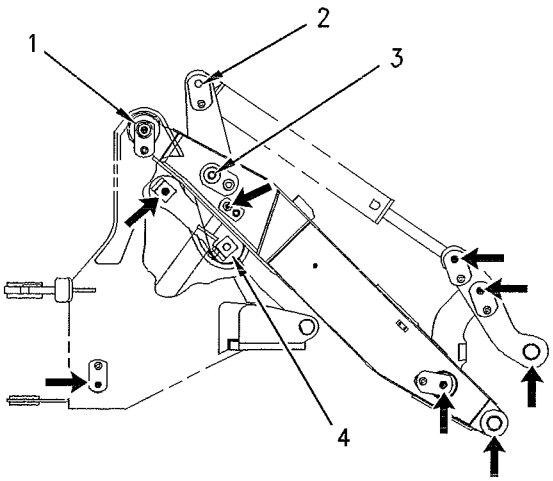

Illustration 127 g00930756

VersaLink

Grease fittings (1), (2), (3), and (4) are greased at the remote grease fitting on the left side of the front frame.

Wipe off the fittings before you apply any lubricant.

Apply lubricant to the grease fittings. The grease fittings are located on each side of the bucket and loader linkage.

Note: The lower bucket pivot bearing needs to be greased at every 50 hour interval.

i01739889

Bucket Lower Pivot Bearings - Lubricate

SMCS Code: 6101-086-BD; 6107-086-BD

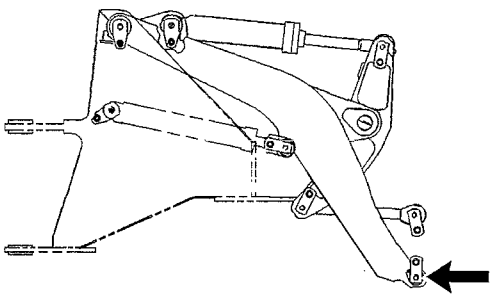

Illustration 128 g00891053

Z-Bar

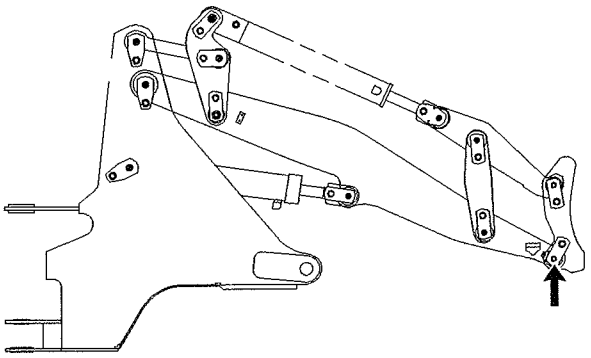

Illustration 129 g00891055
Integrated Toolcarrier

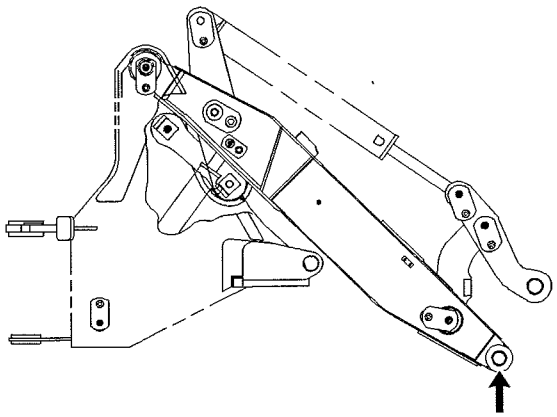

Illustration 130 g00891056
VersaLink

Wipe off the fittings before you apply any lubricant.

Apply lubricant to the grease fittings. The grease fittings are located on both sides of the bucket.

i03657242

Bucket Tips - Inspect/Replace

SMCS Code: 6805-040; 6805-510

⚠ WARNING

Personal injury or death can result from the bucket falling.

Block the bucket before changing bucket tips.

Bucket Tips

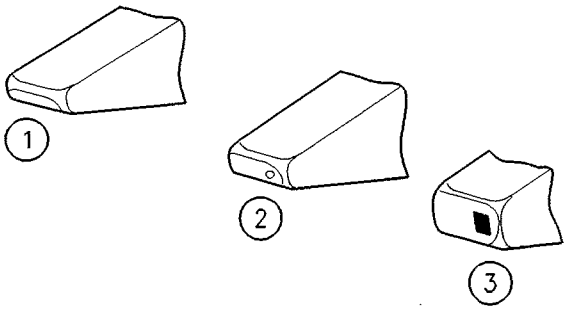

Illustration 131 g00101352
(1) Usable
(2) Replace the tip.
(3) Replace the tip.

Check the bucket tips for wear. If the bucket tip has a hole, replace the bucket tip.

1. Remove the pin from the bucket tip. The pin can be removed by one of the following methods.
   - Use a hammer and a punch from the retainer side of the bucket to drive out the pin.
   - Use a Pin-Master. Follow Step 1.a through Step 1.c for the procedure.

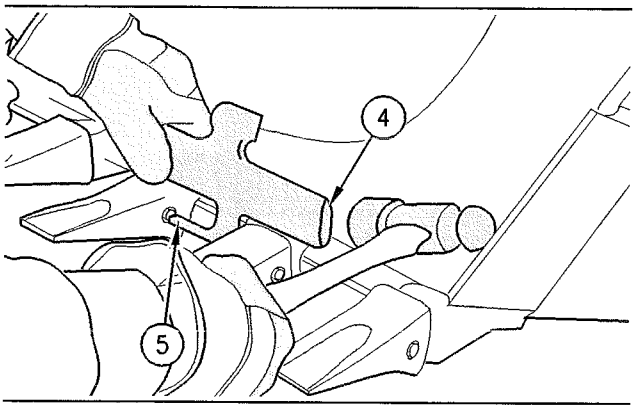

Illustration 132 g00590670

(4) Back of Pin-Master
(5) Extractor

a. Place the Pin-Master on the bucket tooth.

b. Align extractor (5) with the pin.

c. Strike the Pin-Master at the back of the tool (4) and remove the pin.

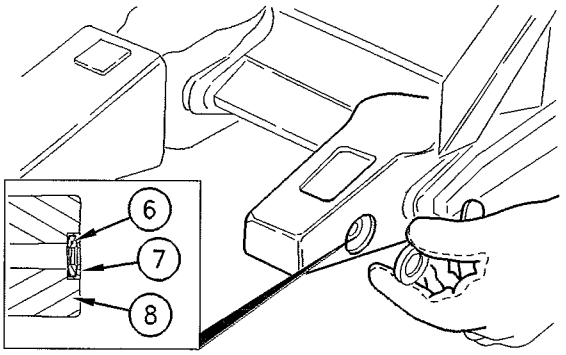

Illustration 133 g00590819

(6) Retainer
(7) Retaining washer
(8) Adapter

2. Clean the adapter and the pin.

3. Fit retainer (6) into retaining washer (7). Install this assembly into the groove that is in the side of adapter (8).

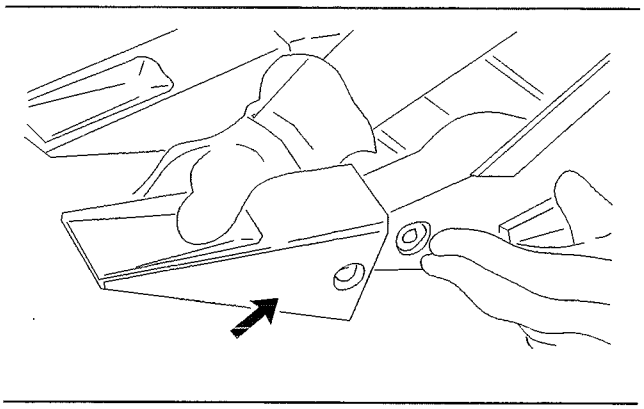

Illustration 134 g00101359

4. Install the new bucket tip onto the adapter.

Note: The bucket tip can be rotated by 180 degrees in order to allow greater penetration or less penetration.

5. Drive the pin through the bucket tip. The pin can be installed by using one of the following methods:

- From the other side of the retainer, drive the pin through the bucket tip, the adapter, and the retainer.
- Use a Pin-Master. Follow Step 5.a through Step 5.e for the procedure.

Note: To correctly install the pin into the retainer, the pin must be driven in from the right side of the tooth. Improper installation of the pin can result in the loss of the bucket tip.

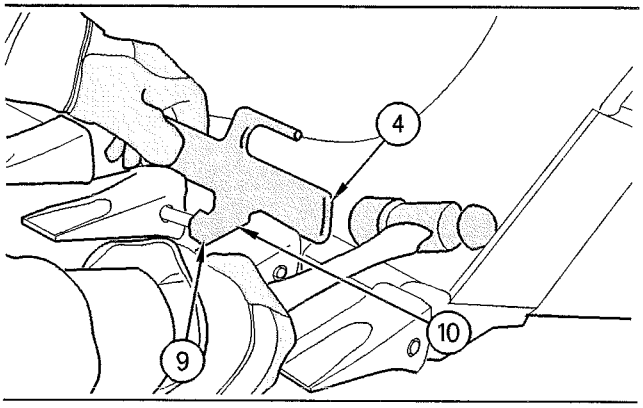

Illustration 135 g00590666

(4) Back of Pin-Master
(9) Pin setter
(10) Pin holder

a. Insert the pin through the bucket tooth.

b. Place the Pin-Master over the bucket tooth and locate the pin in the hole of holder (10).

c. Strike the tool with a hammer at the back of the tool (4) in order to start the pin.

d. Slide pin holder (10) away from the pin and rotate the tool slightly in order to align pin setter (9) with the pin.

e. Strike the end of the tool until the pin is fully inserted.

6. After you drive the pin, make sure that the retainer fits snugly into the pin groove.

K-Series Tip

Removal

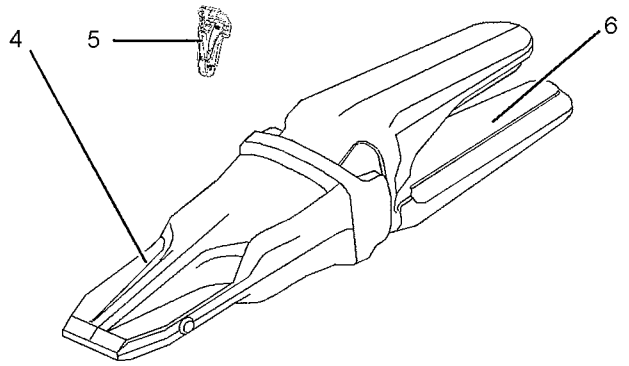

Illustration 136 g01389463

Note: Retainers are often damaged during the removal process. Caterpillar recommends the installation of a new retainer when bucket tips are rotated or replaced.

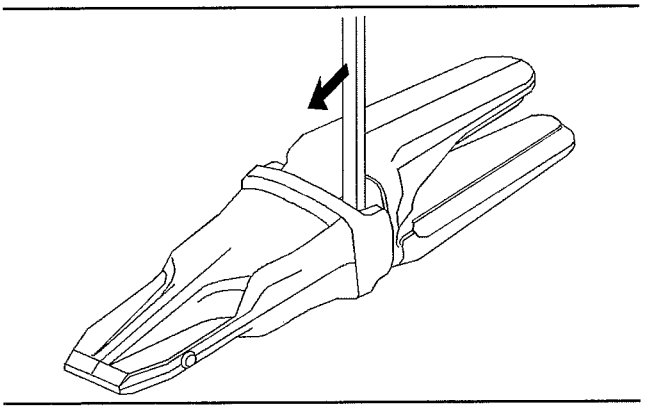

Illustration 137 g01175361

1. Use a pry bar in order to disengage retainer (5).

2. Use the pry bar in order to remove retainer (5) from bucket tip (4).

3. Remove bucket tip (4) from adapter (6) with a slight counterclockwise rotation.

4. Clean adapter (6).

Installation

1. Clean the adapter and the area around the latch, if necessary.

2. Install the new bucket tip onto the adapter with a slight clockwise rotation.

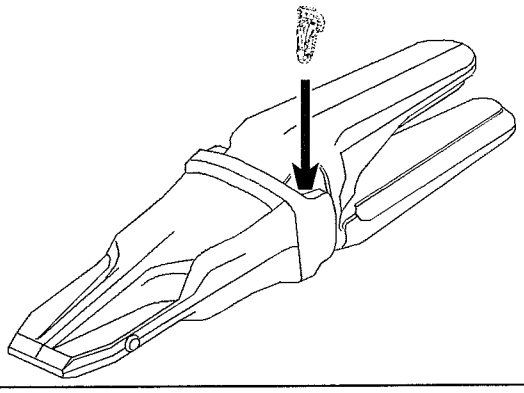

Illustration 138 g01124736

3. Install the retainer. Make sure that the retainer's latch catches under the tip pocket.

4. Make sure that the latch is properly seated by trying to remove the bucket tip.

i02003771

Bucket Wear Plates - Inspect/Replace

SMCS Code: 6120-040; 6120-510

⚠ WARNING

Personal injury or death can result from falling bucket.

When working under or around the bucket or linkage, with the bucket raised, proper support must be provided for the bucket and/or the linkage.

Replace the wear plates before damage to the bottom of the bucket occurs.

1. Raise the bucket and block up the bucket.

2. Loosen bolts and remove wear plates.

3. Install new wear plates. Tighten the bolts to the specified torque.

Reference: For more information, refer to Specifications, SENR3130, "Torque Specifications".

i01699420

Cab Air Filter - Clean/Replace

SMCS Code: 7342-070; 7342-510

Clean Filters

Note: Clean the filter elements more often in dusty conditions. If there is a noticeable reduction in the airflow from the air vents, check the filter elements.

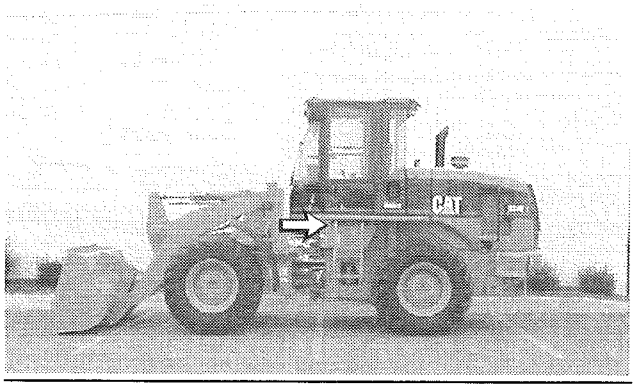

Illustration 139 g00614999

1. Remove the filter cover. The filter cover is located on the left side of the operator compartment under the steps.
2. Remove the filter elements. Clean the filter elements with compressed air. You can also wash the filter elements with a solution of warm water and of a nonsudsing household detergent.

   Do not wash the filter elements while the filter elements are installed on the machine.
3. Rinse the filter elements in clean water. Air dry the filter elements thoroughly.
4. Install the filter elements and replace the cover.

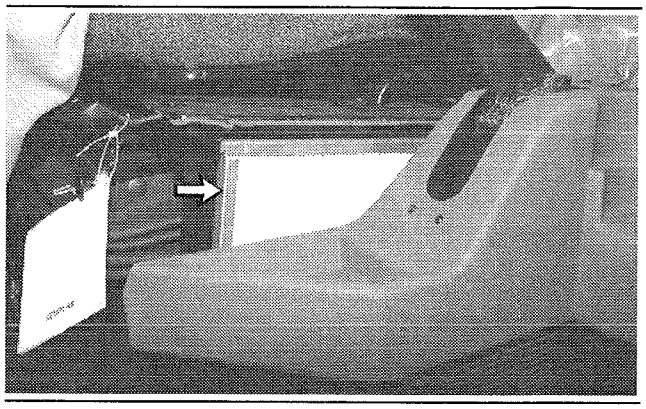

Illustration 140 g00447093

5. Remove the filter cover and filter elements. The filter elements are located near the left side of the operator seat.

Note: Raise the operator seat in order to remove the filter elements.

6. Clean the filter elements with compressed air. You can also wash the filter elements with a solution of warm water and of a nonsudsing household detergent.
7. Rinse the filter elements in clean water. Air dry the filter elements thoroughly.
8. Replace any filter elements that are worn or damaged.
9. Face the seal toward the parking brake lever when you install the filter element.

i02230814

Circuit Breakers and Fuses - Reset/Replace

SMCS Code: 1417-510; 1420-529

Circuit Breakers Reset

The circuit breakers are located in the engine compartment on the left side of the machine.

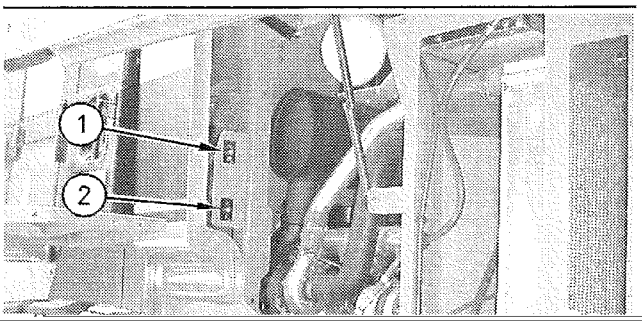

The fuse panel is located on the console at the right side of the cab.

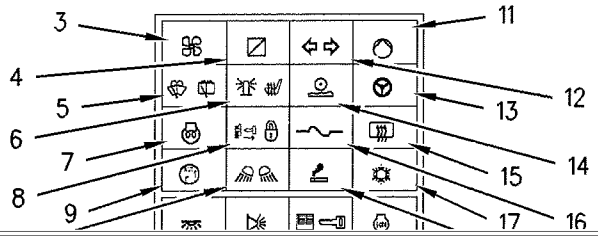

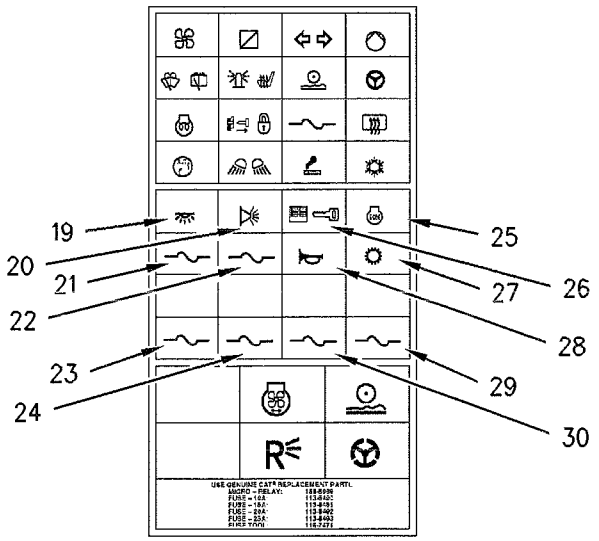

Illustration 144 g00908350

Dome Light (19) – 10 Amp

Stop Lights (20) – 10 Amp

Spare (21) – 15 Amp

Spare (22) – 10 Amp

Key (23) – Open

Spare (24) – Open

Engine ECM (25) – 10 Amp

Cab Monitor / Key (26) – 10 Amp

Transmission (27) – 10 Amp

Forward Horn (28) – 10 Amp

Spare (29) – Open

Spare (30) – Open

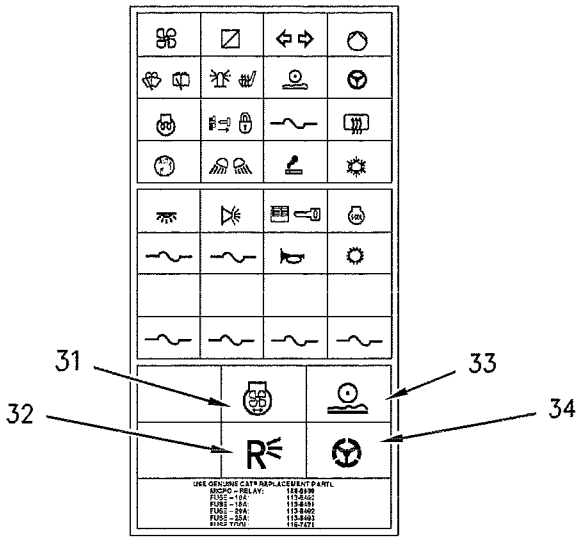

Illustration 145 g00908351

Reversing Fan (31) – Relay

Backup Lamps (32) – Relay

Ride Control (33) – Relay

Secondary Steering (34) – Relay

i01799688

Cooling System Coolant (ELC) - Change

SMCS Code: 1395-044-NL

WARNING

Pressurized system: Hot coolant can cause serious burn. To open cap, stop engine, wait until radiator is cool. Then loosen cap slowly to relieve the pressure.

NOTICE

Mixing ELC with other products will reduce the effectiveness of the coolant.

This could result in damage to cooling system components.

If Caterpillar products are not available and commercial products must be used, make sure they have passed the Caterpillar EC-1 specification for pre-mixed or concentrate coolants and Caterpillar Extender.

Note: This machine is shipped with Extended Life Coolant. Extended Life Coolant is recommended for use.

Drain the coolant whenever the coolant is dirty. Drain the coolant whenever the coolant starts to foam.

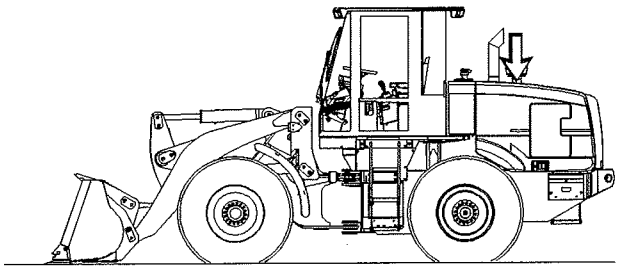

Illustration 146 g00928711

The overflow tank is located under the access panel on the top of the engine compartment. Use the steps and the handholds in order to reach the access panel. The steps and handholds are located on the left side of the machine.

1. Open the access panel on the top of the engine compartment.
2. Slowly lift the tab on the cap for the overflow tank in order to relieve system pressure. Remove the cap for the overflow tank.

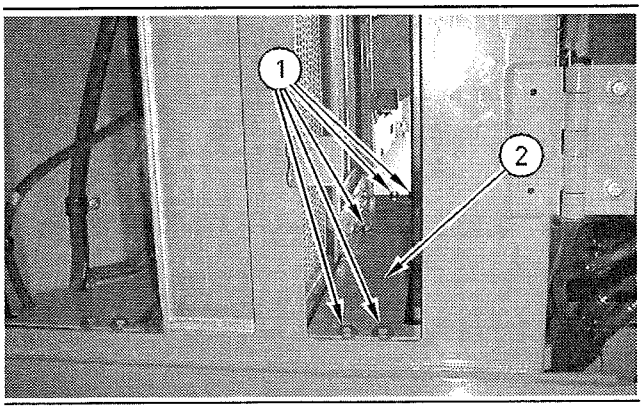

Illustration 147 g00921567

3. Open the access doors on both sides of the engine compartment. Remove five bolts (1). Remove plate (2).

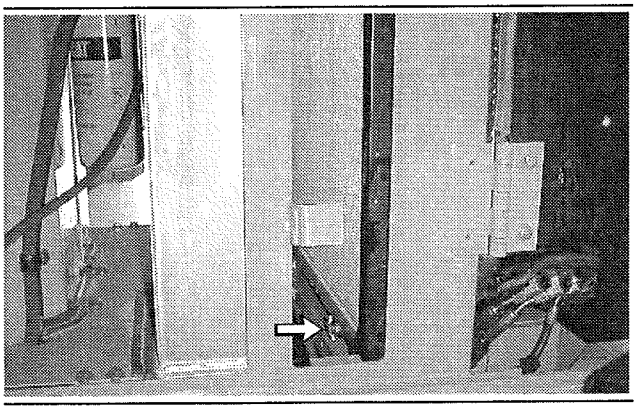

Illustration 148 g00921568

4. The drain valve is located on the bottom left corner of the radiator. Open the drain valve. Allow the coolant to drain into a suitable container.
5. Close the drain valve. Fill the system with a solution which consists of clean water and of cooling system cleaner. The concentration of the cooling system cleaner in the solution should be between 6 percent and 10 percent.
6. Start the engine. Run the engine for 90 minutes. Stop the engine. Drain the cleaning solution into a suitable container.
7. While the engine is stopped, flush the system with water. Flush the system until the draining water is transparent.
8. Close the drain valve.
9. Add the coolant solution. See the following topics:
   - Operation and Maintenance Manual, "Cooling System Specifications"
   - Operation and Maintenance Manual, "Refill Capacities"

Note: If you are using Caterpillar antifreeze, do not add the supplemental coolant additive at this time.

10. Start the engine. Run the engine without the cap for the overflow tank until the thermostat opens and the coolant level stabilizes.

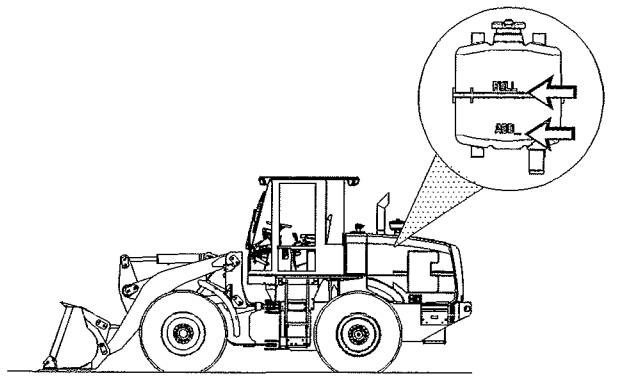

Illustration 149 g00928710

11. Maintain the coolant level between the ADD and FULL marks on the overflow tank.

12. Install the cap for the overflow tank.

13. Stop the engine.

14. Replace the access panel. Close the access door.

For information about the addition of Extender to your cooling system, see the Operation and Maintenance Manual, "Cooling System Coolant Extender (ELC) - Add" or consult your Caterpillar dealer.

Flushing the Extended Life Coolant From the Cooling System

Some engines utilize Extended Life Coolant. See the Operation and Maintenance Manual, "Maintenance Interval Schedule" in order to determine the service interval. If a Extended Life Coolant was previously used, flush the cooling system with clean water. No other cleaning agents are required.

Flushing a Standard Coolant From the Cooling System

If you change the coolant of a machine to Extended Life Coolant from another type of coolant, use a Caterpillar cleaning agent to flush the cooling system. After you drain the cooling system, thoroughly flush the cooling system with clean water. **All of the cleaning agent must be removed from the cooling system.**

i00095664

Cooling System Coolant Extender (ELC) - Add

SMCS Code: 1352-544-NL

⚠ WARNING

Pressurized system: Hot coolant can cause serious burn. To open cap, stop engine, wait until radiator is cool. Then loose the cap slowly to relieve the pressure.

When a Caterpillar Extended Life Coolant is used, an extender must be added to the cooling system. See the Operation and Maintenance Manual, "Maintenance Interval Schedule" for the proper service interval. The amount of extender is determined by the cooling system capacity.

Table 60

RECOMMENDED AMOUNT OF EXTENDER BY COOLING SYSTEM CAPACITY	
Cooling System Capacity	**Recommended Amount of Extender**
22 to 30 L (6 to 8 US gal)	0.57 L (.60 qt)
30 to 38 L (8 to 10 US gal)	0.71 L (.75 qt)
38 to 49 L (10 to 13 US gal)	0.95 L (.95 qt)
49 to 64 L (13 to 17 US gal)	1.18 L (1.25 qt)

For additional information on the addition of extender, see Operation and Maintenance Manual, "Caterpillar Coolant Recommendations" or consult your Caterpillar dealer.

i02091429

Cooling System Coolant Level - Check

SMCS Code: 1395-535-FLV

⚠ WARNING

Pressurized system: Hot coolant can cause serious burn. To open cap, stop engine, wait until radiator is cool. Then loosen cap slowly to relieve the pressure.

NOTICE
Excessive additive (greater than the recommended 6% initial fill) together with concentrations of antifreeze greater than 60% cause deposits to form and can result in radiator tube blockage and overheating.

1. Open the engine access panel on the left side of the machine.

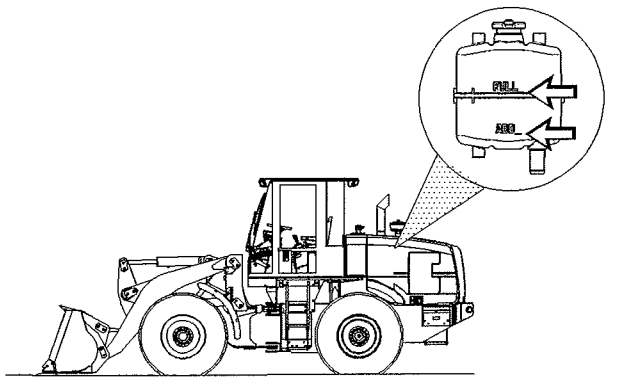

Illustration 150 g00928710

2. Maintain the coolant level between the ADD and the FULL marks on the overflow tank when the cooling system is cool.

Note: Refer to Operation and Maintenance Manual, "General Hazard Information" for information on containing fluid spillage.

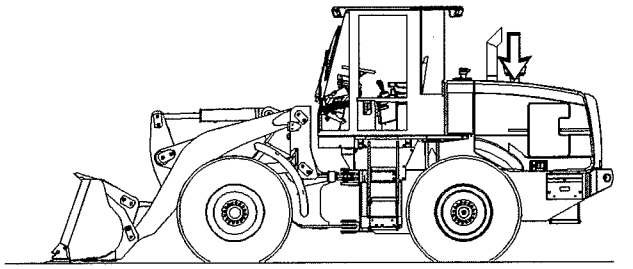

Illustration 151 g00928711

3. Open the access panel on the top of the engine compartment.

4. If additional coolant is necessary, remove the cap on the overflow tank and add the appropriate coolant mixture. If you need to add coolant daily, check the cooling system for leaks.

5. Install the cap for the overflow tank. Close the cover on top of the engine compartment.

6. Close the engine compartment.

i02161416

Cooling System Coolant Sample (Level 1) - Obtain

SMCS Code: 1350-008; 1395-008; 7542

NOTICE
Care must be taken to ensure that fluids are contained during performance of inspection, maintenance, testing, adjusting and repair of the product. Be prepared to collect the fluid with suitable containers before opening any compartment or disassembling any component containing fluids.

Refer to Special Publication, NENG2500, "Caterpillar Tools and Shop Products Guide" for tools and supplies suitable to collect and contain fluids on Caterpillar products.

Dispose of all fluids according to local regulations and mandates.

Note: Level 1 results may indicate a need for Level 2 Analysis.

Reference: See Operation and Maintenance Manual, "Cooling System Level - Check" in order to access the overflow tank for coolant sample.

Obtain the sample of the coolant as close as possible to the recommended sampling interval. In order to receive the full effect of S·O·S analysis, you must establish a consistent trend of data. In order to establish a pertinent history of data, perform consistent samplings that are evenly spaced. Supplies for collecting samples can be obtained from your Caterpillar dealer.

Use the following guidelines for proper sampling of the coolant:

- Complete the information on the label for the sampling bottle before you begin to take the samples.
- Keep the unused sampling bottles stored in plastic bags.
- Obtain coolant samples directly from the coolant sample port. You should not obtain the samples from any other location.
- Keep the lids on empty sampling bottles until you are ready to collect the sample.
- Place the sample in the mailing tube immediately after obtaining the sample in order to avoid contamination.

- Never collect samples from expansion bottles.
- Never collect samples from the drain for a system.

Submit the sample for Level 1 analysis. Level 1 analysis is a test of the properties of the coolant.

For additional information about coolant analysis, see Special Publication, SEBU6250, "Caterpillar Machine Fluids Recommendations" or consult your Caterpillar dealer.

i02161468

Cooling System Coolant Sample (Level 2) - Obtain

SMCS Code: 1350-008; 1395-008; 7542

NOTICE
Care must be taken to ensure that fluids are contained during performance of inspection, maintenance, testing, adjusting and repair of the product. Be prepared to collect the fluid with suitable containers before opening any compartment or disassembling any component containing fluids.

Refer to Special Publication, NENG2500, "Caterpillar Tools and Shop Products Guide" for tools and supplies suitable to collect and contain fluids on Caterpillar products.

Dispose of all fluids according to local regulations and mandates.

Reference: See Operation and Maintenance Manual, "Cooling System Level - Check" in order to access the overflow tank for coolant sample.

Obtain the sample of the coolant as close as possible to the recommended sampling interval. Supplies for collecting samples can be obtained from your Caterpillar dealer.

Refer to Operation and Maintenance Manual, "Cooling System Coolant Sample (Level 1) - Obtain" for the guidelines for proper sampling of the coolant.

Submit the sample for Level 2 analysis. The Level 2 analysis is a comprehensive chemical evaluation of the coolant. This analysis is also a check of the overall condition of the inside of the cooling system.

Reference: For additional information about coolant analysis, refer to Special Publication, SEBU6250, "Caterpillar Machine Fluids Recommendations" or consult your Caterpillar dealer.

i01778060

Cooling System Water Temperature Regulator - Replace

SMCS Code: 1355-510; 1393-010

Replace the thermostat on a regular basis in order to reduce the chance of unscheduled downtime and of problems with the cooling system. Failure to replace the engine's thermostat on a regularly scheduled basis could cause severe engine damage.

The thermostat should be replaced after the cooling system has been cleaned. Replace the thermostat while the cooling system is completely drained or while the cooling system coolant is drained to a level that is below the thermostat housing.

Note: If you are only replacing the thermostat, drain the cooling system coolant to a level that is below the thermostat housing.

Caterpillar engines incorporate a shunt design cooling system. It is mandatory to always operate the engine with a thermostat.

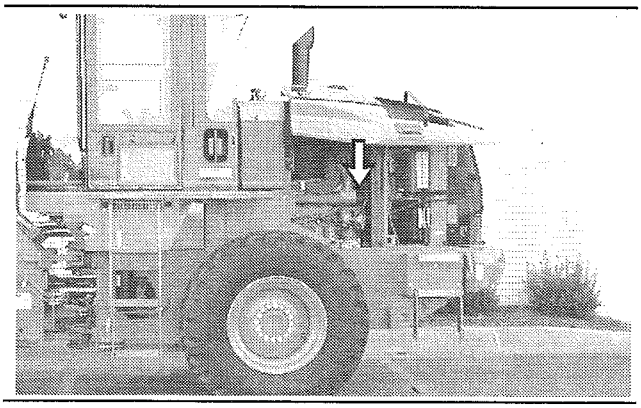

Illustration 152 g00615827

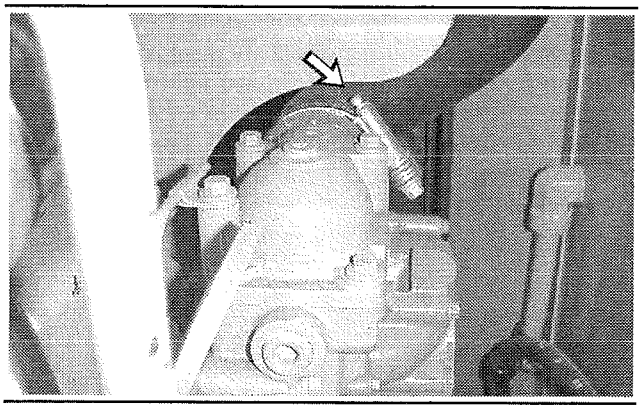

Illustration 153 g00615829

1. Loosen the hose clamp and remove the hose from the thermostat housing assembly.

2. Remove the bolts from the thermostat housing assembly. Remove the thermostat housing assembly.

3. Remove the gasket, the thermostat, and the seal from the thermostat housing assembly.

4. Install a new seal in the thermostat housing assembly. Install a new thermostat and a new gasket. Install the thermostat housing assembly on the engine cylinder head.

   The thermostats can be reused under the following conditions.

   - The thermostat is tested and the thermostat meets test specifications.
   - The thermostat is not damaged.
   - The thermostat does not have excessive buildup of deposits.

5. Install the hose. Tighten the hose clamp.

6. Refill the cooling system. See Operation and Maintenance Manual, "Lubricant Viscosities" and Operation and Maintenance Manual, "Refill Capacities".

i03024515

Differential and Final Drive Oil - Change

SMCS Code: 3278-044-OC; 4011-044-OC

Wipe the covers and surfaces around openings before you check the oil. Wipe the covers and surfaces around openings before you add oil.

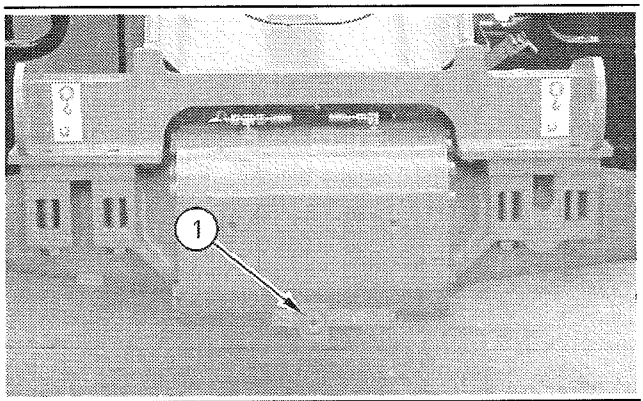

Illustration 154 g00615911

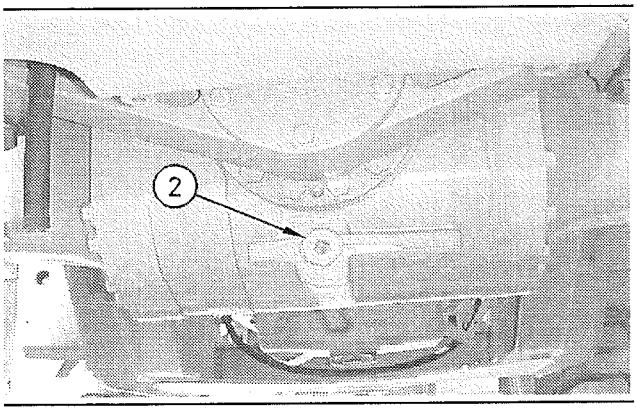

Illustration 155 g00615871

1. Remove the drain plugs for the front differential (1) and for the rear differential (2). Allow the oil to drain into a suitable container.

2. Clean the drain plugs and install the drain plugs.

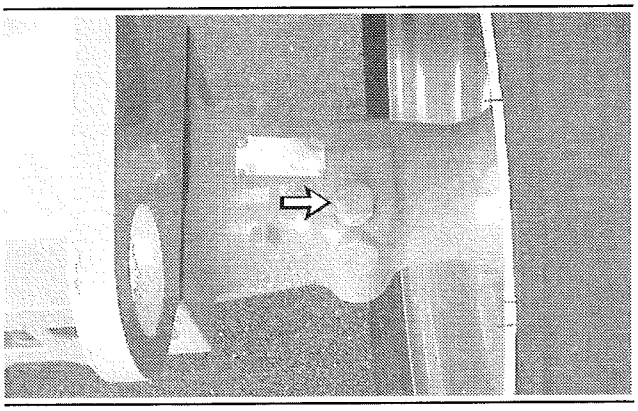

Illustration 156 g00615872

3. Remove the dipstick/fill plug for the front differential and remove the dipstick/fill plug for the rear differential.

4. Add 0.5 L (.53 qt) of Hydraulic Oil Additive to each axle.

5. Fill the axles with oil. Maintain the oil between the "ADD" mark and the "FULL" mark on the dipstick/fill plug of each differential. See Operation and Maintenance Manual, "Lubricant Viscosities" and Operation and Maintenance Manual, "Refill Capacities".

Note: Install the dipstick/fill plug completely before you check the oil level. If the dipstick/fill plug is not installed completely, an incorrect oil level reading can occur.

6. Replace the dipstick/fill plugs for each differential. Operate the machine for a few minutes and allow the oil to flow completely through the axles. Remove the dipstick/fill plugs and recheck the oil level. Add oil, if necessary.

7. Clean the dipstick/fill plugs and install the dipstick/fill plugs for each differential.

i02310335

Differential and Final Drive Oil Level - Check

SMCS Code: 3278-535-FLV; 4011-535-FLV

Before you measure the oil level, operate the machine for a few minutes. This will allow all of the oil to reach a common level.

Park the machine on level ground. Lower the bucket and apply slight downward pressure. Engage the parking brake. Stop the engine.

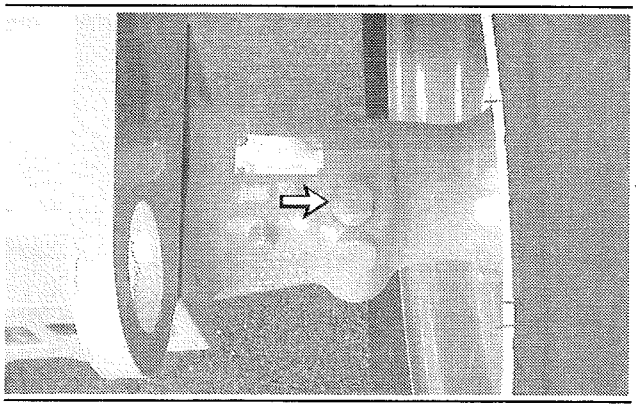

Illustration 157 g00615872

1. Remove the dipstick/fill plug for the front differential. Check the oil level.

2. Maintain the oil level between the "ADD" mark and the "FULL" mark on the dipstick/fill plug. Add oil, if necessary. Replace the dipstick/fill plug.

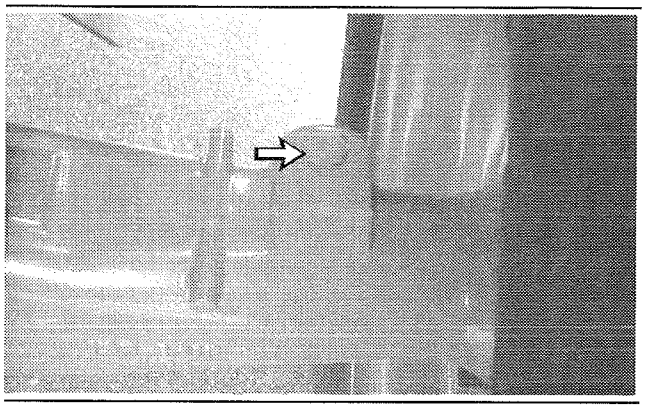

Illustration 158 g00615943

3. Remove the dipstick/fill plug for the rear differential. Check the oil level.

4. Maintain the oil level between the "ADD" mark and the "FULL" mark on the dipstick/fill plug. Add oil, if necessary. Replace the dipstick/fill plug.

i02091494

Differential and Final Drive Oil Sample - Obtain

SMCS Code: 3278-008; 4011-008; 4070-008; 7542

NOTICE
Always use a designated pump for oil sampling, and use a separate designated pump for coolant sampling. Using the same pump for both types of samples may contaminate the samples that are being drawn. This contaminate may cause a false analysis and an incorrect interpretation that could lead to concerns by both dealers and customers.

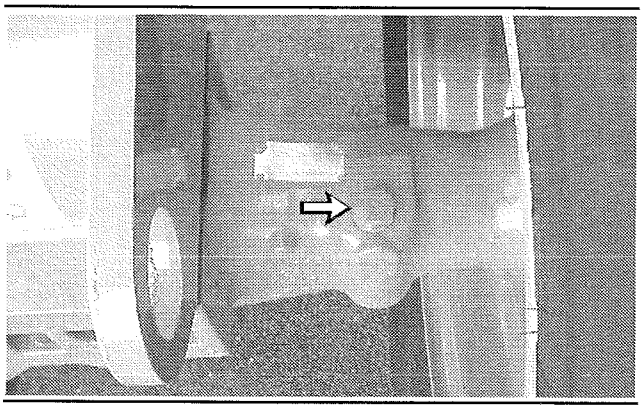

Illustration 159 g00614039

In order to obtain a sample of the differential and final drive oil, remove the filler plug. Withdraw the oil through the filler opening.

Refer to Special Publication, SEBU6250, "Caterpillar Machine Fluids Recommendations", "S·O·S Oil Analysis" for information that pertains to obtaining an oil sample. Refer to Special Publication, PEHP6001, "How To Take A Good Oil Sample" for more information about obtaining an oil sample.

i01700983

Drive Shaft Spline (Center) - Lubricate

SMCS Code: 3253-086

Wipe the grease fitting before you lubricate the grease fitting.

NOTICE
To prevent damage to the seal, fully articulate the machine to the right or to the left, before lubricating the spline.

1. Start the engine. Raise the bucket. Release the parking brake. Fully articulate the machine to the left or to the right.
2. Lower the bucket to the ground. Engage the parking brake. Stop the engine.

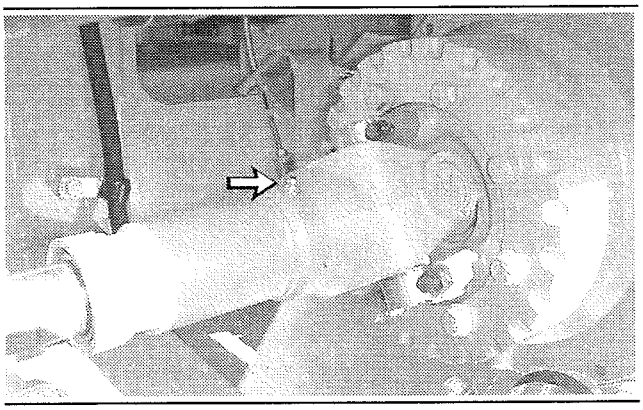

Illustration 160 g00616221

3. Apply lubricant to the grease fitting that is on the drive shaft spline.
4. Start the engine. Raise the bucket. Release the parking brake. Articulate the machine until the machine is straight.
5. Lower the bucket until the bucket exerts a slight downward pressure on the ground. Stop the engine. Engage the parking brake.

i01778099

Drive Shaft Support Bearing - Lubricate

SMCS Code: 3253; 3267-086-BD

Wipe the grease fitting before you lubricate the grease fitting.

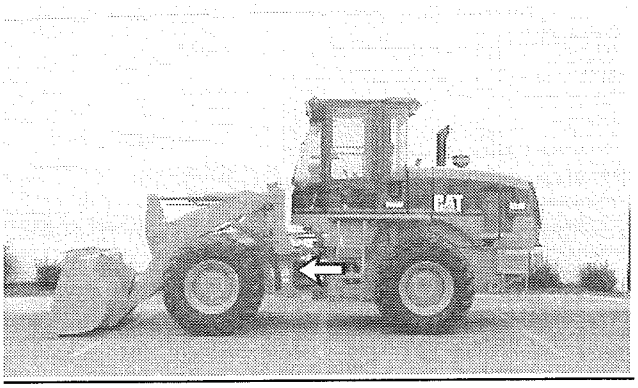

Illustration 161 g00616283

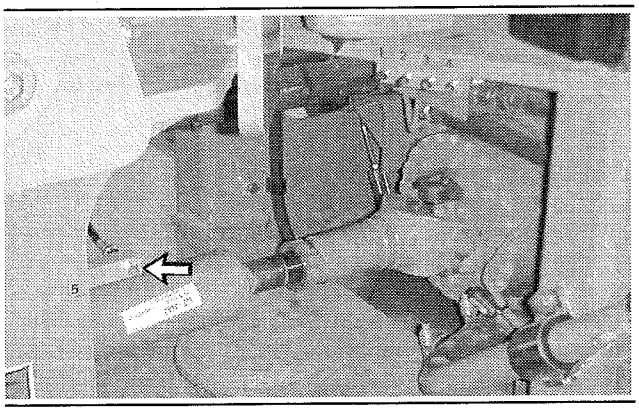

Illustration 162 g00909201
924G/924Gz

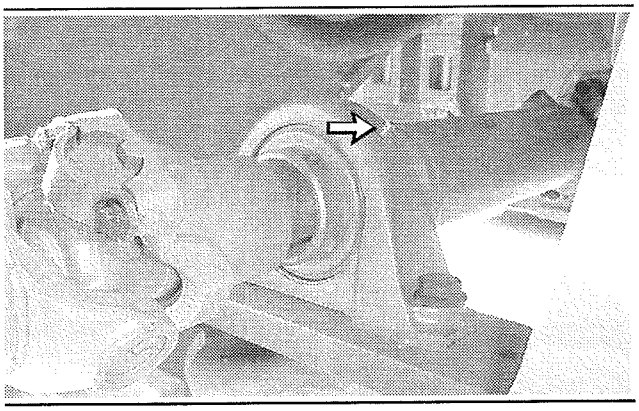

Illustration 163 g00616286
928G/IT28G

Apply lubricant to the grease fitting that is on the drive shaft support bearing.

i02310346

Engine Air Filter Primary Element - Clean/Replace

SMCS Code: 1054-070-PY; 1054-510-PY

The primary air filter element is located in the engine compartment.

NOTICE
Never service the air cleaner when the engine is running, to avoid engine damage.

NOTICE
Caterpillar recommends certified air filter cleaning services that are available at Caterpillar dealers. The Caterpillar cleaning process uses proven procedures to assure consistent quality and sufficient filter life.

Observe the following guidelines if you attempt to clean the filter element:

Do not tap or strike the filter element in order to remove dust.

Do not wash the filter element.

Use low pressure compressed air in order to remove the dust from the filter element. Air pressure must not exceed 207 kPa (30 psi). Direct the air flow up the pleats and down the pleats from the inside of the filter element. Take extreme care in order to avoid damage to the pleats.

Do not use air filters with damaged pleats, gaskets, or seals. Dirt entering the engine will cause damage to engine components.

Service the air cleaner filter element when the yellow piston on the engine air filter service indicator enters the red zone. Refer to Operation and Maintenance Manual, "Engine Air Filter Service Indicator - Inspect". Refer to Operation and Maintenance Manual, "Engine Air Filter Secondary Element - Replace".

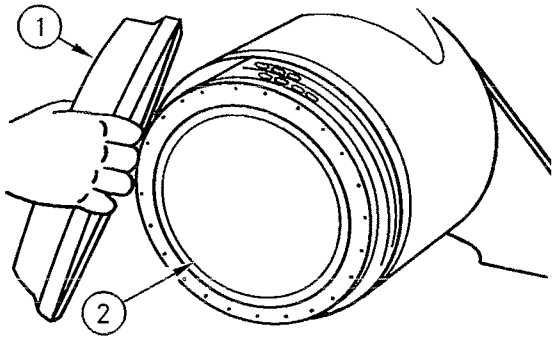

Illustration 164 g00101864

1. Remove the air cleaner housing cover (1).
2. Remove the primary filter element (2) from the air cleaner housing.

   When you use pressure air, the maximum air pressure is 207 kPa (30 psi).

   a. When you clean the inside pleats and the outside pleats, direct the air along the pleats.

   b. Inspect the filter elements after you clean the filter elements. Do not use a filter if the pleats, the gaskets or the seals are damaged.

   c. Reset the engine air filter service indicator.

      Replace the primary element after the primary element has been cleaned six times. Also replace the primary element if the primary element has been in service for one year.

3. Install a clean filter element and install the cover.

i01778246

Engine Air Filter Secondary Element - Replace

SMCS Code: 1054-510-SE

NOTICE
Always replace the secondary filter element. Never attempt to reuse it by cleaning.

The secondary filter element should be replaced at the time the primary element is serviced for the third time.

The secondary filter element should also be replaced if the yellow piston in the filter element indicator enters the red zone after installation of a clean primary element, or if the exhaust smoke is still black.

1. Open the engine access door on the right side of the machine.

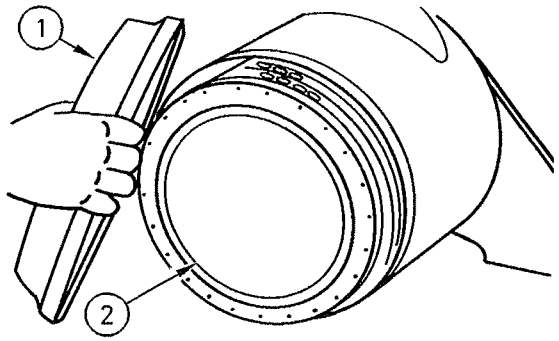

Illustration 165 g00101864

2. Remove the air cleaner housing cover (1).

3. Remove the primary filter element (2) from the air cleaner housing.

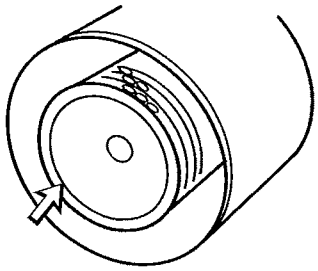

Illustration 166 g00038606

4. Remove the secondary filter element.

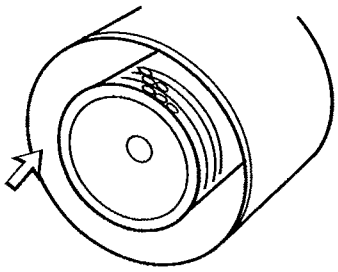

Illustration 167 g00101865

5. Cover the air inlet opening. Clean the inside of the air cleaner housing.

6. Inspect the gasket between the air inlet pipe and the air cleaner housing. Replace the gasket if the gasket is damaged.

7. Uncover the air inlet opening. Install a new secondary element.

8. Install the primary element and the air cleaner housing cover. Fasten the clips in order to secure the air cleaner housing cover.

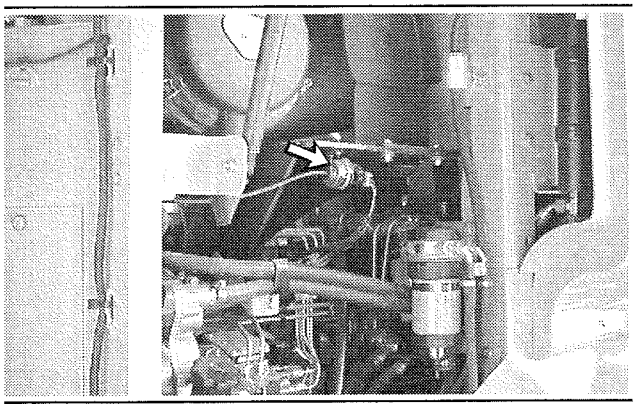

Illustration 168 g00909287

9. Reset the filter element indicator.

10. Close the engine access door.

i01778263

Engine Air Filter Service Indicator - Inspect

SMCS Code: 7452-040

NOTICE
Service the air cleaner only with the engine stopped. Engine damage could result.

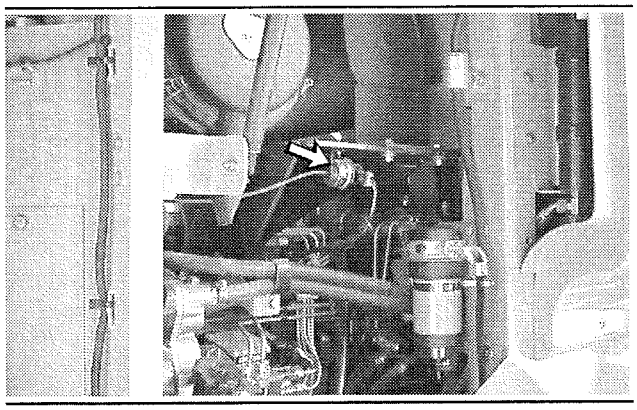

Illustration 169 g00909287

The filter service indicator is located in the engine compartment on the right side of the machine.

Start the engine. Run the engine at high idle. If the yellow piston in the filter service indicator enters the red zone, service the air cleaner. Stop the engine.

i01701038

Engine Air Precleaner - Clean (If Equipped)

SMCS Code: 1055-070

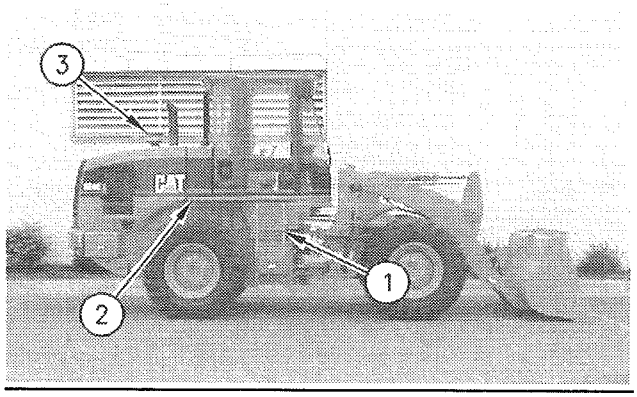

Illustration 170 g00616353

Use the ladder (1) and the platform (2) in order to access the precleaner bowl (3). The ladder and the platform are located on the right side of the machine.

1. Empty the precleaner bowl whenever the dirt reaches the "FULL" mark.

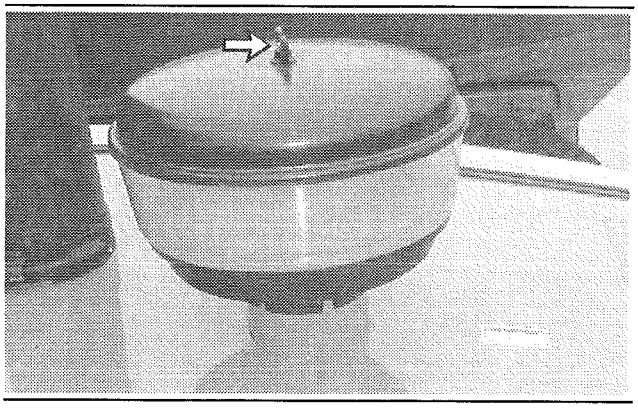

Illustration 171 g00616354

2. Loosen the wing nut on the cover and remove the cover.
3. Empty the precleaner bowl. Wash the precleaner bowl and wash the cover.
4. Install the precleaner bowl and install the cover. Tighten the wing nut until the wing nut is only finger tight. Do not use a tool to tighten the wing nut.

i02356267

Engine Crankcase Breather - Clean

SMCS Code: 1317-070

Open the engine access door on the right side of the machine.

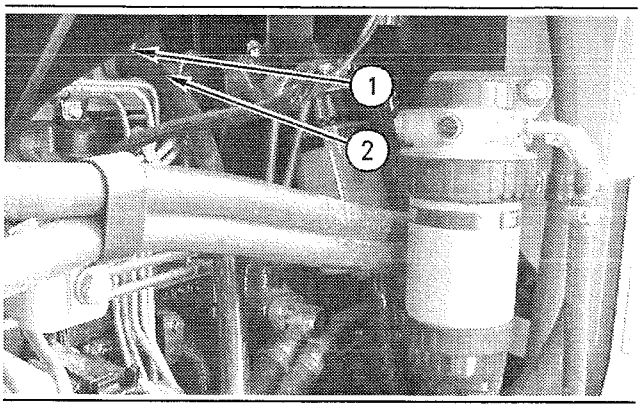

Illustration 172 g00909608

The breather is located below the air cleaner on the side of the valve cover.

1. Loosen the breather outlet hose clamp (1). Remove the breather hose (2) from the valve cover.
2. Remove the valve cover.
3. Check the condition of the cover seal. If the used seal is damaged, replace the seal with a new seal.
4. Wash the element in a clean, nonflammable solvent. Wash the valve cover in a clean, nonflammable solvent.
5. Shake the element in order to dry the element. Pressure air may also be used to dry the element.
6. Inspect the breather hose for damage. Replace the breather hose, if necessary.
7. Install the breather element. Install the valve cover.
8. Install the breather hose and the breather outlet hose clamp.
9. Close the engine access door.

i02356274

Engine Crankcase Breather (Closed Circuit) - Replace (If Equipped)

SMCS Code: 1317-510-FQ

S/N: DDA1-Up

S/N: RTA1-Up

S/N: RBB1-Up

S/N: WMB1-Up

S/N: WAC1-Up

S/N: DJD1-Up

S/N: WLG1-Up

S/N: TWR1-Up

S/N: DBT1-1623

S/N: TFW1-Up

S/N: WGX1-Up

S/N: DFZ1-Up

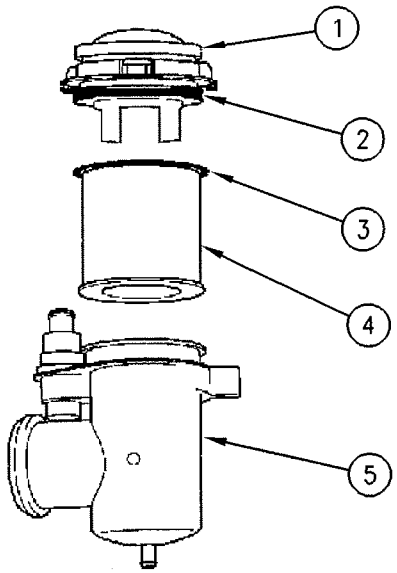

g00927676

Illustration 173

(1) Breather Cap
(2) O-Ring
(3) O-Ring for the Breather Element
(4) Breather Element
(5) Housing for the Breather

1. Open the engine access door that is located on the right side of the machine.
2. Turn the cover (1) for the filter housing counterclockwise for one quarter of a turn in order to remove the cover.
3. Remove the filter element (4) by pulling the filter element out of the housing (5).
4. Clean the inside of the housing for the breather (5).
5. Lubricate the O-ring (3) with clean engine oil. If necessary, fit a new O-ring (3) to the housing for the breather.
6. Install a new filter element (4).
7. Install the cover (1) for the filter housing and turn one quarter of a turn clockwise in order to lock the cover in place.
8. Close all access covers.

i01779869

Engine Oil Level - Check

SMCS Code: 1348-535-FLV

NOTICE
Do not overfill the crankcase. Engine damage can result.

1. Open the engine access door on the right side of the machine.

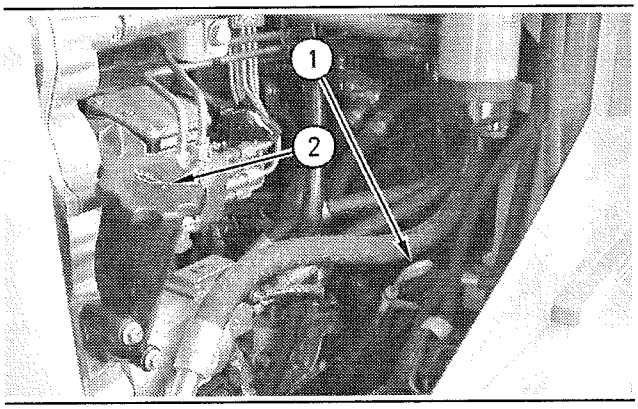

g00910012

Illustration 174

2. While the engine is stopped, maintain the oil level in the crosshatched region of the engine oil dipstick (1).
3. If necessary, remove the oil filler plug (2) and add oil.
4. Clean the oil filler plug and install the oil filler plug.
5. Close the engine access door.

i02091558

Engine Oil Sample - Obtain

SMCS Code: 1348-008; 7542-008

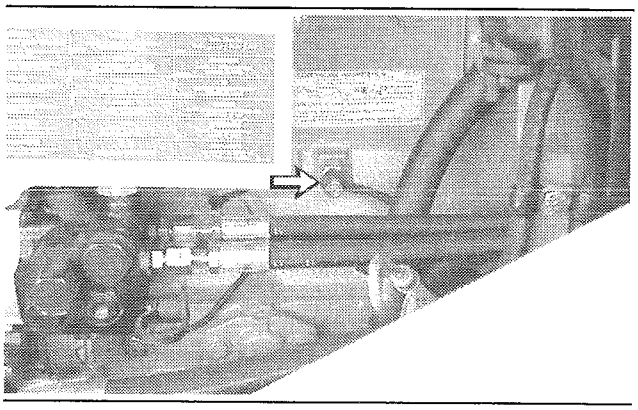

Illustration 175 g00614035

Use the sampling valve in order to obtain a sample of the engine oil. The engine must be running in order to take a sample of the engine oil.

Refer to Special Publication, SEBU6250, "Caterpillar Machine Fluids Recommendations", "S·O·S Oil Analysis" for information that pertains to obtaining an oil sample. Refer to Special Publication, PEHP6001, "How To Take A Good Oil Sample" for more information about obtaining an oil sample.

i02154566

Engine Oil and Filter - Change

SMCS Code: 1308-510; 1348-044

The normal oil change interval is "Every 500 Service Hours or Three Months" when the following conditions are met:

- Caterpillar oil or API Specification CG-4 multigrade oil is used.
- Caterpillar filters are used.
- The altitude does not exceed 2300 m (7545 ft).
- Sulfur content in the fuel is between 0.05% and 0.50%.

An oil change interval of "Every 250 Service Hours or every month" is required when the following conditions occur:

- Caterpillar oil or API Specification CG-4 multigrade oil is not used.
- The altitude exceeds 2300 m (7545 ft).
- Sulfur content in the fuel is between 0.50% and 1.00%.

An oil change interval of "Every 125 Service Hours" is required when the following condition occurs:

- Sulfur content in the fuel is above 1.00%.

Refer to the results of the S·O·S oil analysis in order to determine if the oil change interval should be decreased. Consult your Caterpillar dealer for detailed information regarding the optimum oil change interval.

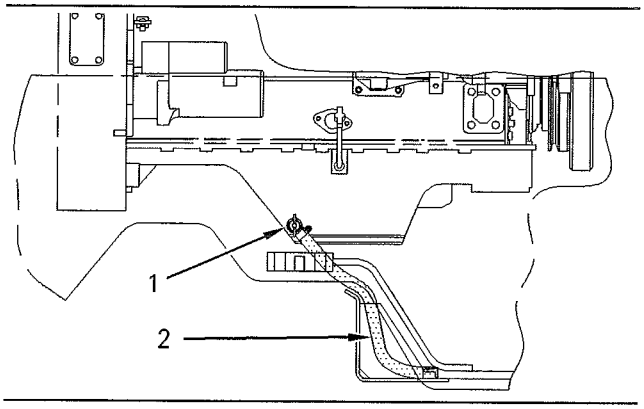

Illustration 176 g00920972

The crankcase drain valve (1) is on the left side of the oil pan.

1. Remove the plug from the bottom of the drain hose (2).
2. Open the crankcase drain valve and drain the oil into a suitable container. Close the crankcase drain valve. Install the plug into the bottom of the drain hose.
3. Open the engine access door on the left side of the machine.

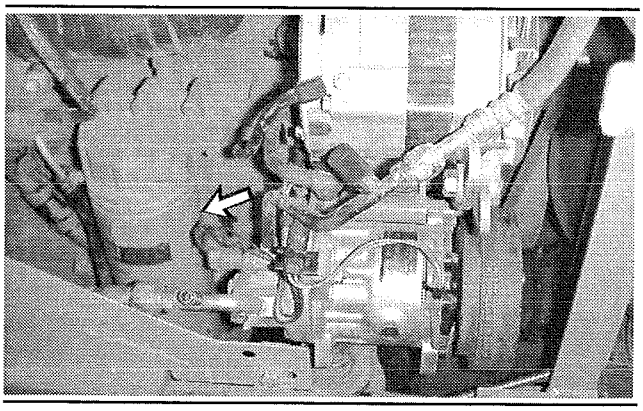

Illustration 177 g00892461

4. Remove the filter element with a strap type wrench. Refer to Operation and Maintenance Manual, "Oil Filter - Inspect".

5. Clean the filter mounting base with a clean cloth. Make sure that the old filter gasket has been removed.

Note: Caterpillar filters are designed to ensure a ready supply of oil with every engine start. Use of approved Caterpillar filters is recommended on this machine.

6. Apply a thin film of clean engine oil to the sealing surface of the new filter element.

7. Install the new filter element by hand. When the gasket contacts the filter base, tighten the filter for an additional 3/4 turn.

8. Open the engine access door on the right side of the machine.

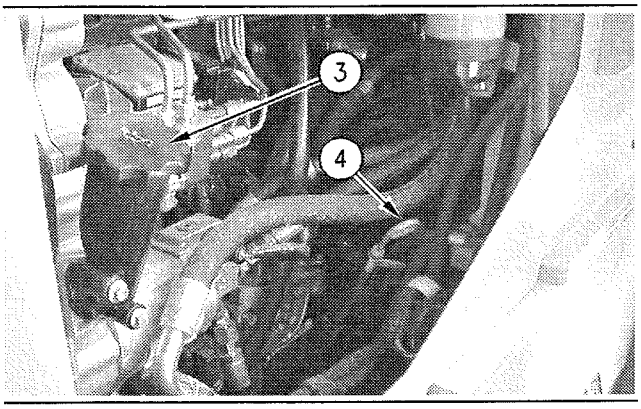

Illustration 178 g00909903

9. Remove the oil filler plug (3). Fill the crankcase with new oil. See Operation and Maintenance Manual, "Lubricant Viscosities" and Operation and Maintenance Manual, "Refill Capacities". Clean the oil filler plug and install the oil filler plug.

10. Start the engine and allow the oil to warm. Check for leaks.

11. Stop the engine and allow the oil to drain back into the oil pan. Maintain the oil level in the crosshatched region of the engine oil dipstick (4). Add oil, if necessary.

12. Close the engine access doors.

i03854660

Engine Valve Lash - Check

SMCS Code: 1105-025

Refer to the Service Manual for the complete adjustment procedure for the engine valve lash.

A qualified mechanic should adjust the engine valve lash because special tools and training are required.

i02450207

Fuel System - Prime

SMCS Code: 1250-548

If air enters the fuel system, the air must be purged before the engine can be started. Air can enter the fuel system when the following events occur:

- The fuel tank is empty or the tank has been partially drained.
- The low pressure fuel lines are disconnected.
- A leak exists in the low pressure fuel system.
- The fuel filter is replaced.

Use the following procedure in order to remove air from the fuel system:

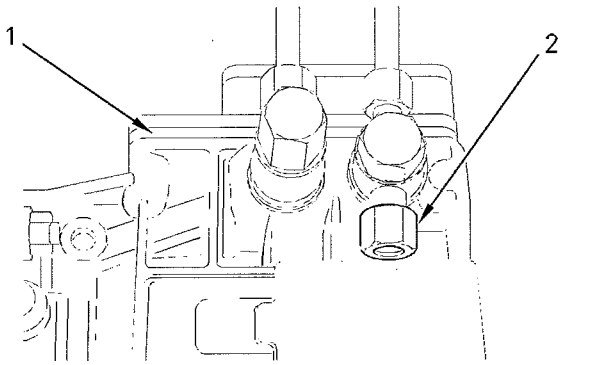

Illustration 179 g00898190

Side of the fuel injection pump

(1) Fuel injection pump
(2) nut

1. Loosen nut (2) on the fuel injection pump.

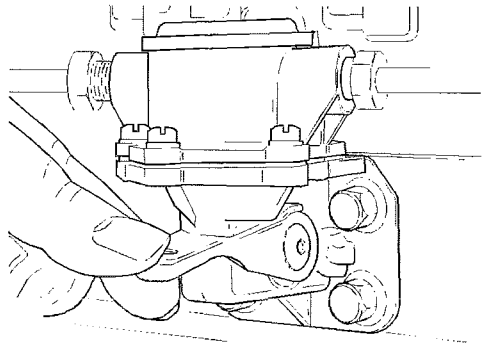

Illustration 180 g00898194

Hand priming lever for the priming pump

Note: If the drive cam of the fuel priming pump is in the position of maximum cam lift, the priming lever will not operate. Rotate the crankshaft by hand one revolution.

2. Operate the priming lever on the priming pump until fuel flows out of nut (2).

3. Tighten nut (2) to a torque of 23 N·m (17 lb ft).

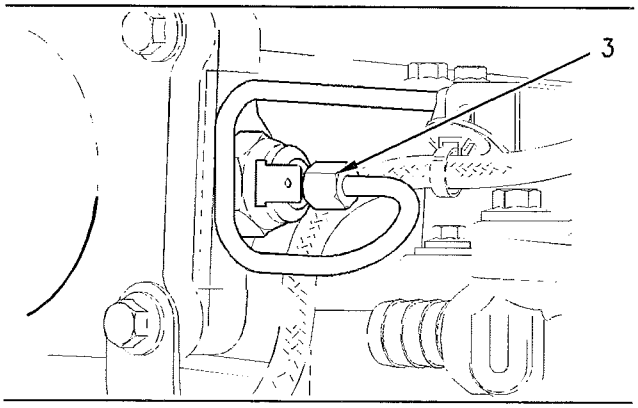

Illustration 181 g00905440

Air inlet heater on the air inlet manifold

(3) Flare nut

4. If the fuel line for the air inlet heater has been drained, loosen nut (3). Operate the priming lever on the fuel priming pump until fuel is free of air from the fuel line.

5. Tighten nut (3) to a torque of 22 N·m (16 lb ft).

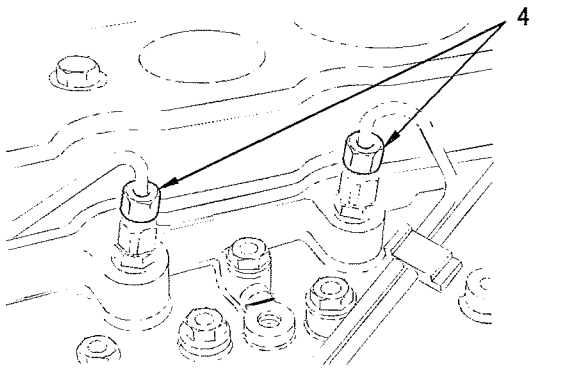

Illustration 182 g00898197

Fuel injection nozzles in the cylinder head

(4) Flare nut

Note: Damage to the fuel injection pump, to the battery, and to the motor starter can occur if the motor starter is used excessively to purge the air from the fuel system.

6. Loosen flare nuts (4) for the high pressure fuel lines on two fuel injection nozzles.

7. Operate the starting motor until fuel is flowing from the fuel lines.

8. Tighten flare nuts (4) to a torque of 22 N·m (16 lb ft).

NOTICE

Do not crank the engine continuously for more than 30 seconds. Allow the starting motor to cool for two minutes before cranking the engine again.

9. The engine is now ready to start. Operate the engine at low idle for a minimum of five minutes immediately after air has been removed from the fuel system.

Note: Running the engine for this period of time will help ensure that the pump is completely free of air. Damage to the internal parts of the pump, which is caused by metal to metal contact, will be prevented. If the engine stops or if the engine runs roughly, check for air in the fuel system. If air is in the fuel system, leakage in the low pressure fuel system probably exists.

i02154630

Fuel System Primary Filter (Water Separator) - Drain

SMCS Code: 1263-543

The water separator is located in the engine compartment on the right side of the machine.

Note: This unit has a dual purpose. The element serves as a water separator and a fuel filter.

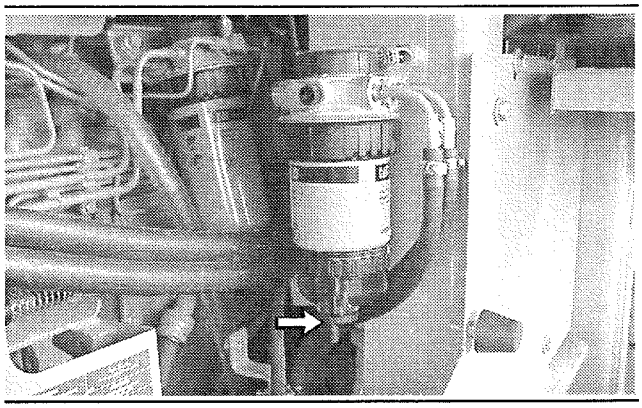

Illustration 183 g00625139

1. Loosen the drain valve on the bottom of the water separator. Allow the water and the sediment to drain into a suitable container.
2. Tighten the drain valve.
3. If the engine fails to start, change the fuel filter. If there is a power loss, change the fuel filter.
4. Tighten the drain valve and close the engine access door.

i02154657

Fuel System Primary Filter (Water Separator) Element - Replace

SMCS Code: 1260-510; 1263-510-FQ

NOTICE
Do not fill fuel filters with fuel before installing them. The fuel will not be filtered and could be contaminated. Contaminated fuel will cause accelerated wear to fuel system parts. The fuel system should be primed prior to starting the engine.

Note: This unit has a dual purpose. The element serves as a water separator and a fuel filter.

The water separator element is located in the engine compartment on the right side of the machine.

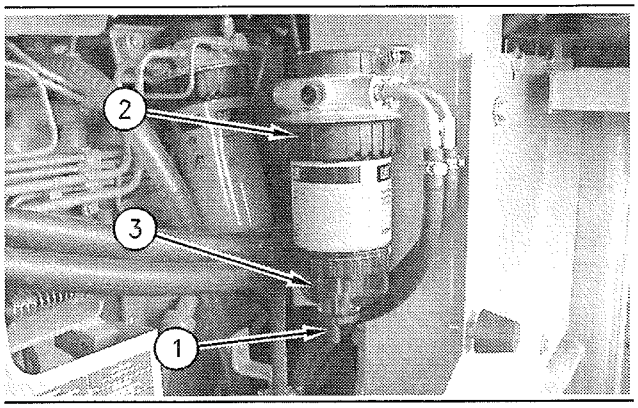

Illustration 184 g00625150

1. Open the drain (1) on the water separator bowl. Allow the water and fuel to drain into a suitable container.
2. Support the water separator element and rotate the locking ring (2) counterclockwise. Remove the locking ring.
3. While the water separator bowl is attached, remove the water separator element from the mounting base.
4. Remove the water separator bowl (3) from the filter element. Clean the water separator bowl and clean the O-ring groove.

Note: The water separator bowl is reusable. Do not discard the water separator bowl.

5. Inspect the O-ring seal of the water separator bowl for damage. Replace the O-ring seal, if necessary.
6. Lubricate the O-ring seal with clean diesel fuel or lubricate the O-ring seal with motor oil. Place the O-ring seal in the groove in the water separator bowl.
7. Spin the water separator bowl onto the new filter element by hand until the filter element is snug. Do not use tools to tighten the filter element.
8. Install the new water separator element. Rotate the locking ring clockwise in order to fasten the filter to the mounting base.
9. Prime the fuel system in order to fill the water separator element with fuel. Refer to Operation and Maintenance Manual, "Fuel System - Prime".

i02092171

Fuel System Secondary Filter - Replace

SMCS Code: 1261-510-SE

NOTICE
Do not fill fuel filters with fuel before installing them. Contaminated fuel will cause accelerated wear to fuel system parts.

The fuel filter is located in the engine compartment on the right side of the machine.

1. Open the engine access door on the right side of the machine.

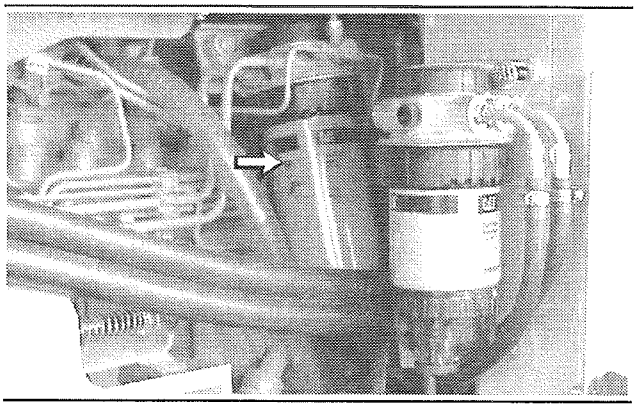

Illustration 185 g00616649

2. Remove the fuel filter. Inspect the fuel filter for debris by cutting the filter open. Discard the filter properly.
3. Clean the mounting base of the fuel filter. Remove any part of the old seal that remains on the mounting base of the fuel filter.
4. Coat the seal of the new fuel filter with clean diesel fuel.
5. Install the new fuel filter by hand. When the seal contacts the base, tighten the filter for an additional three quarters of a turn.
6. Prime the fuel system. Refer to Operation and Maintenance Manual, "Fuel System - Prime".
7. Close the engine access door.

i01793682

Fuel Tank Cap and Strainer - Clean

SMCS Code: 1273-070-Z2; 1273-070-STR

The fuel tank cap is located on the right side of the machine.

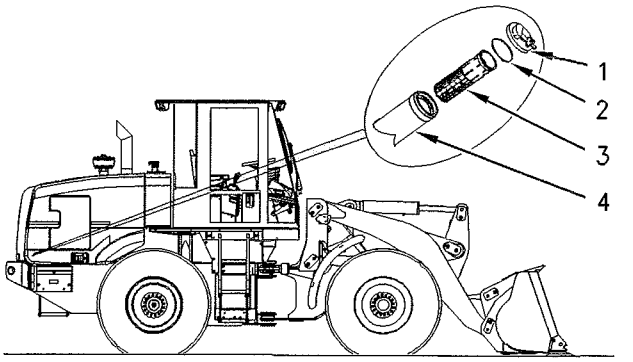

Illustration 186 g00917717

1. Remove fuel tank cap (1) and strainer (3) from fuel tank (4). Remove seal (2) from the cap.
2. Wash the strainer and the fuel tank cap in a clean, nonflammable solvent.
3. Install the strainer into the filler opening.
4. Inspect the seal for damage. Replace the seal, if necessary. Install the fuel tank cap.

i03796298

Hydraulic System Oil - Change

SMCS Code: 5095-044

Operate the machine for a few minutes in order to warm the hydraulic system oil.

The machine should be level . Lower the bucket to the ground and apply slight downward pressure. Engage the parking brake and stop the engine.

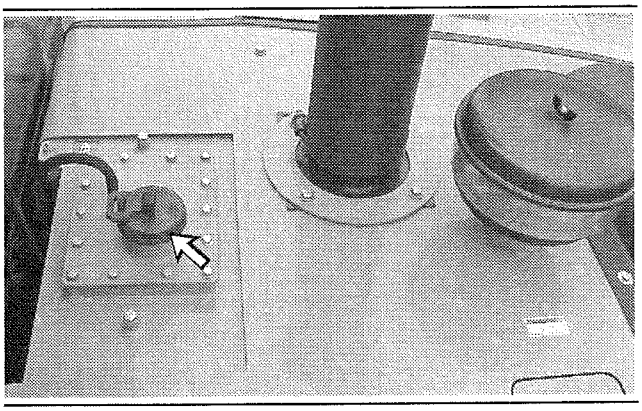

Illustration 187 g00910320

1. Remove the hydraulic tank filler cap.

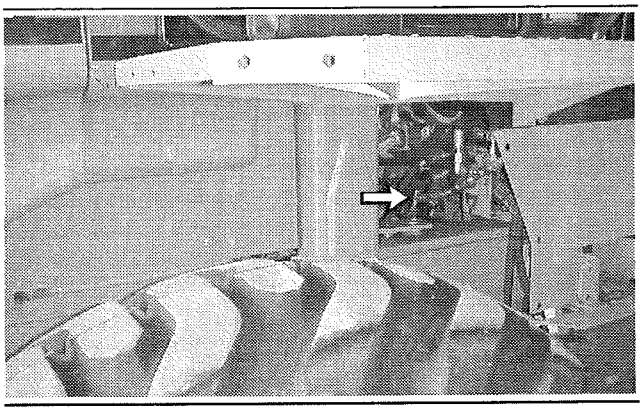

Illustration 188 g00923426
924Gz/924G

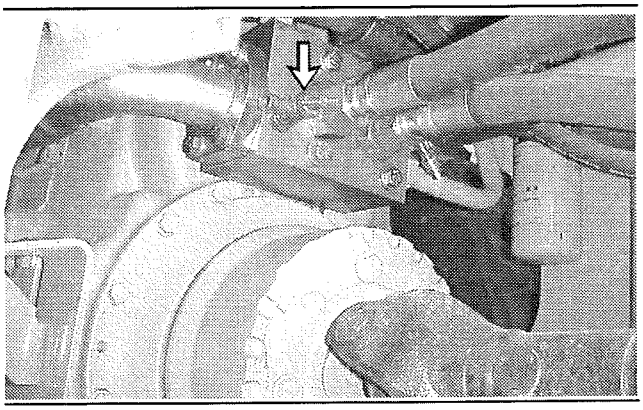

Illustration 189 g00910326
928G/IT28G

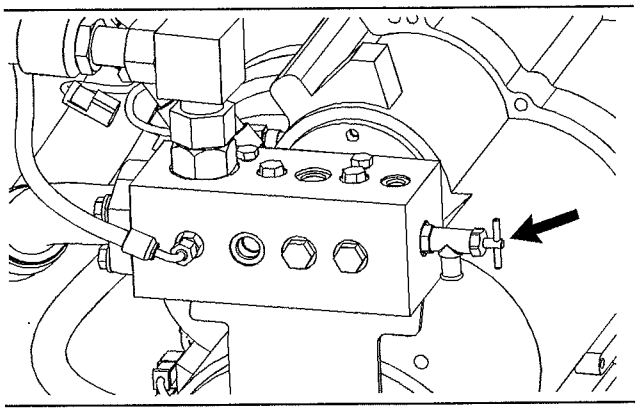

Illustration 190 g02053195
930G

2. The hydraulic tank drain valve is located on a manifold near the articulation hitch for the 928G, 930G, and the IT28G. The hydraulic tank drain valve is located under the right side of the cab behind a panel on the 924G and the 924Gz. Open the drain valve and allow the hydraulic oil to drain into a suitable container.

Note: The 930G has the same manifold as the 928G and the IT28G. The drain valve is located at the end of the manifold on the 930G.

3. Close the drain valve.

4. Open the engine access door on the right side of the machine.

5. Change the hydraulic system filter and the hydraulic tank breather. Refer to Operation and Maintenance Manual, "Hydraulic System Oil Filter - Change".

6. Fill the hydraulic system oil tank. Refer to Operation and Maintenance Manual, "Lubricant Viscosities" and Operation and Maintenance Manual, "Refill Capacities".

7. Inspect the gasket on the hydraulic tank filler cap for damage. Replace the gasket, if necessary.

8. Install the hydraulic tank filler cap.

9. Start the engine and run the engine for a few minutes. The cooling fan should be operating and the brake oil pressure indicator should go out. If the cooling fan is not operating or the brake oil pressure indicator does not go out, repeat Step 6 and Step 8.

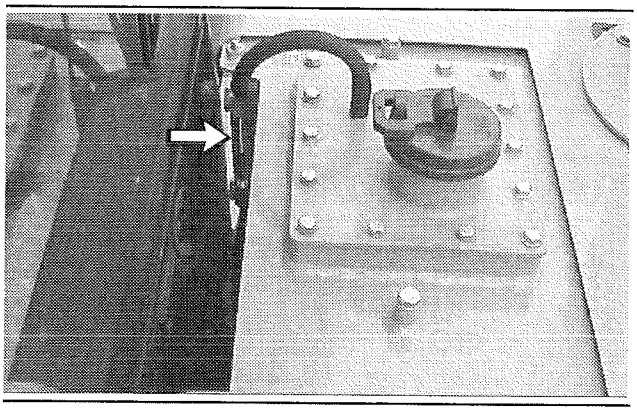

Illustration 191 g00910327

10. Maintain the hydraulic oil level between the top and the bottom mark on the sight gauge. Add oil, if necessary.

Note: The oil must be free of bubbles. If bubbles are present in the oil, air is entering the hydraulic system. Inspect the suction hoses and hose clamps.

11. Stop the engine.

12. If necessary, tighten any loose clamps and any loose connections. Replace any damaged hoses.

13. Close the engine access door.

i02310396

Hydraulic System Oil Filter - Replace

SMCS Code: 5068-510

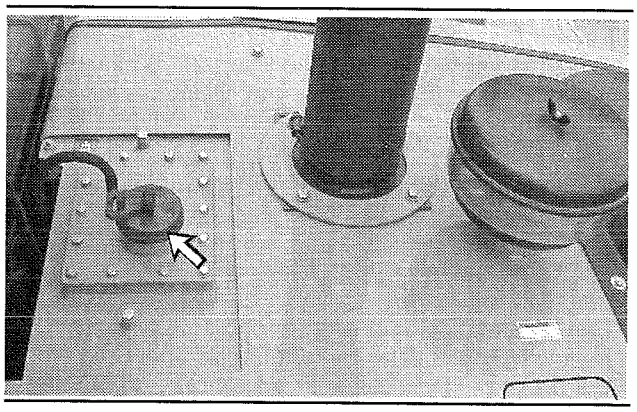

Illustration 192 g00910320

1. Remove the hydraulic tank filler cap.

2. The hydraulic oil filter is located in the back of the machine. Open the engine access door on the right side of the machine.

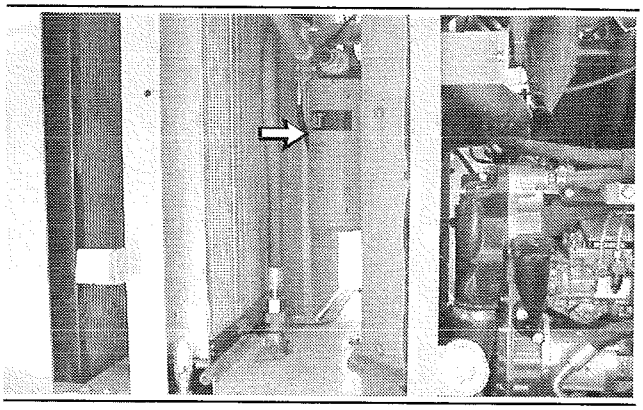

Illustration 193 g00911775

3. Remove the filter element with a strap type wrench.

4. Clean the filter element mounting base. Remove any part of the filter element gasket that remains on the filter element mounting base.

5. Apply a thin coat of oil to seal on the new filter. Install a new hydraulic oil filter hand tight until the seal of the hydraulic oil filter contacts the base. Note the position of the index marks on the filter in relation to a fixed point on the filter base.

6. There are rotation index marks on the hydraulic oil filter that are spaced 90 degrees or 1/4 of a turn away from each other. When you tighten the hydraulic oil filter, use the rotation index marks as a guide.

7. Tighten the filter according to the instructions that are printed on the filter. Use the index marks as a guide. For non-Caterpillar filters, use the instructions that are provided with the filter. You may need to use a filter strap wrench, or another suitable tool, in order to turn the filter to the amount that is required for final installation. Make sure that the installation tool does not damage the filter.

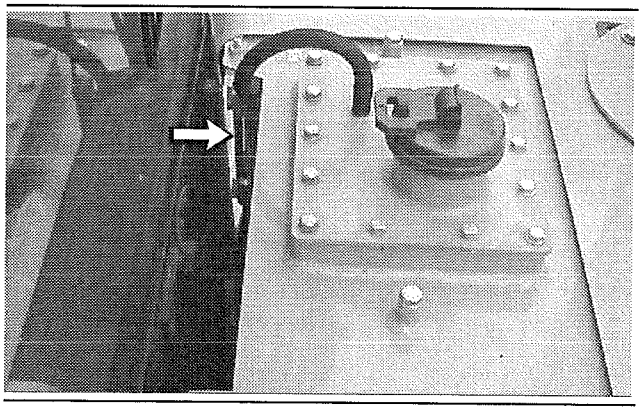

Illustration 194 g00910327

8. Maintain the hydraulic oil level between the top and the bottom mark on the sight gauge. Add oil, if necessary.

9. Inspect the gasket on the hydraulic tank filler cap for damage. Replace the gasket, if necessary.

10. Install the hydraulic tank filler cap.

i01786775

Hydraulic System Oil Level - Check

SMCS Code: 5095-535-FLV

Note: Check the hydraulic system oil level with the machine on a level surface.

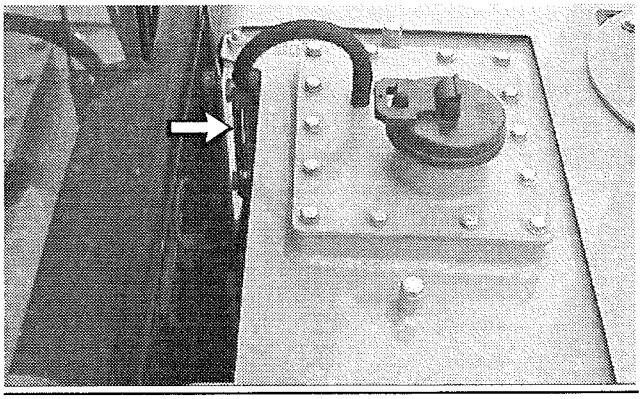

Illustration 195 g00910327

1. Maintain the hydraulic oil level between the top and the bottom mark on the sight gauge. Add oil, if necessary.

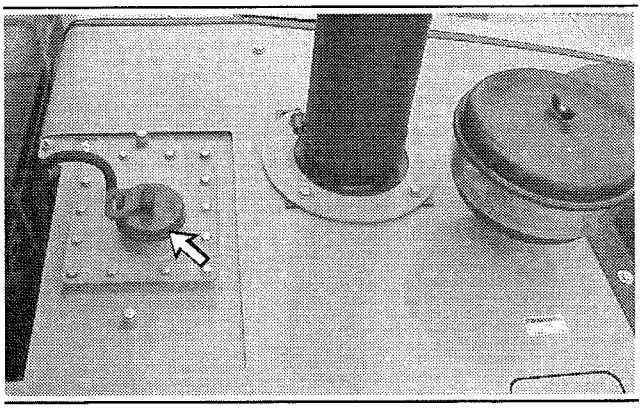

Illustration 196 g00910320

2. The hydraulic tank filler cap is located on the top of the engine compartment. Remove the hydraulic tank filler cap and add hydraulic oil, if necessary.

3. Clean the hydraulic tank filler cap. Install the hydraulic tank filler cap.

i02091697

Hydraulic System Oil Sample - Obtain

SMCS Code: 5050-008; 5056-008; 7542-008

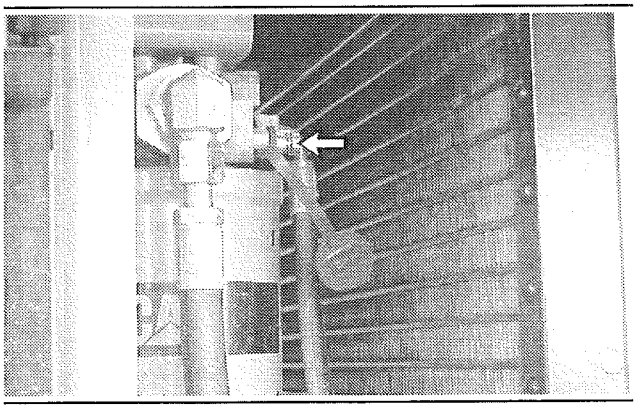

Illustration 197 g00614037

Use the sampling valve in order to obtain a sample of the hydraulic oil. The engine must be running in order to take a sample of the hydraulic oil.

Refer to Special Publication, SEBU6250, "Caterpillar Machine Fluids Recommendations", "S·O·S Oil Analysis" for information that pertains to obtaining and oil sample. Refer to Special Publication, PEHP6001, "How To Take A Good Oil Sample" for more information about obtaining an oil sample.

i01822082

Hydraulic Tank Breather - Replace

SMCS Code: 5056-510-BRE

The hydraulic tank breather is located on the right side of the machine in the engine compartment.

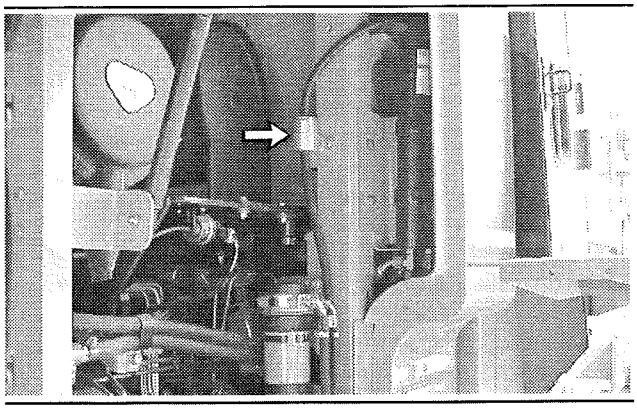

Illustration 198 g00911777

Remove the hydraulic tank breather. Replace the old breather with a new breather. Make sure that the hose is not clogged. Make sure that the hose is not kinked.

i02106227

Oil Filter - Inspect

SMCS Code: 1308-507; 3067-507; 5068-507

Inspect a Used Filter for Debris

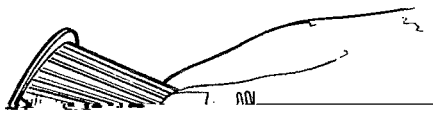

i03657277

Quick Coupler - Check (If Equipped)

SMCS Code: 6129-535

When you install a work tool on the quick coupler, inspect the engagement of the coupler pins. If there is play between the coupler pins and the corresponding bores, inspect the coupler pins and the bores for damage or wear.

If there is play between the quick coupler and the hooks of the work tool, inspect the quick coupler and the hooks for wear or for damage.

Make any necessary repairs before you operate the

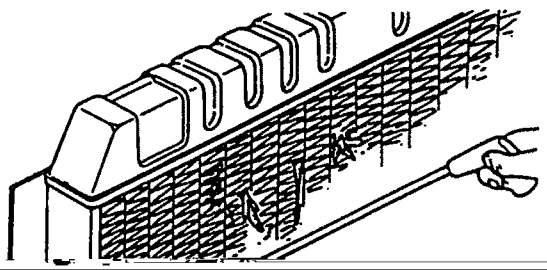

Note: Apply oil to all ROPS bolt threads before you install the bolts. Failure to apply oil to the bolt threads can result in improper bolt torque.

Tighten the bolts that hold the platform to the frame to a torque of 530 ± 70 N·m (400 ± 50 lb ft). Tighten the bolts that hold the ROPS to the platform to a torque of 460 ± 60 N·m (340 ± 45 lb ft). Once you have torqued all the bolts, torque the bolts again.

Inspect the seat belt (3) for webbing that is worn or frayed. Replace the seat belt if the seat belt is worn or frayed.

Consult your Caterpillar dealer for the replacement of the seat belt and the mounting hardware.

Note: Within three years of the date of installation or within five years of the date of manufacture, replace the seat belt. Replace the seat belt at the date which occurs first. A date label for determining the age of the seat belt is attached to the seat belt, the seat belt buckle, and the seat belt retractor.

If your machine is equipped with a seat belt extension, also perform this inspection procedure for the seat belt extension.

i02429594

Seat Belt - Replace

SMCS Code: 7327-510

Within three years of the date of installation or within five years of the date of manufacture, replace the seat belt . Replace the seat belt at the date which occurs first. A date label for determining the age of the seat belt is attached to the seat belt, the seat belt buckle, and the seat belt retractor.

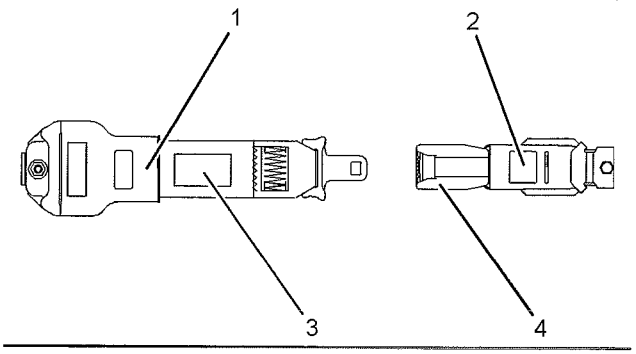

Illustration 204 g01152685

(1) Date of installation (retractor)
(2) Date of installation (buckle)
(3) Date of manufacture (tag) (fully extended web)
(4) Date of manufacture (underside) (buckle)

Consult your Caterpillar dealer for the replacement of the seat belt and the mounting hardware.

If your machine is equipped with a seat belt extension, also perform this replacement procedure for the seat belt extension.

i03589859

Steering Column Play - Check

SMCS Code: 4310-535; 4338-535

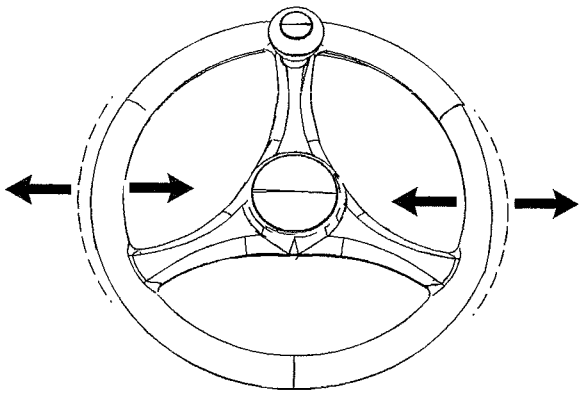

Illustration 205 g01408466

1. Hold the steering wheel with both hands.
2. Try to move the steering wheel from one side to the other side. The maximum allowed movement in the steering column should not exceed 25 mm (1.0 inch). If the value is not within the limit, perform the following steps:
   a. Inspect the pivot joint for loose bolts.
   b. Tighten the bolts if the bolts are loose.

Note: Apply 9S-3263 Thread Lock Compound to the bolts before tightening.

   c. Inspect the pivot joint for excessive wear.
   d. Replace the bushings if there is excessive wear.

⚠ WARNING

Failure to perform this inspection and repair may cause loss of steering control, which may result in personal injury or death.

Do not operate the machine until the inspection and repair are completed.

Contact your Caterpillar dealer for any other required service.

i03589938

Steering Column Spline (HMU Steering) - Lubricate

SMCS Code: 4310-086-SN; 4343-086-SN

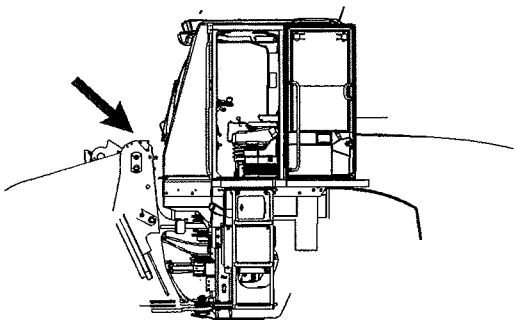

Illustration 206 g01477014

The metering pump is located under the front of the cab.

⚠ WARNING

Crushing Hazard. Connect the steering frame lock between front and rear frames before servicing the machine in the articulation area. Disconnect the steering frame lock and secure it in the stored position before resuming operation. Failure to do so could result in serious injury or death.

When you check the compact wheel loaders, perform the following step first.

- Remove the plastic, cone-shaped nose in order to reach the steering valve (HMU steering).

Refer to Operation and Maintenance Manual, "Steering Frame Lock" before entering the articulation joint.

Note: Do not disconnect any hydraulic lines from the metering pump.

Use the following steps to lubricate the splines on the steering column:

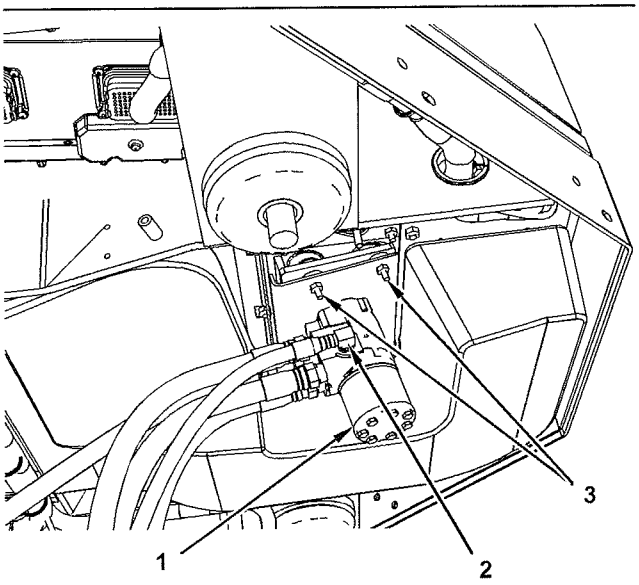

Illustration 207 g01311462

(1) Metering Pump
(2) Hose Coupling
(3) Bolts

1. Support the metering pump (1). Loosen the four bolts (3) that hold the pump. Do not loosen the hose couplings (2).

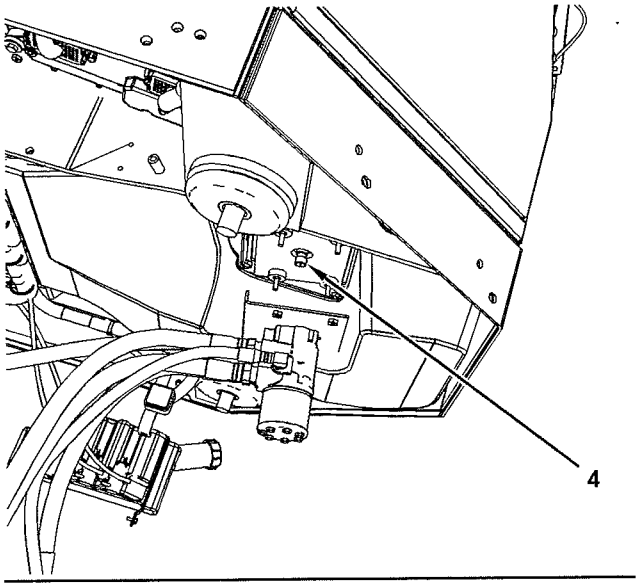

Illustration 208 g01311464

(4) Splines

2. Lower the pump in order to expose the splines (4).

3. Clean the male splines on the steering column. Clean the female splines in the pump.

4. Apply proper grease to the splines. Refer to Operation and Maintenance Manual, "Lubricant Viscosities" for selecting the proper grease.

5. Push the pump into position.

6. Tighten the four bolts that hold the pump.

7. Test the steering system.

i01767543

Steering Cylinder Bearings - Lubricate

SMCS Code: 4303-086-BD

924G/924Gz

Wipe all grease fittings before you apply any lubricant to the grease fittings.

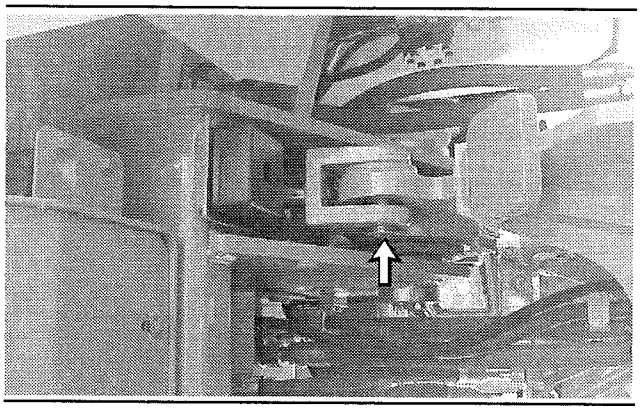

Illustration 209 g00626511

Right side steering cylinder

Apply lubricant to the grease fitting for the rod end of the steering cylinder.

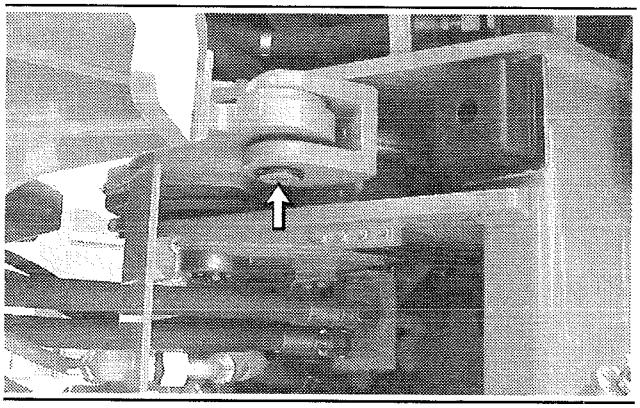

Illustration 210 g00626510

Left side steering cylinder

Apply lubricant to the grease fitting for the rod end of the steering cylinder.

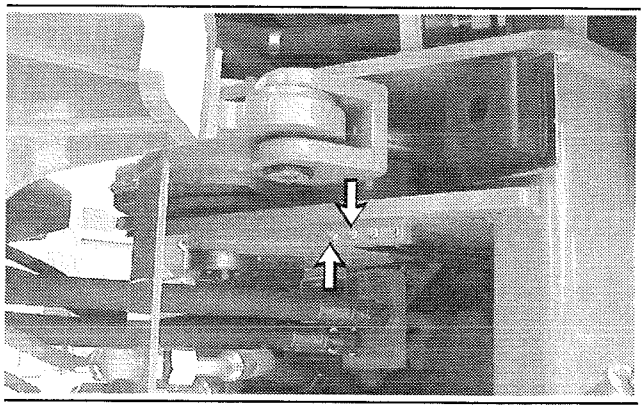

Illustration 211 g00626533

Apply lubricant to the two remote grease fittings for the head ends of both steering cylinders.

928G/IT28G

Wipe all grease fittings before you apply any lubricant to the grease fittings.

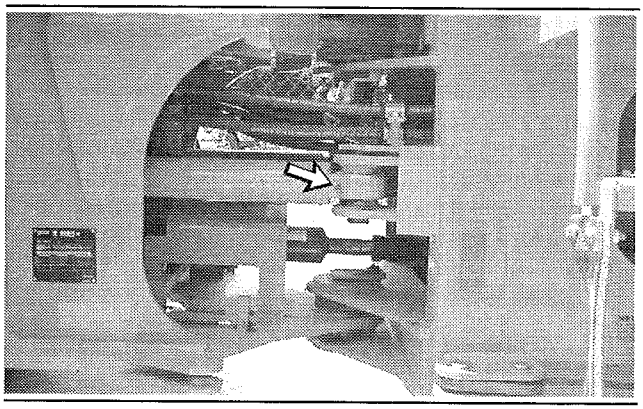

Illustration 212 g00913074

Left side steering cylinder

Apply lubricant to the grease fitting for the head end of the steering cylinder.

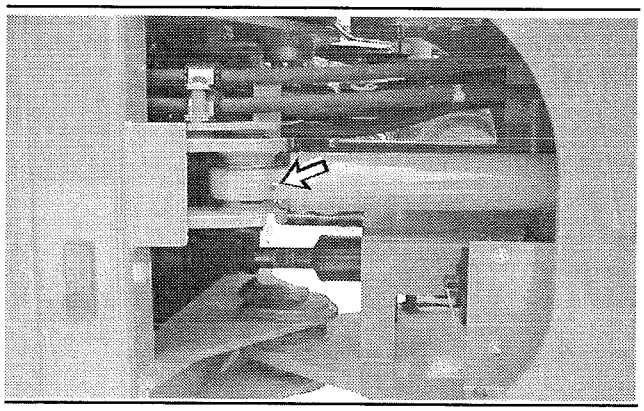

Illustration 213 g00913073

Right side steering cylinder

Apply lubricant to the grease fitting for the head end of the steering cylinder.

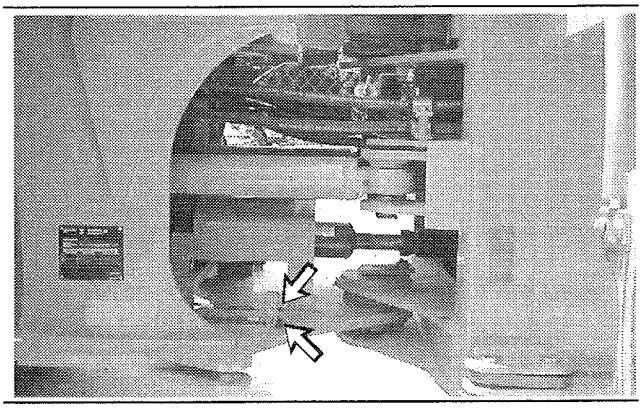

Illustration 214 g00913018

Apply lubricant to the two remote grease fittings for the rod ends of both steering cylinders.

i02154685

Tire Inflation - Check

SMCS Code: 4203-535-AI

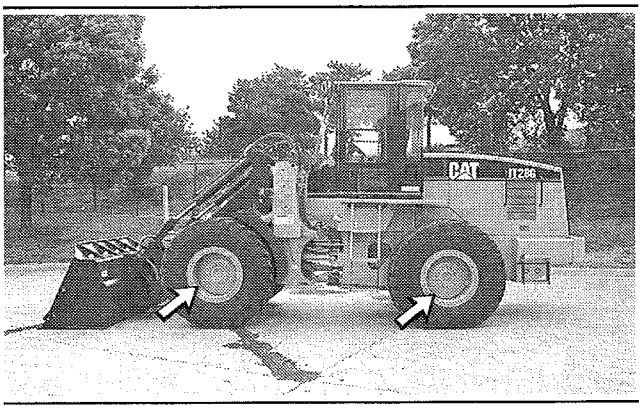

Illustration 215 g00474937

Measure the tire pressure on each tire. Consult your Caterpillar dealer for the correct load rating and for the correct operating pressures.

Inflate the tires, if necessary. See Operation and Maintenance Manual, "Tire Inflation Information".

i01733850

Transmission Magnetic Screen - Clean

SMCS Code: 3030-070-MGS; 3030-535-MGS; 3030

1. Drain the transmission oil. See Operation and Maintenance Manual, "Transmission Oil - Change".

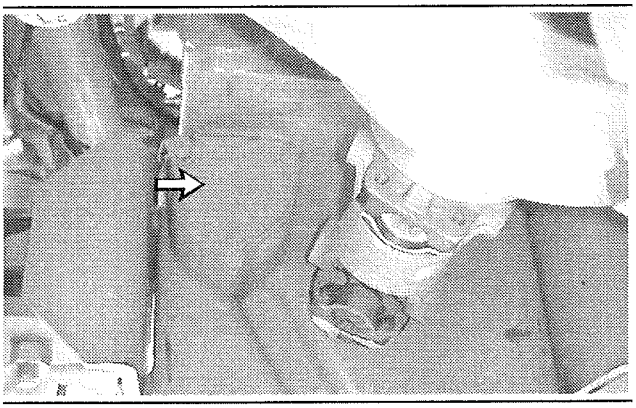

Illustration 216 g00627182

2. Remove the magnetic strainer cover.
3. Remove the magnets from the housing.
4. Remove the screen from the housing.
5. Wash the tube and the screen in a clean, nonflammable solvent.

NOTICE
Do not drop or rap the magnets against any hard objects. Replace any damaged magnets.

6. Clean the magnets with a cloth, with a stiff bristle brush, or with pressure air.
7. Install the magnets and the tube assembly into the magnetic screen.
8. Install the magnetic screen.
9. Clean the cover and inspect the seal. Replace the seal, if the seal is damaged.
10. Install the cover. Tighten the cover bolts.
11. Fill the transmission. See Operation and Maintenance Manual, "Transmission Oil - Change".

i01733855

Transmission Oil - Change

SMCS Code: 3030-044

Operate the machine for a few minutes in order to warm the transmission oil.

The machine should be level. Lower the bucket to the ground and apply slight downward pressure. Engage the parking brake and stop the engine.

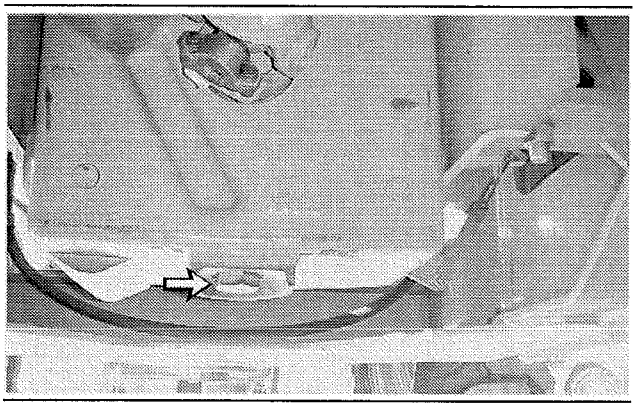

Illustration 217 g00627260

1. Remove the transmission drain plug. Allow the transmission oil to drain into a suitable container. Clean the transmission drain plug and install the transmission drain plug.

2. Change the transmission oil filter element. Refer to Operation and Maintenance Manual, "Transmission Oil Filter - Replace".

3. Clean the transmission magnetic screen. Refer to Operation and Maintenance Manual, "Transmission Magnetic Screen - Clean".

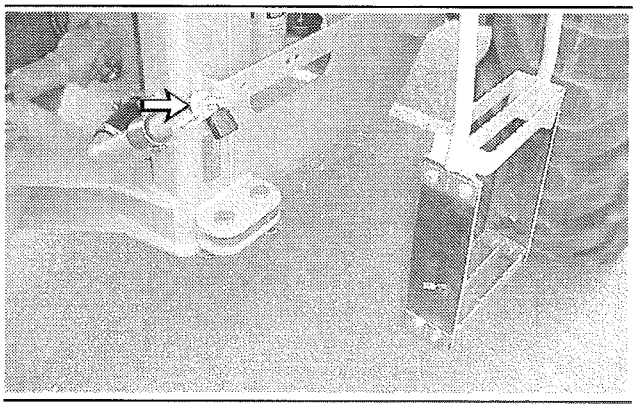

Illustration 218 g00627264

4. Fill the transmission with transmission oil through the transmission filler tube. Refer to Operation and Maintenance Manual, "Lubricant Viscosities" and Operation and Maintenance Manual, "Refill Capacities".

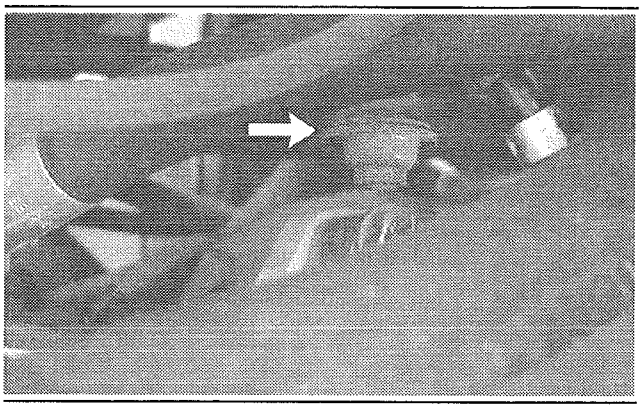

Illustration 219 g00627267

5. Remove the transmission breather that is located on the top of the transmission case. Install a new transmission breather.

6. Start the engine and run the engine at low idle. Apply the service brake. Slowly operate the transmission controls in order to circulate the oil.

7. Move the transmission control lever to NEUTRAL and engage the parking brake. Inspect the transmission for leaks.

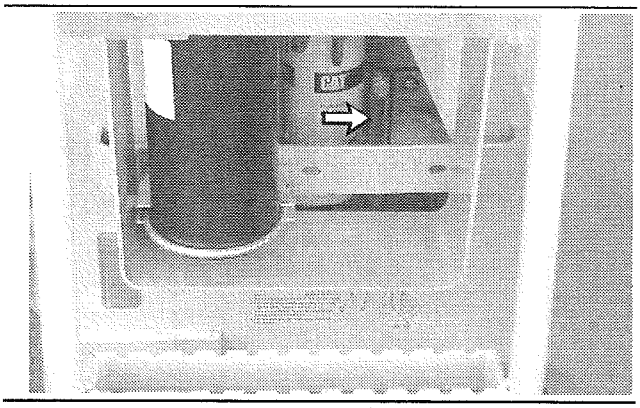

Illustration 220 g00627269

8. Maintain the transmission oil level between the "LOW" mark and the "HIGH" mark in the sight gauge when the transmission is warm and the engine is running. Maintain the transmission oil level to the top of the sight gauge when the transmission is cool and the engine is not running. Add transmission oil through the transmission filler tube, if necessary.

Note: Check the transmission oil level by using the dipstick if the sight gauge is blocked. You may need to take more than one reading in order to achieve a consistent reading on the dipstick. The oil level needs to be maintained in the crosshatched area of the dipstick. The dipstick is attached to the oil fill cap.

9. Stop the engine.

i01734082

Transmission Oil Filter - Replace

SMCS Code: 3067-510

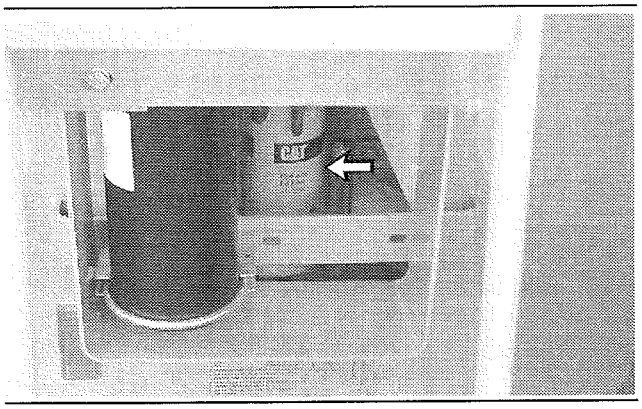

Illustration 221 g00627316

1. The transmission filter is located on the left side of the machine under the steps. Remove the transmission oil filter element with a strap type wrench.
2. Clean the filter element mounting base. Remove any part of the filter element gasket that remains on the filter element mounting base.
3. Apply a light coat of oil to the gasket of the new filter element.
4. Install the new filter element by hand. When the gasket contacts the mounting base, tighten the filter element for an additional three quarters of a turn.
5. Start the engine and apply the service brake. Slowly operate the transmission controls in order to circulate the transmission oil.
6. Move the transmission control lever to NEUTRAL and engage the parking. Inspect the filter element for leaks.

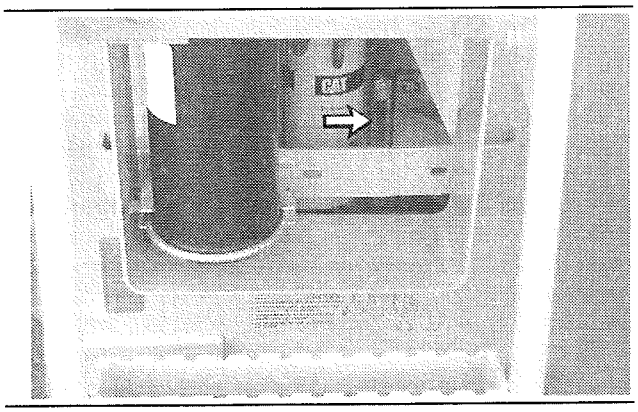

Illustration 222 g00627269

7. Maintain the transmission oil level between the "LOW" mark and the "HIGH" mark on the sight gauge when the transmission is warm and the engine is running. Maintain the transmission oil level to the top of the sight gauge when the transmission is cool and the engine is not running. Add transmission oil, if necessary.

Note: Check the transmission oil level by using the dipstick if the sight gauge is blocked. You may need to take more than one reading in order to achieve a consistent reading on the dipstick. The oil level needs to be maintained in the crosshatched area of the dipstick. The oil fill cap is also the dipstick.

8. Stop the engine.

i01734092

Transmission Oil Level - Check

SMCS Code: 3030-535-FLV

Check the transmission oil level while the machine is on a level surface.

The sight gauge for the transmission oil level is located on the left side of the machine under the steps.

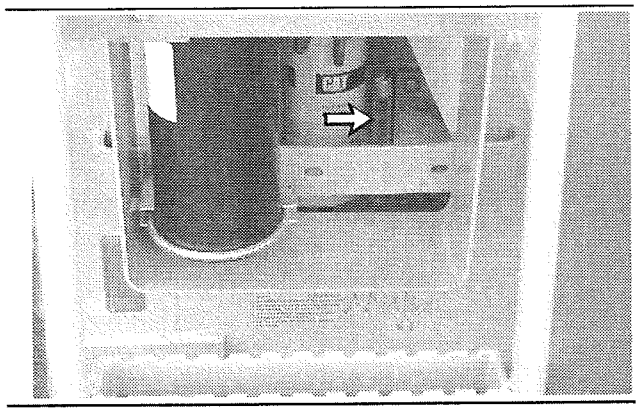

Illustration 223 g00627269

1. Maintain the transmission oil level between the "LOW" mark and the "HIGH" mark on the sight gauge when the transmission is warm and the engine is running. Maintain the transmission oil level to the top of the sight gauge when the transmission is cool and the engine is not running.

Note: Check the transmission oil level by using the dipstick if the sight gauge is blocked. You may need to take more than one reading in order to achieve a consistent reading on the dipstick. The oil level needs to be maintained in the crosshatched area of the dipstick. The oil fill cap is also the dipstick.

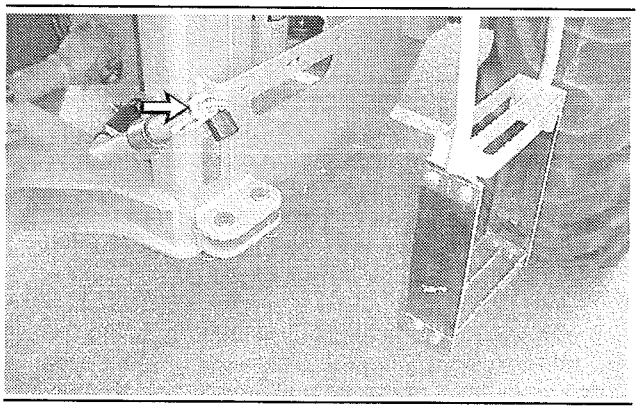

Illustration 224 g00627264

2. Remove the transmission filler plug and add transmission oil, if necessary.

3. Clean the filler plug and install the filler plug.

i02092030

Transmission Oil Sample - Obtain

SMCS Code: 3080-008; 7542-008

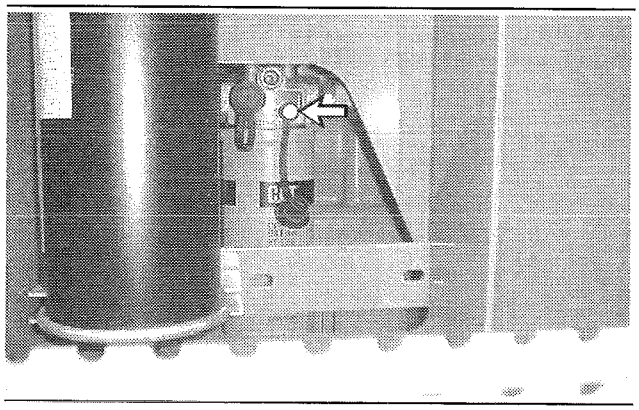

Illustration 225 g00614038

Use the sampling valve in order to obtain a sample of the transmission oil. The engine must be running in order to take a sample of the transmission oil.

Refer to Special Publication, SEBU6250, "Caterpillar Machine Fluids Recommendations", "S·O·S Oil Analysis" for information that pertains to obtaining an oil sample. Refer to Special Publication, PEHP6001, "How To Take A Good Oil Sample" for more information about obtaining an oil sample.

i01706737

Window Washer Reservoir - Fill

SMCS Code: 7306-544

NOTICE
When operating in freezing temperatures, use Caterpillar nonfreezing window washer solvent or equivalent. System damage can result from freezing.

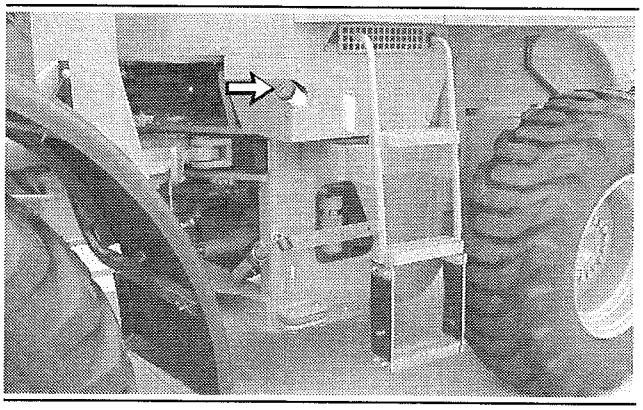

Illustration 226 g00627905

The window washer reservoir is located on the left side of the machine under the cab.

Fill the reservoir with window washer solvent.

i01740157

Window Wipers - Inspect/Replace

SMCS Code: 7305-040; 7305-510

Inspect the condition of the window wiper blades. Replace the window wiper blades if the window wiper blades are worn or damaged. If the window wiper blades streak the window, replace the window wiper blades.

i03732700

Windows - Clean

SMCS Code: 7310-070

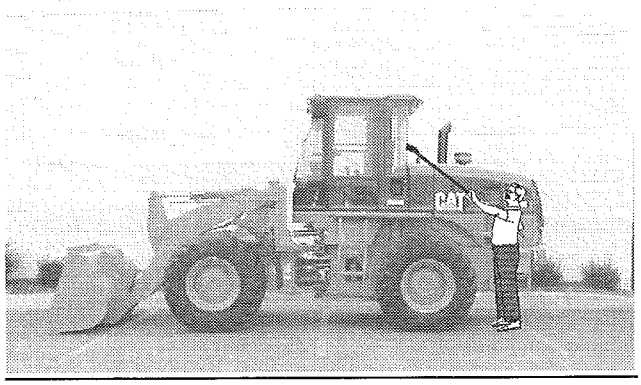

g00627875

Illustration 227

Use commercially available window cleaning solutions in order to clean the windows. Clean the outside of the windows from the ground unless handholds are available.

For machines that are equipped with debris screen guards, unlatch the side screen guards, and swing the guards to the open position in order to clean the glass behind the screen.

Reference Information Section

Reference Materials

i02337360

Reference Material

SMCS Code: 1000; 7000

Cooling System

Special Publication, PMEP5027, "Label - ELC Radiator Label"

Special Publication, PEHJ0067, "Product Data Sheet for Caterpillar ELC"

Special Publication, PEHP9554, "Product Data Sheet for Caterpillar DEAC (Diesel Engine Antifreeze/Coolant)"

Special Publication, SEBD0518, "Know Your Cooling System"

Special Publication, SEBD0970, "Coolant and Your Engine"

Grease

Data Sheet, NEHP6010, "Cat Ultra 5Moly Grease (NLGI grade 1 and grade 2)"

Data Sheet, NEHP6011, "Cat Arctic Platinum Grease (NLGI grade 0)"

Data Sheet, NEHP6012, "Cat Desert Gold Grease (NLGI grade 2)"

Data Sheet, NEHP6015, "Cat High Speed Ball Bearing Grease (NLGI grade 2)"

Special Publication, PEGJ0035, "Grease Selection Guide"

Data Sheet, PEHJ0088, "Cat Multipurpose Grease (NLGI grade 2)"

Data Sheet, PEHP0002, "Cat Advanced 3Moly Grease (NLGI grade 2)"

Hydraulic Oil

Special Publication, PEGP6028, "Caterpillar Hydraulic Systems Management Guide"

Special Publication, PEHJ0009, "Product Data Sheet for Caterpillar Hydraulic Oil (HYDO) (SAE 10W)"

Special Publication, PEHP6047, "Product Data Sheet for Caterpillar Biodegradable Hydraulic Oil (HEES)"

Miscellaneous Publications

Power Train Disassembly and Assembly, RENR6422, "Tire and Rim - Remove and Install"

Special Publication, PECP9067, "One Safe Source"

Special Publication, PEDP9131, "Fluid Contamination - The Silent Thief"

Special Publication, PEWJ0074, "Cat Filter & Fluid Application Guide"

Special Publication, SEBD0400 , "Dictionary of Pictographic Symbols"

Special Publication, SEBD0717, "Diesel Fuels and Your Engine"

Special Publication, SEBF1015, "Improving Component Durability - Final Drives and Differentials"

Special Publication, SEBU6250, "Caterpillar Machine Fluid Recommendations"

Special Publication, SEBU5898, "Cold Weather Recommendations"

Special Publication, SENR5664, "Air Conditioning and Heater R-134a for All Caterpillar Machines"

Special Publication, SENR9620, "Improving Fuel System Durability"

Special Publication, SMBU6981, "Emissions Control Warranty Information"

Special Instruction, SMHS7867, "Nitrogen Tire Inflation Group"

Oil

Special Publication, PEHP3050, "Product Data Sheet for Caterpillar Multipurpose Tractor Oil (MTO)"

Special Publication, PEHP6001, "How to Take a Good Oil Sample"

Special Publication, PEHJ0007, "Product Data Sheet for Caterpillar Arctic TDTO (SAE 0W-20) (synthetic blend)"

Special Publication, PEHJ0008, "Product Data Sheet for Caterpillar Arctic DEO (SAE 0W-30)"

Special Publication, PEHJ0030, "Product Data Sheet for Caterpillar Synthetic Gear Oil (SAE 75W-140)"

Special Publication, PEHJ0059, "Product Data Sheet for Caterpillar DEO (SAE 10W-30)"

Special Publication, PEHP7506, "Product Data Sheet for Caterpillar TDTO (SAE 10W, SAE 30, SAE 50)"

Special Publication, PEHP7508, "Product Data Sheet for Caterpillar Gear Oil (GO) (SAE 80W-90 and SAE 85W-140)"

Special Publication, PEHP7062, "Product Data Sheet for Caterpillar DEO Synthetic (SAE 5W-40)"

Special Publication, PEHP9530, "Product Data Sheet for Caterpillar FDAO (SAE 60)"

Special Publication, PEHP9570, "Product Data Sheet for Caterpillar FDAO Synthetic (Multigrade)"

Special Publication, PELJ0179, "Caterpillar Engine Crankcase Fluid-1 Specifications (Cat ECF-1)"

Special Publication, PEHP8035, "Product Data Sheet for TDTO Transmission Multi-Season (TMS)"

Special Publication, SEBD0640, "Oil and Your Engine"

Parts Manuals

Parts Manual, SEBP3524, 924GZ DFZ1-UP, RTA1-UP, WGX1-UP, 924G DDA1-UP, RBB1-UP, and WMB1-UP

Parts Manual, SEBP3520, 928G DJD1-UP, WLG1-UP, IT28G DBT1-UP, WAC1-UP, 930G TWR1-UP, and TFW1-UP

ROPS/FOPS Structure

Special Publication, SEBD1587, "What ROPS/FOPS Certification Means"

Special Publication, SEHS6929, "Inspection, Maintenance and Repair of ROPS and Attachment Installation Guidelines"

Safety Manuals

Safety Manual, SEBU5614, "Safety Manual"

Service Manuals

Service Manual, RENR8733, "Wheel Loader Electrical System (NACD)"

Service Manual, RENR9695, "Wheel Loader Electrical System (EAME)"

S·O·S Information

Special Publication, PEDP7036, "S·O·S Services"

Special Publication, PEHP7052, "Making the Most of S·O·S Services"

Special Publication, PEHP7057, "S·O·S Coolant Analysis"

Special Publication, PEHP7076, "Understanding S·O·S Services Tests"

Specifications Manuals

Specifications Manual, SENR3130, "Torque Specifications"

Tools

Special Publication, NENG2500, "Caterpillar Dealer Service Tool Catalog"

Additional Reference Material

SAE J183, "Classification" This can normally be found in the SAE handbook.

SAE J313, "Diesel Fuels" This can be found in the SAE handbook. Also, this publication can be obtained from your local technological society, from your local library, or from your local college.

SAE J754, "Nomenclature" This can normally be found in the SAE handbook.

Engine Manufacturers Association, " Engine Fluids Data Book"

Engine Manufacturers Association
Two North LaSalle Street, Suite 2200
Chicago, Illinois USA 60602
E-mail: ema@enginemanufacturers.org
(312) 827-8700
Facsimile: (312) 827-8737

i03645566

Decommissioning and Disposal

SMCS Code: 1000; 7000

When the product is removed from service, local regulations for the product decommissioning will vary. Disposal of the product will vary with local regulations. Consult the nearest Caterpillar dealer for additional information.

Index

A

Adjustments 93
Alert Indicators 82
Alternate Exit 57
Articulation Bearings - Lubricate 116
Axle Oil Cooler Screen - Clean/Replace 116
Axle Oscillation Bearings - Lubricate 116

B

Backup Alarm - Test 117
Backup Alarm (If Equipped) 82
Battery Disconnect Switch 81
Battery or Battery Cable - Inspect/Replace 117
Before Operation 22, 55
Before Starting Engine 21
Belts - Inspect/Adjust/Replace 118
  Air Conditioner Belt (If Equipped) 118
  Alternator Belt 118
Brake Accumulator - Check 119
Brake Discs - Check 119
  Inspect the Wear of Brake Discs 119
Braking System - Test 120
  Secondary Brake Holding Ability Test 120
  Service Brake Holding Ability Test 120
Bucket Cutting Edges - Inspect/Replace 121
Bucket Linkage and Loader Cylinder Bearings - Lubricate 122
Bucket Lower Pivot Bearings - Lubricate 122
Bucket Tips - Inspect/Replace 123
  Bucket Tips 123
  K-Series Tip 125
Bucket Wear Plates - Inspect/Replace 125
Burn Prevention 16
  Batteries 16
  Coolant 16
  Oils 16

C

Cab Air Filter - Clean/Replace 126
  Clean Filters 126
Cab Door 57
Capacities (Refill) 112
Circuit Breakers and Fuses - Reset/Replace 126
  Circuit Breakers Reset 126
  Replace Fuses 127
Cooling System Coolant (ELC) - Change 128
  Flushing a Standard Coolant From the Cooling System 130
  Flushing the Extended Life Coolant From the Cooling System 130
Cooling System Coolant Extender (ELC) - Add 130
Cooling System Coolant Level - Check 130
Cooling System Coolant Sample (Level 1) - Obtain 131
Cooling System Coolant Sample (Level 2) - Obtain 132
Cooling System Water Temperature Regulator - Replace 132
Crushing Prevention and Cutting Prevention 15

D

Daily Inspection 55
Decommissioning and Disposal 160
Differential and Final Drive Oil - Change 133
Differential and Final Drive Oil Level - Check 134
Differential and Final Drive Oil Sample - Obtain 134
Drive Shaft Spline (Center) - Lubricate 135
Drive Shaft Support Bearing - Lubricate 135

E

Electrical Storm Injury Prevention 21
Emissions Certification Film 53
Engine Air Filter Primary Element - Clean/ Replace 136
Engine Air Filter Secondary Element - Replace 136
Engine Air Filter Service Indicator - Inspect 137
Engine Air Precleaner - Clean (If Equipped) 138
Engine Crankcase Breather - Clean 138
Engine Crankcase Breather (Closed Circuit) - Replace (If Equipped) 139
Engine Oil and Filter - Change 140
Engine Oil Level - Check 139
Engine Oil Sample - Obtain 140
Engine Starting 22, 88
  Start the Engine 88
  Warm up the Engine and Machine 88
Engine Starting (Alternate Methods) 104
Engine Starting with Jump Start Cables 104
  Use of Jump Start Cables 104
Engine Stopping 23
Engine Valve Lash - Check 141
Equipment Lowering with Engine Stopped 24, 96
  Lowering the Equipment with the Accumulator Charged 97
  Lowering the Equipment with the Accumulator Discharged 97

F

Fire Extinguisher Location 19

Fire Prevention and Explosion Prevention 16
Battery and Battery Cables 17
Ether 19
Fire Extinguisher 19
General 16
Lines, Tubes and Hoses 18
Wiring 18
Foreword 5
California Proposition 65 Warning 4
Caterpillar Product Identification Number 5
Certified Engine Maintenance 4
Literature Information 4
Machine Capacity 5
Maintenance 4
Operation 4
Safety 4
Fuel System - Prime 141
Fuel System Primary Filter (Water Separator) - Drain 143
Fuel System Primary Filter (Water Separator) Element - Replace 143
Fuel System Secondary Filter - Replace 144
Fuel Tank Cap and Strainer - Clean 144

G

General Hazard Information 13
Asbestos Information 15
Containing Fluid Spillage 14
Dispose of Waste Properly 15
Fluid Penetration 14
Pressurized Air and Water 14
Trapped Pressure 14
General Information 28

H

Hydraulic System Oil - Change 144
Hydraulic System Oil Filter - Replace 146
Hydraulic System Oil Level - Check 147
Hydraulic System Oil Sample - Obtain 147
Hydraulic Tank Breather - Replace 147

I

Identification Information 52
Important Safety Information 2

L

Leaving the Machine 98
Lift Kickout - Adjust 93
Lifting and Tying Down the Machine 99
Lubricant Viscosities 109
Lubricant Viscosities and Refill Capacities 109

M

Machine Operation 57
Machine Retrieval 101
Towing with a Running Engine 102
Towing with a Stopped Engine 102
Maintenance Interval Schedule 114
Maintenance Section 106
Maintenance Support 113
Mounting and Dismounting 55
Alternate Exit 55

O

Oil Filter - Inspect 148
Inspect a Used Filter for Debris 148
Operation 22, 90
Operation Information 90
Changing Direction and Speed 90
Quick Coupler Function (if Equipped) 91
Secondary Steering (If Equipped) 90
Operation Section 55
Operator Controls 63
Autoshift Control 66
Backup alarm (If Equipped) 71
Directional Turn Signal and Hazard Flasher Control 71
Engine Start Switch 71
Gauges 72
Governor Control 72
Ground Speed Limiter (If Equipped) 73
Heating and Air Conditioning Control 73
Hydraulic Controls 70
Hydraulic Lockout Control 74
Kickout and Positioner Control 74
Light Switches 75
Loader Controls 67
Machine Security System (If Equipped) 75
Operator Programmable Transmission Neutralizer 76
Parking Brake Control 76
Quick Coupler Control 77
Reversing Fan Control (If Equipped) 78
Ride Control (If Equipped) 78
Service Brake Control 78
Steering Column Tilt Control 79
Steering Control 79
Transmission Control 80
Window Wiper and Window Washer 81
Operator Station 27

P

Parking 23, 96
Plate Locations and Film Locations 52
CE Mark 53
Product Information Section 28

Product Link (If Equipped) 84
Data Broadcasts 84
Operation in a Blast Site 85
Regulatory Compliance 85
Programmable Transmission Neutralizer - Adjust .. 94

Q

Quick Coupler - Check (If Equipped) 148

R

Radiator Core - Clean 148
Rated Load 29
Bucket Rated Load 29
Logging Fork Rated Load 47
Rated Load for all other Work Tools 50
Rated Load for Material Handling Arm 45
Rated Load for Pallet Forks 40
Reference Information Section 158
Reference Material 158
Additional Reference Material 159
Cooling System 158
Grease 158
Hydraulic Oil 158
Miscellaneous Publications 158
Oil 158
Parts Manuals 159
ROPS/FOPS Structure 159
S·O·S Information 159
Safety Manuals 159
Service Manuals 159
Specifications Manuals 159
Tools 159
Reference Materials 158
Roading the Machine 99
Rollover Protective Structure (ROPS) - Inspect .. 149

S

S·O·S Information 112
Safety Messages 6
Safety Section 6
Seat 58
Contour Series Air Seat 60
Contour Series Seat 59
Suspension Seat 58
Seat Belt 61
Extension of the Seat Belt 63
Seat Belt Adjustment for Non-Retractable Seat Belts 61
Seat Belt Adjustment for Retractable Seat Belts 62
Seat Belt - Inspect 149
Seat Belt - Replace 150
Shipping the Machine 99
Slope Operation 23
Sound Information and Vibration Information 25
Sound Level Information 25
Sound Level Information for Machines in European Union Countries and in Countries that Adopt the "EU Directives" 25
Sources 27
"The European Union Physical Agents (Vibration) Directive 2002/44/EC" 25
Specifications 28
Application/Configuration Restrictions 28
Intended Use 28
Machine Data 28
Steering Column Play - Check 150
Steering Column Spline (HMU Steering) - Lubricate 151
Steering Cylinder Bearings - Lubricate 152
924G/924Gz 152
928G/IT28G 152
Steering Frame Lock 56
Stopping the Engine 96
Stopping the Engine if an Electrical Malfunction Occurs 96
Stopping the Machine 96

T

Table of Contents 3
Tire Inflation - Check 153
Tire Inflation Information 106
Tire Inflation Pressure 106
924G and 924Gz 107
928G and IT28G 107
930G 108
Operating Pressure 106
Tire Inflation with Nitrogen 106
Tire Inflation Pressure Adjustment 108
Tire Inflation with Air 106
Tire Information 20
Towing Information 101
Transmission Magnetic Screen - Clean 153
Transmission Oil - Change 153
Transmission Oil Filter - Replace 155
Transmission Oil Level - Check 155
Transmission Oil Sample - Obtain 156
Transportation Information 99

V

Visibility Information 21

W

Welding on Machines and Engines with Electronic Controls 113
Window Washer Reservoir - Fill 156
Window Wipers - Inspect/Replace 156
Windows - Clean 157
Work Tool Positioner - Adjust 93

Work Tools..... 24

Product and Dealer Information

Note: For product identification plate locations, see the section "Product Identification Information" in the Operation and Maintenance Manual.

Delivery Date: _____

Product Information

Model: _____

Product Identification Number: _____

Engine Serial Number: _____

Transmission Serial Number: _____

Generator Serial Number: _____

Attachment Serial Numbers: _____

Attachment Information: _____

Customer Equipment Number: _____

Dealer Equipment Number: _____

Dealer Information

Name: _____ Branch: _____

Address: _____

_____

_____

	Dealer Contact	Phone Number	Hours
Sales:	_____	_____	_____
Parts:	_____	_____	_____
Service:	_____	_____	_____

©2010 Caterpillar
All Rights Reserved

Cat, Caterpillar, their respective logos, "Caterpillar Yellow" and the Power edge trade dress, as well as corporate and product identity used herein, are trademarks of Caterpillar and may not be used without permission.

Printed in U.S.A.