CATERPILLAR®

SEBP3526
December 2002

RUTHZIL TRATOR COMERCIAL DE PEÇAS LTDA 11 97083-6812 ROLANDO

Parts Manual

SIS

See "General Information" for New Parts Manual Features.

924G, 924Gz Wheel Loader

RBB1-Up (Machine)
RTA1-Up (Machine)
CPT1-Up (Engine)

Powered By 3056E Engine
This Parts Manual is also Available in .PDF Format on Compact Disc (CD-ROM) - Caterpillar Form No. SERP3526

Product and Dealer Information

Note: For product identification plate locations, see the section “Product Identification Information” in the Operation and Maintenance Manual.

Delivery Date: _____

Product Information

Model: _____

Product Identification Number: _____

Engine Serial Number: _____

Transmission Serial Number: _____

Generator Serial Number: _____

Attachment Serial Numbers: _____

Attachment Information: _____

Customer Equipment Number: _____

Dealer Equipment Number: _____

Dealer Information

Name: _____ Branch: _____

Address: _____

_____

_____

	Dealer Contact	Phone Number	Hours
Sales:	_____	_____	_____
Parts:	_____	_____	_____
Service:	_____	_____	_____

Información del Producto/Distribuidor

Nota: Para saber la ubicación de las placas de identificación del producto, ver la sección “Información sobre identificación del producto” en el Manual de Operación y Mantenimiento.

Fecha de entrega: _____

Información del producto

Modelo: _____

Número de identificación del producto: _____

Número de serie del motor: _____

Número de serie de la transmisión: _____

Número de serie del generador: _____

Números de serie de los accesorios: _____

Información sobre los accesorios: _____

Número del equipo del cliente: _____

Número del equipo del distribuidor: _____

Información del distribuidor

Nombre: _____ Sucursal: _____

Dirección: _____

_____

_____

	Comunicación con el distribuidor	Número de teléfono	Horas
Ventas:	_____	_____	_____
Piezas:	_____	_____	_____
Servicio:	_____	_____	_____

Informações Sobre Produto e Revendedor

Nota: Para localizações da placa de identificação do produto, consulte a seção, “Informações Sobre Identificação do Produto” no Manual de Operação e Manutenção.

Data de Entrega: _____

Informações Sobre o Produto

Modelo: _____

Número de Identificação do Produto: _____

Número de Série do Motor: _____

Número de Série da Transmissão: _____

Número de Série do Gerador: _____

Números de Série de Acessórios: _____

Informações Sobre Acessórios: _____

Número do Equipamento do Cliente: _____

Número do Equipamento do Revendedor: _____

Informações Sobre o Revendedor

Nome: _____ Filial: _____

Endereço: _____

_____

_____

	Contato do Revendedor	Telefone	Horas
Vendas:	_____	_____	_____
Peças:	_____	_____	_____
Serviço:	_____	_____	_____

MEMORANDA

TABLE OF CONTENTS

Name	Page
GENERAL INFORMATION	A12
REPAIR ALTERNATIVES	A23
SUPPLEMENTAL COOLANT ADDITIVES	A26
ENGLISH-PORTUGUESE PARTS NOMENCLATURE	A29
MAINTENANCE PARTS	A37
INDEX	A50
MACHINE ARRANGEMENT	1
CHASSIS AR	1
COMMON AR	3
ENGINE ARRANGEMENT	4
ENGINE AR	4
ENGINE AR-PRIMARY	5
INSTALLATION AR-ENGINE	6
BASIC ENGINE	7
CAMSHAFT GP	7
COVER GP-ENGINE	8
COVER GP-VALVE MECHANISM	10
CRANKSHAFT GP	12
CYLINDER BLOCK GP	13
CYLINDER HEAD GP	16
DRAIN GP-ENGINE OIL	18
FASTENER GP-CYLINDER HEAD	19
FLYWHEEL GP	20
GEAR GP-FRONT	21
HOUSING GP-FLYWHEEL	22
HOUSING GP-FRONT	24
LIFTING GP-ENGINE	26
MOUNTING GP-ALTERNATOR	27
MOUNTING GP-ENGINE & TMSN	28
MOUNTING GP-FAN DRIVE	30
PAN GP-OIL	32
PISTON & ROD GP	34
PLUG GP-CYLINDER BLOCK	35
PLUG GP-CYLINDER HEAD	37
PLUG GP-ENGINE	38
PLUG GP-FLYWHEEL HOUSING	39
PULLEY GP-CRANKSHAFT	40
ROCKER ARM GP	42
VALVE MECHANISM GP	44
LUBRICATION SYSTEM	45
FILTER GP-ENGINE OIL	45
GAUGE GP-OIL LEVEL (DIPSTICK)	46
PUMP GP-ENGINE OIL	48
VALVE GP-FLUID SAMPLING	50
COOLING SYSTEM	51
CONNECTION GP-WATER	51
COOLER GP-FLTR BASE & ENG OIL	52
FAN GP-SUCTION	54
GUARD GP-FAN	56
LINES GP-WATER	58
PUMP GP-WATER	60
RADIATOR GP	62
AIR INLET AND EXHAUST SYSTEM	67
AIR CLEANER GP	67
ELBOW GP-AIR INLET	69
EXTENSION GP-EXHAUST	70
LINES GP-AIR	71
MUFFLER GP	72
PRECLEANER GP	73
TURBOCHARGER GP	74
FUEL SYSTEM	76
FILTER GP-FUEL	76
LINES GP-FUEL	78
PUMP GP-FUEL INJECTION	82
PUMP GP-FUEL TRANSFER	86
SEPARATOR GP-WATER	89
TANK & MTG GP-FUEL	90
ELECTRICAL AND STARTING SYSTEM	91
ALARM GP	91
ALTERNATOR GP-CHARGING	92
CONTROL GP-LIFT KICKOUT	100
CONTROL GP-MACHINE	101
CONTROL GP-POSITION	102
CONVERTER GP-ELECTRICAL	103
ELECTRONICS GP-MACHINE	104
HEATER GP-JACKET WATER	105
INSTALLATION GP-SECURITY	107
LAMP GP-FLOOD	108
LAMP GP-STOP & TAIL	109
LAMP GP-WARNING BEACON	110
LIGHTING GP-AUXILIARY	111
LIGHTING GP-FLOOD	112
LIGHTING GP-FLOOD & SIGNAL	118
LIGHTING GP-REAR	120
LIGHTING GP-WARNING	121
LINES GP-STARTING AID	122
SENSOR GP-POSITION	123
STARTING AID GP	124
STARTING MOTOR GP-ELECTRIC	125
SWITCH GP-DISCONNECT	128
SWITCH GP-MAGNETIC	129
SWITCH GP-WIPER	131
WARNING GP-BACKUP	133
WIRING GP-BATTERY	134
WIRING GP-CAB	136
WIRING GP-COMMUNICATION	148

TABLE OF CONTENTS

Name	Page
WIRING GP-ELECTRONIC CONTROL	150
WIRING GP-ENGINE	152
WIRING GP-FRONT	158
WIRING GP-MACHINE	162
WIRING GP-REAR	166
WIRING GP-RIDE CONTROL	168
WIRING GP-SECONDARY STEERING	172
POWER TRAIN	174
AXLE AR-FIXED	174
AXLE AR-OSCILLATING	174
BRAKE & PLANETARY GP	178
CASE & PARTS GP-PLANETARY	182
CLUTCH GP	184
CONTROL GP-TRANSMISSION	190
COVER GP-TRANSMISSION	192
DIFFERENTIAL GP	194
DIFFERENTIAL GP-LIMITED SLIP	195
DRIVE GP-FLEXIBLE COUPLING	196
DRIVE GP-PUMP	197
FILLER GP-POWER TRAIN OIL	198
FILTER & LINES GP-TRANSMISSION	200
FILTER GP-OIL	202
GEAR GP-BEVEL & PINION	203
GEAR GP-INPUT TRANSFER	208
GEAR GP-OUTPUT TRANSFER	210
HOUSING GP-FIXED AXLE	212
HOUSING GP-OSCILLATING AXLE	214
LINES GP-AXLE OIL COOLER	218
LINES GP-TORQUE CONV COOLER	224
MOUNTING GP-AXLE	226
MOUNTING GP-RIM	227
POWER TRAIN AR	227
PUMP GP-GEAR	228
RIM AR	230
RIM GP-DEMOUNTABLE	231
SHAFT GP-DRIVE	235
STOP GP-AXLE OSCILLATION	237
TIRE & RIM AR	237
TRANSMISSION AR	243
VALVE GP-BYPASS	244
VALVE GP-RELIEF	245
VALVE GP-TRANSMISSION CONTROL	246
FRAME AND BODY	248
BOX GP-BATTERY	248
COUNTERWEIGHT GP	249
FENDER GP-FRONT	251
FRAME GP-LOADER	254
FRAME GP-REAR	256
GUARD GP-CRANKCASE	257
GUARD GP-LINES	258
GUARD GP-POWER TRAIN	264
HITCH GP-ARTICULATING	266
HOOD & GUARD GP	268
LADDER GP	270
LINES GP-GREASE	272
LINK GP-STEERING FRAME LOCK	274
PANEL GP-TOP	276
BRAKING SYSTEM	278
ACCUMULATOR GP-BRAKE	278
CONTROL GP-PARKING BRAKE	279
CONTROL GP-SERVICE BRAKE	282
LINES GP-SERVICE BRAKE	284
PUMP & MTG GP-BRAKE & HYD FAN	287
PUMP GP-GEAR	288
STEERING SYSTEM	292
CONTROL GP-STEERING	292
CYLINDER & MTG GP-STEERING	296
CYLINDER GP-STEERING	298
LINES GP-SECONDARY STEERING	300
LINES GP-STEERING	304
STEERING AR	307
STEERING AR-SECONDARY	307
STEERING COLUMN GP	308
HYDRAULIC SYSTEM	309
CONTROL AR-RIDE	309
CONTROL GP-HANDLE	310
CONTROL GP-PILOT OPERATED HYD	311
COOLER GP-HYD & TMSN OIL	322
COOLER GP-HYDRAULIC OIL	324
CYLINDER & MTG GP-COUPLER	325
CYLINDER GP-LIFT	326
CYLINDER GP-TILT	328
FILTER GP-OIL	330
HYDRAULIC AR	332
HYDRAULIC AR-2 VALVE	333
HYDRAULIC AR-3 VALVE	334
HYDRAULIC AR-4 VALVE	335
KICKOUT & POSITIONER GP	338
LINES GP-COUPLER	342
LINES GP-FRONT	354
LINES GP-HYDRAULIC	356
LINES GP-HYDRAULIC FAN	364
LINES GP-LIFT CYLINDER	372
LINES GP-PILOT	380
LINES GP-RIDE CONTROL	384
LINES GP-TILT CYLINDER	392
MOTOR & MTG GP-HYDRAULIC FAN	398
MOTOR AR-HYDRAULIC FAN	400
MOTOR GP-GEAR	401
MOUNTING GP-CONTROL VALVE	408
PIVOT GP-PILOT VALVE	409
PLATE GP-PILOT VALVE	413
PUMP & MTG GP-HYDRAULIC	414

TABLE OF CONTENTS

Name	Page
PUMP GP-PISTON	415
ROTATING GP-PUMP	420
TANK & MTG GP-HYDRAULIC	422
VALVE GP-BALL	424
VALVE GP-COMBINATION	425
VALVE GP-CONTROL	426
VALVE GP-MAIN CONTROL	428
VALVE GP-PILOT	448
VALVE GP-PILOT CARTRIDGE	474
VALVE GP-PRESS & FLOW CMPNSTR	482
VALVE GP-PRESSURE REDUCING	484
VALVE GP-QUICK COUPLER	485
VALVE GP-RIDE CONTROL	486
VALVE GP-SHUTOFF	488
VALVE GP-SOLENOID	490
IMPLEMENTS	494
BRACKET GP-TRANSPORT	494
CONTROL GP-BUCKET	496
CONTROL GP-WORK TOOL	498
WORK TOOLS	506
ADAPTER GP-TIP	506
ARM GP-MATERIAL HANDLING	507
BUCKET AS-GENERAL PURPOSE	508
BUCKET AS-LIGHT MATERIAL	512
BUCKET AS-PENETRATION	513
BUCKET GP-GENERAL PURPOSE	514
CARRIAGE AS-FORK	521
COUPLER AR-QUICK	521
COUPLER GP-QUICK	522
EDGE GP-CUTTING	524
EDGE GP-SEGMENT	524
FORK GP	525
FORK GP-PALLET	526
GUARD GP-BUCKET	528
GUARD GP-OVERFLOW	529
MOUNTING GP-BUCKET	531
TIP GP-LONG	532
TIP GP-SHORT	534
TOOTH GP-LONG	536
OPERATOR STATION	537
AIR CONDITIONER & MOUNTING GP	537
AIR CONDITIONER AR	538
AIR CONDITIONER GP	540
ARMREST GP	543
CAB AR	546
CAB AR-ENCLOSED ROPS	547
CAB GP	548
CANOPY AR-OPEN ROPS	551
CANOPY GP-OPEN ROPS	551
COMPRESSOR GP-REFRIGERANT	553
CONDENSER & MTG GP-REFRIGERANT	555
CONDENSER GP-REFRIGERANT	557
COVER GP-CONSOLE	558
DASH GP	559
DEFROSTER GP-CAB	560
DOOR GP-CAB	561
DUCT GP-AIR	566
EXTENSION GP-BACKREST	567
FILTER GP-CAB AIR	568
HEATER & MTG GP-CAB	569
HEATER AR-CAB	570
HEATER GP-CAB	572
HOUSING GP-SEAT SUSPENSION	574
INSTALLATION GP-RADIO	577
LINER GP-CAB	579
LINES GP-AIR CONDITIONER	588
LINES GP-HEATER	592
LITERATURE GP	594
MIRROR GP-REAR VIEW	595
MOTOR GP-WINDOW WIPER	597
MOUNTING GP-CAB	599
OPERATOR AR	600
PAN GP-BACKREST	601
PAN GP-SEAT	602
PANEL GP-INSTRUMENT	604
PEDAL GP-BRAKE	619
PEDAL GP-GOVERNOR	620
ROPS GP-ENCLOSED	621
ROPS GP-OPEN	622
SCREEN GP-SUN	624
SEAT & MOUNTING GP	625
SEAT BELT GP	629
SEAT GP	632
SEAT GP-SUSPENSION	635
SKIRT GP-CAB	640
SUPPORT GP-SEAT	642
SUSPENSION GP-SEAT	644
VISOR GP-CAB	648
WASHER GP-WINDOW	649
WIPER GP-WINDOW	652
SERVICE EQUIPMENT AND SUPPLIES	655
BOX GP-TOOL	655
FILM GP	656
PLATE & FILM GP	657
PART NUMBER INDEX	B1

CONTENIDO

Nombre	Página
INFORMACIÓN GENERAL	A15
ALTERNATIVAS DE REPARACIÓN	A24
ADITIVOS DE REFRIGERANTE SUPLEMENTARIOS	A27
PIEZAS DE MANTENIMIENTO	A41
INDICE	A59
CONFIGURACIÓN DE MÁQUINAS	1
CHASIS (CONFIG)	1
CONFIGURACIÓN COMÚN	3
CONFIGURACION DE MOTOR	4
CONFIGURACIÓN DE MOTORES	4
MOTOR PRIMARIO (CONFIG)	5
CONFIGURACIÓN DE INSTALACIÓN DEL MOTOR	6
MOTOR BÁSICO	7
ÁRBOL DE LEVAS (GR)	7
TAPA DEL MOTOR (GR)	8
TAPA DEL MECANISMO DE VÁLVULAS (GR)	10
CIGÜEÑAL (GR)	12
BLOQUE MOTOR (GR)	13
CULATA DE CILINDROS (GR)	16
DRENAJE DEL ACEITE DE MOTOR	18
CULATA DE CILINDROS - TORNILLERÍA DE LA (GR)	19
VOLANTE (GR)	20
ENGRANAJE DELANTERO (GR)	21
VOLANTE - CAJA DE (GR)	22
CAJA DELANTERA (GR)	24
CÁNCAMOS DE LEVANTAMIENTO DEL MOTOR (GR)	26
MONTAJE DEL ALTERNADOR (GR)	27
MONTAJE DEL MOTOR Y LA TRANSMISIÓN (GR)	28
MONTAJE DEL MANDO DE VENTILADOR (GR)	30
CÁRTER - COLECTOR DEL (GR)	32
PISTÓN Y BIELA (GR)	34
TAPÓN DEL BLOQUE MOTOR (GR)	35
TAPÓN DE CULATA (GR)	37
TAPÓN DEL MOTOR (GR)	38
TAPÓN DE LA CAJA DEL VOLANTE (GR)	39
CIGÜEÑAL - POLEA DE (GR)	40
BALANCÍN (GR)	42
MECANISMO DE VÁLVULAS (GR)	44
SISTEMA DE LUBRICACIÓN	45
FILTRO DE ACEITE DEL MOTOR (GR)	45
INDICADOR DEL NIVEL DE ACEITE (VARILLA) (GR)	46
BOMBA DE ACEITE DEL MOTOR (GR)	48
VÁLVULA DE MUESTREO (GR)	50
SISTEMA DE ENFRIAMIENTO	51
AGUA - CONEXIÓN DE (GR)	51
ENFRIADOR DE ACEITE DEL MOTOR Y BASE DEL FILTRO	52
SUCCIÓN - VENTILADOR DE (GR)	54
PROTECTOR DEL VENTILADOR (GR)	56
TUBERÍAS DEL AGUA (GR)	58
BOMBA DE AGUA (GR)	60
RADIADOR (GR)	62
SISTEMA DE AIRE DE ADMISIÓN Y ESCAPE	67
FILTRO DE AIRE (GR)	67
CODO DE ADMISIÓN DE AIRE (GR)	69
EXTENSIÓN DEL ESCAPE (GR)	70
AIRE - TUBERÍAS DE (GR)	71
SILENCIADOR (GR)	72
ANTEFILTRO (GR)	73
TURBOCOMPRESOR (GR)	74
SISTEMA DE COMBUSTIBLE	76
FILTRO DE COMBUSTIBLE (GR)	76
TUBERÍAS DE COMBUSTIBLE (GR)	78
BOMBA DE INYECCIÓN DE COMBUSTIBLE (GR)	82
BOMBA DE TRANSFERENCIA DE COMBUSTIBLE (GR)	86
SEPARADOR DE AGUA (GR)	89
TANQUE DE COMBUSTIBLE Y GRUPO DE MONTAJE	90
SISTEMA ELECTRICO Y DE ARRANQUE	91
ALARMA (GR)	91
CARGA - ALTERNADOR DE (GR)	92
CONTROL DE DESCONEXIÓN DE LEVANTAMIENTO (GR)	100
CONTROL DE MAQUINA (GR)	101
CONTROL DE POSICION (GR)	102
CONVERTIDOR ELÉCTRICO (GR)	103
ELECTRONICA DE LA MAQUINA (GR)	104
AGUA DE LAS CAMISAS - CALENTADOR DEL (GR)	105
INSTALACION DE SEGURIDAD (GR)	107
REFLECTOR (GR)	108
LUCES DE PARADA Y COLA (GR)	109
LÁMPARA DE BALIZA DE ADVERTENCIA (GR)	110

CONTENIDO

Nombre	Página
LUCES AUXILIARES (GR)	111
LUCES DE REFLECTOR (GR)	112
LUCES DE REFLECTOR Y CAMBIO DE DIRECCION (GR)	118
LUCES TRASERAS (GR)	120
LUCES DE ADVERTENCIA (GR)	121
TUBERÍAS DEL AUXILIAR DE ARRANQUE CON ÉTER EN EL MOTOR (GR)	122
DETECTOR DE POSICIÓN (SISTEMA DE COMBUST.) (GR)	123
AUXILIAR DE ARRANQUE (GR)	124
MOTOR DE ARRANQUE ELÉCTRICO (GR)	125
DISYUNTOR (GR)	128
INTERRUPTOR MAGNÉTICO (GR)	129
INTERRUPTOR DEL LIMPIADOR (GR)	131
RETROCESO - ALARMA DE (GR)	133
CABLES DE LA BATERÍA	134
CABLES DE LA CABINA (GR)	136
ALAMBRADO DE COMUNICACION (GR)	148
CABLES DEL CONTROL ELECTRÓNICO (GR)	150
CABLES DEL MOTOR (GR)	152
CABLES DELANTEROS (GR)	158
CABLES DE LA MÁQUINA (GR)	162
CABLES POSTERIORES (GR)	166
CABLES DE CONTROL DE AMORTIGUACIÓN (GR)	168
CABLES DE LA DIRECCIÓN SECUNDARIA	172
TREN DE FUERZA	174
EJE FIJO (CONFIG)	174
EJE OSCILANTE (CONFIG)	174
FRENO Y PLANETARIOS (GR)	178
CAJA Y PIEZAS DE LOS PLANETARIOS	182
EMBRAGUE (GR)	184
CONTROL DE LA TRANSMISIÓN (GR)	190
TAPA DE TRANSMISION (GR)	192
DIFERENCIAL (GR)	194
DIFERENCIAL DE DESLIZAMIENTO LIMITADO (GR)	195
ACOPLAMIENTO FLEXIBLE - MANDO DE (GR)	196
MANDO DE BOMBA (GR)	197
TUBO DE LLENADO DE ACEITE DE LA TRANSMISIÓN (GR)	198
TUBERÍAS DEL FILTRO Y LA TRANSMISIÓN (GR)	200
FILTRO DE ACEITE (GR)	202
ENGRANAJE DE CORONA Y PIÑÓN (GR)	203
ENGRANAJE DE TRANSFERENCIA DE ENTRADA (GR)	208
ENGRANAJE DE TRANSFERENCIA DE SALIDA	210
CAJA DEL EJE OSCILANTE (GR)	212
CAJA DE EJE OSCILANTE (GR)	214
TUBERÍAS DEL ENFRIADOR DE ACEITE DEL EJE (GR)	218
TUBERIAS DEL ENFRIADOR DEL CONVERTIDOR DE PAR	224
EJE - GRUPO DE MONTAJE	226
MONTAJE DE ARO	227
TREN DE FUERZA (CONFIG)	227
BOMBA DE ENGRANAJES (GR)	228
LLANTA (CONFIG)	230
ARO DESMONTABLE (GR)	231
EJE DE MANDO (GR)	235
TOPE DE OSCILACIÓN DEL EJE	237
ARO Y RUEDA	237
TRANSMISION (CONFIG)	243
DERIVACIÓN - VÁLVULA DE (GR)	244
VÁLVULA DE ALIVIO (GR)	245
VÁLVULA DE CONTROL DE LA TRANSMISIÓN (GR)	246
BASTIDOR Y CAJA	248
CAJA DE BATERÍA	248
CONTRAPESO (GR)	249
GUARDABARROS DELANTERO (GR)	251
BASTIDOR DEL CARGADOR (GR)	254
BASTIDOR TRASERO (GR)	256
CÁRTER - PROTECTOR DEL (GR)	257
PROTECTOR DE LAS TUBERÍAS (GR)	258
PROTECTOR DEL TREN DE FUERZA (GR)	264
ENGANCHE ARTICULADO (GR)	266
CAPO Y PROTECTOR (GR)	268
ESCALERILLA (GR)	270
TUBERÍAS DE ENGRASE (GR)	272
TIRANTE DE TRABA DEL BASTIDOR DE DIRECCIÓN (GR)	274
PANEL SUPERIOR (GR)	276
SISTEMA DE FRENOS	278
ACUMULADOR DEL FRENO (GR)	278
CONTROL DEL FRENO DE ESTACIONAMIENTO	279
FRENO DE SERVICIO - CONTROL (GR)	282
TUBERÍAS DEL FRENO DE SERVICIO (GR)	284
GRUPO DE BOMBA Y MONTAJE, FRENOS Y VENTILADOR HIDRÁULICO	287
BOMBA DE ENGRANAJES (GR)	288

CONTENIDO

Nombre	Página
SISTEMA DE DIRECCIÓN	292
CONTROL DE DIRECCIÓN (GR)	292
CILINDRO DE DIRECCIÓN Y MONTAJE (GR)	296
CILINDRO DE DIRECCIÓN (GR)	298
TUBERÍAS DE LA DIRECCIÓN SECUNDARIA (GR)	300
TUBERÍAS DE DIRECCIÓN (GR)	304
DIRECCIÓN (CONFIG)	307
DIRECCIÓN SECUNDARIA (CONFIG)	307
COLUMNA DE DIRECCIÓN (GR)	308
SISTEMA HIDRÁULICO	309
CONTROL DE AMORTIGUACIÓN (CONFIG)	309
CONTROL DE MANIJA (GR)	310
CONTROL HIDRÁULICO DE OPERACIÓN PILOTO (GR)	311
GRUPO DE REFRIGERANTE, HIDRÁULICO Y ACEITE DE TRANSMISIÓN	322
ENFRIADOR DEL ACEITE HIDRAULICO (GR)	324
CILINDRO DE ACOPLAMINETO Y MONTAJE (GR)	325
CILINDRO DE LEVANTAMIENTO (GR)	326
INCLINACIÓN HORIZONTAL - CILINDRO DE (GR)	328
FILTRO DE ACEITE (GR)	330
HIDRÁULICA (CONFIG)	332
CONFIGURACIÓN HIDRÁULICA DE 2 VÁLVULAS	333
VÁLVULA HIDRÁULICA DE 3 VÍAS (CONFIG)	334
VÁLVULA HIDRÁULICA DE 4 VÍAS (CONFIG)	335
POSICIONADOR DEL CUCHARÓN Y DESCONEXIÓN (GR)	338
ACOPLADOR - TUBERÍAS DE (GR)	342
TUBERÍAS DELANTERAS (GR)	354
TUBERÍAS HIDRÁULICAS (GR)	356
TUBERÍAS HIDRÁULICAS DEL VENTILADOR (GR)	364
CILINDRO DE LEVANTAMIENTO - TUBERÍAS DEL (GR)	372
TUBERÍAS CON SERVOMANDO (GR)	380
TUBERIAS DE CONTROL DE LA SUSPENSIÓN (GR)	384
TUBERÍAS DEL CILINDRO DE INCLINACIÓN (GR)	392
MOTOR Y MONTAJE DE VENTILADOR HIDRAULICO (GR)	398
MOTOR (CONFIG), VENTILADOR HIDRÁULICO	400
MOTOR DE ENGRANAJES (GR)	401
MONTAJE DE LA VÁLVULA DE CONTROL (GR)	408
GRUPO DE PIVOTE, VÁLVULA PILOTO	409
GRUPO DE PLANCHA, VÁLVULA PILOTO	413
BOMBA HIDRÁULICA Y MONTAJE (GR)	414
BOMBA DE PISTONES (GR)	415
GRUPO GIRATORIO DE BOMBA	420
TANQUE HIDRÁULICO Y MONTAJE (GR)	422
BOLA DE VÁLVULA (GR)	424
VÁLVULA DE COMBINACIÓN (GR)	425
VÁLVULA DE CONTROL (GR)	426
VÁLVULA DEL CONTROL PRINCIPAL (GR)	428
VÁLVULA PILOTO (GR)	448
VALVULA PILOTO DE CARTUCHO (GR)	474
VÁLVULA COMPENSADORA DE FLUJO Y PRESIÓN (GR)	482
VÁLVULA REDUCTORA DE PRESIÓN (GR)	484
VÁLVULA DE ACOPLAMIENTO RÁPIDO (GR)	485
VÁLVULA DE CONTROL DE LA AMORTIGUACIÓN (GR)	486
VÁLVULA DE CORTE (GR)	488
VÁLVULA DE SOLENOIDE (GR)	490
IMPLEMENTOS	494
SOPORTE DE TRANSPORTE (GR)	494
CONTROL DEL CUCHARÓN (GR)	496
CONTROL DE LA HERRAMIENTA DE TRABAJO (GR)	498
HERRAMIENTAS	506
GRUPO DE PUNTA Y ADAPTADOR	506
AGUILÓN TELESCÓPICO (GR)	507
CUCHARÓN DE USO GENERAL (CONJ)	508
CUCHARÓN PARA MATERIALES LIVIANOS	512
CUCHARON PARA PENETRACIÓN (CONJ)	513
CUCHARÓN DE USO GENERAL (GR)	514
PORTAHORQUILLAS (CONJ)	521
ACOPLADOR RÁPIDO (CONFIG)	521
ACOPLADOR RÁPIDO (GR)	522
CUCHILLA (GR)	524
SEGMENTO DE CUCHILLA (GR)	524
HORQUILLA (GR)	525
HORQUILLA PARA TARIMAS (GR)	526

CONTENIDO

Nombre	Página
GRUPO DE PROTECTOR DEL CUCHARON	528
PROTECTOR DE REBALSE (GR)	529
MONTAJE DEL CUCHARÓN (GR)	531
PUNTA LARGA (GR)	532
PUNTA CORTA (GR)	534
DIENTE LARGO (GR)	536
PUESTO DEL OPERADOR	537
ACONDICIONADOR DE AIRE Y MONTAJE (GR)	537
ACONDICIONADOR DE AIRE (CONFIG)	538
ACONDICIONADOR DE AIRE (GR)	540
POSABRAZOS (GR)	543
CABINA (CONFIG)	546
SISTEMA ROPS DE CABINA CERRADA (CONFIG)	547
CABINA (GR)	548
TECHO ROPS ABIERTO (CONFIG)	551
TECHO ROPS ABIERTO (GR)	551
COMPRESOR DE REFRIGERANTE (GR)	553
CONDENSADOR DEL REFRIGERANTE Y MONTAJE (GR)	555
CONDENSADOR DE REFRIGERANTE (GR)	557
TAPA DE LA CONSOLA (GR)	558
CONSOLA (GR)	559
DESCONGELADOR DE LA CABINA (GR)	560
PUERTA DE CABINA	561
CONDUCTO DE AIRE (GR)	566
EXTENSIÓN DEL RESPALDO (GR)	567
FILTRO DE AIRE DE LA CABINA (GR)	568
CALEFACCIÓN Y MONTAJE DE LA CABINA (GR)	569
CALEFACCIÓN DE LA CABINA (CONFIG)	570
CALEFACCIÓN DE LA CABINA (GR)	572
CAJA DE LA SUSPENSIÓN DEL ASIENTO (GR)	574
INSTALACIÓN DE RADIO (GR)	577
REVESTIMIENTO DE LA CABINA (GR)	579
TUBERÍAS DE ACONDICIONADOR DE AIRE (GR)	588
TUBERÍAS DE LA CALEFACCIÓN (GR)	592
PUBLICACIONES (GR)	594
RETROVISOR (GR)	595
MOTOR-LIMPIAPARABRISAS (GR)	597
GRUPO DE MONTAJE DE LA CABINA	599
COMPARTIMIENTO DEL OPERADOR (CONFIG)	600
SOPORTE DEL RESPALDO (GR)	601
CUBIERTA INFERIOR DEL ASIENTO DEL OPERADOR (GR)	602
TABLERO DE INSTRUMENTOS (GR)	604
PEDAL DE FRENO (GR)	619
REGULADOR - PEDAL DEL (GR)	620
CABINA ROPS CERRADA (GR)	621
ESTRUCTURA ROPS ABIERTA (GR)	622
PERSIANA PARA EL SOL (GR)	624
ASIENTO Y MONTAJE (GR)	625
CINTURÓN DE SEGURIDAD (GR)	629
ASIENTO (GR)	632
SUSPENSIÓN - ASIENTO CON (GR)	635
FALDON DE CABINA (GR)	640
SOPORTE DEL ASIENTO (GR)	642
ASIENTO CON SUSPENSIÓN (GR)	644
VISERA (GR)	648
LAVAPARABRISAS DE LA VENTANA (GR)	649
LIMPIAPARABRISAS DE LA VENTANA (GR)	652
EQUIPO DE SERVICIO Y SUMINISTROS	655
CAJA DE HERRAMIENTAS (GR)	655
ETIQUETA DE ADVERTENCIA (GR)	656
CALCOMANÍAS Y PLACAS DE IDENTIFICACIÓN (GR)	657
INDICE DE NUMEROS DE PIEZA	B1

ÍNDICE

Designação	Página
INFORMAÇÃO GERAL	A19
ALTERNATIVAS DE REPARO	A25
ADITIVOS SUPLEMENTARES DO LÍQUIDO ARREFECEDOR	A28
NOMENCLATURA DE PEÇAS INGLÊS-PORTUGUÊS	A29
PEÇAS DE MANUTENÇÃO	A46
ÍNDICE	A69
MÁQUINA - ARRANJO	1
CHASSI	1
ARRANJO BÁSICO	3
MOTOR - ARRANJO	4
MOTOR	4
MOTOR PRIMÁRIO	5
GRUPO DE INSTALAÇÃO - MOTOR	6
MOTOR BÁSICO	7
EIXO-COMANDO DE VÁLVULA	7
TAMPA - MOTOR	8
TAMPA - MECANISMO DAS VÁLVULAS	10
VIRABREQUIM	12
BLOCO DO MOTOR	13
CABEÇOTE DO MOTOR	16
DRENO - ÓLEO DO MOTOR	18
FIXADORES - CABEÇOTE DO MOTOR	19
VOLANTE DO MOTOR	20
ENGRENAGENS DE DISTRIBUIÇÃO	21
CAIXA DO VOLANTE DO MOTOR	22
CAIXA DIANTEIRA	24
LEVANTAMENTO DO MOTOR	26
MONTAGEM - ALTERNADOR	27
MONTAGEM - MOTOR E TRANSMISSÃO	28
MONTAGEM - COMANDO DO VENTILADOR	30
CÁRTER DO ÓLEO DO MOTOR	32
PISTÃO E BIELA	34
BUJÃO DO BLOCO DO CILINDRO	35
BUJÃO - CABEÇA DO CILINDRO	37
BUJÃO DO MOTOR	38
BUJÃO - CAIXA DO VOLANTE DO MOTOR	39
POLIA DO VIRABREQUIM	40
BALANCIM	42
MECANISMO DAS VÁLVULAS	44
SISTEMA DE LUBRIFICAÇÃO	45
FILTRO - ÓLEO DO MOTOR	45
INDICADOR - NÍVEL DO ÓLEO (VARETA)	46
BOMBA DE ÓLEO - MOTOR	48
VÁLVULA PARA TIRAR AMOSTRAS DE FLUIDOS	50
SISTEMA DE ARREFECIMENTO	51
CONEXÃO - TUBO D'ÁGUA	51
ARREFECEDOR DE ÓLEO DO MOTOR E BASE DO FILTRO	52
VENTILADOR DE SUCÇÃO	54
PROTETOR DO VENTILADOR	56
TUBOS - ÁGUA	58
BOMBA DE ÁGUA	60
RADIADOR	62
SISTEMA DA ADMISSÃO DE AR E DE ESCAPE	67
PURIFICADOR DE AR	67
COTOVELO DE ADMISSÃO DE AR	69
EXTENSÃO DO TUBO DE ESCAPE	70
TUBOS - AR	71
SILENCIADOR	72
PRÉ-PURIFICADOR	73
TURBOALIMENTADOR	74
SISTEMA DE COMBUSTÍVEL	76
FILTRO - COMBUSTÍVEL	76
TUBOS - COMBUSTÍVEL	78
BOMBA DE INJEÇÃO DO COMBUSTÍVEL	82
BOMBA DE TRANSFERÊNCIA DO COMBUSTÍVEL	86
SEPARADOR DE ÁGUA	89
TANQUE DE COMBUSTÍVEL E MONTAGEM	90
SISTEMA ELÉTRICO E DE PARTIDA	91
ALARME	91
ALTERNADOR DE CORRENTE	92
CONTROLE - DESENGATE AUTOMÁTICO DE LEVANTAMENTO	100
CONTROLE DA MÁQUINA	101
CONTROLE - POSIÇÃO	102
CONVERSOR ELÉTRICO	103
SISTEMA ELETRÔNICO - MÁQUINA	104
AQUECEDOR DA ÁGUA DO MOTOR	105
INSTALAÇÃO-SEGURANÇA	107
LÂMPADA - FAROL	108
LUZ TRASEIRA E DE FREIO	109
LUZ GIRATÓRIA DE ALARME	110
ILUMINAÇÃO - AUXILIAR	111
SISTEMA DE ILUMINAÇÃO - FARÓIS	112

ÍNDICE

Designação	Página
SISTEMA DE ILUMINAÇÃO - FARÓIS E SINAL	118
ILUMINAÇÃO - TRASEIRA	120
SISTEMA DE ILUMINAÇÃO - ADVERTÊNCIA	121
TUBOS - AUXILIAR DE PARTIDA A ÉTER - MOTOR	122
EMISSOR - POSIÇÃO	123
AUXILIAR DE PARTIDA	124
MOTOR ELÉTRICO DE PARTIDA	125
CHAVE GERAL	128
INTERRUPTOR - MAGNÉTICO	129
INTERRUPTOR - LIMPADOR DO PÁRA-BRISA	131
ALARME DE MARCHA À RÉ	133
CABOS/FIOS ELÉTRICOS - BATERIA	134
CABOS/FIOS ELÉTRICOS - CABINE	136
CABO/FIOS ELÉTRICOS-COMUNICAÇÃO	148
CABOS/FIOS ELÉTRICOS - CONTROLE ELETRÔNICO	150
CABOS/FIOS ELÉTRICOS - MOTOR	152
CABOS/FIOS ELÉTRICOS - DIANTEIROS	158
CABOS/FIOS ELÉTRICOS - MÁQUINA	162
CABOS/FIOS ELÉTRICOS - TRASEIROS	166
CABOS/FIOS ELÉTRICOS - ABSORÇÃO DE IMPACTOS	168
CABOS/FIOS ELÉTRICOS - DIREÇÃO SECUNDÁRIA	172
TREM DE FORÇA	174
EIXO FIXO	174
EIXO OSCILANTE	174
FREIOS E ENGRENAGENS PLANETARIAS	178
CARCAÇA DAS ENGRENAGENS PLANETÁRIAS E COMPONENTES	182
EMBREAGEM	184
CONTROLE DA TRANSMISSÃO	190
TAMPA - TRANSMISSÃO	192
DIFERENCIAL	194
DIFERENCIAL - DESLIZAMENTO LIMITADO	195
COMANDO - ACOPLAMENTO FLEXÍVEL	196
COMANDO DA BOMBA	197
BOCAL DE ENCHIMENTO DE ÓLEO DO TREM DE FORÇA	198
FILTRO E TUBOS - TRANSMISSÃO	200
FILTRO - ÓLEO	202
ENGRENAGEM-COROA E PINHÃO	203
ENGRENAGEM - TRANSFERÊNCIA DE ENTRADA	208
ENGRENAGENS DE SAÍDA DE TRANSFERÊNCIA	210
CAIXA - EIXO FIXO	212
CAIXA - EIXO OSCILANTE	214
TUBOS - ARREFECEDOR DE ÓLEO DO EIXO	218
TUBOS - ARREFECEDOR DO CONVERSOR DE TORQUE	224
MONTAGEM DO EIXO	226
MONTAGEM - ARO	227
TREM DE FORÇA	227
BOMBA DE ENGRENAGENS	228
ARO	230
ARO DESMONTÁVEL	231
EIXO DE TRANSMISSÃO	235
BATENTE DE OSCILAÇÃO DO EIXO	237
PNEU E ARO	237
TRANSMISSÃO	243
VÁLVULA DE DERIVAÇÃO	244
VÁLVULA DE ALÍVIO	245
VÁLVULA DE CONTROLE - TRANSMISSÃO	246
CHASSI E CARROCERIA	248
CAIXA - BATERIA	248
CONTRAPESO	249
PÁRA-LAMA DIANTEIRO	251
CHASSI DIANTEIRO	254
CHASSI TRASEIRO	256
PROTETOR - CÁRTER DO ÓLEO DO MOTOR	257
PROTETOR - TUBOS	258
PROTETOR - TREM DE FORÇA	264
ENGATE - ARTICULAÇÃO	266
CAPÔ E PROTETOR	268
ESCADA	270
TUBOS - GRAXA	272
ELO - TRAVA DA ARMAÇÃO DA DIREÇÃO	274
PAINEL - SUPERIOR	276
SISTEMA DE FREIO	278
ACUMULADOR - FREIO	278
CONTROLE DO FREIO DE ESTACIONAMENTO	279
CONTROLE DO FREIO DE SERVIÇO	282
TUBOS - FREIO DE SERVIÇO	284
BOMBA E MONTAGEM - FREIO E VENTILADOR HIDRÁULICO	287
BOMBA DE ENGRENAGENS	288
SISTEMA DE DIREÇÃO	292
CONTROLE DE DIREÇÃO	292
CILINDRO DE DIREÇÃO E MONTAGEM	296

ÍNDICE

Designação	Página
CILINDRO DA DIREÇÃO	298
TUBOS - DIREÇÃO SECUNDÁRIA	300
TUBOS - DIREÇÃO	304
DIREÇÃO	307
DIREÇÃO SECUNDÁRIA	307
COLUNA DA DIREÇÃO	308
SISTEMA HIDRÁULICO	309
SISTEMA DE ABSORÇÃO DE IMPACTOS	309
CONTROLE-CABO	310
CONTROLE HIDRÁULICO DE OPERAÇÃO PILOTO	311
ARREFECEDOR - ÓLEO HIDRÁULICO E DA TRANSMISSÃO	322
ARREFECEDOR DO ÓLEO HIDRÁULICO	324
CILINDRO DO ACOPLADOR E MONTAGEM	325
CILINDRO DE LEVANTAMENTO	326
CILINDRO DE INCLINAÇÃO	328
FILTRO - ÓLEO	330
COMANDO HIDRÁULICO	332
ARRANJO HIDRÁULICO - 2 VÁLVULAS	333
ARRANJO HIDRÁULICO - 3 VÁLVULAS	334
ARRANJO HIDRÁULICO - 4 VÁLVULAS	335
DESENGATE E POSICIONADOR DA CAÇAMBA	338
TUBOS - ACOPLADOR	342
TUBOS - DIANTEIROS	354
TUBOS - ÓLEO HIDRÁULICO	356
TUBOS - VENTILADOR HIDRÁULICOS	364
TUBOS - CILINDRO DE LEVANTAMENTO	372
TUBOS - CIRCUITO PILOTO	380
TUBOS - ABSORÇÃO DE IMPACTOS	384
TUBOS - CILINDRO DE INCLINAÇÃO	392
MOTOR E MONTAGEM - VENTILADOR HIDRÁULICO	398
MOTOR - VENTILADOR HIDRÁULICO	400
MOTOR - ENGRENAGENS	401
MONTAGEM - VÁLVULA DE CONTROLE	408
ARTICULAÇÃO DA VÁLVULA PILOTO	409
PLACA DA VÁLVULA PILOTO	413
BOMBA HIDRÁULICA E MONTAGEM	414
BOMBA DE PISTÃO	415
GRUPO ROTATIVO DA BOMBA	420
TANQUE DE ÓLEO HIDRÁULICO E MONTAGEM	422
VÁLVULA ESFÉRICA	424
VÁLVULA COMBINADA	425
VÁLVULA DE CONTROLE	426
VÁLVULA - CONTROLE PRINCIPAL	428
VÁLVULA DE CONTROLE PILOTO	448
VÁLVULA DO CARTUCHO PILOTO	474
VÁLVULA DE CONTROLE - PRESSÃO E COMPENSAÇÃO DE FLUXO	482
VÁLVULA DE REDUÇÃO DE PRESSÃO	484
VÁLVULA DE ACOPLAMENTO RÁPIDO	485
VÁLVULA DE CONTROLE DE ABSORÇÃO DE IMPACTOS	486
VÁLVULA DE PARADA	488
VÁLVULA SOLENÓIDE	490
ACESSÓRIOS	494
SUPORTE PARA TRANSPORTE	494
CONTROLE DA CAÇAMBA	496
CONTROLE DA FERRAMENTA DE TRABALHO	498
FERRAMENTAS DE TRABALHO	506
ADAPTADOR DA PONTA	506
BRAÇO - MANIPULADOR DE MATERIAIS	507
CAÇAMBA PARA APLICAÇÃO GERAL	508
CACAMBA PARA MATERIAL LEVE	512
CAÇAMBA PARA PENETRAÇÃO	513
CAÇAMBA PARA APLICAÇÃO GERAL	514
SUPORTE - GARFO	521
ACOPLADOR RÁPIDO	521
BORDA CORTANTE	524
BORDA SEGMENTADA DA CAÇAMBA	524
GARFO	525
GARFO DE PALETAS	526
PROTETOR - CAÇAMBA	528
PROTETOR CONTRA TRANSBORDAMENTO	529
MONTAGEM - CAÇAMBA	531
PONTA LONGA	532
PONTA CURTA	534
DENTE LONGO	536
ESTAÇÃO DO OPERADOR	537
CONDICIONADOR DE AR E MONTAGEM	537
CONDICIONADOR DE AR	538
BRAÇO DO ASSENTO	543
CABINE	546
CABINE - ESTRUTURA ROPS COBERTA	547
CABINE	548
TOLDO - ROPS ABERTA	551
TOLDO - ESTRUTURA ROPS ABERTA	551

ÍNDICE

Designação	Página
COMPRESSOR DE REFRIGERANTE	553
CONDENSADOR DO REFRIGERANTE E MONTAGEM	555
CONDENSADOR DE REFRIGERANTE	557
TAMPA - CONSOLO	558
PAINEL DE INSTRUMENTOS	559
DESEMBAÇADOR DA CABINE	560
PORTA DA CABINE	561
DUCTO DE AR	566
EXTENSÃO - ENCOSTO	567
FILTRO - AR DA CABINE	568
AQUECEDOR DA CABINE E MONTAGEM	569
AQUECEDOR DA CABINE	570
CAIXA - SUSPENSÃO DO ASSENTO	574
INSTALAÇÃO DO RÁDIO	577
REVESTIMENTO DA CABINE	579
TUBOS - AR CONDICIONADO	588
TUBOS - AQUECEDOR	592
PUBLICAÇÃO	594
ESPELHO RETROVISOR	595
MOTOR - LIMPADOR DO VIDRO	597
MONTAGEM - CABINE	599
CABINE	600
FUNDO - ENCOSTO	601
ASSENTO - FUNDO	602
PAINEL DE INSTRUMENTOS	604
PEDAL DO FREIO	619
PEDAL DO GOVERNADOR	620
ROPS FECHADA	621
ROPS ABERTA	622
TELA PÁRA-SOL	624
ASSENTO E MONTAGEM	625
CINTO DE SEGURANÇA	629
ASSENTO	632
ASSENTO COM SUSPENSÃO	635
PAINEL PROTETOR - CABINE	640
SUPORTE - ASSENTO	642
SUSPENSÃO - ASSENTO	644
PÁRA-SOL DA CABINE	648
LAVADOR DO VIDRO	649
LIMPADOR DO VIDRO	652
EQUIPAMENTOS DE SERVIÇO E SUPRIMENTOS	655
CAIXA DE FERRAMENTAS	655
DECALQUE	656
PLACA E DECALQUE	657
ÍNDICE DE NÚMERO DE PEÇA	B1

GENERAL INFORMATION

1. MACHINE IDENTIFICATION

Caterpillar machines are identified by Product Identification Numbers (PIN). Some components included in a machine may be identified by Serial Numbers (S/N). Typical components that will be serialized include engines, transmissions, bulldozers, and rippers. The machine and engine are further identified by arrangement numbers and in some cases modification numbers. These numbers are shown on the product identification plate(s) and on the master plate in the operator's compartment.

Caterpillar dealers need all of these numbers to determine accurate parts identification.

SIS ***New Feature***

Effective First Quarter 2001 the Caterpillar Product Identification Number (PIN) will change from 8 to 17 characters. In an effort to provide uniform equipment identification, Caterpillar and other construction equipment manufacturers are moving to comply with the latest version of the product identification numbering standard. Non-road machine PINs are defined by ISO 10261. The new PIN format will apply to all Caterpillar machines and generator sets. The PIN plates and frame marking will display the 17 character PIN. The new format will look like the following:

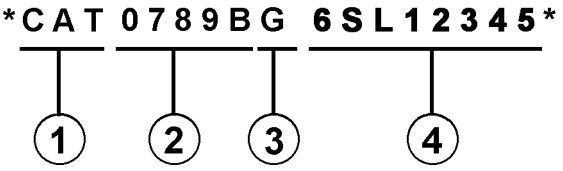

Where:

1. Caterpillar's World Manufacturing Code (characters 1-3)

2. Machine Descriptor (characters 4-8)

3. Check Character (character 9)

4. Machine Indicator Section (MIS) or Product Sequence Number (characters 10-17). These were previously referred to as the Serial Number.

Machines and generator sets produced before First Quarter 2001 will maintain their 8 character PIN format.

Components such as engines, transmissions, axles, etc. and work tools will continue to use an 8 character Serial Number (S/N).

2. ORDERING PARTS

⚠ WARNING

When replacement parts are required for this product Caterpillar recommends using Caterpillar replacement parts or parts with equivalent specifications including, but not limited to, physical dimensions, type, strength and material.

Failure to heed this warning can lead to premature failures, product damage, personal injury or death.

Quality Caterpillar replacement parts are available from Caterpillar dealers throughout the world. Their parts inventories are up to date and include all parts normally required to protect your investment in Caterpillar machines. Dealers may offer repair kits or remanufactured parts to allow selection of the most effective repair alternative for a particular situation. When ordering parts, your order should specify the quantity, part number, part name, and the serial number/product identification number of the machine for which the parts are needed.

3. PARTS MANUAL ORGANIZATION

Product information in this manual is presented as "information elements" that represent all of the components for the specific model. Engine Arrangement and Seat Group are examples of information elements. The information elements are organized alphabetically by part name and secondarily by part number within each major section of the manual.

4. TABLE OF CONTENTS

SIS ***New Feature***

A table of contents (TOC) is found at the beginning of the manual. The TOC lists each section of the manual with a complete list of all information elements organized as they appear in the manual. Page numbers are provided for quick reference to detailed parts identification illustrations and serviceable consist lists.

5. MAINTENANCE PARTS INDEX

The Maintenance Parts Index, located near the beginning of the manual, references most frequently used maintenance part numbers, providing description, quantity, usage and page number. This information is organized alphabetically by part description.

6. INDEX

The index located near the front of the manual is an alphabetical listing of all information elements included in the manual. Page numbers are provided for quick reference to detailed parts identification illustrations and serviceable consist lists.

7. PART NUMBER INDEX

A numerical index listing all part numbers and the corresponding page number(s) appears at the back of the manual.

8. CAPTIONS

Captions located at the top of each page of an information element identify the part number and part name along with additional descriptive information. PIN and S/N information found in each caption should be used to select correct information for a specific machine. Field replacement options, identification of optional attachment components, and where used ("part of") information is also provided.

SIS ***New Feature***

The first line of a caption is shown in larger type font to indicate the beginning of an information element. Captions for additional pages that may be required to illustrate an information element will be shown in standard type font and will include the term *(contd.)* .

9. NON-SERVICED PARTS

SIS ***New Feature***

In some instances it is necessary to display non-serviced parts that are a link to a lower level serviceable consist lists. These non-serviced part numbers are shown in *italic* type indicating that they are not available.

10. PARTS LIST REFERENCE NUMBERS

SIS ***New Feature***

Numbers shown in the Ref No column correspond to numbers used in the associated graphic(s). An alphabetic suffix may be added to a reference number to identify lower level consist items. Numbers shown in the Graphic Ref column refer to the graphic number identifier displayed in the lower left corner of each illustration. The Graphic Ref number may be used in combination with the item Ref No to determine the correct part number. There may be intentional omission of a Ref No in a consist list as information is updated to reflect the latest serviceable part numbers.

11. INDENTED PART NAMES

When a part name is indented in a parts list, it is part of (included in) the group or assembly under which it is indented.

12. ILLUSTRATION REFERENCE LETTERS

When necessary, illustrations contain reference letters (A, B, C etc.) that are intended to track lines and harnesses from one point to another. They are also used to show where to reconnect illustrations that have been separated.

13. ABBREVIATIONS AND SYMBOLS

O.D. – Outside Diameter
I.D. – Inside Diameter
A – Not Part Of This Group
B – Use As Required
C – Change From Previous Type
D – Order By The Meter
E – Order By The Centimeter
F – Not Shown
G – Order By The Inch
I – See Hose Fabrication Guide
M – Metric Part
R – Remfg Part May Be Available
Y – Separate Illustration
Z – Not Serviced Separately

NOTE:

Continuing improvement and advancement of product design may cause changes to your machine which may not be included in this publication. Whenever a question arises regarding your Caterpillar product or this publication, please consult your Caterpillar dealer for the latest available information.

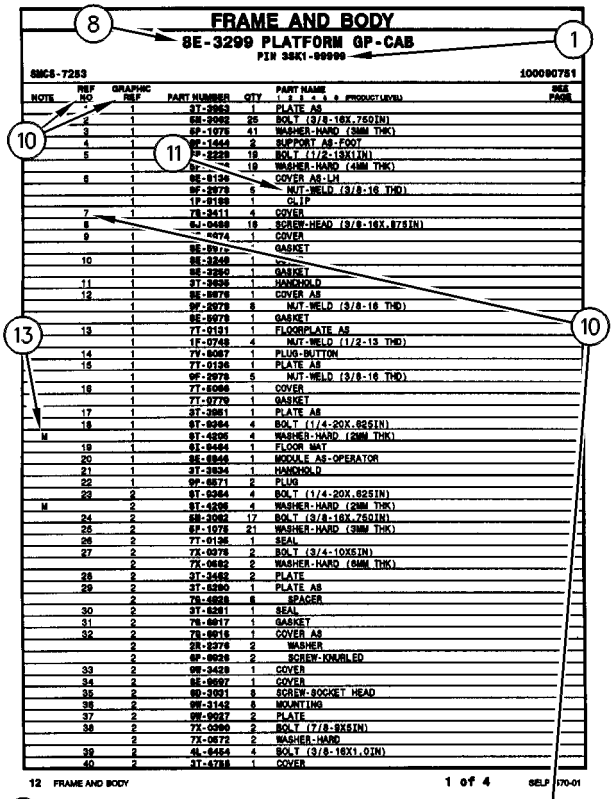

FRAME AND BODY

8E-3299 PLATFORM GP-CAB

PIN 38K1-99999

SMCS-7283 100090751

NOTE	REF NO	GRAPHIC REF	PART NUMBER	QTY	PART NAME 1 2 3 4 5 6 (PRODUCT LEVEL)	SEE PAGE
	1	1	3T-3953	1	PLATE AS	
	2	1	6B-3062	25	BOLT (3/8-16X.750IN)	
	3	1	6P-1075	41	WASHER-HARD (9MM THK)	
	4	1	9F-1444	2	SUPPORT AS-FOOT	
	5	1	7P-2229	19	BOLT (1/2-13X1IN)	
		1	6P-[illegible]	19	WASHER-HARD (4MM THK)	
	6	1	8E-8194	1	COVER AS-LH	
		1	9F-2979	5	NUT-WELD (3/8-16 THD)	
		1	1P-8199	1	CLIP	
	7	1	7S-3411	4	COVER	
	8		6J-0468	19	SCREW-HEAD (3/8-16X.875IN)	
	9	1	[illegible]-4674	1	COVER	
		1	8E-8972	1	GASKET	
	10	1	8E-3248	1	[illegible]	
		1	8E-3250	1	GASKET	
	11	1	3T-3939	1	HANDHOLD	
	12	1	8E-8978	1	COVER AS	
		1	9F-2978	8	NUT-WELD (3/8-16 THD)	
		1	8E-8978	1	GASKET	
	13	1	7T-0131	1	FLOORPLATE AS	
		1	1F-0748	4	NUT-WELD (1/2-13 THD)	
	14	1	7Y-8087	1	PLUG-BUTTON	
	15	1	7T-0136	1	PLATE AS	
		1	9F-2979	5	NUT-WELD (3/8-16 THD)	
	16	1	7T-8098	1	COVER	
		1	7T-0779	1	GASKET	
	17	1	3T-3951	1	PLATE AS	
	18	1	6T-8364	4	BOLT (1/4-20X.625IN)	
M		1	9T-4205	4	WASHER-HARD (2MM THK)	
	19	1	8X-8464	1	FLOOR MAT	
	20	1	8E-8946	1	MODULE AS-OPERATOR	
	21	1	3T-3934	1	HANDHOLD	
	22	1	9P-8871	2	PLUG	
	23	2	6T-8364	4	BOLT (1/4-20X.625IN)	
M		2	9T-4205	4	WASHER-HARD (2MM THK)	
	24	2	6B-3062	17	BOLT (3/8-16X.750IN)	
	25	2	6P-1075	21	WASHER-HARD (9MM THK)	
	26	2	7T-0136	1	SEAL	
	27	2	7X-0378	2	BOLT (3/4-10X5IN)	
		2	7X-0682	2	WASHER-HARD (6MM THK)	
	28	2	3T-3482	2	PLATE	
	29	2	3T-8290	1	PLATE AS	
		2	7S-4838	6	SPACER	
	30	2	3T-8291	1	SEAL	
	31	2	7S-8817	1	GASKET	
	32	2	7S-8916	1	COVER AS	
		2	2R-2376	2	WASHER	
		2	6P-8826	2	SCREW-KNURLED	
	33	2	9W-3429	1	COVER	
	34	2	8E-8897	1	COVER	
	35	2	9D-3991	8	SCREW-SOCKET HEAD	
	36	2	9W-3142	8	MOUNTING	
	37	2	9W-9027	2	PLATE	
	38	2	7X-0390	2	BOLT (7/8-9X5IN)	
		2	7X-0672	2	WASHER-HARD	
	39	2	6L-4454	4	BOLT (3/8-16X1.0IN)	
	40	2	3T-4788	1	COVER	

12 FRAME AND BODY 1 of 4 SELP4570-01

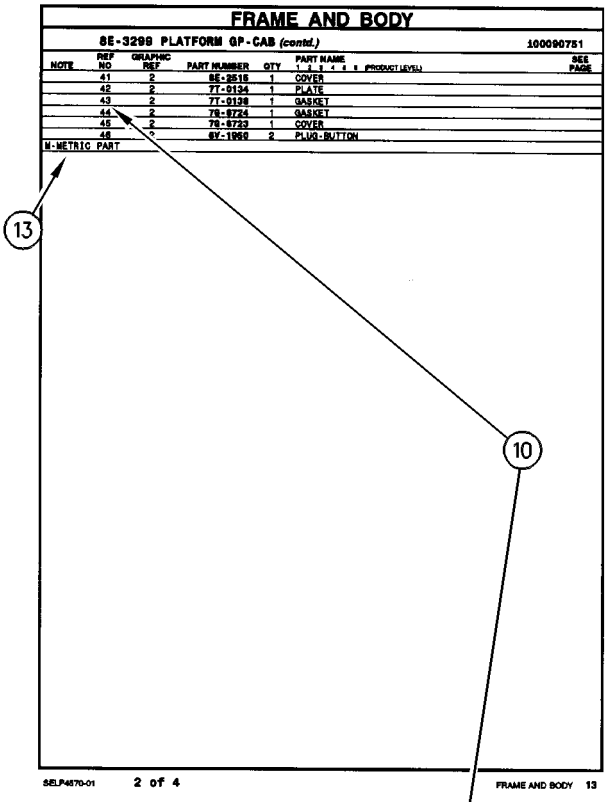

FRAME AND BODY

8E-3299 PLATFORM GP-CAB (contd.) 100090751

NOTE	REF NO	GRAPHIC REF	PART NUMBER	QTY	PART NAME 1 2 3 4 5 6 (PRODUCT LEVEL)	SEE PAGE
	41	2	8E-2515	1	COVER	
	42	2	7T-0134	1	PLATE	
	43	2	7T-0138	1	GASKET	
	44	2	7S-8724	1	GASKET	
	45	2	7S-8723	1	COVER	
	46	[illegible]	6V-1958	2	PLUG-BUTTON	
M-METRIC PART						

SELP4570-01 2 of 4 FRAME AND BODY 13

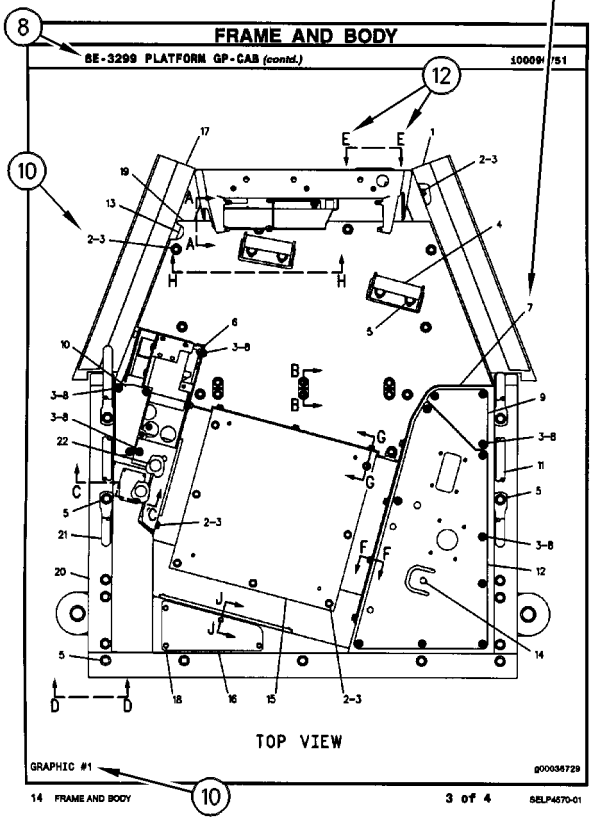

FRAME AND BODY

8E-3299 PLATFORM GP-CAB (contd.) 100090751

TOP VIEW

GRAPHIC #1 g00036729

14 FRAME AND BODY 3 of 4 SELP4570-01

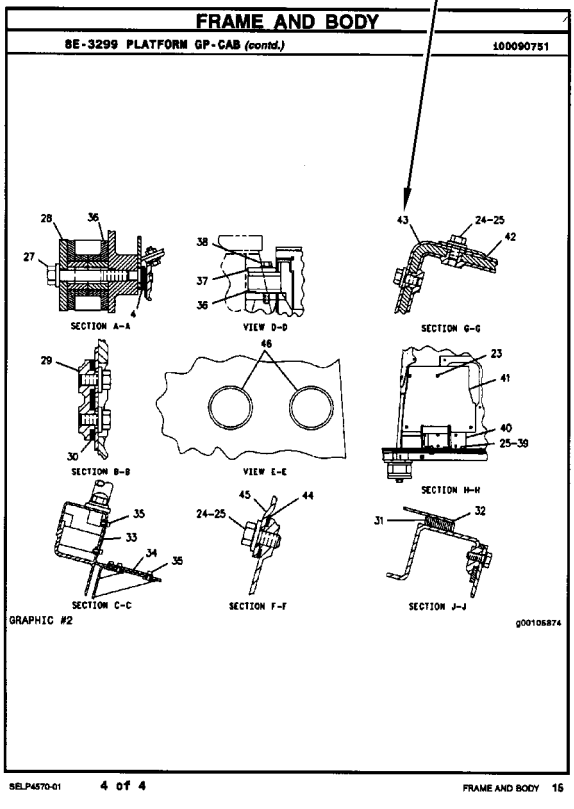

FRAME AND BODY

8E-3299 PLATFORM GP-CAB (contd.) 100090751

SECTION A-A

VIEW D-D

SECTION G-G

SECTION B-B

VIEW E-E

SECTION H-H

SECTION C-C

SECTION F-F

SECTION J-J

GRAPHIC #2 g00105874

SELP4570-01 4 of 4 FRAME AND BODY 16

1. MÁQUINAS

Las máquinas Caterpillar se identifican con Números de Identificación del Producto (PIN). Algunos componentes incluídos en la máquina pueden estar identificados con Números de Serie (N/S). Los componentes que tienen típicamente esta identificación incluyen motores, transmisiones, hojas topadoras y desgarradores. La máquina y el motor se identifican además con Números de Configuración y en algunos casos, Números de Modificación. Estos números están en las placas de identificación del producto o en la placa principal en la cabina del operador.

Los distribuidores Caterpillar necesitan estos números para identificar con exactitud los números de piezas de repuesto.

SIS *Nueva Característica*

A partir del primer trimestre del 2001, el Número de Identificación de Producto (PIN) de Caterpillar cambiará de 8 a 17 caracteres. Para hacer más uniforme el método de identificación de equipos, Caterpillar y otros fabricantes de equipo de construcción han tomado medidas para cumplir con la versión más reciente de la norma de numeración de identificación de productos. Los Números de Identificación de Producto para máquinas que no se operan en carreteras son definidos por la norma ISO 10261. El nuevo formato PIN corresponderá a todas las máquinas y grupos electrógenos Caterpillar. Las placas y los caracteres PIN estampados en el bastidor mostrarán el PIN de 17 caracteres. El nuevo formato tendrá la apariencia siguiente:

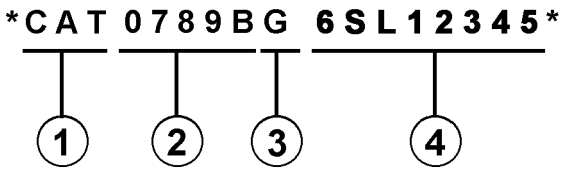

Significado de los caracteres:

1. Código de Fabricación Mundial de Caterpillar (caracteres 1-3)

2. Sección Descriptor de la Máquina (caracteres 4-8)

3. Carácter de Verificación (carácter 9)

4. Sección Indicador de la Máquina (MIS) o Número de Secuencia de Producto (caracteres 10-17). Anteriormente, estos caracteres constituían el Número de Serie.

Las máquinas y grupos electrógenos producidos antes del primer semestre del 2001 mantendrán su formato PIN de 8 caracteres.

Los componentes como motores, transmisiones, ejes, herramientas de trabajo, etc., continuarán usando un Número de Serie (S/N) de 8 caracteres.

2. COMO PEDIR REPUESTOS

⚠ ADVERTENCIA

Cuando se necesiten piezas de repuesto para este producto, Caterpillar recomienda usar piezas de repuesto Caterpillar o piezas que tengan especificaciones equivalentes incluyendo, pero sin estar limitadas a, dimensiones físicas, tipo, fortaleza y material.

El no hacer caso de esta advertencia puede llevar a fallas prematuras, daños al producto y lesiones graves o mortales.

Las piezas de repuesto Caterpillar de calidad están a la disposición de los distribuidores Caterpillar en todo el mundo. Sus existencias actualizadas incluyen todas las piezas normalmente requeridas para proteger su inversión en máquinas Caterpillar. Los distribuidores pueden tener juegos de reparación o piezas remanufacturadas para permitir la selección de la mejor alternativa de reparación en un caso en particular. Al pedir piezas de repuesto, especifique en su pedido la cantidad, el número de pieza, el nombre de la pieza y el número de serie/número de identificación del producto, de la máquina para la cual se necesitan estas piezas.

3. ORGANIZACION DEL MANUAL DE PIEZAS

La información sobre el producto, se presenta en este manual, como "elementos de información" que representan todos los componentes de un modelo específico. Las configuraciones de motores y los grupos de asientos son ejemplos de elementos de información. Los elementos de información están organizados primeramente por nombres de piezas en orden alfabético y en segundo lugar, por el número de pieza dentro de cada sección principal del manual.

4. CONTENIDO

SIS *Nueva Característica*

La página de Contenido se encuentra al principio del manual. El Contenido indica cada sección del manual con una lista completa de todos los elementos de información organizados en el orden que aparecen en el manual. Los números de página proporcionan una referencia rápida a las ilustraciones detalladas de identificación de piezas y a las listas de componentes de repuesto de dichas piezas.

5. ÍNDICE DE PIEZAS DE MANTENIMIENTO

Al principio de este catálogo se encuentra un índice de los números de piezas utilizadas más frecuentemente para el mantenimiento, que incluye descripción, cantidad necesaria, lugar de utilización y número de página. Esta información está organizada alfabéticamente, por descripción de la pieza.

6. ÍNDICE

El Índice, ubicado cerca del principio del manual, es una lista en orden alfabético de todos los elementos de información incluídos en el manual. Los números de página proporcionan una referencia rápida a las ilustraciones detalladas de identificación de piezas y a las listas de componentes de repuesto de dichas piezas.

7. INDICE NUMÉRICO DE PIEZAS

Un índice numérico de piezas con el correspondiente número de página aparece al final de este catálogo.

8. TÍTULOS

Los títulos ubicados en la parte superior de cada página de elementos de información identifican el número y el nombre de la pieza junto con información descriptiva adicional para ayudar al usuario a determinar las piezas necesarias para una máquina en particular. También se suministra información sobre las opciones de reparación en el campo, la identificación de componentes de accesorios optativos y el lugar de ubicación de la pieza ("es parte de").

SIS *Nueva Característica*

La primera línea del título se muestra con un tipo de letra más grande para indicar el comienzo de un elemento de información. Si se requieren páginas adicionales para ilustrar un elemento de información, los títulos se muestran con un tipo de letra normal y la continuación se indica entre paréntesis.

9. PIEZAS QUE NO SE SUMINISTRAN COMO REPUESTO

SIS *Nueva Característica*

En algunos casos es necesario indicar piezas que no se suministran como repuesto pero que pueden estar conectadas a listas de componentes de otras piezas de repuesto. En tal caso, dichas piezas se muestran en cursiva para indicar que no son piezas disponibles.

10. NÚMEROS DE REFERENCIA

SIS *Nueva Característica*

Los números en la columna de No. de Referencia corresponden a los números indicados en la ilustración que pertenece a ese número de pieza. Los números que tienen un sufijo alfabético identifican artículos de las listas de componentes de piezas. Los números en la columna de Referencia de la ilustración se identifican en la esquina inferior izquierda de cada ilustración. Para determinar el número de pieza correcto se puede utilizar tanto el No. de Referencia de la ilustración como el No. de Referencia del artículo. A medida que se actualiza la información para indicar los más recientes números de piezas de repuesto, puede omitirse intencionalmente un No. de Referencia en una lista de componentes de piezas.

11. NOMBRES DE PIEZA SANGRADOS

Cuando el nombre de una pieza está sangrado en una lista, significa que esta pieza forma parte del grupo o conjunto del renglón inmediatamente superior.

12. LETRAS DE REFERENCIA DE ILUSTRACIONES

Las ilustraciones contienen algunas veces letras de referencia (A, B, C etc.) cuyo propósito es seguir el trayecto de líneas y mazos de cables de un punto a otro. También se utilizan para mostrar dónde volver a unir ilustraciones que se habían separado.

13. ABREVIATURAS Y SIMBOLOS

O.D. – Diámetro exterior
I.D. – Diámetro interior
A – No es pieza de este grupo
B – Utilizado según la demanda
C – Indica cambio
D – Se pide por metro
E – Se pide por centímetro
F – No se muestra
G – Se pide por pulgada
I – Ver "Hose Fabrication Guide"
M – Pieza métrica
R – Puede estar disponible como pieza remanufacturada
Y – Ilustración separada
Z – No se suministra por separado

NOTA:

Las contínuas mejoras y adelantos en diseño podrían originar cambios a su máquina que no se incluyen en esta publicación. Cuando tenga alguna pregunta acerca de su producto Caterpillar o de esta publicación, consulte al distribuidor Caterpillar para obtener la información más reciente.

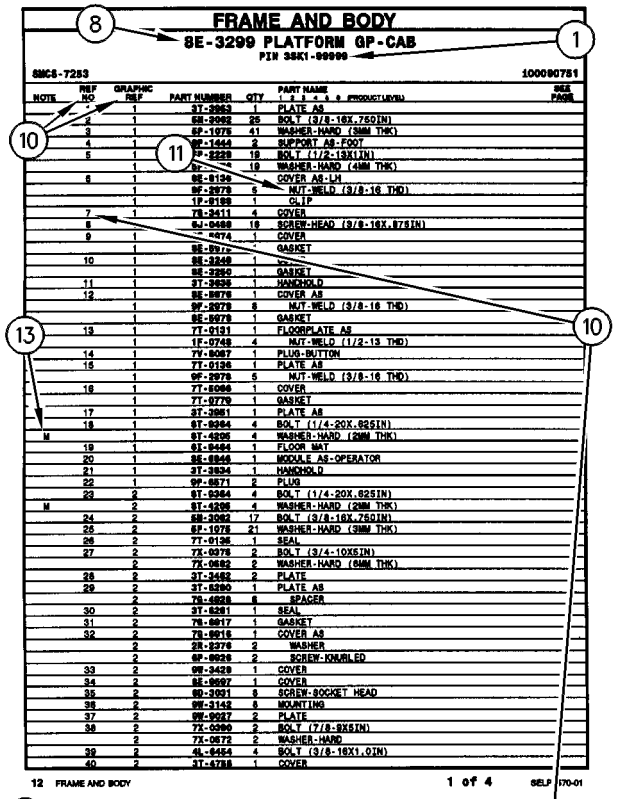

FRAME AND BODY

8E-3299 PLATFORM GP-CAB

PIN 38K1-99999

SMCS-7283 100090751

NOTE	REF NO	GRAPHIC REF	PART NUMBER	QTY	PART NAME 1 2 3 4 5 6 (PRODUCT LEVEL)	SEE PAGE
	1	1	3T-3953	1	PLATE AS	
	2	1	5B-3062	25	BOLT (3/8-16X.750IN)	
	3	1	6P-1075	41	WASHER-HARD (9MM THK)	
	4	1	9F-1444	2	SUPPORT AS-FOOT	
	5	1	5P-2329	19	BOLT (1/2-13X1IN)	
		1	6P-[illegible]	19	WASHER-HARD (4MM THK)	
	6	1	8E-8134	1	COVER AS-LH	
		1	9F-2979	5	NUT-WELD (3/8-16 THD)	
		1	1P-8188	1	CLIP	
	7	1	7S-3411	4	COVER	
	8		5J-0468	19	SCREW-HEAD (3/8-16X.875IN)	
	9	1	[illegible]-4674	1	COVER	
		1	8E-8972	[illegible]	GASKET	
	10	1	8E-3248	1	[illegible]	
		1	8E-3250	1	GASKET	
	11	1	3T-3939	1	HANDHOLD	
	12	1	8E-8978	1	COVER AS	
		1	9F-2978	8	NUT-WELD (3/8-16 THD)	
		1	8E-8978	1	GASKET	
	13	1	7T-0131	1	FLOORPLATE AS	
		1	1F-0748	4	NUT-WELD (1/2-13 THD)	
	14	1	7V-8087	1	PLUG-BUTTON	
	15	1	7T-0136	1	PLATE AS	
		1	9F-2979	5	NUT-WELD (3/8-16 THD)	
	16	1	7T-8098	1	COVER	
		1	7T-0779	1	GASKET	
	17	1	3T-3951	1	PLATE AS	
	18	1	6T-8364	4	BOLT (1/4-20X.625IN)	
M		1	9T-4205	4	WASHER-HARD (2MM THK)	
	19	1	8X-8464	1	FLOOR MAT	
	20	1	8E-8946	1	MODULE AS-OPERATOR	
	21	1	3T-3934	1	HANDHOLD	
	22	1	9P-8871	2	PLUG	
	23	2	6T-8364	4	BOLT (1/4-20X.625IN)	
M		2	9T-4205	4	WASHER-HARD (2MM THK)	
	24	2	5B-3062	17	BOLT (3/8-16X.750IN)	
	25	2	6P-1075	21	WASHER-HARD (9MM THK)	
	26	2	7T-0136	1	SEAL	
	27	2	7X-0378	2	BOLT (3/4-10X5IN)	
		2	7X-0682	2	WASHER-HARD (6MM THK)	
	28	2	3T-3482	2	PLATE	
	29	2	3T-8290	1	PLATE AS	
		2	7S-4838	6	SPACER	
	30	2	3T-8281	1	SEAL	
	31	2	7S-8017	1	GASKET	
	32	2	7S-8016	1	COVER AS	
		2	2R-2376	2	WASHER	
		2	6P-8826	2	SCREW-KNURLED	
	33	2	9W-3429	1	COVER	
	34	2	8E-8937	1	COVER	
	35	2	9D-3931	8	SCREW-SOCKET HEAD	
	36	2	9W-3142	8	MOUNTING	
	37	2	9W-9027	2	PLATE	
	38	2	7X-0360	2	BOLT (7/8-9X5IN)	
		2	7X-0672	2	WASHER-HARD	
	39	2	4L-4454	4	BOLT (3/8-16X1.0IN)	
	40	2	3T-4788	1	COVER	

12 FRAME AND BODY 1 of 4 SELP4570-01

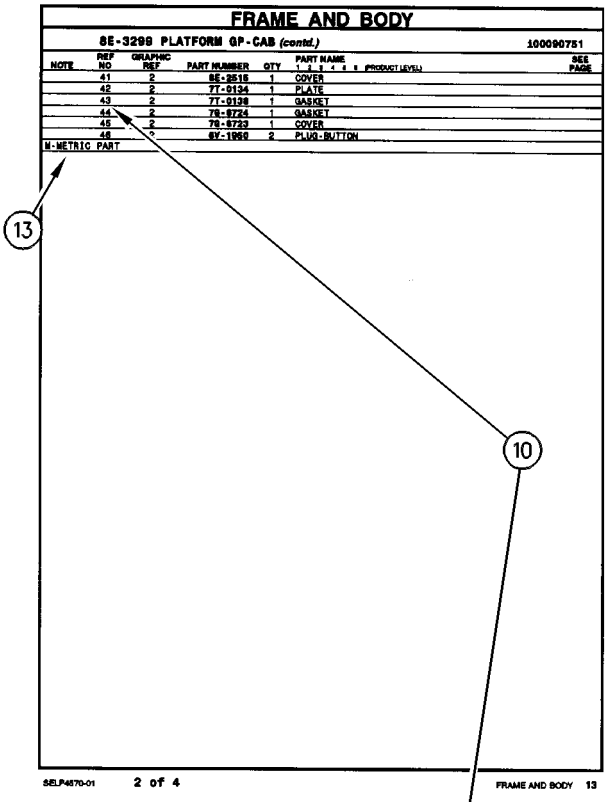

FRAME AND BODY

8E-3299 PLATFORM GP-CAB (contd.) 100090751

NOTE	REF NO	GRAPHIC REF	PART NUMBER	QTY	PART NAME 1 2 3 4 5 6 (PRODUCT LEVEL)	SEE PAGE
	41	2	8E-2515	1	COVER	
	42	2	7T-0134	1	PLATE	
	43	2	7T-0138	1	GASKET	
	44	2	7S-8724	1	GASKET	
	45	2	7S-8723	1	COVER	
	46	[illegible]	6V-1958	2	PLUG-BUTTON	
M-METRIC PART						

SELP4570-01 2 of 4 FRAME AND BODY 13

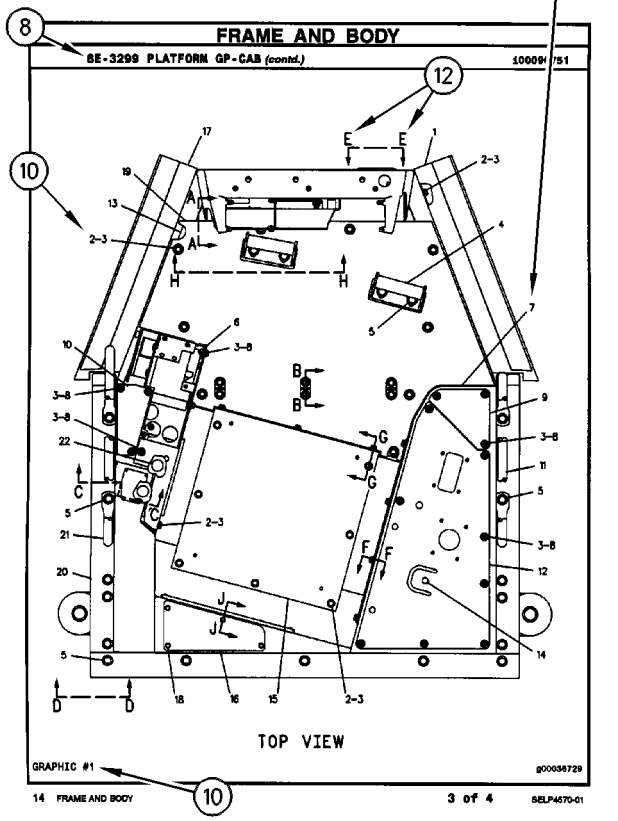

FRAME AND BODY

8E-3299 PLATFORM GP-CAB (contd.) 100090751

TOP VIEW

GRAPHIC #1 g00036729

14 FRAME AND BODY 3 of 4 SELP4570-01

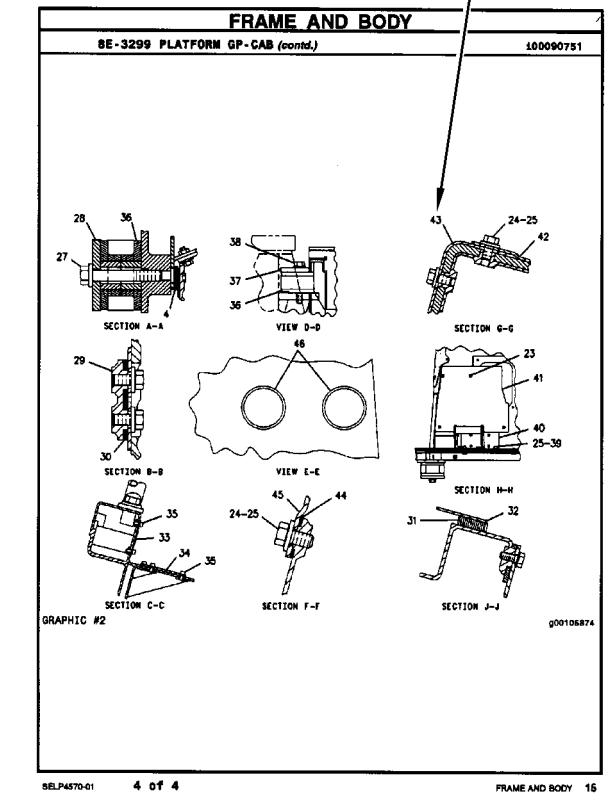

FRAME AND BODY

8E-3299 PLATFORM GP-CAB (contd.) 100090751

SECTION A-A VIEW D-D SECTION G-G

SECTION B-B VIEW E-E SECTION H-H

SECTION C-C SECTION F-F SECTION J-J

GRAPHIC #2 g00105874

SELP4570-01 4 of 4 FRAME AND BODY 16

1. IDENTIFICAÇÃO DA MÁQUINA

As máquinas Caterpillar são identificadas pelos Números de Informação do Produto (PIN). Alguns componentes incluídos numa máquina podem ser identificados por Números de Série (S/N). Componentes típicos que serão enumerados com números de série incluem motores, transmissões, lâminas e ríperes. Além do número de série, a máquina e o motor são ainda identificados por números de arranjo e, em alguns casos, números de modificações. Tais números encontram-se na(s) placa(s) de identificação do produto e na placa mestre no compartimento do operador.

Novidades

A partir do primeiro trimestre de 2001 o Número de Identificação de Produto da Caterpillar (PIN) vai mudar de 8 para 17 caracteres. Esforçando-se para fornecer uma identificação uniforme de equipamentos, a Caterpillar e outros fabricantes de equipamento de construção estão mudando para atender a versão mais atualizada do padrão de identificação de produtos. Os números de PIN para produtos de aplicações não rodoviárias são definidos pela ISO 10261. O novo formato de número PIN será adotado em todas as máquinas e grupos geradores Caterpillar. As placas e as marcações do chassi mostrarão os 17 dígitos de PIN. O novo formato terá a seguinte disposição:

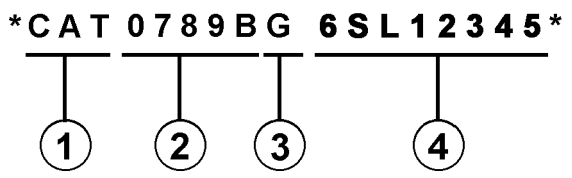

Onde:

1. Código de Fabricação Mundial da Caterpillar (dígitos 1-3)

2. Descrição da Máquina (dígitos 4-8)

3. Dígito de Verificação (dígito 9)

4. Seção de Indicador da Máquina (MIS) ou Número de Seqüência de Produto (dígitos 10-17). Estes eram anteriormente chamados de Número de Série.

Máquinas e grupos geradores produzidos antes do primeiro trimestre de 2001 manterão o formato de 8 caracteres de PIN.

Componentes como motores, transmissões, eixos, ferramentas de trabalho, etc. continuarão a usar Número de Série (S/N) com oito caracteres.

2. COMO OBTER PEÇAS

⚠ CUIDADO

Quando peças de substituição são exigidas para este produto, a Caterpillar recomenda a utilização de peças de substituição Caterpillar ou peças com as especificações equivalentes incluindo, mas não limitadas, à dimensões físicas, tipos, resistência e materiais.

A inobservância desta advertência poderá resultar em falhas prematuras, danos ao produto, ferimentos ou morte.

As Peças de Reposição de Qualidade Caterpillar encontram-se disponíveis nos revendedores Caterpillar no mundo inteiro. Seus estoques de peças são atualizados e incluem todas as peças normalmente necessárias para proteger seu investimento em máquinas Caterpillar. Alguns revendedores podem oferecer jogos de reparo ou peças de troca/remanufaturadas disponíveis como uma opção da alternativa de reparo mais eficaz para uma situação específica. Ao encomendar peças, seu pedido deve especificar a quantidade, o número e o nome da peça e o número de série/número de identificação do produto referentes à máquina para a qual as peças se destinam.

3. ORGANIZAÇÃO DO MANUAL DE PEÇAS

A informação do produto neste manual é apresentada em forma de "elementos de informação" que representam todos os componentes para o modelo específico. Arranjo de Motor e Grupo de Assento são exemplos de elementos de informação. Os elementos de informação são organizados em ordem alfabética por nome de peça ou secundariamente, por número de peça incluído em cada seção principal do manual.

4. LISTA DE CONTEÚDOS

Novidades

A Lista de Conteúdos (TOC) se encontra no princípio do manual. A Lista de Conteúdos (TOC) relaciona em cada seção do manual uma lista completa com todos os elementos de informação organizados conforme aparecem no manual. Números de página são fornecidos para que se tenha referência rápida de ilustrações de peças detalhadas e listas de conteúdos que podem receber serviço de manutenção.

5. ÍNDICE DE PEÇAS DE MANUTENÇÃO

O Índice de Peças de Manutenção, localizado perto do princípio do manual, faz referência aos números de peça de manutenção usados com maior frequência, fornecendo uma descrição, a quantidade, o uso e o número de página. Esta informação é organizada com a descrição da peça em ordem alfabética.

6. ÍNDICE

O Índice localizado perto do princípio do manual, consiste de uma lista em ordem alfabética de todos os elementos de informação incluídos no manual. Números de página são fornecidos para que se tenha referência rápida de ilustrações de peças detalhadas e listas de conteúdos que podem receber serviço de manutenção.

7. ÍNDICE DE NÚMERO DE PEÇA

Um índice numérico relacionando todos os números de peça e a(s) página(s) correspondentes, aparece no final do manual.

8. LEGENDAS

As legendas localizadas na parte de cima de cada página de um elemento de informação identifica o número de peça e o nome da peça, juntamente com informação descritiva adicional. Informações sobre o Número de Informação do Produto (PIN) e o Número de Série (S/N) encontradas em cada legenda devem ser usadas para selecionar a informação correta sobre uma máquina específica. Opções de substituição no campo, identificação de componentes de acessórios opcionais e informações sobre onde são utilizados ("parte de") são também fornecidas.

SIS ***Novidades***

A primeira linha de uma legenda é indicada em tipo maior para indicar o princípio de um elemento de informação. Legendas para páginas adicionais que podem ser necessárias para ilustrar um elemento de informação serão apresentadas em tipo padrão e incluirão o termo *(continua)* .

9. NÃO DISPONÍVEL SEPARADAMENTE

SIS ***Novidades***

Em alguns casos, é necessário mostrar peças não disponíveis separadamente que têm uma ligação com listas de conteúdos de nível inferior que podem receber serviço de manutenção. Os números de peça destes componentes não disponíveis aparecerão em *itálico* , a fim de indicar que não estão disponíveis.

10. NÙMEROS DE REFERÊNCIA À LISTA DE PEÇAS

SIS ***Novidades***

Os números indicados na coluna Ref No (No. de Referência) correspondem-se aos números usados no(s) gráfico(s) correspondente(s). Um sufixo com letras pode ser acrescentado a um número de referência para identificar itens de conteúdo de nível inferior. Os números indicados na coluna Graphic Ref (Referência de Gráfico) referem-se ao identificador de número de gráfico presente no canto esquerdo inferior de cada ilustração. O número de Referência de Gráfico pode ser usado em combinação com o item Ref No para determinar-se o número de peça correto. Poderá haver omissão intencional de um número de referência (Ref No) de uma lista de conteúdos uma vez que as informações são atualizadas para refletir os números de peça mais recentes que podem receber serviço de manutenção.

11. NOMES DE PEÇAS DESALINHADOS

Quando um nome de peça encontra-se desalinhado numa lista de peças, significa que tal item faz parte do (está incluído no) grupo ou conjunto sob o qual está relacionado.

12. LETRAS DE REFERÊNCIA NAS ILUSTRAÇÕES

Quando necessário, as ilustrações contêm letras de referência (A, B, C, etc.) que são utilizadas para seguir tubulações e cabos elétricos de um ponto a outro. Também foram utilizadas para indicar onde se pode reconectar as ilustrações que foram separadas.

13. ABREVIAÇÕES E SÍMBOLOS

O.D. – "Outside Diameter" (Diâmetro Externo)
I.D. – "Inside Diameter" (Diâmetro Interno)
A – Não faz parte deste grupo
B – Use conforme necessário
C – Indica modificação
D – Vendido por metro
E – Vendido por centímetro
F – Não ilustrado
G – Vendido por polegada
I – Consulte o seu revendedor quanto a mangueira
M – Peça métrica
R – Peça remanufaturada pode estar disponível; consulte o seu revendedor Cat
Y – Ilustração separada
Z – Não disponível separadamente

NOTA:

Os contínuos aperfeiçoamentos e avanços no projeto do produto podem ocasionar modificações em sua máquina que talvez ainda não estejam incluídas nesta publicação. Sempre que surgirem dúvidas quanto a um produto Caterpillar ou quanto à presente publicação, consulte o seu revendedor Caterpillar para obter as informações mais recentes disponíveis.

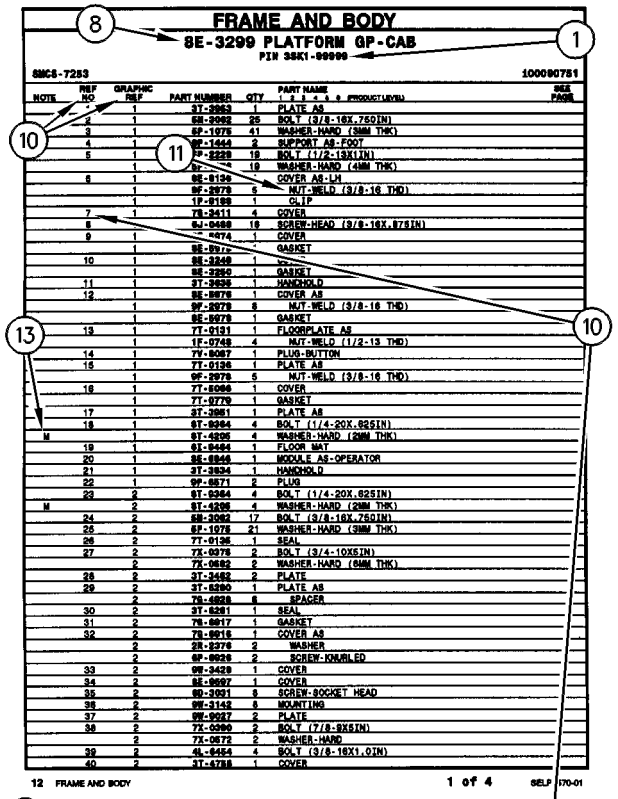

FRAME AND BODY

8E-3299 PLATFORM GP-CAB

PIN 38K1-99999

SMCS-7283 100090751

NOTE	REF NO	GRAPHIC REF	PART NUMBER	QTY	PART NAME (1 2 3 4 5 6 PRODUCT LEVEL)	SEE PAGE
	1	1	3T-3953	1	PLATE AS	
	2	1	6B-3062	25	BOLT (3/8-16X.750IN)	
	3	1	6P-1075	41	WASHER-HARD (9MM THK)	
	4	1	9F-1444	2	SUPPORT AS-FOOT	
	5	1	6P-2329	19	BOLT (1/2-13X1IN)	
		1	6P-	19	WASHER-HARD (4MM THK)	
	6	1	8E-8134	1	COVER AS-LH	
		1	9F-2979	5	NUT-WELD (3/8-16 THD)	
		1	1P-8188	1	CLIP	
	7	1	7S-3411	4	COVER	
	8		6J-0468	19	SCREW-HEAD (3/8-16X.875IN)	
	9	1	7T-4674	1	COVER	
		1	8E-8972	1	GASKET	
	10	1	8E-3248	1	[illegible]	
		1	8E-3250	1	GASKET	
	11	1	3T-3939	1	HANDHOLD	
	12	1	8E-8978	1	COVER AS	
		1	9F-2978	8	NUT-WELD (3/8-16 THD)	
		1	8E-8978	1	GASKET	
	13	1	7T-0131	1	FLOORPLATE AS	
		1	1F-0748	4	NUT-WELD (1/2-13 THD)	
	14	1	7Y-8087	1	PLUG-BUTTON	
	15	1	7T-0136	1	PLATE AS	
		1	9F-2979	5	NUT-WELD (3/8-16 THD)	
	16	1	7T-8098	1	COVER	
		1	7T-0779	1	GASKET	
	17	1	3T-3951	1	PLATE AS	
	18	1	6T-8364	4	BOLT (1/4-20X.625IN)	
M		1	6T-4205	4	WASHER-HARD (2MM THK)	
	19	1	6I-8464	1	FLOOR MAT	
	20	1	8E-8946	1	MODULE AS-OPERATOR	
	21	1	3T-3934	1	HANDHOLD	
	22	1	9P-8871	2	PLUG	
	23	2	6T-8364	4	BOLT (1/4-20X.625IN)	
M		2	6T-4205	4	WASHER-HARD (2MM THK)	
	24	2	6B-3062	17	BOLT (3/8-16X.750IN)	
	26	2	6P-1075	21	WASHER-HARD (9MM THK)	
	26	2	7T-0136	1	SEAL	
	27	2	7X-0378	2	BOLT (3/4-10X5IN)	
		2	7X-0682	2	WASHER-HARD (6MM THK)	
	28	2	3T-3482	2	PLATE	
	29	2	3T-8290	1	PLATE AS	
		2	7S-4838	6	SPACER	
	30	2	3T-8291	1	SEAL	
	31	2	7S-8817	1	GASKET	
	32	2	7S-8916	1	COVER AS	
		2	2R-2376	2	WASHER	
		2	6P-8826	2	SCREW-KNURLED	
	33	2	9W-3429	1	COVER	
	34	2	8E-8937	1	COVER	
	35	2	9D-3931	8	SCREW-SOCKET HEAD	
	36	2	9W-3142	8	MOUNTING	
	37	2	9W-9027	2	PLATE	
	38	2	7X-0360	2	BOLT (7/8-9X6IN)	
		2	7X-0672	2	WASHER-HARD	
	39	2	6L-4454	4	BOLT (3/8-16X1.0IN)	
	40	2	3T-4788	1	COVER	

12 FRAME AND BODY 1 of 4 SELP4570-01

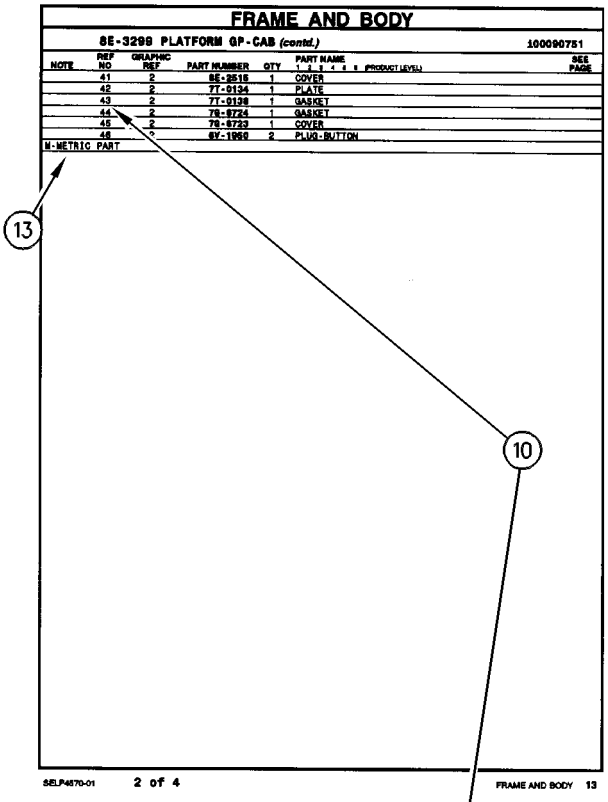

FRAME AND BODY

8E-3299 PLATFORM GP-CAB (contd.) 100090751

NOTE	REF NO	GRAPHIC REF	PART NUMBER	QTY	PART NAME (1 2 3 4 5 6 PRODUCT LEVEL)	SEE PAGE
	41	2	8E-2515	1	COVER	
	42	2	7T-0134	1	PLATE	
	43	2	7T-0138	1	GASKET	
	44	2	7S-8724	1	GASKET	
	45	2	7S-8723	1	COVER	
	46		6V-1958	2	PLUG-BUTTON	
M-METRIC PART						

SELP4570-01 2 of 4 FRAME AND BODY 13

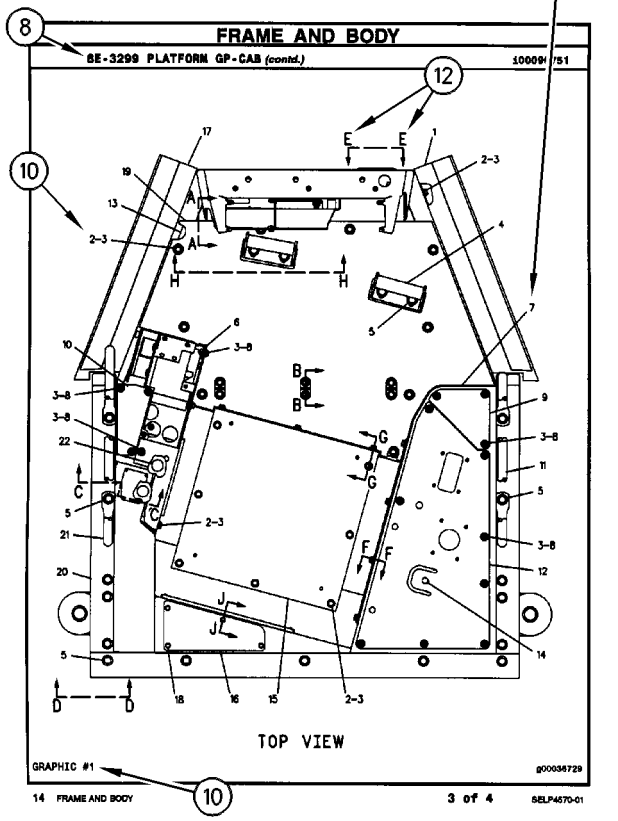

FRAME AND BODY

8E-3299 PLATFORM GP-CAB (contd.) 100090751

TOP VIEW

GRAPHIC #1 g00036729

14 FRAME AND BODY 3 of 4 SELP4570-01

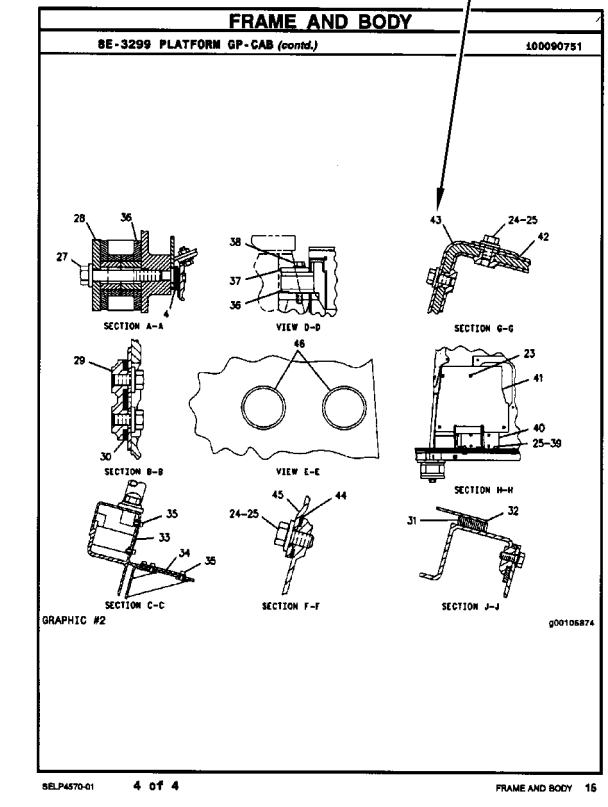

FRAME AND BODY

8E-3299 PLATFORM GP-CAB (contd.) 100090751

SECTION A-A

VIEW D-D

SECTION G-G

SECTION B-B

VIEW E-E

SECTION H-H

SECTION C-C

SECTION F-F

SECTION J-J

GRAPHIC #2 g00105874

SELP4570-01 4 of 4 FRAME AND BODY 16

REMANUFACTURED COMPONENTS

As an option when making repairs consider Caterpillar Remanufactured Components. Components that are available through the Caterpillar Remanufactured Program are identified three ways in the parts book:

- with the letter R in the note field of the parts list
- with an R* at the beginning of the first line of the caption
- with an *R at the end of the first line of the caption

Typical components included in the Remanufacturing Program include:

ALTERNATORS
CONNECTING RODS
CRANKSHAFTS - UNDERSIZE
CRANKSHAFTS - UPGRADE TO NEW
CYLINDER HEADS
ELECTRONIC CONTROL MODULES (ECM)
ELECTRONIC SENSORS
FUEL INJECTORS
FUEL NOZZLES
FUEL PUMPS
GOVERNORS
OIL PUMPS
PISTONS
SHORT BLOCKS
STARTERS
TURBOCHARGERS - COMPLETE
TURBOCHARGER CARTRIDGES
WATER PUMPS

Caterpillar Remanufactured engines for many engine arrangements are also available.

ALTERNATIVAS DE REPARACIÓN

COMPONENTES REMANUFACTURADOS

Al hacer reparaciones, tenga en cuenta la opción de Componentes Remanufacturados Caterpillar. Los componentes que están disponibles por medio del programa de Productos Remanufacturados Caterpillar se identifican de tres maneras en el manual de piezas:

- con la letra R en el espacio de Nota de la lista de piezas
- con una R* al comienzo de la primera línea de la leyenda
- con una *R al final de la primera línea de la leyenda

Los componentes que se incluyen típicamente en el Programa de Productos Remanufacturados son:

ALTERNADORES
BIELAS
CIGÜEÑALES - BAJOMEDIDA
CIGÜEÑALES - REMANUFACTURADOS A NUEVO
CULATAS
MÓDULOS DE CONTROL ELECTRÓNICO (ECM)
SENSORES ELECTRONICOS
INYECTORES
BOQUILLAS
BOMBAS DE COMBUSTIBLE
REGULADORES
BOMBAS DE ACEITE
PISTONES
MONOBLOQUES
MOTORES DE ARRANQUE
TURBOCOMPRESORES - COMPLETOS
NÚCLEOS DE TURBOCOMPRESOR
BOMBAS DE AGUA

También hay disponibles motores Remanufacturados Caterpillar para muchas de las configuraciones de motores.

COMPONENTES REMANUFATURADOS

Considere o uso de Componentes Remanufaturados Caterpillar ao efetuar reparos. Os componentes disponíveis através do Programa de Remanufatura Caterpillar são identificados de três formas no manual de peças:

- com um R na área da nota da lista de peças
- com um R* no princípio da primeira linha da legenda
- com um *R no final da primeira linha da legenda

Os componentes típicos que constam no Programa de Remanufatura incluem:

ALTERNADORES
BIELAS
VIRABREQUINS - SUBMEDIDAS
VIRABREQUINS - ATUALIZAÇÃO
CABEÇOTES
MÓDULOS DE CONTROLE ELETRÔNICO (ECM)
SENSORES ELETRÔNICOS
INJETORES DE COMBUSTÍVEL
BICOS DE ABASTECIMENTO DE COMBUSTÍVEL
BOMBAS DE COMBUSTÍVEL
GOVERNADORES
BOMBAS DE ÓLEO
PISTÕES
BLOCOS BÁSICOS DO MOTOR
MOTORES DE PARTIDA
TURBOALIMENTADORES - COMPLETOS
CARTUCHOS DE TURBOALIMENTADORES
BOMBAS D'ÁGUA

Motores Remanufaturados Caterpillar também encontram-se disponíveis para diversos arranjos de motor.

SUPPLEMENTAL COOLANT ADDITIVES

CUSTOMER BENEFITS:

Protects against cavitation, foam, erosion, corrosion, and scale buildup in cooling systems.

- Provides measured coolant conditioner.

DESCRIPTION:

Additives deplete from the coolant with normal operation. For this reason, Supplemental Coolant Additives (SCA) must be added to all heavy duty coolants at regular intervals. In addition, when not using a fully formulated, pre-charged antifreeze, like Caterpillar's DEAC, an initial charge of SCA must be added to the cooling system. The amount of SCA added to the system is dependent on the capacity of the system.

The SCA for initial fill is provided as a liquid. SCA's for maintenance intervals are available in liquid form and as a spin-on element. (No Spin-on available for 3600 Family of Engines)

NOTE:

The amount of SCA added at initial fill is not the same as the amount added at maintenance intervals.

The coolant additive elements can be used with any ethylene or propylene glycol type antifreeze which meets ASTM D4985 or ASTM D5345 Specifications.

NOTE:

For use with standard heavy duty coolant only, not for use with Extended Life Coolant.

PARTS NEEDED:

Cooling System Capacity		Liquid SCA at Initial Fill	Liquid SCA at Maintenance*	Spin-on SCA Maintenance Element*
Liters	Gallons			
22-30	(6-8)	3P-2044 (1)	6V-3542 (1)	111-2370 (1)
30-38	(8-10)	3P-2044 (1) 6V-3542 (1)	111-2372 (1)	111-2369 (1)
38-49	(10-13)	3P-2044 (1) 8T-1589 (1)	111-2372 (1)	111-2369 (1)
49-64	(13-17)	3P-2044 (2)	8T-1589 (1)	9N-3368 (1)
64-83	(17-22)	3P-2044 (2) 8T-1589 (1)	111-2372 (1) 6V-3542 (1)	111-2371 (1)
83-114	(22-30)	3P-2044 (3) 8T-1589 (1)	3P-2044 (1)	9N-3718 (1)
114-163	(30-43)	3P-2044 (5)	3P-2044 (1) 6V-3542 (1)	111-2371 (2)
163-242	(43-64)	3P-2044 (8)	3P-2044 (2)	9N-3718 (2)

** Normal maintenance period is 250 hrs. See your Operation and Maintenance Manual for complete coolant maintenance instructions.*

( ) Indicates quantity required.

ADITIVOS DE REFRIGERANTE SUPLEMENTARIOS

VENTAJAS PARA EL USUARIO:

Protegen contra la cavitación, la formación de espuma, la corrosión y la acumulación de escamas en los sistemas de enfriamiento.

- Suministra un acondicionador dosificado de refrigerante.

DESCRIPCIÓN:

Los aditivos en el refrigerante se agotan con la operación normal. Por esta razón, se debe agregar Aditivo de refrigerante suplementario (SCA) a todos los refrigerantes para servicio pesado, a intervalos regulares. Además, cuando no se usa un anticongelante de precarga completo, tal como el DEAC de Caterpillar, es necesario agregar una cantidad de aditivo de refrigerante suplementario inicial al sistema de enfriamiento. La cantidad de aditivo que se debe agregar depende de la capacidad del sistema.

El SCA de llenado inicial es líquido. El que se usa para el mantenimiento está disponible tanto en líquido como en un elemento enroscable. (No hay elemento enroscable disponible para la Familia de Motores 3600).

NOTA:

La cantidad de aditivo de llenado inicial no es la misma que se agrega en los intervalos de mantenimiento.

Los elementos de aditivo de refrigerante se pueden usar con cualquier anticongelante de tipo glicol etilénico o propílico que esté de acuerdo con las especificaciones de las normas ASTM D4985 o ASTM D5345.

NOTA:

Se debe utilizar únicamente con refrigerante estándar para servicio pesado; no se debe usar con Refrigerante de Larga Duración.

PIEZAS NECESARIAS:

Capacidad del Sistema de Enfriamiento		SCA líquido de llenado inicial	SCA líquido de mantenimiento*	Elemento de mantenimiento enroscable*
litros	gal EE.UU.			
22-30	6-8	3P-2044 (1)	6V-3542 (1)	111-2370 (1)
30-38	8-10	3P-2044 (1) 6V-3542 (1)	111-2372 (1)	111-2369 (1)
38-49	10-13	3P-2044 (1) 8T-1589 (1)	111-2372 (1)	111-2369 (1)
49-64	13-17	3P-2044 (2)	8T-1589 (1)	9N-3368 (1)
64-83	17-22	3P-2044 (2) 8T-1589 (1)	111-2372 (1) 6V-3542 (1)	111-2371 (1)
83-114	22-30	3P-2044 (3) 8T-1589 (1)	3P-2044 (1)	9N-3718 (1)
114-163	30-43	3P-2044 (5)	3P-2044 (1) 6V-3542 (1)	111-2371 (2)
163-242	43-64	3P-2044 (8)	3P-2044 (2)	9N-3718 (2)

** El período normal de mantenimiento es de 250 horas. Para ver las instrucciones completas sobre el mantenimiento del refrigerante, consulte el Manual de Operación y Mantenimiento.*

( ) Indica la cantidad necesaria.

ADITIVOS SUPLEMENTARES DO LÍQUIDO ARREFECEDOR

BENEFÍCIOS PARA O CLIENTE:

Protege contra cavitação, espuma, erosão, corrosão e acúmulo de crostas nos sistemas de arrefecimento.

- Fornece uma quantidade pré-determinada de condicionador de arrefecimento.

DESCRIÇÃO:

Com a operação normal, os aditivos se esgotam do líquido arrefecedor. Por isso, Aditivos Suplementares do Líquido Arrefecedor (SCA) devem ser acrescentados a todos os líquidos arrefecedores para serviço pesado em intervalos regulares. Além disso, quando um anticongelante pré-carregado, totalmente formulado não for usado, como o DEAC Caterpillar, uma carga inicial de SCA deve ser acrescentada ao sistema de arrefecimento. A quantidade de SCA acrescentada ao sistema depende da capacidade do sistema.

O SCA para abastecimento inicial é fornecido em forma de líquido. Os aditivos suplementares (SCA) para intervalos de manutenção estão à disposição em forma líquida e como um elemento com roscas. (Exceto os Motores da Família 3600)

NOTA:

A quantidade de SCA adicionada no abastecimento inicial não é a mesma que a acrescentada nos intervalos de manutenção.

Os elementos do aditivo do líquido arrefecedor podem ser usados com qualquer tipo de anticongelante etileno ou propileno que satisfaz as Especificações ASTM D4985 ou ASTM D5345.

NOTA:

Para uso apenas com líquido arrefecedor para serviço pesado padrão, não deve ser usado com Líquido Arrefecedor de Vida Longa.

PEÇAS NECESSÁRIAS:

Capacidade do Sistema de Arrefecimento		Líquido SCA Durante Abastecimento Inicial	Líquido SCA Durante Manutenção*	Elemento de Manutenção de SCA com Roscas*
Litros	Galões			
22-30	6-8	3P-2044 (1)	6V-3542 (1)	111-2370 (1)
30-38	8-10	3P-2044 (1) 6V-3542 (1)	111-2372 (1)	111-2369 (1)
38-49	10-13	3P-2044 (1) 8T-1589 (1)	111-2372 (1)	111-2369 (1)
49-64	13-17	3P-2044 (2)	8T-1589 (1)	9N-3368 (1)
64-83	17-22	3P-2044 (2) 8T-1589 (1)	111-2372 (1) 6V-3542 (1)	111-2371 (1)
83-114	22-30	3P-2044 (3) 8T-1589 (1)	3P-2044 (1)	9N-3718 (1)
114-163	30-43	3P-2044 (5)	3P-2044 (1) 6V-3542 (1)	111-2371 (2)
163-242	43-64	3P-2044 (8)	3P-2044 (2)	9N-3718 (2)

** O período normal de manutenção é de 250 horas. Consulte o Manual de Operação e Manutenção para obter instruções completas quanto à manutenção do líquido arrefecedor.*

( ) Indica a quantidade exigida.

NOMENCLATURA DE PEÇAS INGLÊS-PORTUGUÊS

INGLÊS	PORTUGUÊS
ABOVE	Acima
ABSORBER	Amortecedor
ACCESSORY	Acessório
ACTUATOR	Acionador
ADAPTER	Adaptador
ADHESIVE	Adesivo
ADJUSTER	Adjustador
AFTERCOOLER	Pós-resfriador
AIR	Ar
AIR CLEANER	Purificador de ar
AIR SYSTEM	Sistema de ar
ALARM	Alarme
ALTERNATOR	Alternador
AMMETER	Amperímetro
ANCHOR	Âncora, fixador
ANGLE	Ângulo, canto
ANVIL A.	Bigorna conj.
ARBOR	Mandril, eixo
ARM	Braço
ARMATURE	Armadura, Induzida
ARM REST	Apoio para braço
ARRESTER	Detentor
ASSEM. = ASSEMBLY	Conjunto
ATTACHMENT	Acessório
AVAILABLE	Disponível
AXLE	Eixo
AXLE SHAFT	Semi-eixo, ponta
BACK-UP ALARM	Alarme de marcha à ré
BACK-UP LIGHT	Luz da marcha à ré
BACK-UP SWITCH	Interruptor de marcha à ré
BACKBOARD	Prancha traseira
BACK CUSHION	Encosto
BACKHOE	Retroescavadeira
BAFFLE	Defletor
BAG	Saco, sacola
BAIL	Alça
BALANCER	Balanceador
BALL	Esfera
BALLCHECK ASSEMBLY	Conjunto de (válvula) de esfera de retenção
BALL JOINT	Junta esférica
BALLSTUD	Munhão esférica
BAND	Banda, cinta, tira
BAND & LINING	Banda e revestimento
BAR	Barra
BARREL	Cilindro
BARRIER	Barreira
BASE	Base
BASIN	Bacia, coletor
BATTERY	Bateria
BEAM	Barra, viga, trave
BEARING	Mancal, rolamento
BEARING BALL	Rolamento de esferas
BEARING-SLEEVE	Mancal tipo luva
BEARING-NEEDLE	Rolamento de agulha
BEARING-ROLLER	Rolamento tipo roletes
BELL	Campânula
BELLCRANK	Alavanca angular
BELLOWS	Fole
BELOW	Abaixo
BELT	Correia, cinto
BELT TIGHTENER	Ajustador de correia
BEVEL GEAR	Coroa
BIT-CUTTER	Broca, fresa
BLACK	Preto
BLADE	Lâmina
BLEEDER	Sangrador
BLOCK	Bloco, calço
BLOWER	Ventilador
BLUE	Azul
BOARD	Prancha, tábua
BODY	Corpo
BOLT	Parafuso
BONNET	Tampa
BOOM	Lança
BOOSTER	Reforçador
BOOT	Protetor contra poeira
BORE	Furo
BOSS	Ressalto
BOTH	Ambos (as)
BOTTOM	Fundo
BOWL	Caçamba
BOX	Caixa
BRACE	Tirante
BRACKET	Suporte
BRAKE	Freio
BREAKER	Interruptor
BREATHER	Respiro
BRIDGE	Braço
BROWN	Marrom
BRUSH	Escova
BUCKET	Caçamba
BULB	Bulbo
BULLDOZER	Bulldozer
BUMPER	Pára-choque
BUSHING	Bucha
BUTTON	Botão
BUZZER WARNING	Alarme sonoro
C = CHANGE	Alteração
CAB	Cabina
CABINET	Gabinete
CABLE	Cabo
CAGE	Alojamento
CALIPER	Calibrador
CAM	Excêntrico, ressalto
CAMSHAFT	Eixo-comando-de-válvulas
CANOPY	Coberta, toldo

NOMENCLATURA DE PEÇAS INGLÊS-PORTUGUÊS

INGLÊS	PORTUGUÊS
CAP	Tampa
CAPACITOR	Capacitor, condensador
CARBURETOR	Caburador
CARCASS	Carcaça
CARRIER	Suporte
CARTON	Caixa de papelão
CARTRIDGE	Cartucho
CASE	Caixa, alojamento
CASING	Invólucro, revestimento
CASTER	Rolete, roldana
CAST IRON	Ferro fundido
CATWALK	Passadiço
CENTER	Centro
CHAIN	Corrente
CHAMBER	Câmara
CHANGEOVER	Modificação
CHANNEL	Canal
CHASSIS	Chassi, armação
CHECK-VALVE	Válvula de retenção
CIRCUIT	Circuito
CIRCUIT BREAKER	Interruptor de circuito
CLAMP	Braçadeira
CLASP	Fecho, grampo
CLEANER	Purificador
CLEVIS	Forquilha, garfo
CLIP	Clipe, presilha, grampo
CLOSURE	Fecho
CLUTCH	Embreagem
COARSE	Grosso, áspero
COATING	Capa, revestimento
COCK	Torneira
COIL	Bobina, serpentina
COLLAR	Colar
COLLECTOR	Coletor
COLLET	Mandril
COLUMN	Coluna
COMPACTOR	Compactador
COMPARTMENT	Compartimento
COMPLETE	Completo
COMPOUND	Composto
COMPRESSOR	Compressor
CONCAVE	Côncavo
CONDITIONER	Condicionador
CONDUIT	Conduite, eletroduto
CONE	Cone
CONNECTING	Ligação
CONNECTED ROD	Biela
CONNECTION	Conexão
CONNECTOR	Conetor
CONSISTS OF	Consiste de
CONSOLE	Consolo
CONTACT	Contato, platinado
CONTACTOR	Contactador
CONTINUED FROM	Continuação de
CONTROL	Controle
CONVERSION	Conversão
CONVERTER	Conversor
COOLER	Arrefecedor
COOLING	Arrefecimento
CORK	Cortiça
CORE	Núcleo
CORNER	Canto
COTTER PIN	Contrapino
COUNTER	Contador, tacômetro
COUNTERWEIGHT	Contrapeso
COUPLER	Acoplador, engate
COUPLING	Acoplamento, conexão
COVER	Tampa
COWL	Capota
COWLING	Capota
CRADLE	Armação, suporte
CRANK	Manivela
CRANKCASE	Cárter
CRANKSHAFT	Virabrequim
CROSS UNION	Junta transversal
CROSSBAR	Barra transversal
CUP	Capa, anel externa
CURTAIN	Cortina
CUSHION	Almofada, amortecedor
CUTTER	Fresa, cortador
CUTTING EDGE	Borda cortante
CYLINDER	Cilindro
CYLINDER BLOCK	Bloco do motor
CYLINDER HEAD	Cabeçote
DAMPER	Amortecedor
DARK GREEN	Verde escuro
DASH	Painel
DASH PANEL	Painel de Instrumento
DECELERATOR	Desacelerador
DEFLECTOR	Defletor
DETENT	Retém, pino de trava
DIAGRAM-WIRING	Diagrama dos circuitos elétricos
DIAL	Medidor de dial
DIAPHRAGM	Diafragma
DIESEL ENGINE COMPLETE	Motor diesel completo
DIFFERENTIAL	Diferencial
DIFFUSER	Difusor
DIMMER	Redutor de luminosidade
DIODE	Diodo
DIRECTOR	Diretor
DISC	Disco
DISCONNECT	Desligar
DISPOSABLE	Disponível, substituível
DISSIPATOR	Dissipador de calor
DISTRIBUTOR	Distribuidor
DM = DECIMETER	dm = decímetro

NOMENCLATURA DE PEÇAS INGLÊS-PORTUGUÊS

INGLÊS	PORTUGUÊS
DOME LIGHT	Lâmpada do teto
DOOR	Porta
DOWEL	Pino-guia, cavilha
DOWNSHIFT	Mudança para marcha mais baixa
DOZER	Bulldozer (lâmina)
DRAIN	Dreno
DRAWBAR	Barra de tração
DRILL	Broca
DRILLED	Broqueado, perturado
DRIVE	Comando, acionamento, propulsão
DRIVER	Acionador, mecanismo propulsor
DRIVESHAFT	Eixo acionador, eixo de transmissão
DRUM	Tambor
DUCT	Conduto, canal
EACH	Cada
EDGE	Borda, canto
EFFECTIVE WITH	Efetivo a partir de
EJECTOR	Ejetor
ELBOW	Cotovelo
ELEMENT	Elemento
ENCLOSURE	Cobertura
END	Extremidade
END BIT	Canto de lâmina
END VIEW	Vista traseira
ENGINE	Motor
ENGINE ARRANGEMENT	Arranjo do motor
EXCEPT	Exceto
EXHAUST	Escape
EXHAUST PIPE	Cano de escape
EXPANDER	Expansor
EXPANSION PLUG	Bujão de expansão
EXTENSION	Extensão
EXTINGUISHER	Extintor
EXTRACTOR	Extrator
EYE	Olhal
EYEBOLT	Parafuso de olhal
FABRIC	Tecido, tela textura
FACING	Revestimento, forro
FAN	Ventilador
FASTENED	Fixo, preso
FASTENER	Fixador, prendedor
FENDER	Pára-lamas
FERRULE	Virola
FIELD COIL	Bobina indutora, ou de campo
FIELD REPLACEMENT	Reposicão ou substituicão no campo
FILLER	Bocal de enchimento
FILM	Película
FILTER	Filtro
FINAL DRIVE	Comando final
FINGER	Dedo
FIREWALL	Parede contra fogo
FITTING	Graxeira, conexão
FIXTURE	Dispositivo, Aparelho
FLANGE	Flange
FLASHER	Luz intermitente
FLOAT	Flutuar, livre
FLOOD-LAMP	Farol
FLOOR	Piso
FLOORMAT	Tapete
FLOORPLATE	Chapa do piso
FLYWEIGHT	Peso volante
FLYWHEEL	Volante
FOLLOWER	Seguidor
FOOT	Pé
FORK	Garfo
FOR USE WITH	Para usar com
FOUNDATION	Assentamento, alicerce
FRAME	Armacão, chassi
FRONT	Frente, dianteiro
FT = FOOT	Pé
FUEL INJECTION	Injecão de combustível
FUEL PUMP	Bomba de combustível
FUEL RATIO	Limitador de combustível
FUEL SYSTEM	Sistema do combustível
FUEL TANK	Tanque do combustível
FUMES DISPOSAL	Eliminação de vapores do cárter
FUSE	Fusível
G = GROUP	Grupo
GAGE	Indicador, manômetro
GAP	Folga, lacuna, intervalo
GASKET	Junta
GASKET KIT	Jogo de junta
GATE	Entrada, trava
GAUGE	Indicador, manômetro
GEAR	Engrenagem, marcha
GEAR BOX	Caixa de engrenagem
GEAR PUMP	Bomba de engrenagem
GENERATOR	Gerador
GLAND	Junta, gaxeta, vedacão sobreposta
GLASS	Vidro
GLOW PLUG	Vela incandescente
GOVERNOR	Governador
GRAB IRON	Balaústre corrimão
GRATE	Grade, grelha
GRAY	Cinza
GRID	Grade, grelha
GRILL	Grade, grelha
GRIP	Pega, garra, cabo

NOMENCLATURA DE PEÇAS INGLÊS-PORTUGUÊS

INGLÊS	PORTUGUÊS
GROMMET	Ilhós
GROUND BRUSH	Escova-terra
GROUND (ELECTRIC)	Terra (eletricidade)
GROUSER	Garra (de sapata)
GUARD	Protetor
GUIDE	Guia
GUSSET	Cantoneira
HACKSAW	Serra para metais
HALF	Metade, meio (a)
HALF LINK	Semi-elo
HAMMER	Martelo
HAND CONTROL	Controle manual
HANDLE	Cabo, alça
HANDRAIL	Corrimão, balaústre
HANGER	Suporte, dispositivo de suspensão
HARDWARE	Ferragem
HARDWARE KIT	Jogo de ferragem
HARNESS	Chicote
HEAD = HD	Cabeça
HEADER	Coletor
HEADLAMP	Farol dianteiro
HEADLIGHT	Farol dianteiro
HEAT SINK	Difusor de calor
HEATER	Aquecedor
HIGH-IDLE	Marcha acelerada em vazio
HINGE	Dobradiça, articulacão
HITCH	Engate
HOIST	Guincho, talha
HOLD	Suporte, fixador
HOLD DOWN	Fixar, reter, manter abaixado
HOLDER	Fixador, suporte
HOLE	Furo, buraco
HOOD	Capô
HOOD & DASH	Capô e painel
HOOK	Gancho
HORN	Buzina
HOSE	Mangueira
HOUSING	Alojamento
HUB	Cubo
HYDRAULIC	Hidráulico
ID = INSIDE DIAMETER	Diâmetro interno
IDLER	Roda-guia
IDLER & SHAFT	Roda-guia e eixo
IDLER GEAR	Engrenagem intermediária
IDLER PULLEY	Polia intermediária
IMPELLER	Impulsor, rotor
IN = INCH	Polegada
INCLUDES	Inclui
INDICATE	Indicam
INDICATOR	Indicador
INLAY	Incrustação
INLET	Admissão, entrada
INPUT	Entrada
INSERT	Inserção
INSTALLATION	Instalação
INSTALLED ON MODEL	Instalação no modelo
INSTRUCTION	Instrução
INSTRUMENT	Instrumento
INSULATED BRUSH	Escova isolada
INSULATION	Isolação, isolamento
INSULATOR	Isolante, isolador
INTAKE	Admissão
INTERLOCK	Trava interna
INTERMEDIATE	Intermediário
INTERNAL	Interno
INVERTER	Inversor
IRON	Ferro
JACK	Macaco
JAW	Mandíbula, garra
JET	Jato, vaporizador
JOINT	Junta, articulação
JUNCTION	Junção
KEY	Chaveta
KINGBOLT	Pino de engate
KNIFE	Faca, lâmina
KNOB	Maçaneta, botão
LADDER	Escada
LAMP	Lâmpada
LARGE	Grande
LATCH	Trinco, lingüeta
LEAD	Condutor, cabo
LEG	Perna
LENS	Lente
LEVEL	Nível
LEVER	Alavanca
L.H. = LEFT HAND	Lado esquerdo
LID	Placa, tampa
LIFT	Levantar
LIFT CYLINDER	Cilindro de levantamento
LIFTER	Tucho
LIFTING EYE	Olhal de levantamento
LIGHT GREEN	Verde claro
LIGHTING	Sistema de iluminação
LINE	Tubulação
LINER	Camisa
LINES & PUMP	Tubulação e bomba
LINES & VALVE	Tubulação e válvula
LINING	Revestimento, lona
LINK	Elo
LINKAGE	Articulação
LIP	Lábio, borda
LISTED	Relacionamento
LITERATURE	Literatura
LOCATED	Localizado

NOMENCLATURA DE PEÇAS INGLÊS-PORTUGUÊS

INGLÊS	PORTUGUÊS
LOCATOR	Localizador
LOCK	Trava
LOCKNUT	Contraporca
LOCKWASHER	Arruela de pressão
LOCKWIRE	Arame de trava
LONG	Longo
LOOM	Tubo isolador
LOW IDLE	Marcha lenta
LOUVER	Persiana
LOWER	Abaixar, inferior
LUBRICANT	Lubrificante
LUG	Ressalto, orelha
MACHINE SCREW	Parafuso de fenda
MAGNET	Imã magneto
MAIN	Principal
MAINTENANCE	Manutenção
MANIFOLD	Coletor
MARKED	Marcado (a)
MARKER	Marcador
MASTER PIN	Pino mestre
MAT	Capacho, esteira
METER	Medidor, contador
MINOR	Menor
MIRROR	Espelho
MISCELLANEOUS	Miscelânea
MODIFICATION	Modificação
MOLDBOARD	Armação da lâmina
MOTOR	Motor
MOULDING	Moldura
MOUNT	Montar
MOUNTED	Montado (a)
MOUNTING	Montagem
MUFFLER	Silenciador
NAMEPLATE	Plaqueta de identificação
N.C. (THREAD)	Rosca grossa
NEEDLE	Agulha
N.F. (THREAD)	Rosca fina
NIB	Ponta, bico
NIPPLE	Conexão
NONE	Nenhum (a)
NORMALIZING	Normalização
NOT PART OF	Não faz parte de
NOZZLE	Bocal, bico injetor
N/S = NOT SERVICED	Não vendável
NUMBER (No)	Número (No)
NUT	Porca
NUT-WING	Porca borboleta
NUT-CASTLE	Porca acastelada
NUT-WELD	Porca-soldada
NUT-CAP	Porca cega
NUT-HEX	Porca sextavada
NUT-LOCK	Contraporca
NUT-IMPERIAL	Porca imperial
NUT-JAM	Porca de trava, contraporca
NUT-LOW CROWN	Porca de meia coroa
NUT-RETAINING	Porca de retenção
NUT-SELF LOCK	Porca de autotravamento
NUT-SLOTTED	Porca fendada
NUT-SPANNER	Porca para chaves
O.D. = OUTSIDE DIAMETER	Diâmetro externo
O-RING	Anel "O"
OIL	Óleo
OILPAN	Cárter
OIL PUMP	Bomba de óleo
OIL SYSTEM	Sistema de lubrificação
OILER	Almotolia, lubrificador
ORANGE	Laranja
TO ORDER	Para pedir
ORIFICE	Orifício
OUTER	Externo
OUTER RACE	Anel externo
OUTPUT	Saída
OVERALL	Geral, total
OVERHAUL	Revisão
OVER SIZE	Sobremedida
PACKING	Embalagem, gaxeta
PAD	Coxim, calço
PADLOCK	Cadeado
PAINT	Pintura
PAN	Cárter
PANEL	Painel
PARKING BRAKE	Freio de estacionamento
PARTITION	Separacão
PARTS G	Grupo de peças
PARTS OF	Peça de
PARTS OF ALL ENGINE ARRANGEMENTS	Peças de todos os arranjos do motor exceto
PAWL	Garra
PEDAL	Pedal
PEDESTAL	Pedestal
PERFORMANCE	Desempenho
PILOT	Piloto
PIN	Pino
PIN & BUSHING	Pino e bucha
PIN-COTTER	Contrapino
PINCH BAR	Pé de cabra
PINION	Pinhão
PIPE	Tubo
PISTON	Pistão
PIVOT	Articulação, pivô
PLANETARY	Planetário
PLATE	Placa
PLATFORM	Plataforma
PLUG	Bujão
PLUNGER	Pistão, êmbolo
POINT	Ponta, ponto

NOMENCLATURA DE PEÇAS INGLÊS-PORTUGUÊS

INGLÊS	PORTUGUÊS
POINTER	Ponteiro
POLE & COIL	Polo e bobina
POLE	Polo, lança, vara
POPPET	Gatilho
POST	Poste, coluna
POTENTIOMETER	Potenciômetro
POWER TAKE OFF	Tomada de força
POWER TRAIN	Trem de força
PRE-SCREENER	Tela protetora
PRECHAMBER	Câmara de pré-combustão
PRECLEANER	Pré-purificador
PRECOMBUSTION	Pré-combustão
PRESS	Prensa
PRESS = PRESSURE	Pressão
PREVIOUS	Prévio, anterior
PRIMARY	Primário, principal
PROBE	Prova
PROJECTOR	Projeter
PROTECTION	Proteção
PROTECTOR	Proteter
PULLER	Extrator, sacador
PULLEY	Polia
PUMP	Bomba
PURPLE	Roxo
PUSHROD	Haste de empuxo
QTY = QUANTITY	Quantidade
RACE	Pista
RACE & ROLLER	Pista e rolete
RACK	Cremalheira
RADIATOR	Radiador
RAIL	Trilho, guia
RANGE TRANSM	Transmissão manual
RATCHET	Catraca
REAR	Traseiro (a)
REBORED	Escareado, alargado
REBUILD KIT	Jogo de recondicionamento
RECEPTACLE	Recipiente
RECTIFIER	Retificador
RED	Vermelho
REDUCER	Redutor
REFER	Referir
REGULATOR	Regulador
RELATED REPAIR ITEMS	Itens de reparos relacionados
RELAY	Relé
RELIEF VALVE	Válvula de alívio
REPAIR G	Grupo de reparo
REPAIR KIT	Jogo de reparo
REPAIR ITEMS	Itens de reparo
REPLACEMENT	Reposição, substituição
REQUIRED	Necessário
RESERVOIR A	Reservatôrio
RESIN	Resina
RESISTOR	Resistência
RETAINER	Fixador
RETARDER	Retardador
REVERSIBLE	Reversível
R.H. = RIGHT HAND	Lado direito
RIM	Aro
RIM & TIRE	Aro e pneu
RING	Anel
RIVET	Rebite
ROCKET	Balancim
ROD	Haste
ROD END	Extremidade da haste
ROLLER	Rolete
ROPE-STARTING	Partida à corda
ROTATOR	Girador
ROTOCHAMBER	Càmara pneumática
ROTOCOIL	Girador de válvula
ROTOR	Rotor
RUST INHIBITOR	Antioxidante
SADDLE	Sela, assento
SAFETY	Segurança
SAFETY TREAD	Tiras antiderrapante
SCRAPER	Tampa
SCREEN	Tela
SCREW	Parafuso
SCREW-HEX HD	Parafuso de cabeça hexagonal
SCREW-KIT	Jogos de parafuso
SCREW-MACHINE	Parafuso de fenda
SCREW-ROUND HD	Parafuso de cabeça redonda
SCREW-FLANGED	Parafuso com flange
SCREW-LOCKING	Parafuso de trava
SCREW-THUMB	Parafuso de orelhas
SCREWDRIVER	Chave de fenda
SEAL	Retentor
SEALED UNIT	Unidade vedada
SEALER	Vedador isolante
SEAT	Assento
SECONDARY	Secundário
SECTION	Seção
SEGMENT	Segmento
SENDER	Emissor
SENSOR	Sensor
SEPARATE	Separar, separado
SEPARATOR	Separador
SERIAL NUMBER PLATE	Placa de número de série
SERVICE	Serviço, manutenção
SERVICE KIT	Jogo de manutenção
SERVICE METER	Horômetro
SETSCREW	Parafuso de fixação
SHACKLE	Grilheto, anel, manilha
SHAFT	Eixo
SHANK	Porta-ponta do escarificador

NOMENCLATURA DE PEÇAS INGLÊS-PORTUGUÊS

INGLÊS	PORTUGUÊS
SHEAVE	Polia, roldana
SHEET	Folha, lâmina
SHELL	Invólucro, cápsula, casquilho
SHIELD	Blindagem, protetor
SHIFT	Mudança
SHIM	Calço
SHIPPING	Embarque
SHOCK ABSORBER	Amortecedor de choques
SHOCKMOUNT	Montagem a prova de choques
SHOE	Sapata
SHORT	Curto
SHOWN	Ilustrado, mostrado
SHROUD	Tampa de proteção
SHUNT	Derivação
SHUT OFF	Desligar, parada
SHUTTLE	Pistão de vaivém
SIDE	Lateral
SIDE VIEW	Vista lateral
SILICONE	Silicone
SINK	Absorvente de calor
SKIVING	Desbaste
SLACK ADJUSTER	Adjustador de folga
SLEEVE	Luva, manga, camisa
SLIDER	Cursor, deslizador
SLIDE RAIL	Trilho deslizante
SLING	Cabos, amarras, linga
SLINGER	Defletor
SLUG	Pistão de reação, pistãozinho
SMALL	Pequeno
SNAP RING	Anel de retenção, anel de pressão
SNUBBER	Amortecedor
SOCKET	Soquete, tomada
SOLENOID	Solenóide
SPACER	Espaçador
SPARE	Sobressalente
SPARK PLUG	Vela de ignição
SPECIAL	Especial
SPEEDOMETER	Velocimetro
SPIDER	Cruzeta
SPINDLE	Ponta de eixo
SPLINE	Estria
SPOOL	Carretel
SPOUT	Calha, tubo
SPRING	Mola
SPROCKET	Roda motriz, roda dentada
STABILIZER	Estabilizador
STACK	Chaminé, cano de escapamento
STAND	Suporte, cavalete
STANDPIPE	Suporte vertical de sucção
STAPLE	Grampo
STARTER	Arranque motor de partida
STATOR	Estator
STEERING	Direção
STEM	Haste
STEP	Degrau
STICK	Vareta
STOP	Parar
STORAGE	Armazenagem
STRAINER	Tela filtrante
STRAP	Tira, cinta, suporte de fixação
STREET ELL	Conexão cotovelo
STRIP	Tira, fita, listra
STROKE	Curso do pistão
STUD	Prisioneiro
SUMP	Tanque, reservatório
SUPPLY VALVE	Válvula de suprimento
SUPPORT	Suporte
SUSPENSION	Suspensão
SWITCH	Interruptor
SWIVEL	Articulação giratória
TAB	Tira, aba, lingüeta
TABLE	Mesa
TACHOGRAPH	Tacógrafo
TACHOMETER	Tacômetro
TAG	Etiqueta
TAIL LAMP	Farol traseiro
TAN	Castanho
TANG	Lingüeta
TANK	Tanque
TAP	Macho
TAPE	Fita
TAPPET	Tucho
TEE	Conexão em "T"
TEMP. = TEMPERATURE	Temperatura
TERMINAL	Terminal
TEST UNIT	Unidade de teste
TESTER	Aparelho de teste
THERMISTOR	Termistor
THERMOCOUPLE	Termopar
THERMOMETER	Termômetro
THERMOSTAT	Termostato
THERMOSWITCH	Interruptor térmico
THICK	Grosso (a) espesso (a)
TIE	Ligação, tirante
THREAD (OF NUT)	Rosca (de porca)
THROTTLE	Acelerador de
THROWER	Defletor
THRU = THROUGH	Através de
TIGHTENER	Tensor
TILT CYLINDER	Cilindro de inclinação
TIMING	Sincronização, Distribuição
TIP	Ponta

NOMENCLATURA DE PEÇAS INGLÊS-PORTUGUÊS

INGLÊS	PORTUGUÊS
TIRE	Pneu
TIRE & RIM	Pneu e aro
TONGUE	Língua, lingueta
TOOL	Ferramenta
TOOLCABINET	Armário para ferramenta
TOOTH/TEETH	Dente/dentes
TOP	Topo, parte superior
TORQUE	Torque
TORQ. CONV.	Conversor de torque
TORQ. DIVIDER	Divisor de torque
TOWER	Torre
TRACK	Esteira
TRACK PIN	Pino de esteira
TRACTOR	Trator
TRAILING UNIT	Unidade rebocada
TRANSFER	Decalcomania
TRANSFORMER	Transformador
TRANSISTOR	Transistor
TRANSMISSION	Transmissão
TRANSMISSION OVERHAUL	Revisão da transmissão
TREAD	Piso, banda de rodagem
TREADLE	Pedal
TROLLY	Carrinho
TRUCK	Caminhão
TRUNNION	Munhão
TUBE	Tubo, cano
TUBING	Tubulagem canalização
TURBINE	Turbina
TURBOCHARGER	Turboalimentador
U-BOLT	Parafuso em "U"
U-JOINT	Junta universal
UNDERSIZE	Submedida
UNION	União
UPPER	Superior
USE AS REQUIRED	Usar conforme necessitar
VALUE	Valor
VALVE	Válvula
VALVE GRINDING	Retificação das válvulas
VEE BELT	Correia "V"
VEE BELT SET	Jogo de correia em "V"
VENT	Respiro
VIEW	Vista
VISE	Morsa, torno
VISOR	Pára-sol
WALKWAY	Passadiço, corredor
WARNING G.	Grupo de alarma
WASHER	Arruela
WATER PUMP	Bomba d'água
WEARPLATE	Placa de desgaste
WEDGE	Cunha
WEIGHT	Peso
WELD	Solda
WELDNUT	Porca soldada
WHEEL	Roda
WHITE	Branco
WICK	Mecha, pavio
WINCH	Guincho
WINDOW	Janela
WINDSHIELD	Pára-brisa
WIPER	Limpador
WIRE	Fio
WIRING	Sistema elétrico
WIRING DIAGRAM	Diagrama do sistema elétrico
WITH	Com
WRAPPER	Invólucro, envoltório
WRENCH	Chave
YELLOW	Amarelo
YOKE	Garfo

MAINTENANCE PARTS

DESCRIPTION	PART NUMBER	QTY	WHERE USED	PAGE
AIR INLET AND EXHAUST SYSTEM				
FILTER ELEMENT AS-AIR (PRIMARY)	152-7217	1	AIR CLEANER GP	67
FILTER ELEMENT AS-AIR (SECONDARY)	152-7219	1	AIR CLEANER GP	67
INDICATOR AS (FILTER CHANGE)	187-2868	1	AIR CLEANER GP	68
BASIC ENGINE				
CAP AS (OIL FILLER)	130-9888	1	COVER GP-VALVE MECHANISM	10
COCK-DRAIN (CYLINDER BLOCK OIL)	2P-4173	1	DRAIN GP-ENGINE OIL	18
FILTER-BREATHER (CRANKCASE)	229-3555	1	COVER GP-VALVE MECHANISM	10
GASKET (VALVE COVER)	216-9604	1	COVER GP-VALVE MECHANISM	10
HOSE (LOWER FUMES DISPOSAL)	216-9617	1	COVER GP-VALVE MECHANISM	10
HOSE (UPPER FUMES DISPOSAL)	216-9614	1	COVER GP-VALVE MECHANISM	10
PLUG	069-1124	2	PLUG GP-CYLINDER BLOCK	35
PLUG-SEAL (OIL DRAIN)	8C-5225	1	DRAIN GP-ENGINE OIL	18
PLUG-SUMP DRAIN	7C-0351	2	PAN GP-OIL	32
SEAL-O-RING (CRANKCASE BREATHER)	229-3556	1	COVER GP-VALVE MECHANISM	10
BRAKING SYSTEM				
CAP-DUST	6V-0852	1	CONTROL GP-SERVICE BRAKE	282
COOLING SYSTEM				
REGULATOR-WATER TEMPERATURE	216-9737	1	CONNECTION GP-WATER	51
SEAL-O-RING (REGULATOR)	140-7515	1	CONNECTION GP-WATER	51
SEAL (REGULATOR HOUSING)	141-6188	1	CONNECTION GP-WATER	51
VALVE GP-RADIATOR DRAIN	225-4287	1	RADIATOR GP	62

MAINTENANCE PARTS

DESCRIPTION	PART NUMBER	QTY	WHERE USED	PAGE
ELECTRICAL AND STARTING SYSTEM				
BELT-DRIVE	9X-8139	1	LAMP GP-WARNING BEACON	110
CIRCUIT BREAKER AS (15 AMP)	3T-2662	1	WIRING GP-ENGINE	152
CIRCUIT BREAKER AS (30 AMP)	147-1773	1	WIRING GP-ENGINE	152
CIRCUIT BREAKER AS (90 AMP)	171-2211	1	WIRING GP-ENGINE	152
CIRCUIT BREAKER GP (60 AMP)	171-2208	1	WIRING GP-ENGINE	152
KEY (BATTERY DISCONNECT)	8H-5306	1	SWITCH GP-DISCONNECT	128
LAMP	9X-4492	1	LAMP GP-STOP & TAIL	109
	9X-7849	1	LAMP GP-WARNING BEACON	110
LAMP AS-LH	5C-9029	1	LIGHTING GP-FLOOD & SIGNAL	118
LAMP AS-RH	5C-8964	1	LIGHTING GP-FLOOD & SIGNAL	118
LAMP AS (12 VOLT)	165-5655	1	INSTALLATION GP-SECURITY	107
		1	WIRING GP-MACHINE	162
LAMP-HEAD (24 VOLT)	9X-3463	1	LIGHTING GP-FLOOD	112
LAMP-HEAD (24 VOLT)(65 WATT)	9X-3463	1	LIGHTING GP-FLOOD & SIGNAL	118
LAMP (24 VOLT)	9X-3463	1	LIGHTING GP-FLOOD	114
	9X-4493	1	LAMP GP-STOP & TAIL	109
	115-1748	4	WIRING GP-CAB	136
		4	WIRING GP-CAB	140
		3	WIRING GP-CAB	144
LAMP (24 VOLT/21 WATT)	9X-4493	2	LIGHTING GP-FLOOD & SIGNAL	118
LAMP (24 VOLT)(65 WATT)	9X-3463	1	LAMP GP-FLOOD	108
LENS	146-2438	1	LAMP GP-STOP & TAIL	109
LENS-AMBER	9X-8121	1	LAMP GP-WARNING BEACON	110
LENS AS	144-5284	1	LAMP GP-FLOOD	108
REFLECTOR	9R-1499	2	LIGHTING GP-FLOOD & SIGNAL	118
REFLECTOR-AMBER	9R-2404	6	LIGHTING GP-FLOOD & SIGNAL	118
V-BELT SET	130-3216	1	ALTERNATOR GP-CHARGING	96
V-BELT SET (INCLUDES 2 BELTS)	130-3216	1	ALTERNATOR GP-CHARGING	98
FRAME AND BODY				
FITTING-GREASE (1/8-27 THD)	3B-8489	2	HITCH GP-ARTICULATING	266
		7	LINES GP-GREASE	272
FUEL SYSTEM				
CAP AS-FUEL	142-8828	1	TANK & MTG GP-FUEL	90
FILTER ELEMENT-FUEL	145-4501	1	FILTER GP-FUEL	76
FILTER ELEMENT-WATER (SEPARATOR)	131-1812	1	SEPARATOR GP-WATER	89
KIT-BOWL SEAL	128-8614	1	SEPARATOR GP-WATER	89

MAINTENANCE PARTS

DESCRIPTION	PART NUMBER	QTY	WHERE USED	PAGE
HYDRAULIC SYSTEM				
BREATHER (HYDRAULIC)	130-4634	1	TANK & MTG GP-HYDRAULIC	422
CAP-DUST	6V-0852	2	LINES GP-HYDRAULIC	356
		2	LINES GP-PILOT	380
		1	LINES GP-TILT CYLINDER	392
		2	LINES GP-TILT CYLINDER	394
	8C-3451	1	FILTER GP-OIL	331
FILTER AS-OIL (HYDRAULIC)	126-1818	1	FILTER GP-OIL	331
KEY	5P-8500	1	TANK & MTG GP-HYDRAULIC	422
PADLOCK GP	5P-8502	1	TANK & MTG GP-HYDRAULIC	422
SCREEN AS	141-9236	1	VALVE GP-PILOT	448
		1	VALVE GP-PILOT	454
		1	VALVE GP-PILOT	458
		1	VALVE GP-PILOT	460
		1	VALVE GP-PILOT	464
		1	VALVE GP-PILOT	466
		1	VALVE GP-PILOT	470
SEAL-O-RING	5P-6718	3	VALVE GP-MAIN CONTROL	428
		6	VALVE GP-MAIN CONTROL	432
		6	VALVE GP-MAIN CONTROL	436
		3	VALVE GP-MAIN CONTROL	440
		6	VALVE GP-MAIN CONTROL	444
IMPLEMENTS				
FITTING-GREASE	3B-8489	5	CONTROL GP-BUCKET	496
		9	CONTROL GP-WORK TOOL	498
		9	CONTROL GP-WORK TOOL	502
FITTING-GREASE (1/8-27 THD)	2D-4867	2	CONTROL GP-BUCKET	496
	3B-8488	1	CONTROL GP-BUCKET	496
	3B-8491	5	CONTROL GP-BUCKET	496
		4	CONTROL GP-WORK TOOL	498
		4	CONTROL GP-WORK TOOL	502
LUBRICATION SYSTEM				
CAP-DUST (OIL SAMPLING VALVE)	8C-3445	1	VALVE GP-FLUID SAMPLING	50
FILTER AS-ENGINE OIL	1R-0739	1	FILTER GP-ENGINE OIL	45
MACHINE ARRANGEMENT				
BATTERY (12 VOLT)	3T-5760	1	CHASSIS AR	2
	115-2422	2	CHASSIS AR	1

MAINTENANCE PARTS

DESCRIPTION	PART NUMBER	QTY	WHERE USED	PAGE
OPERATOR STATION				
BLADE AS-WIPER	6V-7419	1	WIPER GP-WINDOW	652
BLADE AS-WIPER (FRONT)	6V-7419	1	WIPER GP-WINDOW	654
BLADE AS-WIPER (REAR)	5C-8811	1	WIPER GP-WINDOW	652
CAP AS (AIR CONDITIONER)	3E-4051	1	LINES GP-AIR CONDITIONER	588
	3E-4052	1	LINES GP-AIR CONDITIONER	588
CIRCUIT BREAKER AS (15 AMP) (AIR SEAT)	3T-2662	1	SEAT & MOUNTING GP	628
FILTER	111-8738	1	FILTER GP-CAB AIR	568
FILTER (AIR)	180-7487	1	FILTER GP-CAB AIR	568
FILTER-SCREEN	8T-5913	2	WASHER GP-WINDOW	650
KEY	5P-8500	2	LITERATURE GP	594
LAMP	112-5219	1	LINER GP-CAB	579
		1	LINER GP-CAB	586
LAMP GP-DOME	107-6032	1	LINER GP-CAB	586
LAMP (24 VOLT)	115-1748	2	PANEL GP-INSTRUMENT	610
V-BELT (AIR CONDITIONER)	1W-2934	1	COMPRESSOR GP-REFRIGERANT	554
POWER TRAIN				
BREATHER (TRANSMISSION)	9G-5127	1	CASE & PARTS GP-PLANETARY	182
CAP-DUST	6V-0852	2	CASE & PARTS GP-PLANETARY	182
		1	FILTER GP-OIL	202
		1	LINES GP-AXLE OIL COOLER	218
		1	LINES GP-TORQUE CONV COOLER	224
	8C-3451	1	FILTER GP-OIL	202
CAP-VALVE	2D-2633	1	RIM GP-DEMOUNTABLE	231
		1	RIM GP-DEMOUNTABLE	233
FILTER AS-OIL (HYDRAULIC)	1G-8878	1	FILTER GP-OIL	202
FILTER-MAGNETIC	8S-9129	1	CASE & PARTS GP-PLANETARY	182
FITTING-GREASE	3B-8489	1	SHAFT GP-DRIVE	236
PLUG-MAGNETIC	5P-4484	1	CASE & PARTS GP-PLANETARY	182
		1	HOUSING GP-FIXED AXLE	212
		1	HOUSING GP-OSCILLATING AXLE	214
SCREEN-SUCTION	8S-9130	1	CASE & PARTS GP-PLANETARY	182
STEERING SYSTEM				
CAP-DUST	6V-0852	1	LINES GP-SECONDARY STEERING	300
		1	LINES GP-STEERING	304
WORK TOOLS				
FITTING-GREASE	3B-8489	1	COUPLER GP-QUICK	522
		1	MOUNTING GP-BUCKET	531
FITTING-GREASE (1/8-27 THD)	3B-8491	2	COUPLER GP-QUICK	522
		2	MOUNTING GP-BUCKET	531

PIEZAS DE MANTENIMIENTO

DESCRIPCION	NUMERO DE PIEZA	CANT	SE UTILIZA EN	PAGINA
BASTIDOR Y CAJA				
CONEXIÓN DE ENGRASE (ROSCA DE 1/8-27)	3B-8489	2	ENGANCHE ARTICULADO (GR)	266
		7	TUBERÍAS DE ENGRASE (GR)	272
CONFIGURACIÓN DE MÁQUINAS				
BATERÍA (12 VOLTIOS)	3T-5760	1	CHASIS (CONFIG)	2
	115-2422	2	CHASIS (CONFIG)	1
HERRAMIENTAS				
CONEXIÓN DE ENGRASE	3B-8489	1	ACOPLADOR RÁPIDO (GR)	522
		1	MONTAJE DEL CUCHARÓN (GR)	531
CONEXIÓN DE ENGRASE (ROSCA DE 1/8-27)	3B-8491	2	ACOPLADOR RÁPIDO (GR)	522
		2	MONTAJE DEL CUCHARÓN (GR)	531
IMPLEMENTOS				
CONEXIÓN DE ENGRASE	3B-8489	9	CONTROL DE LA HERRAMIENTA DE TRABAJO (GR)	498
		9	CONTROL DE LA HERRAMIENTA DE TRABAJO (GR)	502
		5	CONTROL DEL CUCHARÓN (GR)	496
CONEXIÓN DE ENGRASE (ROSCA DE 1/8-27)	2D-4867	2	CONTROL DEL CUCHARÓN (GR)	496
	3B-8488	1	CONTROL DEL CUCHARÓN (GR)	496
	3B-8491	4	CONTROL DE LA HERRAMIENTA DE TRABAJO (GR)	498
		4	CONTROL DE LA HERRAMIENTA DE TRABAJO (GR)	502
		5	CONTROL DEL CUCHARÓN (GR)	496
MOTOR BÁSICO				
EMPAQUETADURA (TAPA DE VÁLVULA)	216-9604	1	TAPA DEL MECANISMO DE VÁLVULAS (GR)	10
FILTRO - RESPIRADERO (CÁRTER DEL MOTOR)	229-3555	1	TAPA DEL MECANISMO DE VÁLVULAS (GR)	10
GRIFO DE DRENAJE (ACEITE DEL BLOQUE DEL MOTOR)	2P-4173	1	DRENAJE DEL ACEITE DE MOTOR	18
MANGUERA (ELIMINADOR DE GASES INFERIOR)	216-9617	1	TAPA DEL MECANISMO DE VÁLVULAS (GR)	10
MANGUERA (ELIMINADOR DE GASES SUPERIOR)	216-9614	1	TAPA DEL MECANISMO DE VÁLVULAS (GR)	10
SELLO ANULAR (RESPIRADERO DEL CARTER)	229-3556	1	TAPA DEL MECANISMO DE VÁLVULAS (GR)	10
TAPÓN	069-1124	2	TAPÓN DEL BLOQUE MOTOR (GR)	35
TAPÓN (CONJ) (FILTRO DE ACEITE)	130-9888	1	TAPA DEL MECANISMO DE VÁLVULAS (GR)	10
TAPON DE DRENAJE DE SUMIDERO	7C-0351	2	CÁRTER - COLECTOR DEL (GR)	32
TAPON DE SELLO (DRENAJE DE ACEITE)	8C-5225	1	DRENAJE DEL ACEITE DE MOTOR	18

PIEZAS DE MANTENIMIENTO

DESCRIPCION	NUMERO DE PIEZA	CANT	SE UTILIZA EN	PAGINA
PUESTO DEL OPERADOR				
CORREA TRAPEZOIDAL (AIRE ACONDICIONADO)	1W-2934	1	COMPRESOR DE REFRIGERANTE (GR)	554
DISYUNTOR (CONJ) (15 A) (ASIENTO DE AIRE)	3T-2662	1	ASIENTO Y MONTAJE (GR)	628
FILTRO	111-8738	1	FILTRO DE AIRE DE LA CABINA (GR)	568
FILTRO (AIRE)	180-7487	1	FILTRO DE AIRE DE LA CABINA (GR)	568
HOJA DE LIMPIAPARABRISAS (CONJ)	6V-7419	1	LIMPIAPARABRISAS DE LA VENTANA (GR)	652
HOJA DE LIMPIAPARABRISAS (CONJ) (DELANTERO)	6V-7419	1	LIMPIAPARABRISAS DE LA VENTANA (GR)	654
HOJA DE LIMPIAPARABRISAS (CONJ) (TRASERO/A)	5C-8811	1	LIMPIAPARABRISAS DE LA VENTANA (GR)	652
LÁMPARA	112-5219	1	REVESTIMIENTO DE LA CABINA (GR)	579
		1	REVESTIMIENTO DE LA CABINA (GR)	586
LÁMPARA DEL TECHO (GR)	107-6032	1	REVESTIMIENTO DE LA CABINA (GR)	586
LÁMPARA (24 VOLTIOS)	115-1748	2	TABLERO DE INSTRUMENTOS (GR)	610
LLAVE	5P-8500	2	PUBLICACIONES (GR)	594
REJILLA DE FILTRO	8T-5913	2	LAVAPARABRISAS DE LA VENTANA (GR)	650
TAPÓN (CONJ) (ACONDICIONADOR DE AIRE)	3E-4051	1	TUBERÍAS DE ACONDICIONADOR DE AIRE (GR)	588
	3E-4052	1	TUBERÍAS DE ACONDICIONADOR DE AIRE (GR)	588
SISTEMA DE AIRE DE ADMISIÓN Y ESCAPE				
ELEMENTO DEL FILTRO DE AIRE (CONJ) (PRIMARIO)	152-7217	1	FILTRO DE AIRE (GR)	67
ELEMENTO DEL FILTRO DE AIRE (CONJ) (SECUNDARIO)	152-7219	1	FILTRO DE AIRE (GR)	67
INDICADOR (CONJ) (CAMBIO DE FILTRO)	187-2868	1	FILTRO DE AIRE (GR)	68
SISTEMA DE COMBUSTIBLE				
ELEMENTO DE FILTRO DE AGUA (SEPARADOR)	131-1812	1	SEPARADOR DE AGUA (GR)	89
ELEMENTO DE FILTRO DE COMBUSTIBLE	145-4501	1	FILTRO DE COMBUSTIBLE (GR)	76
JUEGO DE SELLO DE TAZA	128-8614	1	SEPARADOR DE AGUA (GR)	89
TAPA DEL COMBUSTIBLE(CONJ)	142-8828	1	TANQUE DE COMBUSTIBLE Y GRUPO DE MONTAJE	90
SISTEMA DE DIRECCIÓN				
TAPA CONTRA EL POLVO	6V-0852	1	TUBERÍAS DE DIRECCIÓN (GR)	304
		1	TUBERÍAS DE LA DIRECCIÓN SECUNDARIA (GR)	300
SISTEMA DE ENFRIAMIENTO				
REGULADOR DE TEMPERATURA DEL AGUA	216-9737	1	AGUA - CONEXIÓN DE (GR)	51
SELLO ANULAR (REGULADOR)	140-7515	1	AGUA - CONEXIÓN DE (GR)	51
SELLO (CAJA DE REGULADOR)	141-6188	1	AGUA - CONEXIÓN DE (GR)	51
VÁLVULA DE DRENAJE DEL RADIADOR (GR)	225-4287	1	RADIADOR (GR)	62

PIEZAS DE MANTENIMIENTO

DESCRIPCION	NUMERO DE PIEZA	CANT	SE UTILIZA EN	PAGINA
SISTEMA DE FRENOS				
TAPA CONTRA EL POLVO	6V-0852	1	FRENO DE SERVICIO - CONTROL (GR)	282
SISTEMA DE LUBRICACIÓN				
FILTRO DE ACEITE DEL MOTOR (CONJ)	1R-0739	1	FILTRO DE ACEITE DEL MOTOR (GR)	45
TAPA CONTRA EL POLVO (VÁLVULA DE MUESTREO DE ACEITE)	8C-3445	1	VÁLVULA DE MUESTREO (GR)	50
SISTEMA ELECTRICO Y DE ARRANQUE				
CRISTAL	146-2438	1	LUCES DE PARADA Y COLA (GR)	109
DISYUNTOR (CONJ) (15 A)	3T-2662	1	CABLES DEL MOTOR (GR)	152
DISYUNTOR (CONJ) (30 A)	147-1773	1	CABLES DEL MOTOR (GR)	152
DISYUNTOR (CONJ) (90 AMP)	171-2211	1	CABLES DEL MOTOR (GR)	152
DISYUNTOR DE CIRCUITO (GR) (60 AMP)	171-2208	1	CABLES DEL MOTOR (GR)	152
JUEGO DE CORREAS TRAPEZOIDALES	130-3216	1	CARGA - ALTERNADOR DE (GR)	96
JUEGO DE CORREAS TRAPEZOIDALES (INCLUYE 2 CORREAS)	130-3216	1	CARGA - ALTERNADOR DE (GR)	98
LÁMPARA	9X-4492	1	LUCES DE PARADA Y COLA (GR)	109
	9X-7849	1	LÁMPARA DE BALIZA DE ADVERTENCIA (GR)	110
LÁMPARA (CONJ) (12 VOLTIOS)	165-5655	1	INSTALACION DE SEGURIDAD (GR)	107
		1	CABLES DE LA MÁQUINA (GR)	162
LÁMPARA DE FARO DELANTERO (24 VOLTIOS)	9X-3463	1	LUCES DE REFLECTOR (GR)	112
LÁMPARA DE FARO DELANTERO (24 VOLTIOS)(65 VATIOS)	9X-3463	1	LUCES DE REFLECTOR Y CAMBIO DE DIRECCION (GR)	118
LAMPARA DERECHA (CONJ)	5C-8964	1	LUCES DE REFLECTOR Y CAMBIO DE DIRECCION (GR)	118
LAMPARA IZQUIERDA (CONJ)	5C-9029	1	LUCES DE REFLECTOR Y CAMBIO DE DIRECCION (GR)	118
LÁMPARA (24 VOLTIOS)	9X-3463	1	LUCES DE REFLECTOR (GR)	114
	115-1748	4	CABLES DE LA CABINA (GR)	136
		4	CABLES DE LA CABINA (GR)	140
		3	CABLES DE LA CABINA (GR)	144
	9X-4493	1	LUCES DE PARADA Y COLA (GR)	109
LÁMPARA (24 VOLTIOS, 21 VATIOS)	9X-4493	2	LUCES DE REFLECTOR Y CAMBIO DE DIRECCION (GR)	118
LÁMPARA (24 VOLTIOS)(65 VATIOS)	9X-3463	1	REFLECTOR (GR)	108
LENTE AMBAR	9X-8121	1	LÁMPARA DE BALIZA DE ADVERTENCIA (GR)	110
LLAVE (DESCONECTAR BATERIA)	8H-5306	1	DISYUNTOR (GR)	128
MANDO DE CORREA	9X-8139	1	LÁMPARA DE BALIZA DE ADVERTENCIA (GR)	110
REFLECTOR	9R-1499	2	LUCES DE REFLECTOR Y CAMBIO DE DIRECCION (GR)	118
REFLECTOR-AMBAR	9R-2404	6	LUCES DE REFLECTOR Y CAMBIO DE DIRECCION (GR)	118
VIDRIO (CONJ)	144-5284	1	REFLECTOR (GR)	108

PIEZAS DE MANTENIMIENTO

DESCRIPCION	NUMERO DE PIEZA	CANT	SE UTILIZA EN	PAGINA
SISTEMA HIDRÁULICO				
CANDADO (GR)	5P-8502	1	TANQUE HIDRÁULICO Y MONTAJE (GR)	422
FILTRO DE ACEITE (CONJ) (HIDRÁULICO)	126-1818	1	FILTRO DE ACEITE (GR)	331
LLAVE	5P-8500	1	TANQUE HIDRÁULICO Y MONTAJE (GR)	422
PANTALLA (CONJ)	141-9236	1	VÁLVULA PILOTO (GR)	448
		1	VÁLVULA PILOTO (GR)	454
		1	VÁLVULA PILOTO (GR)	458
		1	VÁLVULA PILOTO (GR)	460
		1	VÁLVULA PILOTO (GR)	464
		1	VÁLVULA PILOTO (GR)	466
		1	VÁLVULA PILOTO (GR)	470
RESPIRADERO (HIDRÁULICO)	130-4634	1	TANQUE HIDRÁULICO Y MONTAJE (GR)	422
SELLO ANULAR	5P-6718	3	VÁLVULA DEL CONTROL PRINCIPAL (GR)	428
		6	VÁLVULA DEL CONTROL PRINCIPAL (GR)	432
		6	VÁLVULA DEL CONTROL PRINCIPAL (GR)	436
		3	VÁLVULA DEL CONTROL PRINCIPAL (GR)	440
		6	VÁLVULA DEL CONTROL PRINCIPAL (GR)	444
TAPA CONTRA EL POLVO	6V-0852	2	TUBERÍAS CON SERVOMANDO (GR)	380
		1	TUBERÍAS DEL CILINDRO DE INCLINACIÓN (GR)	392
		2	TUBERÍAS DEL CILINDRO DE INCLINACIÓN (GR)	394
		2	TUBERÍAS HIDRÁULICAS (GR)	356
	8C-3451	1	FILTRO DE ACEITE (GR)	331

PIEZAS DE MANTENIMIENTO

DESCRIPCION	NUMERO DE PIEZA	CANT	SE UTILIZA EN	PAGINA
TREN DE FUERZA				
CONEXIÓN DE ENGRASE	3B-8489	1	EJE DE MANDO (GR)	236
FILTRO DE ACEITE (CONJ) (HIDRAULICO)	1G-8878	1	FILTRO DE ACEITE (GR)	202
FILTRO MAGNÉTICO	8S-9129	1	CAJA Y PIEZAS DE LOS PLANETARIOS	182
REJILLA DE SUCCIÓN	8S-9130	1	CAJA Y PIEZAS DE LOS PLANETARIOS	182
RESPIRADERO (TRANSMISION)	9G-5127	1	CAJA Y PIEZAS DE LOS PLANETARIOS	182
TAPA	2D-2633	1	ARO DESMONTABLE (GR)	231
		1	ARO DESMONTABLE (GR)	233
TAPA CONTRA EL POLVO	6V-0852	2	CAJA Y PIEZAS DE LOS PLANETARIOS	182
		1	FILTRO DE ACEITE (GR)	202
		1	TUBERÍAS DEL ENFRIADOR DE ACEITE DEL EJE (GR)	218
		1	TUBERIAS DEL ENFRIADOR DEL CONVERTIDOR DE PAR	224
	8C-3451	1	FILTRO DE ACEITE (GR)	202
TAPÓN MAGNÉTICO	5P-4484	1	CAJA DE EJE OSCILANTE (GR)	214
		1	CAJA DEL EJE OSCILANTE (GR)	212
		1	CAJA Y PIEZAS DE LOS PLANETARIOS	182

PEÇAS DE MANUTENÇÃO

DESCRIÇÃO	NÚMERO DE PEÇA	QUANT	UTILIZADA EM	PÁGINA
ACESSÓRIOS				
GRAXEIRA	3B-8489	5	CONTROLE DA CAÇAMBA	496
		9	CONTROLE DA FERRAMENTA DE TRABALHO	498
		9	CONTROLE DA FERRAMENTA DE TRABALHO	502
GRAXEIRA (ROSCA 1/8-27 POL)	2D-4867	2	CONTROLE DA CAÇAMBA	496
	3B-8488	1	CONTROLE DA CAÇAMBA	496
	3B-8491	5	CONTROLE DA CAÇAMBA	496
		4	CONTROLE DA FERRAMENTA DE TRABALHO	498
		4	CONTROLE DA FERRAMENTA DE TRABALHO	502
CHASSI E CARROCERIA				
GRAXEIRA (ROSCA 1/8-27 POL)	3B-8489	2	ENGATE - ARTICULAÇÃO	266
		7	TUBOS - GRAXA	272
ESTAÇÃO DO OPERADOR				
CHAVE	5P-8500	2	PUBLICAÇÃO	594
CORREIA EM V (AR CONDICIONADO)	1W-2934	1	COMPRESSOR DE REFRIGERANTE	554
DISJUNTOR AUTOMÁTICO DE CIRCUITO (15 A) (AR - ASSENTO)	3T-2662	1	ASSENTO E MONTAGEM	628
FILTRO	111-8738	1	FILTRO - AR DA CABINE	568
FILTRO - TELA	8T-5913	2	LAVADOR DO VIDRO	650
FILTRO (AR)	180-7487	1	FILTRO - AR DA CABINE	568
LÂMINA DO LIMPADOR DE PÁRA-BRISA	6V-7419	1	LIMPADOR DO VIDRO	652
LÂMINA DO LIMPADOR DE PÁRA-BRISA (DIANTEIRO)	6V-7419	1	LIMPADOR DO VIDRO	654
LÂMINA DO LIMPADOR DE PÁRA-BRISA (PARTE TRASEIRA)	5C-8811	1	LIMPADOR DO VIDRO	652
LÂMPADA	112-5219	1	REVESTIMENTO DA CABINE	579
		1	REVESTIMENTO DA CABINE	586
LÂMPADA - TETO	107-6032	1	REVESTIMENTO DA CABINE	586
LÂMPADA (24 V)	115-1748	2	PAINEL DE INSTRUMENTOS	610
TAMPA (CONDICIONADOR DE AR)	3E-4051	1	TUBOS - AR CONDICIONADO	588
	3E-4052	1	TUBOS - AR CONDICIONADO	588
FERRAMENTAS DE TRABALHO				
GRAXEIRA	3B-8489	1	ACOPLADOR RÁPIDO	522
		1	MONTAGEM - CAÇAMBA	531
GRAXEIRA (ROSCA 1/8-27 POL)	3B-8491	2	ACOPLADOR RÁPIDO	522
		2	MONTAGEM - CAÇAMBA	531
MÁQUINA - ARRANJO				
BATERIA (12 V)	3T-5760	1	CHASSI	2
	115-2422	2	CHASSI	1

PEÇAS DE MANUTENÇÃO

DESCRIÇÃO	NÚMERO DE PEÇA	QUANT	UTILIZADA EM	PÁGINA
MOTOR BÁSICO				
BUJÃO - DRENAGEM DO RESERVATÓRIO	7C-0351	2	CÁRTER DO ÓLEO DO MOTOR	32
BUJÃO-RETENTOR (DRENO DO ÓLEO)	8C-5225	1	DRENO - ÓLEO DO MOTOR	18
FILTRO - RESPIRO (CÁRTER)	229-3555	1	TAMPA - MECANISMO DAS VÁLVULAS	10
JUNTA (TAMPA DA VÁLVULA)	216-9604	1	TAMPA - MECANISMO DAS VÁLVULAS	10
MANGUEIRA (DESCARTE DE VAPORES - INFERIOR)	216-9617	1	TAMPA - MECANISMO DAS VÁLVULAS	10
MANGUEIRA (DESCARTE DE VAPORES - SUPERIOR)	216-9614	1	TAMPA - MECANISMO DAS VÁLVULAS	10
RETENTOR DE ANEL-O (RESPIRO DO CÁRTER DO ÓLEO DO MOTOR)	229-3556	1	TAMPA - MECANISMO DAS VÁLVULAS	10
TAMPA (BOCAL DE ENCHIMENTO DE ÓLEO)	130-9888	1	TAMPA - MECANISMO DAS VÁLVULAS	10
TAMPÃO	069-1124	2	BUJÃO DO BLOCO DO CILINDRO	35
TORNEIRA-DRENAGEM (ÓLEO DO BLOCO DO CILINDRO)	2P-4173	1	DRENO - ÓLEO DO MOTOR	18
SISTEMA DA ADMISSÃO DE AR E DE ESCAPE				
ELEMENTO DO FILTRO DE AR (PRIMÁRIO)	152-7217	1	PURIFICADOR DE AR	67
ELEMENTO DO FILTRO DE AR (SECUNDÁRIO)	152-7219	1	PURIFICADOR DE AR	67
INDICADOR (TROCA DO FILTRO)	187-2868	1	PURIFICADOR DE AR	68
SISTEMA DE ARREFECIMENTO				
REGULADOR DE TEMPERATURA DA ÁGUA	216-9737	1	CONEXÃO - TUBO D'ÁGUA	51
RETENTOR (ALOJAMENTO DO REGULADOR)	141-6188	1	CONEXÃO - TUBO D'ÁGUA	51
RETENTOR DE ANEL-O (REGULADOR)	140-7515	1	CONEXÃO - TUBO D'ÁGUA	51
VÁLVULA DE DRENAGEM DO RADIADOR	225-4287	1	RADIADOR	62
SISTEMA DE COMBUSTÍVEL				
ELEMENTO DO FILTRO DE COMBUSTÍVEL	145-4501	1	FILTRO - COMBUSTÍVEL	76
ELEMENTO FILTRANTE-ÁGUA (SEPARADOR)	131-1812	1	SEPARADOR DE ÁGUA	89
JOGO DE VEDADOR DA CAÇAMBA	128-8614	1	SEPARADOR DE ÁGUA	89
TAMPA - TANQUE DE COMBUSTÍVEL	142-8828	1	TANQUE DE COMBUSTÍVEL E MONTAGEM	90
SISTEMA DE DIREÇÃO				
TAMPA CONTRA POEIRA	6V-0852	1	TUBOS - DIREÇÃO	304
		1	TUBOS - DIREÇÃO SECUNDÁRIA	300
SISTEMA DE FREIO				
TAMPA CONTRA POEIRA	6V-0852	1	CONTROLE DO FREIO DE SERVIÇO	282
SISTEMA DE LUBRIFICAÇÃO				
FILTRO - ÓLEO DO MOTOR	1R-0739	1	FILTRO - ÓLEO DO MOTOR	45
TAMPA CONTRA POEIRA (VÁLVULA DE AMOSTRAGEM DE ÓLEO)	8C-3445	1	VÁLVULA PARA TIRAR AMOSTRAS DE FLUIDOS	50

PEÇAS DE MANUTENÇÃO

DESCRIÇÃO	NÚMERO DE PEÇA	QUANT	UTILIZADA EM	PÁGINA
SISTEMA ELÉTRICO E DE PARTIDA				
CHAVE (DESCONECTAR A BATERIA)	8H-5306	1	CHAVE GERAL	128
CORREIA DE COMANDO	9X-8139	1	LUZ GIRATÓRIA DE ALARME	110
DISJUNTOR AUTOMÁTICO DE CIRCUITO (15 A)	3T-2662	1	CABOS/FIOS ELÉTRICOS - MOTOR	152
DISJUNTOR AUTOMÁTICO DE CIRCUITO (30 A)	147-1773	1	CABOS/FIOS ELÉTRICOS - MOTOR	152
DISJUNTOR AUTOMÁTICO DE CIRCUITO (90 AMP)	171-2211	1	CABOS/FIOS ELÉTRICOS - MOTOR	152
FAROL DIANTEIRO (24 V)	9X-3463	1	SISTEMA DE ILUMINAÇÃO - FARÓIS	112
FAROL DIANTEIRO (24 VOLTS)(65 WATTS)	9X-3463	1	SISTEMA DE ILUMINAÇÃO - FARÓIS E SINAL	118
INTERRUPTOR - CIRCUITO (60 A)	171-2208	1	CABOS/FIOS ELÉTRICOS - MOTOR	152
JOGO DE CORREIAS EM V	130-3216	1	ALTERNADOR DE CORRENTE	96
JOGO DE CORREIAS EM V (INCLUI 2 CORREIAS)	130-3216	1	ALTERNADOR DE CORRENTE	98
LÂMPADA	9X-4492	1	LUZ TRASEIRA E DE FREIO	109
	9X-7849	1	LUZ GIRATÓRIA DE ALARME	110
LÂMPADA - LADO DIREITO	5C-8964	1	SISTEMA DE ILUMINAÇÃO - FARÓIS E SINAL	118
LÂMPADA - LADO ESQUERDO	5C-9029	1	SISTEMA DE ILUMINAÇÃO - FARÓIS E SINAL	118
LÂMPADA (12 V)	165-5655	1	CABOS/FIOS ELÉTRICOS - MÁQUINA	162
		1	INSTALAÇÃO-SEGURANÇA	107
LÂMPADA (24 V)	9X-3463	1	SISTEMA DE ILUMINAÇÃO - FARÓIS	114
	9X-4493	1	LUZ TRASEIRA E DE FREIO	109
	115-1748	4	CABOS/FIOS ELÉTRICOS - CABINE	136
		4	CABOS/FIOS ELÉTRICOS - CABINE	140
		3	CABOS/FIOS ELÉTRICOS - CABINE	144
LÂMPADA (24 VOLTS/21 WATTS)	9X-4493	2	SISTEMA DE ILUMINAÇÃO - FARÓIS E SINAL	118
LÂMPADA (24 VOLTS)(65 WATTS)	9X-3463	1	LÂMPADA - FAROL	108
LENTE	144-5284	1	LÂMPADA - FAROL	108
	146-2438	1	LUZ TRASEIRA E DE FREIO	109
LENTE ÂMBAR	9X-8121	1	LUZ GIRATÓRIA DE ALARME	110
REFLETOR	9R-1499	2	SISTEMA DE ILUMINAÇÃO - FARÓIS E SINAL	118
REFLETOR - ÂMBAR	9R-2404	6	SISTEMA DE ILUMINAÇÃO - FARÓIS E SINAL	118

PEÇAS DE MANUTENÇÃO

DESCRIÇÃO	NÚMERO DE PEÇA	QUANT	UTILIZADA EM	PÁGINA
SISTEMA HIDRÁULICO				
CADEADO	5P-8502	1	TANQUE DE ÓLEO HIDRÁULICO E MONTAGEM	422
CHAVE	5P-8500	1	TANQUE DE ÓLEO HIDRÁULICO E MONTAGEM	422
FILTRO - ÓLEO (HIDRÁULICO)	126-1818	1	FILTRO - ÓLEO	331
RESPIRO (HIDRÁULICO)	130-4634	1	TANQUE DE ÓLEO HIDRÁULICO E MONTAGEM	422
RETENTOR DE ANEL-O	5P-6718	3	VÁLVULA - CONTROLE PRINCIPAL	428
		6	VÁLVULA - CONTROLE PRINCIPAL	432
		6	VÁLVULA - CONTROLE PRINCIPAL	436
		3	VÁLVULA - CONTROLE PRINCIPAL	440
		6	VÁLVULA - CONTROLE PRINCIPAL	444
TAMPA CONTRA POEIRA	6V-0852	1	TUBOS - CILINDRO DE INCLINAÇÃO	392
		2	TUBOS - CILINDRO DE INCLINAÇÃO	394
		2	TUBOS - CIRCUITO PILOTO	380
		2	TUBOS - ÓLEO HIDRÁULICO	356
	8C-3451	1	FILTRO - ÓLEO	331
TELA FILTRANTE	141-9236	1	VÁLVULA DE CONTROLE PILOTO	448
		1	VÁLVULA DE CONTROLE PILOTO	454
		1	VÁLVULA DE CONTROLE PILOTO	458
		1	VÁLVULA DE CONTROLE PILOTO	460
		1	VÁLVULA DE CONTROLE PILOTO	464
		1	VÁLVULA DE CONTROLE PILOTO	466
		1	VÁLVULA DE CONTROLE PILOTO	470
TREM DE FORÇA				
BUJÃO MAGNÉTICO	5P-4484	1	CAIXA - EIXO FIXO	212
		1	CAIXA - EIXO OSCILANTE	214
		1	CARCAÇA DAS ENGRENAGENS PLANETÁRIAS E COMPONENTES	182
FILTRO - MAGNÉTICO	8S-9129	1	CARCAÇA DAS ENGRENAGENS PLANETÁRIAS E COMPONENTES	182
FILTRO - ÓLEO (HIDRÁULICO)	1G-8878	1	FILTRO - ÓLEO	202
GRAXEIRA	3B-8489	1	EIXO DE TRANSMISSÃO	236
RESPIRO (TRANSMISSÃO)	9G-5127	1	CARCAÇA DAS ENGRENAGENS PLANETÁRIAS E COMPONENTES	182
TAMPA CONTRA POEIRA	6V-0852	2	CARCAÇA DAS ENGRENAGENS PLANETÁRIAS E COMPONENTES	182
		1	FILTRO - ÓLEO	202
		1	TUBOS - ARREFECEDOR DE ÓLEO DO EIXO	218
		1	TUBOS - ARREFECEDOR DO CONVERSOR DE TORQUE	224
	8C-3451	1	FILTRO - ÓLEO	202
TAMPA DA VÁLVULA	2D-2633	1	ARO DESMONTÁVEL	231
		1	ARO DESMONTÁVEL	233
TELA DE SUCÇÃO	8S-9130	1	CARCAÇA DAS ENGRENAGENS PLANETÁRIAS E COMPONENTES	182

INDEX

Name	Page
A	
ACCUMULATOR GP-BRAKE	278
ADAPTER GP	219
ADAPTER GP-TIP	506
AIR CLEANER GP	67
	68
AIR CONDITIONER & MOUNTING GP	537
AIR CONDITIONER AR	538
AIR CONDITIONER GP	540
ALARM GP–ACTION	91
ALTERNATOR GP-CHARGING	92
	94
	96
	98
ARM GP-MATERIAL HANDLING	507
ARMREST GP	544
	634
	635
ARMREST GP–LH	545
ARMREST GP–RH	543
AXLE AR-FIXED	174
AXLE AR-OSCILLATING	174
	175
	176
	177
B	
BATTERY (12 VOLT)	1
	2
BELT-DRIVE	110
BLADE AS-WIPER	652
BLADE AS-WIPER (FRONT)	654
BLADE AS-WIPER (REAR)	652
BLOCK-MINIFUSE	610
	614
BOWL AS-WATER COLLECTION	89
BOX GP-BATTERY	248
BOX GP-TOOL	655
BRACKET GP-TRANSPORT	494
	495
BRAKE & PLANETARY GP	178
	180
BREATHER (HYDRAULIC)	422
BREATHER (TRANSMISSION)	182
BUCKET AS-GENERAL PURPOSE	508
	510
	511
BUCKET AS-LIGHT MATERIAL	512
BUCKET AS-PENETRATION–QUICK COUPLER	513
BUCKET GP-GENERAL PURPOSE	514
	516
	517
	518
	520
BUCKET GP-GENERAL PURPOSE–QUICK COUPLER	519
C	
CAB AR	546
	547
CAB AR-ENCLOSED ROPS	547
CAB GP	548
	550
CABLE AS	537
CAMSHAFT GP	7
CANOPY AR-OPEN ROPS	551
CANOPY GP-OPEN ROPS	551
	552
CAP AS (AIR CONDITIONER)	588
CAP AS-FUEL	90
CAP AS (OIL FILLER)	10
CAP-DUST	182
	202
	218
	224
	282
	300
	304
	331
	356
	380
	392
	394
CAP-DUST (OIL SAMPLING VALVE)	50
CAP-VALVE	231
	233
CARRIAGE AS-FORK	521
CASE & PARTS GP-PLANETARY	182
CHASSIS AR	1
	2
CIRCUIT BREAKER AS (15 AMP)	152
CIRCUIT BREAKER AS (15 AMP) (AIR SEAT)	628
CIRCUIT BREAKER AS (30 AMP)	152
CIRCUIT BREAKER AS (90 AMP)	152
CIRCUIT BREAKER GP (60 AMP)	152
CLUTCH GP	184
	186
	188
COCK-DRAIN (CYLINDER BLOCK OIL)	18
COMMON AR	3
COMPRESSOR GP-REFRIGERANT	553
	554
CONDENSER & MTG GP-REFRIGERANT	555
	556
CONDENSER GP-REFRIGERANT	557
CONNECTION GP-WATER	51

INDEX

Name	Page
CONTROL AR-RIDE	309
CONTROL GP-BUCKET	496
CONTROL GP-COMMUNICATION (PRODUCT LINK)	148
CONTROL GP-HANDLE	310
CONTROL GP-LIFT KICKOUT	100
	338
	340
CONTROL GP-MACHINE	101
CONTROL GP-PARKING BRAKE	279
	280
CONTROL GP-PILOT OPERATED HYD	311
	312
	314
	316
	318
	320
CONTROL GP-POSITION	338
	340
CONTROL GP-POSITION–WORK TOOL	102
CONTROL GP-SERVICE BRAKE	282
CONTROL GP-STEERING	292
	294
CONTROL GP-TRANSMISSION	190
	191
CONTROL GP-UNPROGRAMMED	101
CONTROL GP-UNPROGRAMMED (SECURITY)	104
CONTROL GP-WORK TOOL	498
CONTROL GP-WORK TOOL–HIGH LIFT	502
CONVERTER GP-ELECTRICAL	103
COOLER GP-FLTR BASE & ENG OIL	52
COOLER GP-HYD & TMSN OIL	322
	323
COOLER GP-HYDRAULIC OIL	324
COUNTERWEIGHT GP	249
	250
COUPLER AR-QUICK	521
COUPLER GP-QUICK	522
COVER GP-CONSOLE	558
COVER GP-ENGINE	8
COVER GP-TRANSMISSION	192
COVER GP-VALVE MECHANISM	10
CRANKSHAFT GP	12
CYLINDER & MTG GP-COUPLER	325
CYLINDER & MTG GP-STEERING	296
CYLINDER BLOCK GP	13
	14
CYLINDER GP-LIFT	326
	327
CYLINDER GP-STEERING	298
CYLINDER GP-TILT	328
	329
CYLINDER HEAD GP	16
	17

D

Name	Page
DASH GP	559
DEFROSTER GP-CAB	560
DIFFERENTIAL GP	194
DIFFERENTIAL GP-LIMITED SLIP	195
DOOR GP-CAB	561
DOOR GP-CAB–LH	562
DOOR GP-CAB–RH	564
DRAIN GP-ENGINE OIL	18
DRIVE GP-FLEXIBLE COUPLING	196
DRIVE GP-PUMP	197
DUCT GP-AIR	566

E

Name	Page
EDGE GP-CUTTING	524
EDGE GP-SEGMENT	524
ELBOW GP-AIR INLET	69
ELECTRONICS GP-MACHINE	104
ELECTRONICS GP-MACHINE–SECURITY	104
ENGINE AR	4
ENGINE AR-PRIMARY	5
EXTENSION GP-BACKREST	567
EXTENSION GP-EXHAUST	70

F

Name	Page
FAN GP-SUCTION	54
FASTENER GP-CYLINDER HEAD	19
FENDER GP-FRONT	251
	252
FILLER GP-POWER TRAIN OIL	198
FILM	100
	102
FILM (BLACK)	488
FILM-CATERPILLAR	551
FILM-CIRCUIT BREAKER	152
FILM (CONTROLS)	606
FILM GP	656
FILM-IDENTIFICATION (CIRCUIT BREAKER)	152
FILM-IDENTIFICATION (GROUP & SEQUENCE NO.)	557
FILM-INSTRUCTION (ENGINE RUN, ON/OFF)	604
FILM-INSTRUCTION (SEAT ADJUSTMENT)	644
	646
FILM (INSTRUMENT PANEL COVER)	604
FILM (MACHINE SECURITY SYSTEM)	107
FILM (MACHINE SECURITY SYSTEM)	162
FILM (PANEL-LH)	140
FILM (PANEL-RH)	140
FILM (PLATE-NAME)	384
	388
FILM (START)	107

INDEX

Name	Page
	162
FILM-WARNING (ACCUMULATOR PRESSURE)	384
FILM-WARNING (ACCUMULATOR PRESSURE)	657
	659
FILM-WARNING (NO ETHER/AIR INTAKE)	657
FILM (12VOLT)	103
FILTER	568
FILTER & LINES GP-TRANSMISSION	200
FILTER (AIR)	568
FILTER AS-ENGINE OIL	45
FILTER AS-OIL (HYDRAULIC)	202
	331
FILTER BASE & ENG OIL COOLER	52
FILTER-BREATHER (CRANKCASE)	10
FILTER ELEMENT AS-AIR (PRIMARY)	67
FILTER ELEMENT AS-AIR (SECONDARY)	67
FILTER ELEMENT-FUEL	76
FILTER ELEMENT-WATER (SEPARATOR)	89
FILTER GP-CAB AIR	568
FILTER GP-ENGINE OIL	45
FILTER GP-FUEL	76
FILTER GP-OIL	202
FILTER GP-OIL–HYDRAULIC	330
	331
FILTER-MAGNETIC	182
FILTER-SCREEN	650
FITTING-GREASE	236
	496
	498
	502
	522
	531
FITTING-GREASE (1/8-27 THD)	496
	498
	502
	522
	531
FITTING-GREASE (1/8-27 THD)	266
	272
FLASHER AS (12/24 VOLT)	118
FLYWHEEL GP	20
FORK GP	525
FORK GP-PALLET	526
	527
FRAME GP-LOADER	254
	255
FRAME GP-REAR	256

G

Name	Page
GASKET (VALVE COVER)	10
GAUGE AS-OIL LEVEL (DIPSTICK)	212
	214
GAUGE AS-OIL LEVEL (DIPSTICK)	198
GAUGE GP-OIL LEVEL (DIPSTICK)	46
GEAR GP-BEVEL & PINION	203
	204
	206
	207
GEAR GP-FRONT	21
GEAR GP-INPUT TRANSFER	208
GEAR GP-OUTPUT TRANSFER	210
GUARD GP-BUCKET–TOOTH TIP	528
GUARD GP-CRANKCASE	257
GUARD GP-FAN	56
GUARD GP-LINES	258
	260
	262
GUARD GP-OVERFLOW	529
	530
GUARD GP-POWER TRAIN	264

H

Name	Page
HARNESS AS-AIR CONDITIONER (CONDENSER FANS)	557
HEATER & MTG GP-CAB	569
HEATER AR-CAB	570
HEATER GP-CAB	572
HEATER GP-JACKET WATER	105
	106
HITCH GP-ARTICULATING	266
HOOD & GUARD GP	268
HORN AS (24 VOLT)(LOW TONE)	158
	160
HOSE (LOWER FUMES DISPOSAL)	10
HOSE (UPPER FUMES DISPOSAL)	10
HOUSING GP-FIXED AXLE	212
HOUSING GP-FLYWHEEL	22
HOUSING GP-FRONT	24
HOUSING GP-OSCILLATING AXLE	214
HOUSING GP-SEAT SUSPENSION	574
HYDRAULIC AR	332
HYDRAULIC AR-2 VALVE	333
	334
HYDRAULIC AR-3 VALVE	334
	335
HYDRAULIC AR-4 VALVE	335
	336

I

Name	Page
INDICATOR AS (FILTER CHANGE)	68
INSTALLATION AR-ENGINE	6
INSTALLATION GP-RADIO	577
	578
INSTALLATION GP-SECURITY	107

INDEX

Name	Page
K	
KEY	422, 594
KEY AS-ELECTRONIC (SECURITY)	101, 162
KEY (BATTERY DISCONNECT)	128
KICKOUT & POSITIONER GP	338, 340
KIT-ADJUSTER	544, 602, 636, 638
KIT-AIR COMPRESSOR	646
KIT-ARMREST-LH	636, 638
KIT-ARMREST-RH	636, 638
KIT-BACK TILT	602
KIT-BEARING	92, 575
KIT-BEARING (ALTERNATOR)	94
KIT-BELT TETHER	644
KIT-BOWL SEAL	89
KIT-BUMPER	574
KIT-BUMPSTOP	636, 638
KIT-CABLE ADJUSTER	636, 638
KIT-CONNECTING PLUG (12 PIN)	606, 611, 614
KIT-CONNECTING PLUG (12 PIN)	152
KIT-CONNECTING PLUG (2 PIN)	107, 144, 152, 158, 160, 162, 166, 168, 170, 246, 540, 557, 572, 606, 611, 614
KIT-CONNECTING PLUG (2 PIN)	140
KIT-CONNECTING PLUG (2 PIN) (MAIN POWER RELAY SWITCH)	130
KIT-CONNECTING PLUG (3 PIN)	107, 144, 152, 158, 160, 162, 166, 246, 290, 606, 611, 614
KIT-CONNECTING PLUG (3 PIN)	140
KIT-CONNECTING PLUG (4 PIN)	144, 158, 191, 606, 611, 614
KIT-CONNECTING PLUG (4 PIN)	136, 140
KIT-CONNECTING PLUG (6 PIN)	107, 144, 158, 160, 162, 606, 611, 614
KIT-CONNECTING PLUG (6 PIN)	136, 140
KIT-CONNECTING PLUG (8 PIN)	144, 148, 158, 160, 191, 577, 606, 611, 614
KIT-CONNECTING PLUG (8 PIN)	136
KIT-CONTACT (STARTING MOTOR)	126
KIT-COVER	636, 638
KIT-CUSHION	544, 567
KIT-DAMPER	636, 638
KIT-FASTENER	646
KIT-FOAM	636, 638
KIT-FOLLOWER	575
KIT-FRAME AS	636, 638
KIT-GEAR (STARTING MOTOR)	126
KIT-HANDLE	636, 638
KIT-HARDWARE	92

INDEX

Name	Page
KIT-HARDWARE (ALTERNATOR)	94
KIT-HEIGHT RISER	636
	638
KIT-HOSE (WATER) (REGULATOR HOUSING)	60
KIT-INDICATOR	575
KIT-LEVER AS	636
	638
KIT-RECEPTACLE (12 PIN)	118
	611
KIT-RECEPTACLE (12 PIN)	158
	160
	606
	611
	614
KIT-RECEPTACLE (12 PIN)	136
	140
	144
KIT-RECEPTACLE (2 PIN)	107
	133
	152
	158
	160
	162
	166
	168
	170
	246
	370
	384
	440
	444
	491
	492
	540
	572
	588
	606
	610
	614
	646
KIT-RECEPTACLE (2 PIN)	91
KIT-RECEPTACLE (2 PIN)	109
	140
	144
KIT-RECEPTACLE (3 PIN)	100
	107
	123
	152
	158
	162
	166
	168
	172
	246
	300
	338
	340
	557
	577
	606
	610
	614
KIT-RECEPTACLE (3 PIN)	376
KIT-RECEPTACLE (3 PIN)	109
	140
	144
KIT-RECEPTACLE (4 PIN)	112
	158
	490
	606
	610
KIT-RECEPTACLE (4 PIN)	604
KIT-RECEPTACLE (6 PIN)	107
	136
	140
	144
	148
	160
	162
	191
	310
	316
	318
	320
	340
	450
	540
	572
	597
	598
	606
	610
	614
KIT-RECEPTACLE (6 PIN)	118
KIT-RECEPTACLE (8 PIN)	131
	132
	136
	140
	144
	148
	448
	454
	458
	460
	464
	466
	470
	606
	611

INDEX

Name	Page
	614
KIT-ROLLER	646
KIT-SCISSORS	646
KIT-SEAL	385
	389
	404
	424
	490
KIT-SEAT CUSHION	632
KIT-SEAT KNOB	632
KIT-SEAT TILT	602
KIT-SLIDE RAIL	636
	638
KIT-SLIDER BLOCK	635
KIT-SPRING	575
	636
	638
KIT-SUSPENSION BEARING	636
	638
KIT-SUSPENSION BOOT	644
KIT-SUSPENSION COVER	636
	638
KIT-SUSPENSION KNOB	574
KIT-SUSPENSION ROLLER	644
KIT-TERMINAL (ALTERNATOR)	94
KIT-TETHER	636
	638
	646
KIT-TILT PAN	632
KIT-UPPER AS	636
KIT-WATER BASE (WATER SEPARATOR)	89

L

Name	Page
LADDER GP	270
LAMP	109
	110
	579
	586
LAMP AS-LH	118
LAMP AS-RH	118
LAMP AS (12 VOLT)	107
	162
LAMP GP-DOME	586
LAMP GP-FLOOD	108
	112
	114
	118
LAMP GP-STOP & TAIL	109
LAMP GP-WARNING BEACON	110
LAMP-HEAD (24 VOLT)	112
LAMP-HEAD (24 VOLT)(65 WATT)	118
LAMP (24 VOLT)	109
	114
	136
	140
	144
	610
LAMP (24 VOLT/21 WATT)	118
LAMP (24 VOLT)(65 WATT)	108
LENS	109
LENS-AMBER	110
LENS AS	108
LIFTING GP-ENGINE	26
LIGHTING GP-AUXILIARY	111
LIGHTING GP-FLOOD	112
	114
	116
LIGHTING GP-FLOOD & SIGNAL	118
LIGHTING GP-REAR	120
LIGHTING GP-WARNING	121
LINER GP-CAB	579
	580
	582
	584
	586
LINES GP-AIR	71
LINES GP-AIR CONDITIONER	588
LINES GP-AXLE OIL COOLER	218
LINES GP-COUPLER	342
	344
	346
	350
LINES GP-FRONT	354
LINES GP-FUEL	78
LINES GP-GREASE	272
LINES GP-HEATER	592
LINES GP-HYDRAULIC	356
	360
	362
LINES GP-HYDRAULIC FAN	364
	368
	370
LINES GP-LIFT CYLINDER	372
	376
LINES GP-PILOT	380
LINES GP-RIDE CONTROL	384
	388
LINES GP-SECONDARY STEERING	300
LINES GP-SERVICE BRAKE	284
LINES GP-STARTING AID	122
LINES GP-STEERING	304
LINES GP-TILT CYLINDER	392
	394
LINES GP-TORQUE CONV COOLER	224
LINES GP-WATER	58
	59
LINK GP-STEERING FRAME LOCK	274
LITERATURE GP	594

INDEX

Name	Page
M	
MIRROR GP-REAR VIEW	595, 596
MOTOR & MTG GP-HYDRAULIC FAN	398, 399
MOTOR AR-HYDRAULIC FAN	400
MOTOR GP-GEAR–REVERSING HYDRAULIC FAN	402, 404
MOTOR GP-GEAR–STANDARD HYDRAULIC FAN	401, 406
MOTOR GP-WINDOW WIPER–FRONT	597
MOTOR GP-WINDOW WIPER–REAR	598
MOUNTING GP-ALTERNATOR	27
MOUNTING GP-AXLE	226
MOUNTING GP-BUCKET	531
MOUNTING GP-CAB	599
MOUNTING GP-CONTROL VALVE	408
MOUNTING GP-ENGINE & TMSN	28
MOUNTING GP-FAN DRIVE	30
MOUNTING GP-RIM	227
MUFFLER GP	72
O	
OPERATOR AR	600
P	
PADLOCK GP	422
PAN GP-BACKREST	601
PAN GP-BACKREST (BACK)	632
PAN GP-OIL	32
PAN GP-SEAT–BOTTOM	602
PAN GP-SEAT (BOTTOM)	632
PANEL GP-INSTRUMENT	604, 606, 610, 614
PANEL GP-TOP	276
PEDAL GP-BRAKE	619
PEDAL GP-GOVERNOR	620
PISTON & ROD GP	34
PIVOT GP-PILOT VALVE	411, 412
PIVOT GP-PILOT VALVE–LIFT	409
PIVOT GP-PILOT VALVE–TILT	410
PLATE & FILM GP	657, 659
PLATE & FILM GP–PORTUGUESE	658
PLATE & FILM GP–SPANISH	658
PLATE GP-PILOT VALVE–JOYSTICK	413
PLATE-INSTRUCTION	588
PLATE-INSTRUCTION (BATTERY)	134
PLATE-INSTRUCTION (IMPLEMENT WITH JOYSTICK)	314
PLATE-WARNING (NO CLEARANCE)	657
PLUG	35
PLUG GP-CYLINDER BLOCK	35, 36
PLUG GP-CYLINDER HEAD	37
PLUG GP-ENGINE	38
PLUG GP-FLYWHEEL HOUSING	39
PLUG-MAGNETIC	182, 212, 214
PLUG-SEAL (OIL DRAIN)	18
PLUG-SUMP DRAIN	32
POWER TRAIN AR	227
PRECLEANER GP	73
PULLER-MINIFUSE	606, 610
PULLEY GP-CRANKSHAFT	40
PUMP & MTG GP-BRAKE & HYD FAN	287
PUMP & MTG GP-HYDRAULIC–IMPLEMENT,PILOT & STEERING	414
PUMP GP-ENGINE OIL	48
PUMP GP-FUEL INJECTION	82
PUMP GP-FUEL TRANSFER	86
PUMP GP-GEAR	228, 229, 290
PUMP GP-GEAR–BRAKING & HYDRAULIC FAN	288
PUMP GP-PISTON–IMPLEMENT	418
PUMP GP-PISTON–IMPLEMENT,PILOT & STEERING	415
PUMP GP-PISTON–PILOT & STEERING	416
PUMP GP-WATER	60
R	
RADIATOR GP	62
REFLECTOR	118
REFLECTOR-AMBER	118
REGULATOR-WATER TEMPERATURE	51
RIM AR	230
RIM GP-DEMOUNTABLE	231, 232, 233, 234
RING-RETAINING	476, 477, 478, 479
ROCKER ARM GP	42
ROPS GP-ENCLOSED	621
ROPS GP-OPEN	622

INDEX

Name	Page
ROTATING GP-PUMP–IMPLEMENT	420
ROTATING GP-PUMP–PILOT & STEERING	421

S

Name	Page
SCREEN AS	448 454 458 460 464 466 470
SCREEN GP-SUN	624
SCREEN-SUCTION	182
SEAL-O-RING	428 432 436 440 444
SEAL-O-RING (CRANKCASE BREATHER)	10
SEAL-O-RING (REGULATOR)	51
SEAL (REGULATOR HOUSING)	51
SEAT & MOUNTING GP	625 626 627 628
SEAT BELT GP	629 634 635
SEAT BELT GP–RETRACTABLE	630
SEAT GP	634
SEAT GP–CLOTH	632
SEAT GP-SUSPENSION	635 636 638
SENSOR GP-POSITION	123
SENSOR GP-PRESSURE	282
SENSOR GP-TEMPERATURE (TORQUE CONVERTER OIL)	152 246
SEPARATOR GP-WATER	89
SHAFT GP-DRIVE	235 236
SHIM PACK (INCLUDES 12 SHIMS)	204 206
SKIRT GP-CAB	640 641
SOFTWARE GP-MACHINE	104
SOFTWARE GP-MACHINE (SECURITY)	104
STARTING AID GP	124
STARTING MOTOR GP-ELECTRIC	125 126
STEERING AR	307
STEERING AR-SECONDARY	307
STEERING COLUMN GP	308
STOP GP-AXLE OSCILLATION	237
SUN VISOR	648
SUPPORT GP-SEAT	642 643
SUSPENSION GP-SEAT	644
SUSPENSION GP-SEAT–AIR	646
SWITCH AS-KICKOUT (BUCKET/FORK SELECTOR)	320
SWITCH AS-LIMIT (BRAKE PEDAL)	610 614
SWITCH AS-LIMIT (PARKING BRAKE)	280
SWITCH AS-LIMIT (SERVICE BRAKE)	606
SWITCH AS-PRESSURE (AXLE OIL)	218
SWITCH AS-PRESSURE (HIGH/LOW) (REFRIGERANT)	588
SWITCH AS-PRESSURE (HYDRAULIC OIL FILTER BYPASS)	331
SWITCH AS-PRESSURE (SECONDARY STEERING)	300
SWITCH AS-ROTARY	140
SWITCH AS-ROTARY (FAN BLOWER SPEED)	610
SWITCH AS-ROTARY (RUNNING LAMP)	144
SWITCH AS-ROTARY (RUNNING/FLOOD/PANEL/TAILLIGHT)	136
SWITCH AS (STARTER 24V)	126
SWITCH AS-THERMOSTAT (REFRIGERANT)	540
SWITCH AS-TURN SIG & WARNING	118
SWITCH AS-WIPER	131 132
SWITCH GP-DISCONNECT–BATTERY	128
SWITCH GP-MAGNETIC	172 614
SWITCH GP-MAGNETIC–MAIN RELAY	130
SWITCH GP-MAGNETIC–SECONDARY STEERING	129
SWITCH GP-MAGNETIC (MAIN RELAY)	606 610
SWITCH GP-MAGNETIC (24V) (STARTING AID RELAY)	152
SWITCH GP-START (KEY)	604
SWITCH GP-WIPER	131 132

T

Name	Page
TANK & MTG GP-FUEL	90
TANK & MTG GP-HYDRAULIC	422
TIP GP-LONG	532 533
TIP GP-SHORT	534 535
TIRE & RIM AR	237 238 239

INDEX

Name	Page
	240
	241
	242
TOOTH GP-LONG	536
TRANSMISSION AR	243
TURBOCHARGER GP	74

V

V-BELT (AIR CONDITIONER)	554
V-BELT SET	96
V-BELT SET (INCLUDES 2 BELTS)	98
VALVE AS (AIR CONDITIONER)	588
VALVE-GAS	278
	384
	388
VALVE GP-BALL–LOWERING CONTROL	424
VALVE GP-BALL (RESOLVER)	372
VALVE GP-BALL (RESOLVER) (DEAD ENGINE LOWER)	376
VALVE GP-BYPASS	224
	244
VALVE GP-COMBINATION	425
VALVE GP-CONTROL–AUXILIARY	426
VALVE GP-FLUID SAMPLING	50
	331
VALVE GP-MAIN CONTROL	428
	432
	436
	440
	444
VALVE GP-PILOT	448
	450
	454
	458
	460
	464
	466
	470
VALVE GP-PILOT CARTRIDGE	474
	476
	477
	478
	479
	480
	481
VALVE GP-PRESS & FLOW CMPNSTR	482
VALVE GP-PRESSURE REDUCING	484
VALVE GP-QUICK COUPLER	485
VALVE GP-RADIATOR DRAIN	62
VALVE GP-RELIEF	245
VALVE GP-RELIEF (MAKE-UP)	404
VALVE GP-RIDE CONTROL	486
VALVE GP-SHUTOFF	488
VALVE GP-SOLENOID	493
VALVE GP-SOLENOID–QUICK COUPLER	490
VALVE GP-SOLENOID–REVERSING FAN	491
VALVE GP-SOLENOID–RIDE CONTROL	492
VALVE GP-TRANSMISSION CONTROL	246
VALVE MECHANISM GP	44
VALVE-SHUTOFF	380
VALVE-SHUTOFF (OIL PAN)	18
VISOR GP-CAB	648

W

WARNING GP-BACKUP	133
WASHER GP-WINDOW	649
	650
	651
WIPER GP-WINDOW	652
WIPER GP-WINDOW–FRONT	654
WIRING GP-BATTERY	134
WIRING GP-CAB	136
	140
	144
WIRING GP-COMMUNICATION	148
WIRING GP-ELECTRONIC CONTROL	150
WIRING GP-ENGINE	152
WIRING GP-FRONT	158
	160
WIRING GP-MACHINE–SECURITY	162
WIRING GP-REAR	166
WIRING GP-RIDE CONTROL	168
	170
WIRING GP-SECONDARY STEERING	172

INDICE

Nombre	Página
A	
ACONDICIONADOR DE AIRE (CONFIG)	538
ACONDICIONADOR DE AIRE (GR)	540
ACONDICIONADOR DE AIRE Y MONTAJE (GR)	537
ACOPLADOR - TUBERÍAS DE (GR)	342 344 346 350
ACOPLADOR RÁPIDO (CONFIG)	521
ACOPLADOR RÁPIDO (GR)	522
ACOPLAMIENTO FLEXIBLE - MANDO DE (GR)	196
ACUMULADOR DEL FRENO (GR)	278
ADAPTADOR (GR)	219
AGUA - CONEXIÓN DE (GR)	51
AGUA DE LAS CAMISAS - CALENTADOR DEL (GR)	105 106
AGUILÓN TELESCÓPICO (GR)	507
AIRE - TUBERÍAS DE (GR)	71
ALAMBRADO DE COMUNICACION (GR)	148
ALARMA (GR)	91
ANILLO RETEN	476 477 478 479
ANTEFILTRO (GR)	73
ÁRBOL DE LEVAS (GR)	7
ARO DESMONTABLE (GR)	231 232 233 234
ARO Y RUEDA	237 238 239 240 241 242
ARRANQUE - INTERRUPTOR DE (GR) (LLAVE)	604
ASIENTO CON SUSPENSIÓN (GR)	644 646
ASIENTO (GR)	632 634
ASIENTO Y MONTAJE (GR)	625 626 627 628
AUXILIAR DE ARRANQUE (GR)	124
B	
BALANCÍN (GR)	42
BASE DEL FILTRO Y ACEITE REFRIGERANTE DE MOTOR	52
BASTIDOR DEL CARGADOR (GR)	254 255
BASTIDOR TRASERO (GR)	256
BATERÍA (12 VOLTIOS)	1 2
BLOQUE DE MINIFUSIBLE	610 614
BLOQUE DESLIZANTE-JUEGO	635
BLOQUE MOTOR (GR)	13 14
BOCINA (CONJ) (24 VOLTIOS)(TONO BAJO)	158 160
BOLA DE VÁLVULA (GR)	424
BOLA DE VÁLVULA (GR) (RESOLVEDOR)	372
BOLA DE VÁLVULA (GR) (RESOLVEDOR) (BAJADA DE MOTOR INOPERANTE)	376
BOMBA DE ACEITE DEL MOTOR (GR)	48
BOMBA DE AGUA (GR)	60
BOMBA DE ENGRANAJES (GR)	288 290
BOMBA DE ENGRANAJES (GR)	228 229
BOMBA DE INYECCIÓN DE COMBUSTIBLE (GR)	82
BOMBA DE PISTONES (GR)	415 416 418
BOMBA DE TRANSFERENCIA DE COMBUSTIBLE (GR)	86
BOMBA HIDRÁULICA Y MONTAJE (GR)	414
C	
CABINA (CONFIG)	546 547
CABINA (GR)	548 550
CABINA ROPS CERRADA (GR)	621
CABLE (CONJ)	537
CABLES DE CONTROL DE AMORTIGUACIÓN (GR)	168 170
CABLES DE LA BATERÍA	134
CABLES DE LA CABINA (GR)	140 144
CABLES DE LA CABINA (GR)	136
CABLES DE LA DIRECCIÓN SECUNDARIA	172
CABLES DE LA MÁQUINA (GR)	162
CABLES DEL CONTROL ELECTRÓNICO (GR)	150
CABLES DEL MOTOR (GR)	152
CABLES DELANTEROS (GR)	160
CABLES DELANTEROS (GR)	158

INDICE

Nombre	Página
CABLES POSTERIORES (GR)	166
CAJA DE BATERÍA	248
CAJA DE EJE OSCILANTE (GR)	214
CAJA DE HERRAMIENTAS (GR)	655
CAJA DE LA SUSPENSIÓN DEL ASIENTO (GR)	574
CAJA DEL EJE OSCILANTE (GR)	212
CAJA DELANTERA (GR)	24
CAJA Y PIEZAS DE LOS PLANETARIOS	182
CALCOMANÍA	100
	102
CALCOMANÍA (ARRANQUE)	107
	162
CALCOMANÍA (CONTROLES)	606
CALCOMANÍA DE ADVERTENCIA (ACUMULADOR DE PRESIÓN)	384
	657
	659
CALCOMANÍA DE ADVERTENCIA (ASIENTO AJUSTABLE)	644
	646
CALCOMANÍA DE ADVERTENCIA (FUNCIONAMIENTO DEL MOTOR, ENCENDIDO/APAGADO)	604
CALCOMANÍA DE ADVERTENCIA (NO ETER/ENTRADA DE AIRE)	657
CALCOMANÍA DE IDENTIFICACIÓN (DISYUNTOR)	152
CALCOMANÍA DE IDENTIFICACIÓN (NUMERO DE GRUPO Y SECUENCIA)	557
CALCOMANIA, DISYUNTOR	152
CALCOMANÍA (NEGRO)	488
CALCOMANÍA (PLACA, NOMBRE)	384
	388
CALCOMANÍA (SISTEMA DE SEGURIDAD DE LA MÁQUINA)	107
	162
CALCOMANÍA (TABLERO, LADO DERECHO)	140
CALCOMANÍA (TABLERO, LADO IZQUIERDO)	140
CALCOMANÍA (TAPA DEL TABLERO DE INSTRUMENTOS)	604
CALCOMANÍA (12 VOLTIOS)	103
CALCOMANÍAS Y PLACAS DE IDENTIFICACIÓN (GR)	657
	658
	659
CALEFACCIÓN DE LA CABINA (CONFIG)	570
CALEFACCIÓN DE LA CABINA (GR)	572
CALEFACCIÓN Y MONTAJE DE LA CABINA (GR)	569
CÁNCAMOS DE LEVANTAMIENTO DEL MOTOR (GR)	26
CANDADO (GR)	422
CAPO Y PROTECTOR (GR)	268
CARGA - ALTERNADOR DE (GR)	98
CARGA - ALTERNADOR DE (GR)	92
	94
	96
CÁRTER - COLECTOR DEL (GR)	32
CÁRTER - PROTECTOR DEL (GR)	257
CHASIS (CONFIG)	1
	2
CIGÜEÑAL - POLEA DE (GR)	40
CIGÜEÑAL (GR)	12
CILINDRO DE ACOPLAMINETO Y MONTAJE (GR)	325
CILINDRO DE DIRECCIÓN (GR)	298
CILINDRO DE DIRECCIÓN Y MONTAJE (GR)	296
CILINDRO DE LEVANTAMIENTO - TUBERÍAS DEL (GR)	372
	376
CILINDRO DE LEVANTAMIENTO (GR)	326
	327
CINTURÓN DE SEGURIDAD (GR)	634
CINTURÓN DE SEGURIDAD (GR)	635
CINTURÓN DE SEGURIDAD (GR)	629
	630
CODO DE ADMISIÓN DE AIRE (GR)	69
COLUMNA DE DIRECCIÓN (GR)	308
COMPARTIMIENTO DEL OPERADOR (CONFIG)	600
COMPRESOR DE REFRIGERANTE (GR)	553
	554
CONDENSADOR DE REFRIGERANTE (GR)	557
CONDENSADOR DEL REFRIGERANTE Y MONTAJE (GR)	555
	556
CONDUCTO DE AIRE (GR)	566
CONEXIÓN DE ENGRASE	236
	496
	498
	502
	522
	531
CONEXIÓN DE ENGRASE (ROSCA DE 1/8-27)	266
	272
	496
CONEXIÓN DE ENGRASE (ROSCA DE 1/8-27)	498
	502
	522
	531
CONFIGURACIÓN COMÚN	3
CONFIGURACIÓN DE INSTALACIÓN DEL MOTOR	6
CONFIGURACIÓN DE MOTORES	4
CONFIGURACIÓN HIDRÁULICA DE 2 VÁLVULAS	333

INDICE

Nombre	Página
	334
CONJUNTO DE CABLES, ACONDICIONADOR DE AIRE (VENTILADORES DEL CONDENSADOR)	557
CONJUNTO DE DESTELLADOR (12/24 VOLTIOS)	118
CONJUNTO DE JUEGO SUPERIOR	636
CONJUNTO DE LLAVE, ELECTRONICA (SEGURIDAD)	101
	162
CONSOLA (GR)	559
CONTRAPESO (GR)	249
	250
CONTROL DE AMORTIGUACIÓN (CONFIG)	309
CONTROL DE COMUNICACION (GR) (ESLABON DE PRODUCTO)	148
CONTROL DE DESCONEXIÓN DE LEVANTAMIENTO (GR)	100
	338
	340
CONTROL DE DIRECCIÓN (GR)	292
	294
CONTROL DE LA HERRAMIENTA DE TRABAJO (GR)	498
	502
CONTROL DE LA TRANSMISIÓN (GR)	190
	191
CONTROL DE MANIJA (GR)	310
CONTROL DE MAQUINA (GR)	101
CONTROL DE POSICION (GR)	102
	338
	340
CONTROL DEL CUCHARÓN (GR)	496
CONTROL DEL FRENO DE ESTACIONAMIENTO	279
	280
CONTROL HIDRÁULICO DE OPERACIÓN PILOTO (GR)	311
	312
	314
	316
	318
	320
CONTROL NO PROGRAMADO (GR)	101
CONTROL NO PROGRAMADO (GR) (SEGURIDAD)	104
CONVERTIDOR ELÉCTRICO (GR)	103
CORREA TRAPEZOIDAL (AIRE ACONDICIONADO)	554
CRISTAL	109
CUBIERTA INFERIOR DEL ASIENTO DEL OPERADOR (GR)	602
CUBIERTA INFERIOR DEL ASIENTO DEL OPERADOR (GR) (PARTE INFERIOR)	632
CUCHARÓN DE USO GENERAL (CONJ)	508
	510
	511
CUCHARÓN DE USO GENERAL (GR)	514
	516
	517
	518
	519
	520
CUCHARÓN PARA MATERIALES LIVIANOS	512
CUCHARON PARA PENETRACIÓN (CONJ)	513
CUCHILLA (GR)	524
CULATA DE CILINDROS - TORNILLERÍA DE LA (GR)	19
CULATA DE CILINDROS (GR)	16
	17

D

DERIVACIÓN - VÁLVULA DE (GR)	224
	244
DESCONGELADOR DE LA CABINA (GR)	560
DETECTOR DE POSICIÓN (SISTEMA DE COMBUST.) (GR)	123
DIENTE LARGO (GR)	536
DIFERENCIAL DE DESLIZAMIENTO LIMITADO (GR)	195
DIFERENCIAL (GR)	194
DIRECCIÓN (CONFIG)	307
DIRECCIÓN SECUNDARIA (CONFIG)	307
DISYUNTOR (CONJ) (15 A)	152
DISYUNTOR (CONJ) (15 A) (ASIENTO DE AIRE)	628
DISYUNTOR (CONJ) (30 A)	152
DISYUNTOR (CONJ) (90 AMP)	152
DISYUNTOR DE CIRCUITO (GR) (60 AMP)	152
DISYUNTOR (GR)	128
DRENAJE DEL ACEITE DE MOTOR	18

E

EJE - GRUPO DE MONTAJE	226
EJE DE MANDO (GR)	235
	236
EJE FIJO (CONFIG)	174
EJE OSCILANTE (CONFIG)	174
	175
	176
	177
ELECTRONICA DE LA MAQUINA (GR)	104
ELECTRONICA DE LA MAQUINA (GR)	104
ELEMENTO DE FILTRO DE AGUA (SEPARADOR)	89
ELEMENTO DE FILTRO DE COMBUSTIBLE	76
ELEMENTO DEL FILTRO DE AIRE (CONJ) (PRIMARIO)	67

INDICE

Nombre	Página
ELEMENTO DEL FILTRO DE AIRE (CONJ) (SECUNDARIO)	67
EMBRAGUE (GR)	184, 186, 188
EMPAQUETADURA (TAPA DE VÁLVULA)	10
ENFRIADOR DE ACEITE DEL MOTOR Y BASE DEL FILTRO	52
ENFRIADOR DEL ACEITE HIDRAULICO (GR)	324
ENGANCHE ARTICULADO (GR)	266
ENGRANAJE DE CORONA Y PIÑÓN (GR)	203, 204, 206, 207
ENGRANAJE DE TRANSFERENCIA DE ENTRADA (GR)	208
ENGRANAJE DE TRANSFERENCIA DE SALIDA	210
ENGRANAJE DELANTERO (GR)	21
ESCALERILLA (GR)	270
ESTRUCTURA ROPS ABIERTA (GR)	622
ETIQUETA DE ADVERTENCIA (GR)	656
EXTENSIÓN DEL ESCAPE (GR)	70
EXTENSIÓN DEL RESPALDO (GR)	567
EXTRACTOR DE MINIFUSIBLES	606, 610

F

Nombre	Página
FALDON DE CABINA (GR)	640, 641
FILTRO	568
FILTRO - RESPIRADERO (CÁRTER DEL MOTOR)	10
FILTRO (AIRE)	568
FILTRO DE ACEITE (CONJ) (HIDRAULICO)	202
FILTRO DE ACEITE (CONJ) (HIDRÁULICO)	331
FILTRO DE ACEITE DEL MOTOR (CONJ)	45
FILTRO DE ACEITE DEL MOTOR (GR)	45
FILTRO DE ACEITE (GR)	202, 330, 331
FILTRO DE AIRE DE LA CABINA (GR)	568
FILTRO DE AIRE (GR)	67, 68
FILTRO DE COMBUSTIBLE (GR)	76
FILTRO MAGNÉTICO	182
FRENO DE SERVICIO - CONTROL (GR)	282
FRENO Y PLANETARIOS (GR)	178, 180

G

Nombre	Página
GRIFO DE DRENAJE (ACEITE DEL BLOQUE DEL MOTOR)	18
GRUPO DE BOMBA Y MONTAJE, FRENOS Y VENTILADOR HIDRÁULICO	287
GRUPO DE MONTAJE DE LA CABINA	599
GRUPO DE PIVOTE, VÁLVULA PILOTO	409, 410, 411, 412
GRUPO DE PLANCHA, VÁLVULA PILOTO	413
GRUPO DE PROTECTOR DEL CUCHARON	528
GRUPO DE PUNTA Y ADAPTADOR	506
GRUPO DE REFRIGERANTE, HIDRÁULICO Y ACEITE DE TRANSMISIÓN	322, 323
GRUPO GIRATORIO DE BOMBA	420, 421
GUARDABARROS DELANTERO (GR)	251, 252

H

Nombre	Página
HIDRÁULICA (CONFIG)	332
HOJA DE LIMPIAPARABRISAS (CONJ)	652
HOJA DE LIMPIAPARABRISAS (CONJ) (DELANTERO)	654
HOJA DE LIMPIAPARABRISAS (CONJ) (TRASERO/A)	652
HORQUILLA (GR)	525
HORQUILLA PARA TARIMAS (GR)	526, 527

I

Nombre	Página
INCLINACIÓN HORIZONTAL - CILINDRO DE (GR)	328, 329
INDICADOR (CONJ) (CAMBIO DE FILTRO)	68
INDICADOR DEL NIVEL DE ACEITE (VARILLA) (GR)	46
INDICADOR DEL NIVEL DEL ACEITE (VARILLA) (CONJ)	198
INDICADOR DEL NIVEL DEL ACEITE (VARILLA) (CONJ)	212, 214
INSTALACIÓN DE RADIO (GR)	577, 578
INSTALACION DE SEGURIDAD (GR)	107
INTERRUPTOR (CONJ) (ARRANQUE DE 24 VOLTIOS)	126
INTERRUPTOR DE DESCONEXIÓN (CONJ) (SELECTOR DE CUCHARON/HORQUILLA)	320

INDICE

Nombre	Página
INTERRUPTOR DE LÍMITE (CONJ) (FRENO DE ESTACIONAMIENTO)	280
INTERRUPTOR DE LÍMITE (CONJ) (FRENO DE SERVICIO)	606
INTERRUPTOR DE LÍMITE (CONJ) (PEDAL DE FRENO)	614
INTERRUPTOR DE LÍMITE (CONJ) (PEDAL DE FRENO)	610
INTERRUPTOR DE PRESIÓN (CONJ) (ACEITE DEL EJE)	218
INTERRUPTOR DE PRESIÓN (CONJ) (ALTO/BAJO) (REFRIGERANTE)	588
INTERRUPTOR DE PRESIÓN (CONJ) (DERIVACION DEL FILTRO DEL ACEITE HIDRAULICO)	331
INTERRUPTOR DE PRESIÓN (CONJ) (DIRECCIÓN SECUNDARIA)	300
INTERRUPTOR DE SEÑAL DE GIRO Y ADVERTENCIA (CONJ)	118
INTERRUPTOR DEL LIMPIADOR (GR)	132
INTERRUPTOR DEL LIMPIADOR (GR)	131
INTERRUPTOR DEL LIMPIAPARABRISAS (CONJ)	131
	132
INTERRUPTOR DEL TERMOSTATO (CONJ) (REFRIGERANTE)	540
INTERRUPTOR MAGNÉTICO (GR)	129
	130
	172
INTERRUPTOR MAGNÉTICO (GR)	614
INTERRUPTOR MAGNÉTICO (GR) (RELE PRINCIPAL)	610
INTERRUPTOR MAGNÉTICO (GR) (RELE PRINCIPAL)	606
INTERRUPTOR MAGNÉTICO (GR) (24V) (RELÉ DE ARRANQUE ASISTIDO)	152
INTERRUPTOR ROTATIVO (CONJ)	140
INTERRUPTOR ROTATIVO (CONJ) (CARRETERA/FAROS/TABLERO/COLA)	136
INTERRUPTOR ROTATIVO (CONJ) (LÁMPARA DE FUNCIONAMIENTO)	144
INTERRUPTOR ROTATIVO (CONJ) (VELOCIDAD DEL VENTILADOR SOPLADOR)	610

J

Nombre	Página
JUEGO ACOJINADO DE GOMA	636
	638
JUEGO AJUSTADOR DE CABLE	636
	638
JUEGO DE AJUSTE DEL ASIENTO	544
	602
	636
	638
JUEGO DE AMORTIGUADOR	544
	567
	636
	638
JUEGO DE ATADURA	636
	638
	646
JUEGO DE BASE DEL SEPARADOR DE AGUA (SEPARADOR DE AGUA)	89
JUEGO DE BASTIDOR (CONJ)	636
	638
JUEGO DE BOTÓN	574
JUEGO DE BOTÓN DEL ASIENTO	632
JUEGO DE CALCES (INCLUYE 12 CALCES)	204
	206
JUEGO DE COJÍN DEL ASIENTO	632
JUEGO DE COJINETE DE SUSPENSIÓN	636
	638
JUEGO DE COJINETES	92
	575
JUEGO DE COJINETES (ALTERNADOR)	94
JUEGO DE CONTACTOR (MOTOR DE ARRANQUE)	126
JUEGO DE CORREAS TRAPEZOIDALES	96
JUEGO DE CORREAS TRAPEZOIDALES (INCLUYE 2 CORREAS)	98
JUEGO DE ELEVADOR DE ALTURA	636
	638
JUEGO DE ENCHUFE (12 CLAVIJAS)	152
	606
	611
	614
JUEGO DE ENCHUFE (2 CLAVIJAS)	107
	140
	144
	152
	158
	160
	162
	166
	168
	170
	246
	540
	557
	572
	606
	611
	614
JUEGO DE ENCHUFE (2 CLAVIJAS) (INTERRUPTOR DE RELE DE POTENCIA PRINCIPAL)	130
JUEGO DE ENCHUFE (3 CLAVIJAS)	107
	140
	144
	152

INDICE

Nombre	Página
	158
	160
	162
	166
	246
	290
	606
	611
	614
JUEGO DE ENCHUFE (4 CLAVIJAS)	136
	140
	144
	158
	191
	606
	611
	614
JUEGO DE ENCHUFE (6 CLAVIJAS)	107
	136
	140
	144
	158
	160
	162
	606
	611
	614
JUEGO DE ENCHUFE (8 CLAVIJAS)	136
	144
	148
	158
	160
	191
	577
	606
	611
	614
JUEGO DE ENGRANAJES (MOTOR DE ARRANQUE)	126
JUEGO DE FUNDA DE LA SUSPENSIÓN DEL ASIENTO	644
JUEGO DE INCLINACIÓN DE ASIENTO	602
JUEGO DE INCLINACIÓN TRASERA	602
JUEGO DE INDICADOR	575
JUEGO DE MANGUERA (AGUA) (CAJA DE REGULADOR)	60
JUEGO DE MANIJA	636
	638
JUEGO DE PALANCA (CONJ)	636
	638
JUEGO DE PANEL DEL RESPALDO DEL ASIENTO	632
JUEGO DE PARAGOLPES	574
	636
	638
JUEGO DE POSABRAZOS DERECHO	636
	638
JUEGO DE RECEPTÁCULO (12 CLAVIJAS)	118
JUEGO DE RECEPTÁCULO (12 CLAVIJAS)	158
	160
	606
	611
	614
JUEGO DE RECEPTÁCULO (12 CLAVIJAS)	136
	140
	144
JUEGO DE RECEPTÁCULO (2 CLAVIJAS)	107
	152
	158
	160
	168
	170
	246
	370
	384
	440
	444
	491
	492
	572
	588
	606
	610
	614
	646
JUEGO DE RECEPTÁCULO (2 CLAVIJAS)	133
	162
	166
	588
JUEGO DE RECEPTÁCULO (2 CLAVIJAS)	540
JUEGO DE RECEPTÁCULO (2 CLAVIJAS)	91
JUEGO DE RECEPTÁCULO (2 CLAVIJAS)	109
	140
	144
JUEGO DE RECEPTÁCULO (3 CLAVIJAS)	100
	107
	123
	152
	158
	168
	172
	246
	338
	340
	557
	577
	606
	610
	614
JUEGO DE RECEPTÁCULO (3 CLAVIJAS)	162

INDICE

Nombre	Página
	166
	300
JUEGO DE RECEPTÁCULO (3 CLAVIJAS)	109
	140
	144
	376
JUEGO DE RECEPTÁCULO (4 CLAVIJAS)	112
	158
	490
	604
	606
	610
JUEGO DE RECEPTÁCULO (6 CLAVIJAS)	107
	118
	136
	140
	144
	148
	160
	191
	316
	318
	320
	340
	450
	572
	597
	598
	606
	610
	614
JUEGO DE RECEPTÁCULO (6 CLAVIJAS)	162
	310
JUEGO DE RECEPTÁCULO (6 CLAVIJAS)	540
JUEGO DE RECEPTÁCULO (8 CLAVIJAS)	148
	448
	454
	458
	460
	464
	466
	470
	606
	611
	614
JUEGO DE RECEPTÁCULO (8 CLAVIJAS)	131
	132
JUEGO DE RECEPTÁCULO (8 CLAVIJAS)	136
	140
	144
JUEGO DE RESORTES	575
	636
	638
JUEGO DE RESTRICCIÓN DEL CINTURÓN	644

Nombre	Página
JUEGO DE RIEL DE DESLIZAMIENTO DEL ASIENTO	636
	638
JUEGO DE RODILLO	644
	646
JUEGO DE SEGUIDOR	575
JUEGO DE SELLO DE TAZA	89
JUEGO DE SELLOS	385
	389
	404
	424
	490
JUEGO DE TAPA	636
	638
JUEGO DE TAPA DE SUSPENSIÓN	636
	638
JUEGO DE TERMINAL (ALTERNADOR)	94
JUEGO DE TIJERAS	646
JUEGO DE TORNILLERÍA	92
	646
JUEGO DE TORNILLERÍA (ALTERNADOR)	94
JUEGO DEL COMPRESOR DE AIRE	646
JUEGO-POSABRAZOS-LADO IZQUIERDO	636
	638

L

LÁMPARA	109
	110
	579
	586
LÁMPARA (CONJ) (12 VOLTIOS)	107
	162
LÁMPARA DE BALIZA DE ADVERTENCIA (GR)	110
LÁMPARA DE FARO DELANTERO (24 VOLTIOS)	112
LÁMPARA DE FARO DELANTERO (24 VOLTIOS)(65 VATIOS)	118
LÁMPARA DEL TECHO (GR)	586
LAMPARA DERECHA (CONJ)	118
LAMPARA IZQUIERDA (CONJ)	118
LÁMPARA (24 VOLTIOS)	109
	136
	140
	144
	610
LÁMPARA (24 VOLTIOS)	114
LÁMPARA (24 VOLTIOS, 21 VATIOS)	118
LÁMPARA (24 VOLTIOS)(65 VATIOS)	108
LAVAPARABRISAS DE LA VENTANA (GR)	649
	650
	651
LENTE AMBAR	110
LIMPIAPARABRISAS DE LA VENTANA (GR)	652

INDICE

Nombre	Página
LIMPIAPARABRISAS DE LA VENTANA (GR)	654
LLANTA (CONFIG)	230
LLAVE	422
	594
LLAVE (DESCONECTAR BATERIA)	128
LUCES AUXILIARES (GR)	111
LUCES DE ADVERTENCIA (GR)	121
LUCES DE PARADA Y COLA (GR)	109
LUCES DE REFLECTOR (GR)	112
	114
	116
LUCES DE REFLECTOR Y CAMBIO DE DIRECCION (GR)	118
LUCES TRASERAS (GR)	120

M

MANDO DE BOMBA (GR)	197
MANDO DE CORREA	110
MANGUERA (ELIMINADOR DE GASES INFERIOR)	10
MANGUERA (ELIMINADOR DE GASES SUPERIOR)	10
MECANISMO DE VÁLVULAS (GR)	44
MONTAJE DE ARO	227
MONTAJE DE LA VÁLVULA DE CONTROL (GR)	408
MONTAJE DEL ALTERNADOR (GR)	27
MONTAJE DEL CUCHARÓN (GR)	531
MONTAJE DEL MANDO DE VENTILADOR (GR)	30
MONTAJE DEL MOTOR Y LA TRANSMISIÓN (GR)	28
MOTOR (CONFIG), VENTILADOR HIDRÁULICO	400
MOTOR DE ARRANQUE ELÉCTRICO (GR)	125
	126
MOTOR DE ENGRANAJES (GR)	401
	402
	404
	406
MOTOR-LIMPIAPARABRISAS (GR)	597
	598
MOTOR PRIMARIO (CONFIG)	5
MOTOR Y MONTAJE DE VENTILADOR HIDRAULICO (GR)	398
	399

P

PANEL SUPERIOR (GR)	276
PANTALLA (CONJ)	448
	454
	458
	460
	464
	466
	470
PEDAL DE FRENO (GR)	619
PERSIANA PARA EL SOL (GR)	624
PISTÓN Y BIELA (GR)	34
PLACA-CATERPILLAR	551
PLACA DE ADVERTENCIA (NO ESPACIO LIBRE)	657
PLACA DE INSTRUCCIONES	588
PLACA DE INSTRUCCIONES (BATERÍA)	134
PLACA DE INSTRUCCIONES (IMPLEMENTO CON PALANCA)	314
PORTAHORQUILLAS (CONJ)	521
POSABRAZOS (GR)	543
	544
	545
	634
	635
POSICIONADOR DEL CUCHARÓN Y DESCONEXIÓN (GR)	338
	340
PROTECTOR DE LAS TUBERÍAS (GR)	258
	260
	262
PROTECTOR DE REBALSE (GR)	529
	530
PROTECTOR DEL TREN DE FUERZA (GR)	264
PROTECTOR DEL VENTILADOR (GR)	56
PUBLICACIONES (GR)	594
PUERTA DE CABINA	561
	562
	564
PUNTA CORTA (GR)	534
	535
PUNTA LARGA (GR)	532
	533

R

RADIADOR (GR)	62
RECIPIENTE DE RECOLECCION DE AGUA (CONJ)	89
REFLECTOR	118
REFLECTOR-AMBAR	118
REFLECTOR (GR)	108
	112
	114
	118
REGULADOR - PEDAL DEL (GR)	620
REGULADOR DE TEMPERATURA DEL AGUA	51
REJILLA DE FILTRO	650
REJILLA DE SUCCIÓN	182
RESPIRADERO (HIDRÁULICO)	422

INDICE

Nombre	Página
RESPIRADERO (TRANSMISION)	182
RETROCESO - ALARMA DE (GR)	133
RETROVISOR (GR)	595 596
REVESTIMIENTO DE LA CABINA (GR)	579 580 582 584 586

S

SEGMENTO DE CUCHILLA (GR)	524
SELLO ANULAR	428 432 436 440 444
SELLO ANULAR (REGULADOR)	51
SELLO ANULAR (RESPIRADERO DEL CARTER)	10
SELLO (CAJA DE REGULADOR)	51
SENSOR DE PRESIÓN (GR)	282
SENSOR DE TEMPERATURA (GR) (ACEITE DE CONVERTIDOR DE PAR)	246
SENSOR DE TEMPERATURA (GR) (ACEITE DE CONVERTIDOR DE PAR)	152
SEPARADOR DE AGUA (GR)	89
SILENCIADOR (GR)	72
SISTEMA ROPS DE CABINA CERRADA (CONFIG)	547
SOFTWARE DE LA MAQUINA (GR)	104
SOFTWARE PARA LA MAQUINA (GR) (SEGURIDAD)	104
SOPORTE DE TRANSPORTE (GR)	494 495
SOPORTE DEL ASIENTO (GR)	642 643
SOPORTE DEL RESPALDO (GR)	601
SOPORTE DEL RESPALDO (GR) (PARTE TRASERA)	632
SUCCIÓN - VENTILADOR DE (GR)	54
SUSPENSIÓN - ASIENTO CON (GR)	635 636 638

T

TABLERO DE INSTRUMENTOS (GR)	604 606 610 614
TANQUE DE COMBUSTIBLE Y GRUPO DE MONTAJE	90
TANQUE HIDRÁULICO Y MONTAJE (GR)	422
TAPA	231 233
TAPA CONTRA EL POLVO	182 202 218 224 282 300 304 331 356 380 392 394
TAPA CONTRA EL POLVO (VÁLVULA DE MUESTREO DE ACEITE)	50
TAPA DE LA CONSOLA (GR)	558
TAPA DE TRANSMISION (GR)	192
TAPA DEL COMBUSTIBLE(CONJ)	90
TAPA DEL MECANISMO DE VÁLVULAS (GR)	10
TAPA DEL MOTOR (GR)	8
TAPÓN	35
TAPÓN (CONJ) (ACONDICIONADOR DE AIRE)	588
TAPÓN (CONJ) (ACONDICIONADOR DE AIRE)	588
TAPÓN (CONJ) (FILTRO DE ACEITE)	10
TAPÓN DE CULATA (GR)	37
TAPON DE DRENAJE DE SUMIDERO	32
TAPÓN DE LA CAJA DEL VOLANTE (GR)	39
TAPON DE SELLO (DRENAJE DE ACEITE)	18
TAPÓN DEL BLOQUE MOTOR (GR)	35 36
TAPÓN DEL MOTOR (GR)	38
TAPÓN MAGNÉTICO	182 212 214
TECHO ROPS ABIERTO (CONFIG)	551
TECHO ROPS ABIERTO (GR)	551 552
TIRANTE DE TRABA DEL BASTIDOR DE DIRECCIÓN (GR)	274
TOPE DE OSCILACIÓN DEL EJE	237
TRANSMISION (CONFIG)	243
TREN DE FUERZA (CONFIG)	227
TUBERÍAS CON SERVOMANDO (GR)	380
TUBERÍAS DE ACONDICIONADOR DE AIRE (GR)	588
TUBERÍAS DE COMBUSTIBLE (GR)	78
TUBERIAS DE CONTROL DE LA SUSPENSIÓN (GR)	384 388
TUBERÍAS DE DIRECCIÓN (GR)	304
TUBERÍAS DE ENGRASE (GR)	272
TUBERÍAS DE LA CALEFACCIÓN (GR)	592

INDICE

Nombre	Página
TUBERÍAS DE LA DIRECCIÓN SECUNDARIA (GR)	300
TUBERÍAS DEL AGUA (GR)	58
	59
TUBERÍAS DEL AUXILIAR DE ARRANQUE CON ÉTER EN EL MOTOR (GR)	122
TUBERÍAS DEL CILINDRO DE INCLINACIÓN (GR)	392
	394
TUBERÍAS DEL ENFRIADOR DE ACEITE DEL EJE (GR)	218
TUBERIAS DEL ENFRIADOR DEL CONVERTIDOR DE PAR	224
TUBERÍAS DEL FILTRO Y LA TRANSMISIÓN (GR)	200
TUBERÍAS DEL FRENO DE SERVICIO (GR)	284
TUBERÍAS DELANTERAS (GR)	354
TUBERÍAS HIDRÁULICAS DEL VENTILADOR (GR)	364
	368
	370
TUBERÍAS HIDRÁULICAS (GR)	356
	360
	362
TUBO DE LLENADO DE ACEITE DE LA TRANSMISIÓN (GR)	198
TURBOCOMPRESOR (GR)	74

V

Nombre	Página
VÁLVULA COMPENSADORA DE FLUJO Y PRESIÓN (GR)	482
VÁLVULA (CONJ) (ACONDICIONADOR DE AIRE)	588
VÁLVULA DE ACOPLAMIENTO RÁPIDO (GR)	485
VÁLVULA DE ALIVIO (GR)	245
VÁLVULA DE ALIVIO (GR) (COMPOSICIÓN)	404
VÁLVULA DE COMBINACIÓN (GR)	425
VÁLVULA DE CONTROL DE LA AMORTIGUACIÓN (GR)	486
VÁLVULA DE CONTROL DE LA TRANSMISIÓN (GR)	246
VÁLVULA DE CONTROL (GR)	426
VÁLVULA DE CORTE	380
VÁLVULA DE CORTE (COLECTOR DE ACEITE)	18
VÁLVULA DE CORTE (GR)	488
VÁLVULA DE DRENAJE DEL RADIADOR (GR)	62
VÁLVULA DE GAS	278
	384
	388
VÁLVULA DE MUESTREO (GR)	50
VÁLVULA DE MUESTREO (GR)	331
VÁLVULA DE SOLENOIDE (GR)	490
	491
	492
	493
VÁLVULA DEL CONTROL PRINCIPAL (GR)	428
	432
	436
	440
VÁLVULA DEL CONTROL PRINCIPAL (GR)	444
VÁLVULA HIDRÁULICA DE 3 VÍAS (CONFIG)	334
	335
VÁLVULA HIDRÁULICA DE 4 VÍAS (CONFIG)	335
	336
VALVULA PILOTO DE CARTUCHO (GR)	474
	476
	477
	478
	479
	480
	481
VÁLVULA PILOTO (GR)	448
	450
	454
	458
	460
	464
	466
	470
VÁLVULA REDUCTORA DE PRESIÓN (GR)	484
VIDRIO (CONJ)	108
VISERA	648
VISERA (GR)	648
VOLANTE - CAJA DE (GR)	22
VOLANTE (GR)	20

ÍNDICE

Designação	Página
A	
ACOPLADOR RÁPIDO	521
	522
ACUMULADOR - FREIO	278
ADAPTADOR	219
ADAPTADOR DA PONTA	506
ALARME	91
ALARME DE MARCHA À RÉ	133
ALTERNADOR DE CORRENTE	92
	94
	96
	98
ANEL RETENTOR	476
	477
	478
	479
AQUECEDOR DA ÁGUA DO MOTOR	105
	106
AQUECEDOR DA CABINE	570
	572
AQUECEDOR DA CABINE E MONTAGEM	569
ARO	230
ARO DESMONTÁVEL	231
	232
	233
	234
ARRANJO BÁSICO	3
ARRANJO HIDRÁULICO - 2 VÁLVULAS	333
	334
ARRANJO HIDRÁULICO - 3 VÁLVULAS	334
	335
ARRANJO HIDRÁULICO - 4 VÁLVULAS	335
	336
ARREFECEDOR - ÓLEO HIDRÁULICO E DA TRANSMISSÃO	322
	323
ARREFECEDOR DE ÓLEO DO MOTOR E BASE DO FILTRO	52
ARREFECEDOR DO ÓLEO HIDRÁULICO	324
ARTICULAÇÃO DA VÁLVULA PILOTO	409
	410
	411
	412
ASSENTO	632
	634
ASSENTO - FUNDO	602
ASSENTO - FUNDO (INFERIOR)	632
ASSENTO COM SUSPENSÃO	635
	636
	638
ASSENTO E MONTAGEM	625
	626
	627
	628
AUXILIAR DE PARTIDA	124
B	
BALANCIM	42
BATENTE DE OSCILAÇÃO DO EIXO	237
BATERIA (12 V)	1
	2
BLOCO DO MOTOR	13
	14
BOCAL DE ENCHIMENTO DE ÓLEO DO TREM DE FORÇA	198
BOMBA DE ÁGUA	60
BOMBA DE ENGRENAGENS	228
	229
	288
	290
BOMBA DE INJEÇÃO DO COMBUSTÍVEL	82
BOMBA DE ÓLEO - MOTOR	48
BOMBA DE PISTÃO	415
	416
	418
BOMBA DE TRANSFERÊNCIA DO COMBUSTÍVEL	86
BOMBA E MONTAGEM - FREIO E VENTILADOR HIDRÁULICO	287
BOMBA HIDRÁULICA E MONTAGEM	414
BORDA CORTANTE	524
BORDA SEGMENTADA DA CAÇAMBA	524
BRAÇO - MANIPULADOR DE MATERIAIS	507
BRAÇO DO ASSENTO	543
	544
	545
	634
	635
BUJÃO - CABEÇA DO CILINDRO	37
BUJÃO - CAIXA DO VOLANTE DO MOTOR	39
BUJÃO - DRENAGEM DO RESERVATÓRIO	32
BUJÃO DO BLOCO DO CILINDRO	35
	36
BUJÃO DO MOTOR	38
BUJÃO MAGNÉTICO	182
	212
	214
BUJÃO-RETENTOR (DRENO DO ÓLEO)	18
BUZINA (24 VOLTS)(TONALIDADE BAIXA)	158
	160
C	
CABEÇOTE DO MOTOR	16
	17

* TRADUÇÃO NÃO DISPONÍVEL NO MOMENTO DA IMPRESSÃO

ÍNDICE

Designação	Página
CABINE	546
	547
	548
	550
	600
CABINE - ESTRUTURA ROPS COBERTA	547
CABO	537
CABO/FIOS ELÉTRICOS-COMUNICAÇÃO	148
CABOS/FIOS ELÉTRICOS - ABSORÇÃO DE IMPACTOS	168
	170
CABOS/FIOS ELÉTRICOS - BATERIA	134
CABOS/FIOS ELÉTRICOS - CABINE	136
	140
	144
CABOS/FIOS ELÉTRICOS - CONTROLE ELETRÔNICO	150
CABOS/FIOS ELÉTRICOS - DIANTEIROS	158
	160
CABOS/FIOS ELÉTRICOS - DIREÇÃO SECUNDÁRIA	172
CABOS/FIOS ELÉTRICOS - MÁQUINA	162
CABOS/FIOS ELÉTRICOS - MOTOR	152
CABOS/FIOS ELÉTRICOS - TRASEIROS	166
CAÇAMBA PARA APLICAÇÃO GERAL	508
	510
	511
	514
	516
	517
	518
	519
	520
CACAMBA PARA MATERIAL LEVE	512
CAÇAMBA PARA PENETRAÇÃO	513
CADEADO	422
CAIXA - BATERIA	248
CAIXA - EIXO FIXO	212
CAIXA - EIXO OSCILANTE	214
CAIXA - SUSPENSÃO DO ASSENTO	574
CAIXA DE FERRAMENTAS	655
CAIXA DIANTEIRA	24
CAIXA DO VOLANTE DO MOTOR	22
CAPÔ E PROTETOR	268
CARCAÇA DAS ENGRENAGENS PLANETÁRIAS E COMPONENTES	182
CÁRTER DO ÓLEO DO MOTOR	32
CHASSI	1
	2
CHASSI DIANTEIRO	254
	255
CHASSI TRASEIRO	256
CHAVE	422
	594
CHAVE - ELETRÔNICO (SEGURANÇA)	162
CHAVE - ELETRÔNICO (SEGURANÇA)	101
CHAVE (DESCONECTAR A BATERIA)	128
CHAVE GERAL	128
CHICOTE - CONDICIONADOR DE AR DA CABINE (VENTILADORES DO CONDENSADOR)	557
CILINDRO DA DIREÇÃO	298
CILINDRO DE DIREÇÃO E MONTAGEM	296
CILINDRO DE INCLINAÇÃO	328
	329
CILINDRO DE LEVANTAMENTO	326
	327
CILINDRO DO ACOPLADOR E MONTAGEM	325
CINTO DE SEGURANÇA	629
	630
	634
	635
COLUNA DA DIREÇÃO	308
COMANDO - ACOPLAMENTO FLEXÍVEL	196
COMANDO DA BOMBA	197
COMANDO HIDRÁULICO	332
COMPRESSOR DE REFRIGERANTE	553
	554
CONDENSADOR DE REFRIGERANTE	557
CONDENSADOR DO REFRIGERANTE E MONTAGEM	555
	556
CONDICIONADOR DE AR	538
	540
CONDICIONADOR DE AR E MONTAGEM	537
CONEXÃO - TUBO D'ÁGUA	51
CONTRAPESO	249
	250
CONTROLE - DESENGATE AUTOMÁTICO DE LEVANTAMENTO	100
	338
	340
CONTROLE - NÃO PROGRAMADO	101
CONTROLE - NÃO PROGRAMADO (SEGURANÇA)	104
CONTROLE - POSIÇÃO	102
	338
	340
CONTROLE-CABO	310
CONTROLE-COMUNICAÇÃO (PRODUCT LINK)	148
CONTROLE DA CAÇAMBA	496
CONTROLE DA FERRAMENTA DE TRABALHO	498
	502
CONTROLE DA MÁQUINA	101

* TRADUÇÃO NÃO DISPONÍVEL NO MOMENTO DA IMPRESSÃO

ÍNDICE

Designação	Página
CONTROLE DA TRANSMISSÃO	190, 191
CONTROLE DE DIREÇÃO	292, 294
CONTROLE DO FREIO DE ESTACIONAMENTO	279, 280
CONTROLE DO FREIO DE SERVIÇO	282
CONTROLE HIDRÁULICO DE OPERAÇÃO PILOTO	311, 312, 314, 316, 318, 320
CONVERSOR ELÉTRICO	103
CORREIA DE COMANDO	110
CORREIA EM V (AR CONDICIONADO)	554
COTOVELO DE ADMISSÃO DE AR	69

D

DECALQUE	100, 102, 656
DECALQUE - ADVERTÊNCIA (PRESSÃO DO ACUMULADOR)	384, 657, 659
DECALQUE - ADVERTÊNCIA (SEM ÉTER - ADMISSÃO DE AR)	657
DECALQUE - CATERPILLAR	551
DECALQUE - IDENTIFICAÇÃO (DISJUNTOR)	152
DECALQUE - IDENTIFICAÇÃO (NO. DE SEQÜÊNCIA E GRUPO)	557
DECALQUE - INSTRUÇÃO (AJUSTE DO ASSENTO)	644, 646
DECALQUE - INSTRUÇÃO (FUNCIONAMENTO DO MOTOR - LIGAR-DESLIGAR)	604
DECALQUE (CONTROLES)	606
DECALQUE (*PANEL-LH)	140
DECALQUE (*PANEL-RH)	140
DECALQUE (PARTIDA)	107, 162
DECALQUE (PLACA - NOME)	384, 388
DECALQUE (PRETO)	488
DECALQUE (SISTEMA DE SEGURANÇA DA MÁQUINA)	107
DECALQUE (SISTEMA DE SEGURANÇA DA MÁQUINA)	162
DECALQUE (TAMPA DO PAINEL DE INSTRUMENTOS)	604
DECALQUE (12VOLT)	103
DENTE LONGO	536
DESEMBAÇADOR DA CABINE	560
DESENGATE E POSICIONADOR DA CAÇAMBA	338, 340
DIFERENCIAL	194
DIFERENCIAL - DESLIZAMENTO LIMITADO	195
DIREÇÃO	307
DIREÇÃO SECUNDÁRIA	307
DISJUNTOR AUTOMÁTICO DE CIRCUITO (15 A)	152
DISJUNTOR AUTOMÁTICO DE CIRCUITO (15 A) (AR - ASSENTO)	628
DISJUNTOR AUTOMÁTICO DE CIRCUITO (30 A)	152
DISJUNTOR AUTOMÁTICO DE CIRCUITO (90 AMP)	152
DRENO - ÓLEO DO MOTOR	18
DUCTO DE AR	566

E

EIXO-COMANDO DE VÁLVULA	7
EIXO DE TRANSMISSÃO	235, 236
EIXO FIXO	174
EIXO OSCILANTE	174, 175, 176, 177
ELEMENTO DO FILTRO DE AR (PRIMÁRIO)	67
ELEMENTO DO FILTRO DE AR (SECUNDÁRIO)	67
ELEMENTO DO FILTRO DE COMBUSTÍVEL	76
ELEMENTO FILTRANTE-ÁGUA (SEPARADOR)	89
ELO - TRAVA DA ARMAÇÃO DA DIREÇÃO	274
EMBREAGEM	184, 186, 188
EMISSOR - POSIÇÃO	123
ENGATE - ARTICULAÇÃO	266
ENGRENAGEM - TRANSFERÊNCIA DE ENTRADA	208
ENGRENAGEM-COROA E PINHÃO	203, 204, 206, 207
ENGRENAGENS DE DISTRIBUIÇÃO	21

* TRADUÇÃO NÃO DISPONÍVEL NO MOMENTO DA IMPRESSÃO

ÍNDICE

Designação	Página
ENGRENAGENS DE SAÍDA DE TRANSFERÊNCIA	210
ESCADA	270
ESPELHO RETROVISOR	595
	596
EXTENSÃO - ENCOSTO	567
EXTENSÃO DO TUBO DE ESCAPE	70

F

FAROL DIANTEIRO (24 V)	112
FAROL DIANTEIRO (24 VOLTS)(65 WATTS)	118
FILTRO	568
FILTRO - AR DA CABINE	568
FILTRO - COMBUSTÍVEL	76
FILTRO - MAGNÉTICO	182
FILTRO - ÓLEO	202
	330
	331
FILTRO - ÓLEO DO MOTOR	45
FILTRO - ÓLEO (HIDRÁULICO)	202
	331
FILTRO - RESPIRO (CÁRTER)	10
FILTRO - TELA	650
FILTRO (AR)	568
FILTRO E TUBOS - TRANSMISSÃO	200
FIXADORES - CABEÇOTE DO MOTOR	19
FREIOS E ENGRENAGENS PLANETARIAS	178
	180
FUNDO - ENCOSTO	601
FUNDO - ENCOSTO (PARTE TRASEIRA)	632

G

GARFO	525
GARFO DE PALETAS	526
	527
GRAXEIRA	236
	496
	498
	502
	522
	531
GRAXEIRA (ROSCA 1/8-27 POL)	266
	272
	496
	498
	502
	522
	531
GRUPO DE INSTALAÇÃO - MOTOR	6
GRUPO DE MINIFUSÍVEL	610
	614
GRUPO ROTATIVO DA BOMBA	420
	421

I

ILUMINAÇÃO - AUXILIAR	111
ILUMINAÇÃO - TRASEIRA	120
INDICADOR - NÍVEL DO ÓLEO (VARETA)	46
INDICADOR - VARETA DO NÍVEL DE ÓLEO	198
	212
	214
INDICADOR (TROCA DO FILTRO)	68
INSTALAÇÃO DO RÁDIO	577
	578
INSTALAÇÃO-SEGURANÇA	107
INTERRUPTOR - CIRCUITO (60 A)	152
INTERRUPTOR - DESENGATE AUTOMÁTICO (SELETOR DA CAÇAMBA - GARFO)	320
INTERRUPTOR - LIMITADOR (FREIO DE ESTACIONAMENTO)	280
INTERRUPTOR - LIMITADOR (FREIO DE SERVIÇO)	606
INTERRUPTOR - LIMITADOR (PEDAL DO FREIO)	610
	614
INTERRUPTOR - LIMPADOR	131
	132
INTERRUPTOR - LIMPADOR DO PÁRA-BRISA	131
	132
INTERRUPTOR - MAGNÉTICO	129
	130
	172
	614
INTERRUPTOR - MAGNÉTICO (RELÉ PRINCIPAL)	606
	610
INTERRUPTOR - MAGNÉTICO (24 V) (RELÉ DO AUXILIAR DE PARTIDA)	152
INTERRUPTOR - PARTIDA (CHAVE)	604
INTERRUPTOR - PRESSÃO (ALTO/BAIXO) (REFRIGERANTE)	588
INTERRUPTOR - PRESSÃO (DIREÇÃO SECUNDÁRIA)	300
INTERRUPTOR - PRESSÃO (FILTRO DE DERIVAÇÃO DO ÓLEO HIDRÁULICO)	331
INTERRUPTOR - PRESSÃO (ÓLEO DO EIXO)	218
INTERRUPTOR - ROTATIVO	140
INTERRUPTOR - ROTATIVO (LUZ DE OPERAÇÃO)	144
INTERRUPTOR - ROTATIVO (OPERAÇÃO - DIANTEIRA - PAINEL - TRASEIRA)	136

* TRADUÇÃO NÃO DISPONÍVEL NO MOMENTO DA IMPRESSÃO

ÍNDICE

Designação	Página
INTERRUPTOR - ROTATIVO (VELOCIDADE DO VENTILADOR)	610
INTERRUPTOR - SINALIZAÇÃO DE DIREÇÃO / LUZ DE ALERTA	118
INTERRUPTOR - TERMOSTATO (REFRIGERANTE)	540
INTERRUPTOR (MOTOR DE PARTIDA DE 24 V)	126
J	
JOGO - SUPERIOR	636
JOGO DE AJUSTADOR	544 602 636 638
JOGO DE AJUSTADOR DE CABO	636 638
JOGO DE AJUSTE DA ALTURA	636 638
JOGO DE ALAVANCA	636 638
JOGO DE ALMOFADA	544 567
JOGO DE ALMOFADA DO ASSENTO	632
JOGO DE AMORTECEDOR	636 638
JOGO DE ARMAÇÃO	636 638
JOGO DE BASE DO SEPARADOR DE ÁGUA (SEPARADOR DE ÁGUA)	89
JOGO DE BATENTE DO ASSENTO	636 638
JOGO DE BLOCO DESLIZADOR	635
JOGO DE BOTÃO DE SUSPENSÃO	574
JOGO DE BRAÇO DO ASSENTO - LADO ESQUERDO	636 638
JOGO DE BRAÇO DO ASSENTO DO OPERADOR - LADO DIREITO	636 638
JOGO DE CALÇOS (INCLUI 12 CALÇOS)	204 206
JOGO DE CÁRTER DE INCLINAÇÃO	632
JOGO DE COIFA DE SUSPENSÃO	644
JOGO DE COMPRESSOR DE AR	646
JOGO DE CONTATO (MOTOR DE PARTIDA)	126
JOGO DE CORDÃO	636 638 646
JOGO DE CORREIAS EM V	96
JOGO DE CORREIAS EM V (INCLUI 2 CORREIAS)	98
JOGO DE ENGRENAGEM (MOTOR DE PARTIDA)	126
JOGO DE ESPUMA	636 638
JOGO DE FIXADOR DE CORREIA	644
JOGO DE FIXADORES	92 646
JOGO DE FIXADORES (ALTERNADOR)	94
JOGO DE INCLINAÇÃO DO ASSENTO	602
JOGO DE INCLINAÇÃO TRASEIRA	602
JOGO DE INDICADOR	575
JOGO DE MAÇANETA DO ASSENTO	632
JOGO DE MANCAL	92 575
JOGO DE MANCAL (ALTERNADOR)	94
JOGO DE MANCAL DA SUSPENSÃO	636 638
JOGO DE MANGUEIRA (ÁGUA) (ALOJAMENTO DO REGULADOR)	60
JOGO DE MOLA	575 636 638
JOGO DE PÁRA-CHOQUE	574
JOGO DE RECEPTÁCULO (12 PINOS)	118 611
JOGO DE RECEPTÁCULO (12 PINOS)	136 140 144 606 611 614
JOGO DE RECEPTÁCULO (12 PINOS)	158 160
JOGO DE RECEPTÁCULO (2 PINOS)	91 107 109 133 140 144 152 158 160 166 168 170 246 370 384 440 444 491 492 540

* TRADUÇÃO NÃO DISPONÍVEL NO MOMENTO DA IMPRESSÃO

ÍNDICE

Designação	Página
	572
	588
	606
	610
	614
	646
JOGO DE RECEPTÁCULO (2 PINOS)	588
JOGO DE RECEPTÁCULO (2 PINOS)	158
	160
	162
JOGO DE RECEPTÁCULO (3 PINOS)	100
	107
	109
	123
	140
	144
	152
	162
	166
	168
	172
	246
	300
	338
	340
	376
	557
	577
	606
	610
	614
JOGO DE RECEPTÁCULO (3 PINOS)	158
JOGO DE RECEPTÁCULO (4 PINOS)	112
	158
	490
	606
	610
JOGO DE RECEPTÁCULO (4 PINOS)	604
JOGO DE RECEPTÁCULO (6 PINOS)	107
	136
	140
	144
	148
	160
	191
	310
	316
	318
	320
	340
	450
	540
	572
	606
	610
	614
JOGO DE RECEPTÁCULO (6 PINOS)	118
JOGO DE RECEPTÁCULO (6 PINOS)	597
	598
JOGO DE RECEPTÁCULO (6 PINOS)	162
JOGO DE RECEPTÁCULO (8 PINOS)	131
	132
	136
	140
	144
	148
	448
	454
	458
	460
	464
	466
	470
	606
	611
	614
JOGO DE RETENTOR	385
	389
	404
	424
	490
JOGO DE ROLETE DE SUSPENSÃO	644
JOGO DE ROLO	646
JOGO DE SEGUIDOR	575
JOGO DE TAMPA	636
	638
JOGO DE TAMPA DA SUSPENSÃO	636
	638
JOGO DE TERMINAL (ALTERNADOR)	94
JOGO DE TESOURAS	646
JOGO DE TOMADA DE CONEXÃO (12 PINOS)	152
	606
	611
	614
JOGO DE TOMADA DE CONEXÃO (2 PINOS)	107
	140
	144
	152
	158
	160
	162
	166
	168
	170
	246

* TRADUÇÃO NÃO DISPONÍVEL NO MOMENTO DA IMPRESSÃO

ÍNDICE

Designação	Página
	557
	572
	606
	611
	614
JOGO DE TOMADA DE CONEXÃO (2 PINOS)	540
JOGO DE TOMADA DE CONEXÃO (2 PINOS) (INTERRUPTOR DE RELÉ DE FORÇA PRINCIPAL)	130
JOGO DE TOMADA DE CONEXÃO (3 PINOS)	107
	140
	144
	152
	158
	160
	162
	166
	246
	290
	606
	611
	614
JOGO DE TOMADA DE CONEXÃO (4 PINOS)	136
	140
	144
	158
	191
	606
	611
	614
JOGO DE TOMADA DE CONEXÃO (6 PINOS)	107
	136
	140
	144
	158
	160
	162
	606
	611
	614
JOGO DE TOMADA DE CONEXÃO (8 PINOS)	136
	144
	148
	158
	160
	191
	577
	606
	611
	614
JOGO DE TRILHO DESLIZANTE	636
	638
JOGO DE VEDADOR DA CAÇAMBA	89
JUNTA (TAMPA DA VÁLVULA)	10

L

LÂMINA DO LIMPADOR DE PÁRA-BRISA	652
LÂMINA DO LIMPADOR DE PÁRA-BRISA (DIANTEIRO)	654
LÂMINA DO LIMPADOR DE PÁRA-BRISA (PARTE TRASEIRA)	652
LÂMPADA	109
	110
	579
	586
LÂMPADA - FAROL	108
	112
	114
	118
LÂMPADA - LADO DIREITO	118
LÂMPADA - LADO ESQUERDO	118
LÂMPADA - TETO	586
LÂMPADA (12 V)	107
	162
LÂMPADA (24 V)	109
	114
	136
	140
	144
	610
LÂMPADA (24 VOLTS/21 WATTS)	118
LÂMPADA (24 VOLTS)(65 WATTS)	108
LAVADOR DO VIDRO	649
	650
	651
LENTE	108
	109
LENTE ÂMBAR	110
LEVANTAMENTO DO MOTOR	26
LIMPADOR DO VIDRO	652
	654
LUZ GIRATÓRIA DE ALARME	110
LUZ INTERMITENTE (12-24 VOLTS)	118
LUZ TRASEIRA E DE FREIO	109

M

MANGUEIRA (DESCARTE DE VAPORES - INFERIOR)	10
MANGUEIRA (DESCARTE DE VAPORES - SUPERIOR)	10
MECANISMO DAS VÁLVULAS	44
MONTAGEM - ALTERNADOR	27
MONTAGEM - ARO	227
MONTAGEM - CABINE	599

* TRADUÇÃO NÃO DISPONÍVEL NO MOMENTO DA IMPRESSÃO

ÍNDICE

Designação	Página
MONTAGEM - CAÇAMBA	531
MONTAGEM - COMANDO DO VENTILADOR	30
MONTAGEM - MOTOR E TRANSMISSÃO	28
MONTAGEM - VÁLVULA DE CONTROLE	408
MONTAGEM DO EIXO	226
MOTOR	4
MOTOR - ENGRENAGENS	401
	402
	404
	406
MOTOR - LIMPADOR DO VIDRO	597
	598
MOTOR - VENTILADOR HIDRÁULICO	400
MOTOR E MONTAGEM - VENTILADOR HIDRÁULICO	398
	399
MOTOR ELÉTRICO DE PARTIDA	125
	126
MOTOR PRIMÁRIO	5

P

PAINEL - SUPERIOR	276
PAINEL DE INSTRUMENTOS	559
	604
	606
	610
	614
PAINEL PROTETOR - CABINE	640
	641
PÁRA-LAMA DIANTEIRO	251
	252
PÁRA-SOL	648
PÁRA-SOL DA CABINE	648
PEDAL DO FREIO	619
PEDAL DO GOVERNADOR	620
PELÍCULA - DISJUNTOR	152
PISTÃO E BIELA	34
PLACA DA VÁLVULA PILOTO	413
PLACA DE ADVERTÊNCIA (SEM ESPAÇO LIVRE)	657
PLACA DE INSTRUÇÃO	588
PLACA DE INSTRUÇÃO (BATERIA)	134
PLACA DE INSTRUÇÃO (IMPLEMENTO COM ALAVANCA DE CONTROLE)	314
PLACA E DECALQUE	657
	658
	659
PNEU E ARO	237
	238
	239
	240
	241
	242
POLIA DO VIRABREQUIM	40
PONTA CURTA	534
	535
PONTA LONGA	532
	533
PORTA DA CABINE	561
	562
	564
PRÉ-PURIFICADOR	73
PROTETOR - CAÇAMBA	528
PROTETOR - CÁRTER DO ÓLEO DO MOTOR	257
PROTETOR - TREM DE FORÇA	264
PROTETOR - TUBOS	258
	260
	262
PROTETOR CONTRA TRANSBORDAMENTO	529
	530
PROTETOR DO VENTILADOR	56
PUBLICAÇÃO	594
PURIFICADOR DE AR	67
	68

R

RADIADOR	62
REFLETOR	118
REFLETOR - ÂMBAR	118
REGULADOR DE TEMPERATURA DA ÁGUA	51
RESERVATÓRIO - ARMAZENAGEM DE ÁGUA	89
RESPIRO (HIDRÁULICO)	422
RESPIRO (TRANSMISSÃO)	182
RETENTOR (ALOJAMENTO DO REGULADOR)	51
RETENTOR DE ANEL-O	428
	432
	436
	440
	444
RETENTOR DE ANEL-O (REGULADOR)	51
RETENTOR DE ANEL-O (RESPIRO DO CÁRTER DO ÓLEO DO MOTOR)	10
REVESTIMENTO DA CABINE	579
	580
	582
	584
	586
ROPS ABERTA	622
ROPS FECHADA	621

* TRADUÇÃO NÃO DISPONÍVEL NO MOMENTO DA IMPRESSÃO

ÍNDICE

Designação	Página

S

SACADOR - MINIFUSÍVEL 606, 610
SENSOR - PRESSÃO 282
SENSOR - TEMPERATURA (ÓLEO DO CONVERSOR DE TORQUE) 152, 246
SEPARADOR DE ÁGUA 89
SILENCIADOR 72
SISTEMA DE ABSORÇÃO DE IMPACTOS 309
SISTEMA DE ILUMINAÇÃO - ADVERTÊNCIA . . . 121
SISTEMA DE ILUMINAÇÃO - FARÓIS 112, 114, 116
SISTEMA DE ILUMINAÇÃO - FARÓIS E SINAL 118
SISTEMA ELETRÔNICO - MÁQUINA 104
SOFTWARE - MÁQUINA 104
SOFTWARE - MÁQUINA (SEGURANÇA) 104
SUPORTE - ASSENTO 642, 643
SUPORTE - GARFO 521
SUPORTE PARA TRANSPORTE 494, 495
SUSPENSÃO - ASSENTO 644, 646

T

TAMPA - CONSOLO 558
TAMPA - MECANISMO DAS VÁLVULAS 10
TAMPA - MOTOR 8
TAMPA - TANQUE DE COMBUSTÍVEL 90
TAMPA - TRANSMISSÃO 192
TAMPA (BOCAL DE ENCHIMENTO DE ÓLEO) . . . 10
TAMPA (CONDICIONADOR DE AR) 588
TAMPA CONTRA POEIRA 182, 202, 218, 224, 282, 300, 304, 331, 356, 380, 392, 394
TAMPA CONTRA POEIRA (VÁLVULA DE AMOSTRAGEM DE ÓLEO) . . . 50
TAMPA DA VÁLVULA 231, 233
TAMPÃO 35

Designação	Página

TANQUE DE COMBUSTÍVEL E MONTAGEM . . . 90
TANQUE DE ÓLEO HIDRÁULICO E MONTAGEM 422
TELA DE SUCÇÃO 182
TELA FILTRANTE 448, 454, 458, 460, 464, 466, 470
TELA PÁRA-SOL 624
TOLDO - ESTRUTURA ROPS ABERTA 551, 552
TOLDO - ROPS ABERTA 551
TORNEIRA-DRENAGEM (ÓLEO DO BLOCO DO CILINDRO) 18
TRANSMISSÃO 243
TREM DE FORÇA 227
TUBOS - ABSORÇÃO DE IMPACTOS 384, 388
TUBOS - ACOPLADOR 342, 344, 346, 350
TUBOS - ÁGUA 58, 59
TUBOS - AQUECEDOR 592
TUBOS - AR 71
TUBOS - AR CONDICIONADO 588
TUBOS - ARREFECEDOR DE ÓLEO DO EIXO 218
TUBOS - ARREFECEDOR DO CONVERSOR DE TORQUE 224
TUBOS - AUXILIAR DE PARTIDA A ÉTER - MOTOR 122
TUBOS - CILINDRO DE INCLINAÇÃO 392, 394
TUBOS - CILINDRO DE LEVANTAMENTO 372, 376
TUBOS - CIRCUITO PILOTO 380
TUBOS - COMBUSTÍVEL 78
TUBOS - DIANTEIROS 354
TUBOS - DIREÇÃO 304
TUBOS - DIREÇÃO SECUNDÁRIA 300
TUBOS - FREIO DE SERVIÇO 284
TUBOS - GRAXA 272
TUBOS - ÓLEO HIDRÁULICO 356, 360, 362
TUBOS - VENTILADOR HIDRÁULICOS 364, 368, 370

* TRADUÇÃO NÃO DISPONÍVEL NO MOMENTO DA IMPRESSÃO

ÍNDICE

Designação	Página
TURBOALIMENTADOR	74
V	
VÁLVULA - CONTROLE PRINCIPAL	428 432 436 440 444
VÁLVULA COMBINADA	425
VÁLVULA (CONDICIONADOR DE AR)	588
VÁLVULA DE ACOPLAMENTO RÁPIDO	485
VÁLVULA DE ALÍVIO	245
VÁLVULA DE ALÍVIO (COMPENSAÇÃO)	404
VÁLVULA DE CONTROLE	426
VÁLVULA DE CONTROLE - PRESSÃO E COMPENSAÇÃO DE FLUXO	482
VÁLVULA DE CONTROLE - TRANSMISSÃO	246
VÁLVULA DE CONTROLE DE ABSORÇÃO DE IMPACTOS	486
VÁLVULA DE CONTROLE PILOTO	448 450 454 458 460 464 466 470
VÁLVULA DE DERIVAÇÃO	224 244
VÁLVULA DE DRENAGEM DO RADIADOR	62
VÁLVULA DE GÁS	278 384 388
VÁLVULA DE PARADA	380 488
VÁLVULA DE PARADA (RESERVATÓRIO DE ÓLEO)	18
VÁLVULA DE REDUÇÃO DE PRESSÃO	484
VÁLVULA DO CARTUCHO PILOTO	474 476 477 478 479 480 481
VÁLVULA ESFÉRICA	424
VÁLVULA ESFÉRICA (RESOLVEDOR)	372
VÁLVULA ESFÉRICA (RESOLVEDOR) (MOTOR INATIVO INFERIOR)	376
VÁLVULA PARA TIRAR AMOSTRAS DE FLUIDOS	50 331
VÁLVULA SOLENÓIDE	490 491 492 493
VENTILADOR DE SUCÇÃO	54
VIRABREQUIM	12
VOLANTE DO MOTOR	20

* TRADUÇÃO NÃO DISPONÍVEL NO MOMENTO DA IMPRESSÃO

MACHINE ARRANGEMENT

176-5181 CHASSIS AR

S/N: RBB1-UP

PART OF 216-8961 COMMON AR

SMCS-7000 **i01816098**

NOTE	PART NUMBER	QTY	PART NAME 1 2 3 4 5 6 (PRODUCT LEVEL)	SEE PAGE
	132-2685	1	BATTERY GP	
	115-2422	2	BATTERY (12 VOLT)	
Y	*202-0420*	1	BOX GP-BATTERY	248
Y	*202-0428*	1	BOX GP-TOOL	655
Y	*132-2470*	1	CONTROL GP-PARKING BRAKE	279
Y	*202-0430*	1	CONTROL GP-SERVICE BRAKE	282
Y	*180-8987*	1	COUNTERWEIGHT GP	250
Y	*132-2550*	1	CYLINDER & MTG GP-STEERING	296
Y	*180-9740*	1	EXTENSION GP-EXHAUST	70
Y	*140-9295*	1	FENDER GP-FRONT	251
Y	*132-2500*	1	FRAME GP-LOADER	254
Y	*202-0400*	1	FRAME GP-REAR	256
Y	*202-7215*	1	GUARD GP-FAN	56
Y	*113-3790*	1	HITCH GP-ARTICULATING	266
Y	*198-8970*	1	HOOD & GUARD GP	268
Y	*218-9937*	1	KICKOUT & POSITIONER GP	340
Y	*208-6173*	1	LADDER GP	270
Y	*184-1333*	1	LINES GP-FUEL	78
Y	*204-5864*	1	LINES GP-GREASE	272
Y	*203-3871*	1	LINES GP-SERVICE BRAKE	284
Y	*203-3872*	1	LINES GP-TORQUE CONV COOLER	224
Y	*7V-2885*	1	LINK GP-STEERING FRAME LOCK	274
Y	*6V-1970*	1	LITERATURE GP	594
Y	*132-2471*	1	MOUNTING GP-AXLE	226
Y	*211-4767*	1	MOUNTING GP-CONTROL VALVE	408
Y	*204-4331*	1	PLATE & FILM GP	659
Y	*202-0354*	1	TANK & MTG GP-FUEL	90
Y	*180-8807*	1	WARNING GP-BACKUP	133
Y	*180-8805*	1	WIRING GP-BATTERY	134
Y	*180-8801*	1	WIRING GP-ENGINE	152
Y	*132-2672*	1	WIRING GP-FRONT	158
Y	*180-8804*	1	WIRING GP-REAR	166

Y-SEPARATE ILLUSTRATION

<END>

MACHINE ARRANGEMENT

176-5201 CHASSIS AR

S/N: RTA1-UP

PART OF 216-8960 COMMON AR

SMCS-7000 **i01863205**

NOTE	PART NUMBER	QTY	PART NAME 1 2 3 4 5 6 (PRODUCT LEVEL)	SEE PAGE
	112-7166	1	BATTERY GP	
	3T-5760	1	BATTERY (12 VOLT)	
Y	*202-0420*	1	BOX GP-BATTERY	248
Y	*202-0428*	1	BOX GP-TOOL	655
Y	*148-7790*	1	CONTROL GP-BUCKET	496
Y	*132-2470*	1	CONTROL GP-PARKING BRAKE	279
Y	*202-0430*	1	CONTROL GP-SERVICE BRAKE	282
	180-8989	1	COVER GP-ACCESS	
	8T-1482	4	WASHER-HARD (26X50X8MM THK)	
M	**8T-5379**	4	BOLT (M24X3X50MM)	
	204-4336	1	PLATE	
	204-4337	1	PLATE	
Y	*132-2550*	1	CYLINDER & MTG GP-STEERING	296
Y	*180-9740*	1	EXTENSION GP-EXHAUST	70
Y	*154-4914*	1	FENDER GP-FRONT	252
Y	*148-7700*	1	FRAME GP-LOADER	255
Y	*202-0400*	1	FRAME GP-REAR	256
Y	*202-7215*	1	GUARD GP-FAN	56
Y	*113-3790*	1	HITCH GP-ARTICULATING	266
Y	*198-8970*	1	HOOD & GUARD GP	268
Y	*148-7678*	1	KICKOUT & POSITIONER GP	338
Y	*208-6173*	1	LADDER GP	270
Y	*184-1333*	1	LINES GP-FUEL	78
Y	*204-5864*	1	LINES GP-GREASE	272
Y	*203-3871*	1	LINES GP-SERVICE BRAKE	284
Y	*203-3872*	1	LINES GP-TORQUE CONV COOLER	224
Y	*7V-2885*	1	LINK GP-STEERING FRAME LOCK	274
Y	*6V-1970*	1	LITERATURE GP	594
Y	*132-2471*	1	MOUNTING GP-AXLE	226
Y	*211-4767*	1	MOUNTING GP-CONTROL VALVE	408
Y	*196-3104*	1	PLATE & FILM GP	657
Y	*202-0354*	1	TANK & MTG GP-FUEL	90
Y	*180-8807*	1	WARNING GP-BACKUP	133
Y	*180-8805*	1	WIRING GP-BATTERY	134
Y	*180-8801*	1	WIRING GP-ENGINE	152
Y	*132-2686*	1	WIRING GP-FRONT	160
Y	*180-8804*	1	WIRING GP-REAR	166

M-METRIC PART
Y-SEPARATE ILLUSTRATION

<END>

MACHINE ARRANGEMENT

216-8960 COMMON AR

S/N: RTA1-UP

SMCS-7000 **i01811778**

NOTE	PART NUMBER	QTY	PART NAME 1 2 3 4 5 6 (PRODUCT LEVEL)	SEE PAGE
Y	*176-5201*	1	CHASSIS AR	2
Y	*222-4879*	1	ELECTRONICS GP-MACHINE	104
Y	*210-1690*	1	ENGINE AR	4
Y	*176-5202*	1	HYDRAULIC AR	332
Y	*216-8963*	1	INSTALLATION AR-ENGINE	6
Y	*204-9416*	1	LIGHTING GP-FLOOD & SIGNAL	118
Y	*176-5186*	1	POWER TRAIN AR	227

Y-SEPARATE ILLUSTRATION

<END>

216-8961 COMMON AR

S/N: RBB1-UP

SMCS-7000 **i01816085**

NOTE	PART NUMBER	QTY	PART NAME 1 2 3 4 5 6 (PRODUCT LEVEL)	SEE PAGE
Y	*176-5181*	1	CHASSIS AR	1
Y	*222-4879*	1	ELECTRONICS GP-MACHINE	104
Y	*210-1690*	1	ENGINE AR	4
Y	*176-5182*	1	HYDRAULIC AR	332
Y	*216-8963*	1	INSTALLATION AR-ENGINE	6
Y	*204-9416*	1	LIGHTING GP-FLOOD & SIGNAL	118
Y	*176-5186*	1	POWER TRAIN AR	227

Y-SEPARATE ILLUSTRATION

<END>

ENGINE ARRANGEMENT

210-1690 ENGINE AR

S/N: RTA1-UP; RBB1-UP

PART OF 216-8960, 216-8961 COMMON AR

SMCS-1000 **i01720290**

NOTE	PART NUMBER	QTY	PART NAME 1 2 3 4 5 6 (PRODUCT LEVEL)	SEE PAGE
Y	*206-2744*	1	ENGINE AR-PRIMARY	5
Y	*186-2347*	1	LINES GP-AIR	71

Y-SEPARATE ILLUSTRATION

ENGINE ARRANGEMENT

206-2744 ENGINE AR-PRIMARY

S/N: CPT1-UP
96 BRAKE KW (129 BHP) AT 2300 RPM
PART OF 210-1690 ENGINE AR

SMCS-1000 **i01861722**

NOTE	PART NUMBER	QTY	PART NAME 1 2 3 4 5 6 (PRODUCT LEVEL)	SEE PAGE
Y	*216-8620*	1	CAMSHAFT GP	7
Y	*216-9740*	1	CONNECTION GP-WATER	51
Y	*221-5285*	1	COOLER GP-FLTR BASE & ENG OIL	52
Y	*221-6858*	1	COVER GP-ENGINE	8
Y	*221-7115*	1	COVER GP-VALVE MECHANISM	10
Y	*216-8316*	1	CRANKSHAFT GP	12
Y	*216-8231*	1	CYLINDER BLOCK GP	13
Y	*216-8343*	1	CYLINDER HEAD GP	17
Y	*217-0594*	1	ELBOW GP-AIR INLET	69
	227-5899	1	ELECTRONICS GP-ENGINE RATINGS	
Y	*171-1423*	1	FASTENER GP-CYLINDER HEAD	19
Y	*221-5290*	1	FILTER GP-ENGINE OIL	45
Y	*217-0640*	1	FILTER GP-FUEL	76
Y	*221-6990*	1	FLYWHEEL GP	20
Y	*217-1499*	1	GEAR GP-FRONT	21
Y	*187-0534*	1	HOUSING GP-FLYWHEEL	22
Y	*221-6835*	1	HOUSING GP-FRONT	24
Y	*221-6875*	1	LIFTING GP-ENGINE	26
Y	*219-1855*	1	LINES GP-STARTING AID	122
Y	*171-1090*	1	MOUNTING GP-ALTERNATOR	27
Y	*170-3711*	1	MOUNTING GP-FAN DRIVE	30
Y	*221-6989*	1	PAN GP-OIL	32
Y	*216-8324*	1	PISTON & ROD GP	34
Y	*147-5524*	1	PLUG GP-CYLINDER BLOCK	35
Y	*147-5532*	1	PLUG GP-CYLINDER BLOCK	36
Y	*141-8614*	1	PLUG GP-CYLINDER HEAD	37
Y	*163-0264*	1	PLUG GP-ENGINE	38
Y	*220-6152*	1	PLUG GP-FLYWHEEL HOUSING	39
Y	*184-5483*	1	PULLEY GP-CRANKSHAFT	40
Y	*220-6148*	1	PUMP GP-ENGINE OIL	48
Y	*217-0109*	1	PUMP GP-FUEL INJECTION	82
Y	*219-2455*	1	PUMP GP-FUEL TRANSFER	86
Y	*221-5369*	1	PUMP GP-WATER	60
Y	*219-1854*	1	STARTING AID GP	124
Y	*221-6866*	1	TURBOCHARGER GP	74
Y	*216-8619*	1	VALVE MECHANISM GP	44
Y	*219-2462*	1	WIRING GP-ELECTRONIC CONTROL	150
			AVAILABLE GASKET KIT(S):	
	216-9612	1	KIT-GASKET (TOP)	
	216-9616	1	KIT-GASKET (BOTTOM)	

Y-SEPARATE ILLUSTRATION

ENGINE ARRANGEMENT

216-8963 INSTALLATION AR-ENGINE

S/N: RTA1-UP; RBB1-UP

PART OF 216-8960, 216-8961 COMMON AR

SMCS-1000 **i01804766**

NOTE	PART NUMBER	QTY	PART NAME 1 2 3 4 5 6 (PRODUCT LEVEL)	SEE PAGE
Y	*186-2337*	1	DRAIN GP-ENGINE OIL	18
Y	*185-1045*	1	FAN GP-SUCTION	54
Y	*186-2348*	1	GAUGE GP-OIL LEVEL (DIPSTICK)	46
Y	*202-0353*	1	MOUNTING GP-ENGINE & TMSN	28
Y	*186-2344*	1	MUFFLER GP	72
Y	*185-1015*	1	RADIATOR GP	62
Y	*1G-9963*	1	STARTING MOTOR GP-ELECTRIC	125
Y	*140-8911*	1	VALVE GP-FLUID SAMPLING	50

Y-SEPARATE ILLUSTRATION

BASIC ENGINE

216-8620 CAMSHAFT GP

S/N: CPT1-UP

PART OF 206-2744 ENGINE AR-PRIMARY

SMCS-1210, 1211, 1212 **i01724910**

NOTE	REF NO	GRAPHIC REF	PART NUMBER	QTY	PART NAME 1 2 3 4 5 6 (PRODUCT LEVEL)	SEE PAGE
	1	1	**154-8056**	1	CAMSHAFT	

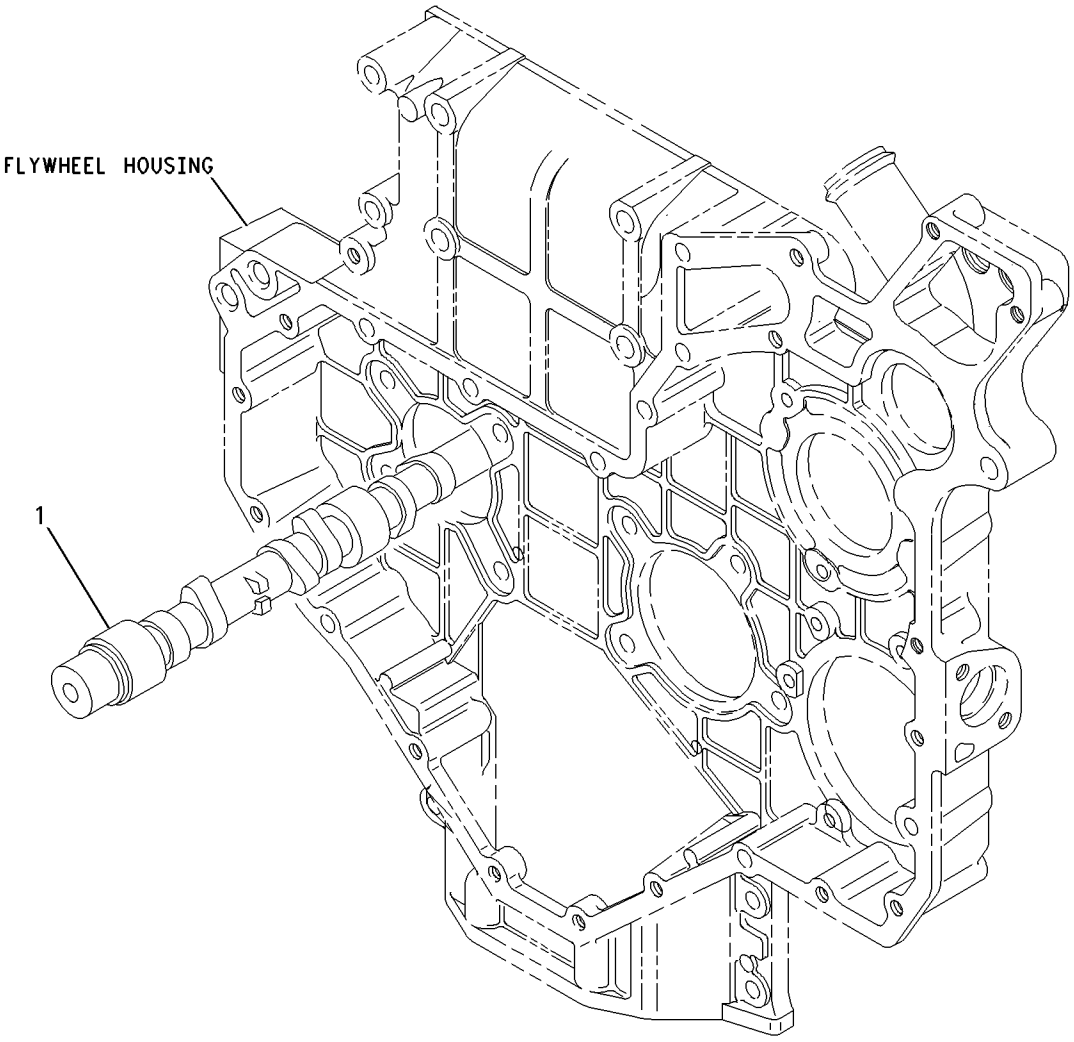

GRAPHIC #1 g00890471

BASIC ENGINE

221-6858 COVER GP-ENGINE

S/N: CPT1-UP

PART OF 206-2744 ENGINE AR-PRIMARY

SMCS-1000 **i01770864**

NOTE	REF NO	GRAPHIC REF	PART NUMBER	QTY	PART NAME 1 2 3 4 5 6 (PRODUCT LEVEL)	SEE PAGE
	1	1	**2B-0858**	1	PLUG-PIPE	
	2	1	**6I-0593**	1	BOLT (M10X1.5X30MM)	
	3	1	**6I-0646**	1	BOLT (M10X1.5X14MM)	
	5	1	**100-4830**	1	BOLT (M10X1.5X20MM)	
	6	1	**111-8222**	5	BOLT	
	7	1	**209-5502**	1	COVER AS (TIMING GEAR)	
	8	1	**209-5503**	1	SEAL-COVER	
	9	1	**214-3203**	1	WASHER	

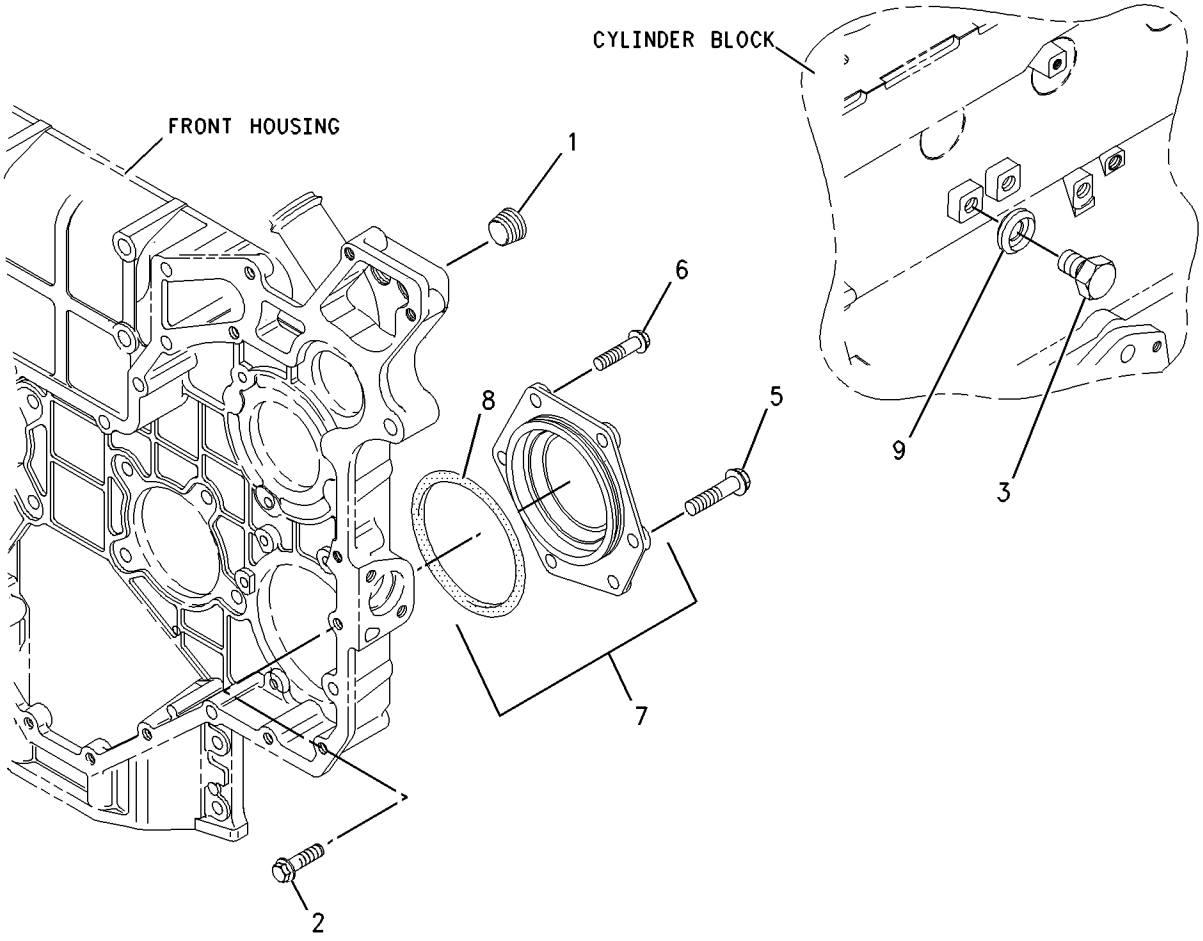

GRAPHIC #1 g00905241

MEMORANDA

BASIC ENGINE

221-7115 COVER GP-VALVE MECHANISM

S/N: CPT1-UP

PART OF 206-2744 ENGINE AR-PRIMARY

SMCS-1107 **i01831736**

NOTE	REF NO	GRAPHIC REF	PART NUMBER	QTY	PART NAME 1 2 3 4 5 6 (PRODUCT LEVEL)	SEE PAGE
	1	1	**2S-3440**	2	CLAMP-HOSE	
	2	1	**5D-1026**	2	CLAMP-HOSE	
	3	1	**6I-0217**	2	BOLT (M8X1.25X20MM)	
	4	1	**6I-0456**	1	BOLT (M8X1.25X45MM)	
	5	1	**6I-4374**	1	BOLT	
	6	1	**100-4104**	1	GASKET	
	7	1	**112-7704**	2	BOLT	
	8	1	**160-6988**	1	FILLER AS-OIL	
	9	1	**113-1505**	1	SEAL-O-RING	
	10	1	**130-9888**	1	CAP AS (OIL FILLER)	
	11	1	**113-1504**	1	SEAL-O-RING	
	12	1	**216-9606**	1	COVER AS (VALVE)	
	12A	1	**229-3557**	1	SEAL-O-RING	
	13	1	**229-3558**	1	BOLT	
	14	1	**216-9600**	8	BOLT	
	15	1	**216-9602**	1	BREATHER AS (CRANKCASE)	
	16	1	**216-9604**	1	GASKET (VALVE COVER)	
	17	1	**216-9608**	1	BREATHER (CRANKCASE)	
	17A	1	**229-3555**	1	FILTER-BREATHER (CRANKCASE)	
	17B	1	**229-3556**	1	SEAL-O-RING (CRANKCASE BREATHER)	
	18	1	**216-9611**	1	BRACKET	
	19	1	**216-9614**	1	HOSE (UPPER FUMES DISPOSAL)	
	20	1	**216-9617**	1	HOSE (LOWER FUMES DISPOSAL)	
	21	1	**216-9618**	1	VALVE	
	22	1	**216-9620**	1	ELBOW	
	23	1	**216-9623**	1	ADAPTER	
	24	1	**219-1803**	1	TUBE	

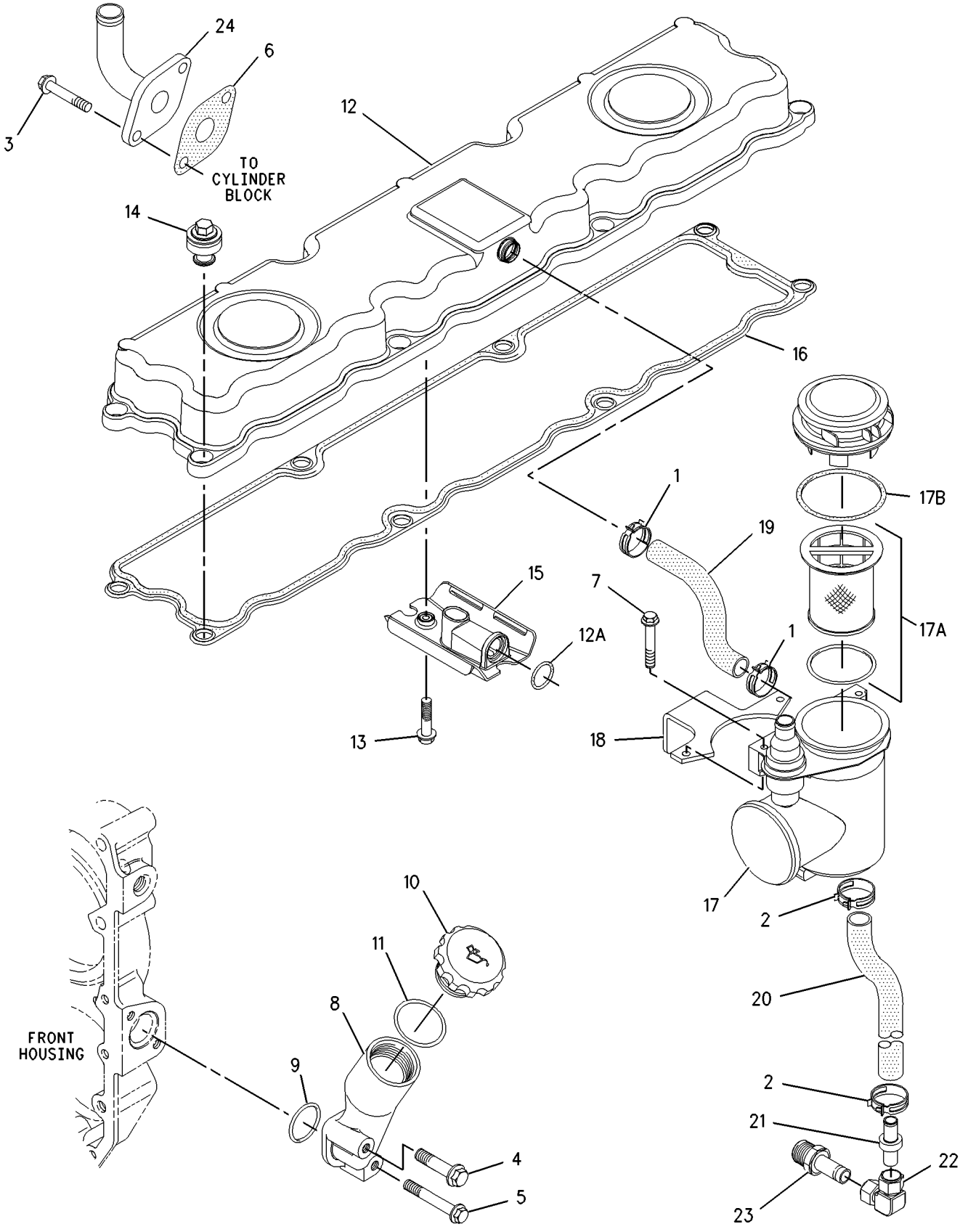

GRAPHIC #1 g00936683

BASIC ENGINE

216-8316 CRANKSHAFT GP

S/N: CPT1-UP

PART OF 206-2744 ENGINE AR-PRIMARY

SMCS-1202 **i01724980**

NOTE	REF NO	GRAPHIC REF	PART NUMBER	QTY	PART NAME 1 2 3 4 5 6 (PRODUCT LEVEL)	SEE PAGE
	1	1	**1B-8736**	1	KEY-WOODRUFF	
	2	1	**216-8314**	1	GEAR-CRANKSHAFT (34 TEETH)	
	3	1	**216-8315**	1	CRANKSHAFT GP	
B	4	1	**7W-4589**	1	BEARING SET-MAIN (.18MM O.S.)	
B		1	**7W-4590**	1	SET-BEARING (0.25 US ID)	
B		1	**7W-4591**	1	SET-BEARING (0.51 US ID)	
B	5	1	**7W-4592**	1	SET-BEARING (0.76 US ID) (STANDARD)	
B		1	**7W-4816**	1	BEARING SET-ROD	
B		1	**7W-4817**	1	SET-BEARING (0.25 US ID)	
B		1	**7W-4818**	1	SET-BEARING (0.51 US ID)	
B		1	**7W-4819**	1	SET-BEARING (0.76 US ID)	
B	6	1	**032-9090**	2	WASHER-THRUST (STANDARD-UPPER)	
B		1	**067-6873**	2	WASHER-THRUST (.18MM OS)	
B	7	1	**032-9091**	2	WASHER-THRUST (STANDARD-LOWER)	
B		1	**067-6874**	2	WASHER-THRUST (.18MM OS)	

B-USE AS REQUIRED

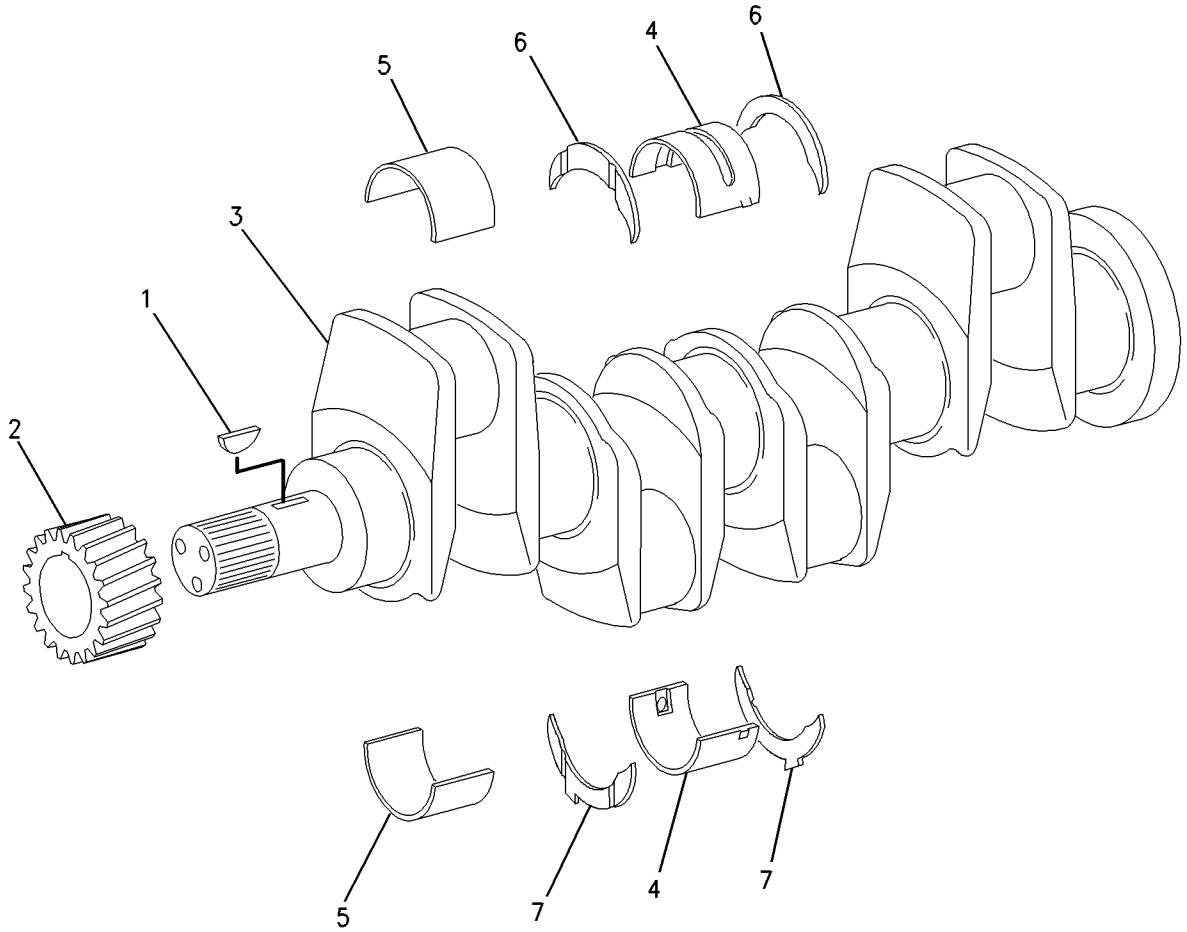

GRAPHIC #1 g00887896

BASIC ENGINE

216-8231 CYLINDER BLOCK GP

S/N: CPT1-UP

PART OF 206-2744 ENGINE AR-PRIMARY

SMCS-1201 **i01777344**

NOTE	REF NO	GRAPHIC REF	PART NUMBER	QTY	PART NAME 1 2 3 4 5 6 (PRODUCT LEVEL)	SEE PAGE
Y	1	1	**216-8235**	1	CYLINDER BLOCK GP	14
	2	1	**209-9219**	10	BOLT (M8X1.25X16MM)	
	3	1	**209-9218**	1	HOUSING AS	
	3A	1	**219-2512**	1	SLEEVE	

Y-SEPARATE ILLUSTRATION

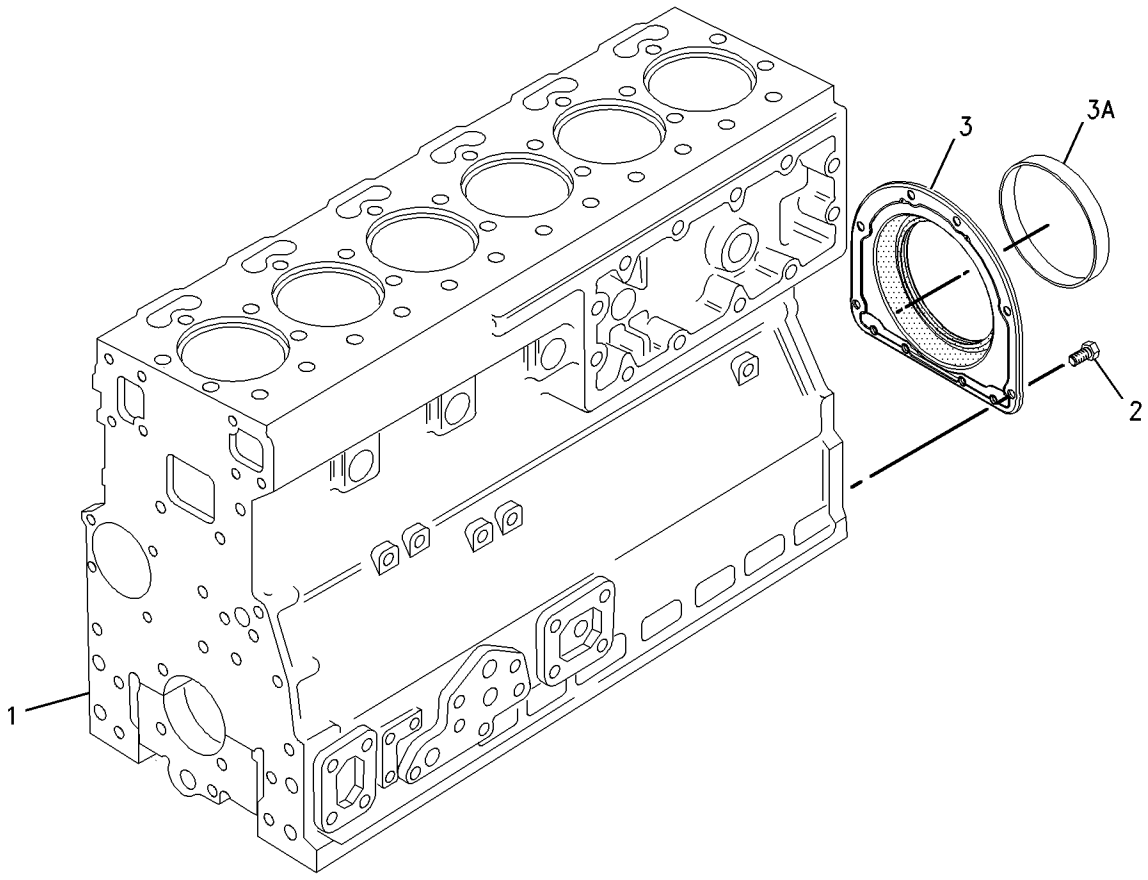

GRAPHIC #1 g00830579

216-8235 CYLINDER BLOCK GP

S/N: CPT1-UP

PART OF 216-8231 CYLINDER BLOCK GP

SMCS-1201 **i01775683**

NOTE	REF NO	GRAPHIC REF	PART NUMBER	QTY	PART NAME 1 2 3 4 5 6 (PRODUCT LEVEL)	SEE PAGE
	1	1	**1N-3762**	12	PLUG-CUP	
	2	1	**6I-1074**	6	VALVE AS (OIL JET)	
					(EACH INCLUDES)	
	3	1	**6I-0686**	1	SPRING	
	4	1	**6I-1075**	1	BALL	
	5	1	**6I-1076**	1	RETAINER	
	6	1	**6I-4354**	1	DOWEL	
	7	1	**7W-2501**	1	PLUG	
	8	1	**9Y-5015**	1	PLUG-FREEZE	
	9	1	**035-8068**	14	BOLT	
	10	1	**036-5802**	1	BEARING	
	11	1	**067-6002**	14	DOWEL	
	12	1	**067-6805**	1	PLUG	
	13	1	**067-6808**	1	PLUG	
	14	1	**111-1815**	6	LINER	
	15	1	**127-3294**	1	SHAFT	
	16	1	**148-3026**	6	JET AS-PISTON COOLING	
	17	1	**214-1668**	1	WASHER-SPECIAL	
	18	1	**215-2103**	6	PLUG	

216-8235 **CYLINDER BLOCK GP** *(contd.)* **i01775683**

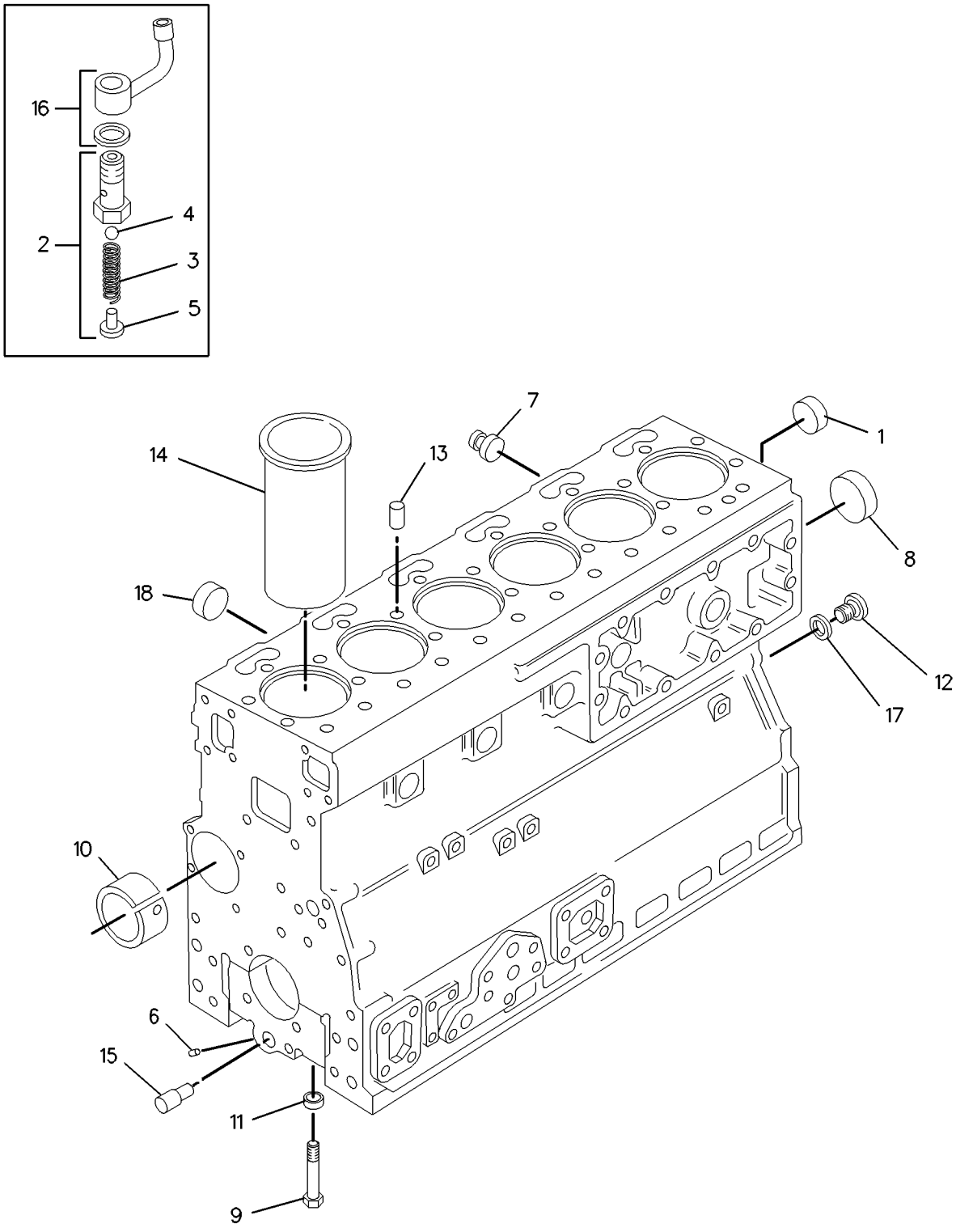

GRAPHIC #1 g00863044

BASIC ENGINE

216-8335 CYLINDER HEAD GP

S/N: CPT1-UP

PART OF 216-8343 CYLINDER HEAD GP

SMCS-1100 **i01775664**

NOTE	REF NO	GRAPHIC REF	PART NUMBER	QTY	PART NAME 1 2 3 4 5 6 (PRODUCT LEVEL)	SEE PAGE
	1	1	**1N-3762**	1	PLUG-CUP	
	2	1	**7M-7410**	6	PLUG (3/8-18 NPTF)	
	3	1	**067-6043**	3	PLUG-SIDE	
	4	1	**138-2050**	6	VALVE-EXHAUST	
	5	1	**138-2060**	12	CAP	
	6	1	**145-6855**	6	VALVE-INLET	
	7	1	**145-6856**	6	SEAL	
	8	1	**145-6858**	6	SEAL (EXHAUST)	
	9	1	**147-1979**	24	PIN-COTTER	
	10	1	**163-9256**	6	GUIDE-VALVE (EXHAUST)	
	11	1	**185-0882**	6	GUIDE-INLET VALVE	
	12	1	**206-4127**	12	SPRING-VALVE	
	13	1	**216-8332**	6	INSERT-VALVE	
	14	1	**216-8333**	6	INSERT-VALVE	

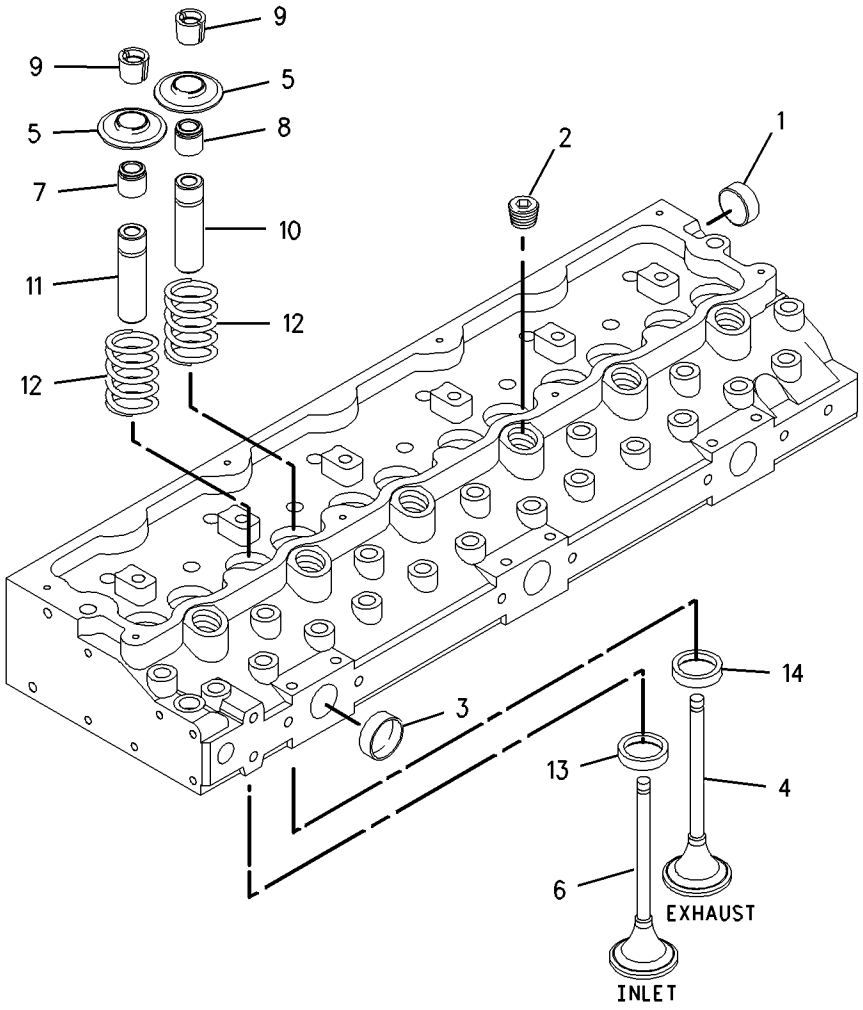

GRAPHIC #1 g00860247

BASIC ENGINE

216-8343 CYLINDER HEAD GP

S/N: CPT1-UP

PART OF 206-2744 ENGINE AR-PRIMARY

SMCS-1100 **i01777361**

NOTE	REF NO	GRAPHIC REF	PART NUMBER	QTY	PART NAME 1 2 3 4 5 6 (PRODUCT LEVEL)	SEE PAGE
	1	1	**7W-2518**	12	BOLT (1/2-20X3.63IN)	
	2	1	**7W-2519**	18	BOLT (1/2-20X4.25IN)	
	3	1	**7W-2520**	2	BOLT (1/2-20X5.09IN)	
	4	1	**156-4173**	1	GASKET-CYLINDER HEAD	
	5	1	**161-9820**	2	PIN	
Y	6	1	**216-8335**	1	CYLINDER HEAD GP	16

Y-SEPARATE ILLUSTRATION

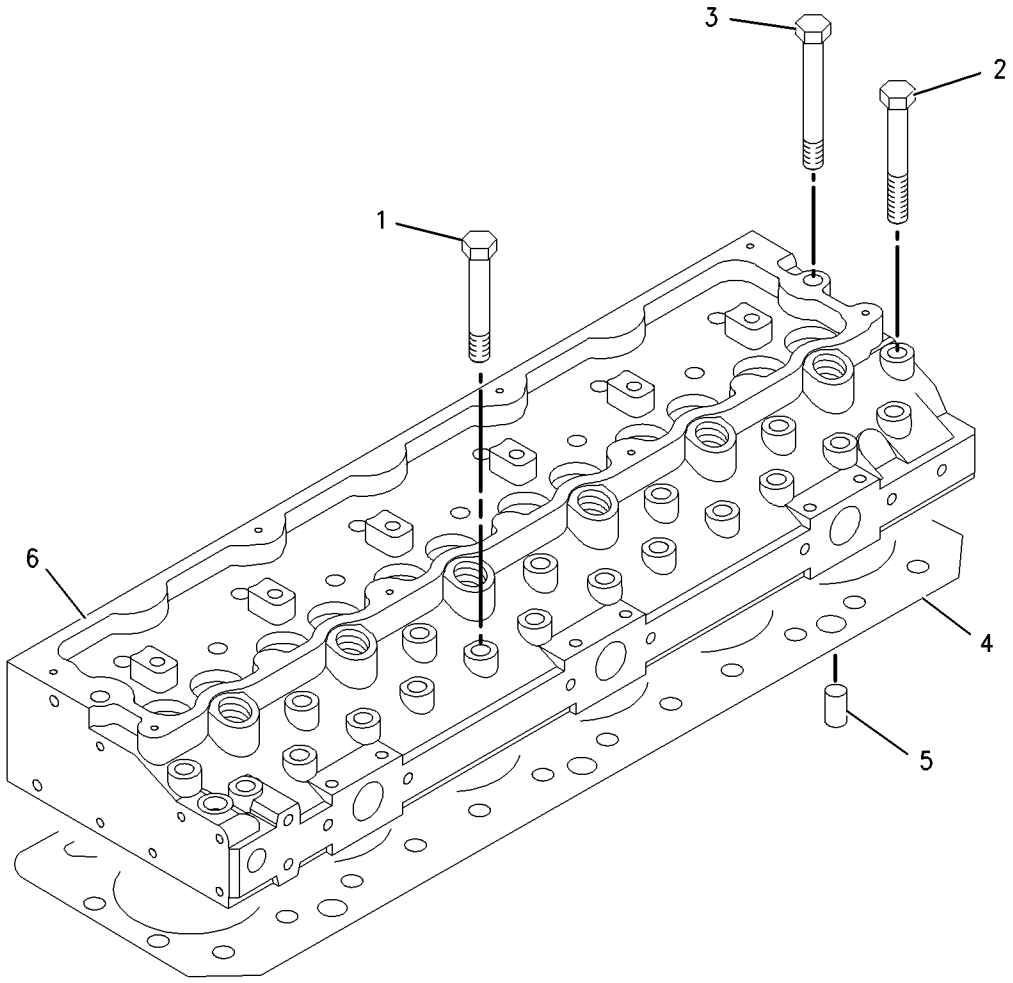

GRAPHIC #1 g00889681

BASIC ENGINE

186-2337 DRAIN GP-ENGINE OIL

S/N: RTA1-UP; RBB1-UP

PART OF 216-8963 INSTALLATION AR-ENGINE

SMCS-1302 **i01818361**

NOTE	REF NO	GRAPHIC REF	PART NUMBER	QTY	PART NAME 1 2 3 4 5 6 (PRODUCT LEVEL)	SEE PAGE
	1	1	**2P-4173**	1	COCK-DRAIN (CYLINDER BLOCK OIL)	
	2	1	**5D-1026**	1	CLAMP-HOSE	
	3	1	**6V-7238**	1	VALVE-SHUTOFF (OIL PAN)	
	4	1	**8C-5225**	1	PLUG-SEAL (OIL DRAIN)	
	5	1	**159-5255**	1	ADAPTER	
	6	1	**3K-0360**	1	SEAL-O-RING	
	7	1	**5P-9186**	1	SEAL-O-RING	
E	8	1	**5P-0743**		HOSE (51CM)	

E-ORDER BY THE CENTIMETER

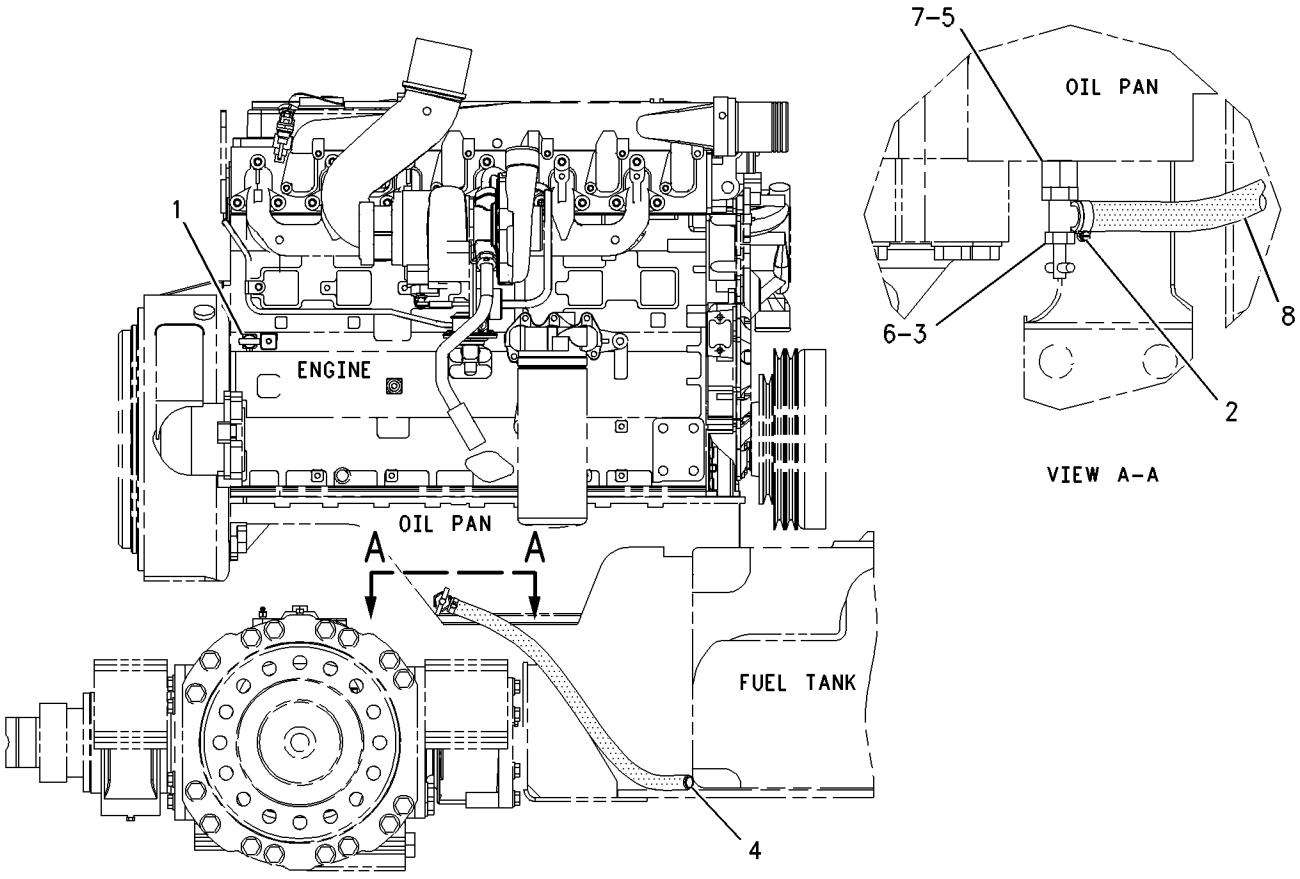

LEFT SIDE VIEW

GRAPHIC #1 g00923022

BASIC ENGINE

171-1423 FASTENER GP-CYLINDER HEAD

S/N: CPT1-UP

PART OF 206-2744 ENGINE AR-PRIMARY

SMCS-1100 **i01173854**

NOTE	REF NO	GRAPHIC REF	PART NUMBER	QTY	PART NAME 1 2 3 4 5 6 (PRODUCT LEVEL)	SEE PAGE
	1	1	**124-3815**	3	BOLT	

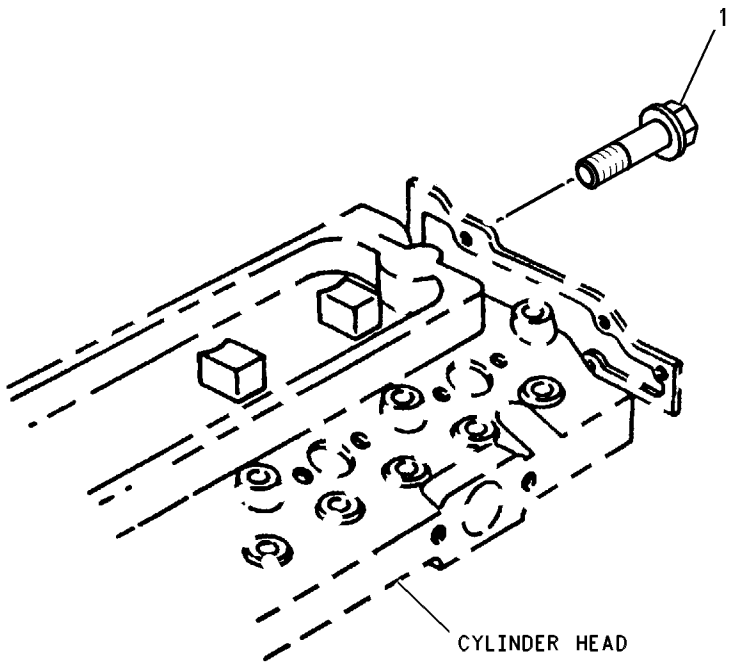

GRAPHIC #1 g00611206

BASIC ENGINE

221-6990 FLYWHEEL GP

S/N: CPT1-UP

PART OF 206-2744 ENGINE AR-PRIMARY

SMCS-1156 **i01725091**

NOTE	REF NO	GRAPHIC REF	PART NUMBER	QTY	PART NAME 1 2 3 4 5 6 (PRODUCT LEVEL)	SEE PAGE
	1	1	**113-7543**	1	FLYWHEEL AS	
	2	1	**033-7687**	1	RING-STARTING MOTOR (126 TEETH)	
	3	1	**4K-7502**	12	BOLT (1/2-20X1.375IN)	
	4	1	**5P-8245**	12	WASHER-HARD (13.5X25.5X3MM THK)	

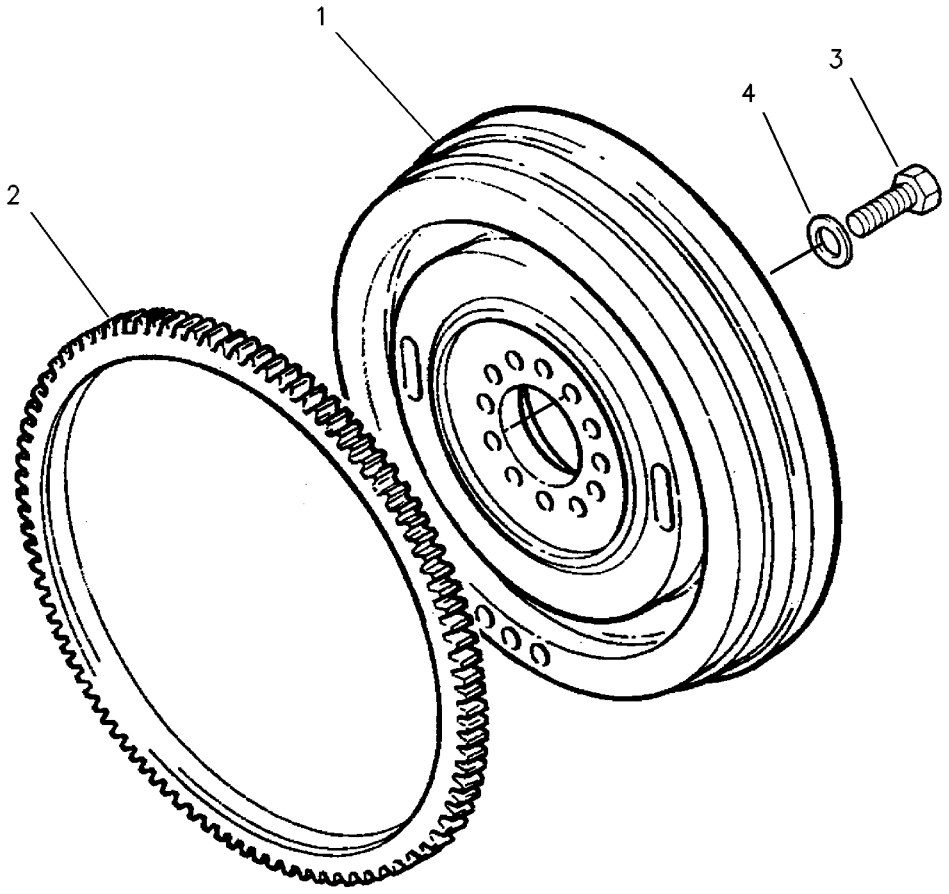

GRAPHIC #1 g00241149

BASIC ENGINE

217-1499 GEAR GP-FRONT

S/N: CPT1-UP

PART OF 206-2744 ENGINE AR-PRIMARY

SMCS-1206 **i01819092**

NOTE	REF NO	GRAPHIC REF	PART NUMBER	QTY	PART NAME 1 2 3 4 5 6 (PRODUCT LEVEL)	SEE PAGE
	1	1	**6I-0256**	1	WASHER	
	2	1	**067-6928**	1	CLIP	
	3	1	**216-8348**	1	GEAR AS-IDLER (31 TEETH)	
	4	1	**067-6927**	1	BUSHING-TERMINAL	

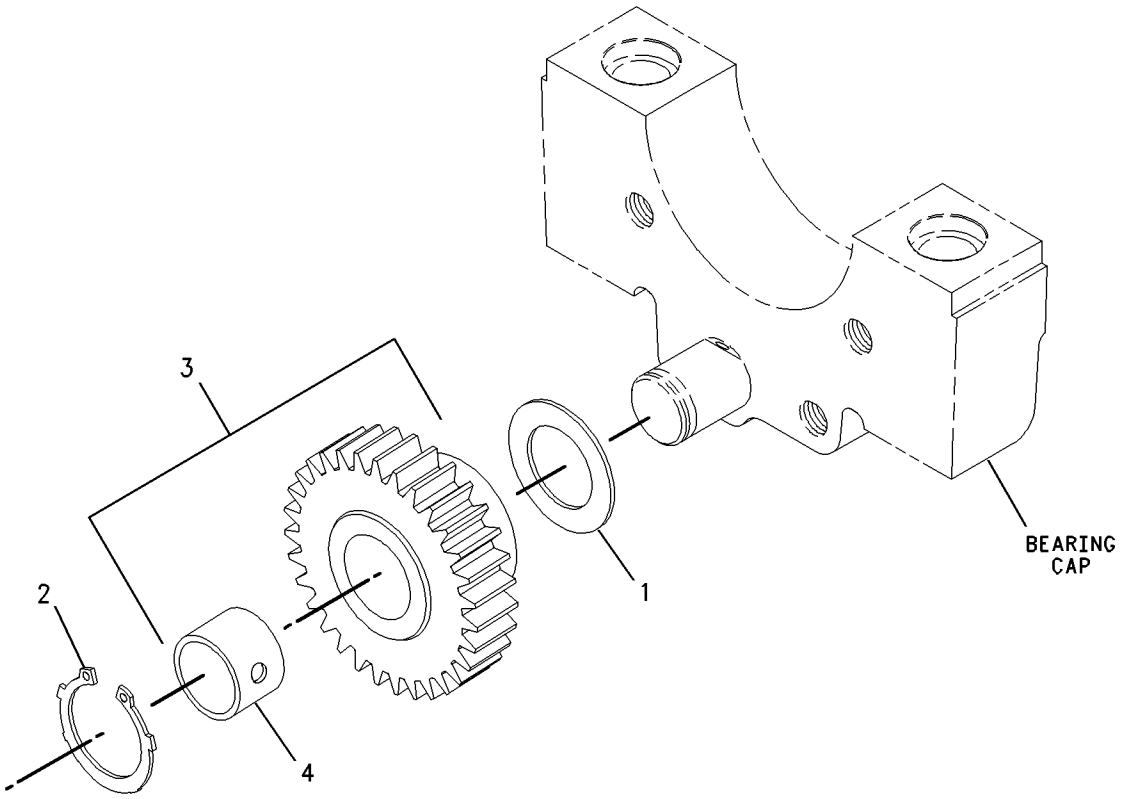

GRAPHIC #1 g00860185

BASIC ENGINE

187-0534 HOUSING GP-FLYWHEEL

S/N: CPT1-UP

PART OF 206-2744 ENGINE AR-PRIMARY

SMCS-1157 **i01721392**

NOTE	REF NO	GRAPHIC REF	PART NUMBER	QTY	PART NAME 1 2 3 4 5 6 (PRODUCT LEVEL)	SEE PAGE
	1	1	**6I-0423**	2	BOLT (M12X1.75X30MM)	
	2	1	**6I-0631**	2	BOLT (M6X1.0X12MM)	
	3	1	**6I-0847**	1	PLUG	
	4	1	**6I-4200**	3	BOLT (M10X1.5X16MM)	
	5	1	**7W-4642**	1	SHIELD-DUST	
	6	1	**067-6123**	2	DOWEL	
	7	1	**102-1957**	1	PLATE	
	8	1	**121-0883**	6	BOLT (M10X1.5X30MM)	
	9	1	**132-0154**	1	PLUG	
	10	1	**149-9176**	1	HOUSING-FLYWHEEL	
	11	1	**166-6176**	1	PLUG	

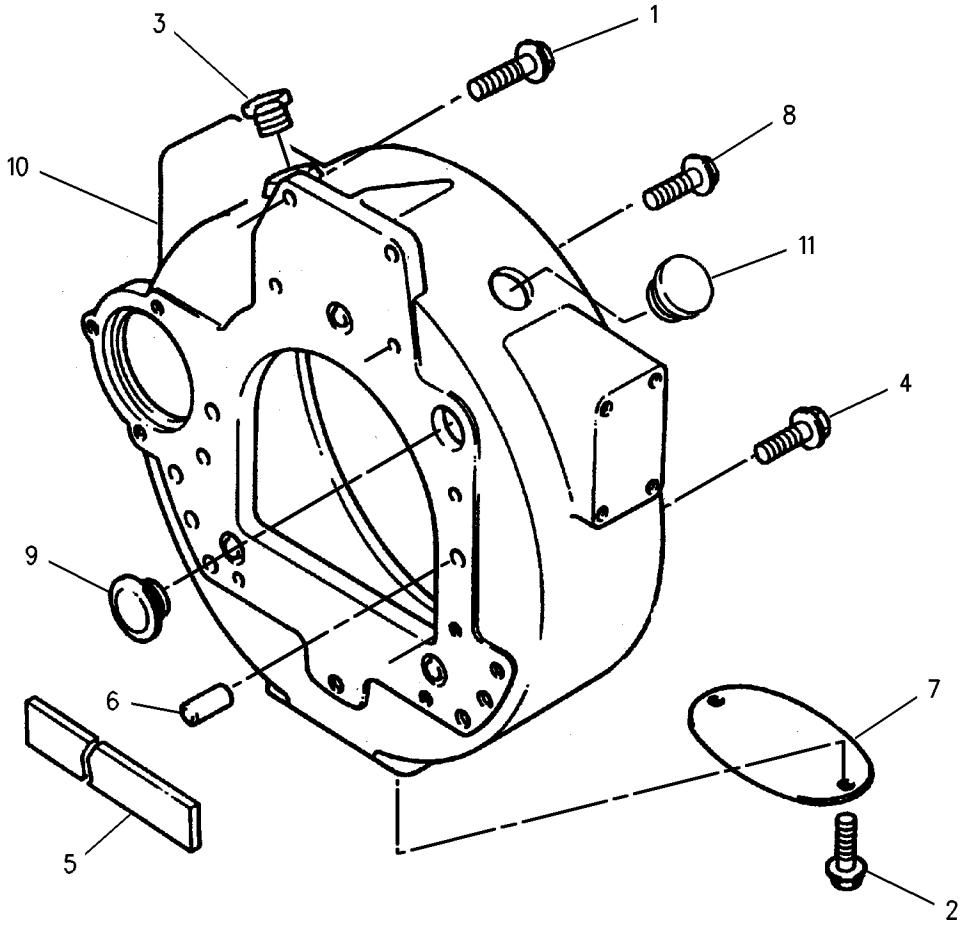

GRAPHIC #1 g00724813

MEMORANDA

BASIC ENGINE

221-6835 HOUSING GP-FRONT

S/N: CPT1-UP

PART OF 206-2744 ENGINE AR-PRIMARY

SMCS-1151, 1162 **i01725186**

NOTE	REF NO	GRAPHIC REF	PART NUMBER	QTY	PART NAME 1 2 3 4 5 6 (PRODUCT LEVEL)	SEE PAGE
	1	1	**1B-8736**	1	KEY-WOODRUFF	
	2	1	**6I-0217**	1	BOLT (M8X1.25X20MM)	
	3	1	**6I-0254**	6	BOLT (M8X1.25X30MM)	
	4	1	**6I-0260**	1	BOLT (M8X1.25X25MM)	
	5	1	**6I-0645**	3	BOLT (M8X1.25X25MM)	
	6	1	**6I-0789**	3	BOLT (M10X1.5X60MM)	
	7	1	**6I-0839**	6	BOLT (M8X1.25X70MM)	
	8	1	**6I-0846**	2	BOLT (M6X1.0X14MM)	
	9	1	**7C-4616**	1	BOLT (M12X1.75X45MM)	
	10	1	**067-6178**	1	WASHER	
	11	1	**067-6179**	1	DOWEL	
	12	1	**067-6897**	1	HUB-IDLER GEAR	
	13	1	**067-6900**	1	PLATE-RETAINING	
	14	1	**133-1011**	1	WASHER	
	15	1	**140-7443**	1	GASKET-COVER	
	16	1	**140-7444**	1	SHIELD	
	17	1	**140-7445**	1	DAMPER	
	18	1	**160-3510**	1	GASKET	
	19	1	**183-6317**	1	COVER AS-FRONT	
	20	1	**4W-5359**	1	SEAL-CRANKSHAFT	
	21	1	**167-2153**	1	SLEEVE-CRANKSHAFT	
	22	1	**216-8632**	1	HOUSING-FRONT	
	23	1	**216-8633**	1	GEAR AS-IDLER (73 TEETH)	
	24	1	**067-6899**	2	BUSHING-IDLER GEAR	
	25	1	**216-8634**	1	GEAR-CAMSHAFT (68 TEETH)	

221-6835 **HOUSING GP-FRONT** *(contd.)* **i01725186**

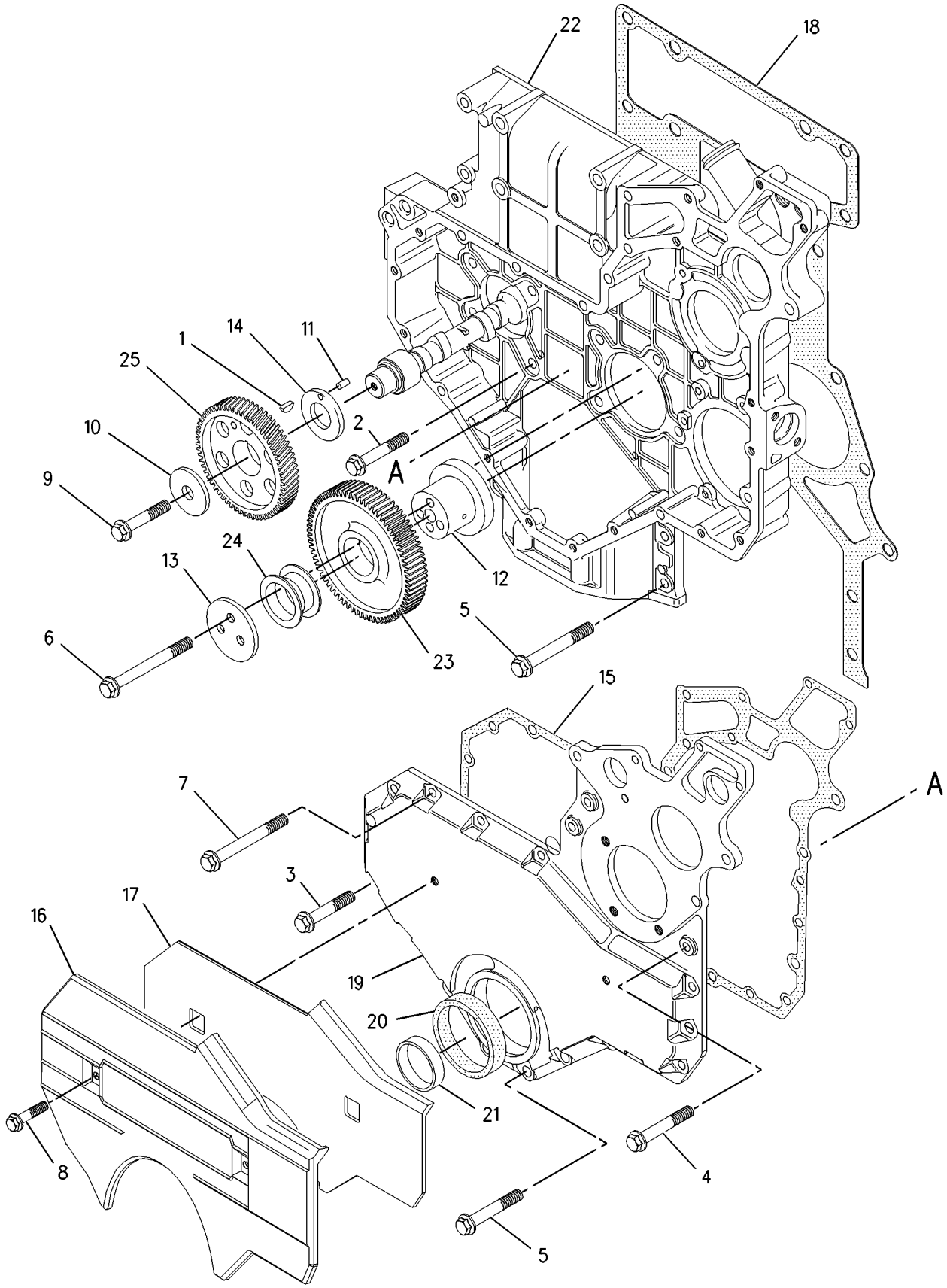

GRAPHIC #1 g00862294

BASIC ENGINE

221-6875 LIFTING GP-ENGINE

S/N: CPT1-UP

PART OF 206-2744 ENGINE AR-PRIMARY

SMCS-1122 **i01725132**

NOTE	REF NO	GRAPHIC REF	PART NUMBER	QTY	PART NAME 1 2 3 4 5 6 (PRODUCT LEVEL)	SEE PAGE
	1	1	**6I-0654**	4	BOLT (M10X1.5X25MM)	
	2	1	**221-6872**	2	PLATE	

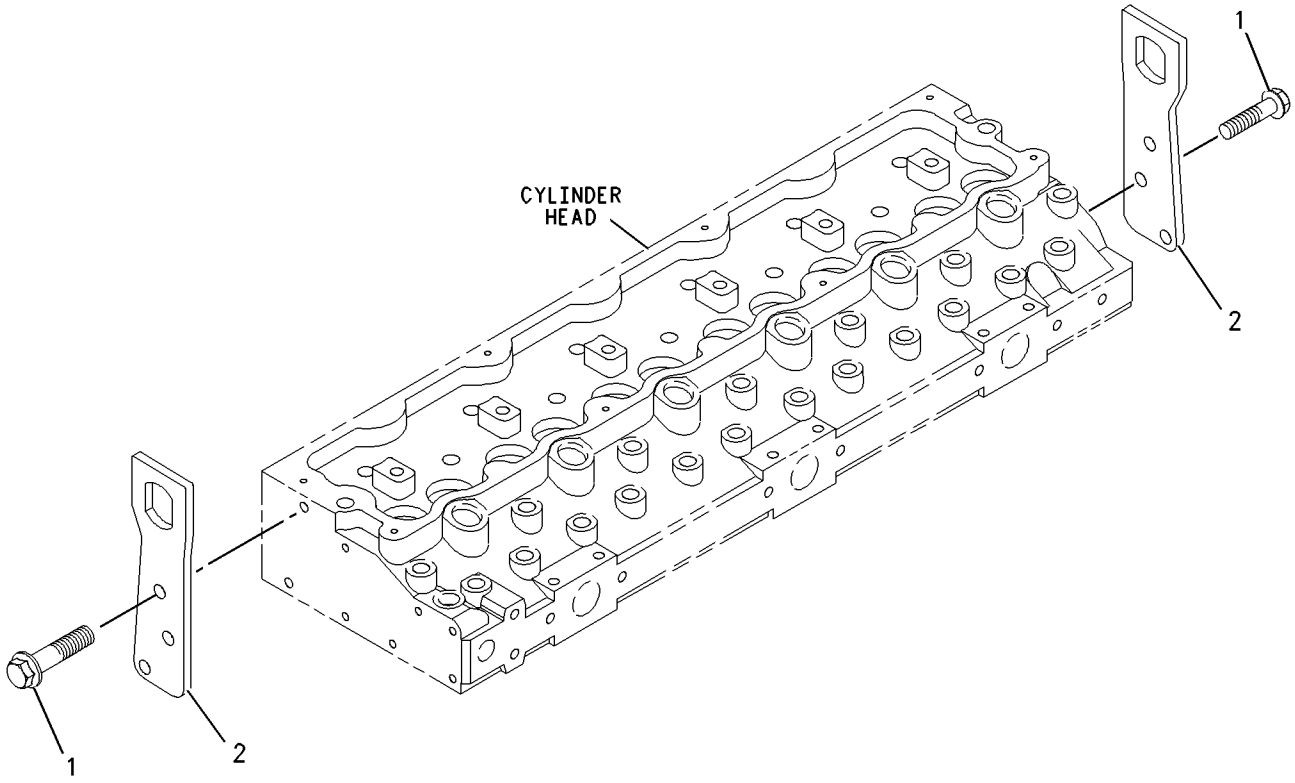

GRAPHIC #1 g00889453

BASIC ENGINE

171-1090 MOUNTING GP-ALTERNATOR

S/N: CPT1-UP

PART OF 206-2744 ENGINE AR-PRIMARY

SMCS-1405 **i01174704**

NOTE	REF NO	GRAPHIC REF	PART NUMBER	QTY	PART NAME 1 2 3 4 5 6 (PRODUCT LEVEL)	SEE PAGE
	1	1	**6I-0254**	2	BOLT	
	2	1	**6I-0839**	1	BOLT	
	3	1	**6I-4374**	2	BOLT	

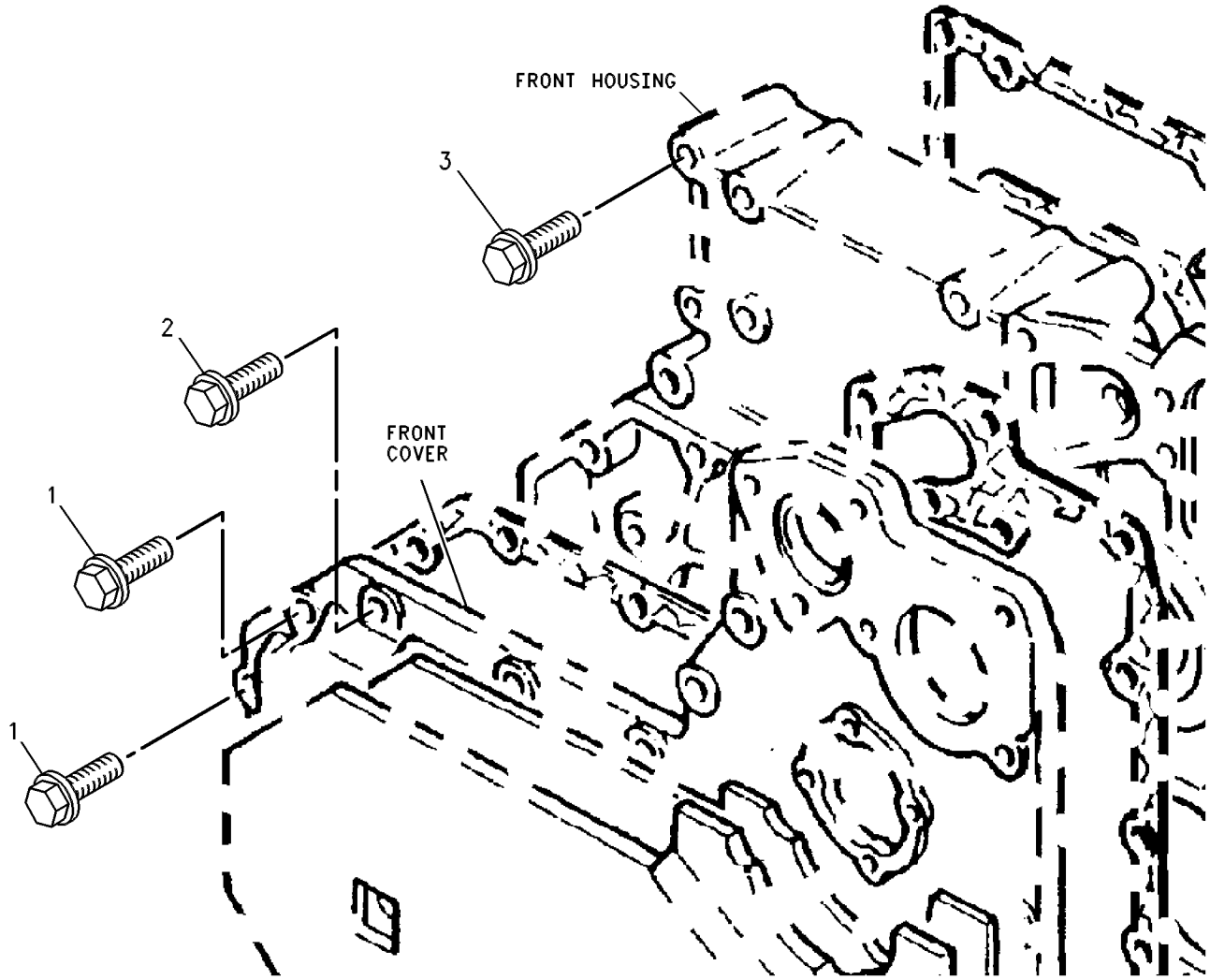

GRAPHIC #1 g00612614

202-0353 MOUNTING GP-ENGINE & TMSN

S/N: RTA1-UP; RBB1-UP

PART OF 216-8963 INSTALLATION AR-ENGINE

SMCS-1152, 1154, 3082 **i01812008**

NOTE	REF NO	GRAPHIC REF	PART NUMBER	QTY	PART NAME 1 2 3 4 5 6 (PRODUCT LEVEL)	SEE PAGE
	1	1	**7X-2622**	2	WASHER (10MM THK)	
M	2	1	**8T-4170**	2	BOLT (M20X2.5X150MM)	
	3	1	**9W-9915**	2	MOUNT AS	
	4	1	**185-1040**	1	BRACKET AS	
M		1	**8T-3597**	3	NUT-WELD (M12X1.75 THD)	
	5	1	**185-1041**	1	BRACKET AS	
	6	1	**199-4152**	2	SUPPORT-ENGINE	
	7	1	**200-2739**	2	SLEEVE	
	8	1	**220-1241**	2	MOUNT AS	
M	9	1	**6V-4249**	8	BOLT (M10X1.5X50 MM)	
	10	1	**6V-5839**	8	WASHER (11X21X2.5MM THK)	
	11	1	**7Y-1734**	2	WASHER	
M	12	1	**8C-8478**	2	BOLT (M20X2.5X140MM)	
	13	1	**8T-4121**	12	WASHER-HARD (11X21X2.5MM THK)	
	14	1	**8T-4122**	7	WASHER-HARD (17X32X3.5MM THK)	
M	15	1	**8T-4131**	2	NUT (M20X2.5 THD)	
M	16	1	**8T-4132**	7	NUT (M16X2 THD)	
M	17	1	**8T-4139**	16	BOLT (M12X1.75X30MM)	
M	18	1	**8T-4186**	12	BOLT (M10X1.5X40MM)	
	19	1	**8T-4223**	16	WASHER-HARD (13.5X25.5X3MM THK)	
	20	1	**8T-5439**	8	WASHER (21.5X45X6MM THK)	
	21	1	**9R-5878**	4	WASHER	

M-METRIC PART

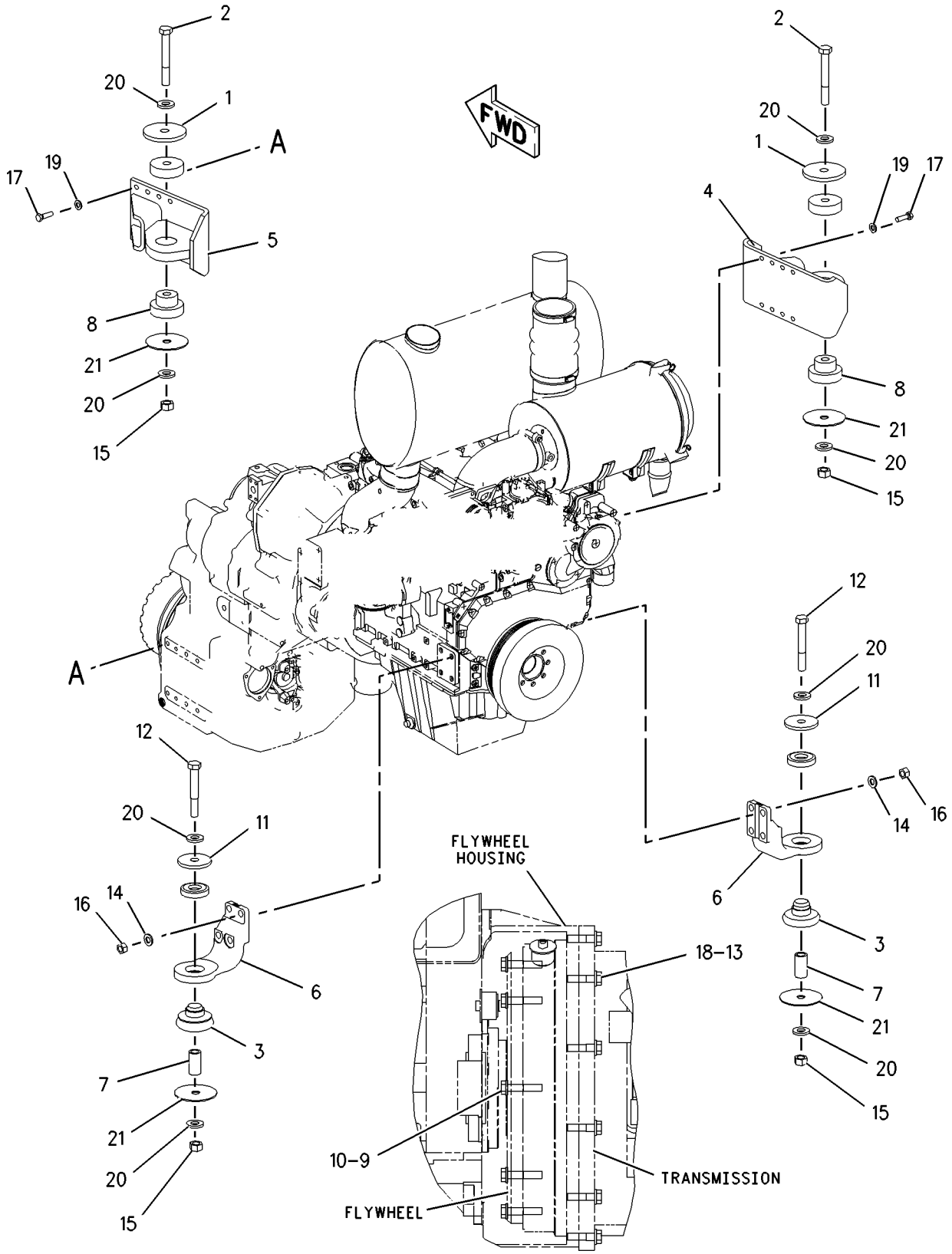

LEFT SIDE VIEW
(OF ENGINE)

GRAPHIC #1

g00925247

BASIC ENGINE

170-3711 MOUNTING GP-FAN DRIVE

S/N: CPT1-UP

PART OF 206-2744 ENGINE AR-PRIMARY

SMCS-1359 **i01174163**

NOTE	REF NO	GRAPHIC REF	PART NUMBER	QTY	PART NAME 1 2 3 4 5 6 (PRODUCT LEVEL)	SEE PAGE
	1	1	**6I-0650**	4	BOLT	

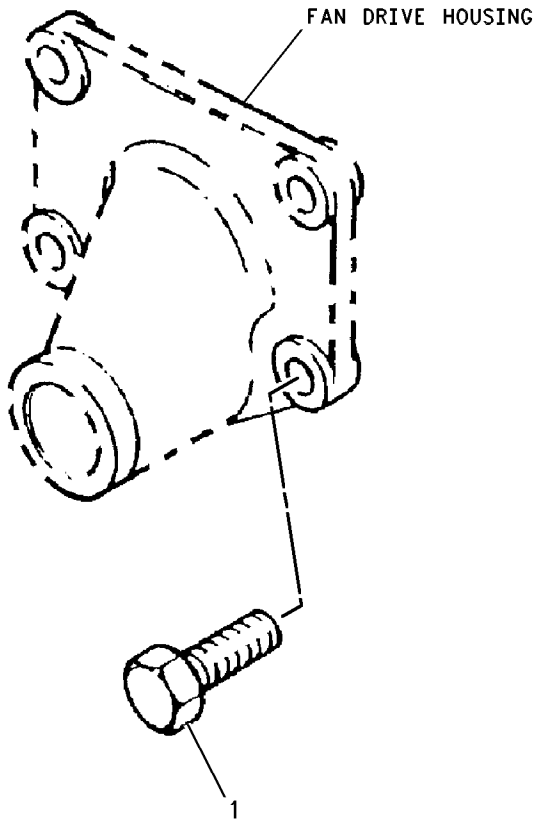

GRAPHIC #1 g00607880

MEMORANDA

BASIC ENGINE

221-6989 PAN GP-OIL

S/N: CPT1-UP

PART OF 206-2744 ENGINE AR-PRIMARY

SMCS-1302 **i01724888**

NOTE	REF NO	GRAPHIC REF	PART NUMBER	QTY	PART NAME 1 2 3 4 5 6 (PRODUCT LEVEL)	SEE PAGE
	1	1	**5P-6718**	2	SEAL-O-RING	
	2	1	**6I-0254**	19	BOLT (M8X1.25X30MM)	
	4	1	**6I-0289**	2	PLUG	
	5	1	**6I-0291**	3	NUT (M8X1.25)	
	6	1	**6I-0363**	2	BOLT (M6X1.0X20MM)	
	7	1	**6I-0456**	2	BOLT (M8X1.25X45MM)	
	8	1	**6I-4681**	1	GASKET	
	9	1	**6I-4709**	4	BOLT (M8X1.25X100MM)	
	10	1	**7C-0351**	2	PLUG-SUMP DRAIN	
	11	1	**100-3751**	1	BOLT (M8X1.25X65MM)	
	12	1	**113-8955**	2	STUD	
	13	1	**113-8957**	1	BRACKET	
	14	1	**124-3815**	2	BOLT (M8X16X1.25MM)	
	15	1	**127-5660**	1	STRAINER	
	16	1	**6I-0260**	2	BOLT (M8X1.25X25MM)	
	17	1	**127-5661**	1	PAN-OIL	
	18	1	**127-5662**	1	PLUG	
	19	1	**128-3792**	1	WASHER	
	20	1	**211-0067**	1	BRIDGE	
	21	1	**213-9710**	1	GASKET	

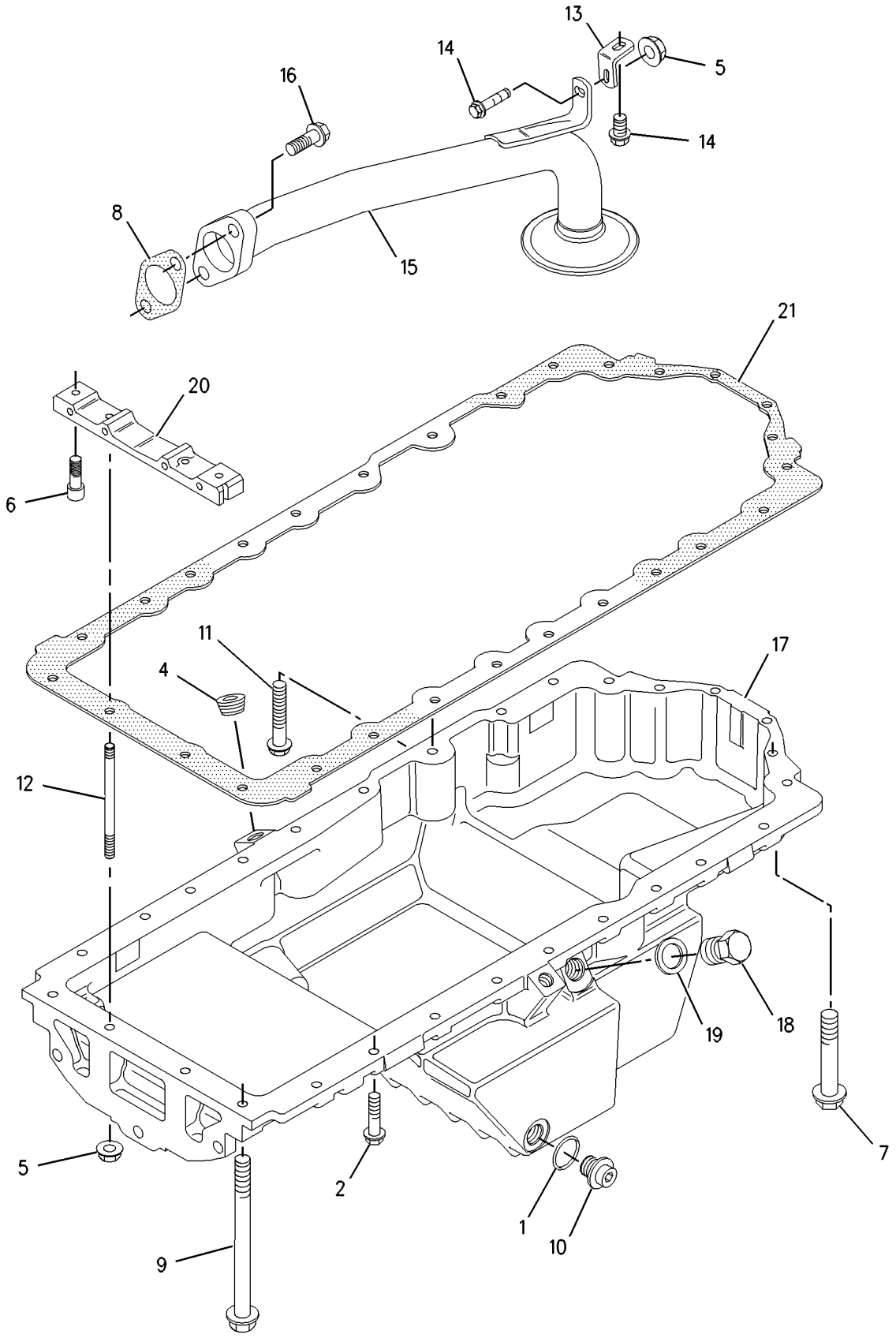

GRAPHIC #1 g00900146

216-8324 PISTON & ROD GP

S/N: CPT1-UP

PART OF 206-2744 ENGINE AR-PRIMARY

SMCS-1225 **i01812818**

NOTE	REF NO	GRAPHIC REF	PART NUMBER	QTY	PART NAME 1 2 3 4 5 6 (PRODUCT LEVEL)	SEE PAGE
	1	1	**216-8323**	6	PISTON AS	
					(EACH INCLUDES)	
		1	**124-3536**	2	RING-RETAINING	
	2	1	**217-1573**	1	KIT-PISTON RING	
J	3	1	**160-6493**	6	ROD AS (H)	
					—OR—	
J		1	**160-6494**	6	ROD AS (J)	
					—OR—	
J		1	**160-6495**	6	ROD AS (K)	
					—OR—	
J		1	**160-6496**	6	ROD AS (L)	
					(EACH ROD AS INCLUDES)	
	4	1	**7W-2505**	2	NUT-CONNECTING ROD	
	5	1	**067-6883**	2	BOLT-ROD CAP	
	6	1	**138-2048**	1	BUSHING	
	7	1	**194-2466**	2	DOWEL	

J-ENSURE THAT THE CORRECT ROD LENGTH IS FITTED.

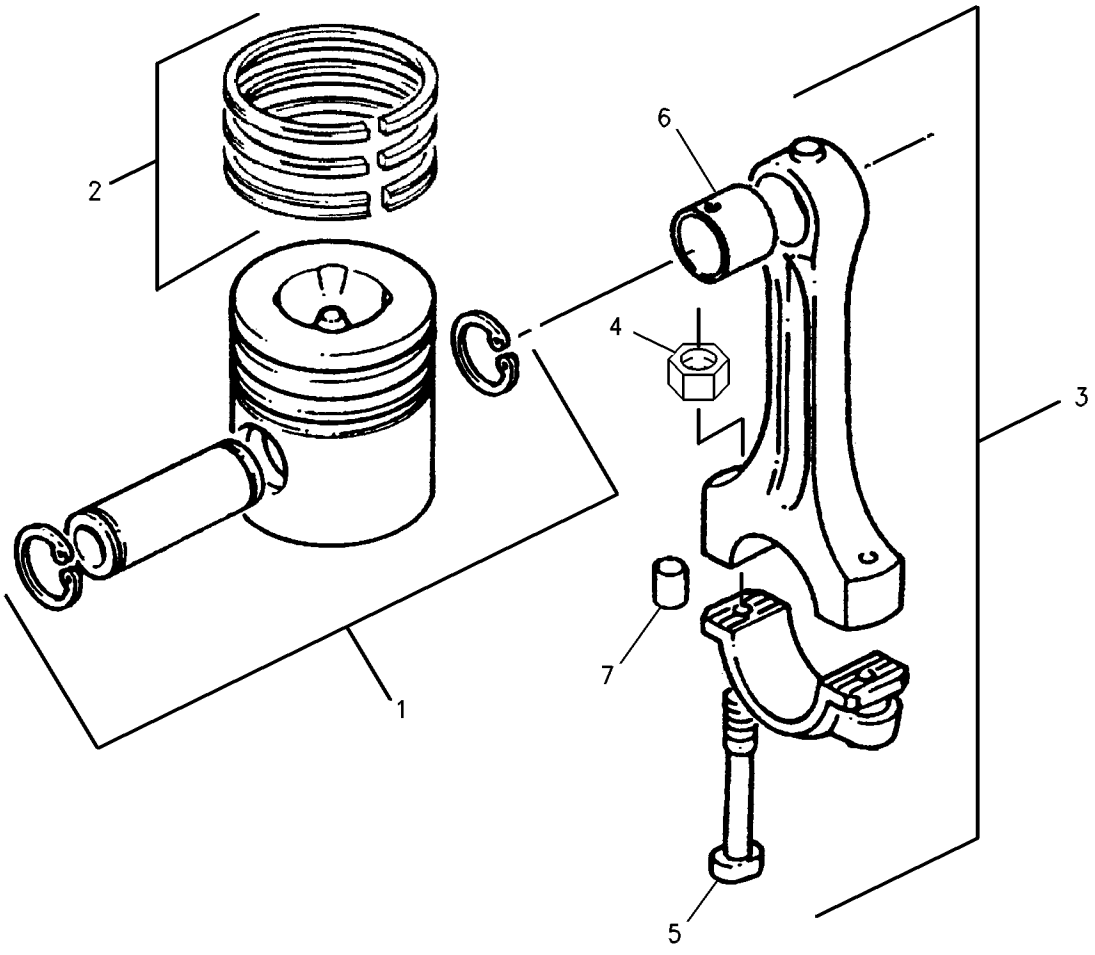

GRAPHIC #1 g00716867

BASIC ENGINE

147-5524 PLUG GP-CYLINDER BLOCK

S/N: CPT1-UP

PART OF 206-2744 ENGINE AR-PRIMARY

SMCS-1201 **i01172154**

NOTE	REF NO	GRAPHIC REF	PART NUMBER	QTY	PART NAME 1 2 3 4 5 6 (PRODUCT LEVEL)	SEE PAGE
	1	1	**069-1124**	2	PLUG	

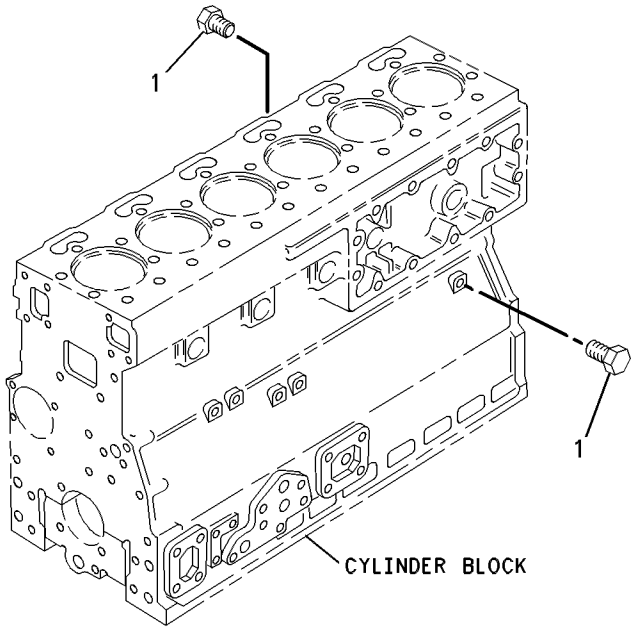

GRAPHIC #1 g00282502

BASIC ENGINE

147-5532 PLUG GP-CYLINDER BLOCK

S/N: CPT1-UP

PART OF 206-2744 ENGINE AR-PRIMARY

SMCS-1201 **i01172159**

NOTE	REF NO	GRAPHIC REF	PART NUMBER	QTY	PART NAME 1 2 3 4 5 6 (PRODUCT LEVEL)	SEE PAGE
	1	1	**035-8063**	2	PLUG	

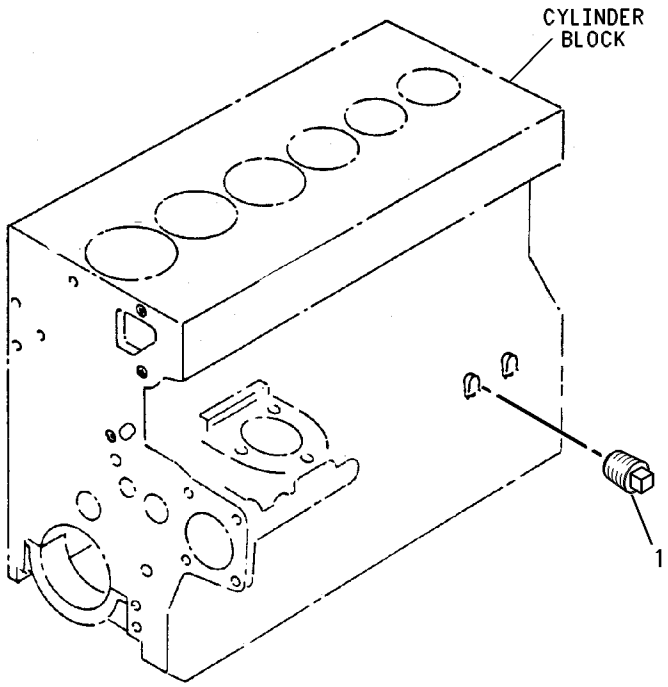

GRAPHIC #1 g00282503

141-8614 PLUG GP-CYLINDER HEAD

S/N: CPT1-UP

PART OF 206-2744 ENGINE AR-PRIMARY

SMCS-1100 **i01721379**

NOTE	REF NO	GRAPHIC REF	PART NUMBER	QTY	PART NAME 1 2 3 4 5 6 (PRODUCT LEVEL)	SEE PAGE
	1	1	**067-6044**	1	PLUG	
	2	1	**067-6045**	1	WASHER (5/8 IN)	

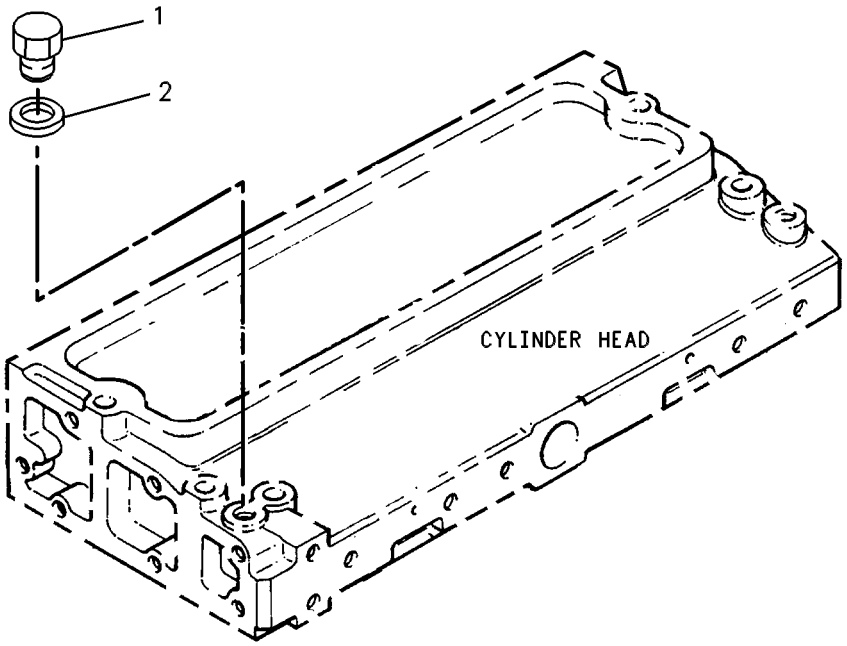

GRAPHIC #1 g00131683

BASIC ENGINE

163-0264 PLUG GP-ENGINE

S/N: CPT1-UP

PART OF 206-2744 ENGINE AR-PRIMARY

SMCS-1000 **i01172165**

NOTE	REF NO	GRAPHIC REF	PART NUMBER	QTY	PART NAME 1 2 3 4 5 6 (PRODUCT LEVEL)	SEE PAGE
	1	1	**2B-0858**	2	PLUG-PIPE (1/2-14 NPTF)	

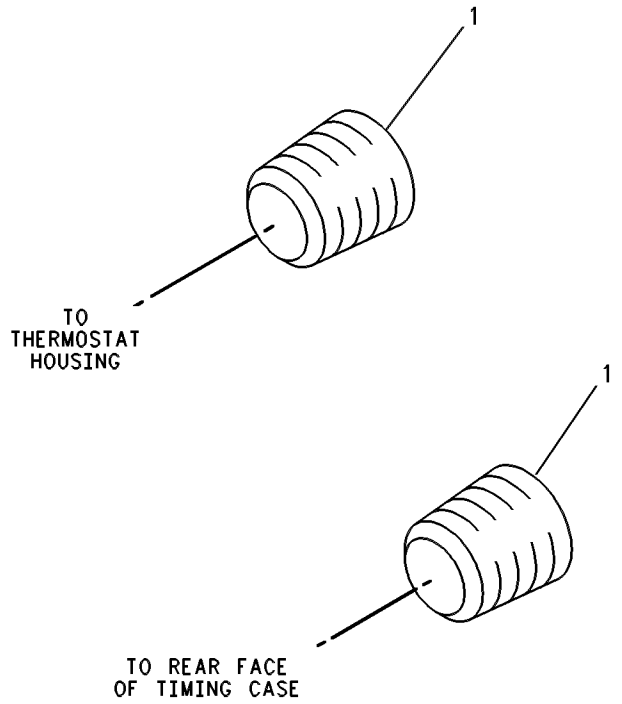

GRAPHIC #1 g00585450

220-6152 PLUG GP-FLYWHEEL HOUSING

S/N: CPT1-UP

PART OF 206-2744 ENGINE AR-PRIMARY

SMCS-1157 **i01725182**

NOTE	REF NO	GRAPHIC REF	PART NUMBER	QTY	PART NAME 1 2 3 4 5 6 (PRODUCT LEVEL)	SEE PAGE
	1	1	**101-2987**	6	PLUG	
	2	1	**102-9460**	1	PLUG	
	3	1	**113-7913**	3	STUD	
	4	1	**171-1411**	4	STUD	
	5	1	**6H-3616**	4	PLUG-PROTECTION	

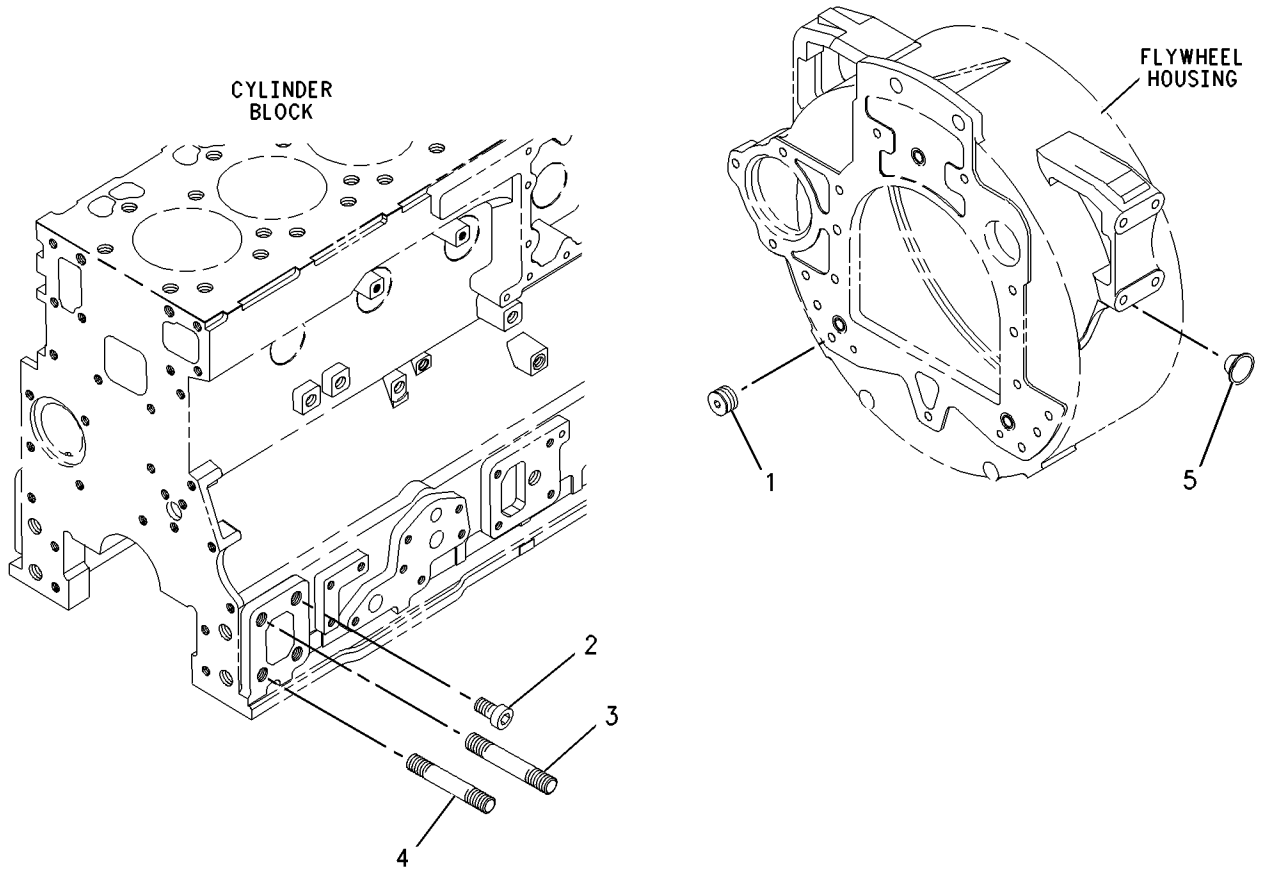

GRAPHIC #1 g00889353

BASIC ENGINE

184-5483 PULLEY GP-CRANKSHAFT

S/N: CPT1-UP

PART OF 206-2744 ENGINE AR-PRIMARY

SMCS-1205 **i01203436**

NOTE	REF NO	GRAPHIC REF	PART NUMBER	QTY	PART NAME 1 2 3 4 5 6 (PRODUCT LEVEL)	SEE PAGE
	1	1	**6I-4714**	1	SPACER	
	2	1	**6I-4716**	1	KEY	
	3	1	**7D-8048**	1	SEAL-O-RING	
	4	1	**7W-4632**	1	LOCK-SPLIT	
	5	1	**7W-4634**	3	BOLT	
	6	1	**7W-4635**	1	BLOCK-THRUST	
	7	1	**102-9941**	8	BOLT	
	8	1	**148-0199**	1	DAMPER	
	9	1	**184-5484**	1	PULLEY	

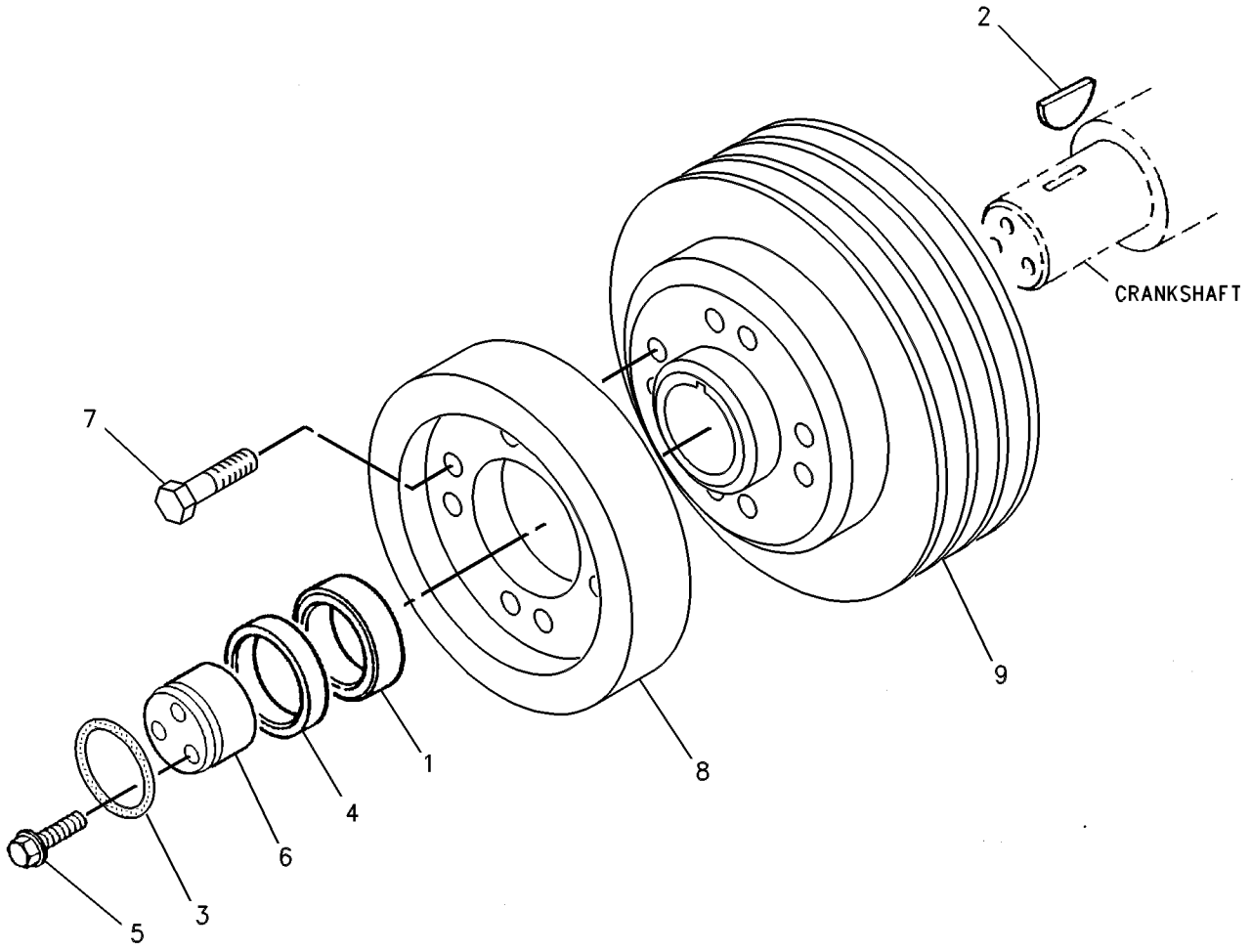

GRAPHIC #1 g00646036

MEMORANDA

146-8956 ROCKER ARM GP

S/N: CPT1-UP

PART OF 216-8619 VALVE MECHANISM GP

SMCS-1123 **i01548270**

NOTE	REF NO	GRAPHIC REF	PART NUMBER	QTY	PART NAME 1 2 3 4 5 6 (PRODUCT LEVEL)	SEE PAGE
	1	1	**6I-1206**	6	BRACKET-SHAFT	
	2	1	**6I-3717**	1	BOLT (NO.10X12.7MM)	
	3	1	**6I-3718**	1	CONNECTION-FEED	
	4	1	**6V-8183**	12	NUT-FULL (3/8-24 THD)	
B	5	1	**195-7004**	2	SHIM	
	6	1	**006-8606**	2	RING-RETAINING	
	7	1	**067-6087**	4	SPRING-SHAFT	
	8	1	**067-6088**	2	SPRING-SHAFT	
	9	1	**185-1546**	8	SCREW	
	10	1	**138-2054**	2	WASHER	
	11	1	**209-0091**	6	LEVER AS (LH)	
					(EACH INCLUDES)	
	12	1	**139-5514**	1	BUSHING-LEVER	
	13	1	**209-0092**	6	LEVER AS (RH)	
					(EACH INCLUDES)	
	14	1	**139-5514**	1	BUSHING-LEVER	
	15	1	**146-8957**	1	SHAFT AS	
	16	1	**067-6083**	2	PLUG-SHAFT END	
	17	1	**129-3493**	1	FERRULE	

B-USE AS REQUIRED

146-8956 ROCKER ARM GP *(contd.)* i01548270

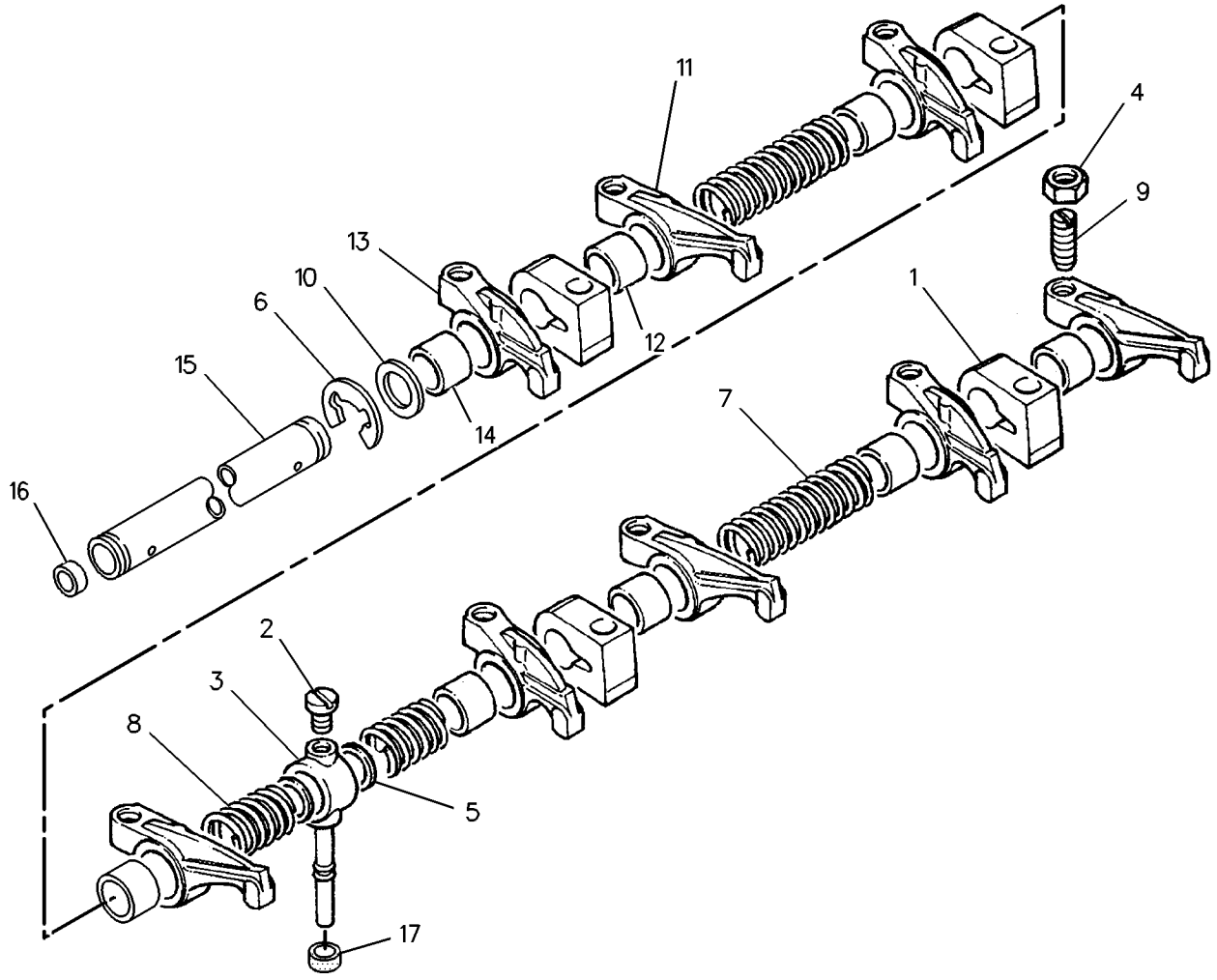

GRAPHIC #1 g00735367

BASIC ENGINE

216-8619 VALVE MECHANISM GP

S/N: CPT1-UP

PART OF 206-2744 ENGINE AR-PRIMARY

SMCS-1102, 1121, 1123 **i01725015**

NOTE	REF NO	GRAPHIC REF	PART NUMBER	QTY	PART NAME 1 2 3 4 5 6 (PRODUCT LEVEL)	SEE PAGE
	1	1	**6I-0235**	6	BOLT (M12X1.75X50MM)	
	2	1	**067-6095**	12	ROD	
	3	1	**138-2053**	12	TAPPET	
Y	4	1	**146-8956**	1	ROCKER ARM GP	42

Y-SEPARATE ILLUSTRATION

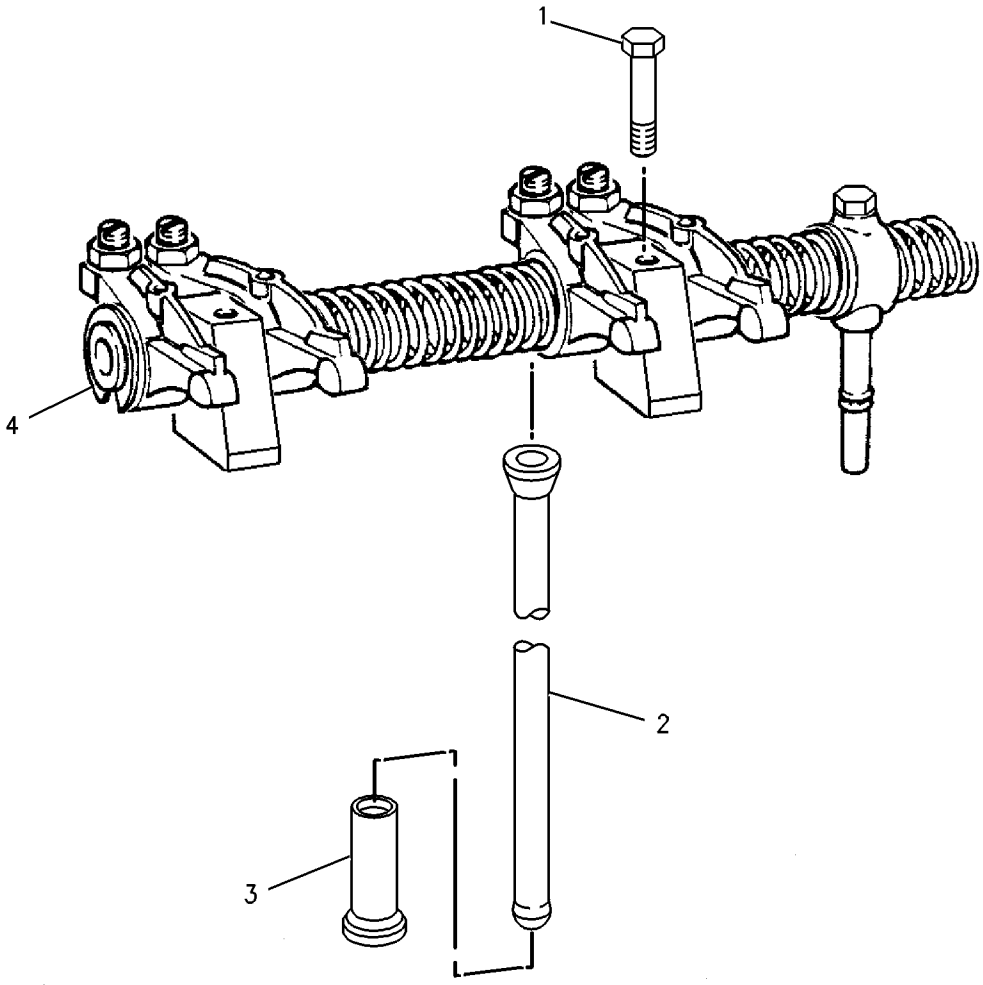

GRAPHIC #1 g00887556

LUBRICATION SYSTEM

221-5290 FILTER GP-ENGINE OIL

S/N: CPT1-UP

PART OF 206-2744 ENGINE AR-PRIMARY

SMCS-1306, 1308 **i01725121**

NOTE	REF NO	GRAPHIC REF	PART NUMBER	QTY	PART NAME 1 2 3 4 5 6 (PRODUCT LEVEL)	SEE PAGE
	1	1	**1R-0739**	1	FILTER AS-ENGINE OIL	

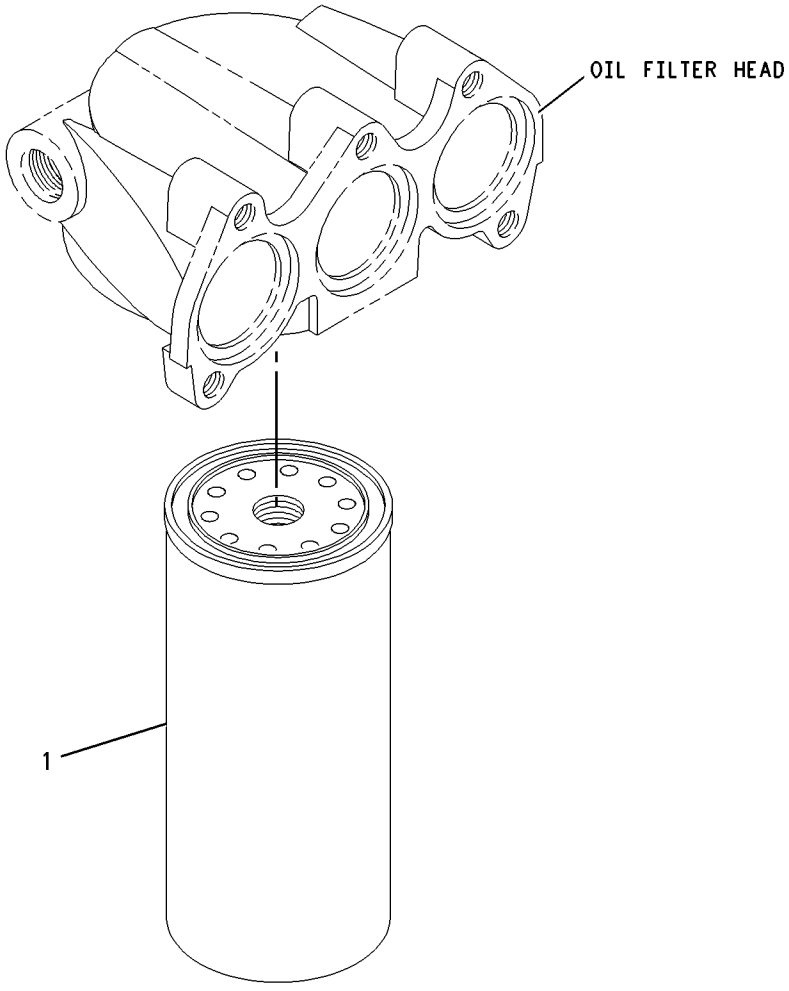

GRAPHIC #1 g00887435

186-2348 GAUGE GP-OIL LEVEL (DIPSTICK)

S/N: RTA1-UP; RBB1-UP

PART OF 216-8963 INSTALLATION AR-ENGINE

SMCS-1326 **i01812063**

NOTE	REF NO	GRAPHIC REF	PART NUMBER	QTY	PART NAME 1 2 3 4 5 6 (PRODUCT LEVEL)	SEE PAGE
	1	1	**6I-1497**	1	SEAL	
	2	1	**166-3988**	1	GAUGE-OIL LEVEL (DIPSTICK)	
	3	1	**166-3990**	1	FILM-INFORMATION	
	4	1	**166-3989**	1	TUBE AS-OIL GAUGE	
	4A	1	**6I-4079**	1	NUT	

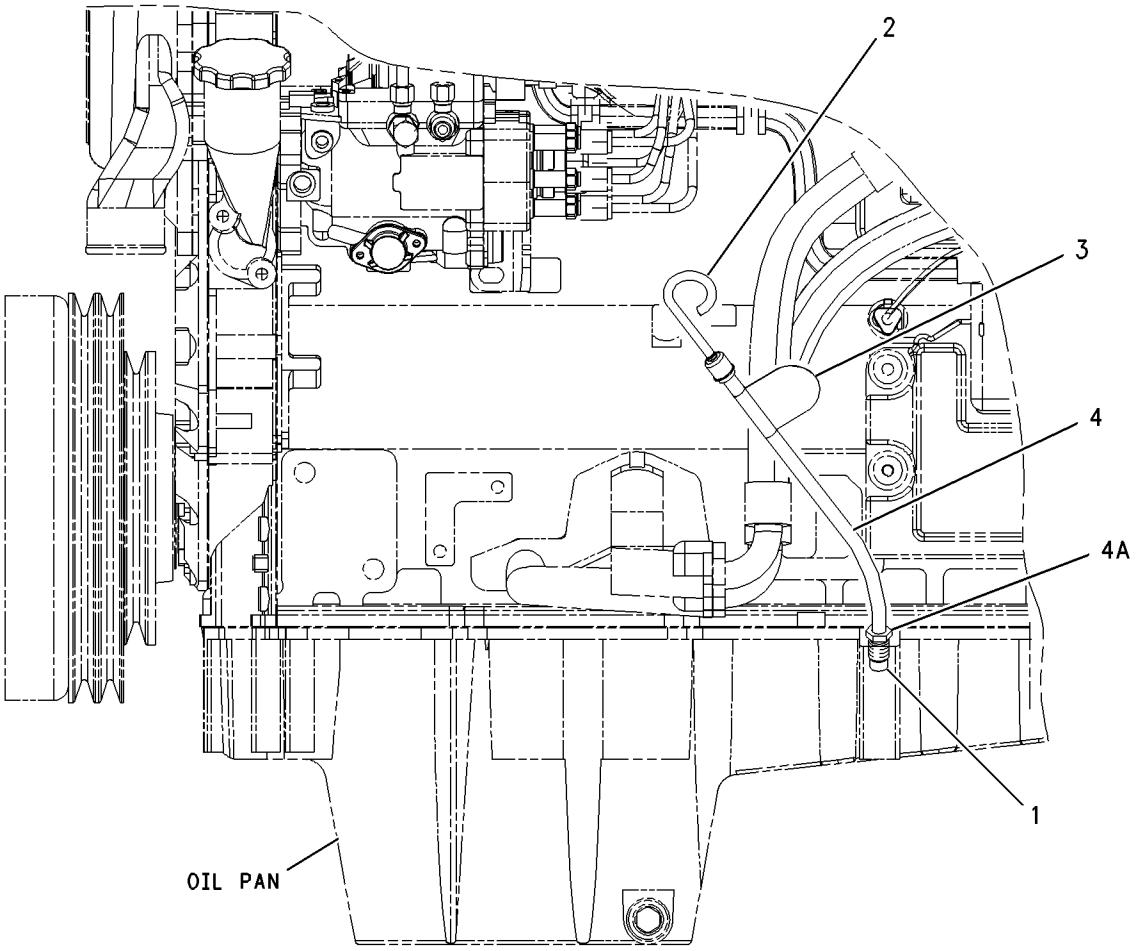

LEFT SIDE VIEW

GRAPHIC #1 g00924573

MEMORANDA

LUBRICATION SYSTEM

220-6148 PUMP GP-ENGINE OIL

S/N: CPT1-UP

PART OF 206-2744 ENGINE AR-PRIMARY

SMCS-1304, 1315 **i01725189**

NOTE	REF NO	GRAPHIC REF	PART NUMBER	QTY	PART NAME 1 2 3 4 5 6 (PRODUCT LEVEL)	SEE PAGE
	1	1	**5C-1796**	1	GASKET	
	2	1	**6I-0260**	6	BOLT (M8X1.25X25MM)	
	3	1	**6I-0291**	1	NUT (M8X1.25)	
	4	1	**6I-4374**	1	BOLT	
	5	1	**067-6933**	1	GASKET	
	6	1	**106-8916**	2	BOLT (M6X16MM)	
	7	1	**112-2370**	1	STUD	
	8	1	**112-7702**	1	HOUSING AS	
	9	1	**6I-0787**	1	RING-RETAINING	
	10	1	**7W-4648**	1	SEAT-SPRING	
	11	1	**7W-4650**	1	SPRING	
	12	1	**7W-4782**	1	PLUNGER	
	13	1	**112-7704**	2	BOLT	
	14	1	**124-3815**	1	BOLT (M8X16X1.25MM)	
	15	1	**183-6318**	1	TUBE AS	
	16	1	**189-5601**	1	SEAL-O-RING	
	17	1	**216-8625**	1	PUMP AS-ENGINE OIL	
	18	1	**220-6151**	1	TUBE-OIL	

220-6148 **PUMP GP-ENGINE OIL** ***(contd.)*** **i01725189**

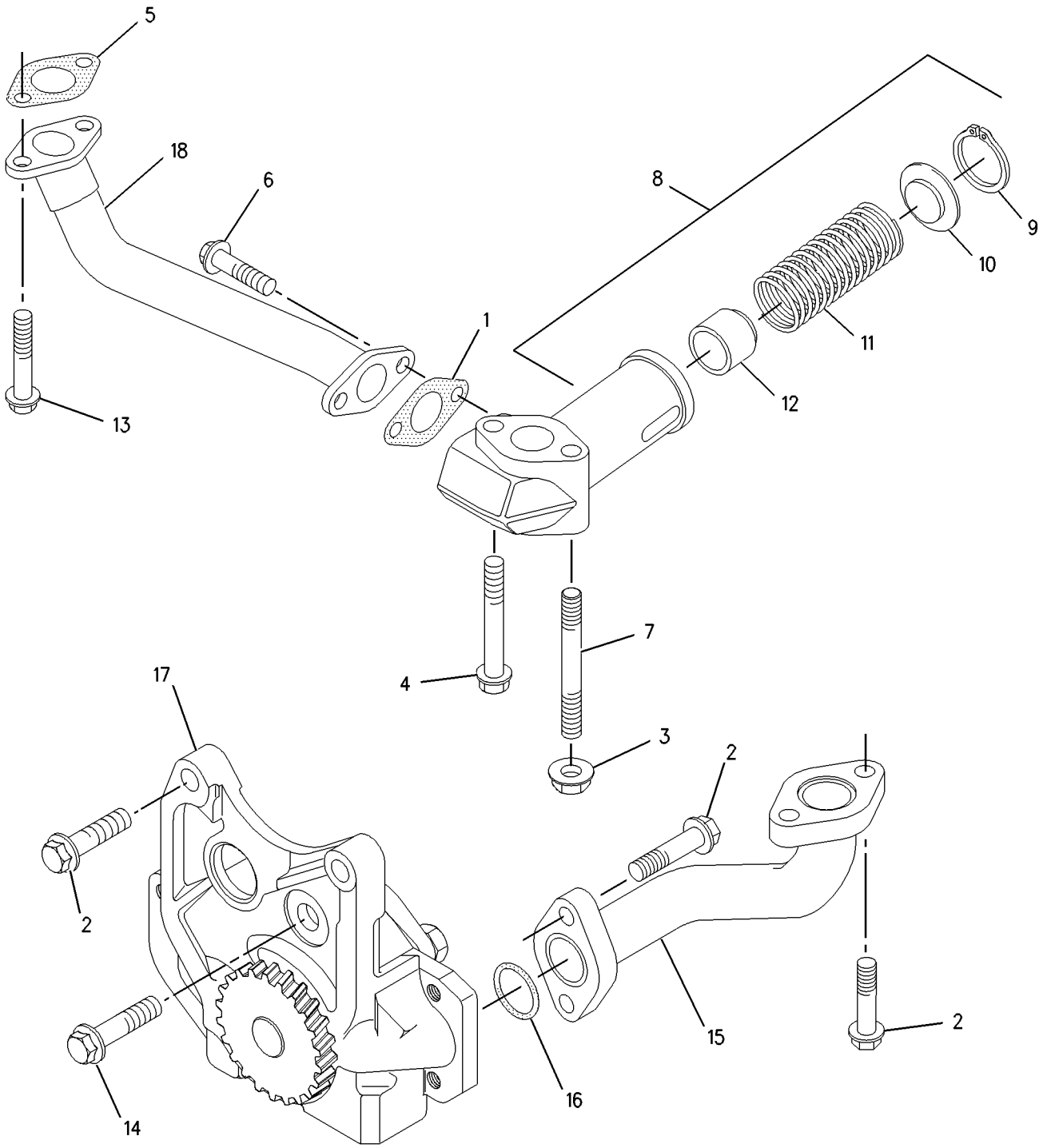

GRAPHIC #1 g00889139

LUBRICATION SYSTEM

140-8911 VALVE GP-FLUID SAMPLING

S/N: RTA1-UP; RBB1-UP

PART OF 216-8963 INSTALLATION AR-ENGINE

SMCS-7542 **i01812053**

NOTE	REF NO	GRAPHIC REF	PART NUMBER	QTY	PART NAME 1 2 3 4 5 6 (PRODUCT LEVEL)	SEE PAGE
	1	1	**6V-7529**	1	ADAPTER	
	2	1	**8C-3445**	1	CAP-DUST (OIL SAMPLING VALVE)	
	3	1	**8C-3446**	1	VALVE GP-FLUID SAMPLING (ENGINE OIL)	
	4	1	**3J-7354**	1	SEAL-O-RING	

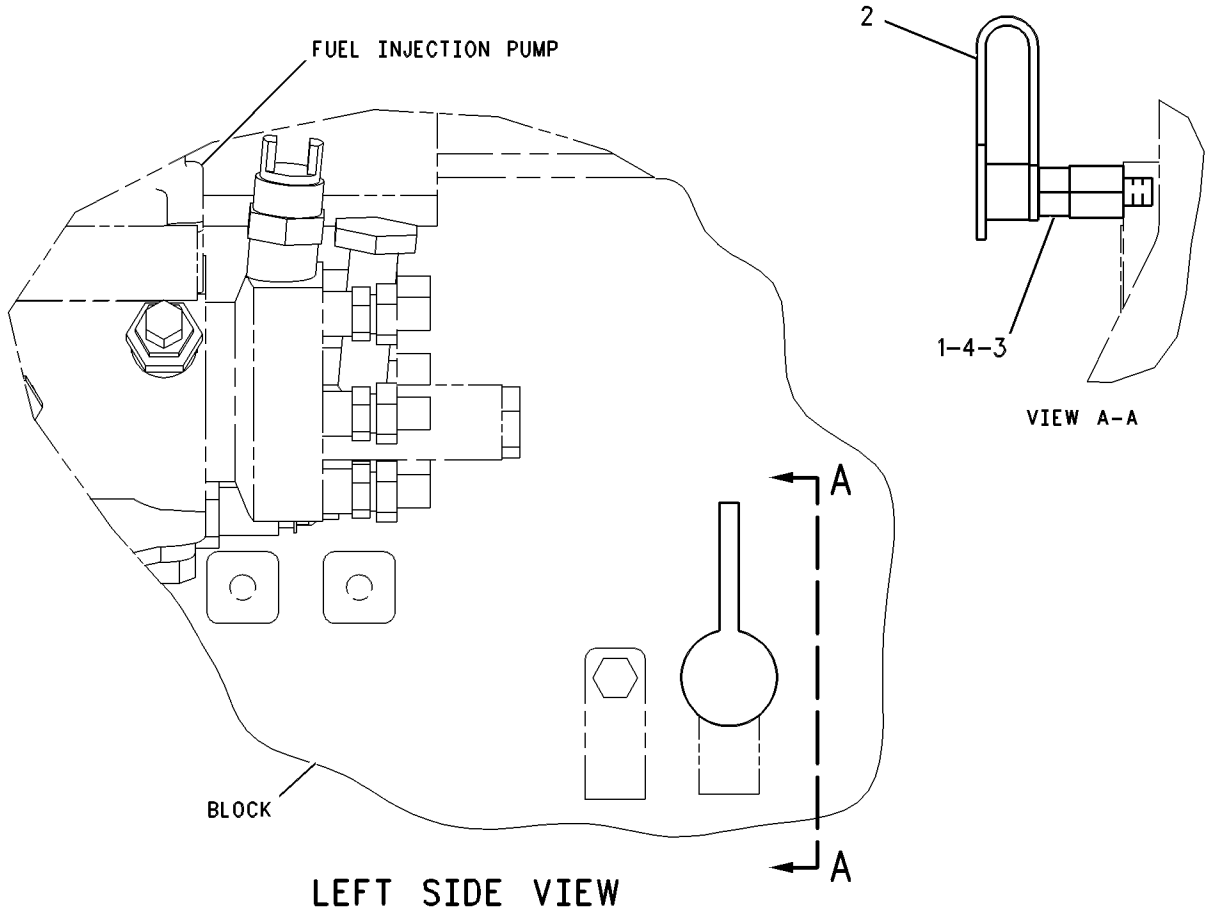

GRAPHIC #1 g00616533

COOLING SYSTEM

216-9740 CONNECTION GP-WATER

S/N: CPT1-UP

PART OF 206-2744 ENGINE AR-PRIMARY

SMCS-1380 **i01855199**

NOTE	REF NO	GRAPHIC REF	PART NUMBER	QTY	PART NAME 1 2 3 4 5 6 (PRODUCT LEVEL)	SEE PAGE
	1	1	**6I-0260**	1	BOLT (M8X1.25X25MM)	
	2	1	**6I-4374**	1	BOLT	
	3	1	**216-9743**	1	CONNECTION AS	
	4	1	**140-7515**	1	SEAL-O-RING (REGULATOR)	
	5	1	**141-6188**	1	SEAL (REGULATOR HOUSING)	
	6	1	**162-0236**	1	RING	
	7	1	**162-0237**	1	PLUG (M8X25MM)	
	8	1	**216-9737**	1	REGULATOR-WATER TEMPERATURE	
	9	1	**171-1078**	1	SPACER	

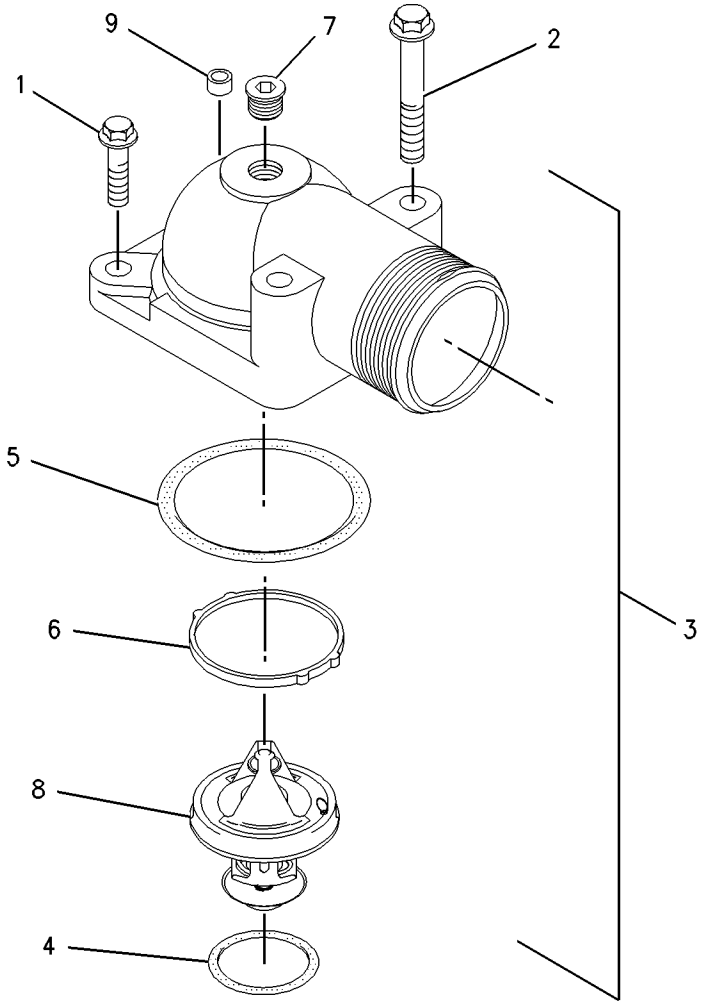

GRAPHIC #1 g00861524

COOLING SYSTEM

221-5285 COOLER GP-FLTR BASE & ENG OIL

S/N: CPT1-UP

PART OF 206-2744 ENGINE AR-PRIMARY

SMCS-1306, 1378 **i01812072**

NOTE	REF NO	GRAPHIC REF	PART NUMBER	QTY	PART NAME 1 2 3 4 5 6 (PRODUCT LEVEL)	SEE PAGE
	1	1	**2M-9780**	1	SEAL-O-RING	
	2	1	**5F-9657**	3	SEAL-O-RING	
M	3	1	**5P-8196**	1	PLUG	
	4	1	**6I-0260**	6	BOLT (M8X1.25X25MM)	
	5	1	**6I-0291**	4	NUT (M8X1.25)	
	6	1	**6I-4786**	1	GASKET	
	7	1	**7C-1493**	1	VALVE AS-BYPASS (OIL FILTER)	
	8	1	**7W-9028**	1	BASE AS-OIL FILTER	
		1	**2P-2537**	1	STUD-HOLLOW	
	9	1	**9L-9188**	1	SPRING-VALVE	
	10	1	**100-4461**	6	BOLT (M10X50MM)	
M	11	1	**101-3895**	3	BOLT (M8X1.25X35MM)	
	12	1	**124-3815**	14	BOLT (M8X16X1.25MM)	
	13	1	**140-8783**	4	BOLT (M10X45MM)	
	14	1	**162-0757**	2	SEAL	
	15	1	**162-0761**	4	FLANGE	
	16	1	**162-9754**	2	SEAL	
	17	1	**175-3915**	1	COOLER-OIL	
	18	1	**216-9637**	1	HOUSING	
	19	1	**216-9638**	1	GASKET	
	20	1	**216-9641**	1	TUBE	
	21	1	**216-9643**	2	GASKET	
	22	1	**216-9645**	1	TUBE	
	23	1	**220-7171**	1	ADAPTER-HOUSING	
	24	1	**221-5278**	1	HEAD AS	
	25	1	**219-1818**	1	CONNECTION	
	26	1	**221-4520**	1	GASKET	
					AVAILABLE REPAIR KIT(S):	
			219-2172	1	KIT-REPAIR	

M-METRIC PART

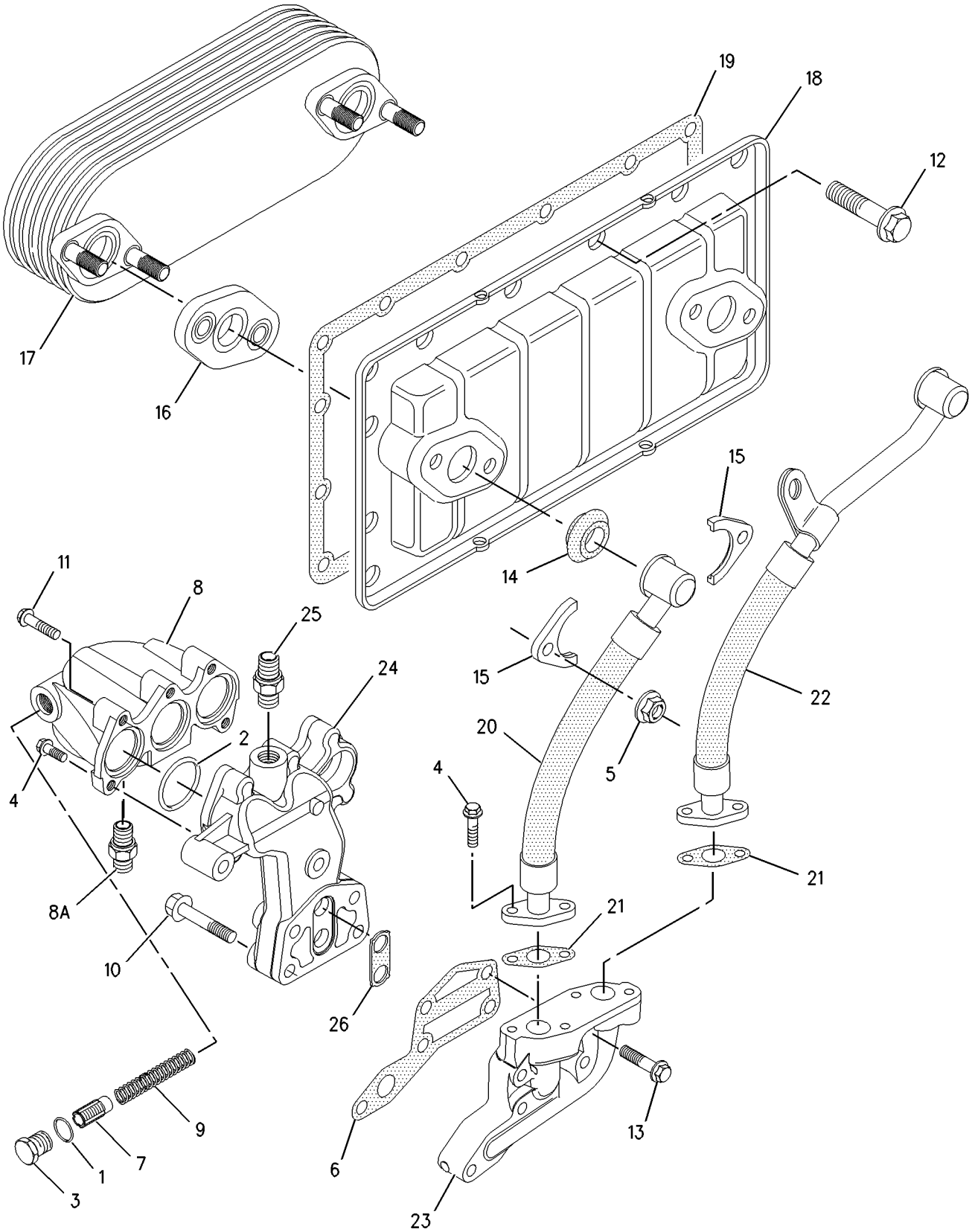

GRAPHIC #1 g00887831

COOLING SYSTEM

185-1045 FAN GP-SUCTION

S/N: RTA1-UP; RBB1-UP

PART OF 216-8963 INSTALLATION AR-ENGINE

SMCS-1356 **i01804764**

NOTE	REF NO	GRAPHIC REF	PART NUMBER	QTY	PART NAME 1 2 3 4 5 6 (PRODUCT LEVEL)	SEE PAGE
	1	1	**185-1046**	1	SPIDER AS-FAN	
M	2	1	**8T-4189**	4	BOLT (M8X1.25X20MM)	
	3	1	**8T-4224**	4	WASHER-HARD (8.8X16X2MM THK)	

M-METRIC PART

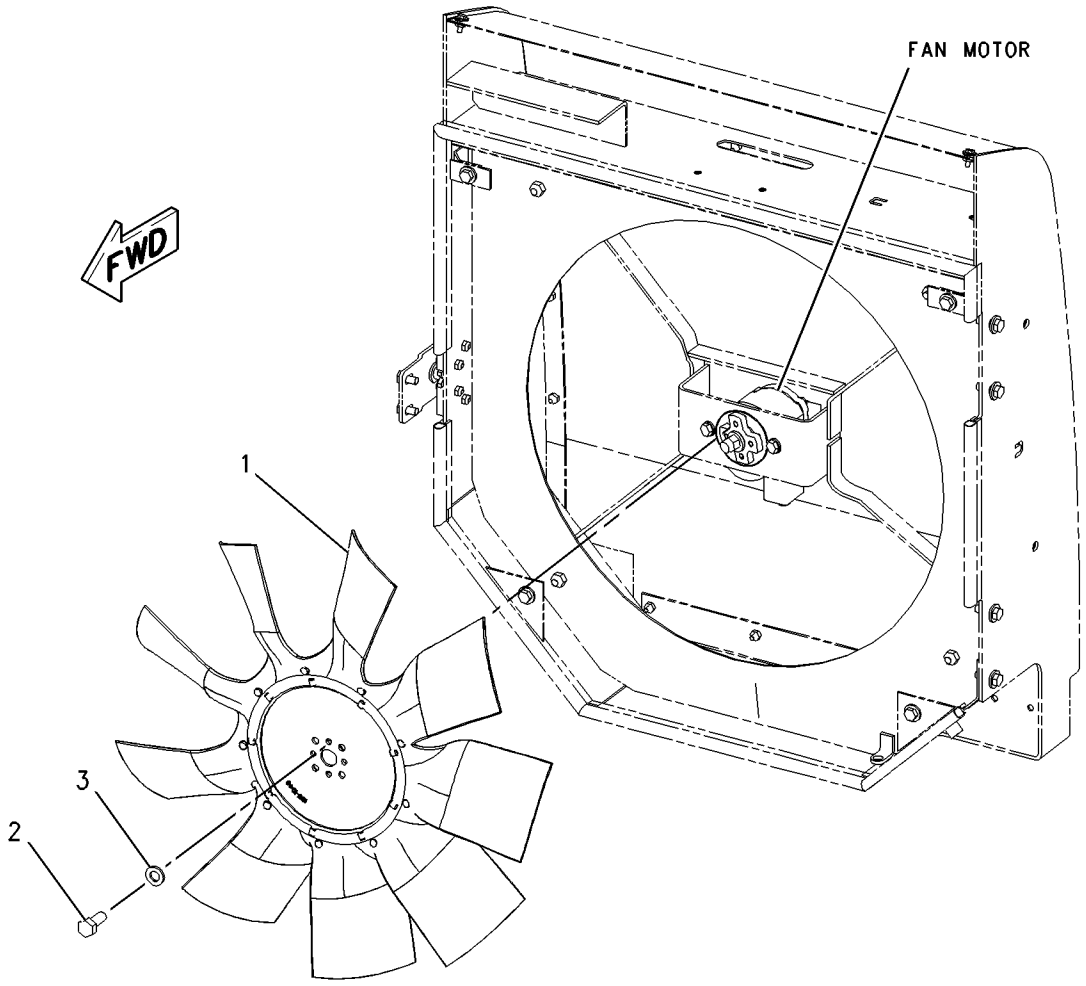

GRAPHIC #1 g00923981

MEMORANDA

COOLING SYSTEM

202-7215 GUARD GP-FAN

S/N: RTA1-UP; RBB1-UP

PART OF 176-5181, 176-5201 CHASSIS AR

SMCS-1360 **i01814754**

NOTE	REF NO	GRAPHIC REF	PART NUMBER	QTY	PART NAME 1 2 3 4 5 6 (PRODUCT LEVEL)	SEE PAGE
	1	1	**5V-8780**	1	KNOB	
	2	1	**8T-4157**	1	STRIKER AS	
		1	**8T-4158**	1	WASHER	
	3	1	**112-5345**	1	LATCH AS-DOOR	
	4	1	**122-6246**	1	PLATE	
	5	1	**174-4246**	1	BRACKET	
	6	1	**202-7216**	1	GUARD AS	
M		1	**6V-9632**	10	NUT-WELD (M6X1 THD)	
		1	**9R-2672**	1	BOSS (M10X20MM)	
	7	1	**202-7857**	1	MOUNT AS	
		1	**5D-9629**	2	ROD	
	8	1	**205-2214**	1	GRILL AS	
M	9	1	**186-0815**	20	BOLT-HEX HEAD (M6X1X20MM)	
	10	1	**186-0817**	20	WASHER-HARD (7X19X2MM THK)	
	11	1	**225-8383**	1	PLATE	
	12	1	**5P-1076**	1	WASHER-HARD (13.5X30X4MM THK)	
M	13	1	**7X-2533**	4	BOLT (M6X1X35MM)	
	14	1	**7X-7729**	12	WASHER (11X25X3MM THK)	
	15	1	**8T-4121**	4	WASHER-HARD (11X21X2.5MM THK)	
M	16	1	**8T-4136**	4	BOLT (M10X1.5X25MM)	
M	17	1	**8T-4137**	8	BOLT (M10X1.5X20MM)	
M	18	1	**8T-4195**	4	BOLT (M10X1.5X30MM)	
	19	1	**8T-4205**	4	WASHER-HARD (7.2X14.5X2MM THK)	
M	20	1	**8T-4244**	1	NUT (M12X1.75 THD)	
D	21	1	**5P-7211**		SEAL (2.7M)	

D-ORDER BY THE METER
M-METRIC PART

202-7215 **GUARD GP-FAN** ***(contd.)*** **i01814754**

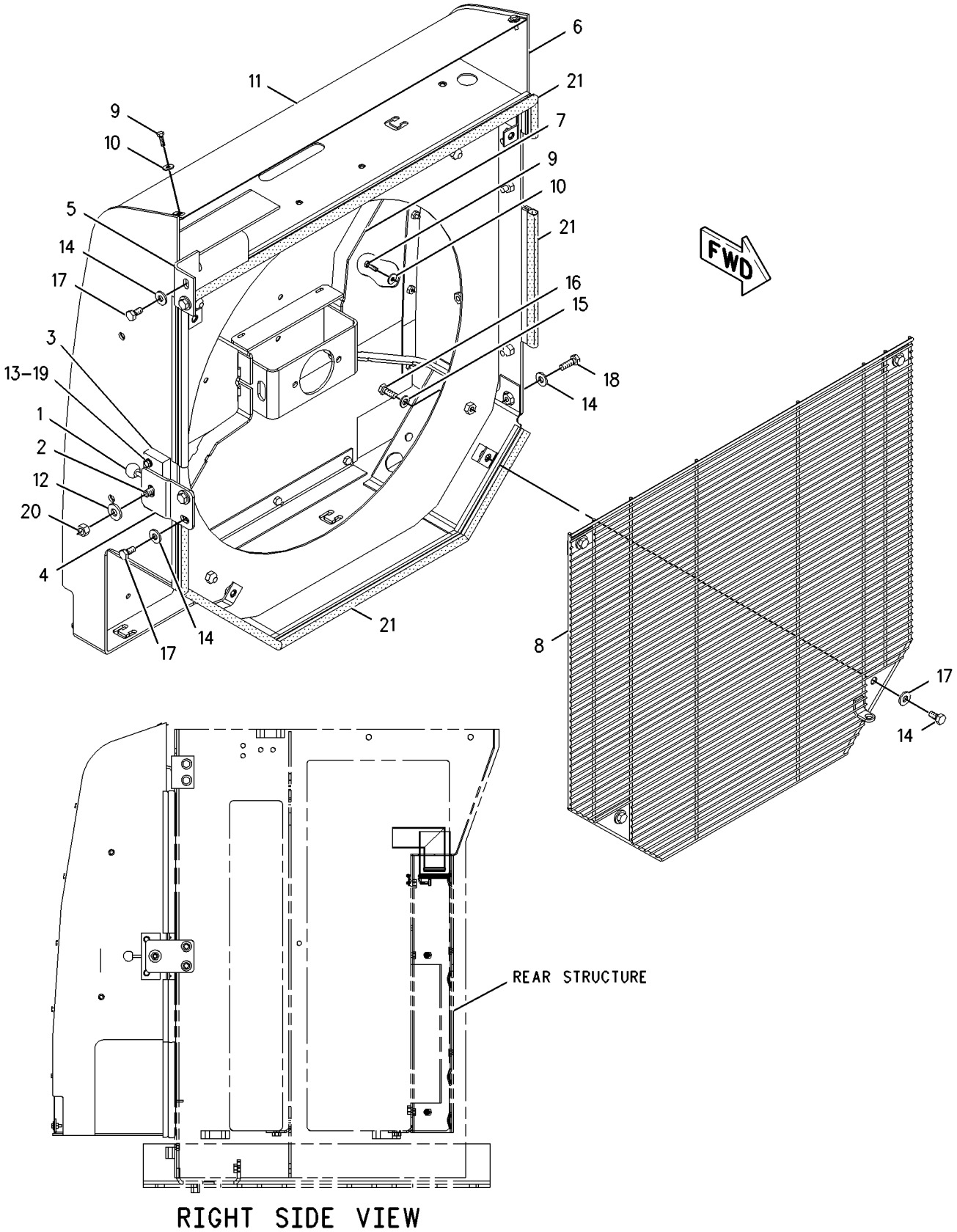

RIGHT SIDE VIEW

GRAPHIC #1 g00916964

COOLING SYSTEM

192-4360 LINES GP-WATER

S/N: RTA1-UP; RBB1-UP
PART OF 203-5945, 203-5946 AXLE AR-OSCILLATING
AN ATTACHMENT

SMCS-1380 **i01819785**

NOTE	REF NO	GRAPHIC REF	PART NUMBER	QTY	PART NAME 1 2 3 4 5 6 (PRODUCT LEVEL)	SEE PAGE
	1	1	**185-1023**	1	HOSE	
	2	1	**185-1024**	1	HOSE	
	3	1	**185-1030**	1	HOSE	
	4	1	**185-1031**	1	HOSE	
	5	1	**214-7458**	1	CLAMP-T'BOLT	
	6	1	**215-4011**	3	CLAMP	
	7	1	**216-6944**	2	CLAMP	
	8	1	**216-6946**	2	CLAMP	

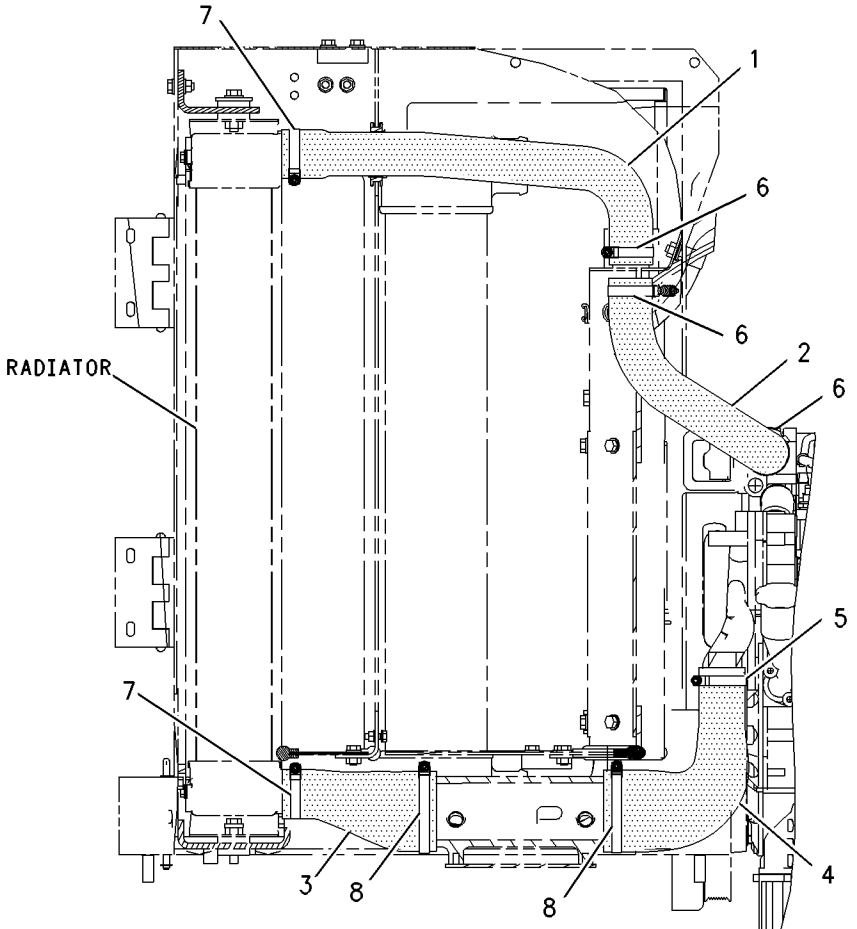

RIGHT SIDE VIEW

GRAPHIC #1 g00914698

192-4367 LINES GP-WATER

S/N: RTA1-UP; RBB1-UP
PART OF 203-5943, 203-5944 AXLE AR-OSCILLATING
AN ATTACHMENT

SMCS-1380 **i01819802**

NOTE	REF NO	GRAPHIC REF	PART NUMBER	QTY	PART NAME 1 2 3 4 5 6 (PRODUCT LEVEL)	SEE PAGE
	1	1	**185-1021**	1	HOSE	
	2	1	**185-1023**	1	HOSE	
	3	1	**185-1024**	1	HOSE	
	4	1	**215-4011**	4	CLAMP	
	5	1	**216-6944**	2	CLAMP	

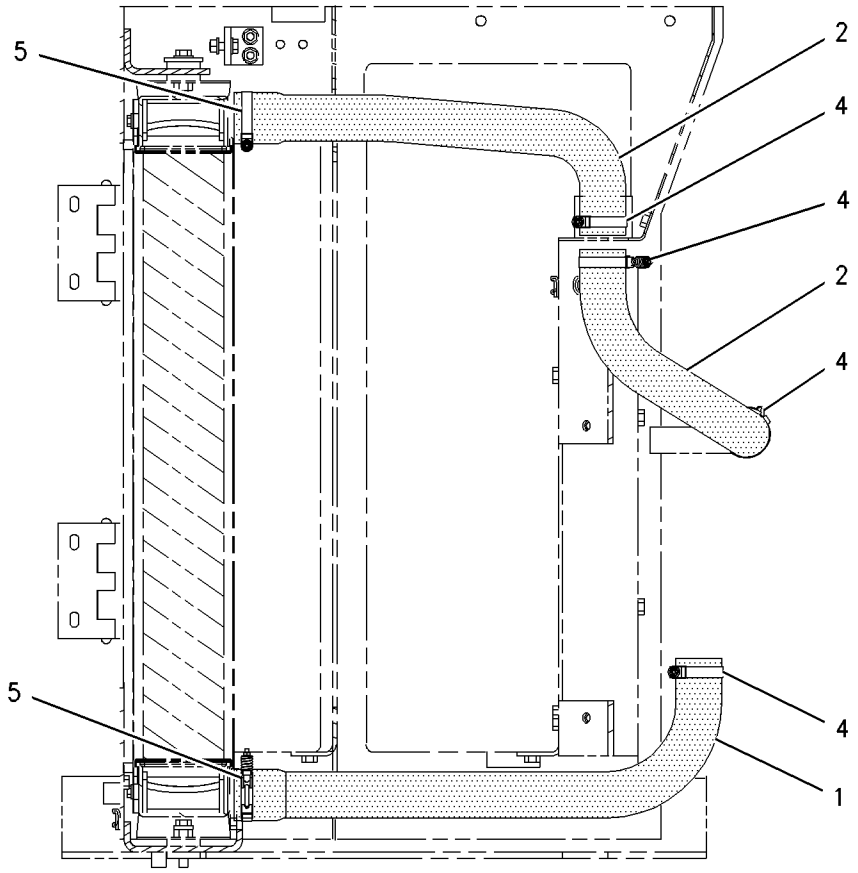

RIGHT SIDE VIEW

GRAPHIC #1 g00930151

COOLING SYSTEM

221-5369 PUMP GP-WATER

S/N: CPT1-UP

PART OF 206-2744 ENGINE AR-PRIMARY

SMCS-1361 **i01812104**

NOTE	REF NO	GRAPHIC REF	PART NUMBER	QTY	PART NAME 1 2 3 4 5 6 (PRODUCT LEVEL)	SEE PAGE
	1	1	**6I-0456**	3	BOLT (M8X1.25X45MM)	
	2	1	**6I-0645**	3	BOLT (M8X1.25X25MM)	
	3	1	**6I-4374**	3	BOLT	
	4	1	**6I-4793**	1	BOLT	
	5	1	**100-3751**	2	BOLT (M8X1.25X65MM)	
	6	1	**101-3771**	1	BOLT	
	7	1	**101-3805**	3	BOLT (M8X1.25X90MM)	
	8	1	**201-8745**	1	GASKET (WATER PUMP)	
	9	1	**140-7505**	1	COVER	
	10	1	**140-7506**	1	GASKET-COVER	
	11	1	**140-7512**	1	KIT-HOSE (WATER) (REGULATOR HOUSING)	
	12	1	**127-8286**	2	CLAMP-HOSE	
	13	1	**171-1076**	1	HOUSING AS (REGULATOR)	
	14	1	**172-4844**	1	SEAL-O-RING	
	15	1	**216-9734**	1	PUMP GP-WATER	
					AVAILABLE REPAIR KIT(S):	
			177-8782	1	KIT-WATER PUMP	

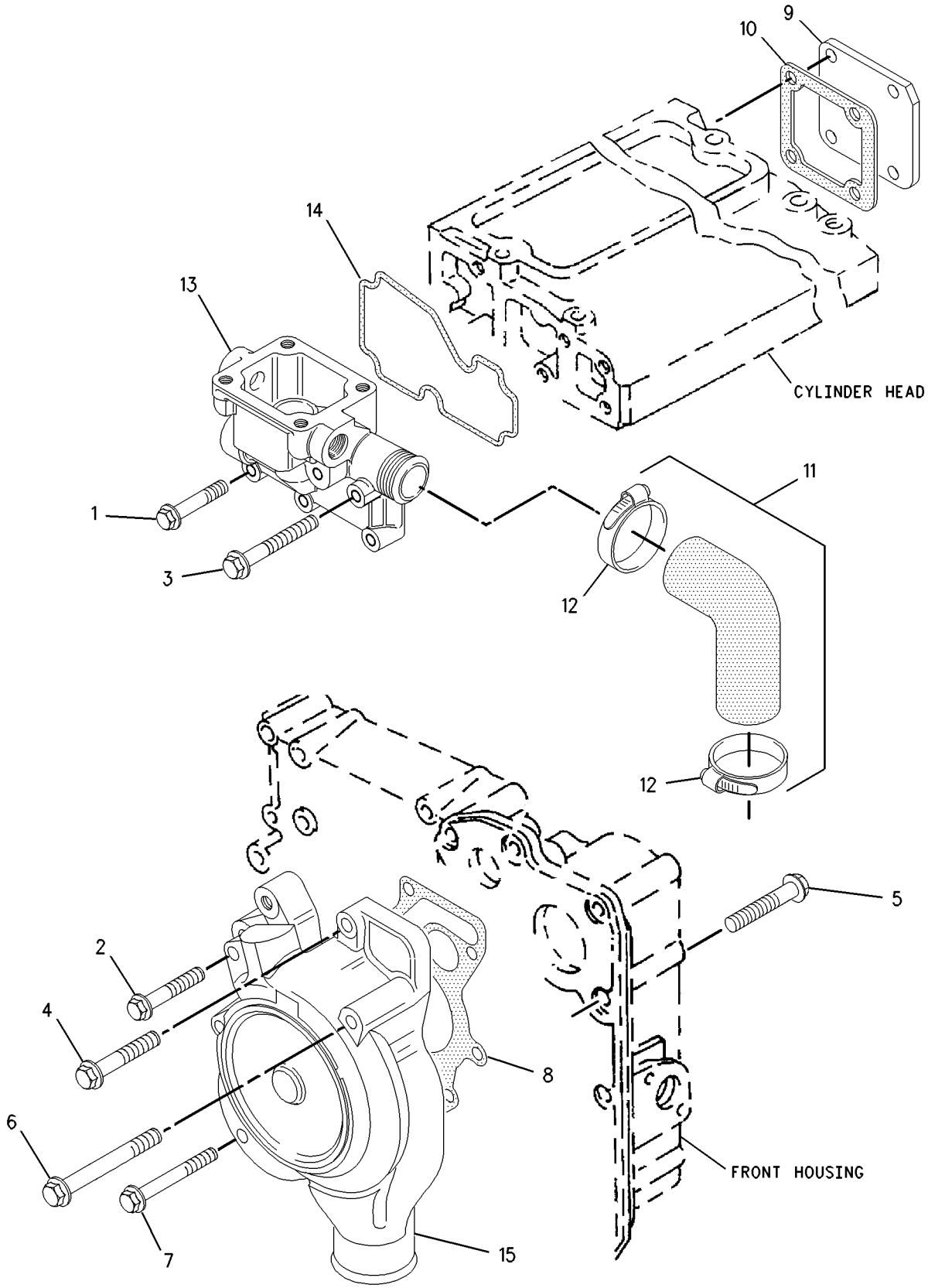

GRAPHIC #1 g00887152

COOLING SYSTEM

185-1015 RADIATOR GP

S/N: RTA1-UP; RBB1-UP

PART OF 216-8963 INSTALLATION AR-ENGINE

SMCS-1353 **i01855167**

NOTE	REF NO	GRAPHIC REF	PART NUMBER	QTY	PART NAME 1 2 3 4 5 6 (PRODUCT LEVEL)	SEE PAGE
E	1	1	**8C-3681**		HOSE (108CM)	
E	1A	3	**8C-3681**		HOSE (178CM)	
E	2	2	**8I-1362**		HOSE (160CM)	
E	3	3	**9X-2133**		HOSE (107CM)	
D	4	1	**5P-5755**		SEAL (.9M)	
D	4A	3	**5P-5755**		SEAL (2.4M)	
D	4B	3	**5P-5755**		SEAL (2.3M)	
D	4C	3	**5P-5755**		SEAL (3.1M)	
D	5	3	**5P-7211**		SEAL (.9M)	
D	5A	3	**5P-7211**		SEAL (.07M)	
D	5B	3	**5P-7211**		SEAL (.3M)	
D	5C	3	**5P-7211**		SEAL (.8M)	
	6	3	**5D-1026**	2	CLAMP-HOSE	
	7	2	**6N-6984**	4	MOUNT	
	8	1	**7K-1181**	1	STRAP-CABLE	
	9	2	**7T-8332**	4	MOUNTING	
	10	2	**9M-7958**	2	CLAMP-HOSE	
	11	1	**009-3101**	1	RING-RETAINING	
	12	3	**127-5447**	6	SPACER	
	13	1,2	*185-1016*	1	RADIATOR GP	
	13A	2	**185-1027**	4	BRACKET AS	
	13B	2	**225-4287**	1	VALVE GP-RADIATOR DRAIN	
	13C	2	**7X-3393**	8	WASHER-HARD	
M	13D	2	**8T-4189**	8	BOLT (M8X1.25X20MM)	
M	13E	2	**8T-4200**	12	BOLT (M8X1.25X16MM)	
	13F	2	**8T-4224**	12	WASHER-HARD (8.8X16X2MM THK)	
	14	1	**185-1017**	1	AFTERCOOLER AS	
	15	2	**185-1036**	1	BRACKET	
	16	2	**185-1049**	1	PLATE	
	17	1	**191-9177**	1	GUARD AS	
	17A	1	**7W-0815**	1	SPACER	
		1	**092-1136**	2	BAR	
	17B	2	**140-9312**	2	HINGE AS	
	17C	1	**7T-1099**	6	LINK	
M	17D	2	**8T-3612**	1	NUT-WELD (M8X1.25 THD)	
	17E	1	**9C-6809**	5	BLOCK	
	17F	1	**9R-2672**	2	BOSS (M10X20MM)	
	18	2	**191-9182**	1	PLATE	
	19	3	**191-9184**	1	PLATE	
	20	3	**191-9192**	1	PLATE	
	21	1	**215-8978**	1	ROD	
	22	3	*227-0104*	1	TANK GP-COOLANT	
	22A	3	**227-4376**	1	CAP AS-RADIATOR	
	23	3	**229-8672**	1	SEAL	
	24	3	**229-9286**	1	SEAL	
	25	2	**230-7246**	1	PLATE AS	
M		2	**8T-3490**	1	NUT-WELD (M10X1.5 THD)	
	26	3	**053-0189**	1	GROMMET	
	27	3	**1B-3057**	2	CLIP	
	28	2	**3K-9520**	1	GROMMET	
	29	3	**4D-7388**	2	CLIP	
M	30	3	**5C-7261**	4	NUT (M8X1.25 THD)	
	31	3	**5P-4116**	8	WASHER-HARD (8.8X20.5X2MM THK)	
	32	3	**5P-6887**	1	GROMMET	
	33	2	**8F-6437**	2	WASHER (13.5X50.8X4.76MM THK)	
	34	1,2,3	**8T-4121**	29	WASHER-HARD (11X21X2.5MM THK)	

185-1015 **RADIATOR GP** ***(contd.)*** **i01855167**

NOTE	REF NO	GRAPHIC REF	PART NUMBER	QTY	PART NAME 1 2 3 4 5 6 (PRODUCT LEVEL)	SEE PAGE
	35	3	**8T-4122**	4	WASHER-HARD (17X32X3.5MM THK)	
M	36	1,2	**8T-4133**	10	NUT (M10X1.5 THD)	
M	37	2,3	**8T-4137**	19	BOLT (M10X1.5X20MM)	
M	38	2	**8T-4182**	4	BOLT (M10X1.5X45MM)	
M	39	3	**8T-4189**	4	BOLT (M8X1.25X20MM)	
M	40	3	**8T-4193**	4	BOLT (M16X2X50MM)	
M	41	2	**8T-4194**	2	BOLT (M12X1.75X50MM)	
M	42	1,2,3	**8T-4195**	6	BOLT (M10X1.5X30MM)	
M	43	1	**8T-4200**	1	BOLT (M8X1.25X16MM)	
	44	2,3	**8T-4222**	10	WASHER-PLATED (11X32X2.5MM THK)	
	45	2	**8T-4223**	2	WASHER-HARD (13.5X25.5X3MM THK)	
	46	1,3	**8T-4224**	5	WASHER-HARD (8.8X16X2MM THK)	
	47	2	**8T-4226**	4	WASHER-PLATED (10.5X45X3MM THK)	
M	48	3	**8T-4908**	4	BOLT (M8X1.25X25MM)	
	49	1	**9M-8406**	1	CLIP	
M	50	1	**9X-8482**	2	SETSCREW-SOCKET (M12X1.75X70MM)	

D-ORDER BY THE METER
E-ORDER BY THE CENTIMETER
M-METRIC PART

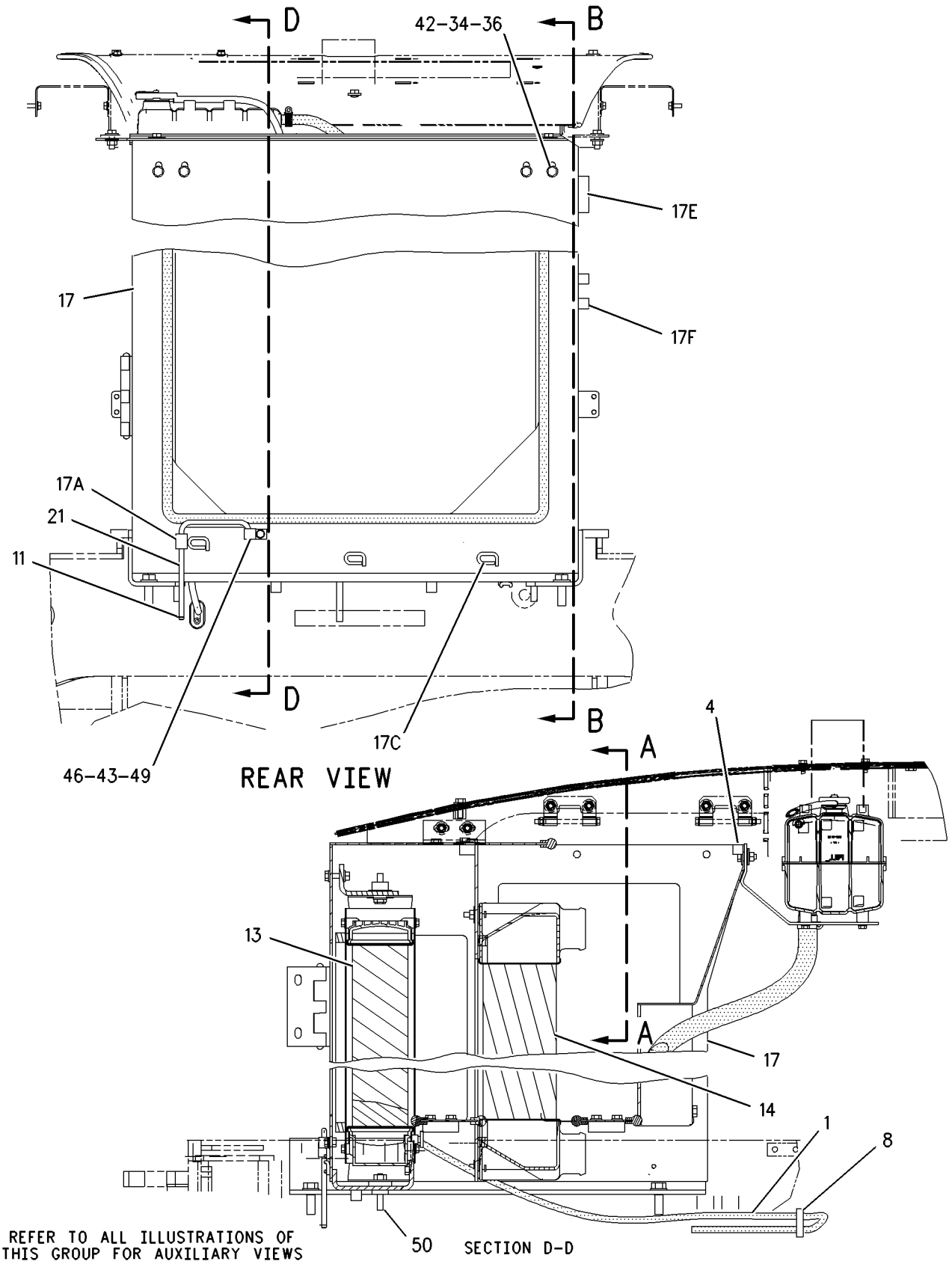

REFER TO ALL ILLUSTRATIONS OF THIS GROUP FOR AUXILIARY VIEWS

GRAPHIC #1

g00946584

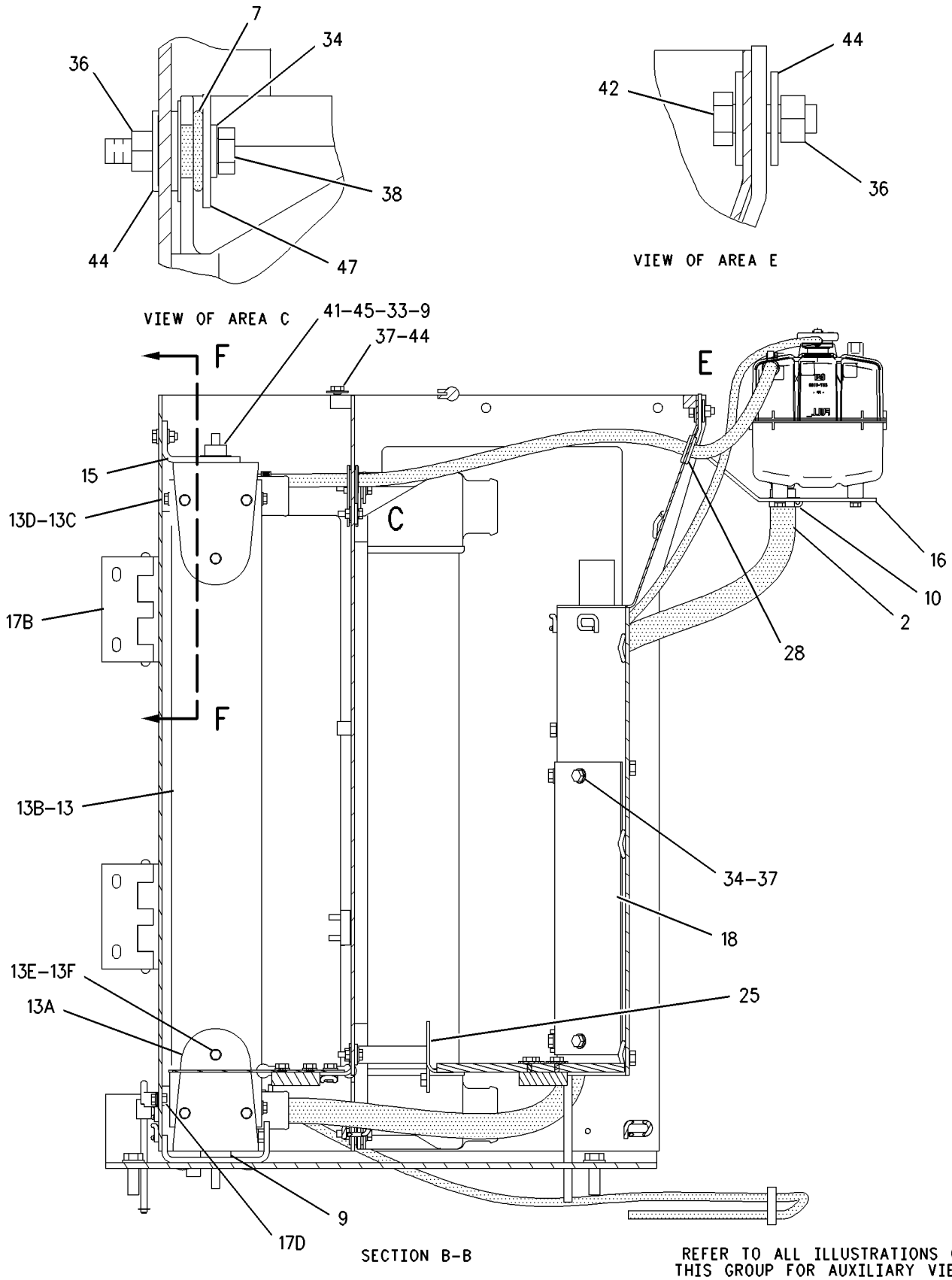

GRAPHIC #2

g00946585

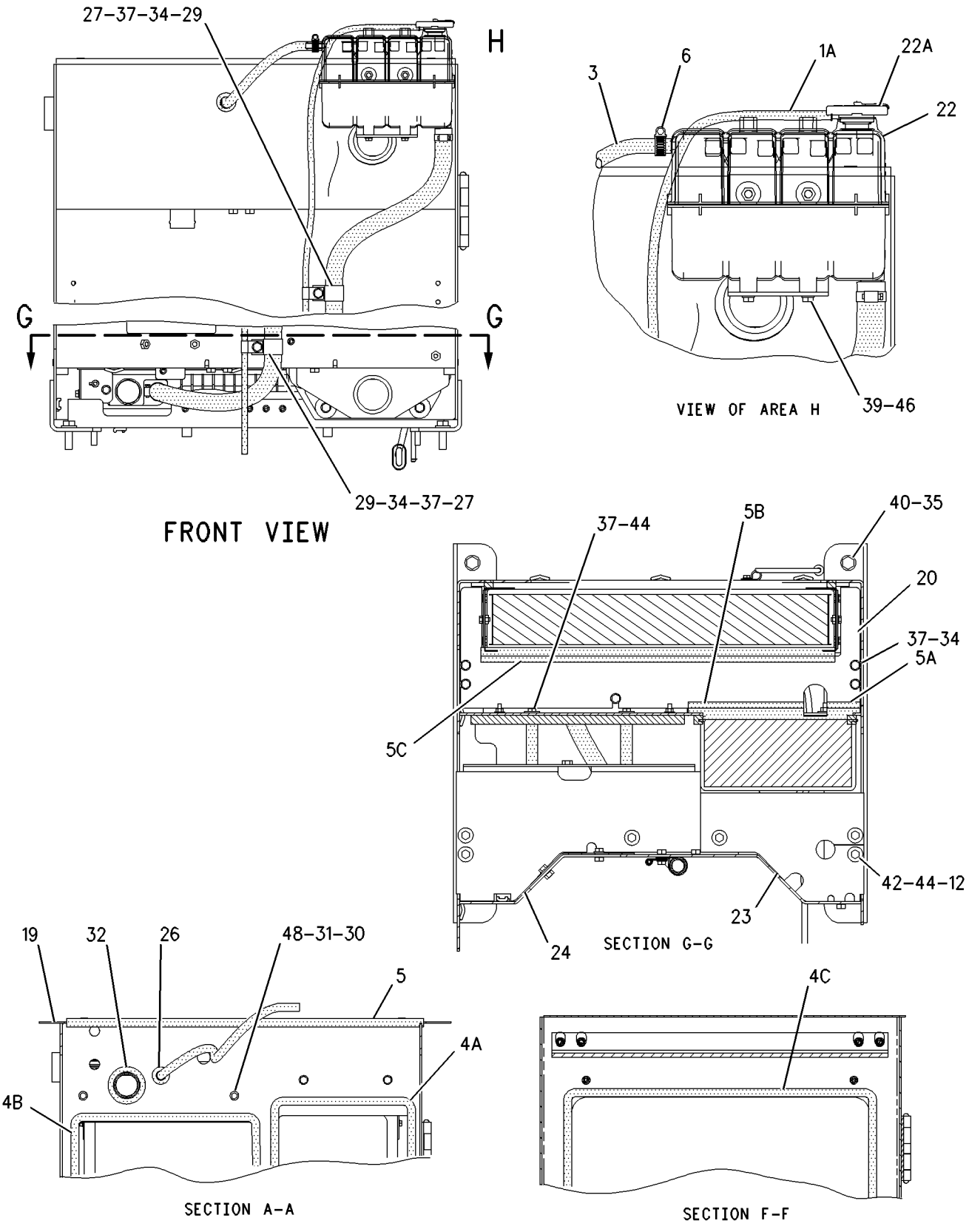

GRAPHIC #3 g00946586

AIR INLET AND EXHAUST SYSTEM

159-3260 AIR CLEANER GP

S/N: RTA1-UP; RBB1-UP
PART OF 204-4329 AIR CLEANER GP
AN ATTACHMENT

SMCS-1051, 1054 **i01820722**

NOTE	REF NO	GRAPHIC REF	PART NUMBER	QTY	PART NAME 1 2 3 4 5 6 (PRODUCT LEVEL)	SEE PAGE
	1	1	**159-6003**	1	COVER AS	
	2	1	**152-7217**	1	FILTER ELEMENT AS-AIR (PRIMARY)	
	3	1	**152-7219**	1	FILTER ELEMENT AS-AIR (SECONDARY)	

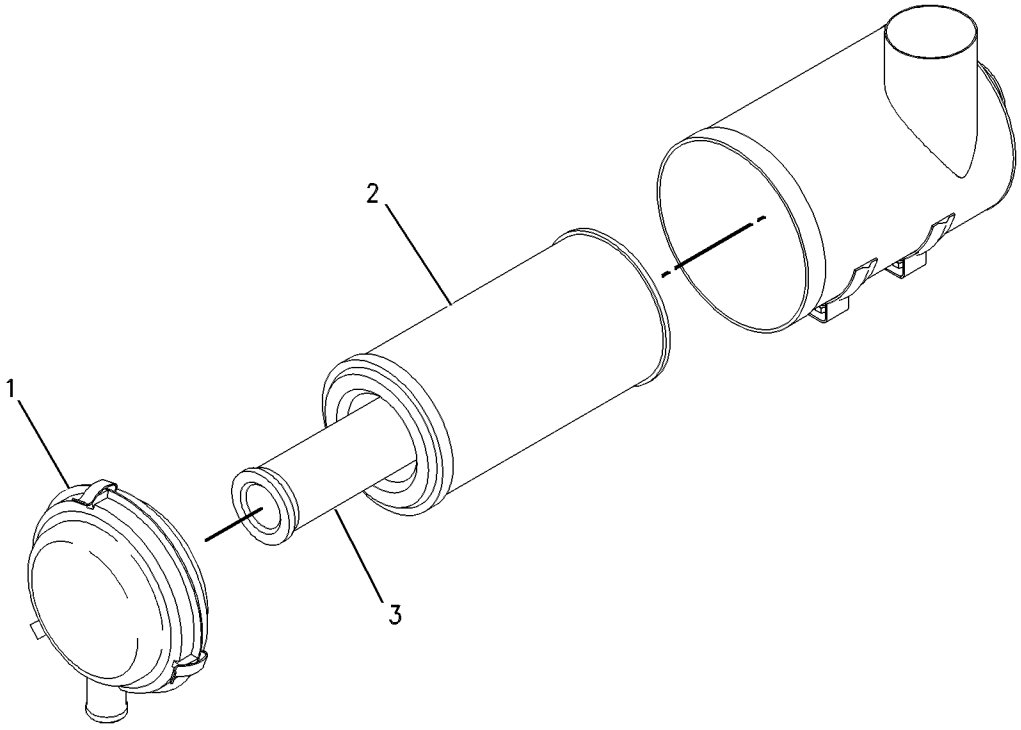

GRAPHIC #1 g00616885

AIR INLET AND EXHAUST SYSTEM

204-4329 AIR CLEANER GP

S/N: RTA1-UP; RBB1-UP
AN ATTACHMENT

SMCS-1051, 1054 **i01820109**

NOTE	REF NO	GRAPHIC REF	PART NUMBER	QTY	PART NAME 1 2 3 4 5 6 (PRODUCT LEVEL)	SEE PAGE
BD	1	1	**6V-1363**		HOSE (1M)	
	2	1	**4B-4863**	4	WASHER (4.7X11X1.2MM THK)	
M	3	1	**8C-4982**	2	BOLT-SOCKET HEAD (M4X0.7X20 MM)	
Y	4	1	**121-7746**	1	PRECLEANER GP	73
	5	1	**123-0275**	1	FITTING	
Y	6	1	**159-3260**	1	AIR CLEANER GP	67
	7	1	**159-3261**	1	HOSE	
	8	1	*218-2792*	1	INDICATOR GP-FILTER CHANGE	
		1	**187-2868**	1	INDICATOR AS (FILTER CHANGE)	
		1	**205-1627**	1	BRACKET	
M	9	1	**5C-8312**	2	NUT (M4X0.7 THD)	
	10	1	**5P-0599**	2	CLAMP	
	11	1	**7D-1728**	2	CLIP	
	12	1	**7X-7729**	4	WASHER (11X25X3MM THK)	
M	13	1	**8T-4136**	4	BOLT (M10X1.5X25MM)	

B-USE AS REQUIRED
D-ORDER BY THE METER
M-METRIC PART
Y-SEPARATE ILLUSTRATION

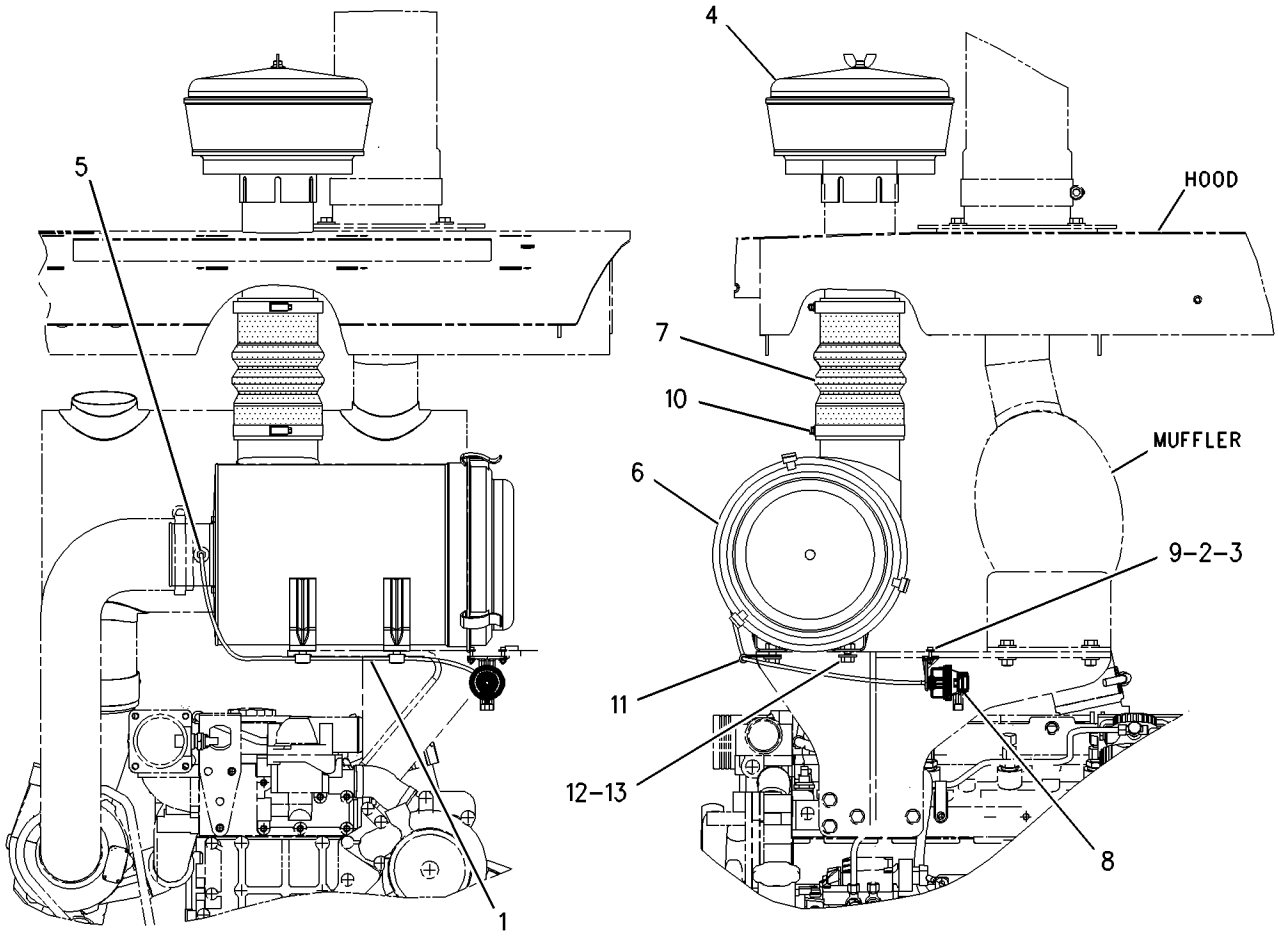

GRAPHIC #1 g00926791

AIR INLET AND EXHAUST SYSTEM

217-0594 ELBOW GP-AIR INLET

S/N: CPT1-UP

PART OF 206-2744 ENGINE AR-PRIMARY

SMCS-1087 **i01725032**

NOTE	REF NO	GRAPHIC REF	PART NUMBER	QTY	PART NAME 1 2 3 4 5 6 (PRODUCT LEVEL)	SEE PAGE
	1	1	**6I-0260**	4	BOLT (M8X1.25X25MM)	
	2	1	**217-0595**	1	CONNECTOR	
	3	1	**217-0596**	1	GASKET	

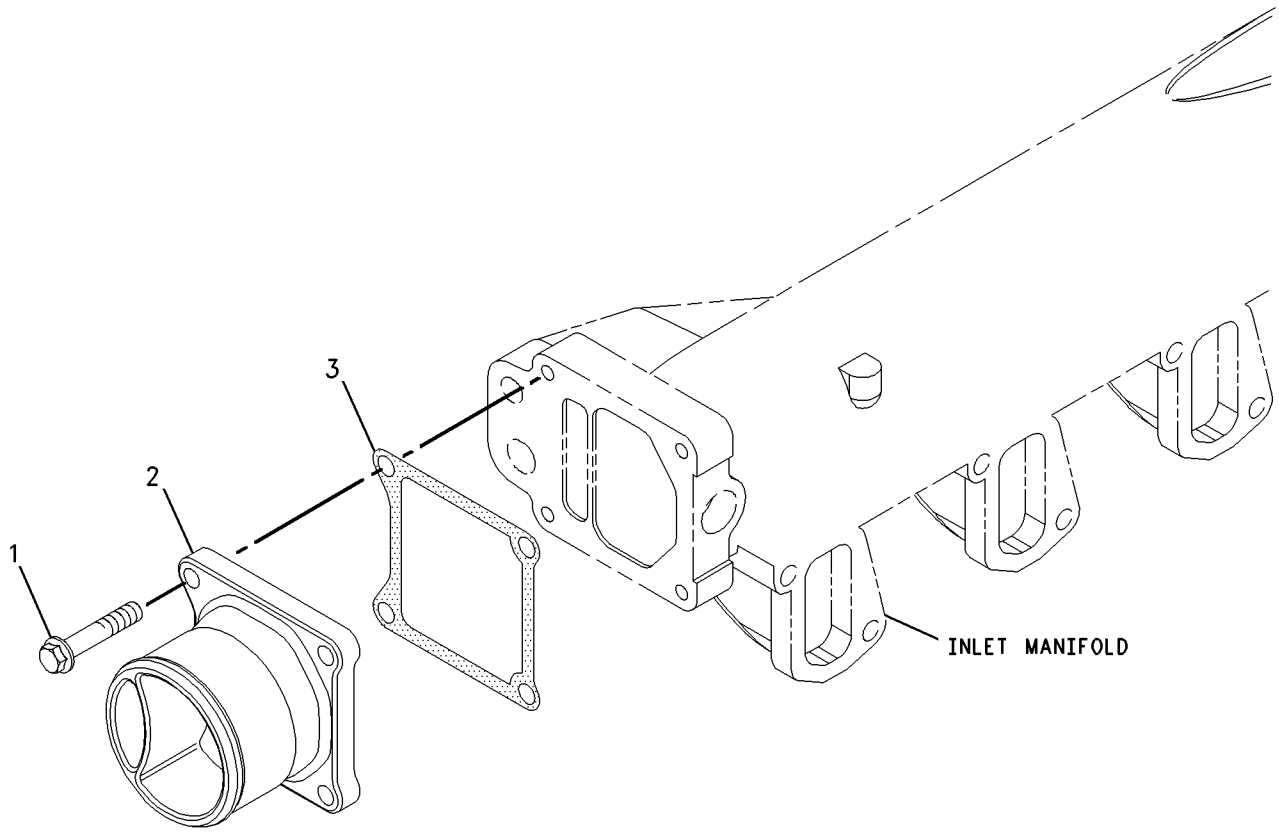

GRAPHIC #1 g00859961

AIR INLET AND EXHAUST SYSTEM

180-9740 EXTENSION GP-EXHAUST

S/N: RTA1-UP; RBB1-UP

PART OF 176-5181, 176-5201 CHASSIS AR

SMCS-1061 **i01813809**

NOTE	REF NO	GRAPHIC REF	PART NUMBER	QTY	PART NAME 1 2 3 4 5 6 (PRODUCT LEVEL)	SEE PAGE
	1	1	**199-4284**	1	SUPPORT AS	
	2	1	**199-4297**	1	PLATE	
	3	1	**199-5117**	1	PIPE AS	
		1	**7E-1397**	1	CLAMP-BENT BOLT	
	4	1	**7X-7729**	4	WASHER (11X25X3MM THK)	
M	5	1	**8T-4195**	4	BOLT (M10X1.5X30MM)	

M-METRIC PART

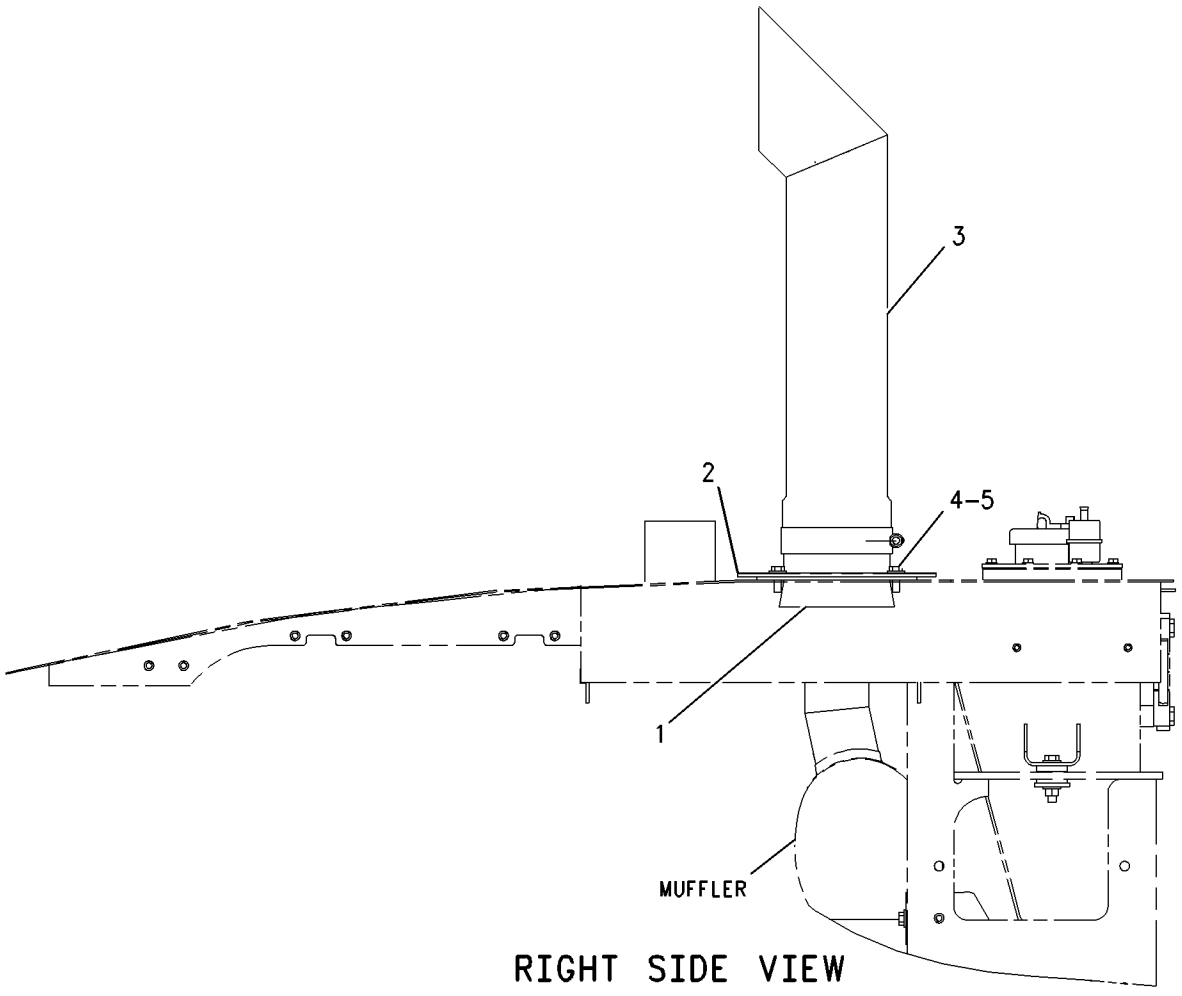

RIGHT SIDE VIEW

GRAPHIC #1 g00915196

AIR INLET AND EXHAUST SYSTEM

186-2347 LINES GP-AIR

S/N: RTA1-UP; RBB1-UP
PART OF 210-1690 ENGINE AR

SMCS-1071 **i01721385**

NOTE	REF NO	GRAPHIC REF	PART NUMBER	QTY	PART NAME 1 2 3 4 5 6 (PRODUCT LEVEL)	SEE PAGE
	1	1	**192-4352**	1	HOSE	
	2	1	**200-0831**	1	HOSE AS	
	3	1	**208-6055**	1	CLAMP	
	4	1	**209-4579**	2	CLAMP	
	5	1	**215-3112**	1	LINES GP-AIR	
	6	1	**109-5351**	1	HOSE-HUMP	
	7	1	**159-2829**	1	HOSE	
	8	1	**209-4578**	1	CLAMP	
	9	1	**214-5514**	1	GROMMET	
	10	1	**214-5515**	1	TUBE	
	11	1	**215-4012**	1	CLAMP	
	12	1	**216-4983**	2	CLAMP	
	13	1	**216-6947**	1	CLAMP	

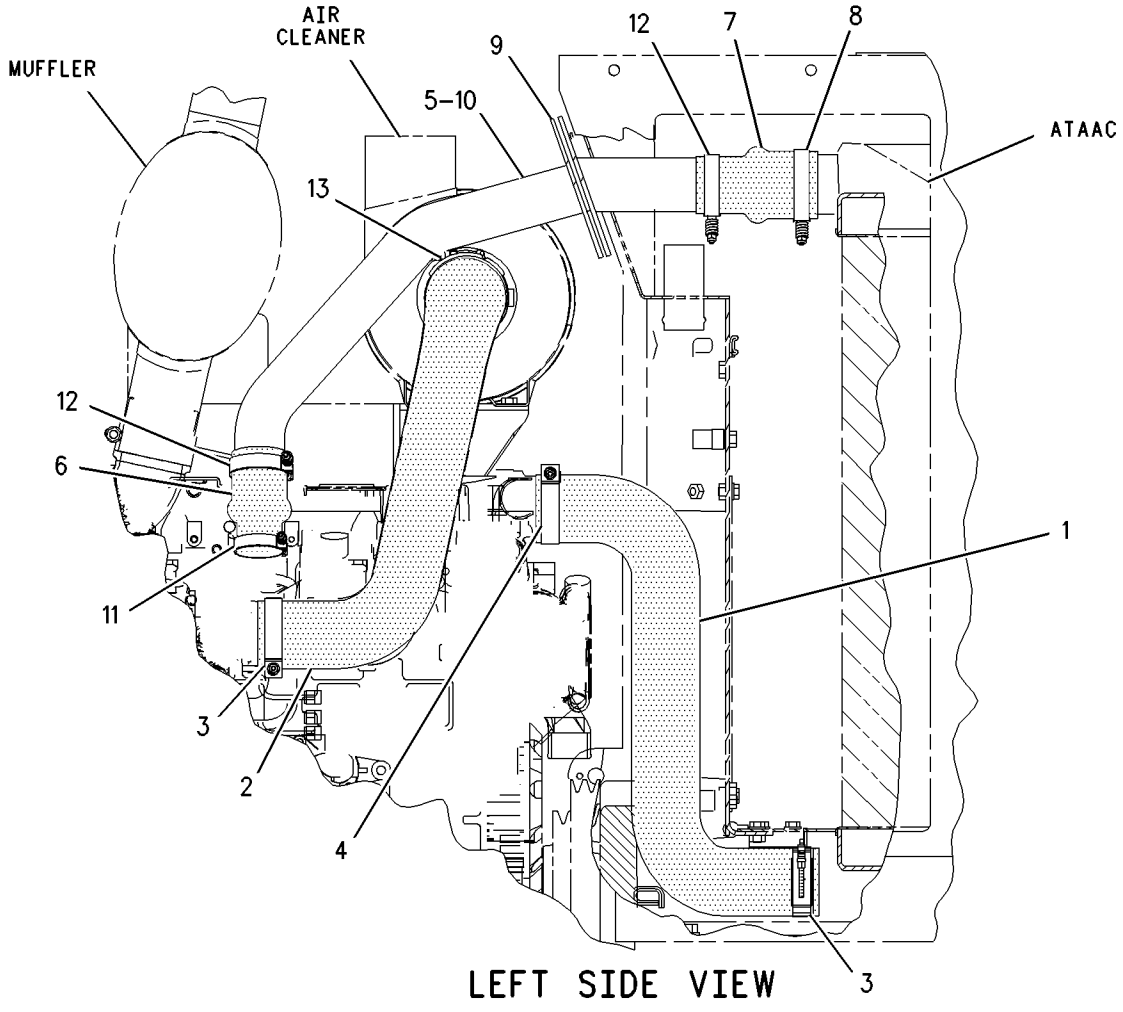

GRAPHIC #1 g00894469

AIR INLET AND EXHAUST SYSTEM

186-2344 MUFFLER GP

S/N: RTA1-UP; RBB1-UP

PART OF 216-8963 INSTALLATION AR-ENGINE

SMCS-1062 **i01804773**

NOTE	REF NO	GRAPHIC REF	PART NUMBER	QTY	PART NAME 1 2 3 4 5 6 (PRODUCT LEVEL)	SEE PAGE
	1	1	**124-2528**	4	SPACER (10MM THK)	
	2	1	**196-9441**	1	SUPPORT AS	
	2A	1	**9R-2672**	1	BOSS (M10X20MM)	
	3	1	**199-5067**	1	MUFFLER AS	
	3A	1	**9Y-8315**	1	CLAMP-BENT BOLT	
	4	1	**7X-7729**	4	WASHER (11X25X3MM THK)	
	5	1	**8T-4121**	4	WASHER-HARD (11X21X2.5MM THK)	
M	6	1	**8T-4133**	2	NUT (M10X1.5 THD)	
M	7	1	**8T-4195**	2	BOLT (M10X1.5X30MM)	
M	8	1	**8T-4196**	4	BOLT (M10X1.5X35MM)	

M-METRIC PART

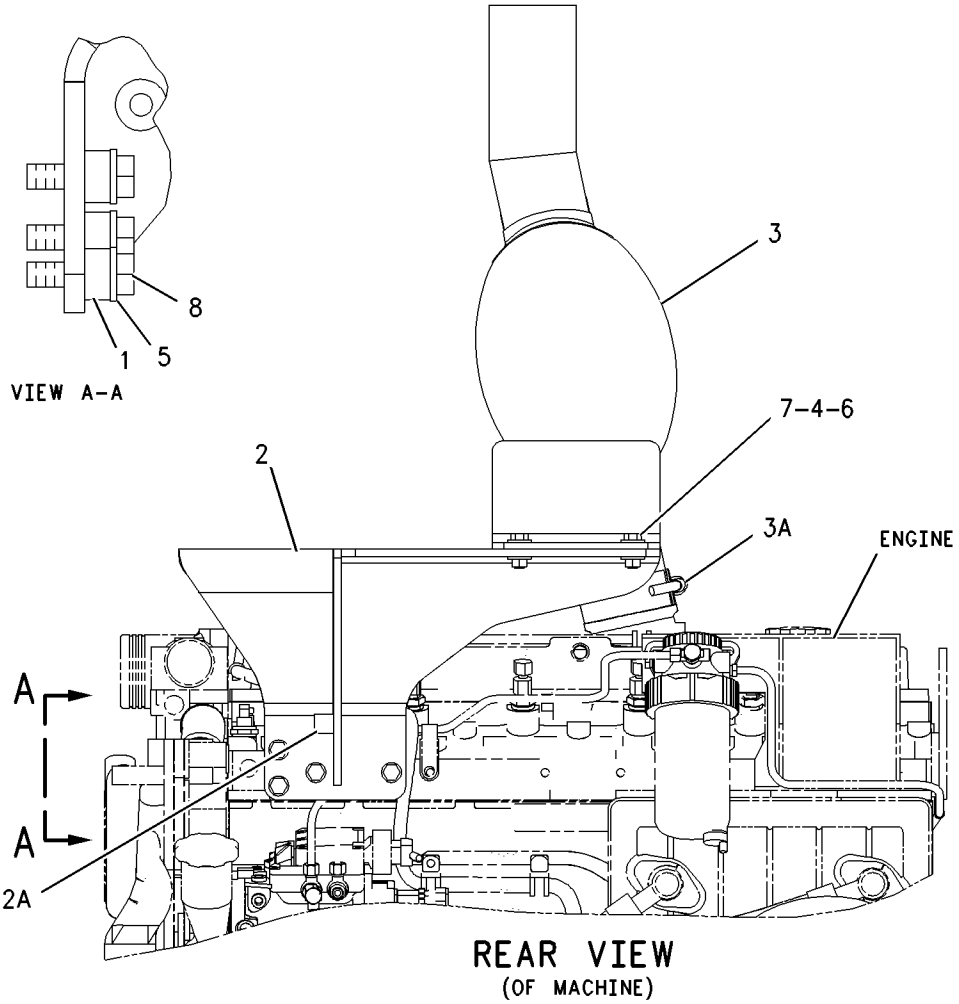

GRAPHIC #1 g00924466

AIR INLET AND EXHAUST SYSTEM

121-7746 PRECLEANER GP

S/N: RTA1-UP; RBB1-UP
PART OF 204-4329 AIR CLEANER GP
AN ATTACHMENT

SMCS-1055 **i01728179**

NOTE	REF NO	GRAPHIC REF	PART NUMBER	QTY	PART NAME 1 2 3 4 5 6 (PRODUCT LEVEL)	SEE PAGE
	1	1	**1M-7250**	1	BOWL	
	2	1	**9M-9439**	1	COVER AS	

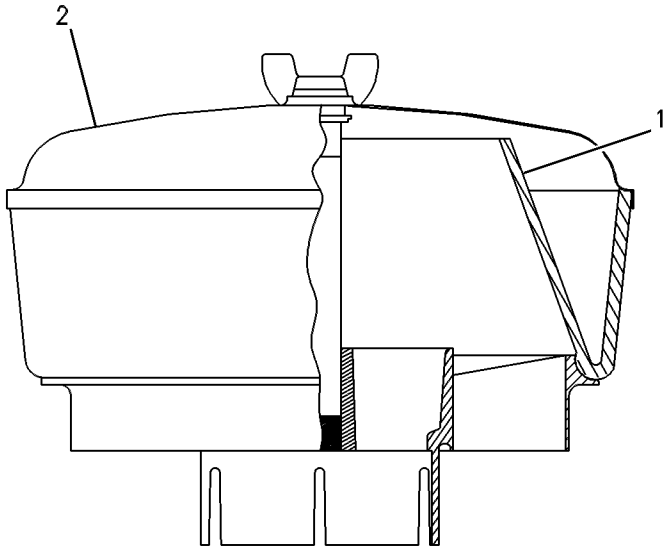

GRAPHIC #1 g00130024

AIR INLET AND EXHAUST SYSTEM

221-6866 TURBOCHARGER GP

S/N: CPT1-UP

PART OF 206-2744 ENGINE AR-PRIMARY

SMCS-1052, 1053 **i01725190**

NOTE	REF NO	GRAPHIC REF	PART NUMBER	QTY	PART NAME 1 2 3 4 5 6 (PRODUCT LEVEL)	SEE PAGE
	1	1	**5D-1026**	2	CLAMP-HOSE	
	2	1	**6I-0217**	2	BOLT (M8X1.25X20MM)	
	3	1	**6I-1132**	1	GASKET	
	4	1	**7W-2628**	1	NUT	
	5	1	**7W-2634**	1	UNION	
	6	1	**032-8048**	1	FITTING-BRASS	
	7	1	**100-4453**	2	STUD	
	8	1	**100-4454**	6	NUT	
	9	1	**100-4466**	1	GASKET	
	10	1	**124-3815**	3	BOLT (M8X16X1.25MM)	
	11	1	**138-2042**	4	NUT	
	12	1	**141-8589**	1	GASKET-TURBOCHARGER	
	13	1	**141-8597**	1	GASKET	
	14	1	**141-8599**	4	STUD	
	15	1	**141-9777**	1	HEAT SHIELD	
	16	1	**146-1841**	18	BOLT	
	17	1	**147-5553**	4	STUD	
	18	1	**160-0149**	1	HOSE	
	19	1	**162-1504**	6	BOLT	
	20	1	**216-2892**	1	BOLT-SOCKET HEAD	
	21	1	**216-8685**	1	TURBOCHARGER GP	
	22	1	**216-8690**	1	TUBE AS	
	23	1	**216-8699**	1	MANIFOLD-INLET	
	24	1	**216-8703**	2	GASKET-MANIFOLD	
	25	1	**216-8705**	6	BOLT	
	26	1	**216-8708**	1	MANIFOLD-EXHAUST	
	27	1	**216-8709**	1	MANIFOLD-EXHAUST	
	28	1	**216-8710**	1	MANIFOLD-EXHAUST	
	29	1	**216-8712**	2	GASKET-MANIFOLD	
	30	1	**221-6863**	1	TUBE AS	
	31	1	**221-6864**	1	ELBOW	

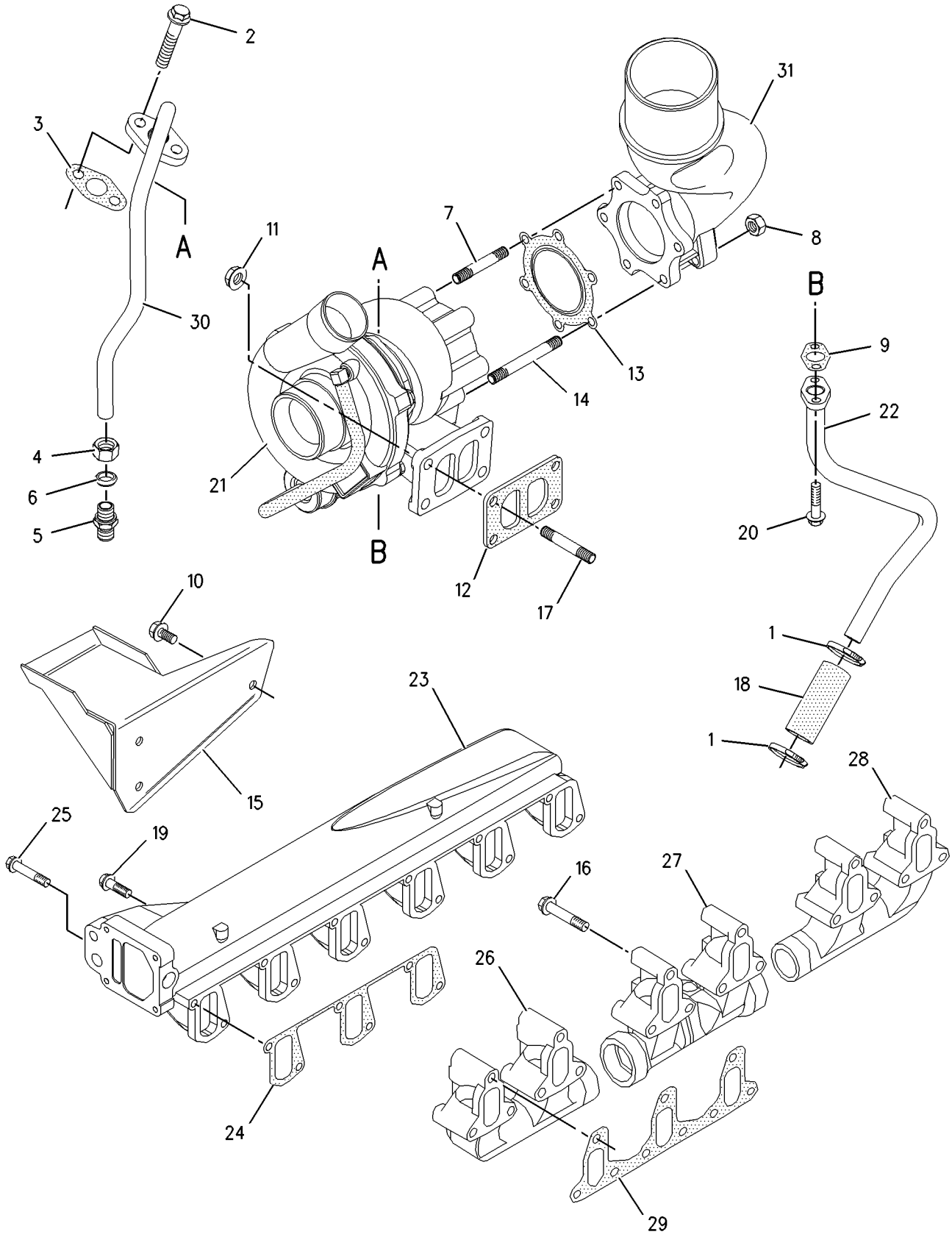

GRAPHIC #1 g00888802

FUEL SYSTEM

217-0640 FILTER GP-FUEL

S/N: CPT1-UP

PART OF 206-2744 ENGINE AR-PRIMARY

SMCS-1261 **i01725041**

NOTE	REF NO	GRAPHIC REF	PART NUMBER	QTY	PART NAME 1 2 3 4 5 6 (PRODUCT LEVEL)	SEE PAGE
	1	1	**6I-0593**	2	BOLT (M10X1.5X30MM)	
	2	1	**141-7844**	1	FILTER ELEMENT AS-FUEL	
	3	1	**145-4501**	1	FILTER ELEMENT-FUEL	

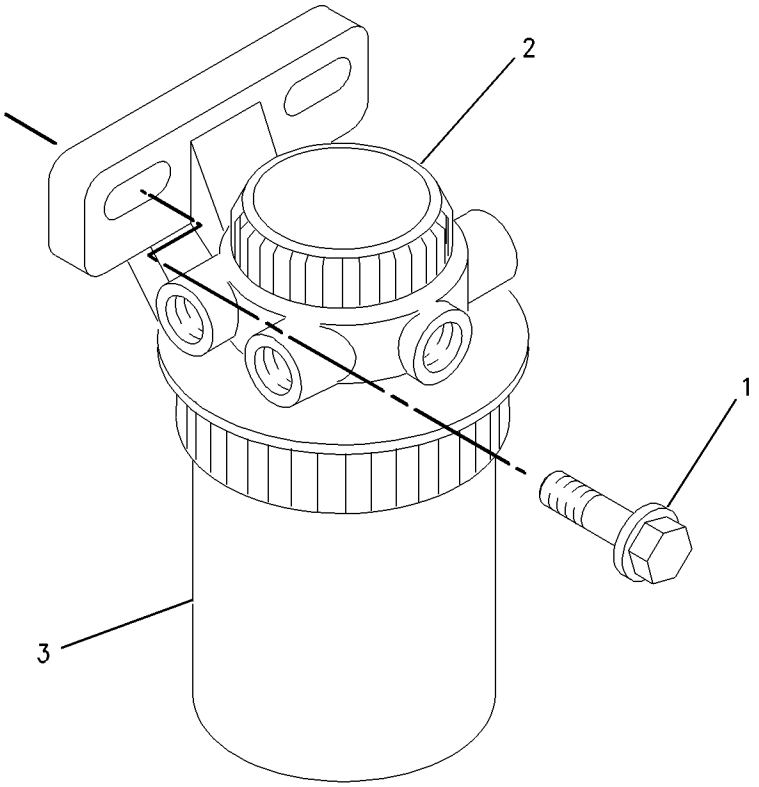

GRAPHIC #1 g00889605

MEMORANDA

FUEL SYSTEM

184-1333 LINES GP-FUEL

S/N: RTA1-UP; RBB1-UP

PART OF 176-5181, 176-5201 CHASSIS AR

SMCS-1274 **i01854684**

NOTE	REF NO	GRAPHIC REF	PART NUMBER	QTY	PART NAME 1 2 3 4 5 6 (PRODUCT LEVEL)	SEE PAGE
	1	1,3	**1P-4278**	6	CLAMP-HOSE	
	3	2	**6G-2263**	1	SPACER (10.5X19X28.5MM THK)	
	4	2	**032-8100**	2	WASHER (.064MM THK)	
	5	2	**033-7849**	2	PLUG	
	7	2	**122-4873**	1	BRACKET AS	
M		2	**8T-3490**	1	NUT-WELD (M10X1.5 THD)	
	8	2	**152-0983**	2	TUBE AS	
	9	2	**220-1865**	1	BRACKET AS	
M		2	**8T-3490**	1	NUT-WELD (M10X1.5 THD)	
Y	10	1	**220-5557**	1	SEPARATOR GP-WATER	89
	11	2	**226-9424**	2	GROMMET	
	12	2	**4D-6466**	2	CLIP	
	13	3	**4K-8302**	1	CLIP	
M	14	2	**5C-7261**	1	NUT (M8X1.25 THD)	
	15	2	**5P-9085**	2	CLIP	
	16	2,3	**6D-3479**	2	CLIP	
	17	2	**7X-7729**	3	WASHER (11X25X3MM THK)	
	18	2,3	**8T-4121**	4	WASHER-HARD (11X21X2.5MM THK)	
M	19	2	**8T-4136**	2	BOLT (M10X1.5X25MM)	
M	20	3	**8T-4137**	1	BOLT (M10X1.5X20MM)	
M	21	2	**8T-4189**	1	BOLT (M8X1.25X20MM)	
M	22	2	**8T-4196**	3	BOLT (M10X1.5X35MM)	
	23	2	**8T-4224**	2	WASHER-HARD (8.8X16X2MM THK)	
M	24	2	**8T-6466**	1	BOLT (M10X1.50X60MM)	
E	25	1	**8C-3681**		HOSE (80CM)	
E	26	1	**5P-1420**		HOSE (178CM)	
E	27	1	**5P-1420**		HOSE (160CM)	
E	28	3	**5P-1420**		HOSE (158CM)	
	29	2	**122-0473**	2	SPACER (6.5MM THK)	

E-ORDER BY THE CENTIMETER
M-METRIC PART
Y-SEPARATE ILLUSTRATION

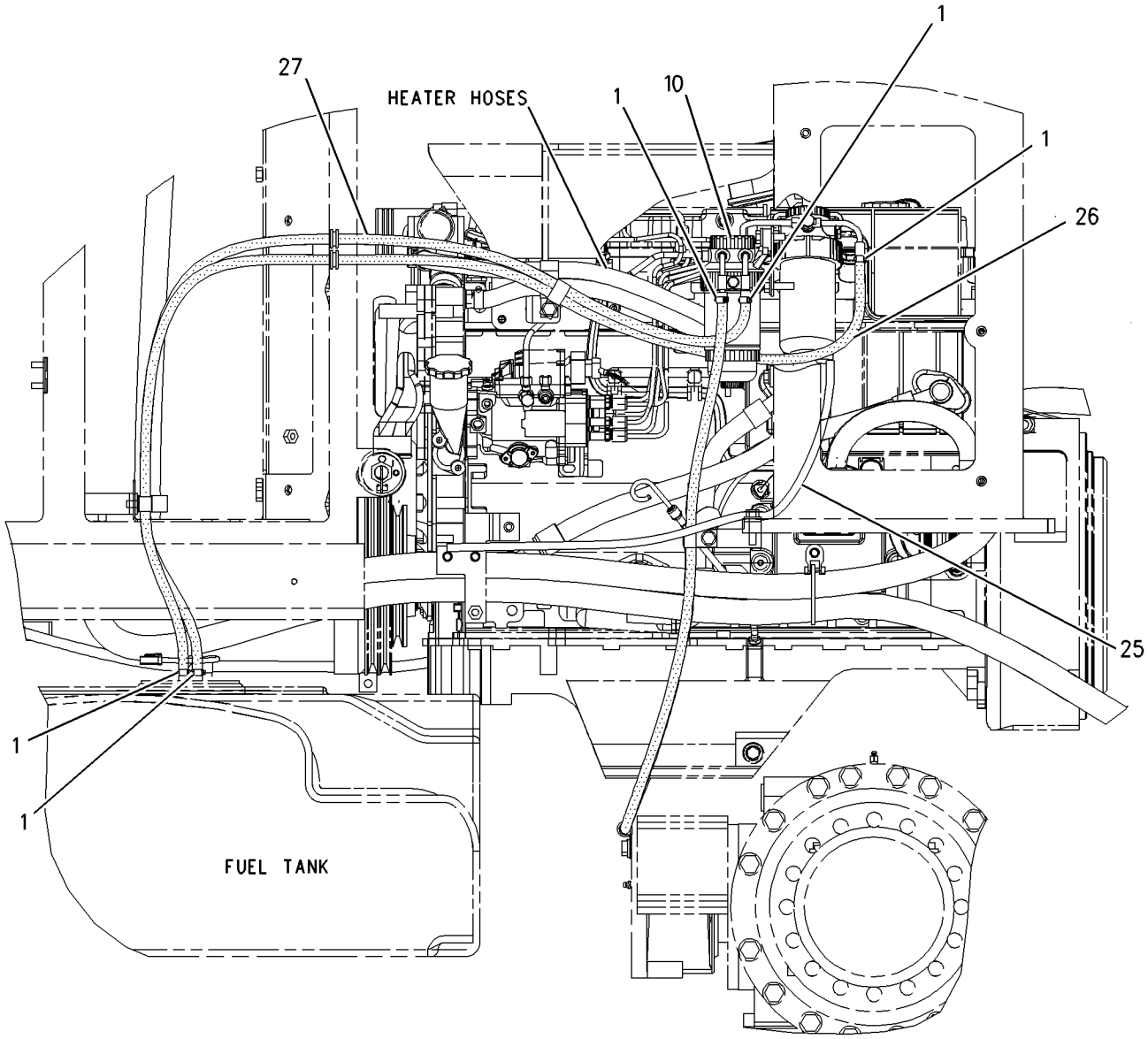

RIGHT SIDE VIEW

GRAPHIC #1 g00920714

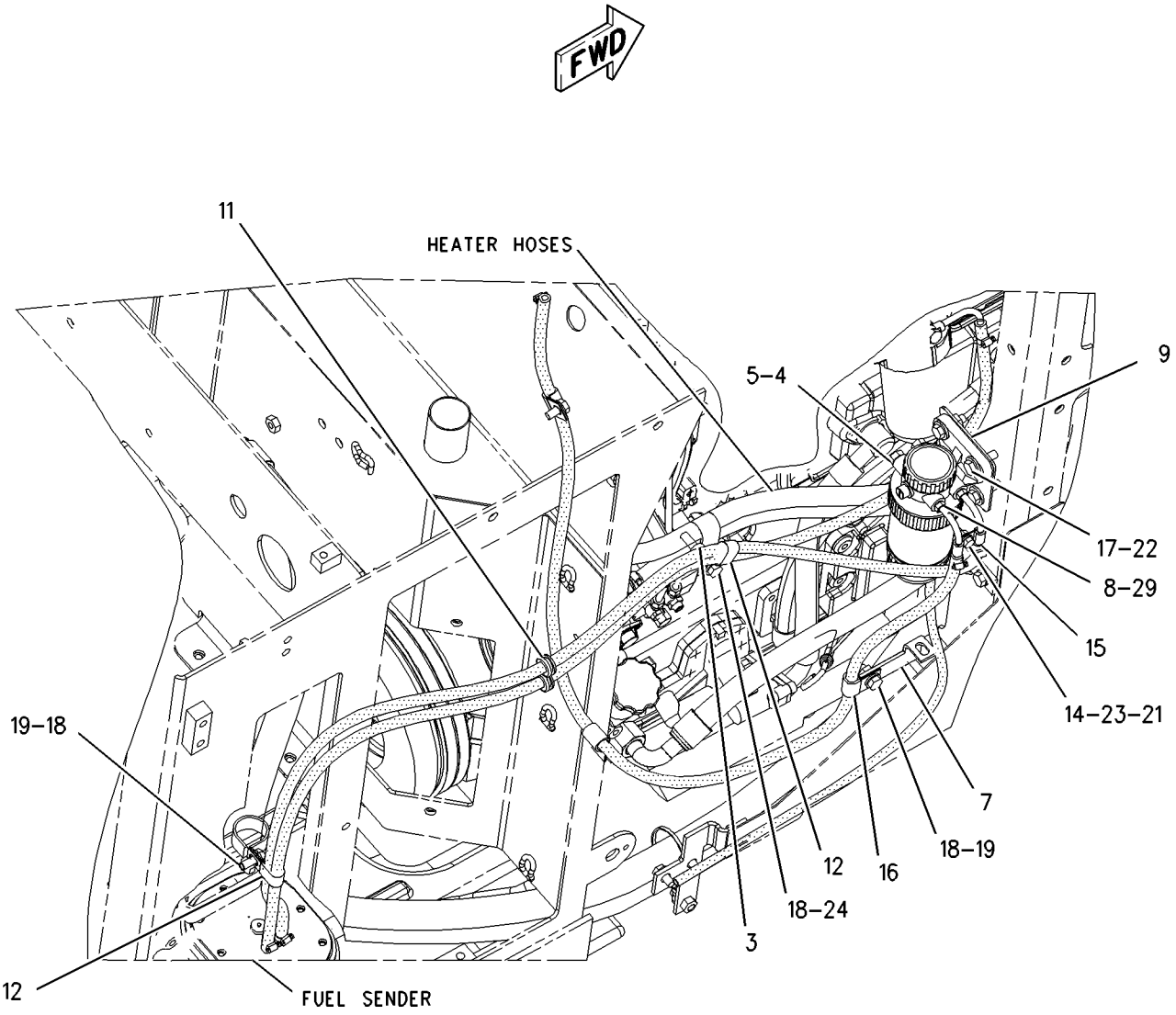

GRAPHIC #2 g00945716

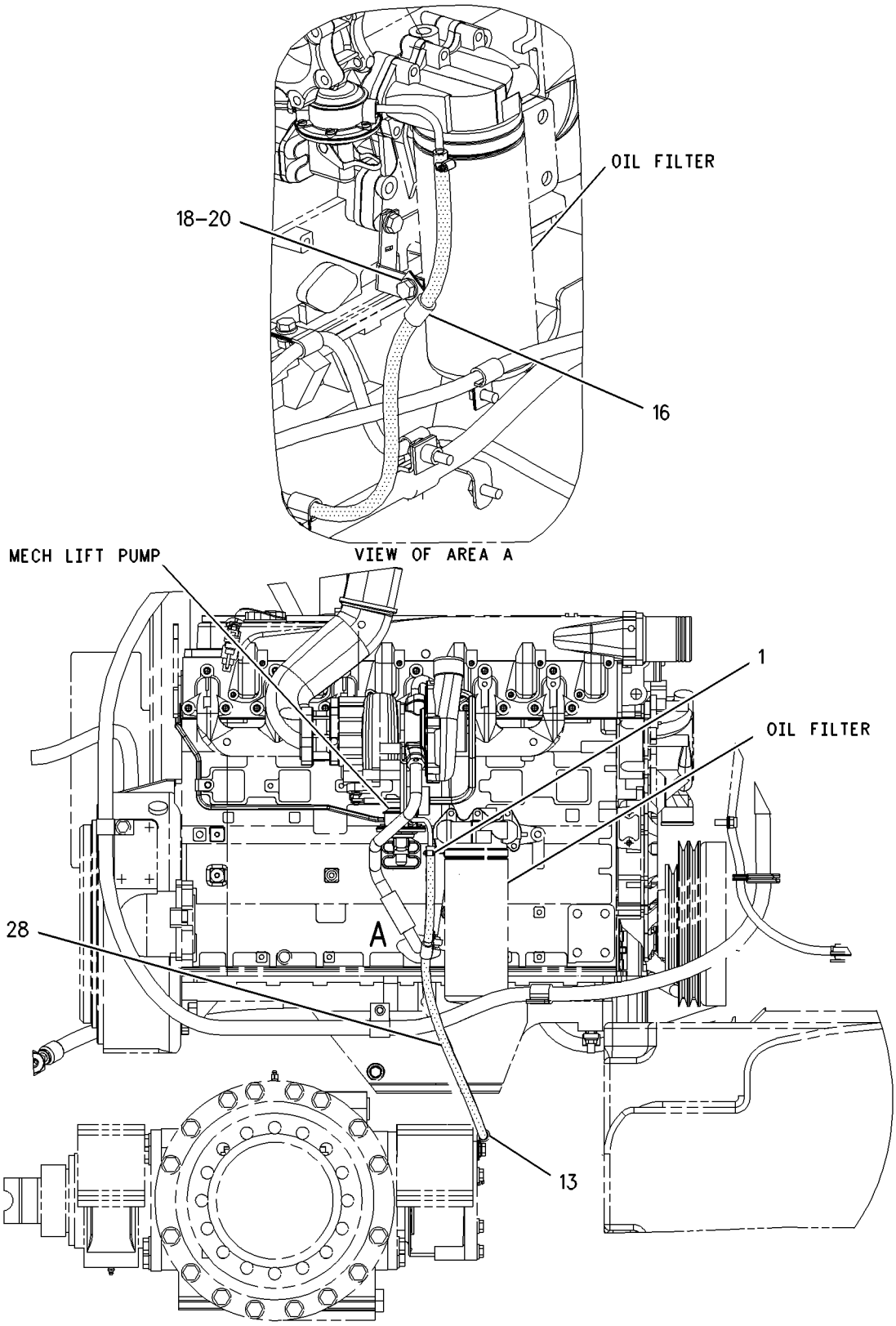

LEFT SIDE VIEW

GRAPHIC #3 g00921089

FUEL SYSTEM

217-0109 PUMP GP-FUEL INJECTION

S/N: CPT1-UP

PART OF 206-2744 ENGINE AR-PRIMARY

SMCS-1251 **i01831925**

NOTE	REF NO	GRAPHIC REF	PART NUMBER	QTY	PART NAME 1 2 3 4 5 6 (PRODUCT LEVEL)	SEE PAGE
	1	1	**4B-4277**	1	WASHER (8.8X17.5X1.6MM THK)	
	2	1	**6I-0217**	1	BOLT (M8X1.25X20MM)	
	3	1	**6I-0291**	8	NUT (M8X1.25)	
	4	1	**133-7668**	1	STUD	
	5	1	**228-8960**	1	CLIP	
	6	1	**228-8963**	2	STUD	
	7	2	**7M-7410**	1	PLUG (3/8-18 NPTF)	
	8	1	**100-4830**	1	BOLT (M10X1.5X20MM)	
	9	1	**124-3708**	3	CLIP	
	10	1	**228-8943**	1	BRACKET	
	11	1	**228-8956**	1	BRACKET	
	12	1	**145-8327**	1	SEAL-O-RING	
	13	2	**149-2091**	1	SEAL-O-RING	
	14	1	**101-3877**	3	STUD	
	15	1	**162-9992**	3	CLIP	
	16	1	**164-3207**	6	WASHER	
	17	1	**221-1018**	1	CONTROL GP-ENGINE ELECTRONIC	
M	18	1	**6V-5217**	4	BOLT (M8X1.25X20MM)	
	19	1	**141-8599**	1	STUD	
	20	1,2	**114-4363**	3	BOLT (M8X1.25X12MM)	
	22	2	**216-3448**	1	SENSOR GP-PRESSURE (ENGINE OIL)	
	23	2	**216-3436**	1	SENSOR GP-TEMPERATURE (ENGINE COOLANT)	
	24	2	**216-3436**	1	SENSOR GP-TEMPERATURE (AIR INLET)	
	25	2	**216-3446**	1	SENSOR GP-SPEED (TIMING)	
	27	2	**199-9252**	1	SEAL-O-RING	
	28	2	**199-9267**	1	SEAL-O-RING	
	29	2	**199-9751**	2	SEAL-O-RING	
	30	2	**216-3450**	1	SENSOR GP-PRESSURE (BOOST)	
	33	1	**216-9786**	6	INJECTOR AS-FUEL	
	35	1	**216-9790**	1	GEAR (FUEL PUMP)	
	37	1	**216-9824**	1	PUMP GP-FUEL INJECTION	
	38	1	**216-9826**	1	TUBE AS (CYL NO.1)	
	39	1	**216-9828**	1	TUBE AS (CYL NO.2)	
	40	1	**216-9830**	1	TUBE AS (CYL NO.3)	
	41	1	**216-9831**	1	TUBE AS (CYL NO.4)	
	42	1	**216-9834**	1	TUBE AS (CYL NO.5)	
	43	1	**216-9835**	1	TUBE AS (CYL NO.6)	
	44	1	**155-0576**	8	MOUNT-ISOLATION	
	45	1	**217-0099**	7	SPACER	
	46	1	**217-0100**	4	SPACER	
	50	1	**215-9430**	4	CONTROL GP-VOLTAGE (24 VOLT) (LOAD PROTECTION)	
		1	**1S-9593**	2	STRAP-CABLE	
		1	**7T-0093**	4	PIN-CONNECTOR	
		1	**177-9653**	1	KIT-RECEPTACLE (4 PIN)	

M-METRIC PART

217-0109 **PUMP GP-FUEL INJECTION** *(contd.)* **i01831925**

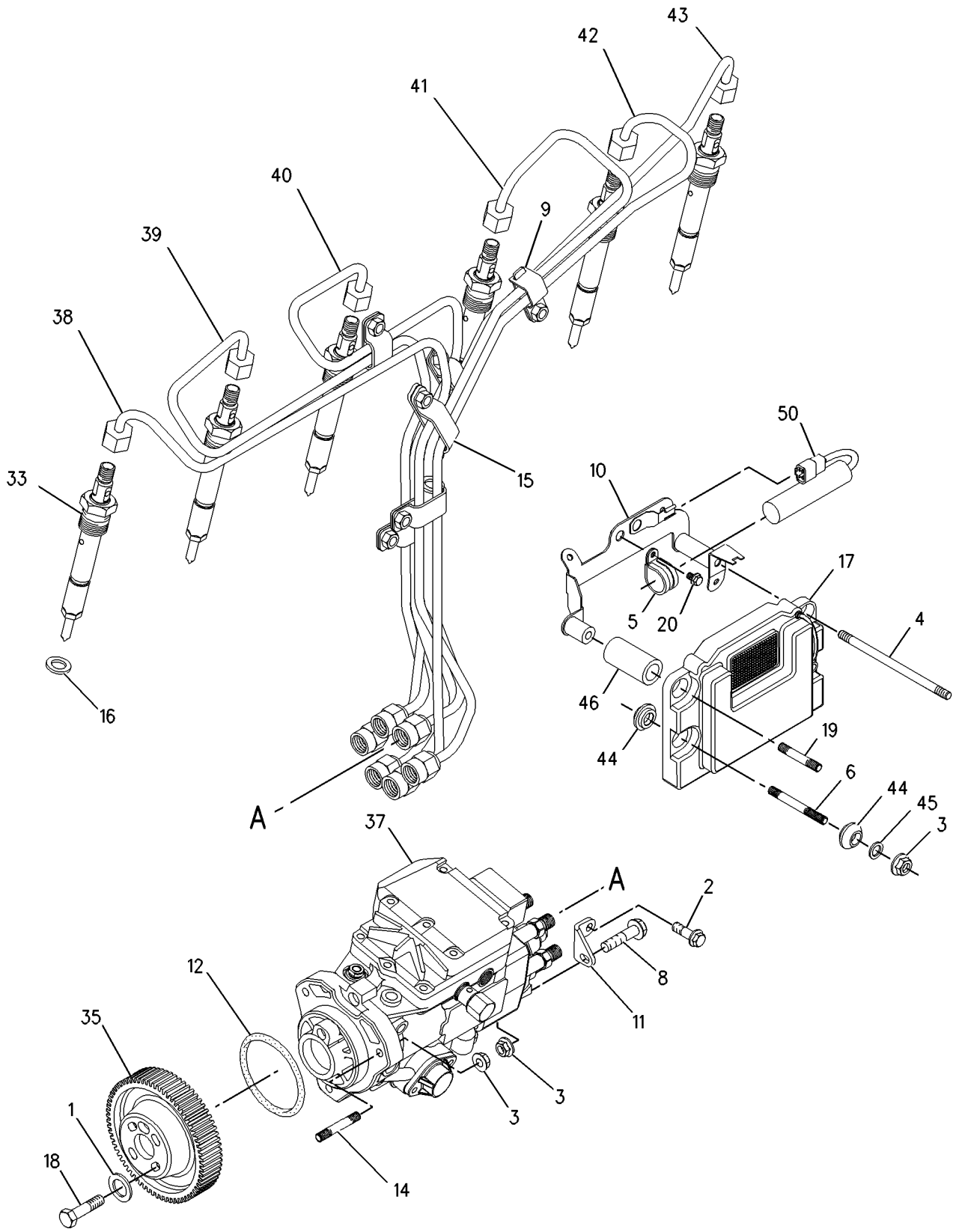

GRAPHIC #1 g00936420

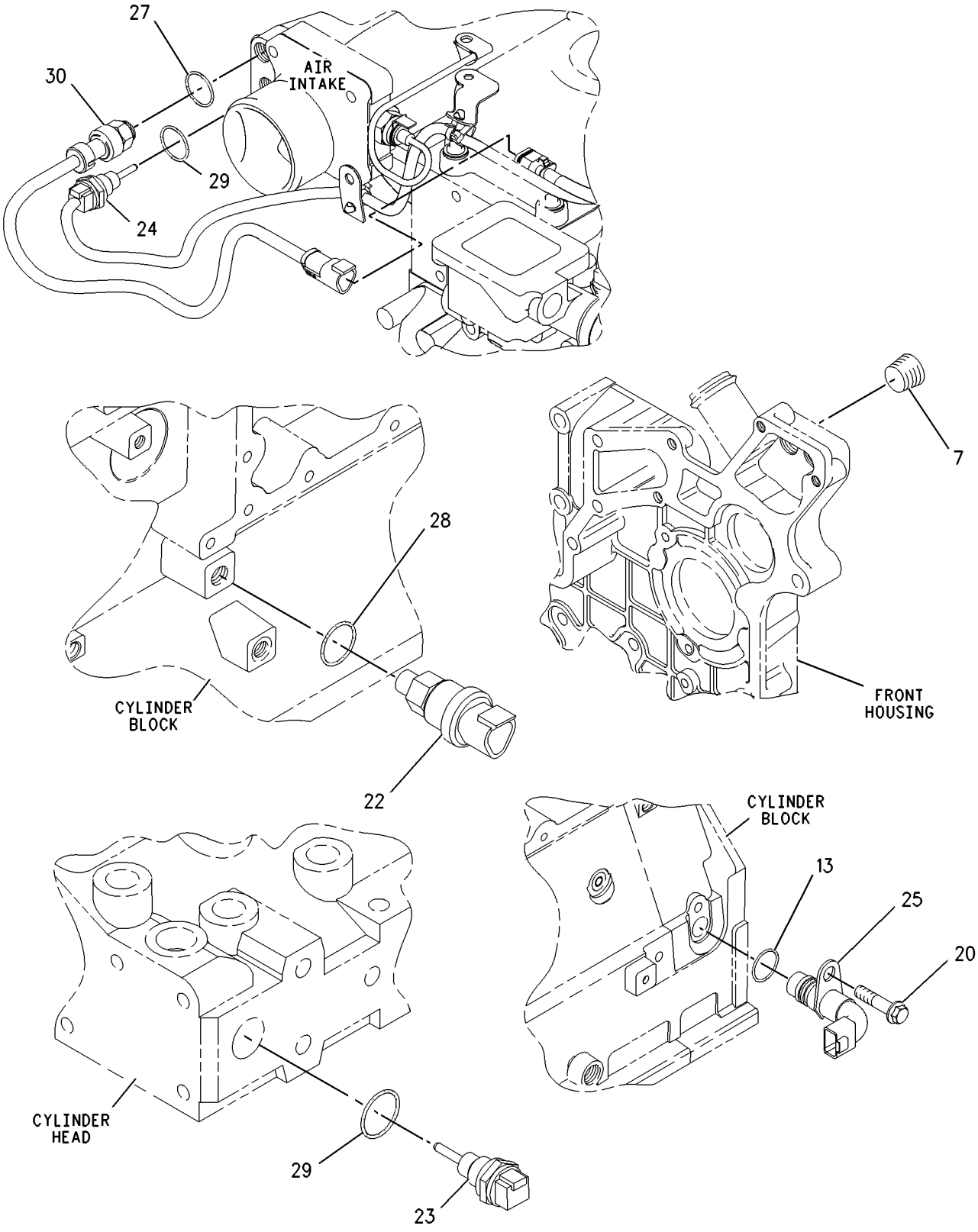

GRAPHIC #2

g00936421

MEMORANDA

219-2455 PUMP GP-FUEL TRANSFER

S/N: CPT1-UP

PART OF 206-2744 ENGINE AR-PRIMARY

SMCS-1256 **i01774001**

NOTE	REF NO	GRAPHIC REF	PART NUMBER	QTY	PART NAME 1 2 3 4 5 6 (PRODUCT LEVEL)	SEE PAGE
	1	1	**5C-1777**	5	NUT	
	2	2	**6I-0217**	1	BOLT (M8X1.25X20MM)	
	3	2	**6I-0254**	4	BOLT (M8X1.25X30MM)	
	4	1	**6I-1090**	1	BOLT (M8X1.25X40MM)	
	5	2	**033-7849**	1	PLUG	
	6	1	**067-6269**	4	FITTING (5/16IN)	
	7	2	**100-4830**	3	BOLT (M10X1.5X20MM)	
	8	2	**101-3906**	1	BOLT	
	9	2	**101-3907**	2	WASHER	
	10	1	**101-7178**	1	BOLT (M10X55MM)	
	11	2	**102-9988**	1	SPACER	
	12	1	**127-8162**	1	CLIP	
	13	2	**162-2000**	1	WASHER	
	14	2	**216-9043**	1	PUMP AS-FUEL PRIMING	
	15	2	**7W-4553**	1	GASKET-FUEL PUMP	
	16	2	**216-9053**	1	CONNECTOR	
	17	1	**216-9086**	1	SPACER	
	18	1	**216-9092**	1	CONNECTOR	
	19	1	**216-9752**	4	WASHER	
	20	1	**217-0721**	1	BOLT	
	21	2	**219-2442**	1	TUBE AS	
	22	2	**102-9986**	1	CLIP	
	23	2	**102-9987**	1	CLIP	
	24	1	**219-2443**	1	TUBE AS	
	25	1	**102-9986**	1	CLIP	
	26	2	**219-2450**	1	BRACKET	
	27	1	**219-2451**	1	CONNECTION	
	28	1	**219-2452**	1	BALL	
	29	1	**219-2453**	1	TUBE AS	
	30	1	**149-6117**	1	CLIP	

219-2455 **PUMP GP-FUEL TRANSFER** *(contd.)* **i01774001**

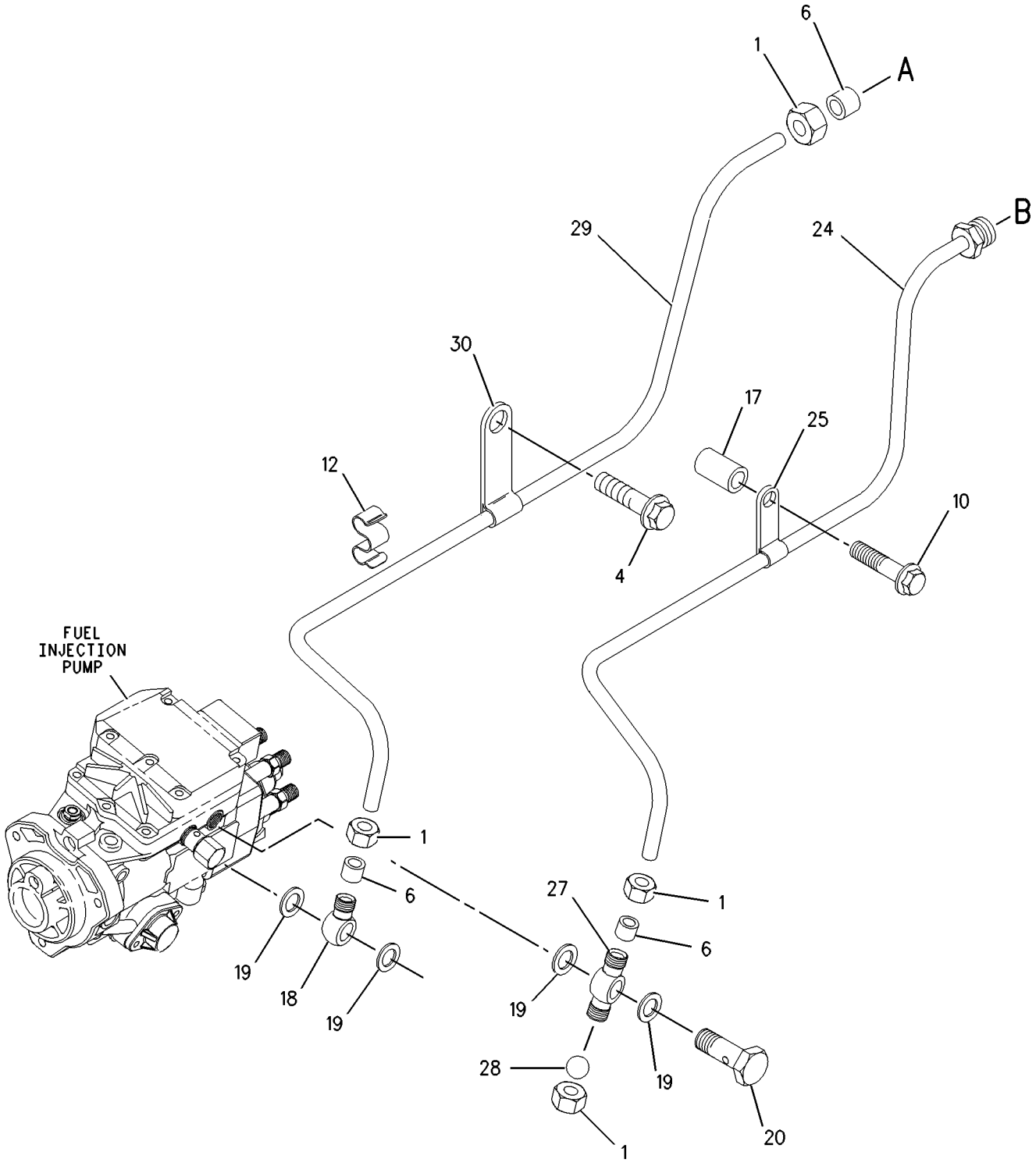

GRAPHIC #1 g00891374

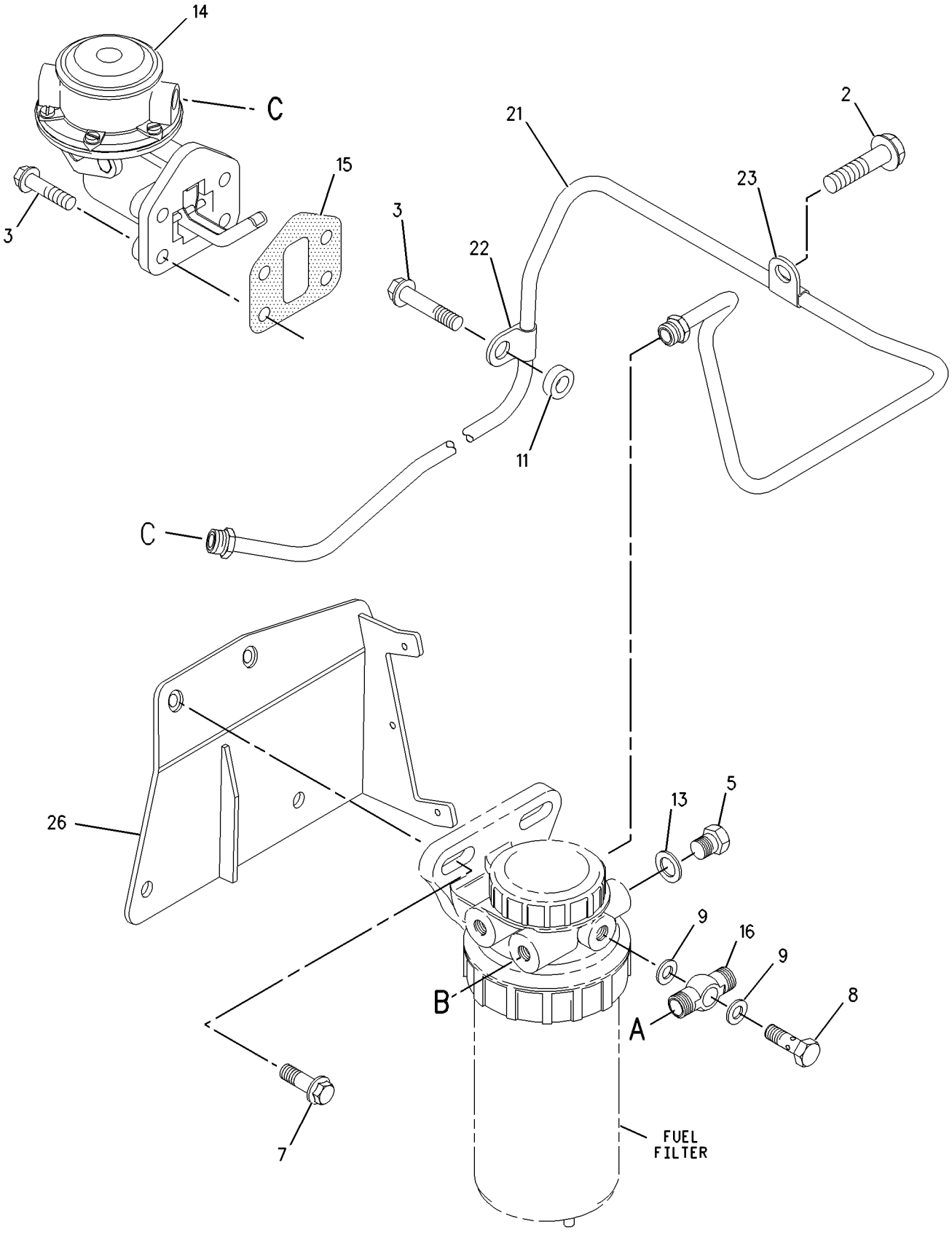

GRAPHIC #2

g00891375

FUEL SYSTEM

220-5557 SEPARATOR GP-WATER

S/N: RTA1-UP; RBB1-UP
WITH BOWL
PART OF 184-1333 LINES GP-FUEL

SMCS-1263 **i01813851**

NOTE	REF NO	GRAPHIC REF	PART NUMBER	QTY	PART NAME 1 2 3 4 5 6 (PRODUCT LEVEL)	SEE PAGE
	1	1	**112-9401**	1	BOWL AS-WATER COLLECTION	
		1	**128-8614**	1	KIT-BOWL SEAL	
	2	1	**118-8118**	1	RING-RETAINING	
	3	1	**118-8119**	1	NUT	
	4	1	**121-4480**	1	KIT-WATER BASE (WATER SEPARATOR)	
					(INCLUDES NUT-CAP, CAP-HEADER, SEAL-CAP, PLUG-VOLUME, SEAL-O-RING, PLUG-VENT, SEAL-DUST & RING RETAINER)	
	5	1	**131-1812**	1	FILTER ELEMENT-WATER (SEPARATOR)	

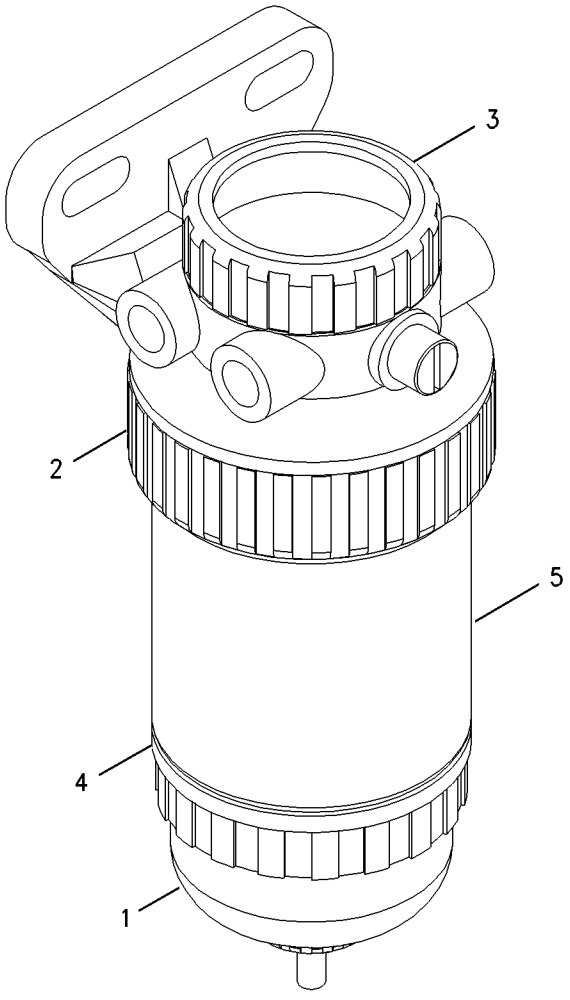

GRAPHIC #1 g00916889

FUEL SYSTEM

202-0354 TANK & MTG GP-FUEL

S/N: RTA1-UP; RBB1-UP

PART OF 176-5181, 176-5201 CHASSIS AR

SMCS-1273 **i01814200**

NOTE	REF NO	GRAPHIC REF	PART NUMBER	QTY	PART NAME 1 2 3 4 5 6 (PRODUCT LEVEL)	SEE PAGE
	1	1	**202-0355**	1	TANK AS-FUEL	
		1	**142-8828**	1	CAP AS-FUEL	
		1	**180-3730**	1	FILTER AS-FUEL	
		1	**206-4441**	1	ADAPTER	
	2	1	**202-0360**	2	STRAP AS	
					(EACH INCLUDES)	
		1	**202-0358**	1	STRAP	
M	3	1	**180-4686**	2	BOLT-HEX HEAD	
	4	1	**8T-4121**	6	WASHER-HARD (11X21X2.5MM THK)	
M	5	1	**8T-4133**	2	NUT (M10X1.5 THD)	
M	6	1	**8T-4137**	2	BOLT (M10X1.5X20MM)	

M-METRIC PART

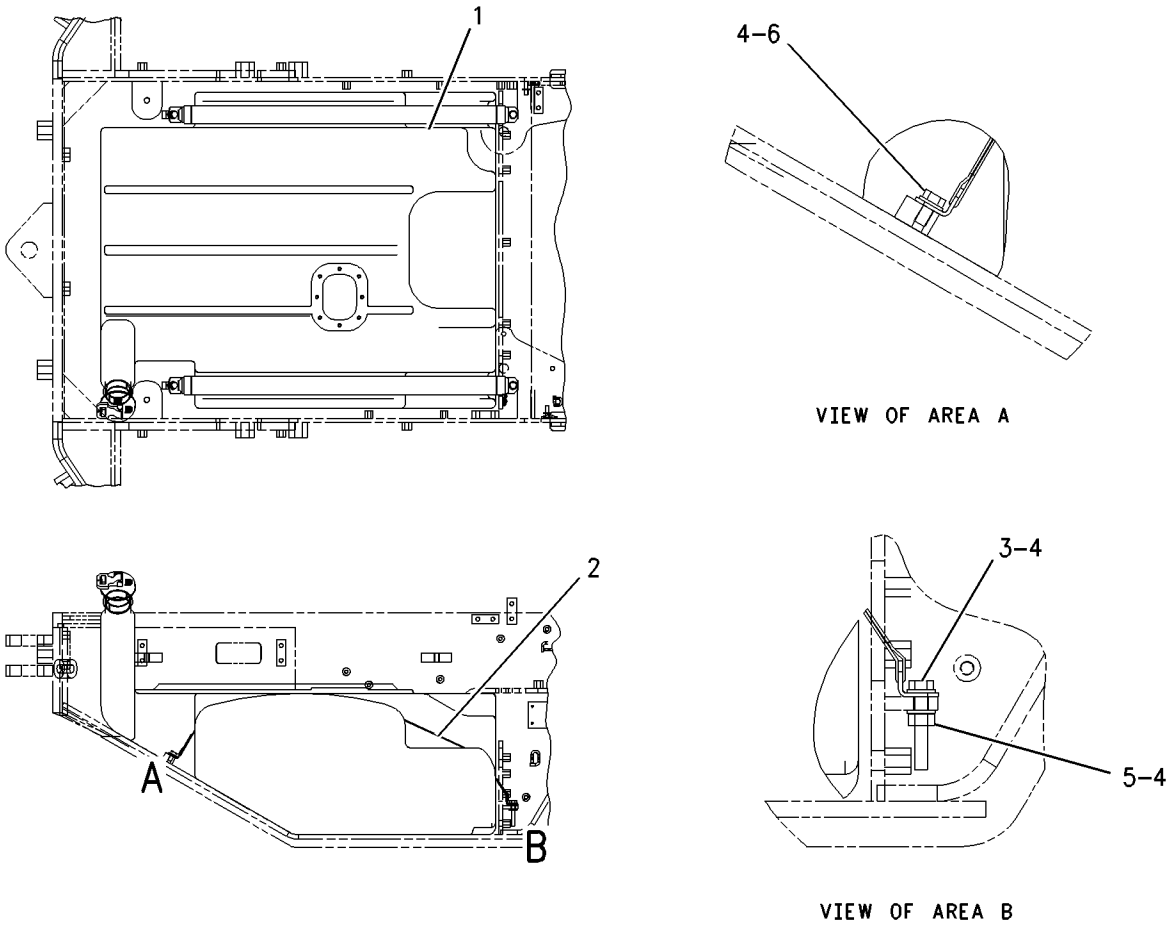

GRAPHIC #1 g00915489

3E-6328 ALARM GP–ACTION

S/N: RTA1-UP; RBB1-UP
24 VOLT
PART OF 204-9416 LIGHTING GP-FLOOD & SIGNAL

SMCS-7406, 7407 **i01487980**

NOTE	REF NO	GRAPHIC REF	PART NUMBER	QTY	PART NAME 1 2 3 4 5 6 (PRODUCT LEVEL)	SEE PAGE
	1	1	**102-8802**	1	KIT-RECEPTACLE (2 PIN)	
					(INCLUDES RECEPTACLE AS & WEDGE)	
	2	1	**186-3735**	2	PIN-CONNECTOR	

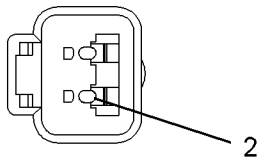

VIEW A–A

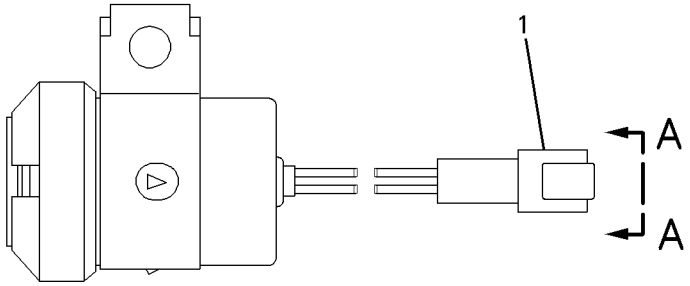

GRAPHIC #1 g00697818

177-9953 ALTERNATOR GP-CHARGING*R

S/N: RTA1-UP; RBB1-UP
24 VOLT, 80 AMP
PART OF 210-1672 ALTERNATOR GP-CHARGING
AN ATTACHMENT

SMCS-1405 **i01820527**

NOTE	REF NO	GRAPHIC REF	PART NUMBER	QTY	PART NAME 1 2 3 4 5 6 (PRODUCT LEVEL)	SEE PAGE
	1	1	**185-2653**	1	FRAME	
	2	1	**5S-7349**	1	BOLT (1/4-20X0.5 IN)	
	3	1	**185-2639**	1	FAN AS	
	4	1	**1H-3244**	1	LOCKWASHER	
	5	1	**185-2645**	1	FRAME	
	6	1	**2K-4821**	1	LOCKNUT (5/8-18 THD)	
	7	1	**5P-8247**	1	WASHER-HARD (17X32X3.5MM THK)	
	8	1	**185-2651**	1	COVER	
	9	1	**8T-4205**	1	WASHER-HARD (7.2X14.5X2MM THK)	
	10	1	**185-2647**	1	GROMMET	
	11	1	**9L-6770**	1	CAP	
	12	1	**185-2643**	1	STATOR AS	
	13	1	**185-2638**	2	COLLAR	
	14	1	**185-2654**	1	PLATE	
	15	1	**185-2650**	1	ROTOR AS	
	16	1	**185-2644**	1	COIL AS	
	17	1	**185-2648**	1	REGULATOR AS	
J	18	1	**6V-8189**	1	NUT (5/16-18 THD)	
J	19	1	**8T-4224**	1	WASHER-HARD (8.8X16X2MM THK)	
J	20	1	**3F-9556**	1	LOCKWASHER	
					AVAILABLE REPAIR KIT(S):	
J			**199-7891**		KIT-TERMINAL	
					(INCLUDES INSULATORS, WASHERS, NUT, STEP NUT)	
			185-2655		KIT-BEARING	
					(INCLUDES 3 BEARINGS)	
			199-8436		KIT-TERMINAL	
					(INCLUDES HOLDER AS, PLATE, INSULATOR, PIN, BOLT, GROMMET, NUT)	
			185-2658		KIT-HARDWARE	
					(INCLUDES BOLTS)	

J-KIT MARKED J AVAILABLE FOR PARTS MARKED J

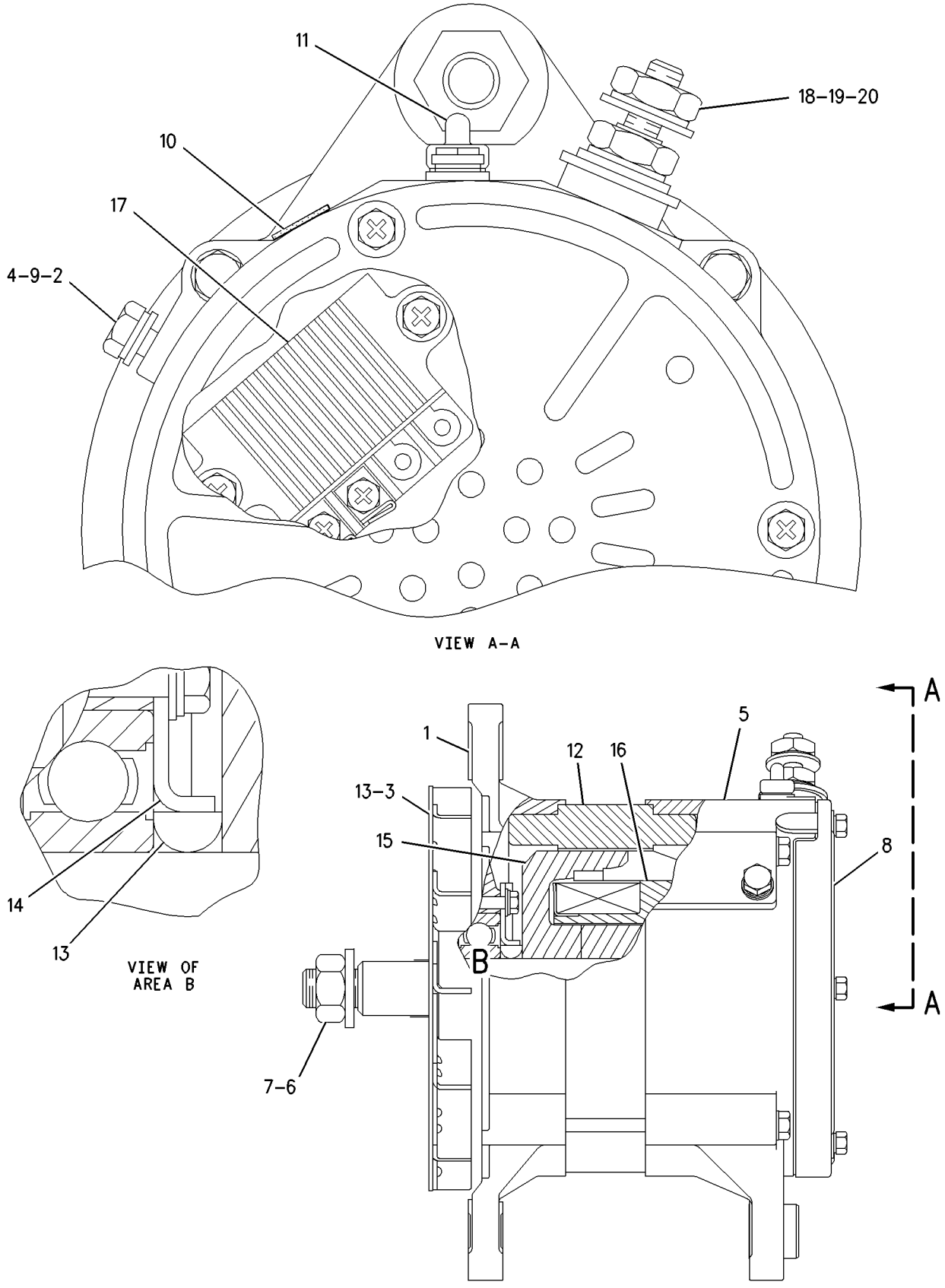

GRAPHIC #1

g00795850

197-8820 ALTERNATOR GP-CHARGING*R

S/N: RTA1-UP; RBB1-UP
24 VOLT, 95 AMP
PART OF 210-1675 ALTERNATOR GP-CHARGING
AN ATTACHMENT

SMCS-1405 **i01820628**

NOTE	REF NO	GRAPHIC REF	PART NUMBER	QTY	PART NAME 1 2 3 4 5 6 (PRODUCT LEVEL)	SEE PAGE
	1	1	**185-2653**	1	FRAME	
	2	1	**5S-7349**	1	BOLT (1/4-20X0.5 IN)	
	3	1	**185-2639**	1	FAN AS	
	4	1	**1H-3244**	1	LOCKWASHER	
	5	1	**185-2645**	1	FRAME	
	6	1	**2K-4821**	1	LOCKNUT (5/8-18 THD)	
	7	1	**5P-8247**	1	WASHER-HARD (17X32X3.5MM THK)	
	8	1	**185-2651**	1	COVER	
	9	1	**8T-4205**	1	WASHER-HARD (7.2X14.5X2MM THK)	
	10	1	**185-2647**	1	GROMMET	
	11	1	**9L-6770**	1	CAP (ALTERNATOR AC TAP)	
	12	1	**205-0626**	1	STATOR AS-ALTERNATOR	
	13	1	**185-2638**	2	COLLAR	
	14	1	**185-2654**	1	PLATE	
	15	1	**185-2650**	1	ROTOR AS	
	16	1	**185-2644**	1	COIL AS	
	17	1	**185-2648**	1	REGULATOR AS	
	18	1	**6V-8189**	1	NUT (5/16-18 THD)	
	19	1	**8T-4224**	1	WASHER-HARD (8.8X16X2MM THK)	
	20	1	**3F-9556**	1	LOCKWASHER	
					AVAILABLE REPAIR KIT(S):	
			185-2655		KIT-BEARING (ALTERNATOR)	
					(INCLUDES 2 BEARINGS)	
			185-2656		KIT-TERMINAL (ALTERNATOR)	
					(INCLUDES HOLDER AS, PLATE, INSULATOR, PIN, BOLTS, GROMMET, AND NUT	
			185-2657		KIT-TERMINAL (ALTERNATOR)	
					(INCLUDES INSULATORS, WASHERS, AND NUTS)	
			185-2658		KIT-HARDWARE (ALTERNATOR)	
					(INCLUDES BOLTS)	

197-8820 ALTERNATOR GP-CHARGING ***(contd.)*** **i01820628**

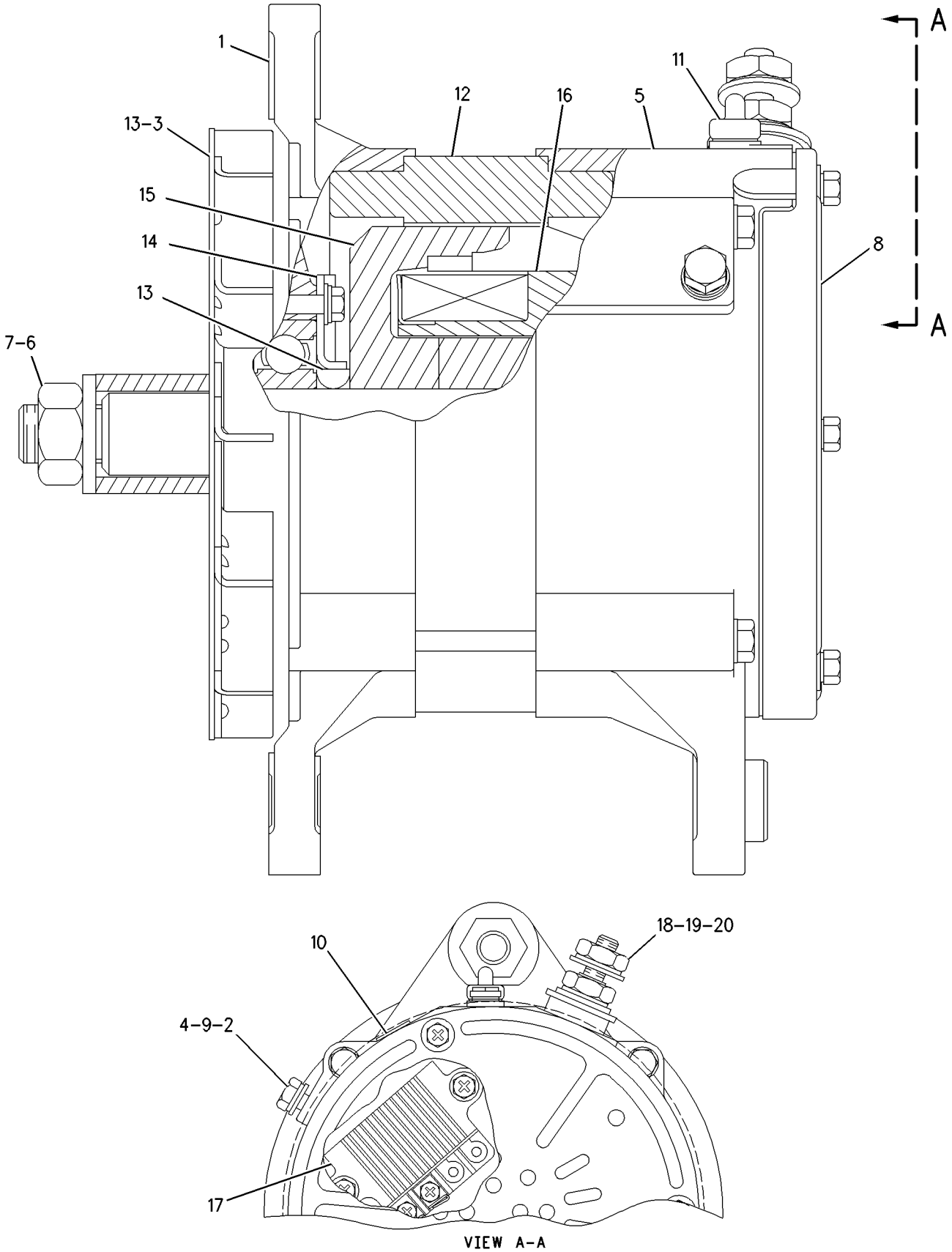

GRAPHIC #1 g00873198

210-1672 ALTERNATOR GP-CHARGING

S/N: RTA1-UP; RBB1-UP
24 VOLT, 80 AMP
AN ATTACHMENT

SMCS-1405 **i01820224**

NOTE	REF NO	GRAPHIC REF	PART NUMBER	QTY	PART NAME 1 2 3 4 5 6 (PRODUCT LEVEL)	SEE PAGE
	1	1	**9L-6246**	1	PULLEY-ALTERNATOR	
	2	1	**9S-1240**	1	NUT AS	
	3	1	**130-3216**	1	V-BELT SET	
					(INCLUDES 2 BELTS)	
	4	1	**157-2393**	1	BRACKET AS	
	5	1	**158-2829**	1	STRAP	
	6	1	**212-8743**	1	BRACKET-ALTERNATOR	
YR	7	1	**177-9953**	1	ALTERNATOR GP-CHARGING	92
	8	1	**5P-1076**	1	WASHER-HARD (13.5X30X4MM THK)	
	9	1	**7X-0338**	1	BOLT (1/2-13X6 IN)	
	10	1	**7X-7729**	1	WASHER (11X25X3MM THK)	
	11	1	**8C-4436**	1	BOLT (1/2-13X1.375 IN)	
M	12	1	**8T-4136**	1	BOLT (M10X1.5X25MM)	
M	13	1	**8T-4183**	1	BOLT (M12X1.75X40MM)	
	14	1	**8T-4223**	2	WASHER-HARD (13.5X25.5X3MM THK)	
	15	1	**8T-4224**	2	WASHER-HARD (8.8X16X2MM THK)	
M	16	1	**8T-6870**	2	BOLT (M8X1.25X70MM)	

M-METRIC PART
R-REMFG PART MAY BE AVAILABLE
Y-SEPARATE ILLUSTRATION

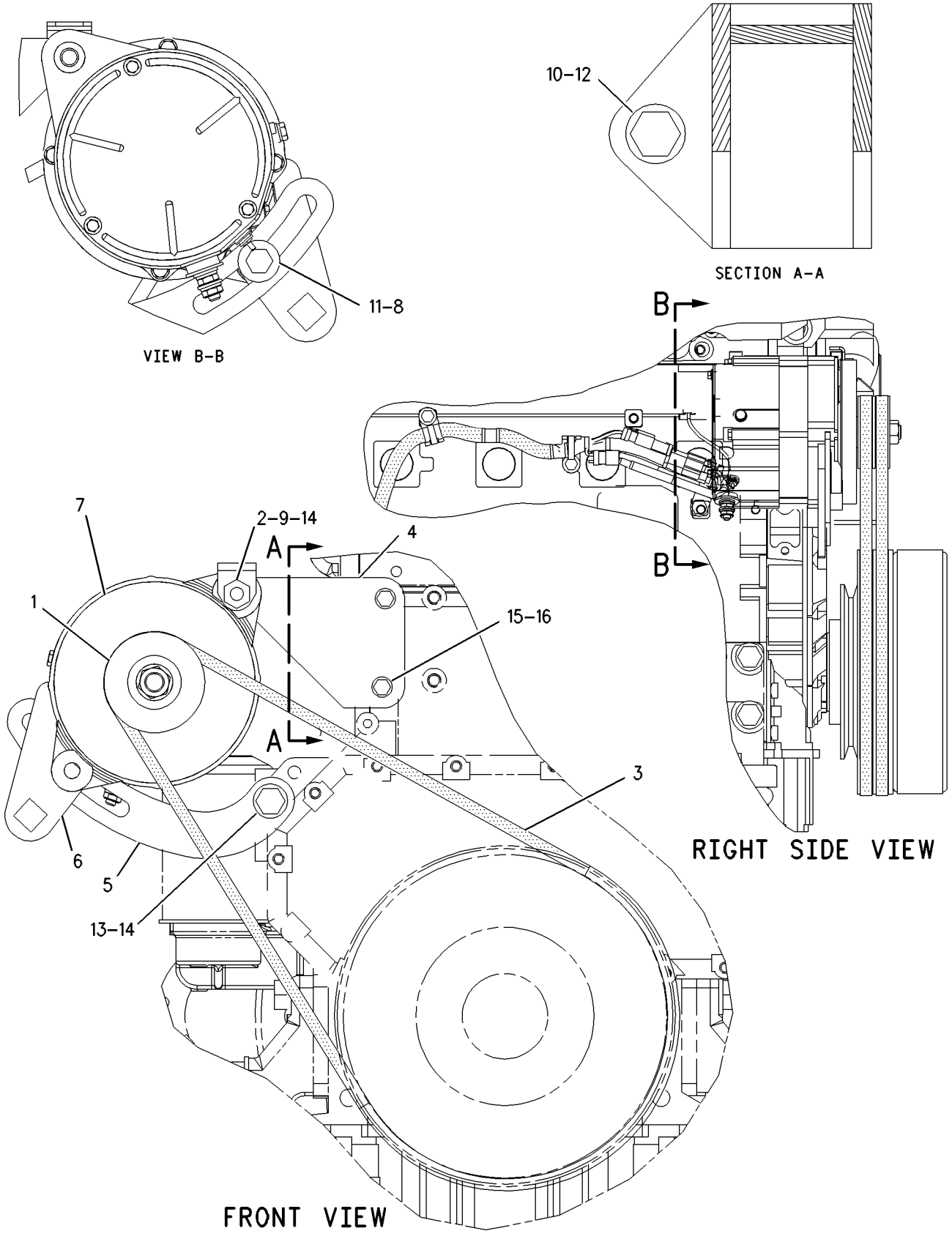

GRAPHIC #1 g00913314

ELECTRICAL AND STARTING SYSTEM

210-1675 ALTERNATOR GP-CHARGING

S/N: RTA1-UP; RBB1-UP
24 VOLT, 95 AMP
AN ATTACHMENT

SMCS-1405 **i01820620**

NOTE	REF NO	GRAPHIC REF	PART NUMBER	QTY	PART NAME 1 2 3 4 5 6 (PRODUCT LEVEL)	SEE PAGE
	1	1	**9L-6246**	1	PULLEY-ALTERNATOR	
	2	1	**9S-1240**	1	NUT AS	
	3	1	**130-3216**	1	V-BELT SET (INCLUDES 2 BELTS)	
	4	1	**157-2393**	1	BRACKET AS	
	5	1	**158-2829**	1	STRAP	
YR	6	1	**197-8820**	1	ALTERNATOR GP-CHARGING	94
	7	1	**212-8743**	1	BRACKET-ALTERNATOR	
	8	1	**5P-1076**	1	WASHER-HARD (13.5X30X4MM THK)	
	9	1	**7X-0338**	1	BOLT (1/2-13X6 IN)	
	10	1	**7X-7729**	1	WASHER (11X25X3MM THK)	
	11	1	**8C-4436**	1	BOLT (1/2-13X1.375 IN)	
M	12	1	**8T-4136**	1	BOLT (M10X1.5X25MM)	
M	13	1	**8T-4183**	1	BOLT (M12X1.75X40MM)	
	14	1	**8T-4223**	2	WASHER-HARD (13.5X25.5X3MM THK)	
	15	1	**8T-4224**	2	WASHER-HARD (8.8X16X2MM THK)	
M	16	1	**8T-6870**	2	BOLT (M8X1.25X70MM)	

M-METRIC PART
R-REMFG PART MAY BE AVAILABLE
Y-SEPARATE ILLUSTRATION

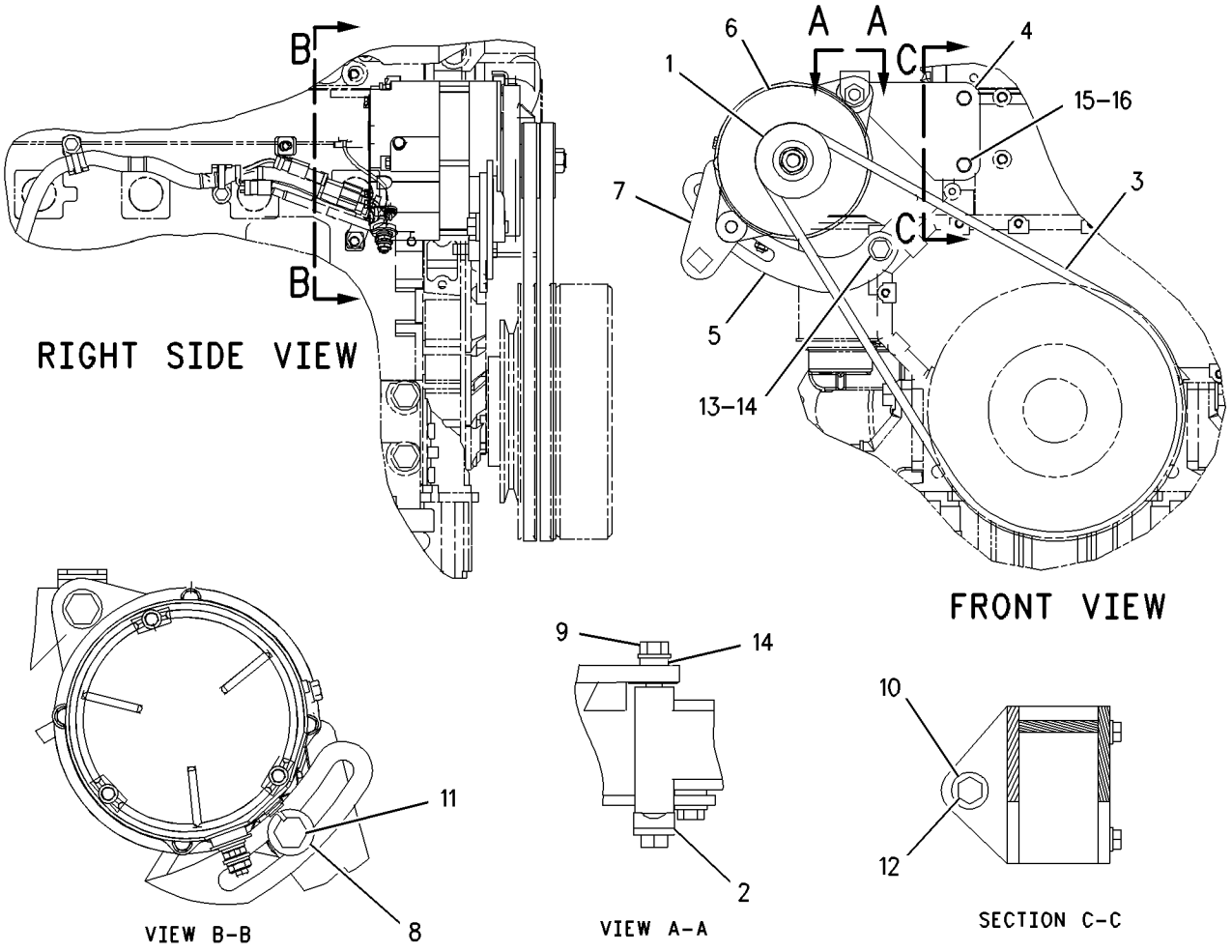

GRAPHIC #1 g00897654

3E-7844 CONTROL GP-LIFT KICKOUT

S/N: RTA1-UP; RBB1-UP

PART OF 148-7678, 218-9937 KICKOUT & POSITIONER GP

SMCS-5109 **i01306083**

NOTE	REF NO	GRAPHIC REF	PART NUMBER	QTY	PART NAME 1 2 3 4 5 6 (PRODUCT LEVEL)	SEE PAGE
	1	1	**9X-5617**	1	FILM	
	2	1	**102-8803**	1	KIT-RECEPTACLE (3 PIN)	
					(INCLUDES RECEPTACLE AS AND WEDGE)	
	3	1	**8T-8729**	3	PIN-CONNECTOR	
	4	1	**3E-3371**	1	WEDGE-RECEPTACLE LOCK	

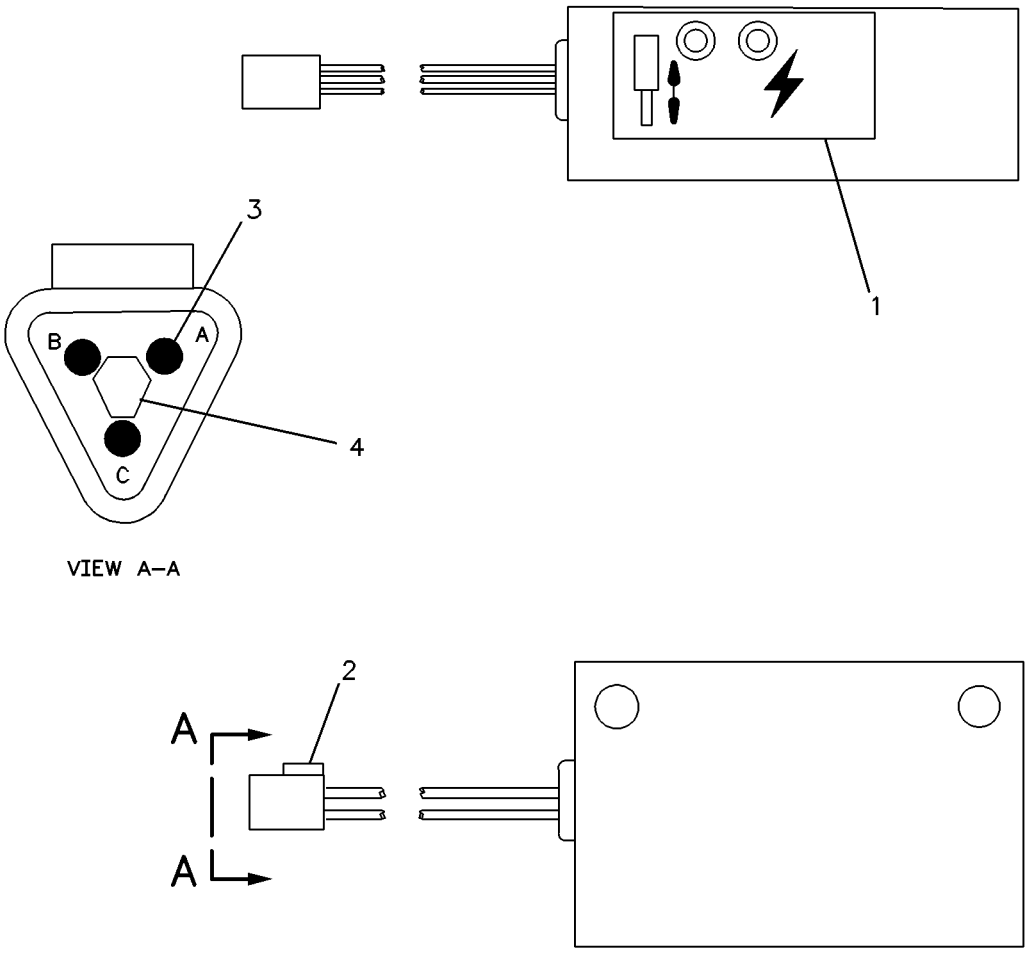

GRAPHIC #1 g00119271

207-5262 CONTROL GP-MACHINE

S/N: RTA1-UP; RBB1-UP
PART OF 228-1846 INSTALLATION GP-SECURITY
AN ATTACHMENT

SMCS-7600, 7610 **i01830603**

NOTE	REF NO	GRAPHIC REF	PART NUMBER	QTY	PART NAME 1 2 3 4 5 6 (PRODUCT LEVEL)	SEE PAGE
	1	1	**156-6155**	1	CONTROL GP-UNPROGRAMMED	
	2	1	**206-5162**	2	KEY AS-ELECTRONIC (SECURITY)	
F		1	**220-6355**	1	SOFTWARE GP-MACHINE (SECURITY)	

F-NOT SHOWN

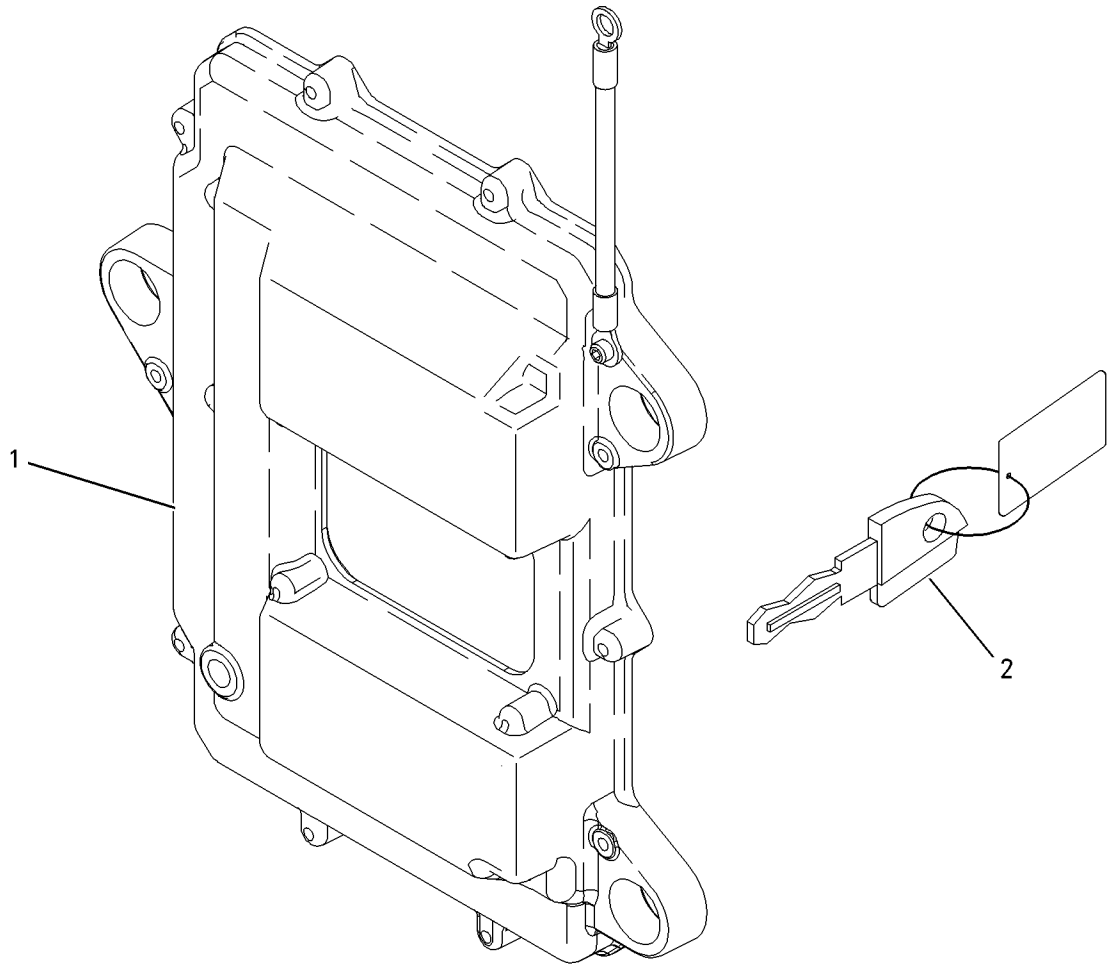

GRAPHIC #1 g00913550

3E-7843 CONTROL GP-POSITION—WORK TOOL

S/N: RTA1-UP; RBB1-UP

PART OF 148-7678, 218-9937 KICKOUT & POSITIONER GP

SMCS-5112 **i00411746**

NOTE	REF NO	GRAPHIC REF	PART NUMBER	QTY	PART NAME 1 2 3 4 5 6 (PRODUCT LEVEL)	SEE PAGE
	1	1	**9X-5617**	1	FILM	
	2	1	**8T-8730**	3	SOCKET-CONNECTOR	
	3	1	**3E-3368**	1	WEDGE-PLUG LOCK	
	4	1	**3E-3367**	1	PLUG AS-CONNECTOR	

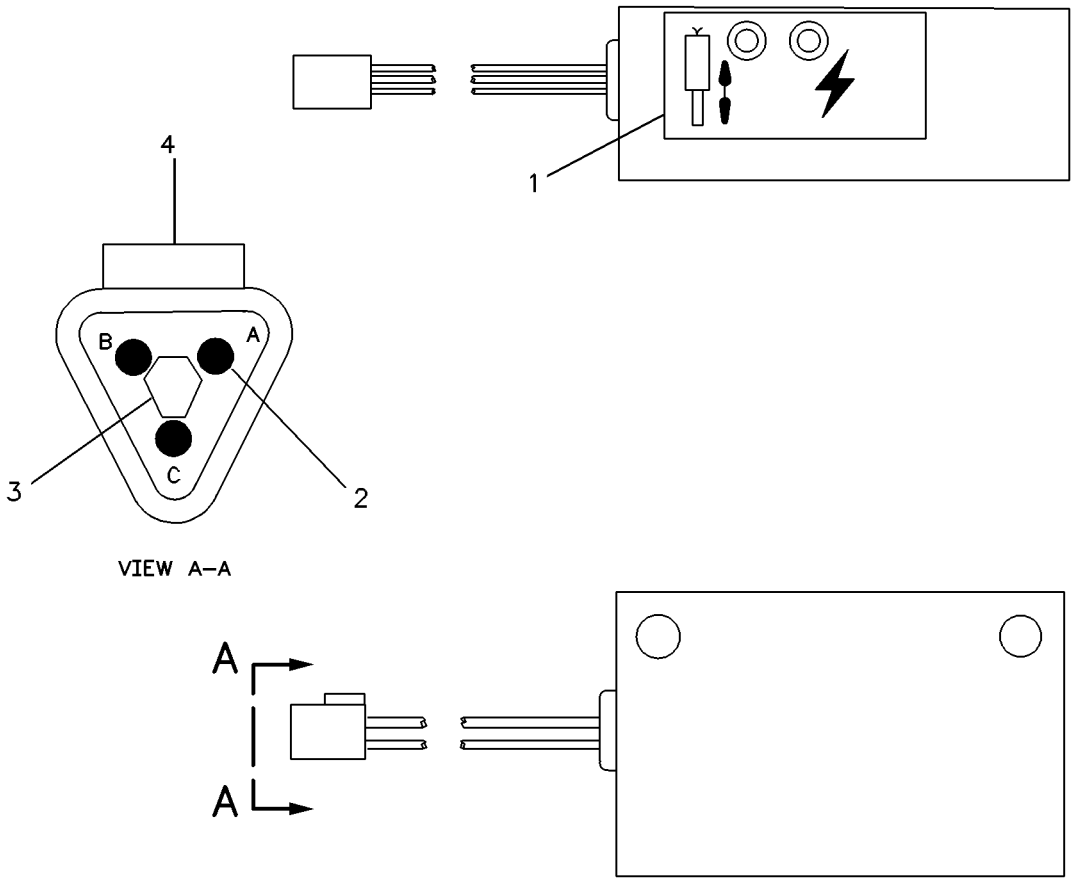

GRAPHIC #1 g00119265

207-5947 CONVERTER GP-ELECTRICAL

S/N: RTA1-UP; RBB1-UP
PART OF 225-4329 INSTALLATION GP-RADIO
AN ATTACHMENT

SMCS-1421 **i01834404**

NOTE	REF NO	GRAPHIC REF	PART NUMBER	QTY	PART NAME 1 2 3 4 5 6 (PRODUCT LEVEL)	SEE PAGE
	1	1	**117-2311**	1	RECEPTACLE AS-POWER (12 VOLT)	
	2	1	**124-5638**	1	FILM (12VOLT)	
	3	1	**205-4285**	1	CONVERTER GP-ELECTRICAL (24 VOLT TO 12 VOLT)	
	4	1	**3V-4791**	1	GROMMET	
M	5	1	**9X-1046**	2	SCREW (M4X0.7X18MM)	
	6	1	**9X-8256**	2	WASHER (6.6X12X2MM THK)	

M-METRIC PART

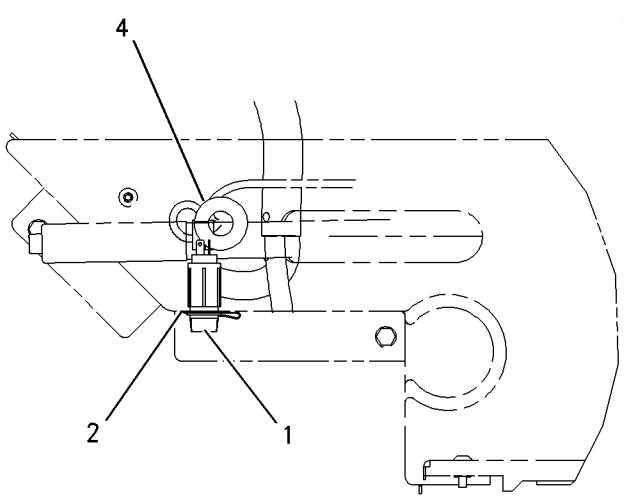

LEFT SIDE VIEW
(PARK BRAKE & COVER AS.)

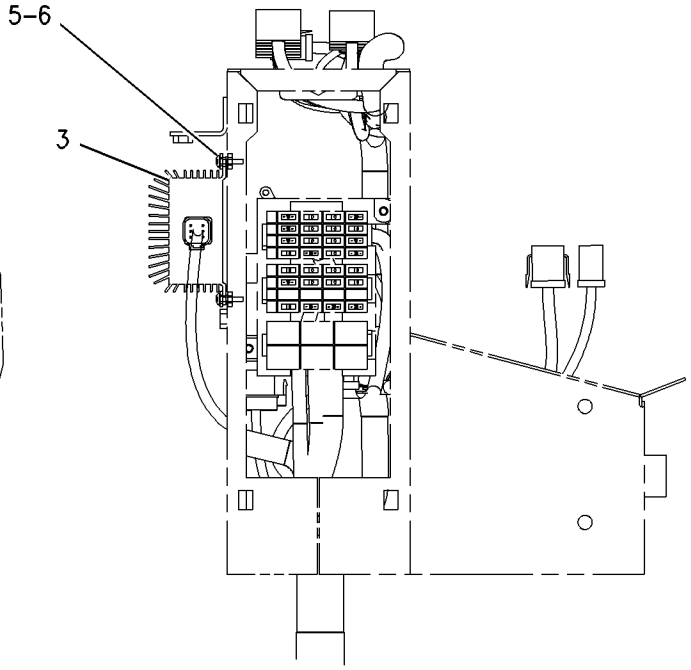

RIGHT SIDE VIEW
(FUSE BOX)

GRAPHIC #1 g00895503

190-2446 ELECTRONICS GP-MACHINE–SECURITY

S/N: RTA1-UP; RBB1-UP
PART OF 189-4871 WIRING GP-MACHINE
AN ATTACHMENT

SMCS-7610, 7620 **i01822197**

NOTE	PART NUMBER	QTY	PART NAME 1 2 3 4 5 6 (PRODUCT LEVEL)	SEE PAGE
	156-6155	1	CONTROL GP-UNPROGRAMMED (SECURITY)	
	7X-6315	1	STRAP AS-GROUND	
	134-4126	1	WASHER (4.52X8.28X.76MM THK)	
	184-2472	1	SCREW-PAN HEAD (LUBRICATED)	
	212-4223	1	FILM (MACHINE SECURITY SYSTEM)	
	207-5268	1	SOFTWARE GP-MACHINE (SECURITY)	

<END>

222-4879 ELECTRONICS GP-MACHINE

S/N: RTA1-UP; RBB1-UP
PART OF 216-8960, 216-8961 COMMON AR

SMCS-7610, 7620 **i01816091**

NOTE	PART NUMBER	QTY	PART NAME 1 2 3 4 5 6 (PRODUCT LEVEL)	SEE PAGE
	215-2884	1	ELECTRONICS GP-MACHINE	
	221-3242	1	SOFTWARE GP-MACHINE	

<END>

107-1852 HEATER GP-JACKET WATER

S/N: RTA1-UP; RBB1-UP
120 VOLT/1000 WATT
AN ATTACHMENT

SMCS-1383 **i01223731**

NOTE	REF NO	GRAPHIC REF	PART NUMBER	QTY	PART NAME 1 2 3 4 5 6 (PRODUCT LEVEL)	SEE PAGE
	1	1	**8M-5254**	1	SEAL-O-RING (31.34MM ID)	
	2	1	**159-6108**	1	CORD AS-HEATER	

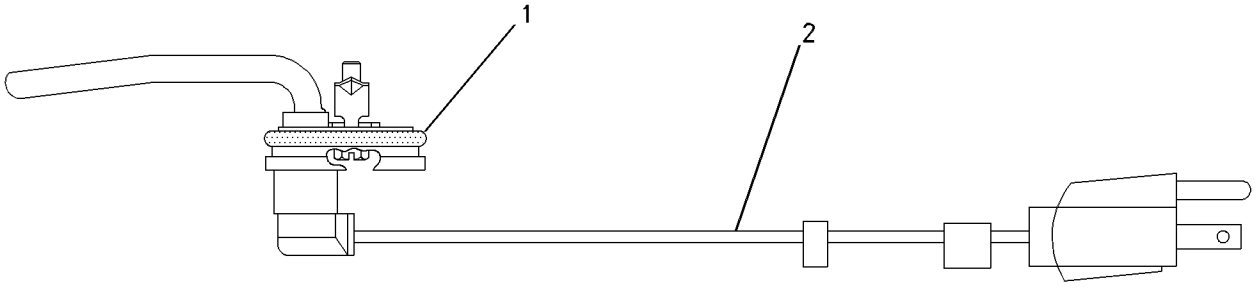

GRAPHIC #1 g00508420

ELECTRICAL AND STARTING SYSTEM

159-4995 HEATER GP-JACKET WATER

S/N: RTA1-UP; RBB1-UP
240V/1000W
AN ATTACHMENT

SMCS-1383 **i01300505**

NOTE	REF NO	GRAPHIC REF	PART NUMBER	QTY	PART NAME 1 2 3 4 5 6 (PRODUCT LEVEL)	SEE PAGE
	1	1	**8M-5254**	1	SEAL-O-RING (31.34MM ID)	
	2	1	**159-4996**	1	CORD AS-HEATER	

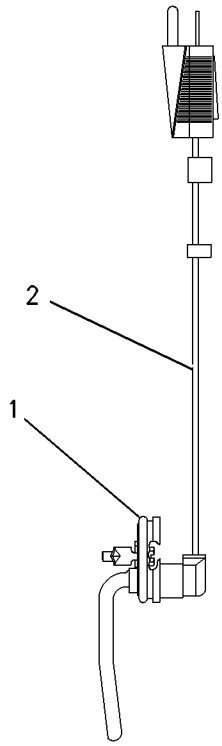

GRAPHIC #1 g00689388

228-1846 INSTALLATION GP-SECURITY

S/N: RTA1-UP; RBB1-UP
AN ATTACHMENT

SMCS-7631 **i01834428**

NOTE	PART NUMBER	QTY	PART NAME 1 2 3 4 5 6 (PRODUCT LEVEL)	SEE PAGE
M	**099-3649**	3	BOLT (M8X1.25X40MM)	
	205-8257	1	COIL AS	
D	**5P-5677**		WIRE-ELECTRICAL (18 GA) (.4M)	
	186-3735	1	PIN-CONNECTOR	
	222-3870	1	COIL AS	
	102-8802	1	KIT-RECEPTACLE (2 PIN)	
	3E-3365	2	WEDGE-RECEPTACLE LOCK (2 PIN)	
	186-3735	4	PIN-CONNECTOR	
E	**9X-1813**	1	SLEEVE (15CM)	
Y	**207-5262**	1	CONTROL GP-MACHINE (SECURITY)	101
	205-0826	1	FILM (MACHINE SECURITY SYSTEM)	
	224-3385	1	FILM (START)	
	224-9611	1	HARNESS AS-CONTROL (SECURITY)	
	102-8805	1	KIT-RECEPTACLE (6 PIN)	
	155-2260	1	KIT-CONNECTING PLUG (3 PIN)	
	155-2270	1	KIT-CONNECTING PLUG (2 PIN)	
	155-2274	1	KIT-CONNECTING PLUG (6 PIN)	
	102-8802	1	KIT-RECEPTACLE (2 PIN)	
	102-8803	1	KIT-RECEPTACLE (3 PIN)	
	165-5655	1	LAMP AS (12 VOLT)	
	186-3735	3	PIN-CONNECTOR	
	8T-9655	6	MOUNT (ISOLATION)	
	6I-1418	3	SPACER (8.2X12.7X28.7MM THK)	
	7K-1181	24	STRAP-CABLE	
	151-6320	2	TOOL-WIRE REMOVAL	
	9N-0869	3	WASHER-HARD (8.8X25.5X2MM THK)	

D-ORDER BY THE METER
E-ORDER BY THE CENTIMETER
M-METRIC PART
Y-SEPARATE ILLUSTRATION

<END>

117-3468 LAMP GP-FLOOD

S/N: RTA1-UP; RBB1-UP
24 VOLT. SUSPENDED
PART OF 115-1558 LIGHTING GP-AUXILIARY, 146-6906 LIGHTING GP-FLOOD, 204-2004 LIGHTING GP-REAR
AN ATTACHMENT

SMCS-1434 **i01289196**

NOTE	REF NO	GRAPHIC REF	PART NUMBER	QTY	PART NAME 1 2 3 4 5 6 (PRODUCT LEVEL)	SEE PAGE
	1	1	**9X-3463**	1	LAMP (24 VOLT)(65 WATT)	
	2	1	**144-5282**	2	SCREW	
	3	1	**144-5283**	1	SEAL	
	4	1	**144-5284**	1	LENS AS	
	5	1	**164-7556**	1	CLIP	

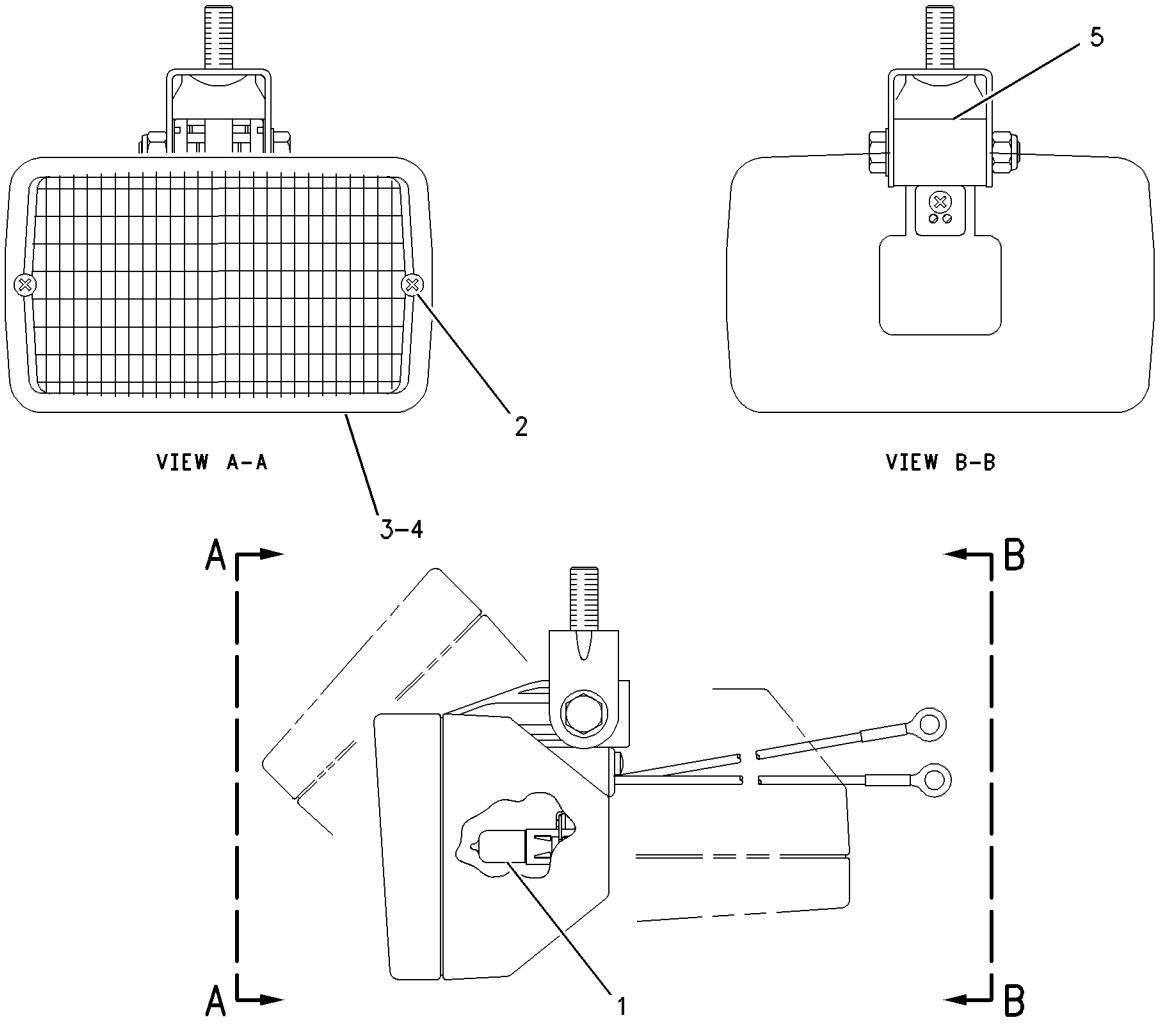

GRAPHIC #1 g00523187

145-6929 LAMP GP-STOP & TAIL

S/N: RTA1-UP; RBB1-UP

PART OF 204-9416 LIGHTING GP-FLOOD & SIGNAL

SMCS-1432 **i01377118**

NOTE	REF NO	GRAPHIC REF	PART NUMBER	QTY	PART NAME 1 2 3 4 5 6 (PRODUCT LEVEL)	SEE PAGE
	1	1	**3E-3365**	1	WEDGE-RECEPTACLE LOCK (2 PIN)	
	2	1	**3E-3371**	1	WEDGE-RECEPTACLE LOCK	
	3	1	**8T-8729**	5	PIN-CONNECTOR	
	4	1	**9X-4492**	1	LAMP	
	5	1	**9X-4493**	1	LAMP (24 VOLT)	
	6	1	**102-8802**	1	KIT-RECEPTACLE (2 PIN)	
					(KIT INCLUDES RECEPTACLE AS AND WEDGE)	
	7	1	**102-8803**	1	KIT-RECEPTACLE (3 PIN)	
					(KIT INCLUDES RECEPTACLE AS AND WEDGE)	
	8	1	**146-2438**	1	LENS	

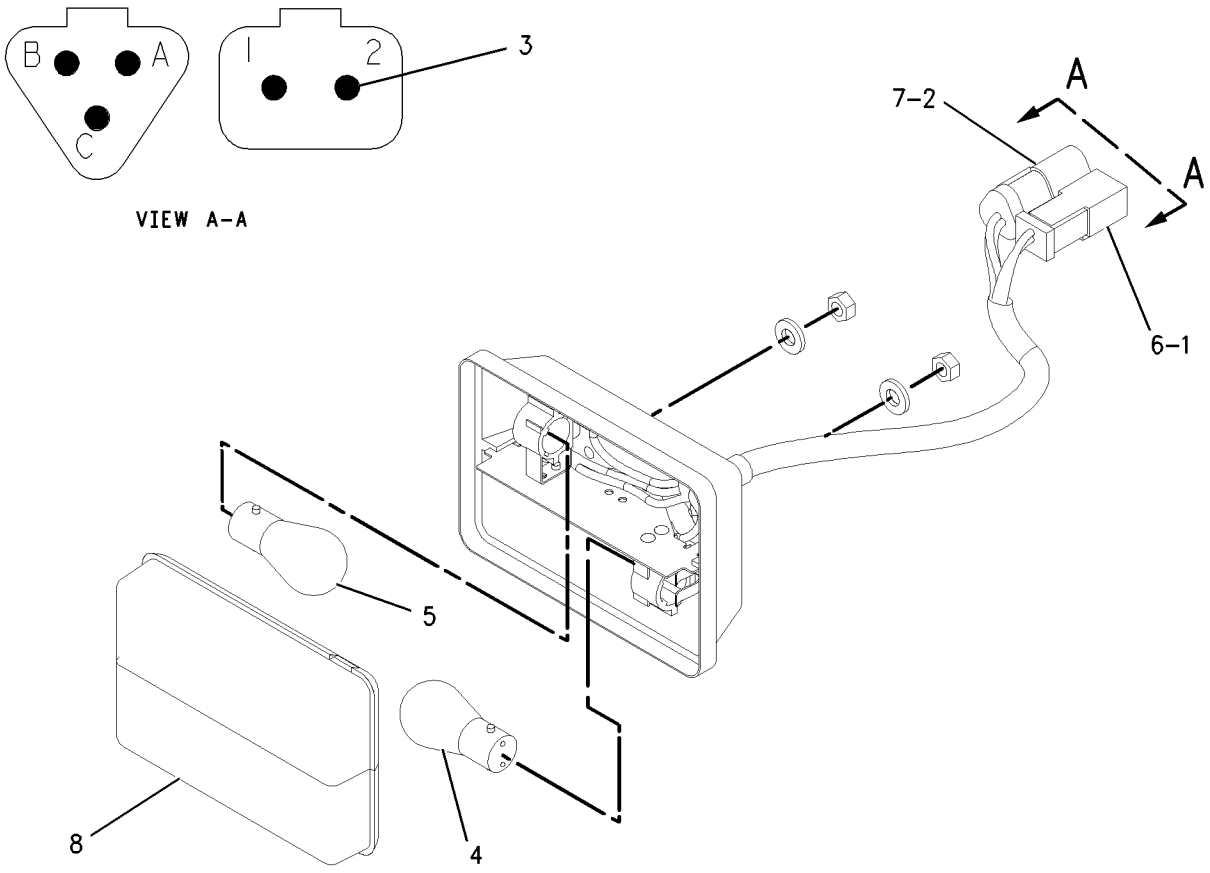

GRAPHIC #1 g00728005

108-1029 LAMP GP-WARNING BEACON

S/N: RTA1-UP; RBB1-UP
PART OF 218-8836 LIGHTING GP-WARNING
AN ATTACHMENT

SMCS-1431 **i01289250**

NOTE	REF NO	GRAPHIC REF	PART NUMBER	QTY	PART NAME 1 2 3 4 5 6 (PRODUCT LEVEL)	SEE PAGE
	1	1	**9X-8121**	1	LENS-AMBER	
	2	1	**9X-7849**	1	LAMP	
	3	1	**9X-8139**	1	BELT-DRIVE	
	4	1	**9R-7958**	1	CORD AS	
	5	1	**9R-7942**	1	PLUG AS	

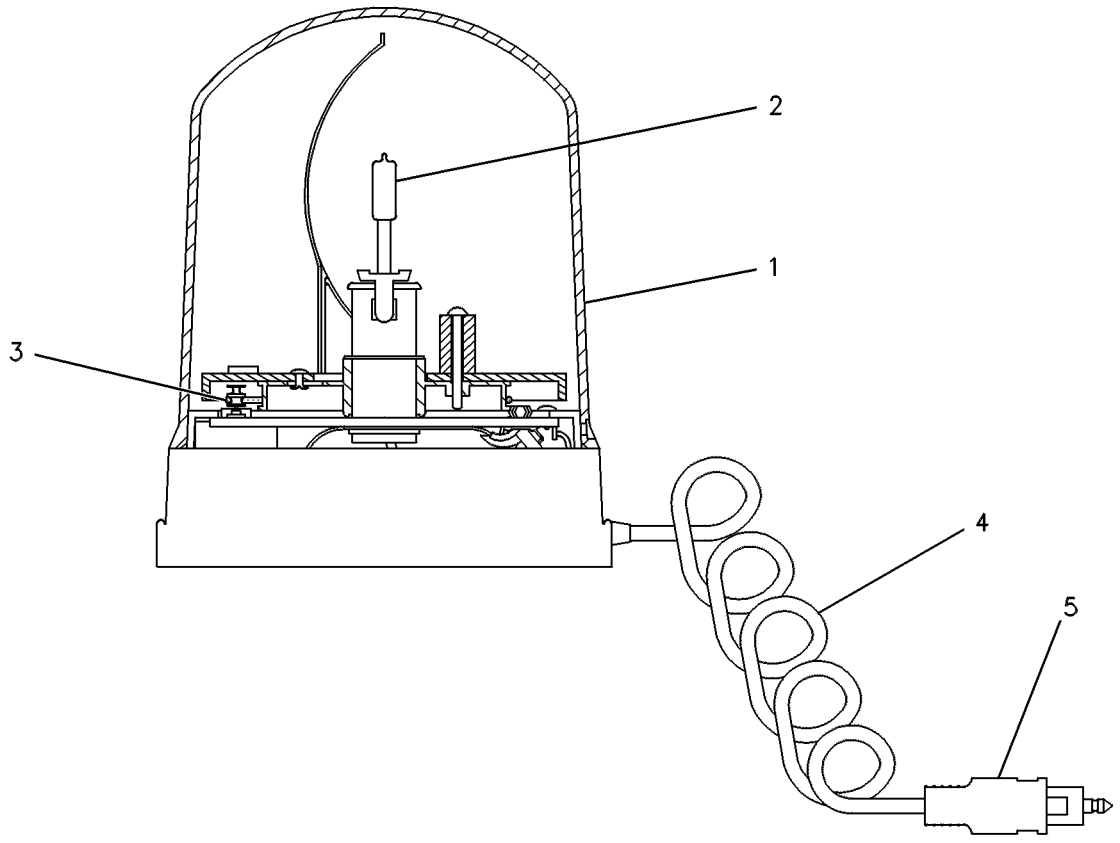

GRAPHIC #1 g00131297

115-1558 LIGHTING GP-AUXILIARY

S/N: RTA1-UP; RBB1-UP
AN ATTACHMENT

SMCS-1429 **i01132857**

NOTE	REF NO	GRAPHIC REF	PART NUMBER	QTY	PART NAME 1 2 3 4 5 6 (PRODUCT LEVEL)	SEE PAGE
	1	1	**115-1559**	2	PLATE	
Y	2	1	**117-3468**	2	LAMP GP-FLOOD	108
M	3	1	**5C-2890**	4	NUT (M6X1.00 THD)	
	4	1	**8T-4121**	2	WASHER-HARD (2.5MM THK)	
M	5	1	**8T-4133**	2	NUT (M10X1.50 THD)	
M	6	1	**8T-4189**	4	BOLT (M8X1.25X20MM)	
	7	1	**8T-4224**	4	WASHER-HARD (8.8X16X2MM THK)	
D	8	1	**5P-6039**		WRAP-SPIRAL (0.5M)	

D-ORDER BY THE METER
M-METRIC PART
Y-SEPARATE ILLUSTRATION

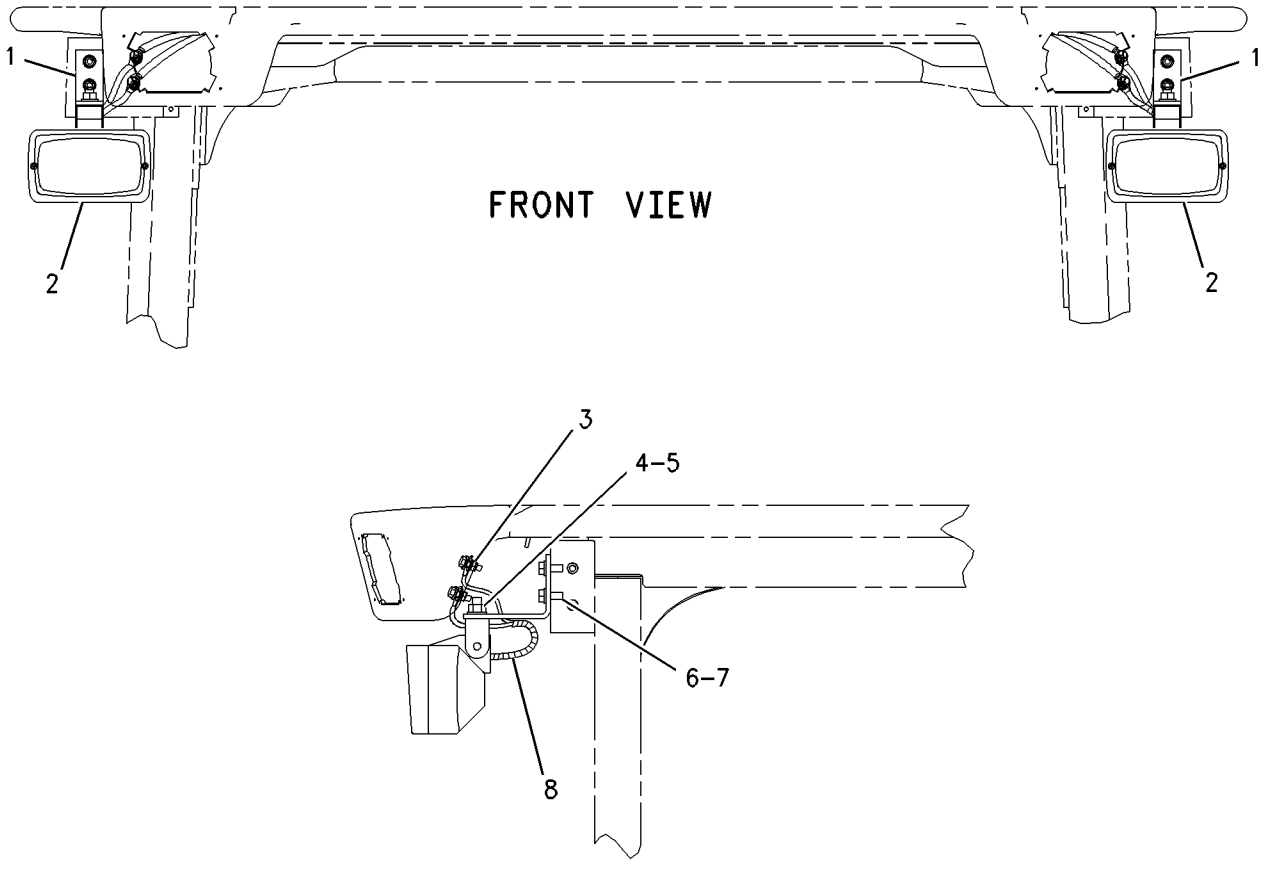

GRAPHIC #1 g00663501

ELECTRICAL AND STARTING SYSTEM

117-9622 LIGHTING GP-FLOOD

S/N: RTA1-UP; RBB1-UP
PART OF 205-0522 CAB AR
AN ATTACHMENT

SMCS-1434 **i01689160**

NOTE	REF NO	GRAPHIC REF	PART NUMBER	QTY	PART NAME 1 2 3 4 5 6 (PRODUCT LEVEL)	SEE PAGE
	1	1	**8E-1118**	1	ANTENNA AS	
D	2	1	**5P-5639**	2	SEAL (0.32M EACH)	
	3	1	**109-7041**	4	LAMP GP-FLOOD	
					(EACH INCLUDES)	
		1	**9X-3463**	1	LAMP-HEAD (24 VOLT)	
		1	**142-5789**	4	SCREW	
	4	1	**109-8981**	1	CABLE AS-COAXIAL	
	5	1	**111-0157**	1	HARNESS AS-LIGHTING (FLOOD)	
		1	**102-8804**	1	KIT-RECEPTACLE (4 PIN)	
					(INCLUDES RECEPTACLE AS & WEDGE)	
	6	1	**114-6604**	16	NUT-SPEED	
	7	1	**119-0781**		ADHESIVE	
C	8	1	**164-5509**	1	BLOCK	
C	9	1	**180-5100**	1	ROOF	
	9A	1	**9R-7941**	1	RECEPTACLE AS-POWER (24 VOLTS)	
		1	**178-7539**	1	RECEPTACLE AS	
		1	**9R-7980**	1	COVER	
		1	**5P-5774**	1	PLUG	
M	10	1	**5C-2890**	4	NUT (M6X1 THD)	
M	11	1	**6V-7357**	4	BOLT (M6X1.0X25MM)	
CM	12	1	**8T-4137**	12	BOLT (M10X1.5X20MM)	
	13	1	**8T-4205**	8	WASHER-HARD (7.2X14.5X2MM THK)	
C	14	1	**8T-4226**	12	WASHER-PLATED (10.5X45X3MM THK)	
D	15	1	**5P-5639**		SEAL (0.51M)	
D	16	1	**5P-5639**		SEAL (0.27M)	

C-CHANGE FROM PREVIOUS TYPE
D-ORDER BY THE METER
M-METRIC PART

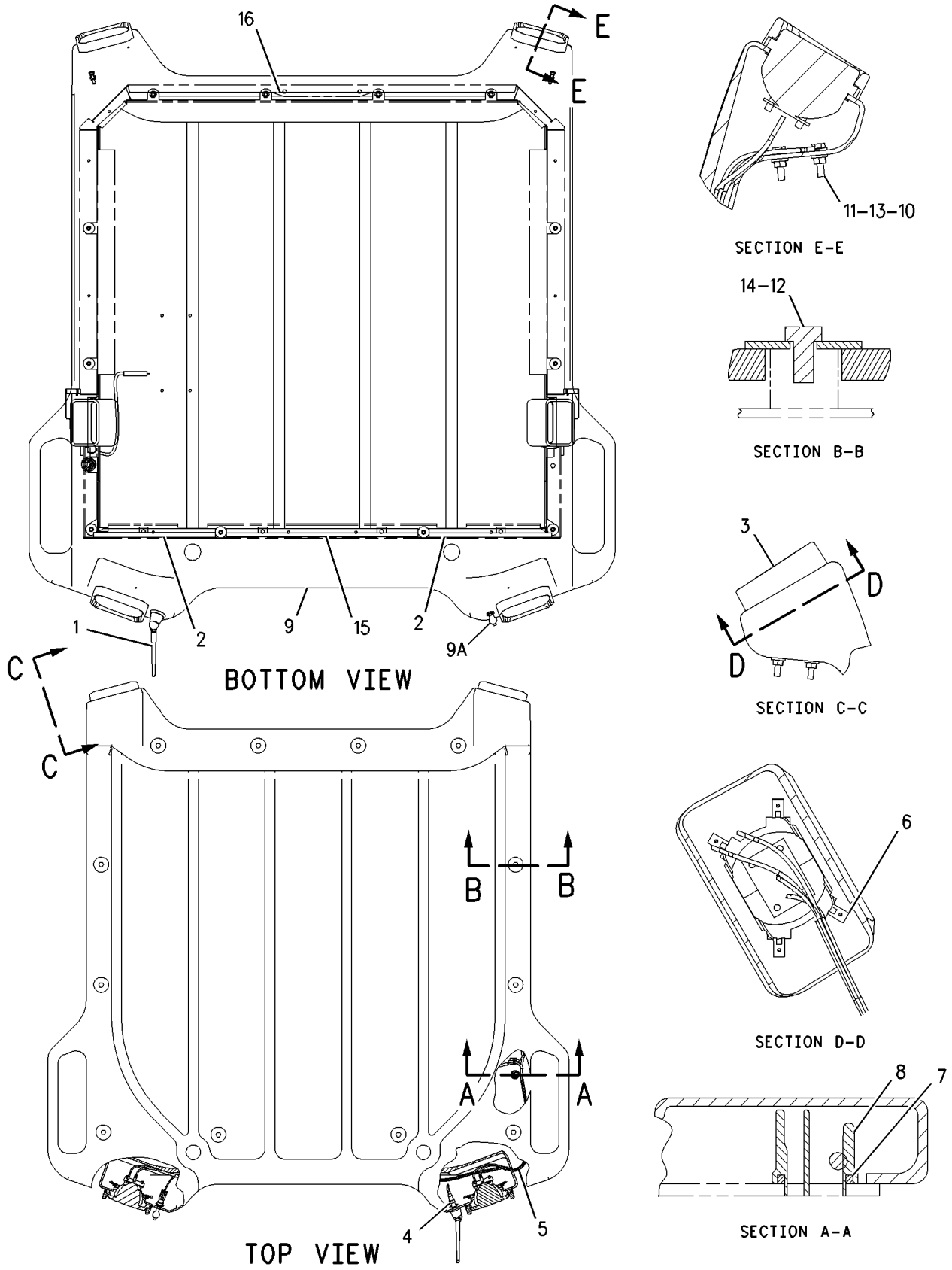

GRAPHIC #1

g00786496

120-6668 LIGHTING GP-FLOOD

S/N: RTA1-UP; RBB1-UP
4 LAMP
PART OF 205-0520 CANOPY GP-OPEN ROPS
AN ATTACHMENT

SMCS-1434 **i01563515**

NOTE	REF NO	GRAPHIC REF	PART NUMBER	QTY	PART NAME 1 2 3 4 5 6 (PRODUCT LEVEL)	SEE PAGE
	1	1	**109-7041**	4	LAMP GP-FLOOD	
					(EACH INCLUDES)	
		1	**142-5789**	4	SCREW	
		1	**9X-3463**	1	LAMP (24 VOLT)	
C	2	1	**180-5100**	1	ROOF	
	3	1	**5P-5774**	1	PLUG	
	4	1	**9R-7941**	1	RECEPTACLE AS-POWER (24 VOLTS)	
		1	**9R-7980**	1	COVER	
CM	5	1	**8T-4137**	12	BOLT (M10X1.5X20MM)	
C	6	1	**8T-4226**	12	WASHER-PLATED (10.5X45X3MM THK)	
C	7	1	**5P-5639**	3	SEAL (.27M EACH)	
C	7A	1	**5P-5639**	2	SEAL (.32M EACH)	
C	7B	1	**5P-5639**		SEAL (.51M)	
	8	1	**114-6604**	16	NUT-SPEED	
	9	1	**111-0157**	1	HARNESS AS-LIGHTING (FLOOD)	
M	10	1	**5C-2890**	4	NUT (M6X1 THD)	
CM	11	1	**6V-7357**	4	BOLT (M6X1.0X25MM)	
	12	1	**8T-4205**	8	WASHER-HARD (7.2X14.5X2MM THK)	

C-CHANGE FROM PREVIOUS TYPE
M-METRIC PART

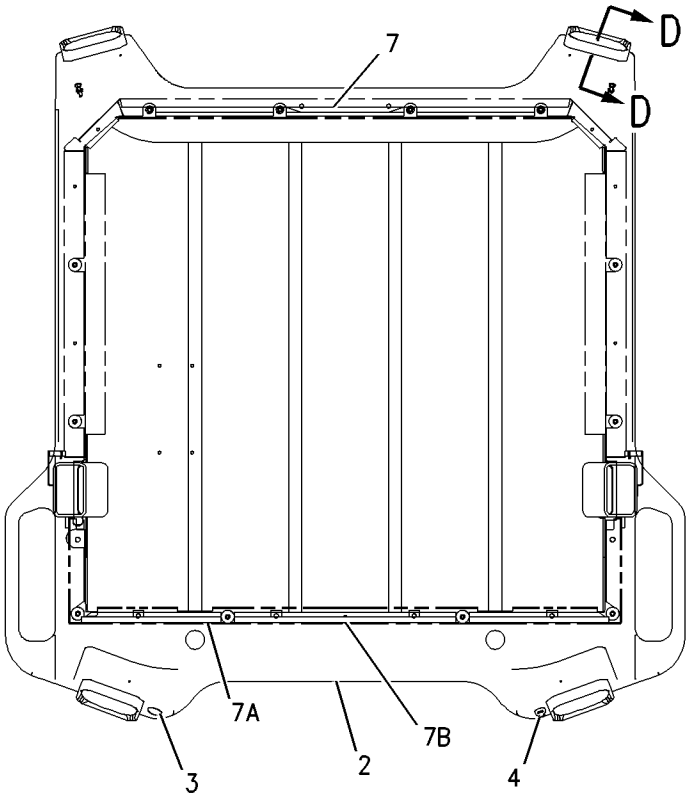

BOTTOM VIEW

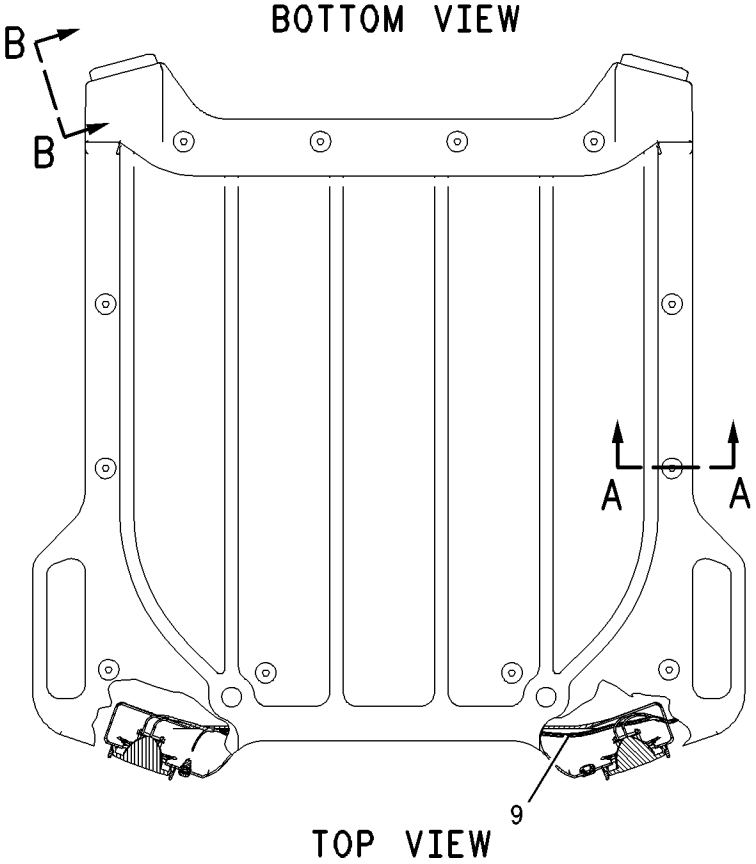

TOP VIEW

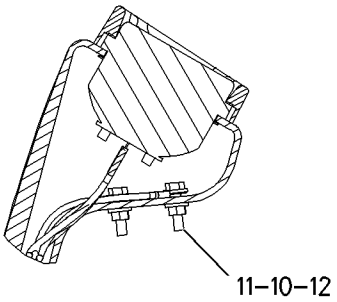

SECTION D-D

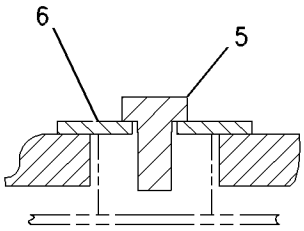

SECTION A-A

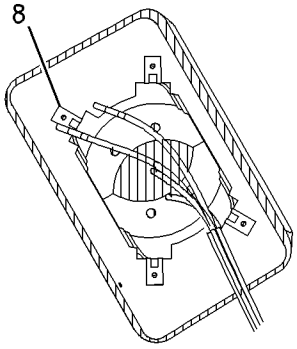

SECTION C-C

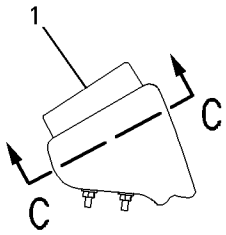

SECTION B-B

GRAPHIC #1

g00821364

146-6906 LIGHTING GP-FLOOD

S/N: RTA1-UP; RBB1-UP
2 LAMP
PART OF 216-6908 CAB AR
AN ATTACHMENT

SMCS-1434 **i01859461**

NOTE	REF NO	GRAPHIC REF	PART NUMBER	QTY	PART NAME 1 2 3 4 5 6 (PRODUCT LEVEL)	SEE PAGE
Y	1	1	**117-3468**	2	LAMP GP-FLOOD (24V, SUSPENDED)	108
	2	1	**115-1559**	2	PLATE	
	3	1	**8T-4121**	2	WASHER-HARD (11X21X2.5MM THK)	
M	4	1	**8T-4133**	2	NUT (M10X1.5 THD)	
	5	1	**5P-8525**	2	GROMMET	
M	6	1	**5C-2890**	8	NUT (M6X1 THD)	
M	7	1	**8T-4970**	8	BOLT (M6X1X14MM)	
	8	1	**4B-4674**	8	WASHER (6.4X14.5X1.6MM THK)	
M	9	1	**8T-4189**	4	BOLT (M8X1.25X20MM)	
	10	1	**8T-4224**	4	WASHER-HARD (8.8X16X2MM THK)	
M	11	1	**8T-4138**	4	BOLT (M6X1X20MM)	
	12	1	**1H-3244**	4	LOCKWASHER	
	13	1	**4B-4276**	8	WASHER (7X16X1.6MM THK)	
	14	1	**5P-6039**		WRAP-SPIRAL (.5M)	
	15	1	**7K-1181**	6	STRAP-CABLE	
	16	1	**157-0634**	1	HARNESS AS-LIGHTING (FLOOD)	

M-METRIC PART
Y-SEPARATE ILLUSTRATION

146-6906 **LIGHTING GP-FLOOD** ***(contd.)*** **i01859461**

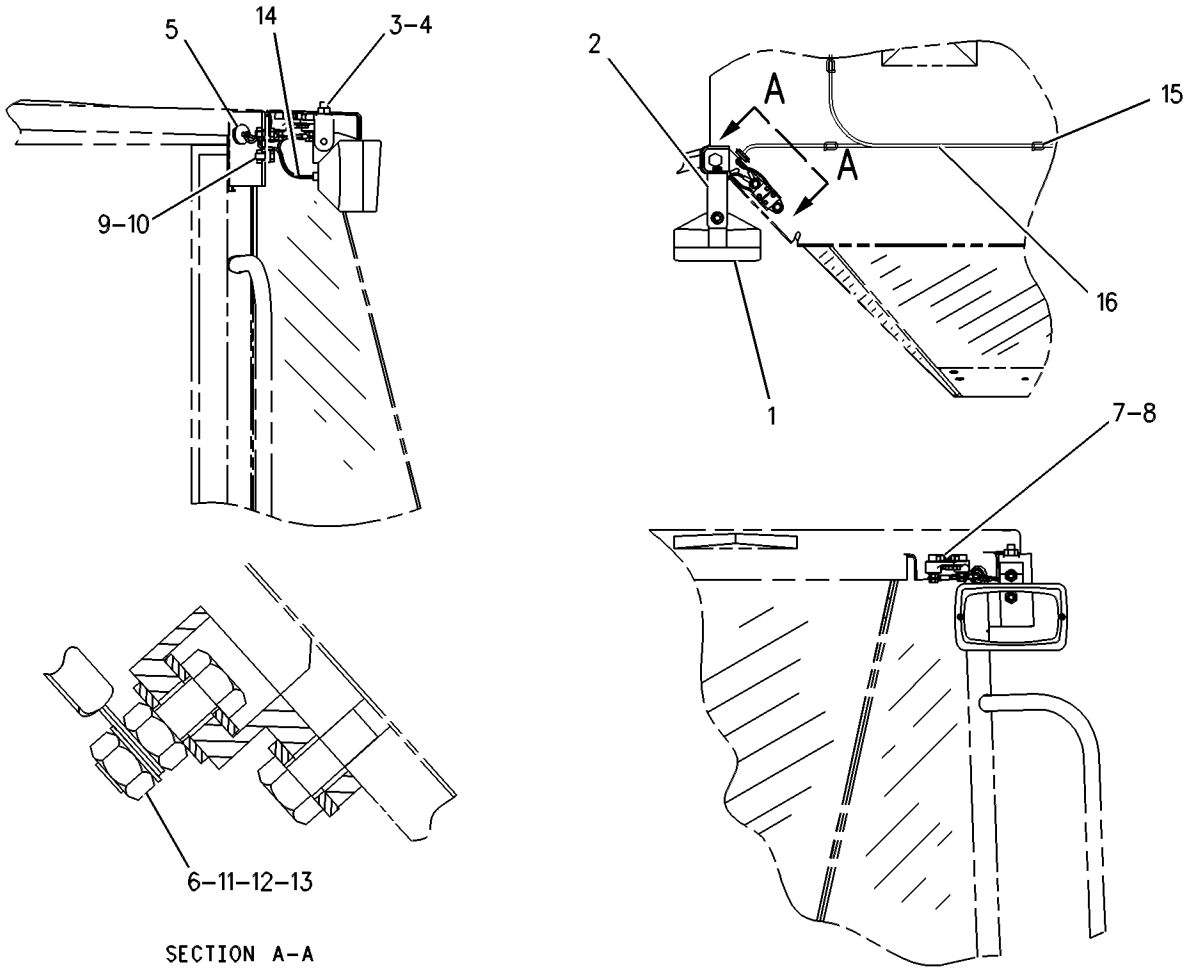

GRAPHIC #1 g00334606

ELECTRICAL AND STARTING SYSTEM

204-9416 LIGHTING GP-FLOOD & SIGNAL

S/N: RTA1-UP; RBB1-UP

PART OF 216-8960, 216-8961 COMMON AR

SMCS-1430, 1434 **i01829599**

NOTE	REF NO	GRAPHIC REF	PART NUMBER	QTY	PART NAME 1 2 3 4 5 6 (PRODUCT LEVEL)	SEE PAGE
Y	1	1	**3E-6328**	1	ALARM GP (24V)	91
	2	1	**5C-8964**	1	LAMP AS-RH	
	3	1	**5C-9029**	1	LAMP AS-LH	
	4	1	**5V-2998**	1	PLATE	
	5	1	**6K-0806**	9	STRAP-CABLE	
	6	1	**9R-1499**	2	REFLECTOR	
	7	1	**9R-2404**	6	REFLECTOR-AMBER	
	8	1	**9X-4493**	2	LAMP (24 VOLT/21 WATT)	
M	9	1	**9X-6615**	4	BOLT (M5X.8X30MM)	
	10	1	**108-0358**	1	FLASHER AS (12/24 VOLT)	
	11	1	**109-7041**	2	LAMP GP-FLOOD	
					(EACH INCLUDES)	
		1	**9X-3463**	1	LAMP-HEAD (24 VOLT)(65 WATT)	
		1	**142-5789**	4	SCREW	
	12	1	**111-5042**	2	FASTENER	
	13	1	**112-7294**	2	HOUSING-LAMP	
	14	1	**114-6604**	8	NUT-SPEED	
	15	1	**131-7866**	2	PLATE AS	
					(EACH INCLUDES)	
M		1	**8T-3612**	3	NUT-WELD (M8X1.25 THD)	
	16	1	**131-7874**	4	PAD-RESILIENT	
	17	1	**132-2349**	2	BRACKET AS	
	18	1	**143-0026**	1	HARNESS AS-LIGHTING (FLOOD & SIGNAL, RIGHT SIDE)	
		1	**102-8805**	1	KIT-RECEPTACLE (6 PIN)	
	19	1	**143-0027**	1	HARNESS AS-LIGHTING (FLOOD & SIGNAL, LEFT SIDE)	
		1	**102-8805**	1	KIT-RECEPTACLE (6 PIN)	
Y	20	1	**145-6929**	2	LAMP GP-STOP & TAIL	109
	21	1	**173-3064**	1	SWITCH AS-TURN SIG & WARNING	
		1	**5L-7200**	1	SCREW (8-32X0.375 IN)	
		1	**9B-7233**	1	LOCKWASHER	
	22	1	**202-7479**	1	HARNESS AS-LIGHTING (TURN SIGNALS)	
		1	**102-8801**	1	KIT-RECEPTACLE (12 PIN)	
	23	1	**119-5026**	2	SCREW-PAN HEAD (10-16X0.63 IN)	
	24	1	**133-3235**	1	LEVER	
	25	1	**1H-4393**	3	LOCKWASHER	
M	26	1	**3T-0851**	4	LOCKNUT (M5X.8 THD)	
M	27	1	**5C-2890**	1	NUT (M6X1 THD)	
M	28	1	**5C-8312**	3	NUT (M4X0.7 THD)	
	29	1	**5P-4116**	6	WASHER-HARD (8.8X20.5X2MM THK)	
	30	1	**7X-0620**	6	WASHER-HARD (5.5X13X1.6MM THK)	
	31	1	**8T-4121**	8	WASHER-HARD (11X21X2.5MM THK)	
M	32	1	**8T-4137**	8	BOLT (M10X1.5X20MM)	
	33	1	**8T-4205**	4	WASHER-HARD (7.2X14.5X2MM THK)	
M	34	1	**8T-6912**	6	BOLT (M8X1.25X50MM)	
M	35	1	**9X-2045**	1	SCREW-TRUSS HEAD (M6X1X20MM)	
	36	1	**9X-8256**	1	WASHER (6.6X12X2MM THK)	

M-METRIC PART
Y-SEPARATE ILLUSTRATION

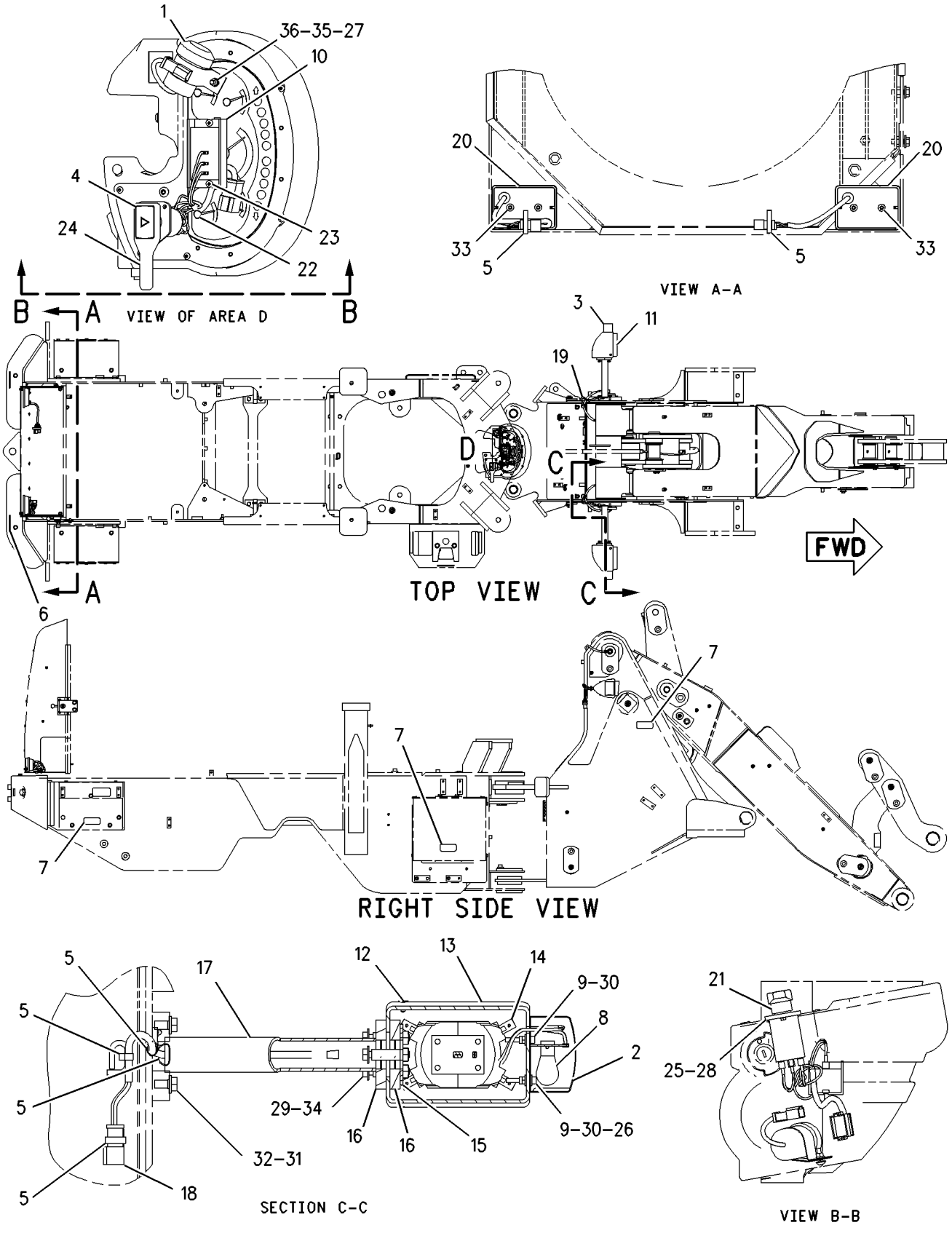

GRAPHIC #1

g00933723

ELECTRICAL AND STARTING SYSTEM

204-2004 LIGHTING GP-REAR

S/N: RTA1-UP; RBB1-UP
PART OF 216-6908 CAB AR
AN ATTACHMENT

SMCS-1434 **i01610529**

NOTE	REF NO	GRAPHIC REF	PART NUMBER	QTY	PART NAME 1 2 3 4 5 6 (PRODUCT LEVEL)	SEE PAGE
BF		1	**3S-2093**	4	STRAP-CABLE	
	2	1	**4B-2048**	8	NUT (10-32 THD)	
	3	1	**4M-7470**	6	GROMMET	
	4	1	**4V-4164**	8	BUSHING-TERMINAL	
	5	1	**6D-6146**	4	SCREW-MACHINE (10-32X1.25)	
	6	1	**7X-7729**	6	WASHER (11X25X3MM THK)	
	7	1	**8T-4121**	2	WASHER-HARD (11X21X2.5MM THK)	
M	8	1	**8T-4133**	4	NUT (M10X1.5 THD)	
M	9	1	**8T-4136**	2	BOLT (M10X1.5X25MM)	
	10	1	**9F-8125**	8	LOCKWASHER	
Y	11	1	**117-3468**	2	LAMP GP-FLOOD	108
	12	1	**9X-9365**	2	BRACKET	
	13	1	**098-8968**	8	WASHER (5X16X1.2MM THK)	

B-USE AS REQUIRED
F-NOT SHOWN
M-METRIC PART
Y-SEPARATE ILLUSTRATION

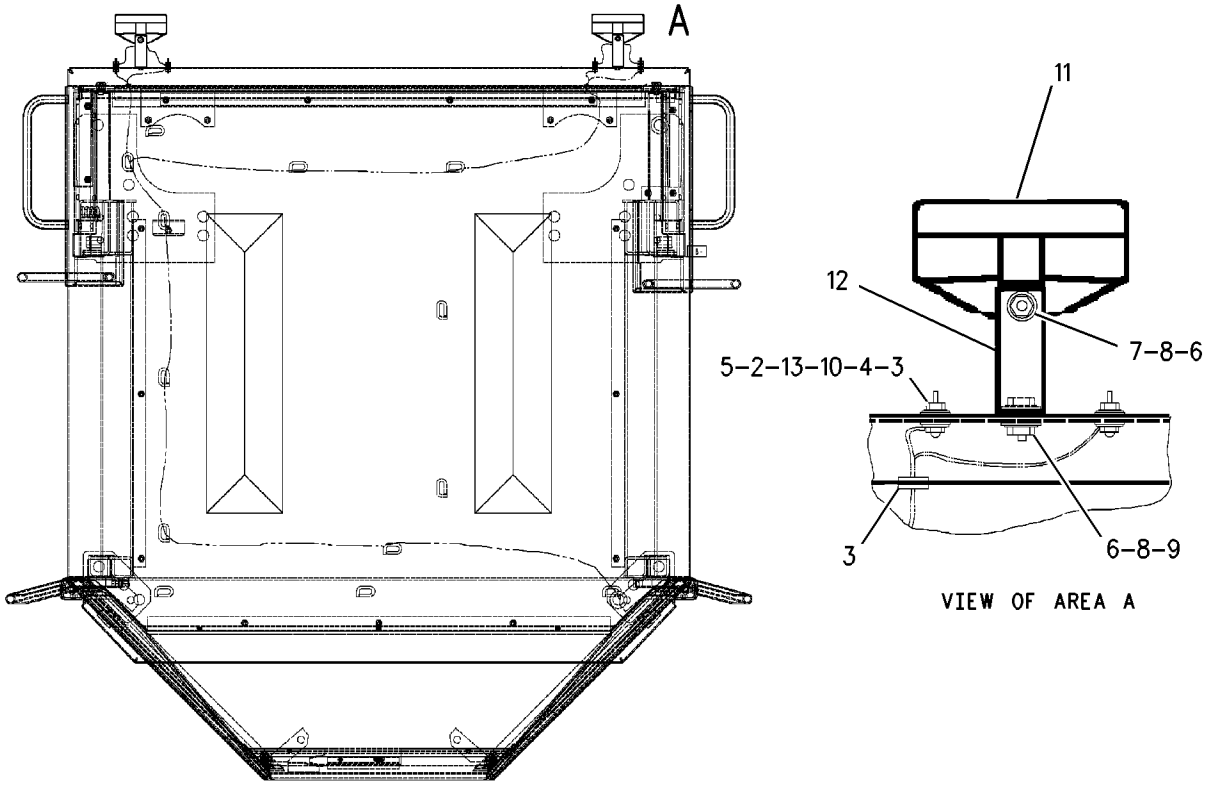

GRAPHIC #1 g00833488

218-8836 LIGHTING GP-WARNING

S/N: RTA1-UP; RBB1-UP
AN ATTACHMENT

SMCS-1431 **i01819945**

NOTE	REF NO	GRAPHIC REF	PART NUMBER	QTY	PART NAME 1 2 3 4 5 6 (PRODUCT LEVEL)	SEE PAGE
Y	1	1	**108-1029**	1	LAMP GP-WARNING BEACON (24 VOLT)	110
	2	1	**129-0336**	1	PLATE	
	3	1	**195-0925**	1	SWITCH AS-ROCKER (WARNING BEACON)	
		1	**111-7899**	1	GASKET	
	4	1	**6V-6635**	4	SCREW-PAN HEAD	

Y-SEPARATE ILLUSTRATION

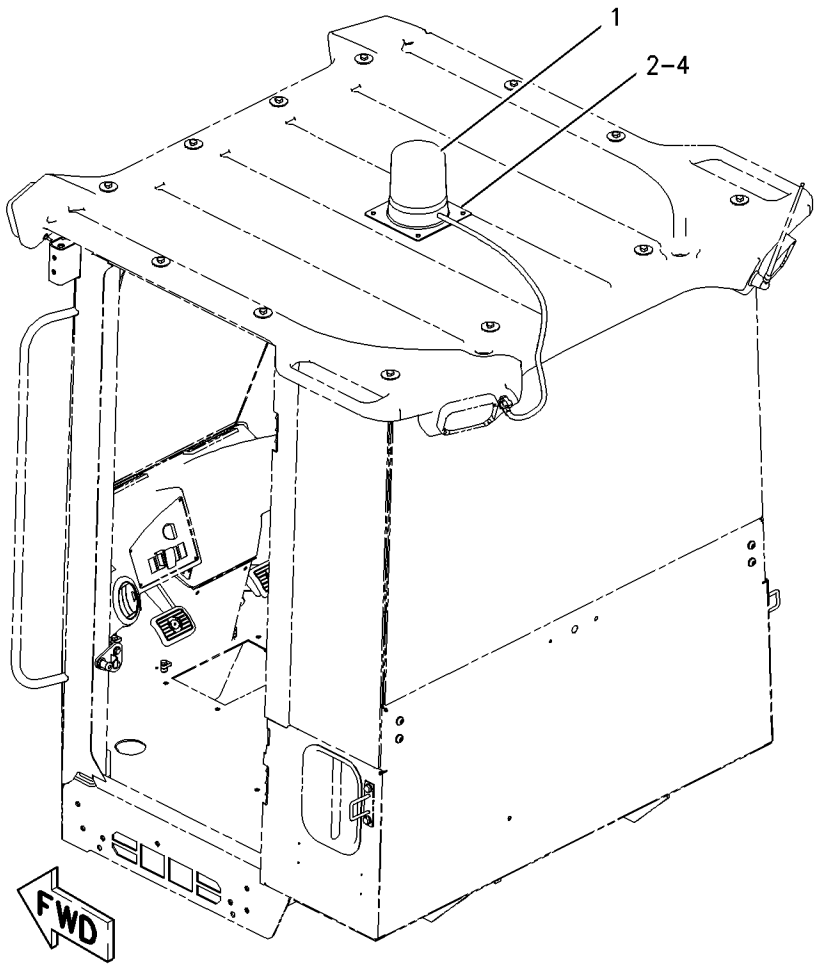

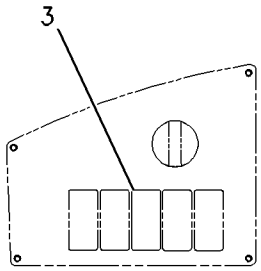

LH SWITCH PANEL
(924, 928, IT28G)

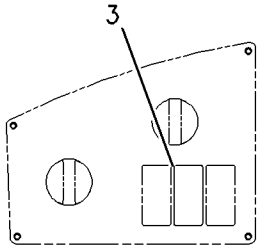

LH SWITCH PANEL
(938, IT38G11)

GRAPHIC #1 g00905707

219-1855 LINES GP-STARTING AID

S/N: CPT1-UP

PART OF 206-2744 ENGINE AR-PRIMARY

SMCS-1090, 1296 **i01725061**

NOTE	REF NO	GRAPHIC REF	PART NUMBER	QTY	PART NAME 1 2 3 4 5 6 (PRODUCT LEVEL)	SEE PAGE
	1	1	**067-6998**	1	NUT	
	2	1	**067-6999**	1	FERRULE	
	3	1	**114-4363**	2	BOLT (M8X1.25X12MM)	
	4	1	**219-1856**	1	LINE AS-FUEL	
	5	1	**101-3927**	3	CLIP	
	6	1	**101-3983**	1	NUT (3/16)	
	7	1	**101-3984**	1	FERRULE	

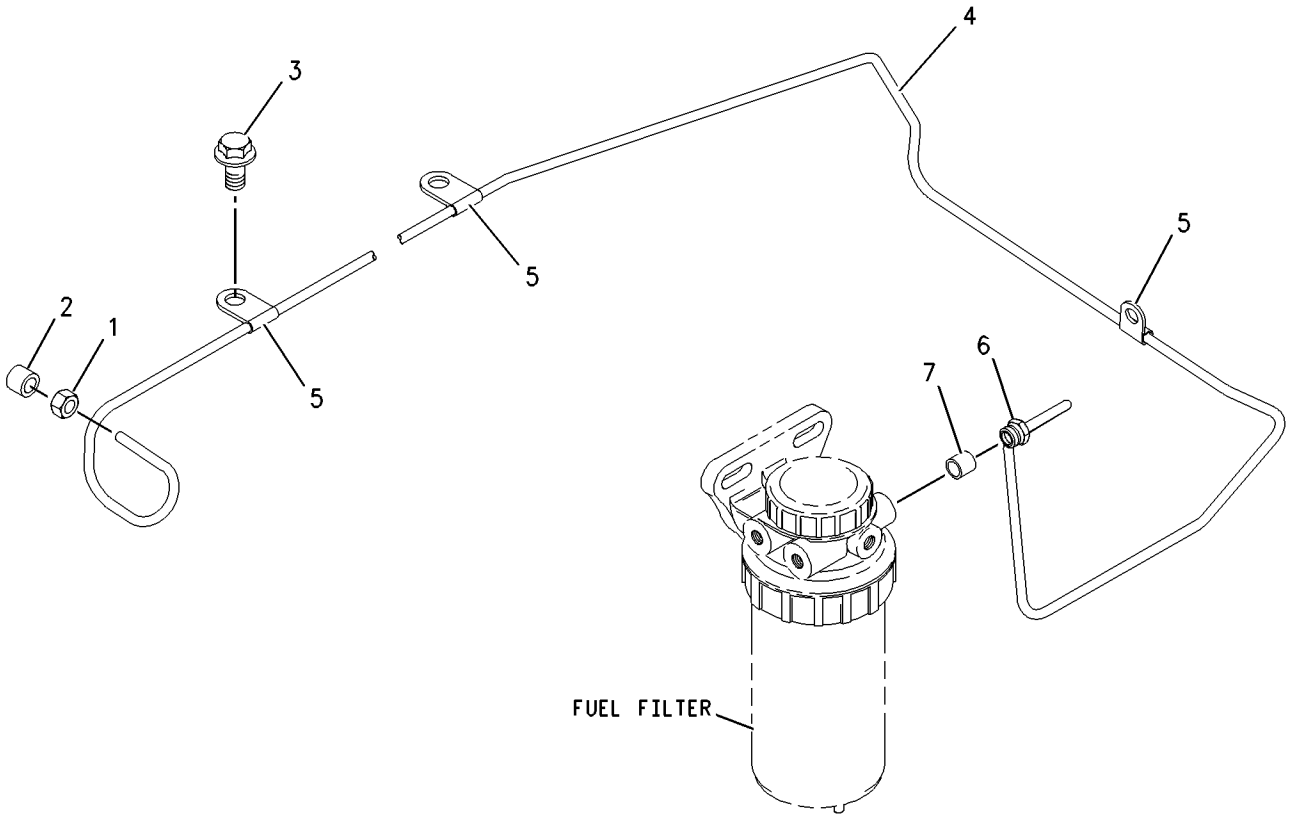

GRAPHIC #1 g00888975

160-2443 SENSOR GP-POSITION

S/N: RTA1-UP; RBB1-UP
ROTARY
PART OF 190-4700 PEDAL GP-GOVERNOR
AN ATTACHMENT

SMCS-4269, 5702, 5736, 5737, 7494 **i01431988**

NOTE	REF NO	GRAPHIC REF	PART NUMBER	QTY	PART NAME 1 2 3 4 5 6 (PRODUCT LEVEL)	SEE PAGE
	1	1	**102-8803**	1	KIT-RECEPTACLE (3 PIN)	
					(INCLUDES RECEPTACLE AS & WEDGE)	
	2	1	**8T-8729**	3	PIN-CONNECTOR	
	3	1	**3E-3371**	1	WEDGE-RECEPTACLE LOCK (3 PIN)	

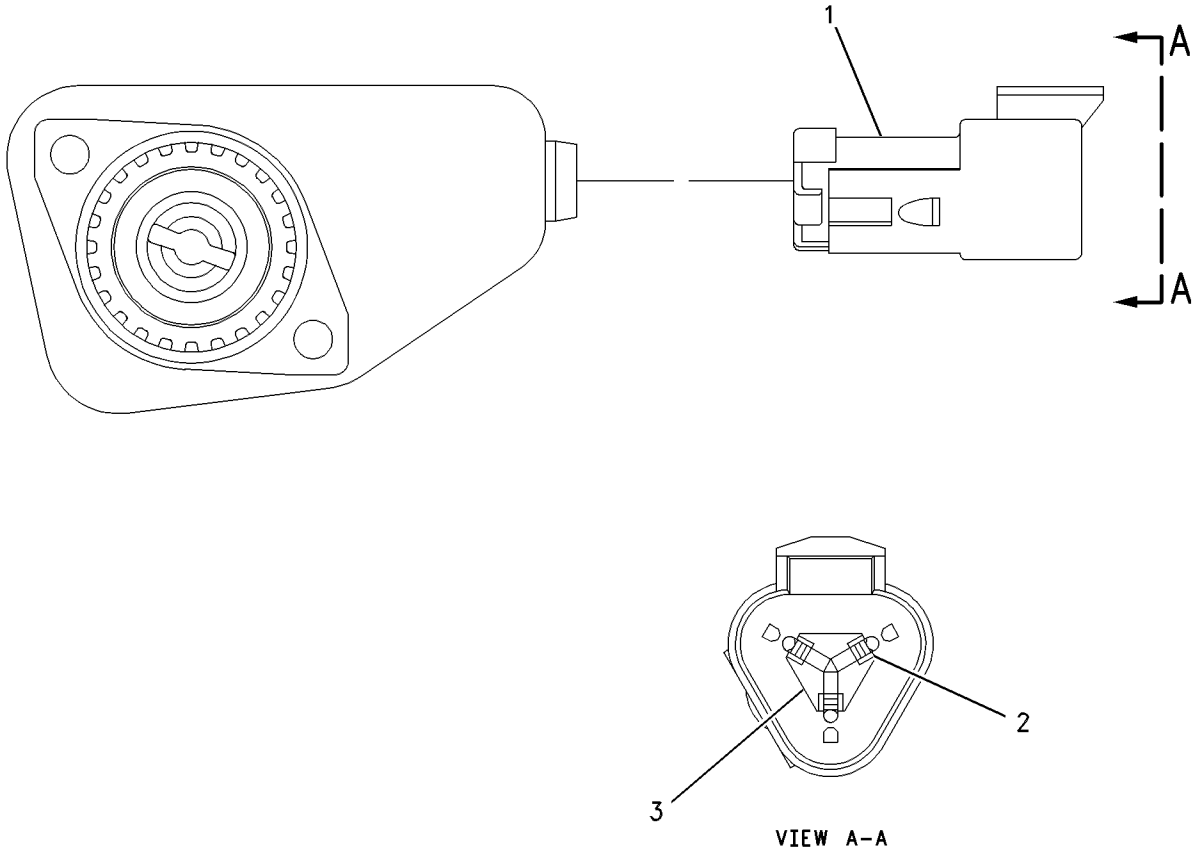

GRAPHIC #1 g00637818

219-1854 STARTING AID GP

S/N: CPT1-UP

PART OF 206-2744 ENGINE AR-PRIMARY

SMCS-1090 **i01725055**

NOTE	REF NO	GRAPHIC REF	PART NUMBER	QTY	PART NAME 1 2 3 4 5 6 (PRODUCT LEVEL)	SEE PAGE
	1	1	**127-2956**	1	WASHER	
	2	1	**186-4272**	1	HEATER (AIR INLET)	

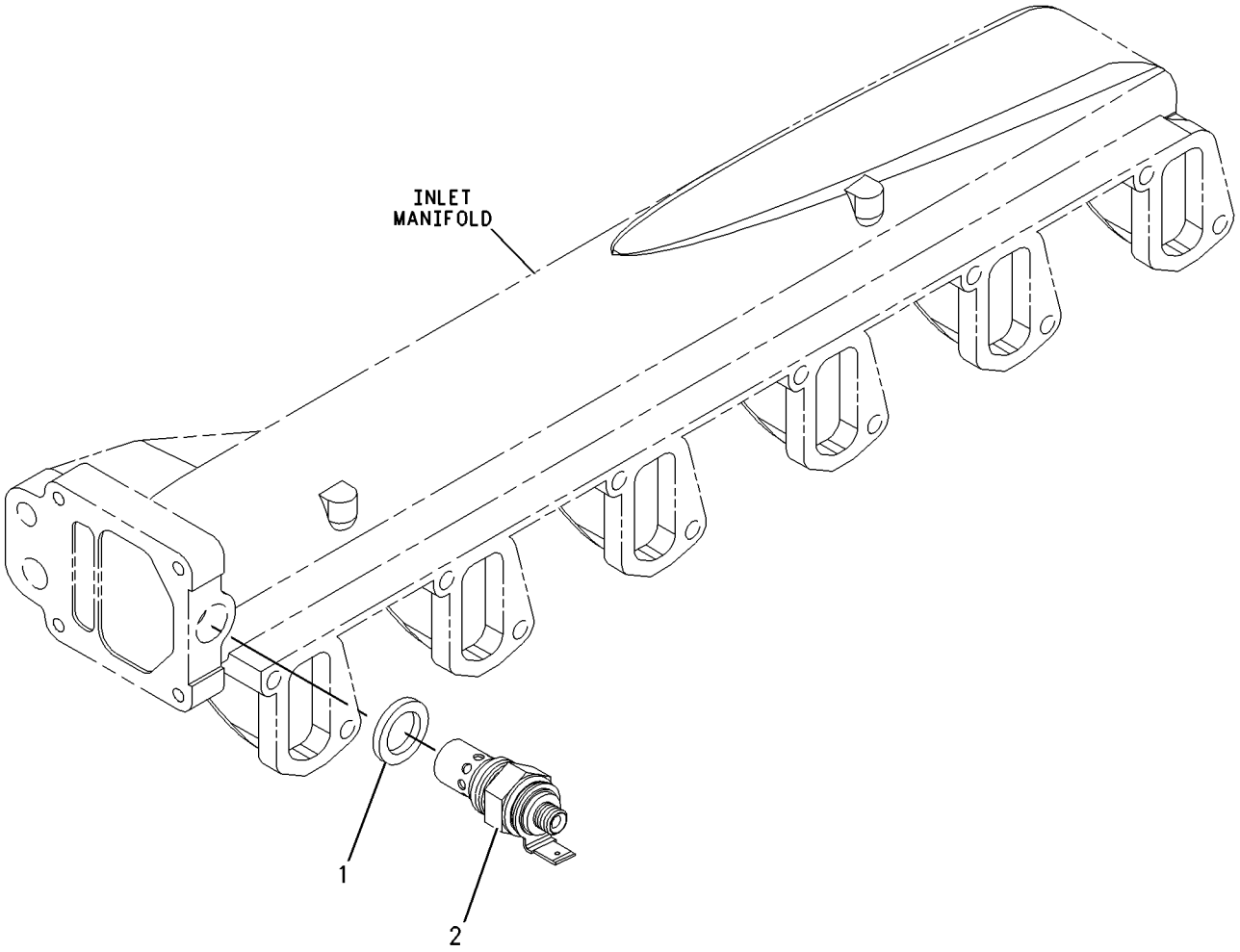

GRAPHIC #1 g00888883

1G-9963 STARTING MOTOR GP-ELECTRIC

S/N: RTA1-UP; RBB1-UP

PART OF 216-8963 INSTALLATION AR-ENGINE

SMCS-1453 **i00918401**

NOTE	REF NO	GRAPHIC REF	PART NUMBER	QTY	PART NAME 1 2 3 4 5 6 (PRODUCT LEVEL)	SEE PAGE
YC	1	1	**143-0541**	1	STARTING MOTOR GP-ELECTRIC	126
M	2	1	**8T-4195**	3	BOLT (M10X1.50X30MM)	
	3	1	**8T-4121**	3	WASHER (2.5MM THK)	

C-CHANGE FROM PREVIOUS TYPE
M-METRIC PART
Y-SEPARATE ILLUSTRATION

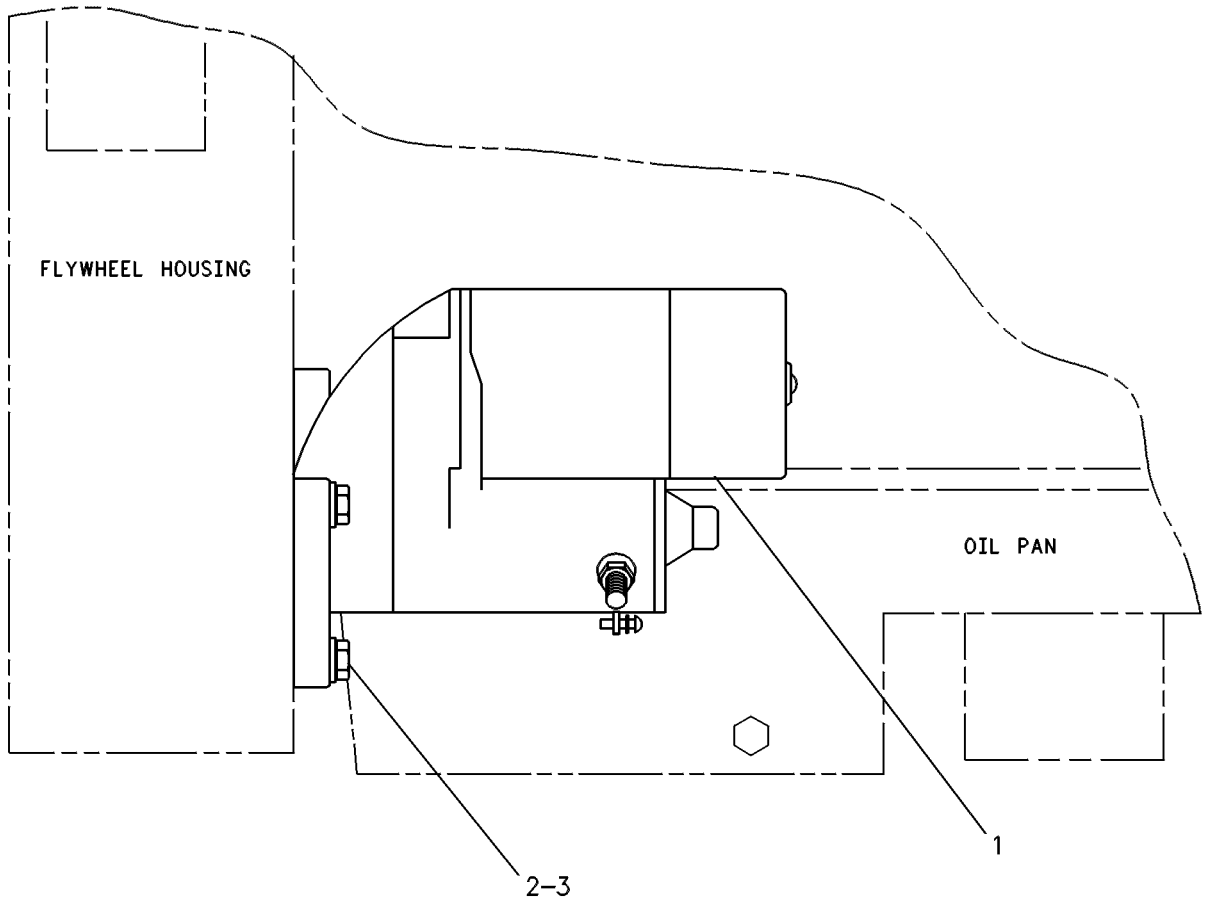

GRAPHIC #1 g00238636

ELECTRICAL AND STARTING SYSTEM

143-0541 STARTING MOTOR GP-ELECTRIC*R

S/N: RTA1-UP; RBB1-UP

PART OF 1G-9963 STARTING MOTOR GP-ELECTRIC

SMCS-1453 **i01812315**

NOTE	REF NO	GRAPHIC REF	PART NUMBER	QTY	PART NAME 1 2 3 4 5 6 (PRODUCT LEVEL)	SEE PAGE
	1	1	**8C-9778**	1	PLUNGER AS	
	2	1	**8C-9783**	1	GASKET	
	3	1	**2P-8104**	1	BEARING	
	4	1	**7T-6092**	1	HOLDER AS-BRUSH	
M	5	1	**8T-4133**	2	NUT (M10X1.5 THD)	
	6	1	**7T-6088**	1	BEARING AS	
	7	1	**7T-6087**	1	WASHER	
	8	1	**7T-6093**	1	CLUTCH AS	
	9	1	**8J-4455**	1	BALL	
	10	1	**7T-6090**	1	SPRING	
	11	1	**8T-4121**	2	WASHER-HARD (11X21X2.5MM THK)	
	12	1	**3E-5153**	1	COVER-STARTING MOTOR	
M	13	1	**9X-2036**	1	SCREW-PAN HEAD	
	14	1	**8F-1434**	1	LOCKWASHER	
	15	1	**100-6659**	1	SWITCH AS (STARTER 24V)	
	16	1	**3E-6238**	1	ARMATURE AS	
	17	1	**3E-6237**	1	CASE AS-STARTING MOTOR	
	18	1	**100-4115**	1	HOUSING-STARTING MOTOR	
	19	1	**143-1344**	1	FRAME-STARTER	
	20	1	**100-3685**	1	CAP	
	21	1	**3E-5154**	1	BUSHING-STARTING MOTOR	
					AVAILABLE REPAIR KIT(S):	
			7T-6099	1	KIT-GEAR (STARTING MOTOR)	
					(INCL RETAINER, PINION AND ROLLERS)	
			8C-5457	1	KIT-CONTACT (STARTING MOTOR)	
					(INCL NUT, WASHER, PLATE BUSHING AND BOLT)	
			100-4112	1	KIT-CONTACT (STARTING MOTOR)	
					(INCL NUT, WASHER, SEAL BUSHING, PLATE & BOLT)	

M-METRIC PART

143-0541 STARTING MOTOR GP-ELECTRIC *(contd.)* **i01812315**

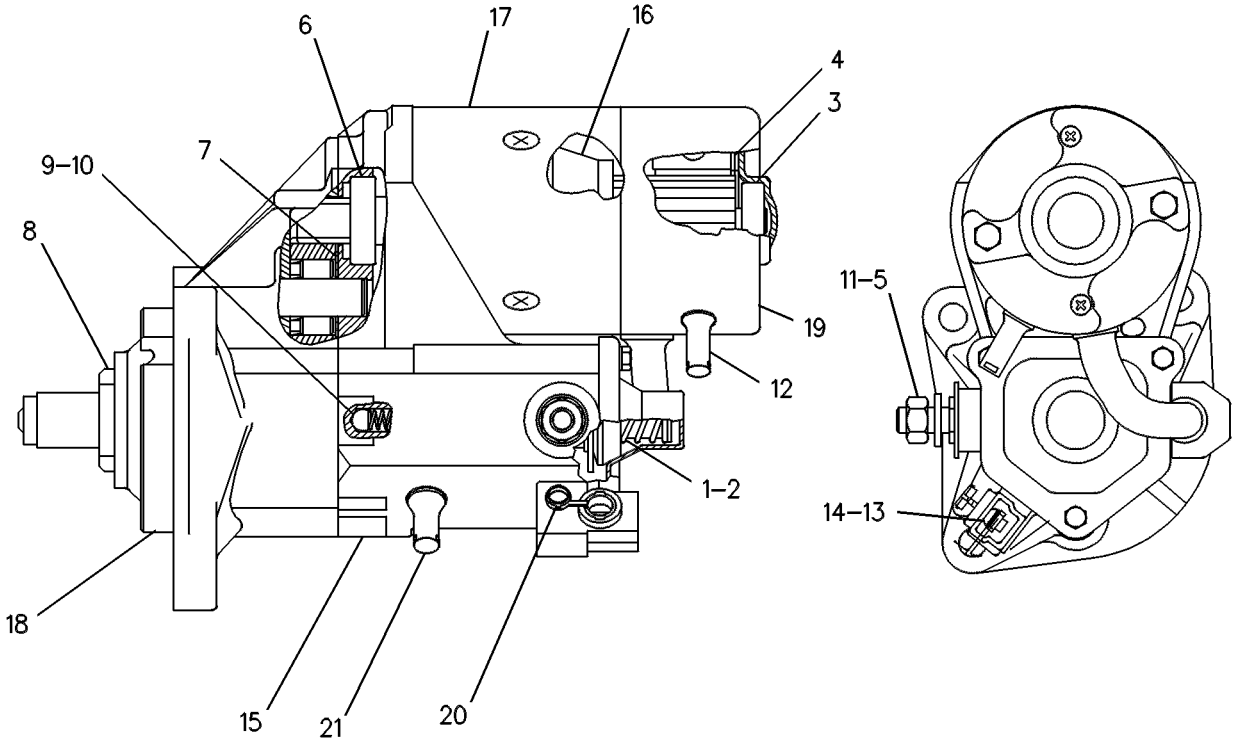

GRAPHIC #1 g00131126

7N-0718 SWITCH GP-DISCONNECT–BATTERY

S/N: RTA1-UP; RBB1-UP

PART OF 180-8805 WIRING GP-BATTERY

SMCS-1411 **i01810002**

NOTE	REF NO	GRAPHIC REF	PART NUMBER	QTY	PART NAME 1 2 3 4 5 6 (PRODUCT LEVEL)	SEE PAGE
	1	1	**8H-5306**	1	KEY (BATTERY DISCONNECT)	
	2	1	**8H-5303**	1	NUT (3/4-16 THD)	
	3	1	**2H-3922**	2	LOCKWASHER	
	4	1	**9F-5644**	2	LOCKWASHER	
	5	1	**6F-7045**	2	NUT-FULL (3/8X24 THD)	

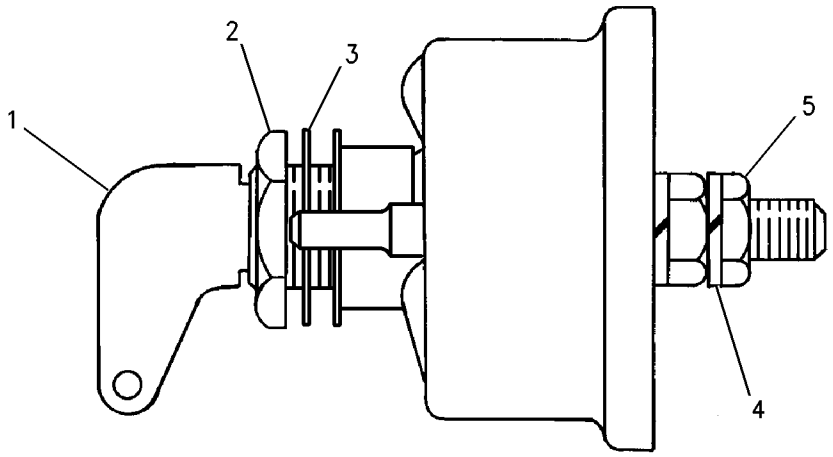

GRAPHIC #1 g00715584

3E-0154 SWITCH GP-MAGNETIC—SECONDARY STEERING

S/N: RTA1-UP; RBB1-UP
PART OF 180-8810 WIRING GP-SECONDARY STEERING
AN ATTACHMENT

SMCS-7499 **i01676990**

NOTE	REF NO	GRAPHIC REF	PART NUMBER	QTY	PART NAME 1 2 3 4 5 6 (PRODUCT LEVEL)	SEE PAGE
	1	1	**7X-0620**	2	WASHER-HARD (5.5X13X1.6MM THK)	
	2	1	**8F-1434**	2	LOCKWASHER	
	3	1	**6V-8378**	2	NUT (10-32 THD)	
	4	1	**6V-8801**	2	NUT (3/8-16 THD)	
	5	1	**7X-0608**	2	WASHER-HARD (10.2X16X2.0MM THK)	
	6	1	**4D-1326**	2	LOCKWASHER	

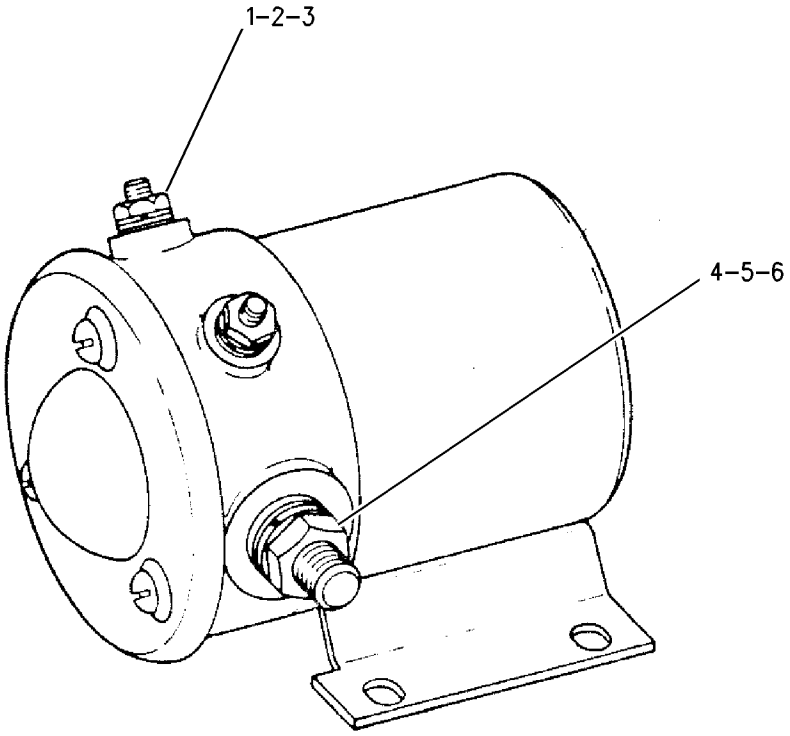

GRAPHIC #1 g00726410

167-0138 SWITCH GP-MAGNETIC–MAIN RELAY

S/N: RTA1-UP; RBB1-UP
24V
PART OF 190-4310, 190-4320, 216-6914 PANEL GP-INSTRUMENT
AN ATTACHMENT

SMCS-7499 **i01589032**

NOTE	REF NO	GRAPHIC REF	PART NUMBER	QTY	PART NAME 1 2 3 4 5 6 (PRODUCT LEVEL)	SEE PAGE
	1	1	**4F-2294**	2	NUT-JAM (5/16-24 THD)	
	2	1	**6V-8186**	2	NUT-FULL (5/16-24 THD)	
	3	1	**155-2270**	1	KIT-CONNECTING PLUG (2 PIN) (MAIN POWER RELAY SWITCH)	
	4	1	**8T-8730**	2	SOCKET-CONNECTOR	
	5	1	**155-2261**	1	WEDGE-PLUG LOCK (2 PIN)	

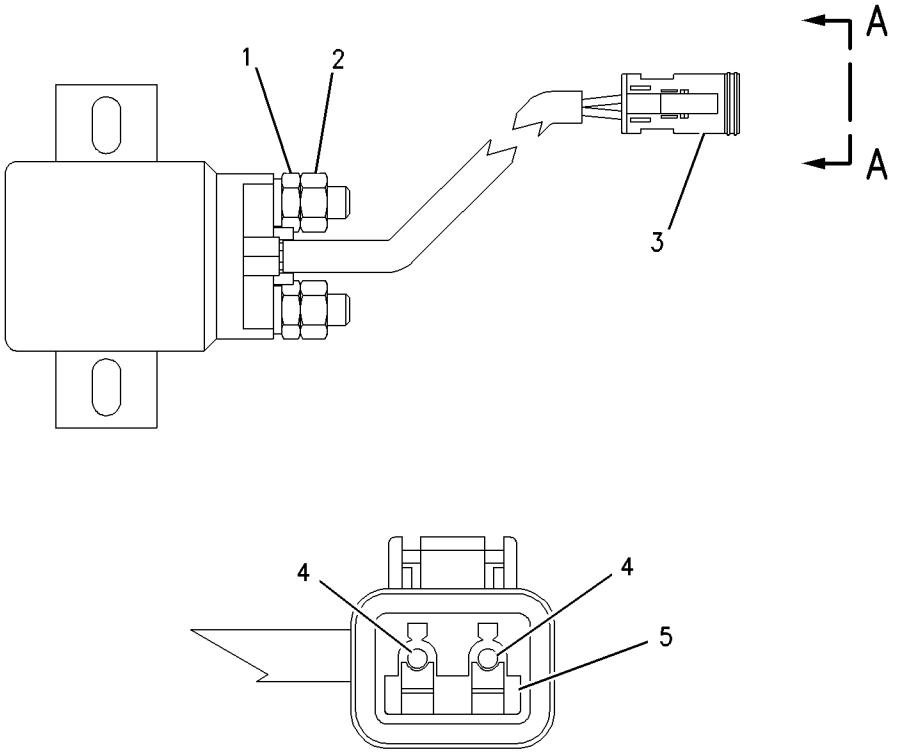

VIEW A-A

GRAPHIC #1 g00823979

107-6133 SWITCH GP-WIPER

S/N: RTA1-UP; RBB1-UP
INTERMITTENT
PART OF 190-4405 CAB AR
AN ATTACHMENT

SMCS-7332 **i01399011**

NOTE	REF NO	GRAPHIC REF	PART NUMBER	QTY	PART NAME 1 2 3 4 5 6 (PRODUCT LEVEL)	SEE PAGE
	1	1	**110-7886**	2	SWITCH AS-WIPER	
					(EACH INCLUDES)	
	2	1	**102-8806**	1	KIT-RECEPTACLE (8 PIN)	
	3	1	**3E-3389**	1	WEDGE-RECEPTACLE LOCK	
	4	1	**6V-8369**	1	NUT (7/16-28 THD)	
	5	1	**2H-3920**	1	LOCKWASHER	
	6	1	**8T-8737**	1	PLUG-SEAL (3.07MM ID)	
	7	1	**8T-8729**	3	PIN-CONNECTOR	
	8	1	**9W-0852**	4	PIN-CONNECTOR	

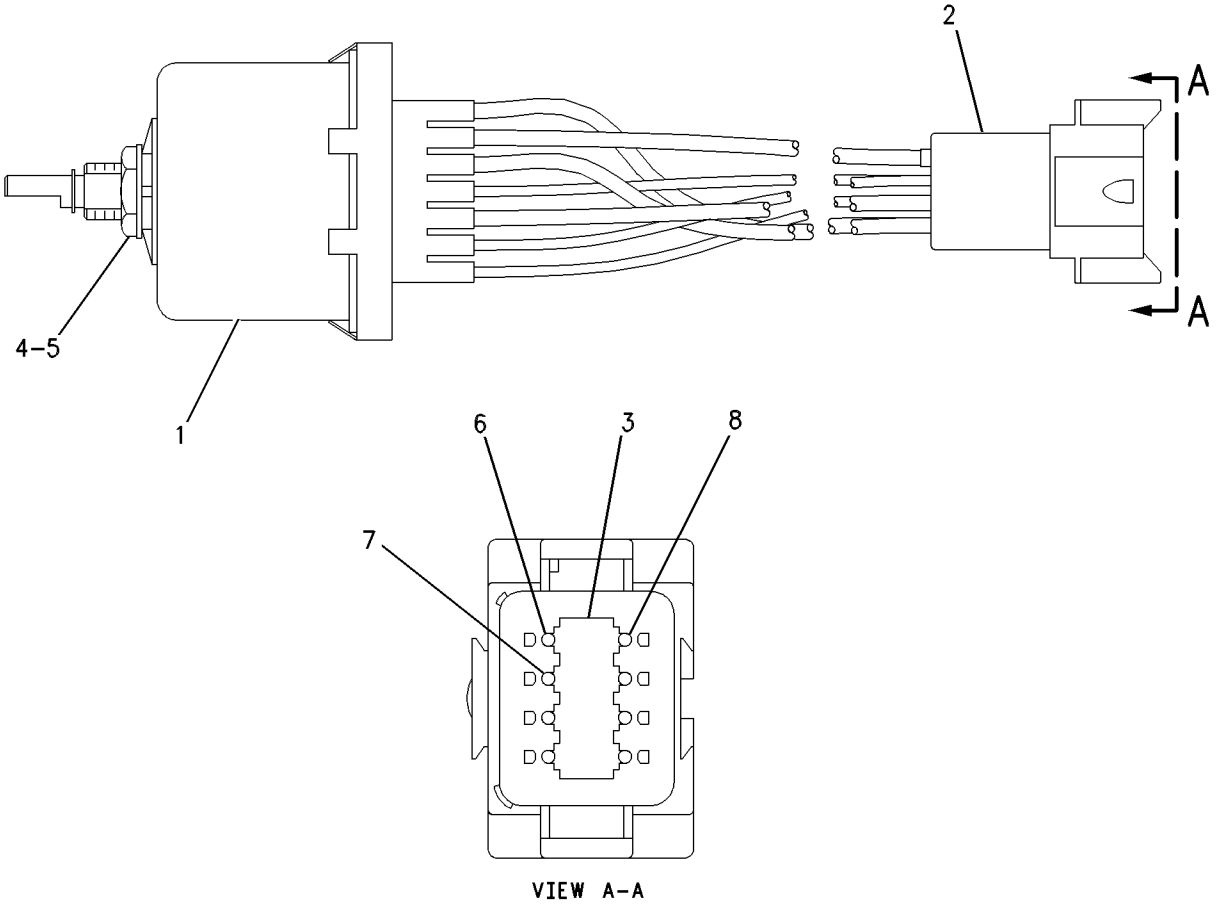

GRAPHIC #1 g00600524

184-2463 SWITCH GP-WIPER

S/N: RTA1-UP; RBB1-UP
PART OF 216-6908 CAB AR
AN ATTACHMENT

SMCS-7332 **i01269837**

NOTE	REF NO	GRAPHIC REF	PART NUMBER	QTY	PART NAME 1 2 3 4 5 6 (PRODUCT LEVEL)	SEE PAGE
	1	1	**110-7886**	1	SWITCH AS-WIPER	
		1	**2H-3920**	1	LOCKWASHER (11.38MM ID)	
		1	**3E-3389**	1	WEDGE-RECEPTACLE LOCK	
		1	**6V-8369**	1	NUT (7/16-28 THD)	
		1	**8T-8729**	3	PIN-CONNECTOR	
		1	**8T-8737**	1	PLUG-SEAL	
		1	**9W-0852**	4	PIN-CONNECTOR	
		1	**102-8806**	1	KIT-RECEPTACLE (8 PIN)	
					(KIT INCLUDES RECEPTACLE AS AND WEDGE)	

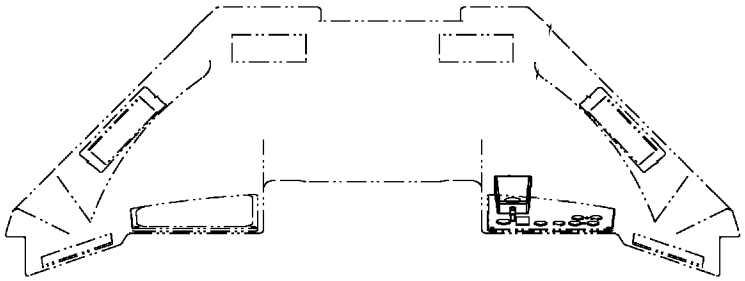

TOP VIEW

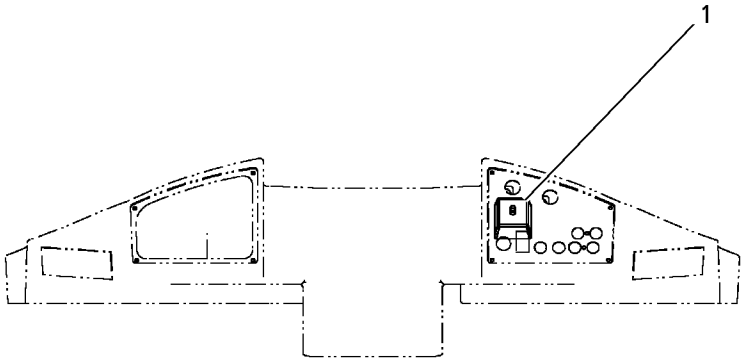

GRAPHIC #1 g00676052

ELECTRICAL AND STARTING SYSTEM

180-8807 WARNING GP-BACKUP

S/N: RTA1-UP; RBB1-UP

PART OF 176-5181, 176-5201 CHASSIS AR

SMCS-7406 **i01813798**

NOTE	REF NO	GRAPHIC REF	PART NUMBER	QTY	PART NAME 1 2 3 4 5 6 (PRODUCT LEVEL)	SEE PAGE
	1	1	**7K-1181**	1	STRAP-CABLE	
	2	1	**213-9100**	1	ALARM-BACKUP	
		1	**102-8802**	1	KIT-RECEPTACLE (2 PIN)	
M	3	1	**8T-4200**	2	BOLT (M8X1.25X16MM)	
	4	1	**8T-4224**	2	WASHER-HARD (8.8X16X2MM THK)	

M-METRIC PART

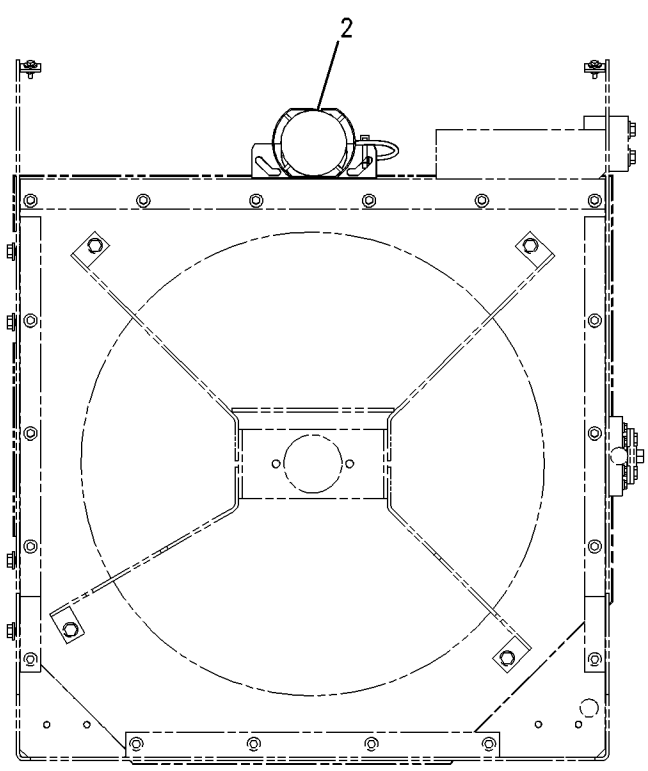

REAR VIEW

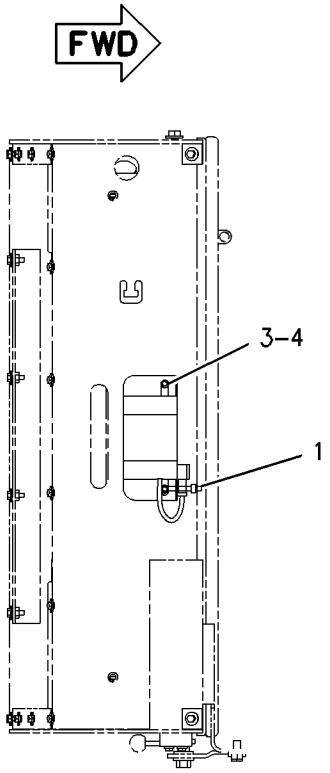

TOP VIEW

GRAPHIC #1 g00915611

180-8805 WIRING GP-BATTERY

S/N: RTA1-UP; RBB1-UP
PART OF 176-5181, 176-5201 CHASSIS AR

SMCS-1402 **i01813608**

NOTE	REF NO	GRAPHIC REF	PART NUMBER	QTY	PART NAME 1 2 3 4 5 6 (PRODUCT LEVEL)	SEE PAGE
	1	1	**2G-8767**	2	WASHER (10.5X60X3MM THK)	
	2	1	**3E-8320**	1	PLATE-INSTRUCTION (BATTERY)	
	3	1	**3W-6188**	1	BRACKET	
	4	1	**6G-2256**	2	CLAMP	
	5	1	**6G-2263**	2	SPACER (10.5X19X28.5MM THK)	
Y	6	1	**7N-0718**	1	SWITCH GP-DISCONNECT (BATTERY)	128
	7	1	**8R-0768**	4	ROD-RETAINING	
	8	1	**091-0081**	1	SPACER (10.5X20X10.0MM THK)	
	9	1	**102-4176**	2	HOLD-DOWN	
	10	1	**111-6940**	1	SPACER (13.1X15.9X36.5MM THK)	
	11	1	**180-8871**	1	CABLE AS	
		1	**5P-0761**		CABLE (00GA)(RED) (146CM)	
		1	**7N-5274**	1	COVER-TERMINAL (BLACK)	
		1	**8N-1725**	1	COVER-TERMINAL (RED)	
		1	**3S-6050**	1	TERMINAL AS-BATTERY (NEGATIVE)	
		1	**3S-6049**	1	TERMINAL AS-BATTERY (POSITIVE)	
	12	1	**180-8872**	1	CABLE AS	
		1	**1S-7252**	1	TERMINAL-RING	
		1	**5P-0747**		CABLE (00GA)(BLACK) (115CM)	
		1	**9G-0002**	1	COVER-TERMINAL	
		1	**9G-8909**	1	COVER-TERMINAL (BLACK)	
		1	**8T-9757**	1	TERMINAL AS-BATTERY (NEGATIVE)	
	13	1	**180-8873**	1	CABLE AS	
		1	**1S-7252**	1	TERMINAL-RING	
		1	**5P-0747**		CABLE (00GA)(BLACK) (17CM)	
		1	**8S-3020**	1	TERMINAL-CABLE	
	14	1	**180-8874**	1	CABLE AS	
		1	**1S-7251**	1	TERMINAL-RING	
		1	**5P-0747**		CABLE (00GA)(BLACK) (30CM)	
		1	**8S-3020**	1	TERMINAL-CABLE	
		1	**9G-8909**	1	COVER-TERMINAL (BLACK)	
	15	1	**226-6059**	1	CABLE AS	
		1	**1S-7252**	1	TERMINAL-RING	
		1	**5P-0761**		CABLE (00GA)(RED) (183CM)	
		1	**8N-0869**	1	COVER-TERMINAL (RED)	
		1	**9G-0004**	1	COVER-TERMINAL (RED)	
		1	**8C-5917**	1	TERMINAL AS-BATTERY (POSITIVE)	
	16	1	**5P-4116**	5	WASHER-HARD (8.8X20.5X2MM THK)	
	17	1	**6D-3479**	9	CLIP	
	18	1	**8T-4121**	14	WASHER-HARD (11X21X2.5MM THK)	
M	19	1	**8T-4133**	5	NUT (M10X1.5 THD)	
M	20	1	**8T-4136**	3	BOLT (M10X1.5X25MM)	
M	21	1	**8T-4137**	5	BOLT (M10X1.5X20MM)	
M	22	1	**8T-6466**	3	BOLT (M10X1.50X60MM)	
M	23	1	**8T-7547**	1	BOLT (M8X1.25X30MM)	
M	24	1	**8T-7963**	4	LOCKNUT	

M-METRIC PART
Y-SEPARATE ILLUSTRATION

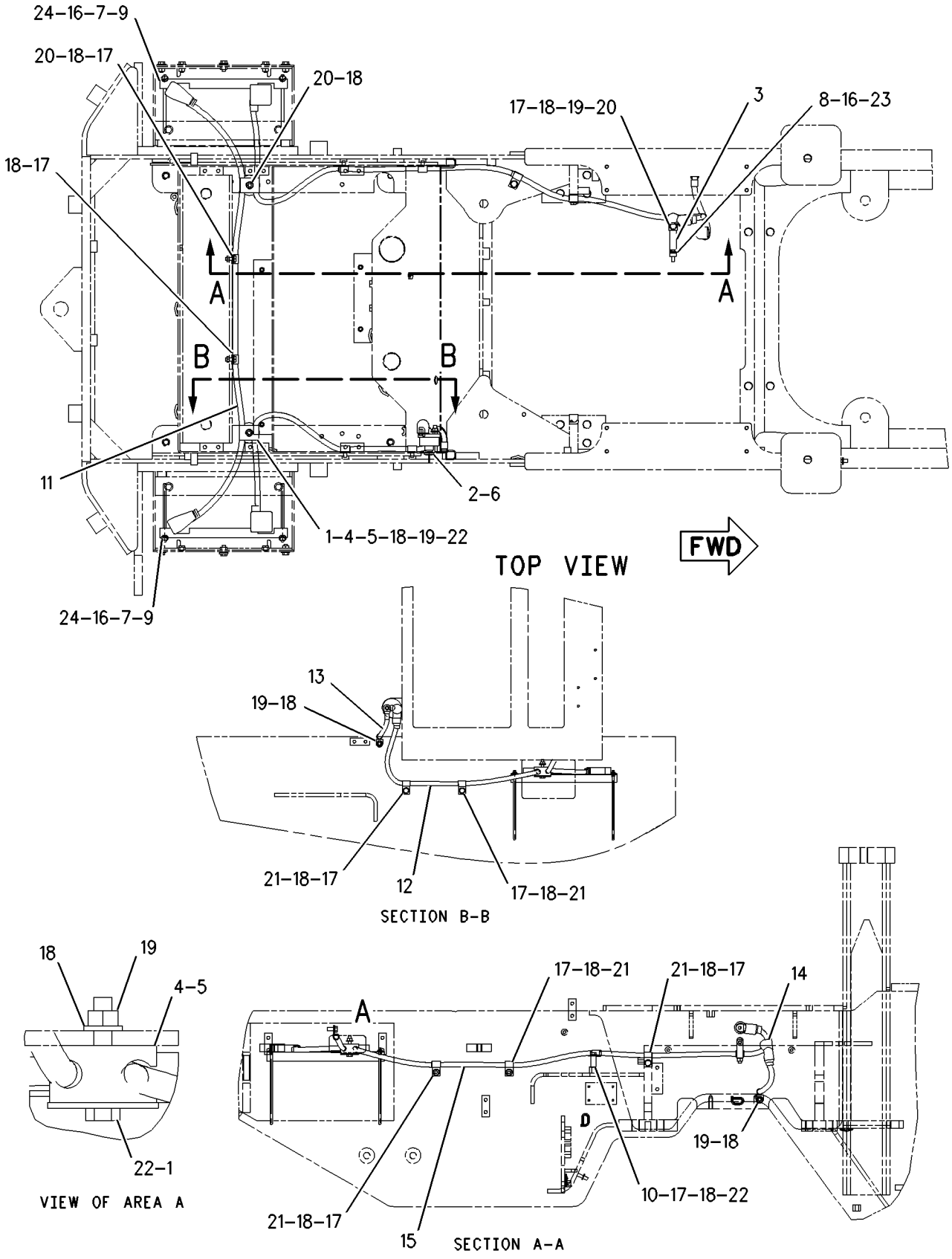

GRAPHIC #1 g00919168

190-4330 WIRING GP-CAB

S/N: RTA1-UP; RBB1-UP
PART OF 190-4406 CANOPY GP-OPEN ROPS
AN ATTACHMENT

SMCS-1408, 7301 **i01823261**

NOTE	REF NO	GRAPHIC REF	PART NUMBER	QTY	PART NAME 1 2 3 4 5 6 (PRODUCT LEVEL)	SEE PAGE
	1	2	**2G-5298**	1	WIRE AS	
B	2	1,2	**7K-1181**	12	STRAP-CABLE	
	3	1	**108-3320**	1	SWITCH AS-ROTARY (RUNNING/FLOOD/PANEL/TAILLIGHT)	
		1	**3E-3389**	1	WEDGE-RECEPTACLE LOCK	
		1	**9W-0852**	8	PIN-CONNECTOR	
		1	**102-8806**	1	KIT-RECEPTACLE (8 PIN)	
	4	1	**110-6109**	1	KNOB-CONTROL	
B	5	1	**111-7899**	4	GASKET	
	6	2	**115-1748**	4	LAMP (24 VOLT)	
B	7	1	**165-0311**	4	PLUG	
	8	1	**172-2309**	1	HARNESS AS-CAB (LOWER ROPS TO ROOF)	
		1	**102-8801**	1	KIT-RECEPTACLE (12 PIN)	
		1	**155-2271**	1	KIT-CONNECTING PLUG (4 PIN)	
	9	1	**185-2766**	1	SWITCH AS-ROCKER (AUTOSHIFT ON/OFF)	
		1	**111-7899**	1	GASKET	
	10	1	**185-2769**	1	SWITCH AS-ROCKER (TRANSMISSION NEUTRALIZER ON/OFF)	
		1	**111-7899**	1	GASKET	
	11	2	**189-6140**	1	HARNESS AS-INSTRUMENT PANEL	
		2	**102-8805**	1	KIT-RECEPTACLE (6 PIN)	
		2	**155-2265**	3	KIT-CONNECTING PLUG (8 PIN)	
		2	**155-2271**	1	KIT-CONNECTING PLUG (4 PIN)	
		2	**155-2274**	1	KIT-CONNECTING PLUG (6 PIN)	
	12	1	**190-4558**	1	PLATE AS	
	13	1	**190-4559**	1	PLATE AS	
	14	1	**201-1024**	1	BRACKET	
	15	1	**202-1129**	8	SCREW-TRUSS HEAD	
	16	1	**204-0357**	1	FILM (PANEL-LH)	
	17	1	**204-0359**	1	FILM (PANEL-RH)	
	18	1	**211-0052**	1	NUT	
	19	1	**4P-7581**	1	CLIP	
	20	2	**4P-8134**	1	CLIP	
	21	1	**6D-4244**	1	CLIP	
	22	1	**8T-4121**	1	WASHER-HARD (11X21X2.5MM THK)	
M	23	1	**8T-4133**	1	NUT (M10X1.5 THD)	
M	24	1,2	**8T-4199**	2	BOLT (M8X1.25X12MM)	
M	25	1	**8T-4200**	1	BOLT (M8X1.25X16MM)	
	26	1,2	**8T-4224**	3	WASHER-HARD (8.8X16X2MM THK)	
	27	1	**9W-0335**	1	LIGHTER AS (CIGAR)(24 VOLT)	

B-USE AS REQUIRED
M-METRIC PART

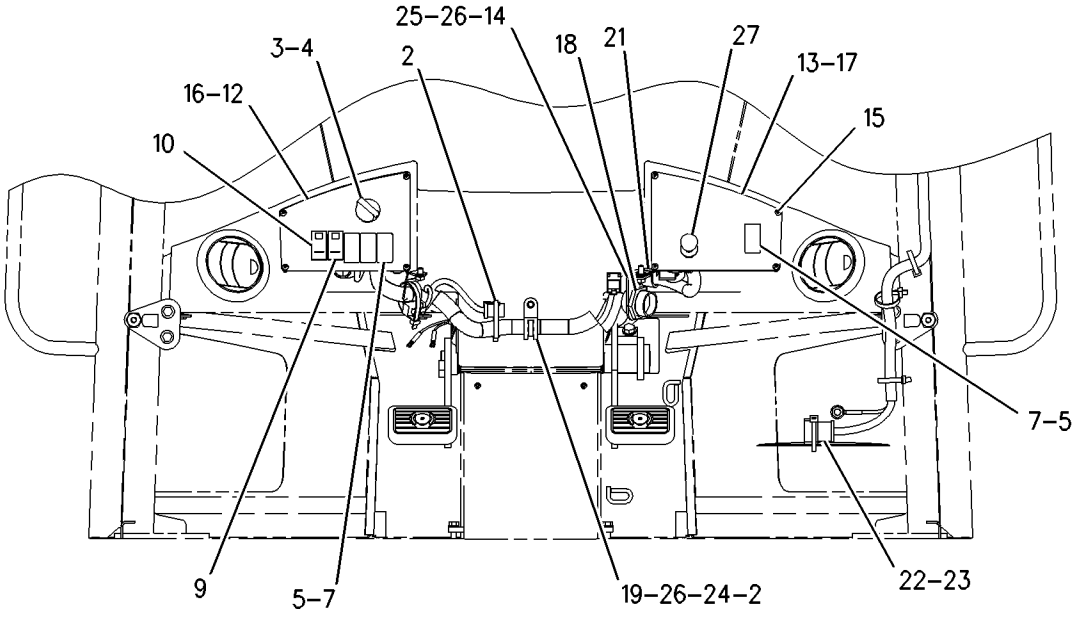

REAR VIEW

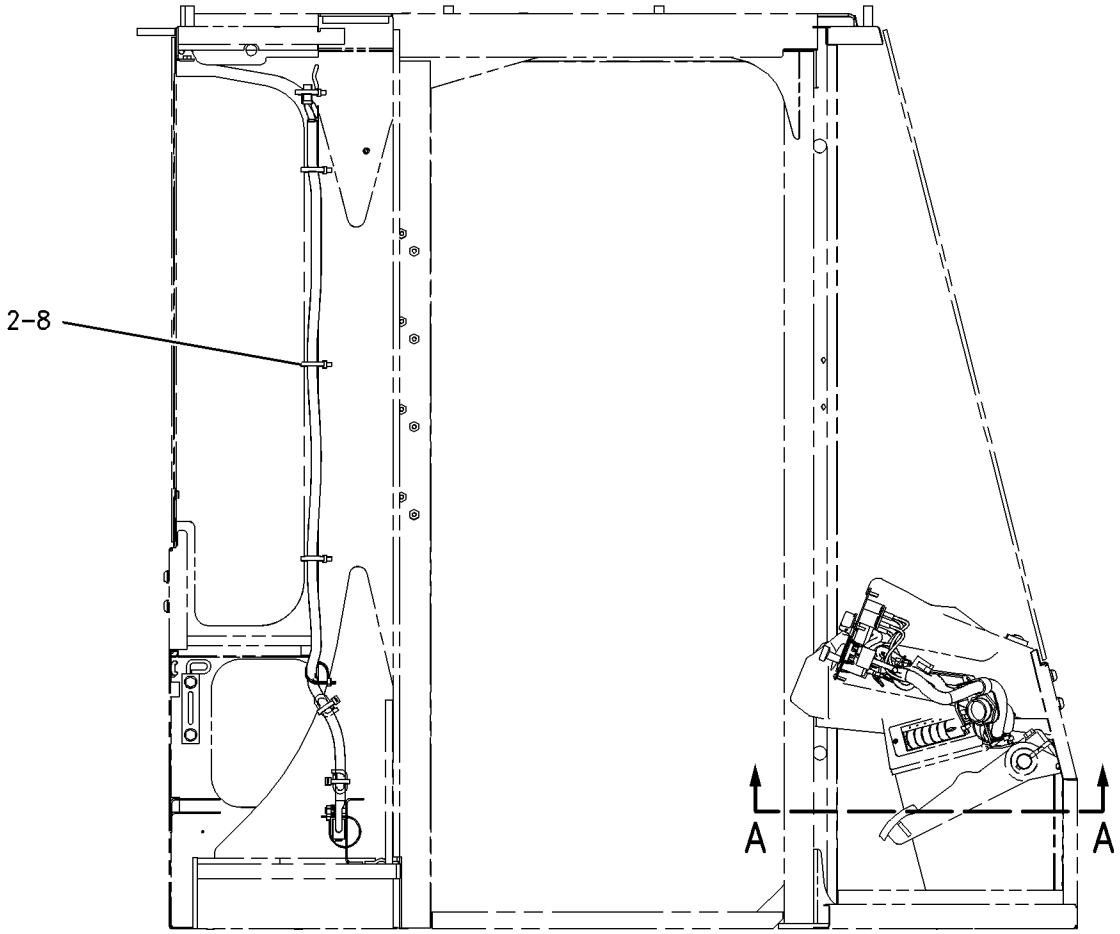

REFER TO ALL ILLUSTRATIONS OF THIS GROUP FOR AUXILIARY VIEWS

RIGHT SIDE VIEW

GRAPHIC #1 g00919850

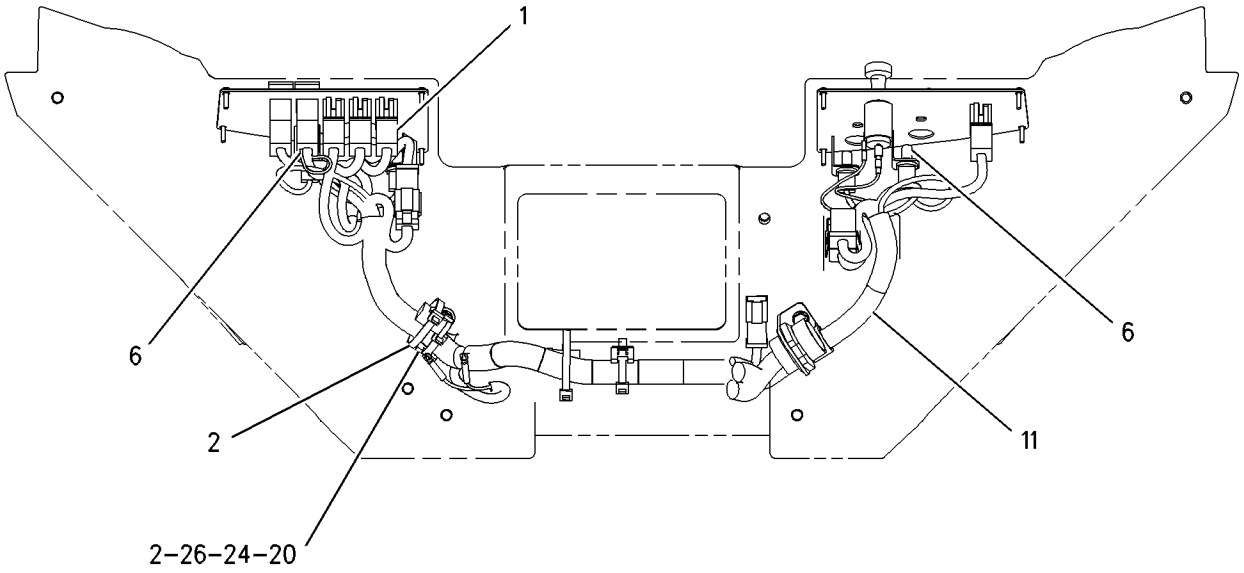

SECTION A-A

GRAPHIC #2 g00919851

MEMORANDA

190-4340 WIRING GP-CAB

S/N: RTA1-UP; RBB1-UP
ENCLOSED
PART OF 190-4405 CAB AR
AN ATTACHMENT

SMCS-1408, 7301 **i01863418**

NOTE	REF NO	GRAPHIC REF	PART NUMBER	QTY	PART NAME 1 2 3 4 5 6 (PRODUCT LEVEL)	SEE PAGE
	1	2	**2G-5298**	1	WIRE AS	
B	2	1,2	**7K-1181**	19	STRAP-CABLE	
	3	1	**108-3320**	1	SWITCH AS-ROTARY	
					(RUNNING/FLOOD/PANEL/TAIL LIGHTS)	
		1	**3E-3389**	1	WEDGE-RECEPTACLE LOCK	
		1	**9W-0852**	8	PIN-CONNECTOR	
		1	**102-8806**	1	KIT-RECEPTACLE (8 PIN)	
	4	1	**110-6109**	3	KNOB-CONTROL	
B	5	1	**111-7899**	4	GASKET	
	6	2	**115-1748**	4	LAMP (24 VOLT)	
B	7	1	**165-0311**	4	PLUG	
	8	1	**172-2307**	1	HARNESS AS-CAB (SHELL)	
		1	**102-8801**	1	KIT-RECEPTACLE (12 PIN)	
		1	**102-8802**	1	KIT-RECEPTACLE (2 PIN)	
		1	**102-8803**	1	KIT-RECEPTACLE (3 PIN)	
		1	**155-2260**	1	KIT-CONNECTING PLUG (3 PIN)	
		1	**155-2270**	1	KIT-CONNECTING PLUG (2 PIN)	
		1	**155-2271**	1	KIT-CONNECTING PLUG (4 PIN)	
		1	**155-2274**	1	KIT-CONNECTING PLUG (6 PIN)	
	9	1	**185-2766**	1	SWITCH AS-ROCKER (AUTOSHIFT ON/OFF)	
	10	1	**185-2769**	1	SWITCH AS-ROCKER	
					(TRANSMISSION NEUTRALIZER ON/OFF)	
		1	**111-7899**	1	GASKET	
	11	2	**189-6140**	1	HARNESS AS-INSTRUMENT PANEL	
		2	**102-8805**	1	KIT-RECEPTACLE (6 PIN)	
	12	1	**190-4558**	1	PLATE AS	
	13	1	**190-4559**	1	PLATE AS	
	14	1	**201-1024**	1	BRACKET	
	15	1	**202-1129**	8	SCREW-TRUSS HEAD	
	16	1	**204-0357**	1	FILM (PANEL-LH)	
	17	1	**204-0358**	1	FILM (PANEL-RH)	
	18	1	**211-0052**	1	NUT	
	19	1	**4P-7581**	1	CLIP	
	20	2	**4P-8134**	1	CLIP	
	21	1	**6D-4244**	1	CLIP	
	22	1	**8T-4121**	1	WASHER-HARD (11X21X2.5MM THK)	
M	23	1	**8T-4133**	1	NUT (M10X1.5 THD)	
M	24	1,2	**8T-4199**	2	BOLT (M8X1.25X12MM)	
M	25	1	**8T-4189**	1	BOLT (M8X1.25X20MM)	
	26	1,2	**8T-4224**	3	WASHER-HARD (8.8X16X2MM THK)	
	27	1	**9W-0335**	1	LIGHTER AS (CIGAR)(24 VOLT)	

B-USE AS REQUIRED
M-METRIC PART

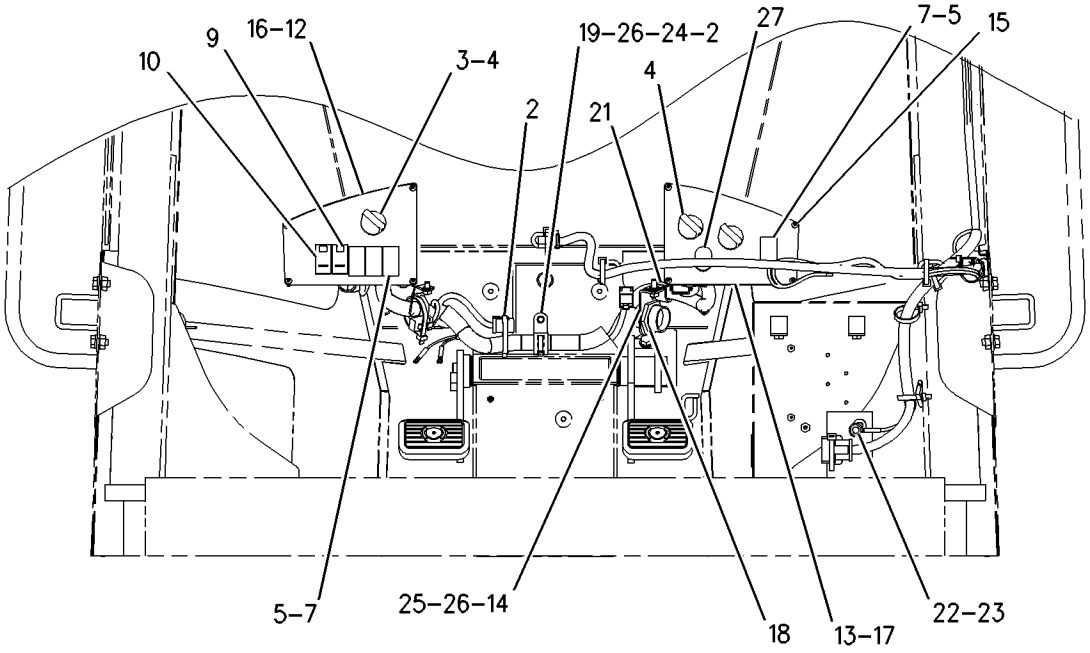

REAR VIEW

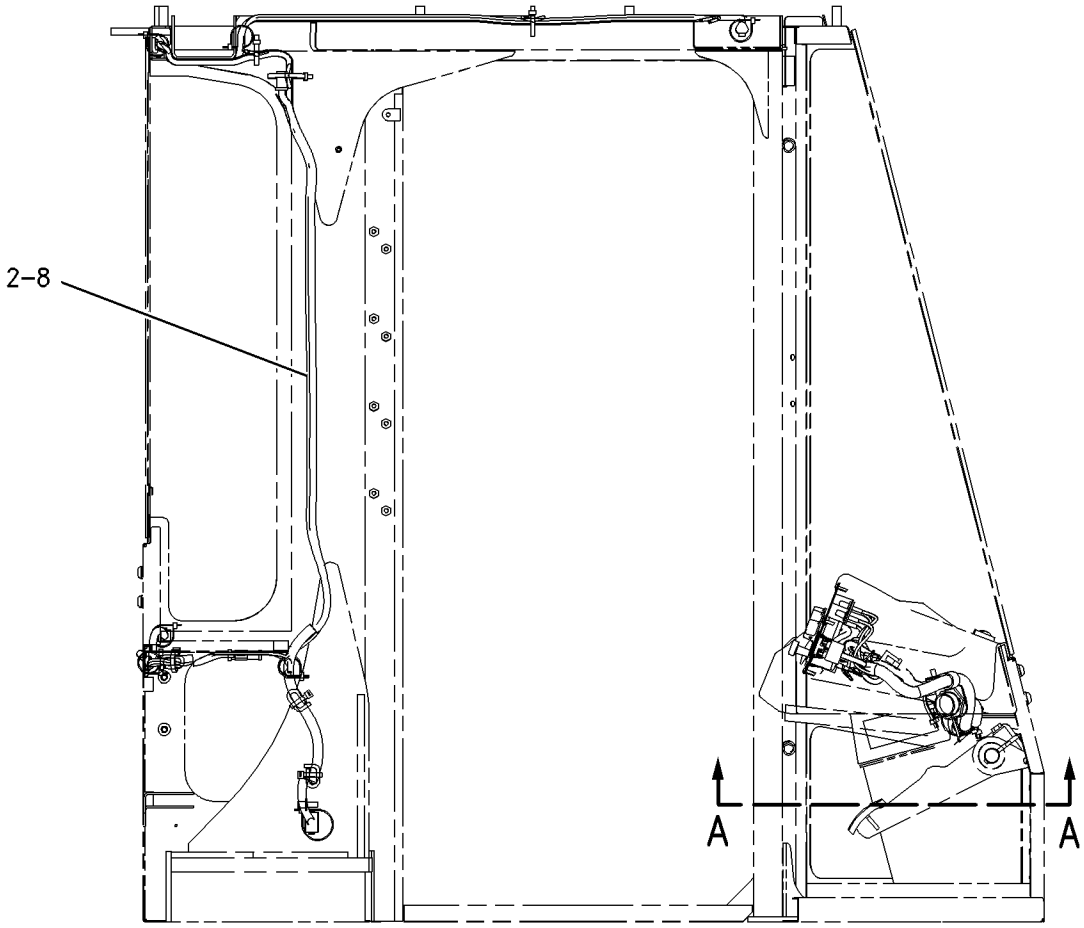

REFER TO ALL ILLUSTRATIONS OF THIS GROUP FOR AUXILIARY VIEWS

RIGHT SIDE VIEW

GRAPHIC #1

g00919588

190-4340 **WIRING GP-CAB** ***(contd.)*** **i01863418**

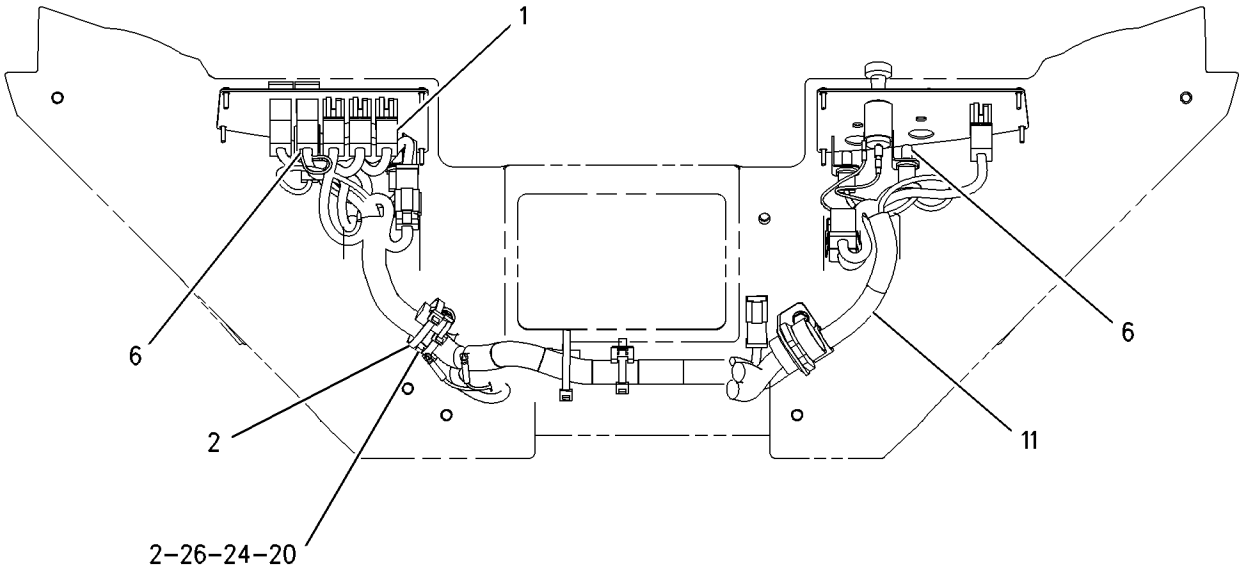

SECTION A-A

GRAPHIC #2 g00919589

MEMORANDA

ELECTRICAL AND STARTING SYSTEM

216-6915 WIRING GP-CAB

S/N: RTA1-UP; RBB1-UP
PART OF 216-6908 CAB AR
AN ATTACHMENT

SMCS-1408, 7301 **i01794039**

NOTE	REF NO	GRAPHIC REF	PART NUMBER	QTY	PART NAME 1 2 3 4 5 6 (PRODUCT LEVEL)	SEE PAGE
	1	1	**1R-0622**	1	PLUG-BUTTON	
	2	2	**2G-5298**	1	WIRE AS	
	3	2	**102-8806**	1	KIT-RECEPTACLE (8 PIN)	
B	4	1,2	**7K-1181**	19	STRAP-CABLE	
	5	2	**8T-8737**	8	PLUG-SEAL	
	6	1	**9W-0335**	1	LIGHTER AS (CIGAR)(24 VOLT)	
	7	1	**108-3320**	1	SWITCH AS-ROTARY (RUNNING LAMP)	
		1	**3E-3389**	1	WEDGE-RECEPTACLE LOCK	
		1	**9W-0852**	8	PIN-CONNECTOR	
		1	**102-8806**	1	KIT-RECEPTACLE (8 PIN)	
	8	1	**110-6109**	2	KNOB-CONTROL	
B	9	1	**111-7899**	4	GASKET	
	10	2	**115-1748**	3	LAMP (24 VOLT)	
B	11	1	**165-0311**	4	PLUG	
	12	1	**172-2307**	1	HARNESS AS-CAB (SHELL)	
		1	**102-8802**	1	KIT-RECEPTACLE (2 PIN)	
		1	**102-8803**	1	KIT-RECEPTACLE (3 PIN)	
		1	**102-8801**	1	KIT-RECEPTACLE (12 PIN)	
		1	**155-2260**	1	KIT-CONNECTING PLUG (3 PIN)	
		1	**155-2270**	1	KIT-CONNECTING PLUG (2 PIN)	
		1	**155-2271**	1	KIT-CONNECTING PLUG (4 PIN)	
		1	**155-2274**	1	KIT-CONNECTING PLUG (6 PIN)	
	13	1	**185-2766**	1	SWITCH AS-ROCKER (AUTOSHIFT ON/OFF)	
	14	1	**185-2769**	1	SWITCH AS-ROCKER (TRANSMISSION NEUTRALIZER ON/OFF)	
	15	2	**189-6140**	1	HARNESS AS-INSTRUMENT PANEL	
		2	**102-8805**	1	KIT-RECEPTACLE (6 PIN)	
		2	**155-2265**	3	KIT-CONNECTING PLUG (8 PIN)	
		2	**155-2271**	1	KIT-CONNECTING PLUG (4 PIN)	
		2	**155-2274**	1	KIT-CONNECTING PLUG (6 PIN)	
	16	1	**190-4558**	1	PLATE AS	
	17	1	**190-4559**	1	PLATE AS	
	18	1	**201-1024**	1	BRACKET	
	19	1	**204-0357**	1	FILM (PANEL-LH)	
	20	1	**204-0358**	1	FILM (PANEL-RH)	
	21	1	**211-0052**	1	NUT	
	22	1	**4P-7581**	1	CLIP (LADDER)	
	23	2	**4P-8134**	1	CLIP	
	24	1	**6D-4244**	1	CLIP	
	25	1	**8T-4121**	1	WASHER-HARD (11X21X2.5MM THK)	
M	26	1	**8T-4133**	1	NUT (M10X1.5 THD)	
M	27	2	**8T-4199**	2	BOLT (M8X1.25X12MM)	
M	28	1	**8T-4200**	1	BOLT (M8X1.25X16MM)	
	29	1,2	**8T-4224**	3	WASHER-HARD (8.8X16X2MM THK)	
M	30	1	**9X-1046**	8	SCREW (M4X0.7X18MM)	

B-USE AS REQUIRED
M-METRIC PART

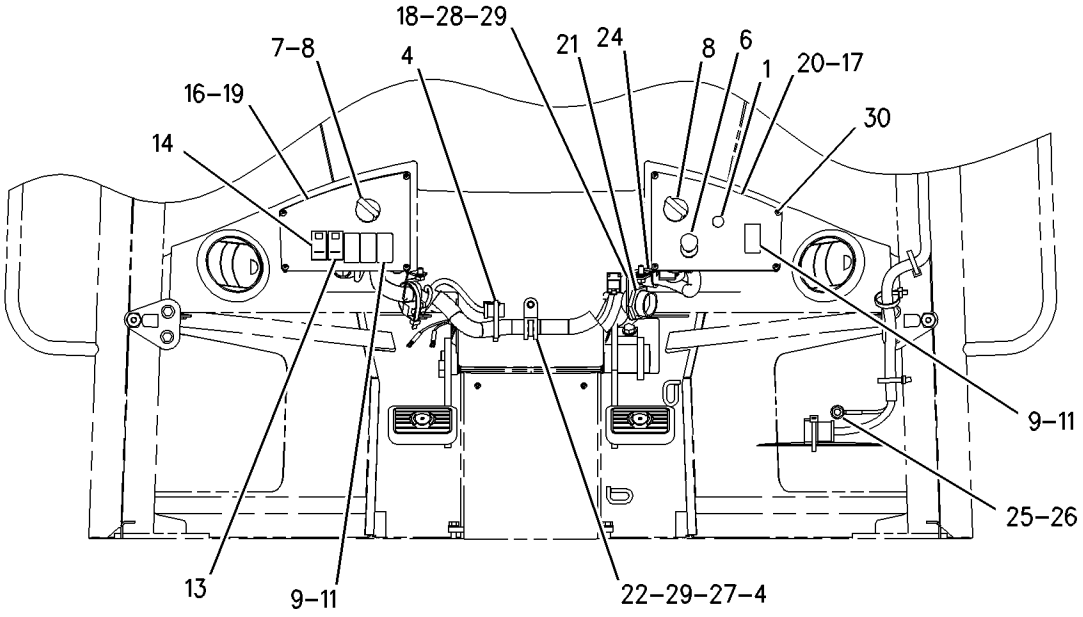

REAR VIEW

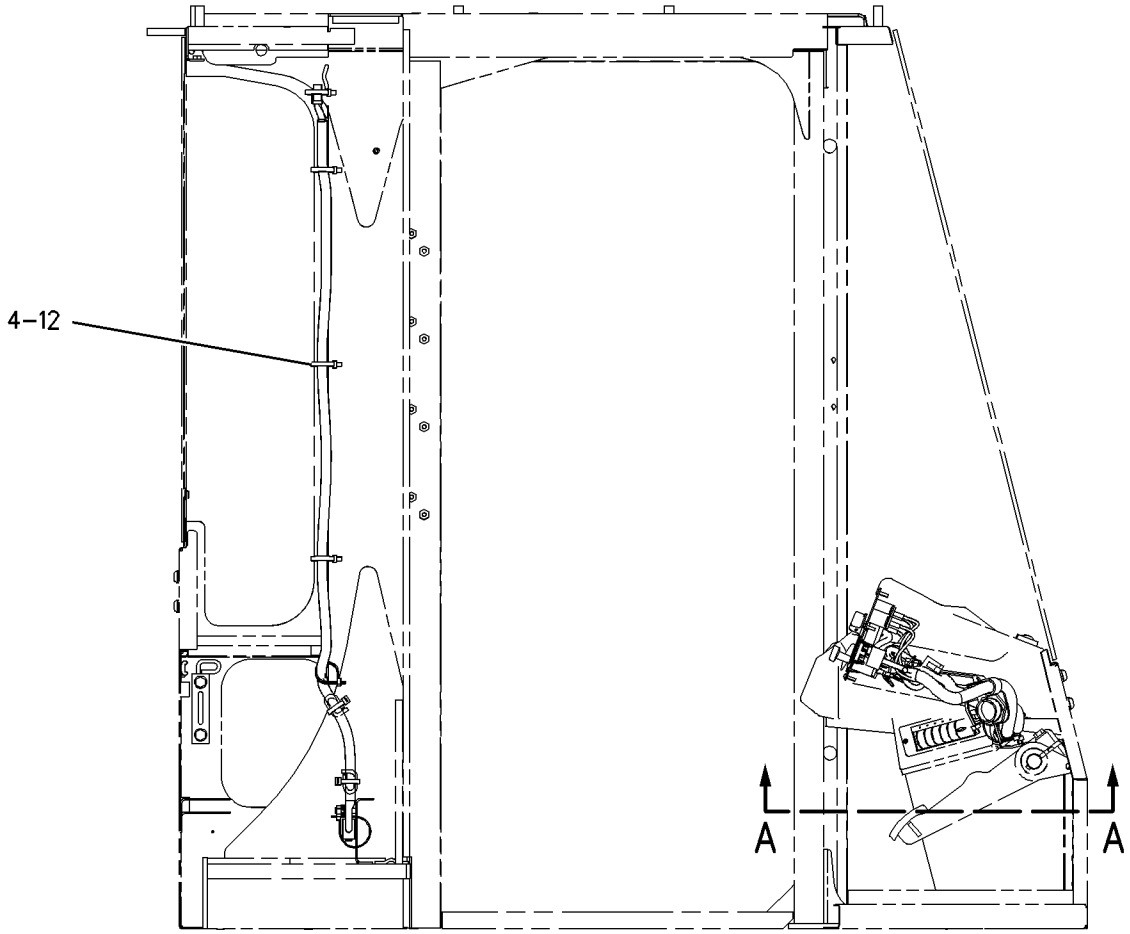

REFER TO ALL ILLUSTRATIONS OF THIS GROUP FOR AUXILIARY VIEWS

RIGHT SIDE VIEW

GRAPHIC #1

g00946362

216-6915 **WIRING GP-CAB** ***(contd.)*** **i01794039**

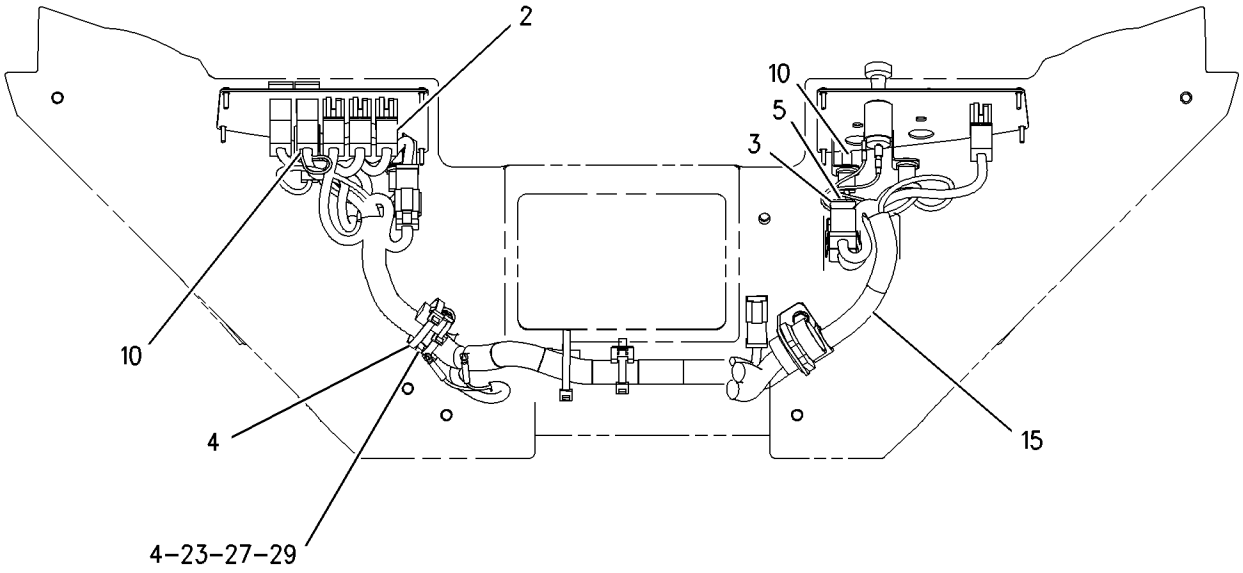

SECTION A–A

GRAPHIC #2 g00946358

MEMORANDA

189-4870 WIRING GP-COMMUNICATION

S/N: RTA1-UP; RBB1-UP
AN ATTACHMENT

SMCS-1408, 7602 **i01810305**

NOTE	REF NO	GRAPHIC REF	PART NUMBER	QTY	PART NAME 1 2 3 4 5 6 (PRODUCT LEVEL)	SEE PAGE
	1	1	**7K-1181**	7	STRAP-CABLE	
	2	1	**9X-8256**	7	WASHER (6.6X12X2MM THK)	
B	3	1	**031-5644**	6	CLIP	
M	4	1	**8T-4971**	4	BOLT (M6X1X30MM)	
	5	1	**190-4564**	1	PLATE AS	
		1	**2M-7077**	4	SPACER (.406IN X .62IN X .37IN THK)	
M		1	**6V-9632**	3	NUT-WELD (M6X1 THD)	
	6	1	**226-3681**	1	PLATE	
	7	1	**207-6796**	1	ANTENNA AS	
		1	**172-6755**	1	ANTENNA	
	8	1	**209-6417**	1	CONTROL GP-COMMUNICATION (PRODUCT LINK)	
	9	1	**218-2439**	1	HARNESS AS-CONTROL (PRODUCT LINK)	
		1	**102-8805**	1	KIT-RECEPTACLE (6 PIN)	
		1	**102-8806**	1	KIT-RECEPTACLE (8 PIN)	
		1	**155-2265**	1	KIT-CONNECTING PLUG (8 PIN)	
M	10	1	**8T-4138**	3	BOLT (M6X1X20MM)	
M	11	1	**8T-4194**	1	BOLT (M12X1.75X50MM)	
	12	1	**8T-4223**	1	WASHER-HARD (13.5X25.5X3MM THK)	

B-USE AS REQUIRED
M-METRIC PART

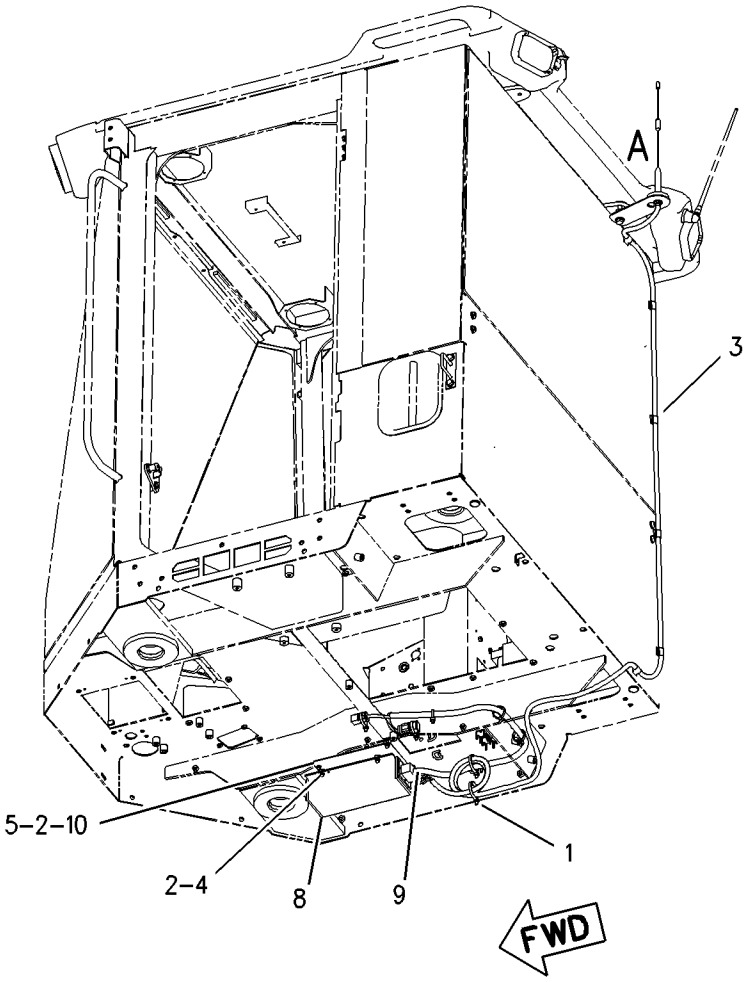

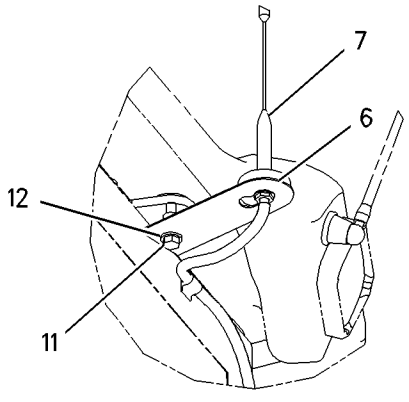

VIEW OF AREA A

GRAPHIC #1 g00937896

219-2462 WIRING GP-ELECTRONIC CONTROL

S/N: CPT1-UP

PART OF 206-2744 ENGINE AR-PRIMARY

SMCS-1408 **i01725079**

NOTE	REF NO	GRAPHIC REF	PART NUMBER	QTY	PART NAME 1 2 3 4 5 6 (PRODUCT LEVEL)	SEE PAGE
	1	1	**100-4458**	3	BOLT (M8X1.25X14MM)	
	2	1	**100-4830**	1	BOLT (M10X1.5X20MM)	
	3	1	**140-8783**	1	BOLT (M10X45MM)	
	4	1	**217-8413**	1	HARNESS AS-ENGINE	
	5	1	**217-8477**	5	CLIP	
	6	1	**217-8478**	2	CLIP	
	7	1	**217-9038**	1	BOLT	
	8	1	**217-9059**	2	SPACER	

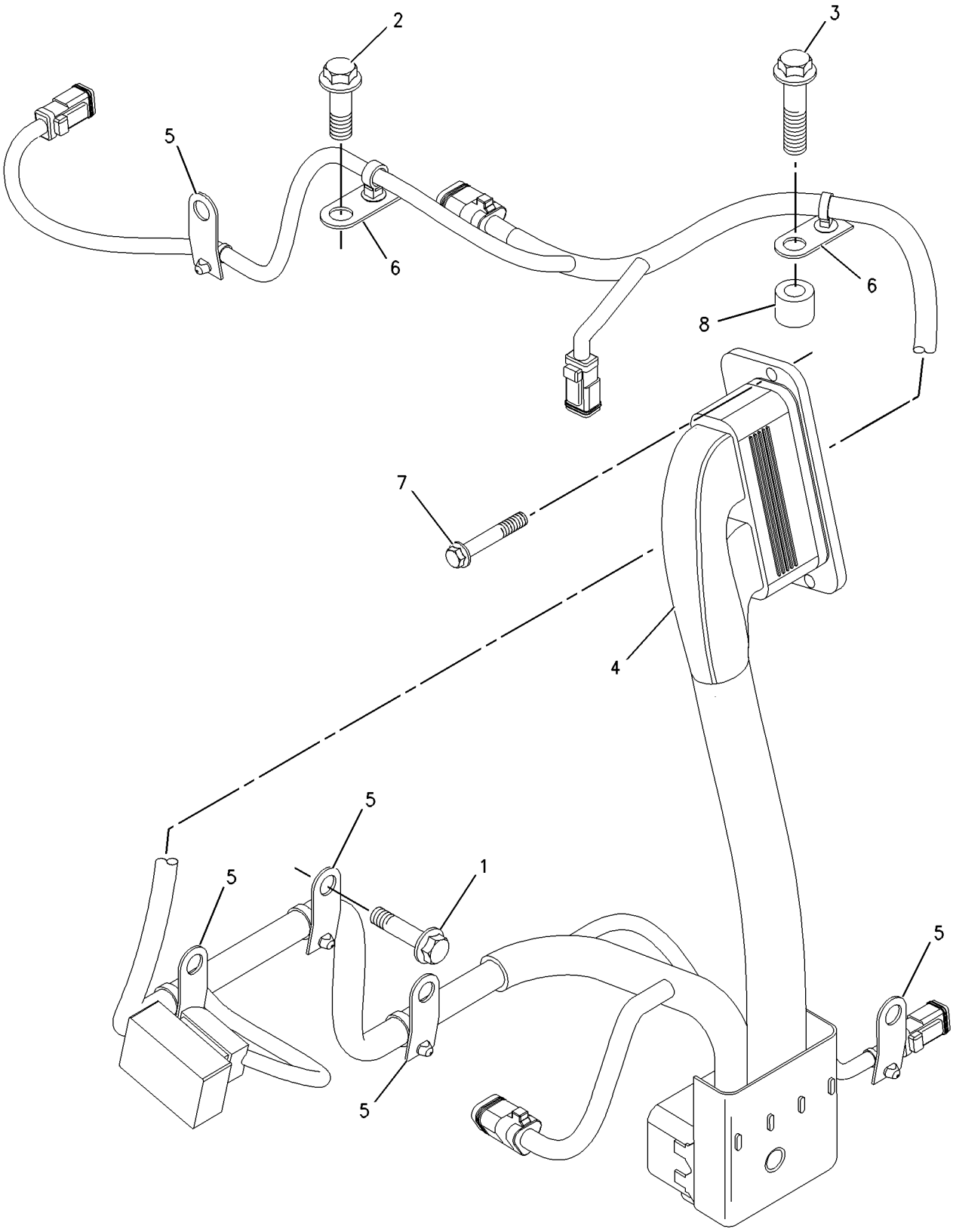

GRAPHIC #1 g00889026

180-8801 WIRING GP-ENGINE

S/N: RTA1-UP; RBB1-UP

PART OF 176-5181, 176-5201 CHASSIS AR

SMCS-1403, 1408 **i01812125**

NOTE	REF NO	GRAPHIC REF	PART NUMBER	QTY	PART NAME 1 2 3 4 5 6 (PRODUCT LEVEL)	SEE PAGE
	1	1	**3E-5239**	2	RELAY AS (24 VOLT)	
	2	3	**3S-2093**	5	STRAP-CABLE	
	3	1	**3T-2662**	1	CIRCUIT BREAKER AS (15 AMP)	
		1	**6V-8376**	2	SCREW-MACHINE (8-32X0.25 IN)	
		1	**9B-7233**	2	LOCKWASHER	
	4	1,2,3	**7K-1181**	22	STRAP-CABLE	
	5	1	**7V-5628**	1	PLATE	
	6	1	**7V-6089**	2	CLAMP	
	7	1	**7W-1251**	1	RESISTOR	
	8	1,2	**8T-8827**	5	BOOT	
	9	1	**091-0081**	1	SPACER (10.5X20X10.0MM THK)	
	10	1	**111-6940**	1	SPACER (13.1X15.9X36.5MM THK)	
	11	1	**118-3534**	1	SWITCH GP-MAGNETIC (24V) (STARTING AID RELAY)	
	12	1	**130-9811**	1	SENSOR GP-TEMPERATURE (TORQUE CONVERTER OIL)	
	13	1	**131-3201**	4	BOOT	
	14	3	**134-2540**	1	RECEPTACLE AS (3 PIN)	
	15	1,3	**135-3327**	2	PLATE AS	
M		1,3	**8T-3490**	1	NUT-WELD (M10X1.5 THD)	
	16	1	**143-9542**	1	FILM-CIRCUIT BREAKER	
	17	1	**147-1773**	1	CIRCUIT BREAKER AS (30 AMP)	
		1	**6V-8378**	2	NUT (10-32 THD)	
		1	**8F-1434**	2	LOCKWASHER	
		1	**8T-0328**	2	WASHER-HARD (5.5X10X1MM THK)	
	18	1	**148-5318**	1	FILM-IDENTIFICATION (CIRCUIT BREAKER)	
	19	2	**148-8298**	1	WIRE AS	
	20	1	**171-2208**	1	CIRCUIT BREAKER GP (60 AMP)	
		1	**1H-3244**	2	LOCKWASHER	
		1	**6V-8187**	2	NUT (1/4-28 THD)	
		1	**8T-4205**	2	WASHER-HARD (7.2X14.5X2MM THK)	
	21	1	**171-2211**	1	CIRCUIT BREAKER AS (90 AMP)	
		1	**1H-3244**	2	LOCKWASHER	
		1	**6V-8187**	2	NUT (1/4-28 THD)	
		1	**8T-4205**	2	WASHER-HARD (7.2X14.5X2MM THK)	
	22	1	**224-9610**	1	HARNESS AS-ENGINE	
		1	**102-8802**	1	KIT-RECEPTACLE (2 PIN)	
		1	**102-8803**	1	KIT-RECEPTACLE (3 PIN)	
		1	**155-2255**	1	KIT-CONNECTING PLUG (12 PIN)	
		1	**155-2270**	6	KIT-CONNECTING PLUG (2 PIN)	
		1	**174-0503**	1	KIT-CONNECTING PLUG (3 PIN)	
	23	1	**225-0066**	1	PLATE AS	
M		1	**6V-9632**	4	NUT-WELD (M6X1 THD)	
		1	**7T-1099**	1	LINK	
		1	**8G-0816**	4	BUSHING-TERMINAL	
	24	1	**225-5224**	1	CABLE AS	
E		1	**8C-3056**		CABLE (2 GA) (20CM)	
		1	**030-1712**	2	RING-TERMINAL	
	25	3	**226-5923**	1	BRACKET	
	26	1	**096-6166**	2	WASHER-HARD (4.5X9X1MM THK)	
	27	1	**3K-0360**	1	SEAL-O-RING	
	28	1	**3K-8106**	2	SCREW-MACHINE (8-32 X 1 IN)	
	29	2,3	**3S-8665**	2	CLIP	
	30	1	**4B-4274**	4	WASHER (5.5X13X1.2MM THK)	
	31	1,2,3	**4P-7581**	10	CLIP (LADDER)	
	32	1,2,3	**4P-8134**	4	CLIP	
	33	1	**5P-4965**	4	SCREW-MACHINE (10-32 THD)	
	34	1	**6V-1889**	2	CLIP	

180-8801 **WIRING GP-ENGINE** ***(contd.)*** **i01812125**

NOTE	REF NO	GRAPHIC REF	PART NUMBER	QTY	PART NAME 1 2 3 4 5 6 (PRODUCT LEVEL)	SEE PAGE
	35	1	**6V-7345**	2	SCREW-MACHINE (8-32X.875 IN)	
M	36	1	**7X-2534**	2	BOLT (M6X1X50MM)	
	37	1,2,3	**8T-4121**	11	WASHER-HARD (11X21X2.5MM THK)	
M	38	1	**8T-4133**	1	NUT (M10X1.5 THD)	
M	39	1	**8T-4137**	1	BOLT (M10X1.5X20MM)	
M	40	1	**8T-4138**	4	BOLT (M6X1X20MM)	
M	41	1	**8T-4186**	5	BOLT (M10X1.5X40MM)	
M	42	3	**8T-4189**	1	BOLT (M8X1.25X20MM)	
M	43	2,3	**8T-4191**	3	BOLT (M10X1.5X16MM)	
M	44	1,3	**8T-4192**	2	BOLT (M12X1.75X25MM)	
M	45	3	**8T-4195**	1	BOLT (M10X1.5X30MM)	
M	46	1	**8T-4197**	1	BOLT (M8X1.25X40MM)	
M	47	1,2	**8T-4200**	4	BOLT (M8X1.25X16MM)	
	48	1,3	**8T-4223**	2	WASHER-HARD (13.5X25.5X3MM THK)	
	49	1,2,3	**8T-4224**	7	WASHER-HARD (8.8X16X2MM THK)	
M	50	1	**8T-6912**	1	BOLT (M8X1.25X50MM)	
M	51	1	**8T-7852**	2	BOLT (M4X.7X10MM)	
	52	2,3	**9M-4972**	2	CLIP	
	53	1	**9X-8256**	8	WASHER (6.6X12X2MM THK)	

E-ORDER BY THE CENTIMETER
M-METRIC PART

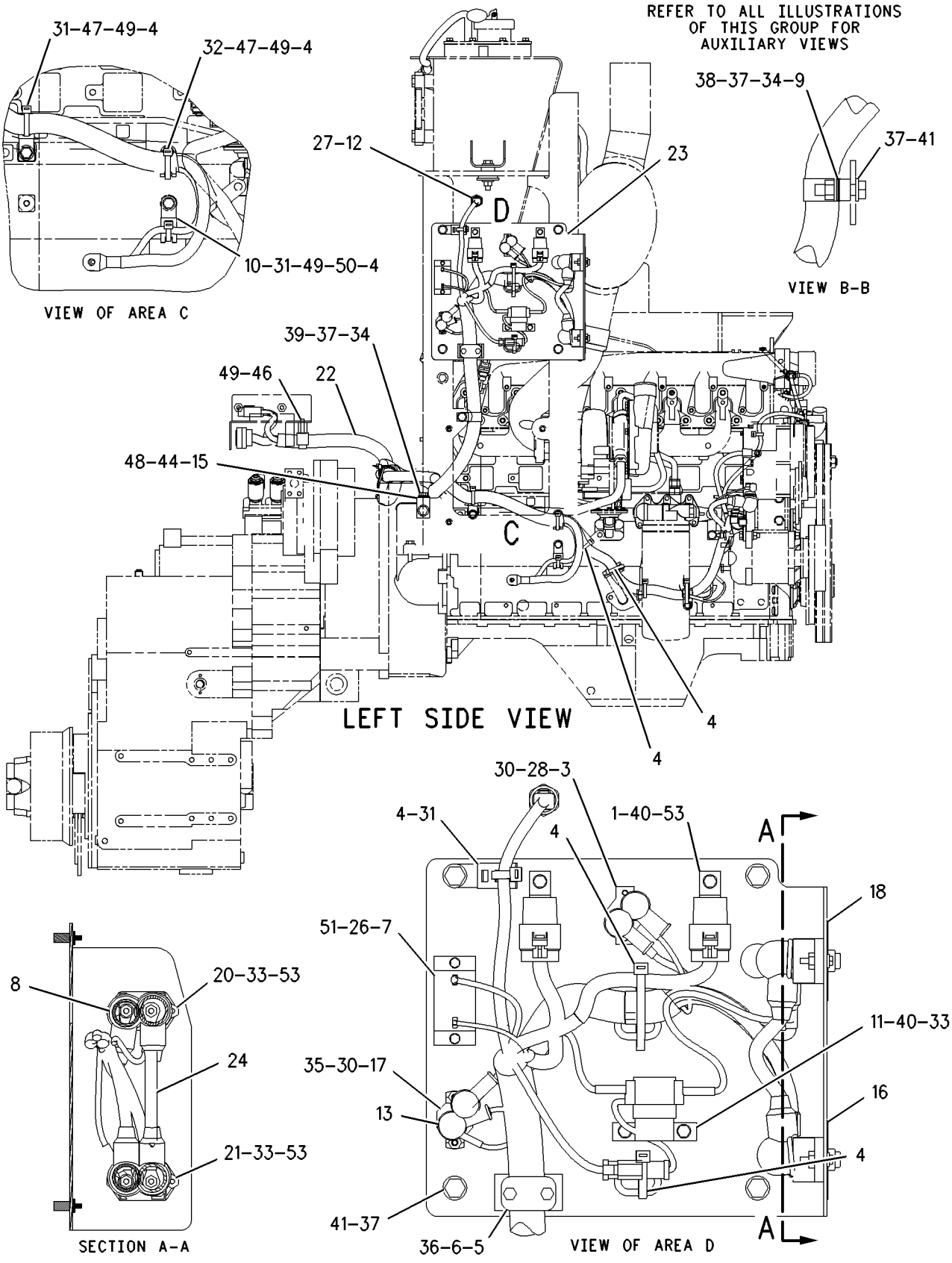

GRAPHIC #1

g00919653

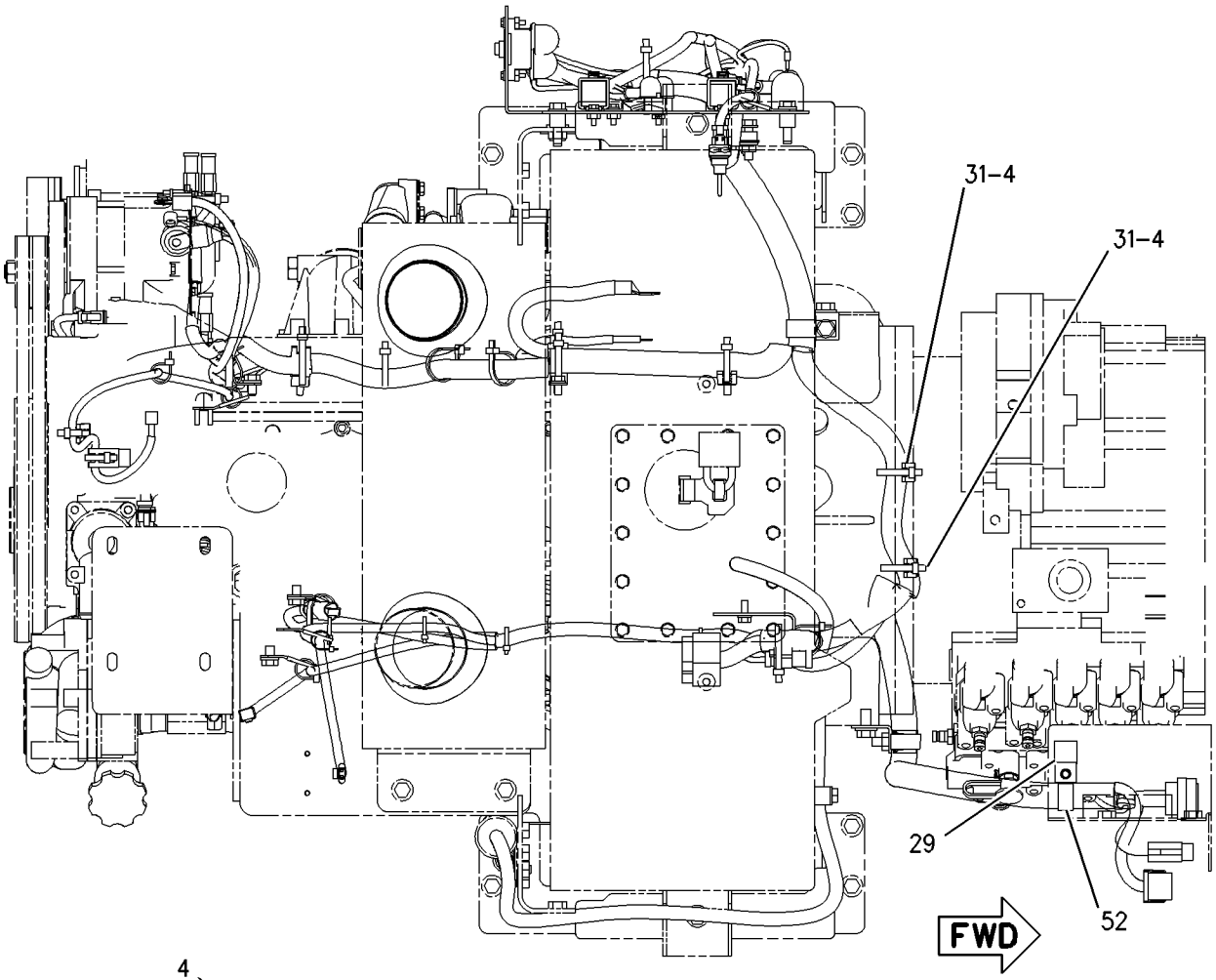

TOP VIEW

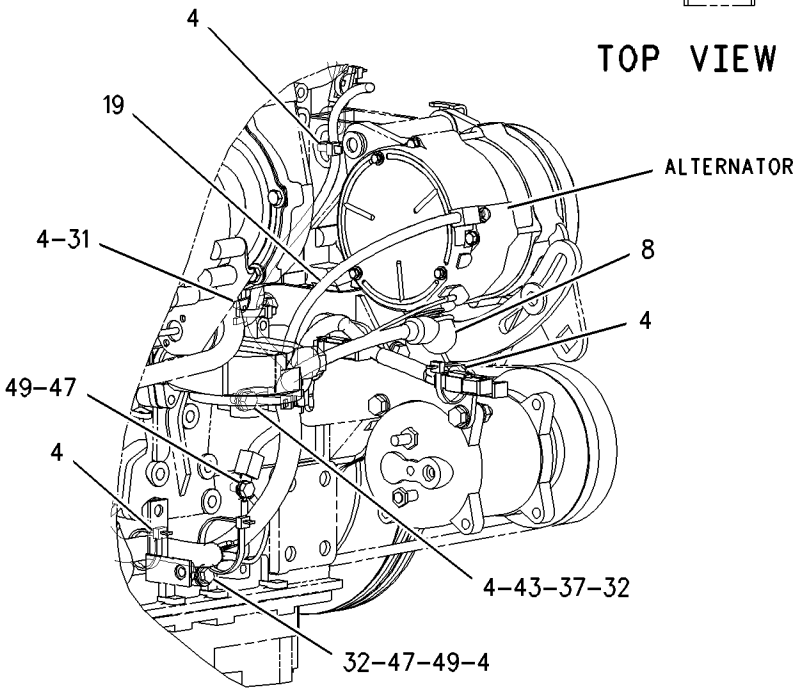

GRAPHIC #2 g00919654

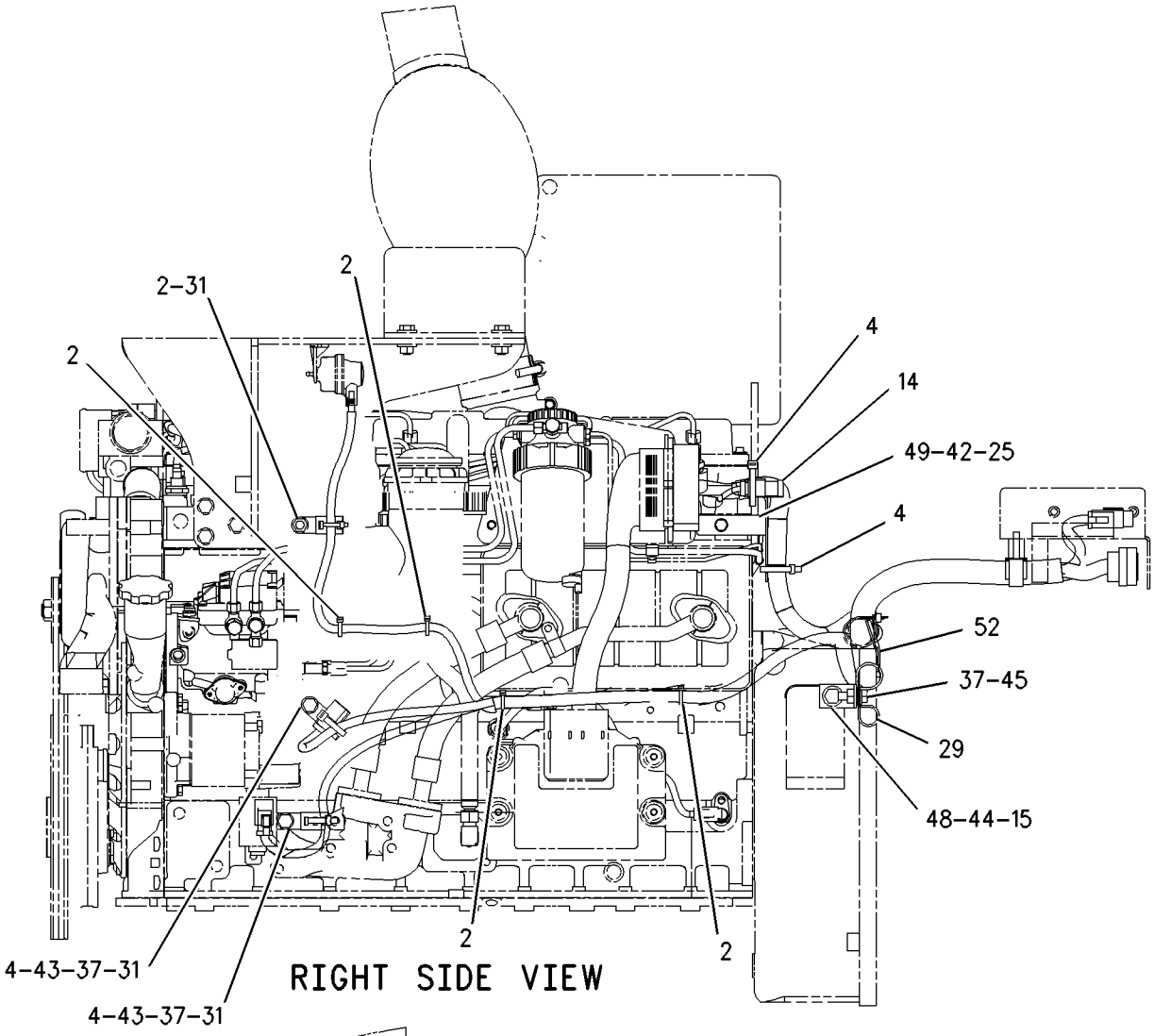

RIGHT SIDE VIEW

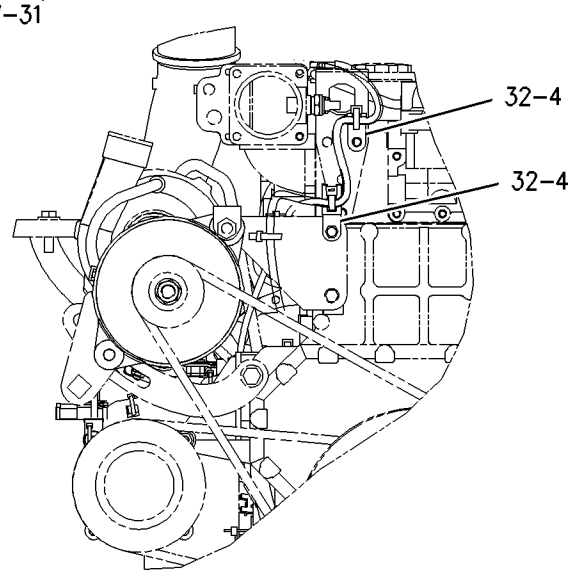

REAR VIEW

GRAPHIC #3 g00919655

MEMORANDA

132-2672 WIRING GP-FRONT

S/N: RBB1-UP

PART OF 176-5181 CHASSIS AR

SMCS-5734 **i01851943**

NOTE	REF NO	GRAPHIC REF	PART NUMBER	QTY	PART NAME 1 2 3 4 5 6 (PRODUCT LEVEL)	SEE PAGE
J	1	1	**7K-1181**	26	STRAP-CABLE	
	2	1	**7V-5628**	2	PLATE	
	3	1	**7V-6089**	4	CLAMP	
J	4	1	**8T-8737**	14	PLUG-SEAL	
	5	1	**102-8802**	3	KIT-RECEPTACLE (2 PIN)	
	6	1	**122-6316**	1	BRACKET AS	
	7	1	**163-1201**	1	HORN AS (24 VOLT)(LOW TONE)	
C	8	1	**213-9838**	1	HARNESS AS-FRONT CHASSIS	
		1	**102-8802**	3	KIT-RECEPTACLE (2 PIN)	
		1	**102-8803**	1	KIT-RECEPTACLE (3 PIN)	
		1	**102-8801**	1	KIT-RECEPTACLE (12 PIN)	
		1	**155-2265**	1	KIT-CONNECTING PLUG (8 PIN)	
		1	**155-2260**	2	KIT-CONNECTING PLUG (3 PIN)	
		1	**155-2270**	6	KIT-CONNECTING PLUG (2 PIN)	
		1	**155-2271**	2	KIT-CONNECTING PLUG (4 PIN)	
		1	**155-2274**	3	KIT-CONNECTING PLUG (6 PIN)	
J	9	1	**102-8804**	2	KIT-RECEPTACLE (4 PIN)	
	10	1	**4P-7581**	5	CLIP (LADDER)	
	11	1	**4P-8134**	2	CLIP	
	12	1	**6S-1066**	2	GROMMET (41.28MM OD)	
M	13	1	**7X-2534**	4	BOLT (M6X1X50MM)	
	14	1	**8T-4121**	3	WASHER-HARD (11X21X2.5MM THK)	
M	15	1	**8T-4137**	4	BOLT (M10X1.5X20MM)	

C-CHANGE FROM PREVIOUS TYPE
J-FOR MACHINES WITHOUT QUICK COUPLER SYSTEM
M-METRIC PART

132-2672 **WIRING GP-FRONT** ***(contd.)*** **i01851943**

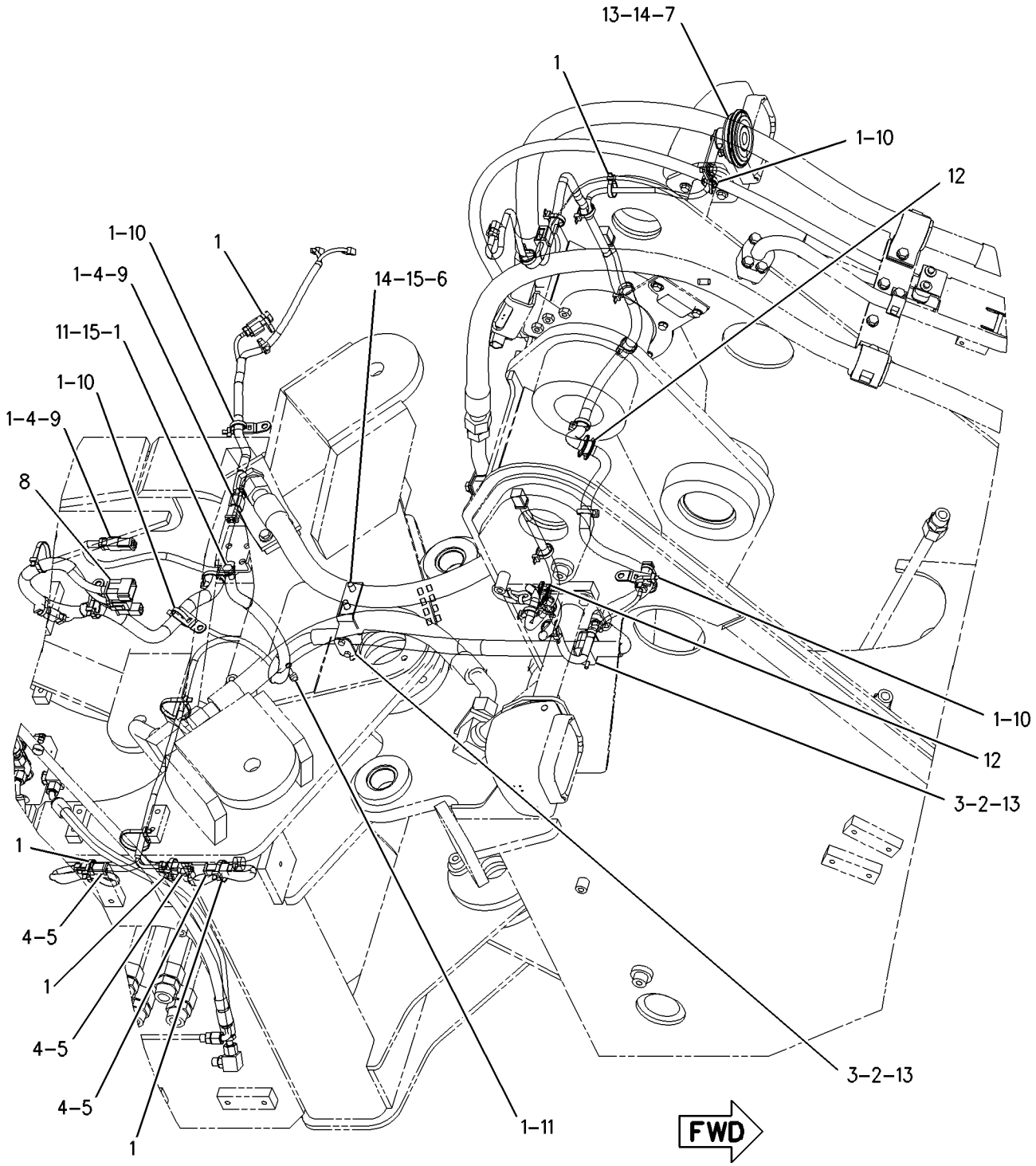

GRAPHIC #1

g00945019

132-2686 WIRING GP-FRONT

S/N: RTA1-UP

PART OF 176-5201 CHASSIS AR

SMCS-5734 **i01830641**

NOTE	REF NO	GRAPHIC REF	PART NUMBER	QTY	PART NAME 1 2 3 4 5 6 (PRODUCT LEVEL)	SEE PAGE
	1	1	**7K-1181**	24	STRAP-CABLE	
	2	1	**7V-5628**	2	PLATE	
	3	1	**7V-6089**	4	CLAMP	
B	4	1	**8T-8737**	14	PLUG-SEAL	
	5	1	**106-8704**	1	SUPPRESSOR AS-ARC	
	6	1	**122-6316**	1	BRACKET AS	
	7	1	**163-1201**	1	HORN AS (24 VOLT)(LOW TONE)	
	8	1	**213-9708**	1	HARNESS AS-FRONT CHASSIS	
		1	**102-8802**	2	KIT-RECEPTACLE (2 PIN)	
		1	**102-8801**	1	KIT-RECEPTACLE (12 PIN)	
		1	**155-2265**	1	KIT-CONNECTING PLUG (8 PIN)	
		1	**155-2260**	2	KIT-CONNECTING PLUG (3 PIN)	
		1	**155-2270**	7	KIT-CONNECTING PLUG (2 PIN)	
		1	**155-2274**	2	KIT-CONNECTING PLUG (6 PIN)	
	9	1	**2M-3432**	2	GROMMET	
	10	1	**102-8802**	1	KIT-RECEPTACLE (2 PIN)	
B	11	1	**102-8805**	2	KIT-RECEPTACLE (6 PIN)	
	12	1	**4P-7581**	4	CLIP	
	13	1	**4P-8134**	5	CLIP	
M	14	1	**7X-2534**	4	BOLT (M6X1X50MM)	
	15	1	**8T-4121**	3	WASHER-HARD (11X21X2.5MM THK)	
M	16	1	**8T-4137**	4	BOLT (M10X1.5X20MM)	

B-USE AS REQUIRED
M-METRIC PART

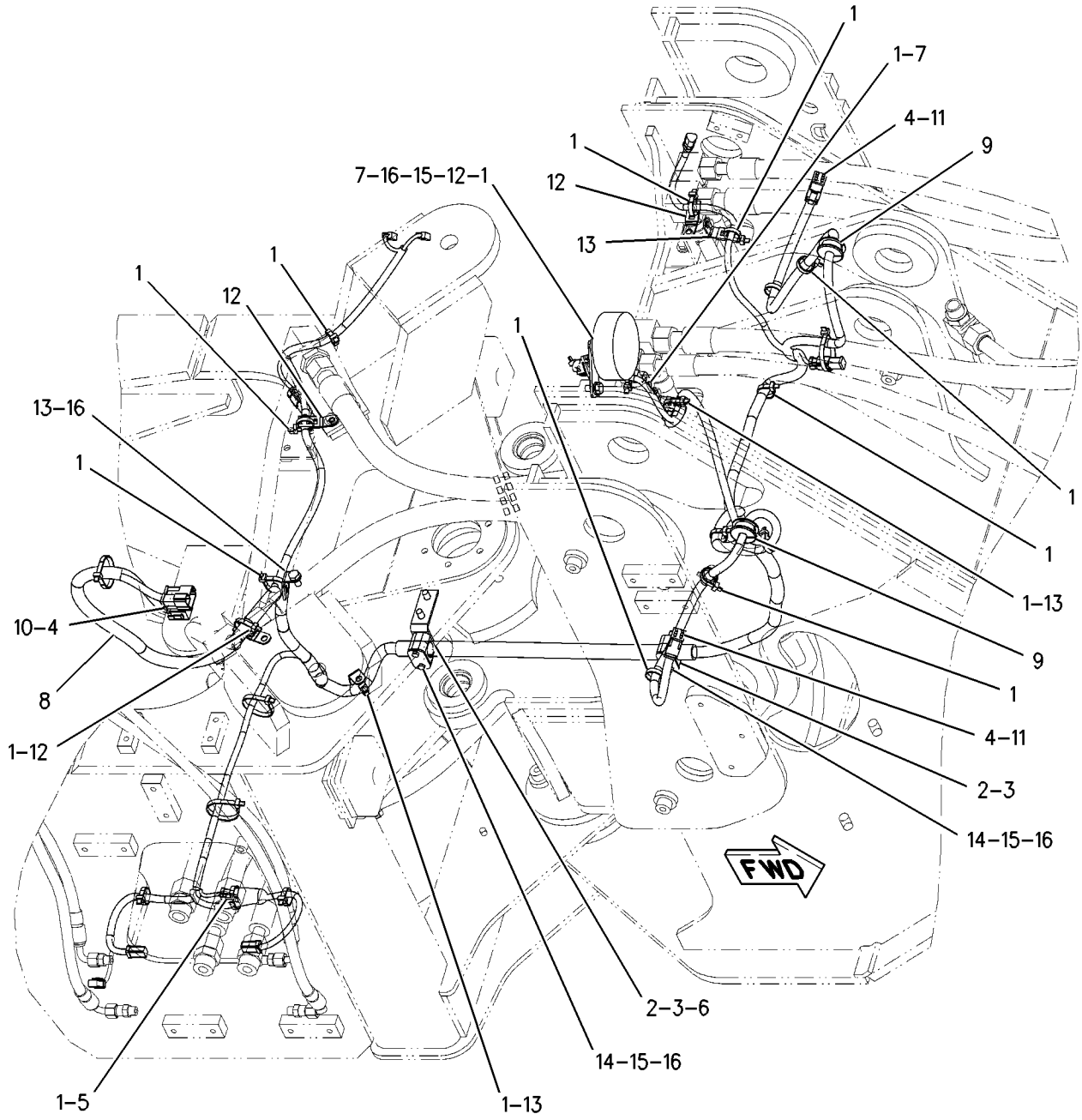

GRAPHIC #1

g00884454

189-4871 WIRING GP-MACHINE–SECURITY

S/N: RTA1-UP; RBB1-UP

AN ATTACHMENT

SMCS-1408 **i01859455**

NOTE	REF NO	GRAPHIC REF	PART NUMBER	QTY	PART NAME 1 2 3 4 5 6 (PRODUCT LEVEL)	SEE PAGE
	1	2	**3E-3371**	1	WEDGE-RECEPTACLE LOCK (3 PIN)	
	2	1	**6I-1418**	3	SPACER (8.2X12.7X28.7MM THK)	
	3	1	**155-0576**	6	MOUNT-ISOLATION	
	4	1	**205-0826**	1	FILM (MACHINE SECURITY SYSTEM)	
	5	1	**206-5162**	2	KEY AS-ELECTRONIC (SECURITY)	
	6	1	**206-5208**	1	COIL AS	
		1	**102-8802**	1	KIT-RECEPTACLE (2 PIN)	
	7	2	**222-3870**	1	COIL AS	
		2	**102-8802**	1	KIT-RECEPTACLE (2 PIN)	
	8	1	**224-9611**	1	HARNESS AS-CONTROL (SECURITY)	
		1	**102-8805**	1	KIT-RECEPTACLE (6 PIN)	
		1	**150-6766**	1	PLUG AS-CONNECTOR	
		1	**159-9322**	1	SEAL-O-RING	
		1	**155-2260**	1	KIT-CONNECTING PLUG (3 PIN)	
		1	**155-2270**	1	KIT-CONNECTING PLUG (2 PIN)	
		1	**155-2274**	1	KIT-CONNECTING PLUG (6 PIN)	
M	9	1	**099-3649**	3	BOLT (M8X1.25X40MM)	
	10	1	**165-5655**	1	LAMP AS (12 VOLT)	
Y	11	1	*190-2446*	1	ELECTRONICS GP-MACHINE (SECURITY)	104
	12	2	**102-8803**	1	KIT-RECEPTACLE (3 PIN)	
B	13	2	**7K-1181**	24	STRAP-CABLE	
	14	1	**9N-0869**	3	WASHER-HARD (8.8X25.5X2MM THK)	
	15	1	**224-3385**	1	FILM (START)	

B-USE AS REQUIRED
M-METRIC PART
Y-SEPARATE ILLUSTRATION

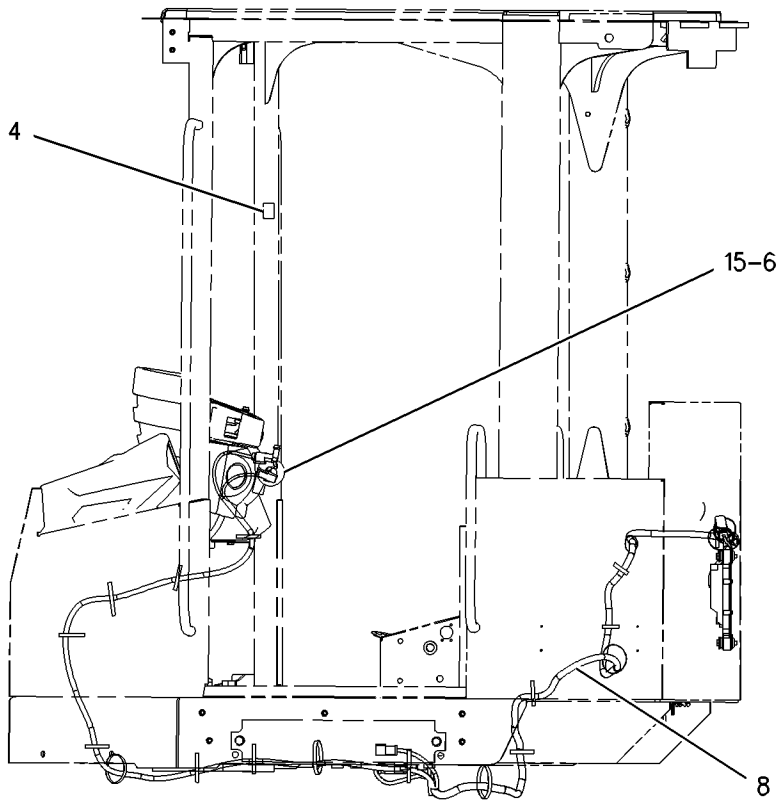

LEFT SIDE VIEW

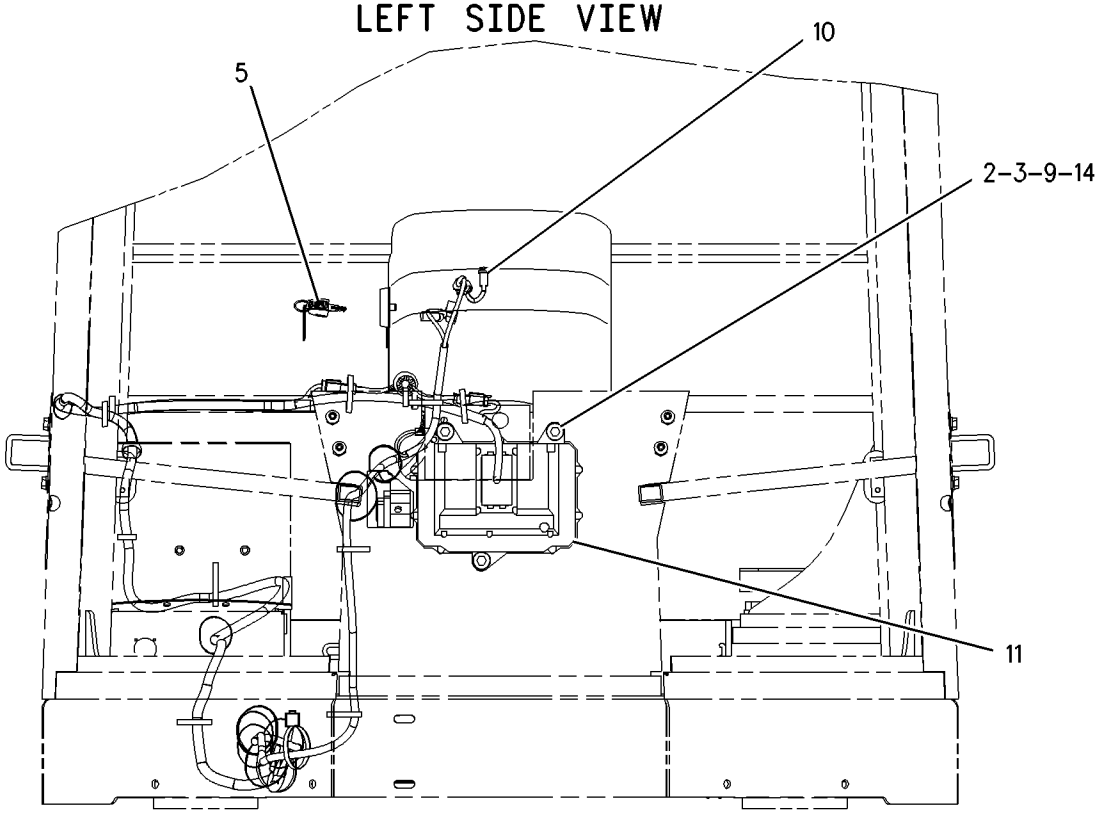

FRONT VIEW

GRAPHIC #1 g00920606

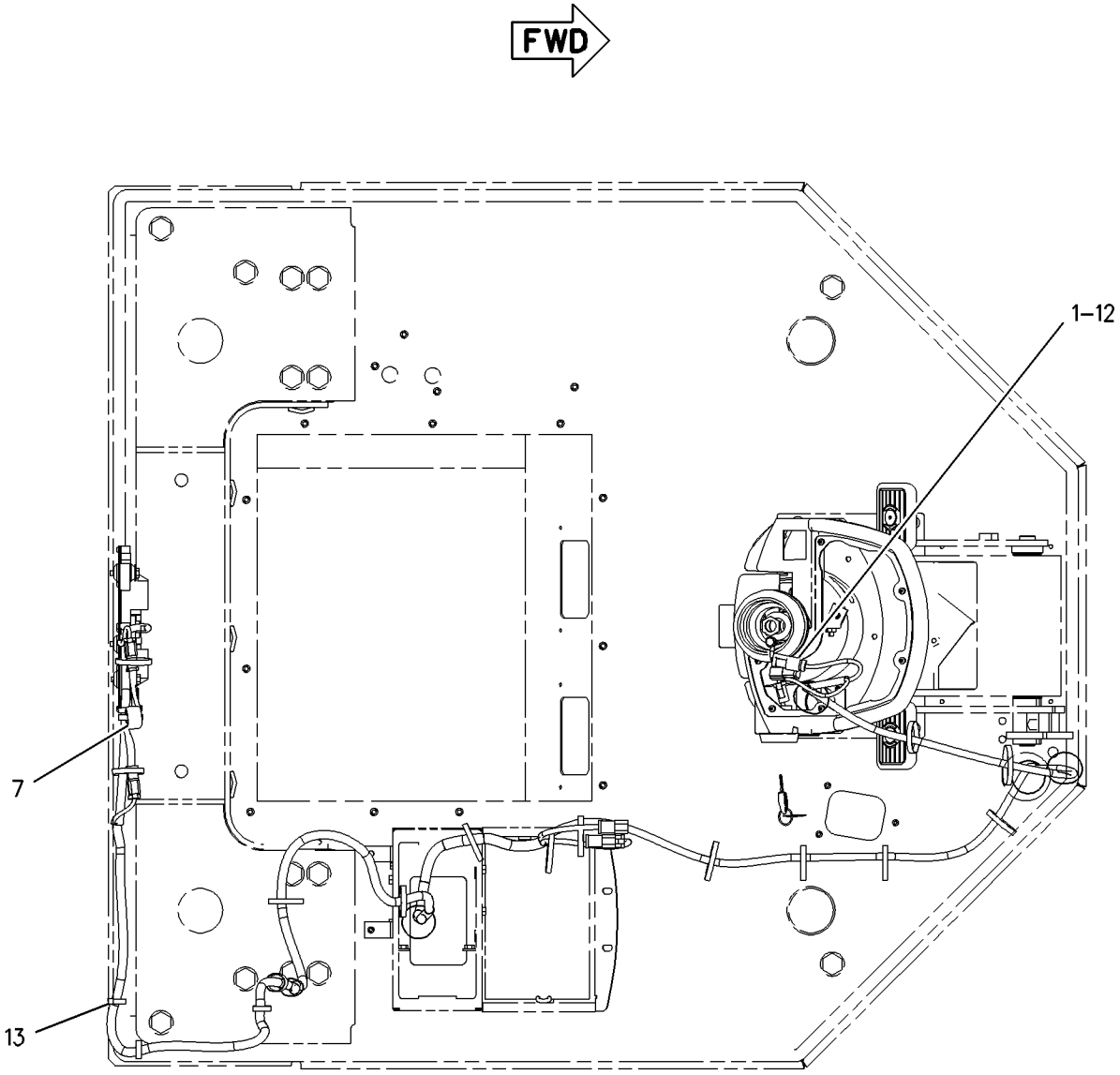

TOP VIEW

GRAPHIC #2 g00920607

MEMORANDA

180-8804 WIRING GP-REAR

S/N: RTA1-UP; RBB1-UP

PART OF 176-5181, 176-5201 CHASSIS AR

SMCS-1408 **i01813313**

NOTE	REF NO	GRAPHIC REF	PART NUMBER	QTY	PART NAME 1 2 3 4 5 6 (PRODUCT LEVEL)	SEE PAGE
	1	1	**7K-1181**	29	STRAP-CABLE	
	2	1	**204-1370**	1	GASKET	
	3	1	**224-9612**	1	HARNESS AS-REAR CHASSIS	
		1	**102-8802**	1	KIT-RECEPTACLE (2 PIN)	
		1	**102-8803**	1	KIT-RECEPTACLE (3 PIN)	
		1	**155-2260**	4	KIT-CONNECTING PLUG (3 PIN)	
		1	**155-2270**	11	KIT-CONNECTING PLUG (2 PIN)	
	4	1	**132-5789**	1	CLIP	
	5	1	**194-7265**	1	SENDER AS-FUEL LEVEL	
		1	**3E-3365**	1	WEDGE-RECEPTACLE LOCK (2 PIN)	
		1	**102-8802**	1	KIT-RECEPTACLE (2 PIN)	
		1	**186-3735**	2	PIN-CONNECTOR	
	6	1	**4P-7581**	4	CLIP (LADDER)	
	7	1	**4P-8134**	2	CLIP	
M	8	1	**5C-9553**	8	BOLT (M6X1X16MM)	
	9	1	**5P-6264**	4	GROMMET	
	10	1	**8D-9671**	1	CLIP	
	11	1	**8T-4121**	6	WASHER-HARD (11X21X2.5MM THK)	
M	12	1	**8T-4137**	5	BOLT (M10X1.5X20MM)	
M	13	1	**8T-4186**	1	BOLT (M10X1.5X40MM)	
	14	1	**8T-4205**	8	WASHER-HARD (7.2X14.5X2MM THK)	

M-METRIC PART

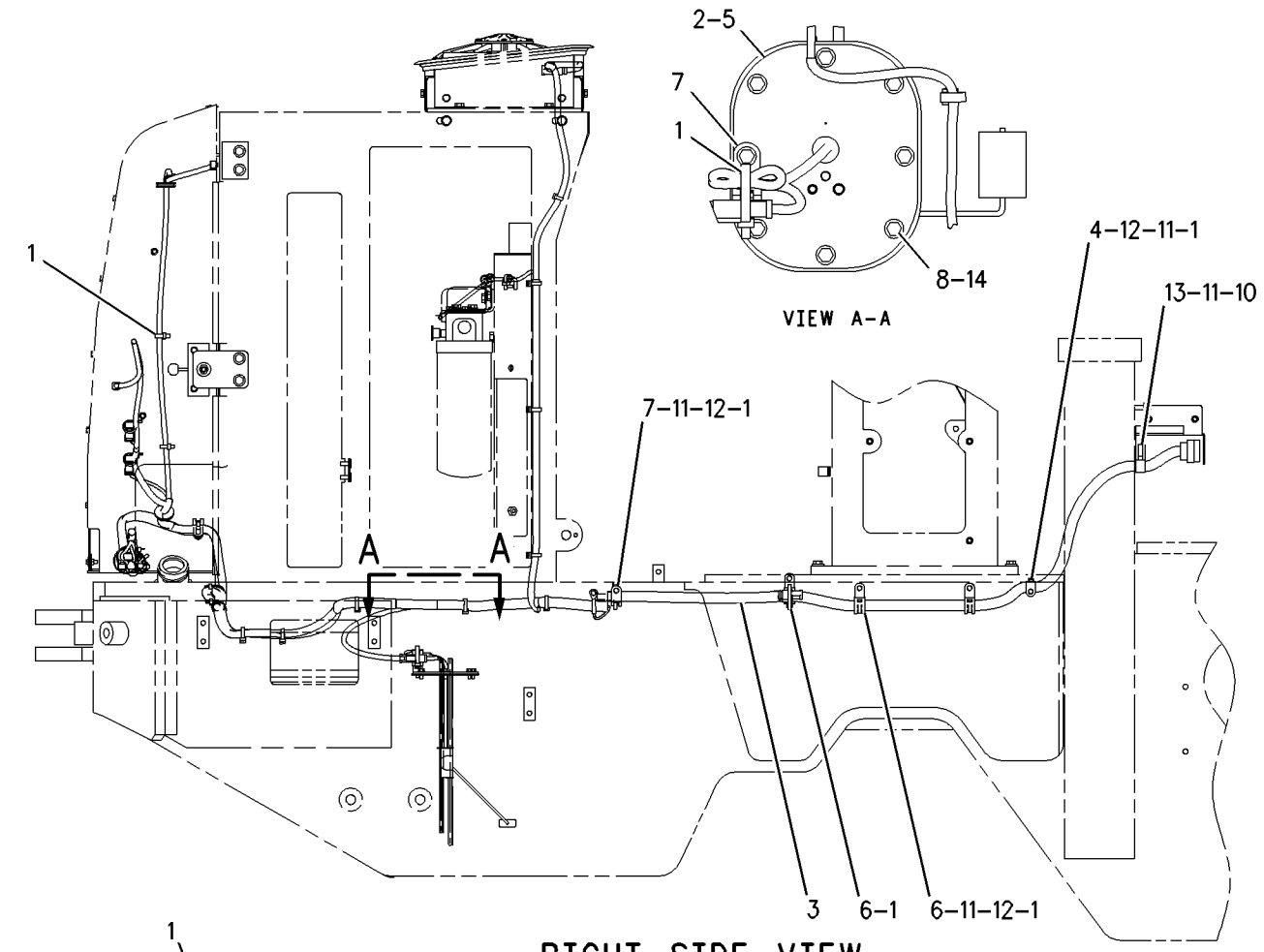

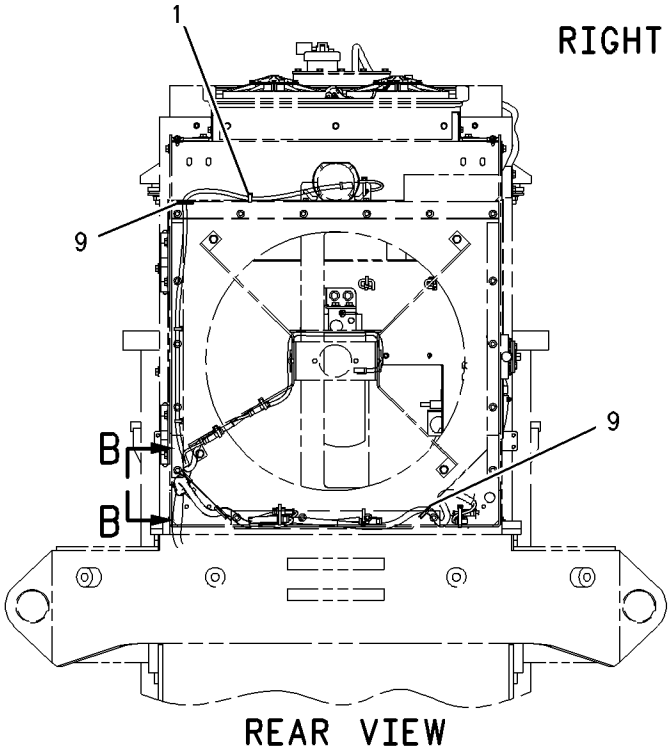

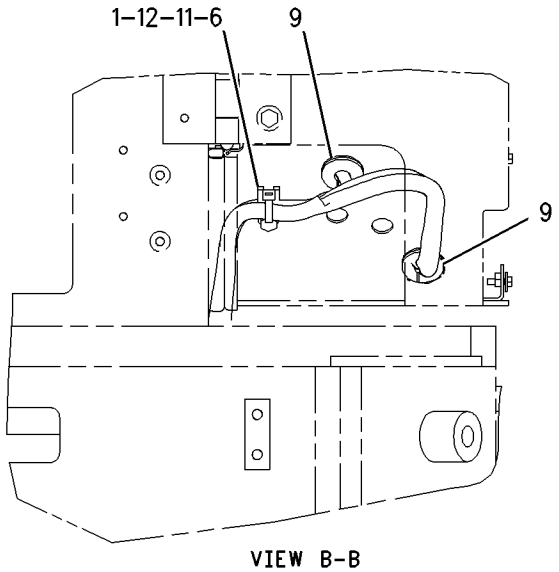

GRAPHIC #1

g00923025

215-2887 WIRING GP-RIDE CONTROL

S/N: RBB1-UP
PART OF 203-8554 CONTROL AR-RIDE
AN ATTACHMENT

SMCS-5004, 5734 **i01825121**

NOTE	REF NO	GRAPHIC REF	PART NUMBER	QTY	PART NAME 1 2 3 4 5 6 (PRODUCT LEVEL)	SEE PAGE
	1	1	**3E-5239**	1	RELAY AS (24 VOLT) (RIDE CONTROL)	
	2	1	**7K-1181**	7	STRAP-CABLE	
	3	1	**106-8704**	1	SUPPRESSOR AS-ARC	
		1	**102-8802**	1	KIT-RECEPTACLE (2 PIN)	
		1	**3E-3365**	1	WEDGE-RECEPTACLE LOCK (2 PIN)	
		1	**186-3735**	2	PIN-CONNECTOR	
	4	1	**158-5089**	1	RELAY AS (RIDE CONTROL/LOAD CHECK RELAY)	
	5	1	**171-6029**	1	HARNESS AS-RIDE CONTROL (SOLENOID)	
		1	**102-8803**	1	KIT-RECEPTACLE (3 PIN)	
		1	**155-2270**	2	KIT-CONNECTING PLUG (2 PIN)	
	6	1	**185-2767**	1	SWITCH AS-ROCKER (RIDE CONTROL)	
		1	**111-7899**	1	GASKET	
	7	1	**217-6729**	1	HARNESS AS-RIDE CONTROL (PRESSURE SWITCH)	
		1	**102-8803**	1	KIT-RECEPTACLE (3 PIN)	
		1	**155-2270**	1	KIT-CONNECTING PLUG (2 PIN)	
	8	1	**4P-7581**	2	CLIP	
	9	1	**4P-8134**	1	CLIP	
M	10	1	**8T-4138**	1	BOLT (M6X1X20MM)	
	11	1	**9X-6165**	1	WASHER (6.5X22X2.5MM THK)	

M-METRIC PART

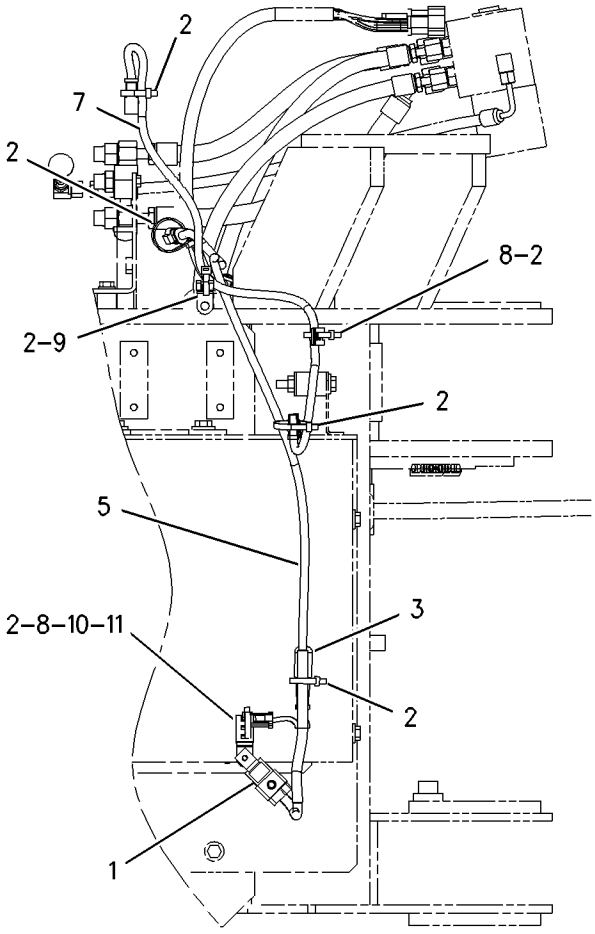

RIGHT SIDE VIEW

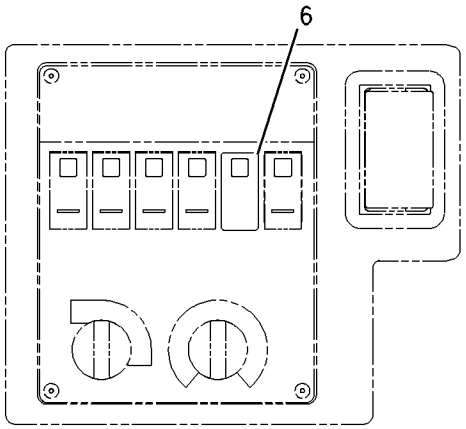

RIGHT HAND CONSOLE

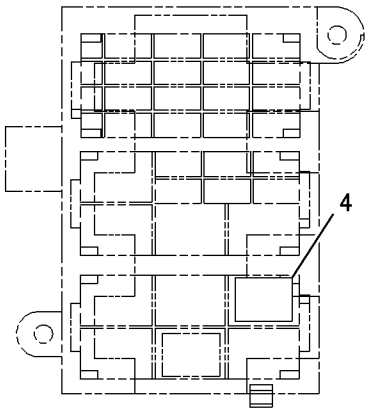

FUSE/RELAY BLOCK

GRAPHIC #1

g00913661

215-2888 WIRING GP-RIDE CONTROL

S/N: RTA1-UP
PART OF 203-8556 CONTROL AR-RIDE
AN ATTACHMENT

SMCS-5004, 5734 **i01820003**

NOTE	REF NO	GRAPHIC REF	PART NUMBER	QTY	PART NAME 1 2 3 4 5 6 (PRODUCT LEVEL)	SEE PAGE
	1	1	**106-8704**	1	SUPPRESSOR AS-ARC	
		1	**102-8802**	1	KIT-RECEPTACLE (2 PIN)	
		1	**3E-3365**	1	WEDGE-RECEPTACLE LOCK (2 PIN)	
		1	**186-3735**	2	PIN-CONNECTOR	
	2	1	**158-5089**	1	RELAY AS (RIDE CONTROL)	
	3	1	**174-1802**	1	HARNESS AS-RIDE CONTROL	
		1	**102-8802**	1	KIT-RECEPTACLE (2 PIN)	
		1	**155-2270**	2	KIT-CONNECTING PLUG (2 PIN)	
	4	1	**185-2767**	1	SWITCH AS-ROCKER (RIDE CONTROL)	
		1	**111-7899**	1	GASKET	
	5	1	**4P-7581**	1	CLIP	
	6	1	**7K-1181**	4	STRAP-CABLE	
M	7	1	**8T-4138**	1	BOLT (M6X1X20MM)	
	8	1	**9X-6165**	1	WASHER (6.5X22X2.5MM THK)	

M-METRIC PART

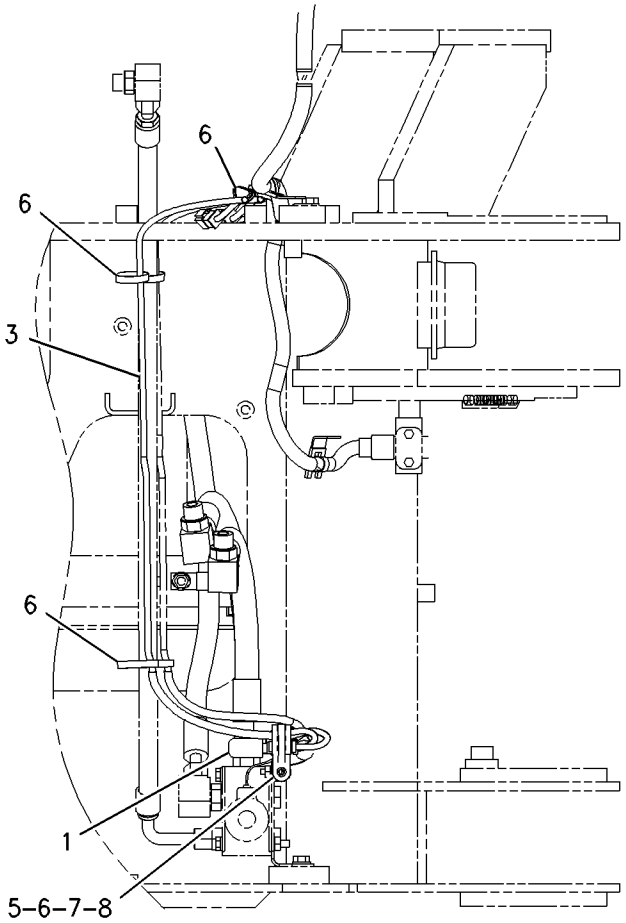

RIGHT SIDE VIEW

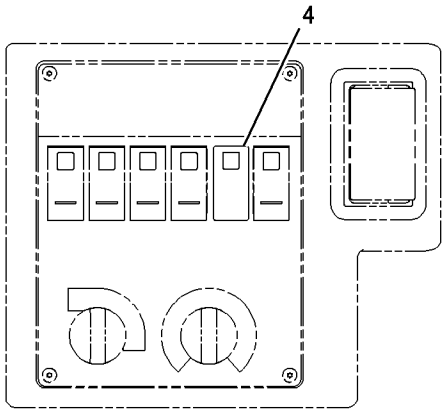

RIGHT HAND CONSOLE

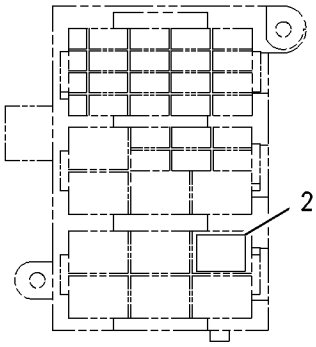

FUSE/RELAY BLOCK

GRAPHIC #1 g00913455

MEMORANDA

180-8810 WIRING GP-SECONDARY STEERING

S/N: RTA1-UP; RBB1-UP
PART OF 203-3888 STEERING AR-SECONDARY
AN ATTACHMENT

SMCS-1408, 4334 **i01818662**

NOTE	REF NO	GRAPHIC REF	PART NUMBER	QTY	PART NAME 1 2 3 4 5 6 (PRODUCT LEVEL)	SEE PAGE
Y	1	1	**3E-0154**	1	SWITCH GP-MAGNETIC	129
	2	1	**7K-1181**	6	STRAP-CABLE	
	3	1	**8X-9618**	1	STRAP AS-GROUND	
	4	1	**9L-1566**	1	SUPPORT-TUBE	
	5	1	**118-5597**	1	DIODE AS	
		1	**2L-8076**	1	TERMINAL-CRIMP (14-16 GA)	
		1	**6V-2689**	1	TUBE-HEAT SHRINK	
	6	1	**158-5089**	1	RELAY AS (SECONDARY STEERING)	
	7	1	**180-8860**	1	HARNESS AS-STEERING (SECONDARY)	
		1	**102-8803**	1	KIT-RECEPTACLE (3 PIN)	
	8	1	**185-2768**	1	SWITCH AS-ROCKER (SECONDARY STEERING)	
		1	**111-7899**	1	GASKET	
	9	1	**208-9645**	1	CABLE AS	
	10	1	**208-9646**	1	CABLE AS	
	11	1	**4P-8134**	1	CLIP	
	12	1	**5P-9299**	3	CLIP	
	13	1	**8T-4121**	7	WASHER-HARD (11X21X2.5MM THK)	
M	14	1	**8T-4133**	3	NUT (M10X1.5 THD)	
M	15	1	**8T-4136**	3	BOLT (M10X1.5X25MM)	
M	16	1	**8T-4171**	4	BOLT (M6X1X12MM)	
	17	1	**8T-4205**	4	WASHER-HARD (7.2X14.5X2MM THK)	
M	18	1	**8T-4195**	1	BOLT (M10X1.5X30MM)	
M	19	1	**8T-4189**	1	BOLT (M8X1.25X20MM)	
	20	1	**5P-4116**	1	WASHER-HARD (8.8X20.5X2MM THK)	
	21	1	**3W-6188**	1	BRACKET	

M-METRIC PART
Y-SEPARATE ILLUSTRATION

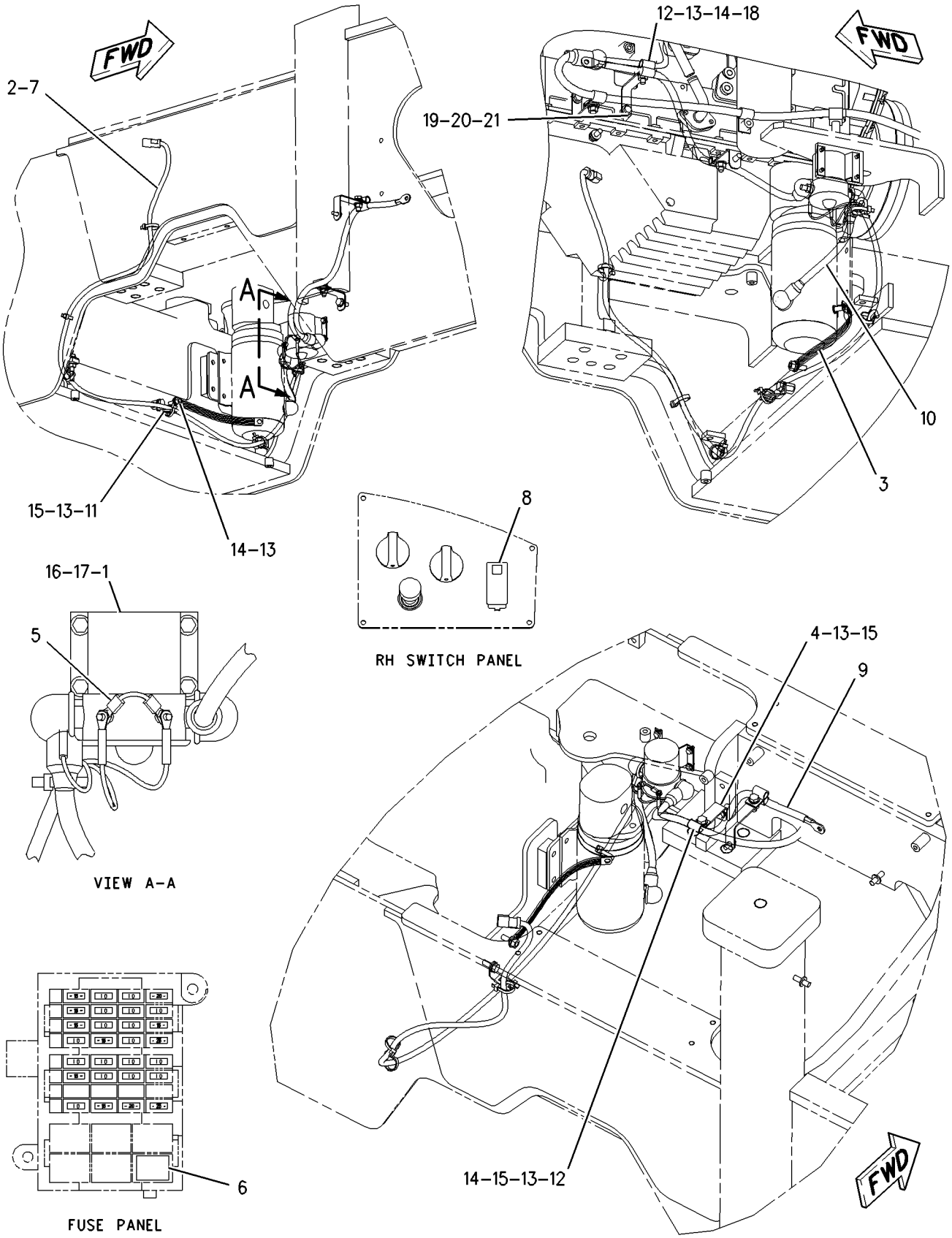

GRAPHIC #1

g00922817

138-1615 AXLE AR-FIXED

S/N: RTA1-UP; RBB1-UP
FRONT,STANDARD DIFFERENTIAL,SINGLE DISC BRAKE
AN ATTACHMENT

SMCS-3013, 3278 **i01216990**

NOTE	PART NUMBER	QTY	PART NAME 1 2 3 4 5 6 (PRODUCT LEVEL)	SEE PAGE
Y	*138-1614*	2	BRAKE & PLANETARY GP	178
Y	**138-1612**	1	DIFFERENTIAL GP	194
Y	*138-1617*	1	GEAR GP-BEVEL & PINION	204
Y	*138-1616*	1	HOUSING GP-FIXED AXLE	212

Y-SEPARATE ILLUSTRATION

<END>

138-2726 AXLE AR-FIXED

S/N: RTA1-UP; RBB1-UP
FRONT,LIMITED SLIP DIFFERENTIAL,SINGLE DISC BRAKE
AN ATTACHMENT

SMCS-3013, 3278 **i01739488**

NOTE	PART NUMBER	QTY	PART NAME 1 2 3 4 5 6 (PRODUCT LEVEL)	SEE PAGE
Y	*138-1614*	2	BRAKE & PLANETARY GP	178
Y	**206-9670**	1	DIFFERENTIAL GP-LIMITED SLIP	195
Y	*138-2776*	1	GEAR GP-BEVEL & PINION	206
Y	*138-1616*	1	HOUSING GP-FIXED AXLE	212
	220-7925	1	PLATE	

Y-SEPARATE ILLUSTRATION

<END>

203-2773 AXLE AR-OSCILLATING

S/N: RTA1-UP; RBB1-UP
REAR,STANDARD DIFFERENTIAL,SINGLE DISC BRAKE
PART OF 203-5943 AXLE AR-OSCILLATING
AN ATTACHMENT

SMCS-3013, 3278 **i01855509**

NOTE	PART NUMBER	QTY	PART NAME 1 2 3 4 5 6 (PRODUCT LEVEL)	SEE PAGE
Y	*138-1614*	2	BRAKE & PLANETARY GP	178
Y	**138-1612**	1	DIFFERENTIAL GP	194
Y	*138-1611*	1	GEAR GP-BEVEL & PINION	203
Y	*203-2774*	1	HOUSING GP-OSCILLATING AXLE	214
	220-7925	1	PLATE GP-IDENTIFICATION	

Y-SEPARATE ILLUSTRATION

<END>

203-2778 AXLE AR-OSCILLATING

S/N: RTA1-UP; RBB1-UP
REAR,LIMITED SLIP DIFFERENTIAL,SINGLE DISC BRAKE
PART OF 203-5944 AXLE AR-OSCILLATING
AN ATTACHMENT

SMCS-3013, 3278 **i01729505**

NOTE	PART NUMBER	QTY	PART NAME 1 2 3 4 5 6 (PRODUCT LEVEL)	SEE PAGE
Y	*138-1614*	2	BRAKE & PLANETARY GP	178
Y	**206-9670**	1	DIFFERENTIAL GP-LIMITED SLIP	195
Y	*138-2777*	1	GEAR GP-BEVEL & PINION	207
Y	*203-2774*	1	HOUSING GP-OSCILLATING AXLE	214
	220-7925	1	PLATE GP-IDENTIFICATION	

Y-SEPARATE ILLUSTRATION

<END>

203-2780 AXLE AR-OSCILLATING

S/N: RTA1-UP; RBB1-UP
REAR,STANDARD DIFFERENTIAL,DUAL DISC BRAKE
PART OF 203-5945 AXLE AR-OSCILLATING
AN ATTACHMENT

SMCS-3013, 3278 **i01819773**

NOTE	PART NUMBER	QTY	PART NAME 1 2 3 4 5 6 (PRODUCT LEVEL)	SEE PAGE
Y	*197-8894*	2	BRAKE & PLANETARY GP	180
Y	*138-1612*	1	DIFFERENTIAL GP	194
Y	*138-1611*	1	GEAR GP-BEVEL & PINION	203
Y	*203-2774*	1	HOUSING GP-OSCILLATING AXLE	214
	220-7925	1	PLATE GP-IDENTIFICATION	

Y-SEPARATE ILLUSTRATION

<END>

203-2781 AXLE AR-OSCILLATING

S/N: RTA1-UP; RBB1-UP
REAR,LIMITED SLIP DIFFERENTIAL,DUAL DISC BRAKE
PART OF 203-5946 AXLE AR-OSCILLATING
AN ATTACHMENT

SMCS-3013, 3278 **i01819933**

NOTE	PART NUMBER	QTY	PART NAME 1 2 3 4 5 6 (PRODUCT LEVEL)	SEE PAGE
Y	*197-8894*	2	BRAKE & PLANETARY GP	180
Y	**206-9670**	1	DIFFERENTIAL GP-LIMITED SLIP	195
Y	*138-2777*	1	GEAR GP-BEVEL & PINION	207
Y	*203-2774*	1	HOUSING GP-OSCILLATING AXLE	214
	220-7925	1	PLATE GP-IDENTIFICATION	

Y-SEPARATE ILLUSTRATION

<END>

203-5943 AXLE AR-OSCILLATING

S/N: RTA1-UP; RBB1-UP
REAR,STANDARD DIFFERENTIAL,DUAL DISC BRAKE
AN ATTACHMENT

SMCS-3013, 3278 **i01819332**

NOTE	PART NUMBER	QTY	PART NAME 1 2 3 4 5 6 (PRODUCT LEVEL)	SEE PAGE
Y	*203-2773*	1	AXLE AR-OSCILLATING (REAR, STANDARD DIFFERENTIAL)	174
Y	*203-3881*	1	LINES GP-HYDRAULIC FAN	364
Y	*192-4367*	1	LINES GP-WATER	59

Y-SEPARATE ILLUSTRATION

<END>

203-5944 AXLE AR-OSCILLATING

S/N: RTA1-UP; RBB1-UP
REAR,LIMITED SLIP DIFFERENTIAL,SINGLE DISC BRAKE
AN ATTACHMENT

SMCS-3013, 3278 **i01819358**

NOTE	PART NUMBER	QTY	PART NAME 1 2 3 4 5 6 (PRODUCT LEVEL)	SEE PAGE
Y	*203-2778*	1	AXLE AR-OSCILLATING (REAR, LIMITED SLIP DIFF)	175
Y	*203-3881*	1	LINES GP-HYDRAULIC FAN	364
Y	*192-4367*	1	LINES GP-WATER	59

Y-SEPARATE ILLUSTRATION

<END>

203-5945 AXLE AR-OSCILLATING

S/N: RTA1-UP; RBB1-UP
REAR,STANDARD DIFFERENTIAL,AXLE OIL COOLER
AN ATTACHMENT

SMCS-3013, 3278 **i01819367**

NOTE	PART NUMBER	QTY	PART NAME 1 2 3 4 5 6 (PRODUCT LEVEL)	SEE PAGE
Y	*203-2780*	1	AXLE AR-OSCILLATING (REAR, STANDARD DIFFERENTIAL)	175
Y	*203-3883*	1	LINES GP-AXLE OIL COOLER	218
Y	*192-4360*	1	LINES GP-WATER (AXLE OIL COOLER)	58

Y-SEPARATE ILLUSTRATION

<END>

203-5946 AXLE AR-OSCILLATING

S/N: RTA1-UP; RBB1-UP
REAR,LIMITED SLIP DIFFERENTIAL,AXLE OIL COOLER
AN ATTACHMENT

SMCS-3013, 3278 **i01819916**

NOTE	PART NUMBER	QTY	PART NAME 1 2 3 4 5 6 (PRODUCT LEVEL)	SEE PAGE
Y	*203-2781*	1	AXLE AR-OSCILLATING (REAR, LIMITED SLIP DIFF)	175
Y	*203-3883*	1	LINES GP-AXLE OIL COOLER	218
Y	*192-4360*	1	LINES GP-WATER (AXLE OIL COOLER)	58

Y-SEPARATE ILLUSTRATION

<END>

138-1614 BRAKE & PLANETARY GP

S/N: RTA1-UP; RBB1-UP

PART OF 138-1615, 138-2726 AXLE AR-FIXED, 203-2773, 203-2778 AXLE AR-OSCILLATING AN ATTACHMENT

SMCS-4011, 4255 **i01423055**

NOTE	REF NO	GRAPHIC REF	PART NUMBER	QTY	PART NAME 1 2 3 4 5 6 (PRODUCT LEVEL)	SEE PAGE
	1	1	**143-4916**	1	PISTON	
	2	1	**170-1208**	1	DISC-FRICTION	
	3	1	**170-4697**	1	PLATE-REACTION	
	4	1	**9C-6020**	3	BEARING-SLEEVE	
	5	1	**8R-7812**	3	GEAR-PLANETARY (29 TEETH)	
	6	1	**8R-0249**	6	WASHER-THRUST	
	7	1	**8T-2925**	3	PIN-SPRING	
	8	1	**8R-0248**	3	SHAFT-PLANETARY	
	9	1	**115-5327**	3	DOWEL	
	10	1	**8R-2537**	1	CARRIER-PLANETARY	
	11	1	**139-3584**	1	GEAR-RING (78 TEETH)	
	12	1	**148-7841**	3	SPRING	
	13	1	**4M-1677**	3	DOWEL-REACTION	
	14	1	**159-3589**	1	SEAL-D-RING	
	15	1	**165-6692**	1	SEAL-D-RING	
	16	1	**143-4918**	1	GEAR-SUN (28 TEETH)	
	17	1	**138-1645**	3	PIN-SPRING	

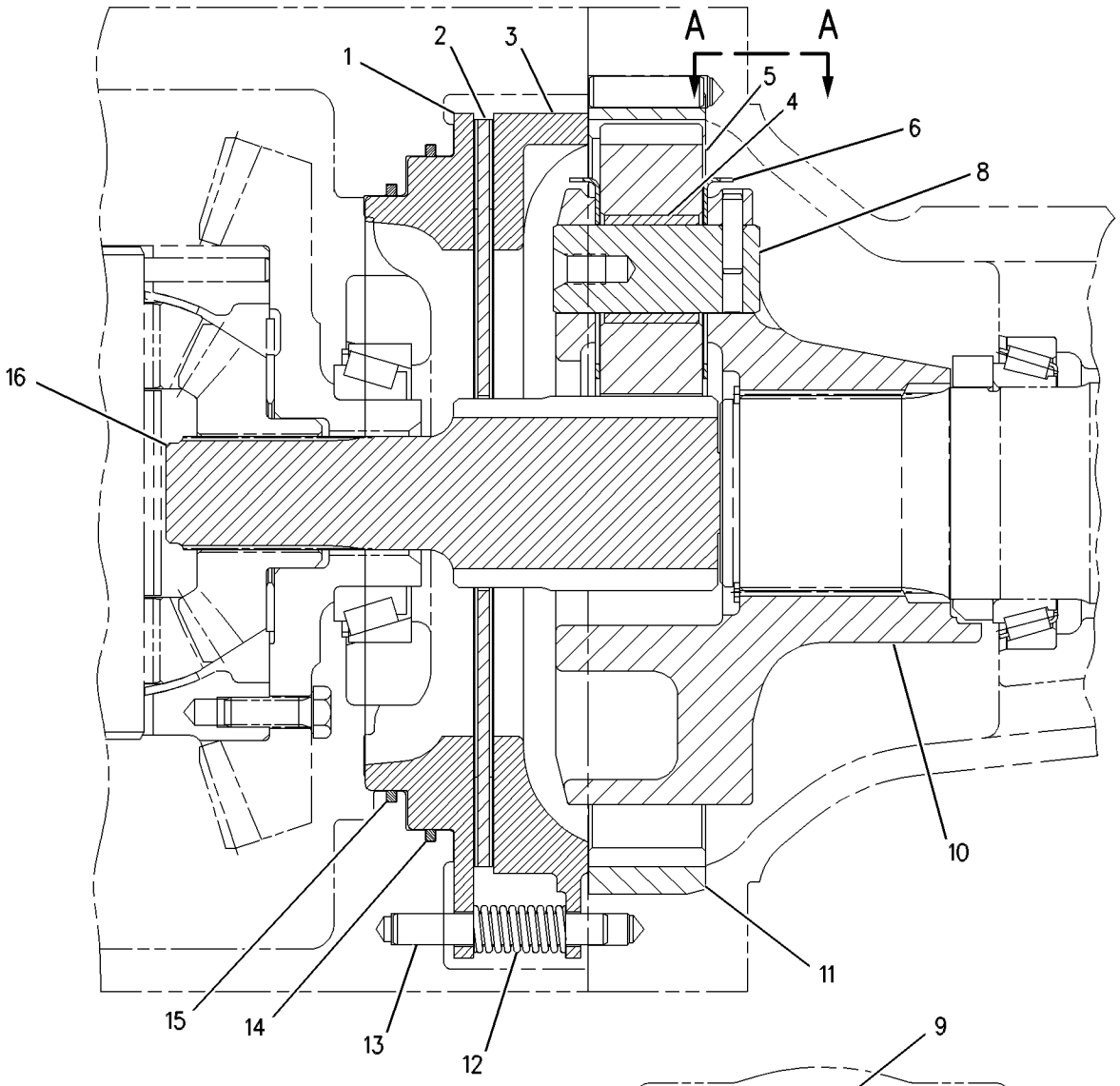

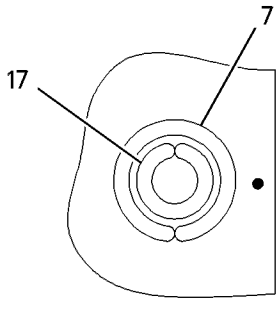

VIEW A-A

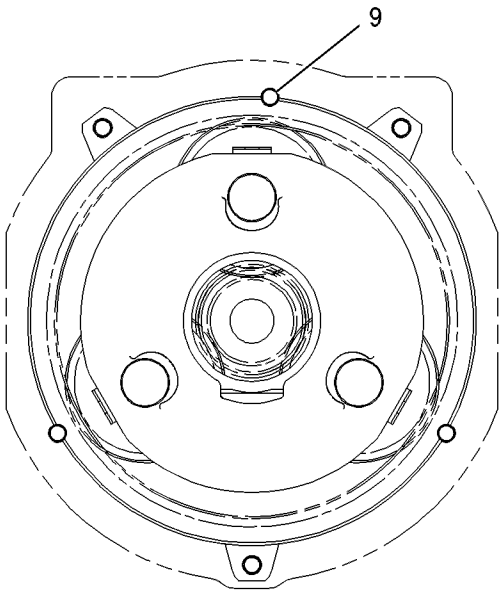

GRAPHIC #1

g00618448

197-8894 BRAKE & PLANETARY GP

S/N: RTA1-UP; RBB1-UP
PART OF 203-2780, 203-2781 AXLE AR-OSCILLATING
AN ATTACHMENT

SMCS-4011, 4255 **i01819841**

NOTE	REF NO	GRAPHIC REF	PART NUMBER	QTY	PART NAME 1 2 3 4 5 6 (PRODUCT LEVEL)	SEE PAGE
	1	1	**143-4916**	1	PISTON	
	2	1	**198-0246**	2	DISC-FRICTION	
	3	1	**197-8896**	1	PLATE-REACTION	
	4	1	**9C-6020**	3	BEARING-SLEEVE	
	5	1	**8R-7812**	3	GEAR-PLANETARY (29 TEETH)	
	6	1	**8R-0249**	6	WASHER-THRUST	
	7	1	**8T-2925**	3	PIN-SPRING	
	8	1	**8R-0248**	3	SHAFT-PLANETARY	
	9	1	**115-5327**	3	DOWEL	
	10	1	**8R-2537**	1	CARRIER-PLANETARY	
	11	1	**139-3584**	1	GEAR-RING	
	12	1	**148-7841**	3	SPRING	
	13	1	**4M-1677**	6	DOWEL-REACTION	
	14	1	**159-3589**	1	SEAL-D-RING	
	15	1	**165-6692**	1	SEAL-D-RING	
	16	1	**143-4918**	1	GEAR-SUN	
	17	1	**138-1645**	3	PIN-SPRING	
	18	1	**197-8898**	1	PLATE-SEPARATOR	

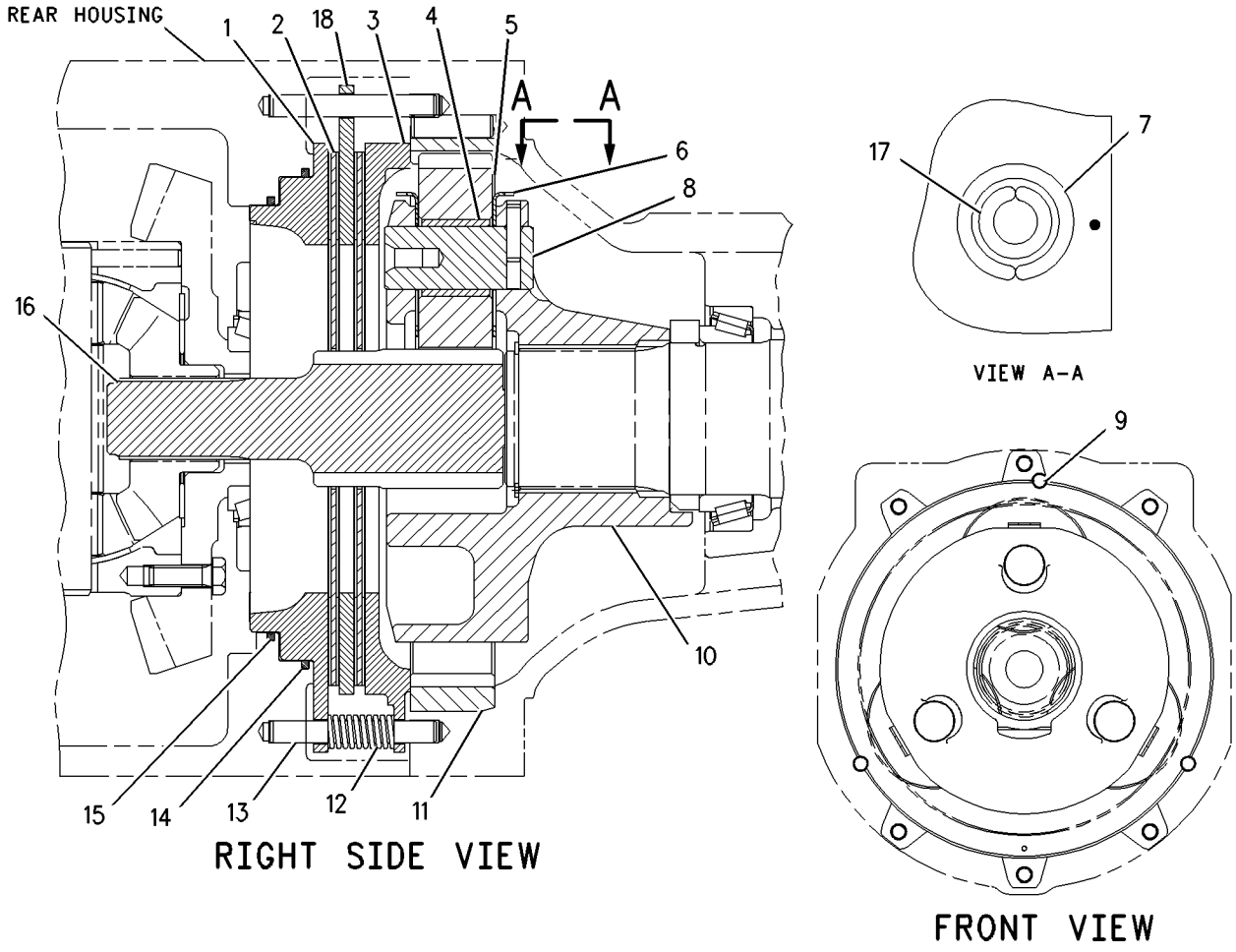

GRAPHIC #1 g00913771

MEMORANDA

180-7504 CASE & PARTS GP-PLANETARY

S/N: RTA1-UP; RBB1-UP
PART OF 180-7503 TRANSMISSION AR
AN ATTACHMENT

SMCS-3064 **i01863129**

NOTE	REF NO	GRAPHIC REF	PART NUMBER	QTY	PART NAME 1 2 3 4 5 6 (PRODUCT LEVEL)	SEE PAGE
M	1	1	**6V-1820**	10	BOLT (M10X1.50X30MM)	
	2	1	**6V-5839**	12	WASHER (11X21X2.5MM THK)	
Y	3	1	**177-0019**	1	COVER GP-TRANSMISSION	192
	4	1	**6V-0852**	2	CAP-DUST	
	5	1	**180-7497**	1	CASE-TRANSMISSION	
	6	1	**9S-4181**	2	PLUG	
	7	1	**9G-5127**	1	BREATHER (TRANSMISSION)	
M	8	1	**7X-0474**	2	BOLT (M10X1.5X220MM)	
M	9	1	**6V-6317**	3	BOLT (M10X1.5X20MM)	
	10	1	**3J-1907**	3	SEAL-O-RING	
	11	1	**102-6770**	1	COVER AS	
	12	1	**102-6780**	1	SHIELD AS	
M		1	**8T-3562**	6	STUD-WELD	
M	13	1	**6A-5591**	4	BOLT (M12X1.75X25MM)	
M	14	1	**6V-8225**	6	NUT (M6X1 THD)	
	15	1	**2N-7006**	1	COVER	
	16	1	**2N-7007**	1	GASKET	
M	17	1	**6V-5230**	13	BOLT (M10X1.5X60MM)	
	18	1	**133-4297**	1	SEAL-LIP TYPE	
	19	1	**6Y-0584**	1	RACE-ROLLER BEARING	
	20	1	**2W-1141**	4	BEARING-ROLLER	
	21	1	**5P-2304**	1	RACE & ROLLER AS	
	22	1	**005-0469**	2	CUP-BEARING	
	23	1	**6Y-9017**	1	CAGE-BEARING	
	24	1	**8H-7521**	1	SEAL-O-RING	
	25	1	**2D-0598**	1	SEAL-O-RING	
	26	1	**9W-1454**	1	COVER	
	27	1	**5P-3863**	1	SEAL-O-RING	
M	28	1	**6V-5217**	3	BOLT (M8X1.25X20MM)	
	29	1	**8S-9130**	1	SCREEN-SUCTION	
	30	1	**8S-9129**	1	FILTER-MAGNETIC	
M	31	1	**6V-5842**	8	BOLT (M10X1.50X40MM)	
	32	1	**5P-4484**	1	PLUG-MAGNETIC	
	33	1	**7M-8485**	4	SEAL-O-RING	
	34	1	**148-1928**	1	VALVE-RELIEF	
	35	1	**9X-4609**	1	SEAL-O-RING	
	36	1	**6V-3965**	2	FITTING AS	
	37	1	**6Y-9016**	1	SHIM PACK (INCLUDES 12 SHIMS)	
	38	1	**1B-3978**	1	CUP-BEARING	
	39	1	**9W-7159**	2	SHIM PACK (INCLUDES 12 SHIMS)	
	40	1	**5P-7684**	1	PLUG	
	41	1	**6K-6307**	1	SEAL-O-RING	
	42	1	**9S-4191**	1	PLUG	
Y	43	1	**6I-9806**	1	VALVE GP-RELIEF	245
	44	1	**8T-5452**	2	SEAL-O-RING	
	45	1	**146-6280**	1	COVER	
	46	1	**4S-5879**	1	SEAL-O-RING	
	47	1	**5H-6005**	4	SEAL-O-RING	
	48	1	**5P-0713**	1	SEAL-LIP	
	49	1	**8J-0426**	1	PLUG	

M-METRIC PART
Y-SEPARATE ILLUSTRATION

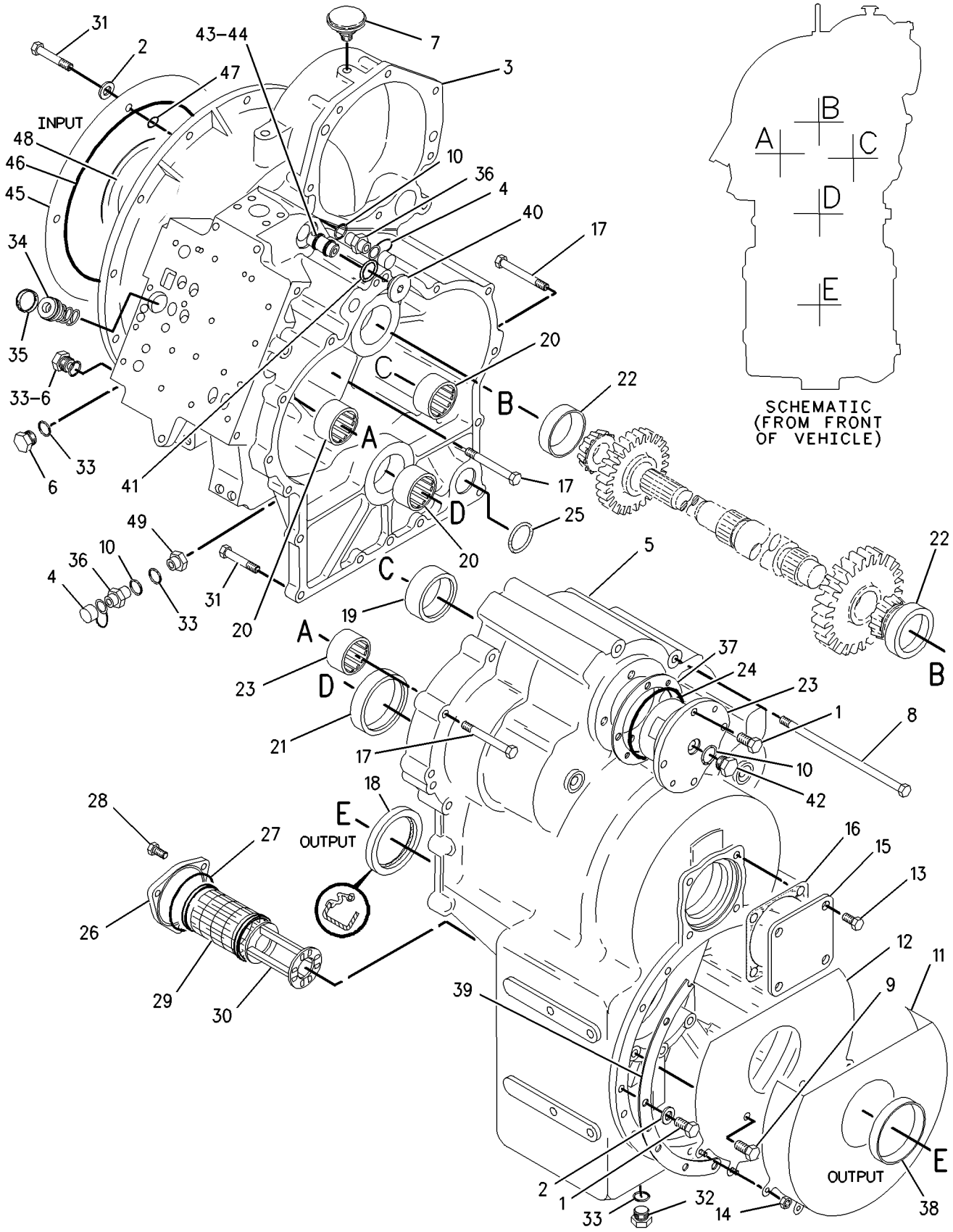

GRAPHIC #1

g00930979

POWER TRAIN

102-7540 CLUTCH GP

S/N: RTA1-UP; RBB1-UP
FIRST AND THIRD
PART OF 180-7503 TRANSMISSION AR
AN ATTACHMENT

SMCS-3155 **i01858640**

NOTE	REF NO	GRAPHIC REF	PART NUMBER	QTY	PART NAME 1 2 3 4 5 6 (PRODUCT LEVEL)	SEE PAGE
	1	1	**6I-8390**	3	RING-SEAL	
	2	1	**8C-3982**	2	RING-RETAINING	
	3	1	**8C-3979**	1	RING-RETAINING	
	4	1	**9W-7765**	1	GEAR (40 TEETH)	
	5	1	**109-4728**	1	HUB AS	
		1	**2W-1141**	1	BEARING-ROLLER	
		1	**7X-2495**	1	RING-RETAINING	
		1	**9W-8013**	1	HUB AS	
	6	1	**9W-9718**	1	RETAINER-SPRING	
	7	1	**6Y-7818**	1	SPRING	
	8	1	**9W-9372**	1	RING-SEAL	
	9	1	**6Y-8157**	1	PISTON	
	10	1	**9W-9371**	1	RING-SEAL	
	11	1	**6Y-8265**	1	SEAL AS-BALANCE	
	12	1	**6Y-5027**	1	RING-RETAINING	
	13	1	**9W-6922**	1	WASHER-THRUST (7.2MM THK)	
	14	1	**8E-6117**	1	GEAR (93 TEETH)	
	15	1	**9W-7770**	1	GEAR (50 TEETH)	
	16	1	**9W-6466**	1	WASHER-THRUST (3.16MM THK)	
	17	1	**8E-6558**	1	RACE-ROLLER BEARING	
	18	1	**147-1666**	1	SHAFT AS	
	19	1	**8E-8317**	2	DISC-THRUST	
	20	1	**6V-2394**	1	RING-RETAINING	
	21	1	**8E-6120**	1	HUB AS	
	22	1	**6Y-8514**	1	PLATE-END	
	23	1	**9U-9797**	1	RING-RETAINING	
	24	1	**9W-6927**	2	RING-RETAINING	
	25	1	**6Y-7922**	8	DISC-FRICTION	
	26	1	**6Y-8512**	8	PLATE-CLUTCH	
	27	1	**114-1071**	1	PISTON	
	28	1	**132-9623**	1	SPRING-WAVE	
	29	1	**6Y-5631**	5	PLATE-CLUTCH	
	30	1	**6Y-7968**	5	DISC-FRICTION	
	31	1	**9U-8875**	1	RING-RETAINING	
	32	1	**8E-5707**	1	PLATE-END	
	33	1	**9W-6904**	1	RING-RETAINING	
	34	1	**8E-8313**	2	DISC-THRUST	
	35	1	**9W-9436**	1	RING-SEAL	
	36	1	**9W-9399**	1	RING-SEAL	

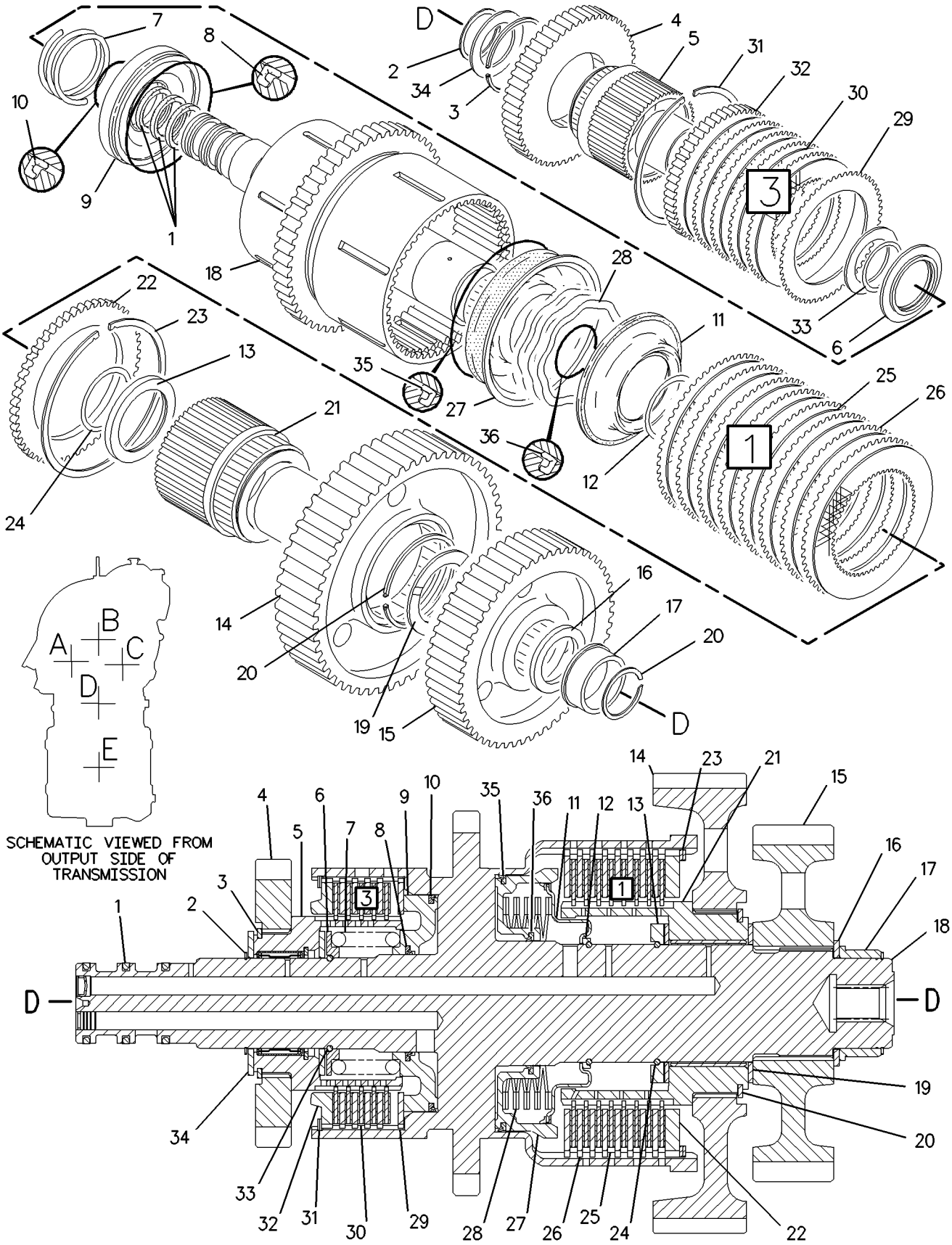

GRAPHIC #1

g00947528

102-7548 CLUTCH GP

S/N: RTA1-UP; RBB1-UP
REVERSE AND SECOND
PART OF 180-7503 TRANSMISSION AR
AN ATTACHMENT

SMCS-3155 **i01718679**

NOTE	REF NO	GRAPHIC REF	PART NUMBER	QTY	PART NAME 1 2 3 4 5 6 (PRODUCT LEVEL)	SEE PAGE
	1	1	**6I-8390**	3	RING-SEAL	
	2	1	**147-1657**	1	SHAFT AS	
		1	**9W-0718**	2	PLUG	
	3	1	**8C-3979**	2	RING-RETAINING	
	4	1	**9W-7761**	1	GEAR (40 TEETH)	
	5	1	**8C-4400**	1	RING-RETAINING	
	6	1	**8E-5726**	1	PLATE-END	
	7	1	**6Y-1300**	6	DISC-FRICTION	
	8	1	**8E-5556**	6	PLATE-CLUTCH	
	9	1	**9W-9372**	2	RING-SEAL	
	10	1	**9W-9371**	1	RING-SEAL	
	11	1	**6Y-5631**	5	PLATE-CLUTCH	
	12	1	**6Y-7968**	5	DISC-FRICTION	
	13	1	**9U-8875**	1	RING-RETAINING	
	14	1	**9W-7763**	1	GEAR (36 TEETH)	
	15	1	**9W-6912**	1	SPACER	
	16	1	**102-6765**	1	GEAR (28 TEETH)	
	17	1	**6Y-0928**	1	SPACER	
	18	1	**6Y-4890**	1	BEARING	
	19	1	**9W-9662**	1	WASHER-THRUST	
	20	1	**109-4728**	1	HUB AS	
		1	**2W-1141**	1	BEARING-ROLLER	
		1	**7X-2495**	1	RING-RETAINING	
		1	**9W-8013**	1	HUB AS	
	21	1	**8E-5707**	1	PLATE-END	
	22	1	**9W-6904**	2	RING-RETAINING	
	23	1	**9W-9718**	1	RETAINER-SPRING	
	24	1	**6Y-7818**	2	SPRING	
	25	1	**6Y-8157**	1	PISTON	
	26	1	**8E-5728**	1	RING-SEAL	
	27	1	**8E-5831**	1	PISTON	
	28	1	**8E-5727**	1	RETAINER-SPRING	
	29	1	**109-4727**	1	HUB AS	
		1	**2W-1141**	1	BEARING-ROLLER	
		1	**6Y-6952**	1	HUB AS	
		1	**7X-2495**	1	RING-RETAINING	
	30	1	**8E-8313**	4	DISC-THRUST	
	31	1	**8C-3982**	1	RING-RETAINING	

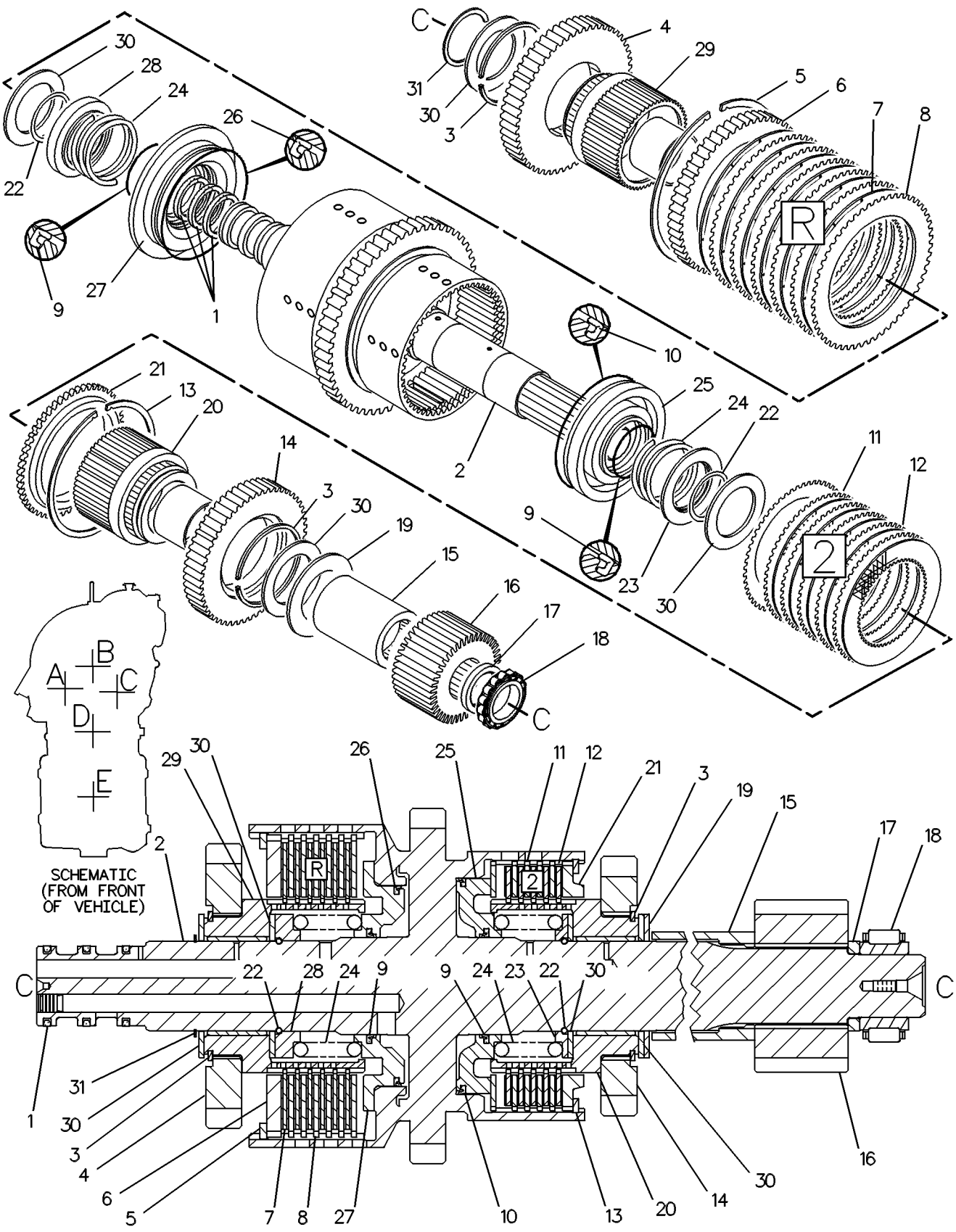

GRAPHIC #1 g00129156

146-6283 CLUTCH GP

S/N: RTA1-UP; RBB1-UP
FORWARD HIGH & FORWARD LOW
PART OF 180-7503 TRANSMISSION AR
AN ATTACHMENT

SMCS-3155 **i01291664**

NOTE	REF NO	GRAPHIC REF	PART NUMBER	QTY	PART NAME 1 2 3 4 5 6 (PRODUCT LEVEL)	SEE PAGE
	1	1	**6I-8390**	3	RING-SEAL	
	2	1	**147-1656**	1	SHAFT AS	
	3	1	**8C-3982**	2	RING-RETAINING	
	4	1	**9W-7761**	1	GEAR (40 TEETH)	
	5	1	**8C-4400**	1	RING-RETAINING	
	6	1	**8E-5726**	1	PLATE-END	
	7	1	**6Y-1300**	6	DISC-FRICTION	
	8	1	**8E-5556**	6	PLATE-CLUTCH	
	9	1	**9W-9372**	2	RING-SEAL	
	10	1	**9W-9371**	1	RING-SEAL	
	11	1	**6Y-5631**	4	PLATE-CLUTCH	
	12	1	**6Y-7968**	4	DISC-FRICTION	
	13	1	**9U-8875**	1	RING-RETAINING	
	14	1	**8E-5707**	1	PLATE-END	
	15	1	**8E-8313**	4	DISC-THRUST	
	16	1	**8C-3979**	1	RING-RETAINING	
	17	1	**141-9917**	1	GEAR AS	
		1	**2W-1141**	1	BEARING-ROLLER	
		1	**7X-2495**	1	RING-RETAINING	
	18	1	**9W-6904**	2	RING-RETAINING	
	19	1	**9W-9718**	1	RETAINER-SPRING	
	20	1	**6Y-7818**	2	SPRING	
	21	1	**6Y-8157**	1	PISTON	
	22	1	**8E-5728**	1	RING-SEAL	
	23	1	**8E-5831**	1	PISTON	
	24	1	**8E-5727**	1	RETAINER-SPRING	
	25	1	**109-4727**	1	HUB AS	
		1	**2W-1141**	1	BEARING-ROLLER	
		1	**7X-2495**	1	RING-RETAINING	

146-6283 **CLUTCH GP** ***(contd.)*** **i01291664**

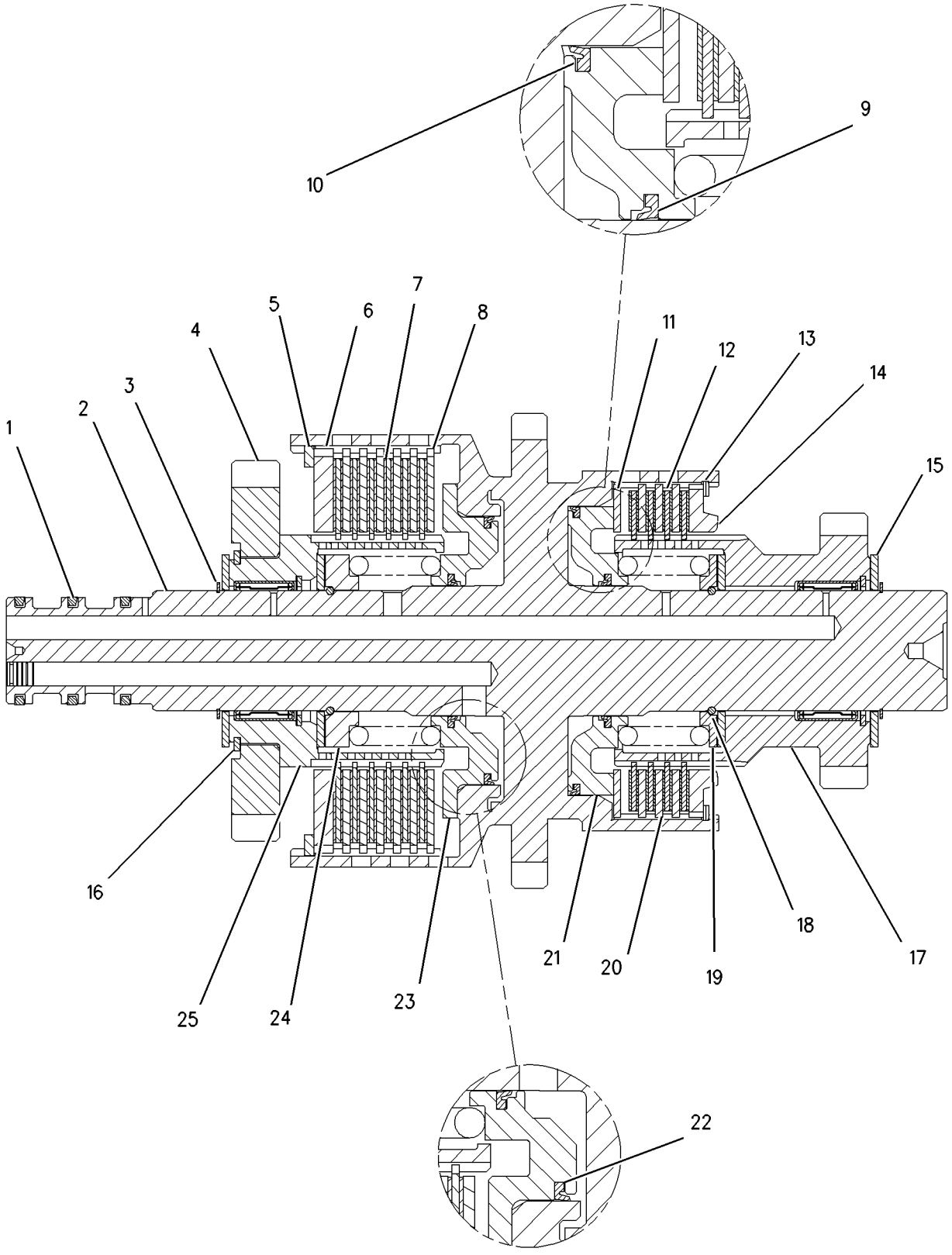

GRAPHIC #1 g00684286

190-4690 CONTROL GP-TRANSMISSION

S/N: RTA1-UP; RBB1-UP

PART OF 190-4405, 216-6908 CAB AR, 190-4406 CANOPY GP-OPEN ROPS

AN ATTACHMENT

SMCS-3065, 3168 **i01828803**

NOTE	REF NO	GRAPHIC REF	PART NUMBER	QTY	PART NAME 1 2 3 4 5 6 (PRODUCT LEVEL)	SEE PAGE
	1	1	**6I-1418**	4	SPACER (8.2X12.7X28.7MM THK)	
	2	1	**8T-9655**	8	MOUNT (ISOLATION)	
M	3	1	**134-1374**	4	BOLT-SOCKET HEAD (M5X.8X20MM)	
Y	4	1	**201-0211**	1	CONTROL GP-TRANSMISSION	191
	5	1	**216-9069**	2	BRACKET AS	
					(EACH INCLUDES)	
M		1	**6V-9632**	1	NUT-WELD (M6X1 THD)	
		1	**216-9068**	1	BRACKET	
	6	1	**217-0956**	1	COVER	
	7	1	**228-0382**	1	SERVICE GP-MACHINE	
M	8	1	**5C-9553**	2	BOLT (M6X1X16MM)	
M	9	1	**7X-0818**	4	BOLT (M8X1.25X45MM)	
	10	1	**9X-8256**	2	WASHER (6.6X12X2MM THK)	

M-METRIC PART
Y-SEPARATE ILLUSTRATION

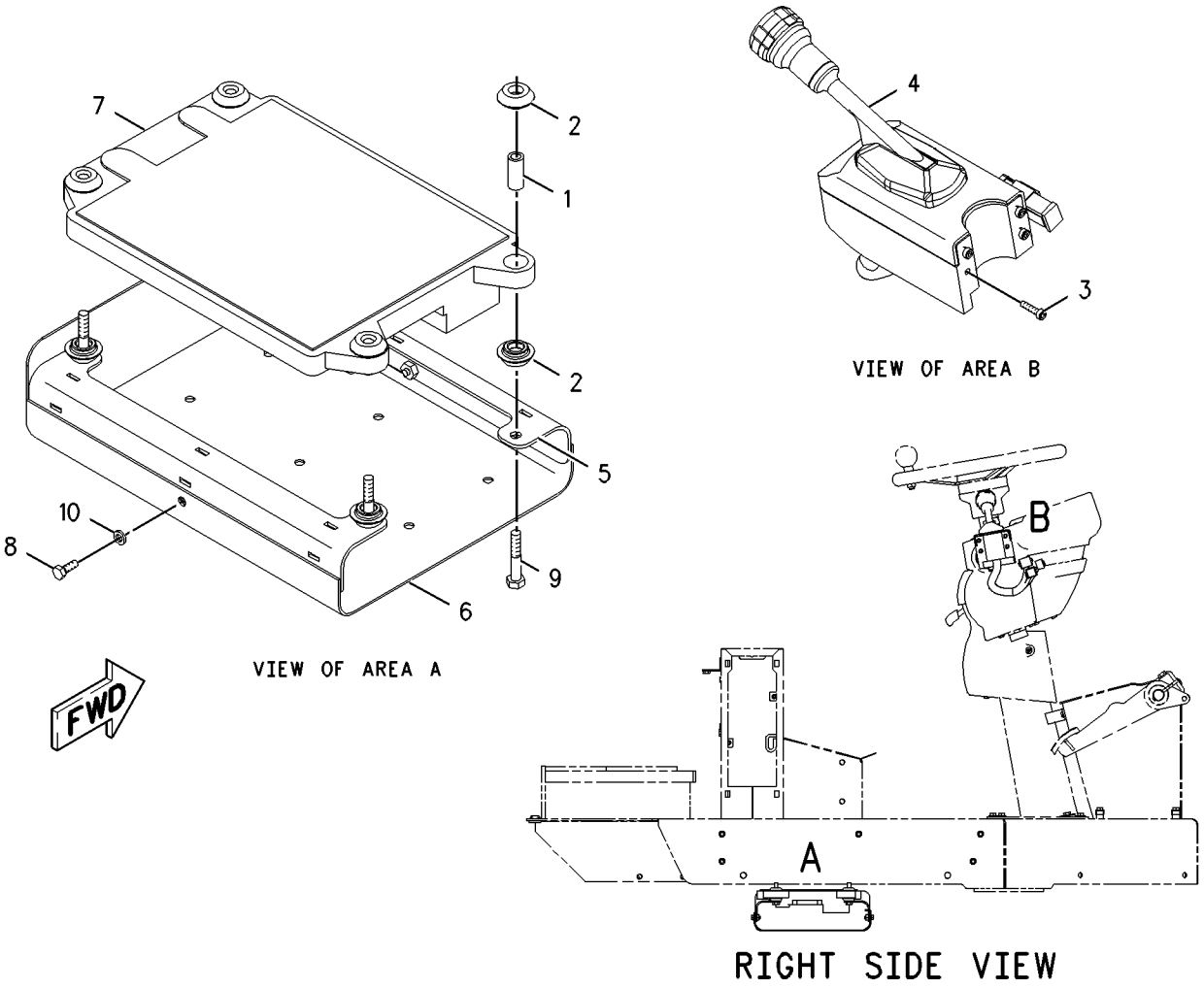

GRAPHIC #1 g00913504

201-0211 CONTROL GP-TRANSMISSION

S/N: RTA1-UP; RBB1-UP
PART OF 190-4690 CONTROL GP-TRANSMISSION
AN ATTACHMENT

SMCS-3065, 3168 **i01539871**

NOTE	REF NO	GRAPHIC REF	PART NUMBER	QTY	PART NAME 1 2 3 4 5 6 (PRODUCT LEVEL)	SEE PAGE
	1	1	**102-8805**	1	KIT-RECEPTACLE (6 PIN)	
					(INCLUDES RECEPTACLE AS AND WEDGE)	
	2	1	**155-2265**	1	KIT-CONNECTING PLUG (8 PIN)	
					(INLUDES PLUG AS AND WEDGE)	
	3	1	**155-2259**	1	WEDGE-PLUG LOCK (8 PIN)	
	4	1	**3E-3383**	1	WEDGE-RECEPTACLE LOCK	
	5	1	**186-3736**	12	SOCKET-CONNECTOR	
	6	1	**186-3735**	4	PIN-CONNECTOR	
	7	1	**101-9161**	1	WIRE AS	
	8	1	**155-2271**	1	KIT-CONNECTING PLUG (4 PIN)	
					(INCLUDES PLUG AS AND WEDGE)	
	9	1	**155-2262**	1	WEDGE-PLUG LOCK (4 PIN)	
	10	1	**9G-3695**	2	PLUG (GROMMET SEALING)	

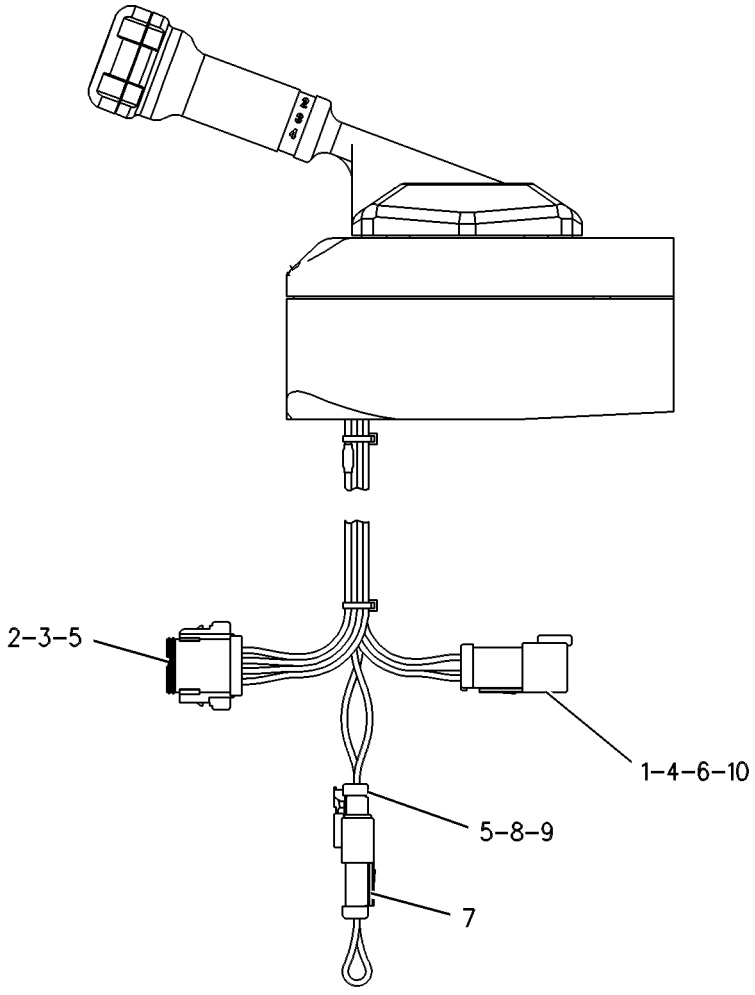

GRAPHIC #1 g00438763

177-0019 COVER GP-TRANSMISSION

S/N: RTA1-UP; RBB1-UP
PART OF 180-7504 CASE & PARTS GP-PLANETARY
AN ATTACHMENT

SMCS-3030 **i01822568**

NOTE	REF NO	GRAPHIC REF	PART NUMBER	QTY	PART NAME 1 2 3 4 5 6 (PRODUCT LEVEL)	SEE PAGE
	1	1	**200-2045**	1	COVER	
	2	1	**7T-6496**	2	PLUG (11.9 MM DIA)	
	3	1	**6Y-0869**	4	PLUG (13.9MM DIA)	
	4	1	**8T-5353**	2	DOWEL	
	5	1	**9S-8008**	4	PLUG	
	6	1	**3D-2824**	4	SEAL-O-RING	
	7	1	**9W-6068**	1	PLUG (10.0MM DIA)	

177-0019 **COVER GP-TRANSMISSION** *(contd.)* **i01822568**

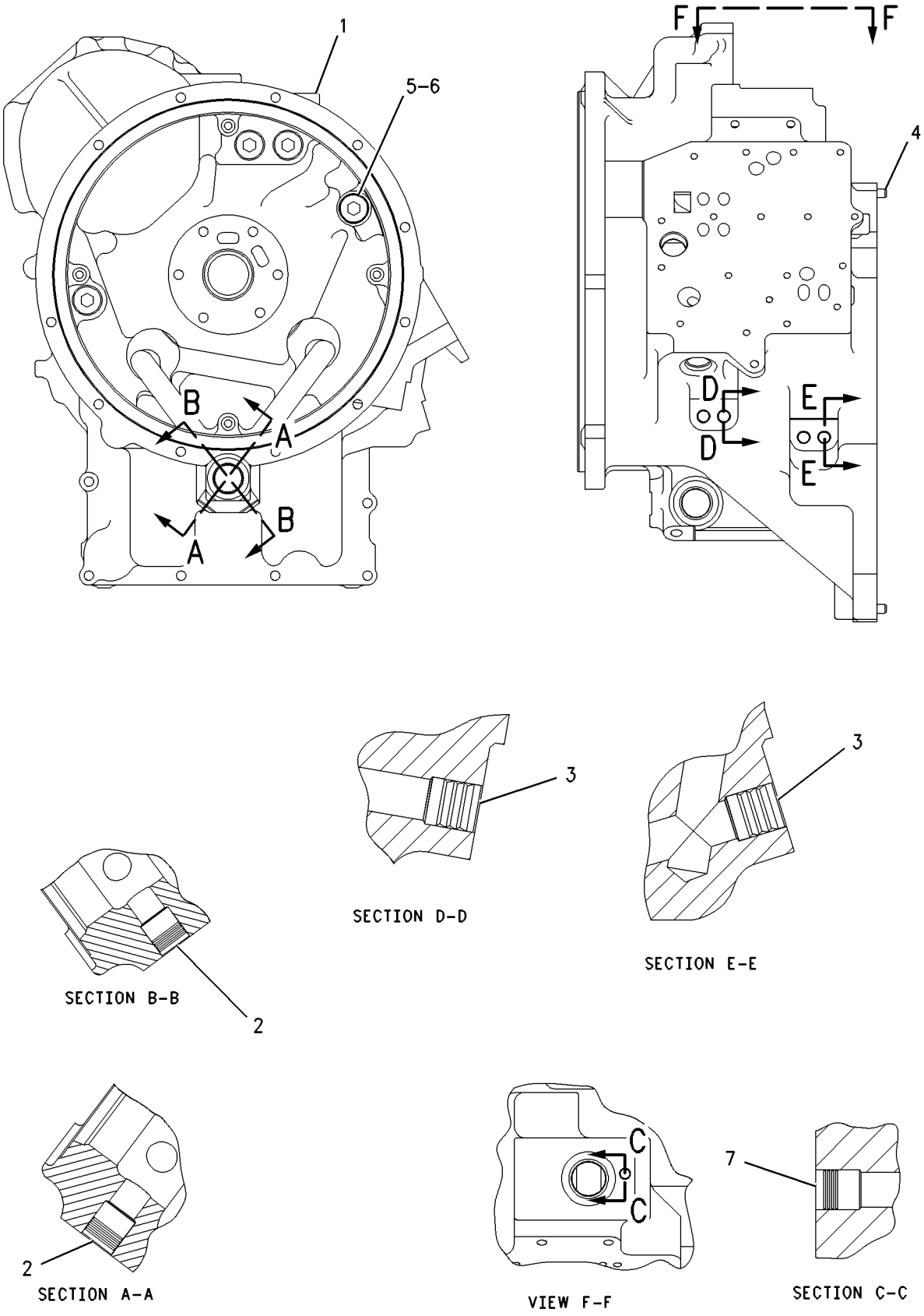

GRAPHIC #1 g00921862

138-1612 DIFFERENTIAL GP

S/N: RTA1-UP; RBB1-UP

PART OF 138-1615 AXLE AR-FIXED, 203-2773, 203-2780 AXLE AR-OSCILLATING

AN ATTACHMENT

SMCS-3258 **i01121141**

NOTE	PART NUMBER	QTY	PART NAME 1 2 3 4 5 6 (PRODUCT LEVEL)	SEE PAGE
	8R-2211	2	BEARING-SLEEVE	
	8R-2538	1	CASE-DIFFERENTIAL	
	6K-5614	1	DOWEL	
	8R-1705	2	GEAR-DIFFERENTIAL BEVEL (16 TEETH)	
	8R-1703	2	PINION-DIFFERENTIAL BEVEL (10 TEETH)	
	7V-8317	1	SHAFT-GOVERNOR CONTROL	
	8R-2212	1	SPACER (82.0MM THK)	
	133-8305	2	WASHER	
	9C-5040	2	WASHER-THRUST (1.5MM THK)	

<END>

206-9670 DIFFERENTIAL GP-LIMITED SLIP

S/N: RTA1-UP; RBB1-UP

PART OF 138-2726 AXLE AR-FIXED, 203-2778, 203-2781 AXLE AR-OSCILLATING AN ATTACHMENT

SMCS-3263 **i01831183**

NOTE	REF NO	GRAPHIC REF	PART NUMBER	QTY	PART NAME 1 2 3 4 5 6 (PRODUCT LEVEL)	SEE PAGE
	1	1	**104-6747**	2	GEAR-DIFFERENTIAL BEVEL (16 TEETH)	
	2	1	**104-6749**	4	PINION-DIFFERENTIAL BEVEL (9 TEETH)	
	3	1	**104-6750**	2	SHAFT-PINION	
	4	1	**104-6751**	2	HOUSING-ACTUATOR	
	5	1	**206-9672**	2	KIT-DISC	
	6	1	**206-9673**	2	KIT-DISC	
	7	1	**104-6754**	1	WASHER-THRUST (3.9MM THK)	
	8	1	**104-6755**	1	CASE AS	
	9	1	**104-6757**	1	WASHER-THRUST	
JM	10	1	**8T-0293**	4	BOLT (M12X1.75X20MM)	

J-PARTS MARKED J ARE FOR SHIPPING & STORAGE ONLY,REMOVE BEFORE INSTALLATION INTO AXLE
M-METRIC PART

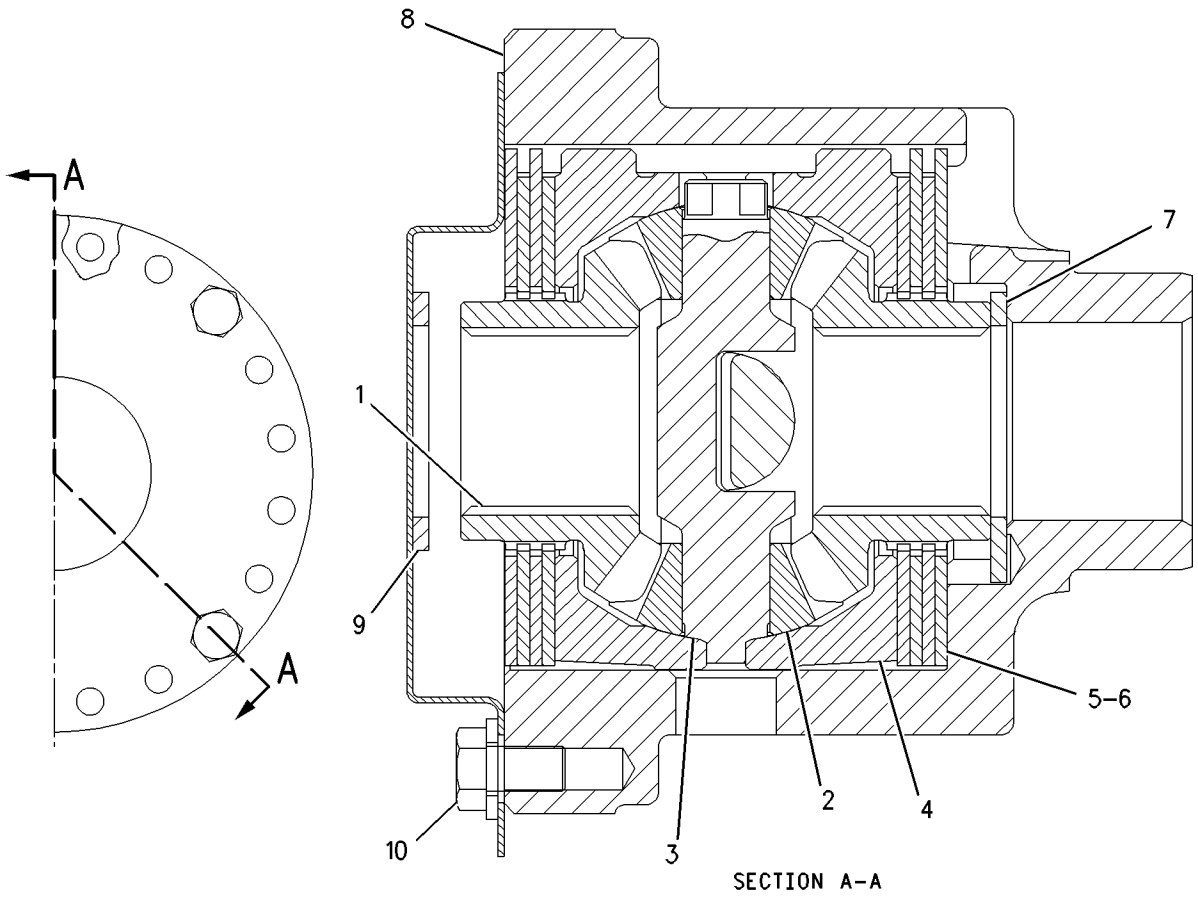

GRAPHIC #1 g00864439

141-8615 DRIVE GP-FLEXIBLE COUPLING

S/N: RTA1-UP; RBB1-UP
PART OF 180-7503 TRANSMISSION AR
AN ATTACHMENT

SMCS-3252 **i01236967**

NOTE	REF NO	GRAPHIC REF	PART NUMBER	QTY	PART NAME 1 2 3 4 5 6 (PRODUCT LEVEL)	SEE PAGE
	1	1	**136-4595**	1	PLATE AS	
M	2	1	**6V-8212**	6	BOLT (M10X1.50X16MM)	
	3	1	**6V-5839**	6	WASHER (2.5MM THK)	
	4	1	**136-4593**	1	PLATE	

M-METRIC PART

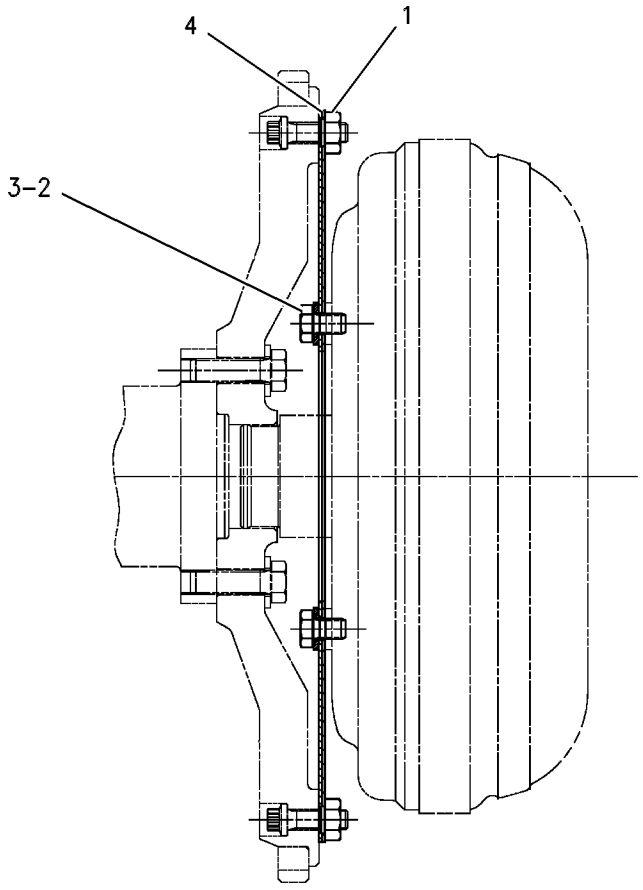

GRAPHIC #1 g00572183

146-6274 DRIVE GP-PUMP

S/N: RTA1-UP; RBB1-UP
PART OF 180-7503 TRANSMISSION AR
AN ATTACHMENT

SMCS-3108 **i01718683**

NOTE	REF NO	GRAPHIC REF	PART NUMBER	QTY	PART NAME 1 2 3 4 5 6 (PRODUCT LEVEL)	SEE PAGE
M	1	1	**6V-5683**	4	BOLT (M6X1X16MM)	
	2	1	**2L-0043**	1	RING-RETAINING	
	3	1	**146-6275**	1	SUPPORT AS-BEARING	
		1	**8E-8425**	1	BEARING-SLEEVE	
	4	1	**141-6821**	1	GEAR-DRIVE	
	5	1	**146-6277**	1	SUPPORT-STATOR	
	6	1	**5L-4753**	1	RING-RETAINING	
	7	1	**106-7799**	1	BALL BEARING	

M-METRIC PART

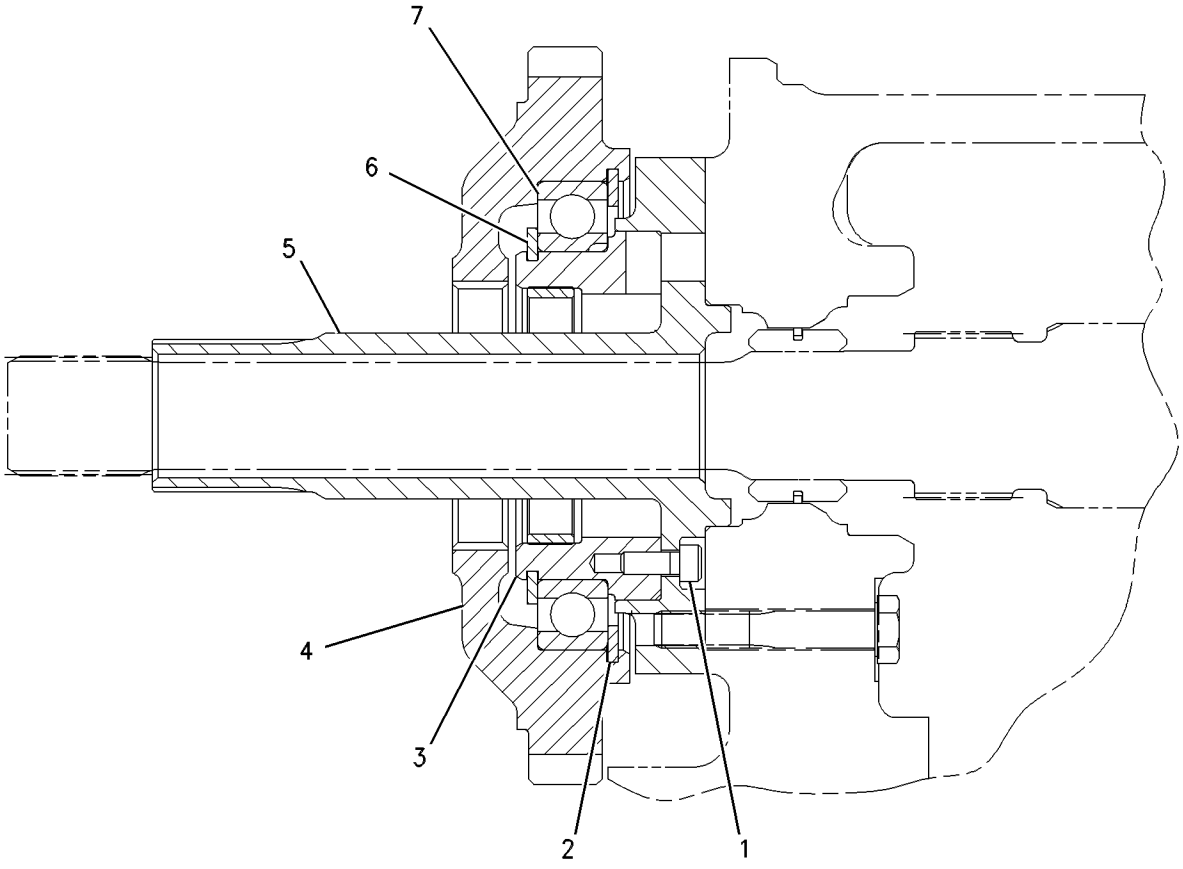

GRAPHIC #1 g00656122

202-6609 FILLER GP-POWER TRAIN OIL

S/N: RTA1-UP; RBB1-UP

PART OF 176-5186 POWER TRAIN AR

SMCS-3005, 3081 **i01699825**

NOTE	REF NO	GRAPHIC REF	PART NUMBER	QTY	PART NAME 1 2 3 4 5 6 (PRODUCT LEVEL)	SEE PAGE
	1	1	**5P-8502**	1	PADLOCK GP	
		1	**5P-8500**	1	KEY	
		1	**8Y-6364**	1	SLEEVE	
	2	1	**8T-6703**	2	CLAMP-HOSE	
	3	1	**8Y-7730**	1	GAUGE AS-OIL LEVEL (DIPSTICK)	
	4	1	**132-2466**	1	TUBE AS	
	5	1	**132-2467**	1	TUBE AS	
	6	1	**143-7899**	1	HOSE	
	7	1	**4J-0523**	1	SEAL-O-RING	
	8	1	**5P-7468**	1	CLIP (SLOT)	
	9	1	**5P-7469**	1	CLIP (TAB)	
	10	1	**6V-0545**	1	GROMMET	
	11	1	**8T-4121**	3	WASHER-HARD (11X21X2.5MM THK)	
M	12	1	**8T-4136**	1	BOLT (M10X1.5X25MM)	
M	13	1	**8T-4196**	2	BOLT (M10X1.5X35MM)	

M-METRIC PART

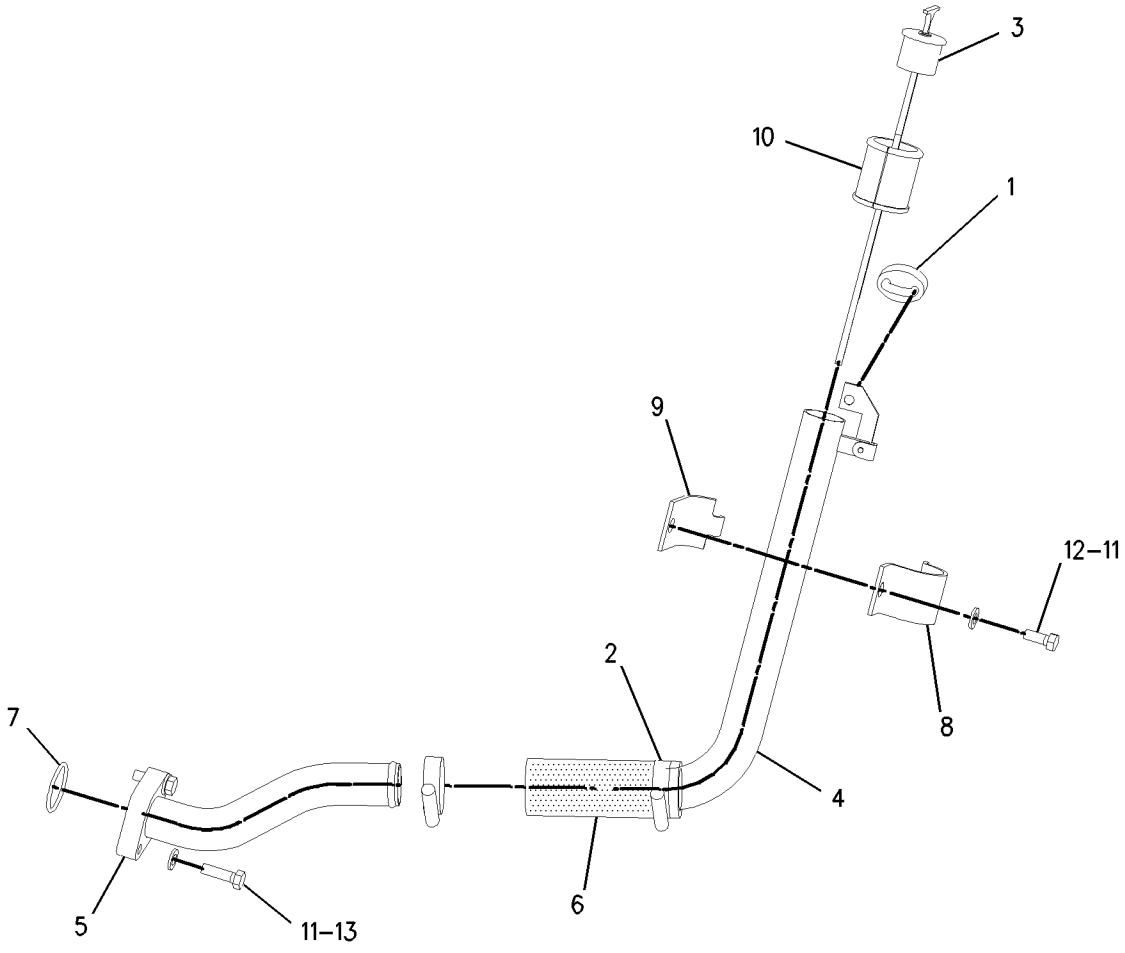

GRAPHIC #1 g00875479

MEMORANDA

218-9824 FILTER & LINES GP-TRANSMISSION

S/N: RTA1-UP; RBB1-UP

PART OF 176-5186 POWER TRAIN AR

SMCS-3067, 3154 **i01810869**

NOTE	REF NO	GRAPHIC REF	PART NUMBER	QTY	PART NAME 1 2 3 4 5 6 (PRODUCT LEVEL)	SEE PAGE
I	1	1	**8Y-0711**	1	HOSE AS	
I	2	1	**217-6419**	1	HOSE AS	
Y	3	1	*226-2869*	1	FILTER GP-OIL	202
	4	1	*148-8327*	1	CONNECTOR AS	
		1	**3D-2824**	1	SEAL-O-RING	
		1	**6V-8637**	1	CONNECTOR-SEAL	
		1	**6V-9746**	1	SEAL-O-RING	
	5	1	*148-8347*	2	ELBOW GP	
					(EACH INCLUDES)	
		1	**6V-9007**	1	ELBOW	
		1	**3D-2824**	1	SEAL-O-RING	
		1	**6V-9746**		SEAL-O-RING	
	6	1	**1P-4576**	2	FLANGE-HALF	
	7	1	**4J-5267**	1	SEAL-O-RING	
	8	1	**8T-4121**	8	WASHER-HARD (11X21X2.5MM THK)	
M	9	1	**8T-4137**	4	BOLT (M10X1.5X20MM)	
M	10	1	**8T-4139**	1	BOLT (M12X1.75X30MM)	
M	11	1	**8T-4196**	1	BOLT (M10X1.5X35MM)	
	12	1	**8T-4223**	1	WASHER-HARD (13.5X25.5X3MM THK)	
	13	1	**8T-7529**	1	CLIP	

I-SEE HOSE FABRICATION GUIDE
M-METRIC PART
Y-SEPARATE ILLUSTRATION

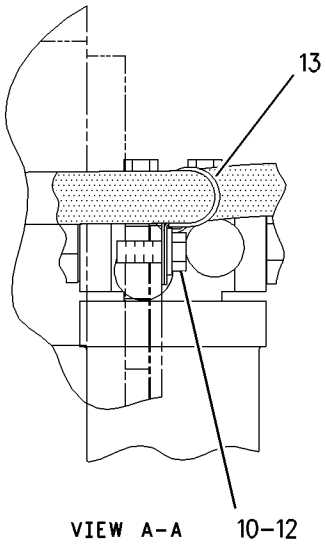

VIEW A-A

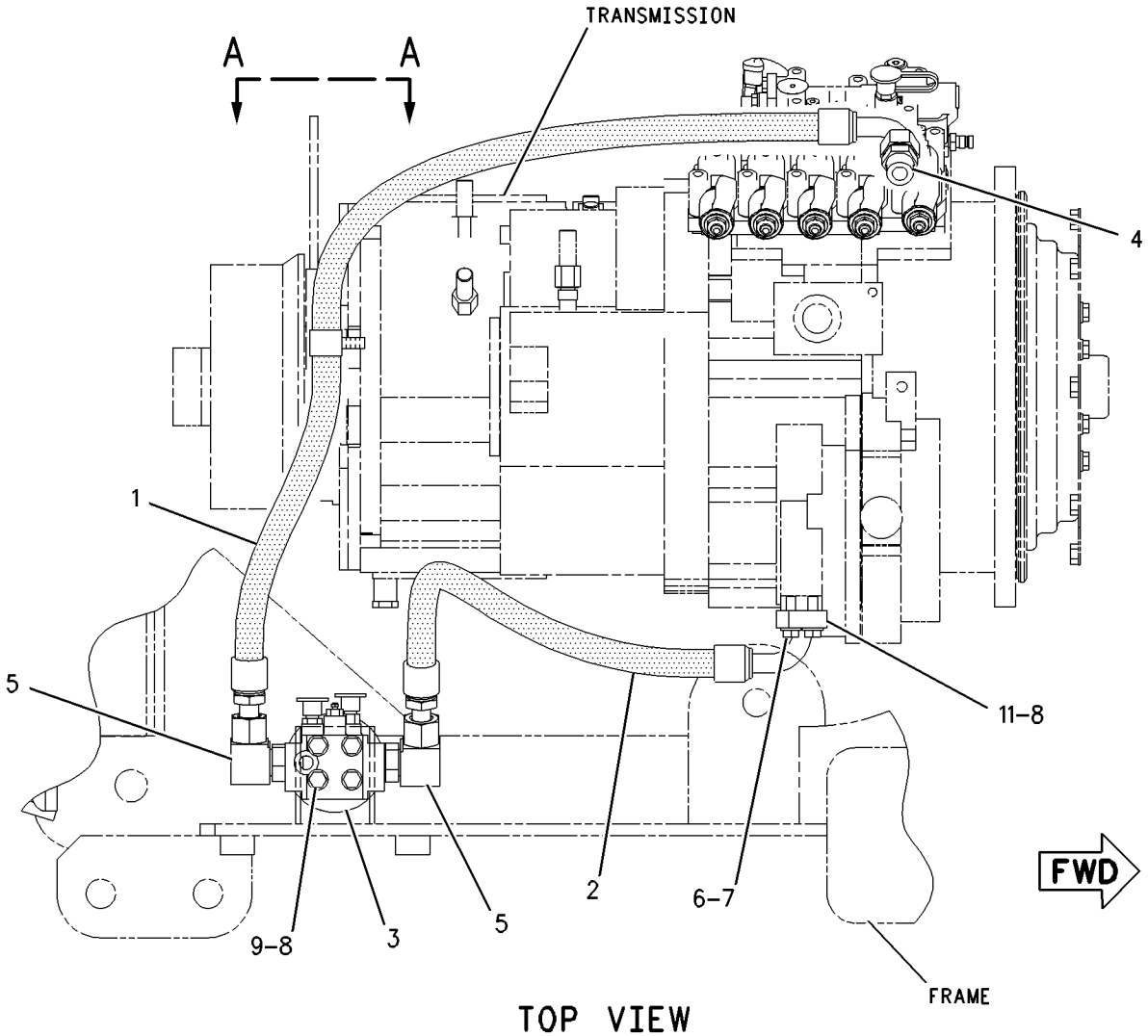

TOP VIEW

GRAPHIC #1

g00925657

226-2869 FILTER GP-OIL

S/N: RTA1-UP; RBB1-UP

PART OF 218-9824 FILTER & LINES GP-TRANSMISSION

SMCS-3004, 3067 **i01810908**

NOTE	REF NO	GRAPHIC REF	PART NUMBER	QTY	PART NAME 1 2 3 4 5 6 (PRODUCT LEVEL)	SEE PAGE
	1	1	**1G-8878**	1	FILTER AS-OIL (HYDRAULIC)	
	2	1	**6V-0852**	1	CAP-DUST	
	3	1	**8C-3451**	1	CAP-DUST	
	4	1	**134-0404**	1	INDICATOR AS	
	5	1	*164-5567*	1	FITTING GP	
		1	**3J-1907**	1	SEAL-O-RING	
		1	**6V-3965**	1	FITTING AS	
	6	1	**3J-1907**	1	SEAL-O-RING	
	7	1	**3J-7354**	1	SEAL-O-RING	
	8	1	**8C-3446**	1	VALVE GP-FLUID SAMPLING	

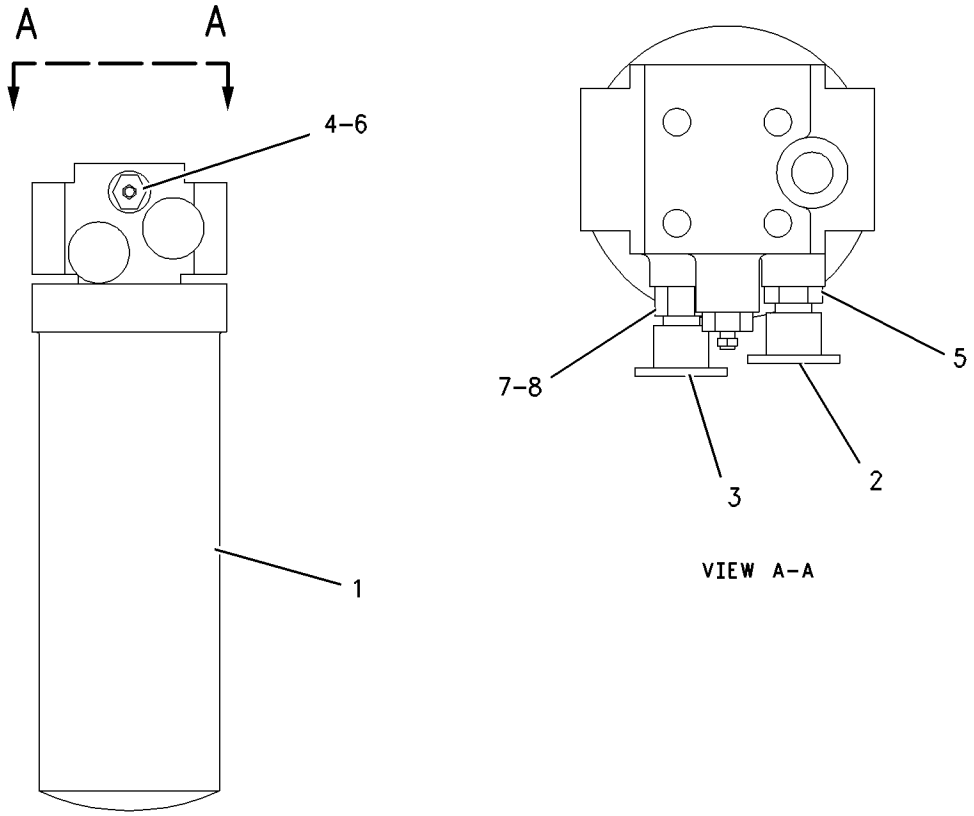

GRAPHIC #1 g00920536

138-1611 GEAR GP-BEVEL & PINION

S/N: RTA1-UP; RBB1-UP
PART OF 203-2773, 203-2780 AXLE AR-OSCILLATING
AN ATTACHMENT

SMCS-3254, 3256 **i01859463**

NOTE	REF NO	GRAPHIC REF	PART NUMBER	QTY	PART NAME 1 2 3 4 5 6 (PRODUCT LEVEL)	SEE PAGE
	1	1	**9S-7949**	1	CUP-BEARING	
	2	1	**9S-7950**	1	CONE-BEARING	
	3	1	**9C-7292**	1	NUT-BEARING	
M	4	1	**6V-8210**	1	BOLT (M8X1.25X16 MM)	
	5	1	**109-5502**	1	LOCK-BEARING	
	6	1	**5L-2031**	1	CUP-BEARING	
	7	1	**6V-3950**	1	CONE-BEARING	
	8	1	**4L-7249**	1	CUP-BEARING	
	9	1	**6V-7527**	1	CONE-BEARING	
	10	1	**221-7117**	1	YOKE AS	
		1	**153-0702**	1	GUARD	
M	11	1	**9C-5206**	1	NUT-STAKE	
	12	1	**8R-2236**	1	WASHER (4MM THK)	
	13	1	**138-1640**	1	GEAR SET-BEVEL	
	14	1	**7D-8636**	1	CONE-BEARING	
	15	1	**7D-8637**	1	CUP-BEARING	
M	16	1	**7X-3350**	20	BOLT-LOCKING (M12X1.75X35 MM)	

M-METRIC PART

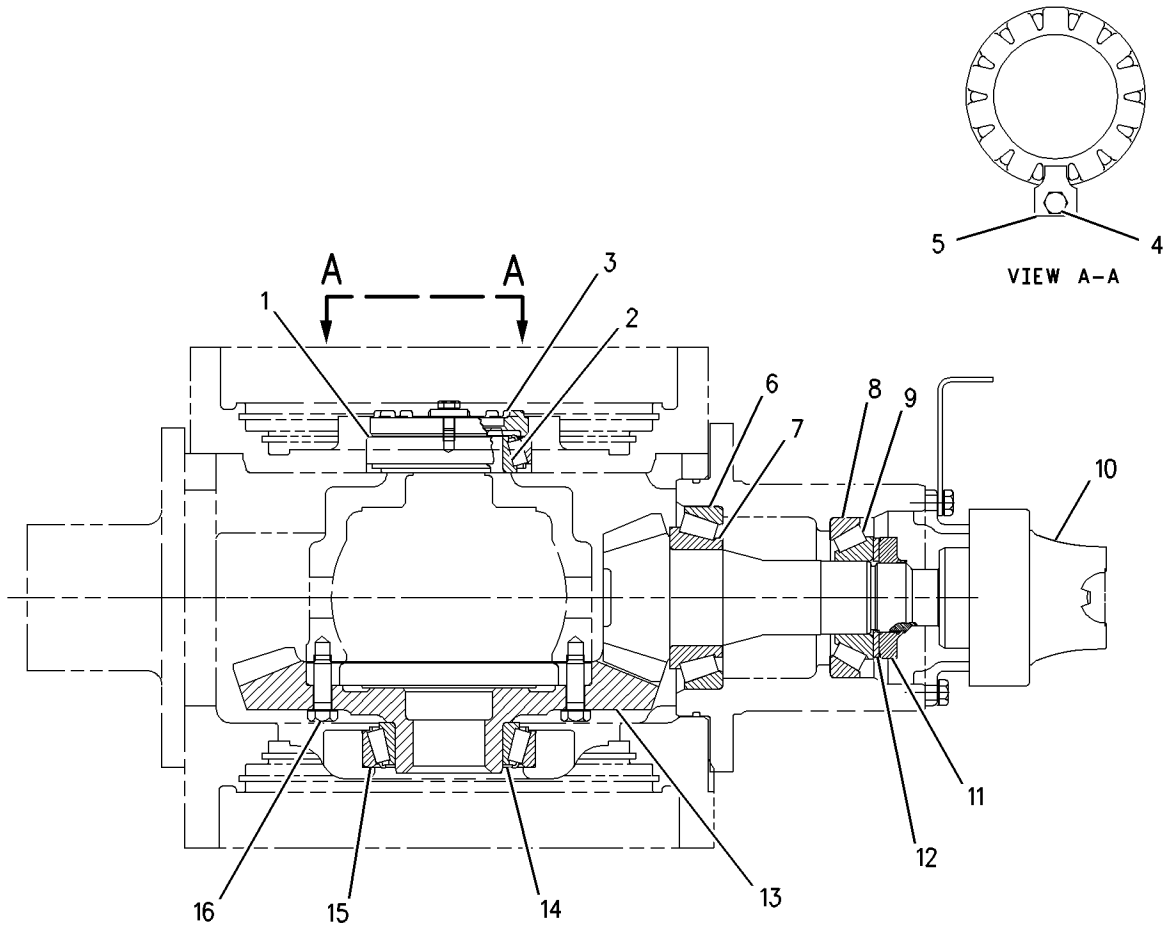

GRAPHIC #1 g00947852

138-1617 GEAR GP-BEVEL & PINION

S/N: RTA1-UP; RBB1-UP
PART OF 138-1615 AXLE AR-FIXED
AN ATTACHMENT

SMCS-3254, 3256 **i01217013**

NOTE	REF NO	GRAPHIC REF	PART NUMBER	QTY	PART NAME 1 2 3 4 5 6 (PRODUCT LEVEL)	SEE PAGE
	1	1	**9S-7949**	1	CUP-ROLLER BEARING	
	2	1	**9S-7950**	1	CONE-ROLLER BEARING	
	3	1	**9C-7292**	1	NUT-BEARING	
M	4	1	**6V-8210**	1	BOLT (M8X1.25X16 MM)	
	5	1	**109-5502**	1	LOCK-BEARING	
	6	1	**5L-2031**	1	CUP-ROLLER BEARING	
	7	1	**6V-3950**	1	CONE-ROLLER BEARING	
	8	1	**4L-7249**	1	CUP-ROLLER BEARING	
	9	1	**6V-7527**	1	CONE-ROLLER BEARING	
	10	1	**138-1736**	1	YOKE AS	
		1	**9C-7418**	1	GUARD	
	11	1	**138-1643**	1	GEAR SET-BEVEL	
	12	1	**7D-8637**	1	CUP-BEARING	
	13	1	**7D-8636**	1	CONE-BEARING	
M	14	1	**7X-3350**	20	BOLT-LOCKING (M12X1.75X35 MM)	
	15	1	**7G-5220**	1	RETAINER	
M	16	1	**6V-5696**	1	BOLT (M12X1.75X80MM)	
B	17	1	**7I-3003**	1	SHIM PACK (INCLUDES 12 SHIMS)	
	18	1	**4F-7389**	1	SEAL-O-RING (37.47MM ID)	

B-USE AS REQUIRED
M-METRIC PART

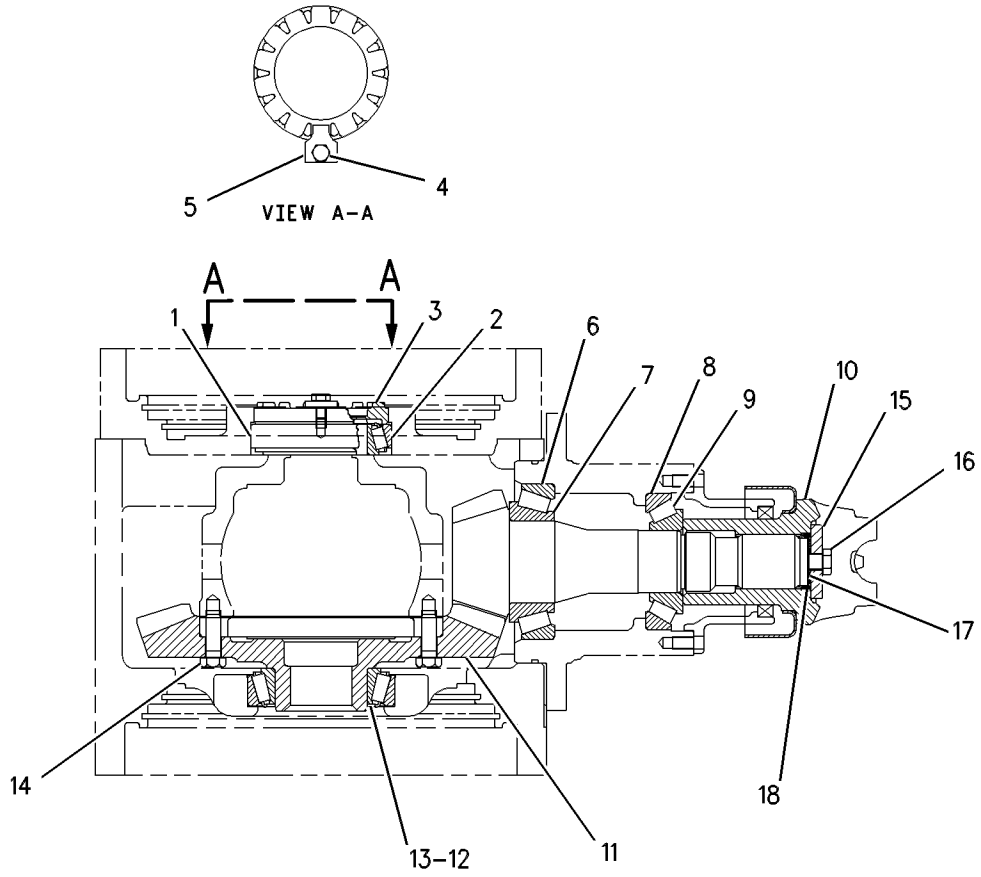

GRAPHIC #1 g00597390

138-2776 GEAR GP-BEVEL & PINION

S/N: RTA1-UP; RBB1-UP
PART OF 138-2726 AXLE AR-FIXED
AN ATTACHMENT

SMCS-3254, 3256 **i01289187**

NOTE	PART NUMBER	QTY	PART NAME 1 2 3 4 5 6 (PRODUCT LEVEL)	SEE PAGE
M	**6V-5696**	1	BOLT (M12X1.75X80MM)	
M	**6V-8210**	1	BOLT (M8X1.25X16 MM)	
	7D-8636	1	CONE-BEARING	
	6V-3950	1	CONE-ROLLER BEARING	
	6V-7527	1	CONE-ROLLER BEARING	
	9S-7950	1	CONE-ROLLER BEARING	
	7D-8637	1	CUP-BEARING	
	4L-7249	1	CUP-ROLLER BEARING	
	5L-2031	1	CUP-ROLLER BEARING	
	9S-7949	1	CUP-ROLLER BEARING	
	147-3621	1	GEAR SET-BEVEL	
	109-5502	1	LOCK-BEARING	
	9C-7292	1	NUT-BEARING	
	7G-5220	1	RETAINER	
	4F-7389	1	SEAL-O-RING (37.47MM ID)	
	7I-3003	1	SHIM PACK (INCLUDES 12 SHIMS)	
	138-1736	1	YOKE AS	
	153-0702	1	GUARD	

M-METRIC PART

<END>

138-2777 GEAR GP-BEVEL & PINION

S/N: RTA1-UP; RBB1-UP
PART OF 203-2778, 203-2781 AXLE AR-OSCILLATING
AN ATTACHMENT

SMCS-3254, 3256 **i01859462**

NOTE	REF NO	GRAPHIC REF	PART NUMBER	QTY	PART NAME 1 2 3 4 5 6 (PRODUCT LEVEL)	SEE PAGE
	1	1	**9S-7949**	1	CUP-BEARING	
	2	1	**9S-7950**	1	CONE-BEARING	
	3	1	**9C-7292**	1	NUT-BEARING	
M	4	1	**6V-8210**	1	BOLT (M8X1.25X16 MM)	
	5	1	**109-5502**	1	LOCK-BEARING	
	6	1	**5L-2031**	1	CUP-BEARING	
	7	1	**6V-3950**	1	CONE-BEARING	
	8	1	**4L-7249**	1	CUP-BEARING	
	9	1	**6V-7527**	1	CONE-BEARING	
	10	1	**221-7117**	1	YOKE AS	
	10A	1	**153-0702**	1	GUARD	
M	11	1	**9C-5206**	1	NUT-STAKE	
	12	1	**8R-2236**	1	WASHER (4MM THK)	
	13	1	**147-3624**	1	GEAR SET-BEVEL	
	14	1	**7D-8636**	1	CONE-BEARING	
	15	1	**7D-8637**	1	CUP-BEARING	
M	16	1	**7X-3344**	20	BOLT (M12X1.75X40MM)	

M-METRIC PART

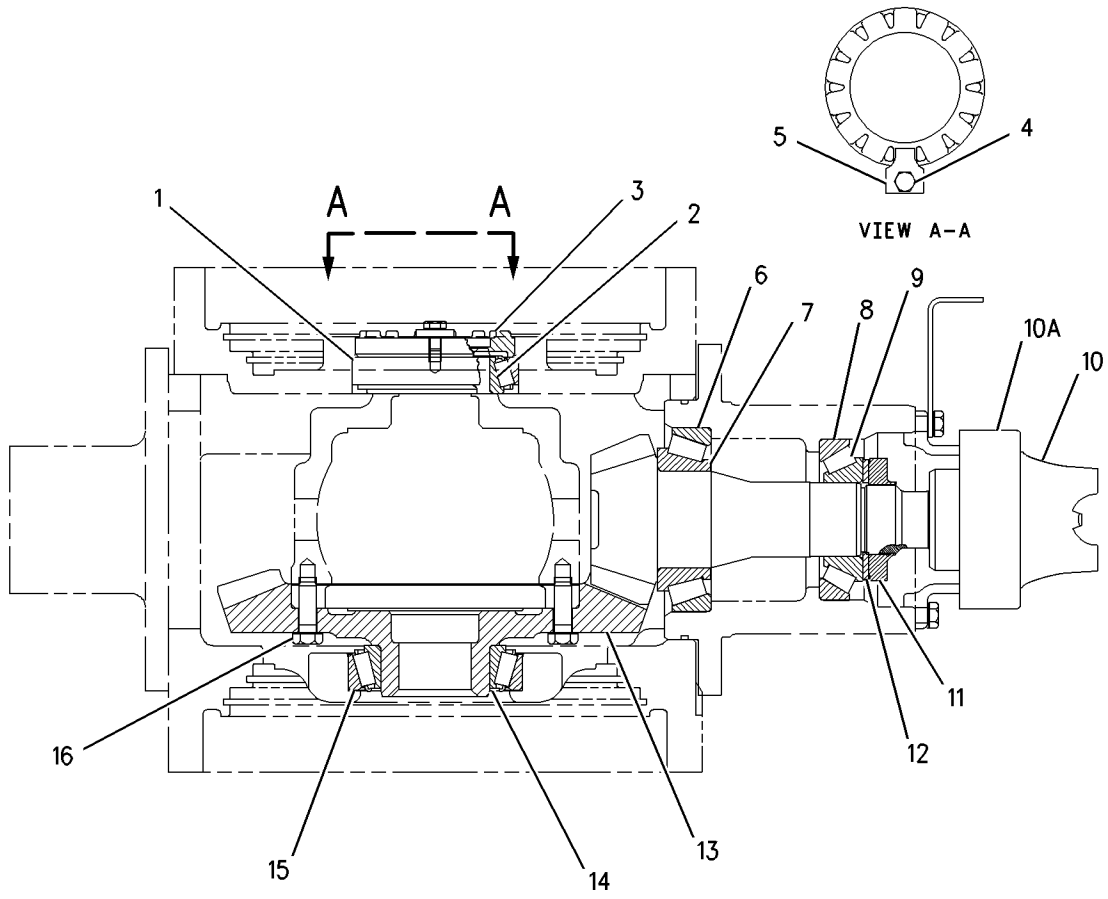

GRAPHIC #1 g00942153

146-6282 GEAR GP-INPUT TRANSFER

S/N: RTA1-UP; RBB1-UP
PART OF 180-7503 TRANSMISSION AR
AN ATTACHMENT

SMCS-3159 **i01236970**

NOTE	REF NO	GRAPHIC REF	PART NUMBER	QTY	PART NAME 1 2 3 4 5 6 (PRODUCT LEVEL)	SEE PAGE
	1	1	**141-8619**	1	SHAFT-INPUT	
	2	1	**6Y-8069**	1	CARRIER-SEAL	
	3	1	**2K-5957**	1	RING-SEALING	
	4	1	**9W-7759**	1	GEAR (29 TEETH)	
	5	1	**141-6822**	1	GEAR (28 TEETH)	
	6	1	**005-0471**	2	CONE-BEARING	

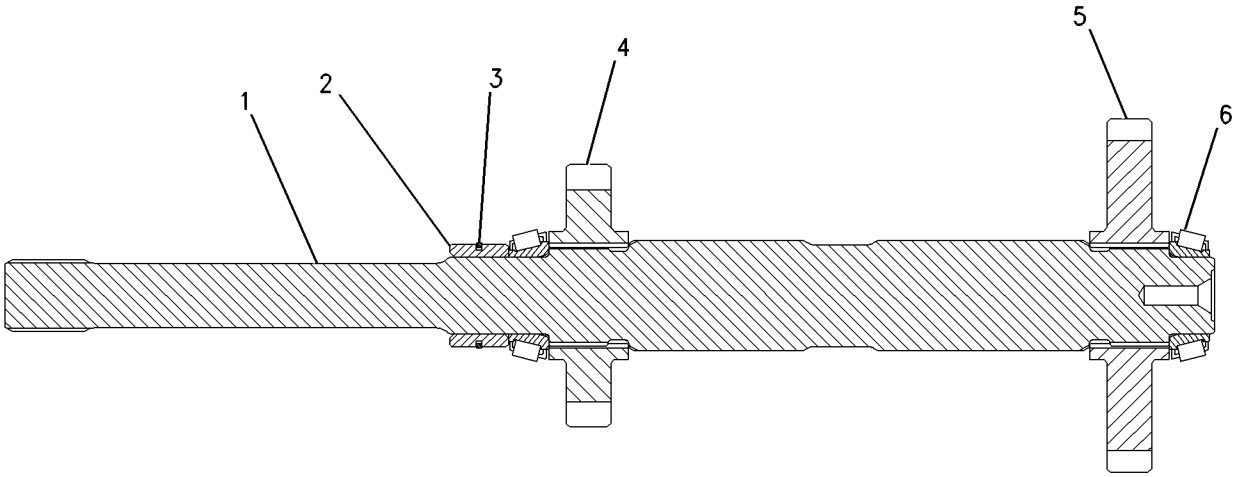

GRAPHIC #1 g00632633

MEMORANDA

146-6284 GEAR GP-OUTPUT TRANSFER

S/N: RTA1-UP; RBB1-UP
PART OF 180-7503 TRANSMISSION AR
AN ATTACHMENT

SMCS-3075, 3159 **i01823167**

NOTE	REF NO	GRAPHIC REF	PART NUMBER	QTY	PART NAME 1 2 3 4 5 6 (PRODUCT LEVEL)	SEE PAGE
	1	1	**4F-8824**	2	SEAL-O-RING	
M	2	1	**6V-5696**	2	BOLT (M12X1.75X80MM)	
	3	1	**7G-5220**	2	RETAINER	
	4	1	**1B-3978**	1	CUP-BEARING	
	5	1	**1B-3980**	2	CONE-BEARING	
	6	1	**9W-7771**	1	GEAR (75 TEETH)	
	7	1	**8T-3293**	1	RING-RETAINING	
	8	1	**5P-2861**	1	SEAL-O-RING	
	9	1	**9U-9551**	1	CAGE-BEARING	
	10	1	**8V-7623**	1	DRUM-BRAKE	
	11	1	**214-4769**	1	BRAKE GP-PARKING	
		1	**1V-2772**	1	SPRING-EXTENSION	
		1	**3K-7056**	1	SPRING-EXTENSION	
		1	**3K-7057**	1	SPRING-EXTENSION	
		1	**111-9050**	2	SHOE AS-LINED	
		1	**214-4768**	1	PLATE AS	
M	12	1	**6V-8675**	4	BOLT (M12X1.75X35MM)	
	13	1	**105-4776**	1	YOKE-BRAKE FLANGE	
M	14	1	**6V-3668**	8	BOLT (M12X1.75X30MM)	
	15	1	**5P-8245**	12	WASHER-HARD (13.5X25.5X3MM THK)	
	16	1	**133-4297**	1	SEAL-LIP TYPE	
	17	1	**123-9056**	1	LEVER AS	
	18	1	**9U-9280**	1	SHAFT-OUTPUT	
	19	1	**105-4775**	1	YOKE-OUTPUT	

M-METRIC PART

146-6284 **GEAR GP-OUTPUT TRANSFER** ***(contd.)*** **i01823167**

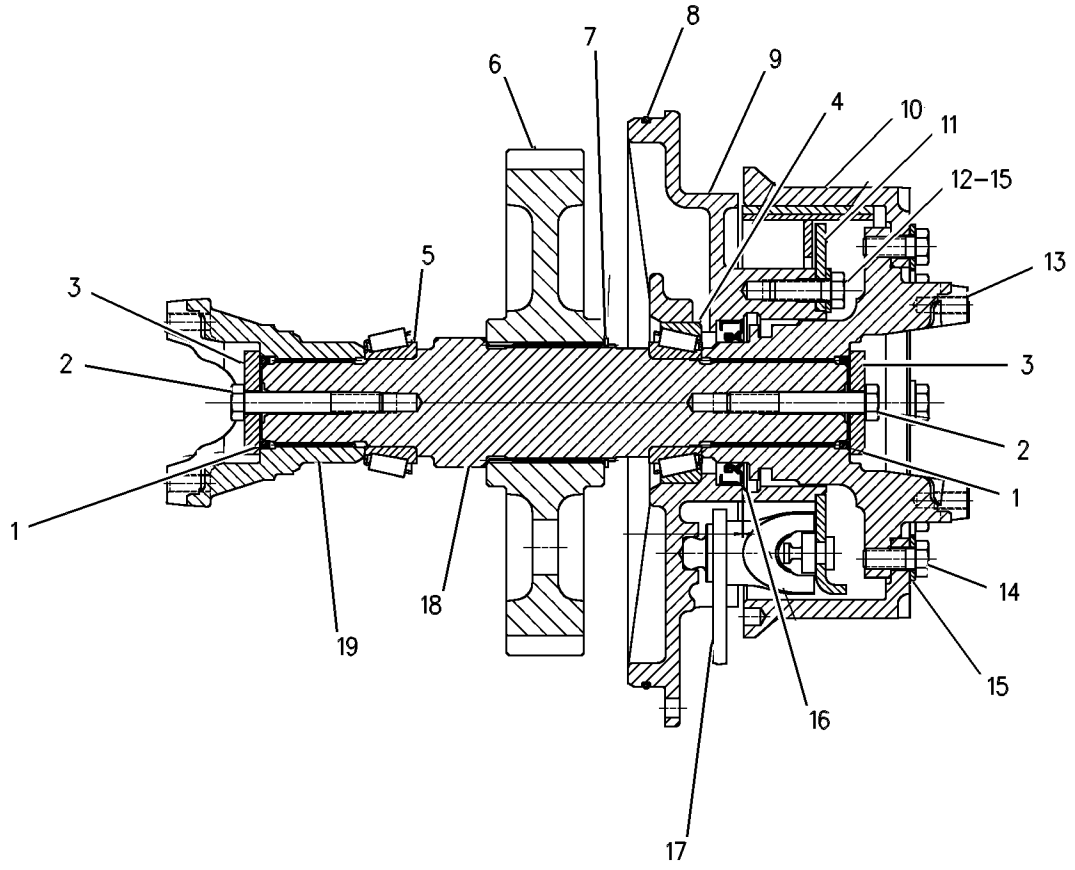

GRAPHIC #1 g00572179

138-1616 HOUSING GP-FIXED AXLE

S/N: RTA1-UP; RBB1-UP
PART OF 138-1615, 138-2726 AXLE AR-FIXED
AN ATTACHMENT

SMCS-3260 **i01863181**

NOTE	REF NO	GRAPHIC REF	PART NUMBER	QTY	PART NAME 1 2 3 4 5 6 (PRODUCT LEVEL)	SEE PAGE
	1	1	**138-1639**	1	HOUSING-CENTER	
	2	1	**9G-5311**	2	SEAL GP-DUO-CONE	
					(EACH INCLUDES)	
		1	**4K-0173**	2	RING-SEALING	
	3	1	**5P-3723**	2	CONE-BEARING	
	4	1	**6D-7690**	2	CUP-BEARING	
	5	1	**5H-3701**	2	SCREW-PURGE	
	6	1	**203-2776**	1	HOUSING	
	7	1	**3B-0551**	1	PLUG-PIPE	
	8	1	**8R-0512**	1	GAUGE AS-OIL LEVEL (DIPSTICK)	
M	9	1	**8T-0358**	16	BOLT (M16X2.0X90MM)	
	10	1	**5P-8247**	32	WASHER-HARD (17X32X3.5MM THK)	
	11	1	**5P-4484**	1	PLUG-MAGNETIC	
M	12	1	**8T-5002**	16	BOLT (M16X180MM)	
	13	1	**138-1635**	2	SHAFT-AXLE	
	14	1	**061-6712**	2	RING-RETAINING	
	15	1	**8R-2532**	2	NUT-BEARING	
	16	1	**6V-0347**	2	CONE-BEARING	
	17	1	**6F-2956**	2	CUP-BEARING	
	18	1	**138-1687**	2	HOUSING-AXLE	
M	19	1	**6V-8675**	10	BOLT (M12X1.75X35MM)	
	20	1	**5P-8245**	10	WASHER-HARD (13.5X25.5X3MM THK)	
B	21	1	**8R-2526**	1	SHIM PACK (INCLUDES 8 SHIMS)	
	22	1	**8F-8733**	1	SEAL-O-RING	
M	23	1	**6V-7732**	6	BOLT (M10X1.5X25MM)	
	24	1	**9X-2027**	6	WASHER (11X18X2MM THK)	
	25	1	**216-0102**	1	RETAINER-SEAL	
	26	1	**133-4294**	1	SEAL-LIP TYPE	
M	27	1	**7X-2436**	2	BOLT-HEX HEAD (M12X1.75X100MM)	
	28	1	**1U-8846**	1	SEALANT-GASKET	
	29	1	**153-3013**	1	HOUSING-PINION	
	30	1	**8T-0336**	1	FITTING-PRESSURE RELIEF (1/8-27 SHORT THREAD)	
	31	1	**7M-8485**	3	SEAL-O-RING	
	32	1	**3E-2338**	2	PLUG-PIPE	

B-USE AS REQUIRED
M-METRIC PART

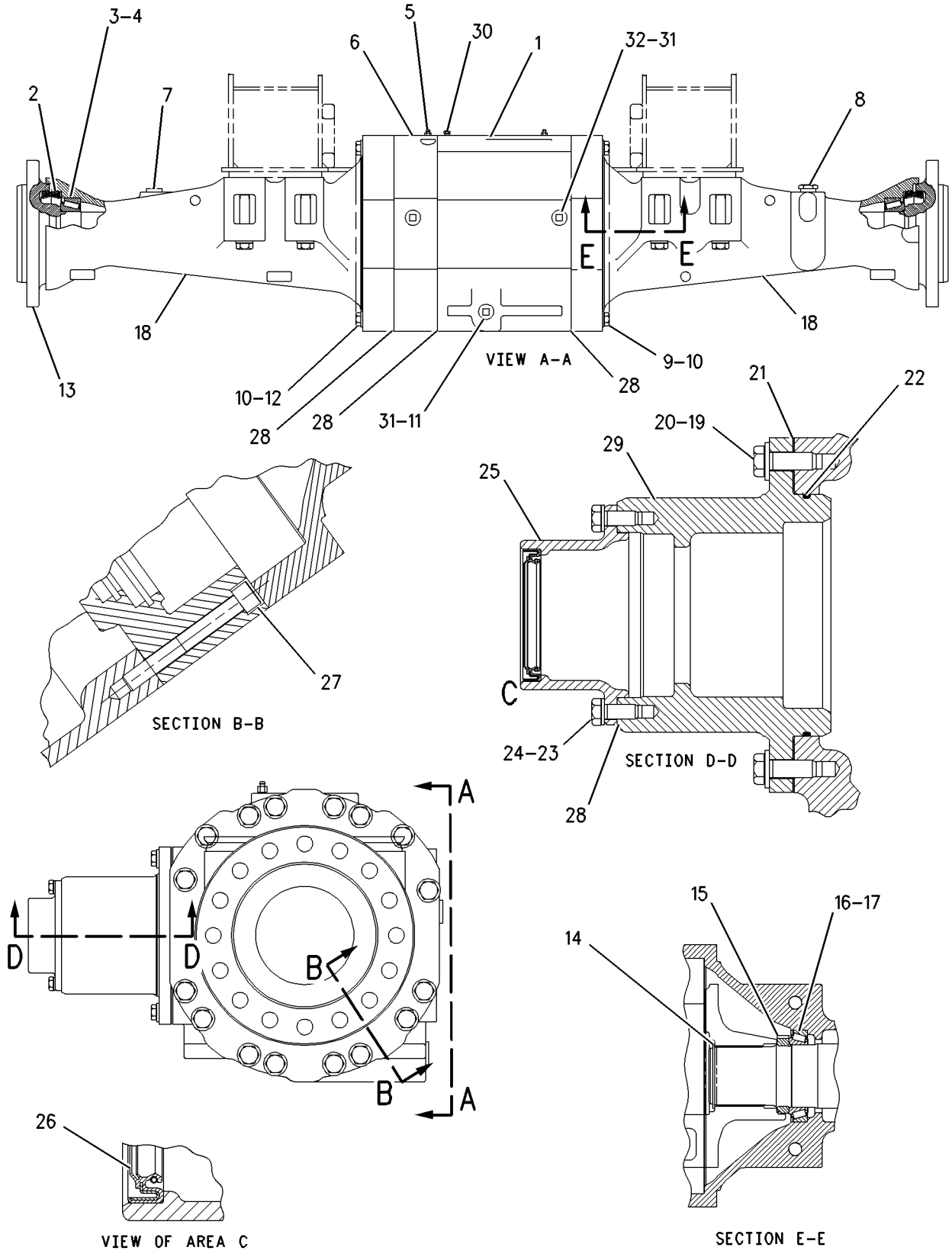

GRAPHIC #1 g00863194

203-2774 HOUSING GP-OSCILLATING AXLE

S/N: RTA1-UP; RBB1-UP

PART OF 203-2773, 203-2778, 203-2780, 203-2781 AXLE AR-OSCILLATING

AN ATTACHMENT

SMCS-3260, 3268 **i01863185**

NOTE	REF NO	GRAPHIC REF	PART NUMBER	QTY	PART NAME 1 2 3 4 5 6 (PRODUCT LEVEL)	SEE PAGE
	1	2	**3B-0551**	1	PLUG-PIPE	
	2	1	**5H-3701**	2	SCREW-PURGE	
	3	1	**141-4892**	1	SUPPORT-TRUNNION	
	4	1	**216-0102**	1	RETAINER-SEAL	
M	5	1	**6V-7732**	6	BOLT (M10X1.5X25MM)	
	6	1	**9X-2027**	6	WASHER (11X18X2MM THK)	
	7	2	**203-2777**	2	HOUSING-AXLE	
	8	1	**128-0219**	1	SUPPORT-TRUNNION	
M	9	1	**7X-2436**	2	BOLT-HEX HEAD (M12X1.75X100MM)	
	10	1	**5P-4484**	1	PLUG-MAGNETIC	
M	11	2	**8T-5002**	16	BOLT (M16X180MM)	
	12	2	**5P-8247**	40	WASHER-HARD (17X32X3.5MM THK)	
	13	2	**8R-2526**	1	SHIM PACK (INCLUDES 8 SHIMS)	
M	14	1	**6V-8197**	6	BOLT (M12X1.75X40MM)	
	15	1,2	**5P-8245**	22	WASHER-HARD (13.5X25.5X3MM THK)	
	16	2	**133-4294**	1	SEAL-LIP TYPE	
	17	2	**9H-1129**	2	SEAL-LIP	
	18	2	**5P-5291**	1	RING-RETAINING	
	19	2	**9C-5048**	1	BEARING-SLEEVE	
	20	2	**8F-8733**	1	SEAL-O-RING	
	21	2	**140-6140**	1	HOUSING-PINION	
M	22	2	**8T-0358**	16	BOLT (M16X2.0X90MM)	
	23	2	**6D-7690**	2	CUP-BEARING	
	24	2	**5P-3723**	2	CONE-BEARING	
	25	2	**9G-5311**	2	SEAL GP-DUO-CONE	
					(EACH INCLUDES)	
		2	**4K-0173**	2	RING-SEALING	
	26	2	**138-1635**	2	SHAFT-AXLE	
M	27	2	**6V-4429**	8	BOLT (M16X2X40MM)	
	28	2	**8R-2584**	1	TRUNNION	
	29	2	**8R-2532**	2	NUT-BEARING	
	30	2	**061-6712**	2	RING-RETAINING	
	31	2	**1K-8061**	2	WASHER-THRUST	
	32	2	**203-2776**	1	HOUSING	
	33	2	**203-2775**	1	HOUSING	
	34	2	**8R-0512**	1	GAUGE AS-OIL LEVEL (DIPSTICK)	
	35	2	**9V-1203**	1	PLATE-THRUST	
	36	2	**9C-5049**	1	BEARING-SLEEVE	
	37	1	**6K-6075**	1	COVER	
	38	2	**5H-1039**	1	SEAL-O-RING	
	39	2	**6V-0347**	2	CONE-BEARING	
	40	1	**5M-6214**	2	PLUG-PIPE	
M	41	2	**7X-3350**	6	BOLT-LOCKING (M12X1.75X35 MM)	
	42	2	**6F-2956**	2	CUP-BEARING	
M	43	2	**6V-8675**	10	BOLT (M12X1.75X35MM)	
	44	1	**8T-0336**	2	FITTING-PRESSURE RELIEF (1/8-27 SHORT THREAD)	
	45	1	**7M-8485**	3	SEAL-O-RING	
	46	1	**3E-2338**	2	PLUG-PIPE	
	47	1	**9S-8005**	1	PLUG	
	48	1	**3K-0360**	1	SEAL-O-RING	

M-METRIC PART

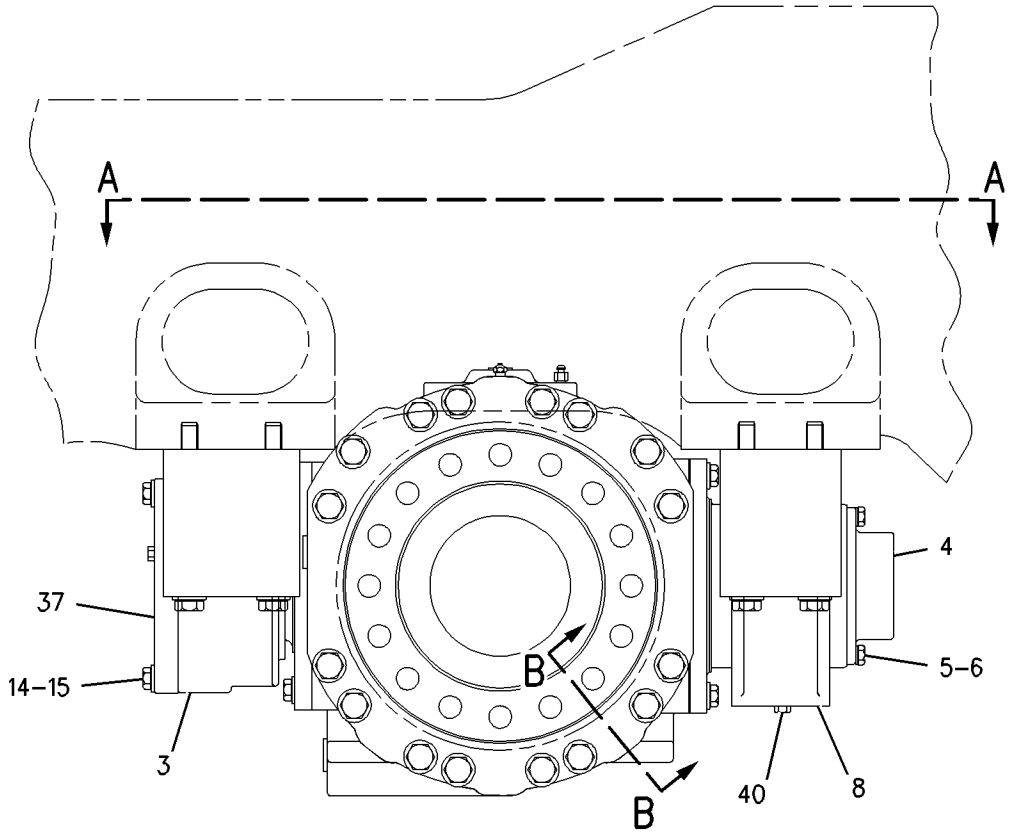

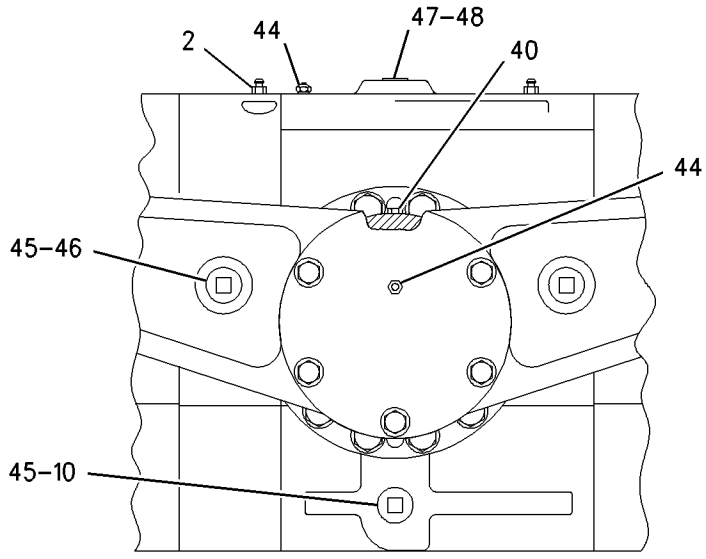

REFER TO ALL ILLUSTRATIONS
IN THIS GROUP FOR
AUXILIARY VIEWS

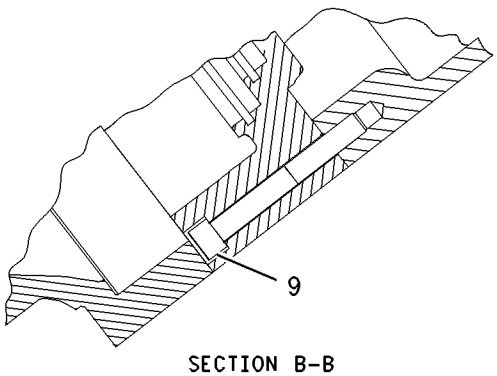

SECTION B-B

GRAPHIC #1

g00874933

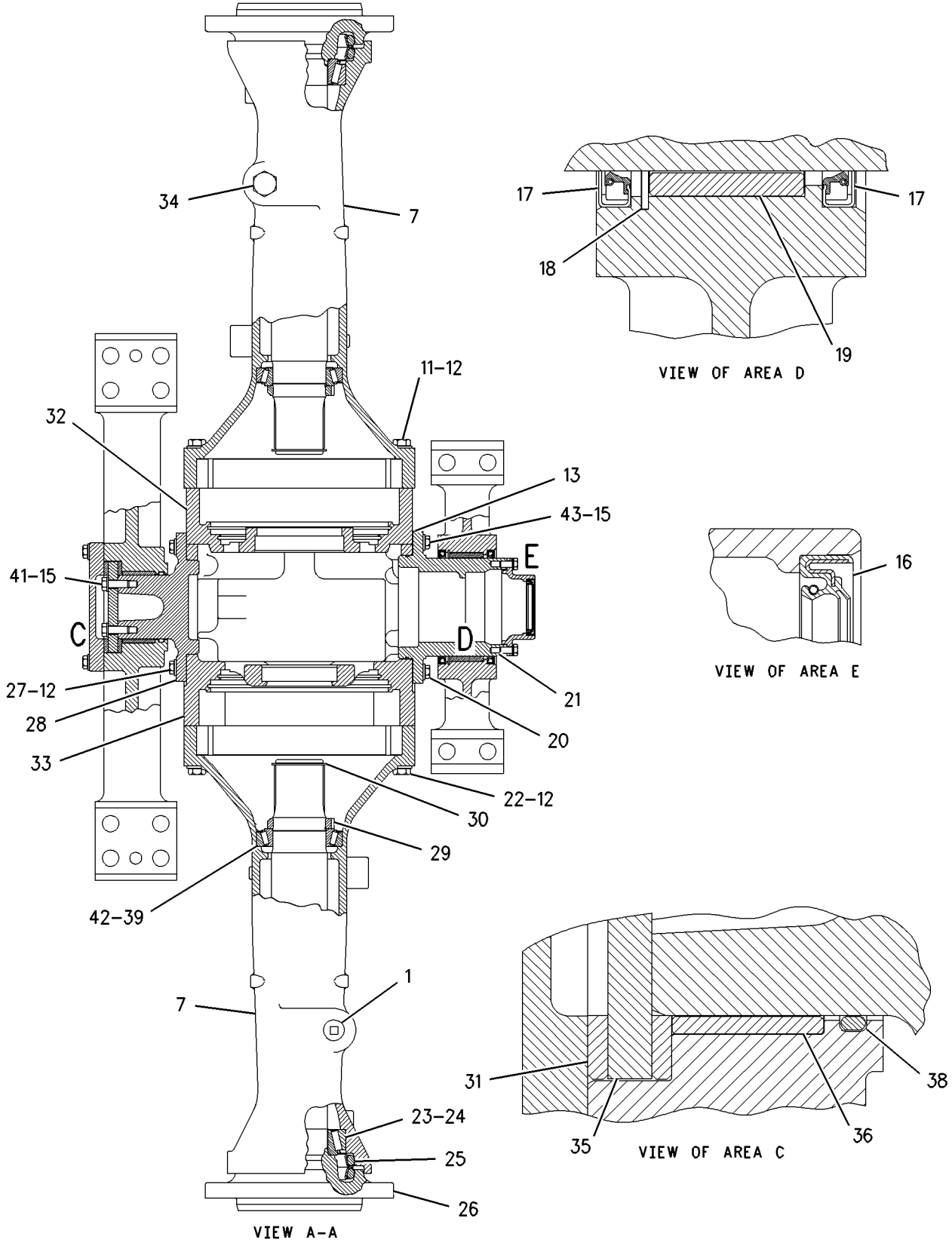

GRAPHIC #2

g00874935

MEMORANDA

203-3883 LINES GP-AXLE OIL COOLER

S/N: RTA1-UP; RBB1-UP
PART OF 203-5945, 203-5946 AXLE AR-OSCILLATING
AN ATTACHMENT

SMCS-3016 **i01848678**

NOTE	REF NO	GRAPHIC REF	PART NUMBER	QTY	PART NAME 1 2 3 4 5 6 (PRODUCT LEVEL)	SEE PAGE
G	1	1	**160-2245**		SLEEVE-ABRASION (59.1 IN)	
G	2	1	**160-2243**		SLEEVE-ABRASION (32.68IN)	
	3	3	**3E-7692**	1	SWITCH AS-PRESSURE (AXLE OIL)	
	4	1,3	**3S-2093**	6	STRAP-CABLE	
	5	1	**6E-2833**	1	SCREEN AS (AXLE OIL COOLER)	
	6	3	**6V-0852**	1	CAP-DUST	
	7	1,3	**7K-1181**	3	STRAP-CABLE	
	8	2	**091-0081**	1	SPACER (10.5X20X10.0MM THK)	
	9	1	*101-1790*	1	ADAPTER AS	
		1	**6V-9746**	1	SEAL-O-RING	
		1	**9X-6643**	1	ADAPTER	
	10	3	**125-7484**	1	SPACER	
	11	3	**129-8087**	1	SPACER (14MM THK)	
	12	1	*172-4622*	1	UNION GP	
		1	**7M-8485**	2	SEAL-O-RING	
		1	**8C-9029**	1	UNION	
	13	3	*185-1028*	1	COOLER GP-AXLE OIL	
M		3	**8T-4189**	2	BOLT (M8X1.25X20MM)	
		3	**8T-4224**	4	WASHER-HARD (8.8X16X2MM THK)	
M		3	**8T-4908**	2	BOLT (M8X1.25X25MM)	
		3	**185-1039**	1	BRACKET AS	
M		3	**8T-3612**	2	NUT-WELD (M8X1.25 THD)	
		3	**205-3652**	1	CORE AS-AXLE OIL COOLER	
	14	2	*187-2120*	1	ELBOW AS	
		2	**4J-5477**	1	SEAL-O-RING	
		2	**8C-8408**	1	ELBOW	
	15	1	**191-9136**	1	PLATE AS	
		1	**9R-2672**	1	BOSS (M10X20MM)	
	16	2	**205-5268**	1	PUMP & MOTOR GP-AXLE OIL CLR	
I	17	1	**212-5085**	1	HOSE AS	
I	18	3	**212-5940**	1	HOSE AS	
I	19	2	**212-5942**	1	HOSE AS	
I	20	1	**212-6056**	1	HOSE AS	
	21	1	**214-1042**	1	PLATE AS	
M		1	**8T-3490**	2	NUT-WELD (M10X1.5 THD)	
I	22	1	**215-3810**	1	HOSE AS	
I	23	3	**215-3811**	1	HOSE AS	
I	24	2	**215-5645**	1	HOSE AS	
I	25	3	**215-5646**	1	HOSE AS	
I	26	3	**215-5647**	1	HOSE AS	
	27	2	**216-3041**	1	BRACKET AS	
M		2	**8T-3490**	2	NUT-WELD (M10X1.5 THD)	
		2	**092-2467**	2	BAR	
I	28	1	**216-3937**	1	HOSE AS	
I	29	3	**216-3938**	1	HOSE AS	
I	30	1	**223-8276**	1	HOSE AS	
	31	3	**226-1354**	1	VALVE GP-CHECK	
		3	**6V-9746**	2	SEAL-O-RING	
	32	3	**227-4306**	1	TUBE AS	
I	33	1	**229-5115**	1	HOSE AS	
I	34	2	**230-6142**	1	HOSE AS	
	35	2	*148-8325*	1	CONNECTOR GP	
		2	**3J-1907**	1	SEAL-O-RING	
		2	**4J-5477**	1	SEAL-O-RING	
		2	**6V-8641**	1	CONNECTOR	

203-3883 LINES GP-AXLE OIL COOLER *(contd.)* i01848678

NOTE	REF NO	GRAPHIC REF	PART NUMBER	QTY	PART NAME 1 2 3 4 5 6 (PRODUCT LEVEL)	SEE PAGE
	36	2	*148-8327*	2	CONNECTOR AS	
					(EACH INCLUDES)	
		2	**3D-2824**	1	SEAL-O-RING	
		2	**6V-8637**	1	CONNECTOR-SEAL	
		2	**6V-9746**	1	SEAL-O-RING	
	37	1	*148-8358*	1	ELBOW AS	
		1	**2M-9780**	1	SEAL-O-RING	
		1	**6V-8398**	1	SEAL-O-RING	
		1	**6V-8624**	1	ELBOW	
	38	2,3	*148-8364*	4	ELBOW AS	
					(EACH INCLUDES)	
		2,3	**3K-0360**	1	SEAL-O-RING	
		2,3	**6V-8398**	1	SEAL-O-RING	
		2,3	**6V-8625**	1	ELBOW	
	39	2	*148-8372*	2	ELBOW GP	
					(EACH INCLUDES)	
		2	**2M-9780**	1	SEAL-O-RING	
		2	**6V-8398**	1	SEAL-O-RING	
		2	**6V-8721**	1	ELBOW	
	40	2	*148-8385*	1	ELBOW GP	
		2	**3J-7354**	1	SEAL-O-RING	
		2	**4J-5477**	1	SEAL-O-RING	
		2	**6V-9000**	1	ELBOW	
	41	2	*148-8388*	1	ELBOW GP	
		2	**2M-9780**	1	SEAL-O-RING	
		2	**6V-8629**	1	ELBOW	
		2	**6V-9746**	1	SEAL-O-RING	
	42	3	*148-8418*	1	REDUCER GP	
		3	**6V-8398**	1	SEAL-O-RING	
		3	**6V-8942**	1	REDUCER-O-RING (FACE)	
	43	3	*148-8424*	1	TEE GP	
		3	**6V-8397**	1	SEAL-O-RING (12.83MM OD)	
		3	**8T-8902**	1	TEE	
	44	2	*148-8444*	1	TEE GP	
		2	**6V-8398**	2	SEAL-O-RING	
		2	**6V-9837**	1	TEE-SWIVEL	
	45	2	*148-8448*	1	FITTING GP	
		2	**4J-5477**	2	SEAL-O-RING	
		2	**6V-9842**	1	TEE-SWIVEL	
	46	3	*150-4037*	1	TEE AS	
		3	**6V-8398**	2	SEAL-O-RING	
		3	**6V-9844**	1	TEE-SWIVEL	
	47	1	*150-4049*	1	ELBOW GP	
		1	**6V-9746**	1	SEAL-O-RING	
		1	**7M-8485**	1	SEAL-O-RING	
		1	**8T-4149**	1	ELBOW	
	48	1	*153-6237*	1	ELBOW GP	
		1	**3D-2824**	1	SEAL-O-RING	
		1	**6V-9004**	1	ELBOW	
		1	**6V-9746**	1	SEAL-O-RING	
	49	3	*153-6248*	1	ADAPTER GP	
		3	**6V-8397**	1	SEAL-O-RING (12.83MM OD)	
		3	**8T-6663**	1	ADAPTER-PORT	
	50	3	*164-5567*	1	FITTING GP	
		3	**3J-1907**	1	SEAL-O-RING	
		3	**6V-3965**	1	FITTING AS	
	51	2	*164-6862*	1	TEE GP	
		2	**6V-9160**	1	TEE-FACE SEAL	
		2	**6V-9746**	3	SEAL-O-RING	

203-3883 LINES GP-AXLE OIL COOLER *(contd.)* i01848678

NOTE	REF NO	GRAPHIC REF	PART NUMBER	QTY	PART NAME 1 2 3 4 5 6 (PRODUCT LEVEL)	SEE PAGE
	52	1,3	**204-8000**	3	MOUNT	
	53	2	**2P-1293**	1	LOCKNUT-BULKHEAD (1 3/16-12 THD)	
	54	3	**3J-1907**	1	SEAL-O-RING	
	55	2	**3P-2404**	1	CLIP	
	56	3	**4D-7388**	1	CLIP	
	57	2	**4D-9517**	2	CLIP	
	58	2	**6D-3479**	1	CLIP	
	59	1,2,3	**6V-1889**	5	CLIP	
	60	3	**6V-8556**	1	NUT (1 3/16-12 THD)	
	61	1	**7M-8485**	1	SEAL-O-RING	
	62	3	**7X-0515**	6	WASHER-HARD (17X35X5MM THK)	
M	63	2	**7X-2543**	2	BOLT (M10X1.5X120MM)	
M	64	3	**7X-2556**	3	BOLT (M16X2X100MM)	
	65	2	**7X-7729**	4	WASHER (11X25X3MM THK)	
M	66	3	**7Y-5227**	3	BOLT (M16X2X190MM)	
	67	2	**8M-2770**	1	CLIP	
	68	3	**8M-2773**	2	CLIP	
	69	2	**8S-5107**	1	SPACER (2.0 IN THK)	
	70	1,2,3	**8T-4121**	13	WASHER-HARD (11X21X2.5MM THK)	
M	71	2	**8T-4133**	1	NUT (M10X1.5 THD)	
M	72	1,2,3	**8T-4136**	5	BOLT (M10X1.5X25MM)	
M	73	1	**8T-4137**	3	BOLT (M10X1.5X20MM)	
M	74	3	**8T-4186**	1	BOLT (M10X1.5X40MM)	
M	75	2	**8T-4195**	2	BOLT (M10X1.5X30MM)	
	76	2	**8T-4223**	1	WASHER-HARD (13.5X25.5X3MM THK)	
M	77	2	**8T-4648**	1	BOLT (M12X1.75X70MM)	
M	78	2	**8T-5005**	2	BOLT (M10X1.50X70MM)	

G-ORDER BY THE INCH
I-SEE HOSE FABRICATION GUIDE
M-METRIC PART

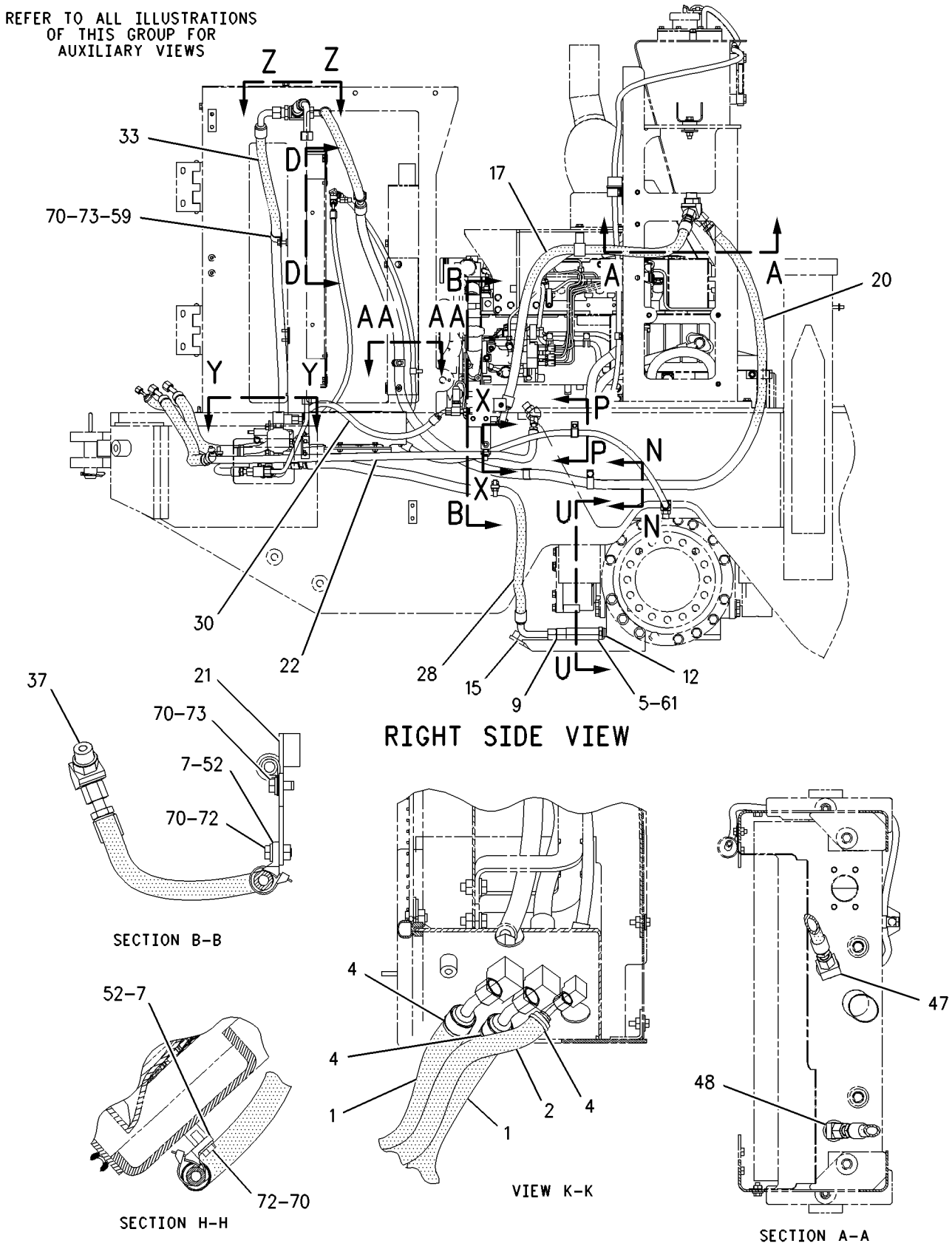

GRAPHIC #1 g00939027

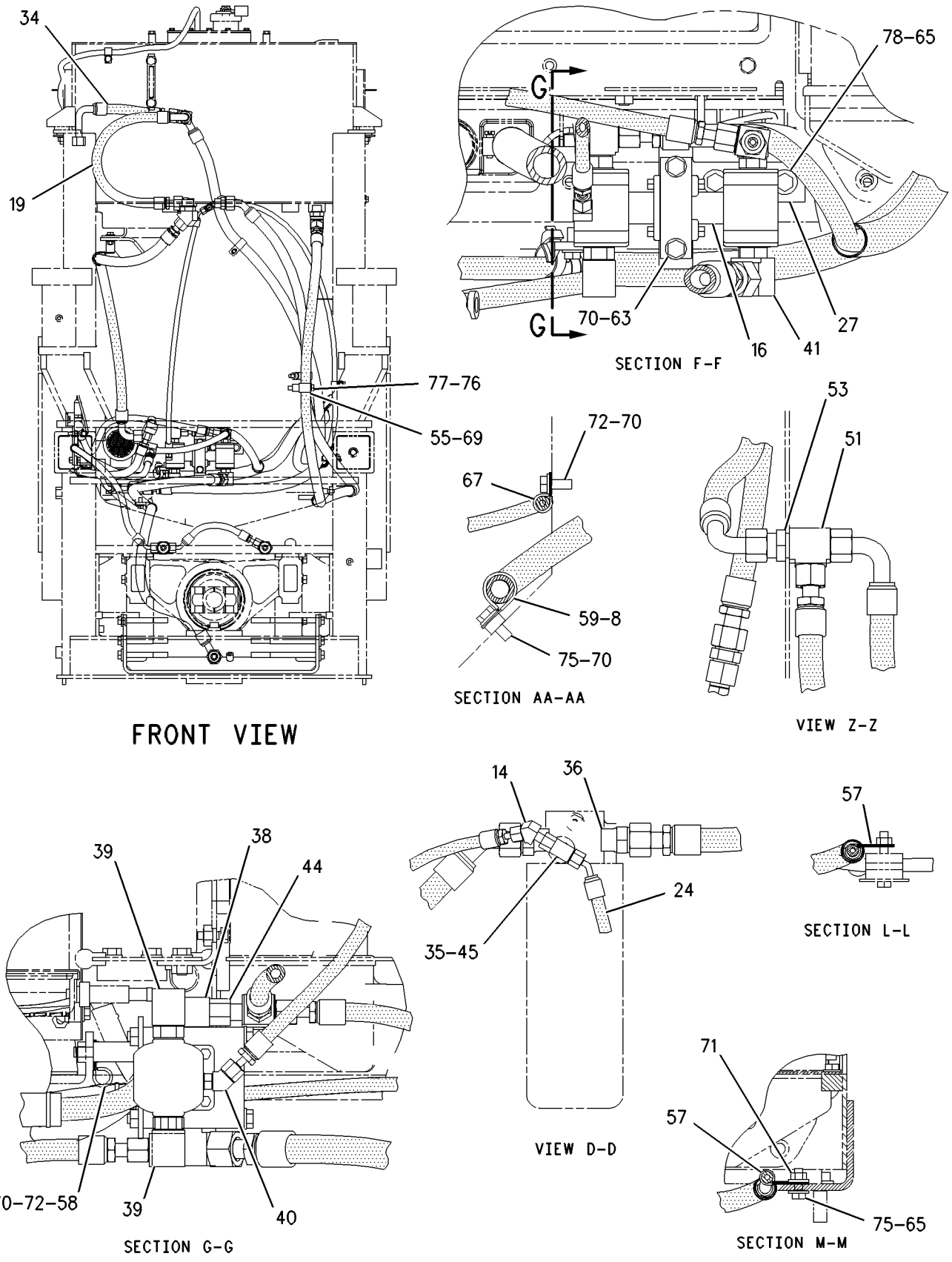

GRAPHIC #2

g00939029

203-3883 **LINES GP-AXLE OIL COOLER** *(contd.)* **i01848678**

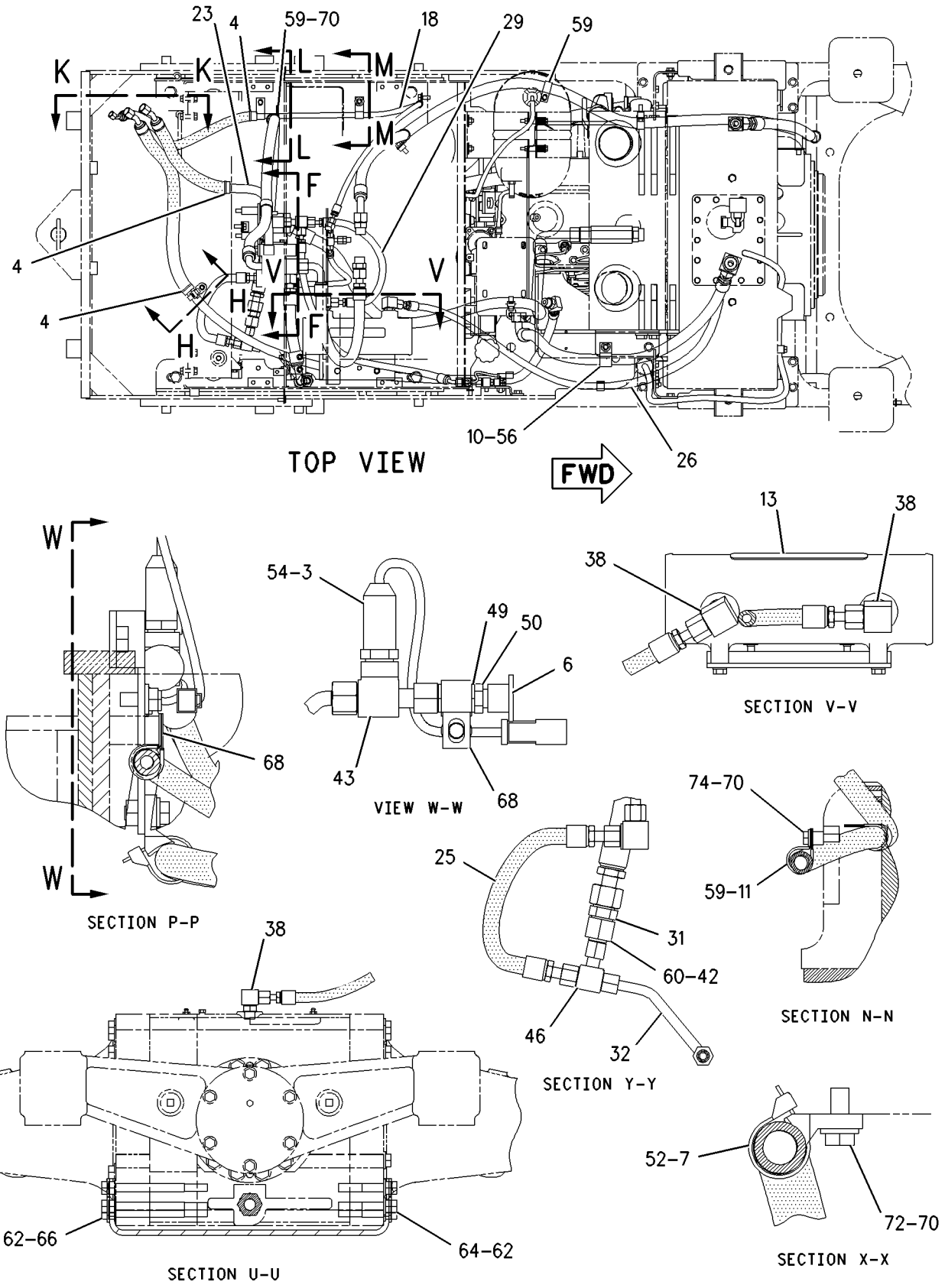

GRAPHIC #3 g00939030

203-3872 LINES GP-TORQUE CONV COOLER

S/N: RTA1-UP; RBB1-UP

PART OF 176-5181, 176-5201 CHASSIS AR

SMCS-1375, 3016 **i01854256**

NOTE	REF NO	GRAPHIC REF	PART NUMBER	QTY	PART NAME 1 2 3 4 5 6 (PRODUCT LEVEL)	SEE PAGE
	1	1	**6V-0852**	1	CAP-DUST	
Y	2	1	**126-0747**	1	VALVE GP-BYPASS	244
I	3	1	**208-2300**	1	HOSE AS	
I	4	1	**208-2301**	1	HOSE AS	
	5	1	**229-2935**	2	TUBE AS	
I	6	1	**229-2938**	1	HOSE AS	
	7	1	**229-2940**	1	PLATE AS	
M		1	**8T-3490**	3	NUT-WELD (M10X1.5 THD)	
	8	1	**229-2941**	1	PLATE AS	
M		1	**8T-3490**	2	NUT-WELD (M10X1.5 THD)	
I	9	1	**230-7287**	1	HOSE AS	
	10	1	*148-8335*	4	CONNECTOR AS	
					(EACH INCLUDES)	
		1	**5K-9090**	1	SEAL-O-RING	
		1	**6V-8635**	1	CONNECTOR	
		1	**7M-8485**	1	SEAL-O-RING	
	11	1	*148-8357*	2	ELBOW GP	
					(EACH INCLUDES)	
		1	**5K-9090**	1	SEAL-O-RING	
		1	**6V-9008**	1	ELBOW	
		1	**7M-8485**	1	SEAL-O-RING	
	12	1	*150-3065*	1	ADAPTER GP	
		1	**3J-1907**	1	SEAL-O-RING	
		1	**6V-0484**	1	ADAPTER-O-RING	
	13	1	*164-5567*	1	FITTING GP	
		1	**3J-1907**	1	SEAL-O-RING	
		1	**6V-3965**	1	FITTING AS	
	14	1	**5K-9090**	2	SEAL-O-RING	
	15	1	**6V-9172**	2	NUT (1 7/16-12 THD)	
	16	1	**7D-7233**	2	CLIP	
	17	1	**8T-4121**	9	WASHER-HARD (11X21X2.5MM THK)	
M	18	1	**8T-4136**	6	BOLT (M10X1.5X25MM)	
M	19	1	**8T-4178**	3	BOLT (M10X1.5X90MM)	

I-SEE HOSE FABRICATION GUIDE
M-METRIC PART
Y-SEPARATE ILLUSTRATION

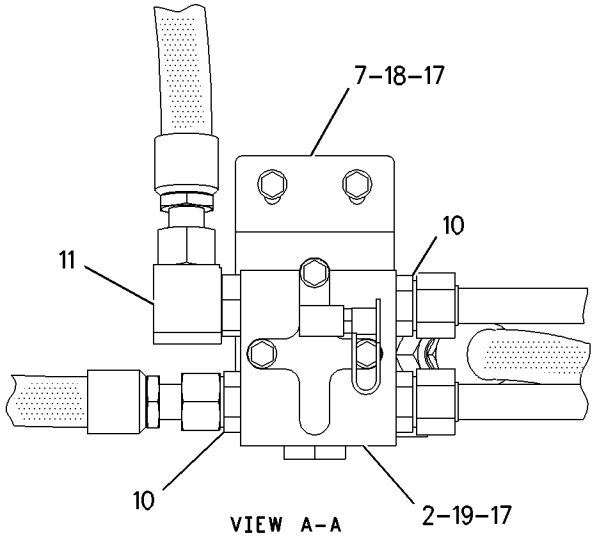

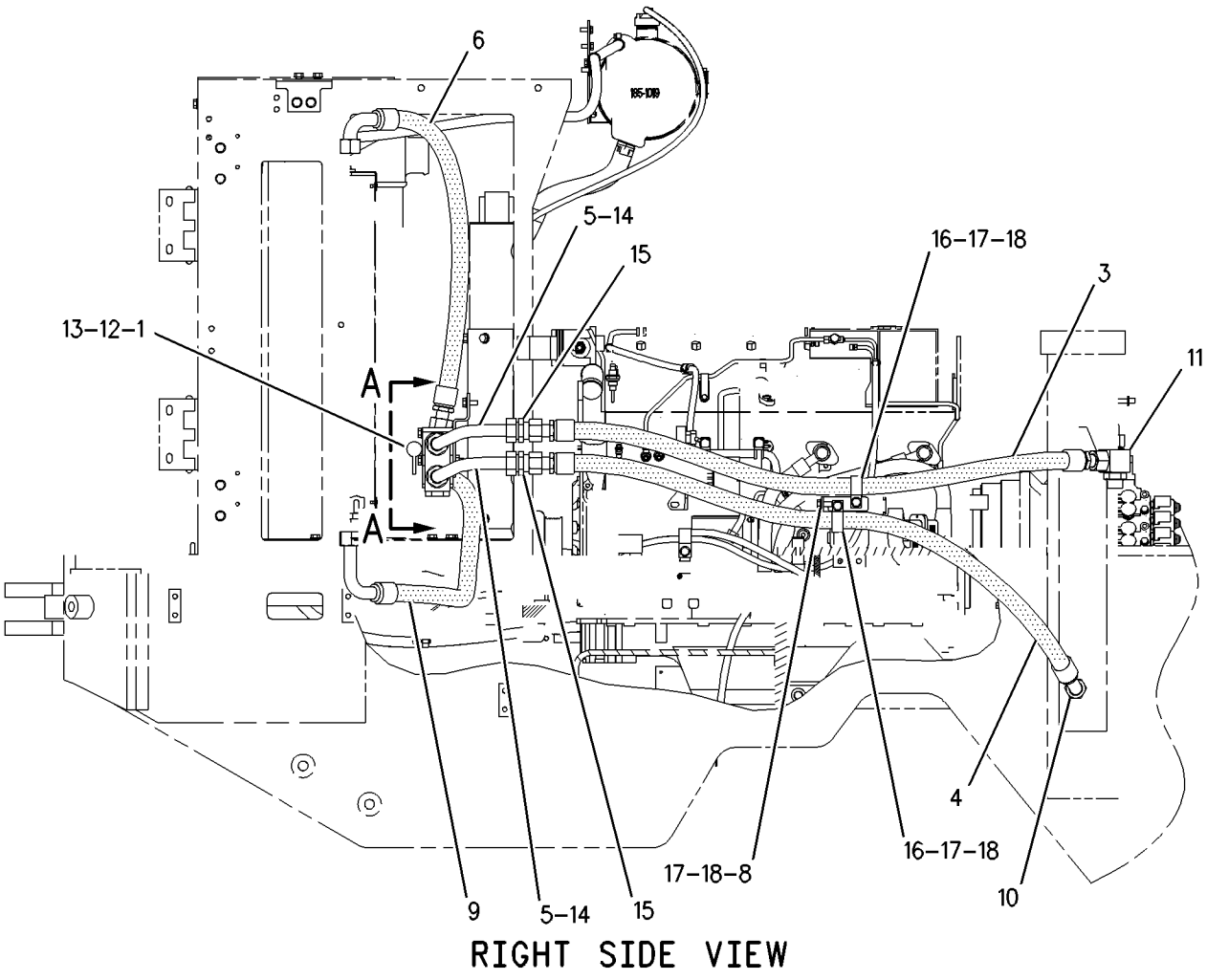

GRAPHIC #1 g00937372

132-2471 MOUNTING GP-AXLE

S/N: RTA1-UP; RBB1-UP

PART OF 176-5181, 176-5201 CHASSIS AR

SMCS-3268, 3278 **i01117520**

NOTE	REF NO	GRAPHIC REF	PART NUMBER	QTY	PART NAME 1 2 3 4 5 6 (PRODUCT LEVEL)	SEE PAGE
	1	1	**6K-8987**	2	DOWEL	
M	2	1	**7X-2465**	20	BOLT (M24X3.0X180MM)	
	3	1	**8T-4167**	20	WASHER (4.0MM THK)	

M-METRIC PART

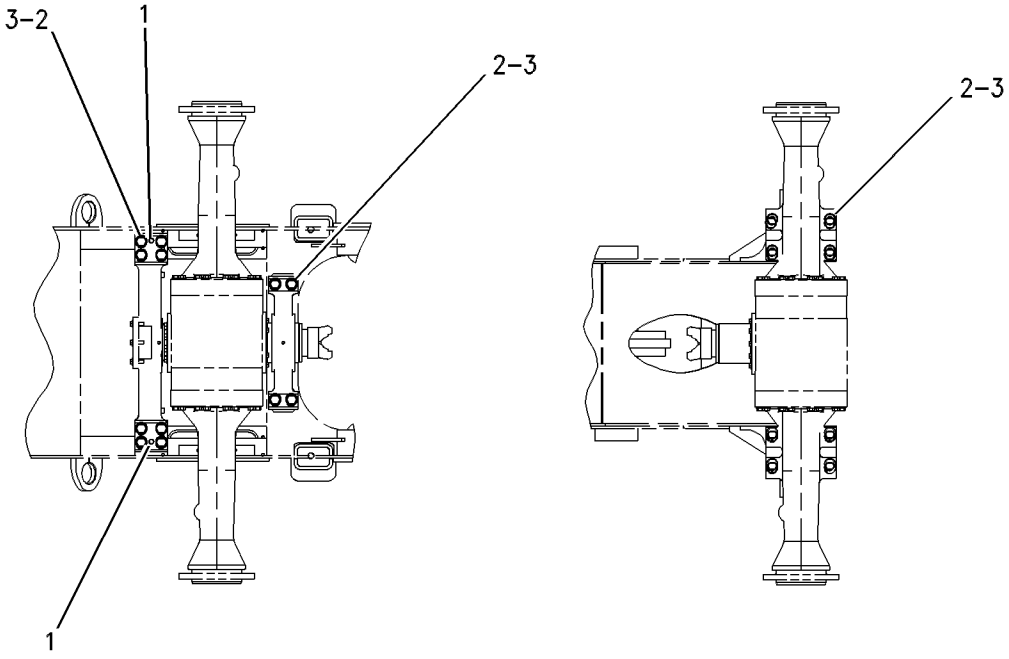

GRAPHIC #1 g00598337

147-5071 MOUNTING GP-RIM

S/N: RTA1-UP; RBB1-UP
PART OF 117-7836, 117-7837, 146-6783 RIM AR
AN ATTACHMENT

SMCS-4202, 4209 **i01132993**

NOTE	PART NUMBER	QTY	PART NAME 1 2 3 4 5 6 (PRODUCT LEVEL)	SEE PAGE
M	**8T-5379**	16	BOLT (M24X3.0X50MM) (LEFT FRONT)	
M	**8T-5379**	16	BOLT (M24X3.0X50MM) (RIGHT FRONT)	
M	**8T-5379**	16	BOLT (M24X3.0X50MM) (LEFT REAR)	
M	**8T-5379**	16	BOLT (M24X3.0X50MM) (RIGHT REAR)	
	8T-4167	16	WASHER (4.0MM THK) (LEFT FRONT)	
	8T-4167	16	WASHER (4.0MM THK) (RIGHT FRONT)	
	8T-4167	16	WASHER (4.0MM THK) (LEFT REAR)	
	8T-4167	16	WASHER (4.0MM THK) (RIGHT REAR)	

M-METRIC PART

<END>

176-5186 POWER TRAIN AR

S/N: RTA1-UP; RBB1-UP
PART OF 216-8960, 216-8961 COMMON AR

SMCS-3000 **i01811914**

NOTE	PART NUMBER	QTY	PART NAME 1 2 3 4 5 6 (PRODUCT LEVEL)	SEE PAGE
Y	*202-6609*	1	FILLER GP-POWER TRAIN OIL	198
Y	*218-9824*	1	FILTER & LINES GP-TRANSMISSION	200
	141-7316	1	GAUGE GP-SIGHT	
	122-8353	2	BOLT (M12X46.5MM)	
	122-8352	4	SEAL-O-RING	
Y	*201-9511*	1	SHAFT GP-DRIVE	235

Y-SEPARATE ILLUSTRATION

<END>

6Y-6712 PUMP GP-GEAR

S/N: RTA1-UP; RBB1-UP
TRANSMISSION
PART OF 121-8917 PUMP GP-GEAR
AN ATTACHMENT

SMCS-3066, 5073 **i00528693**

NOTE	REF NO	GRAPHIC REF	PART NUMBER	QTY	PART NAME 1 2 3 4 5 6 (PRODUCT LEVEL)	SEE PAGE
M	1	1	**6V-5842**	1	BOLT (M10X1.50X40MM)	
M	2	1	**6V-7981**	5	BOLT (M10X1.50X70MM)	
		1	**6Y-5010**	1	WASHER	
	3	1	**8E-9968**	1	BODY AS	
	4	1	**3T-2094**	2	BEARING-SLEEVE	
	5	1	**5M-4987**	2	DOWEL (.494 DIA X.75IN OAL)	
	6	1	**8T-5353**	2	DOWEL (.368 DIA X.75IN OAL)	
	7	1	**6Y-4464**	1	GEAR AS-OIL PUMP (17 TEETH)	
	8	1	**5H-3252**	1	SEAL-O-RING (145.64MM ID)	
	9	1	**6Y-4997**	1	COVER AS	
	10	1	**3T-2094**	2	BEARING-SLEEVE	
	11	1	**6Y-4465**	1	GEAR-OIL PUMP (15 TEETH)	

M-METRIC PART

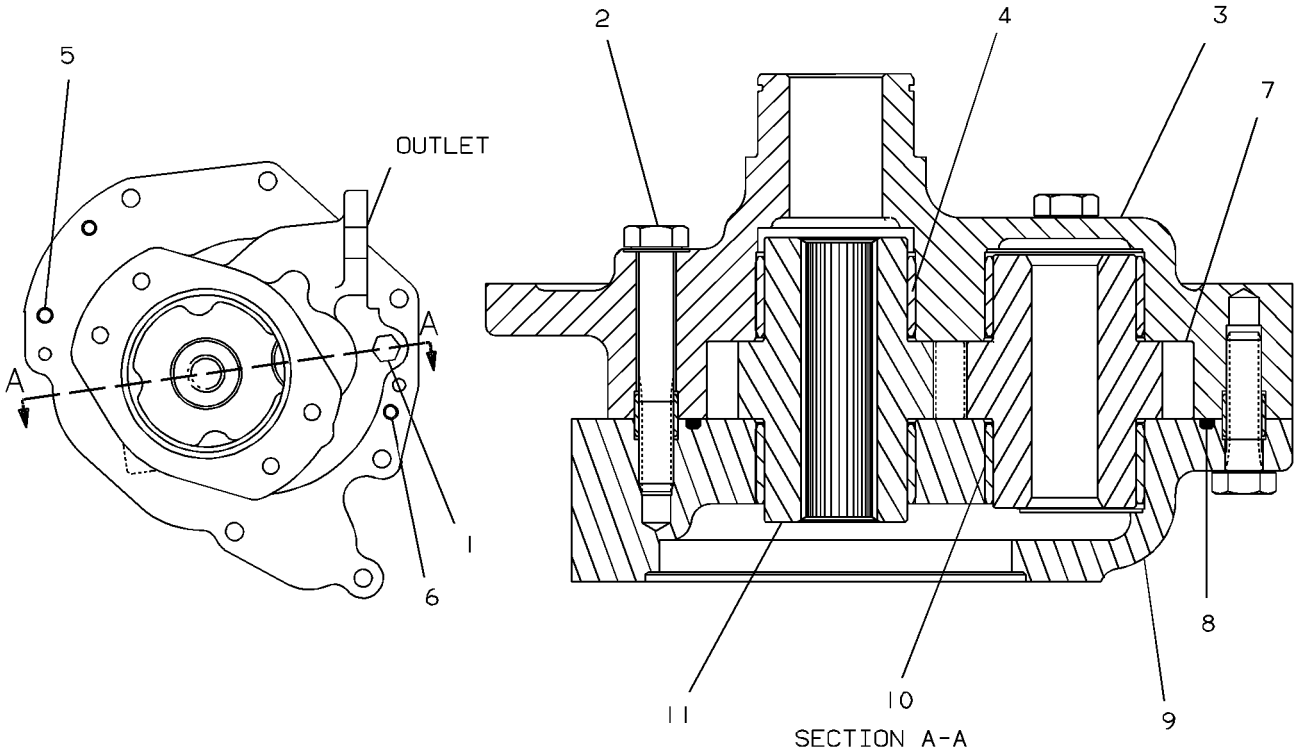

GRAPHIC #1 g00126574

121-8917 PUMP GP-GEAR

S/N: RTA1-UP; RBB1-UP
TRANSMISSION
PART OF 180-7503 TRANSMISSION AR
AN ATTACHMENT

SMCS-3066, 5073 **i01236980**

NOTE	REF NO	GRAPHIC REF	PART NUMBER	QTY	PART NAME 1 2 3 4 5 6 (PRODUCT LEVEL)	SEE PAGE
Y	1	1	**6Y-6712**	1	PUMP GP-GEAR	228
	2	1	**120-4483**	1	GEAR-DRIVE	
M	3	1	**6V-6317**	6	BOLT (M10X20MM)	
	4	1	**2J-7550**	1	RING-RETAINING	
	5	1	**6Y-4618**	1	SHAFT-GOVERNOR CONTROL	
	6	1	**4B-3665**	1	BALL BEARING	
	7	1	**1H-9696**	1	SEAL-O-RING (44.0MM ID)	
M	8	1	**6V-4249**	2	BOLT (M10X1.5X50 MM)	
M	9	1	**6V-1820**	5	BOLT (M10X1.50X30MM)	
B	10	1	**1U-8846**	1	SEALANT	

B-USE AS REQUIRED
M-METRIC PART
Y-SEPARATE ILLUSTRATION

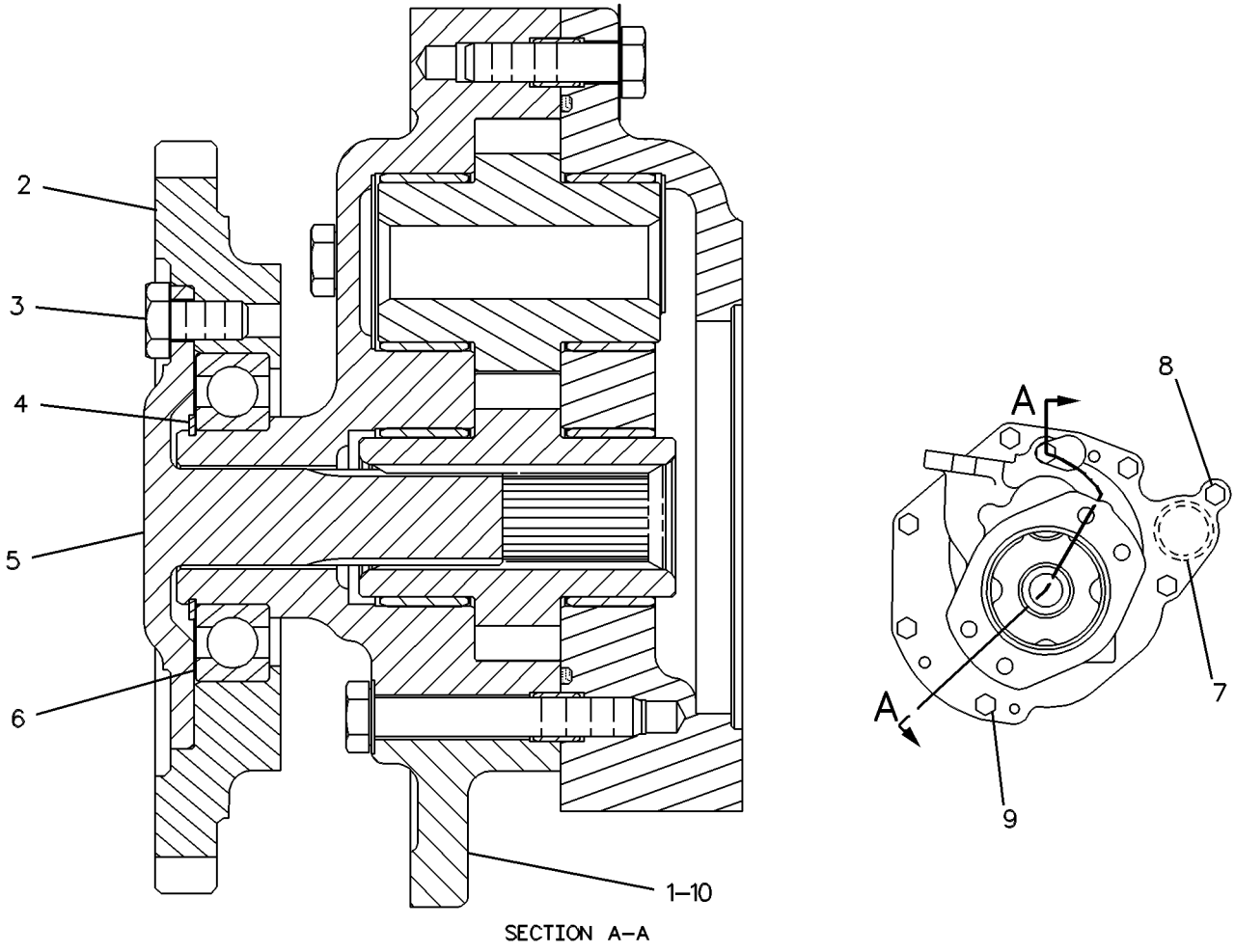

GRAPHIC #1 g00103796

117-7836 RIM AR

S/N: RTA1-UP; RBB1-UP
13.00X25. 1 PIECE
PART OF 117-7848, 117-7849, 128-5438, 128-5439, 229-4953, 229-4954, 229-4962
TIRE & RIM AR
AN ATTACHMENT

SMCS-4209 **i01858726**

NOTE	PART NUMBER	QTY	PART NAME 1 2 3 4 5 6 (PRODUCT LEVEL)	SEE PAGE
Y	*147-5071*	1	MOUNTING GP-RIM	227
Y	*117-7839*	4	RIM GP-DEMOUNTABLE	232
Y-SEPARATE ILLUSTRATION				

<END>

117-7837 RIM AR

S/N: RTA1-UP; RBB1-UP
17.5-25 TUBELESS TIRES. 3 PIECE
PART OF 117-7860, 117-7861, 128-5440, 171-1138, 229-4956, 229-4957, 229-4970
TIRE & RIM AR
AN ATTACHMENT

SMCS-4209 **i01152626**

NOTE	PART NUMBER	QTY	PART NAME 1 2 3 4 5 6 (PRODUCT LEVEL)	SEE PAGE
Y	*147-5071*	1	MOUNTING GP-RIM	227
Y	*117-7840*	4	RIM GP-DEMOUNTABLE	233
Y-SEPARATE ILLUSTRATION				

<END>

146-6783 RIM AR

S/N: RTA1-UP; RBB1-UP
17.00X25,3 PIECE
PART OF 147-5571, 147-5572, 147-5573, 147-5574, 229-4965, 229-4966, 229-4967
TIRE & RIM AR
AN ATTACHMENT

SMCS-4209 **i01207942**

NOTE	PART NUMBER	QTY	PART NAME 1 2 3 4 5 6 (PRODUCT LEVEL)	SEE PAGE
Y	*147-5071*	1	MOUNTING GP-RIM	227
Y	*2Q-5979*	4	RIM GP-DEMOUNTABLE	231
Y-SEPARATE ILLUSTRATION				

<END>

2Q-5979 RIM GP-DEMOUNTABLE

S/N: RTA1-UP; RBB1-UP
17.00X25 3-PIECE
PART OF 146-6783 RIM AR
AN ATTACHMENT

SMCS-4209 **i01505977**

NOTE	REF NO	GRAPHIC REF	PART NUMBER	QTY	PART NAME 1 2 3 4 5 6 (PRODUCT LEVEL)	SEE PAGE
CY	1	1	**186-4943**	1	RIM GP-DEMOUNTABLE	234
	2	1	**6D-0337**	1	VALVE GP-TIRE	
C	3	1	**6D-0443**	1	HOUSING AS-CORE	
		1	**2D-2628**	1	CORE-VALVE	
		1	**2D-2633**	1	CAP-VALVE	
C	4	1	**8D-2707**	1	SPUD AS	
		1	**2D-2629**	1	GROMMET	
		1	**2D-2630**	1	WASHER-RING	
		1	**2D-2631**	1	NUT (.482-26 THD)	
	5	1	**4K-4879**	1	SEAL-O-RING	

C-CHANGE FROM PREVIOUS TYPE
Y-SEPARATE ILLUSTRATION

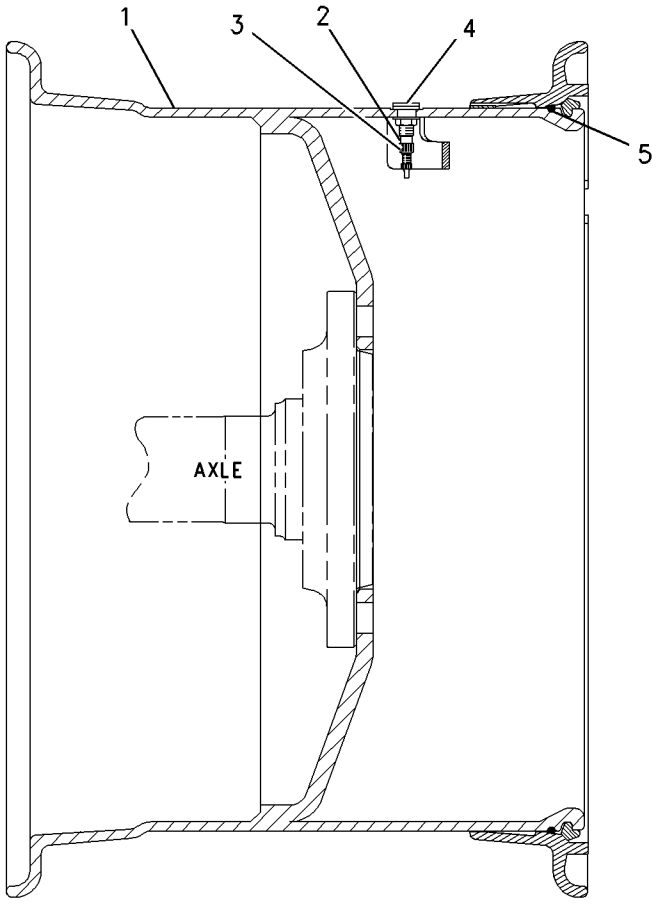

GRAPHIC #1 g00781479

117-7839 RIM GP-DEMOUNTABLE

S/N: RTA1-UP; RBB1-UP
17.5 X R25 TUBELESS TIRES
PART OF 117-7836 RIM AR
AN ATTACHMENT

SMCS-4209 **i00528258**

NOTE	REF NO	GRAPHIC REF	PART NUMBER	QTY	PART NAME 1 2 3 4 5 6 (PRODUCT LEVEL)	SEE PAGE
	1	1	**8R-5825**	1	RIM AS	
	2	1	**2G-6595**	1	VALVE GP-TIRE	
		1	**6F-3930**	1	CORE-VALVE	
		1	**9K-7951**	1	CAP-VALVE	
		1	**7D-5252**	1	SPUD AS	
		1	**2D-2507**	1	SPUD	
		1	**2D-2508**	1	GROMMET	
		1	**2D-2509**	1	LOCKNUT	

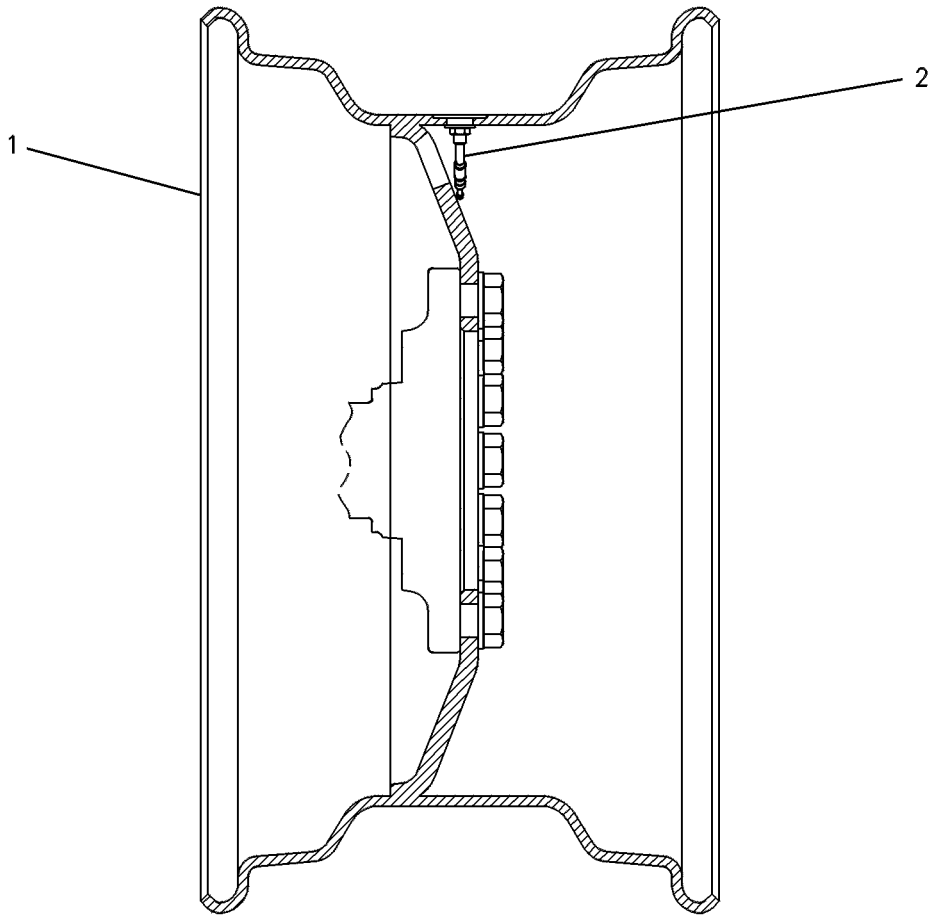

GRAPHIC #1 g00129196

117-7840 RIM GP-DEMOUNTABLE

S/N: RTA1-UP; RBB1-UP
PART OF 117-7837 RIM AR
AN ATTACHMENT

SMCS-4209 **i01487762**

NOTE	REF NO	GRAPHIC REF	PART NUMBER	QTY	PART NAME 1 2 3 4 5 6 (PRODUCT LEVEL)	SEE PAGE
	1	1	**4K-4879**	1	SEAL-O-RING	
	2	1	**6D-0337**	1	VALVE GP-TIRE	
		1	**6D-0443**	1	HOUSING AS-CORE	
		1	**2D-2628**	1	CORE-VALVE	
		1	**2D-2633**	1	CAP-VALVE	
		1	**8D-2707**	1	SPUD AS	
		1	**2D-2629**	1	GROMMET	
		1	**2D-2630**	1	WASHER-RING	
		1	**2D-2631**	1	NUT (.482-26 THD)	
C	3	1	**186-4942**	1	RIM GP-DEMOUNTABLE	

C-CHANGE FROM PREVIOUS TYPE

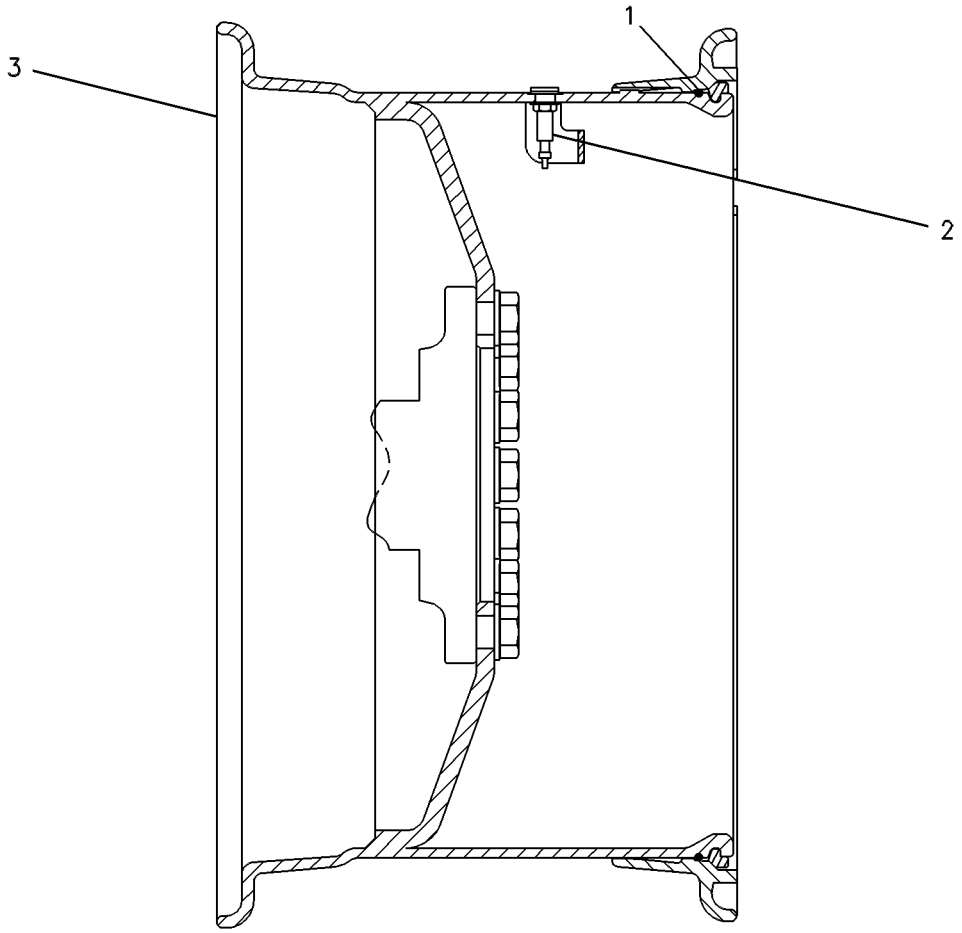

GRAPHIC #1 g00276411

176-1706 RIM GP-DEMOUNTABLE

S/N: RTA1-UP; RBB1-UP
17.00 X 25. THREE PIECE
PART OF 186-4943 RIM GP-DEMOUNTABLE
AN ATTACHMENT

SMCS-4209 **i01506017**

NOTE	PART NUMBER	QTY	PART NAME 1 2 3 4 5 6 (PRODUCT LEVEL)	SEE PAGE
	176-0118	1	DRIVER	
	171-8689	1	FLANGE AS	
	4K-4881	1	LOCK RING	
	176-1707	1	RIM AS	

<END>

186-4943 RIM GP-DEMOUNTABLE

S/N: RTA1-UP; RBB1-UP
17.00X25. 3 PIECE
PART OF 2Q-5979 RIM GP-DEMOUNTABLE
AN ATTACHMENT

SMCS-4209 **i01859456**

NOTE	PART NUMBER	QTY	PART NAME 1 2 3 4 5 6 (PRODUCT LEVEL)	SEE PAGE
Y	*176-1706*	1	RIM GP-DEMOUNTABLE	234

Y-SEPARATE ILLUSTRATION

<END>

201-9511 SHAFT GP-DRIVE

S/N: RTA1-UP; RBB1-UP
PART OF 176-5186 POWER TRAIN AR

SMCS-3253 **i01812052**

NOTE	REF NO	GRAPHIC REF	PART NUMBER	QTY	PART NAME 1 2 3 4 5 6 (PRODUCT LEVEL)	SEE PAGE
	1	1	**4E-5984**	10	STRAP	
	2	1	**201-9515**	1	UNIVERSAL JOINT GP (FRONT)	
		1	**191-2226**	2	SPIDER & BEARING GP	
					(EACH INCLUDES)	
		1	**8V-7315**	4	RING	
	3	1	**201-9517**	1	SLIP JOINT GP (CENTER)	
		1	**1K-6853**	1	FITTING	
		1	**3B-8488**	1	FITTING-GREASE	
		1	**8R-2022**	1	SEAL	
		1	**193-4640**	2	SPIDER & BEARING GP	
					(EACH INCLUDES)	
		1	**8V-7315**	4	RING	
Y	4	1	**224-6793**	1	SHAFT GP-DRIVE (REAR)	236
M	5	1	**4E-5985**	20	BOLT-12 POINT HEAD (M10X1.25X20MM)	
	6	1	**8T-4122**	2	WASHER-HARD (17X32X3.5MM THK)	
M	7	1	**8T-4140**	2	BOLT (M16X2X60MM)	

M-METRIC PART
Y-SEPARATE ILLUSTRATION

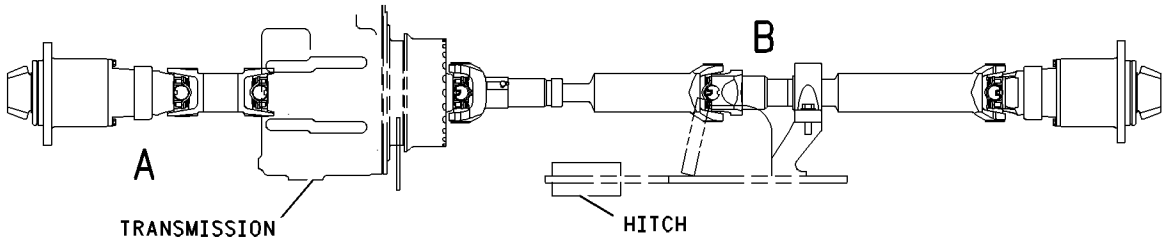

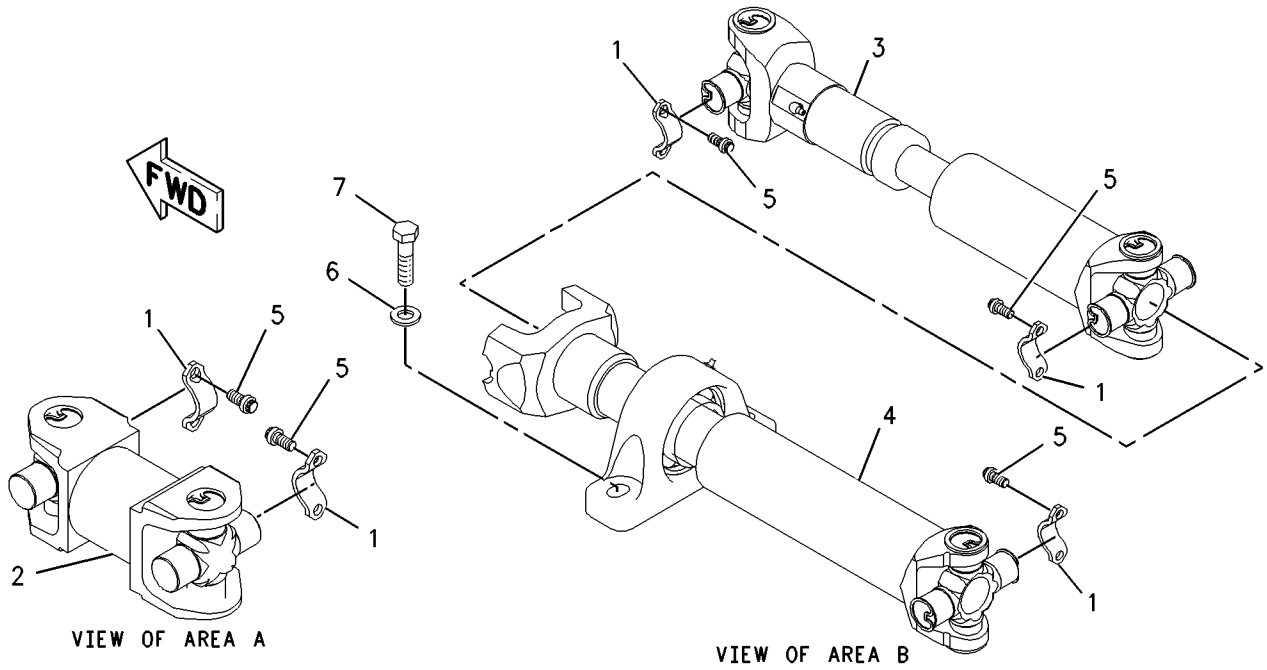

GRAPHIC #1 g00910786

224-6793 SHAFT GP-DRIVE

S/N: RTA1-UP; RBB1-UP

PART OF 201-9511 SHAFT GP-DRIVE

SMCS-3253 **i01812024**

NOTE	REF NO	GRAPHIC REF	PART NUMBER	QTY	PART NAME 1 2 3 4 5 6 (PRODUCT LEVEL)	SEE PAGE
	1	1	**6I-8531**	1	BEARING GP-PILLOW BLOCK	
		1	**3B-8489**	1	FITTING-GREASE	
		1	*197-7995*	1	KIT-SETSCREW	
		1	**9L-7712**	1	NUT (3/8-24 THD)	
		1	**022-3108**	1	SETSCREW	
		1	**197-6666**	1	SETSCREW	
	2	1	**9U-3668**	1	YOKE	
	3	1	**224-6792**	1	UNIVERSAL JOINT GP	
		1	**193-4640**	1	KIT-DIFFERENTIAL BEARING	
		1	**8V-7315**	4	RING	
M	4	1	**8T-0372**	1	BOLT (M12X1.75X90MM)	
	5	1	**9V-2412**	1	RETAINER	

M-METRIC PART

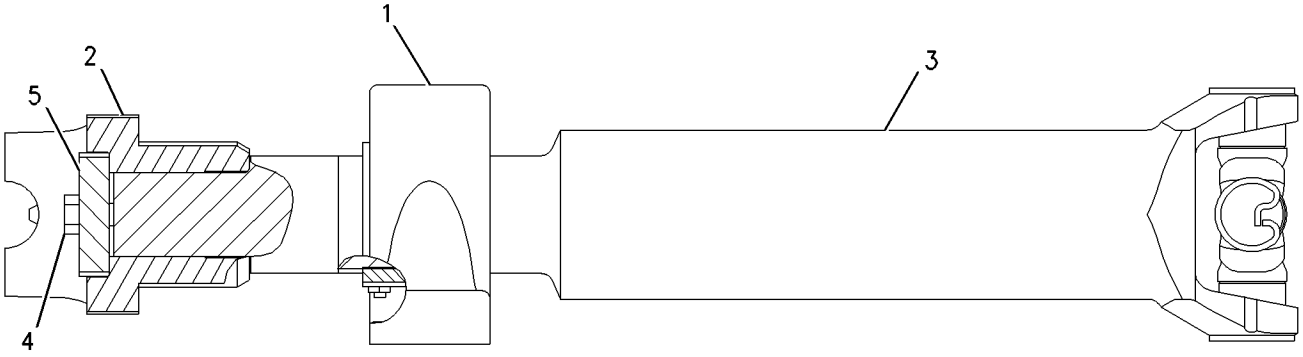

GRAPHIC #1 g00914154

147-5576 STOP GP-AXLE OSCILLATION

S/N: RTA1-UP; RBB1-UP
PART OF 147-5571, 147-5572, 147-5573, 147-5574, 229-4965, 229-4966, 229-4967
TIRE & RIM AR
AN ATTACHMENT

SMCS-3259 **i01179919**

NOTE	PART NUMBER	QTY	PART NAME 1 2 3 4 5 6 (PRODUCT LEVEL)	SEE PAGE
	147-5577	2	BLOCK	
M	**8T-4956**	4	BOLT (M12X1.75X35MM)	
	8T-4223	4	WASHER-HARD (3MM THK)	

M-METRIC PART

<END>

117-7848 TIRE & RIM AR

S/N: RTA1-UP; RBB1-UP
AN ATTACHMENT

SMCS-4202 **i01859469**

NOTE	PART NUMBER	QTY	PART NAME 1 2 3 4 5 6 (PRODUCT LEVEL)	SEE PAGE
Y	*117-7836*	1	RIM AR	230
	106-4835	4	TIRE (17.5 R25*L-2)	

Y-SEPARATE ILLUSTRATION

<END>

117-7849 TIRE & RIM AR

S/N: RTA1-UP; RBB1-UP
AN ATTACHMENT

SMCS-4202 **i01859468**

NOTE	PART NUMBER	QTY	PART NAME 1 2 3 4 5 6 (PRODUCT LEVEL)	SEE PAGE
Y	*117-7836*	1	RIM AR	230
	6C-3246	4	TIRE (17.5 R25*L-3)	

Y-SEPARATE ILLUSTRATION

<END>

117-7860 TIRE & RIM AR

S/N: RTA1-UP; RBB1-UP
AN ATTACHMENT

SMCS-4202 **i01859467**

NOTE	PART NUMBER	QTY	PART NAME 1 2 3 4 5 6 (PRODUCT LEVEL)	SEE PAGE
Y	*117-7837*	1	RIM AR	230
	106-4835	4	TIRE (17.5 R25*L-2)	

Y-SEPARATE ILLUSTRATION

<END>

117-7861 TIRE & RIM AR

S/N: RTA1-UP; RBB1-UP
AN ATTACHMENT

SMCS-4202 **i01859466**

NOTE	PART NUMBER	QTY	PART NAME 1 2 3 4 5 6 (PRODUCT LEVEL)	SEE PAGE
Y	*117-7837*	1	RIM AR	230
	6C-3246	4	TIRE (17.5 R25*L-3)	

Y-SEPARATE ILLUSTRATION

<END>

128-5438 TIRE & RIM AR

S/N: RTA1-UP; RBB1-UP
AN ATTACHMENT

SMCS-4202 **i01850985**

NOTE	PART NUMBER	QTY	PART NAME 1 2 3 4 5 6 (PRODUCT LEVEL)	SEE PAGE
Y	*117-7836*	1	RIM AR	230
	142-6182	4	TIRE (17.50-25 12PR L-2)	

Y-SEPARATE ILLUSTRATION

<END>

128-5439 TIRE & RIM AR

S/N: RTA1-UP; RBB1-UP
AN ATTACHMENT

SMCS-4202 **i01859465**

NOTE	PART NUMBER	QTY	PART NAME 1 2 3 4 5 6 (PRODUCT LEVEL)	SEE PAGE
Y	*117-7836*	1	RIM AR	230
	142-6185	4	TIRE (17.50-25 12PR L-3)	

Y-SEPARATE ILLUSTRATION

<END>

128-5440 TIRE & RIM AR

S/N: RTA1-UP; RBB1-UP
AN ATTACHMENT

SMCS-4202 **i01859464**

NOTE	PART NUMBER	QTY	PART NAME 1 2 3 4 5 6 (PRODUCT LEVEL)	SEE PAGE
Y	*117-7837*	1	RIM AR	230
	142-6182	4	TIRE (17.50-25 12PR L-2)	

Y-SEPARATE ILLUSTRATION

<END>

147-5571 TIRE & RIM AR

S/N: RTA1-UP; RBB1-UP
AN ATTACHMENT

SMCS-4202 **i01859460**

NOTE	PART NUMBER	QTY	PART NAME 1 2 3 4 5 6 (PRODUCT LEVEL)	SEE PAGE
Y	*146-6783*	1	RIM AR	230
Y	*147-5576*	1	STOP GP-AXLE OSCILLATION	237
	128-5164	4	TIRE (20.5X25 12PR L-2)	

Y-SEPARATE ILLUSTRATION

<END>

147-5572 TIRE & RIM AR

S/N: RTA1-UP; RBB1-UP
AN ATTACHMENT

SMCS-4202 **i01859459**

NOTE	PART NUMBER	QTY	PART NAME 1 2 3 4 5 6 (PRODUCT LEVEL)	SEE PAGE
Y	*146-6783*	1	RIM AR	230
Y	*147-5576*	1	STOP GP-AXLE OSCILLATION	237
	128-5167	4	TIRE (20.5X25 12PR L-3)	

Y-SEPARATE ILLUSTRATION

<END>

147-5573 TIRE & RIM AR

S/N: RTA1-UP; RBB1-UP
AN ATTACHMENT

SMCS-4202 **i01859458**

NOTE	PART NUMBER	QTY	PART NAME 1 2 3 4 5 6 (PRODUCT LEVEL)	SEE PAGE
Y	*146-6783*	1	RIM AR	230
Y	*147-5576*	1	STOP GP-AXLE OSCILLATION	237
	106-4837	4	TIRE (20.5 R25*L-2)	

Y-SEPARATE ILLUSTRATION

<END>

147-5574 TIRE & RIM AR

S/N: RTA1-UP; RBB1-UP
AN ATTACHMENT

SMCS-4202 **i01810221**

NOTE	PART NUMBER	QTY	PART NAME 1 2 3 4 5 6 (PRODUCT LEVEL)	SEE PAGE
Y	*146-6783*	1	RIM AR	230
Y	*147-5576*	1	STOP GP-AXLE OSCILLATION	237
	6C-3247	4	TIRE (20.5 R25*L-3)	

Y-SEPARATE ILLUSTRATION

<END>

171-1138 TIRE & RIM AR

S/N: RTA1-UP; RBB1-UP
AN ATTACHMENT

SMCS-4202 **i01859457**

NOTE	PART NUMBER	QTY	PART NAME 1 2 3 4 5 6 (PRODUCT LEVEL)	SEE PAGE
Y	*117-7837*	1	RIM AR	230
	6W-6807	4	TIRE (17.5-25 16PR L-3)	

Y-SEPARATE ILLUSTRATION

<END>

229-4953 TIRE & RIM AR

S/N: RTA1-UP; RBB1-UP
AN ATTACHMENT

SMCS-4202 **i01833605**

NOTE	PART NUMBER	QTY	PART NAME 1 2 3 4 5 6 (PRODUCT LEVEL)	SEE PAGE
Y	*117-7836*	1	RIM AR	230
	106-4835	4	TIRE (17.5 R25*L-2)	

Y-SEPARATE ILLUSTRATION

<END>

229-4954 TIRE & RIM AR

S/N: RTA1-UP; RBB1-UP
AN ATTACHMENT

SMCS-4202 **i01833610**

NOTE	PART NUMBER	QTY	PART NAME 1 2 3 4 5 6 (PRODUCT LEVEL)	SEE PAGE
	6C-3246	4	TIRE (17.5 R25*L-3)	
Y	*117-7836*	1	RIM AR	230

Y-SEPARATE ILLUSTRATION

<END>

229-4956 TIRE & RIM AR

S/N: RTA1-UP; RBB1-UP
AN ATTACHMENT

SMCS-4202 **i01833615**

NOTE	PART NUMBER	QTY	PART NAME 1 2 3 4 5 6 (PRODUCT LEVEL)	SEE PAGE
	106-4835	4	TIRE (17.5 R25*L-2)	
Y	*117-7837*	1	RIM AR	230

Y-SEPARATE ILLUSTRATION

<END>

229-4957 TIRE & RIM AR

S/N: RTA1-UP; RBB1-UP
AN ATTACHMENT

SMCS-4202 **i01833619**

NOTE	PART NUMBER	QTY	PART NAME 1 2 3 4 5 6 (PRODUCT LEVEL)	SEE PAGE
	6C-3246	4	TIRE (17.5 R25*L-3)	
Y	*117-7837*	1	RIM AR	230

Y-SEPARATE ILLUSTRATION

<END>

229-4962 TIRE & RIM AR

S/N: RTA1-UP; RBB1-UP
AN ATTACHMENT

SMCS-4202 **i01833628**

NOTE	PART NUMBER	QTY	PART NAME 1 2 3 4 5 6 (PRODUCT LEVEL)	SEE PAGE
Y	*117-7836*	1	RIM AR	230
	128-5450	4	TIRE (17.5X25 12PR L-2)	

Y-SEPARATE ILLUSTRATION

<END>

229-4965 TIRE & RIM AR

S/N: RTA1-UP; RBB1-UP
AN ATTACHMENT

SMCS-4202 **i01833642**

NOTE	PART NUMBER	QTY	PART NAME 1 2 3 4 5 6 (PRODUCT LEVEL)	SEE PAGE
	128-5164	4	TIRE (20.5X25 12PR L-2)	
Y	*146-6783*	1	RIM AR	230
Y	*147-5576*	1	STOP GP-AXLE OSCILLATION	237
	8T-4223	4	WASHER-HARD (13.5X25.5X3MM THK)	
M	**8T-4956**	4	BOLT (M12X1.75X35MM)	
	147-5577	2	BLOCK	

M-METRIC PART
Y-SEPARATE ILLUSTRATION

<END>

229-4966 TIRE & RIM AR

S/N: RTA1-UP; RBB1-UP
AN ATTACHMENT

SMCS-4202 **i01833645**

NOTE	PART NUMBER	QTY	PART NAME 1 2 3 4 5 6 (PRODUCT LEVEL)	SEE PAGE
Y	*146-6783*	1	RIM AR	230
Y	*147-5576*	1	STOP GP-AXLE OSCILLATION	237
	106-4837	4	TIRE (20.5 R25*L-2)	

Y-SEPARATE ILLUSTRATION

<END>

229-4967 TIRE & RIM AR

S/N: RTA1-UP; RBB1-UP
AN ATTACHMENT

SMCS-4202 **i01836860**

NOTE	PART NUMBER	QTY	PART NAME 1 2 3 4 5 6 (PRODUCT LEVEL)	SEE PAGE
Y	*146-6783*	1	RIM AR	230
Y	*147-5576*	1	STOP GP-AXLE OSCILLATION	237
	6C-3247	4	TIRE (20.5 R25*L-3)	

Y-SEPARATE ILLUSTRATION

<END>

229-4970 TIRE & RIM AR

S/N: RTA1-UP; RBB1-UP
AN ATTACHMENT

SMCS-4202 **i01836870**

NOTE	PART NUMBER	QTY	PART NAME 1 2 3 4 5 6 (PRODUCT LEVEL)	SEE PAGE
Y	*117-7837*	1	RIM AR	230
	6W-6807	4	TIRE (17.5-25 16PR L-3)	

Y-SEPARATE ILLUSTRATION

<END>

180-7503 TRANSMISSION AR

S/N: RTA1-UP; RBB1-UP
AN ATTACHMENT

SMCS-3030 **i01862536**

NOTE	REF NO	GRAPHIC REF	PART NUMBER	QTY	PART NAME 1 2 3 4 5 6 (PRODUCT LEVEL)	SEE PAGE
Y	1	1	*141-8615*	1	DRIVE GP-FLEXIBLE COUPLING	196
	2	1	**201-0952**	1	CONVERTION AR-TORQUE CONVERTER	
Y	3	1	*146-6274*	1	DRIVE GP-PUMP	197
Y	4	1	*180-7504*	1	CASE & PARTS GP-PLANETARY	182
Y	5	1	*146-6282*	1	GEAR GP-INPUT TRANSFER	208
Y	6	1	*146-6283*	1	CLUTCH GP (FWD HIGH AND FWD LOW)	188
Y	7	1	*102-7548*	1	CLUTCH GP (SECOND AND REVERSE)	186
Y	8	1	*102-7540*	1	CLUTCH GP (FIRST AND THIRD)	184
Y	9	1	*146-6284*	1	GEAR GP-OUTPUT TRANSFER	210
Y	10	1	**200-2042**	1	VALVE GP-TRANSMISSION CONTROL	246
Y	11	1	*121-8917*	1	PUMP GP-GEAR (TRANSMISSION)	229

Y-SEPARATE ILLUSTRATION

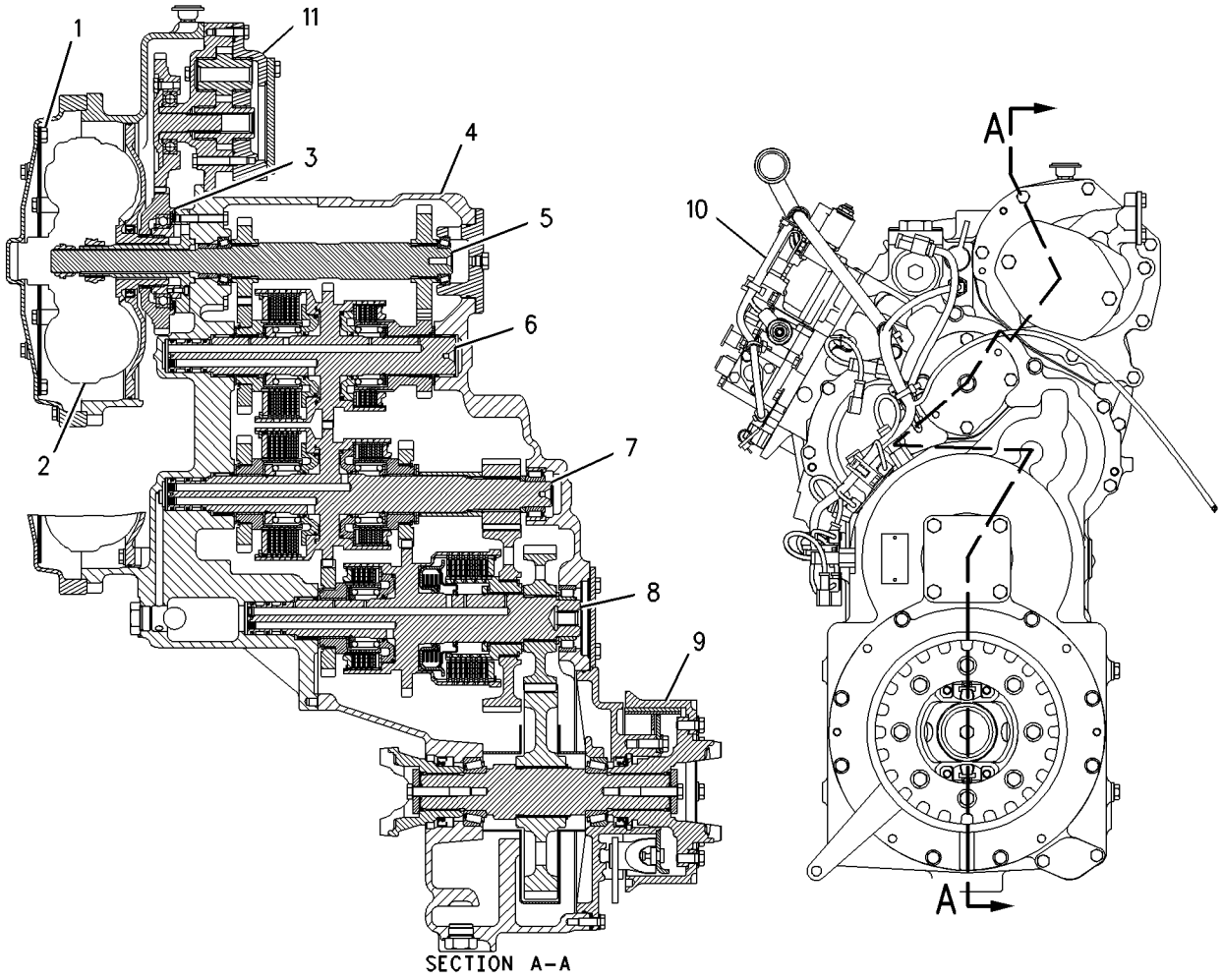

GRAPHIC #1 g00925415

126-0747 VALVE GP-BYPASS

S/N: RTA1-UP; RBB1-UP

PART OF 203-3872 LINES GP-TORQUE CONV COOLER

SMCS-5093 **i01458199**

NOTE	REF NO	GRAPHIC REF	PART NUMBER	QTY	PART NAME 1 2 3 4 5 6 (PRODUCT LEVEL)	SEE PAGE
	1	1	**9S-4191**	1	PLUG-STRAIGHT THREAD	
	2	1	**126-0748**	1	BODY	
	3	1	**3J-1907**	1	SEAL-O-RING	
	4	1	**6V-8218**	1	SEAL-O-RING	

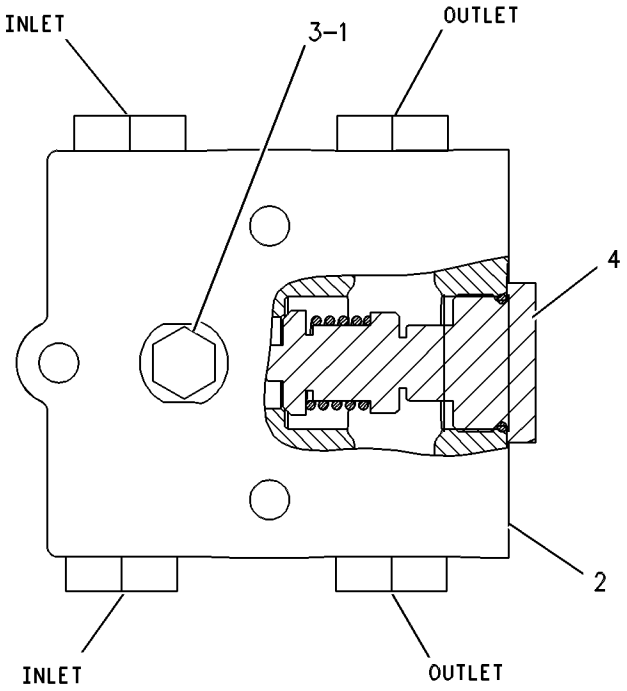

GRAPHIC #1 g00449170

6I-9806 VALVE GP-RELIEF

S/N: RTA1-UP; RBB1-UP
PART OF 180-7504 CASE & PARTS GP-PLANETARY
AN ATTACHMENT

SMCS-3133, 3182, 3210, 3213 **i00528685**

NOTE	REF NO	GRAPHIC REF	PART NUMBER	QTY	PART NAME 1 2 3 4 5 6 (PRODUCT LEVEL)	SEE PAGE
	1	1	**6I-9805**	1	BODY	
	2	1	**2S-1382**	1	SPRING	
	3	1	**6I-9804**	1	SPOOL	
	4	1	**2L-6726**	1	RING-RETAINING	

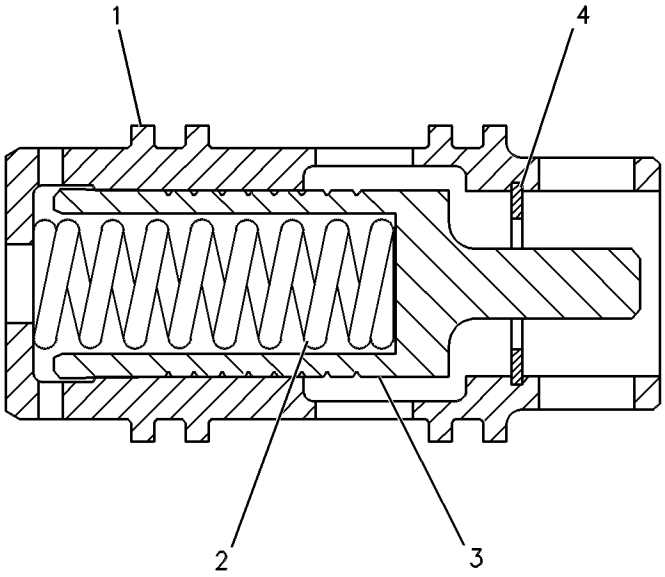

GRAPHIC #1 g00128535

200-2042 VALVE GP-TRANSMISSION CONTROL

S/N: RTA1-UP; RBB1-UP
PART OF 180-7503 TRANSMISSION AR
AN ATTACHMENT

SMCS-3073, 3167 **i01822149**

NOTE	REF NO	GRAPHIC REF	PART NUMBER	QTY	PART NAME 1 2 3 4 5 6 (PRODUCT LEVEL)	SEE PAGE
	1	1	**7K-1181**	10	STRAP-CABLE	
	2	1	**8E-7841**	2	CLIP AS-CONNECTING	
	3	1	**9L-9068**	2	DOWEL	
	4	1	**130-9811**	1	SENSOR GP-TEMPERATURE (TORQUE CONVERTER OIL)	
	5	1	**180-8852**	1	HARNESS AS-VALVE (TRANSMISSION CONTROL)	
		1	**102-8803**	1	KIT-RECEPTACLE (3 PIN)	
		1	**155-2260**	2	KIT-CONNECTING PLUG (3 PIN)	
		1	**155-2270**	12	KIT-CONNECTING PLUG (2 PIN)	
	6	1	**200-2043**	1	VALVE GP-TRANSMISSION CONTROL	
	7	1	**107-3114**	1	SEAL-O-RING	
	8	1	**130-5300**	2	CLIP	
	9	1	**132-5789**	8	CLIP	
	10	1	**183-8597**	3	SENSOR GP-SPEED (TRANSMISSION INTERMEDIATE)	
					(EACH INCLUDES)	
		1	**102-8802**	1	KIT-RECEPTACLE (2 PIN)	
		1	**3E-3365**	1	WEDGE-RECEPTACLE LOCK (2 PIN)	
		1	**186-3735**	2	PIN-CONNECTOR	
		1	**9X-1813**		SLEEVE (14CM)	
		1	**171-5349**	1	STRAP-MARKER	
	11	1	**196-1185**	2	SENSOR GP-SPEED (TRANSMISSION OUTPUT)	
					(EACH INCLUDES)	
		1	**102-8802**	1	KIT-RECEPTACLE (2 PIN)	
		1	**3E-3365**	1	WEDGE-RECEPTACLE LOCK (2 PIN)	
		1	**186-3735**	2	PIN-CONNECTOR	
		1	**9X-1813**		SLEEVE (14CM)	
		1	**171-5349**	1	STRAP-MARKER	
	12	1	**3K-0360**	6	SEAL-O-RING	
	13	1	**4P-7581**	2	CLIP	
M	14	1	**6V-2317**	1	BOLT (M8X1.25X30MM)	
M	15	1	**6V-3821**	4	BOLT (M8X1.25X110MM)	
M	16	1	**6V-3822**	1	BOLT (M10X1.5X35MM)	
M	17	1	**6V-5217**	2	BOLT (M8X1.25X20MM)	
M	18	1	**6V-5218**	3	BOLT (M8X1.25X35MM)	
M	19	1	**6V-5223**	9	BOLT (M8X1.25X100MM)	
	20	1	**6V-5839**	1	WASHER (11X21X2.5MM THK)	
	21	1	**8M-5251**	5	SEAL-O-RING	
	22	1	**9M-1974**	19	WASHER-HARD (8.8X16X2MM THK)	
	23	1	**183-8597**	1	SENSOR GP-SPEED (TORQUE CONVERTER OUTPUT)	
		1	**102-8802**	1	KIT-RECEPTACLE (2 PIN)	
		1	**3E-3365**	1	WEDGE-RECEPTACLE LOCK (2 PIN)	
		1	**186-3735**	2	PIN-CONNECTOR	
		1	**9X-1813**		SLEEVE (14CM)	
		1	**171-5349**	1	STRAP-MARKER	

M-METRIC PART

200-2042 VALVE GP-TRANSMISSION CONTROL *(contd.)* i01822149

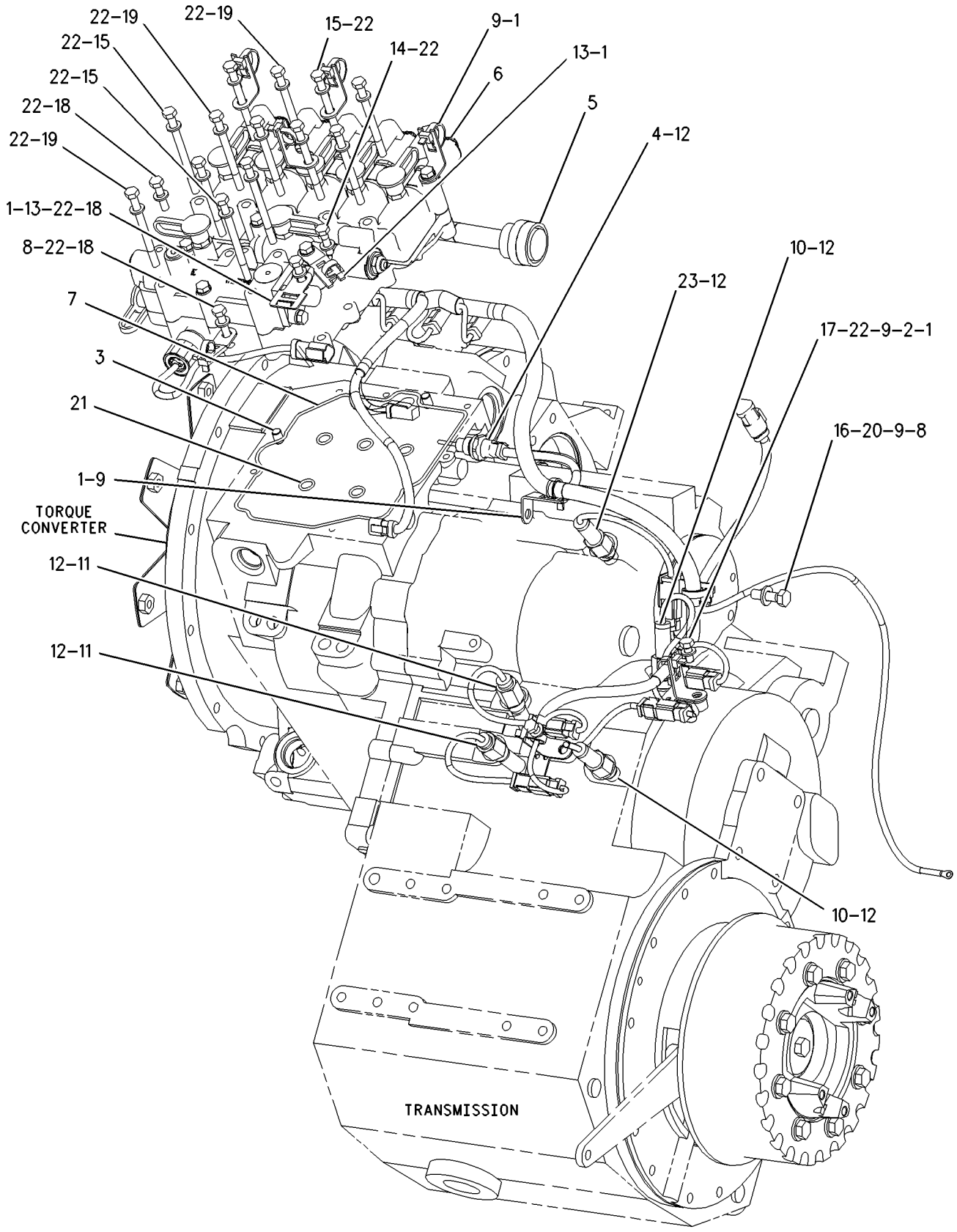

GRAPHIC #1 g00922072

FRAME AND BODY

202-0420 BOX GP-BATTERY

S/N: RTA1-UP; RBB1-UP

PART OF 176-5181, 176-5201 CHASSIS AR

SMCS-7257 **i01814292**

NOTE	REF NO	GRAPHIC REF	PART NUMBER	QTY	PART NAME 1 2 3 4 5 6 (PRODUCT LEVEL)	SEE PAGE
	1	1	**146-7980**	2	PLATE AS	
					(EACH INCLUDES)	
M		1	**8T-3490**	2	NUT-WELD (M10X1.5 THD)	
	2	1	**176-2435**	2	BOX AS	
					(EACH INCLUDES)	
M		1	**8T-3490**	6	NUT-WELD (M10X1.5 THD)	
	3	1	**176-2437**	2	COVER (RH)	
	4	1	**7X-7729**	22	WASHER (11X25X3MM THK)	
M	5	1	**8T-4136**	22	BOLT (M10X1.5X25MM)	

M-METRIC PART

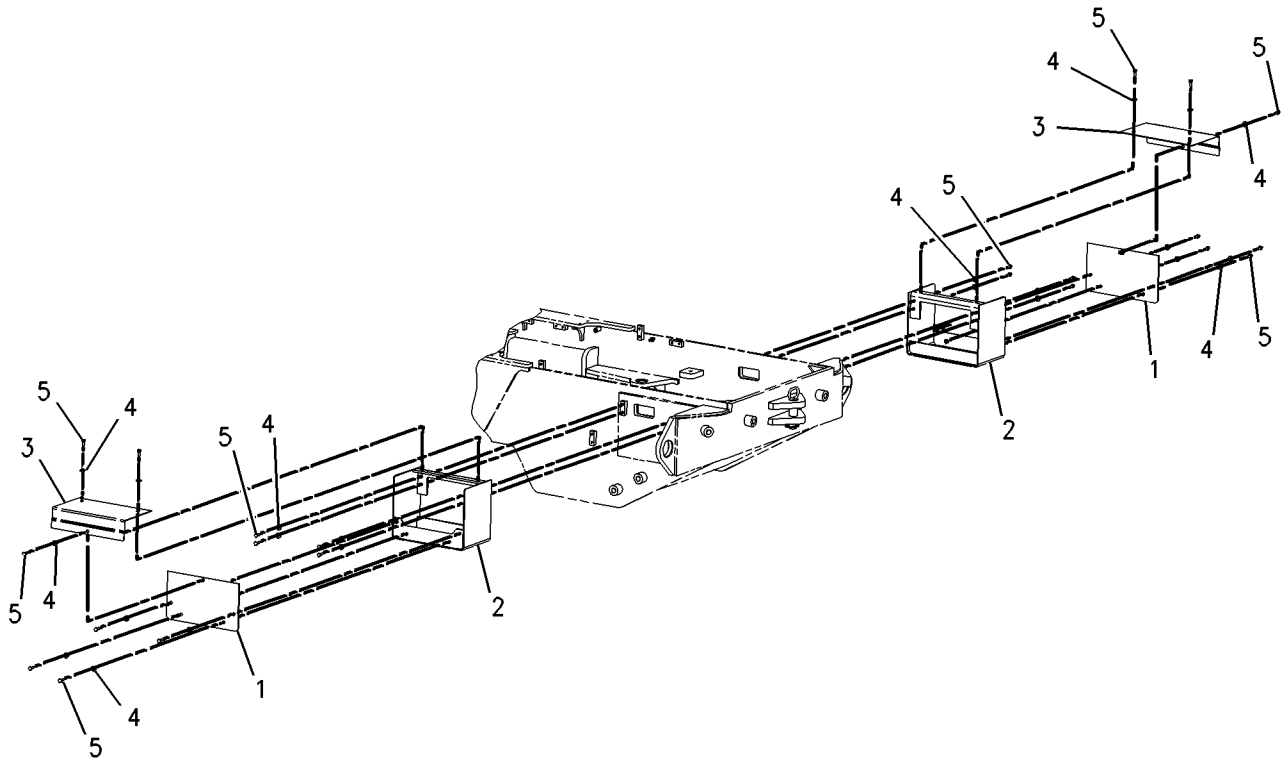

GRAPHIC #1 g00877769

146-0059 COUNTERWEIGHT GP

S/N: RTA1-UP; RBB1-UP
AN ATTACHMENT

SMCS-7056 **i01300779**

NOTE	REF NO	GRAPHIC REF	PART NUMBER	QTY	PART NAME 1 2 3 4 5 6 (PRODUCT LEVEL)	SEE PAGE
	1	1	**8T-1482**	4	WASHER-HARD	
	2	1	**146-0058**	1	COUNTERWEIGHT	
	3	1	**148-7819**	1	COUNTERWEIGHT	
M	4	1	**8T-4649**	4	BOLT (M24X3X140MM)	

M-METRIC PART

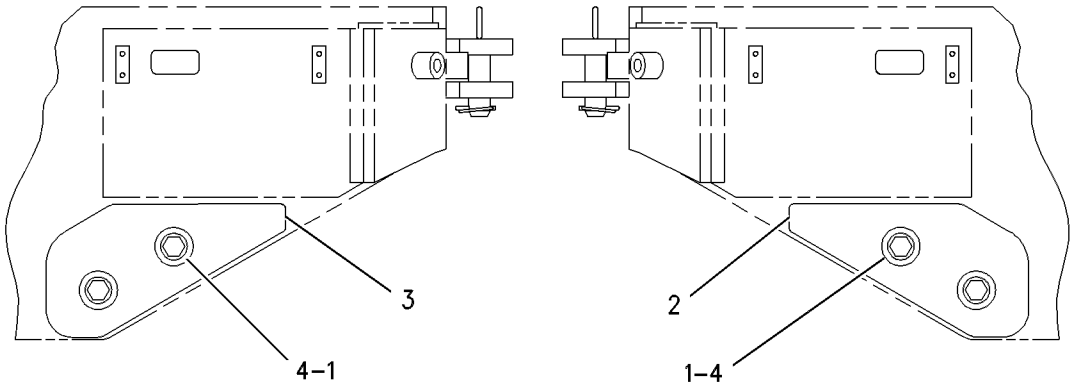

GRAPHIC #1 g00620172

FRAME AND BODY

180-8987 COUNTERWEIGHT GP

S/N: RBB1-UP

PART OF 176-5181 CHASSIS AR

SMCS-7056 **i01859599**

NOTE	REF NO	GRAPHIC REF	PART NUMBER	QTY	PART NAME 1 2 3 4 5 6 (PRODUCT LEVEL)	SEE PAGE
	1	1	**204-4334**	1	COUNTERWEIGHT AS (RH)	
	2	1	**204-4335**	1	COUNTERWEIGHT AS (LH)	
M	3	1	**7X-2577**	4	BOLT (M24X3X90MM)	
	4	1	**8T-1482**	4	WASHER-HARD (26X50X8MM THK)	
M	5	1	**8T-4179**	2	BOLT (M12X1.75X20MM)	
	6	1	**8T-4223**	2	WASHER-HARD (13.5X25.5X3MM THK)	

M-METRIC PART

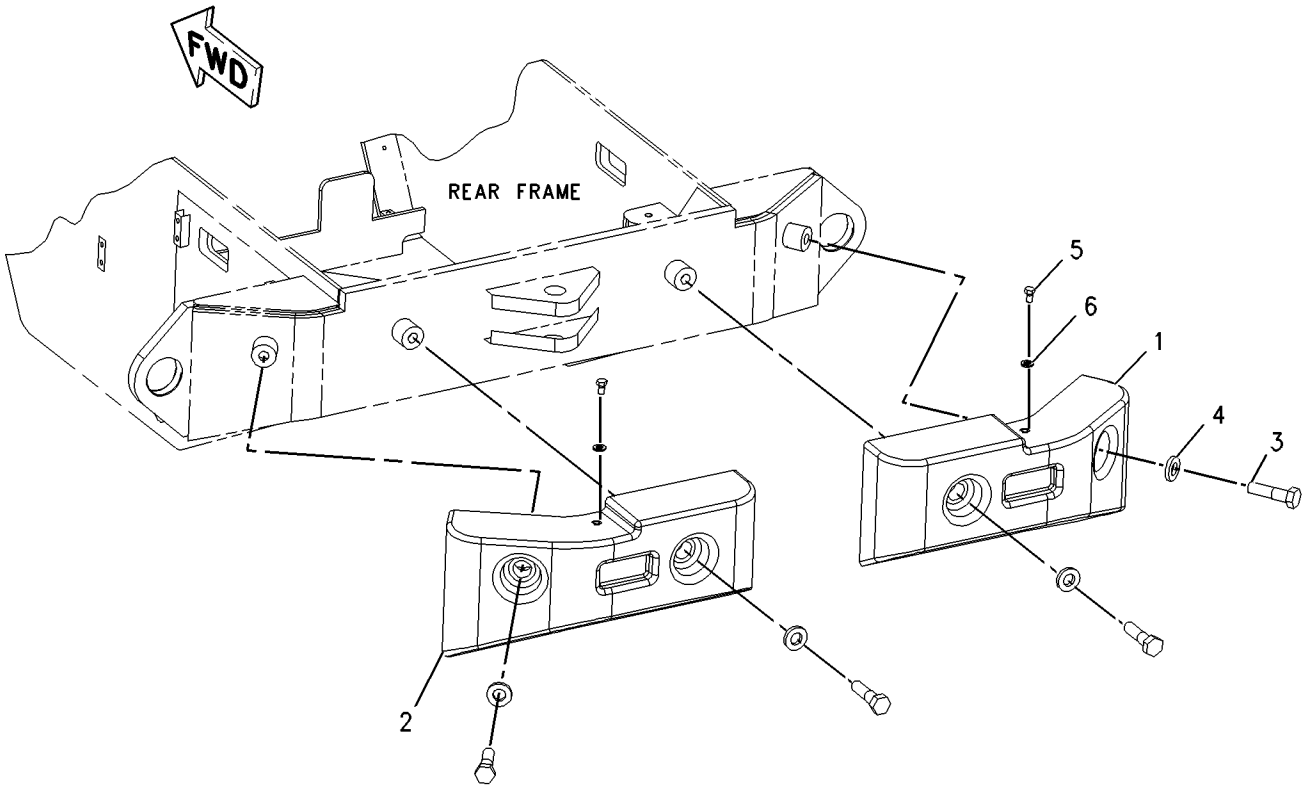

GRAPHIC #1 g00907185

140-9295 FENDER GP-FRONT

S/N: RBB1-UP

PART OF 176-5181 CHASSIS AR

SMCS-7252 **i01859600**

NOTE	REF NO	GRAPHIC REF	PART NUMBER	QTY	PART NAME 1 2 3 4 5 6 (PRODUCT LEVEL)	SEE PAGE
	1	1	**214-9564**	8	PLATE	
	2	1	**140-9296**	2	BRACKET AS	
	3	1	**214-9563**	2	FENDER	
	4	1	**7X-7729**	8	WASHER (11X25X3MM THK)	
	5	1	**204-0813**	8	BOLT (M6X1X40MM)	
M	6	1	**8T-4136**	8	BOLT (M10X1.5X25MM)	

M-METRIC PART

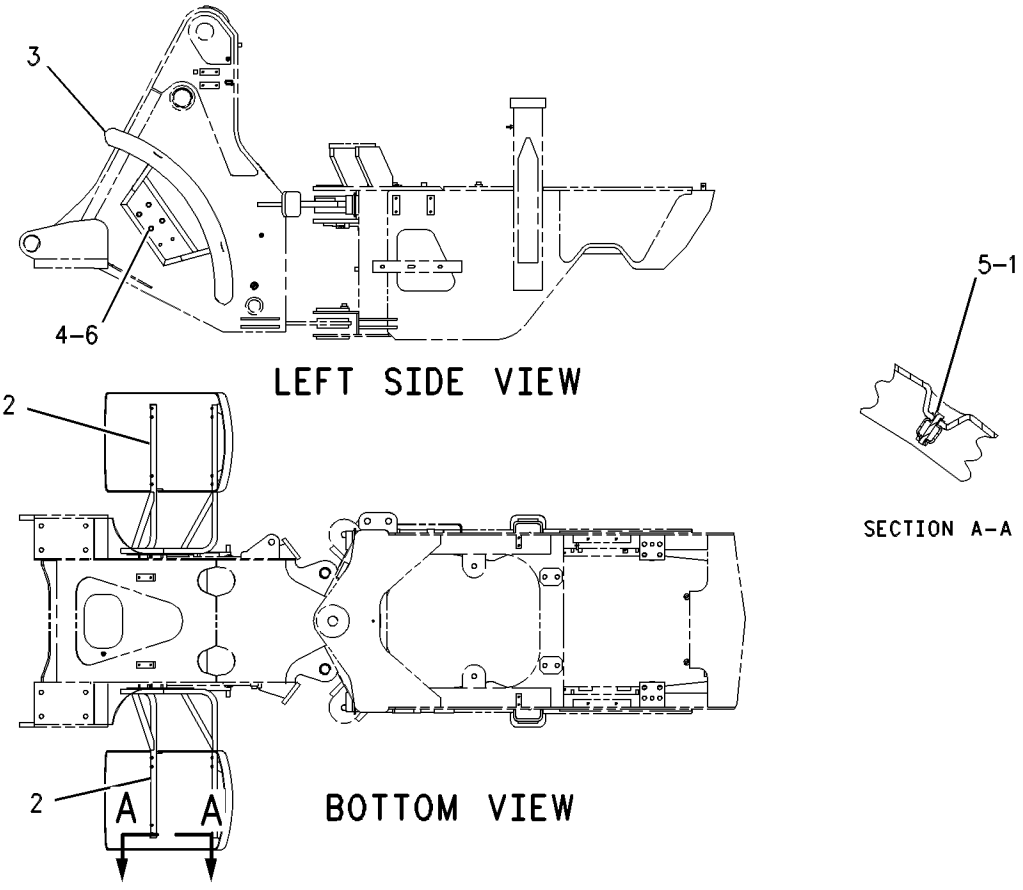

GRAPHIC #1 g00616416

154-4914 FENDER GP-FRONT

S/N: RTA1-UP

PART OF 176-5201 CHASSIS AR

SMCS-7252 **i01859605**

NOTE	REF NO	GRAPHIC REF	PART NUMBER	QTY	PART NAME 1 2 3 4 5 6 (PRODUCT LEVEL)	SEE PAGE
	1	1	**214-9564**	8	PLATE	
	2	1	**8I-6603**	4	INSERT-SQUARE	
	3	1	**214-9563**	2	FENDER	
	4	1	**154-4917**	1	BRACKET AS (RH)	
	5	1	**154-4918**	1	BRACKET AS (LH)	
	6	1	**204-0814**	8	BOLT (M6X1X60MM)	
	7	1	**7X-7729**	6	WASHER (11X25X3MM THK)	
M	8	1	**8T-4182**	6	BOLT (M10X1.5X45MM)	

M-METRIC PART

154-4914 **FENDER GP-FRONT** *(contd.)* **i01859605**

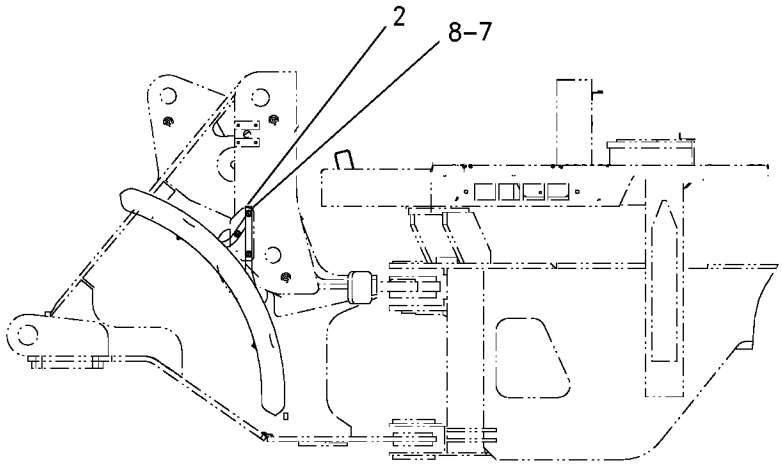

LEFT SIDE VIEW

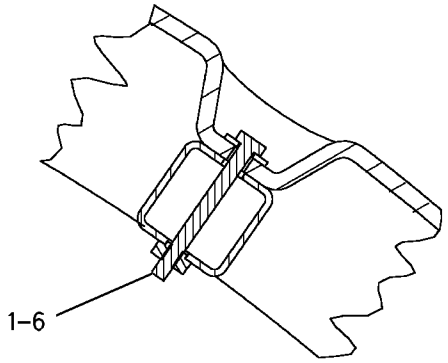

SECTION A-A

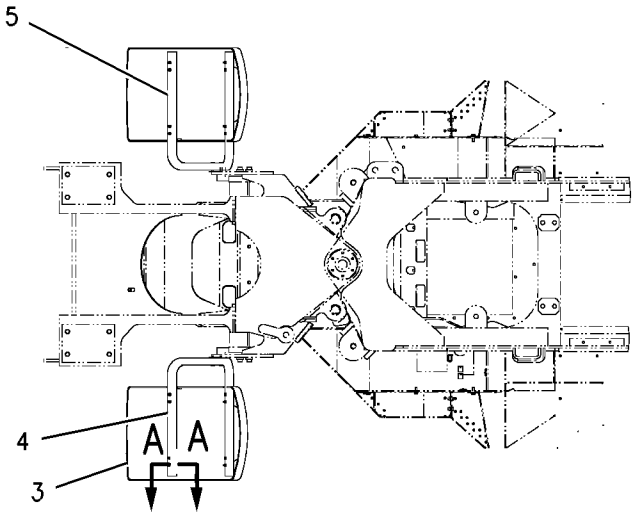

BOTTOM VIEW

GRAPHIC #1 g00683602

FRAME AND BODY

132-2500 FRAME GP-LOADER

S/N: RBB1-UP

PART OF 176-5181 CHASSIS AR

SMCS-7054 **i01289237**

NOTE	REF NO	GRAPHIC REF	PART NUMBER	QTY	PART NAME 1 2 3 4 5 6 (PRODUCT LEVEL)	SEE PAGE
	1	1	**132-2501**	1	FRAME AS-FRONT	
	2	1	**7T-1099**	19	LINK	
	3	1	**8Y-4489**	6	BOSS	
	4	1	**9C-6809**	6	BLOCK	
	5	1	**9R-2672**	2	BOSS (M10X20MM)	
	6	1	**9T-3598**	11	LUG	

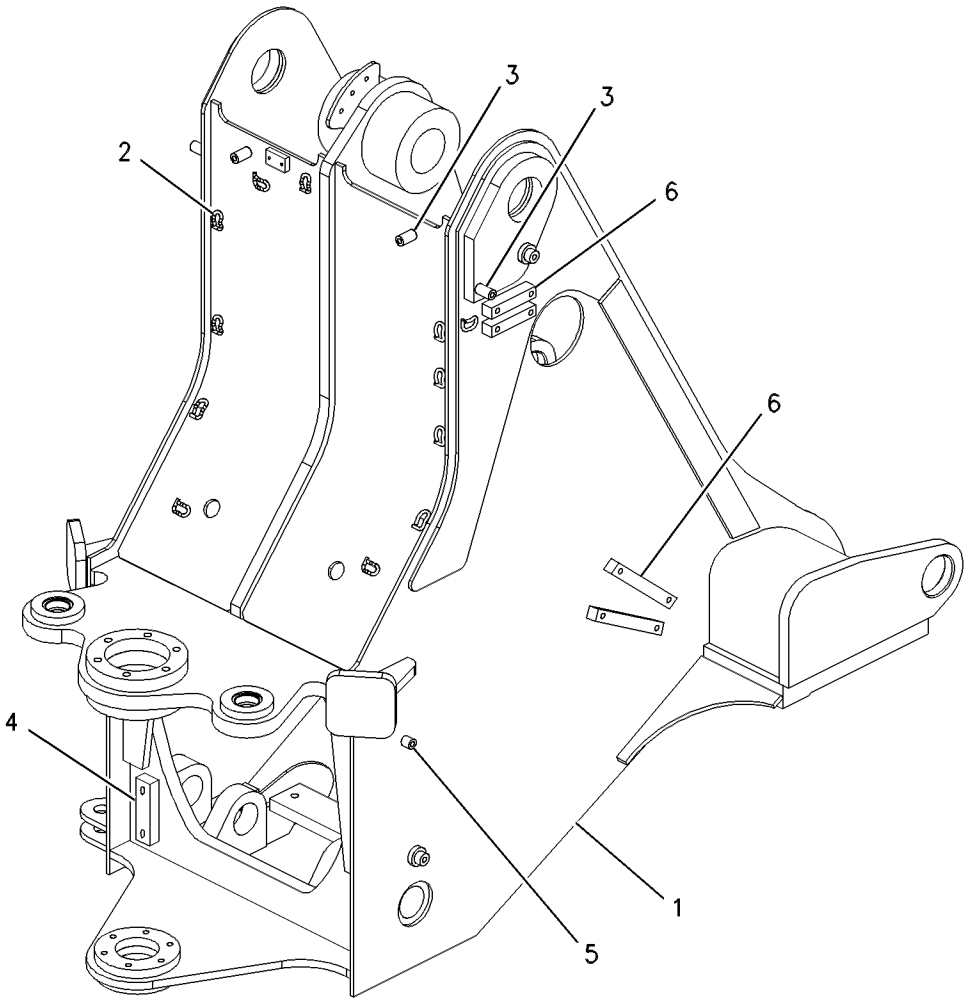

GRAPHIC #1 g00639618

FRAME AND BODY

148-7700 FRAME GP-LOADER

S/N: RTA1-UP

PART OF 176-5201 CHASSIS AR

SMCS-7054 **i01862504**

NOTE	REF NO	GRAPHIC REF	PART NUMBER	QTY	PART NAME 1 2 3 4 5 6 (PRODUCT LEVEL)	SEE PAGE
	1	1	**148-7702**	1	FRAME AS-FRONT	
	1A	1	**7T-1099**	13	LINK	
		1	**8Y-4489**	3	BOSS (M10X35MM)	
	1B	1	**9C-6809**	7	BLOCK	
		1	**9R-2672**	2	BOSS (M10X20MM)	
	1C	1	**9T-3598**	6	LUG	
	2	1	**148-7752**	1	PLATE	
	3	1	**7X-7729**	4	WASHER (11X25X3MM THK)	
M	4	1	**8T-4195**	4	BOLT (M10X1.5X30MM)	

M-METRIC PART

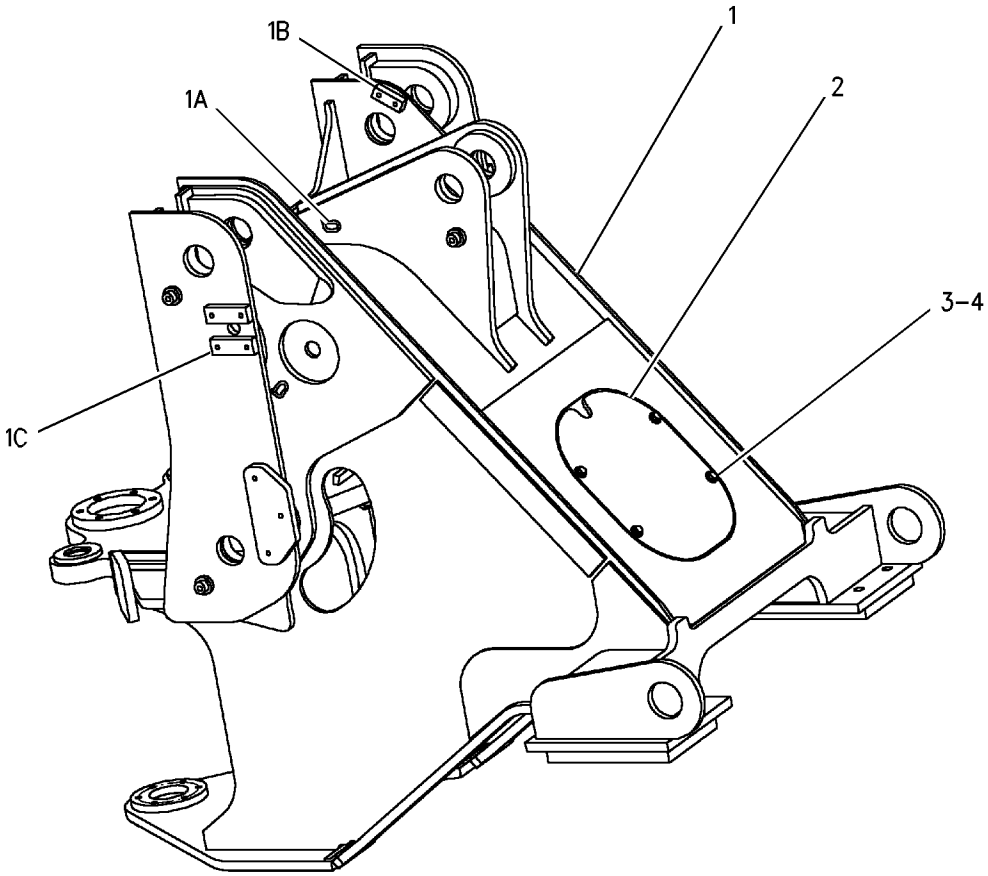

GRAPHIC #1 g00949470

FRAME AND BODY

202-0400 FRAME GP-REAR

S/N: RTA1-UP; RBB1-UP

PART OF 176-5181, 176-5201 CHASSIS AR

SMCS-7051 **i01814283**

NOTE	REF NO	GRAPHIC REF	PART NUMBER	QTY	PART NAME 1 2 3 4 5 6 (PRODUCT LEVEL)	SEE PAGE
	1	1	**103-5796**	1	PIN-KEEPER	
	2	1	**112-0885**	2	PAD AS-RESILIENT	
	3	1	**132-2558**	1	PIN AS	
	4	1	**202-0401**	1	FRAME AS-REAR	
	5	1	**8T-4121**	2	WASHER-HARD (11X21X2.5MM THK)	
M	6	1	**8T-4137**	2	BOLT (M10X1.5X20MM)	

M-METRIC PART

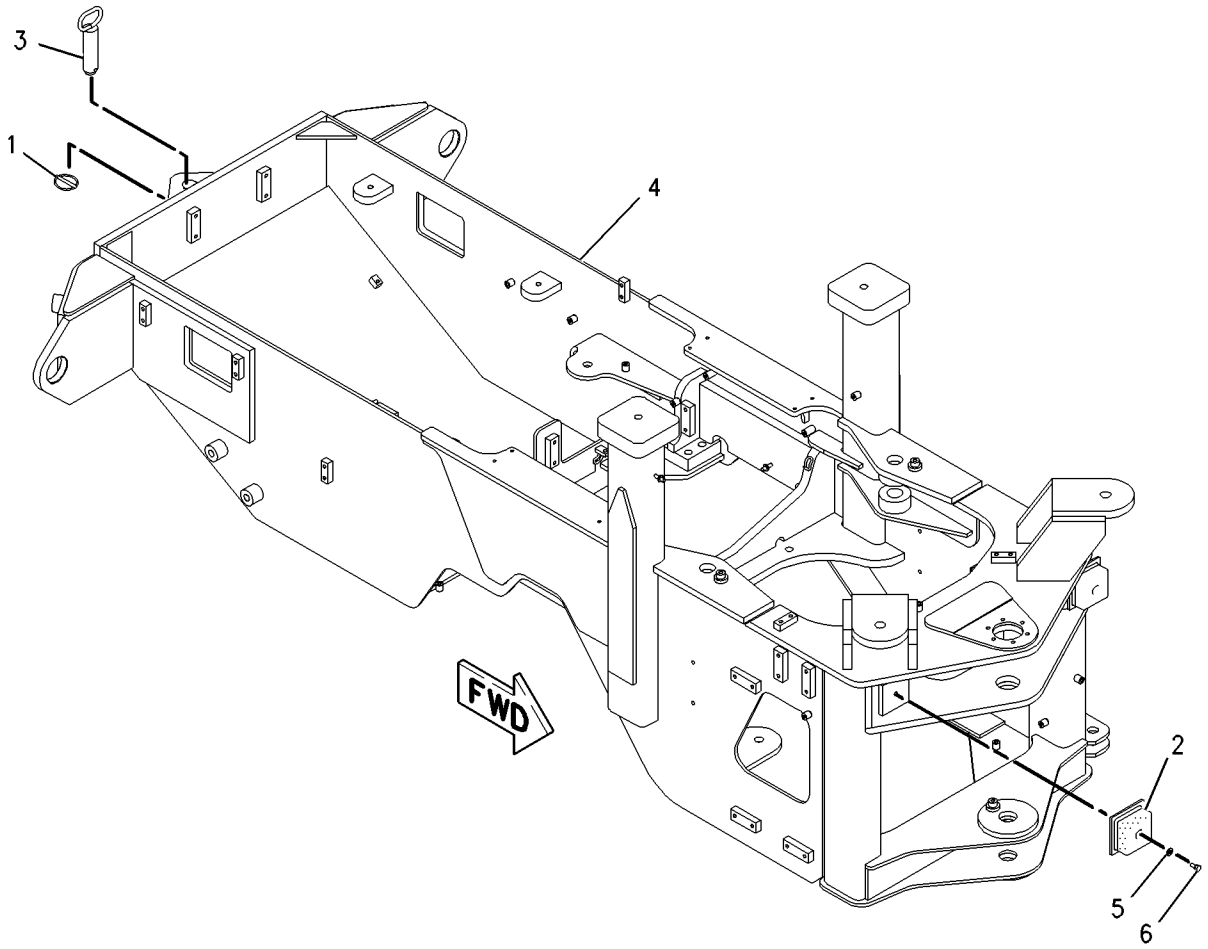

GRAPHIC #1 g00915560

FRAME AND BODY

213-9036 GUARD GP-CRANKCASE

S/N: RTA1-UP; RBB1-UP
AN ATTACHMENT

SMCS-7151 **i01828821**

NOTE	REF NO	GRAPHIC REF	PART NUMBER	QTY	PART NAME 1 2 3 4 5 6 (PRODUCT LEVEL)	SEE PAGE
	1	1	**213-9037**	1	PLATE AS	
	2	1	**7X-7729**	2	WASHER (11X25X3MM THK)	
M	3	1	**8T-4195**	2	BOLT (M10X1.5X30MM)	

M-METRIC PART

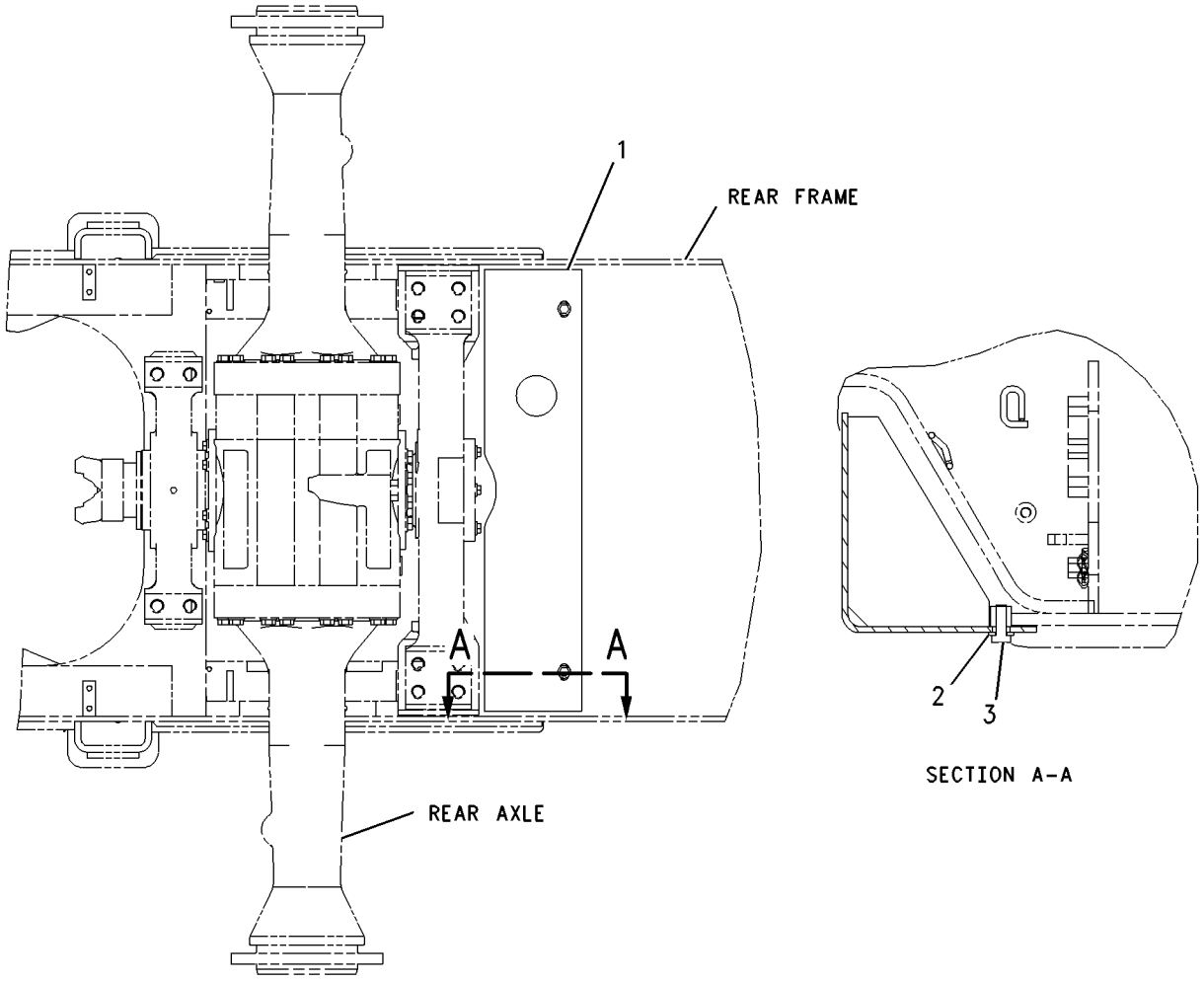

GRAPHIC #1 g00933097

156-4555 GUARD GP-LINES

S/N: RTA1-UP
THREE VALVE
AN ATTACHMENT

SMCS-7167 **i01196404**

NOTE	REF NO	GRAPHIC REF	PART NUMBER	QTY	PART NAME 1 2 3 4 5 6 (PRODUCT LEVEL)	SEE PAGE
	1	1	**7K-1181**	6	STRAP-CABLE (4IN DIA)	
	2	1	**5P-8444**	2	GROMMET	
	3	1	**5P-7468**	2	CLIP (SLOT)	
	4	1	**5P-7469**	2	CLIP (TAB)	

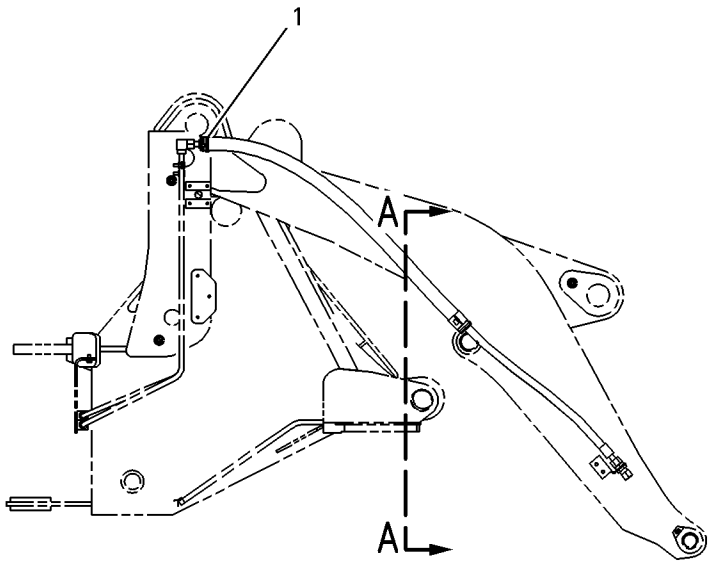

RIGHT SIDE VIEW

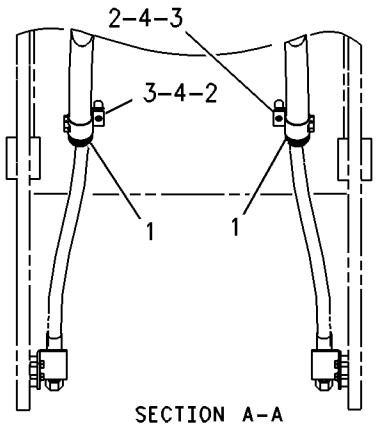

SECTION A-A

GRAPHIC #1 g00639942

MEMORANDA

156-4556 GUARD GP-LINES

S/N: RBB1-UP
THREE VALVE
AN ATTACHMENT

SMCS-7167 **i01196406**

NOTE	REF NO	GRAPHIC REF	PART NUMBER	QTY	PART NAME 1 2 3 4 5 6 (PRODUCT LEVEL)	SEE PAGE
	1	1	**7K-1181**	8	STRAP-CABLE (4IN DIA)	
	2	1	**163-4356**	2	GUARD-HOSE	
	3	1	**5P-7468**	4	CLIP (SLOT)	
	4	1	**5P-7469**	4	CLIP (TAB)	
	5	1	**5P-8444**	4	GROMMET	

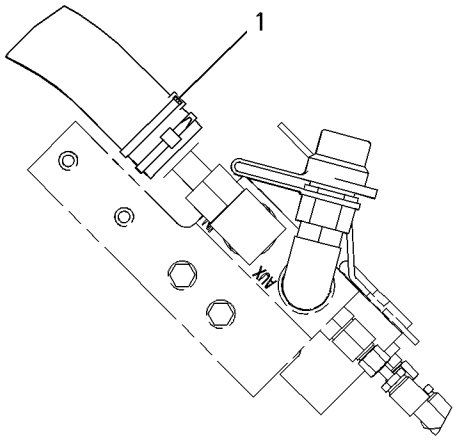

VIEW OF AREA A

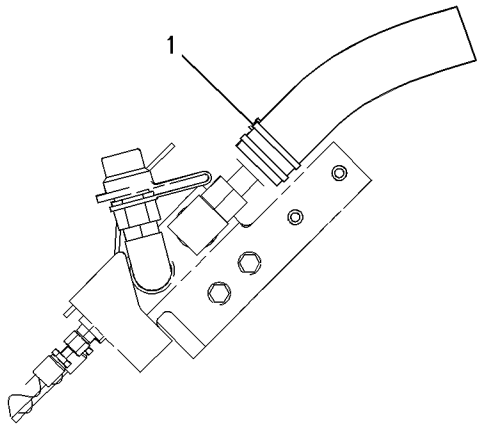

VIEW B-B

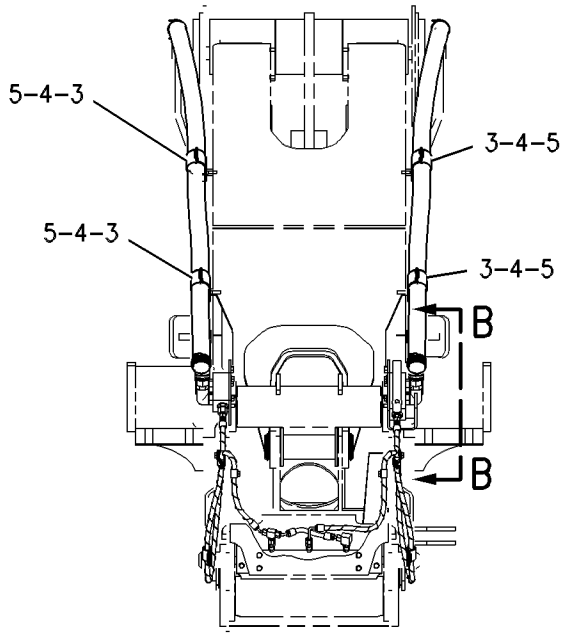

FRONT VIEW

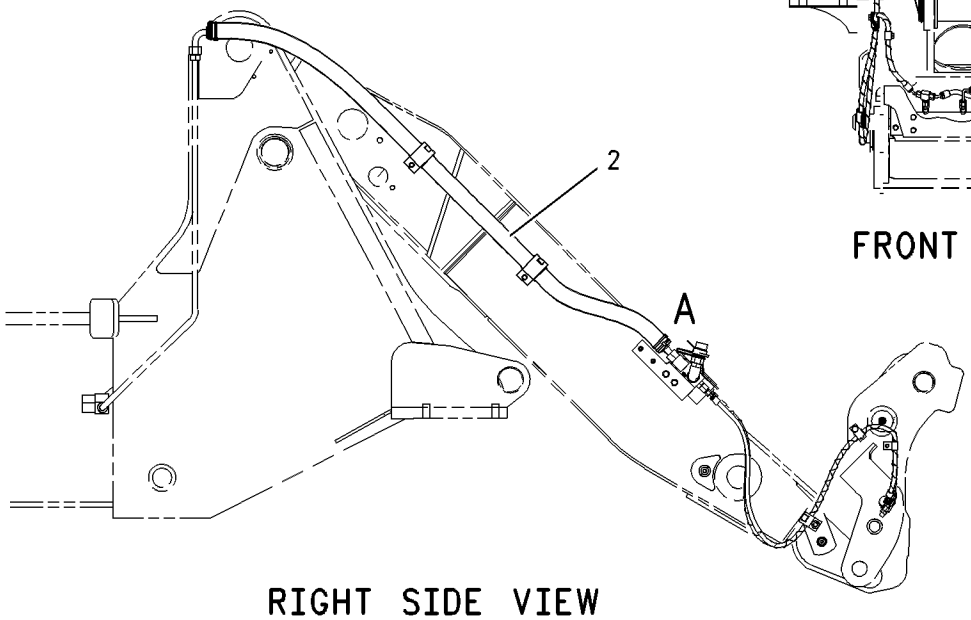

RIGHT SIDE VIEW

GRAPHIC #1 g00632844

156-4557 GUARD GP-LINES

S/N: RBB1-UP
FOUR VALVE
AN ATTACHMENT

SMCS-7167 **i01196409**

NOTE	REF NO	GRAPHIC REF	PART NUMBER	QTY	PART NAME 1 2 3 4 5 6 (PRODUCT LEVEL)	SEE PAGE
	1	1	**7K-1181**	8	STRAP-CABLE (4IN DIA)	
	2	1	**6R-2050**	2	SLEEVE	
	3	1	**5P-7466**	4	CLIP (SLOT)	
	4	1	**5P-7467**	4	CLIP (TAB)	
	5	1	**5P-8112**	4	GROMMET	

156-4557 **GUARD GP-LINES** *(contd.)* **i01196409**

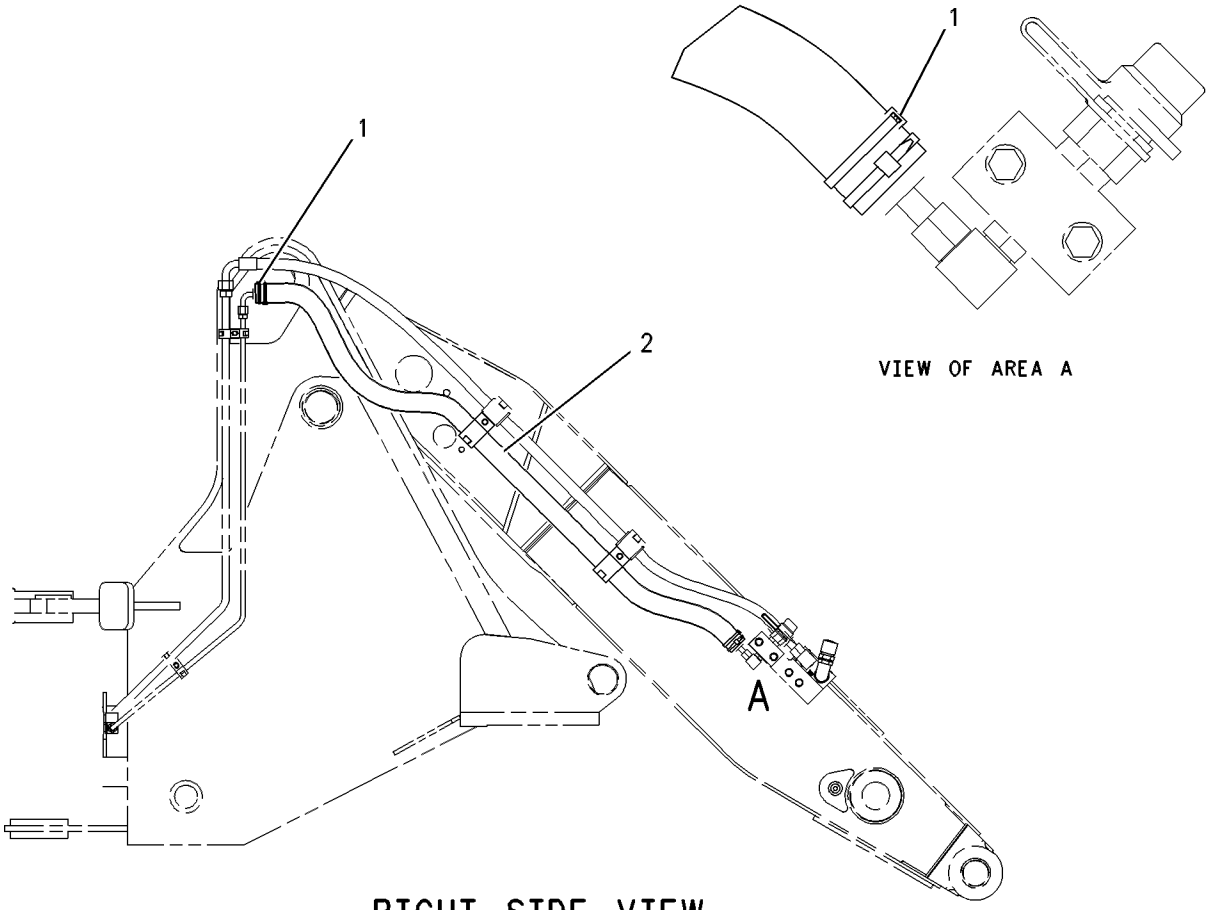

RIGHT SIDE VIEW

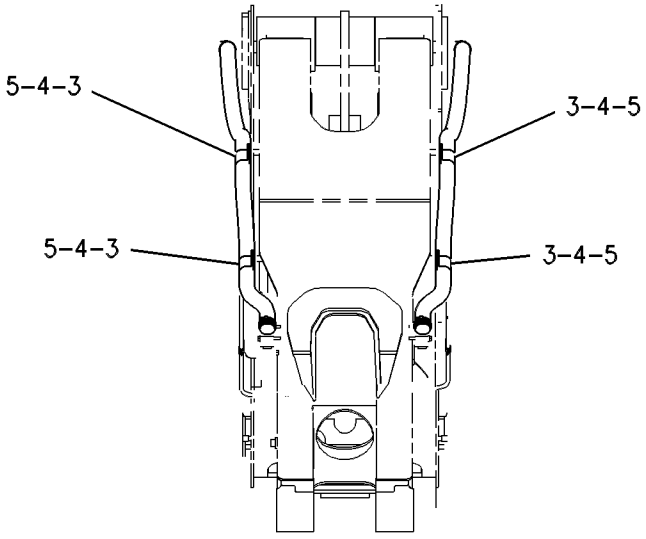

FRONT VIEW

GRAPHIC #1 g00632906

FRAME AND BODY

167-3912 GUARD GP-POWER TRAIN

S/N: RTA1-UP; RBB1-UP
AN ATTACHMENT

SMCS-7153 **i01131250**

NOTE	REF NO	GRAPHIC REF	PART NUMBER	QTY	PART NAME 1 2 3 4 5 6 (PRODUCT LEVEL)	SEE PAGE
	1	1	**4E-9754**	1	PLATE	
	2	1	**7W-3447**	3	SPACER (10.2MM THK)	
	3	1	**8R-8847**	1	RETAINER-SPRING	
	4	1	**150-7862**	1	PLATE AS	
	5	1	**1S-0994**	1	CLIP (20.64MM ID)	
	6	1	**7X-0578**	3	WASHER-HARD (2.5MM THK)	
	7	1	**8T-4121**	2	WASHER (2.5MM THK)	
M	8	1	**8T-4133**	1	NUT (M10X1.50 THD)	
M	9	1	**8T-4186**	1	BOLT (M10X1.50X40MM)	
M	10	1	**8T-4195**	2	BOLT (M10X1.50X30MM)	
	11	1	**8T-4223**	2	WASHER-HARD (3MM THK)	
M	12	1	**8T-4956**	2	BOLT (M12X1.75X35MM)	

M-METRIC PART

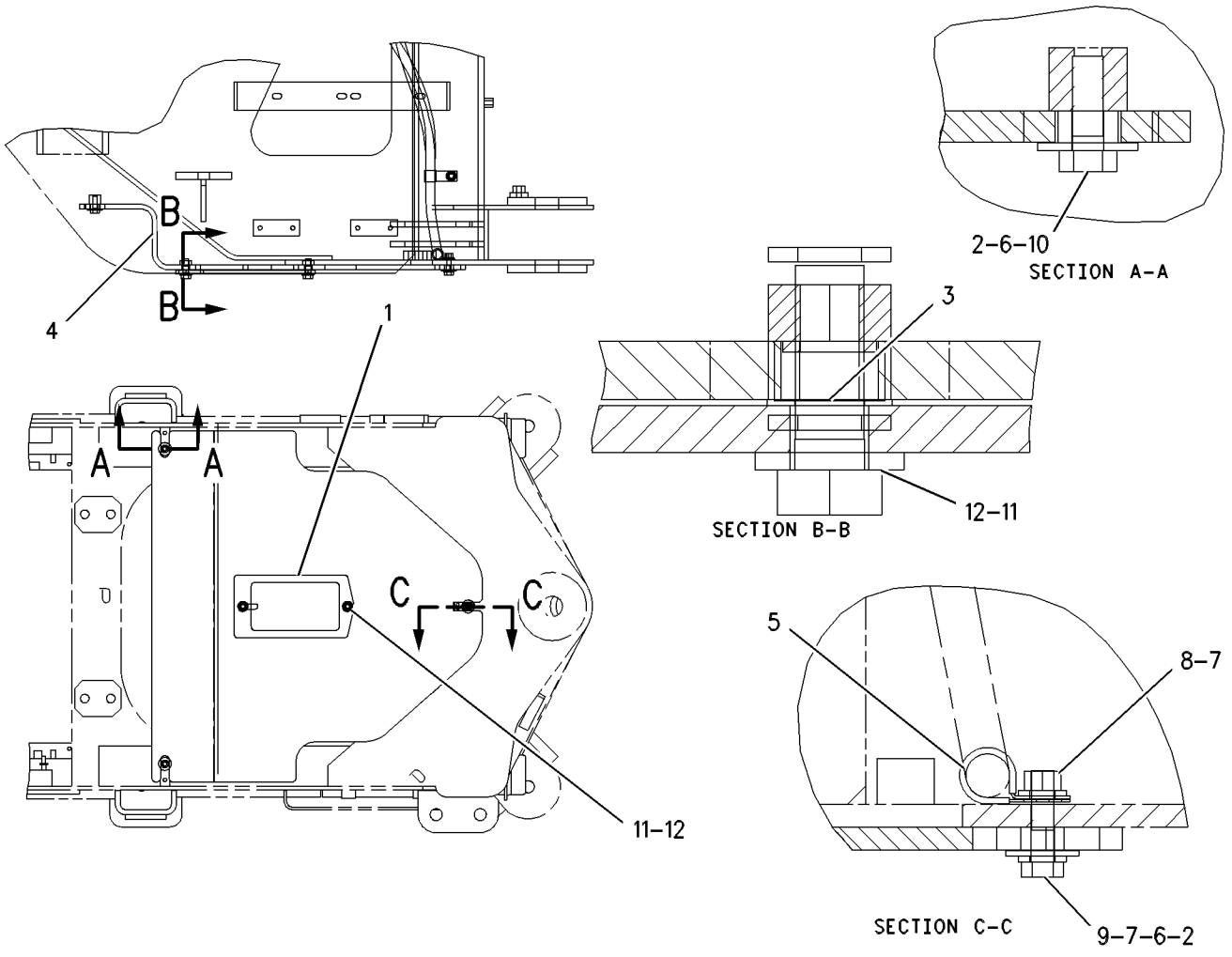

GRAPHIC #1 g00634176

MEMORANDA

FRAME AND BODY

113-3790 HITCH GP-ARTICULATING

S/N: RTA1-UP; RBB1-UP

PART OF 176-5181, 176-5201 CHASSIS AR

SMCS-7057, 7100 **i01862457**

NOTE	REF NO	GRAPHIC REF	PART NUMBER	QTY	PART NAME 1 2 3 4 5 6 (PRODUCT LEVEL)	SEE PAGE
	1	1	**4K-7464**	1	SHIM PACK (INCLUDES 19 SHIMS)	
	2	1	**6I-8860**	2	CUP-BEARING	
	3	1	**6K-4185**	1	SPACER (1.44 IN THK)	
	4	1	**6K-4191**	1	CAP-UPPER	
	5	1	**6V-1194**	2	CUP-BEARING	
	6	1	**6V-8795**	2	CONE-BEARING	
	7	1	**6W-8246**	1	SHIM PACK (INCLUDES 27 SHIMS)	
	8	1	**6I-8849**	2	CONE-BEARING	
	9	1	**8R-7091**	1	CAP	
	10	1	**8R-7092**	1	CAP	
	11	1	**8Y-7047**	1	PIN AS	
	12	1	**9V-6343**	1	CAP	
	13	1	**110-7628**	1	SHIM	
	14	1	**113-3791**	1	PIN AS	
	15	1	**113-3793**	1	PLATE	
	16	1	**113-3794**	2	SHIM PACK (INCLUDES 19 SHIMS)	
	17	1	**3B-8489**	2	FITTING-GREASE (1/8-27 THD)	
	18	1	**6K-4186**	2	SEAL-LIP	
	19	1	**7X-0618**	1	WASHER-HARD (13.5X40X5MM THK)	
	20	1	**8T-4121**	6	WASHER-HARD (11X21X2.5MM THK)	
M	21	1	**8T-4192**	1	BOLT (M12X1.75X25MM)	
M	22	1	**8T-4172**	6	BOLT (M10X1.50X80MM)	
M	23	1	**8T-4194**	10	BOLT (M12X1.75X50MM)	
	24	1	**8T-4223**	16	WASHER-HARD (13.5X25.5X3MM THK)	
M	25	1	**8T-5041**	6	BOLT (M12X1.75X120MM)	
	26	1	**9H-2258**	2	SEAL-LIP	

M-METRIC PART

113-3790 **HITCH GP-ARTICULATING** *(contd.)* **i01862457**

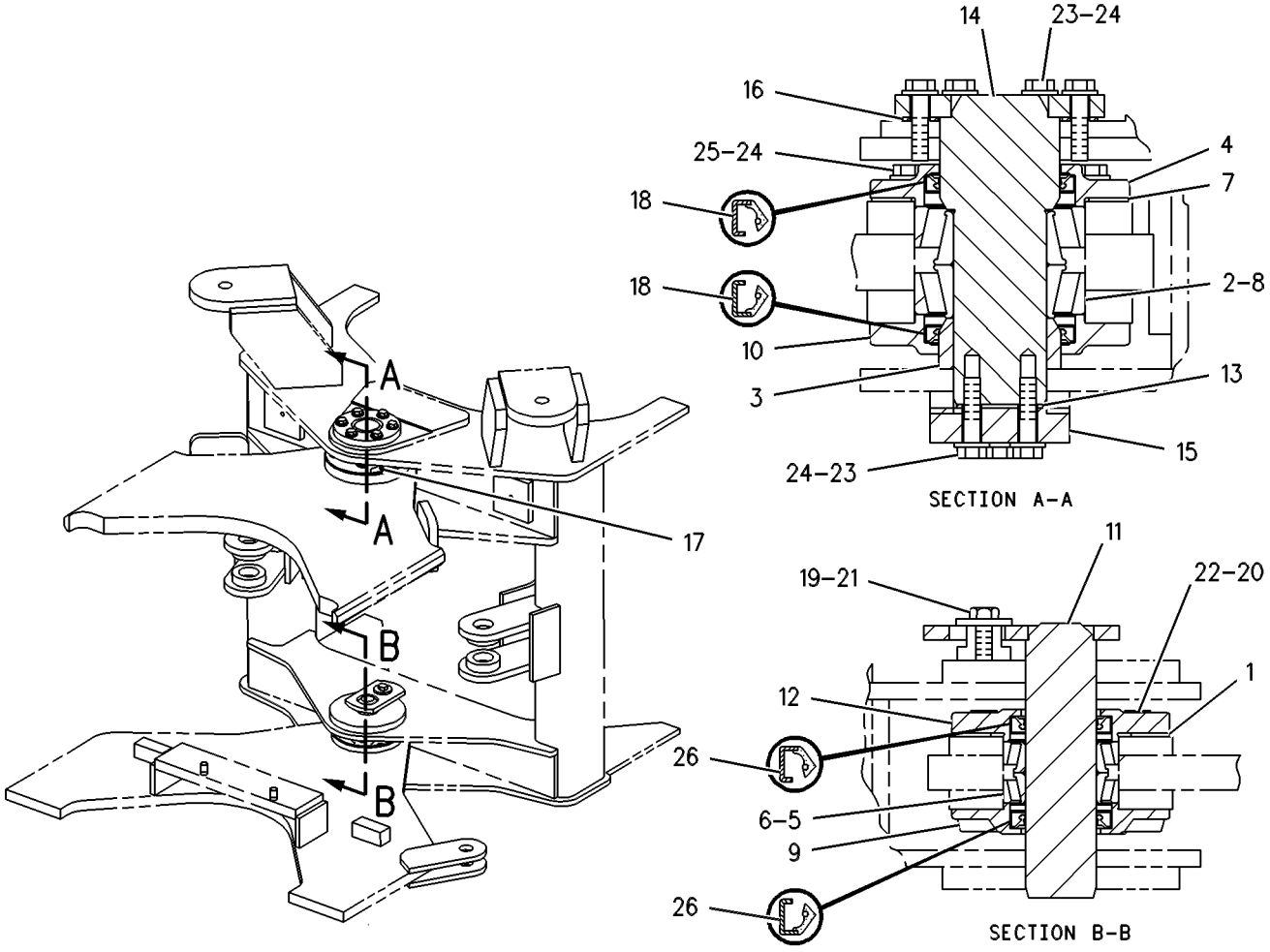

GRAPHIC #1 g00131887

FRAME AND BODY

198-8970 HOOD & GUARD GP

S/N: RTA1-UP; RBB1-UP

PART OF 176-5181, 176-5201 CHASSIS AR

SMCS-7251 **i01854319**

NOTE	REF NO	GRAPHIC REF	PART NUMBER	QTY	PART NAME 1 2 3 4 5 6 (PRODUCT LEVEL)	SEE PAGE
D	1	1	**5P-5637**		SEAL (1M)	
	2	1	**125-2086**	1	LOCK AS-CYLINDER	
		1	**7F-9223**	1	LOCKWASHER	
		1	**8T-5004**	1	SCREW-MACHINE (1/4-28X0.375 IN)	
	3	1	**130-1916**	4	STUD-BALL	
	4	1	**228-7696**	2	SPRING AS-GAS	
	5	1	**172-8591**	2	NUT-SPRING	
	6	1	**198-8933**	4	HINGE	
	7	1	**198-8942**	2	BRACKET	
	8	1	**198-8943**	2	BRACKET	
	9	1	**198-8944**	2	PLATE	
	10	1	**198-8945**	1	DOOR AS (RH)	
	11	1	**198-8946**	1	DOOR AS (LH)	
	12	1	**198-8954**	1	PANEL AS (RH)	
	13	1	**198-8955**	1	PANEL AS (LH)	
	14	1	**198-8959**	2	PLATE	
	15	1	**198-8961**	2	PLATE	
	16	1	**202-0370**	1	HOOD AS	
	17	1	**224-8930**	2	LATCH AS	
	18	1	**225-3800**	1	HINGE AS (RH)	
	19	1	**225-3801**	1	HINGE AS (LH)	
M	20	1	**131-3540**	4	LOCKNUT (M8X1.25 THD)	
M	21	1	**5C-2890**	8	NUT (M6X1 THD)	
M	22	1	**5C-7261**	12	NUT (M8X1.25 THD)	
	23	1	**5P-4115**	2	WASHER-HARD (7.2X19X2MM THK)	
M	24	1	**7X-2535**	2	BOLT (M6X1X60MM)	
M	25	1	**7X-2540**	4	BOLT (M8X1.25X120MM)	
	26	1	**7X-7729**	35	WASHER (11X25X3MM THK)	
M	27	1	**8T-4133**	4	NUT (M10X1.5 THD)	
M	28	1	**8T-4138**	8	BOLT (M6X1X20MM)	
M	29	1	**8T-4189**	18	BOLT (M8X1.25X20MM)	
M	30	1	**8T-4195**	31	BOLT (M10X1.5X30MM)	
	31	1	**8T-4205**	16	WASHER-HARD (7.2X14.5X2MM THK)	
	32	1	**8T-4224**	42	WASHER-HARD (8.8X16X2MM THK)	
M	33	1	**8T-4908**	4	BOLT (M8X1.25X25MM)	
E	34	1	**207-0536**	1	SEAL (181CM)	
E	35	1	**207-0536**	1	SEAL (181CM)	
E	36	1	**9X-8699**	2	SEAL (91CM EACH)	
E	37	1	**9X-8699**	2	SEAL (306CM EACH)	

D-ORDER BY THE METER
E-ORDER BY THE CENTIMETER
M-METRIC PART

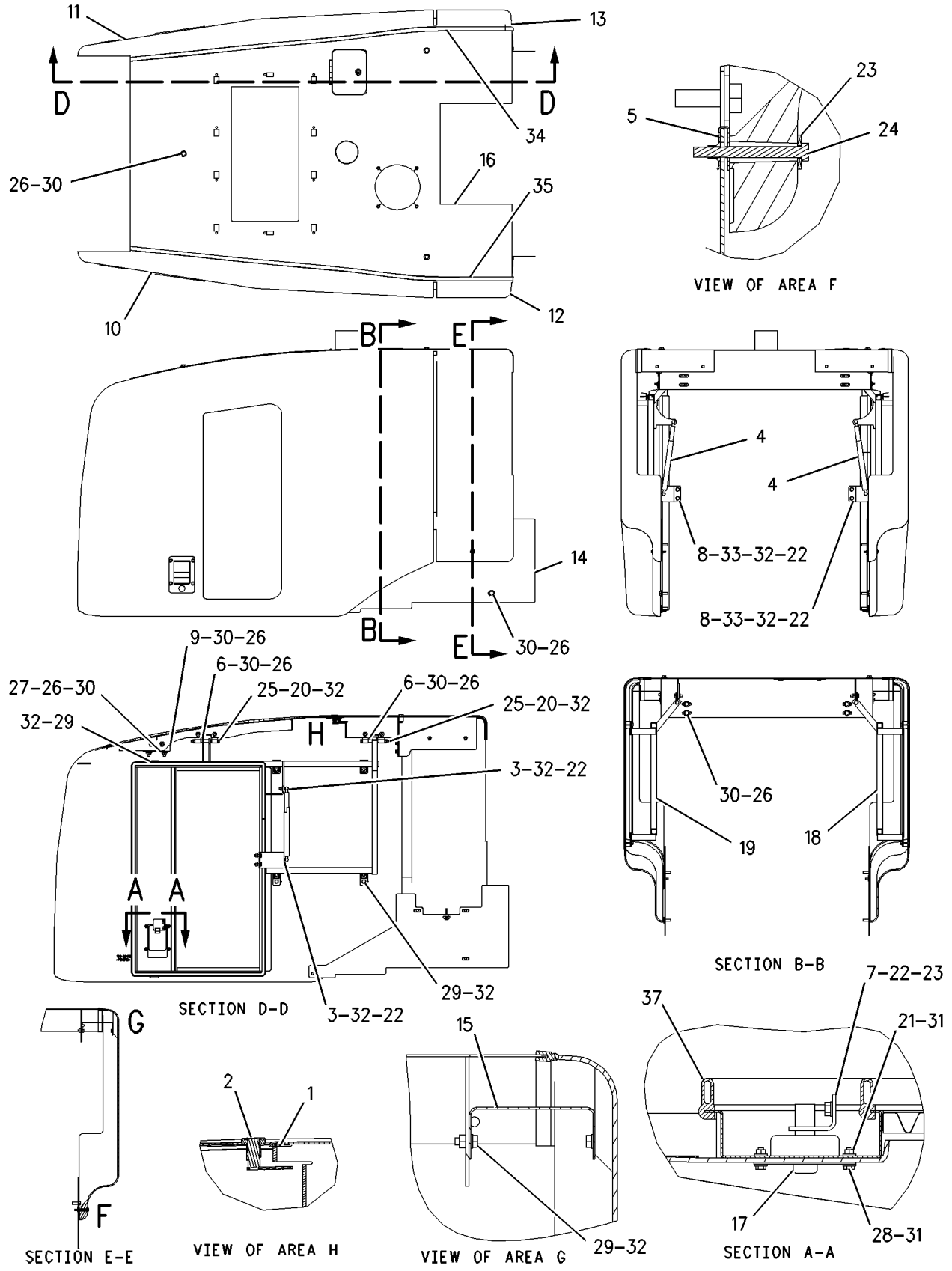

GRAPHIC #1 g00918009

FRAME AND BODY

208-6173 LADDER GP

S/N: RTA1-UP; RBB1-UP

PART OF 176-5181, 176-5201 CHASSIS AR

SMCS-7254 **i01814920**

NOTE	REF NO	GRAPHIC REF	PART NUMBER	QTY	PART NAME 1 2 3 4 5 6 (PRODUCT LEVEL)	SEE PAGE
	1	1	**127-5447**	16	SPACER	
	2	1	**134-5214**	1	STEP AS	
M		1	**8T-3490**	2	NUT-WELD (M10X1.5 THD)	
	3	1	**134-5215**	1	STEP AS	
M		1	**8T-3490**	2	NUT-WELD (M10X1.5 THD)	
	4	1	**140-9189**	2	LADDER AS	
	5	1	**146-7934**	1	BRACKET AS	
M		1	**8T-3490**	2	NUT-WELD (M10X1.5 THD)	
	6	1	**153-4856**	4	BELT	
	7	1	**153-9706**	8	PLATE	
	8	1	**189-0942**	1	BRACKET AS	
M		1	**8T-3490**	2	NUT-WELD (M10X1.5 THD)	
	9	1	**202-0392**	1	PLATFORM AS (RH)	
M		1	**6V-9632**	2	NUT-WELD (M6X1 THD)	
M		1	**8T-3490**	2	NUT-WELD (M10X1.5 THD)	
	10	1	**202-0393**	1	PLATFORM AS (LH)	
M		1	**6V-9632**	2	NUT-WELD (M6X1 THD)	
M		1	**8T-3490**	2	NUT-WELD (M10X1.5 THD)	
	11	1	**215-3886**	2	STEP	
					(EACH INCLUDES)	
M		1	**8T-3490**	4	NUT-WELD (M10X1.5 THD)	
	12	1	**7X-7729**	52	WASHER (11X25X3MM THK)	
M	13	1	**8T-4133**	16	NUT (M10X1.5 THD)	
M	14	1	**8T-4136**	22	BOLT (M10X1.5X25MM)	
M	15	1	**8T-4186**	24	BOLT (M10X1.5X40MM)	
M	16	1	**8T-4195**	8	BOLT (M10X1.5X30MM)	
	17	1	**8T-4222**	2	WASHER-PLATED (11X32X2.5MM THK)	

M-METRIC PART

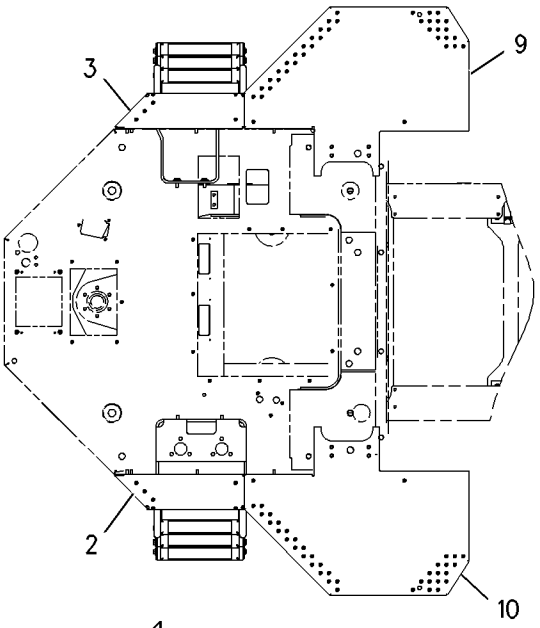

FWD TOP VIEW

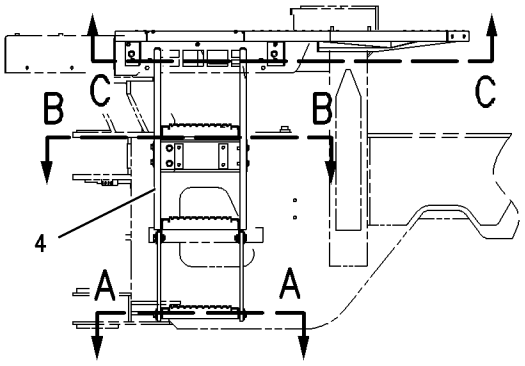

LEFT SIDE VIEW

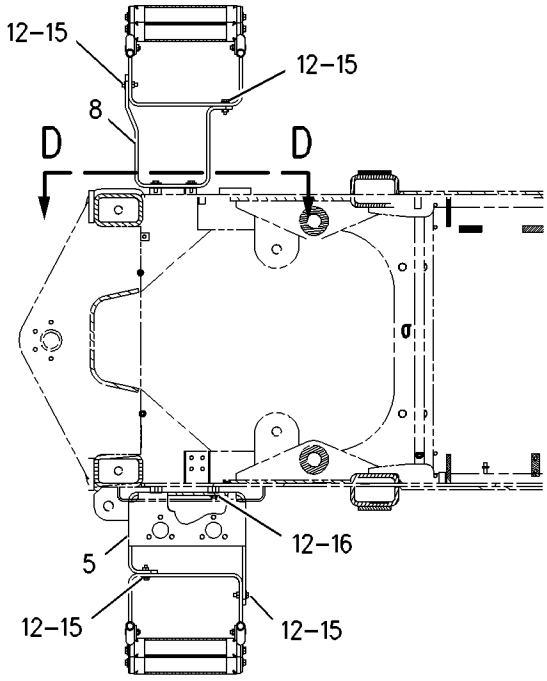

SECTION B-B

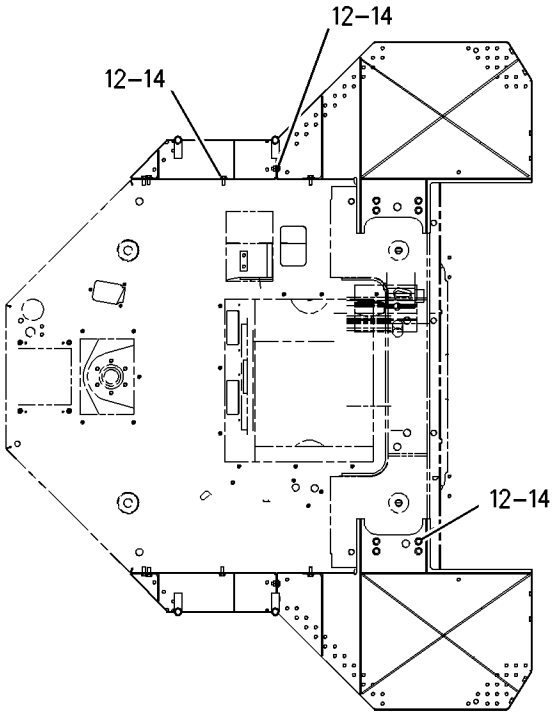

SECTION C-C

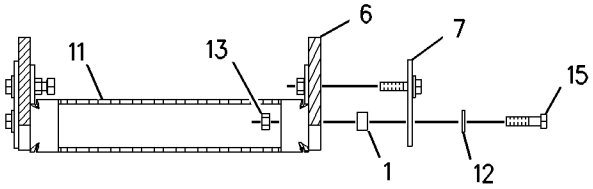

SECTION A-A

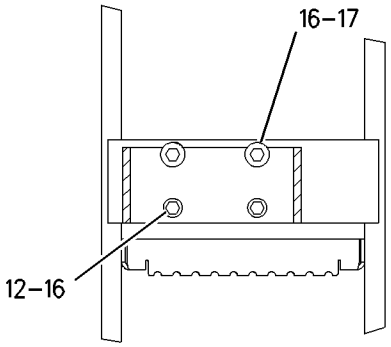

SECTION D-D

GRAPHIC #1 g00907631

FRAME AND BODY

204-5864 LINES GP-GREASE

S/N: RTA1-UP; RBB1-UP

PART OF 176-5181, 176-5201 CHASSIS AR

SMCS-7510 **i01814883**

NOTE	REF NO	GRAPHIC REF	PART NUMBER	QTY	PART NAME 1 2 3 4 5 6 (PRODUCT LEVEL)	SEE PAGE
	1	2	**5T-9771**	1	HOSE AS	
	2	2	**6G-9933**	3	HOSE AS	
	3	2	**7K-1181**	2	STRAP-CABLE	
	4	1	**8W-4342**	1	HOSE AS	
	5	2	**3B-6552**	5	ELBOW	
	6	1,2	**3B-8489**	7	FITTING-GREASE (1/8-27 THD)	
	7	2	**6V-1889**	1	CLIP	

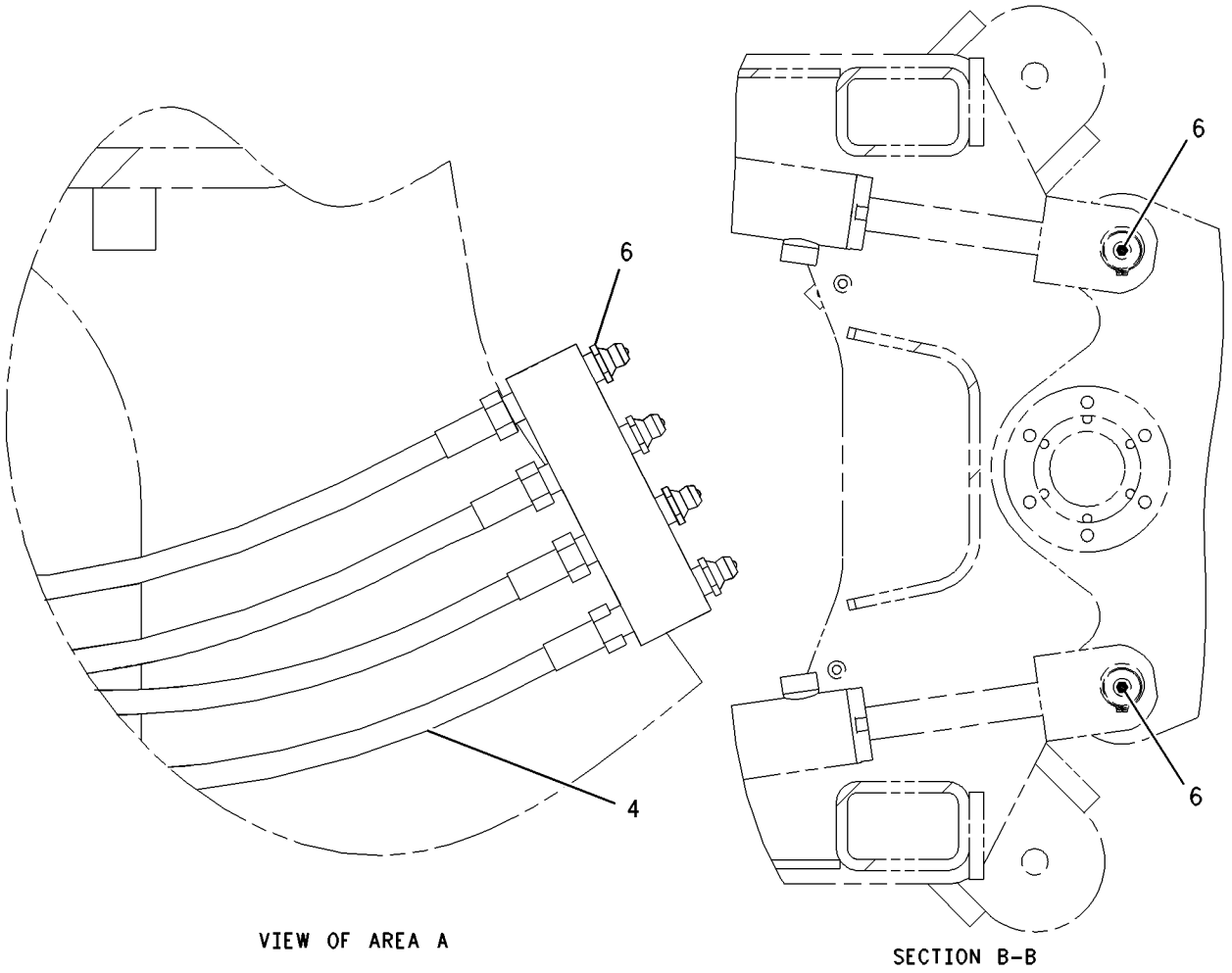

GRAPHIC #1 g00916053

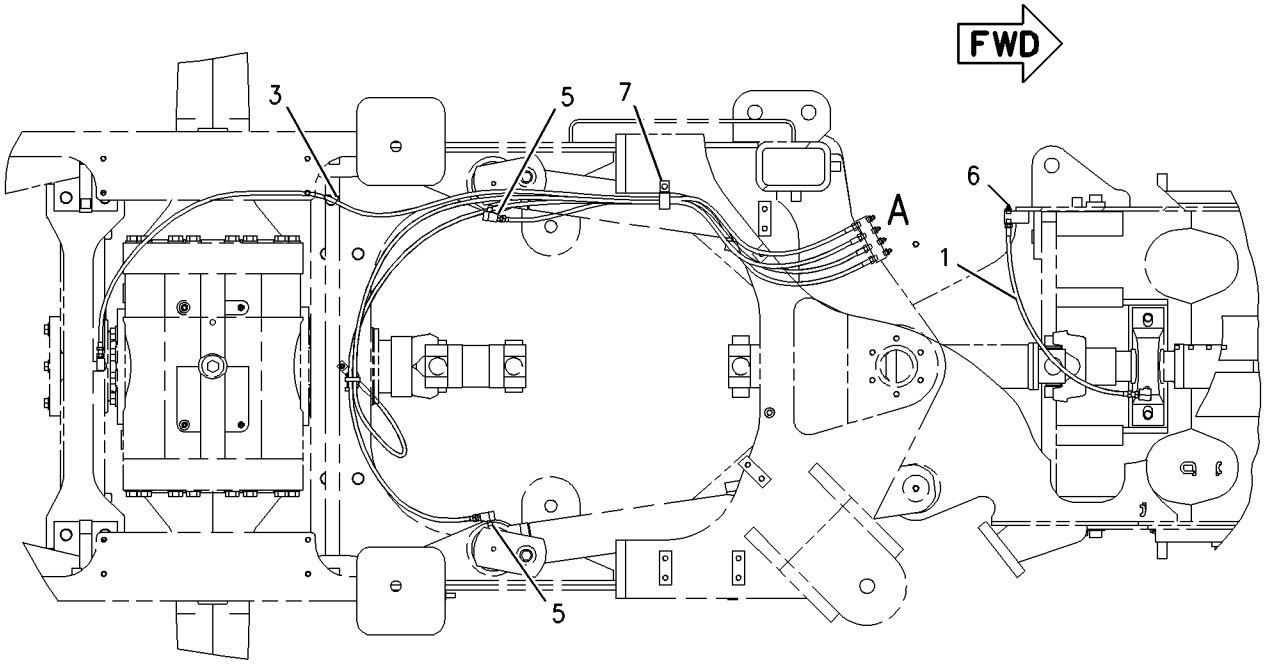

TOP VIEW

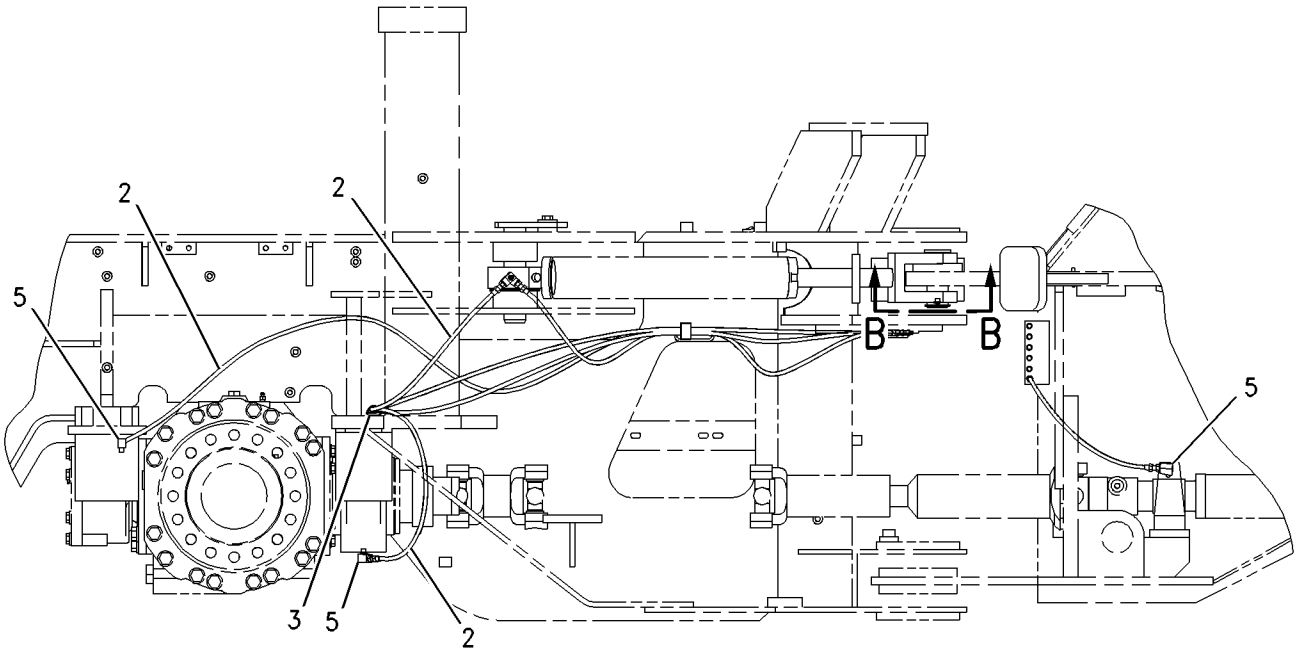

RIGHT SIDE VIEW

REFER TO ALL ILLUSTRATIONS OF THIS GROUP FOR AUXILIARY VIEWS

GRAPHIC #2

g00916009

7V-2885 LINK GP-STEERING FRAME LOCK

S/N: RTA1-UP; RBB1-UP

PART OF 176-5181, 176-5201 CHASSIS AR

SMCS-7506 **i00634105**

NOTE	REF NO	GRAPHIC REF	PART NUMBER	QTY	PART NAME 1 2 3 4 5 6 (PRODUCT LEVEL)	SEE PAGE
	1	1	**5V-4998**	1	LINK	
	2	1	**5V-4999**	2	PIN	
	3	1	**5P-8837**	2	LOCKPIN	

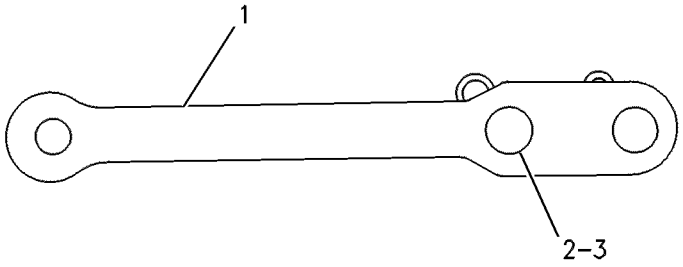

GRAPHIC #1 g00120262

MEMORANDA

198-8964 PANEL GP-TOP

S/N: RTA1-UP; RBB1-UP
PART OF 190-4401 HEATER AR-CAB, 190-4645, 216-6907 OPERATOR AR
AN ATTACHMENT

SMCS-7251 **i01810904**

NOTE	REF NO	GRAPHIC REF	PART NUMBER	QTY	PART NAME 1 2 3 4 5 6 (PRODUCT LEVEL)	SEE PAGE
	1	1	**172-8591**	10	NUT-SPRING	
	2	1	**191-9188**	1	PLATE	
	3	1	**198-8957**	1	PLATE	
	4	1	**220-0691**	4	PLATE AS	
					(EACH INCLUDES)	
M		1	**8T-3490**	2	NUT-WELD (M10X1.5 THD)	
	5	1	**5P-9212**	1	PLUG	
	6	1	**8T-4121**	8	WASHER-HARD (11X21X2.5MM THK)	
M	7	1	**8T-4137**	8	BOLT (M10X1.5X20MM)	
M	8	1	**8T-4138**	10	BOLT (M6X1X20MM)	
	9	1	**8T-4205**	10	WASHER-HARD (7.2X14.5X2MM THK)	

M-METRIC PART

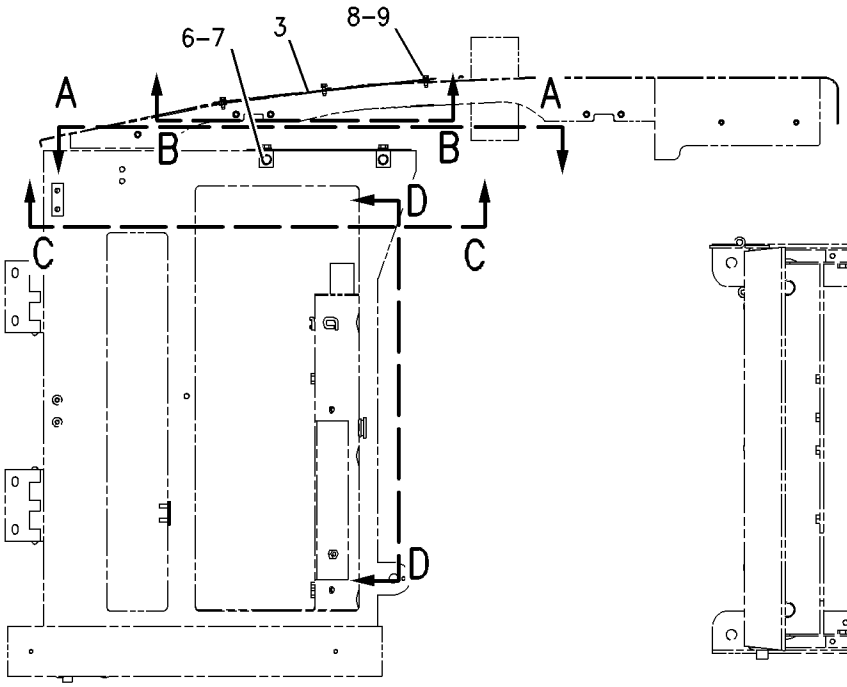

RIGHT SIDE VIEW

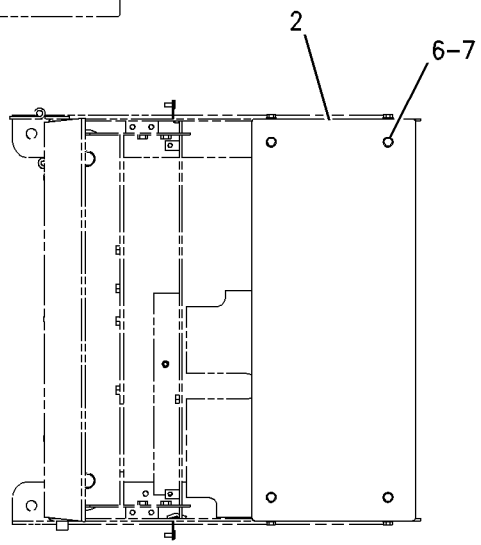

VIEW A-A

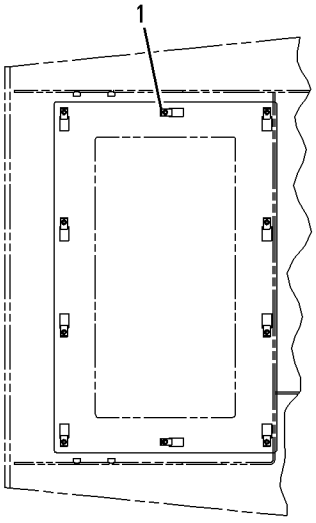

VIEW B-B

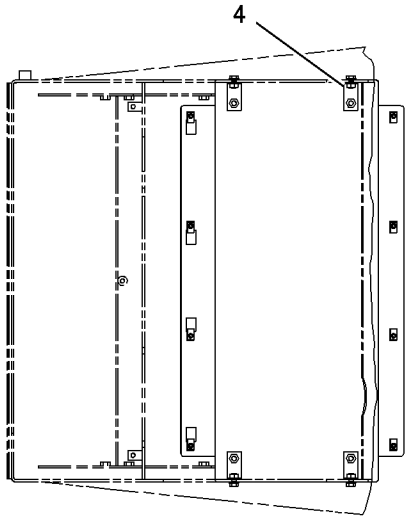

VIEW C-C

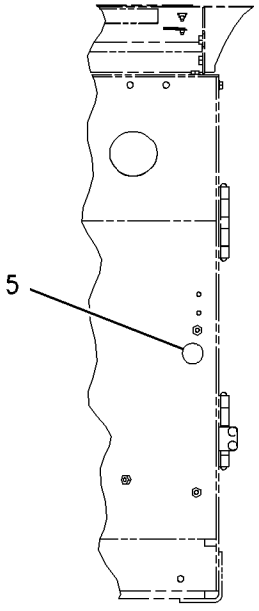

VIEW D-D

GRAPHIC #1 g00917920

140-9251 ACCUMULATOR GP-BRAKE

S/N: RTA1-UP; RBB1-UP

PART OF 203-3871 LINES GP-SERVICE BRAKE

SMCS-4263 **i01135146**

NOTE	REF NO	GRAPHIC REF	PART NUMBER	QTY	PART NAME 1 2 3 4 5 6 (PRODUCT LEVEL)	SEE PAGE
	1	1	**030-9613**	2	SCREW-FORMING	
	2	1	**1J-9671**	1	SEAL-O-RING (10.52MM ID)	
	3	1	**069-2535**	1	VALVE-GAS	
	4	1	**069-2536**	1	PROTECTOR-GAS VALVE	
F		1	**160-0496**	1	KIT-ACCUMULATOR SERVICE	

F-NOT SHOWN

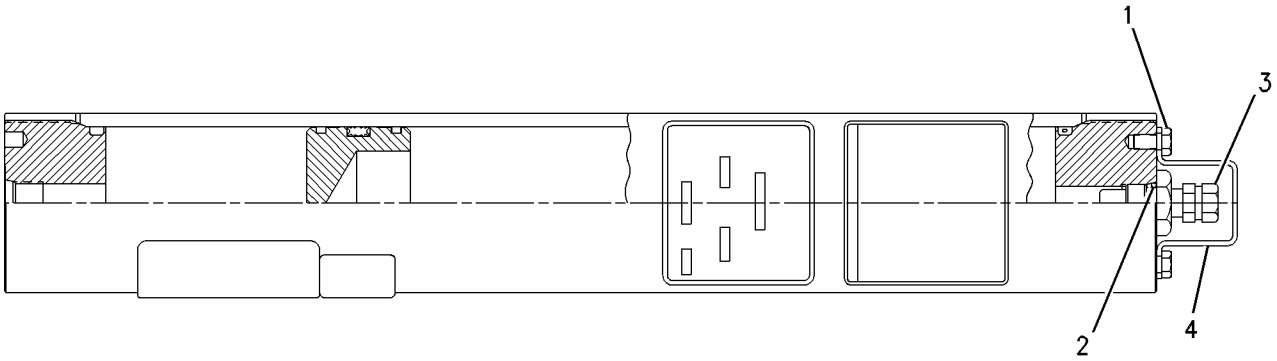

GRAPHIC #1 g00649352

132-2470 CONTROL GP-PARKING BRAKE

S/N: RTA1-UP; RBB1-UP

PART OF 176-5181, 176-5201 CHASSIS AR

SMCS-4282, 4284 **i01433677**

NOTE	REF NO	GRAPHIC REF	PART NUMBER	QTY	PART NAME 1 2 3 4 5 6 (PRODUCT LEVEL)	SEE PAGE
	1	1	**3B-4610**	1	COTTER	
	2	1	**6V-8758**	1	PIN-CLEVIS	
	3	1	**8C-6160**	1	CLEVIS AS	
	4	1	**9U-0710**	2	CLIP	
	5	1	**132-2493**	1	BRACKET AS	
	6	1	**143-3193**	1	CABLE AS	
		1	**9U-0710**	2	CLIP	
		1	**186-4415**	2	CLEVIS	
M	7	1	**5C-7261**	1	NUT (M8X1.25 THD)	
	8	1	**5P-9297**	3	CLIP	
	9	1	**8T-4121**	3	WASHER-HARD (11X21X2.5MM THK)	
M	10	1	**8T-4137**	3	BOLT (M10X1.5X20MM)	
	11	1	**8T-4223**	3	WASHER-HARD (13.5X25.5X3MM THK)	
M	12	1	**8T-4956**	3	BOLT (M12X1.75X35MM)	

M-METRIC PART

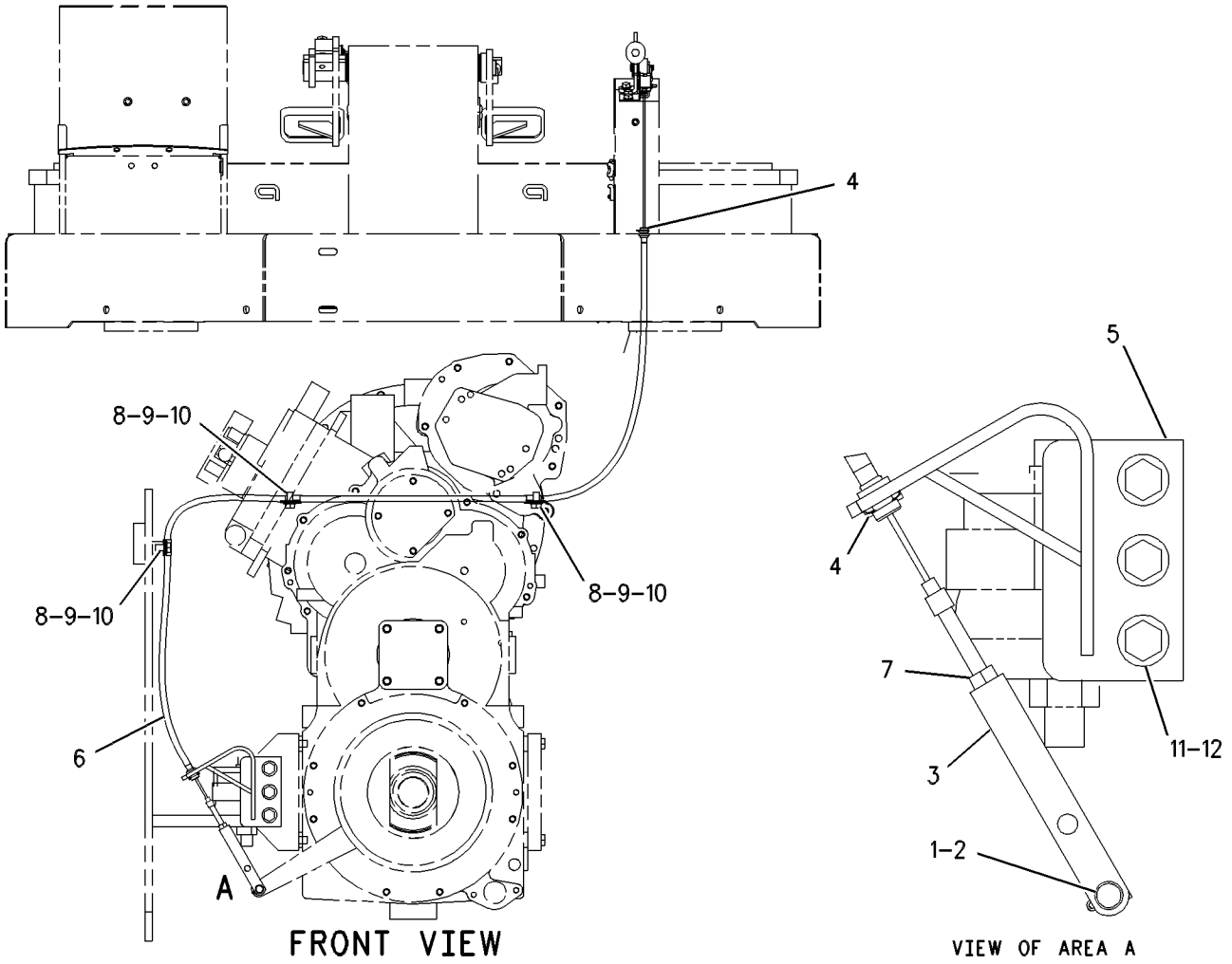

GRAPHIC #1 g00620843

168-7000 CONTROL GP-PARKING BRAKE

S/N: RTA1-UP; RBB1-UP

PART OF 190-4405, 216-6908 CAB AR, 190-4406 CANOPY GP-OPEN ROPS

AN ATTACHMENT

SMCS-4282, 4284 **i01374826**

NOTE	REF NO	GRAPHIC REF	PART NUMBER	QTY	PART NAME 1 2 3 4 5 6 (PRODUCT LEVEL)	SEE PAGE
	1	1	**3H-8538**	1	PIN	
	2	1	**6G-4195**	1	SWITCH AS-LIMIT (PARKING BRAKE)	
		1	**3L-8187**	3	LOCKWASHER (NO.6-INT)	
		1	**6V-8373**	3	SCREW-MACHINE (6-32X.187IN)	
	3	1	**6S-6646**	1	PIN	
	4	1	**8K-1433**	1	GROMMET (12.70MM ID)	
	5	1	**186-4415**	1	CLEVIS	
	6	1	**163-6408**	1	BRACKET AS	
		1	**7T-1099**	2	LINK	
M		1	**8T-3612**	3	NUT-WELD (M8X1.25 THD)	
	7	1	**163-6412**	1	LEVER AS	
		1	**9R-9110**	1	BUTTON	
		1	**9R-9111**	1	SPRING-COMPRESSION	
	8	1	**2N-3477**	2	SCREW-MACHINE (6-32X1.25IN)	
	9	1	**4B-5324**	4	WASHER (1.2MM THK)	
	10	1	**7D-6922**	2	LOCKNUT (6-32 THD)	
M	11	1	**8T-4189**	4	BOLT (M8X1.25X20MM)	
	12	1	**8T-4224**	4	WASHER-HARD (8.8X16X2MM THK)	

M-METRIC PART

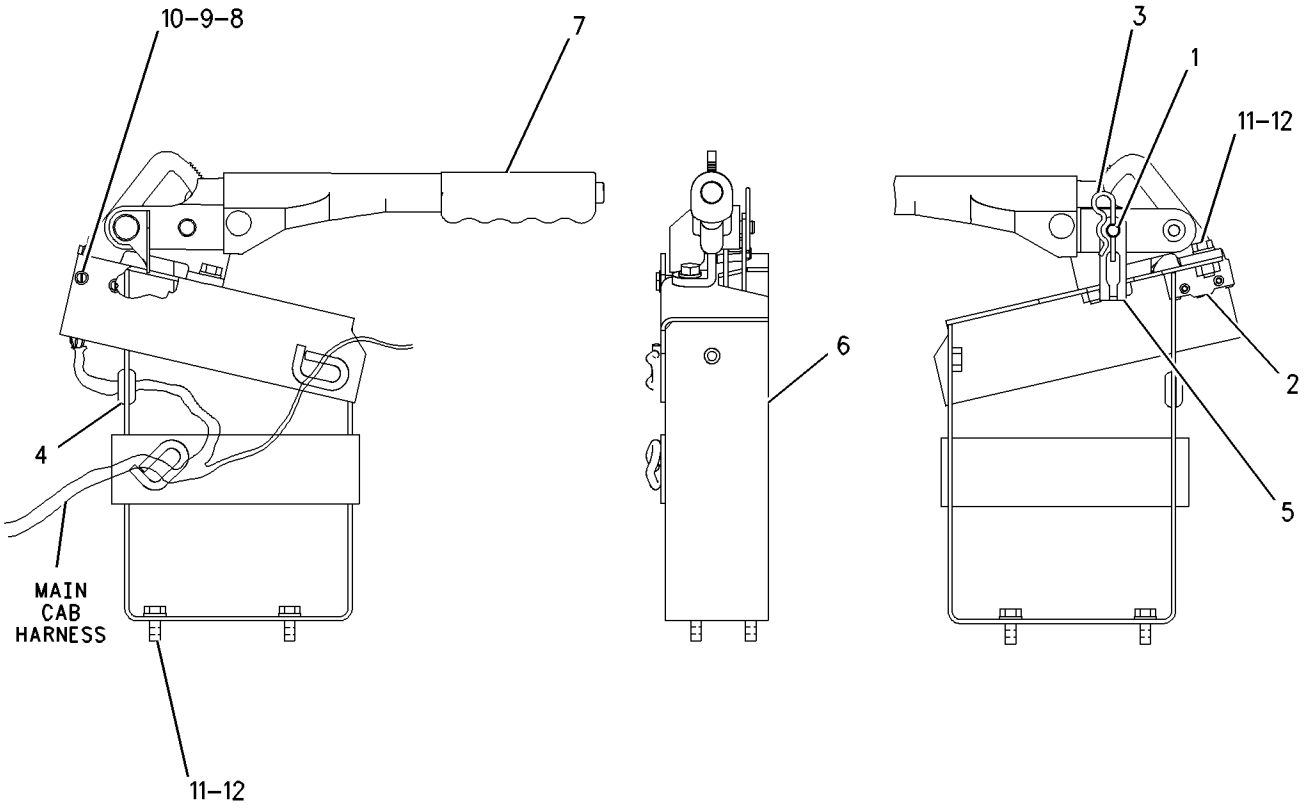

GRAPHIC #1 g00729380

BRAKING SYSTEM

202-0430 CONTROL GP-SERVICE BRAKE

S/N: RTA1-UP; RBB1-UP

PART OF 176-5181, 176-5201 CHASSIS AR

SMCS-4257, 4258, 4265, 4269, 4280 **i01859596**

NOTE	REF NO	GRAPHIC REF	PART NUMBER	QTY	PART NAME 1 2 3 4 5 6 (PRODUCT LEVEL)	SEE PAGE
	1	1	**3B-4617**	2	PIN-COTTER	
	2	1	**3E-2332**	1	ELBOW	
	3	1	**6G-0233**	1	BOOT	
	4	1	**6V-0852**	1	CAP-DUST	
	5	1	**6V-3965**	1	FITTING AS	
	6	1	**7C-6467**	2	PLUG	
	7	1	**8E-8296**	2	DISC-THRUST	
	8	1	**8T-6431**	1	ROD END	
M	9	1	**9X-2065**	1	NUT	
	10	1	**128-0168**	1	ROD	
	11	1	**128-0169**	1	ROLLER	
	12	1	**132-0988**	1	BRACKET AS	
		1	**5G-6973**	2	LUG	
	13	1	**132-0994**	1	END-BEARING ROD	
	14	1	**132-3789**	1	PLATE	
	15	1	**133-7675**	1	SPRING	
M	16	1	**134-0673**	2	BOLT (M10X1.5X50MM)	
	17	1	**144-8521**	1	VALVE GP-BRAKE CONTROL (SERVICE)	
		1	**117-7798**	1	BOOT	
		1	**117-7799**	1	KIT-SEAL	
					(INCLUDES 4 O-RINGS, 1 QUAD RING, CUP AND BOOT)	
	18	1	**146-6822**	1	LEVER AS	
	19	1	**165-6365**	1	FITTING AS	
		1	**3J-1907**	1	SEAL-O-RING	
		1	**7W-7381**	1	FITTING-OUTLET	
	20	1	**188-3823**	1	SENSOR GP-PRESSURE	
	21	1	*148-8336*	2	CONNECTOR AS	
					(EACH INCLUDES)	
		1	**3J-1907**	1	SEAL-O-RING	
		1	**6V-8397**	1	SEAL-O-RING	
		1	**6V-8636**	1	CONNECTOR	
	22	1	*148-8378*	1	ELBOW AS	
		1	**3J-1907**	1	SEAL-O-RING	
		1	**6V-8397**	1	SEAL-O-RING	
		1	**6V-8724**	1	ELBOW	
	23	1	*148-8443*	2	TEE GP	
					(EACH INCLUDES)	
		1	**3J-1907**	1	SEAL-O-RING	
		1	**6V-8397**	1	SEAL-O-RING	
		1	**7X-2459**	1	TEE-O-RING	
	24	1	**3J-1907**	2	SEAL-O-RING	
	25	1	**3J-7354**	1	SEAL-O-RING	
	26	1	**5V-4410**	2	BEARING-SLEEVE	
M	27	1	**8T-0389**	2	LOCKNUT (M10X1.5 THD)	
	28	1	**8T-4121**	15	WASHER-HARD (11X21X2.5MM THK)	
M	29	1	**8T-4133**	1	NUT (M10X1.5 THD)	
M	30	1	**8T-4137**	6	BOLT (M10X1.5X20MM)	
M	31	1	**8T-4196**	2	BOLT (M10X1.5X35MM)	
	32	1	**9R-2807**	1	CLIP	
	33	1	**9R-3067**	1	PIN	

M-METRIC PART

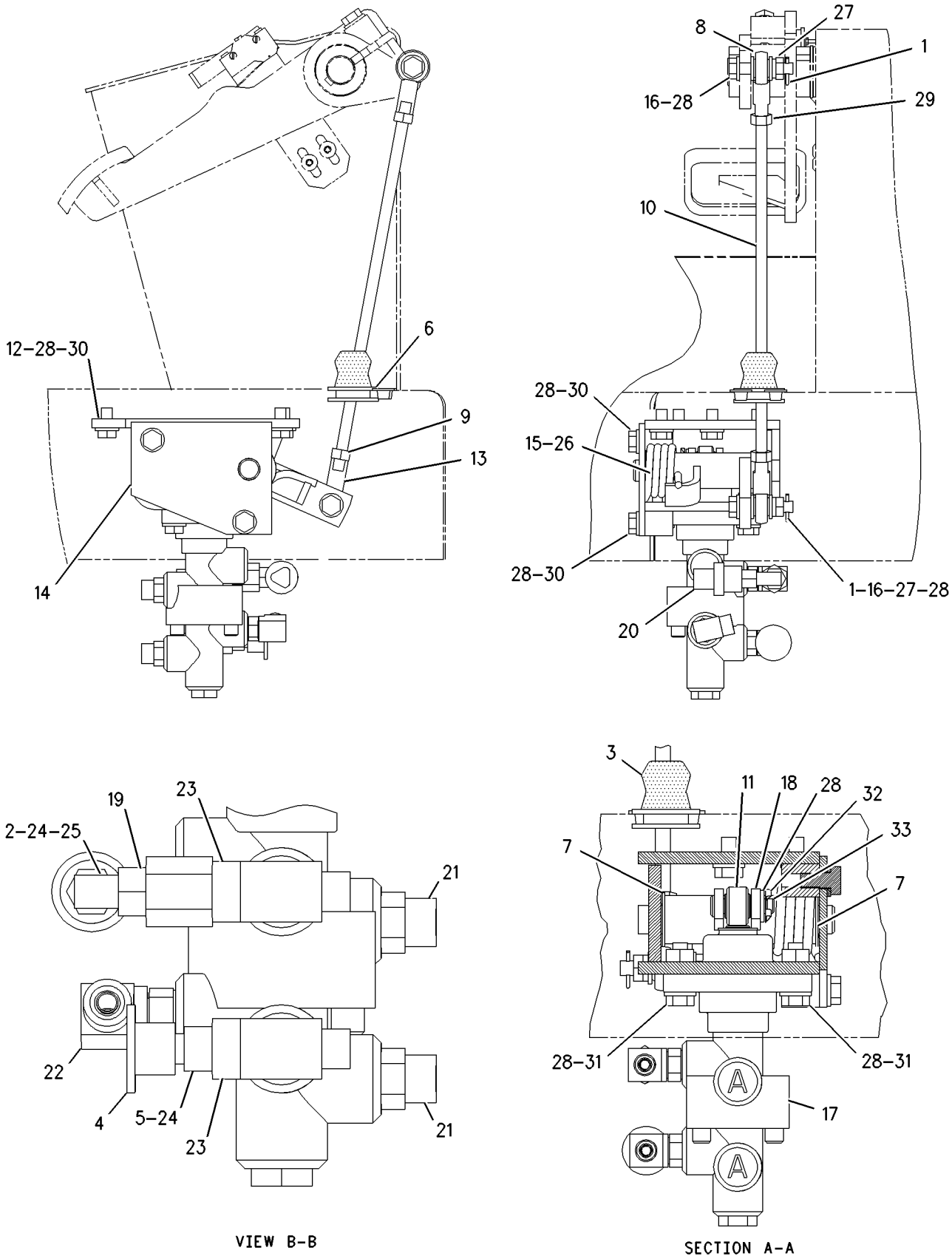

GRAPHIC #1 g00917008

BRAKING SYSTEM

203-3871 LINES GP-SERVICE BRAKE

S/N: RTA1-UP; RBB1-UP

PART OF 176-5181, 176-5201 CHASSIS AR

SMCS-4257 **i01854294**

NOTE	REF NO	GRAPHIC REF	PART NUMBER	QTY	PART NAME 1 2 3 4 5 6 (PRODUCT LEVEL)	SEE PAGE
	1	1,2	**3S-2093**	5	STRAP-CABLE	
	2	2	**4E-7540**	1	ANGLE	
	3	1,2	**5P-5148**	2	STRAP-TIE	
	4	1,2	**9X-6581**	1	NUT	
	5	2	**091-0081**	1	SPACER (10.5X20X10.0MM THK)	
	6	1	**111-6940**	2	SPACER (13.1X15.9X36.5MM THK)	
	7	2	**135-3327**	1	PLATE AS	
M		2	**8T-3490**	1	NUT-WELD (M10X1.5 THD)	
Y	8	2	*140-9251*	2	ACCUMULATOR GP-BRAKE	278
I	9	2	**140-9273**	1	HOSE AS	
	10	2	**156-4130**	4	CLIP	
	11	2	*156-4281*	1	TEE AS	
		2	**3J-7354**	1	SEAL-O-RING	
		2	**6V-8397**	2	SEAL-O-RING	
		2	**7X-0838**	1	TEE-O-RING	
	12	1	*156-4282*	1	REDUCER AS	
		1	**6V-8397**	1	SEAL-O-RING	
		1	**6V-8938**	1	REDUCER-O-RING	
	13	2	**200-6345**	1	MOUNT-SWIVEL	
	14	1,2	**204-2281**	4	TIE	
	15	2	**205-3961**	1	PLATE	
	16	2	**205-5469**	1	GUARD-HOSE	
I	17	1	**213-7435**	2	HOSE AS	
I	18	2	**213-7436**	2	HOSE AS	
I	19	2	**213-7437**	1	HOSE AS	
I	20	2	**214-8917**	2	HOSE AS	
I	21	2	**216-8395**	1	HOSE AS	
	22	1	*148-8353*	2	ELBOW GP	
					(EACH INCLUDES)	
		1	**3J-1907**	1	SEAL-O-RING	
		1	**6V-8397**	1	SEAL-O-RING	
		1	**6V-9001**	1	ELBOW	
	23	2	*148-8361*	2	ELBOW GP	
					(EACH INCLUDES)	
		2	**3J-7354**	1	SEAL-O-RING	
		2	**6V-8397**	1	SEAL-O-RING	
		2	**6V-9200**	1	ELBOW	
	24	2	*148-8435*	2	TEE AS	
					(EACH INCLUDES)	
		2	**3J-1907**	1	SEAL-O-RING	
		2	**6V-8397**	2	SEAL-O-RING	
		2	**6V-8781**	1	TEE-FACE SEAL	
	25	2	*173-7225*	1	TEE AS	
		2	**3J-7354**	1	SEAL-O-RING	
		2	**6V-8397**	2	SEAL-O-RING	
		2	**6V-9161**	1	TEE	
	26	1,2	**4D-7735**	2	CLIP	
M	27	2	**5C-7261**	1	NUT (M8X1.25 THD)	
	28	1,2	**5K-5338**	4	CLIP	
	29	1,2	**5P-4116**	3	WASHER-HARD (8.8X20.5X2MM THK)	
	30	2	**7V-6571**	1	GROMMET	
	31	1,2	**7X-7729**	3	WASHER (11X25X3MM THK)	
	32	1,2	**8M-2773**	2	CLIP	
	33	2	**8T-1895**	1	CLIP (SLOT)	
	34	2	**8T-1896**	1	CLIP (TAB)	
	35	1,2	**8T-4121**	10	WASHER-HARD (11X21X2.5MM THK)	

203-3871 LINES GP-SERVICE BRAKE *(contd.)* i01854294

NOTE	REF NO	GRAPHIC REF	PART NUMBER	QTY	PART NAME 1 2 3 4 5 6 (PRODUCT LEVEL)	SEE PAGE
M	36	2	**8T-4133**	3	NUT (M10X1.5 THD)	
M	37	2	**8T-4136**	3	BOLT (M10X1.5X25MM)	
M	38	2	**8T-4186**	1	BOLT (M10X1.5X40MM)	
M	39	1,2	**8T-4195**	5	BOLT (M10X1.5X30MM)	
M	40	1	**8T-6466**	1	BOLT (M10X1.50X60MM)	
M	41	1	**8T-6869**	1	BOLT (M8X1.25X60MM)	

I-SEE HOSE FABRICATION GUIDE
M-METRIC PART
Y-SEPARATE ILLUSTRATION

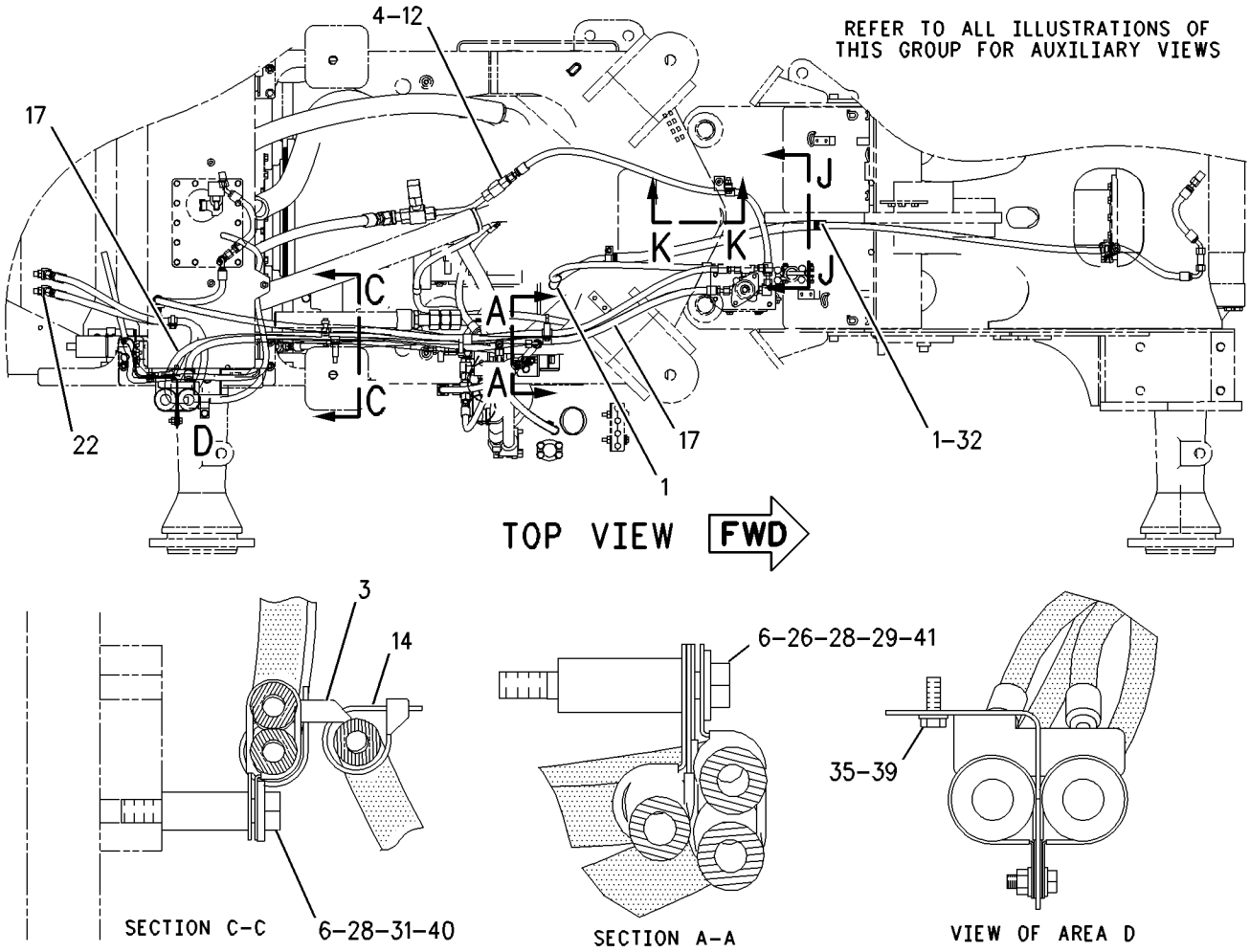

GRAPHIC #1 g00928863

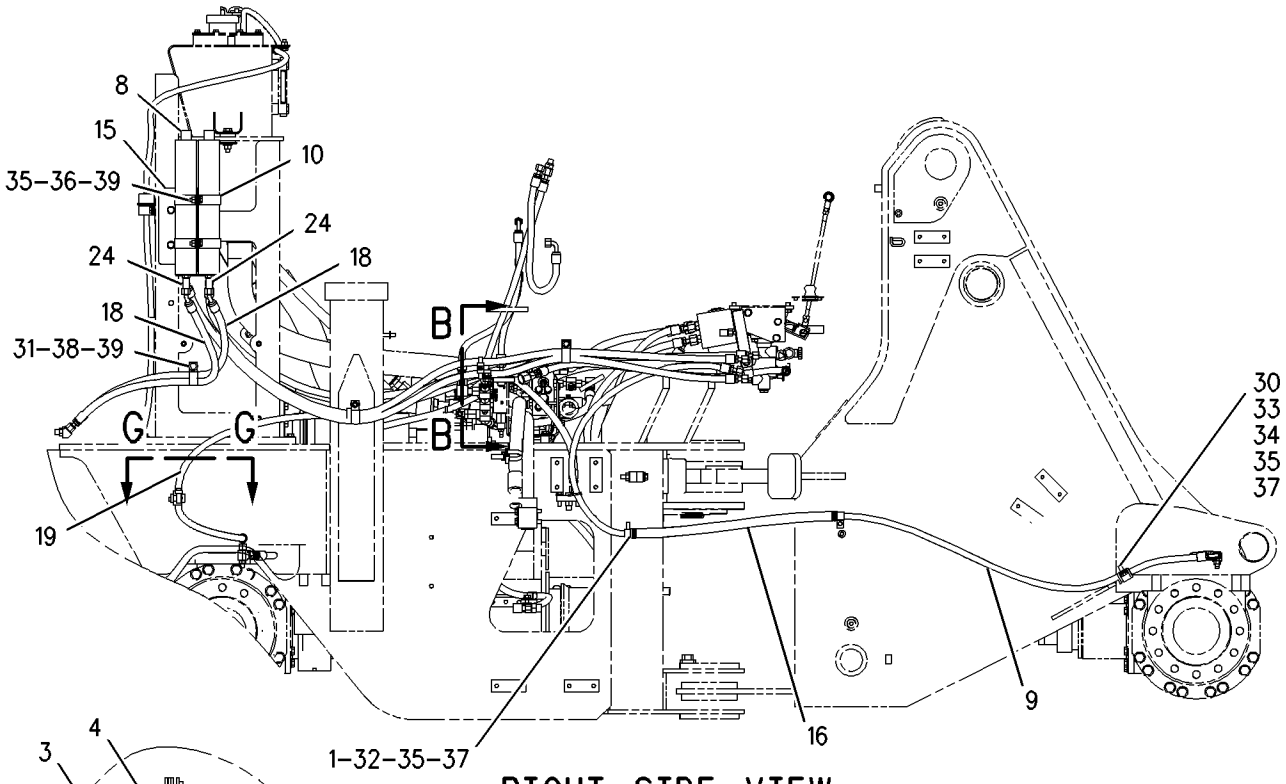

RIGHT SIDE VIEW

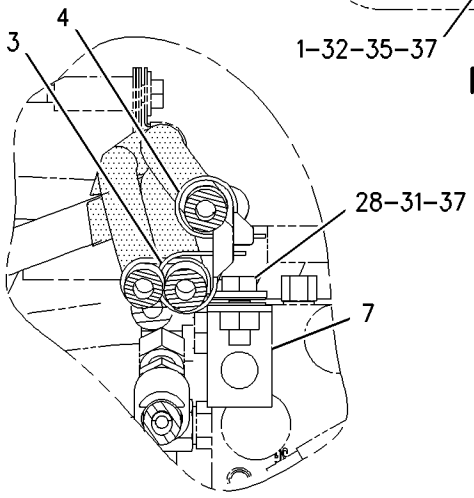

SECTION B-B

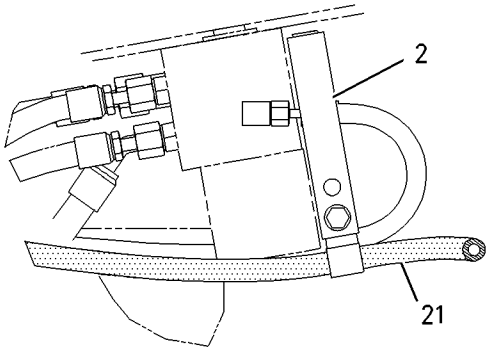

SECTION K-K

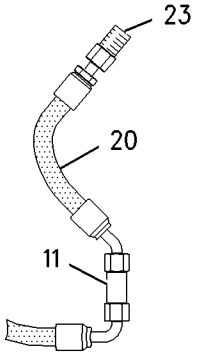

VIEW E-E

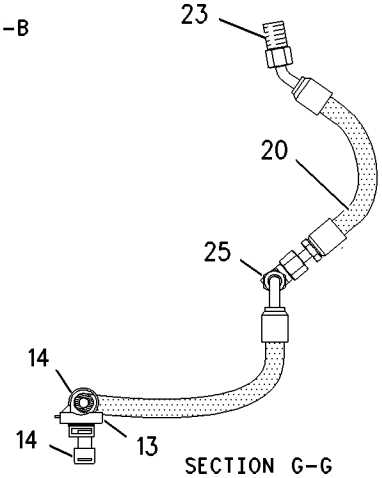

SECTION G-G

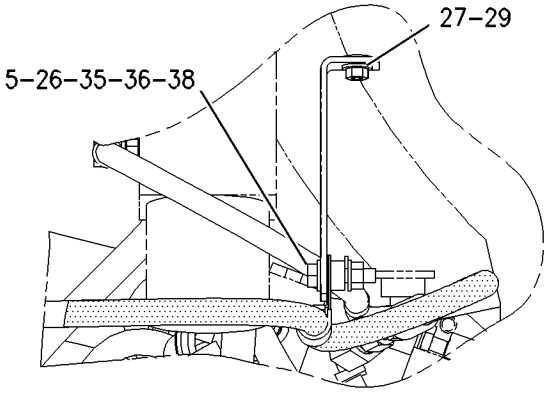

VIEW J-J

GRAPHIC #2

g00917162

BRAKING SYSTEM

203-3898 PUMP & MTG GP-BRAKE & HYD FAN

S/N: RTA1-UP; RBB1-UP

PART OF 176-5182, 176-5202 HYDRAULIC AR

SMCS-1387, 4268 **i01815880**

NOTE	REF NO	GRAPHIC REF	PART NUMBER	QTY	PART NAME 1 2 3 4 5 6 (PRODUCT LEVEL)	SEE PAGE
	1	1	**9Y-9380**	1	GASKET	
Y	2	1	**205-3665**	1	PUMP GP-GEAR (BRAKING & HYDRAULIC FAN)	290
M	3	1	**3E-8016**	5	BOLT-LOCKING (M8X1.25X25MM)	
	4	1	**8T-4224**	6	WASHER-HARD (8.8X16X2MM THK)	
M	5	1	**8T-6870**	1	BOLT (M8X1.25X70MM)	

M-METRIC PART
Y-SEPARATE ILLUSTRATION

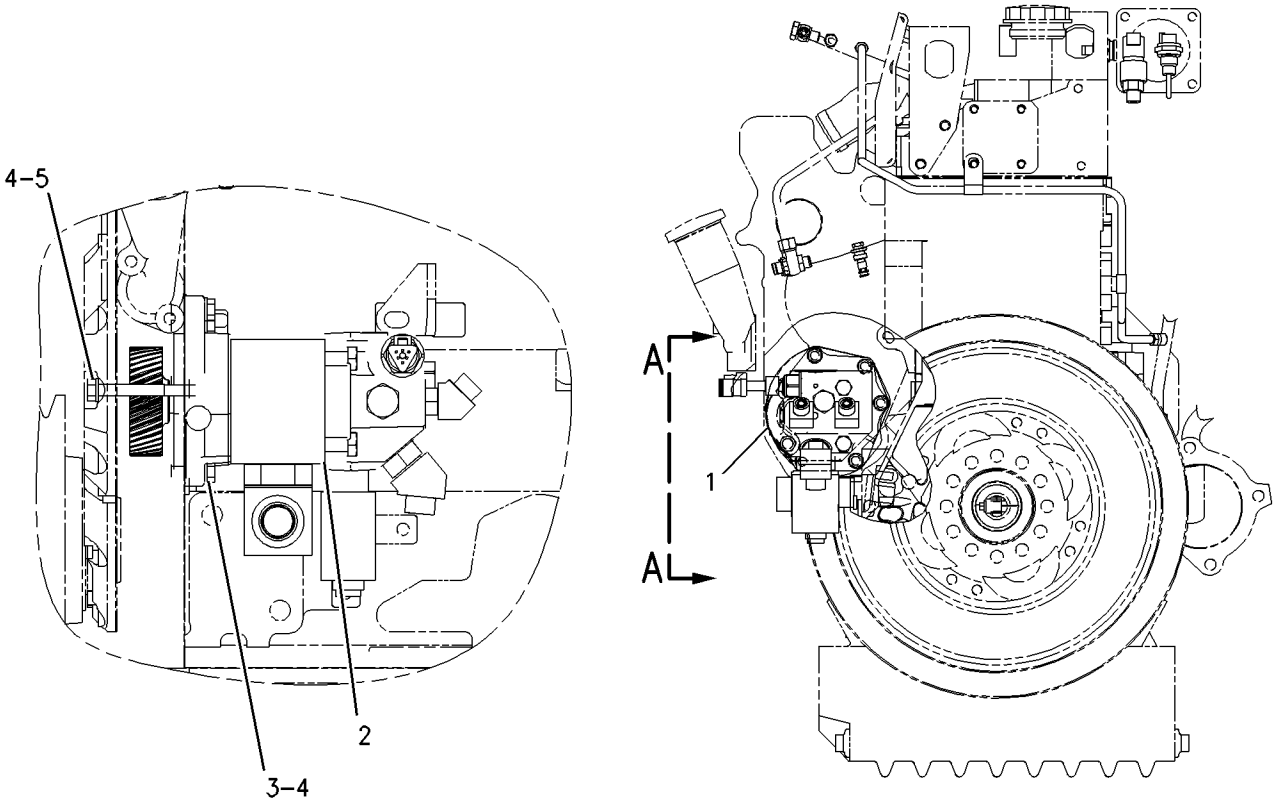

VIEW A-A

GRAPHIC #1 g00916565

199-5683 PUMP GP-GEAR–BRAKING & HYDRAULIC FAN

S/N: RTA1-UP; RBB1-UP

PART OF 205-3665 PUMP GP-GEAR

SMCS-4268, 4306, 5073 **i01859597**

NOTE	REF NO	GRAPHIC REF	PART NUMBER	QTY	PART NAME 1 2 3 4 5 6 (PRODUCT LEVEL)	SEE PAGE
J	1	1	**131-0715**	1	SEAL-SHAFT	
J	2	1	**187-1267**	1	RING-RETAINING	
J	3	1	**204-4148**	1	SEAL-SHAFT	
	4	1	**220-2657**	1	FLANGE	
	5	1	**6E-2943**	1	PLUG	
J	6	1	**4W-7356**	2	SEAL	
	7	1	**099-3095**	3	DOWEL	
	8	1	**1V-8787**	1	PIN	
	9	1	**220-2658**	1	COVER-END	
	10	1	**208-2293**	4	BOLT (M10X1.5X97.8MM)	
					AVAILABLE REPAIR KIT(S):	
J			**201-5242**	1	KIT-SEAL	

J-KIT MARKED J SERVICES PARTS MARKED J

199-5683 **PUMP GP-GEAR** ***(contd.)*** **i01859597**

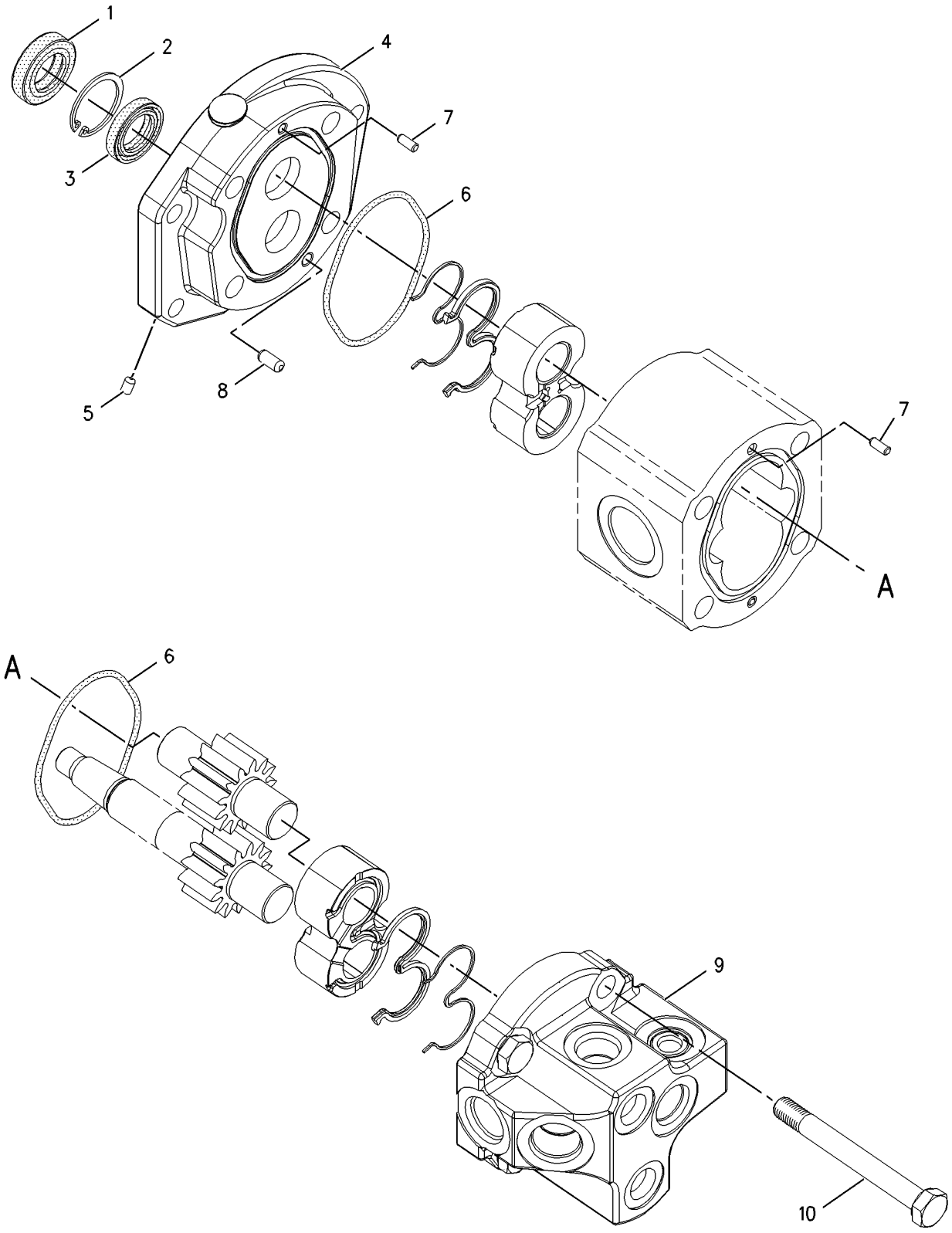

GRAPHIC #1 g00918500

205-3665 PUMP GP-GEAR

S/N: RTA1-UP; RBB1-UP

PART OF 203-3898 PUMP & MTG GP-BRAKE & HYD FAN

SMCS-4268, 4306, 5073 **i01815967**

NOTE	REF NO	GRAPHIC REF	PART NUMBER	QTY	PART NAME 1 2 3 4 5 6 (PRODUCT LEVEL)	SEE PAGE
	1	1	**205-4587**	1	GEAR	
M	2	1	**160-8499**	1	NUT	
	3	1	**5P-8244**	1	WASHER (12X22.5X2.5MM THK)	
	4	1	**203-6590**	1	VALVE GP-SOLENOID	
	4A	1	**146-3728**	1	WASHER-SPRING	
	4B	1	**148-2350**	1	COIL AS	
	4C	1	**154-4133**	1	CARTRIDGE AS	
		1	**6V-5049**	2	SEAL-O-RING	
	4D	1	**203-6591**	1	ADAPTER AS	
Y	5	1	**199-5683**	1	PUMP GP-GEAR	288
	6	1	*148-8347*	1	ELBOW GP	
		1	**3D-2824**	1	SEAL-O-RING	
		1	**6V-9007**	1	ELBOW	
		1	**6V-9746**	1	SEAL-O-RING	
	7	1	**213-4555**	1	VALVE GP-CONTROL	
		1	**3K-0360**	1	SEAL-O-RING	
		1	**095-1750**	1	SEAL-O-RING	
		1	**161-6149**	1	SEAL-O-RING	
		1	**161-6161**	1	RING-BACKUP	
		1	**187-0541**	1	RING-BACKUP	
	8	1	**215-6671**	1	SENSOR GP-PRESSURE	
E		1	**9X-1813**		SLEEVE (35CM)	
		1	**155-2260**	1	KIT-CONNECTING PLUG (3 PIN)	
		1	**155-2276**	1	WEDGE-PLUG LOCK (3 PIN)	
	9	1	**3E-4296**	1	SEAL-O-RING	
	10	1	**220-0186**	1	ORIFICE	
	11	1	**087-0991**	1	VALVE AS-CHECK	
	12	1	*148-8358*	1	ELBOW AS	
		1	**2M-9780**	1	SEAL-O-RING	
		1	**6V-8398**	1	SEAL-O-RING	
		1	**6V-8624**	1	ELBOW	
	13	1	*148-8353*	2	ELBOW GP	
					(EACH INCLUDES)	
		1	**3J-1907**	1	SEAL-O-RING	
		1	**6V-8397**	1	SEAL-O-RING	
		1	**6V-9001**	1	ELBOW	

E-ORDER BY THE CENTIMETER
M-METRIC PART
Y-SEPARATE ILLUSTRATION

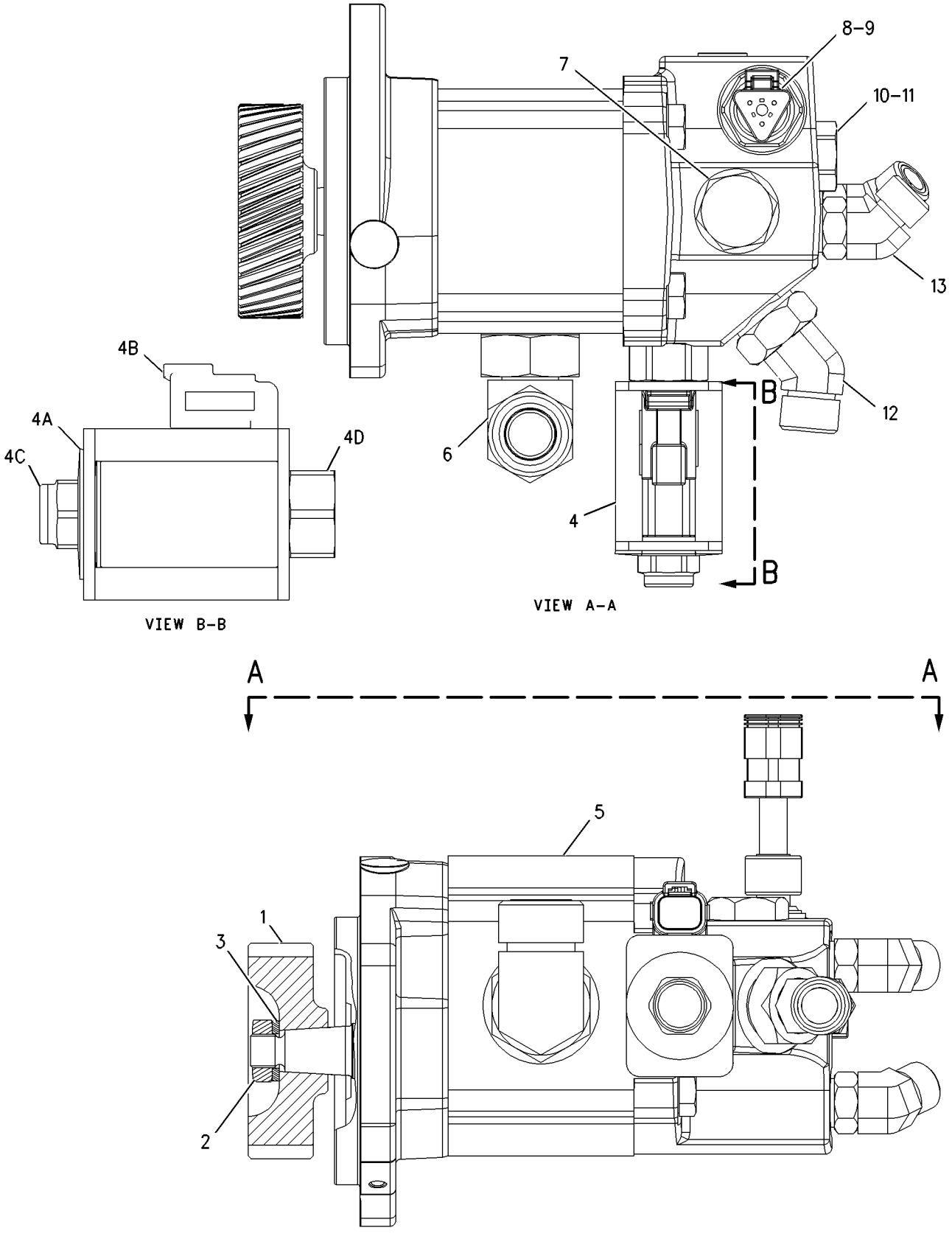

GRAPHIC #1 g00918970

STEERING SYSTEM

190-4635 CONTROL GP-STEERING

S/N: RTA1-UP; RBB1-UP
PART OF 190-4405 CAB AR
AN ATTACHMENT

SMCS-4304, 4309, 4310, 4338 **i01793737**

NOTE	REF NO	GRAPHIC REF	PART NUMBER	QTY	PART NAME 1 2 3 4 5 6 (PRODUCT LEVEL)	SEE PAGE
	1	1	**2T-3360**	1	BUTTON AS-HORN	
	2	1	**8R-2918**	1	KNOB AS	
	3	1	**9D-7924**	4	MOUNTING	
	4	1	**107-6007**	1	SUPPORT AS	
	5	1	**107-6141**	1	COVER	
	6	1	**111-7874**	1	SEAL	
	7	1	**111-7878**	1	COVER	
	8	1	**129-3270**	1	WHEEL AS-STEERING	
	9	1	**134-4735**	1	PLATE AS	
M		1	**8T-3612**	4	NUT-WELD (M8X1.25 THD)	
Y	10	1	**201-4825**	1	STEERING COLUMN GP (TILT)	308
	11	1	**5P-4116**	5	WASHER-HARD (8.8X20.5X2MM THK)	
	12	1	**7X-0603**	4	WASHER-HARD (9.9X35X2.5MM THK)	
M	13	1	**8T-4189**	5	BOLT (M8X1.25X20MM)	
M	14	1	**8T-4191**	4	BOLT (M10X1.5X16MM)	
M	15	1	**8T-6869**	4	BOLT (M8X1.25X60MM)	
M	16	1	**8T-8894**	4	BOLT-SOCKET HEAD (M10X1.5X20MM)	
M	17	1	**9X-2042**	4	SCREW-TRUSS HEAD (M6X1X12MM)	
M	18	1	**9X-2045**	2	SCREW-TRUSS HEAD (M6X1X20MM)	

M-METRIC PART
Y-SEPARATE ILLUSTRATION

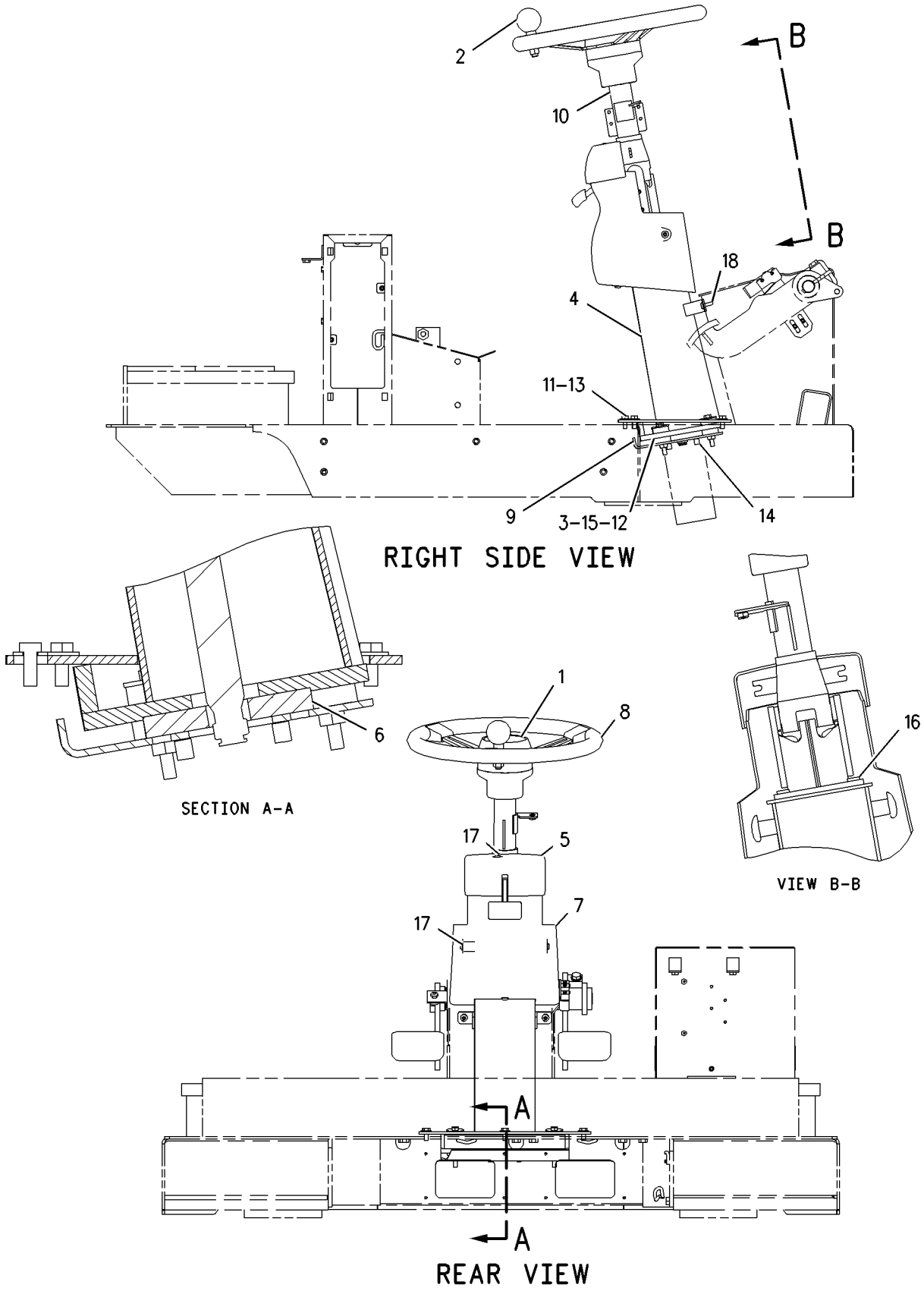

GRAPHIC #1 g00913540

STEERING SYSTEM

190-4643 CONTROL GP-STEERING

S/N: RTA1-UP; RBB1-UP
PART OF 216-6908 CAB AR, 190-4406 CANOPY GP-OPEN ROPS
AN ATTACHMENT

SMCS-4304, 4309, 4310, 4338 **i01793821**

NOTE	REF NO	GRAPHIC REF	PART NUMBER	QTY	PART NAME 1 2 3 4 5 6 (PRODUCT LEVEL)	SEE PAGE
	1	1	**2T-3360**	1	BUTTON AS-HORN	
	2	1	**8R-2918**	1	KNOB AS	
	3	1	**9D-7924**	4	MOUNTING	
	4	1	**107-6007**	1	SUPPORT AS	
	5	1	**107-6141**	1	COVER	
	6	1	**111-7878**	1	COVER	
	7	1	**129-3270**	1	WHEEL AS-STEERING	
	8	1	**134-4735**	1	PLATE AS	
M		1	**8T-3612**	4	NUT-WELD (M8X1.25 THD)	
Y	9	1	**201-4825**	1	STEERING COLUMN GP (TILT)	308
	10	1	**5P-4116**	5	WASHER-HARD (8.8X20.5X2MM THK)	
	11	1	**7X-0603**	4	WASHER-HARD (9.9X35X2.5MM THK)	
M	12	1	**8T-4189**	5	BOLT (M8X1.25X20MM)	
M	13	1	**8T-4191**	4	BOLT (M10X1.5X16MM)	
M	14	1	**8T-6869**	4	BOLT (M8X1.25X60MM)	
M	15	1	**8T-8894**	4	BOLT-SOCKET HEAD (M10X1.5X20MM)	
M	16	1	**9X-2042**	4	SCREW-TRUSS HEAD (M6X1X12MM)	
M	17	1	**9X-2045**	2	SCREW-TRUSS HEAD (M6X1X20MM)	

M-METRIC PART
Y-SEPARATE ILLUSTRATION

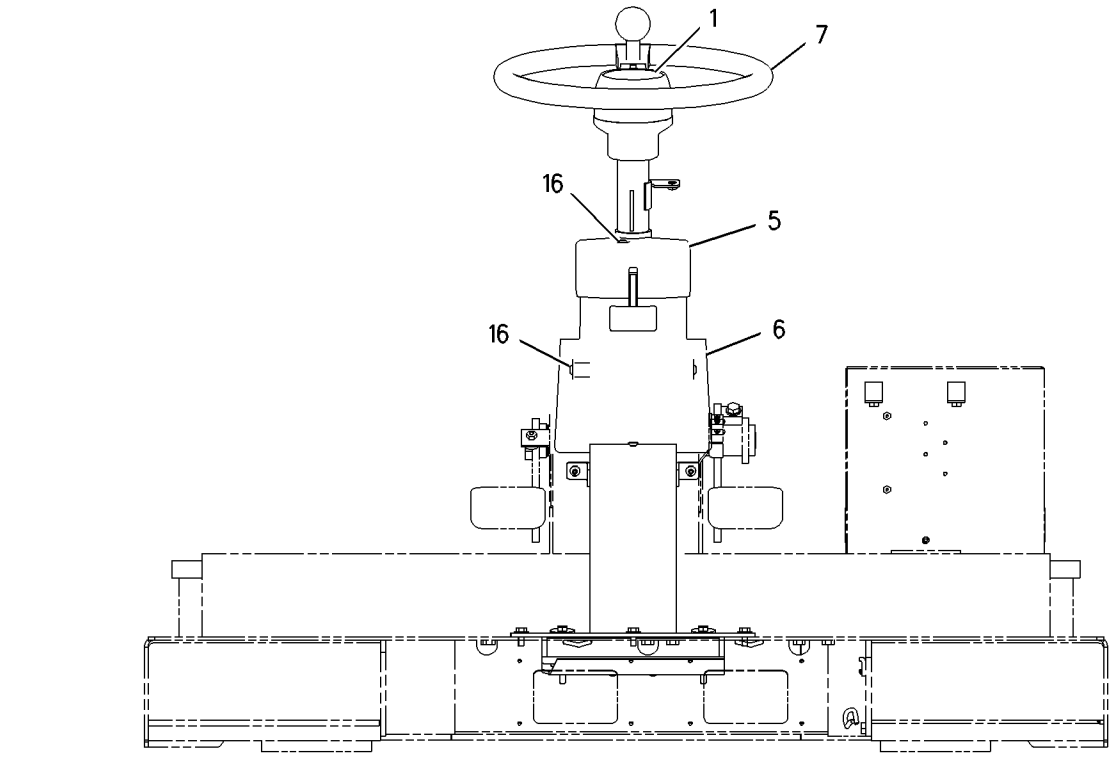

REAR VIEW

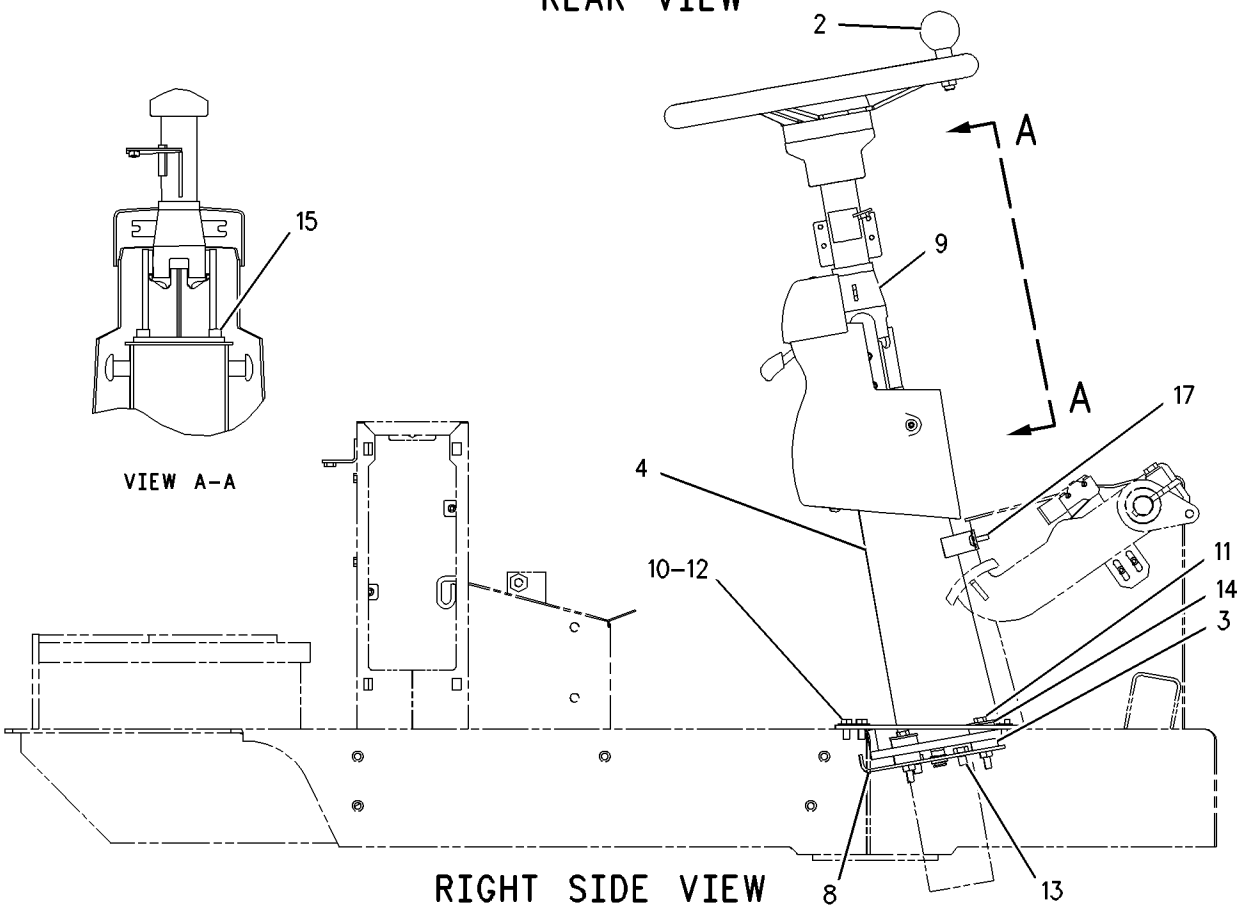

VIEW A–A

RIGHT SIDE VIEW

GRAPHIC #1 g00913405

132-2550 CYLINDER & MTG GP-STEERING

S/N: RTA1-UP; RBB1-UP

PART OF 176-5181, 176-5201 CHASSIS AR

SMCS-4303 **i01499448**

NOTE	REF NO	GRAPHIC REF	PART NUMBER	QTY	PART NAME 1 2 3 4 5 6 (PRODUCT LEVEL)	SEE PAGE
B	1	1	**9D-1535**	16	WASHER-THRUST (1.22MM THK)	
	2	1	**132-2553**	2	PIN	
	3	1	**132-2554**	2	PIN AS	
Y	4	1	**142-6251**	2	CYLINDER GP-STEERING	298
	5	1	**6V-3213**	2	RING-RETAINING	
	6	1	**7X-0618**	2	WASHER-HARD (13.5X40X5MM THK)	
M	7	1	**8T-4192**	2	BOLT (M12X1.75X25MM)	

B-USE AS REQUIRED
M-METRIC PART
Y-SEPARATE ILLUSTRATION

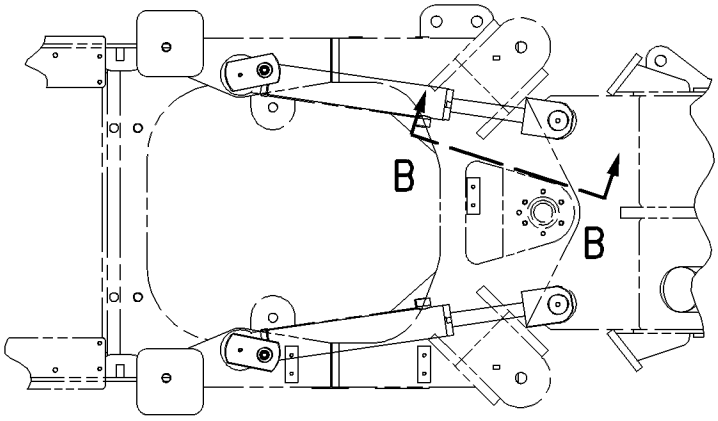

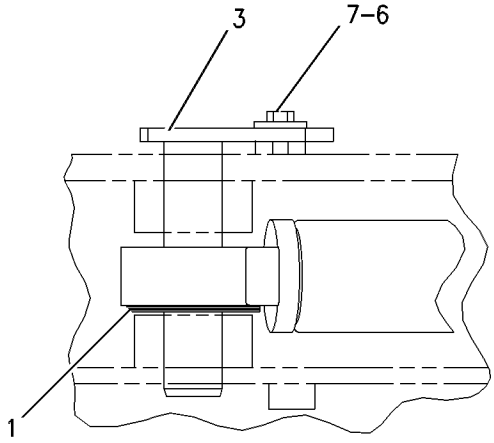

VIEW OF AREA A

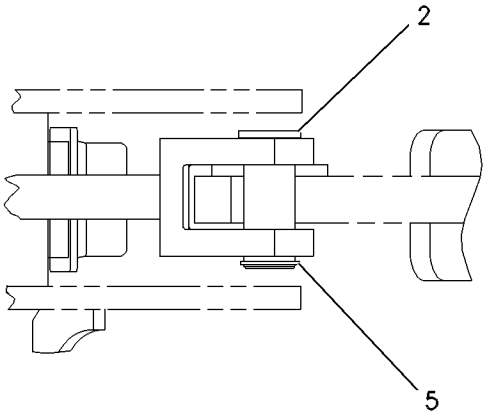

VIEW B-B

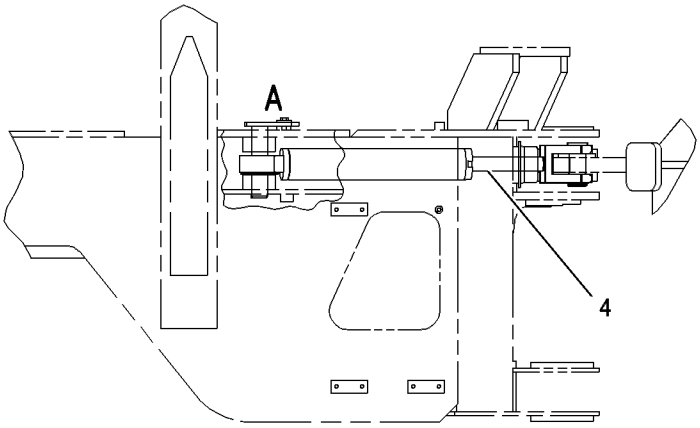

GRAPHIC #1 g00623407

STEERING SYSTEM

142-6251 CYLINDER GP-STEERING

S/N: RTA1-UP; RBB1-UP
69.85MM (2.75IN)BORE X 344.7MM (13.6IN) STROKE
PART OF 132-2550 CYLINDER & MTG GP-STEERING

SMCS-4303 **i01538969**

NOTE	REF NO	GRAPHIC REF	PART NUMBER	QTY	PART NAME 1 2 3 4 5 6 (PRODUCT LEVEL)	SEE PAGE
	1	1	**142-6252**	1	CYLINDER AS	
	1A	1	**4D-4431**	1	BEARING-ALIGNING	
M	2	1	**173-9779**	1	BOLT-HEX HEAD (M24X3.0X80MM)	
	3	1	**6V-8237**	1	WASHER (26X44X4MM THK)	
	4	1	**8J-0112**	1	RING-WEAR	
	5	1	**5J-7010**	1	SEAL AS	
	6	1	**142-7568**	1	PISTON	
	7	1	**6E-4940**	1	HEAD	
	8	1	**142-6255**	1	ROD AS	
	9	1	**4J-9225**	1	RING-BACKUP	
	10	1	**175-7895**	1	SEAL-O-RING	
	11	1	**4T-6780**	1	RING-WEAR	
	12	1	**167-2186**	1	SEAL AS-BUFFER	
	13	1	**167-2294**	1	SEAL-U-CUP	
	14	1	**167-2450**	1	SEAL-WIPER	

M-METRIC PART

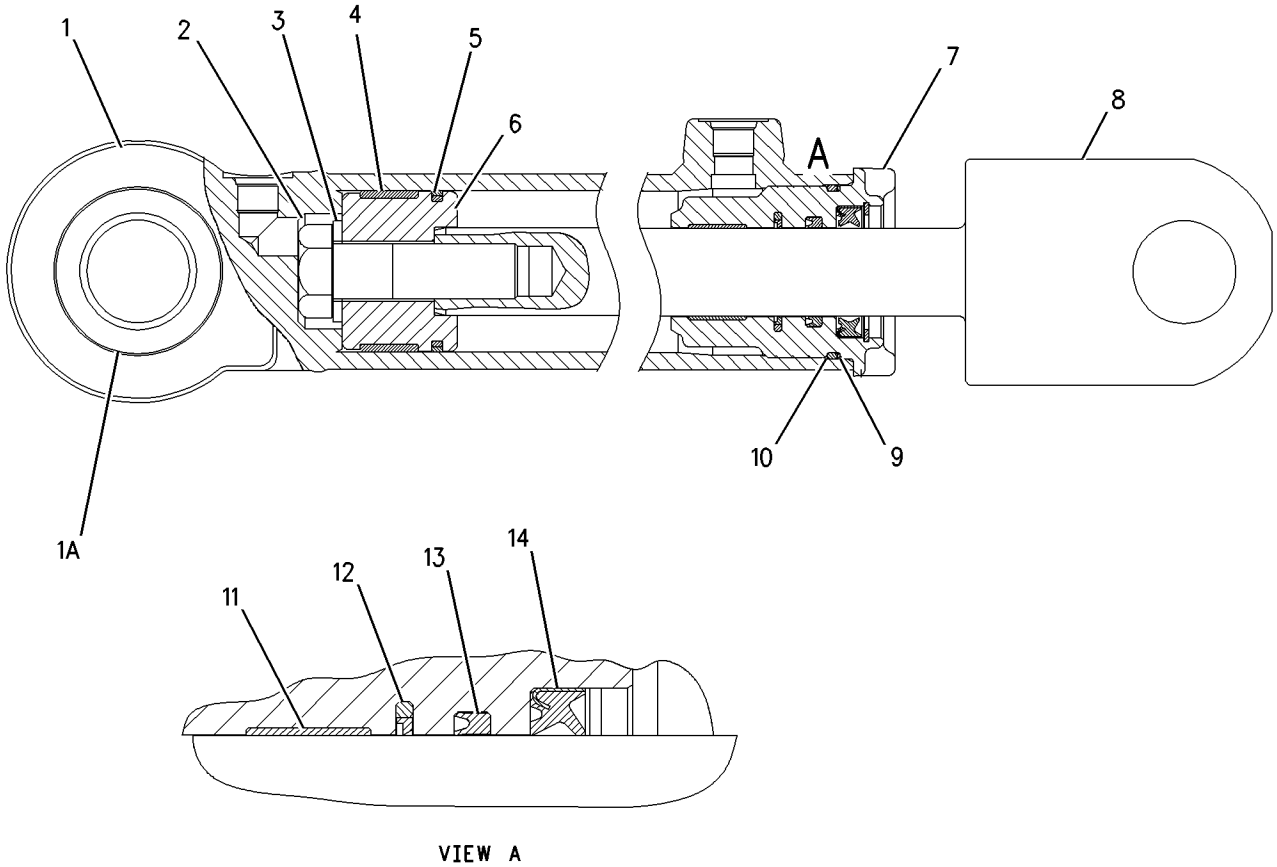

GRAPHIC #1 g00799300

MEMORANDA

STEERING SYSTEM

206-2571 LINES GP-SECONDARY STEERING

S/N: RTA1-UP; RBB1-UP
PART OF 203-3888 STEERING AR-SECONDARY
AN ATTACHMENT

SMCS-4304 **i01862452**

NOTE	REF NO	GRAPHIC REF	PART NUMBER	QTY	PART NAME 1 2 3 4 5 6 (PRODUCT LEVEL)	SEE PAGE
	1	2	**3E-6450**	1	SWITCH AS-PRESSURE (SECONDARY STEERING)	
		2	**102-8803**	1	KIT-RECEPTACLE (3 PIN)	
		2	**3E-3371**	1	WEDGE-RECEPTACLE LOCK (3 PIN)	
		2	**186-3735**	1	PIN-CONNECTOR	
	2	1	**6V-0852**	1	CAP-DUST	
	3	1	**7K-1181**	1	STRAP-CABLE	
	4	1	**9T-1013**	2	VALVE AS-CHECK	
					(EACH INCLUDES)	
		1	**3K-0360**	1	SEAL-O-RING	
		1	**6V-8398**	1	SEAL-O-RING	
	5	1	**9T-8071**	1	VALVE GP-RELIEF (SECONDARY STEERING)	
I	6	2	**146-7906**	1	HOSE AS	
I	7	2	**146-7907**	1	HOSE AS	
I	8	2	**146-7908**	1	HOSE AS	
I	9	1	**169-2943**	1	HOSE AS	
	10	1	*169-4274*	1	TEE AS	
		1	**3J-7354**	1	SEAL-O-RING	
		1	**4J-5477**	1	SEAL-O-RING	
		1	**8T-3313**	1	TEE-O-RING	
	11	2	**200-6345**	1	MOUNT-SWIVEL	
	12	2	**204-2281**	2	TIE	
	13	1	**205-5266**	1	PUMP & MOTOR GP-SEC STEERING	
		1	**1A-2209**	2	BOLT (3/8-24X1.25 IN)	
		1	**117-3915**	1	MOTOR GP-ELECTRIC	
		1	**6V-8801**	2	NUT (3/8-16 THD)	
		1	**7X-0608**	2	WASHER-HARD (10.2X16X2.0MM THK)	
		1	**123-8914**	1	PUMP	
	14	1	**211-6643**	1	PLATE AS	
M		1	**8T-3612**	4	NUT-WELD (M8X1.25 THD)	
I	15	1	**213-7438**	1	HOSE AS	
I	16	2	**214-1542**	1	HOSE AS	
I	17	1	**214-1543**	1	HOSE AS	
I	18	1	**214-1544**	1	HOSE AS	
	19	1	**214-4153**	1	PUMP GP-METERING (HMU)	
I	20	1	**214-7098**	1	HOSE AS	
I	21	1	**216-8396**	1	HOSE AS	
I	22	1	**216-8398**	1	HOSE AS	
	23	1,2	*148-8340*	4	CONNECTOR GP	
					(EACH INCLUDES)	
		1,2	**3K-0360**	1	SEAL-O-RING	
		1,2	**6V-8398**	1	SEAL-O-RING	
		1,2	**6V-8639**	1	CONNECTOR	
	24	2	*148-8342*	2	CONNECTOR GP	
					(EACH INCLUDES)	
		2	**3K-0360**	1	SEAL-O-RING	
		2	**6V-8632**	1	CONNECTOR	
		2	**7J-9108**	1	SEAL-O-RING	
	25	1	*148-8345*	1	CONNECTOR GP	
		1	**2M-9780**	1	SEAL-O-RING	
		1	**6V-8398**	1	SEAL-O-RING	
		1	**6V-8639**	1	CONNECTOR	
	26	1	*148-8347*	1	ELBOW GP	
		1	**3D-2824**	1	SEAL-O-RING	
		1	**6V-9007**	1	ELBOW	
		1	**6V-9746**	1	SEAL-O-RING	

206-2571 LINES GP-SECONDARY STEERING *(contd.)* i01862452

NOTE	REF NO	GRAPHIC REF	PART NUMBER	QTY	PART NAME 1 2 3 4 5 6 (PRODUCT LEVEL)	SEE PAGE
	27	2	*148-8364*	2	ELBOW AS	
					(EACH INCLUDES)	
		2	**3K-0360**	1	SEAL-O-RING	
		2	**6V-8398**	1	SEAL-O-RING	
		2	**6V-8625**	1	ELBOW	
	28	2	*148-8369*	1	ELBOW GP	
		2	**3J-7354**	1	SEAL-O-RING	
		2	**4J-5477**	1	SEAL-O-RING	
		2	**6V-8628**	1	ELBOW	
	29	2	*148-8428*	1	TEE GP	
		2	**3K-0360**	1	SEAL-O-RING	
		2	**6V-8398**	2	SEAL-O-RING	
		2	**6V-8782**	1	TEE-FACE SEAL	
	30	1,2	*148-8436*	2	TEE AS	
					(EACH INCLUDES)	
		1,2	**3K-0360**	1	SEAL-O-RING	
		1,2	**6V-8398**	2	SEAL-O-RING	
		1,2	**6V-8775**	1	TEE-FACE SEAL	
	31	1	*150-4033*	1	TEE GP	
		1	**6V-9746**	2	SEAL-O-RING	
		1	**6V-9846**	1	TEE-SWIVEL	
	32	2	*150-4036*	1	TEE AS	
		2	**3K-0360**	1	SEAL-O-RING	
		2	**118-0911**	1	TEE-O-RING PORT	
	33	1	*153-6241*	1	ELBOW GP	
		1	**6V-8398**	1	SEAL-O-RING	
		1	**8C-8989**	1	ELBOW	
	34	1	*155-6258*	1	ELBOW AS	
		1	**3D-2824**	1	SEAL-O-RING	
		1	**6V-8398**	1	SEAL-O-RING	
		1	**127-1647**	1	ELBOW	
	35	1	*164-5567*	1	FITTING GP	
		1	**3J-1907**	1	SEAL-O-RING	
		1	**6V-3965**	1	FITTING AS	
	36	2	**3K-0360**	1	SEAL-O-RING	
	37	1	**6D-4244**	1	CLIP	
	38	1	**7X-7729**	2	WASHER (11X25X3MM THK)	
	39	2	**8M-2773**	1	CLIP	
	40	2	**8S-0948**	2	CLIP	
	41	1,2	**8T-4121**	3	WASHER-HARD (11X21X2.5MM THK)	
M	42	1	**8T-4136**	2	BOLT (M10X1.5X25MM)	
M	43	2	**8T-4137**	2	BOLT (M10X1.5X20MM)	
M	44	1	**8T-4186**	1	BOLT (M10X1.5X40MM)	
	45	1	**8T-4224**	4	WASHER-HARD (8.8X16X2MM THK)	
M	46	1	**8T-7547**	4	BOLT (M8X1.25X30MM)	

I-SEE HOSE FABRICATION GUIDE
M-METRIC PART

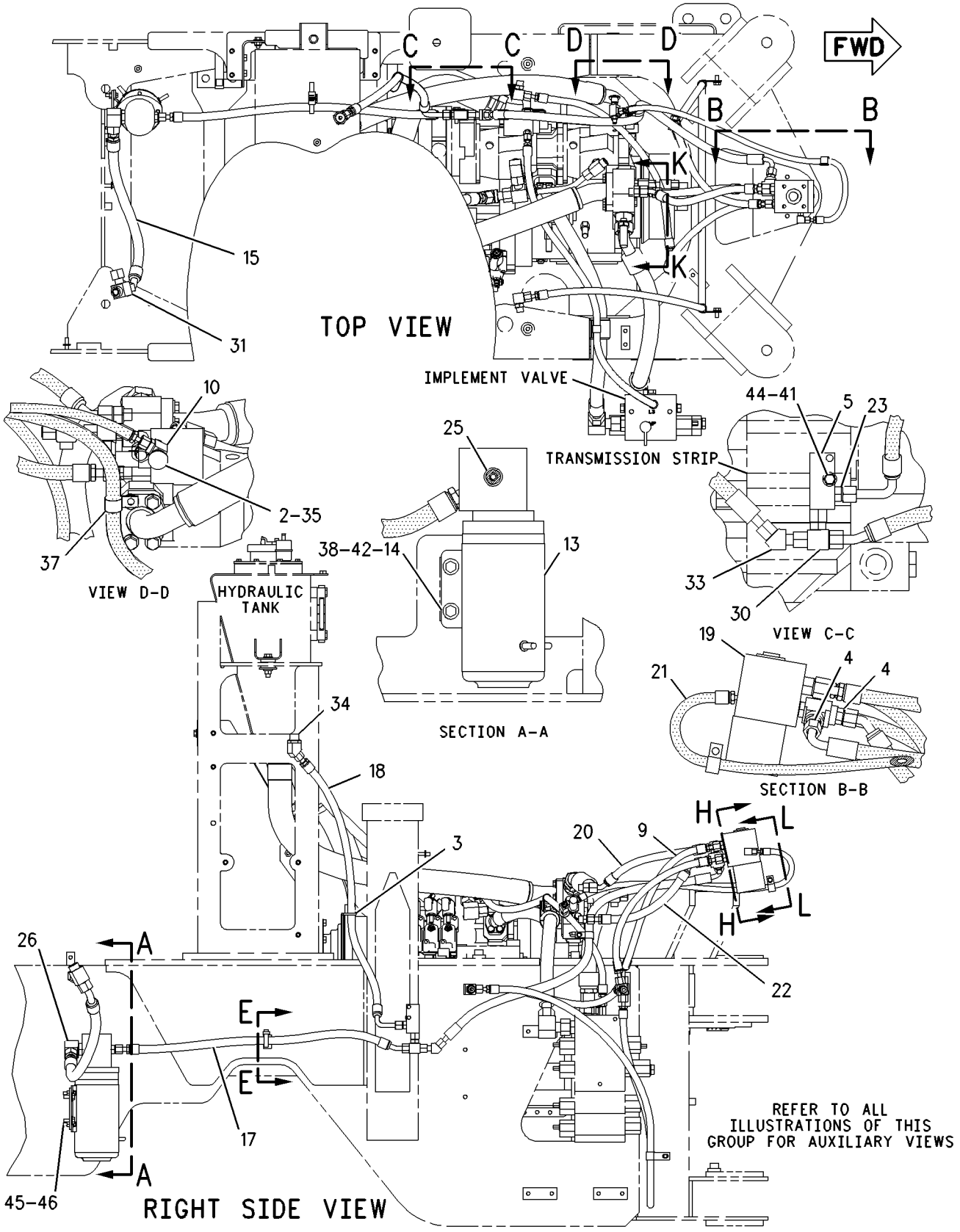

GRAPHIC #1 g00924870

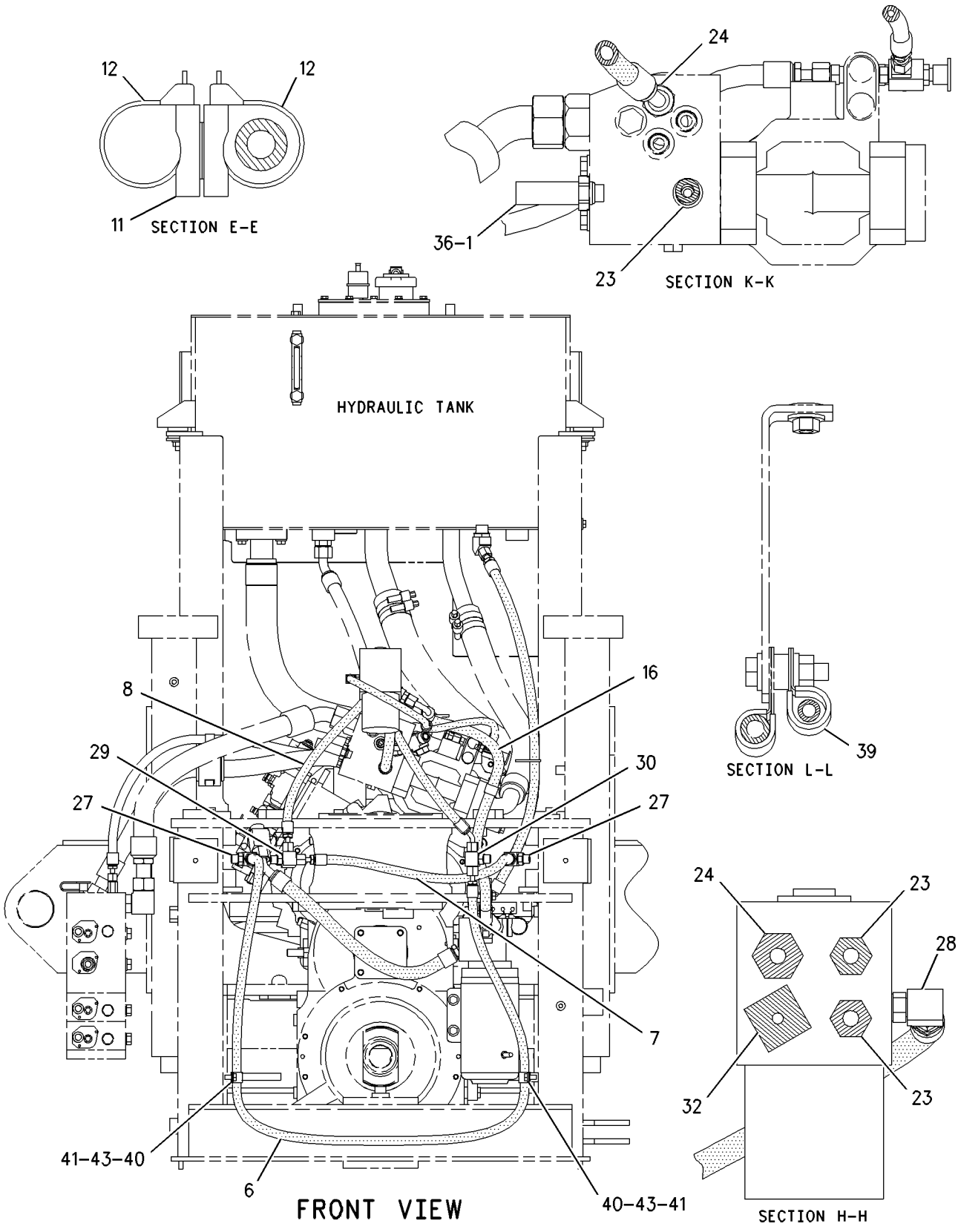

GRAPHIC #2

g00924875

STEERING SYSTEM

214-5871 LINES GP-STEERING

S/N: RTA1-UP; RBB1-UP
PART OF 212-9979 STEERING AR
AN ATTACHMENT

SMCS-4304 **i01828847**

NOTE	REF NO	GRAPHIC REF	PART NUMBER	QTY	PART NAME 1 2 3 4 5 6 (PRODUCT LEVEL)	SEE PAGE
	1	2	**6V-0852**	1	CAP-DUST	
I	2	1	**146-7906**	1	HOSE AS	
I	3	1	**146-7907**	1	HOSE AS	
I	4	1	**146-7908**	1	HOSE AS	
	5	1	**214-4153**	1	PUMP GP-METERING (HMU)	
I	6	1	**169-2943**	1	HOSE AS	
	7	2	*169-4274*	1	TEE AS	
		2	**3J-7354**	1	SEAL-O-RING	
		2	**4J-5477**	1	SEAL-O-RING	
		2	**8T-3313**	1	TEE-O-RING	
I	8	1	**172-6456**	1	HOSE AS	
I	9	1	**214-7098**	1	HOSE AS	
I	10	1	**216-8396**	1	HOSE AS	
	11	1,2	*148-8340*	4	CONNECTOR GP	
					(EACH INCLUDES)	
		1,2	**3K-0360**	1	SEAL-O-RING	
		1,2	**6V-8398**	1	SEAL-O-RING	
		1,2	**6V-8639**	1	CONNECTOR	
	12	1,2	*148-8342*	2	CONNECTOR GP	
					(EACH INCLUDES)	
		1,2	**3K-0360**	1	SEAL-O-RING	
		1,2	**6V-8632**	1	CONNECTOR	
		1,2	**7J-9108**	1	SEAL-O-RING	
	13	2	*148-8364*	2	ELBOW GP	
					(EACH INCLUDES)	
		2	**3K-0360**	1	SEAL-O-RING	
		2	**6V-8398**	1	SEAL-O-RING	
		2	**6V-8625**	1	ELBOW	
	14	1	*148-8369*	1	ELBOW GP	
		1	**3J-7354**	1	SEAL-O-RING	
		1	**4J-5477**	1	SEAL-O-RING	
		1	**6V-8628**	1	ELBOW	
	15	2	*148-8428*	1	TEE GP	
		2	**3K-0360**	1	SEAL-O-RING	
		2	**6V-8398**	2	SEAL-O-RING	
		2	**6V-8782**	1	TEE-FACE SEAL	
	16	2	*148-8436*	1	TEE AS	
		2	**3K-0360**	1	SEAL-O-RING	
		2	**6V-8398**	2	SEAL-O-RING	
		2	**6V-8775**	1	TEE-FACE SEAL	
	17	1	*148-8408*	1	PLUG AS	
		1	**3D-2824**	1	SEAL-O-RING	
		1	**9S-4183**	1	PLUG	
	18	2	*164-5567*	1	FITTING GP	
		2	**3J-1907**	1	SEAL-O-RING	
		2	**6V-3965**	1	FITTING AS	
	19	2	**8M-2773**	1	CLIP	
	20	2	**8S-0948**	2	CLIP	
	21	2	**8T-4121**	2	WASHER-HARD (11X21X2.5MM THK)	
M	22	2	**8T-4137**	2	BOLT (M10X1.5X20MM)	

I-SEE HOSE FABRICATION GUIDE
M-METRIC PART

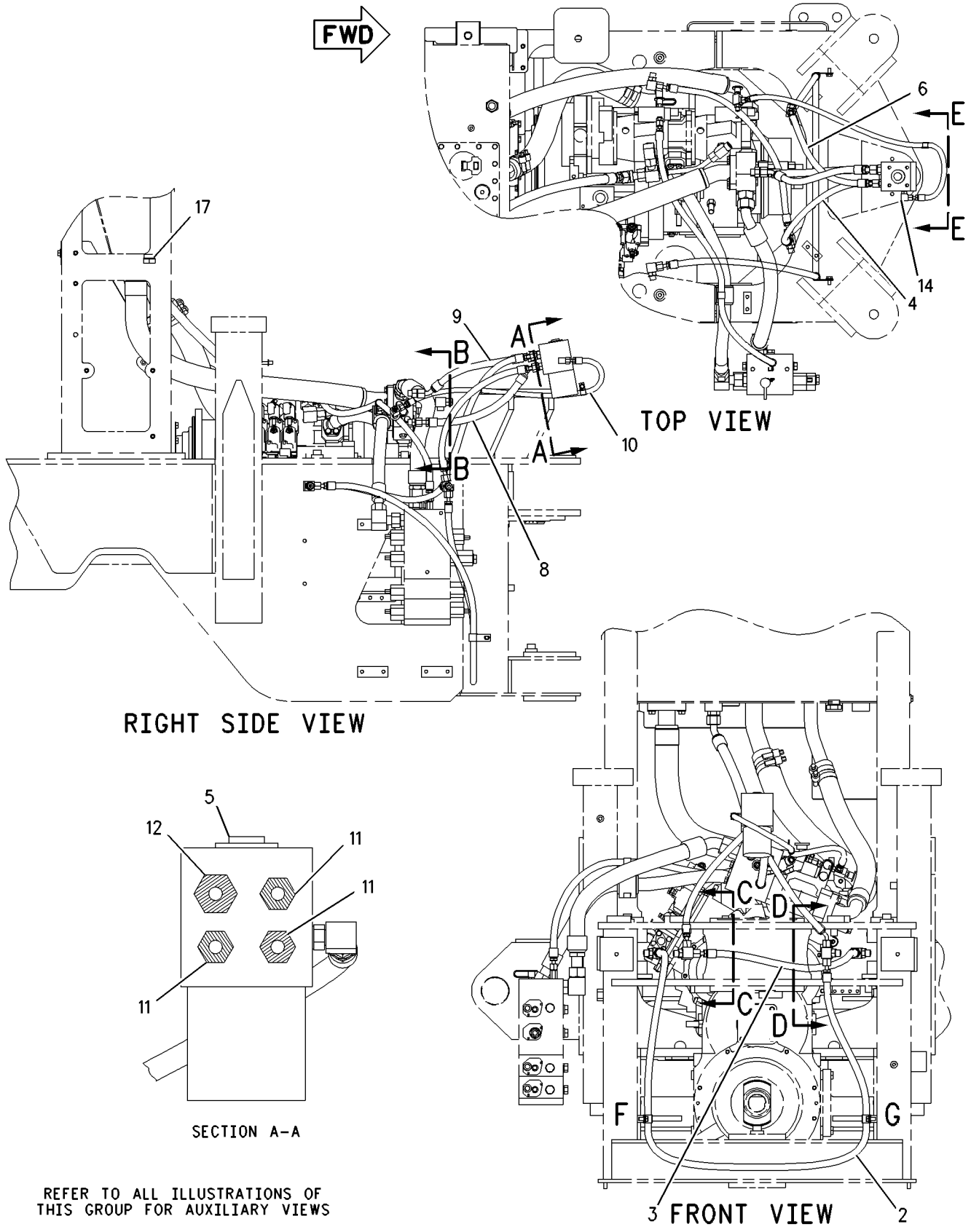

GRAPHIC #1 g00916131

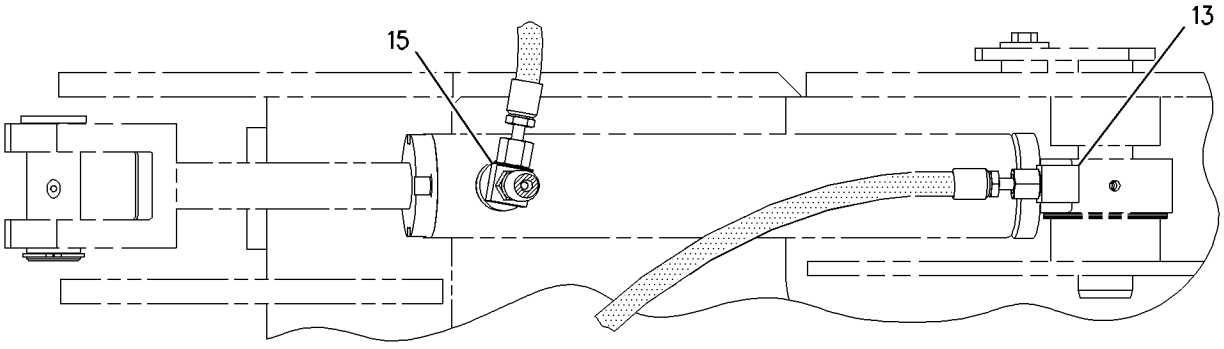

SECTION C-C

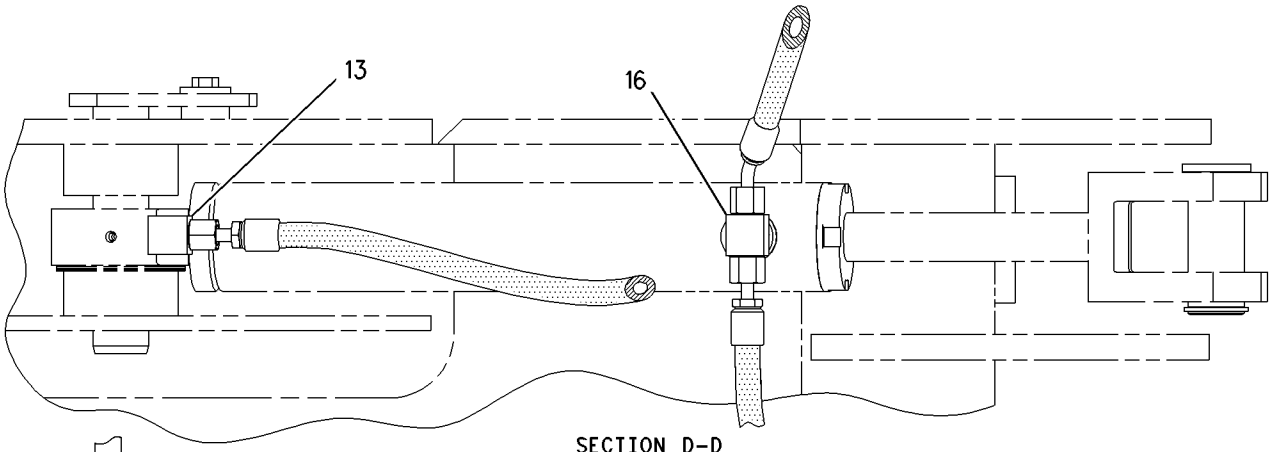

SECTION D-D

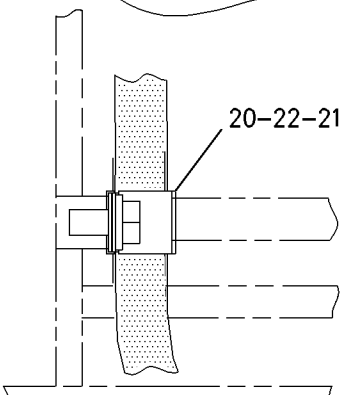

VIEW OF AREA F

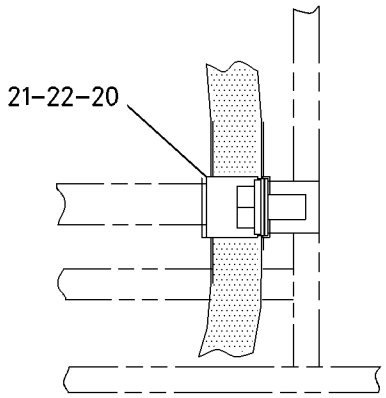

VIEW OF AREA G

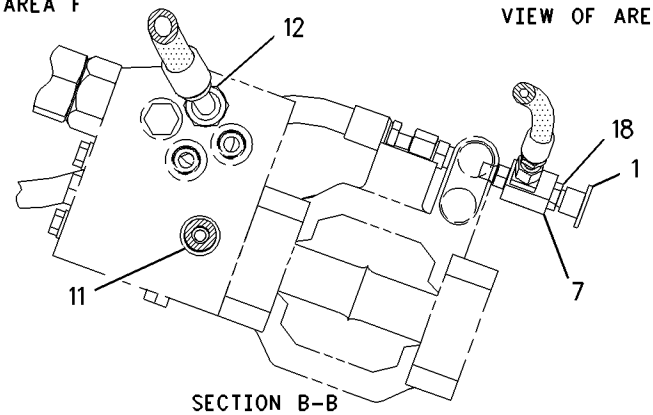

SECTION B-B

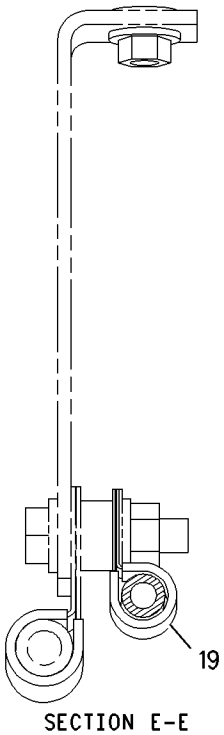

SECTION E-E

GRAPHIC #2

g00916233

STEERING SYSTEM

212-9979 STEERING AR

S/N: RTA1-UP; RBB1-UP

AN ATTACHMENT

SMCS-4300 **i01828810**

NOTE	PART NUMBER	QTY	PART NAME 1 2 3 4 5 6 (PRODUCT LEVEL)	SEE PAGE
Y	*214-5871*	1	LINES GP-STEERING	304
Y-SEPARATE ILLUSTRATION				

<END>

203-3888 STEERING AR-SECONDARY

S/N: RTA1-UP; RBB1-UP

AN ATTACHMENT

SMCS-4300 **i01818453**

NOTE	PART NUMBER	QTY	PART NAME 1 2 3 4 5 6 (PRODUCT LEVEL)	SEE PAGE
Y	*206-2571*	1	LINES GP-SECONDARY STEERING	300
Y	*180-8810*	1	WIRING GP-SECONDARY STEERING	172
Y-SEPARATE ILLUSTRATION				

<END>

201-4825 STEERING COLUMN GP

S/N: RTA1-UP; RBB1-UP
TILT
PART OF 190-4635, 190-4643 CONTROL GP-STEERING
AN ATTACHMENT

SMCS-4310 **i01793726**

NOTE	REF NO	GRAPHIC REF	PART NUMBER	QTY	PART NAME 1 2 3 4 5 6 (PRODUCT LEVEL)	SEE PAGE
	1	1	**149-0777**	1	KIT-KNOB	
	2	1	**222-1241**	1	KIT-HORN	
M	3	1	**169-3261**	1	NUT (M18X1.5 THD)	
	4	1	**217-4154**	1	SPRING AS-GAS	
	5	1	**217-4155**	1	KIT-TILT LEVER	
	6	1	**196-3699**	2	PIN-PIVOT	
	7	1	**196-3698**	2	BUSHING-PIVOT	

M-METRIC PART

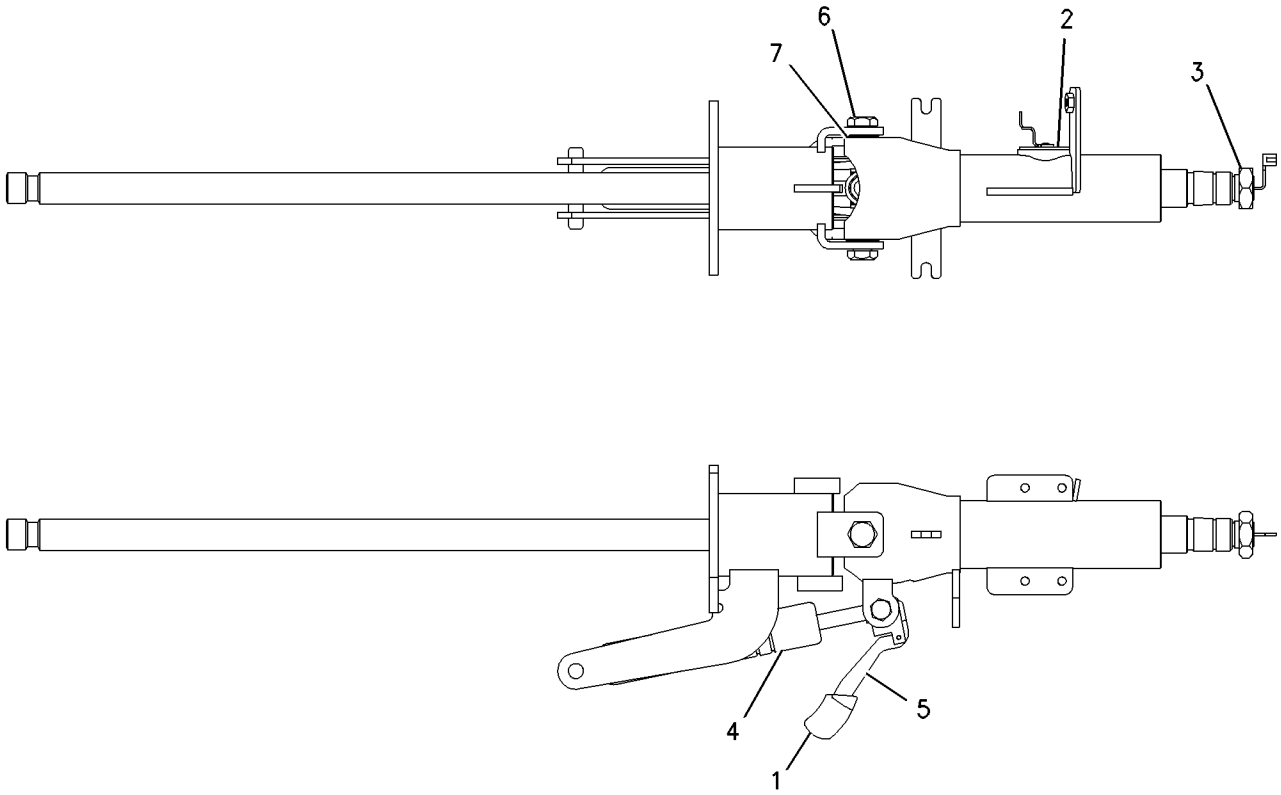

GRAPHIC #1 g00917591

203-8554 CONTROL AR-RIDE

S/N: RBB1-UP
AN ATTACHMENT

SMCS-5004 **i01833197**

NOTE	PART NUMBER	QTY	PART NAME 1 2 3 4 5 6 (PRODUCT LEVEL)	SEE PAGE
Y	*203-8555*	1	LINES GP-RIDE CONTROL	384
Y	*215-2887*	1	WIRING GP-RIDE CONTROL	168

Y-SEPARATE ILLUSTRATION

<END>

203-8556 CONTROL AR-RIDE

S/N: RTA1-UP
AN ATTACHMENT

SMCS-5004 **i01819960**

NOTE	PART NUMBER	QTY	PART NAME 1 2 3 4 5 6 (PRODUCT LEVEL)	SEE PAGE
Y	*203-8557*	1	LINES GP-RIDE CONTROL	388
Y	*215-2888*	1	WIRING GP-RIDE CONTROL	170

Y-SEPARATE ILLUSTRATION

<END>

HYDRAULIC SYSTEM

184-5296 CONTROL GP-HANDLE

S/N: RTA1-UP; RBB1-UP

PART OF 203-3889, 203-3890 HYDRAULIC AR-2 VALVE, 203-3891, 203-3892 HYDRAULIC AR-3 VALVE, 203-3893 HYDRAULIC AR-4 VALVE AN ATTACHMENT

SMCS-3065, 5063, 5705 **i01817490**

NOTE	REF NO	GRAPHIC REF	PART NUMBER	QTY	PART NAME 1 2 3 4 5 6 (PRODUCT LEVEL)	SEE PAGE
M	1	1	**150-1293**	2	SCREW-BUTTON HEAD (M4X0.7X12MM)	
	2	1	**208-6097**	1	HANDLE GP-CONTROL (TMSN F-N-R & DOWNSHIFT)	
		1	**186-3735**	6	PIN-CONNECTOR	
	3	1	**149-4359**	1	ROD-CONTROL	
	4	1	**102-8805**	1	KIT-RECEPTACLE (6 PIN)	
					(INCLUDES RECEPTACLE AS & WEDGE)	
	5	1	**3E-3383**	1	WEDGE-RECEPTACLE LOCK	
M	6	1	**8T-4244**	1	NUT (M12X1.75 THD)	

M-METRIC PART

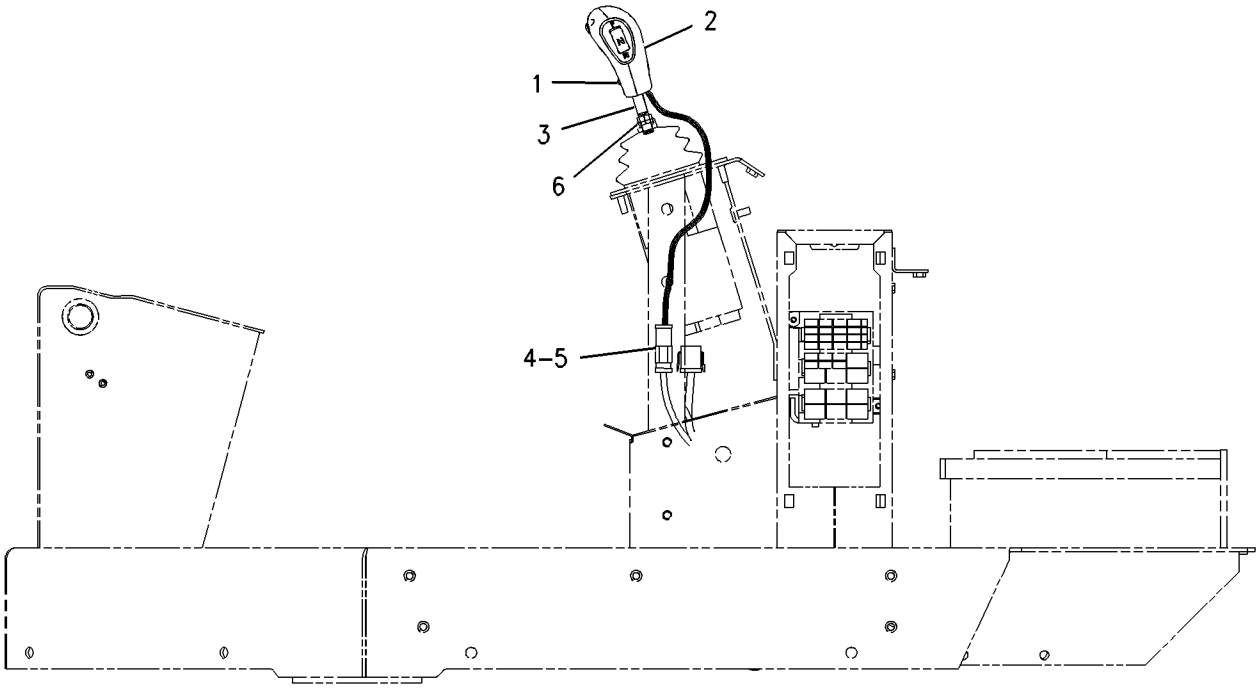

RIGHT SIDE VIEW

GRAPHIC #1 g00885736

HYDRAULIC SYSTEM

225-1059 CONTROL GP-PILOT OPERATED HYD

S/N: RTA1-UP; RBB1-UP
JOYSTICK,2 FUNCTION
PART OF 203-3889, 203-3890 HYDRAULIC AR-2 VALVE
AN ATTACHMENT

SMCS-5063 **i01817463**

NOTE	REF NO	GRAPHIC REF	PART NUMBER	QTY	PART NAME 1 2 3 4 5 6 (PRODUCT LEVEL)	SEE PAGE
	1	1	**103-2006**	4	SCREW-PAN HEAD	
	2	1	**107-6050**	1	SUPPORT AS	
	3	1	**146-3765**	1	COVER	
	4	1	**179-6397**	1	PLATE-INSTRUCTION	
Y	5	1	**212-1302**	1	VALVE GP-PILOT (JOYSTICK, 2 FUNCTION)	458
	6	1	**223-4717**	1	BRACKET	
Y	7	1	**225-1057**	1	VALVE GP-SHUTOFF (PILOT ON/OFF)	488
M	8	1	**5C-7261**	4	NUT (M8X1.25 THD)	
	9	1	**8T-4121**	2	WASHER-HARD (11X21X2.5MM THK)	
M	10	1	**8T-4137**	2	BOLT (M10X1.5X20MM)	
	11	1	**8T-4224**	4	WASHER-HARD (8.8X16X2MM THK)	
M	12	1	**9X-2040**	2	SCREW-TRUSS HEAD (M10X1.5X25MM)	
M	13	1	**9X-2041**	2	SCREW-TRUSS HEAD (M10X1.5X20MM)	

M-METRIC PART
Y-SEPARATE ILLUSTRATION

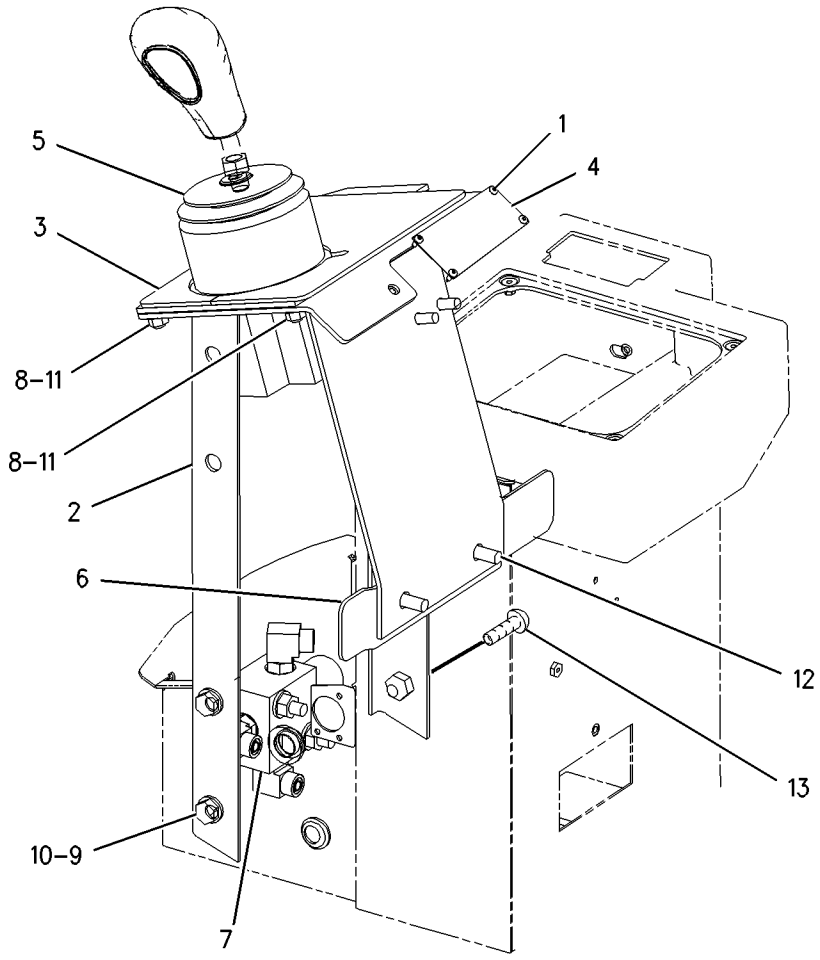

GRAPHIC #1 g00917402

225-1060 CONTROL GP-PILOT OPERATED HYD

S/N: RTA1-UP; RBB1-UP
JOYSTICK,3 FUNCTION
PART OF 203-3891, 203-3892 HYDRAULIC AR-3 VALVE
AN ATTACHMENT

SMCS-5063 **i01819019**

NOTE	REF NO	GRAPHIC REF	PART NUMBER	QTY	PART NAME 1 2 3 4 5 6 (PRODUCT LEVEL)	SEE PAGE
	1	1	**103-2006**	4	SCREW-PAN HEAD	
	2	1	**107-6050**	1	SUPPORT AS	
	3	1	**114-3937**	1	ROD	
	4	1	**124-4401**	1	KNOB	
	5	1	**164-4111**	1	COVER	
	6	1	**179-6397**	1	PLATE-INSTRUCTION (IMPLEMENT WITH JOYSTICK)	
Y	7	1	**212-1305**	1	VALVE GP-PILOT (JOYSTICK, 3 FUNCTION)	464
	8	1	**223-4717**	1	BRACKET	
Y	9	1	*225-1057*	1	VALVE GP-SHUTOFF (PILOT ON/OFF)	488
M	10	1	**5C-7261**	4	NUT (M8X1.25 THD)	
	11	1	**8T-4121**	2	WASHER-HARD (11X21X2.5MM THK)	
M	12	1	**8T-4137**	2	BOLT (M10X1.5X20MM)	
	13	1	**8T-4224**	4	WASHER-HARD (8.8X16X2MM THK)	
M	14	1	**8T-4244**	1	NUT (M12X1.75 THD)	
M	15	1	**9X-2040**	2	SCREW-TRUSS HEAD (M10X1.5X25MM)	
M	16	1	**9X-2041**	2	SCREW-TRUSS HEAD (M10X1.5X20MM)	

M-METRIC PART
Y-SEPARATE ILLUSTRATION

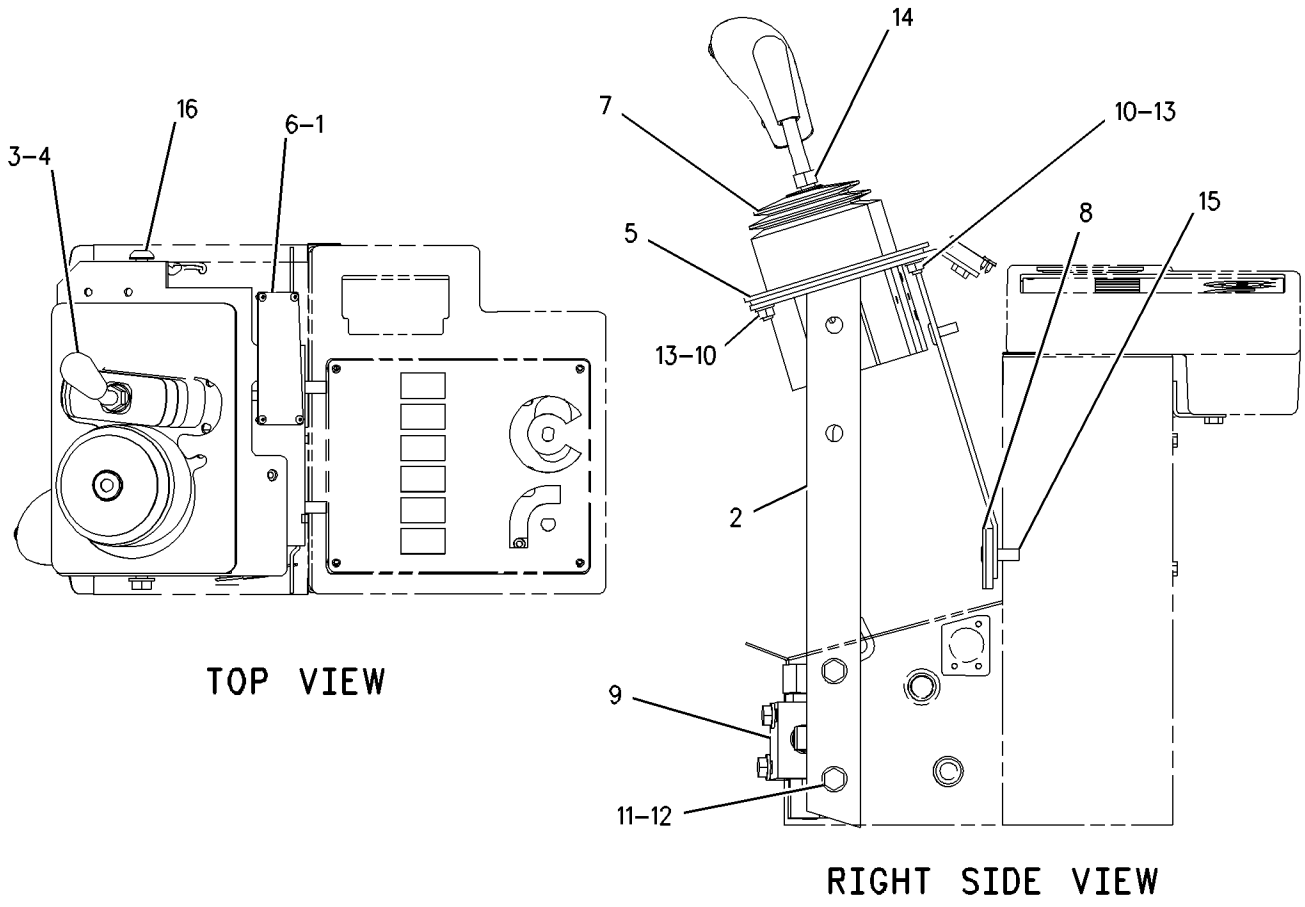

GRAPHIC #1 g00917577

225-1061 CONTROL GP-PILOT OPERATED HYD

S/N: RBB1-UP
JOYSTICK,4 FUNCTION
PART OF 203-3893 HYDRAULIC AR-4 VALVE
AN ATTACHMENT

SMCS-5063 **i01822861**

NOTE	REF NO	GRAPHIC REF	PART NUMBER	QTY	PART NAME 1 2 3 4 5 6 (PRODUCT LEVEL)	SEE PAGE
	1	1	**103-2006**	4	SCREW-PAN HEAD	
	2	1	**107-6050**	1	SUPPORT AS	
	3	1	**114-3937**	1	ROD	
	4	1	**114-3940**	1	ROD	
	5	1	**124-4401**	2	KNOB	
	6	1	**179-6396**	1	PLATE-INSTRUCTION (IMPLEMENT WITH JOYSTICK)	
Y	7	1	**212-1307**	1	VALVE GP-PILOT (JOYSTICK, 4 FUNCTION)	470
	8	1	**223-4717**	1	BRACKET	
Y	9	1	**225-1057**	1	VALVE GP-SHUTOFF (PILOT ON/OFF)	488
M	10	1	**5C-7261**	4	NUT (M8X1.25 THD)	
	11	1	**8T-4121**	2	WASHER-HARD (11X21X2.5MM THK)	
M	12	1	**8T-4137**	2	BOLT (M10X1.5X20MM)	
	13	1	**8T-4224**	4	WASHER-HARD (8.8X16X2MM THK)	
M	14	1	**8T-4244**	2	NUT (M12X1.75 THD)	
M	15	1	**9X-2040**	2	SCREW-TRUSS HEAD (M10X1.5X25MM)	
M	16	1	**9X-2041**	2	SCREW-TRUSS HEAD (M10X1.5X20MM)	

M-METRIC PART
Y-SEPARATE ILLUSTRATION

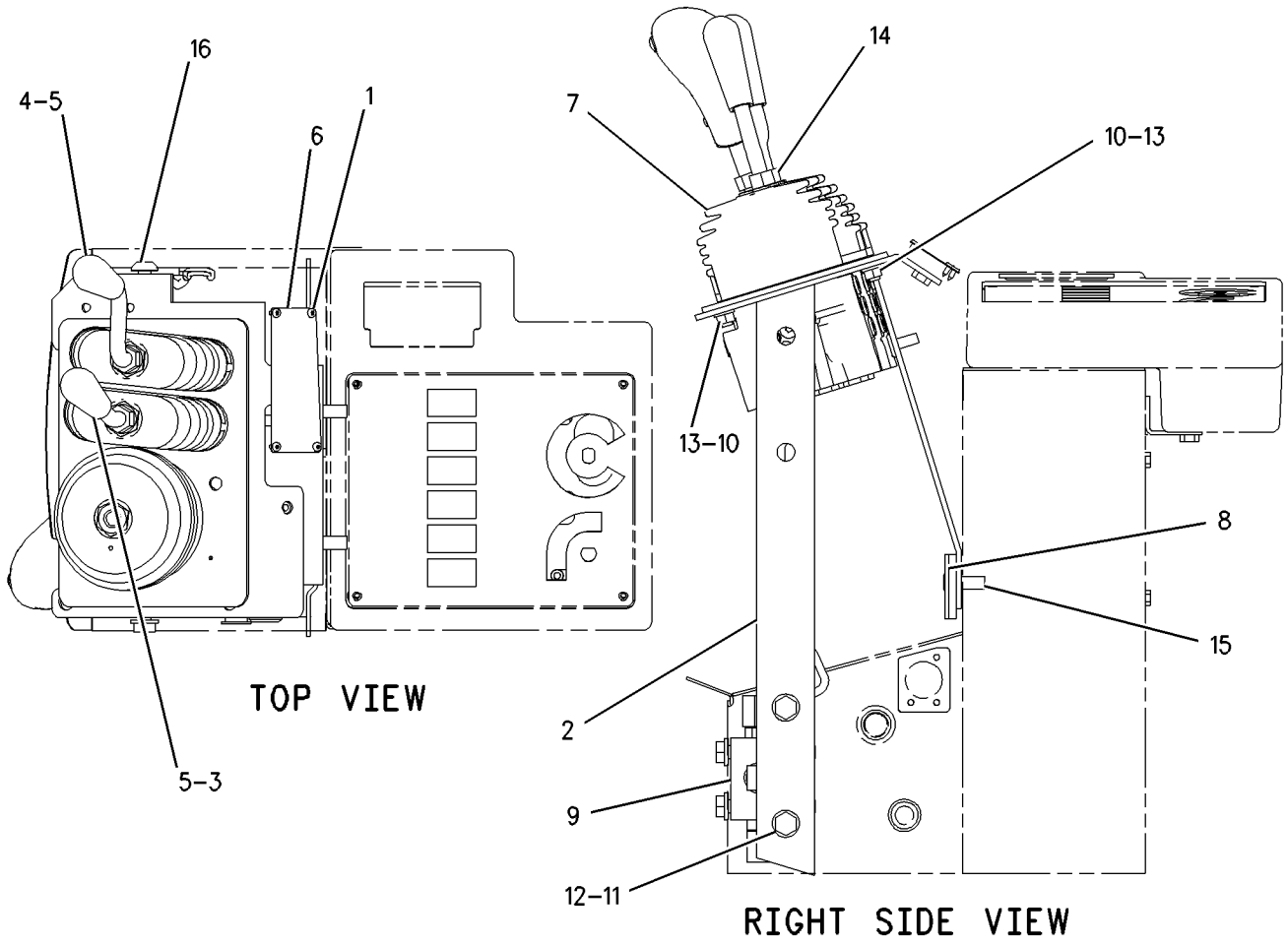

GRAPHIC #1 g00917480

HYDRAULIC SYSTEM

225-1062 CONTROL GP-PILOT OPERATED HYD

S/N: RTA1-UP; RBB1-UP
2 FUNCTION
PART OF 225-5162, 225-5165 HYDRAULIC AR-2 VALVE
AN ATTACHMENT

SMCS-5063 **i01836407**

NOTE	REF NO	GRAPHIC REF	PART NUMBER	QTY	PART NAME 1 2 3 4 5 6 (PRODUCT LEVEL)	SEE PAGE
	1	1	**103-2006**	4	SCREW-PAN HEAD	
	2	1	**107-6050**	1	SUPPORT AS	
		1	**7T-1099**	2	LINK	
	3	1	**114-3940**	1	ROD	
	4	1	**124-4401**	1	KNOB	
	5	1	**124-6913**	1	ROD	
	6	1	**133-8597**	1	HANDLE AS	
		1	**5I-3762**	1	KNOB	
		1	**186-3735**	2	PIN-CONNECTOR	
	7	1	**141-9191**	1	PLATE	
	8	1	**163-1869**	1	COVER	
Y	9	1	**212-1301**	1	VALVE GP-PILOT (2 FUNCTION)	454
	10	1	**223-4717**	1	BRACKET	
Y	11	1	**225-1057**	1	VALVE GP-SHUTOFF (PILOT ON/OFF)	488
M	12	1	**150-1293**	1	SCREW-BUTTON HEAD (M4X0.7X12MM)	
	13	1	**1H-4393**	1	LOCKWASHER	
	14	1	**102-8805**	1	KIT-RECEPTACLE (6 PIN)	
	15	1	**3E-3383**	1	WEDGE-RECEPTACLE LOCK	
M	16	1	**5C-7261**	4	NUT (M8X1.25 THD)	
	17	1	**8T-4121**	2	WASHER-HARD (11X21X2.5MM THK)	
M	18	1	**8T-4137**	2	BOLT (M10X1.5X20MM)	
	19	1	**8T-4224**	4	WASHER-HARD (8.8X16X2MM THK)	
M	20	1	**8T-4244**	2	NUT (M12X1.75 THD)	
	21	1	**8T-8737**	4	PLUG-SEAL	
M	22	1	**9X-2040**	2	SCREW-TRUSS HEAD (M10X1.5X25MM)	
M	23	1	**9X-2041**	2	SCREW-TRUSS HEAD (M10X1.5X20MM)	

M-METRIC PART
Y-SEPARATE ILLUSTRATION

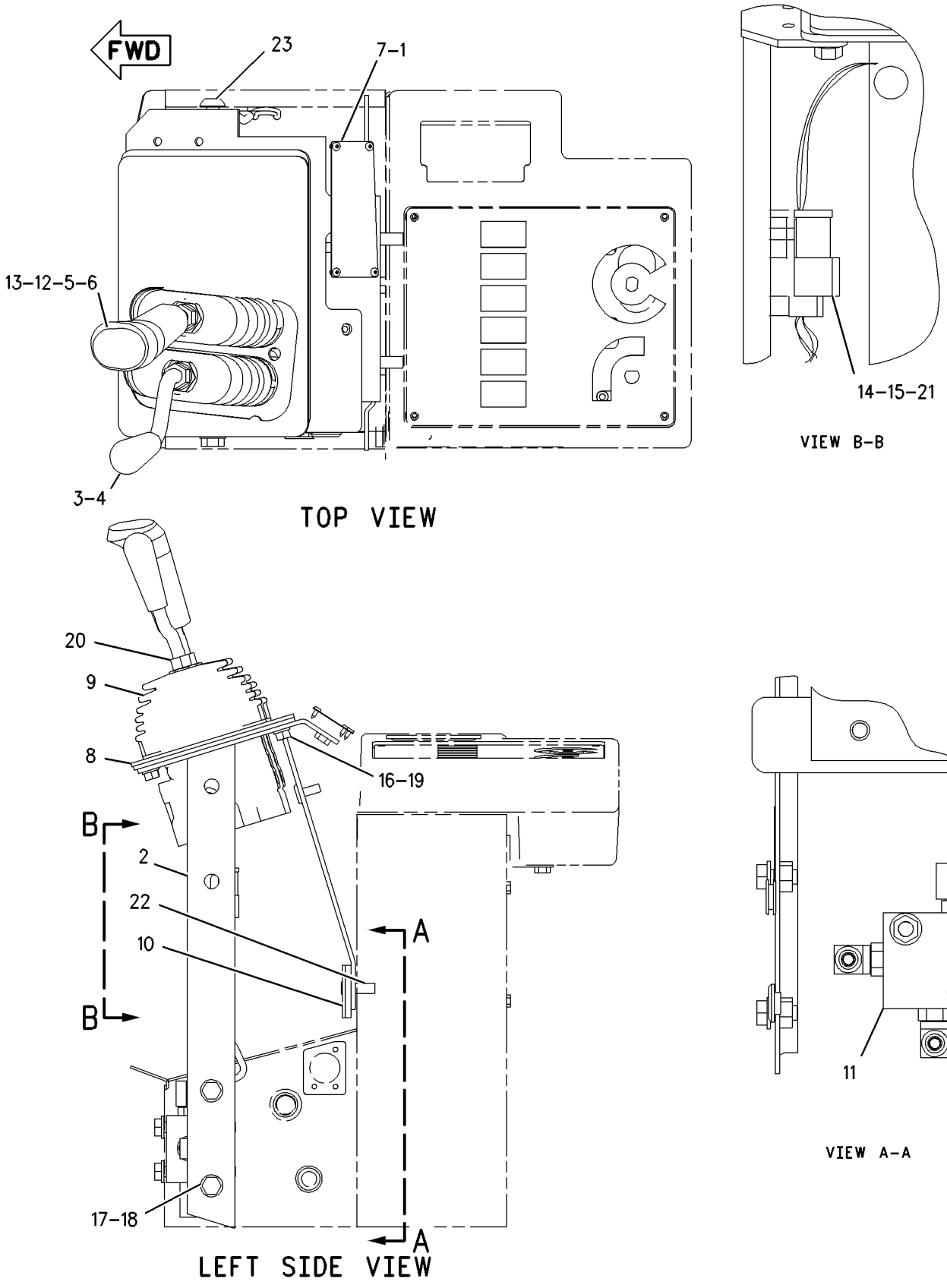

GRAPHIC #1

g00914341

HYDRAULIC SYSTEM

225-1063 CONTROL GP-PILOT OPERATED HYD

S/N: RTA1-UP; RBB1-UP
3 FUNCTION
PART OF 225-5163, 225-5166 HYDRAULIC AR-3 VALVE
AN ATTACHMENT

SMCS-5063 **i01836439**

NOTE	REF NO	GRAPHIC REF	PART NUMBER	QTY	PART NAME 1 2 3 4 5 6 (PRODUCT LEVEL)	SEE PAGE
	1	1	**103-2006**	4	SCREW-PAN HEAD	
	2	1	**107-6050**	1	SUPPORT AS	
		1	**7T-1099**	2	LINK	
	3	1	**114-3937**	1	ROD	
	4	1	**114-3940**	1	ROD	
	5	1	**124-4401**	2	KNOB	
	6	1	**124-6913**	1	ROD	
	7	1	**133-8597**	1	HANDLE AS	
		1	**5I-3762**	1	KNOB	
		1	**186-3735**	2	PIN-CONNECTOR	
	8	1	**141-9191**	1	PLATE	
	9	1	**163-1870**	1	COVER	
Y	10	1	**212-1304**	1	VALVE GP-PILOT (3 FUNCTION)	460
	11	1	**223-4717**	1	BRACKET	
Y	12	1	**225-1057**	1	VALVE GP-SHUTOFF (PILOT ON/OFF)	488
M	13	1	**150-1293**	1	SCREW-BUTTON HEAD (M4X0.7X12MM)	
	14	1	**1H-4393**	1	LOCKWASHER	
	15	1	**102-8805**	1	KIT-RECEPTACLE (6 PIN)	
	16	1	**3E-3383**	1	WEDGE-RECEPTACLE LOCK	
M	17	1	**5C-7261**	4	NUT (M8X1.25 THD)	
	18	1	**8T-4121**	2	WASHER-HARD (11X21X2.5MM THK)	
M	19	1	**8T-4137**	2	BOLT (M10X1.5X20MM)	
	20	1	**8T-4224**	4	WASHER-HARD (8.8X16X2MM THK)	
M	21	1	**8T-4244**	3	NUT (M12X1.75 THD)	
	22	1	**8T-8737**	4	PLUG-SEAL	
M	23	1	**9X-2040**	2	SCREW-TRUSS HEAD (M10X1.5X25MM)	
M	24	1	**9X-2041**	2	SCREW-TRUSS HEAD (M10X1.5X20MM)	

M-METRIC PART
Y-SEPARATE ILLUSTRATION

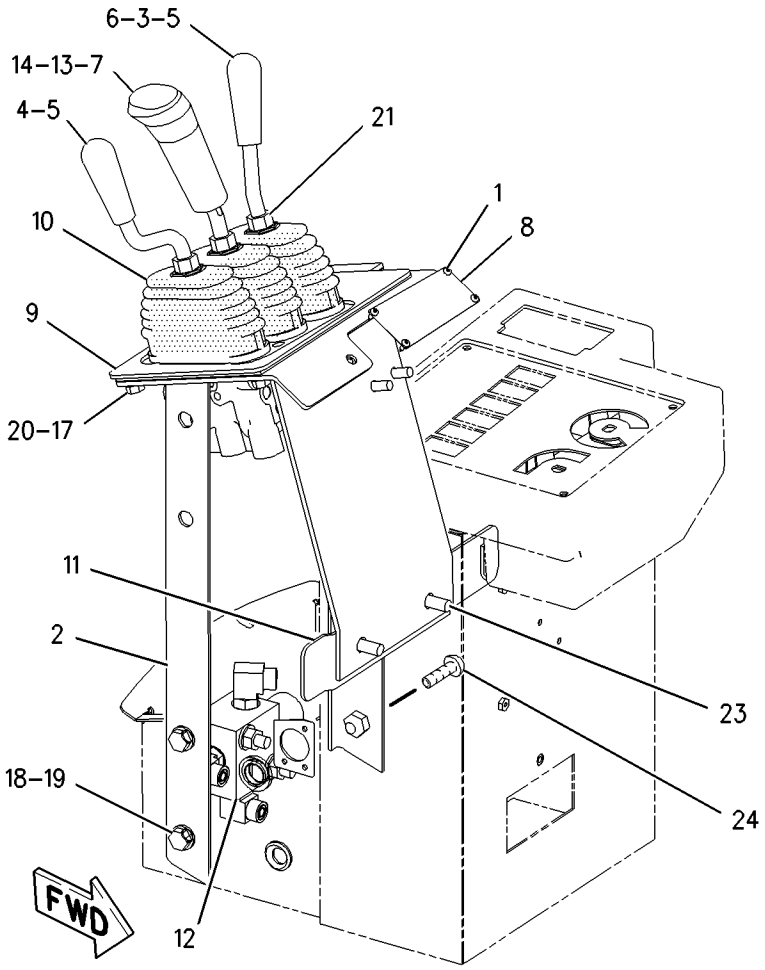

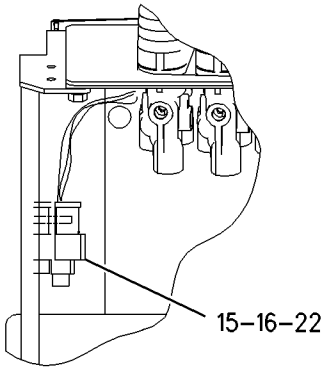

REAR VIEW

GRAPHIC #1

g00914093

HYDRAULIC SYSTEM

225-1064 CONTROL GP-PILOT OPERATED HYD

S/N: RBB1-UP
4 FUNCTION
PART OF 223-0561 HYDRAULIC AR-4 VALVE
AN ATTACHMENT

SMCS-5063 **i01862604**

NOTE	REF NO	GRAPHIC REF	PART NUMBER	QTY	PART NAME 1 2 3 4 5 6 (PRODUCT LEVEL)	SEE PAGE
	1	1	**103-2006**	4	SCREW-PAN HEAD	
	2	1	**107-6037**	1	SWITCH AS-KICKOUT (BUCKET/FORK SELECTOR)	
		1	**111-7899**	1	GASKET	
	3	1	**107-6050**	1	SUPPORT AS	
	4	1	**114-3937**	1	ROD	
	5	1	**114-3940**	2	ROD	
	6	1	**124-4401**	3	KNOB	
	7	1	**124-6913**	1	ROD	
	8	1	**133-8597**	1	HANDLE AS	
		1	**5I-3762**	1	KNOB	
		1	**186-3735**	2	PIN-CONNECTOR	
	9	1	**179-6398**	1	PLATE-INSTRUCTION	
Y	10	1	**212-1306**	1	VALVE GP-PILOT (4 FUNCTION)	466
	11	1	**223-4717**	1	BRACKET	
Y	12	1	**225-1057**	1	VALVE GP-SHUTOFF (HYDRAULIC LOCKOUT)	488
M	13	1	**150-1293**	1	SCREW-BUTTON HEAD (M4X0.7X12MM)	
	14	1	**1H-4393**	1	LOCKWASHER	
	15	1	**102-8805**	1	KIT-RECEPTACLE (6 PIN)	
	16	1	**3E-3383**	1	WEDGE-RECEPTACLE LOCK	
M	17	1	**5C-7261**	4	NUT (M8X1.25 THD)	
	18	1	**8T-4121**	2	WASHER-HARD (11X21X2.5MM THK)	
M	19	1	**8T-4137**	2	BOLT (M10X1.5X20MM)	
	20	1	**8T-4224**	4	WASHER-HARD (8.8X16X2MM THK)	
M	21	1	**8T-4244**	4	NUT (M12X1.75 THD)	
	22	1	**8T-8737**	4	PLUG-SEAL	
M	23	1	**9X-2040**	2	SCREW-TRUSS HEAD (M10X1.5X25MM)	
M	24	1	**9X-2041**	2	SCREW-TRUSS HEAD (M10X1.5X20MM)	

M-METRIC PART
Y-SEPARATE ILLUSTRATION

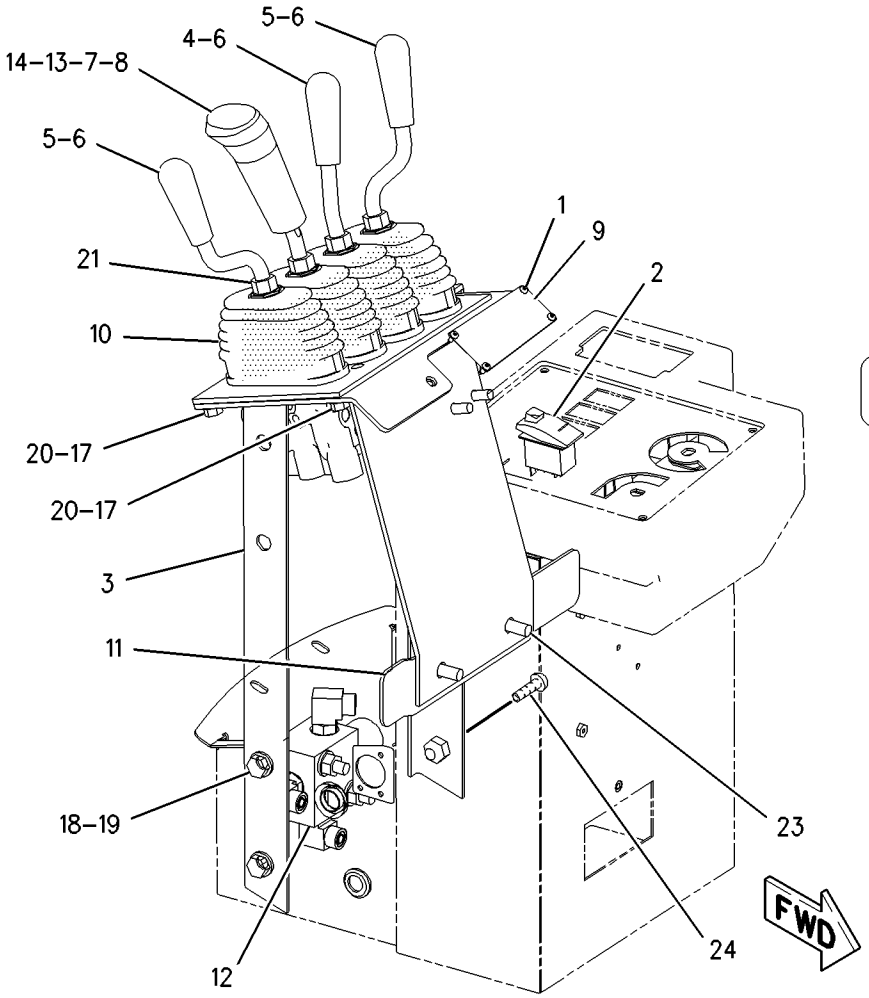

GRAPHIC #1

g00917439

HYDRAULIC SYSTEM

215-6741 COOLER GP-HYD & TMSN OIL

S/N: RTA1-UP; RBB1-UP
AN ATTACHMENT

SMCS-1374, 1375 **i01854409**

NOTE	REF NO	GRAPHIC REF	PART NUMBER	QTY	PART NAME 1 2 3 4 5 6 (PRODUCT LEVEL)	SEE PAGE
	1	1	**8T-9386**	2	CONNECTOR	
	2	1	**9X-6656**	1	CONNECTOR	
	3	1	**6V-9746**	1	SEAL-O-RING	
	4	1	**123-4065**	40	RIVET-POP	
	5	1	**185-1032**	1	CORE AS-HYDRAULIC OIL COOLER	
	6	1	**215-6737**	1	CORE AS-POWER TRAIN OIL COOLER	
	7	1	**228-7372**	1	CONNECTOR	
	8	1	**2M-9780**	4	SEAL-O-RING	
	9	1	**5K-9090**	2	SEAL-O-RING	
	10	1	**6V-8398**	1	SEAL-O-RING	

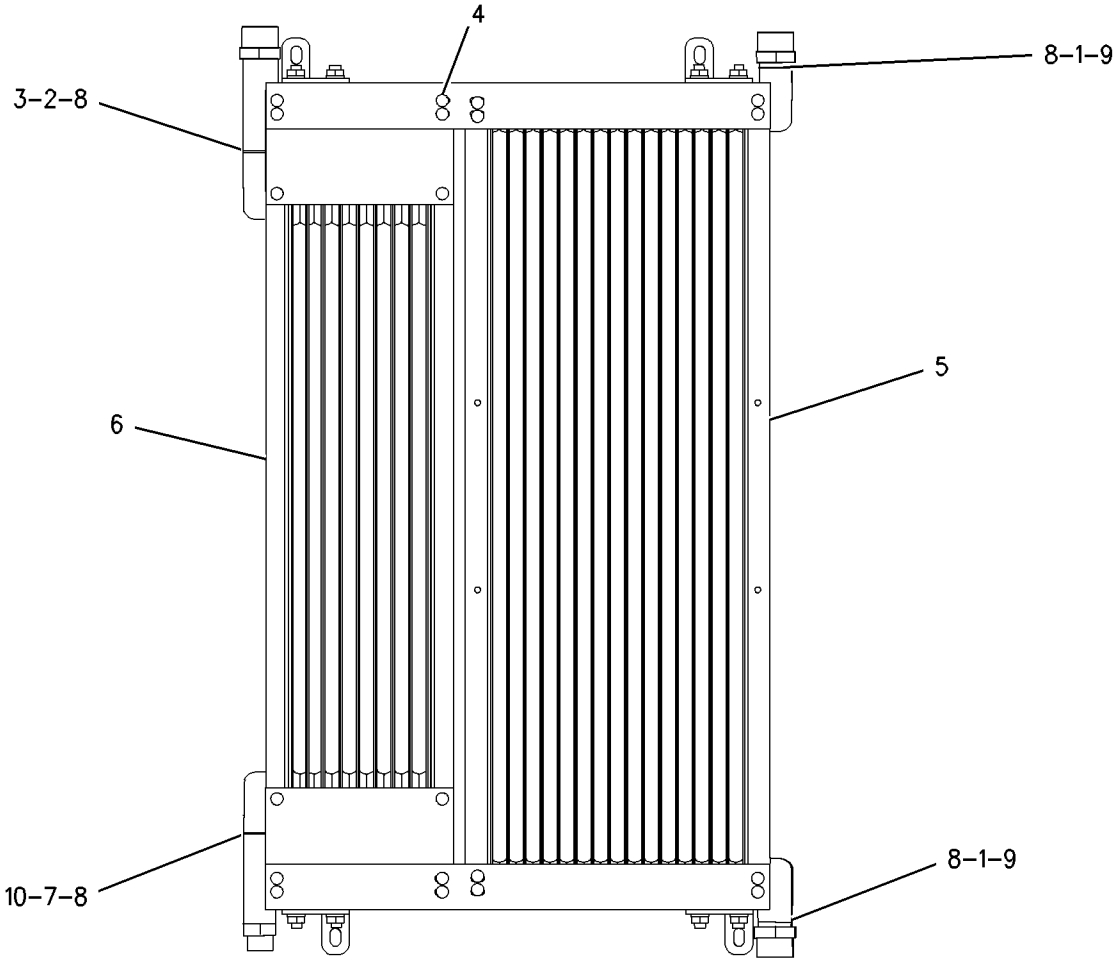

GRAPHIC #1 g00945424

215-6743 COOLER GP-HYD & TMSN OIL

S/N: RTA1-UP; RBB1-UP
HEAVY DUTY
PART OF 227-9400 COOLER GP-HYDRAULIC OIL
AN ATTACHMENT

SMCS-1374, 1375 **i01854477**

NOTE	REF NO	GRAPHIC REF	PART NUMBER	QTY	PART NAME 1 2 3 4 5 6 (PRODUCT LEVEL)	SEE PAGE
	1	1	**8T-9386**	2	CONNECTOR	
	2	1	**6V-9746**	1	SEAL-O-RING	
	3	1	**123-4065**	32	RIVET-POP	
	4	1	**185-1032**	1	CORE AS-HYDRAULIC OIL COOLER	
	5	1	**215-6740**	1	CORE AS-POWER TRAIN OIL COOLER (HEAVY DUTY)	
	6	1	**2M-9780**	4	SEAL-O-RING	
	7	1	**5K-9090**	2	SEAL-O-RING	
	8	1	**6V-8398**	1	SEAL-O-RING	
	9	1	**6V-8638**	1	CONNECTOR-SEAL	
	10	1	**6V-8640**	1	CONNECTOR-SEAL	

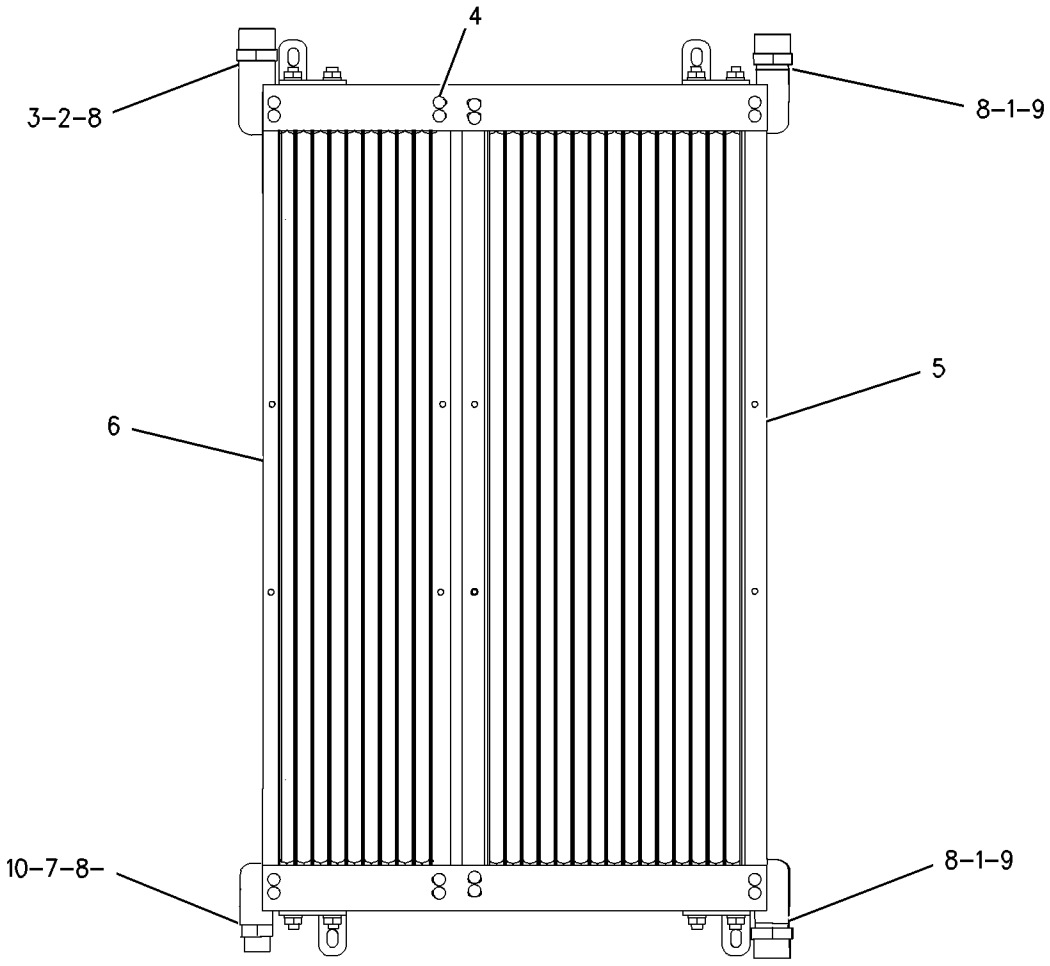

GRAPHIC #1 g00945492

HYDRAULIC SYSTEM

227-9400 COOLER GP-HYDRAULIC OIL

S/N: RTA1-UP; RBB1-UP
HEAVY DUTY
AN ATTACHMENT

SMCS-1374 **i01833350**

NOTE	REF NO	GRAPHIC REF	PART NUMBER	QTY	PART NAME 1 2 3 4 5 6 (PRODUCT LEVEL)	SEE PAGE
Y	1	1	**215-6743**	1	COOLER GP-HYD & TMSN OIL (HEAVY DUTY)	323

Y-SEPARATE ILLUSTRATION

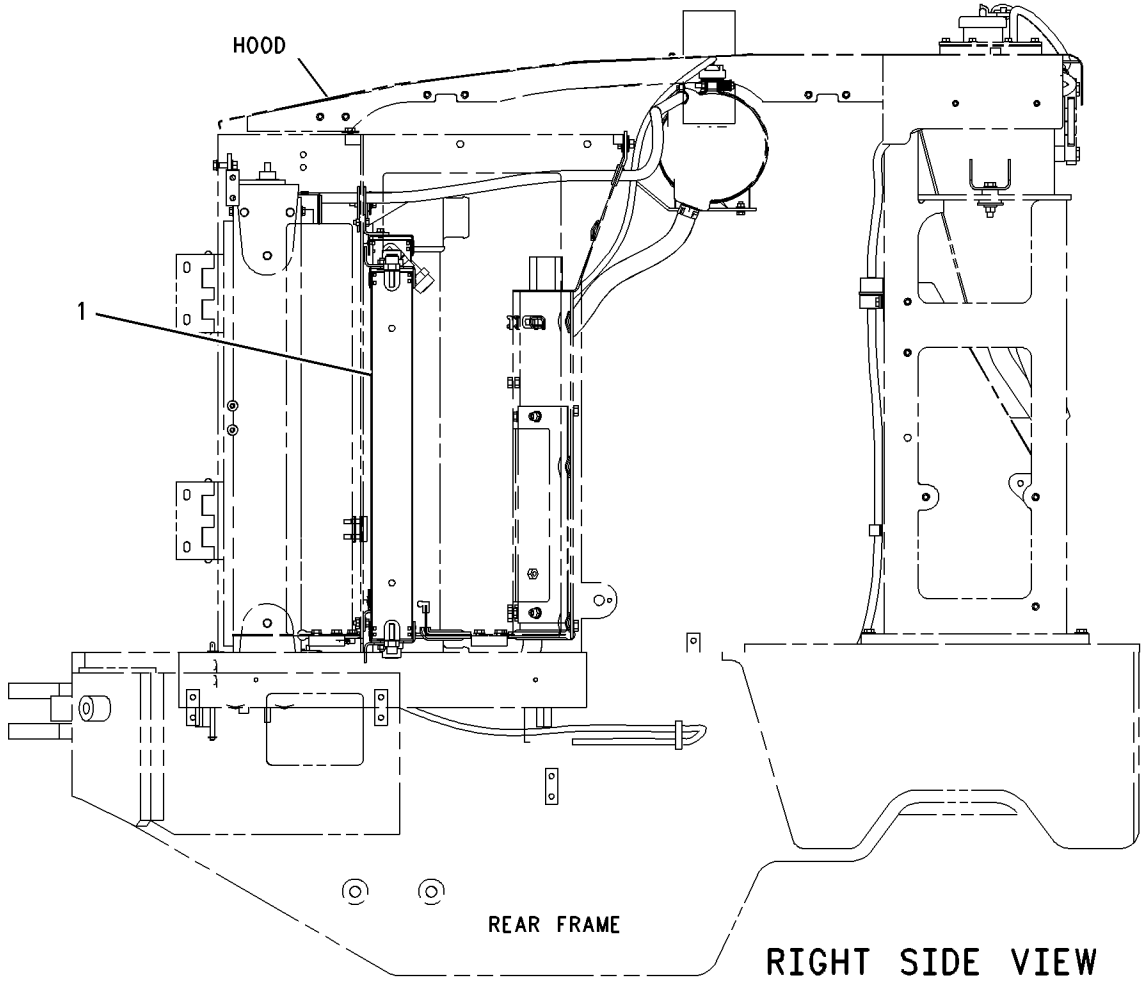

GRAPHIC #1 g00928792

148-7827 CYLINDER & MTG GP-COUPLER

S/N: RBB1-UP
PART OF 218-5113, 218-5114 COUPLER AR-QUICK
AN ATTACHMENT

SMCS-5133 **i01182179**

NOTE	PART NUMBER	QTY	PART NAME 1 2 3 4 5 6 (PRODUCT LEVEL)	SEE PAGE
	178-3720	1	CYLINDER GP-PIN COUPLER	
	6W-5760	2	DOWEL	
	6W-5761	2	PIN	

<END>

HYDRAULIC SYSTEM

141-7483 CYLINDER GP-LIFT BASCULAMENTO

S/N: RBB1-UP
101.6MM (4.0IN)BORE X 807MM (31.77IN) STROKE
PART OF 176-5182 HYDRAULIC AR

SMCS-5102 **i01503680**

NOTE	REF NO	GRAPHIC REF	PART NUMBER	QTY	PART NAME 1 2 3 4 5 6 (PRODUCT LEVEL)	SEE PAGE
	1	1	**141-7486**	1	CYLINDER AS	
		1	**6E-1497**	1	BOSS	
		1	**7P-3454**	1	BEARING-SLEEVE (63.741MM ID)	
M	2	1	**173-9682**	1	BOLT-HEX HEAD (M36X4X100MM)	
	3	1	**7D-5238**	1	WASHER (.25IN THK)	
	4	1	**6J-2797**	1	RING-WEAR	
	5	1	**5J-5402**	1	SEAL AS	
	6	1	**121-3397**	1	HEAD	
	7	1	**175-7537**	1	ROD AS	
		1	**118-1008**	1	BEARING	
	8	1	**2K-6830**	1	RING-BACKUP	
	9	1	**175-7900**	1	SEAL-O-RING	
	10	1	**142-5893**	1	PISTON	
	11	1	**8T-0785**	1	RING-WEAR	
	12	1	**167-2201**	1	SEAL AS-BUFFER	
	13	1	**167-2312**	1	SEAL-U-CUP	
	14	1	**167-2463**	1	SEAL-WIPER	

M-METRIC PART

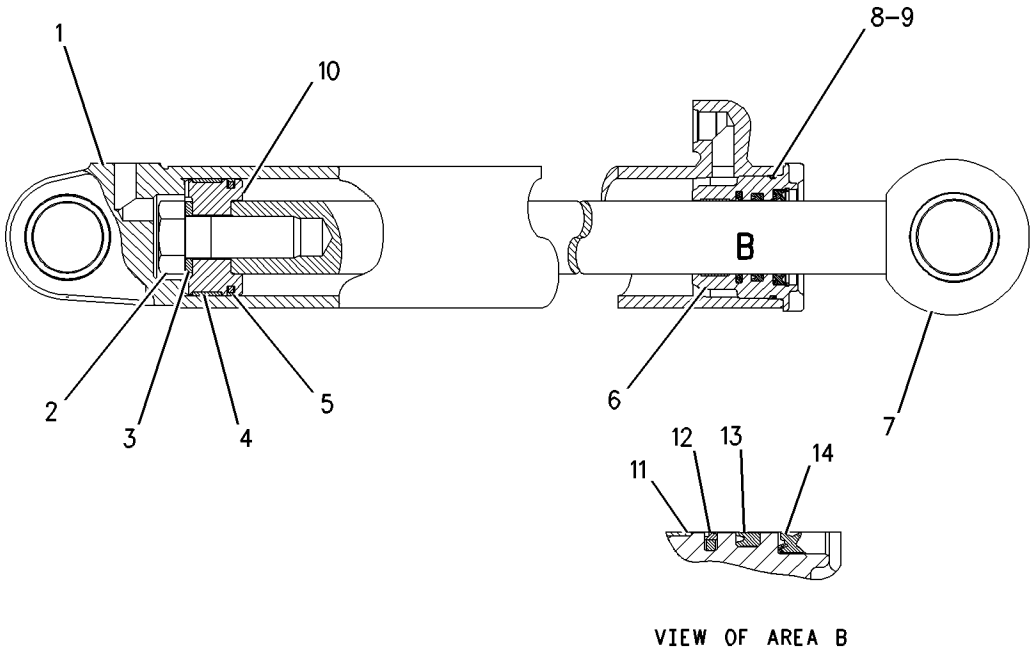

VIEW OF AREA B

GRAPHIC #1 g00780191

152-4187 CYLINDER GP-LIFT BASCULAMENTO

S/N: RTA1-UP
108MM (4.25IN)BORE X 755MM (29.72IN) STROKE
PART OF 176-5202 HYDRAULIC AR

SMCS-5102 **i01486866**

NOTE	REF NO	GRAPHIC REF	PART NUMBER	QTY	PART NAME 1 2 3 4 5 6 (PRODUCT LEVEL)	SEE PAGE
	1	1	**152-4189**	1	CYLINDER AS	
		1	**6E-1497**	1	BOSS	
		1	**174-7582**	1	CAP AS	
		1	**7P-3454**	1	BEARING-SLEEVE (63.741MM ID)	
M	2	1	**173-9682**	1	BOLT-HEX HEAD (M36X4X100MM)	
	3	1	**7D-5238**	1	WASHER (.25IN THK)	
	4	1	**6J-7264**	1	RING-WEAR	
	5	1	**8C-9164**	1	SEAL AS	
	6	1	**152-4191**	1	PISTON	
	7	1	**4M-0189**	1	SEAL-O-RING	
	8	1	**4J-9220**	1	RING-BACKUP	
	9	1	**152-4192**	1	HEAD	
	10	1	**152-4195**	1	ROD AS	
	11	1	**167-2463**	1	SEAL-WIPER	
	12	1	**167-2312**	1	SEAL-U-CUP	
	13	1	**167-2201**	1	SEAL AS-BUFFER	
	14	1	**8T-0785**	1	RING-WEAR	

M-METRIC PART

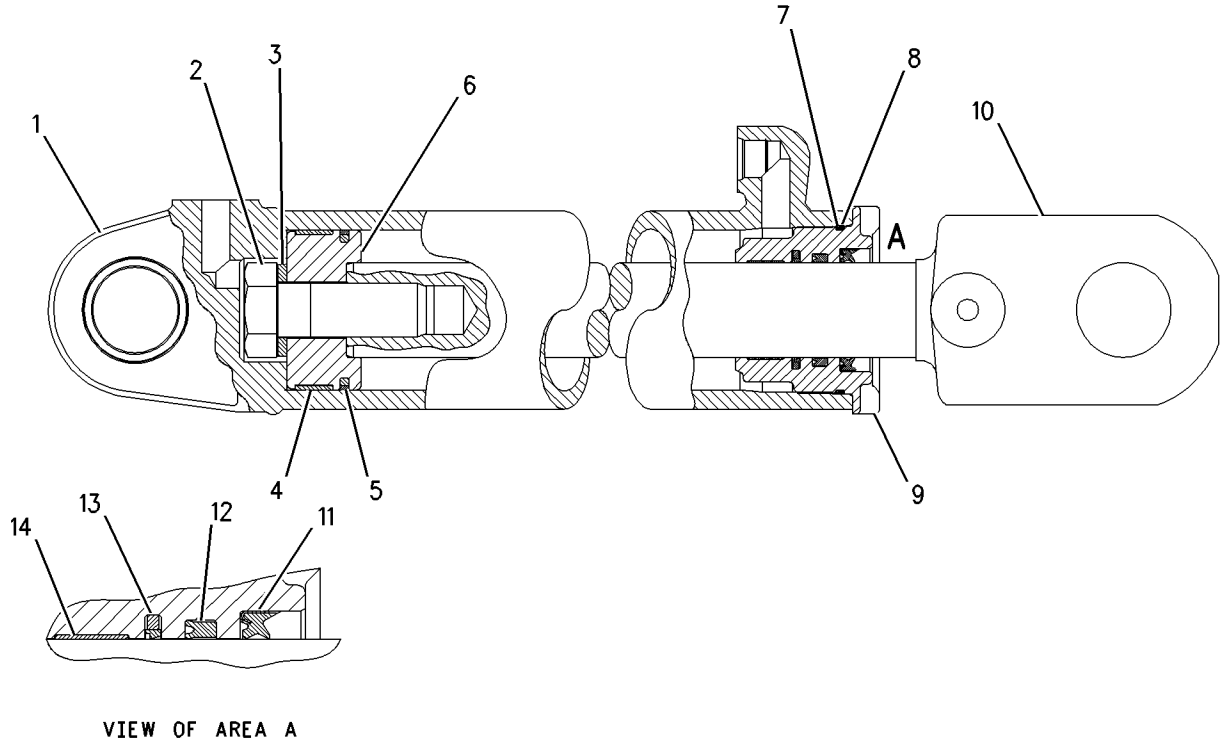

VIEW OF AREA A

GRAPHIC #1 g00772935

141-7484 CYLINDER GP-TILT BASCULAMENTO

S/N: RBB1-UP
133.35MM (5.25IN) BORE X 945MM (37.20IN) STROKE
PART OF 176-5182 HYDRAULIC AR

SMCS-5104 **i01519865**

NOTE	REF NO	GRAPHIC REF	PART NUMBER	QTY	PART NAME 1 2 3 4 5 6 (PRODUCT LEVEL)	SEE PAGE
	1	1	**141-7485**	1	CYLINDER AS	
	1A	1	**7P-8753**	1	BEARING	
	2	1	**5J-7878**	1	NUT-SELF LOCKING	
	3	1	**2D-0714**	1	RING-WEAR	
	4	1	**8T-0763**	1	SEAL AS	
	5	1	**141-8185**	1	PISTON	
	6	1	**175-7905**	1	SEAL-O-RING	
	7	1	**2J-7767**	1	RING-BACKUP	
	8	1	**141-8184**	1	HEAD	
	9	1	**141-7487**	1	ROD AS	
	9A	1	**7P-8753**	1	BEARING	
	10	1	**167-2463**	1	SEAL-WIPER	
	11	1	**167-2312**	1	SEAL-U-CUP	
	12	1	**167-2201**	1	SEAL AS-BUFFER	
	13	1	**8T-0785**	1	RING-WEAR	

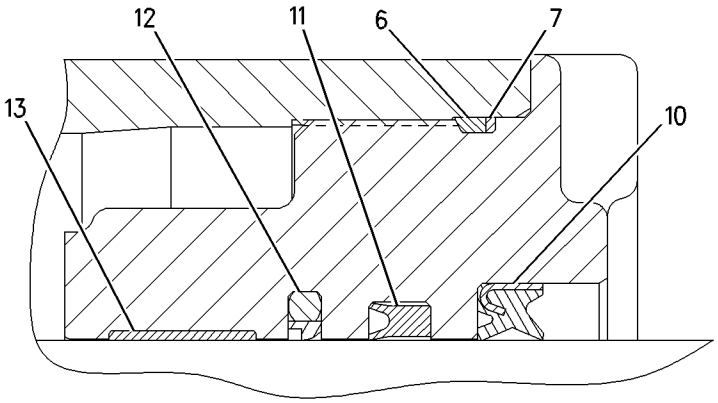

VIEW OF AREA A

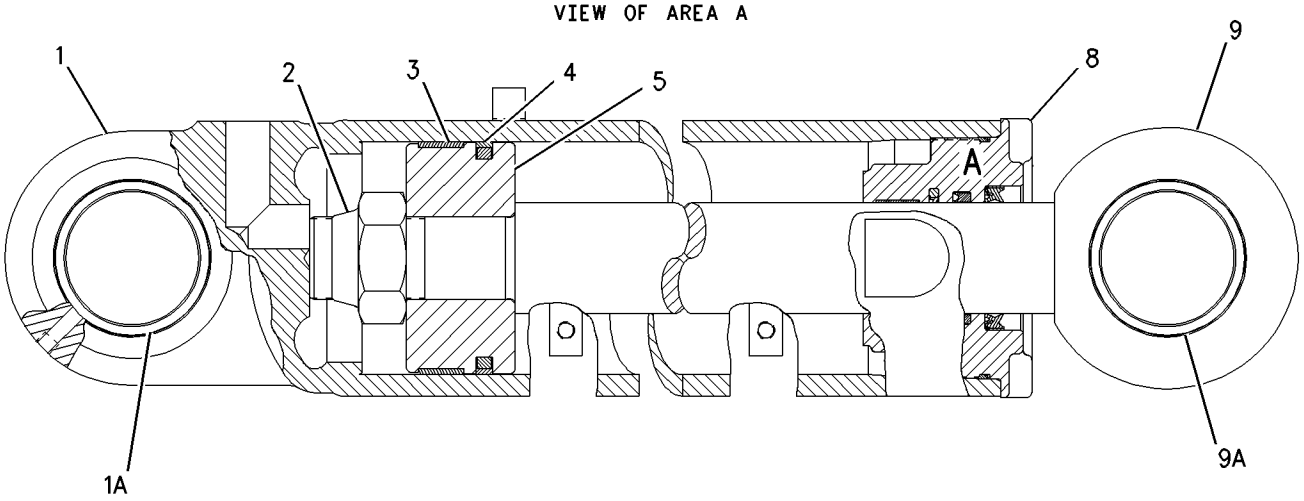

GRAPHIC #1 g00789250

152-5306 CYLINDER GP-TILT BASCULAMENTO

S/N: RTA1-UP
120.6MM (4.75IN)BORE X 520MM (20.47IN) STROKE
PART OF 176-5202 HYDRAULIC AR

SMCS-5104 **i01505608**

NOTE	REF NO	GRAPHIC REF	PART NUMBER	QTY	PART NAME 1 2 3 4 5 6 (PRODUCT LEVEL)	SEE PAGE
	1	1	**152-5309**	1	CYLINDER AS	
		1	**3G-2791**	1	BEARING-SLEEVE	
		1	**110-7849**	2	LUG	
M	2	1	**173-9682**	1	BOLT-HEX HEAD (M36X4X100MM)	
	3	1	**7D-5238**	1	WASHER (.25IN THK)	
	4	1	**8T-8390**	1	RING-WEAR	
	5	1	**4T-8588**	1	SEAL AS	
	6	1	**133-8773**	1	PISTON	
	7	1	**175-7903**	1	SEAL-O-RING	
	8	1	**2J-3961**	1	RING-BACKUP	
	9	1	**120-6679**	1	HEAD	
	10	1	**134-1396**	1	ROD AS	
		1	**3G-2797**	1	BEARING-SLEEVE (63.741MM ID)	
	11	1	**167-2463**	1	SEAL-WIPER	
	12	1	**167-2312**	1	SEAL-U-CUP	
	13	1	**167-2201**	1	SEAL AS-BUFFER	
	14	1	**8T-0785**	1	RING-WEAR	

M-METRIC PART

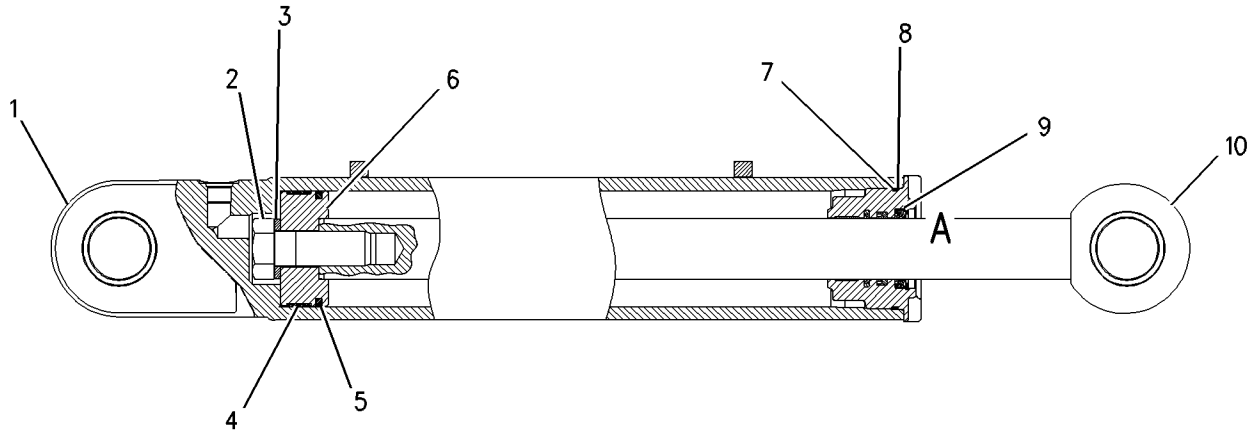

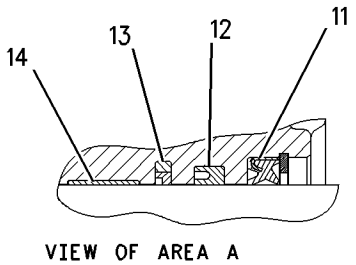

VIEW OF AREA A

GRAPHIC #1 g00646240

203-3877 FILTER GP-OIL—HYDRAULIC

S/N: RTA1-UP; RBB1-UP

PART OF 176-5182, 176-5202 HYDRAULIC AR

SMCS-5068, 5092 **i01815745**

NOTE	REF NO	GRAPHIC REF	PART NUMBER	QTY	PART NAME 1 2 3 4 5 6 (PRODUCT LEVEL)	SEE PAGE
	1	1	**113-3987**	1	BRACKET	
Y	2	1	**209-3149**	1	FILTER GP-OIL (HYDRAULIC)	331
	3	1	**7X-7729**	2	WASHER (11X25X3MM THK)	
	4	1	**8T-4121**	4	WASHER-HARD (11X21X2.5MM THK)	
M	5	1	**8T-4136**	2	BOLT (M10X1.5X25MM)	
M	6	1	**8T-4137**	4	BOLT (M10X1.5X20MM)	

M-METRIC PART
Y-SEPARATE ILLUSTRATION

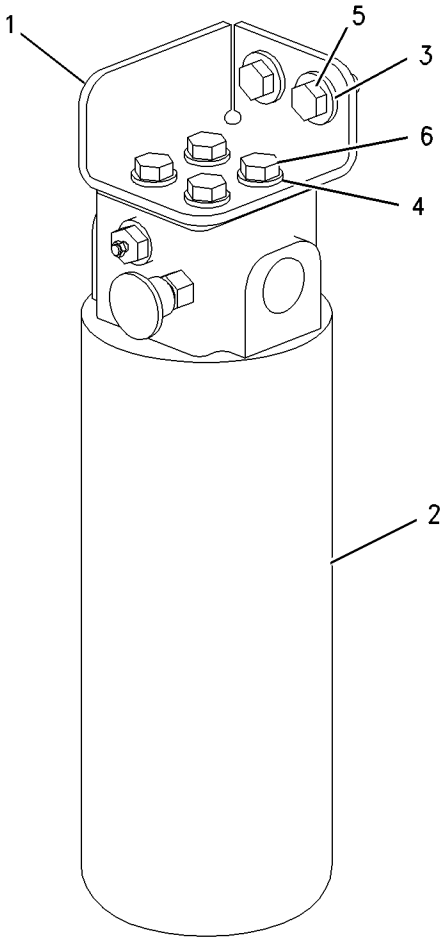

GRAPHIC #1 g00926888

209-3149 FILTER GP-OIL–HYDRAULIC

S/N: RTA1-UP; RBB1-UP

PART OF 203-3877 FILTER GP-OIL

SMCS-5068, 5092 **i01862647**

NOTE	REF NO	GRAPHIC REF	PART NUMBER	QTY	PART NAME 1 2 3 4 5 6 (PRODUCT LEVEL)	SEE PAGE
	1	1	**126-1818**	1	FILTER AS-OIL (HYDRAULIC)	
	2	1	**3J-7354**	1	SEAL-O-RING	
	3	1	**7X-8549**	1	SWITCH AS-PRESSURE (HYDRAULIC OIL FILTER BYPASS)	
		1	**3J-1907**	1	SEAL-O-RING	
	4	1	**8C-3446**	1	VALVE GP-FLUID SAMPLING	
	5	1	**8C-3451**	1	CAP-DUST	
	6	1	**3J-1907**	1	SEAL-O-RING	

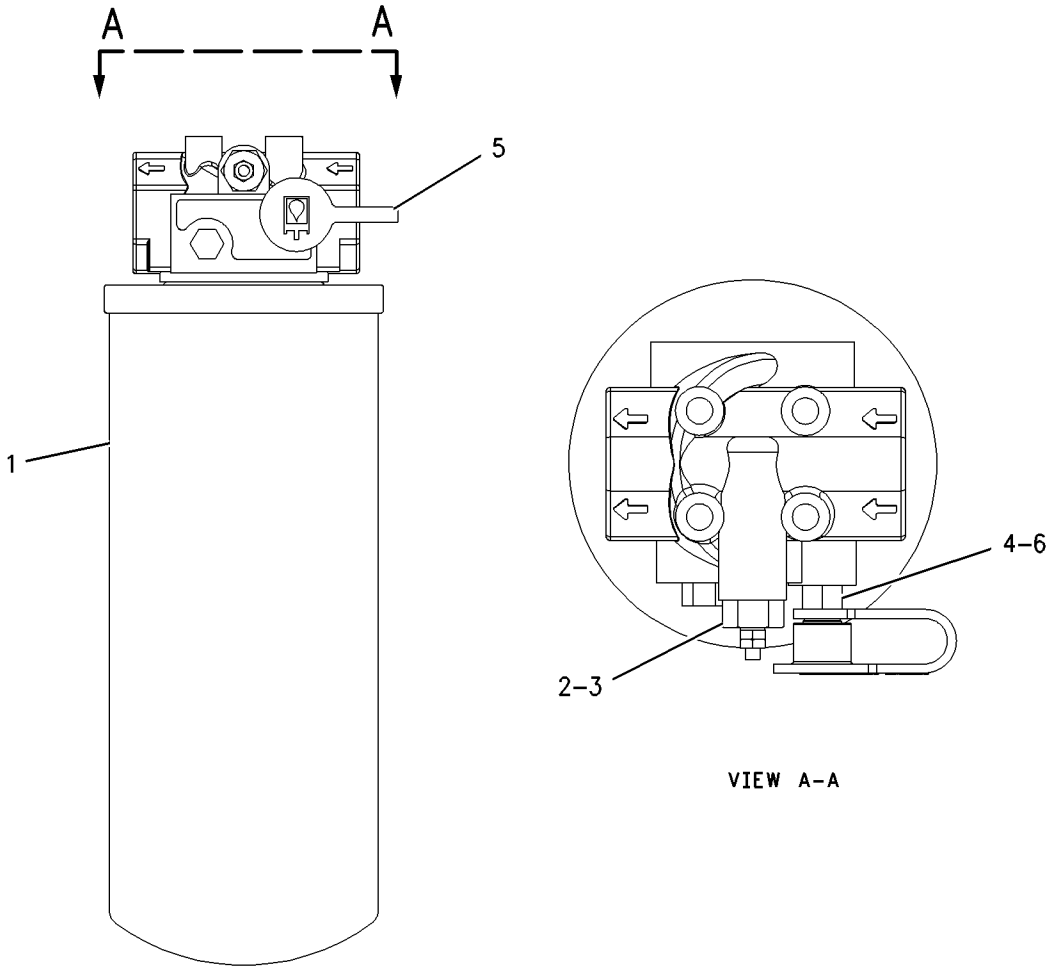

VIEW A-A

GRAPHIC #1 g00920953

HYDRAULIC SYSTEM

176-5182 HYDRAULIC AR

S/N: RBB1-UP

PART OF 216-8961 COMMON AR

SMCS-5051 **i01816326**

NOTE	PART NUMBER	QTY	PART NAME 1 2 3 4 5 6 (PRODUCT LEVEL)	SEE PAGE
Y	**141-7483**	2	CYLINDER GP-LIFT	326
Y	**141-7484**	1	CYLINDER GP-TILT	328
Y	*203-3877*	1	FILTER GP-OIL (HYDRAULIC)	330
Y	*203-3873*	1	LINES GP-HYDRAULIC	356
Y	*214-9434*	1	LINES GP-LIFT CYLINDER	372
Y	*203-3874*	1	LINES GP-PILOT	380
Y	*214-9437*	1	LINES GP-TILT CYLINDER	394
Y	*203-3898*	1	PUMP & MTG GP-BRAKE & HYD FAN	287
Y	*132-2476*	1	PUMP & MTG GP-HYDRAULIC (IMPLEMENT, PILOT & STEERING)	414
Y	*201-8108*	1	TANK & MTG GP-HYDRAULIC	422

Y-SEPARATE ILLUSTRATION

<END>

176-5202 HYDRAULIC AR

S/N: RTA1-UP

PART OF 216-8960 COMMON AR

SMCS-5051 **i01814950**

NOTE	PART NUMBER	QTY	PART NAME 1 2 3 4 5 6 (PRODUCT LEVEL)	SEE PAGE
Y	**152-4187**	2	CYLINDER GP-LIFT	327
Y	**152-5306**	1	CYLINDER GP-TILT	329
Y	*203-3877*	1	FILTER GP-OIL (HYDRAULIC)	330
Y	*203-3873*	1	LINES GP-HYDRAULIC	356
Y	*217-8421*	1	LINES GP-LIFT CYLINDER	376
Y	*203-3874*	1	LINES GP-PILOT	380
Y	*212-3354*	1	LINES GP-TILT CYLINDER	392
Y	*203-3898*	1	PUMP & MTG GP-BRAKE & HYD FAN	287
Y	*132-2476*	1	PUMP & MTG GP-HYDRAULIC (IMPLEMENT, PILOT & STEERING)	414
Y	*201-8108*	1	TANK & MTG GP-HYDRAULIC	422

Y-SEPARATE ILLUSTRATION

<END>

203-3889 HYDRAULIC AR-2 VALVE

S/N: RBB1-UP
ONE LEVER,FORWARD,NEUTRAL,REVERSE
AN ATTACHMENT

SMCS-5051 **i01859595**

NOTE	PART NUMBER	QTY	PART NAME 1 2 3 4 5 6 (PRODUCT LEVEL)	SEE PAGE
Y	*184-5296*	1	CONTROL GP-HANDLE (TMSN F-N-R & DOWNSHIFT CONTROL)	310
Y	*225-1059*	1	CONTROL GP-PILOT OPERATED HYD (JOYSTICK, TWO FUNCTION)	311
Y	**209-0270**	1	VALVE GP-MAIN CONTROL (2 FUNCTION)	428

Y-SEPARATE ILLUSTRATION

<END>

203-3890 HYDRAULIC AR-2 VALVE

S/N: RTA1-UP
ONE LEVER,FORWARD,NEUTRAL,REVERSE
AN ATTACHMENT

SMCS-5051 **i01818879**

NOTE	PART NUMBER	QTY	PART NAME 1 2 3 4 5 6 (PRODUCT LEVEL)	SEE PAGE
Y	*184-5296*	1	CONTROL GP-HANDLE (TMSN F-N-R & DOWNSHIFT CONTROL)	310
Y	*225-1059*	1	CONTROL GP-PILOT OPERATED HYD (JOYSTICK, TWO FUNCTION)	311
Y	**209-0273**	1	VALVE GP-MAIN CONTROL (2 FUNCTION)	440

Y-SEPARATE ILLUSTRATION

<END>

225-5162 HYDRAULIC AR-2 VALVE

S/N: RBB1-UP
2 LEVER
AN ATTACHMENT

SMCS-5051 **i01836396**

NOTE	PART NUMBER	QTY	PART NAME 1 2 3 4 5 6 (PRODUCT LEVEL)	SEE PAGE
Y	*225-1062*	1	CONTROL GP-PILOT OPERATED HYD (2 FUNCTION)	316
Y	**209-0270**	1	VALVE GP-MAIN CONTROL (2 FUNCTION)	428

Y-SEPARATE ILLUSTRATION

<END>

HYDRAULIC SYSTEM

225-5165 HYDRAULIC AR-2 VALVE

S/N: RTA1-UP
2 LEVER
AN ATTACHMENT

SMCS-5051 **i01836621**

NOTE	PART NUMBER	QTY	PART NAME 1 2 3 4 5 6 (PRODUCT LEVEL)	SEE PAGE
Y	*225-1062*	1	CONTROL GP-PILOT OPERATED HYD (2 FUNCTION)	316
Y	**209-0273**	1	VALVE GP-MAIN CONTROL (2 FUNCTION)	440
Y-SEPARATE ILLUSTRATION				

<END>

203-3891 HYDRAULIC AR-3 VALVE

S/N: RBB1-UP
2 LEVER, FORWARD,NEUTRAL,REVERSE
AN ATTACHMENT

SMCS-5051 **i01822747**

NOTE	PART NUMBER	QTY	PART NAME 1 2 3 4 5 6 (PRODUCT LEVEL)	SEE PAGE
Y	*184-5296*	1	CONTROL GP-HANDLE (TMSN F-N-R & DOWNSHIFT CONTROL)	310
Y	*225-1060*	1	CONTROL GP-PILOT OPERATED HYD (JOYSTICK, 3 FUNCTION)	312
Y	*211-1063*	1	LINES GP-HYDRAULIC	360
Y	**209-0271**	1	VALVE GP-MAIN CONTROL (3 FUNCTION)	432
Y-SEPARATE ILLUSTRATION				

<END>

203-3892 HYDRAULIC AR-3 VALVE

S/N: RTA1-UP
2 LEVER,FOWARD,NEUTRAL,REVERSE
AN ATTACHMENT

SMCS-5051 **i01818975**

NOTE	PART NUMBER	QTY	PART NAME 1 2 3 4 5 6 (PRODUCT LEVEL)	SEE PAGE
Y	*184-5296*	1	CONTROL GP-HANDLE (TMSN F-N-R & DOWNSHIFT CONTROL)	310
Y	*225-1060*	1	CONTROL GP-PILOT OPERATED HYD (JOYSTICK, 3 FUNCTION)	312
Y	*212-3358*	1	LINES GP-FRONT	354
Y	**209-0274**	1	VALVE GP-MAIN CONTROL (3 FUNCTION)	444
Y-SEPARATE ILLUSTRATION				

<END>

HYDRAULIC SYSTEM

225-5163 HYDRAULIC AR-3 VALVE

S/N: RBB1-UP
3 LEVER
AN ATTACHMENT

SMCS-5051 **i01836430**

NOTE	PART NUMBER	QTY	PART NAME 1 2 3 4 5 6 (PRODUCT LEVEL)	SEE PAGE
Y	*225-1063*	1	CONTROL GP-PILOT OPERATED HYD (3 FUNCTION)	318
Y	*211-1063*	1	LINES GP-HYDRAULIC	360
Y	**209-0271**	1	VALVE GP-MAIN CONTROL (3 FUNCTION)	432
Y-SEPARATE ILLUSTRATION				

<END>

225-5166 HYDRAULIC AR-3 VALVE

S/N: RTA1-UP
3 LEVER
AN ATTACHMENT

SMCS-5051 **i01836637**

NOTE	PART NUMBER	QTY	PART NAME 1 2 3 4 5 6 (PRODUCT LEVEL)	SEE PAGE
Y	*225-1063*	1	CONTROL GP-PILOT OPERATED HYD (3 FUNCTION)	318
Y	*212-3358*	1	LINES GP-FRONT	354
Y	**209-0274**	1	VALVE GP-MAIN CONTROL (3 FUNCTION)	444
Y-SEPARATE ILLUSTRATION				

<END>

203-3893 HYDRAULIC AR-4 VALVE

S/N: RBB1-UP
3 LEVER, FORWARD,NEUTRAL,REVERSE
AN ATTACHMENT

SMCS-5051 **i01822763**

NOTE	PART NUMBER	QTY	PART NAME 1 2 3 4 5 6 (PRODUCT LEVEL)	SEE PAGE
Y	*184-5296*	1	CONTROL GP-HANDLE (TMSN F-N-R & DOWNSHIFT CONTROL)	310
Y	*225-1061*	1	CONTROL GP-PILOT OPERATED HYD (JOYSTICK, 4 FUNCTION)	314
Y	*211-1063*	1	LINES GP-HYDRAULIC (1 CIRCUIT)	360
Y	*223-0521*	1	LINES GP-HYDRAULIC (4 VALVE, HIGH LIFT)	362
Y	**209-0272**	1	VALVE GP-MAIN CONTROL (4 FUNCTION)	436
Y-SEPARATE ILLUSTRATION				

<END>

HYDRAULIC SYSTEM

223-0561 HYDRAULIC AR-4 VALVE

S/N: RBB1-UP
4 LEVER
AN ATTACHMENT

SMCS-5051 **i01862658**

NOTE	PART NUMBER	QTY	PART NAME 1 2 3 4 5 6 (PRODUCT LEVEL)	SEE PAGE
Y	*225-1064*	1	CONTROL GP-PILOT OPERATED HYD (4 FUNCTION)	320
Y	*211-1063*	1	LINES GP-HYDRAULIC (ONE CIRCUIT)	360
Y	*223-0521*	1	LINES GP-HYDRAULIC (4 VALVE, HIGH LIFT)	362
Y	**209-0272**	1	VALVE GP-MAIN CONTROL (4 FUNCTION)	436

Y-SEPARATE ILLUSTRATION

<END>

MEMORANDA

HYDRAULIC SYSTEM

148-7678 KICKOUT & POSITIONER GP

S/N: RTA1-UP

PART OF 176-5201 CHASSIS AR

SMCS-5109, 5112 **i01830786**

NOTE	REF NO	GRAPHIC REF	PART NUMBER	QTY	PART NAME 1 2 3 4 5 6 (PRODUCT LEVEL)	SEE PAGE
D	1	1	**5P-6039**		WRAP-SPIRAL (0.1M)	
Y	2	1	**3E-7843**	1	CONTROL GP-POSITION	102
Y	3	1	**3E-7844**	1	CONTROL GP-LIFT KICKOUT	100
	4	1	**5G-7820**	1	MAGNET AS	
	5	1	**6K-0806**	4	STRAP-CABLE	
	6	1	**9X-2132**	1	RETAINER	
	7	1	**106-6394**	1	CLAMP	
	8	1	**109-1297**	2	CLAMP	
	9	1	**110-8054**	1	CLAMP	
	10	1	**118-0885**	1	SHAFT AS	
	11	1	**118-0888**	1	TUBE	
	12	1	**132-2698**	1	HARNESS AS-CONTROL (KICKOUT & POSITIONER)	
		1	**102-8803**	2	KIT-RECEPTACLE (3 PIN)	
	13	1	**154-4930**	1	BRACKET	
	14	1	**154-4937**	1	CLAMP AS	
	15	1	**187-3661**	1	CLIP	
	16	1	**4K-8302**	1	CLIP	
	17	1	**4P-8134**	2	CLIP	
M	18	1	**5C-7261**	3	NUT (M8X1.25 THD)	
	19	1	**5G-7822**	1	PLATE	
	20	1	**5P-4116**	7	WASHER-HARD (8.8X20.5X2MM THK)	
	21	1	**6D-3479**	1	CLIP	
M	22	1	**6V-7744**	1	LOCKNUT (M10X1.5 THD)	
	23	1	**7X-7729**	2	WASHER (11X25X3MM THK)	
	24	1	**8T-4121**	4	WASHER-HARD (11X21X2.5MM THK)	
M	25	1	**8T-4136**	4	BOLT (M10X1.5X25MM)	
M	26	1	**8T-4186**	1	BOLT (M10X1.5X40MM)	
M	27	1	**8T-4189**	10	BOLT (M8X1.25X20MM)	
	28	1	**8T-4223**	1	WASHER-HARD (13.5X25.5X3MM THK)	
	29	1	**8T-4224**	6	WASHER-HARD (8.8X16X2MM THK)	

D-ORDER BY THE METER
M-METRIC PART
Y-SEPARATE ILLUSTRATION

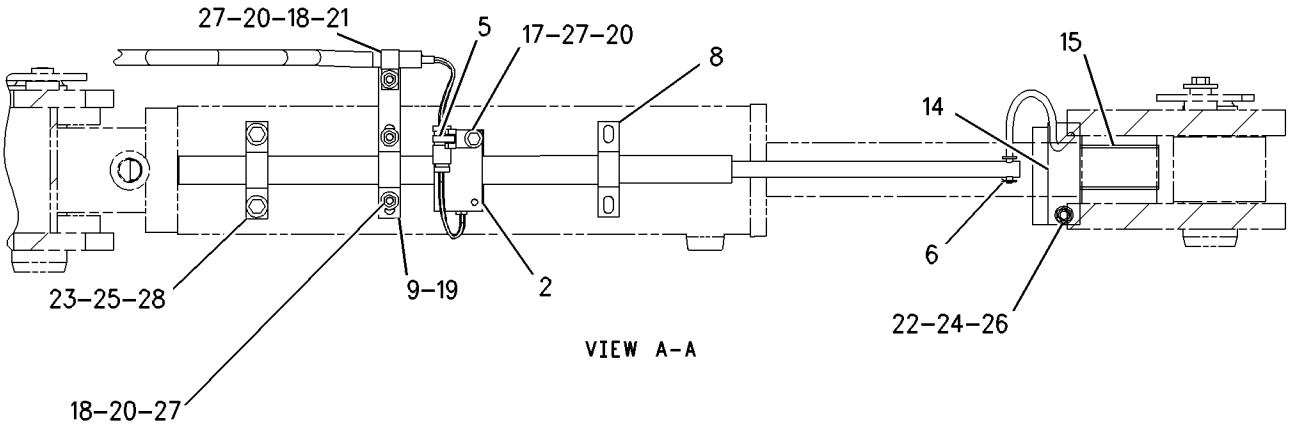

VIEW A-A

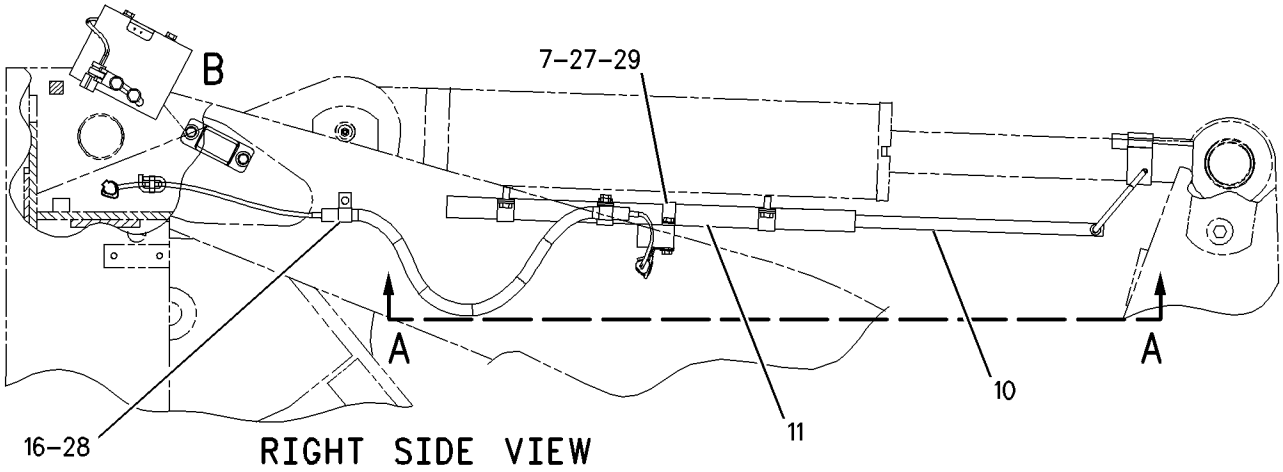

RIGHT SIDE VIEW

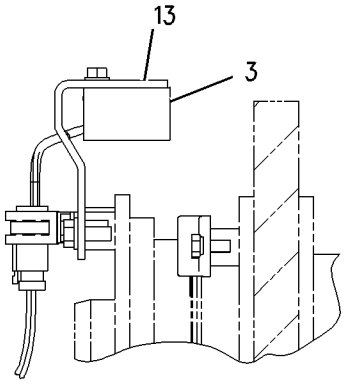

SECTION C-C

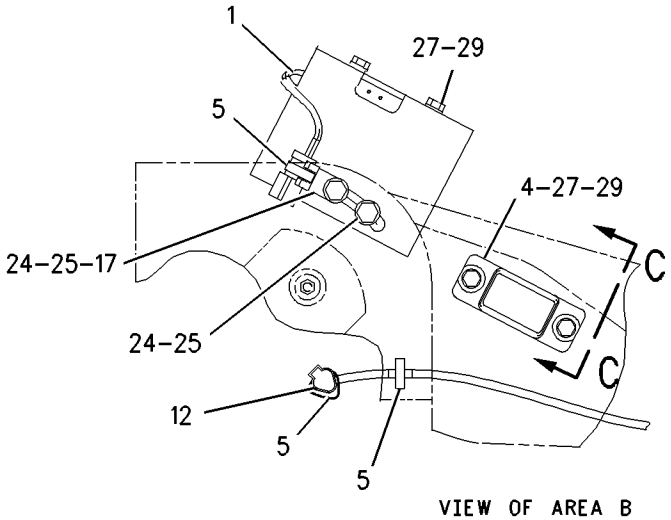

VIEW OF AREA B

GRAPHIC #1 g00799294

HYDRAULIC SYSTEM

218-9937 KICKOUT & POSITIONER GP

S/N: RBB1-UP

PART OF 176-5181 CHASSIS AR

SMCS-5109, 5112 **i01816177**

NOTE	REF NO	GRAPHIC REF	PART NUMBER	QTY	PART NAME 1 2 3 4 5 6 (PRODUCT LEVEL)	SEE PAGE
Y	1	1	**3E-7843**	2	CONTROL GP-POSITION	102
Y	2	1	**3E-7844**	1	CONTROL GP-LIFT KICKOUT	100
	3	1	**5G-7820**	1	MAGNET AS	
	4	1	**7K-1181**	3	STRAP-CABLE	
	5	1	**7V-5626**	4	CLAMP	
	6	1	**7V-5628**	1	PLATE	
	7	1	**9X-2132**	1	RETAINER	
	8	1	**132-2694**	1	HARNESS AS-CONTROL (KICKOUT & POSITIONER)	
		1	**102-8803**	1	KIT-RECEPTACLE (3 PIN)	
		1	**102-8805**	1	KIT-RECEPTACLE (6 PIN)	
	9	1	**136-4794**	1	PLATE AS	
M		1	**6V-9632**	2	NUT-WELD (M6X1 THD)	
	10	1	**146-0066**	1	BRACKET	
	11	1	**146-0067**	1	BRACKET AS	
M		1	**8T-3612**	2	NUT-WELD (M8X1.25 THD)	
	12	1	**146-0071**	1	PLATE AS	
	13	1	**148-7860**	1	SHAFT AS	
	14	1	**148-7861**	1	TUBE	
	15	1	**148-7862**	1	BRACKET	
	16	1	**188-0172**	2	CLAMP	
	17	1	**189-5593**	1	PLATE	
	18	1	**195-0922**	1	SWITCH AS-ROCKER (BUCKET/FORK SELECTOR)	
		1	**111-7899**	1	GASKET	
	19	1	**4P-8134**	1	CLIP	
	20	1	**5P-4115**	2	WASHER-HARD (7.2X19X2MM THK)	
	21	1	**5P-4116**	4	WASHER-HARD (8.8X20.5X2MM THK)	
M	22	1	**7X-2534**	4	BOLT (M6X1X50MM)	
	23	1	**7X-7729**	2	WASHER (11X25X3MM THK)	
	24	1	**8T-4121**	8	WASHER-HARD (11X21X2.5MM THK)	
M	25	1	**8T-4136**	2	BOLT (M10X1.5X25MM)	
M	26	1	**8T-4137**	8	BOLT (M10X1.5X20MM)	
M	27	1	**8T-4189**	8	BOLT (M8X1.25X20MM)	
	28	1	**8T-4224**	4	WASHER-HARD (8.8X16X2MM THK)	

M-METRIC PART
Y-SEPARATE ILLUSTRATION

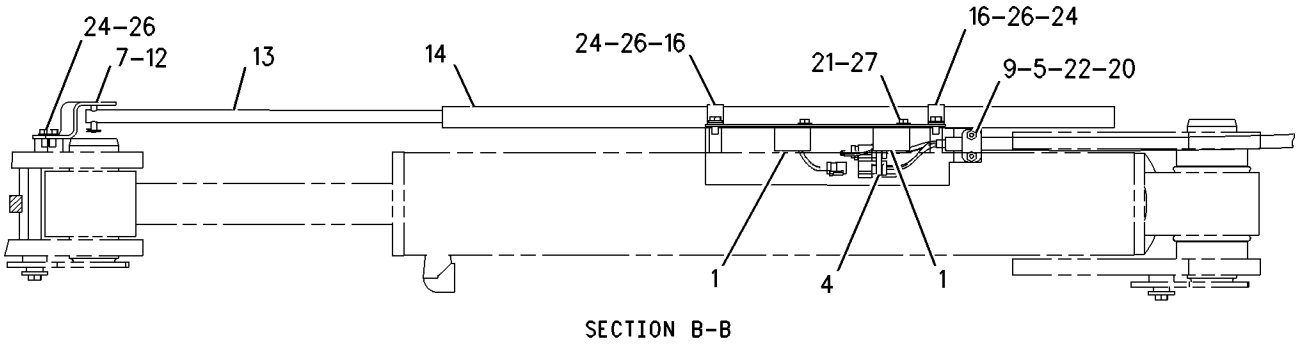

SECTION B-B

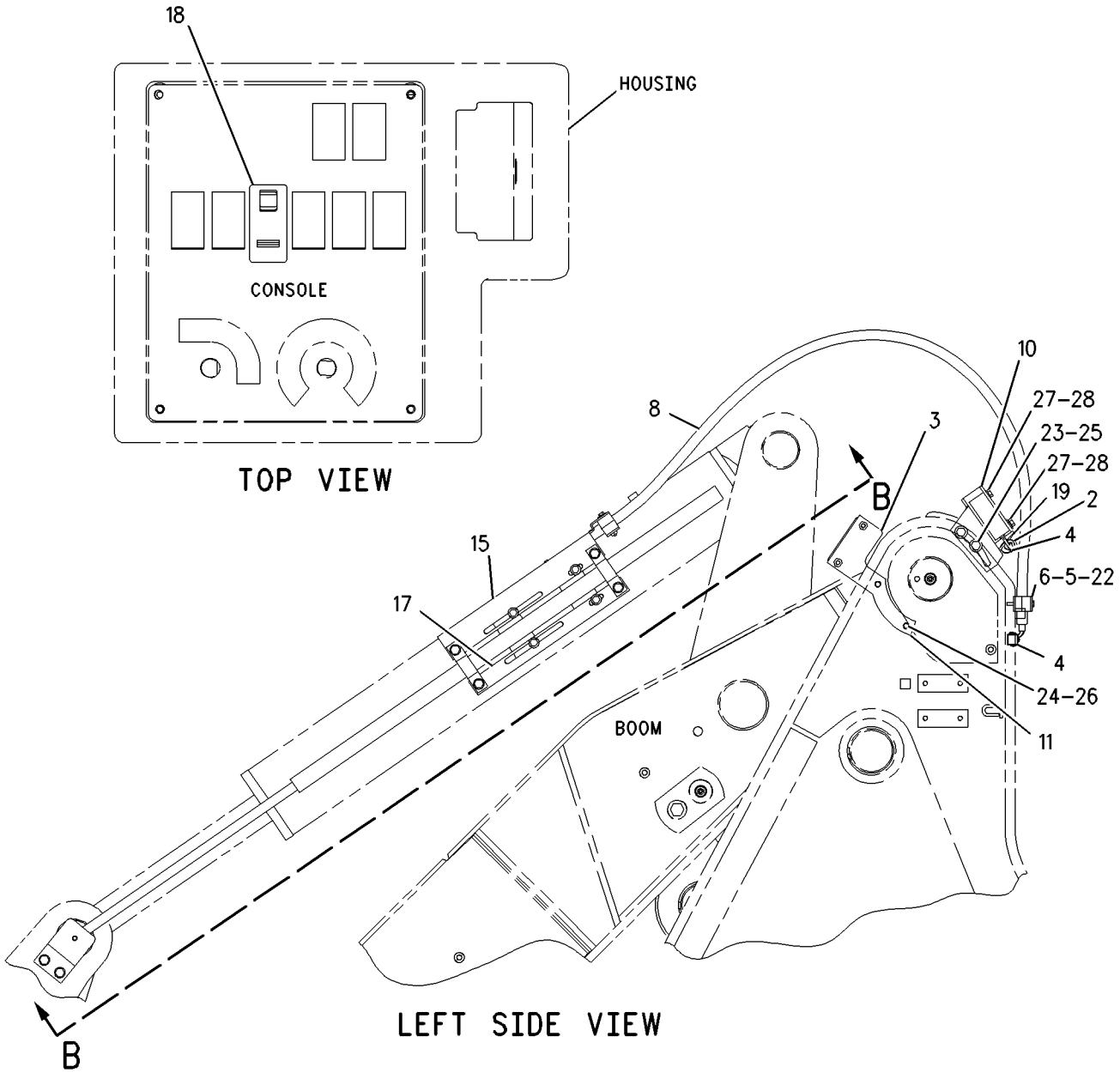

GRAPHIC #1 g00915135

HYDRAULIC SYSTEM

146-7970 LINES GP-COUPLER

S/N: RBB1-UP
AN ATTACHMENT

SMCS-5057, 5133 **i01823683**

NOTE	REF NO	GRAPHIC REF	PART NUMBER	QTY	PART NAME 1 2 3 4 5 6 (PRODUCT LEVEL)	SEE PAGE
	1	1	**195-6525**	1	COUPLING	
	2	1	**195-6526**	1	COUPLING	
	3	1	**195-9877**	1	CAP-DUST	
	4	1	**195-9878**	1	CAP-DUST	
	5	1	**213-5065**	2	BRACKET	
I	6	1	**216-6969**	2	HOSE AS	
	7	1	*148-8455*	2	UNION AS	
		1	**6V-8997**	1	UNION	
		1	**6V-9746**	2	SEAL-O-RING	
	8	1	*171-6725*	2	ELBOW AS	
		1	**3D-2824**	1	SEAL-O-RING	
		1	**8T-6451**	1	ELBOW	
	9	1	**2P-1293**	2	LOCKNUT-BULKHEAD (1 3/16-12 THD)	
	10	1	**5P-7466**	4	CLIP (SLOT)	
	11	1	*5P-7467*	4	CLIP (TAB)	
	12	1	*5P-8112*	4	GROMMET	
	13	1	**8T-4121**	8	WASHER-HARD (11X21X2.5MM THK)	
M	14	1	**8T-4137**	4	BOLT (M10X1.5X20MM)	
M	15	1	**8T-4196**	4	BOLT (M10X1.5X35MM)	

I-SEE HOSE FABRICATION GUIDE
M-METRIC PART

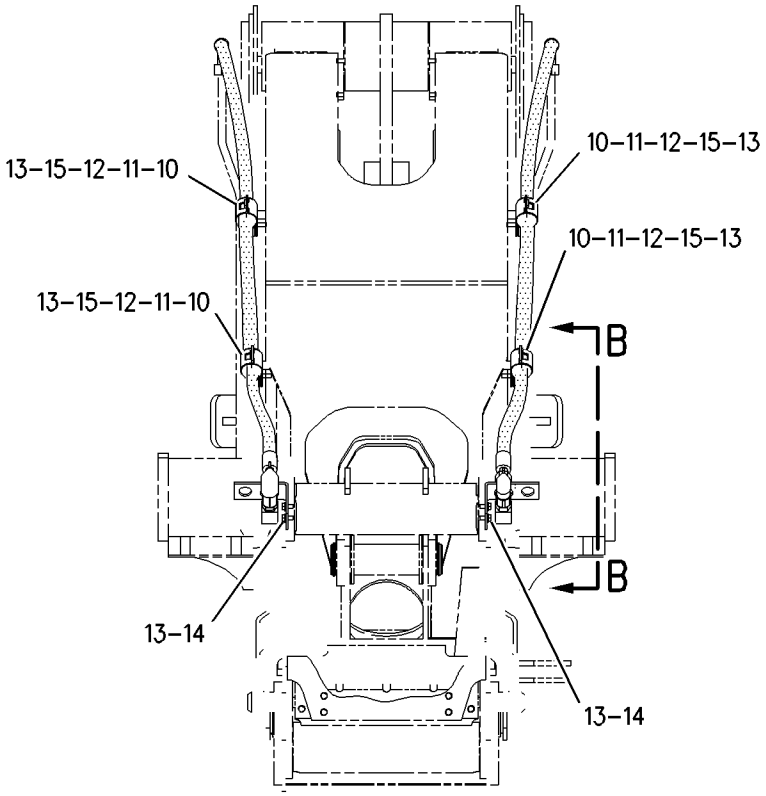

FRONT VIEW

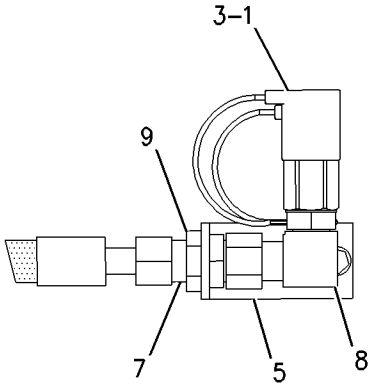

VIEW OF AREA A

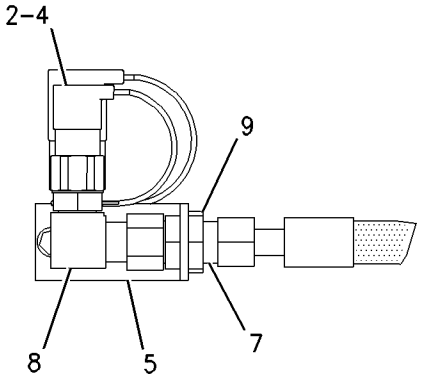

VIEW B-B

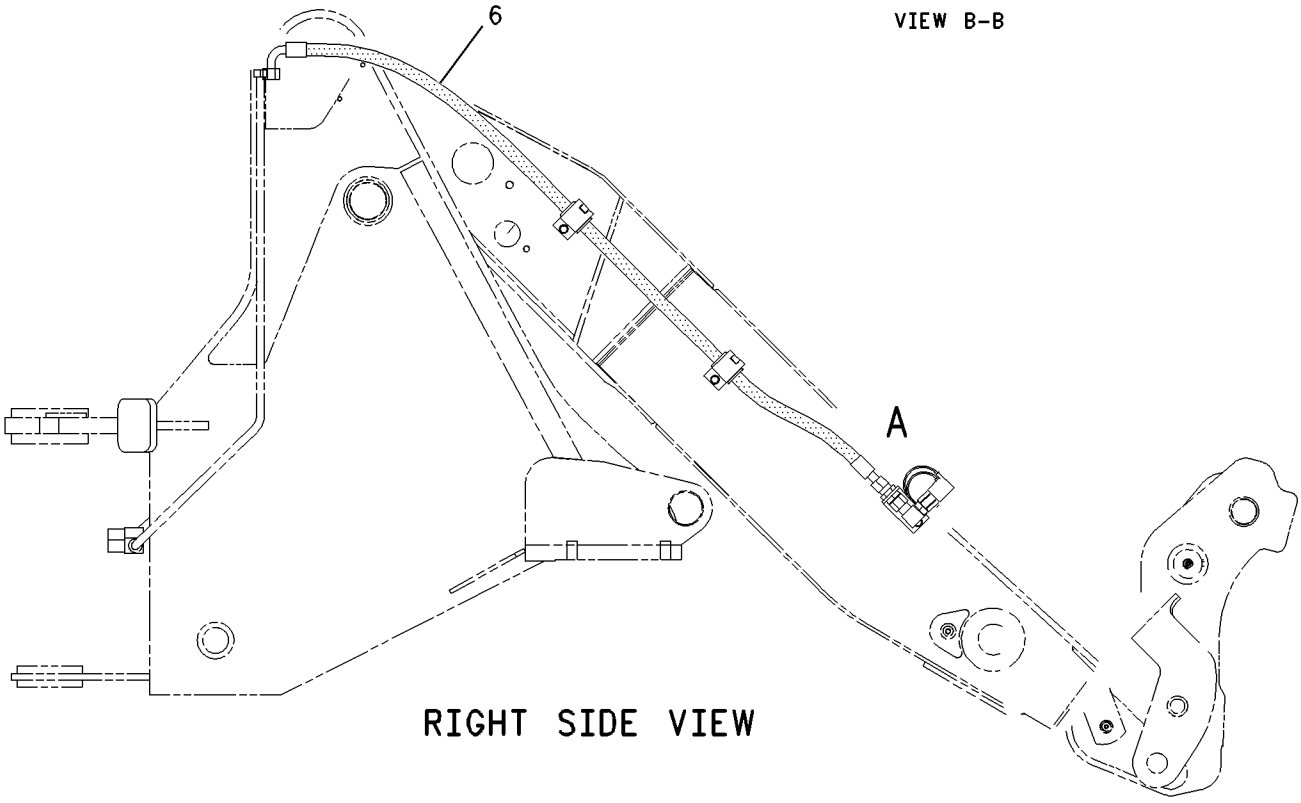

RIGHT SIDE VIEW

GRAPHIC #1

g00931665

HYDRAULIC SYSTEM

154-4920 LINES GP-COUPLER

S/N: RBB1-UP
HIGH LIFT
AN ATTACHMENT

SMCS-5057, 5133 **i01823781**

NOTE	REF NO	GRAPHIC REF	PART NUMBER	QTY	PART NAME 1 2 3 4 5 6 (PRODUCT LEVEL)	SEE PAGE
	1	1	**195-6525**	1	COUPLING	
	2	1	**195-6526**	2	COUPLING	
	3	1	**195-9877**	1	CAP-DUST	
	4	1	**195-9878**	1	CAP-DUST	
	5	1	**213-5065**	2	BRACKET	
I	6	1	**216-6970**	2	HOSE AS	
	7	1	*148-8455*	2	UNION AS	
		1	**6V-8997**	1	UNION	
		1	**6V-9746**	2	SEAL-O-RING	
	8	1	*171-6725*	2	ELBOW AS	
		1	**3D-2824**	1	SEAL-O-RING	
		1	**8T-6451**	1	ELBOW	
	9	1	**2P-1293**	2	LOCKNUT-BULKHEAD (1 3/16-12 THD)	
	10	1	**5P-7466**	4	CLIP (SLOT)	
	11	1	**5P-7467**	4	CLIP (TAB)	
	12	1	**5P-8112**	4	GROMMET	
	13	1	**8T-4121**	8	WASHER-HARD (11X21X2.5MM THK)	
M	14	1	**8T-4137**	4	BOLT (M10X1.5X20MM)	
M	15	1	**8T-4195**	4	BOLT (M10X1.5X30MM)	

I-SEE HOSE FABRICATION GUIDE
M-METRIC PART

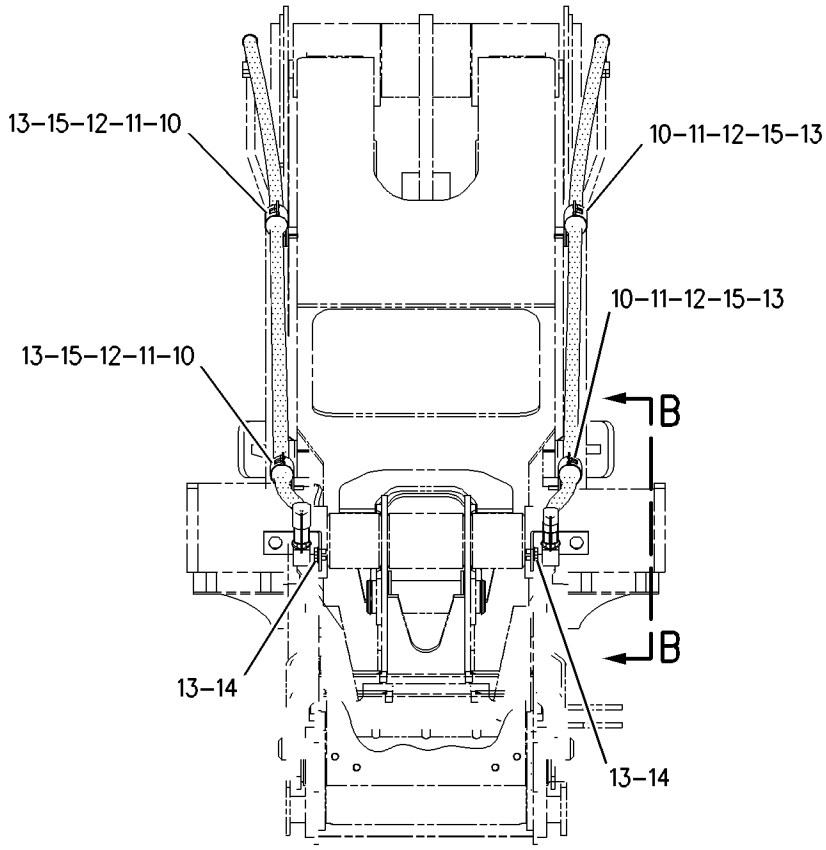

FRONT VIEW

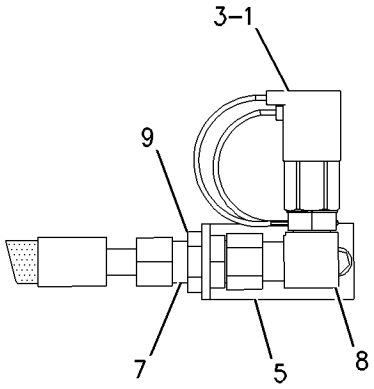

VIEW OF AREA A

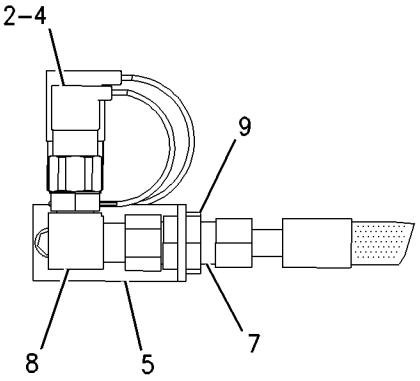

VIEW B-B

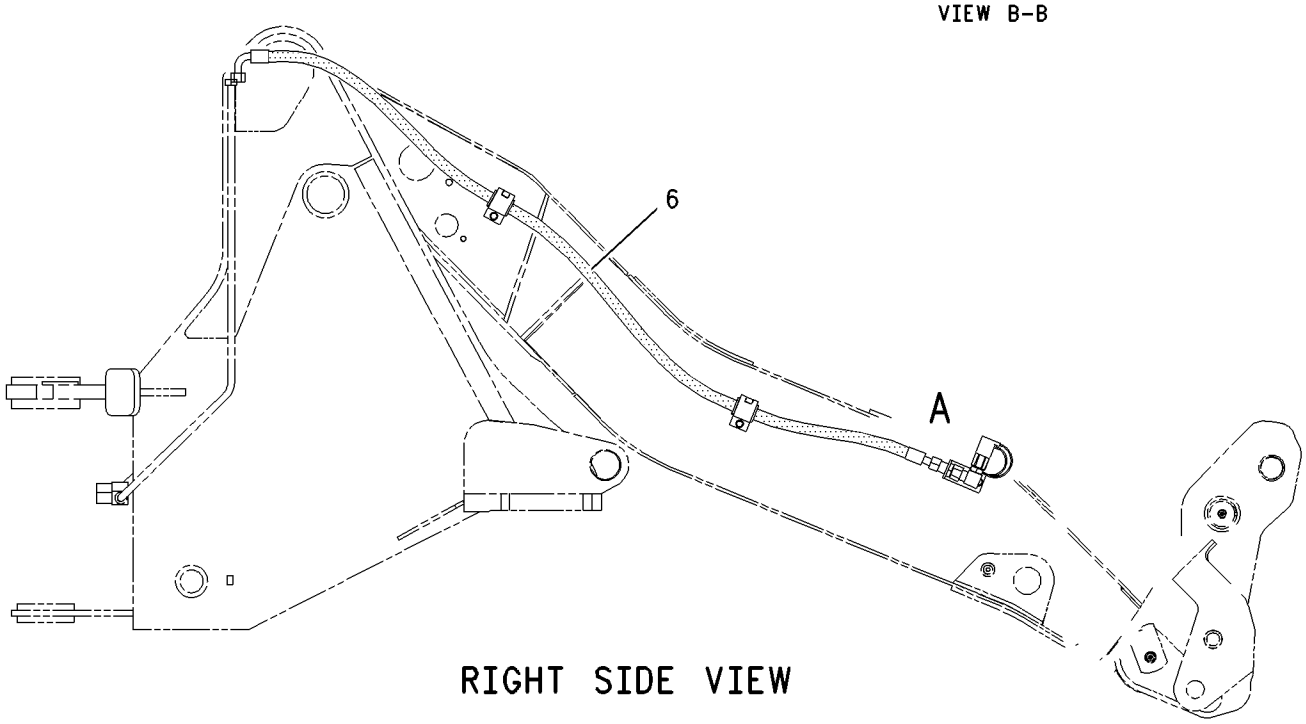

RIGHT SIDE VIEW

GRAPHIC #1 g00931704

HYDRAULIC SYSTEM

217-2771 LINES GP-COUPLER

S/N: RBB1-UP
PART OF 218-5113 COUPLER AR-QUICK
AN ATTACHMENT

SMCS-5057, 5133 **i01840737**

NOTE	REF NO	GRAPHIC REF	PART NUMBER	QTY	PART NAME 1 2 3 4 5 6 (PRODUCT LEVEL)	SEE PAGE
	1	1,2	**5K-4778**	2	CLIP	
	2	1	**7K-1181**	2	STRAP-CABLE	
I	3	1	**169-9049**	1	HOSE AS	
I	4	1	**176-7558**	1	HOSE AS	
	5	1	**180-2387**	1	TUBE AS	
	6	1	**180-2388**	1	TUBE AS	
	7	1	**186-0357**	3	CLIP	
	8	1	**186-0359**	1	CLIP	
	9	2	**192-7625**	1	SWITCH AS (QUICK COUPLER)	
		2	**111-7899**	1	GASKET	
Y	10	1	**193-4750**	1	VALVE GP-QUICK COUPLER	485
	11	1	**195-8673**	1	PLATE AS	
	12	1	**200-1898**	1	SUPRESSOR-ARC	
	13	2	**160-2247**	1	SLEEVE-ABRASION	
I	14	2	**211-5875**	1	HOSE AS	
I	15	2	**211-5877**	1	HOSE AS	
I	16	2	**214-5389**	1	HOSE AS	
I	17	2	**214-5390**	1	HOSE AS	
I	18	1	**217-2768**	1	HOSE AS	
I	19	2	**217-2769**	2	HOSE AS	
	20	1,2	*148-8325*	7	CONNECTOR GP	
					(EACH INCLUDES)	
		1,2	**3J-1907**	1	SEAL-O-RING (11.89MM ID)	
		1,2	**4J-5477**	1	SEAL-O-RING	
		1,2	**6V-8641**	1	CONNECTOR	
	21	2	*148-8351*	2	ELBOW GP	
					(EACH INCLUDES)	
		2	**4J-5477**	1	SEAL-O-RING	
		2	**6V-9849**	1	ELBOW-SWIVEL	
	22	1,2	*148-8368*	4	ELBOW GP	
					(EACH INCLUDES)	
		1,2	**3J-1907**	1	SEAL-O-RING (11.89MM ID)	
		1,2	**4J-5477**	1	SEAL-O-RING	
		1,2	**6V-8627**	1	ELBOW	
	23	1	*148-8419*	1	REDUCER GP	
		1	**4J-5477**	1	SEAL-O-RING	
		1	**6V-8935**	1	REDUCER-O-RING	
	24	2	*150-5968*	2	TEE GP	
					(EACH INCLUDES)	
		2	**4J-5477**	2	SEAL-O-RING	
		2	**6V-9835**	1	TEE	
	25	2	**174-5907**	4	CLIP	
	26	1,2	**3P-5903**	4	CLIP (TAB)	
	27	1,2	**3P-5904**	4	CLIP (SLOT)	
	28	1	**4J-5477**	4	SEAL-O-RING	
	29	1	**4P-8134**	1	CLIP	
	30	1,2	**6D-3479**	7	CLIP	
	31	2	**6K-8178**	1	CLIP	
	32	1	**6V-8554**	1	NUT (13/16-16 THD)	
	33	2	**7D-7233**	2	CLIP	
	34	1,2	**7X-7729**	16	WASHER (11X25X3MM THK)	
	35	1	**8T-4121**	2	WASHER-HARD (11X21X2.5MM THK)	
M	36	2	**8T-4133**	2	NUT (M10X1.5 THD)	
M	37	1,2	**8T-4137**	12	BOLT (M10X1.5X20MM)	
M	38	1	**8T-4139**	3	BOLT (M12X1.75X30MM)	

217-2771 **LINES GP-COUPLER** *(contd.)* **i01840737**

NOTE	REF NO	GRAPHIC REF	PART NUMBER	QTY	PART NAME 1 2 3 4 5 6 (PRODUCT LEVEL)	SEE PAGE
M	39	2	**8T-4195**	2	BOLT (M10X1.5X30MM)	
	40	1,2	**8T-4223**	5	WASHER-HARD (13.5X25.5X3MM THK)	
M	41	1	**8T-5436**	2	BOLT (M10X1.50X130MM)	

I-SEE HOSE FABRICATION GUIDE
M-METRIC PART
Y-SEPARATE ILLUSTRATION

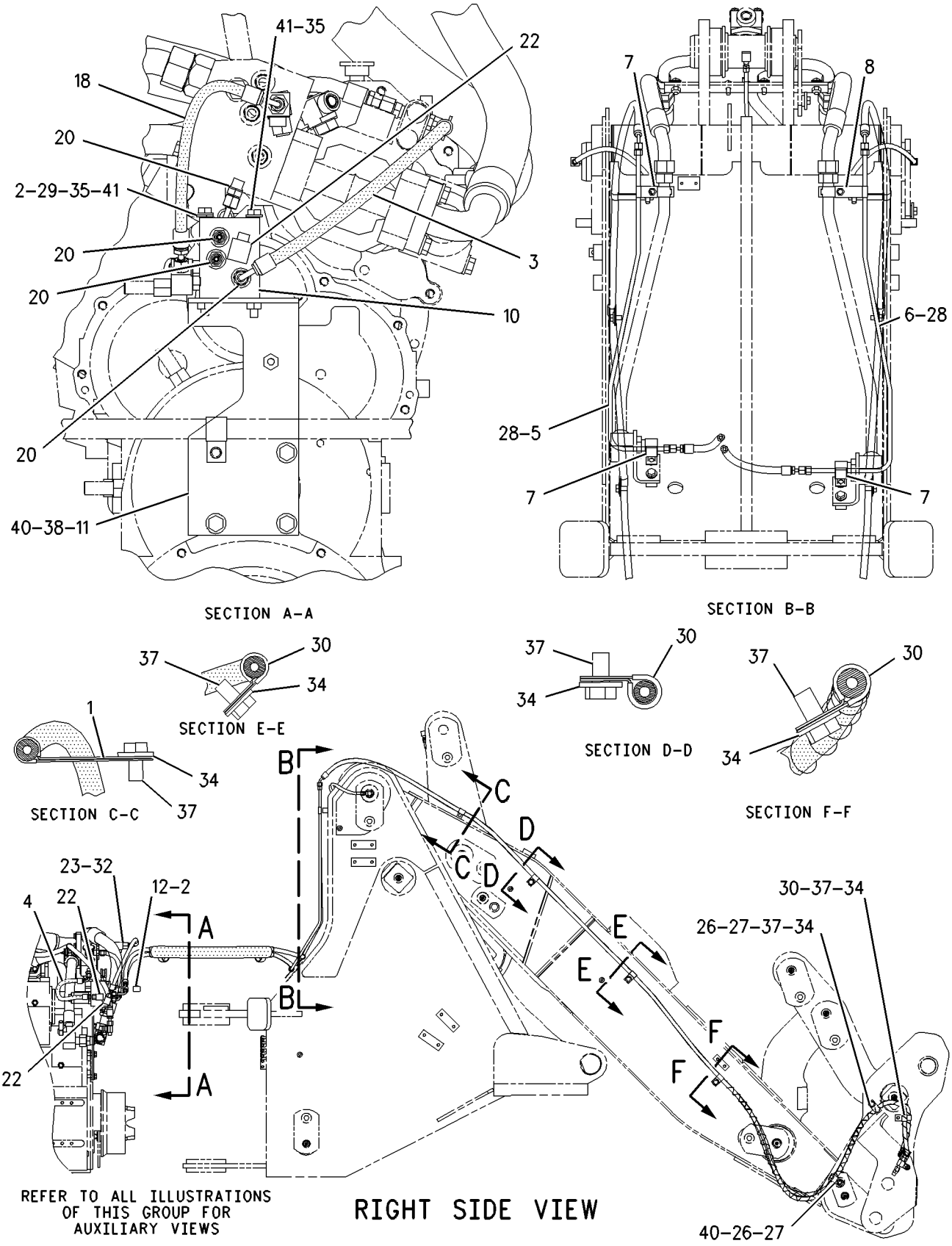

GRAPHIC #1 g00917022

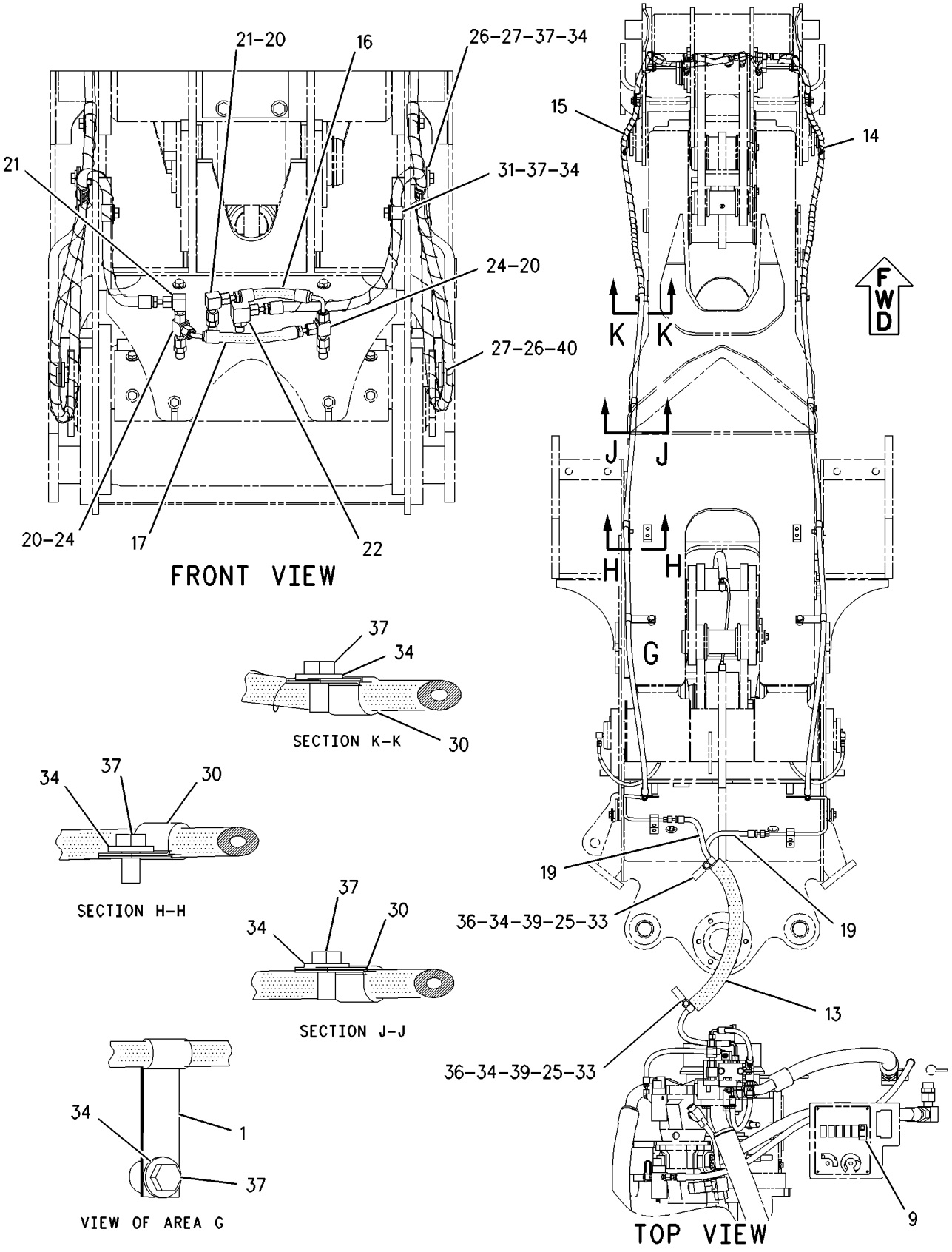

GRAPHIC #2 g00914190

HYDRAULIC SYSTEM

217-2773 LINES GP-COUPLER

S/N: RBB1-UP
HIGH LIFT
PART OF 218-5114 COUPLER AR-QUICK
AN ATTACHMENT

SMCS-5057, 5133 **i01862664**

NOTE	REF NO	GRAPHIC REF	PART NUMBER	QTY	PART NAME 1 2 3 4 5 6 (PRODUCT LEVEL)	SEE PAGE
	1	1,2	**5K-4778**	2	CLIP	
	2	1	**7K-1181**	2	STRAP-CABLE	
I	3	1	**169-9049**	1	HOSE AS	
I	4	1	**176-7558**	1	HOSE AS	
	5	1	**180-2387**	1	TUBE AS	
	6	1	**180-2388**	1	TUBE AS	
	7	1	**186-0357**	3	CLIP	
	8	1	**186-0359**	1	CLIP	
	9	2	**192-7625**	1	SWITCH AS (QUICK COUPLER)	
		2	**111-7899**	1	GASKET	
Y	10	1	**193-4750**	1	VALVE GP-QUICK COUPLER	485
	11	1	**195-8673**	1	PLATE AS	
	12	1	**200-1898**	1	SUPRESSOR-ARC	
	13	2	**160-2247**	1	SLEEVE-ABRASION	
I	14	2	**214-5389**	1	HOSE AS	
I	15	2	**214-5390**	1	HOSE AS	
I	16	2	**215-9648**	1	HOSE AS	
I	17	2	**215-9649**	1	HOSE AS	
I	18	1	**217-2768**	1	HOSE AS	
I	19	2	**217-2769**	2	HOSE AS	
	20	1,2	*148-8325*	7	CONNECTOR GP	
					(EACH INCLUDES)	
		1,2	**3J-1907**	1	SEAL-O-RING	
		1,2	**4J-5477**	1	SEAL-O-RING	
		1,2	**6V-8641**	1	CONNECTOR	
	21	2	*148-8351*	2	ELBOW GP	
					(EACH INCLUDES)	
		2	**4J-5477**	1	SEAL-O-RING	
		2	**6V-9849**	1	ELBOW-SWIVEL	
	22	1,2	*148-8368*	4	ELBOW GP	
					(EACH INCLUDES)	
		1,2	**3J-1907**	1	SEAL-O-RING	
		1,2	**4J-5477**	1	SEAL-O-RING	
		1,2	**6V-8627**	1	ELBOW	
	23	1	*148-8419*	1	REDUCER GP	
		1	**4J-5477**	1	SEAL-O-RING	
		1	**6V-8935**	1	REDUCER-O-RING	
	24	2	*150-5968*	2	TEE GP	
					(EACH INCLUDES)	
		2	**4J-5477**	2	SEAL-O-RING	
		2	**6V-9835**	1	TEE	
	25	2	**174-5907**	4	CLIP	
	26	1,2	**3P-5903**	4	CLIP (TAB)	
	27	1,2	**3P-5904**	4	CLIP (SLOT)	
	28	1	**4J-5477**	4	SEAL-O-RING	
	29	1	**4P-8134**	1	CLIP	
	30	1,2	**6D-3479**	9	CLIP	
	31	2	**6K-8178**	1	CLIP	
	32	1	**6V-8554**	1	NUT (13/16-16 THD)	
	33	2	**7D-7233**	2	CLIP	
	34	1,2	**7X-7729**	18	WASHER (11X25X3MM THK)	
	35	1	**8T-4121**	2	WASHER-HARD (11X21X2.5MM THK)	
M	36	2	**8T-4133**	2	NUT (M10X1.5 THD)	
M	37	1,2	**8T-4137**	14	BOLT (M10X1.5X20MM)	

217-2773 **LINES GP-COUPLER** *(contd.)* **i01862664**

NOTE	REF NO	GRAPHIC REF	PART NUMBER	QTY	PART NAME 1 2 3 4 5 6 (PRODUCT LEVEL)	SEE PAGE
M	38	1	**8T-4139**	3	BOLT (M12X1.75X30MM)	
M	39	2	**8T-4195**	2	BOLT (M10X1.5X30MM)	
	40	1,2	**8T-4223**	5	WASHER-HARD (13.5X25.5X3MM THK)	
M	41	1	**8T-5436**	2	BOLT (M10X1.50X130MM)	

I-SEE HOSE FABRICATION GUIDE
M-METRIC PART
Y-SEPARATE ILLUSTRATION

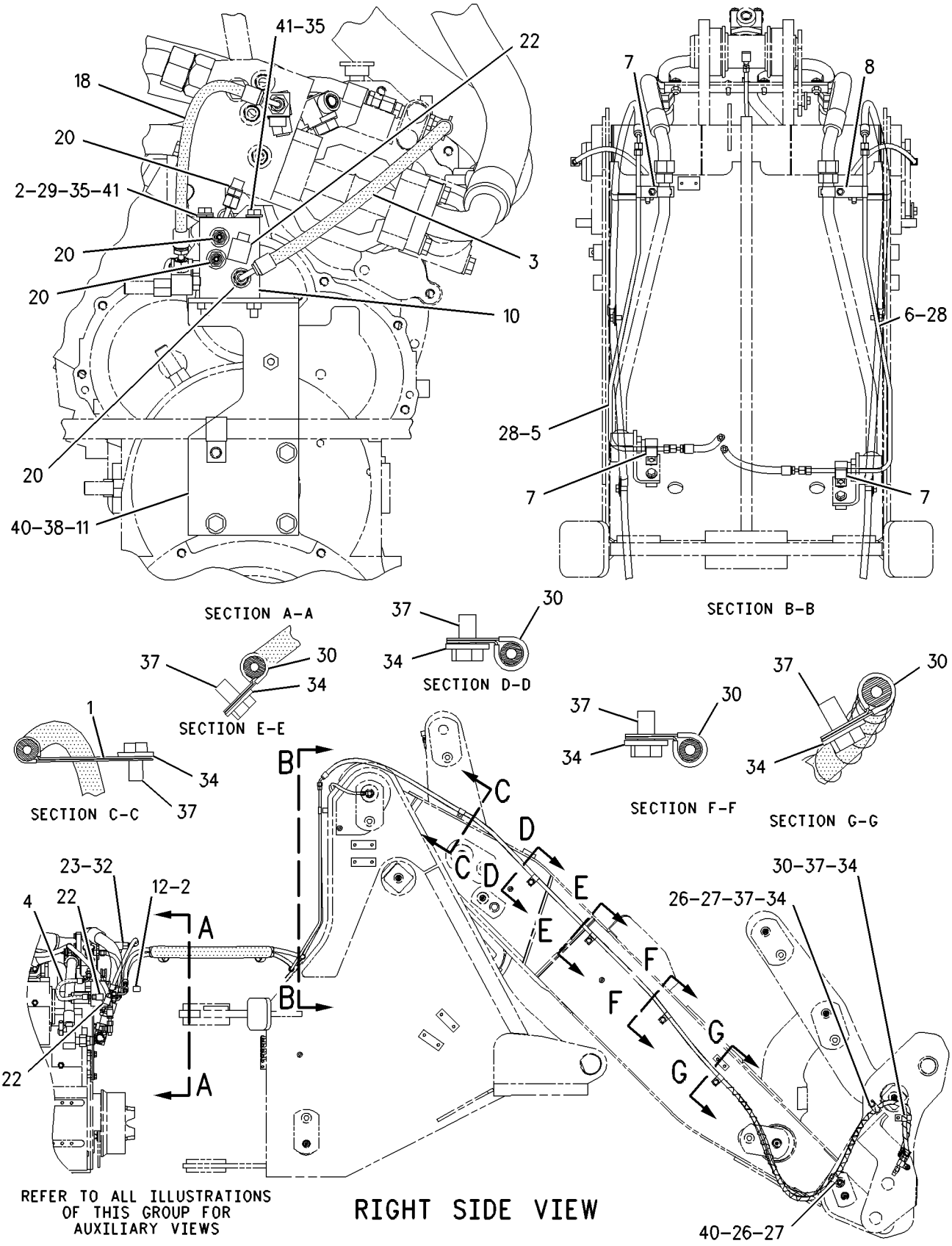

GRAPHIC #1 g00914785

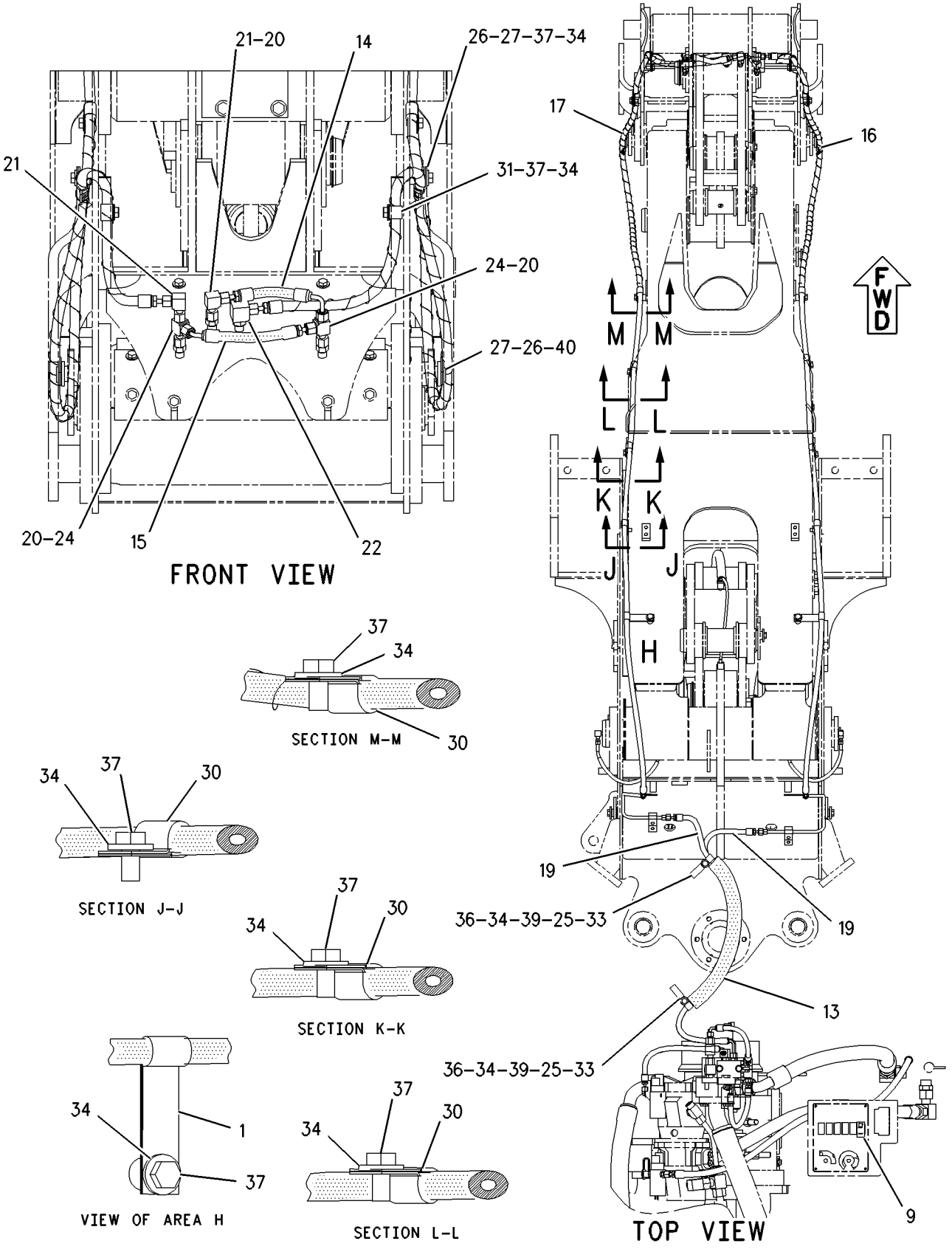

GRAPHIC #2

g00914786

HYDRAULIC SYSTEM

212-3358 LINES GP-FRONT

S/N: RTA1-UP
PART OF 203-3892, 225-5166 HYDRAULIC AR-3 VALVE
AN ATTACHMENT

SMCS-5057 **i01819060**

NOTE	REF NO	GRAPHIC REF	PART NUMBER	QTY	PART NAME 1 2 3 4 5 6 (PRODUCT LEVEL)	SEE PAGE
M	1	1	**8T-4186**	2	BOLT (M10X1.5X40MM)	
M	2	1	**8T-4195**	3	BOLT (M10X1.5X30MM)	
I	3	1	**146-0112**	1	HOSE AS	
I	4	1	**180-2390**	2	HOSE AS	
	5	1	**194-2915**	1	PLATE	
	6	1	**194-2921**	1	BRACKET	
	7	1	**194-3127**	1	BRACKET	
	8	1	**194-8731**	1	TUBE AS	
	9	1	**194-8734**	1	TUBE AS	
	10	1	**195-0290**	1	PLATE AS	
M		1	**8T-3490**	1	NUT-WELD (M10X1.5 THD)	
I	11	1	**214-0734**	1	HOSE AS	
I	12	1	**214-0735**	1	HOSE AS	
I	13	1	**214-0736**	1	HOSE AS	
	14	1	*148-8321*	2	CONNECTOR AS	
					(EACH INCLUDES)	
		1	**3J-1907**	1	SEAL-O-RING	
		1	**6V-8397**	1	SEAL-O-RING	
		1	**8C-0564**	1	CONNECTOR	
	15	1	*148-8336*	2	CONNECTOR AS	
					(EACH INCLUDES)	
		1	**3J-1907**	1	SEAL-O-RING	
		1	**6V-8397**	1	SEAL-O-RING	
		1	**6V-8636**	1	CONNECTOR	
	16	1	*148-8339*	2	CONNECTOR GP	
					(EACH INCLUDES)	
		1	**6V-8716**	1	CONNECTOR	
		1	**6V-9746**	1	SEAL-O-RING	
		1	**7M-8485**	1	SEAL-O-RING	
	17	1	*148-8455*	2	UNION GP	
					(EACH INCLUDES)	
		1	**6V-8997**	1	UNION	
		1	**6V-9746**	2	SEAL-O-RING	
	18	1	*171-6723*	1	ELBOW AS	
		1	**6V-9746**	1	SEAL-O-RING	
		1	**8T-8899**	1	ELBOW	
	19	1	**2P-1293**	4	LOCKNUT-BULKHEAD (1 3/16-12 THD)	
	20	1	**5P-7466**	4	CLIP (SLOT)	
	21	1	**5P-7467**	4	CLIP (TAB)	
	22	1	**5P-8112**	4	GROMMET	
	23	1	**6V-9746**	4	SEAL-O-RING	
	24	1	**6V-9832**	2	CAP AS	
	25	1	**7X-7729**	10	WASHER (11X25X3MM THK)	
	26	1	**8T-1887**	2	CLIP (SLOT)	
	27	1	**8T-1888**	2	CLIP (TAB)	
	28	1	**8T-4121**	4	WASHER-HARD (11X21X2.5MM THK)	
M	29	1	**8T-4136**	8	BOLT (M10X1.5X25MM)	
M	30	1	**8T-4185**	1	BOLT (M10X1.5X50MM)	

I-SEE HOSE FABRICATION GUIDE
M-METRIC PART

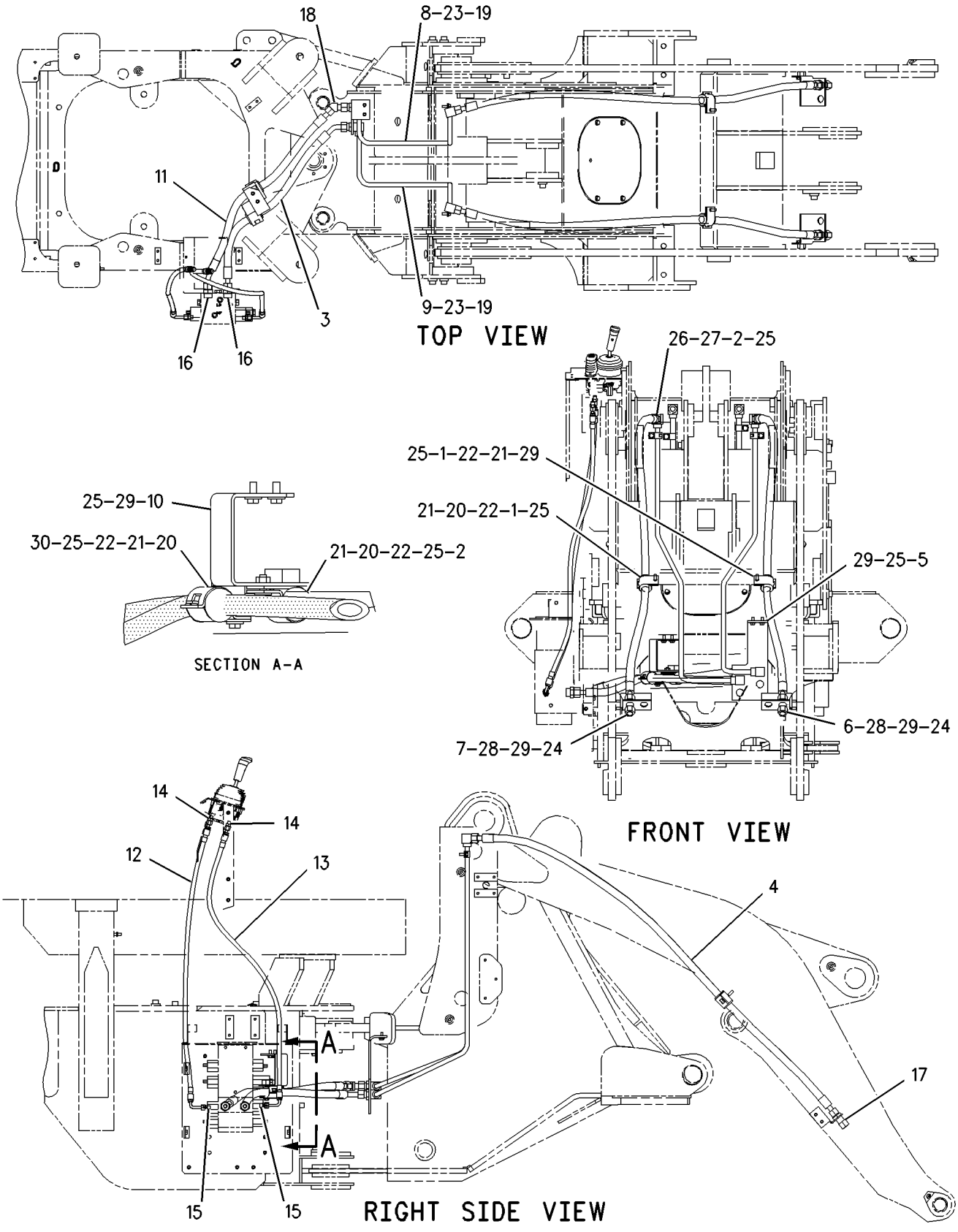

GRAPHIC #1

g00875473

HYDRAULIC SYSTEM

203-3873 LINES GP-HYDRAULIC

S/N: RTA1-UP; RBB1-UP

PART OF 176-5182, 176-5202 HYDRAULIC AR

SMCS-5057 **i01854355**

NOTE	REF NO	GRAPHIC REF	PART NUMBER	QTY	PART NAME 1 2 3 4 5 6 (PRODUCT LEVEL)	SEE PAGE
	1	1	**227-8234**	1	HOSE	
	2	1,2	**6V-0852**	2	CAP-DUST	
	3	1,2	**8T-4984**	4	CLAMP-HOSE	
	4	1	**8T-6703**	2	CLAMP-HOSE	
I	5	1	**132-2376**	1	HOSE AS	
	6	2	*155-3503*	1	TEE AS	
		2	**2M-9780**	1	SEAL-O-RING	
		2	**6V-8776**	1	TEE-FACE SEAL	
		2	**7J-9108**	2	SEAL-O-RING	
	7	2	**169-2981**	1	TUBE AS	
	8	1	**205-7105**	1	HOSE AS	
I	9	1	**205-7106**	1	HOSE AS	
I	10	1	**205-7108**	1	HOSE AS	
	11	2	**205-7110**	1	TUBE AS	
	12	2	**209-0789**	1	MANIFOLD	
I	13	1	**211-4793**	1	HOSE AS	
	14	2	**212-7521**	1	VALVE GP-CHECK (RETURN RESTRICTOR)	
		2	**2S-4078**	1	SEAL-O-RING	
		2	**6V-8400**	1	SEAL-O-RING	
I	15	1	**214-2232**	1	HOSE AS	
	16	1	**217-4101**	1	TUBE AS	
I	17	1	**220-0497**	1	HOSE AS	
	18	2	*148-8326*	1	CONNECTOR GP	
		2	**3J-7354**	1	SEAL-O-RING	
		2	**6V-8397**	1	SEAL-O-RING	
		2	**6V-9872**	1	CONNECTOR	
	19	1	*148-8327*	1	CONNECTOR AS	
		1	**3D-2824**	1	SEAL-O-RING	
		1	**6V-8637**	1	CONNECTOR-SEAL	
		1	**6V-9746**	1	SEAL-O-RING	
	20	2	*148-8335*	1	CONNECTOR AS	
		2	**5K-9090**	1	SEAL-O-RING	
		2	**6V-8635**	1	CONNECTOR	
		2	**7M-8485**	1	SEAL-O-RING	
	21	1	*148-8338*	1	CONNECTOR GP	
		1	**3J-1907**	1	SEAL-O-RING	
		1	**6V-8397**	1	SEAL-O-RING	
		1	**8T-0075**	1	CONNECTOR	
	22	2	*148-8352*	1	ELBOW GP	
		2	**5K-9090**	1	SEAL-O-RING	
		2	**6V-9854**	1	ELBOW-SWIVEL	
	23	1	*148-8367*	1	ELBOW GP	
		1	**6V-8397**	1	SEAL-O-RING	
		1	**6V-9850**	1	ELBOW-SWIVEL	
	24	1	*148-8373*	1	ELBOW GP	
		1	**6V-8400**	1	SEAL-O-RING	
		1	**7M-8485**	1	SEAL-O-RING	
		1	**8C-3364**	1	ELBOW	
	25	1	*148-8388*	1	ELBOW GP	
		1	**2M-9780**	1	SEAL-O-RING	
		1	**6V-8629**	1	ELBOW	
		1	**6V-9746**	1	SEAL-O-RING	
	26	2	*148-8407*	1	PLUG GP	
		2	**3J-1907**	1	SEAL-O-RING	
		2	**9S-4191**	1	PLUG	

203-3873 **LINES GP-HYDRAULIC** *(contd.)* **i01854355**

NOTE	REF NO	GRAPHIC REF	PART NUMBER	QTY	PART NAME 1 2 3 4 5 6 (PRODUCT LEVEL)	SEE PAGE
	27	2	*148-8411*	2	PLUG GP	
					(EACH INCLUDES)	
		2	**3K-0360**	1	SEAL-O-RING	
		2	**9S-4185**	1	PLUG	
	28	2	*148-8428*	1	TEE GP	
		2	**3K-0360**	1	SEAL-O-RING	
		2	**6V-8398**	2	SEAL-O-RING	
		2	**6V-8782**	1	TEE-FACE SEAL	
	29	1	*148-8433*	1	TEE GP	
		1	**6V-8397**	2	SEAL-O-RING	
		1	**6V-9836**	1	TEE-SWIVEL	
	30	2	*148-8444*	1	TEE GP	
		2	**6V-8398**	2	SEAL-O-RING	
		2	**6V-9837**	1	TEE-SWIVEL	
	31	2	*180-9933*	1	ADAPTER GP	
		2	**3J-7354**	1	SEAL-O-RING	
		2	**135-9941**	1	ADAPTER-90 DEGREE	
	32	1	*150-4033*	1	TEE GP	
		1	**6V-9746**	2	SEAL-O-RING	
		1	**6V-9846**	1	TEE-SWIVEL	
	33	1,2	*164-5567*	2	FITTING GP	
					(EACH INCLUDES)	
		1,2	**3J-1907**	1	SEAL-O-RING	
		1,2	**6V-3965**	1	FITTING AS	
	34	2	*171-6723*	1	ELBOW AS	
		2	**6V-9746**	1	SEAL-O-RING	
		2	**8T-8899**	1	ELBOW	
	35	2	**1P-3703**	1	SEAL-RECTANGULAR	
	36	2	**1P-3708**	1	SEAL-RECTANGULAR	
	37	2	**1P-4579**	2	FLANGE-HALF	
	38	2	**1P-4582**	2	FLANGE-HALF	
	39	1	**1P-4584**	2	FLANGE-HALF	
	40	1	**4J-0520**	1	SEAL-O-RING	
	41	2	**4J-0524**	1	SEAL-O-RING	
	42	2	**4J-0527**	1	SEAL-O-RING	
	43	1	**5P-7468**	1	CLIP (SLOT)	
	44	1	**5P-7469**	1	CLIP (TAB)	
	45	1	**5P-8444**	1	GROMMET	
	46	1	**6D-4246**	1	CLIP	
	47	1	**6J-2680**	1	SEAL-O-RING	
	48	2	**6V-9830**	2	CAP AS	
M	49	2	**7X-2549**	4	BOLT (M12X1.75X100MM)	
	50	1	**7X-7729**	4	WASHER (11X25X3MM THK)	
M	51	2	**8C-2926**	4	BOLT (M10X1.50X140MM)	
	52	1	**8C-3206**	2	FLANGE-HALF	
	53	1,2	**8T-4121**	8	WASHER-HARD (11X21X2.5MM THK)	
M	54	2	**8T-4183**	4	BOLT (M12X1.75X40MM)	
M	55	2	**8T-4184**	4	BOLT (M12X1.75X45MM)	
M	56	1	**8T-4186**	4	BOLT (M10X1.5X40MM)	
M	57	1	**8T-4196**	4	BOLT (M10X1.5X35MM)	
	58	2	**8T-4223**	12	WASHER-HARD (13.5X25.5X3MM THK)	

I-SEE HOSE FABRICATION GUIDE
M-METRIC PART

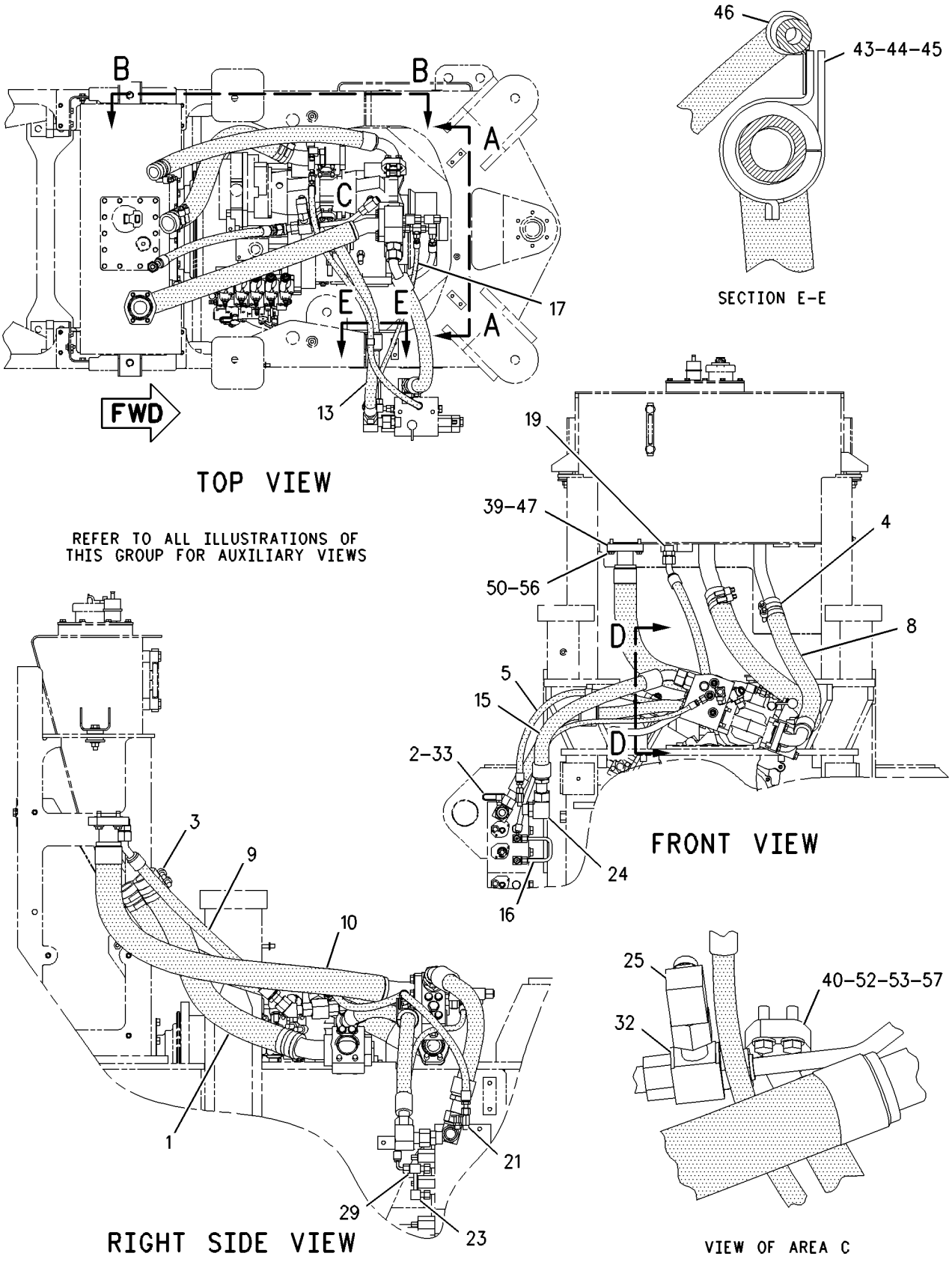

GRAPHIC #1 g00921322

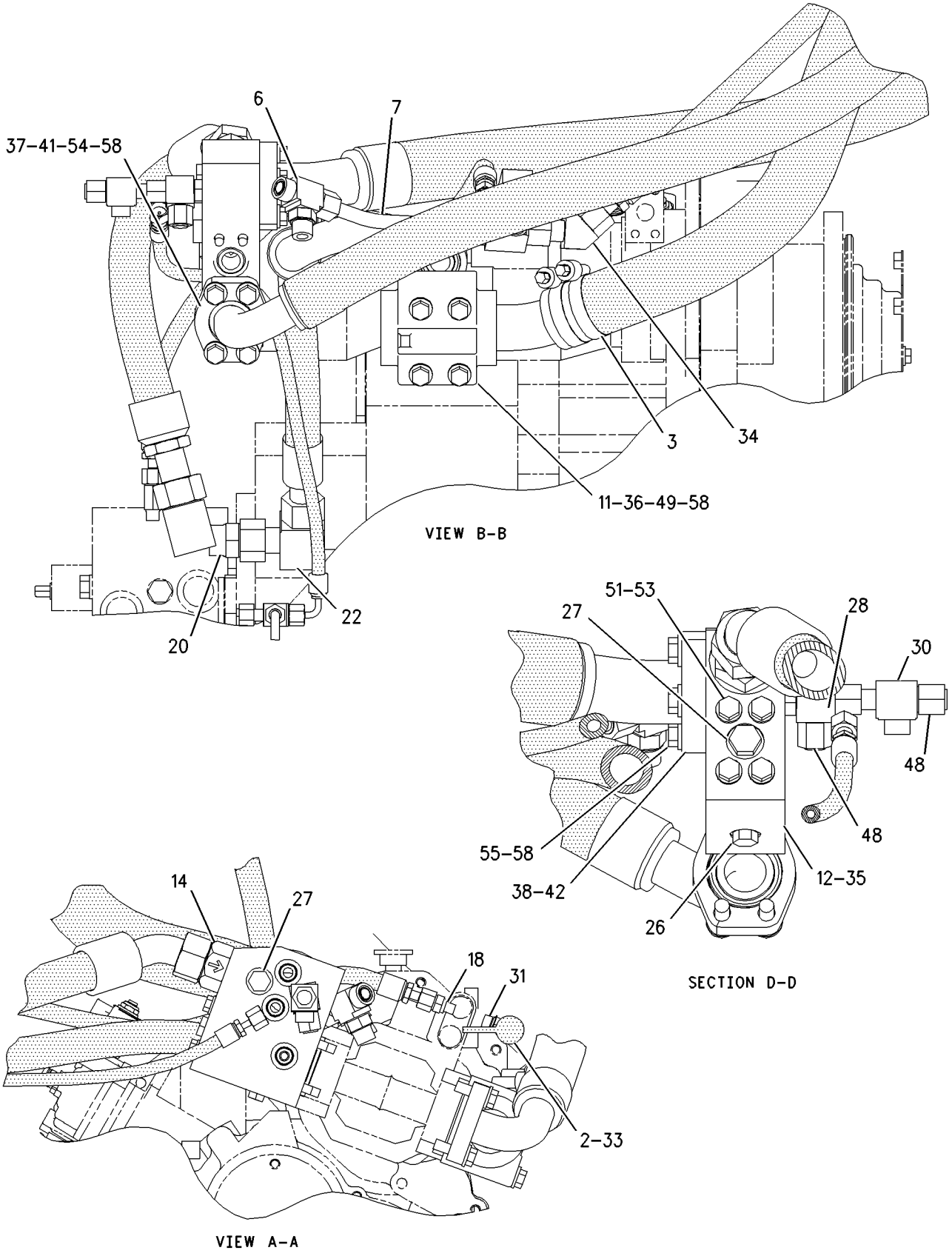

GRAPHIC #2

g00921324

HYDRAULIC SYSTEM

211-1063 LINES GP-HYDRAULIC

S/N: RBB1-UP
ONE CIRCUIT
PART OF 203-3891, 225-5163 HYDRAULIC AR-3 VALVE, 203-3893, 223-0561 HYDRAULIC AR-4 VALVE
AN ATTACHMENT

SMCS-5057 **i01715414**

NOTE	REF NO	GRAPHIC REF	PART NUMBER	QTY	PART NAME 1 2 3 4 5 6 (PRODUCT LEVEL)	SEE PAGE
M	1	1	**8T-4195**	2	BOLT (M10X1.5X30MM)	
M	2	1	**8T-4136**	8	BOLT (M10X1.5X25MM)	
I	3	1	**146-0112**	1	HOSE AS	
	4	1	**146-0113**	1	TUBE AS	
	5	1	**146-0114**	1	TUBE AS	
	6	1	**146-0117**	1	PLATE AS	
		1	**8Y-3925**	1	BOSS (3/8-16X1.20 IN)	
		1	**9C-6809**	1	BLOCK	
	7	1	**146-0118**	1	PLATE	
I	8	1	**214-0734**	1	HOSE AS	
I	9	1	**214-0735**	1	HOSE AS	
I	10	1	**214-0736**	1	HOSE AS	
	11	1	*148-8321*	2	CONNECTOR AS	
					(EACH INCLUDES)	
		1	**3J-1907**	1	SEAL-O-RING	
		1	**6V-8397**	1	SEAL-O-RING	
		1	**8C-0564**	1	CONNECTOR	
	12	1	*148-8336*	2	CONNECTOR GP	
					(EACH INCLUDES)	
		1	**3J-1907**	1	SEAL-O-RING	
		1	**6V-8397**	1	SEAL-O-RING	
		1	**6V-8636**	1	CONNECTOR	
	13	1	*148-8339*	2	CONNECTOR GP	
					(EACH INCLUDES)	
		1	**6V-8716**	1	CONNECTOR	
		1	**6V-9746**	1	SEAL-O-RING	
		1	**7M-8485**	1	SEAL-O-RING	
	14	1	*171-6723*	1	ELBOW AS	
		1	**6V-9746**	1	SEAL-O-RING	
		1	**8T-8899**	1	ELBOW	
	15	1	**2P-1293**	2	LOCKNUT-BULKHEAD (1 3/16-12 THD)	
	16	1	**5P-7466**	2	CLIP (SLOT)	
	17	1	**5P-7467**	2	CLIP (TAB)	
	18	1	**5P-8112**	2	GROMMET	
	19	1	**6V-9746**	4	SEAL-O-RING	
	20	1	**7X-7729**	4	WASHER (11X25X3MM THK)	
	21	1	**8T-1887**	4	CLIP (SLOT)	
	22	1	**8T-1888**	4	CLIP (TAB)	
	23	1	**8T-4121**	6	WASHER-HARD (11X21X2.5MM THK)	

I-SEE HOSE FABRICATION GUIDE
M-METRIC PART

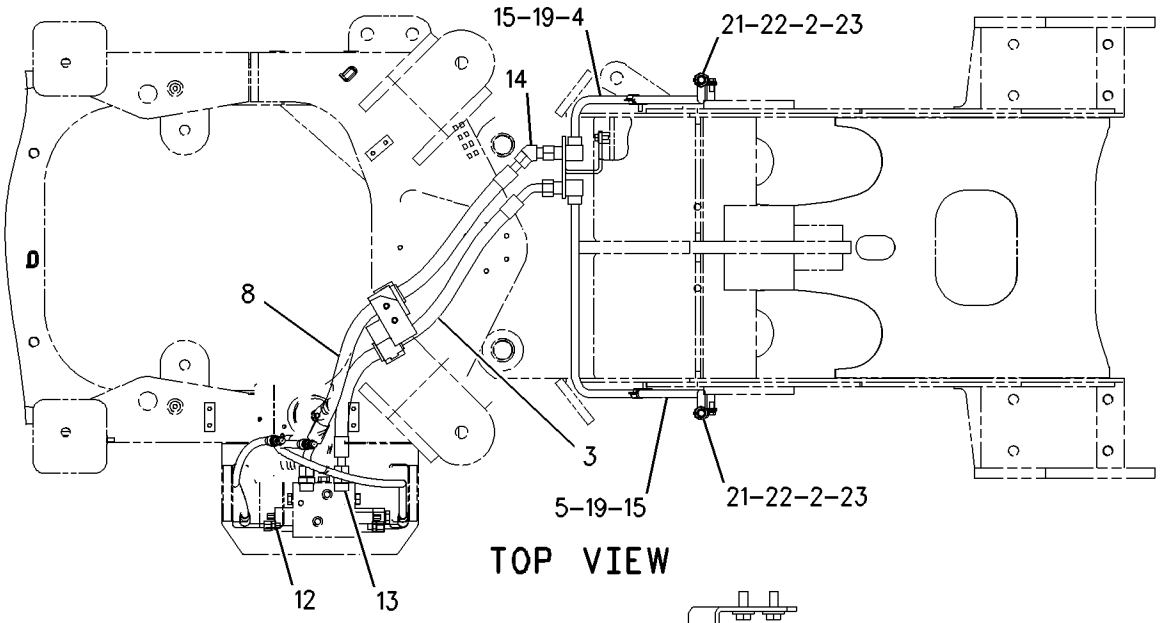

TOP VIEW

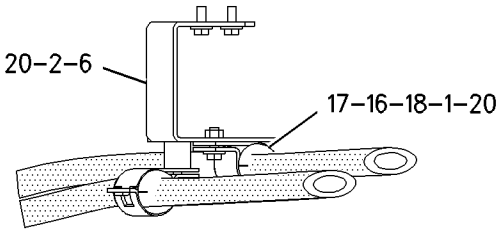

SECTION A-A

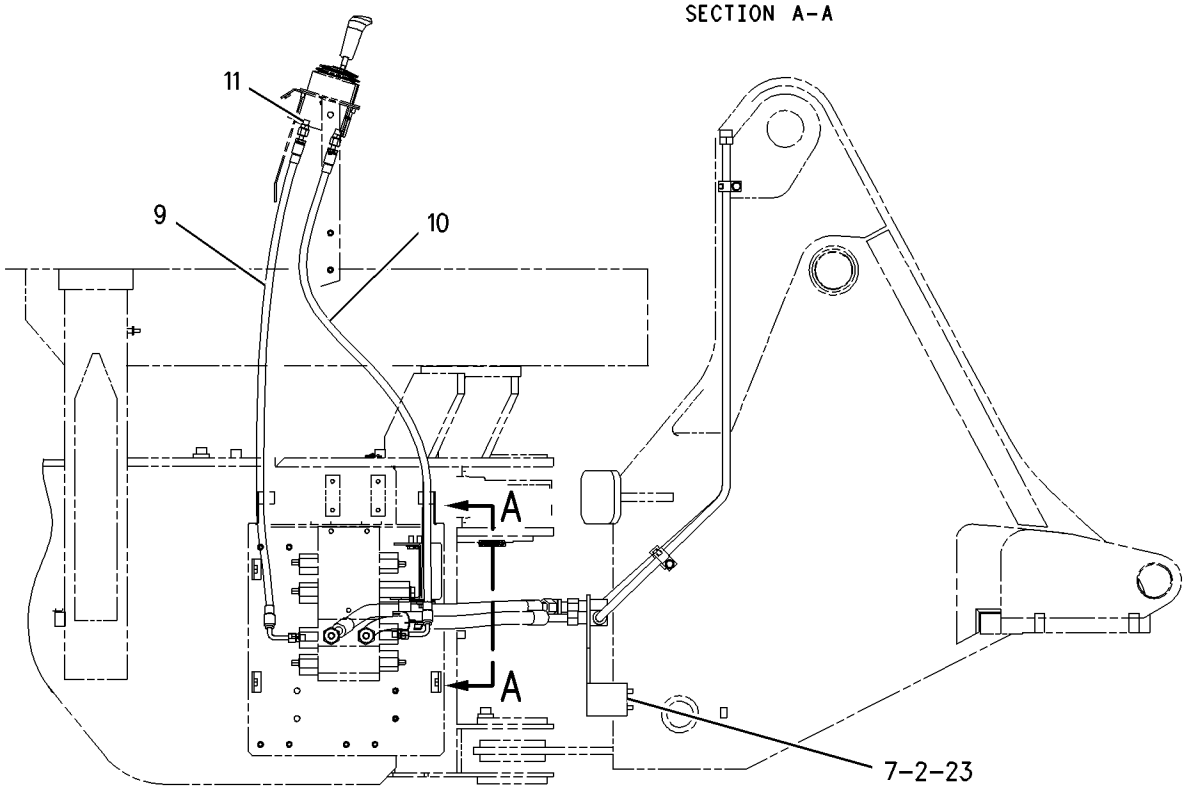

RIGHT SIDE VIEW

GRAPHIC #1 g00878764

HYDRAULIC SYSTEM

223-0521 LINES GP-HYDRAULIC

S/N: RBB1-UP
4 VALVE,HIGH LIFT
PART OF 203-3893, 223-0561 HYDRAULIC AR-4 VALVE
AN ATTACHMENT

SMCS-5057 **i01822839**

NOTE	REF NO	GRAPHIC REF	PART NUMBER	QTY	PART NAME 1 2 3 4 5 6 (PRODUCT LEVEL)	SEE PAGE
M	1	1	**8T-4195**	2	BOLT (M10X1.5X30MM)	
M	2	1	**8T-4136**	2	BOLT (M10X1.5X25MM)	
I	3	1	**146-0123**	1	HOSE AS	
	4	1	**146-7951**	1	TUBE AS	
	5	1	**146-7952**	1	TUBE AS	
	6	1	**146-7953**	1	PLATE AS	
		1	**9R-2672**	2	BOSS (M10X20MM)	
	7	1	*153-6241*	1	ELBOW GP	
		1	**6V-8398**	1	SEAL-O-RING	
		1	**8C-8989**	1	ELBOW	
	8	1	*153-6252*	2	CONNECTOR AS	
					(EACH INCLUDES)	
		1	**6V-8398**	1	SEAL-O-RING	
		1	**7M-8485**	1	SEAL-O-RING	
		1	**9X-8408**	1	CONNECTOR	
I	9	1	**214-0737**	1	HOSE AS	
I	10	1	**214-0738**	1	HOSE AS	
I	11	1	**214-0739**	1	HOSE AS	
	12	1	*148-8321*	2	CONNECTOR AS	
					(EACH INCLUDES)	
		1	**3J-1907**	1	SEAL-O-RING (11.89MM ID)	
		1	**6V-8397**	1	SEAL-O-RING (12.83MM OD)	
		1	**8C-0564**	1	CONNECTOR	
	13	1	*148-8336*	2	CONNECTOR AS	
					(EACH INCLUDES)	
		1	**3J-1907**	1	SEAL-O-RING (11.89MM ID)	
		1	**6V-8397**	1	SEAL-O-RING (12.83MM OD)	
		1	**6V-8636**	1	CONNECTOR	
	14	1	*148-8375*	2	ELBOW GP	
					(EACH INCLUDES)	
		1	**6V-8398**	2	SEAL-O-RING	
		1	**6V-8981**	1	ELBOW	
	15	1	**5P-7464**	2	CLIP (SLOT)	
	16	1	**5P-7465**	2	CLIP (TAB)	
	17	1	**6V-1249**	2	GROMMET	
	18	1	**6V-8398**	2	SEAL-O-RING	
	19	1	**6V-9169**	2	NUT-BULKHEAD (13/16-16 THD)	
	20	1	**8T-1885**	4	CLIP (SLOT)	
	21	1	**8T-1886**	4	CLIP (TAB)	
	22	1	**8T-4121**	4	WASHER-HARD (11X21X2.5MM THK)	

I-SEE HOSE FABRICATION GUIDE
M-METRIC PART

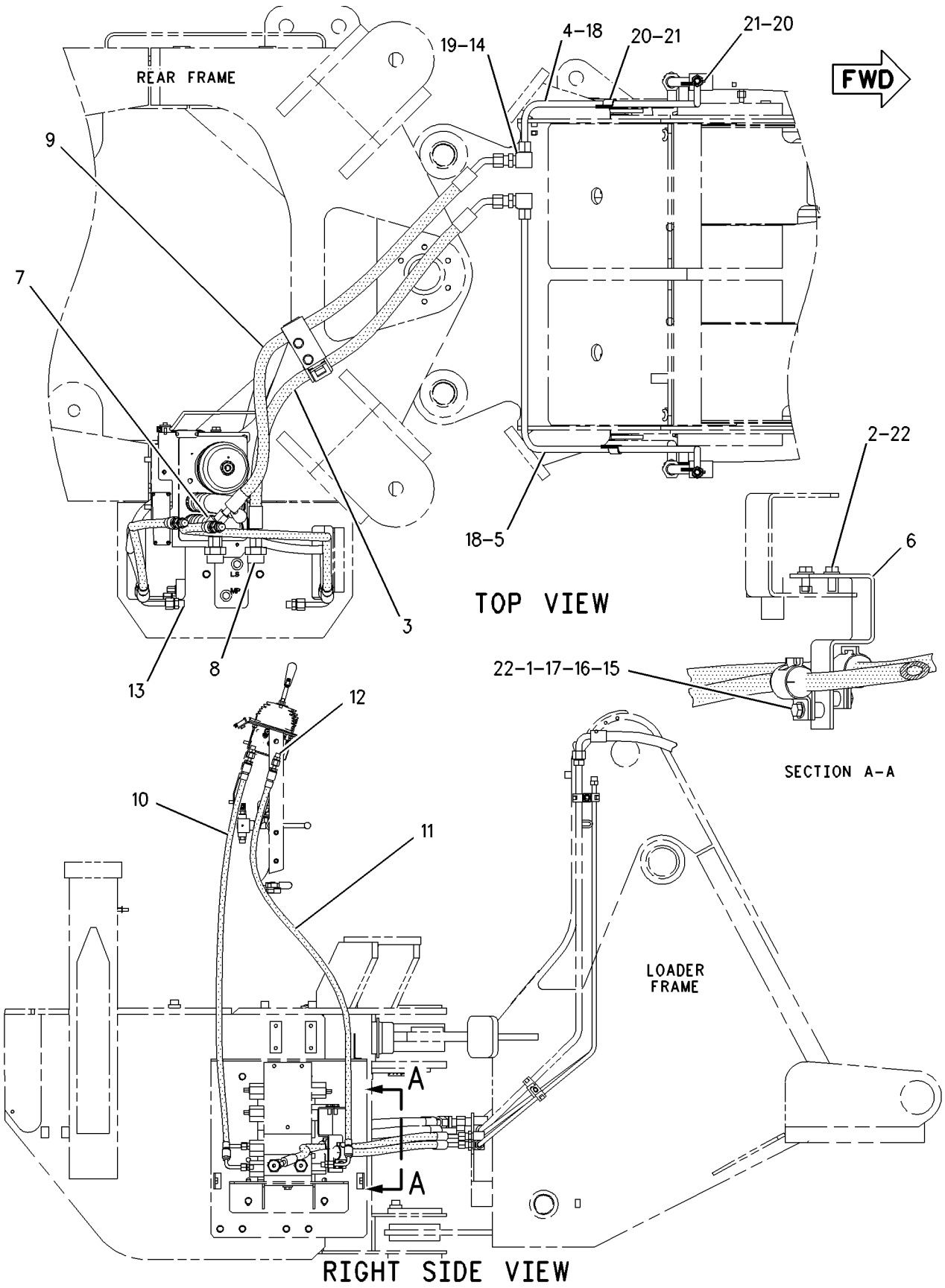

GRAPHIC #1

g00917635

HYDRAULIC SYSTEM

203-3881 LINES GP-HYDRAULIC FAN

S/N: RTA1-UP; RBB1-UP
PART OF 203-5943, 203-5944 AXLE AR-OSCILLATING
AN ATTACHMENT

SMCS-1386, 1387, 5057 **i01854404**

NOTE	REF NO	GRAPHIC REF	PART NUMBER	QTY	PART NAME 1 2 3 4 5 6 (PRODUCT LEVEL)	SEE PAGE
G	1	2	**160-2245**		SLEEVE-ABRASION (67IN)	
G	2	2	**160-2243**		SLEEVE-ABRASION (33IN)	
	3	1,2	**3S-2093**	6	STRAP-CABLE	
	4	2	**7K-1181**	2	STRAP-CABLE	
	5	2	**091-0081**	1	SPACER (10.5X20X10.0MM THK)	
	6	1	**125-7484**	1	SPACER	
	7	2	**129-8087**	1	SPACER (14MM THK)	
	8	1	**163-4295**	1	PLATE AS	
M		1	**8T-3490**	2	NUT-WELD (M10X1.5 THD)	
I	9	1	**209-7801**	1	HOSE AS	
I	10	1	**212-5085**	1	HOSE AS	
I	11	1	**212-5940**	1	HOSE AS	
I	12	2	**212-5942**	1	HOSE AS	
I	13	1	**212-6056**	1	HOSE AS	
	14	2	**214-1042**	1	PLATE AS	
M		2	**8T-3490**	2	NUT-WELD (M10X1.5 THD)	
I	15	1	**215-3810**	1	HOSE AS	
	16	2	**226-1354**	1	VALVE GP-CHECK	
		2	**6V-9746**	2	SEAL-O-RING	
	17	2	**227-4306**	1	TUBE AS	
I	18	1	**229-5115**	1	HOSE AS	
I	19	2	**230-6142**	1	HOSE AS	
	20	1	*148-8327*	2	CONNECTOR AS	
					(EACH INCLUDES)	
		1	**3D-2824**	1	SEAL-O-RING	
		1	**6V-8637**	1	CONNECTOR-SEAL	
		1	**6V-9746**	1	SEAL-O-RING	
	21	2	*148-8358*	1	ELBOW AS	
		2	**2M-9780**	1	SEAL-O-RING	
		2	**6V-8398**	1	SEAL-O-RING	
		2	**6V-8624**	1	ELBOW	
	22	1	*148-8368*	1	ELBOW GP	
		1	**3J-1907**	1	SEAL-O-RING	
		1	**4J-5477**	1	SEAL-O-RING	
		1	**6V-8627**	1	ELBOW	
	23	2	**148-8418**	1	REDUCER GP	
		2	**6V-8398**	1	SEAL-O-RING	
		2	**6V-8942**	1	REDUCER-O-RING (FACE)	
	24	2	**150-4037**	1	TEE AS	
		2	**6V-8398**	2	SEAL-O-RING	
		2	**6V-9844**	1	TEE-SWIVEL	
	25	1	*150-4049*	1	ELBOW GP	
		1	**8T-4149**	1	ELBOW	
		1	**6V-9746**	1	SEAL-O-RING	
		1	**7M-8485**	1	SEAL-O-RING	
	26	1	*153-6237*	1	ELBOW GP	
		1	**3D-2824**	1	SEAL-O-RING	
		1	**6V-9004**	1	ELBOW	
		1	**6V-9746**	1	SEAL-O-RING	
	27	2	**153-6241**	1	ELBOW GP	
		2	**6V-8398**	1	SEAL-O-RING	
		2	**8C-8989**	1	ELBOW	
	28	2	**164-6862**	1	TEE GP	
		2	**6V-9160**	1	TEE-FACE SEAL	
		2	**6V-9746**	3	SEAL-O-RING	

203-3881 LINES GP-HYDRAULIC FAN *(contd.)* i01854404

NOTE	REF NO	GRAPHIC REF	PART NUMBER	QTY	PART NAME 1 2 3 4 5 6 (PRODUCT LEVEL)	SEE PAGE
	29	2	**204-8000**	2	MOUNT	
	30	2	**2P-1293**	1	LOCKNUT-BULKHEAD (1 3/16-12 THD)	
	31	1	**3P-2404**	1	CLIP	
	32	1	**4D-7388**	1	CLIP	
	33	2	**4D-9517**	2	CLIP	
	34	1,2	**6V-1889**	5	CLIP	
	35	2	**6V-8556**	1	NUT (1 3/16-12 THD)	
	36	2	**7X-7729**	2	WASHER (11X25X3MM THK)	
	37	2	**8M-2770**	1	CLIP	
	38	1	**8S-5107**	1	SPACER (2.0 IN THK)	
	39	1,2	**8T-4121**	10	WASHER-HARD (11X21X2.5MM THK)	
M	40	2	**8T-4133**	1	NUT (M10X1.5 THD)	
M	41	2	**8T-4136**	2	BOLT (M10X1.5X25MM)	
M	42	1,2	**8T-4137**	3	BOLT (M10X1.5X20MM)	
M	43	2	**8T-4186**	1	BOLT (M10X1.5X40MM)	
M	44	1,2	**8T-4195**	4	BOLT (M10X1.5X30MM)	
	45	1	**8T-4223**	1	WASHER-HARD (13.5X25.5X3MM THK)	
M	46	1	**8T-4648**	1	BOLT (M12X1.75X70MM)	

G-ORDER BY THE INCH
I-SEE HOSE FABRICATION GUIDE
M-METRIC PART

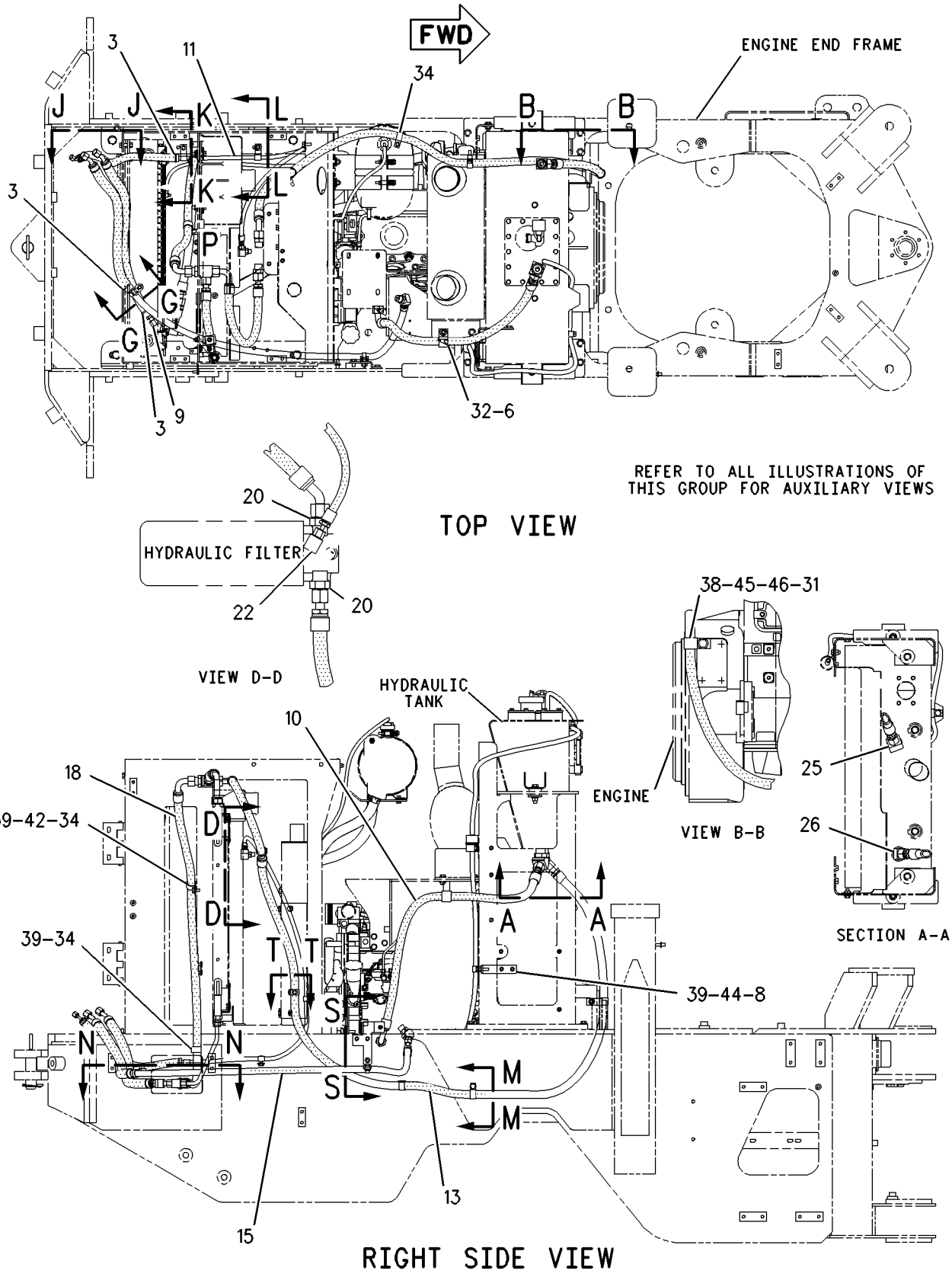

GRAPHIC #1 g00938861

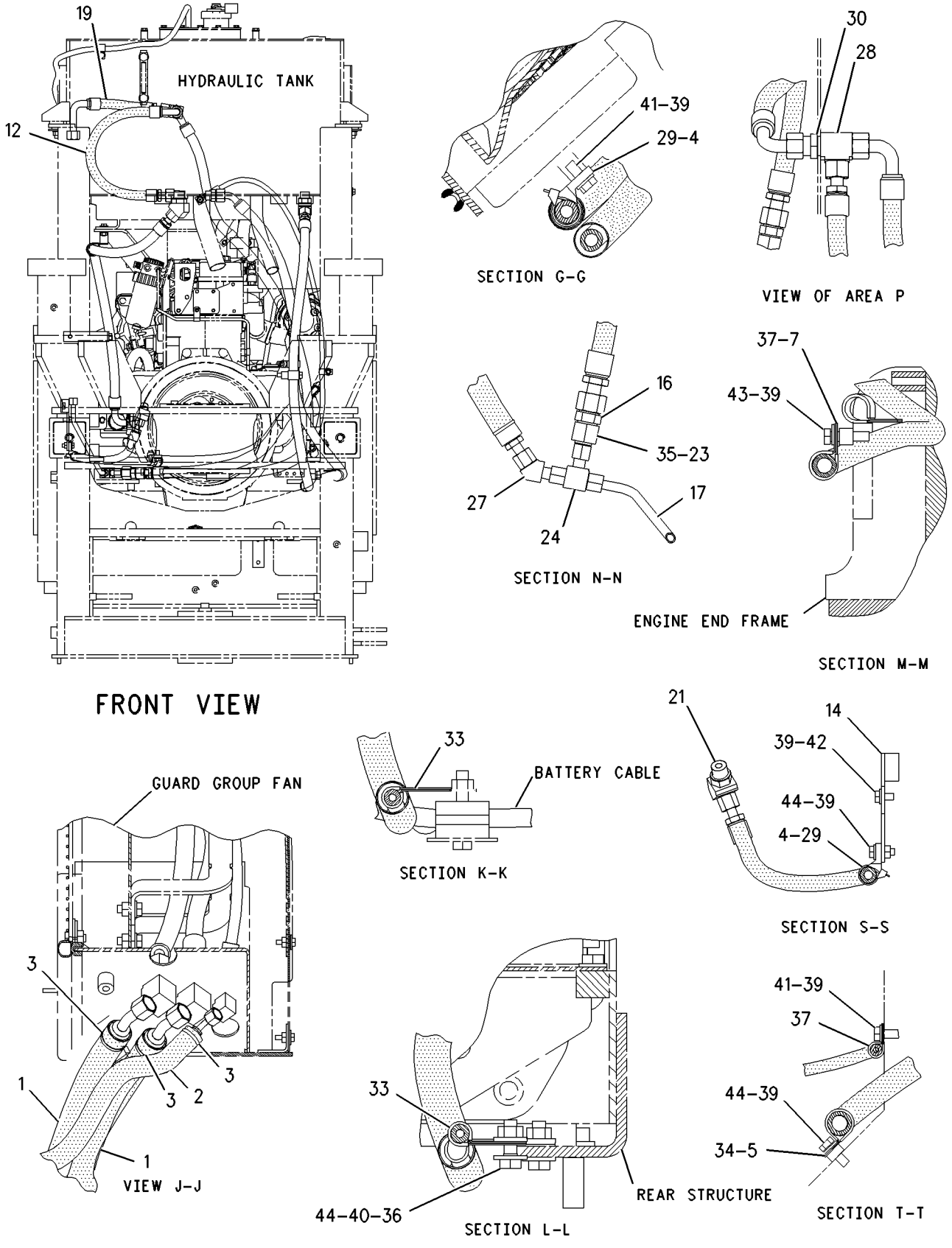

GRAPHIC #2 g00938880

212-6282 LINES GP-HYDRAULIC FAN

S/N: RTA1-UP; RBB1-UP
WITH FAN
PART OF 203-3884 MOTOR AR-HYDRAULIC FAN
AN ATTACHMENT

SMCS-1386, 1387, 5057 **i01817417**

NOTE	REF NO	GRAPHIC REF	PART NUMBER	QTY	PART NAME 1 2 3 4 5 6 (PRODUCT LEVEL)	SEE PAGE
I	1	1	**164-1908**	1	HOSE AS	
I	2	1	**214-7091**	1	HOSE AS	
I	3	1	**214-7092**	1	HOSE AS	
	4	1	*148-8316*	1	CONNECTOR GP	
		1	**3J-7354**	1	SEAL-O-RING	
		1	**4J-5477**	1	SEAL-O-RING	
		1	**6V-8647**	1	CONNECTOR	
	5	1	*148-8372*	1	ELBOW GP	
		1	**2M-9780**	1	SEAL-O-RING	
		1	**6V-8398**	1	SEAL-O-RING	
		1	**6V-8721**	1	ELBOW	
	6	1	*148-8375*	2	ELBOW GP	
					(EACH INCLUDES)	
		1	**6V-8398**	2	SEAL-O-RING	
		1	**6V-8981**	1	ELBOW	
	7	1	*148-8381*	1	ELBOW GP	
		1	**3D-2824**	1	SEAL-O-RING	
		1	**6V-8398**	1	SEAL-O-RING	
		1	**8T-5429**	1	ELBOW	
	8	1	*148-8384*	1	ELBOW AS	
		1	**4J-5477**	2	SEAL-O-RING	
		1	**6V-8979**	1	ELBOW	
	9	1	**2P-1279**	1	LOCKNUT (9/16-18 THD)	
	10	1	**6V-9169**	2	NUT-BULKHEAD (13/16-16 THD)	

I-SEE HOSE FABRICATION GUIDE

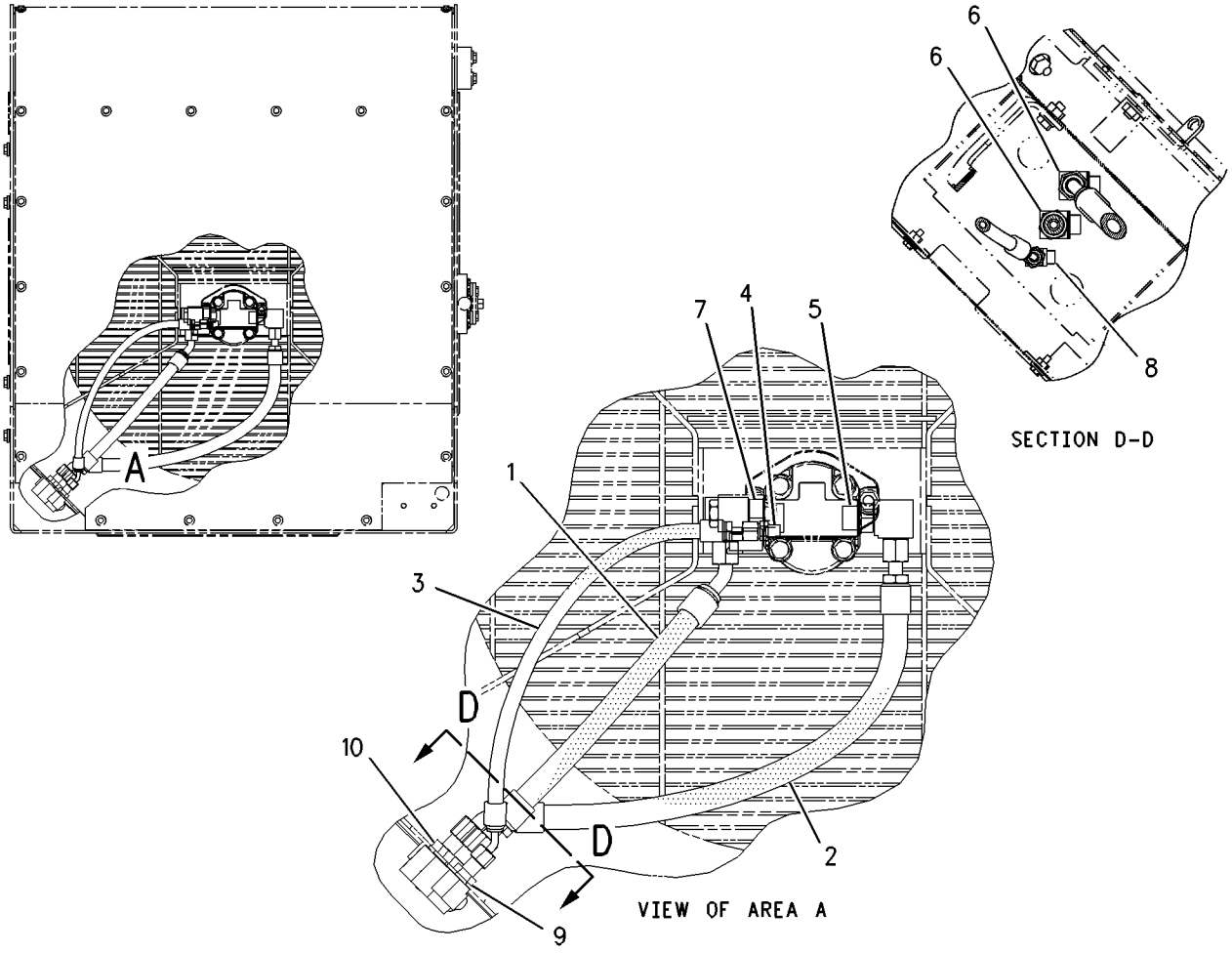

GRAPHIC #1 g00896302

HYDRAULIC SYSTEM

212-6283 LINES GP-HYDRAULIC FAN

S/N: RTA1-UP; RBB1-UP
WITH FAN
PART OF 203-3885 MOTOR AR-HYDRAULIC FAN
AN ATTACHMENT

SMCS-1386, 1387, 5057 **i01859343**

NOTE	REF NO	GRAPHIC REF	PART NUMBER	QTY	PART NAME 1 2 3 4 5 6 (PRODUCT LEVEL)	SEE PAGE
	1	1	**7K-1181**	1	STRAP-CABLE	
	2	1	**106-8704**	1	SUPPRESSOR AS-ARC	
		1	**102-8802**	1	KIT-RECEPTACLE (2 PIN)	
		1	**3E-3365**	1	WEDGE-RECEPTACLE LOCK (2 PIN)	
		1	**186-3735**	2	PIN-CONNECTOR	
	3	1	**158-5089**	1	RELAY AS	
	4	1	**185-2765**	1	SWITCH AS-ROCKER (REVERSING FAN ON/OFF)	
		1	**111-7899**	1	GASKET	
I	5	1	**214-7091**	1	HOSE AS	
I	6	1	**215-3813**	1	HOSE AS	
I	7	1	**215-5644**	1	HOSE AS	
	8	1	*148-8316*	1	CONNECTOR AS	
		1	**3J-7354**	1	SEAL-O-RING	
		1	**4J-5477**	1	SEAL-O-RING	
		1	**6V-8647**	1	CONNECTOR	
	9	1	*148-8340*	1	CONNECTOR GP	
		1	**3K-0360**	1	SEAL-O-RING	
		1	**6V-8398**	1	SEAL-O-RING	
		1	**6V-8639**	1	CONNECTOR	
	10	1	*148-8345*	1	CONNECTOR GP	
		1	**2M-9780**	1	SEAL-O-RING	
		1	**6V-8398**	1	SEAL-O-RING	
		1	**6V-8638**	1	CONNECTOR-SEAL	
	11	1	*148-8375*	2	ELBOW GP	
					(EACH INCLUDES)	
		1	**6V-8398**	2	SEAL-O-RING	
		1	**6V-8981**	1	ELBOW	
	12	1	*148-8384*	1	ELBOW AS	
		1	**4J-5477**	2	SEAL-O-RING	
		1	**6V-8979**	1	ELBOW	
	13	1	**2P-1279**	1	LOCKNUT (9/16-18 THD)	
	14	1	**6V-9169**	2	NUT-BULKHEAD (13/16-16 THD)	

I-SEE HOSE FABRICATION GUIDE

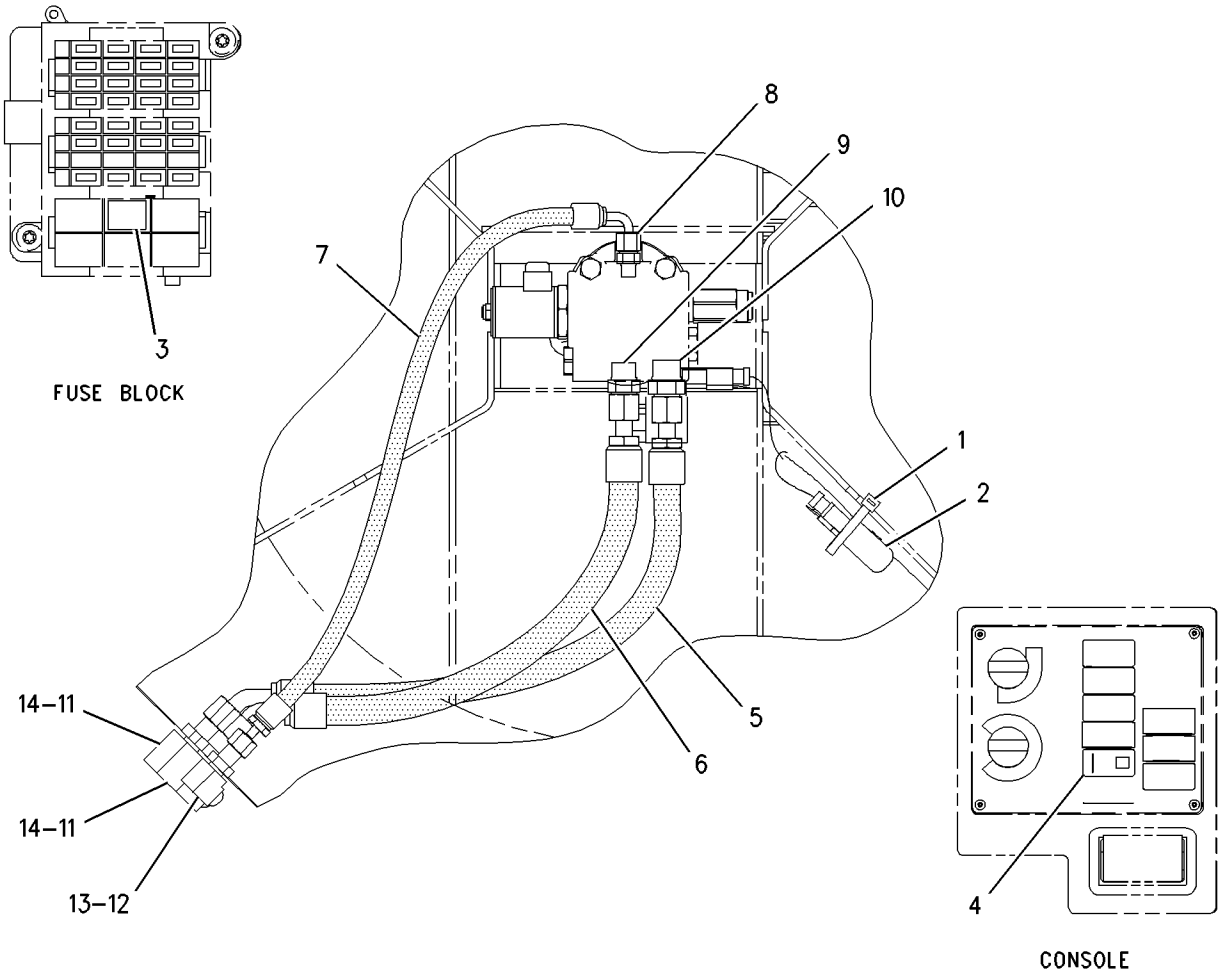

GRAPHIC #1 g00947750

HYDRAULIC SYSTEM

214-9434 LINES GP-LIFT CYLINDER

S/N: RBB1-UP

PART OF 176-5182 HYDRAULIC AR

SMCS-5057, 5102 **i01836848**

NOTE	REF NO	GRAPHIC REF	PART NUMBER	QTY	PART NAME 1 2 3 4 5 6 (PRODUCT LEVEL)	SEE PAGE
	1	1	**5P-0599**	2	CLAMP	
	2	2	**7K-1181**	2	STRAP-CABLE	
	3	1	**7K-3971**	4	TAG-IDENTIFICATION (L1)	
	4	1	**7K-3972**	2	TAG-IDENTIFICATION (L2)	
	5	1	**9R-9572**	2	BLOCK	
Y	6	2	**112-1817**	1	VALVE GP-BALL (RESOLVER)	424
I	7	1	**132-2367**	2	HOSE AS	
I	8	1	**146-0111**	2	HOSE AS	
I	9	2	**148-7783**	1	HOSE AS	
I	10	2	**148-7784**	1	HOSE AS	
	11	2	*164-5545*	1	CONNECTOR AS	
		2	**3E-2335**	1	CONNECTOR	
		2	**3J-1907**	1	SEAL-O-RING	
		2	**6V-8397**	1	SEAL-O-RING	
	12	2	**185-3596**	1	BRACKET AS	
M		2	**6V-9632**	2	NUT-WELD (M6X1 THD)	
	13	1	**211-1058**	1	TUBE AS	
	14	1	**211-4230**	1	TUBE AS	
	15	2	**212-8136**	1	BRACKET	
I	16	1	**213-6940**	1	HOSE AS	
	17	2	**213-8783**	1	BRACKET AS	
		2	**8Y-4489**	2	BOSS	
I	18	1	**214-3765**	1	HOSE AS	
I	19	1	**214-3767**	1	HOSE AS	
	20	1	**217-8112**	1	TUBE AS	
	21	1	**218-0255**	1	BRACKET AS	
M		1	**8T-3490**	1	NUT-WELD (M10X1.5 THD)	
	22	1	**218-0256**	1	BRACKET	
I	23	1	**219-8742**	1	HOSE AS	
	24	1	**221-0852**	1	TUBE AS	
I	25	1	**221-3234**	1	HOSE AS	
	26	1	*148-8321*	2	CONNECTOR AS	
					(EACH INCLUDES)	
		1	**3J-1907**	1	SEAL-O-RING	
		1	**6V-8397**	1	SEAL-O-RING	
		1	**8C-0564**	1	CONNECTOR	
	27	1	*148-8327*	2	CONNECTOR AS	
					(EACH INCLUDES)	
		1	**3D-2824**	1	SEAL-O-RING	
		1	**6V-8637**	1	CONNECTOR-SEAL	
		1	**6V-9746**	1	SEAL-O-RING	
	28	1	*148-8335*	2	CONNECTOR AS	
					(EACH INCLUDES)	
		1	**5K-9090**	1	SEAL-O-RING	
		1	**6V-8635**	1	CONNECTOR	
		1	**7M-8485**	1	SEAL-O-RING	
	29	1,2	*148-8336*	3	CONNECTOR AS	
					(EACH INCLUDES)	
		1,2	**3J-1907**	1	SEAL-O-RING	
		1,2	**6V-8397**	1	SEAL-O-RING	
		1,2	**6V-8636**	1	CONNECTOR	
	30	1	**148-8410**	2	PLUG AS	
					(EACH INCLUDES)	
		1	**2M-9780**	1	SEAL-O-RING	
		1	**9S-4190**	1	PLUG	
	31	1	*150-3056*	1	TEE AS	

214-9434 LINES GP-LIFT CYLINDER *(contd.)* i01836848

NOTE	REF NO	GRAPHIC REF	PART NUMBER	QTY	PART NAME 1 2 3 4 5 6 (PRODUCT LEVEL)	SEE PAGE
		1	**6V-8397**	3	SEAL-O-RING	
		1	**6V-8788**	1	TEE	
	32	2	**4B-4274**	4	WASHER (5.5X13X1.2MM THK)	
	33	1	**4J-5267**	2	SEAL-O-RING	
	34	1	**5K-9090**	4	SEAL-O-RING	
	35	2	**5P-7468**	2	CLIP (SLOT)	
	36	2	**5P-7469**	2	CLIP (TAB)	
	37	2	**5P-8444**	2	GROMMET	
	38	1	**6V-7359**	4	GROMMET	
	39	1	**6V-8398**	1	SEAL-O-RING	
	40	2	**6V-9172**	2	NUT (1 7/16-12 THD)	
	41	1	**6V-9746**	4	SEAL-O-RING	
	42	1	**6V-9829**	1	CAP AS	
	43	1,2	**7X-7729**	12	WASHER (11X25X3MM THK)	
M	44	2	**7Y-3173**	4	SCREW-BUTTON HEAD (M4X0.7X12MM)	
	45	1,2	**8C-3205**	4	FLANGE-HALF	
	46	2	**8M-2773**	1	CLIP	
	47	1	**8T-1899**	4	CLIP (SLOT)	
	48	1	**8T-1900**	4	CLIP (TAB)	
	49	1,2	**8T-4121**	15	WASHER-HARD (11X21X2.5MM THK)	
M	50	1,2	**8T-4133**	4	NUT (M10X1.5 THD)	
M	51	1,2	**8T-4136**	11	BOLT (M10X1.5X25MM)	
M	52	2	**8T-4182**	2	BOLT (M10X1.5X45MM)	
M	53	2	**8T-4195**	2	BOLT (M10X1.5X30MM)	
M	54	1	**8T-4196**	8	BOLT (M10X1.5X35MM)	

I-SEE HOSE FABRICATION GUIDE
M-METRIC PART
Y-SEPARATE ILLUSTRATION

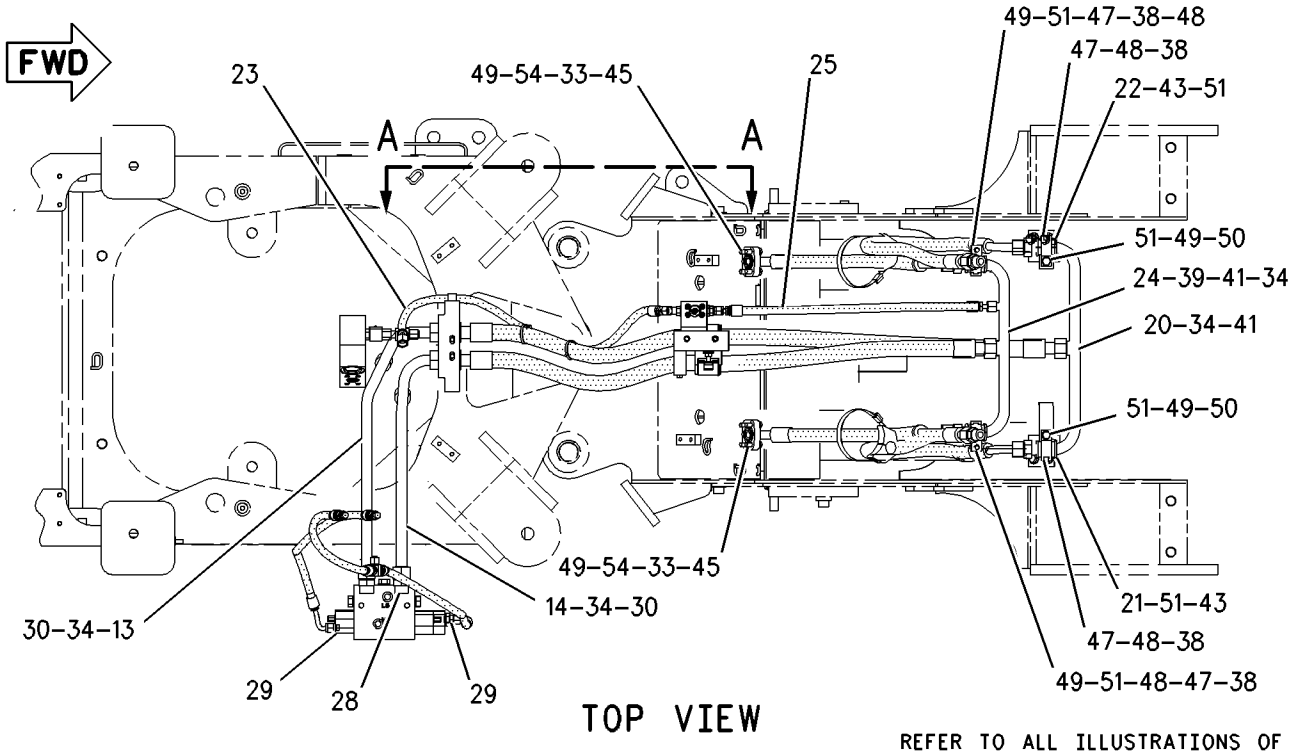

TOP VIEW

REFER TO ALL ILLUSTRATIONS OF THIS GROUP FOR AUXILIARY VIEWS

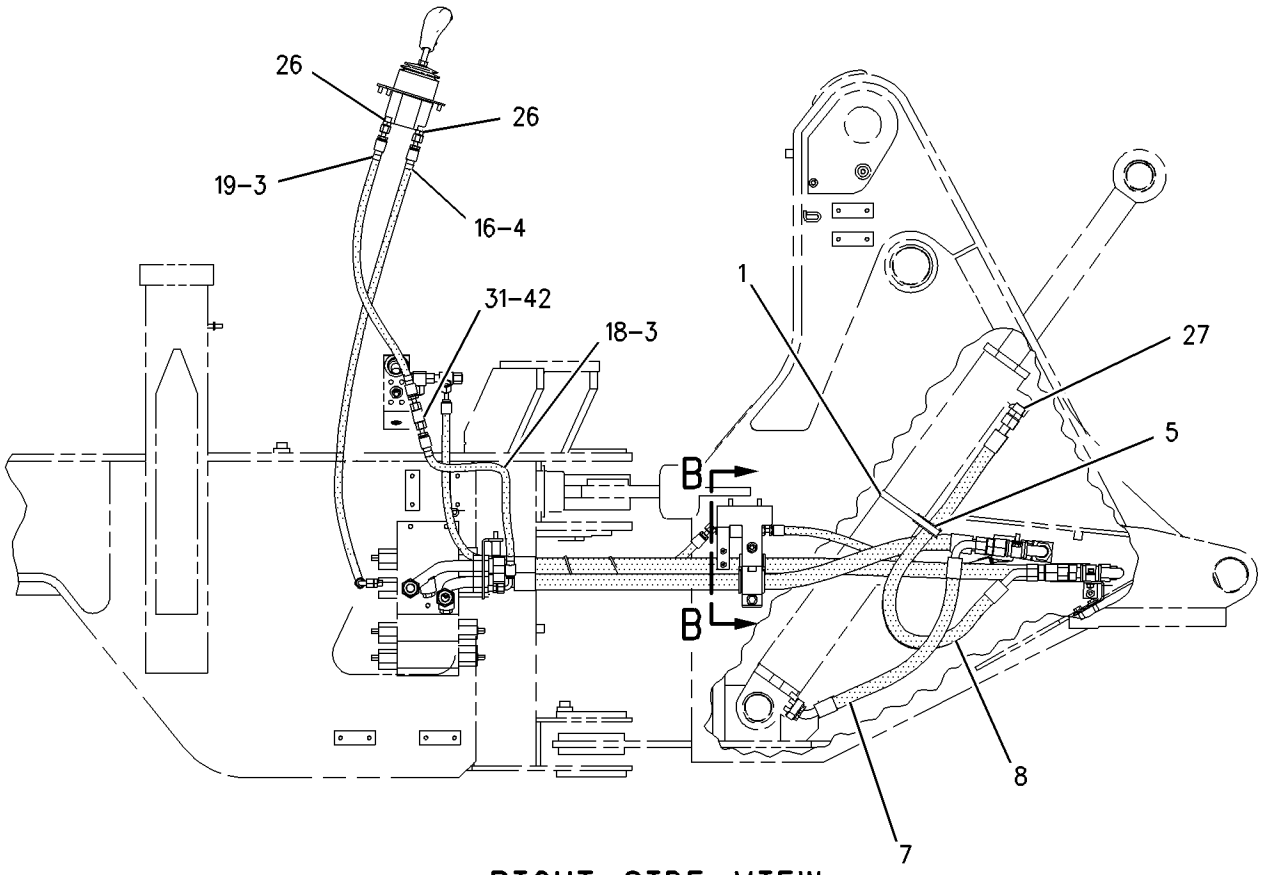

RIGHT SIDE VIEW

GRAPHIC #1

g00939263

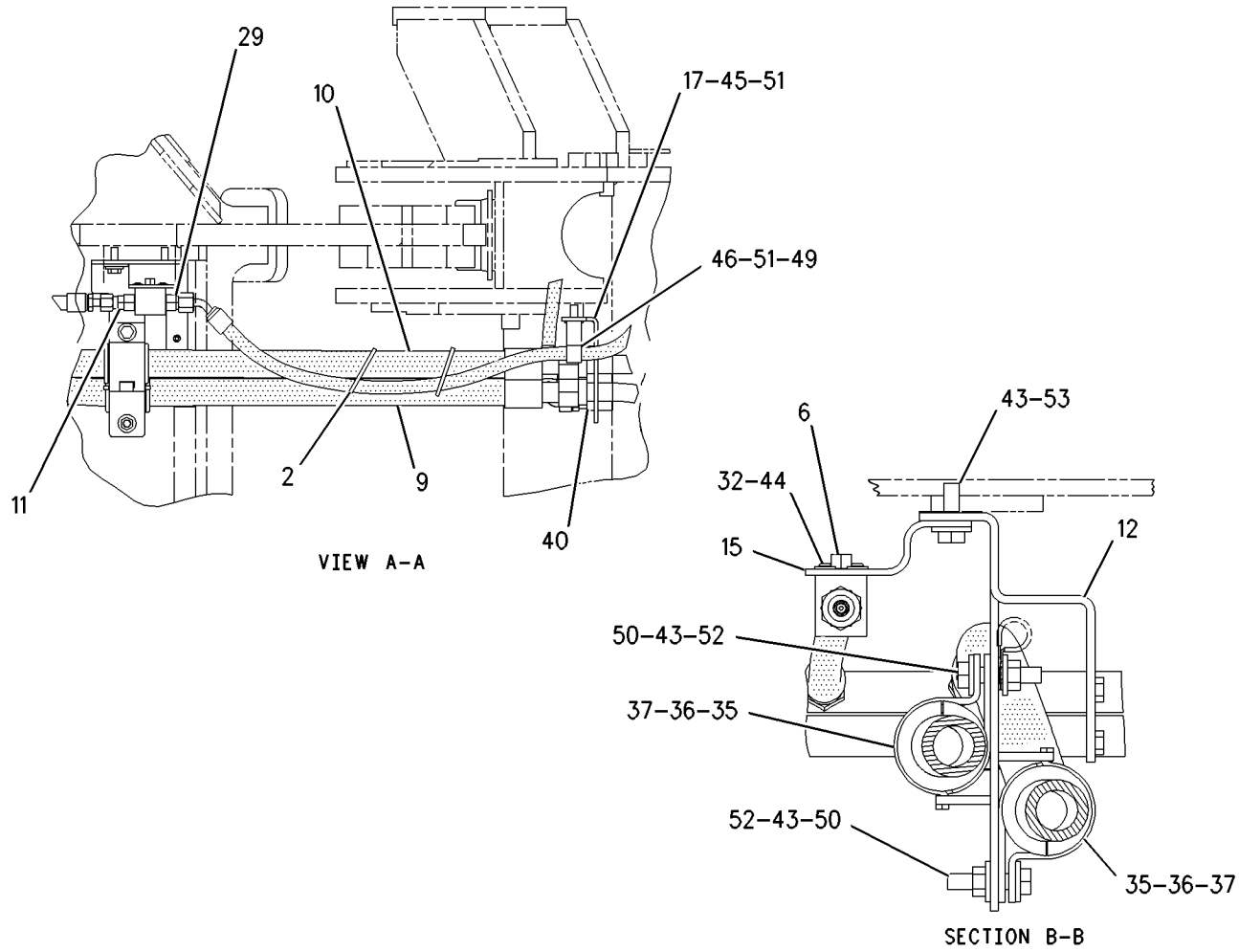

GRAPHIC #2

g00939282

HYDRAULIC SYSTEM

217-8421 LINES GP-LIFT CYLINDER

S/N: RTA1-UP

PART OF 176-5202 HYDRAULIC AR

SMCS-5057, 5102 **i01854267**

NOTE	REF NO	GRAPHIC REF	PART NUMBER	QTY	PART NAME 1 2 3 4 5 6 (PRODUCT LEVEL)	SEE PAGE
	1	2	**3E-5239**	1	RELAY AS (24 VOLT)	
	2	2	**3S-2093**	5	STRAP-CABLE	
	3	2	**6V-1625**	1	TEE-O-RING	
	4	2	**7K-1181**	2	STRAP-CABLE	
	5	1	**7K-3971**	4	TAG-IDENTIFICATION (L1)	
	6	1	**7K-3972**	2	TAG-IDENTIFICATION (L2)	
	7	2	**9C-6460**	1	ELBOW	
	8	2	**9C-6461**	1	ELBOW	
Y	9	2	*112-1817*	1	VALVE GP-BALL (RESOLVER) (DEAD ENGINE LOWER)	424
I	10	1	**154-4900**	2	HOSE AS	
	11	1	**154-4901**	1	TUBE AS	
	12	1	**154-4902**	1	TUBE AS	
I	13	2	**154-4903**	2	HOSE AS	
I	14	2	**154-4904**	2	HOSE AS	
	15	2	**154-4909**	2	BRACKET AS	
					(EACH INCLUDES)	
M		2	**8T-3490**	1	NUT-WELD (M10X1.5 THD)	
	16	2	*164-5545*	1	CONNECTOR AS	
		2	**3E-2335**	1	CONNECTOR	
		2	**3J-1907**	1	SEAL-O-RING	
		2	**6V-8397**	1	SEAL-O-RING	
	17	1	*165-6365*	1	FITTING AS	
		1	**3J-1907**	1	SEAL-O-RING	
		1	**7W-7381**	1	FITTING-OUTLET	
	18	2	**185-3596**	1	BRACKET AS	
M		2	**6V-9632**	2	NUT-WELD (M6X1 THD)	
	19	1	**211-1058**	1	TUBE AS	
	20	1	**211-4230**	1	TUBE AS	
	21	2	**212-8136**	1	BRACKET	
I	22	1	**213-6940**	1	HOSE AS	
	23	2	**213-8783**	1	BRACKET AS	
		2	**8Y-4489**	2	BOSS	
I	24	1	**214-3765**	1	HOSE AS	
I	25	1	**214-3767**	1	HOSE AS	
	26	2	**217-8113**	1	TUBE AS	
I	27	2	**219-8742**	1	HOSE AS	
	28	2	**221-2831**	1	TUBE AS	
I	29	2	**221-2989**	1	HOSE AS	
	30	2	**228-7868**	1	HARNESS AS	
	31	2	**229-1537**	1	SWITCH AS-PRESSURE (FLOAT)	
		2	**102-8803**	1	KIT-RECEPTACLE (3 PIN)	
	32	1	*148-8321*	2	CONNECTOR AS	
					(EACH INCLUDES)	
		1	**3J-1907**	1	SEAL-O-RING	
		1	**6V-8397**	1	SEAL-O-RING	
		1	**8C-0564**	1	CONNECTOR	
	33	1	*148-8327*	2	CONNECTOR AS	
					(EACH INCLUDES)	
		1	**3D-2824**	1	SEAL-O-RING	
		1	**6V-8637**	1	CONNECTOR-SEAL	
		1	**6V-9746**	1	SEAL-O-RING	
	34	2	*148-8335*	2	CONNECTOR AS	
					(EACH INCLUDES)	
		2	**5K-9090**	1	SEAL-O-RING	
		2	**6V-8635**	1	CONNECTOR	
		2	**7M-8485**	1	SEAL-O-RING	

217-8421 LINES GP-LIFT CYLINDER *(contd.)* i01854267

NOTE	REF NO	GRAPHIC REF	PART NUMBER	QTY	PART NAME 1 2 3 4 5 6 (PRODUCT LEVEL)	SEE PAGE
	35	1,2	*148-8336*	3	CONNECTOR AS	
					(EACH INCLUDES)	
		1,2	**3J-1907**	1	SEAL-O-RING	
		1,2	**6V-8397**	1	SEAL-O-RING	
		1,2	**6V-8636**	1	CONNECTOR	
	36	1	*148-8410*	2	PLUG AS	
					(EACH INCLUDES)	
		1	**2M-9780**	1	SEAL-O-RING	
		1	**9S-4190**	1	PLUG	
	37	1	*150-3056*	1	TEE AS	
		1	**6V-8397**	3	SEAL-O-RING	
		1	**6V-8788**	1	TEE	
	38	2	**1P-3703**	2	SEAL-RECTANGULAR	
	39	2	**3J-1907**	1	SEAL-O-RING	
	40	2	**3K-0360**	1	SEAL-O-RING	
	41	2	**4B-4274**	4	WASHER (5.5X13X1.2MM THK)	
	42	2	**4J-5267**	2	SEAL-O-RING	
	43	2	**4P-7581**	1	CLIP (LADDER)	
	44	1,2	**5K-9090**	4	SEAL-O-RING	
	45	2	**5P-7468**	2	CLIP (SLOT)	
	46	2	**5P-7469**	2	CLIP (TAB)	
	47	2	**5P-8444**	2	GROMMET	
	48	2	**5R-0939**	2	CLIP (TAB)	
	49	2	**5R-0940**	2	CLIP (SLOT)	
	50	2	**6V-7359**	4	GROMMET	
	51	2	**6V-8398**	1	SEAL-O-RING	
	52	2	**6V-9172**	2	NUT (1 7/16-12 THD)	
	53	1,2	**6V-9746**	6	SEAL-O-RING	
	54	1	**6V-9829**	1	CAP AS	
	55	2	**7X-7729**	10	WASHER (11X25X3MM THK)	
M	56	2	**7Y-3173**	4	SCREW-BUTTON HEAD (M4X0.7X12MM)	
	57	2	**8C-3205**	4	FLANGE-HALF	
	58	2	**8M-2773**	1	CLIP	
	59	2	**8T-1899**	4	CLIP (SLOT)	
	60	2	**8T-1900**	4	CLIP (TAB)	
	61	2	**8T-4121**	17	WASHER-HARD (11X21X2.5MM THK)	
M	62	2	**8T-4133**	2	NUT (M10X1.5 THD)	
M	63	2	**8T-4136**	3	BOLT (M10X1.5X25MM)	
M	64	2	**8T-4137**	2	BOLT (M10X1.5X20MM)	
M	65	2	**8T-4182**	6	BOLT (M10X1.5X45MM)	
M	66	2	**8T-4186**	8	BOLT (M10X1.5X40MM)	
M	67	2	**8T-4195**	10	BOLT (M10X1.5X30MM)	
M	68	2	**8T-5005**	4	BOLT (M10X1.50X70MM)	

I-SEE HOSE FABRICATION GUIDE
M-METRIC PART
Y-SEPARATE ILLUSTRATION

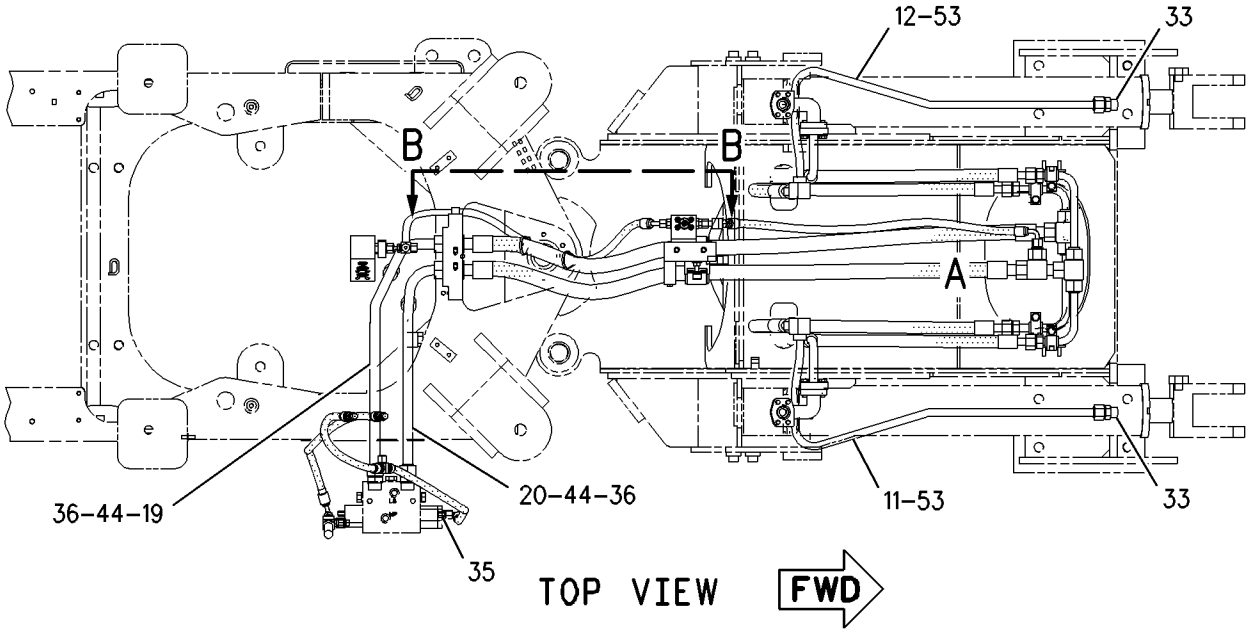

REFER TO ALL ILLUSTRATIONS
IN THIS GROUP FOR
AUXILIARY VIEWS

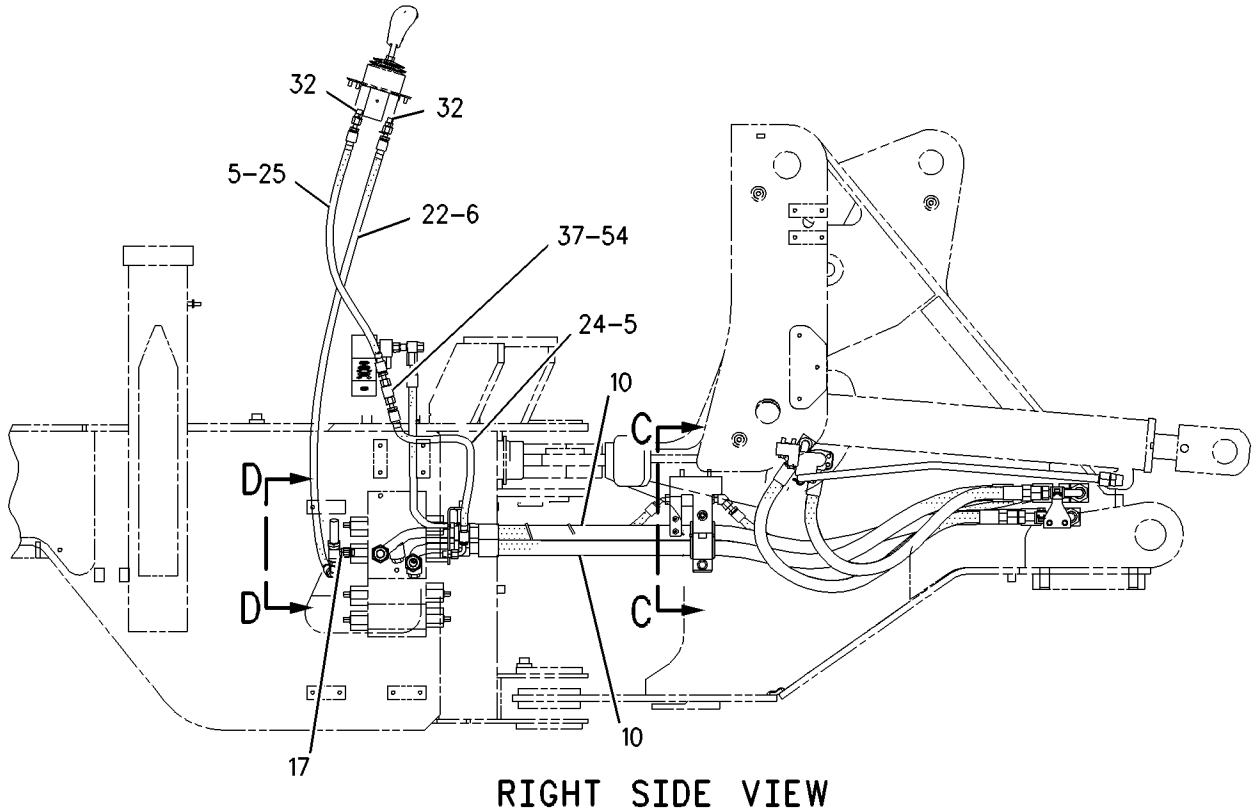

GRAPHIC #1 g00937937

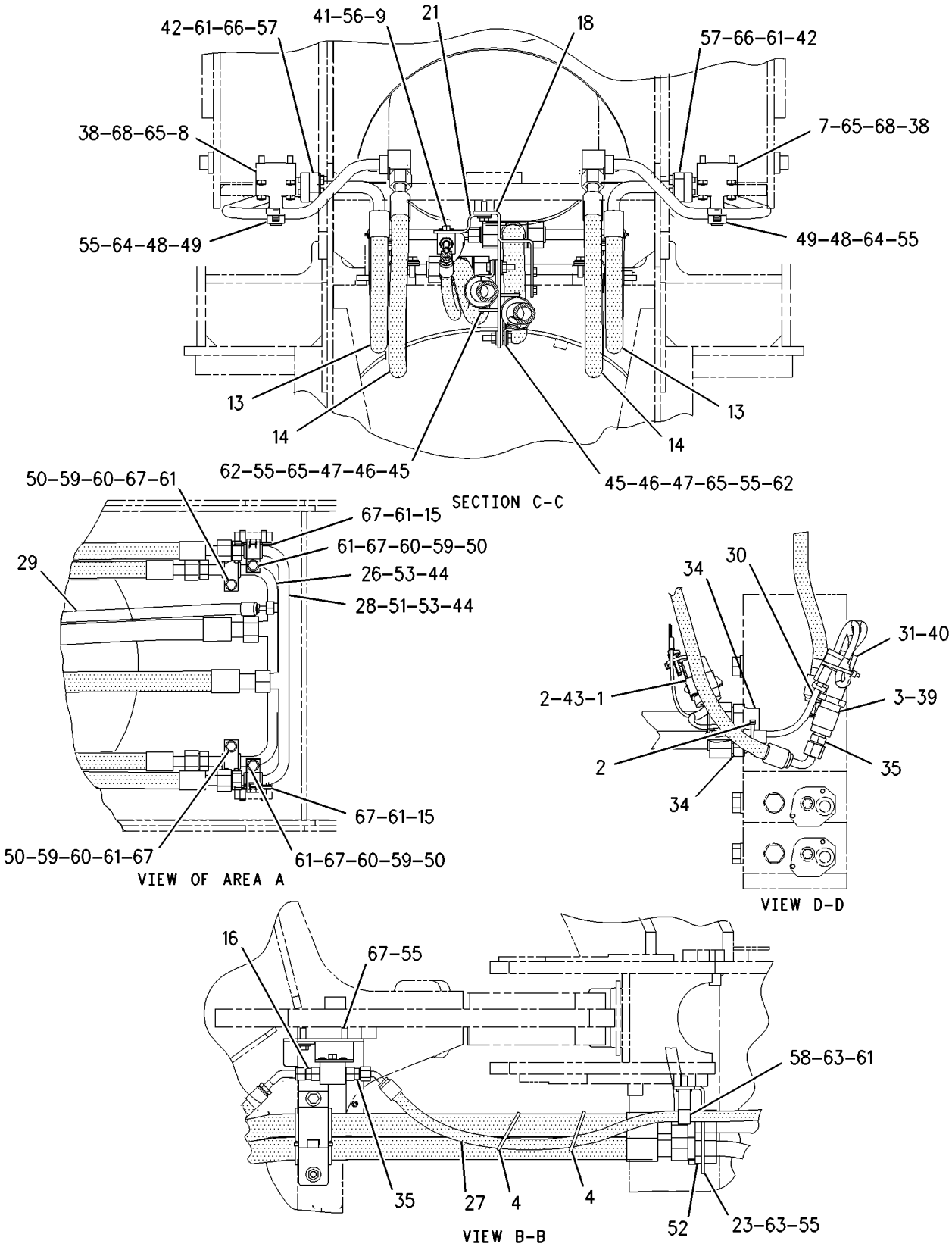

GRAPHIC #2

g00937938

HYDRAULIC SYSTEM

203-3874 LINES GP-PILOT

S/N: RTA1-UP; RBB1-UP

SUPPLY

PART OF 176-5182, 176-5202 HYDRAULIC AR

SMCS-5057, 5059 **i01836790**

NOTE	REF NO	GRAPHIC REF	PART NUMBER	QTY	PART NAME 1 2 3 4 5 6 (PRODUCT LEVEL)	SEE PAGE
	1	2	**5P-5148**	1	STRAP-TIE	
	2	2	**6V-0852**	2	CAP-DUST	
	3	2	**6V-7238**	1	VALVE-SHUTOFF	
	4	2	**7K-1181**	4	STRAP-CABLE	
	5	2	**8Y-8387**	2	BLOCK	
	6	2	**111-6940**	2	SPACER (13.1X15.9X36.5MM THK)	
	7	2	**157-5544**	1	ACCUMULATOR GP-PILOT OIL	
		2	**158-2336**	1	VALVE-GAS	
		2	**160-0496**	1	KIT-ACCUMULATOR SERVICE	
					(INCLUDES SEALS)	
		2	**183-7600**	1	PISTON	
	8	2	**140-9289**	1	PLATE AS	
M		2	**8T-3490**	2	NUT-WELD (M10X1.5 THD)	
I	9	2	**146-0104**	1	HOSE AS	
	10	2	**156-4130**	2	CLIP	
I	11	2	**158-3820**	1	HOSE AS	
	12	2	*164-5586*	1	TEE GP	
		2	**6V-8398**	1	SEAL-O-RING	
		2	**7X-0871**	1	TEE	
Y	13	2	**185-5209**	1	VALVE GP-PRESSURE REDUCING	484
	14	2	**200-6345**	1	MOUNT-SWIVEL	
I	15	2	**214-7093**	1	HOSE AS	
I	16	2	**214-7094**	1	HOSE AS	
	17	2	**219-7845**	1	PLATE AS	
		2	**4H-4063**	1	PIN	
M		2	**6V-9632**	1	NUT-WELD (M6X1 THD)	
M		2	**8T-3490**	2	NUT-WELD (M10X1.5 THD)	
		2	**009-4499**	1	PIN-ALIGNMENT	
I	18	2	**226-3863**	1	HOSE AS	
I	19	2	**226-3864**	1	HOSE AS	
I	20	2	**226-5554**	1	HOSE AS	
	21	2	*148-8307*	1	ADAPTER GP	
		2	**3J-1907**	1	SEAL-O-RING (11.89MM ID)	
		2	**5P-8874**	1	ADAPTER	
	22	2	*148-8318*	1	CONNECTOR GP	
		2	**3K-0360**	1	SEAL-O-RING	
		2	**6V-8397**	1	SEAL-O-RING (12.83MM OD)	
		2	**6V-8634**	1	CONNECTOR	
	23	2	*148-8336*	1	CONNECTOR AS	
		2	**3J-1907**	1	SEAL-O-RING (11.89MM ID)	
		2	**6V-8397**	1	SEAL-O-RING (12.83MM OD)	
		2	**6V-8636**	1	CONNECTOR	
	24	2	*148-8353*	3	ELBOW GP	
					(EACH INCLUDES)	
		2	**3J-1907**	1	SEAL-O-RING (11.89MM ID)	
		2	**6V-8397**	1	SEAL-O-RING (12.83MM OD)	
		2	**6V-9001**	1	ELBOW	
	25	2	*148-8367*	1	ELBOW GP	
		2	**6V-8397**	1	SEAL-O-RING (12.83MM OD)	
		2	**6V-9850**	1	ELBOW-SWIVEL	
	26	2	*148-8370*	1	ELBOW GP	
		2	**6V-8398**	1	SEAL-O-RING	
		2	**6V-9851**	1	ELBOW	
	27	2	*148-8378*	1	ELBOW AS	
		2	**3J-1907**	1	SEAL-O-RING (11.89MM ID)	

203-3874 **LINES GP-PILOT** ***(contd.)*** **i01836790**

NOTE	REF NO	GRAPHIC REF	PART NUMBER	QTY	PART NAME 1 2 3 4 5 6 (PRODUCT LEVEL)	SEE PAGE
		2	**6V-8397**	1	SEAL-O-RING (12.83MM OD)	
		2	**6V-8724**	1	ELBOW	
	28	2	*148-8433*	1	TEE GP	
		2	**6V-8397**	2	SEAL-O-RING (12.83MM OD)	
		2	**6V-9836**	1	TEE-SWIVEL	
	29	2	*148-8436*	1	TEE AS	
		2	**3K-0360**	1	SEAL-O-RING	
		2	**6V-8398**	2	SEAL-O-RING	
		2	**6V-8775**	1	TEE-FACE SEAL	
	30	2	*148-8444*	1	TEE GP	
		2	**6V-8398**	2	SEAL-O-RING	
		2	**6V-9837**	1	TEE-SWIVEL	
	31	2	*150-4043*	1	CONNECTOR GP	
		2	**3J-1907**	1	SEAL-O-RING (11.89MM ID)	
		2	**6V-8398**	1	SEAL-O-RING	
		2	**6V-9873**	1	CONNECTOR-SEAL	
	32	2	**3J-1907**	2	SEAL-O-RING (11.89MM ID)	
	33	2	**3K-0360**	1	SEAL-O-RING	
	34	2	**6V-3965**	2	FITTING AS	
	35	2	**7X-7729**	2	WASHER (11X25X3MM THK)	
	36	2	**8T-4121**	6	WASHER-HARD (11X21X2.5MM THK)	
M	37	2	**8T-4133**	1	NUT (M10X1.5 THD)	
M	38	2	**8T-4136**	2	BOLT (M10X1.5X25MM)	
M	39	2	**8T-4137**	2	BOLT (M10X1.5X20MM)	
M	40	2	**8T-4172**	1	BOLT (M10X1.50X80MM)	
M	41	2	**8T-5005**	2	BOLT (M10X1.50X70MM)	
	42	2	*148-8309*	1	ADAPTER AS	
		2	**2P-8421**	1	ADAPTER-O-RING	
		2	**3D-2824**	1	SEAL-O-RING	

I-SEE HOSE FABRICATION GUIDE
M-METRIC PART
Y-SEPARATE ILLUSTRATION

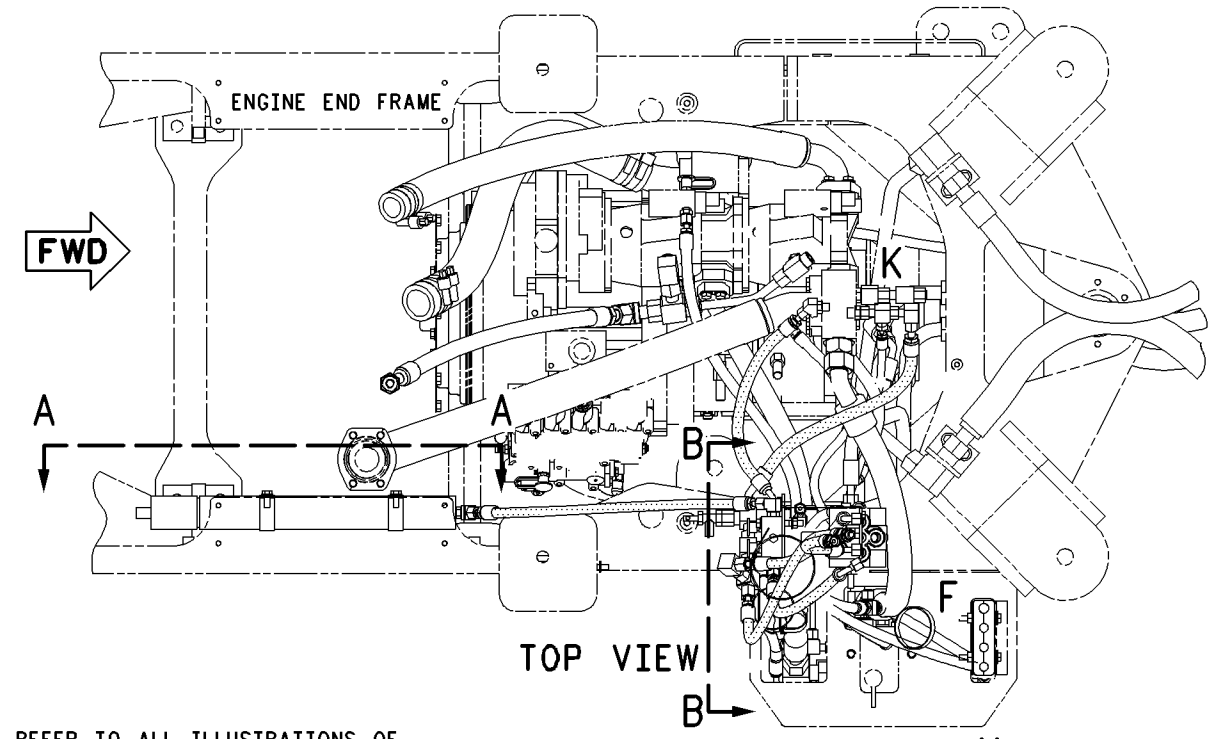

REFER TO ALL ILLUSTRATIONS OF THIS GROUP FOR AUXILIARY VIEWS

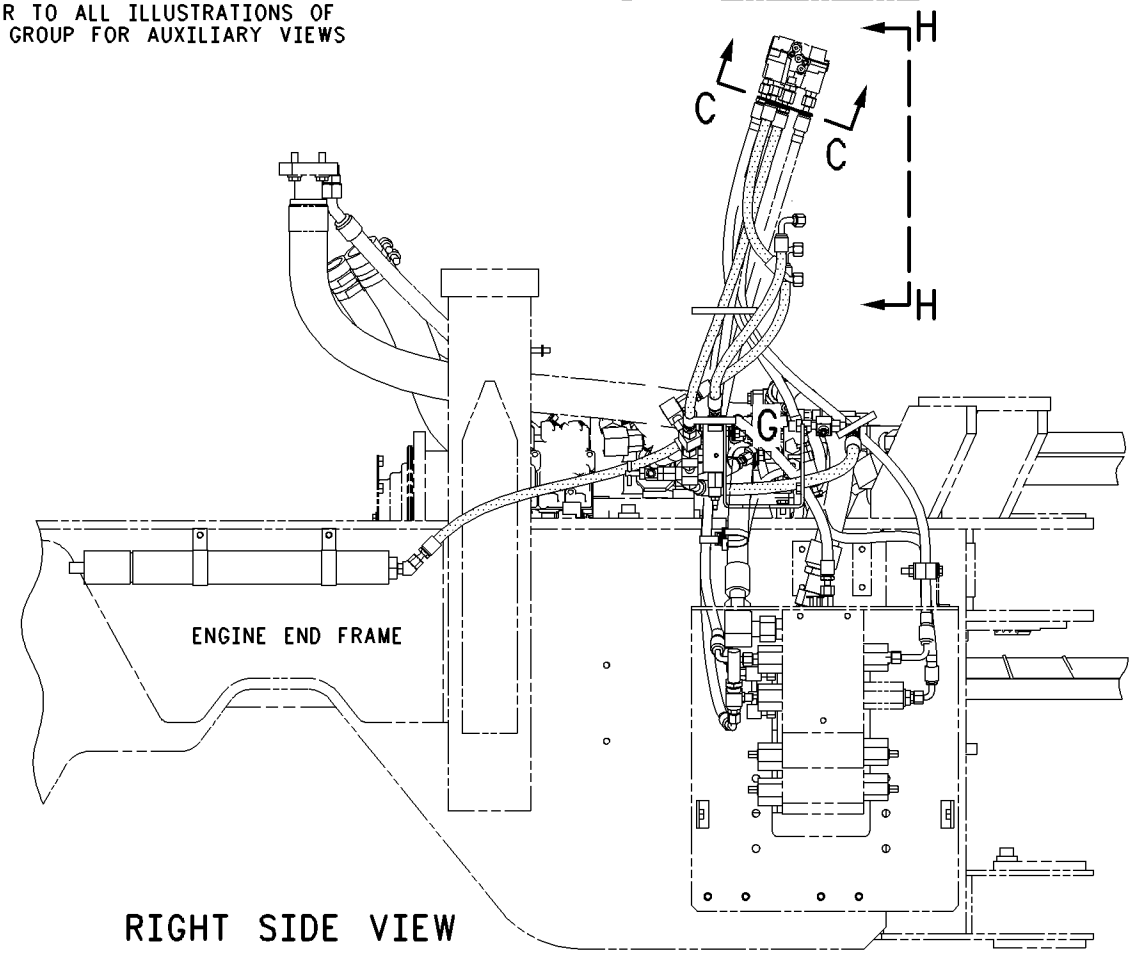

GRAPHIC #1 g00928848

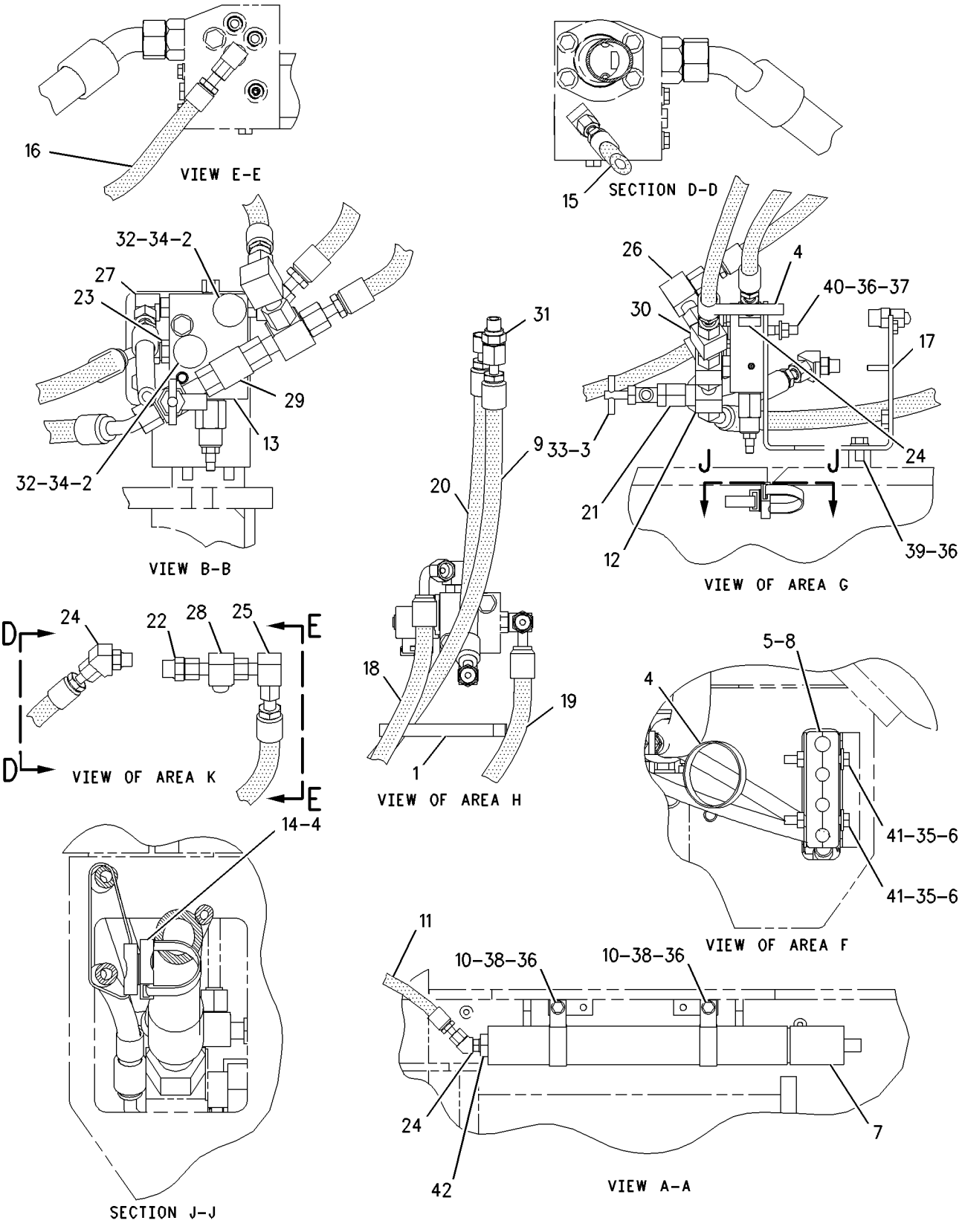

GRAPHIC #2

g00928841

HYDRAULIC SYSTEM

203-8555 LINES GP-RIDE CONTROL

S/N: RBB1-UP
V-LINK
PART OF 203-8554 CONTROL AR-RIDE
AN ATTACHMENT

SMCS-5057, 5077 **i01833204**

NOTE	REF NO	GRAPHIC REF	PART NUMBER	QTY	PART NAME 1 2 3 4 5 6 (PRODUCT LEVEL)	SEE PAGE
	1	2	**3S-2093**	2	STRAP-CABLE	
	2	2	**6U-5219**	1	U-CLAMP AS	
		2	**5P-1075**	2	WASHER-HARD (10.2X22.5X3MM THK)	
		2	**6V-8801**	2	NUT (3/8-16 THD)	
	3	1	**105-3330**	1	FILM-WARNING (ACCUMULATOR PRESSURE)	
	4	1	**126-6916**	1	SWITCH AS-PRESSURE (RIDE CONTROL DISABLE)	
		1	**102-8802**	1	KIT-RECEPTACLE (2 PIN)	
		1	**3E-3365**	1	WEDGE-RECEPTACLE LOCK (2 PIN)	
		1	**186-3735**	2	PIN-CONNECTOR	
	5	2	**128-2477**	1	SPACER	
I	6	2	**133-4824**	1	HOSE AS	
	7	2	**146-7937**	1	PLATE AS	
M		2	**8T-3490**	4	NUT-WELD (M10X1.5 THD)	
	8	1	*148-8424*	1	TEE GP	
		1	**6V-8397**	1	SEAL-O-RING (12.83MM OD)	
		1	**8T-8902**	1	TEE	
I	9	1	**191-1678**	1	HOSE AS	
I	10	1	**191-1679**	1	HOSE AS	
Y	11	1	**192-0086**	1	VALVE GP-RIDE CONTROL	486
	12	2	**200-6345**	1	MOUNT-SWIVEL	
	13	2	**204-2281**	2	TIE	
I	14	2	**215-6429**	1	HOSE AS	
	15	1	**215-8188**	1	PLATE AS	
M		1	**6V-9632**	1	NUT-WELD (M6X1 THD)	
M		1	**8T-3490**	1	NUT-WELD (M10X1.5 THD)	
I	16	1	**219-1388**	1	HOSE AS	
I	17	2	**219-1389**	1	HOSE AS	
	18	2	**219-1460**	1	GUARD-HOSE	
J	19	2	**223-9699**	1	ACCUMULATOR GP-RIDE CONTROL (UNCHARGED)	
		2	**069-2535**	1	VALVE-GAS	
		2	**170-0503**	1	FILM (PLATE-NAME)	
	20	2	*148-8315*	2	CONNECTOR GP	
					(EACH INCLUDES)	
		2	**2M-9780**	1	SEAL-O-RING	
		2	**6V-8642**	1	CONNECTOR	
		2	**7J-9108**	1	SEAL-O-RING	
	21	2	*148-8336*	1	CONNECTOR AS	
		2	**3J-1907**	1	SEAL-O-RING (11.89MM ID)	
		2	**6V-8397**	1	SEAL-O-RING (12.83MM OD)	
		2	**6V-8636**	1	CONNECTOR	
	22	2	*148-8345*	1	CONNECTOR GP	
		2	**2M-9780**	1	SEAL-O-RING	
		2	**6V-8398**	1	SEAL-O-RING	
		2	**6V-8638**	1	CONNECTOR-SEAL	
	23	2	*148-8364*	1	ELBOW AS	
		2	**3K-0360**	1	SEAL-O-RING	
		2	**6V-8398**	1	SEAL-O-RING	
		2	**6V-8625**	1	ELBOW	
	24	1	*148-8367*	1	ELBOW GP	
		1	**6V-8397**	1	SEAL-O-RING (12.83MM OD)	
		1	**6V-9850**	1	ELBOW-SWIVEL	
	25	2	*148-8371*	1	ELBOW AS	
		2	**6V-8397**	1	SEAL-O-RING (12.83MM OD)	
		2	**8C-8988**	1	ELBOW	

203-8555 LINES GP-RIDE CONTROL *(contd.)* i01833204

NOTE	REF NO	GRAPHIC REF	PART NUMBER	QTY	PART NAME 1 2 3 4 5 6 (PRODUCT LEVEL)	SEE PAGE
	26	2	*148-8372*	1	ELBOW GP	
		2	**2M-9780**	1	SEAL-O-RING	
		2	**6V-8398**	1	SEAL-O-RING	
		2	**6V-8721**	1	ELBOW	
	27	2	*148-8378*	1	ELBOW AS	
		2	**3J-1907**	1	SEAL-O-RING (11.89MM ID)	
		2	**6V-8397**	1	SEAL-O-RING (12.83MM OD)	
		2	**6V-8724**	1	ELBOW	
	28	1	*148-8390*	2	ELBOW GP	
					(EACH INCLUDES)	
		1	**2M-9780**	1	SEAL-O-RING	
		1	**6V-8626**	1	ELBOW	
		1	**7J-9108**	1	SEAL-O-RING	
	29	1	*148-8433*	1	TEE GP	
		1	**6V-8397**	2	SEAL-O-RING (12.83MM OD)	
		1	**6V-9836**	1	TEE-SWIVEL	
	30	1	**3J-1907**	1	SEAL-O-RING (11.89MM ID)	
	31	1	**4D-7735**	1	CLIP	
	32	1	**7X-7729**	2	WASHER (11X25X3MM THK)	
	33	1,2	**8T-4121**	10	WASHER-HARD (11X21X2.5MM THK)	
M	34	1,2	**8T-4137**	5	BOLT (M10X1.5X20MM)	
M	35	2	**8T-4194**	1	BOLT (M12X1.75X50MM)	
M	36	1,2	**8T-4195**	5	BOLT (M10X1.5X30MM)	
M	37	1	**8T-4198**	2	BOLT (M10X1.5X100MM)	
	38	2	**8T-4223**	1	WASHER-HARD (13.5X25.5X3MM THK)	
	39	2	**9P-2749**	1	CLIP (TAB)	
	40	2	**9P-2750**	1	CLIP (SLOT)	
					AVAILABLE REPAIR KIT(S):	
J			**170-0493**	1	KIT-SEAL	
					(INCLUDES 2 SEAL RINGS,2 BACKUP WASHERS,2 PISTON RINGS, 1 PISTON SEAL)	

I-SEE HOSE FABRICATION GUIDE
J-KIT MARKED J SERVICES PART MARKED J
M-METRIC PART
Y-SEPARATE ILLUSTRATION

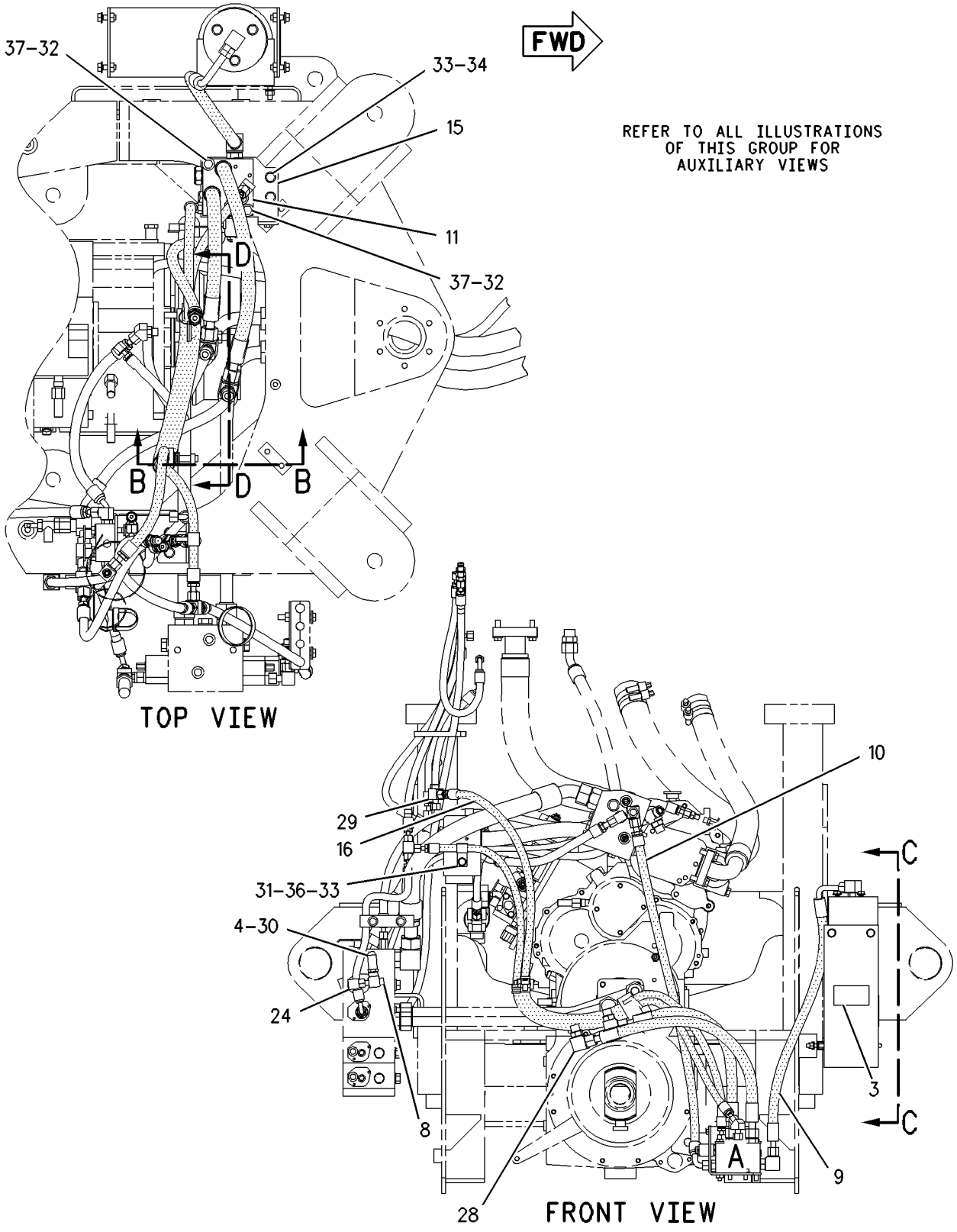

GRAPHIC #1

g00925265

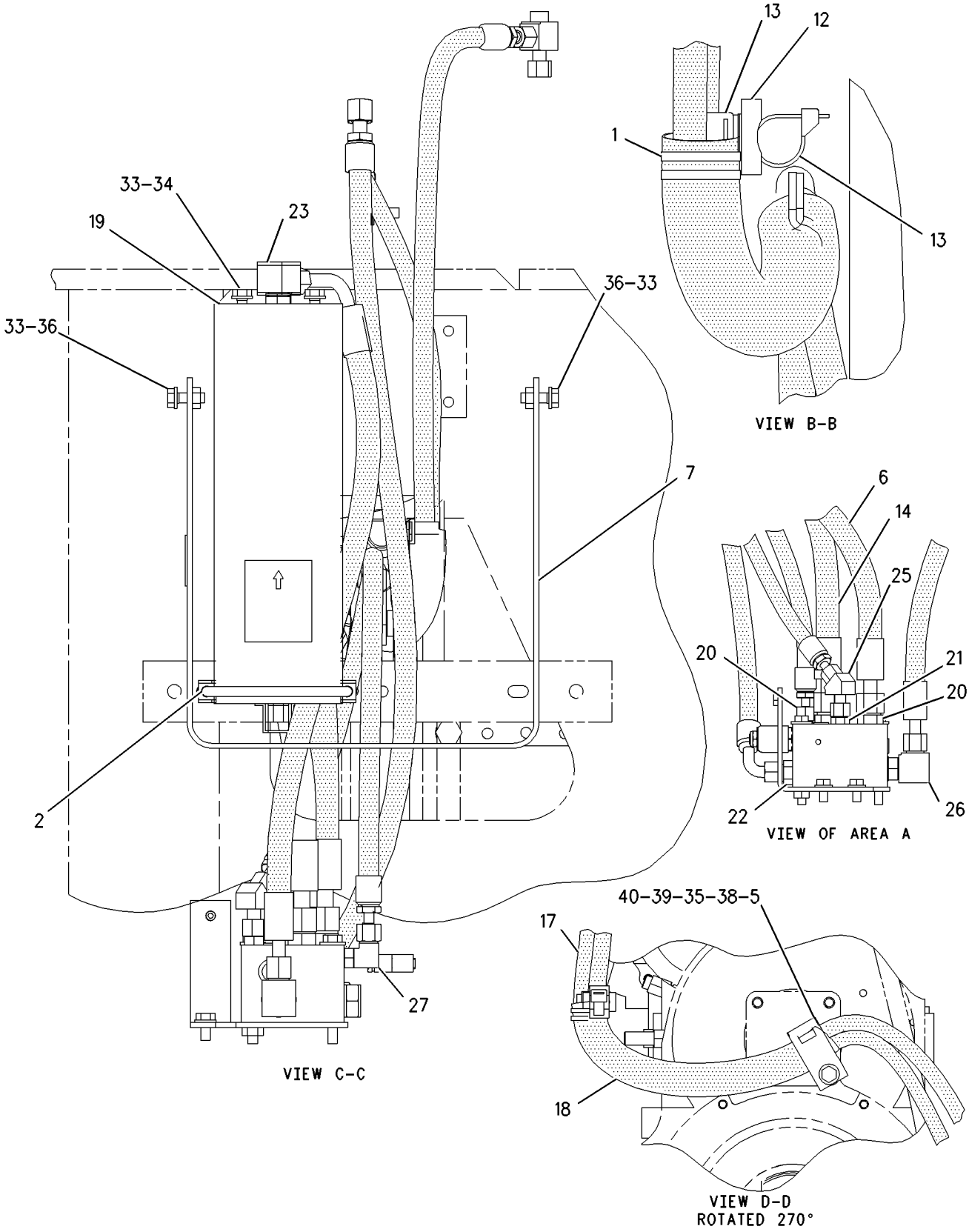

GRAPHIC #2

g00925266

HYDRAULIC SYSTEM

203-8557 LINES GP-RIDE CONTROL

S/N: RTA1-UP
PART OF 203-8556 CONTROL AR-RIDE
AN ATTACHMENT

SMCS-5057, 5077 **i01819980**

NOTE	REF NO	GRAPHIC REF	PART NUMBER	QTY	PART NAME 1 2 3 4 5 6 (PRODUCT LEVEL)	SEE PAGE
	1	2	**3S-2093**	2	STRAP-CABLE	
	2	2	**6U-5219**	1	U-CLAMP AS	
		2	**5P-1075**	2	WASHER-HARD (10.2X22.5X3MM THK)	
		2	**6V-8801**	2	NUT (3/8-16 THD)	
	3	1	**105-3330**	1	FILM-WARNING (ACCUMULATOR PRESSURE)	
	4	2	**128-2477**	1	SPACER	
I	5	2	**133-4824**	1	HOSE AS	
	6	2	**146-7937**	1	PLATE AS	
M		2	**8T-3490**	4	NUT-WELD (M10X1.5 THD)	
I	7	1	**191-1678**	1	HOSE AS	
I	8	1	**191-1679**	1	HOSE AS	
Y	9	1	**192-0086**	1	VALVE GP-RIDE CONTROL	486
	10	2	**200-6345**	1	MOUNT-SWIVEL	
	11	2	**204-2281**	2	TIE	
I	12	2	**215-6429**	1	HOSE AS	
	13	1	**215-8188**	1	PLATE AS	
M		1	**6V-9632**	1	NUT-WELD (M6X1 THD)	
M		1	**8T-3490**	1	NUT-WELD (M10X1.5 THD)	
I	14	1	**219-1388**	1	HOSE AS	
I	15	2	**219-1389**	1	HOSE AS	
	16	2	**219-1460**	1	GUARD-HOSE	
J	17	2	*223-9699*	1	ACCUMULATOR GP-RIDE CONTROL (UNCHARGED)	
		2	**069-2535**	1	VALVE-GAS	
		2	**170-0503**	1	FILM (PLATE-NAME)	
	18	2	*148-8315*	2	CONNECTOR GP	
					(EACH INCLUDES)	
		2	**2M-9780**	1	SEAL-O-RING	
		2	**6V-8642**	1	CONNECTOR	
		2	**7J-9108**	1	SEAL-O-RING	
	19	2	*148-8336*	1	CONNECTOR AS	
		2	**3J-1907**	1	SEAL-O-RING	
		2	**6V-8397**	1	SEAL-O-RING	
		2	**6V-8636**	1	CONNECTOR	
	20	2	*148-8345*	1	CONNECTOR GP	
		2	**2M-9780**	1	SEAL-O-RING	
		2	**6V-8398**	1	SEAL-O-RING	
		2	**6V-8638**	1	CONNECTOR-SEAL	
	21	2	*148-8364*	1	ELBOW GP	
		2	**3K-0360**	1	SEAL-O-RING	
		2	**6V-8398**	1	SEAL-O-RING	
		2	**6V-8625**	1	ELBOW	
	22	2	*148-8371*	1	ELBOW AS	
		2	**6V-8397**	1	SEAL-O-RING	
		2	**8C-8988**	1	ELBOW	
	23	2	*148-8372*	1	ELBOW GP	
		2	**2M-9780**	1	SEAL-O-RING	
		2	**6V-8398**	1	SEAL-O-RING	
		2	**6V-8721**	1	ELBOW	
	24	2	*148-8378*	1	ELBOW AS	
		2	**3J-1907**	1	SEAL-O-RING	
		2	**6V-8397**	1	SEAL-O-RING	
		2	**6V-8724**	1	ELBOW	
	25	1	*148-8390*	2	ELBOW GP	
					(EACH INCLUDES)	
		1	**2M-9780**	1	SEAL-O-RING	

203-8557 LINES GP-RIDE CONTROL *(contd.)* i01819980

NOTE	REF NO	GRAPHIC REF	PART NUMBER	QTY	PART NAME 1 2 3 4 5 6 (PRODUCT LEVEL)	SEE PAGE
		1	**6V-8626**	1	ELBOW	
		1	**7J-9108**	1	SEAL-O-RING	
	26	1	*148-8433*	1	TEE GP	
		1	**6V-8397**	2	SEAL-O-RING	
		1	**6V-9836**	1	TEE-SWIVEL	
	27	1	**4D-7735**	1	CLIP	
	28	1	**7X-7729**	2	WASHER (11X25X3MM THK)	
	29	1,2	**8T-4121**	10	WASHER-HARD (11X21X2.5MM THK)	
M	30	1,2	**8T-4137**	5	BOLT (M10X1.5X20MM)	
M	31	1,2	**8T-4194**	1	BOLT (M12X1.75X50MM)	
M	32	1,2	**8T-4195**	5	BOLT (M10X1.5X30MM)	
M	33	1	**8T-4198**	2	BOLT (M10X1.5X100MM)	
	34	2	**8T-4223**	1	WASHER-HARD (13.5X25.5X3MM THK)	
	35	2	**9P-2749**	1	CLIP (TAB)	
	36	2	**9P-2750**	1	CLIP (SLOT)	
					AVAILABLE REPAIR KIT(S):	
J			**170-0493**	1	KIT-SEAL	

I-SEE HOSE FABRICATION GUIDE
J-KIT MARKED J SERVICES PART MARKED J
M-METRIC PART
Y-SEPARATE ILLUSTRATION

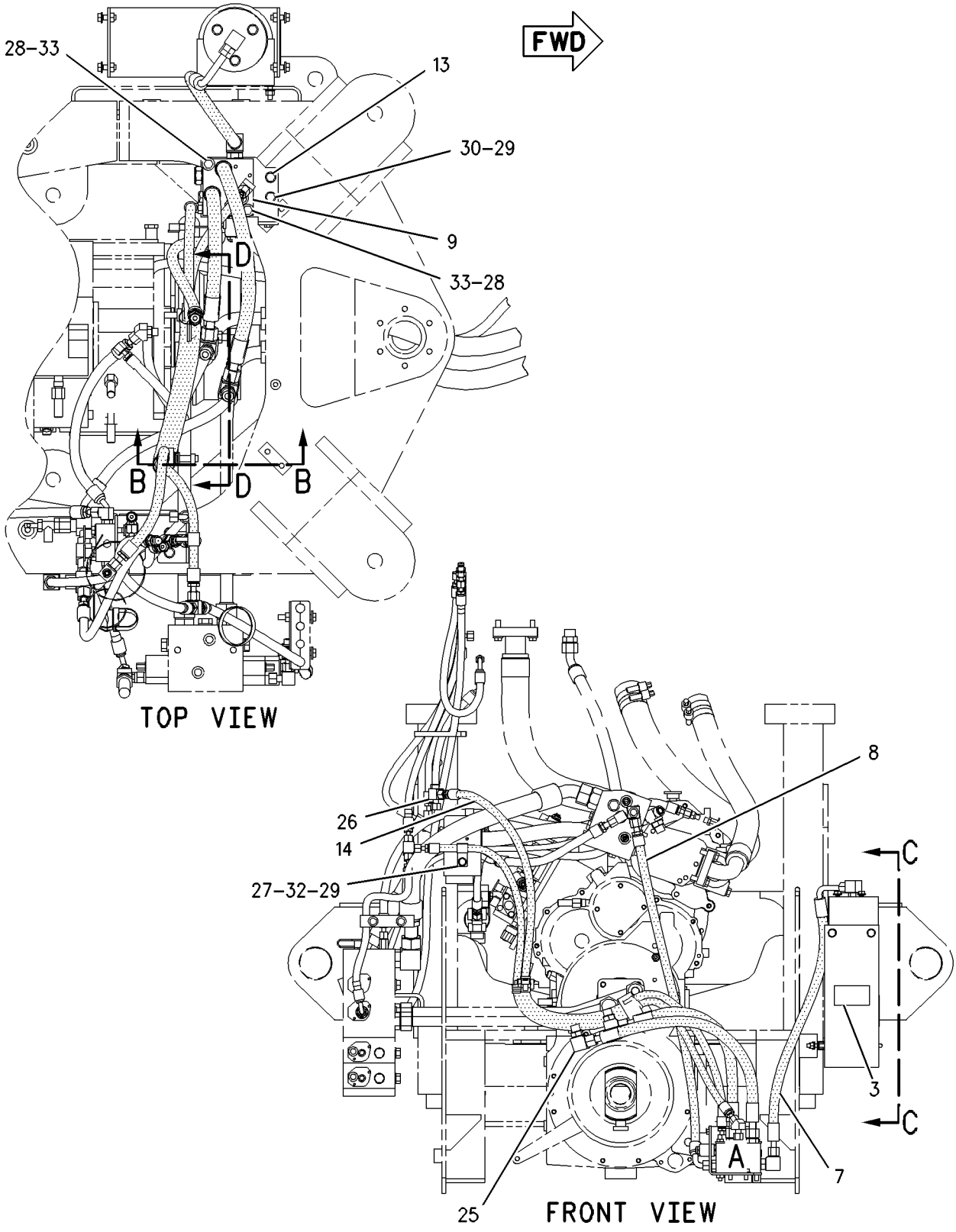

GRAPHIC #1 g00915106

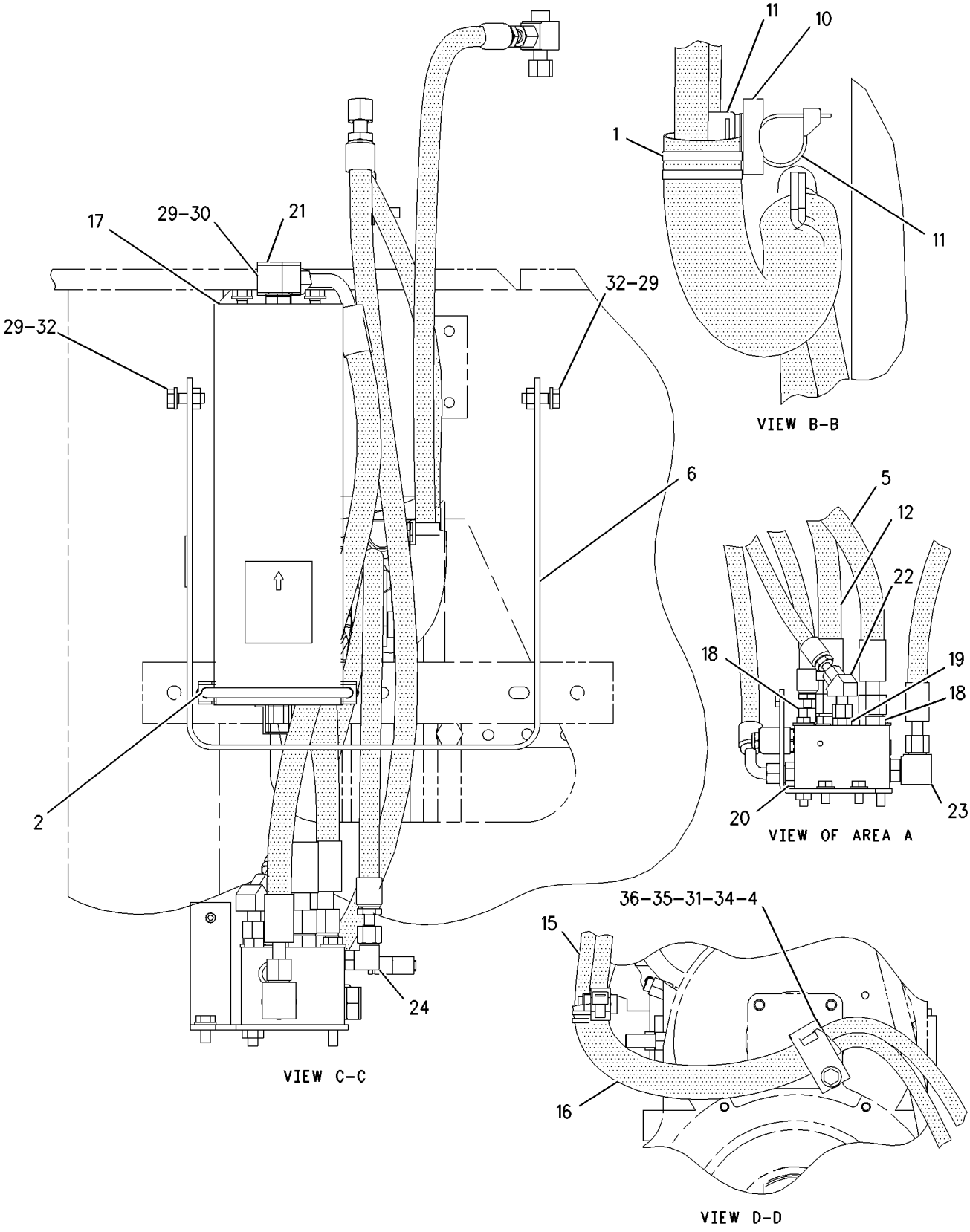

GRAPHIC #2

g00915484

HYDRAULIC SYSTEM

212-3354 LINES GP-TILT CYLINDER

S/N: RTA1-UP

PART OF 176-5202 HYDRAULIC AR

SMCS-5057, 5104 **i01701829**

NOTE	REF NO	GRAPHIC REF	PART NUMBER	QTY	PART NAME 1 2 3 4 5 6 (PRODUCT LEVEL)	SEE PAGE
	1	1	**6V-0852**	1	CAP-DUST	
M	2	1	**8T-4136**	15	BOLT (M10X1.5X25MM)	
	3	1	**8T-4121**	5	WASHER-HARD (11X21X2.5MM THK)	
	4	1	**132-2393**	1	BRACKET	
	5	1	**132-2398**	1	BRACKET	
	6	1	**148-7761**	1	BRACKET AS	
I	7	1	**148-7762**	2	HOSE AS	
I	8	1	**148-7763**	2	HOSE AS	
	9	1	**148-7765**	1	PLATE	
	10	1	**148-7769**	1	TUBE AS	
	11	1	**160-2248**	1	SLEEVE-ABRASION	
	12	1	**194-2917**	1	PLATE AS	
	13	1	**194-2918**	1	PLATE AS	
	14	1	**210-5545**	1	TUBE AS	
	15	1	**210-5546**	1	TUBE AS	
	16	1	**212-2238**	1	TUBE AS	
	17	1	**212-2239**	1	TUBE AS	
I	18	1	**213-5003**	1	HOSE AS	
I	19	1	**213-5004**	1	HOSE AS	
	20	1	*148-8335*	2	CONNECTOR GP	
					(EACH INCLUDES)	
		1	**5K-9090**	1	SEAL-O-RING	
		1	**6V-8635**	1	CONNECTOR	
		1	**7M-8485**	1	SEAL-O-RING	
	21	1	*148-8336*	4	CONNECTOR GP	
					(EACH INCLUDES)	
		1	**3J-1907**	1	SEAL-O-RING	
		1	**6V-8397**	1	SEAL-O-RING	
		1	**6V-8636**	1	CONNECTOR	
	22	1	*148-8362*	2	ELBOW GP	
					(EACH INCLUDES)	
		1	**3D-2824**	1	SEAL-O-RING	
		1	**5K-9090**	1	SEAL-O-RING	
		1	**8T-6684**	1	ELBOW	
	23	1	*148-8405*	1	PLUG AS-STO	
		1	**1J-9671**	1	SEAL-O-RING	
		1	**3K-8460**	1	PLUG	
	24	1	*148-8411*	1	PLUG GP	
		1	**3K-0360**	1	SEAL-O-RING	
		1	**9S-4185**	1	PLUG	
	25	1	*150-4046*	1	ADAPTER GP	
		1	**2M-9780**	1	SEAL-O-RING	
		1	**5P-1404**	1	ADAPTER-O-RING (STRAIGHT THREAD)	
	26	1	*164-5577*	2	ELBOW GP	
					(EACH INCLUDES)	
		1	**5K-9090**	2	SEAL-O-RING	
		1	**6V-8984**	1	ELBOW	
	27	1	**3J-1907**	1	SEAL-O-RING	
	28	1	**5K-9090**	5	SEAL-O-RING	
	29	1	**6V-3965**	1	FITTING AS	
	30	1	**6V-9172**	4	NUT (1 7/16-12 THD)	
	31	1	**7X-7729**	10	WASHER (11X25X3MM THK)	
	32	1	**8T-1889**	3	CLIP (SLOT)	
	33	1	**8T-1890**	3	CLIP (TAB)	

I-SEE HOSE FABRICATION GUIDE
M-METRIC PART

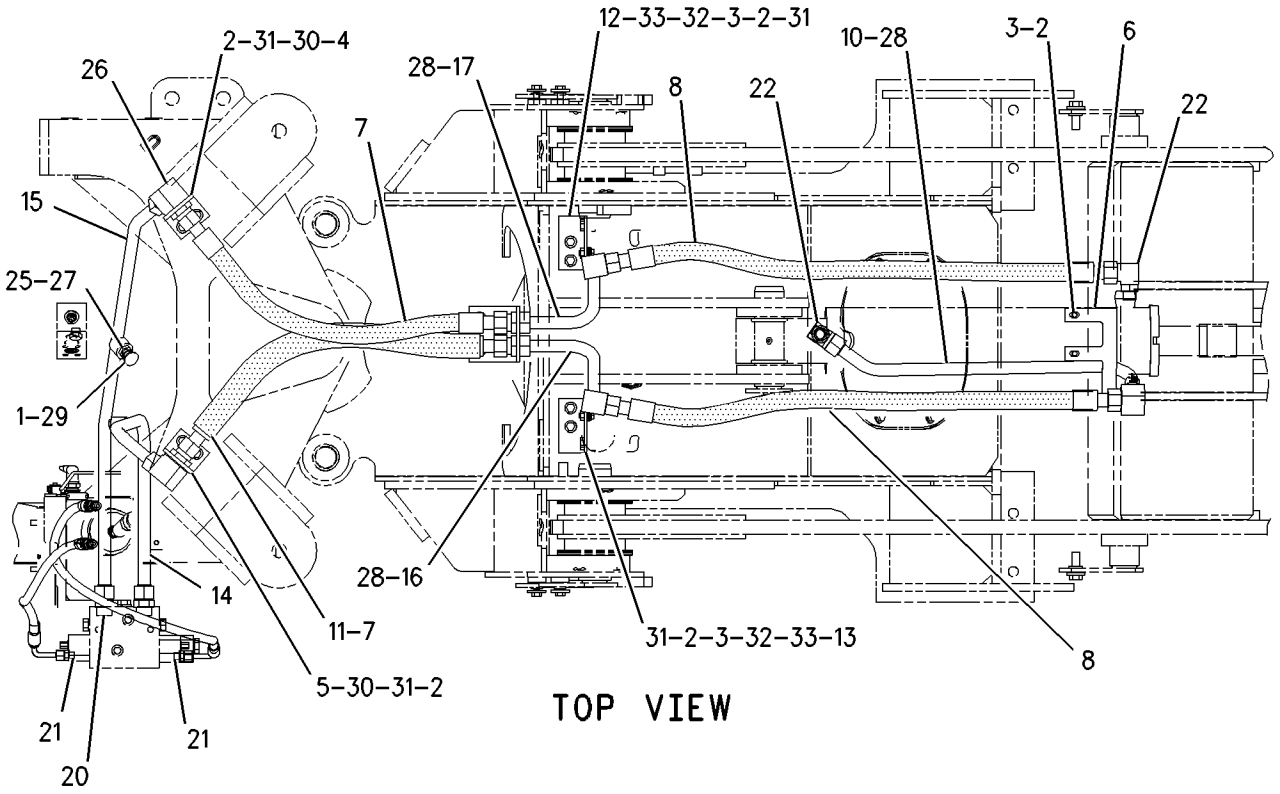

TOP VIEW

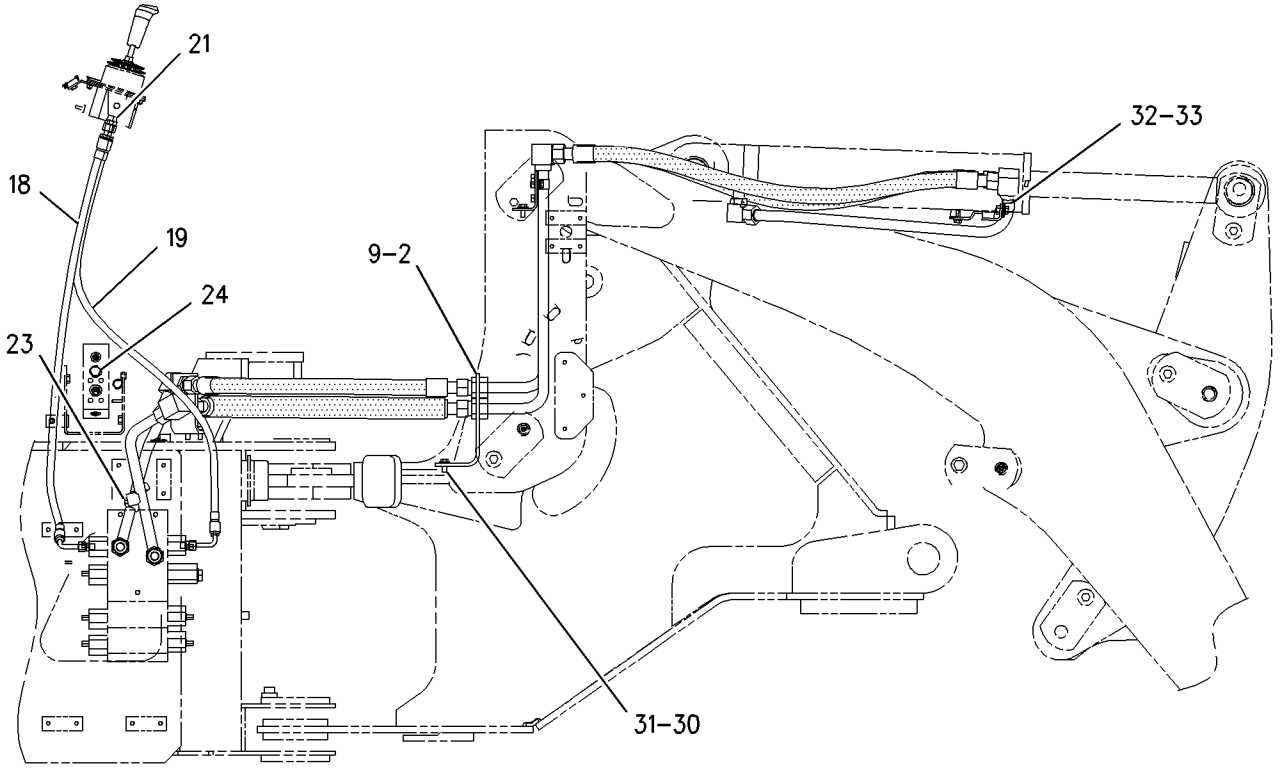

RIGHT SIDE VIEW

GRAPHIC #1 g00879287

HYDRAULIC SYSTEM

214-9437 LINES GP-TILT CYLINDER

S/N: RBB1-UP

PART OF 176-5182 HYDRAULIC AR

SMCS-5057, 5104 **i01816509**

NOTE	REF NO	GRAPHIC REF	PART NUMBER	QTY	PART NAME 1 2 3 4 5 6 (PRODUCT LEVEL)	SEE PAGE
	1	1	**6V-0852**	2	CAP-DUST	
	2	1	**7K-3974**	2	TAG-IDENTIFICATION (T1)	
	3	1	**7K-3975**	2	TAG-IDENTIFICATION (T2)	
	4	1	**110-6349**	2	FITTING AS	
	5	2	**132-2373**	1	TUBE AS	
	6	2	**132-2374**	1	TUBE AS	
I	7	1	**132-2387**	1	HOSE AS	
	8	2	**132-2390**	1	PLATE AS	
M		2	**8T-3490**	2	NUT-WELD (M10X1.5 THD)	
	9	2	**132-2391**	1	TUBE AS	
	10	1	**132-2393**	1	BRACKET	
I	11	1	**132-2395**	2	HOSE AS	
	12	1	**132-2398**	1	BRACKET	
I	13	1	**132-2399**	1	HOSE AS	
I	14	1	**148-7778**	1	HOSE AS	
I	15	1	**153-8072**	1	HOSE AS	
	16	2	**153-8462**	2	CLIP (SLOT)	
	17	2	**153-8463**	2	CLIP (TAB)	
	18	1	*169-5862*	2	ELBOW AS	
					(EACH INCLUDES)	
		1	**3J-1907**	1	SEAL-O-RING	
		1	**8C-6712**	1	ELBOW	
Y	19	1	**173-4032**	1	VALVE GP-COMBINATION	425
	20	1	**176-7583**	1	TUBE AS	
	21	2	**184-6352**	1	BRACKET	
	22	2	**184-6353**	1	BRACKET	
	23	1	*184-7200*	1	GUARD-HOSE	
		1	**160-2248**	1	SLEEVE-ABRASION	
	24	1	**210-5545**	1	TUBE AS	
I	25	1	**213-5003**	1	HOSE AS	
I	26	1	**213-5004**	1	HOSE AS	
I	27	1	**214-7096**	1	HOSE AS	
	28	1	**221-3206**	1	TUBE AS	
	29	1	*148-8316*	1	CONNECTOR GP	
		1	**3J-7354**	1	SEAL-O-RING	
		1	**4J-5477**	1	SEAL-O-RING	
		1	**6V-8647**	1	CONNECTOR	
	30	1	*148-8321*	2	CONNECTOR AS	
					(EACH INCLUDES)	
		1	**3J-1907**	1	SEAL-O-RING	
		1	**6V-8397**	1	SEAL-O-RING	
		1	**8C-0564**	1	CONNECTOR	
	31	1	*148-8329*	1	CONNECTOR AS	
		1	**4K-1388**	1	SEAL-O-RING	
		1	**5K-9090**	1	SEAL-O-RING	
		1	**8T-6453**	1	CONNECTOR	
	32	1	*148-8335*	2	CONNECTOR AS	
					(EACH INCLUDES)	
		1	**5K-9090**	1	SEAL-O-RING	
		1	**6V-8635**	1	CONNECTOR	
		1	**7M-8485**	1	SEAL-O-RING	
	33	1	*148-8336*	2	CONNECTOR AS	
					(EACH INCLUDES)	
		1	**3J-1907**	1	SEAL-O-RING	
		1	**6V-8397**	1	SEAL-O-RING	
		1	**6V-8636**	1	CONNECTOR	

214-9437 LINES GP-TILT CYLINDER *(contd.)* i01816509

NOTE	REF NO	GRAPHIC REF	PART NUMBER	QTY	PART NAME 1 2 3 4 5 6 (PRODUCT LEVEL)	SEE PAGE
	34	1	*148-8340*	2	CONNECTOR GP	
					(EACH INCLUDES)	
		1	**3K-0360**	1	SEAL-O-RING	
		1	**6V-8398**	1	SEAL-O-RING	
		1	**6V-8639**	1	CONNECTOR	
	35	1	*148-8345*	1	CONNECTOR GP	
		1	**2M-9780**	1	SEAL-O-RING	
		1	**6V-8398**	1	SEAL-O-RING	
		1	**6V-8638**	1	CONNECTOR-SEAL	
	36	1	*148-8364*	1	ELBOW GP	
		1	**3K-0360**	1	SEAL-O-RING	
		1	**6V-8398**	1	SEAL-O-RING	
		1	**6V-8625**	1	ELBOW	
	37	1	*164-5577*	2	ELBOW GP	
					(EACH INCLUDES)	
		1	**5K-9090**	2	SEAL-O-RING	
		1	**6V-8984**	1	ELBOW	
	38	1	*174-6118*	1	ELBOW AS	
		1	**1J-9671**	1	SEAL-O-RING	
		1	**4J-5477**	1	SEAL-O-RING	
		1	**100-7603**	1	ELBOW	
	39	2	**1P-3703**	1	SEAL-RECTANGULAR	
	40	1	**1P-3704**	1	SEAL-RECTANGULAR	
	41	1,2	**5K-9090**	6	SEAL-O-RING	
	42	2	**5P-8444**	2	GROMMET	
	43	1	**6J-7035**	1	FLANGE	
	44	1,2	**6V-9172**	4	NUT (1 7/16-12 THD)	
M	45	1	**7X-2534**	1	BOLT (M6X1X50MM)	
	46	1,2	**7X-7729**	16	WASHER (11X25X3MM THK)	
	47	2	**8T-1889**	5	CLIP (SLOT)	
	48	2	**8T-1890**	5	CLIP (TAB)	
	49	2	**8T-4121**	10	WASHER-HARD (11X21X2.5MM THK)	
M	50	1,2	**8T-4136**	13	BOLT (M10X1.5X25MM)	
M	51	2	**8T-4172**	4	BOLT (M10X1.50X80MM)	
M	52	2	**8T-4195**	5	BOLT (M10X1.5X30MM)	
	53	1	**9X-8256**	1	WASHER (6.6X12X2MM THK)	

I-SEE HOSE FABRICATION GUIDE
M-METRIC PART
Y-SEPARATE ILLUSTRATION

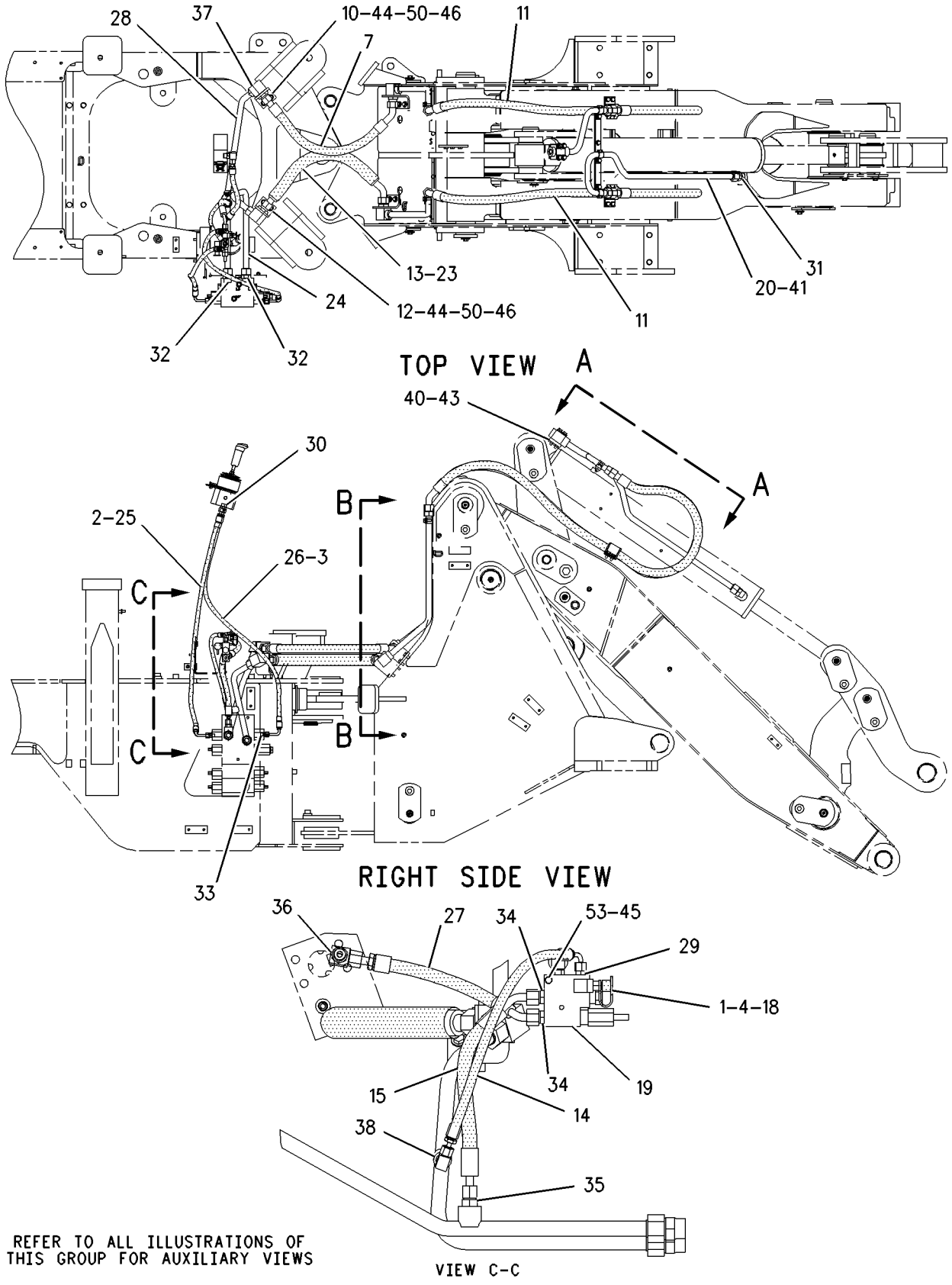

GRAPHIC #1 g00919508

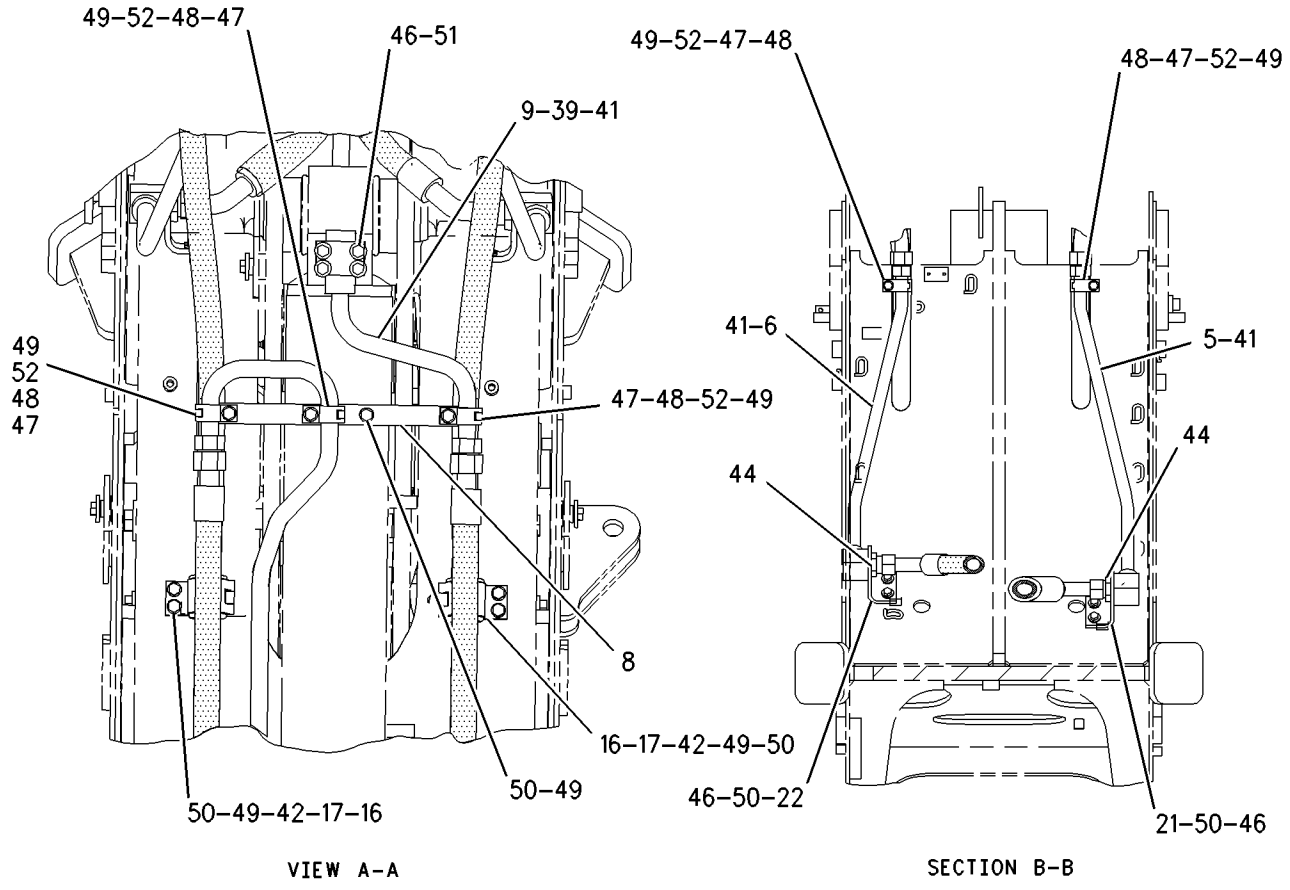

GRAPHIC #2

g00919509

212-6301 MOTOR & MTG GP-HYDRAULIC FAN

S/N: RTA1-UP; RBB1-UP
STANDARD
PART OF 203-3884 MOTOR AR-HYDRAULIC FAN
AN ATTACHMENT

SMCS-1386 **i01817368**

NOTE	REF NO	GRAPHIC REF	PART NUMBER	QTY	PART NAME 1 2 3 4 5 6 (PRODUCT LEVEL)	SEE PAGE
Y	1	1	**205-3669**	1	MOTOR GP-GEAR (HYDRAULIC FAN-STANDARD)	406
	2	1	**8T-4121**	4	WASHER-HARD (11X21X2.5MM THK)	
M	3	1	**8T-4133**	2	NUT (M10X1.5 THD)	
M	4	1	**8T-4196**	2	BOLT (M10X1.5X35MM)	

M-METRIC PART
Y-SEPARATE ILLUSTRATION

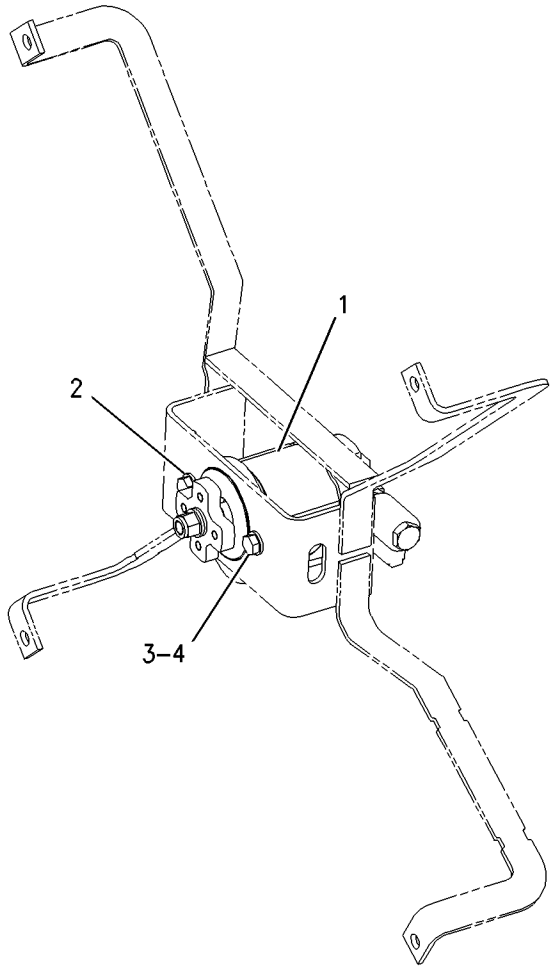

GRAPHIC #1 g00897163

212-6304 MOTOR & MTG GP-HYDRAULIC FAN

S/N: RTA1-UP; RBB1-UP
REVERSING
PART OF 203-3885 MOTOR AR-HYDRAULIC FAN
AN ATTACHMENT

SMCS-1386 **i01818397**

NOTE	REF NO	GRAPHIC REF	PART NUMBER	QTY	PART NAME 1 2 3 4 5 6 (PRODUCT LEVEL)	SEE PAGE
Y	1	1	*205-3668*	1	MOTOR GP-GEAR (HYDRAULIC FAN-REVERSING)	404
	2	1	**8T-4121**	4	WASHER-HARD (11X21X2.5MM THK)	
M	3	1	**8T-4133**	2	NUT (M10X1.5 THD)	
M	4	1	**8T-4196**	2	BOLT (M10X1.5X35MM)	

M-METRIC PART
Y-SEPARATE ILLUSTRATION

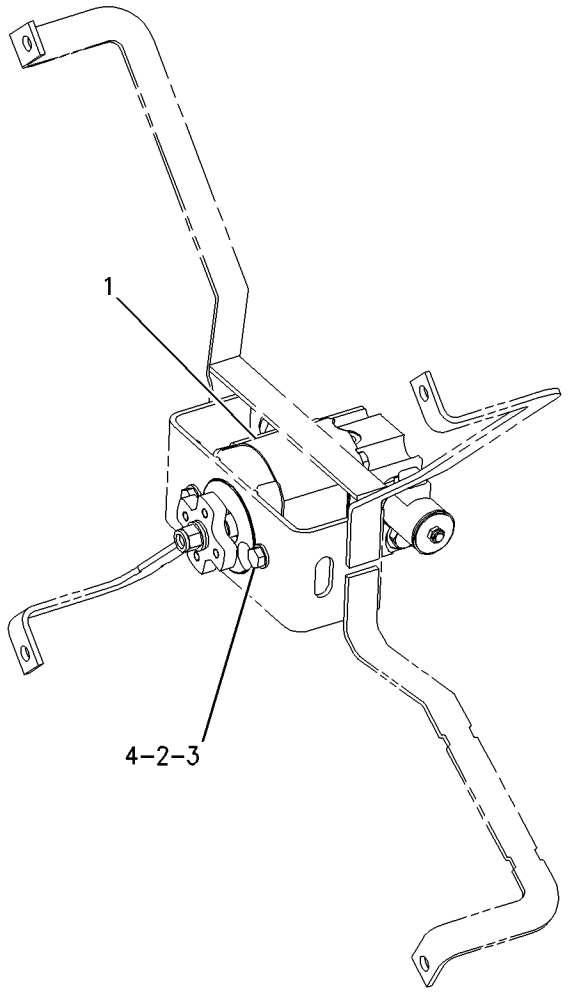

GRAPHIC #1 g00896396

203-3884 MOTOR AR-HYDRAULIC FAN

S/N: RTA1-UP; RBB1-UP
STANDARD
AN ATTACHMENT

SMCS-1386, 1387, 5057 **i01817314**

NOTE	PART NUMBER	QTY	PART NAME 1 2 3 4 5 6 (PRODUCT LEVEL)	SEE PAGE
Y	*212-6282*	1	LINES GP-HYDRAULIC FAN	368
Y	*212-6301*	1	MOTOR & MTG GP-HYDRAULIC FAN (STANDARD)	398

Y-SEPARATE ILLUSTRATION

<END>

203-3885 MOTOR AR-HYDRAULIC FAN

S/N: RTA1-UP; RBB1-UP
REVERSING
AN ATTACHMENT

SMCS-1386, 1387, 5057 **i01817488**

NOTE	PART NUMBER	QTY	PART NAME 1 2 3 4 5 6 (PRODUCT LEVEL)	SEE PAGE
Y	*212-6283*	1	LINES GP-HYDRAULIC FAN	370
Y	*212-6304*	1	MOTOR & MTG GP-HYDRAULIC FAN (REVERSING)	399

Y-SEPARATE ILLUSTRATION

<END>

199-5681 MOTOR GP-GEAR–STANDARD HYDRAULIC FAN

S/N: RTA1-UP; RBB1-UP
PART OF 205-3669 MOTOR GP-GEAR
AN ATTACHMENT

SMCS-1386, 5061 **i01827496**

NOTE	REF NO	GRAPHIC REF	PART NUMBER	QTY	PART NAME 1 2 3 4 5 6 (PRODUCT LEVEL)	SEE PAGE
	1	1	**176-0210**	1	FLANGE	
	2	1	**099-3095**	4	DOWEL	
	3	1	**220-2681**	1	CAP-END	
M	4	1	**176-0798**	4	BOLT (M10X1.50X94MM)	
J	5	1	**176-0209**	1	SEAL-LIP TYPE	
J	6	1	**187-1267**	1	RING-RETAINING	
J	7	1	**135-5935**	1	SEAL-SHAFT	
J	8	1	**4W-7356**	2	SEAL	
					AVAILABLE REPAIR KIT(S):	
J			**209-6427**	1	KIT-SEAL	

J-KIT MARKED J INCLUDES PARTS MARKED J
M-METRIC PART

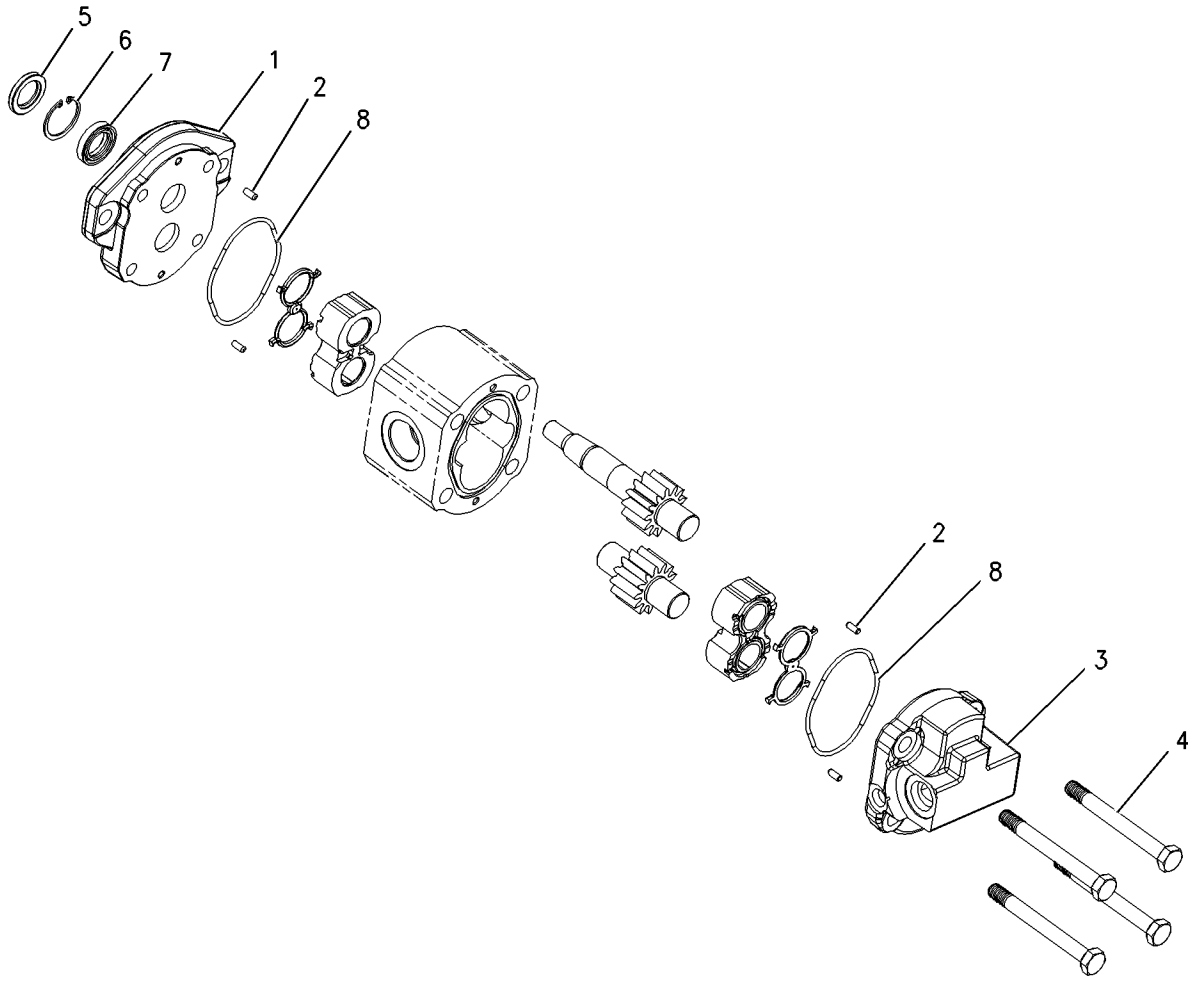

GRAPHIC #1 g00897085

199-5682 MOTOR GP-GEAR–REVERSING HYDRAULIC FAN

S/N: RTA1-UP; RBB1-UP
PART OF 205-3668 MOTOR GP-GEAR
AN ATTACHMENT

SMCS-1386, 5061 **i01827507**

NOTE	REF NO	GRAPHIC REF	PART NUMBER	QTY	PART NAME 1 2 3 4 5 6 (PRODUCT LEVEL)	SEE PAGE
	1	1	**208-2292**	2	BOLT (M10X1.50X87MM)	
J	2	1	**176-0209**	1	SEAL-LIP TYPE	
J	3	1	**187-1267**	1	RING-RETAINING	
J	4	1	**135-5935**	1	SEAL-SHAFT	
	5	1	**208-0792**	1	FLANGE	
J	6	1	**4W-7356**	2	SEAL	
	7	1	**099-3095**	4	DOWEL	
	8	1	**220-2680**	1	CAP-END	
M	9	1	**176-0798**	2	BOLT (M10X1.50X94MM)	
					AVAILABLE REPAIR KIT(S):	
J			**209-6427**	1	KIT-SEAL	

J-KIT MARKED J SERVICES PARTS MARKED J
M-METRIC PART

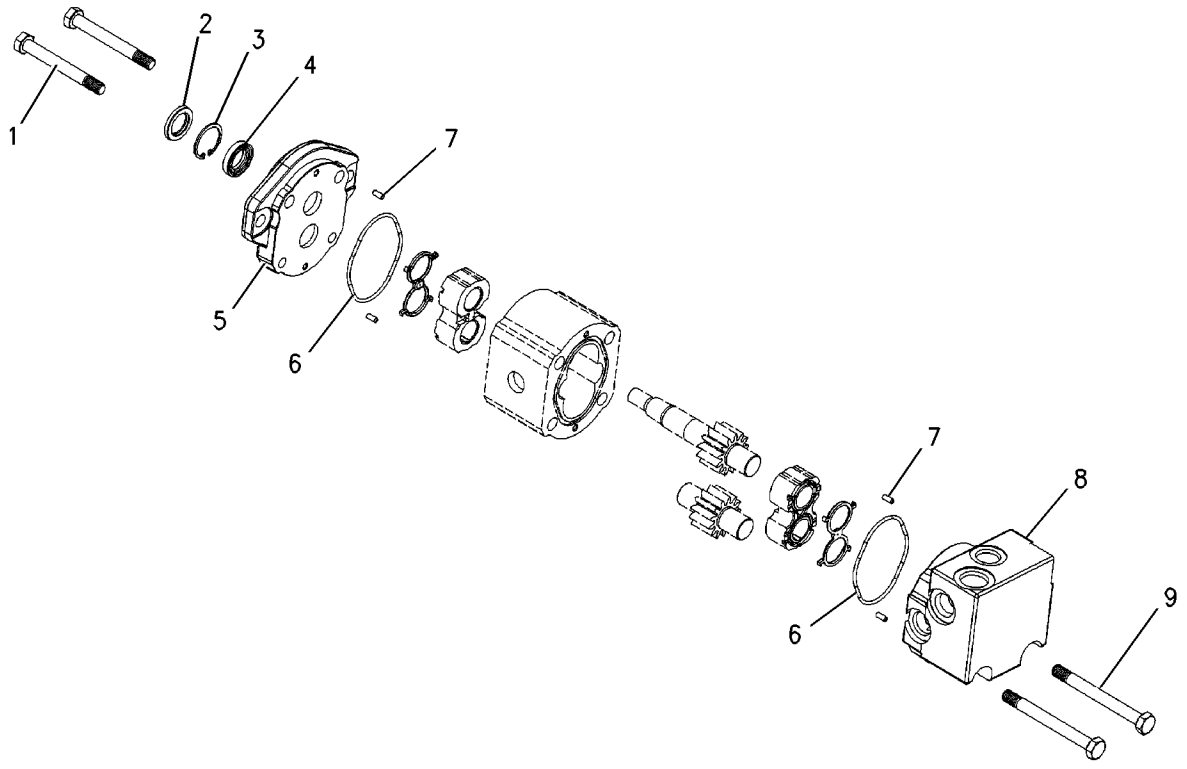

GRAPHIC #1 g00896487

MEMORANDA

205-3668 MOTOR GP-GEAR—REVERSING HYDRAULIC FAN

S/N: RTA1-UP; RBB1-UP
PART OF 212-6304 MOTOR & MTG GP-HYDRAULIC FAN
AN ATTACHMENT

SMCS-1386, 5061 **i01859594**

NOTE	REF NO	GRAPHIC REF	PART NUMBER	QTY	PART NAME 1 2 3 4 5 6 (PRODUCT LEVEL)	SEE PAGE
	1	1	**113-3632**	1	ADAPTER-FAN	
Y	2	1	**211-2092**	1	VALVE GP-SOLENOID (DEMAND FAN)	493
Y	3	1	**189-2100**	1	VALVE GP-SOLENOID (REVERSING FAN)	491
J	4	1	**208-0886**	1	VALVE GP-RELIEF (MAKE-UP)	
Y	5	1	**199-5682**	1	MOTOR GP-GEAR (HYDRAULIC FAN - REVERSING)	402
	6	1	**2M-2570**	1	LOCKNUT	
	7	1	**5P-8245**	1	WASHER-HARD (13.5X25.5X3MM THK)	
	8	1	*148-8316*	1	CONNECTOR AS	
		1	**3J-7354**	1	SEAL-O-RING	
		1	**4J-5477**	1	SEAL-O-RING	
		1	**6V-8647**	1	CONNECTOR	
	9	1	**087-0991**	1	VALVE AS-CHECK	
	10	1	*148-8340*	1	CONNECTOR GP	
		1	**3K-0360**	1	SEAL-O-RING	
		1	**6V-8398**	1	SEAL-O-RING	
		1	**6V-8639**	1	CONNECTOR	
	11	1	*148-8372*	1	ELBOW GP	
		1	**2M-9780**	1	SEAL-O-RING	
		1	**6V-8398**	1	SEAL-O-RING	
		1	**6V-8721**	1	ELBOW	
					AVAILABLE REPAIR KIT(S):	
J			**120-9051**	1	KIT-SEAL	

J-KIT MARKED J SERVICES PARTS MARKED J
Y-SEPARATE ILLUSTRATION

205-3668 **MOTOR GP-GEAR** ***(contd.)*** **i01859594**

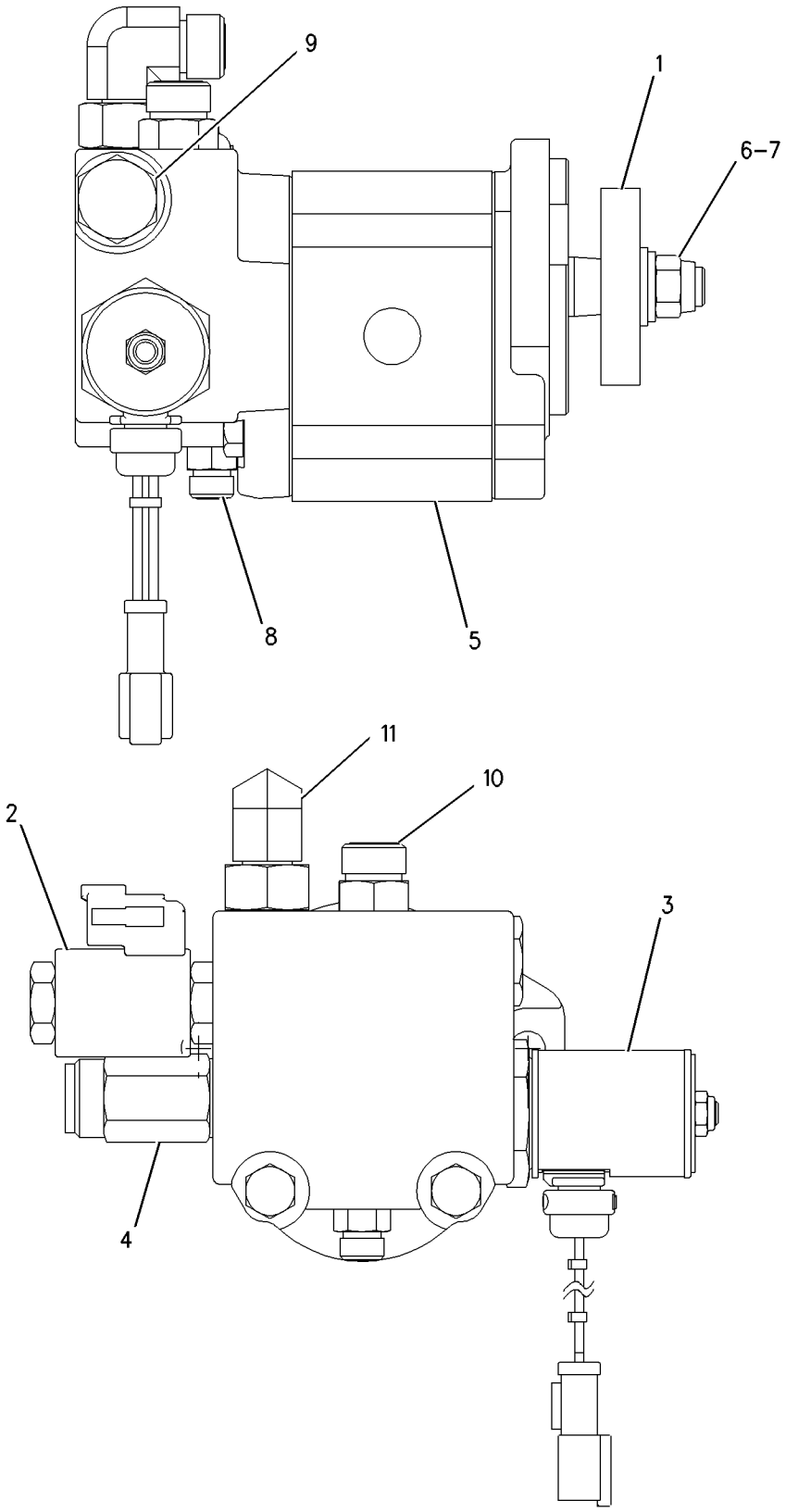

GRAPHIC #1 g00896497

205-3669 MOTOR GP-GEAR–STANDARD HYDRAULIC FAN

S/N: RTA1-UP; RBB1-UP

PART OF 212-6301 MOTOR & MTG GP-HYDRAULIC FAN

AN ATTACHMENT

SMCS-1386, 5061 **i01859593**

NOTE	REF NO	GRAPHIC REF	PART NUMBER	QTY	PART NAME 1 2 3 4 5 6 (PRODUCT LEVEL)	SEE PAGE
	1	1	**113-3632**	1	ADAPTER-FAN	
Y	2	1	**211-2092**	1	VALVE GP-SOLENOID (DEMAND FAN)	493
Y	3	1	**199-5681**	1	MOTOR GP-GEAR (HYDRAULIC FAN-STANDARD)	401
	4	1	**2M-2570**	1	LOCKNUT	
	5	1	**5P-8245**	1	WASHER-HARD (13.5X25.5X3MM THK)	
	6	1	*148-8372*	1	ELBOW GP	
		1	**2M-9780**	1	SEAL-O-RING	
		1	**6V-8398**	1	SEAL-O-RING	
		1	**6V-8721**	1	ELBOW	
	7	1	*148-8381*	1	ELBOW GP	
		1	**3D-2824**	1	SEAL-O-RING	
		1	**6V-8398**	1	SEAL-O-RING	
		1	**8T-5429**	1	ELBOW	
	8	1	*148-8316*	1	CONNECTOR AS	
		1	**3J-7354**	1	SEAL-O-RING	
		1	**4J-5477**	1	SEAL-O-RING	
		1	**6V-8647**	1	CONNECTOR	
	9	1	**087-0991**	1	VALVE AS-CHECK	

Y-SEPARATE ILLUSTRATION

205-3669 MOTOR GP-GEAR *(contd.)* **i01859593**

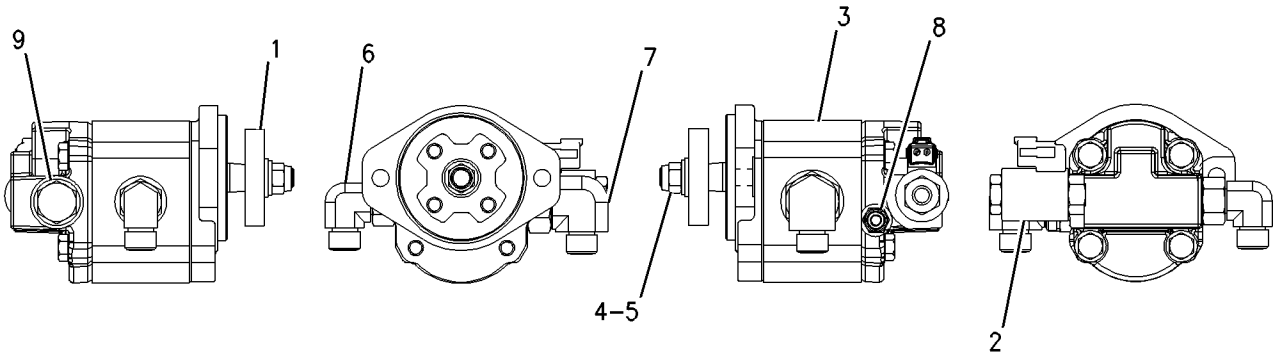

GRAPHIC #1 g00897100

HYDRAULIC SYSTEM

211-4767 MOUNTING GP-CONTROL VALVE

S/N: RTA1-UP; RBB1-UP

PART OF 176-5181, 176-5201 CHASSIS AR

SMCS-5051 **i01754632**

NOTE	REF NO	GRAPHIC REF	PART NUMBER	QTY	PART NAME 1 2 3 4 5 6 (PRODUCT LEVEL)	SEE PAGE
	1	1	**140-9291**	1	COVER	
	2	1	**211-0608**	1	BRACKET AS	
	3	1	**211-0622**	1	BRACKET AS	
	4	1	**5P-1076**	3	WASHER-HARD (13.5X30X4MM THK)	
	5	1	**7X-7729**	4	WASHER (11X25X3MM THK)	
	6	1	**8T-4121**	9	WASHER-HARD (11X21X2.5MM THK)	
M	7	1	**8T-4136**	7	BOLT (M10X1.5X25MM)	
M	8	1	**8T-4137**	4	BOLT (M10X1.5X20MM)	
M	9	1	**8T-4192**	1	BOLT (M12X1.75X25MM)	
M	10	1	**8T-4195**	2	BOLT (M10X1.5X30MM)	
M	11	1	**8T-4956**	2	BOLT (M12X1.75X35MM)	

M-METRIC PART

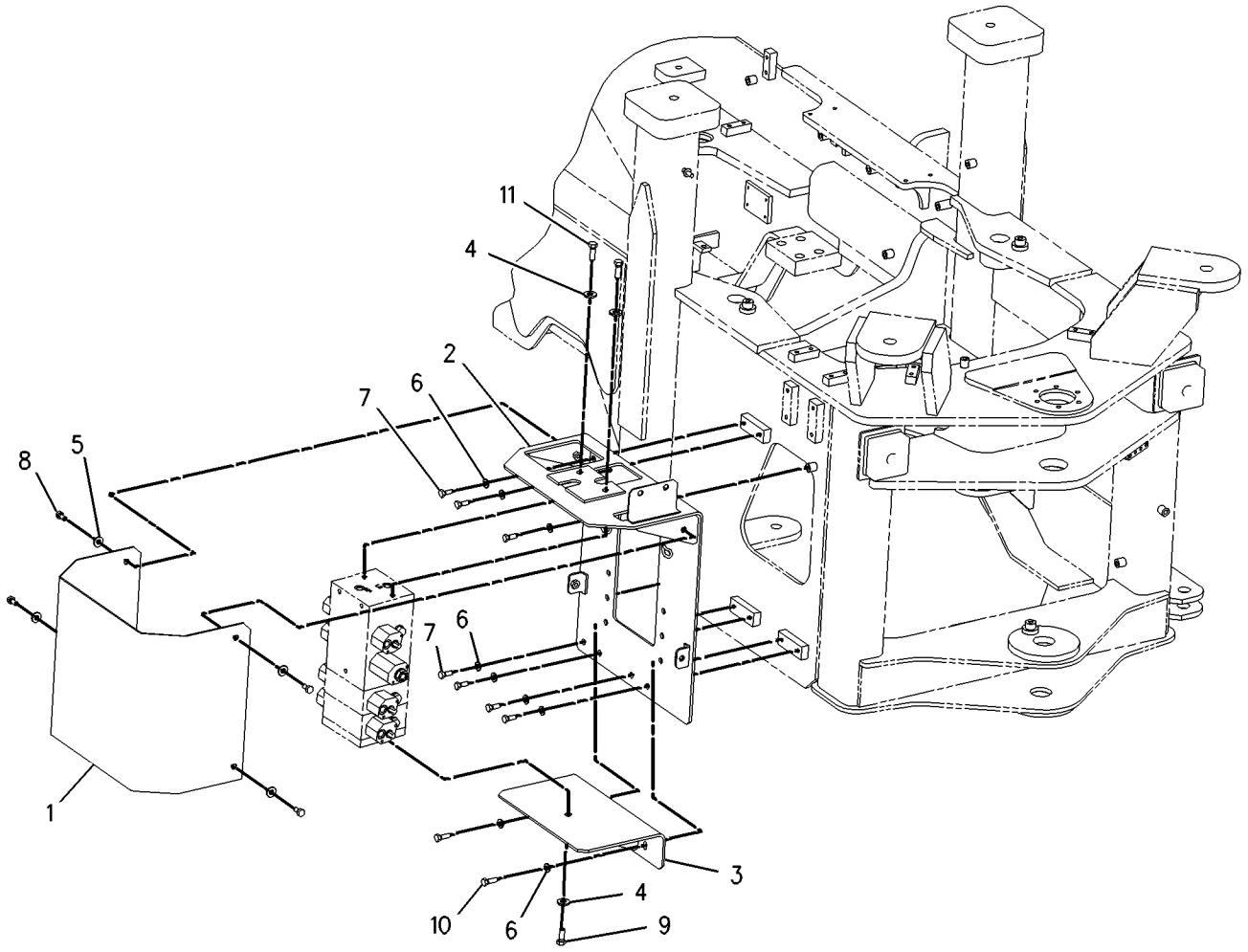

GRAPHIC #1 g00857812

145-2322 PIVOT GP-PILOT VALVE–LIFT

S/N: RBB1-UP
PART OF 145-5256 VALVE GP-PILOT
AN ATTACHMENT

SMCS-5059 **i01738563**

NOTE	REF NO	GRAPHIC REF	PART NUMBER	QTY	PART NAME 1 2 3 4 5 6 (PRODUCT LEVEL)	SEE PAGE
	1	1	**139-4189**	1	PLATE	
	2	1	**141-7481**	1	SPACER	
	3	1	**146-3337**	2	PLUNGER AS	
					(EACH INCLUDES)	
		1	**8T-1138**	2	RING-RETAINING	
		1	**131-2639**	1	WASHER (3.2X9.0X0.5MM THK)	
	4	1	**146-6315**	2	PIN	
	5	1	**146-8479**	1	SWIVEL	
	6	1	**153-8941**	1	WASHER	
	7	1	**153-8946**	2	SPRING	
	8	1	**146-6317**	1	WASHER (21.8X34X9MM THK)	
	9	1	**159-3781**	2	SPRING	
M	10	1	**5C-2890**	2	NUT (M6X1 THD)	

M-METRIC PART

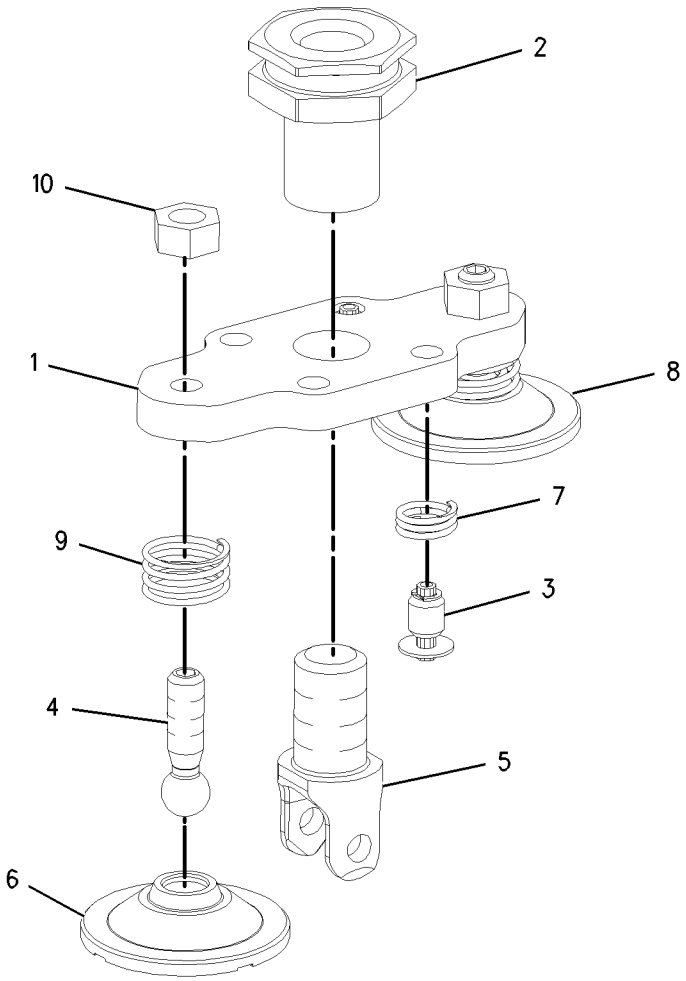

GRAPHIC #1 g00890431

147-2038 PIVOT GP-PILOT VALVE–TILT

S/N: RBB1-UP
PART OF 145-5256 VALVE GP-PILOT
AN ATTACHMENT

SMCS-5059 **i01727901**

NOTE	REF NO	GRAPHIC REF	PART NUMBER	QTY	PART NAME 1 2 3 4 5 6 (PRODUCT LEVEL)	SEE PAGE
	1	1	**139-4189**	1	PLATE	
	2	1	**141-7481**	1	SPACER	
	3	1	**146-6315**	2	PIN	
	4	1	**146-8479**	1	SWIVEL	
	5	1	**153-8941**	1	WASHER	
	6	1	**159-3781**	1	SPRING	
M	7	1	**5C-2890**	2	NUT (M6X1 THD)	

M-METRIC PART

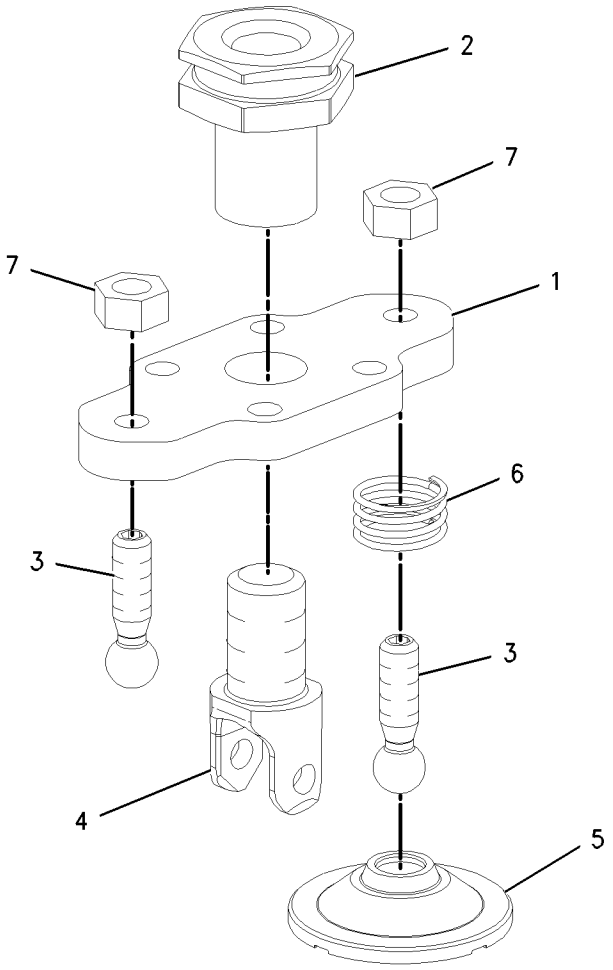

GRAPHIC #1 g00890089

HYDRAULIC SYSTEM

160-6300 PIVOT GP-PILOT VALVE

S/N: RTA1-UP; RBB1-UP
PART OF 212-1301, 212-1304, 212-1306 VALVE GP-PILOT
AN ATTACHMENT

SMCS-5059 **i01832308**

NOTE	REF NO	GRAPHIC REF	PART NUMBER	QTY	PART NAME 1 2 3 4 5 6 (PRODUCT LEVEL)	SEE PAGE
	1	1	**141-7481**	1	SPACER	
	2	1	**146-6315**	2	PIN-ADJUSTMENT	
	3	1	**146-8479**	1	SWIVEL	
	4	1	**153-8945**	2	PLUNGER AS	
		1	**3H-7180**	1	SETSCREW (1/4-28X.25IN)	
		1	**6J-9996**	1	SPRING	
	5	1	**174-1366**	1	PLATE	
	6	1	**146-6317**	2	RETAINER	
	7	1	**159-3781**	2	SPRING	
M	8	1	**5C-2890**	2	NUT (M6X1 THD)	

M-METRIC PART

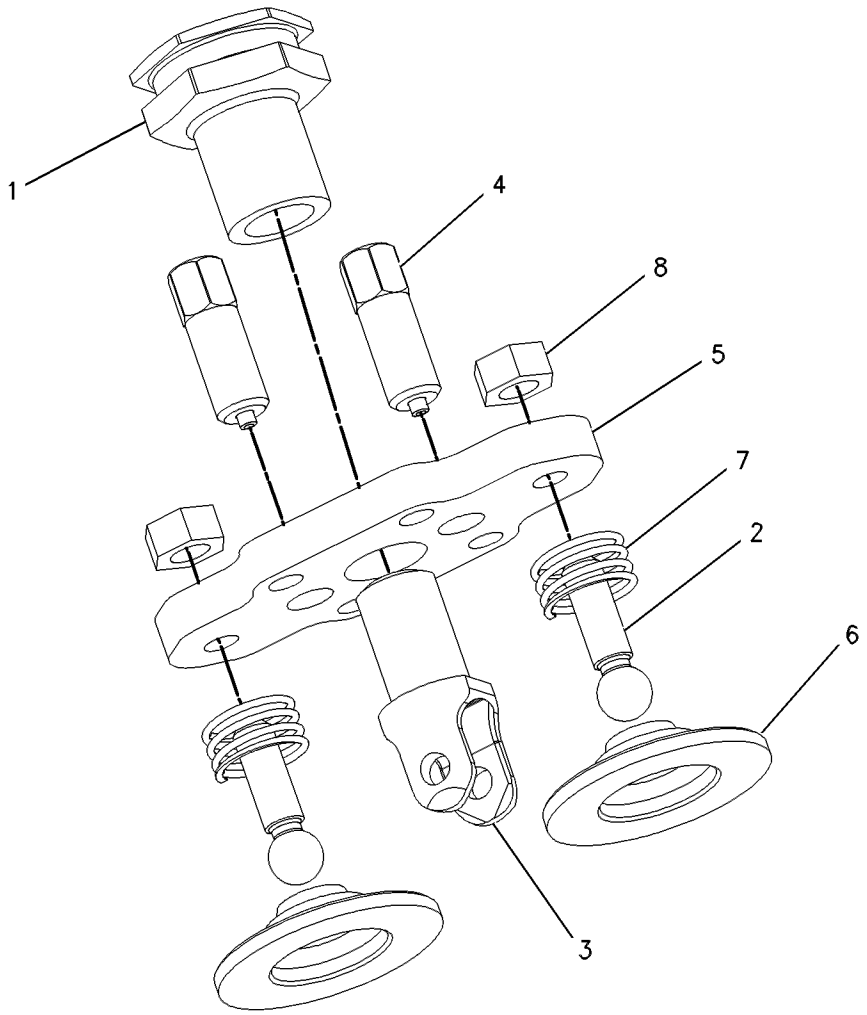

GRAPHIC #1 g00636667

HYDRAULIC SYSTEM

175-9443 PIVOT GP-PILOT VALVE

S/N: RTA1-UP; RBB1-UP

PART OF 212-1301, 212-1304, 212-1305, 212-1306, 212-1307 VALVE GP-PILOT

AN ATTACHMENT

SMCS-5059 **i01832305**

NOTE	REF NO	GRAPHIC REF	PART NUMBER	QTY	PART NAME 1 2 3 4 5 6 (PRODUCT LEVEL)	SEE PAGE
	1	1	**139-4189**	1	PLATE	
	2	1	**141-7481**	1	SPACER	
	3	1	**146-3337**	2	PLUNGER AS	
		1	**8T-1138**	2	RING-RETAINING	
		1	**131-2639**	2	WASHER (3.2X9.0X0.5MM THK)	
	4	1	**146-6315**	1	PIN-ADJUSTMENT	
	5	1	**146-8479**	1	SWIVEL	
	6	1	**153-8946**	2	SPRING	
M	7	1	**178-7877**	1	SETSCREW	
	8	1	**146-6317**	1	RETAINER	
	9	1	**159-3781**	1	SPRING	
M	10	1	**5C-2890**	2	NUT (M6X1 THD)	

M-METRIC PART

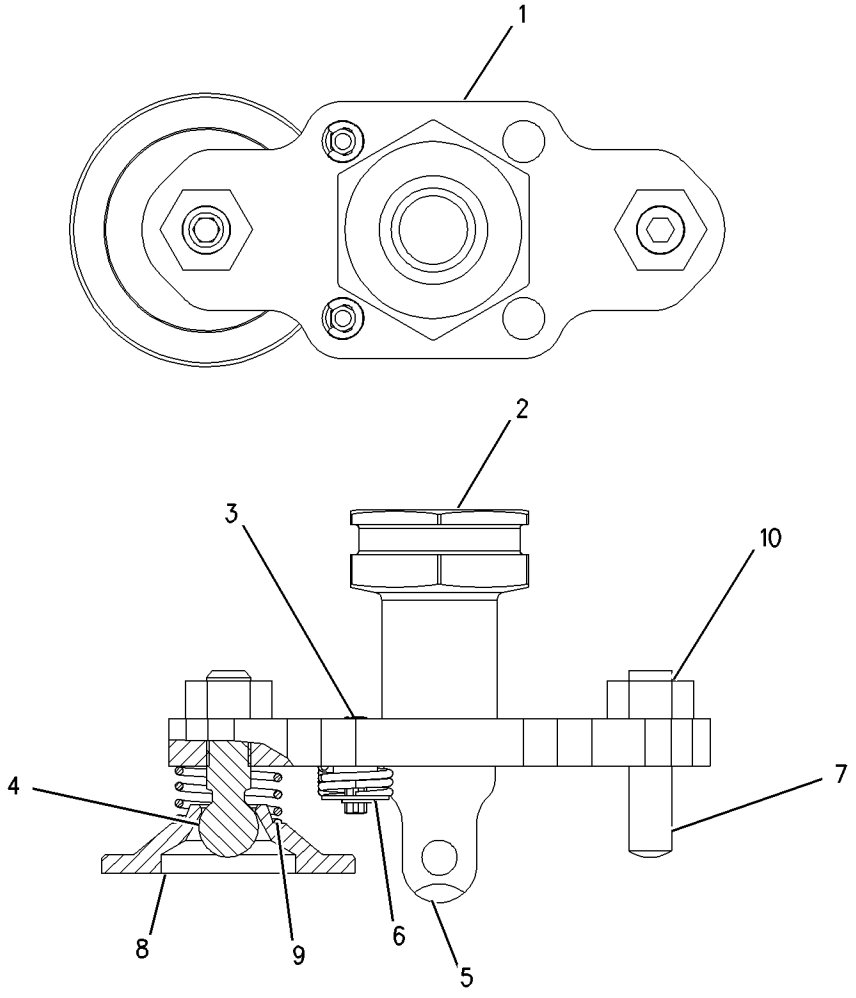

GRAPHIC #1 g00683735

147-3322 PLATE GP-PILOT VALVE–JOYSTICK

S/N: RTA1-UP; RBB1-UP
PART OF 212-1302, 212-1305, 212-1307 VALVE GP-PILOT
AN ATTACHMENT

SMCS-5059 **i01832303**

NOTE	REF NO	GRAPHIC REF	PART NUMBER	QTY	PART NAME 1 2 3 4 5 6 (PRODUCT LEVEL)	SEE PAGE
M	1	1	**5C-2890**	4	NUT (M6X1 THD)	
	2	1	**146-6315**	3	PIN-ADJUSTMENT	
	3	1	**153-8945**	3	PLUNGER AS	
					(EACH INCLUDES)	
		1	**3H-7180**	1	SETSCREW (1/4-28X.25IN)	
		1	**6J-9996**	1	SPRING	
M	4	1	**178-7877**	1	SETSCREW	
	5	1	**146-6317**	3	RETAINER	
	6	1	**159-3781**	3	SPRING	

M-METRIC PART

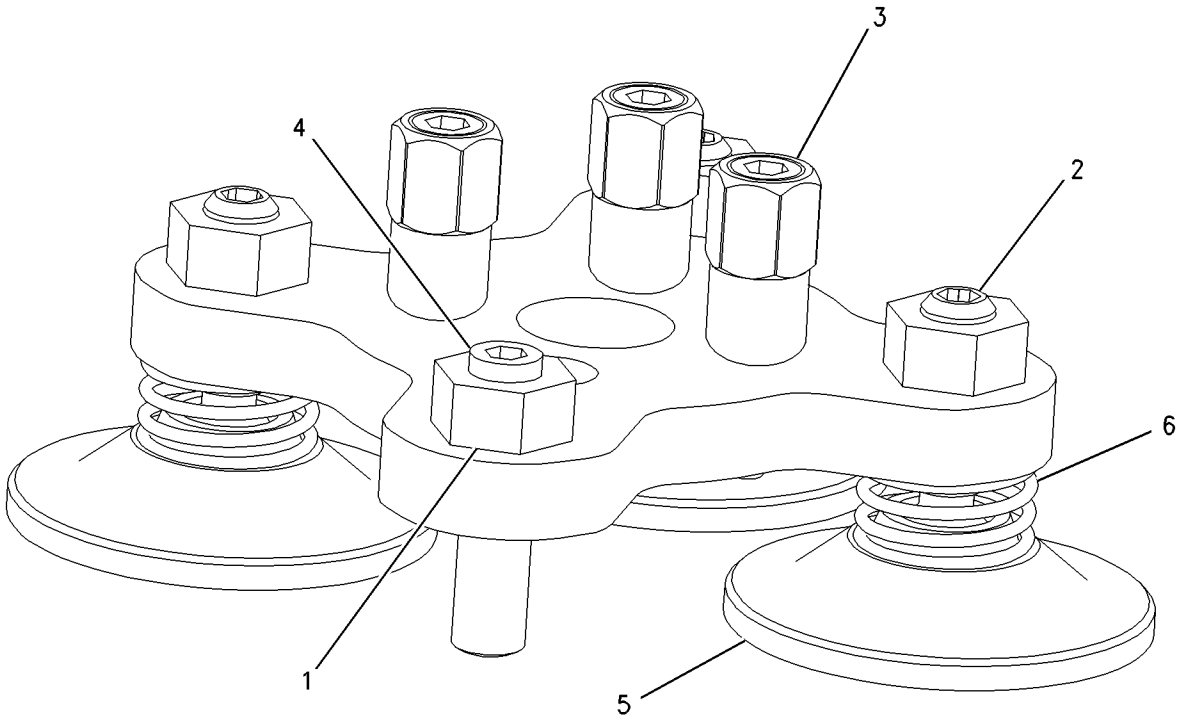

GRAPHIC #1 g00810224

132-2476 PUMP & MTG GP-HYDRAULIC–
IMPLEMENT,PILOT & STEERING
S/N: RTA1-UP; RBB1-UP
PART OF 176-5182, 176-5202 HYDRAULIC AR

SMCS-5055, 5070, 5073, 5084 **i01859602**

NOTE	REF NO	GRAPHIC REF	PART NUMBER	QTY	PART NAME 1 2 3 4 5 6 (PRODUCT LEVEL)	SEE PAGE
Y	1	1	**163-2428**	1	PUMP GP-PISTON (IMPLEMENT, PILOT & STEERING)	415
	2	1	**1H-6227**	1	SEAL-O-RING	
M	3	1	**6V-8200**	2	BOLT-HEX SOCKET (M12X1.75X35MM)	
	4	1	**8T-7971**	2	WASHER-HARD (13.5X25.5X5MM THK)	

M-METRIC PART
Y-SEPARATE ILLUSTRATION

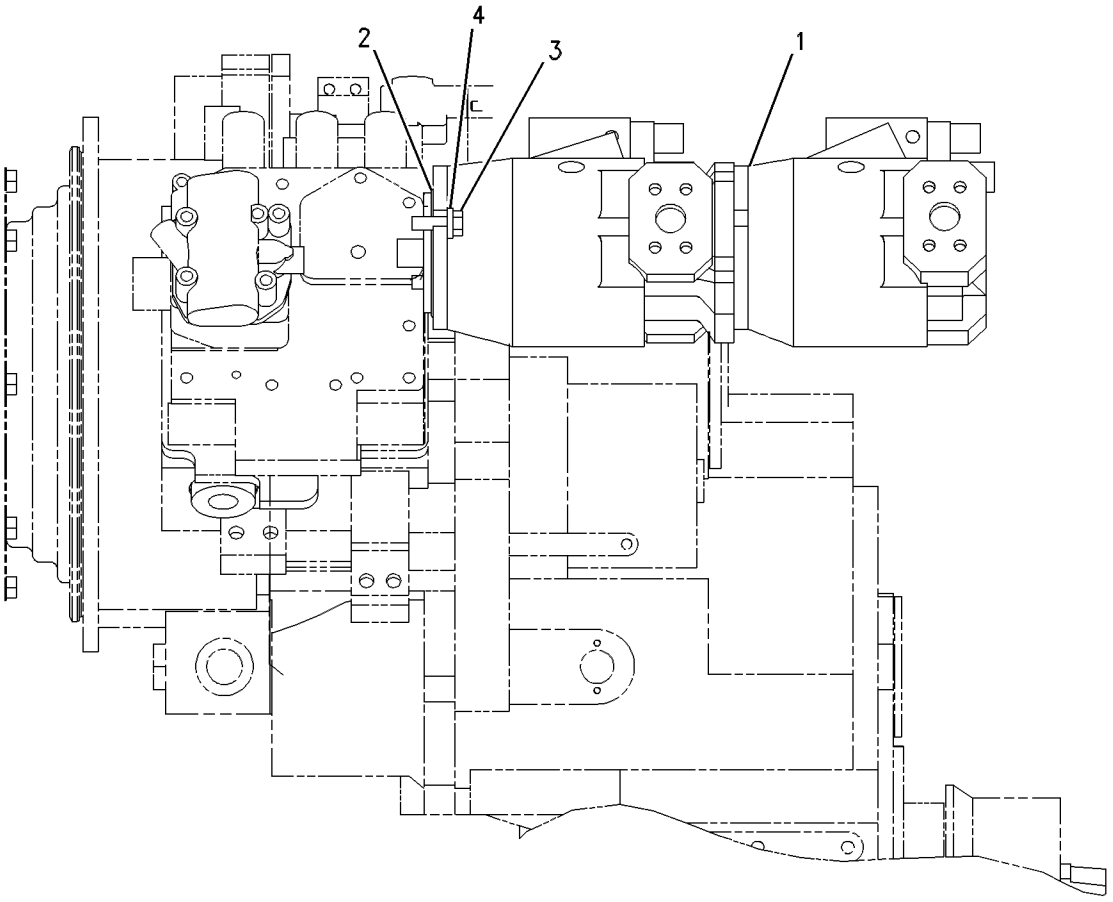

GRAPHIC #1 g00605834

163-2428 PUMP GP-PISTON–IMPLEMENT,PILOT & STEERING

S/N: RTA1-UP; RBB1-UP

PART OF 132-2476 PUMP & MTG GP-HYDRAULIC

SMCS-5070 **i01831345**

NOTE	PART NUMBER	QTY	PART NAME 1 2 3 4 5 6 (PRODUCT LEVEL)	SEE PAGE
YR	**168-9027**	1	PUMP GP-PISTON (FRONT) (IMPLEMENT)	418
YR	**168-7873**	1	PUMP GP-PISTON (REAR) (STEERING & PILOT)	416

R-REMFG PART MAY BE AVAILABLE
Y-SEPARATE ILLUSTRATION

<END>

HYDRAULIC SYSTEM

168-7873 PUMP GP-PISTON—PILOT & STEERING

S/N: RTA1-UP; RBB1-UP

PART OF 163-2428 PUMP GP-PISTON

SMCS-5070 **i01229600**

NOTE	REF NO	GRAPHIC REF	PART NUMBER	QTY	PART NAME 1 2 3 4 5 6 (PRODUCT LEVEL)	SEE PAGE
	1	1	**168-7872**	1	SHAFT-PUMP	
	2	1	**8C-3110**	1	RING-RETAINING	
	3	1	**127-9471**	1	SEAL-PUMP SHAFT	
	4	1	**9S-8006**	1	PLUG-O-RING (7/8-14 THD)	
	5	1	**2M-9780**	1	SEAL-O-RING (19.18MM ID)	
	6	1	**127-9490**	1	SPRING	
	7	1	**127-9472**	1	ROD	
	8	1	**168-7861**	1	PISTON-CONTROL	
	9	1	**168-7863**	1	PLUG-CONTROL	
	10	1	**8T-7525**	1	SEAL-O-RING (23.7MM ID)	
	11	1	**083-4419**	1	PIN	
	12	1	**168-7864**	1	HEAD-PUMP	
	13	1	**168-3504**	1	SEAL (7.65MM ID)	
	14	1	**136-8423**	1	PLUG-BREAK OFF	
M	15	1	**095-0670**	4	BOLT (M12X1.75X45MM)	
	16	1	**105-3035**	1	CONE-ROLLER BEARING	
	17	1	**105-3036**	1	CUP-ROLLER BEARING	
	18	1	**127-9485**	1	SEAL-O-RING	
	19	1	**138-8173**	1	PLATE-VALVE	
	20	1	**127-9483**	1	SHIM	
Y	21	1	**168-7868**	1	ROTATING GP-PUMP	421
	22	1	**127-9482**	1	SWASHPLATE	
	23	1	**168-7869**	2	BEARING-CRADLE	
	24	1	**6V-4635**	1	CONE	
	25	1	**6V-4636**	1	CUP	
	26	1	**168-7871**	1	HOUSING-PUMP	
FY		1	**168-7323**	1	VALVE GP-PRESS & FLOW CMPNSTR	482

F-NOT SHOWN
M-METRIC PART
Y-SEPARATE ILLUSTRATION

168-7873 PUMP GP-PISTON *(contd.)* **i01229600**

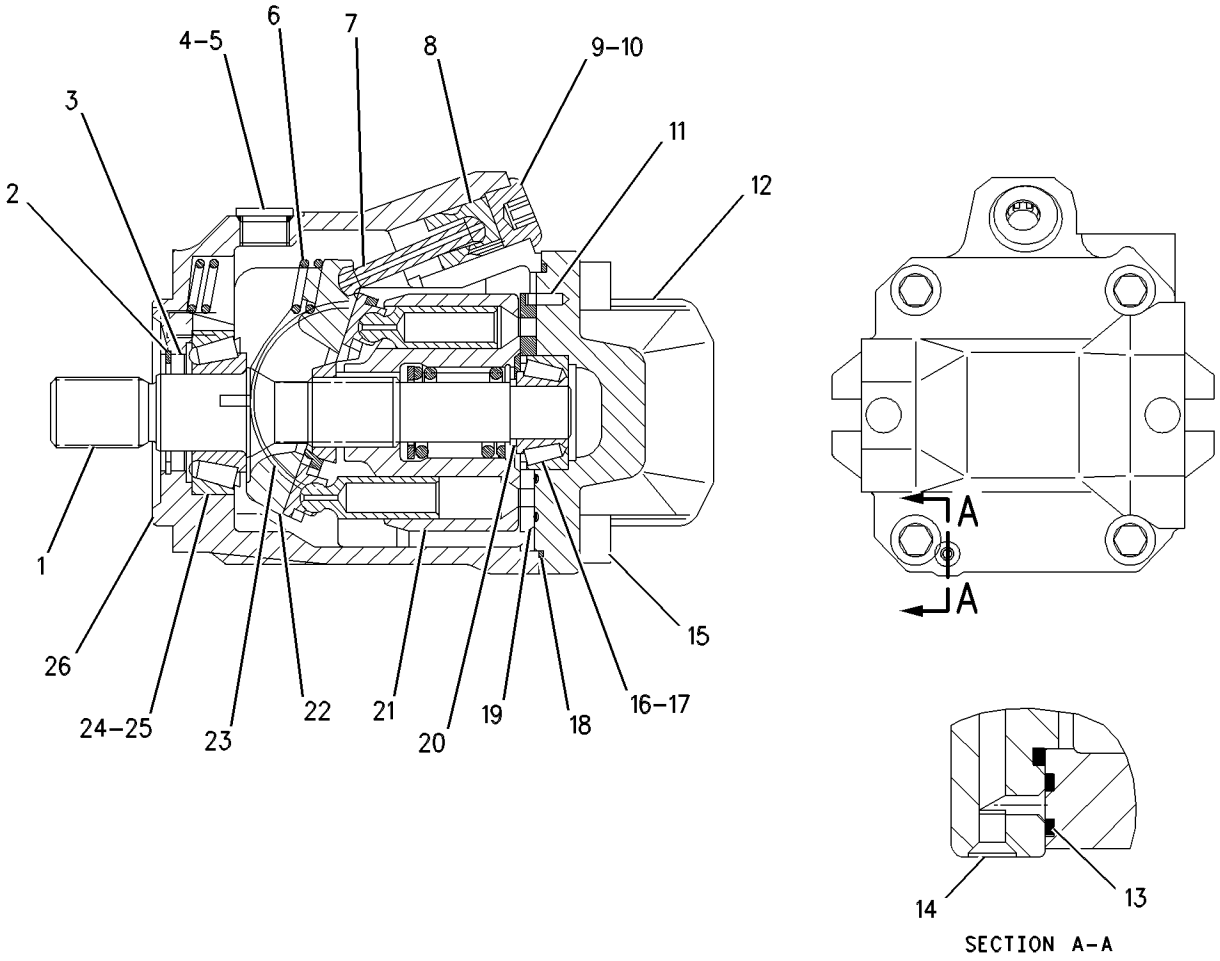

GRAPHIC #1 g00616137

HYDRAULIC SYSTEM

168-9027 PUMP GP-PISTON—IMPLEMENT

S/N: RTA1-UP; RBB1-UP

PART OF 163-2428 PUMP GP-PISTON

SMCS-5070 **i01229590**

NOTE	REF NO	GRAPHIC REF	PART NUMBER	QTY	PART NAME 1 2 3 4 5 6 (PRODUCT LEVEL)	SEE PAGE
M	1	1	**6R-7943**	2	SCREW	
	2	1	**7Y-5267**	1	RING-RETAINING	
	3	1	**168-7319**	1	SEAL-SHAFT (28MM ID)	
	4	1	**9S-8006**	1	PLUG-O-RING (7/8-14 THD)	
	5	1	**2M-9780**	1	SEAL-O-RING (19.18MM ID)	
	6	1	**168-2197**	1	SPRING	
	7	1	**168-2198**	1	LINK-CONTROL	
	8	1	**168-2199**	1	PISTON-CONTROL	
	9	1	**168-2200**	1	PLUG-CONTROL	
	10	1	**8T-7525**	1	SEAL-O-RING (23.7MM ID)	
	11	1	**083-4419**	1	PIN	
	12	1	**168-7316**	1	HEAD-PUMP	
	13	1	**168-3504**	1	SEAL (7.65MM ID)	
	14	1	**136-8423**	2	PLUG-BREAK OFF	
M	15	1	**104-8085**	4	BOLT-SOCKET HEAD	
	16	1	**9W-2109**	1	CONE	
	17	1	**9W-2110**	1	CUP	
	18	1	**117-8801**	1	SEAL-O-RING (126.67MM ID)	
	19	1	**168-7321**	1	PLATE-PORT	
	20	1	**168-2203**	1	SHIM-SHAFT	
Y	21	1	**168-2204**	1	ROTATING GP-PUMP	420
	22	1	**168-7317**	1	SWASHPLATE-PUMP	
	23	1	**168-2206**	2	BEARING-CRADLE	
	24	1	**3P-1210**	1	CONE-ROLLER BEARING	
	25	1	**8J-0412**	1	CUP-ROLLER BEARING	
	26	1	**168-7315**	1	HOUSING-PUMP	
	27	1	**168-7318**	1	SHAFT-PUMP	
	28	1	**118-3122**	1	SEAL-O-RING	
	29	1	**168-7320**	1	COUPLING-SHAFT	
M	30	1	**8T-3957**	2	BOLT-HEX SOCKET (M12X1.75X30MM)	
	31	1	**8T-4223**	2	WASHER-HARD (3MM THK)	
FY			**168-7323**	1	VALVE GP-PRESS & FLOW CMPNSTR	482

F-NOT SHOWN
M-METRIC PART
Y-SEPARATE ILLUSTRATION

168-9027 PUMP GP-PISTON ***(contd.)*** **i01229590**

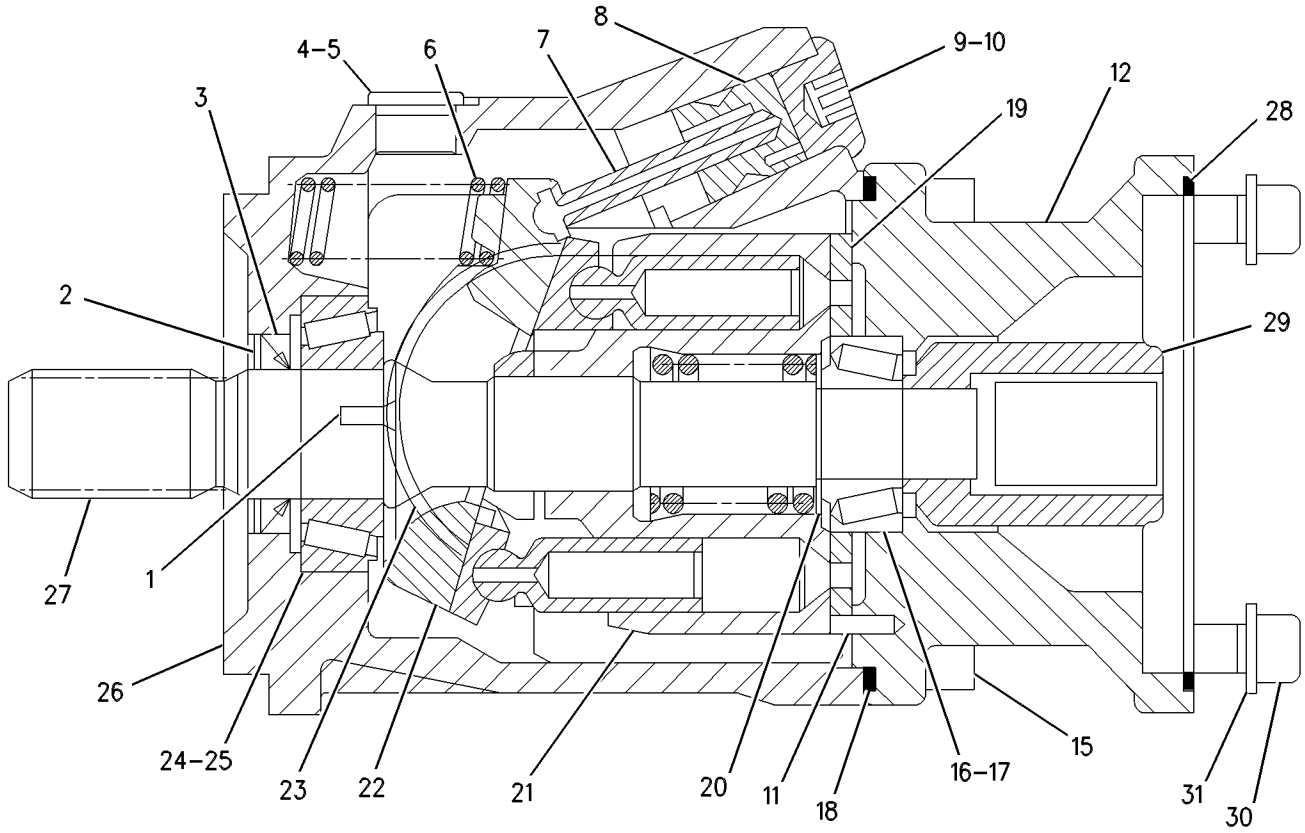

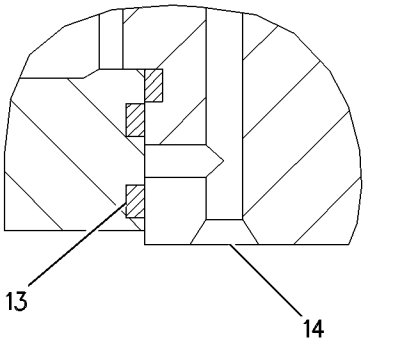

SECTION A–A

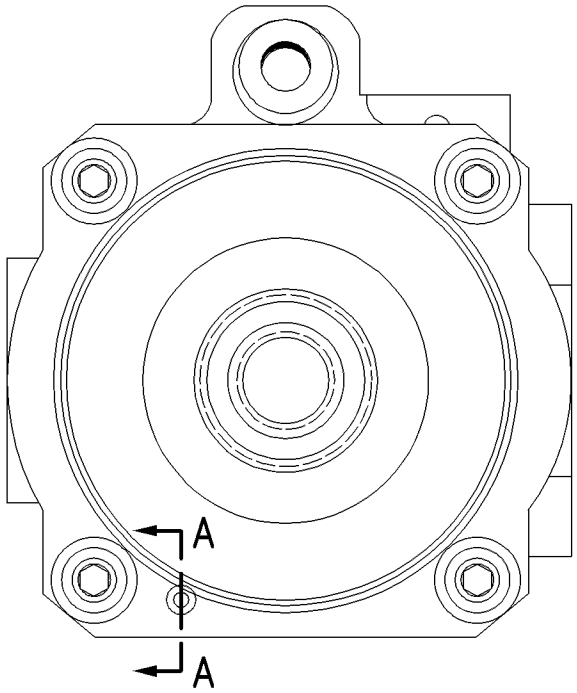

GRAPHIC #1 g00618731

168-2204 ROTATING GP-PUMP—IMPLEMENT

S/N: RTA1-UP; RBB1-UP

PART OF 168-9027 PUMP GP-PISTON

SMCS-1387, 5070, 5084 **i01229673**

NOTE	REF NO	GRAPHIC REF	PART NUMBER	QTY	PART NAME 1 2 3 4 5 6 (PRODUCT LEVEL)	SEE PAGE
	1	1	**168-3378**	1	BEARING-SPHERICAL	
	2	1	**168-3379**	3	PIN	
	3	1	**6V-7723**	1	RING-RETAINING (INTERNAL)(45.5MM DIA)	
	4	1	**168-3380**	1	BARREL-CYLINDER	
	5	1	**168-3381**	1	SPRING	
	6	1	**168-3382**	1	WASHER	
	7	1	**168-3384**	9	PISTON AS-PUMP	
	8	1	**168-3385**	1	PLATE-RETRACTION	

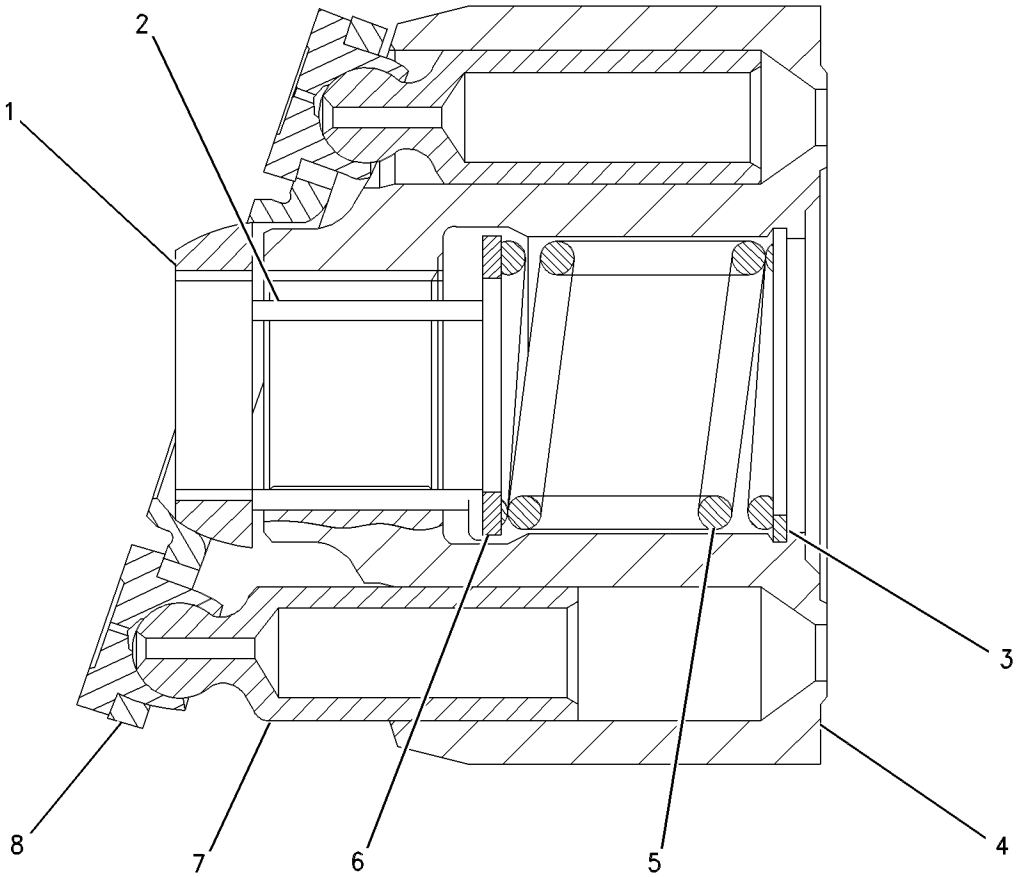

GRAPHIC #1 g00538144

168-7868 ROTATING GP-PUMP—PILOT & STEERING

S/N: RTA1-UP; RBB1-UP

PART OF 168-7873 PUMP GP-PISTON

SMCS-1387, 5070, 5084 **i01229714**

NOTE	REF NO	GRAPHIC REF	PART NUMBER	QTY	PART NAME 1 2 3 4 5 6 (PRODUCT LEVEL)	SEE PAGE
	1	1	**138-8175**	1	BEARING-SPHER.	
	2	1	**168-7940**	3	PIN	
	3	1	**096-0015**	1	RING-RETAINING	
	4	1	**128-7069**	1	BARREL	
	5	1	**168-7941**	1	SPRING	
	6	1	**168-7942**	1	WASHER	
	7	1	**168-7943**	9	PISTON AS	
	8	1	**168-7944**	1	PLATE-RETRACTION	

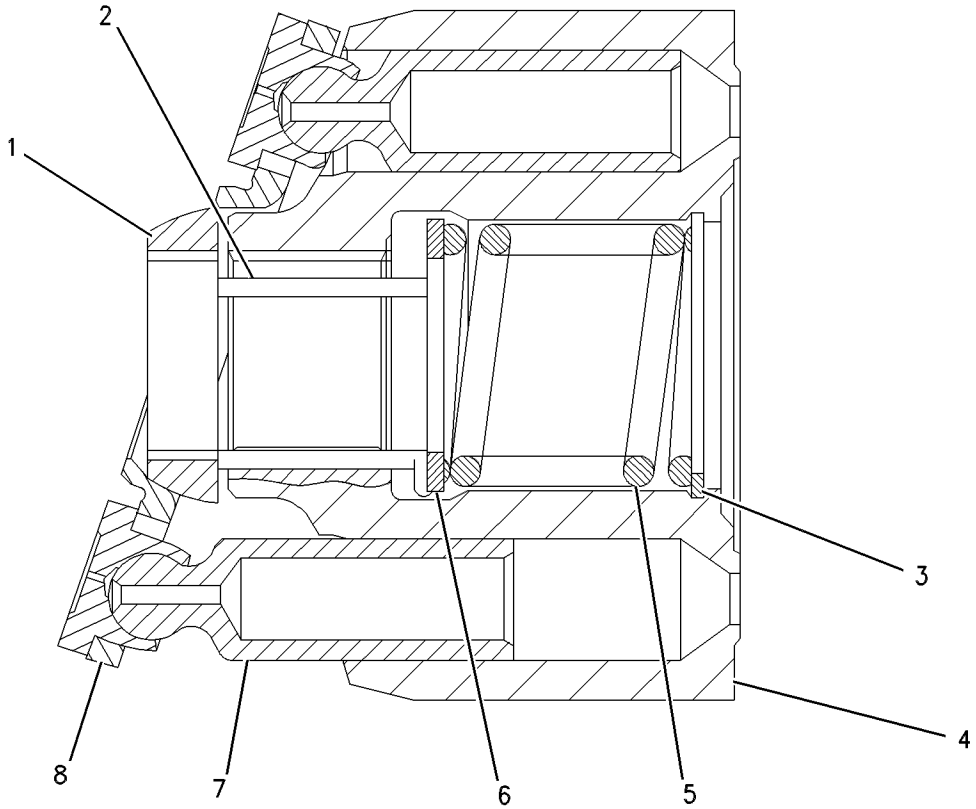

GRAPHIC #1 g00616122

HYDRAULIC SYSTEM

201-8108 TANK & MTG GP-HYDRAULIC

S/N: RTA1-UP; RBB1-UP

PART OF 176-5182, 176-5202 HYDRAULIC AR

SMCS-5056, 5068 **i01862670**

NOTE	REF NO	GRAPHIC REF	PART NUMBER	QTY	PART NAME 1 2 3 4 5 6 (PRODUCT LEVEL)	SEE PAGE
	1	1	**5P-8502**	1	PADLOCK GP	
		1	**5P-8500**	1	KEY	
	2	1	**7T-8332**	4	MOUNTING	
	3	1	**130-4634**	1	BREATHER (HYDRAULIC)	
	4	1	**202-9801**	1	PLATE AS	
M		1	**8T-3490**	12	NUT-WELD (M10X1.5 THD)	
	5	1	**202-9802**	1	PLATE AS	
M		1	**8T-3490**	10	NUT-WELD (M10X1.5 THD)	
	6	1	**205-8439**	1	PLATE AS	
M		1	**8T-3490**	2	NUT-WELD (M10X1.5 THD)	
	7	1	**228-0820**	1	TANK GP-HYDRAULIC	
	8	1	**1S-0833**	1	CLIP	
	9	1	**7X-7729**	11	WASHER (11X25X3MM THK)	
	10	1	**8F-6437**	4	WASHER (13.5X50.8X4.76MM THK)	
	11	1	**8M-2773**	2	CLIP	
	12	1	**8T-4121**	2	WASHER-HARD (11X21X2.5MM THK)	
M	13	1	**8T-4136**	5	BOLT (M10X1.5X25MM)	
M	14	1	**8T-4186**	8	BOLT (M10X1.5X40MM)	
	15	1	**8T-4223**	8	WASHER-HARD (13.5X25.5X3MM THK)	
M	16	1	**8T-4244**	4	NUT (M12X1.75 THD)	
M	17	1	**8T-4910**	4	BOLT (M12X1.75X60MM)	
E	18	1	**5P-1442**		HOSE (124CM)	
E	19	1	**5P-1442**		HOSE (88CM)	

E-ORDER BY THE CENTIMETER
M-METRIC PART

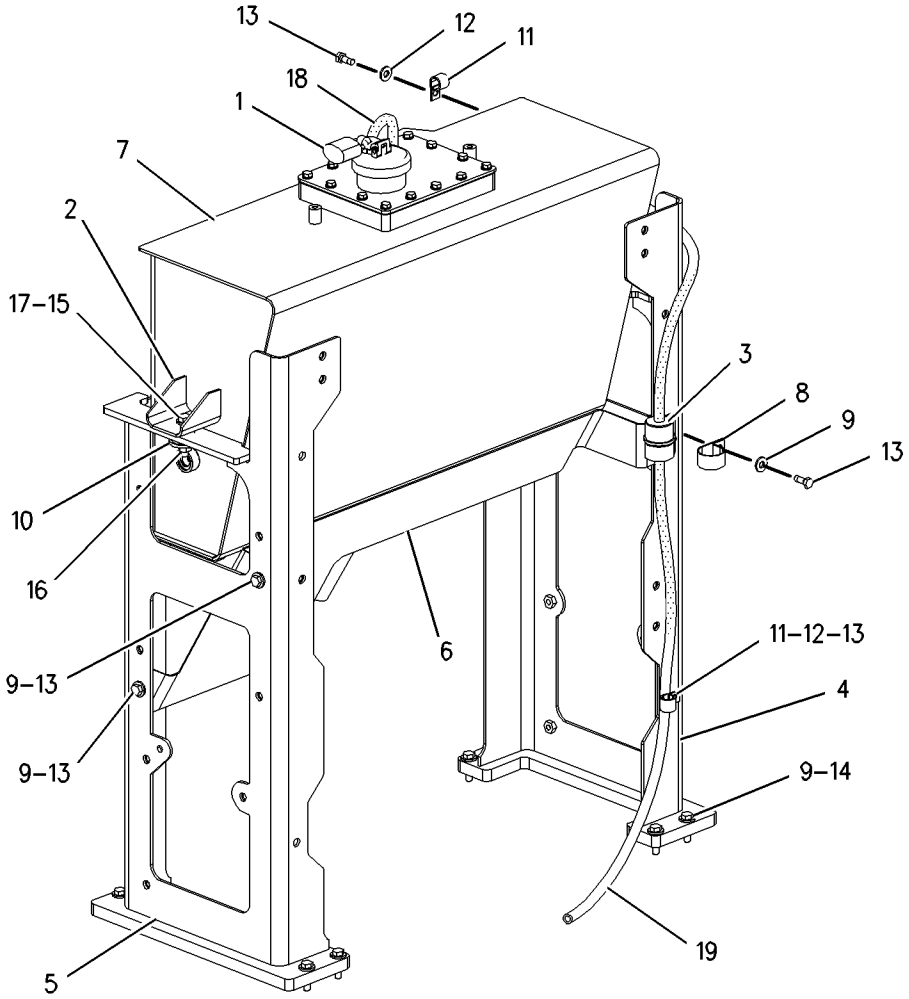

GRAPHIC #1

g00927752

112-1817 VALVE GP-BALL–LOWERING CONTROL

S/N: RTA1-UP; RBB1-UP

PART OF 214-9434, 217-8421 LINES GP-LIFT CYLINDER

SMCS-5001, 5130, 5147 **i01859603**

NOTE	PART NUMBER	QTY	PART NAME 1 2 3 4 5 6 (PRODUCT LEVEL)	SEE PAGE
J	*202-0671*	1	VALVE GP-BALL	
			–OR–	
J	*202-0673*	1	VALVE GP-BALL	
			–OR–	
J	*202-0674*	1	VALVE GP-BALL	
			AVAILABLE REPAIR KIT(S):	
J	**112-9861**	1	KIT-SEAL	
			(INCLUDES SEALS, CONNECTORS & THRUST RING)	

J-KIT MARKED J SERVICES PARTS MARKED J

<END>

173-4032 VALVE GP-COMBINATION

S/N: RBB1-UP

PART OF 214-9437 LINES GP-TILT CYLINDER

SMCS-5064 **i01831541**

NOTE	REF NO	GRAPHIC REF	PART NUMBER	QTY	PART NAME 1 2 3 4 5 6 (PRODUCT LEVEL)	SEE PAGE
	1	1	**173-7061**	1	VALVE GP-RELIEF (TILT)	
	2	1	**173-7062**	1	VALVE GP-DIVERTER (TILT)	
	3	1	**3J-7354**	1	SEAL-O-RING	
	4	1	**3K-0360**	2	SEAL-O-RING	
	5	1	**9S-8002**	1	PLUG	
	6	1	**9S-8005**	2	PLUG	

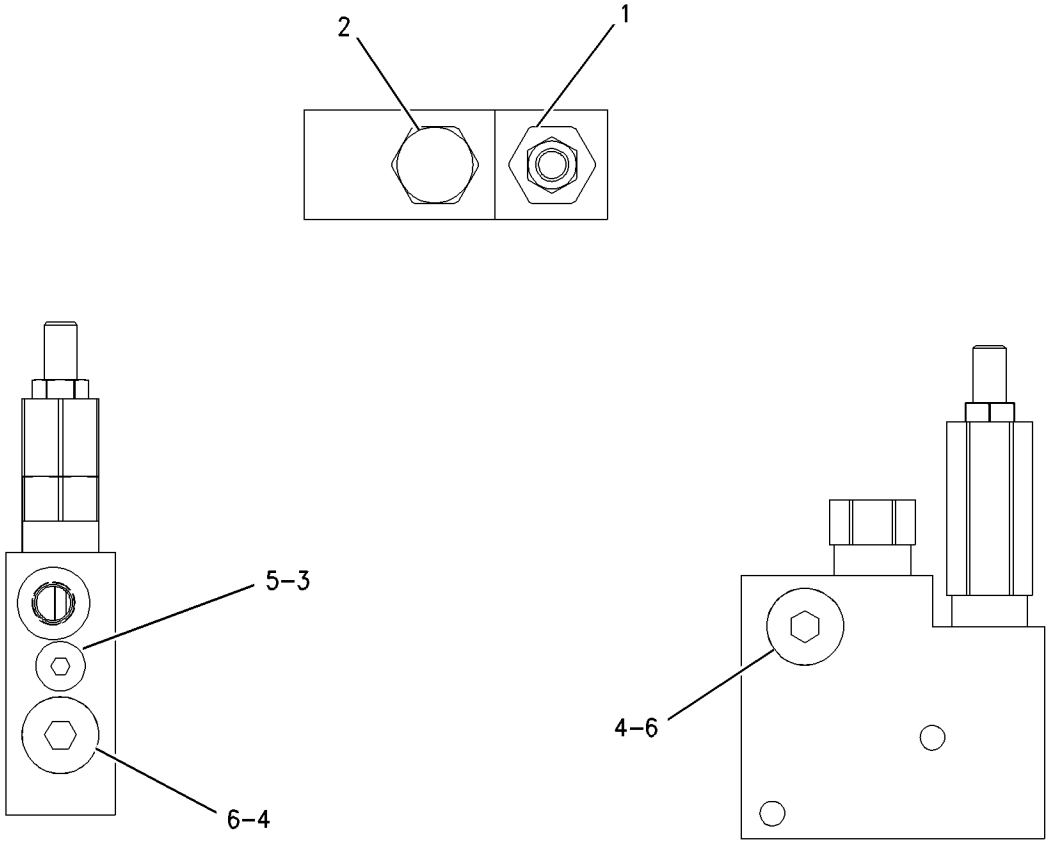

GRAPHIC #1 g00640883

216-7502 VALVE GP-CONTROL–AUXILIARY

S/N: RTA1-UP; RBB1-UP
PART OF 209-0271, 209-0272, 209-0274 VALVE GP-MAIN CONTROL
AN ATTACHMENT

SMCS-5051 **i01859590**

NOTE	REF NO	GRAPHIC REF	PART NUMBER	QTY	PART NAME 1 2 3 4 5 6 (PRODUCT LEVEL)	SEE PAGE
	1	1	**215-8137**	2	KIT-VALVE	
					(EACH INCLUDES BLOCK, NUT, CAP, AND STUD)	
	2	1	**5P-3456**	2	SEAL-O-RING	
	3	1	**215-8131**	2	SPRING	
	4	1	**215-8129**	1	RETAINER	
	5	1	**211-5255**	4	BOLT-SOCKET HEAD	
	6	1	**215-8128**	1	RETAINER	
	7	1	**215-8139**	1	VALVE GP-CHECK	
	8	1	**216-7523**	1	SPRING	
	9	1	**216-7525**	1	KIT-PLUG	
					(INCLUDES PLUG AND SEAL)	
	10	1	**216-9729**	1	STEM	
	11	1	**8T-7524**	1	SEAL-O-RING	

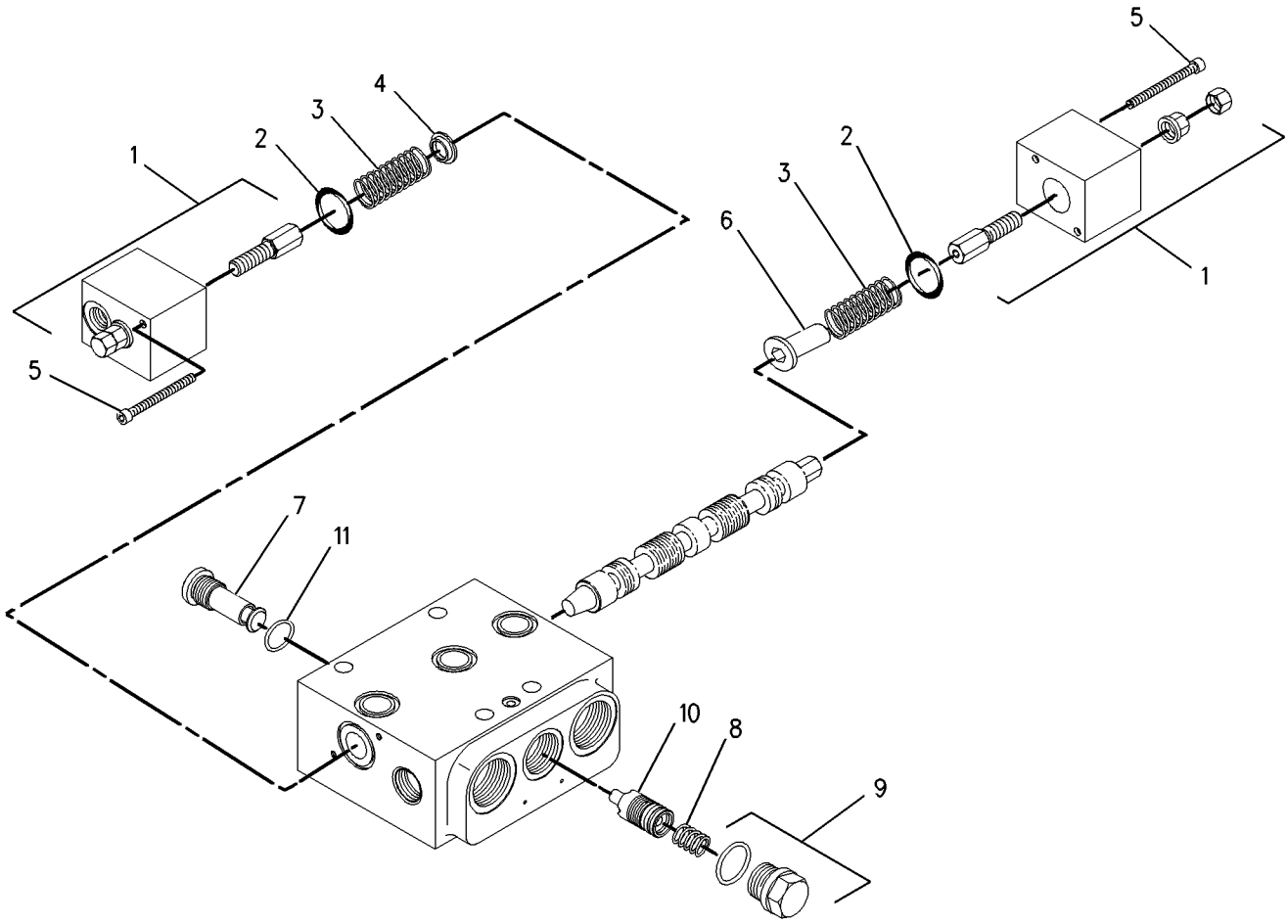

GRAPHIC #1 g00927396

MEMORANDA

HYDRAULIC SYSTEM

209-0270 VALVE GP-MAIN CONTROL

S/N: RBB1-UP
2 FUNCTION
PART OF 203-3889, 225-5162 HYDRAULIC AR-2 VALVE
AN ATTACHMENT

SMCS-5051 **i01862678**

NOTE	REF NO	GRAPHIC REF	PART NUMBER	QTY	PART NAME 1 2 3 4 5 6 (PRODUCT LEVEL)	SEE PAGE
M	1	1	**5A-3604**	4	BOLT-SOCKET HEAD (M8X1.25X25MM)	
	2	1	**216-9819**	1	PLATE	
	3	1	**6V-8397**	2	SEAL-O-RING	
	4	1	**229-9850**	1	VALVE GP-CHECK (MAKEUP OIL)	
	5	1	**215-8115**	1	VALVE GP-FLOW CONTROL (SIGNAL DRAIN)	
		1	**033-5879**	1	SEAL-O-RING	
		1	**192-7111**	1	SEAL-O-RING	
	6	1	**6V-7970**	1	SEAL-O-RING	
	7	1	**8C-4424**	1	PLUG	
	8	1	**216-7913**	2	KIT-ORIFICE (CHECK VALVE)	
					(INCLUDES SPRING AND PLUG)	
	9	1	**215-8111**	1	KIT-VALVE	
					(INCLUDES STEM, SPRING, PLUG AND SEAL)	
	10	1	**215-8109**	1	KIT-VALVE	
					(INCLUDES STEM, SPRING, PLUG AND SEAL)	
	11	1	**215-8116**	1	VALVE GP-RELIEF (SIGNAL LIMITER)	
		1	**033-5879**	1	SEAL-O-RING	
		1	**192-7111**	1	SEAL-O-RING	
	12	1	**217-3708**	2	VALVE GP-CHECK (PILOT OPERATED)	
	13	1	**215-8138**	1	VALVE GP-CHECK	
	14	1	**3E-2331**	1	PLUG	
	15	1	**215-8139**	2	VALVE GP-CHECK (LOAD)	
	15A	1	**215-8139**	1	VALVE GP-CHECK (REGENERATION)	
	16	1	**8T-7524**	4	SEAL-O-RING	
	17	1	**215-8113**	1	VALVE GP-CHECK (BACKPRESSURE)	
		1	**6V-8352**	1	SEAL-O-RING	
	18	1	**5P-6718**	3	SEAL-O-RING	
	19	1	**061-7538**	1	SEAL-O-RING	
	20	1	**217-4598**	1	VALVE GP-RELIEF (MAKEUP)	
		1	**123-7531**	1	KIT-SEAL	
	21	1	**189-3014**	1	SCREW	
	22	1	**206-7655**	1	SCREW	
	23	1	**206-7647**	1	SCREW	
	24	1	**6V-9507**	1	PLUG-FACE SEAL	
	25	1	**4J-5477**	1	SEAL-O-RING	
	26	2	**215-8135**	1	KIT-VALVE	
					(INCLUDES BLOCK, STUD AND LOCKNUT)	
	27	2	**215-8134**	1	KIT-VALVE	
					(INCLUDES BLOCK,SEAL,ORIFICE,RETAINER,SPRING AND CAP)	
	28	2	**215-8136**	1	KIT-VALVE	
					(INCLUDES BLOCK, CAPS AND STUD)	
	29	2	**215-8137**	1	KIT-VALVE	
					(INCLUDES BLOCK, CAPS AND STUD)	
	30	2	**215-8132**	1	KIT-VALVE (SHOCK REDUCING CHECK VALVE)	
					(INCLUDES SPOOL AND SEAL)	
M	31	2	**120-3956**	2	BOLT-HEX SOCKET (M5X0.8X60MM)	
M	32	2	**127-4832**	2	BOLT-SOCKET HEAD	
	33	2	**211-5255**	4	BOLT-SOCKET HEAD	
	34	2	**5P-3456**	4	SEAL-O-RING	
	35	2	**215-8131**	4	SPRING	
	36	2	**215-8128**	2	RETAINER	
	37	2	**215-8133**	1	RING	
	38	2	**215-8129**	2	RETAINER	

209-0270 VALVE GP-MAIN CONTROL *(contd.)* i01862678

NOTE	REF NO	GRAPHIC REF	PART NUMBER	QTY	PART NAME 1 2 3 4 5 6 (PRODUCT LEVEL)	SEE PAGE
	39	1	**217-4597**	1	VALVE GP-RELIEF (MAKEUP)	
		1	**123-7531**	1	KIT-SEAL	

M-METRIC PART

209-0270 VALVE GP-MAIN CONTROL *(contd.)* i01862678

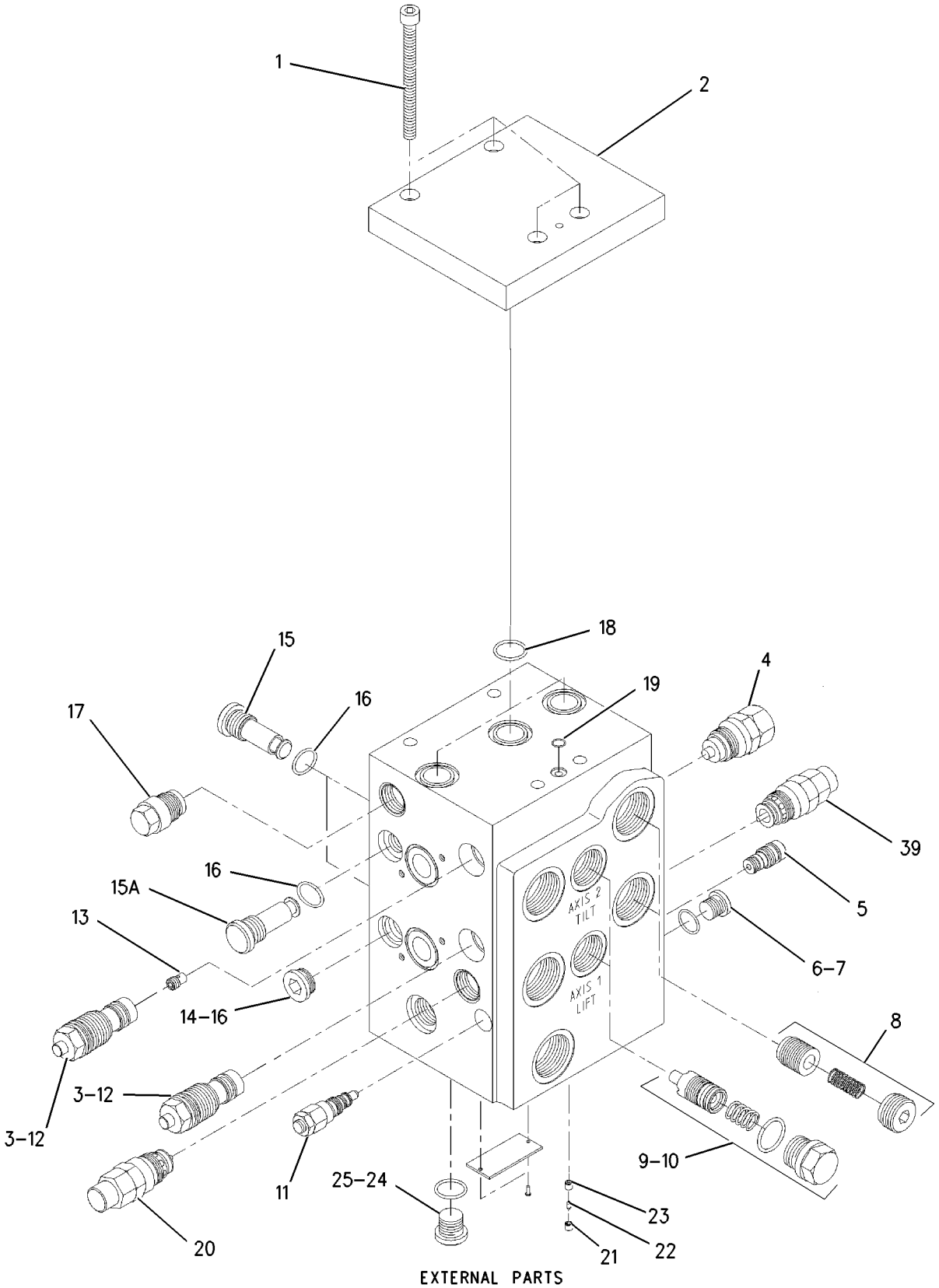

EXTERNAL PARTS

GRAPHIC #1 g00945088

209-0270 VALVE GP-MAIN CONTROL *(contd.)* i01862678

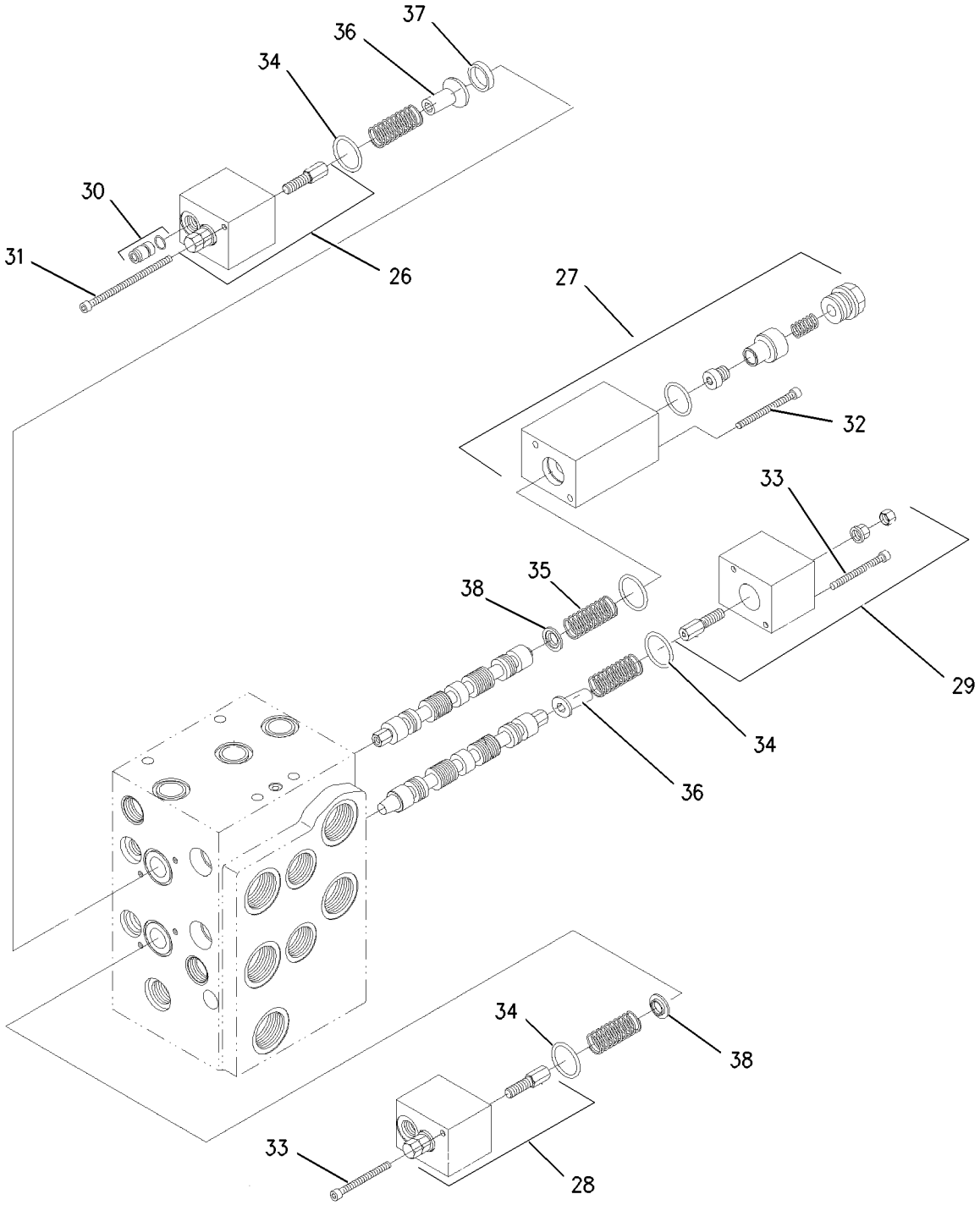

INTERNAL PARTS

GRAPHIC #2 g00895485

HYDRAULIC SYSTEM

209-0271 VALVE GP-MAIN CONTROL

S/N: RBB1-UP
3 FUNCTION
PART OF 203-3891, 225-5163 HYDRAULIC AR-3 VALVE
AN ATTACHMENT

SMCS-5051 **i01862717**

NOTE	REF NO	GRAPHIC REF	PART NUMBER	QTY	PART NAME 1 2 3 4 5 6 (PRODUCT LEVEL)	SEE PAGE
M	1	1	**8T-2394**	4	BOLT-SOCKET HEAD (M8X1.25X90MM)	
	2	1	**216-9819**	1	PLATE	
	3	1	**215-8119**	2	VALVE GP-RELIEF	
		1	**123-7531**	1	KIT-SEAL	
	4	1	**229-9850**	1	VALVE GP-CHECK	
	5	1	**215-8115**	1	VALVE GP-FLOW CONTROL (SIGNAL DRAIN)	
		1	**033-5879**	1	SEAL-O-RING	
		1	**192-7111**	1	SEAL-O-RING	
	6	1	**6V-7970**	1	SEAL-O-RING	
	7	1	**8C-4424**	1	PLUG	
	8	1	**216-7913**	2	KIT-ORIFICE (CHECK VALVE)	
					(INCLUDES SPRING AND PLUG)	
	9	1	**215-8111**	1	KIT-VALVE	
					(INCLUDES STEM, SPRING, PLUG AND SEAL)	
	10	1	**215-8109**	1	KIT-VALVE	
					(INCLUDES STEM, SPRING, PLUG AND SEAL)	
	11	1	**215-8116**	1	VALVE GP-RELIEF (SIGNAL LIMITER)	
		1	**033-5879**	1	SEAL-O-RING	
		1	**192-7111**	1	SEAL-O-RING	
	12	1	**217-3708**	2	VALVE GP-CHECK (PILOT OPERATED)	
	13	1	**215-8138**	1	VALVE GP-CHECK	
	14	1	**3E-2331**	1	PLUG	
	15	1	**215-8139**	2	VALVE GP-CHECK (LOAD)	
	15A	1	**215-8139**	1	VALVE GP-CHECK (REGENERATION)	
	16	1	**8T-7524**	4	SEAL-O-RING	
	17	1	**215-8113**	1	VALVE GP-CHECK (BACKPRESSURE)	
		1	**6V-8352**	1	SEAL-O-RING	
	18	1	**5P-6718**	6	SEAL-O-RING	
	19	1	**061-7538**	2	SEAL-O-RING	
Y	20	1	**216-7502**	1	VALVE GP-CONTROL (AUXILIARY)	426
	21	1	**189-3014**	1	SCREW	
	22	1	**206-7655**	1	SCREW	
	23	1	**206-7647**	1	SCREW	
	24	1	**6V-9507**	1	PLUG-FACE SEAL	
	25	1	**4J-5477**	1	SEAL-O-RING	
	26	2	**215-8135**	1	KIT-VALVE	
					(INCLUDES BLOCK, STUD AND LOCKNUT)	
	27	2	**215-8134**	1	KIT-VALVE	
					(INCLUDES BLOCK, SEAL,ORIFICE,RETAINER,SPRING AND CAP)	
	28	2	**215-8136**	1	KIT-VALVE	
					(INCLUDES BLOCK, CAPS AND STUD)	
	29	2	**215-8137**	1	KIT-VALVE	
					(INCLUDES BLOCK, CAPS AND STUD)	
	30	2	**215-8132**	3	KIT-VALVE (SHOCK REDUCING CHECK VALVE)	
					(INCLUDES SPOOL AND SEAL)	
M	31	2	**120-3956**	2	BOLT-HEX SOCKET (M5X0.8X60MM)	
M	32	2	**127-4832**	2	BOLT-SOCKET HEAD	
	33	2	**211-5255**	4	BOLT-SOCKET HEAD	
	34	2	**5P-3456**	4	SEAL-O-RING	
	35	2	**215-8131**	4	SPRING	
	36	2	**215-8128**	2	RETAINER	
	37	2	**215-8133**	1	RING	
	38	2	**215-8129**	2	RETAINER	

209-0271 VALVE GP-MAIN CONTROL *(contd.)* i01862717

NOTE	REF NO	GRAPHIC REF	PART NUMBER	QTY	PART NAME 1 2 3 4 5 6 (PRODUCT LEVEL)	SEE PAGE
	39	1	**217-4597**	1	VALVE GP-RELIEF (MAKEUP)	
		1	**123-7531**	1	KIT-SEAL	
	40	1	**217-4598**	1	VALVE GP-RELIEF (MAKEUP)	
		1	**123-7531**	1	KIT-SEAL	
	41	1	**6V-8397**	2	SEAL-O-RING	

M-METRIC PART
Y-SEPARATE ILLUSTRATION

209-0271 VALVE GP-MAIN CONTROL *(contd.)* i01862717

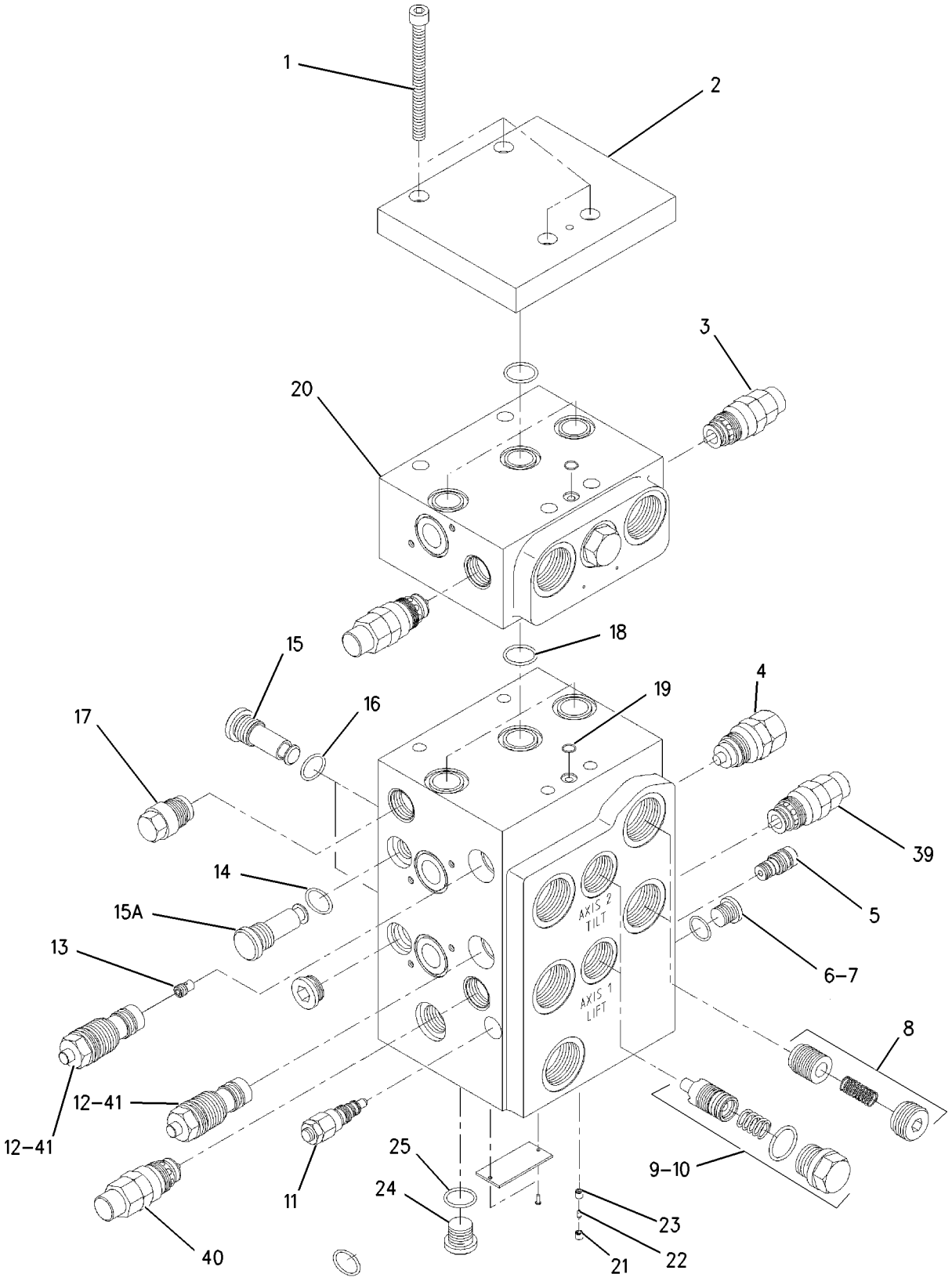

EXTERNAL PARTS

GRAPHIC #1 g00945157

209-0271 VALVE GP-MAIN CONTROL *(contd.)* i01862717

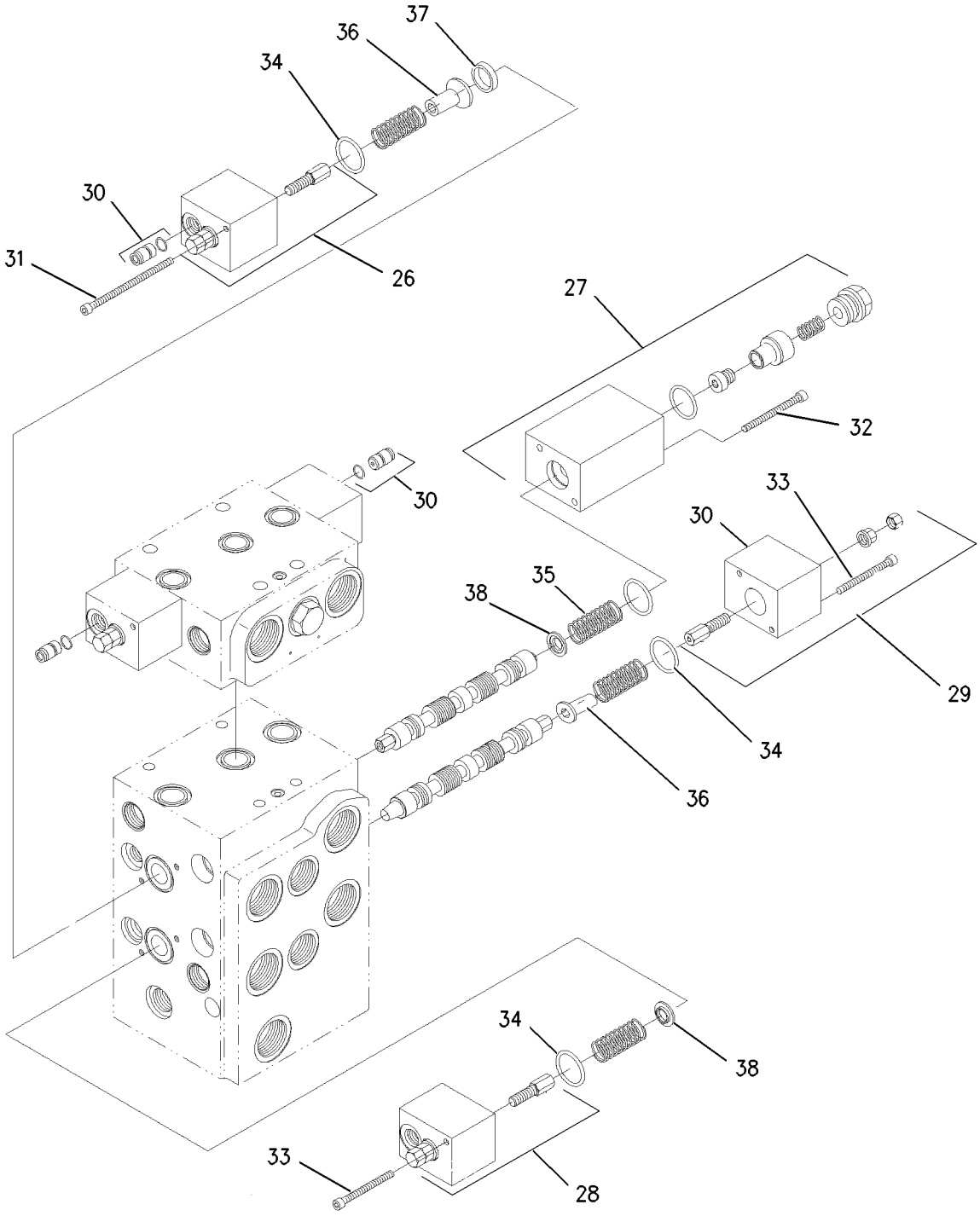

INTERNAL PARTS

GRAPHIC #2 g00930522

HYDRAULIC SYSTEM

209-0272 VALVE GP-MAIN CONTROL

S/N: RBB1-UP
4 FUNCTION
PART OF 203-3893, 223-0561 HYDRAULIC AR-4 VALVE
AN ATTACHMENT

SMCS-5051 **i01862724**

NOTE	REF NO	GRAPHIC REF	PART NUMBER	QTY	PART NAME 1 2 3 4 5 6 (PRODUCT LEVEL)	SEE PAGE
	1	1	**217-3401**	4	BOLT	
	2	1	**216-9819**	1	PLATE	
	3	1	**215-8119**	2	VALVE GP-RELIEF	
		1	**123-7531**	1	KIT-SEAL	
	4	1	**229-9850**	1	VALVE GP-CHECK	
	5	1	**215-8115**	1	VALVE GP-FLOW CONTROL (SIGNAL DRAIN)	
		1	**033-5879**	1	SEAL-O-RING	
		1	**192-7111**	1	SEAL-O-RING	
	6	1	**6V-7970**	1	SEAL-O-RING	
	7	1	**8C-4424**	1	PLUG	
	8	1	**216-7913**	2	KIT-ORIFICE (CHECK VALVE)	
					(INCLUDES SPRING AND PLUG)	
	9	1	**215-8111**	1	KIT-VALVE	
					(INCLUDES STEM, SPRING, PLUG AND SEAL)	
	10	1	**215-8109**	1	KIT-VALVE	
					(INCLUDES STEM, SPRING, PLUG AND SEAL)	
	11	1	**215-8116**	1	VALVE GP-RELIEF (SIGNAL LIMITER)	
		1	**033-5879**	1	SEAL-O-RING	
		1	**192-7111**	1	SEAL-O-RING	
	12	1	**217-3708**	2	VALVE GP-CHECK (PILOT OPERATED)	
	13	1	**215-8138**	1	VALVE GP-CHECK	
	14	1	**3E-2331**	1	PLUG	
	15	1	**215-8139**	2	VALVE GP-CHECK (LOAD)	
	15A	1	**215-8139**	1	VALVE GP-CHECK (REGENERATION)	
	16	1	**8T-7524**	4	SEAL-O-RING	
	17	1	**215-8113**	1	VALVE GP-CHECK (BACKPRESSURE)	
		1	**6V-8352**	1	SEAL-O-RING	
	18	1	**5P-6718**	6	SEAL-O-RING	
	19	1	**061-7538**	2	SEAL-O-RING	
Y	20	1	**216-7502**	1	VALVE GP-CONTROL (AUXILIARY)	426
	21	1	**189-3014**	1	SCREW	
	22	1	**206-7655**	1	SCREW	
	23	1	**206-7647**	1	SCREW	
	24	1	**6V-9507**	1	PLUG-FACE SEAL	
	25	1	**4J-5477**	1	SEAL-O-RING	
	26	2	**215-8135**	1	KIT-VALVE	
					(INCLUDES BLOCK, STUD AND LOCKNUT)	
	27	2	**215-8134**	1	KIT-VALVE	
					(INCLUDES BLOCK, SEAL, ORIFICE, RETAINER, SPRING AND CAP)	
	28	2	**215-8136**	1	KIT-VALVE	
					(INCLUDES BLOCK, CAPS AND STUD)	
	29	2	**215-8137**	1	KIT-VALVE	
					(INCLUDES BLOCK, CAPS AND STUD)	
	30	2	**215-8132**	3	KIT-VALVE (SHOCK REDUCING CHECK VALVE)	
					(INCLUDES SPOOL AND SEAL)	
M	31	2	**120-3956**	2	BOLT-HEX SOCKET (M5X0.8X60MM)	
M	32	2	**127-4832**	2	BOLT-SOCKET HEAD	
	33	2	**211-5255**	4	BOLT-SOCKET HEAD	
	34	2	**5P-3456**	4	SEAL-O-RING	
	35	2	**215-8131**	4	SPRING	
	36	2	**215-8128**	2	RETAINER	
	37	2	**215-8133**	1	RING	
	38	2	**215-8129**	2	RETAINER	

209-0272 VALVE GP-MAIN CONTROL *(contd.)* i01862724

NOTE	REF NO	GRAPHIC REF	PART NUMBER	QTY	PART NAME 1 2 3 4 5 6 (PRODUCT LEVEL)	SEE PAGE
	39	1	**217-4597**	1	VALVE GP-RELIEF (MAKEUP)	
		1	**123-7531**	1	KIT-SEAL	
	40	1	**217-4598**	1	VALVE GP-RELIEF (MAKEUP)	
		1	**123-7531**	1	KIT-SEAL	
	41	1	**6V-8397**	2	SEAL-O-RING	

M-METRIC PART
Y-SEPARATE ILLUSTRATION

209-0272 VALVE GP-MAIN CONTROL *(contd.)* i01862724

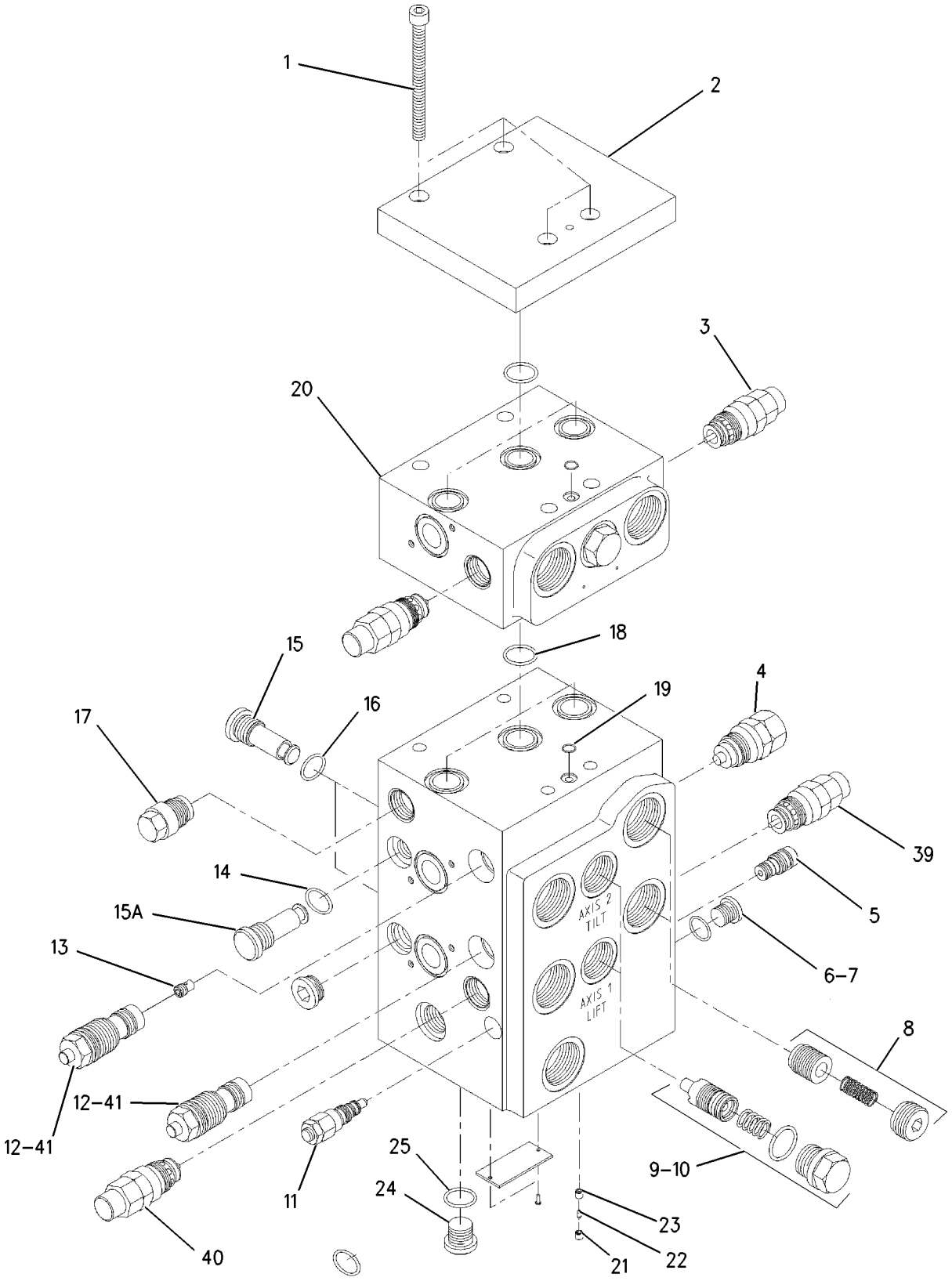

EXTERNAL PARTS

GRAPHIC #1 g00945157

209-0272 VALVE GP-MAIN CONTROL *(contd.)* i01862724

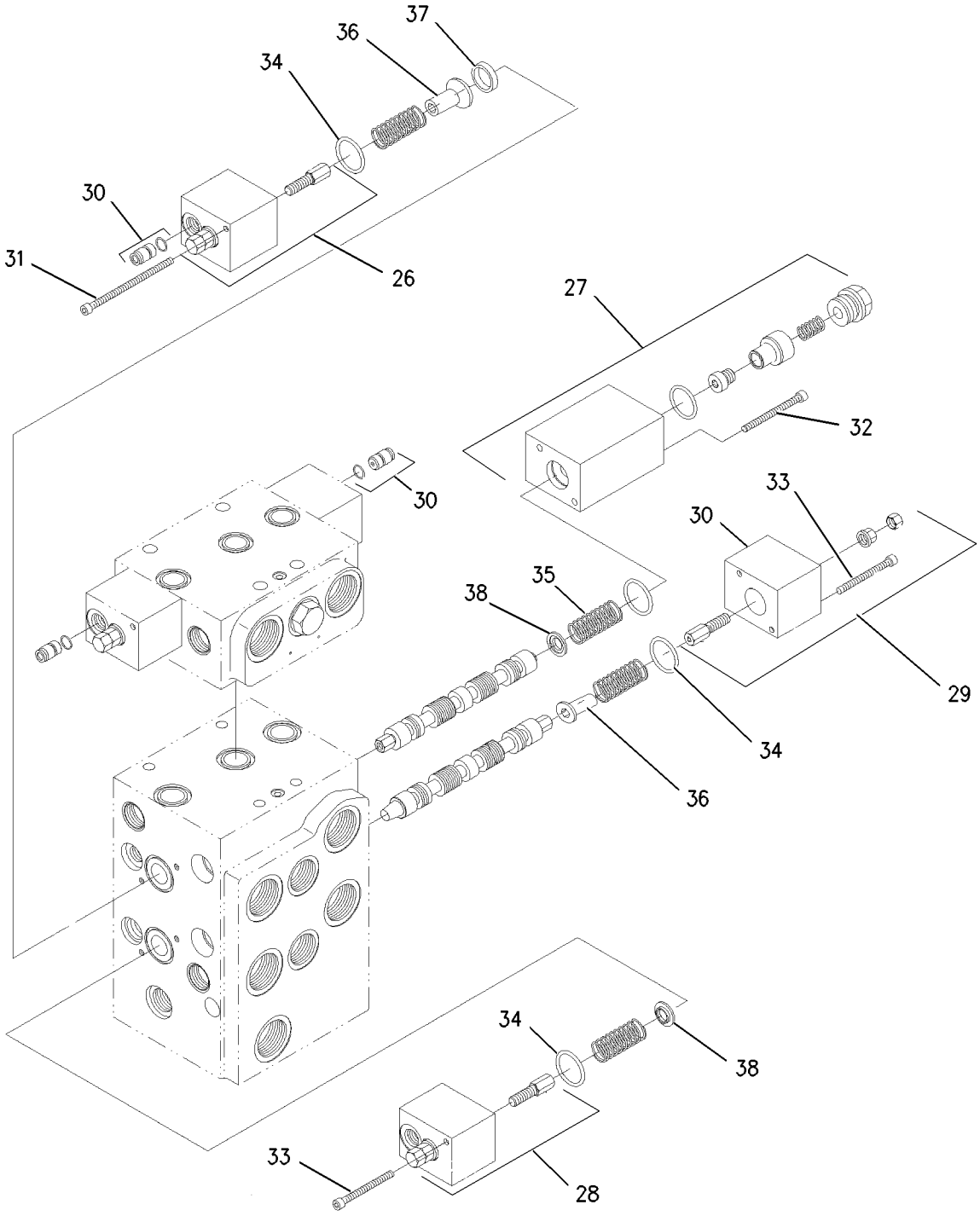

INTERNAL PARTS

GRAPHIC #2 g00930522

HYDRAULIC SYSTEM

209-0273 VALVE GP-MAIN CONTROL

S/N: RTA1-UP
Z-BAR LIFT
PART OF 203-3890, 225-5165 HYDRAULIC AR-2 VALVE
AN ATTACHMENT

SMCS-5051 **i01831591**

NOTE	REF NO	GRAPHIC REF	PART NUMBER	QTY	PART NAME 1 2 3 4 5 6 (PRODUCT LEVEL)	SEE PAGE
M	1	1	**5A-3604**	4	BOLT-SOCKET HEAD (M8X1.25X25MM)	
	2	1	**216-9819**	1	PLATE	
	3	1	**217-4597**	2	VALVE GP-RELIEF (MAKEUP)	
					(EACH INCLUDES)	
		1	**123-7531**	1	KIT-SEAL	
	4	1	**215-8118**	2	VALVE GP-SOLENOID (FLOAT)	
					(EACH INCLUDES)	
		1	**102-8802**	1	KIT-RECEPTACLE (2 PIN)	
					(KIT SERVICES RECEPTACLE AS AND WEDGE)	
		1	**217-2106**	1	KIT-SEAL	
	5	1	**215-8115**	1	VALVE GP-FLOW CONTROL (SIGNAL DRAIN)	
		1	**033-5879**	1	SEAL-O-RING	
		1	**192-7111**	1	SEAL-O-RING	
	6	1	**6V-7970**	1	SEAL-O-RING	
	7	1	**8C-4424**	1	PLUG	
	8	1	**216-7913**	2	KIT-ORIFICE (CHECK VALVE)	
	9	1	**215-8111**	1	KIT-VALVE	
	10	1	**215-8109**	1	KIT-VALVE	
	11	1	**215-8116**	1	VALVE GP-RELIEF (SIGNAL LIMITER)	
		1	**033-5879**	1	SEAL-O-RING	
		1	**192-7111**	1	SEAL-O-RING	
	12	1	**217-3708**	2	VALVE GP-CHECK (PILOT OPERATED)	
	13	1	**6V-8397**	2	SEAL-O-RING	
	14	1	**3E-2331**	1	PLUG	
	15	1	**215-8139**	2	VALVE GP-CHECK (LOAD)	
	15A	1	**215-8139**	1	VALVE GP-CHECK (ANTICAVITATION)	
	16	1	**8T-7524**	4	SEAL-O-RING	
	17	1	**215-8113**	1	VALVE GP-CHECK (MAKEUP RELIEF)	
		1	**6V-8352**	1	SEAL-O-RING	
	18	1	**5P-6718**	3	SEAL-O-RING	
	19	1	**061-7538**	1	SEAL-O-RING	
	20	1	**189-3014**	1	SCREW	
	21	1	**206-7655**	1	SCREW	
	22	1	**206-7647**	1	SCREW	
	23	1	**6V-9507**	1	PLUG-FACE SEAL	
	24	1	**4J-5477**	1	SEAL-O-RING	
	25	2	**215-8135**	1	KIT-VALVE	
	26	2	**215-8134**	1	KIT-VALVE	
	27	2	**215-8136**	1	KIT-VALVE	
	28	2	**215-8137**	1	KIT-VALVE	
	29	2	**215-8132**	3	KIT-VALVE (SHOCK REDUCING CHECK VALVE)	
M	30	2	**120-3956**	2	BOLT-HEX SOCKET (M5X0.8X60MM)	
M	31	2	**127-4832**	2	BOLT-SOCKET HEAD	
	32	2	**211-5255**	4	BOLT-SOCKET HEAD	
	33	2	**5P-3456**	4	SEAL-O-RING	
	34	2	**215-8131**	4	SPRING	
	35	2	**215-8128**	2	RETAINER	
	36	2	**215-8133**	1	RING	
	37	2	**215-8129**	2	RETAINER	

M-METRIC PART

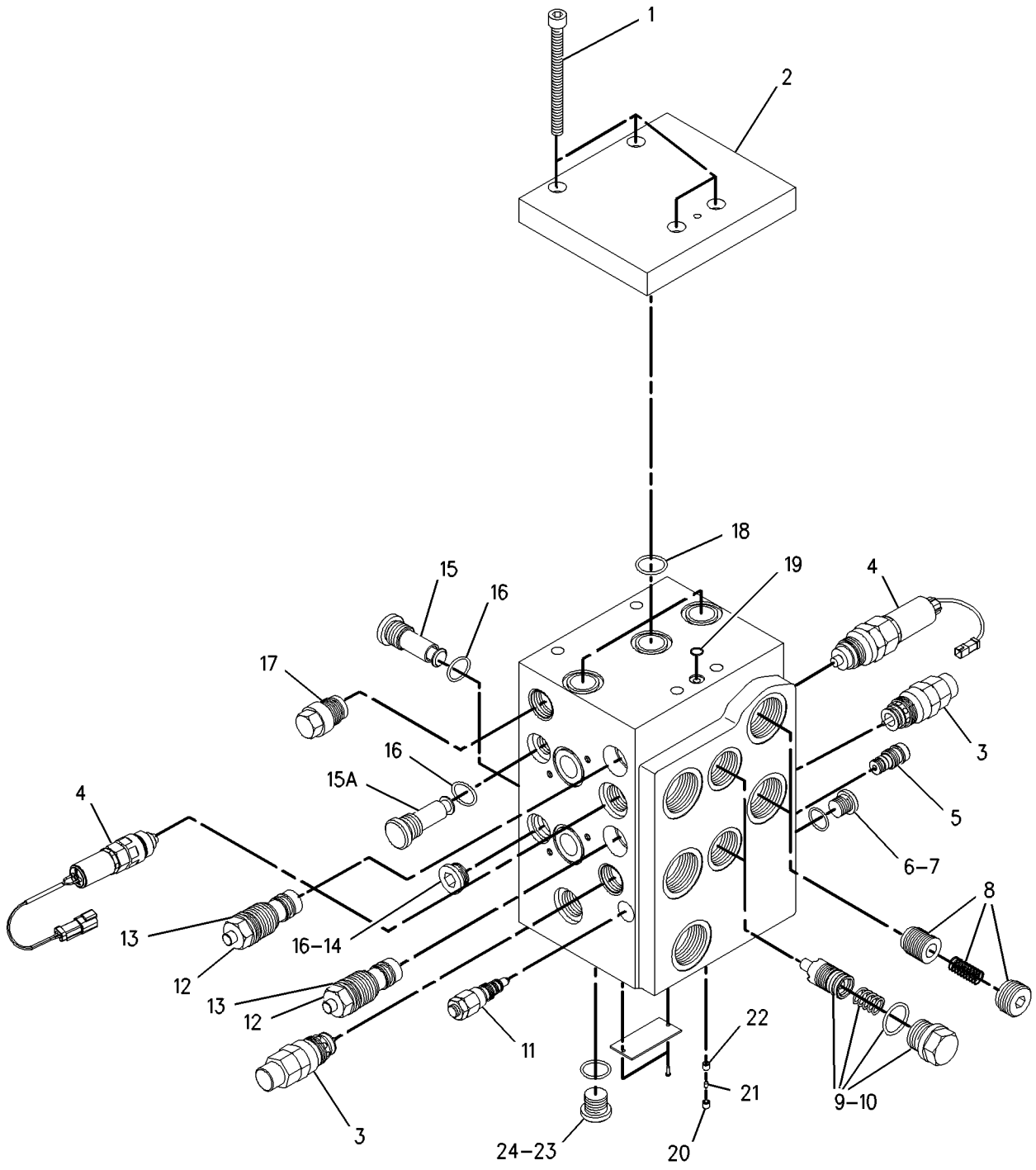

EXTERNAL PARTS

GRAPHIC #1

g00935553

209-0273 VALVE GP-MAIN CONTROL *(contd.)* i01831591

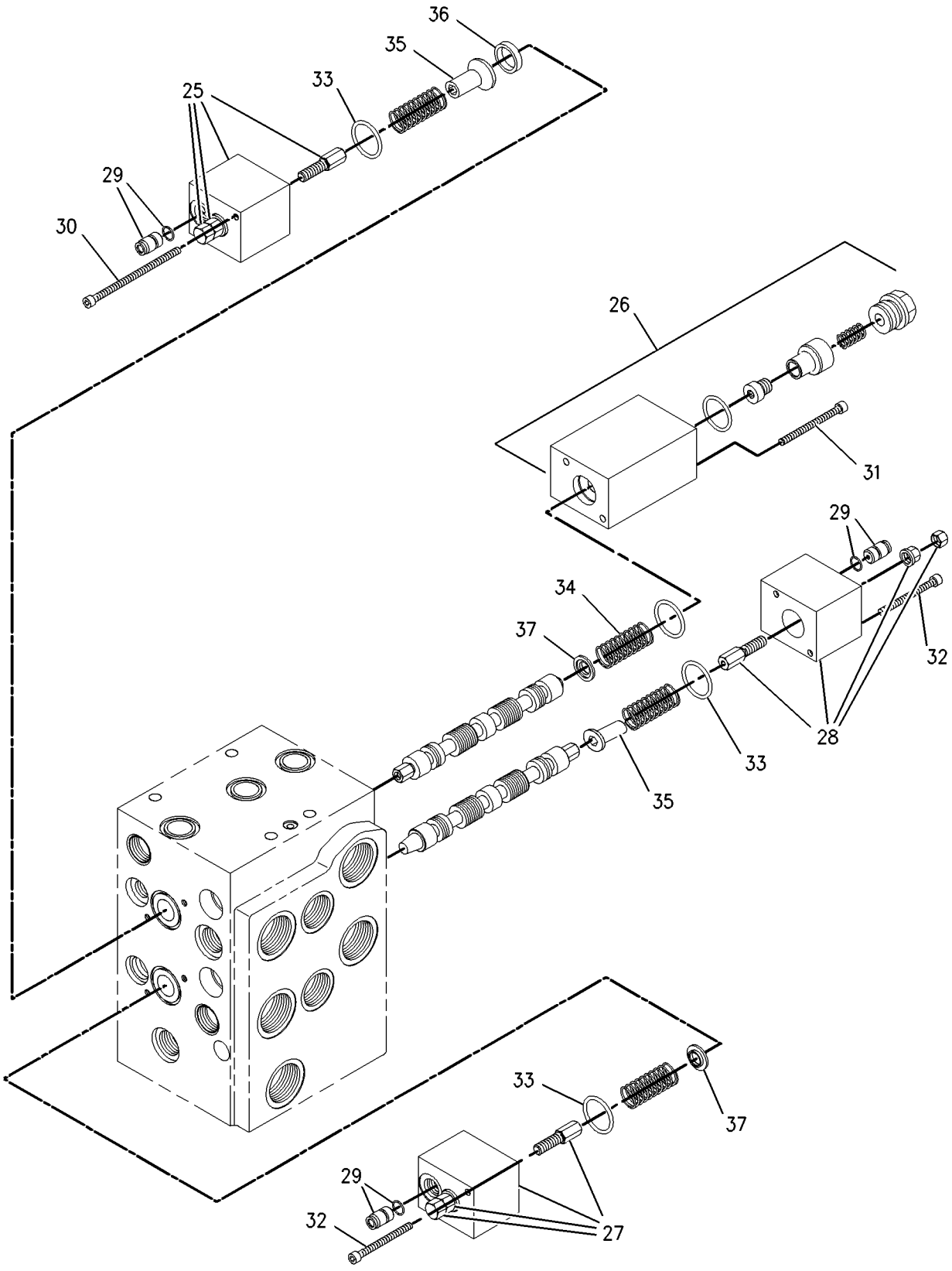

INTERNAL PARTS

GRAPHIC #2 g00898239

MEMORANDA

HYDRAULIC SYSTEM

209-0274 VALVE GP-MAIN CONTROL

S/N: RTA1-UP
Z-BAR LIFT
PART OF 203-3892, 225-5166 HYDRAULIC AR-3 VALVE
AN ATTACHMENT

SMCS-5051 **i01862736**

NOTE	REF NO	GRAPHIC REF	PART NUMBER	QTY	PART NAME 1 2 3 4 5 6 (PRODUCT LEVEL)	SEE PAGE
M	1	1	**8T-2394**	4	BOLT-SOCKET HEAD (M8X1.25X90MM)	
	2	1	**216-9819**	1	PLATE	
	3	1	**215-8119**	2	VALVE GP-RELIEF	
					(EACH INCLUDES)	
		1	**123-7531**	1	KIT-SEAL	
	4	1	**215-8118**	2	VALVE GP-SOLENOID (FLOAT)	
					(EACH INCLUDES)	
		1	**102-8802**	1	KIT-RECEPTACLE (2 PIN)	
		1	**217-2106**	1	KIT-SEAL	
					(INCLUDES 4 SEAL RINGS)	
	5	1	**215-8115**	1	VALVE GP-FLOW CONTROL (SIGNAL DRAIN)	
		1	**033-5879**	1	SEAL-O-RING	
		1	**192-7111**	1	SEAL-O-RING	
	6	1	**6V-7970**	1	SEAL-O-RING	
	7	1	**8C-4424**	1	PLUG	
	8	1	**216-7913**	2	KIT-ORIFICE (CHECK VALVE)	
					(INCLUDES SPRING AND PLUG)	
	9	1	**215-8111**	1	KIT-VALVE	
					(INCLUDES STEM, SPRING, PLUG AND SEAL)	
	10	1	**215-8109**	1	KIT-VALVE	
					(INCLUDES STEM, SPRING, PLUG AND SEAL)	
	11	1	**215-8116**	1	VALVE GP-RELIEF (SIGNAL LIMITER)	
		1	**033-5879**	1	SEAL-O-RING	
		1	**192-7111**	1	SEAL-O-RING	
	12	1	**217-3708**	2	VALVE GP-CHECK	
	13	1	**6V-8397**	2	SEAL-O-RING	
	14	1	**3E-2331**	1	PLUG	
	15	1	**215-8139**	2	VALVE GP-CHECK (LOAD)	
	15A	1	**215-8139**	1	VALVE GP-CHECK (REGENERATION)	
	16	1	**8T-7524**	4	SEAL-O-RING	
	17	1	**215-8113**	1	VALVE GP-CHECK (BACKPRESSURE)	
		1	**6V-8352**	1	SEAL-O-RING	
	18	1	**5P-6718**	6	SEAL-O-RING	
	19	1	**061-7538**	2	SEAL-O-RING	
Y	20	1	**216-7502**	1	VALVE GP-CONTROL (AUXILIARY)	426
	21	1	**189-3014**	1	SCREW	
	22	1	**206-7655**	1	SCREW	
	23	1	**206-7647**	1	SCREW	
	24	1	**6V-9507**	1	PLUG-FACE SEAL	
	25	1	**4J-5477**	1	SEAL-O-RING	
	26	2	**215-8135**	1	KIT-VALVE	
					(INCLUDES BLOCK, STUD, AND LOCKNUT)	
	27	2	**215-8134**	1	KIT-VALVE	
					(INCLUDES BLOCK, SEAL, ORIFICE, RETAINER, SPRING AND CAP)	
	28	2	**215-8136**	1	KIT-VALVE	
					(INCLUDES BLOCK, CAPS AND STUD)	
	29	2	**215-8137**	1	KIT-VALVE	
					(INCLUDES BLOCK, CAPS AND STUD)	
	30	2	**215-8132**	5	KIT-VALVE (SHOCK REDUCING CHECK VALVE)	
M	31	2	**120-3956**	2	BOLT-HEX SOCKET (M5X0.8X60MM)	
M	32	2	**127-4832**	2	BOLT-SOCKET HEAD	
	33	2	**211-5255**	4	BOLT-SOCKET HEAD	
	34	2	**5P-3456**	4	SEAL-O-RING	

209-0274 VALVE GP-MAIN CONTROL *(contd.)* i01862736

NOTE	REF NO	GRAPHIC REF	PART NUMBER	QTY	PART NAME 1 2 3 4 5 6 (PRODUCT LEVEL)	SEE PAGE
	35	2	**215-8131**	4	SPRING	
	36	2	**215-8128**	2	RETAINER	
	37	2	**215-8133**	1	RING	
	38	2	**215-8129**	2	RETAINER	
	39	1	**217-4597**	2	VALVE GP-RELIEF (MAKEUP)	
					(EACH INCLUDES)	
		1	**123-7531**	1	KIT-SEAL	

M-METRIC PART
Y-SEPARATE ILLUSTRATION

209-0274 VALVE GP-MAIN CONTROL *(contd.)* i01862736

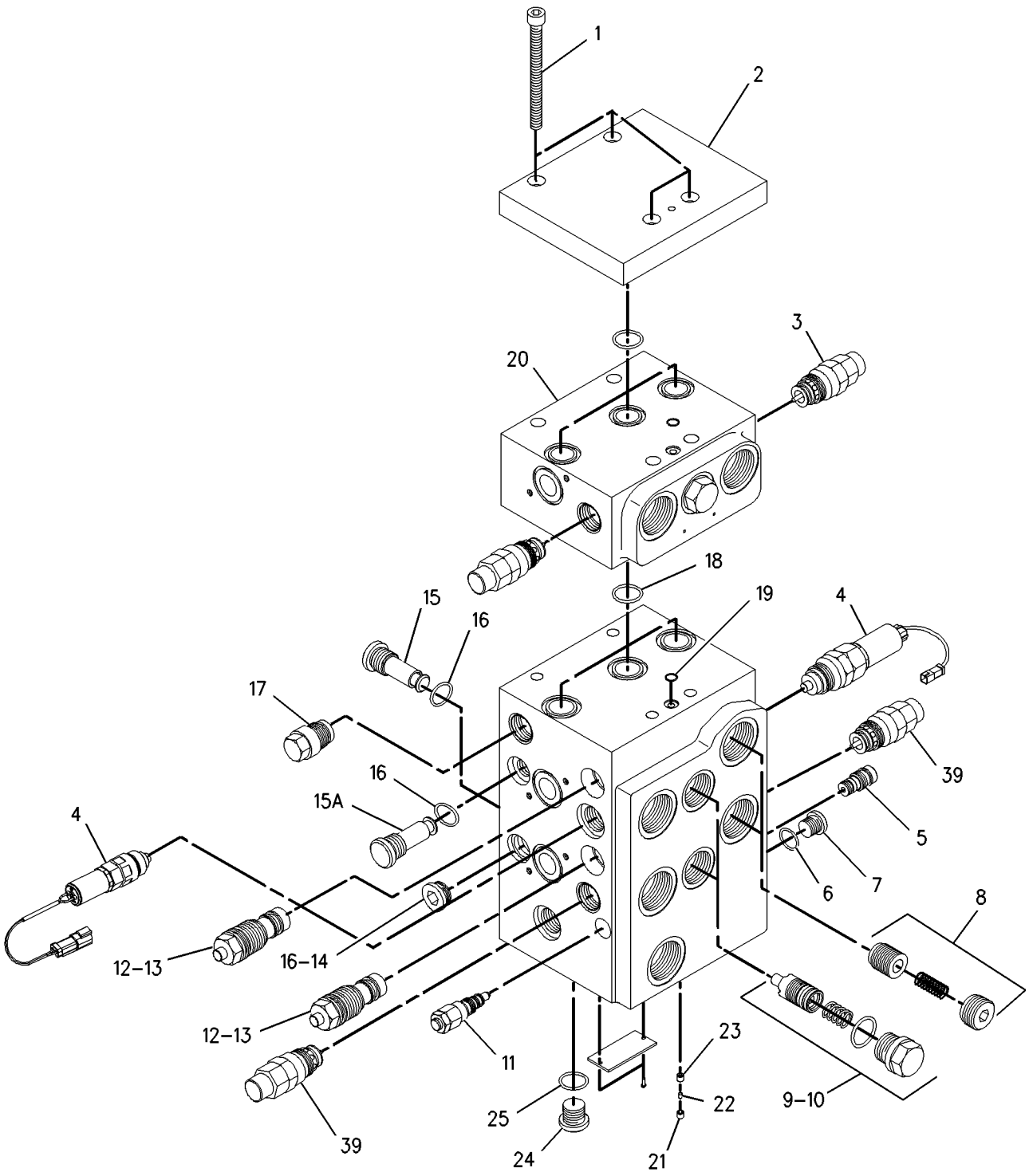

EXTERNAL PARTS

GRAPHIC #1 g00935919

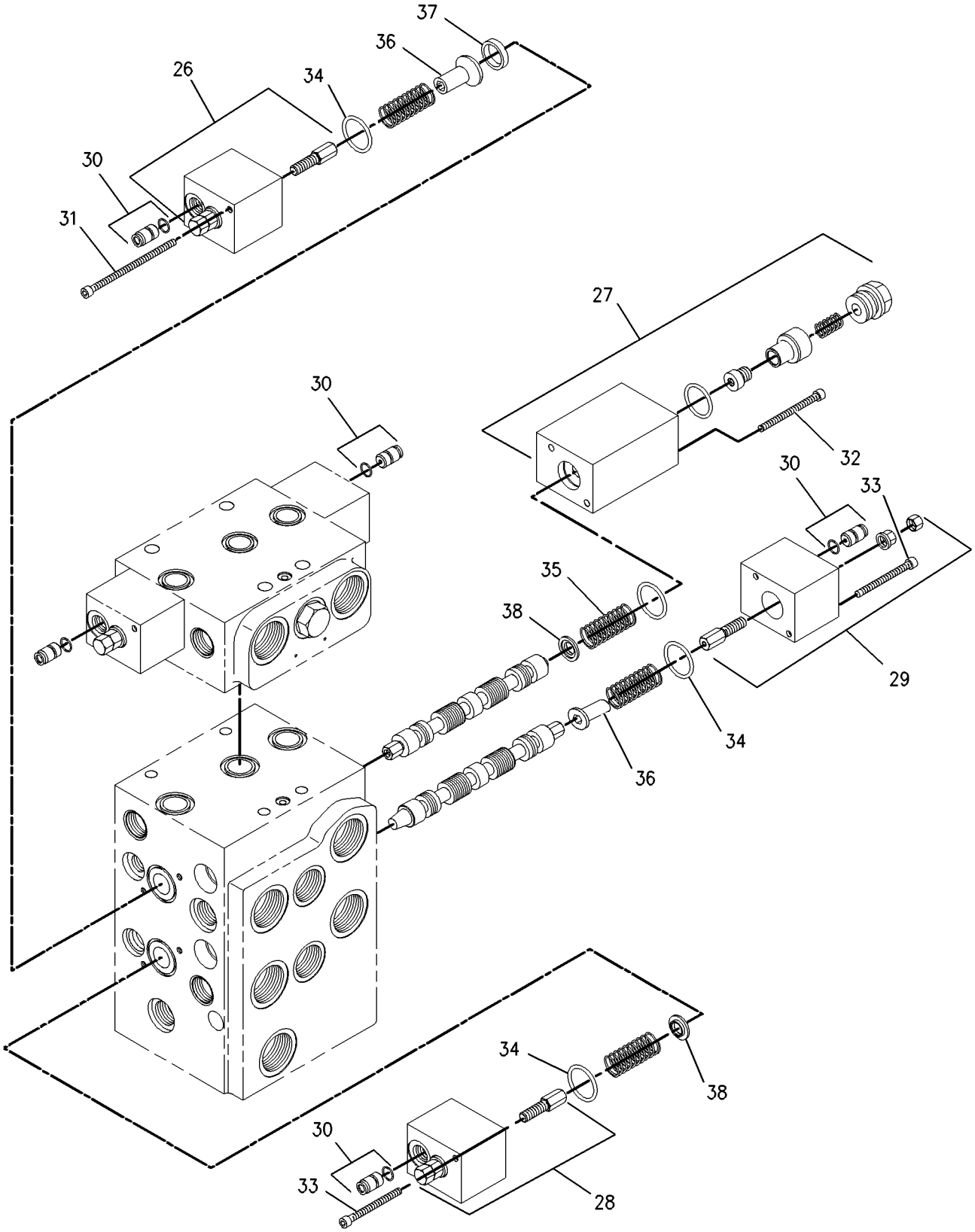

INTERNAL PARTS

GRAPHIC #2 g00898258

HYDRAULIC SYSTEM

136-9289 VALVE GP-PILOT

S/N: RBB1-UP
JOYSTICK,2 FUNCTION
PART OF 212-1307 VALVE GP-PILOT
AN ATTACHMENT

SMCS-5059 **i01833226**

NOTE	REF NO	GRAPHIC REF	PART NUMBER	QTY	PART NAME 1 2 3 4 5 6 (PRODUCT LEVEL)	SEE PAGE
Y	2	1	**137-0266**	1	VALVE GP-PILOT CARTRIDGE	474
	3	1	**141-7481**	1	SPACER	
	4	1	**141-9236**	1	SCREEN AS	
	5	1	**142-2651**	1	PLATE AS	
	6	1	**146-8478**	1	CUP	
	7	1	**153-8952**	1	ADAPTER	
	8	1	**163-5512**	5	GROMMET	
Y	9	1	**170-8513**	1	VALVE GP-PILOT CARTRIDGE	478
Y	10	1	**172-0223**	1	VALVE GP-PILOT CARTRIDGE	479
	11	1	**102-8806**	1	KIT-RECEPTACLE (8 PIN)	
					(KIT INCLUDES RECEPTACLE AS AND WEDGE)	
	12	1	**136-9297**	1	PLATE	
	13	1	**136-9298**	1	RETAINER	
	14	1	**141-4852**	1	BOOT	
	15	1	**145-8428**	3	COIL AS-DETENT	
					(EACH INCLUDES)	
		1	**8T-8729**	2	PIN-CONNECTOR	
Y	16	1	**145-8711**	2	VALVE GP-PILOT CARTRIDGE	477
	17	1	**147-3322**	1	PLATE GP-PILOT VALVE (JOYSTICK)	
M		1	**5C-2890**	4	NUT (M6X1 THD)	
		1	**146-6315**	4	PIN-ADJUSTMENT	
		1	**146-6317**	3	RETAINER	
		1	**153-8945**	3	PLUNGER AS	
					(EACH INCLUDES)	
		1	**3H-7180**	1	SETSCREW (1/4-28X.25IN)	
		1	**6J-9996**	1	SPRING	
		1	**159-3781**	3	SPRING	
	19	1	**149-5470**	1	PLATE	
	20	1	**153-8947**	1	SWIVEL AS	
	21	1	**3J-1907**	1	SEAL-O-RING	
	22	1	**3J-7354**	8	SEAL-O-RING	
	24	1	**6V-8397**	1	SEAL-O-RING	
	25	1	**6V-8636**	1	CONNECTOR	
	26	1	**8L-2786**	1	SEAL-O-RING	
M	27	1	**8T-0267**	4	BOLT-SOCKET HEAD (M6X1X12MM)	
	28	1	**8T-8737**	2	PLUG-SEAL	
	29	1	**9S-8002**	8	PLUG	

M-METRIC PART
Y-SEPARATE ILLUSTRATION

136-9289 VALVE GP-PILOT *(contd.)* i01833226

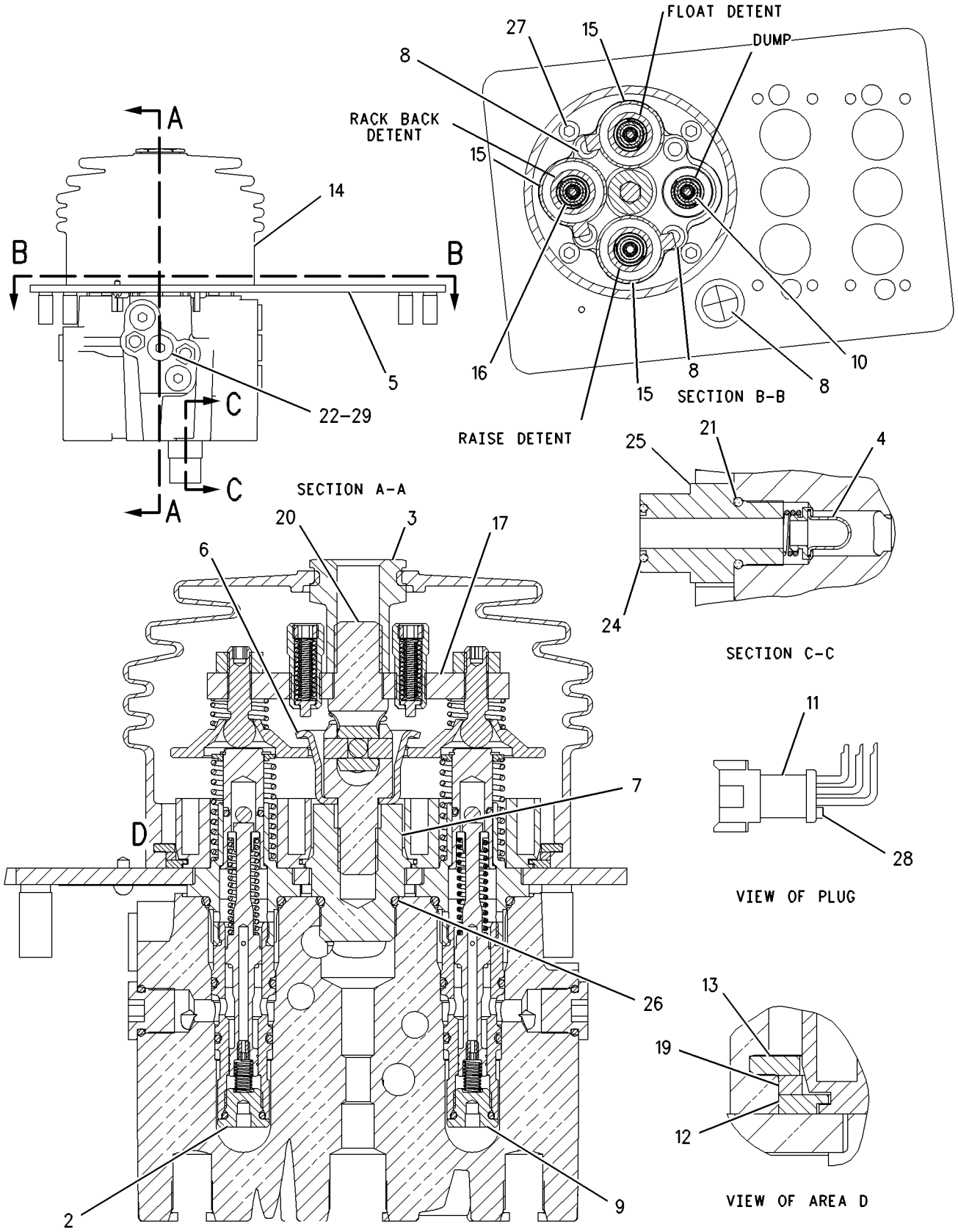

GRAPHIC #1 g00645105

HYDRAULIC SYSTEM

145-5256 VALVE GP-PILOT

S/N: RBB1-UP
2 FUNCTION
PART OF 212-1307 VALVE GP-PILOT
AN ATTACHMENT

SMCS-5059 **i01728773**

NOTE	REF NO	GRAPHIC REF	PART NUMBER	QTY	PART NAME 1 2 3 4 5 6 (PRODUCT LEVEL)	SEE PAGE
M	1	1	**5C-2890**	2	NUT (M6X1 THD)	
	2	1	**9S-8002**	12	PLUG	
	3	2	**141-1556**	2	RETAINER	
	4	2	**141-2032**	2	PLATE	
	5	2	**144-7850**	1	PLATE AS	
	6	2	**148-7922**	2	PLATE	
Y	7	2	**145-2322**	1	PIVOT GP-PILOT VALVE	409
	8	2	**102-8805**	1	KIT-RECEPTACLE (6 PIN)	
	9	2	**146-8477**	2	BRACKET	
	10	1	**146-8981**	2	PIN	
	11	1	**033-9139**	4	RING-RETAINING	
M	12	2	**105-3481**	2	BOLT-HEX SOCKET (M8X1.25X20MM)	
	13	1	**136-9292**	2	BOOT	
	14	2	**137-9755**	3	COIL AS	
					(EACH INCLUDES)	
		2	**1S-9593**	2	STRAP-CABLE	
		2	**8T-8729**	2	PIN-CONNECTOR	
M	15	1	**141-8546**	2	BOLT-SOCKET HEAD (M6X1.00X110MM)	
	16	2	**145-2334**	2	ADAPTER	
	17	1	**145-7977**	2	ADAPTER	
Y	18	2	**145-8710**	2	VALVE GP-PILOT CARTRIDGE (LIFT)	476
Y	19	2	**145-8711**	2	VALVE GP-PILOT CARTRIDGE (TILT)	477
	20	2	**8L-2786**	2	SEAL-O-RING	
Y	21	2	**147-2038**	1	PIVOT GP-PILOT VALVE	410
M	22	2	**147-4502**	8	BOLT-SOCKET HEAD (M6X1X10.0MM)	
	23	1	**3J-7354**	16	SEAL-O-RING	
	24	2	**8T-8737**	2	PLUG-SEAL	

M-METRIC PART
Y-SEPARATE ILLUSTRATION

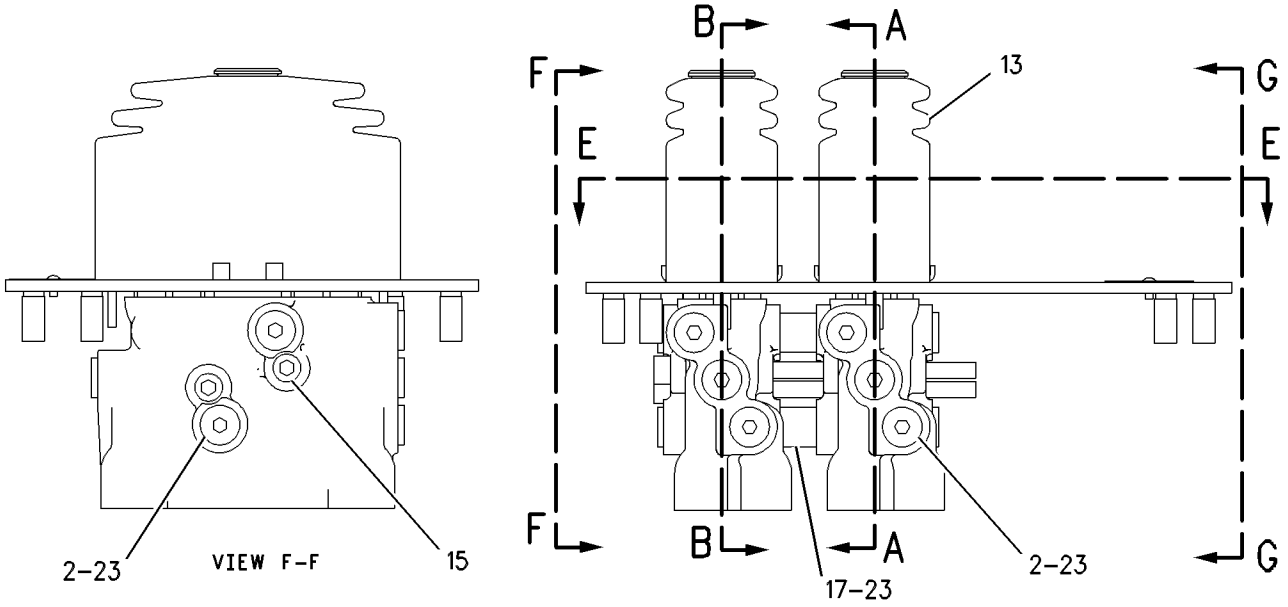

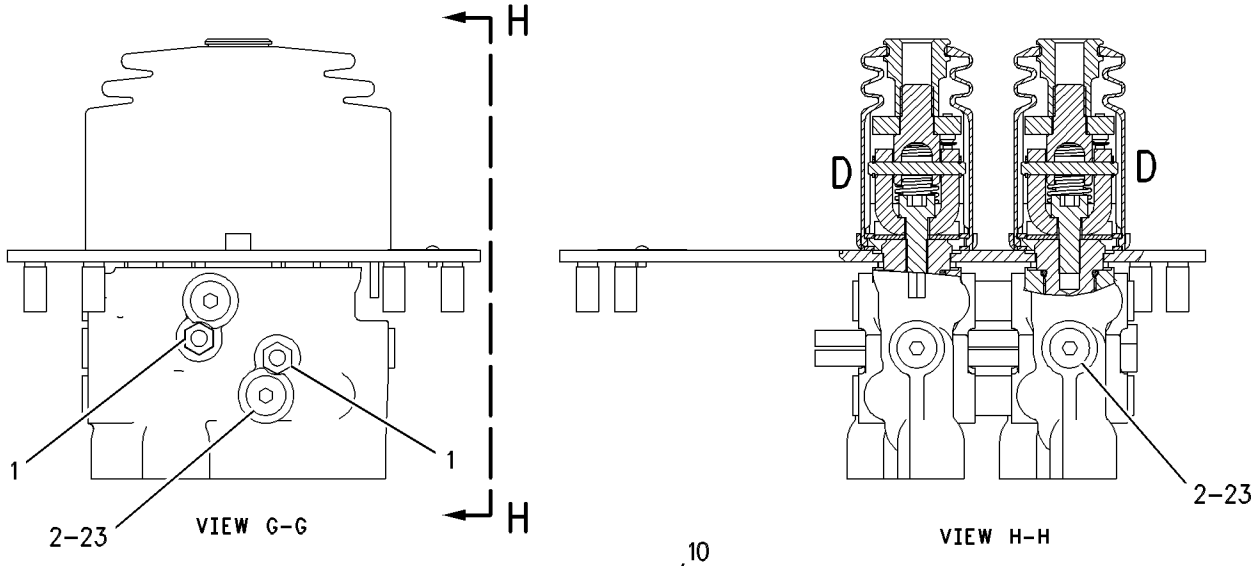

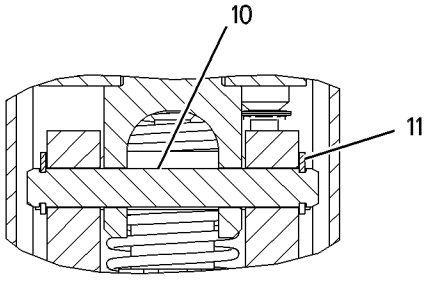

VIEW OF AREA D

REFER TO ALL ILLUSTRATIONS OF THIS GROUP FOR AUXILIARY VIEWS

GRAPHIC #1 g00281431

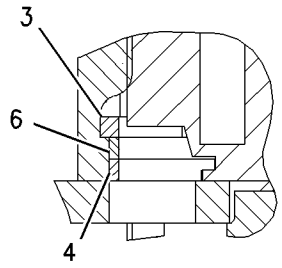

VIEW OF AREA C

REFER TO ALL ILLUSTRATIONS OF THIS GROUP FOR AUXILIARY VIEWS

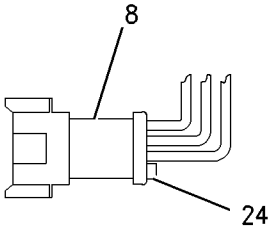

PLUG DETAIL

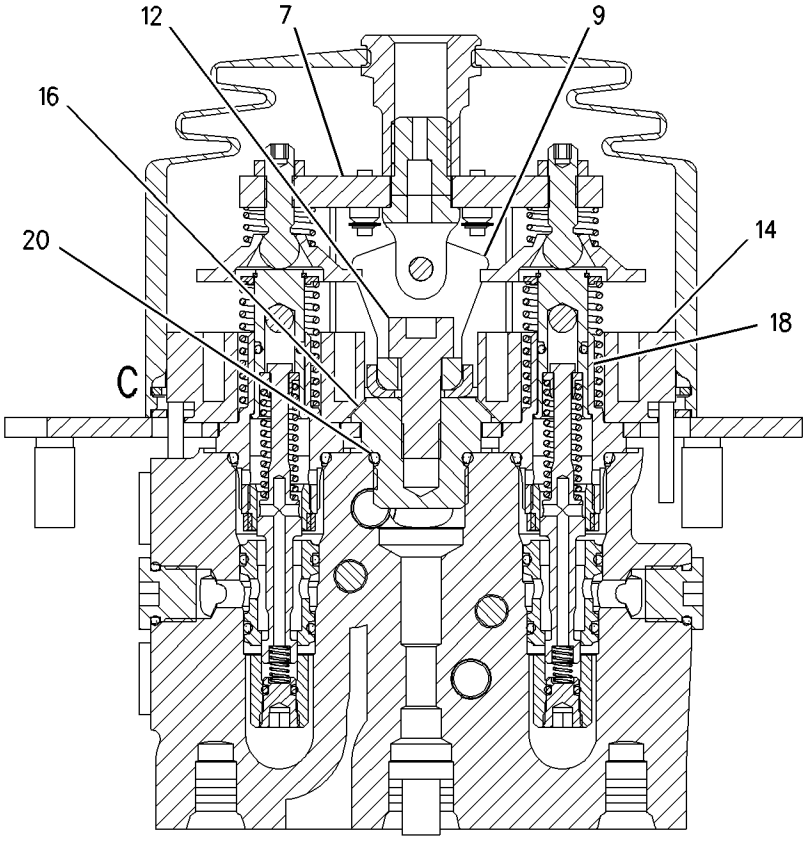

SECTION A-A

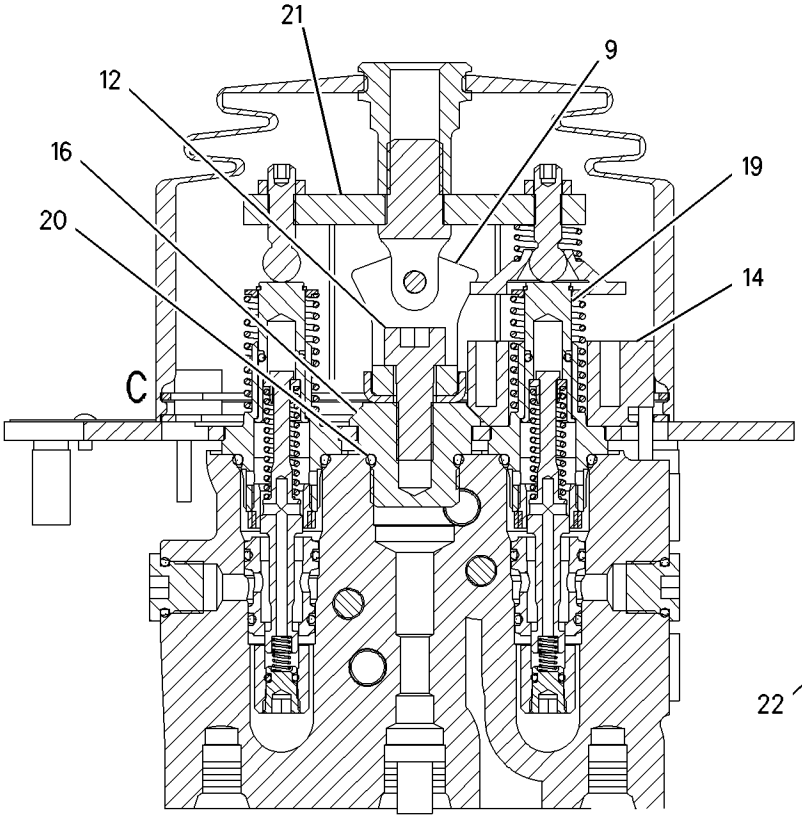

SECTION B-B

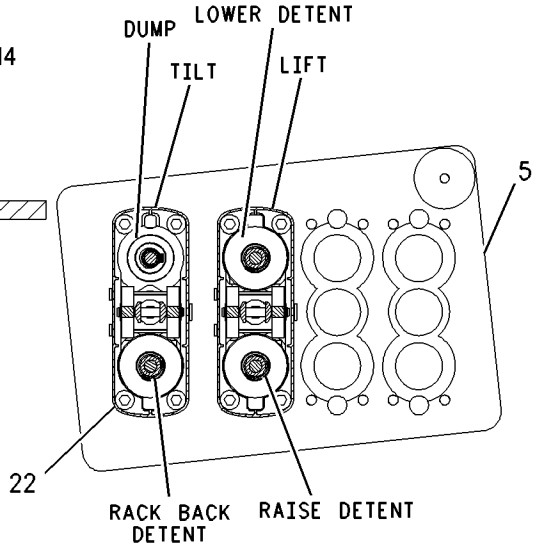

SECTION E-E

GRAPHIC #2

g00888456

MEMORANDA

HYDRAULIC SYSTEM

212-1301 VALVE GP-PILOT

S/N: RTA1-UP; RBB1-UP
2 FUNCTION
PART OF 225-1062 CONTROL GP-PILOT OPERATED HYD
AN ATTACHMENT

SMCS-5059 **i01833230**

NOTE	REF NO	GRAPHIC REF	PART NUMBER	QTY	PART NAME 1 2 3 4 5 6 (PRODUCT LEVEL)	SEE PAGE
	1	1	**9S-8002**	12	PLUG	
	2	2	**8T-8737**	2	PLUG-SEAL	
	3	2	**141-1556**	2	RETAINER	
	4	2	**141-2032**	2	PLATE	
	5	2	**141-9236**	1	SCREEN AS	
	6	2	**145-2334**	2	ADAPTER	
	7	2	**146-8477**	2	BRACKET	
	8	2	**146-8981**	2	PIN	
	9	2	**148-7922**	2	PLATE	
	10	1	**160-0750**	2	ADAPTER	
	11	1	**163-5512**	5	GROMMET	
	12	2	**173-9964**	1	PLATE-BUMPER	
Y	13	2	**175-9443**	1	PIVOT GP-PILOT VALVE	412
	14	2	**033-9139**	4	RING-RETAINING	
	15	2	**102-8806**	1	KIT-RECEPTACLE (8 PIN)	
					(KIT SERVICES RECEPTACLE AS AND WEDGE)	
	16	1	**136-9292**	2	BOOT	
	17	2	**145-8428**	3	COIL AS-DETENT	
		2	**6V-2689**	1	TUBE-HEAT SHRINK	
		2	**186-3735**	1	PIN-CONNECTOR	
	18	1	**160-6298**	1	PLATE AS	
Y	19	2	*160-6300*	1	PIVOT GP-PILOT VALVE	411
M	20	1	**191-8920**	8	BOLT-SOCKET HEAD (M6X1X12MM)	
Y	21	2	**212-4962**	4	VALVE GP-PILOT CARTRIDGE	480
	22	1	**9S-4191**	2	PLUG	
	23	1,2	**3J-1907**	3	SEAL-O-RING	
	24	1	**3J-7354**	16	SEAL-O-RING	
M	25	2	**5A-3604**	2	BOLT-SOCKET HEAD (M8X1.25X25MM)	
M	26	1	**5C-2890**	2	NUT (M6X1 THD)	
	27	2	**5W-1437**	1	LOCKWASHER	
	28	2	**6V-8397**	1	SEAL-O-RING	
	29	2	**6V-8636**	1	CONNECTOR	
	30	2	**8L-2786**	2	SEAL-O-RING	
M	31	1	**8T-2397**	2	BOLT (M6X1X90MM)	

M-METRIC PART
Y-SEPARATE ILLUSTRATION

212-1301 VALVE GP-PILOT *(contd.)*

i01833230

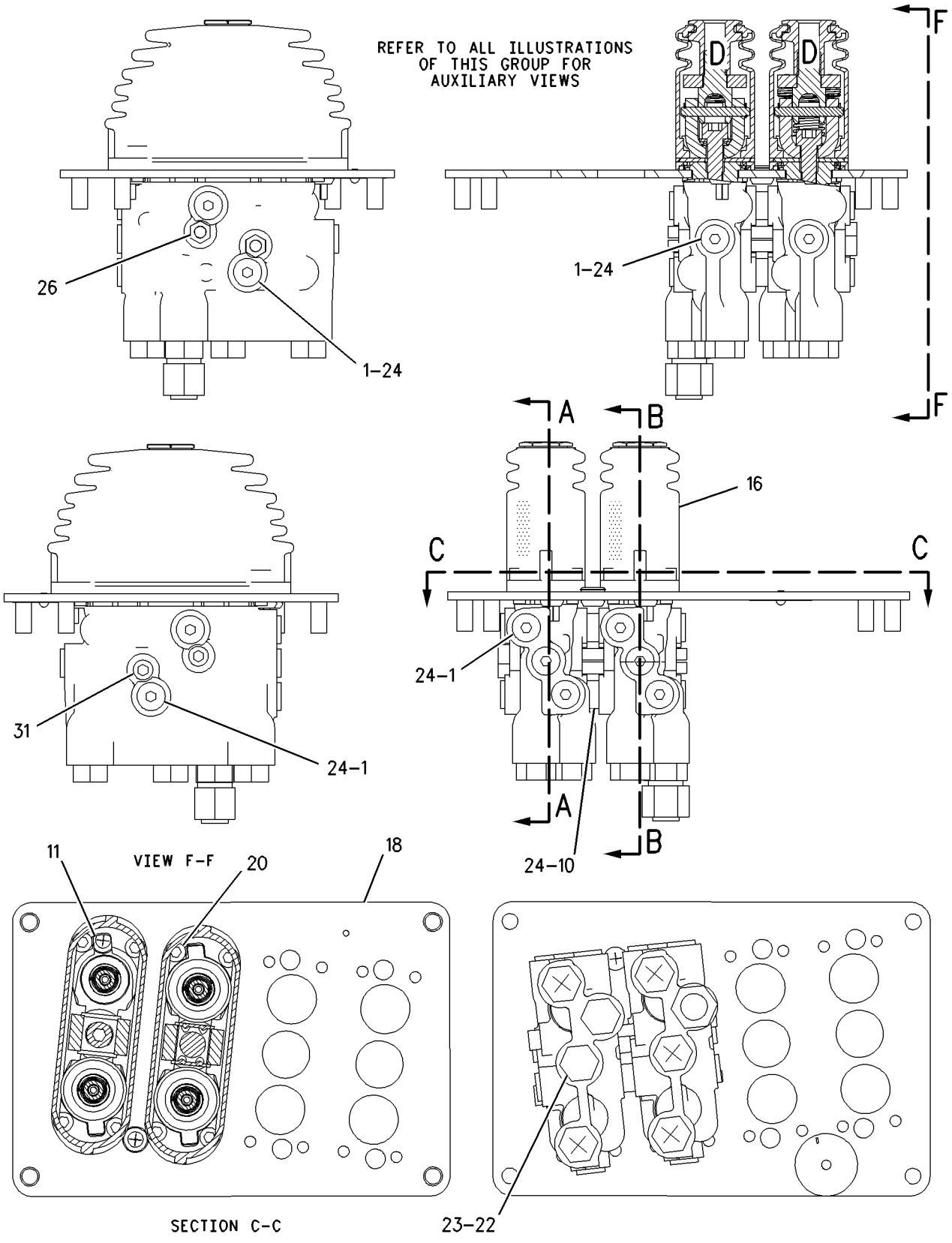

GRAPHIC #1

g00896844

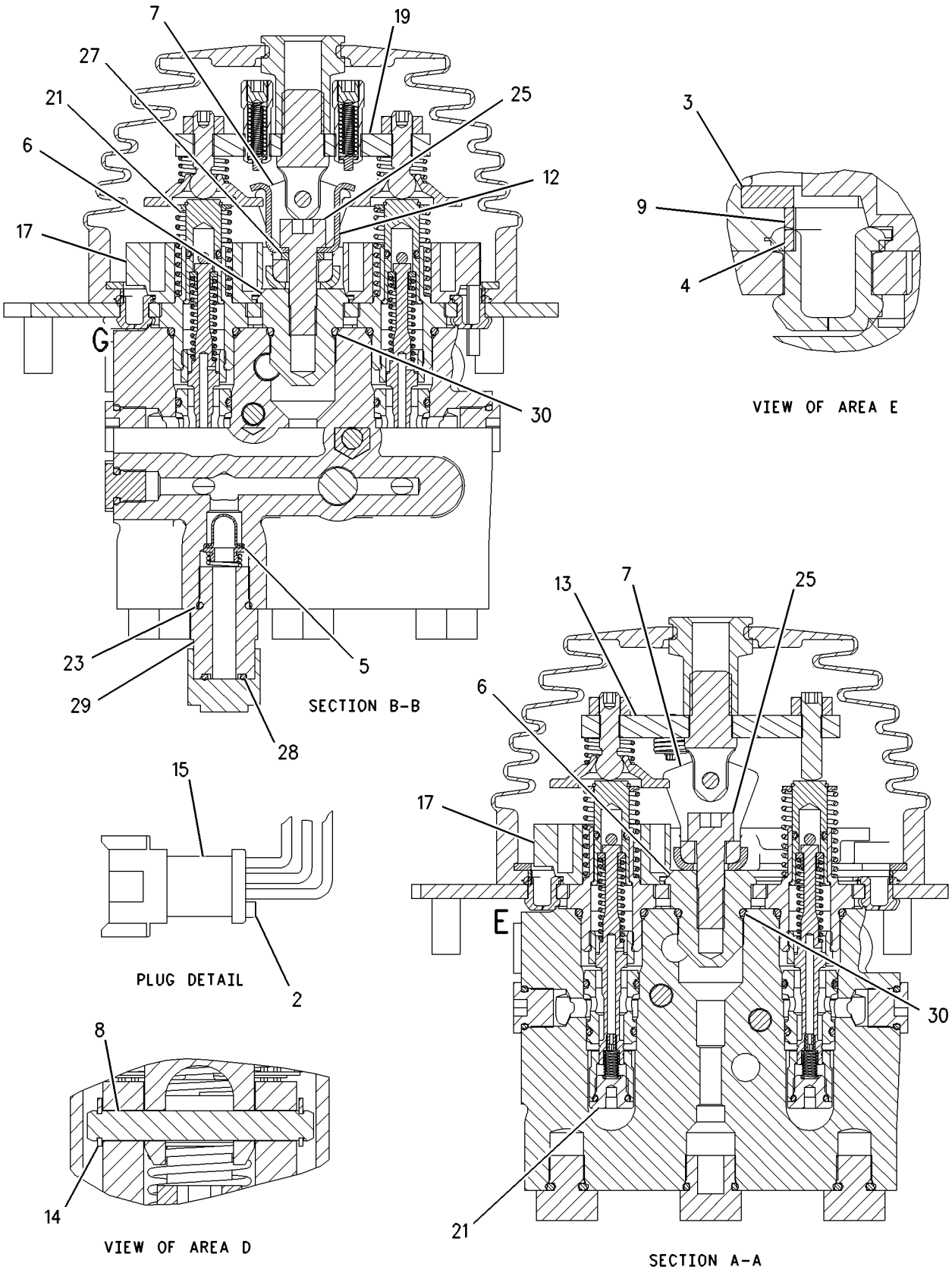

GRAPHIC #2 g00896841

MEMORANDA

212-1302 VALVE GP-PILOT

S/N: RTA1-UP; RBB1-UP
JOYSTICK,2 FUNCTION
PART OF 225-1059 CONTROL GP-PILOT OPERATED HYD
AN ATTACHMENT

SMCS-5059 **i01833233**

NOTE	REF NO	GRAPHIC REF	PART NUMBER	QTY	PART NAME 1 2 3 4 5 6 (PRODUCT LEVEL)	SEE PAGE
	1	1	**141-4852**	1	BOOT	
	2	1	**141-7481**	1	SPACER	
	3	1	**141-9236**	1	SCREEN AS	
	4	1	**142-2651**	1	PLATE AS	
	5	1	**146-8478**	1	CUP	
	6	1	**153-8947**	1	SWIVEL AS	
	7	1	**153-8952**	1	ADAPTER	
	8	1	**163-5512**	5	GROMMET	
	9	1	**102-8806**	1	KIT-RECEPTACLE (8 PIN)	
					(KIT SERVICES RECEPTACLE AS AND WEDGE)	
	10	1	*136-9291*	1	BODY	
	11	1	**136-9297**	1	PLATE	
	12	1	**136-9298**	1	RETAINER	
	13	1	**145-8428**	3	COIL AS-DETENT	
					(EACH INCLUDES)	
		1	**8T-8729**	2	PIN-CONNECTOR	
Y	14	1	**147-3322**	1	PLATE GP-PILOT VALVE (JOYSTICK)	413
	15	1	**149-5470**	1	PLATE	
M	16	1	**191-8920**	4	BOLT-SOCKET HEAD (M6X1X12MM)	
Y	17	1	**212-4962**	2	VALVE GP-PILOT CARTRIDGE	480
Y	18	1	**212-4963**	2	VALVE GP-PILOT CARTRIDGE	481
	19	1	**9S-8002**	8	PLUG	
	20	1	**3J-1907**	1	SEAL-O-RING	
	21	1	**3J-7354**	8	SEAL-O-RING	
	22	1	**8T-8737**	2	PLUG-SEAL	
	23	1	**6V-8397**	1	SEAL-O-RING	
	24	1	**6V-8636**	1	CONNECTOR	
	25	1	**8L-2786**	1	SEAL-O-RING	

M-METRIC PART
Y-SEPARATE ILLUSTRATION

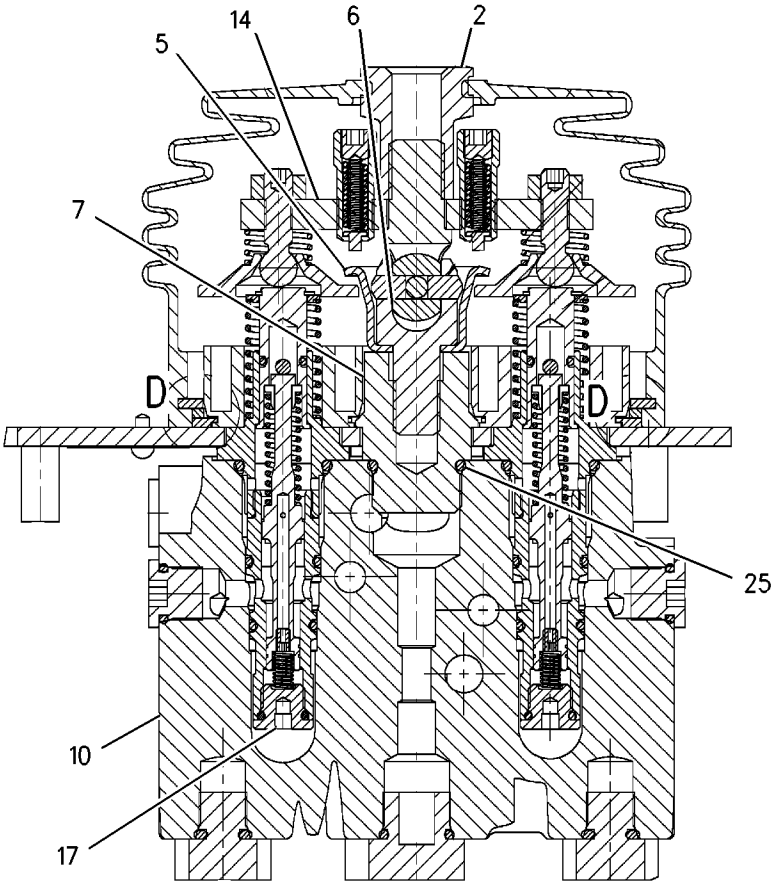

SECTION A-A

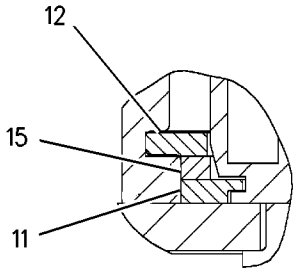

VIEW OF AREA D

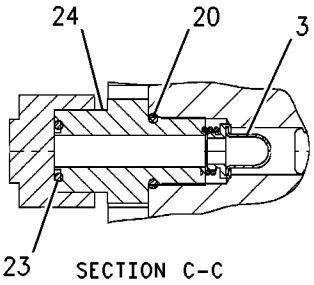

SECTION C-C

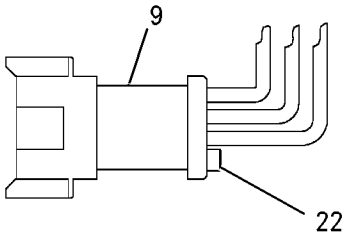

PLUG DETAIL

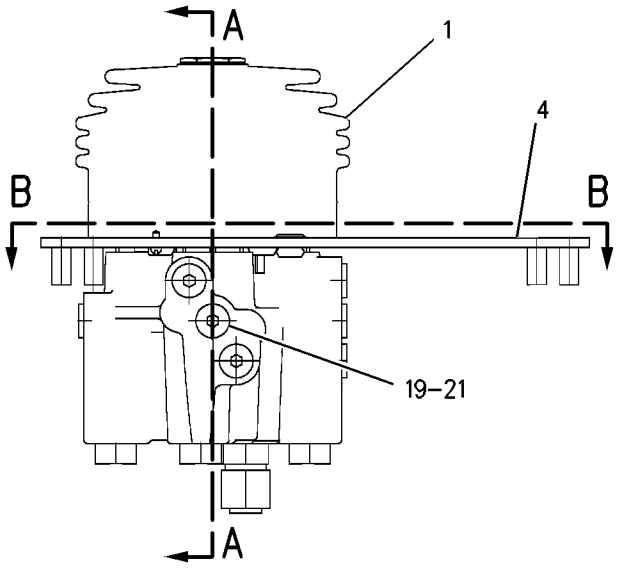

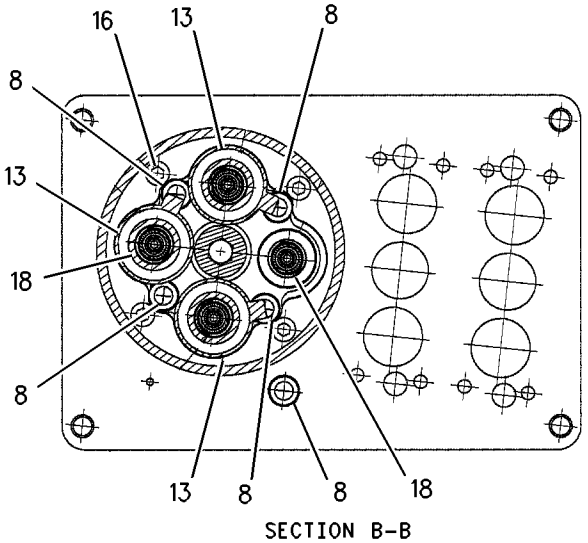

SECTION B-B

GRAPHIC #1 g00886130

HYDRAULIC SYSTEM

212-1304 VALVE GP-PILOT

S/N: RTA1-UP; RBB1-UP
3 FUNCTION
PART OF 225-1063 CONTROL GP-PILOT OPERATED HYD
AN ATTACHMENT

SMCS-5059 **i01836468**

NOTE	REF NO	GRAPHIC REF	PART NUMBER	QTY	PART NAME 1 2 3 4 5 6 (PRODUCT LEVEL)	SEE PAGE
	1	1	**9S-8002**	16	PLUG	
	2	1	**9S-4191**	4	PLUG (9/16-18 THD)	
	3	2	**141-1556**	3	RETAINER	
	4	2	**141-2032**	3	PLATE	
	5	2	**141-9236**	1	SCREEN AS	
	6	2	**145-2334**	3	ADAPTER	
	7	2	**146-8477**	3	BRACKET	
	8	2	**146-8981**	3	PIN	
	9	2	**148-7922**	3	PLATE	
	10	1	**160-0750**	4	ADAPTER	
	11	1	**163-5512**	7	GROMMET	
	12	2	**173-9964**	1	PLATE-BUMPER	
Y	13	2	**175-9443**	2	PIVOT GP-PILOT VALVE	412
	14	2	**033-9139**	6	RING-RETAINING	
	15	2	**102-8806**	1	KIT-RECEPTACLE (8 PIN)	
	16	1	**136-9292**	3	BOOT	
	17	2	**145-8428**	4	COIL AS-DETENT	
					(EACH INCLUDES)	
		2	**6V-2689**	1	TUBE-HEAT SHRINK	
		2	**186-3735**	1	PIN-CONNECTOR	
	18	1	**160-6298**	1	PLATE AS	
Y	19	2	*160-6300*	1	PIVOT GP-PILOT VALVE	411
M	20	1	**168-4520**	2	BOLT-SOCKET HEAD	
M	21	1	**191-8920**	12	BOLT-SOCKET HEAD (M6X1X12MM)	
Y	22	2	**212-4962**	6	VALVE GP-PILOT CARTRIDGE	480
	23	2	**8L-2786**	3	SEAL-O-RING (16.36MM ID)	
	24	1,2	**3J-1907**	5	SEAL-O-RING	
	25	1	**3J-7354**	24	SEAL-O-RING	
M	26	2	**5A-3604**	3	BOLT-SOCKET HEAD (M8X1.25X25MM)	
M	27	1	**5C-2890**	2	NUT (M6X1 THD)	
	28	2	**5W-1437**	1	LOCKWASHER	
	29	2	**6V-8397**	1	SEAL-O-RING	
	30	2	**6V-8636**	1	CONNECTOR	

M-METRIC PART
Y-SEPARATE ILLUSTRATION

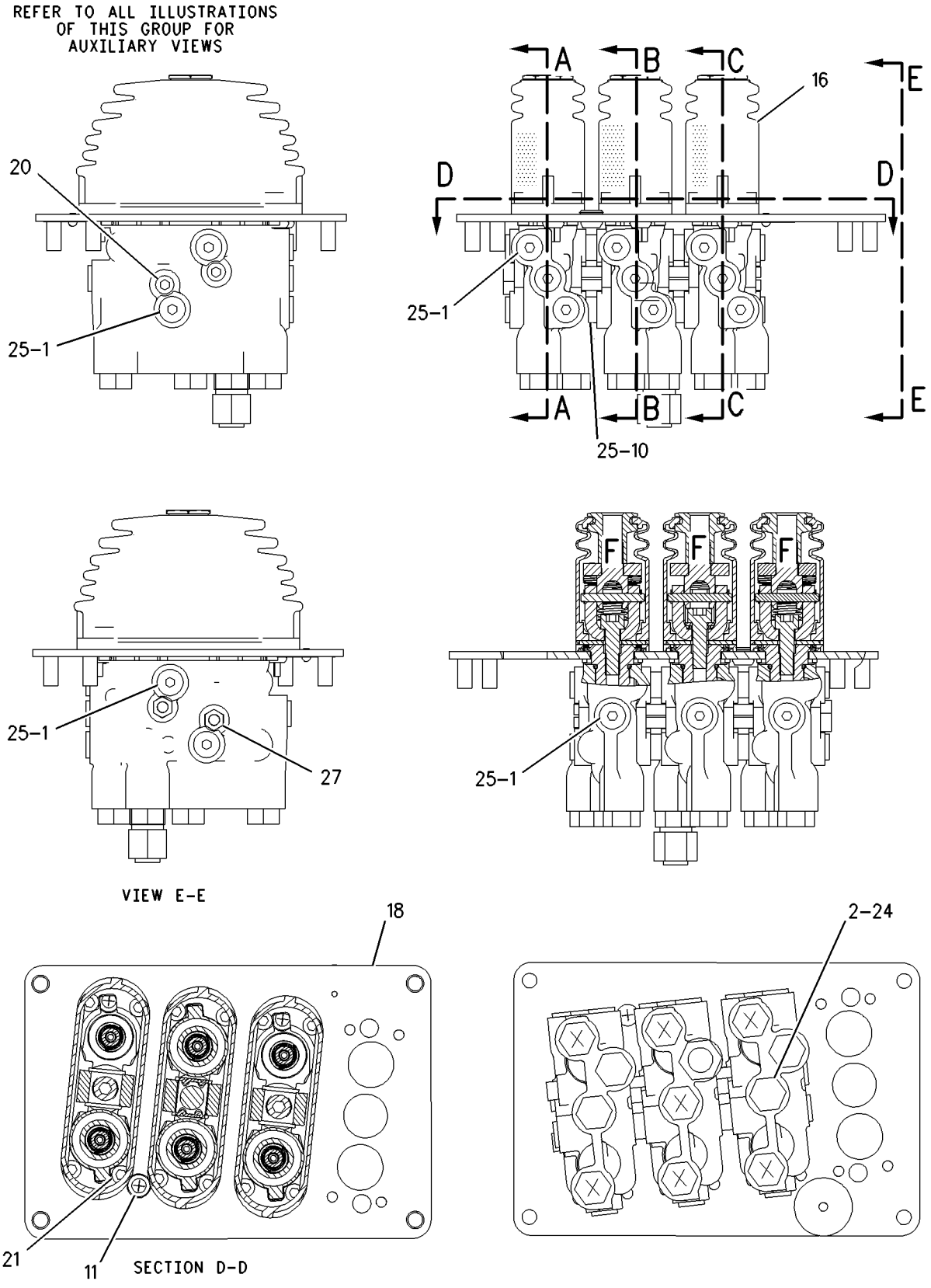

GRAPHIC #1 g00888177

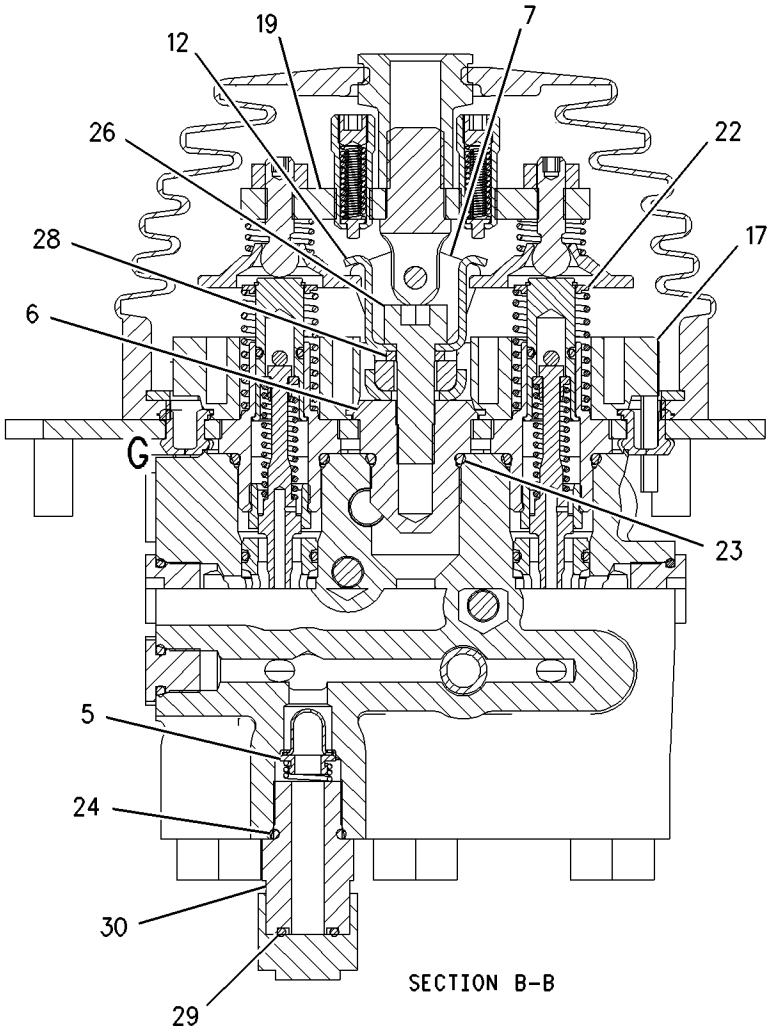

SECTION B-B

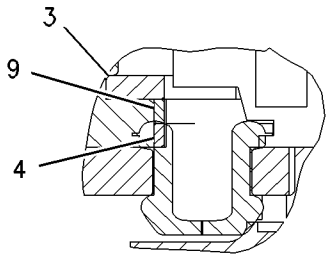

VIEW OF AREA G

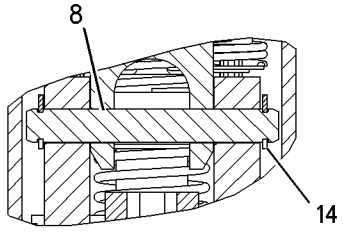

VIEW OF AREA F

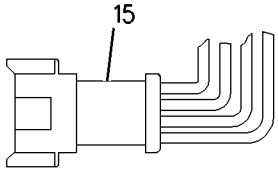

PLUG DETAIL

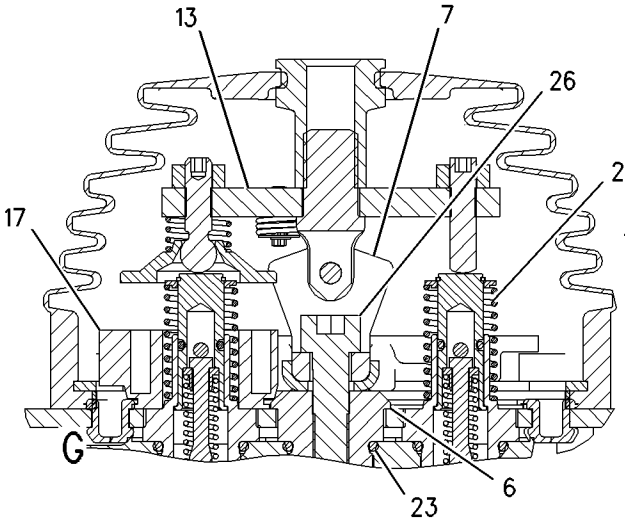

SECTION A-A

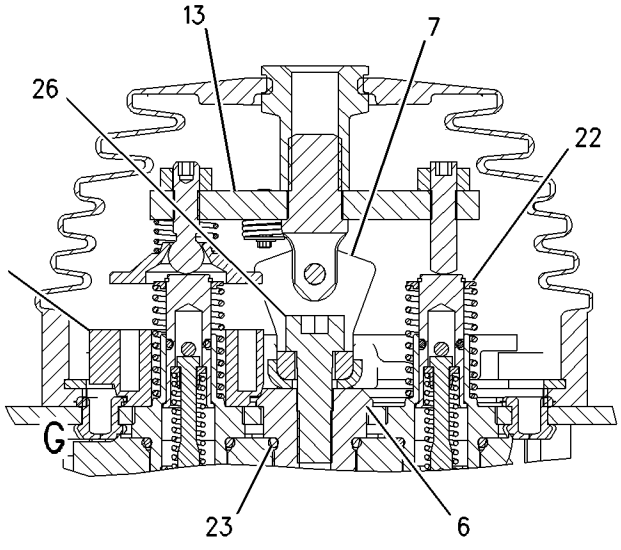

SECTION C-C

GRAPHIC #2

g00888178

MEMORANDA

HYDRAULIC SYSTEM

212-1305 VALVE GP-PILOT

S/N: RTA1-UP; RBB1-UP
JOYSTICK,3 FUNCTION
PART OF 225-1060 CONTROL GP-PILOT OPERATED HYD
AN ATTACHMENT

SMCS-5059 **i01859592**

NOTE	REF NO	GRAPHIC REF	PART NUMBER	QTY	PART NAME 1 2 3 4 5 6 (PRODUCT LEVEL)	SEE PAGE
	1	1	**6V-8636**	1	CONNECTOR	
	2	1	**8L-2786**	2	SEAL-O-RING	
	3	1	**141-1095**	2	ADAPTER	
	4	1	**141-1556**	1	RETAINER	
	5	1	**141-2032**	1	PLATE	
	6	1	**141-4852**	1	BOOT	
	7	1	**141-7481**	1	SPACER	
	8	1	**141-9236**	1	SCREEN AS	
	9	1	**142-2651**	1	PLATE AS	
	10	1	**145-2334**	1	ADAPTER	
	11	1	**146-8477**	1	BRACKET	
	12	1	**146-8478**	1	CUP	
	13	1	**146-8981**	1	PIN	
	14	1	**148-7922**	1	PLATE	
	15	1	**153-8947**	1	SWIVEL AS	
	16	1	**153-8952**	1	ADAPTER	
	17	1	**163-5512**	7	GROMMET	
Y	18	1	**175-9443**	1	PIVOT GP-PILOT VALVE	412
	19	1	**033-9139**	2	RING-RETAINING	
	20	1	**102-8806**	1	KIT-RECEPTACLE (8 PIN)	
	21	1	**9S-8002**	12	PLUG	
	22	1	**136-9292**	1	BOOT	
	23	1	**136-9297**	1	PLATE	
	24	1	**136-9298**	1	RETAINER	
M	25	1	**140-9926**	2	BOLT-SOCKET HEAD	
	26	1	**145-8428**	4	COIL AS-DETENT	
		1	**6V-2689**	1	TUBE-HEAT SHRINK	
		1	**186-3735**	2	PIN-CONNECTOR	
Y	27	1	**147-3322**	1	PLATE GP-PILOT VALVE (JOYSTICK)	413
	28	1	**149-5470**	1	PLATE	
M	29	1	**191-8920**	8	BOLT-SOCKET HEAD (M6X1X12MM)	
Y	30	1	**212-4962**	4	VALVE GP-PILOT CARTRIDGE	480
Y	31	1	**212-4963**	2	VALVE GP-PILOT CARTRIDGE	481
	32	1	**9S-4191**	2	PLUG	
	33	1	**3J-1907**	3	SEAL-O-RING	
	34	1	**3J-7354**	16	SEAL-O-RING	
M	35	1	**5A-3604**	1	BOLT-SOCKET HEAD (M8X1.25X25MM)	
M	36	1	**5C-2890**	2	NUT (M6X1 THD)	
	37	1	**6V-8397**	1	SEAL-O-RING	

M-METRIC PART
Y-SEPARATE ILLUSTRATION

212-1305 VALVE GP-PILOT *(contd.)* **i01859592**

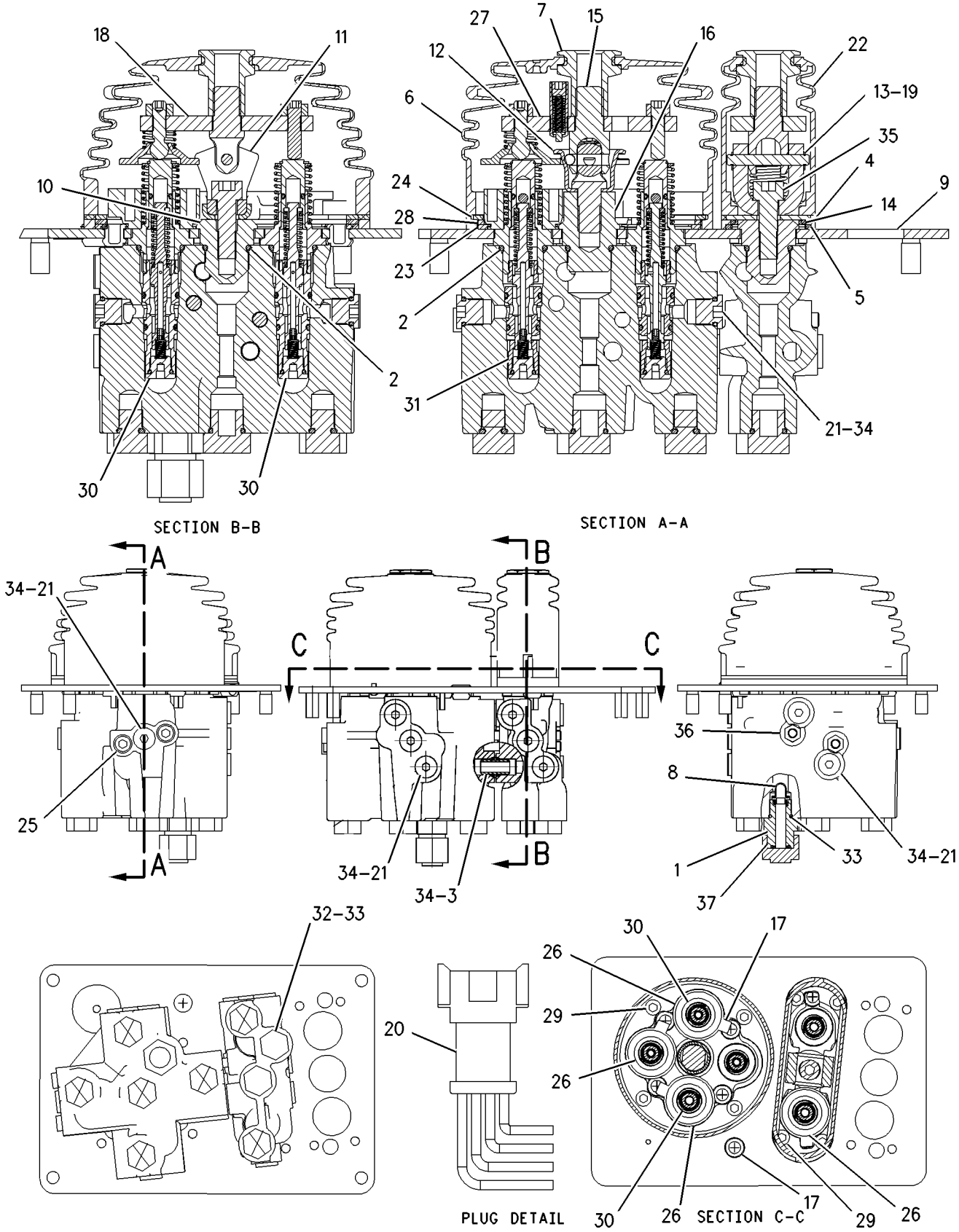

GRAPHIC #1 g00875369

HYDRAULIC SYSTEM

212-1306 VALVE GP-PILOT

S/N: RBB1-UP
4 FUNCTION
PART OF 225-1064 CONTROL GP-PILOT OPERATED HYD
AN ATTACHMENT

SMCS-5059 **i01836371**

NOTE	REF NO	GRAPHIC REF	PART NUMBER	QTY	PART NAME 1 2 3 4 5 6 (PRODUCT LEVEL)	SEE PAGE
	1	1	**9S-8002**	20	PLUG	
	2	2	**8L-2786**	4	SEAL-O-RING (16.36MM ID)	
	3	2	**141-1556**	4	RETAINER	
	4	2	**141-2032**	4	PLATE	
	5	2	**141-9236**	1	SCREEN AS	
	6	2	**145-2334**	4	ADAPTER	
	7	2	**146-8477**	4	BRACKET	
	8	2	**146-8981**	4	PIN	
	9	2	**147-3114**	1	PIVOT GP-PILOT VALVE (AUXILIARY)	
M		2	**5C-2890**	2	NUT (M6X1 THD)	
		2	**139-4189**	1	PLATE	
		2	**141-7481**	1	SPACER	
		2	**146-8479**	1	SWIVEL	
M		2	**178-7877**	2	SETSCREW	
	10	2	**148-7922**	4	PLATE	
	11	1	**160-0750**	6	ADAPTER	
	12	1	**163-5512**	9	GROMMET	
	13	2	**173-9964**	1	PLATE-BUMPER	
Y	14	2	**175-9443**	2	PIVOT GP-PILOT VALVE	412
	15	2	**033-9139**	8	RING-RETAINING	
	16	2	**102-8806**	1	KIT-RECEPTACLE (8 PIN)	
	17	1	**136-9292**	4	BOOT	
	18	2	**145-8428**	4	COIL AS-DETENT	
					(EACH INCLUDES)	
		2	**6V-2689**	1	TUBE-HEAT SHRINK (.8M)	
		2	**186-3735**	2	PIN-CONNECTOR	
	19	1	**160-6298**	1	PLATE AS	
Y	20	2	*160-6300*	1	PIVOT GP-PILOT VALVE	411
M	21	1	**168-4521**	2	BOLT-SOCKET HEAD	
M	22	1	**191-8920**	16	BOLT-SOCKET HEAD (M6X1X12MM)	
Y	23	2	**212-4962**	8	VALVE GP-PILOT CARTRIDGE	480
	24	1	**9S-4191**	6	PLUG (9/16-18 THD)	
	25	1,2	**3J-1907**	7	SEAL-O-RING	
	26	1	**3J-7354**	32	SEAL-O-RING	
M	27	2	**5A-3604**	4	BOLT-SOCKET HEAD (M8X1.25X25MM)	
M	28	1	**5C-2890**	2	NUT (M6X1 THD)	
	29	2	**5W-1437**	1	LOCKWASHER	
	30	2	**6V-8397**	1	SEAL-O-RING	
	31	2	**6V-8636**	1	CONNECTOR	

M-METRIC PART
Y-SEPARATE ILLUSTRATION

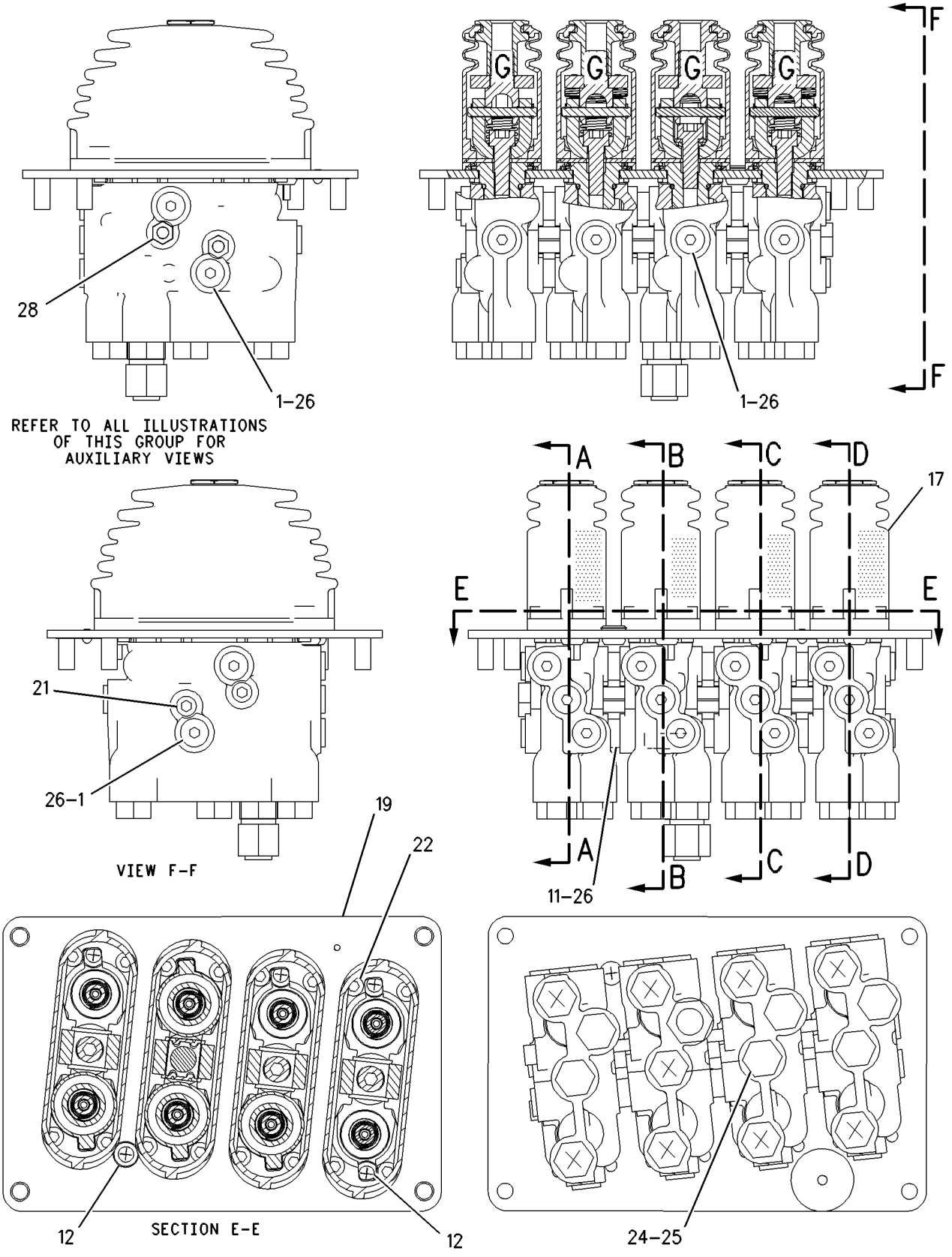

GRAPHIC #1

g00889829

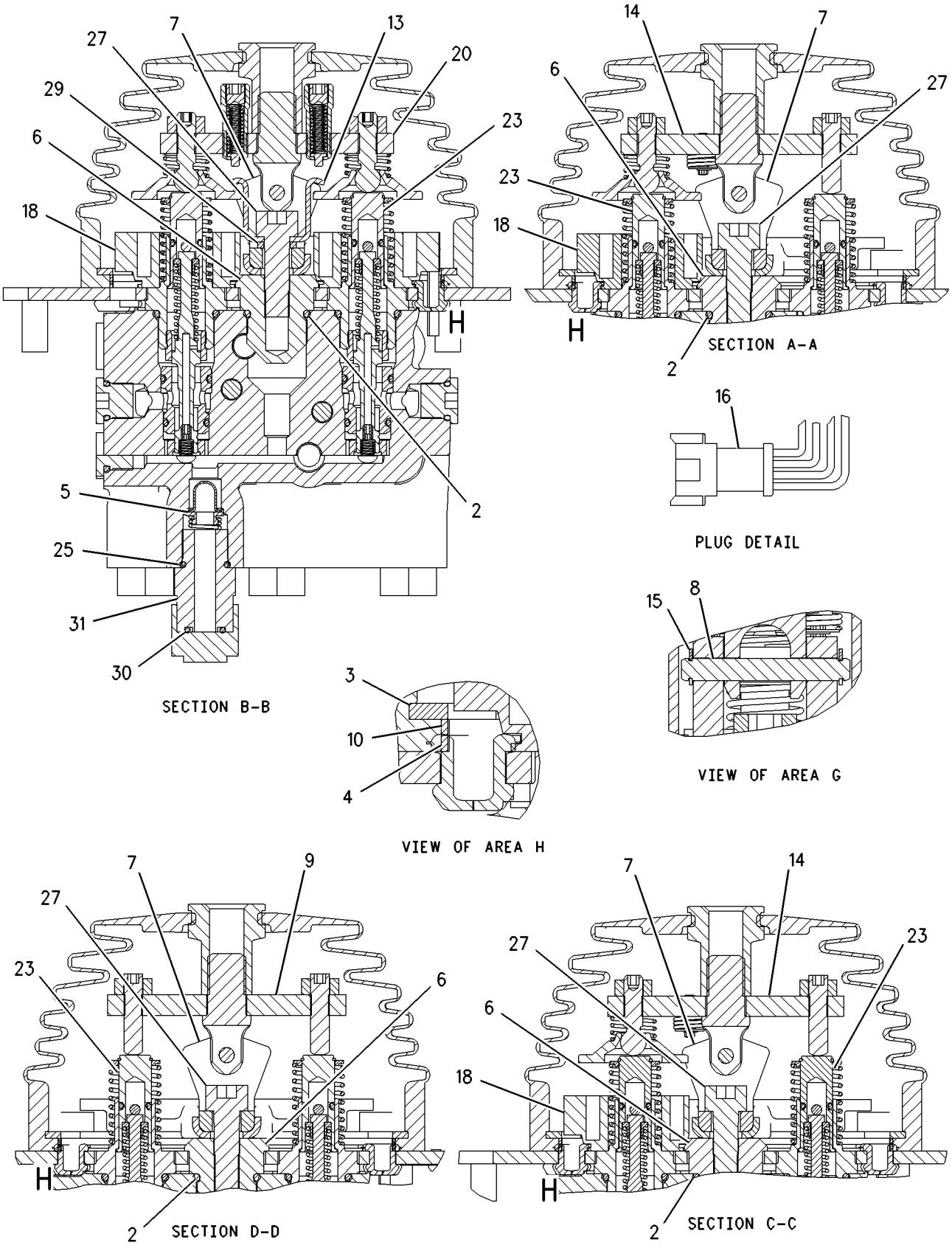

GRAPHIC #2 g00889830

MEMORANDA

212-1307 VALVE GP-PILOT

S/N: RBB1-UP
JOYSTICK,4 FUNCTION
PART OF 225-1061 CONTROL GP-PILOT OPERATED HYD
AN ATTACHMENT

SMCS-5059 **i01859591**

NOTE	REF NO	GRAPHIC REF	PART NUMBER	QTY	PART NAME 1 2 3 4 5 6 (PRODUCT LEVEL)	SEE PAGE
Y	1	1	**145-5256**	2	VALVE GP-PILOT (2 FUNCTION)	450
	2	1	**141-1095**	2	ADAPTER	
	3	2	**141-1556**	2	RETAINER	
	4	2	**141-2032**	2	PLATE	
	5	1	**141-4852**	1	BOOT	
	6	2	**141-7481**	1	SPACER	
	7	1	**141-9236**	1	SCREEN AS	
	8	2	**142-2651**	1	PLATE AS	
	9	2	**145-2334**	2	ADAPTER	
	10	2	**146-8477**	2	BRACKET	
	11	2	**146-8478**	1	CUP	
	12	2	**146-8981**	2	PIN	
	13	2	**147-3114**	1	PIVOT GP-PILOT VALVE (AUXILIARY)	
M		2	**5C-2890**	2	NUT (M6X1 THD)	
		2	**139-4189**	1	PLATE	
		2	**141-7481**	1	SPACER	
		2	**146-8479**	1	SWIVEL	
M		2	**178-7877**	2	SETSCREW	
	14	2	**148-7922**	2	PLATE	
	15	2	**153-8947**	1	SWIVEL AS	
	16	2	**153-8952**	1	ADAPTER	
	17	1	**163-5512**	9	GROMMET	
Y	18	2	**175-9443**	1	PIVOT GP-PILOT VALVE	412
	19	2	**033-9139**	4	RING-RETAINING	
	20	2	**102-8806**	1	KIT-RECEPTACLE (8 PIN)	
Y	21	1	**136-9289**	1	VALVE GP-PILOT (JOYSTICK, 2 FUNCTION)	448
	22	1	**136-9292**	2	BOOT	
	23	2	**136-9297**	1	PLATE	
	24	2	**136-9298**	1	RETAINER	
	25	2	**145-8428**	4	COIL AS-DETENT	
Y	26	2	**147-3322**	1	PLATE GP-PILOT VALVE (JOYSTICK)	413
	27	2	**149-5470**	1	PLATE	
	28	1	**157-6144**	2	ADAPTER	
M	29	1	**157-6155**	2	BOLT-SOCKET HEAD	
M	30	1	**191-8920**	12	BOLT-SOCKET HEAD (M6X1X12MM)	
Y	31	1,2	**212-4962**	6	VALVE GP-PILOT CARTRIDGE	480
Y	32	1	**212-4963**	2	VALVE GP-PILOT CARTRIDGE	481
	33	1,2	**9S-8002**	16	PLUG	
	34	1	**3J-1907**	5	SEAL-O-RING	
	35	1,2	**3J-7354**	24	SEAL-O-RING	
	36	1	**9S-4191**	4	PLUG	
M	37	2	**5A-3604**	2	BOLT-SOCKET HEAD (M8X1.25X25MM)	
M	38	1	**5C-2890**	2	NUT (M6X1 THD)	
	39	1	**6V-8397**	1	SEAL-O-RING	
	40	1	**6V-8636**	1	CONNECTOR	
	41	2	**8L-2786**	3	SEAL-O-RING	

M-METRIC PART
Y-SEPARATE ILLUSTRATION

212-1307 VALVE GP-PILOT *(contd.)* **i01859591**

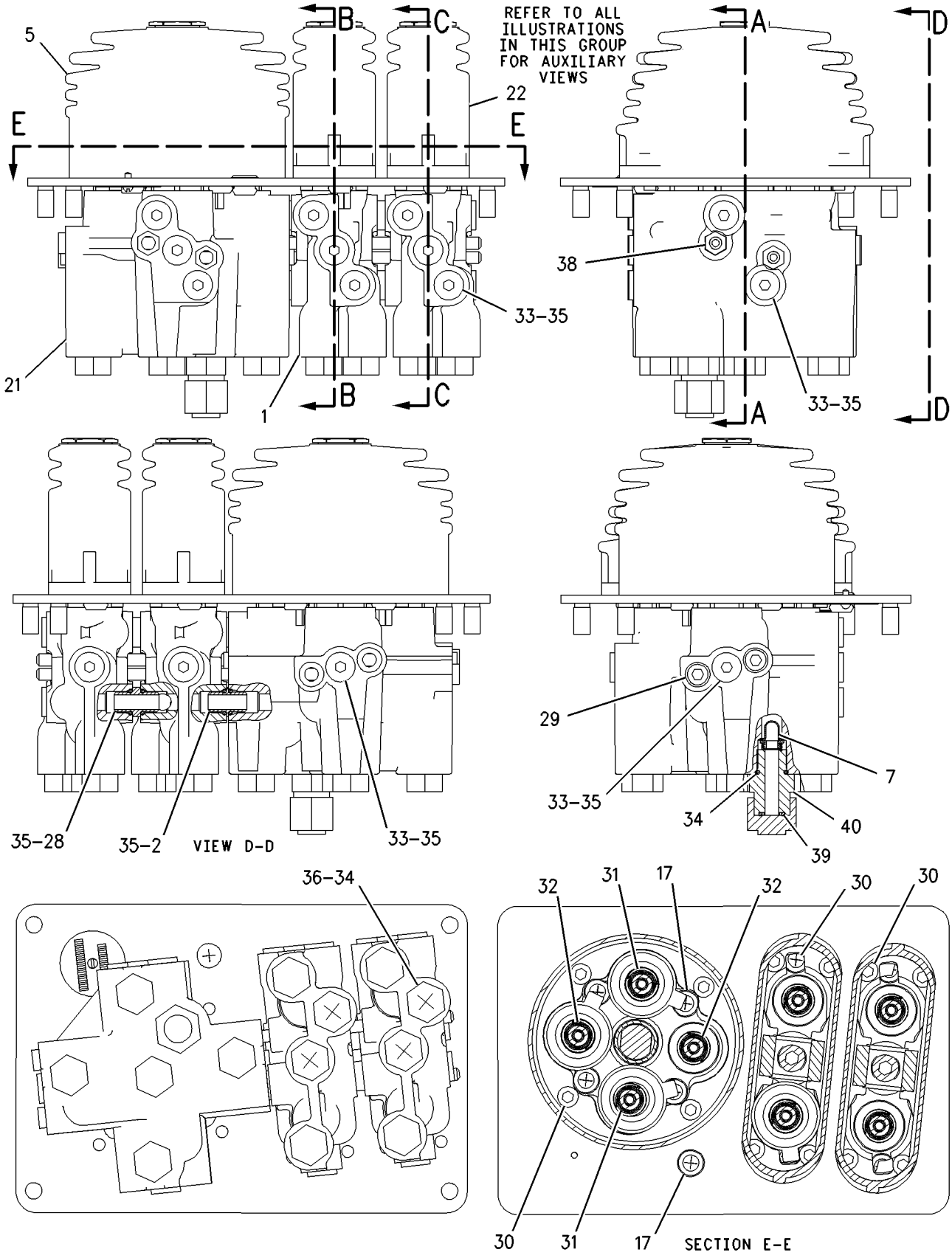

GRAPHIC #1 g00886161

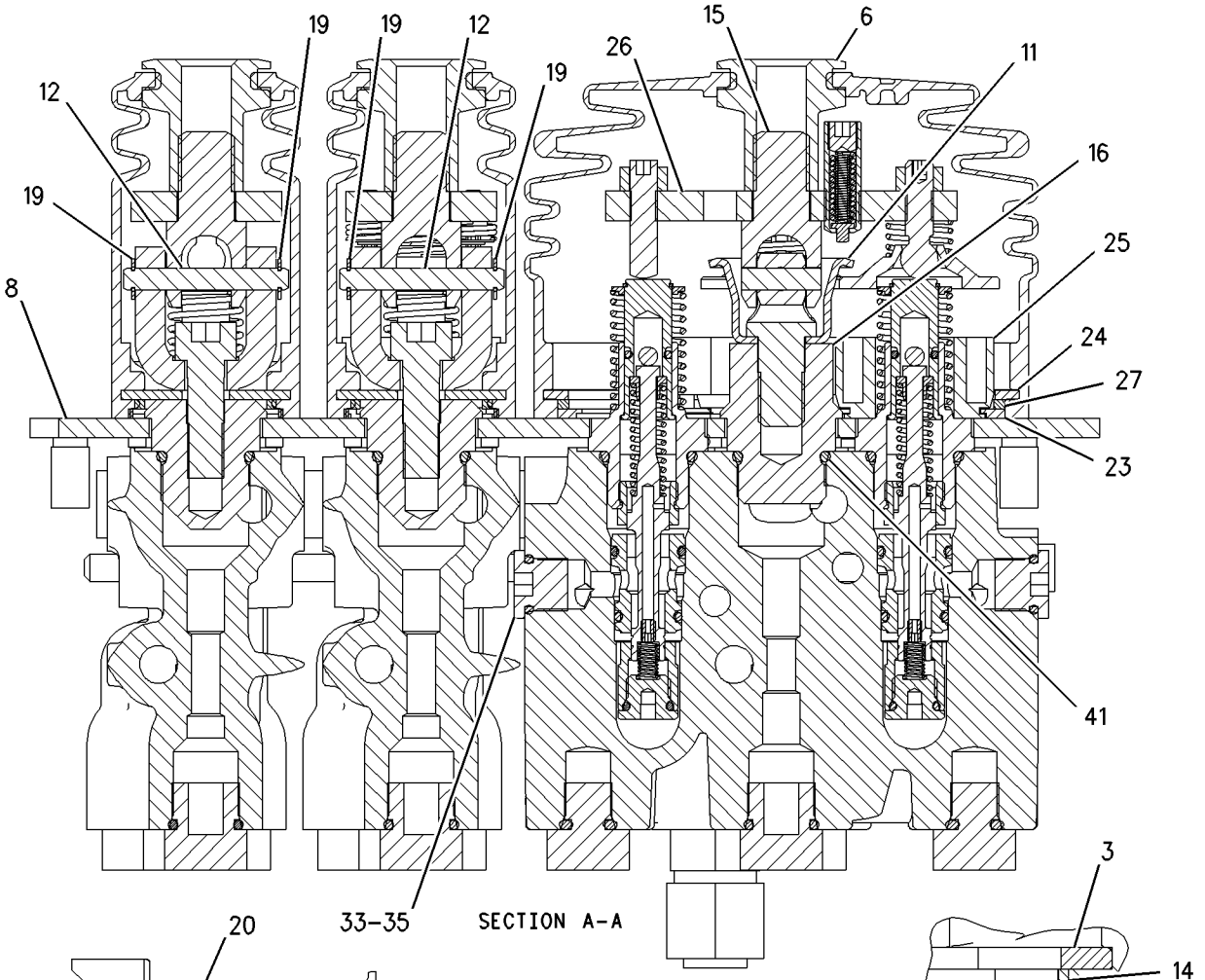

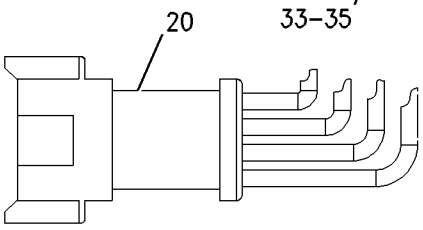

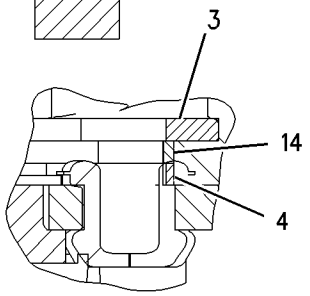

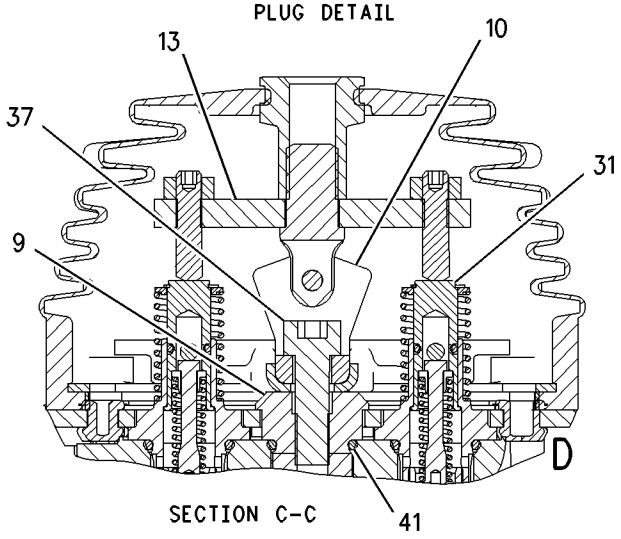

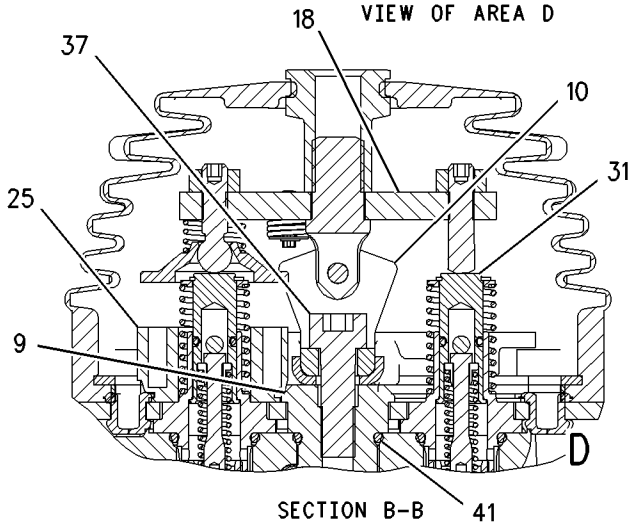

GRAPHIC #2

g00886168

MEMORANDA

HYDRAULIC SYSTEM

137-0266 VALVE GP-PILOT CARTRIDGE

S/N: RBB1-UP
PART OF 136-9289 VALVE GP-PILOT
AN ATTACHMENT

SMCS-5059 **i01859601**

NOTE	REF NO	GRAPHIC REF	PART NUMBER	QTY	PART NAME 1 2 3 4 5 6 (PRODUCT LEVEL)	SEE PAGE
	1	1	**136-9304**	1	ADAPTER	
	2	1	**145-8707**	1	SPRING	
	3	1	**146-6316**	2	RETAINER	
	4	1	**146-6319**	1	RETAINER	
	5	1	**153-8925**	1	STOP	
	6	1	**116-4527**	1	ORIFICE	
	7	1	**146-6318**	1	PLUNGER	
	8	1	**153-8924**	1	SPOOL	
	9	1	**153-8926**	1	SPRING	
	10	1	**153-8929**	1	CAGE	
	11	1	**157-2152**	1	SPRING	
	12	1	**1M-6718**	1	BALL	
	13	1	**2H-3429**	1	RING-RETAINING	
	14	1	**3K-0360**	1	SEAL-O-RING	
	15	1	**4K-2039**	1	SEAL-O-RING	
	16	1	**6M-5062**	1	SEAL-O-RING	
	17	1	**7I-6601**	1	SEAL-O-RING	
	18	1	**7J-0204**	1	SEAL-O-RING	

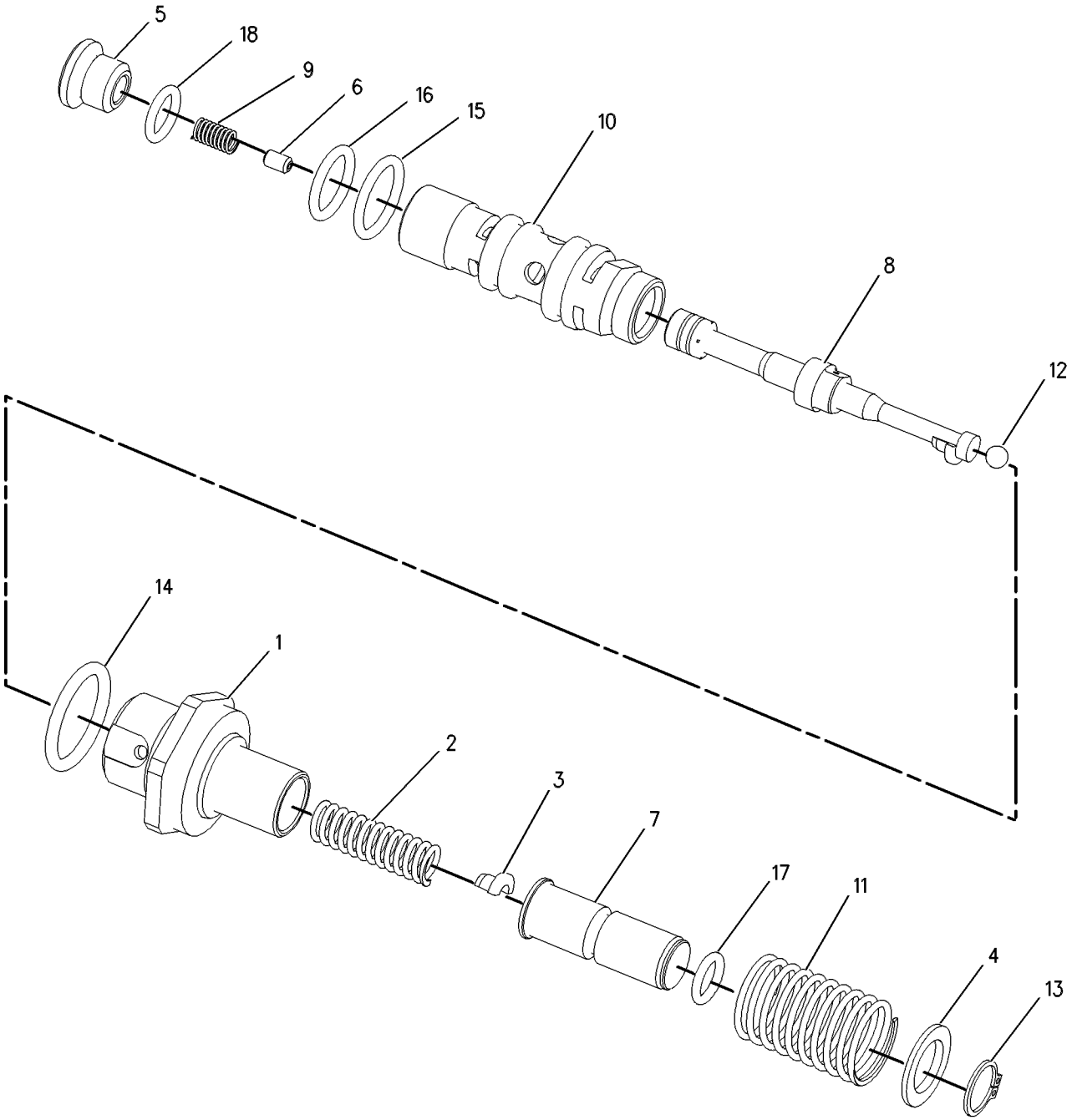

GRAPHIC #1 g00484334

HYDRAULIC SYSTEM

145-8710 VALVE GP-PILOT CARTRIDGE

S/N: RBB1-UP
PART OF 145-5256 VALVE GP-PILOT
AN ATTACHMENT

SMCS-5059 **i01098524**

NOTE	REF NO	GRAPHIC REF	PART NUMBER	QTY	PART NAME 1 2 3 4 5 6 (PRODUCT LEVEL)	SEE PAGE
	1	1	**136-9301**	1	SPRING	
	2	1	**136-9304**	1	ADAPTER	
	3	1	**141-5151**	1	SPRING	
	4	1	**146-6316**	2	RETAINER	
	5	1	**146-6319**	1	RETAINER	
	6	1	**153-8925**	1	STOP	
	7	1	**116-4527**	1	ORIFICE	
	8	1	**146-6318**	1	PLUNGER	
	9	1	**153-8924**	1	SPOOL	
	10	1	**153-8926**	1	SPRING	
	11	1	**153-8929**	1	CAGE	
	12	1	**1M-6718**	1	BALL	
	13	1	**2H-3429**	1	RING-RETAINING	
	14	1	**3K-0360**	1	SEAL-O-RING (16.36MM ID)	
	15	1	**4K-2039**	1	SEAL-O-RING (12.42MM ID)	
	16	1	**6M-5062**	1	SEAL-O-RING (10.82MM ID)	
	17	1	**7I-6601**	1	SEAL-O-RING (6.73MM ID)	
	18	1	**7J-0204**	1	SEAL-O-RING (7.65MM ID)	

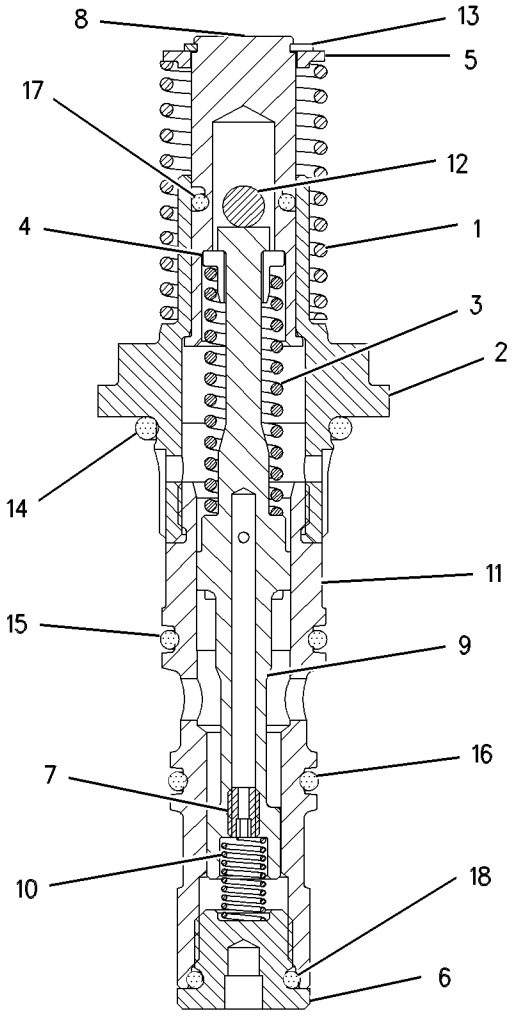

GRAPHIC #1 g00577903

145-8711 VALVE GP-PILOT CARTRIDGE

S/N: RBB1-UP
PART OF 136-9289, 145-5256 VALVE GP-PILOT
AN ATTACHMENT

SMCS-5059 **i01203961**

NOTE	REF NO	GRAPHIC REF	PART NUMBER	QTY	PART NAME 1 2 3 4 5 6 (PRODUCT LEVEL)	SEE PAGE
	1	1	**136-9304**	1	ADAPTER	
	2	1	**145-8707**	1	SPRING	
	3	1	**146-6316**	2	RETAINER	
	4	1	**146-6319**	1	RETAINER	
	5	1	**153-8925**	1	STOP	
	6	1	**116-4527**	1	ORIFICE	
	7	1	**146-6318**	1	PLUNGER	
	8	1	**153-8924**	1	SPOOL	
	9	1	**153-8926**	1	SPRING	
	10	1	**153-8929**	1	CAGE	
	11	1	**157-2153**	1	SPRING	
	12	1	**1M-6718**	1	BALL	
	13	1	**2H-3429**	1	RING-RETAINING	
	14	1	**3K-0360**	1	SEAL-O-RING (16.36MM ID)	
	15	1	**4K-2039**	1	SEAL-O-RING (12.42MM ID)	
	16	1	**6M-5062**	1	SEAL-O-RING (10.82MM ID)	
	17	1	**7I-6601**	1	SEAL-O-RING (6.73MM ID)	
	18	1	**7J-0204**	1	SEAL-O-RING (7.65MM ID)	

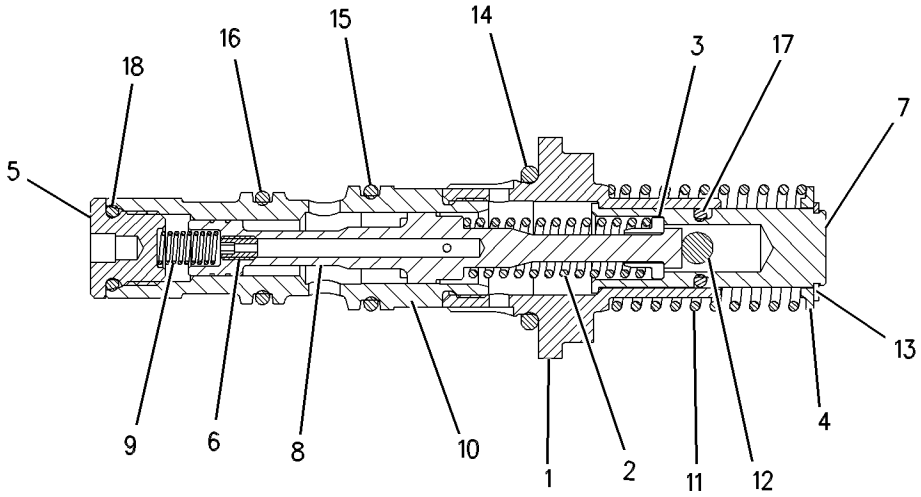

GRAPHIC #1 g00605140

HYDRAULIC SYSTEM

170-8513 VALVE GP-PILOT CARTRIDGE

S/N: RBB1-UP
PART OF 136-9289 VALVE GP-PILOT
AN ATTACHMENT

SMCS-5059 **i01206094**

NOTE	REF NO	GRAPHIC REF	PART NUMBER	QTY	PART NAME 1 2 3 4 5 6 (PRODUCT LEVEL)	SEE PAGE
	1	1	**136-9304**	1	ADAPTER	
	2	1	**141-5151**	1	SPRING	
	3	1	**146-6316**	2	RETAINER	
	4	1	**146-6319**	1	RETAINER	
	5	1	**153-8925**	1	STOP	
	6	1	**116-4527**	1	ORIFICE	
	7	1	**146-6318**	1	PLUNGER	
	8	1	**153-8924**	1	SPOOL	
	9	1	**153-8926**	1	SPRING	
	10	1	**153-8929**	1	CAGE	
	11	1	**157-2152**	1	SPRING	
	12	1	**1M-6718**	1	BALL	
	13	1	**2H-3429**	1	RING-RETAINING	
	14	1	**3K-0360**	1	SEAL-O-RING (16.36MM ID)	
	15	1	**4K-2039**	1	SEAL-O-RING (12.42MM ID)	
	16	1	**6M-5062**	1	SEAL-O-RING (10.82MM ID)	
	17	1	**7I-6601**	1	SEAL-O-RING (6.73MM ID)	
	18	1	**7J-0204**	1	SEAL-O-RING (7.65MM ID)	

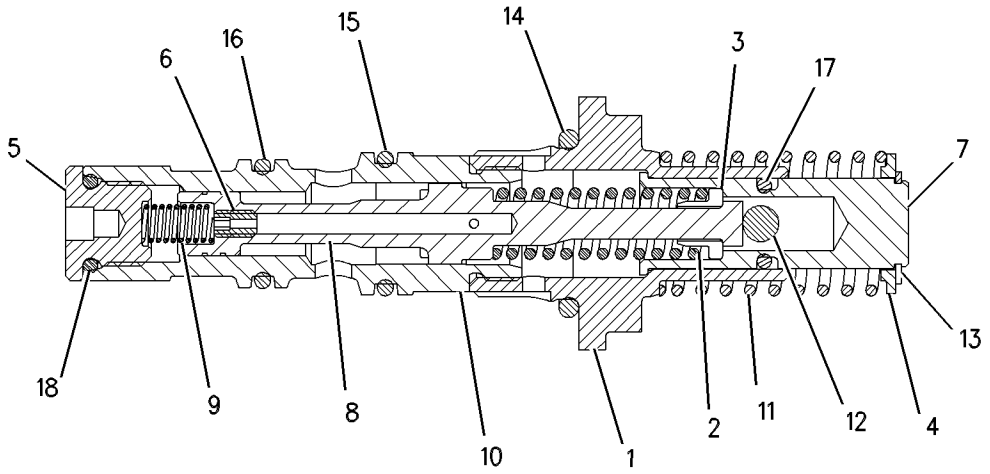

GRAPHIC #1 g00597577

172-0223 VALVE GP-PILOT CARTRIDGE

S/N: RBB1-UP
PART OF 136-9289 VALVE GP-PILOT
AN ATTACHMENT

SMCS-5059 **i01208675**

NOTE	REF NO	GRAPHIC REF	PART NUMBER	QTY	PART NAME 1 2 3 4 5 6 (PRODUCT LEVEL)	SEE PAGE
	1	1	**136-9304**	1	ADAPTER	
	2	1	**146-6316**	2	RETAINER	
	3	1	**146-6319**	1	RETAINER	
	4	1	**153-8925**	1	STOP	
	5	1	**171-4055**	1	SPRING	
	6	1	**116-4527**	1	ORIFICE	
	7	1	**146-6318**	1	PLUNGER	
	8	1	**153-8924**	1	SPOOL	
	9	1	**153-8926**	1	SPRING	
	10	1	**153-8929**	1	CAGE	
	11	1	**157-2153**	1	SPRING	
	12	1	**2H-3429**	1	RING-RETAINING	
	13	1	**3E-4354**	1	BALL	
	14	1	**3K-0360**	1	SEAL-O-RING (16.36MM ID)	
	15	1	**4K-2039**	1	SEAL-O-RING (12.42MM ID)	
	16	1	**6M-5062**	1	SEAL-O-RING (10.82MM ID)	
	17	1	**7I-6601**	1	SEAL-O-RING (6.73MM ID)	
	18	1	**7J-0204**	1	SEAL-O-RING (7.65MM ID)	

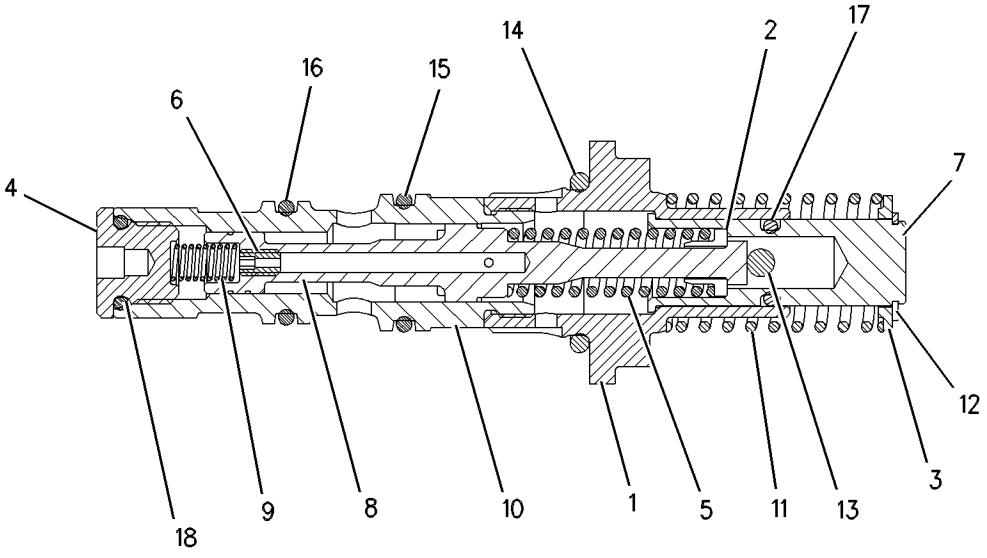

GRAPHIC #1 g00598081

212-4962 VALVE GP-PILOT CARTRIDGE

S/N: RTA1-UP; RBB1-UP

PART OF 212-1301, 212-1302, 212-1304, 212-1305, 212-1306, 212-1307 VALVE GP-PILOT AN ATTACHMENT

SMCS-5059 **i01822324**

NOTE	REF NO	GRAPHIC REF	PART NUMBER	QTY	PART NAME 1 2 3 4 5 6 (PRODUCT LEVEL)	SEE PAGE
	1	1	**116-4527**	1	ORIFICE	
	2	1	**6M-5062**	1	SEAL-O-RING	
	3	1	**146-6316**	2	RETAINER	
	4	1	**7I-6601**	1	SEAL-O-RING	
	5	1	**146-6319**	1	RETAINER	
	6	1	**153-8924**	1	SPOOL	
	7	1	**153-8925**	1	STOP	
	8	1	**153-8926**	1	SPRING	
	9	1	**153-8929**	1	CAGE	
	10	1	**7J-0204**	1	SEAL-O-RING	
	11	1	**157-2152**	1	SPRING	
	12	1	**2H-3429**	1	RING-RETAINING	
	13	1	**3E-4354**	1	BALL	
	14	1	**3K-0360**	1	SEAL-O-RING	
	15	1	**4K-2039**	1	SEAL-O-RING	

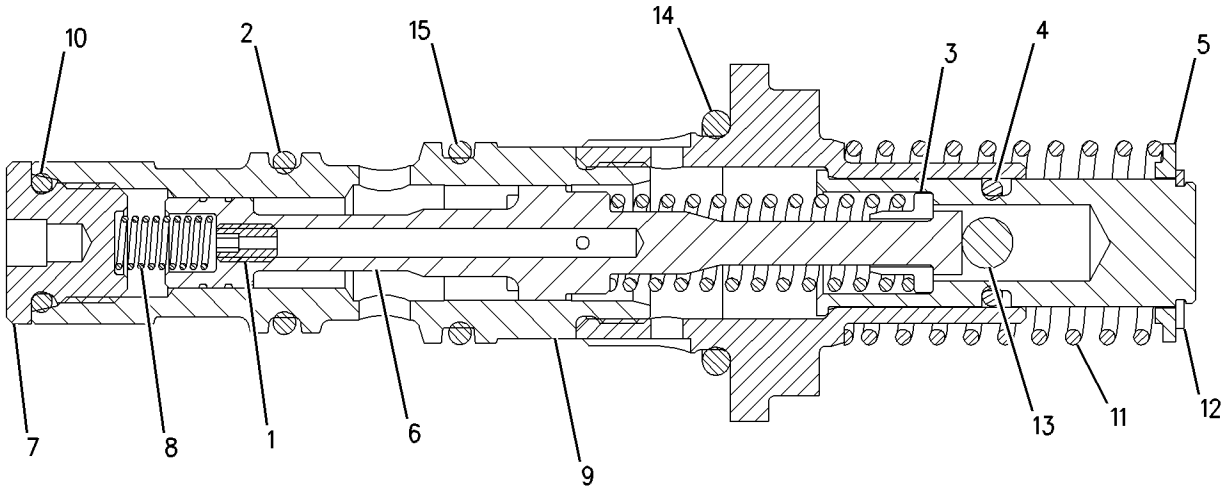

GRAPHIC #1 g00930437

212-4963 VALVE GP-PILOT CARTRIDGE

S/N: RTA1-UP; RBB1-UP
PART OF 212-1302, 212-1305, 212-1307 VALVE GP-PILOT
AN ATTACHMENT

SMCS-5059 **i01822407**

NOTE	REF NO	GRAPHIC REF	PART NUMBER	QTY	PART NAME 1 2 3 4 5 6 (PRODUCT LEVEL)	SEE PAGE
	1	1	**116-4527**	1	ORIFICE	
	2	1	**6M-5062**	1	SEAL-O-RING	
	3	1	**146-6316**	2	RETAINER	
	4	1	**7I-6601**	1	SEAL-O-RING	
	5	1	**146-6319**	1	RETAINER	
	6	1	**153-8924**	1	SPOOL	
	7	1	**153-8925**	1	STOP	
	8	1	**153-8926**	1	SPRING	
	9	1	**153-8929**	1	CAGE	
	10	1	**157-2153**	1	SPRING	
	11	1	**7J-0204**	1	SEAL-O-RING	
	12	1	**2H-3429**	1	RING-RETAINING	
	13	1	**3E-4354**	1	BALL	
	14	1	**3K-0360**	1	SEAL-O-RING	
	15	1	**4K-2039**	1	SEAL-O-RING	

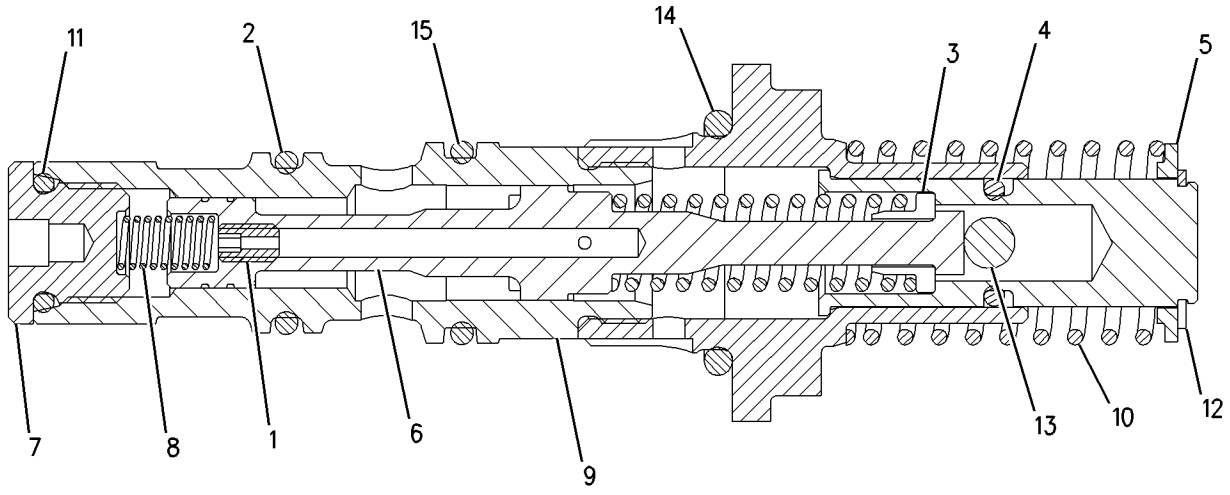

GRAPHIC #1 g00930441

HYDRAULIC SYSTEM

168-7323 VALVE GP-PRESS & FLOW CMPNSTR

S/N: RTA1-UP; RBB1-UP

PART OF 168-7873, 168-9027 PUMP GP-PISTON

SMCS-5086 **i01862748**

NOTE	REF NO	GRAPHIC REF	PART NUMBER	QTY	PART NAME 1 2 3 4 5 6 (PRODUCT LEVEL)	SEE PAGE
	1	1	**6E-6528**	6	SEAL	
	2	1	**6E-6527**	2	PLUG	
	3	1	**6E-3268**	1	RETAINER-SPRING	
	4	1	**6E-3275**	1	SPRING	
	5	1	**6E-3274**	1	SPRING	
	6	1	**033-6043**	1	SEAL-O-RING	
	7	1	**6E-3272**	1	SEAT	
	8	1	**6E-6540**	1	PLUG	
M	9	1	**6E-6538**	2	NUT-ADJUSTMENT (M8X1 THD)	
M	10	1	**6E-6537**	2	SCREW-ADJUSTMENT (M8X1X28MM)	
M	11	1	**6E-6539**	2	NUT-CAP (M8X1 THD)	
	12	1	**6E-3273**	1	SEAT	
	13	1	**6E-6536**	1	PLUG	
	14	1	**6E-3269**	1	RETAINER-SPRING	
	15	1	**105-2145**	1	VALVE-ORIFICE	
	16	1	**5P-9262**	1	SEAL-O-RING	
	17	1	**9S-8002**	1	PLUG	
	18	1	**3J-7354**	1	SEAL-O-RING	
	19	1	**6V-8352**	1	SEAL-O-RING	
M	20	1	**8T-8442**	4	BOLT-SOCKET HEAD (M6X1X30MM)	
	21	1	**9X-7680**	3	SEAL-O-RING	
	22	1	**6E-3276**	1	SPRING	

M-METRIC PART

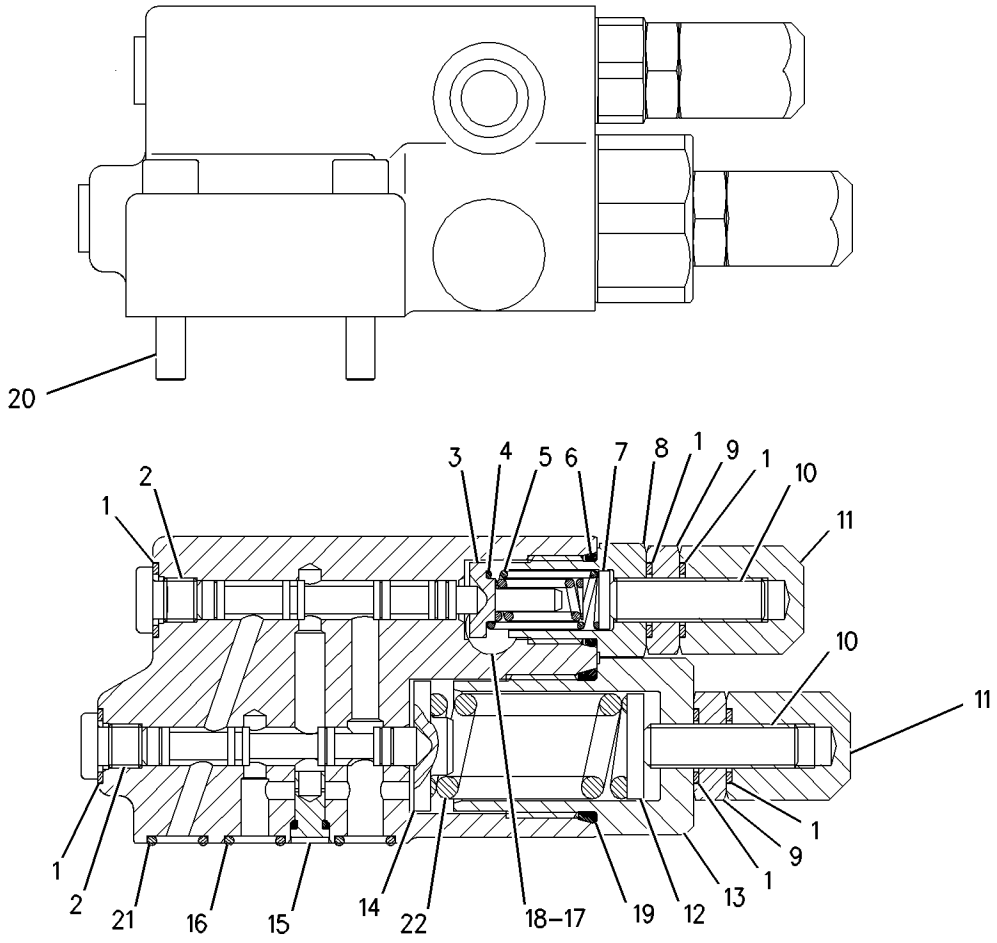

GRAPHIC #1 g00831780

185-5209 VALVE GP-PRESSURE REDUCING

S/N: RTA1-UP; RBB1-UP

PART OF 203-3874 LINES GP-PILOT

SMCS-5117 **i01862793**

NOTE	REF NO	GRAPHIC REF	PART NUMBER	QTY	PART NAME 1 2 3 4 5 6 (PRODUCT LEVEL)	SEE PAGE
	1	1	**119-8397**	1	VALVE GP-CHECK	
		1	**9N-1756**	1	SEAL-O-RING	
		1	**033-5853**	1	SEAL-O-RING	
		1	**126-5985**	1	RING-BACKUP	
	2	1	**184-9975**	1	VALVE GP-PRESSURE REDUCING	
		1	**6V-6924**	2	RING-BACKUP	
		1	**6V-5758**	1	SEAL-O-RING	
		1	**033-6027**	1	SEAL-O-RING	
		1	**033-6043**	1	SEAL-O-RING	
		1	**185-2327**	2	RING-BACKUP	

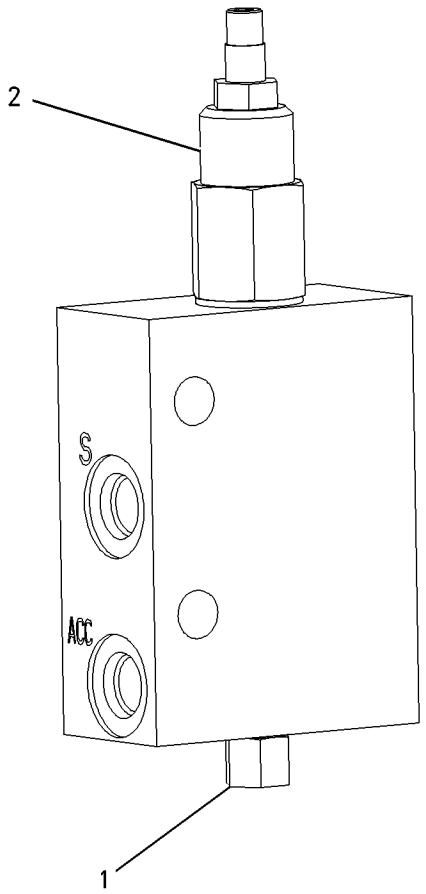

GRAPHIC #1 g00685814

HYDRAULIC SYSTEM

193-4750 VALVE GP-QUICK COUPLER

S/N: RBB1-UP
PART OF 217-2771, 217-2773 LINES GP-COUPLER
AN ATTACHMENT

SMCS-5491 **i01859606**

NOTE	REF NO	GRAPHIC REF	PART NUMBER	QTY	PART NAME 1 2 3 4 5 6 (PRODUCT LEVEL)	SEE PAGE
Y	1	1	**3E-9205**	1	VALVE GP-SOLENOID (QUICK COUPLER)	490
	2	1	**154-5225**	2	VALVE GP-SHUTTLE	
		1	**2M-9780**	1	SEAL-O-RING	
		1	**6V-8398**	1	SEAL-O-RING	
		1	**161-6161**	2	RING-BACKUP	
		1	**169-1616**	2	RING	
		1	**095-1751**	1	SEAL-O-RING	
	3	1	**201-8080**	1	MANIFOLD AS	

Y-SEPARATE ILLUSTRATION

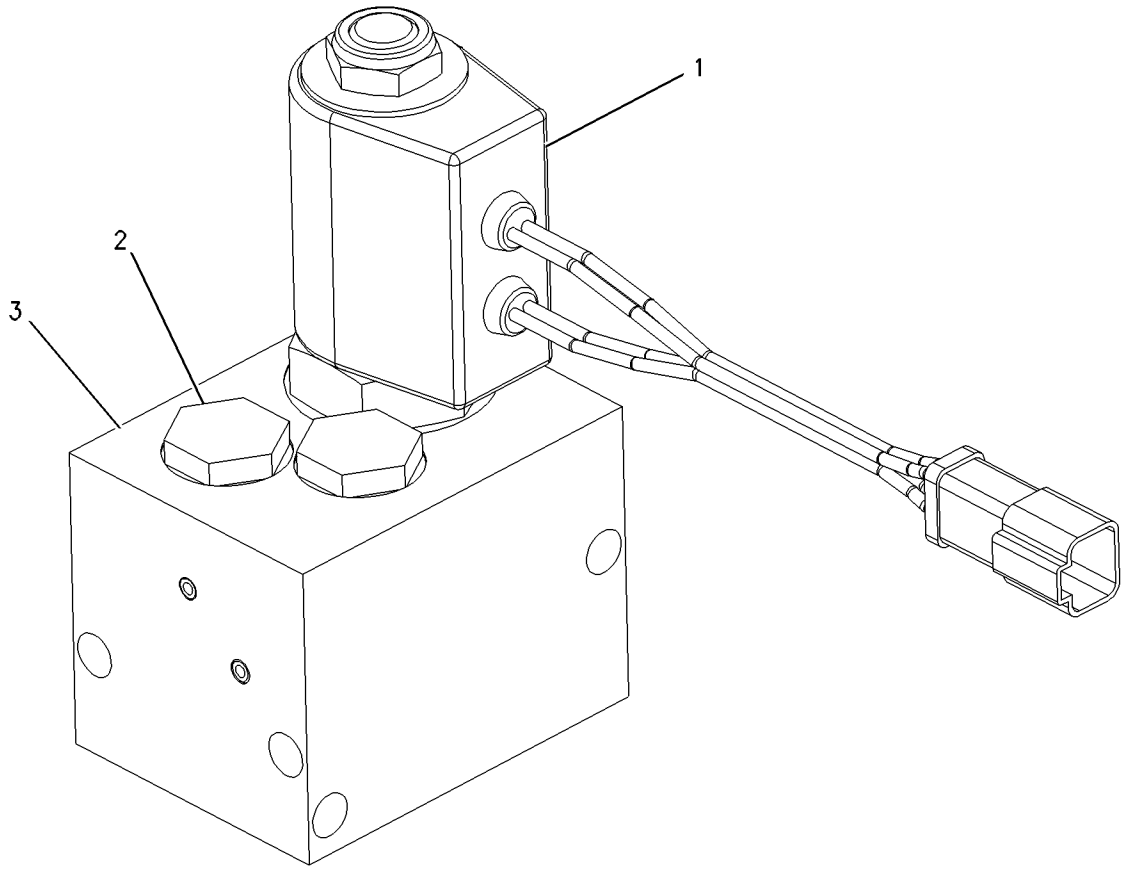

GRAPHIC #1 g00906392

192-0086 VALVE GP-RIDE CONTROL

S/N: RTA1-UP; RBB1-UP
PART OF 203-8555, 203-8557 LINES GP-RIDE CONTROL
AN ATTACHMENT

SMCS-5054 **i01820049**

NOTE	REF NO	GRAPHIC REF	PART NUMBER	QTY	PART NAME 1 2 3 4 5 6 (PRODUCT LEVEL)	SEE PAGE
	1	1	**160-0269**	1	ORIFICE GP	
		1	**4J-7533**	1	SEAL-O-RING	
	2	1	**190-8308**	1	CARTRIDGE AS	
		1	**193-5958**	1	KIT-SEAL	
					(INCLUDES SEALS AND RINGS)	
	3	1	**190-8310**	1	MANIFOLD AS	
		1	**219-1790**	3	PLUG AS	
		1	**4J-7533**	1	SEAL-O-RING	
	4	1	**190-8314**	1	SPOOL-VALVE	
Y	5	1	**201-0950**	1	VALVE GP-SOLENOID (RIDE CONTROL)	492
	6	1	**206-3632**	1	VALVE-CHECK	
		1	**143-5446**	1	KIT-SEAL	
					(INCLUDES SEALS AND RINGS)	
	7	1	**9S-8004**	3	PLUG	
					AVAILABLE REPAIR KIT(S):	
			196-2408	1	KIT-SERVICE	
					(INCLUDES BALLS, SEATS, O-RINGS, SPRING, SPRING GUIDE AND SEAT)	

Y-SEPARATE ILLUSTRATION

192-0086 VALVE GP-RIDE CONTROL *(contd.)* i01820049

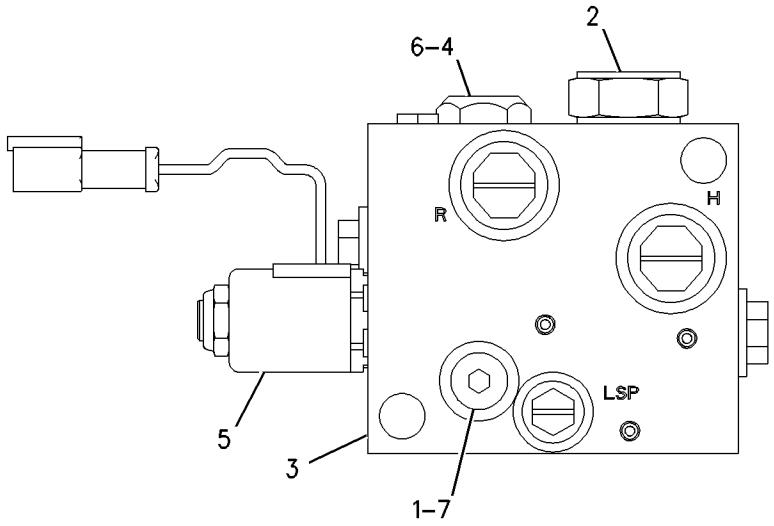

GRAPHIC #1 g00896832

HYDRAULIC SYSTEM

225-1057 VALVE GP-SHUTOFF

S/N: RTA1-UP; RBB1-UP
PART OF 225-1059, 225-1060, 225-1061, 225-1062, 225-1063, 225-1064 CONTROL
GP-PILOT OPERATED HYD
AN ATTACHMENT

SMCS-5059, 5130 **i01817476**

NOTE	REF NO	GRAPHIC REF	PART NUMBER	QTY	PART NAME 1 2 3 4 5 6 (PRODUCT LEVEL)	SEE PAGE
	1	1	**6V-1178**	1	PLUG-BUTTON	
	2	1	**8R-3695**	1	GROMMET	
J	3	1	**222-3138**	1	VALVE & MTG GP-SOLENOID (PILOT ON/OFF)	
M	3A	1	**8T-1158**	1	BOLT-SOCKET HEAD (M8X1.25X20MM)	
	3B	1	**208-2978**	1	MANIFOLD	
	3C	1	**225-0300**	1	VALVE GP-SOLENOID	
	3D	1	**212-0061**	1	FLANGE	
	4	1	**226-2095**	1	FILM (BLACK)	
	5	1	*148-8378*	3	ELBOW AS	
					(EACH INCLUDES)	
		1	**3J-1907**	1	SEAL-O-RING	
		1	**6V-8397**	1	SEAL-O-RING	
		1	**6V-8724**	1	ELBOW	
M	6	1	**2Y-5829**	2	NUT (M10X1.5 THD)	
	7	1	**6V-5839**	4	WASHER (11X21X2.5MM THK)	
M	8	1	**6V-7981**	2	BOLT (M10X1.50X70MM)	
					AVAILABLE REPAIR KIT(S):	
J			**200-2371**	1	KIT-SEAL (INCLUDES 4 SEAL RINGS)	

J-KIT MARKED AVAILABLE FOR PART MARKED J
M-METRIC PART

225-1057 **VALVE GP-SHUTOFF** ***(contd.)*** **i01817476**

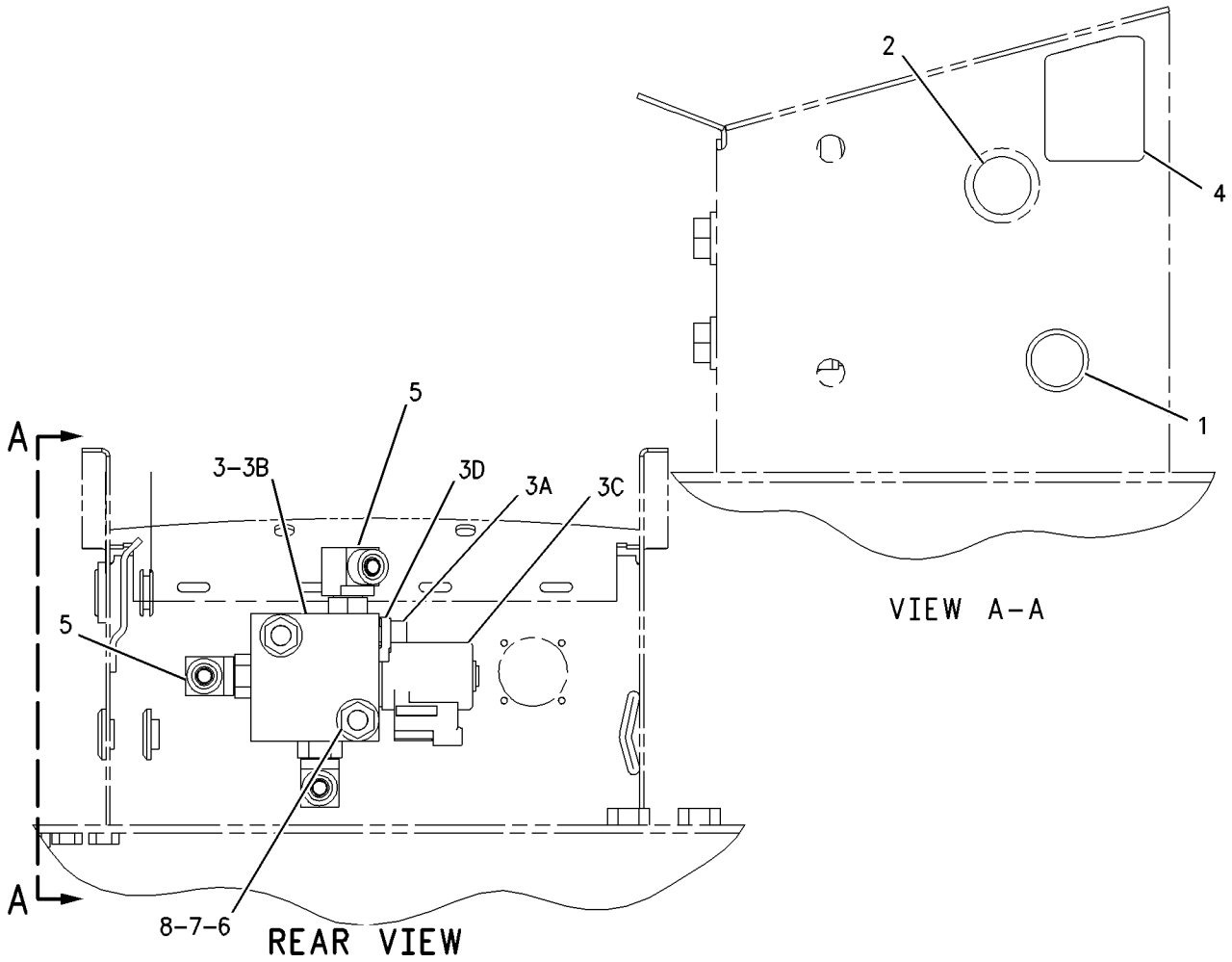

GRAPHIC #1 g00930477

3E-9205 VALVE GP-SOLENOID–QUICK COUPLER

S/N: RBB1-UP
24 VOLT
PART OF 193-4750 VALVE GP-QUICK COUPLER
AN ATTACHMENT

SMCS-4805, 5132, 5479 **i01229572**

NOTE	REF NO	GRAPHIC REF	PART NUMBER	QTY	PART NAME 1 2 3 4 5 6 (PRODUCT LEVEL)	SEE PAGE
	1	1	**6T-9244**	1	CARTRIDGE AS	
	2	1	**3E-8581**	1	COIL AS	
	3	1	**102-8804**	1	KIT-RECEPTACLE (4 PIN)	
					(INCLUDES RECEPTACLE AS & WEDGE)	
		1	**3E-3377**	1	WEDGE-RECEPTACLE LOCK	
		1	**8T-8729**	4	PIN-CONNECTOR	
	4	1	**1S-9593**	2	STRAP-CABLE (0.62IN DIA)	
	5	1	**157-2284**	1	LOCKNUT-SPECIAL (5/8-18 THD)	
	6	1	**160-5843**	1	WASHER-IDENTIFICATION	
	7	1	**160-5844**	1	SPRING-BELLEVILLE	
					AVAILABLE REPAIR KIT(S):	
			6T-3381	1	KIT-SEAL	

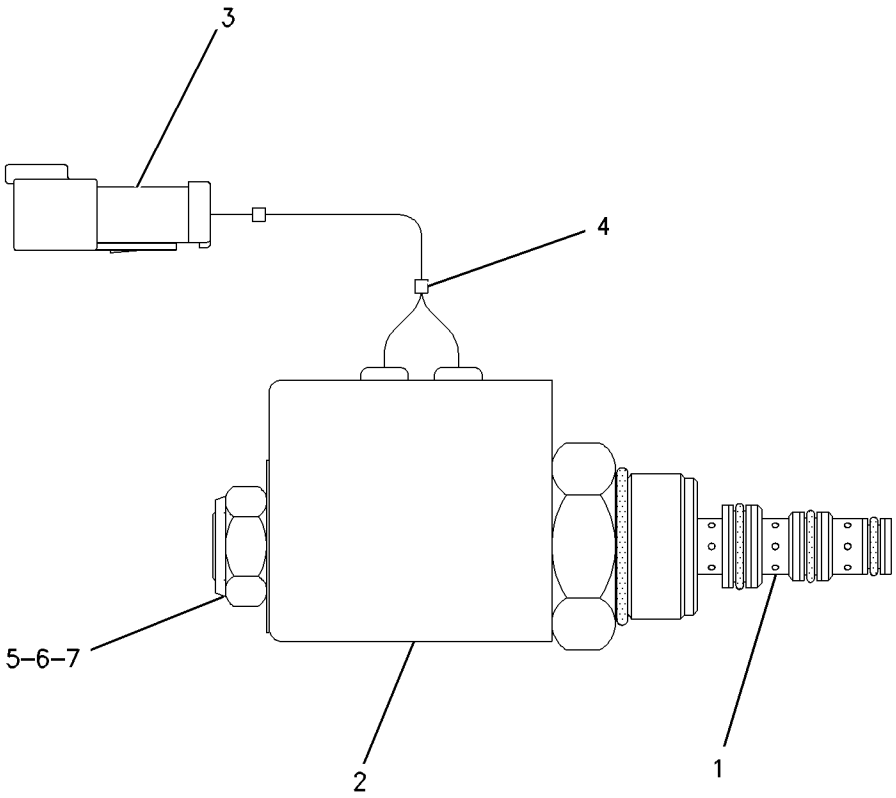

GRAPHIC #1 g00657410

189-2100 VALVE GP-SOLENOID—REVERSING FAN

S/N: RTA1-UP; RBB1-UP
24 VOLT
PART OF 205-3668 MOTOR GP-GEAR
AN ATTACHMENT

SMCS-4805, 5132, 5479 **i01827449**

NOTE	REF NO	GRAPHIC REF	PART NUMBER	QTY	PART NAME 1 2 3 4 5 6 (PRODUCT LEVEL)	SEE PAGE
	1	1	**8C-9987**	1	WASHER (8.3X28X2.5MM THK)	
	2	1	**111-0343**	1	LOCKNUT (5/16-18 THD)	
	3	1	**189-0189**	1	COIL AS	
		1	**1S-9593**	2	STRAP-CABLE	
		1	**102-8802**	1	KIT-RECEPTACLE (2 PIN)	
		1	**3E-3365**	1	WEDGE-RECEPTACLE LOCK (2 PIN)	
		1	**186-3735**	1	PIN-CONNECTOR	
J	4	1	*189-2096*	1	CARTRIDGE AS-VALVE	
		1	**8C-9987**	1	WASHER (8.3X28X2.5MM THK)	
		1	**111-0343**	1	LOCKNUT (5/16-18 THD)	
					AVAILABLE REPAIR KIT(S):	
J			**6T-7054**	1	KIT-SEAL	

J-KIT MARKED J SERVICES PART MARKED J

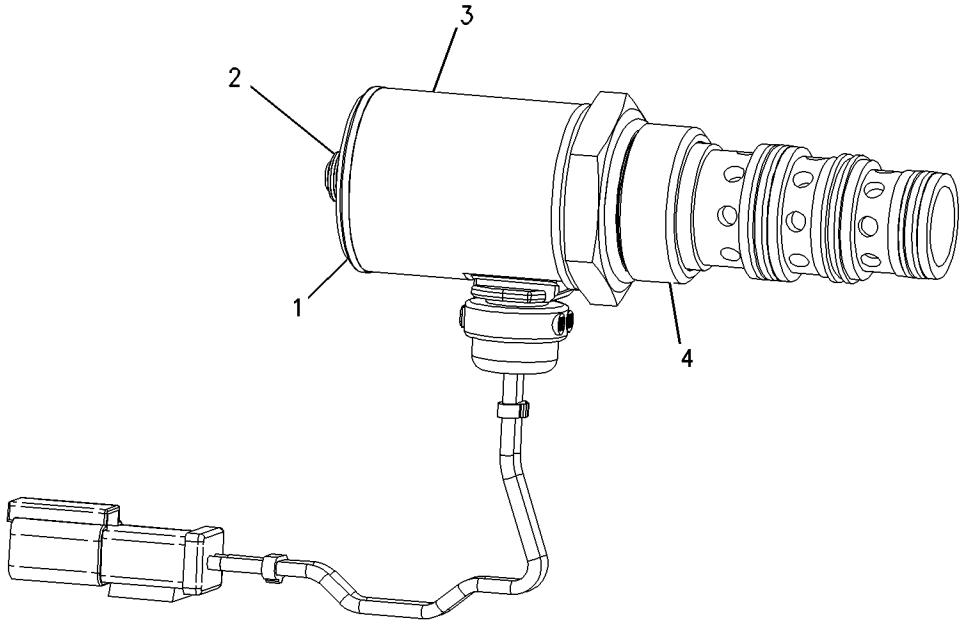

GRAPHIC #1 g00891427

201-0950 VALVE GP-SOLENOID—RIDE CONTROL

S/N: RTA1-UP; RBB1-UP
24 VOLT. RIDE CONTROL
PART OF 192-0086 VALVE GP-RIDE CONTROL
AN ATTACHMENT

SMCS-4805, 5132, 5479 **i01820077**

NOTE	REF NO	GRAPHIC REF	PART NUMBER	QTY	PART NAME 1 2 3 4 5 6 (PRODUCT LEVEL)	SEE PAGE
	1	1	**122-1133**	1	COIL AS	
		1	**1S-9593**	2	STRAP-CABLE	
		1	**186-3735**	2	PIN-CONNECTOR	
		1	**102-8802**	1	KIT-RECEPTACLE (2 PIN)	
	2	1	**156-5970**	1	NUT (1/2-20-2B THD)	
	3	1	**171-8772**	1	VALVE AS-SOLENOID	
		1	**156-5970**	1	NUT (1/2-20-2B THD)	
					AVAILABLE REPAIR KIT(S):	
			195-7430	1	KIT-SEAL	

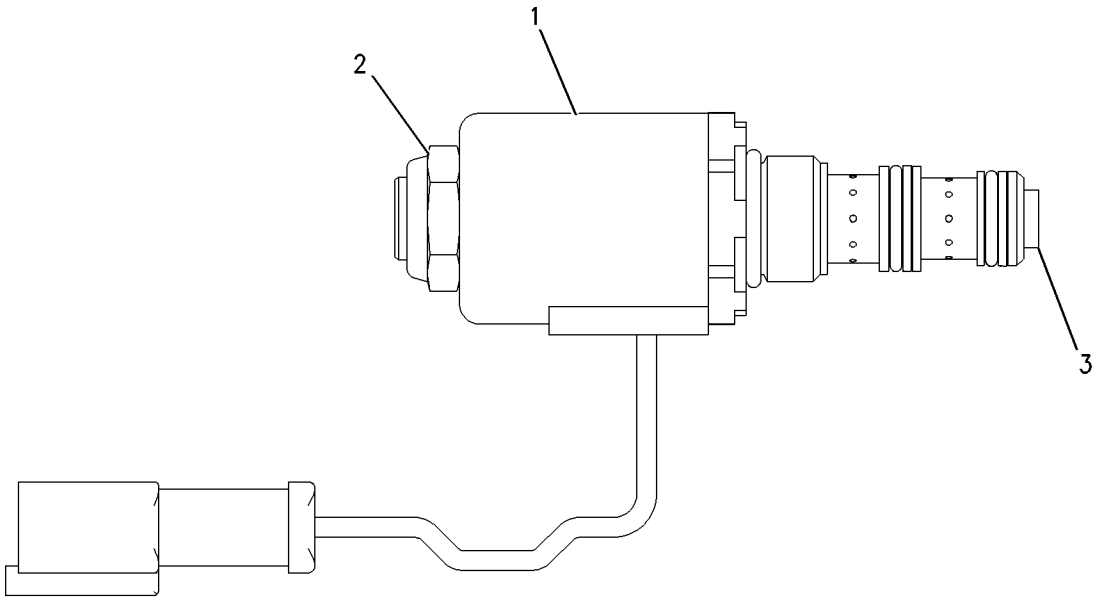

GRAPHIC #1 g00888488

HYDRAULIC SYSTEM

211-2092 VALVE GP-SOLENOID

S/N: RTA1-UP; RBB1-UP
24 VOLT
PART OF 205-3668, 205-3669 MOTOR GP-GEAR
AN ATTACHMENT

SMCS-4805, 5132, 5479 **i01827675**

NOTE	REF NO	GRAPHIC REF	PART NUMBER	QTY	PART NAME 1 2 3 4 5 6 (PRODUCT LEVEL)	SEE PAGE
	1	1	**123-3132**	1	RING-BACKUP	
	2	1	**8L-2779**	1	SEAL-O-RING (9.25MM ID)	
	3	1	**224-5846**	1	COIL AS	
		1	**033-6032**	1	SEAL-O-RING	
	4	1	**033-6028**	1	SEAL-O-RING	

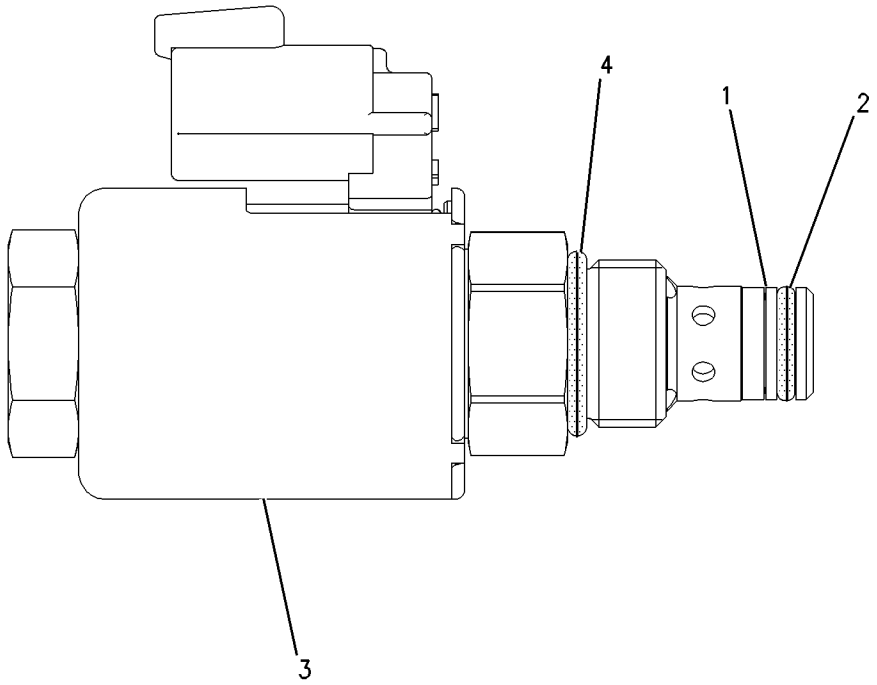

GRAPHIC #1 g00898928

IMPLEMENTS

142-8464 BRACKET GP-TRANSPORT

S/N: RTA1-UP
AN ATTACHMENT

SMCS-7505 **i01200357**

NOTE	REF NO	GRAPHIC REF	PART NUMBER	QTY	PART NAME 1 2 3 4 5 6 (PRODUCT LEVEL)	SEE PAGE
	1	1	**107-2503**	1	RETAINER	
	2	1	**140-3024**	2	BRACKET AS	
	3	1	**8T-4121**	2	WASHER (2.5MM THK)	
M	4	1	**8T-6685**	2	BOLT (M10X1.50X110MM)	

M-METRIC PART

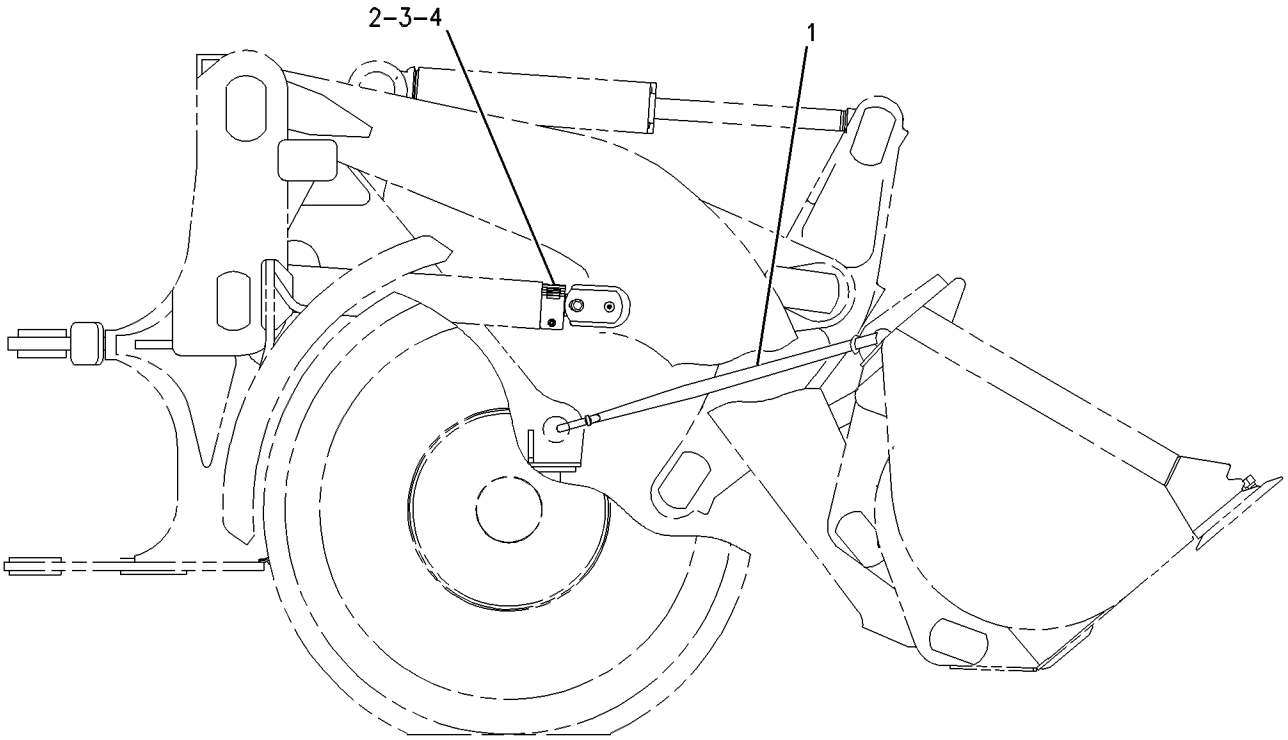

RIGHT SIDE VIEW

GRAPHIC #1 g00636691

IMPLEMENTS

163-4330 BRACKET GP-TRANSPORT

S/N: RBB1-UP
AN ATTACHMENT

SMCS-7505 **i01822911**

NOTE	REF NO	GRAPHIC REF	PART NUMBER	QTY	PART NAME 1 2 3 4 5 6 (PRODUCT LEVEL)	SEE PAGE
	1	1	**107-2503**	1	RETAINER	
	2	1	**177-4240**	2	BRACKET AS	
	3	1	**8T-4121**	2	WASHER-HARD (11X21X2.5MM THK)	
M	4	1	**8T-6685**	2	BOLT (M10X1.50X110MM)	

M-METRIC PART

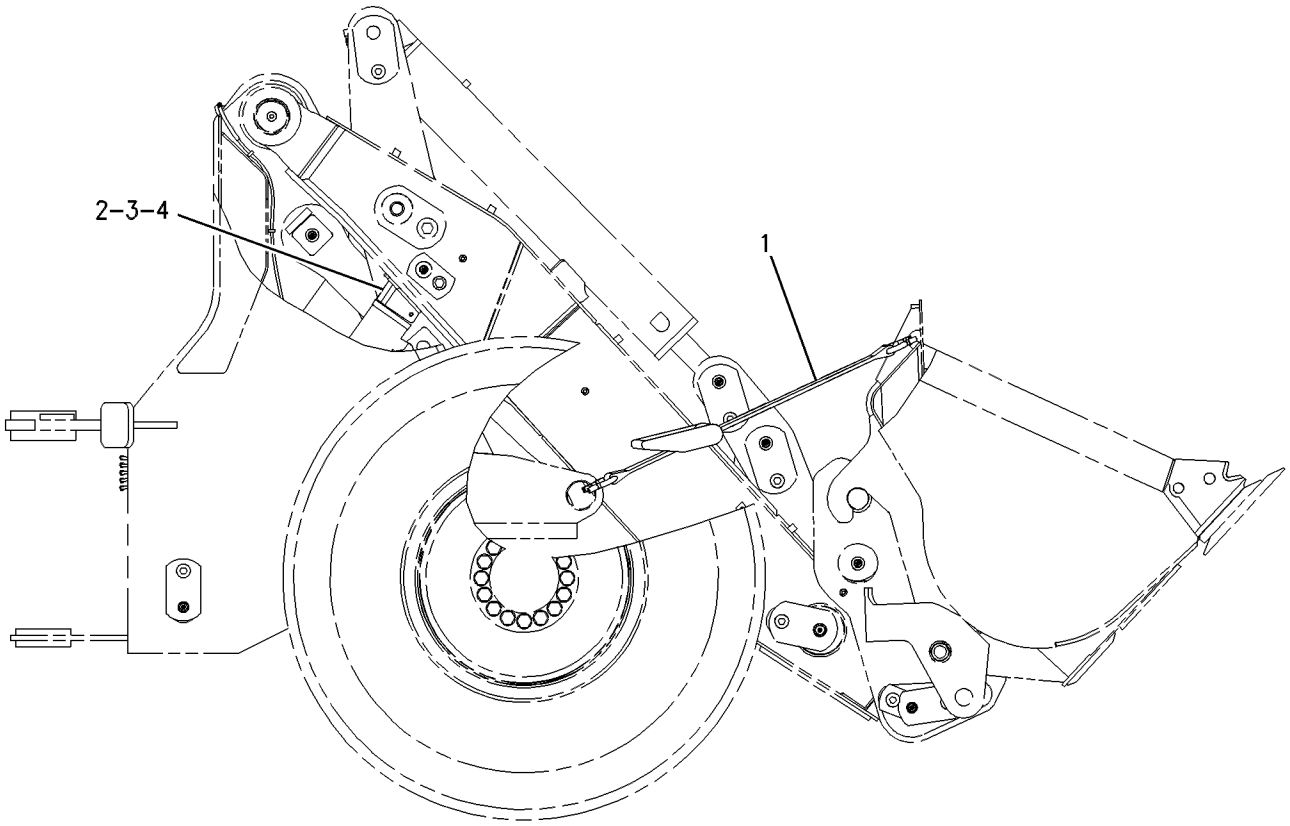

RIGHT SIDE VIEW

GRAPHIC #1 g00642372

148-7790 CONTROL GP-BUCKET

S/N: RTA1-UP

PART OF 176-5201 CHASSIS AR

SMCS-6107 **i01859992**

NOTE	REF NO	GRAPHIC REF	PART NUMBER	QTY	PART NAME 1 2 3 4 5 6 (PRODUCT LEVEL)	SEE PAGE
	1	1	**3B-8488**	1	FITTING-GREASE (1/8-27 THD)	
	2	1	**3B-8491**	5	FITTING-GREASE (1/8-27 THD)	
	3	1	**4V-4905**	2	SPACER (13.5MM THK)	
	4	1	**5V-6454**	4	WASHER (1.6MM THK)	
	5	1	**5V-6455**	2	WASHER (52X120X1.0 THK)	
	6	1	**7K-9203**	4	SEAL-LIP	
	7	1	**7K-9204**	2	SEAL-LIP	
	8	1	**7K-9205**	14	SEAL-LIP	
	9	1	**7K-9208**	4	SEAL-LIP	
	10	1	**7K-9212**	2	SEAL-LIP	
B	11	1	**176-0623**	4	WASHER (78X160X1.6MM THK)	
B	12	1	**176-0624**	10	WASHER (78X160X3MM THK)	
	13	1	**148-7797**	1	LEVER AS	
		1	**4V-4453**	2	BEARING-SLEEVE (89.185MM ID)	
	14	1	**148-7798**	1	LINK AS	
		1	**3G-2797**	1	BEARING-SLEEVE (63.741MM ID)	
		1	**4V-8643**	1	BEARING-SLEEVE (57.379MM ID)	
	15	1	**148-7800**	1	ARM AS-LIFT	
		1	**4V-8631**	2	BEARING-SLEEVE (51.018MM ID)	
		1	**9C-6003**	2	BEARING	
		1	**9C-6809**	2	BLOCK	
		1	**9V-3404**	2	BEARING-SLEEVE	
	16	1	**148-7870**	2	PIN AS	
	17	1	**148-7871**	2	PIN AS	
	18	1	**148-7872**	1	PIN AS	
	19	1	**148-7873**	2	PIN AS	
	20	1	**148-7874**	1	PIN AS	
	21	1	**148-7875**	1	PIN AS	
	22	1	**148-7876**	2	PIN AS	
	23	1	**148-7877**	2	PIN AS	
	24	1	**2D-4867**	2	FITTING-GREASE (1/8-27 THD)	
	25	1	**3B-8489**	5	FITTING-GREASE	
	26	1	**3E-9411**	2	WASHER-HARD (17.5X38X6MM THK)	
	27	1	**7X-0618**	11	WASHER-HARD (13.5X40X5MM THK)	
M	28	1	**8T-4192**	11	BOLT (M12X1.75X25MM)	
M	29	1	**8T-4193**	2	BOLT (M16X2X50MM)	

B-USE AS REQUIRED
M-METRIC PART

148-7790 **CONTROL GP-BUCKET** *(contd.)* **i01859992**

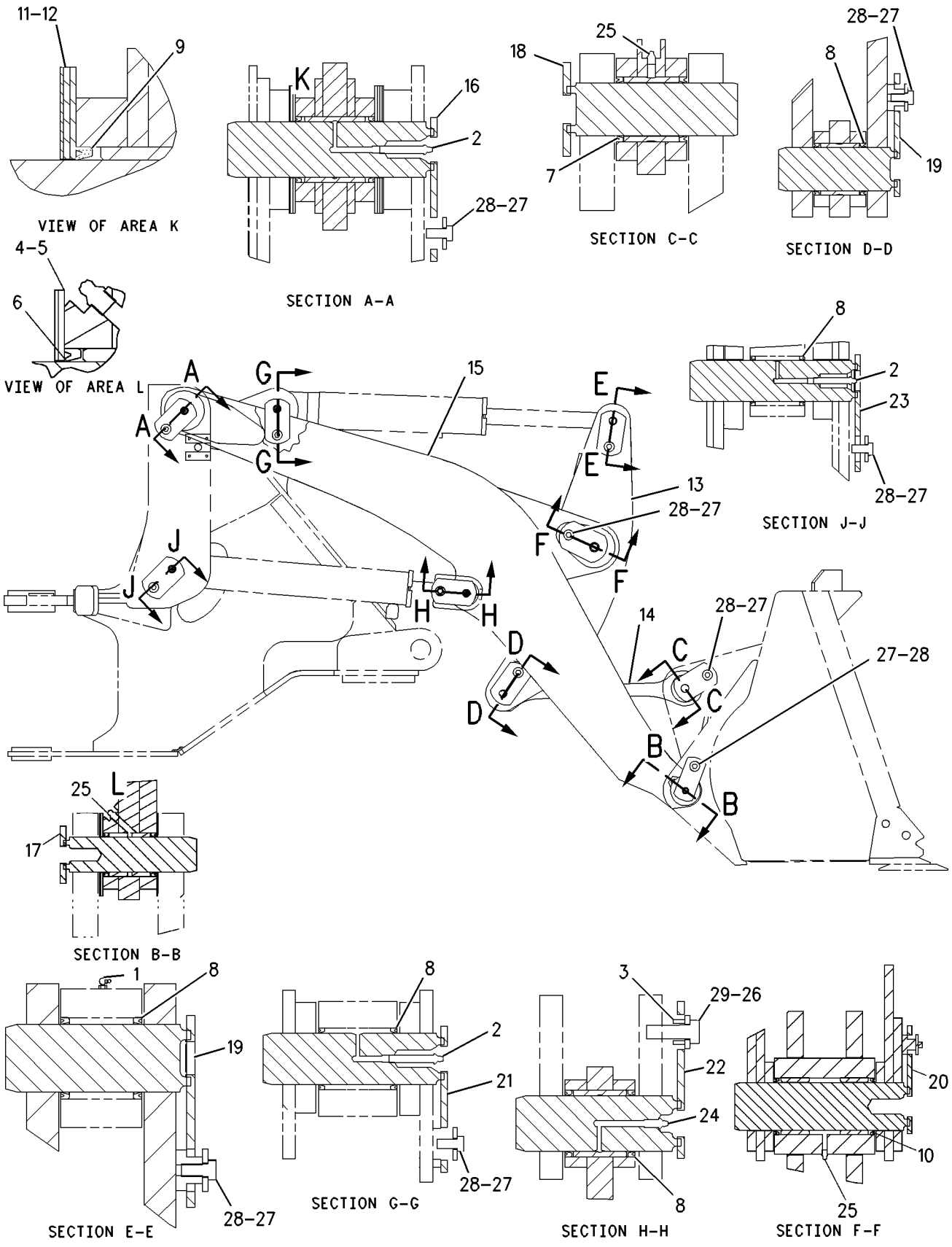

GRAPHIC #1 g00648646

IMPLEMENTS

132-2350 CONTROL GP-WORK TOOL

S/N: RBB1-UP
STANDARD
AN ATTACHMENT

SMCS-6116, 6117, 6119, 6700 **i01859997**

NOTE	REF NO	GRAPHIC REF	PART NUMBER	QTY	PART NAME 1 2 3 4 5 6 (PRODUCT LEVEL)	SEE PAGE
E	1	1	**121-0199**	2	WRAP-SPIRAL (3/8 IN OD) (29CM)	
	2	1,2	**3B-6552**	4	ELBOW	
	3	1	**3B-7734**	1	NIPPLE-PIPE	
	4	1,2	**3G-0572**	2	HOSE AS	
	5	2	**5T-3821**	1	HOSE AS	
	6	2	**7K-1181**	7	STRAP-CABLE	
	7	1,2	**7K-9205**	8	SEAL-LIP	
	8	1	**7K-9208**	4	SEAL-LIP	
	9	1,2	**7K-9209**	10	SEAL-LIP	
	10	1,2	**7K-9212**	8	SEAL-LIP	
	11	2	**7K-9216**	2	SEAL-LIP	
	12	1	**8B-4884**	1	ELBOW	
	13	2	**9C-7907**	3	SPACER (14MM THK)	
	14	1	**107-9976**	4	SEAL-O-RING	
	15	2	**118-2722**	2	SEAL-O-RING	
	16	1	**132-2300**	1	ARM & BEARING AS	
	16A	1	**7P-3466**	2	BEARING-SLEEVE (70.102MM ID)	
	16B	1	**4V-4453**	4	BEARING-SLEEVE (89.185MM ID)	
	17	1	**132-2351**	1	LEVER & BEARING AS	
	17A	1	**4V-8639**	2	BEARING-SLEEVE (76.481MM ID)	
	18	1	**132-2357**	1	LINK & BEARING AS	
	18A	1	**4V-8639**	2	BEARING-SLEEVE (76.481MM ID)	
	18B	1	**7P-8753**	1	BEARING	
	19	1	**143-4969**	1	LEVER & BEARING AS	
	19A	1	**4V-2879**	2	BEARING-SLEEVE (101.91MM ID)	
	20	1	**143-4979**	1	LINK & BEARING AS	
	20A	1	**4V-4453**	2	BEARING-SLEEVE (89.185MM ID)	
	21	2	**146-7990**	1	PIN AS	
	22	1	**146-7993**	2	PIN AS	
	23	2	**146-7996**	2	PIN AS	
	24	1	**146-8000**	1	PIN AS	
	25	2	**146-8009**	1	PIN AS	
	26	1	**146-8010**	2	PIN AS	
	27	1	**146-8013**	1	PIN AS	
	28	2	**146-8016**	1	PIN AS	
	29	2	**146-8019**	1	PIN AS	
BG	30	2	**160-2243**		SLEEVE-ABRASION (1IN)	
	31	1	**163-4361**	1	HOSE AS	
	32	2	**163-4362**	1	HOSE AS	
	33	2	**177-1452**	2	WASHER-HARD	
B	34	1	**194-7109**	4	SHIM (1MM THK)	
B		1	**194-7110**	2	SHIM (0.5MM THK)	
E	35	2	**121-0199**		WRAP-SPIRAL (3/8 IN OD) (17.5CM)	
B	36	1	**194-7111**	2	SHIM (4MM THK)	
B		1	**194-7112**	2	SHIM (2MM THK)	
	37	2	**9X-8582**	3	CLIP	
	38	1	**002-0639**	1	ADAPTER-PIPE	
	39	2	**1M-8652**	2	RING-RETAINING	
	40	1,2	**3B-8489**	9	FITTING-GREASE	
	41	1,2	**3B-8491**	4	FITTING-GREASE (1/8-27 THD)	
	42	2	**3E-9411**	2	WASHER-HARD (17.5X38X6MM THK)	
	43	2	**4D-8123**	1	CLIP	
	44	1,2	**7X-0618**	7	WASHER-HARD (13.5X40X5MM THK)	
	45	2	**8T-4121**	3	WASHER-HARD (11X21X2.5MM THK)	
M	46	2	**8T-4137**	3	BOLT (M10X1.5X20MM)	

132-2350 **CONTROL GP-WORK TOOL** *(contd.)*

i01859997

NOTE	REF NO	GRAPHIC REF	PART NUMBER	QTY	PART NAME 1 2 3 4 5 6 (PRODUCT LEVEL)	SEE PAGE
M	47	1,2	**8T-4192**	7	BOLT (M12X1.75X25MM)	
M	48	2	**8T-4193**	2	BOLT (M16X2X50MM)	
M	49	2	**8T-6430**	2	BOLT (M20X2.5X50MM)	

B-USE AS REQUIRED
E-ORDER BY THE CENTIMETER
G-ORDER BY THE INCH
M-METRIC PART

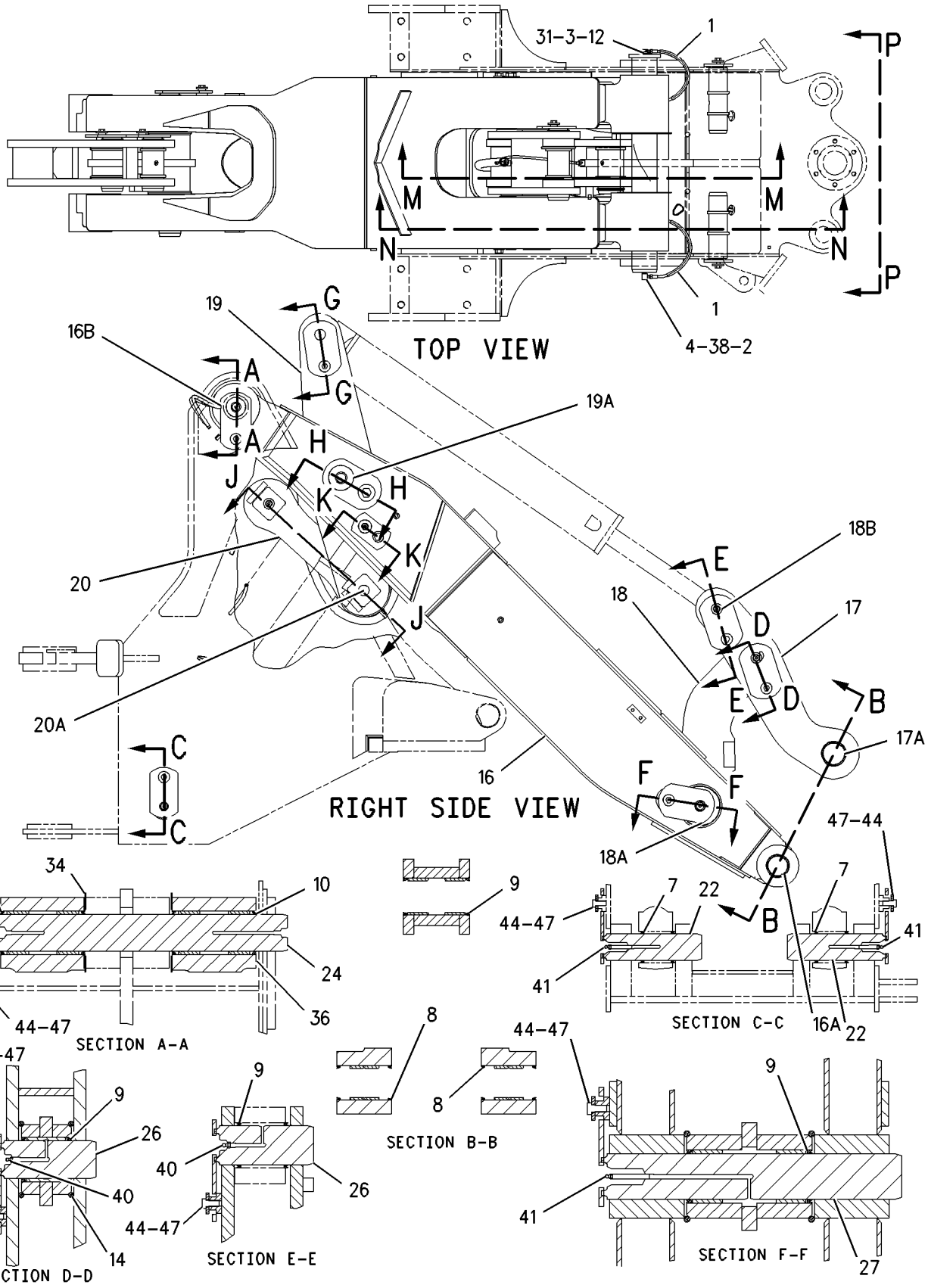

GRAPHIC #1 g00796914

132-2350 **CONTROL GP-WORK TOOL** *(contd.)* **i01859997**

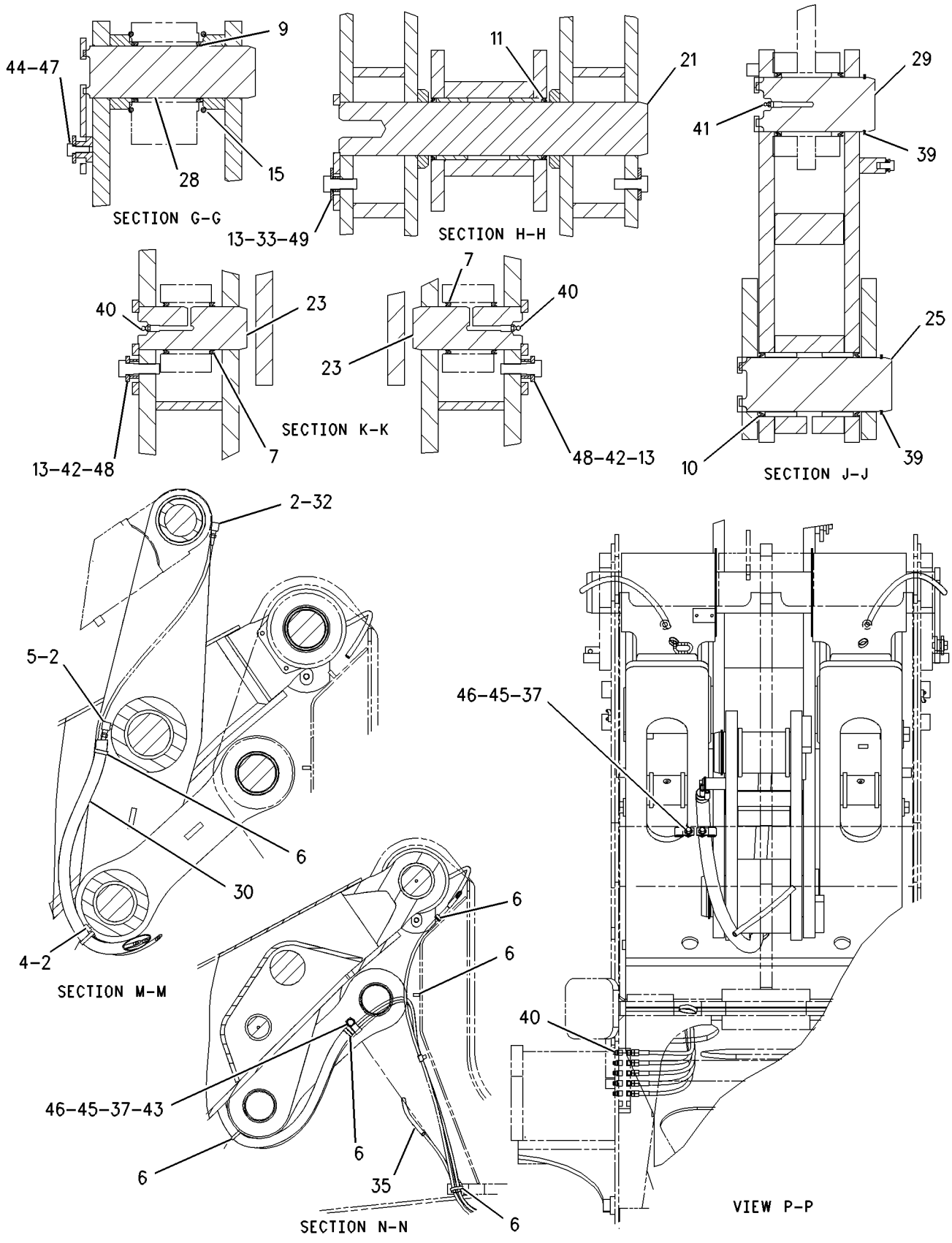

GRAPHIC #2 g00796912

IMPLEMENTS

148-7680 CONTROL GP-WORK TOOL—HIGH LIFT

S/N: RBB1-UP

AN ATTACHMENT

SMCS-6116, 6117, 6119, 6700 **i01862800**

NOTE	REF NO	GRAPHIC REF	PART NUMBER	QTY	PART NAME 1 2 3 4 5 6 (PRODUCT LEVEL)	SEE PAGE
E	1	2	**121-0199**	2	WRAP-SPIRAL (3/8 IN OD) (29CM)	
	2	2	**3B-6552**	4	ELBOW	
	3	2	**3B-7734**	1	NIPPLE-PIPE	
	4	2	**3G-0572**	2	HOSE AS	
	5	2	**5T-3821**	1	HOSE AS	
	6	2	**7K-1181**	7	STRAP-CABLE	
	7	1	**7K-9205**	8	SEAL-LIP	
	8	1	**7K-9208**	4	SEAL-LIP	
	9	1	**7K-9209**	10	SEAL-LIP	
	10	1	**7K-9212**	8	SEAL-LIP	
	11	1	**7K-9216**	2	SEAL-LIP	
	12	2	**8B-4884**	1	ELBOW	
	13	1	**9C-7907**	3	SPACER (14MM THK)	
	14	1	**107-9976**	4	SEAL-O-RING	
	15	1	**118-2722**	2	SEAL-O-RING	
	16	1	**132-2357**	1	LINK & BEARING AS	
		1	**4V-8639**	2	BEARING-SLEEVE (76.481MM ID)	
		1	**7P-8753**	1	BEARING	
	17	1	**143-4969**	1	LEVER & BEARING AS	
		1	**4V-2879**	2	BEARING-SLEEVE (101.91MM ID)	
	18	1	**143-4979**	1	LINK & BEARING AS	
		1	**4V-4453**	2	BEARING-SLEEVE (89.185MM ID)	
	19	1	**146-7990**	1	PIN AS	
	20	1	**146-7993**	2	PIN AS	
	21	1	**146-7996**	2	PIN AS	
	22	1	**146-8000**	1	PIN AS	
	23	1	**146-8009**	1	PIN AS	
	24	1	**146-8010**	2	PIN AS	
	25	1	**146-8013**	1	PIN AS	
	26	1	**146-8016**	1	PIN AS	
	27	1	**146-8019**	1	PIN AS	
	28	1	**148-7681**	1	LEVER & BEARING AS	
		1	**4V-8639**	2	BEARING-SLEEVE (76.481MM ID)	
	29	1	**148-7685**	1	ARM & BEARING AS	
		1	**7P-3466**	2	BEARING-SLEEVE (70.102MM ID)	
		1	**156-8000**	4	BEARING-SLEEVE	
G	30	2	**160-2243**		SLEEVE-ABRASION (1IN)	
	31	2	**163-4361**	1	HOSE AS	
	32	2	**163-4362**	1	HOSE AS	
	33	1	**174-3734**	2	FILM (HIGH LIFT)	
	34	1	**177-1452**	2	WASHER-HARD	
B	35	1	**194-7109**	4	SHIM (1MM THK)	
B	36	1	**194-7110**	2	SHIM (0.5MM THK)	
	37	1	**194-7111**	2	SHIM (4MM THK)	
	38	1	**194-7112**	2	SHIM (2MM THK)	
	39	2	**002-0639**	1	ADAPTER-PIPE	
	40	1	**1M-8652**	2	RING-RETAINING	
	41	1,2	**3B-8489**	9	FITTING-GREASE	
	42	1	**3B-8491**	4	FITTING-GREASE (1/8-27 THD)	
	43	1	**3E-9411**	2	WASHER-HARD (17.5X38X6MM THK)	
	44	2	**4D-8123**	1	CLIP	
	45	1	**7X-0618**	7	WASHER-HARD (13.5X40X5MM THK)	
	46	2	**8T-4121**	3	WASHER-HARD (11X21X2.5MM THK)	
M	47	2	**8T-4137**	3	BOLT (M10X1.5X20MM)	
M	48	1	**8T-4192**	7	BOLT (M12X1.75X25MM)	
M	49	1	**8T-4193**	2	BOLT (M16X2X50MM)	

148-7680 CONTROL GP-WORK TOOL *(contd.)* i01862800

NOTE	REF NO	GRAPHIC REF	PART NUMBER	QTY	PART NAME 1 2 3 4 5 6 (PRODUCT LEVEL)	SEE PAGE
M	50	1	**8T-6430**	2	BOLT (M20X2.5X50MM)	
	51	2	**9X-8582**	3	CLIP	
E	52	2	**121-0199**		WRAP-SPIRAL (3/8 IN OD) (17.5CM)	

B-USE AS REQUIRED
E-ORDER BY THE CENTIMETER
G-ORDER BY THE INCH
M-METRIC PART

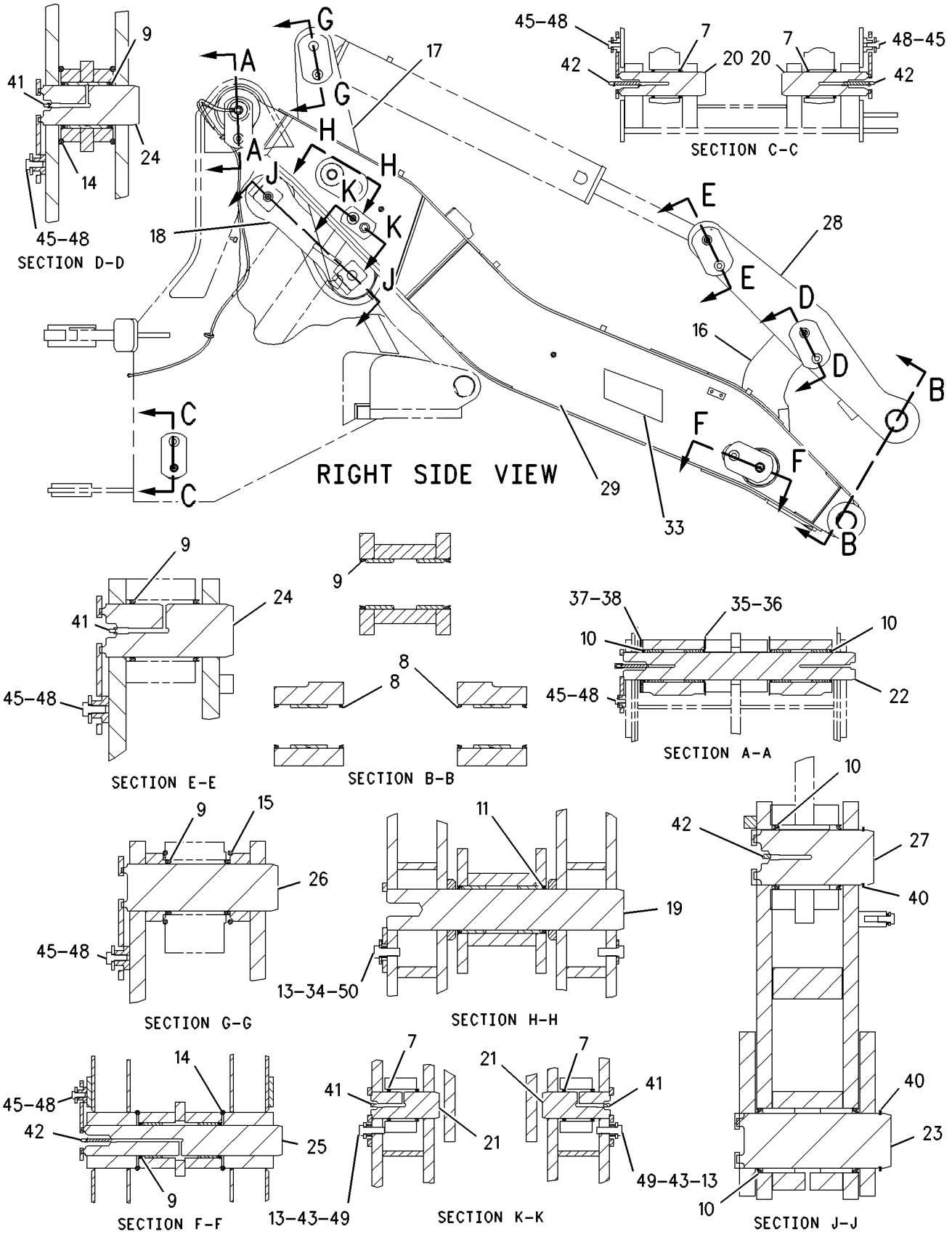

GRAPHIC #1

g00796784

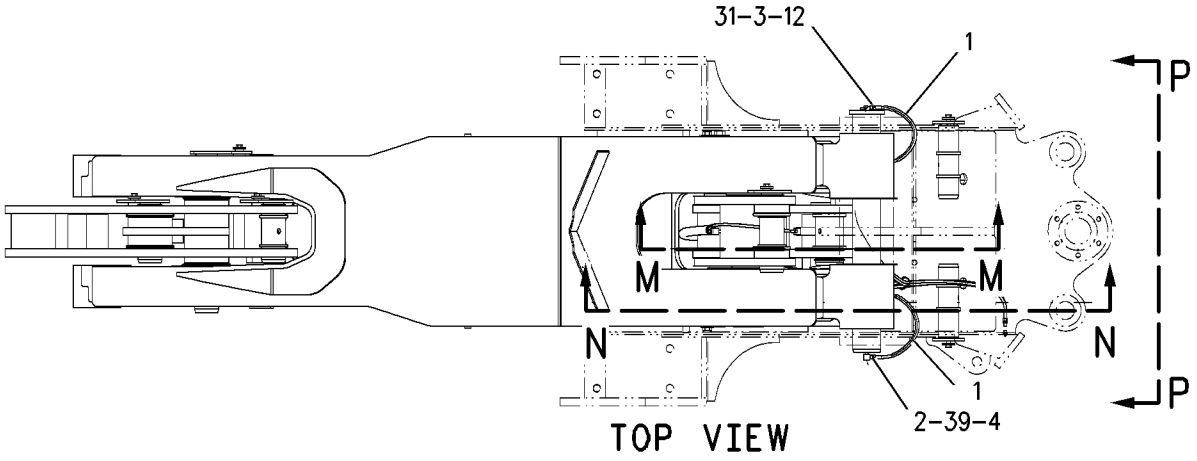

TOP VIEW

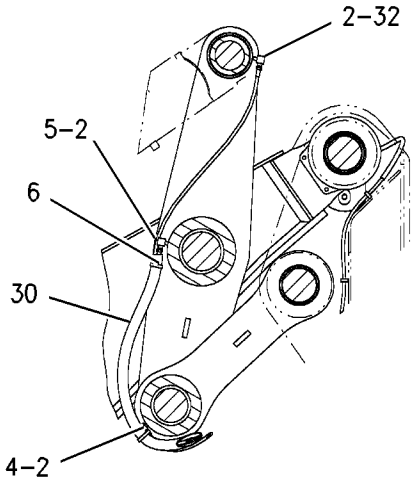

SECTION M-M

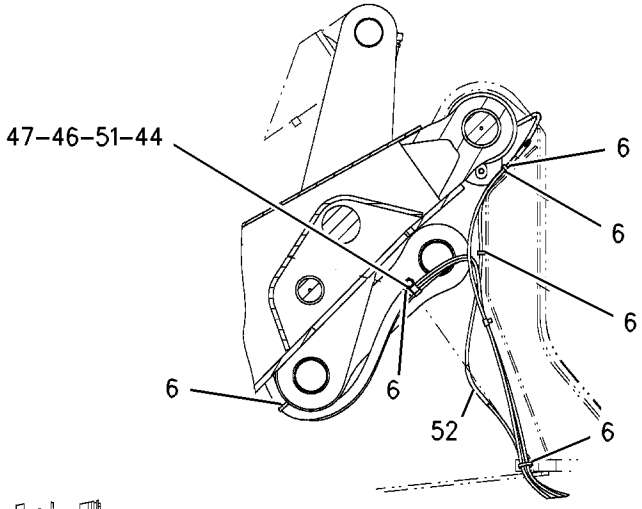

SECTION N-N

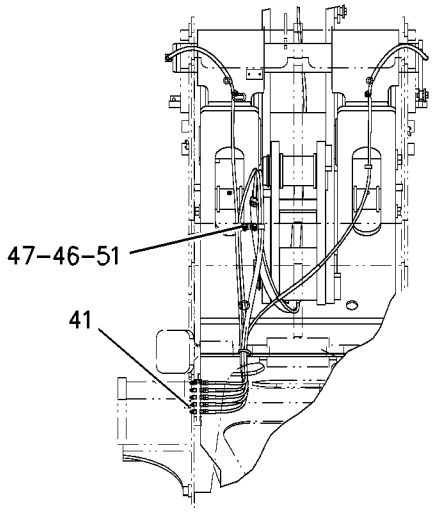

VIEW P-P

GRAPHIC #2

g00805493

WORK TOOLS

116-9713 ADAPTER GP-TIP

S/N: RTA1-UP; RBB1-UP

AN ATTACHMENT

SMCS-6803 **i01862804**

NOTE	PART NUMBER	QTY	PART NAME 1 2 3 4 5 6 (PRODUCT LEVEL)	SEE PAGE
	6I-9250	1	ADAPTER-LH	
	6I-9251	1	ADAPTER-RH	
	1U-0257	6	ADAPTER-STRAP	
	8J-2928	12	BOLT-PLOW (1-8X3.75 IN)	
	4F-4042	2	BOLT-PLOW (M1-8X3 IN)	
	4J-9058	2	BOLT-PLOW (1-8X3.25 IN)	
	8J-2933	12	NUT (1-8 THD)	
	2J-3507	4	NUT-FULL (1-8 THD)	

<END>

WORK TOOLS

9V-1795 ARM GP-MATERIAL HANDLING

S/N: RBB1-UP
AN ATTACHMENT

SMCS-6542 **i01206039**

NOTE	REF NO	GRAPHIC REF	PART NUMBER	QTY	PART NAME 1 2 3 4 5 6 (PRODUCT LEVEL)	SEE PAGE
	1	1	**9V-1590**	1	BASE AS	
	2	1	**5G-2373**	2	PIN	
	3	1	**8D-3791**	2	PIN (LOCK)	
	4	1	**6W-5652**	1	EXTENSION AS	
	5	1	**6W-5656**	1	EXTENSION AS	
	6	1	**9V-2715**	1	SHACKLE	
	7	1	**9V-2714**	1	HOOK	
	8	1	**6W-5679**	1	RETAINER AS	
	9	1	**8T-4896**	2	WASHER-HARD (2.5MM THK)	
	10	1	**5M-3062**	2	BOLT (3/8-16X.75IN)	
	11	1	**6W-5678**	1	RETAINER AS	
	12	1	**1K-6870**	1	LOCKNUT (3/4-10 THD)	
	13	1	**7X-0371**	1	BOLT (3/4-10X3.75 IN)	
	14	1	**8T-2356**	2	FILM-INSTRUCTION	

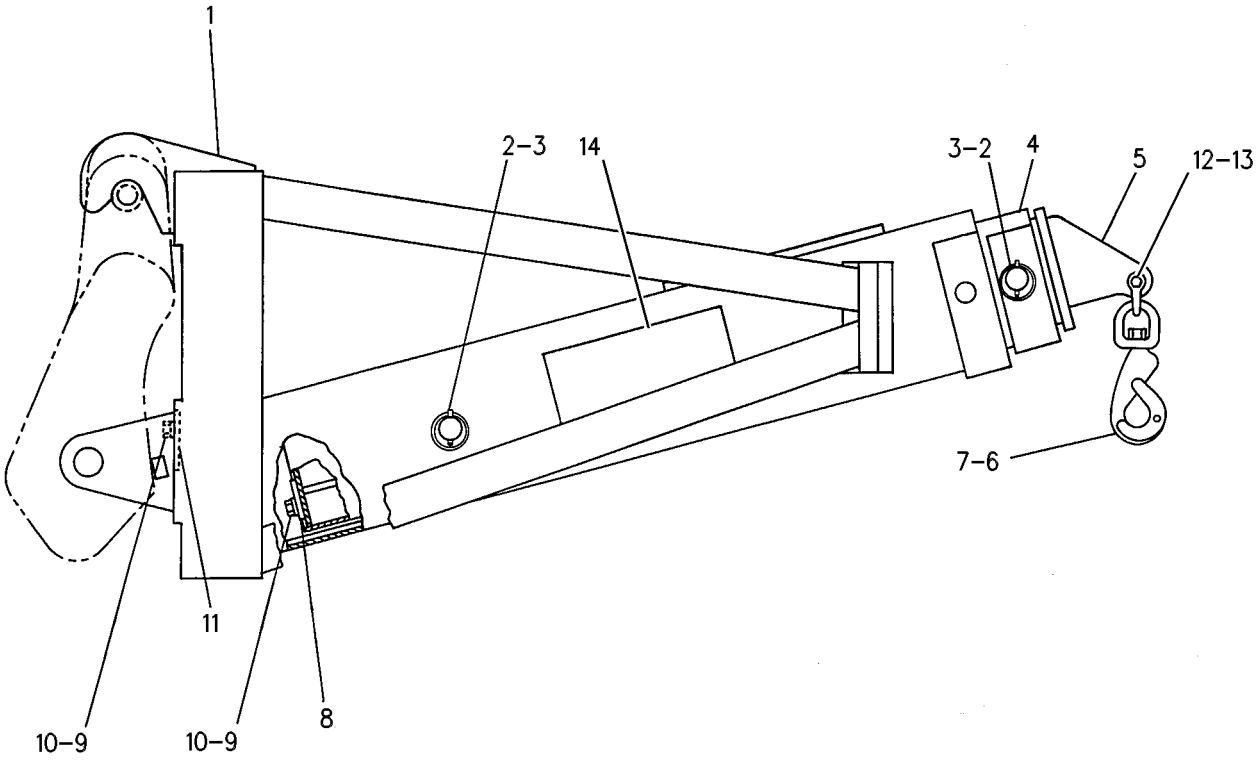

GRAPHIC #1 g00130013

145-5163 BUCKET AS-GENERAL PURPOSE

S/N: RBB1-UP
1.9 CUBIC METERS
PART OF 172-8563 BUCKET AS-GENERAL PURPOSE
AN ATTACHMENT

SMCS-6101 **i01862852**

NOTE	REF NO	GRAPHIC REF	PART NUMBER	QTY	PART NAME 1 2 3 4 5 6 (PRODUCT LEVEL)	SEE PAGE
	1	1	**4E-0659**	1	EDGE-CUTTING	
	2	1	**162-7790**	4	PLATE	
	3	1	**162-1961**	2	PLATE	
	4	1	**9T-3598**	2	LUG	
	5	1	**9V-4484**	3	PLATE	
	6	1	**145-5202**	1	HINGE AS (LH INNER)	
	7	1	**111-9758**	1	PLATE	
	8	1	**145-5201**	1	HINGE AS (RH INNER)	

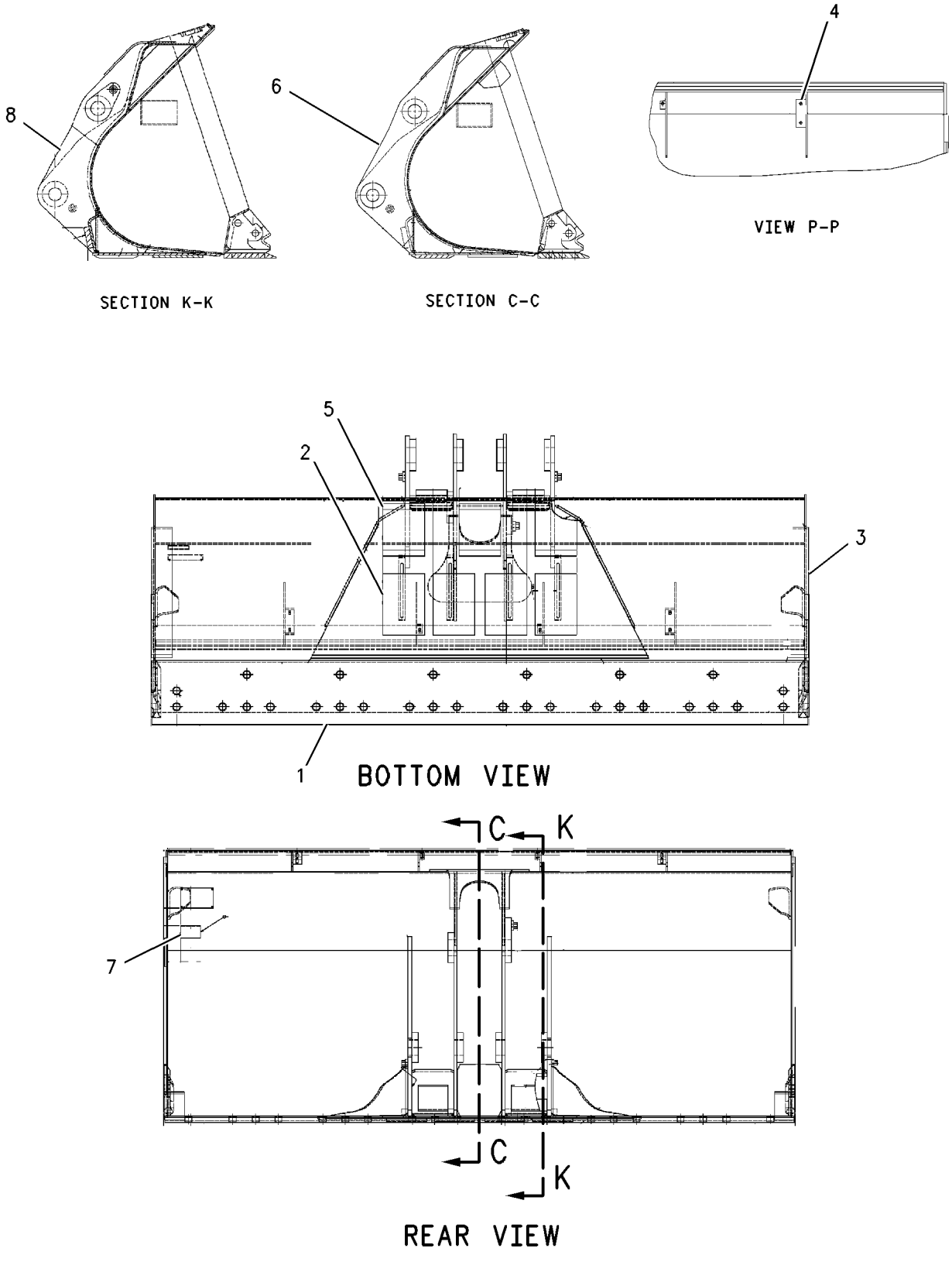

GRAPHIC #1 g00654767

172-8563 BUCKET AS-GENERAL PURPOSE

S/N: RBB1-UP
1.8 CUBIC METERS
PART OF 167-3963 BUCKET GP-GENERAL PURPOSE
AN ATTACHMENT

SMCS-6101 **i01505695**

NOTE	REF NO	GRAPHIC REF	PART NUMBER	QTY	PART NAME 1 2 3 4 5 6 (PRODUCT LEVEL)	SEE PAGE
Y	1	1	*145-5163*	1	BUCKET AS-GENERAL PURPOSE	508

Y-SEPARATE ILLUSTRATION

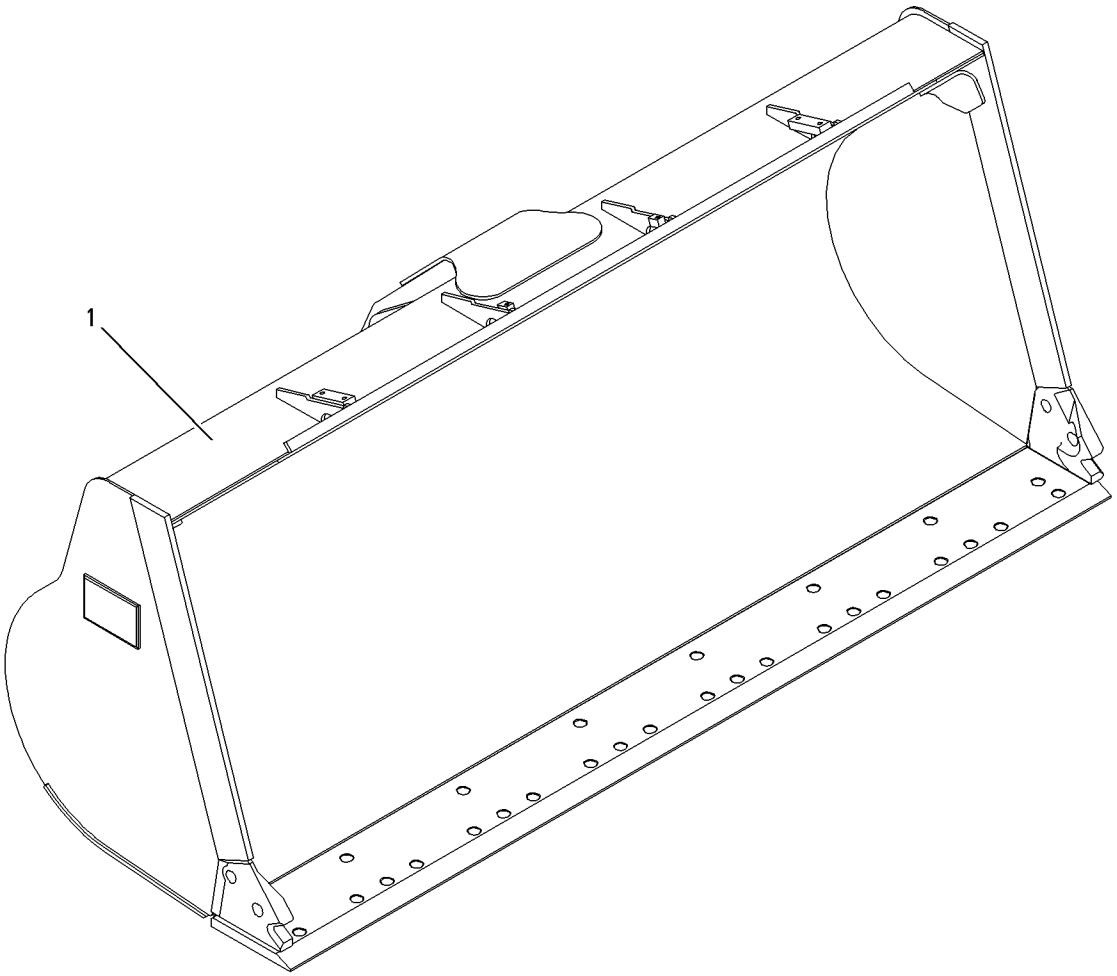

GRAPHIC #1 g00782875

WORK TOOLS

172-8568 BUCKET AS-GENERAL PURPOSE

S/N: RTA1-UP
1.8 CUBIC METERS
AN ATTACHMENT

SMCS-6101 **i01862876**

NOTE	REF NO	GRAPHIC REF	PART NUMBER	QTY	PART NAME 1 2 3 4 5 6 (PRODUCT LEVEL)	SEE PAGE
	1	1	**4E-0659**	1	EDGE-CUTTING	
	2	1	**111-9758**	1	PLATE	
	3	1	**152-4014**	1	HINGE AS (RH CENTER)	
	4	1	**152-4015**	1	HINGE AS (LH CENTER)	
	5	1	**152-4020**	1	HINGE AS (LH OUTER)	
	6	1	**152-4021**	1	HINGE AS (RH OUTER)	
	7	1	**152-4022**	1	HINGE AS (LH INNER)	
	8	1	**152-4023**	1	HINGE AS (RH INNER)	
	9	1	**168-8389**	4	TACK-FASTENER	
		1	**9V-4484**	2	PLATE	
		1	**162-1961**	2	PLATE	
		1	**168-7551**	2	PLATE	
		1	**169-4952**	2	PLATE	

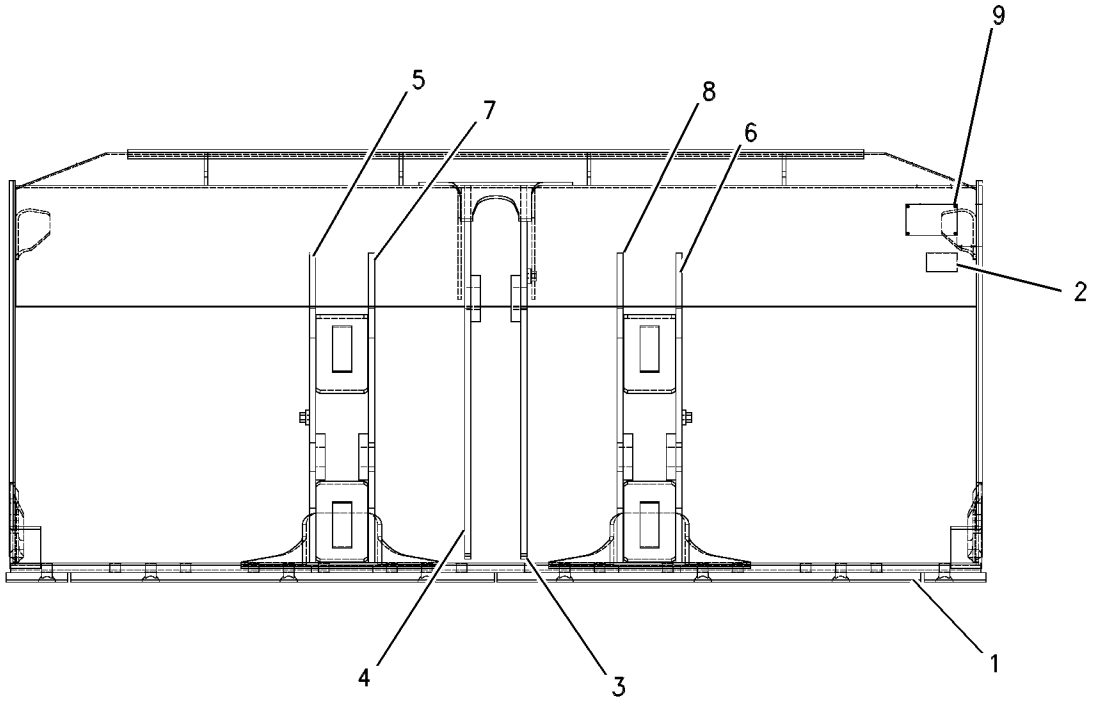

GRAPHIC #1 g00605444

172-8558 BUCKET AS-LIGHT MATERIAL

S/N: RBB1-UP
2.1 CUBIC METERS
PART OF 167-3965 BUCKET GP-GENERAL PURPOSE
AN ATTACHMENT

SMCS-6103 **i01862878**

NOTE	REF NO	GRAPHIC REF	PART NUMBER	QTY	PART NAME 1 2 3 4 5 6 (PRODUCT LEVEL)	SEE PAGE
	1	1	**4E-0659**	1	EDGE-CUTTING	
	2	1	**9T-3598**	2	LUG	
	3	1	**9V-4484**	4	PLATE	
	4	1	**111-9758**	1	PLATE	
	5	1	**162-7790**	2	PLATE	
	6	1	**164-4021**	2	PLATE	
	7	1	**164-9316**	2	PLATE	
	8	1	**154-8413**	1	BAR	
	9	1	**154-8413**	1	BAR	
	10	1	**6K-4076**	1	BEARING-SLEEVE	
	11	1	**6K-4076**	1	BEARING-SLEEVE	

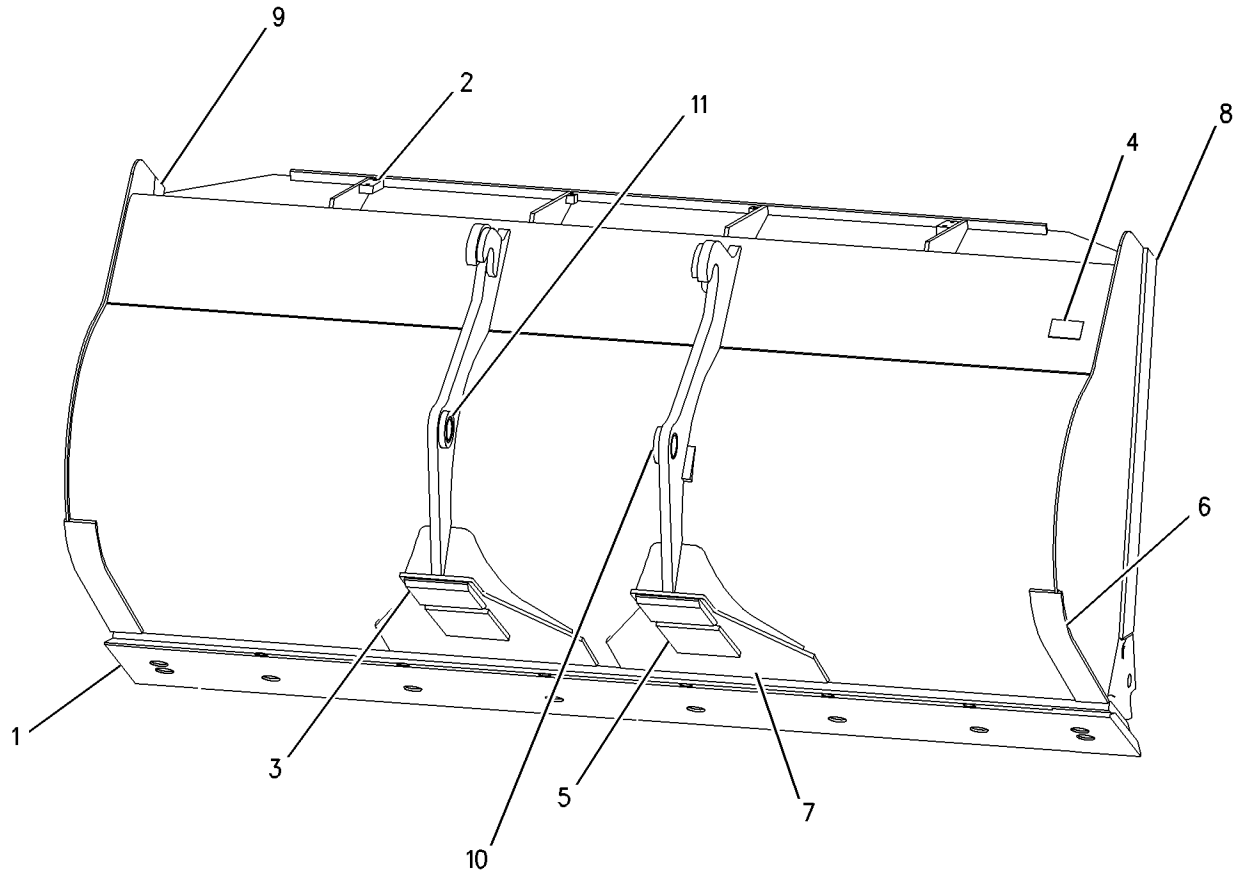

GRAPHIC #1 g00740637

172-8560 BUCKET AS-PENETRATION—QUICK COUPLER

S/N: RBB1-UP
1.7 CUBIC METERS
PART OF 167-3967 BUCKET GP-GENERAL PURPOSE
AN ATTACHMENT

SMCS-6131 **i01506091**

NOTE	REF NO	GRAPHIC REF	PART NUMBER	QTY	PART NAME 1 2 3 4 5 6 (PRODUCT LEVEL)	SEE PAGE
	1	1	**4E-2482**	1	EDGE AS-CUTTING	
	2	1	**9T-3598**	2	LUG	
	3	1	**111-9758**	1	PLATE	
	4	1	**145-5220**	1	PLATE-WEAR	
	5	1	**145-5221**	1	PLATE-WEAR	

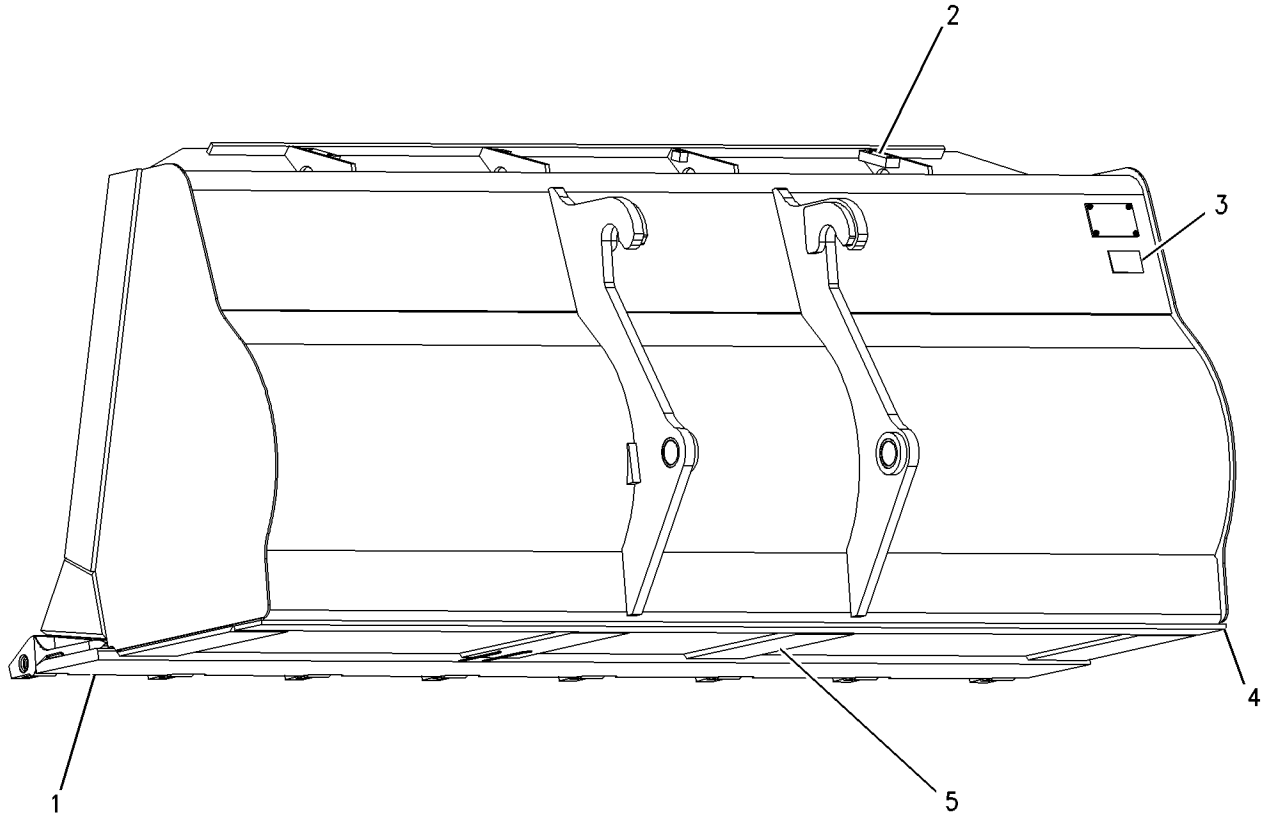

GRAPHIC #1 g00781575

WORK TOOLS

167-3962 BUCKET GP-GENERAL PURPOSE

S/N: RBB1-UP
2.1 CUBIC METERS
AN ATTACHMENT

SMCS-6101 **i01862880**

NOTE	REF NO	GRAPHIC REF	PART NUMBER	QTY	PART NAME 1 2 3 4 5 6 (PRODUCT LEVEL)	SEE PAGE
	1	1	**143-4973**	1	PLATE AS	
Y	2	1	*148-7900*	1	MOUNTING GP-BUCKET	531
	3	1	**4E-0659**	1	EDGE-CUTTING	
	4	1	**111-9758**	1	PLATE	
	5	1	**6I-8313**	1	CORNER-RH	
	6	1	**154-8413**	1	BAR	
	7	1	**6I-8312**	1	CORNER-LH	
	8	1	**154-8413**	1	BAR	
	9	1	**9T-3598**	2	LUG	
	10	1	**9V-4484**	2	PLATE	
	11	1	**162-7790**	4	PLATE	
	12	1	**164-4021**	2	PLATE	
	13	1	**164-4022**	1	HINGE AS (LH INNER)	
	14	1	**145-5201**	1	HINGE AS (RH INNER)	
	15	1	**145-5202**	1	HINGE AS (LH INNER)	
	16	1	**164-4024**	1	HINGE AS (LH OUTER)	
	17	1	**164-9316**	2	PLATE	
	18	1	**8T-4121**	6	WASHER-HARD (11X21X2.5MM THK)	
M	19	1	**8T-4136**	6	BOLT (M10X1.5X25MM)	

M-METRIC PART
Y-SEPARATE ILLUSTRATION

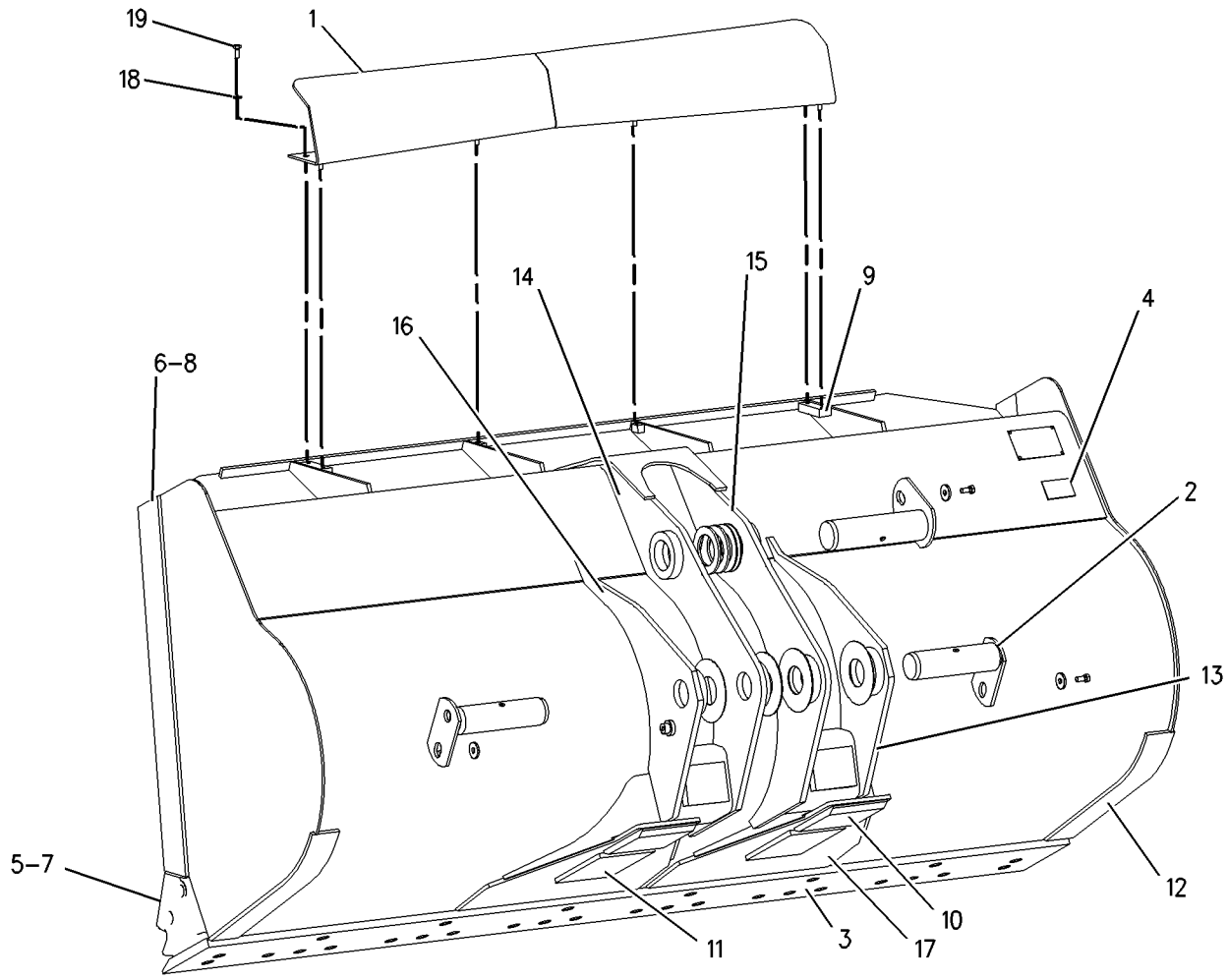

GRAPHIC #1 g00646762

WORK TOOLS

167-3963 BUCKET GP-GENERAL PURPOSE

S/N: RBB1-UP
1.8 CUBIC METERS
AN ATTACHMENT

SMCS-6101 **i01795692**

NOTE	REF NO	GRAPHIC REF	PART NUMBER	QTY	PART NAME 1 2 3 4 5 6 (PRODUCT LEVEL)	SEE PAGE
	1	1	**208-1032**	1	PLATE AS	
Y	2	1	*148-7900*	1	MOUNTING GP-BUCKET	531
Y	3	1	*172-8563*	1	BUCKET AS-GENERAL PURPOSE	510
	4	1	**8T-4121**	6	WASHER-HARD (11X21X2.5MM THK)	
M	5	1	**8T-4136**	6	BOLT (M10X1.5X25MM)	

M-METRIC PART
Y-SEPARATE ILLUSTRATION

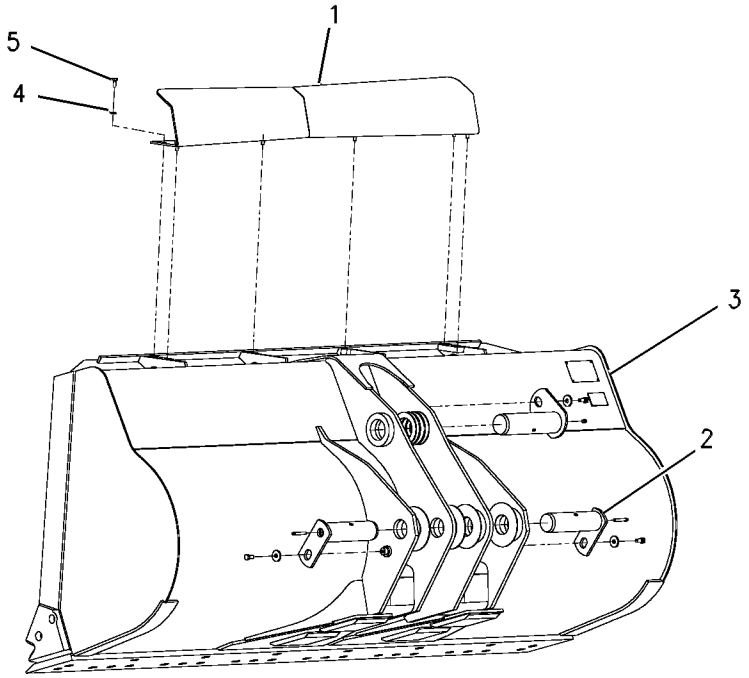

GRAPHIC #1 g00605267

167-3965 BUCKET GP-GENERAL PURPOSE

S/N: RBB1-UP
2.1 CUBIC METERS
AN ATTACHMENT

SMCS-6101 **i01487418**

NOTE	REF NO	GRAPHIC REF	PART NUMBER	QTY	PART NAME 1 2 3 4 5 6 (PRODUCT LEVEL)	SEE PAGE
	1	1	**143-4973**	1	PLATE AS	
Y	2	1	*172-8558*	1	BUCKET AS-LIGHT MATERIAL	512
	3	1	**8T-4121**	6	WASHER-HARD (11X21X2.5MM THK)	
M	4	1	**8T-4136**	6	BOLT (M10X1.5X25MM)	

M-METRIC PART
Y-SEPARATE ILLUSTRATION

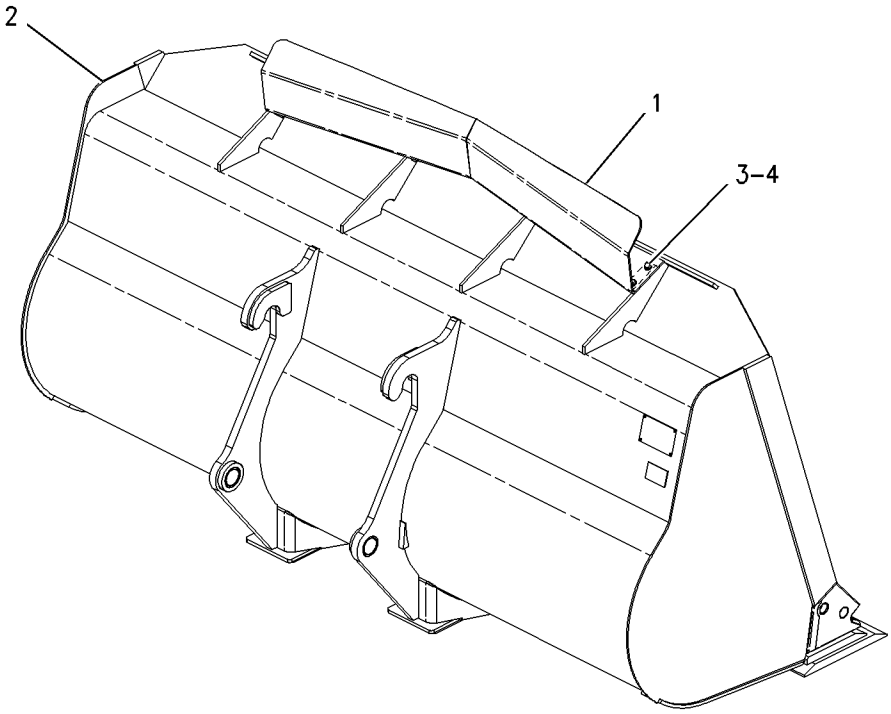

GRAPHIC #1 g00616770

WORK TOOLS

167-3966 BUCKET GP-GENERAL PURPOSE

S/N: RBB1-UP
1.8 CUBIC METERS
AN ATTACHMENT

SMCS-6101 **i01552719**

NOTE	REF NO	GRAPHIC REF	PART NUMBER	QTY	PART NAME 1 2 3 4 5 6 (PRODUCT LEVEL)	SEE PAGE
	1	1	**143-4973**	1	PLATE AS	
	2	1	**4E-0659**	1	EDGE-CUTTING	
	2A	1	**9T-3598**	2	LUG	
	2B	1	**9V-4484**	2	PLATE	
	2C	1	**111-9758**	1	PLATE	
	2D	1	**162-1960**	2	PLATE	
	2E	1	**162-1961**	2	PLATE	
	2F	1	**168-7551**	2	PLATE	
	3	1	**8T-4121**	6	WASHER-HARD (11X21X2.5MM THK)	
M	4	1	**8T-4136**	6	BOLT (M10X1.5X25MM)	

M-METRIC PART

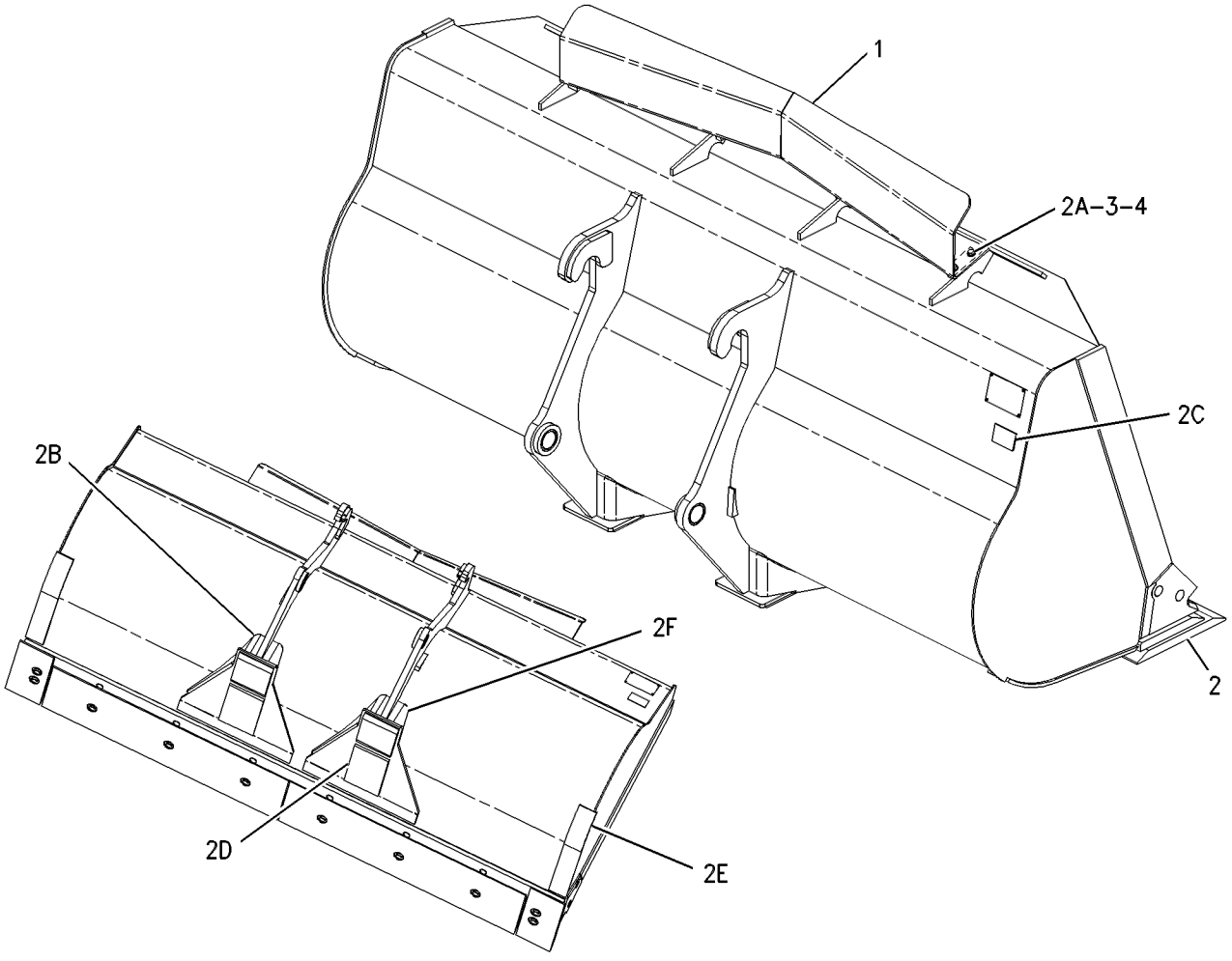

GRAPHIC #1 g00605282

167-3967 BUCKET GP-GENERAL PURPOSE–QUICK COUPLER

S/N: RBB1-UP
1.7 CU M
AN ATTACHMENT

SMCS-6101 **i01487422**

NOTE	REF NO	GRAPHIC REF	PART NUMBER	QTY	PART NAME 1 2 3 4 5 6 (PRODUCT LEVEL)	SEE PAGE
	1	1	**143-4973**	1	PLATE AS	
Y	2	1	*172-8560*	1	BUCKET AS-PENETRATION	513
	3	1	**8T-4121**	6	WASHER-HARD (11X21X2.5MM THK)	
M	4	1	**8T-4136**	6	BOLT (M10X1.5X25MM)	

M-METRIC PART
Y-SEPARATE ILLUSTRATION

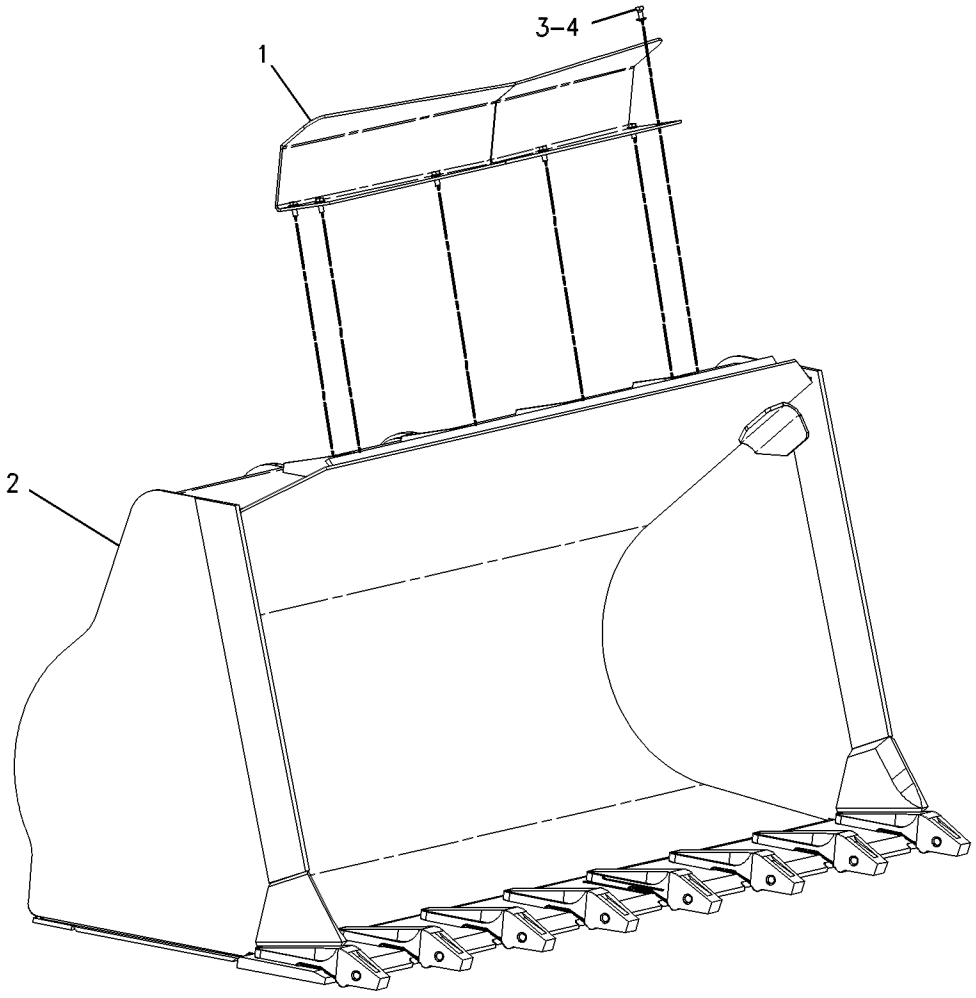

GRAPHIC #1 g00660618

WORK TOOLS

178-4661 BUCKET GP-GENERAL PURPOSE

S/N: RBB1-UP
2.8 CU M
AN ATTACHMENT

SMCS-6101 **i01862881**

NOTE	REF NO	GRAPHIC REF	PART NUMBER	QTY	PART NAME 1 2 3 4 5 6 (PRODUCT LEVEL)	SEE PAGE
	1	1	**208-1032**	1	PLATE AS	
Y	2	1	*148-7900*	1	MOUNTING GP-BUCKET	531
	3	1	**4E-0659**	1	EDGE-CUTTING	
	4	1	**9T-3598**	2	LUG	
	5	1	**9V-4484**	2	PLATE	
	6	1	**111-9758**	1	PLATE	
	7	1	**145-5201**	1	HINGE AS (RH INNER)	
	8	1	**145-5202**	1	HINGE AS (LH INNER)	
	9	1	**162-7790**	4	PLATE	
	10	1	**164-4022**	1	HINGE AS (LH INNER)	
	11	1	**164-4024**	1	HINGE AS (LH OUTER)	
	12	1	**164-9316**	2	PLATE	
	13	1	**174-4726**	2	PLATE	
	14	1	**8T-4121**	6	WASHER-HARD (11X21X2.5MM THK)	
M	15	1	**8T-4136**	6	BOLT (M10X1.5X25MM)	

M-METRIC PART
Y-SEPARATE ILLUSTRATION

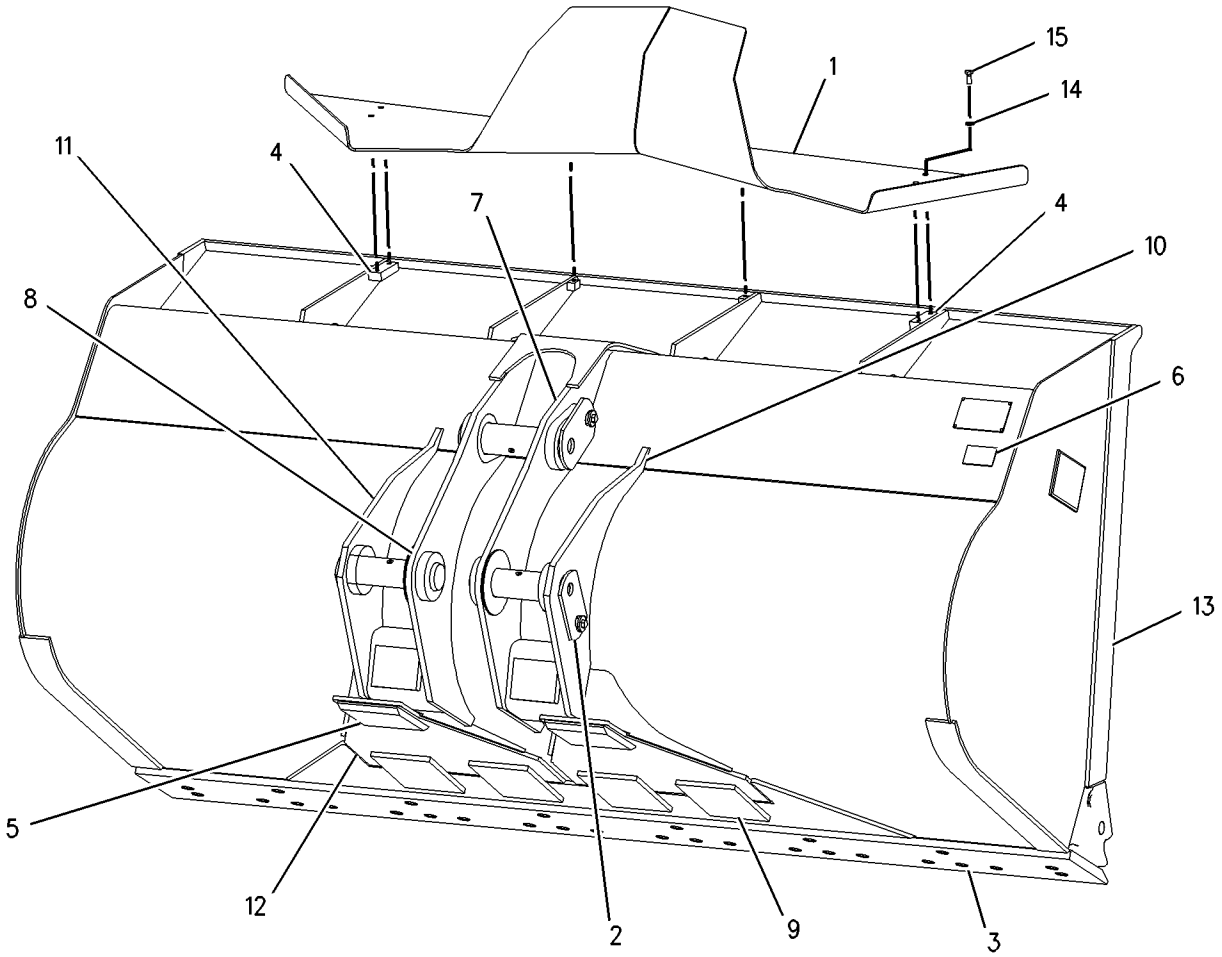

GRAPHIC #1 g00947283

WORK TOOLS

132-2443 CARRIAGE AS-FORK

S/N: RBB1-UP
AN ATTACHMENT

SMCS-6402 **i01259162**

NOTE	PART NUMBER	QTY	PART NAME 1 2 3 4 5 6 (PRODUCT LEVEL)	SEE PAGE
			(NO SERVICED PARTS)	

<END>

218-5113 COUPLER AR-QUICK

S/N: RBB1-UP
STANDARD LIFT
FOR USE WITH 132-2350—PAGE 498. CANNOT BE USED WITH 148-7900—PAGE 531
AN ATTACHMENT

SMCS-6129 **i01839727**

NOTE	PART NUMBER	QTY	PART NAME 1 2 3 4 5 6 (PRODUCT LEVEL)	SEE PAGE
Y	*132-2401*	1	COUPLER GP-QUICK	522
Y	*148-7827*	1	CYLINDER & MTG GP-COUPLER	325
Y	*217-2771*	1	LINES GP-COUPLER	346
Y-SEPARATE ILLUSTRATION				

<END>

218-5114 COUPLER AR-QUICK

S/N: RBB1-UP
HIGH LIFT
FOR USE WITH 148-7680—PAGE 502. CANNOT BE USED WITH 148-7900—PAGE 531
AN ATTACHMENT

SMCS-6129 **i01839737**

NOTE	PART NUMBER	QTY	PART NAME 1 2 3 4 5 6 (PRODUCT LEVEL)	SEE PAGE
Y	*132-2401*	1	COUPLER GP-QUICK	522
Y	*148-7827*	1	CYLINDER & MTG GP-COUPLER	325
Y	*217-2773*	1	LINES GP-COUPLER (HIGH LIFT)	350
Y-SEPARATE ILLUSTRATION				

<END>

WORK TOOLS

132-2401 COUPLER GP-QUICK

S/N: RBB1-UP

PART OF 218-5113, 218-5114 COUPLER AR-QUICK

AN ATTACHMENT

SMCS-6129 **i01862884**

NOTE	REF NO	GRAPHIC REF	PART NUMBER	QTY	PART NAME 1 2 3 4 5 6 (PRODUCT LEVEL)	SEE PAGE
	1	1	**3B-8489**	1	FITTING-GREASE	
	2	1	**3B-8491**	2	FITTING-GREASE (1/8-27 THD)	
	3	1	**176-0623**	2	WASHER (78X160X1.6MM THK)	
	4	1	**176-0624**	2	WASHER (78X160X3MM THK)	
	5	1	**8T-9530**	4	TACK-FASTENER	
C	6	1	**214-7127**	1	COUPLER AS	
	7	1	**132-2419**	2	PIN AS	
	8	1	**132-2427**	1	PIN AS	
	9	1	**132-2435**	1	PLATE	
	10	1	**132-2441**	1	PLATE AS	
	11	1	**145-9377**	1	PLATE-INSTRUCTION	
	12	1	**146-7986**	2	SHIM (3.18MM THK)	
	13	1	**146-7987**	2	SHIM (6.35MM THK)	
	14	1	**5P-4116**	8	WASHER-HARD (8.8X20.5X2MM THK)	
	15	1	**7X-0618**	2	WASHER-HARD (13.5X40X5MM THK)	
M	16	1	**8T-4908**	8	BOLT (M8X1.25X25MM)	
M	17	1	**8T-4956**	2	BOLT (M12X1.75X35MM)	
	18	1	**9H-5604**	1	RING-RETAINING	

C-CHANGE FROM PREVIOUS TYPE
M-METRIC PART

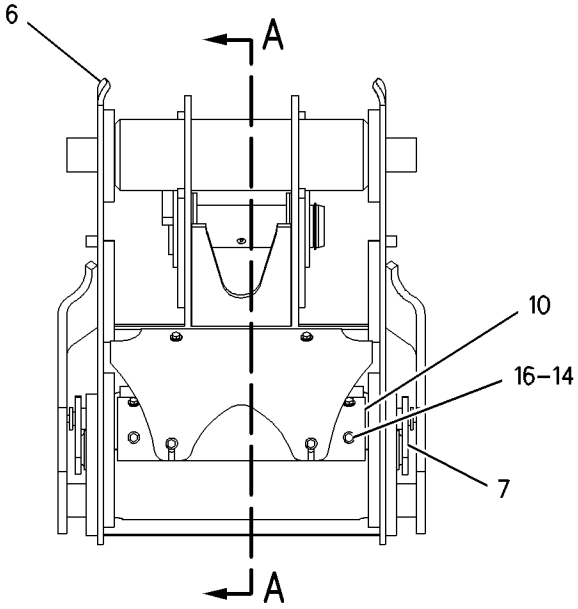

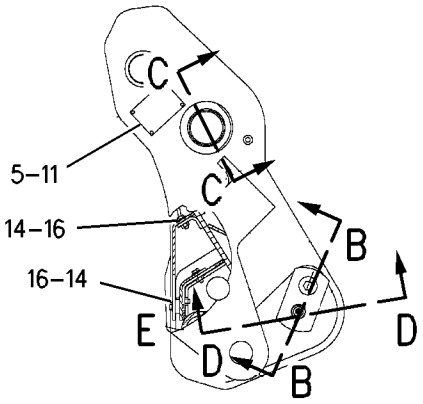

SECTION A-A

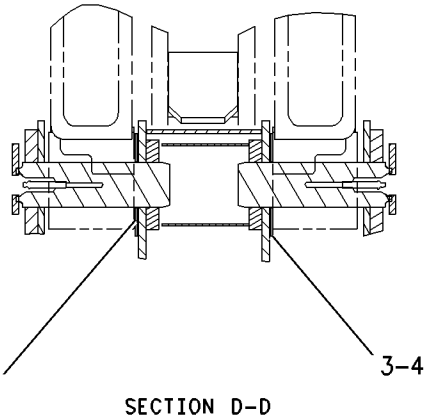

SECTION D-D

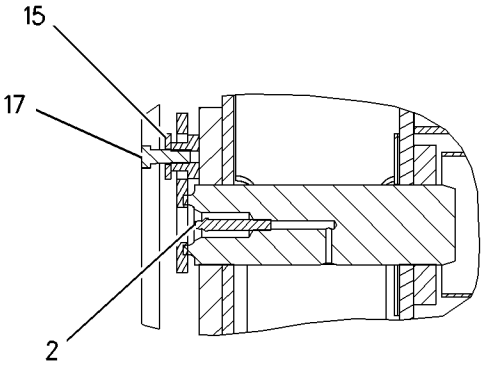

SECTION B-B

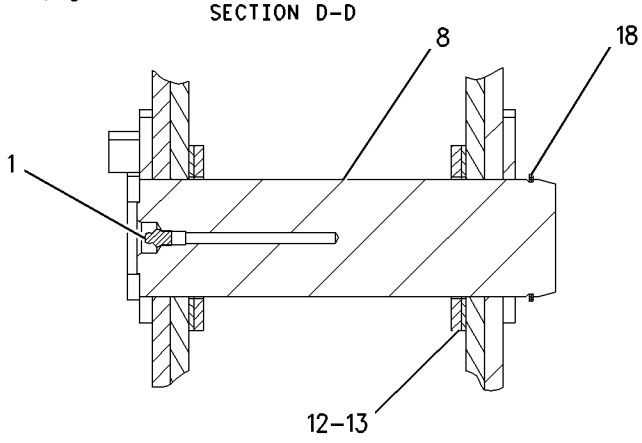

SECTION C-C

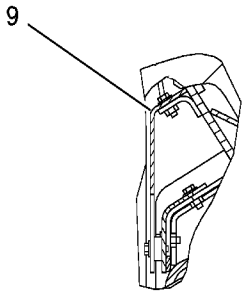

VIEW OF AREA E

GRAPHIC #1 g00935731

WORK TOOLS

8E-4566 EDGE GP-CUTTING

S/N: RTA1-UP; RBB1-UP
AN ATTACHMENT

SMCS-6801 **i01130561**

NOTE	PART NUMBER	QTY	PART NAME 1 2 3 4 5 6 (PRODUCT LEVEL)	SEE PAGE
	1J-5607	10	BOLT-PLOW	
	8E-4567	2	EDGE-CUTTING	
	4T-8091	2	EDGE-END	
	2J-3507	10	NUT-FULL (1-8 THD)	

<END>

8E-4568 EDGE GP-SEGMENT

S/N: RTA1-UP; RBB1-UP
AN ATTACHMENT

SMCS-6818 **i01130557**

NOTE	PART NUMBER	QTY	PART NAME 1 2 3 4 5 6 (PRODUCT LEVEL)	SEE PAGE
	1J-5607	14	BOLT-PLOW	
	8E-4569	7	EDGE-SEGMENT	
	2J-3507	14	NUT-FULL (1-8 THD)	

<END>

WORK TOOLS

195-6937 F0RK GP

S/N: RBB1-UP
PALLET
AN ATTACHMENT

i01738133

NOTE	REF NO	GRAPHIC REF	PART NUMBER	QTY	PART NAME 1 2 3 4 5 6 (PRODUCT LEVEL)	SEE PAGE
	1	1	**221-3424**	1	POSITIONER GP-WORK TOOL	
		1	**195-6961**	1	INSERT	
		1	**221-3428**	1	PIN	

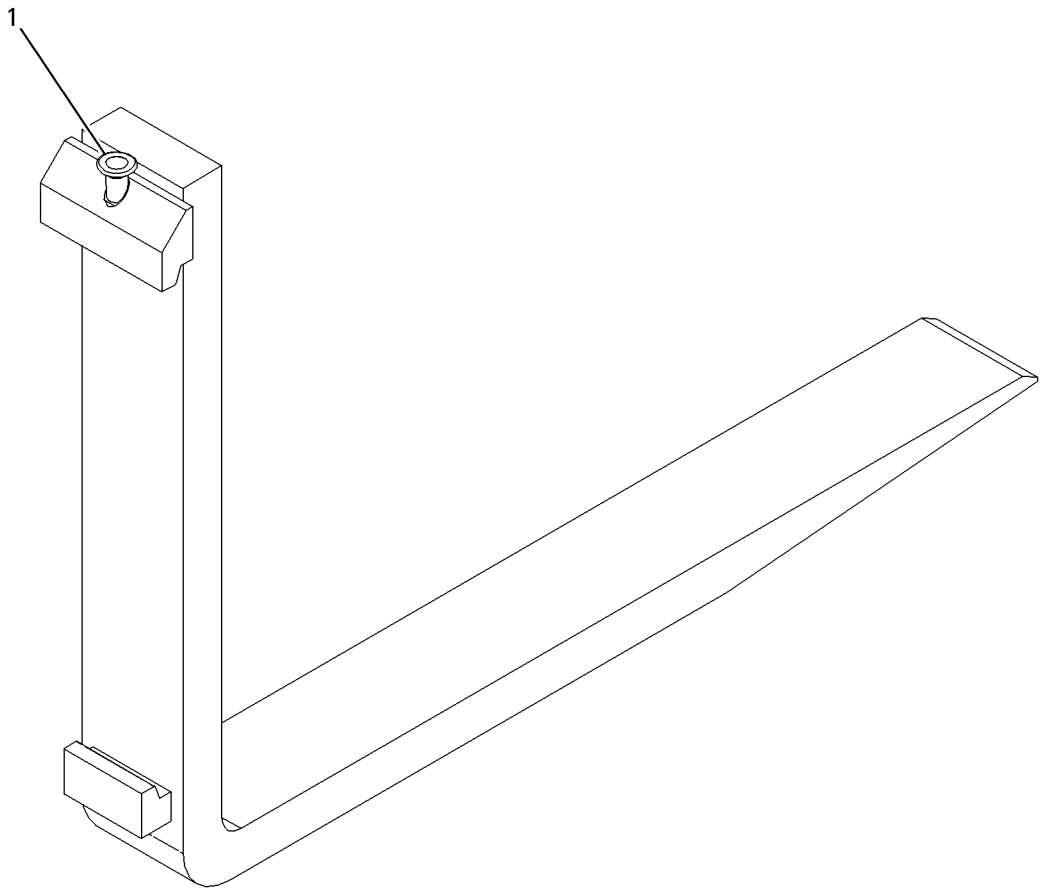

GRAPHIC #1

g00798608

WORK TOOLS

195-6935 FORK GP-PALLET

S/N: RBB1-UP

AN ATTACHMENT

SMCS-6405 **i01738109**

NOTE	REF NO	GRAPHIC REF	PART NUMBER	QTY	PART NAME 1 2 3 4 5 6 (PRODUCT LEVEL)	SEE PAGE
	1	1	**221-3424**	1	POSITIONER GP-WORK TOOL	
	2	1	**195-6961**	1	INSERT	
	3	1	**195-6962**	1	PIN	

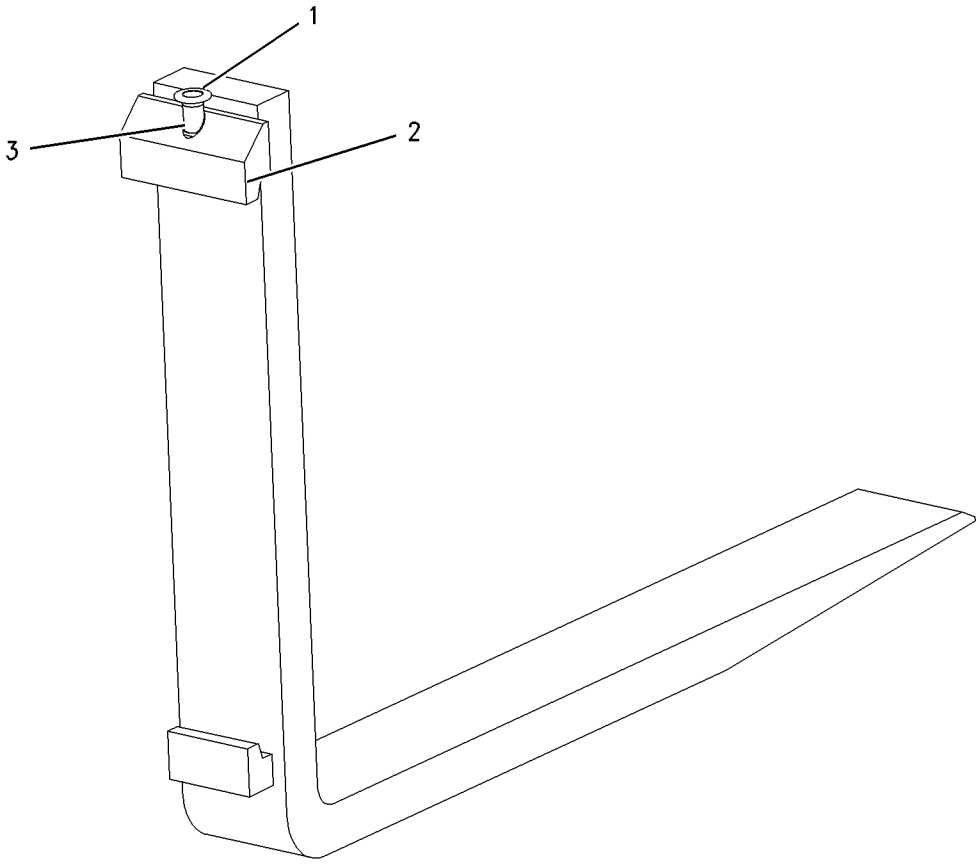

GRAPHIC #1 g00811797

WORK TOOLS

195-6938 FORK GP-PALLET

S/N: RBB1-UP

AN ATTACHMENT

SMCS-6405 **i01738134**

NOTE	REF NO	GRAPHIC REF	PART NUMBER	QTY	PART NAME 1 2 3 4 5 6 (PRODUCT LEVEL)	SEE PAGE
	1	1	**221-3424**	1	POSITIONER GP-WORK TOOL	
		1	**195-6961**	1	INSERT	
		1	**221-3428**	1	PIN	

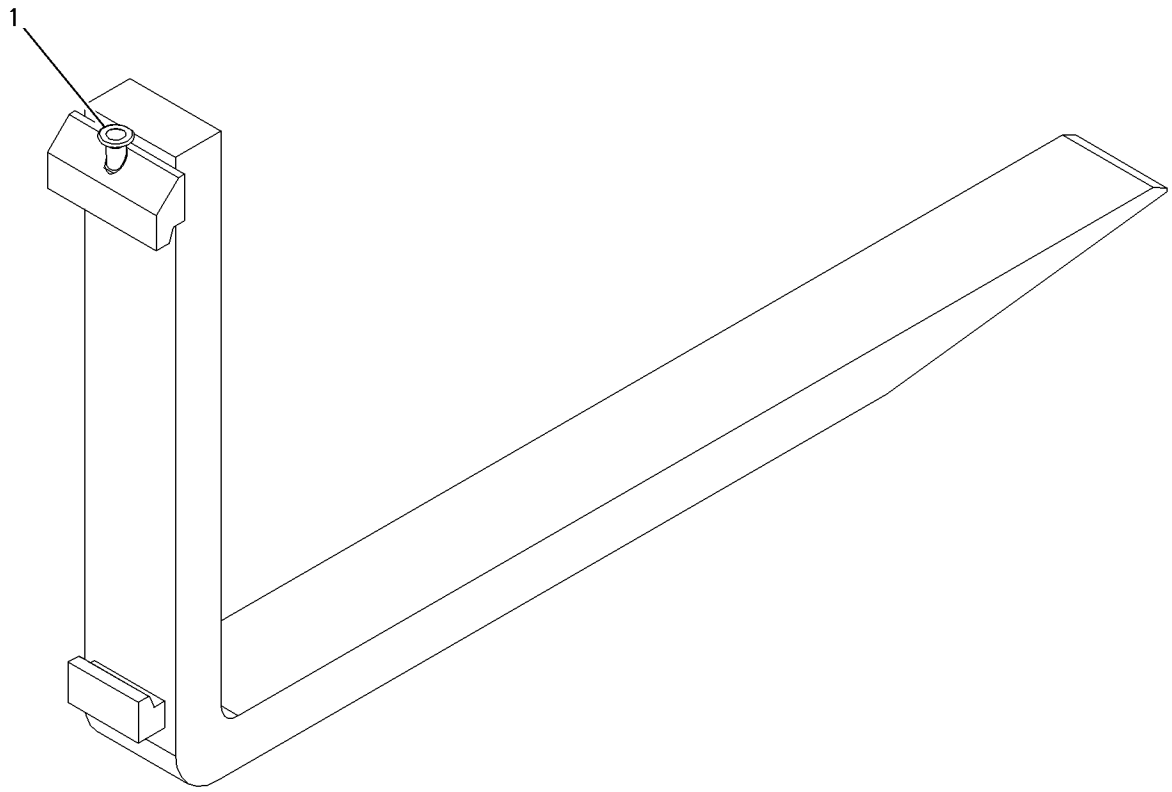

GRAPHIC #1 g00797945

WORK TOOLS

142-8463 GUARD GP-BUCKET—TOOTH TIP

S/N: RTA1-UP; RBB1-UP

AN ATTACHMENT

SMCS-6800, 6805 **i01141855**

NOTE	REF NO	GRAPHIC REF	PART NUMBER	QTY	PART NAME 1 2 3 4 5 6 (PRODUCT LEVEL)	SEE PAGE
	1	1	**6C-7607**	2	CHAIN AS	
		1	**6C-7606**	2	ROD	
	2	1	**106-7743**	2	PLATE AS	
	3	1	**109-7669**	1	PLATE AS	
M		1	**5C-9553**	4	BOLT (M6X1.0X16MM)	
		1	**5P-4115**	4	WASHER (2MM THK)	
M	4	1	**8T-4196**	4	BOLT (M10X1.50X35MM)	

M-METRIC PART

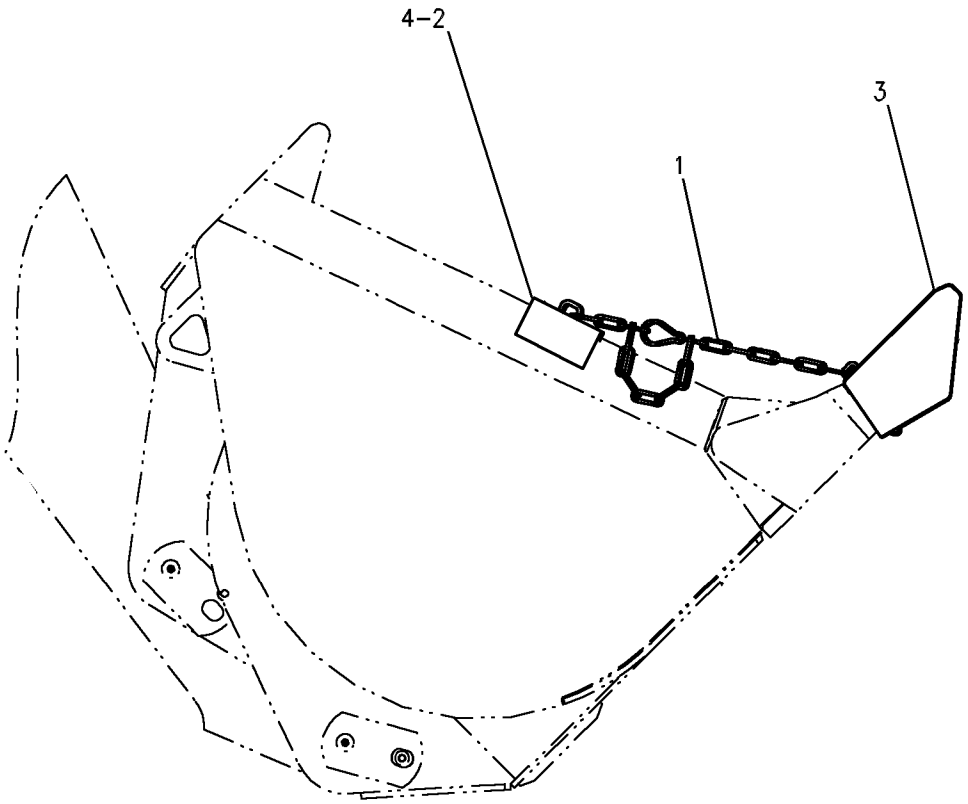

GRAPHIC #1 g00606134

WORK TOOLS

165-0198 GUARD GP-OVERFLOW

S/N: RBB1-UP

AN ATTACHMENT

SMCS-7186 **i01212288**

NOTE	REF NO	GRAPHIC REF	PART NUMBER	QTY	PART NAME 1 2 3 4 5 6 (PRODUCT LEVEL)	SEE PAGE
	1	1	**143-4973**	1	PLATE AS	
	2	1	**7X-7729**	6	WASHER (3MM THK)	
M	3	1	**8T-4136**	6	BOLT (M10X1.50X25MM)	

M-METRIC PART

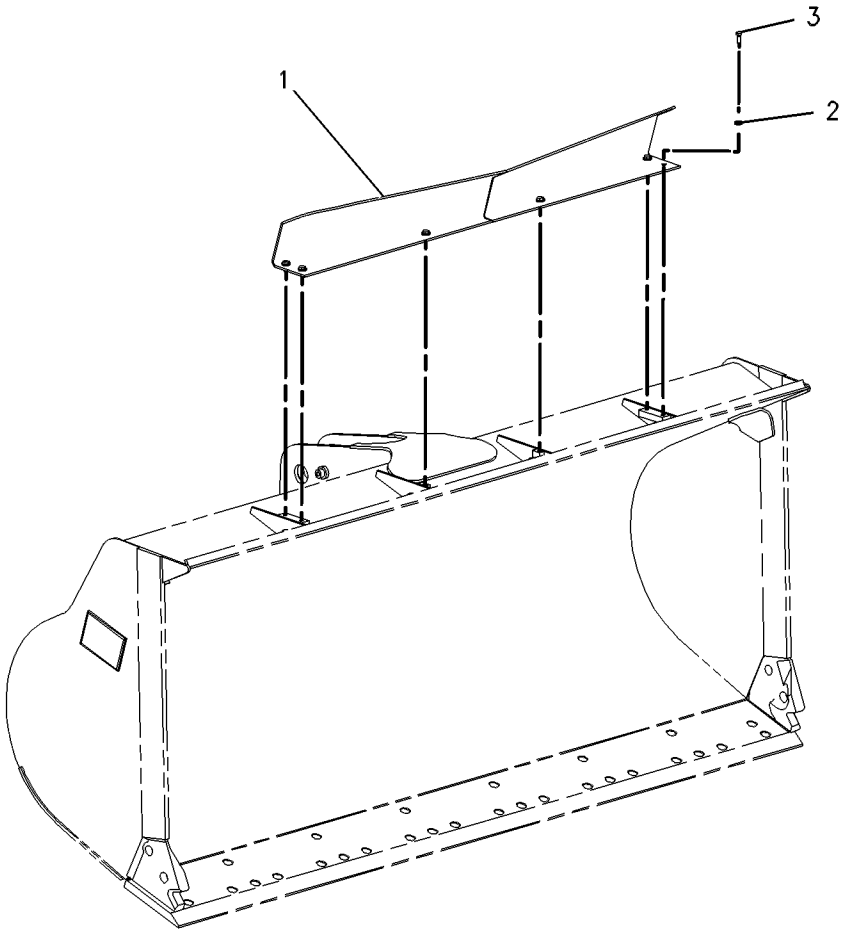

GRAPHIC #1 g00634130

WORK TOOLS

217-3622 GUARD GP-OVERFLOW

S/N: RBB1-UP

FIELD INSTALLATION

SMCS-7186 **i01833751**

NOTE	REF NO	GRAPHIC REF	PART NUMBER	QTY	PART NAME 1 2 3 4 5 6 (PRODUCT LEVEL)	SEE PAGE
	1	1	**208-1032**	1	PLATE AS	
	2	1	**7X-7729**	6	WASHER (11X25X3MM THK)	
M	3	1	**8T-4136**	6	BOLT (M10X1.5X25MM)	

M-METRIC PART

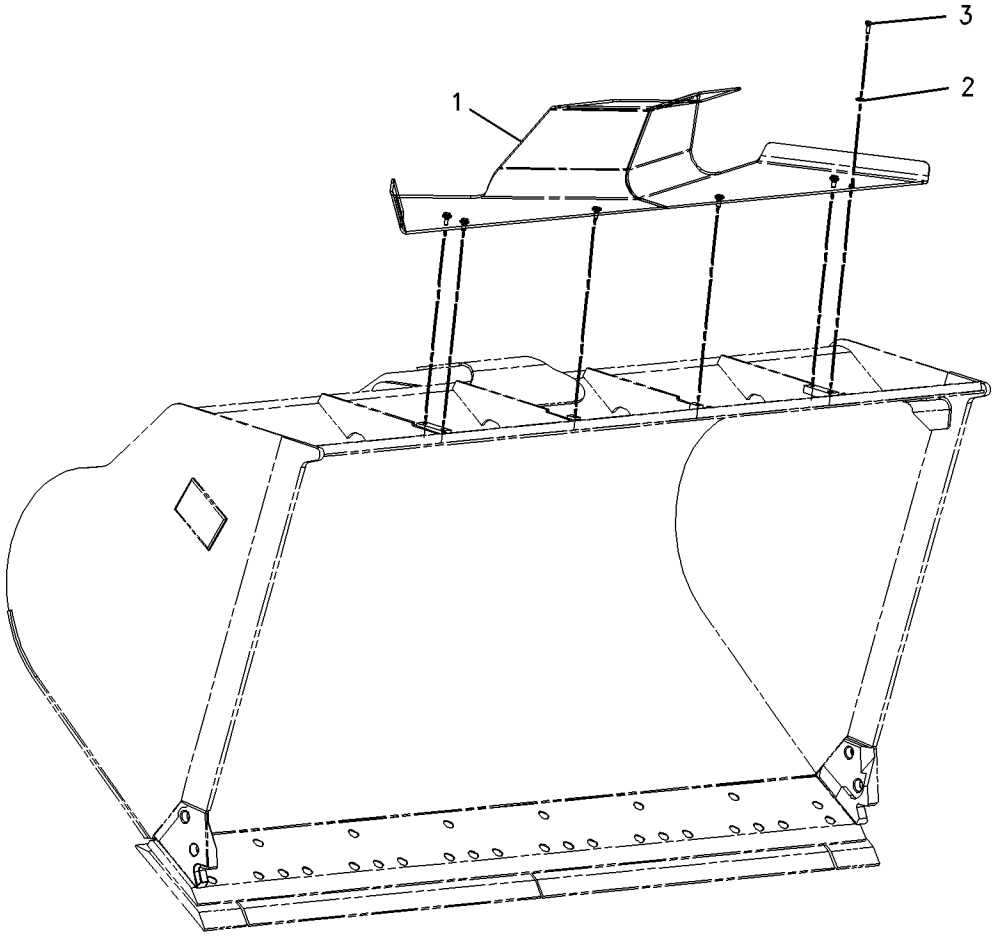

GRAPHIC #1 g00878691

WORK TOOLS

148-7900 MOUNTING GP-BUCKET

S/N: RBB1-UP

PART OF 167-3962, 167-3963, 178-4661 BUCKET GP-GENERAL PURPOSE

AN ATTACHMENT

SMCS-6101, 6102, 6103, 6131, 6523 **i01860004**

NOTE	REF NO	GRAPHIC REF	PART NUMBER	QTY	PART NAME 1 2 3 4 5 6 (PRODUCT LEVEL)	SEE PAGE
	1	1	**3B-8489**	1	FITTING-GREASE	
	2	1	**3B-8491**	2	FITTING-GREASE (1/8-27 THD)	
B	3	1	**8R-0308**	2	WASHER (1.6MM THK)	
B	4	1	**8R-0309**	2	WASHER (3MM THK)	
B	5	1	**146-7986**	2	SHIM (3.18MM THK)	
B	6	1	**146-7987**	2	SHIM (6.35MM THK)	
	7	1	**146-8003**	2	PIN AS	
	8	1	**146-8006**	1	PIN AS	
	9	1	**7X-0618**	3	WASHER-HARD (13.5X40X5MM THK)	
M	10	1	**8T-4192**	3	BOLT (M12X1.75X25MM)	

B-USE AS REQUIRED
M-METRIC PART

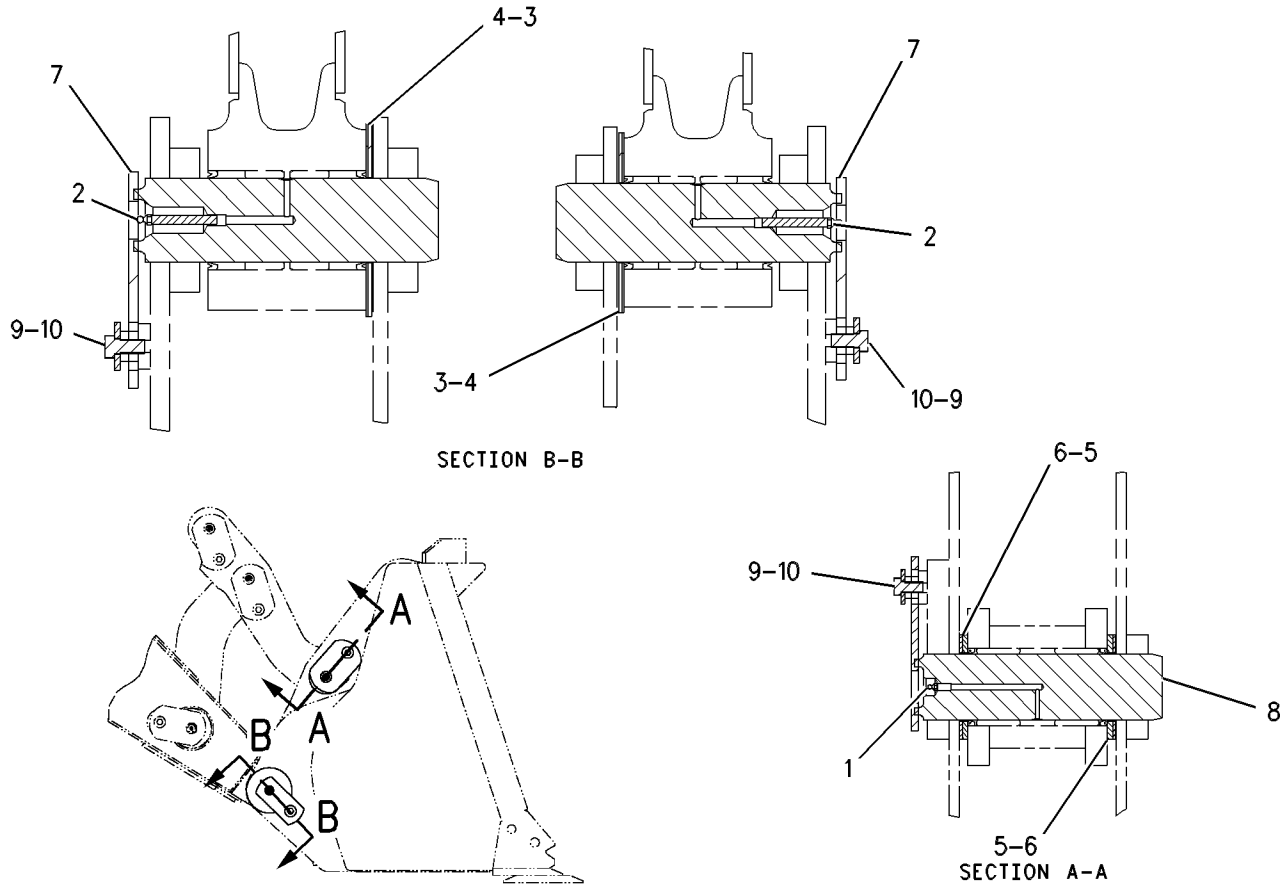

GRAPHIC #1 g00605231

9J-3169 TIP GP-LONG

S/N: RTA1-UP; RBB1-UP
PART OF 9W-8142 TIP GP-LONG, 3G-4017 TOOTH GP-LONG
AN ATTACHMENT

SMCS-6805 **i01556049**

NOTE	REF NO	GRAPHIC REF	PART NUMBER	QTY	PART NAME 1 2 3 4 5 6 (PRODUCT LEVEL)	SEE PAGE
	1	1	**132-4763**	1	PIN-G.E.T.	
		1	**149-5733**	1	RETAINER AS-G.E.T.	
C	2	1	**1U-3252**	1	TIP-LONG	

C-CHANGE FROM PREVIOUS TYPE

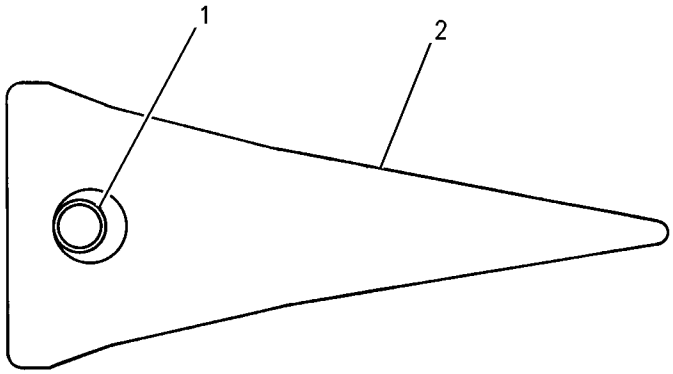

GRAPHIC #1 g00688389

WORK TOOLS

9W-8142 TIP GP-LONG

S/N: RTA1-UP; RBB1-UP
FOR USE WITH 117-1130 BUCKET AS, 116-9713 ADAPTER GP-TIP
AN ATTACHMENT

SMCS-6805 **i00448280**

NOTE	PART NUMBER	QTY	PART NAME 1 2 3 4 5 6 (PRODUCT LEVEL)	SEE PAGE
Y	*9J-3169*	1	TIP GP-LONG	532

Y-SEPARATE ILLUSTRATION

<END>

WORK TOOLS

9J-3178 TIP GP-SHORT

S/N: RTA1-UP; RBB1-UP
PART OF 9W-8143 TIP GP-SHORT
AN ATTACHMENT

SMCS-6805 **i01645927**

NOTE	REF NO	GRAPHIC REF	PART NUMBER	QTY	PART NAME 1 2 3 4 5 6 (PRODUCT LEVEL)	SEE PAGE
	1	1	**132-4763**	1	PIN-G.E.T.	
		1	**149-5733**	1	RETAINER AS-G.E.T.	
C	2	1	**1U-3251**	1	TIP-SHORT	

C-CHANGE FROM PREVIOUS TYPE

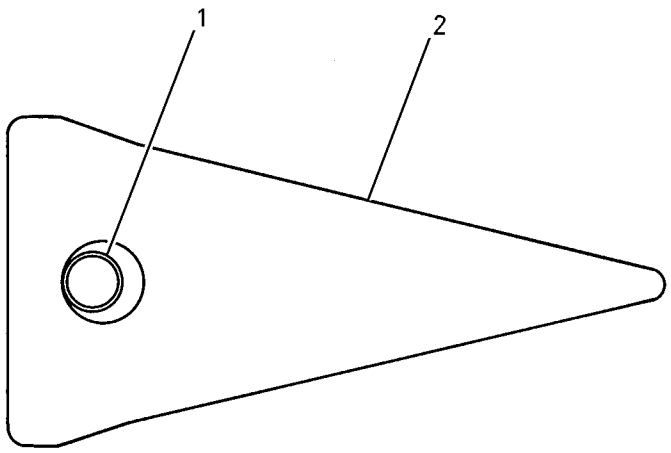

GRAPHIC #1 g00704305

WORK TOOLS

9W-8143 TIP GP-SHORT

S/N: RTA1-UP; RBB1-UP

AN ATTACHMENT

SMCS-6805 **i00448272**

NOTE	PART NUMBER	QTY	PART NAME 1 2 3 4 5 6 (PRODUCT LEVEL)	SEE PAGE
Y	*9J-3178*	1	TIP GP-SHORT	534

Y-SEPARATE ILLUSTRATION

<END>

WORK TOOLS

3G-4017 TOOTH GP-LONG

S/N: RTA1-UP; RBB1-UP

AN ATTACHMENT

SMCS-6822 **i01833121**

NOTE	REF NO	GRAPHIC REF	PART NUMBER	QTY	PART NAME 1 2 3 4 5 6 (PRODUCT LEVEL)	SEE PAGE
	1	1	**4J-9058**	2	BOLT-PLOW (1-8X3.25 IN)	
	2	1	**8J-2933**	14	NUT (1-8 THD)	
	3	1	**3G-4259**	1	ADAPTER-STRAP-RH	
		1	**3G-4258**	1	ADAPTER-STRAP-LH	
Y	4	1	*9J-3169*	8	TIP GP-LONG	532
	5	1	**1U-0257**	6	ADAPTER-STRAP	
	6	1	**8J-2928**	12	BOLT-PLOW (1-8X3.75 IN)	

Y-SEPARATE ILLUSTRATION

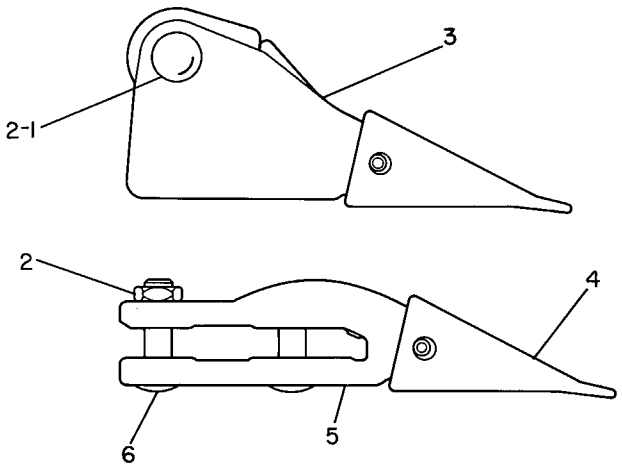

GRAPHIC #1 g00123878

OPERATOR STATION

190-4605 AIR CONDITIONER & MOUNTING GP

S/N: RTA1-UP; RBB1-UP
WITH CONTROL
PART OF 190-4402 AIR CONDITIONER AR
AN ATTACHMENT

SMCS-7320 **i01811092**

NOTE	REF NO	GRAPHIC REF	PART NUMBER	QTY	PART NAME 1 2 3 4 5 6 (PRODUCT LEVEL)	SEE PAGE
J	1	1	**5P-5643**		SEAL (2DM)	
	2	1	**9X-8117**	2	TUBE AS	
	3	1	**118-7259**	1	GASKET	
	4	1	**156-4449**	1	CABLE AS	
		1	**2H-3920**	2	LOCKWASHER	
		1	**6V-8369**	1	NUT (7/16-28 THD)	
		1	**143-8874**	1	BOOT	
Y	5	1	**180-9873**	1	AIR CONDITIONER GP	540
	6	1	**195-0913**	1	SWITCH AS-ROCKER (AIR CONDITIONER)	
		1	**111-7899**	1	GASKET	
	7	1	**7X-0579**	11	WASHER-HARD (8.8X25.5X2MM THK)	
M	8	1	**8T-4908**	11	BOLT (M8X1.25X25MM)	

J-ORDER BY THE DECIMETER
M-METRIC PART
Y-SEPARATE ILLUSTRATION

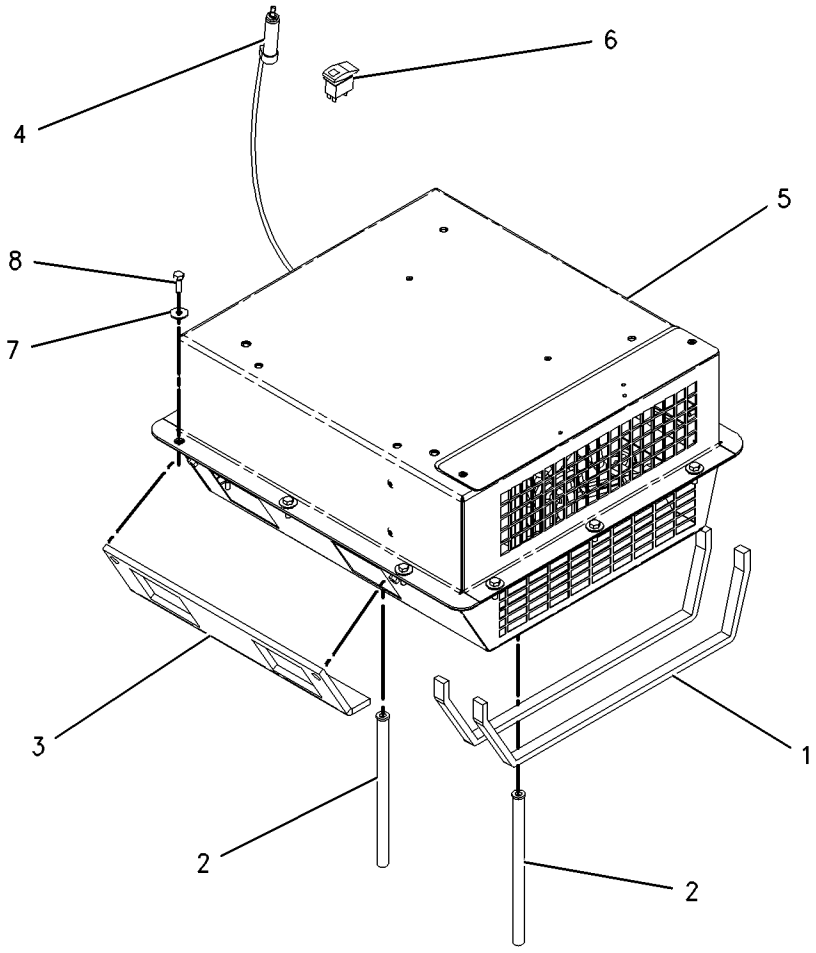

GRAPHIC #1 g00869013

OPERATOR STATION

190-4402 AIR CONDITIONER AR

S/N: RTA1-UP; RBB1-UP

AN ATTACHMENT

SMCS-7320 **i01810949**

NOTE	PART NUMBER	QTY	PART NAME 1 2 3 4 5 6 (PRODUCT LEVEL)	SEE PAGE
Y	*190-4605*	1	AIR CONDITIONER & MOUNTING GP	537
Y	*201-1802*	1	COMPRESSOR GP-REFRIGERANT	554
Y	*203-5937*	1	CONDENSER & MTG GP-REFRIGERANT	556
Y	*203-5932*	1	LINES GP-AIR CONDITIONER	588
Y	*203-5931*	1	LINES GP-HEATER	592
	198-8965	1	PANEL GP-TOP	
	172-8591	10	NUT-SPRING	
	198-8956	1	COVER AS	
	186-0817	10	WASHER-HARD (7X19X2MM THK)	
M	**8T-4138**	10	BOLT (M6X1X20MM)	

M-METRIC PART
Y-SEPARATE ILLUSTRATION

<END>

MEMORANDA

OPERATOR STATION

180-9873 AIR CONDITIONER GP

S/N: RTA1-UP; RBB1-UP
PART OF 190-4605 AIR CONDITIONER & MOUNTING GP
AN ATTACHMENT

SMCS-7320 **i01856212**

NOTE	REF NO	GRAPHIC REF	PART NUMBER	QTY	PART NAME 1 2 3 4 5 6 (PRODUCT LEVEL)	SEE PAGE
E	1	1	**5P-5908**		SEAL (10CM)	
	2	1	**1P-6522**	1	GROMMET	
	3	1	**2H-3922**	1	LOCKWASHER	
	4	1	**2H-3923**	1	LOCKWASHER	
	5	1	**2S-3745**	6	SCREW-TAPPING (10-16X.5 IN)	
	6	1	**3B-4501**	2	LOCKWASHER	
	7	1	**3E-1841**	1	LEVER	
	8	1	**3E-5464**	1	SWITCH AS-THERMOSTAT (REFRIGERANT)	
	9	1	**3S-2093**	1	STRAP-CABLE	
M	10	1	**5C-9553**	4	BOLT (M6X1X16MM)	
	11	1	**6V-1668**	2	WASHER (6.5X29.1X3MM THK)	
	12	1	**7F-2050**	1	LOCKNUT (3/4-16 THD)	
	13	1	**7F-2060**	1	LOCKNUT (7/8-14 THD)	
	14	1	**8C-4586**	2	CLAMP	
M	15	1	**8C-8457**	1	SCREW-MACHINE	
	16	1	**8T-0154**	6	CLAMP-HOSE	
M	17	1	**8T-4171**	4	BOLT (M6X1X12MM)	
	18	1	**8T-4205**	13	WASHER-HARD (7.2X14.5X2MM THK)	
	19	1	**8T-6631**	2	SCREW-MACHINE (8-32X0.5 IN)	
	20	1	**8Y-5737**	1	CLIP	
	21	1	**9G-1950**	1	RESISTOR	
M	22	1	**9X-2044**	1	SCREW-TRUSS HEAD (M6X1X16MM)	
	23	1	**9X-2185**	4	SCREW (8-15X0.44 IN)	
	24	1	**037-4426**	1	RETAINER	
	25	1	**100-3143**	2	PLATE-ORIFICE	
	26	1	**100-3426**	2	WHEEL-BLOWER	
					(EACH INCLUDES)	
		1	**037-4838**	2	CLAMP	
	27	1	**102-0341**	1	CLIP (TAB)	
	28	1	**114-3140**	1	GROMMET	
	29	1	**118-5044**	1	HARNESS AS-HEATER & AIR COND	
		1	**155-2270**	1	KIT-CONNECTING PLUG (2 PIN)	
					(INCLUDES PLUG AS,WEDGE & INTERFACE SEAL)	
		1	**102-8805**	1	KIT-RECEPTACLE (6 PIN)	
					(INCLUDES RECEPTACLE AS & WEDGE)	
	30	1	**118-5046**	1	HOUSING AS	
M		1	**6V-9632**	1	NUT-WELD (M6X1 THD)	
	31	1	**123-8851**	1	CASE AS	
M		1	**6V-9632**	7	NUT-WELD (M6X1 THD)	
	32	1	**124-8494**	2	GASKET	
	33	1	**124-8495**	1	VALVE AS-WATER	
M	34	1	**129-3178**	3	LOCKNUT (M6X1 THD)	
M	35	1	**141-9784**	1	BOLT-HEX HEAD (M6X190MM)	
	36	1	**151-0894**	1	COVER AS	
M		1	**7X-2478**	2	NUT-WELD	
M		1	**8T-3490**	4	NUT-WELD (M10X1.5 THD)	
	37	1	**174-1486**	1	MOTOR AS-BLOWER	
		1	**102-8802**	1	KIT-RECEPTACLE (2 PIN)	
					(INCLUDES RECEPTACLE AS AND WEDGE)	
		1	**3E-3365**	1	WEDGE-RECEPTACLE LOCK (2 PIN)	
		1	**9W-0852**	2	PIN-CONNECTOR	
	38	1	**180-3528**	1	COIL AS	
		1	**189-1707**	1	ORIFICE AS-AIR CONDITIONER	
	39	1	**183-7528**	1	COIL AS	
M	40	1	**6V-7728**	1	BOLT (M6X1.0X45MM)	

180-9873 **AIR CONDITIONER GP** ***(contd.)*** **i01856212**

NOTE	REF NO	GRAPHIC REF	PART NUMBER	QTY	PART NAME 1 2 3 4 5 6 (PRODUCT LEVEL)	SEE PAGE
D	41	1	**6V-1392**		SEAL (0.6M)	
D	41A	1	**6V-1392**	2	SEAL (1.7M EACH)	
E	42	1	**136-1953**		HOSE (18CM)	
E	42A	1	**136-1953**		HOSE (15CM)	
E	42B	1	**136-1953**		HOSE (23CM)	
D	43	1	**8T-5372**		SEAL (0.15M)	
D	43A	1	**8T-5372**	2	SEAL (0.12M EACH)	
D	44	1	**5P-7070**	2	INSULATION-STRIP (0.6M EACH)	
D	45	1	**5P-5643**		SEAL (0.4M)	

D-ORDER BY THE METER
E-ORDER BY THE CENTIMETER
M-METRIC PART

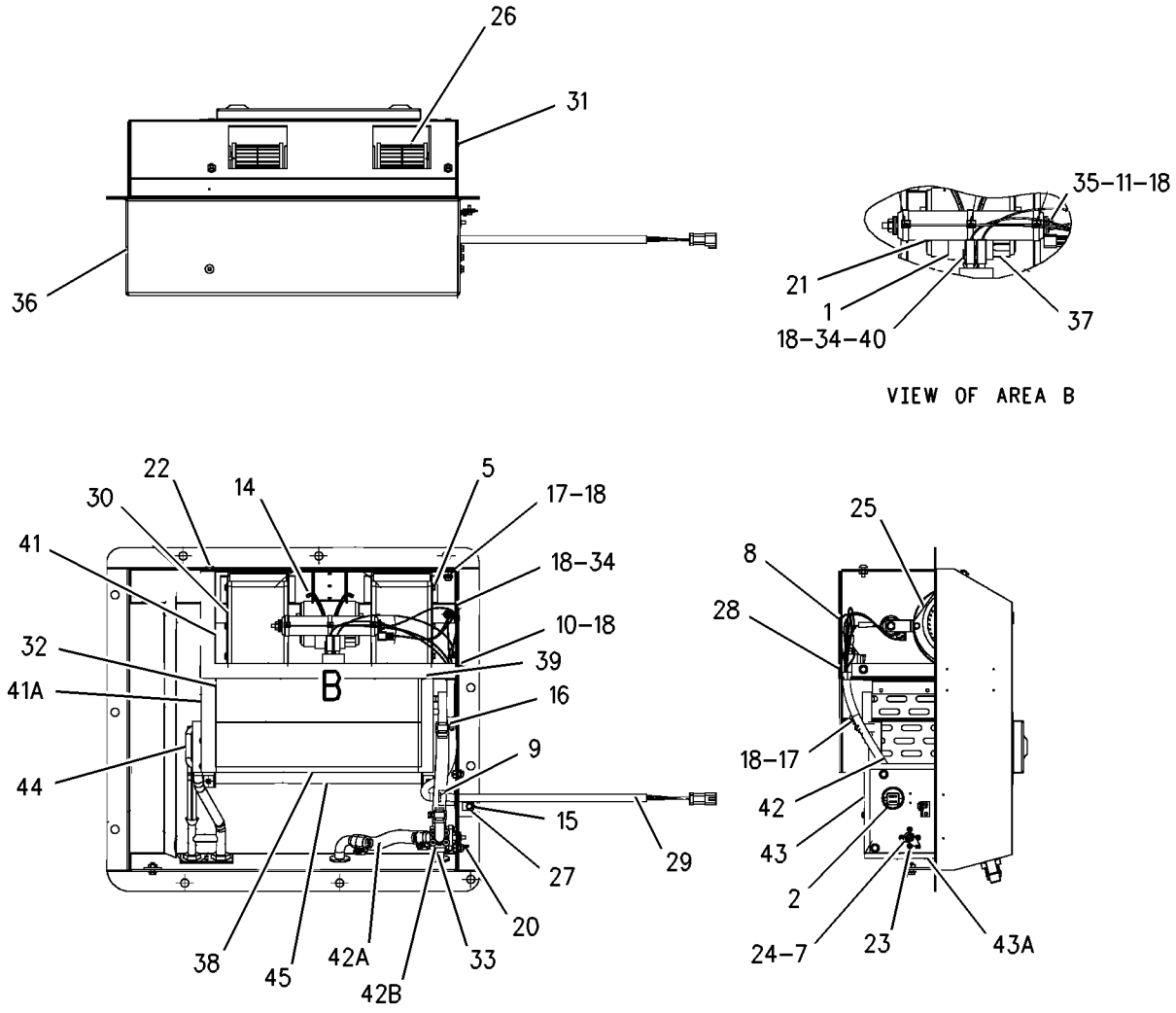

GRAPHIC #1 g00697006

OPERATOR STATION

8Y-4200 ARMREST GP–RH

S/N: RTA1-UP; RBB1-UP
PART OF 119-7128 SEAT GP, 8Y-6977 SEAT GP-SUSPENSION
AN ATTACHMENT

SMCS-7307, 7312 **i01289179**

NOTE	REF NO	GRAPHIC REF	PART NUMBER	QTY	PART NAME 1 2 3 4 5 6 (PRODUCT LEVEL)	SEE PAGE
Y	1	1	**8Y-5904**	1	ARMREST GP	544
	2	1	**8Y-5897**	1	BRACKET AS	
	3	1	**7X-0456**	1	BOLT (7/16-14X4.5IN)	
	4	1	**0S-1594**	1	BOLT (3/8-16X1 IN)	
	5	1	**5V-1498**	1	LOCKNUT (3/8-16 THD)	
	6	1	**9X-8873**	1	BOLT (1/2-13X2.25IN)	
	7	1	**2M-0849**	1	WASHER-HARD (5MM THK)	
	8	1	**1K-6872**	1	LOCKNUT (1/2-13 THD)	
Y-SEPARATE ILLUSTRATION						

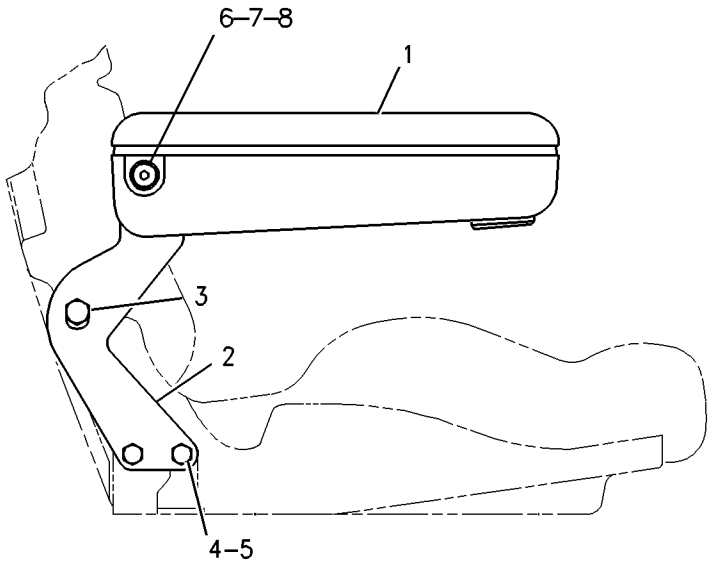

GRAPHIC #1 g00683908

OPERATOR STATION

8Y-5904 ARMREST GP

S/N: RTA1-UP; RBB1-UP
PART OF 8Y-4200, 8Y-6000 ARMREST GP
AN ATTACHMENT

SMCS-7307, 7312 **i01539068**

NOTE	REF NO	GRAPHIC REF	PART NUMBER	QTY	PART NAME 1 2 3 4 5 6 (PRODUCT LEVEL)	SEE PAGE
	1	1	**8Y-5906**	1	BASE-ARMREST	
L	2	1	**8S-7803**	1	RING-RETAINING	
J	3	1	**6V-2687**	4	SCREW-PAN HEAD (10-24X1IN)	
L	4	1	**8T-8641**	1	WASHER (M9.8X16.0X0.8MM THK)	
L	5	1	**3E-4312**	1	NUT-SQUARE	
	6	1	**8Y-5914**	1	SPRING	
					AVAILABLE REPAIR KIT(S):	
J			**8Y-5988**	1	KIT-CUSHION	
L			**8Y-6028**	1	KIT-ADJUSTER	

J-KIT MARKED J SERVICES PART MARKED J
L-KIT MARKED L SERVICES PARTS MARKED L

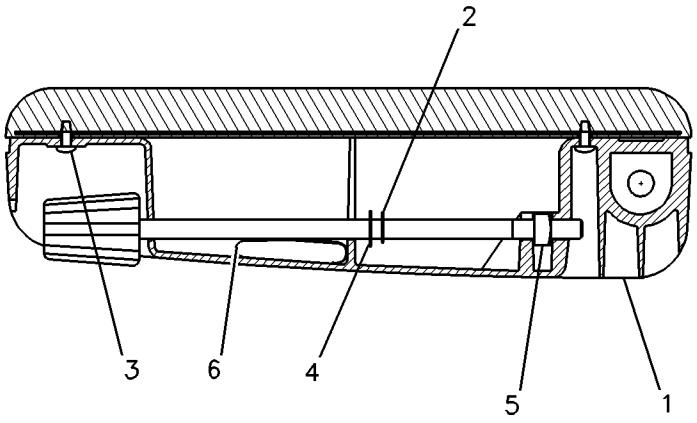

GRAPHIC #1 g00799356

8Y-6000 ARMREST GP–LH

S/N: RTA1-UP; RBB1-UP
PART OF 119-7128 SEAT GP, 8Y-6977 SEAT GP-SUSPENSION
AN ATTACHMENT

SMCS-7307, 7312 **i01289181**

NOTE	REF NO	GRAPHIC REF	PART NUMBER	QTY	PART NAME 1 2 3 4 5 6 (PRODUCT LEVEL)	SEE PAGE
Y	1	1	**8Y-5904**	1	ARMREST GP	544
	2	1	**8Y-5898**	1	BRACKET AS	
	3	1	**7X-0456**	1	BOLT (7/16-14X4.5IN)	
	4	1	**0S-1594**	1	BOLT (3/8-16X1 IN)	
	5	1	**5V-1498**	1	LOCKNUT (3/8-16 THD)	
	6	1	**9X-8873**	1	BOLT (1/2-13X2.25IN)	
	7	1	**2M-0849**	1	WASHER-HARD (5MM THK)	
	8	1	**1K-6872**	1	LOCKNUT (1/2-13 THD)	

Y-SEPARATE ILLUSTRATION

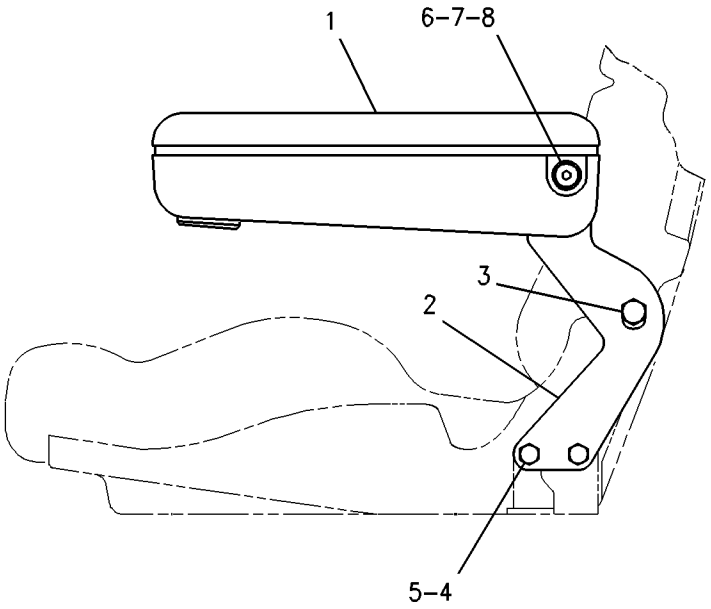

GRAPHIC #1 g00683909

OPERATOR STATION

190-4405 CAB AR

S/N: RTA1-UP; RBB1-UP
PART OF 190-4634 CAB AR
AN ATTACHMENT

SMCS-7301 **i01793746**

NOTE	PART NUMBER	QTY	PART NAME 1 2 3 4 5 6 (PRODUCT LEVEL)	SEE PAGE
Y	*168-7000*	1	CONTROL GP-PARKING BRAKE	280
Y	*190-4635*	1	CONTROL GP-STEERING	292
Y	*190-4690*	1	CONTROL GP-TRANSMISSION	190
Y	*207-5948*	1	DEFROSTER GP-CAB	560
Y	*107-4630*	1	DUCT GP-AIR	566
	118-0626	1	FILM-WINDOW (FRONT)	
Y	*119-4769*	1	FILTER GP-CAB AIR	568
Y	*107-4634*	1	LINER GP-CAB	579
Y	*107-4643*	1	MIRROR GP-REAR VIEW	596
Y	*190-4320*	1	PANEL GP-INSTRUMENT	610
Y	*190-4700*	1	PEDAL GP-GOVERNOR	620
Y	*107-6133*	1	SWITCH GP-WIPER	131
Y	*107-4628*	1	WIPER GP-WINDOW	652
Y	*190-4340*	1	WIRING GP-CAB	140

Y-SEPARATE ILLUSTRATION

<END>

190-4634 CAB AR

S/N: RTA1-UP; RBB1-UP
WITH FIXED WINDOWS
PART OF 190-4633 OPERATOR AR
AN ATTACHMENT

SMCS-7301 **i01793831**

NOTE	PART NUMBER	QTY	PART NAME 1 2 3 4 5 6 (PRODUCT LEVEL)	SEE PAGE
Y	*190-4405*	1	CAB AR	546
Y	*205-0522*	1	CAB AR	546

Y-SEPARATE ILLUSTRATION

<END>

205-0522 CAB AR

S/N: RTA1-UP; RBB1-UP
PART OF 190-4634 CAB AR
AN ATTACHMENT

SMCS-7301 **i01618741**

NOTE	PART NUMBER	QTY	PART NAME 1 2 3 4 5 6 (PRODUCT LEVEL)	SEE PAGE
Y	*137-7602*	1	DOOR GP-CAB	561
Y	*117-9622*	1	LIGHTING GP-FLOOD	112
Y	*174-9749*	1	ROPS GP-ENCLOSED	621

Y-SEPARATE ILLUSTRATION

<END>

OPERATOR STATION

216-6908 CAB AR

S/N: RTA1-UP; RBB1-UP
PART OF 216-6907 OPERATOR AR
AN ATTACHMENT

SMCS-7301 **i01793999**

NOTE	PART NUMBER	QTY	PART NAME 1 2 3 4 5 6 (PRODUCT LEVEL)	SEE PAGE
Y	**169-9903**	1	CAB GP	548
Y	*168-7000*	1	CONTROL GP-PARKING BRAKE	280
Y	*190-4643*	1	CONTROL GP-STEERING	294
Y	*190-4690*	1	CONTROL GP-TRANSMISSION	190
Y	*118-0809*	1	DASH GP	559
	118-0626	1	FILM-WINDOW (FRONT)	
Y	*146-6906*	1	LIGHTING GP-FLOOD	116
Y	*204-2004*	1	LIGHTING GP-REAR	120
Y	*172-5512*	1	LINER GP-CAB	586
Y	*107-4643*	1	MIRROR GP-REAR VIEW	596
Y	*184-5297*	1	PANEL GP-INSTRUMENT	604
Y	*216-6914*	1	PANEL GP-INSTRUMENT	614
Y	*190-4700*	1	PEDAL GP-GOVERNOR	620
Y	*172-5507*	1	SUPPORT GP-SEAT	643
Y	*184-2463*	1	SWITCH GP-WIPER	132
Y	*146-6908*	1	WIPER GP-WINDOW (FRONT)	654
Y	*216-6915*	1	WIRING GP-CAB	144

Y-SEPARATE ILLUSTRATION

<END>

190-4632 CAB AR-ENCLOSED ROPS

S/N: RTA1-UP; RBB1-UP
AN ATTACHMENT

SMCS-7301, 7325 **i01793841**

NOTE	PART NUMBER	QTY	PART NAME 1 2 3 4 5 6 (PRODUCT LEVEL)	SEE PAGE
Y	*190-4633*	1	OPERATOR AR	600
Y	*174-2215*	1	SKIRT GP-CAB	641

Y-SEPARATE ILLUSTRATION

<END>

OPERATOR STATION

169-9903 CAB GP

S/N: RTA1-UP; RBB1-UP
PART OF 216-6908 CAB AR
AN ATTACHMENT

SMCS-7301, 7325, 7335 **i01689358**

NOTE	REF NO	GRAPHIC REF	PART NUMBER	QTY	PART NAME 1 2 3 4 5 6 (PRODUCT LEVEL)	SEE PAGE
	1	1	**1B-8723**	1	KEY-WOODRUFF	
	2	1	**6K-8088**	4	BEARING-ROLLER	
	3	1	**8E-8300**	2	DISC-THRUST	
	4	1	**8R-6904**	2	TREAD-RUBBER	
	5	1	**107-6056**	1	PEDAL AS-LH	
	6	1	**107-6144**	1	GLASS-FRONT (LH)	
	7	1	**107-6145**	1	GLASS-FRONT	
	8	1	**110-7524**	21	BUTTON	
	9	1	**111-0132**	1	PEDAL AS-RH	
	10	1	**111-0177**	1	GLASS-FRONT (RH)	
	11	1	**166-8679**	1	PLATE	
	12	1	**169-9904**	1	CAB AS	
	13	1	**169-9908**	1	GLASS-REAR	
	14	1	**169-9949**	1	SUPPORT AS	
		1	**169-9950**	1	PLATE AS	
M	15	1	**6V-3940**	4	BOLT (M8X1.25X25MM)	
	16	1	**8T-4121**	1	WASHER-HARD (11X21X2.5MM THK)	
M	17	1	**8T-4185**	1	BOLT (M10X1.5X50MM)	
	18	1	**9M-1974**	4	WASHER-HARD (8.8X16X2MM THK)	
M	19	1	**9X-2045**	4	SCREW-TRUSS HEAD (M6X1X20MM)	

M-METRIC PART

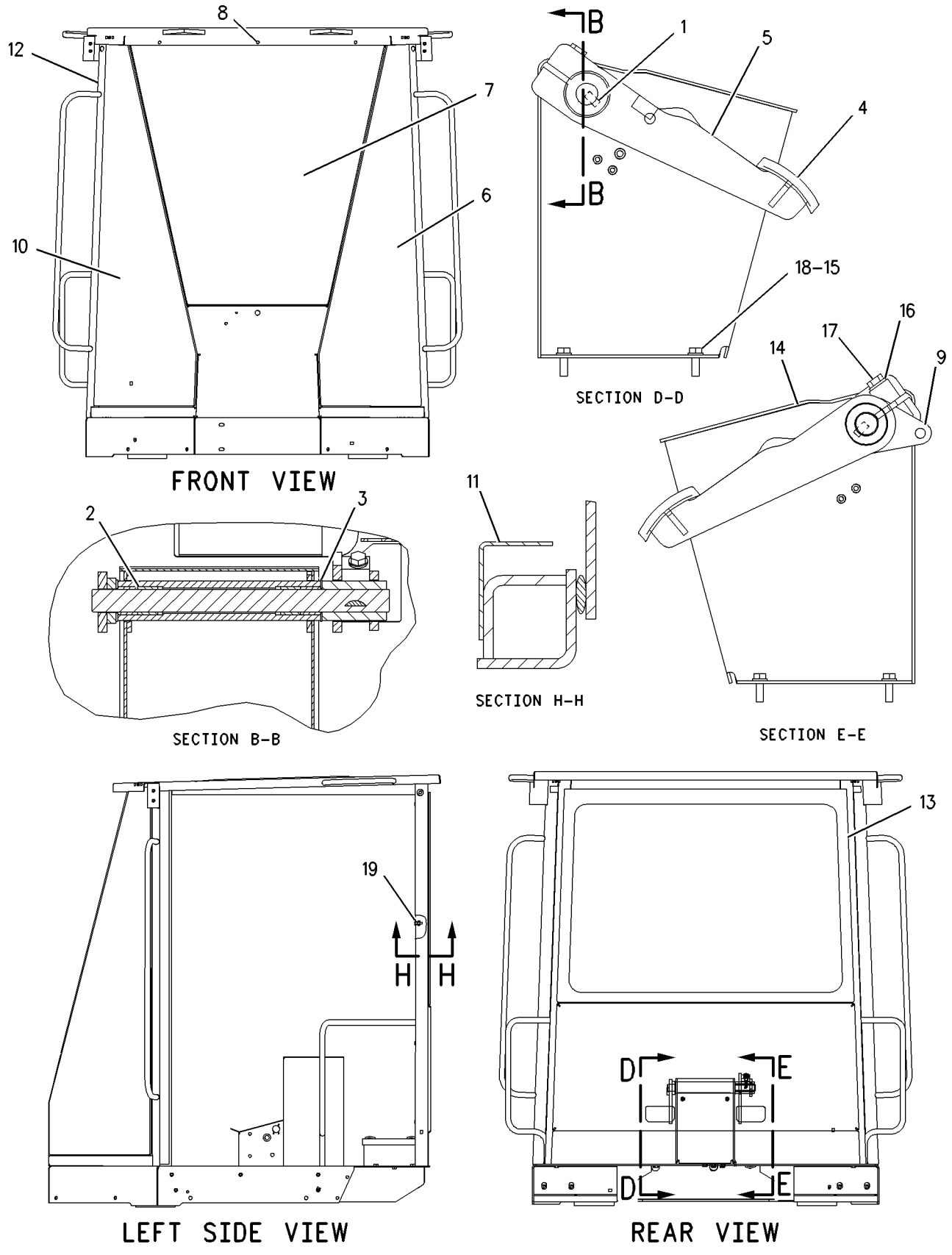

GRAPHIC #1 g00678401

OPERATOR STATION

174-9755 CAB GP

S/N: RTA1-UP; RBB1-UP
PART OF 174-9749 ROPS GP-ENCLOSED
AN ATTACHMENT

SMCS-7301, 7325, 7335 **i01851353**

NOTE	REF NO	GRAPHIC REF	PART NUMBER	QTY	PART NAME 1 2 3 4 5 6 (PRODUCT LEVEL)	SEE PAGE
	1	1	*174-9753*	1	CAB AS	
		1	**5D-9629**	1	ROD	
		1	**7T-1099**	21	LINK	
M		1	**8T-3734**	12	BOSS-WELD	
	2	1	**161-8042**	1	GLASS AS-REAR	

M-METRIC PART

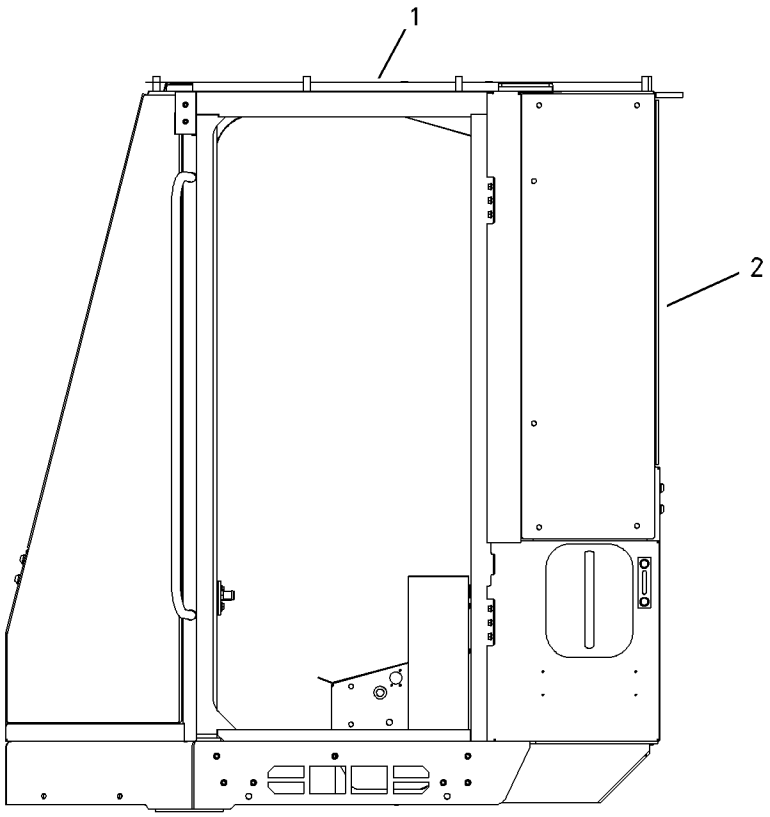

LEFT SIDE VIEW

GRAPHIC #1 g00943131

OPERATOR STATION

190-4644 CANOPY AR-OPEN ROPS

S/N: RTA1-UP; RBB1-UP
OPEN
AN ATTACHMENT

SMCS-7302, 7323 **i01817161**

NOTE	PART NUMBER	QTY	PART NAME 1 2 3 4 5 6 (PRODUCT LEVEL)	SEE PAGE
Y	*190-4645*	1	OPERATOR AR	600
Y	*174-2213*	1	SKIRT GP-CAB	640

Y-SEPARATE ILLUSTRATION

<END>

190-4646 CANOPY AR-OPEN ROPS

S/N: RTA1-UP; RBB1-UP
PART OF 190-4645 OPERATOR AR
AN ATTACHMENT

SMCS-7302, 7323 **i01817206**

NOTE	PART NUMBER	QTY	PART NAME 1 2 3 4 5 6 (PRODUCT LEVEL)	SEE PAGE
Y	*190-4406*	1	CANOPY GP-OPEN ROPS	551
Y	*205-0520*	1	CANOPY GP-OPEN ROPS	552

Y-SEPARATE ILLUSTRATION

<END>

190-4406 CANOPY GP-OPEN ROPS

S/N: RTA1-UP; RBB1-UP
PART OF 190-4646 CANOPY AR-OPEN ROPS
AN ATTACHMENT

SMCS-7323 **i01827462**

NOTE	PART NUMBER	QTY	PART NAME 1 2 3 4 5 6 (PRODUCT LEVEL)	SEE PAGE
Y	*168-7000*	1	CONTROL GP-PARKING BRAKE	280
Y	*190-4643*	1	CONTROL GP-STEERING	294
Y	*190-4690*	1	CONTROL GP-TRANSMISSION	190
Y	*118-0809*	1	DASH GP	559
	9X-2433	1	FILM-CATERPILLAR	
Y	*107-4643*	1	MIRROR GP-REAR VIEW	596
Y	*184-5297*	1	PANEL GP-INSTRUMENT	604
Y	*190-4310*	1	PANEL GP-INSTRUMENT	606
Y	*190-4700*	1	PEDAL GP-GOVERNOR	620
Y	*118-0808*	1	SUPPORT GP-SEAT	642
Y	*190-4330*	1	WIRING GP-CAB	136

Y-SEPARATE ILLUSTRATION

<END>

OPERATOR STATION

205-0520 CANOPY GP-OPEN ROPS

S/N: RTA1-UP; RBB1-UP
PART OF 190-4646 CANOPY AR-OPEN ROPS
AN ATTACHMENT

SMCS-7323 **i01554307**

NOTE	PART NUMBER	QTY	PART NAME 1 2 3 4 5 6 (PRODUCT LEVEL)	SEE PAGE
Y	*120-6668*	1	LIGHTING GP-FLOOD	114
Y	*174-9764*	1	ROPS GP-OPEN	622

Y-SEPARATE ILLUSTRATION

<END>

OPERATOR STATION

106-5122 COMPRESSOR GP-REFRIGERANT

S/N: RTA1-UP; RBB1-UP
PART OF 201-1802 COMPRESSOR GP-REFRIGERANT
AN ATTACHMENT

SMCS-1802 **i00670172**

NOTE	REF NO	GRAPHIC REF	PART NUMBER	QTY	PART NAME 1 2 3 4 5 6 (PRODUCT LEVEL)	SEE PAGE
	1	1	**7T-4532**	1	PLUG AS	
	2	1	**9X-7385**	2	SEAL-O-RING (20.22MM ID)	

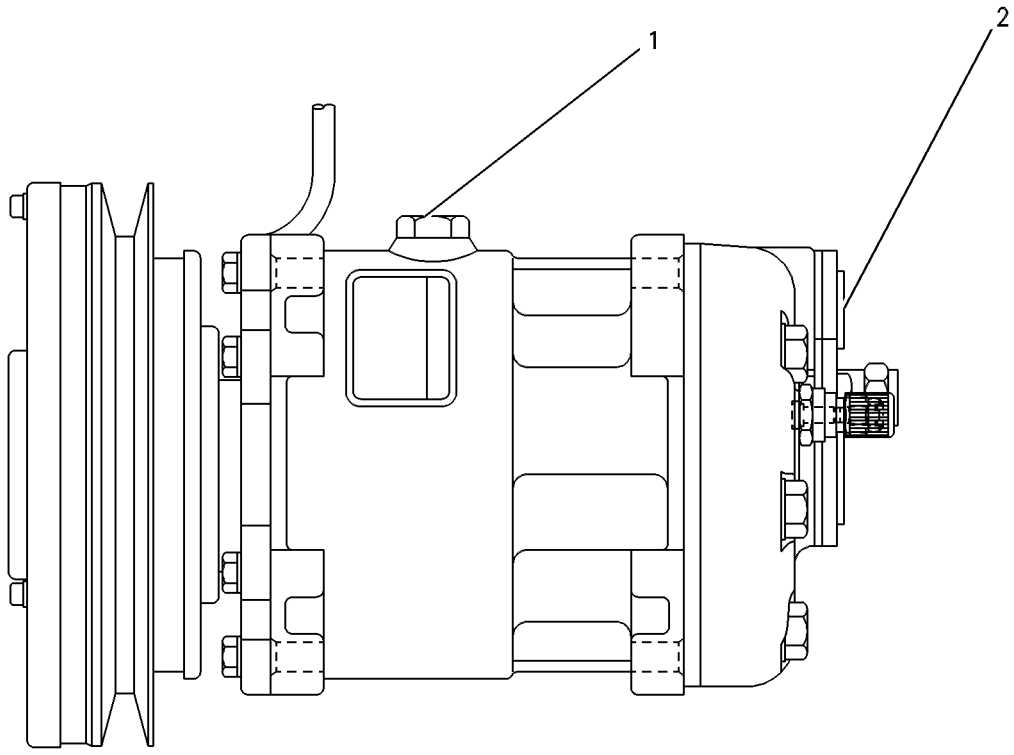

GRAPHIC #1 g00279110

OPERATOR STATION

201-1802 COMPRESSOR GP-REFRIGERANT

S/N: RTA1-UP; RBB1-UP
PART OF 190-4402 AIR CONDITIONER AR
AN ATTACHMENT

SMCS-1802 **i01862969**

NOTE	REF NO	GRAPHIC REF	PART NUMBER	QTY	PART NAME 1 2 3 4 5 6 (PRODUCT LEVEL)	SEE PAGE
	1	1	**1W-2934**	1	V-BELT (AIR CONDITIONER)	
Y	2	1	**106-5122**	1	COMPRESSOR GP-REFRIGERANT	553
	3	1	**149-5624**	1	BRACKET AS	
	4	1	**201-1803**	1	PLATE	
M	5	1	**150-5984**	1	BOLT-HEX HEAD (M10X1.50X140MM)	
	6	1	**7X-7729**	1	WASHER (11X25X3MM THK)	
	7	1	**8T-4121**	6	WASHER-HARD (11X21X2.5MM THK)	
M	8	1	**8T-4133**	2	NUT (M10X1.5 THD)	
M	9	1	**8T-4136**	4	BOLT (M10X1.5X25MM)	
M	10	1	**8T-4186**	1	BOLT (M10X1.5X40MM)	
	11	1	**8T-4222**	1	WASHER-PLATED (11X32X2.5MM THK)	

M-METRIC PART
Y-SEPARATE ILLUSTRATION

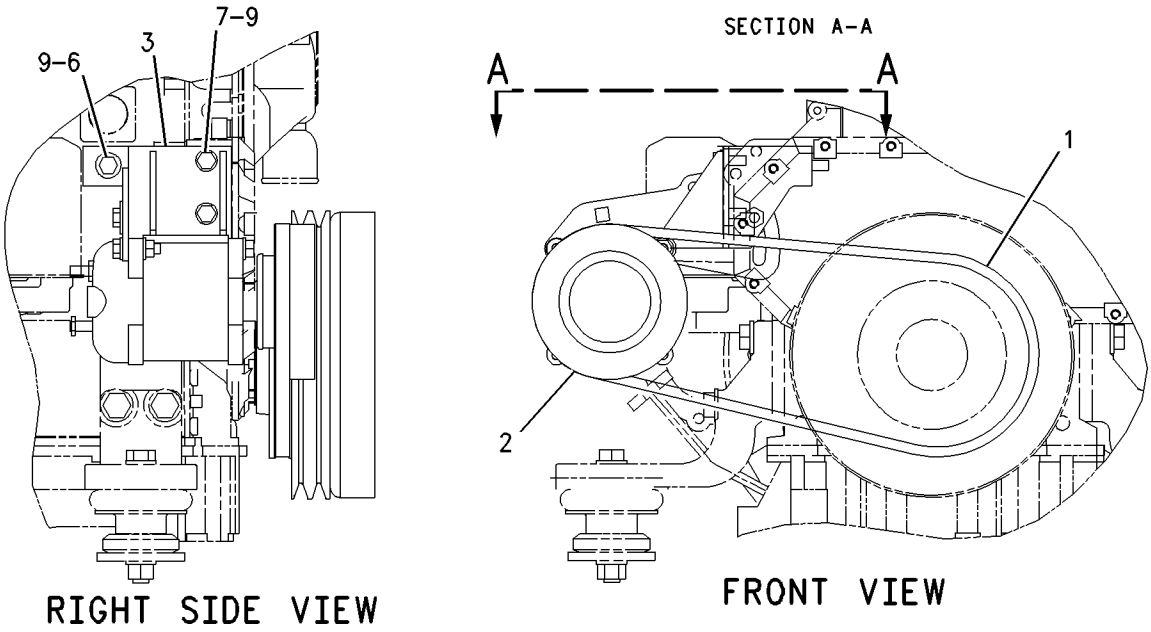

GRAPHIC #1 g00877966

OPERATOR STATION

202-0363 CONDENSER & MTG GP-REFRIGERANT

S/N: RTA1-UP; RBB1-UP
PART OF 203-5937 CONDENSER & MTG GP-REFRIGERANT
AN ATTACHMENT

SMCS-1805 **i01811425**

NOTE	REF NO	GRAPHIC REF	PART NUMBER	QTY	PART NAME 1 2 3 4 5 6 (PRODUCT LEVEL)	SEE PAGE
Y	1	1	**199-7041**	1	CONDENSER GP-REFRIGERANT	557
	2	1	**205-6025**	1	BRACKET	
	3	1	**205-6026**	1	BRACKET	
	4	1	**205-6027**	1	BRACKET	
	5	1	**205-6028**	1	BRACKET	
M	6	1	**8T-4189**	10	BOLT (M8X1.25X20MM)	
	7	1	**8T-4224**	10	WASHER-HARD (8.8X16X2MM THK)	

M-METRIC PART
Y-SEPARATE ILLUSTRATION

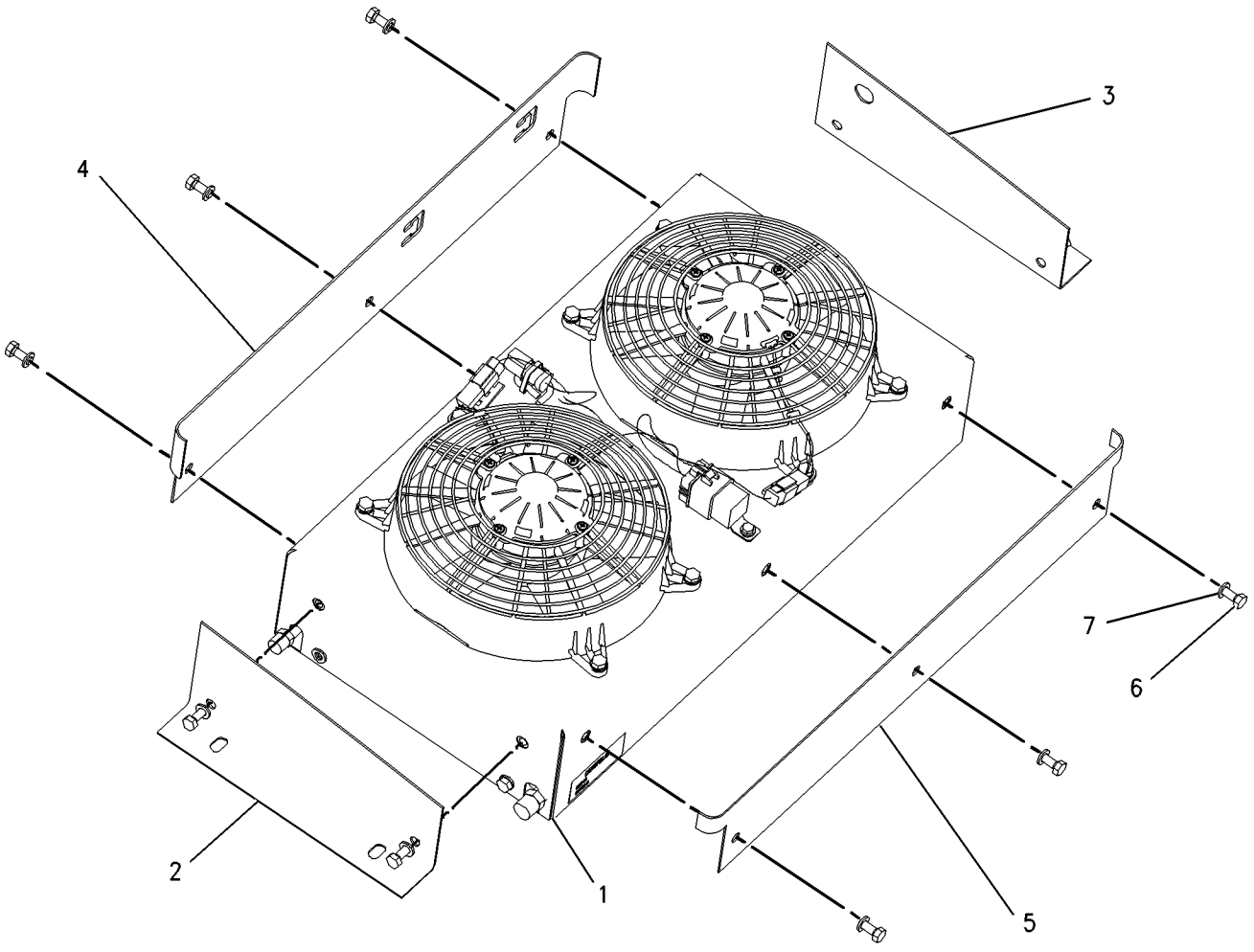

GRAPHIC #1 g00895692

203-5937 CONDENSER & MTG GP-REFRIGERANT

S/N: RTA1-UP; RBB1-UP
PART OF 190-4402 AIR CONDITIONER AR
AN ATTACHMENT

SMCS-1805 **i01811318**

NOTE	REF NO	GRAPHIC REF	PART NUMBER	QTY	PART NAME 1 2 3 4 5 6 (PRODUCT LEVEL)	SEE PAGE
Y	1	1	*202-0363*	1	CONDENSER & MTG GP-REFRIGERANT	555
	2	1	**205-6024**	2	BRACKET AS	
					(EACH INCLUDES)	
M		1	**8T-3490**	4	NUT-WELD (M10X1.5 THD)	
	3	1	**8T-4121**	8	WASHER-HARD (11X21X2.5MM THK)	
M	4	1	**8T-4195**	8	BOLT (M10X1.5X30MM)	
BE	5	1	**112-9736**		SEAL (193CM)	

B-USE AS REQUIRED
E-ORDER BY THE CENTIMETER
M-METRIC PART
Y-SEPARATE ILLUSTRATION

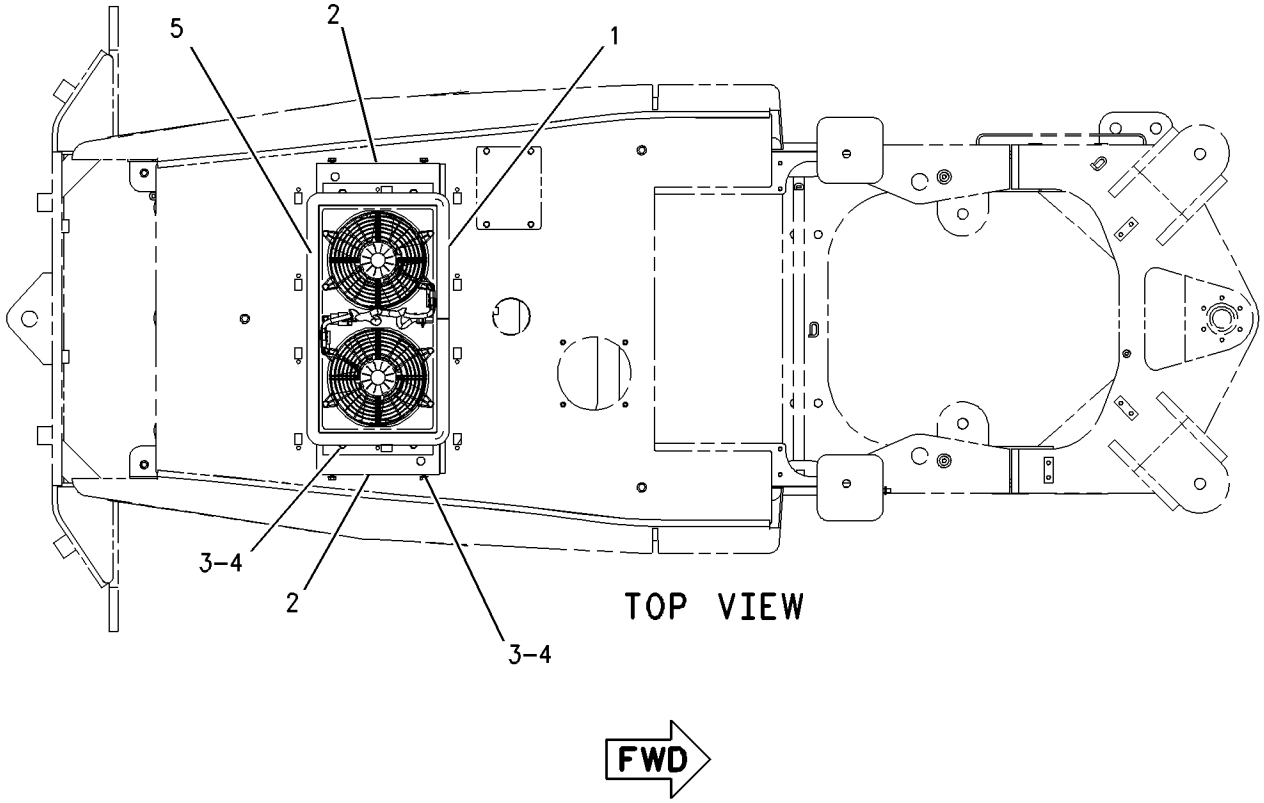

GRAPHIC #1 g00919510

OPERATOR STATION

199-7041 CONDENSER GP-REFRIGERANT

S/N: RTA1-UP; RBB1-UP
PART OF 202-0363 CONDENSER & MTG GP-REFRIGERANT
AN ATTACHMENT

SMCS-1805 **i01854981**

NOTE	REF NO	GRAPHIC REF	PART NUMBER	QTY	PART NAME 1 2 3 4 5 6 (PRODUCT LEVEL)	SEE PAGE
	1	1	**3E-5239**	1	RELAY AS (24 VOLT)	
	2	1	**3S-2093**	5	STRAP-CABLE	
	3	1	**8C-3756**	1	FILM-IDENTIFICATION (GROUP & SEQUENCE NO.)	
	4	1	**169-7434**	2	FAN AS	
	5	1	**169-7435**	1	HARNESS AS-AIR CONDITIONER (CONDENSER FANS)	
		1	**102-8803**	1	KIT-RECEPTACLE (3 PIN)	
		1	**155-2270**	2	KIT-CONNECTING PLUG (2 PIN)	
	6	1	**199-7042**	1	CASE AS	
	7	1	**199-7043**	1	COIL AS-CONDENSER	
	8	1	**4P-7581**	2	CLIP (LADDER)	
M	9	1	**5C-9553**	1	BOLT (M6X1X16MM)	
M	10	1	**8T-4200**	4	BOLT (M8X1.25X16MM)	
	11	1	**8T-4205**	1	WASHER-HARD (7.2X14.5X2MM THK)	
	12	1	**8T-4224**	12	WASHER-HARD (8.8X16X2MM THK)	
M	13	1	**8T-5093**	8	BOLT-LOCKING (M8X1.25X25MM)	

M-METRIC PART

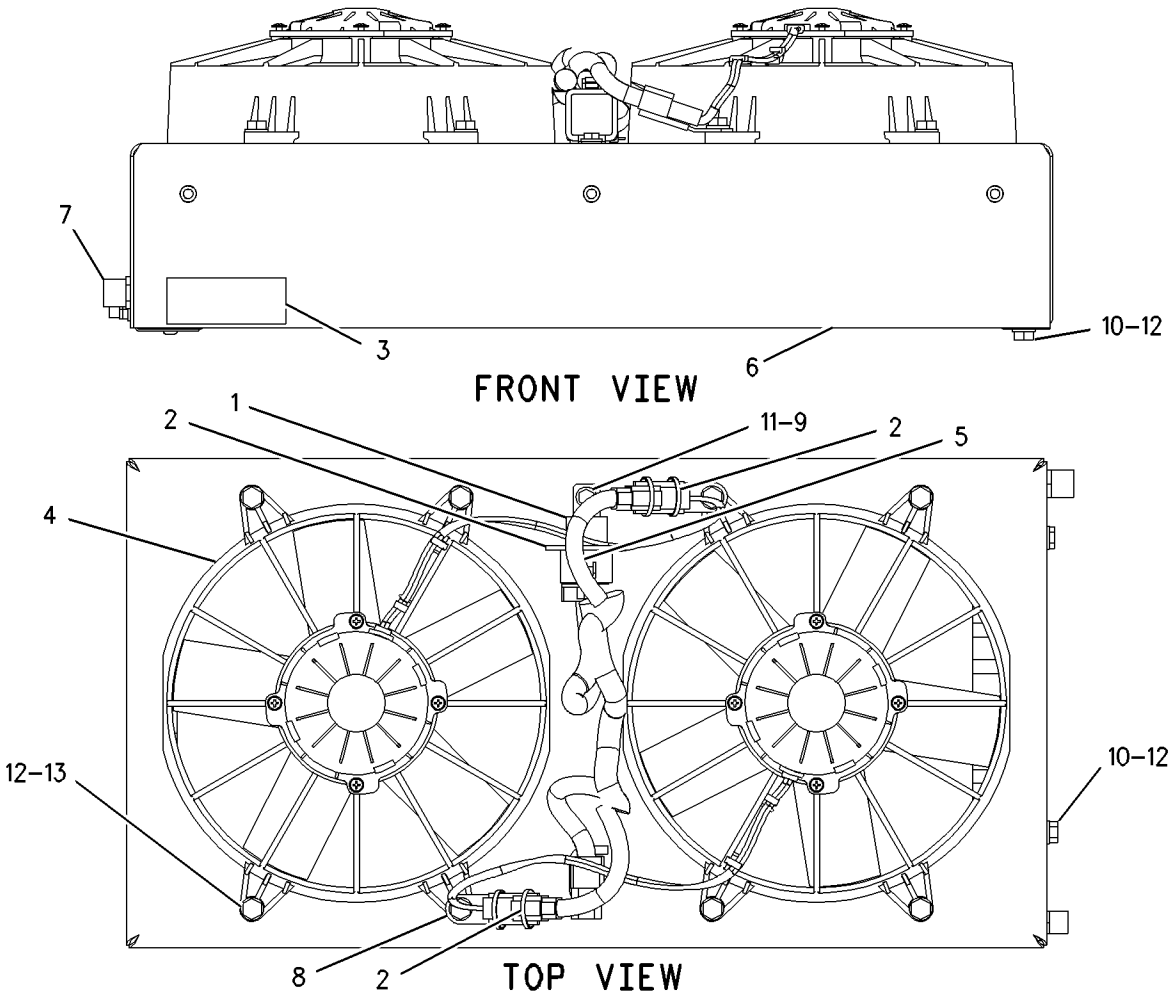

GRAPHIC #1 g00946176

OPERATOR STATION

149-4612 COVER GP-CONSOLE

S/N: RTA1-UP; RBB1-UP
PART OF 190-4633, 190-4645, 216-6907 OPERATOR AR
AN ATTACHMENT

SMCS-5258 **i01816691**

NOTE	REF NO	GRAPHIC REF	PART NUMBER	QTY	PART NAME 1 2 3 4 5 6 (PRODUCT LEVEL)	SEE PAGE
E	1	1	**3E-3892**		SEAL (120CM)	
	2	1	**4E-1062**	1	CUSHION AS-ARMREST	
	3	1	**111-0149**	1	SUPPORT AS	
	4	1	**111-7875**	1	PLATE	
	5	1	**187-2082**	1	LEVER-CONTROL	
	6	1	**226-1832**	1	COVER AS	
M	7	1	**3E-8020**	2	SCREW-TRUSS HEAD (M6X1X25MM)	
M	8	1	**8T-4138**	2	BOLT (M6X1X20MM)	
	9	1	**8T-4205**	2	WASHER-HARD (7.2X14.5X2MM THK)	
M	10	1	**9X-2042**	6	SCREW-TRUSS HEAD (M6X1X12MM)	
E	11	1	**3E-3892**		SEAL (76CM)	

E-ORDER BY THE CENTIMETER
M-METRIC PART

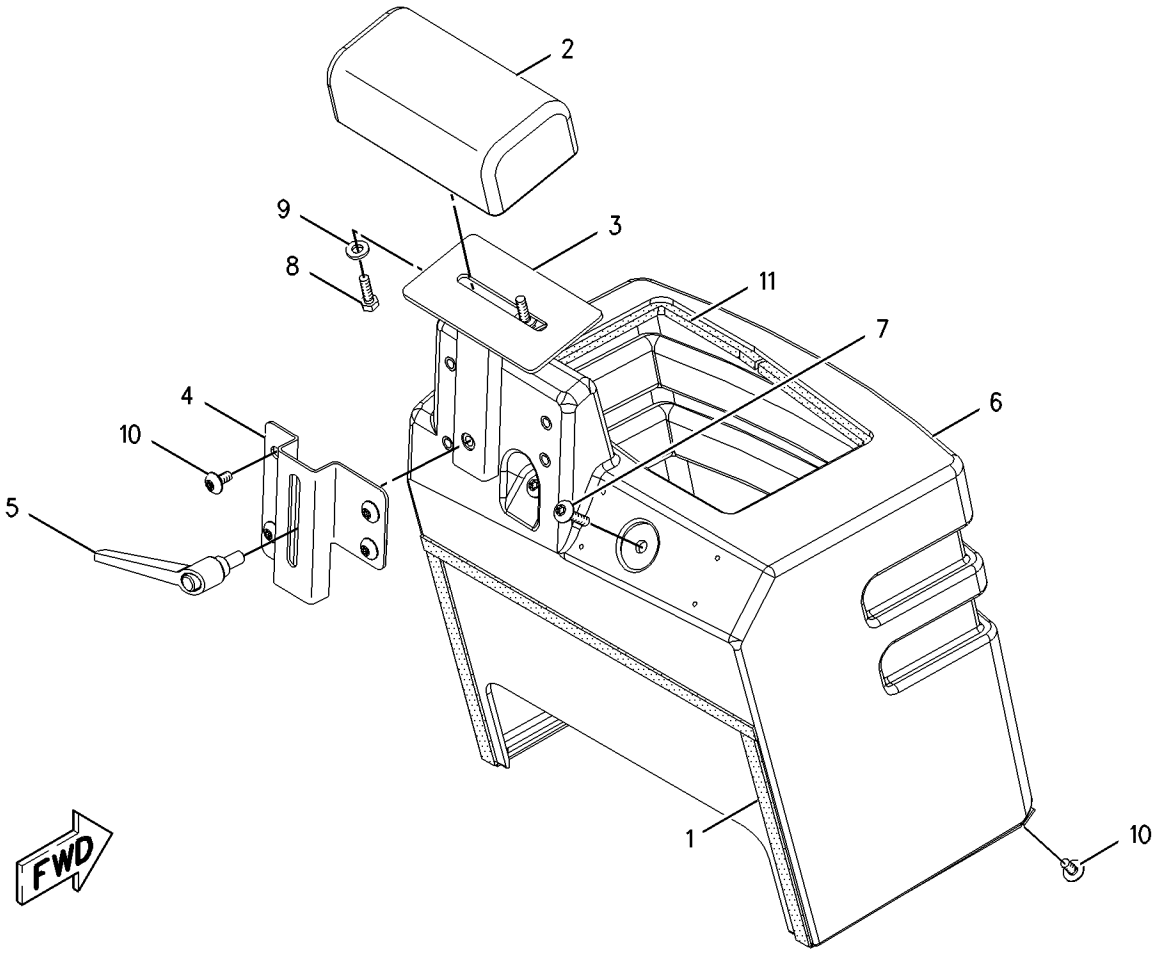

GRAPHIC #1 g00928930

OPERATOR STATION

118-0809 DASH GP

S/N: RTA1-UP; RBB1-UP
PART OF 216-6908 CAB AR, 190-4406 CANOPY GP-OPEN ROPS
AN ATTACHMENT

SMCS-7314 **i01374382**

NOTE	REF NO	GRAPHIC REF	PART NUMBER	QTY	PART NAME 1 2 3 4 5 6 (PRODUCT LEVEL)	SEE PAGE
C	1	1	**166-9287**	1	DASH AS	
	2	1	**5P-4116**	4	WASHER-HARD (8.8X20.5X2MM THK)	
M	3	1	**8T-4908**	4	BOLT (M8X1.25X25MM)	

C-CHANGE FROM PREVIOUS TYPE
M-METRIC PART

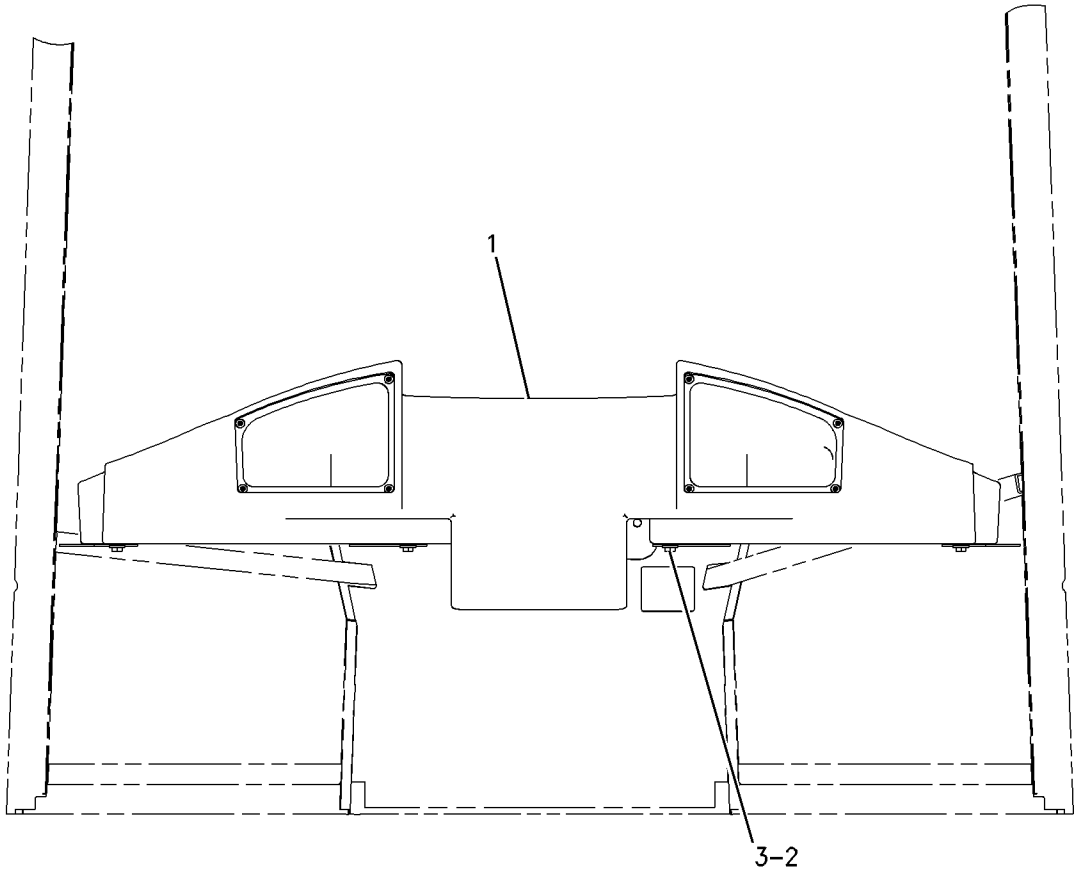

GRAPHIC #1 g00729083

OPERATOR STATION

207-5948 DEFROSTER GP-CAB

S/N: RTA1-UP; RBB1-UP
PART OF 190-4405 CAB AR
AN ATTACHMENT

SMCS-7304, 7316 **i01831651**

NOTE	REF NO	GRAPHIC REF	PART NUMBER	QTY	PART NAME 1 2 3 4 5 6 (PRODUCT LEVEL)	SEE PAGE
	1	1	**3E-5239**	1	RELAY AS (24 VOLT)	
	2	1	**204-8799**	1	SWITCH AS-ROCKER (DEFROSTER)	
		1	**111-7899**	1	GASKET	
	3	1	**8T-4205**	1	WASHER-HARD (7.2X14.5X2MM THK)	
M	4	1	**9X-2042**	1	SCREW-TRUSS HEAD (M6X1X12MM)	

M-METRIC PART

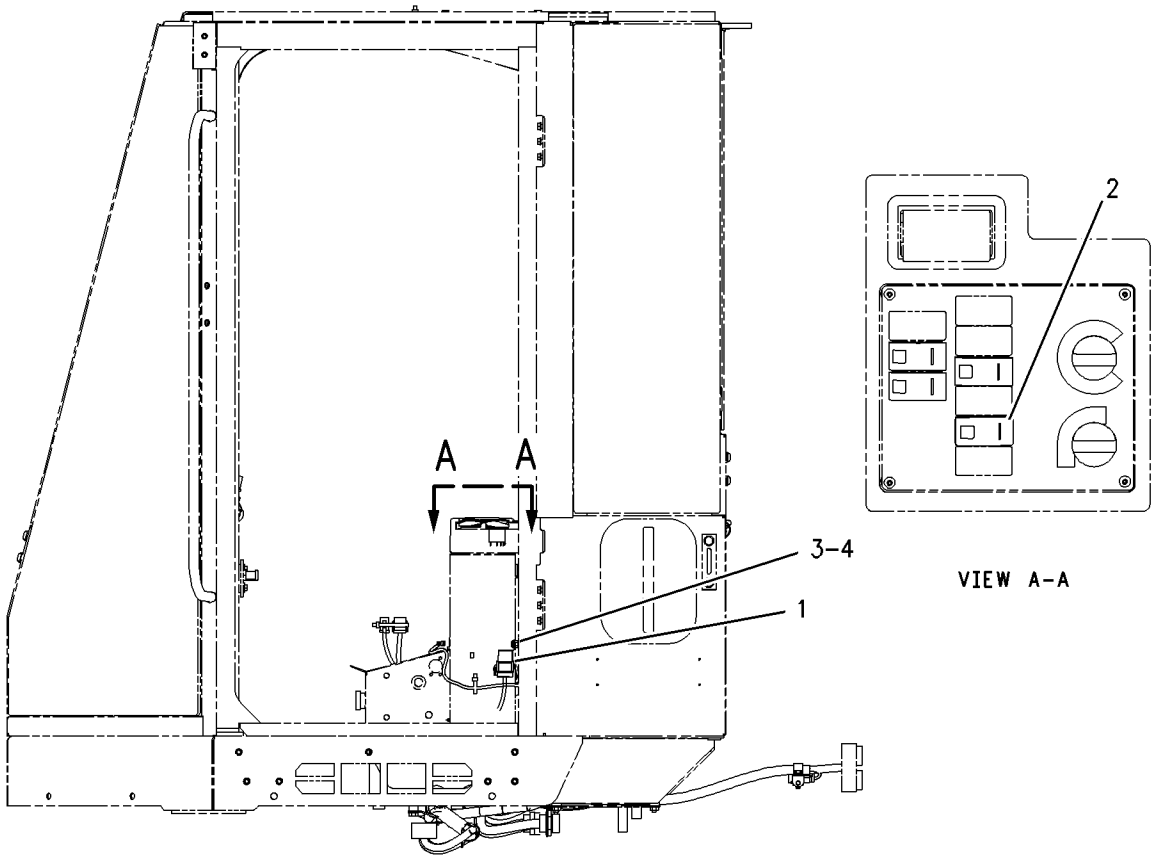

LEFT SIDE VIEW

GRAPHIC #1 g00917880

OPERATOR STATION

137-7602 DOOR GP-CAB

S/N: RTA1-UP; RBB1-UP
PART OF 205-0522 CAB AR
AN ATTACHMENT

SMCS-7308 **i01301266**

NOTE	PART NUMBER	QTY	PART NAME 1 2 3 4 5 6 (PRODUCT LEVEL)	SEE PAGE
Y	**164-4563**	1	DOOR GP-CAB (LH)	562
Y	**164-4564**	1	DOOR GP-CAB (RH)	564

Y-SEPARATE ILLUSTRATION

<END>

OPERATOR STATION

164-4563 DOOR GP-CAB—LH

S/N: RTA1-UP; RBB1-UP
PART OF 137-7602 DOOR GP-CAB
AN ATTACHMENT

SMCS-7308 **i01329020**

NOTE	REF NO	GRAPHIC REF	PART NUMBER	QTY	PART NAME 1 2 3 4 5 6 (PRODUCT LEVEL)	SEE PAGE
	1	1	**3T-5201**	1	BEARING	
	2	1	**4E-1384**	2	BUMPER-CONICAL	
	3	1	**7W-2108**	1	SPRING-BYPASS VALVE	
	4	1	**7X-2497**	1	HANDLE-DOOR	
M	5	1	**8T-4180**	4	SCREW-MACHINE (M5X0.8X20MM)	
	6	1	**8T-4742**	1	END-YOKE ROD	
	7	1	**8T-4747**	2	BRACKET	
	8	1	**8Y-4807**	1	HANDLE AS	
		1	**8Y-4501**	1	SPRING-HANDLE	
	9	1	**8Y-6386**	1	SEAL-HANDLE	
	10	1	**9G-2761**	1	LATCH AS-DOOR	
	11	1	**107-6117**	1	COVER-LH	
	12	1	**141-8580**	1	RING-RETAINING	
	13	1	**161-9640**	1	COVER	
	14	1	**161-9641**	1	PLATE	
	15	1	**161-9642**	1	ROD AS	
	16	1	**161-9647**	1	PLATE	
	17	1	**162-2188**	1	DOOR AS	
	17A	1	**107-6104**	2	INSERT	
	17B	1	**107-6125**	2	HINGE AS	
	17C	1	**107-6127**	1	STRIP	
	17D	1	**111-0200**	1	HANDHOLD	
	17E	1	**115-1552**	1	HANDLE-PULL	
	18	1	**162-2189**	1	GLASS	
	19	1	**162-2190**	1	GLASS	
	20	1	**168-2457**	1	LATCH AS	
	21	1	**169-3995**	1	SEAL	
M	22	1	**5C-2890**	1	NUT (M6X1.00 THD)	
M	23	1	**5C-7261**	2	NUT (M8X1.25 THD)	
M	24	1	**8T-4181**	5	BOLT (M6X1X20MM)	
	25	1	**8T-4205**	6	WASHER-HARD (2MM THK)	
M	26	1	**8T-4971**	4	BOLT (M6X1.0X30MM)	
M	27	1	**9X-2042**	11	SCREW-TRUSS HEAD (M6X1.0X12MM)	
E	28	1	**3E-3805**		SEAL (420CM)	
	29	1	**178-2593**	1	BUMPER	

E-ORDER BY THE CENTIMETER
M-METRIC PART

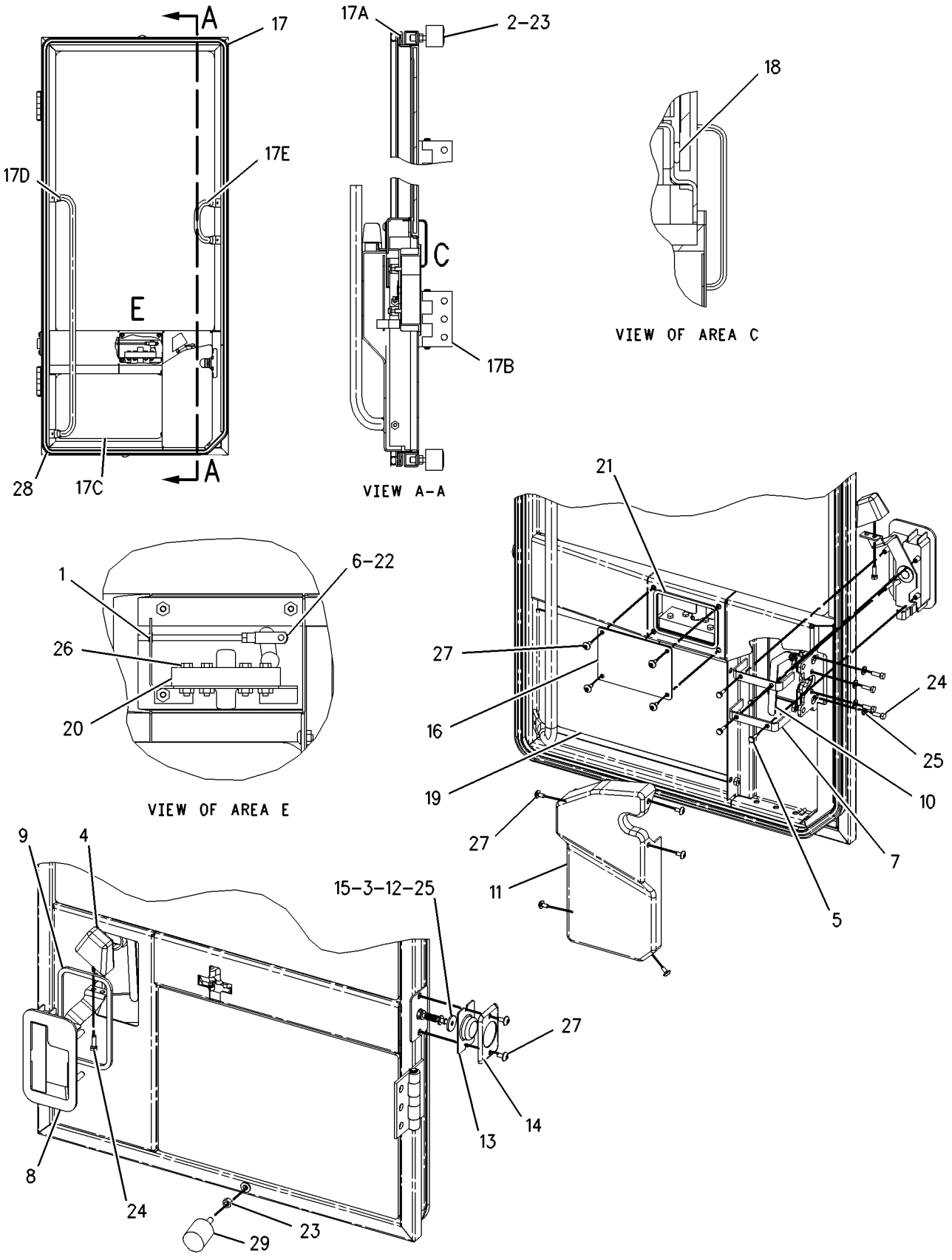

GRAPHIC #1 g00703237

OPERATOR STATION

164-4564 DOOR GP-CAB—RH

S/N: RTA1-UP; RBB1-UP
FIXED GLASS
PART OF 137-7602 DOOR GP-CAB
AN ATTACHMENT

SMCS-7308 **i01305252**

NOTE	REF NO	GRAPHIC REF	PART NUMBER	QTY	PART NAME 1 2 3 4 5 6 (PRODUCT LEVEL)	SEE PAGE
	1	1	**3T-5201**	1	BEARING	
	2	1	**178-2593**	2	BUMPER	
	3	1	**7W-2108**	1	SPRING-BYPASS VALVE	
	4	1	**7X-2497**	1	HANDLE-DOOR	
M	5	1	**8T-4180**	4	SCREW-MACHINE (M5X0.8X20MM)	
	6	1	**8T-4742**	1	END-YOKE ROD	
	7	1	**8T-4747**	2	BRACKET	
	8	1	**8Y-6386**	1	SEAL-HANDLE	
	9	1	**9G-2759**	1	LATCH AS-DOOR	
	10	1	**111-0202**	1	COVER-RH	
	11	1	**112-1528**	1	HANDLE AS-PADDLE	
		1	**8Y-4501**	1	SPRING-HANDLE	
	12	1	**141-8580**	1	RING-RETAINING	
	13	1	**161-9640**	1	COVER	
	14	1	**161-9641**	1	PLATE	
	15	1	**161-9642**	1	ROD AS	
	16	1	**161-9647**	1	PLATE	
	17	1	**162-2189**	1	GLASS	
	18	1	**162-2190**	1	GLASS	
	19	1	**164-4562**	1	DOOR AS	
	19A	1	**107-6125**	2	HINGE AS	
	19B	1	**111-0201**	1	HANDHOLD	
	19C	1	**115-1552**	1	HANDLE-PULL	
		1	**107-6104**	2	INSERT	
	20	1	**168-2458**	1	LATCH AS	
	21	1	**169-3995**	1	SEAL	
M	22	1	**5C-2890**	1	NUT (M6X1.00 THD)	
M	23	1	**5C-7261**	2	NUT (M8X1.25 THD)	
M	24	1	**8T-4181**	5	BOLT (M6X1X20MM)	
	25	1	**8T-4205**	6	WASHER-HARD (2MM THK)	
M	26	1	**8T-4971**	4	BOLT (M6X1.0X30MM)	
M	27	1	**9X-2042**	11	SCREW-TRUSS HEAD (M6X1.0X12MM)	
E	28	1	**3E-3805**		SEAL (420CM)	
	29	1	**110-7524**	14	BUTTON	

E-ORDER BY THE CENTIMETER
M-METRIC PART

164-4564 D00R GP-CAB *(contd.)*

i01305252

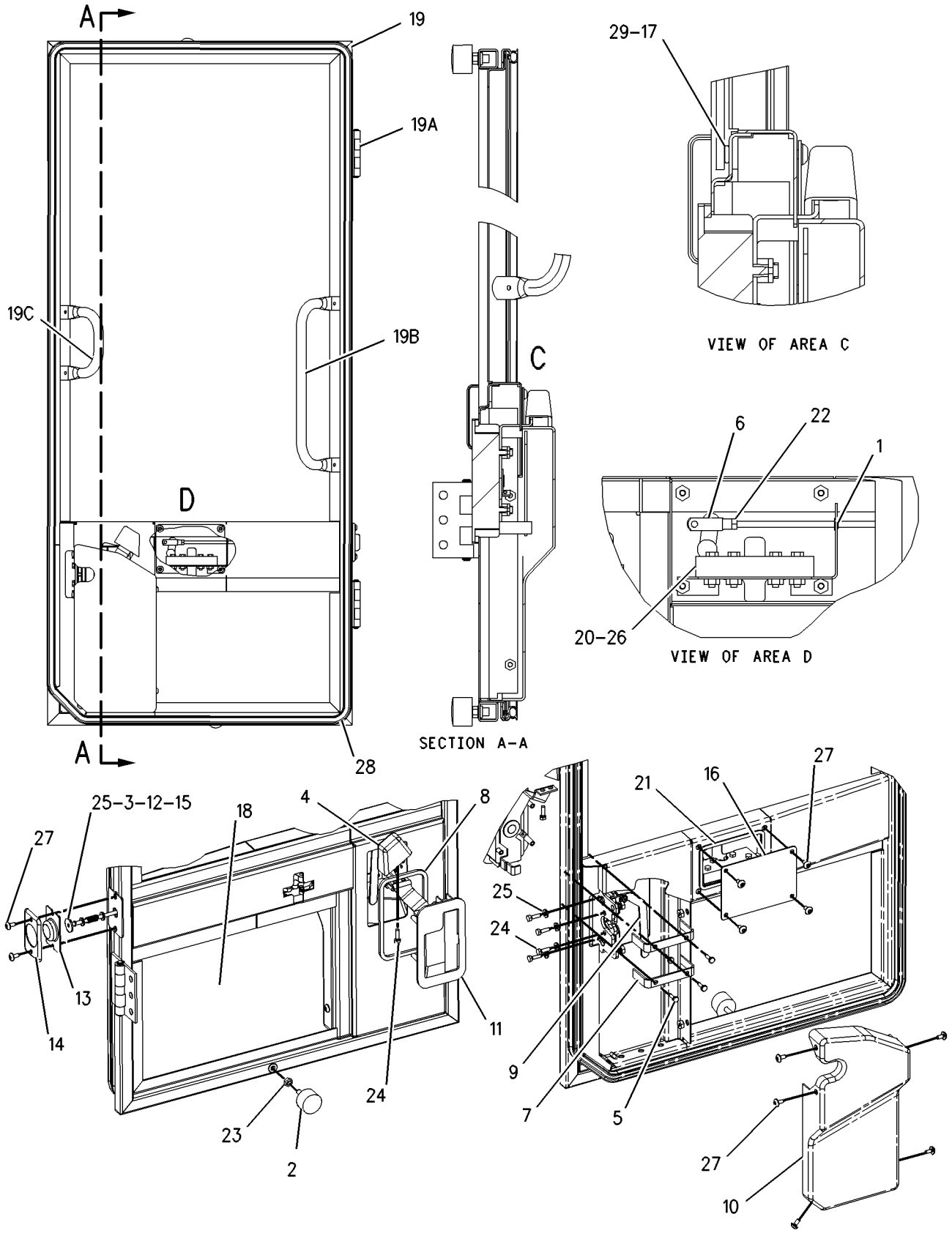

GRAPHIC #1

g00691351

OPERATOR STATION

107-4630 DUCT GP-AIR

S/N: RTA1-UP; RBB1-UP
PART OF 190-4405 CAB AR
AN ATTACHMENT

SMCS-7304, 7320, 7337 **i01057645**

NOTE	REF NO	GRAPHIC REF	PART NUMBER	QTY	PART NAME 1 2 3 4 5 6 (PRODUCT LEVEL)	SEE PAGE
BD	1	1	**5P-5927**		SEAL	
	2	1	**8Y-6388**	10	LOUVER AS	
	3	1	**104-2091**	20	SCREW-FLAT HEAD (NO.6-20X0.5IN)	
	4	1	**107-6025**	1	DUCT AS	
	5	1	**107-6079**	1	DUCT	
	6	1	**161-7620**	12	SCREW-PAN HEAD	
	7	1	**5P-4116**	4	WASHER (2MM THK)	
M	8	1	**8T-4908**	4	BOLT (M8X1.25X25MM)	

B-USE AS REQUIRED
D-ORDER BY THE METER
M-METRIC PART

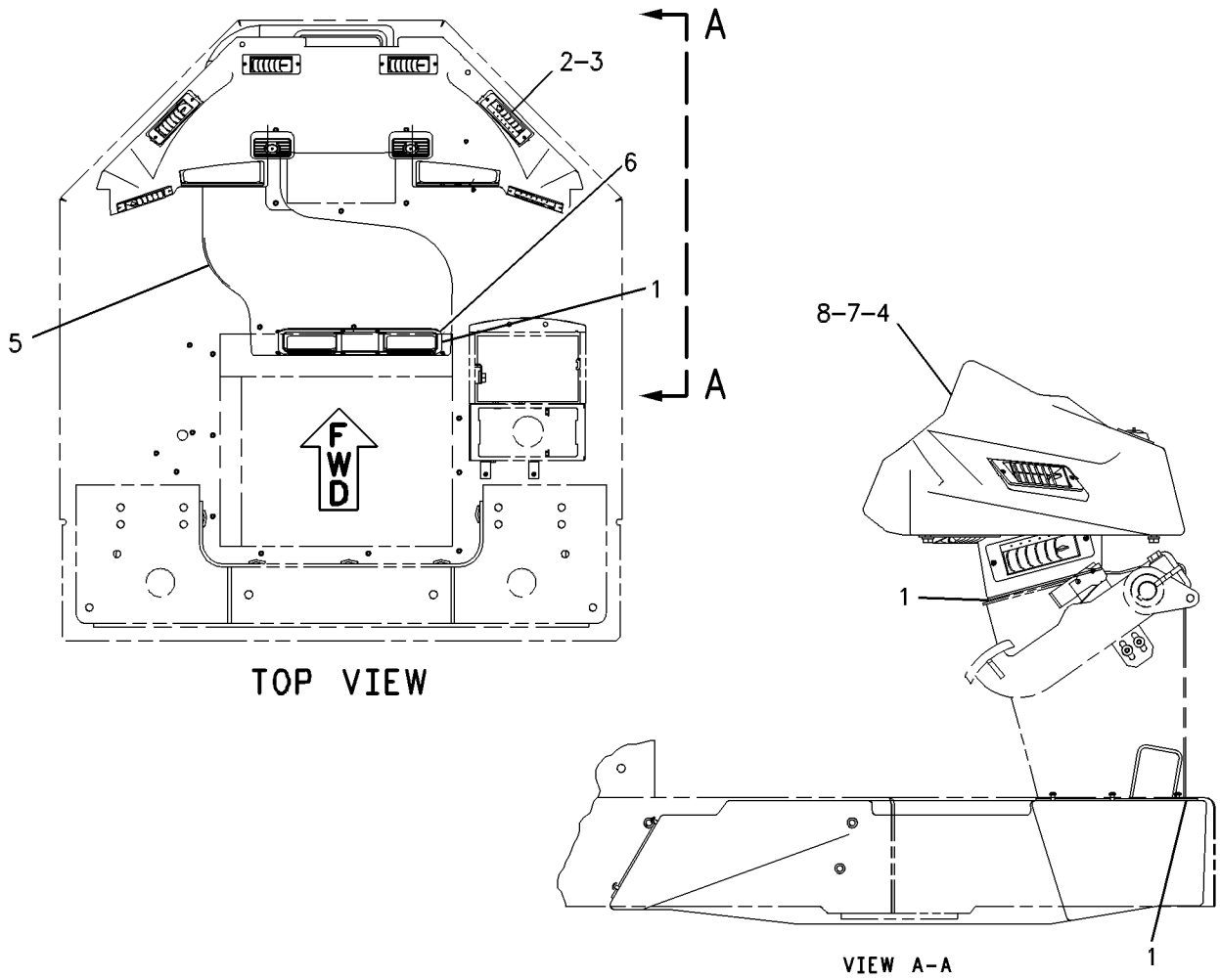

GRAPHIC #1 g00549722

8Y-6883 EXTENSION GP-BACKREST

S/N: RTA1-UP; RBB1-UP
CLOTH
PART OF 119-7128 SEAT GP, 8Y-6977 SEAT GP-SUSPENSION
AN ATTACHMENT

SMCS-7312 **i01171808**

NOTE	REF NO	GRAPHIC REF	PART NUMBER	QTY	PART NAME 1 2 3 4 5 6 (PRODUCT LEVEL)	SEE PAGE
J	1	1	**8Y-5947**	2	FASTENER	
	2	1	**8Y-5877**	1	PAN AS-EXTENSION	
					AVAILABLE REPAIR KIT(S):	
J			**119-7130**	1	KIT-CUSHION	

J-KIT MARKED J INCLUDES CUSHION AS & PART MARKED J

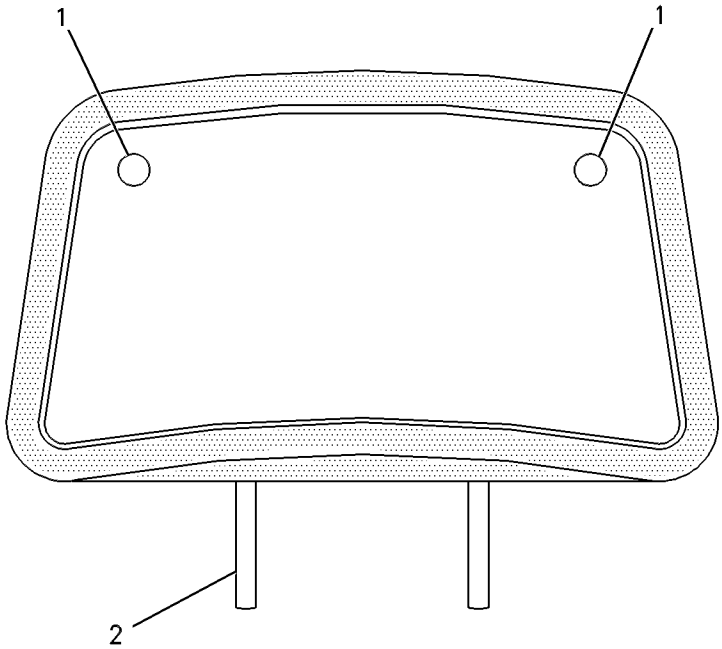

REAR VIEW

GRAPHIC #1 g00086580

OPERATOR STATION

119-4769 FILTER GP-CAB AIR

S/N: RTA1-UP; RBB1-UP
PART OF 190-4405 CAB AR
AN ATTACHMENT

SMCS-7342 **i01862919**

NOTE	REF NO	GRAPHIC REF	PART NUMBER	QTY	PART NAME 1 2 3 4 5 6 (PRODUCT LEVEL)	SEE PAGE
	1	1	**111-8738**	1	FILTER	
	2	1	**180-7487**	1	FILTER (AIR)	
	3	1	**114-3944**	1	COVER	
	4	1	**116-7856**	4	KNOB-CONTROL	
	5	1	**127-8613**	1	GASKET	
	6	1	**180-7486**	1	COVER AS	

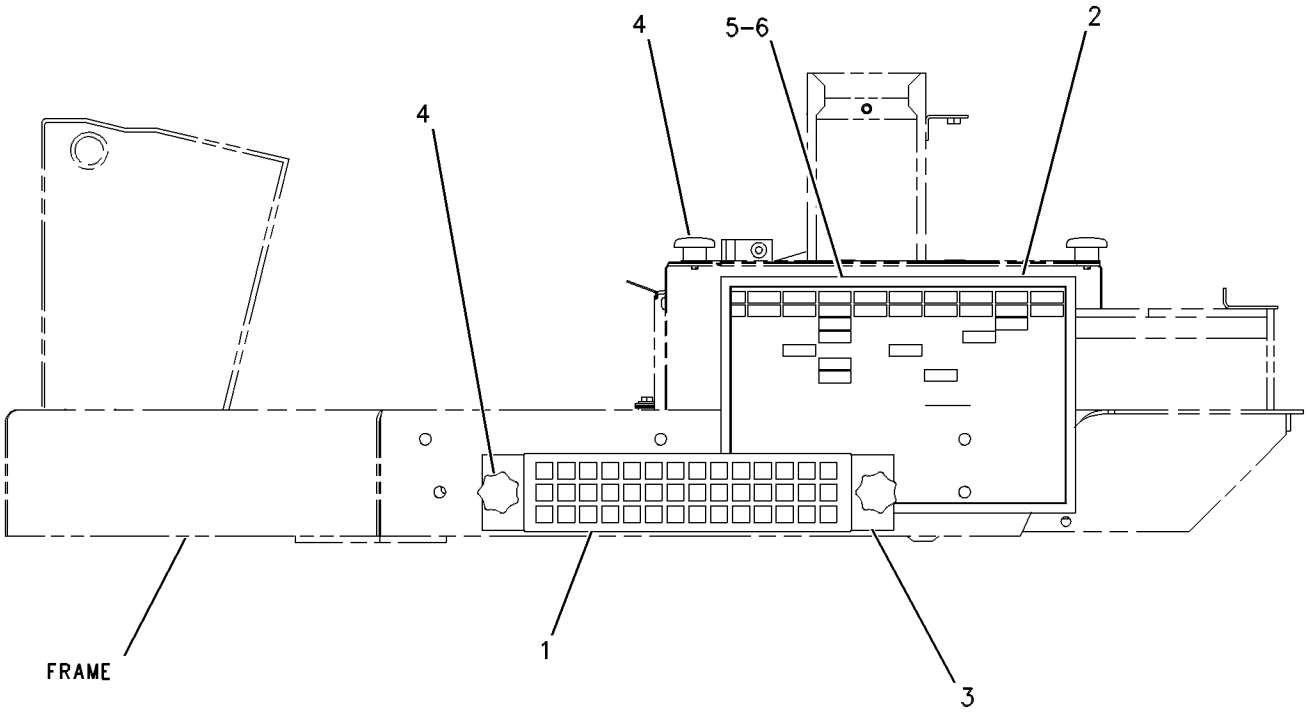

LEFT SIDE VIEW

GRAPHIC #1 g00661567

OPERATOR STATION

107-4629 HEATER & MTG GP-CAB

S/N: RTA1-UP; RBB1-UP
PART OF 190-4401 HEATER AR-CAB
AN ATTACHMENT

SMCS-7304 **i01482727**

NOTE	REF NO	GRAPHIC REF	PART NUMBER	QTY	PART NAME 1 2 3 4 5 6 (PRODUCT LEVEL)	SEE PAGE
BD	1	1	**5P-5643**		SEAL	
CY	2	1	**180-9874**	1	HEATER GP-CAB	572
	3	1	**156-4449**	1	CABLE AS	
		1	**2H-3920**	2	LOCKWASHER	
		1	**6V-8369**	1	NUT (7/16-28 THD)	
		1	**143-8874**	1	BOOT	
	4	1	**118-7259**	1	GASKET	
	5	1	**7X-0579**	11	WASHER-HARD (8.8X25.5X2MM THK)	
M	6	1	**8T-4908**	11	BOLT (M8X1.25X25MM)	

B-USE AS REQUIRED
C-CHANGE FROM PREVIOUS TYPE
D-ORDER BY THE METER
M-METRIC PART
Y-SEPARATE ILLUSTRATION

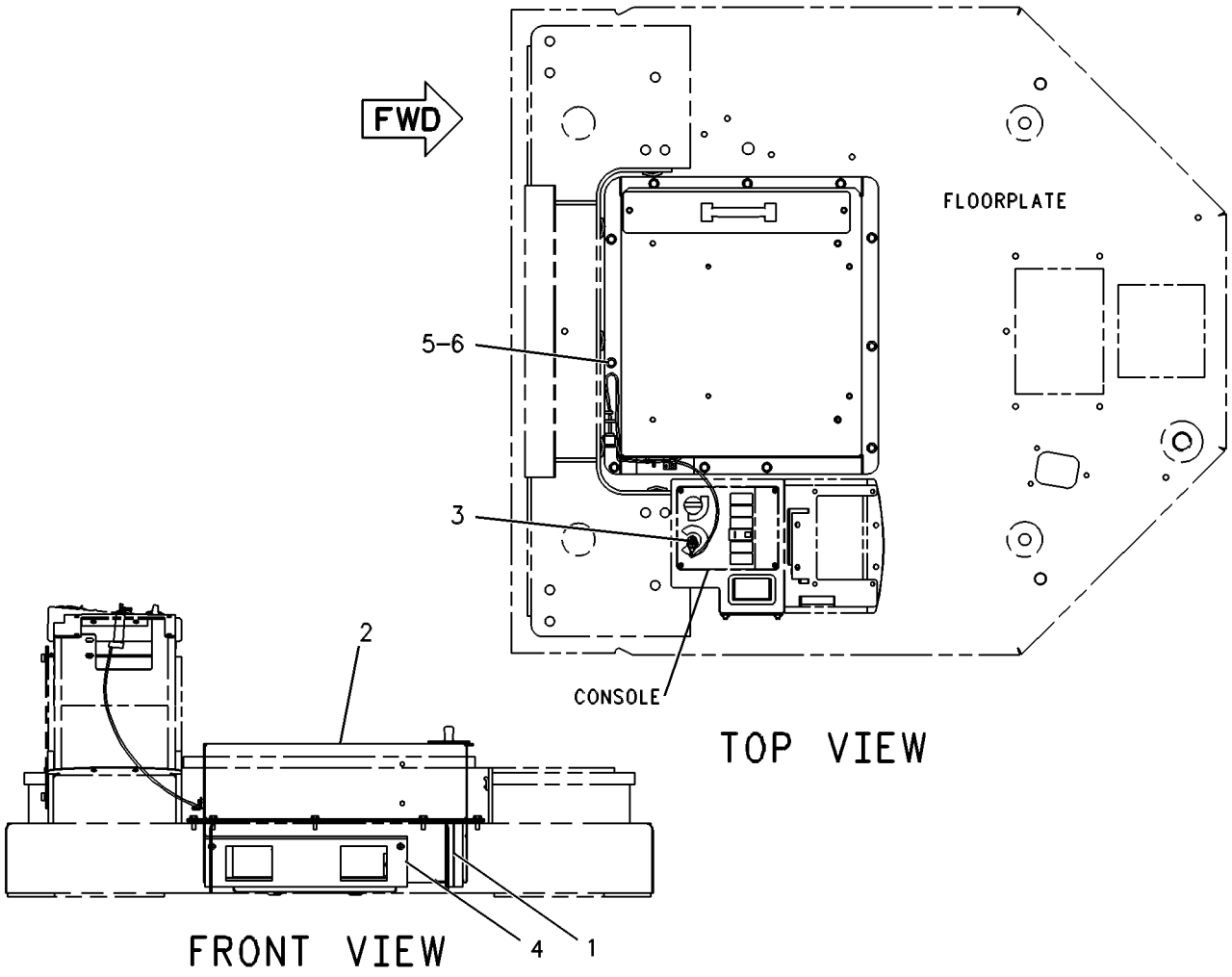

GRAPHIC #1 g00131666

OPERATOR STATION

190-4401 HEATER AR-CAB

S/N: RTA1-UP; RBB1-UP

AN ATTACHMENT

SMCS-7304 **i01810877**

NOTE	PART NUMBER	QTY	PART NAME 1 2 3 4 5 6 (PRODUCT LEVEL)	SEE PAGE
Y	*107-4629*	1	HEATER & MTG GP-CAB	569
Y	*203-5931*	1	LINES GP-HEATER	592
Y	*198-8964*	1	PANEL GP-TOP	276

Y-SEPARATE ILLUSTRATION

<END>

MEMORANDA

OPERATOR STATION

180-9874 HEATER GP-CAB

S/N: RTA1-UP; RBB1-UP
PART OF 107-4629 HEATER & MTG GP-CAB
AN ATTACHMENT

SMCS-7304 **i01689379**

NOTE	REF NO	GRAPHIC REF	PART NUMBER	QTY	PART NAME 1 2 3 4 5 6 (PRODUCT LEVEL)	SEE PAGE
D	1	1	**5P-5908**		SEAL (1M)	
	2	1	**1P-6522**	1	GROMMET	
	3	1	**2S-3745**	6	SCREW-TAPPING (10-16X.5 IN)	
	4	1	**3E-1841**	1	LEVER	
	5	1	**3S-2093**	2	STRAP-CABLE	
M	6	1	**5C-9553**	4	BOLT (M6X1X16MM)	
	7	1	**6V-1668**	2	WASHER (6.5X29.1X3MM THK)	
	8	1	**8C-4586**	2	CLAMP	
M	9	1	**8C-8457**	1	SCREW-MACHINE	
	10	1	**8T-0154**	6	CLAMP-HOSE	
M	11	1	**8T-4171**	2	BOLT (M6X1X12MM)	
	12	1	**8T-4205**	11	WASHER-HARD (7.2X14.5X2MM THK)	
	13	1	**8Y-5737**	1	CLIP	
	14	1	**9G-1950**	1	RESISTOR	
M	15	1	**9X-2044**	1	SCREW-TRUSS HEAD (M6X1X16MM)	
	16	1	**9X-2185**	4	SCREW (8-15X0.44 IN)	
	17	1	**037-4426**	1	RETAINER	
	18	1	**100-3143**	2	PLATE-ORIFICE	
	19	1	**100-3426**	2	WHEEL-BLOWER	
					(EACH INCLUDES)	
		1	**037-4838**	2	CLAMP	
	20	1	**102-0341**	1	CLIP (TAB)	
	21	1	**114-3140**	1	GROMMET	
	22	1	**118-5044**	1	HARNESS AS-HEATER (CAB)	
		1	**155-2270**	1	KIT-CONNECTING PLUG (2 PIN)	
					(INCLUDES PLUG AS & WEDGE)	
		1	**102-8805**	1	KIT-RECEPTACLE (6 PIN)	
					(INCLUDES RECEPTACLE AS & WEDGE)	
		1	**8T-8737**	1	PLUG-SEAL	
	23	1	**118-5046**	1	HOUSING AS	
M		1	**6V-9632**	1	NUT-WELD (M6X1 THD)	
	24	1	**124-8494**	1	GASKET	
	25	1	**124-8495**	1	VALVE AS-WATER	
M	26	1	**129-3178**	3	LOCKNUT (M6X1 THD)	
M	27	1	**141-9784**	1	BOLT-HEX HEAD (M6X190MM)	
	28	1	**151-0894**	1	COVER AS	
M		1	**8T-3490**	4	NUT-WELD (M10X1.5 THD)	
	29	1	**156-6819**	1	CASE AS	
M		1	**6V-9632**	9	NUT-WELD (M6X1 THD)	
	30	1	**174-1486**	1	MOTOR AS-BLOWER	
		1	**3E-3365**	1	WEDGE-RECEPTACLE LOCK (2 PIN)	
		1	**9W-0852**	2	PIN-CONNECTOR	
		1	**102-8802**	1	KIT-RECEPTACLE (2 PIN)	
					(INCLUDES RECEPTACLE AS & WEDGE)	
	31	1	**183-7528**	1	COIL AS	
M	32	1	**6V-7728**	1	BOLT (M6X1.0X45MM)	
E	33	1	**136-1953**		HOSE (56CM)	
D	34	1	**8T-5372**		SEAL (.4M)	
D	35	1	**6V-1392**		SEAL (.8M)	

D-ORDER BY THE METER
E-ORDER BY THE CENTIMETER
M-METRIC PART

180-9874 HEATER GP-CAB *(contd.)* i01689379

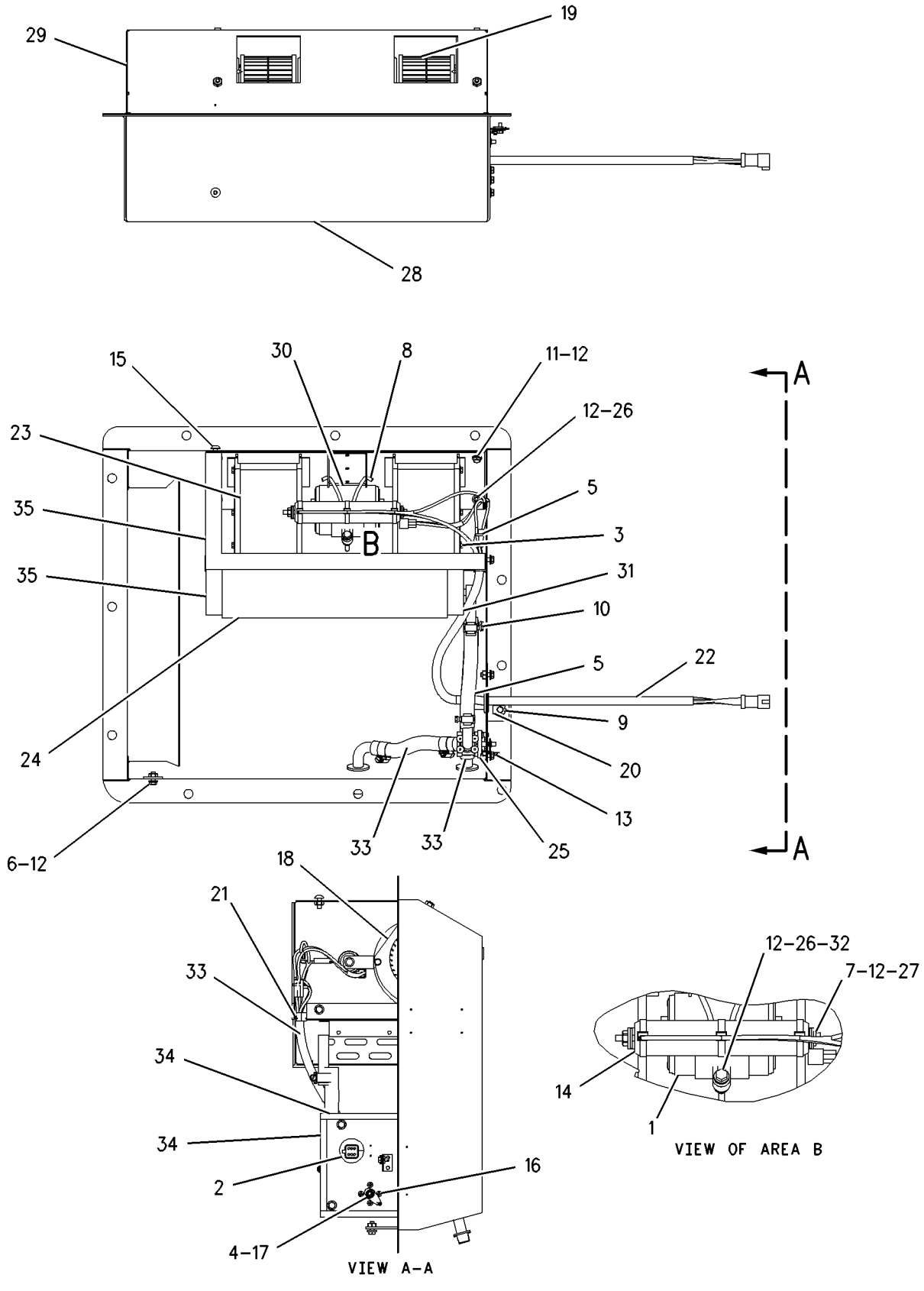

GRAPHIC #1 g00660004

OPERATOR STATION

108-4582 HOUSING GP-SEAT SUSPENSION

S/N: RTA1-UP; RBB1-UP
PART OF 108-4082 SUSPENSION GP-SEAT
AN ATTACHMENT

SMCS-7321, 7324 **i01289260**

NOTE	REF NO	GRAPHIC REF	PART NUMBER	QTY	PART NAME 1 2 3 4 5 6 (PRODUCT LEVEL)	SEE PAGE
	1	1	**161-5967**	1	SHAFT	
	2	1	**8Y-6066**	1	SPRING	
	3	1	**8Y-6069**	1	ADJUSTER AS	
	4	1	**8Y-6068**	1	NUT (3/8 X 16 THD)	
	5	1	**8Y-6029**	1	HOUSING AS-UPPER	
	6	1	**8Y-6047**	2	PIN	
	7	1	**2M-7819**	4	RING-RETAINING	
	8	1	**8Y-6041**	1	ARM AS	
	9	1	**8Y-6045**	1	CAM	
	10	1	**8Y-6046**	1	PIN	
	11	1	**8S-7803**	4	RING-RETAINING	
	12	1	**131-4242**	1	BOLT (3/8-16X5.18IN)	
	13	1	**7M-7219**	1	BEARING-THRUST	
	14	1	**3D-2975**	2	RING-RETAINING	
	15	1	**095-0878**	1	PIN-SPRING	
	16	1	**9X-8918**	3	SCREW-FLAT HEAD (8-32X0.50 IN)	
	17	1	**5P-8445**	4	RING-RETAINING	
	18	1	**4B-5059**	6	WASHER (2.5MM THK)	
	19	1	**8Y-6060**	2	ROLLER	
	20	1	**1Y-7927**	1	PIN	
	21	1	**7V-5191**	2	SPACER (7.1MM THK)	
	22	1	**5D-4822**	2	RING-RETAINING	
	23	1	**8Y-6062**	1	LINK-ACTUATOR-RH	
	24	1	**8Y-6063**	1	LINK-ACTUATOR-LH	
	25	1	**5V-0770**	2	BOLT-CARRIAGE	
	26	1	**8Y-6064**	2	ROLLER-SLIDER	
	27	1	**131-5167**	1	KNOB AS-WEIGHT	
		1	**4V-7875**	1	HANDLE	
		1	**6V-3259**	1	PIN-SPRING	
		1	**149-7226**	1	SCREW-PAN HEAD	
	28	1	**8Y-6067**	1	SPACER (10.54 MM THK)	
	29	1	**8L-8413**	2	STRAP-CABLE (1.12IN DIA)	
LZ	30	1		1	KNOB-HEIGHT	
LZ	31	1		1	KNOB-HEIGHT	
JZ	32	1		3	BUMPER	
PZ	33	1		2	BUSHING-GUIDE	
PZ	34	1		2	SPRING	
PZ	35	1		2	ROD	
PZ	36	1		2	SPACER	
QZ	37	1		2	SPRING	
QZ	38	1		2	BUSHING	
SZ	39	1		1	PIN	
SZ	40	1		1	FOLLOWER-CAM	
TZ	41	1		1	GUIDE	
TZ	42	1		1	TAPE-INDICATOR	
UZ	43	1		1	FOLLOWER-CAM	
UZ	44	1		1	PIN	
VZ	45	1		1	ROLLER AS	
VZ	46	1		2	ROLLER AS	
	47	1	**4N-2927**	2	RACE-THRUST BEARING	
	48	1	**2D-6235**	2	LOCKNUT (1/4-20 THD)	
					AVAILABLE REPAIR KIT(S):	
J			**100-5179**	1	KIT-BUMPER	
L			**8Y-5945**	1	KIT-SUSPENSION KNOB	

108-4582 HOUSING GP-SEAT SUSPENSION *(contd.)* i01289260

NOTE	REF NO	GRAPHIC REF	PART NUMBER	QTY	PART NAME 1 2 3 4 5 6 (PRODUCT LEVEL)	SEE PAGE
P			**8Y-6860**	1	KIT-SPRING	
Q			**8Y-6859**	1	KIT-SPRING	
S			**108-4086**	1	KIT-FOLLOWER	
T			**100-3224**	1	KIT-INDICATOR	
U			**108-4087**	1	KIT-FOLLOWER	
V			**108-4103**	1	KIT-BEARING	

J-KIT MARKED J INCLUDES PART(S) MARKED J
L-KIT MARKED L INCLUDES PART(S) MARKED L
P-KIT MARKED P INCLUDES PART(S) MARKED P
Q-KIT MARKED Q INCLUDES PART(S) MARKED Q
S-KIT MARKED S INCLUDES PART(S) MARKED S
T-KIT MARKED T INCLUDES PART(S) MARKED T
U-KIT MARKED U INCLUDES PART(S) MARKED U
V-KIT MARKED V INCLUDES PART(S) MARKED V
Z-NOT SERVICED SEPARATELY

108-4582 HOUSING GP-SEAT SUSPENSION *(contd.)* i01289260

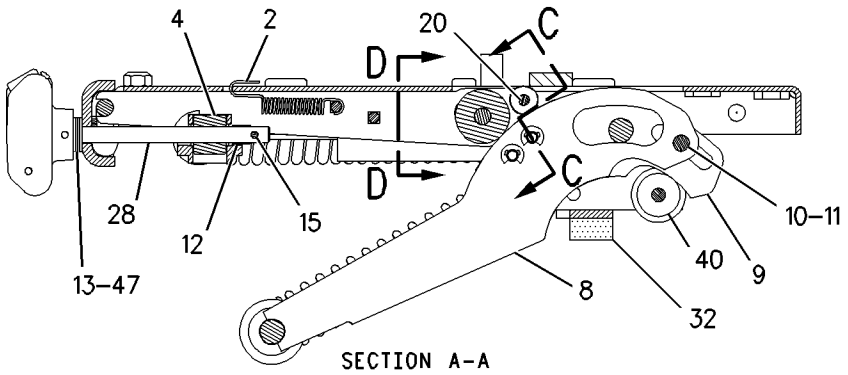

SECTION A-A

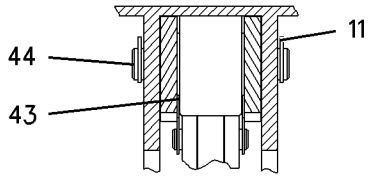

SECTION D-D

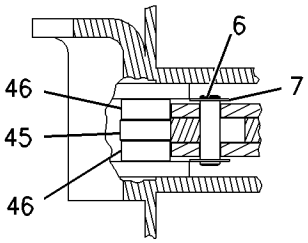

SECTION C-C

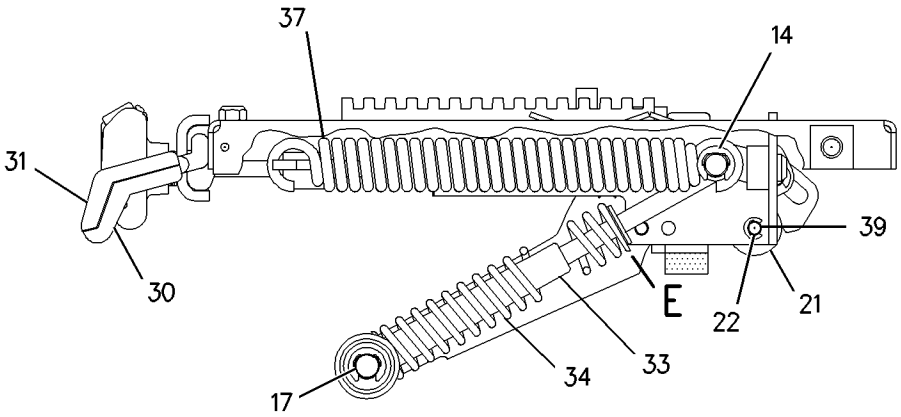

VIEW B-B

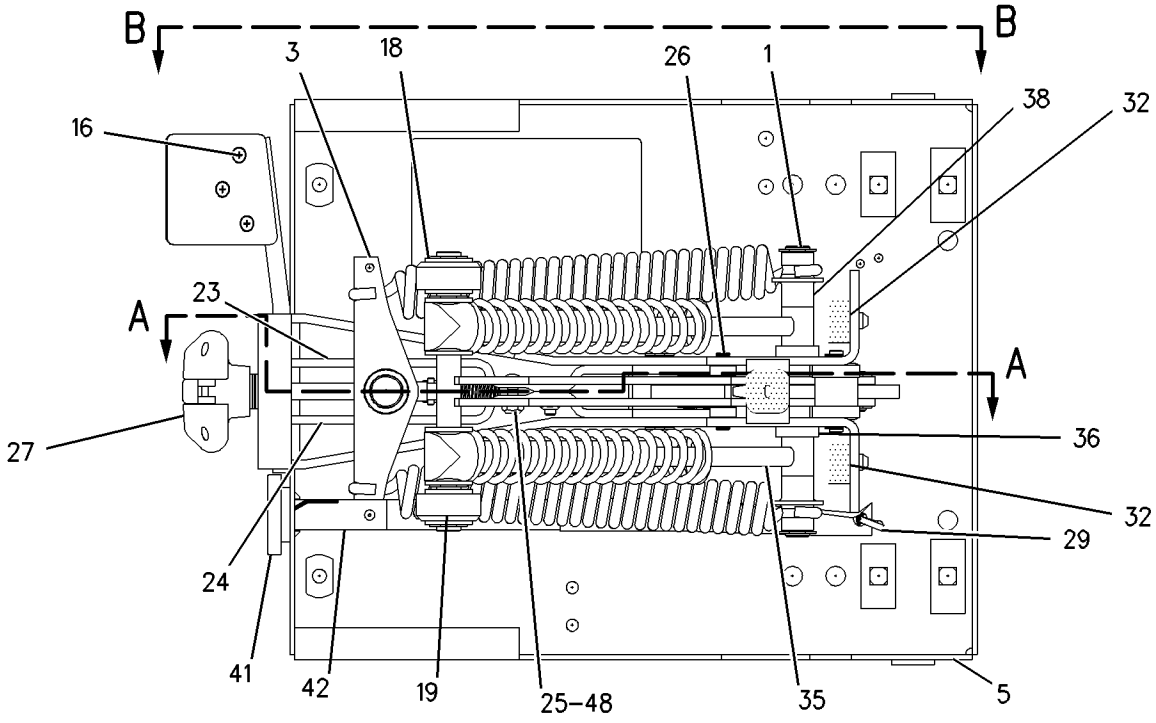

BOTTOM VIEW

GRAPHIC #1 g00683912

OPERATOR STATION

107-4645 INSTALLATION GP-RADIO

S/N: RTA1-UP; RBB1-UP
24 VOLT
PART OF 225-4329 INSTALLATION GP-RADIO
AN ATTACHMENT

SMCS-7338 **i01862926**

NOTE	REF NO	GRAPHIC REF	PART NUMBER	QTY	PART NAME 1 2 3 4 5 6 (PRODUCT LEVEL)	SEE PAGE
	1	1	**4E-1411**	1	BUSHING-TERMINAL	
	2	1	**8C-6440**	8	SCREW-PAN HEAD (10-16X0.50 IN)	
M	3	1	**9X-2042**	4	SCREW-TRUSS HEAD (M6X1X12MM)	
	4	1	**168-8772**	2	SPEAKER AS	
	5	1	**174-6491**	1	HARNESS AS-RADIO	
		1	**102-8803**	1	KIT-RECEPTACLE (3 PIN)	
		1	**155-2265**	1	KIT-CONNECTING PLUG (8 PIN)	
	6	1	**114-3953**	1	BRACKET AS	
M		1	**6V-9632**	4	NUT-WELD (M6X1 THD)	
	7	1	**114-3954**	1	COVER	
	8	1	**9U-8263**	1	COVER	
	9	1	**5P-4115**	4	WASHER-HARD (7.2X19X2MM THK)	
	10	1	**5P-8524**	4	GROMMET	
	11	1	**7K-1181**	4	STRAP-CABLE	
M	12	1	**8T-4134**	4	NUT (M6X1 THD)	

M-METRIC PART

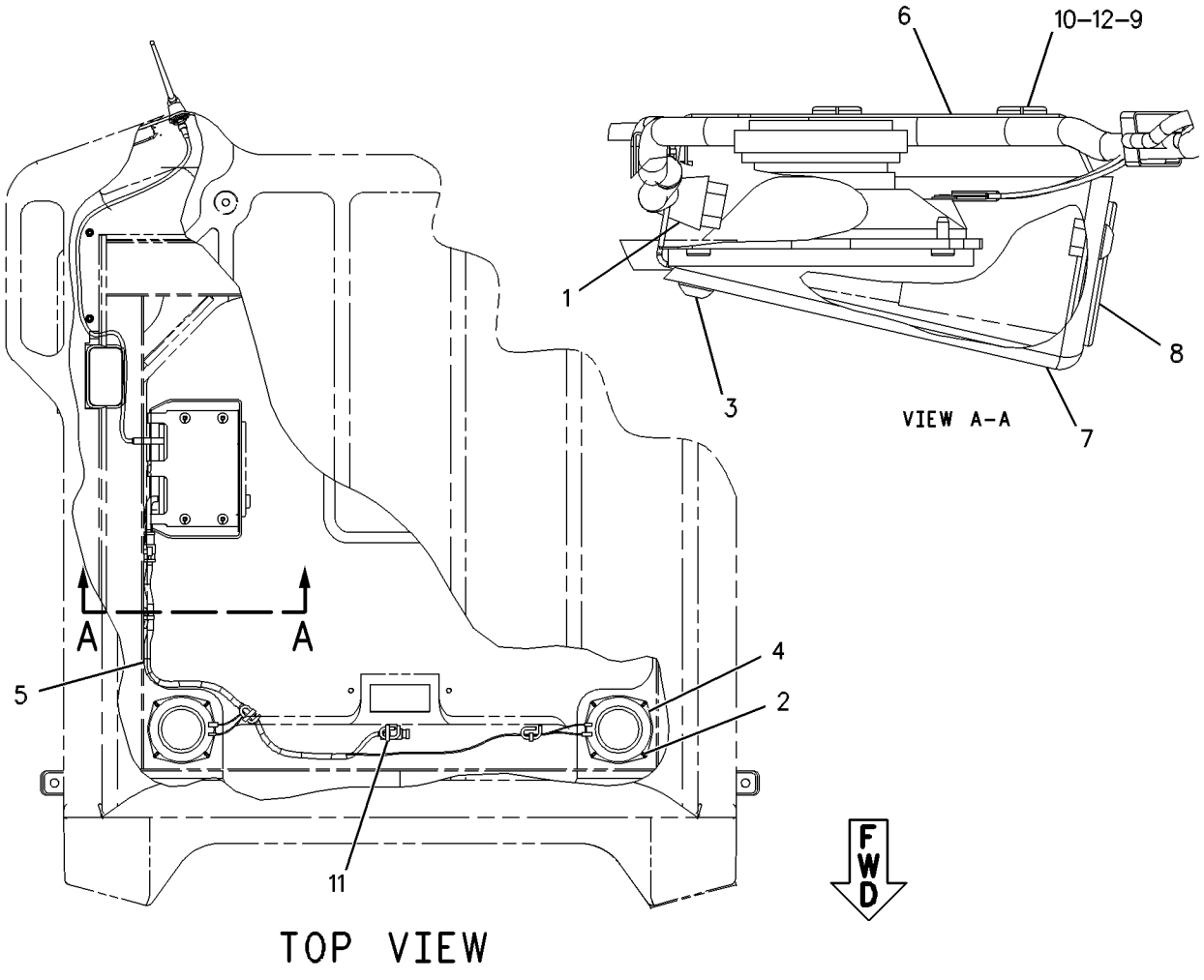

GRAPHIC #1 g00652852

OPERATOR STATION

225-4329 INSTALLATION GP-RADIO

S/N: RTA1-UP; RBB1-UP
12 VOLT
AN ATTACHMENT

SMCS-7338 **i01834391**

NOTE	PART NUMBER	QTY	PART NAME 1 2 3 4 5 6 (PRODUCT LEVEL)	SEE PAGE
Y	*207-5947*	1	CONVERTER GP-ELECTRICAL	103
Y	*107-4645*	1	INSTALLATION GP-RADIO	577

Y-SEPARATE ILLUSTRATION

<END>

OPERATOR STATION

107-4634 LINER GP-CAB

S/N: RTA1-UP; RBB1-UP
PART OF 190-4405 CAB AR
AN ATTACHMENT

SMCS-7329 **i01801804**

NOTE	REF NO	GRAPHIC REF	PART NUMBER	QTY	PART NAME 1 2 3 4 5 6 (PRODUCT LEVEL)	SEE PAGE
	1	1	**6V-8928**	1	HOOK-COAT	
	2	1	**107-6032**	1	LAMP GP-DOME	
		1	**112-5219**	1	LAMP	
	3	1	**145-5307**	1	PLATE	
	4	1	**180-5098**	1	INSULATION	
C	5	1	**190-4705**	1	HEADLINER AS	
		1	**4E-8293**	6	FASTENER	
C	6	1	**190-4706**	1	COVER AS	
C	7	1	**190-4707**	1	COVER AS	
C	8	1	**190-4708**	1	COVER AS	
M	9	1	**6V-8490**	4	BOLT (M6X1X25MM)	
M	10	1	**9X-2045**	1	SCREW-TRUSS HEAD (M6X1X20MM)	

C-CHANGE FROM PREVIOUS TYPE
M-METRIC PART

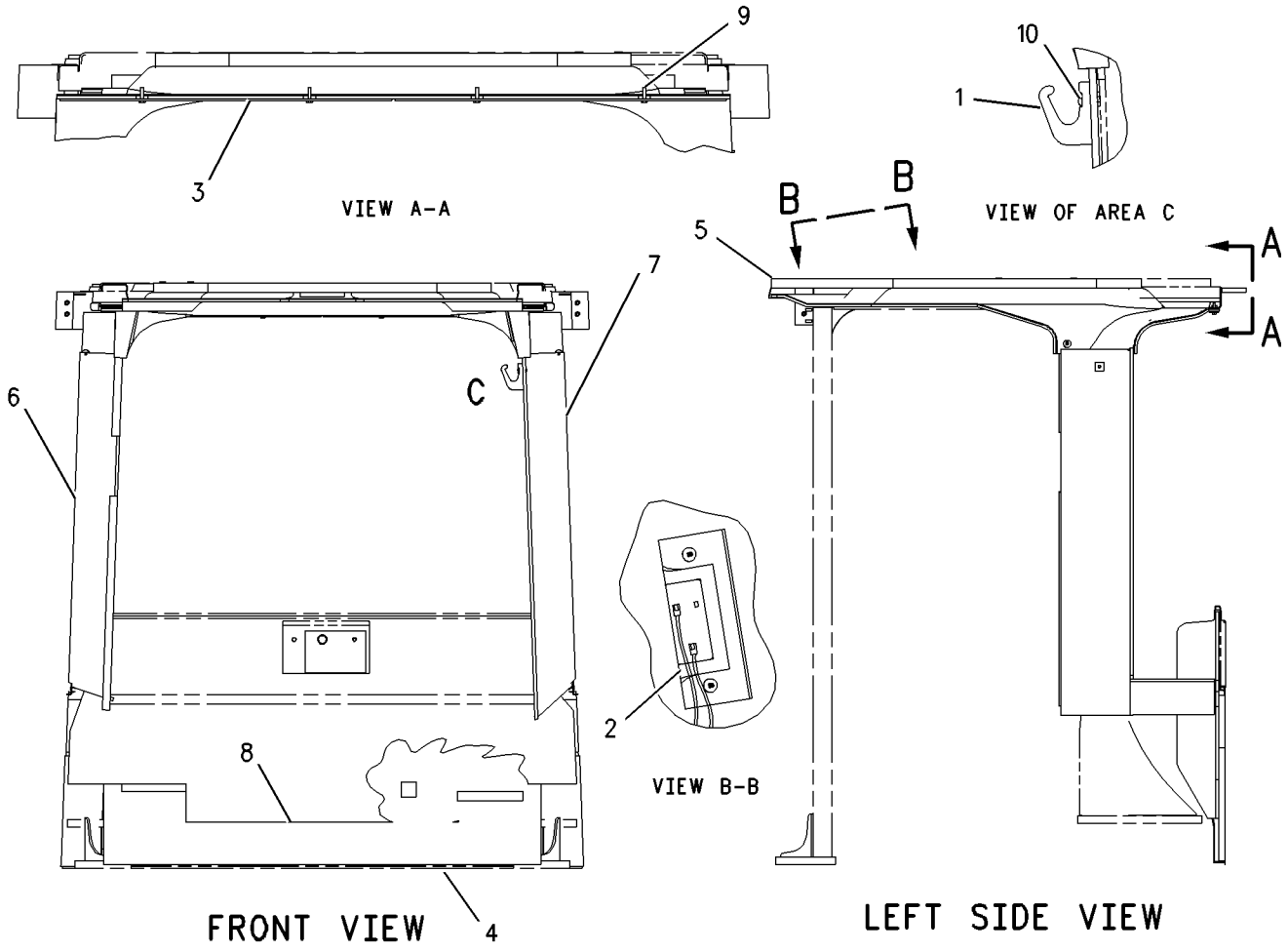

GRAPHIC #1 g00870818

OPERATOR STATION

125-3961 LINER GP-CAB

S/N: RTA1-UP; RBB1-UP
PART OF 190-4633 OPERATOR AR
AN ATTACHMENT

SMCS-7329 **i01482790**

NOTE	REF NO	GRAPHIC REF	PART NUMBER	QTY	PART NAME 1 2 3 4 5 6 (PRODUCT LEVEL)	SEE PAGE
	1	1	**4E-2161**	1	STRAP	
BD	2	1	**5P-5637**		SEAL	
	3	1	**125-7045**	1	COVER AS	
	4	1	**125-7043**	1	BOX AS	
	5	1	**136-2109**	1	COVER AS	
		1	**128-0899**	4	RIVET	
		1	**4S-8264**	3	RIVET-POP	
		1	**120-0596**	1	BRACKET	
		1	**124-9015**	1	KIT-BRUSH SEAL	
	6	1	**127-6510**	2	COVER	
	7	1	**154-4370**	1	FLOOR MAT	
	8	1	**111-7881**	1	COVER AS	
J	9	1	**8C-3426**	1	LOCK AS-CYLINDER	
		1	**7F-9223**	1	LOCKWASHER	
		1	**8T-5004**	1	SCREW-MACHINE (1/4-28X0.375 IN)	
	10	1	**141-4984**	1	INSULATION AS	
M	11	1	**5C-2890**	2	NUT (M6X1 THD)	
	12	1	**115-1561**	1	COVER	
M	13	1	**8T-4189**	3	BOLT (M8X1.25X20MM)	
	14	1	**8T-4224**	5	WASHER-HARD (8.8X16X2MM THK)	
M	15	1	**9X-2042**	7	SCREW-TRUSS HEAD (M6X1X12MM)	
M	16	1	**8T-4200**	2	BOLT (M8X1.25X16MM)	
	17	1	**8T-4205**	2	WASHER-HARD (7.2X14.5X2MM THK)	
	18	1	**8N-9033**	2	PLUG	
	19	1	**125-7046**	1	PLATE AS	
	20	1	**8T-3995**	5	NUT (M6X1 THD)	
M	21	1	**9X-2045**	2	SCREW-TRUSS HEAD (M6X1X20MM)	

B-USE AS REQUIRED
D-ORDER BY THE METER
J-REQUIRES 5P8500 KEY
M-METRIC PART

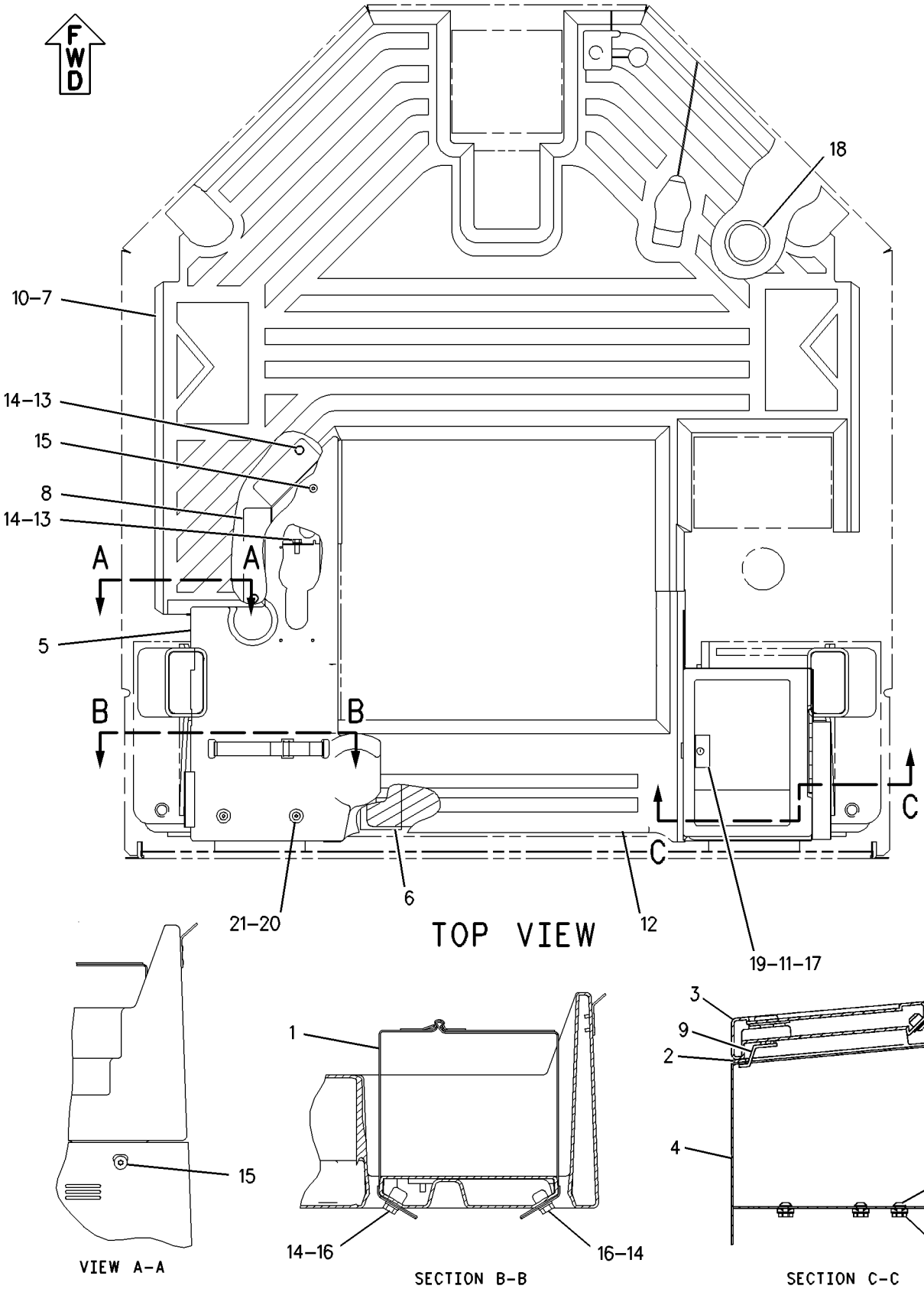

GRAPHIC #1 g00770449

OPERATOR STATION

125-3962 LINER GP-CAB

S/N: RTA1-UP; RBB1-UP
PART OF 190-4645 OPERATOR AR
AN ATTACHMENT

SMCS-7329 **i01574061**

NOTE	REF NO	GRAPHIC REF	PART NUMBER	QTY	PART NAME 1 2 3 4 5 6 (PRODUCT LEVEL)	SEE PAGE
	1	1	**4E-2161**	1	STRAP	
J	2	1	**8C-3426**	1	LOCK AS-CYLINDER	
		1	**7F-9223**	1	LOCKWASHER	
		1	**8T-5004**	1	SCREW-MACHINE (1/4-28X0.375 IN)	
	3	1	**8T-3995**	5	NUT (M6X1 THD)	
	4	1	**111-7881**	1	COVER AS	
	5	1	**125-7043**	1	BOX AS	
	6	1	**125-7045**	1	COVER AS	
	7	1	**125-7046**	1	PLATE AS	
	8	1	**126-1034**	1	HEADLINER AS	
	9	1	**126-1035**	1	PLATE AS	
	10	1	**126-1036**	1	PLATE AS	
	11	1	**126-1367**	1	INSULATION	
	12	1	**127-7457**	1	INSULATION	
	13	1	**136-2109**	1	COVER AS	
		1	**4S-8264**	3	RIVET-POP	
		1	**9R-2620**	1	PLUG	
		1	**120-0596**	1	BRACKET	
		1	**124-9015**	1	KIT-BRUSH SEAL	
		1	**128-0899**	4	RIVET	
	14	1	**141-4984**	1	INSULATION AS	
C	15	1	**154-4370**	1	FLOOR MAT	
M	16	1	**5C-2890**	2	NUT (M6X1 THD)	
M	17	1	**8T-4189**	3	BOLT (M8X1.25X20MM)	
M	18	1	**8T-4200**	2	BOLT (M8X1.25X16MM)	
	19	1	**8T-4205**	2	WASHER-HARD (7.2X14.5X2MM THK)	
	20	1	**8T-4224**	5	WASHER-HARD (8.8X16X2MM THK)	
	21	1	**9D-3769**	1	GROMMET	
M	22	1	**9X-2042**	11	SCREW-TRUSS HEAD (M6X1X12MM)	
M	23	1	**9X-2045**	4	SCREW-TRUSS HEAD (M6X1X20MM)	
BD	24	1	**5P-0798**		SEAL (0.8M)	

B-USE AS REQUIRED
C-CHANGE FROM PREVIOUS TYPE
D-ORDER BY THE METER
J-REQUIRES 5P8500 KEY
M-METRIC PART

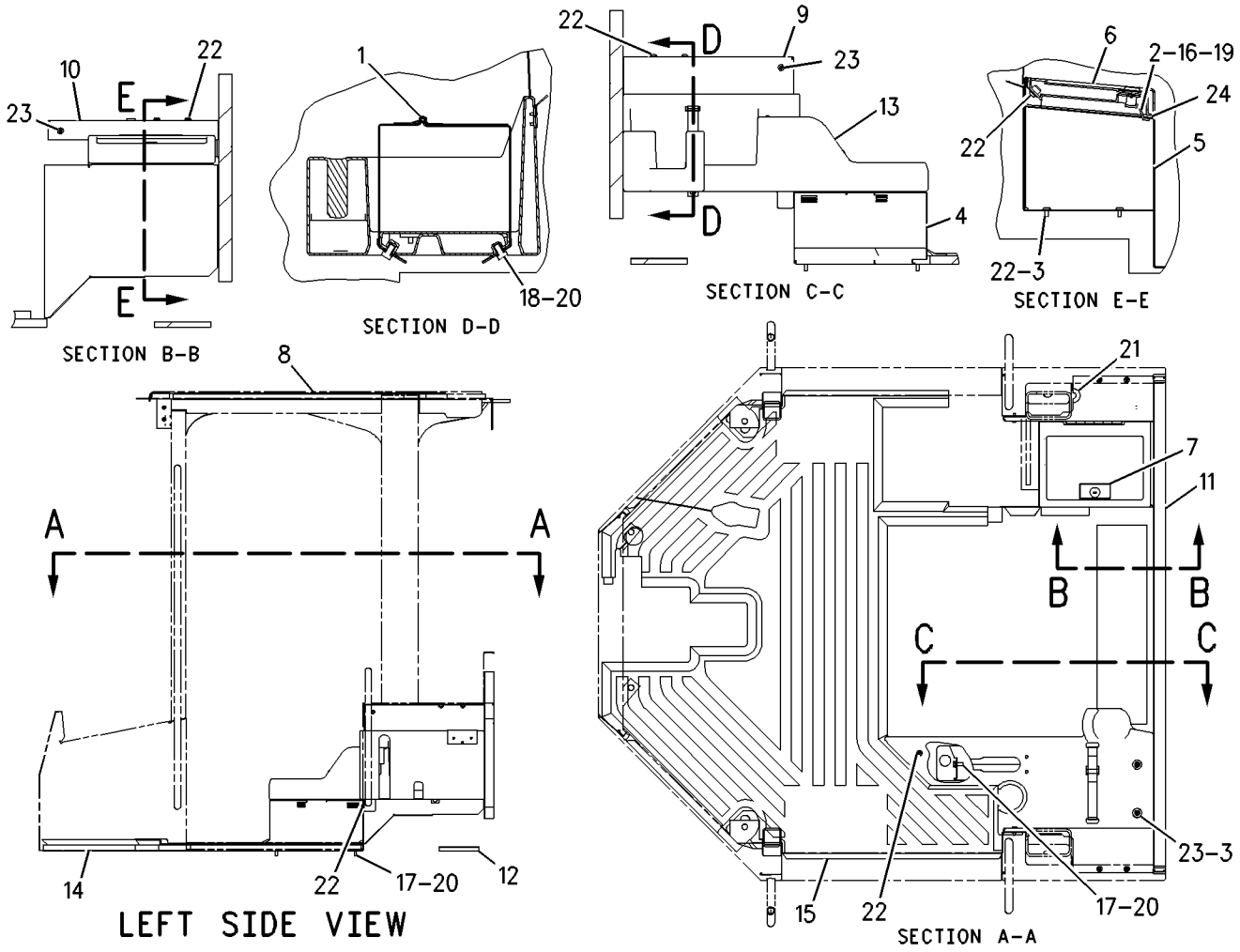

GRAPHIC #1

g00844220

OPERATOR STATION

172-5508 LINER GP-CAB

S/N: RTA1-UP; RBB1-UP
PART OF 216-6907 OPERATOR AR
AN ATTACHMENT

SMCS-7329 **i01705308**

NOTE	REF NO	GRAPHIC REF	PART NUMBER	QTY	PART NAME 1 2 3 4 5 6 (PRODUCT LEVEL)	SEE PAGE
	1	1	**8C-3426**	1	LOCK AS-CYLINDER	
		1	**7F-9223**	1	LOCKWASHER	
		1	**8T-5004**	1	SCREW-MACHINE (1/4-28X0.375 IN)	
	2	1	**8N-9033**	2	PLUG	
	3	1	**125-7045**	1	COVER AS	
	4	1	**125-7046**	1	PLATE AS	
	5	1	*172-5501*	1	COVER AS	
		1	**4S-8264**	4	RIVET-POP	
		1	**124-9015**	1	KIT-BRUSH SEAL	
		1	**172-5500**	1	PLATE AS	
	6	1	**172-5503**	1	BOX AS	
	7	1	**174-0565**	1	FLOOR MAT	
M	8	1	**5C-2890**	2	NUT (M6X1 THD)	
M	9	1	**8T-4189**	7	BOLT (M8X1.25X20MM)	
	10	1	**8T-4205**	2	WASHER-HARD (7.2X14.5X2MM THK)	
	11	1	**8T-4224**	7	WASHER-HARD (8.8X16X2MM THK)	
M	12	1	**9X-2042**	2	SCREW-TRUSS HEAD (M6X1X12MM)	
D	13	1	**5P-5637**		SEAL (0.8M)	
E	14	1	**126-8472**	3	SEAL (15CM)	

D-ORDER BY THE METER
E-ORDER BY THE CENTIMETER
M-METRIC PART

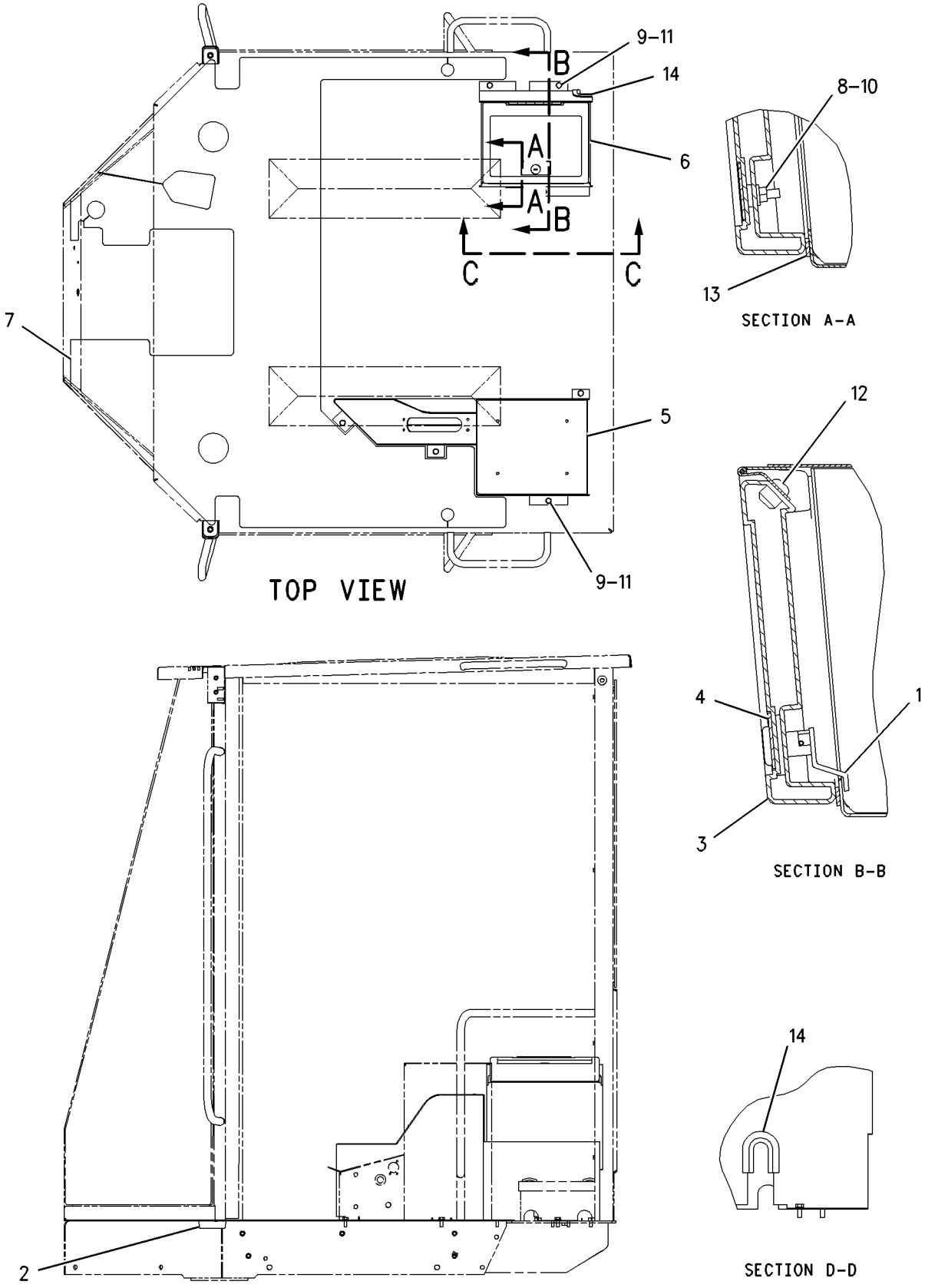

GRAPHIC #1 g00678298

OPERATOR STATION

172-5512 LINER GP-CAB

S/N: RTA1-UP; RBB1-UP
PART OF 216-6908 CAB AR
AN ATTACHMENT

SMCS-7329 **i01212413**

NOTE	REF NO	GRAPHIC REF	PART NUMBER	QTY	PART NAME 1 2 3 4 5 6 (PRODUCT LEVEL)	SEE PAGE
	1	1	**9X-2038**	12	WASHER (2MM THK)	
	2	1	**107-6032**	1	LAMP GP-DOME	
		1	**112-5219**	1	LAMP	
	3	1	**174-0563**	1	HEADLINER AS	
M	4	1	**9X-2045**	12	SCREW-TRUSS HEAD (M6X1X20MM)	

M-METRIC PART

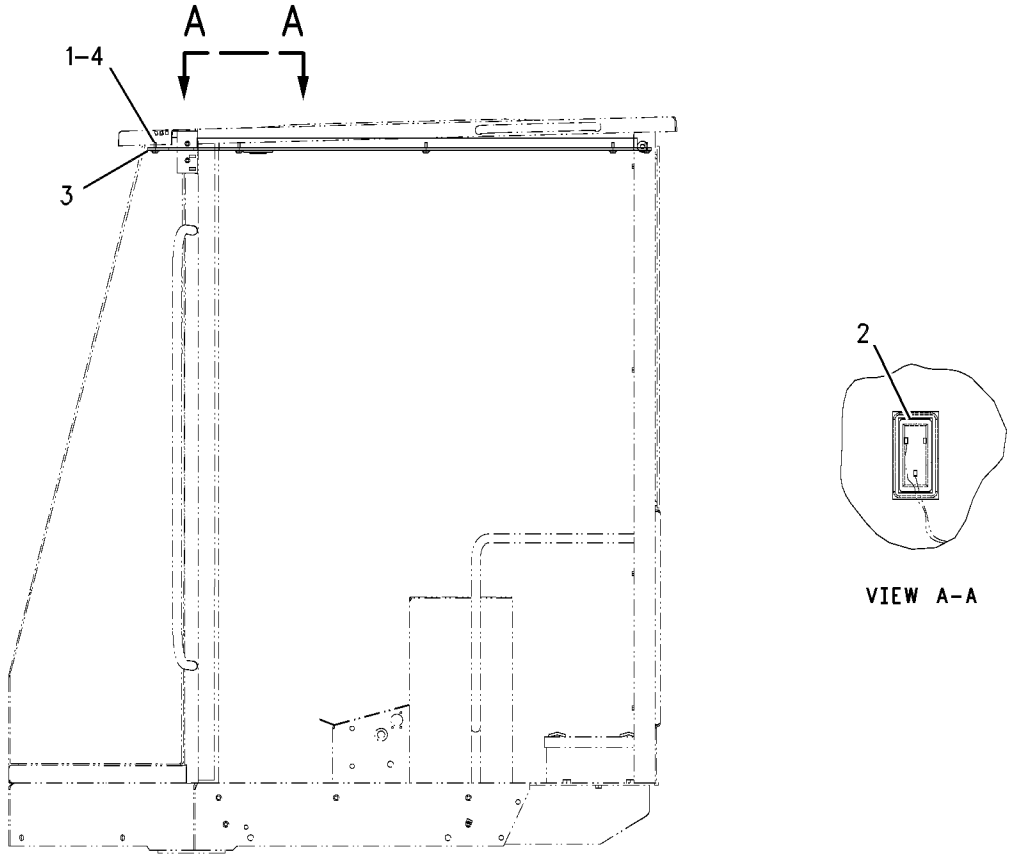

GRAPHIC #1 g00661099

MEMORANDA

OPERATOR STATION

203-5932 LINES GP-AIR CONDITIONER

S/N: RTA1-UP; RBB1-UP
PART OF 190-4402 AIR CONDITIONER AR
AN ATTACHMENT

SMCS-1808 **i01854476**

NOTE	REF NO	GRAPHIC REF	PART NUMBER	QTY	PART NAME 1 2 3 4 5 6 (PRODUCT LEVEL)	SEE PAGE
BD	1	2	**6V-2495**		SEAL (.2M)	
	2	2	**1P-6356**	1	PLATE	
	3	1,2	**3S-2093**	8	STRAP-CABLE	
	4	2	**101-8296**	2	CLIP	
	5	2	**106-8704**	1	SUPPRESSOR AS-ARC	
		2	**102-8802**	1	KIT-RECEPTACLE (2 PIN)	
		2	**186-3735**	2	PIN-CONNECTOR	
	6	2	**114-5333**	1	SWITCH AS-PRESSURE (HIGH/LOW) (REFRIGERANT)	
		2	**102-8802**	1	KIT-RECEPTACLE (2 PIN)	
		2	**186-3735**	2	PIN-CONNECTOR	
	7	2	**155-9816**	1	FITTING AS-AIR CONDITIONER	
		2	**3E-4052**	1	CAP AS (AIR CONDITIONER)	
		2	**3E-4058**	1	VALVE AS (AIR CONDITIONER)	
	8	2	**163-9324**	1	PLATE-INSTRUCTION	
	9	2	**186-6190**	1	ACCUMULATOR-REFRIGERANT	
I	10	1	**206-4431**	1	HOSE AS	
I	11	1	**206-4432**	1	HOSE AS	
I	12	1	**206-4433**	1	HOSE AS	
	13	1	**206-4435**	1	BRACKET AS	
M		1	**8T-3490**	2	NUT-WELD (M10X1.5 THD)	
	14	1	**207-3362**	1	TUBE AS	
I	15	1	**207-3366**	1	HOSE AS	
	16	2	**1M-4543**	1	GROMMET	
	17	1,2	**1P-7009**	4	CLIP	
	18	2	**3E-4056**	1	FITTING AS-AIR CONDITIONER	
		2	**3E-4051**	1	CAP AS (AIR CONDITIONER)	
		2	**3E-4057**	1	VALVE AS (AIR CONDITIONER)	
	19	2	**4P-7581**	1	CLIP (LADDER)	
	20	1,2	**4S-1962**	2	CLIP	
	21	1	**5P-7648**	1	GROMMET	
	22	1	**7K-1181**	1	STRAP-CABLE	
	23	2	**8T-2561**	1	WASHER-HARD (10.5X28.5X5MM THK)	
	24	1,2	**8T-4121**	9	WASHER-HARD (11X21X2.5MM THK)	
M	25	1,2	**8T-4137**	5	BOLT (M10X1.5X20MM)	
M	26	1,2	**8T-4195**	3	BOLT (M10X1.5X30MM)	
M	27	2	**8T-6466**	1	BOLT (M10X1.50X60MM)	
	28	1	**9D-3768**	1	GROMMET	
	29	2	**9M-8406**	2	CLIP	
	30	2	**9X-7378**	1	SEAL-O-RING	
	31	1	**9X-7380**	1	SEAL-O-RING	
	32	1	**9X-7381**	3	SEAL-O-RING	
	33	1	**9X-7382**	3	SEAL-O-RING	
	34	2	**9X-7383**	2	SEAL-O-RING	
M	35	2	**8T-4186**	1	BOLT (M10X1.5X40MM)	
	36	2	**7W-3447**	1	SPACER (10.2X19.05X10.2MM THK)	
	37	2	**2L-9653**	1	CLIP	

B-USE AS REQUIRED
D-ORDER BY THE METER
I-SEE HOSE FABRICATION GUIDE
M-METRIC PART

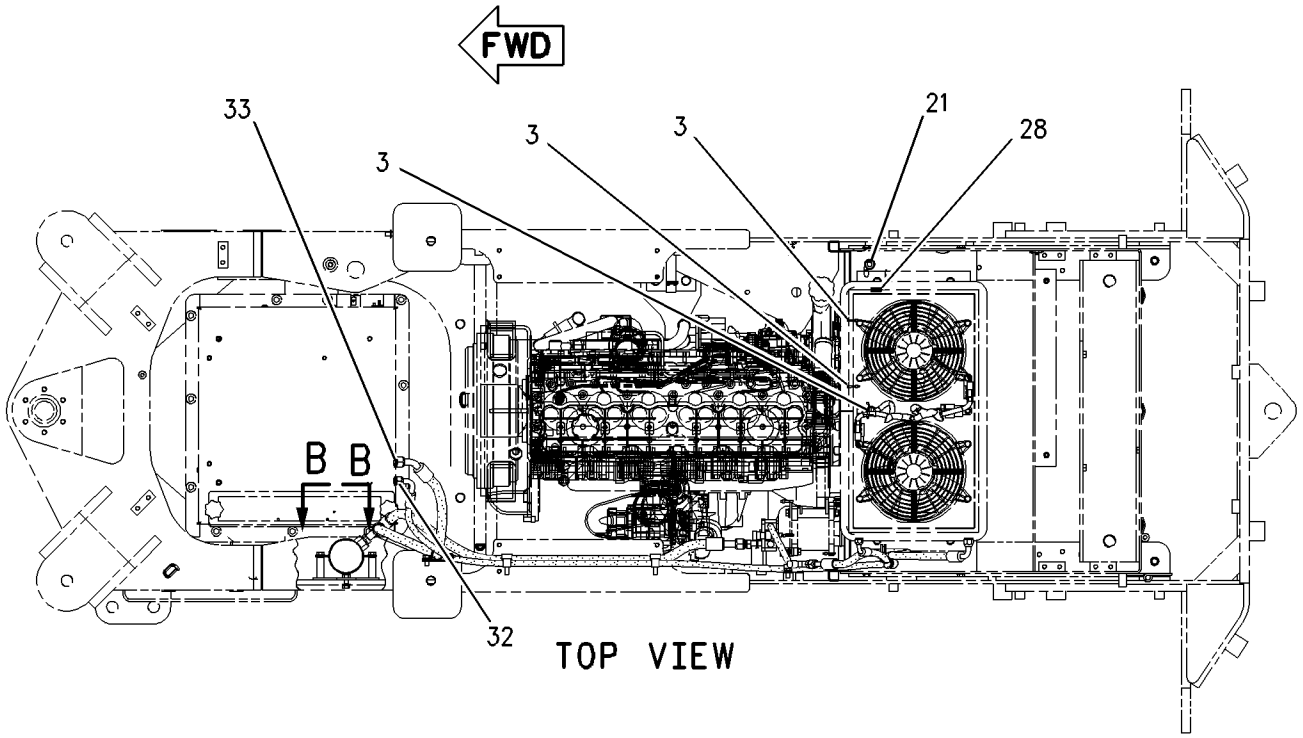

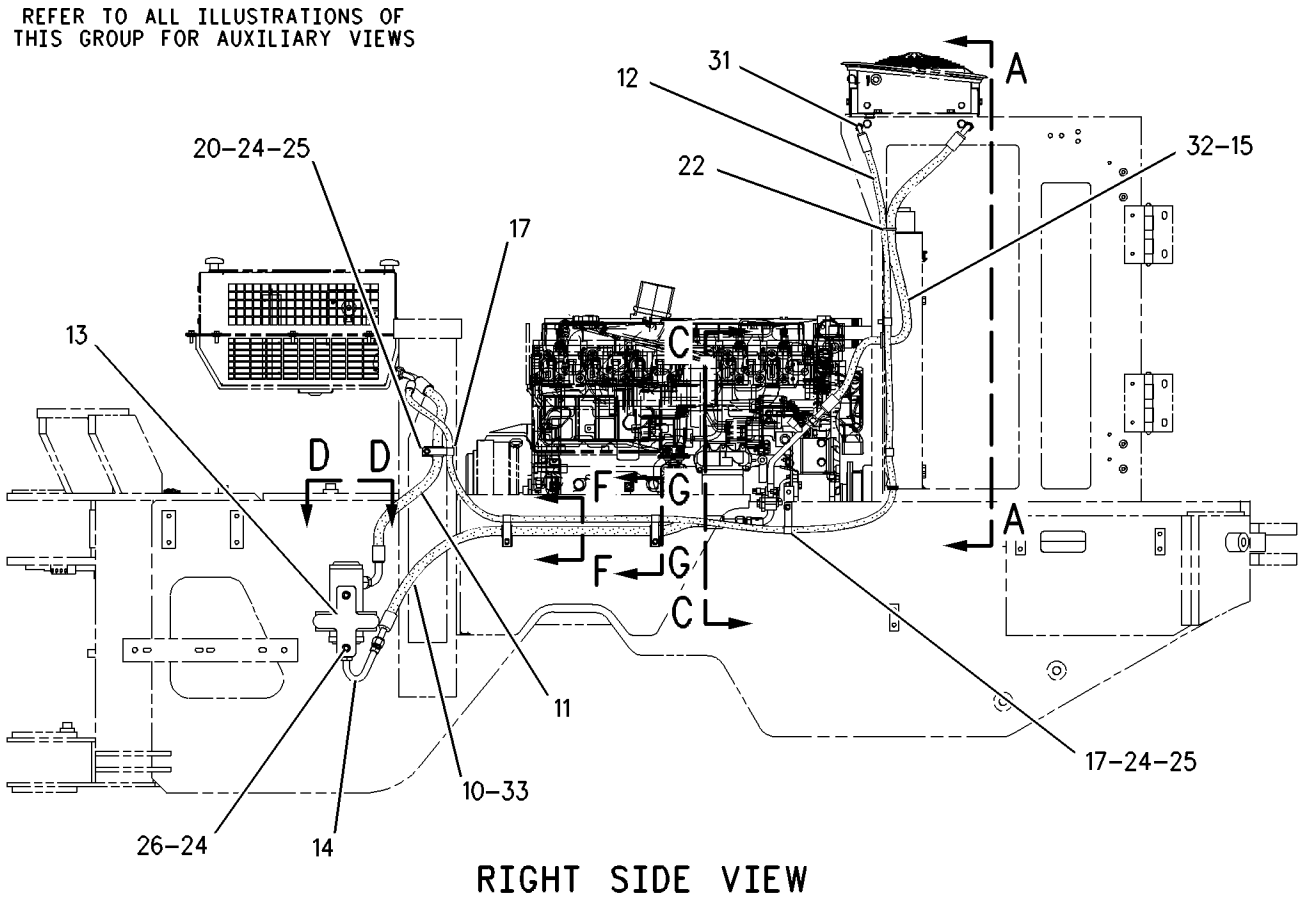

GRAPHIC #1 g00937980

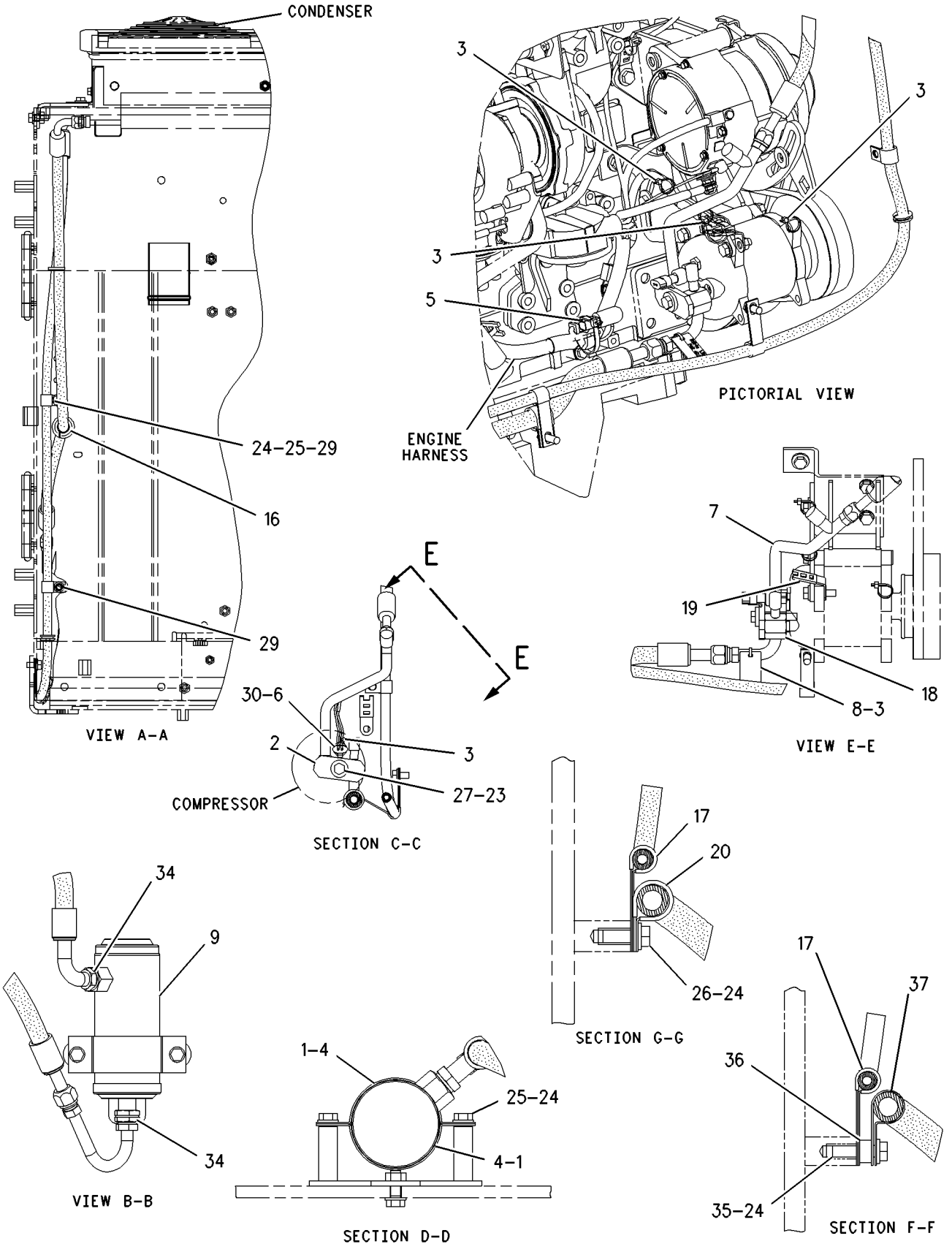

GRAPHIC #2

g00937958

MEMORANDA

OPERATOR STATION

203-5931 LINES GP-HEATER

S/N: RTA1-UP; RBB1-UP
PART OF 190-4402 AIR CONDITIONER AR, 190-4401 HEATER AR-CAB
AN ATTACHMENT

SMCS-7304 **i01854470**

NOTE	REF NO	GRAPHIC REF	PART NUMBER	QTY	PART NAME 1 2 3 4 5 6 (PRODUCT LEVEL)	SEE PAGE
BE	1	1	**5P-0767**		HOSE (109CM)	
	2	1	**5D-1026**	4	CLAMP-HOSE	
	3	1	**9M-4814**	2	CONNECTOR-HOSE	
	4	1	**219-8604**	1	PLATE AS	
M		1	**8T-3490**	1	NUT-WELD (M10X1.5 THD)	
	5	1	**6D-1641**	2	CLIP	
	6	1	**7X-7729**	1	WASHER (11X25X3MM THK)	
	7	1	**8T-4121**	1	WASHER-HARD (11X21X2.5MM THK)	
M	8	1	**8T-4137**	2	BOLT (M10X1.5X20MM)	
BE	9	1	**5P-0767**		HOSE (138CM)	

B-USE AS REQUIRED
E-ORDER BY THE CENTIMETER
M-METRIC PART

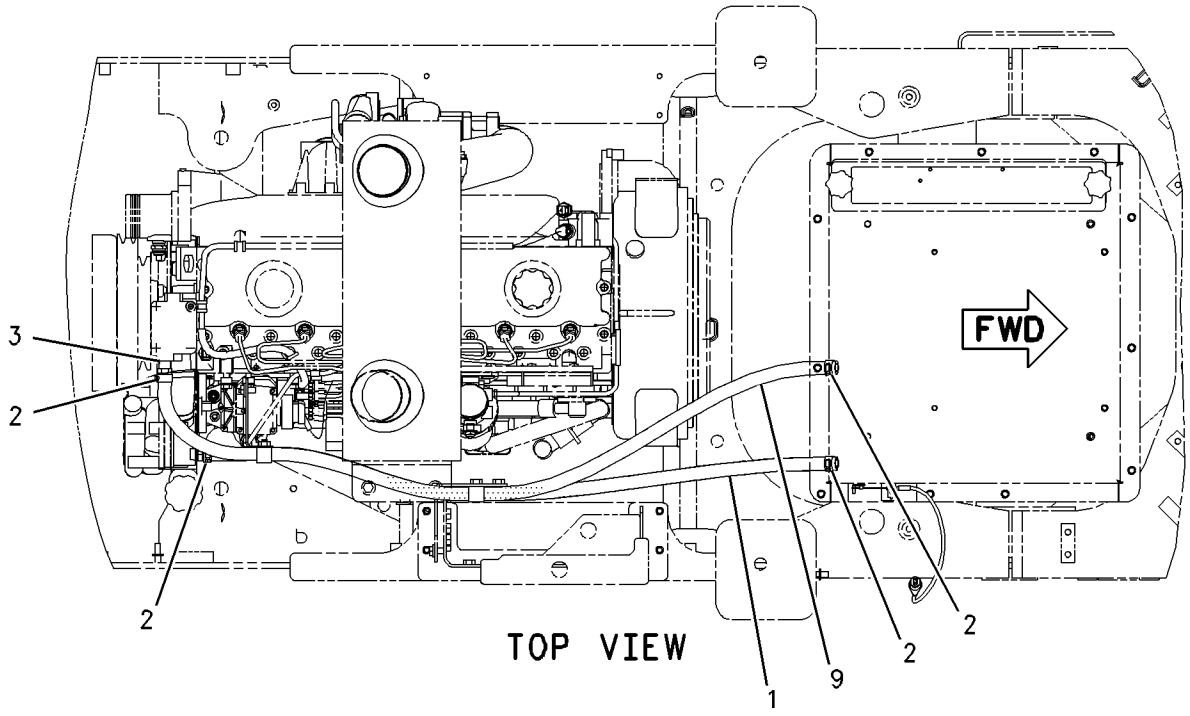

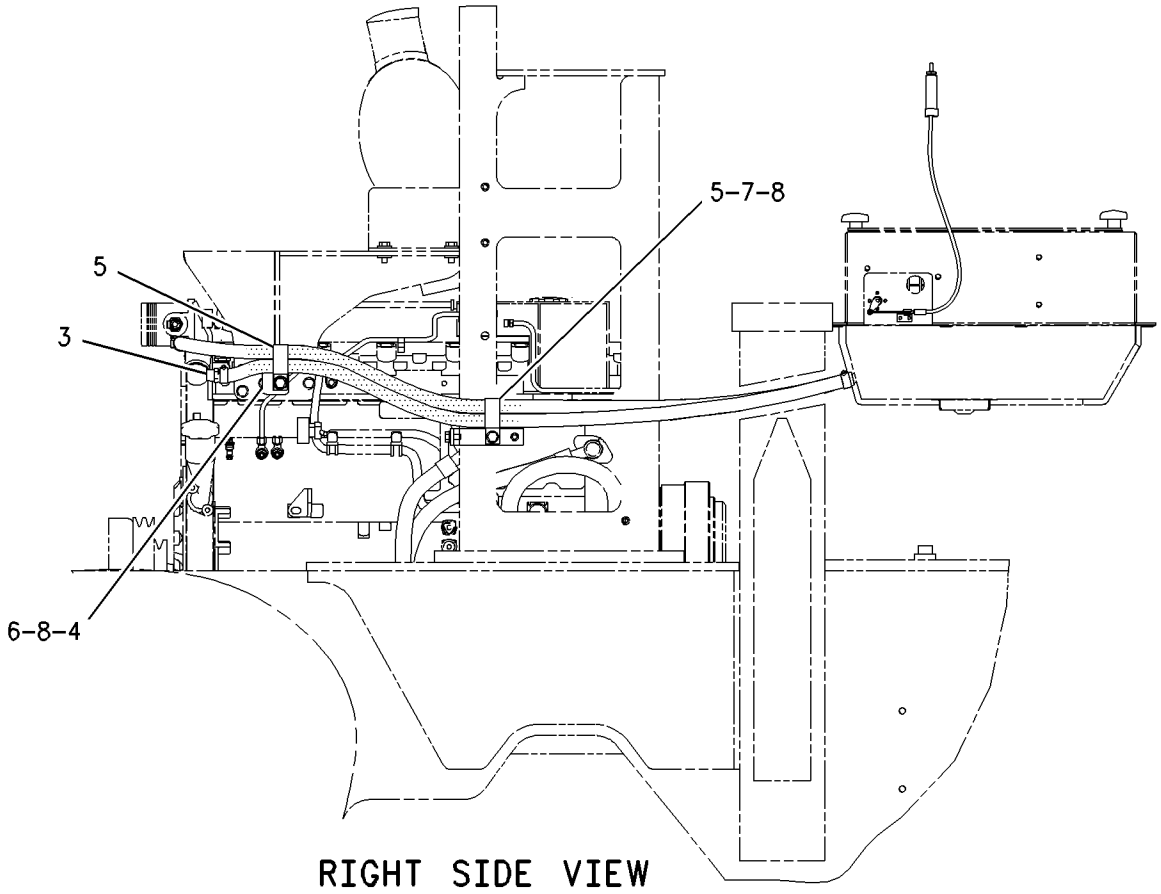

GRAPHIC #1 g00935519

OPERATOR STATION

6V-1970 LITERATURE GP

S/N: RTA1-UP; RBB1-UP

PART OF 176-5181, 176-5201 CHASSIS AR

SMCS-7300, 7400 **i00607038**

NOTE	PART NUMBER	QTY	PART NAME 1 2 3 4 5 6 (PRODUCT LEVEL)	SEE PAGE
	5P-8500	2	KEY	
	2Y-3209	2	SEAL-WIRE	

<END>

OPERATOR STATION

107-4642 MIRROR GP-REAR VIEW

S/N: RTA1-UP; RBB1-UP
EXTERIOR CAB
AN ATTACHMENT

SMCS-7319 **i00710783**

NOTE	REF NO	GRAPHIC REF	PART NUMBER	QTY	PART NAME 1 2 3 4 5 6 (PRODUCT LEVEL)	SEE PAGE
	1	1	**150-6582**	2	MIRROR AS	
	2	1	**123-6621**	1	BRACKET AS-LH	
	3	1	**123-6622**	1	BRACKET AS-RH	
M	4	1	**8T-4189**	4	BOLT (M8X1.25X20MM)	
	5	1	**8T-4224**	4	WASHER-HARD (2MM THK)	

M-METRIC PART

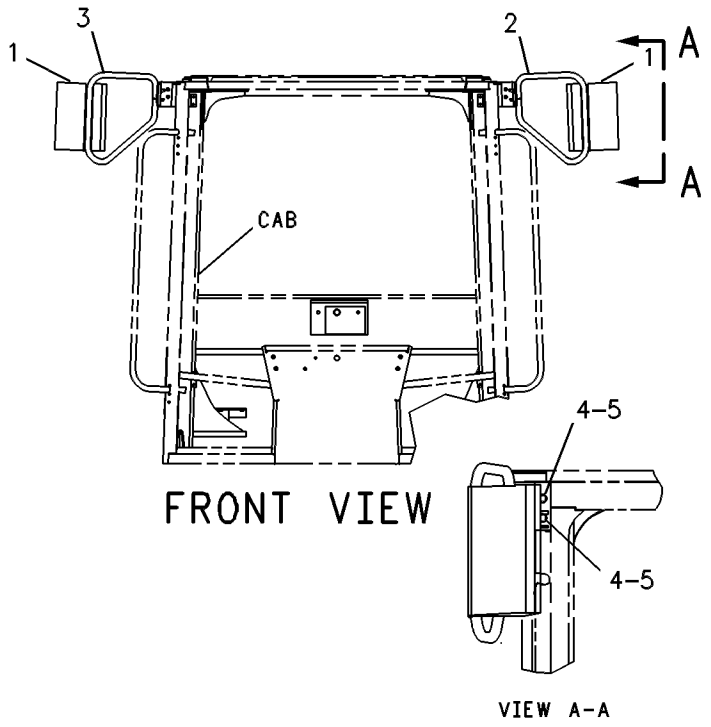

FRONT VIEW

VIEW A-A

GRAPHIC #1 g00307313

OPERATOR STATION

107-4643 MIRROR GP-REAR VIEW

S/N: RTA1-UP; RBB1-UP
PART OF 190-4405, 216-6908 CAB AR, 190-4406 CANOPY GP-OPEN ROPS
AN ATTACHMENT

SMCS-7319 **i01281975**

NOTE	REF NO	GRAPHIC REF	PART NUMBER	QTY	PART NAME 1 2 3 4 5 6 (PRODUCT LEVEL)	SEE PAGE
	1	1	**5P-6872**	2	MIRROR	
	2	1	**114-3956**	2	PLATE	
M	3	1	**8T-4138**	4	BOLT (M6X1.0X20MM)	
	4	1	**8T-4205**	4	WASHER-HARD (2MM THK)	

M-METRIC PART

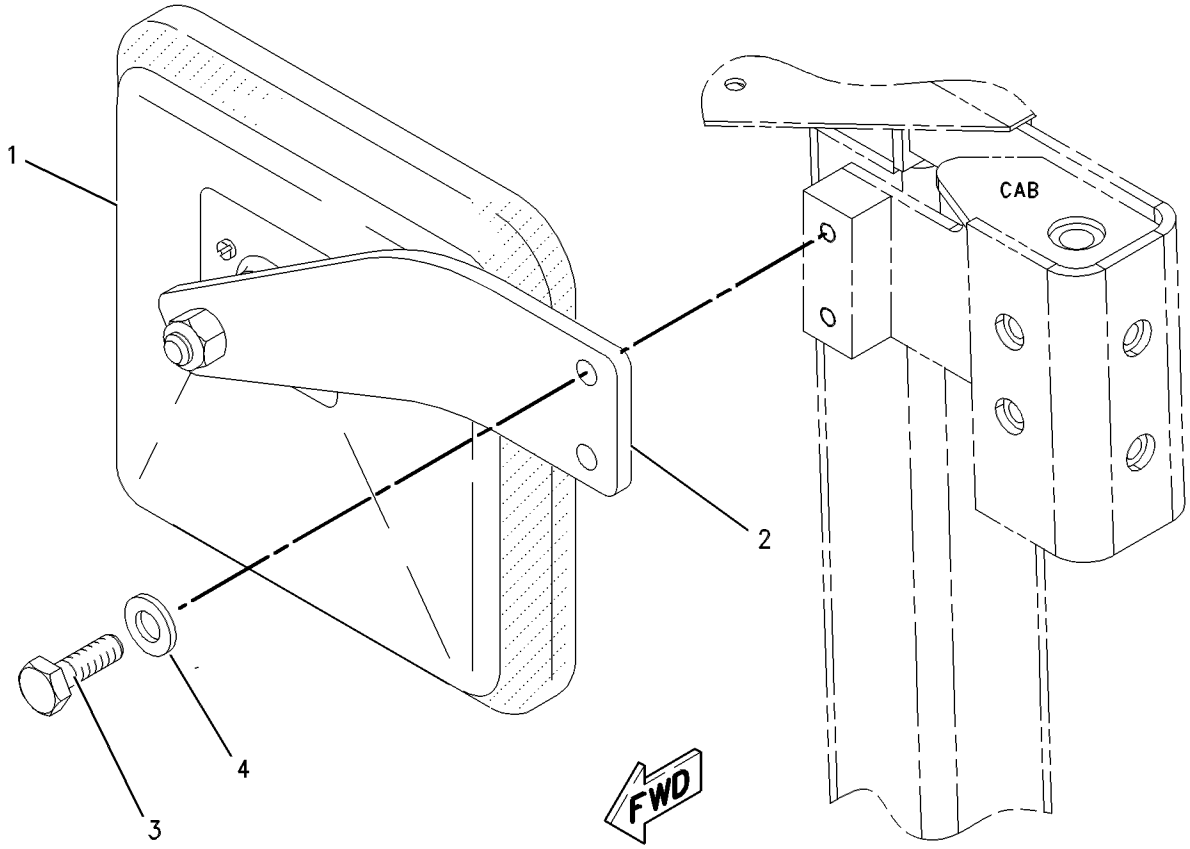

GRAPHIC #1 g00621211

155-5783 MOTOR GP-WINDOW WIPER–FRONT

S/N: RTA1-UP; RBB1-UP
24 VOLT
PART OF 107-4628, 146-6908 WIPER GP-WINDOW
AN ATTACHMENT

SMCS-7305 **i01298944**

NOTE	REF NO	GRAPHIC REF	PART NUMBER	QTY	PART NAME 1 2 3 4 5 6 (PRODUCT LEVEL)	SEE PAGE
	1	1	**102-8805**	1	KIT-RECEPTACLE (6 PIN)	
					(INCLUDES RECEPTACLE AS AND WEDGE)	
	2	1	**8T-8737**	1	PLUG-SEAL	
	3	1	**8T-8729**	5	PIN-CONNECTOR	

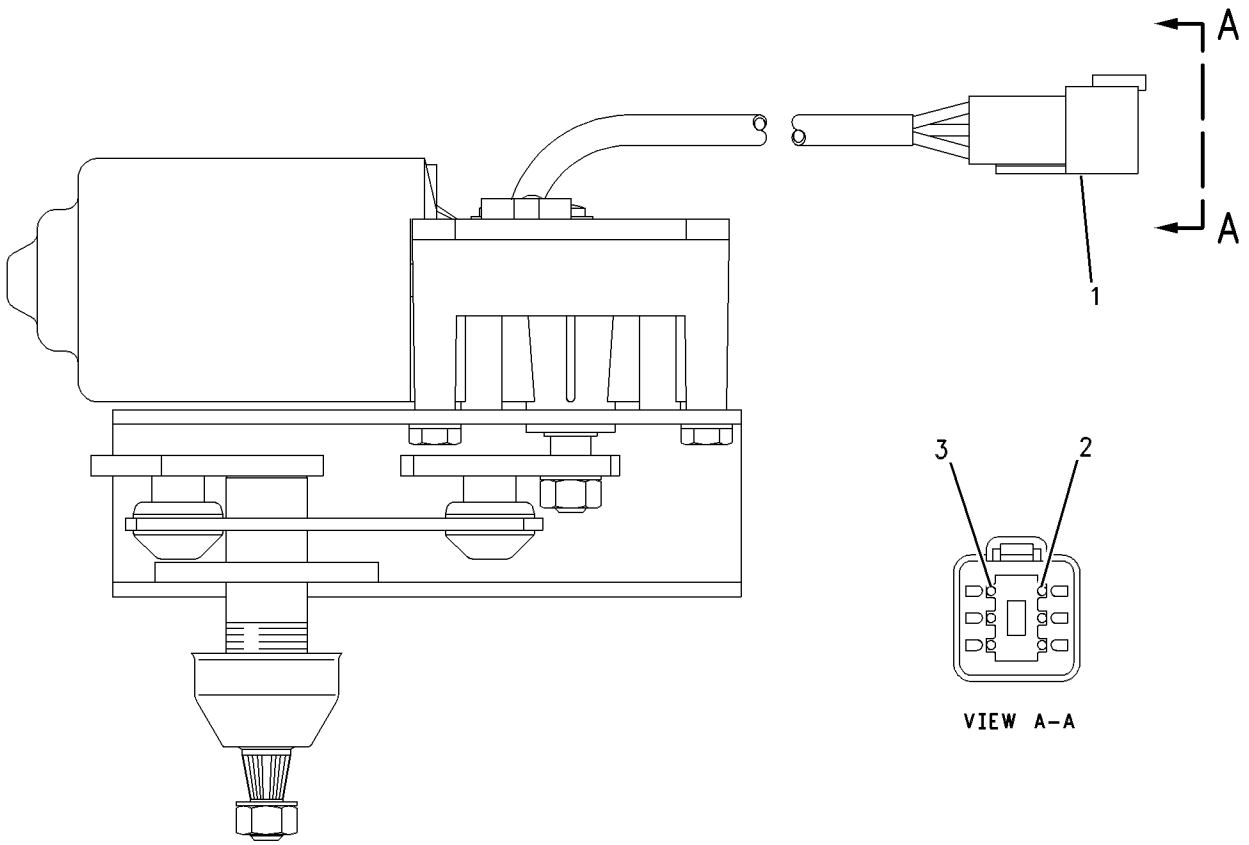

GRAPHIC #1 g00615262

155-5784 MOTOR GP-WINDOW WIPER–REAR

S/N: RTA1-UP; RBB1-UP
24 VOLT
PART OF 107-4628 WIPER GP-WINDOW
AN ATTACHMENT

SMCS-7305 **i01298945**

NOTE	REF NO	GRAPHIC REF	PART NUMBER	QTY	PART NAME 1 2 3 4 5 6 (PRODUCT LEVEL)	SEE PAGE
	1	1	**102-8805**	1	KIT-RECEPTACLE (6 PIN)	
					(INCLUDES RECEPTACLE AS AND WEDGE)	
	2	1	**8T-8737**	1	PLUG-SEAL	
	3	1	**8T-8729**	5	PIN-CONNECTOR	

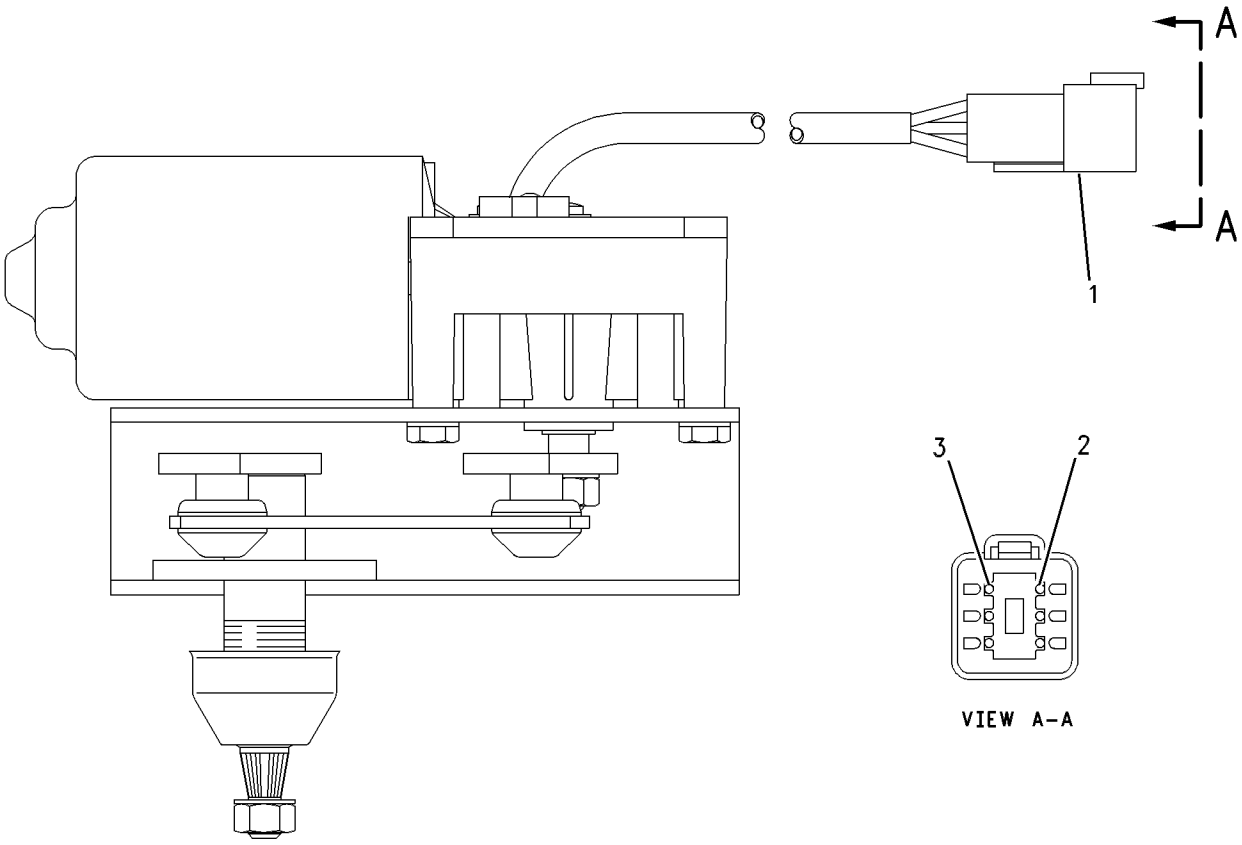

VIEW A–A

GRAPHIC #1 g00615271

OPERATOR STATION

156-4271 MOUNTING GP-CAB

S/N: RTA1-UP; RBB1-UP
PART OF 190-4633, 190-4645, 216-6907 OPERATOR AR
AN ATTACHMENT

SMCS-7301 **i01215188**

NOTE	REF NO	GRAPHIC REF	PART NUMBER	QTY	PART NAME 1 2 3 4 5 6 (PRODUCT LEVEL)	SEE PAGE
	1	1	**6Y-2525**	4	SLEEVE-ROPS	
	2	1	**8Y-7119**	4	WASHER (12MM THK)	
	3	1	**9W-9940**	4	MOUNT AS	
M	4	1	**7X-2567**	4	BOLT (M24X3X160 MM)	
M	5	1	**8T-4001**	2	NUT (M24X3.00 THD)	
	6	1	**8T-4167**	6	WASHER (4.0MM THK)	

M-METRIC PART

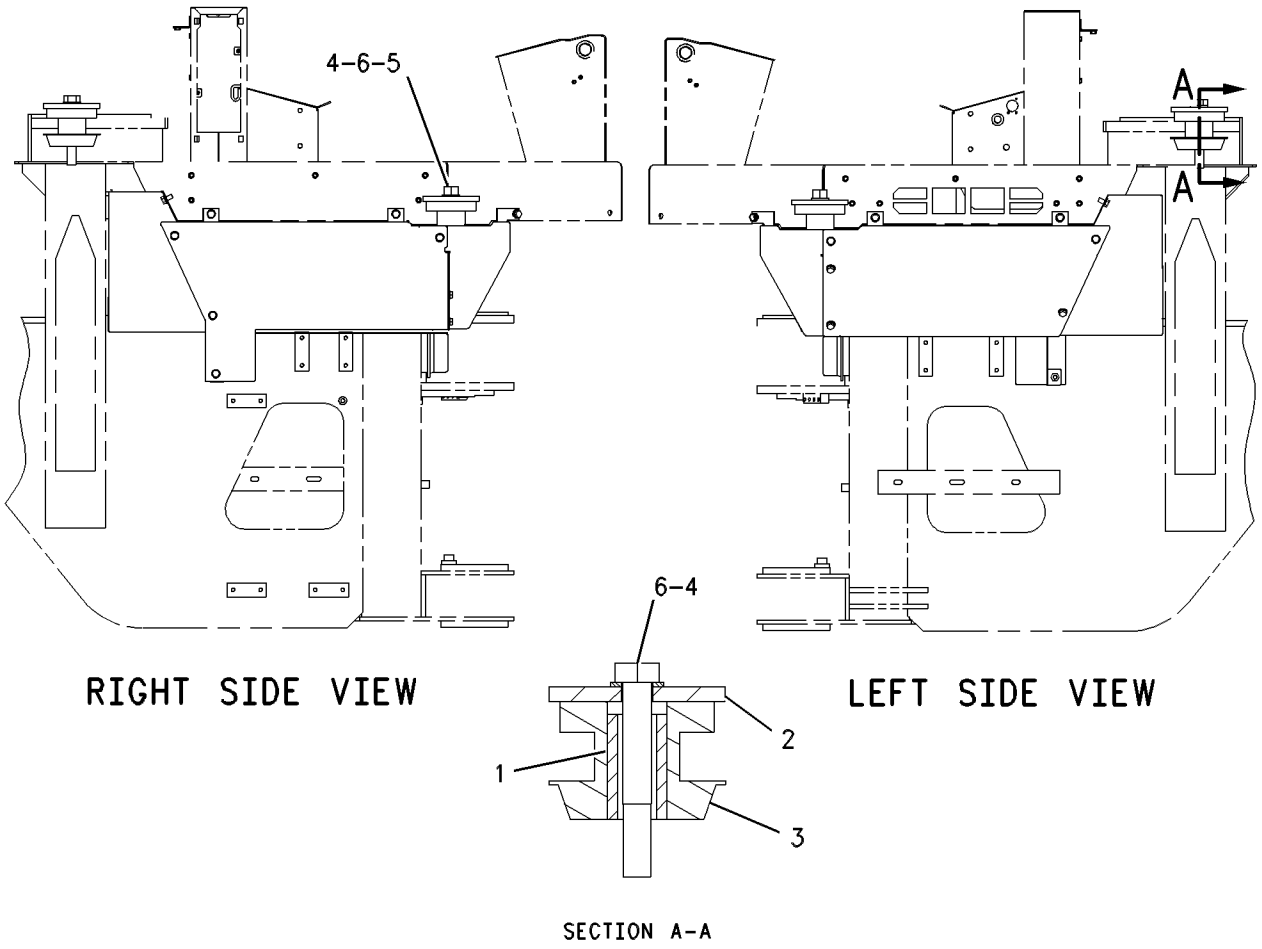

GRAPHIC #1 g00648781

OPERATOR STATION

190-4633 OPERATOR AR

S/N: RTA1-UP; RBB1-UP
PART OF 190-4632 CAB AR-ENCLOSED ROPS
AN ATTACHMENT

SMCS-7301, 7325, 7335 **i01793837**

NOTE	PART NUMBER	QTY	PART NAME 1 2 3 4 5 6 (PRODUCT LEVEL)	SEE PAGE
Y	*190-4634*	1	CAB AR	546
Y	*149-4612*	1	COVER GP-CONSOLE	558
Y	*125-3961*	1	LINER GP-CAB	580
Y	*156-4271*	1	MOUNTING GP-CAB	599
Y	*184-5297*	1	PANEL GP-INSTRUMENT	604
Y	*131-1236*	1	WASHER GP-WINDOW	649

Y-SEPARATE ILLUSTRATION

<END>

190-4645 OPERATOR AR

S/N: RTA1-UP; RBB1-UP
PART OF 190-4644 CANOPY AR-OPEN ROPS
AN ATTACHMENT

SMCS-7301, 7325, 7335 **i01817168**

NOTE	PART NUMBER	QTY	PART NAME 1 2 3 4 5 6 (PRODUCT LEVEL)	SEE PAGE
Y	*190-4646*	1	CANOPY AR-OPEN ROPS	551
Y	*149-4612*	1	COVER GP-CONSOLE	558
Y	*125-3962*	1	LINER GP-CAB	582
Y	*156-4271*	1	MOUNTING GP-CAB	599
Y	*184-5297*	1	PANEL GP-INSTRUMENT	604
Y	*198-8964*	1	PANEL GP-TOP	276

Y-SEPARATE ILLUSTRATION

<END>

216-6907 OPERATOR AR

S/N: RTA1-UP; RBB1-UP
AN ATTACHMENT

SMCS-7301, 7325, 7335 **i01793995**

NOTE	PART NUMBER	QTY	PART NAME 1 2 3 4 5 6 (PRODUCT LEVEL)	SEE PAGE
Y	*149-4612*	1	COVER GP-CONSOLE	558
Y	*156-4271*	1	MOUNTING GP-CAB	599
Y	*172-5508*	1	LINER GP-CAB	584
Y	*173-4311*	1	WASHER GP-WINDOW	651
Y	*174-2215*	1	SKIRT GP-CAB	641
Y	*198-8964*	1	PANEL GP-TOP	276
Y	*216-6908*	1	CAB AR	547

Y-SEPARATE ILLUSTRATION

<END>

OPERATOR STATION

108-8421 PAN GP-BACKREST

S/N: RTA1-UP; RBB1-UP
PART OF 8Y-6882 SEAT GP
AN ATTACHMENT

SMCS-7312 **i01298788**

NOTE	REF NO	GRAPHIC REF	PART NUMBER	QTY	PART NAME 1 2 3 4 5 6 (PRODUCT LEVEL)	SEE PAGE
	1	1	**9M-5733**	2	RIVET-POP (4.78MM DIA)	
	2	1	**8Y-6006**	1	LID AS	
	3	1	**8Y-6010**	1	LANYARD	
	4	1	**4S-8287**	8	RIVET-POP (6MM DIA)	
	5	1	**8Y-5972**	1	LATCH	
	6	1	**108-8423**	1	SHAFT AS-LUMBAR	
	7	1	**3E-4336**	1	STUD-BALL	
	8	1	**3E-4335**	1	CLIP	
	9	1	**2F-7306**	1	SCREW-MACHINE (6-32X.25 IN)	
	10	1	**8F-1462**	1	WASHER-PLATED	
E	11	1	**3E-6575**		SEAL (76CM)	
	12	1	**108-8424**	1	PAN-LUMBAR	
	13	1	**8Y-5903**	2	CAM	
	14	1	**3E-4362**	2	PIN-SPRING	

E-ORDER BY THE CENTIMETER

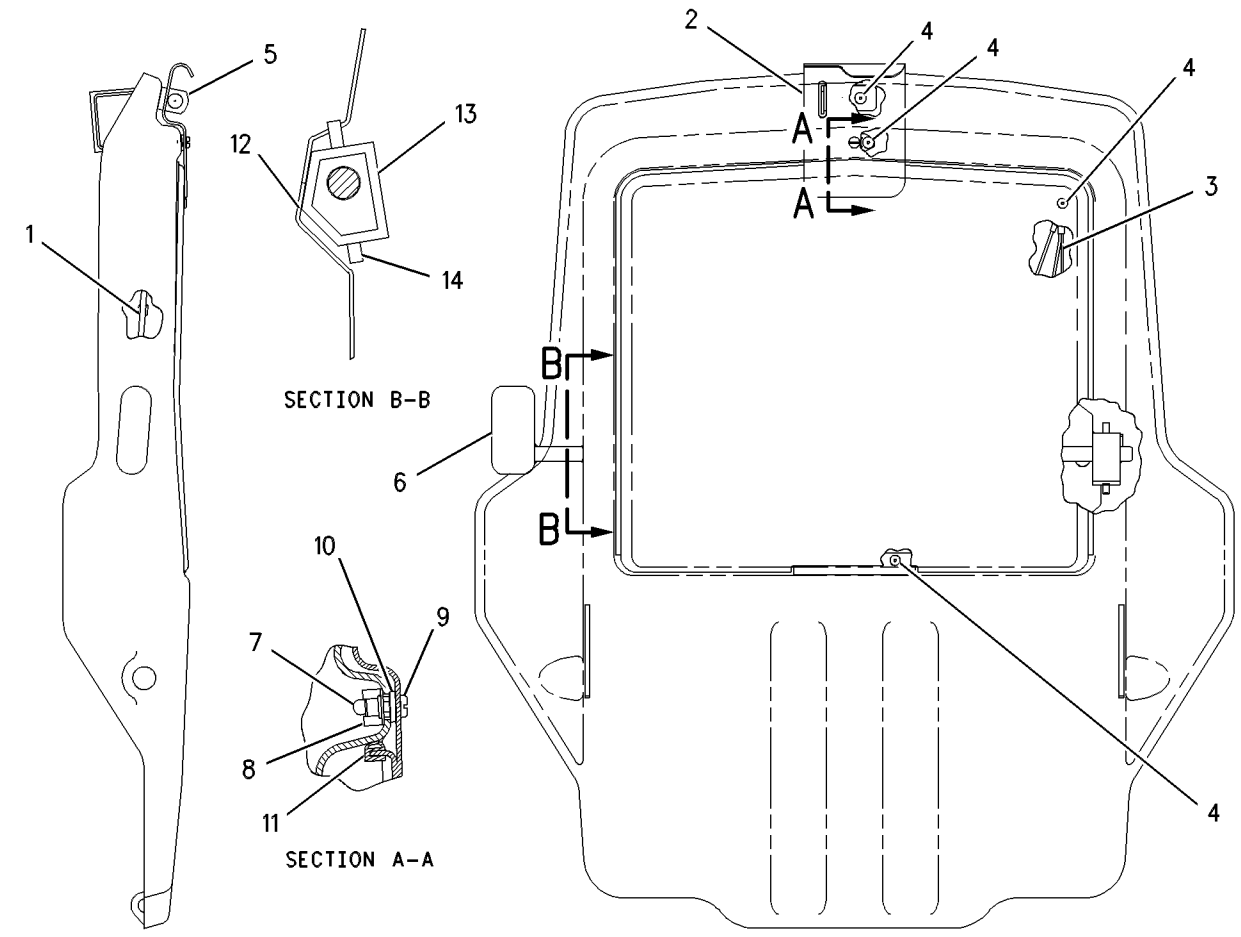

GRAPHIC #1 g00383446

OPERATOR STATION

8Y-5992 PAN GP-SEAT—BOTTOM

S/N: RTA1-UP; RBB1-UP
PART OF 8Y-6882 SEAT GP
AN ATTACHMENT

SMCS-7312 **i01114003**

NOTE	REF NO	GRAPHIC REF	PART NUMBER	QTY	PART NAME 1 2 3 4 5 6 (PRODUCT LEVEL)	SEE PAGE
	1	1	**8Y-5892**	1	PAN AS-SEAT	
JL	2	1	**3K-4897**	4	PIN-SPRING	
N	3	1	**9M-5733**	1	RIVET-POP (4.78MM DIA)	
N	4	1	**6V-2456**	2	RING-RETAINING	
JZ	5	1		1	ROD AS	
JLZ	6	1		2	SPRING	
LZ	7	1		1	ROD AS	
LZ	8	1		1	BUSHING-TERMINAL	
NZ	9	1		1	BRACKET	
NZ	10	1		1	CABLE AS	
NZ	11	1		1	PIN	
NZ	12	1		1	ADJUSTER AS	
					AVAILABLE REPAIR KIT(S):	
J			**8Y-5995**	1	KIT-SEAT TILT	
					(INCLUDES BUSHING & LOCKPIN)	
L			**8Y-5998**	1	KIT-BACK TILT	
					(INCLUDES BUSHING)	
N			**8Y-5999**	1	KIT-ADJUSTER	

J-KIT MARKED J INCLUDES PART(S) MARKED J
L-KIT MARKED L INCLUDES PART(S) MARKED L
N-KIT MARKED N INCLUDES PART(S) MARKED N
Z-NOT SERVICED SEPARATELY

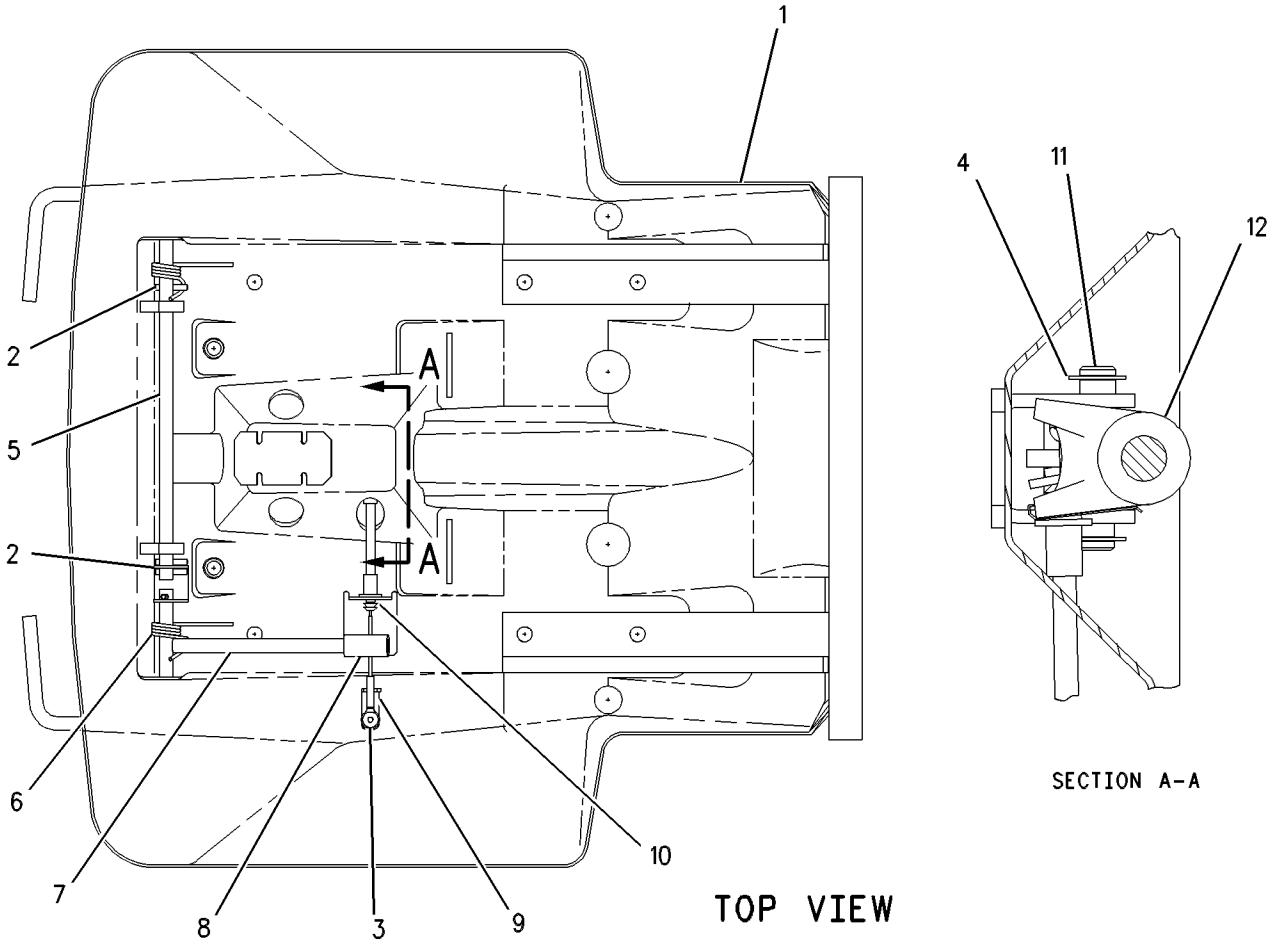

GRAPHIC #1 g00315615

OPERATOR STATION

184-5297 PANEL GP-INSTRUMENT

S/N: RTA1-UP; RBB1-UP
PART OF 216-6908 CAB AR, 190-4406 CANOPY GP-OPEN ROPS, 190-4633, 190-4645 OPERATOR AR
AN ATTACHMENT

SMCS-7451 **i01817256**

NOTE	REF NO	GRAPHIC REF	PART NUMBER	QTY	PART NAME 1 2 3 4 5 6 (PRODUCT LEVEL)	SEE PAGE
	1	1	**110-7887**	1	SWITCH GP-START (KEY)	
		1	**3E-3377**	1	WEDGE-RECEPTACLE LOCK	
		1	**7T-6799**	1	NUT-MOUNTING (1-32 THD)	
		1	**102-8804**	1	KIT-RECEPTACLE (4 PIN)	
		1	**186-3735**	4	PIN-CONNECTOR	
	2	1	**129-7184**	1	FILM-INSTRUCTION (ENGINE RUN, ON/OFF)	
B	3	1	**184-5293**	1	PLUG	
	4	1	**185-5629**	1	PLATE AS	
	5	1	**190-4555**	1	HOUSING AS	
	6	1	**190-4556**	1	PLATE AS	
	7	1	**190-4563**	1	PLATE AS	
M		1	**6V-9632**	2	NUT-WELD (M6X1 THD)	
	8	1	**218-2401**	1	MODULE GP-DISPLAY	
	9	1	**1H-4393**	6	LOCKWASHER	
M	10	1	**5C-2890**	2	NUT (M6X1 THD)	
M	11	1	**5C-8312**	6	NUT (M4X0.7 THD)	
	12	1	**8T-4205**	4	WASHER-HARD (7.2X14.5X2MM THK)	
	13	1	**202-1129**	6	SCREW-TRUSS HEAD	
M	14	1	**6V-8490**	2	BOLT (M6X1X25MM)	
M	15	1	**9X-2045**	3	SCREW-TRUSS HEAD (M6X1X20MM)	
	16	1	**214-4916**	1	FILM (INSTRUMENT PANEL COVER)	
M	17	1	**129-3178**	2	LOCKNUT (M6X1 THD)	
	18	1	**8C-9987**	2	WASHER (8.3X28X2.5MM THK)	

B-USE AS REQUIRED
M-METRIC PART

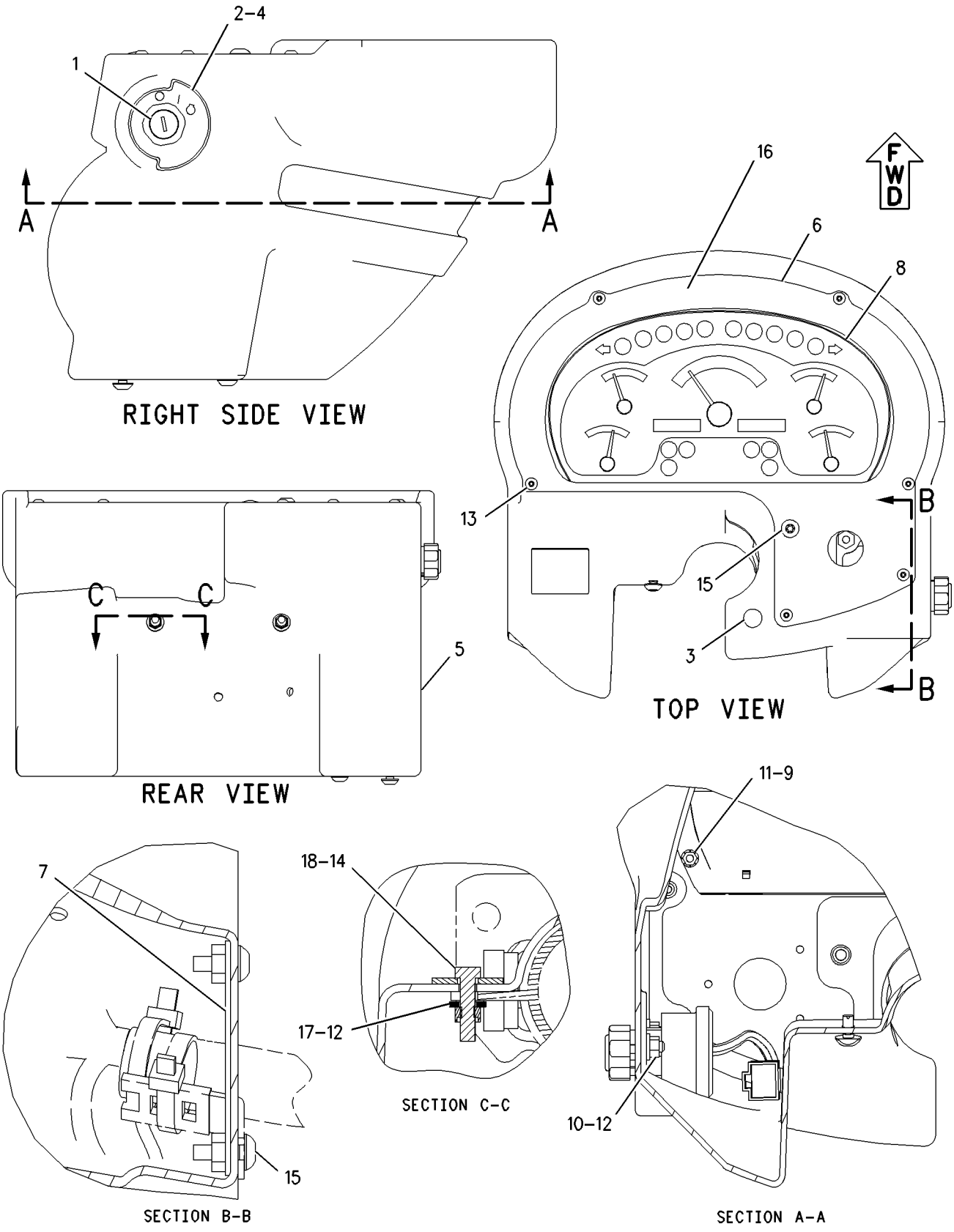

GRAPHIC #1

g00927674

OPERATOR STATION

190-4310 PANEL GP-INSTRUMENT

S/N: RTA1-UP; RBB1-UP
PART OF 190-4406 CANOPY GP-OPEN ROPS
AN ATTACHMENT

SMCS-7451 **i01862933**

NOTE	REF NO	GRAPHIC REF	PART NUMBER	QTY	PART NAME 1 2 3 4 5 6 (PRODUCT LEVEL)	SEE PAGE
E	1	2	**126-8472**		SEAL (14CM)	
	2	2	**154-5629**	1	ASHTRAY AS	
	3	2	**2G-5298**	1	WIRE AS	
	4	2	**4I-3038**	4	WASHER (3.3X8X0.5MM THK)	
	5	1	**6G-4195**	1	SWITCH AS-LIMIT (SERVICE BRAKE)	
		1	**3L-8187**	3	LOCKWASHER (3.70X7.24X.48MM THK)	
		1	**6V-8373**	3	SCREW-MACHINE (6-32X0.187 IN)	
	6	1	**6Y-6584**	1	STRAP AS-GROUND	
	7	1	**7K-1181**	42	STRAP-CABLE	
	8	2	**8C-6354**	1	CAP-RECEPTACLE	
	9	1	**9C-9785**	1	BUMPER	
	10	1	**107-6013**	1	SEAL	
	11	2	**107-6021**	1	HOUSING AS	
	12	2	**111-7899**	4	GASKET	
	13	1	**116-7471**	1	PULLER-MINIFUSE	
	14	1	**117-3787**	4	KNOB	
	15	1	**117-3788**	4	RECEPTACLE	
	16	1	**117-3789**	4	RETAINER	
	17	1	**118-7362**	1	GROMMET-SPLIT	
	18	1	**134-2540**	1	RECEPTACLE AS (3 PIN)	
	19	2	**134-4096**	1	PLATE AS	
	20	1	**148-5689**	1	GROMMET-SPLIT	
	21	2	**158-5089**	1	RELAY AS (PARKING BRAKE)	
	22	2	**160-6520**	1	PLATE	
	23	2	**165-0311**	4	PLUG	
Y	24	1	**167-0138**	1	SWITCH GP-MAGNETIC (MAIN RELAY)	130
	25	1	**170-7064**	1	BRACKET AS	
M		1	**159-9539**	1	NUT-WELD (M6X1 THD)	
	26	1	**178-1780**	1	CLIP	
	27	2	**195-0916**	1	SWITCH AS-ROCKER (THROTTLE LOCK SET/RESUME)	
		2	**111-7899**	1	GASKET	
	28	2	**195-0917**	1	SWITCH AS-ROCKER (THROTTLE LOCK ON/OFF)	
	29	2	**195-0921**	1	SWITCH AS-ROCKER (KICKOUT ON/OFF)	
		2	**111-7899**	1	GASKET	
	30	2	**202-1129**	4	SCREW-TRUSS HEAD	
	31	1	**206-1345**	2	STRAP-CABLE	
	32	1	**211-0052**	3	NUT	
	33	2	**224-8629**	1	SWITCH AS-ROCKER (IMPLEMENT DISABLE SWITCH)	
		2	**111-7899**	1	GASKET	
	34	1	**224-9609**	1	HARNESS AS-CAB (MAIN)	
		1	**102-8802**	3	KIT-RECEPTACLE (2 PIN)	
		1	**102-8803**	1	KIT-RECEPTACLE (3 PIN)	
		1	**102-8804**	1	KIT-RECEPTACLE (4 PIN)	
		1	**102-8805**	1	KIT-RECEPTACLE (6 PIN)	
		1	**102-8806**	2	KIT-RECEPTACLE (8 PIN)	
		1	**102-8801**	1	KIT-RECEPTACLE (12 PIN)	
		1	**155-2255**	4	KIT-CONNECTING PLUG (12 PIN)	
		1	**155-2265**	1	KIT-CONNECTING PLUG (8 PIN)	
		1	**155-2260**	4	KIT-CONNECTING PLUG (3 PIN)	
		1	**155-2270**	7	KIT-CONNECTING PLUG (2 PIN)	
		1	**155-2271**	1	KIT-CONNECTING PLUG (4 PIN)	
		1	**155-2274**	7	KIT-CONNECTING PLUG (6 PIN)	
		1	**174-0503**	1	KIT-CONNECTING PLUG (3 PIN)	
	35	2	**226-2065**	1	FILM (CONTROLS)	
	36	1	**226-2951**	1	BRACKET AS	

190-4310 **PANEL GP-INSTRUMENT** ***(contd.)*** **i01862933**

NOTE	REF NO	GRAPHIC REF	PART NUMBER	QTY	PART NAME 1 2 3 4 5 6 (PRODUCT LEVEL)	SEE PAGE
	37	1	**226-3378**	1	PLATE AS	
M		1	**8T-3490**	2	NUT-WELD (M10X1.5 THD)	
	38	1	**226-3407**	1	FILM-FUSE PANEL (FUSE/RELAY)	
	39	1	**107-6072**	1	PLATE	
	40	2	**142-2928**	4	LOCKNUT	
	41	1,2	**170-9360**	1	GROMMET	
	42	1	**2N-3477**	2	SCREW-MACHINE (6-32X1.25 IN)	
	43	1	**4B-5324**	2	WASHER (3.9X9.6X1.2MM THK)	
	44	1	**4P-7581**	2	CLIP	
	45	1	**4P-8134**	4	CLIP	
	46	2	**5P-4115**	4	WASHER-HARD (7.2X19X2MM THK)	
	47	1	**5P-4116**	1	WASHER-HARD (8.8X20.5X2MM THK)	
M	48	1	**6V-8837**	1	BOLT (M6X1X16 MM)	
	49	1	**7D-6922**	2	LOCKNUT (6-32 THD)	
	50	2	**7X-3308**	4	BOLT-HEX (4-40-THD)	
	51	1	**8T-4121**	6	WASHER-HARD (11X21X2.5MM THK)	
M	52	1	**8T-4133**	2	NUT (M10X1.5 THD)	
M	53	1	**8T-4137**	2	BOLT (M10X1.5X20MM)	
M	54	1	**8T-4189**	3	BOLT (M8X1.25X20MM)	
M	55	1	**8T-4195**	2	BOLT (M10X1.5X30MM)	
M	56	1	**8T-4199**	2	BOLT (M8X1.25X12MM)	
	57	1	**8T-4205**	3	WASHER-HARD (7.2X14.5X2MM THK)	
	58	1	**8T-4224**	4	WASHER-HARD (8.8X16X2MM THK)	
M	59	1,2	**9X-2042**	6	SCREW-TRUSS HEAD (M6X1X12MM)	
M	60	2	**9X-2045**	2	SCREW-TRUSS HEAD (M6X1X20MM)	
E	61	1	**103-2543**		SEAL (3CM)	

E-ORDER BY THE CENTIMETER
M-METRIC PART
Y-SEPARATE ILLUSTRATION

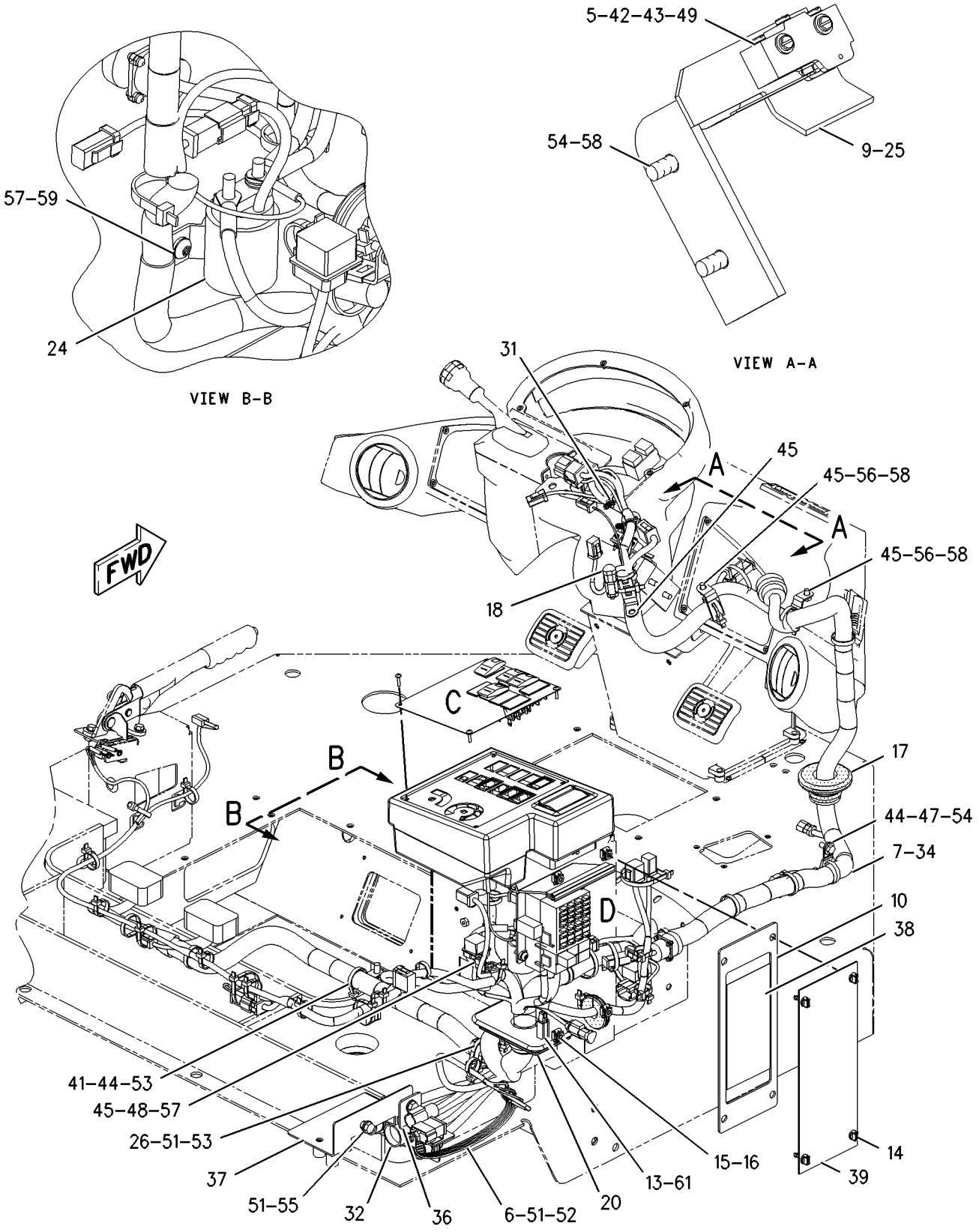

GRAPHIC #1

g00930543

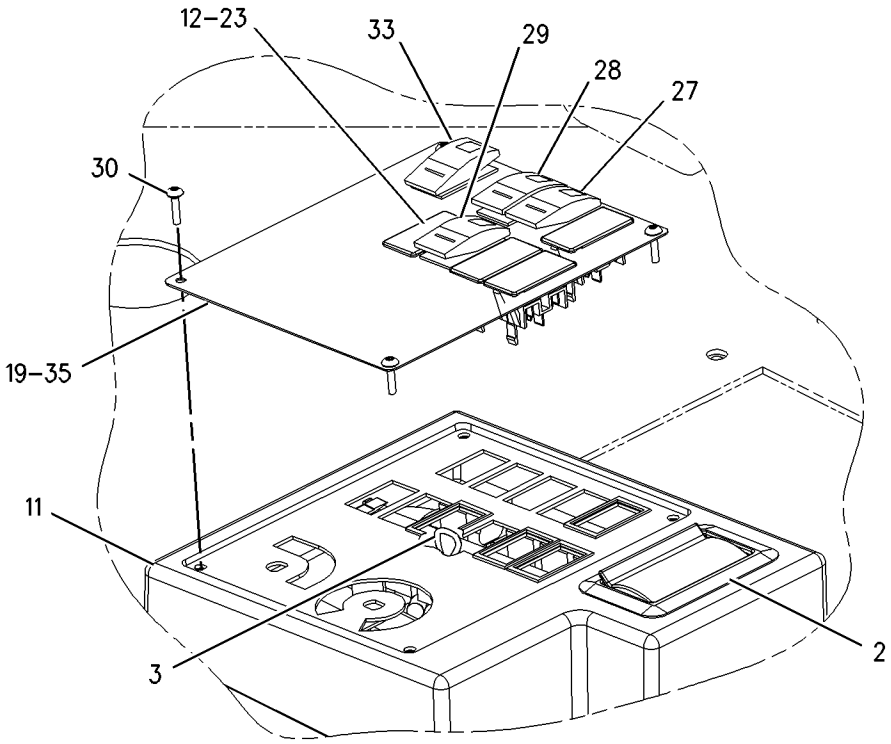

VIEW OF AREA C

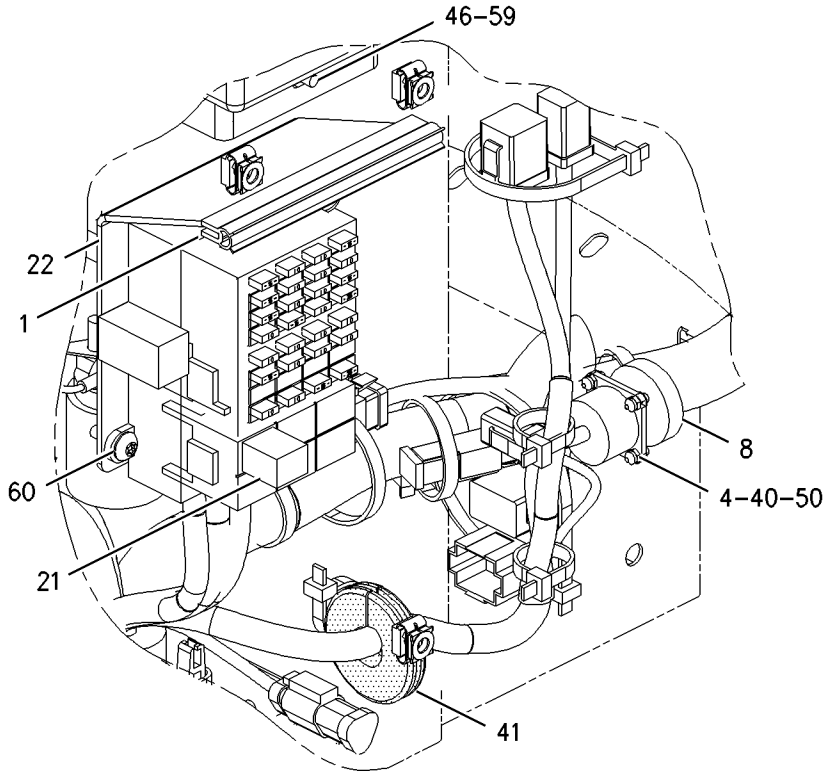

VIEW OF AREA D

GRAPHIC #2 g00930544

OPERATOR STATION

190-4320 PANEL GP-INSTRUMENT

S/N: RTA1-UP; RBB1-UP
PART OF 190-4405 CAB AR
AN ATTACHMENT

SMCS-7451 **i01862975**

NOTE	REF NO	GRAPHIC REF	PART NUMBER	QTY	PART NAME 1 2 3 4 5 6 (PRODUCT LEVEL)	SEE PAGE
	1	1	**154-5629**	1	ASHTRAY AS	
B	2	2	**2G-5298**	1	WIRE AS	
	3	1	**4I-3038**	4	WASHER (3.3X8X0.5MM THK)	
	4	1	**6G-4195**	1	SWITCH AS-LIMIT (BRAKE PEDAL)	
		1	**3L-8187**	3	LOCKWASHER (3.70X7.24X.48MM THK)	
		1	**6V-8373**	3	SCREW-MACHINE (6-32X0.187 IN)	
	5	1	**6V-8369**	1	NUT (7/16-28 THD)	
	6	1	**6Y-6584**	1	STRAP AS-GROUND	
	7	1	**7K-1181**	39	STRAP-CABLE	
	8	1	**8C-6354**	1	CAP-RECEPTACLE	
	9	1	**9C-9785**	1	BUMPER	
	10	2	**107-6013**	1	SEAL	
	11	1	**107-6021**	1	HOUSING AS	
	12	1	**110-6109**	2	KNOB-CONTROL	
	13	1	**110-7890**	1	SWITCH AS-ROTARY (FAN BLOWER SPEED)	
		1	**3E-3383**	1	WEDGE-RECEPTACLE LOCK	
		1	**8T-8737**	1	PLUG-SEAL	
		1	**9W-0852**	5	PIN-CONNECTOR	
		1	**102-8805**	1	KIT-RECEPTACLE (6 PIN)	
B	14	1	**111-7899**	6	GASKET	
	15	2	**114-3951**	1	PLATE	
	16	2	**115-1748**	2	LAMP (24 VOLT)	
	17	2	**116-7471**	1	PULLER-MINIFUSE	
	18	1	**117-3787**	4	KNOB	
	19	1	**117-3788**	4	RECEPTACLE	
	20	1	**117-3789**	4	RETAINER	
	21	1	**118-7362**	1	GROMMET-SPLIT	
	22	1	**134-2540**	1	RECEPTACLE AS (3 PIN)	
	23	1	**134-4096**	1	PLATE AS	
	24	1	**148-5689**	1	GROMMET-SPLIT	
	25	2	**158-5089**	1	RELAY AS	
B	26	1	**165-0311**	6	PLUG	
Y	27	2	**167-0138**	1	SWITCH GP-MAGNETIC (MAIN RELAY)	130
	28	1	**170-7064**	1	BRACKET AS	
M		1	**159-9539**	1	NUT-WELD (M6X1 THD)	
	29	1	**178-1780**	1	CLIP	
	30	1	**195-0916**	1	SWITCH AS-ROCKER (THROTTLE LOCK SET/RESUME)	
		1	**111-7899**	1	GASKET	
	31	1	**195-0917**	1	SWITCH AS-ROCKER (THROTTLE LOCK ON/OFF)	
	32	1	**195-0921**	1	SWITCH AS-ROCKER (KICKOUT ON/OFF)	
		1	**111-7899**	1	GASKET	
	33	1	**202-1129**	4	SCREW-TRUSS HEAD	
	34	1	**206-1345**	2	STRAP-CABLE	
	35	2	**211-0052**	3	NUT	
	36	1	**224-8629**	1	SWITCH AS-ROCKER	
		1	**111-7899**	1	GASKET	
	37	1	**224-9609**	1	HARNESS AS-CAB (MAIN)	
		1	**112-9609**	1	BLOCK-MICRORELAY	
		1	**112-9610**	1	LOCK-MICRORELAY	
		1	**124-9636**	1	BLOCK-MINIFUSE	
		1	**124-9637**	1	LOCK-MINIFUSE	
		1	**102-8802**	3	KIT-RECEPTACLE (2 PIN)	
		1	**102-8803**	1	KIT-RECEPTACLE (3 PIN)	
		1	**102-8804**	1	KIT-RECEPTACLE (4 PIN)	
		1	**102-8805**	1	KIT-RECEPTACLE (6 PIN)	

190-4320 **PANEL GP-INSTRUMENT** ***(contd.)*** **i01862975**

NOTE	REF NO	GRAPHIC REF	PART NUMBER	QTY	PART NAME 1 2 3 4 5 6 (PRODUCT LEVEL)	SEE PAGE
		1	**102-8806**	2	KIT-RECEPTACLE (8 PIN)	
		1	**102-8801**	1	KIT-RECEPTACLE (12 PIN)	
		1	**155-2255**	4	KIT-CONNECTING PLUG (12 PIN)	
		1	**155-2265**	1	KIT-CONNECTING PLUG (8 PIN)	
		1	**155-2260**	4	KIT-CONNECTING PLUG (3 PIN)	
		1	**155-2270**	7	KIT-CONNECTING PLUG (2 PIN)	
		1	**155-2271**	1	KIT-CONNECTING PLUG (4 PIN)	
		1	**155-2274**	1	KIT-CONNECTING PLUG (6 PIN)	
		1	**174-0503**	1	KIT-CONNECTING PLUG (3 PIN)	
		1	**218-3623**	1	PLUG AS	
		1	**102-8801**	1	KIT-RECEPTACLE (12 PIN)	
	38	1	**226-2066**	1	FILM (CONTROLS)	
	39	1	**226-2951**	1	BRACKET AS	
	40	1	**226-3378**	1	PLATE AS	
M		1	**8T-3490**	2	NUT-WELD (M10X1.5 THD)	
	41	2	**226-3407**	1	FILM-FUSE PANEL	
	42	1	**107-6072**	1	PLATE	
	43	1	**142-2928**	4	LOCKNUT	
	44	2	**170-9360**	1	GROMMET	
	45	1	**2H-3920**	1	LOCKWASHER	
	46	1	**2N-3477**	2	SCREW-MACHINE (6-32X1.25 IN)	
	47	1	**4B-5324**	2	WASHER (3.9X9.6X1.2MM THK)	
	48	1	**4P-7581**	2	CLIP	
	49	1,2	**4P-8134**	4	CLIP	
	50	2	**5P-4115**	4	WASHER-HARD (7.2X19X2MM THK)	
	51	1	**5P-4116**	1	WASHER-HARD (8.8X20.5X2MM THK)	
M	52	2	**6V-8837**	1	BOLT (M6X1X16 MM)	
	53	1	**7D-6922**	2	LOCKNUT (6-32 THD)	
	54	1	**7X-3308**	4	BOLT-HEX (4-40-THD)	
	55	1	**8T-4121**	6	WASHER-HARD (11X21X2.5MM THK)	
M	56	1	**8T-4133**	2	NUT (M10X1.5 THD)	
M	57	1	**8T-4137**	2	BOLT (M10X1.5X20MM)	
M	58	1	**8T-4189**	3	BOLT (M8X1.25X20MM)	
M	59	1	**8T-4195**	2	BOLT (M10X1.5X30MM)	
M	60	1	**8T-4199**	2	BOLT (M8X1.25X12MM)	
	61	2	**8T-4205**	3	WASHER-HARD (7.2X14.5X2MM THK)	
	62	1	**8T-4224**	4	WASHER-HARD (8.8X16X2MM THK)	
M	63	2	**9X-2042**	6	SCREW-TRUSS HEAD (M6X1X12MM)	
M	64	2	**9X-2045**	2	SCREW-TRUSS HEAD (M6X1X20MM)	
E	65	2	**103-2543**		SEAL (3CM)	

B-USE AS REQUIRED
E-ORDER BY THE CENTIMETER
M-METRIC PART
Y-SEPARATE ILLUSTRATION

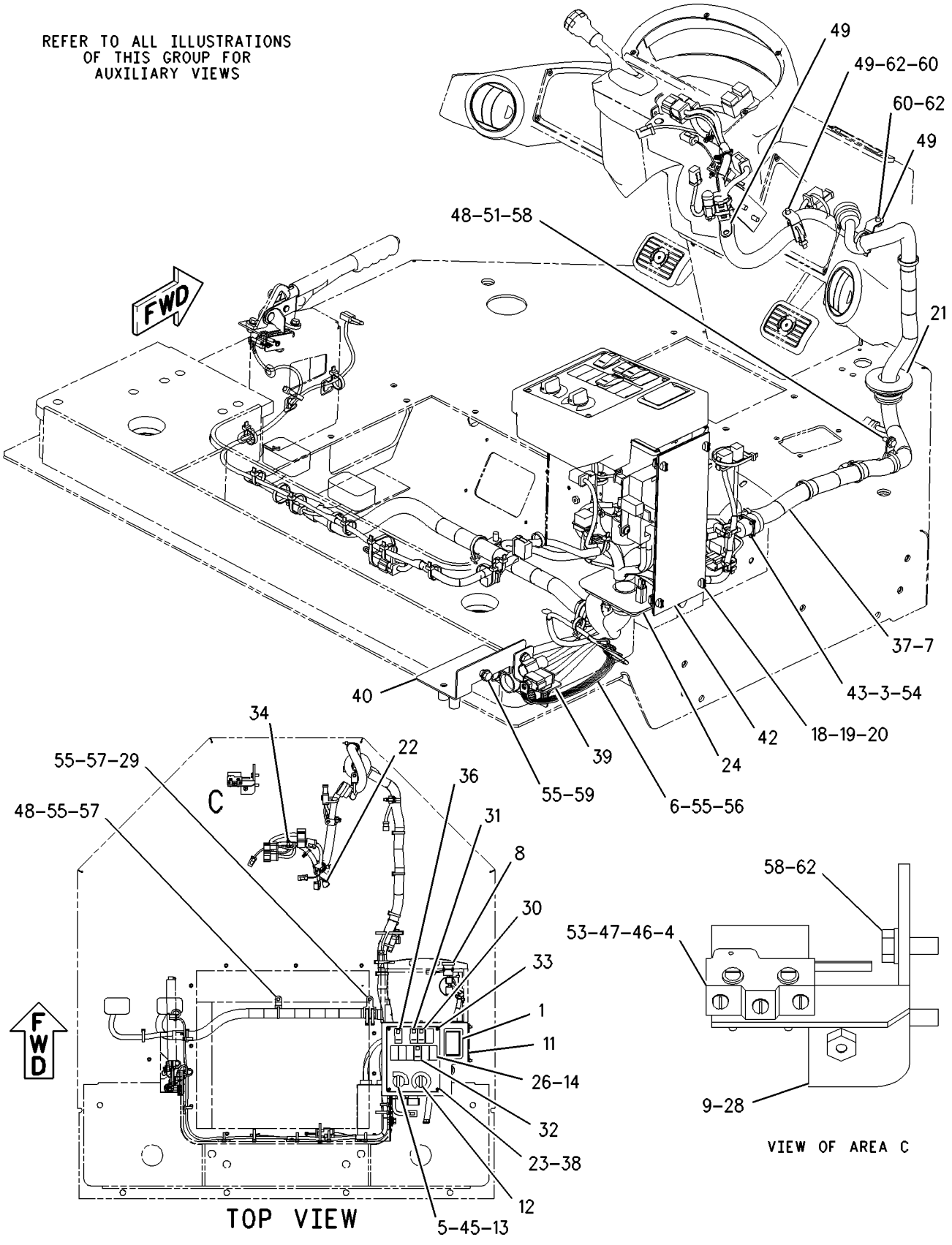

GRAPHIC #1 g00938166

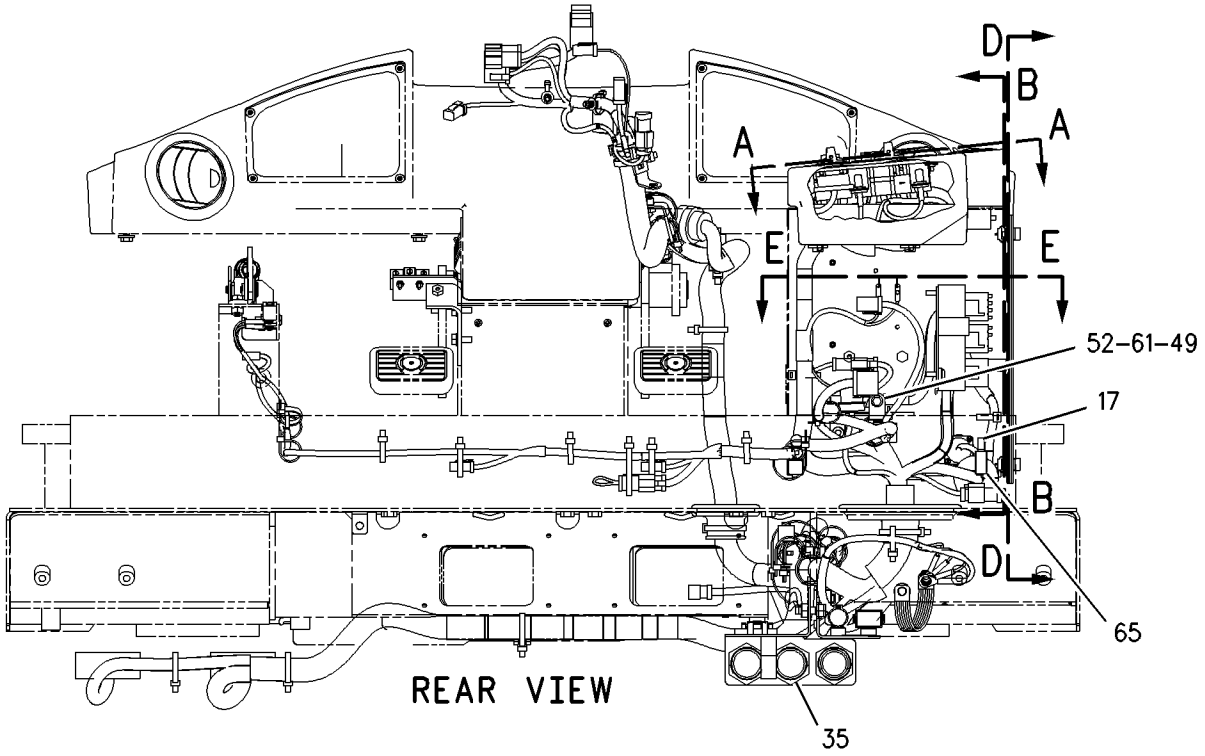

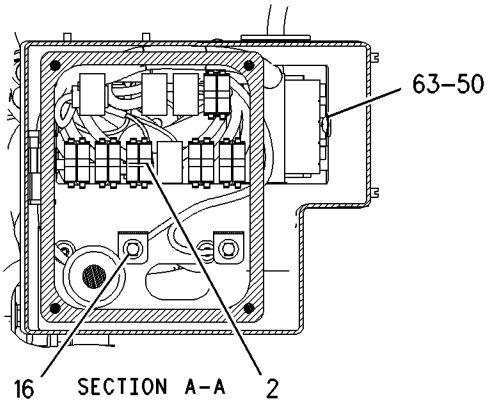

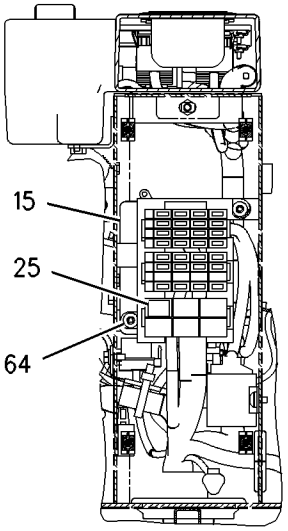

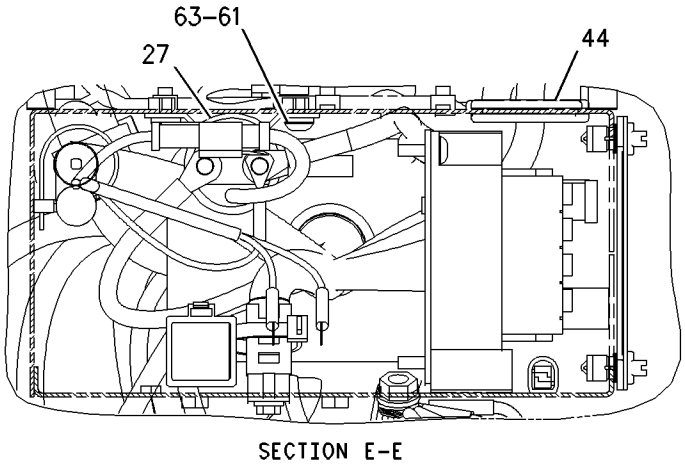

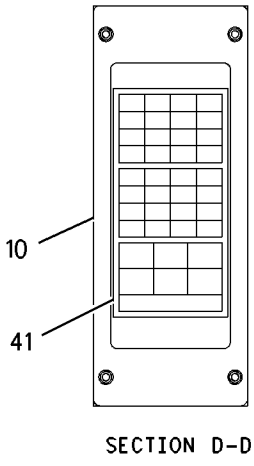

GRAPHIC #2 g00938176

OPERATOR STATION

216-6914 PANEL GP-INSTRUMENT

S/N: RTA1-UP; RBB1-UP
PART OF 216-6908 CAB AR
AN ATTACHMENT

SMCS-7451 **i01862982**

NOTE	REF NO	GRAPHIC REF	PART NUMBER	QTY	PART NAME 1 2 3 4 5 6 (PRODUCT LEVEL)	SEE PAGE
E	1	1	**126-8472**		SEAL (14CM)	
	2	1	**1W-1539**	1	BRACKET-SUPPORT	
	3	2	**2G-5298**	1	WIRE AS	
	4	2	**4I-3038**	4	WASHER (3.3X8X0.5MM THK)	
	5	2	**6G-4195**	1	SWITCH AS-LIMIT (BRAKE PEDAL)	
		2	**3L-8187**	3	LOCKWASHER (3.70X7.24X.48MM THK)	
		2	**6V-8373**	3	SCREW-MACHINE (6-32X0.187 IN)	
	6	1	**6Y-6584**	1	STRAP AS-GROUND	
	7	1	**7K-1181**	43	STRAP-CABLE	
	8	1,3	**8C-6354**	1	CAP-RECEPTACLE	
	9	2	**9C-9785**	1	BUMPER	
M	10	1	**9X-2042**	2	SCREW-TRUSS HEAD (M6X1X12MM)	
	11	2	**106-8704**	1	SUPPRESSOR AS-ARC	
		2	**102-8802**	1	KIT-RECEPTACLE (2 PIN)	
		2	**3E-3365**	1	WEDGE-RECEPTACLE LOCK (2 PIN)	
		2	**186-3735**	2	PIN-CONNECTOR	
	12	1	**107-6013**	1	SEAL	
	13	2	**111-7899**	4	GASKET	
	14	3	**117-3274**	1	PLUG AS	
		3	**102-8805**	1	KIT-RECEPTACLE (6 PIN)	
		3	**3E-3383**	1	WEDGE-RECEPTACLE LOCK	
		3	**186-3735**	4	PIN-CONNECTOR	
		3	**8T-8737**	2	PLUG-SEAL	
	15	1	**117-3787**	4	KNOB	
	16	1	**117-3788**	4	RECEPTACLE	
	17	1	**117-3789**	4	RETAINER	
	18	1	**118-7362**	1	GROMMET-SPLIT	
	19	1,2	**134-2540**	2	RECEPTACLE AS (3 PIN)	
	20	2	**134-4096**	1	PLATE AS	
	21	1	**148-5689**	1	GROMMET-SPLIT	
	22	1	**160-6520**	1	PLATE	
	23	2	**165-0311**	4	PLUG	
Y	24	1	**167-0138**	1	SWITCH GP-MAGNETIC	130
	25	2	**170-7064**	1	BRACKET AS	
	26	1	**178-3987**	1	FILM (FUSE PANEL)	
	27	1	**189-6135**	1	HARNESS AS-CAB (MAIN)	
		1	**112-9609**	1	BLOCK-MICRORELAY	
		1	**112-9610**	1	LOCK-MICRORELAY	
		1	**124-9636**	1	BLOCK-MINIFUSE	
		1	**124-9637**	1	LOCK-MINIFUSE	
		1	**102-8801**	1	KIT-RECEPTACLE (12 PIN)	
		1	**102-8802**	2	KIT-RECEPTACLE (2 PIN)	
		1	**102-8803**	1	KIT-RECEPTACLE (3 PIN)	
		1	**102-8805**	2	KIT-RECEPTACLE (6 PIN)	
		1	**102-8806**	2	KIT-RECEPTACLE (8 PIN)	
		1	**155-2255**	4	KIT-CONNECTING PLUG (12 PIN)	
		1	**155-2265**	1	KIT-CONNECTING PLUG (8 PIN)	
		1	**155-2260**	4	KIT-CONNECTING PLUG (3 PIN)	
		1	**155-2260**	1	KIT-CONNECTING PLUG (3 PIN)	
		1	**155-2270**	8	KIT-CONNECTING PLUG (2 PIN)	
		1	**155-2271**	1	KIT-CONNECTING PLUG (4 PIN)	
		1	**155-2274**	7	KIT-CONNECTING PLUG (6 PIN)	
		1	**174-0503**	2	KIT-CONNECTING PLUG (3 PIN)	
	28	1	**189-6138**	1	PLATE AS	
	29	2	**195-0916**	1	SWITCH AS-ROCKER (THROTTLE LOCK SET/RESUME)	

216-6914 **PANEL GP-INSTRUMENT** ***(contd.)*** **i01862982**

NOTE	REF NO	GRAPHIC REF	PART NUMBER	QTY	PART NAME 1 2 3 4 5 6 (PRODUCT LEVEL)	SEE PAGE
		2	**111-7899**	1	GASKET	
	30	2	**195-0917**	1	SWITCH AS-ROCKER (THROTTLE LOCK ON/OFF)	
	31	2	**195-0921**	1	SWITCH AS-ROCKER (KICKOUT ON/OFF)	
		2	**111-7899**	1	GASKET	
	32	2	**204-0355**	1	FILM (CONTROLS)	
	33	2	**206-1345**	2	STRAP-CABLE	
	34	3	**211-0052**	2	NUT	
	35	1	**107-6072**	1	PLATE	
	36	2	**132-5789**	1	CLIP	
	37	2	**142-2928**	4	LOCKNUT	
	38	3	**2G-1133**	1	GROMMET	
	39	2	**2N-3477**	2	SCREW-MACHINE (6-32X1.25 IN)	
	40	2	**4B-5324**	2	WASHER (3.9X9.6X1.2MM THK)	
	41	1,2	**4P-7581**	4	CLIP	
	42	1,3	**4P-8134**	4	CLIP	
M	43	1	**5C-7261**	1	NUT (M8X1.25 THD)	
	44	1	**5P-4116**	5	WASHER-HARD (8.8X20.5X2MM THK)	
	45	1	**6D-4244**	3	CLIP	
M	46	3	**6V-8837**	1	BOLT (M6X1X16 MM)	
	47	2	**7D-6922**	2	LOCKNUT (6-32 THD)	
	48	2	**7X-3308**	4	BOLT-HEX (4-40-THD)	
	49	1,2	**8T-4121**	5	WASHER-HARD (11X21X2.5MM THK)	
M	50	1	**8T-4133**	2	NUT (M10X1.5 THD)	
M	51	2	**8T-4136**	2	BOLT (M10X1.5X25MM)	
M	52	2	**8T-4137**	2	BOLT (M10X1.5X20MM)	
M	53	1,2	**8T-4189**	6	BOLT (M8X1.25X20MM)	
M	54	1	**8T-4199**	2	BOLT (M8X1.25X12MM)	
	55	1,3	**8T-4205**	3	WASHER-HARD (7.2X14.5X2MM THK)	
	56	1,2	**8T-4224**	4	WASHER-HARD (8.8X16X2MM THK)	
M	57	1	**8T-7547**	1	BOLT (M8X1.25X30MM)	
M	58	1	**9X-1046**	4	SCREW (M4X0.7X18MM)	
M	59	1	**9X-2045**	2	SCREW-TRUSS HEAD (M6X1X20MM)	

E-ORDER BY THE CENTIMETER
M-METRIC PART
Y-SEPARATE ILLUSTRATION

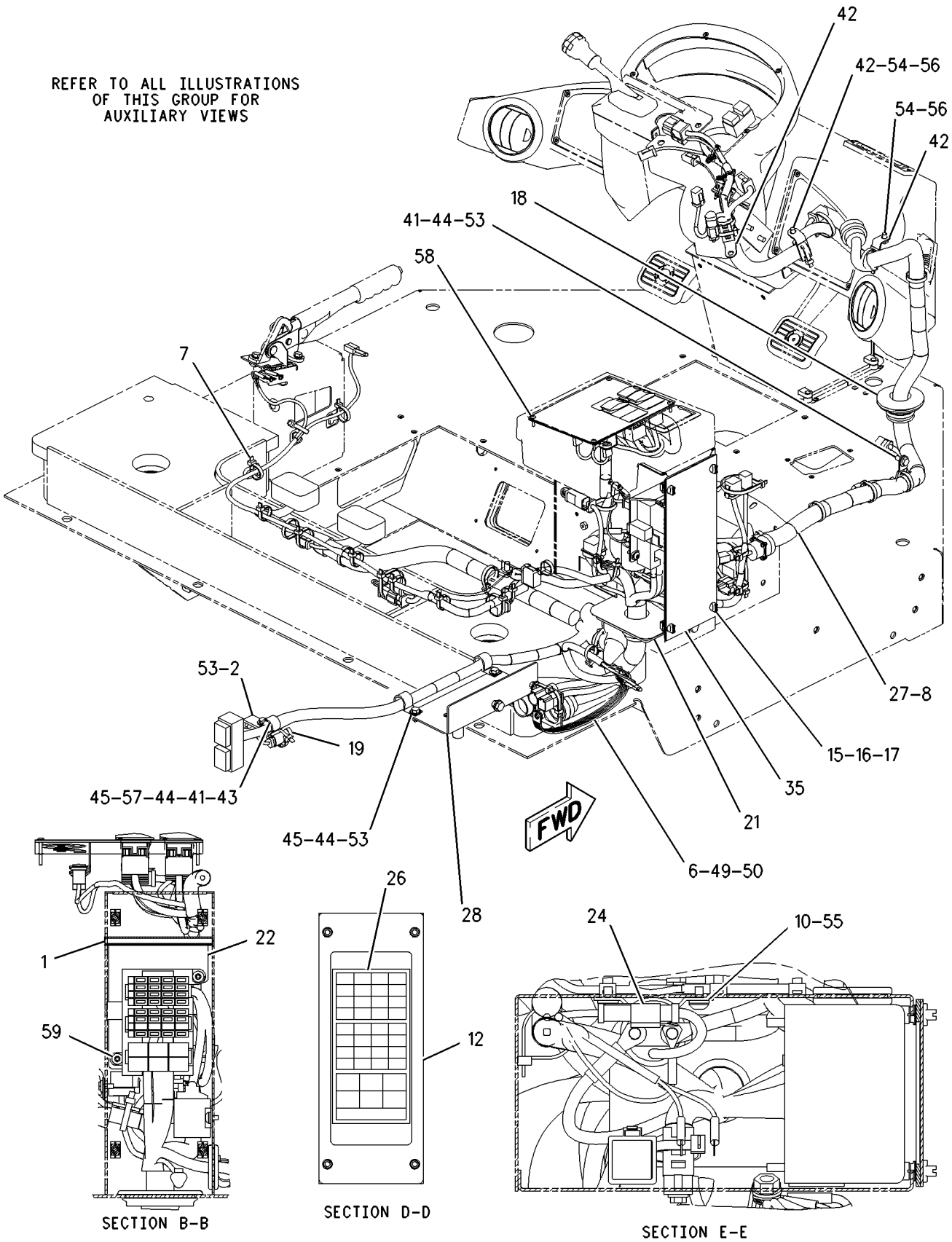

GRAPHIC #1 g00926098

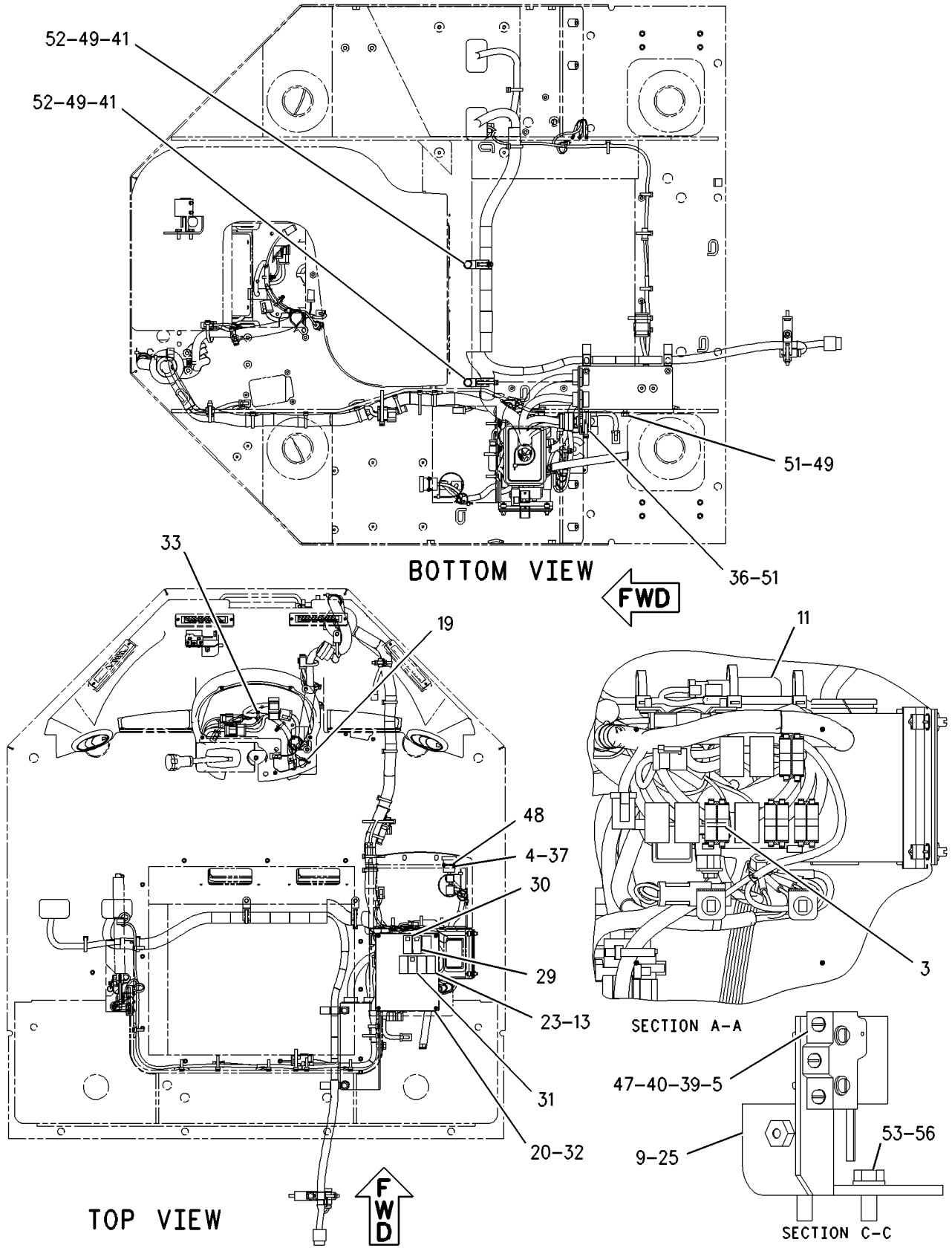

GRAPHIC #2

g00926100

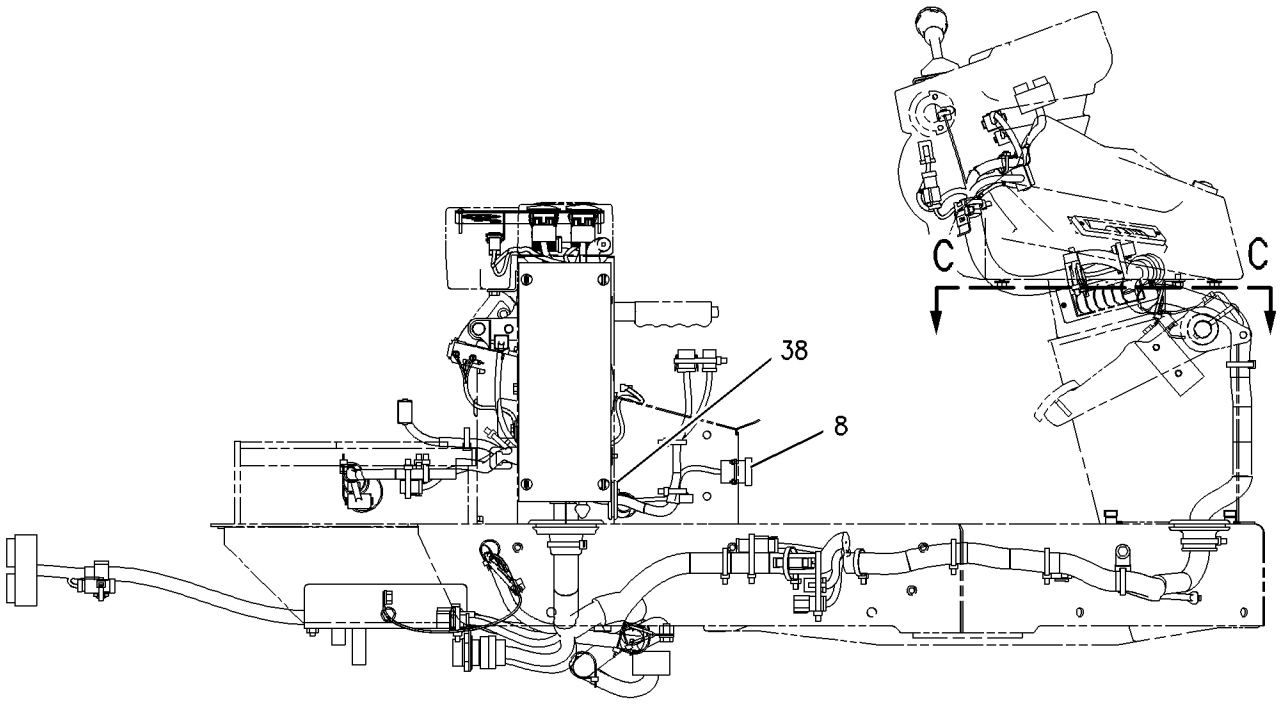

RIGHT SIDE VIEW

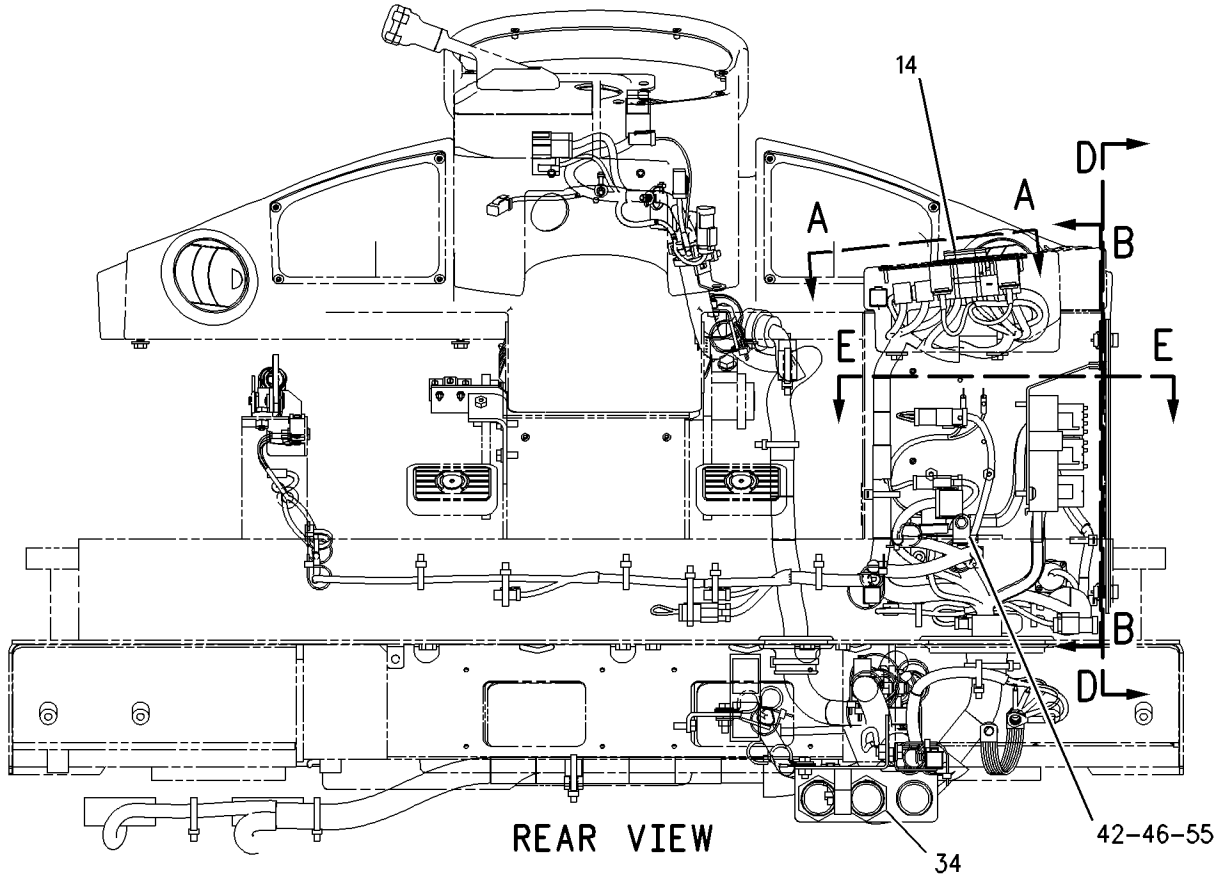

REAR VIEW

GRAPHIC #3

g00926101

OPERATOR STATION

174-9730 PEDAL GP-BRAKE

S/N: RTA1-UP; RBB1-UP
PART OF 174-9749 ROPS GP-ENCLOSED, 174-9764 ROPS GP-OPEN
AN ATTACHMENT

SMCS-4269, 4290 **i01860062**

NOTE	REF NO	GRAPHIC REF	PART NUMBER	QTY	PART NAME 1 2 3 4 5 6 (PRODUCT LEVEL)	SEE PAGE
	1	1	**1B-8723**	1	KEY-WOODRUFF	
	2	1	**6K-8088**	4	BEARING-ROLLER	
	3	1	**8E-8300**	2	DISC-THRUST	
	4	1	**8R-6904**	2	TREAD-RUBBER	
	5	1	**107-6056**	1	PEDAL AS-LH	
	6	1	**111-0132**	1	PEDAL AS-RH	
	7	1	**174-9725**	1	SUPPORT AS	
M		1	**159-9539**	2	NUT-WELD (M6X1 THD)	
M		1	**159-9540**	2	NUT-WELD (M8X1.25 THD)	
	8	1	**8T-4121**	1	WASHER-HARD (11X21X2.5MM THK)	
M	9	1	**8T-4185**	1	BOLT (M10X1.5X50MM)	

M-METRIC PART

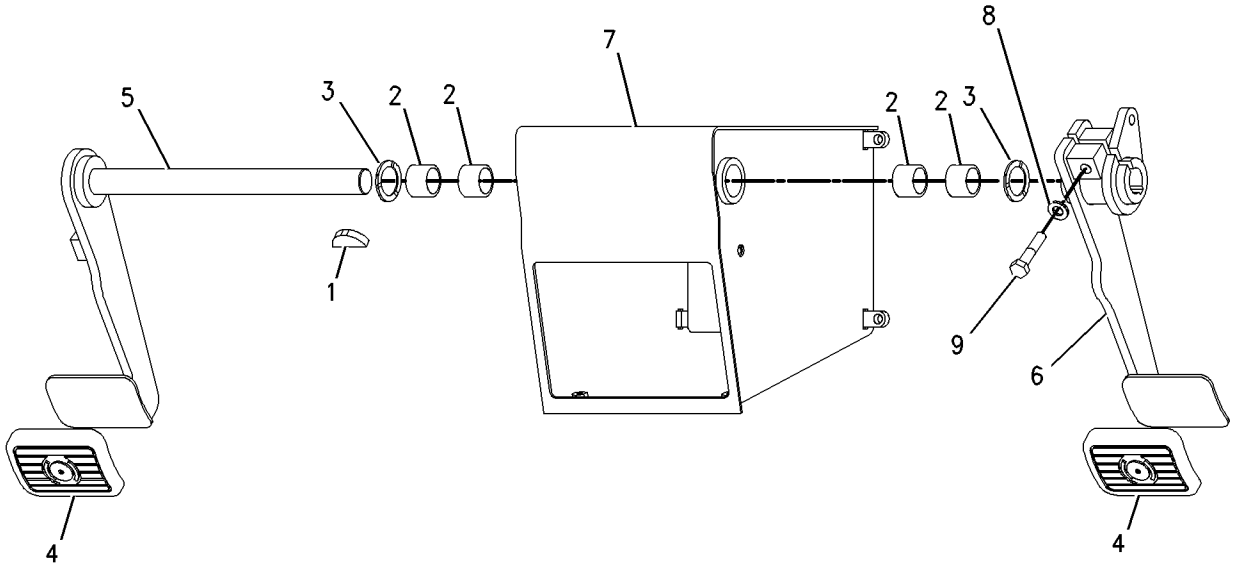

GRAPHIC #1 g00748414

OPERATOR STATION

190-4700 PEDAL GP-GOVERNOR

S/N: RTA1-UP; RBB1-UP
PART OF 190-4405, 216-6908 CAB AR, 190-4406 CANOPY GP-OPEN ROPS
AN ATTACHMENT

SMCS-1276 **i01794477**

NOTE	REF NO	GRAPHIC REF	PART NUMBER	QTY	PART NAME 1 2 3 4 5 6 (PRODUCT LEVEL)	SEE PAGE
	1	1	**190-4701**	1	PEDAL GP-GOVERNOR	
M	1A	1	**3C-3364**	1	NUT-HALF	
M	1B	1	**3C-4922**	1	SCREW-HEX HEAD	
Y	1C	1	**160-2443**	1	SENSOR GP-POSITION (THROTTLE)	123
M	2	1	**9X-2045**	3	SCREW-TRUSS HEAD (M6X1X20MM)	

M-METRIC PART
Y-SEPARATE ILLUSTRATION

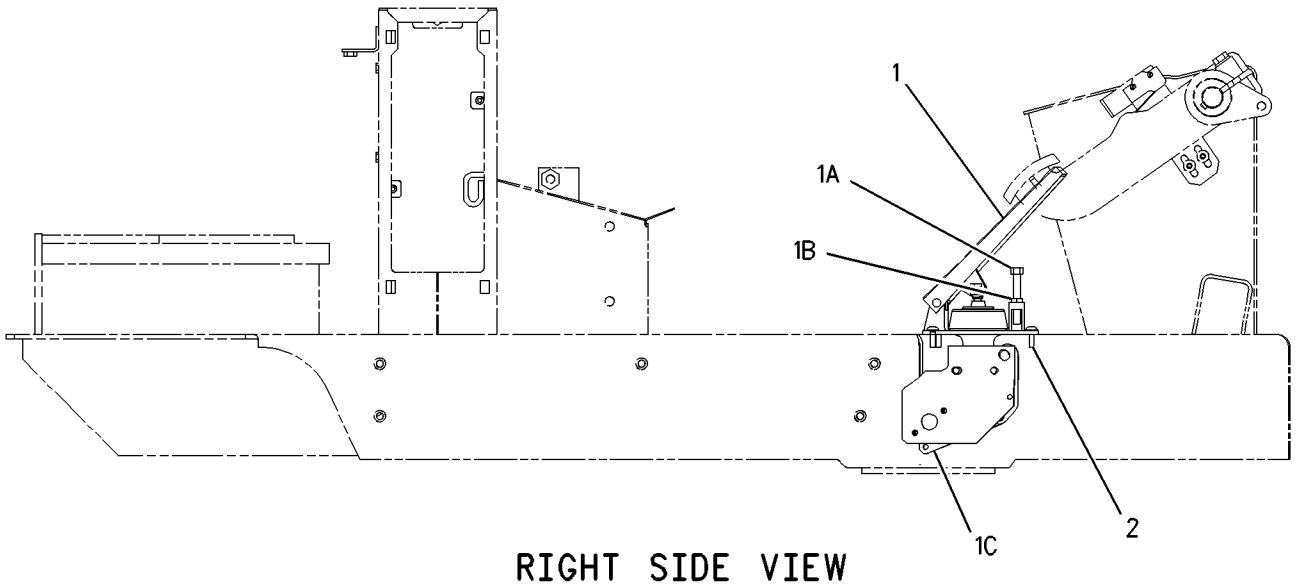

RIGHT SIDE VIEW

GRAPHIC #1 g00917905

OPERATOR STATION

174-9749 ROPS GP-ENCLOSED

S/N: RTA1-UP; RBB1-UP
PART OF 205-0522 CAB AR
AN ATTACHMENT

SMCS-7325 **i01376821**

NOTE	REF NO	GRAPHIC REF	PART NUMBER	QTY	PART NAME 1 2 3 4 5 6 (PRODUCT LEVEL)	SEE PAGE
	1	1	**091-0079**	2	PLUG	
Y	2	1	*174-9730*	1	PEDAL GP-BRAKE	619
Y	3	1	**174-9755**	1	CAB GP	550
M	4	1	**8T-4189**	4	BOLT (M8X1.25X20MM)	
	5	1	**8T-4224**	4	WASHER-HARD (8.8X16X2MM THK)	

M-METRIC PART
Y-SEPARATE ILLUSTRATION

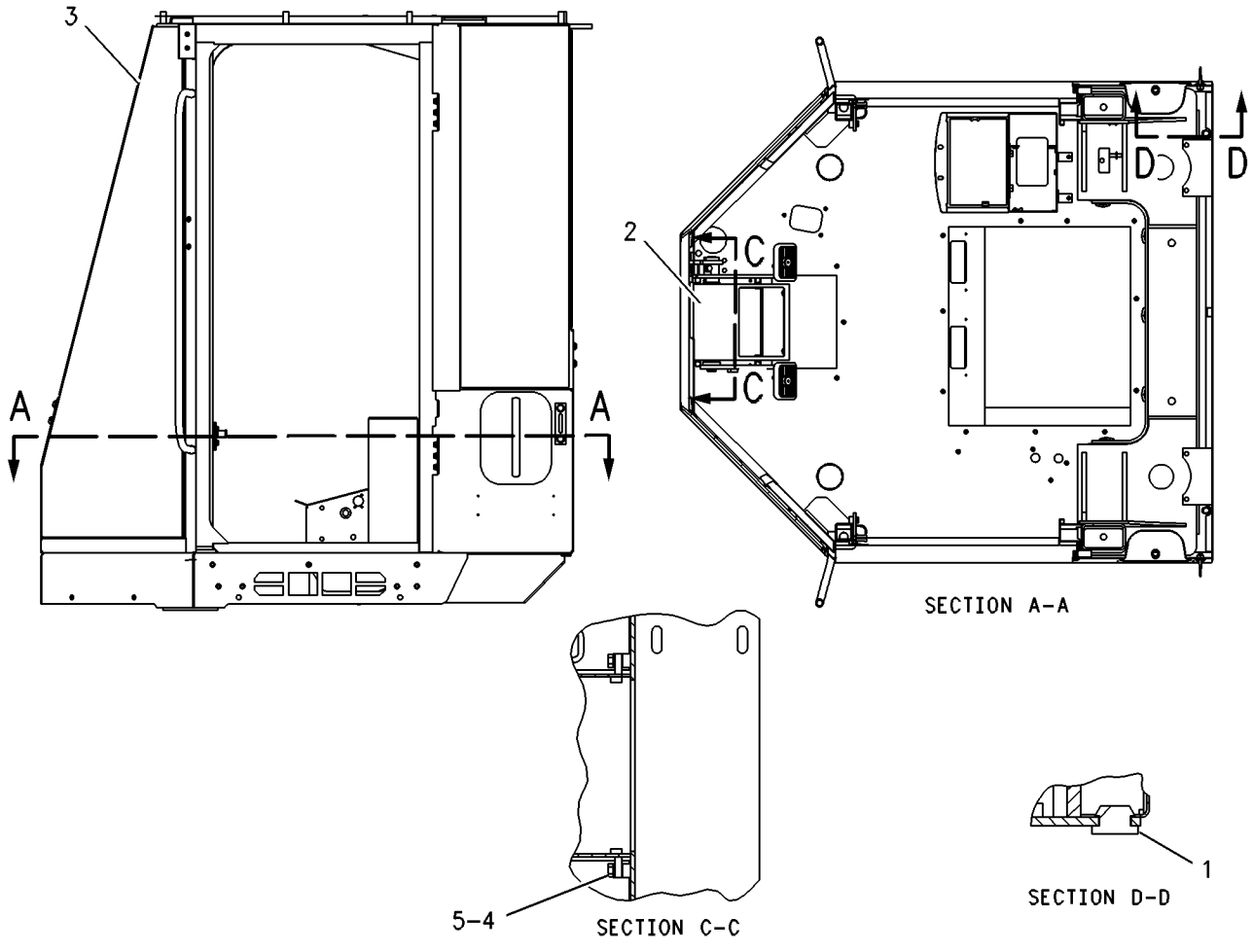

GRAPHIC #1 g00677502

OPERATOR STATION

174-9764 ROPS GP-OPEN

S/N: RTA1-UP; RBB1-UP
PART OF 205-0520 CANOPY GP-OPEN ROPS
AN ATTACHMENT

SMCS-7323 **i01554259**

NOTE	REF NO	GRAPHIC REF	PART NUMBER	QTY	PART NAME 1 2 3 4 5 6 (PRODUCT LEVEL)	SEE PAGE
	1	1	**118-7255**	1	COVER	
Y	2	1	*174-9730*	1	PEDAL GP-BRAKE	619
	3	1	**174-9763**	1	CANOPY AS	
	4	1	**8T-4121**	2	WASHER-HARD (11X21X2.5MM THK)	
M	5	1	**8T-4137**	2	BOLT (M10X1.5X20MM)	
M	6	1	**8T-4189**	4	BOLT (M8X1.25X20MM)	
	7	1	**8T-4224**	4	WASHER-HARD (8.8X16X2MM THK)	

M-METRIC PART
Y-SEPARATE ILLUSTRATION

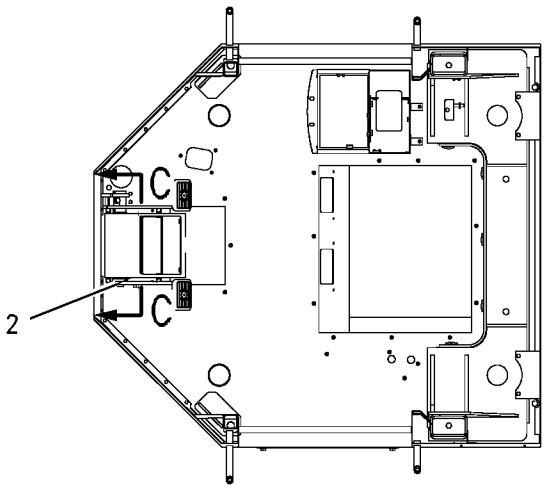

SECTION A-A

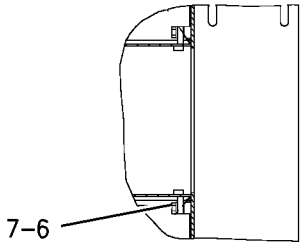

SECTION C-C

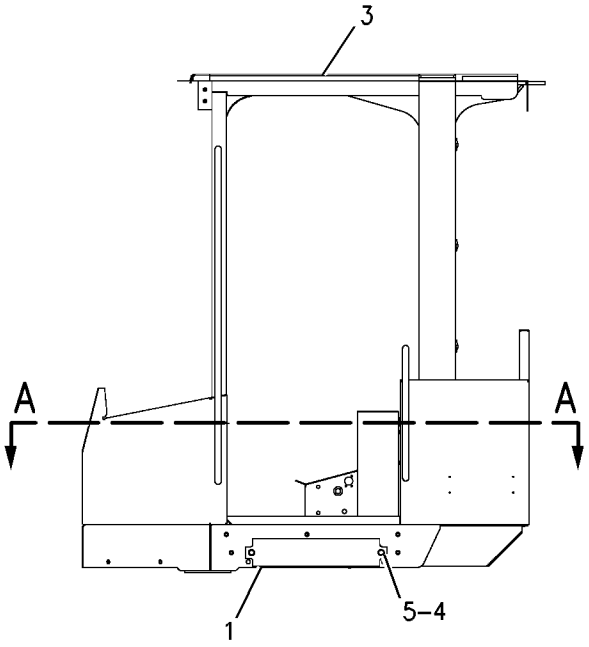

GRAPHIC #1 g00669460

OPERATOR STATION

118-7250 SCREEN GP-SUN

S/N: RTA1-UP; RBB1-UP

AN ATTACHMENT

SMCS-7165 **i01850342**

NOTE	REF NO	GRAPHIC REF	PART NUMBER	QTY	PART NAME 1 2 3 4 5 6 (PRODUCT LEVEL)	SEE PAGE
	1	1	**119-2073**	2	HOOK-RETAINER	

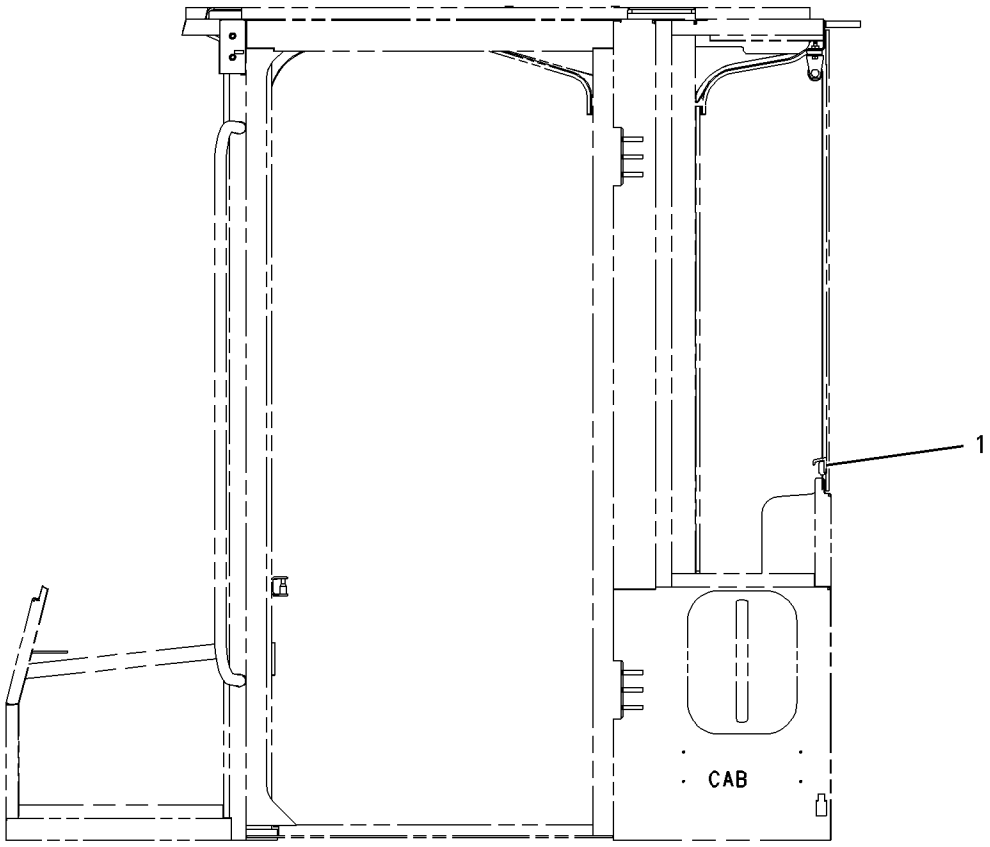

LEFT SIDE VIEW

GRAPHIC #1 g00942564

OPERATOR STATION

107-5977 SEAT & MOUNTING GP

S/N: RTA1-UP; RBB1-UP
AN ATTACHMENT

SMCS-7312 **i01132769**

NOTE	REF NO	GRAPHIC REF	PART NUMBER	QTY	PART NAME 1 2 3 4 5 6 (PRODUCT LEVEL)	SEE PAGE
M	1	1	**113-9232**	4	BOLT-HEX HEAD (8X1.25X30 MM)	
	2	1	**118-7236**	1	PLATE	
Y	3	1	**119-8263**	1	SEAT GP-SUSPENSION	638
Y	4	1	**129-7253**	1	SEAT BELT GP	629
M	5	1	**9X-2041**	4	SCREW-TRUSS HEAD (M10X1.5X20MM)	

M-METRIC PART
Y-SEPARATE ILLUSTRATION

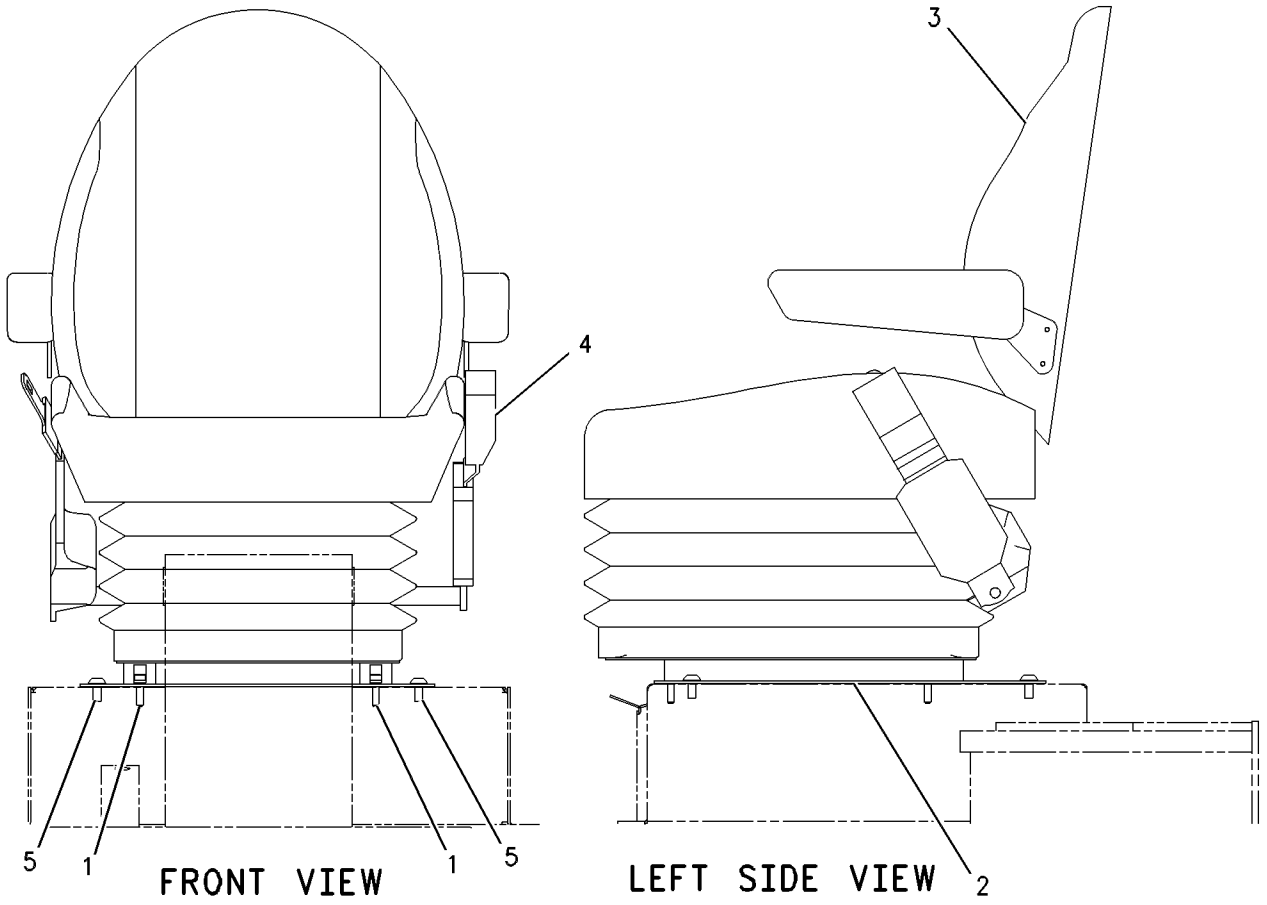

GRAPHIC #1 g00599744

OPERATOR STATION

107-5978 SEAT & MOUNTING GP

S/N: RTA1-UP; RBB1-UP
AN ATTACHMENT

SMCS-7312 **i01131238**

NOTE	REF NO	GRAPHIC REF	PART NUMBER	QTY	PART NAME 1 2 3 4 5 6 (PRODUCT LEVEL)	SEE PAGE
Y	1	1	**8Y-6977**	1	SEAT GP-SUSPENSION	635
M	2	1	**113-9232**	2	BOLT-HEX HEAD (8X1.25X30 MM)	
	3	1	**8T-4121**	4	WASHER-HARD (2.5MM THK)	
M	4	1	**9X-2125**	4	BOLT-LOCKING (M10X1.5X25MM)	

M-METRIC PART
Y-SEPARATE ILLUSTRATION

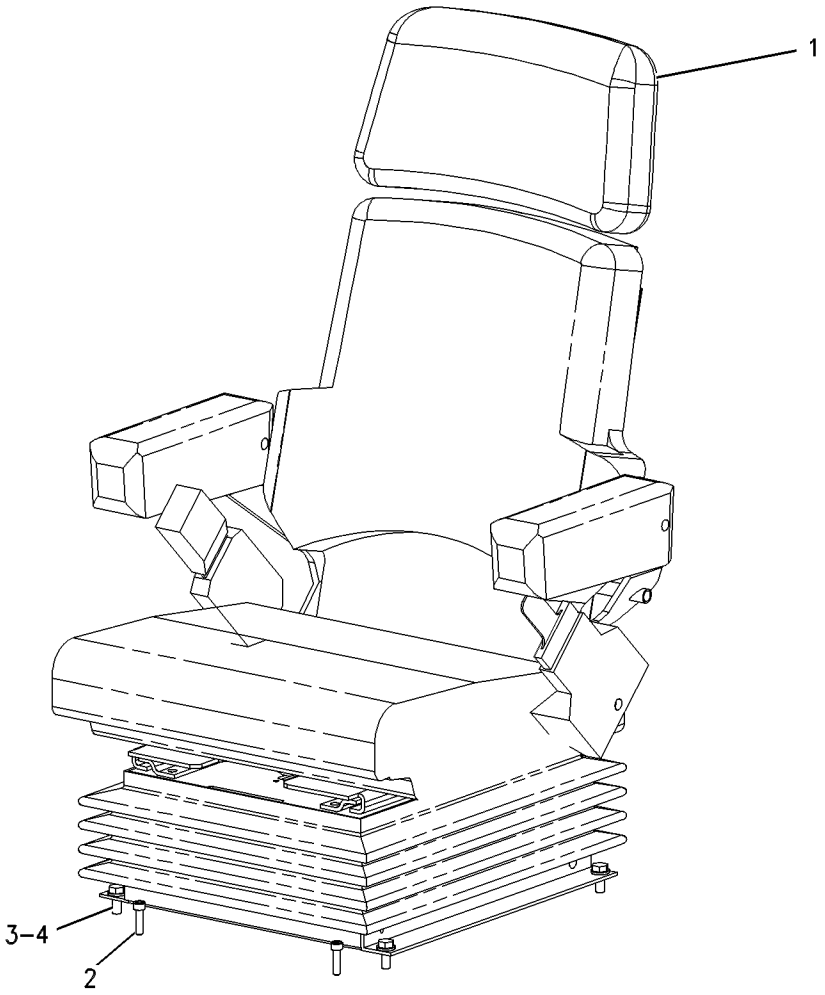

GRAPHIC #1 g00663499

OPERATOR STATION

118-0817 SEAT & MOUNTING GP

S/N: RTA1-UP; RBB1-UP
AN ATTACHMENT

SMCS-7312 **i00717812**

NOTE	REF NO	GRAPHIC REF	PART NUMBER	QTY	PART NAME 1 2 3 4 5 6 (PRODUCT LEVEL)	SEE PAGE
Y	1	1	**108-2192**	1	SEAT GP-SUSPENSION	636
Y	2	1	**129-7253**	1	SEAT BELT GP	629
M	3	1	**113-9232**	4	BOLT-HEX HEAD (8X1.25X30 MM)	
	4	1	**118-7236**	1	PLATE	
M	5	1	**9X-2041**	4	SCREW-TRUSS HEAD (M10X1.5X20MM)	

M-METRIC PART
Y-SEPARATE ILLUSTRATION

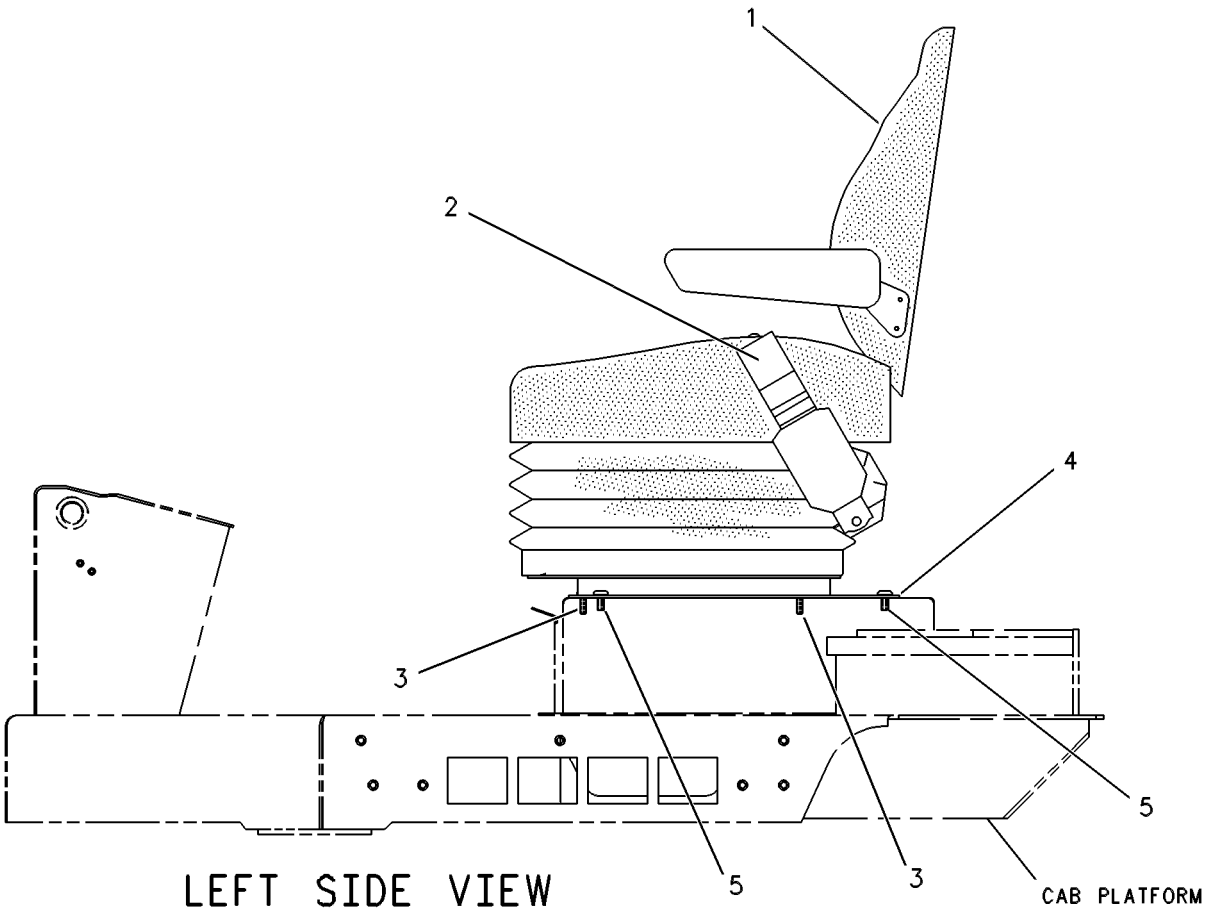

GRAPHIC #1 g00131414

OPERATOR STATION

118-0819 SEAT & MOUNTING GP

S/N: RTA1-UP; RBB1-UP
AN ATTACHMENT

SMCS-7312 **i01224275**

NOTE	REF NO	GRAPHIC REF	PART NUMBER	QTY	PART NAME 1 2 3 4 5 6 (PRODUCT LEVEL)	SEE PAGE
	1	1	**3T-2662**	1	CIRCUIT BREAKER AS (15 AMP) (AIR SEAT)	
		1	**6V-8376**	2	SCREW-MACHINE (8-32X.25IN)	
		1	**9B-7233**	2	LOCKWASHER (NO.8)	
	2	1	**161-9289**	4	BLOCK-SLIDER	
	3	1	**068-4209**	2	SCREW (8-32X0.75IN)	
M	4	1	**113-9232**	2	BOLT-HEX HEAD (8X1.25X30 MM)	
YC	5	1	**150-7718**	1	SUSPENSION GP-SEAT	646
Y	6	1	*119-7128*	1	SEAT GP	634
	7	1	**4F-4879**	1	BOLT (3/8-16X.5IN)	
	8	1	**8T-4121**	4	WASHER-HARD (2.5MM THK)	
M	9	1	**9X-2125**	4	BOLT-LOCKING (M10X1.5X25MM)	
	10	1	**173-5787**	4	SETSCREW	

C-CHANGE FROM PREVIOUS TYPE
M-METRIC PART
Y-SEPARATE ILLUSTRATION

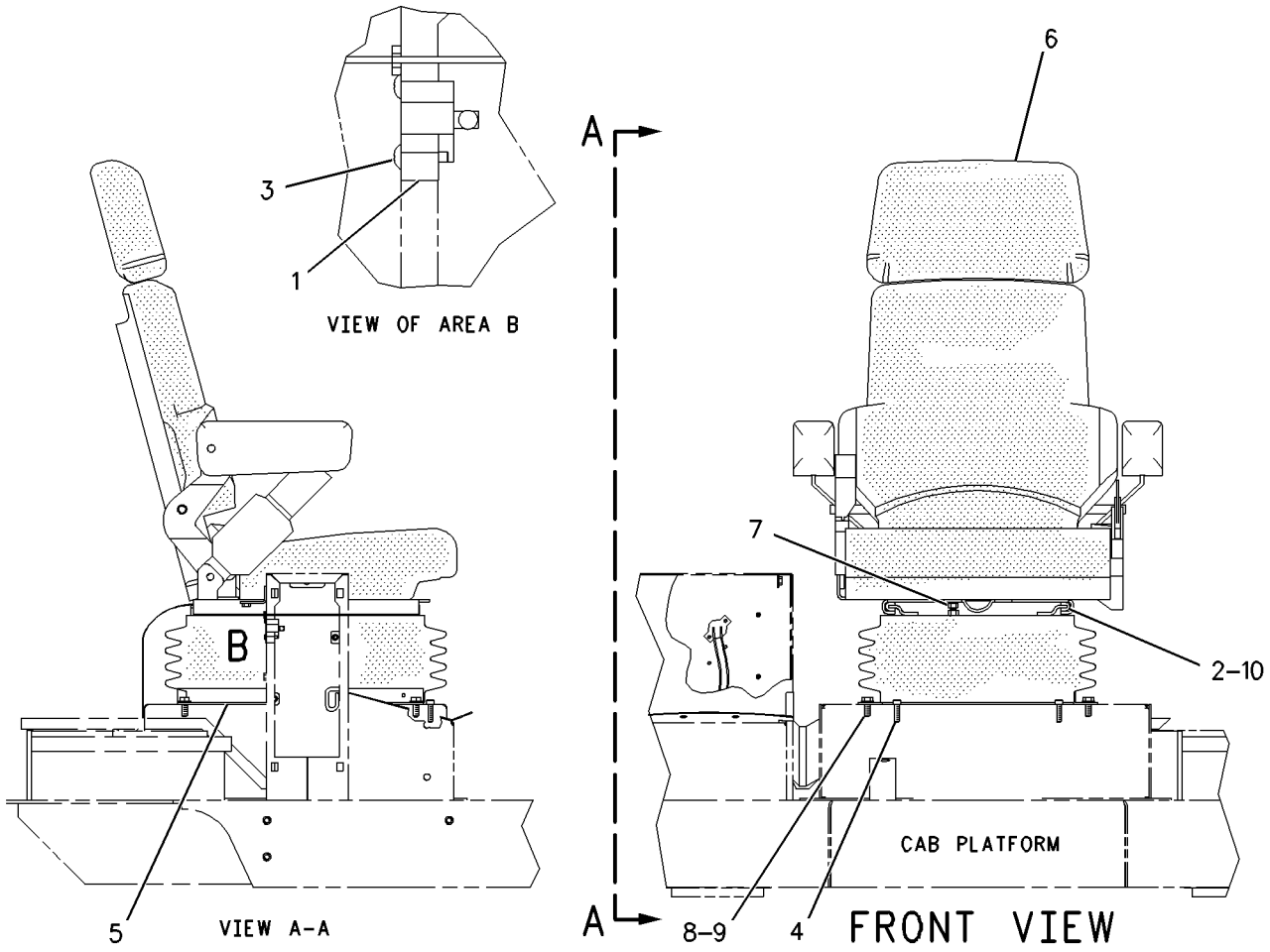

GRAPHIC #1 g00654461

129-7253 SEAT BELT GP

S/N: RTA1-UP; RBB1-UP
PART OF 107-5977, 118-0817 SEAT & MOUNTING GP
AN ATTACHMENT

SMCS-7327 **i00799314**

NOTE	REF NO	GRAPHIC REF	PART NUMBER	QTY	PART NAME 1 2 3 4 5 6 (PRODUCT LEVEL)	SEE PAGE
	1	1	**8S-0934**	1	LOCKNUT-FLANGE (7/16-20 THD)	
	2	1	**1J-6298**	1	BOLT (7/16-20X3.5IN)	
	3	1	**8S-4723**	1	BOLT (7/16-20X1.5IN)	

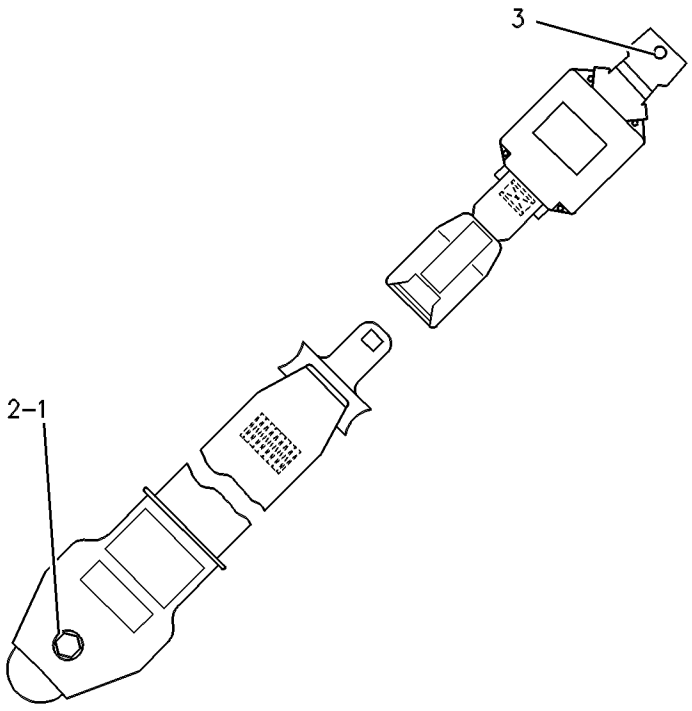

GRAPHIC #1 g00121683

OPERATOR STATION

156-1148 SEAT BELT GP–RETRACTABLE

S/N: RTA1-UP; RBB1-UP
PART OF 119-7128 SEAT GP, 8Y-6977 SEAT GP-SUSPENSION
AN ATTACHMENT

SMCS-7327 **i01204029**

NOTE	REF NO	GRAPHIC REF	PART NUMBER	QTY	PART NAME 1 2 3 4 5 6 (PRODUCT LEVEL)	SEE PAGE
	1	1	**8Y-5953**	1	BOLT-HEX (7/16-20X1.5IN)	
	2	1	**8T-5360**	1	WASHER (2.5MM THK)	
	3	1	**1A-4350**	1	BOLT (7/16-20X1.75IN)	
	4	1	**4D-6432**	1	LOCKNUT (7/16-20 THD)	

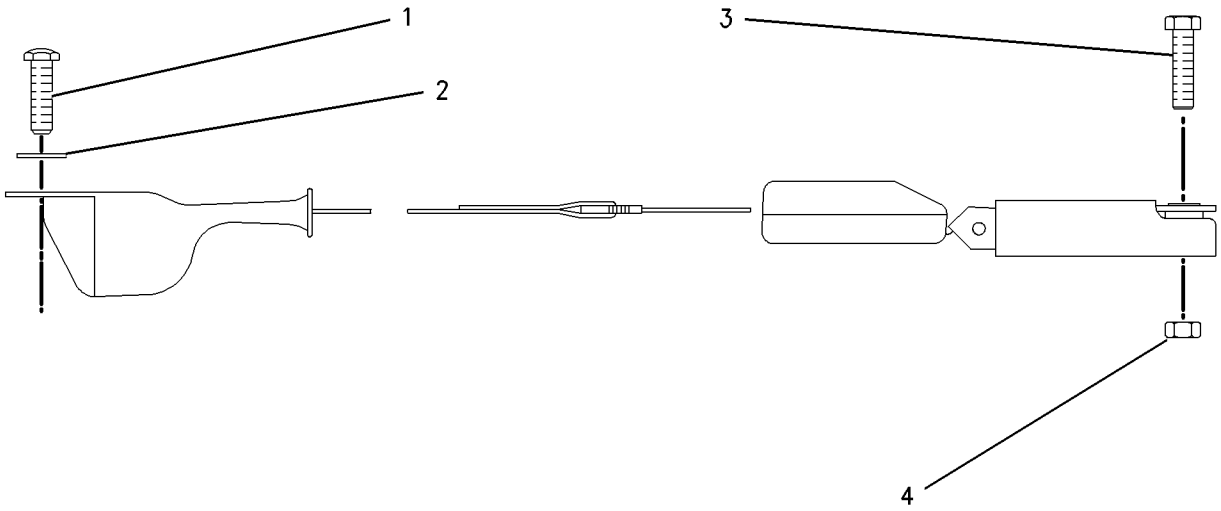

GRAPHIC #1 g00643863

MEMORANDA

OPERATOR STATION

8Y-6882 SEAT GP–CLOTH

S/N: RTA1-UP; RBB1-UP
LUMBAR
PART OF 119-7128 SEAT GP, 8Y-6977 SEAT GP-SUSPENSION
AN ATTACHMENT

SMCS-7312 **i01299242**

NOTE	REF NO	GRAPHIC REF	PART NUMBER	QTY	PART NAME 1 2 3 4 5 6 (PRODUCT LEVEL)	SEE PAGE
Y	1	1	**108-8421**	1	PAN GP-BACKREST (BACK)	601
Y	2	1	*8Y-5992*	1	PAN GP-SEAT (BOTTOM)	602
L	3	1	**113-0899**	10	SCREW-FLAT HEAD (6-20X.5 IN)	
	4	1	**119-7127**	1	CUSHION AS (BACK)	
B	5	1	**061-8803**	4	SHIM (1.52MM THK)	
S	6	1	**9L-7469**	2	LOCKPIN	
	7	1	**8Y-5929**	1	PLATE AS-SLIDE	
		1	**4K-9097**	7	NUT-WELD (5/16-18 THD)	
	8	1	**8Y-5930**	1	BAR AS-SLIDE	
	9	1	**8Y-5931**	1	BAR AS-LATCH	
	10	1	**8S-7803**	2	RING-RETAINING	
	11	1	**8Y-5932**	1	LATCH AS	
	12	1	**8Y-5936**	1	SPRING	
	13	1	**095-0878**	1	PIN-SPRING	
	14	1	**8Y-6051**	2	SPACER (14.24MM THK)	
	15	1	**7B-7525**	2	BOLT-SOCKET HEAD (7/16-14X1.25 IN)	
	16	1	**8Y-5981**	2	BUSHING-BACKREST	
	17	1	**8Y-5937**	1	BRACKET AS-RH	
	18	1	**8Y-5938**	1	BRACKET AS-LH	
		1	**4D-6432**	1	LOCKNUT (7/16-20 THD)	
	19	1	**7U-4898**	6	SCREW (3/8-16X0.75 IN)	
	20	1	**2K-4973**	6	LOCKNUT (3/8-16 THD)	
	21	1	**8Y-5979**	1	PIN	
	22	1	**6V-2456**	2	RING-RETAINING	
	23	1	**8Y-5928**	2	SPRING	
	24	1	**2B-2695**	4	BOLT (5/16-18X.875 IN)	
JS	25	1	**8Y-5947**	4	FASTENER	
	26	1	**8Y-6833**	1	SPRING-RH	
	27	1	**8Y-6834**	1	SPRING-LH	
	28	1	**1C-0569**	2	BOLT (5/16-18X.5 IN)	
JZ	29	1		1	CUSHION AS (BOTTOM)	
LZ	30	1		1	KNOB-SEAT TILT (UPPER)	
LZ	31	1		1	KNOB-SLIDE (UPPER)	
LZ	32	1		1	KNOB-SLIDE (LOWER)	
LZ	33	1		1	KNOB-BACK TILT (UPPER)	
LZ	34	1		1	KNOB-BACK TILT (LOWER)	
LZ	35	1		1	KNOB-SEAT TILT (LOWER)	
SZ	36	1		1	PAN AS (TILT)	
					AVAILABLE REPAIR KIT(S):	
S			**8Y-6933**	1	KIT-TILT PAN	
L			**112-4577**	1	KIT-SEAT KNOB	
J			**119-7141**	1	KIT-SEAT CUSHION	

B-USE AS REQUIRED
J-REPAIR KIT MARKED J INCLUDES PART(S) MARKED J
L-REPAIR KIT MARKED L INCLUDES PART(S) MARKED L
S-REPAIR KIT MARKED S INCLUDES PART(S) MARKED S
Y-SEPARATE ILLUSTRATION
Z-NOT SERVICED SEPARATELY

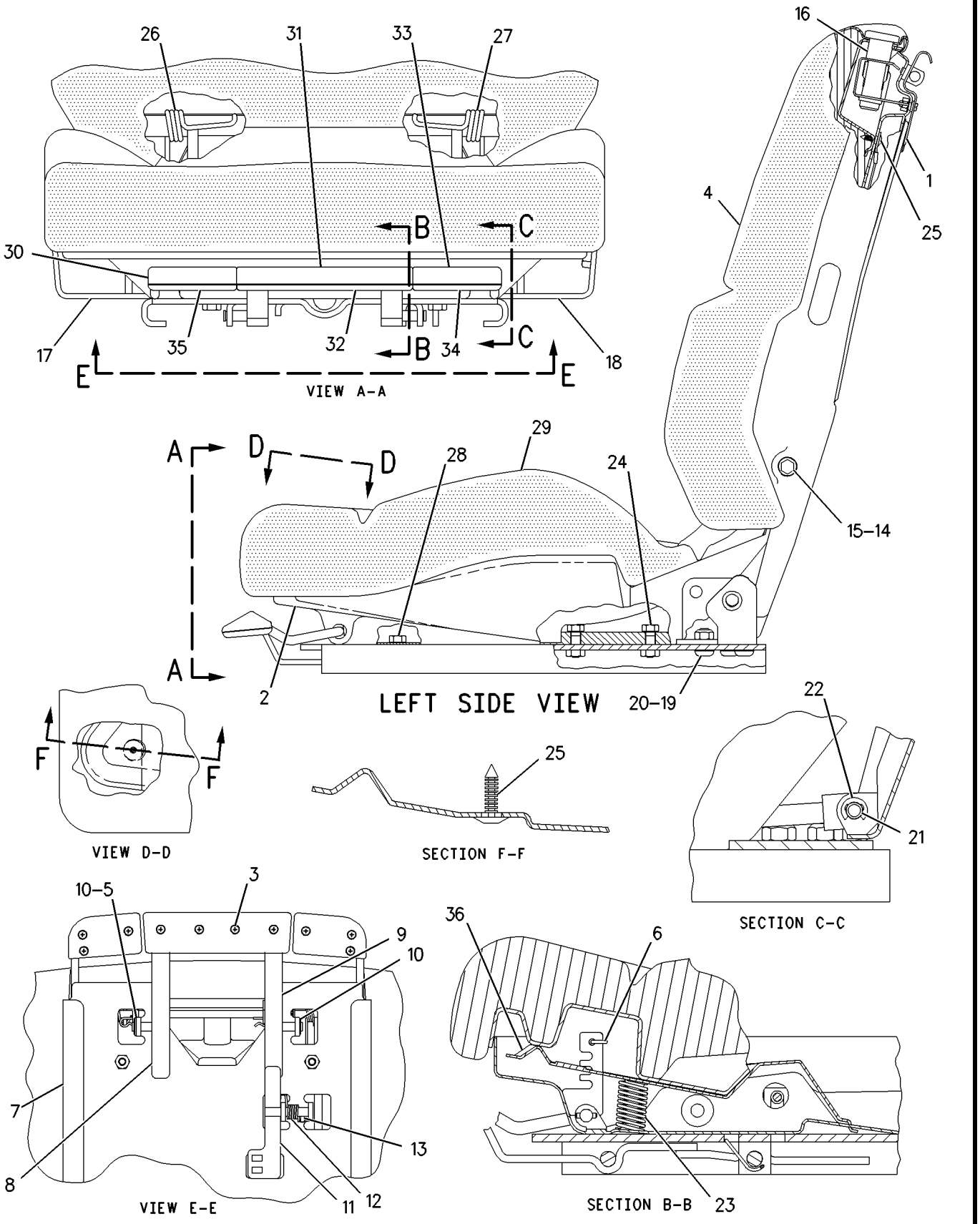

GRAPHIC #1 g00688544

OPERATOR STATION

119-7128 SEAT GP

S/N: RTA1-UP; RBB1-UP
PART OF 118-0819 SEAT & MOUNTING GP
AN ATTACHMENT

SMCS-7312 **i01171767**

NOTE	REF NO	GRAPHIC REF	PART NUMBER	QTY	PART NAME 1 2 3 4 5 6 (PRODUCT LEVEL)	SEE PAGE
Y	1	1	**8Y-6883**	1	EXTENSION GP-BACKREST	567
Y	2	1	**8Y-6882**	1	SEAT GP (CLOTH)	632
Y	3	1	**8Y-6000**	1	ARMREST GP	545
Y	4	1	**8Y-4200**	1	ARMREST GP	543
CY	5	1	**156-1148**	1	SEAT BELT GP	630

C-CHANGE FROM PREVIOUS TYPE
Y-SEPARATE ILLUSTRATION

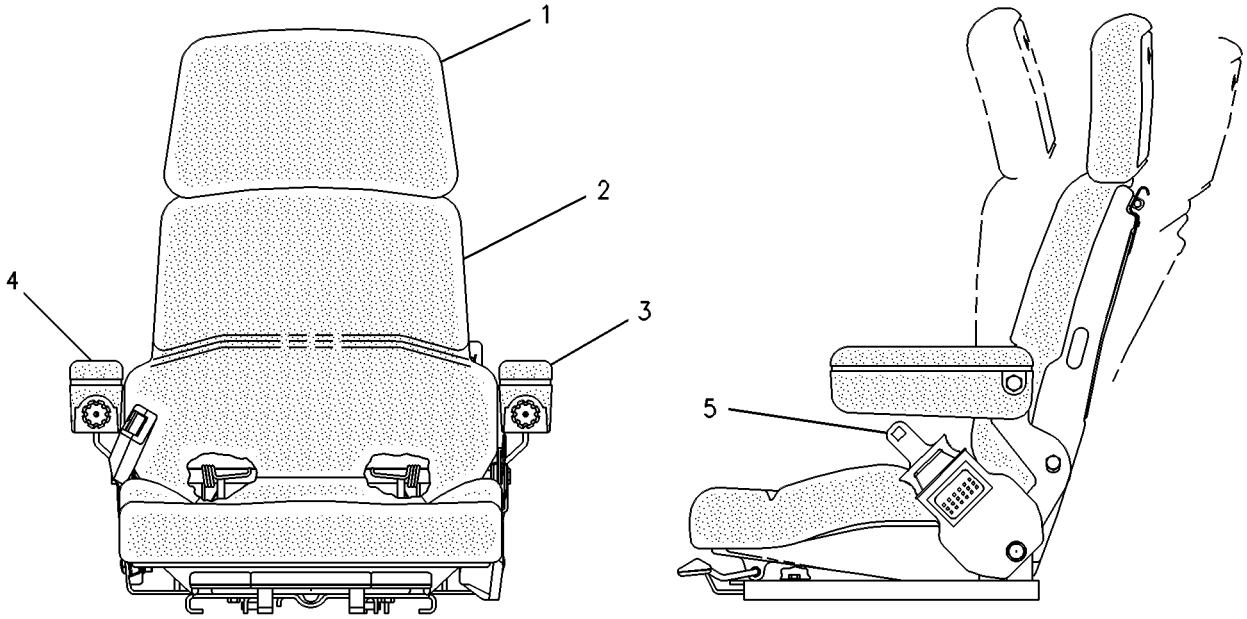

FRONT VIEW RIGHT SIDE VIEW

GRAPHIC #1 g00089006

OPERATOR STATION

8Y-6977 SEAT GP-SUSPENSION

S/N: RTA1-UP; RBB1-UP
PART OF 107-5978 SEAT & MOUNTING GP
AN ATTACHMENT

SMCS-7324, 7336 **i01132739**

NOTE	REF NO	GRAPHIC REF	PART NUMBER	QTY	PART NAME 1 2 3 4 5 6 (PRODUCT LEVEL)	SEE PAGE
Y	1	1	**8Y-6883**	1	EXTENSION GP-BACKREST	567
Y	2	1	**8Y-6882**	1	SEAT GP	632
Y	3	1	**8Y-6000**	1	ARMREST GP	545
Y	4	1	**8Y-4200**	1	ARMREST GP	543
Y	5	1	**108-4082**	1	SUSPENSION GP-SEAT	644
CY	6	1	**156-1148**	1	SEAT BELT GP	630
J	7	1	**4F-4879**	1	BOLT (3/8-16X.5IN)	
					AVAILABLE REPAIR KIT(S):	
J			**149-4745**	1	KIT-SLIDER BLOCK	
					(INCLUDES 4 BLOCKS)	

C-CHANGE FROM PREVIOUS TYPE
J-KIT MARKED J INCLUDES PART MARKED J
Y-SEPARATE ILLUSTRATION

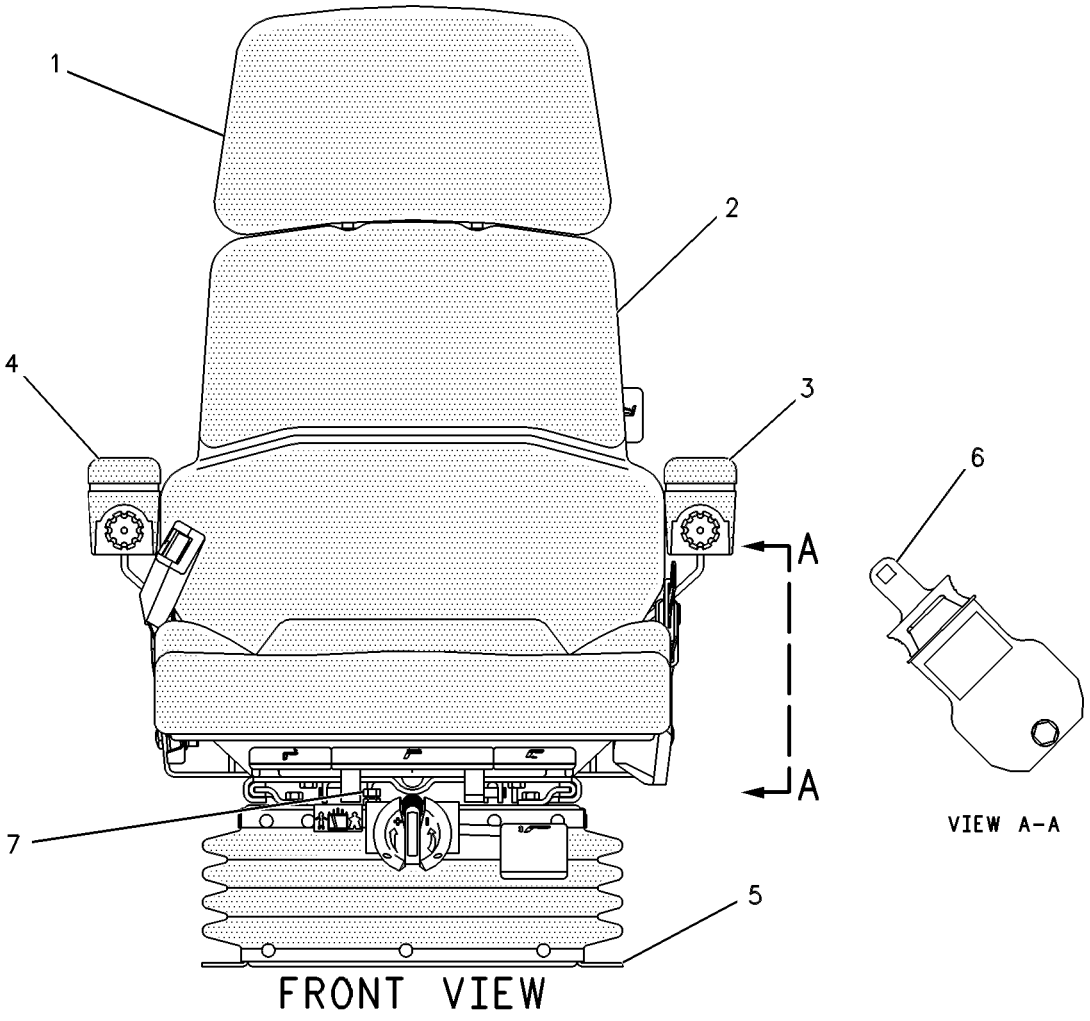

GRAPHIC #1 g00088970

OPERATOR STATION

108-2192 SEAT GP-SUSPENSION

S/N: RTA1-UP; RBB1-UP
VINYL
PART OF 118-0817 SEAT & MOUNTING GP
AN ATTACHMENT

SMCS-7324, 7336 **i01084076**

NOTE	REF NO	GRAPHIC REF	PART NUMBER	QTY	PART NAME 1 2 3 4 5 6 (PRODUCT LEVEL)	SEE PAGE
J	1	1	**110-5054**	1	KIT-COVER	
J	2	1	**110-5058**	1	KIT-COVER	
J	3	1	**110-5059**	1	KIT-FOAM	
J	4	1	**110-5056**	1	KIT-FOAM	
	5	1	**110-5060**	1	KIT-ARMREST-LH	
	6	1	**110-5061**	1	KIT-ARMREST-RH	
J	7	1	**110-5052**	1	KIT-FRAME AS	
	8	1	**7I-6756**	1	KIT-CABLE ADJUSTER	
	9	1	**110-5062**	1	KIT-SPRING	
	10	1	**110-5064**	1	KIT-LEVER AS	
	11	1	**110-5067**	1	KIT-HANDLE	
	12	1	**110-5074**	1	KIT-SUSPENSION BEARING	
	13	1	**110-5063**	1	KIT-HEIGHT RISER	
	14	1	**110-5072**	1	KIT-SLIDE RAIL	
	15	1	**110-5065**	1	KIT-DAMPER	
	16	1	**110-5073**	1	SUSPENSION AS	
	17	1	**128-2678**	1	KIT-TETHER	
	18	1	**110-5068**	1	KIT-ADJUSTER	
	19	1	**110-5066**	1	KIT-BUMPSTOP	
	20	1	**110-5071**	1	KIT-SUSPENSION COVER	
					AVAILABLE REPAIR KIT(S):	
J			**110-5051**	1	KIT-UPPER AS	

J-KIT(S) MARKED J INCLUDES PART(S) MARKED J

108-2192 SEAT GP-SUSPENSION *(contd.)* i01084076

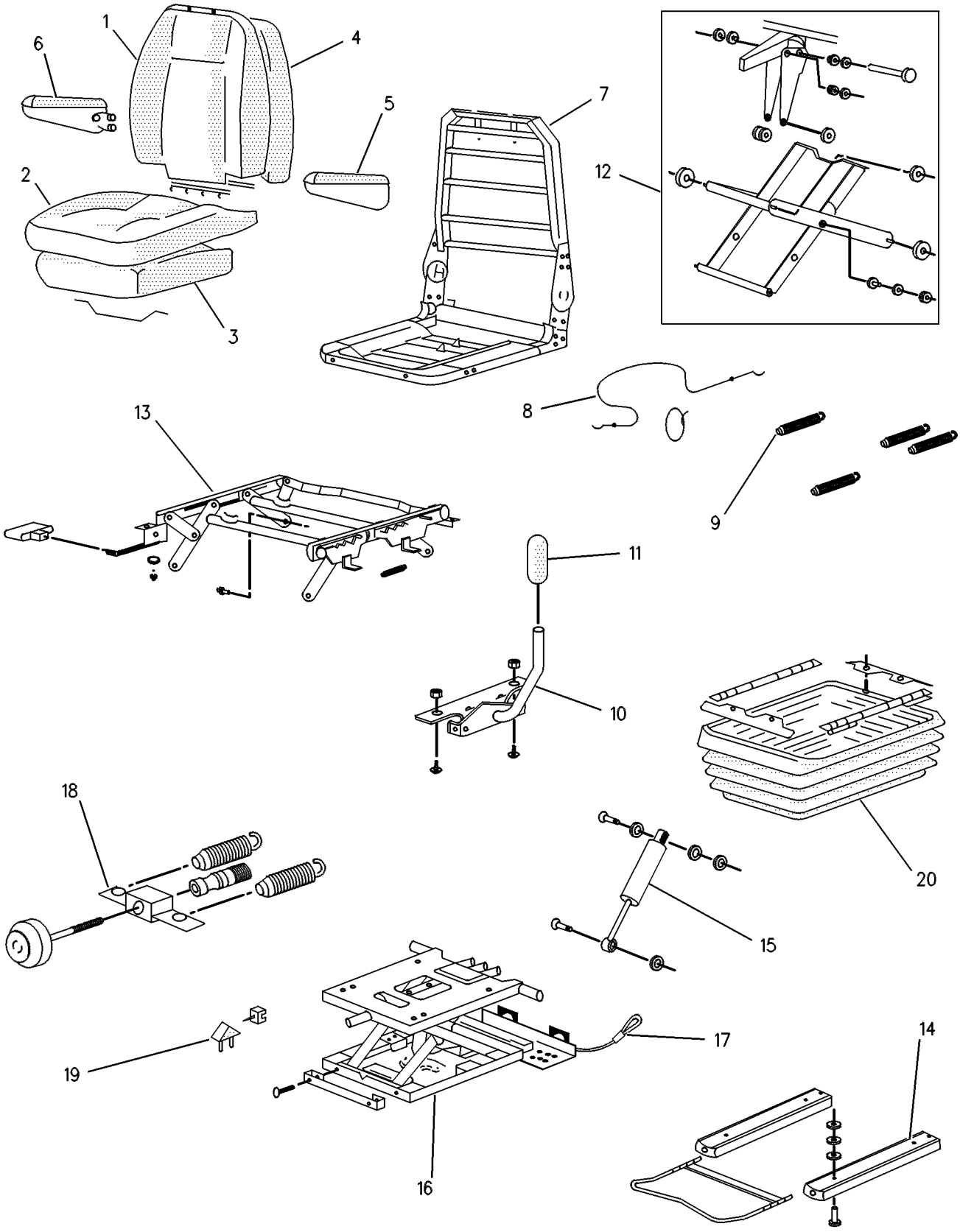

GRAPHIC #1 g00120293

OPERATOR STATION

119-8263 SEAT GP-SUSPENSION

S/N: RTA1-UP; RBB1-UP
GRAY FABRIC
PART OF 107-5977 SEAT & MOUNTING GP
AN ATTACHMENT

SMCS-7324, 7336 **i01132771**

NOTE	REF NO	GRAPHIC REF	PART NUMBER	QTY	PART NAME 1 2 3 4 5 6 (PRODUCT LEVEL)	SEE PAGE
	1	1	**120-7733**	1	KIT-COVER	
	2	1	**120-7734**	1	KIT-COVER	
	3	1	**110-5059**	1	KIT-FOAM	
	4	1	**110-5056**	1	KIT-FOAM	
	5	1	**110-5060**	1	KIT-ARMREST-LH	
	6	1	**110-5061**	1	KIT-ARMREST-RH	
	7	1	**110-5052**	1	KIT-FRAME AS	
	8	1	**7I-6756**	1	KIT-CABLE ADJUSTER	
	9	1	**110-5062**	1	KIT-SPRING	
	10	1	**110-5064**	1	KIT-LEVER AS	
	11	1	**120-7732**	1	KIT-HANDLE	
	12	1	**110-5074**	1	KIT-SUSPENSION BEARING	
	13	1	**110-5063**	1	KIT-HEIGHT RISER	
	14	1	**110-5072**	1	KIT-SLIDE RAIL	
	15	1	**110-5065**	1	KIT-DAMPER	
	16	1	**110-5073**	1	SUSPENSION AS	
	17	1	**128-2678**	1	KIT-TETHER	
	18	1	**110-5068**	1	KIT-ADJUSTER	
	19	1	**110-5066**	1	KIT-BUMPSTOP	
	20	1	**110-5071**	1	KIT-SUSPENSION COVER	

119-8263 SEAT GP-SUSPENSION *(contd.)* i01132771

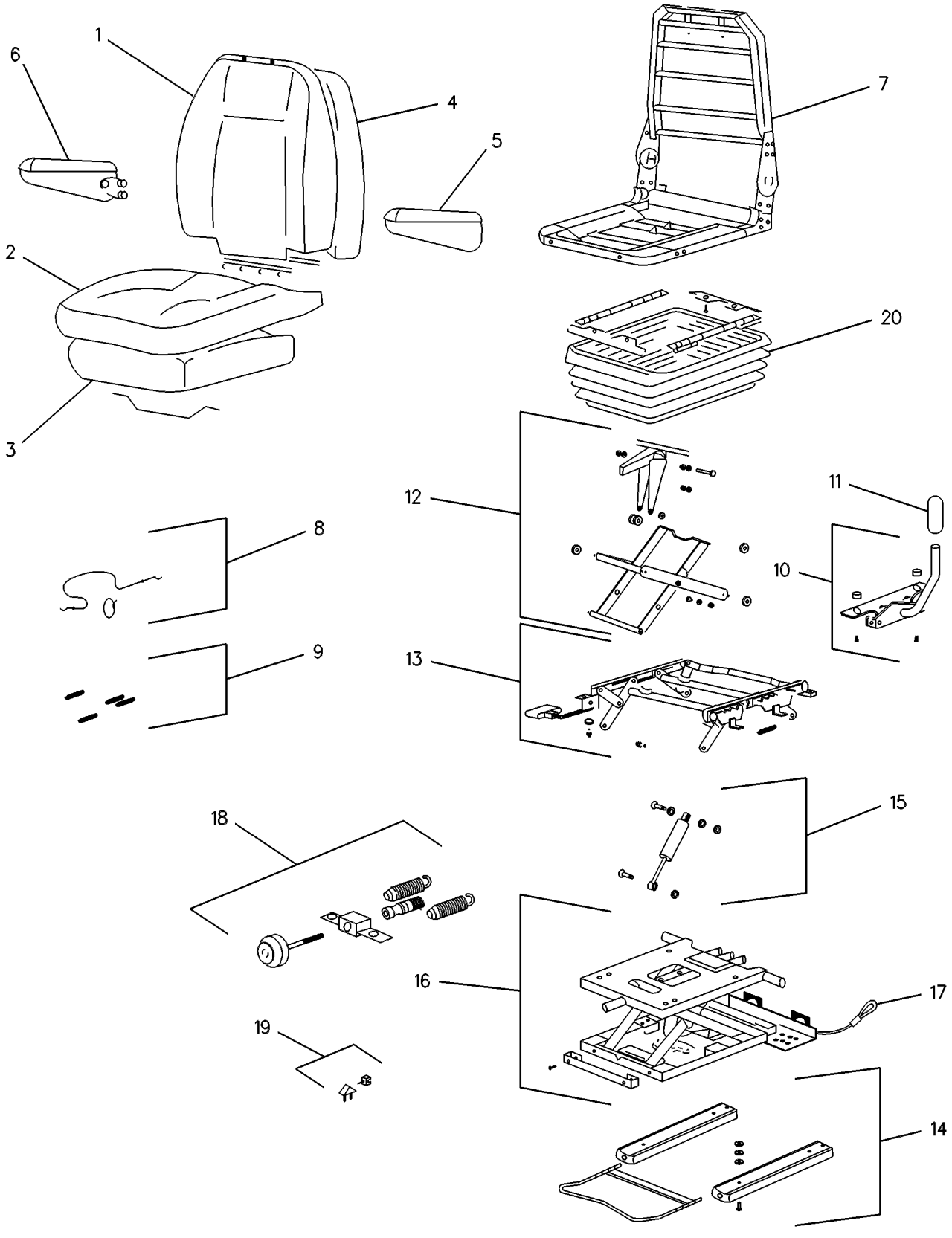

GRAPHIC #1 g00131422

OPERATOR STATION

174-2213 SKIRT GP-CAB

S/N: RTA1-UP; RBB1-UP
VERSALINK
PART OF 190-4644 CANOPY AR-OPEN ROPS
AN ATTACHMENT

SMCS-7301 **i01219606**

NOTE	REF NO	GRAPHIC REF	PART NUMBER	QTY	PART NAME 1 2 3 4 5 6 (PRODUCT LEVEL)	SEE PAGE
	1	1	**128-0782**	1	SHEET AS	
	2	1	**132-3543**	1	STRAP AS	
	3	1	**162-1981**	1	SHEET AS	
	4	1	**162-1982**	1	SHEET AS	
	5	1	**162-1983**	1	SHEET AS	
	6	1	**162-1984**	1	SHEET AS	
	7	1	**174-2211**	1	SHEET AS	
	8	1	**8T-4121**	23	WASHER-HARD (2.5MM THK)	
M	9	1	**8T-4137**	23	BOLT (M10X1.50X20MM)	

M-METRIC PART

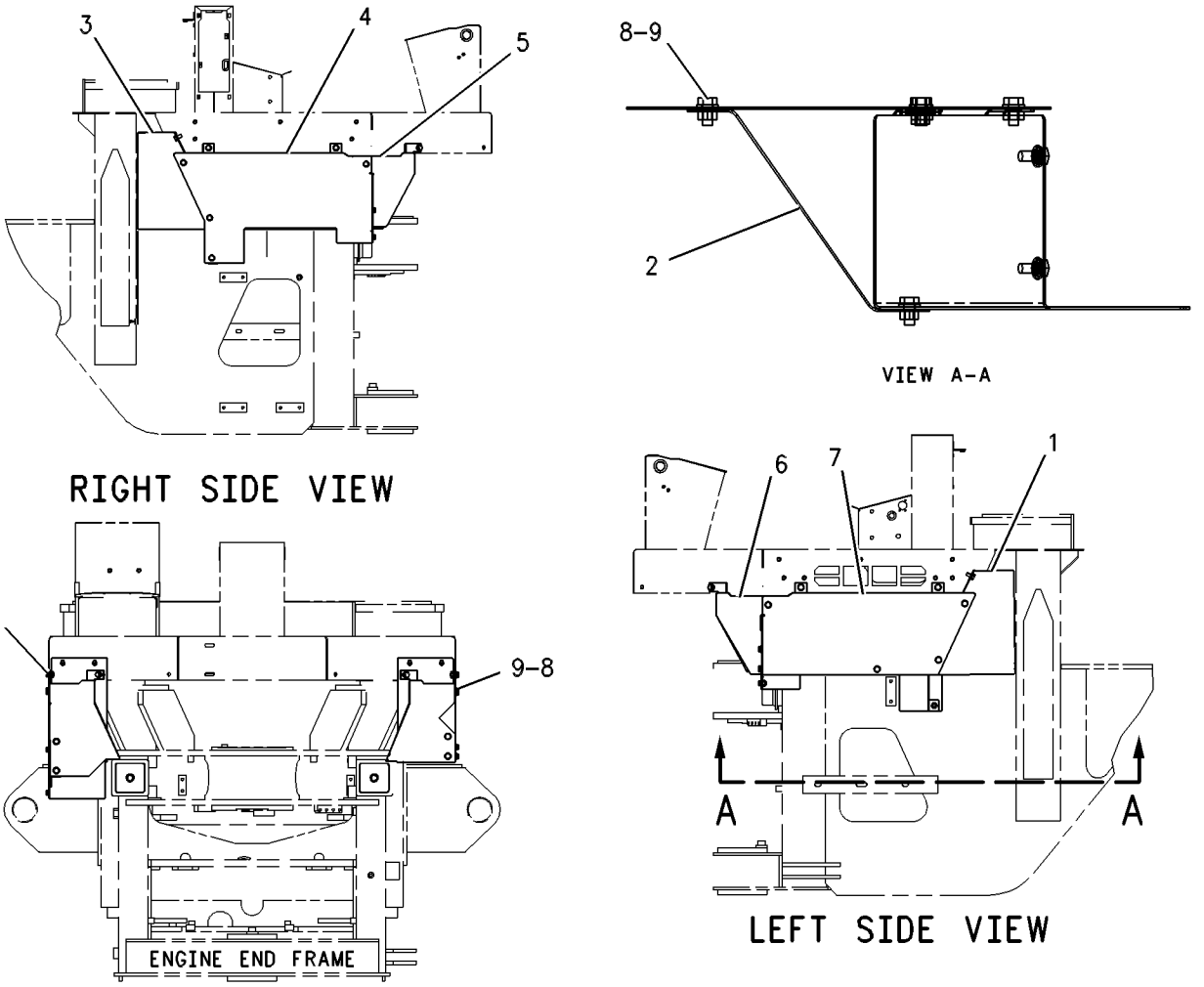

GRAPHIC #1 g00637750

OPERATOR STATION

174-2215 SKIRT GP-CAB

S/N: RTA1-UP; RBB1-UP
VERSALINK
PART OF 190-4632 CAB AR-ENCLOSED ROPS, 216-6907 OPERATOR AR
AN ATTACHMENT

SMCS-7301 **i01219617**

NOTE	REF NO	GRAPHIC REF	PART NUMBER	QTY	PART NAME 1 2 3 4 5 6 (PRODUCT LEVEL)	SEE PAGE
	1	1	**128-0782**	1	SHEET AS	
	2	1	**128-0784**	1	SHEET AS	
	3	1	**132-3543**	1	STRAP AS	
	4	1	**162-1981**	1	SHEET AS	
	5	1	**162-1982**	1	SHEET AS	
	6	1	**162-1983**	1	SHEET AS	
	7	1	**162-1984**	1	SHEET AS	
	8	1	**8T-4121**	23	WASHER-HARD (2.5MM THK)	
M	9	1	**8T-4137**	23	BOLT (M10X1.50X20MM)	

M-METRIC PART

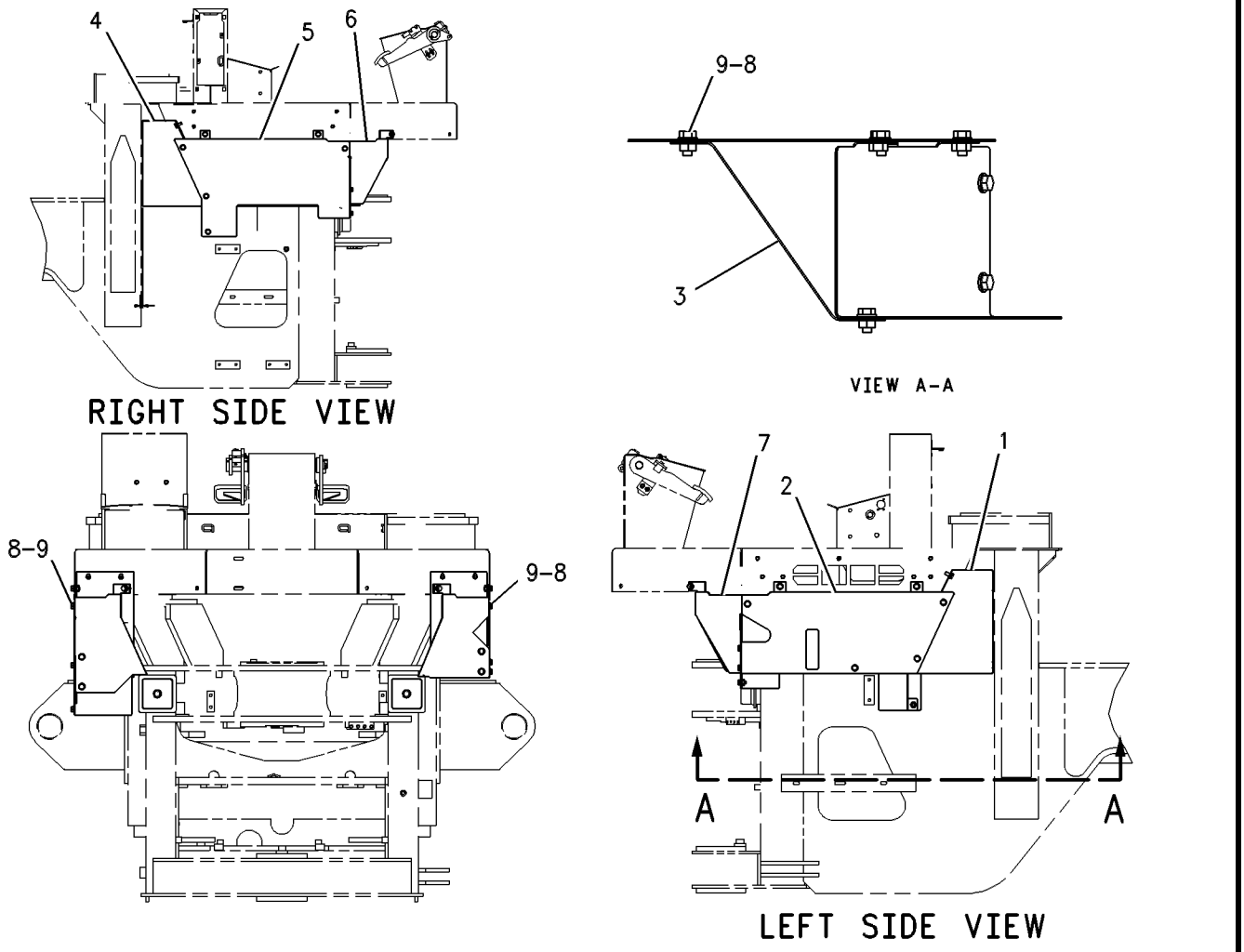

GRAPHIC #1 g00634153

OPERATOR STATION

118-0808 SUPPORT GP-SEAT

S/N: RTA1-UP; RBB1-UP
PART OF 190-4406 CANOPY GP-OPEN ROPS
AN ATTACHMENT

SMCS-7321 **i00717796**

NOTE	REF NO	GRAPHIC REF	PART NUMBER	QTY	PART NAME 1 2 3 4 5 6 (PRODUCT LEVEL)	SEE PAGE
	1	1	**119-8310**	1	COVER AS	
M		1	**8T-3490**	2	NUT-WELD (M10X1.5 THD)	
M		1	**8T-3612**	2	NUT-WELD (M8X1.25 THD)	
	2	1	**7X-0579**	11	WASHER-HARD (2.0MM THK)	
M	3	1	**8T-4908**	11	BOLT (M8X1.25X25MM)	

M-METRIC PART

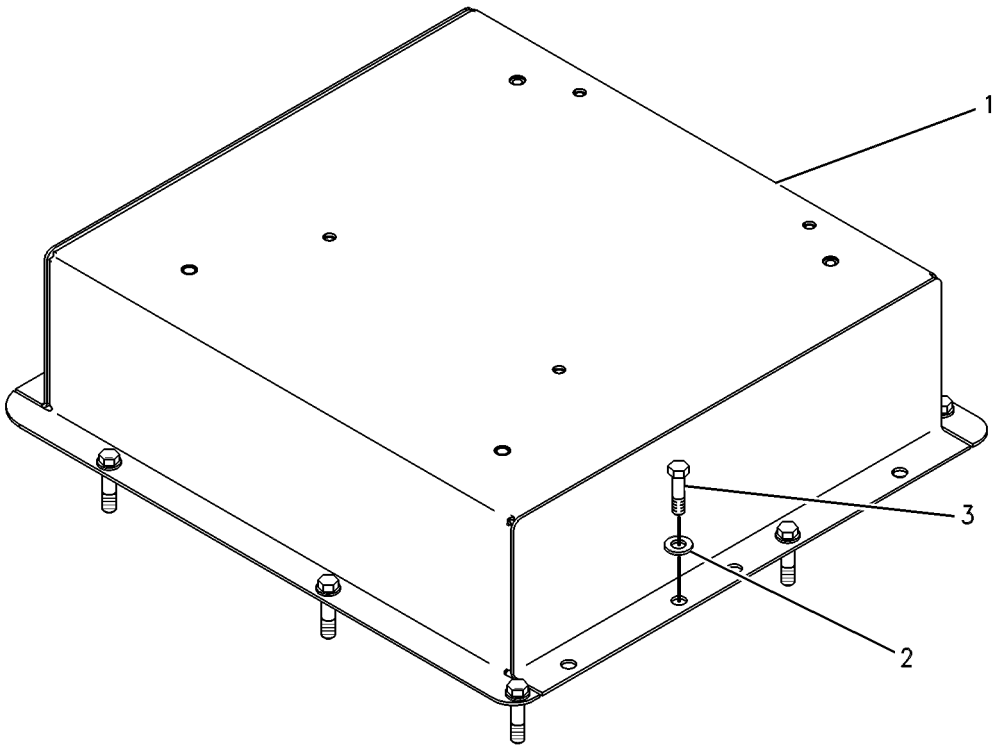

GRAPHIC #1 g00131738

OPERATOR STATION

172-5507 SUPPORT GP-SEAT

S/N: RTA1-UP; RBB1-UP
PART OF 216-6908 CAB AR
AN ATTACHMENT

SMCS-7321 **i01282132**

NOTE	REF NO	GRAPHIC REF	PART NUMBER	QTY	PART NAME 1 2 3 4 5 6 (PRODUCT LEVEL)	SEE PAGE
	1	1	**119-8310**	1	COVER AS	
		1	**7T-1099**	3	LINK	
	2	1	**7X-0579**	11	WASHER-HARD (2.0MM THK)	
M	3	1	**8T-4908**	11	BOLT (M8X1.25X25MM)	

M-METRIC PART

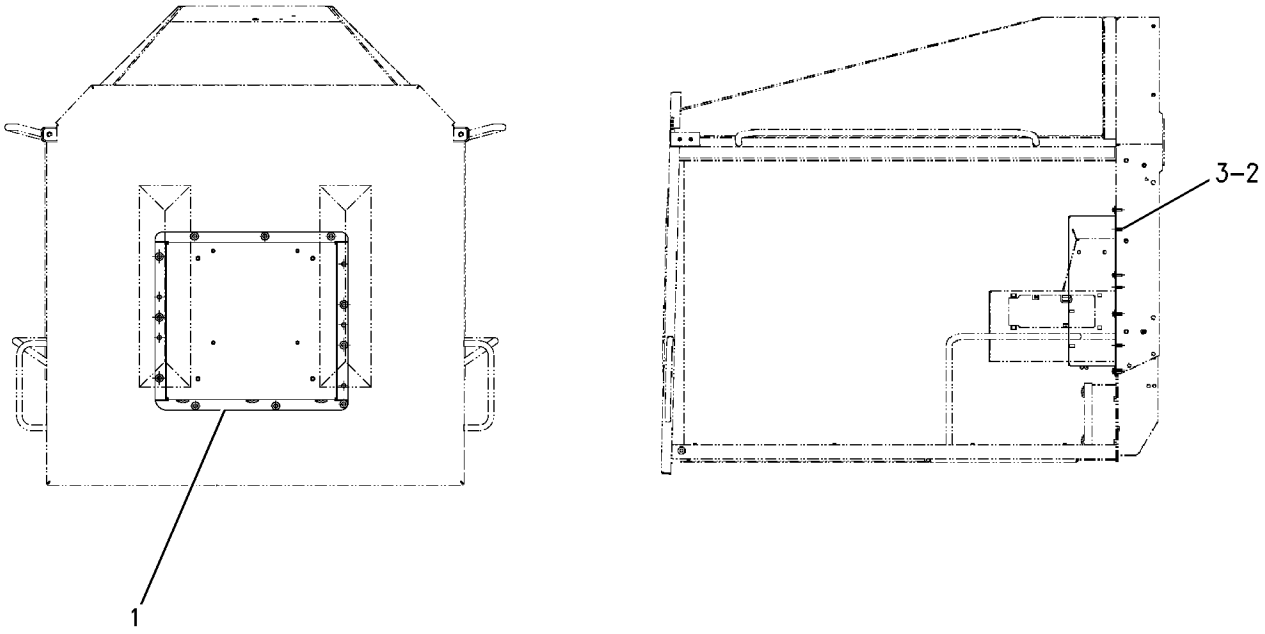

GRAPHIC #1 g00680267

OPERATOR STATION

108-4082 SUSPENSION GP-SEAT

S/N: RTA1-UP; RBB1-UP
PART OF 8Y-6977 SEAT GP-SUSPENSION
AN ATTACHMENT

SMCS-7324 **i01150854**

NOTE	REF NO	GRAPHIC REF	PART NUMBER	QTY	PART NAME 1 2 3 4 5 6 (PRODUCT LEVEL)	SEE PAGE
	1	1	**8Y-6022**	1	PLATE-SLIDE	
	2	1	**8Y-6023**	1	PLATE-SLIDE	
	3	1	**5M-3062**	2	BOLT (3/8-16X.75IN)	
	4	1	**5P-1075**	4	WASHER-HARD (3MM THK)	
	5	1	**2K-4973**	6	LOCKNUT (3/8-16 THD)	
	6	1	**1D-4677**	4	BOLT-ROUND HEAD (3/8-16X1 IN)	
	7	1	**8Y-6014**	1	HOUSING AS-LOWER	
	8	1	**8Y-6012**	1	ARM AS-SUSPENSION	
J	9	1	**101-0003**	23	FASTENER	
Y	10	1	**108-4582**	1	HOUSING GP-SEAT SUSPENSION	574
J	11	1	**108-4878**	3	NUT-PUSH	
	12	1	**8Y-5965**	1	ABSORBER-SHOCK	
	13	1	**5V-1497**	1	RETAINER	
	14	1	**4V-7884**	2	BEARING	
	15	1	**4V-8577**	4	BEARING	
	16	1	**8Y-6024**	2	SHAFT AS	
J	17	1	**111-5042**	3	FASTENER	
	18	1	**145-0326**	1	FILM-INSTRUCTION (SEAT ADJUSTMENT)	
					AVAILABLE REPAIR KIT(S):	
			101-4194	1	KIT-BELT TETHER	
					(INCLUDES 2 BELTS)	
			101-4195	1	KIT-SUSPENSION ROLLER	
					(INCLUDES 4 ROLLERS)	
J			**8Y-5944**	1	KIT-SUSPENSION BOOT	
					(INCLUDES BOOT & 2 RETAINERS)	

J-KIT MARKED J INCLUDES PART(S) MARKED J
Y-SEPARATE ILLUSTRATION

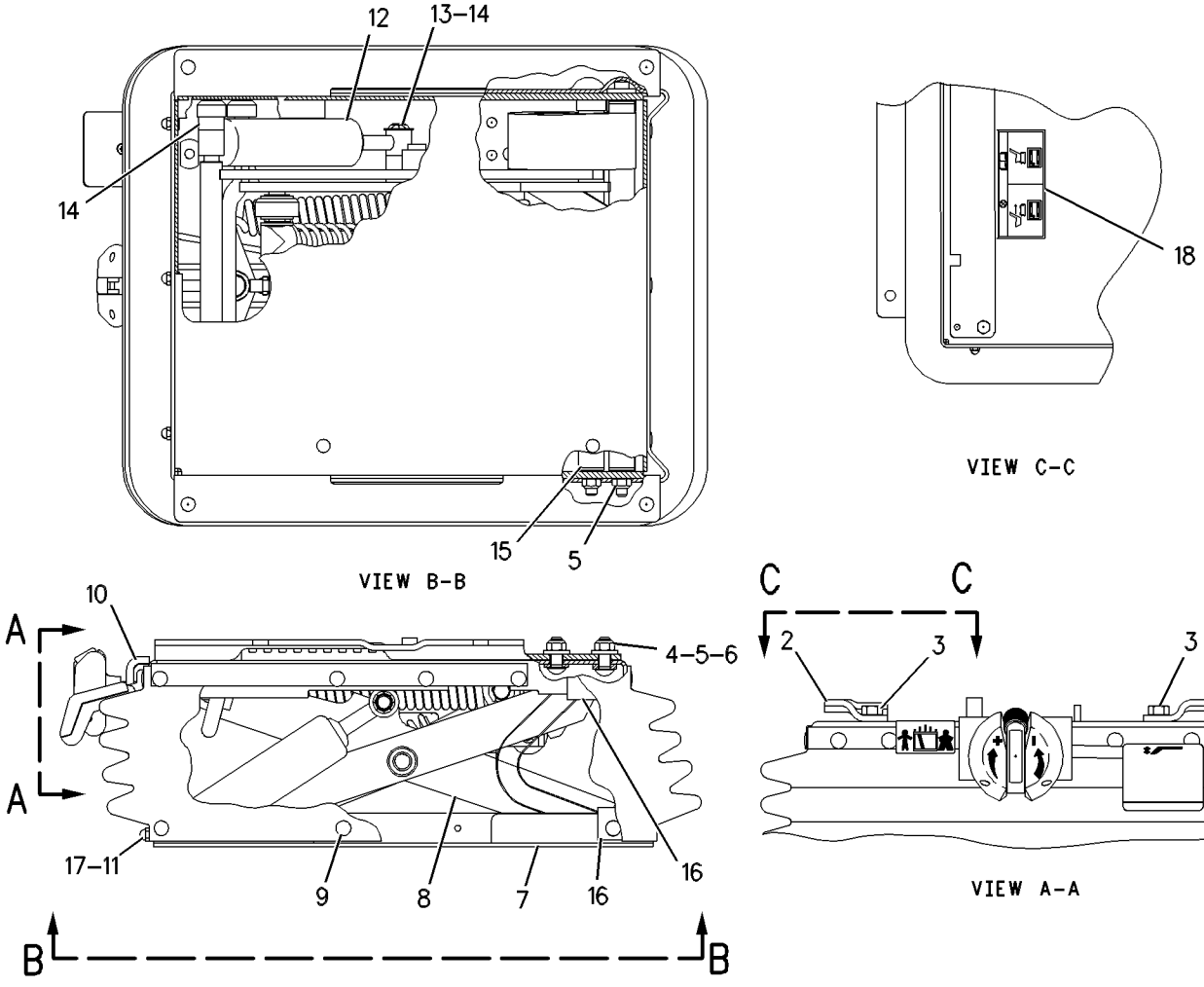

GRAPHIC #1 g00578063

OPERATOR STATION

150-7718 SUSPENSION GP-SEAT—AIR

S/N: RTA1-UP; RBB1-UP
PART OF 118-0819 SEAT & MOUNTING GP
AN ATTACHMENT

SMCS-7324 **i01392629**

NOTE	REF NO	GRAPHIC REF	PART NUMBER	QTY	PART NAME 1 2 3 4 5 6 (PRODUCT LEVEL)	SEE PAGE
	1	1	**4V-7884**	2	BEARING	
C	2	1	**166-7223**	1	HOUSING AS	
	3	1	**4V-8556**	1	BOLT (3/8-16X2.34IN)	
	5	1	**5P-8167**	1	BOLT (3/8-16X.625 IN)	
	6	1	**8Y-6917**	1	BOOT	
	7	1	**102-6317**	2	BUMPER	
	8	1	**124-7128**	1	BUSHING-RELIEF	
	9	1	**9M-0164**	1	CLAMP-HOSE	
	10	1	**145-0326**	1	FILM-INSTRUCTION (SEAT ADJUSTMENT)	
	11	1	**147-4549**	1	FITTING-ELBOW	
	12	1	**149-2400**	1	FITTING	
	13	1	**149-2399**	1	FITTING	
	14	1	**8Y-6922**	1	HOUSING AS	
C	15	1	**2K-4973**	1	LOCKNUT (3/8-16 THD)	
	16	1	**3J-4818**	4	LOCKWASHER	
	17	1	**1B-4430**	4	NUT-JAM (1/2-20 THD)	
	18	1	**124-7126**	1	KIT-SCISSORS	
	19	1	**8M-3267**	1	SCREW-HEX SOCKET	
	20	1	**123-8157**	2	SHAFT	
	21	1	**123-9131**	1	ABSORBER-SHOCK	
	22	1	**147-6522**	1	SPRING-AIR	
	23	1	**6K-0806**	1	STRAP-CABLE	
	24	1	**8L-8413**	4	STRAP-CABLE	
	25	1	**149-2403**	1	VALVE AS	
E	27	1	**147-6541**		TUBE (29CM)	
E	28	1	**147-6541**		TUBE (9CM)	
B	29	1	**160-7765**	1	WASHER (16.26X22.23X1.97MM THK)	
B	30	1	**160-7766**	6	WASHER (16.26X22.23X0.51MM THK)	
B	31	1	**160-7767**	6	WASHER (3.68X12.57X0.51MM THK)	
	32	1	**102-8802**	1	KIT-RECEPTACLE (2 PIN)	
					(INCLUDES RECEPTACLE AS AND WEDGE)	
					AVAILABLE REPAIR KIT(S):	
			8Y-6928	1	KIT-FASTENER	
					(INCLUDES RATCHET CLIPS)	
			123-9128	1	KIT-ROLLER	
					(INCLUDES FLANGED BEARINGS, ROLLERS, & TIE WRAP)	
			128-0613	1	KIT-TETHER	
			149-2398	1	KIT-AIR COMPRESSOR	
					(INCLUDES COMPRESSOR AS & SLEEVE)	

B-USE AS REQUIRED
C-CHANGE FROM PREVIOUS TYPE
E-ORDER BY THE CENTIMETER

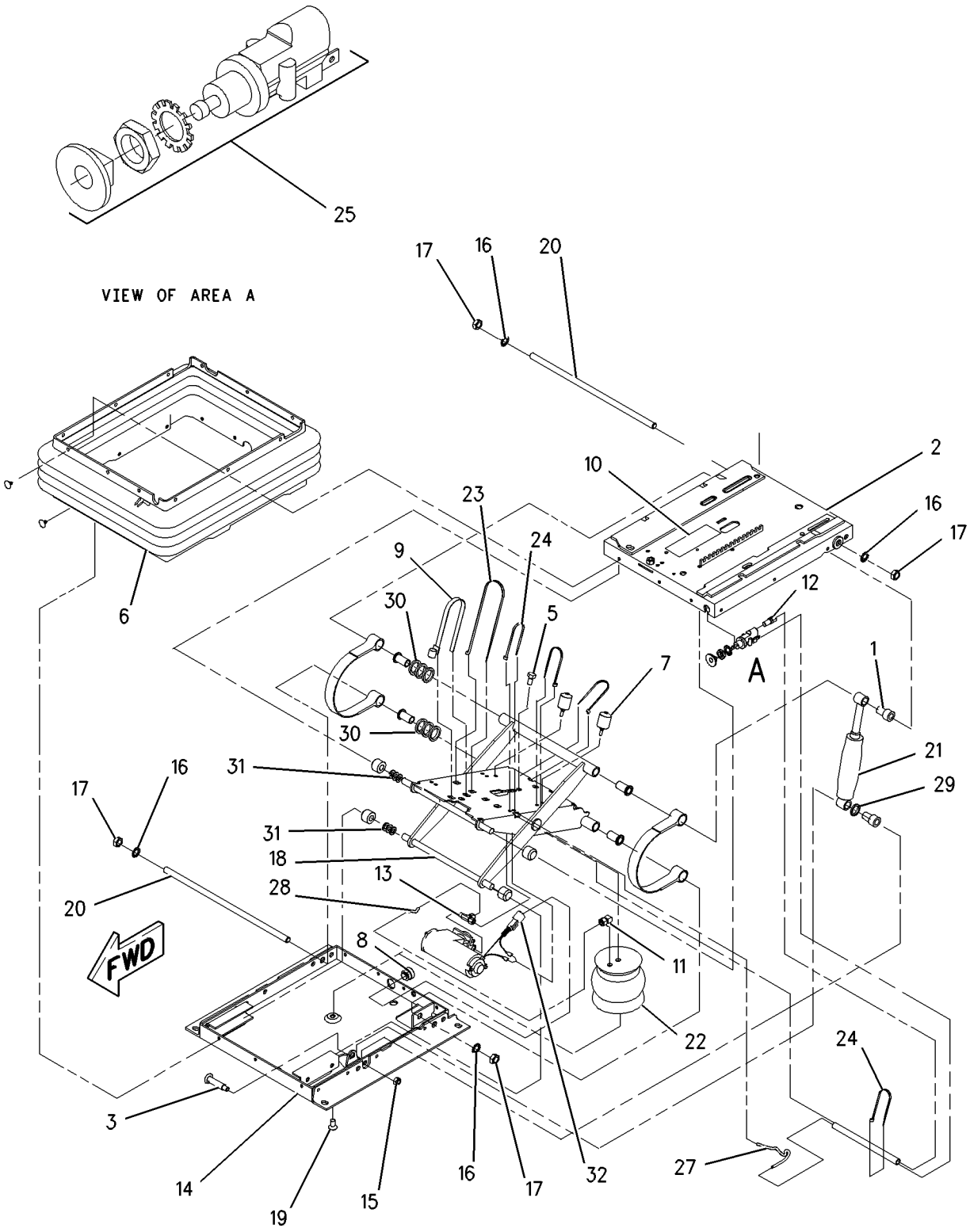

GRAPHIC #1 g00677809

OPERATOR STATION

107-4641 VISOR GP-CAB

S/N: RTA1-UP; RBB1-UP
AN ATTACHMENT

SMCS-7301, 7325, 7335 **i01130547**

NOTE	REF NO	GRAPHIC REF	PART NUMBER	QTY	PART NAME 1 2 3 4 5 6 (PRODUCT LEVEL)	SEE PAGE
	1	1	**9R-3203**	2	PLATE	
	2	1	**9R-3204**	1	PLATE AS	
	3	1	**9R-3205**	1	VISOR AS	
M	4	1	**9X-2042**	2	SCREW-TRUSS HEAD (M6X1.0X12MM)	
M	5	1	**9X-2045**	2	SCREW-TRUSS HEAD (M6X1X20MM)	

M-METRIC PART

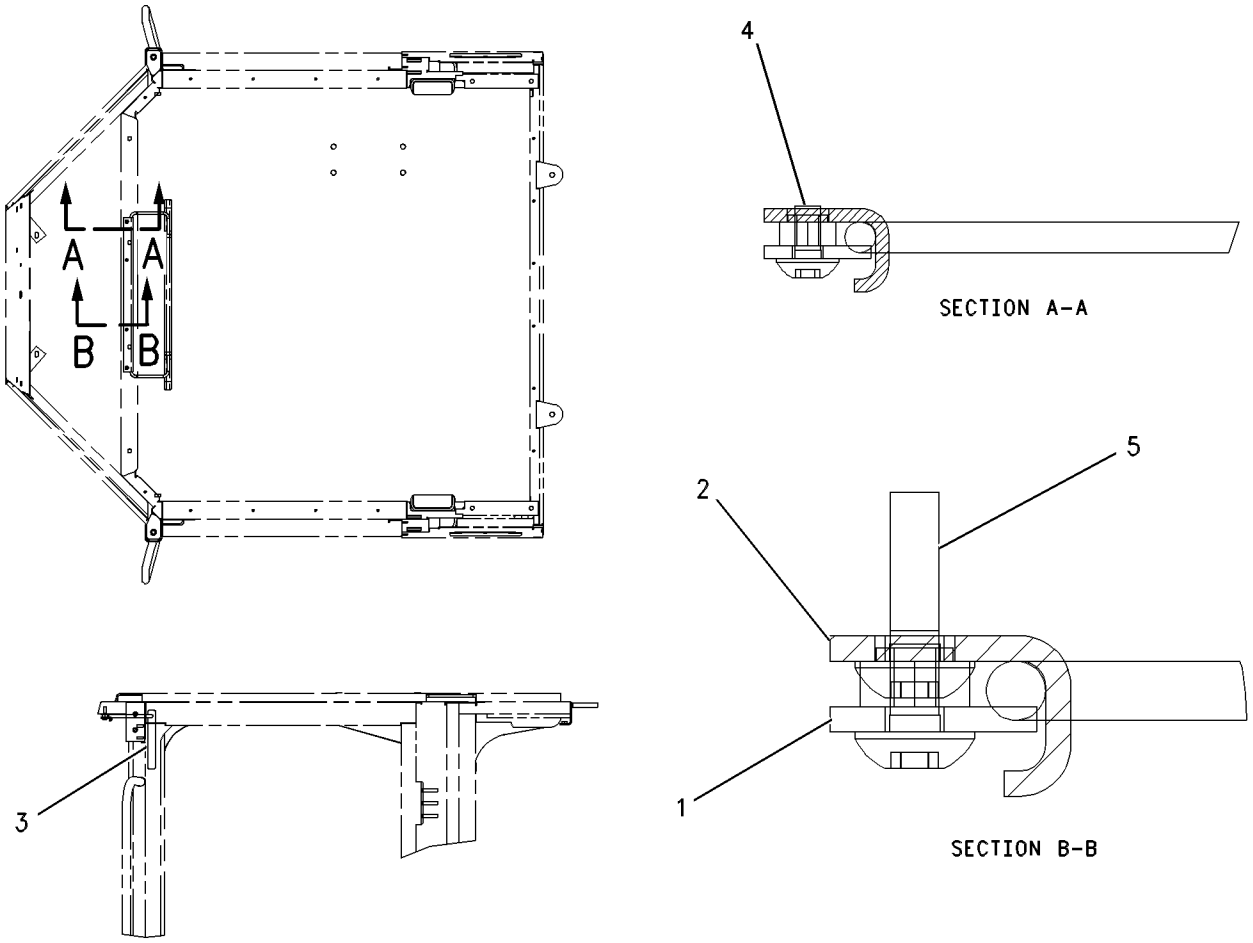

GRAPHIC #1 g00599031

OPERATOR STATION

131-1236 WASHER GP-WINDOW

S/N: RTA1-UP; RBB1-UP
PART OF 190-4633 OPERATOR AR
AN ATTACHMENT

SMCS-7306 **i01628750**

NOTE	REF NO	GRAPHIC REF	PART NUMBER	QTY	PART NAME 1 2 3 4 5 6 (PRODUCT LEVEL)	SEE PAGE
	1	1	**4E-7316**	1	STRAP AS	
	2	1	**131-1237**	1	BRACKET AS	
	3	1	**131-1238**	1	BRACKET AS	
Y	4	1	**152-2764**	1	WASHER GP-WINDOW	650
	5	1	**3S-2093**	2	STRAP-CABLE	
	6	1	**8T-4121**	4	WASHER-HARD (11X21X2.5MM THK)	
M	7	1	**8T-4137**	4	BOLT (M10X1.5X20MM)	
M	8	1	**8T-4189**	2	BOLT (M8X1.25X20MM)	
	9	1	**8T-4224**	2	WASHER-HARD (8.8X16X2MM THK)	
E	10	1	**144-0195**		HOSE (1.37M)	
E	11	1	**144-0195**		HOSE (2.67M)	

E-ORDER BY THE CENTIMETER
M-METRIC PART
Y-SEPARATE ILLUSTRATION

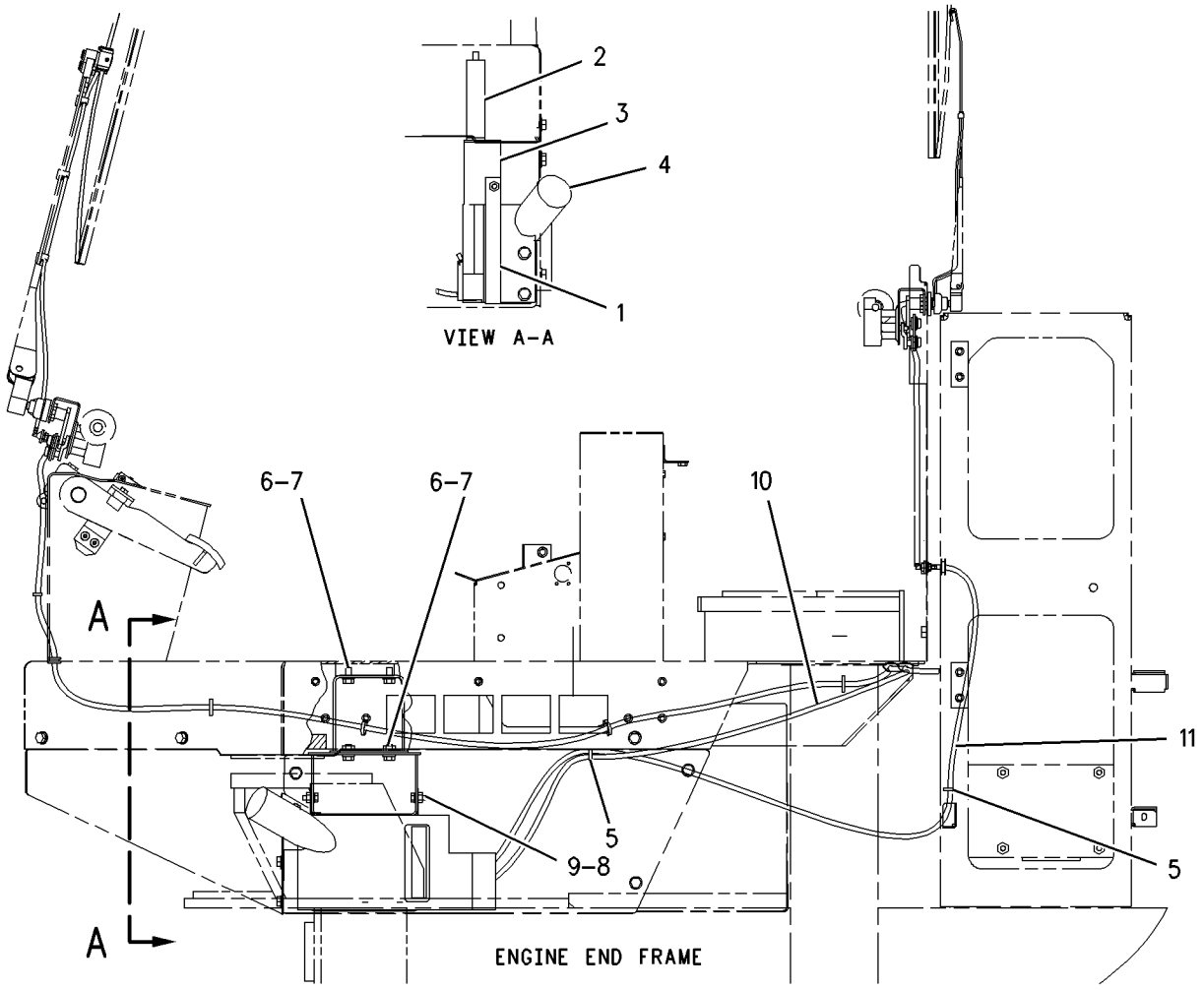

GRAPHIC #1 g00844247

OPERATOR STATION

152-2764 WASHER GP-WINDOW

S/N: RTA1-UP; RBB1-UP
PART OF 131-1236, 173-4311 WASHER GP-WINDOW
AN ATTACHMENT

SMCS-7306 **i01062076**

NOTE	REF NO	GRAPHIC REF	PART NUMBER	QTY	PART NAME 1 2 3 4 5 6 (PRODUCT LEVEL)	SEE PAGE
	1	1	**152-2763**	1	RESERVOIR	
	2	1	**8E-8292**	1	CAP-VENTED	
	3	1	**7T-8890**	2	PUMP AS-WASHER	
	4	1	**8T-5914**	2	GROMMET	
	5	1	**8T-5913**	2	FILTER-SCREEN	

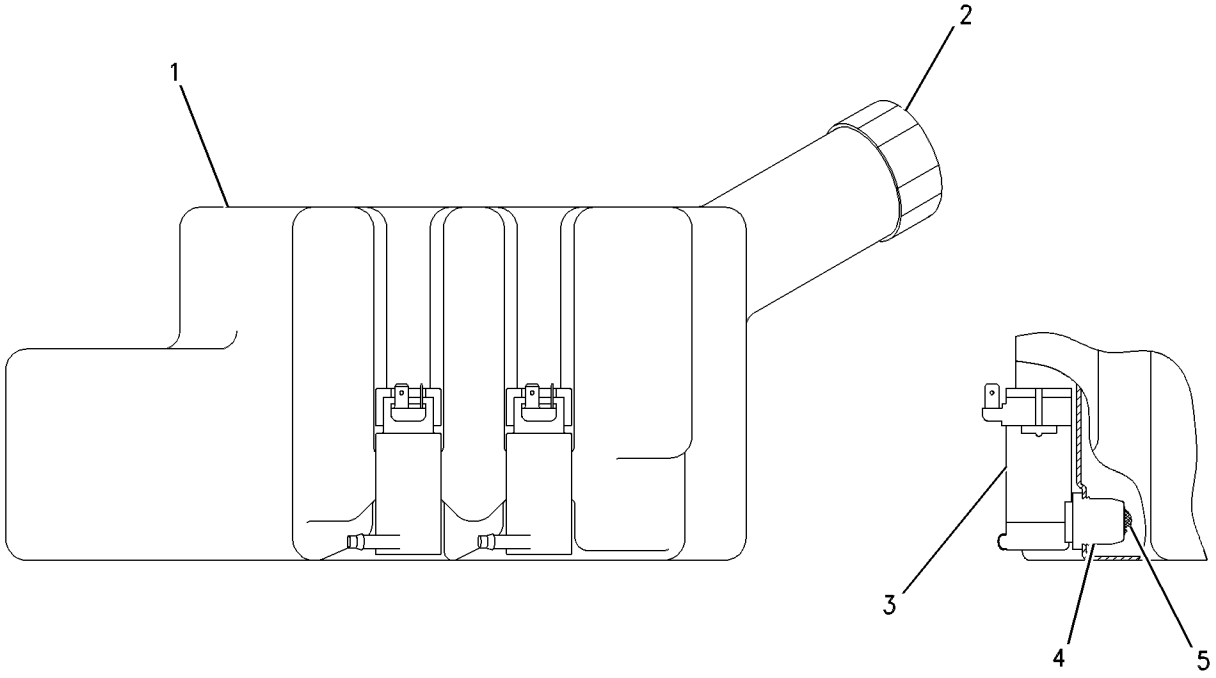

GRAPHIC #1 g00325164

OPERATOR STATION

173-4311 WASHER GP-WINDOW

S/N: RTA1-UP; RBB1-UP
PART OF 216-6907 OPERATOR AR
AN ATTACHMENT

SMCS-7306 **i01212242**

NOTE	REF NO	GRAPHIC REF	PART NUMBER	QTY	PART NAME 1 2 3 4 5 6 (PRODUCT LEVEL)	SEE PAGE
	1	1	**4E-7316**	1	STRAP AS	
	2	1	**131-1237**	1	BRACKET AS	
	3	1	**131-1238**	1	BRACKET AS	
Y	4	1	**152-2764**	1	WASHER GP-WINDOW	650
	5	1	**8T-4121**	4	WASHER-HARD (2.5MM THK)	
M	6	1	**8T-4137**	4	BOLT (M10X1.50X20MM)	
M	7	1	**8T-4189**	2	BOLT (M8X1.25X20MM)	
	8	1	**8T-4224**	2	WASHER-HARD (8.8X16X2MM THK)	

M-METRIC PART
Y-SEPARATE ILLUSTRATION

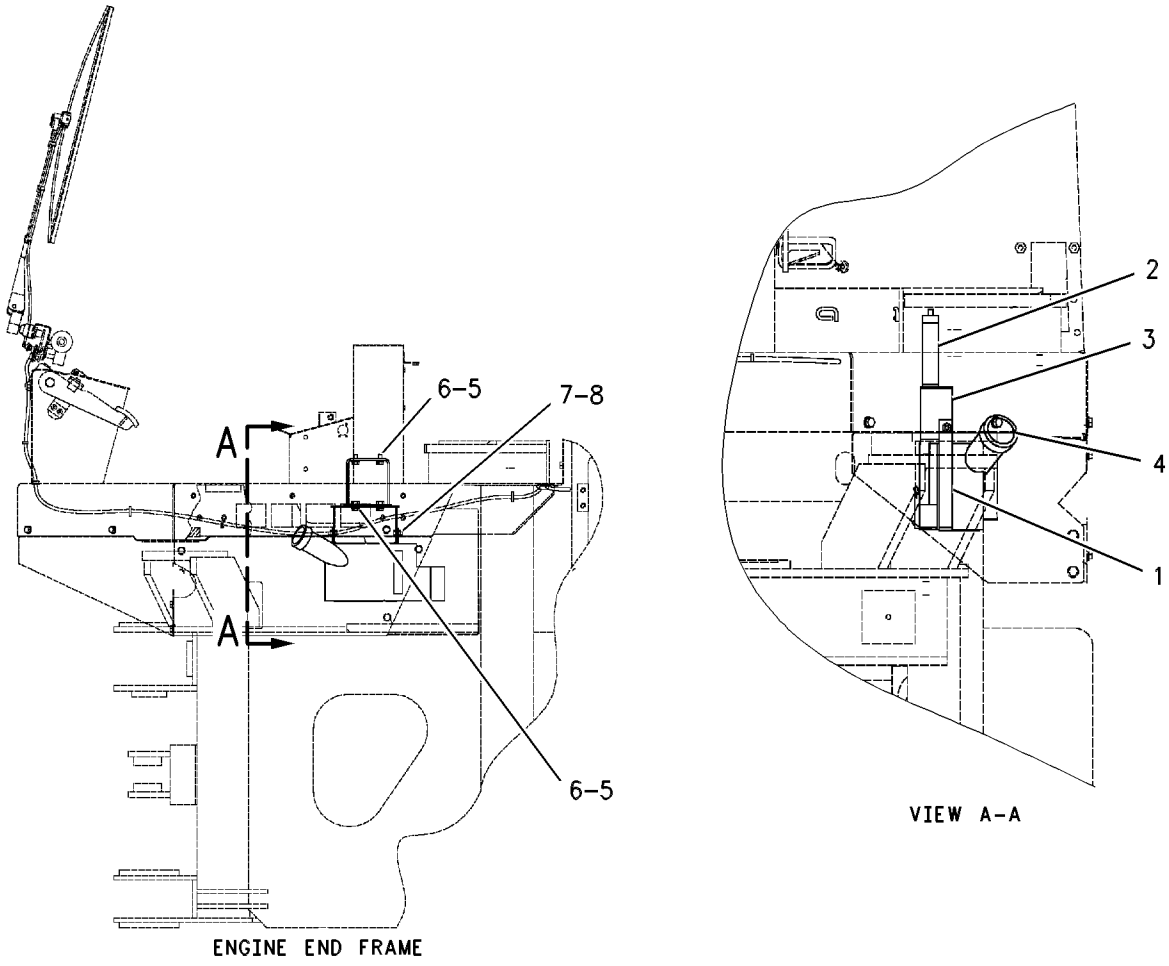

GRAPHIC #1 g00661083

OPERATOR STATION

107-4628 WIPER GP-WINDOW

S/N: RTA1-UP; RBB1-UP
PART OF 190-4405 CAB AR
AN ATTACHMENT

SMCS-7305 **i01823194**

NOTE	REF NO	GRAPHIC REF	PART NUMBER	QTY	PART NAME 1 2 3 4 5 6 (PRODUCT LEVEL)	SEE PAGE
	1	1	**5C-8811**	1	BLADE AS-WIPER (REAR)	
	2	1	**6V-6210**	1	GASKET-SHAFT	
	3	1	**6V-7419**	1	BLADE AS-WIPER	
	4	1	**8T-5400**	4	CONNECTOR	
	5	1	**9R-2596**	1	PLATE	
C	6	1	**155-5779**	1	WIPER PIVOT AS	
C	7	1	**155-5781**	1	ARM AS-WIPER (REAR)	
C	8	1	**214-7636**	1	ARM AS	
CY	9	1	**155-5783**	1	MOTOR GP-WINDOW WIPER (24 VOLT) (FRONT)	597
CY	10	1	**155-5784**	1	MOTOR GP-WINDOW WIPER (24 VOLT) (REAR)	598
	11	1	**3S-2093**	7	STRAP-CABLE	
	12	1	**4M-7470**	1	GROMMET	
M	13	1	**9X-2045**	2	SCREW-TRUSS HEAD (M6X1X20MM)	
E	14	1	**144-0195**		HOSE (70CM)	
E	15	1	**144-0195**		HOSE (270CM)	

C-CHANGE FROM PREVIOUS TYPE
E-ORDER BY THE CENTIMETER
M-METRIC PART
Y-SEPARATE ILLUSTRATION

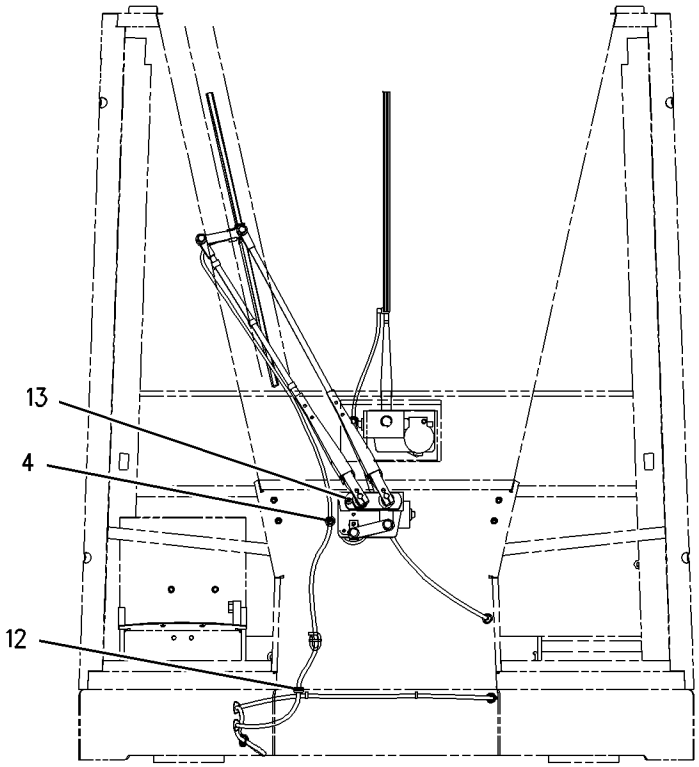

FRONT VIEW

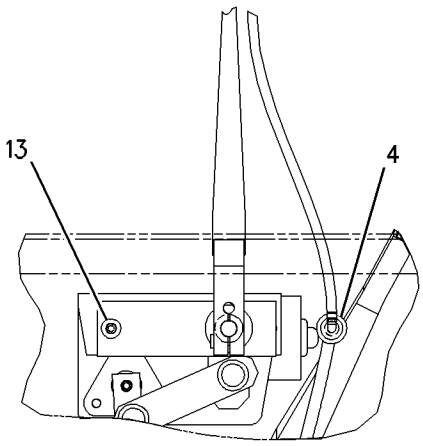

VIEW E-E

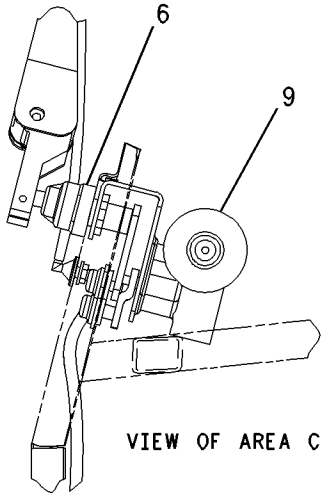

VIEW OF AREA C

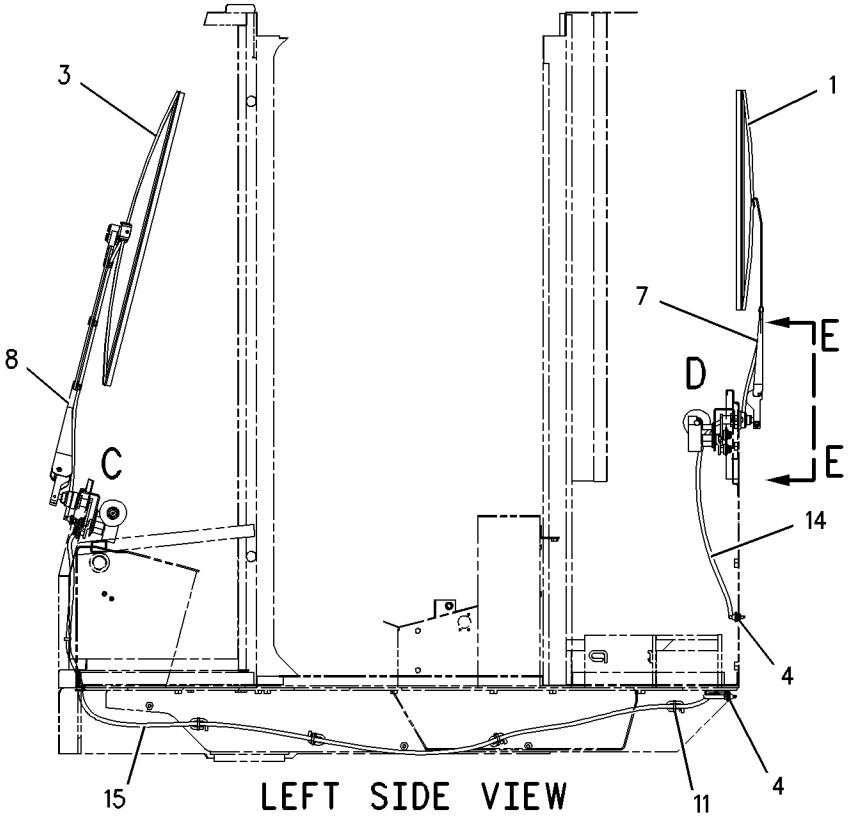

LEFT SIDE VIEW

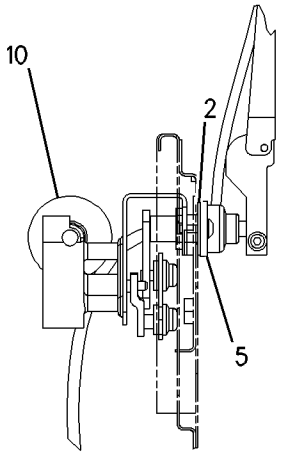

VIEW OF AREA D

GRAPHIC #1 g00842831

OPERATOR STATION

146-6908 WIPER GP-WINDOW—FRONT

S/N: RTA1-UP; RBB1-UP
PART OF 216-6908 CAB AR
AN ATTACHMENT

SMCS-7305 **i01739917**

NOTE	REF NO	GRAPHIC REF	PART NUMBER	QTY	PART NAME 1 2 3 4 5 6 (PRODUCT LEVEL)	SEE PAGE
	1	1	**6V-7419**	1	BLADE AS-WIPER (FRONT)	
C	2	1	**8T-5400**	1	CONNECTOR	
	3	1	**155-5779**	1	WIPER PIVOT AS	
	4	1	**155-5782**	1	ARM AS-WIPER (FRONT)	
Y	5	1	**155-5783**	1	MOTOR GP-WINDOW WIPER (24 VOLT)	597
	6	1	**3S-2093**	7	STRAP-CABLE	
	7	1	**4M-7470**	1	GROMMET	
M	8	1	**9X-2045**	1	SCREW-TRUSS HEAD (M6X1X20MM)	
CE	9	1	**144-0195**		HOSE (311 CM)	
C	10	1	**6K-9632**	1	TEE	
C	11	1	**9R-3469**	1	DIAPHRAGM	

C-CHANGE FROM PREVIOUS TYPE
E-ORDER BY THE CENTIMETER
M-METRIC PART
Y-SEPARATE ILLUSTRATION

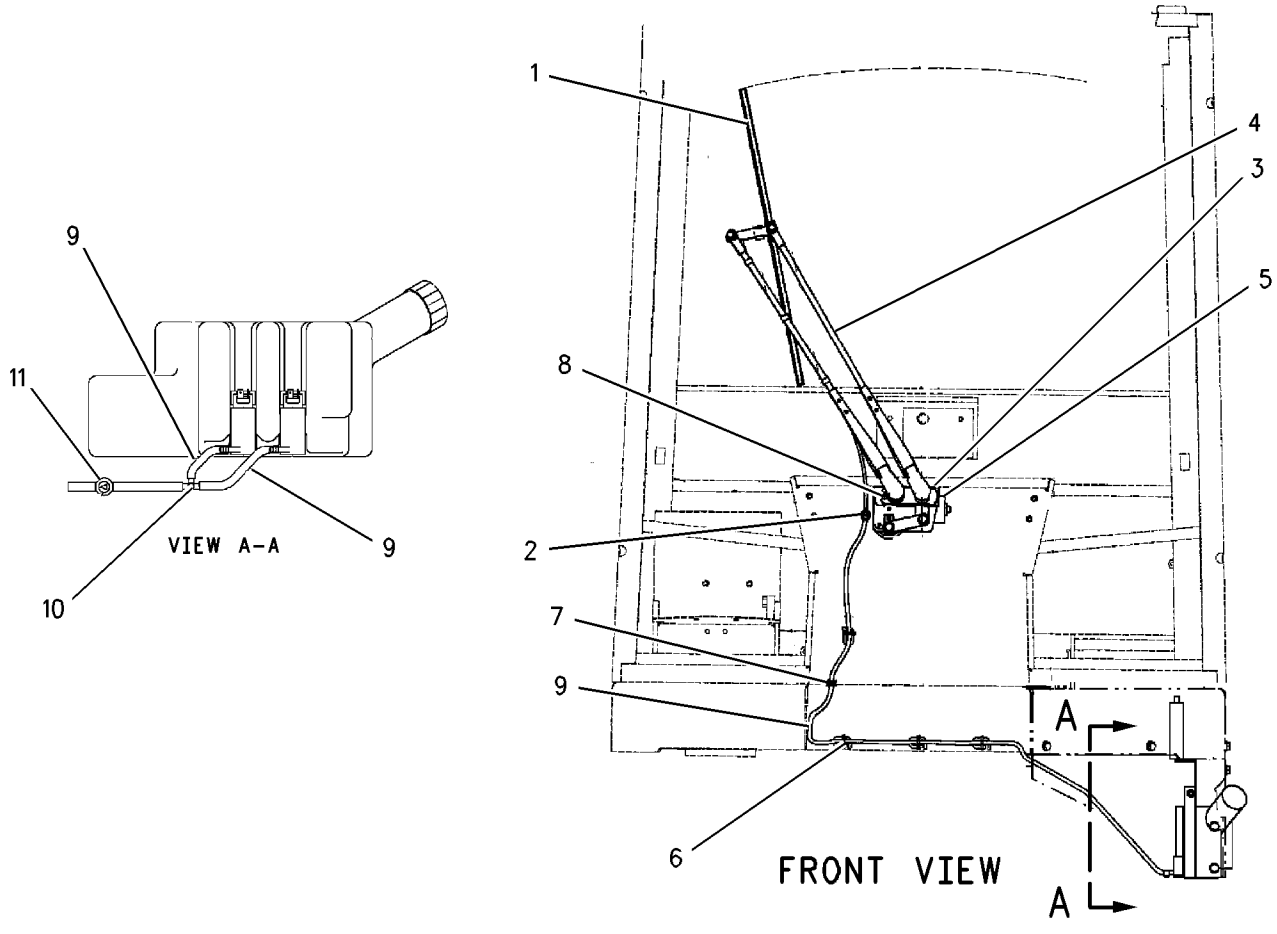

GRAPHIC #1 g00929225

SERVICE EQUIPMENT AND SUPPLIES

202-0428 BOX GP-TOOL

S/N: RTA1-UP; RBB1-UP

PART OF 176-5181, 176-5201 CHASSIS AR

SMCS-7259 **i01814401**

NOTE	REF NO	GRAPHIC REF	PART NUMBER	QTY	PART NAME 1 2 3 4 5 6 (PRODUCT LEVEL)	SEE PAGE
	1	1	**204-4341**	1	TOOL BOX	
	2	1	**204-4342**	1	CHANNEL	
	3	1	**3B-4605**	2	PIN-COTTER	
	4	1	**7X-7729**	4	WASHER (11X25X3MM THK)	
M	5	1	**8T-4137**	4	BOLT (M10X1.5X20MM)	
	6	1	**9S-1305**	2	PIN-CLEVIS	
E	7	1	**5P-5637**		SEAL (.3M)	

E-ORDER BY THE CENTIMETER
M-METRIC PART

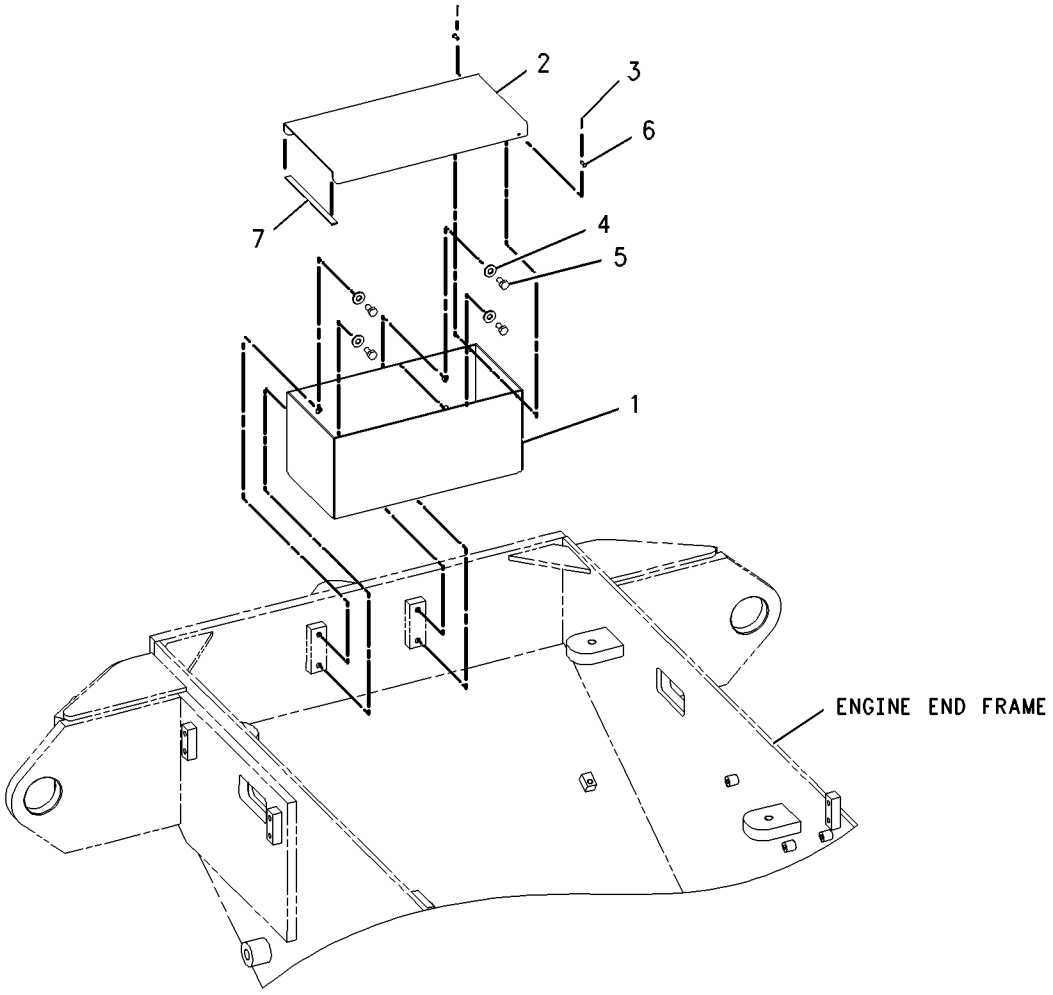

GRAPHIC #1 g00915483

SERVICE EQUIPMENT AND SUPPLIES

220-5562 FILM GP

S/N: RBB1-UP

PART OF 204-4331 PLATE & FILM GP

SMCS-7405, 7557 **i01860066**

NOTE	REF NO	GRAPHIC REF	PART NUMBER	QTY	PART NAME 1 2 3 4 5 6 (PRODUCT LEVEL)	SEE PAGE
	1	1	**208-4972**	1	FILM-CAT (RED STRIPE-RH)	
	2	1	**208-4973**	1	FILM-CAT (RH)	
	3	1	**208-4976**	2	FILM (STRIPE)	
	4	1	**208-4975**	1	FILM-CAT (LH)	
	5	1	**208-4974**	1	FILM-CAT (RED STRIPE-LH)	
	6	1	**220-5560**	2	FILM (924G)	
	7	1	**9X-2447**	1	FILM-CATERPILLAR	

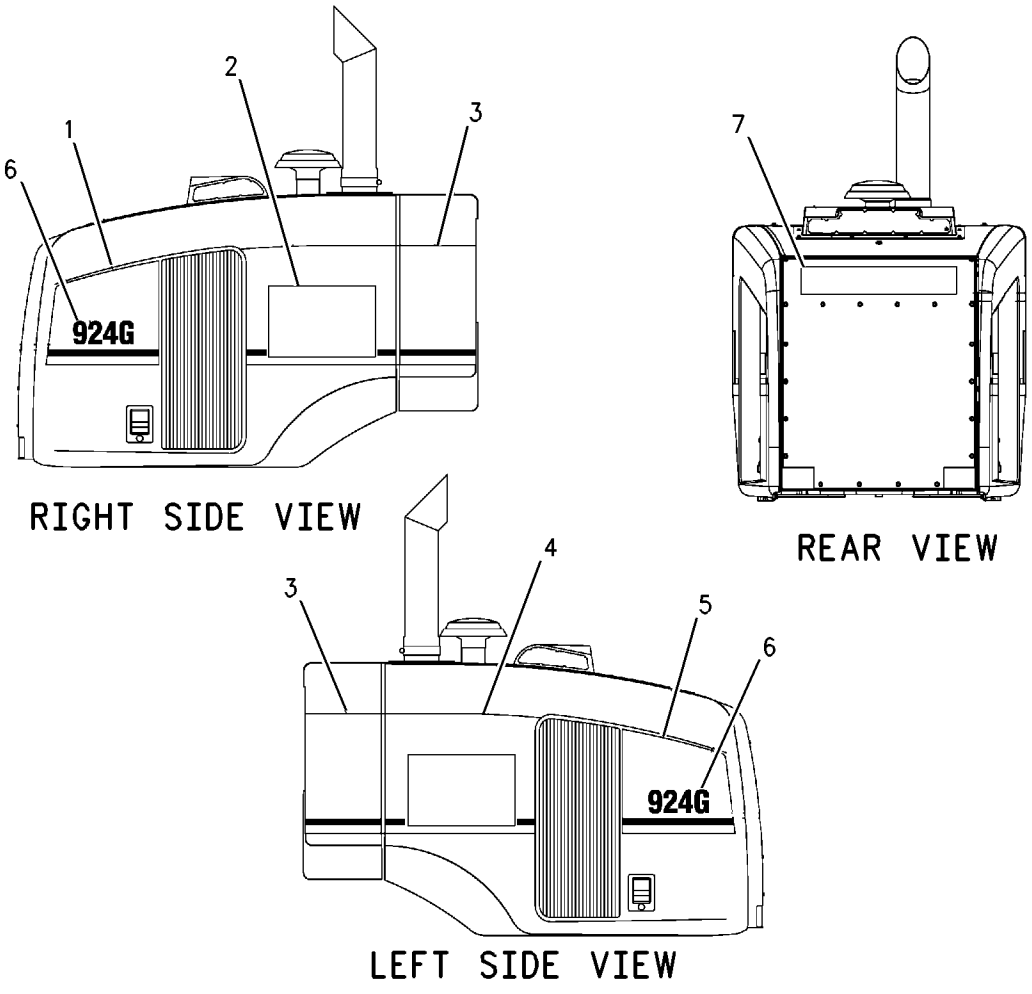

GRAPHIC #1 g00915541

196-3104 PLATE & FILM GP

S/N: RTA1-UP
PART OF 176-5201 CHASSIS AR

SMCS-7405, 7557 **i01855093**

NOTE	PART NUMBER	QTY	PART NAME 1 2 3 4 5 6 (PRODUCT LEVEL)	SEE PAGE
	5P-9884	1	FILM (HYDRAULIC OIL)	
			(LOCATE ON TOP OF HYDRAULIC TANK)	
	220-5573	1	FILM	
			(LOCATE ON LH SIDE OF NON-ENGINE END FRAME)	
	220-5563	1	FILM GP	
	9X-2447	1	FILM-CATERPILLAR	
	134-7258	1	FILM-IDENTIFICATION (EXTENDED LIFE COOLANT)	
			(LOCATE ON UNDERSIDE OF SHUNT TANK ACCESS DOOR)	
	179-3610	1	FILM-INSTRUCTION	
			(LOCATE ABOVE GREASE BLOCK ON ENGINE END FRAME)	
	179-3611	1	FILM-INSTRUCTION	
			(LOCATE BESIDE GREASE BLOCK ON NON-ENGINE END FRAME)	
	220-5574	1	FILM-INSTRUCTION (RADIATOR DOORS)	
			(LOCATE ON FAN GUARD BELOW LATCH)	
	7X-3229	4	FILM-LIFT & TIE DOWN	
			(LOCATE ABOVE EACH TIE DOWN EYE)	
	4P-6422	1	FILM-WARNING (NO ETHER/AIR INTAKE)	
			(LOCATE ON LH SIDE OF ENGINE COMPARTMENT HOOD)	
	105-3330	2	FILM-WARNING (ACCUMULATOR PRESSURE)	
			(LOCATE 1 VERTICALLY ON FRONT STRUCTURE AND 1 HORIZONTALLY ON RH SIDE OF NON-ENGINE END FRAME)	
	9X-1878	1	PLATE (PRODUCT IDENTIFICATION)	
			(LOCATE ON LH SIDE OF NON-ENGINE END FRAME)	
	202-9824	1	PLATE-INFORMATION (BRAZIL)	
			(LOCATE NEAR PIN PLATE)	
	4B-4158	6	SCREW-DRIVE (3/16X0.25 IN)	
			(FASTENS 9X1878 AND 2029824 PLATES)	
	9X-6562	4	TACK-FASTENER	

<END>

203-4626 PLATE & FILM GP

S/N: RTA1-UP; RBB1-UP
AN ATTACHMENT

SMCS-7405, 7557 **i01819111**

NOTE	PART NUMBER	QTY	PART NAME 1 2 3 4 5 6 (PRODUCT LEVEL)	SEE PAGE
	120-5106	1	FILM-WARNING (RADIATOR PRESSURE)	
			(UNDERSIDE OF SHUNT TANK ACCESS DOOR)	
	145-9123	2	FILM-WARNING (CABLE CONNECTION)	
			(INSIDE BATTERY BOX FRONT SIDE)	
	220-5575	1	FILM-WARNING (START INSTRUCTIONS)	
			(RH B POST INSIDE CAB)	
	5P-7244	2	PLATE-WARNING (NO CLEARANCE)	
			(OUTER PLATE OF NON-ENGINE END FRAME)	
	9X-6562	8	TACK-FASTENER	
	2S-2981	1	TAG-WARNING (STEERING FRAME LOCK LINK)	

<END>

203-4628 PLATE & FILM GP—SPANISH

S/N: RTA1-UP; RBB1-UP

AN ATTACHMENT

SMCS-7405, 7557 **i01819143**

NOTE	PART NUMBER	QTY	PART NAME 1 2 3 4 5 6 (PRODUCT LEVEL)	SEE PAGE
	120-5140	1	FILM-WARNING (RADIATOR PRESSURE)	
			(UNDERSIDE OF SHUNT TANK ACCESS DOOR)	
	147-0346	2	FILM-WARNING (CABLE CONNECTION)	
			(INSIDE BATTERY BOX)	
	220-5577	1	FILM-WARNING (START INSTRUCTIONS)	
			(RH B POST INSIDE CAB)	
	1S-3400	2	PLATE-WARNING (NO CLEARANCE)	
			(OUTER PLAT OF NON-ENGINE END FRAME)	
	8T-9530	8	TACK-FASTENER	
	2S-2981	1	TAG-WARNING (STEERING FRAME LOCK LINK)	

<END>

203-4629 PLATE & FILM GP—PORTUGUESE

S/N: RTA1-UP; RBB1-UP

AN ATTACHMENT

SMCS-7405, 7557 **i01863080**

NOTE	PART NUMBER	QTY	PART NAME 1 2 3 4 5 6 (PRODUCT LEVEL)	SEE PAGE
	127-5243	1	FILM-WARNING (RADIATOR PRESSURE)	
			(LOCATE ON UNDERSIDE OF SHUNT TANK ACCESS DOOR)	
	147-0347	2	FILM-WARNING (CABLE CONNECTION)	
			(LOCATE INSIDE OF BATTERY BOX)	
	220-5578	1	FILM-WARNING (START INSTRUCTIONS)	
			(LOCATE ON BRACKET ON RH "B" POST)	
	1S-3846	2	PLATE-WARNING (NO CLEARANCE)	
			(LOCATE ON OUTER PLATE OF NON-ENGINE END FRAME)	
	7K-6536	4	RIVET-POP	
			(LOCATE ON EXTERIOR CAB PANEL)	
	8T-9530	8	TACK-FASTENER	

<END>

SERVICE EQUIPMENT AND SUPPLIES

204-4331 PLATE & FILM GP

S/N: RBB1-UP

PART OF 176-5181 CHASSIS AR

SMCS-7405, 7557 **i01863265**

NOTE	PART NUMBER	QTY	PART NAME 1 2 3 4 5 6 (PRODUCT LEVEL)	SEE PAGE
	220-5573	1	FILM (GREASE)	
			(ON LEFT SIDE OF NON-ENGINE END FRAME)	
	5P-9884	1	FILM (HYDRAULIC OIL)	
			(ON TOP OF HYDRAULIC TANK)	
Y	**220-5562**	1	FILM GP	656
	134-7258	1	FILM-IDENTIFICATION (EXTENDED LIFE COOLANT)	
			(ON UNDERSIDE OF SHUNT TANK ACCESS DOOR)	
	179-3609	1	FILM-INSTRUCTION	
			(ON LEFT SIDE OF NON-ENGINE END FRAME)	
	179-3610	1	FILM-INSTRUCTION	
			(ABOVE GREASE BLOCK)	
	220-5574	1	FILM-INSTRUCTION (RADIATOR DOORS)	
			(ON FAN GUARD BELOW THE LATCH)	
	179-3612	1	FILM-INSTRUCTION	
			(BESIDE GREASE BLOCK)	
	7X-3229	4	FILM-LIFT & TIE DOWN	
			(ABOVE EACH TIE DOWN EYE)	
	105-3330	2	FILM-WARNING (ACCUMULATOR PRESSURE)	
			(1 ON FRONT RH SIDE OF MACHINE)	
			(1 ON RH SIDE OF ENGINE END FRAME)	
	4P-6422	1	FILM-WARNING (NO ETHER/AIR INTAKE)	
			(ON LH ENGINE COMPARTMENT HOOD)	

Y-SEPARATE ILLUSTRATION

<END>

MEMORANDA

PART NUMBER INDEX

Part	Page
0	
0S-1594	543
	545
1	
1A-2209	300
1A-4350	630
1B-3057	62
1B-3978	182
	210
1B-3980	210
1B-4430	646
1B-8723	548
	619
1B-8736	12
	24
1C-0569	632
1D-4677	644
1G-8878	202
1G-9963	6
	▶125
1H-3244	92
	94
	116
	152
1H-4393	118
	316
	318
	320
	604
1H-6227	414
1H-9696	229
1J-5607	524
1J-6298	629
1J-9671	278
	392
	395
1K-6853	235
1K-6870	507
1K-6872	543
	545
1K-8061	214
1M-4543	588
1M-6718	474
	476
	477
	478
1M-7250	73
1M-8652	498
	502
1N-3762	14
	16
1P-3703	357
	377
	395
1P-3704	395
1P-3708	357
1P-4278	78
1P-4576	200
1P-4579	357
1P-4582	357
1P-4584	357
1P-6356	588
1P-6522	540
	572
1P-7009	588
1R-0622	144
1R-0739	45
1S-0833	422
1S-0994	264
1S-3400	658
1S-3846	658
1S-7251	134
1S-7252	134
1S-9593	82
	450
	490
	491
	492
1U-0257	506
	536
1U-3251	534
1U-3252	532
1U-8846	212
	229
1V-2772	210
1V-8787	288
1W-1539	614
1W-2934	554
1Y-7927	574
2	
2B-0858	8
	38
2B-2695	632
2D-0598	182
2D-0714	328
2D-2507	232
2D-2508	232
2D-2509	232
2D-2628	231
	233
2D-2629	231
	233
2D-2630	231
	233
2D-2631	231
	233
2D-2633	231
	233
2D-4867	496
2D-6235	574
2F-7306	601
2G-1133	615
2G-5298	136
	140
	144
	606
	610
	614
2G-6595	232
2G-8767	134
2H-3429	474
	476
	477
	478
	479
	480
	481
2H-3920	131
	132
	537
	569
	611
2H-3922	128
	540
2H-3923	540
2J-3507	506
	524
2J-3961	329
2J-7550	229
2J-7767	328
2K-4821	92
	94
2K-4973	632
	644
	646
2K-5957	208
2K-6830	326
2L-0043	197
2L-6726	245
2L-8076	172
2L-9653	588
2M-0849	543
	545
2M-2570	404
	406
2M-3432	160
2M-7077	148
2M-7819	574
2M-9780	52
	219
	290
	300
	322
	323
	356
	364
	368
	370
	372
	377
	384
	385
	388
	392
	395
	404
	406
	416
	418
	485
2N-3477	280
	607
	611
	615
2N-7006	182
2N-7007	182
2P-1279	368
	370
2P-1293	220
	342
	344
	354
	360
	365
2P-2537	52
2P-4173	18
2P-8104	126
2P-8421	381
2Q-5979	230
	▶231
2S-1382	245
2S-2981	657
	658
2S-3440	10
2S-3745	540
	572
2S-4078	356
2T-3360	292
	294
2W-1141	182
	184
	186
	188
2Y-3209	594
2Y-5829	488
3	
3B-0551	212
	214
3B-4501	540
3B-4605	655
3B-4610	279
3B-4617	282
3B-6552	272
	498
	502
3B-7734	498
	502
3B-8488	235
	496
3B-8489	236
	266
	272
	496
	498
	502
	522
	531
3B-8491	496
	498
	502
	522
	531
3C-3364	620
3C-4922	620
3D-2824	192
	200
	219
	290
	300
	301

▶ **PRIMARY REFERENCE**

PART NUMBER INDEX

Part	Page
	304
	342
	344
	356
	364
	368
	372
	376
	381
	392
	406
3D-2975	574
3E-0154	▶129
	172
3E-1841	540
	572
3E-2331	428
	432
	436
	440
	444
3E-2332	282
3E-2335	372
	376
3E-2338	212
	214
3E-3365	107
	109
	166
	168
	170
	246
	370
	384
	491
	540
	572
	614
3E-3367	102
3E-3368	102
3E-3371	100
	109
	123
	162
	300
3E-3377	490
	604
3E-3383	191
	310
	316
	318
	320
	610
	614
3E-3389	131
	132
	136
	140
	144
3E-3805	562
	564
3E-3892	558
3E-4051	588
3E-4052	588
3E-4056	588
3E-4057	588
3E-4058	588
3E-4296	290
3E-4312	544
3E-4335	601
3E-4336	601
3E-4354	479
	480
	481
3E-4362	601
3E-5153	126
3E-5154	126
3E-5239	152
	168
	376
	557
	560
3E-5464	540
3E-6237	126
3E-6238	126
3E-6328	▶91
	118
3E-6450	300
3E-6575	601
3E-7692	218
3E-7843	▶102
	338
	340
3E-7844	▶100
	338
	340
3E-8016	287
3E-8020	558
3E-8320	134
3E-8581	490
3E-9205	485
	▶490
3E-9411	496
	498
	502
3F-9556	92
	94
3G-0572	498
	502
3G-2791	329
3G-2797	329
	496
3G-4017	▶536
3G-4258	536
3G-4259	536
3H-7180	411
	413
	448
3H-8538	280
3J-1907	182
	202
	218
	219
	220
	224
	244
	282
	284
	290
	301
	304
	331
	346
	350
	354
	356
	357
	360
	362
	364
	372
	376
	377
	380
	381
	384
	385
	388
	392
	394
	448
	454
	458
	460
	464
	466
	470
	488
3J-4818	646
3J-7354	50
	202
	219
	282
	284
	300
	301
	304
	331
	356
	357
	368
	370
	394
	404
	406
	425
	448
	450
	454
	458
	460
	464
	466
	470
	482
3K-0360	18
	152
	214
	219
	246
	290
	300
	301
	304
	357
	370
	377
	380
	381
	384
	388
	392
	395
	404
	425
	474
	476
	477
	478
	479
	480
	481
3K-4897	602
3K-7056	210
3K-7057	210
3K-8106	152
3K-8460	392
3K-9520	62
3L-8187	280
	606
	610
	614
3P-1210	418
3P-2404	220
	365
3P-5903	346
	350
3P-5904	346
	350
3S-2093	120
	152
	218
	284
	364
	376
	384
	388
	540
	557
	572
	588
	649
	652
	654
3S-6049	134
3S-6050	134
3S-8665	152
3T-0851	118
3T-2094	228
3T-2662	152
	628
3T-5201	562
	564
3T-5760	2
3V-4791	103
3W-6188	134
	172

▶ **PRIMARY REFERENCE**

PART NUMBER INDEX

Part	Page
4	
4B-2048	120
4B-3665	229
4B-4158	657
4B-4274	152
	373
	377
4B-4276	116
4B-4277	82
4B-4674	116
4B-4863	68
4B-5059	574
4B-5324	280
	607
	611
	615
4D-1326	129
4D-4431	298
4D-6432	630
	632
4D-6466	78
4D-7388	62
	220
	365
4D-7735	284
	385
	389
4D-8123	498
	502
4D-9517	220
	365
4E-0659	508
	511
	512
	514
	518
	520
4E-1062	558
4E-1384	562
4E-1411	577
4E-2161	580
	582
4E-2482	513
4E-5984	235
4E-5985	235
4E-7316	649
	651
4E-7540	284
4E-8293	579
4E-9754	264
4F-2294	130
4F-4042	506
4F-4879	628
	635
4F-7389	204
	206
4F-8824	210
4H-4063	380
4I-3038	606
	610
	614
4J-0520	357
4J-0523	198
4J-0524	357
4J-0527	357
4J-5267	200
	373
	377
4J-5477	218
	219
	300
	301
	304
	346
	350
	364
	368
	370
	394
	395
	404
	406
	428
	432
	436
	440
	444
4J-7533	486
4J-9058	506
	536
4J-9220	327
4J-9225	298
4K-0173	212
	214
4K-1388	394
4K-2039	474
	476
	477
	478
	479
	480
	481
4K-4879	231
	233
4K-4881	234
4K-7464	266
4K-7502	20
4K-8302	78
	338
4K-9097	632
4L-7249	203
	204
	206
	207
4M-0189	327
4M-1677	178
	180
4M-7470	120
	652
	654
4N-2927	574
4P-6422	657
	659
4P-7581	136
	140
	144
	152
	158
	160
	166
	168
	170
	246
	377
	557
	588
	607
	611
	615
4P-8134	136
	140
	144
	152
	158
	160
	166
	168
	172
	338
	340
	346
	350
	607
	611
	615
4S-1962	588
4S-5879	182
4S-8264	580
	582
	584
4S-8287	601
4T-6780	298
4T-8091	524
4T-8588	329
4V-2879	498
	502
4V-4164	120
4V-4453	496
	498
	502
4V-4905	496
4V-7875	574
4V-7884	644
	646
4V-8556	646
4V-8577	644
4V-8631	496
4V-8639	498
	502
4V-8643	496
4W-5359	24
4W-7356	288
	401
	402
5	
5A-3604	428
	440
	454
	460
	464
	466
	470
5C-1777	86
5C-1796	48
5C-2890	111
	112
	114
	116
	118
	268
	409
	410
	411
	412
	413
	448
	450
	454
	460
	464
	466
	470
	562
	564
	580
	582
	584
	604
5C-7261	62
	78
	268
	279
	284
	311
	312
	314
	316
	318
	320
	338
	562
	564
	615
5C-8312	68
	118
	604
5C-8811	652
5C-8964	118
5C-9029	118
5C-9553	166
	190
	528
	540
	557
	572
5D-1026	10
	18
	62
	74
	592
5D-4822	574
5D-9629	56
	550
5F-9657	52
5G-2373	507
5G-6973	282

► **PRIMARY REFERENCE**

PART NUMBER INDEX

Part	Page	Part	Page	Part	Page	Part	Page
5G-7820	338		214		342	5R-0939	377
	340	5P-3863	182		344	5R-0940	377
5G-7822	338	5P-4115	268		354	5S-7349	92
5H-1039	214		340		360		94
5H-3252	228		528	5P-7467	262	5T-3821	498
5H-3701	212		577		342		502
	214		607		344	5T-9771	272
5H-6005	182		611		354	5V-0770	574
5I-3762	316	5P-4116	62		360	5V-1497	644
	318		118	5P-7468	198	5V-1498	543
	320		134		258		545
5J-5402	326		172		260	5V-2998	118
5J-7010	298		284		357	5V-4410	282
5J-7878	328		292		373	5V-4998	274
5K-4778	346		294		377	5V-4999	274
	350		338	5P-7469	198	5V-6454	496
5K-5338	284		340		258	5V-6455	496
5K-9090	224		522		260	5V-8780	56
	322		559		357	5W-1437	454
	323		566		373		460
	356		607		377		466
	372		611	5P-7648	588		
	373		615	5P-7684	182		
	376	5P-4484	182	5P-8112	262	**6**	
	377		212		342		
	392		214		344	6A-5591	182
	394	5P-4965	152		354	6C-3246	237
	395	5P-5148	284		360		238
5L-2031	203		380	5P-8167	646		240
	204	5P-5291	214	5P-8196	52		241
	206	5P-5637	268	5P-8244	290	6C-3247	239
	207		580	5P-8245	20		242
5L-4753	197		584		210	6C-7606	528
5L-7200	118		655		212	6C-7607	528
5M-3062	507	5P-5639	112		214	6D-0337	231
	644		114		404		233
5M-4987	228	5P-5643	537		406	6D-0443	231
5M-6214	214		541	5P-8247	92		233
5P-0599	68		569		94	6D-1641	592
	372	5P-5677	107		212	6D-3479	78
5P-0713	182	5P-5755	62		214		134
5P-0743	18	5P-5774	112	5P-8444	258		220
5P-0747	134		114		260		338
5P-0761	134	5P-5908	540		357		346
5P-0767	592		572		373		350
5P-0798	582	5P-5927	566		377	6D-4244	136
5P-1075	384	5P-6039	111		395		140
	388		116	5P-8445	574		144
	644		338	5P-8500	198		301
5P-1076	56	5P-6264	166		422		615
	96	5P-6718	32		594	6D-4246	357
	98		428	5P-8502	198	6D-6146	120
	408		432		422	6D-7690	212
5P-1404	392		436	5P-8524	577		214
5P-1420	78		440	5P-8525	116	6E-1497	326
5P-1442	422		444	5P-8837	274		327
5P-2304	182	5P-6872	596	5P-8874	380	6E-2833	218
5P-2861	210	5P-6887	62	5P-9085	78	6E-2943	288
5P-3456	426	5P-7070	541	5P-9186	18	6E-3268	482
	428	5P-7211	56	5P-9212	276	6E-3269	482
	432		62	5P-9262	482	6E-3272	482
	436	5P-7244	657	5P-9297	279	6E-3273	482
	440	5P-7464	362	5P-9299	172	6E-3274	482
	444	5P-7465	362	5P-9884	657	6E-3275	482
5P-3723	212	5P-7466	262		659	6E-3276	482

PART NUMBER INDEX

Part	Page	Part	Page	Part	Page	Part	Page
6E-4940	298	6I-1075	14		478		204
6E-6527	482	6I-1076	14		479		206
6E-6528	482	6I-1090	86		480		207
6E-6536	482	6I-1132	74		481	6V-3965	182
6E-6537	482	6I-1206	42	6N-6984	62		202
6E-6538	482	6I-1418	107	6R-2050	262		219
6E-6539	482		162	6R-7943	418		224
6E-6540	482		190	6S-1066	158		282
6F-2956	212	6I-1497	46	6S-6646	280		301
	214	6I-3717	42	6T-3381	490		304
6F-3930	232	6I-3718	42	6T-7054	491		357
6F-7045	128	6I-4079	46	6T-9244	490		381
6G-0233	282	6I-4200	22	6U-5219	384		392
6G-2256	134	6I-4354	14		388	6V-4249	28
6G-2263	78	6I-4374	10	6V-0347	212		229
	134		27		214	6V-4429	214
6G-4195	280		48	6V-0484	224	6V-4635	416
	606		51	6V-0545	198	6V-4636	416
	610		60	6V-0852	182	6V-5049	290
	614	6I-4681	32		202	6V-5217	82
6G-9933	272	6I-4709	32		218		182
6H-3616	39	6I-4714	40		224		246
6I-0217	10	6I-4716	40		282	6V-5218	246
	24	6I-4786	52		300	6V-5223	246
	74	6I-4793	60		304	6V-5230	182
	82	6I-8312	514		356	6V-5683	197
	86	6I-8313	514		380	6V-5696	204
6I-0235	44	6I-8390	184		392		206
6I-0254	24		186		394		210
	27		188	6V-1178	488	6V-5758	484
	32	6I-8531	236	6V-1194	266	6V-5839	28
	86	6I-8849	266	6V-1249	362		182
6I-0256	21	6I-8860	266	6V-1363	68		196
6I-0260	24	6I-9250	506	6V-1392	541		246
	32	6I-9251	506		572		488
	48	6I-9804	245	6V-1625	376	6V-5842	182
	51	6I-9805	245	6V-1668	540		228
	52	6I-9806	182		572	6V-6210	652
	69		▶245	6V-1820	182	6V-6317	182
6I-0289	32	6J-2680	357		229		229
6I-0291	32	6J-2797	326	6V-1889	152	6V-6635	121
	48	6J-7035	395		220	6V-6924	484
	52	6J-7264	327		272	6V-7238	18
	82	6J-9996	411		365		380
6I-0363	32		413	6V-1970	1	6V-7345	153
6I-0423	22		448		2	6V-7357	112
6I-0456	10	6K-0806	118		▶594		114
	32		338	6V-2317	246	6V-7359	373
	60		646	6V-2394	184		377
6I-0593	8	6K-4076	512	6V-2456	602	6V-7419	652
	76	6K-4185	266		632		654
6I-0631	22	6K-4186	266	6V-2495	588	6V-7527	203
6I-0645	24	6K-4191	266	6V-2687	544		204
	60	6K-5614	194	6V-2689	172		206
6I-0646	8	6K-6075	214		454		207
6I-0650	30	6K-6307	182		460	6V-7529	50
6I-0654	26	6K-8088	548		464	6V-7723	420
6I-0686	14		619		466	6V-7728	540
6I-0787	48	6K-8178	346	6V-3213	296		572
6I-0789	24		350	6V-3259	574	6V-7732	212
6I-0839	24	6K-8987	226	6V-3668	210		214
	27	6K-9632	654	6V-3821	246	6V-7744	338
6I-0846	24	6M-5062	474	6V-3822	246	6V-7970	428
6I-0847	22		476	6V-3940	548		432
6I-1074	14		477	6V-3950	203		436

▶ **PRIMARY REFERENCE**

PART NUMBER INDEX

Part	Page	Part	Page	Part	Page	Part	Page
	440		454		354	6V-8781	284
	444		458		360	6V-8782	301
6V-7981	228		460		362		304
	488		464		372		357
6V-8183	42		466		377	6V-8788	373
6V-8186	130		470		380		377
6V-8187	152		488		384	6V-8795	266
6V-8189	92	6V-8398	219		388	6V-8801	129
	94		290		392		300
6V-8197	214		300		394		384
6V-8200	414		301		448		388
6V-8210	203		304		454	6V-8837	607
	204		322		458		611
	206		323		460		615
	207		357		464	6V-8928	579
6V-8212	196		362		466	6V-8935	346
6V-8218	244		364		470		350
6V-8225	182		368	6V-8637	200	6V-8938	284
6V-8237	298		370		219	6V-8942	219
6V-8352	428		373		356		364
	432		377		364	6V-8979	368
	436		380		372		370
	440		381		376	6V-8981	362
	444		384	6V-8638	323		368
	482		385		370		370
6V-8369	131		388		384	6V-8984	392
	132		395		388		395
	537		404		395	6V-8997	342
	569		406	6V-8639	300		344
	610		485		304		354
6V-8373	280	6V-8400	356		370	6V-9000	219
	606	6V-8490	579		395	6V-9001	284
	610		604		404		290
	614	6V-8554	346	6V-8640	323		380
6V-8376	152		350	6V-8641	218	6V-9004	219
	628	6V-8556	220		346		364
6V-8378	129		365		350	6V-9007	200
	152	6V-8624	219	6V-8642	384		290
6V-8397	219		290		388		300
	282		364	6V-8647	368	6V-9008	224
	284	6V-8625	219		370	6V-9160	219
	290		301		394		364
	354		304		404	6V-9161	284
	356		384		406	6V-9169	362
	357		388	6V-8675	210		368
	360		395		212		370
	362	6V-8626	385		214	6V-9172	224
	372		389	6V-8716	354		373
	373	6V-8627	346		360		377
	376		350	6V-8721	219		392
	377		364		368		395
	380	6V-8628	301		385	6V-9200	284
	381		304		388	6V-9507	428
	384	6V-8629	219		404		432
	385		356		406		436
	388	6V-8632	300	6V-8724	282		440
	389		304		381		444
	392	6V-8634	380		385	6V-9632	56
	394	6V-8635	224		388		148
	428		356		488		152
	433		372	6V-8758	279		190
	437		376	6V-8775	301		270
	440		392		304		340
	444		394		381		372
	448	6V-8636	282	6V-8776	356		376

PART NUMBER INDEX

Part	Page
	380
	384
	388
	540
	572
	577
	604
6V-9746	200
	218
	219
	290
	300
	301
	322
	323
	342
	344
	354
	356
	357
	360
	364
	372
	373
	376
	377
6V-9829	373
	377
6V-9830	357
6V-9832	354
6V-9835	346
	350
6V-9836	357
	381
	385
	389
6V-9837	219
	357
	381
6V-9842	219
6V-9844	219
	364
6V-9846	301
	357
6V-9849	346
	350
6V-9850	356
	380
	384
6V-9851	380
6V-9854	356
6V-9872	356
6V-9873	381
6W-5652	507
6W-5656	507
6W-5678	507
6W-5679	507
6W-5760	325
6W-5761	325
6W-6807	240
	242
6W-8246	266
6Y-0584	182
6Y-0869	192
6Y-0928	186
6Y-1300	186
	188
6Y-2525	599
6Y-4464	228
6Y-4465	228
6Y-4618	229
6Y-4890	186
6Y-4997	228
6Y-5010	228
6Y-5027	184
6Y-5631	184
	186
	188
6Y-6584	606
	610
	614
6Y-6712	▶228
	229
6Y-6952	186
6Y-7818	184
	186
	188
6Y-7922	184
6Y-7968	184
	186
	188
6Y-8069	208
6Y-8157	184
	186
	188
6Y-8265	184
6Y-8512	184
6Y-8514	184
6Y-9016	182
6Y-9017	182
7	
7B-7525	632
7C-0351	32
7C-1493	52
7C-4616	24
7C-6467	282
7D-1728	68
7D-5238	326
	327
	329
7D-5252	232
7D-6922	280
	607
	611
	615
7D-7233	224
	346
	350
7D-8048	40
7D-8636	203
	204
	206
	207
7D-8637	203
	204
	206
	207
7E-1397	70
7F-2050	540
7F-2060	540
7F-9223	268
	580
	582
	584
7G-5220	204
	206
	210
7I-3003	204
	206
7I-6601	474
	476
	477
	478
	479
	480
	481
7I-6756	636
	638
7J-0204	474
	476
	477
	478
	479
	480
	481
7J-9108	300
	304
	356
	384
	385
	388
	389
7K-1181	62
	107
	116
	133
	136
	140
	144
	148
	152
	158
	160
	162
	166
	168
	170
	172
	218
	246
	258
	260
	262
	272
	300
	340
	346
	350
	364
	370
	372
	376
	380
	498
	502
	577
	588
	606
	610
	614
7K-3971	372
	376
7K-3972	372
	376
7K-3974	394
7K-3975	394
7K-6536	658
7K-9203	496
7K-9204	496
7K-9205	496
	498
	502
7K-9208	496
	498
	502
7K-9209	498
	502
7K-9212	496
	498
	502
7K-9216	498
	502
7M-7219	574
7M-7410	16
	82
7M-8485	182
	212
	214
	218
	219
	220
	224
	354
	356
	360
	362
	364
	372
	376
	392
	394
7N-0718	▶128
	134
7N-5274	134
7P-3454	326
	327
7P-3466	498
	502
7P-8753	328
	498
	502
7T-0093	82
7T-1099	62
	152
	254
	255
	280

▶ **PRIMARY REFERENCE**

PART NUMBER INDEX

Part	Page
	316
	318
	550
	643
7T-4532	553
7T-6087	126
7T-6088	126
7T-6090	126
7T-6092	126
7T-6093	126
7T-6099	126
7T-6496	192
7T-6799	604
7T-8332	62
	422
7T-8890	650
7U-4898	632
7V-2885	1
	2
	▶274
7V-5191	574
7V-5626	340
7V-5628	152
	158
	160
	340
7V-6089	152
	158
	160
7V-6571	284
7V-8317	194
7W-0815	62
7W-1251	152
7W-2108	562
	564
7W-2501	14
7W-2505	34
7W-2518	17
7W-2519	17
7W-2520	17
7W-2628	74
7W-2634	74
7W-3447	264
	588
7W-4553	86
7W-4589	12
7W-4590	12
7W-4591	12
7W-4592	12
7W-4632	40
7W-4634	40
7W-4635	40
7W-4642	22
7W-4648	48
7W-4650	48
7W-4782	48
7W-4816	12
7W-4817	12
7W-4818	12
7W-4819	12
7W-7381	282
	376
7W-9028	52
7X-0338	96
	98
7X-0371	507
7X-0456	543
	545
7X-0474	182
7X-0515	220
7X-0578	264
7X-0579	537
	569
	642
	643
7X-0603	292
	294
7X-0608	129
	300
7X-0618	266
	296
	496
	498
	502
	522
	531
7X-0620	118
	129
7X-0818	190
7X-0838	284
7X-0871	380
7X-2436	212
	214
7X-2459	282
7X-2465	226
7X-2478	540
7X-2495	184
	186
	188
7X-2497	562
	564
7X-2533	56
7X-2534	153
	158
	160
	340
7X-2535	268
7X-2540	268
7X-2543	220
7X-2549	357
7X-2556	220
7X-2567	599
7X-2577	250
7X-2622	28
7X-3229	657
	659
7X-3308	607
	611
	615
7X-3344	207
7X-3350	203
	204
	214
7X-3393	62
7X-6315	104
7X-7729	56
	68
	70
	72
	78
	96
	98
	120
	220
	248
	251
	252
	255
	257
	268
	270
	284
	301
	330
	338
	340
	346
	350
	354
	357
	360
	365
	373
	377
	381
	385
	389
	392
	395
	408
	422
	529
	530
	554
	592
	655
7X-8549	331
7Y-1734	28
7Y-3173	373
	377
7Y-5227	220
7Y-5267	418
8B-4884	498
	502
8C-0564	354
	360
	362
	372
	376
	394
8C-2926	357
8C-3056	152
8C-3110	416
8C-3205	373
	377
8C-3206	357
8C-3364	356
8C-3426	580
	582
	584
8C-3445	50
8C-3446	50
	202
	331
8C-3451	202
	331
8C-3681	62
	78
8C-3756	557
8C-3979	184
	186
	188
8C-3982	184
	186
	188
8C-4400	186
	188
8C-4424	428
	432
	436
	440
	444
8C-4436	96
	98
8C-4586	540
	572
8C-4982	68
8C-5225	18
8C-5457	126
8C-5917	134
8C-6160	279
8C-6354	606
	610
	614
8C-6440	577
8C-6712	394
8C-8408	218
8C-8457	540
	572
8C-8478	28
8C-8988	384
	388
8C-8989	301
	362
	364
8C-9029	218
8C-9164	327
8C-9778	126
8C-9783	126
8C-9987	491
	604
8D-2707	231
	233
8D-3791	507
8D-9671	166
8E-1118	112
8E-4566	▶524
8E-4567	524
8E-4568	▶524
8E-4569	524
8E-5556	186
	188
8E-5707	184
	186
	188

8

▶ **PRIMARY REFERENCE**

PART NUMBER INDEX

Part	Page	Part	Page	Part	Page	Part	Page
8E-5726	186	8M-3267	646	8T-0372	236	8T-3562	182
	188	8M-5251	246	8T-0389	282	8T-3597	28
8E-5727	186	8M-5254	105	8T-0763	328	8T-3612	62
	188		106	8T-0785	326		118
8E-5728	186	8N-0869	134		327		218
	188	8N-1725	134		328		280
8E-5831	186	8N-9033	580		329		292
	188		584	8T-1138	409		294
8E-6117	184	8R-0248	178		412		300
8E-6120	184		180	8T-1158	488		340
8E-6558	184	8R-0249	178	8T-1482	2		642
8E-7841	246		180		249	8T-3734	550
8E-8292	650	8R-0308	531		250	8T-3957	418
8E-8296	282	8R-0309	531	8T-1885	362	8T-3995	580
8E-8300	548	8R-0512	212	8T-1886	362		582
	619		214	8T-1887	354	8T-4001	599
8E-8313	184	8R-0768	134		360	8T-4121	28
	186	8R-1703	194	8T-1888	354		56
	188	8R-1705	194		360		62
8E-8317	184	8R-2022	235	8T-1889	392		72
8E-8425	197	8R-2211	194		395		78
8E-9968	228	8R-2212	194	8T-1890	392		90
8F-1434	126	8R-2236	203		395		111
	129		207	8T-1895	284		116
	152	8R-2526	212	8T-1896	284		118
8F-1462	601		214	8T-1899	373		120
8F-6437	62	8R-2532	212		377		125
	422		214	8T-1900	373		126
8F-8733	212	8R-2537	178		377		134
	214		180	8T-2356	507		136
8G-0816	152	8R-2538	194	8T-2394	432		140
8H-5303	128	8R-2584	214		444		144
8H-5306	128	8R-2918	292	8T-2397	454		153
8H-7521	182		294	8T-2561	588		158
8I-1362	62	8R-3695	488	8T-2925	178		160
8I-6603	252	8R-5825	232		180		166
8J-0112	298	8R-6904	548	8T-3293	210		172
8J-0412	418		619	8T-3313	300		198
8J-0426	182	8R-7091	266		304		200
8J-2928	506	8R-7092	266	8T-3490	62		220
	536	8R-7812	178		78		224
8J-2933	506		180		152		256
	536	8R-8847	264		218		264
8J-4455	126	8S-0934	629		224		266
8K-1433	280	8S-0948	301		248		276
8L-2779	493		304		270		279
8L-2786	448	8S-3020	134		276		282
	450	8S-4723	629		284		284
	454	8S-5107	220		354		301
	458		365		364		304
	460	8S-7803	544		372		311
	464		574		376		312
	466		632		380		314
	470	8S-9129	182		384		316
8L-8413	574	8S-9130	182		388		318
	646	8T-0075	356		394		320
8M-2770	220	8T-0154	540		422		330
	365		572		540		338
8M-2773	220	8T-0267	448		556		340
	284	8T-0293	195		572		342
	301	8T-0328	152		588		344
	304	8T-0336	212		592		346
	373		214		607		350
	377	8T-0358	212		611		354
	422		214		642		357

► **PRIMARY REFERENCE**

PART NUMBER INDEX

Part	Page	Part	Page	Part	Page	Part	Page
	360		350		220		381
	362		365		256		395
	365		373		276	8T-4178	224
	373		377		279	8T-4179	250
	377		381		282	8T-4180	562
	381		398		301		564
	385		399		304	8T-4181	562
	389		554		311		564
	392		607		312	8T-4182	63
	395		611		314		252
	398		615		316		373
	399	8T-4134	577		318		377
	408	8T-4136	56		320	8T-4183	96
	422		68		330		98
	494		78		340		357
	495		96		342	8T-4184	357
	498		98		344	8T-4185	354
	502		120		346		548
	514		134		350		619
	516		172		365	8T-4186	28
	517		198		377		153
	518		220		381		166
	519		224		385		220
	520		248		389		264
	548		251		408		270
	554		270		498		285
	556		285		502		301
	588		301		588		338
	592		330		592		354
	607		338		607		357
	611		340		611		365
	615		354		615		377
	619		360		622		422
	622		362		640		554
	626		365		641		588
	628		373		649	8T-4189	54
	640		377		651		62
	641		381		655		63
	649		392	8T-4138	116		78
	651		395		148		111
8T-4122	28		408		153		116
	63		422		168		140
	235		514		170		153
8T-4131	28		516		268		172
8T-4132	28		517		276		218
8T-4133	63		518		538		268
	72		519		558		280
	90		520		596		292
	111		529	8T-4139	28		294
	116		530		200		338
	120		554		346		340
	126		615		351		555
	134	8T-4137	56	8T-4140	235		580
	136		63	8T-4149	219		582
	140		78		364		584
	144		90	8T-4157	56		595
	153		112	8T-4158	56		607
	172		114	8T-4167	226		611
	220		118		227		615
	264		134		599		621
	268		153	8T-4170	28		622
	270		158	8T-4171	172		649
	282		160		540		651
	285		166		572	8T-4191	153
	346		200	8T-4172	266		292

► **PRIMARY REFERENCE**

PART NUMBER INDEX

Part	Page	Part	Page	Part	Page	Part	Page
	294		144	8T-4224	54		559
8T-4192	153		607		62		566
	266		611		63		569
	296		615		78		642
	408	8T-4200	62		92		643
	496		63		94	8T-4910	422
	499		133		96	8T-4956	237
	502		136		98		241
	531		144		111		264
8T-4193	63		153		116		279
	496		557		133		408
	499		580		136		522
	502		582		140	8T-4970	116
8T-4194	63	8T-4205	56		144	8T-4971	148
	148		92		153		562
	266		94		218		564
	385		112		268	8T-4984	356
	389		114		280	8T-5002	212
8T-4195	56		118		287		214
	63		152		301	8T-5004	268
	70		166		311		580
	72		172		312		582
	125		268		314		584
	153		276		316	8T-5005	220
	172		540		318		377
	220		557		320		381
	255		558		338	8T-5041	266
	257		560		340	8T-5093	557
	264		562		555	8T-5353	192
	268		564		557		228
	270		572		580	8T-5360	630
	285		580		582	8T-5372	541
	344		582		584		572
	347		584		595	8T-5379	2
	351		596		607		227
	354		604		611	8T-5400	652
	360		607		615		654
	362		611		621	8T-5429	368
	365		615		622		406
	373	8T-4222	63		649	8T-5436	347
	377		270		651		351
	385		554	8T-4226	63	8T-5439	28
	389	8T-4223	28		112	8T-5452	182
	395		63		114	8T-5913	650
	408		96	8T-4244	56	8T-5914	650
	556		98		310	8T-6430	499
	588		148		312		503
	607		153		314	8T-6431	282
	611		200		316	8T-6451	342
8T-4196	72		220		318		344
	78		237		320	8T-6453	394
	198		241		422	8T-6466	78
	200		250	8T-4648	220		134
	282		264		365		285
	342		266	8T-4649	249		588
	357		279	8T-4742	562	8T-6631	540
	373		338		564	8T-6663	219
	398		347	8T-4747	562	8T-6684	392
	399		351		564	8T-6685	494
	528		357	8T-4896	507		495
8T-4197	153		365	8T-4908	63	8T-6703	198
8T-4198	385		385		218		356
	389		389		268	8T-6869	285
8T-4199	136		418		522		292
	140		422		537		294

► **PRIMARY REFERENCE**

PART NUMBER INDEX

Part	Page
8T-6870	96
	98
	287
8T-6912	118
	153
8T-7524	426
	428
	432
	436
	440
	444
8T-7525	416
	418
8T-7529	200
8T-7547	134
	301
	615
8T-7852	153
8T-7963	134
8T-7971	414
8T-8390	329
8T-8442	482
8T-8641	544
8T-8729	100
	109
	123
	131
	132
	448
	450
	458
	490
	597
	598
8T-8730	102
	130
8T-8737	131
	132
	144
	158
	160
	316
	318
	320
	448
	450
	454
	458
	572
	597
	598
	610
	614
8T-8827	152
8T-8894	292
	294
8T-8899	354
	357
	360
8T-8902	219
	384
8T-9386	322
	323
8T-9530	522
	658
8T-9655	107
	190
8T-9757	134
8V-7315	235
	236
8V-7623	210
8W-4342	272
8X-9618	172
8Y-0711	200
8Y-3925	360
8Y-4200	▶543
	634
	635
8Y-4489	254
	255
	372
	376
8Y-4501	562
	564
8Y-4807	562
8Y-5737	540
	572
8Y-5877	567
8Y-5892	602
8Y-5897	543
8Y-5898	545
8Y-5903	601
8Y-5904	543
	▶544
	545
8Y-5906	544
8Y-5914	544
8Y-5928	632
8Y-5929	632
8Y-5930	632
8Y-5931	632
8Y-5932	632
8Y-5936	632
8Y-5937	632
8Y-5938	632
8Y-5944	644
8Y-5945	574
8Y-5947	567
	632
8Y-5953	630
8Y-5965	644
8Y-5972	601
8Y-5979	632
8Y-5981	632
8Y-5988	544
8Y-5992	▶602
	632
8Y-5995	602
8Y-5998	602
8Y-5999	602
8Y-6000	▶545
	634
	635
8Y-6006	601
8Y-6010	601
8Y-6012	644
8Y-6014	644
8Y-6022	644
8Y-6023	644
8Y-6024	644
8Y-6028	544
8Y-6029	574
8Y-6041	574
8Y-6045	574
8Y-6046	574
8Y-6047	574
8Y-6051	632
8Y-6060	574
8Y-6062	574
8Y-6063	574
8Y-6064	574
8Y-6066	574
8Y-6067	574
8Y-6068	574
8Y-6069	574
8Y-6364	198
8Y-6386	562
	564
8Y-6388	566
8Y-6833	632
8Y-6834	632
8Y-6859	575
8Y-6860	575
8Y-6882	▶632
	634
	635
8Y-6883	▶567
	634
	635
8Y-6917	646
8Y-6922	646
8Y-6928	646
8Y-6933	632
8Y-6977	626
	▶635
8Y-7047	266
8Y-7119	599
8Y-7730	198
8Y-8387	380
9	
9B-7233	118
	152
	628
9C-5040	194
9C-5048	214
9C-5049	214
9C-5206	203
	207
9C-6003	496
9C-6020	178
	180
9C-6460	376
9C-6461	376
9C-6809	62
	254
	255
	360
	496
9C-7292	203
	204
	206
	207
9C-7418	204
9C-7907	498
	502
9C-9785	606
	610
	614
9D-1535	296
9D-3768	588
9D-3769	582
9D-7924	292
	294
9F-5644	128
9F-8125	120
9G-0002	134
9G-0004	134
9G-1950	540
	572
9G-2759	564
9G-2761	562
9G-3695	191
9G-5127	182
9G-5311	212
	214
9G-8909	134
9H-1129	214
9H-2258	266
9H-5604	522
9J-3169	▶532
	533
	536
9J-3178	▶534
	535
9K-7951	232
9L-1566	172
9L-6246	96
	98
9L-6770	92
	94
9L-7469	632
9L-7712	236
9L-9068	246
9L-9188	52
9M-0164	646
9M-1974	246
	548
9M-4814	592
9M-4972	153
9M-5733	601
	602
9M-7958	62
9M-8406	63
	588
9M-9439	73
9N-0869	107
	162
9N-1756	484
9P-2749	385
	389
9P-2750	385
	389
9R-1499	118
9R-2404	118
9R-2596	652
9R-2620	582
9R-2672	56

▶ **PRIMARY REFERENCE**

PART NUMBER INDEX

Part	Page
	62
	72
	218
	254
	255
	362
9R-2807	282
9R-3067	282
9R-3203	648
9R-3204	648
9R-3205	648
9R-3469	654
9R-5878	28
9R-7941	112
	114
9R-7942	110
9R-7958	110
9R-7980	112
	114
9R-9110	280
9R-9111	280
9R-9572	372
9S-1240	96
	98
9S-1305	655
9S-4181	182
9S-4183	304
9S-4185	357
	392
9S-4190	372
	377
9S-4191	182
	244
	356
	454
	460
	464
	466
	470
9S-7949	203
	204
	206
	207
9S-7950	203
	204
	206
	207
9S-8002	425
	448
	450
	454
	458
	460
	464
	466
	470
	482
9S-8004	486
9S-8005	214
	425
9S-8006	416
	418
9S-8008	192
9T-1013	300
9T-3598	254
9T-8071	300
9U-0710	279
9U-3668	236
9U-8263	577
9U-8875	184
	186
	188
9U-9280	210
9U-9551	210
9U-9797	184
9V-1203	214
9V-1590	507
9V-1795	▶507
9V-2412	236
9V-2714	507
9V-2715	507
9V-3404	496
9V-4484	508
	511
	512
	514
	518
	520
9V-6343	266
9W-0335	136
	140
	144
9W-0718	186
9W-0852	131
	132
	136
	140
	144
	540
	572
	610
9W-1454	182
9W-2109	418
9W-2110	418
9W-6068	192
9W-6466	184
9W-6904	184
	186
	188
9W-6912	186
9W-6922	184
9W-6927	184
9W-7159	182
9W-7759	208
9W-7761	186
	188
9W-7763	186
9W-7765	184
9W-7770	184
9W-7771	210
9W-8013	184
	186
9W-8142	▶533
9W-8143	▶535
9W-9371	184
	186
	188
9W-9372	184
	186
	188
9W-9399	184
9W-9436	184
9W-9662	186
9W-9718	184
	186
	188
9W-9915	28
9W-9940	599
9X-1046	103
	144
	615
9X-1813	107
	246
	290
9X-1878	657
9X-2027	212
	214
9X-2036	126
9X-2038	586
9X-2040	311
	312
	314
	316
	318
	320
9X-2041	311
	312
	314
	316
	318
	320
	625
	627
9X-2042	292
	294
	558
	560
	562
	564
	577
	580
	582
	584
	607
	611
	614
	648
9X-2044	540
	572
9X-2045	118
	292
	294
	548
	579
	580
	582
	586
	604
9X-2065	282
9X-2125	626
	628
9X-2132	338
	340
9X-2133	62
9X-2185	540
	572
9X-2433	551
9X-2447	656
	657
9X-3463	108
	112
	114
	118
9X-4492	109
9X-4493	109
	118
9X-4609	182
9X-5617	100
	102
9X-6165	168
	170
9X-6562	657
9X-6581	284
9X-6615	118
9X-6643	218
9X-6656	322
9X-7378	588
9X-7380	588
9X-7381	588
9X-7382	588
9X-7383	588
9X-7385	553
9X-7680	482
9X-7849	110
9X-8117	537
9X-8121	110
9X-8139	110
9X-8256	103
	118
	148
	153
	190
	395
9X-8408	362
9X-8482	63
9X-8582	498
	503
9X-8699	268
9X-8873	543
	545
9X-8918	574
9X-9365	120
9Y-5015	14
9Y-8315	72
9Y-9380	287

▶ **PRIMARY REFERENCE**

PART NUMBER INDEX

Part	Page
0	
002-0639	498
	502
005-0469	182
005-0471	208
006-8606	42
009-3101	62
009-4499	380
022-3108	236
030-1712	152
030-9613	278
031-5644	148
032-8048	74
032-8100	78
032-9090	12
032-9091	12
033-5853	484
033-5879	428
	432
	436
	440
	444
033-6027	484
033-6028	493
033-6032	493
033-6043	482
	484
033-7687	20
033-7849	78
	86
033-9139	450
	454
	460
	464
	466
	470
035-8063	36
035-8068	14
036-5802	14
037-4426	540
	572
037-4838	540
	572
053-0189	62
061-6712	212
	214
061-7538	428
	432
	436
	440
	444
061-8803	632
067-6002	14
067-6043	16
067-6044	37
067-6045	37
067-6083	42
067-6087	42
067-6088	42
067-6095	44
067-6123	22
067-6178	24
067-6179	24
067-6269	86
067-6805	14
067-6808	14
067-6873	12
067-6874	12
067-6883	34
067-6897	24
067-6899	24
067-6900	24
067-6927	21
067-6928	21
067-6933	48
067-6998	122
067-6999	122
068-4209	628
069-1124	35
069-2535	278
	384
	388
069-2536	278
083-4419	416
	418
087-0991	290
	404
	406
091-0079	621
091-0081	134
	152
	218
	284
	364
092-1136	62
092-2467	218
095-0670	416
095-0878	574
	632
095-1750	290
095-1751	485
096-0015	421
096-6166	152
098-8968	120
099-3095	288
	401
	402
099-3649	107
	162
1	
100-3143	540
	572
100-3224	575
100-3426	540
	572
100-3685	126
100-3751	32
	60
100-4104	10
100-4112	126
100-4115	126
100-4453	74
100-4454	74
100-4458	150
100-4461	52
100-4466	74
100-4830	8
	82
	86
	150
100-5179	574
100-6659	126
100-7603	395
101-0003	644
101-1790	218
101-2987	39
101-3771	60
101-3805	60
101-3877	82
101-3895	52
101-3906	86
101-3907	86
101-3927	122
101-3983	122
101-3984	122
101-4194	644
101-4195	644
101-7178	86
101-8296	588
101-9161	191
102-0341	540
	572
102-1957	22
102-4176	134
102-6317	646
102-6765	186
102-6770	182
102-6780	182
102-7540	▶184
	243
102-7548	▶186
	243
102-8801	118
	136
	140
	144
	158
	160
	606
	611
	614
102-8802	91
	107
	109
	133
	140
	144
	152
	158
	160
	162
	166
	168
	170
	246
	370
	384
	440
	444
	491
	492
102-8803	100
	107
	109
	123
	140
	144
	152
	158
	162
	166
	168
	172
	246
	300
	338
	340
	376
	557
	577
	606
	610
	614
102-8804	112
	158
	490
	604
	606
	610
102-8805	107
	118
	136
	140
	144
	148
	160
	162
	191
	310
	316
	318
	320
	340
	450
	540
	572
	597
	598
	606
	610
	614
102-8806	131
	132
	136
	140
	144
	148
	448
	454

▶ **PRIMARY REFERENCE**

PART NUMBER INDEX

Part	Page
	458
	460
	464
	466
	470
	606
	611
	614
102-9460	39
102-9941	40
102-9986	86
102-9987	86
102-9988	86
103-2006	311
	312
	314
	316
	318
	320
103-2543	607
	611
103-5796	256
104-2091	566
104-6747	195
104-6749	195
104-6750	195
104-6751	195
104-6754	195
104-6755	195
104-6757	195
104-8085	418
105-2145	482
105-3035	416
105-3036	416
105-3330	384
	388
	657
	659
105-3481	450
105-4775	210
105-4776	210
106-4835	237
	240
106-4837	239
	241
106-5122	▶553
	554
106-6394	338
106-7743	528
106-7799	197
106-8704	160
	168
	170
	370
	588
	614
106-8916	48
107-1852	▶105
107-2503	494
	495
107-3114	246
107-4628	546
	▶652
107-4629	▶569
	570
107-4630	546
	▶566
107-4634	546
	▶579
107-4641	▶648
107-4642	▶595
107-4643	546
	547
	551
	▶596
107-4645	▶577
	578
107-5977	▶625
107-5978	▶626
107-6007	292
	294
107-6013	606
	610
	614
107-6021	606
	610
107-6025	566
107-6032	579
	586
107-6037	320
107-6050	311
	312
	314
	316
	318
	320
107-6056	548
	619
107-6072	607
	611
	615
107-6079	566
107-6104	562
	564
107-6117	562
107-6125	562
	564
107-6127	562
107-6133	▶131
	546
107-6141	292
	294
107-6144	548
107-6145	548
107-9976	498
	502
108-0358	118
108-1029	▶110
	121
108-2192	627
	▶636
108-3320	136
	140
	144
108-4082	635
	▶644
108-4086	575
108-4087	575
108-4103	575
108-4582	▶574
	644
108-4878	644
108-8421	▶601
	632
108-8423	601
108-8424	601
109-1297	338
109-4727	186
	188
109-4728	184
	186
109-5351	71
109-5502	203
	204
	206
	207
109-7041	112
	114
	118
109-7669	528
109-8981	112
110-5051	636
110-5052	636
	638
110-5054	636
110-5056	636
	638
110-5058	636
110-5059	636
	638
110-5060	636
	638
110-5061	636
	638
110-5062	636
	638
110-5063	636
	638
110-5064	636
	638
110-5065	636
	638
110-5066	636
	638
110-5067	636
110-5068	636
	638
110-5071	636
	638
110-5072	636
	638
110-5073	636
	638
110-5074	636
	638
110-6109	136
	140
	144
	610
110-6349	394
110-7524	548
	564
110-7628	266
110-7849	329
110-7886	131
	132
110-7887	604
110-7890	610
110-8054	338
111-0132	548
	619
111-0149	558
111-0157	112
	114
111-0177	548
111-0200	562
111-0201	564
111-0202	564
111-0343	491
111-1815	14
111-5042	118
	644
111-6940	134
	152
	284
	380
111-7874	292
111-7875	558
111-7878	292
	294
111-7881	580
	582
111-7899	121
	136
	140
	144
	168
	170
	172
	320
	340
	346
	350
	370
	537
	560
	606
	610
	614
	615
111-8222	8
111-8738	568
111-9050	210
111-9758	508
	511
	512
	513
	514
	518
	520
112-0885	256
112-1528	564
112-1817	372
	376
	▶424
112-2370	48
112-4577	632
112-5219	579
	586
112-5345	56

▶ **PRIMARY REFERENCE**

PART NUMBER INDEX

Part	Page
112-7166	2
112-7294	118
112-7702	48
112-7704	10
	48
112-9401	89
112-9609	610
	614
112-9610	610
	614
112-9736	556
112-9861	424
113-0899	632
113-1504	10
113-1505	10
113-3632	404
	406
113-3790	1
	2
	▶266
113-3791	266
113-3793	266
113-3794	266
113-3987	330
113-7543	20
113-7913	39
113-8955	32
113-8957	32
113-9232	625
	626
	627
	628
114-1071	184
114-3140	540
	572
114-3937	312
	314
	318
	320
114-3940	314
	316
	318
	320
114-3944	568
114-3951	610
114-3953	577
114-3954	577
114-3956	596
114-4363	82
	122
114-5333	588
114-6604	112
	114
	118
115-1552	562
	564
115-1558	▶111
115-1559	111
	116
115-1561	580
115-1748	136
	140
	144
	610
115-2422	1
115-5327	178
	180
116-4527	474
	476
	477
	478
	479
	480
	481
116-7471	606
	610
116-7856	568
116-9713	▶506
117-2311	103
117-3274	614
117-3468	▶108
	111
	116
	120
117-3787	606
	610
	614
117-3788	606
	610
	614
117-3789	606
	610
	614
117-3915	300
117-7798	282
117-7799	282
117-7836	▶230
	237
	238
	240
	241
117-7837	▶230
	237
	238
	240
	241
	242
117-7839	230
	▶232
117-7840	230
	▶233
117-7848	▶237
117-7849	▶237
117-7860	▶237
117-7861	▶238
117-8801	418
117-9622	▶112
	546
118-0626	546
	547
118-0808	551
	▶642
118-0809	547
	551
	▶559
118-0817	▶627
118-0819	▶628
118-0885	338
118-0888	338
118-0911	301
118-1008	326
118-2722	498
	502
118-3122	418
118-3534	152
118-5044	540
	572
118-5046	540
	572
118-5597	172
118-7236	625
	627
118-7250	▶624
118-7255	622
118-7259	537
	569
118-7362	606
	610
	614
118-8118	89
118-8119	89
119-0781	112
119-2073	624
119-4769	546
	▶568
119-5026	118
119-7127	632
119-7128	628
	▶634
119-7130	567
119-7141	632
119-8263	625
	▶638
119-8310	642
	643
119-8397	484
120-0596	580
	582
120-3956	428
	432
	436
	440
	444
120-4483	229
120-5106	657
120-5140	658
120-6668	▶114
	552
120-6679	329
120-7732	638
120-7733	638
120-7734	638
120-9051	404
121-0199	498
	502
	503
121-0883	22
121-3397	326
121-4480	89
121-7746	68
	▶73
121-8917	▶229
	243
122-0473	78
122-1133	492
122-4873	78
122-6246	56
122-6316	158
	160
122-8352	227
122-8353	227
123-0275	68
123-3132	493
123-4065	322
	323
123-6621	595
123-6622	595
123-7531	428
	429
	432
	433
	436
	437
	440
	444
	445
123-8157	646
123-8851	540
123-8914	300
123-9056	210
123-9128	646
123-9131	646
124-2528	72
124-3536	34
124-3708	82
124-3815	19
	32
	48
	52
	74
124-4401	312
	314
	316
	318
	320
124-5638	103
124-6913	316
	318
	320
124-7126	646
124-7128	646
124-8494	540
	572
124-8495	540
	572
124-9015	580
	582
	584
124-9636	610
	614
124-9637	610
	614
125-2086	268
125-3961	▶580
	600
125-3962	▶582
	600
125-7043	580
	582
125-7045	580

▶ **PRIMARY REFERENCE**

PART NUMBER INDEX

Part	Page
	582
	584
125-7046	580
	582
	584
125-7484	218
	364
126-0747	224
	▶244
126-0748	244
126-1034	582
126-1035	582
126-1036	582
126-1367	582
126-1818	331
126-5985	484
126-6916	384
126-8472	584
	606
	614
127-1647	301
127-2956	124
127-3294	14
127-4832	428
	432
	436
	440
	444
127-5243	658
127-5447	62
	270
127-5660	32
127-5661	32
127-5662	32
127-6510	580
127-7457	582
127-8162	86
127-8286	60
127-8613	568
127-9471	416
127-9472	416
127-9482	416
127-9483	416
127-9485	416
127-9490	416
128-0168	282
128-0169	282
128-0219	214
128-0613	646
128-0782	640
	641
128-0784	641
128-0899	580
	582
128-2477	384
	388
128-2678	636
	638
128-3792	32
128-5164	239
	241
128-5167	239
128-5438	▶238
128-5439	▶238
128-5440	▶238
128-5450	241
128-7069	421
128-8614	89
129-0336	121
129-3178	540
	572
	604
129-3270	292
	294
129-3493	42
129-7184	604
129-7253	625
	627
	▶629
129-8087	218
	364
130-1916	268
130-3216	96
	98
130-4634	422
130-5300	246
130-9811	152
	246
130-9888	10
131-0715	288
131-1236	600
	▶649
131-1237	649
	651
131-1238	649
	651
131-1812	89
131-2639	409
	412
131-3201	152
131-3540	268
131-4242	574
131-5167	574
131-7866	118
131-7874	118
132-0154	22
132-0988	282
132-0994	282
132-2300	498
132-2349	118
132-2350	▶498
132-2351	498
132-2357	498
	502
132-2367	372
132-2373	394
132-2374	394
132-2376	356
132-2387	394
132-2390	394
132-2391	394
132-2393	392
	394
132-2395	394
132-2398	392
	394
132-2399	394
132-2401	521
	▶522
132-2419	522
132-2427	522
132-2435	522
132-2441	522
132-2443	▶521
132-2466	198
132-2467	198
132-2470	1
	2
	▶279
132-2471	1
	2
	▶226
132-2476	332
	▶414
132-2493	279
132-2500	1
	▶254
132-2501	254
132-2550	1
	2
	▶296
132-2553	296
132-2554	296
132-2558	256
132-2672	1
	▶158
132-2685	1
132-2686	2
	▶160
132-2694	340
132-2698	338
132-3543	640
	641
132-3789	282
132-4763	532
	534
132-5789	166
	246
	615
132-9623	184
133-1011	24
133-3235	118
133-4294	212
	214
133-4297	182
	210
133-4824	384
	388
133-7668	82
133-7675	282
133-8305	194
133-8597	316
	318
	320
133-8773	329
134-0404	202
134-0673	282
134-1374	190
134-1396	329
134-2540	152
	606
	610
	614
134-4096	606
	610
134-4126	104
134-4735	292
	294
134-5214	270
134-5215	270
134-7258	657
	659
135-3327	152
	284
135-5935	401
	402
135-9941	357
136-1953	541
	572
136-2109	580
	582
136-4593	196
136-4595	196
136-4794	340
136-8423	416
	418
136-9289	▶448
	470
136-9291	458
136-9292	450
	454
	460
	464
	466
	470
136-9297	448
	458
	464
	470
136-9298	448
	458
	464
	470
136-9301	476
136-9304	474
	476
	477
	478
	479
137-0266	448
	▶474
137-7602	546
	▶561
137-9755	450
138-1611	174
	175
	▶203
138-1612	174
	175
	▶194
138-1614	174
	175
	▶178
138-1615	▶174
138-1616	174
	▶212
138-1617	174
	▶204
138-1635	212

▶ **PRIMARY REFERENCE**

PART NUMBER INDEX

Part	Page
	214
138-1639	212
138-1640	203
138-1643	204
138-1645	178
	180
138-1687	212
138-1736	204
	206
138-2042	74
138-2048	34
138-2050	16
138-2053	44
138-2054	42
138-2060	16
138-2726	▶174
138-2776	174
	▶206
138-2777	175
	▶207
138-8173	416
138-8175	421
139-3584	178
	180
139-4189	409
	410
	412
	466
	470
139-5514	42
140-3024	494
140-6140	214
140-7443	24
140-7444	24
140-7445	24
140-7505	60
140-7506	60
140-7512	60
140-7515	51
140-8783	52
	150
140-8911	6
	▶50
140-9189	270
140-9251	▶278
	284
140-9273	284
140-9289	380
140-9291	408
140-9295	1
	▶251
140-9296	251
140-9312	62
140-9926	464
141-1095	464
	470
141-1556	450
	454
	460
	464
	466
	470
141-2032	450
	454
	460
	464
	466
	470
141-4852	448
	458
	464
	470
141-4892	214
141-4984	580
	582
141-5151	476
	478
141-6188	51
141-6821	197
141-6822	208
141-7316	227
141-7481	409
	410
	411
	412
	448
	458
	464
	466
	470
141-7483	▶326
	332
141-7484	▶328
	332
141-7485	328
141-7486	326
141-7487	328
141-7844	76
141-8184	328
141-8185	328
141-8546	450
141-8580	562
	564
141-8589	74
141-8597	74
141-8599	74
	82
141-8614	5
	▶37
141-8615	▶196
	243
141-8619	208
141-9191	316
	318
141-9236	448
	454
	458
	460
	464
	466
	470
141-9777	74
141-9784	540
	572
141-9917	188
142-2651	448
	458
	464
	470
142-2928	607
	611
	615
142-5789	112
	114
	118
142-5893	326
142-6182	238
142-6185	238
142-6251	296
	▶298
142-6252	298
142-6255	298
142-7568	298
142-8463	▶528
142-8464	▶494
142-8828	90
143-0026	118
143-0027	118
143-0541	125
	▶126
143-1344	126
143-3193	279
143-4916	178
	180
143-4918	178
	180
143-4969	498
	502
143-4973	514
	517
	518
	519
	529
143-4979	498
	502
143-5446	486
143-7899	198
143-8874	537
	569
143-9542	152
144-0195	649
	652
	654
144-5282	108
144-5283	108
144-5284	108
144-7850	450
144-8521	282
145-0326	644
	646
145-2322	▶409
	450
145-2334	450
	454
	460
	464
	466
	470
145-4501	76
145-5163	▶508
	510
145-5201	508
	514
	520
145-5202	508
145-5220	513
145-5221	513
145-5256	▶450
	470
145-5307	579
145-6855	16
145-6856	16
145-6858	16
145-6929	▶109
	118
145-7977	450
145-8327	82
145-8428	448
	454
	458
	460
	464
	466
	470
145-8707	474
	477
145-8710	450
	▶476
145-8711	448
	450
	▶477
145-9123	657
145-9377	522
146-0058	249
146-0059	▶249
146-0066	340
146-0067	340
146-0071	340
146-0104	380
146-0111	372
146-0112	354
	360
146-0113	360
146-0114	360
146-0117	360
146-0118	360
146-0123	362
146-1841	74
146-2438	109
146-3337	409
	412
146-3728	290
146-3765	311
146-6274	▶197
	243
146-6275	197
146-6277	197
146-6280	182
146-6282	▶208
	243
146-6283	▶188
	243
146-6284	▶210
	243
146-6315	409
	410
	411
	412

▶ **PRIMARY REFERENCE**

PART NUMBER INDEX

Part	Page
	413
	448
146-6316	474
	476
	477
	478
	479
	480
	481
146-6317	409
	411
	412
	413
	448
146-6318	474
	476
	477
	478
	479
146-6319	474
	476
	477
	478
	479
	480
	481
146-6783	▶230
	239
	241
	242
146-6822	282
146-6906	▶116
	547
146-6908	547
	▶654
146-7906	300
	304
146-7907	300
	304
146-7908	300
	304
146-7934	270
146-7937	384
	388
146-7951	362
146-7952	362
146-7953	362
146-7970	▶342
146-7980	248
146-7986	522
	531
146-7987	522
	531
146-7990	498
	502
146-7993	498
	502
146-7996	498
	502
146-8000	498
	502
146-8003	531
146-8006	531
146-8009	498
	502
146-8010	498
	502
146-8013	498
	502
146-8016	498
	502
146-8019	498
	502
146-8477	450
	454
	460
	464
	466
	470
146-8478	448
	458
	464
	470
146-8479	409
	410
	411
	412
	466
	470
146-8956	▶42
	44
146-8957	42
146-8981	450
	454
	460
	464
	466
	470
147-0346	658
147-0347	658
147-1656	188
147-1657	186
147-1666	184
147-1773	152
147-1979	16
147-2038	▶410
	450
147-3114	466
	470
147-3322	▶413
	448
	458
	464
	470
147-3621	206
147-3624	207
147-4502	450
147-4549	646
147-5071	▶227
	230
147-5524	5
	▶35
147-5532	5
	▶36
147-5553	74
147-5571	▶239
147-5572	▶239
147-5573	▶239
147-5574	▶239
147-5576	▶237
	239
	241
	242
147-5577	237
	241
147-6522	646
147-6541	646
148-0199	40
148-1928	182
148-2350	290
148-3026	14
148-5318	152
148-5689	606
	610
	614
148-7678	2
	▶338
148-7680	▶502
148-7681	502
148-7685	502
148-7700	2
	▶255
148-7702	255
148-7752	255
148-7761	392
148-7762	392
148-7763	392
148-7765	392
148-7769	392
148-7778	394
148-7783	372
148-7784	372
148-7790	2
	▶496
148-7797	496
148-7798	496
148-7800	496
148-7819	249
148-7827	▶325
	521
148-7841	178
	180
148-7860	340
148-7861	340
148-7862	340
148-7870	496
148-7871	496
148-7872	496
148-7873	496
148-7874	496
148-7875	496
148-7876	496
148-7877	496
148-7900	514
	516
	520
	▶531
148-7922	450
	454
	460
	464
	466
	470
148-8298	152
148-8307	380
148-8309	381
148-8315	384
	388
148-8316	368
	370
	394
	404
	406
148-8318	380
148-8321	354
	360
	362
	372
	376
	394
148-8325	218
	346
	350
148-8326	356
148-8327	200
	219
	356
	364
	372
	376
148-8329	394
148-8335	224
	356
	372
	376
	392
	394
148-8336	282
	354
	360
	362
	372
	377
	380
	384
	388
	392
	394
148-8338	356
148-8339	354
	360
148-8340	300
	304
	370
	395
	404
148-8342	300
	304
148-8345	300
	370
	384
	388
	395
148-8347	200
	290
	300
148-8351	346
	350
148-8352	356
148-8353	284

▶ **PRIMARY REFERENCE**

PART NUMBER INDEX

Part	Page
	290
	380
148-8357	224
148-8358	219
	290
	364
148-8361	284
148-8362	392
148-8364	219
	301
	304
	384
	388
	395
148-8367	356
	380
	384
148-8368	346
	350
	364
148-8369	301
	304
148-8370	380
148-8371	384
	388
148-8372	219
	368
	385
	388
	404
	406
148-8373	356
148-8375	362
	368
	370
148-8378	282
	380
	385
	388
	488
148-8381	368
	406
148-8384	368
	370
148-8385	219
148-8388	219
	356
148-8390	385
	388
148-8405	392
148-8407	356
148-8408	304
148-8410	372
	377
148-8411	357
	392
148-8418	219
	364
148-8419	346
	350
148-8424	219
	384
148-8428	301
	304
	357
148-8433	357
	381
	385
	389
148-8435	284
148-8436	301
	304
	381
148-8443	282
148-8444	219
	357
	381
148-8448	219
148-8455	342
	344
	354
149-0777	308
149-2091	82
149-2398	646
149-2399	646
149-2400	646
149-2403	646
149-4359	310
149-4612	▶558
	600
149-4745	635
149-5470	448
	458
	464
	470
149-5624	554
149-5733	532
	534
149-6117	86
149-7226	574
149-9176	22
150-1293	310
	316
	318
	320
150-3056	372
	377
150-3065	224
150-4033	301
	357
150-4036	301
150-4037	219
	364
150-4043	381
150-4046	392
150-4049	219
	364
150-5968	346
	350
150-5984	554
150-6582	595
150-6766	162
150-7718	628
	▶646
150-7862	264
151-0894	540
	572
151-6320	107
152-0983	78
152-2763	650
152-2764	649
	▶650
	651
152-4014	511
152-4015	511
152-4020	511
152-4021	511
152-4022	511
152-4023	511
152-4187	▶327
	332
152-4189	327
152-4191	327
152-4192	327
152-4195	327
152-5306	▶329
	332
152-5309	329
152-7217	67
152-7219	67
153-0702	203
	206
	207
153-3013	212
153-4856	270
153-6237	219
	364
153-6241	301
	362
	364
153-6248	219
153-6252	362
153-8072	394
153-8462	394
153-8463	394
153-8924	474
	476
	477
	478
	479
	480
	481
153-8925	474
	476
	477
	478
	479
	480
	481
153-8926	474
	476
	477
	478
	479
	480
	481
153-8929	474
	476
	477
	478
	479
	480
	481
153-8941	409
	410
153-8945	411
	413
	448
153-8946	409
	412
153-8947	448
	458
	464
	470
153-8952	448
	458
	464
	470
153-9706	270
154-4133	290
154-4370	580
	582
154-4900	376
154-4901	376
154-4902	376
154-4903	376
154-4904	376
154-4909	376
154-4914	2
	▶252
154-4917	252
154-4918	252
154-4920	▶344
154-4930	338
154-4937	338
154-5225	485
154-5629	606
	610
154-8056	7
154-8413	512
	514
155-0576	82
	162
155-2255	152
	606
	611
	614
155-2259	191
155-2260	107
	140
	144
	158
	160
	162
	166
	246
	290
	606
	611
	614
155-2261	130
155-2262	191
155-2265	136
	144
	148
	158
	160
	191
	577
	606

▶ **PRIMARY REFERENCE**

PART NUMBER INDEX

Part	Page
	611
	614
155-2270	107
	130
	140
	144
	152
	158
	160
	162
	166
	168
	170
	246
	540
	557
	572
	606
	611
	614
155-2271	136
	140
	144
	158
	191
	606
	611
	614
155-2274	107
	136
	140
	144
	158
	160
	162
	606
	611
	614
155-2276	290
155-3503	356
155-5779	652
	654
155-5781	652
155-5782	654
155-5783	▶597
	652
	654
155-5784	▶598
	652
155-6258	301
155-9816	588
156-1148	▶630
	634
	635
156-4130	284
	380
156-4173	17
156-4271	▶599
	600
156-4281	284
156-4282	284
156-4449	537
	569
156-4555	▶258
156-4556	▶260
156-4557	▶262
156-5970	492
156-6155	101
	104
156-6819	572
156-8000	502
157-0634	116
157-2152	474
	478
	480
157-2153	477
	479
	481
157-2284	490
157-2393	96
	98
157-5544	380
157-6144	470
157-6155	470
158-2336	380
158-2829	96
	98
158-3820	380
158-5089	168
	170
	172
	370
	606
	610
159-2829	71
159-3260	▶67
	68
159-3261	68
159-3589	178
	180
159-3781	409
	410
	411
	412
	413
	448
159-4995	▶106
159-4996	106
159-5255	18
159-6003	67
159-6108	105
159-9322	162
159-9539	606
	610
	619
159-9540	619
160-0149	74
160-0269	486
160-0496	278
	380
160-0750	454
	460
	466
160-2243	218
	364
	498
	502
160-2245	218
	364
160-2247	346
	350
160-2248	392
	394
160-2443	▶123
	620
160-3510	24
160-5843	490
160-5844	490
160-6298	454
	460
	466
160-6300	▶411
	454
	460
	466
160-6493	34
160-6494	34
160-6495	34
160-6496	34
160-6520	606
	614
160-6988	10
160-7765	646
160-7766	646
160-7767	646
160-8499	290
161-5967	574
161-6149	290
161-6161	290
	485
161-7620	566
161-8042	550
161-9289	628
161-9640	562
	564
161-9641	562
	564
161-9642	562
	564
161-9647	562
	564
161-9820	17
162-0236	51
162-0237	51
162-0757	52
162-0761	52
162-1504	74
162-1960	518
162-1961	508
	511
	518
162-1981	640
	641
162-1982	640
	641
162-1983	640
	641
162-1984	640
	641
162-2000	86
162-2188	562
162-2189	562
	564
162-2190	562
	564
162-7790	508
	512
	514
	520
162-9754	52
162-9992	82
163-0264	5
	▶38
163-1201	158
	160
163-1869	316
163-1870	318
163-2428	414
	▶415
163-4295	364
163-4330	▶495
163-4356	260
163-4361	498
	502
163-4362	498
	502
163-5512	448
	454
	458
	460
	464
	466
	470
163-6408	280
163-6412	280
163-9256	16
163-9324	588
164-1908	368
164-3207	82
164-4021	512
	514
164-4022	514
	520
164-4024	514
	520
164-4111	312
164-4562	564
164-4563	561
	▶562
164-4564	561
	▶564
164-5509	112
164-5545	372
	376
164-5567	202
	219
	224
	301
	304
	357
164-5577	392
	395
164-5586	380
164-6862	219
	364
164-7556	108
164-9316	512
	514
	520
165-0198	▶529

▶ **PRIMARY REFERENCE**

PART NUMBER INDEX

Part	Page
165-0311	136
	140
	144
	606
	610
	614
165-5655	107
	162
165-6365	282
	376
165-6692	178
	180
166-3988	46
166-3989	46
166-3990	46
166-6176	22
166-7223	646
166-8679	548
166-9287	559
167-0138	▶130
	606
	610
	614
167-2153	24
167-2186	298
167-2201	326
	327
	328
	329
167-2294	298
167-2312	326
	327
	328
	329
167-2450	298
167-2463	326
	327
	328
	329
167-3912	▶264
167-3962	▶514
167-3963	▶516
167-3965	▶517
167-3966	▶518
167-3967	▶519
168-2197	418
168-2198	418
168-2199	418
168-2200	418
168-2203	418
168-2204	418
	▶420
168-2206	418
168-2457	562
168-2458	564
168-3378	420
168-3379	420
168-3380	420
168-3381	420
168-3382	420
168-3384	420
168-3385	420
168-3504	416
	418
168-4520	460
168-4521	466
168-7000	▶280
	546
	547
	551
168-7315	418
168-7316	418
168-7317	418
168-7318	418
168-7319	418
168-7320	418
168-7321	418
168-7323	416
	418
	▶482
168-7551	511
	518
168-7861	416
168-7863	416
168-7864	416
168-7868	416
	▶421
168-7869	416
168-7871	416
168-7872	416
168-7873	415
	▶416
168-7940	421
168-7941	421
168-7942	421
168-7943	421
168-7944	421
168-8389	511
168-8772	577
168-9027	415
	▶418
169-1616	485
169-2943	300
	304
169-2981	356
169-3261	308
169-3995	562
	564
169-4274	300
	304
169-4952	511
169-5862	394
169-7434	557
169-7435	557
169-9049	346
	350
169-9903	547
	▶548
169-9904	548
169-9908	548
169-9949	548
169-9950	548
170-0493	385
	389
170-0503	384
	388
170-1208	178
170-3711	5
	▶30
170-4697	178
170-7064	606
	610
	614
170-8513	448
	▶478
170-9360	607
	611
171-1076	60
171-1078	51
171-1090	5
	▶27
171-1138	▶240
171-1411	39
171-1423	5
	▶19
171-2208	152
171-2211	152
171-4055	479
171-5349	246
171-6029	168
171-6723	354
	357
	360
171-6725	342
	344
171-8689	234
171-8772	492
172-0223	448
	▶479
172-2307	140
	144
172-2309	136
172-4622	218
172-4844	60
172-5500	584
172-5501	584
172-5503	584
172-5507	547
	▶643
172-5508	▶584
	600
172-5512	547
	▶586
172-6456	304
172-6755	148
172-8558	▶512
	517
172-8560	▶513
	519
172-8563	▶510
	516
172-8568	▶511
172-8591	268
	276
	538
173-3064	118
173-4032	394
	▶425
173-4311	600
	▶651
173-5787	628
173-7061	425
173-7062	425
173-7225	284
173-9682	326
	327
	329
173-9779	298
173-9964	454
	460
	466
174-0503	152
	606
	611
	614
174-0563	586
174-0565	584
174-1366	411
174-1486	540
	572
174-1802	170
174-2211	640
174-2213	551
	▶640
174-2215	547
	600
	▶641
174-3734	502
174-4246	56
174-4726	520
174-5907	346
	350
174-6118	395
174-6491	577
174-7582	327
174-9725	619
174-9730	▶619
	621
	622
174-9749	546
	▶621
174-9753	550
174-9755	▶550
	621
174-9763	622
174-9764	552
	▶622
175-3915	52
175-7537	326
175-7895	298
175-7900	326
175-7903	329
175-7905	328
175-9443	▶412
	454
	460
	464
	466
	470
176-0118	234
176-0209	401
	402
176-0210	401
176-0623	496
	522
176-0624	496
	522
176-0798	401
	402
176-1706	▶234

▶ **PRIMARY REFERENCE**

PART NUMBER INDEX

Part	Page
176-1707	234
176-2435	248
176-2437	248
176-5181	▶1
	3
176-5182	3
	▶332
176-5186	3
	▶227
176-5201	▶2
	3
176-5202	3
	▶332
176-7558	346
	350
176-7583	394
177-0019	182
	▶192
177-1452	498
	502
177-4240	495
177-8782	60
177-9653	82
177-9953	▶92
	96
178-1780	606
	610
178-2593	562
	564
178-3720	325
178-3987	614
178-4661	▶520
178-7539	112
178-7877	412
	413
	466
	470
179-3609	659
179-3610	657
	659
179-3611	657
179-3612	659
179-6396	314
179-6397	311
	312
179-6398	320
180-2387	346
	350
180-2388	346
	350
180-2390	354
180-3528	540
180-3730	90
180-4686	90
180-5098	579
180-5100	112
	114
180-7486	568
180-7487	568
180-7497	182
180-7503	▶243
180-7504	▶182
	243
180-8801	1
	2
	▶152
180-8804	1
	2
	▶166
180-8805	1
	2
	▶134
180-8807	1
	2
	▶133
180-8810	▶172
	307
180-8852	246
180-8860	172
180-8871	134
180-8872	134
180-8873	134
180-8874	134
180-8987	1
	▶250
180-8989	2
180-9740	1
	2
	▶70
180-9873	537
	▶540
180-9874	569
	▶572
180-9933	357
183-6317	24
183-6318	48
183-7528	540
	572
183-7600	380
183-8597	246
184-1333	1
	2
	▶78
184-2463	▶132
	547
184-2472	104
184-5293	604
184-5296	▶310
	333
	334
	335
184-5297	547
	551
	600
	▶604
184-5483	5
	▶40
184-5484	40
184-6352	394
184-6353	394
184-7200	394
184-9975	484
185-0882	16
185-1015	6
	▶62
185-1016	62
185-1017	62
185-1021	59
185-1023	58
	59
185-1024	58
	59
185-1027	62
185-1028	218
185-1030	58
185-1031	58
185-1032	322
	323
185-1036	62
185-1039	218
185-1040	28
185-1041	28
185-1045	6
	▶54
185-1046	54
185-1049	62
185-1546	42
185-2327	484
185-2638	92
	94
185-2639	92
	94
185-2643	92
185-2644	92
	94
185-2645	92
	94
185-2647	92
	94
185-2648	92
	94
185-2650	92
	94
185-2651	92
	94
185-2653	92
	94
185-2654	92
	94
185-2655	92
	94
185-2656	94
185-2657	94
185-2658	92
	94
185-2765	370
185-2766	136
	140
	144
185-2767	168
	170
185-2768	172
185-2769	136
	140
	144
185-3596	372
	376
185-5209	380
	▶484
185-5629	604
186-0357	346
	350
186-0359	346
	350
186-0815	56
	59
186-0817	56
	538
186-2337	6
	▶18
186-2344	6
	▶72
186-2347	4
	▶71
186-2348	6
	▶46
186-3735	91
	107
	166
	168
	170
	191
	246
	300
	310
	316
	318
	320
	370
	384
	454
	460
	464
	466
	491
	492
	588
	604
	614
186-3736	191
186-4272	124
186-4415	279
	280
186-4942	233
186-4943	231
	▶234
186-6190	588
187-0534	5
	▶22
187-0541	290
187-1267	288
	401
	402
187-2082	558
187-2120	218
187-2868	68
187-3661	338
188-0172	340
188-3823	282
189-0189	491
189-0942	270
189-1707	540
189-2096	491
189-2100	404
	▶491
189-3014	428
	432
	436
	440
	444
189-4870	▶148

▶ **PRIMARY REFERENCE**

PART NUMBER INDEX

Part	Page
189-4871	▶162
189-5593	340
189-5601	48
189-6135	614
189-6138	614
189-6140	136
	140
	144
190-2446	▶104
	162
190-4310	551
	▶606
190-4320	546
	▶610
190-4330	▶136
	551
190-4340	▶140
	546
190-4401	▶570
190-4402	▶538
190-4405	▶546
190-4406	▶551
190-4555	604
190-4556	604
190-4558	136
	140
	144
190-4559	136
	140
	144
190-4563	604
190-4564	148
190-4605	▶537
	538
190-4632	▶547
190-4633	547
	▶600
190-4634	▶546
	600
190-4635	▶292
	546
190-4643	▶294
	547
	551
190-4644	▶551
190-4645	551
	▶600
190-4646	▶551
	600
190-4690	▶190
	546
	547
	551
190-4700	546
	547
	551
	▶620
190-4701	620
190-4705	579
190-4706	579
190-4707	579
190-4708	579
190-8308	486
190-8310	486
190-8314	486
191-1678	384
	388
191-1679	384
	388
191-2226	235
191-8920	454
	458
	460
	464
	466
	470
191-9136	218
191-9177	62
191-9182	62
191-9184	62
191-9188	276
191-9192	62
192-0086	384
	388
	▶486
192-4352	71
192-4360	▶58
	176
192-4367	▶59
	176
192-7111	428
	432
	436
	440
	444
192-7625	346
	350
193-4640	235
	236
193-4750	346
	350
	▶485
193-5958	486
194-2466	34
194-2915	354
194-2917	392
194-2918	392
194-2921	354
194-3127	354
194-7109	498
	502
194-7110	498
	502
194-7111	498
	502
194-7112	498
	502
194-7265	166
194-8731	354
194-8734	354
195-0290	354
195-0913	537
195-0916	606
	610
	614
195-0917	606
	610
	615
195-0921	606
	610
	615
195-0922	340
195-0925	121
195-6525	342
	344
195-6526	342
	344
195-6935	▶526
195-6937	▶525
195-6938	▶527
195-6961	525
	526
	527
195-6962	526
195-7004	42
195-7430	492
195-8673	346
	350
195-9877	342
	344
195-9878	342
	344
196-1185	246
196-2408	486
196-3104	2
	▶657
196-3698	308
196-3699	308
196-9441	72
197-6666	236
197-7995	236
197-8820	▶94
	98
197-8894	175
	▶180
197-8896	180
197-8898	180
198-0246	180
198-8933	268
198-8942	268
198-8943	268
198-8944	268
198-8945	268
198-8946	268
198-8954	268
198-8955	268
198-8956	538
198-8957	276
198-8959	268
198-8961	268
198-8964	▶276
	570
	600
198-8965	538
198-8970	1
	2
	▶268
199-4152	28
199-4284	70
199-4297	70
199-5067	72
199-5117	70
199-5681	▶401
	406
199-5682	▶402
	404
199-5683	▶288
	290
199-7041	555
	▶557
199-7042	557
199-7043	557
199-7891	92
199-8436	92
199-9252	82
199-9267	82
199-9751	82
2	
200-0831	71
200-1898	346
	350
200-2042	243
	▶246
200-2043	246
200-2045	192
200-2371	488
200-2739	28
200-6345	284
	300
	380
	384
	388
201-0211	190
	▶191
201-0950	486
	▶492
201-0952	243
201-1024	136
	140
	144
201-1802	538
	▶554
201-1803	554
201-4825	292
	294
	▶308
201-5242	288
201-8080	485
201-8108	332
	▶422
201-8745	60
201-9511	227
	▶235
201-9515	235
201-9517	235
202-0353	6
	▶28
202-0354	1
	2
	▶90
202-0355	90
202-0358	90
202-0360	90
202-0363	▶555
	556
202-0370	268

▶ **PRIMARY REFERENCE**

PART NUMBER INDEX

Part	Page	Part	Page	Part	Page	Part	Page
202-0392	270		▶218	204-9416	3	206-9673	195
202-0393	270	203-3884	▶400		▶118	207-0536	268
202-0400	1	203-3885	▶400	205-0520	551	207-3362	588
	2	203-3888	▶307		▶552	207-3366	588
	▶256	203-3889	▶333	205-0522	▶546	207-5262	▶101
202-0401	256	203-3890	▶333	205-0626	94		107
202-0420	1	203-3891	▶334	205-0826	107	207-5268	104
	2	203-3892	▶334		162	207-5947	▶103
	▶248	203-3893	▶335	205-1627	68		578
202-0428	1	203-3898	▶287	205-2214	56	207-5948	546
	2		332	205-3652	218		▶560
	▶655	203-4626	▶657	205-3665	287	207-6796	148
202-0430	1	203-4628	▶658		▶290	208-0792	402
	2	203-4629	▶658	205-3668	399	208-0886	404
	▶282	203-5931	538		▶404	208-1032	516
202-0671	424		570	205-3669	398		520
202-0673	424		▶592		▶406		530
202-0674	424	203-5932	538	205-3961	284	208-2292	402
202-1129	136		▶588	205-4285	103	208-2293	288
	140	203-5937	538	205-4587	290	208-2300	224
	604		▶556	205-5266	300	208-2301	224
	606	203-5943	▶176	205-5268	218	208-2978	488
	610	203-5944	▶176	205-5469	284	208-4972	656
202-6609	▶198	203-5945	▶176	205-6024	556	208-4973	656
	227	203-5946	▶177	205-6025	555	208-4974	656
202-7215	1	203-6590	290	205-6026	555	208-4975	656
	2	203-6591	290	205-6027	555	208-4976	656
	▶56	203-8554	▶309	205-6028	555	208-6055	71
202-7216	56	203-8555	309	205-7105	356	208-6097	310
202-7479	118		▶384	205-7106	356	208-6173	1
202-7857	56	203-8556	▶309	205-7108	356		2
202-9801	422	203-8557	309	205-7110	356		▶270
202-9802	422		▶388	205-8257	107	208-9645	172
202-9824	657	204-0355	615	205-8439	422	208-9646	172
203-2773	▶174	204-0357	136	206-1345	606	209-0091	42
	176		140		610	209-0092	42
203-2774	174		144		615	209-0270	333
	175	204-0358	140	206-2571	▶300		▶428
	▶214		144		307	209-0271	334
203-2775	214	204-0359	136	206-2744	4		335
203-2776	212	204-0813	251		▶5		▶432
	214	204-0814	252	206-3632	486	209-0272	335
203-2777	214	204-1370	166	206-4127	16		336
203-2778	▶175	204-2004	▶120	206-4431	588		▶436
	176		547	206-4432	588	209-0273	333
203-2780	▶175	204-2281	284	206-4433	588		334
	176		300	206-4435	588		▶440
203-2781	▶175		384	206-4441	90	209-0274	334
	177		388	206-5162	101		335
203-3871	1	204-4148	288		162		▶444
	2	204-4329	▶68	206-5208	162	209-0789	356
	▶284	204-4331	1	206-7647	428	209-3149	330
203-3872	1		▶659		432		▶331
	2	204-4334	250		436	209-4578	71
	▶224	204-4335	250		440	209-4579	71
203-3873	332	204-4336	2		444	209-5502	8
	▶356	204-4337	2	206-7655	428	209-5503	8
203-3874	332	204-4341	655		432	209-6417	148
	▶380	204-4342	655		436	209-6427	401
203-3877	▶330	204-5864	1		440		402
	332		2		444	209-7801	364
203-3881	176		▶272	206-9670	174	209-9218	13
	▶364	204-8000	220		175	209-9219	13
203-3883	176		365		▶195	210-1672	▶96
	177	204-8799	560	206-9672	195	210-1675	▶98

▶ **PRIMARY REFERENCE**

PART NUMBER INDEX

Part	Page
210-1690	3
	▶4
210-5545	392
	394
210-5546	392
211-0052	136
	140
	144
	606
	610
	615
211-0067	32
211-0608	408
211-0622	408
211-1058	372
	376
211-1063	334
	335
	336
	▶360
211-2092	404
	406
	▶493
211-4230	372
	376
211-4767	1
	2
	▶408
211-4793	356
211-5255	426
	428
	432
	436
	440
	444
211-5875	346
211-5877	346
211-6643	300
212-0061	488
212-1301	316
	▶454
212-1302	311
	▶458
212-1304	318
	▶460
212-1305	312
	▶464
212-1306	320
	▶466
212-1307	314
	▶470
212-2238	392
212-2239	392
212-3354	332
	▶392
212-3358	334
	335
	▶354
212-4223	104
212-4962	454
	458
	460
	464
	466
	470
	▶480
212-4963	458
	464
	470
	▶481
212-5085	218
	364
212-5940	218
	364
212-5942	218
	364
212-6056	218
	364
212-6282	▶368
	400
212-6283	▶370
	400
212-6301	▶398
	400
212-6304	▶399
	400
212-7521	356
212-8136	372
	376
212-8743	96
	98
212-9979	▶307
213-4555	290
213-5003	392
	394
213-5004	392
	394
213-5065	342
	344
213-6940	372
	376
213-7435	284
213-7436	284
213-7437	284
213-7438	300
213-8783	372
	376
213-9036	▶257
213-9037	257
213-9100	133
213-9708	160
213-9710	32
213-9838	158
214-0734	354
	360
214-0735	354
	360
214-0736	354
	360
214-0737	362
214-0738	362
214-0739	362
214-1042	218
	364
214-1542	300
214-1543	300
214-1544	300
214-1668	14
214-2232	356
214-3203	8
214-3765	372
	376
214-3767	372
	376
214-4153	300
	304
214-4768	210
214-4769	210
214-4916	604
214-5389	346
	350
214-5390	346
	350
214-5514	71
214-5515	71
214-5871	▶304
	307
214-7091	368
	370
214-7092	368
214-7093	380
214-7094	380
214-7096	394
214-7098	300
	304
214-7127	522
214-7458	58
214-7636	652
214-8917	284
214-9434	332
	▶372
214-9437	332
	▶394
214-9563	251
	252
214-9564	251
	252
215-2103	14
215-2884	104
215-2887	▶168
	309
215-2888	▶170
	309
215-3112	71
215-3810	218
	364
215-3811	218
215-3813	370
215-3886	270
215-4011	58
	59
215-4012	71
215-5644	370
215-5645	218
215-5646	218
215-5647	218
215-6429	384
	388
215-6671	290
215-6737	322
215-6740	323
215-6741	▶322
215-6743	▶323
	324
215-8109	428
215-8111	428
	432
	436
	440
	444
215-8113	428
	432
	436
	440
	444
215-8115	428
	432
	436
	440
	444
215-8116	428
	432
	436
	440
	444
215-8118	440
	444
215-8119	432
	436
	444
215-8128	426
	428
	432
	436
	440
	445
215-8129	426
	428
	432
	436
	440
	445
215-8131	426
	428
	432
	436
	440
	445
215-8132	428
	432
	436
	440
	444
215-8133	428
	432
	436
	440
	445
215-8134	428
	432
	436
	440
	444
215-8135	428
	432
	436

▶ **PRIMARY REFERENCE**

PART NUMBER INDEX

Part	Page	Part	Page	Part	Page	Part	Page
	440	216-8235	13	216-9729	426	217-6729	168
	444		▶14	216-9734	60	217-8112	372
215-8136	428	216-8314	12	216-9737	51	217-8113	376
	432	216-8315	12	216-9740	5	217-8413	150
	436	216-8316	5		▶51	217-8421	332
	440		▶12	216-9743	51		▶376
	444	216-8323	34	216-9752	86	217-8477	150
215-8137	426	216-8324	5	216-9786	82	217-8478	150
	428		▶34	216-9790	82	217-9038	150
	432	216-8332	16	216-9819	428	217-9059	150
	436	216-8333	16		432	218-0255	372
	440	216-8335	▶16		436	218-0256	372
	444		17		440	218-2401	604
215-8138	428	216-8343	5		444	218-2439	148
	432		▶17	216-9824	82	218-2792	68
	436	216-8348	21	216-9826	82	218-3623	611
215-8139	426	216-8395	284	216-9828	82	218-5113	▶521
	428	216-8396	300	216-9830	82	218-5114	▶521
	432		304	216-9831	82	218-8836	▶121
	436	216-8398	300	216-9834	82	218-9824	▶200
	440	216-8619	5	216-9835	82		227
	444		▶44	217-0099	82	218-9937	1
215-8188	384	216-8620	5	217-0100	82		▶340
	388		▶7	217-0109	5	219-1388	384
215-8978	62	216-8625	48		▶82		388
215-9430	82	216-8632	24	217-0594	5	219-1389	384
215-9648	350	216-8633	24		▶69		388
215-9649	350	216-8634	24	217-0595	69	219-1460	384
216-0102	212	216-8685	74	217-0596	69		388
	214	216-8690	74	217-0640	5	219-1790	486
216-2892	74	216-8699	74		▶76	219-1803	10
216-3041	218	216-8703	74	217-0721	86	219-1818	52
216-3436	82	216-8705	74	217-0956	190	219-1854	5
216-3446	82	216-8708	74	217-1499	5		▶124
216-3448	82	216-8709	74		▶21	219-1855	5
216-3450	82	216-8710	74	217-1573	34		▶122
216-3937	218	216-8712	74	217-2106	440	219-1856	122
216-3938	218	216-8960	▶3		444	219-2172	52
216-4983	71	216-8961	▶3	217-2768	346	219-2442	86
216-6907	▶600	216-8963	3		350	219-2443	86
216-6908	▶547		▶6	217-2769	346	219-2450	86
	600	216-9043	86		350	219-2451	86
216-6914	547	216-9053	86	217-2771	▶346	219-2452	86
	▶614	216-9068	190		521	219-2453	86
216-6915	▶144	216-9069	190	217-2773	▶350	219-2455	5
	547	216-9086	86		521		▶86
216-6944	58	216-9092	86	217-3401	436	219-2462	5
	59	216-9600	10	217-3622	▶530		▶150
216-6946	58	216-9602	10	217-3708	428	219-2512	13
216-6947	71	216-9604	10		432	219-7845	380
216-6969	342	216-9606	10		436	219-8604	592
216-6970	344	216-9608	10		440	219-8742	372
216-7502	▶426	216-9611	10		444		376
	432	216-9612	5	217-4101	356	220-0186	290
	436	216-9614	10	217-4154	308	220-0497	356
	444	216-9616	5	217-4155	308	220-0691	276
216-7523	426	216-9617	10	217-4597	429	220-1241	28
216-7525	426	216-9618	10		433	220-1865	78
216-7913	428	216-9620	10		437	220-2657	288
	432	216-9623	10		440	220-2658	288
	436	216-9637	52		445	220-2680	402
	440	216-9638	52	217-4598	428	220-2681	401
	444	216-9641	52		433	220-5557	78
216-8231	5	216-9643	52		437		▶89
	▶13	216-9645	52	217-6419	200	220-5560	656

▶ **PRIMARY REFERENCE**

PART NUMBER INDEX

Part	Page
220-5562	▶656
	659
220-5563	657
220-5573	657
	659
220-5574	657
	659
220-5575	657
220-5577	658
220-5578	658
220-6148	5
	▶48
220-6151	48
220-6152	5
	▶39
220-6355	101
220-7171	52
220-7925	174
	175
221-0852	372
221-1018	82
221-2831	376
221-2989	376
221-3206	394
221-3234	372
221-3242	104
221-3424	525
	526
	527
221-3428	525
	527
221-4520	52
221-5278	52
221-5285	5
	▶52
221-5290	5
	▶45
221-5369	5
	▶60
221-6835	5
	▶24
221-6858	5
	▶8
221-6863	74
221-6864	74
221-6866	5
	▶74
221-6872	26
221-6875	5
	▶26
221-6989	5
	▶32
221-6990	5
	▶20
221-7115	5
	▶10
221-7117	203
	207
222-1241	308
222-3138	488
222-3870	107
	162
222-4879	3
	▶104
223-0521	335
	336
	▶362
223-0561	▶336
223-4717	311
	312
	314
	316
	318
	320
223-8276	218
223-9699	384
	388
224-3385	107
	162
224-5846	493
224-6792	236
224-6793	235
	▶236
224-8629	606
	610
224-8930	268
224-9609	606
	610
224-9610	152
224-9611	107
	162
224-9612	166
225-0066	152
225-0300	488
225-1057	311
	312
	314
	316
	318
	320
	▶488
225-1059	▶311
	333
225-1060	▶312
	334
225-1061	▶314
	335
225-1062	▶316
	333
	334
225-1063	▶318
	335
225-1064	▶320
	336
225-3800	268
225-3801	268
225-4287	62
225-4329	▶578
225-5162	▶333
225-5163	▶335
225-5165	▶334
225-5166	▶335
225-5224	152
225-8383	56
226-1354	218
	364
226-1832	558
226-2065	606
226-2066	611
226-2095	488
226-2869	200
	▶202
226-2951	606
	611
226-3378	607
	611
226-3407	607
	611
226-3681	148
226-3863	380
226-3864	380
226-5554	380
226-5923	152
226-6059	134
226-9424	78
227-0104	62
227-4306	218
	364
227-4376	62
227-5899	5
227-8234	356
227-9400	▶324
228-0382	190
228-0820	422
228-1846	▶107
228-7372	322
228-7696	268
228-7868	376
228-8943	82
228-8956	82
228-8960	82
228-8963	82
229-1537	376
229-2935	224
229-2938	224
229-2940	224
229-2941	224
229-3555	10
229-3556	10
229-3557	10
229-3558	10
229-4953	▶240
229-4954	▶240
229-4956	▶240
229-4957	▶241
229-4962	▶241
229-4965	▶241
229-4966	▶241
229-4967	▶242
229-4970	▶242
229-5115	218
	364
229-8672	62
229-9286	62
229-9850	428
	432
	436
230-6142	218
	364
230-7246	62
230-7287	224

▶ **PRIMARY REFERENCE**



© 2002 Caterpillar
All Rights Reserved

Printed in U.S.A.