RUTHZIL TRATOR COMERCIAL DE PEÇAS LTDA 11 97083-6812 ROLANDO

TM 5-3805-290-23P

NOVEMBRO 2007

TECHNICAL MANUAL

924G CATERPILLAR

FIELD MAINTENANCE MANUAL

REPAIR PARTS AND SPECIAL TOOLS LISTS (RPSTL)

FOR

LOADER, LIGHT, SCOOP:
2.5 CUBIC YARD MULTIPURPOSE (MP) CLAMSHELL BUCKET,
DIESEL ENGINE DRIVEN (DED), 4-WHEEL DRIVE
NSN 3805-01-533-1768
MODEL 924G



DISTRIBUTION STATEMENT A - Approved for public release; distribution is unlimited.

HEADQUARTERS, DEPARTMENT OF THE ARMY

NOVEMBER 2007

LIST OF EFFECTIVE PAGES/WORK PACKAGES

Date of issue for original manual is:

Original 30 November 2007

TOTAL NUMBER OF PAGES FOR FRONT AND REAR MATTER IS 24 AND TOTAL NUMBER OF WORK PACKAGES IS 4 CONSISTING OF THE FOLLOWING:

Page/WP No.	***Change No.**
Front Cover (2 pp.)	0
TOC (10 pp.)	0
WP 0001 00 (6 pp.)	0
WP 0002 00 (406 pp.)	0
WP 0003 00 (12 pp.)	0
WP 0004 00 (96 pp.)	0
Back Cover (2 pp).	0

* Zero in this column indicates an original page or work package.

TECHNICAL MANUAL
TM 5-3805-290-23P

HEADQUARTERS
DEPARTMENT OF THE ARMY
Washington, D.C. 30 November 2007

TECHNICAL MANUAL

FIELD MAINTENANCE MANUAL

REPAIR PARTS AND SPECIAL TOOLS LISTS (RPSTL)

FOR

LOADER, LIGHT, SCOOP:
2.5 CUBIC YARD MULTIPURPOSE (MP) CLAMSHELL BUCKET, DIESEL ENGINE DRIVEN (DED), 4-WHEEL DRIVE
NSN 3805-01-533-1768

MODEL 924G

REPORTING ERRORS AND RECOMMENDING IMPROVEMENTS

You can help improve this publication. If you find any mistakes or if you know of a way to improve the procedures, please let us know. Submit your DA Form 2028 (Recommended Changes to Equipment Technical Publications), through the Internet, on the Army Electronic Product Support (AEPS) website. The Internet address is: https://aeps.ria.army.mil. The DA Form 2028 is located under the Public Applications section in the AEPS Public Home Page. Fill out the form and click on SUBMIT. Using this form on the AEPS will enable us to respond quicker to your comments and better manage the DA Form 2028 program. You may also mail, fax or E-mail your letter or DA Form 2028 direct to: TACOM Life Cycle Management Command, ATTN: AMSTA-LC-LMPP/TECH PUBS, 1 Rock Island Arsenal, Rock Island, IL 61299-7630. The E-mail address is ROCK-TACOM-TECH-PUBS@conus.army.mil. The fax number is DSN 793-0726 or Commercial (309) 782-0726.

DISTRIBUTION STATEMENT A - Approved for public release; distribution is unlimited.

TABLE OF CONTENTS

WP 0001 00 FIELD MAINTENANCE (UNIT AND DIRECT SUPPORT MAINTENANCE) REPAIR PARTS AND SPECIAL TOOLS LISTS (RPSTL) INTRODUCTION

WP 0002 00 REPAIR PARTS LIST

GROUP 01 ENGINE

0100 ENGINE ASSEMBLY 0002 00-3
ENGINE AND ENGINE MOUNTING 1 0002 00-3
0101 CRANKCASE, BLOCK, CYLINDER HEAD 0002 00-5
CYLINDER HEAD AND RELATED PARTS 2 0002 00-5
0102 CRANKSHAFT 0002 00-7
REAR AND FRONT MAIN SEAL 3 0002 00-7
VIBRATION DAMPER AND PULLEY 4 0002 00-9
0103 FLYWHEEL ASSEMBLY 0002 00-11
FLYWHEEL ASSEMBLY AND HOUSING 5 0002 00-11
0105 VALVES, CAMSHAFTS, AND TIMING SYSTEM 0002 00-13
ROCKER ARM 6 0002 00-13
VALVE COVER 7 0002 00-15
FRONT HOUSING AND TIMING GEAR 8 0002 00-17
0106 ENGINE LUBRICATION SYSTEM 0002 00-19
BREATHER TUBE 9 0002 00-19
ENGINE OIL SAMPLING VALVE 10 0002 00-21
ENGINE OIL PUMP, BYPASS VALVE, AND PISTON COOLING JETS 11 0002 00-23
ENGINE OIL FILTER, OIL COOLER LINES, FITTINGS, HOSES, AND CORE 12 0002 00-25
ENGINE OIL FILLER 13 0002 00-27
OIL PAN AND RELATED PARTS 14 0002 00-29
ENGINE OIL DRAIN 15 0002 00-31
0108 MANIFOLDS 0002 00-33
INTAKE AND EXHAUST MANIFOLD AND RELATED PARTS 16 0002 00-33

GROUP 03 FUEL SYSTEM

0301 CARBURETOR, FUEL INJECTOR 0002 00-35
FUEL INJECTOR ASSEMBLY 17 0002 00-35
0302 FUEL PUMPS 0002 00-37
FUEL TRANSFER PUMP AND LINES 18 0002 00-37
FUEL INJECTION PUMP, LINES, AND RELATED PARTS 19 0002 00-39
0304 AIR CLEANER 0002 00-41
AIR CLEANER, HOUSING, PRECLEANER, AND RESTRICTION INDICATOR 20 0002 00-41
0305 SUPERCHARGER, BLOWER, TURBOCHARGER OR ALTITUDE COMPENSATOR 0002 00-43
TURBOCHARGER AND RELATED PARTS 21 0002 00-43

TABLE OF CONTENTS (Con't)

	Illus/Fig	Page
AFTERCOOLER AND MOUNTING	22	0002 00-45
TURBOCHARGER AND AFTERCOOLER AIR LINES AND CLAMPS	23	0002 00-47
0306 TANKS, LINES, FITTINGS, HEADERS		0002 00-51
FUEL LINES	24	0002 00-51
FUEL TANK, STANDARD	25	0002 00-53
0309 FUEL FILTERS		0002 00-55
PRIMARY AND SECONDARY FUEL FILTERS (FUEL/WATER SEPARATOR AND BASE)	26	0002 00-55
0311 ENGINE STARTING AIDS		0002 00-57
ETHER STARTING AID LINE	27	0002 00-57
ETHER STARTING AID AND MOUNTING	28	0002 00-59
0312 ACCELERATOR, THROTTLE OR CHOKE CONTROLS		0002 00-61
THROTTLE PEDAL AND RELATED PARTS	29	0002 00-61
GROUP 04 EXHAUST SYSTEM		
0401 MUFFLER AND PIPES		0002 00-63
EXHAUST PIPE	30	0002 00-63
MUFFLER	31	0002 00-65
GROUP 05 COOLING SYSTEM		
0501 RADIATOR, EVAPORATIVE COOLER, OR HEAT EXCHANGER		0002 00-67
RADIATOR AND MOUNTING	32	0002 00-67
0503 WATER MANIFOLD, HEADERS, THERMOSTATS AND HOUSING GASKET		0002 00-69
THERMOSTAT AND HOUSING	33	0002 00-69
COOLANT TANK LINES	34	0002 00-71
RADIATOR HOSES AND FITTINGS	35	0002 00-73
0504 WATER PUMP		0002 00-75
WATER PUMP AND MOUNTING	36	0002 00-75
0505 FAN ASSEMBLY		0002 00-77
HYDRAULIC FAN, MOTOR, AND RELATED PARTS	37	0002 00-77
GROUP 06 ELECTRICAL SYSTEM		
0601 GENERATOR, ALTERNATOR		0002 00-79
ALTERNATOR, V-BELT, AND RELATED PARTS	38	0002 00-79
0603 STARTING MOTOR		0002 00-81
STARTING MOTOR (STARTER)	39	0002 00-81

TABLE OF CONTENTS (Con't)

	Illus/Fig	Page
0607 INSTRUMENT OR ENGINE CONTROL PANEL		0002 00-83
WIPER SWITCH	40	0002 00-83
CONTROL SWITCHES AND PANEL	41	0002 00-85
INSTRUMENT PANEL (BLACKOUT)	42	0002 00-87
CAB WIRING HARNESS AND CONTROL SWITCHES (RIGHT SIDE)	43	0002 00-91
0608 MISCELLANEOUS ITEMS		0002 00-95
MACHINE (TRANSMISSION) ECM	44	0002 00-95
ENGINE ECM	45	0002 00-97
POWER CONVERTER AND RELAYS	46	0002 00-99
0609 LIGHTS		0002 00-101
WORKLIGHTS AND RELATED PARTS	47	0002 00-101
LIGHTS (SERVICE, REAR, BLACKOUT DRIVE, AND TURN SIGNAL)	48	0002 00-103
0610 SENDING UNITS AND WARNING SWITCHES		0002 00-105
HYDRAULIC OIL FILTER BYPASS SWITCH	49	0002 00-105
BRAKE CHARGING PRESSURE SENSOR	50	0002 00-107
ELECTRICAL SENSORS, SWITCHES, AND RELATED PARTS	51	0002 00-113
FUEL LEVEL SENDING UNIT	52	0002 00-117
0611 HORN, SIREN		0002 00-119
HORN	53	0002 00-119
BACKUP ALARM	54	0002 00-121
0612 BATTERIES, STORAGE		0002 00-123
BATTERY (STANDARD AND ARCTIC)	55	0002 00-123
BATTERY BOX AND WIRING (STANDARD)	56	0002 00-127
0613 HULL OR CHASSIS WIRING HARNESS		0002 00-131
SECONDARY STEERING WIRING	57	0002 00-131
ENGINE CONTROL WIRING HARNESS	58	0002 00-133
RIDE CONTROL WIRING	59	0002 00-135
WORKLIGHT WIRING	60	0002 00-137
CAB WIRING	61	0002 00-139
ENGINE WIRING HARNESS	62	0002 00-141
REAR WIRING HARNESS	63	0002 00-143
FRONT WIRING HARNESS	64	0002 00-145
TRANSMISSION CONTROL WIRING	65	0002 00-147
GROUP 07 TRANSMISSION		
0705 TRANSMISSION SHIFTING COMPONENTS		0002 00-149
TRANSMISSION CONTROL AND RELATED PARTS	66	0002 00-149
0710 TRANSMISSION ASSEMBLY		0002 00-151
TORQUE CONVERTER	67	0002 00-151

TABLE OF CONTENTS (Con't)

	Illus/Fig	Page
TRANSMISSION AND TRANSMISSION MOUNTING	68	0002 00-153
0714 SERVE UNIT		0002 00-157
TRANSMISSION CONTROL VALVE AND RELATED PARTS	69	0002 00-157
0721 COOLERS, PUMPS, MOTORS		0002 00-159
TRANSMISSION OIL FILLER	70	0002 00-159
TRANSMISSION OIL STRAINER	71	0002 00-161
TRANSMISSION AND HYDRAULIC COOLER	72	0002 00-163
TRANSMISSION OIL LINES AND FILTER	73	0002 00-165
TRANSMISSION OIL PUMP AND MOUNTING	74	0002 00-167
TORQUE CONVERTER OIL COOLER LINES	75	0002 00-169
GROUP 09 PROPELLER, PROPELLER SHAFTS, UNIVERSAL JOINTS, COUPLER AND CLAMP ASSEMBLY		
0900 PROPELLER SHAFTS		0002 00-171
DRIVE SHAFTS AND RELATED PARTS	76	0002 00-171
GROUP 10 FRONT AXLE		
1000 FRONT AXLE ASSEMBLY		0002 00-173
FRONT AXLE ASSEMBLY	77	0002 00-173
GROUP 11 REAR AXLE		
1100 REAR AXLE ASSEMBLY		0002 00-175
REAR AXLE ASSEMBLY	78	0002 00-175
GROUP 12 BRAKES		
1201 HAND BRAKES		0002 00-177
PARKING BRAKE CONTROL AND RELATED PARTS	79	0002 00-177
PARKING BRAKE HANDLE AND RELATED PARTS	80	0002 00-179
1202 SERVICE BRAKES		0002 00-181
SERVICE BRAKE CONTROL AND RELATED PARTS	81	0002 00-181
1204 HYDRAULIC BRAKE SYSTEM		0002 00-183
SERVICE BRAKE LINES	82	0002 00-183
1206 MECHANICAL BRAKE SYSTEM		0002 00-187
BRAKE PEDALS	83	0002 00-187
GROUP 13 WHEELS AND TRACKS		
1311 WHEEL ASSEMBLY		0002 00-189
WHEEL ASSEMBLY AND RELATED PARTS	84	0002 00-189
1313 TIRES, TUBES, TIRE CHAINS		0002 00-191
TIRES	85	0002 00-191

TABLE OF CONTENTS (Con't)

	Illus/Fig	Page
GROUP 14 STEERING		
1401 MECHANICAL STEERING GEAR ASSEMBLY		0002 00-193
STEERING WHEEL AND RELATED PARTS	86	0002 00-193
1410 HYDRAULIC PUMP OR FLUID MOTOR ASSEMBLY		0002 00-195
SECONDARY STEERING AND METERING PUMPS	87	0002 00-195
HYDRAULIC STEERING PUMP	88	0002 00-197
1411 HOSES, LINES, FITTINGS		0002 00-199
STEERING LINES	89	0002 00-199
1412 HYDRAULIC OR AIR CYLINDERS		0002 00-203
STEERING CYLINDER AND MOUNTING	90	0002 00-203
1414 STEERING SYSTEM VALVES		0002 00-205
SECONDARY STEERING RELIEF VALVE	91	0002 00-205
GROUP 15 FRAME, TOWING ATTACHMENTS, DRAWBARS, AND ARTICULATION SYSTEMS		
1501 FRAME ASSEMBLY		0002 00-207
REAR AXLE STOP	92	0002 00-207
COMPONENT VALVE MOUNTING	93	0002 00-209
RADIATOR FRAME AND RELATED PARTS	94	0002 00-211
REMOTE LUBRICATION LINES	95	0002 00-215
WORKLIGHT FRAME AND MOUNTING	96	0002 00-217
FRAME	97	0002 00-219
1502 COUNTERWEIGHTS		0002 00-221
COUNTERWEIGHTS	98	0002 00-221
1503 PINTLES AND TOWING ATTACHMENTS		0002 00-223
ARTICULATING HITCH AND RELATED PARTS	99	0002 00-223
GROUP 18 BODY, CAB, HOOD AND HULL		
DASH ASSEMBLY	100	0002 00-225
REAR COVER AND RELATED PARTS	101	0002 00-227
CAB MOUNTING	102	0002 00-229
CAB	103	0002 00-231
DOOR ASSEMBLY (LEFT SIDE)	104	0002 00-233
DOOR ASSEMBLY (RIGHT SIDE)	105	0002 00-235
CHASSIS GUARDS AND COVERS	106	0002 00-237
LADDER AND RELATED PARTS	107	0002 00-239
HOOD, SIDE COVERS, AND RELATED PARTS	108	0002 00-241
JOYSTICK CONSOLE	109	0002 00-243

TABLE OF CONTENTS (Con't)

	Illus/Fig	Page
1802 FENDERS, RUNNING BOARDS WITH MOUNTING AND ATTACHING PARTS, OUTRIGGERS, WINDSHIELD, GLASS, ETC		0002 00-245
FRONT FENDER	110	0002 00-245
CAB WINDOWS	111	0002 00-247
1806 UPHOLSTERY SEATS AND CARPETS		0002 00-249
SEAT	112	0002 00-249
CAB LINERS	113	0002 00-251
1808 STOWAGE RACKS, BOXES, STRAPS, CARRYING CASES, CABLE REELS, HOSE REELS, ETC		0002 00-253
TOOLBOX AND RIFLE RACK	114	0002 00-253
GROUP 22 BODY, CHASSIS AND HULL ACCESSORY ITEMS		
2202 ACCESSORY ITEMS		0002 00-255
WINDSHIELD WASHER PUMP AND RELATED PARTS	115	0002 00-255
WINDSHIELD WIPER AND RELATED PARTS	116	0002 00-257
REAR VIEW MIRROR	117	0002 00-259
CAB DEFROSTER	118	0002 00-261
CAB HEATER LINES	119	0002 00-263
A/C INTAKE COVER	120	0002 00-265
2207 WINTERIZATION EQUIPMENT		0002 00-267
AIR DUCT	121	0002 00-267
CAB AIR FILTER	122	0002 00-269
2210 DATA PLATES AND INSTRUCTION HOLDERS		0002 00-273
DATA PLATES AND INSTRUCTION HOLDERS	123	0002 00-273
GROUP 24 HYDRAULIC AND FLUID SYSTEMS		
2401 PUMP AND MOTOR		0002 00-275
BRAKING AND HYDRAULIC FAN PUMP	124	0002 00-275
2402 MANIFOLD AND/OR CONTROL VALVES		0002 00-277
MAIN HYDRAULIC CONTROL VALVE	125	0002 00-277
TILT CONTROL VALVE (COMBINATION)	126	0002 00-279
DEAD ENGINE LOWERING CONTROL VALVE	127	0002 00-281
PILOT OPERATED HYDRAULIC CONTROL VALVE AND LOCKOUT VALVE	128	0002 00-283
RIDE CONTROL VALVE	129	0002 00-285
COUPLER VALVE	130	0002 00-287
2403 HYDRAULIC CONTROLS AND/OR MANUAL CONTROLS		0002 00-289
PILOT OPERATED HYDRAULIC CONTROLS AND RELATED PARTS	131	0002 00-289
DIRECTIONAL CONTROL HANDLE	132	0002 00-291
PILOT OIL ACCUMULATOR	133	0002 00-293
RIDE CONTROL ACCUMULATOR	134	0002 00-295

TABLE OF CONTENTS (Con't)

	Illus/Fig	Page
2404 TILT CYLINDERS AND TILT CRANK		0002 00-297
TILT CYLINDER	135	0002 00-297
2405 MAST COLUMN		0002 00-299
HYDRAULIC LIFT CYLINDER	136	0002 00-299
2406 STRAINERS, FILTERS, LINES AND FITTINGS, ETC.		0002 00-301
HYDRAULIC LINES	137	0002 00-301
PILOT LINES (HYDRAULIC)	138	0002 00-305
HYDRAULIC OIL FILTER AND SAMPLING VALVE	139	0002 00-309
LIFT CYLINDER LINES	140	0002 00-313
TILT CYLINDER LINES	141	0002 00-317
QUICK COUPLER LINES	142	0002 00-321
COUPLER LINES (THIRD FUNCTION, SECONDARY)	143	0002 00-323
HYDRAULIC FAN MOTOR LINES	144	0002 00-325
RIDE CONTROL LINES	145	0002 00-327
HYDRAULIC OIL LINES	146	0002 00-331
COUPLER LINES	147	0002 00-337
BUCKET HYDRAULIC LINES	148	0002 00-341
FAN SUPPLY LINES (STANDARD)	149	0002 00-343
2407 HYDRAULIC CYLINDERS		0002 00-347
COUPLER CYLINDER	150	0002 00-347
BUCKET HYDRAULIC CYLINDER	151	0002 00-349
2408 LIQUID TANKS OR RESERVOIRS		0002 00-351
HYDRAULIC TANK AND MOUNTING	152	0002 00-351
GROUP 33 SPECIAL PURPOSE KITS		
3303 WINTERIZATION KITS		0002 00-353
FUEL LEVEL SENDING UNIT (ARCTIC)	153	0002 00-353
FAN SUPPLY LINES (ARCTIC)	154	0002 00-355
HEATER (ARCTIC)	155	0002 00-359
LADDER AND RELATED PARTS (ARCTIC)	156	0002 00-361
HEATER WIRING (ARCTIC)	157	0002 00-363
BATTERY BOX (ARCTIC)	158	0002 00-365
BATTERY WIRING (ARCTIC)	159	0002 00-367
CHASSIS GUARDS AND COVERS (ARCTIC)	160	0002 00-369
3307 SPECIAL PURPOSE KITS		0002 00-371
FORKLIFT ASSEMBLY	161	0002 00-371
GROUP 52 REFRIGERATION, AIR CONDITIONER HEATER, AND AIR CONDITIONING COMPONENTS		
5200 AIR CONDITIONER/HEATER ASSEMBLY AND GAS COMPRESSOR ASSEMBLY		0002 00-373
A/C COMPRESSOR	162	0002 00-373
A/C AND MOUNTING	163	0002 00-377

TABLE OF CONTENTS (Con't)

	Illus/Fig	Page
5217 REFRIGERANT PIPING		0002 00-381
A/C LINES	164	0002 00-381
5221 REFRIGERANT ACCUMULATOR		0002 00-385
A/C ACCUMULATOR	165	0002 00-385
5230 CONDENSER		0002 00-387
A/C CONDENSER AND MOUNTING	166	0002 00-387
5241 EVAPORATOR		0002 00-389
A/C EVAPORATOR	167	0002 00-389
5243 BLOWER ASSEMBLY		0002 00-391
A/C BLOWER MOTOR	168	0002 00-391
5245 AIR FILTERS		0002 00-393
A/C FILTER	169	0002 00-393
5247 HEATING UNITS		0002 00-395
A/C HEATER COIL	170	0002 00-395
GROUP 74 CRANES, SHOVELS, AND EARTH MOVING EQUIPMENT COMPONENTS		
7436 LIFT ARMS AND PIVOT ASSEMBLIES		0002 00-397
QUICK COUPLER	171	0002 00-397
IMPLEMENT CONTROL	172	0002 00-399
7437 LOADER BUCKET ASSEMBLY OR FORKLIFT		0002 00-401
BUCKET AND RELATED PARTS	173	0002 00-401
GROUP 94 REPAIR KITS		
9401 REPAIR KITS		0002 00-403
KITS	KITS	0002 00-403
GROUP 95 GENERAL USE STANDARDIZED PARTS		
9501 HARDWARE SUPPLIES AND BULK MATERIEL, COMMON		0002 00-405
BULK	BULK	0002 00-405
WP 0003 00 SPECIAL TOOLS LIST		
GROUP 26 TOOLS AND TEST EQUIPMENT		
2604 SPECIAL TOOLS		0003 00-5
UNIT SUPPORT SPECIAL TOOLS	174	0003 00-5
DIRECT SUPPORT SPECIAL TOOLS	175	0003 00-11
WP 0004 00 CROSS-REFERENCE INDEXES		
NSN CROSS-REFERENCE INDEX		0004 00-1
P/N CROSS-REFERENCE INDEX		0004 00-31

FIELD MAINTENANCE (UNIT AND DIRECT SUPPORT MAINTENANCE) REPAIR PARTS AND SPECIAL TOOLS LISTS (RPSTL) INTRODUCTION 0001 00

SCOPE

This RPSTL lists and authorizes spares and repair parts; special tools; special test, measurement, and diagnostic equipment (TMDE); and other special support equipment required for performance of Unit and Direct Support maintenance of the 924G Loader, Light Type II. It authorizes the requisitioning, issue, and disposition of spares, repair parts, and special tools as indicated by the source, maintenance, and recoverability (SMR) codes.

GENERAL

In addition to the Introduction work package, this RPSTL is divided into the following work packages:

1. **Repair Parts Lists Work Package.** Work package containing lists of spares and repair parts authorized by this RPSTL for use in the performance of maintenance. This work package also includes parts which must be removed for replacement of the authorized parts. Parts lists are composed of functional groups in ascending alphanumeric sequence, with the parts in each group listed in ascending figure and item number sequence. Sending units, brackets, filters, and bolts are listed with the component they mount on. Bulk materials are listed by item name in FIG. BULK at the end of the work package. Repair parts kits are listed separately in their own functional group. Items listed are shown on the associated illustrations.

2. **Special Tools List Work Package.** Work package containing lists of special tools, special TMDE, and special support equipment authorized by this RPSTL [as indicated by Basis of Issue (BOI) information in the DESCRIPTION AND USABLE ON CODE (UOC) column]. Tools that are components of common tool sets and/or Class VII are listed.

3. **Cross-Reference Indexes Work Package.** There are two cross-reference indexes in this RPSTL: National Stock Number Index and Part Number Index. The National Stock Number (NSN) Index work package, *and* the Part Number (P/N) Index work package (*If reference designator is used enter: and the Reference Designator Index work package)*. The National Stock Number Index work package refers you to the figure and item number. The Part Number Index work package refers you to the figure and item number. (*If* reference designator is used enter: The Reference Designator Index work package refers you to the figure and item number).

EXPLANATION OF COLUMNS IN THE REPAIR PARTS LISTS AND SPECIAL TOOLS LIST WORK PACKAGES

1. **Item No. (Column 1).** Indicates the number used to identify items called out in the illustration.

2. **SMR Code (Column 2).** The SMR code containing supply/requisitioning information, maintenance level authorization criteria, and disposition instruction, as shown in the following breakout:

SOURCE CODE	MAINTENANCE CODE		RECOVERABILITY CODE
XXxxx	xxXXx		xxxxX
1st two positions	3rd position	4th position	5th position
How you get an item.	Who can install, replace or use the item.	Who can do complete repair* on the item.	Who determines disposition action on an unserviceable item.

* *Complete Repair:* Maintenance capacity, capability, and authority to perform all corrective maintenance tasks of the *"Repair"* function in a use/user environment in order to restore serviceability to a failed item.

a. **Source Code.** The source code tells you how to get an item needed for maintenance, repair, or overhaul of an end item/equipment. Explanations of source codes follow:

EXPLANATION OF COLUMNS IN THE REPAIR PARTS LISTS AND SPECIAL TOOLS LIST WORK PACKAGES - CONTINUED

Source Code	Application/Explanation
	NOTE **Items coded PC are subject to deterioration.**
PA PB PC PD PE PF PG	Stocked items; use the applicable NSN to request/requisition items with these source codes. They are authorized to the maintenance category indicated by the code entered in the third position of the SMR code.
KD KF KB	Items with these codes are not to be requested/requisitioned individually. They are part of a kit which is authorized to the maintenance level indicated in the third position of the SMR code. The complete kit must be requisitioned and applied.
MO - Made at Unit/ AVUM level MF - Made at DS/AVIM Level MH - Made at GS Level ML - Made at SRA MD - Made at Depot	Items with these codes are not to be requested/requisitioned individually. They must be made from bulk materiel which is identified by the part number in the DESCRIPTION AND USABLE ON CODE (UOC) column and listed in the bulk materiel group work package of the RPSTL. If the item is authorized to you by the third position of the SMR code, but the source code indicates it is made at a higher level, order the item from the higher level of maintenance.
AO-Assembled by Unit/ AVUM level AF-Assembled by DS/ AVIM level AH-Assembled by GS level AL-Assembled by SRA AD-Assembled by Depot	Items with these codes are not to be requested/requisitioned individually. The parts that make up the assembled item must be requisitioned or fabricated and assembled at the level of maintenance indicated by the source code. If the third position of the SMR code authorizes you to replace the item, but the source code indicates the item is assembled at a higher level, order the item from the higher level of maintenance.
XA	Do not requisition an "XA" coded item. Order the next higher assembly. (Refer to NOTE below).
XB	If an item is not available from salvage, order it using the CAGEC and P/N.
XC	Installation drawings, diagrams, instruction sheets, field service drawings; identified by manufacturer's P/N.
XD	Item is not stocked. Order an XD-coded item through normal supply channels using the CAGEC and P/N given, if no NSN is available.

NOTE

Cannibalization or controlled exchange, when authorized, may be used as a source of supply for items with the above source codes, except for those source coded "XA" or those aircraft support items restricted by requirements of AR 750-1.

EXPLANATION OF COLUMNS IN THE REPAIR PARTS LISTS AND SPECIAL TOOLS LIST WORK PACKAGES - CONTINUED

b. **Maintenance Code.** Maintenance codes tell you the level(s) of maintenance authorized to use and repair support items. The maintenance codes are entered in the third and fourth positions of the SMR code as follows:

(1) Third Position. The maintenance code entered in the third position tells you the lowest maintenance level authorized to remove, replace, and use an item. The maintenance code entered in the third position will indicate authorization to one of the following levels of maintenance:

Maintenance Code	Application/Explanation
C	Crew or Operator maintenance done within Unit/AVUM maintenance.
O	Unit Level/AVUM maintenance can remove, replace, and use the item.
F	Direct Support/AVIM maintenance can remove, replace, and use the item.
H	General Support maintenance can remove, replace, and use the item.
L	Specialized Repair Activity (SRA) can remove, replace, and use the item.
D	Depot Maintenance can remove, replace, and use the item.

(2) Fourth Position. The maintenance code entered in the fourth position tells you whether or not the item is to be repaired and identifies the lowest maintenance level with the capability to do complete repair (perform all authorized repair functions).

NOTE

Some limited repair may be done on the item at a lower level of maintenance, if authorized by the Maintenance Allocation Chart (MAC) and SMR codes.

Maintenance Code	Application/Explanation
O	Unit/AVUM is the lowest level that can do complete repair of the item.
F	Direct Support/AVIM is the lowest level that can do complete repair of the item.
H	General Support is the lowest level that can do complete repair of the item.
L	Specialized Repair Activity (SRA) is the lowest level that can do complete repair of the item.
D	Depot is the lowest level that can do complete repair of the item.
Z	Nonreparable. No repair is authorized.
B	No repair is authorized. No parts or special tools are authorized for the maintenance of a “B”-coded item. However, the item may be reconditioned by adjusting, lubricating, etc., at the user level.

EXPLANATION OF COLUMNS IN THE REPAIR PARTS LISTS AND SPECIAL TOOLS LIST WORK PACKAGES - CONTINUED

c. **Recoverability Code.** Recoverability codes are assigned to items to indicate the disposition action on unserviceable items. The recoverability code is entered in the fifth position of the SMR code as follows:

Recoverability Code	Application/Explanation
Z	Nonreparable item. When unserviceable, condemn and dispose of the item at the level of maintenance shown in the third position of the SMR code.
O	Reparable item. When uneconomically reparable, condemn and dispose of the item at the Unit level maintenance.
F	Reparable item. When uneconomically reparable, condemn and dispose of the item at Direct Support level.
H	Reparable item. When uneconomically reparable, condemn and dispose of the item at General Support level.
D	Reparable item. When beyond lower level repair capability, return to depot. Condemnation and disposal of item are not authorized below depot level.
L	Reparable item. Condemnation and disposal of item not authorized below Specialized Repair Activity (SRA).
A	Item requires special handling or condemnation procedures because of specific reasons (e.g., precious metal content, high dollar value, critical material, or hazardous material). Refer to appropriate manuals/directives for specific instructions.

3. **NSN - (Column 3).** The NSN for the item is listed in this column.

4. **CAGEC (Column 4).** The Commercial and Government Entity Code (CAGEC) is a five-digit code which is used to identify the manufacturer, distributor, or Government agency/activity that supplies the item.

5. **PART NUMBER (Column 5).** Indicates the primary number used by the manufacturer (individual, company, firm, corporation, or Government activity), which controls the design and characteristics of the item by means of its engineering drawings, specifications, standards, and inspection requirements to identify an item or range of items.

NOTE

When you use an NSN to requisition an item, the item you receive may have a different part number from the part ordered.

6. **DESCRIPTION AND USABLE ON CODE (UOC) (Column 6).** This column includes the following information:

   a. The Federal item name and, when required, a minimum description to identify the item.

   b. Part Numbers (P/Ns) of bulk materials are referenced in this column in the line entry to be manufactured or fabricated.

   c. Hardness Critical Item (HCI). A support item that provides the equipment with special protection from electromagnetic pulse (EMP) damage during a nuclear attack.

   d. The statement END OF FIGURE appears just below the last item description in column (6) for a given figure in both the repair parts list and special tools list work packages.

EXPLANATION OF COLUMNS IN THE REPAIR PARTS LISTS AND SPECIAL TOOLS LIST WORK PACKAGES - CONTINUED

7. **QTY (Column 7).** The QTY (quantity per figure) column indicates the quantity of the item used in the breakout shown on the illustration/figure, which is prepared for a functional group, subfunctional group, group or an assembly. A "V" appearing in this column in lieu of a quantity indicates that the quantity is variable and the quantity may vary from application to application.

EXPLANATION OF CROSS-REFERENCE INDEXES WORK PACKAGE FORMAT AND COLUMNS

1. **National Stock Number (NSN) Index Work Package.**

   a. **STOCK NUMBER Column.** This column lists the NSN by National Item Identification Number (NIIN) sequence. The NIIN consists of the last nine digits of the NSN (i.e., NSN 5305-01-674-1467). When using this column to locate an item, ignore the first four digits of the NSN. However, the complete NSN should be used when ordering items by stock number.

   b. **FIG. Column.** This column lists the number of the figure where the item is identified/located. The figures are in numerical order in WP 0002 00 and WP 0003 00.

   c. **ITEM Column.** The item number identifies the item associated with the figure listed in the adjacent FIG. column. This item is also identified by the NSN listed on the same line.

2. **Part Number (P/N) Index Work Package.** Part numbers in this index are listed in ascending alphanumeric sequence (i.e., vertical arrangement of letter and number combination which places the first letter or digit of each group in order A through Z, followed by the numbers 0 through 9 and each following letter or digit in like order).

   a. **PART NUMBER Column.** Indicates the P/N assigned to the item.

   b. **FIG. Column.** This column lists the number of the figure where the item is identified/located in the repair parts list and special tools list work packages.

   c. **ITEM Column.** The item number is the number assigned to the item as it appears in the figure referenced in the adjacent figure number column.

SPECIAL INFORMATION

1. **Usable On Code (UOC).** The UOC appears in the lower left corner of the DESCRIPTION column heading. Usable on codes are shown as "UOC:" in the Description Column (justified left) on the first line under the applicable item/nomenclature. Uncoded items are applicable to all models. Identification of the UOC's used in the RPSTL are:

Code	Used On
924	924G Loader, Light Type II

2. **Fabrication Instructions.** Bulk materiels required to manufacture items are listed in the Bulk Materiel functional group of this RPSTL. Part numbers for bulk materiel are also referenced in the Description Column of the line item entry for the item to be manufactured/fabricated. Detailed fabrication instructions for items source coded to be manufactured or fabricated are found in TM 5-3805-290-23-1 and TM 5-3805-290-23-2.

3. **Index Numbers.** Items which have the word BULK in the figure column will have an index number shown in the item number column. This index number is a cross-reference between the NSN/P/N Index work package and the bulk materiel list in the repair parts list work package.

SPECIAL INFORMATION - CONTINUED

4. **Associated Publications.** The publication(s) listed below pertain to the 924G Loader, Light Type II and its components:

Publication	Short Title
TM 5-3805-290-10	Operator's Manual for Loader, Light Type II
TM 5-3805-290-23-1	Field Maintenance Manual for Loader, Light Type II
TM 5-3805-290-23-2	Field Maintenance Manual for Loader, Light Type II

HOW TO LOCATE REPAIR PARTS

1. **When NSNs or Part Numbers Are Not Known.**

   a. Using the table of contents, determine the assembly group to which the item belongs. This is necessary since figures are prepared for assembly groups and subassembly groups, and lists are divided into the same groups.

   b. Find the figure covering the functional group or the subfunctional group to which the item belongs.

   c. Identify the item on the figure and note the number(s).

   d. Look in the repair parts list work packages for the figure and item numbers. The NSNs and part numbers are on the same line as the associated item numbers.

2. **When National Stock Number is Known:**

   a. **First.** If you have the NSN, look in the STOCK NUMBER column of the NSN index work package. The NSN is arranged in NIIN sequence. Note the figure and item number next to the NSN.

   b. **Second.** Turn to the figure and locate the item number. Verify that the item is the one you are looking for.

3. **When Part Number is Known:**

   a. **First.** If you have the P/N and not the NSN, look in the PART NUMBER column of the P/N index work package. Identify the figure and item number.

   b. **Second.** Look up the item on the figure in the applicable repair parts list work package.

ABBREVIATIONS

For standard abbreviations see ASME Y14.38-1999, *Abbreviations and Acronyms*.

Abbreviations	Explanation
NIIN	National Item Identification Number (consists of the last 9 digits of the NSN)
RPSTL	Repair Parts and Special Tools Lists
SMR	Source, Maintenance, and Recoverability Code
TMDE	Test, Measurement, and Diagnostic Equipment

END OF WORK PACKAGE

REPAIR PARTS LIST **0002 00**

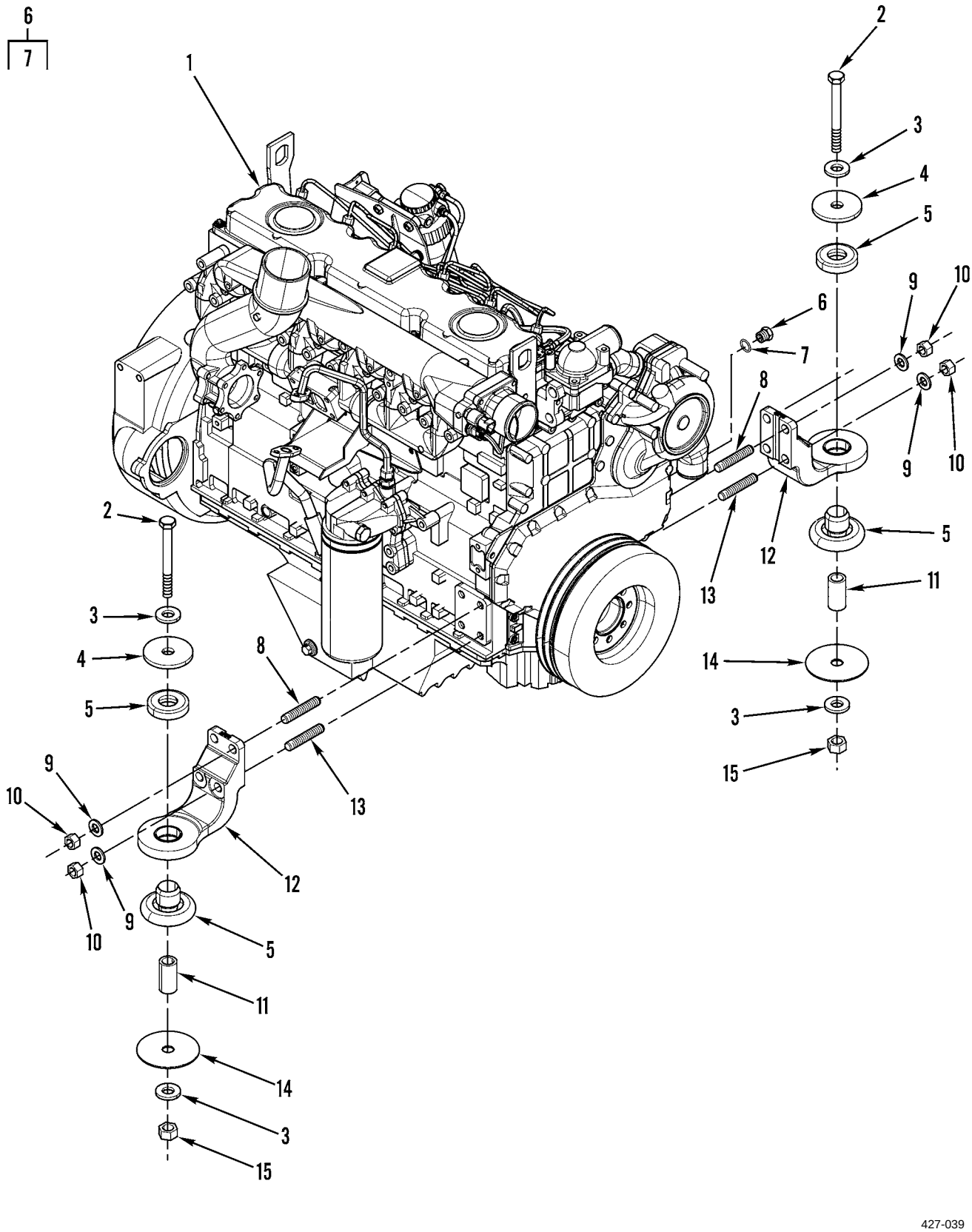

Figure 1. Engine and Engine Mounting

(1) ITEM NO	(2) SMR CODE	(3) NSN	(4) CAGEC	(5) PART NUMBER	(6) DESCRIPTION AND USABLE ON CODES(UOC)	(7) QTY
					GROUP 01 ENGINE	
					GROUP 0100 ENGINE ASSEMBLY	
					FIG. 1 ENGINE AND ENGINE MOUNTING	
1	PAFHH		11083	3020572	ENGINE,DIESEL BASIC ENGINE.....	1
2	PAFZZ	5305014714848	11083	8C8478	SCREW,CAP,HEXAGON H M20 X 2.5 X 140MM.....	2
3	PAFZZ	5310014292862	11083	8T5439	WASHER,FLAT 21.5 X 45 X 6MM THK....	4
4	PFFZZ	5310015440013	11083	7Y1734	WASHER,FLAT 21.5 X 90 X 8MM THK....	2
5	PFFZZ	5340015435037	11083	9W9915	MOUNT,RESILIENT,GEN.....	2
6	PFFZZ	5365015438022	11083	2590373	PLUG,MACHINE THREAD.....	1
7	PFFZZ	5331015436570	11083	1738277	.O-RING.....	1
8	PFFZZ	5307015436668	11083	1137913	STUD,PLAIN.....	3
9	PAFZZ	5310013647468	11083	8T4122	WASHER,FLAT 17 X 32 X 3.5MM THK....	7
10	PAFZZ	5310014138764	11083	8T4132	NUT,PLAIN,HEXAGON M16 X 2 THD.....	7
11	PFFZZ	5365015438722	11083	2002739	SPACER,SLEEVE.....	2
12	PFFZZ	5340015436492	11083	1994152	BRACKET,MOUNTING.....	2
13	PFFZZ	5307015436663	11083	1711411	STUD,PLAIN.....	4
14	PFFZZ	5310015444746	11083	9R5878	WASHER,FLAT 21.5 X 114 X 3MM THK..	2
15	PAFZZ	5310014714476	11083	8T4131	NUT,PLAIN,ROUND M20 X 2.5 THD.....	2
					END OF FIGURE	

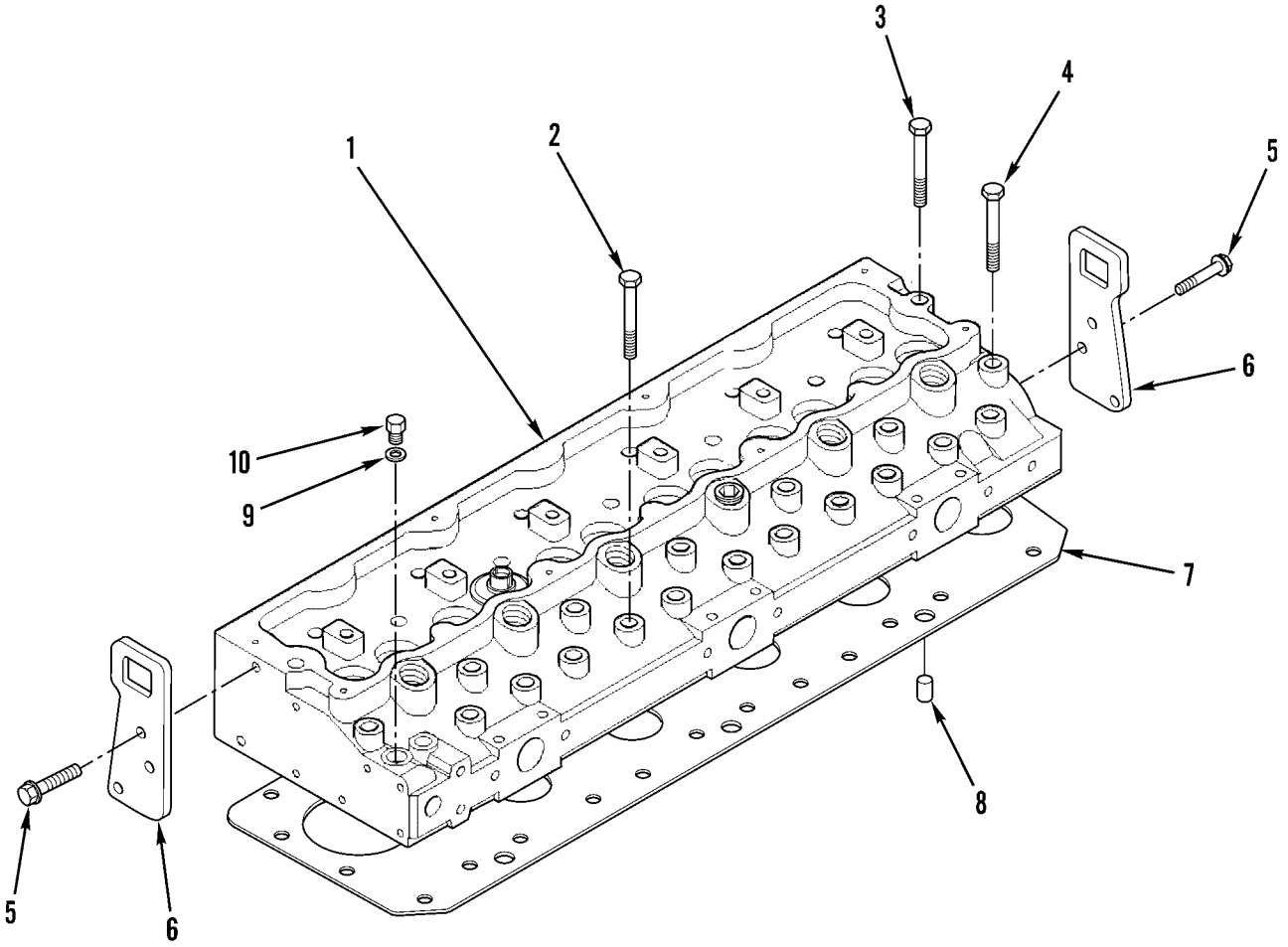

427-005

Figure 2. Cylinder Head and Related Parts

(1) ITEM NO	(2) SMR CODE	(3) NSN	(4) CAGEC	(5) PART NUMBER	(6) DESCRIPTION AND USABLE ON CODES(UOC)	(7) QTY
					GROUP 0101 CRANKCASE, BLOCK, CYLINDER HEAD	
					FIG. 2 CYLINDER HEAD AND RELATED PARTS	
1	PAFHH	2815015438658	11083	2168335	CYLINDER HEAD,DIES.....	1
2	PAFZZ	5305014714489	11083	7W2518	SCREW,CAP,HEXAGON H 1/2-20 X 3.63IN	12
3	PAFZZ	5305014714122	11083	7W2520	SCREW,CAP,HEXAGON H 1/2-20 X 5.09IN	2
4	PAFZZ	5305014714487	11083	7W2519	SCREW,CAP,HEXAGON H 1/2-20 X 4.25IN	18
5	PFFZZ	5340014715234	11083	6I0654	BRACKET,ANGLE BOLT,ASSEMBLED WASHER M10 X 1.5 X 25MM.....	4
6	PFFZZ	5340015435785	11083	2216872	PLATE,MOUNTING.....	2
7	PFFZZ	5330015435053	11083	2400205	GASKET.....	1
8	PAFZZ	5315014715303	11083	1619820	PIN,STRAIGHT,HEADLE.....	2
9	PFFZZ	5310015436937	11083	2474928	WASHER,SEAL 16 .5 X 20.5 X 1.6MM...	1
10	PAFZZ	5340014714841	11083	0676044	PLUG,LEAKPROOF SEAL.....	1
					END OF FIGURE	

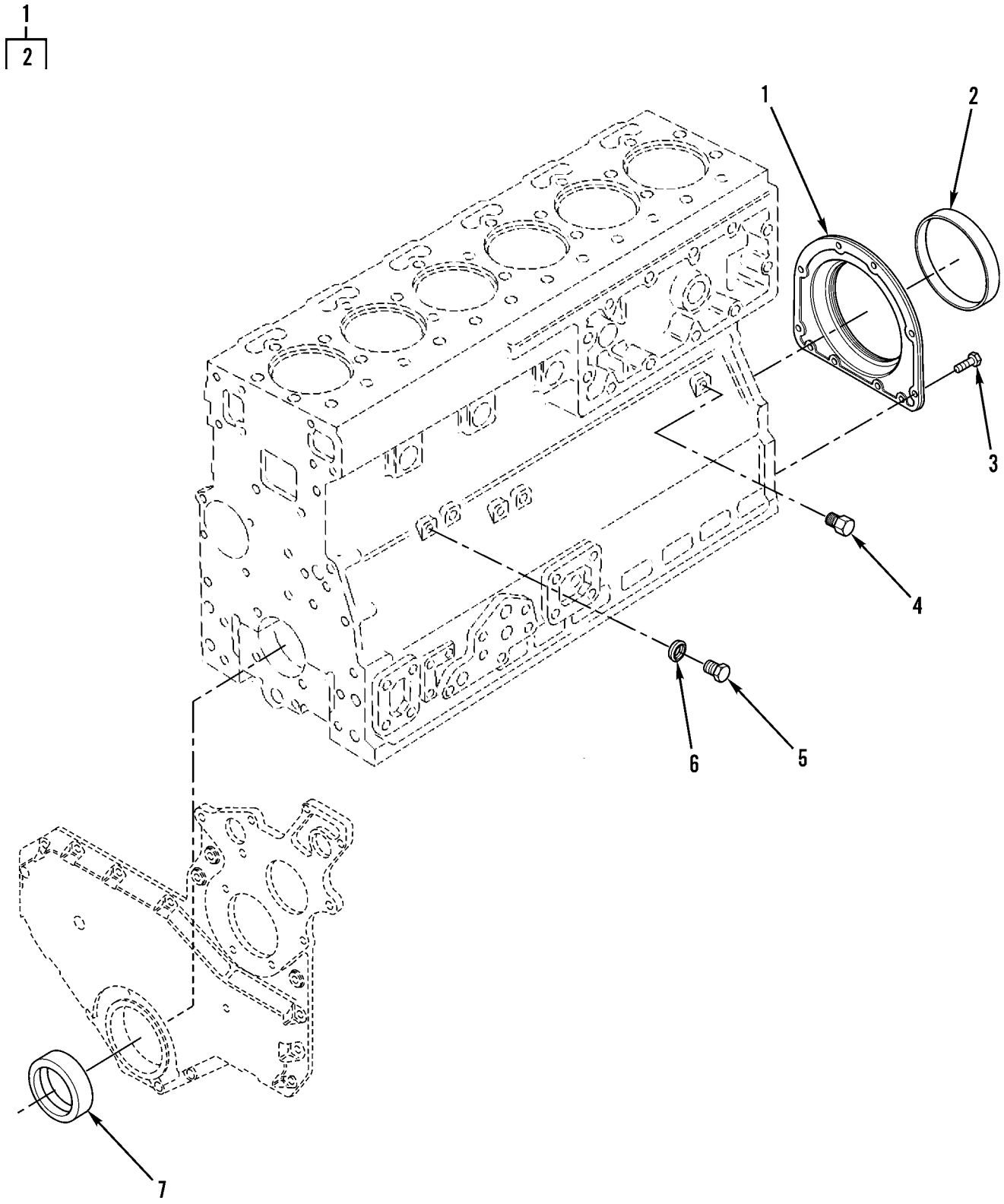

Figure 3. Rear and Front Main Seal

(1) ITEM NO	(2) SMR CODE	(3) NSN	(4) CAGEC	(5) PART NUMBER	(6) DESCRIPTION AND USABLE ON CODES(UOC)	(7) QTY
					GROUP 0102 CRANKSHAFT	
					FIG. 3 REAR AND FRONT MAIN SEAL	
1	PAFZZ	2815015260116	11083	2099218	HOUSING,OIL PUMP AS.....	1
2	PAFZZ	3120015258560	11083	2192512	.BEARING,SLEEVE.....	1
3	PAFZZ	5306015239677	11083	2099219	BOLT,MACHINE M8X1.25 X 16MM.....	10
4	PAFZZ	4730014713623	11083	0691124	PLUG,PIPE.....	1
5	PAFZZ	5306014715239	11083	6I0646	BOLT,MACHINE M10 X 1.5 X 14MM.....	1
6	PFFZZ	5310015436587	11083	2143203	WASHER,SEAL.....	1
7	PAFZZ		11083	2880422	GASKET.....	1
					END OF FIGURE	

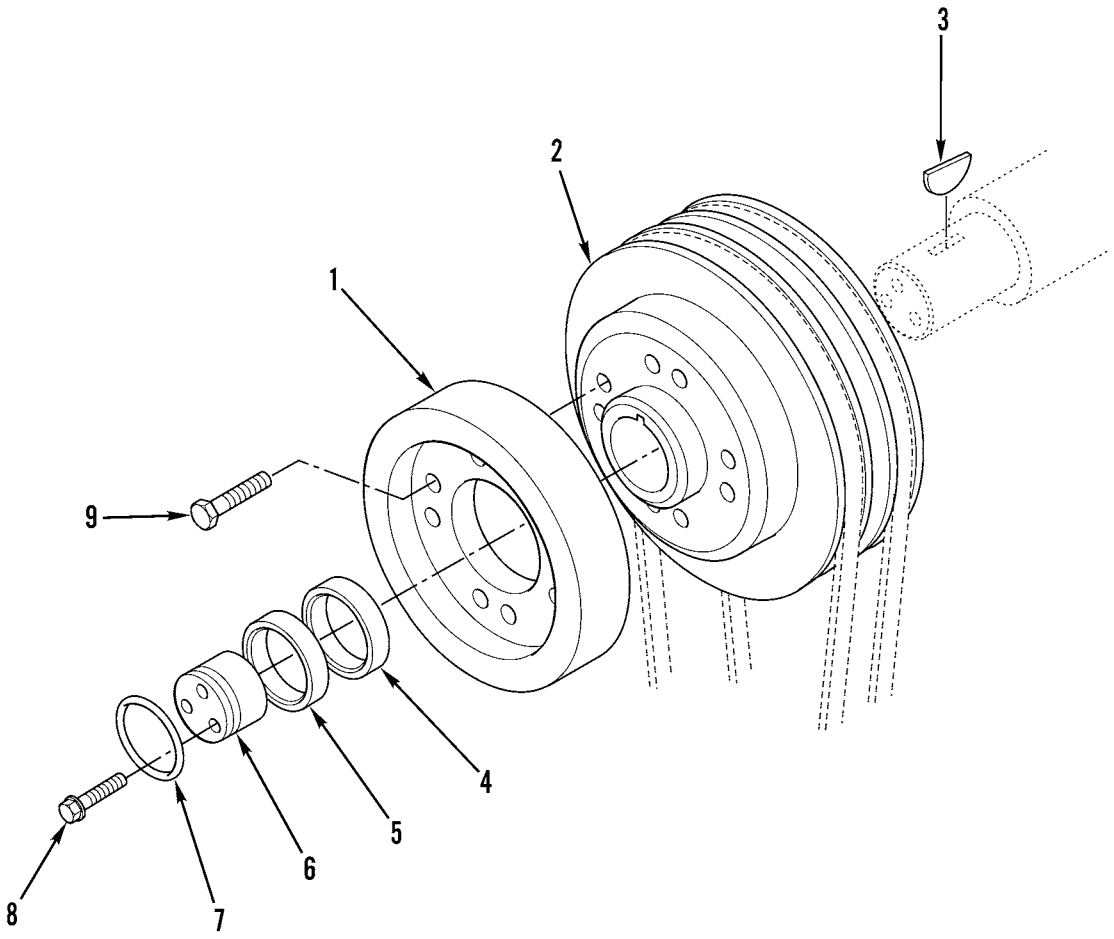

427-007

Figure 4. Vibration Damper and Pulley

(1) ITEM NO	(2) SMR CODE	(3) NSN	(4) CAGEC	(5) PART NUMBER	(6) DESCRIPTION AND USABLE ON CODES(UOC)	(7) QTY
					GROUP 0102 CRANKSHAFT	
					FIG. 4 VIBRATION DAMPER AND PULLEY	
1	PFFZZ	2815015441291	11083	2432249	DAMPENER,VIBRATION,.....	1
2	PFFZZ	3020015435797	11083	1845484	PULLEY,GROOVE.....	1
3	PFFZZ	5315015441878	11083	6I4716	KEY,WOODRUFF.....	1
4	PFFZZ	5365015446076	11083	6I4714	SPACER,STRAIGHT.....	1
5	PAFZZ	5365015441899	11083	7W4632	RING,TAPERED.....	1
6	PFFZZ	3040015435773	11083	7W4635	COLLAR,SHAFT.....	1
7	PFFZZ	5331015436186	11083	7D8048	O-RING.....	1
8	PAFZZ	5305014714118	11083	7W4634	SCREW,CAP,HEXAGON H 7/16-20 X 1.5NIN.....	3
9	PFFZZ	5306015442847	11083	1029941	BOLT,MACHINE M12 X 1.75 X 25MM.....	8
					END OF FIGURE	

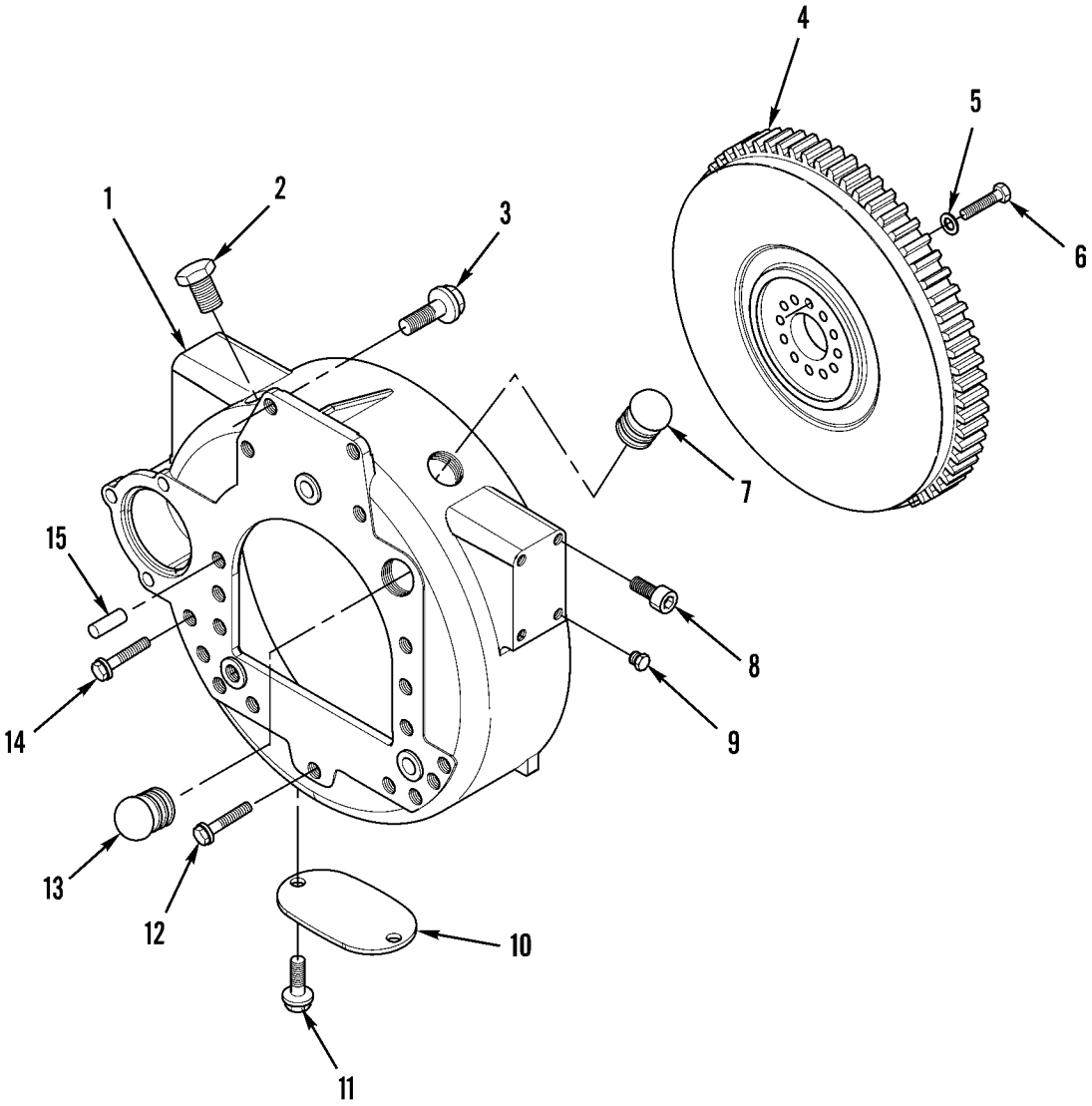

427-008

Figure 5. Flywheel Assembly and Housing

(1) ITEM NO	(2) SMR CODE	(3) NSN	(4) CAGEC	(5) PART NUMBER	(6) DESCRIPTION AND USABLE ON CODES(UOC)	(7) QTY
					GROUP 0103 FLYWHEEL ASSEMBLY	
					FIG. 5 FLYWHEEL ASSEMBLY AND HOUSING	
1	PFFZZ	2815015444087	11083	1499176	HOUSING,FLYWHEEL.....	1
2	PAFZZ	5340014287027	13446	2487Y005	PLUG,PROTECTIVE,DUS.....	1
3	PAFZZ	5305014714121	11083	6I0423	SCREW,CAP,HEXAGON H M12 X 1.75 X 30MM.....	2
4	PAFZZ	2815015438651	11083	1137543	FLYWHEEL,ENGINE.....	1
5	PAFZZ		11083	1454911	WASHER,FLAT 13.5 X 25.5 X 3MM THK..	10
6	PAFZZ	5306010537491	11083	4K7502	BOLT,MACHINE 1/2-20 X 1.375IN.....	10
7	PFFZZ		11083	1993108	PLUG.....	1
8	PFFZZ	5340015436583	11083	1029460	PLUG,PROTECTIVE,DUS.....	1
9	PAFZZ		11083	2052345	PLUG,PROTECTIVE,DUS.....	4
10	PFFZZ	5340015435767	11083	1021957	COVER,ACCESS.....	1
11	PAFZZ	5305014715272	11083	6I0631	SCREW,CAP,HEXAGON H M6 X 1.0 X 12MM	2
12	PAFZZ	5305014715279	11083	6I0593	SCREW,CAP,HEXAGON H.....	3
13	PFFZZ		11083	1993109	PLUG.....	1
14	PAFZZ	5306014715418	11083	1210883	BOLT,MACHINE M10 X 1.5 X 30MM.....	6
15	PAFZZ	5315014716190	11083	0676123	PIN,STRAIGHT,HEADLE.....	2
					END OF FIGURE	

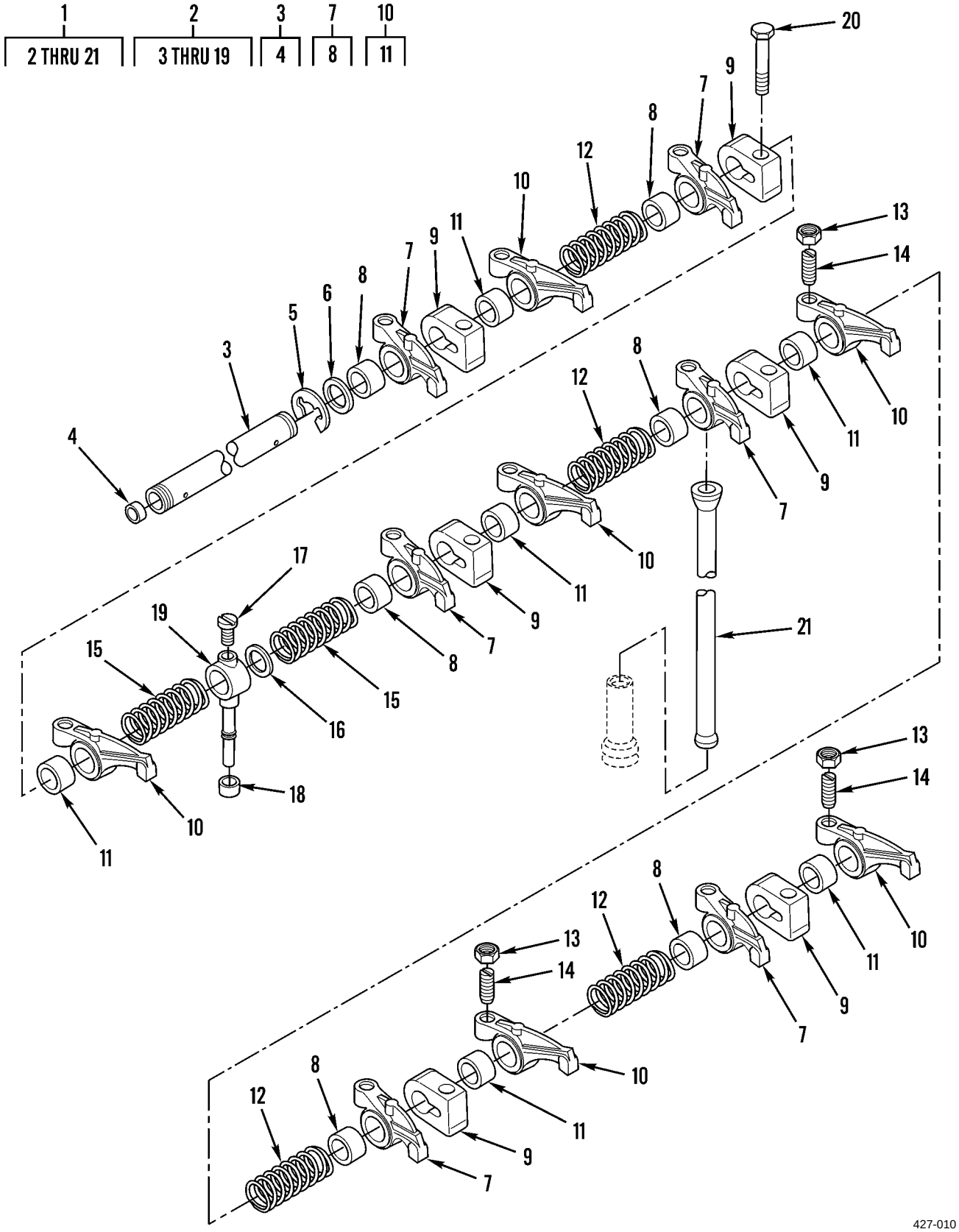

Figure 6. Rocker Arm

(1) ITEM NO	(2) SMR CODE	(3) NSN	(4) CAGEC	(5) PART NUMBER	(6) DESCRIPTION AND USABLE ON CODES(UOC)	(7) QTY
					GROUP 0105 VALVES, CAMSHAFTS, AND TIMING SYSTEM	
					FIG. 6 ROCKER ARM	
1	AFFZZ		11083	2168619	MECHANISM GP-V-A.....	1
2	PFFFF	2815015444090	11083	1468956	.ROCKER ARM,ENGINE P.....	1
3	PFFZZ	3040015441311	11083	1468957	..SHAFT,ASSEMBLY.....	1
4	PAFZZ	5340014716178	11083	0676083	...PLUG,LEAKPROOF SEAL.....	2
5	PAFZZ	5325014714795	11083	0068606	..RING,RETAINING.....	2
6	PAFZZ	5310014714665	11083	1382054	..WASHER BLANK.....	2
7	PAFZZ	2815015296489	11083	2090092	..ROCKER ARM,ENGINE P RH INTAKE....	6
8	PFFZZ	3120015435159	11083	2090093	...BUSHING,SLEEVE.....	1
9	PAFZZ	2815014714400	11083	6I1206	..BRACKET,ROCKER ARM.....	6
10	PAFZZ	2815015300825	11083	2090091	..ROCKER ARM,ENGINE P LH EXHAUST...	6
11	PFFZZ	3120015435159	11083	2090093	...BUSHING,SLEEVE.....	1
12	PAFZZ	5360014716174	11083	0676087	..SPRING,HELICAL,COMP.....	4
13	PAFZZ	5310014299774	11083	6V8183	..NUT,PLAIN,HEXAGON 3/8-24 THD.....	12
14	PAFZZ	5305015060722	11083	1851546	..SCREW,MACHINE.....	12
15	PAFZZ	5360014716176	11083	0676088	..SPRING,HELICAL,COMP.....	2
16	PAFZZ	5365015057374	11083	1957004	..SHIM.....	2
17	PAFZZ	5305014715602	11083	6I3717	..SCREW,MACHINE NO 10 X 12.7MM.....	1
18	PAFZZ	4730014715110	11083	1293493	..FERRULE,SWAGE,TUBE.....	1
19	PAFZZ	4730014715070	11083	6I3718	..CONNECTOR,MULTIPLE,.....	1
20	PAFZZ	5305014715761	11083	6I0235	.SCREW,CAP,HEXAGON H M12 X 1.75 X 50MM.....	6
21	PAFZZ	2815014714372	11083	0676095	.PUSH ROD,ENGINE POP.....	12
					END OF FIGURE	

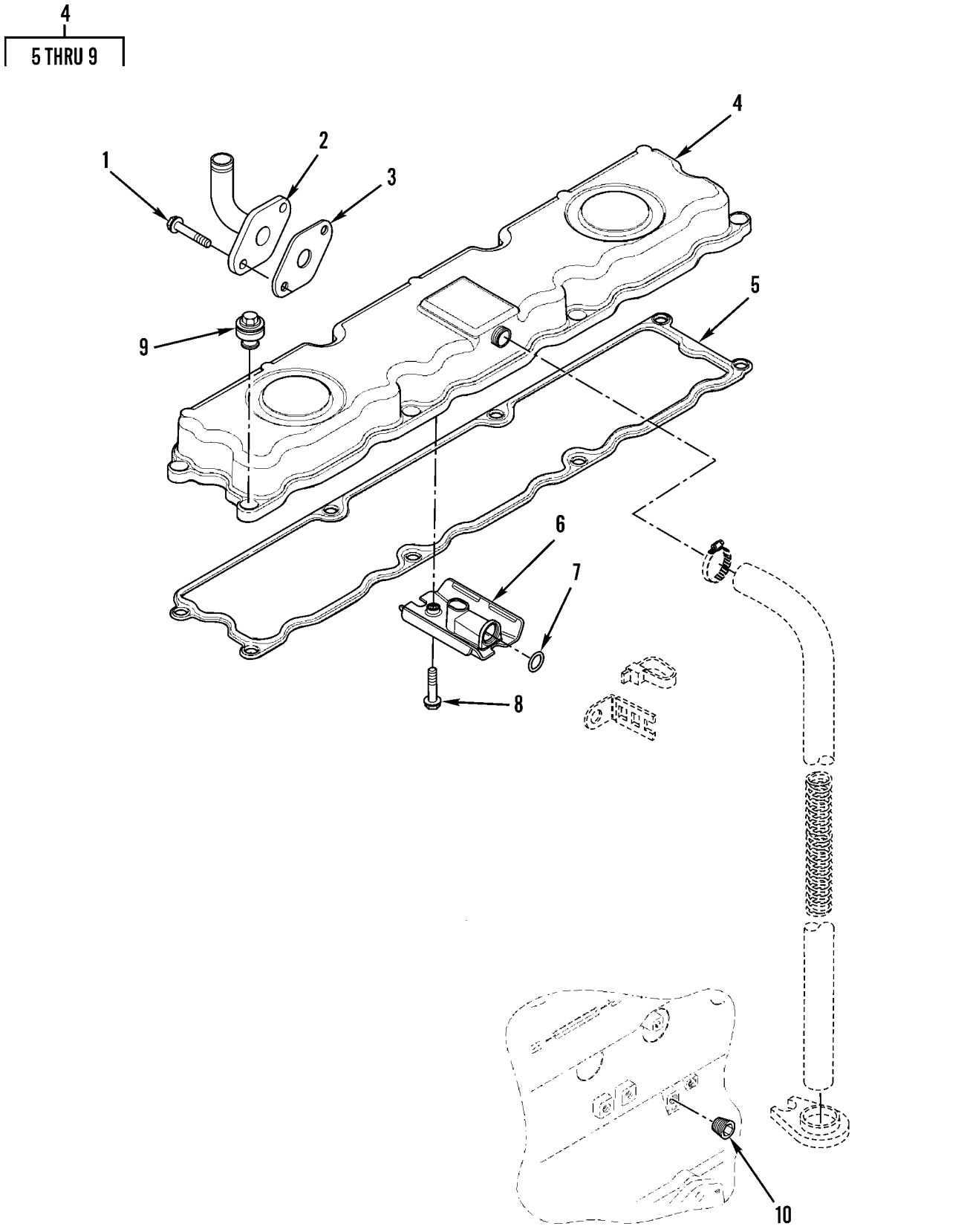

Figure 7. Valve Cover

(1) ITEM NO	(2) SMR CODE	(3) NSN	(4) CAGEC	(5) PART NUMBER	(6) DESCRIPTION AND USABLE ON CODES(UOC)	(7) QTY
					GROUP 0105 VALVES, CAMSHAFTS, AND TIMING SYSTEM	
					FIG. 7 VALVE COVER	
1	PAOZZ	5306014715217	11083	6I0217	BOLT,ASSEMBLED WASH M8 X 1.25 X 20MM.....	2
2	PFOZZ	4710015436828	11083	2191803	TUBE ASSEMBLY,METAL.....	1
3	PFOZZ	5330015435055	11083	1004104	GASKET.....	1
4	PFOZZ	2815015441295	11083	2169606	COVER,ENGINE POPPET.....	1
5	PAOZZ	5330015173382	11083	2169604	.GASKET VALVE COVER.....	1
6	PFOZZ	2990015444098	11083	2169602	.VALVE,POSITIVE CRAN CRANKCASE VENT	1
7	PFOZZ	5331015436954	11083	2293557	.O-RING.....	1
8	PFOZZ	5306015435781	11083	2293558	.BOLT,MACHINE.....	1
9	PFOZZ	5306015435788	11083	2169600	.BOLT,MACHINE.....	8
10	PAOZZ	4730000575555	11083	7M7410	PLUG,PIPE.....	1
					END OF FIGURE	

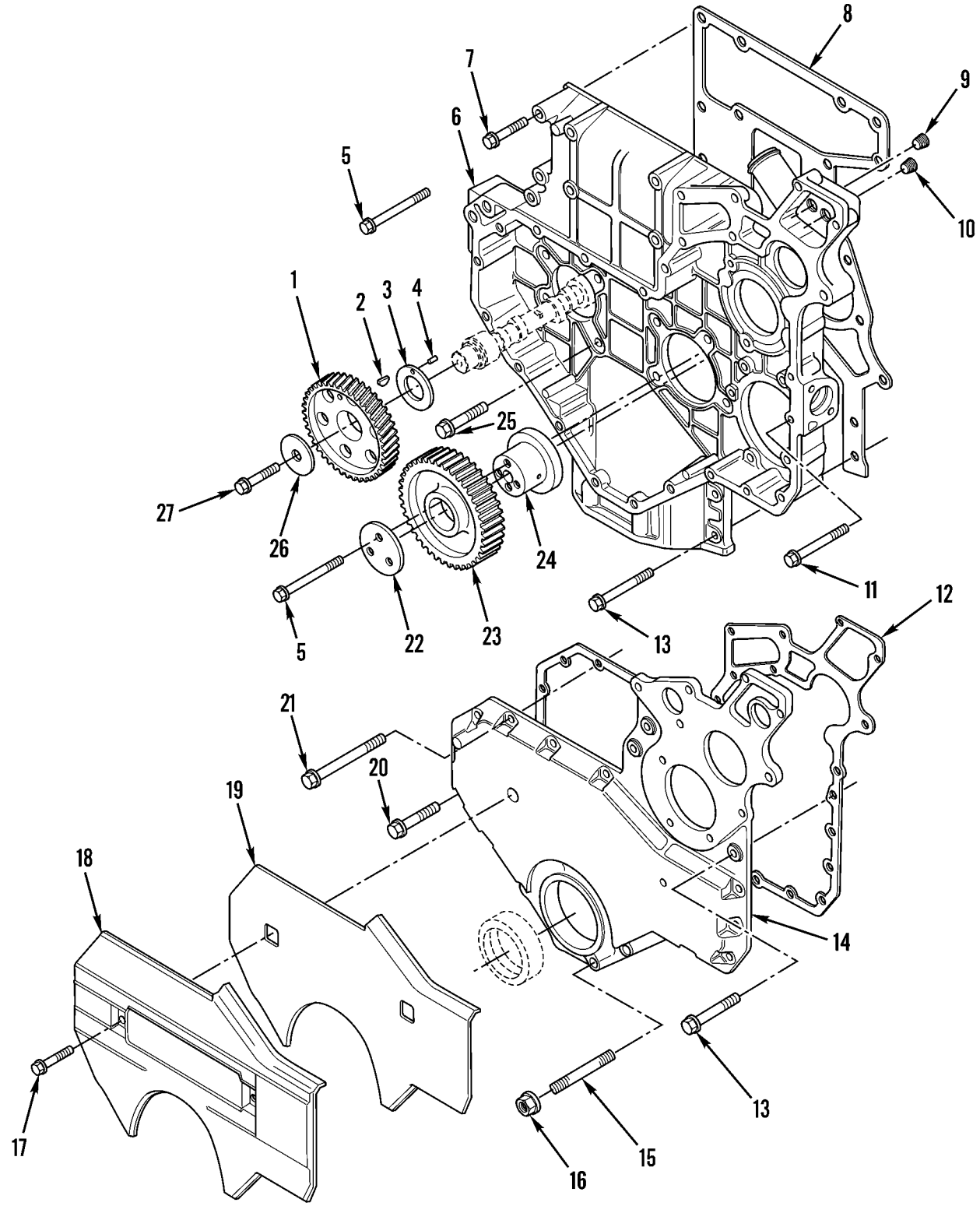

Figure 8. Front Housing and Timing Gear

(1) ITEM NO	(2) SMR CODE	(3) NSN	(4) CAGEC	(5) PART NUMBER	(6) DESCRIPTION AND USABLE ON CODES(UOC)	(7) QTY
					GROUP 0105 VALVES, CAMSHAFTS, AND TIMING SYSTEM	
					FIG. 8 FRONT HOUSING AND TIMING GEAR	
1	PAFZZ	3020015238543	11083	2168634	GEAR,HELICAL 68 TEETH.....	1
2	PAFZZ	5315006165530	80205	MS35756-15	KEY,WOODRUFF.....	1
3	PAFZZ	5310015055681	11083	0676178	WASHER,FLAT.....	1
4	PAFZZ	5315014715141	11083	0676179	PIN,STRAIGHT,HEADLE.....	1
5	PAFZZ	5305014715830	11083	6I0650	SCREW,CAP,HEXAGON H.....	7
6	PFFZZ	2815015447152	11083	2168632	COVERTIMINGGEAR,INT.....	1
7	PAFZZ	5306014715199	11083	6I4374	BOLT,ASSEMBLED WASH.....	2
8	PAFZZ	5330015056792	11083	6I0836	GASKET.....	1
9	PAFZZ	4730000575555	11083	7M7410	PLUG,PIPE.....	1
10	PAFZZ	4730002783383	15235	PLG1	PLUG,PIPE.....	1
11	PAFZZ	5305014715279	11083	6I0593	SCREW,CAP,HEXAGON H M10 X 1.5 X 30MM.....	1
12	PAFZZ	5330015292512	11083	1772391	GASKET.....	1
13	PAFZZ	5306014714703	11083	6I0260	BOLT,ASSEMBLED WASH M8 X 1.25 X 25MM.....	5
14	PAFZZ	5340015293183	11083	1836317	COVER,ACCESS.....	1
15	PFFZZ		11083	6I0840	STUD.....	2
16	PAFZZ	5310014713997	11083	6I0291	NUT,PLAIN,CAP.....	2
17	PAFZZ	5305014716189	11083	6I0846	SCREW,CAP,HEXAGON H M6 X 1 X 14MM..	2
18	PAFZZ	2815014715026	11083	1407444	GUARD,DIESEL ENGINE.....	1
19	PAFZZ	2815014715024	11083	1407445	DAMPENER,VIBRATION,.....	1
20	PAFZZ	5306014715222	11083	6I0254	BOLT,ASSEMBLED WASH.....	6
21	PFFZZ	5340014715310	11083	6I0839	BRACKET,ANGLE M8 X 1.25 X 70MM.....	6
22	PFFZZ		11083	2951711	PLATE,MOUNTING.....	1
23	PAFZZ	3020015238447	11083	2514336	GEAR,DRIVE MOTION 73 TEETH.....	1
24	PFFZZ	3040015437796	11083	2829861	HUB,BODY.....	1
25	PAFZZ	5306014715217	11083	6I0217	BOLT,ASSEMBLED WASH M8 X 1.25 X 20MM.....	1
26	PAFZZ	5310014715216	11083	1331011	WASHER BLANK.....	1
27	PAFZZ	5305014714735	11083	7C4616	SCREW,CAP,HEXAGON H M12 X 1.75 X 45MM.....	1
					END OF FIGURE	

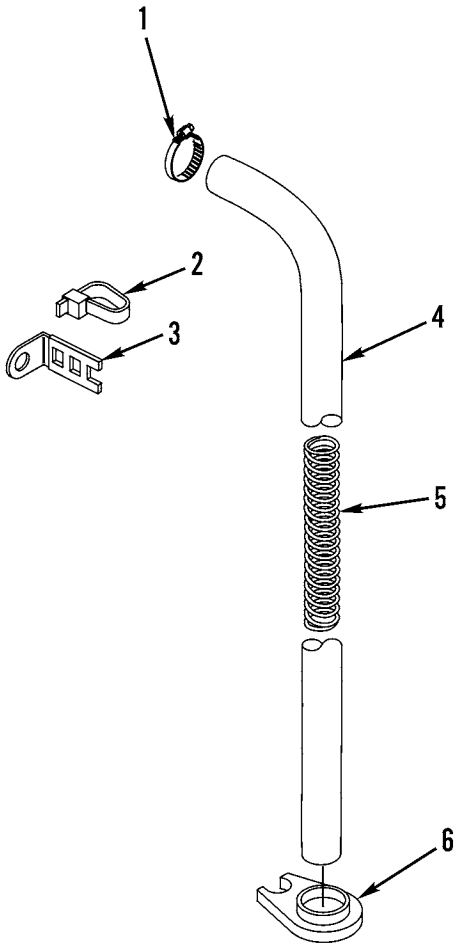

427-239

Figure 9. Breather Tube

(1) ITEM NO	(2) SMR CODE	(3) NSN	(4) CAGEC	(5) PART NUMBER	(6) DESCRIPTION AND USABLE ON CODES(UOC)	(7) QTY
					GROUP 0106 ENGINE LUBRICATION SYSTEM	
					FIG. 9 BREATHER TUBE	
1	PFOZZ		11083	1013450	CLAMP,LOOP	1
2	PFOZZ	5975015437982	11083	2179039	STRAP	1
3	PAOZZ	5340014715243	11083	4P8134	CLIP,SPRING TENSION	1
4	PFOZZ	4720015436750	11083	1915049	HOSE,NONMETALLIC	1
5	PAOZZ	5365015240590	11083	1621565	SPRING,LOADER,BACKH	1
6	PAOZZ	5340014715840	11083	7C1281	BRACKET,ANGLE SUPPORT BRACKET	1
					END OF FIGURE	

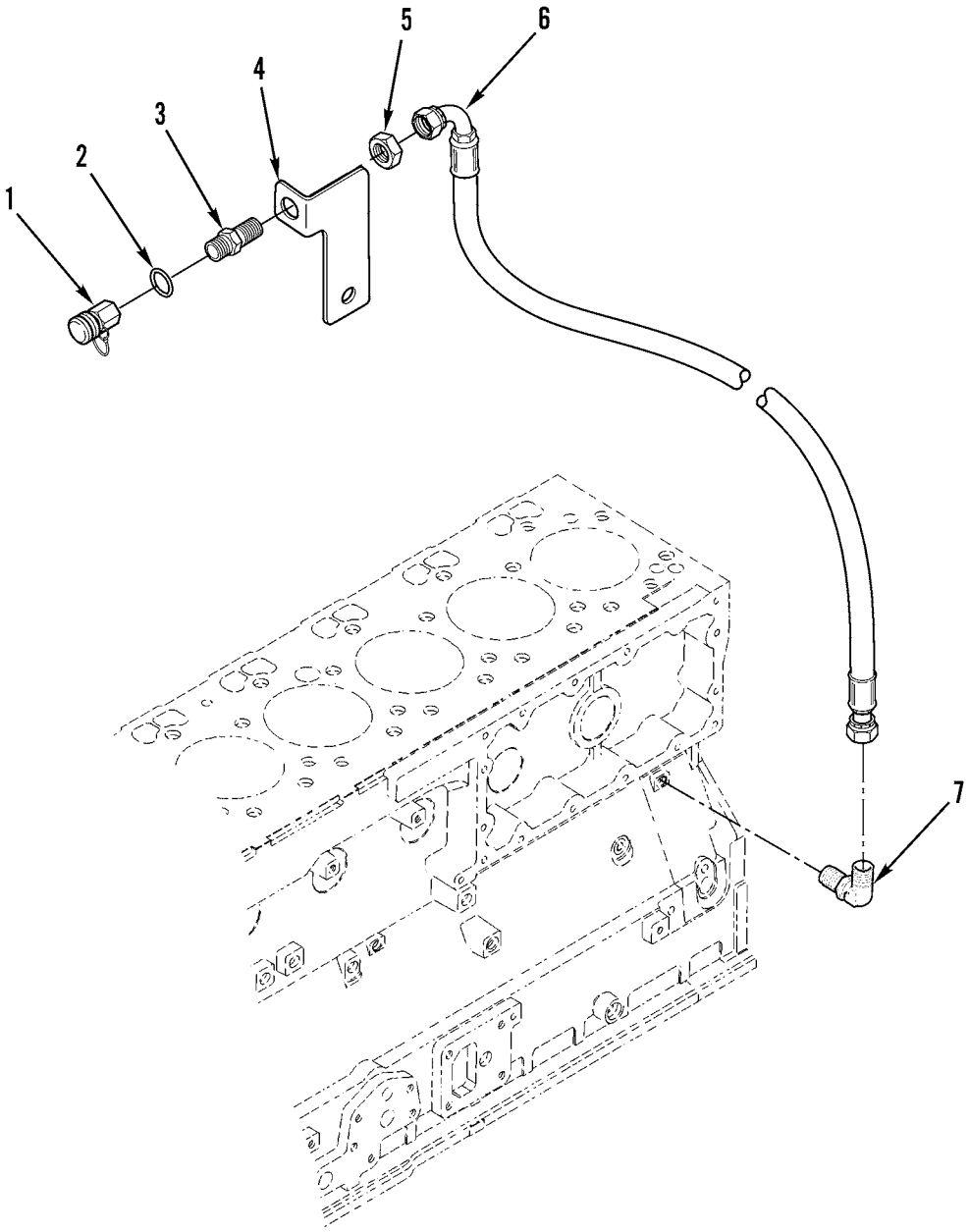

427-009

Figure 10. Engine Oil Sampling Valve

(1) ITEM NO	(2) SMR CODE	(3) NSN	(4) CAGEC	(5) PART NUMBER	(6) DESCRIPTION AND USABLE ON CODES(UOC)	(7) QTY
					GROUP 0106 ENGINE LUBRICATION SYSTEM	
					FIG. 10 ENGINE OIL SAMPLING VALVE	
1	PAOZZ	4820012029608	11083	5R6801	VALVE,SAMPLING,HYDR ENGINE OIL SAMPLING VALVE (RED TAG).....	1
2	PAOZZ	5331010491292	11083	3J7354	O-RING 8.92MM ID.....	1
3	PAOZZ	4730011442386	11083	5R5107	ADAPTER,STRAIGHT,TU.....	1
4	PFOZZ	5340015457956	11083	2935859	BRACKET,MOUNTING.....	1
5	PFOZZ	5310015456705	11083	7F6999	NUT,PLAIN,HEXAGON.....	1
6	PFOZZ	4720015450388	11083	9G2654	HOSE ASSEMBLY,NONME.....	1
7	PAOZZ		11083	2N1287	ELBOW,PIPE TO TUBE.....	1
					END OF FIGURE	

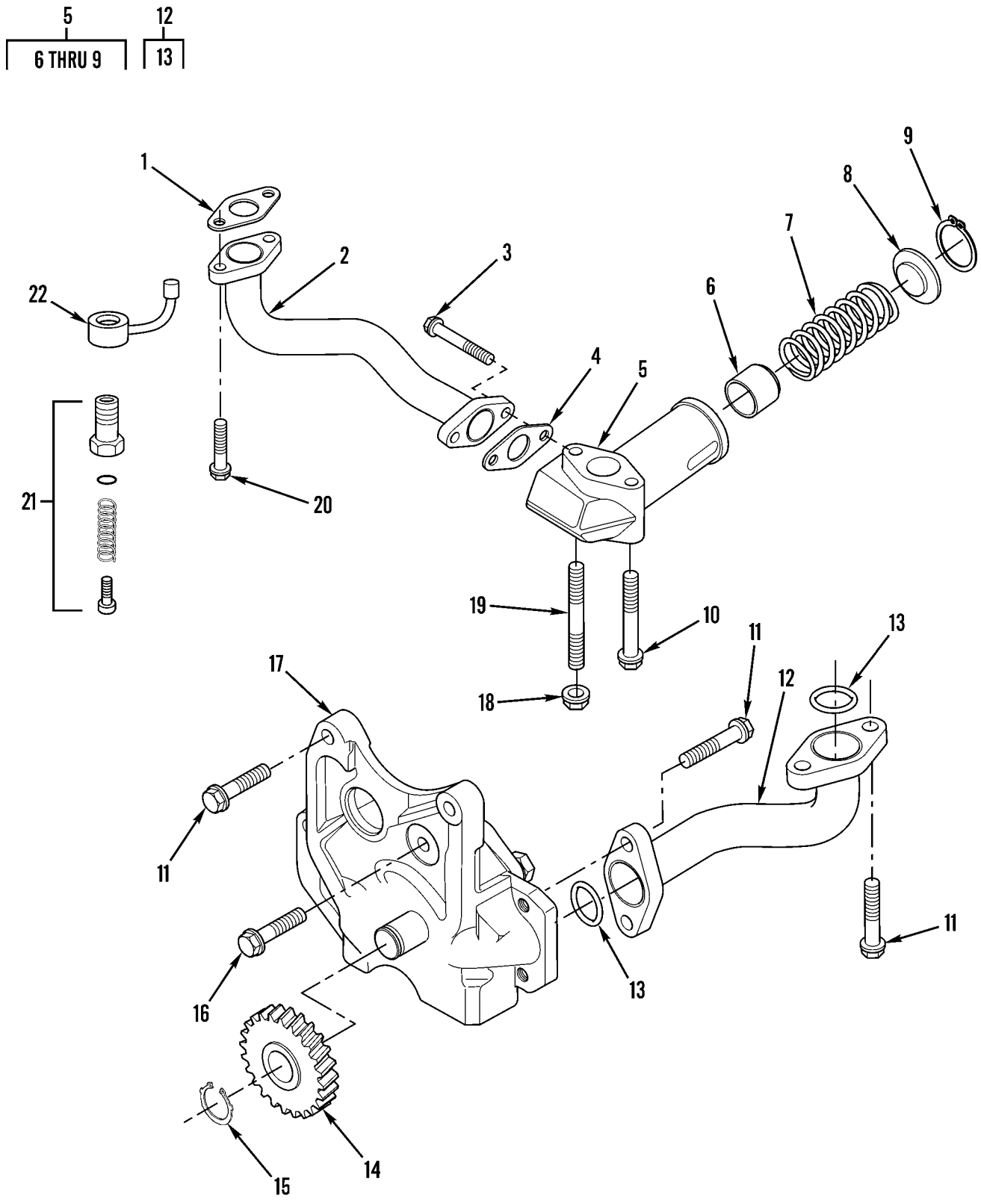

Figure 11. Engine Oil Pump, Bypass Valve, and Piston Cooling Jets

(1) ITEM NO	(2) SMR CODE	(3) NSN	(4) CAGEC	(5) PART NUMBER	(6) DESCRIPTION AND USABLE ON CODES(UOC)	(7) QTY
					GROUP 0106 ENGINE LUBRICATION SYSTEM	
					FIG. 11 ENGINE OIL PUMP, BYPASS VALVE, AND PISTON COOLING JETS	
1	PFFZZ	5330015441978	11083	5C1796	GASKET	1
2	PFFZZ	4710015436671	11083	1336105	TUBE ASSEMBLY,METAL	1
3	PAFZZ	5306014714726	11083	1068916	BOLT,ASSEMBLED WASH M6 X 16MM	2
4	PFFZZ	5330015437176	11083	0676933	GASKET	1
5	PFFZZ	4820015445906	11083	1127702	HOUSING SECTION,OIL OIL BYPASS VALVE	1
6	PAFZZ	3040014713931	11083	7W4782	.SHAFT,SHOULDERED PLUNGER,DETENT	1
7	PFFZZ	5360015442858	11083	7W4650	.SPRING,HELICAL,COMP	1
8	PAFZZ	5340014714758	11083	7W4648	.SEAT,HELICAL COMPRE	1
9	PAFZZ	5325014715280	11083	6I0787	.RING,RETAINING	1
10	PAFZZ	5306014715199	11083	6I4374	BOLT,ASSEMBLED WASH	2
11	PAFZZ	5306014714703	11083	6I0260	BOLT,ASSEMBLED WASH M8 X 1.25 X 25MM	6
12	PFFZZ	4710015436503	11083	1836318	TUBE ASSEMBLY,METAL	1
13	PFFZZ	5331015436952	11083	1895601	.O-RING	2
14	PFFZZ		11083	2168348	IDLER GEAR	1
15	PAFZZ	5325014716182	11083	0676928	RING,RETAINING	1
16	PAFZZ	5306014714728	11083	1243815	BOLT,ASSEMBLED WASH M8X16 X 1.25MM	1
17	PFFZZ	2815015173834	11083	2168625	OIL PUMP ASSEMBLY,E	1
18	PAFZZ	5310014713997	11083	6I0291	NUT,PLAIN,CAP M8 X 1.25 -THD	1
19	PFFZZ	5307015435955	11083	1344139	STUD,PLAIN	1
20	PFFZZ	5306015434949	11083	1336106	BOLT,MACHINE	2
21	PAFZZ	4820014537824	11083	6I1074	VALVE,CHECK PISTON COOLING JET	6
22	PAFZZ	4820014714158	11083	1483026	NOZZLE,VALVE	6
					END OF FIGURE	

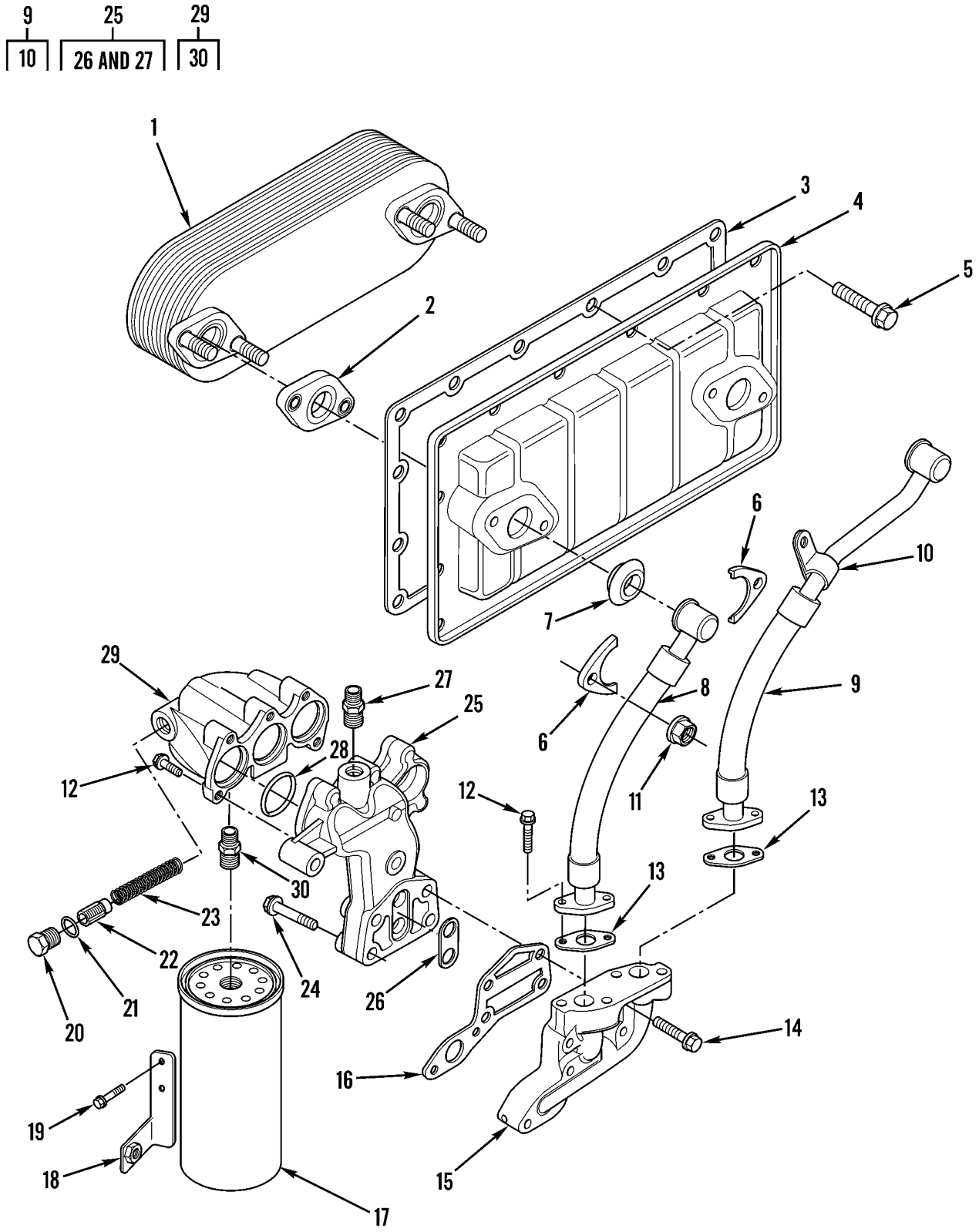

Figure 12. Engine Oil Filter, Oil Cooler Lines, Fittings, Hoses, and Core

(1) ITEM NO	(2) SMR CODE	(3) NSN	(4) CAGEC	(5) PART NUMBER	(6) DESCRIPTION AND USABLE ON CODES(UOC)	(7) QTY
					GROUP 0106 ENGINE LUBRICATION SYSTEM	
					FIG. 12 ENGINE OIL FILTER, OIL COOLER LINES, FITTINGS, HOSES, AND CORE	
1	PFOZZ	2930015441317	11083	2490832	COOLER,LUBRICATING ENGINE OIL COOLER CORE.....	1
2	PAOZZ	5330015261942	11083	1629754	GASKET SEAL PART OF KIT P/N 2192172	2
3	PAOZZ	5330015261949	11083	2169638	GASKET PART OF KIT P/N 2192172.....	1
4	PFOZZ	2930015444117	11083	2490800	HOUSING,OIL COOLER.....	1
5	PAOZZ	5306014714728	11083	1243815	BOLT,ASSEMBLED WASH M8X16 X 1.25MM.	14
6	PFOZZ	4730015436833	11083	1620761	FLANGE,PIPE.....	4
7	PAOZZ	5330015265111	11083	2303776	SEAL,PLAIN PART OF KIT P/N 2192172..	2
8	PFOZZ	4720015386803	11083	2318047	HOSE ASSEMBLY,NONME.....	1
9	PFOZZ	4720015387820	11083	2318048	HOSE ASSEMBLY,NONME.....	1
10	PFOZZ	5340015440939	11083	1668725	.CLAMP,LOOP.....	1
11	PAOZZ	5310014713997	11083	6I0291	NUT,PLAIN,CAP M8 X 1.25 -THD.....	4
12	PAOZZ	5306014714703	11083	6I0260	BOLT,ASSEMBLED WASH M8 X 1.25 X 25MM.....	6
13	PFOZZ	5330015436647	11083	2169643	GASKET PART OF KIT P/N 2192172.....	2
14	PAOZZ	5306015240325	11083	1408783	BOLT,MACHINE M10 X 45MM.....	4
15	PFOZZ	3040015445908	11083	2207171	ADAPTER,HOUSING.....	1
16	PFOZZ	5330015436126	11083	6I4786	GASKET.....	1
17	PAOZZ	2940015131518	11083	1R0739	FILTER ELEMENT,FLUI.....	1
18	PFOZZ	5340015441946	11083	2463189	BRACKET,ANGLE.....	1
19	PAOZZ	5306015284396	11083	1013895	BOLT,MACHINE M8 X 1.25 X 35MM.....	3
20	PAOZZ	5340013436678	11083	5P8196	PLUG,PROTECTIVE,DUS.....	1
21	PAOZZ	5330009390687	11083	2M9780	PACKING,PREFORMED 19.18MM ID.....	1
22	PAOZZ	4820012845435	11083	7C1493	VALVE,CHECK.....	1
23	PAOZZ	5360001752701	11083	9L9188	SPRING,HELICAL,COMP.....	1
24	PAOZZ	5306015240303	11083	1004461	BOLT,MACHINE M10 X 50MM.....	6
25	PFOZZ	3040015435666	11083	2215278	ADAPTER,HOUSING.....	1
26	PFOZZ	5330015436644	11083	2214520	.GASKET.....	1
27	PFOZZ	4730015436742	11083	2191818	.ADAPTER,STRAIGHT,PI.....	1
28	PAOZZ	5331002919572	11083	5F9657	O-RING.....	3
29	PAOZZ	4330013846317	11083	7W9028	HEAD,FLUID FILTER BASE.....	1
30	PAOZZ	5307010691419	11083	2P2537	.STUD,PLAIN ADAPTER,STRAIGHT.....	1
					END OF FIGURE	

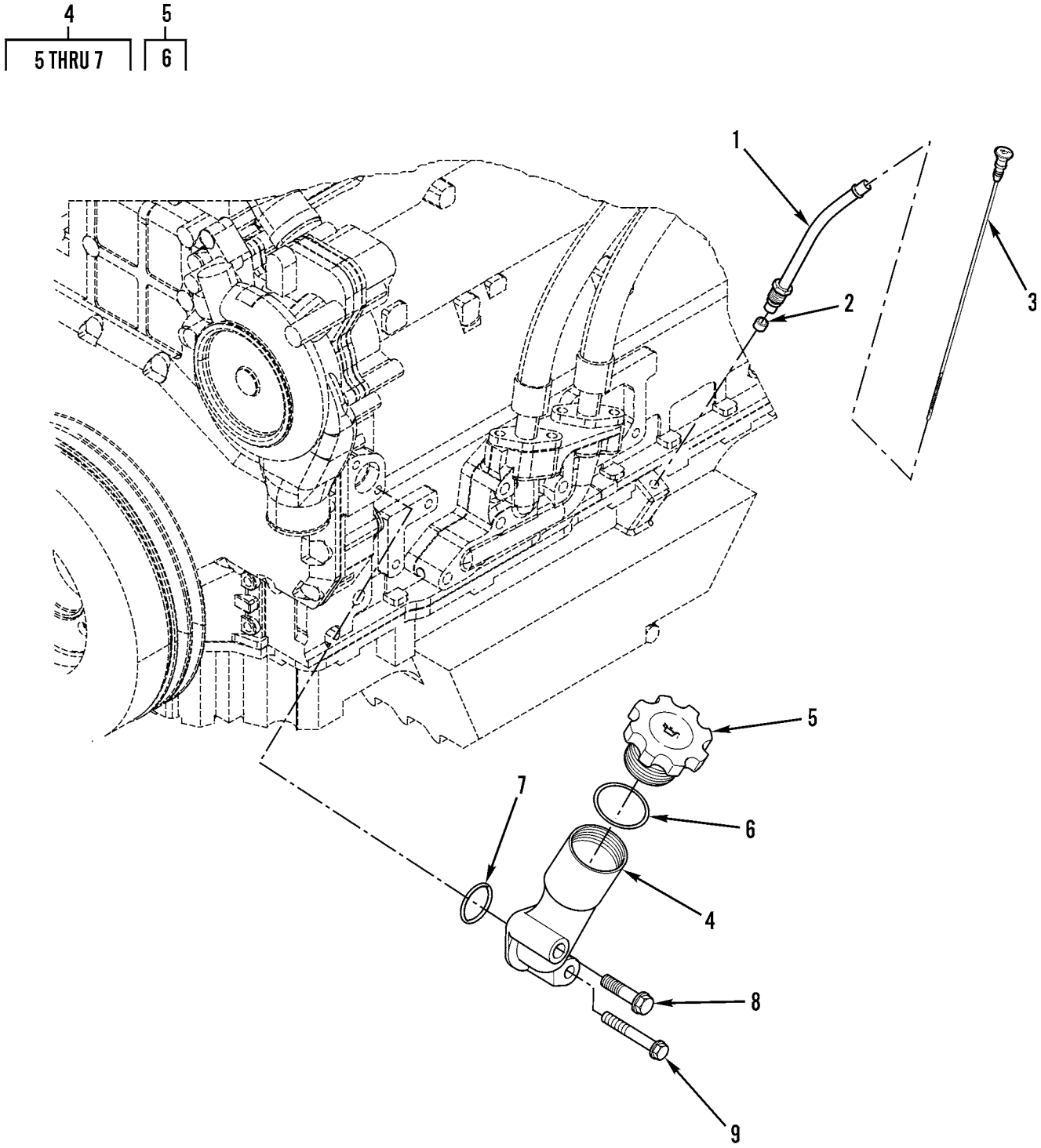

Figure 13. Engine Oil Filler

(1) ITEM NO	(2) SMR CODE	(3) NSN	(4) CAGEC	(5) PART NUMBER	(6) DESCRIPTION AND USABLE ON CODES(UOC)	(7) QTY
					GROUP 0106 ENGINE LUBRICATION SYSTEM	
					FIG. 13 ENGINE OIL FILLER	
1	PFOZZ		11083	2315158	FILLER NECK,VEHICUL.....	1
2	PAOZZ	5331014715581	11083	6I1497	O-RING.....	1
3	PAOZZ	6680015454677	11083	1912349	GAGE,ROD,LIQUID LEV DIPSTICK.....	1
4	PAOZZ	2590015298989	11083	1606988	FILLER NECK,VEHICUL.....	1
5	PAOZZ	2590014714674	11083	1309888	.CAP,FILLER OPENING.....	1
6	PAOZZ	5331014713780	11083	1131504	..O-RING.....	1
7	PAOZZ	5331014715221	11083	1131505	.O-RING.....	1
8	PAOZZ	5306015293358	11083	6I0456	BOLT,MACHINE M8 X 1.25 X 45MM.....	1
9	PAOZZ	5306014715199	11083	6I4374	BOLT,ASSEMBLED WASH.....	1
					END OF FIGURE	

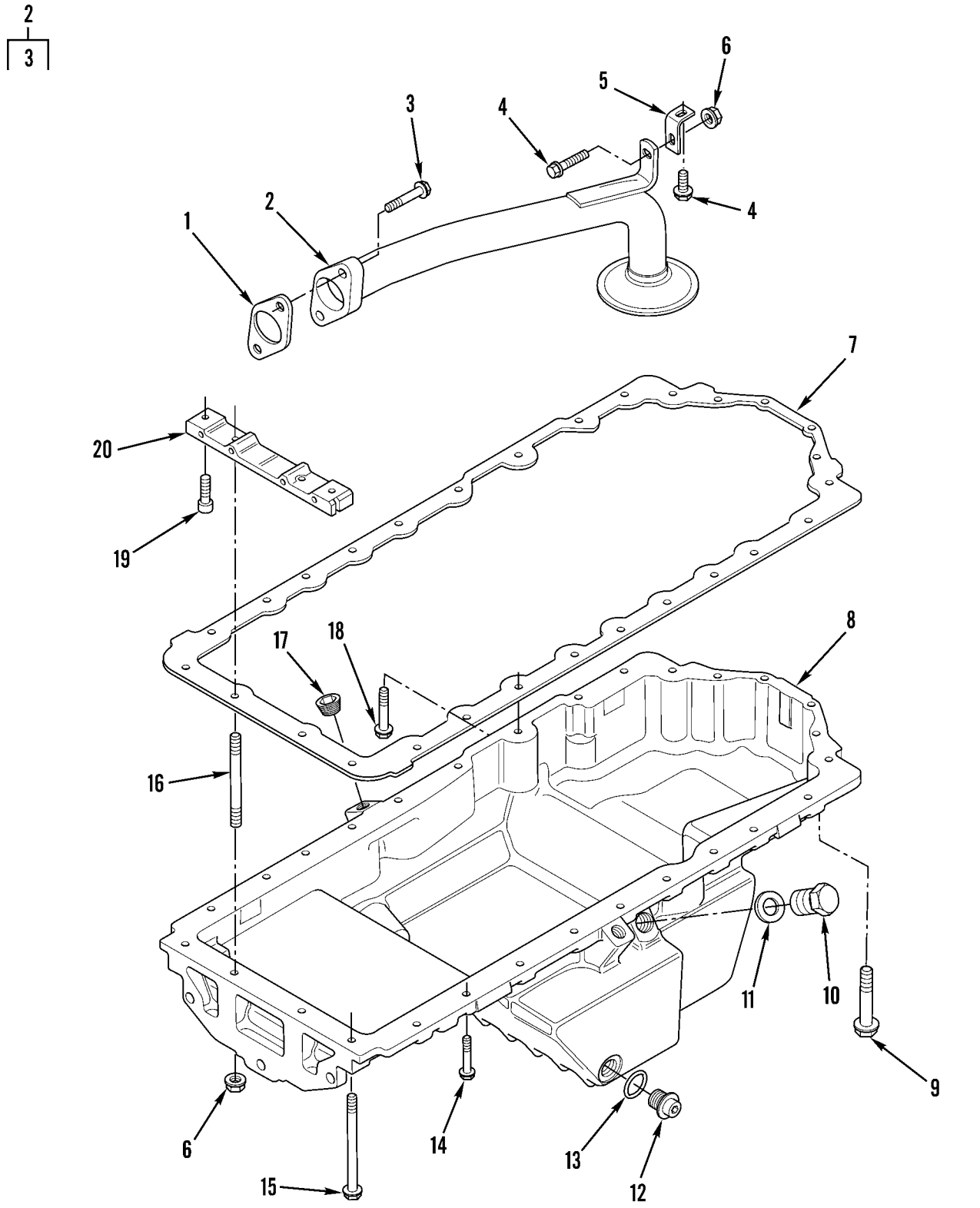

Figure 14. Oil Pan and Related Parts

(1) ITEM NO	(2) SMR CODE	(3) NSN	(4) CAGEC	(5) PART NUMBER	(6) DESCRIPTION AND USABLE ON CODES(UOC)	(7) QTY
					GROUP 0106 ENGINE LUBRICATION SYSTEM	
					FIG. 14 OIL PAN AND RELATED PARTS	
1	PFFZZ	5330015435048	11083	6I4681	GASKET	1
2	PFFZZ	2815015441335	11083	1275660	STRAINER,OIL PUMP	1
3	PAFZZ	5306014714703	11083	6I0260	.BOLT,ASSEMBLED WASH M8 X 1.25 X 25MM	2
4	PAFZZ	5306014714728	11083	1243815	BOLT,ASSEMBLED WASH M8X16 X 1.25MM.	2
5	PFFZA	5340015435786	11083	1138957	BRACKET,ANGLE	1
6	PAFZZ	5310014713997	11083	6I0291	NUT,PLAIN,CAP M8 X 1.25 -THD	3
7	PFFZZ	5330015436642	11083	2139710	GASKET	1
8	PFFZZ	2815015447158	11083	1275661	OIL PAN	1
9	PAFZZ	5306015293358	11083	6I0456	BOLT,MACHINE M8 X 1.25 X 45MM	2
10	PFFZZ	5365015436599	11083	1275662	PLUG,MACHINE THREAD	1
11	PFFZZ	5310015436590	11083	1283792	WASHER,SEAL	1
12	PAFZZ	5365014715460	11083	7C0351	PLUG,MACHINE THREAD	2
13	PAFZZ	5331011814951	11083	5P6718	O-RING 18.64MM ID	2
14	PAFZZ	5306014715222	11083	6I0254	BOLT,ASSEMBLED WASH M8 X 1.25 X 30MM	19
15	PFFZZ	5306015435790	11083	6I4709	BOLT,MACHINE M8 X 1.25 X 100MM	4
16	PFFZZ	5307015436936	11083	1138955	STUD,PLAIN	2
17	PAFZZ	5365014258538	11083	6I0289	PLUG,MACHINE THREAD	2
18	PAFZZ	5306014715762	11083	1003751	BOLT,MACHINE M8 X 1.25 X 65MM	1
19	PAFZZ	5306014714547	11083	6I0363	BOLT,INTERNAL WRENC M6 X 1 X 20 MM.	2
20	PFFZZ	5340015436670	11083	2490207	PLATE,MOUNTING	1
					END OF FIGURE	

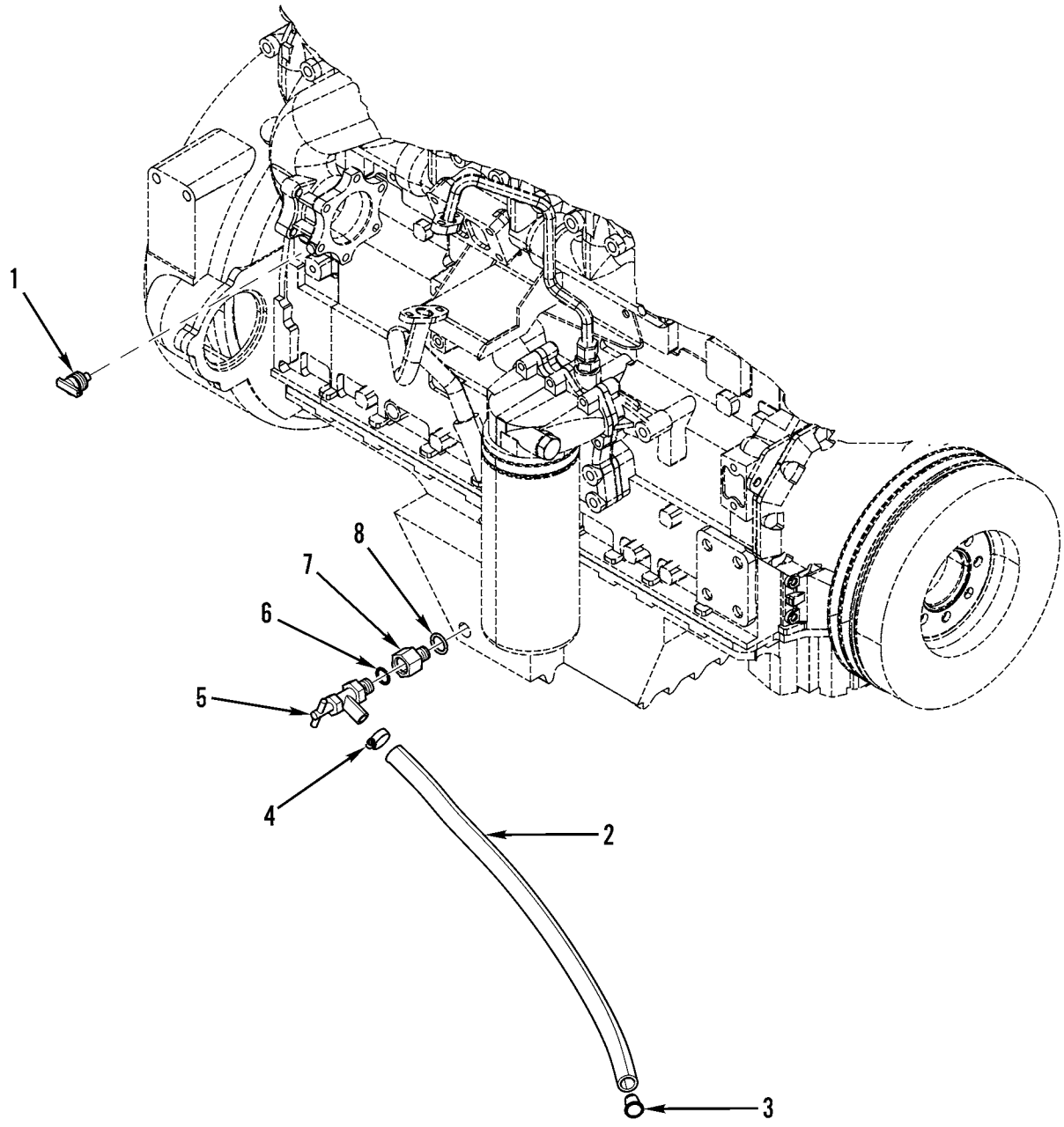

427-047

Figure 15. Engine Oil Drain

(1) ITEM NO	(2) SMR CODE	(3) NSN	(4) CAGEC	(5) PART NUMBER	(6) DESCRIPTION AND USABLE ON CODES(UOC)	(7) QTY
					GROUP 0106 ENGINE LUBRICATION SYSTEM	
					FIG. 15 ENGINE OIL DRAIN	
1	PAOZZ	4820007202096	72216	E2019X4	COCK,DRAIN.....	1
2	MOOZZ		11083	5P0743-51	HOSE,NONMETALLIC MAKE FROM HOSE P/N 5P0743, 20.1 INCHES (51 CM).....	1
3	PFOZZ	5340015441358	11083	8C5225	CAP-PLUG,PROTECTIVE.....	1
4	PAOZZ	4730011223338	11083	5D1026	CLAMP,HOSE.....	1
5	PAOZZ	4820013436277	11083	6V7238	COCK,POPPET DRAIN ENGINE OIL DRAIN.	1
6	PAOZZ	5331009486482	11083	3K0360	O-RING 16.36MM ID.....	1
7	PFOZZ	4730015442795	11083	1595255	ADAPTER,STRAIGHT,PI.....	1
8	PAOZZ	5331011814951	11083	5P6718	O-RING 18.64MM ID.....	1
					END OF FIGURE	

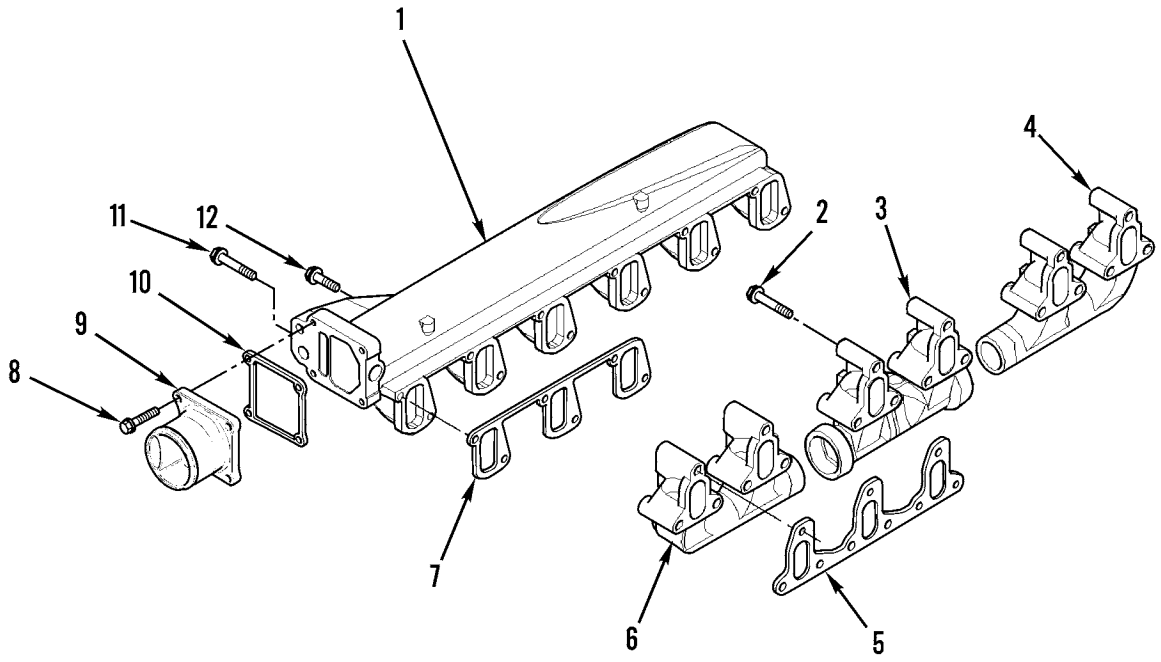

427-002

Figure 16. Intake and Exhaust Manifold and Related Parts

(1) ITEM NO	(2) SMR CODE	(3) NSN	(4) CAGEC	(5) PART NUMBER	(6) DESCRIPTION AND USABLE ON CODES(UOC)	(7) QTY
					GROUP 0108 MANIFOLDS	
					FIG. 16 INTAKE AND EXHAUST MANIFOLD AND RELATED PARTS	
1	PAFZZ	2815015437802	11083	2168699	MANIFOLD,INTAKE.....	1
2	PFFZZ	5306015435966	11083	2388292	BOLT,MACHINE.....	18
3	PFFZZ	2815015435502	11083	2168709	MANIFOLD,EXHAUST EXHAUST.....	1
4	PFFZZ	2815015445925	11083	2168710	MANIFOLD,EXHAUST EXHAUST.....	1
5	PAFZZ	5330015261882	11083	2168712	GASKET.....	2
6	PFFZZ	2815015445918	11083	2168708	MANIFOLD,EXHAUST EXHAUST.....	1
7	PAFZZ	5330015261873	11083	2168703	GASKET INTAKE.....	2
8	PAOZZ	5306014714703	11083	6I0260	BOLT,ASSEMBLED WASH M8 X 1.25 X 25MM.....	4
9	PFOZZ	2815015437804	11083	2170595	ADAPTER,INTAKE MANI.....	1
10	PFOZZ	5330015436951	11083	2170596	GASKET.....	1
11	PFFZZ	5306015434951	11083	2168705	BOLT,MACHINE.....	6
12	PFFZZ	5306015437210	11083	1621504	BOLT,MACHINE.....	6
					END OF FIGURE	

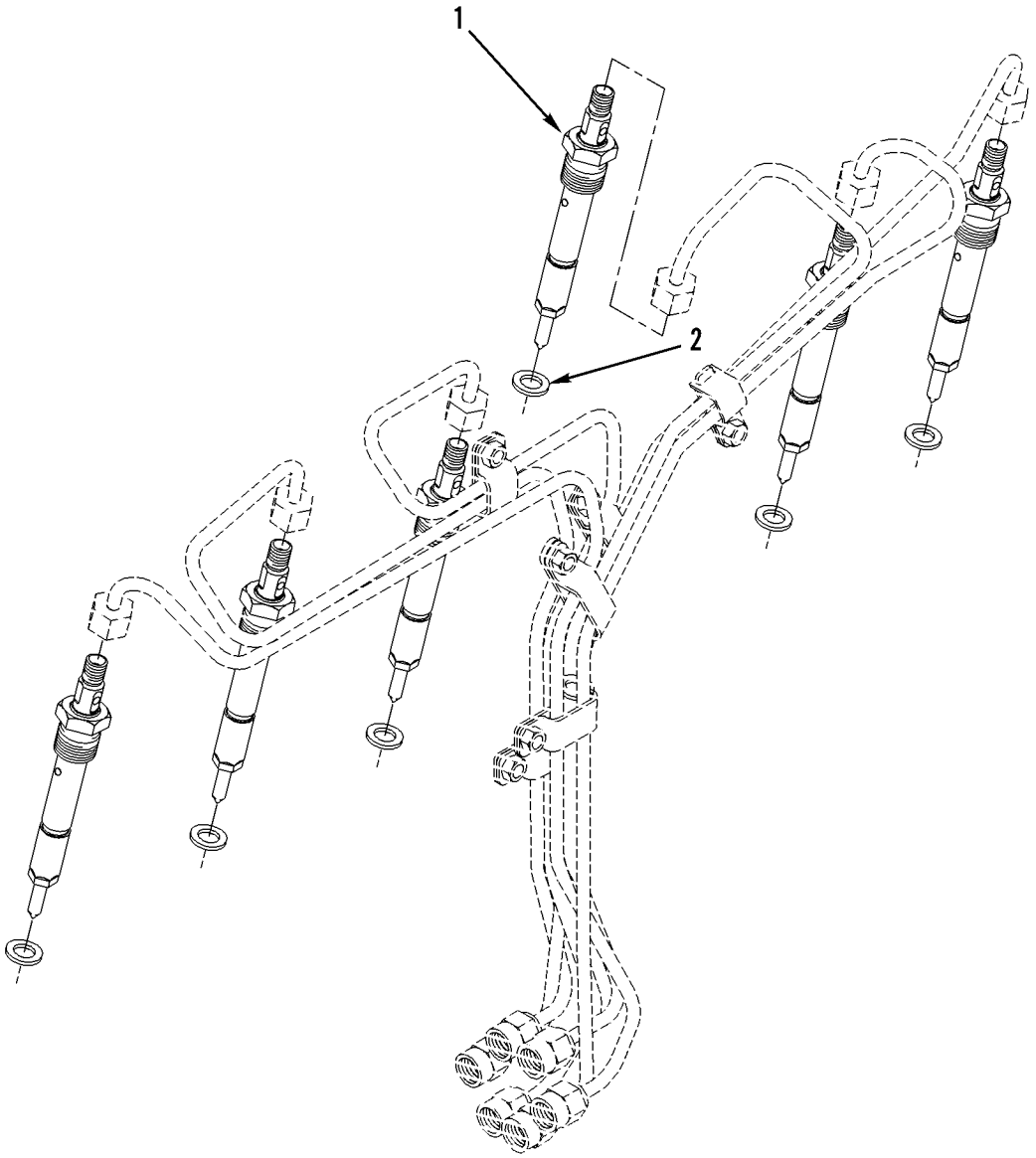

427-097

Figure 17. Fuel Injector Assembly

(1) ITEM NO	(2) SMR CODE	(3) NSN	(4) CAGEC	(5) PART NUMBER	(6) DESCRIPTION AND USABLE ON CODES(UOC)	(7) QTY
					GROUP 03 FUEL SYSTEM	
					GROUP 0301 CARBURETOR, FUEL INJECTOR	
					FIG. 17 FUEL INJECTOR ASSEMBLY	
1	PAFZZ	2910015172749	11083	2169786	HOLDER,FUEL INJECTO INJECTOR ASSEMBLY,FUEL.....	6
2	PAFZZ	5330015173412	11083	1643207	GASKET.....	6
					END OF FIGURE	

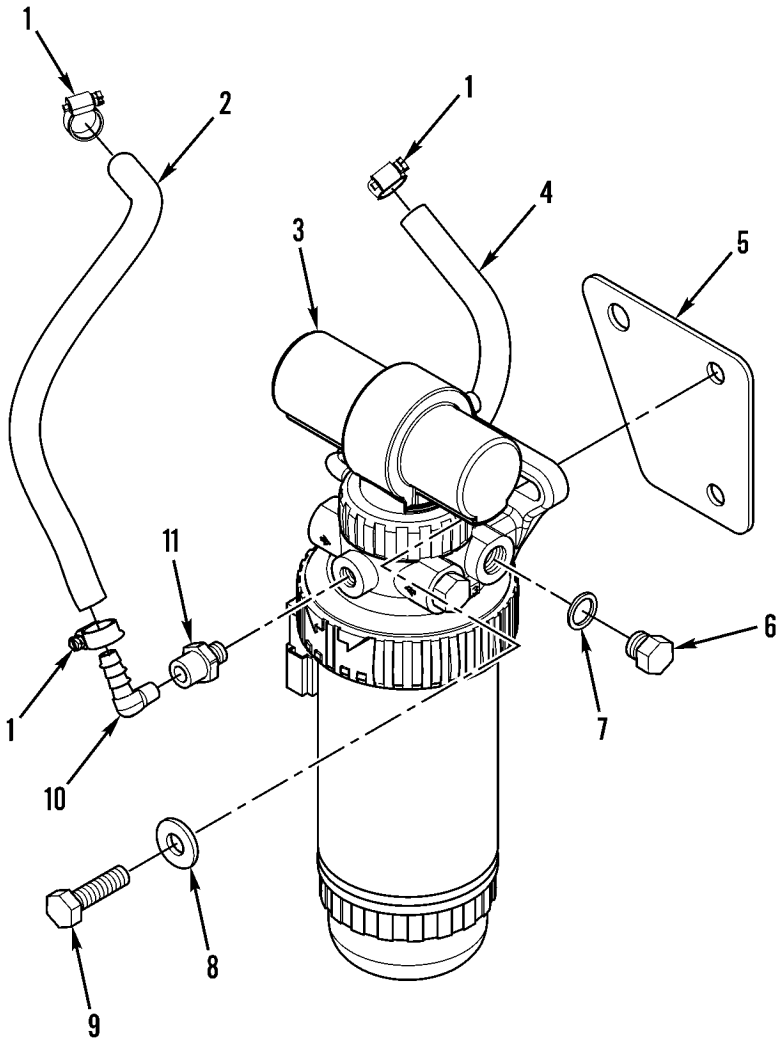

427-096

Figure 18. Fuel Transfer Pump and Lines

(1) ITEM NO	(2) SMR CODE	(3) NSN	(4) CAGEC	(5) PART NUMBER	(6) DESCRIPTION AND USABLE ON CODES(UOC)	(7) QTY
					GROUP 0302 FUEL PUMPS	
					FIG. 18 FUEL TRANSFER PUMP AND LINES	
1	PAOZZ	5342010630674	11083	1P4278	CLAMP.....	4
2	MOOZZ		11083	5P1420-28	HOSE,NONMETALLIC MAKE FROM HOSE P/N 5P1420, 11 INCHES (28CM).....	1
3	PAOZZ	2910015458358	11083	2342862	PUMP,FUEL,ELECTRICA INCLUDES FUEL TRANSFER PUMP.....	1
4	MOOZZ		11083	5P1420-16	HOSE,NONMETALLIC MAKE FROM HOSE P/N 5P1420, 6.3 INCHES (16CM).....	1
5	PFOZZ	5340015436082	11083	2201865	PLATE,MOUNTING.....	1
6	PAOZZ	5365014713999	11083	0337849	PLUG,MACHINE THREAD.....	2
7	PAOZZ	5310015055677	11083	0328100	WASHER,FLAT 0.531 X 0.718 X 0.064IN THK,SEAL.....	2
8	PAOZZ	5310014309036	11083	7X7729	WASHER,FLAT 11 X 25 X 3MM THK.....	3
9	PAOZZ	5305013601996	11083	8T4196	SCREW,CAP,HEXAGON H M10 X 1.5 X 35MM.....	3
10	PAOZZ	4730015239451	11083	0694080	ADAPTER,STRAIGHT,PI ELBOW.....	1
11	PAOZZ	4320015335977	11083	2289132	FITTING,FUEL PUMP.....	1
					END OF FIGURE	

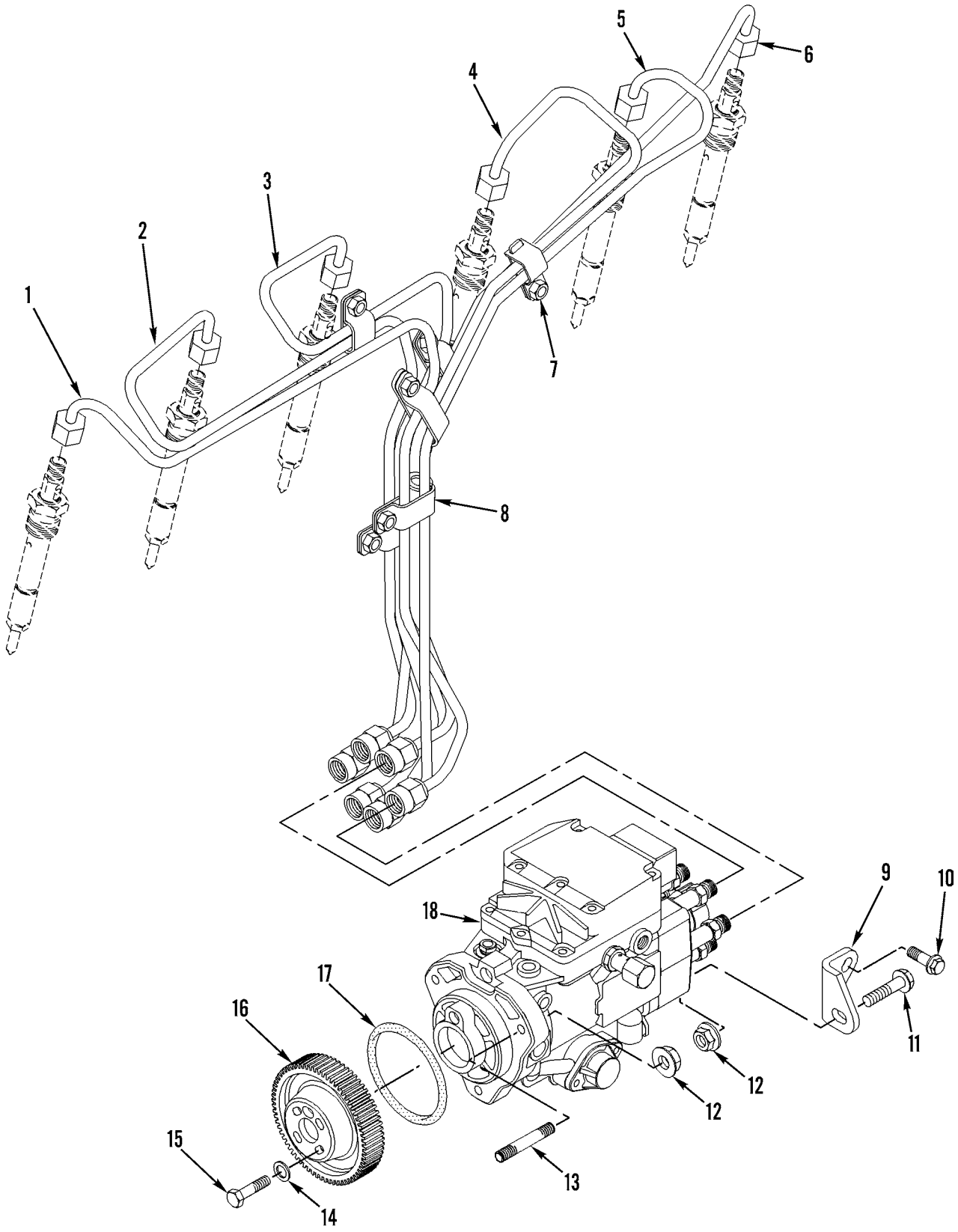

Figure 19. Fuel Injection Pump, Lines, and Related Parts

(1) ITEM NO	(2) SMR CODE	(3) NSN	(4) CAGEC	(5) PART NUMBER	(6) DESCRIPTION AND USABLE ON CODES(UOC)	(7) QTY
					GROUP 0302 FUEL PUMPS	
					FIG. 19 FUEL INJECTION PUMP, LINES, AND RELATED PARTS	
1	PFOZZ	4710015436519	11083	2169826	TUBE ASSEMBLY,METAL CYLINDER #1....	1
2	PFOZZ	4710015436733	11083	2169828	TUBE ASSEMBLY,METAL CYLINDER #2....	1
3	PFOZZ	4710015436525	11083	2169830	TUBE ASSEMBLY,METAL CYLINDER #3....	1
4	PFOZZ	4710015436737	11083	2169831	TUBE ASSEMBLY,METAL CYLINDER #4....	1
5	PFOZZ	4710015441811	11083	2169834	TUBE ASSEMBLY,METAL CYLINDER #5....	1
6	PFOZZ	4710015439276	11083	2169835	TUBE ASSEMBLY,METAL CYLINDER #6....	1
7	PFOZZ	5340015436203	11083	1243708	CLAMP,LOOP.....	3
8	PFOZZ	5340015441021	11083	1629992	CLAMP,LOOP.....	3
9	PFOZZ	5340015445545	11083	2288943	BRACKET,MOUNTING.....	1
10	PAFZZ	5306014715165	11083	1004830	BOLT,MACHINE M10 X 1.25 X 12MM.....	1
11	PAFZZ	5306014715217	11083	6I0217	BOLT,ASSEMBLED WASH M8 X 1.25 X 20 MM.....	1
12	PAFZZ	5310014713997	11083	6I0291	NUT,PLAIN,CAP M8 X 1.25 THD.....	4
13	PAFZZ	5307014714793	11083	1013877	STUD,PLAIN.....	3
14	PAFZZ	5310003628168	61208	M2048F	WASHER,FLAT 8.8 X 17.5 X 1.6MM.....	4
15	PFFZZ	5306015443296	11083	1797071	BOLT,MACHINE M8 X 1.25 X 20MM.....	4
16	PFFZZ	3020015440545	11083	2169790	GEAR,SPUR.....	1
17	PAFZZ	5330015261893	11083	1458327	GASKET.....	1
18	PAFHH	2910015172754	11083	2169824	PUMP,FUEL,METERING.....	1
					END OF FIGURE	

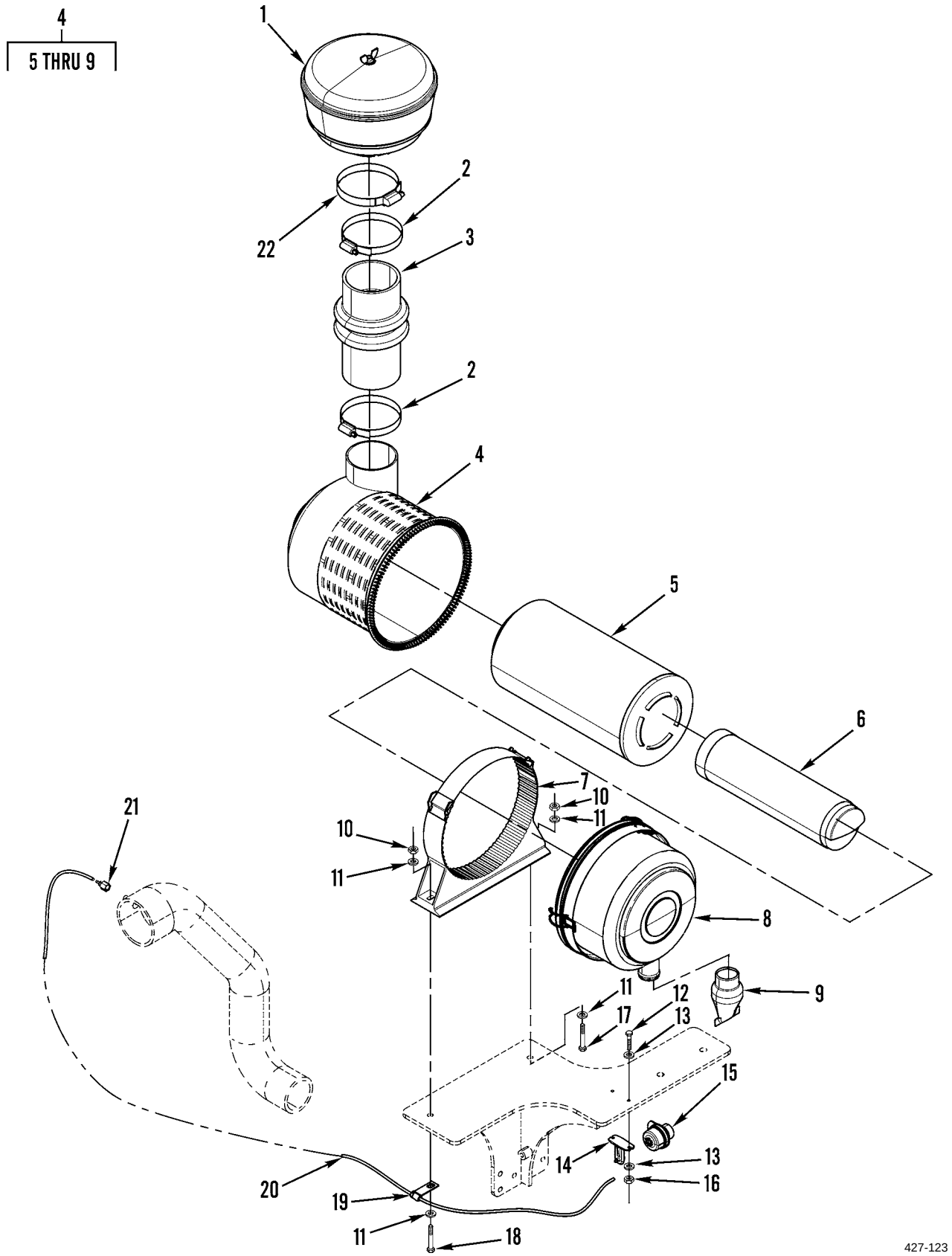

Figure 20. Air Cleaner, Housing, Precleaner, and Restriction Indicator

(1) ITEM NO	(2) SMR CODE	(3) NSN	(4) CAGEC	(5) PART NUMBER	(6) DESCRIPTION AND USABLE ON CODES(UOC)	(7) QTY
					GROUP 0304 AIR CLEANER	
					FIG. 20 AIR CLEANER, HOUSING, PRECLEANER, AND RESTRICTION INDICATOR	
1	PAOZZ	2940010687108	11083	1217746	PRECLEANER.....	1
2	PAOZZ	4730011844274	11083	5P1717	CLAMP,HOSE.....	2
3	PFOZZ	4720015449507	11083	2435057	HOSE,NONMETALLIC.....	1
4	PAOZZ	2940015459577	11083	2274321	AIRCLEANER,INTAKE.....	1
5	PAOZZ	2940015451946	11083	2229020	.FILTER ELEMENT,INTA PRIMARY.....	1
6	PAOZZ	2940015451950	11083	2229021	.FILTER ELEMENT,INTA SECONDARY.....	1
7	PFOZZ	5340015437074	11083	2435054	.BRACKET,MOUNTING.....	1
8	PFOZZ	5340015444013	11083	2242262	.COVER,ACCESS.....	1
9	PFOZZ	2940015453168	11083	2242263	.FILTER ASSEMBLY,FLU.....	1
10	PAOZZ	5310013975100	11083	5C7261	NUT,PLAIN,HEXAGON M8 X 1.25 THD....	2
11	PAOZZ	5310013598806	11083	8T4224	WASHER,FLAT 8.8 X 16 X 2MM THK.....	4
12	PAOZZ	5306015238995	11083	8C4982	BOLT,SHOULDER M4 X 0.7 X 20MM.....	2
13	PAOZZ	5310004328001	11083	4B4863	WASHER,FLAT 4.7 X 11 X 1.2MM THK...	4
14	PFOZZ	5340015441059	11083	2051627	BRACKET,MOUNTING.....	1
15	PAOZZ	2940015458357	11083	1872868	INDICATOR,FILTER,WA.....	1
16	PAOZZ	5310014135297	11083	5C8312	NUT,PLAIN,HEXAGON M4 X 0.7 THD.....	2
17	PAOZZ	5306013600930	11083	7X0818	BOLT,MACHINE M8 X 1.25 X 45MM.....	1
18	PAOZZ	5305013981287	11083	8T6912	SCREW,CAP,HEXAGON H M8 X 1.25 X 50MM.....	1
19	PAOZZ	5340011021789	11083	7D1728	CLIP,RETAINING.....	1
20	MOOZZ		11083	6V1363-1	HOSE ASSEMBLY,NONME MAKE FROM HOSE P/N 6V1363, 39.4 INCHES (1 M).....	1
21	PFOZZ	4730015449119	11083	2554692	ADAPTER,STRAIGHT,HO.....	1
22	PFOZZ	4730015449116	11083	1316143	CLAMP,HOSE.....	1
					END OF FIGURE	

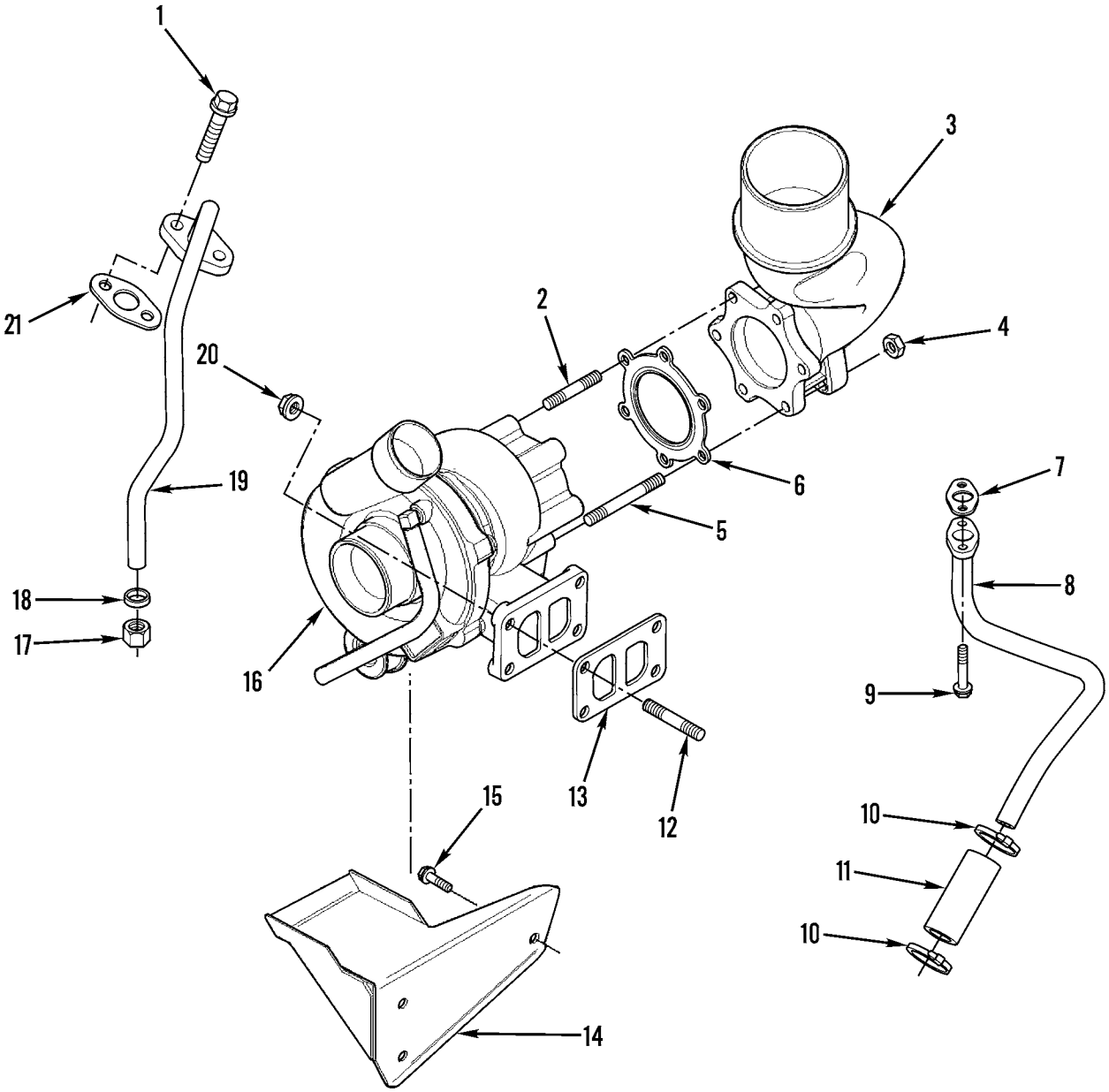

427-001

Figure 21. Turbocharger and Related Parts

(1) ITEM NO	(2) SMR CODE	(3) NSN	(4) CAGEC	(5) PART NUMBER	(6) DESCRIPTION AND USABLE ON CODES(UOC)	(7) QTY
					GROUP 0305 SUPERCHARGER, BLOWER, TURBOCHARGER OR ALTITUDE COMPENSATOR	
					FIG. 21 TURBOCHARGER AND RELATED PARTS	
1	PAFZZ	5306014715217	11083	6I0217	BOLT,ASSEMBLED WASH M8 X 1.25 X 20MM	2
2	PFFZZ	5307015436658	11083	1004453	STUD,PLAIN	2
3	PFFZZ	4730015436708	11083	2216864	ELBOW,FLANGE TO HOS	1
4	PAFZZ	5310014715163	11083	1004454	NUT BLANK	6
5	PFFZZ	5307015441009	11083	1418599	STUD,PLAIN	4
6	PAFZZ	5330015261903	11083	1418597	GASKET	1
7	PFFZZ	5330015436636	11083	1004466	GASKET	1
8	PFFZZ	4710015436515	11083	2168690	TUBE ASSEMBLY,METAL LOWER	1
9	PFFZZ	5306015442851	11083	2162892	BOLT,MACHINE	1
10	PAFZZ	4730011223338	11083	5D1026	CLAMP,HOSE	2
11	PFFZZ		11083	1600149	HOSE-TURBO DRAI	1
12	PFFZZ	5307015443288	11083	1475553	STUD,PLAIN	4
13	PAFZZ	5330015261848	11083	1418589	GASKET TURBO	1
14	PFFZZ	2990015435230	11083	1419777	HEATSHIELD,EXHAUST	1
15	PAFZZ	5306014714728	11083	1243815	BOLT,ASSEMBLED WASH M8 X 16 X 1.25MM	3
16	PAFZZ	2950015437959	11083	2359694	TURBOSUPERCHARGER,E	1
17	PFFZZ	4730015441377	11083	7W2628	NUT,TUBE COUPLING	1
18	PFFZZ	4730015436681	11083	0328048	FERRULE,COMPRESSION	1
19	PFFZZ	4710015435519	11083	2216863	TUBE ASSEMBLY,METAL UPPER	1
20	PAFZZ	5310014715203	11083	6I0563	NUT,PLAIN,ASSEMBLED M10 X 1.5 THD	4
21	PFFZZ	5330015436132	11083	6I1132	GASKET	1
					END OF FIGURE	

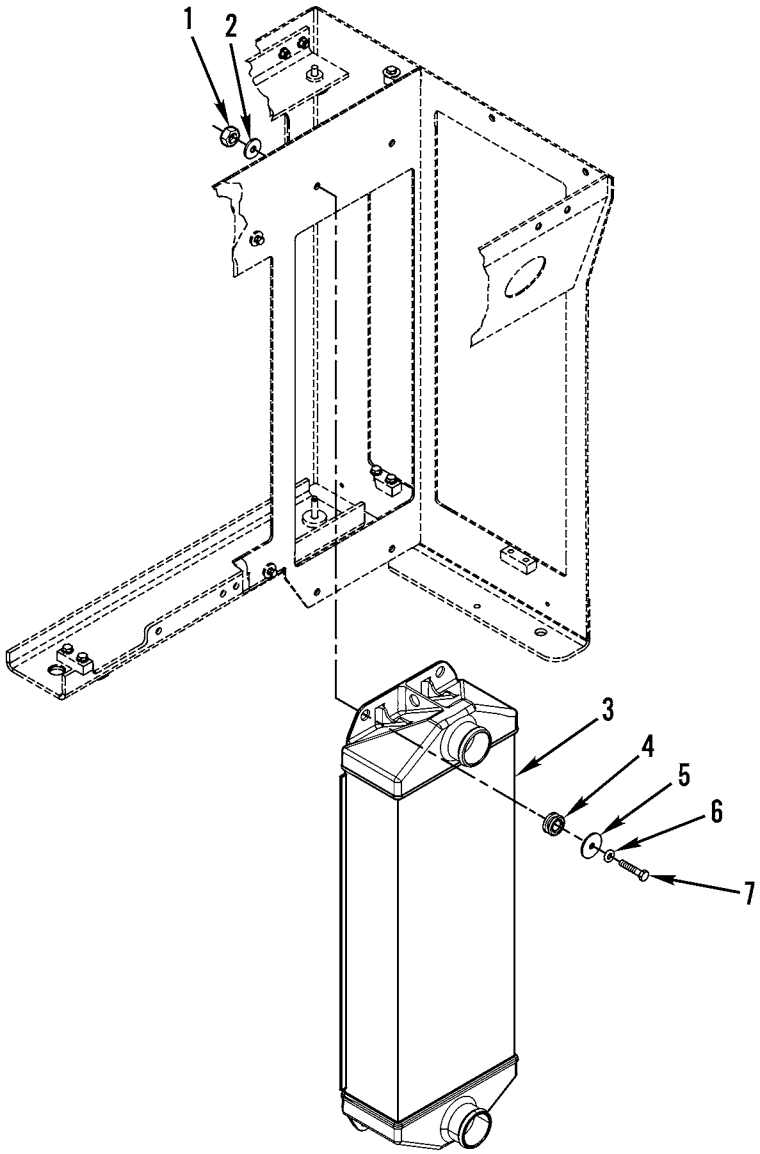

427-072

Figure 22. Aftercooler and Mounting

(1) ITEM NO	(2) SMR CODE	(3) NSN	(4) CAGEC	(5) PART NUMBER	(6) DESCRIPTION AND USABLE ON CODES(UOC)	(7) QTY
					GROUP 0305 SUPERCHARGER, BLOWER, TURBOCHARGER OR ALTITUDE COMPENSATOR	
					FIG. 22 AFTERCOOLER AND MOUNTING	
1	PAOZZ	5310013527726	11083	8T4133	NUT,PLAIN,HEXAGON M10 X 1.5 THD....	4
2	PAOZZ	5310014293253	11083	8T4222	WASHER,FLAT 11 X 32 X 3.5MM THK....	4
3	PAOZZ	2930015265314	11083	1851017	RADIATOR,ENGINE COO AFTERCOOLER....	1
4	PAOZZ	5325013454589	11083	6N6984	GROMMET,METALLIC MOUNT,RESILIENT, GENERAL.....	4
5	PAOZZ	5310014256246	11083	8T4226	WASHER,FLAT.....	4
6	PAOZZ	5310013522753	11083	8T4121	WASHER,FLAT.....	4
7	PAOZZ	5306014149639	11083	8T4182	BOLT,SHOULDER.....	4
					END OF FIGURE	

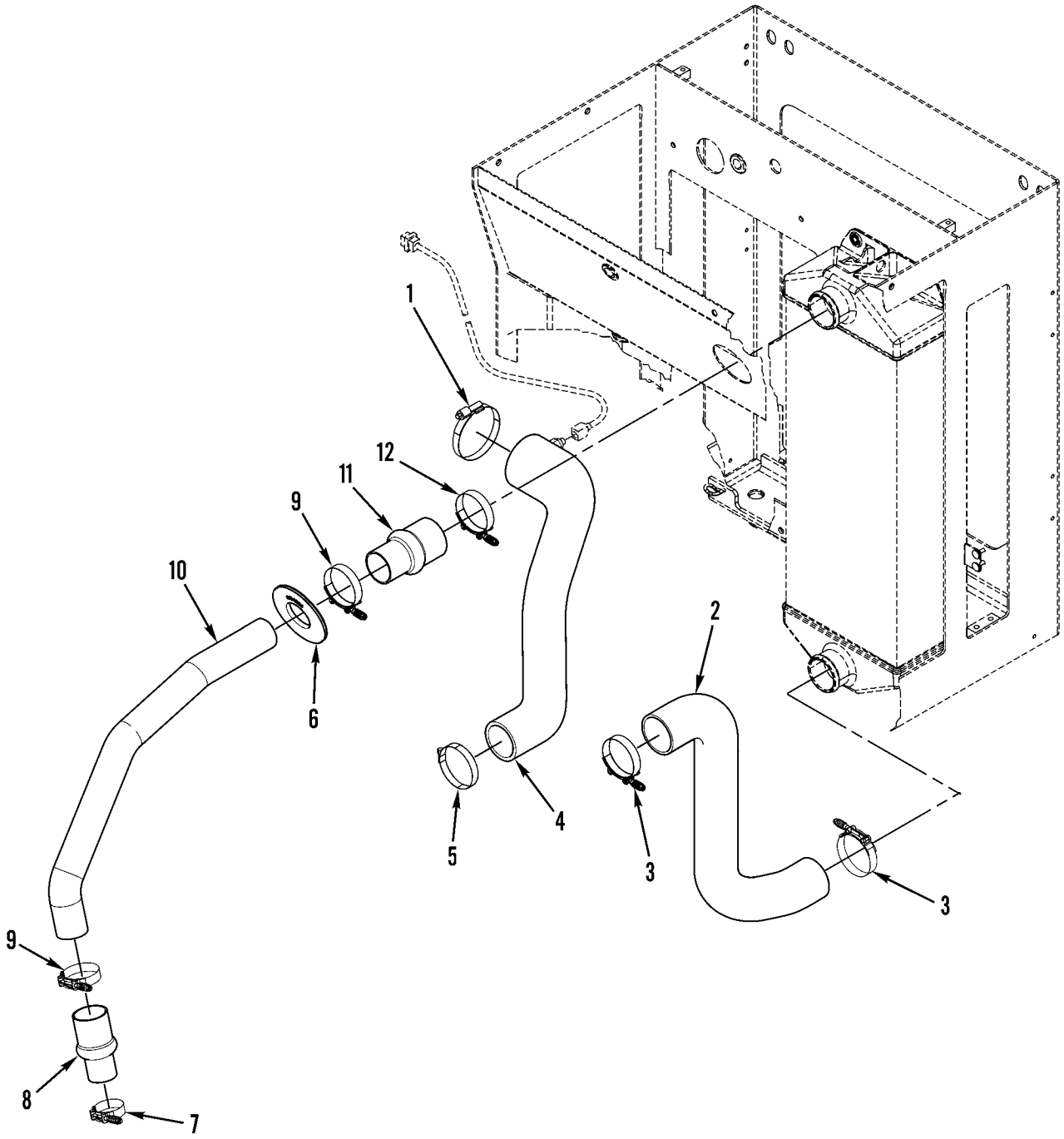

Figure 23. Turbocharger and Aftercooler Air Lines and Clamps

(1) ITEM NO	(2) SMR CODE	(3) NSN	(4) CAGEC	(5) PART NUMBER	(6) DESCRIPTION AND USABLE ON CODES(UOC)	(7) QTY
					GROUP 0305 SUPERCHARGER, BLOWER, TURBOCHARGER OR ALTITUDE COMPENSATOR	
					FIG. 23 TURBOCHARGER AND AFTERCOOLER AIR LINES AND CLAMPS	
1	PAOZZ	4730014736287	11083	8T4986	CLAMP,HOSE.....	1
2	PFOZZ	4720015449187	11083	1924342	HOSE,PREFORMED.....	1
3	PFOZZ	4720015449195	11083	2094580	CLAMP,HOSE.....	2
4	PFOZZ	4720015449509	11083	2435060	HOSE,PREFORMED.....	1
5	PAOZZ	4730014736294	11083	1440367	CLAMP,HOSE.....	1
6	PFOZZ	5325015444180	11083	2145514	GROMMET,NONMETALLIC.....	1
7	PFOZZ	4720015449189	11083	2154012	CLAMP,HOSE.....	1
8	PFOZZ	4720015449186	11083	1095351	HOSE,NONMETALLIC.....	1
9	PFOZZ	4730015511614	11083	2164983	CLAMP,HOSE.....	2
10	PFOZZ	4710015449512	11083	2145515	TUBE,BENT,METALLIC.....	1
11	PFOZZ	4720015449508	11083	1592829	HOSE,NONMETALLIC.....	1
12	PFOZZ	4730015449524	11083	2094578	CLAMP,HOSE.....	1
					END OF FIGURE	

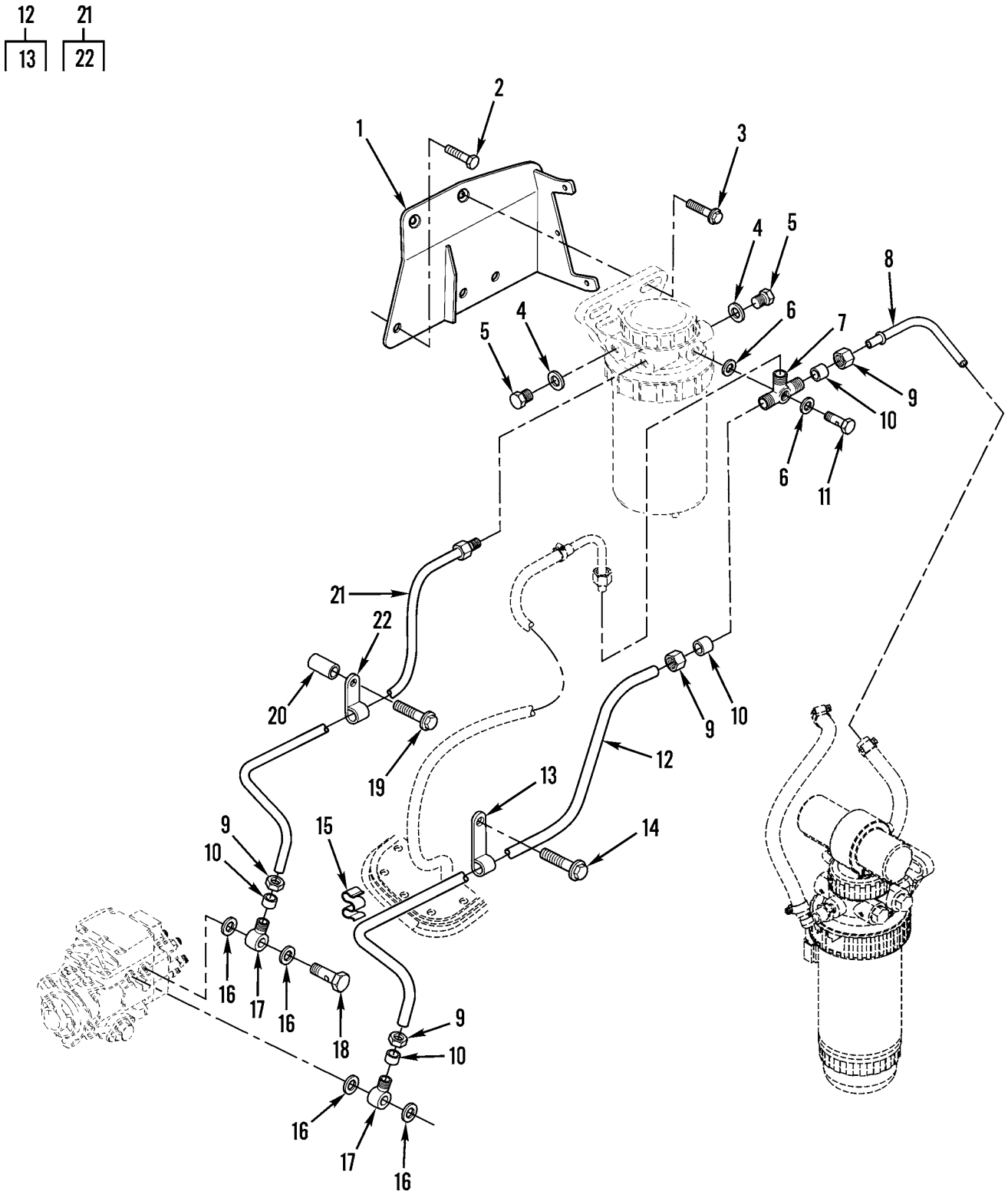

Figure 24. Fuel Lines (Sheet 1 of 2)

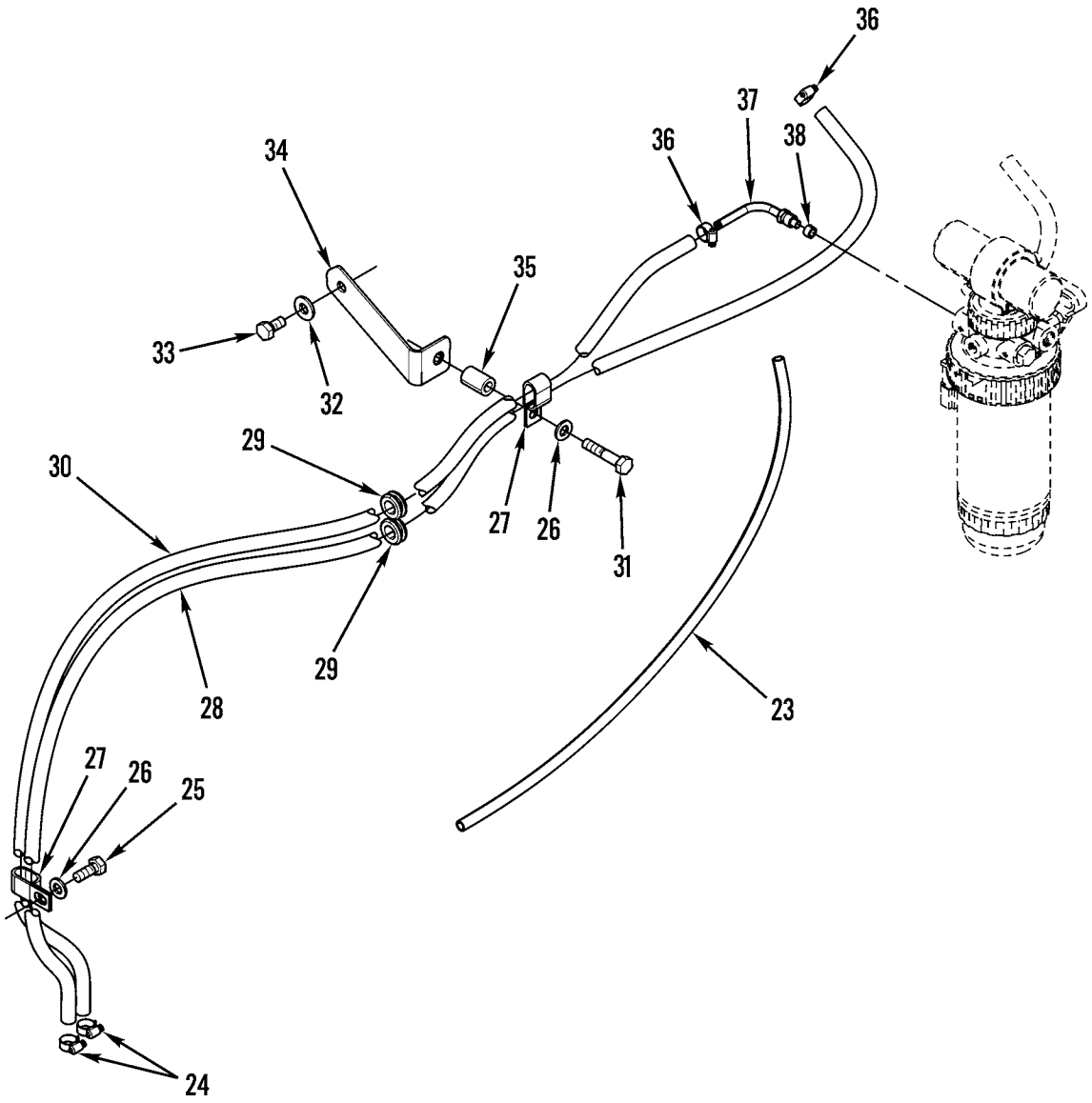

427-165-2

Figure 24. Fuel Lines (Sheet 2 of 2)

(1) ITEM NO	(2) SMR CODE	(3) NSN	(4) CAGEC	(5) PART NUMBER	(6) DESCRIPTION AND USABLE ON CODES(UOC)	(7) QTY
					GROUP 0306 TANKS, LINES, FITTINGS, HEADERS	
					FIG. 24 FUEL LINES	
1	PFOZZ	5340015441941	11083	2192450	BRACKET,MOUNTING.....	1
2	PAOZZ	5306014715165	11083	1004830	BOLT,MACHINE M10 X 1.5 X 20MM.....	3
3	PAOZZ	5340014715234	11083	6I0654	BRACKET,ANGLE PART IS ACTUALLY BOLT,MACHINE (M10 X 1.5 X 25MM).....	2
4	PFOZZ	5310015436612	11083	1622000	WASHER,SEAL.....	2
5	PFOZZ	5365014713999	11083	0337849	PLUG,MACHINE THREAD.....	2
6	PAOZZ	5310014255408	13446	2415928	WASHER,FLAT SEAL.....	2
7	PFOZZ	4730015436653	11083	2169053	CONNECTOR,MULTIPLE.....	1
8	PFOZZ	4710015436745	11083	2323368	TUBE,BENT,METALLIC.....	1
9	PAOZZ	5310014715241	11083	5C1777	NUT,PLAIN,CAP.....	4
10	PAOZZ	4730014714792	11083	0676269	FERRULE,COMPRESSION.....	4
11	PAOZZ	5306014713871	11083	1013906	BOLT,MACHINE.....	1
12	PFOZZ	4710015436660	11083	2192453	TUBE ASSEMBLY,METAL.....	1
13	PAOZZ	5342014714629	11083	1496117	.BRACKET,ENGINE ACCE CLAMP LOOP....	1
14	PAOZZ	5305014714127	11083	6I1090	SCREW,CAP,HEXAGON H M8 X 1.25 X 40MM.....	1
15	PAOZZ	5340014715164	11083	1278162	CLIP,RETAINING.....	1
16	PAOZZ	5310015264838	11083	2169752	WASHER,FLAT.....	4
17	PFOZZ	4320015436649	11083	2169092	CONNECTOR,FLUID,PUM.....	2
18	PAOZZ	4730015262853	11083	2170721	BOLT,FLUID PASSAGE.....	1
19	PFOZZ	5306015436617	11083	1017178	BOLT,MACHINE M10 X 55MM.....	1
20	PFOZZ	5365015446082	11083	2169086	SPACER,SLEEVE 10.5 X 20 X 32MM THK.	1
21	PFOZZ	4710015436657	11083	2192443	TUBE ASSEMBLY,METAL.....	1
22	PFOZZ	5340015440929	11083	1029986	.CLAMP,LOOP.....	1
23	MOOZZ		11083	8C3681-88	HOSE,NONMETALLIC MAKE FROM HOSE P/N 8C3681, 33.7 INCHES (88 CM) DRAIN TUBE.....	1
24	PAOZZ	4730012299689	19428	520531	CLAMP,HOSE.....	2
25	PAOZZ	5306013601634	11083	8T4136	BOLT,MACHINE M10 X 1.5 X 25MM.....	1
26	PAOZZ	5310013522753	11083	8T4121	WASHER,FLAT 11 X 21 X 2.5MM THK....	2
27	PAOZZ	5340004264644	11083	4D6466	CLAMP,LOOP.....	2
28	MOOZZ		11083	5P1420-177	HOSE,NONMETALLIC MAKE FROM HOSE P/N 5P1420, 69.7 INCHES (17 7CM).....	1
29	PFOZZ	5325015436488	11083	2269424	GROMMET,METALLIC.....	2
30	MOOZZ		11083	5P1420-150	HOSE,NONMETALLIC MAKE FROM HOSE P/N 5P1420, 59.1 INCHES (15 0CM).....	1
31	PAOZZ	5305013981286	11083	8T4185	SCREW,CAP,HEXAGON H M10 X 1.5 X 50MM.....	1
32	PAOZZ	5310014309036	11083	7X7729	WASHER,FLAT 11 X 25 X 3MM THK.....	1
33	PAOZZ	5306013600928	11083	8T4137	BOLT,MACHINE M10 X 1.5 X 20MM.....	1
34	PFOZZ	5340015445529	11083	2198604	BRACKET,ANGLE.....	1
35	PAOZZ	5365011759326	11083	6G2263	SPACER,SLEEVE 10.5 X 19 X 28.5MM THK.....	1
36	PAOZZ	5342010630674	11083	1P4278	CLAMP.....	2
37	PFOZZ	4710015449104	11083	1520983	TUBE ASSEMBLY,METAL.....	2
38	PAOZZ	4730014714792	11083	0676269	FERRULE,COMPRESSION COMPRESSION WASHER.....	2
					END OF FIGURE	

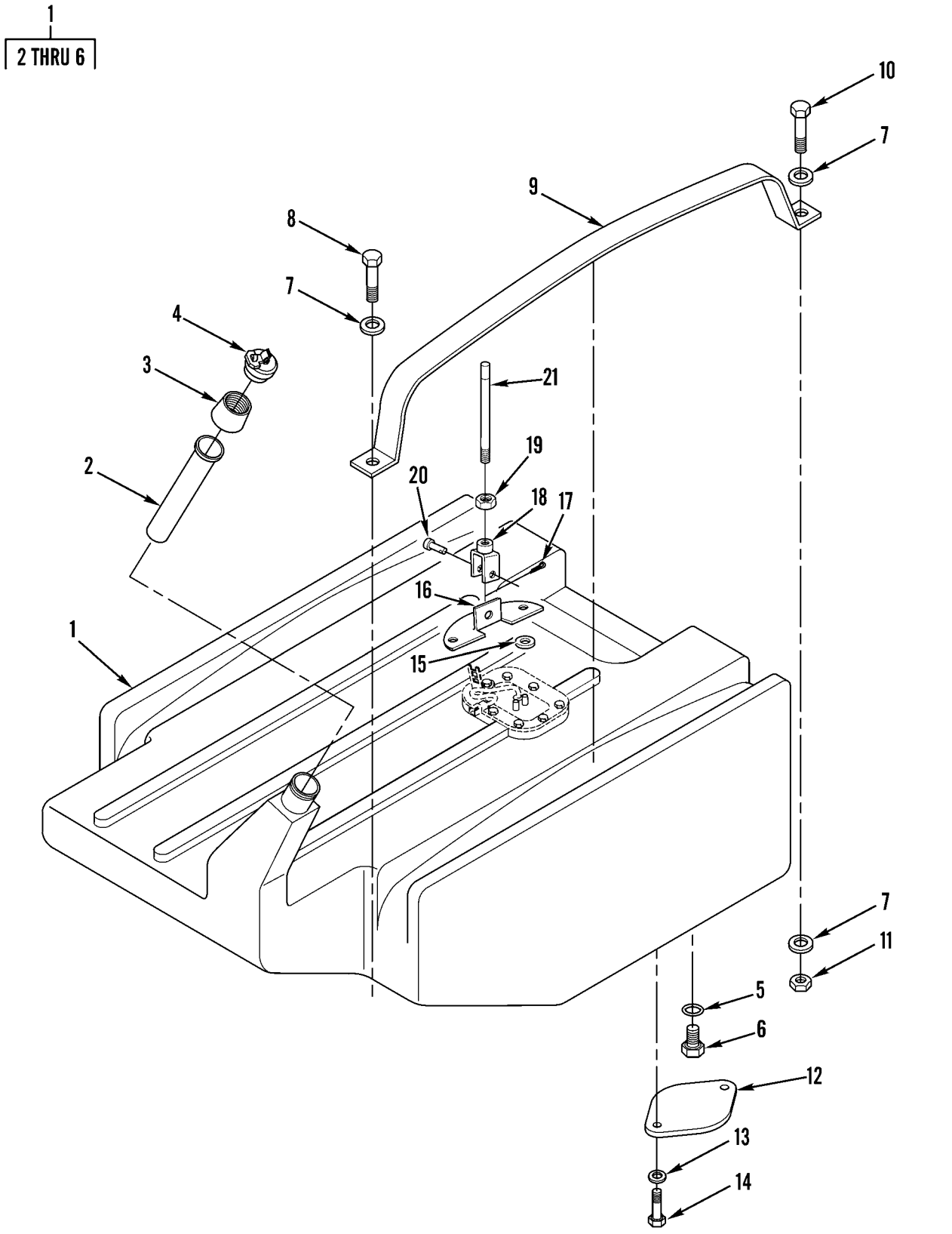

Figure 25. Fuel Tank, Standard

(1) ITEM NO	(2) SMR CODE	(3) NSN	(4) CAGEC	(5) PART NUMBER	(6) DESCRIPTION AND USABLE ON CODES(UOC)	(7) QTY
					GROUP 0306 TANKS, LINES, FITTINGS, HEADERS	
					FIG. 25 FUEL TANK, STANDARD	
1	PAFZZ	2910015513537	11083	2804280	TANK,FUEL,ENGINE.....	1
2	PAFZZ	4330015265246	11083	1803730	.FILTER ELEMENT,FLUI.....	1
3	PFFZZ	4730015454182	11083	2064441	.ADAPTER AND FLANGE.....	1
4	PAOZZ	2930015173282	11083	1428828	.CAP,FILLER OPENING.....	1
5	PAFZZ	5330009390687	11083	2M9780	.PACKING,PREFORMED 19.18MM ID.....	1
6	PAFZZ	5365010530180	11083	9S4190	.PLUG,MACHINE THREAD.....	1
7	PAFZZ	5310013522753	11083	8T4121	WASHER,FLAT 11 X 21 X 2.5MM THK....	6
8	PAFZZ	5306013600928	11083	8T4137	BOLT,MACHINE M10 X 1.5 X 20MM.....	2
9	PFFZZ	5340015456300	11083	2020360	STRAP,RETAINING.....	2
10	PFFZZ	5305015450586	11083	1804686	SCREW,CAP,HEXAGON H M10 X 1.5 X 60MM.....	2
11	PAFZZ	5310013527726	11083	8T4133	NUT,PLAIN,HEXAGON M10 X 1.5 THD....	2
12	PFFZZ	5340015448722	11083	2850620	COVER,ACCESS.....	1
13	PAFZZ	5310014309036	11083	7X7729	WASHER,FLAT 11 X 25 X 3MM THK.....	2
14	PAFZZ	5305013601996	11083	8T4196	SCREW,CAP,HEXAGON H M10 X 1.5 X 35MM.....	2
15	PFFZZ	5365015454193	11083	1951141	SPACER,PLATE.....	3
16	PFFZZ	5340015457955	11083	2797127	BRACKET,MOUNTING.....	1
17	PAFZZ	5315015071544	11083	1798235	PIN,LOCK.....	1
18	PAFZZ	5410015238889	11083	8T4815	ROD ASSEMBLY,ADJUST.....	1
19	PAFZZ	5310013527726	11083	8T4133	NUT,PLAIN,HEXAGON M10 X 1.5 THD....	1
20	PAFZZ	5315002726760	11083	1B0676	PIN,STRAIGHT,HEADED.....	1
21	PFFZZ	5340015453019	11083	2815619	ROD,STRAIGHT,HEADLE.....	1
					END OF FIGURE	

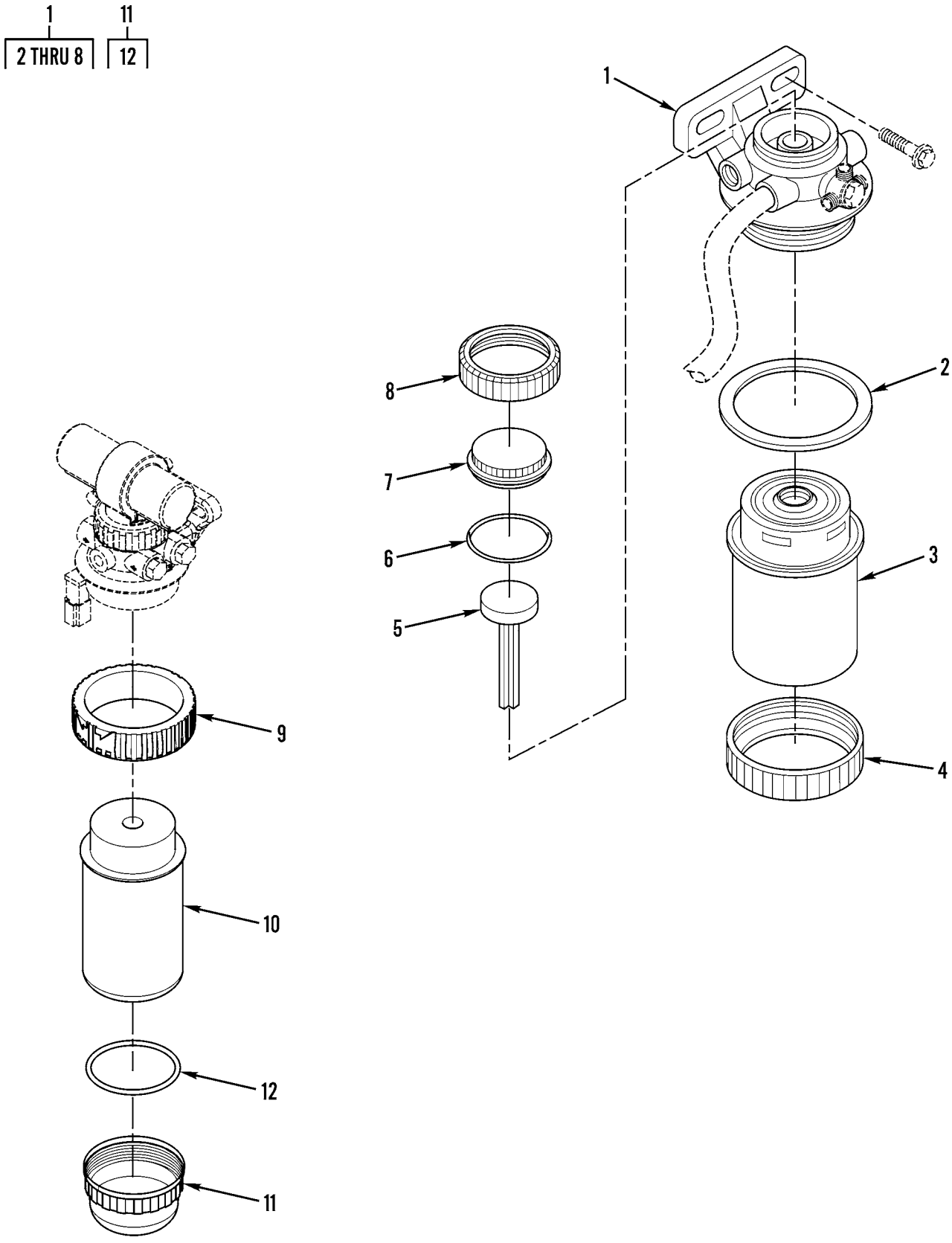

Figure 26. Primary and Secondary Fuel Filters (Fuel/water Separator and Base)

(1) ITEM NO	(2) SMR CODE	(3) NSN	(4) CAGEC	(5) PART NUMBER	(6) DESCRIPTION AND USABLE ON CODES(UOC)	(7) QTY
					GROUP 0309 FUEL FILTERS	
					FIG. 26 PRIMARY AND SECONDARY FUEL FILTERS (FUEL/WATER SEPARATOR AND BASE)	
1	XDOZZ		11083	1417844	FILTER AS.....	1
2	XAOZZ		11083	1417844-1	.O-RING.....	1
3	PAOZZ	4330015173279	11083	1454501	.FILTER ELEMENT,FLUI SECONDARY, FUEL/WATER SEPARATOR.....	1
4	XAOZZ		11083	1417844-2	.NUT,PLAIN,BARREL.....	1
5	PAOZZ	5365015056950	11083	1013742	.PLUG,MACHINE THREAD.....	1
6	PAOZZ	5330014738725	11083	1013741	.SEAL RING,METAL.....	1
7	PAOZZ	5365015056948	11083	1013740	.PLUG,MACHINE THREAD.....	1
8	PAOZZ	5310014259917	11083	1013739	.NUT,PLAIN,BARREL.....	1
9	PAOZZ	5325014736372	11083	1188118	RING,RETAINING.....	1
10	PAOZZ	2940015451954	11083	2347967	FILTER ELEMENT,FLUI FUEL PRIMARY...	1
11	PAOZZ	2910014737044	11083	1129401	BOWL,SEDIMENT.....	1
12	PAOZZ	5330014734105	11083	1288614	.PARTS KIT,SEAL REPL O-RING.....	1
					END OF FIGURE	

4
5

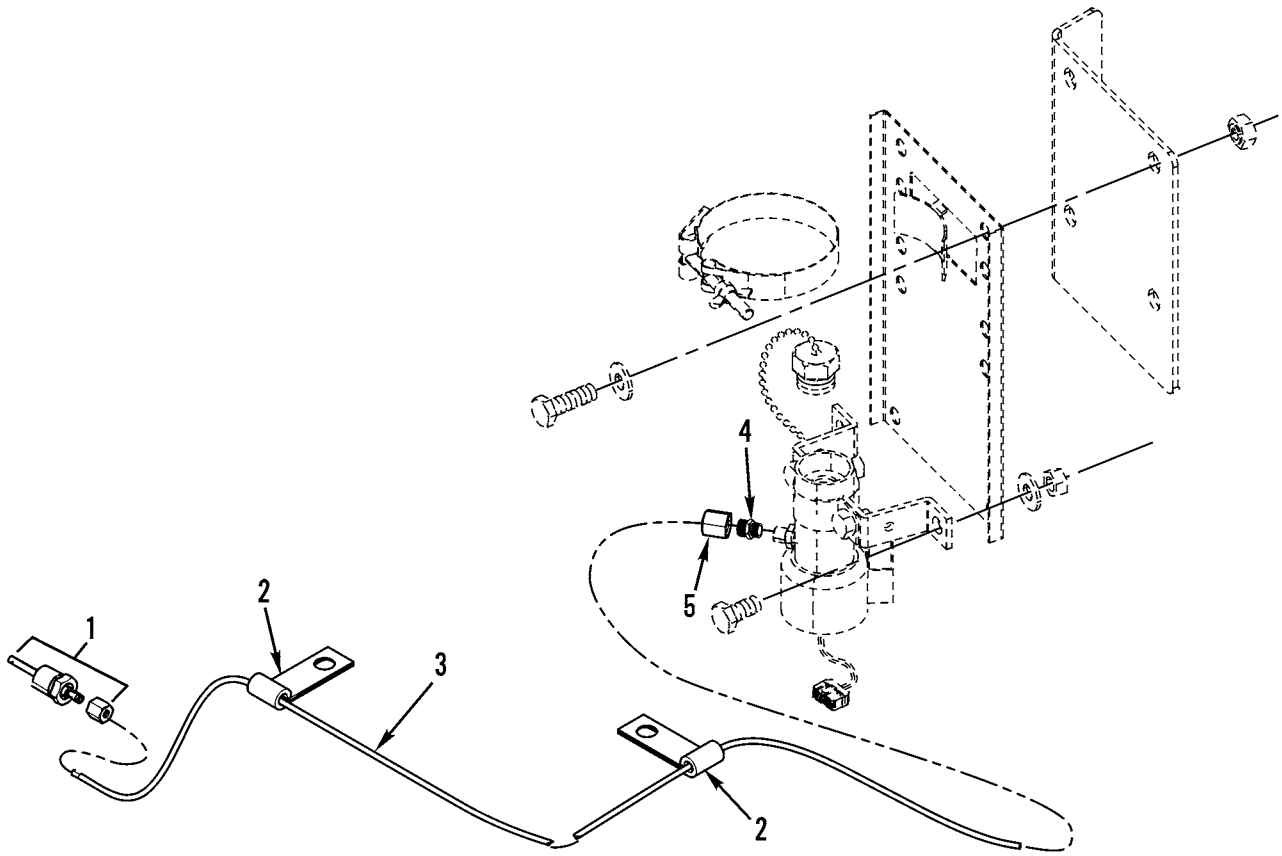

427-078

Figure 27. Ether Starting Aid Line

(1) ITEM NO	(2) SMR CODE	(3) NSN	(4) CAGEC	(5) PART NUMBER	(6) DESCRIPTION AND USABLE ON CODES(UOC)	(7) QTY
					GROUP 0311 ENGINE STARTING AIDS	
					FIG. 27 ETHER STARTING AID LINE	
1	PAOZZ	2910014303418	11083	7X6101	INJECTOR ASSEMBLY,F.....	1
2	PAOZZ	5340011021789	11083	7D1728	CLIP,RETAINING.....	2
3	MOOZZ		11083	5P5630-103	TUBE MAKE FROM TUBING P/N 5P5630, 40.6 INCHES (103CM).....	1
4	PFOZZ	4730015451398	11083	2300917	ADAPTER,STRAIGHT,TU.....	1
5	PFOZZ	5310015456304	11083	2364545	.NUT,SLEEVE.....	1
					END OF FIGURE	

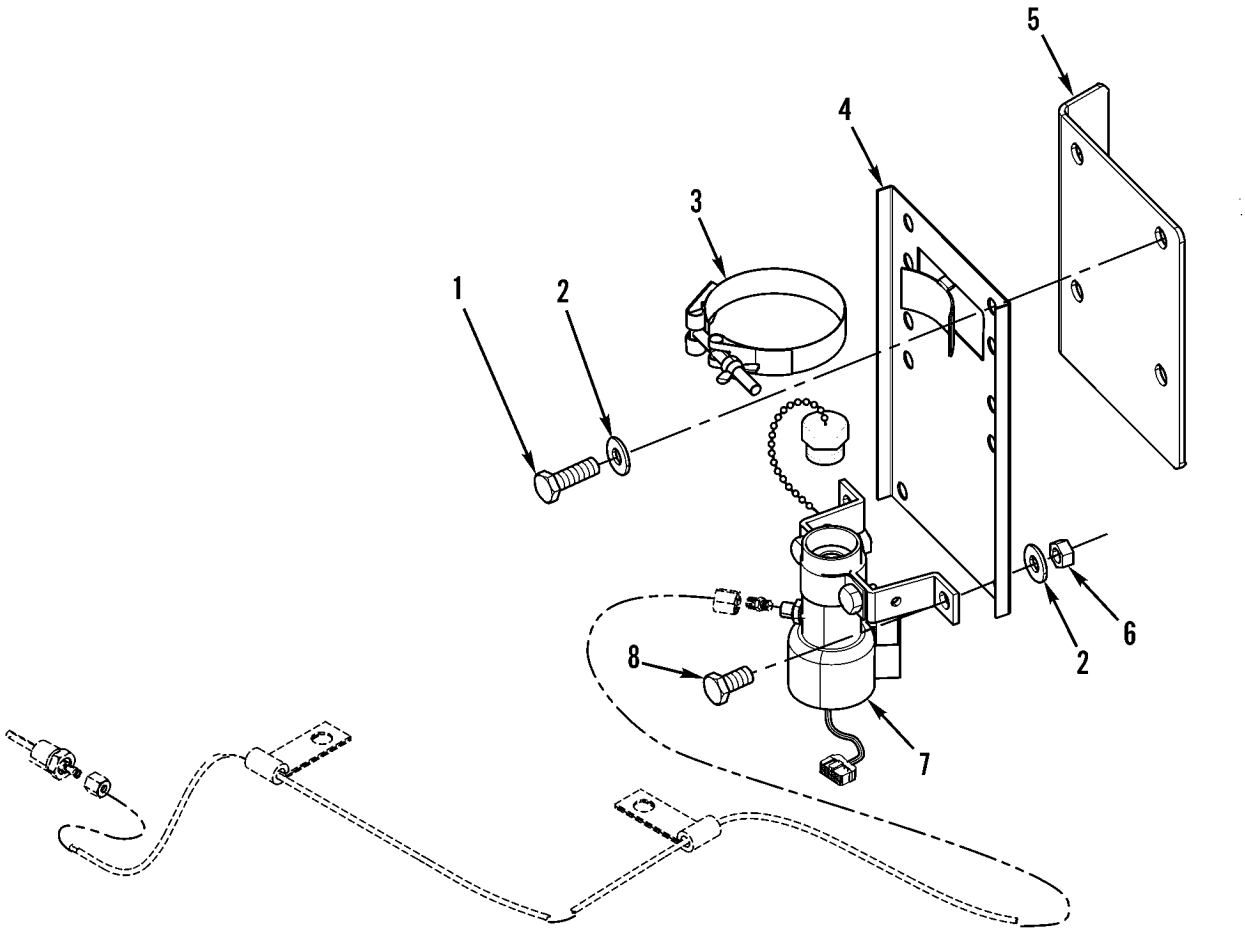

427-132

Figure 28. Ether Starting Aid and Mounting

(1) ITEM NO	(2) SMR CODE	(3) NSN	(4) CAGEC	(5) PART NUMBER	(6) DESCRIPTION AND USABLE ON CODES(UOC)	(7) QTY
					GROUP 0311 ENGINE STARTING AIDS	
					FIG. 28 ETHER STARTING AID AND MOUNTING	
1	PAOZZ	5305013981282	11083	8T4908	SCREW,CAP,HEXAGON H M8 X 1.25 X 25MM	4
2	PAOZZ	5310010955910	11083	5P4116	WASHER,SQUARE CONE 8.8 X 20.5 X 2MM THK	6
3	PFOZZ	4730015448068	11083	2766596	CLAMP,HOSE	1
4	PFOZZ	5340015448718	11083	2368013	BRACKET,MOUNTING	1
5	PFOZZ	5340015450573	11083	2335035	BRACKET,MOUNTING	1
6	PAOZZ	5310013975100	11083	5C7261	NUT,PLAIN,HEXAGON M8 X 1.25 THD	2
7	PAOZZ	4820015519292	11083	2391134	VALVE ASSEMBLY	1
8	PAOZZ	5306014734524	11083	8T4199	BOLT,MACHINE M8 X 1.25 X 12MM	4
					END OF FIGURE	

2
3 THRU 12

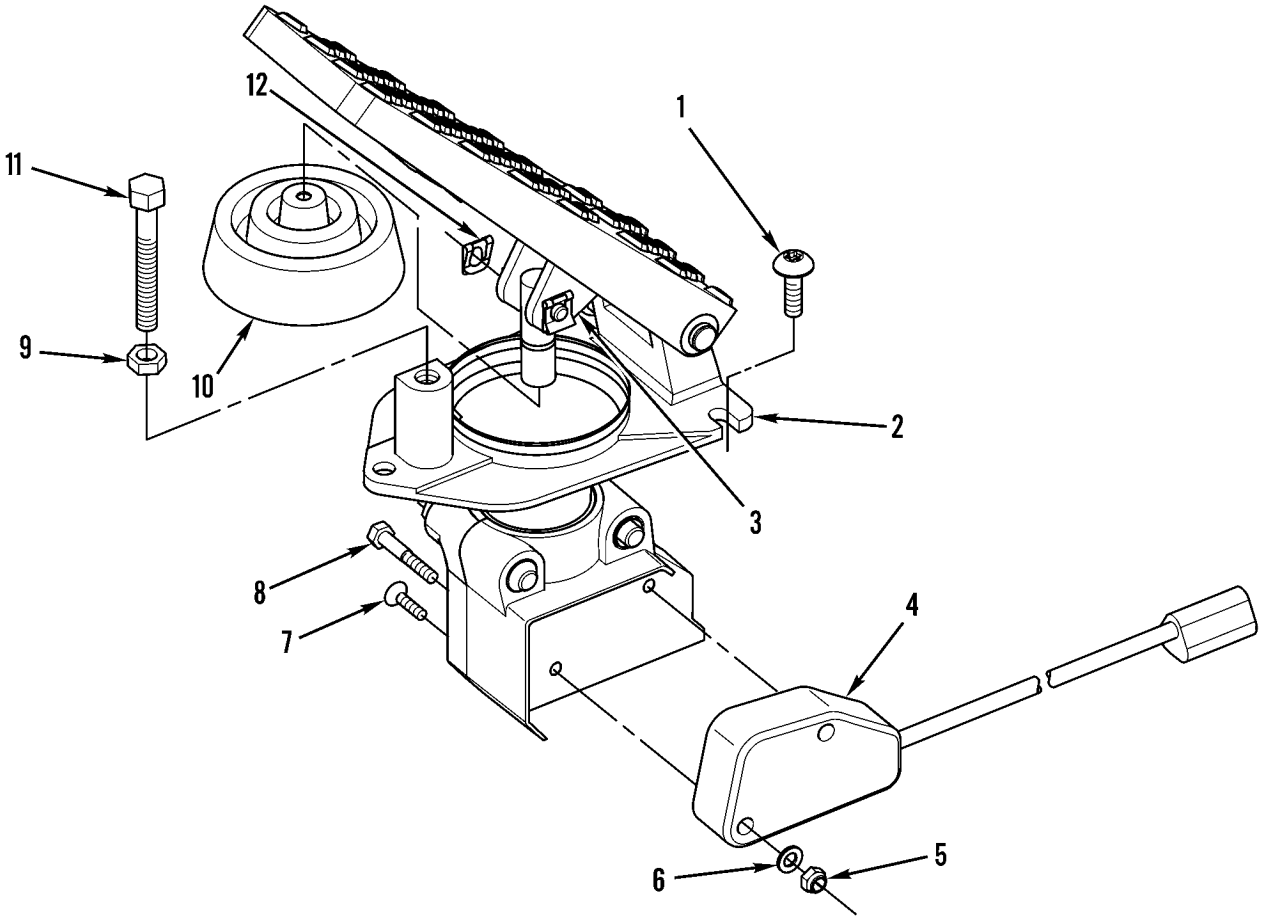

427-018

Figure 29. Throttle Pedal and Related Parts

(1) ITEM NO	(2) SMR CODE	(3) NSN	(4) CAGEC	(5) PART NUMBER	(6) DESCRIPTION AND USABLE ON CODES(UOC)	(7) QTY
					GROUP 0312 ACCELERATOR, THROTTLE OR CHOKE CONTROLS	
					FIG. 29 THROTTLE PEDAL AND RELATED PARTS	
1	PAOZZ	5305014310874	11083	9X2045	SCREW,MACHINE M6 X 1 X 20MM.....	3
2	PAOZZ	2540015458360	11083	2617148	PEDAL ASSEMBLY,CONT.....	1
3	PAOZZ	2590015325687	11083	2430062	.KIT,REPAIR,GOVERNOR INCLUDES SHAFT,CLIPS, AND BEARINGS.....	1
4	PAOZZ	5930015267609	11083	1602443	.SWITCH,PROXIMITY ROTARY.....	1
5	PFOZZ	5310015436532	11083	1794324	.NUT,SELF-LOCKINGHEX M5 X 0.8THD...	2
6	PAOZZ	5310014138757	11083	8T0328	.WASHER,FLAT 5.5 X 10 X 1MM THK....	2
7	PFOZZ	5305015436190	11083	0963772	.SCREW,MACHINE.....	2
8	PAOZZ	5306014385554	11083	6V2313	.BOLT,MACHINE.....	2
9	PFOZZ	5310015444693	11083	3C3364	.NUT,PLAIN,HEXAGON M8 X 1.25 THD...	1
10	PAOZZ	5340015277671	11083	2430063	.BOOT,DUST AND MOIST.....	1
11	PFOZZ	5306015449522	11083	3C4922	.BOLT,MACHINE M8 X 1.25 X 60MM.....	1
12	PAOZZ	5340015238996	11083	8T6902	.CLIP,RETAINING.....	2
					END OF FIGURE	

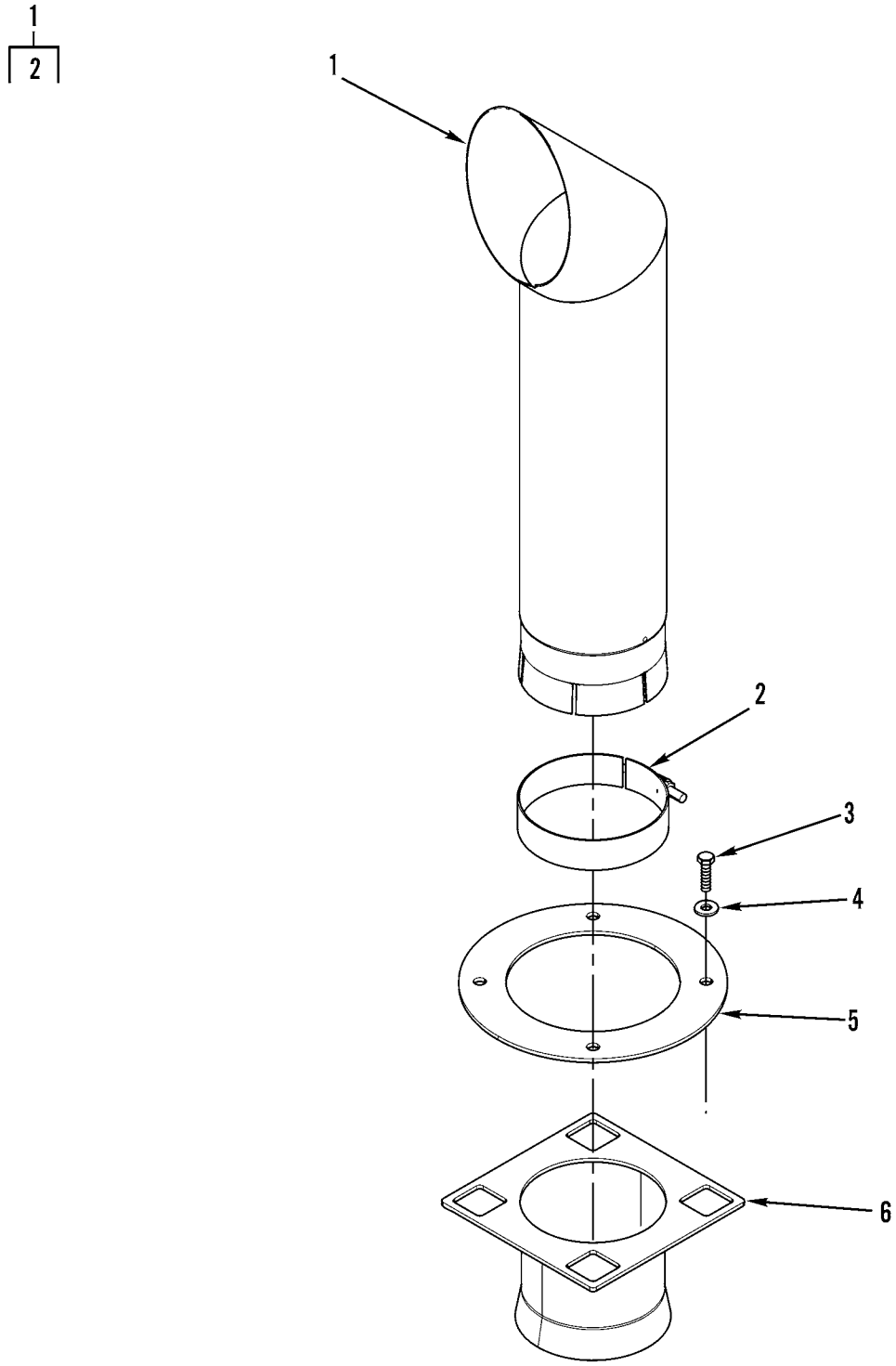

427-019

Figure 30. Exhaust Pipe

(1) ITEM NO	(2) SMR CODE	(3) NSN	(4) CAGEC	(5) PART NUMBER	(6) DESCRIPTION AND USABLE ON CODES(UOC)	(7) QTY
					GROUP 04 EXHAUST SYSTEM	
					GROUP 0401 MUFFLER AND PIPES	
					FIG. 30 EXHAUST PIPE	
1	PAOZZ	2990015174837	11083	1995117	PIPE,EXHAUST INCLUDES CLAMP.....	1
2	PAOZZ	5340014382007	11083	7E1397	.CLAMP,LOOP.....	1
3	PAOZZ	5305013981284	11083	8T4195	SCREW,CAP,HEXAGON H M10 X 1.5 X 30MM.....	4
4	PAOZZ	5310014309036	11083	7X7729	WASHER,FLAT 11 X 25 X 3MM THK.....	4
5	PFOZZ	5340015445563	11083	1994297	PLATE,MOUNTING.....	1
6	PFOZZ	5340015436673	11083	1994284	BRACKET,MOUNTING.....	1
					END OF FIGURE	

1
2

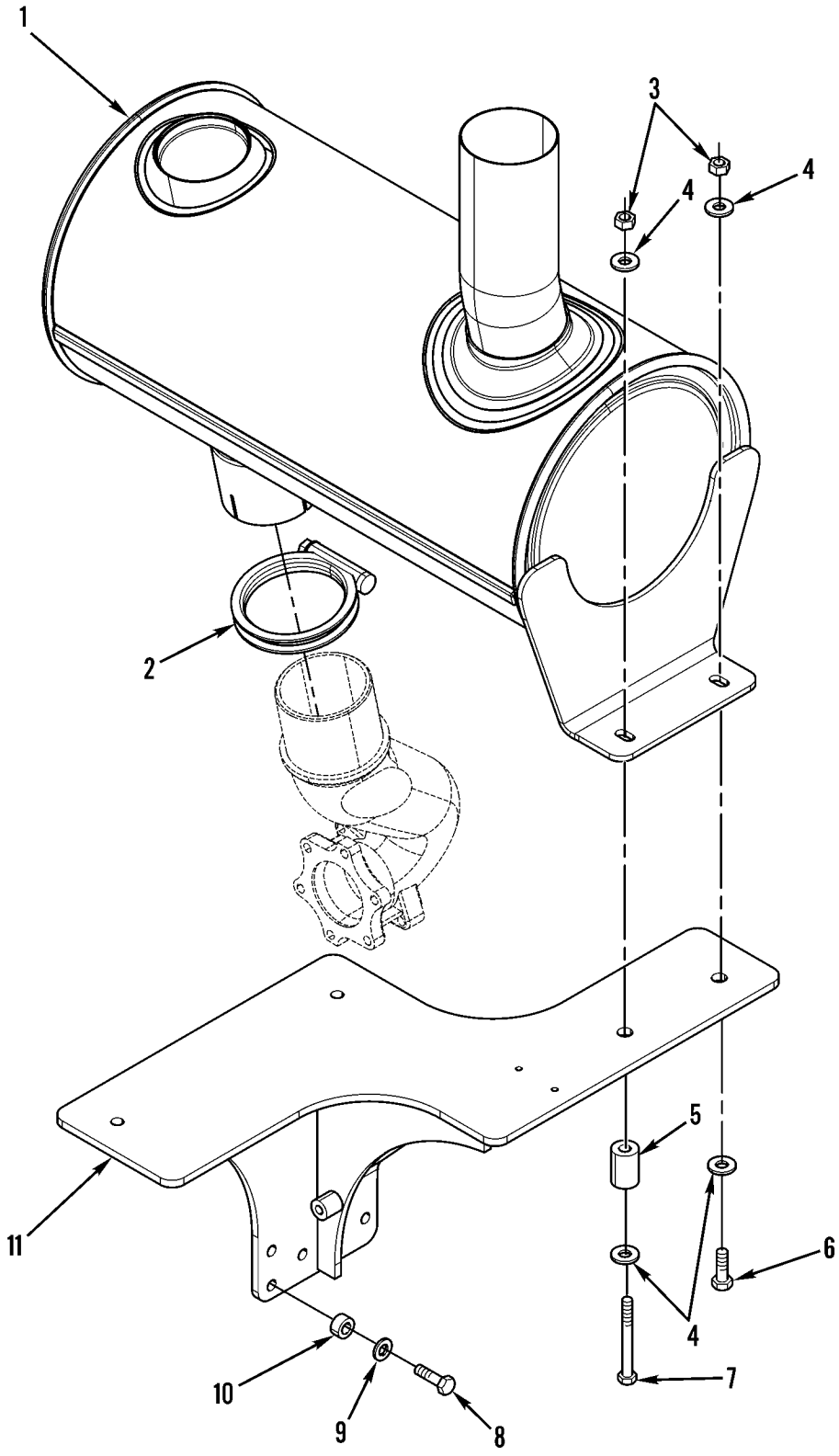

Figure 31. Muffler

(1) ITEM NO	(2) SMR CODE	(3) NSN	(4) CAGEC	(5) PART NUMBER	(6) DESCRIPTION AND USABLE ON CODES(UOC)	(7) QTY
					GROUP 0401 MUFFLER AND PIPES	
					FIG. 31 MUFFLER	
1	PAOZZ	2990015438671	11083	2527173	MUFFLER,EXHAUST.....	1
2	PFOZZ		11083	2552355	.CLAMP.....	1
3	PAOZZ	5310013527726	11083	8T4133	NUT,PLAIN,HEXAGON M10 X 1.5 THD....	2
4	PAOZZ	5310014309036	11083	7X7729	WASHER,FLAT 11 X 25 X 3MM THK.....	4
5	PFOZZ	5365015444772	11083	1257484	SPACER,RING 11 X 25 X 36MM THK.....	1
6	PAOZZ	5305013981284	11083	8T4195	SCREW,CAP,HEXAGON H M10 X 1.5 X 30MM.....	1
7	PAOZZ	5305014398526	11083	8T5005	SCREW,MACHINE M10 X 1.5 X 70MM.....	1
8	PAOZZ	5305013601996	11083	8T4196	SCREW,CAP,HEXAGON H M10 X 1.5 X 35MM.....	4
9	PAOZZ	5310013522753	11083	8T4121	WASHER,FLAT 11 X 21 X 2.5MM THK....	4
10	PFOZZ	5365015441398	11083	1242528	SPACER,SLEEVE 11 X 20 X 10MM THK...	4
11	PFOZZ	5340015441368	11083	2408159	BRACKET,MOUNTING.....	1
					END OF FIGURE	

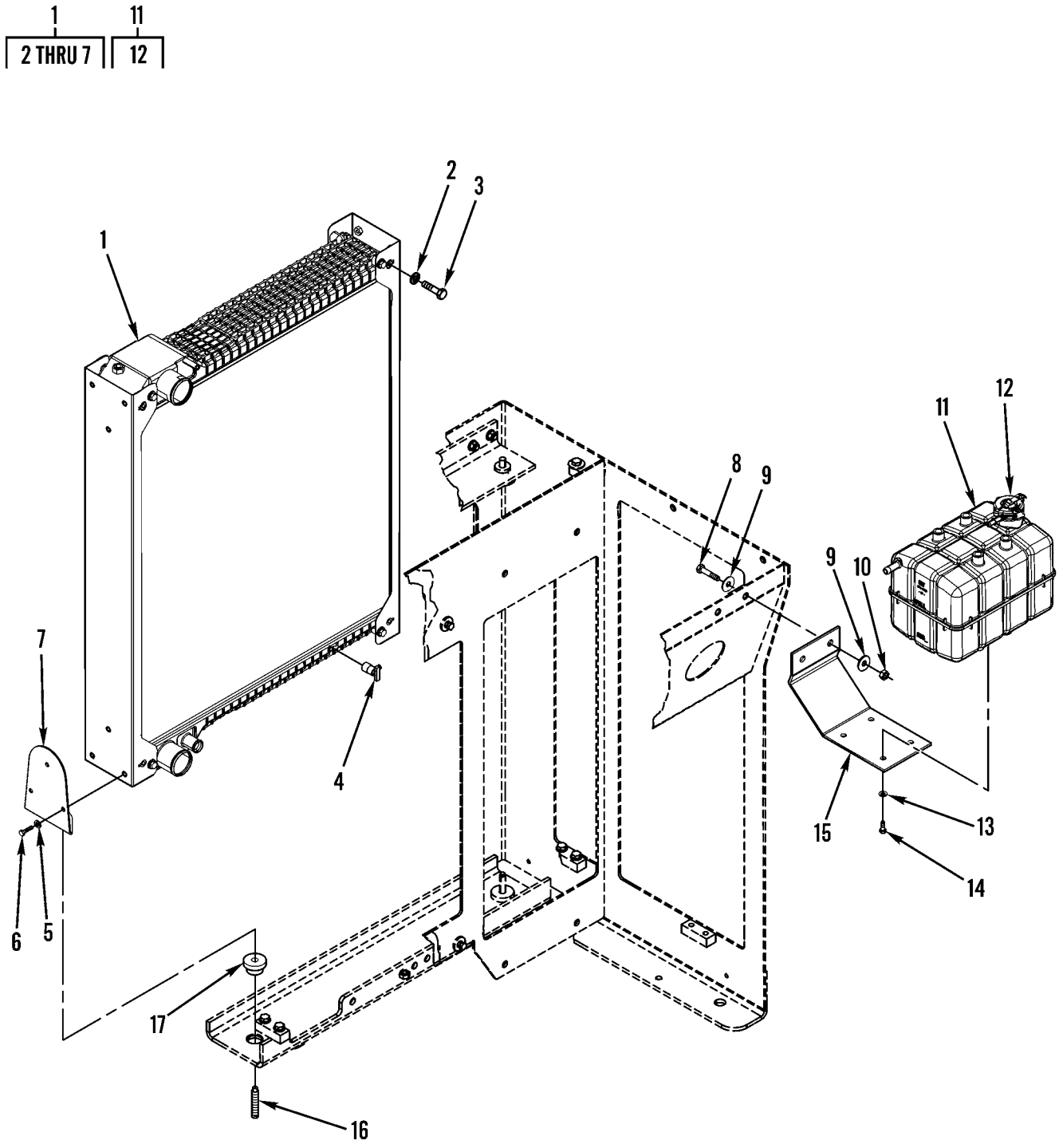

Figure 32. Radiator and Mounting

(1) ITEM NO	(2) SMR CODE	(3) NSN	(4) CAGEC	(5) PART NUMBER	(6) DESCRIPTION AND USABLE ON CODES(UOC)	(7) QTY
					GROUP 05 COOLING SYSTEM	
					GROUP 0501 RADIATOR, EVAPORATIVE COOLER, OR HEAT EXCHANGER	
					FIG. 32 RADIATOR AND MOUNTING	
1	PAFZZ	2930015265256	11083	1851016	RADIATOR,ENGINE COO.....	1
2	PAFZZ	5310014734445	11083	7X3393	.WASHER,FLAT 8.3 X 19 X 1.83MM THK.	8
3	PAFZZ	5306013600927	11083	8T4189	.BOLT,MACHINE M8 X 1.25 X 20MM.....	8
4	PFOZZ	4820015435500	11083	2254287	.COCK-DRAIN.....	1
5	PAFZZ	5310013598806	11083	8T4224	WASHER,FLAT.....	12
6	PAFZZ	5305013601703	11083	8T4200	SCREW,CAP,HEXAGON H.....	12
7	PFFZZ	5340015436985	11083	1851027	.BRACKET,MOUNTING.....	4
8	PAFZZ	5305013981284	11083	8T4195	SCREW,CAP,HEXAGON H M10 X 1.5 X 30MM.....	2
9	PAFZZ	5310014293253	11083	8T4222	WASHER,FLAT 11 X 32 X 3.5MM THK....	4
10	PAFZZ	5310013527726	11083	8T4133	NUT,PLAIN,HEXAGON M10 X 1.5 THD....	2
11	PAOZZ	2930015438675	11083	2270104	TANK,RADIATOR,OVERF.....	1
12	PAOZZ	2930015297675	11083	2274376	.CAP,FILLER OPENING.....	1
13	PAFZZ	5310013598806	11083	8T4224	WASHER,FLAT 8.8 X 16 X 2MM THK.....	4
14	PAFZZ	5305013601703	11083	8T4200	SCREW,CAP,HEXAGON H M8 X 1.25 X 16MM.....	4
15	PFFZZ	5340015441363	11083	1851049	PLATE,MOUNTING.....	1
16	PFFZZ	5305015444765	11083	9X8482	SETSCREW M12 X 1.75 X 70MM.....	2
17	PFFZZ	5340015444166	11083	7T8332	MOUNT,RESILIENT,GEN.....	2
					END OF FIGURE	

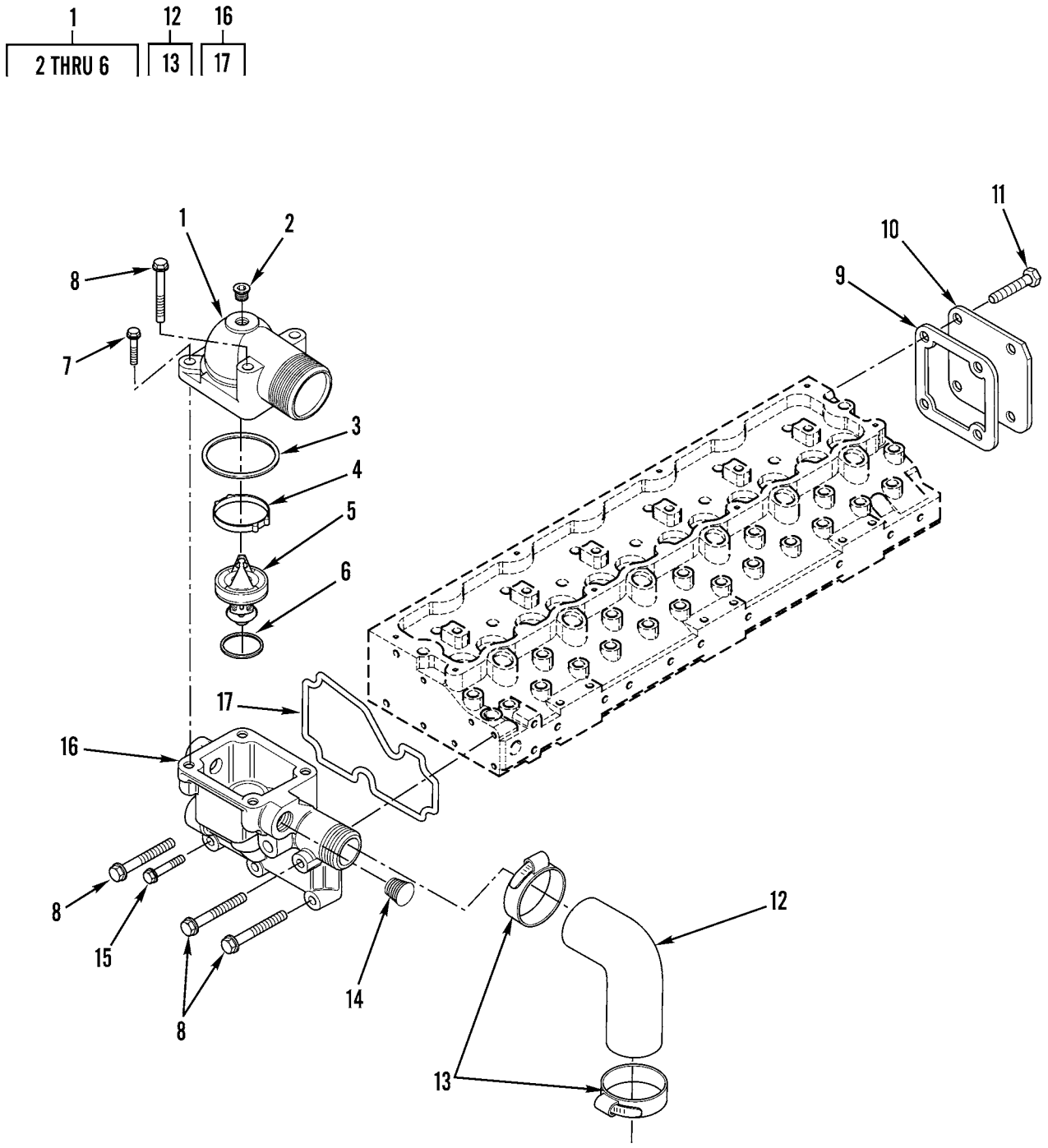

Figure 33. Thermostat and Housing

(1) ITEM NO	(2) SMR CODE	(3) NSN	(4) CAGEC	(5) PART NUMBER	(6) DESCRIPTION AND USABLE ON CODES(UOC)	(7) QTY
					GROUP 0503 WATER MANIFOLD, HEADERS, THERMOSTATS AND HOUSING GASKET	
					FIG. 33 THERMOSTAT AND HOUSING	
1	PFOZZ	2815015441325	11083	2169743	WATEROUTLET,ENGINE.....	1
2	PFOZZ	5365015436968	11083	1620237	.PLUG,MACHINE THREAD.....	1
3	PAOZZ	5330014715561	11083	1416188	.SEAL,NONMETALLIC RO.....	1
4	PAOZZ	5325014715434	11083	1620236	.RING,RETAINING.....	1
5	PAOZZ	6685015175762	11083	2169737	.THERMOSTAT,FLOW CON.....	1
6	PAOZZ	5331014714712	11083	1407515	.O-RING.....	1
7	PAOZZ	5306014714703	11083	6I0260	BOLT,ASSEMBLED WASH M8 X 1.25 X 25MM.....	2
8	PAOZZ	5306014715199	11083	6I4374	BOLT,ASSEMBLED WASH.....	5
9	PAOZZ	5330014714711	11083	1407506	GASKET.....	1
10	PAOZZ	5340014715202	11083	1407505	COVER,ACCESS.....	1
11	PAOZZ	5306014714728	11083	1243815	BOLT,ASSEMBLED WASH M8X16 X 1.25MM.	3
12	PAOZZ	4720014714539	11083	1407512	PARTS KIT,HOSE ASSE.....	1
13	PAOZZ	4730010618216	11083	2S3440	.CLAMP,HOSE.....	2
14	PAOZZ	4730002783383	15235	PLG1	PLUG,PIPE.....	1
15	PAOZZ	5306015293358	11083	6I0456	BOLT,MACHINE M8 X 1.25 X 45MM.....	3
16	PAOZZ	4320014714897	11083	2346862	HOUSING SECTION,LIQ.....	1
17	PFOZZ	5330015436197	11083	2346861	.GASKET.....	1
					END OF FIGURE	

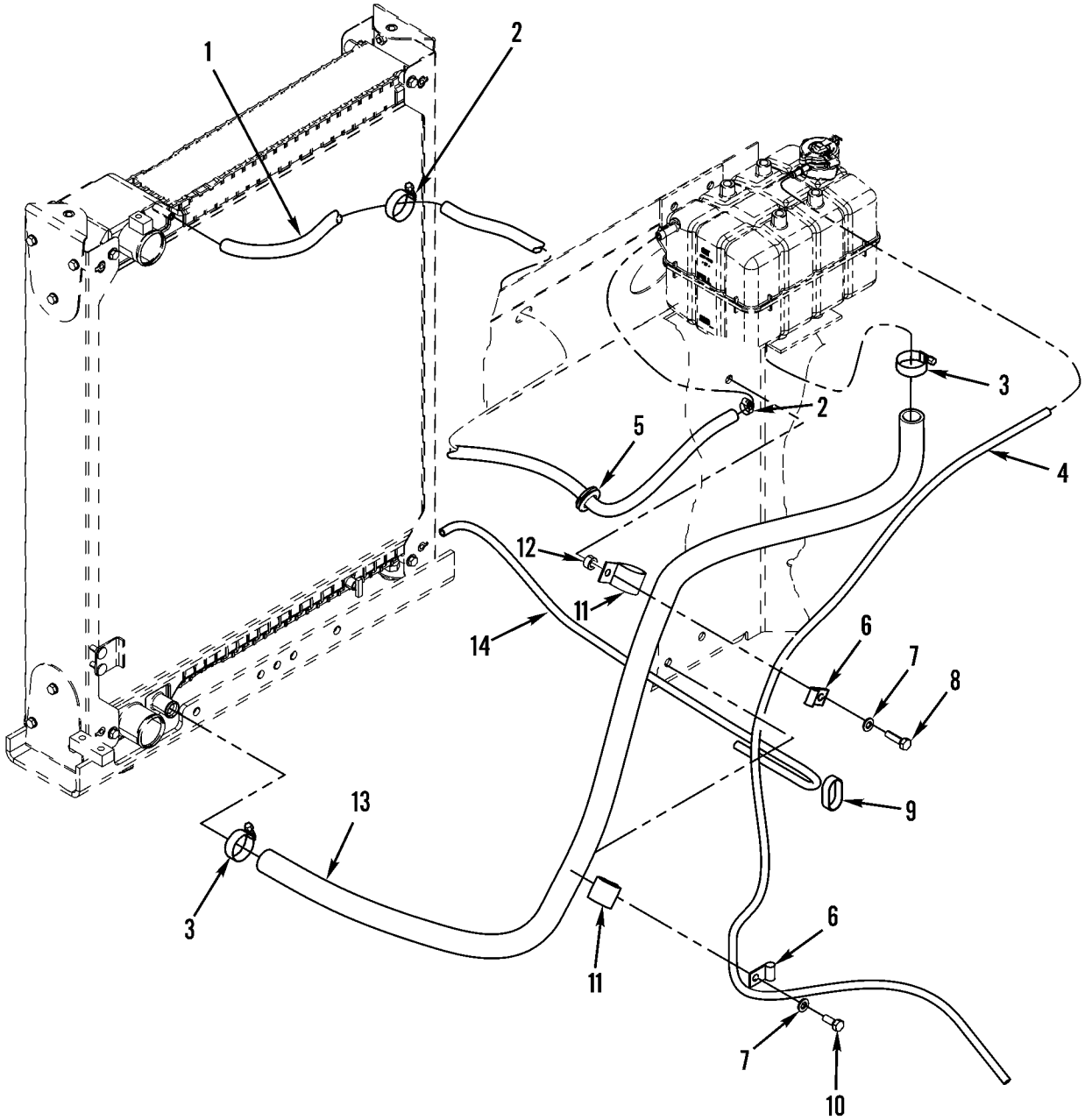

427-063

Figure 34. Coolant Tank Lines

(1) ITEM NO	(2) SMR CODE	(3) NSN	(4) CAGEC	(5) PART NUMBER	(6) DESCRIPTION AND USABLE ON CODES(UOC)	(7) QTY
					GROUP 0503 WATER MANIFOLD, HEADERS, THERMOSTATS AND HOUSING GASKET	
					FIG. 34 COOLANT TANK LINES	
1	MOOZZ		11083	9X2133-96	HOSE,NONMETALLIC MAKE FROM HOSE P/N 9X2133, 37.8 INCHES (96 CM).....	1
2	PAOZZ	4730012299689	19428	520531	CLAMP,HOSE.....	2
3	PAOZZ	5340014384644	11083	7X7958	CLAMP,LOOP.....	2
4	MOOZZ		11083	8C3681-203	HOSE,NONMETALLIC MAKE FROM HOSE P/N 8C3681, 80 INCHES (203C M).....	1
5	PAOZZ	5325010627138	11083	3K9520	GROMMET.....	1
6	PAOZZ	5340004238320	11083	1B3057	CLIP,SPRING TENSION.....	2
7	PAOZZ	5310013522753	11083	8T4121	WASHER,FLAT 11 X 21 X 2.5MM THK....	2
8	PAOZZ	5305014195181	11083	8T4172	SCREW,CAP,HEXAGON H M10 X 1.5 X 80MM.....	1
9	PAOZZ	2815010534712	11083	7K1181	STRAP.....	1
10	PAOZZ	5306013601634	11083	8T4136	BOLT,MACHINE M10 X 1.5 X 25MM.....	1
11	PAOZZ	5340013601316	11083	4D7388	CLAMP,LOOP.....	2
12	PFOZZ	5365015055443	11083	1333260	SPACER,STRAIGHT.....	1
13	MOOZZ		11083	5P1506-172	HOSE,NONMETALLIC MAKE FROM HOSE P/N 5P1506, 67.8 INCHES (17 2CM).....	1
14	MOOZZ		11083	8C3681-108	HOSE,NONMETALLIC MAKE FROM HOSE P/N 8C3681, 42.5 INCHES (10 8CM).....	1
					END OF FIGURE	

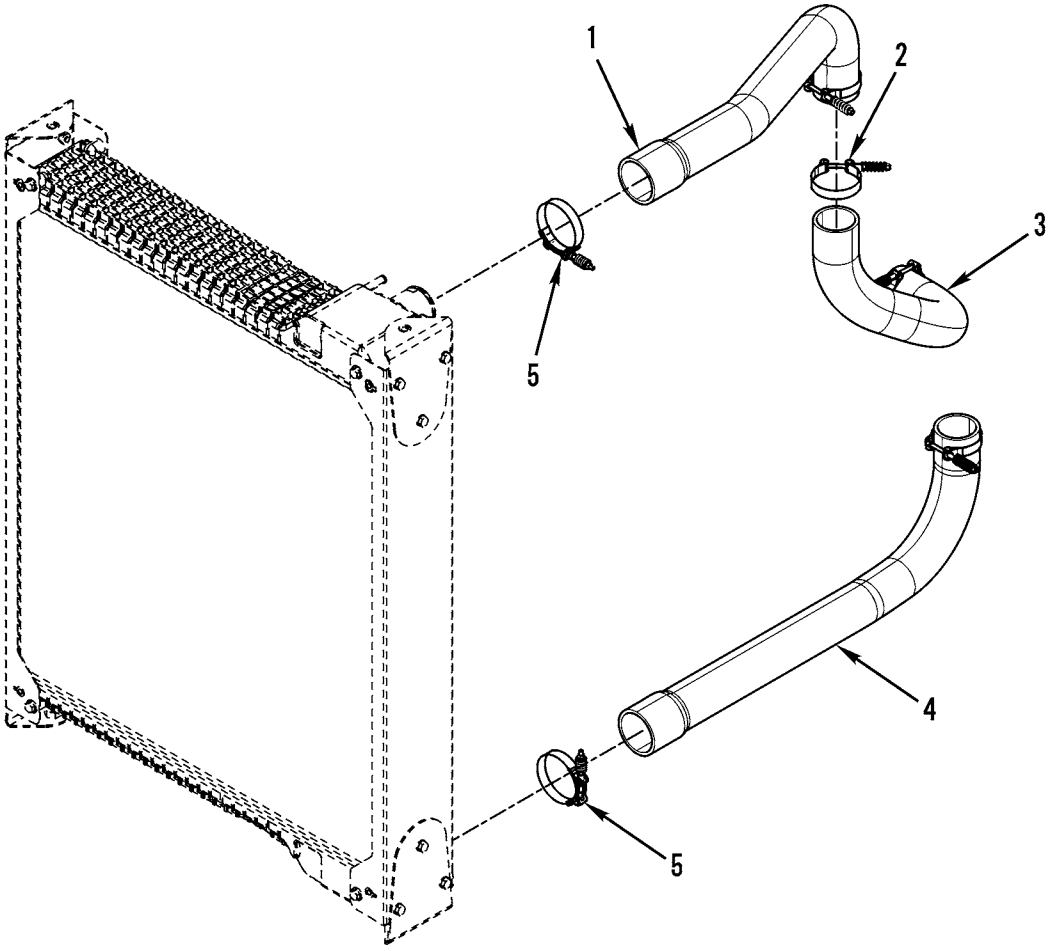

427-095

Figure 35. Radiator Hoses and Fittings

(1) ITEM NO	(2) SMR CODE	(3) NSN	(4) CAGEC	(5) PART NUMBER	(6) DESCRIPTION AND USABLE ON CODES(UOC)	(7) QTY
					GROUP 0503 WATER MANIFOLD, HEADERS, THERMOSTATS AND HOUSING GASKET	
					FIG. 35 RADIATOR HOSES AND FITTINGS	
1	PAOZZ	4720015176890	11083	1851023	HOSE,PREFORMED.....	1
2	PAOZZ	5306015237414	11083	2147458	BOLT,MACHINE CLAMP,HOSE.....	4
3	PAOZZ	4720015176895	11083	1851024	HOSE,PREFORMED.....	1
4	PAOZZ	4720015448621	11083	1851021	HOSE,PREFORMED.....	1
5	PFOZZ	4730015454187	11083	2166945	CLAMP,HOSE.....	2
					END OF FIGURE	

1
2

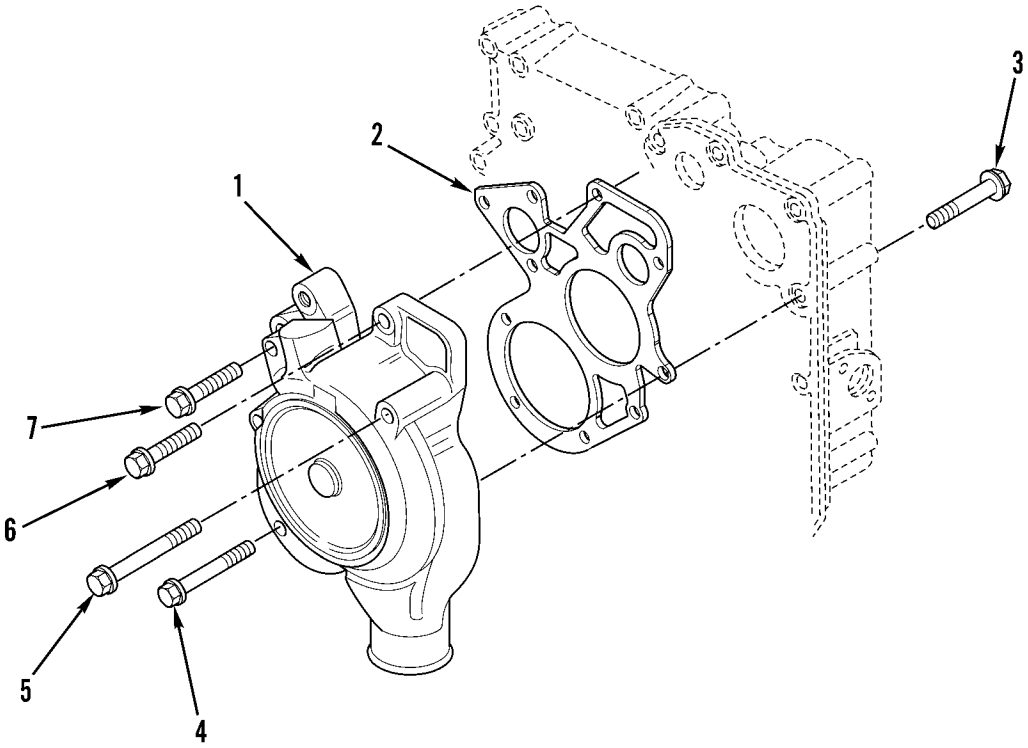

427-020

Figure 36. Water Pump and Mounting

(1) ITEM NO	(2) SMR CODE	(3) NSN	(4) CAGEC	(5) PART NUMBER	(6) DESCRIPTION AND USABLE ON CODES(UOC)	(7) QTY
					GROUP 0504 WATER PUMP	
					FIG. 36 WATER PUMP AND MOUNTING	
1	PAOZZ	2930015173410	11083	2346110	PUMP,COOLING SYSTEM.....	1
2	PAOZZ	5330015173400	11083	2018745	.GASKET.....	1
3	PFOZZ	5340014715310	11083	6I0839	BRACKET,ANGLE M8 X 1.25 X 70MM.....	2
4	PAOZZ	5306014287032	11083	1013805	BOLT,MACHINE M8 X 1.25 X 90MM.....	3
5	PAOZZ	5306014287030	13446	2314K166	BOLT,MACHINE.....	3
6	PAOZZ	5306014714905	11083	6I4793	BOLT,ASSEMBLED WASH.....	1
7	PAOZZ	5305015056793	11083	6I0645	SCREW,CAP,HEXAGON H M8 X 1.25 X 25MM.....	1
					END OF FIGURE	

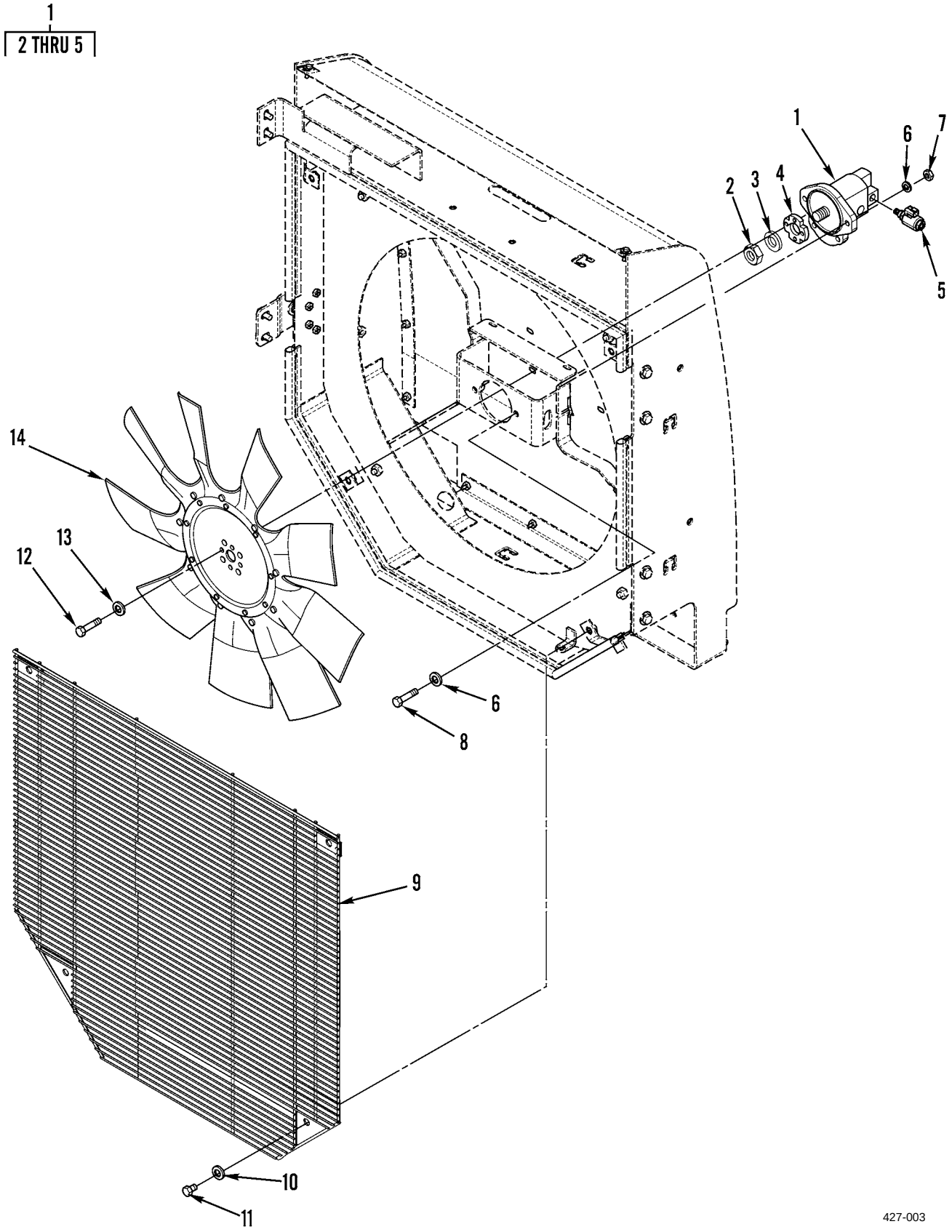

Figure 37. Hydraulic Fan, Motor, and Related Parts

(1) ITEM NO	(2) SMR CODE	(3) NSN	(4) CAGEC	(5) PART NUMBER	(6) DESCRIPTION AND USABLE ON CODES(UOC)	(7) QTY
					GROUP 0505 FAN ASSEMBLY	
					FIG. 37 HYDRAULIC FAN, MOTOR, AND RELATED PARTS	
1	PAFZZ	6105015435977	11083	2053669	MOTOR,ALTERNATINGCU.....	1
2	PAFZZ	5310008775795	80205	MS21044-N8	.NUT,SELF-LOCKING,HE 1/2-20 THD....	1
3	PAFZZ	5310010980624	11083	5P8245	.WASHER,FLAT 13.5 X 25.5 X 3MM THK.	1
4	PAFZZ	5340014742006	11083	1133632	.BRACKET,MOUNTING.....	1
5	PAFZZ		11083	2112092	.VALVE,SOLENOID DEMAND FAN.....	1
6	PAFZZ	5310013522753	11083	8T4121	WASHER,FLAT 11 X 21 X 2.5MM THK....	4
7	PAFZZ	5310013527726	11083	8T4133	NUT,PLAIN,HEXAGON M10 X 1.5 THD....	2
8	PAFZZ	5305013601996	11083	8T4196	SCREW,CAP,HEXAGON H M10 X 1.5 X 35MM.....	2
9	PFFZZ	2510015449566	11083	2052214	GRILLE,RADIATOR VEH.....	1
10	PAFZZ	5310014309036	11083	7X7729	WASHER,FLAT 11 X 25 X 3MM THK.....	4
11	PAFZZ	5306013600928	11083	8T4137	BOLT,MACHINE M10 X 1.5 X 20MM.....	4
12	PAFZZ	5306013600927	11083	8T4189	BOLT,MACHINE M8 X 1.25 X 20MM.....	4
13	PAFZZ	5310013598806	11083	8T4224	WASHER,FLAT 8.8 X 16 X 2MM THK.....	4
14	PAFZZ	2930015437952	11083	1851046	IMPELLER,FAN,AXIAL.....	1
					END OF FIGURE	

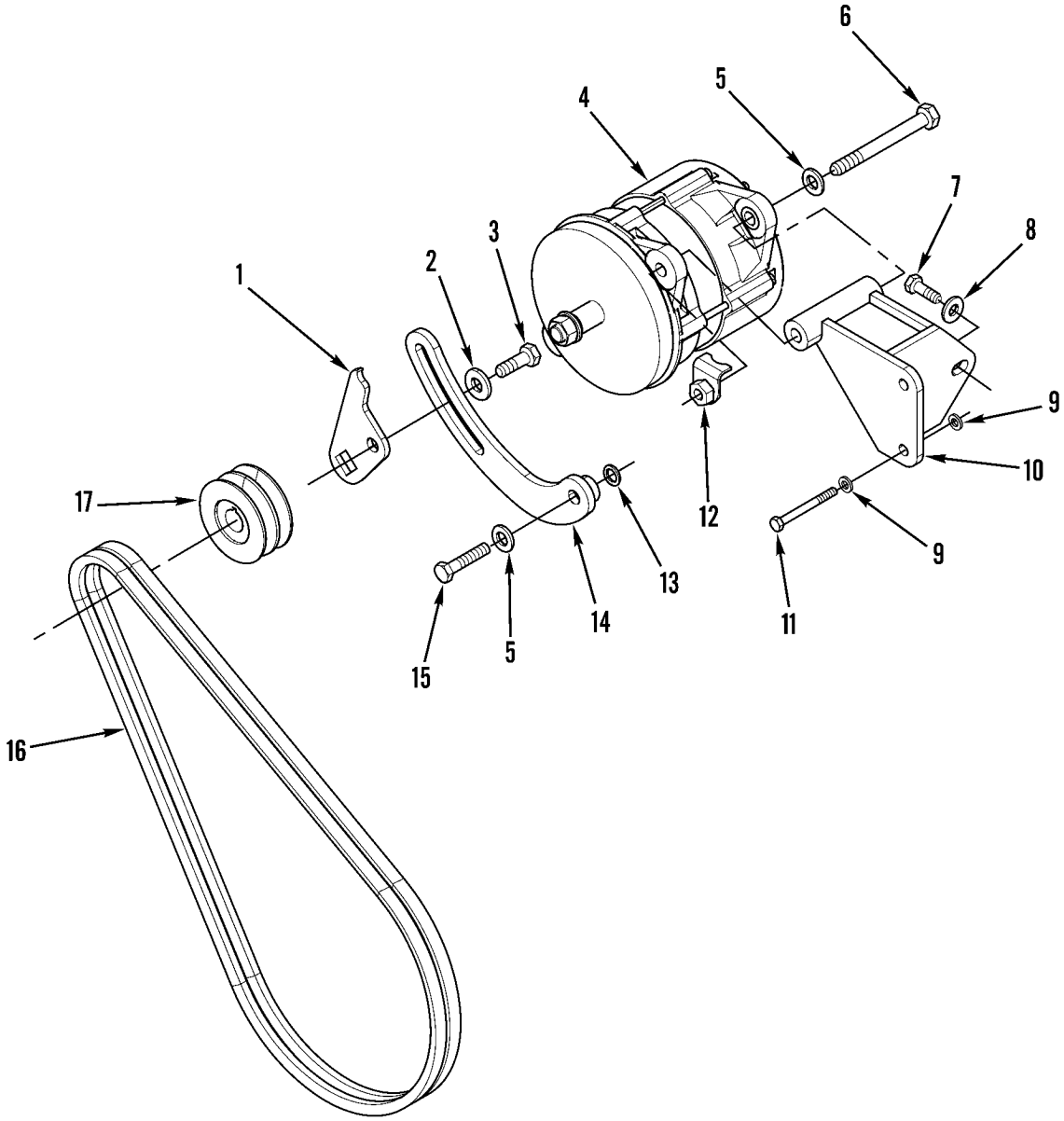

427-021

Figure 38. Alternator, V-Belt, and Related Parts

(1) ITEM NO	(2) SMR CODE	(3) NSN	(4) CAGEC	(5) PART NUMBER	(6) DESCRIPTION AND USABLE ON CODES(UOC)	(7) QTY
					GROUP 06 ELECTRICAL SYSTEM	
					GROUP 0601 GENERATOR, ALTERNATOR	
					FIG. 38 ALTERNATOR, V-BELT, AND RELATED PARTS	
1	PFOZZ		11083	2128743	BRACKET,MOUNTING.....	1
2	PAOZZ	5310010976720	11083	5P1076	WASHER,SHOULDERED A 13.5 X 30 4 MM.	1
3	PAOZZ	5306014294756	11083	8C4436	BOLT,MACHINE 1/2-13 X 1.375IN.....	1
4	PAOZZ	6115015266757	11083	1978820	GENERATOR,ALTERNATI.....	1
5	PAOZZ	5310010980624	11083	8T4223	WASHER,FLAT 13.5 X 25.5 X 3MM THK..	2
6	PAOZZ	5306014391003	11083	7X0338	BOLT,MACHINE 1/2-13 X 16IN.....	1
7	PAOZZ	5306013601634	11083	8T4136	BOLT,MACHINE M10 X 1.5 X 25MM.....	1
8	PAOZZ	5310014309036	11083	7X7729	WASHER,FLAT 11 X 25 X 3MM THK.....	1
9	PAOZZ	5310013598806	11083	8T4224	WASHER,FLAT 8.8 X 16 X 2MM THK.....	4
10	PFOZZ	5340015445577	11083	1572393	BRACKET,,MOUNTING.....	1
11	PAOZZ	5305014398537	11083	8T6870	SCREW,MACHINE M8 X 1.25 X 70MM.....	2
12	PAOZZ	5310002537918	11083	9S1240	NUT,PLAIN,PLATE.....	1
13	PAOZZ	5310014736481	11083	7X0599	WASHER,FLAT 13 X 20 X 2MM.....	1
14	PFOZZ	5340015436005	11083	1582829	BRACKET,MOUNTING.....	1
15	PAOZZ	5306014138770	11083	8T4183	BOLT,SHOULDER M12 X 1.75 X 40MM....	1
16	PAOZZ	3030015176047	11083	1303216	BELTS,V,MATCHED SET.....	1
17	PFOZZ	3020015446374	11083	9L6246	PULLEY,GROOVE.....	1
					END OF FIGURE	

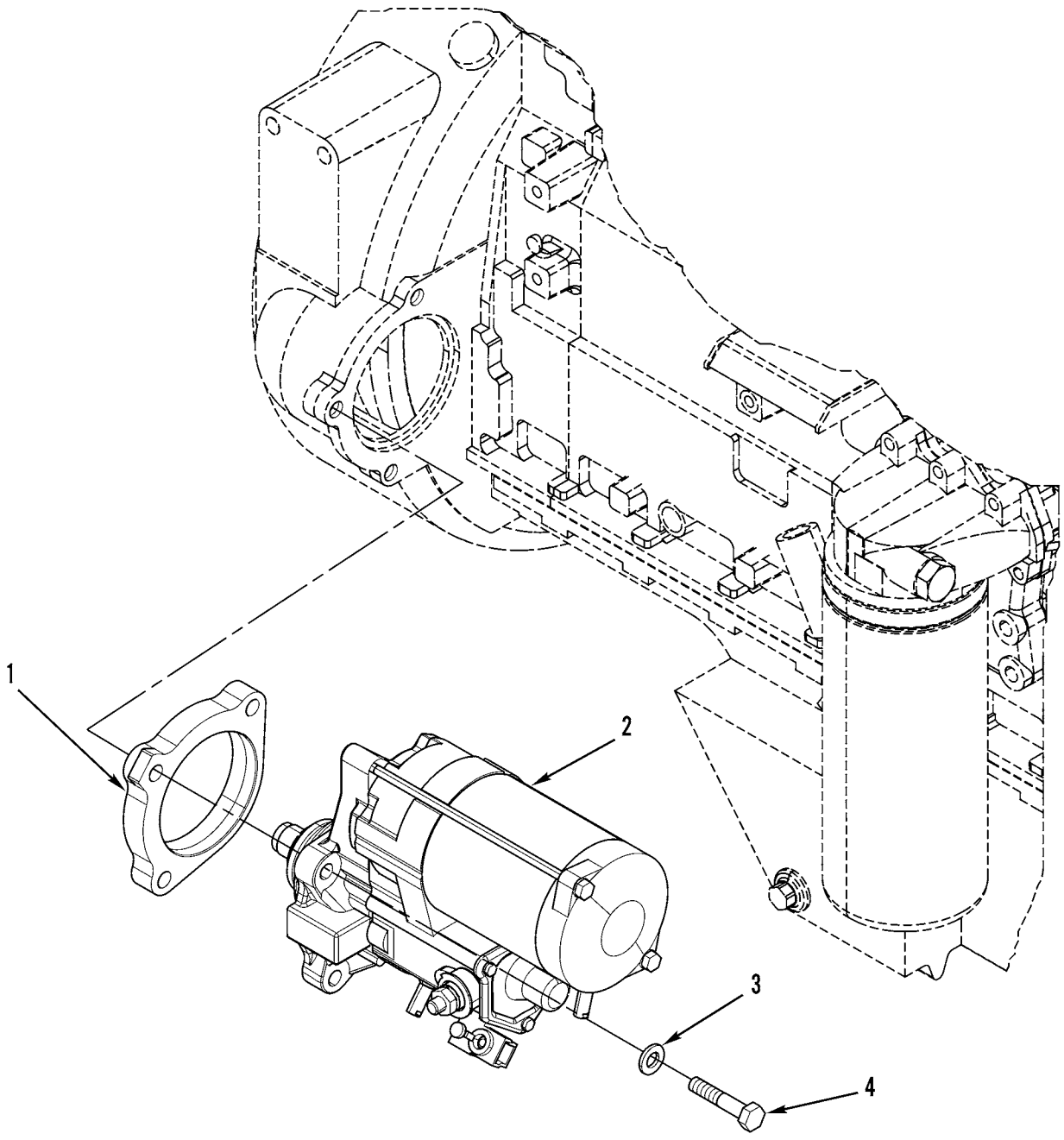

427-049

Figure 39. Starting Motor (Starter)

(1) ITEM NO	(2) SMR CODE	(3) NSN	(4) CAGEC	(5) PART NUMBER	(6) DESCRIPTION AND USABLE ON CODES(UOC)	(7) QTY
					GROUP 0603 STARTING MOTOR	
					FIG. 39 STARTING MOTOR (STARTER)	
1	PFOZZ	5365015446079	11083	7W4540	SPACER,PLATE.....	1
2	PAOZZ	2920015435506	11083	2342637	STARTER,ENGINE,ELEC.....	1
3	PAOZZ	5310013522753	11083	8T4121	WASHER,FLAT 11 X 21 X 2.5MM THK....	3
4	PAOZZ	5305013981286	11083	8T4185	SCREW,CAP,HEXAGON H M10 X 1.5 X 30MM.....	3
					END OF FIGURE	

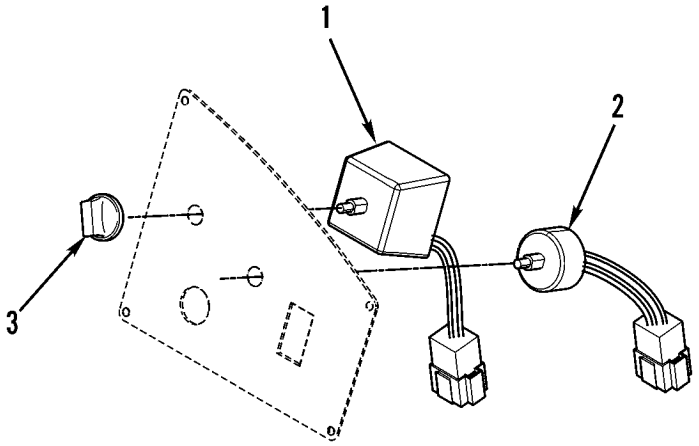

427-159

Figure 40. Wiper Switch

(1) ITEM NO	(2) SMR CODE	(3) NSN	(4) CAGEC	(5) PART NUMBER	(6) DESCRIPTION AND USABLE ON CODES(UOC)	(7) QTY
					GROUP 0607 INSTRUMENT OR ENGINE CONTROL PANEL	
					FIG. 40 WIPER SWITCH	
1	PFOZZ	5930015437963	11083	1107886	SWITCH,ROTARY FRONT WIPER.....	1
2	PFOZZ	5930015437966	11083	1126174	SWITCH,ROTARY REAR WIPER.....	1
3	PAOZZ	5355014735758	11083	1106109	KNOB.....	2
					END OF FIGURE	

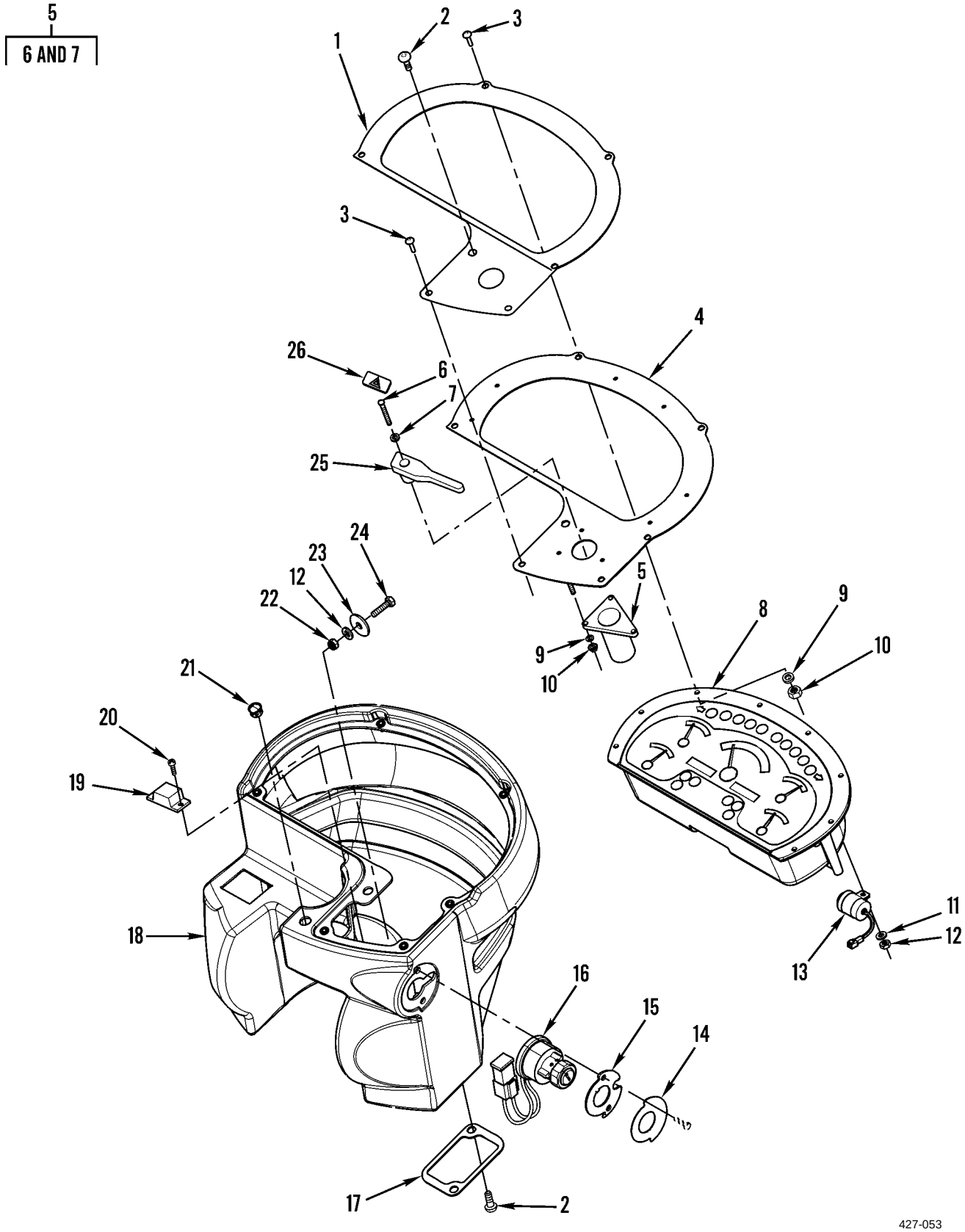

Figure 41. Control Switches and Panel

(1) ITEM NO	(2) SMR CODE	(3) NSN	(4) CAGEC	(5) PART NUMBER	(6) DESCRIPTION AND USABLE ON CODES(UOC)	(7) QTY
					GROUP 0607 INSTRUMENT OR ENGINE CONTROL PANEL	
					FIG. 41 CONTROL SWITCHES AND PANEL	
1	PFOZZ	7690015444374	11083	2144916	DECAL	1
2	PAOZZ	5305014310874	11083	9X2045	SCREW,MACHINE M6 X 1 X 20MM	3
3	PAOZZ	5305014389790	11083	9X1046	SCREW,MACHINE M4 X 0.7 X 18MM	6
4	PFOZZ	5340015437821	11083	1904556	PLATE,MOUNTING	1
5	PAOZZ	6220010937946	11083	1733064	CONTROL,DIRECTIONAL	1
6	PAOZZ	5305010589146	11083	5L7200	.SCREW,MACHINE 8-32 X 0.375 IN	1
7	PAOZZ	5310005590070	11083	9B7233	.WASHER,LOCK #8,INTERNAL TOOTH	1
8	PAOZZ	2510015169697	11083	2182401	PANEL,VEHICULAR OPE	1
9	PAOZZ	5310011701508	11083	1H4393	WASHER,LOCK	6
10	PAOZZ	5310014135297	11083	5C8312	NUT,PLAIN,HEXAGON M4 X 0.7 THD	6
11	PAOZZ	5310008412576	11083	8T4205	WASHER,FLAT	4
12	PAOZZ	5310013533404	11083	5C2890	NUT,PLAIN,HEXAGON	2
13	PAOZZ	6350014239687	11083	3E6328	ALARM GROUP,EMS FAU SWITCH,LOCK, IGNITION	1
14	PFOZZ	7690014741520	11083	1297184	LABEL	1
15	PFOZZ	5340015441369	11083	1855629	PLATE,MOUNTING	1
16	PAOZZ	2920014741759	11083	1688280	SWITCH,ENGINE START	1
17	PFOZZ	5340015441370	11083	1904563	PLATE,MOUNTING	1
18	PFOZZ	2510015436507	11083	1904555	PANEL,VEHICULAR OPE INSTRUMENT PANEL HOUSING	1
19	PAOZZ		11083	1080358	FLASHER,THERMAL	1
20	PAOZZ		11083	1195026	SCREW,MACHINE 10-16 X 0.63 INCHES	2
21	PAOZZ	5365015055646	11083	1845293	PLUG,MACHINE THREAD	1
22	PAOZZ	5310014735503	11083	1293178	NUT,SELF-LOCKING,RO	2
23	PAOZZ	5310014294717	11083	8C9987	WASHER,FLAT	2
24	PAOZZ	5305013601004	11083	6V8490	SCREW,CAP,HEXAGON H	2
25	PFOZZ	3040015460253	11083	1333235	LEVER,MANUAL CONTRO	1
26	PAOZZ	9905012229884	11083	5V2998	PLATE,DESIGNATION	1
					END OF FIGURE	

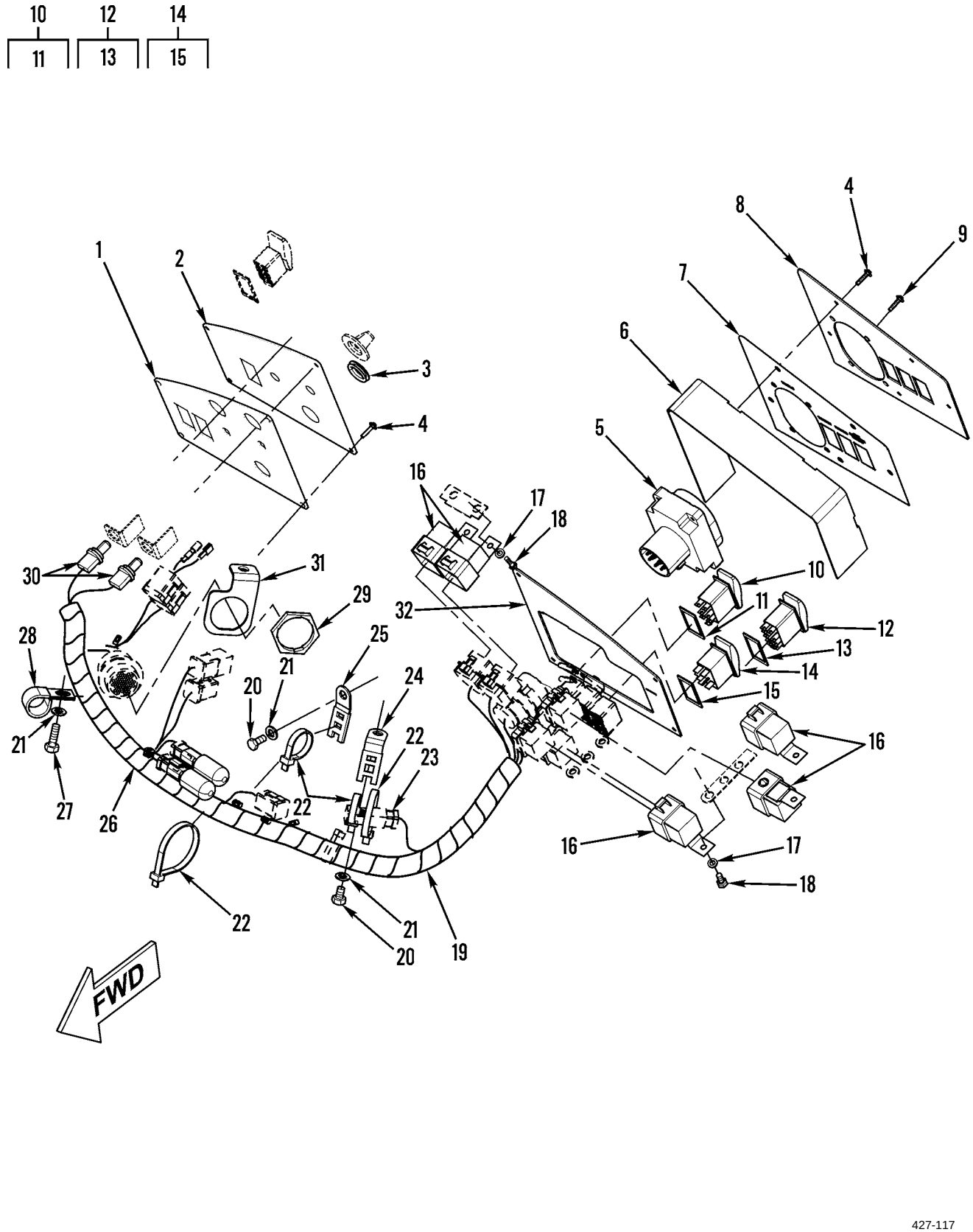

Figure 42. Instrument Panel (Blackout)

(1) ITEM NO	(2) SMR CODE	(3) NSN	(4) CAGEC	(5) PART NUMBER	(6) DESCRIPTION AND USABLE ON CODES(UOC)	(7) QTY
					GROUP 0607 INSTRUMENT OR ENGINE CONTROL PANEL	
					FIG. 42 INSTRUMENT PANEL (BLACKOUT)	
1	PFOZZ	5340015450104	11083	1904559	PLATE,MOUNTING.....	1
2	PFOZZ	7690015448212	11083	2040358	MARKER,IDENTIFICATI.....	1
3	PAOZZ	5340015236504	11083	9R2620	PLUG,VENT.....	1
4	PAOZZ	5305014389790	11083	9X1046	SCREW,MACHINE M4 X 0.7 X 18MM.....	13
5	PAOZZ	5895015445202	11083	2241159	CONTROL-INDICATOR.....	1
6	PFOZZ	5340015448667	11083	2806971	PLATE,MOUNTING.....	1
7	PFOZZ	5340015448170	11083	2806976	COVER,ACCESS.....	1
8	PFOZZ	7690015448576	11083	2806977	MARKER,IDENTIFICATI.....	1
9	PAOZZ	5305014736110	11083	6V7978	SCREW,MACHINE.....	4
10	PAOZZ	5930015513134	11083	2863594	SWITCH,TOGGLE WORKLIGHT.....	1
11	PAOZZ	5330015277212	11083	1117899	.GASKET.....	1
12	PAOZZ	5930015513133	11083	2508115	SWITCH,TOGGLE TRANSMISSION NEUTRALIZER OVERRIDE.....	1
13	PAOZZ	5330015277212	11083	1117899	.GASKET.....	1
14	PAOZZ	5930015512407	11083	1950925	SWITCH ASSEMBLY AUTOSHIFT.....	1
15	PAOZZ	5330015277212	11083	1117899	.GASKET.....	1
16	PAOZZ	5945014681267	11083	3E5239	RELAY,ELECTROMAGNET.....	5
17	PAOZZ	5310008412576	11083	8T4205	WASHER,FLAT 7.2 X 14.5 X 2MM THK...	5
18	PAOZZ	5306014293167	11083	8T4171	BOLT,MACHINE M6 X 1 X 12MM.....	5
19	PAOZZ	6150015517243	11083	2788832	WIRING HARNESS,BRAN.....	1
20	PAOZZ	5306014734524	11083	8T4199	BOLT,MACHINE M8 X 1.25 X 12MM.....	2
21	PAOZZ	5310013598806	11083	8T4224	WASHER,FLAT 8.8 X 16 X 2MM THK.....	3
22	PAOZZ	2815010534712	11083	7K1181	STRAP.....	4
23	PAOZZ	5970014734163	11083	1068704	INSULATOR,STANDOFF.....	2
24	PAOZZ	5340014715243	11083	4P8134	CLIP,SPRING TENSION.....	1
25	PAOZZ	5999014708845	11083	4P7581	CLIP,ELECTRICAL.....	1
26	MOOZZ		11083	5P6038-150	GUARD,HOSE MAKE FROM GUARD P/N 5P6038, 6 INCHES (150MM).....	1
27	PAOZZ	5305013981282	11083	8T4908	SCREW,CAP,HEXAGON H M8 X 1.25 X 25MM.....	1
28	PAOZZ	5340015511839	11083	6D4244	CLAMP,LOOP.....	1
29	PAOZZ	5310015238881	11083	2110052	NUT,PLAIN,HEXAGON 11/16-18 THD.....	1
30	PAOZZ	6220015390923	11083	1151748	LIGHT,INDICATOR.....	2
31	PFOZZ	5340015454943	11083	2011024	BRACKET,MOUNTING.....	1
32	PFOZZ	5340015453128	11083	1451135	PLATE,MOUNTING.....	1
					END OF FIGURE	

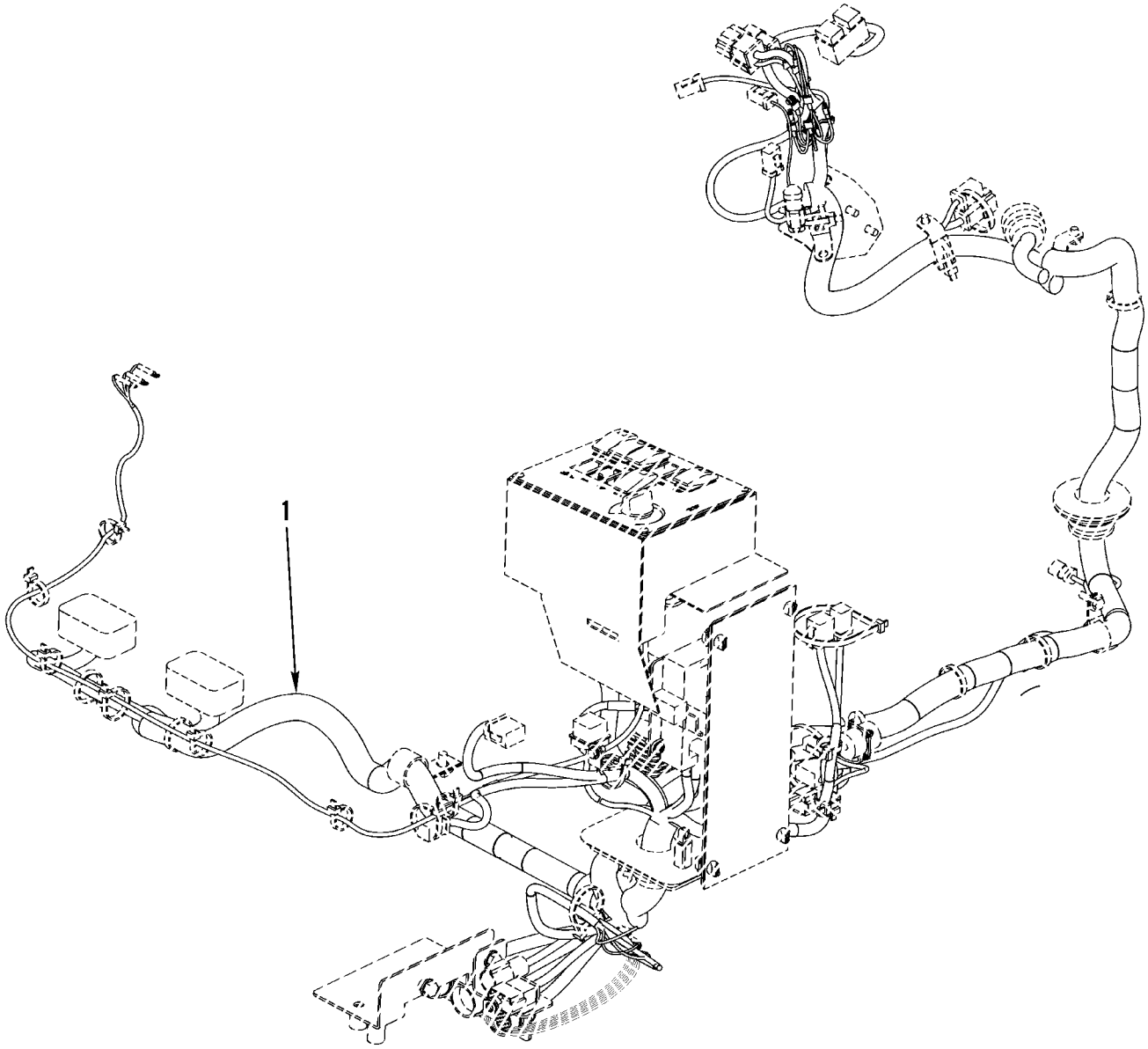

427-130-1

Figure 43. Cab Wiring Harness and Control Switches (Right Side) (Sheet 1 of 2)

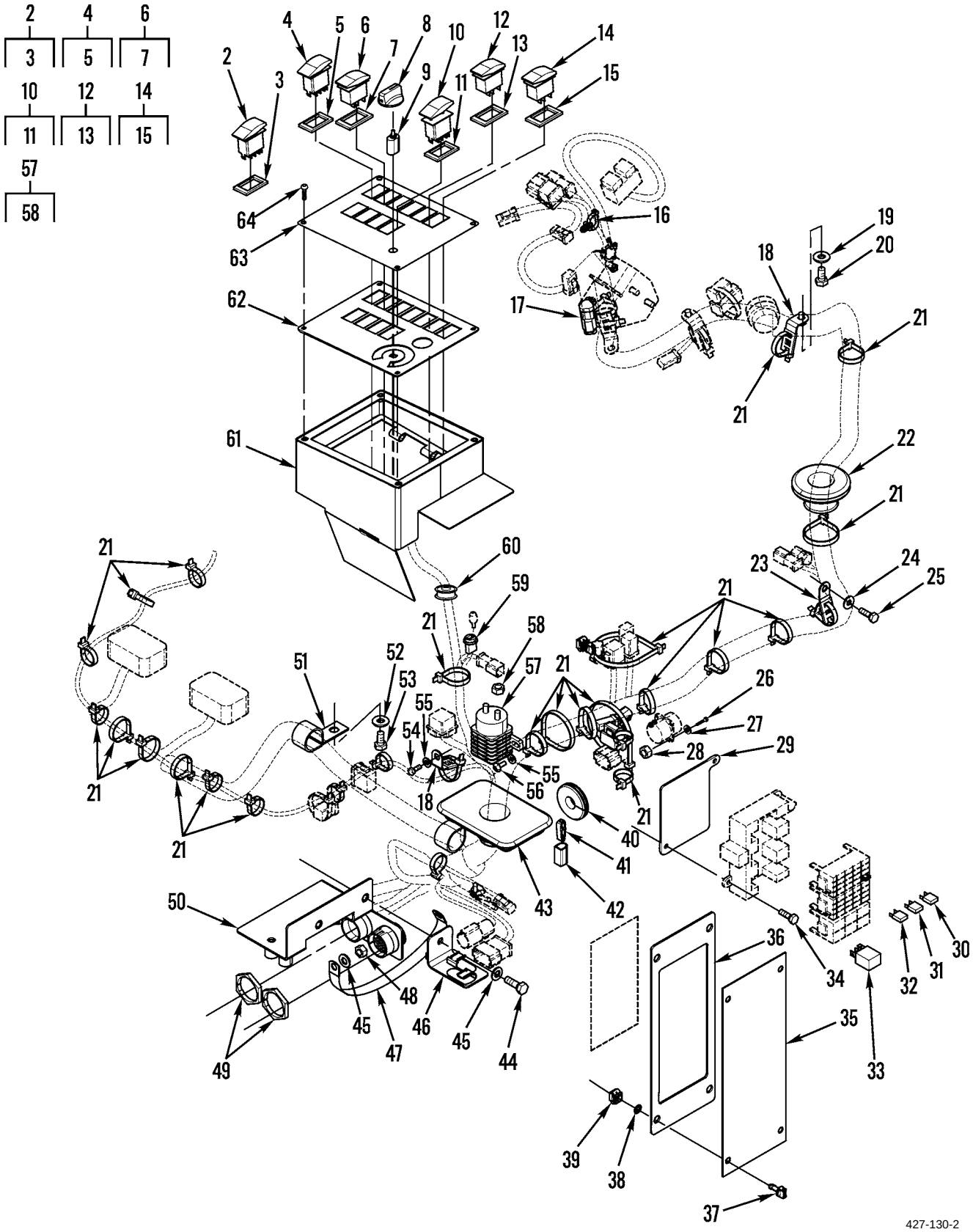

Figure 43. Cab Wiring Harness and Control Switches (Right Side) (Sheet 2 of 2)

(1) ITEM NO	(2) SMR CODE	(3) NSN	(4) CAGEC	(5) PART NUMBER	(6) DESCRIPTION AND USABLE ON CODES(UOC)	(7) QTY
					GROUP 0607 INSTRUMENT OR ENGINE CONTROL PANEL	
					FIG. 43 CAB WIRING HARNESS AND CONTROL SWITCHES (RIGHT SIDE)	
1	PAOZZ	6150015516671	11083	2788823	WIRING HARNESS,BRAN.....	1
2	PAOZZ	5930015517899	11083	2364234	SWITCH,TOGGLE.....	1
3	PAOZZ	5330015277212	11083	1117899	.GASKET.....	1
4	PAOZZ	5930015512411	11083	2248629	SWITCH,TOGGLE.....	1
5	PAOZZ	5330015277212	11083	1117899	.GASKET.....	1
6	PAOZZ	5930015513132	11083	1950917	SWITCH,TOGGLE.....	1
7	PAOZZ	5330015277212	11083	1117899	.GASKET.....	1
8	PAOZZ	5355014735758	11083	1106109	KNOB.....	1
9	PAOZZ	2590014458431	11083	1564449	CONTROL ASSEMBLY,PU.....	1
10	PAOZZ	5930015512490	11083	1950916	SWITCH,TOGGLE.....	1
11	PAOZZ	5330015277212	11083	1117899	.GASKET.....	1
12	PAOZZ	5930015512421	11083	1950922	SWITCH,TOGGLE.....	1
13	PAOZZ	5330015277212	11083	1117899	.GASKET.....	1
14	PAOZZ	5930015515602	11083	1950921	SWITCH,TOGGLE.....	1
15	PAOZZ	5330015277212	11083	1117899	.GASKET.....	1
16	PFOZZ	5340015448172	11083	2061345	STRAP,RETAINING.....	2
17	PAOZZ	5935015341072	11083	1342540	CONNECTOR,RECEPTACL.....	1
18	PAOZZ	5340014715243	11083	4P8134	CLIP,SPRING TENSION.....	4
19	PAOZZ	5310013598806	11083	8T4224	WASHER,FLAT 8.8 X 16 X 2MM THK.....	2
20	PAOZZ	5306014734524	11083	8T4199	BOLT,MACHINE M8 X 1.25 X 12MM.....	2
21	PAOZZ	2815010534712	11083	7K1181	STRAP.....	32
22	PAOZZ	5325014757799	11083	1187362	GROMMET,NONMETALLIC.....	1
23	PAOZZ	5999014708845	11083	4P7581	CLIP,ELECTRICAL.....	1
24	PAOZZ	5310010955910	11083	5P4116	WASHER,SQUARE CONE 8.8 X 20.5 X 2MM THK.....	1
25	PAOZZ	5305013981282	11083	8T4908	SCREW,CAP,HEXAGON H M8 X 1.25 X 25MM.....	1
26	PFOZZ	5306015451498	11083	7X3308	BOLT,MACHINE 4-40 X 0.375 IN.....	4
27	PAOZZ	5310015056789	11083	4I3038	WASHER,FLAT 3.3 X 8 X 0.5MM THK....	4
28	PFOZZ	5310015463169	11083	1422928	NUT,SELF-LOCKING,HE 4-40 THD.....	4
29	PFOZZ	5340015450589	11083	1143951	COVER,ACCESS.....	1
30	PAOZZ	5920014745401	11083	1138490	FUSE,CARTRIDGE 10 AMPHERE.....	18
31	PAOZZ	5920015237417	11083	1138491	FUSE,CARTRIDGE 15 AMPHERE.....	8
32	PAOZZ	5920015483622	11083	1243548	FUSE,CARTRIDGE 30 AMPHERE.....	2
33	PAOZZ	5945015264236	11083	1585089	RELAY,ELECTROMAGNET.....	1
34	PAOZZ	5305014310874	11083	9X2045	SCREW,MACHINE M6 X 1 X 20MM.....	2
35	PAOZZ	5340014741605	11083	1076072	PLATE,MOUNTING.....	1
36	PAOZZ	5330014975738	11083	1076013	GASKET.....	1
37	PFOZZ	5355015453134	11083	1173787	KNOB.....	4
38	PAOZZ	5325015057419	11083	1173789	RING,RETAINING.....	4
39	PFOZZ	5310015450115	11083	1173788	CLIP,RETAINING.....	4
40	PFOZZ	5325015448646	11083	1709360	GROMMET,NONMETALLIC.....	1
41	PAOZZ	5920015057409	11083	1167471	SHELL,FUSE.....	1
42	MOOZZ		11083	1032543-30	SEAL,NONMETALLIC MAKE FROM SEAL P/N 1032543, 1.2 INCHES (30 MM).....	1
43	PFOZZ	5325015454966	11083	1485689	GROMMET,NONMETALLIC.....	1

(1) ITEM NO	(2) SMR CODE	(3) NSN	(4) CAGEC	(5) PART NUMBER	(6) DESCRIPTION AND USABLE ON CODES(UOC)	(7) QTY
44	PAOZZ	5305013981284	11083	8T4195	SCREW,CAP,HEXAGON H M10 X 1.5 X 30MM.....	2
45	PAOZZ	5310013522753	11083	8T4121	WASHER,FLAT 11 X 21 X 2.5MM THK....	5
46	PFOZZ	5340015452309	11083	2262951	BRACKET,MOUNTING.....	1
47	PFOZZ	5999015449569	11083	6Y6584	STRAP,ELECTRICAL GR.....	1
48	PAOZZ	5310013527726	11083	8T4133	NUT,PLAIN,HEXAGON M10 X 1.5 THD....	2
49	PAOZZ	5310015238881	11083	2110052	NUT,PLAIN,HEXAGON 11/16-18 THD.....	3
50	PFOZZ	5340015450592	11083	2263378	PLATE,MOUNTING.....	1
51	PFOZZ	5340015454967	11083	2492757	CLIP,RETAINING.....	2
52	PAOZZ	5310014309036	11083	7X7729	WASHER,FLAT 11 X 25 X 3MM THK.....	1
53	PAOZZ	5306013600928	11083	8T4137	BOLT,MACHINE M10 X 1.5 X 20MM.....	2
54	PAOZZ	5306014384985	11083	6V8837	BOLT BLANK M6 X 1 X 16MM.....	1
55	PAOZZ	5310008412576	11083	8T4205	WASHER,FLAT 7.2 X 14.5 X 2MM THK...	3
56	PAOZZ	5305014389808	11083	9X2044	SCREW,MACHINE M6 X 1 16MM.....	2
57	PAOZZ	5930014714137	11083	2418368	SWITCH,REED.....	1
58	PAOZZ	5310008539335	96906	MS35691-13	.NUT,PLAIN,HEXAGON 5/16-24 THD.....	2
59	PAOZZ	6220015390923	11083	1151748	LIGHT,INDICATOR.....	1
60	PAOZZ	5325012861801	11083	5P8525	GROMMET,NONMETALLIC.....	1
61	PFOZZ	5340015448671	11083	2806965	PLATE,MOUNTING.....	1
62	PFOZZ	5340015448177	11083	2806969	PLATE,MOUNTING.....	1
63	PFOZZ	7690015448187	11083	2806970	MARKER,IDENTIFICATI.....	1
64	PAOZZ	5305014389790	11083	9X1046	SCREW,MACHINE M4 X 0.7 X 18MM.....	4

END OF FIGURE

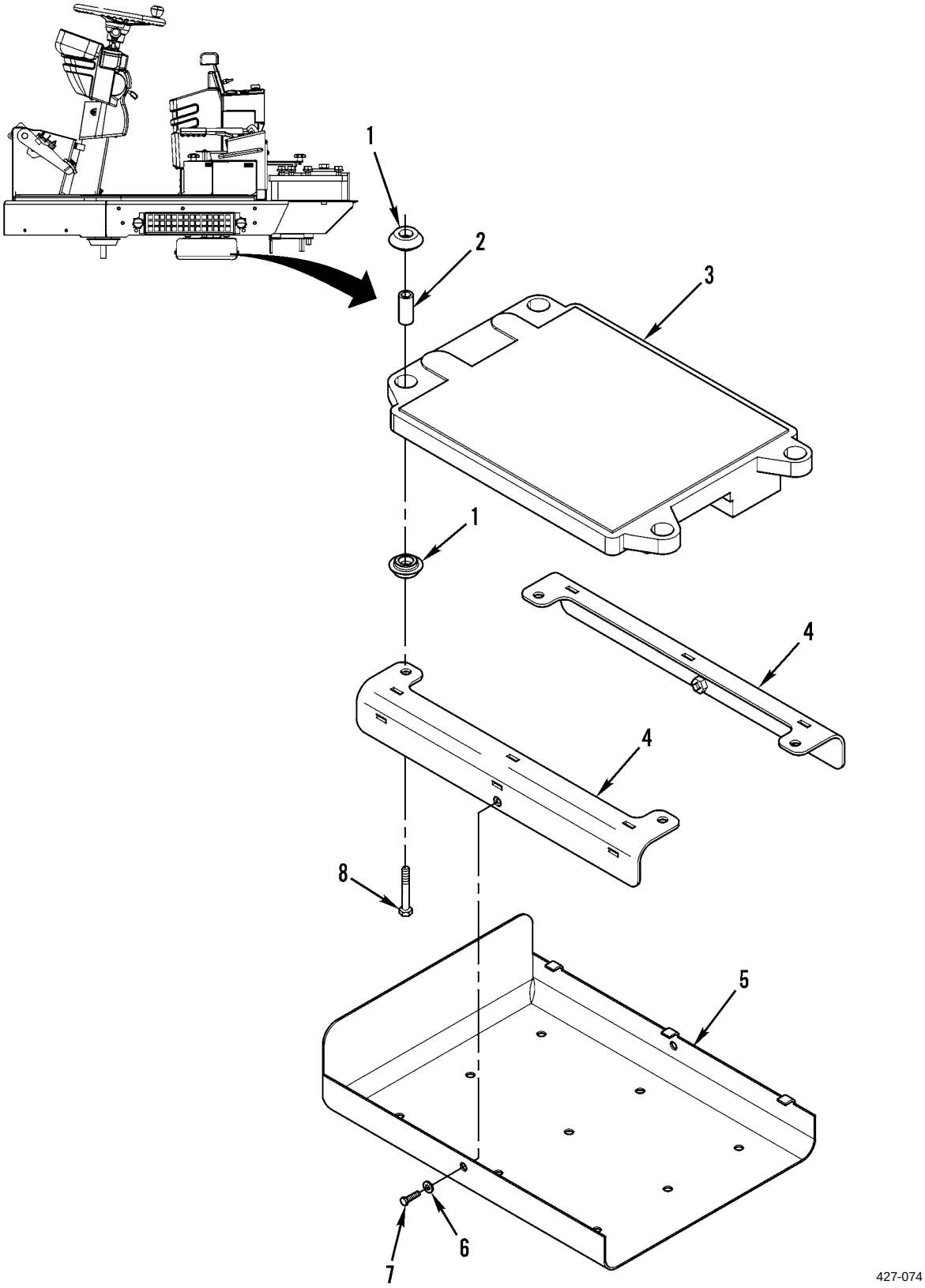

Figure 44. Machine (Transmission) ECM

(1) ITEM NO	(2) SMR CODE	(3) NSN	(4) CAGEC	(5) PART NUMBER	(6) DESCRIPTION AND USABLE ON CODES(UOC)	(7) QTY
					GROUP 0608 MISCELLANEOUS ITEMS	
					FIG. 44 MACHINE (TRANSMISSION) ECM	
1	PAOZZ	5340014600266	11083	8T9655	PLATE,RESILIENT MOU MOUNT, RESILIENT,GENERAL PURPOSE.....	8
2	PAOZZ	5365014960506	45152	6HA144	SPACER,RING.....	4
3	PAOZZ	2520015461084	11083	2621408	CONTROL ASSEMBLY,TR.....	1
4	PFOZZ	5340015434969	11083	2169069	BRACKET,MOUNTING.....	2
5	PFOZA	5340015436008	11083	2170956	BRACKET,MOUNTING.....	1
6	PAOZZ	5310014151606	11083	9X8256	WASHER,FLAT 6.6 X 12 X 2MM THK.....	2
7	PAOZZ	5306011817849	11083	5C9553	BOLT,MACHINE M6 X 1 X 16MM.....	2
8	PAOZZ	5306013600930	11083	7X0818	BOLT,MACHINE M8 X 1.25 X 45MM.....	4
					END OF FIGURE	

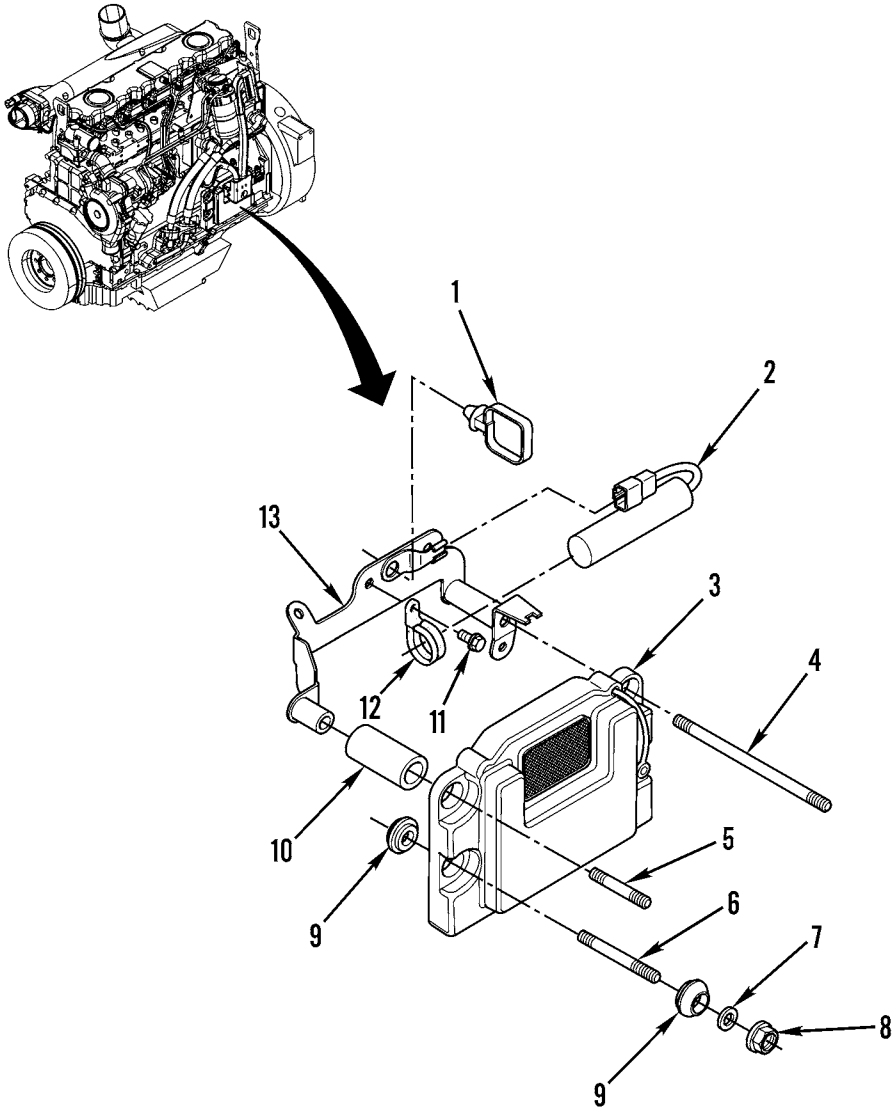

427-098

Figure 45. Engine ECM

(1) ITEM NO	(2) SMR CODE	(3) NSN	(4) CAGEC	(5) PART NUMBER	(6) DESCRIPTION AND USABLE ON CODES(UOC)	(7) QTY
					GROUP 0608 MISCELLANEOUS ITEMS	
					FIG. 45 ENGINE ECM	
1	PFOZZ	5975015437975	11083	2356281	STRAP,TIEDOWN,ELECT.....	1
2	PAOZZ		11083	2705322	VOLTAGE LOAD PROTEC.....	1
3	PAOZZ		11083	2492898	ECM KIT.....	1
4	PFOZZ	5307015445538	11083	2355917	STUD,PLAIN.....	1
5	PFOZZ	5307015435971	11083	1031074	STUD,PLAIN.....	1
6	PFOZZ	5307015436659	11083	1475551	STUD,PLAIN.....	2
7	PFOZZ	5310015437070	11083	2170099	WASHER,FLAT.....	7
8	PAOZZ	5310014713997	11083	6I0291	NUT,PLAIN,CAP M8 X 1.25 THD.....	4
9	PFOZZ	5340015436702	11083	1550576	MOUNT,RESILIENT,GEN.....	5
10	PFOZZ	5365015441381	11083	2170100	SPACER,SLEEVE.....	4
11	PAOZZ	5306014287041	13446	2314H102	BOLT,MACHINE M8 X 1.25 X 12MM.....	3
12	PFOZZ	5340015435979	11083	2288960	CLAMP,LOOP.....	1
13	PFOZZ	5340015435001	11083	2288956	BRACKET,MOUNTING.....	1
					END OF FIGURE	

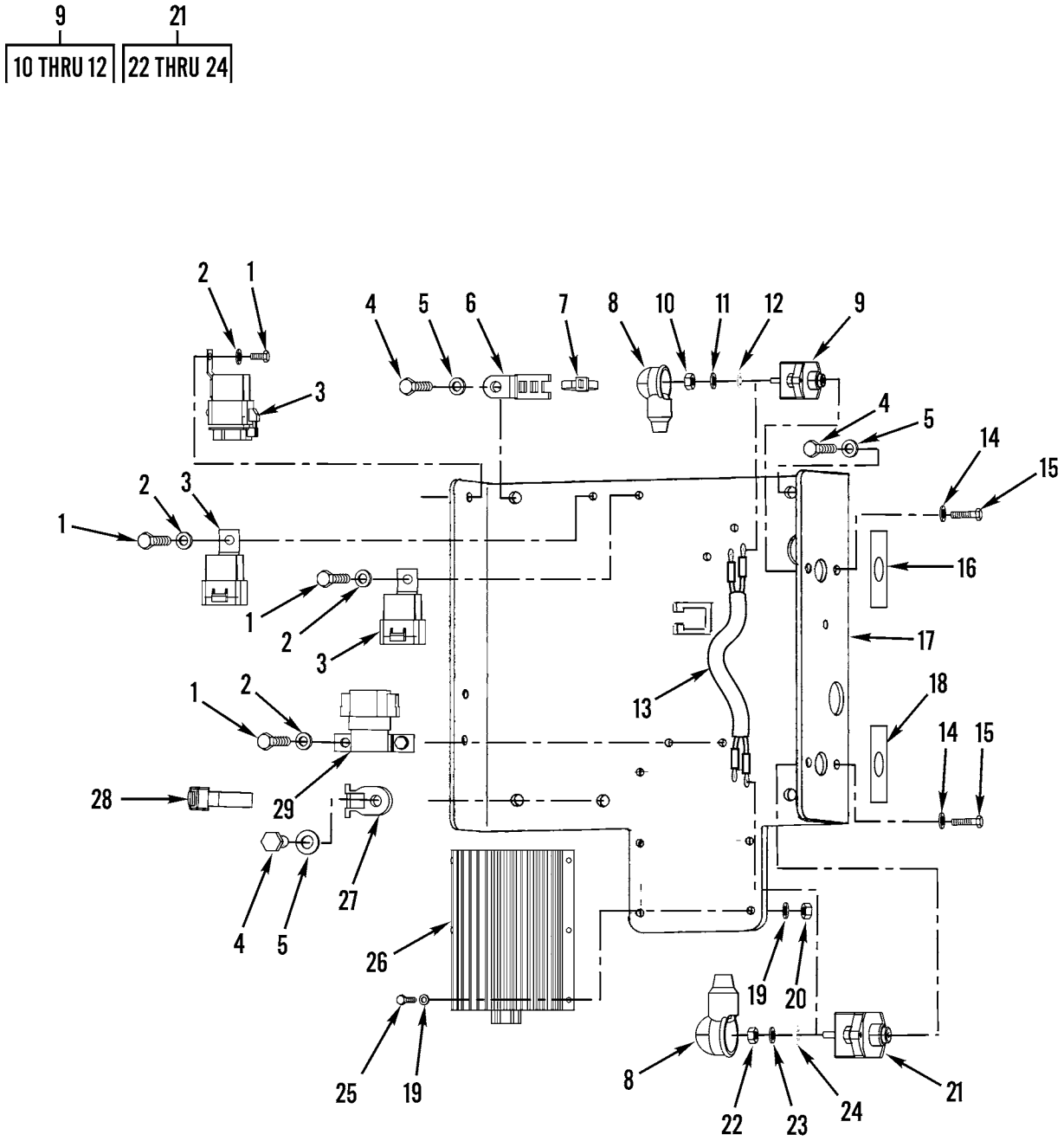

427-084

Figure 46. Power Converter and Relays

(1) ITEM NO	(2) SMR CODE	(3) NSN	(4) CAGEC	(5) PART NUMBER	(6) DESCRIPTION AND USABLE ON CODES(UOC)	(7) QTY
					GROUP 0608 MISCELLANEOUS ITEMS	
					FIG. 46 POWER CONVERTER AND RELAYS	
1	PAFZZ	5306014293167	11083	8T4171	BOLT,MACHINE M6 X 1 X 12MM.....	5
2	PAFZZ	5310014151606	11083	9X8256	WASHER,FLAT 6.6 X 12 X 2MM THK.....	5
3	PAFZZ	5945014681267	11083	3E5239	RELAY,ELECTROMAGNET FUEL PUMP, ETHER,LIFT PUMP.....	3
4	PAFZZ	5306013601634	11083	8T4136	BOLT,MACHINE M10 X 1.5 X 25MM.....	5
5	PAFZZ	5310013522753	11083	8T4121	WASHER,FLAT 11 X 21 X 2.5MM THK....	5
6	PAFZZ	5999014708845	11083	4P7581	CLIP,ELECTRICAL.....	1
7	PAFZZ	2815010534712	11083	7K1181	STRAP.....	1
8	PAFZZ	5305014398544	11083	8T8827	SCREW,MACHINE NSN NAME IS INCORRECT. THE PART IS ACTUALLY BOOT,DUST AND MOISTURE SEAL.....	5
9	PAFZZ	5925014981823	11083	1712208	CIRCUIT BREAKER MAIN.....	1
10	PAFZZ	5310009137020	11083	6V8187	.NUT,PLAIN,HEXAGON 1/4-28 THD.....	2
11	PFFZZ	5310015456457	11083	2532111	.WASHER,LOCK.....	2
12	PAFZZ	5310008412576	11083	8T4205	.WASHER,FLAT 7.2 X 14.5 X 2MM THK..	2
13	PAFZZ	6150015512833	11083	2255224	CABLE ASSEMBLY,POWE.....	1
14	PAFZZ	5310001435722	3HKX1	1D4717	WASHER,FLAT 5.5 X 13 X 1.2MM THK...	4
15	PAFZZ	5305012111465	11083	5P4965	SCREW,CAP,HEXAGON H.....	4
16	PFFZZ	7690015448265	11083	1485318	MARKER,IDENTIFICATI.....	1
17	PFFZZ	5340015455030	11083	2809730	PLATE,MOUNTING RELAY PANEL.....	1
18	PFFZZ	7690015448259	11083	1439542	MARKER,IDENTIFICATI.....	1
19	PAFZZ	5310014376101	11083	0966166	WASHER,FLAT 4.5 X 9 X 1MM THK.....	12
20	PAFZZ	5310014135297	11083	5C8312	NUT,PLAIN,HEXAGON M4 X 0.7 THD.....	6
21	PAFZZ	5925015265965	11083	1712211	CIRCUIT BREAKER.....	1
22	PAFZZ	5310009137020	11083	6V8187	.NUT,PLAIN,HEXAGON 1/4-28 THD.....	2
23	PFFZZ	5310015456457	11083	2532111	.WASHER,LOCK.....	2
24	PAFZZ	5310008412576	11083	8T4205	.WASHER,FLAT 7.2 X 14.5 X 2MM THK..	2
25	PAFZZ	5305014135912	11083	6V9491	SCREW,MACHINE.....	6
26	PAFZZ	6130015515333	11083	2090381	POWER SUPPLY.....	1
27	PFFZZ	5975015437985	11083	2048000	MOUNTING BASE,TIEDO.....	1
28	PFFZZ	5975015438005	11083	2042281	STRAP,TIEDOWN,ELECT.....	1
29	PAFZZ	5930014440451	11083	1183534	SWITCH,REED STARTER RELAY.....	1
					END OF FIGURE	

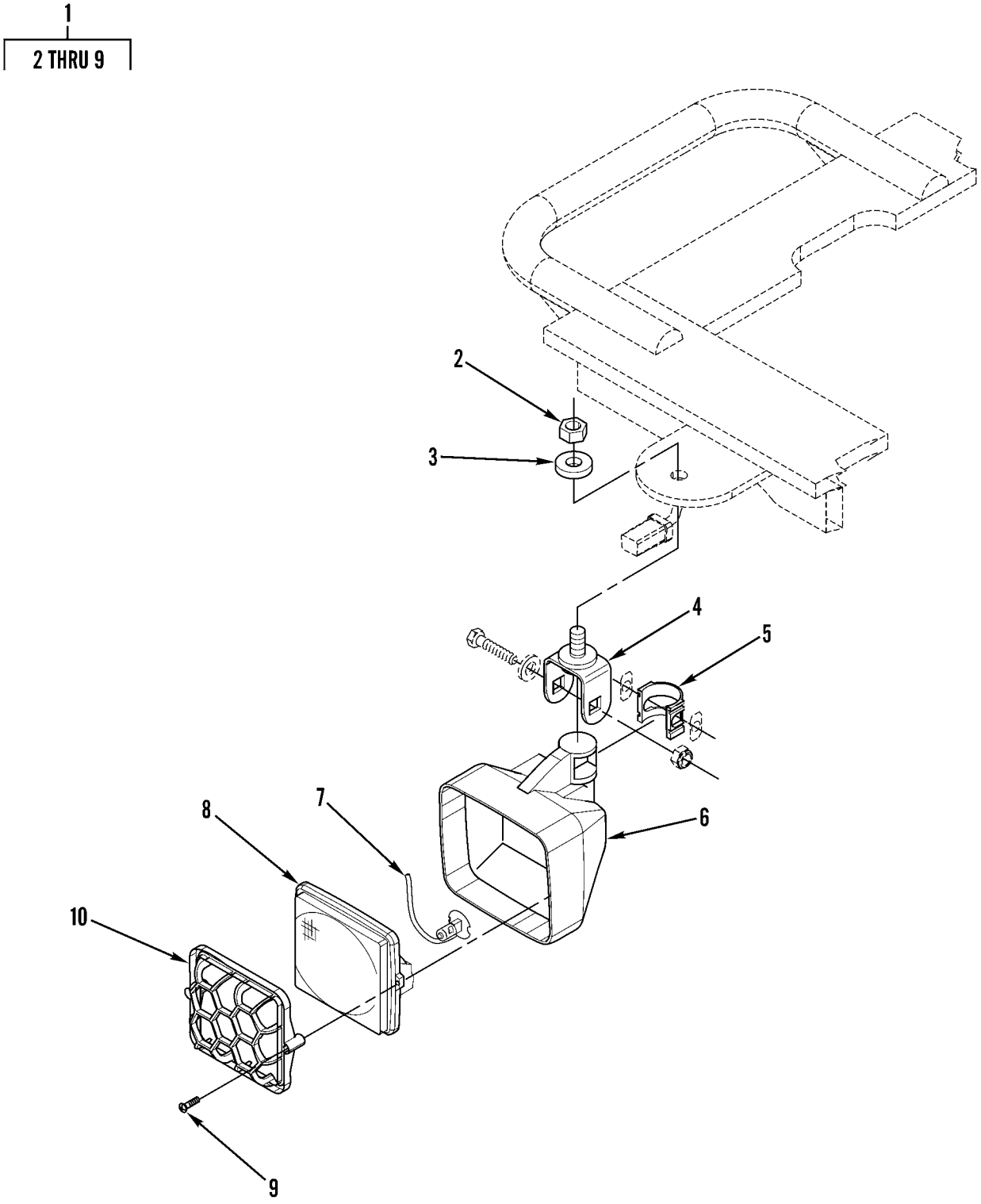

427-112

Figure 47. Worklights and Related Parts

(1) ITEM NO	(2) SMR CODE	(3) NSN	(4) CAGEC	(5) PART NUMBER	(6) DESCRIPTION AND USABLE ON CODES(UOC)	(7) QTY
					GROUP 0609 LIGHTS	
					FIG. 47 WORKLIGHTS AND RELATED PARTS	
1	PAOZZ	6220015455466	11083	2344325	LAMP UNIT,VEHICULAR.....	4
2	PAOZZ	5310014138761	11083	8T0389	.NUT,PLAIN,HEXAGON M10 X 1.15 THD..	1
3	PAOZZ	5310013522753	11083	8T4121	.WASHER,FLAT 11 X 21 X 2.5MM THK...	1
4	PAOZZ	5340015311009	11083	2347731	.BRACKET,MOUNTING.....	1
5	PAOZZ	5340015276479	11083	1647556	.CLIP,RETAINING.....	1
6	PFOZZ	6240015455521	11083	2347730	.HOLDER,LAMP.....	1
7	PAOZZ	6240014292747	11083	9X3463	.LAMP,INCANDESCENT.....	1
8	PAOZZ	6220015277525	11083	2026614	.LENS,LIGHT.....	1
9	PAOZZ	5305014294024	11083	9X4244	.SCREW,EXTERNALLY RE.....	2
10	PFOZZ	6220015455479	11083	2807895	GUARD,LAMP.....	4
					END OF FIGURE	

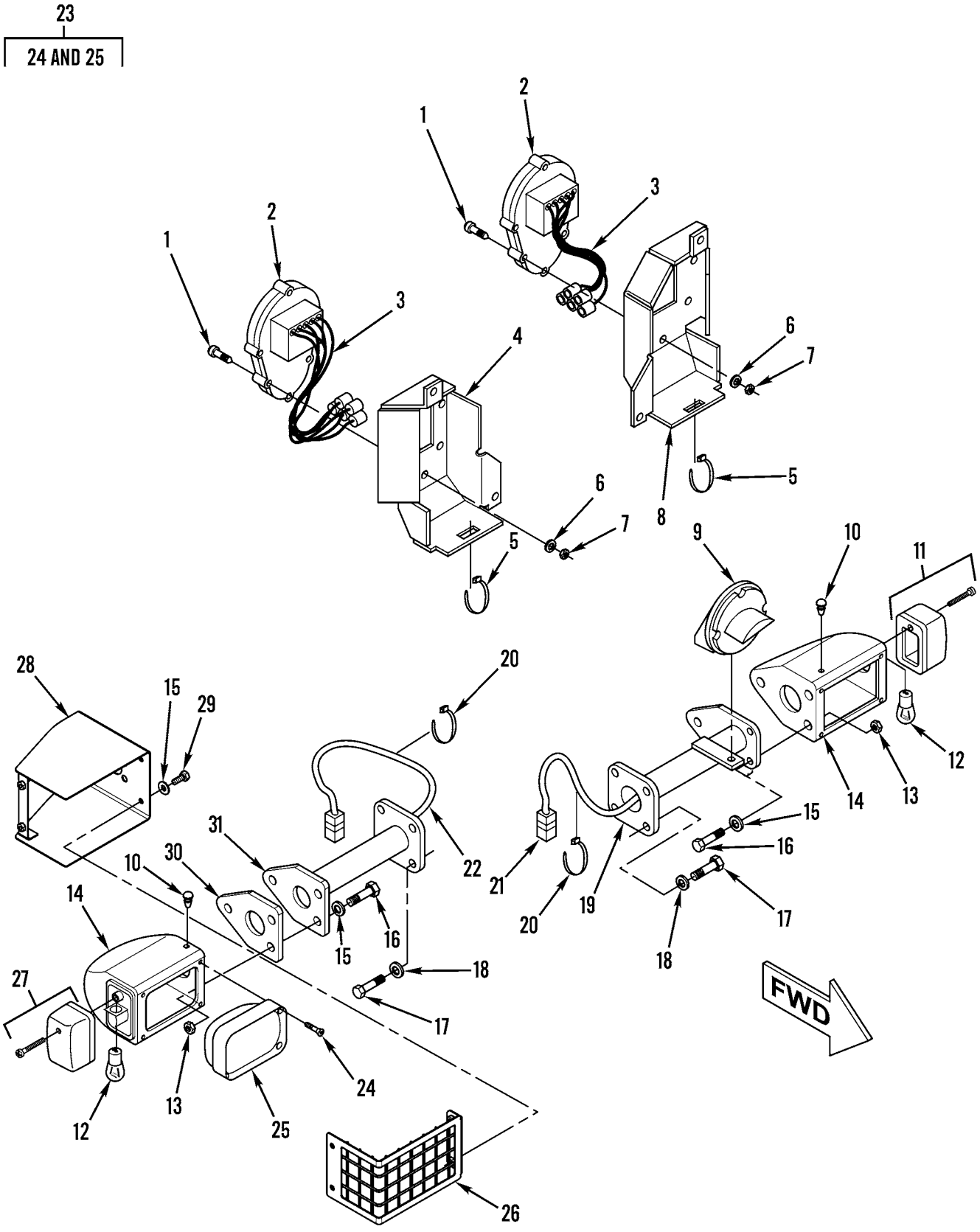

Figure 48. Lights (Service, Rear, Blackout Drive, and Turn Signal)

(1) ITEM NO	(2) SMR CODE	(3) NSN	(4) CAGEC	(5) PART NUMBER	(6) DESCRIPTION AND USABLE ON CODES(UOC)	(7) QTY
					GROUP 0609 LIGHTS	
					FIG. 48 LIGHTS (SERVICE, REAR, BLACKOUT DRIVE, AND TURN SIGNAL)	
1	PFOZZ	5340015448303	11083	1383198	SCREW,MACHINE.....	12
2	PAOZZ		11083	2907294	LIGHT,BLACKOUT.....	2
3	MOOZZ		11083	1210199-40	WRAP-SPIRAL MAKE FROM WRAP P/N 1210199, 15.8 INCHES (4 0CM).....	2
4	PFOZZ	5340015454621	11083	2890499	BRACKET,MOUNTING RH.....	1
5	PFOZZ	5975015438005	11083	2042281	STRAP,TIE DOWN,ELEC.....	3
6	PAOZZ	5310001435722	3HKX1	1D4717	WASHER,FLAT 5.5 X 13 X 1.2MM THK...	12
7	PAOZZ	5310010632968	11083	2H7152	NUT.....	12
8	PFOZZ	5340015450624	11083	2890497	PLATE,MOUNTING LH.....	1
9	PAOZZ	6220015528746	11083	2907292	LAMP UNIT,VEHICULAR.....	1
10	PAOZZ	5340014290832	11083	1115042	PLATE,MOUNTING PLUG,PROTECTIVE, DUST AND MOISTURE SEAL.....	2
11	PAOZZ	6220014378992	11083	5C9029	TAILLIGHT,VEHICULAR TURN LAMP LH...	1
12	PAOZZ	6240014390994	11083	9X4493	LAMP,INCANDESCENT.....	2
13	PAOZZ	5310014139703	11083	3T0851	NUT,PLAIN,HEXAGON.....	4
14	PFOZZ	6240015455518	11083	1127294	HOLDER,LAMP.....	2
15	PAOZZ	5310010955910	11083	5P4116	WASHER,SQUARE CONE 8.8 X 20.5 X 2MM THK.....	14
16	PAOZZ	5305013981287	11083	8T6912	SCREW,CAP,HEXAGON H M8 X 1.25 X 50MM.....	6
17	PAOZZ	5306013600928	11083	8T4137	BOLT,MACHINE M10 X 1.5 X 20MM.....	8
18	PAOZZ	5310013522753	11083	8T4121	WASHER,FLAT 11 X 21 X 2.5MM THK....	8
19	PFOZZ	5340015453500	11083	2804288	BRACKET,MOUNTING.....	1
20	PAOZZ	4730010686077	11083	6K0806	TIE.....	7
21	PFOZZ	6150015450899	11083	1430027	WIRING HARNESS.....	1
22	PFOZZ	6150015450894	11083	1430026	WIRING HARNESS.....	1
23	PAOZZ	6220015512888	11083	1097041	FLOODLIGHT,ELECTRIC.....	2
24	PFOZZ	5305015453126	11083	1425789	.SCREW,MACHINE.....	4
25	PAOZZ	6240014292747	11083	9X3463	.LAMP,INCANDESCENT.....	1
26	PFOZZ	6220015437937	11083	1938107	GUARD,LAMP.....	2
27	PAOZZ	6220014378990	11083	5C8964	TAILLIGHT,VEHICULAR TURN LAMP RH...	1
28	PFOZZ	5340015437126	11083	1938108	BRACKET,MOUNTING.....	2
29	PAOZZ	5306013600927	11083	8T4189	BOLT,MACHINE M8 X 1.25 X 20MM.....	8
30	PFOZZ	2590015456672	11083	1317874	PAD,CUSHIONING.....	4
31	PFOZZ	5340015448683	11083	1322349	BRACKET,MOUNTING.....	1
					END OF FIGURE	

1
2

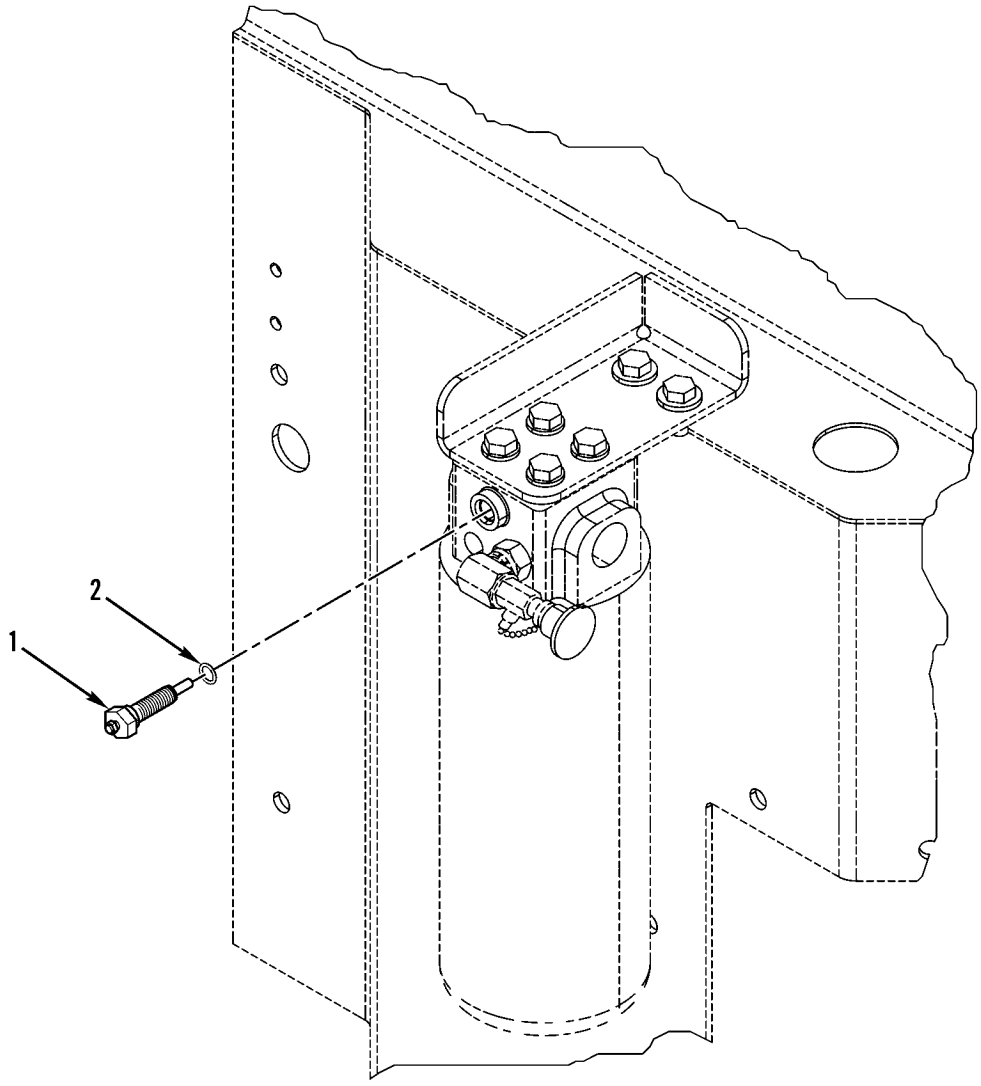

427-043

Figure 49. Hydraulic Oil Filter Bypass Switch

(1) ITEM NO	(2) SMR CODE	(3) NSN	(4) CAGEC	(5) PART NUMBER	(6) DESCRIPTION AND USABLE ON CODES(UOC)	(7) QTY
					GROUP 0610 SENDING UNITS AND WARNING SWITCHES	
					FIG. 49 HYDRAULIC OIL FILTER BYPASS SWITCH	
1	PFOZZ	5930015437979	11083	7X8549	SWITCH,PRESSURE HYDRAULIC OIL FILTER BYPASS.....	1
2	PAOZZ	5331013336444	11083	3J1907	.O-RING 11.89MM ID.....	1
					END OF FIGURE	

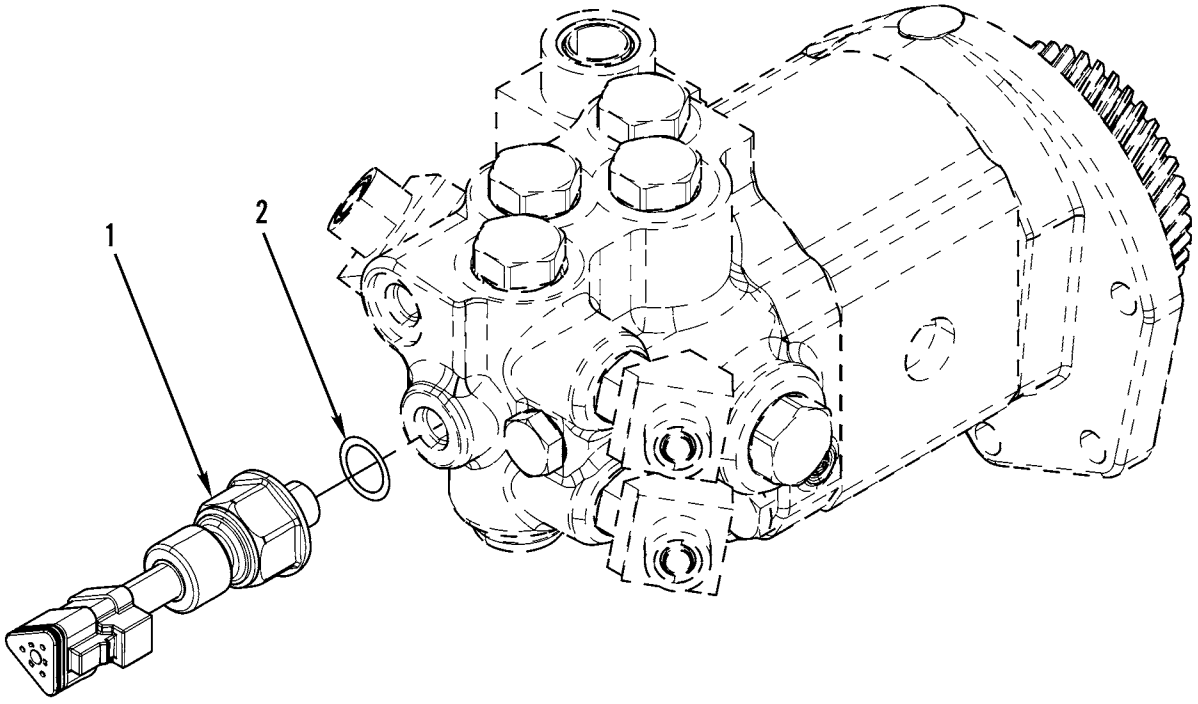

427-061

Figure 50. Brake Charging Pressure Sensor

(1) ITEM NO	(2) SMR CODE	(3) NSN	(4) CAGEC	(5) PART NUMBER	(6) DESCRIPTION AND USABLE ON CODES(UOC)	(7) QTY
					GROUP 0610 SENDING UNITS AND WARNING SWITCHES	
					FIG. 50 BRAKE CHARGING PRESSURE SENSOR	
1	PAOZZ	2990015254676	11083	2244536	SENSOR,BAROMETRIC A.....	1
2	PAOZZ	5331014523208	11083	1J9671	O-RING 10.52MM ID.....	1
					END OF FIGURE	

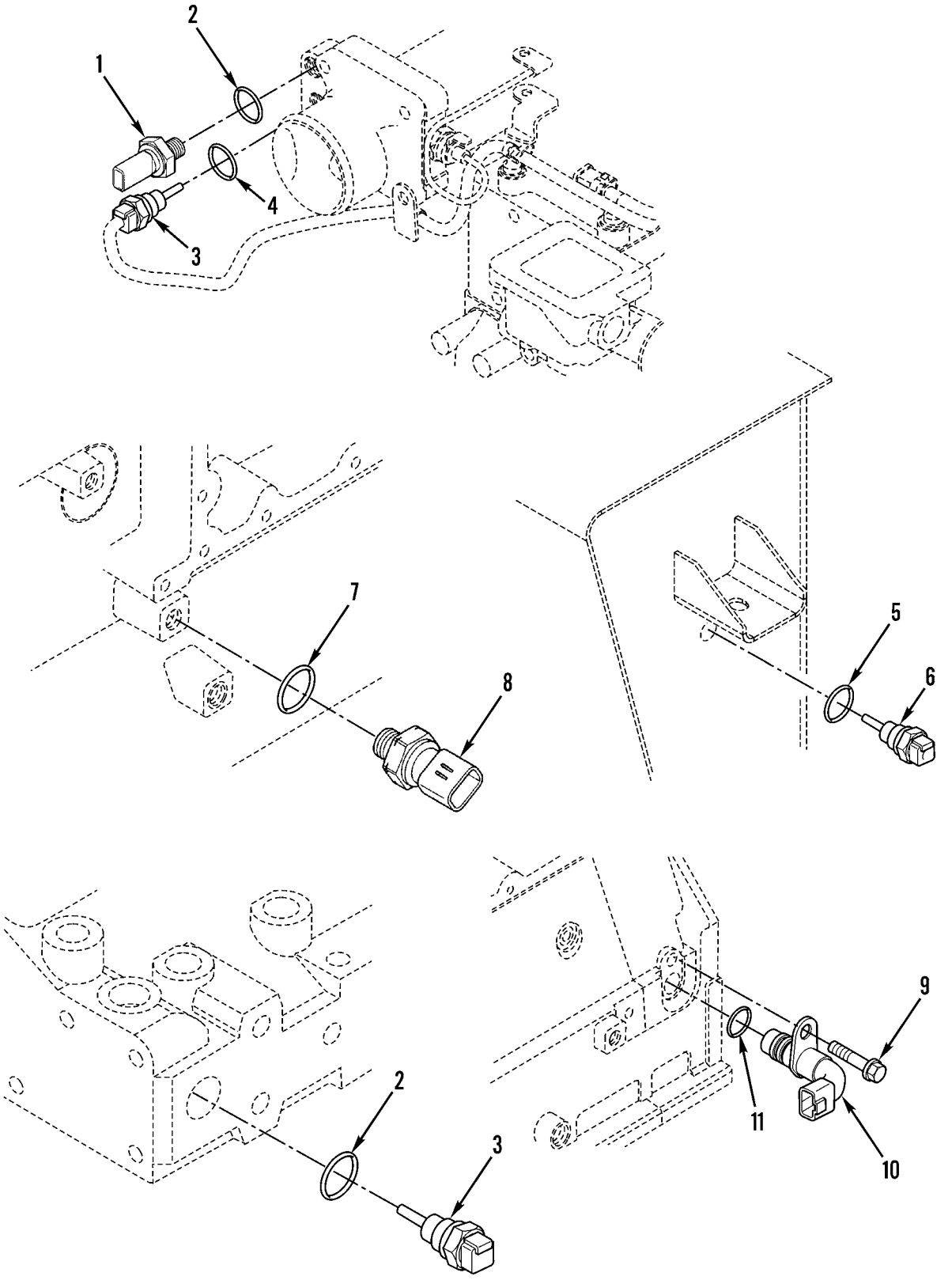

Figure 51. Electrical Sensors, Switches, and Related Parts (Sheet 1 of 4)

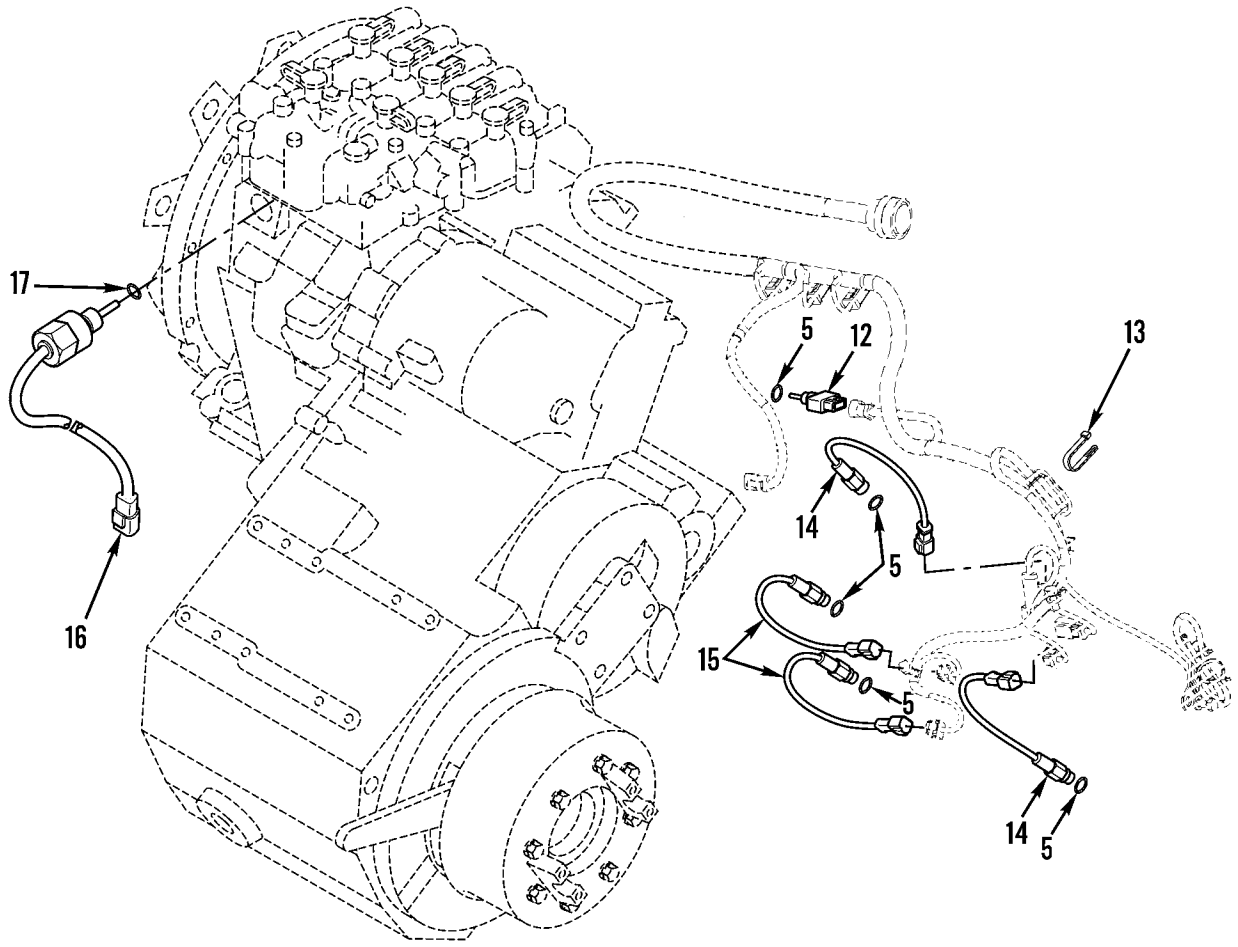

3001-2

Figure 51. Electrical Sensors, Switches, and Related Parts (Sheet 2 of 4)

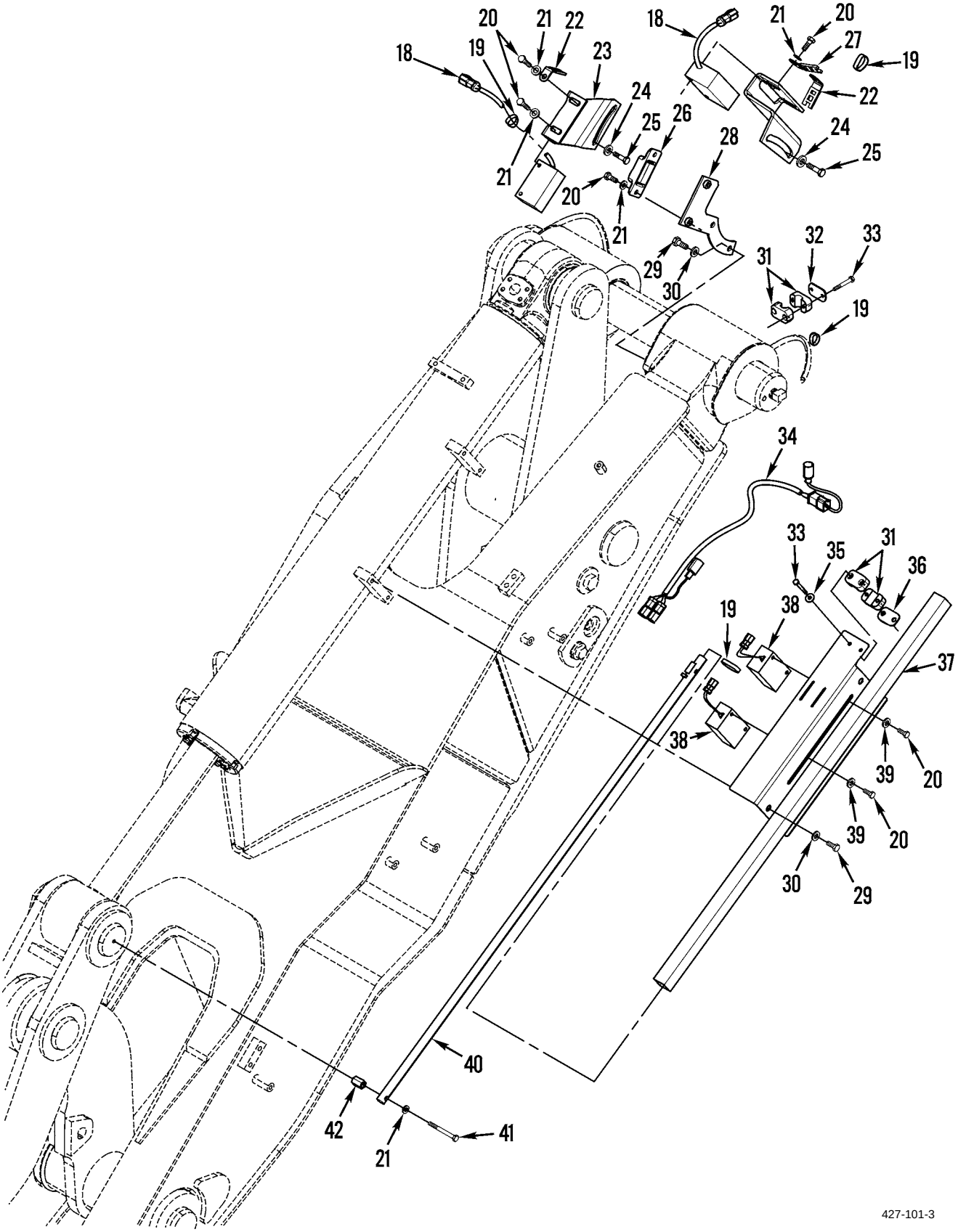

Figure 51. Electrical Sensors, Switches, and Related Parts (Sheet 3 of 4)

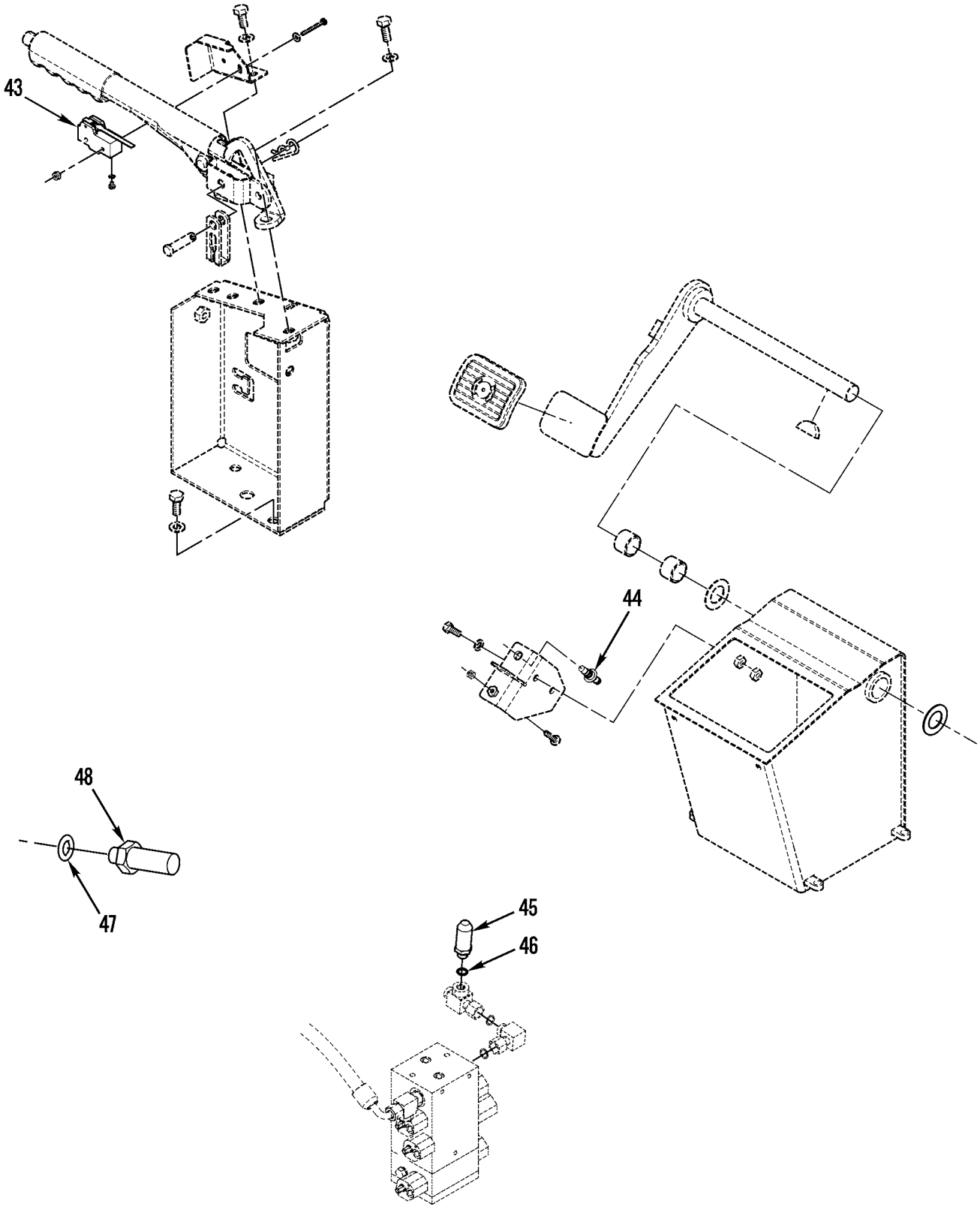

Figure 51. Electrical Sensors, Switches, and Related Parts (Sheet 4 of 4)

(1) ITEM NO	(2) SMR CODE	(3) NSN	(4) CAGEC	(5) PART NUMBER	(6) DESCRIPTION AND USABLE ON CODES(UOC)	(7) QTY
					GROUP 0610 SENDING UNITS AND WARNING SWITCHES	
					FIG. 51 ELECTRICAL SENSORS, SWITCHES, AND RELATED PARTS	
1	PAOZZ		11083	2746720	TRANSMITTER,PRESSUR AIR PRESSURE SENSOR.....	1
2	PAOZZ	5331015261896	11083	1999252	O-RING.....	2
3	PAOZZ		11083	2684360	TRANSMITTER,TEMPERA SENSOR/COOLANT/AIR.....	2
4	PAOZZ	5331015240182	11083	1999751	O-RING.....	1
5	PAOZZ	5331009486482	11083	3K0360	O-RING 16.36MM ID.....	7
6	PAOZZ	6685015516235	11083	2644297	SENSOR,AMBIENT TEMP HYDRAULIC OIL TEMP.....	1
7	PAOZZ	5331015265160	11083	1492091	O-RING.....	1
8	PAOZZ	6685015179295	11083	2163446	TRANSMITTER,PRESSUR SPEED (TIMING) SENSOR.....	1
9	PAOZZ	5306014287041	13446	2314H102	BOLT,MACHINE M8 X 1.25 X 12MM.....	1
10	PAOZZ		11083	2746721	TRANSMITTER,PRESSUR ENGINE OIL PRESSURE SENSOR.....	1
11	PAOZZ	5331015261832	11083	1999267	O-RING.....	1
12	PAOZZ	5905014697259	11083	1309811	RESISTOR,THERMAL TORQUE CONVERTER OIL TEMP.....	1
13	PAOZZ	2920010589099	11083	3S2093	STRAP.....	5
14	PAOZZ	2815015174210	11083	1838597	SPEED SENSOR,DIESEL OUTPUT SPEED SENSORS.....	3
15	PAOZZ	2815015175399	11083	1961185	SPEED SENSOR,DIESEL OUTPUT SPEED SENSORS.....	2
16	PAOZZ	6685015450829	11083	1342252	TRANSMITTER,TEMPERA TRANSMISSION OIL TEMP.....	1
17	PAOZZ	5331013336444	11083	3J1907	O-RING 11.89MM ID.....	1
18	PAOZZ	2590015514550	11083	3E7844	CONTROL ASSEMBLY,PU.....	2
19	PAOZZ	2815010534712	11083	7K1181	STRAP.....	4
20	PAOZZ	5306013600927	11083	8T4189	BOLT,MACHINE M8 1.25 X 20MM.....	10
21	PAOZZ	5310013598806	11083	8T4224	WASHER,FLAT 8.8 X 16 X 2MM THK.....	7
22	PAOZZ	5340014715243	11083	4P8134	CLIP,SPRING TENSION.....	2
23	PFOZZ	5340015453405	11083	1460066	BRACKET,MOUNTING.....	2
24	PAOZZ	5310014309036	11083	7X7729	WASHER,FLAT 11 X 25 X 3MM THK.....	4
25	PAOZZ	5306013601634	11083	8T4136	BOLT,MACHINE M10 X 1.5 X 25MM.....	4
26	PAOZZ	5340015056787	11083	5G7820	MAGNET,PERMANENT.....	1
27	PAOZZ	5999014708845	11083	4P7581	CLIP,ELECTRICAL.....	1
28	PFOZZ	5340015450623	11083	1460067	BRACKET,MOUNTING.....	1
29	PAOZZ	5306013600928	11083	8T4137	BOLT,MACHINE M10 X 1.5 X 20MM.....	6
30	PAOZZ	5310013522753	11083	8T4121	WASHER,FLAT 11 X 21 X 2.5MM THK....	6
31	PAOZZ	4730014736383	11083	7V5626	CLAMP,HOSE,SPECIAL-.....	4
32	PAOZZ	5340014400525	11083	7V5628	PLATE,MOUNTING.....	1
33	PAOZZ	5306014389854	11083	7X2534	BOLT,MACHINE M6 X 1 X 50MM.....	4
34	PAOZZ	6150015520314	11083	1322694	WIRING HARNESS.....	1
35	PAOZZ	5310010980634	11083	5P4115	WASHER,FLAT 7.2 X 19 X 2MM THK.....	2
36	PFOZZ	5340015448307	11083	1364794	BRACKET,MOUNTING.....	1
37	PFOZZ	4710015448639	11083	2405843	TUBE,METAL.....	1
38	PAOZZ	2590015056786	11083	3E7843	CONTROL ASSEMBLY,PU.....	2

(1) ITEM NO	(2) SMR CODE	(3) NSN	(4) CAGEC	(5) PART NUMBER	(6) DESCRIPTION AND USABLE ON CODES(UOC)	(7) QTY
39	PAOZZ	5310010955910	11083	5P4116	WASHER,SQUARE CONE 8.8 X 20.5 X 2MM THK.....	4
40	PFOZZ	3040015448150	11083	1487860	SHAFT,STRAIGHT.....	1
41	PAOZZ	5305014398537	11083	8T6870	SCREW,MACHINE M8 X 1.25 X 70MM.....	1
42	PFOZZ	5365015448633	11083	2647734	SPACER,STRAIGHT.....	1
43	PAOZZ	5930015146235	11083	6G4195	SWITCH,SENSITIVE.....	1
44	PAOZZ	5930015237860	11083	1058034	SWITCH ASSEMBLY BRAKE LIGHT SWITCH.	1
45	PFOZZ	5930015438014	11083	1266916	SWITCH,TOGGLE RIDE CONTROL PRESSURE SWITCH.....	1
46	PAOZZ	5331013336444	11083	3J1907	O-RING 11.89MM ID.....	1
47	PAOZZ	5331009486482	11083	3K0360	O-RING 16.36MM ID.....	1
48	PAOZZ	5930015270723	11083	2305771	SWITCH,PRESSURE.....	1

END OF FIGURE

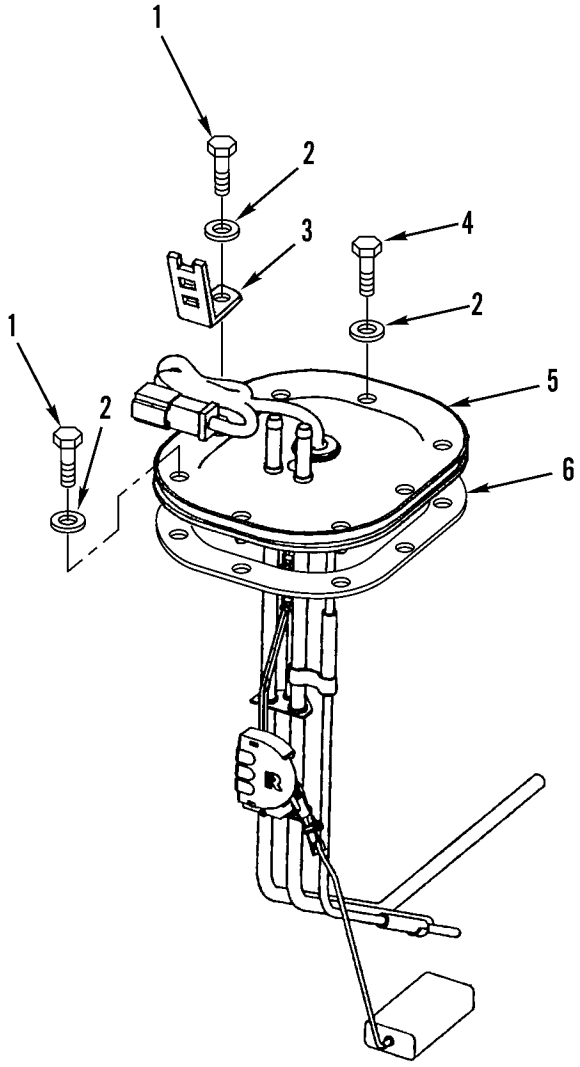

427-122

Figure 52. Fuel Level Sending Unit

(1) ITEM NO	(2) SMR CODE	(3) NSN	(4) CAGEC	(5) PART NUMBER	(6) DESCRIPTION AND USABLE ON CODES(UOC)	(7) QTY
					GROUP 0610 SENDING UNITS AND WARNING SWITCHES	
					FIG. 52 FUEL LEVEL SENDING UNIT	
1	PAOZZ	5306011817849	11083	5C9553	BOLT,MACHINE M6 X 1 X 16MM.....	5
2	PAOZZ	5310008412576	11083	8T4205	WASHER,FLAT 7.2 X 14.5 X 2MM THK...	8
3	PAOZZ	5340014715243	11083	4P8134	CLIP,SPRING TENSION.....	1
4	PAOZZ	5305014398527	11083	8T4971	SCREW,MACHINE M6 X 1 X 30MM.....	3
5	PAOZZ	6620015261478	11083	1947265	TRANSMITTER,PRESSUR.....	1
6	PAOZZ	5330015265164	11083	2041370	GASKET.....	1
					END OF FIGURE	

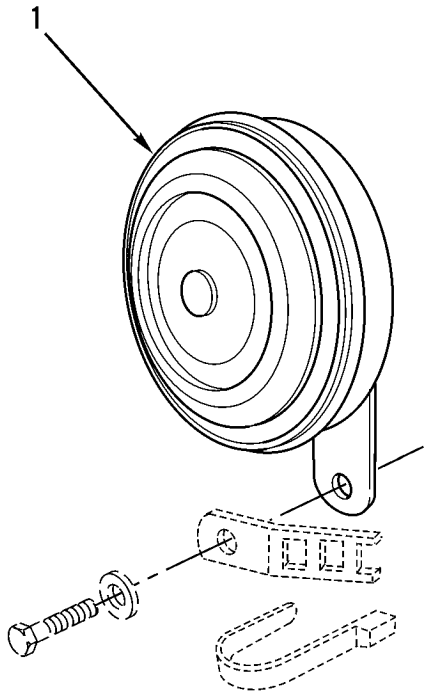

427-175

Figure 53. Horn

(1) ITEM NO	(2) SMR CODE	(3) NSN	(4) CAGEC	(5) PART NUMBER	(6) DESCRIPTION AND USABLE ON CODES(UOC)	(7) QTY
					GROUP 0611 HORN, SIREN	
					FIG. 53 HORN	
1	PAOZZ	2590001356277	11083	1631201	HORN,TRACTOR.....	1
					END OF FIGURE	

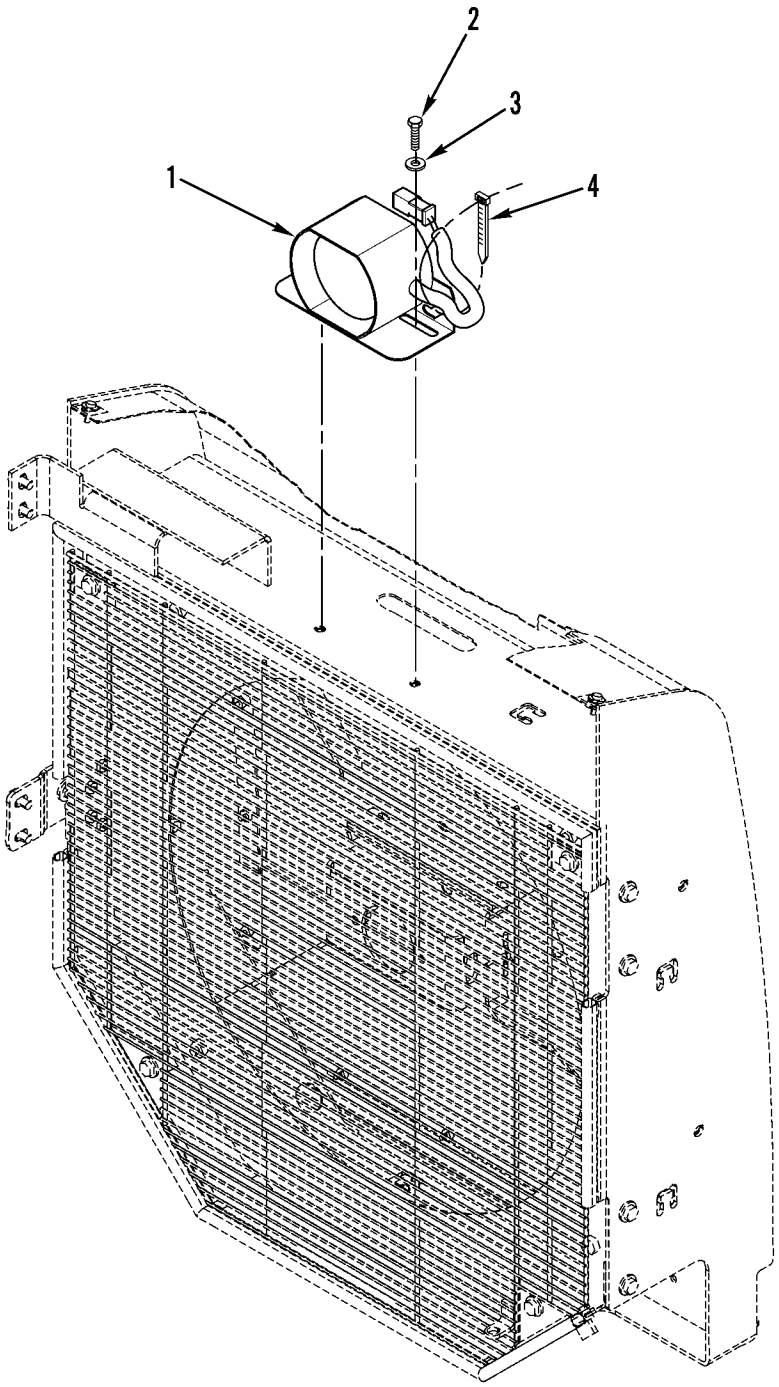

427-024

Figure 54. Backup Alarm

(1) ITEM NO	(2) SMR CODE	(3) NSN	(4) CAGEC	(5) PART NUMBER	(6) DESCRIPTION AND USABLE ON CODES(UOC)	(7) QTY
					GROUP 0611 HORN, SIREN	
					FIG. 54 BACKUP ALARM	
1	PAOZZ	6350015337015	11083	2139100	ALARM,BACK-UP,VEHIC.....	1
2	PAOZZ	5305013601703	11083	8T4200	SCREW,CAP,HEXAGON H M8 X 1.25 X 16MM.....	2
3	PAOZZ	5310013598806	11083	8T4224	WASHER,FLAT 8.8 X 16 X 2MM THK.....	2
4	PAOZZ	2815010534712	11083	7K1181	STRAP.....	1
					END OF FIGURE	

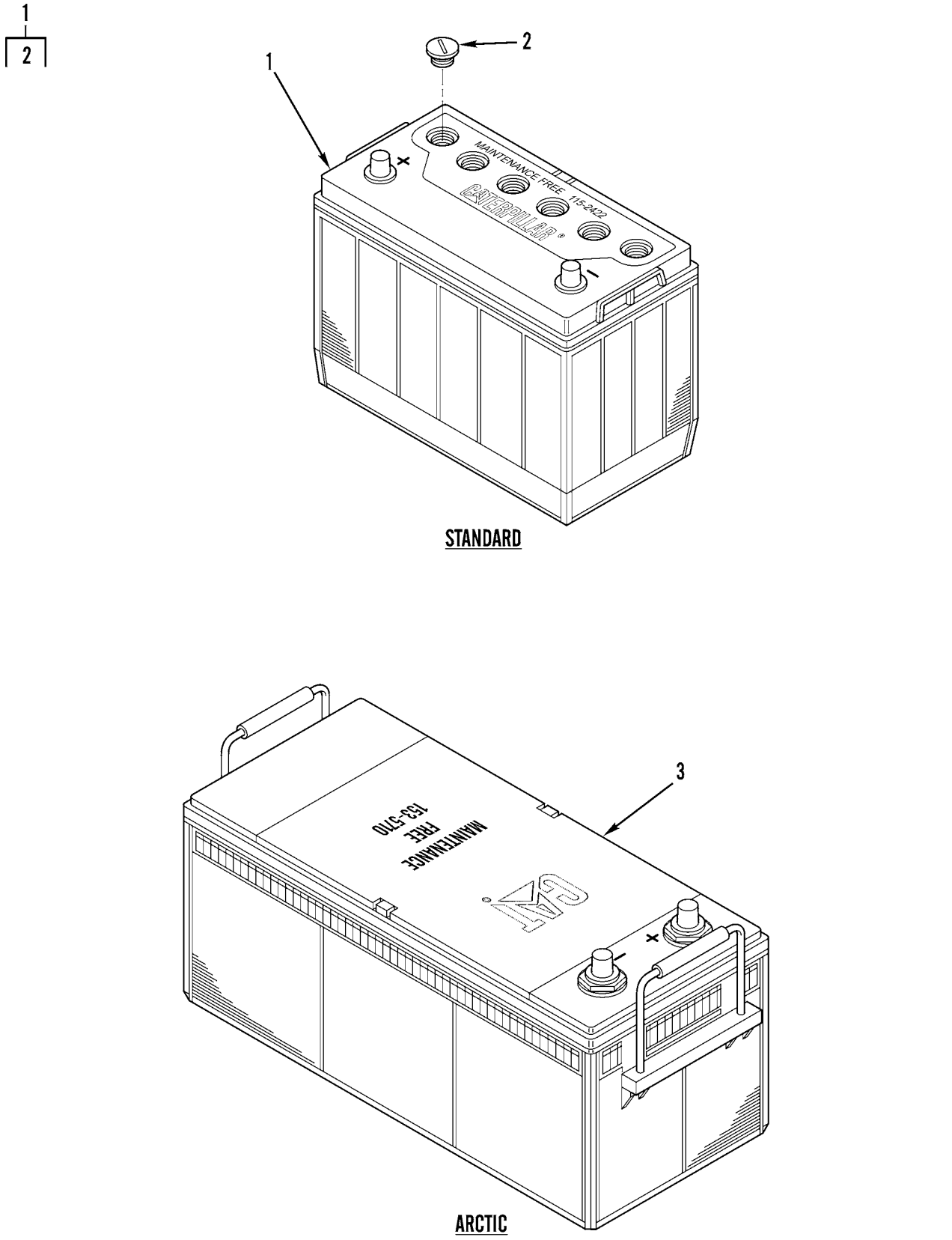

Figure 55. Battery (Standard and Arctic)

(1) ITEM NO	(2) SMR CODE	(3) NSN	(4) CAGEC	(5) PART NUMBER	(6) DESCRIPTION AND USABLE ON CODES(UOC)	(7) QTY
					GROUP 0612 BATTERIES, STORAGE	
					FIG. 55 BATTERY (STANDARD AND ARCTIC)	
1	PAOZZ	6140015282975	11083	1152422	BATTERY,STORAGE STANDARD.....	2
2	PFOZZ	6160015450574	11083	1231373	.FILLER CAP,BATTERY.....	6
3	PAOZZ	6140015450940	11083	1535710	BATTERY,STORAGE ARCTIC.....	2
					END OF FIGURE	

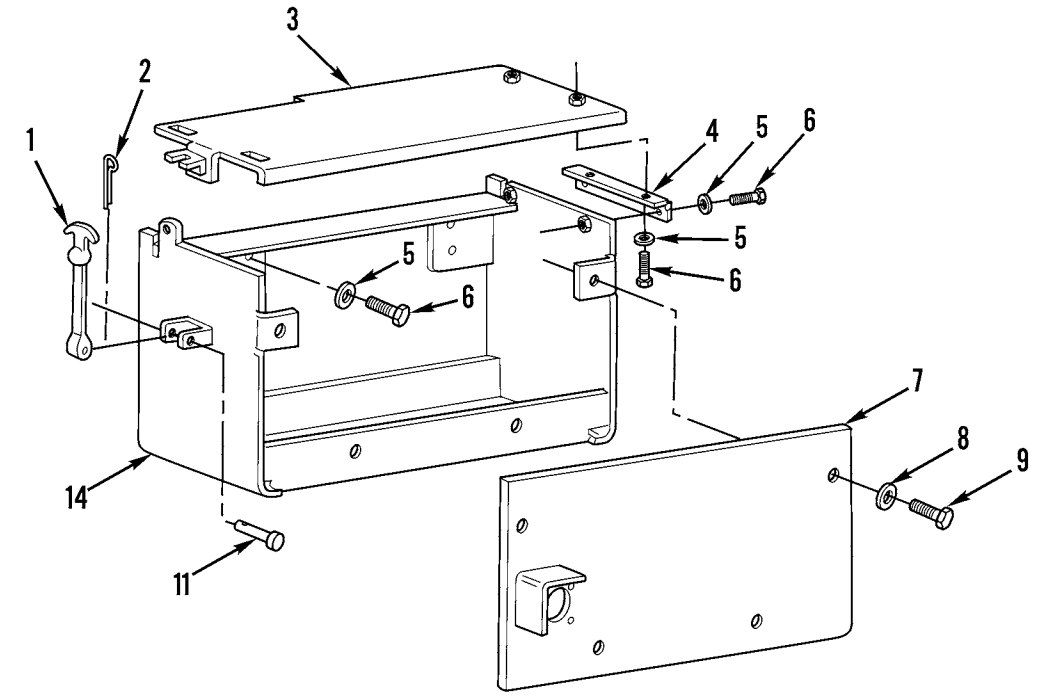

LEFT SIDE

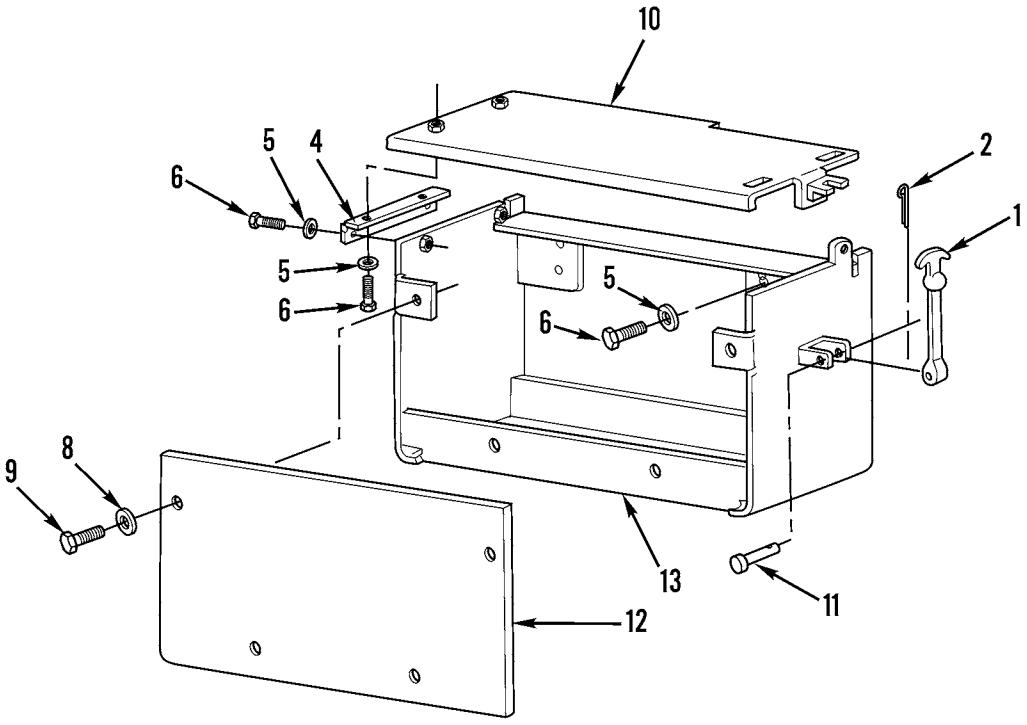

RIGHT SIDE

427-129-1

Figure 56. Battery Box and Wiring (Standard) (Sheet 1 of 2)

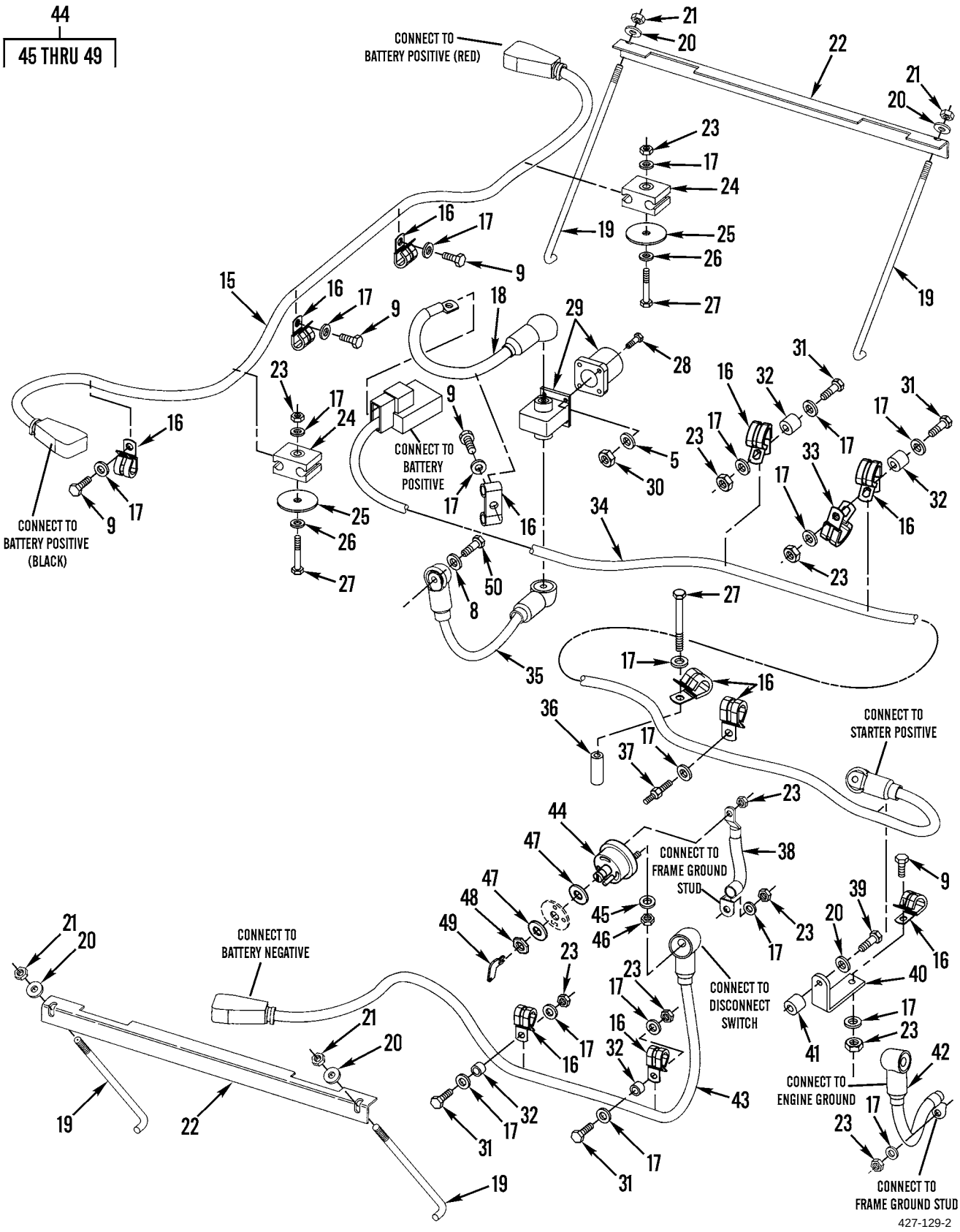

Figure 56. Battery Box and Wiring (Standard) (Sheet 2 of 2)

(1) ITEM NO	(2) SMR CODE	(3) NSN	(4) CAGEC	(5) PART NUMBER	(6) DESCRIPTION AND USABLE ON CODES(UOC)	(7) QTY
					GROUP 0612 BATTERIES, STORAGE	
					FIG. 56 BATTERY BOX AND WIRING (STANDARD)	
1	PAOZZ	5342004101903	11083	9M3835	LATCH,HOOD	2
2	PAOZZ	5315010630738	11083	3B4609	PIN	2
3	PFOZZ	5340015450527	11083	2832194	COVER,BATTERY BOX LH	1
4	PFOZZ	5340015454991	11083	2673773	HINGE,BUTT	2
5	PAOZZ	5310014151606	11083	9X8256	WASHER,FLAT 6.6 X 12 X 2MM THK	8
6	PAOZZ	5306011817849	11083	5C9553	BOLT,MACHINE M6 X 1 X 16MM	8
7	PFOZZ	6160015461134	11083	2844833	COVER,BATTERY LH	1
8	PAOZZ	5310014309036	11083	7X7729	WASHER,FLAT 11 X 25 X 3MM THK	1
9	PAOZZ	5306013601634	11083	8T4136	BOLT,MACHINE M10 X 1.5 X 25MM	4
10	PFOZZ	5340015450563	11083	2844830	COVER,BATTERY BOX RH	1
11	PAOZZ	5315007161056	19204	7161056	PIN,STRAIGHT,HEADED	2
12	PFOZZ	5340015450824	11083	2844832	COVER,BATTERY RH	1
13	PFOZZ	5340015450528	11083	2844823	BATTERY BOX RH	1
14	PFOZZ	5340015450530	11083	2844827	BATTERY BOX LH	1
15	PAOZZ	6150015512808	11083	1808871	LEAD,STORAGE BATTER	1
16	PAOZZ	5340010599345	11083	6D3479	CLIP	11
17	PAOZZ	5310013522753	11083	8T4121	WASHER,FLAT 11 X 21 X 2.5MM THK	19
18	PAOZZ	6150015517253	11083	2844864	LEAD,STORAGE BATTER	1
19	PAOZZ	5306014741795	11083	8R0768	ROD,THREADED END	4
20	PAOZZ	5310010955910	11083	5P4116	WASHER,SQUARE CONE 8.8 X 20.5 X 2MM THK	5
21	PAOZZ	5310014143289	11083	8T7963	NUT,PLAIN,HEXAGON	4
22	PFOZZ	5340015454994	11083	1024176	BRACKET,ANGLE	2
23	PAOZZ	5310013527726	11083	8T4133	NUT,PLAIN,HEXAGON M10 X 1.5 THD	9
24	PAOZZ	5342011852404	11083	6G2256	CLAMP	2
25	PAOZZ	5310011787414	11083	2G8767	WASHER,FLAT 10.5 X 60 X 3MM THK	2
26	PAOZZ	5365011759326	11083	6G2263	SPACER,SLEEVE	2
27	PAOZZ	5305014398534	11083	8T6466	SCREW,MACHINE M10 X 1.5 X 60MM	3
28	PAOZZ	5306015239002	11083	0965969	BOLT,MACHINE	4
29	PAOZZ	5935010979974	11083	5R4467	CONNECTOR,RECEPTACL NATO SLAVE RECEPTACLE	1
30	PAOZZ	5310012572204	11083	6V8127	NUT,PLAIN,HEXAGON	4
31	PAOZZ	5305013981286	11083	8T4185	SCREW,CAP,HEXAGON H M10 X 1.5 X 50MM	4
32	PFOZZ	5365015451401	11083	1298087	SPACER,STRAIGHT	4
33	PAOZZ	5340004238320	11083	1B3057	CLIP,SPRING TENSION	1
34	PAOZZ	6150015512792	11083	2519345	LEAD,STORAGE BATTER	1
35	PAOZZ	6150015523317	11083	2844863	LEAD,STORAGE BATTER	1
36	PFOZZ	5365015436601	11083	1116940	SPACER,SLEEVE	1
37	PAOZZ	5307014710426	11083	1013129	STUD,SHOULDERED	1
38	PAOZZ	6150015517248	11083	1808873	LEAD,STORAGE BATTER	1
39	PAOZZ	5305013601011	11083	8T7547	SCREW,CAP,HEXAGON H M8 X 1.25 X 30MM	1
40	PFOZZ	5340015436645	11083	3W6188	BRACKET,MOUNTING	1
41	PFOZZ	5365015436976	11083	0910081	SPACER,SLEEVE	1
42	PAOZZ	6150015520355	11083	1808874	LEAD,STORAGE BATTER	1
43	PAOZZ	6150015516599	11083	1808872	LEAD,STORAGE BATTER	1

(1) ITEM NO	(2) SMR CODE	(3) NSN	(4) CAGEC	(5) PART NUMBER	(6) DESCRIPTION AND USABLE ON CODES(UOC)	(7) QTY
44	PAOZZ	2920007757691	11083	7N0718	SWITCH,LOCK,IGNITIO.....	1
45	PAOZZ	5310010635822	11083	9F5644	.WASHER,LOCK.....	2
46	PAOZZ	5310008339298	11083	6F7045	.NUT,PLAIN,HEXAGON 3/8 X 24 THD....	2
47	PAOZZ	5310005503714	80205	MS35333-47	.WASHER,LOCK 19.86 X 31.31 X 1.3MM THK.....	2
48	PAOZZ	5310010637852	11083	8H5303	.NUT 3/4-16 THD.....	1
49	PAOZZ	5930007151939	11083	8H5306	.KEY,SWITCH.....	1
50	PAOZZ	5305013981284	11083	8T4195	SCREW,CAP,HEXAGON H M10 X 1.5 X 30MM.....	1

END OF FIGURE

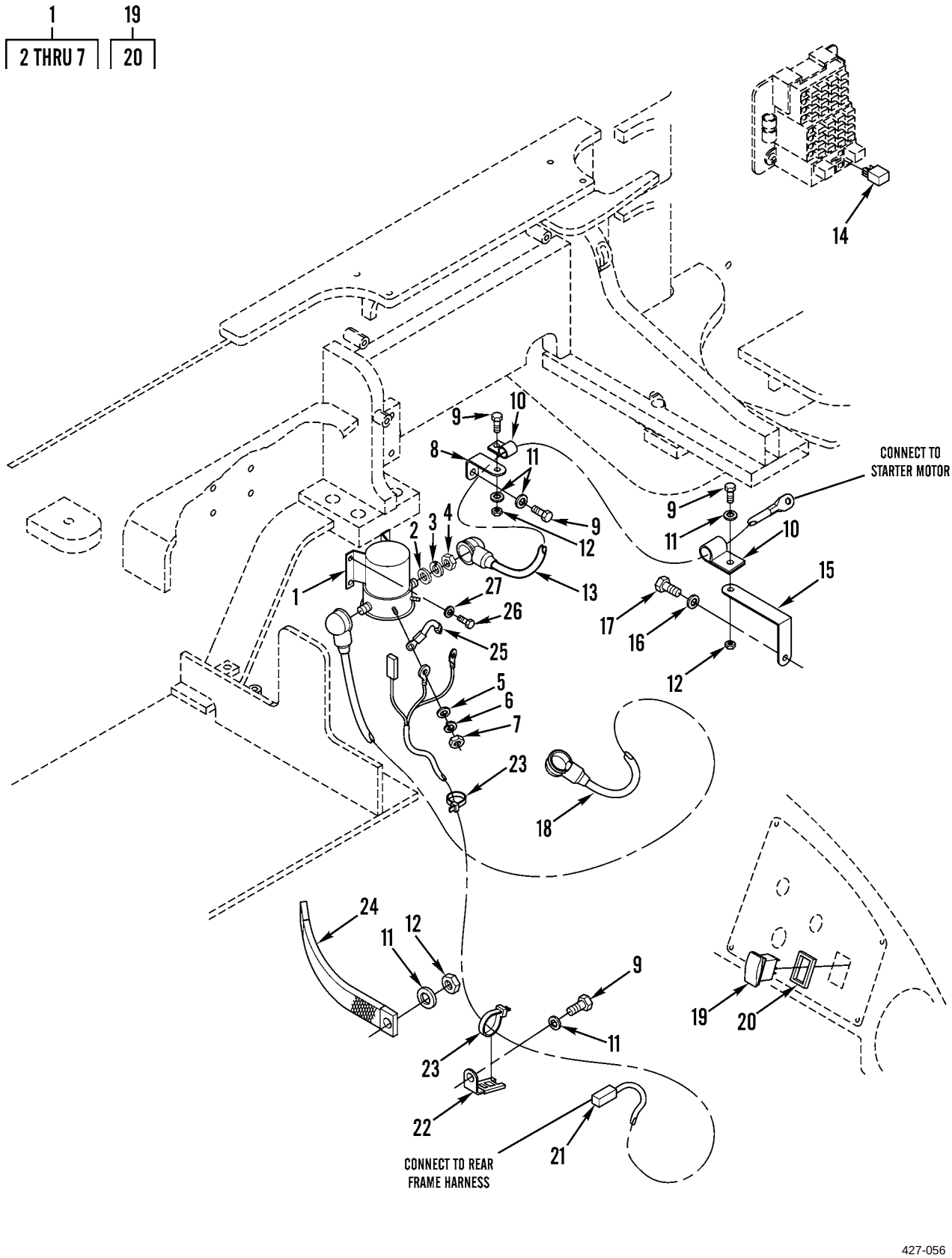

Figure 57. Secondary Steering Wiring

(1) ITEM NO	(2) SMR CODE	(3) NSN	(4) CAGEC	(5) PART NUMBER	(6) DESCRIPTION AND USABLE ON CODES(UOC)	(7) QTY
					GROUP 0613 HULL OR CHASSIS WIRING HARNESS	
					FIG. 57 SECONDARY STEERING WIRING	
1	PAFZZ	5930015437970	11083	1790006	SWITCH,REED SECONDARY STEERING RELAY.....	1
2	PAFZZ	5310010629903	11083	4L6499	.WASHER 0.38 X 0.88 X 0.02 INCHES THK.....	2
3	PAFZZ	5310014381899	11083	4D1326	.WASHER,KEY.....	2
4	PAFZZ	5310008512682	96906	MS35691-17	.NUT,PLAIN,HEXAGON 3/8-16 THD.....	2
5	PAFZZ	5310013527562	11083	7X0620	.WASHER,FLAT 5.5 X 13 X 1.6MM THK..	2
6	PAFZZ	5310005765752	80205	MS35333-39	.WASHER,LOCK.....	2
7	PAFZZ	5310012124579	11083	6V8378	.NUT,PLAIN,HEXAGON 10-32 THD.....	2
8	PAFZZ	5342010642060	11083	9L1566	SUPPORT.....	1
9	PAFZZ	5306013601634	11083	8T4136	BOLT,MACHINE M10 X 1.5 X 25MM.....	4
10	PAFZZ	5340012866208	11083	5P9299	CLAMP,LOOP.....	2
11	PAFZZ	5310013522753	11083	8T4121	WASHER,FLAT 11 X 21 X 2.5MM THK....	7
12	PAFZZ	5310013527726	11083	8T4133	NUT,PLAIN,HEXAGON M10 X 1.5 THD....	3
13	PAFZZ	6150015435992	11083	2089645	LEAD,ELECTRICAL.....	1
14	PAFZZ	5945015264236	11083	1585089	RELAY,ELECTROMAGNET 24-VOLT, SECONDARY STEERING.....	1
15	PFFZZ	5340015436645	11083	3W6188	BRACKET,MOUNTING.....	1
16	PAFZZ	5310010955910	11083	5P4116	WASHER,SQUARE CONE 8.8 X 20.5 X 2MM THK.....	1
17	PAFZZ	5306013600927	11083	8T4189	BOLT,MACHINE M8 X 1.25 X 20MM.....	1
18	PAFZZ	6150015435997	11083	2089646	LEAD,ELECTRICAL.....	1
19	PFFZZ	5930015437972	11083	1852768	SWITCH,TOGGLE SECONDARY STEERING...	1
20	PAFZZ	5330015277212	11083	1117899	.GASKET.....	1
21	PAFZZ	6150015435989	11083	1808860	CABLE ASSEMBLY,SPEC.....	1
22	PAFZZ	5340014715243	11083	4P8134	CLIP,SPRING TENSION.....	1
23	PAFZZ	2815010534712	11083	7K1181	STRAP.....	6
24	PFFZZ	6150015434465	11083	8X9618	LEAD,ELECTRICAL.....	1
25	PFFZZ	5961015437958	11083	1185597	SEMICONDUCTOR DEVIC.....	1
26	PAFZZ	5306014293167	11083	8T4171	BOLT,MACHINE M6 X 1 X 12MM.....	4
27	PAFZZ	5310008412576	11083	8T4205	WASHER,FLAT 7.2 X 14.5 X 2MM THK...	4
					END OF FIGURE	

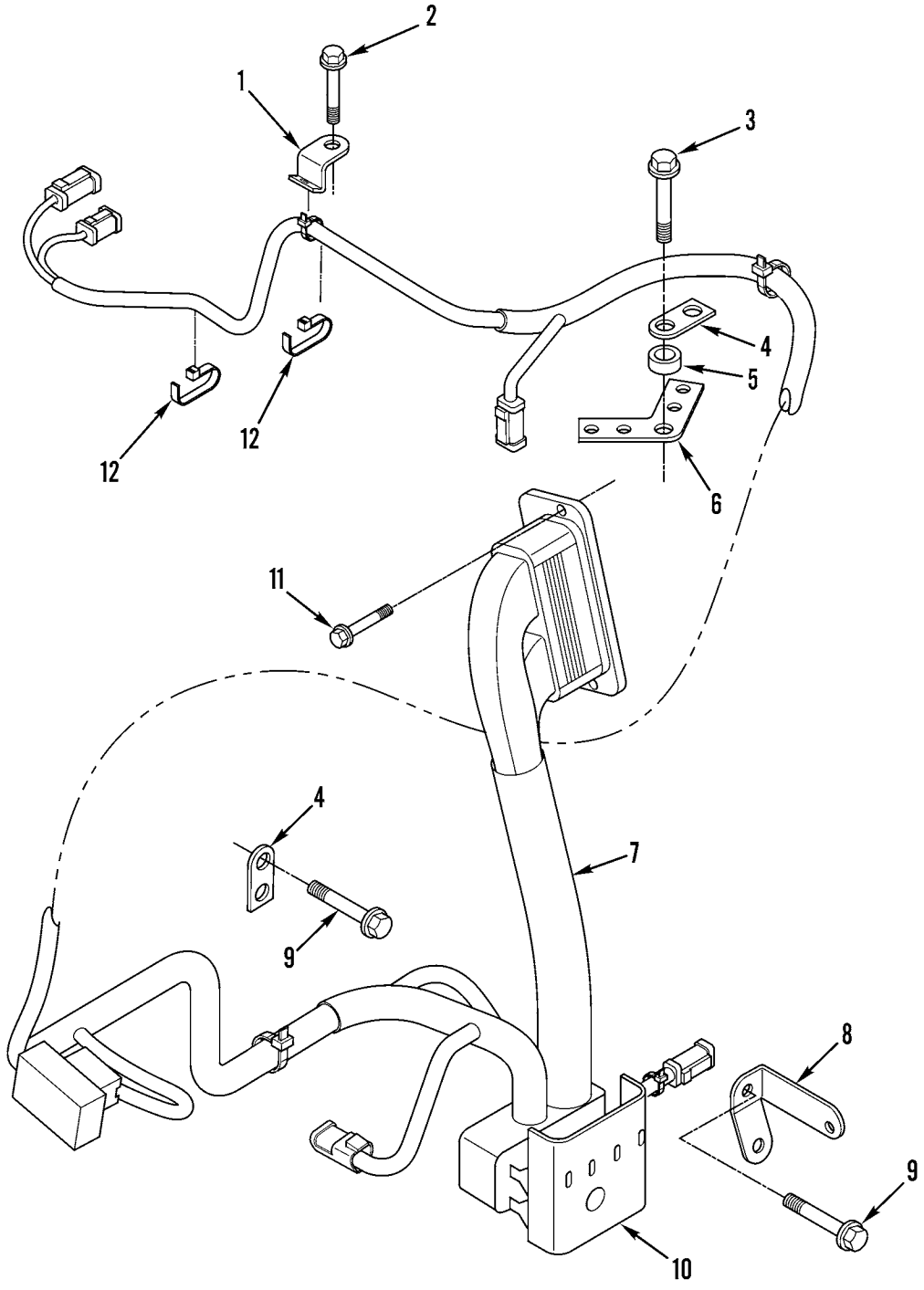

427-022

Figure 58. Engine Control Wiring Harness

(1) ITEM NO	(2) SMR CODE	(3) NSN	(4) CAGEC	(5) PART NUMBER	(6) DESCRIPTION AND USABLE ON CODES(UOC)	(7) QTY
					GROUP 0613 HULL OR CHASSIS WIRING HARNESS	
					FIG. 58 ENGINE CONTROL WIRING HARNESS	
1	PFFZZ	5340015441023	11083	2287477	BRACKET,MOUUNTING.....	1
2	PAFZZ	5306014287041	13446	2314H102	BOLT,MACHINE M8 X 1.25 X 12MM.....	1
3	PAFZZ	5306015240325	11083	1408783	BOLT,MACHINE M10 X 45MM.....	1
4	PAFZZ	5975015437982	11083	2179039	STRAP,TIEDOWN,ELECT.....	1
5	PFFZZ	5365015446082	11083	2169086	SPACER,SLEEVE 10.5 X 20 X 32MM THK.	1
6	PFFZZ	5340015436689	11083	2268780	BRACKET,ANGLE.....	1
7	PAFZZ	6150015450564	11083	2553453	WIRING HARNESS,BRAN ENGINE CONTROL.	1
8	PFFZZ	5340015436692	11083	2268778	BRACKET,DOUBLE ANGL.....	1
9	PAFZZ	5306014287034	13446	2314H001	BOLT,MACHINE M8 X 1.25 X 14MM.....	3
10	PFFZZ		11083	2242738	COVER.....	1
11	PFFZZ	5306015436219	11083	2179038	BOLT,MACHINE M4 X 0.7 X 14MM.....	5
12	PFFZZ	5340015435988	11083	2178477	BRACKET,MOUNTING.....	2
					END OF FIGURE	

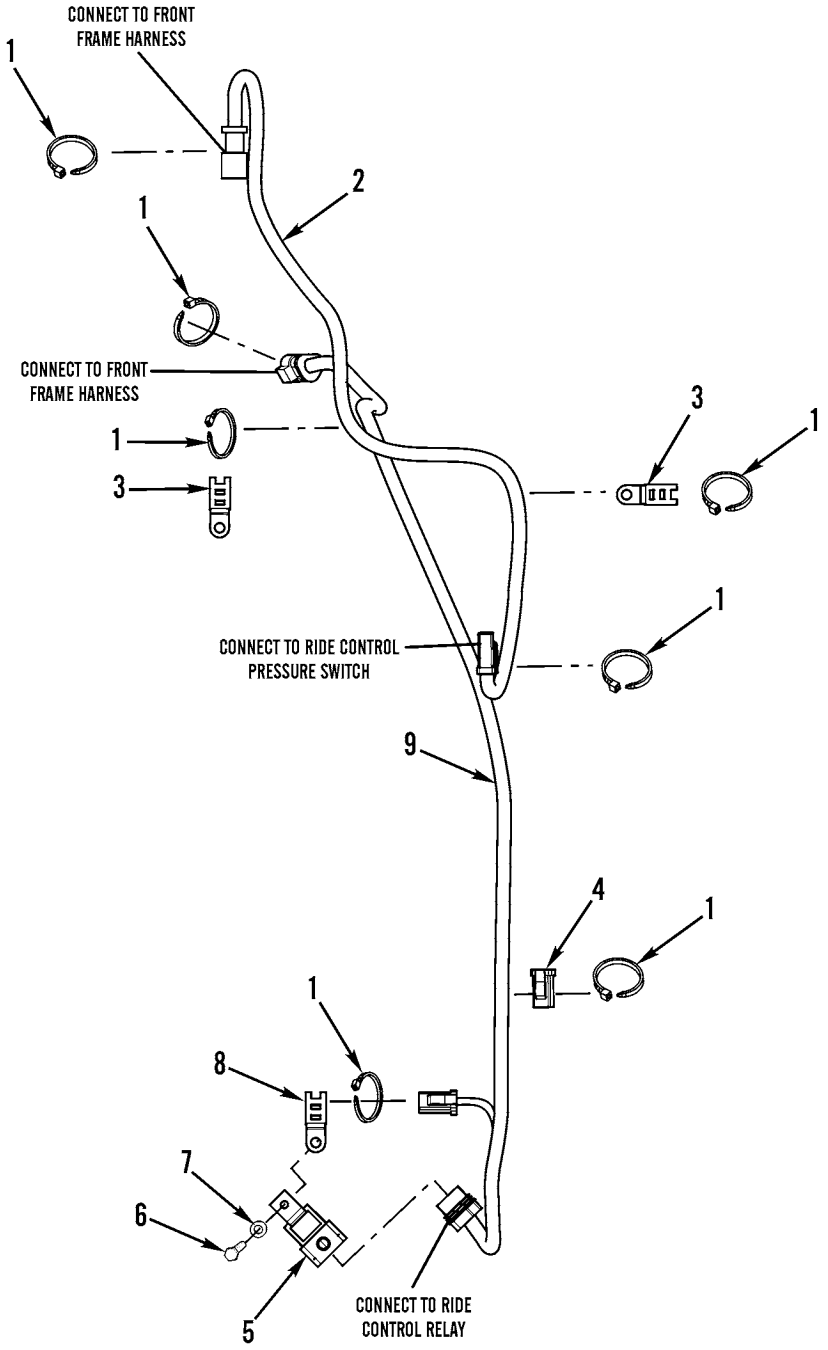

427-157

Figure 59. Ride Control Wiring

(1) ITEM NO	(2) SMR CODE	(3) NSN	(4) CAGEC	(5) PART NUMBER	(6) DESCRIPTION AND USABLE ON CODES(UOC)	(7) QTY
					GROUP 0613 HULL OR CHASSIS WIRING HARNESS	
					FIG. 59 RIDE CONTROL WIRING	
1	PAFZZ	2815010534712	11083	7K1181	STRAP	7
2	PFFZZ	6150015434503	11083	2176729	CABLE ASSEMBLY,SPEC	1
3	PAFZZ	5340014715243	11083	4P8134	CLIP,SPRING TENSION	1
4	PAFZZ	5970014734163	11083	1068704	INSULATOR,STANDOFF	1
5	PAFZZ	5945014681267	11083	3E5239	RELAY,ELECTROMAGNET	1
6	PAFZZ	5306014135287	11083	8T4138	BOLT,SHOULDER M6 X 1 X 20MM	1
7	PAFZZ	5310014392619	11083	9X6165	WASHER,FLAT 6.5 X 22 X 2.5MM THK	1
8	PAFZZ	5999014708845	11083	4P7581	CLIP,ELECTRICAL	2
9	PFFZZ	6150015435565	11083	1716029	CABLE ASSEMBLY,SPEC	1
					END OF FIGURE	

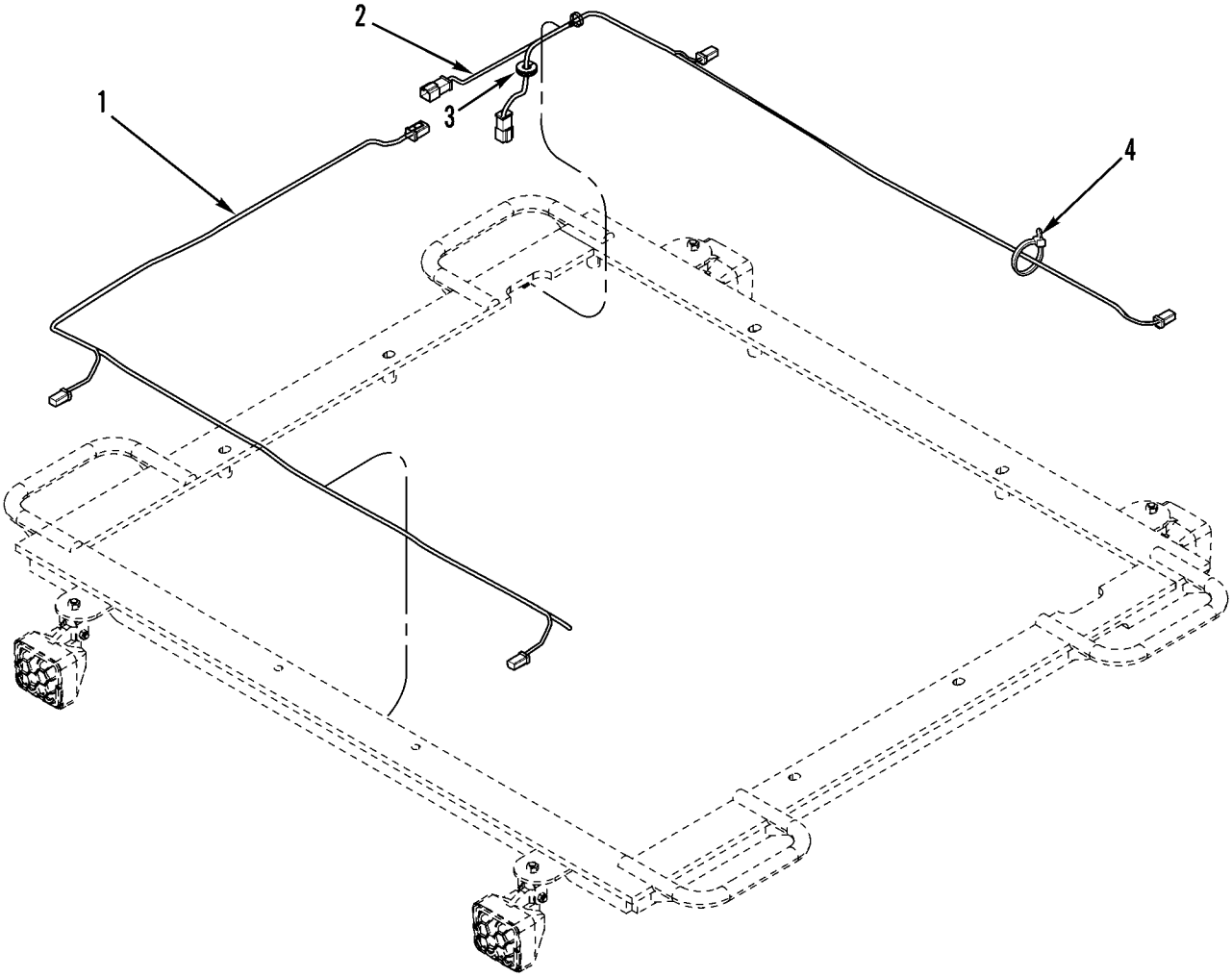

427-111

Figure 60. Worklight Wiring

(1) ITEM NO	(2) SMR CODE	(3) NSN	(4) CAGEC	(5) PART NUMBER	(6) DESCRIPTION AND USABLE ON CODES(UOC)	(7) QTY
					GROUP 0613 HULL OR CHASSIS WIRING HARNESS	
					FIG. 60 WORKLIGHT WIRING	
1	PAFZZ	6150015450787	11083	2824422	WIRING HARNESS,BRAN.....	1
2	PAFZZ	6150015450386	11083	2824421	WIRING,HARNESS.....	1
3	PAOZZ	5325015270351	11083	9X7345	GROMMET,NONMETALLIC.....	1
4	PAOZZ	2920010589099	11083	3S2093	STRAP.....	12
					END OF FIGURE	

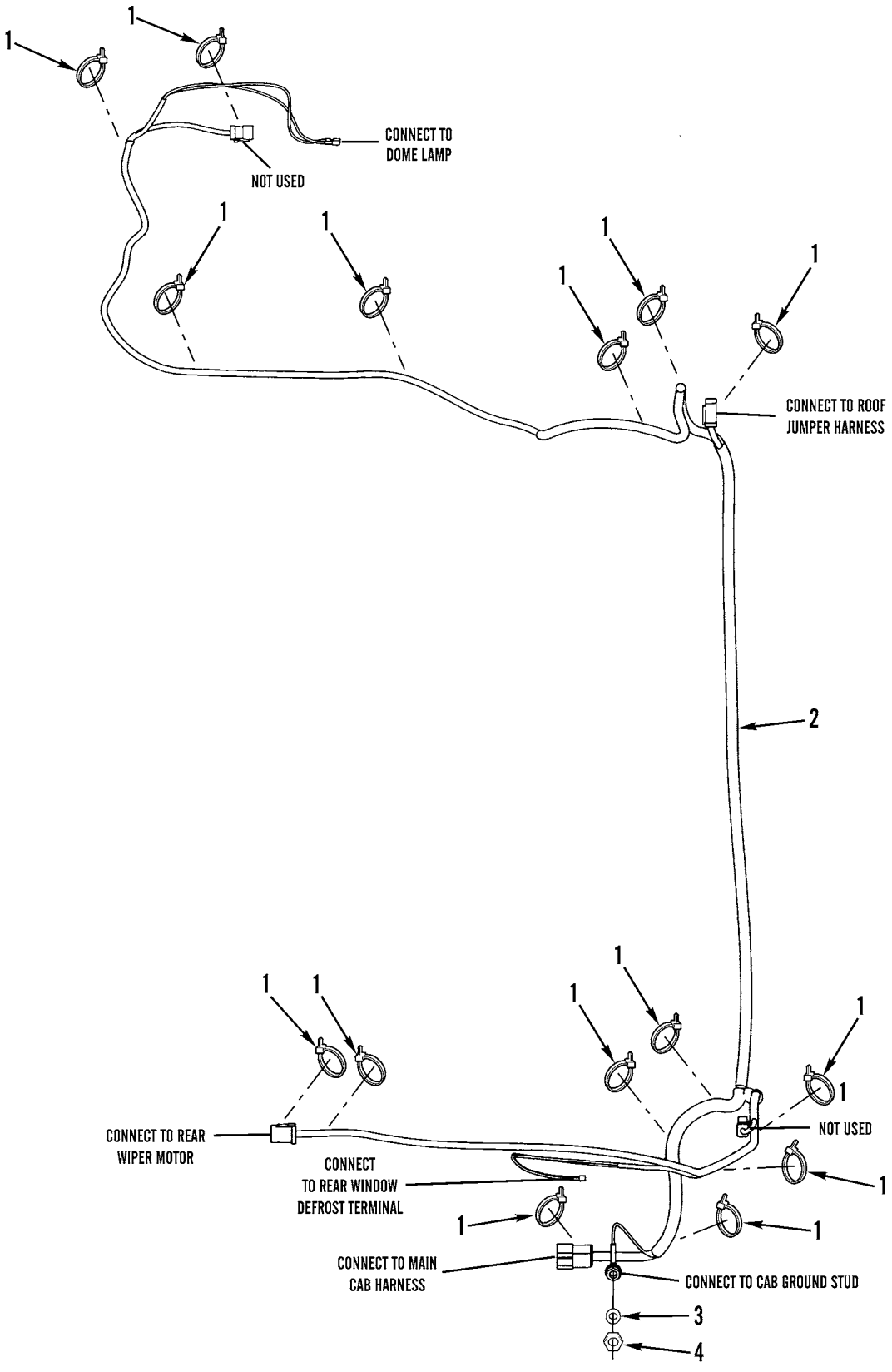

Figure 61. Cab Wiring

(1) ITEM NO	(2) SMR CODE	(3) NSN	(4) CAGEC	(5) PART NUMBER	(6) DESCRIPTION AND USABLE ON CODES(UOC)	(7) QTY
					GROUP 0613 HULL OR CHASSIS WIRING HARNESS	
					FIG. 61 CAB WIRING	
1	PAFZZ	2815010534712	11083	7K1181	STRAP.....	15
2	PAFZZ	6150015512535	11083	1722307	WIRING HARNESS,BRAN.....	1
3	PAFZZ	5310013522753	11083	8T4121	WASHER,FLAT 11 X 21 X 2.5MM THK....	1
4	PAFZZ	5310013527726	11083	8T4133	NUT,PLAIN,HEXAGON M10 X 1.5 THD....	1
					END OF FIGURE	

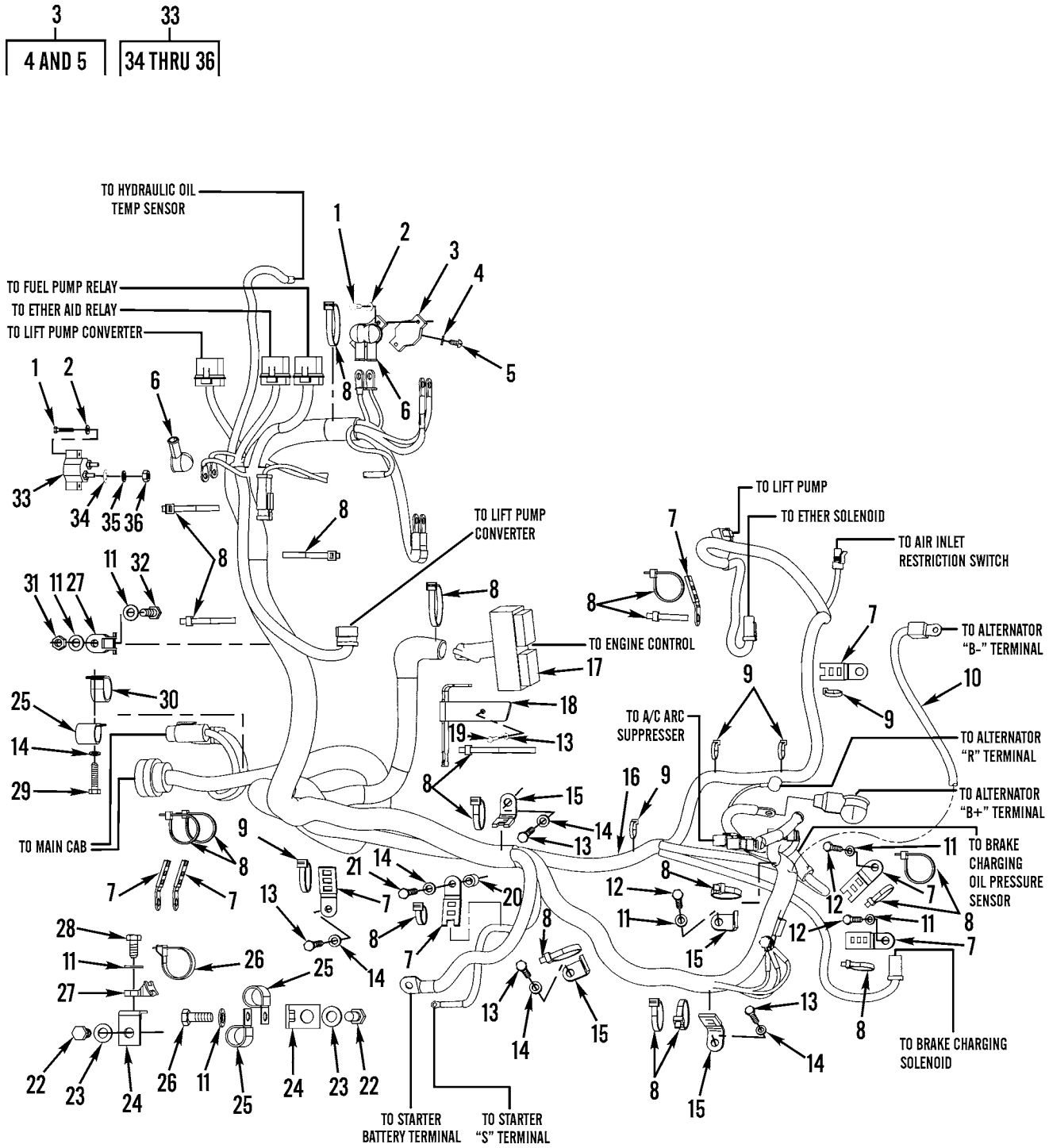

427-121

Figure 62. Engine Wiring Harness

(1) ITEM NO	(2) SMR CODE	(3) NSN	(4) CAGEC	(5) PART NUMBER	(6) DESCRIPTION AND USABLE ON CODES(UOC)	(7) QTY
					GROUP 0613 HULL OR CHASSIS WIRING HARNESS	
					FIG. 62 ENGINE WIRING HARNESS	
1	PFFZZ	5305015448200	11083	6V7345	SCREW,MACHINE 8-32 X 0.875 IN.....	4
2	PAFZZ	5310004328001	11083	4B4863	WASHER,FLAT 4.7 X 11 X 1.2MM THK...	4
3	PAFZZ	5925011840633	11083	3T2662	CIRCUIT BREAKER LAMP.....	1
4	PAFZZ	5310005590070	11083	9B7233	.WASHER,LOCK #8,INTERNAL TOOTH.....	2
5	PAFZZ	5305011845919	11083	6V8376	.SCREW,MACHINE 8-32 X 0.25 IN.....	2
6	PAFZZ	5340015238872	11083	1313201	BOOT,DUST AND MOIST.....	4
7	PAFZZ	5999014708845	11083	4P7581	CLIP,ELECTRICAL.....	9
8	PAFZZ	2815010534712	11083	7K1181	STRAP.....	19
9	PAFZZ	2920010589099	11083	3S2093	STRAP.....	5
10	PAFZZ	6150015266755	11083	1488298	CABLE ASSEMBLY,SPEC.....	1
11	PAFZZ	5310013522753	11083	8T4121	WASHER,FLAT 11 X 21 X 2.5MM THK....	7
12	PAFZZ	5306014080450	11083	8T4191	BOLT,MACHINE M10 X 1.5 X 16MM.....	3
13	PAFZZ	5305013601703	11083	8T4200	SCREW,CAP,HEXAGON H M8 X 1.25 X 16MM.....	5
14	PAFZZ	5310013598806	11083	8T4224	WASHER,FLAT 8.8 X 16 X 2MM THK.....	8
15	PAFZZ	5340014715243	11083	4P8134	CLIP,SPRING TENSION.....	4
16	PAFZZ	6150015512786	11083	2326555	WIRING HARNESS,BRAN.....	1
17	PAFZZ	5935015341072	11083	1342540	CONNECTOR,RECEPTACL.....	1
18	PFFZZ	5340015450616	11083	2265923	BRACKET,MOUNTING.....	1
19	PAFZZ	5306013600927	11083	8T4189	BOLT,MACHINE M8 1.25 X 20MM.....	1
20	PFFZZ	5365015436601	11083	1116940	SPACER,SLEEVE.....	1
21	PAFZZ	5305013981287	11083	8T6912	SCREW,CAP,HEXAGON H M8 X 1.25 X 50MM.....	1
22	PAFZZ	5306014138771	11083	8T4192	BOLT,SHOULDER M12 X 1.25 X 20MM....	2
23	PAFZZ	5310010980624	11083	8T4223	WASHER,FLAT 13.5 X 25.5 X 3MM THK..	2
24	PFFZZ	5340015435631	11083	1353327	BRACKET,ANGLE.....	2
25	PAFZZ	5340010986683	11083	3S8665	CLAMP,LOOP.....	3
26	PAFZZ	5305013981284	11083	8T4195	SCREW,CAP,HEXAGON H M10 X 1.5 X 30MM.....	1
26	PFFZZ	5975015438005	11083	2042281	STRAP,TIE DOWN,ELEC.....	2
27	PFFZZ	5975015437985	11083	2048000	MOUNTING BASE,TIEDO.....	3
28	PAFZZ	5306013600928	11083	8T4137	BOLT,MACHINE M10 X 1.5 X 20MM.....	1
29	PAFZZ	5306014079016	11083	8T4197	BOLT,MACHINE M8 X 1.25 X 40MM.....	1
30	PAFZZ	5325014151608	11083	9M4972	FASTENER,SPRING TEN.....	1
31	PAFZZ	5310013527726	11083	8T4133	NUT,PLAIN,HEXAGON M10 X 1.5 THD....	1
32	PAFZZ	5306013600932	11083	8T4186	BOLT,MACHINE M10 X 1.5 X 40MM.....	1
33	PAFZZ	5925015265964	11083	1471773	CIRCUIT BREAKER AUXILIARY.....	1
34	PAFZZ	5310014138757	11083	8T0328	.WASHER,FLAT 5.5 X 10 X 1MM THK....	2
35	PAFZZ	5310005765752	80205	MS35333-39	.WASHER,LOCK.....	2
36	PAFZZ	5310012124579	11083	6V8378	.NUT,PLAIN,HEXAGON 10-32 THD.....	2
					END OF FIGURE	

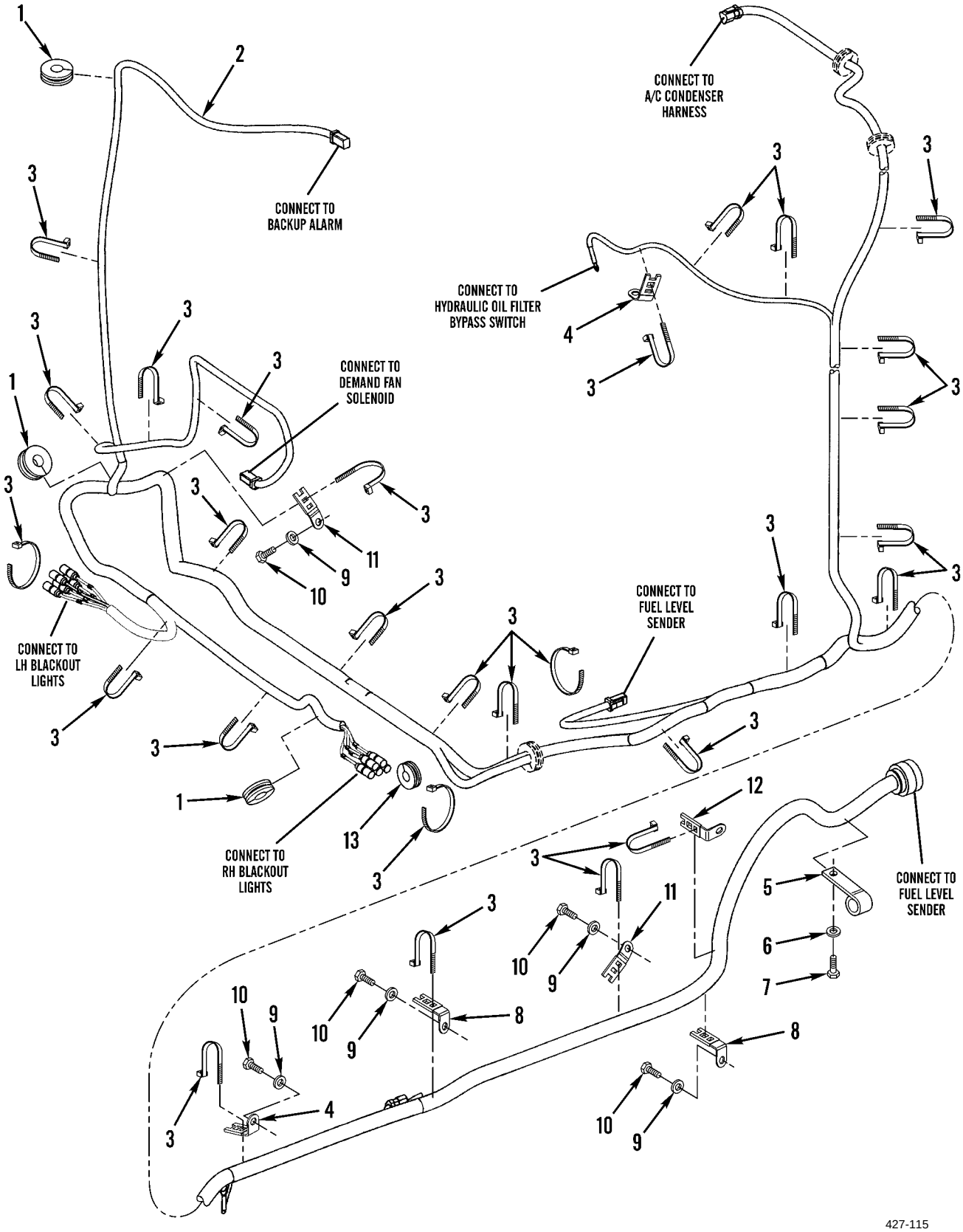

Figure 63. Rear Wiring Harness

(1) ITEM NO	(2) SMR CODE	(3) NSN	(4) CAGEC	(5) PART NUMBER	(6) DESCRIPTION AND USABLE ON CODES(UOC)	(7) QTY
					GROUP 0613 HULL OR CHASSIS WIRING HARNESS	
					FIG. 63 REAR WIRING HARNESS	
1	PFFZZ	5325015455035	11083	5P6264	GROMMET,NONMETALLIC.....	4
2	PAFZZ	6150015523321	11083	2788841	WIRING HARNESS,BRAN.....	1
3	PAFZZ	2815010534712	11083	7K1181	STRAP.....	34
4	PAFZZ	5340014715243	11083	4P8134	CLIP,SPRING TENSION.....	2
5	PFFZZ	5340015450567	11083	8D9671	CLIP,SPRING TENSION.....	1
6	PAFZZ	5310013598806	11083	8T4224	WASHER,FLAT 8.8 X 16 X 2MM THK.....	1
7	PAFZZ	5306014079016	11083	8T4197	BOLT,MACHINE M8 X 1.25 X 40MM.....	1
8	PAFZZ	5340014800363	11083	1325789	CLAMP,LOOP.....	2
9	PAFZZ	5310013522753	11083	8T4121	WASHER,FLAT 11 X 21 X 2.5MM THK....	6
10	PAFZZ	5306013600928	11083	8T4137	BOLT,MACHINE M10 X 1.5 X 20MM.....	6
11	PAFZZ	5999014708845	11083	4P7581	CLIP,ELECTRICAL.....	3
12	PFFZZ	5340015455047	11083	1781781	CLIP,SPRING TENSION.....	1
13	PAFZZ	5325014735253	11083	7G7053	GROMMET,NONMETALLIC.....	1
					END OF FIGURE	

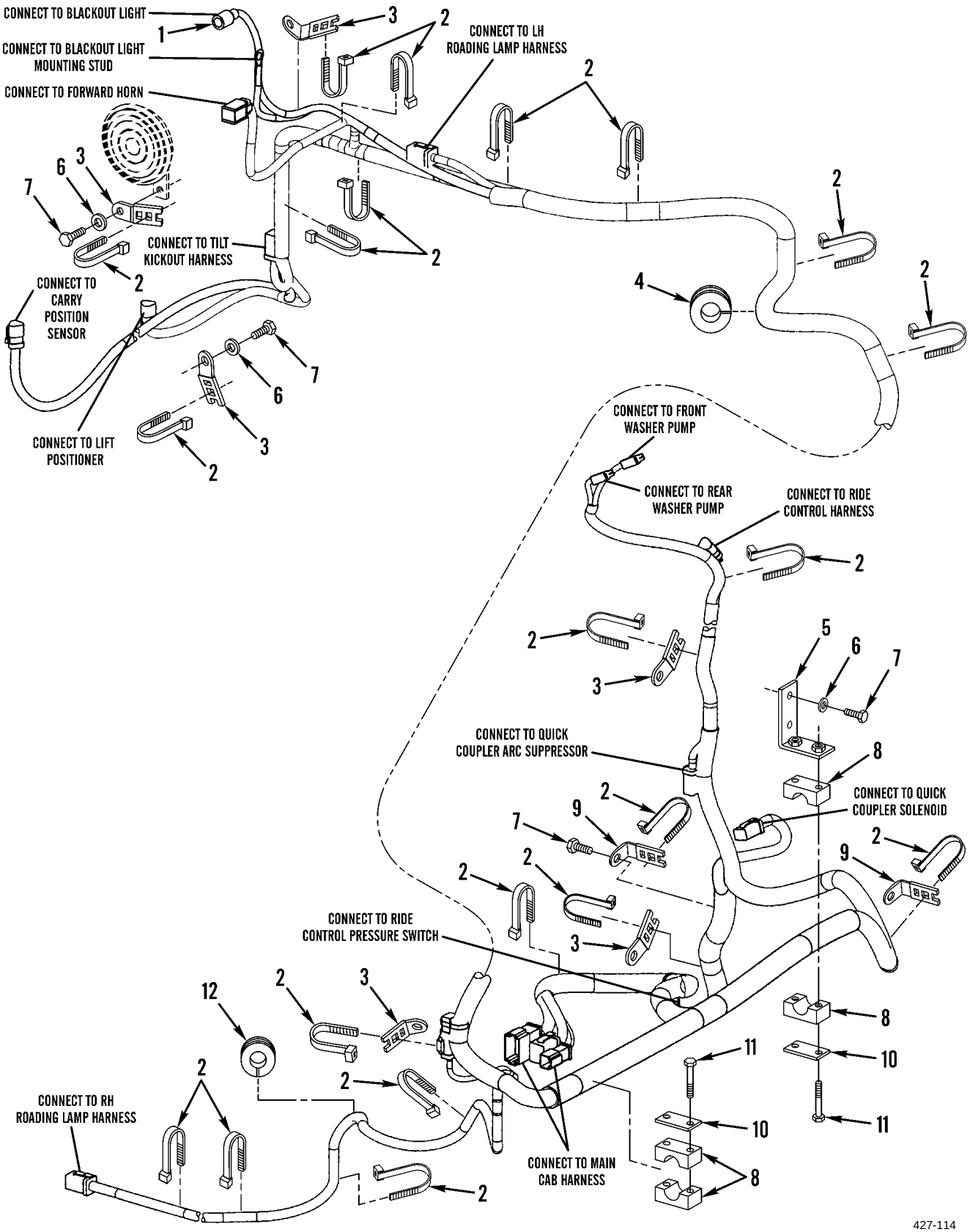

Figure 64. Front Wiring Harness

(1) ITEM NO	(2) SMR CODE	(3) NSN	(4) CAGEC	(5) PART NUMBER	(6) DESCRIPTION AND USABLE ON CODES(UOC)	(7) QTY
					GROUP 0613 HULL OR CHASSIS WIRING HARNESS	
					FIG. 64 FRONT WIRING HARNESS	
1	PAFZZ	6150015516623	11083	2788840	WIRING HARNESS,BRAN.....	1
2	PAFZZ	2815010534712	11083	7K1181	STRAP.....	21
3	PAFZZ	5999014708845	11083	4P7581	CLIP,ELECTRICAL.....	6
4	PFFZZ	5325015448217	11083	7G3228	GROMMET,NONMETALLIC.....	1
5	PFFZZ	5340015455552	11083	1226316	BRACKET,ANGLE.....	1
6	PAFZZ	5310013522753	11083	8T4121	WASHER,FLAT 11 X 21 X 2.5MM THK....	4
7	PAFZZ	5306013600928	11083	8T4137	BOLT,MACHINE M10 X 1.5 X 20MM.....	5
8	PAFZZ	5340014400544	11083	7V6089	CLAMP,LOOP.....	4
9	PAFZZ	5340014715243	11083	4P8134	CLIP,SPRING TENSION.....	2
10	PAFZZ	5340014400525	11083	7V5628	PLATE,MOUNTING.....	2
11	PAFZZ	5306014389854	11083	7X2534	BOLT,MACHINE M6 X 1 X 50MM.....	4
12	PFFZZ	5325015448659	11083	2M3433	GROMMET,NONMETALLIC.....	1
					END OF FIGURE	

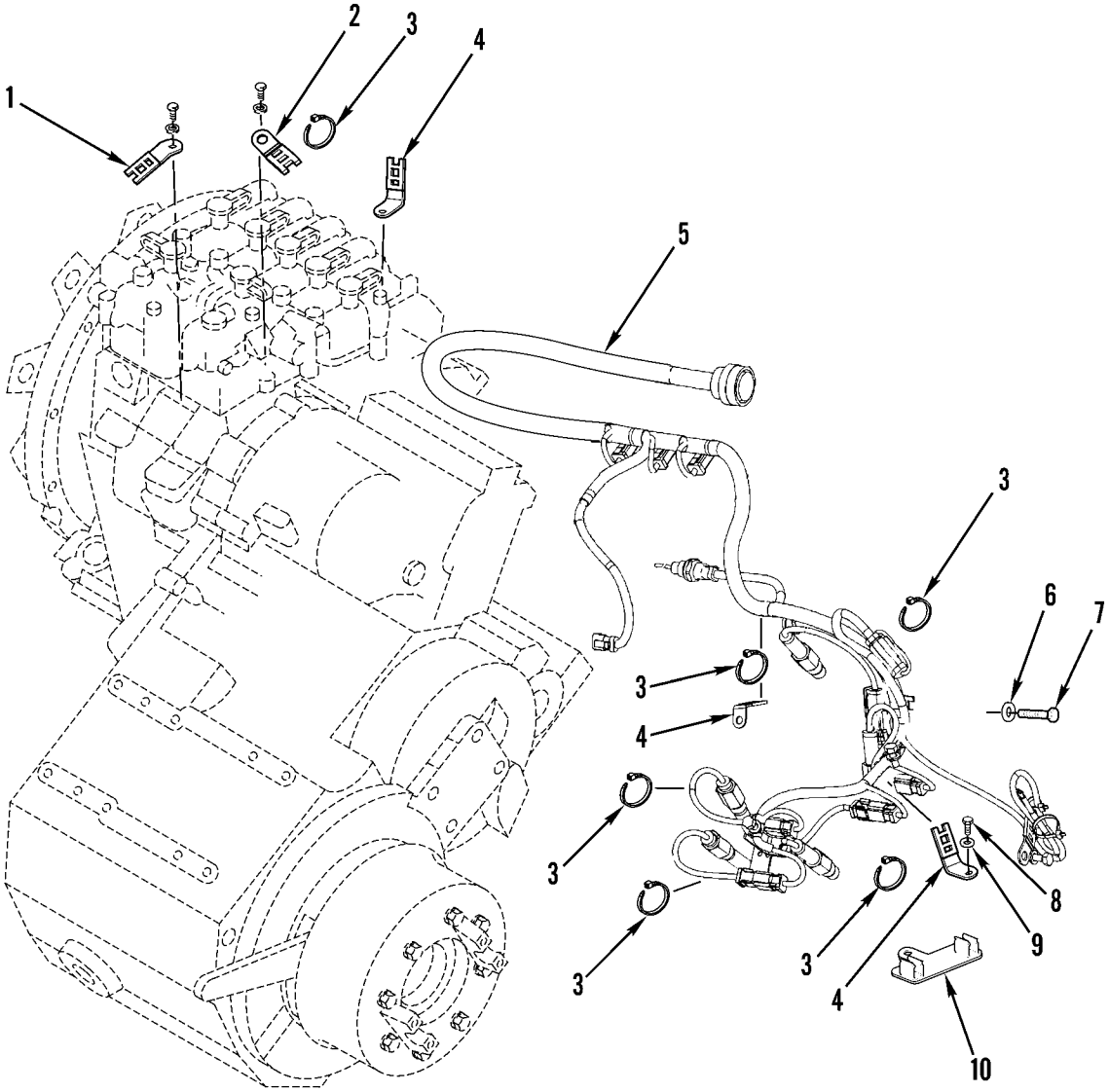

427-167

Figure 65. Transmission Control Wiring

(1) ITEM NO	(2) SMR CODE	(3) NSN	(4) CAGEC	(5) PART NUMBER	(6) DESCRIPTION AND USABLE ON CODES(UOC)	(7) QTY
					GROUP 0613 HULL OR CHASSIS WIRING HARNESS	
					FIG. 65 TRANSMISSION CONTROL WIRING	
1	PAFZZ	5340015141843	11083	1305300	CLIP,SPRING TENSION.....	2
2	PAFZZ	5999014708845	11083	4P7581	CLIP,ELECTRICAL.....	3
3	PAFZZ	2920010589099	11083	3S2093	STRAP.....	12
4	PAFZZ	5340014800363	11083	1325789	CLAMP,LOOP.....	8
5	PFFZZ	6150015450902	11083	2149059	WIRING HARNESS,BRAN.....	1
6	PAFZZ	5310013600983	11083	6V5839	WASHER,LOCK 11 X 21 X 2.5MM THK....	1
7	PAFZZ	5305013601990	11083	6V3822	SCREW,CAP,HEXAGON H M10 X 1.5 X 35MM.....	1
8	PAFZZ	5306013600931	11083	6V5217	BOLT,MACHINE M8 X 1.25 X 20MM.....	2
9	PAFZZ	5310004324064	11083	9M1974	WASHER,FLAT 8.8 X 16 X 2MM THK.....	2
10	PAFZZ	5340014385523	11083	8E7841	BRACKET,MOUNTING.....	2
					END OF FIGURE	

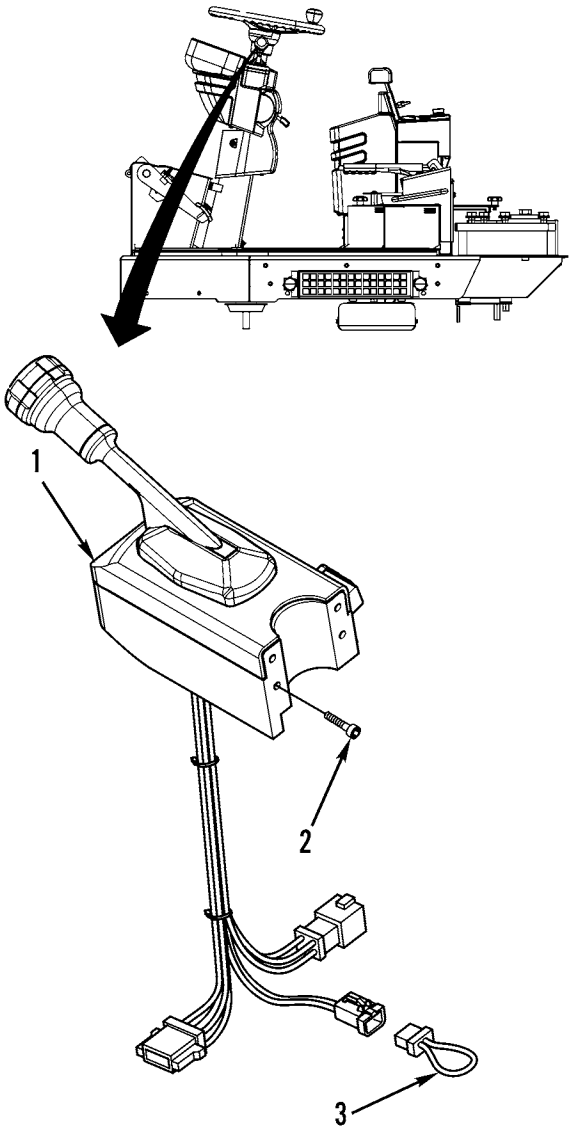

427-027

Figure 66. Transmission Control and Related Parts

(1) ITEM NO	(2) SMR CODE	(3) NSN	(4) CAGEC	(5) PART NUMBER	(6) DESCRIPTION AND USABLE ON CODES(UOC)	(7) QTY
					GROUP 07 TRANSMISSION	
					GROUP 0705 TRANSMISSION SHIFTING COMPONENTS	
					FIG. 66 TRANSMISSION CONTROL AND RELATED PARTS	
1	PAOZZ	2520015450875	11083	2067433	CONTROL ASSEMBLY,TR SHIFT LEVER....	1
2	PFOZZ	5306015445917	11083	1341374	BOLT,MACHINE M5 X 0.8 X 20MM.....	4
3	PFOZZ	6150015438342	11083	1019161	WIRING HARNESS.....	1
					END OF FIGURE	

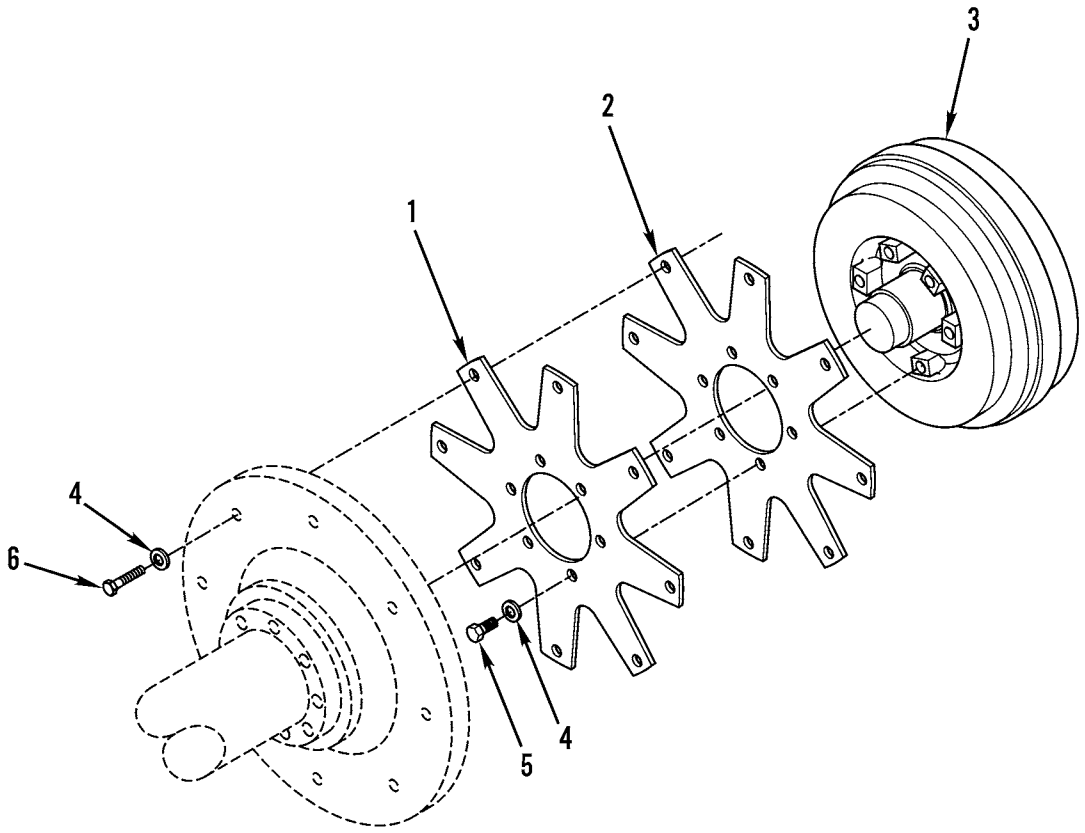

427-059

Figure 67. Torque Converter

(1) ITEM NO	(2) SMR CODE	(3) NSN	(4) CAGEC	(5) PART NUMBER	(6) DESCRIPTION AND USABLE ON CODES(UOC)	(7) QTY
					GROUP 0710 TRANSMISSION ASSEMBLY	
					FIG. 67 TORQUE CONVERTER	
1	PFFZZ	5340015436596	11083	1364593	PLATE,MOUNTING.....	1
2	PFFZZ	5340015441373	11083	1364595	PLATE,MOUNTING.....	1
3	PAFZZ	2520015436542	11083	2010952	TORQUECONVERTER,VEH TORQUE CONVERTER.....	1
4	PAFZZ	5310013600983	11083	6V5839	WASHER,LOCK 11 X 21 X 2.5MM THK....	6
5	PAFZZ	5305014943913	11083	6V8212	SCREW,CAP,HEXAGON H M10 X 1.5 X 16MM.....	6
6	PAFZZ	5306014297098	11083	6V4249	BOLT,MACHINE M10 X 1.5 X 50MM.....	8
					END OF FIGURE	

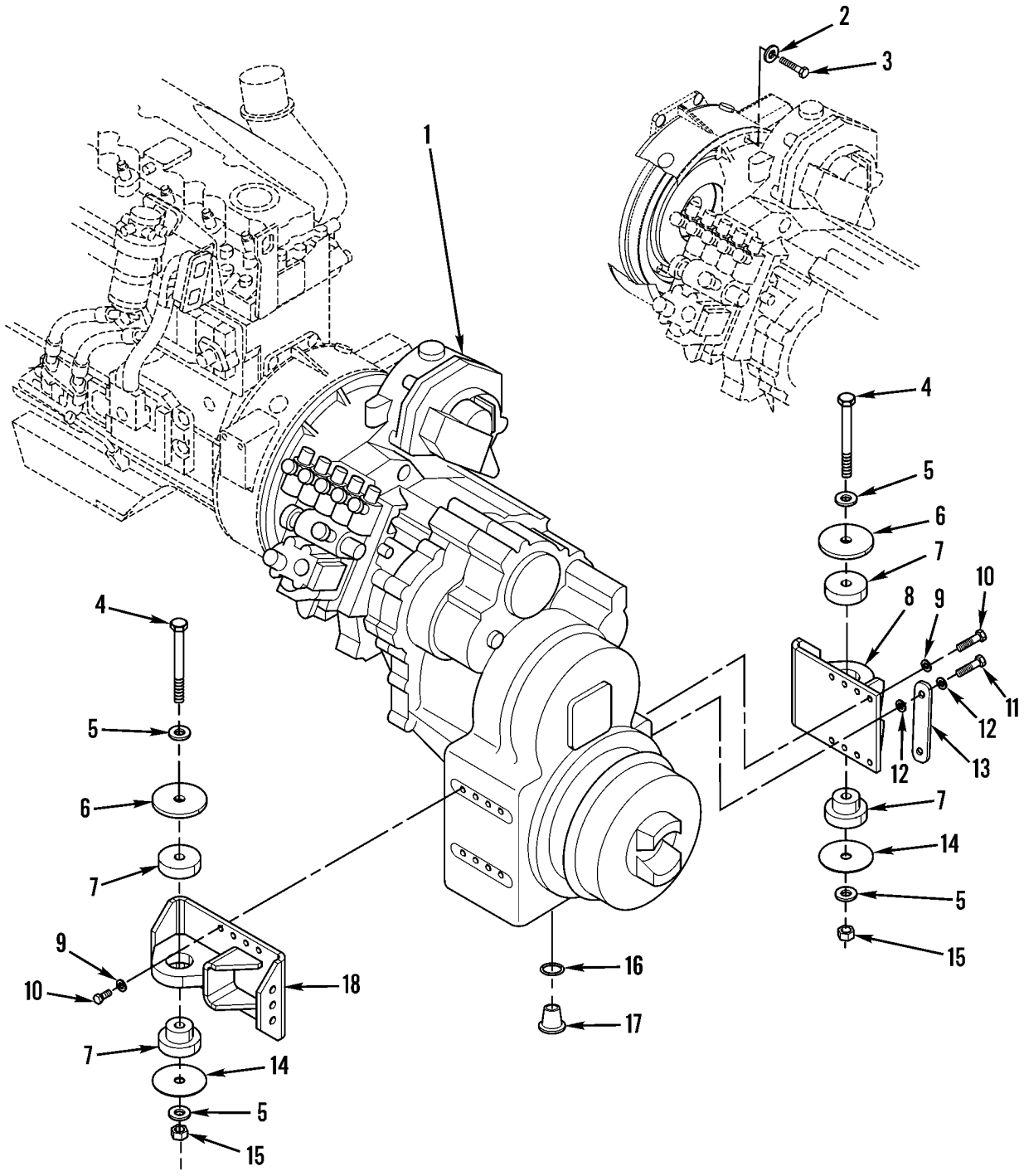

Figure 68. Transmission and Transmission Mounting

(1) ITEM NO	(2) SMR CODE	(3) NSN	(4) CAGEC	(5) PART NUMBER	(6) DESCRIPTION AND USABLE ON CODES(UOC)	(7) QTY
					GROUP 0710 TRANSMISSION ASSEMBLY	
					FIG. 68 TRANSMISSION AND TRANSMISSION MOUNTING	
1	PAFHH		11083	1807503	TRANSMISSION,HYDRAU TRANSMISSION MOUNTS.....	1
2	PAFZZ	5310013522753	11083	8T4121	WASHER,FLAT 11 X 21 X 2.5MM THK....	12
3	PAFZZ	5306013600932	11083	8T4186	BOLT,MACHINE M10 X 1.5 X 40MM.....	12
4	PAFZZ	5305014715274	11083	8T4170	SCREW,CAP,HEXAGON H M20 X 2.5 X 150MM.....	2
5	PAFZZ	5310014292862	11083	8T5439	WASHER,FLAT 21.5 X 45 X 6MM THK....	4
6	PFFZZ	5310015444205	11083	7X2622	WASHER,FLAT 22 X 115 X 10MM THK....	2
7	PFFZZ	5340015436554	11083	2201241	MOUNT,RESILIENT,GEN.....	2
8	PFFZZ	5340015444751	11083	1851041	BRACKET,MOUNTING.....	1
9	PAFZZ	5310010980624	11083	8T4223	WASHER,FLAT 13.5 X 25.5 X 3MM THK..	16
10	PAFZZ	5306013646384	11083	8T4139	BOLT,MACHINE M12 X 1.75 X 30MM.....	16
11	PFOZZ	5306015434959	11083	1228353	BOLT,MACHINE M12 X 46.5 MM.....	2
12	PAOZZ	5331009489774	11083	5J2974	O-RING.....	4
13	PFOZZ		11083	1417316	INDICATOR,SIGHT,LIQ.....	1
14	PFFZZ	5310015444746	11083	9R5878	WASHER,FLAT 21.5 X 114 X 3MM THK..	2
15	PAFZZ	5310014714476	11083	8T4131	NUT,PLAIN,ROUND M20 X 2.5 THD.....	2
16	PAFZZ	5330009309407	11083	7M8485	SEAL,ADAPTER,MOTOR O-RING.....	1
17	PAFZZ	5365011008868	11083	5P4484	PLUG,MACHINE THREAD.....	1
18	PFFZZ	5340015436476	11083	1851040	BRACKET,MOUNTING.....	1
					END OF FIGURE	

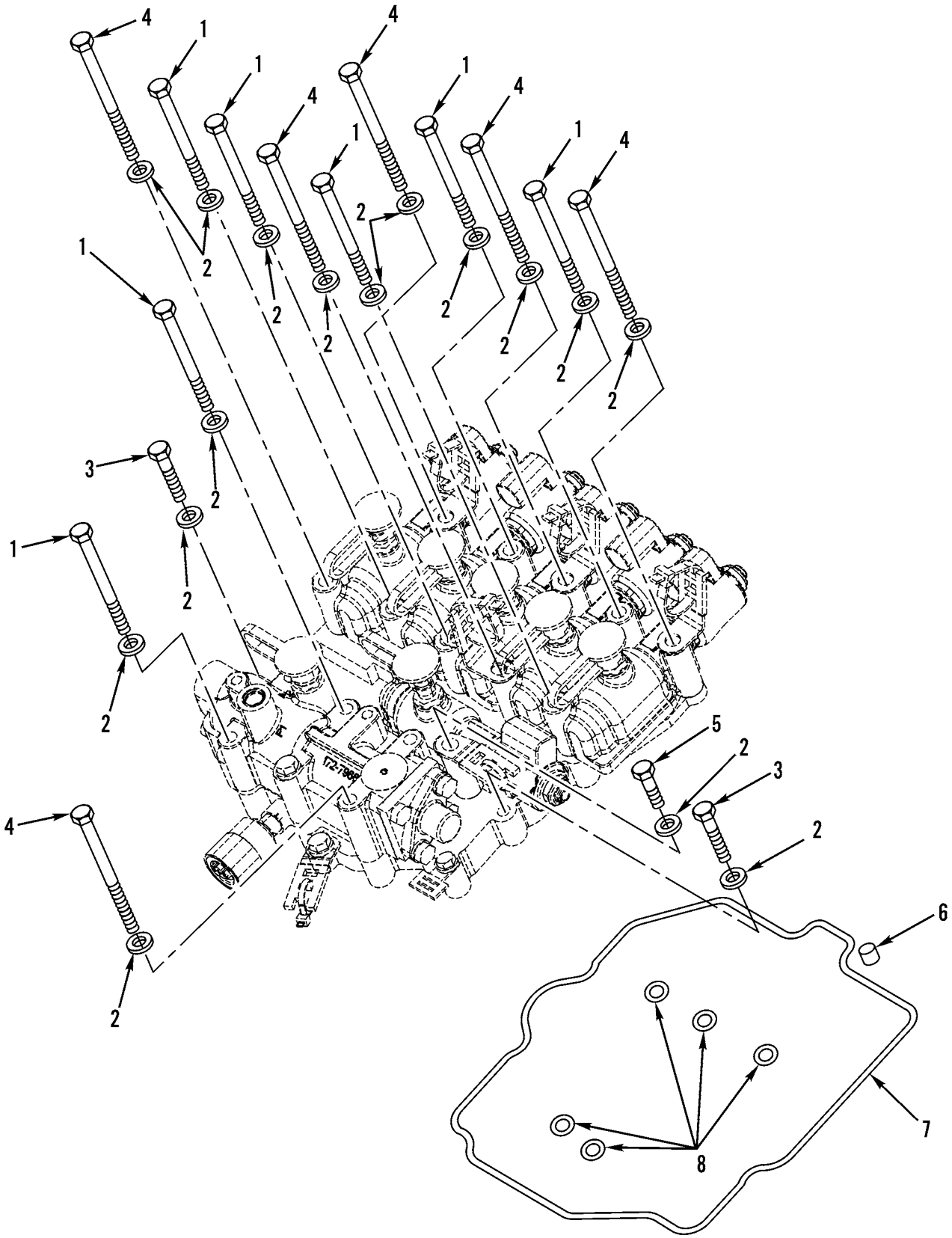

Figure 69. Transmission Control Valve and Related Parts (Sheet 1 of 2)

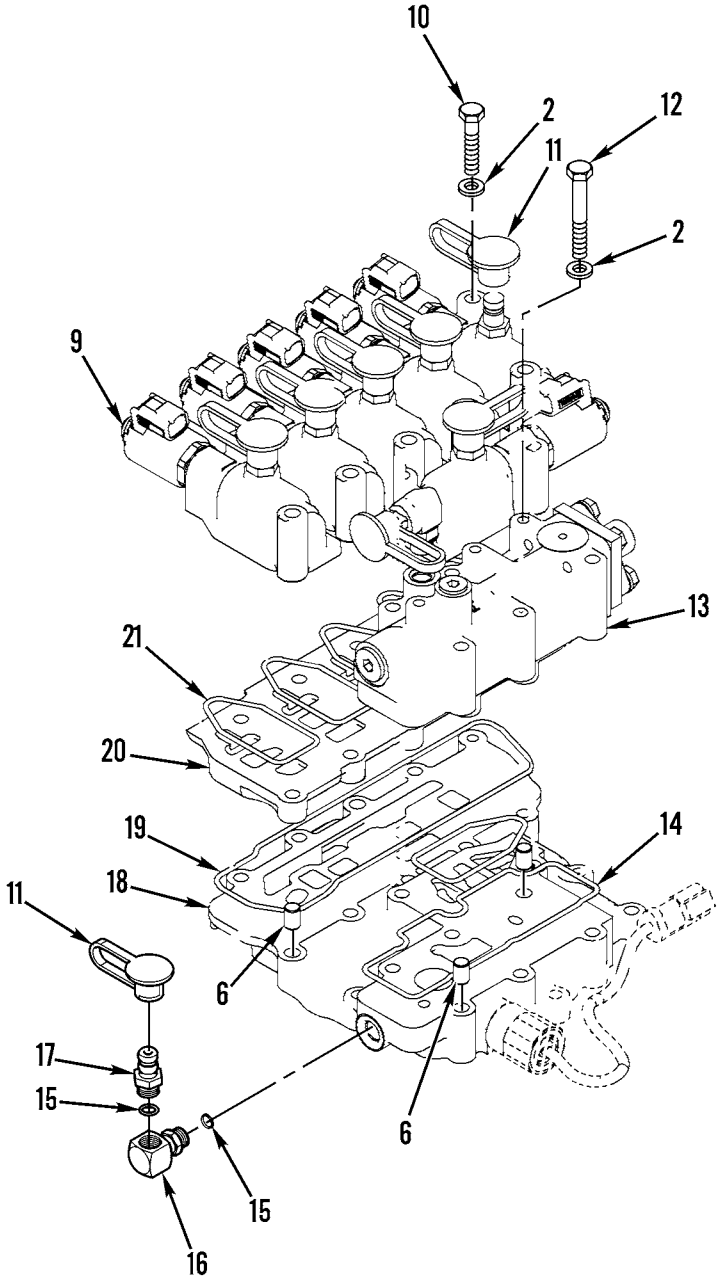

427-166-2

Figure 69. Transmission Control Valve and Related Parts (Sheet 2 of 2)

(1) ITEM NO	(2) SMR CODE	(3) NSN	(4) CAGEC	(5) PART NUMBER	(6) DESCRIPTION AND USABLE ON CODES(UOC)	(7) QTY
					GROUP 0714 SERVE UNIT	
					FIG. 69 TRANSMISSION CONTROL VALVE AND RELATED PARTS	
1	PAOZZ	5305013601007	11083	6V5223	SCREW,CAP,HEXAGON H M8 X 1.25 X 100MM	7
2	PAOZZ	5310004324064	11083	9M1974	WASHER,FLAT 8.8 X 16 X 2MM THK	23
3	PAOZZ	5305013601006	11083	6V5218	SCREW,CAP,HEXAGON H M8 X 1.25 X 35MM	4
4	PAOZZ	5305013601992	11083	6V3821	SCREW,CAP,HEXAGON H M8 X 1.25 X 110MM	6
5	PAOZZ	5305013601707	11083	6V5215	SCREW,CAP,HEXAGON H M8 X 1.25 X 16MM	1
6	PFOZZ	5315015454627	11083	9L9068	PIN,STRAIGHT,HEADLE	4
7	PFOZZ	5330015453148	11083	1073114	SEAL,PLAIN	1
8	PAOZZ	5331005578439	11083	8M5251	O-RING 12.37MM ID	5
9	PAOZZ	4810015511639	11083	2443114	SERVOVALVE,HYDRAULI	6
10	PAOZZ	5306013601940	11083	8T4177	BOLT,MACHINE M8 X 1.25 X 90MM	1
11	PAOZZ	5340011653715	11083	6V0852	CAP,PROTECTIVE,DUST	7
12	PAOZZ	5305013601005	11083	5P8347	SCREW,CAP,HEXAGON H M8 X 1.25 X 70MM	4
13	PFOZZ	4820015448617	11083	1770026	VALVE,SAFETY RELIEF	1
14	PAOZZ	5331010686104	11083	2P1692	O-RING 133.02MM ID	1
15	PAOZZ	5331013336444	11083	3J1907	O-RING 11.89MM ID	2
16	PAOZZ	4730014736582	11083	6V0484	ELBOW,TUBE TO HOSE	1
17	PAOZZ	4730011641777	11083	6V3965	COUPLING HALF,QUICK	1
18	PFOZZ	4730015452975	11083	2002044	MANIFOLD,HYDRAULIC	1
19	PFOZZ	5330015456305	11083	9X7725	SEAL,PLAIN 183.82MM ID	1
20	PFOZZ	4730015452978	11083	2013316	MANIFOLD,HYDRAULIC	1
21	PAOZZ	5331004317139	11083	8S0768	O-RING 61.59MM ID	6
					END OF FIGURE	

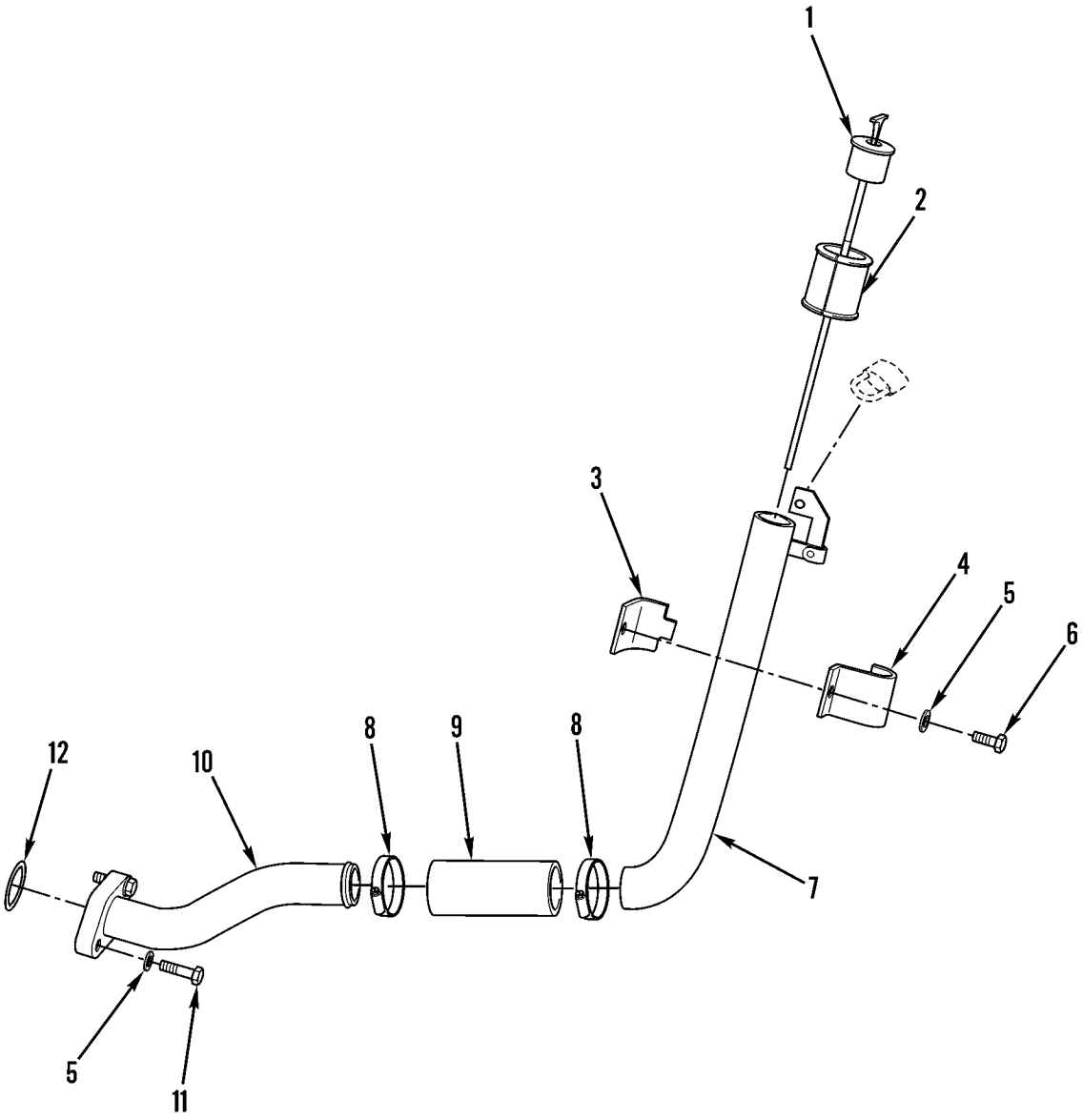

427-025

Figure 70. Transmission Oil Filler

(1) ITEM NO	(2) SMR CODE	(3) NSN	(4) CAGEC	(5) PART NUMBER	(6) DESCRIPTION AND USABLE ON CODES(UOC)	(7) QTY
					GROUP 0721 COOLERS, PUMPS, MOTORS	
					FIG. 70 TRANSMISSION OIL FILLER	
1	PFOZZ	6680015435546	11083	8Y7730	GAGE ROD,LIQUID LEV DIPSTICK.....	1
2	PFOZZ	5325015436001	11083	6V0545	GROMMET,NONMETALLIC.....	1
3	PAOZZ	5340011636175	11083	5P7469	CLIP,SPRING TENSION.....	1
4	PAOZZ	5340011639459	11083	5P7468	CLIP,SPRING TENSION.....	1
5	PAOZZ	5310013522753	11083	8T4121	WASHER,FLAT 11 X 21 X 2.5MM THK....	3
6	PAOZZ	5306013601634	11083	8T4136	BOLT,MACHINE M10 X 1.5 X 25MM.....	1
7	PFOZZ	4710015441862	11083	1322466	TUBE,BENT,METALLIC.....	1
8	PAOZZ	5340014293148	11083	8T6703	CLAMP,LOOP.....	2
9	PAOZZ	4720015451406	11083	1437899	HOSE,NONMETALLIC.....	1
10	PAOZZ	4710015435630	11083	1322467	TUBE ASSEMBLY,METAL LOWER.....	1
11	PAOZZ	5305013601996	11083	8T4196	SCREW,CAP,HEXAGON H M10 X 1.5 X 35MM.....	2
12	PFOZZ	5331010062129	11083	4J0523	O-RING 44.04 MM ID.....	1
					END OF FIGURE	

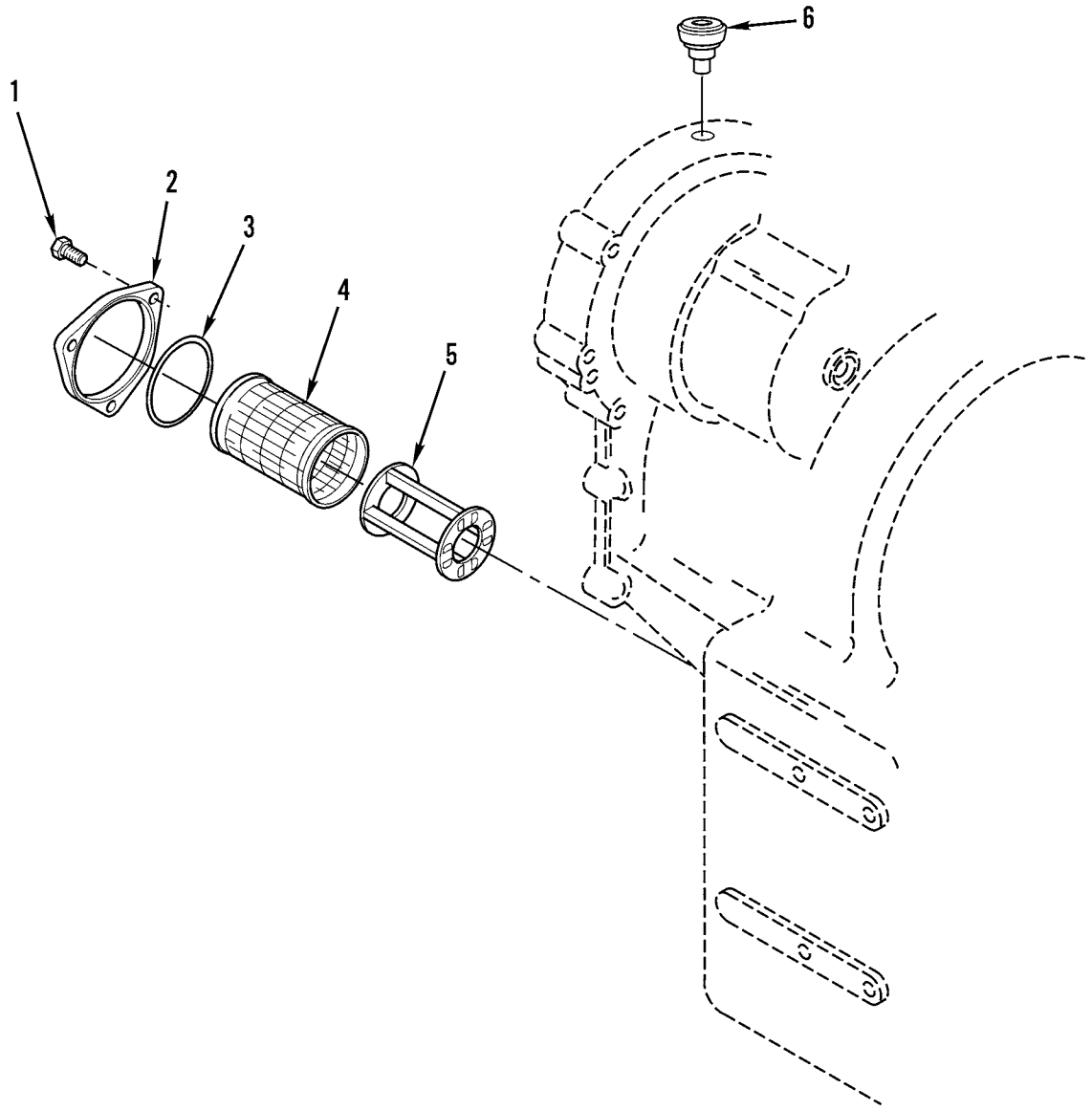

427-164

Figure 71. Transmission Oil Strainer

(1) ITEM NO	(2) SMR CODE	(3) NSN	(4) CAGEC	(5) PART NUMBER	(6) DESCRIPTION AND USABLE ON CODES(UOC)	(7) QTY
					GROUP 0721 COOLERS, PUMPS, MOTORS	
					FIG. 71 TRANSMISSION OIL STRAINER	
1	PAOZZ	5306013600931	11083	6V5217	BOLT,MACHINE M8 X 1.25 X 20MM.....	3
2	PFOZZ	2940015449176	11083	9W1454	HEAD,SEDIMENT STRAI.....	1
3	PAOZZ	5331014243524	11083	5P3863	O-RING.....	1
4	PAOZZ	4330010667713	11083	8S9129	FILTER,FLUID MAGNETIC.....	1
5	PAOZZ	4730011597840	11083	8S9130	STRAINER ELEMENT,SE.....	1
6	PAOZZ	2520011640077	11083	9G5127	BREATHER.....	1
					END OF FIGURE	

1
2 THRU 6

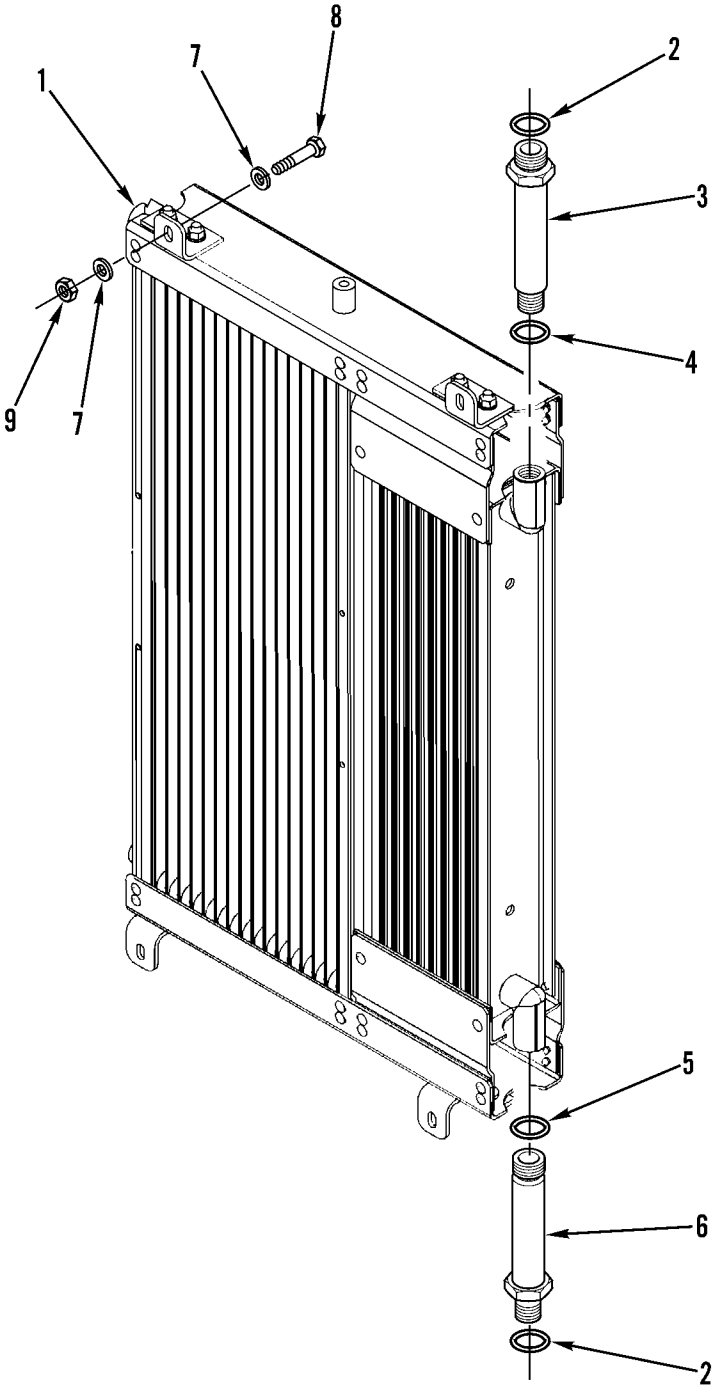

427-154

Figure 72. Transmission and Hydraulic Cooler

(1) ITEM NO	(2) SMR CODE	(3) NSN	(4) CAGEC	(5) PART NUMBER	(6) DESCRIPTION AND USABLE ON CODES(UOC)	(7) QTY
					GROUP 0721 COOLERS, PUMPS, MOTORS	
					FIG. 72 TRANSMISSION AND HYDRAULIC COOLER	
1	PAOZZ	3040015452740	11083	2396770	COOLER,FLUID,TRANSM.....	1
2	PAOZZ	5330009390687	11083	2M9780	.PACKING,PREFORMED 19.18MM ID.....	2
3	PFOZZ	4320015449494	11083	9X6656	.FLUID,PUMP.....	1
4	PAOZZ	5331010584030	11083	6V9746	.O-RING 22.50MM OD.....	1
5	PAOZZ	5331005806583	11083	6V8398	.O-RING 16.03MM OD.....	1
6	PFOZZ	4320015449521	11083	2287372	.CONNECTOR,FLUID,PUM.....	1
7	PAOZZ	5310010955910	11083	5P4116	WASHER,SQUARE CONE 8.8 X 20.5 X 2MM THK.....	8
8	PAOZZ	5305013601011	11083	8T7547	SCREW,CAP,HEXAGON H M8 X 1.25 X 30MM.....	4
9	PAOZZ	5310013975100	11083	5C7261	NUT,PLAIN,HEXAGON M8 X 1.25 THD....	4
					END OF FIGURE	

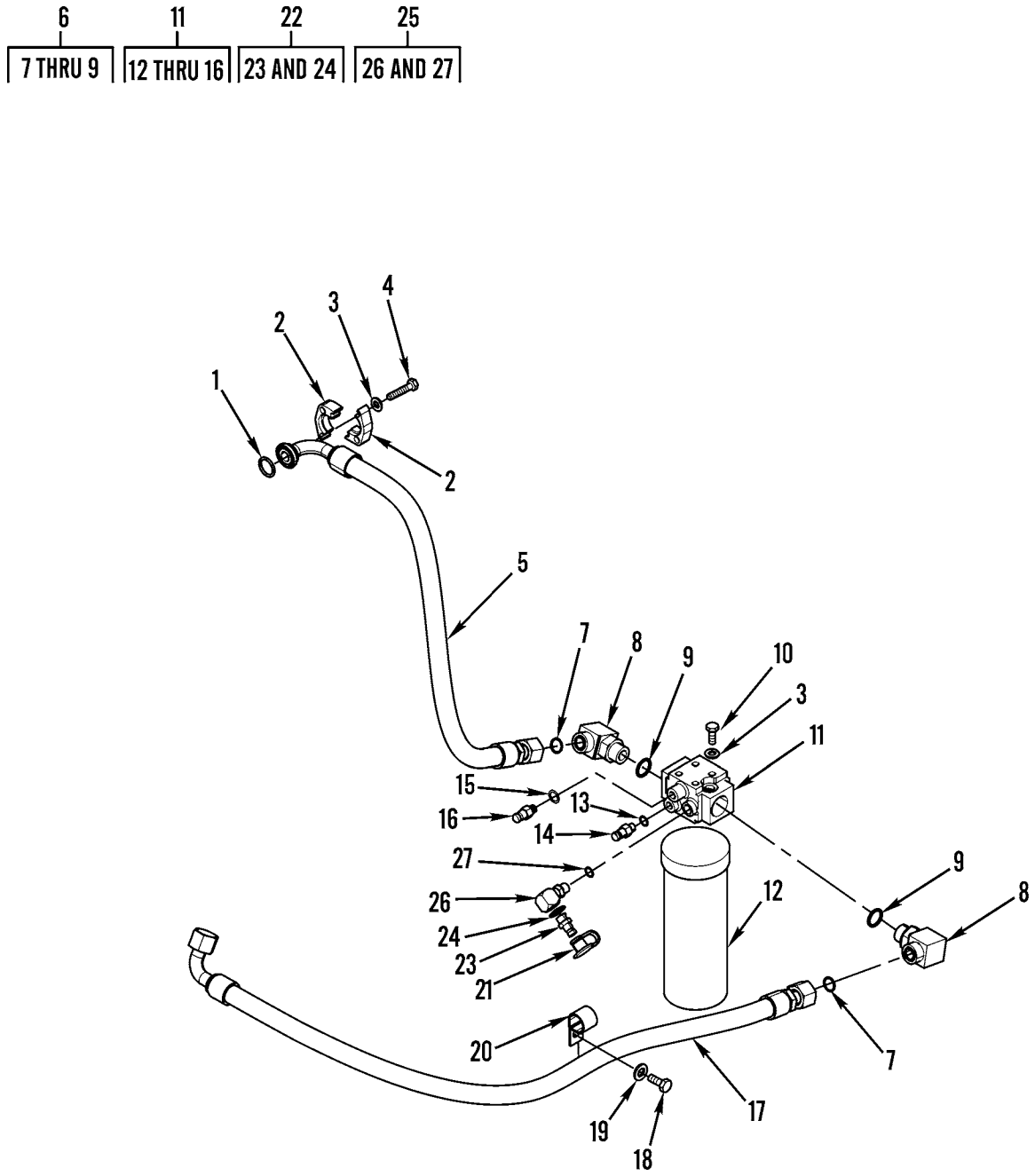

427-155

Figure 73. Transmission Oil Lines and Filter

(1) ITEM NO	(2) SMR CODE	(3) NSN	(4) CAGEC	(5) PART NUMBER	(6) DESCRIPTION AND USABLE ON CODES(UOC)	(7) QTY
					GROUP 0721 COOLERS, PUMPS, MOTORS	
					FIG. 73 TRANSMISSION OIL LINES AND FILTER	
1	PAOZZ	5331010176535	11083	4J5267	O-RING 24.99MM ID.....	1
2	PAOZZ	4730010513134	11083	1P4576	FLANGE,PIPE.....	2
3	PAOZZ	5310013522753	11083	8T4121	WASHER,FLAT 11 X 21 X 2.5MM THK....	8
4	PAOZZ	5305013601996	11083	8T4196	SCREW,CAP,HEXAGON H M10 X 1.5 X 35MM.....	4
5	PAOZZ	4720015436949	11083	2176419	HOSE ASSEMBLY,NONME.....	1
6	AOOZZ		11083	1488347	ELBOW AS.....	2
7	PAOZZ	5331009448281	11083	3D2824	.O-RING 23.47MM ID.....	1
8	PAOZZ	4730012918498	11083	6V9007	.ELBOW,TUBE TO BOSS.....	1
9	PAOZZ	5331010584030	11083	6V9746	.O-RING 22.50MM OD.....	1
10	PAOZZ	5306013600928	11083	8T4137	BOLT,MACHINE M10 X 1.5 X 20MM.....	4
11	PFOZZ		11083	2262869	FILTER GP-O(BSC) INCLUDES TRANSMISSION OIL FILTER BASE.....	1
12	PAOZZ	2910014387423	11083	1G8878	.FILTER,FLUID TRANSMISSION.....	1
13	PAOZZ	5331010491292	81346	ASTM D2000 M6BG9 10	.O-RING 8.92MM ID.....	1
14	PAOZZ	4820012138015	11083	5R6800	.VALVE,VENT TRANSMISSION OIL SAMPLING VALVE (YELLOW TA G).....	1
15	PAOZZ	5331013336444	11083	3J1907	.O-RING 11.89MM ID.....	1
16	PAOZZ	4820015439254	11083	1340404	.VALVE,SAFETY RELIEF POWERTRAIN OIL FILTER BYPASS.....	1
17	PFOZZ	4720015439272	11083	8Y0711	HOSE ASSEMBLY,NONME.....	1
18	PAOZZ	5306013646384	11083	8T4139	BOLT,MACHINE M12 X 1.75 X 30MM.....	1
19	PAOZZ	5310010980624	11083	8T4223	WASHER,FLAT 13.5 X 25.5 X 3MM THK..	1
20	PAOZZ	5325015056912	11083	8T7529	FASTENER,POSITIVE L CLAMP,LOOP.....	1
21	PAOZZ	5340011653715	11083	6V0852	CAP,PROTECTIVE,DUST CAP,DUST.....	1
22	AOOZZ		11083	1645567	NIPPLE ASSEMBLY.....	1
23	PAOZZ	4730011641777	11083	6V3965	.COUPLING HALF,QUICK.....	1
24	PAOZZ	5331013336444	11083	3J1907	.O-RING 11.89MM ID.....	1
25	AOOZZ		11083	1646874	FITTING AS.....	1
26	PFOZZ	4730015441817	11083	0857356	.ELBOW,TUBE TO BOSS.....	1
27	PAOZZ	5331013336444	11083	3J1907	.O-RING 11.89MM ID.....	1
					END OF FIGURE	

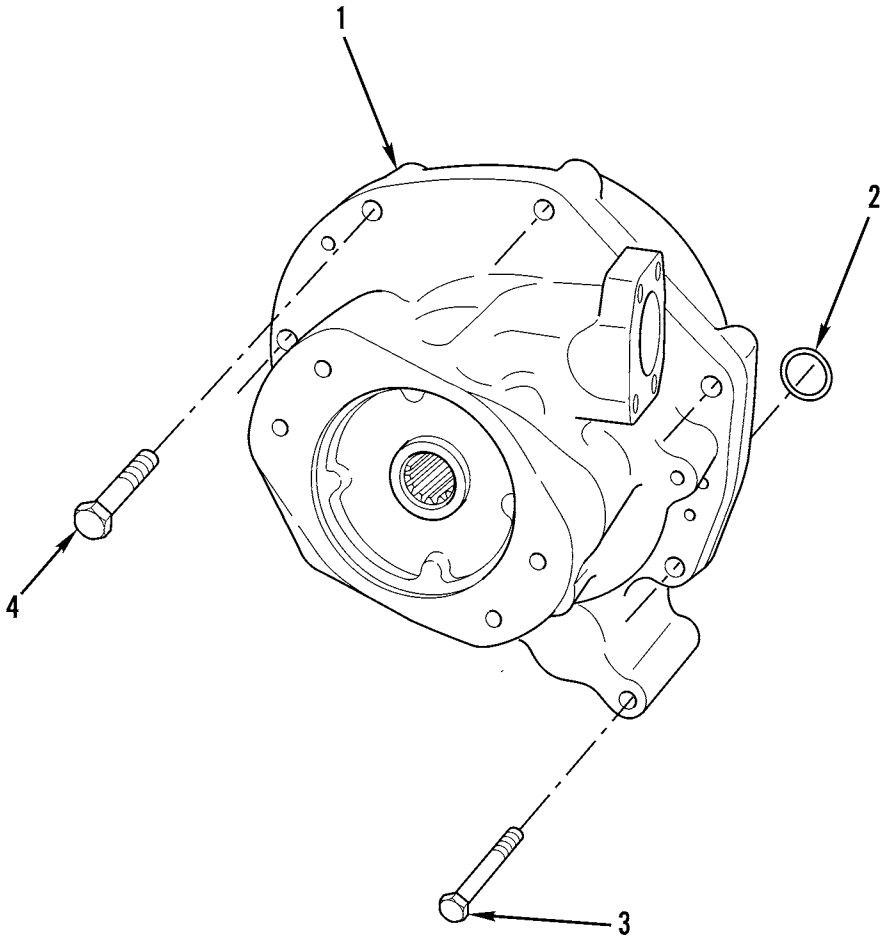

427-160

Figure 74. Transmission Oil Pump and Mounting

(1) ITEM NO	(2) SMR CODE	(3) NSN	(4) CAGEC	(5) PART NUMBER	(6) DESCRIPTION AND USABLE ON CODES(UOC)	(7) QTY
					GROUP 0721 COOLERS, PUMPS, MOTORS	
					FIG. 74 TRANSMISSION OIL PUMP AND MOUNTING	
1	PAFHH	4320015172804	11083	6Y6712	PUMP,ROTARY.....	1
2	PAFZZ	5331005801226	11083	1H9696	O-RING 44.04MM ID.....	1
3	PAFZZ	5306014297098	11083	6V4249	BOLT,MACHINE M10 X 1.5 X 50MM.....	2
4	PAFZZ	5306013114592	11083	6V1820	BOLT,MACHINE M10 X 1.5 X 30MM.....	5
					END OF FIGURE	

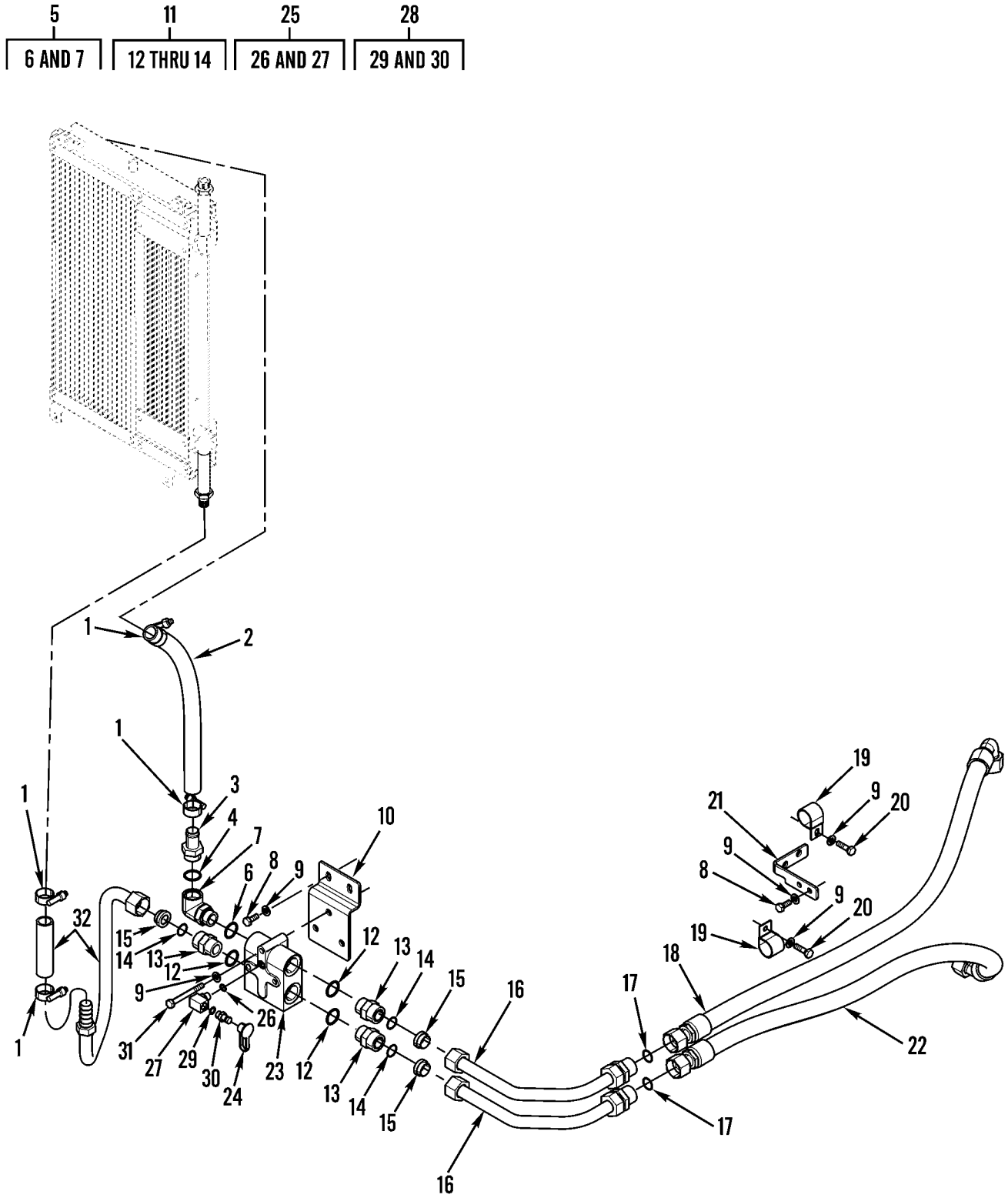

Figure 75. Torque Converter Oil Cooler Lines

(1) ITEM NO	(2) SMR CODE	(3) NSN	(4) CAGEC	(5) PART NUMBER	(6) DESCRIPTION AND USABLE ON CODES(UOC)	(7) QTY
					GROUP 0721 COOLERS, PUMPS, MOTORS	
					FIG. 75 TORQUE CONVERTER OIL COOLER LINES	
1	PAOZZ	5340014384644	11083	7X7958	CLAMP,LOOP.....	4
2	MOOZZ		11083	1467453-55	HOSE ASSEMBLY,NONME MAKE FROM HOSE P/N 1467453, 21.7 INCHES (5 5CM)....	1
3	PFOZZ	4730015449492	11083	5P4362	ADAPTER,STRAIGHT,PI.....	1
4	PAOZZ	5330009309407	11083	7M8485	SEAL,ADAPTER,MOTOR O-RING, 29.74MM ID.....	1
5	AOOZZ		11083	2416172	ELBOW AS.....	1
6	PAOZZ	5330009309407	11083	7M8485	.SEAL,ADAPTER,MOTOR O-RING, 29.74MM ID.....	1
7	PFOZZ	4730015449527	11083	1730064	.ELBOW,TUBE.....	1
8	PAOZZ	5306013601634	11083	8T4136	BOLT,MACHINE M10 X 1.5 X 25MM.....	4
9	PAOZZ	5310013522753	11083	8T4121	WASHER,FLAT 11 X 21 X 2.5MM THK....	9
10	PFOZZ	5340015435636	11083	2292940	PLATE,MOUNTING.....	1
11	AOOZZ		11083	1488335	CONNECTOR AS.....	3
12	PAOZZ	5330014381387	11083	5K9090	.GASKET 27.22MM OD.....	1
13	PAOZZ	5935014379076	11083	6V8635	.CONNECTOR,PLUG,ELEC ADAPTER, STRAIGHT,PIPE TO TUBE.....	1
14	PAOZZ	5330009309407	11083	7M8485	.SEAL,ADAPTER,MOTOR O-RING, 29.74MM ID.....	1
15	PAOZZ	4730014732114	11083	6V9172	NUT,UNION 1 - 7/16 - 12 THD.....	2
16	PAOZZ	4710015449111	11083	2292935	TUBE ASSEMBLY,METAL.....	2
17	PAOZZ	5330014381387	11083	5K9090	GASKET 27.22MM OD.....	2
18	PAOZZ	4720015449222	11083	2082300	HOSE ASSEMBLY,NONME.....	1
19	PAOZZ	5340013601316	11083	4D7388	CLAMP,LOOP.....	2
20	PAOZZ	5305013601996	11083	8T4196	SCREW,CAP,HEXAGON H M10 X 1.5 X 35MM.....	2
21	PFOZZ	5340015435673	11083	2292941	PLATE,MOUNTING.....	1
22	PAOZZ	4720015449223	11083	2082301	HOSE ASSEMBLY,NONME.....	1
23	PAOZZ	4820015449493	11083	1260747	FLUID PRESSURE OIL COOLER BYPASS VALVE.....	1
24	PAOZZ	5340011653715	11083	6V0852	CAP,PROTECTIVE,DUST.....	1
25	AOOZZ		11083	1503065	ADAPTER AS.....	1
26	PAOZZ	5331013336444	11083	3J1907	.O-RING 11.89MM ID.....	1
27	PAOZZ	4730014736582	11083	6V0484	.ELBOW,TUBE TO HOSE.....	1
28	AOOZZ		11083	1645567	NIPPLE AS.....	1
29	PAOZZ	5331013336444	11083	3J1907	.O-RING 11.89MM ID.....	1
30	PAOZZ	4730011641777	11083	6V3965	.COUPLING HALF,QUICK.....	1
31	PAOZZ	5305014714491	11083	8T4178	SCREW,CAP,HEXAGON H M10 X 1.5 X 90MM.....	3
32	PAOZZ	4710015449511	11083	2430686	TUBE ASSEMBLY,METAL.....	1
					END OF FIGURE	

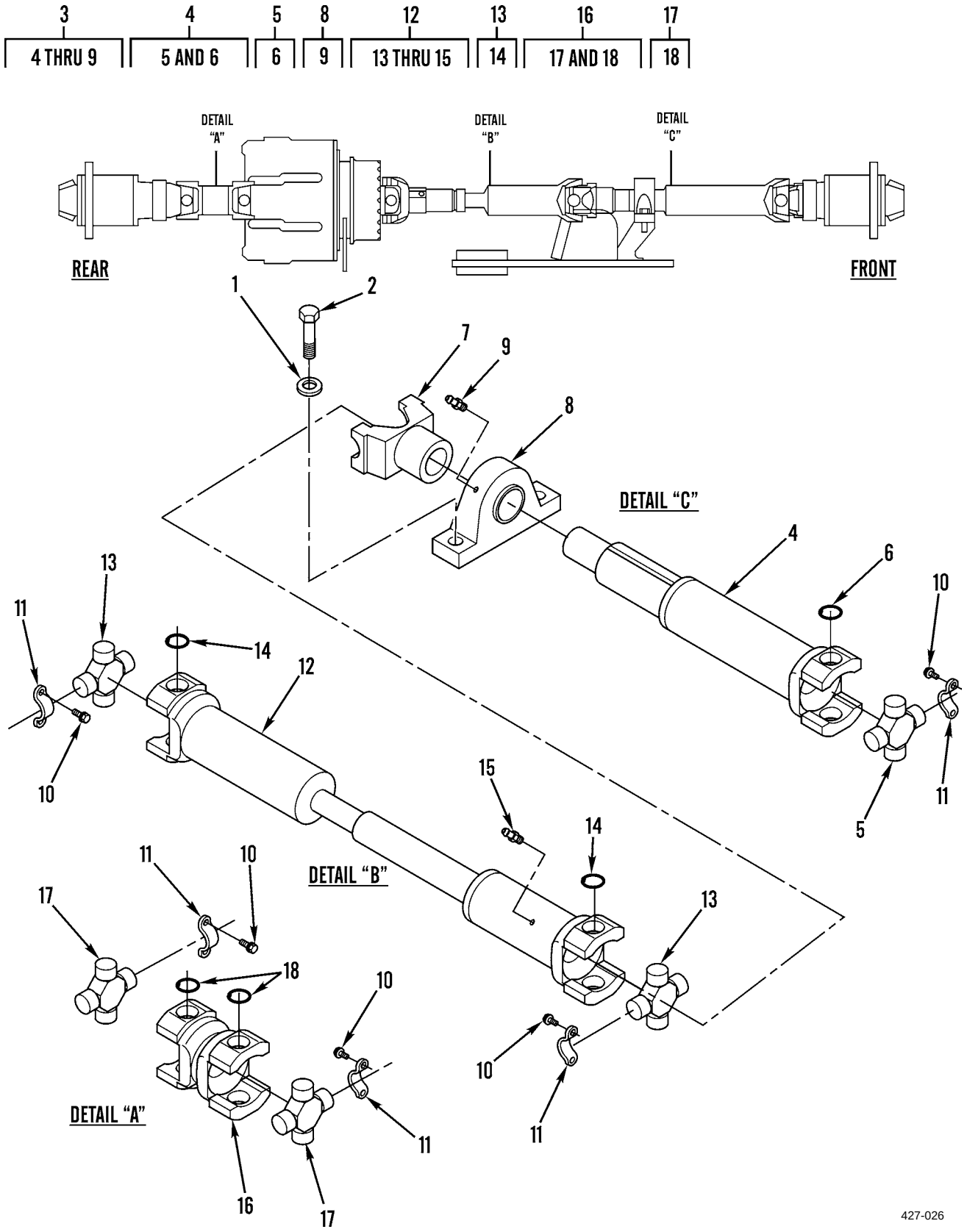

Figure 76. Drive Shafts and Related Parts

(1) ITEM NO	(2) SMR CODE	(3) NSN	(4) CAGEC	(5) PART NUMBER	(6) DESCRIPTION AND USABLE ON CODES(UOC)	(7) QTY
					GROUP 09 PROPELLER, PROPELLER SHAFTS, uNIVERSAL JOINTS, COUPLER AND CLAMP ASSEMBLY	
					GROUP 0900 PROPELLER SHAFTS	
					FIG. 76 DRIVE SHAFTS AND RELATED PARTS	
1	PAOZZ	5310013647468	11083	8T4122	WASHER,FLAT 17 X 32 X 3.5MM.....	2
2	PAOZZ	5306014293162	11083	8T4140	BOLT,MACHINE M16 X 2 X 60MM.....	2
3	XDOZZ		11083	2246793	SHAFT,PROPELLER FRONT.....	1
4	PAOZZ	2520015437817	11083	2246792	.PROPELLER SHAFT WIT FRONT.....	1
5	PAOZZ	2520015169698	11083	1934640	..SPIDER,DIFFERENTIAL.....	1
6	PFOZZ	5325015434961	11083	8V7315	...RING,RETAINING.....	4
7	PAOZZ	2520015438663	11083	9U3668	.YOKE UNIVERSAL JOIN.....	1
8	PAOZZ	3130015270159	11083	6I8531	.BEARING UNIT,ROLLER.....	1
9	PAOZZ	4730000504208	11083	3B8489	..FITTING,LUBRICATION.....	1
10	PFOZZ	5306015445574	11083	4E5985	BOLT,MACHINE 12-POINT HEAD.....	20
11	PFOZZ	5340015437145	11083	4E5984	STRAP,RETAINING.....	10
12	PFOZZ	2520015437806	11083	2019517	PROPELLER SHAFT WIT SLIP JOINT.....	1
13	PAOZZ	2520015169698	11083	1934640	.SPIDER,DIFFERENTIAL.....	2
14	PFOZZ	5325015434961	11083	8V7315	..RING,RETAINING.....	4
15	PAOZZ	4730001720034	81343	AS15003-6	.FITTING,LUBRICATION.....	1
16	PFOZZ	2520015433599	11083	2019515	PROPELLERSHAFTWITHU REAR.....	1
17	PAOZZ	2520015169700	11083	1912226	.SPIDER,DIFFERENTIAL.....	2
18	PFOZZ	5325015434961	11083	8V7315	..RING,RETAINING.....	4
					END OF FIGURE	

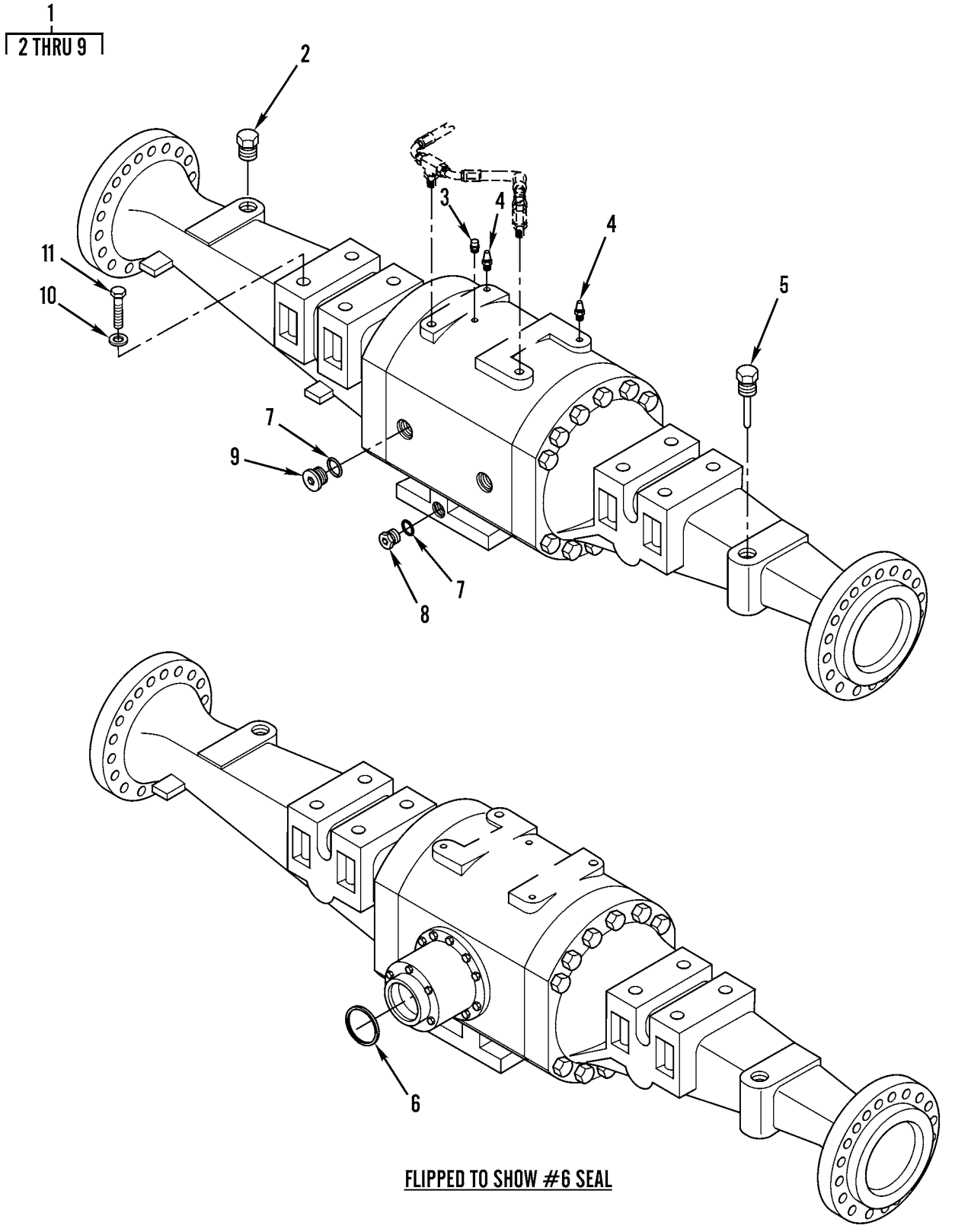

Figure 77. Front Axle Assembly

(1) ITEM NO	(2) SMR CODE	(3) NSN	(4) CAGEC	(5) PART NUMBER	(6) DESCRIPTION AND USABLE ON CODES(UOC)	(7) QTY
					GROUP 10 FRONT AXLE	
					GROUP 1000 FRONT AXLE ASSEMBLY	
					FIG. 77 FRONT AXLE ASSEMBLY	
1	PAFHH		11083	1382726	AXLE ASSEMBLY,AUTOM.....	1
2	PAFZZ	4730002633122	11083	3B0551	.PLUG,PIPE.....	1
3	PAFZZ	4730014389714	11083	8T0336	.COUPLING,TUBE VALVE,RELIEF.....	1
4	PAFZZ	4820014381385	11083	5H3701	.VALVE,BLEEDER,HYDRA.....	2
5	PFFZZ	6680015454654	11083	8R0512	.GAGE ROD,LIQUID LEV DIPSTICK.....	1
6	PAFZZ	5330015264858	11083	1334294	.SEAL,PLAIN ENCASED.....	1
7	PAFZZ	5330009309407	11083	7M8485	.SEAL,ADAPTER,MOTOR O-RING, 29.74MM ID.....	3
8	PAFZZ	5365011008868	11083	5P4484	.PLUG,MACHINE THREAD.....	1
9	PFFZZ	5365015449519	11083	3E2338	.PLUG,MACHINE THREAD.....	2
10	PAFZZ	5310014138769	11083	8T4167	WASHER,FLAT 26 X 44 X 4MM THK.....	8
11	PAFZZ	5306014137703	11083	7X2465	BOLT,SHOULDER M24 X 3.0 X 180MM....	8
					END OF FIGURE	

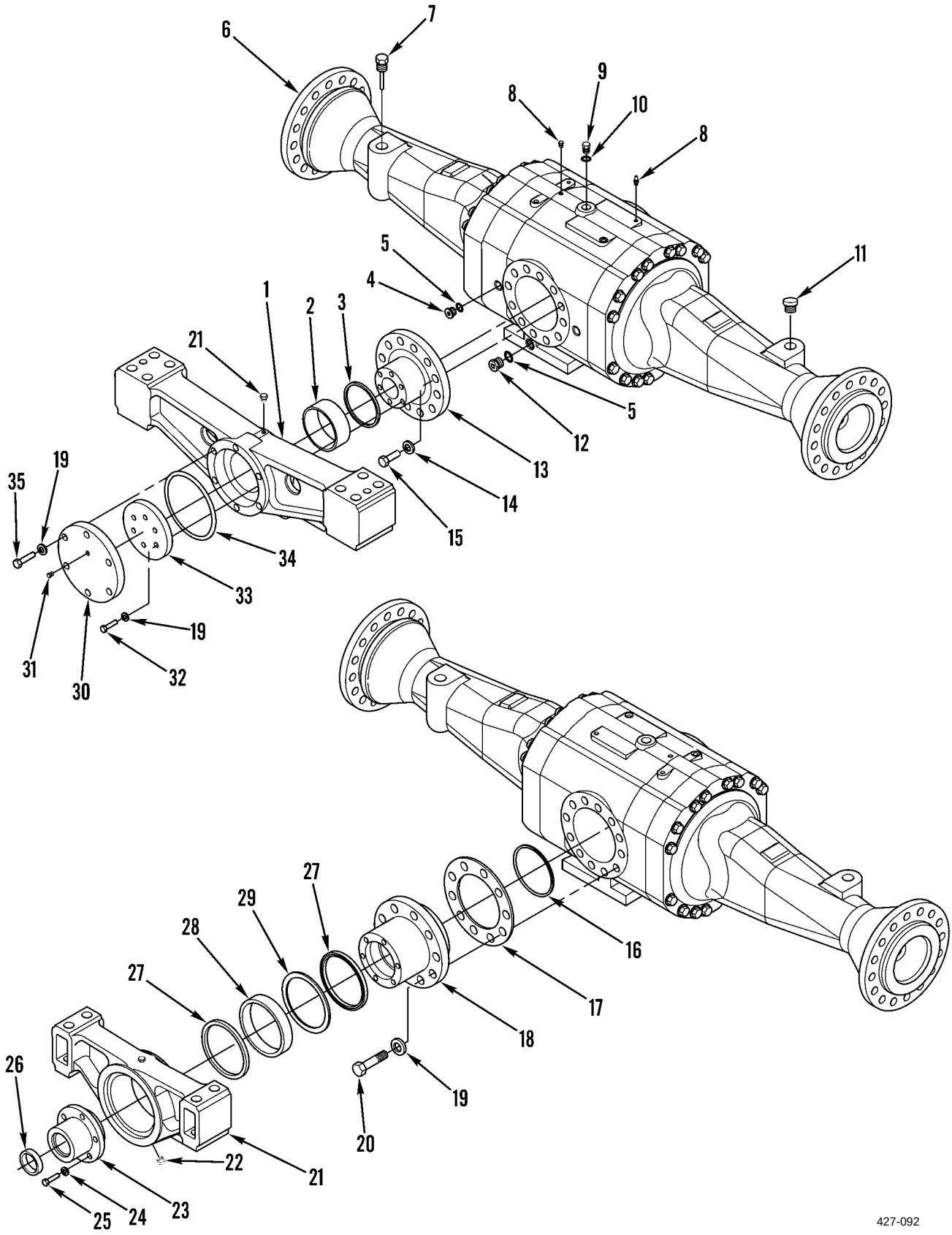

Figure 78. Rear Axle Assembly

(1) ITEM NO	(2) SMR CODE	(3) NSN	(4) CAGEC	(5) PART NUMBER	(6) DESCRIPTION AND USABLE ON CODES(UOC)	(7) QTY
					GROUP 11 REAR AXLE	
					GROUP 1100 REAR AXLE ASSEMBLY	
					FIG. 78 REAR AXLE ASSEMBLY	
1	PFFZZ	2530015457649	11083	1414892	SUPPORT,AXLE,VEHICU.....	1
2	PAFZZ	3120015441840	11083	9C5049	BEARING,SLEEVE.....	1
3	PAFZZ	5331007138605	11083	5H1039	O-RING.....	1
4	PFFZZ	5365015449519	11083	3E2338	PLUG,MACHINE THREAD.....	2
5	PAFZZ	5330009309407	11083	7M8485	SEAL,ADAPTER,MOTOR O-RING, 29.74MM ID.....	3
6	PAFHH		11083	2677368	AXLE ASSEMBLY,AUTOM.....	1
7	PFFZZ	6680015454654	11083	8R0512	GAGE ROD,LIQUID LEV.....	1
8	PAFZZ	4820014381385	11083	5H3701	VALVE,BLEEDER,HYDRA.....	2
9	PAFZZ	5365010318183	11083	9S8005	PLUG,MACHINE THREAD.....	1
10	PAFZZ	5331009486482	11083	3K0360	O-RING 16.36MM ID.....	1
11	PAFZZ	4730002633122	11083	3B0551	PLUG,PIPE.....	1
12	PAFZZ	5365011008868	11083	5P4484	PLUG,MACHINE THREAD.....	1
13	PAFZZ	2520015437935	11083	8R2584	SPIDER,DIFFERENTIAL.....	1
14	PAFZZ	5310014138769	11083	8T4167	WASHER,FLAT 26 X 44 X 4MM THK.....	12
15	PAFZZ	5306014137703	11083	7X2465	BOLT,SHOULDER M24 X 3.0 X 180MM....	12
16	PAFZZ	5331005618344	11083	8F8733	O-RING 151.99MM ID.....	1
17	PAFZZ	5365015265508	11083	8R2526	SHIM SET.....	1
18	PFFZZ	2520015435039	11083	1406140	HOUSING SECTION,AXL.....	1
19	PAFZZ	5310010980624	11083	5P8245	WASHER,FLAT 13.5 X 25.5X3MM.....	22
20	PAFZZ	5305015338049	11083	6V8675	SCREW,CAP,HEXAGON H M12 X 1.75 X 35MM.....	10
21	PFFZZ	2530015433640	11083	1280219	SUPPORT,AXLE,VEHICU.....	1
22	PAFZZ	4730009247886	11083	5M6214	PLUG,PIPE.....	2
23	PAFZZ	3110011614027	11083	5P3723	CONE AND ROLLERS,TA.....	1
24	PAFZZ	5310014389803	11083	9X2027	WASHER,FLAT 11 X 18 X 2MM THK.....	6
25	PAFZZ	5306014385559	11083	6V7732	BOLT,MACHINE M10 X 1.5 X 25MM.....	6
26	PAFZZ	5330015264858	11083	1334294	SEAL,PLAIN ENCASED.....	1
27	PAFZZ	5330008986665	11083	9H1129	SEAL,PLAIN ENCASED.....	2
28	PAFZZ	3120015441835	11083	9C5048	BEARING,SLEEVE.....	1
29	PFFZZ	5325015439537	11083	5P5291	RING-RETAINING.....	1
30	PFFZZ	5340015444687	11083	6K6075	COVER,ACCESS.....	1
31	PAFZZ	4730014389714	11083	8T0336	COUPLING,TUBE.....	2
32	PFFZZ	5306015444691	11083	2591456	BOLT,MACHINE 12 X 1.75 X 35MM.....	6
33	PFFZZ	3110015435084	11083	9V1203	PLATE,RETAINING,BEA.....	1
34	PAFZZ	5310014798672	11083	1K8061	WASHER,FLAT 4.03 X 5.72 X 0.265IN THK.....	2
35	PAFZZ	5306014381755	11083	6V8197	BOLT,MACHINE M12 X 1.75 40MM.....	6
					END OF FIGURE	

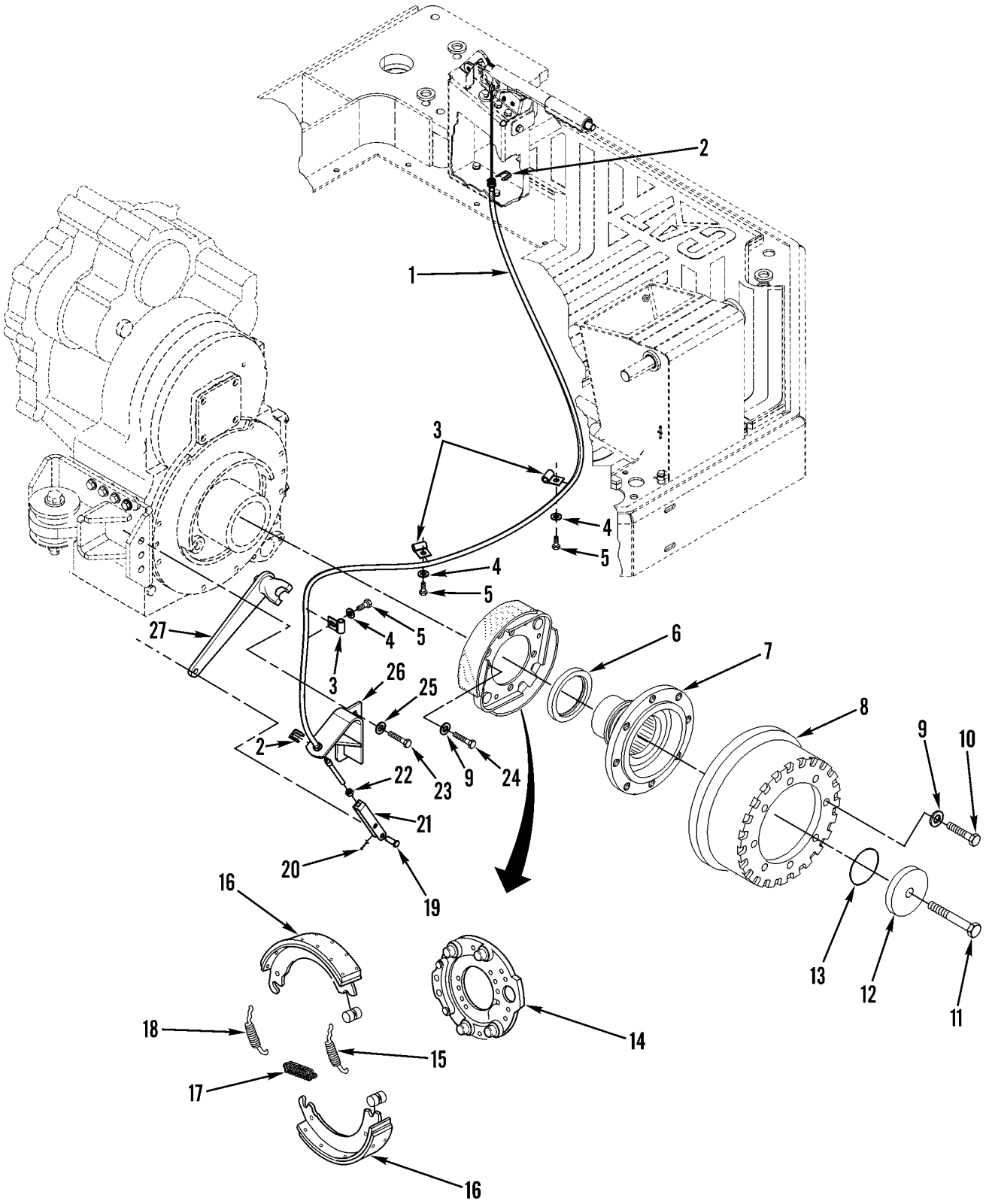

427-028

Figure 79. Parking Brake Control and Related Parts

(1) ITEM NO	(2) SMR CODE	(3) NSN	(4) CAGEC	(5) PART NUMBER	(6) DESCRIPTION AND USABLE ON CODES(UOC)	(7) QTY
					GROUP 12 BRAKES	
					GROUP 1201 HAND BRAKES	
					FIG. 79 PARKING BRAKE CONTROL AND RELATED PARTS	
1	PAOZZ	2990015271066	11083	1433193	CONTROL ASSEMBLY,PU PARKING BRAKE CABLE.....	1
2	PFOZZ	5340015436469	11083	9U0710	CLIP,RETAINING.....	2
3	PAOZZ	5340011612682	11083	5P9297	CLAMP,LOOP.....	3
4	PAOZZ	5310013522753	11083	8T4121	WASHER,FLAT 11 X 21 X 2.5MM THK....	3
5	PAOZZ	5306013600928	11083	8T4137	BOLT,MACHINE M10 X 1.5 X 20MM.....	3
6	PAOZZ	5330015173431	11083	1334297	SEAL,PLAIN ENCASED.....	1
7	PFOZZ	2520015450041	11083	1054776	YOKE,UNIVERSAL JOIN.....	1
8	PAOZZ	3040015267619	11083	8V7623	BRAKE DRUM.....	1
9	PAOZZ	5310010980624	11083	8T4223	WASHER,FLAT 13.5 X 25.5 X 3MM THK..	12
10	PAOZZ	5306014481550	11083	6V3668	BOLT,MACHINE.....	8
11	PAOZZ	5306014381750	11083	6V5696	BOLT,MACHINE M12 X 1.75 X 80MM.....	1
12	PFOZZ	5330015453012	11083	7G5220	RETAINER,ROLLER,BEA.....	2
13	PAOZZ	5331009685388	11083	4F8824	O-RING 43.82MM ID.....	1
14	PFOZZ	5340015460178	11083	2144768	PLATE,RETAINING.....	1
15	PAOZZ	5360011854051	11083	1V2772	SPRING,HELICAL,EXTE.....	1
16	PAOZZ	2530015169703	11083	1119050	BRAKE SHOE.....	2
17	PAOZZ	5360008619114	11083	3K7056	SPRING,HELICAL,TORS.....	1
18	PAOZZ	5360008640046	11083	3K7057	SPRING,HELICAL,EXTE.....	1
19	PFOZZ	5315015445934	11083	6V8758	PIN,STRAIGHT,HEADLE.....	1
20	PAOZZ	5315008161794	24617	103374	PIN,COTTER.....	1
21	PFOZZ	5340015436015	11083	8C6160	CLEVIS,ROD END.....	1
22	PAOZZ	5310013975100	11083	5C7261	NUT,PLAIN,HEXAGON M8 X 1.25 THD....	1
23	PAOZZ	5306014734526	11083	8T4956	BOLT,MACHINE M12 X 1.75 X 35MM.....	3
24	PAOZZ	5305015338049	11083	6V8675	SCREW,CAP,HEXAGON H.....	4
25	PAOZZ	5310010980624	11083	8T4223	WASHER,FLAT 13.5 X 25.5 X 3MM THK..	3
26	PFOZZ	5340015436685	11083	1322493	BRACKET,MOUNTING.....	1
27	PFOZZ	3040015450907	11083	1239056	LEVER ASSEMBLY,MANU.....	1
					END OF FIGURE	

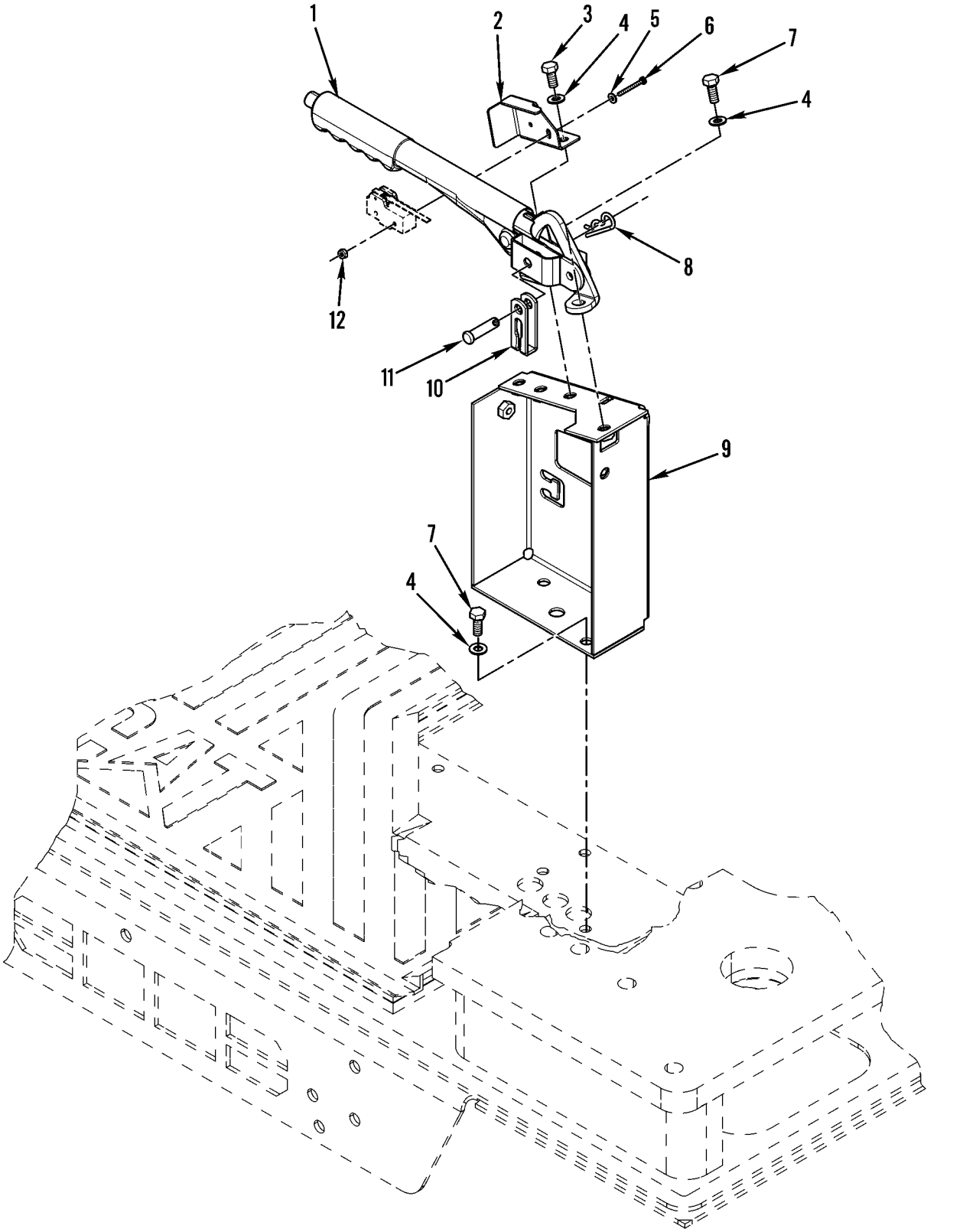

Figure 80. Parking Brake Handle and Related Parts

(1) ITEM NO	(2) SMR CODE	(3) NSN	(4) CAGEC	(5) PART NUMBER	(6) DESCRIPTION AND USABLE ON CODES(UOC)	(7) QTY
					GROUP 1201 HAND BRAKES	
					FIG. 80 PARKING BRAKE HANDLE AND RELATED PARTS	
1	PAOZZ	3040015460258	11083	1636412	LEVER,MANUAL CONTRO.....	1
2	PFOZZ	5340015436696	11083	2404673	BRACKET,MOUNTING.....	1
3	PAOZZ	5305013601703	11083	8T4200	SCREW,CAP,HEXAGON H M8 X 1.25 X 16MM.....	2
4	PAOZZ	5310013598806	11083	8T4224	WASHER,FLAT 8.8 X 16 X 2MM THK.....	6
5	PAOZZ	5310010630687	11083	4B5324	WASHER 3.9 X 9.6 X 1.2MM THK.....	2
6	PAOZZ		11083	2N3477	SCREW 6-32 X 1.25 INCHES.....	2
7	PAOZZ	5306013600927	11083	8T4189	BOLT,MACHINE M8 X 1.25 X 20MM.....	4
8	PAOZZ	5315014298652	11083	6S6646	PIN,STRAIGHT,HEADLE PIN,LOCK.....	1
9	PAOZZ	5340015445919	11083	2365842	CLIP,RETAINING BRACKET,MOUNTING....	1
10	PFOZZ	3040015455549	11083	1864415	CONNECTING LINK,RIG.....	1
11	PAOZZ	5315015444695	11083	3H8538	PIN,STRAIGHT,HEADED.....	1
12	PFOZZ	5310015436607	11083	7D6922	NUT,PLAIN,HEXAGON 6-32 THD.....	2
					END OF FIGURE	

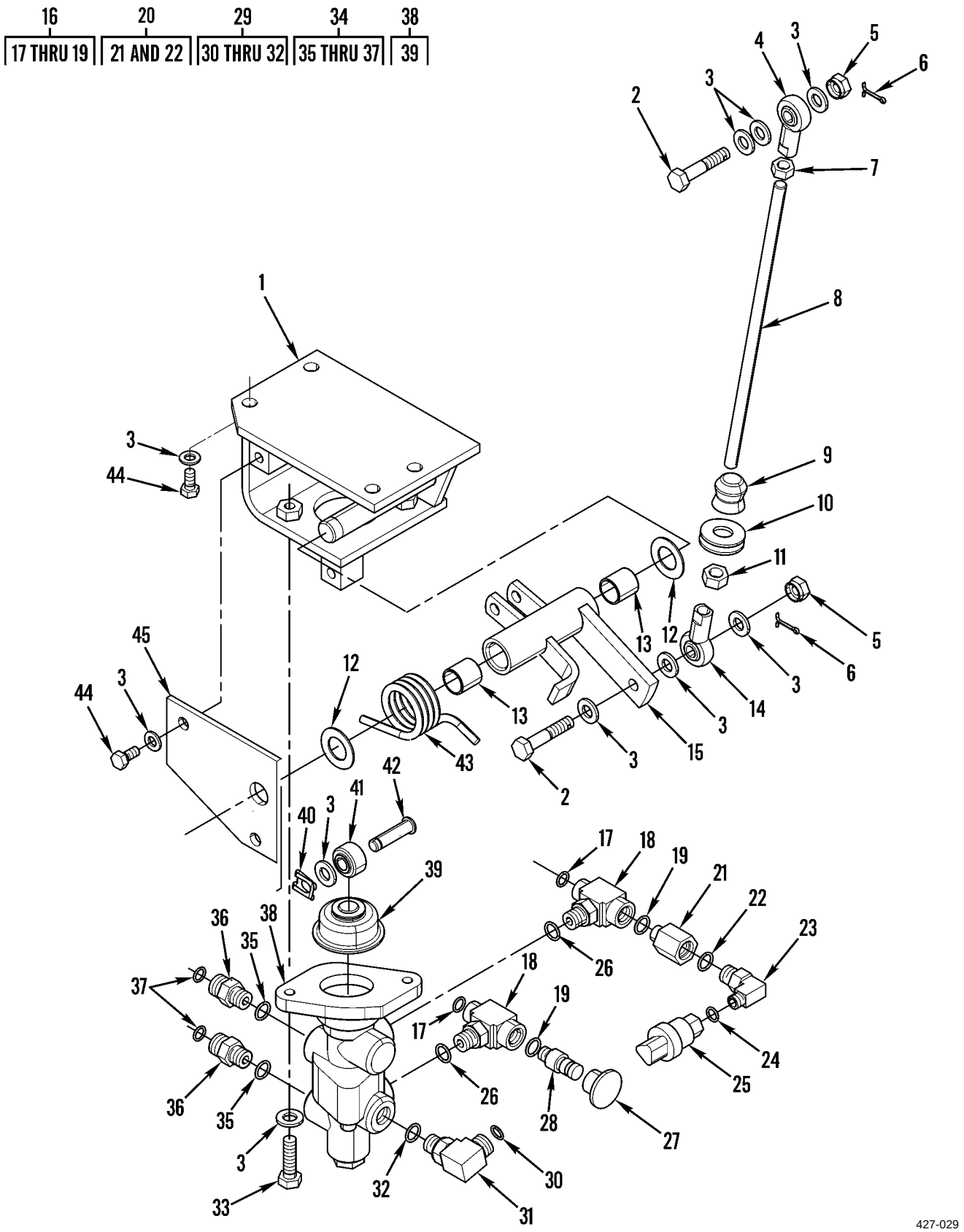

Figure 81. Service Brake Control and Related Parts

(1) ITEM NO	(2) SMR CODE	(3) NSN	(4) CAGEC	(5) PART NUMBER	(6) DESCRIPTION AND USABLE ON CODES(UOC)	(7) QTY
					GROUP 1202 SERVICE BRAKES	
					FIG. 81 SERVICE BRAKE CONTROL AND RELATED PARTS	
1	PFOZZ	5340015441054	11083	1320988	BRACKET,MOUNTING.....	1
2	PFOZZ	5306015436655	11083	1340673	BOLT,MACHINE M10 X 1.5 X 50MM.....	2
3	PAOZZ	5310013522753	11083	8T4121	WASHER,FLAT 11 X 21 X 2.5MM THK....	15
4	PAOZZ	5340014736179	11083	8T6431	CONNECTOR,ROD END.....	1
5	PAOZZ	5310014138761	11083	8T0389	NUT,PLAIN,HEXAGON M10 X 1.15 THD...	2
6	PAOZZ	5315008395822	80059	AN380-4-4	PIN,COTTER.....	2
7	PAOZZ	5310013527726	11083	8T4133	NUT,PLAIN,HEXAGON M10 X 1.5 THD....	1
8	PFOZZ	5340015436699	11083	1280168	ROD,THREADED END.....	1
9	PAOZZ	9390010947076	11083	6G0233	BELLOWS,PROTECTION.....	1
10	PFOZZ	5325015436022	11083	7C6467	GROMMET,NONMETALLIC.....	2
11	PFOZZ	5310015436604	11083	9X2065	NUT,PLAIN,HEXAGON M10 X 1.15 THD...	1
12	PFOZZ	3120015435086	11083	8E8296	BEARING WASHER,THRU.....	2
13	PFOZZ	5365015446081	11083	5V4410	SPACER,SLEEVE.....	2
14	PFOZZ	3110015446080	11083	1320994	BEARING,BALL,ROD EN.....	1
15	PAOZZ	5340015445504	11083	1466822	BRACKET,LEVER.....	1
16	AOOZZ		11083	1488443	TEE AS-STOR.....	2
17	PAOZZ	5331005796495	11083	6V8397	.O-RING 12.83MM OD.....	1
18	PAOZZ	4730013604197	11083	7X2459	.TEE,BOSS.....	1
19	PAOZZ	5331013336444	11083	3J1907	.O-RING 11.89MM ID.....	1
20	AOOZZ		11083	1656365	FITTING AS.....	1
21	XDOZZ		11083	7W7381	.COUPLING,TUBE.....	1
22	PAOZZ	5331013336444	11083	3J1907	.O-RING 11.89MM ID.....	1
23	PFOZZ	4730015449530	11083	3E2332	ELBOW,TUBE.....	1
24	PAOZZ	5331010491292	81346	ASTM D2000 M6BG9 10	O-RING 8.92MM ID.....	1
25	PAOZZ	6620015262857	11083	1883823	TRANSMITTER,PRESSUR BRAKE OIL.....	1
26	PAOZZ	5331013336444	11083	3J1907	O-RING 11.89MM ID.....	2
27	PAOZZ	5340011653715	11083	6V0852	CAP,PROTECTIVE,DUST DUST CAP.....	1
28	PFOZZ	4730011641777	11083	6V3965	COUPLING HALF,QUICK.....	1
29	AOOZZ		11083	1488378	ELBOW AS-90 DEG.....	1
30	PAOZZ	5331005796495	11083	6V8397	.O-RING 12.83MM OD.....	1
31	PAOZZ	4730013604146	11083	6V8724	.ELBOW,PIPE.....	1
32	PAOZZ	5331013336444	11083	3J1907	.O-RING 11.89MM ID.....	1
33	PAOZZ	5305013601996	11083	8T4196	SCREW,CAP,HEXAGON H M10 X 1.5 X 35MM.....	2
34	AOOZZ		11083	1488336	CONNECTOR AS.....	2
35	PAOZZ	5331013336444	11083	3J1907	.O-RING 11.89MM ID.....	1
36	PAOZZ	4730012699540	11083	6V8636	.ADAPTER,STRAIGHT,TU.....	1
37	PAOZZ	5331005796495	11083	6V8397	.O-RING 12.83MM OD.....	1
38	PAOZZ	4820015267286	11083	1448521	VALVE,CHECK BRAKE VALVE.....	1
39	PFOZZ		11083	1177798	.BOOT.....	1
40	PAOZZ	5340013640372	11083	9R2807	CLIP,RETAINING.....	1
41	PFOZZ	3110015436971	11083	1280169	RETAINER,ROLLER BEA.....	1
42	PFOZZ	5315015436482	11083	9R3067	PIN,STRAIGHT,HEADED.....	1
43	PAOZZ	5360015444388	11083	1337675	SPRING,HELICAL,COMP.....	1
44	PAOZZ	5306013600928	11083	8T4137	BOLT,MACHINE M10 X 1.5 X 20MM.....	6
45	PFOZZ	5340015443433	11083	1323789	PLATE,MOUNTING.....	1
					END OF FIGURE	

1	11	22	39	45	50
2 THRU 5	12 THRU 14	23 THRU 25	40 THRU 42	46 THRU 48	51 THRU 53

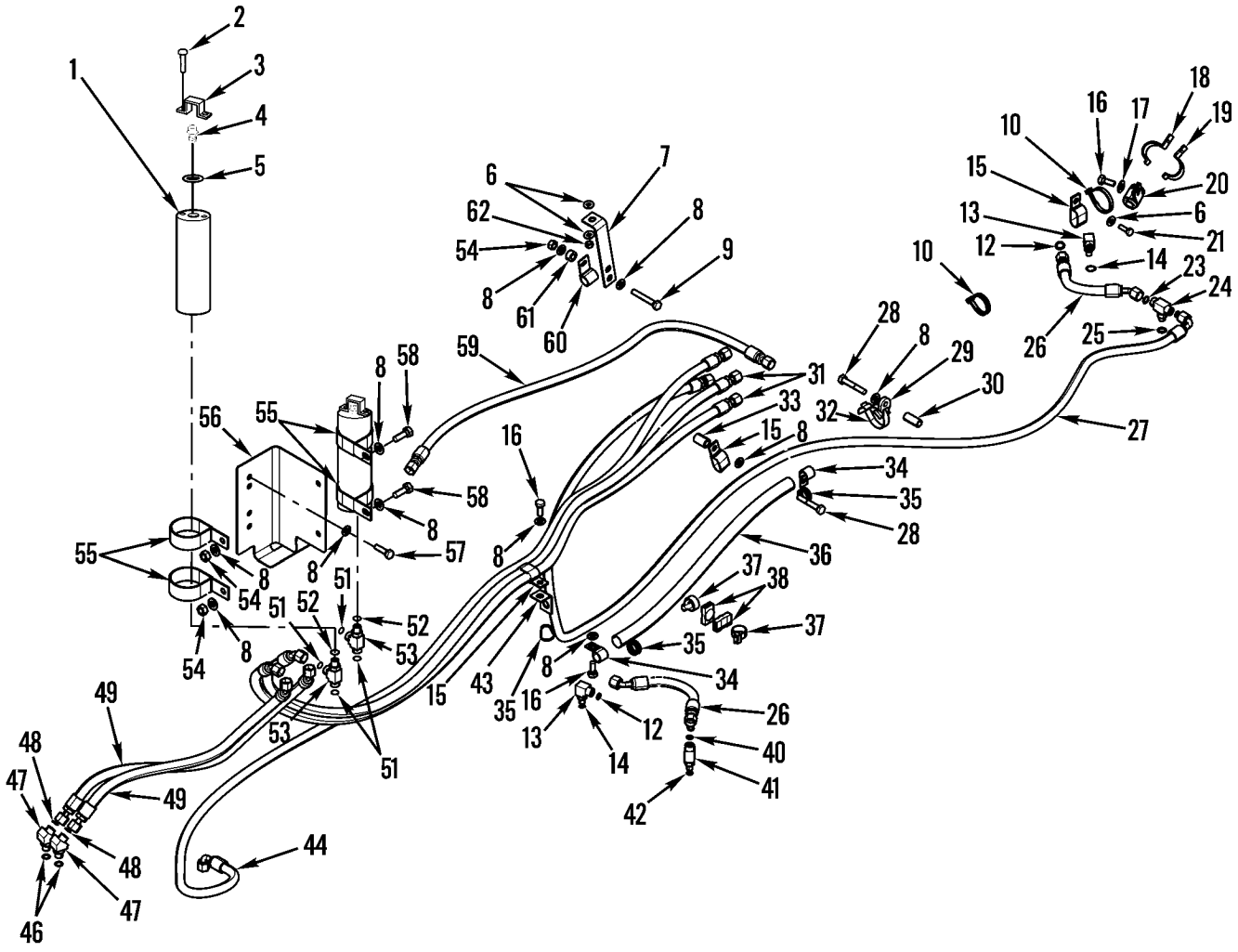

Figure 82. Service Brake Lines

(1) ITEM NO	(2) SMR CODE	(3) NSN	(4) CAGEC	(5) PART NUMBER	(6) DESCRIPTION AND USABLE ON CODES(UOC)	(7) QTY
					GROUP 1204 HYDRAULIC BRAKE SYSTEM	
					FIG. 82 SERVICE BRAKE LINES	
1	PAOZZ	2590015458672	11083	1495532	ACCUMULATOR,HYDRAUL.....	2
2	PAOZZ	5305014381893	11083	0309613	.SCREW,MACHINE 10-24 X 0.37IN.....	2
3	PFOZZ	5340015441055	11083	0692536	.COVER,ACCESS.....	1
4	PFOZZ	4820015423414	11083	0692535	.VALVE,CALIBRATED FL NITROGEN FILL.	1
5	PAOZZ	5331014523208	11083	1J9671	.O-RING 10.52MM ID.....	1
6	PAOZZ	5310010955910	11083	5P4116	WASHER,SQUARE CONE 8.8 X 20.5 X 2MM THK.....	3
7	PFOZZ	5340015436485	11083	4E7540	BRACKET,ANGLE.....	1
8	PAOZZ	5310013522753	11083	8T4121	WASHER,FLAT 11 X 21 X 2.5MM THK....	12
9	PFOZZ	5306015437307	11083	1608744	BOLT,MACHINE M10 X 1.5 X 65MM.....	1
10	PAOZZ	2815010534712	11083	7K1181	STRAP.....	2
11	AOOZZ		11083	1488361	ELBOW AS.....	2
12	PAOZZ	5331010491292	11083	3J7354	.O-RING 8.92MM ID.....	1
13	PAOZZ	4730014380761	11083	6V9200	.ELBOW,TUBE.....	1
14	PAOZZ	5331005796495	11083	6V8397	.O-RING 12.83MM OD.....	1
15	PAOZZ	5340010512357	11083	5K5338	CLIP.....	3
16	PAOZZ	5306013601634	11083	8T4136	BOLT,MACHINE M10 X 1.5 X 25MM.....	3
17	PAOZZ	5310014309036	11083	7X7729	WASHER,FLAT 11 X 25 X 3MM THK.....	1
18	PAOZZ	5340013646549	11083	8T1896	CLIP,SPRING TENSION.....	1
19	PFOZZ	5340015435622	11083	8T1895	CLIP,SPRING TENSION.....	1
20	PAOZZ	5325011680914	11083	7V6571	GROMMET,NONMETALLIC.....	1
21	PAOZZ	5305013981282	11083	8T4908	SCREW,CAP,HEXAGON H M8 X 1.25 X 25MM.....	1
22	AOOZZ		11083	1564281	TEE AS.....	1
23	PAOZZ	5331010491292	11083	3J7354	.O-RING 8.92MM ID.....	1
24	PFOZZ	4730015449529	11083	7X0838	.TEE,HOSE.....	1
25	PAOZZ	5331005796495	11083	6V8397	.O-RING 12.83MM OD.....	2
26	PAOZZ	4720015449221	11083	2148917	HOSE ASSEMBLY,NONME.....	2
27	PAOZZ	4720015450784	11083	1126727	HOSE ASSEMBLY,NONME.....	1
28	PAOZZ	5305014398534	11083	8T6466	SCREW,MACHINE M10 X 1.5 X 60MM.....	2
29	PFOZZ	5975015437985	11083	2048000	MOUNTING BASE,TIEDO.....	1
30	PFOZZ	5365015436601	11083	1116940	SPACER,SLEEVE.....	1
31	PAOZZ	4720015449204	11083	2173609	HOSE ASSEMBLY,NONME.....	1
32	PAOZZ	5975015085704	11083	5P5148	STRAP,TIEDOWN,ELECT.....	1
33	PAOZZ	5365011759326	11083	6G2263	SPACER,SLEEVE.....	1
34	PAOZZ	5342004982946	11083	8M2773	CLIP.....	2
35	PAOZZ	2920010589099	11083	3S2093	STRAP.....	5
36	PFOZZ	9330015441062	11083	2055469	TUBING,PLASTIC,SPIR.....	1
37	PFOZZ	5975015438005	11083	2042281	STRAP,TIE DOWN,ELEC.....	2
38	PFOZZ	4730015449103	11083	2006345	ELBOW,SWIVEL,FLANGE.....	1
39	AOOZZ		11083	1737225	TEE AS.....	1
40	PAOZZ	5331010491292	11083	3J7354	.O-RING 8.92MM ID.....	1
41	PAOZZ	4730014380767	11083	6V9161	.TEE,TUBE.....	1
42	PAOZZ	5331005796495	11083	6V8397	.O-RING 12.83MM OD.....	2
43	PFOZZ	5340015435631	11083	1353327	BRACKET,ANGLE.....	1
44	PAOZZ	4720015449209	11083	2137437	HOSE ASSEMBLY,NONME.....	1
45	AOOZZ		11083	1488353	ELBOW AS-45 DEG.....	2
46	PAOZZ	5331013336444	11083	3J1907	.O-RING 11.89MM ID.....	1

(1) ITEM NO	(2) SMR CODE	(3) NSN	(4) CAGEC	(5) PART NUMBER	(6) DESCRIPTION AND USABLE ON CODES(UOC)	(7) QTY
47	PAOZZ	4730013646397	11083	6V9001	.ELBOW,HOSE.....	1
48	PAOZZ	5331005796495	11083	6V8397	.O-RING 12.83MM OD.....	1
49	PAOZZ	4720015449208	11083	2137436	HOSE ASSEMBLY,NONME.....	2
50	AOOZZ		11083	1488435	TEE AS-ORFS.....	2
51	PAOZZ	5331005796495	11083	6V8397	.O-RING 12.83MM OD.....	2
52	PAOZZ	5331013336444	11083	3J1907	.O-RING 11.89MM ID.....	1
53	PAOZZ	4730014380751	11083	6V8781	.TEE,TUBE.....	1
54	PAOZZ	5310013527726	11083	8T4133	NUT,PLAIN,HEXAGON M10 X 1.5 THD....	3
55	PFOZZ	5340015443495	11083	1564130	CLAMP,LOOP.....	4
56	PFOZZ	5340015445544	11083	2053961	BRACKET,MOUNTING.....	1
57	PAOZZ	5305013601996	11083	8T4196	SCREW,CAP,HEXAGON H M10 X 1.5 X 35MM.....	2
58	PAOZZ	5305013981284	11083	8T4195	SCREW,CAP,HEXAGON H M10 X 1.5 X 30MM.....	2
59	PAOZZ	4720015449203	11083	8W2522	HOSE ASSEMBLY,NONME.....	1
60	PAOZZ	5325014381900	11083	4D7735	FASTENER,POSITIVE L.....	1
61	PFOZZ	5365015436976	11083	0910081	SPACER,SLEEVE.....	1
62	PAOZZ	5310013975100	11083	5C7261	NUT,PLAIN,HEXAGON M8 X 1.25 THD....	1

END OF FIGURE

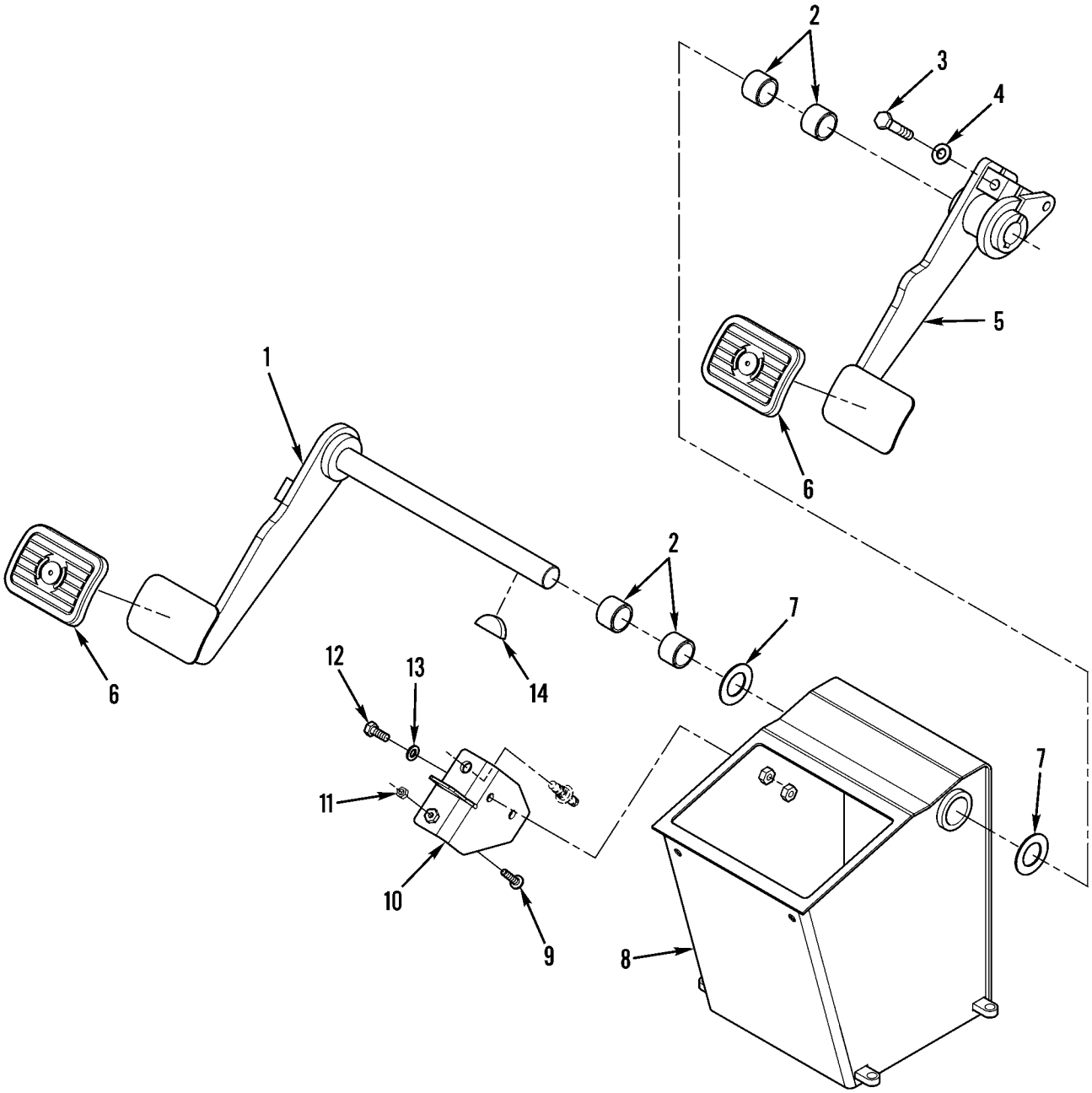

427-138

Figure 83. Brake Pedals

(1) ITEM NO	(2) SMR CODE	(3) NSN	(4) CAGEC	(5) PART NUMBER	(6) DESCRIPTION AND USABLE ON CODES(UOC)	(7) QTY
					GROUP 1206 MECHANICAL BRAKE SYSTEM	
					FIG. 83 BRAKE PEDALS	
1	PFOZZ	2540015448906	11083	1076056	PEDAL,CONTROL LH.....	1
2	PAOZZ	3110010669172	11083	1035962	BEARING.....	4
3	PAOZZ	5305013981286	11083	8T4185	SCREW,CAP,HEXAGON H M10 X 1.5 X 50MM.....	1
4	PAOZZ	5310013522753	11083	8T4121	WASHER,FLAT 11 X 21 X 2.5MM THK....	1
5	PFOZZ	2540015450088	11083	1110132	PEDAL,CONTROL RH.....	1
6	PFOZZ	2540015450103	11083	8R6904	PAD,PEDAL.....	2
7	PAOZZ	5310006909146	11083	8E8300	WASHER,FLAT WASHER,THRUST.....	2
8	PFOZZ	2540015458114	11083	1749725	PEDAL ASSEMBLY,CONT.....	1
9	PFOZZ	5340015450125	11083	2459088	BUMPER PEDAL STOP.....	1
10	PFOZZ	5340015453144	11083	2384864	BRACKET,MOUNTING.....	1
11	PAOZZ	5310013533404	11083	5C2890	NUT,PLAIN,HEXAGON M6 X 1 THD.....	1
12	PAOZZ	5306013600927	11083	8T4189	BOLT,MACHINE M8 1.25 X 20MM.....	2
13	PAOZZ	5310013598806	11083	8T4224	WASHER,FLAT 8.8 X 16 X 2MM THK.....	2
14	PAOZZ		11083	1B8723	KEY,WOODRUFF.....	1
					END OF FIGURE	

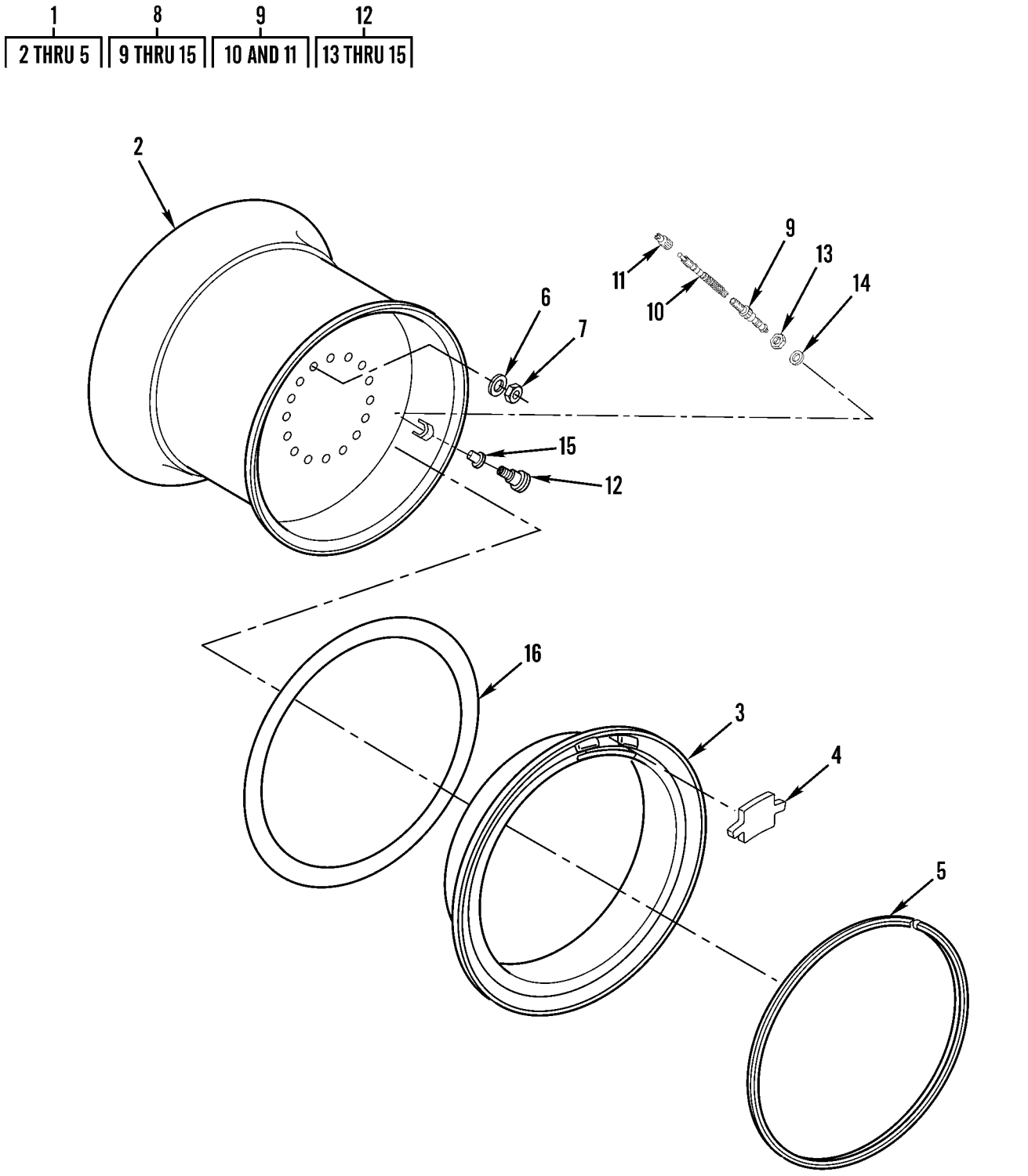

Figure 84. Wheel Assembly and Related Parts

(1) ITEM NO	(2) SMR CODE	(3) NSN	(4) CAGEC	(5) PART NUMBER	(6) DESCRIPTION AND USABLE ON CODES(UOC)	(7) QTY
					GROUP 13 WHEELS AND TRACKS	
					GROUP 1311 WHEEL ASSEMBLY	
					FIG. 84 WHEEL ASSEMBLY AND RELATED PARTS	
1	PAOOO	2530015441970	11083	1864943	WHEEL,PNEUMATIC TIR.....	4
2	XAOZZ		11083	2531691	.RIM AS. BACK.....	1
3	XAOZZ		11083	8W9576	.RING,RETAINING FRONT.....	1
4	PFOZZ	2530015442698	11083	1760118	.RING,LOCK,AUTOMOTIV.....	1
5	PAOZZ	2530009728243	11083	4K4881	.RING,LOCK,AUTOMOTIV.....	1
6	PAOZZ	5310014138769	11083	8T4167	WASHER,FLAT 26 X 44 X 4MM THK.....	64
7	PFOZZ	5306015436661	11083	8T5379	BOLT,MACHINE M24 X 3.0 X 50MM.....	64
8	PAOZZ	4820000057525	11083	6D0337	VALVE ASSEMBLY,MANI.....	4
9	PAOZZ	4810014389599	11083	6D0443	.BODY,VALVE.....	1
10	PAOZZ	3810014800985	11083	2D2628	..VALVE,CORE PACKAGE.....	1
11	PAOZZ	5999014378468	11083	2D2633	..CAP,ELECTRICAL.....	1
12	PAOZZ	5307015235530	11083	8D2707	.STUD,PLAIN SPUD ASSEMBLY.....	1
13	PAOZZ	2640008590382	11083	2D2631	..NUT,VALVE STEM,PNEU.....	1
14	PAOZZ	5310015378375	11083	2D2630	..WASHER,FLAT.....	1
15	PAOZZ	5325015378374	11083	2D2629	..GROMMET,NONMETALLIC.....	1
16	PAOZZ	5330012333555	11083	4K4879	SEAL.....	4
					END OF FIGURE	

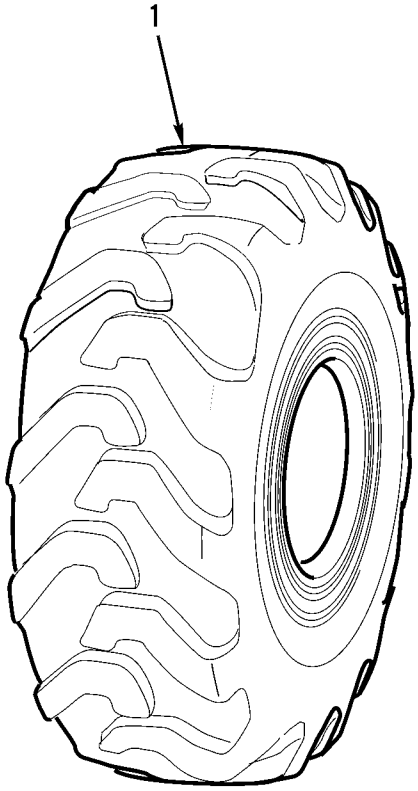

427-065

Figure 85. Tires

(1) ITEM NO	(2) SMR CODE	(3) NSN	(4) CAGEC	(5) PART NUMBER	(6) DESCRIPTION AND USABLE ON CODES(UOC)	(7) QTY
					GROUP 1313 TIRES, TUBES, TIRE CHAINS	
					FIG. 85 TIRES	
1	PAOZZ	2610007265165	81348	STYX/GP2/CL-E/TY BA/20.	TIRE,PNEUMATIC,VEHI.....	4
					END OF FIGURE	

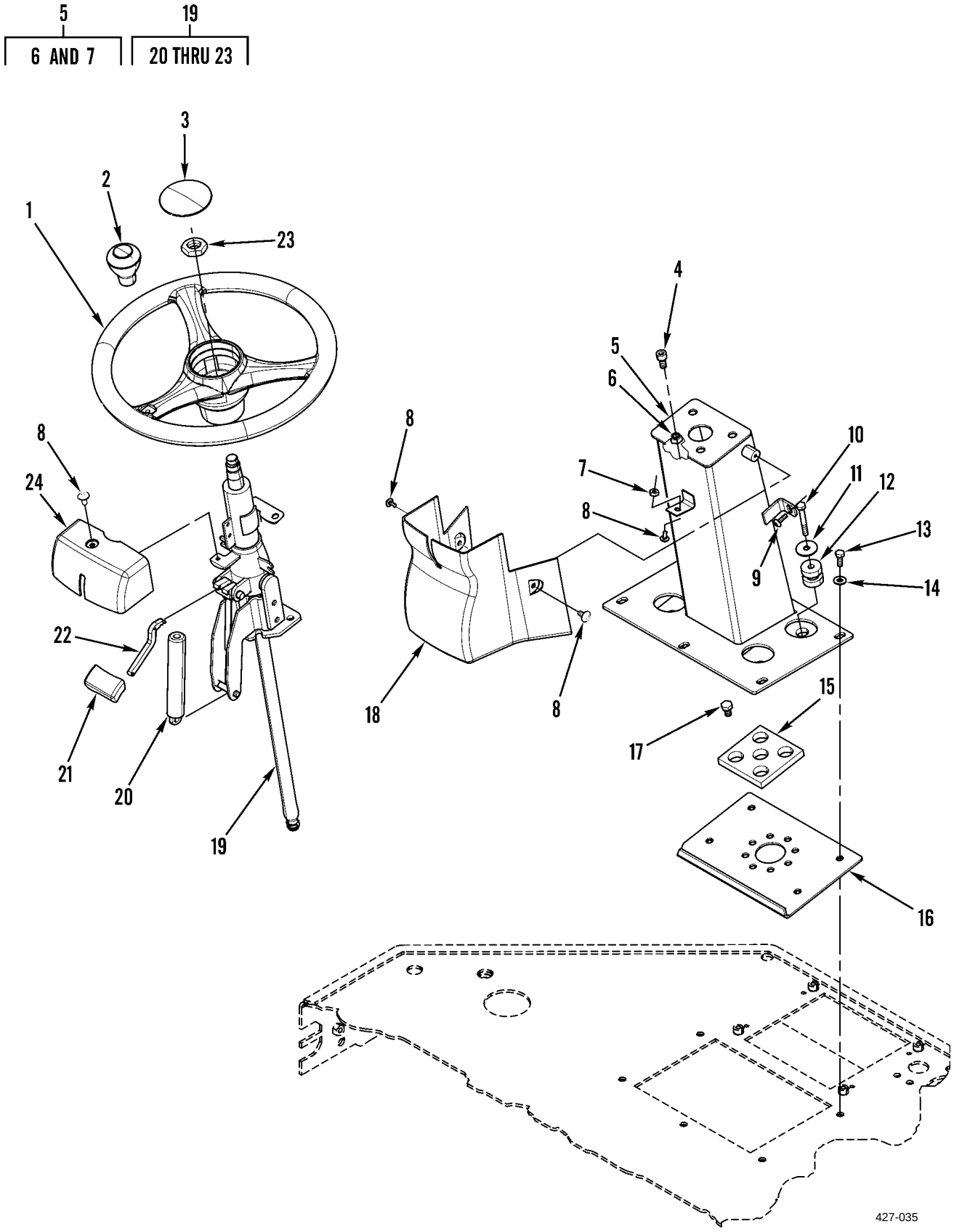

Figure 86. Steering Wheel and Related Parts

(1) ITEM NO	(2) SMR CODE	(3) NSN	(4) CAGEC	(5) PART NUMBER	(6) DESCRIPTION AND USABLE ON CODES(UOC)	(7) QTY
					GROUP 14 STEERING	
					GROUP 1401 MECHANICAL STEERING GEAR ASSEMBLY	
					FIG. 86 STEERING WHEEL AND RELATED PARTS	
1	PAOZZ	2530015450872	11083	2552743	STEERING WHEEL.....	1
2	PFOZZ	5355015436669	11083	2552748	KNOB INCLUDES MOUNTING BOLT.....	1
3	PAOZZ	5355014380856	11083	2T3360	KNOB HORN BUTTON,VEHICLE.....	1
4	PAOZZ	5305015072645	11083	8T8894	SCREW,TAPPING.....	4
5	PFOZZ	2530015450869	11083	1076007	SUPPORT,STEERING CO.....	1
6	PAOZZ	5310014293166	11083	8T3490	.NUT,PLAIN,HEXAGON M10 X 1.5 THD...	4
7	PAOZZ	5310014297858	11083	6V9632	.NUT,PLAIN,HEXAGON M6 X 1 THD.....	1
8	PAOZZ	5305014389806	11083	9X2042	SCREW,MACHINE M6 X 1 X 12MM.....	4
9	PAOZZ	5305014310874	11083	9X2045	SCREW,MACHINE M6 X 1 X 20MM.....	2
10	PAOZZ	5305013981285	11083	8T6869	SCREW,CAP,HEXAGON H M8 X 1.25 X 60MM.....	4
11	PAOZZ	5310015056821	11083	7X0603	WASHER,FLAT 9.9 X 35 X 2.5MM THK...	4
12	PAOZZ	5340014714835	11083	9D7924	MOUNT,RESILIENT,GEN.....	4
13	PAOZZ	5306013600927	11083	8T4189	BOLT,MACHINE M8 X 1.25 X 20MM.....	5
14	PAOZZ	5310010955910	11083	5P4116	WASHER,SQUARE CONE 8.8 X 20.5 X 2MM THK.....	5
15	PAOZZ	5330014741586	11083	1117874	SEAL,PLAIN.....	1
16	PAOZZ	5340014741688	11083	1344735	BRACKET,ANGLE.....	1
17	PAOZZ	5306014080450	11083	8T4191	BOLT,MACHINE M10 X 1.5 X 16MM.....	4
18	PAOZZ	5340014741594	11083	1117878	COVER,ACCESS.....	1
19	PFOZZ	2530015458359	11083	2014825	HOUSING,STEERING CO.....	1
20	PFOZZ	2540015456693	11083	2174154	.CYLINDER ASSEMBLY,R DAMPENER.....	1
21	PAOZZ	5355015311641	11083	1490777	.KIT,KNOB.....	1
22	PAOZZ	2530015325377	11083	2174155	.KIT,TILT,LEVER,STEE.....	1
23	PAOZZ	5310014135910	11083	6V8227	.NUT,PLAIN,HEXAGON M18 X 1.5-6 THD.	1
24	PAOZZ	5340014741673	11083	1076141	COVER,ACCESS.....	1
					END OF FIGURE	

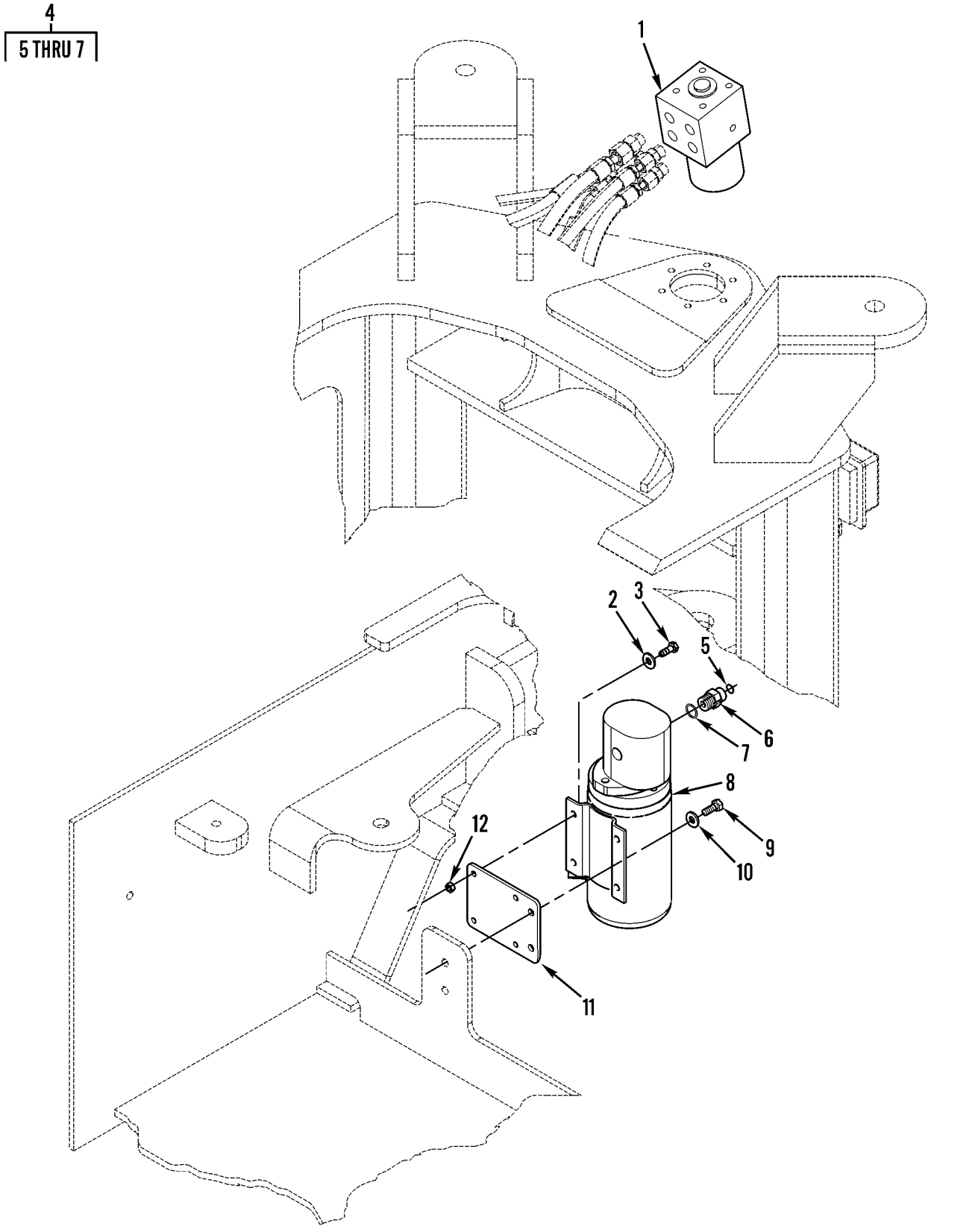

Figure 87. Secondary Steering and Metering Pumps

(1) ITEM NO	(2) SMR CODE	(3) NSN	(4) CAGEC	(5) PART NUMBER	(6) DESCRIPTION AND USABLE ON CODES(UOC)	(7) QTY
					GROUP 1410 HYDRAULIC PUMP OR FLUID MOTOR ASSEMBLY	
					FIG. 87 SECONDARY STEERING AND METERING PUMPS	
1	PAOZZ	2530015438700	11083	2144153	PUMP ASSEMBLY,POWER.....	1
2	PAOZZ	5310013598806	11083	8T4224	WASHER,FLAT 8.8 X 16 X 2MM THK.....	4
3	PAOZZ	5305013981282	11083	8T4908	SCREW,CAP,HEXAGON H M8 X 1.25 X 25MM.....	4
4	AOOZZ		11083	1488345	CONNECTOR AS.....	1
5	PAOZZ	5331005806583	11083	6V8398	.O-RING 16.03MM OD.....	1
6	PAOZZ	4730014714915	11083	6V8638	.BUSHING,HOSE.....	1
7	PAOZZ	5330009390687	11083	2M9780	.PACKING,PREFORMED 19.18MM ID.....	1
8	PAOZZ	2530015267640	11083	2055266	PUMP ASSEMBLY,POWER.....	1
9	PAOZZ	5306013601634	11083	8T4136	BOLT,MACHINE M10 X 1.5 X 25MM.....	2
10	PAOZZ	5310014309036	11083	7X7729	WASHER,FLAT 11 X 25 X 3MM THK.....	2
11	PFOZZ	5340015446086	11083	2527154	PLATE,MOUNTING.....	1
12	PAOZZ	5310013975100	11083	5C7261	NUT,PLAIN,HEXAGON M8 X 1.25 THD....	4
					END OF FIGURE	

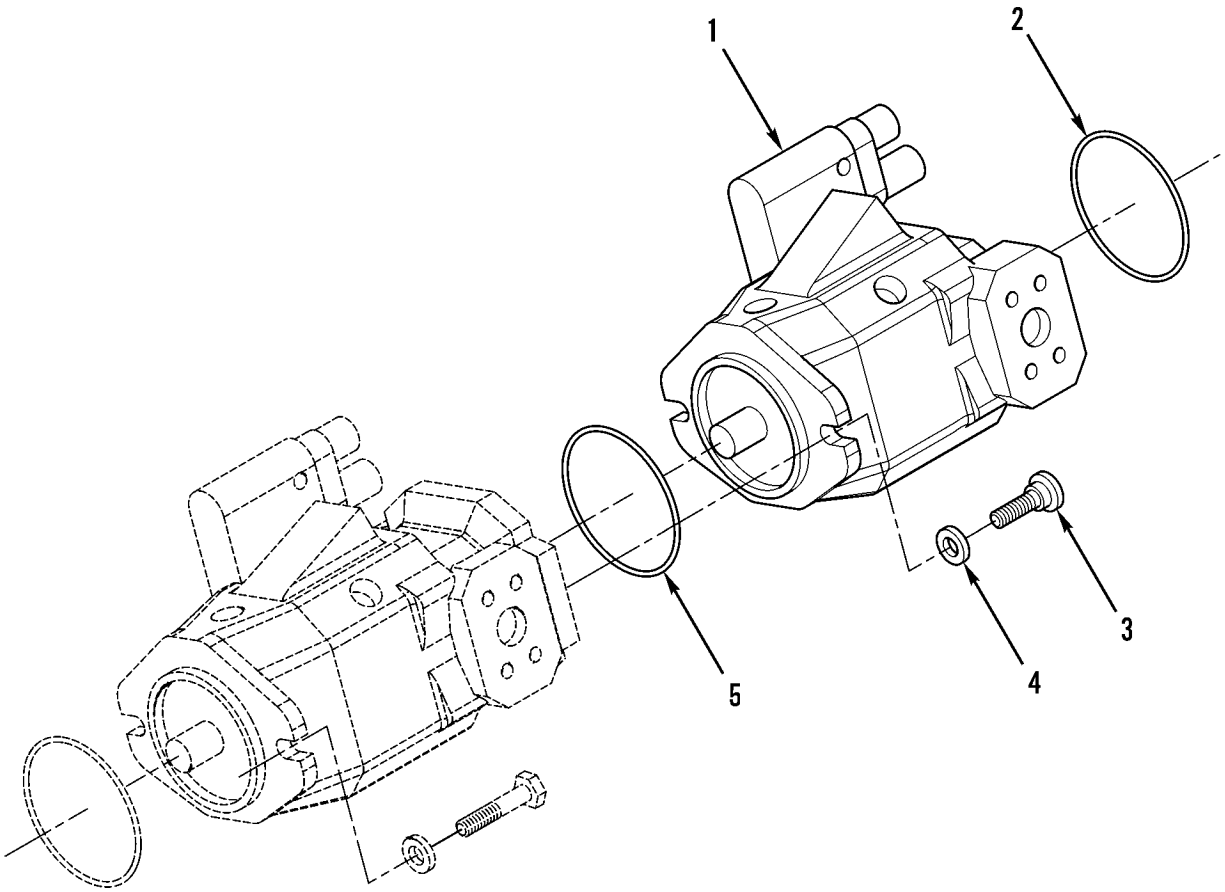

427-085

Figure 88. Hydraulic Steering Pump

(1) ITEM NO	(2) SMR CODE	(3) NSN	(4) CAGEC	(5) PART NUMBER	(6) DESCRIPTION AND USABLE ON CODES(UOC)	(7) QTY
					GROUP 1410 HYDRAULIC PUMP OR FLUID MOTOR ASSEMBLY	
					FIG. 88 HYDRAULIC STEERING PUMP	
1	PAFHH	4320015270761	11083	1687873	PUMP,HYDRAULIC RAM, OUTER,STEERING & PILOT.....	1
2	PAFZZ	5331015444698	11083	1183122	0-RING.....	1
3	PAFZZ	5306014734513	11083	8T3957	BOLT,MACHINE M12 X 1.75 X 30MM.....	2
4	PAFZZ	5310010980624	11083	8T4223	WASHER,FLAT 13.5 X 25.5 X 3MM THK..	2
5	PFFZZ	5330015450391	11083	1683504	GASKET.....	1
					END OF FIGURE	

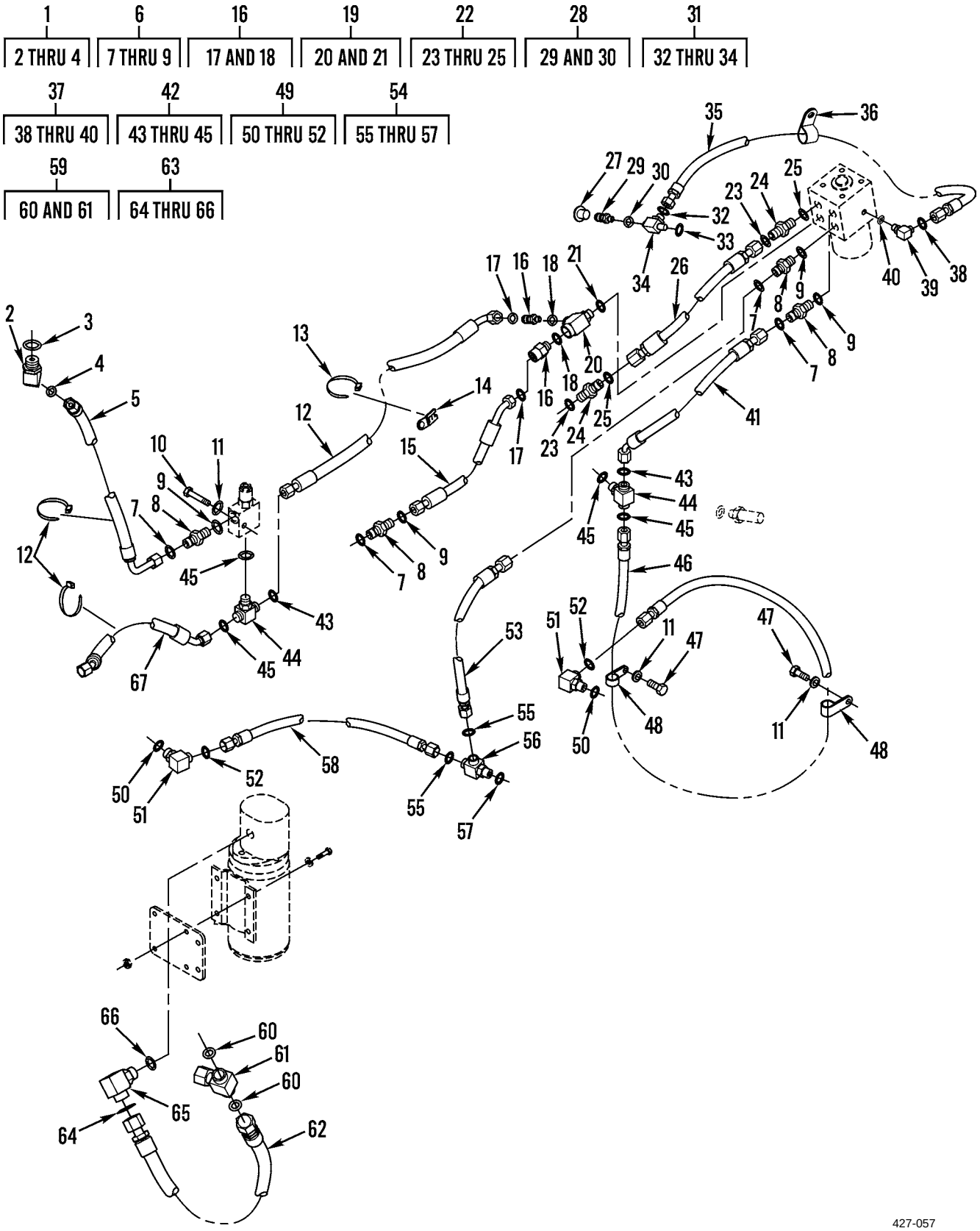

Figure 89. Steering Lines

(1) ITEM NO	(2) SMR CODE	(3) NSN	(4) CAGEC	(5) PART NUMBER	(6) DESCRIPTION AND USABLE ON CODES(UOC)	(7) QTY
					GROUP 1411 HOSES, LINES, FITTINGS	
					FIG. 89 STEERING LINES	
1	AOOZZ		11083	1556258	ELBOW AS	1
2	PAOZZ	4730015436184	11083	1271647	.ELBOW,HOSE TO BOSS	1
3	PAOZZ	5331009448281	11083	3D2824	.O-RING 23.47MM ID	1
4	PAOZZ	5331005806583	11083	6V8398	.O-RING 16.03MM OD	1
5	PAOZZ	4720015442829	11083	1065727	HOSE ASSEMBLY,NONME	1
6	AOOZZ		11083	1488340	CONNECTOR AS	4
7	PAOZZ	5331009486482	11083	3K0360	.O-RING 16.36MM ID	1
8	PAOZZ	4730012918500	11083	6V8639	.REDUCER,BOSS	1
9	PAOZZ	5331005806583	11083	6V8398	.O-RING 16.03MM OD	1
10	PAOZZ	5306014149639	11083	8T4182	BOLT,SHOULDER M10 X 1.5 X 45MM	1
11	PAOZZ	5310013522753	11083	8T4121	WASHER,FLAT 11 X 21 X 2.5MM THK	3
12	PAOZZ	4720015436832	11083	2141542	HOSE ASSEMBLY,NONME	1
13	PAOZZ	2815010534712	11083	7K1181	STRAP	4
14	PAOZZ	5340014735536	11083	4P7428	CLIP,RETAINING	1
15	PAOZZ	4720015436072	11083	2168398	HOSE ASSEMBLY,NONME	1
16	PFOZZ	4820015442412	11083	9T1013	VALVE,CHECK	2
17	PAOZZ	5331009486482	11083	3K0360	.O-RING 16.36MM ID	1
18	PAOZZ	5331005806583	11083	6V8398	.O-RING 16.03MM OD	1
19	AOOZZ		11083	1504036	TEE AS	1
20	PAOZZ	4730015442411	11083	1180911	.TEE,HOSE TO BOSS	1
21	PAOZZ	5331009486482	11083	3K0360	.O-RING 16.36MM ID	1
22	AOOZZ		11083	1488342	CONNECTOR AS	2
23	PAOZZ	5331009486482	11083	3K0360	.O-RING 16.36MM ID	1
24	PAOZZ	4730015056807	11083	6V8632	.COUPLING,TUBE	1
25	PAOZZ	5330011244370	11083	7J9108	.SEAL	1
26	PAOZZ	4720015435069	11083	2147098	HOSE ASSEMBLY,NONME	1
27	PAOZZ	5340011653715	11083	6V0852	CAP,PROTECTIVE,DUST	1
28	AOOZZ		11083	1645567	NIPPLE AS	1
29	PAOZZ	4730011641777	01276	FD90-1102-05-04	.COUPLING HALF,QUICK	1
30	PAOZZ	5331013336444	11083	3J1907	.O-RING 11.89MM ID	1
31	AOOZZ		11083	1694274	TEE AS	1
32	PAOZZ	5331008558059	11083	4J5477	.O-RING 11.23MM OD	1
33	PAOZZ	5331010491292	81346	ASTM D2000 M6BG9 10	.O-RING 8.92MM ID	1
34	PAOZZ	5306014741626	11083	8T3313	.BOLT,TEE HEAD TEE,TUBE	1
35	PAOZZ	4720015436835	11083	2168396	HOSE ASSEMBLY,NONME	1
36	PAOZZ	5342004982946	11083	8M2773	CLIP	1
37	AOOZZ		11083	1488369	ELBOW AS	1
38	PAOZZ	5331010491292	81346	ASTM D2000 M6BG9 10	.O-RING 8.92MM ID	1
39	PAOZZ	4730013609206	11083	6V8628	.ELBOW,TUBE TO BOSS	1
40	PAOZZ	5331008558059	11083	4J5477	.O-RING 11.23MM OD	1
41	PAOZZ	4720015436830	11083	1692943	HOSE ASSEMBLY,NONME	1
42	AOOZZ		11083	1488436	TEE AS-ORFS	2
43	PAOZZ	5331009486482	11083	3K0360	.O-RING 16.36MM ID	1
44	PAOZZ	4730015178779	11083	6V8775	.TEE,TUBE	1
45	PAOZZ	5331005806583	11083	6V8398	.O-RING 16.03MM OD	2
46	PAOZZ	4720015435743	11083	1467906	HOSE ASSEMBLY,NONME	1

(1) ITEM NO	(2) SMR CODE	(3) NSN	(4) CAGEC	(5) PART NUMBER	(6) DESCRIPTION AND USABLE ON CODES(UOC)	(7) QTY
47	PAOZZ	5306013600928	11083	8T4137	BOLT,MACHINE M10 X 1.5 X 20MM.....	2
48	XDOZZ		11083	8S0948	CLIP.....	2
49	AOOZZ		11083	1488364	ELBOW AS.....	2
50	PAOZZ	5331009486482	11083	3K0360	.O-RING 16.36MM ID.....	1
51	PAOZZ	4730013497772	11083	6V8625	.ELBOW,TUBE TO BOSS.....	1
52	PAOZZ	5331005806583	11083	6V8398	.O-RING 16.03MM OD.....	1
53	PAOZZ	4720015436544	11083	1467908	HOSE ASSEMBLY,NONME.....	1
54	AOOZZ		11083	1488428	TEE AS.-ORFS.....	1
55	PAOZZ	5331005806583	11083	6V8398	.O-RING 16.03MM OD.....	2
56	PAOZZ	4730013497776	11083	6V8782	.TEE,TUBE TO BOSS.....	1
57	PAOZZ	5331009486482	11083	3K0360	.O-RING 16.36MM ID.....	1
58	PAOZZ	4720015435066	11083	2176316	HOSE ASSEMBLY,NONME.....	1
59	AOOZZ		11083	1504033	TEE AS.....	1
60	PAOZZ	5331010584030	11083	6V9746	.O-RING 22.50MM OD.....	2
61	PAOZZ	4730014715711	11083	6V9846	.TEE,TUBE.....	1
62	PAOZZ	4720015436058	11083	2137438	HOSE ASSEMBLY,NONME.....	1
63	AOOZZ		11083	1488347	ELBOW AS.....	1
64	PAOZZ	5331009448281	11083	3D2824	.O-RING 23.47MM ID.....	1
65	PAOZZ	4730012918498	11083	6V9007	.ELBOW,TUBE TO BOSS.....	1
66	PAOZZ	5331010584030	11083	6V9746	.O-RING 22.50MM OD.....	1
67	PAOZZ	4720015441901	11083	1653133	HOSE ASSEMBLY,NONME.....	1

END OF FIGURE

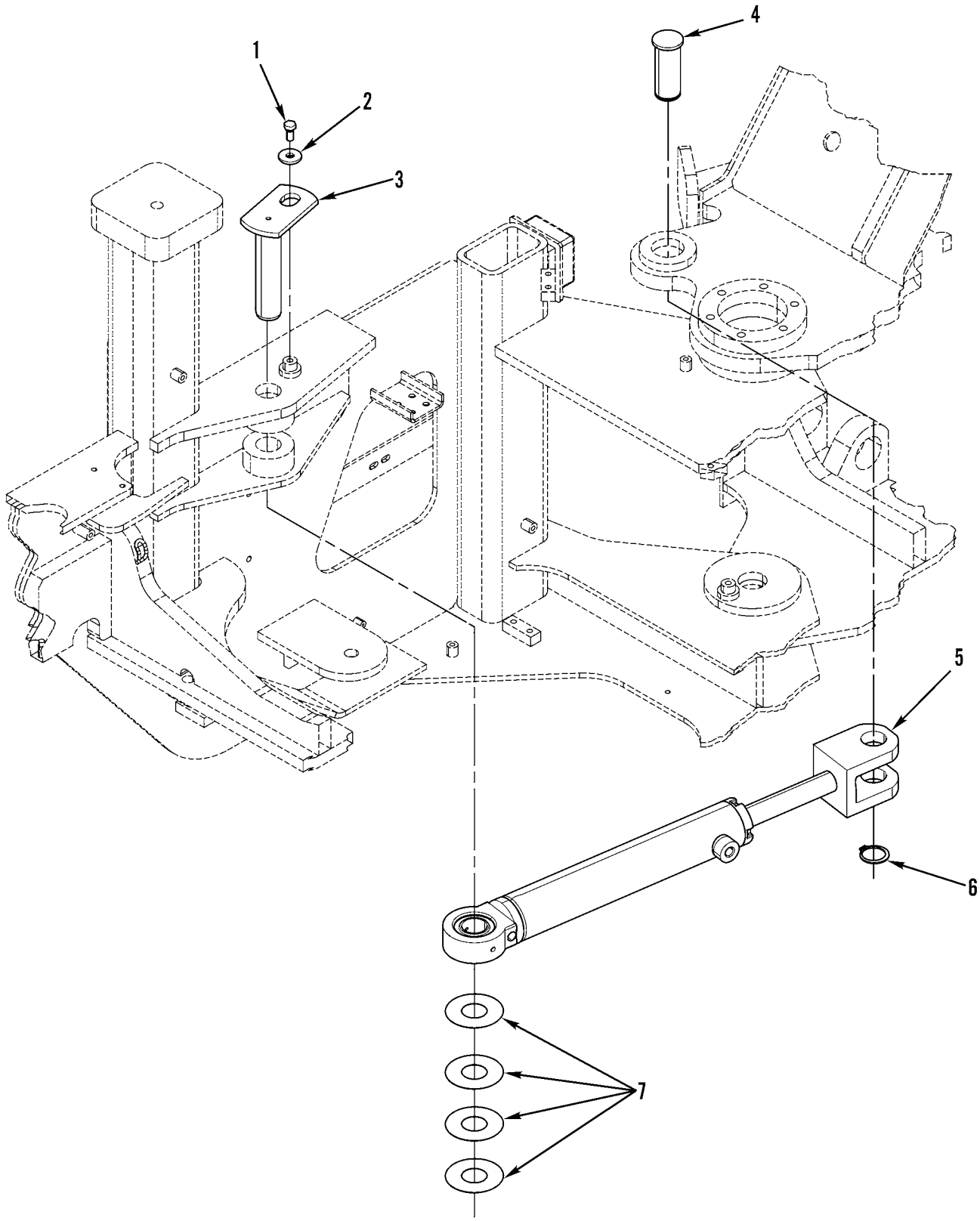

Figure 90. Steering Cylinder and Mounting

(1) ITEM NO	(2) SMR CODE	(3) NSN	(4) CAGEC	(5) PART NUMBER	(6) DESCRIPTION AND USABLE ON CODES(UOC)	(7) QTY
					GROUP 1412 HYDRAULIC OR AIR CYLINDERS	
					FIG. 90 STEERING CYLINDER AND MOUNTING	
1	PAOZZ	5306014138771	11083	8T4192	BOLT,SHOULDER M12 X 1.75 X 25MM....	2
2	PFOZZ	5310015443388	11083	7X0618	WASHER,FLAT 13.5 X 40 X 5MM THK....	2
3	PFOZZ	5315015443390	11083	1322554	PIN,STRAIGHT,HEADED.....	2
4	PFOZZ	5315015441050	11083	1322553	PIN,STRAIGHT,HEADED.....	2
5	PAOHH		11083	1426251	CYLINDER ASSEMBLY,A.....	2
6	PAOZZ	5325013646422	11083	6V3213	RING,RETAINING.....	2
7	PFOZZ	5365015437824	11083	9D1535	SPACER,STRAIGHT 44.8 X 101.6 X 1.22MM THK.....	16
					END OF FIGURE	

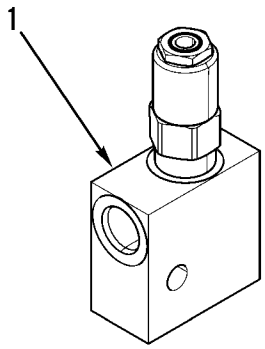

427-127

Figure 91. Secondary Steering Relief Valve

(1) ITEM NO	(2) SMR CODE	(3) NSN	(4) CAGEC	(5) PART NUMBER	(6) DESCRIPTION AND USABLE ON CODES(UOC)	(7) QTY
					GROUP 1414 STEERING SYSTEM VALVES	
					FIG. 91 SECONDARY STEERING RELIEF VALVE	
1	PAOZZ	4820015435746	11083	2510907	VALVE,SAFETY RELIEF.....	1
					END OF FIGURE	

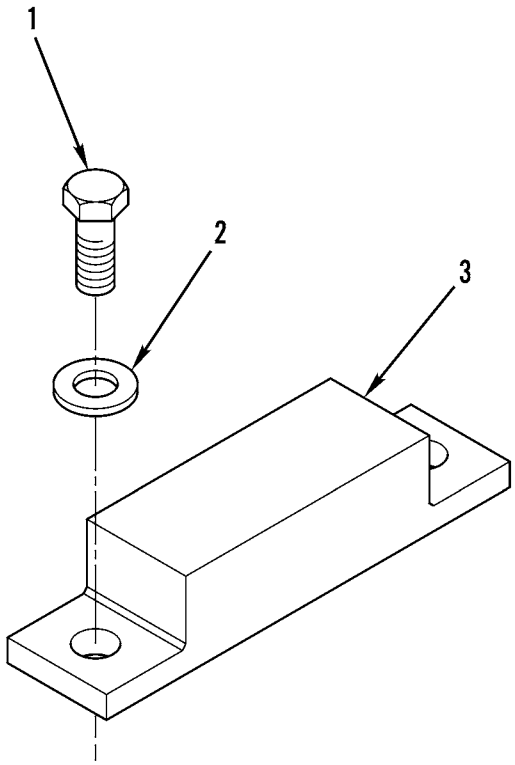

427-153

Figure 92. Rear Axle Stop

(1) ITEM NO	(2) SMR CODE	(3) NSN	(4) CAGEC	(5) PART NUMBER	(6) DESCRIPTION AND USABLE ON CODES(UOC)	(7) QTY
					GROUP 15 FRAME, TOWING ATTACHMENTS, DRAWBARS, AND ARTICULATION SYSTEMS	
					GROUP 1501 FRAME ASSEMBLY	
					FIG. 92 REAR AXLE STOP	
1	PAOZZ	5306014734526	11083	8T4956	BOLT,MACHINE M12 X 1.75 X 35MM.....	4
2	PAOZZ	5310010980624	11083	8T4223	WASHER,FLAT 13.5 X 25.5 X 3MM THK..	4
3	PAOZZ	5340015446083	11083	1475577	CLAMP,BLOCK.....	2
					END OF FIGURE	

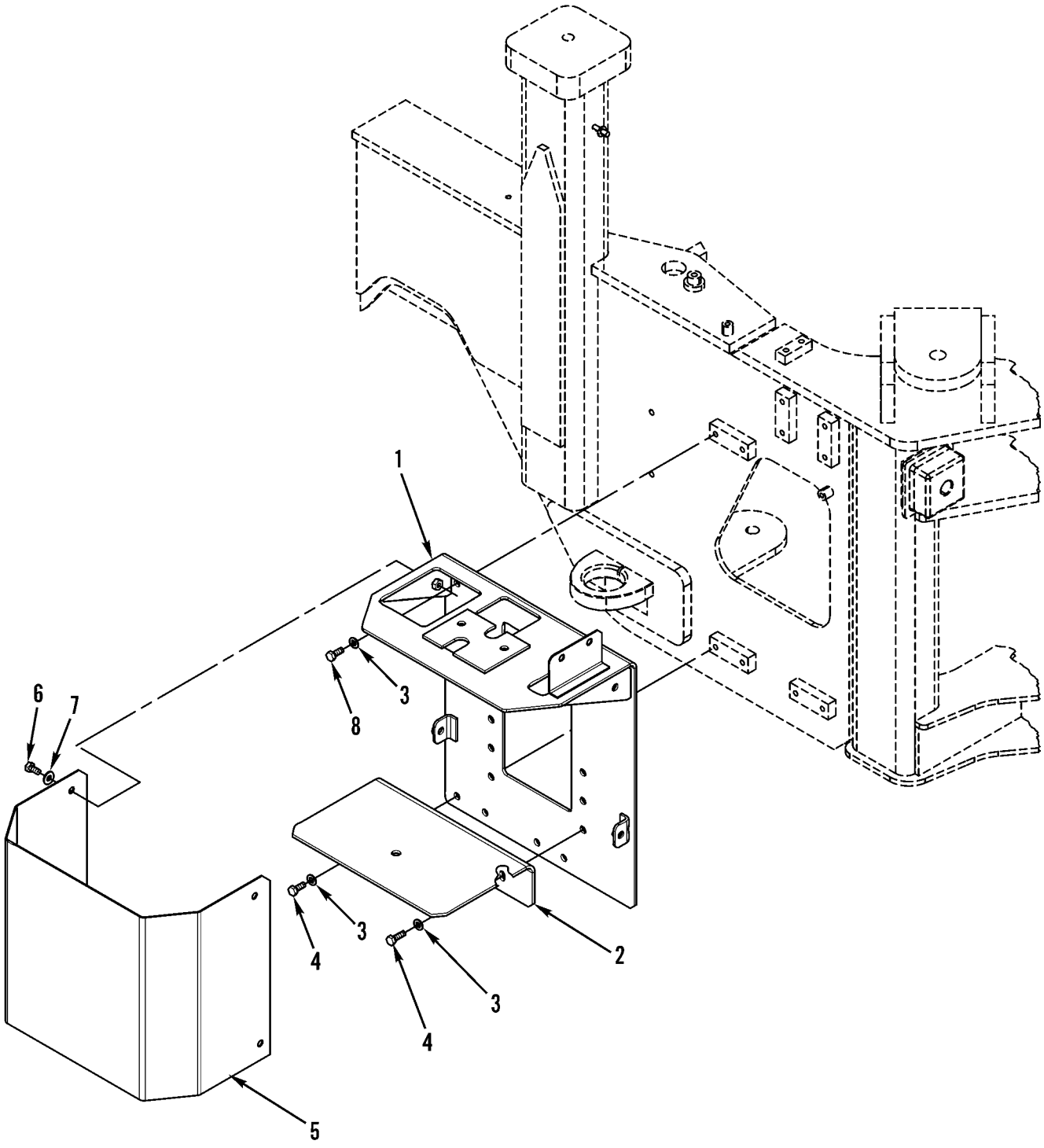

427-080

Figure 93. Component Valve Mounting

(1) ITEM NO	(2) SMR CODE	(3) NSN	(4) CAGEC	(5) PART NUMBER	(6) DESCRIPTION AND USABLE ON CODES(UOC)	(7) QTY
					GROUP 1501 FRAME ASSEMBLY	
					FIG. 93 COMPONENT VALVE MOUNTING	
1	PFOZZ	5340015435003	11083	2110608	BRACKET,MOUNTING.....	1
2	PFOZZ	5340015436078	11083	2110622	BRACKET,ANGLE.....	1
3	PAOZZ	5310013522753	11083	8T4121	WASHER,FLAT 11 X 21 X 2.5MM THK....	9
4	PAOZZ	5305013981284	11083	8T4195	SCREW,CAP,HEXAGON H M10 X 1.5 X 30MM.....	2
5	PFOZZ	2590015449582	11083	1409291	COVER,VEHICULAR.....	1
6	PAOZZ	5306013600928	11083	8T4137	BOLT,MACHINE M10 X 1.5 X 20MM.....	4
7	PAOZZ	5310014309036	11083	7X7729	WASHER,FLAT 11 X 25 X 3MM THK.....	4
8	PAOZZ	5306013601634	11083	8T4136	BOLT,MACHINE M10 X 1.5 X 25MM.....	7
					END OF FIGURE	

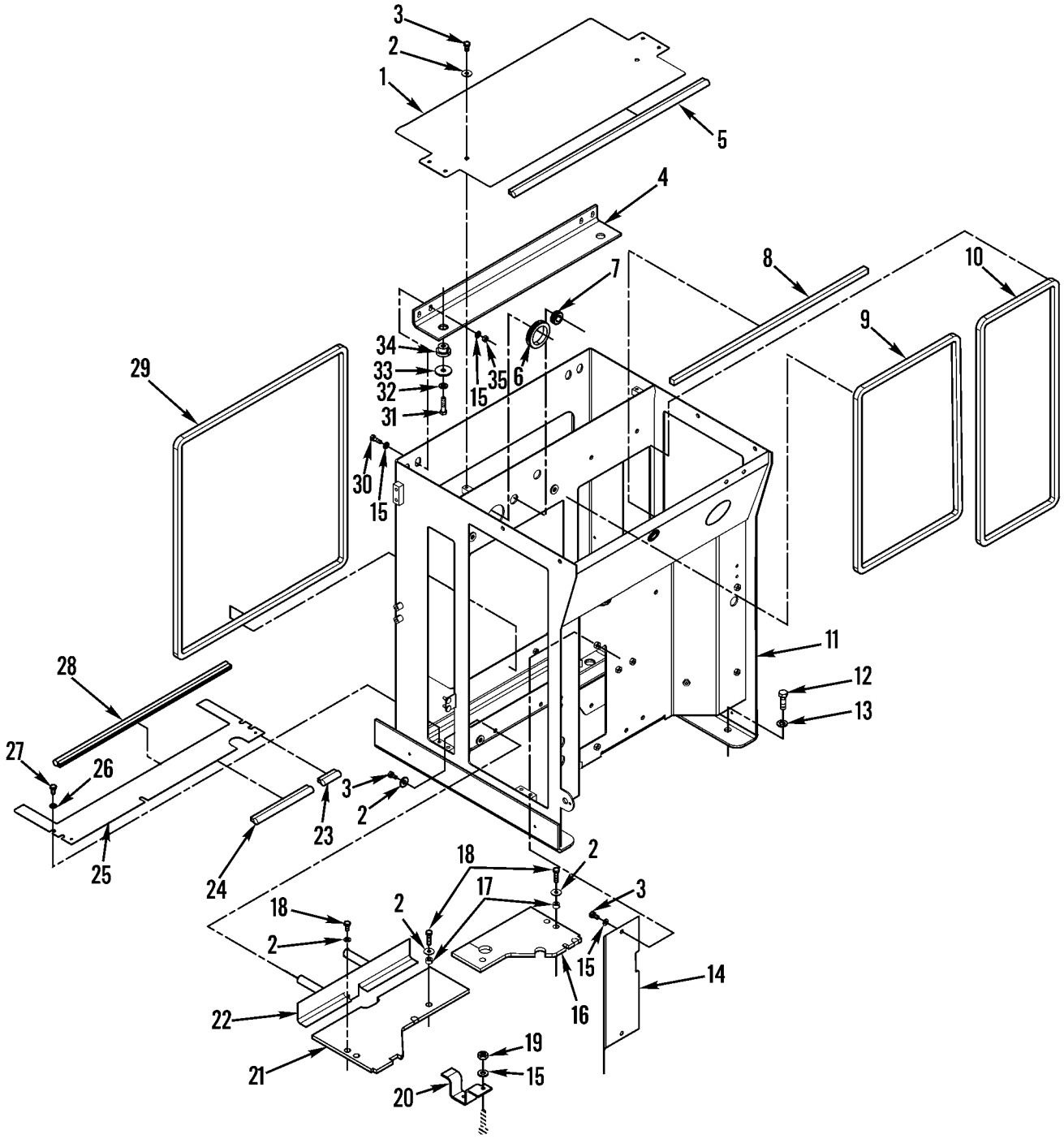

427-064

Figure 94. Radiator Frame and Related Parts

(1) ITEM NO	(2) SMR CODE	(3) NSN	(4) CAGEC	(5) PART NUMBER	(6) DESCRIPTION AND USABLE ON CODES(UOC)	(7) QTY
					GROUP 1501 FRAME ASSEMBLY	
					FIG. 94 RADIATOR FRAME AND RELATED PARTS	
1	PFFZZ	5340015439719	11083	1919184	PLATE,MOUNTING.....	1
2	PAFZZ	5310014293253	11083	8T4222	WASHER,FLAT 11 X 32 X 3.5MM THK....	10
3	PAFZZ	5306013600928	11083	8T4137	BOLT,MACHINE M10 X 1.5 X 20MM.....	9
4	PFOZZ	5340015438695	11083	1851036	BRACKET,MOUNTING.....	1
5	MOOZZ		11083	5P7211-85	SEAL,NONMETALLIC SP MAKE FROM SEAL P/N 5P7211, 33.5 INCHES (85 CM).....	1
6	PAOZZ	5325011604619	11083	5P6887	GROMMET,NONMETALLIC.....	1
7	PFOZZ	5325015157957	11083	0530189	GROMMET,NONMETALLIC.....	1
8	MFFZZ		11083	5P5755-85	SEAL MAKE FROM SEAL P/N 5P5755, 33.5 INCHES (85 CM).....	1
9	MFFZZ		11083	5P5755-225.8	SEAL MAKE FROM SEAL P/N 5P5755, 88.9 INCHES (22 5.8CM).....	1
10	MFFZZ		11083	5P5755-235.3	SEAL MAKE FROM SEAL P/N 5P5755, 92.7 INCHES (23 5.3CM).....	1
11	PFOZZ	2510015433909	11083	1919177	GRILLE,RADIATOR,VEH.....	1
12	PAFZZ	5306014293171	11083	8T4193	BOLT,MACHINE M16 X 2 X 50MM.....	4
13	PAOZZ	5310013647468	11083	8T4122	WASHER,FLAT 17 X 32 X 3.5MM THK....	4
14	PFFZZ	5340015444371	11083	1919182	PLATE,MOUNTING.....	1
15	PAFZZ	5310013522753	11083	8T4121	WASHER,FLAT 11 X 21 X 2.5MM THK....	14
16	PFFZZ	5330015444757	11083	2430689	GASKET RUBBER MAT.....	1
17	PFFZZ	5365015439599	11083	1275447	SPACER,RING 10.5MM ID.....	6
18	PAFZZ	5306013600932	11083	8T4186	BOLT,MACHINE M10 X 1.5 X 40MM.....	6
19	PAFZZ	5310014138761	11083	8T0389	NUT,PLAIN,HEXAGON M10 X 1.15 THD...	1
20	PFFZZ	5340015436524	11083	2797128	BRACKET,MOUNTING.....	1
21	PFFZZ	5330015435046	11083	2299286	GASKET RUBBER MAT.....	1
22	PFFZZ	5340015436508	11083	2307246	PLATE,MOUNTING.....	1
23	MOOZZ		11083	5P7211-7	SEAL,NONMETALLIC SP MAKE FROM SEAL P/N 5P7211, 2.8 INCHES (7CM).....	1
24	MOOZZ		11083	5P7211-24.4	SEAL,NONMETALLIC SP MAKE FROM SEAL P/N 5P7211, 11.9 INCHES (24 .4CM)...	1
25	PFOZZ	5340015444755	11083	1919192	PLATE,MOUNTING.....	1
26	PAOZZ	5310013522753	11083	8T4121	WASHER,FLAT 11 X 21 X 2.5MM THK....	4
27	PAOZZ	5306013600928	11083	8T4137	BOLT,MACHINE M10 X 1.5 X 20MM.....	4
28	MOOZZ		11083	5P7211-78	SEAL,NONMETALLIC SP MAKE FROM SEAL P/N 5P7211, 30.1 INCHES (78 CM).....	1
29	MFFZZ		11083	5P5755-305	SEAL MAKE FROM SEAL P/N 5P5755, 120.1 INCHES (3 05CM).....	1
30	PAFZZ	5305013981284	11083	8T4195	SCREW,CAP,HEXAGON H M10 X 1.5 X 30MM.....	4
31	PAFZZ	5306014293174	11083	8T4194	BOLT,MACHINE M12 X 1.75 X 50MM.....	2
32	PAFZZ	5310010980624	11083	8T4223	WASHER,FLAT 13.5 X 25.5 X 3MM THK..	2
33	PAFZZ	5310011701359	11083	8F6437	WASHER,FLAT 13.5 X 50.8 X 4.76MM THK.....	2
34	PFFZZ	5340015444166	11083	7T8332	MOUNT,RESILIENT,GEN.....	2
35	PAOZZ	5310013527726	11083	8T4133	NUT,PLAIN,HEXAGON M10 X 1.5 THD....	4
					END OF FIGURE	

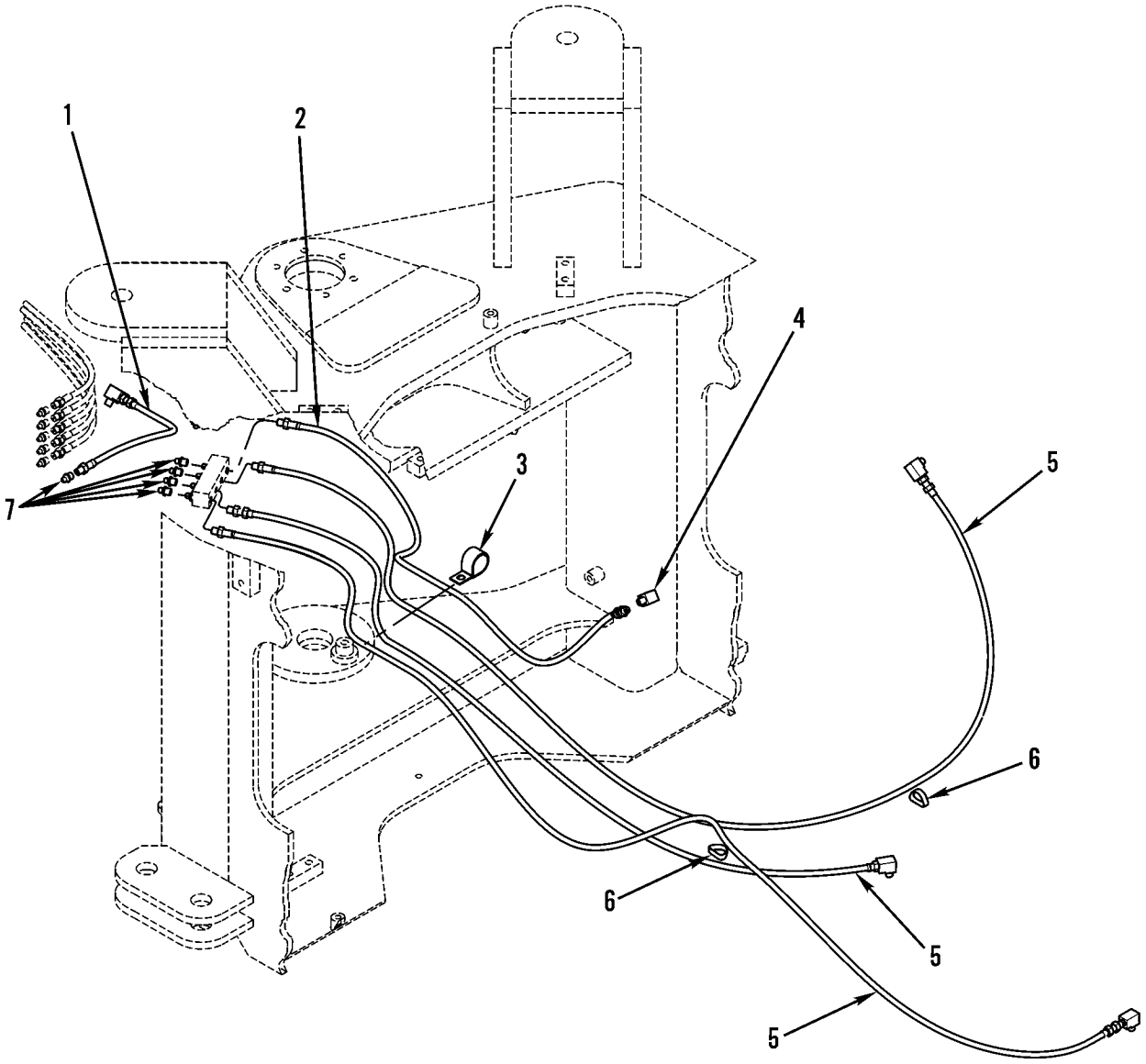

427-162-1

Figure 95. Remote Lubrication Lines (Sheet 1 of 2)

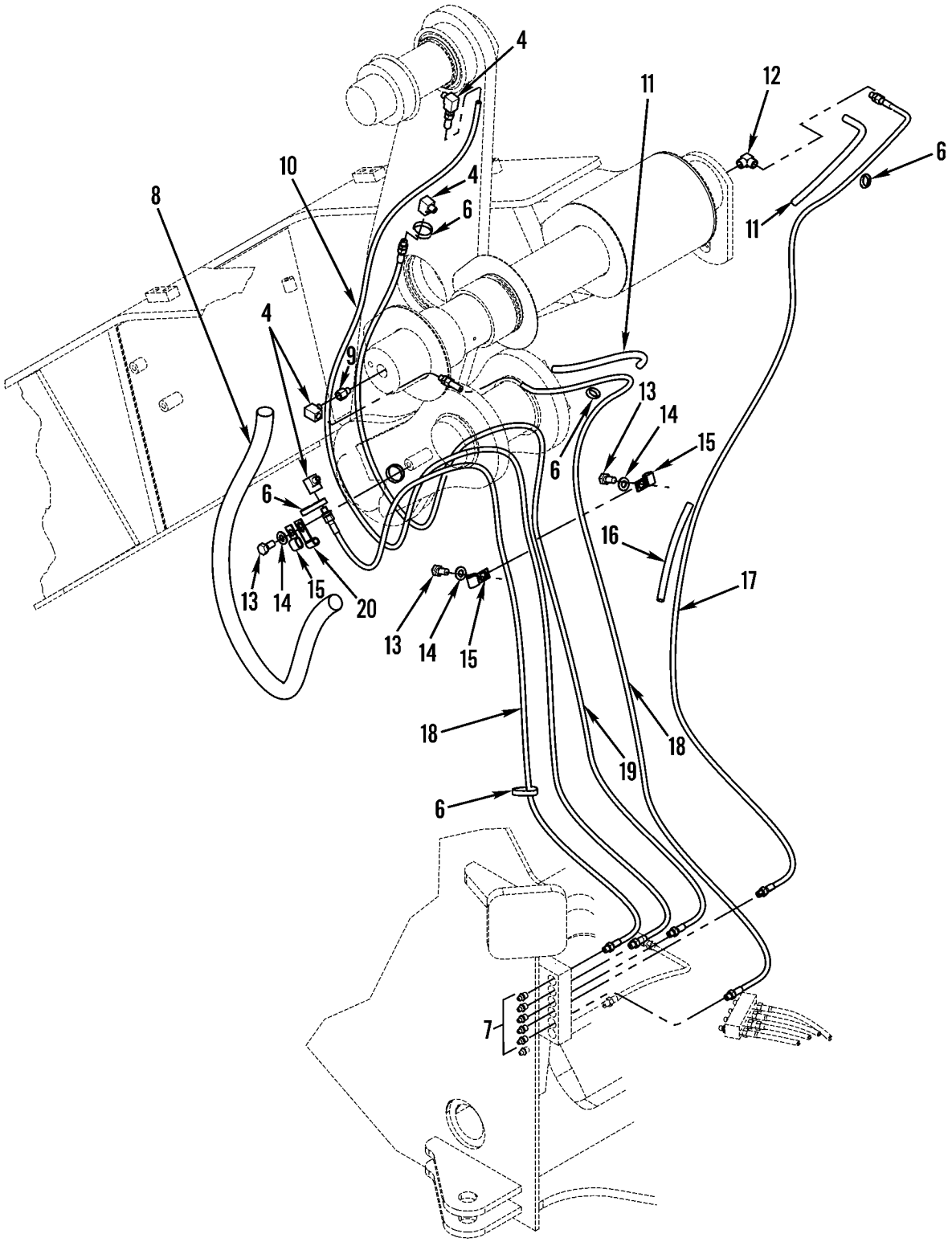

427-162-2

Figure 95. Remote Lubrication Lines (Sheet 2 of 2)

(1) ITEM NO	(2) SMR CODE	(3) NSN	(4) CAGEC	(5) PART NUMBER	(6) DESCRIPTION AND USABLE ON CODES(UOC)	(7) QTY
					GROUP 1501 FRAME ASSEMBLY	
					FIG. 95 REMOTE LUBRICATION LINES	
1	PFOZZ	4720015451404	11083	5T9771	HOSE ASSEMBLY,NONME.....	1
2	PFOZZ	4720015449504	11083	8W4342	HOSE ASSEMBLY,NONME.....	1
3	PAOZZ	5340012983216	75272	COV-1913	CLAMP,LOOP.....	1
4	PAOZZ	4730002315605	11083	3B6552	ELBOW,PIPE.....	9
5	PFOZZ	4720015451405	11083	6G9933	HOSE ASSEMBLY,NONME.....	3
6	PAOZZ	2815010534712	11083	7K1181	STRAP.....	9
7	PAOZZ	4730000504208	11083	3B8489	FITTING,LUBRICATION.....	7
8	MOOZZ		11083	1602243-104	TUBING,NONMETALLIC MAKE FROM TUBING P/N: 1602243, 41 INCHES (104CM).....	1
9	PFOZZ	4730015449147	11083	0020639	ADAPTER,STRAIGHT,PI.....	1
10	PFOZZ	4720015449148	11083	1634362	HOSEASSEMBLY,NONME.....	1
11	MOOZZ		11083	1210199-29	TUBING,PLASTIC,SPIR MAKE FROM TUBING,PLASTIC,SPIRAL PN 1210199, 11.5 INCHES (29CM).....	2
12	PAOZZ	4730002277915	11083	8B4884	ELBOW,PIPE.....	1
13	PAOZZ	5306013600928	11083	8T4137	BOLT,MACHINE M10 X 1.5 X 20MM.....	3
14	PAOZZ	5310013522753	11083	8T4121	WASHER,FLAT 11 X 21 X 2.5MM THK....	3
15	PFOZZ	5340015436189	11083	9X8582	CLAMP,LOOP.....	3
16	MOOZZ		11083	1210199-18	TUBING,PLASTIC,SPIR MAKE FROM TUBING P/N 1210199, 7 INCHES (18CM).	1
17	PFOZZ	4720015449503	11083	1634361	HOSE ASSEMBLY,NONME.....	1
18	PFOZZ	4720015449145	11083	3G0572	HOSE ASSEMBLY,NONME.....	2
19	PFOZZ	4720015449498	11083	5T3821	HOSE ASSEMBLY,NONME.....	1
20	PAOZZ	5340004264646	11083	4D8123	CLAMP,LOOP.....	1
					END OF FIGURE	

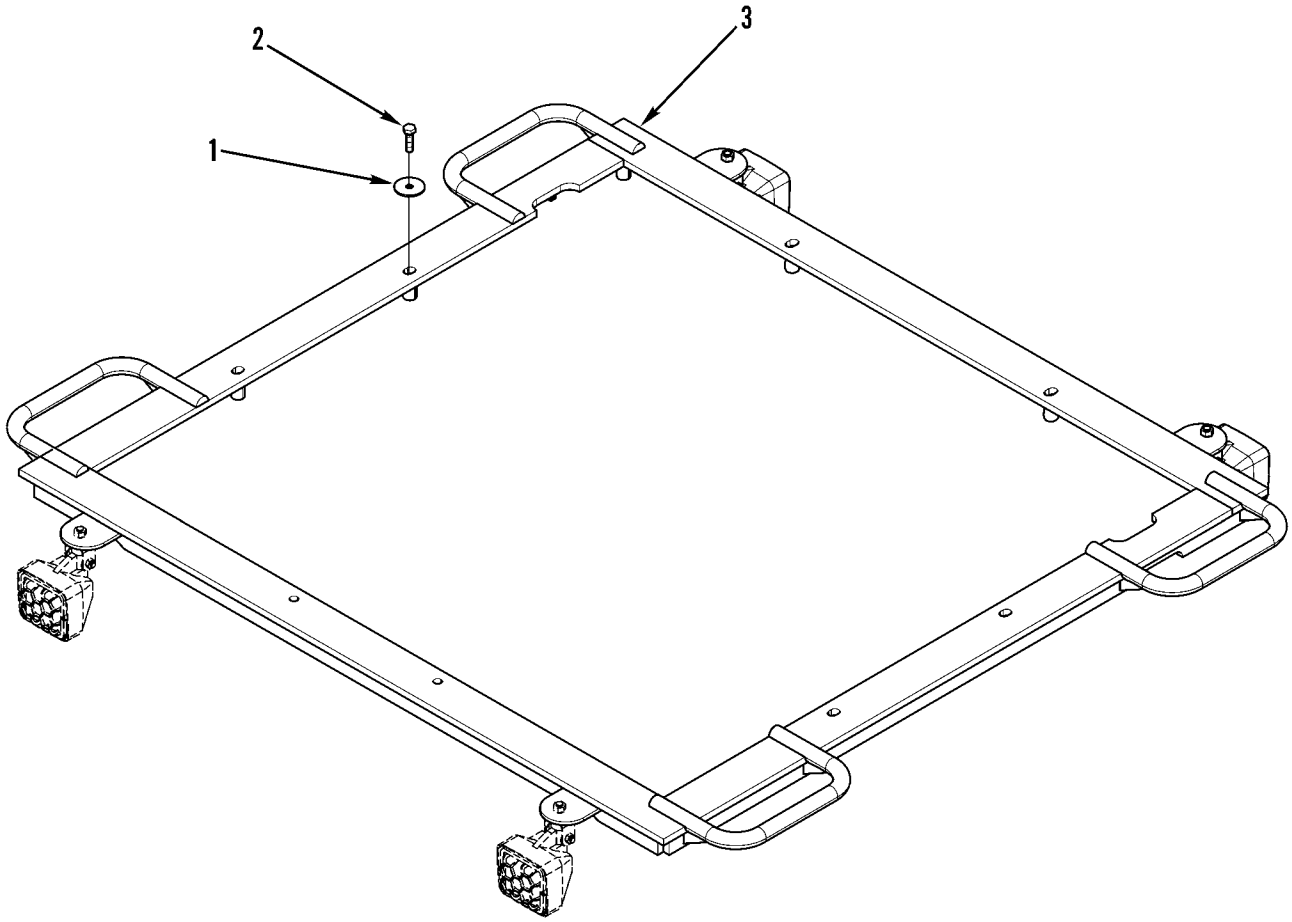

427-110

Figure 96. Worklight Frame and Mounting

(1) ITEM NO	(2) SMR CODE	(3) NSN	(4) CAGEC	(5) PART NUMBER	(6) DESCRIPTION AND USABLE ON CODES(UOC)	(7) QTY
					GROUP 1501 FRAME ASSEMBLY	
					FIG. 96 WORKLIGHT FRAME AND MOUNTING	
1	PAOZZ	5310014256246	11083	8T4226	WASHER,FLAT 10.5 X 45 X 3MM THK....	8
2	PAOZZ	5305013601996	11083	8T4196	SCREW,CAP,HEXAGON H M10 X 1.5 X 35MM.....	8
3	PFOZZ	5340015454212	11083	2806978	BRACKET,MOUNTING.....	1
					END OF FIGURE	

2
3 AND 4

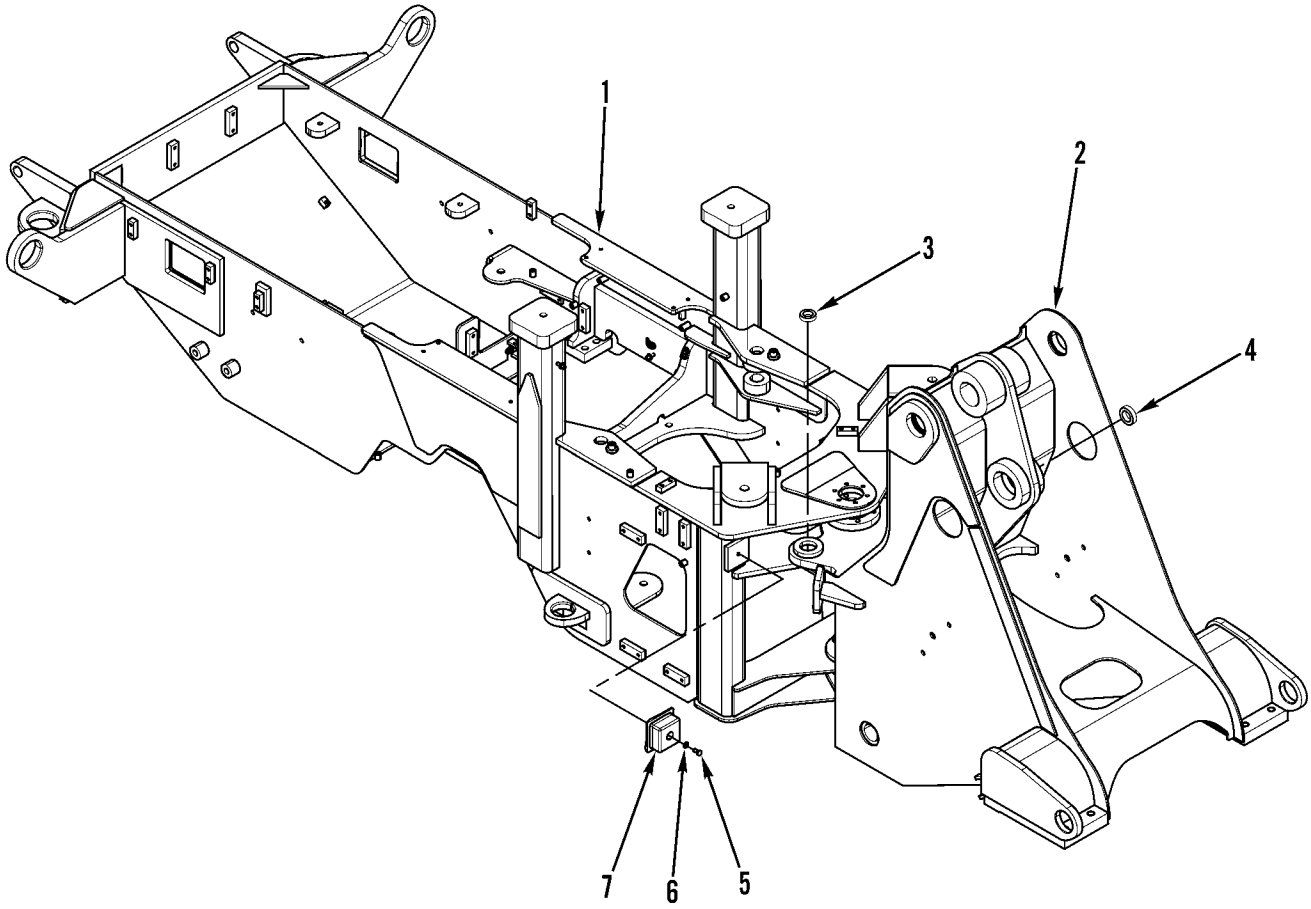

427-103

Figure 97. Frame

(1) ITEM NO	(2) SMR CODE	(3) NSN	(4) CAGEC	(5) PART NUMBER	(6) DESCRIPTION AND USABLE ON CODES(UOC)	(7) QTY
					GROUP 1501 FRAME ASSEMBLY	
					FIG. 97 FRAME	
1	PAOZZ	2510015513575	11083	2804268	FRAME,STRUCTURAL,VE REAR.....	1
2	PAOZZ	2510015513487	11083	2806769	FRAME,STRUCTURAL,VE FRONT.....	1
3	PAOZZ	3120015513346	11083	4K4709	.BEARING,SLEEVE.....	2
4	PAOZZ	3120015513349	11083	1713667	.BEARING,SLEEVE.....	1
5	PAOZZ	5306013600928	11083	8T4137	BOLT,MACHINE M10 X 1.5 X 20MM.....	2
6	PAOZZ	5310013522753	11083	8T4121	WASHER,FLAT 11 X 21 X 2.5MM THK....	2
7	PFOZZ	2590015167762	11083	1120885	PAD,CUSHIONING.....	2
					END OF FIGURE	

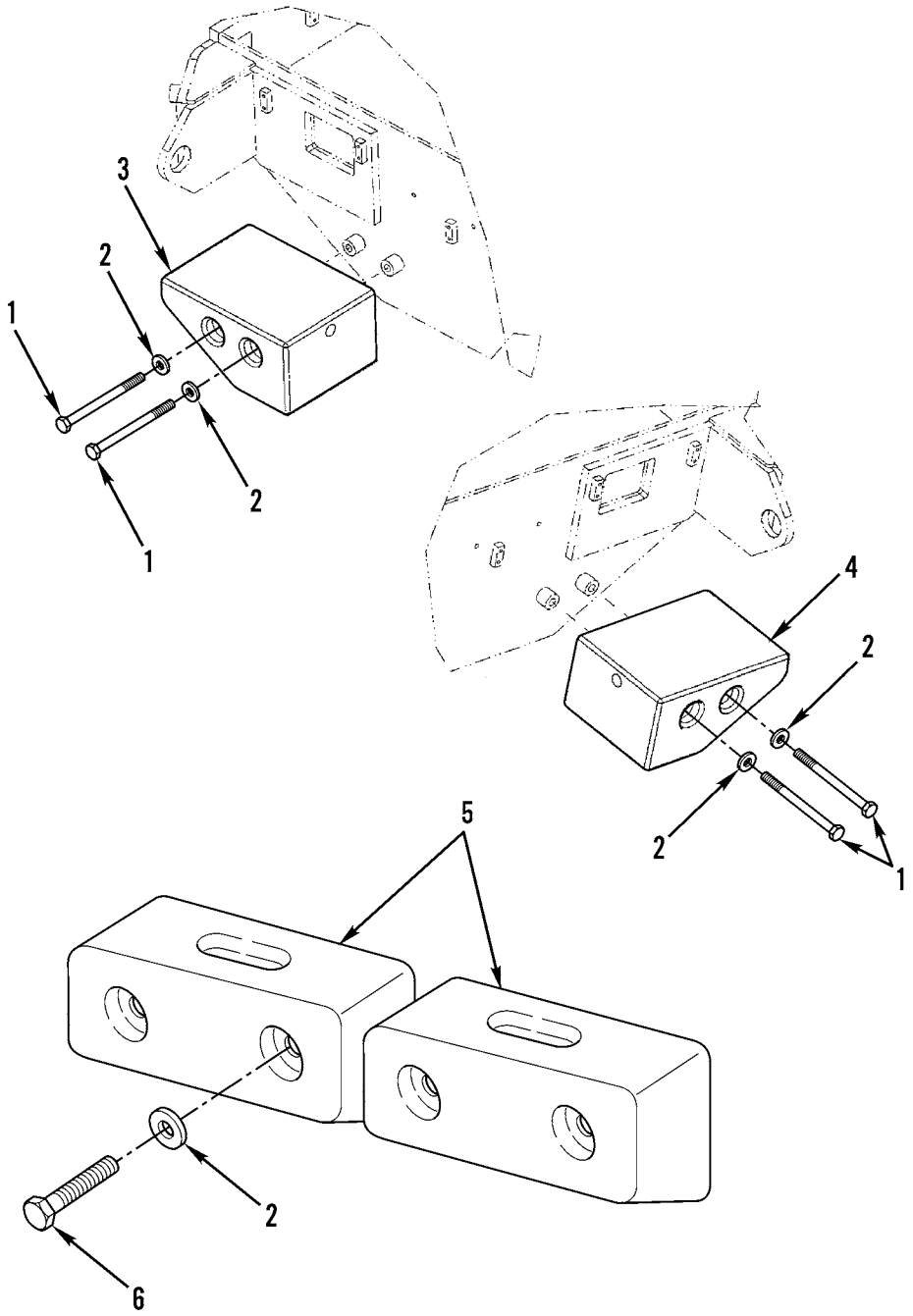

427-108

Figure 98. Counterweights

(1) ITEM NO	(2) SMR CODE	(3) NSN	(4) CAGEC	(5) PART NUMBER	(6) DESCRIPTION AND USABLE ON CODES(UOC)	(7) QTY
					GROUP 1502 COUNTERWEIGHTS	
					FIG. 98 COUNTERWEIGHTS	
1	PFOZZ	5306015451403	11083	1217897	BOLT,MACHINE M24 X 3 X 315MM.....	4
2	PFOZZ	5310015453049	11083	8T1482	WASHER,FLAT 26 X 50 X 8MM THK.....	8
3	PAOZZ	3040015448905	11083	2567517	COUNTERWEIGHT RH.....	1
4	PAOZZ	3040015448903	11083	2567516	COUNTERWEIGHT LH.....	1
5	PAOZZ	3040015515549	11083	2824415	COUNTERWEIGHT.....	2
6	PAOZZ	5306014741764	11083	8C3290	BOLT,MACHINE M24 X 3 X 150MM.....	4
					END OF FIGURE	

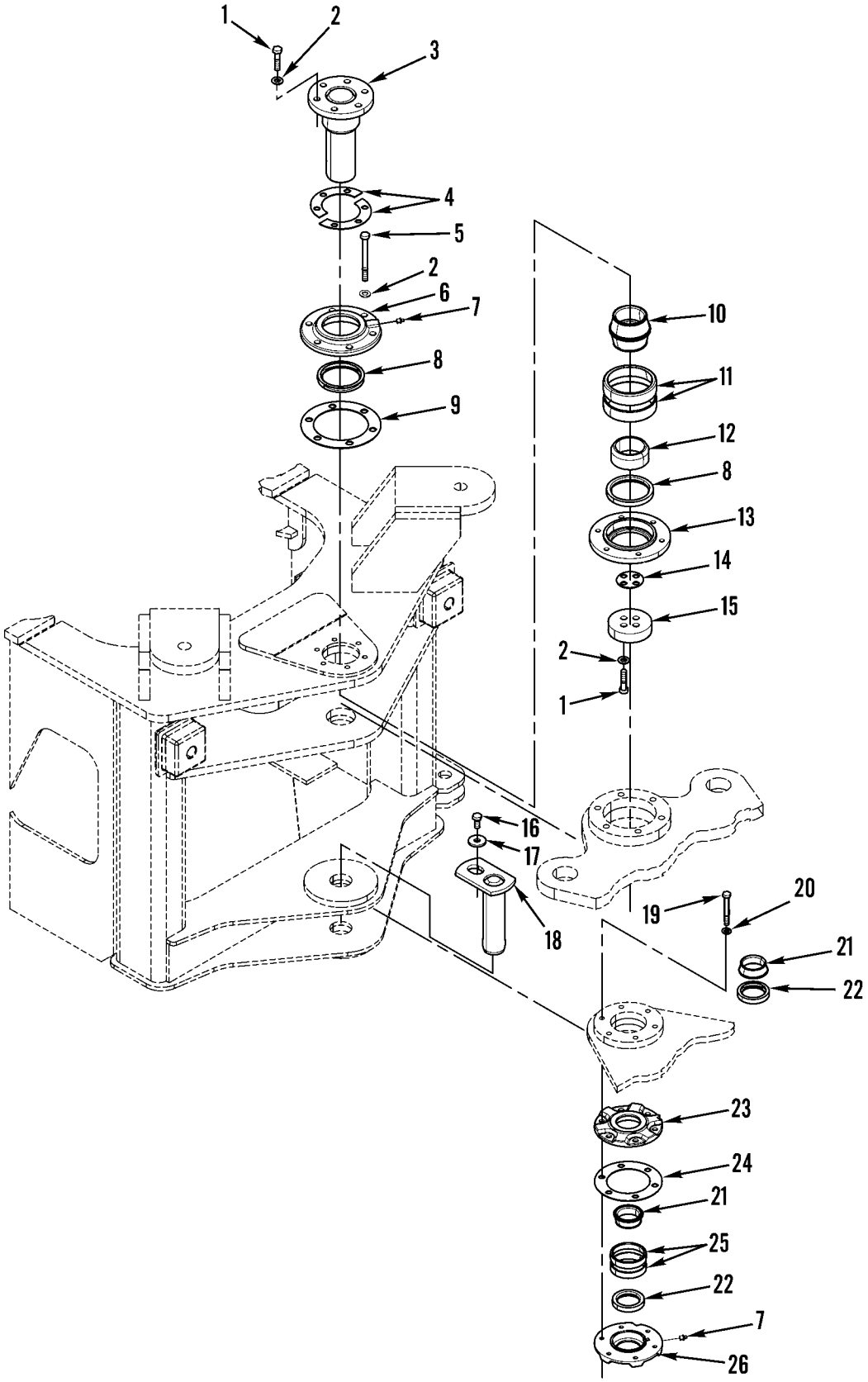

Figure 99. Articulating Hitch and Related Parts

(1) ITEM NO	(2) SMR CODE	(3) NSN	(4) CAGEC	(5) PART NUMBER	(6) DESCRIPTION AND USABLE ON CODES(UOC)	(7) QTY
					GROUP 1503 PINTLES AND TOWING ATTACHMENTS	
					FIG. 99 ARTICULATING HITCH AND RELATED PARTS	
1	PAFZZ	5306014293174	11083	8T4194	BOLT,MACHINE M12 X 1.75 X 50MM.....	10
2	PAFZZ	5310010980624	11083	8T4223	WASHER,FLAT 13.5 X 25.5 X 3MM THK..	16
3	PAFZZ	5315015445932	11083	1133791	PIN,STRAIGHT,HEADED.....	1
4	PFFZZ	5365015444767	11083	1133794	SHIM ASSORTMENT.....	2
5	PAFZZ	5305014713980	11083	8T5041	SCREW,CAP,HEXAGON H M12 X 1.75 X 120MM.....	6
6	PFFZZ	3130015449517	11083	6K4191	CAP,PILLOW BLOCK.....	1
7	PAOZZ	4730000504208	11083	3B8489	FITTING,LUBRICATION.....	2
8	PAFZZ	5330012362375	11083	6K4186	SEAL,PLAIN.....	2
9	PFFZZ	5365015438707	11083	6W8246	SHIM ASSORTMENT.....	1
10	PAFZZ	3110015441813	11083	6I8849	CONE,TAPERED ROLLER.....	1
11	PAFZZ	3110005549004	60038	HM212010	CUP,TAPERED ROLLER.....	2
12	PFFZZ	5365015449518	11083	6K4185	SPACER,STRAIGHT.....	1
13	PFFZZ	5340015445921	11083	8R7092	PLATE,RETAINING SEA.....	1
14	PFFZZ	5365015441384	11083	1107628	SHIM.....	1
15	PFFZZ	5340015436013	11083	1133793	PLATE,MOUNTING.....	1
16	PAFZZ	5306014138771	11083	8T4192	BOLT,SHOULDER M12 X 1.75 X 25MM....	1
17	PFFZZ	5310015443388	11083	7X0618	WASHER,FLAT 13.5 X 40 X 5MM THK....	1
18	PAFZZ	5315015445928	11083	8Y7047	PIN,STRAIGHT,HEADLE.....	1
19	PAFZZ	5305014195181	11083	8T4172	SCREW,CAP,HEXAGON H M10 X 1.5 X 80MM.....	6
20	PAFZZ	5310013522753	11083	8T4121	WASHER,FLAT 11 X 21 X 2.5MM THK....	6
21	PAFZZ	3110015388505	11083	6V8795	CONE,TAPERED ROLLER.....	2
22	PAFZZ	5330009236956	11083	9H2258	SEAL,PLAIN ENCASED SEAL,PLAIN.....	2
23	PFFZZ	5340015434991	11083	9V6343	PLATE,RETAINING,SEA.....	1
24	PAFZZ	5365010691502	11083	4K7464	SHIM.....	1
25	PAFZZ	3110015388484	11083	6V1194	CUP,TAPERED ROLLING.....	2
26	PFFZZ	5340015436677	11083	8R7091	PLATE,RETAINING SEA.....	1
					END OF FIGURE	

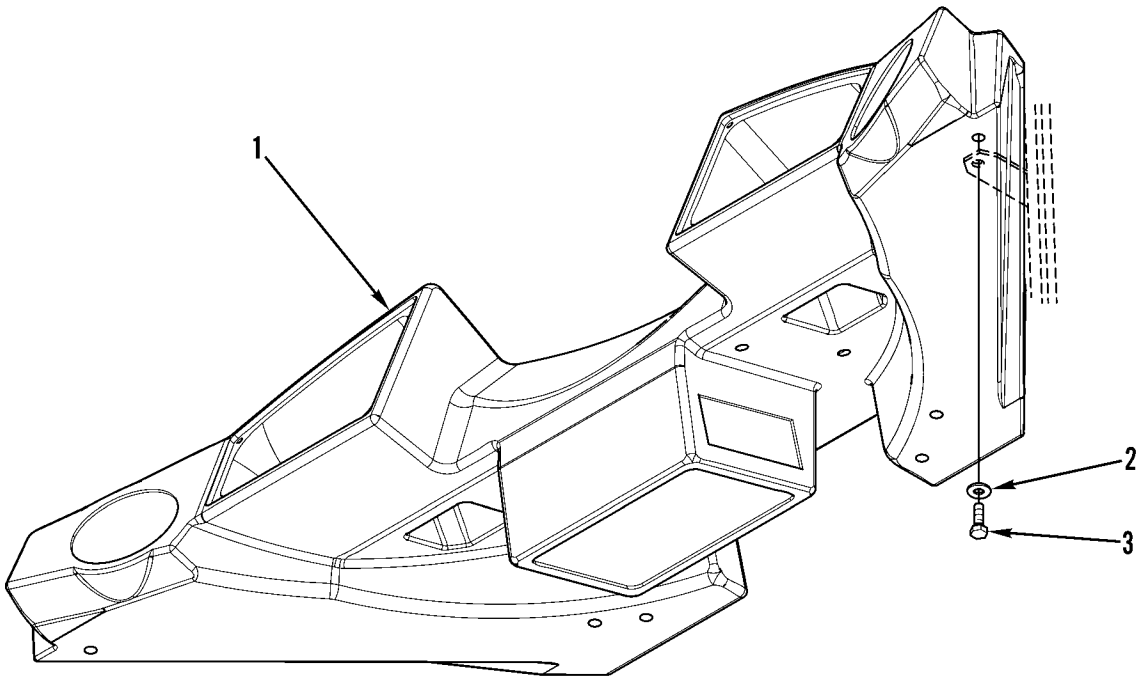

427-128

Figure 100. Dash Assembly

(1) ITEM NO	(2) SMR CODE	(3) NSN	(4) CAGEC	(5) PART NUMBER	(6) DESCRIPTION AND USABLE ON CODES(UOC)	(7) QTY
					GROUP 18 BODY, CAB, HOOD AND HULL	
					GROUP 1801 BODY, CAB, HOOD, AND HULL ASSEMBLIES	
					FIG. 100 DASH ASSEMBLY	
1	PFOZZ	2510015450868	11083	1669287	PANEL,VEHICULAR OPE.....	1
2	PAOZZ	5310010955910	11083	5P4116	WASHER,SQUARE CONE 8.8 X 20.5 X 2MM THK.....	4
3	PAOZZ	5305013981282	11083	8T4908	SCREW,CAP,HEXAGON H M8 X 1.25 X 25MM.....	4
					END OF FIGURE	

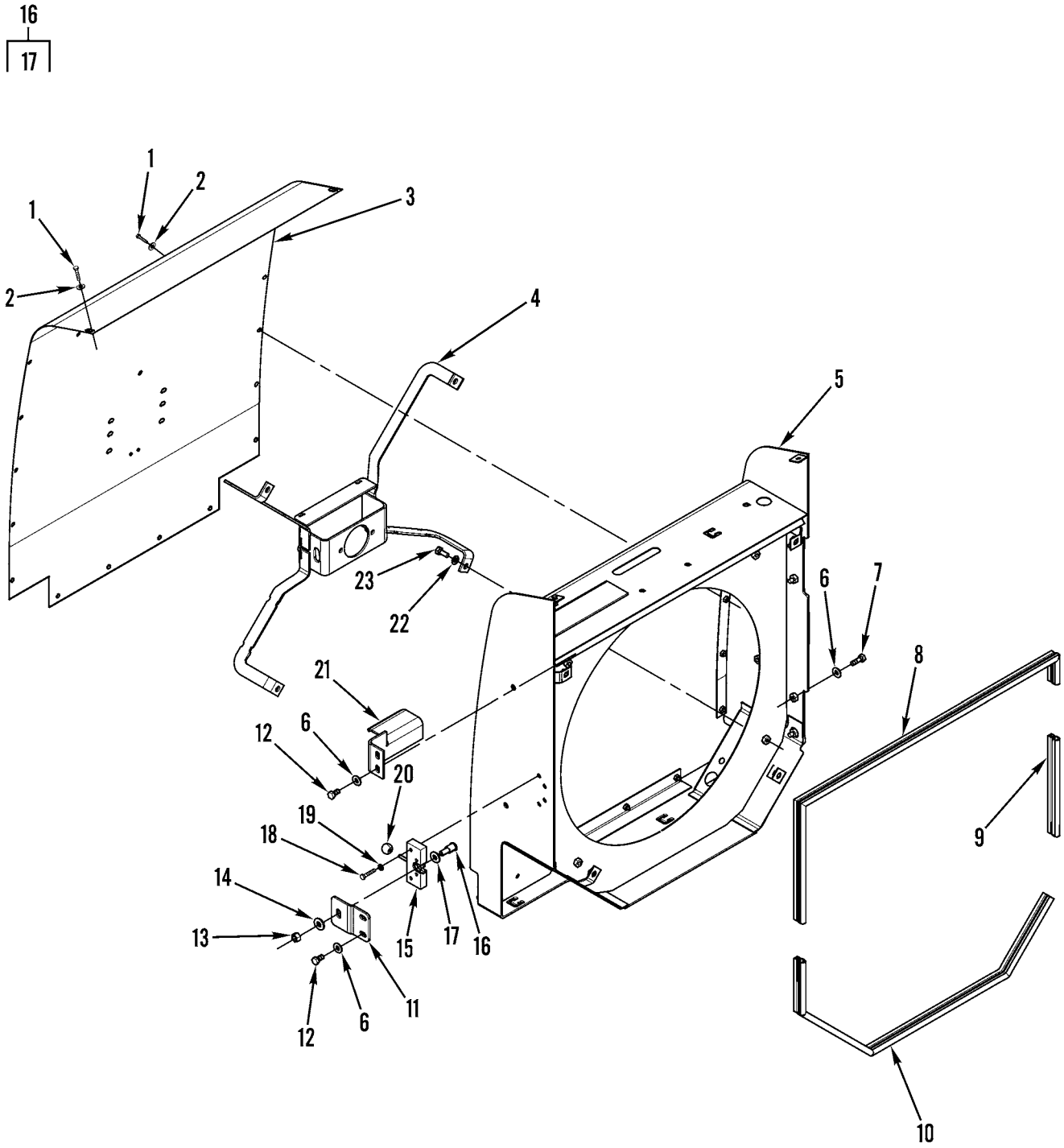

427-004

Figure 101. Rear Cover and Related Parts

(1) ITEM NO	(2) SMR CODE	(3) NSN	(4) CAGEC	(5) PART NUMBER	(6) DESCRIPTION AND USABLE ON CODES(UOC)	(7) QTY
					GROUP 1801 BODY, CAB, HOOD, AND HULL ASSEMBLIES	
					FIG. 101 REAR COVER AND RELATED PARTS	
1	PFOZZ	5306015445518	11083	1860815	BOLT,MACHINE M6 X 1 X 20MM.....	20
2	PAOZZ	5310015060726	11083	1860817	WASHER,FLAT 7 X 19 X 2MM THK.....	20
3	PFOZZ	2930015449576	11083	2567271	RETAINER,RADIATOR.....	1
4	PFOZZ	5340015436033	11083	2027857	BRACKET,MOUNTING.....	1
5	PAOZZ	2930015449565	11083	2027216	SHROUD,FAN RADIATOR.....	1
6	PAOZZ	5310014309036	11083	7X7729	WASHER,FLAT 11 X 25 X 3MM THK.....	8
7	PAOZZ	5305013981284	11083	8T4195	SCREW,CAP,HEXAGON H M10 X 1.5 X 30MM.....	4
8	MOOZZ		11083	5P7211-1.267	SEAL,NONMETALLIC SP MAKE FROM SEAL P/N: 5P7211, 49.9 INCHES (1 .267M)..	1
9	MOOZZ		11083	5P7211-0.28	SEAL,NONMETALLIC SP MAKE FROM SEAL P/N: 5P7211, 11.1 INCHES (0 .28M)...	1
10	MOOZZ		11083	5P7211-1.115	SEAL,NONMETALLIC SP MAKE FROM SEAL P/N: 5P7211, 43.9 INCHES (1 .115M)..	1
11	PFOZZ	5340015434995	11083	1226246	PLATE,MOUNTING.....	1
12	PAOZZ	5306013600928	11083	8T4137	BOLT,MACHINE M10 X 1.5 X 20MM.....	4
13	PAOZZ	5310013527374	11083	8T4244	NUT,PLAIN,HEXAGON M12 X 1.75 THD...	1
14	PAOZZ	5310010976720	11083	5P1076	WASHER,SHOULDERED A 13.5 X 30 X 4MM THK.....	1
15	PAOZZ	2540014737050	11083	1125345	LATCH,DOOR,VEHICULA.....	1
16	PFOZZ	5340015445511	11083	8T4157	STRIKE,CATCH.....	1
17	PAOZZ	5310014389728	11083	8T4158	.WASHER,FLAT.....	1
18	PAOZZ	5306014137702	11083	7X2533	BOLT,SHOULDER M6 X 1 X 35MM.....	4
19	PAOZZ	5310008412576	11083	8T4205	WASHER,FLAT 7.2 X 14.5 X 2MM THK...	4
20	PAOZZ	5355011653414	11083	5V8780	KNOB.....	1
21	PFOZZ	5340015436025	11083	1744246	BRACKET,DOUBLE ANGL.....	1
22	PAOZZ	5310013522753	11083	8T4121	WASHER,FLAT 11 X 21 X 2.5MM THK....	4
23	PAOZZ	5306013601634	11083	8T4136	BOLT,MACHINE M10 X 1.5 X 25MM.....	4
					END OF FIGURE	

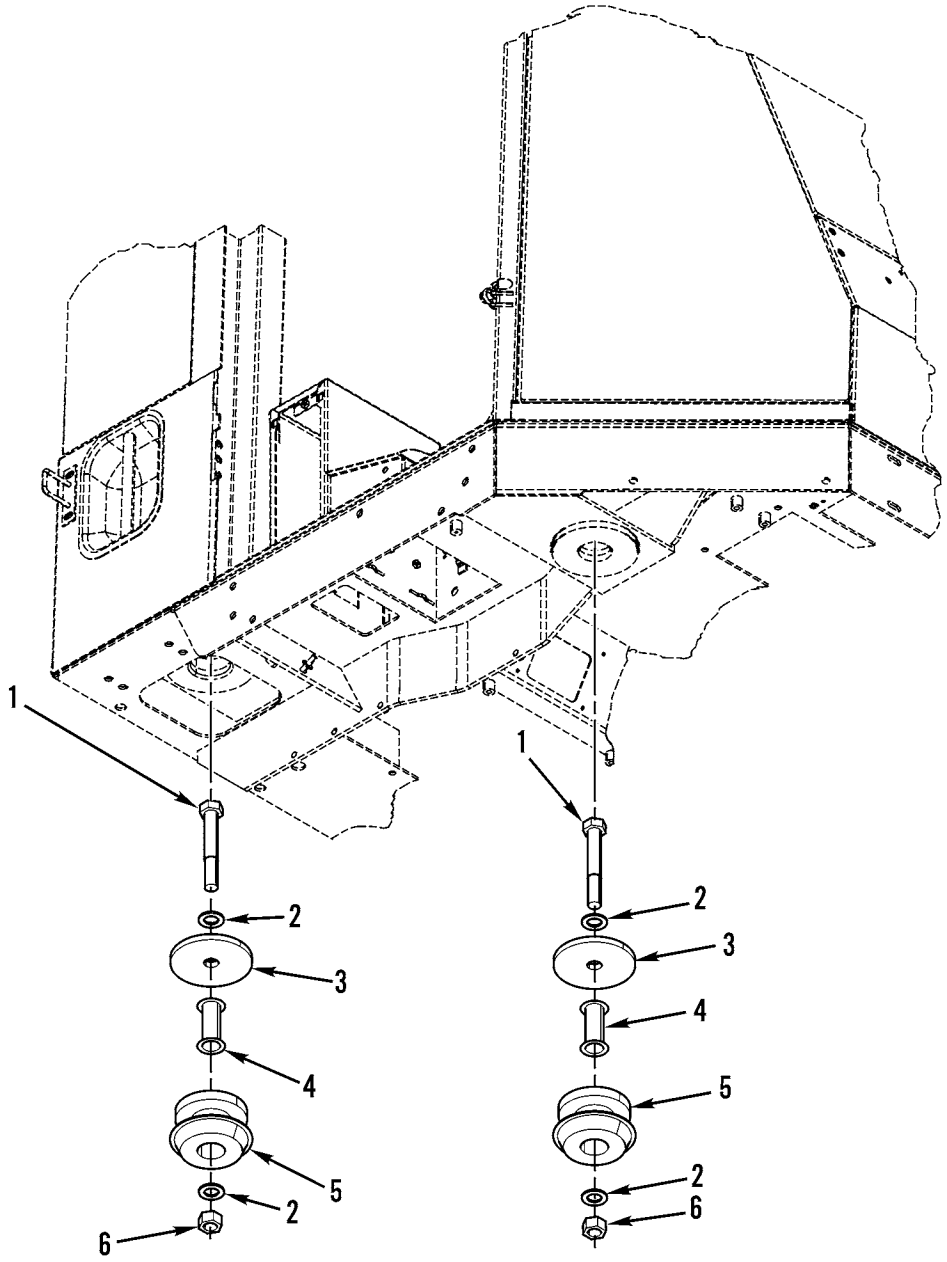

427-032

Figure 102. Cab Mounting

(1) ITEM NO	(2) SMR CODE	(3) NSN	(4) CAGEC	(5) PART NUMBER	(6) DESCRIPTION AND USABLE ON CODES(UOC)	(7) QTY
					GROUP 1801 BODY, CAB, HOOD, AND HULL ASSEMBLIES	
					FIG. 102 CAB MOUNTING	
1	PAFZZ	5306014734472	11083	7X2567	BOLT,SHOULDER M24 X 3 X 160MM.....	4
2	PAFZZ	5310014138769	11083	8T4167	WASHER,FLAT 26 X 44 X 4MM THK.....	6
3	PAFZZ	5310014389051	11083	8Y7119	WASHER,FLAT 26 X 144 X 12MM THK....	4
4	PAFZZ	5365014381967	11083	6Y2525	SPACER,SLEEVE.....	4
5	PAFZZ	5340014389799	11083	9W9940	BOLT ASSEMBLY,CLAMP MOUNT, RESILIENT,GENERAL.....	4
6	PAFZZ	5310014138767	11083	8T4001	NUT,PLAIN,HEXAGON M24 X 3THD.....	2
					END OF FIGURE	

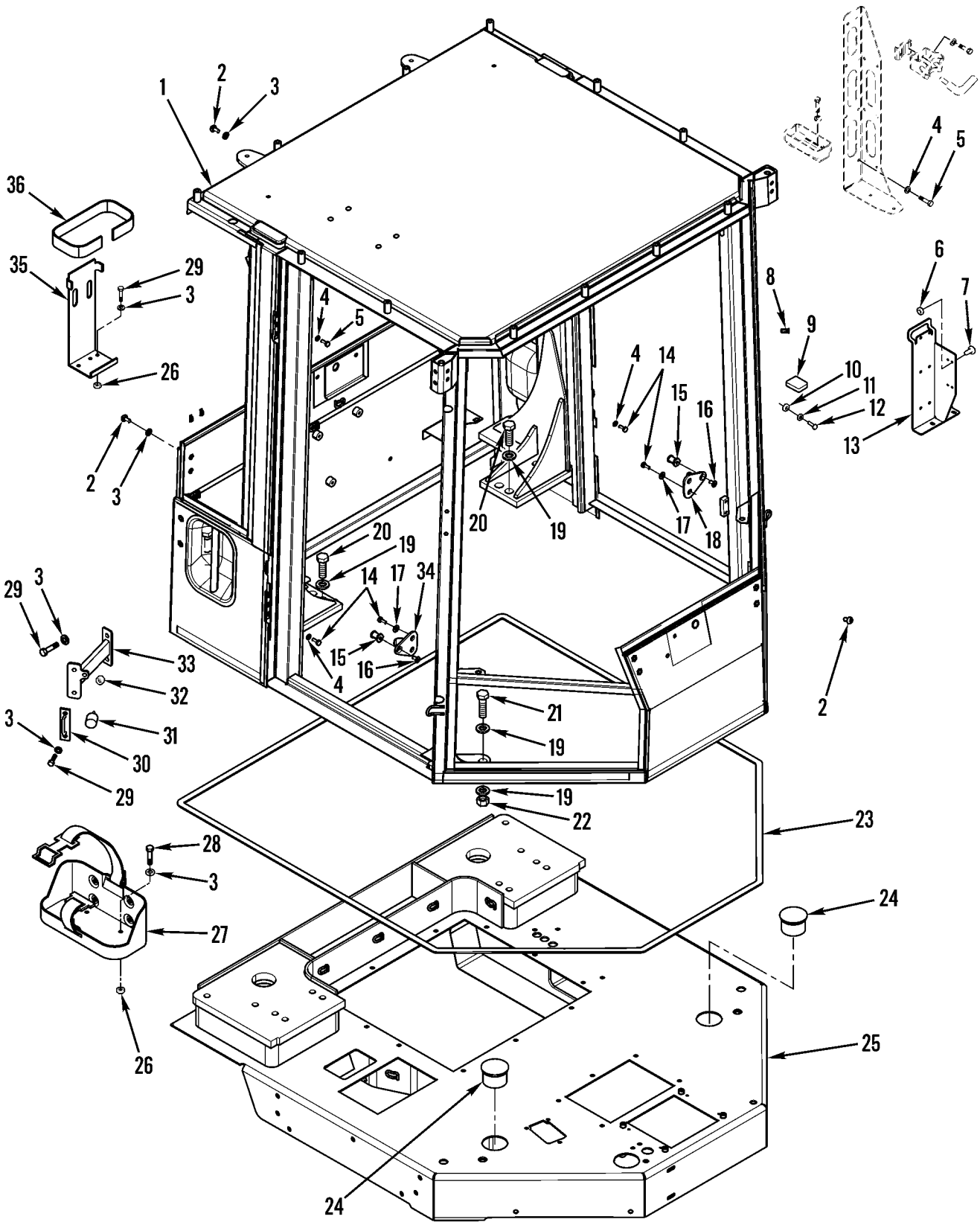

Figure 103. Cab

(1) ITEM NO	(2) SMR CODE	(3) NSN	(4) CAGEC	(5) PART NUMBER	(6) DESCRIPTION AND USABLE ON CODES(UOC)	(7) QTY
					GROUP 1801 BODY, CAB, HOOD, AND HULL ASSEMBLIES	
					FIG. 103 CAB	
1	PAFZZ	2510015514636	11083	2806994	CAB ASSEMBLY.....	1
2	PAOZZ	5305014310871	11083	9X2041	SCREW,MACHINE M10 X 1.5 X 20MM.....	8
3	PAOZZ	5310013522753	11083	8T4121	WASHER,FLAT 11 X 21 X 2.5MM THK....	12
4	PAOZZ	5310013598806	11083	8T4224	WASHER,FLAT 8.8 X 16 X 2MM THK.....	12
5	PAOZZ	5306014741843	11083	8T1158	BOLT,MACHINE M8 X 1.25 X 20MM-CAPSCREW.....	6
6	PAOZZ	5310014743064	11083	6D5801	NUT BLANK.....	4
7	PFOZZ	5305015448643	11083	7K3436	SCREW,SELF-LOCKING.....	4
8	PFOZZ	5325015449216	11083	1983393	INSERT,SCREW THREAD.....	4
9	PFOZZ	5340015450617	11083	2844868	SLIDING BLOCK RUBBER.....	1
10	PAOZZ	5310013533404	11083	5C2890	NUT,PLAIN,HEXAGON M6 X 1 THD.....	1
11	PAOZZ	5310014151606	11083	9X8256	WASHER,FLAT 6.6 X 12 X 2MM THK.....	2
12	PAOZZ	5306014293167	11083	8T4171	BOLT,MACHINE M6 X 1 X 12MM.....	1
13	PFOZZ	5340015448204	11083	2806988	BRACKET,MOUNTING.....	1
14	PAOZZ	5306013600927	11083	8T4189	BOLT,MACHINE M8 1.25 X 20MM.....	4
15	PFOZZ	2540015450084	11083	8Y6377	WEDGE,DOOR DOVETAIL.....	2
16	PAOZZ	5305015056963	11083	1084311	SCREW,SHOULDER 3/8-16 X 0.75 IN....	2
17	PAOZZ	5310010955910	11083	5P4116	WASHER,SQUARE CONE 8.8 X 20.5 X 2MM THK.....	4
18	PAOZZ	5340015511835	11083	1110204	STRIKE,CATCH RIGHT SIDE.....	1
19	PFOZZ	5310015448628	11083	1541580	WASHER,FLAT.....	16
20	PAOZZ	5306014309030	11083	7X2563	BOLT,MACHINE.....	12
21	PAOZZ	5306013599326	11083	8T4141	BOLT,MACHINE.....	2
22	PAOZZ	5310014714476	11083	8T4131	NUT,PLAIN,ROUND M20 X 2.5 THD.....	2
23	MOOZZ		11083	5P5643-550	SEAL,NONMETALLIC MAKE FROM SEAL P/N 5P5643, 217 INCHES (550 CM).....	1
24	PAOZZ	5340015450594	11083	8N9033	PLUG,PROTECTIVE,DUS.....	2
25	PFFZZ	2510015448908	11083	2285878	FLOOR,BODY,VEHICULA.....	1
26	PAOZZ	5310013527726	11083	8T4133	NUT,PLAIN,HEXAGON M10 X 1.5 THD....	5
27	PAOZZ	5340013422648	11083	5R6242	BRACKET,MOUNTING.....	1
28	PAOZZ	5305013601996	11083	8T4196	SCREW,CAP,HEXAGON H M10 X 1.5 X 35MM.....	3
29	PAOZZ	5306013600928	11083	8T4137	BOLT,MACHINE M10 X 1.5 X 20MM.....	4
30	PFOZZ	5340015448157	11083	1619645	STRIKE,CATCH.....	2
31	PFOZZ	5340015450500	11083	1782593	BUMPER.....	1
32	PAOZZ	5310013975100	11083	5C7261	NUT,PLAIN,HEXAGON M8 X 1.25 THD....	1
33	PFOZZ	2540015457727	11083	2341814	LATCH,DOOR,VEHICULA.....	1
34	PAOZZ	5340015511837	11083	1110209	STRIKE,CATCH LEFT SIDE.....	1
35	PFOZZ	5340015453494	11083	2844866	BRACKET,MOUNTING.....	1
36	PFOZZ	5340015456738	11083	2400362	STRAP,RETAINING.....	1
					END OF FIGURE	

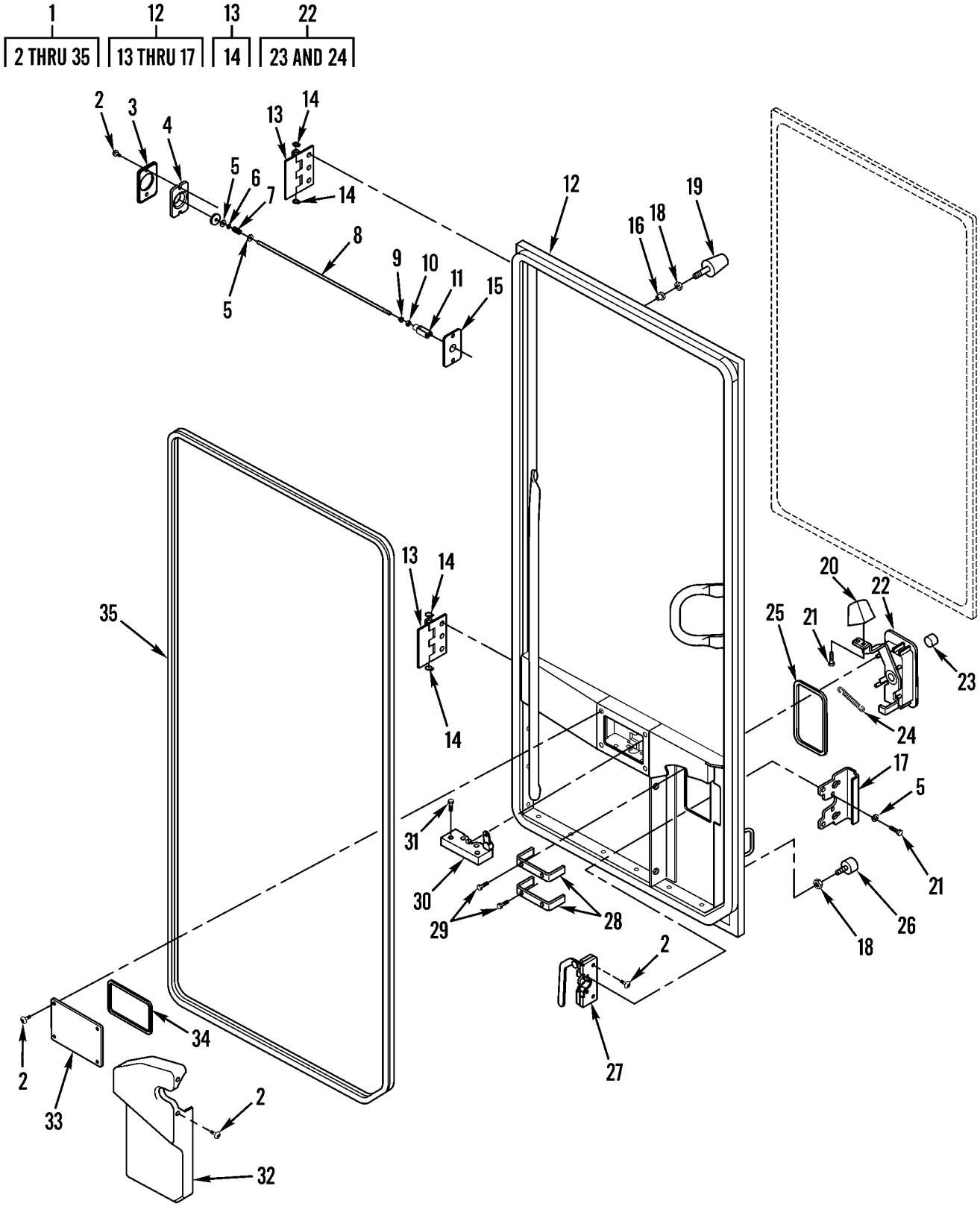

Figure 104. Door Assembly (Left Side)

(1) ITEM NO	(2) SMR CODE	(3) NSN	(4) CAGEC	(5) PART NUMBER	(6) DESCRIPTION AND USABLE ON CODES(UOC)	(7) QTY
					GROUP 1801 BODY, CAB, HOOD, AND HULL ASSEMBLIES	
					FIG. 104 DOOR ASSEMBLY (LEFT SIDE)	
1	PFOOO	2510015454095	11083	2857785	DOOR,VEHICULAR LH.....	1
2	PAOZZ	5305014389806	11083	9X2042	.SCREW,MACHINE M6 X 1 X 12MM.....	11
3	PFOZZ	5340015454217	11083	1619641	.PLATE,RETAINING,SEA.....	1
4	PFOZZ	5340015450078	11083	1619640	.COVER.....	1
5	PAOZZ	5310008412576	11083	8T4205	.WASHER,FLAT 7.2 X 14.5 X 2MM THK..	6
6	PFOZZ	5325015453055	11083	1418580	.RING,RETAINING.....	1
7	PFOZZ	5360015450476	11083	7W2108	.SPRING,HELICAL,COMP.....	1
8	PFOZZ	5340015448662	11083	1619642	.BAR,LATCH.....	1
9	PFOZZ	5365015448160	11083	3T5201	.BUSHING,NONMETALLIC.....	1
10	PAOZZ	5310013533404	11083	5C2890	.NUT,PLAIN,HEXAGON M6 X 1 THD.....	1
11	PAOZZ	2510015056836	11083	8T4742	.FRAME SECTION,STRUC ROD END-YOKE..	1
12	PAOZZ	2510015516639	11083	2857786	.DOOR,VEHICULAR LH.....	1
13	PFOZZ	2510015448952	11083	1076125	..HINGE,DOOR,VEHICULA.....	2
14	PFOZZ	5325015454219	11083	0962323	...RING,RETAINING.....	2
15	PFOZZ	5340015451476	11083	1619639	..PLATE,MOUNTING.....	1
16	PFOZZ	5325015453062	11083	1076104	..INSERT,SCREW THREAD.....	2
17	PFOZZ	5340015450082	11083	1076120	..PLATE,MOUNTING.....	1
18	PAOZZ	5310013975100	11083	5C7261	.NUT,PLAIN,HEXAGON M8 X 1.25 THD...	2
19	PAOZZ	5340014382813	11083	4E1384	.BUMPER CONICAL.....	1
20	PAOZZ	5340014388218	11083	7X2497	.HANDLE,MANUAL CONTR.....	1
21	PAOZZ	5305014398514	11083	8T4181	.SCREW,MACHINE M6 X 1 X 12MM.....	5
22	PFOZZ	2540015448656	11083	2857790	.HANDLE,DOOR,VEHICUL.....	1
23	PFOZZ	5340015462156	11083	2867094	..PLUG,PROTECTIVE,DUS.....	1
24	PAOZZ	5360014389030	11083	8Y4501	..SPRING,HELICAL,COMP.....	1
25	PAOZZ	5330014389044	11083	8Y6386	.GASKET.....	1
26	PFOZZ	5340015450500	11083	1782593	.BUMPER.....	1
27	PFOZZ	2540015448909	11083	9G2761	.LATCH,DOOR,VEHICULA.....	1
28	PAOZZ	5340014398521	11083	8T4747	.BRACKET,MOUNTING.....	2
29	PAOZZ	5305014389730	11083	8T4180	.SCREW,MACHINE M5 X 0.8 X 20MM.....	4
30	PFOZZ	2540015448635	11083	1682457	.LATCH,DOOR,VEHICULA.....	1
31	PAOZZ	5305014398527	11083	8T4971	.SCREW,MACHINE M6 X 1 X 30MM.....	4
32	PFOZZ	5340015456638	11083	1076117	.COVER,ACCESS LH.....	1
33	PFOZZ	5340015448162	11083	1619647	.COVER,ACCESS.....	1
34	PFOZZ	5330015449220	11083	1693995	.SEAL,PLAIN.....	1
35	MOOZZ		11083	3E3805-420	.GASKET MAKE FROM GASKET P/N 3E3805	1
					END OF FIGURE	

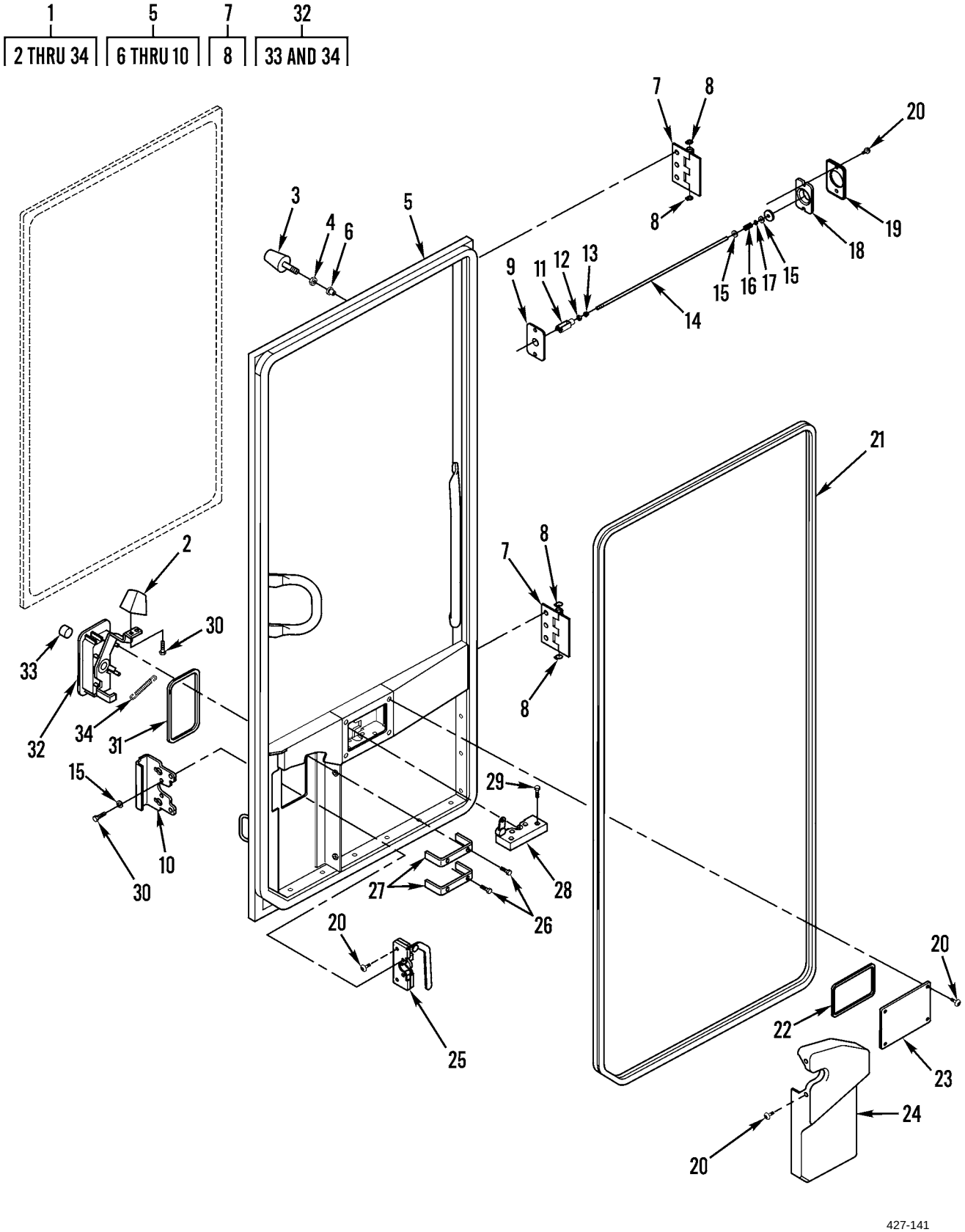

Figure 105. Door Assembly (Right Side)

(1) ITEM NO	(2) SMR CODE	(3) NSN	(4) CAGEC	(5) PART NUMBER	(6) DESCRIPTION AND USABLE ON CODES(UOC)	(7) QTY
					GROUP 1801 BODY, CAB, HOOD, AND HULL ASSEMBLIES	
					FIG. 105 DOOR ASSEMBLY (RIGHT SIDE)	
1	PFOOO	2510015454106	11083	2857787	DOOR,VEHICULAR RH.....	1
2	PAOZZ	5340014388218	11083	7X2497	.HANDLE,MANUAL CONTR.....	1
3	PAOZZ	5340014382813	11083	4E1384	.BUMPER CONICAL.....	1
4	PAOZZ	5310013975100	11083	5C7261	.NUT,PLAIN,HEXAGON M8 X 1.25 THD...	2
5	PAOZZ	2510015512458	11083	2857788	.DOOR,VEHICULAR RH.....	1
6	PFOZZ	5325015453062	11083	1076104	..INSERT,SCREW THREAD.....	2
7	PFOZZ	2510015448952	11083	1076125	..HINGE,DOOR,VEHICULA.....	2
8	PFOZZ	5325015454219	11083	0962323	...RING,RETAINING.....	2
9	PFOZZ	5340015451476	11083	1619639	..PLATE,MOUNTING.....	1
10	PFOZZ	5340015450082	11083	1076120	..PLATE,MOUNTING.....	1
11	PAOZZ	2510015056836	11083	8T4742	.FRAME SECTION,STRUC ROD END-YOKE..	1
12	PAOZZ	5310013533404	11083	5C2890	.NUT,PLAIN,HEXAGON M6 X 1 THD.....	1
13	PFOZZ	5365015448160	11083	3T5201	.BUSHING,NONMETALLIC.....	1
14	PFOZZ	5340015448662	11083	1619642	.BAR,LATCH.....	1
15	PAOZZ	5310008412576	11083	8T4205	.WASHER,FLAT 7.2 X 14.5 X 2MM THK..	6
16	PFOZZ	5360015450476	11083	7W2108	.SPRING,HELICAL,COMP.....	1
17	PFOZZ	5325015453055	11083	1418580	.RING,RETAINING.....	1
18	PFOZZ	5340015450078	11083	1619640	.COVER.....	1
19	PFOZZ	5340015454217	11083	1619641	.PLATE,RETAINING,SEA.....	1
20	PAOZZ	5305014389806	11083	9X2042	.SCREW,MACHINE M6 X 1 X 12MM.....	11
21	MOOZZ		11083	3E3805-420	.GASKET MAKE FROM GASKET P/N 3E3805	1
22	PFOZZ	5330015449220	11083	1693995	.SEAL,PLAIN.....	1
23	PFOZZ	5340015448162	11083	1619647	.COVER,ACCESS.....	1
24	PFOZZ	5340015450503	11083	1110202	.COVER,ACCESS RH.....	1
25	PFOZZ	2540015448909	11083	9G2761	.LATCH,DOOR,VEHICULA.....	1
26	PAOZZ	5305014389730	11083	8T4180	.SCREW,MACHINE.....	4
27	PAOZZ	5340014398521	11083	8T4747	.BRACKET,MOUNTING.....	2
28	PFOZZ	2540015451779	11083	1682458	.LATCH,DOOR,VEHICULA.....	1
29	PAOZZ	5305014398527	11083	8T4971	.SCREW,MACHINE M6 X 1 X 30MM.....	4
30	PAOZZ	5305014398514	11083	8T4181	.SCREW,MACHINE M6 X 1 X 12MM.....	5
31	PAOZZ	5330014389044	11083	8Y6386	.GASKET.....	1
32	PFOZZ	2540015454133	11083	2857791	.HANDLE,DOOR,VEHICUL.....	1
33	PFOZZ	5340015462156	11083	2867094	..PLUG,PROTECTIVE,DUS.....	1
34	PAOZZ	5360014389030	11083	8Y4501	..SPRING,HELICAL,COMP.....	1
					END OF FIGURE	

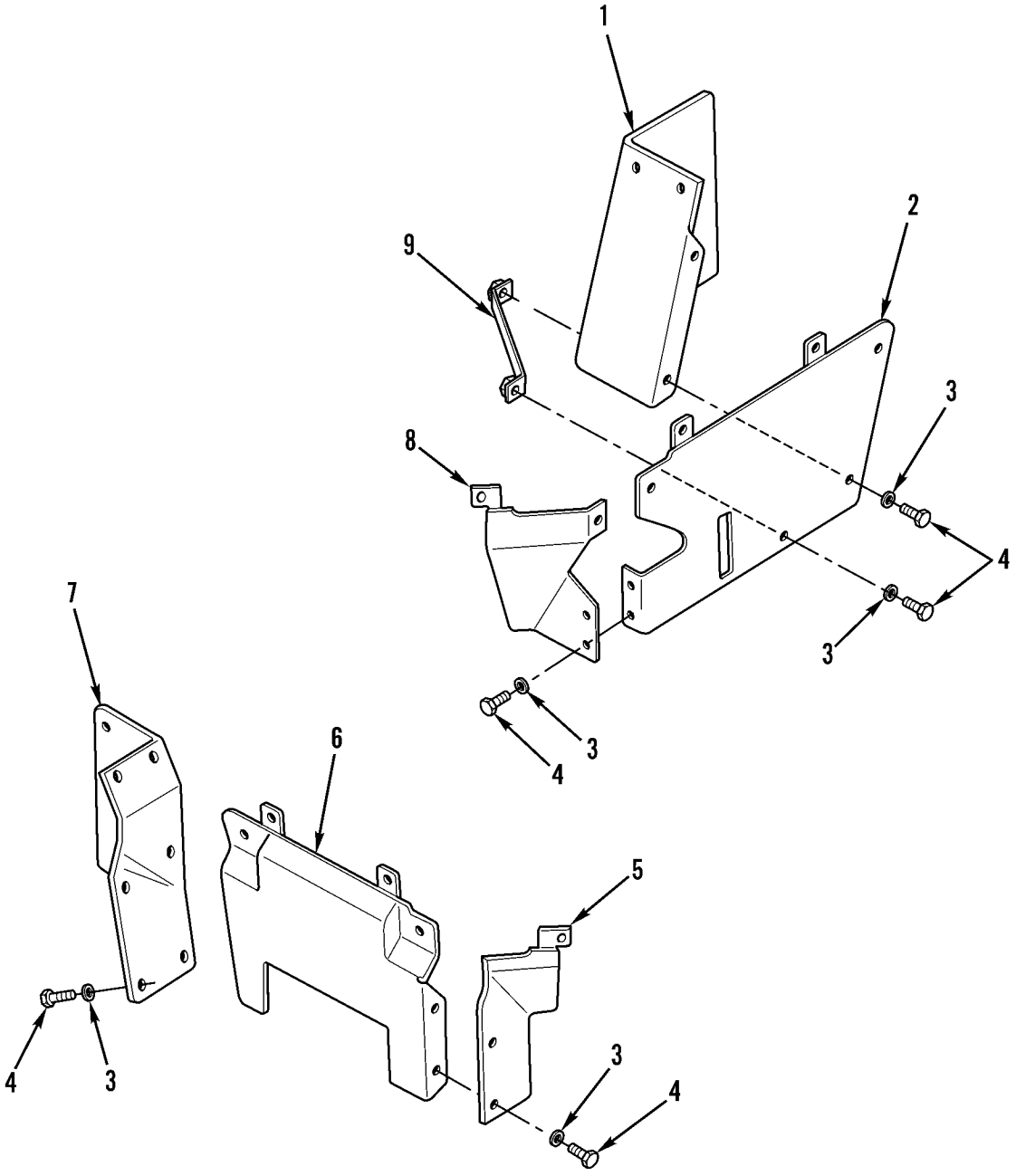

427-139

Figure 106. Chassis Guards and Covers

(1) ITEM NO	(2) SMR CODE	(3) NSN	(4) CAGEC	(5) PART NUMBER	(6) DESCRIPTION AND USABLE ON CODES(UOC)	(7) QTY
					GROUP 1801 BODY, CAB, HOOD, AND HULL ASSEMBLIES	
					FIG. 106 CHASSIS GUARDS AND COVERS	
1	PFOZZ	2510015448741	11083	1280782	PANEL,BODY,VEHICULA.....	1
2	PFOZZ	2510015451814	11083	1280784	PANEL,BODY,VEHICULA.....	1
3	PAOZZ	5310013522753	11083	8T4121	WASHER,FLAT 11 X 21 X 2.5MM THK....	23
4	PAOZZ	5306013600928	11083	8T4137	BOLT,MACHINE M10 X 1.5 X 20MM.....	23
5	PFOZZ	2510015448753	11083	1621983	PANEL,BODY,VEHICULA.....	1
6	PFOZZ	2510015456974	11083	1621982	PANEL,BODY,VEHICULA.....	1
7	PFOZZ	2510015448738	11083	1621981	PANEL,BODY,VEHICULA.....	1
8	PFOZZ	2510015458460	11083	1621984	PANEL,BODY,VEHICULA.....	1
9	PFOZZ	5340015448619	11083	1323543	BRACKET,ANGLE.....	1
					END OF FIGURE	

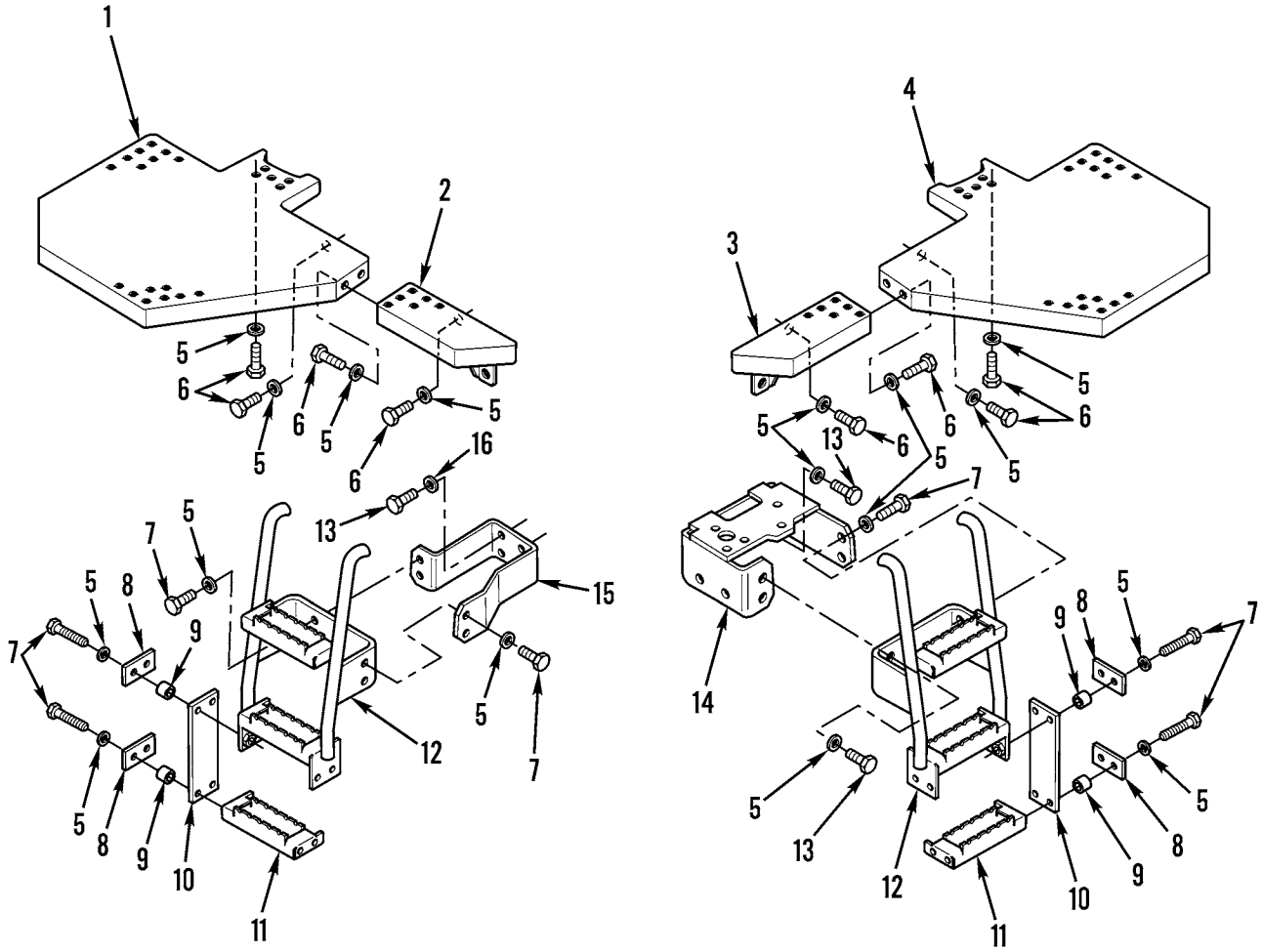

427-136

Figure 107. Ladder and Related Parts

(1) ITEM NO	(2) SMR CODE	(3) NSN	(4) CAGEC	(5) PART NUMBER	(6) DESCRIPTION AND USABLE ON CODES(UOC)	(7) QTY
					GROUP 1801 BODY, CAB, HOOD, AND HULL ASSEMBLIES	
					FIG. 107 LADDER AND RELATED PARTS	
1	PFOZZ	2510015448766	11083	2020392	FRAME,STRUCTURAL VE RH.....	1
2	PFOZZ	5440015449603	11083	1345215	LADDER,SAFETY STEP.....	1
3	PFOZZ	5440015449595	11083	1345214	LADDER,SAFETY STEP.....	1
4	PFOZZ	2510015458111	11083	2020393	FRAME,STRUCTURAL,VE LH.....	1
5	PAOZZ	5310014309036	11083	7X7729	WASHER,FLAT 11 X 25 X 3MM THK.....	52
6	PAOZZ	5306013601634	11083	8T4136	BOLT,MACHINE M10 X 1.5 X 25MM.....	22
7	PAOZZ	5306013600932	11083	8T4186	BOLT,MACHINE M10 X 1.5 X 40MM.....	24
8	PFOZZ	5340015452342	11083	1539706	PLATE,MOUNTING.....	8
9	PFOZZ	5365015450467	11083	1542302	SPACER,SLEEVE.....	16
10	PFOZZ	5340015448180	11083	1534856	MOUNT,RESILIENT,GEN.....	4
11	PFOZZ	5440015449609	11083	2153886	LADDER,SAFETY STEP.....	2
12	PFOZZ	2540015448760	11083	1409189	LADDER,VEHICLE BOAR.....	2
13	PAOZZ	5305013981284	11083	8T4195	SCREW,CAP,HEXAGON H M10 X 1.5 X 30MM.....	8
14	PFOZZ	2590015451860	11083	2515641	BRACKET,VEHICULAR C.....	1
15	PFOZZ	2590015458482	11083	1890942	BRACKET,VEHICULAR C.....	1
16	PAOZZ	5310014293253	11083	8T4222	WASHER,FLAT 11 X 32 X 3.5MM THK....	2
					END OF FIGURE	

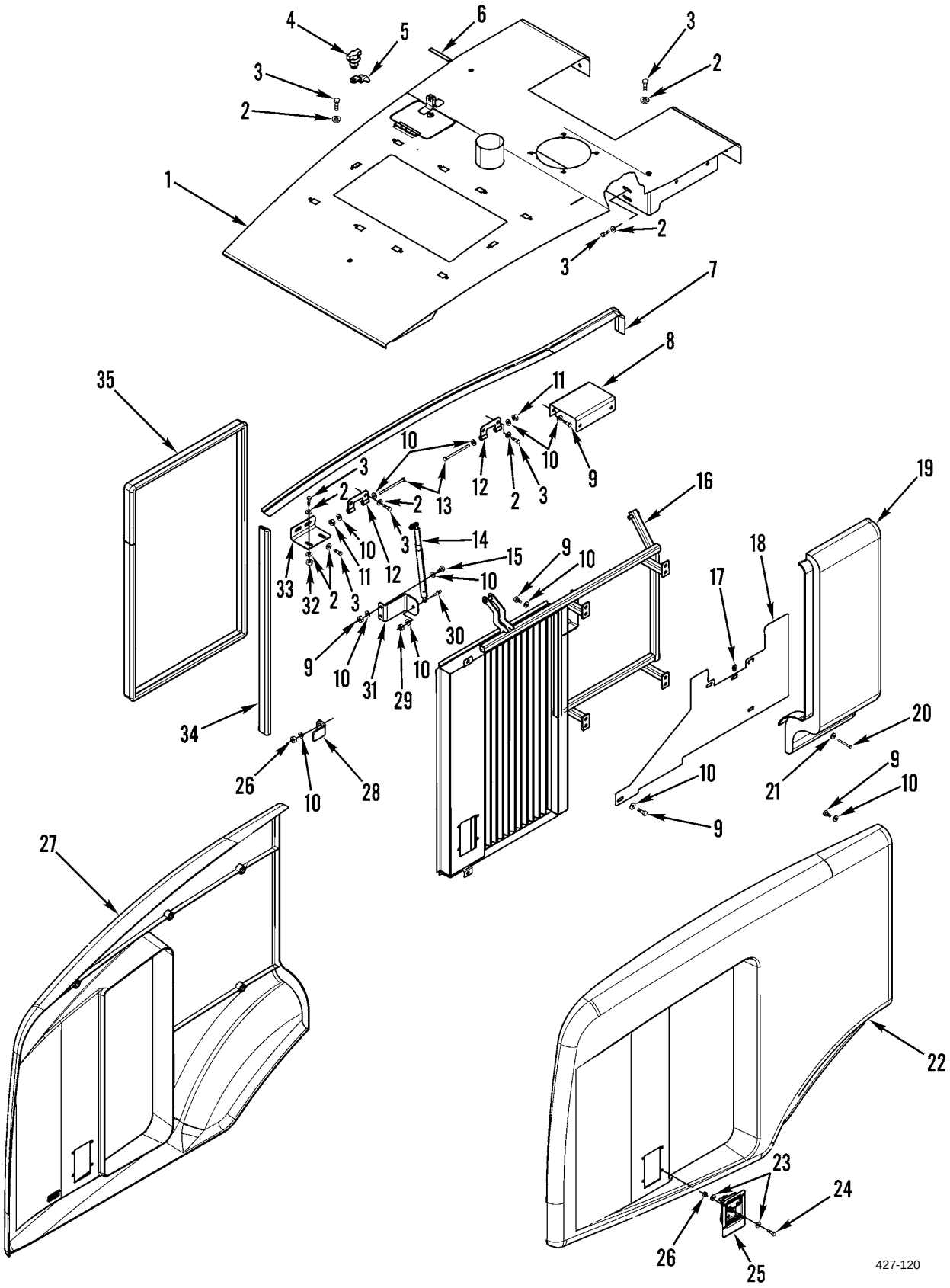

Figure 108. Hood, Side Covers, and Related Parts

(1) ITEM NO	(2) SMR CODE	(3) NSN	(4) CAGEC	(5) PART NUMBER	(6) DESCRIPTION AND USABLE ON CODES(UOC)	(7) QTY
					GROUP 1801 BODY, CAB, HOOD, AND HULL ASSEMBLIES	
					FIG. 108 HOOD, SIDE COVERS, AND RELATED PARTS	
1	PFOZZ	2510015450094	11083	2804276	HOOD,ENGINE COMPART.....	1
2	PAOZZ	5310014309036	11083	7X7729	WASHER,FLAT 11 X 25 X 3MM THK.....	35
3	PAOZZ	5305013981284	11083	8T4195	SCREW,CAP,HEXAGON H M10 X 1.5 X 30MM.....	31
4	PFOZZ	5340015456297	11083	1746381	BOLT,LOCK.....	1
5	MOOZZ		11083	5P5637-10	SEAL,RUBBER STRIP MAKE FROM SEAL P/N 5P5637, 4 INCHES (10CM).....	1
6	PAOZZ	3040014741720	11083	1189587	CAM,CONTROL.....	1
7	MOOZZ		11083	1367728-180	SEAL-COMPOSITE MAKE FROM SEAL P/N 1367728, 70.9 INCHES (1 80CM).....	2
8	PFOZZ	5340015453079	11083	1988961	BRACKET,MOUNTING.....	2
9	PAOZZ	5306013600927	11083	8T4189	BOLT,MACHINE M8 1.25 X 20MM.....	18
10	PAOZZ	5310013598806	11083	8T4224	WASHER,FLAT 8.8 X 16 X 2MM THK.....	42
11	PAOZZ	5310014741733	11083	1313540	NUT,SELF-LOCKING,HE.....	4
12	PFOZZ	2510015456758	11083	1988933	HINGE,DOOR,VEHICULA.....	4
13	PFOZZ	5306015453042	11083	7X2540	BOLT,MACHINE M8 X 1.25 X 120MM.....	4
14	PAOZZ	2540015513428	11083	2287696	CYLINDER ASSEMBLY,R STRUT.....	2
15	PAOZZ	5305013981282	11083	8T4908	SCREW,CAP,HEXAGON H M8 X 1.25 X 25MM.....	4
16	PFOZZ	2510015451937	11083	2253800	FRAME,STRUCTURAL,VE RH.....	1
16	PFOZZ	2510015456677	11083	2253801	FRAME,STRUCTURAL,VE LH.....	1
17	PAOZZ	5310015055512	11083	1728591	NUT,PLAIN,HEXAGON.....	2
18	PFOZZ	5340015450620	11083	1988959	PLATE,MOUNTING.....	2
19	PFOZZ	2510015451935	11083	1988954	PANEL,BODY,VEHICULA RH COVER.....	1
19	PFOZZ	2510015457712	11083	1988955	PANEL,BODY,VEHICULA LH COVER.....	1
20	PAOZZ	5306014137706	11083	7X2535	BOLT,SHOULDER M6 X 1 X 60MM.....	2
21	PAOZZ	5310010980634	11083	5P4115	WASHER,FLAT 7.2 X 19 X 2MM THK.....	2
22	PFOZZ	2510015452042	11083	1988945	HOOD,ENGINE COMPART RH.....	1
23	PAOZZ	5310008412576	11083	8T4205	WASHER,FLAT 7.2 X 14.5 X 2MM THK...	16
24	PAOZZ	5306014135287	11083	8T4138	BOLT,SHOULDER M6 X 1 X 20MM.....	8
25	PFOZZ	5340015450619	11083	7X2484	HANDLE UNIT,DOOR.....	2
26	PAOZZ	5310013533404	11083	5C2890	NUT,PLAIN,HEXAGON M6 X 1 THD.....	8
27	PFOZZ	2510015457688	11083	1988946	HOOD,ENGINE COMPART LH.....	1
28	PFOZZ	5340015448681	11083	1988942	BRACKET,MOUNTING.....	2
29	PAOZZ	5310013975100	11083	5C7261	NUT,PLAIN,HEXAGON M8 X 1.25 THD....	12
30	PFOZZ	5307015450506	11083	1301916	STUD,BALL.....	4
31	PFOZZ	5340015448222	11083	1988943	BRACKET,DOUBLE ANGL.....	2
32	PAOZZ	5310013527726	11083	8T4133	NUT,PLAIN,HEXAGON M10 X 1.5 THD....	4
33	PFOZZ	5340015453498	11083	1988944	BRACKET,MOUNTING.....	2
34	MOOZZ		11083	9X8699-91.2	SEAL MAKE FROM SEAL P/N 9X8699, 36 INCHES (91.2 CM).....	2
35	MOOZZ		11083	9X8699-306.3	SEAL MAKE FROM SEAL P/N 9X8699, 120.6 INCHES (3 06.3CM).....	2
					END OF FIGURE	

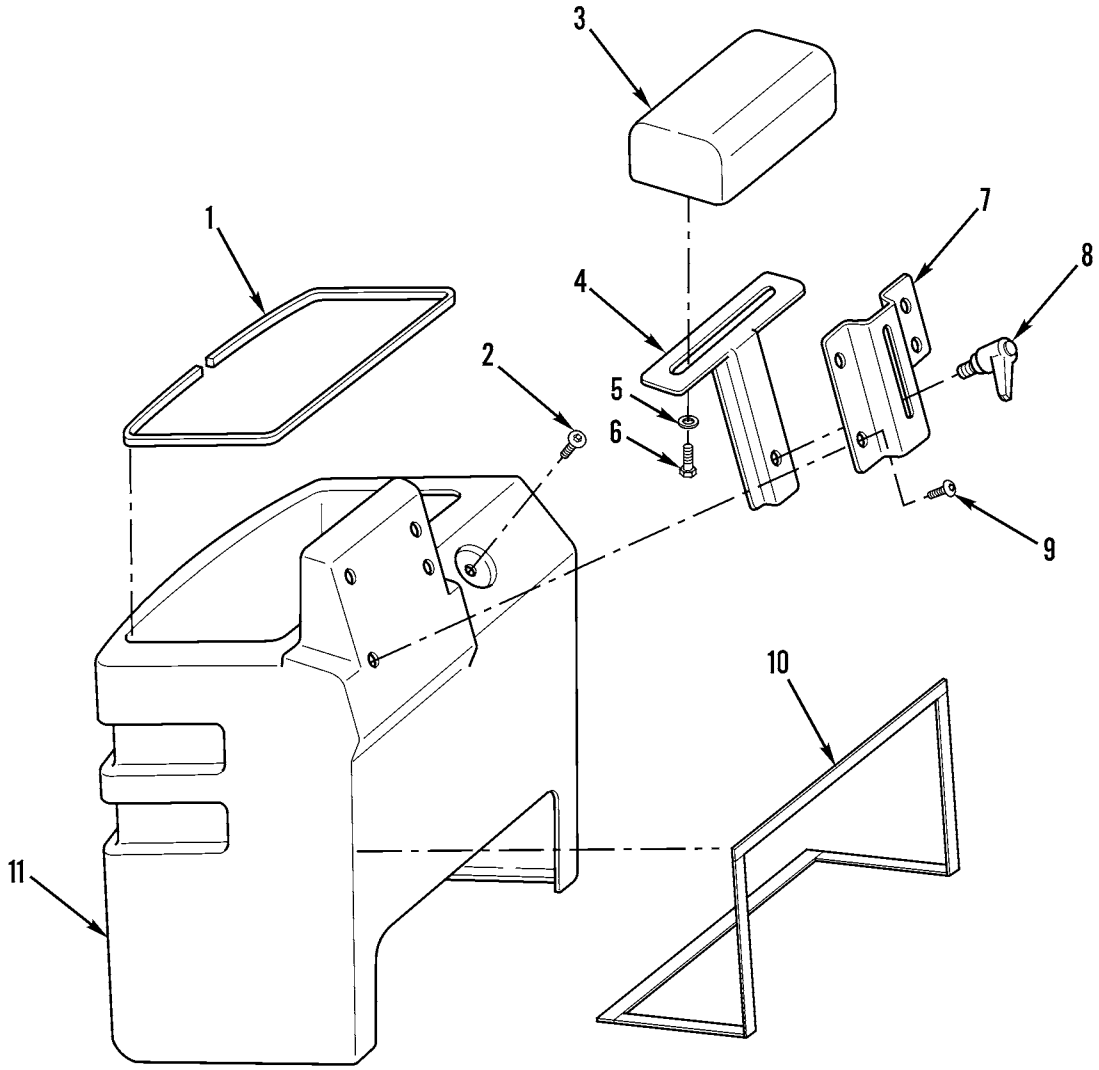

427-100

Figure 109. Joystick Console

(1) ITEM NO	(2) SMR CODE	(3) NSN	(4) CAGEC	(5) PART NUMBER	(6) DESCRIPTION AND USABLE ON CODES(UOC)	(7) QTY
					GROUP 1801 BODY, CAB, HOOD, AND HULL ASSEMBLIES	
					FIG. 109 JOYSTICK CONSOLE	
1	MOOZZ		11083	3E3892-76	GASKET MAKE FROM GASKET P/N 3E3892, 30 INCHES (76 CM).....	1
2	PFOZZ	5305015436495	11083	3E8020	SCREW,MACHINE M6 X 1 X 25MM.....	2
3	PAOZZ	2540014741756	11083	4E1062	ARMREST,VEHICULAR.....	1
4	PFOZZ	5340015448166	11083	1110149	BRACKET,MOUNTING.....	1
5	PAOZZ	5310008412576	11083	8T4205	WASHER,FLAT 7.2 X 14.5 X 2MM THK...	2
6	PAOZZ	5306014135287	11083	8T4138	BOLT,SHOULDER M6 X 1 X 20MM.....	2
7	PAOZZ	5340014742100	11083	1117875	PLATE,MOUNTING.....	1
8	PFOZZ	5340015451487	11083	1872082	HANDLE,MANUAL CONTR.....	1
9	PAOZZ	5305014389806	11083	9X2042	SCREW,MACHINE M6 X 1 X 12MM.....	6
10	MOOZZ		11083	3E3892-120	GASKET MAKE FROM GASKET P/N 3E3892, 47.3 INCHES (120CM).....	1
11	PFOZZ	5340015450577	11083	2261832	COVER,ACCESS.....	1
					END OF FIGURE	

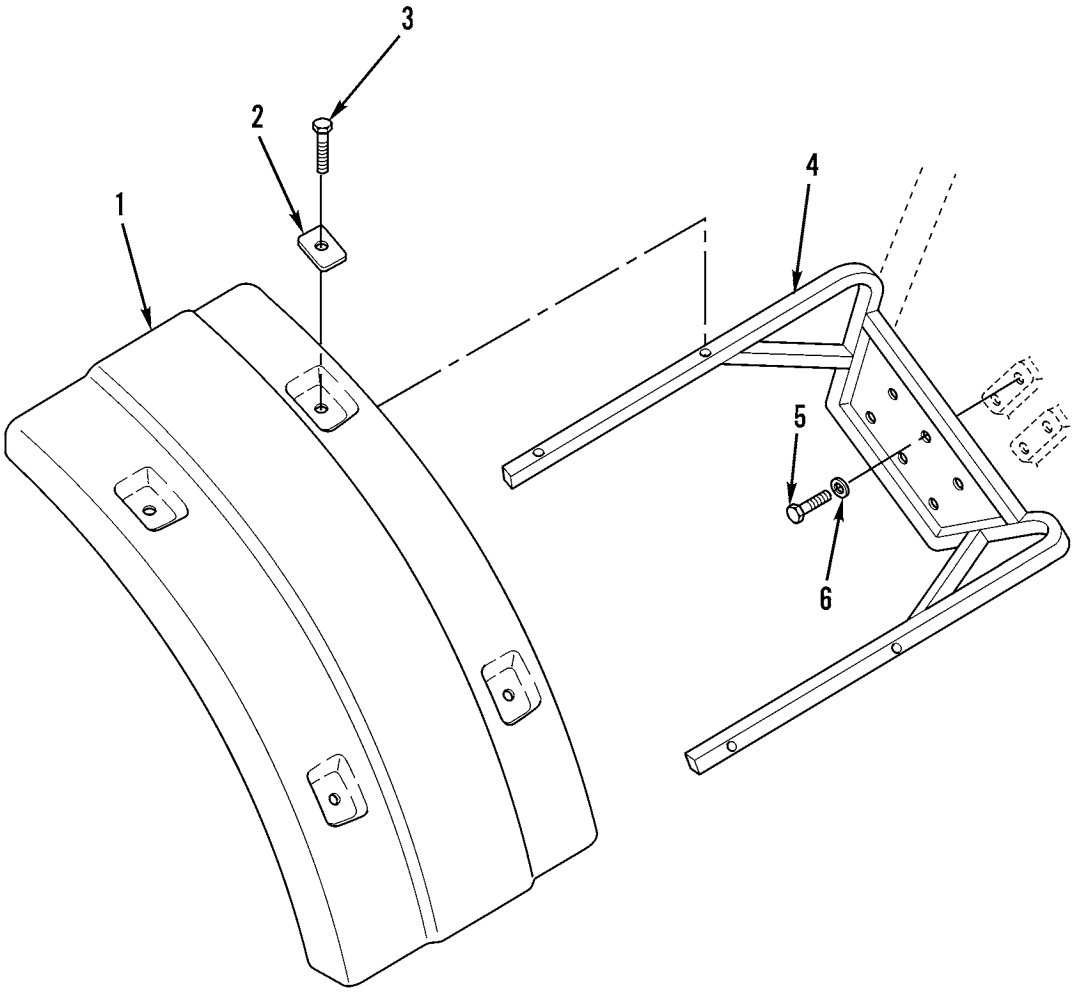

427-083

Figure 110. Front Fender

(1) ITEM NO	(2) SMR CODE	(3) NSN	(4) CAGEC	(5) PART NUMBER	(6) DESCRIPTION AND USABLE ON CODES(UOC)	(7) QTY
					GROUP 1802 FENDERS, RUNNING BOARDS WITH MOUNTING AND ATTACHING PARTS, OUTRIGGERS, WINDSHIELD, GLASS, ETC.	
					FIG. 110 FRONT FENDER	
1	PFOZZ	2510015456712	11083	2149563	FENDER,VEHICULAR.....	2
2	PFOZZ	5340015439463	11083	2149564	PLATE,MOUNTING.....	8
3	PFOZZ	5306015436217	11083	2040813	BOLT,MACHINE M6 X 1 X 40MM.....	8
4	PFOZZ	5340015436195	11083	1409296	BRACKET,MOUNTING.....	2
5	PAOZZ	5306013601634	11083	8T4136	BOLT,MACHINE M10 X 1.5 X 25MM.....	8
6	PAOZZ	5310014309036	11083	7X7729	WASHER,FLAT 11 X 25 X 3MM THK.....	8
					END OF FIGURE	

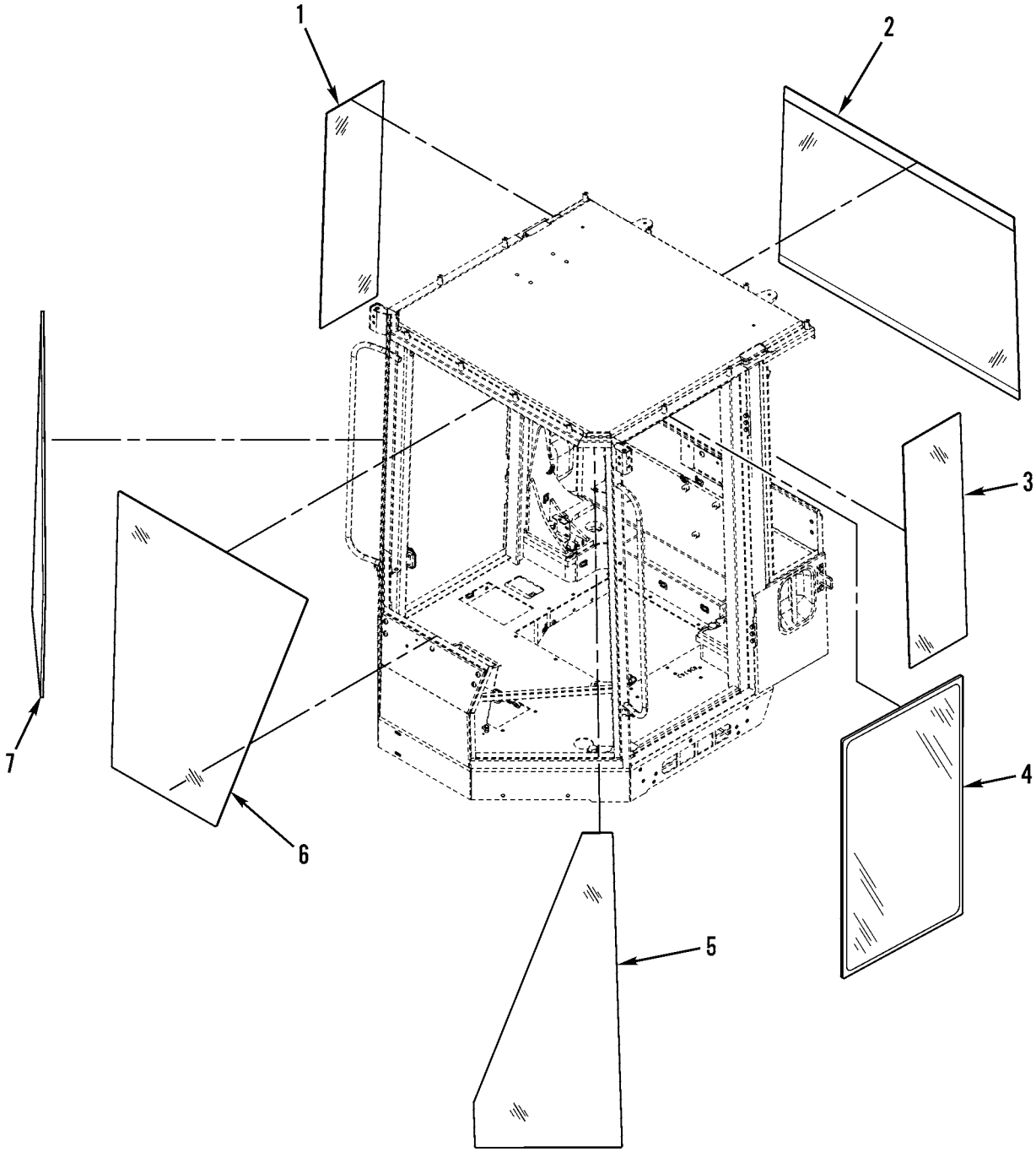

427-137

Figure 111. Cab Windows

(1) ITEM NO	(2) SMR CODE	(3) NSN	(4) CAGEC	(5) PART NUMBER	(6) DESCRIPTION AND USABLE ON CODES(UOC)	(7) QTY
					GROUP 1802 FENDERS, RUNNING BOARDS WITH MOUNTING AND ATTACHING PARTS, OUTRIGGERS, WINDSHIELD, GLASS, ETC.	
					FIG. 111 CAB WINDOWS	
1	PAFZZ	9340015513180	11083	1110178	GLASS,LAMINATED RIGHT SIDE.....	1
2	PAFZZ	9340015513390	11083	1618042	GLASS,LAMINATED REAR.....	1
3	PAFZZ	9340015513379	11083	1076146	GLASS,LAMINATED LEFT SIDE.....	1
4	PAOZZ	9340015513370	11083	1622189	GLASS,LAMINATED DOOR.....	2
5	PAFZZ	9340015513412	11083	1076144	GLASS,LAMINATED LEFT FRONT.....	1
6	PAFZZ	2510015513418	11083	1076145	GLASS,LAMINATED WINDSHIELD.....	1
7	PAFZZ	9340015513381	11083	1110177	GLASS,LAMINATED RIGHT FRONT.....	1
					END OF FIGURE	

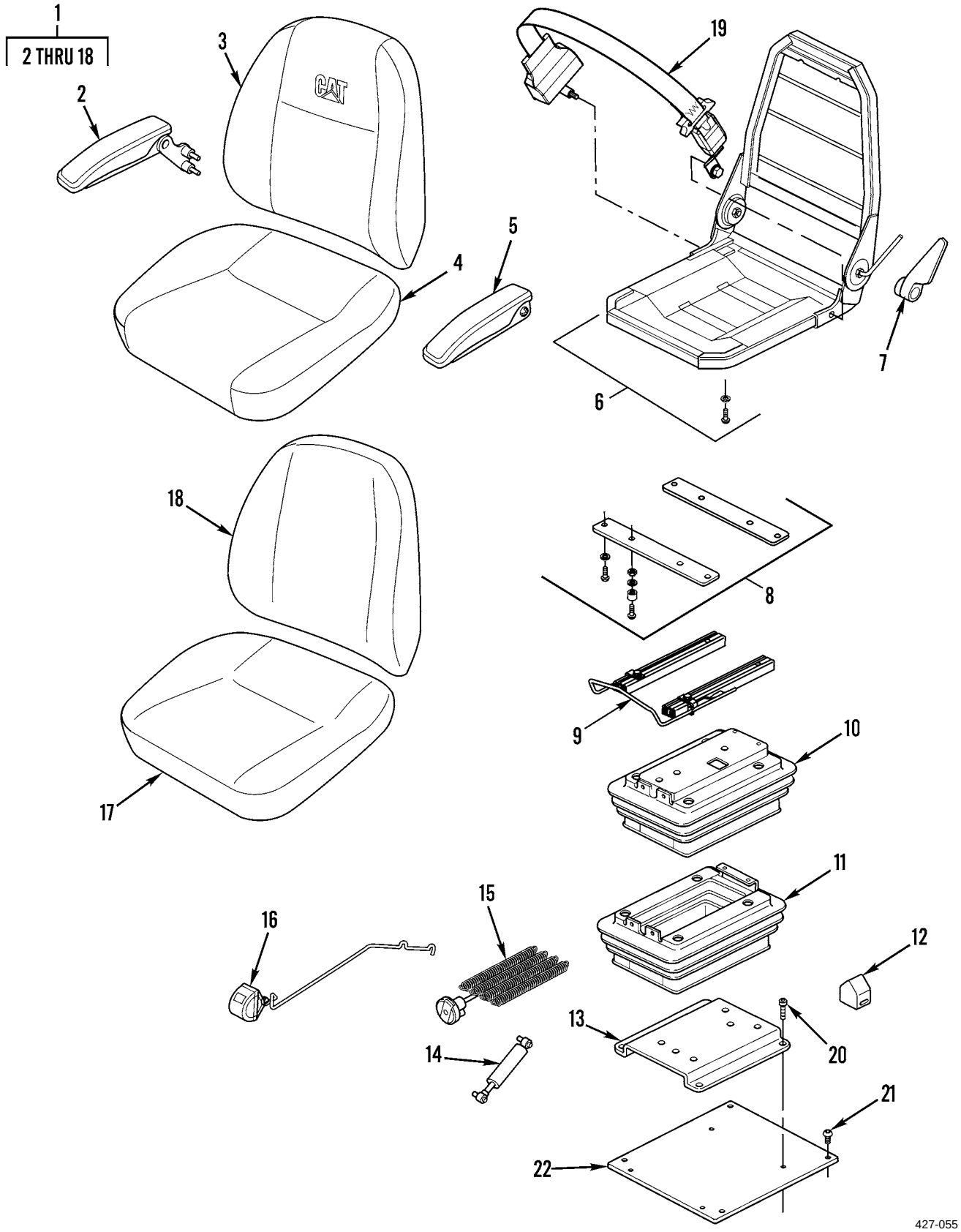

Figure 112. Seat

(1) ITEM NO	(2) SMR CODE	(3) NSN	(4) CAGEC	(5) PART NUMBER	(6) DESCRIPTION AND USABLE ON CODES(UOC)	(7) QTY
					GROUP 1806 UPHOLSTERY SEATS AND CARPETS	
					FIG. 112 SEAT	
1	PAOOO	2540015435675	11083	2337387	SEAT,VEHICULAR.....	1
2	PFOZZ	2540015445962	11083	2428764	.ARMREST,VEHICULAR.....	1
3	PFOZZ	2540015433684	11083	1554957	.COVER,KIT.....	1
4	PFOZZ	2540015445954	11083	1561685	.COVER,SEAT,VEHICULA.....	1
5	PFOZZ	2540015433826	11083	2428765	.ARMREST,VEHICULAR.....	1
6	PAOZZ	2540015438677	11083	2024732	.FRAME,SEAT VEHICULA.....	1
7	PFOZZ	5340015435022	11083	2506013	.LEVER,MANUALCONTROL.....	1
8	PAOZZ	2540015441825	11083	2506011	.SUPPORT,SEAT,VEHICU.....	1
9	PAOZZ	2540015441956	11083	2506012	.BAR,GUIDE,VEHICULAR.....	1
10	PAOZZ	2540015438682	11083	2024738	.SUPPORT SEAT,VEHICU.....	1
11	PFOZZ	5340015446088	11083	2134574	.COVER,ACCESS.....	1
12	PFOZZ	5340015436593	11083	2024739	.BUMPER.....	1
13	PAOZZ	5340015446085	11083	2041126	.PLATE,MOUNTING.....	1
14	PFOZZ	2540015433717	11083	2024736	.CYLINDER,ASSEMBLY.....	1
15	PFOZZ	2540015433729	11083	2134579	.ADJUSTER,VEHICULARS.....	1
16	PFOZZ	2540015445959	11083	2134576	.ADJUSTER,VEHICULARS.....	1
17	PAOZZ	2590015143269	11083	1105059	.FOAM KIT.....	1
18	PAOZZ	2590015143268	11083	1105056	.FOAM KIT.....	1
19	PAOZZ	2540015435512	11083	2237937	BELT,VEHICULAR,SAFE.....	1
20	PAOZZ	5305015446087	11083	1139232	SCREW,CAP,SOCKET HE.....	4
21	PAOZZ	5305014310871	11083	9X2041	SCREW,MACHINE M10 X 1.5 X 20MM.....	4
22	PAOZZ	5340015446084	11083	1187236	PLATE,MOUNTING.....	1
					END OF FIGURE	

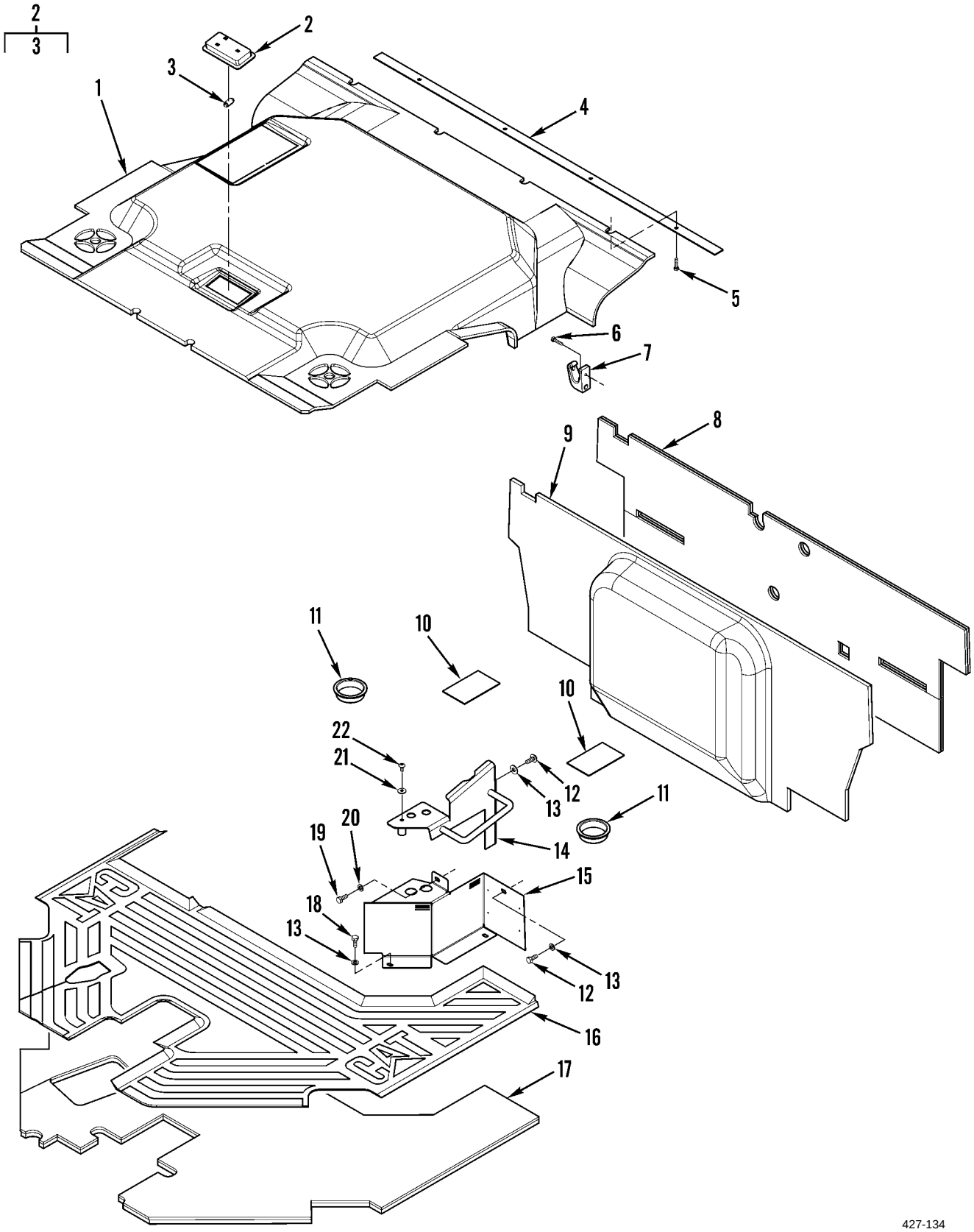

Figure 113. Cab Liners

(1) ITEM NO	(2) SMR CODE	(3) NSN	(4) CAGEC	(5) PART NUMBER	(6) DESCRIPTION AND USABLE ON CODES(UOC)	(7) QTY
					GROUP 1806 UPHOLSTERY SEATS AND CARPETS	
					FIG. 113 CAB LINERS	
1	PFOZZ	2510015451784	11083	2402562	INSULATION PANEL,VE HEADLINER.....	1
2	PFOZZ	6220015449572	11083	1076032	LIGHT,DOME.....	1
3	PFOZZ	6240015449579	11083	2591286	.LAMP,INCANDESCENT.....	1
4	PFOZZ	5340015452338	11083	1455307	PLATE,MOUNTING.....	1
5	PAOZZ	5305013601004	11083	6V8490	SCREW,CAP,HEXAGON H M6 X 1 X 25MM..	4
6	PAOZZ	5305014310874	11083	9X2045	SCREW,MACHINE M6 X 1 X 20MM.....	1
7	PAOZZ	5340014297873	11083	6V8928	HOOK,SUPPORT.....	1
8	PFOZZ	2510015448696	11083	1805098	INSULATION PANEL,VE.....	1
9	PFOZZ	5340015448707	11083	2402563	COVER,FITTED,VEHICU LINER.....	1
10	PFOZZ	5340015454972	11083	1276510	COVER,ACCESS.....	2
11	PFOZZ	5340015450594	11083	8N9033	PLUG,PROTECTIVE,DUS.....	2
12	PFOZZ	5305015450174	11083	1272170	SCREW,MACHINE.....	1
13	PAOZZ	5310010955910	11083	5P4116	WASHER,SQUARE CONE 8.8 X 20.5 X 2MM THK.....	1
14	PFOZZ	2590015448720	11083	2366581	BRACKET,VEHICULAR C.....	1
15	PFOZZ	5340015454922	11083	1117881	COVER,ACCESS.....	1
16	PFOZZ	2540015451802	11083	2806984	MAT,FLOOR.....	1
17	PFOZZ	2540015451790	11083	1414984	INSULATION,THERMAL,.....	1
18	PAOZZ	5306013600927	11083	8T4189	BOLT,MACHINE M8 1.25 X 20MM.....	2
19	PAOZZ	5305013981282	11083	8T4908	SCREW,CAP,HEXAGON H M8 X 1.25 X 25MM.....	1
20	PAOZZ	5310013598806	11083	8T4224	WASHER,FLAT 8.8 X 16 X 2MM THK.....	3
21	PAOZZ	5310014389809	11083	9X2038	WASHER,FLAT.....	1
22	PAOZZ	5305014389807	11083	9X2043	SCREW,MACHINE.....	1
					END OF FIGURE	

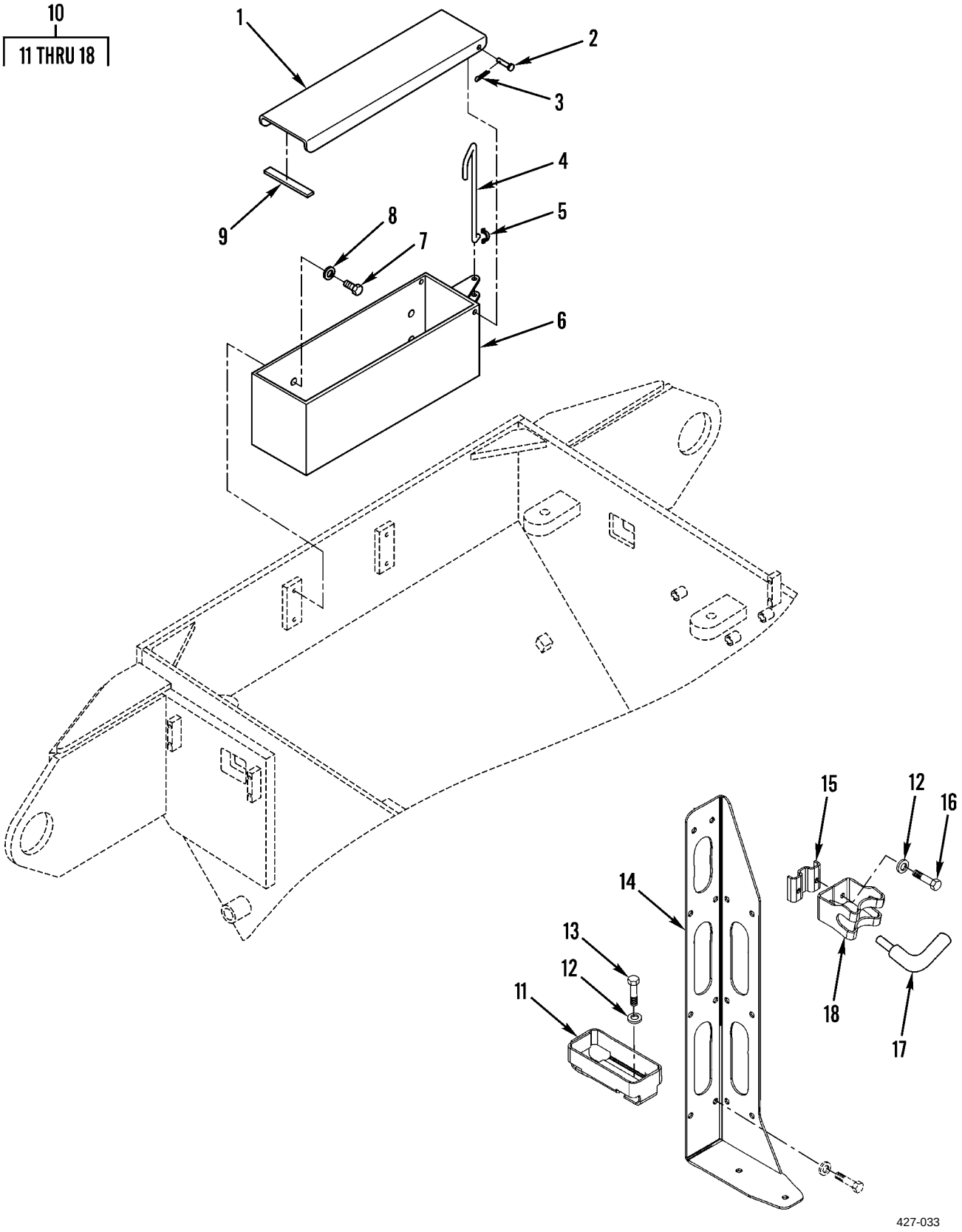

Figure 114. Toolbox and Rifle Rack

(1) ITEM NO	(2) SMR CODE	(3) NSN	(4) CAGEC	(5) PART NUMBER	(6) DESCRIPTION AND USABLE ON CODES(UOC)	(7) QTY
					GROUP 1808 STOWAGE RACKS, BOXES, STRAPS, CARRYING CASES, CABLE REELS, HOSE REELS, ETC.	
					FIG. 114 TOOLBOX AND RIFLE RACK	
1	PFOZZ	5340015445565	11083	2044342	COVER,ACCESS.....	1
2	PFOZZ	5315015434944	11083	9S1305	PIN,STRAIGHT,HEADED.....	2
3	PAOZZ	5315008395820	80205	MS24665-134	PIN,COTTER.....	2
4	PFOZZ	5340015449515	11083	2393322	ROD,STRAIGHT,HEADLE.....	1
5	PFOZZ	5325015436018	11083	0093101	RING,RETAINING.....	1
6	PFOZZ	2540015449564	11083	2399891	BOX,ACCESSORIES STO.....	1
7	PAOZZ	5306013600928	11083	8T4137	BOLT,MACHINE M10 X 1.5 X 20MM.....	4
8	PAOZZ	5310014309036	11083	7X7729	WASHER,FLAT 11 X 25 X 3MM THK.....	4
9	MOOZZ		11083	5P5637-.3	SEAL,RUBBER STRIP MAKE FROM SEAL, RUBBER STRIP P/N 5P5637, 11.9 INCHES (0.3M).....	1
10	PAOZZ	2590015445812	11083	2450772	BRACKET,SMALL ARMS, RIFLE BRACKET..	1
11	PAOZZ	5340015535835	11083	2451106	.BRACKET,MOUNTING.....	1
12	PAOZZ	5310014151606	11083	9X8256	.WASHER,FLAT 6.6 X 12 X 2MM THK....	4
13	PAOZZ	5306011817849	11083	5C9553	.BOLT,MACHINE M6 X 1 X 16MM.....	2
14	PAOZZ	5340015445225	11083	2450768	.BRACKET,MOUNTING.....	1
15	PAOZZ	5340015445237	11083	2451108	.BRACKET,MOUNTING.....	1
16	PAOZZ	5305014398527	11083	8T4971	.SCREW,MACHINE M6 X 1 X 30MM.....	2
17	PAOZZ	5340015306463	11083	2451109	.LATCH,THUMB.....	1
18	PAOZZ	5340015445231	11083	2451107	.BRACKET,MOUNTING.....	1
					END OF FIGURE	

6
7 THRU 11

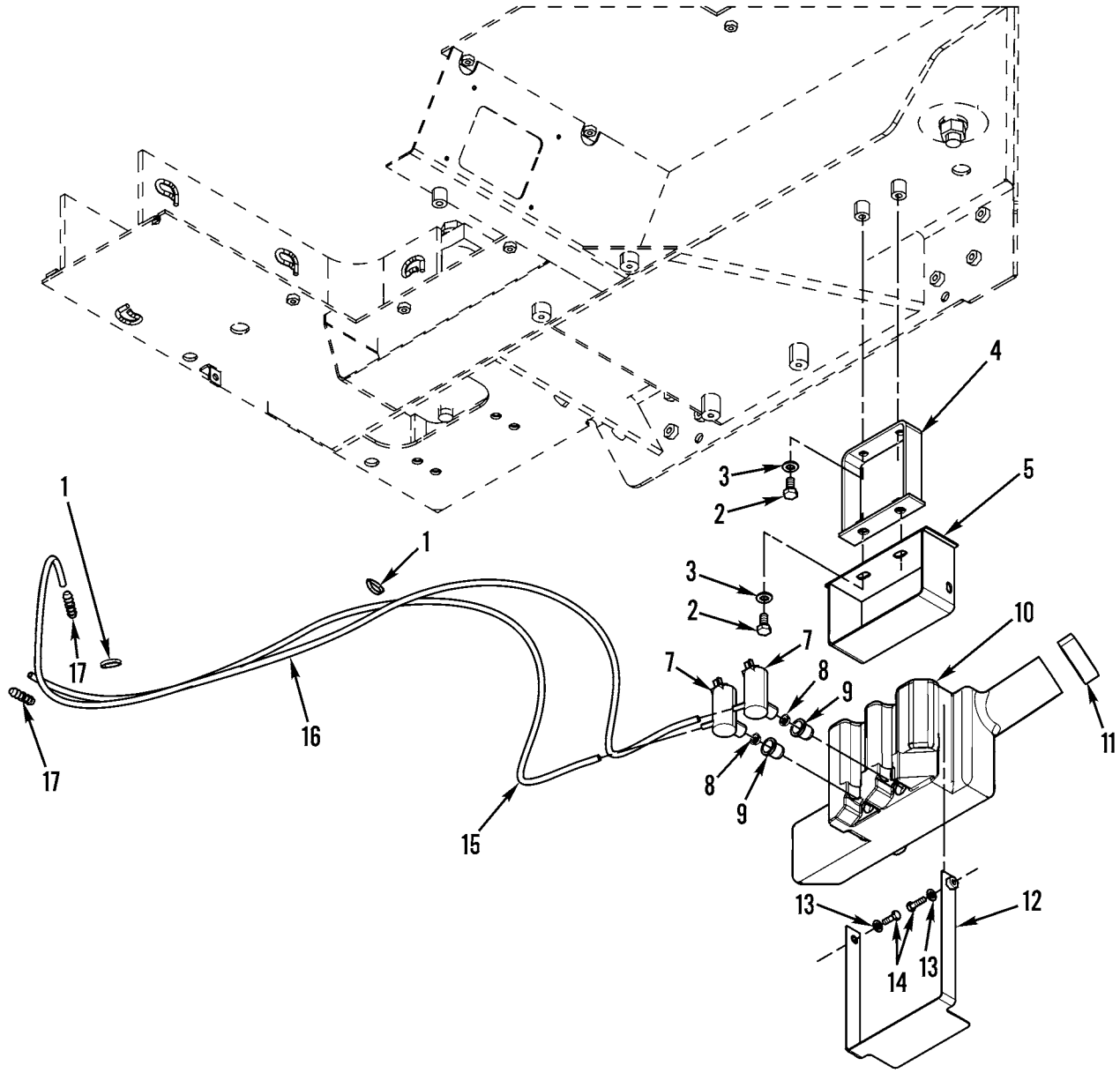

427-060

Figure 115. Windshield Washer Pump and Related Parts

(1) ITEM NO	(2) SMR CODE	(3) NSN	(4) CAGEC	(5) PART NUMBER	(6) DESCRIPTION AND USABLE ON CODES(UOC)	(7) QTY
					GROUP 22 BODY, CHASSIS AND HULL ACCESSORY ITEMS	
					GROUP 2202 ACCESSORY ITEMS	
					FIG. 115 WINDSHIELD WASHER PUMP AND RELATED PARTS	
1	PAOZZ	2920010589099	11083	3S2093	STRAP	2
2	PAOZZ	5306013600928	11083	8T4137	BOLT,MACHINE M10 X 1.5 X 20MM	4
3	PAOZZ	5310013522753	11083	8T4121	WASHER,FLAT 11 X 21 X 2.5MM THK	4
4	PFOZZ	5340015441375	11083	1311237	BRACKET,MOUNTING	1
5	PFOZZ	5340015444766	11083	1311238	BRACKET,MOUNTING	1
6	AOOZZ		11083	1522764	WASHER GP	1
7	XDOZZ		11083	7T8890	.PUMP,WINDSHIELD WAS	2
8	PAOZZ	5325014399355	11083	8T5914	.RING,RETAINING GROMMET	2
9	PAOZZ	2910014398533	11083	8T5913	.FILTER BODY,FLUID SCREEN	2
10	PFOZZ	2540015442701	11083	1522763	.RESERVOIR,WINDSHIEL	1
11	PFOZZ	2590015433830	11083	8E8292	.CAP,FILLEROPENING	1
12	PFOZZ	5340015438699	11083	4E7316	BRACKET,MOUNTING	1
13	PAOZZ	5310013598806	11083	8T4224	WASHER,FLAT 8.8 X 16 X 2MM THK	2
14	PAOZZ	5306013600927	11083	8T4189	BOLT,MACHINE M8 X 1.25 X 20MM	2
15	MOOZZ		11083	1440195-127	HOSE,NONMETALLIC MAKE FROM HOSE P/N 1440195, 50 INCHES (127 CM)	1
16	MOOZZ		11083	1440195-142	HOSE,NONMETALLIC MAKE FROM HOSE P/N 1440195, 56 INCHES (142 CM)	1
17	PFOZZ	4730015448088	11083	8G1151	ADAPTER,STRAIGHT,HO	2
					END OF FIGURE	

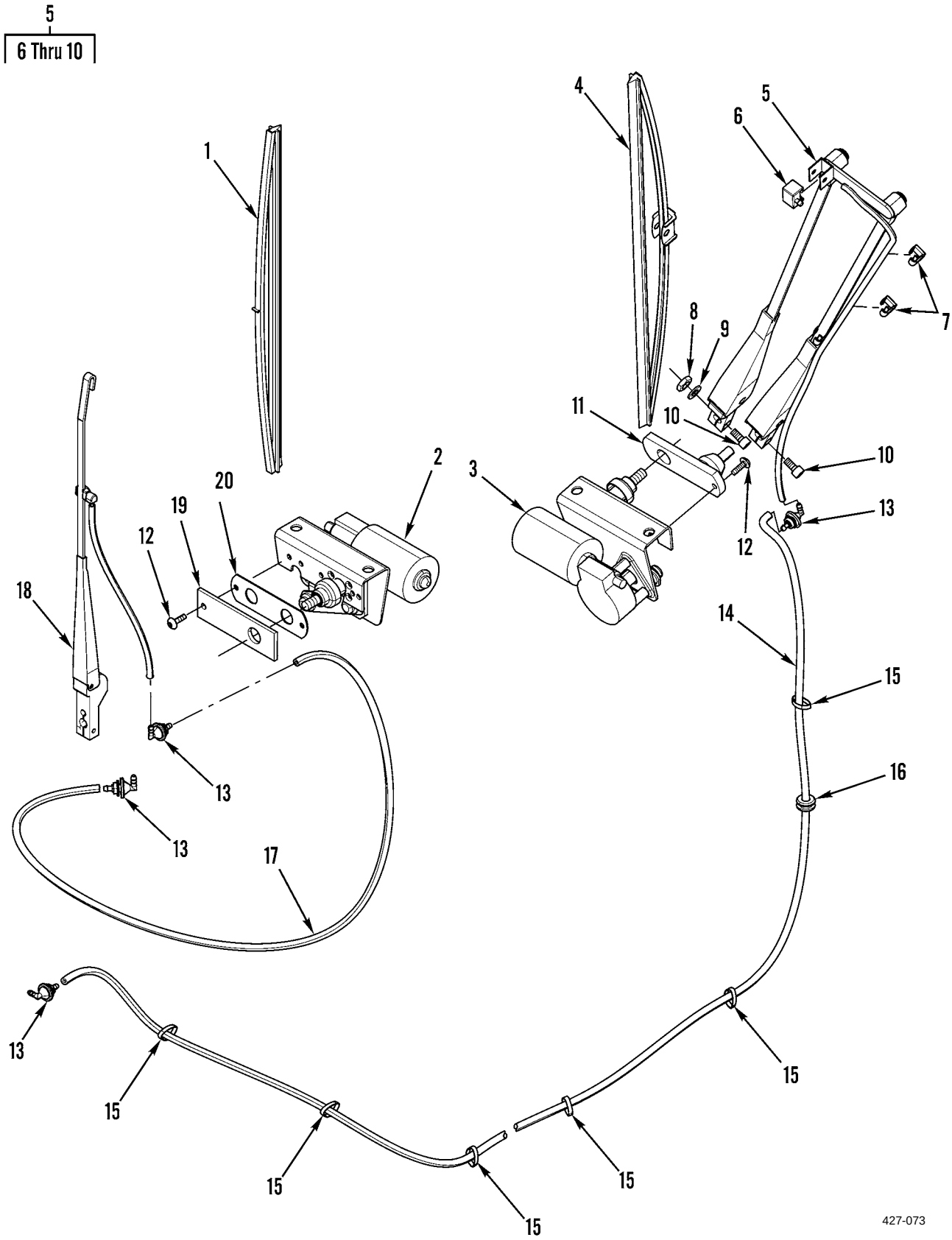

Figure 116. Windshield Wiper and Related Parts

(1) ITEM NO	(2) SMR CODE	(3) NSN	(4) CAGEC	(5) PART NUMBER	(6) DESCRIPTION AND USABLE ON CODES(UOC)	(7) QTY
					GROUP 2202 ACCESSORY ITEMS	
					FIG. 116 WINDSHIELD WIPER AND RELATED PARTS	
1	PAOZZ	2540014138918	11083	5C8811	BLADE,WINDSHIELD WI REAR.....	1
2	PAOZZ	2540015267381	11083	1555784	MOTOR,WINDSHIELD WI REAR.....	1
3	PAOZZ	2540015267380	11083	1555783	MOTOR,WINDSHIELD WI FRONT.....	1
4	PAOZZ	2540014554896	11083	6V7419	BLADE,WINDSHIELD WI FRONT.....	1
5	PFOZZ	2540015438725	11083	2147636	ARM,WINDSHIELD WIPE FRONT.....	1
6	PAOZZ	2540015437845	11083	1363190	.NOZZLE,WINDSHIELD W.....	1
7	PFOZZ	5340015437009	11083	1363188	.CLIP,RETAINING.....	3
8	PAOZZ	5310014736099	11083	6V8225	.NUT,PLAIN,HEXAGON M6 X 1 THD.....	4
9	PFOZZ	5310015443379	11083	2277392	.WASHER,FLAT 6.3 X 10.3 X 0.4MM THK	4
10	PFOZZ	5306015441048	11083	1918921	.BOLT,INTERNAL WRENC M6 X 1 X 25MM.	4
11	PFOZZ	2540015433659	11083	1555779	PIVOT ASSEMBLY,WIND.....	1
12	PAOZZ	5305014310874	11083	9X2045	SCREW,MACHINE M6 X 1 X 20MM.....	2
13	PAOZZ	5935014398530	11083	8T5400	CONNECTOR,PLUG,ELEC.....	4
14	MOOZZ		11083	1440195-2.67	HOSE,NONMETALLIC MAKE FROM HOSE P/N 1440195, 105.2 INCHES (2.67M)....	1
15	PAOZZ	2920010589099	11083	3S2093	STRAP.....	7
16	PAOZZ	5325002496345	96906	MS35489-69	GROMMET,NONMETALLIC.....	1
17	MOOZZ		11083	1440195-.7	HOSE,NONMETALLIC MAKE FROM HOSE P/N 1440195 , 27.6 INCHES (0.7 M)....	1
18	PFOZZ	2540015438714	11083	1555781	ARM,WINDSHIELD WIPE REAR.....	1
19	PFOZZ	5340015439484	11083	9R2596	PLATE,MOUNTING.....	1
20	PAOZZ	5330014299771	11083	6V6210	GASKET.....	1
					END OF FIGURE	

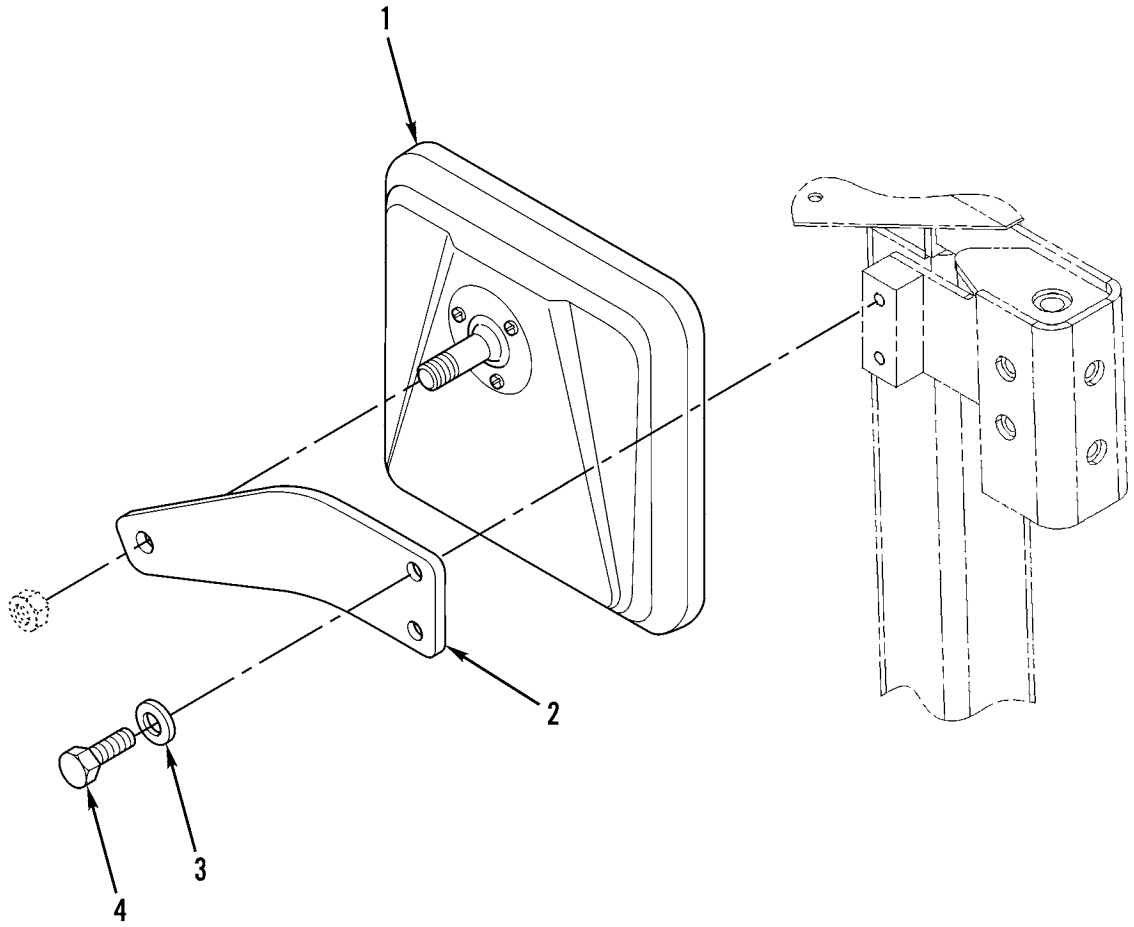

427-076

Figure 117. Rear View Mirror

(1) ITEM NO	(2) SMR CODE	(3) NSN	(4) CAGEC	(5) PART NUMBER	(6) DESCRIPTION AND USABLE ON CODES(UOC)	(7) QTY
					GROUP 2202 ACCESSORY ITEMS	
					FIG. 117 REAR VIEW MIRROR	
1	PAOZZ		70052	2300	MIRROR HEAD,VEHICUL.....	2
2	PFOZZ	5340015436180	11083	1143956	PLATE,MOUNTING.....	2
3	PAOZZ	5310008412576	11083	8T4205	WASHER,FLAT 7.2 X 14.5 X 2MM.....	4
4	PAOZZ	5306011817849	11083	5C9553	BOLT,MACHINE M6 X 1 X 16MM.....	4
					END OF FIGURE	



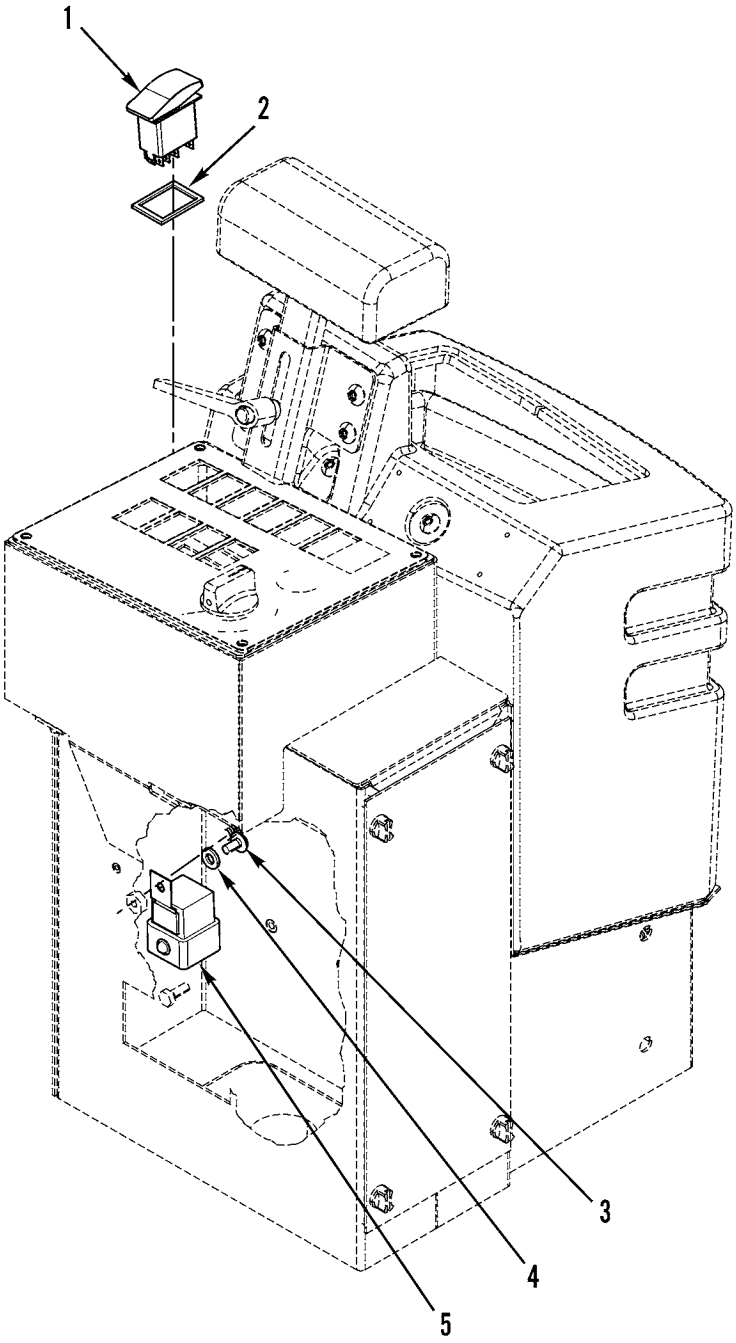

427-079

Figure 118. Cab Defroster

(1) ITEM NO	(2) SMR CODE	(3) NSN	(4) CAGEC	(5) PART NUMBER	(6) DESCRIPTION AND USABLE ON CODES(UOC)	(7) QTY
					GROUP 2202 ACCESSORY ITEMS	
					FIG. 118 CAB DEFROSTER	
1	PAOZZ	5930015438008	11083	2048799	SWITCH,TOGGLE.....	1
2	PAOZZ	5330015277212	11083	1117899	.GASKET.....	1
3	PAOZZ	5305014389806	11083	9X2042	SCREW,MACHINE M6 X 1 X 12MM.....	1
4	PAOZZ	5310008412576	11083	8T4205	WASHER,FLAT 7.2 X 14.5 X 2MM.....	1
5	PAOZZ	5945014681267	11083	3E5239	RELAY,ELECTROMAGNET.....	1
					END OF FIGURE	

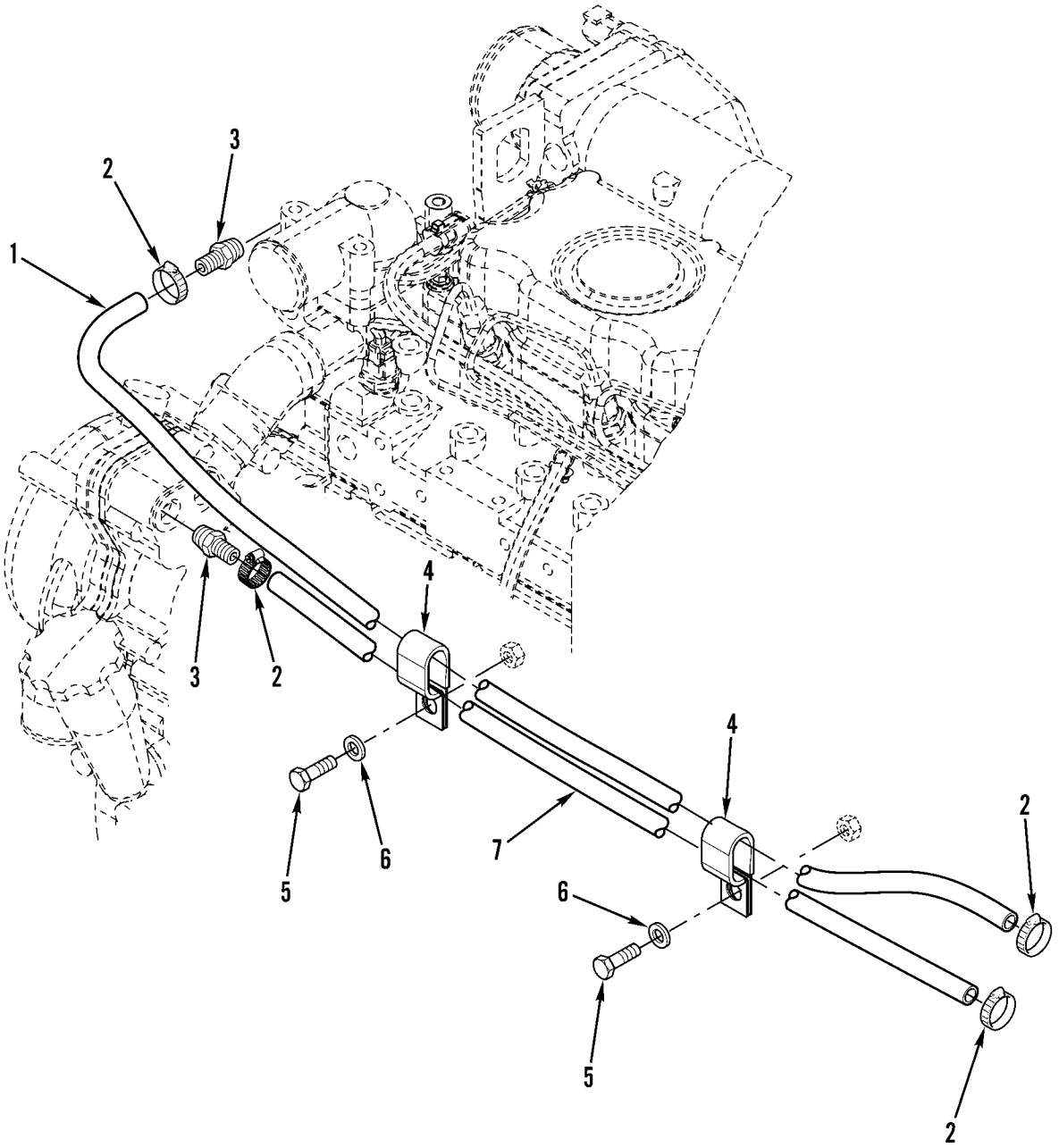

Figure 119. Cab Heater Lines

(1) ITEM NO	(2) SMR CODE	(3) NSN	(4) CAGEC	(5) PART NUMBER	(6) DESCRIPTION AND USABLE ON CODES(UOC)	(7) QTY
					GROUP 2202 ACCESSORY ITEMS	
					FIG. 119 CAB HEATER LINES	
1	MOOZZ		11083	5P0767-138	HOSE MAKE FROM HOSE P/N 5P0767, 54.4 INCHES (13 8CM).....	1
2	PAOZZ	4730011223338	11083	5D1026	CLAMP,HOSE.....	4
3	PAOZZ	4730014734034	11083	9M4814	COUPLING,HOSE.....	2
4	PAOZZ	5342010647512	11083	6D1641	CLIP.....	2
5	PAOZZ	5306013600928	11083	8T4137	BOLT,MACHINE M10 X 1.5 X 20MM.....	1
6	PAOZZ	5310013522753	11083	8T4121	WASHER,FLAT 11 X 21 X 2.5MM THK....	1
7	MOOZZ		11083	5P0767-118	HOSE MAKE FROM HOSE P/N 5P0767, 46.7 INCHES (11 8CM).....	1
					END OF FIGURE	

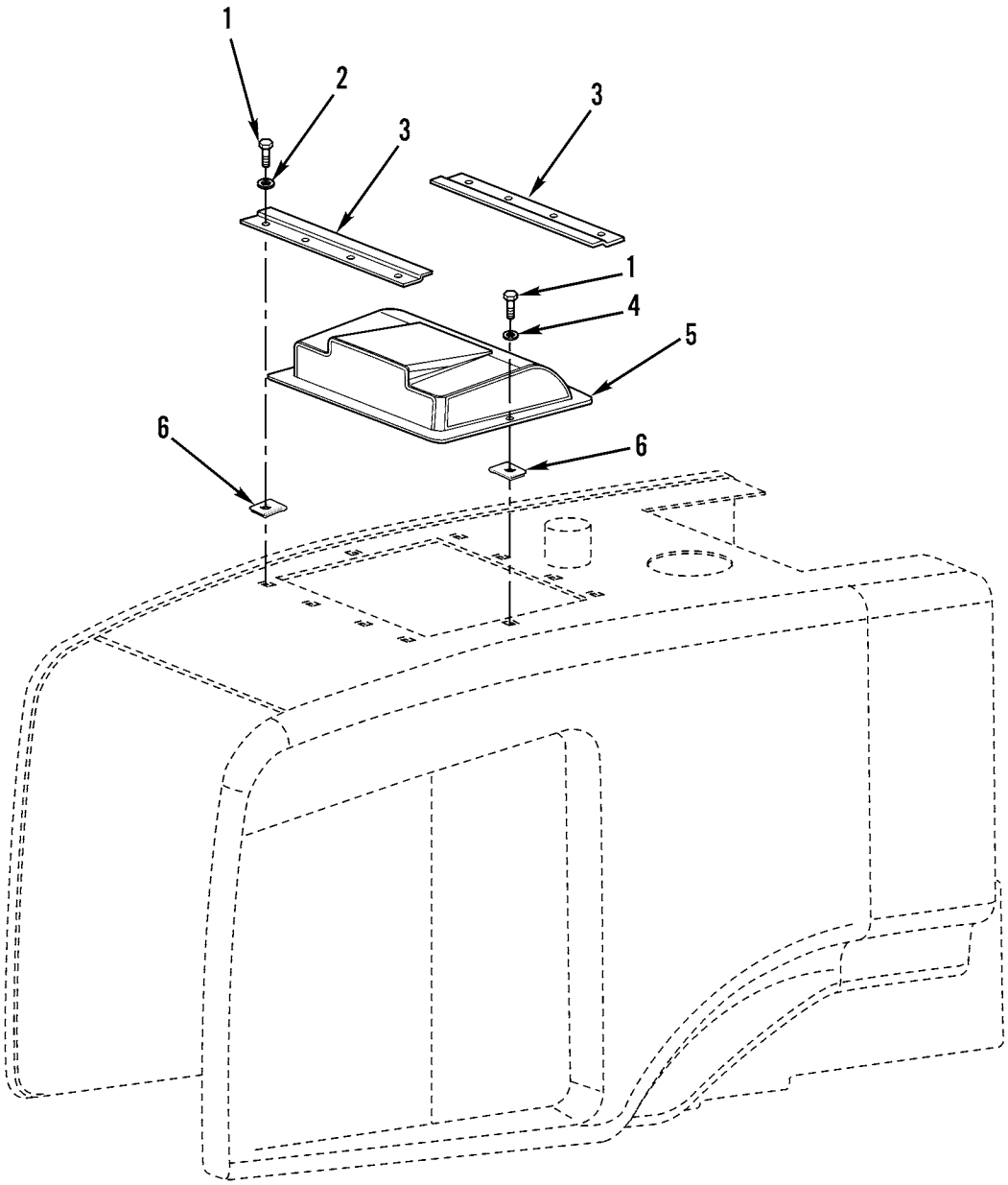

427-090

Figure 120. A/C Intake Cover

(1) ITEM NO	(2) SMR CODE	(3) NSN	(4) CAGEC	(5) PART NUMBER	(6) DESCRIPTION AND USABLE ON CODES(UOC)	(7) QTY
					GROUP 2202 ACCESSORY ITEMS	
					FIG. 120 A/C INTAKE COVER	
1	PAOZZ	5306014135287	11083	8T4138	BOLT,SHOULDER M6 X 1 X 20MM.....	10
2	PAOZZ	5310008412576	11083	8T4205	WASHER,FLAT 7.2 X 14.5 X 2MM.....	8
3	PFOZZ	5340015435767	11083	2356948	COVER,ACCESS.....	2
4	PAOZZ	5310015060726	11083	1860817	WASHER,FLAT 7 X 19 X 2MM THK.....	2
5	PFOZZ	2590015453172	11083	2356947	COVER,VEHICULAR COM.....	1
6	PAOZZ	5310015055512	11083	1728591	NUT,PLAIN,HEXAGON.....	10
					END OF FIGURE	

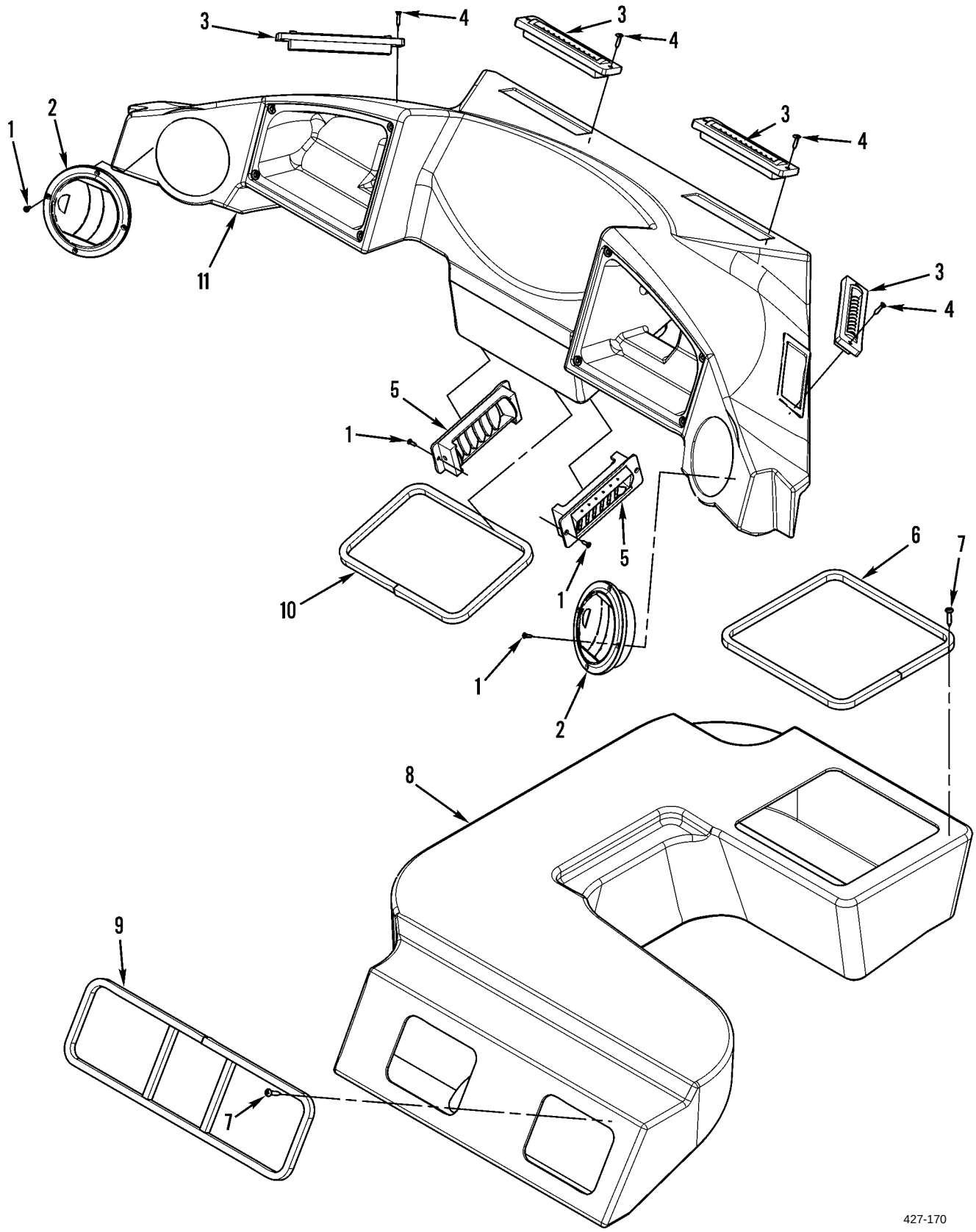

Figure 121. Air Duct

(1) ITEM NO	(2) SMR CODE	(3) NSN	(4) CAGEC	(5) PART NUMBER	(6) DESCRIPTION AND USABLE ON CODES(UOC)	(7) QTY
					GROUP 2207 WINTERIZATION EQUIPMENT	
					FIG. 121 AIR DUCT	
1	PAOZZ	5305015055701	11083	1042091	SCREW,SHOULDER #6-20 X 0.5 IN.....	12
2	PAOZZ	2540015438666	11083	8Y6391	DIFFUSER,AIR,VEHICU.....	2
3	PAOZZ	2510015056037	11083	1515715	FRAME SECTION,STRUC VENTILATOR,AIR CIRCULATING.....	4
4	PAOZZ	5305015055576	11083	1483626	SCREW,MACHINE #6-20 X 19.05MM.....	8
5	PAOZZ	2540014734828	11083	8Y6388	VENTILATOR,AIR CIRC.....	2
6	MOOZZ		11083	5P5927-.93	RUBBER STRIP MAKE FROM RUBBER STRIP P/N 5P5927, 36.7 INCHES (0 .93M).....	1
7	PFOZZ	5305015445915	11083	1617620	SCREW,CAP,SOCKET HE.....	12
8	PFOZZ	2540015437924	11083	1076079	DUCT.....	1
9	MOOZZ		11083	5P5927-1.21	RUBBER STRIP MAKE FROM RUBBER STRIP P/N 5P5927, 47.7 IN CHES (1.21M).....	1
10	MOOZZ		11083	5P5927-1.06	RUBBER STRIP MAKE FROM RUBBER STRIP P/N 5P5927, 41.8 IN CHES (1.06M).....	1
11	PFOZZ	2540015433615	11083	1669286	DUCT ASSEMBLY,AIR C FRONT.....	1
					END OF FIGURE	

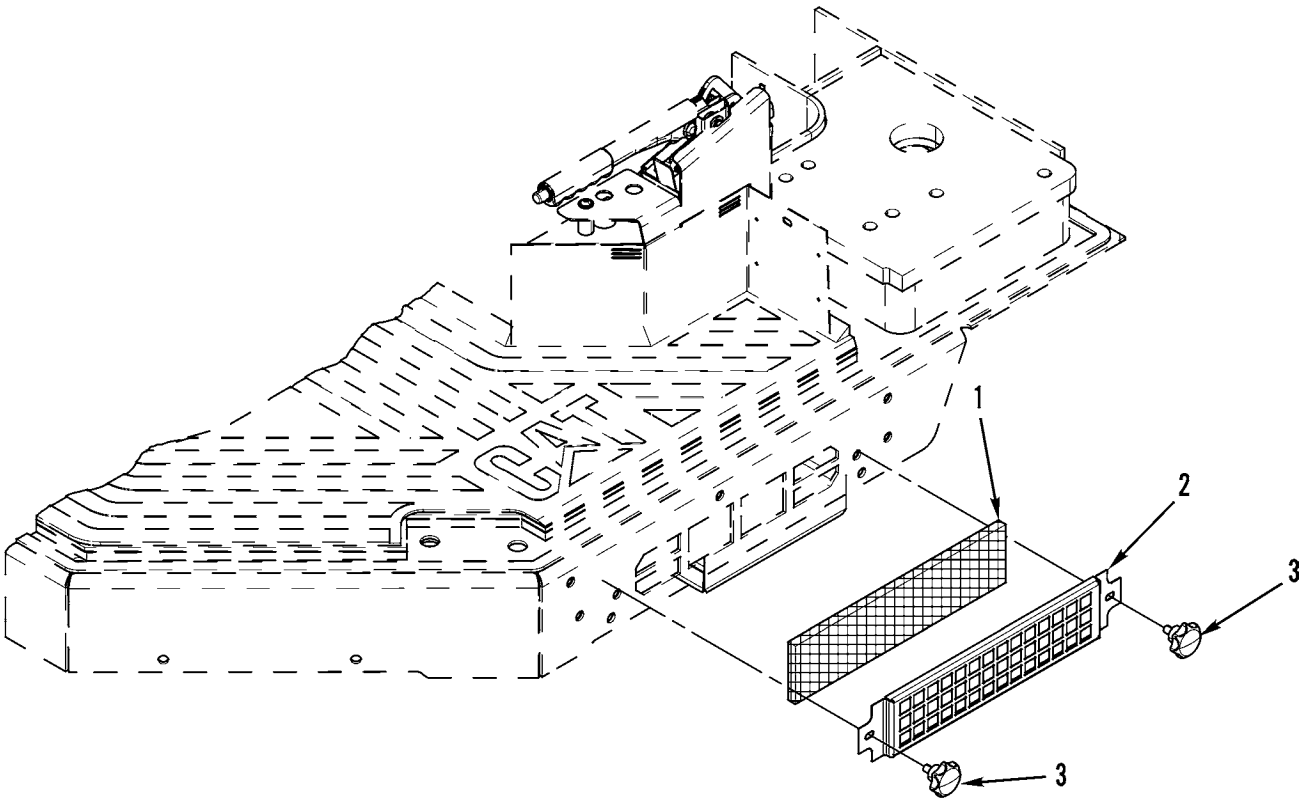

427-113

Figure 122. Cab Air Filter

(1) ITEM NO	(2) SMR CODE	(3) NSN	(4) CAGEC	(5) PART NUMBER	(6) DESCRIPTION AND USABLE ON CODES(UOC)	(7) QTY
					GROUP 2207 WINTERIZATION EQUIPMENT	
					FIG. 122 CAB AIR FILTER	
1	PFOZZ	4130015395281	11083	1118738	FILTER ELEMENT,AIR AIR CLEANER.....	1
2	PFOZZ	5340015436520	11083	1143944	COVER,ACCESS.....	1
3	PFOZZ	5365015436992	11083	1167856	KNOB.....	2
					END OF FIGURE	

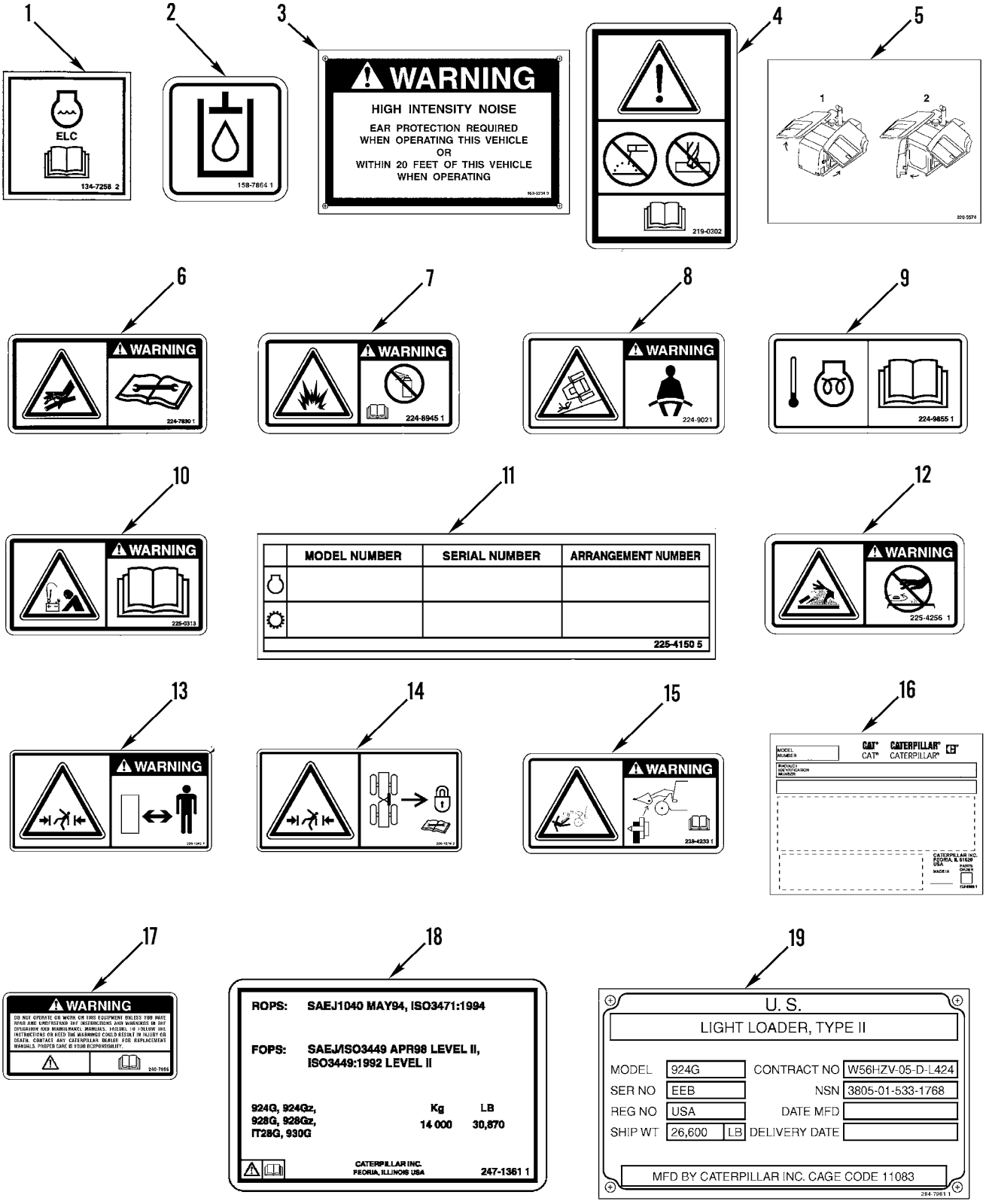

427-161-1

Figure 123. Data Plates and Instruction Holders (Sheet 1 of 2)

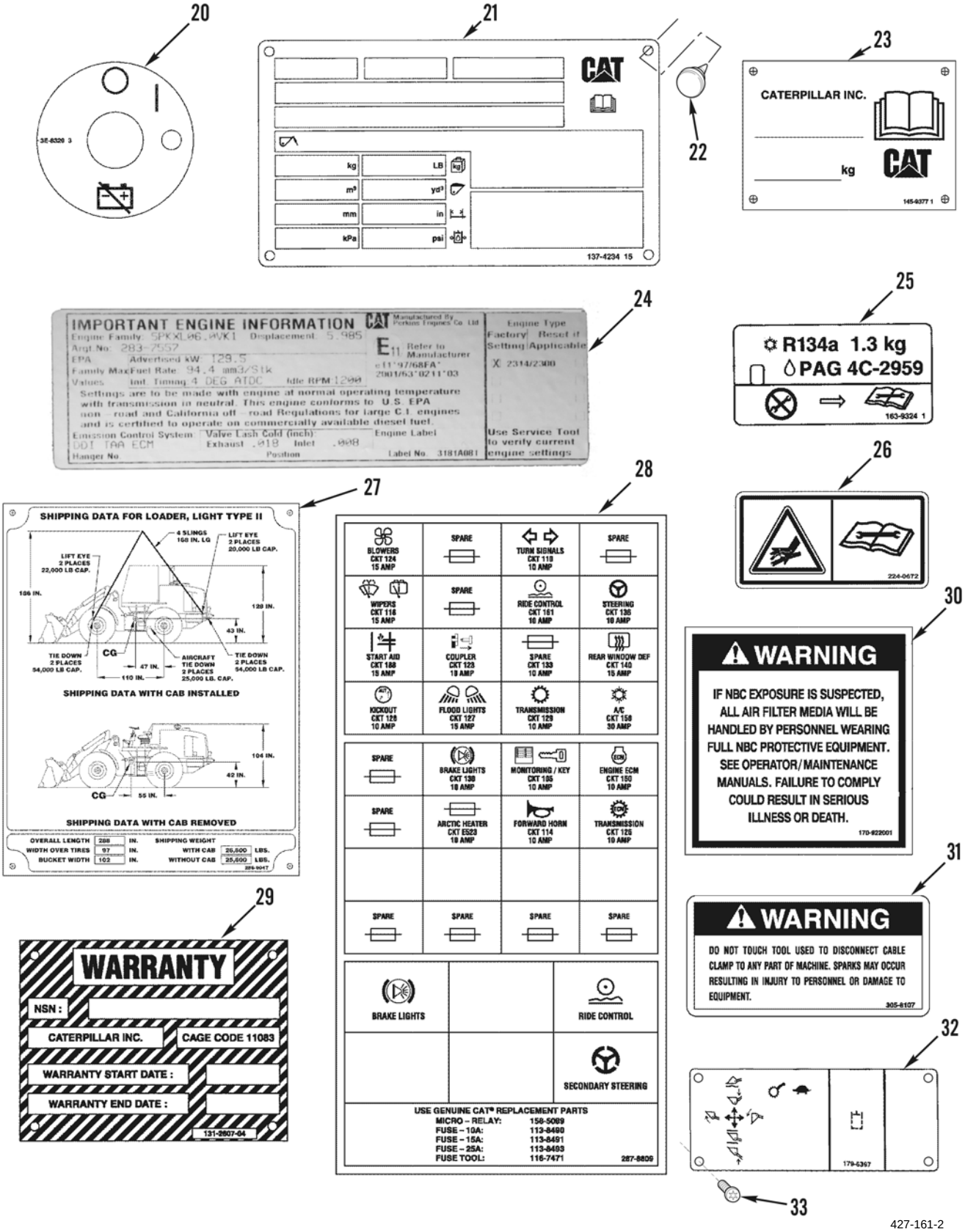

Figure 123. Data Plates and Instruction Holders (Sheet 2 of 2)

(1) ITEM NO	(2) SMR CODE	(3) NSN	(4) CAGEC	(5) PART NUMBER	(6) DESCRIPTION AND USABLE ON CODES(UOC)	(7) QTY
					GROUP 2210 DATA PLATES AND INSTRUCTION HOLDERS	
					FIG. 123 DATA PLATES AND INSTRUCTION HOLDERS	
1	PAOZZ	7690014714008	11083	1347258	DECAL E.L.C.	1
2	PFOZZ	7690015448271	11083	1587864	MARKER,IDENTIFICATI HYDRAULIC OIL FILM.	1
3	PAOZZ	9905014745766	11083	1633234	PLATE,IDENTIFICATIO HIGH INTENSITY NOISE WARNING.	1
4	PAOZZ		11083	2190302	MARKER,IDENTIFICATI NO WELD/NO DRILL WARNING.	1
5	PFOZZ	7690015448275	11083	2205574	MARKER,IDENTIFICATI RADIATOR DOOR.	1
6	PAOZZ		11083	2247830	DECAL HIGH PRESSURE WARNING.	2
7	PAOZZ	7690015515086	11083	2248945	MARKER,IDENTIFICATI ETHER WARNING-DO NOT SPRAY.	1
8	PAOZZ		11083	2249021	MARKER,IDENTIFICATI SEAT BELT WARNING.	1
9	PFOZZ	7690015448283	11083	2249855	MARKER,IDENTIFICATI STARTING AID.	1
10	PAOZZ		11083	2250313	MARKER,IDENTIFICATI JUMP START WARNING.	2
11	PAOZZ	9905015305591	11083	2254150	PLATE,IDENTIFICATIO MODEL/SERIAL NUMBER.	1
12	PAOZZ	7690015515151	11083	2254256	MARKER,IDENTIFICATI HOT FLUID UNDER PRESSURE WARNING.	1
13	PAOZZ	7690015515082	11083	2261242	MARKER,IDENTIFICATI SAFE DISTANCE WARNING.	2
14	PAOZZ	7690015515286	11083	2261275	MARKER,IDENTIFICATI CRUSH HAZARD-STEERING.	1
15	PAOZZ	7690015515279	11083	2394233	MARKER,IDENTIFICATI CRUSH WARNING-QUICK COUPLER.	1
16	PAOZZ	9905015304638	11083	2396989	PLATE,IDENTIFICATIO.	1
17	PAOZZ	7690015515282	11083	2407956	MARKER,IDENTIFICATI READ OPERATOR MANUAL.	1
18	PFOZZ	7690015448574	11083	2471361	MARKER,IDENTIFICATI ROPS/FOPS WEIGHT.	1
19	PFOZZ	9905015463189	11083	2847981	PLATE,IDENTIFICATIO.	1
20	PAOZZ	9905014290776	11083	3E8320	PLATE,IDENTIFICATIO.	1
21	PFOZZ	9905015462186	11083	1374234	PLATE,IDENTIFICATIO.	1
22	PAOZZ	5325015240603	11083	1688389	FASTENER,SNAP.	4
23	PFOZZ		11083	1459377	PLATE,IDENTIFICATIO.	1
24	PFOZZ	7690015448575	13446	3181A081	MARKER,IDENTIFICATI.	1
25	PFOZZ	7690015448577	11083	1639324	MARKER,IDENTIFICATI.	1
26	PAOZZ	7690015441067	11083	2240672	DECAL HIGH PRESSURE.	1
27	PFOZZ		11083	2868047	PLATE,IDENTIFICATIO.	1
28	PFOZZ	7690015448209	11083	2878809	MARKER,IDENTIFICATI.	1
29	PFOZZ	5365014735331	11083	1312807	SHIM.	1
30	PAOZZ	7690014743533	11083	1709220	MARKER,IDENTIFICATI NBC WARNING.	3
31	PAOZZ		11083	3058107	MARKER,IDENTIFICATI BATTERY WARNING	1
32	PFOZZ		11083	1796397	PLATE,INSTRUCTION.	1
33	PAOZZ		11083	1032006	SCREW,MACHINE.	4
					END OF FIGURE	

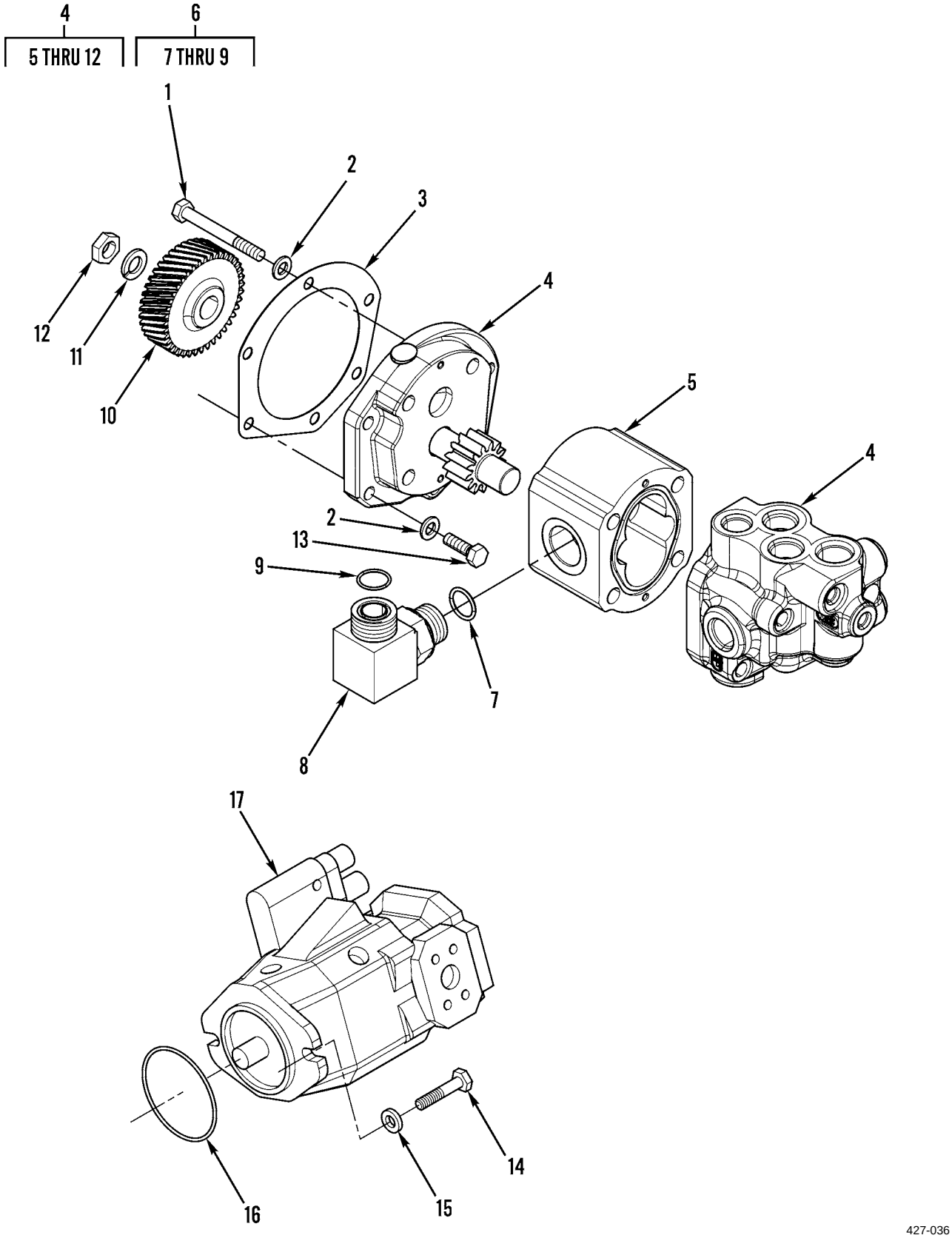

Figure 124. Braking and Hydraulic Fan Pump

(1) ITEM NO	(2) SMR CODE	(3) NSN	(4) CAGEC	(5) PART NUMBER	(6) DESCRIPTION AND USABLE ON CODES(UOC)	(7) QTY
					GROUP 24 HYDRAULIC AND FLUID SYSTEMS	
					GROUP 2401 PUMP AND MOTOR	
					FIG. 124 BRAKING AND HYDRAULIC FAN PUMP	
1	PAFZZ	5305014398537	11083	8T6870	SCREW,MACHINE M8 X 1.25 X 70MM.....	1
2	PAFZZ	5310013598806	11083	8T4224	WASHER,FLAT 8.8 X 16 X 2MM THK.....	6
3	PAFZZ	5330014715143	11083	9Y9380	PAPER,GASKET.....	1
4	PAFZZ	4320015441954	11083	2622875	PUMP,ROTARY.....	1
5	PAFZZ	4320015441828	11083	2635513	.PUMP,HYDRAULIC.....	1
6	AFFZZ		11083	1488347	.ELBOW AS.....	1
7	PAFZZ	5331009448281	11083	3D2824	..O-RING 23.47MM ID.....	1
8	PAFZZ	4730012918498	11083	6V9007	..ELBOW,TUBE TO BOSS.....	1
9	PAFZZ	5331010584030	11083	6V9746	..O-RING 22.50MM OD.....	1
10	PAFZZ	3020015434039	11083	2054587	.GEAR,HELICAL.....	1
11	PAFZZ	5310010978955	11083	5P8244	.WASHER,FLAT 12 X 22.5 X 2.5MM THK.	1
12	PAFZZ	5310014741856	11083	1608499	.NUT,PLAIN,HEXAGON M12 X 1.5 THD...	1
13	PAFZZ	5306014792736	45152	9HB895	BOLT,MACHINE.....	5
14	PAFZZ	5306015151611	11083	6V8200	BOLT,MACHINE M12 X 1.75 X 35MM.....	2
15	PAFZZ	5306014741864	11083	8T7971	BOLT,ASSEMBLED WASH WASHER,FLAT....	2
16	PAFZZ	5331005081373	11083	1H6227	O-RING 101.19MM ID.....	1
17	PAFHH	4320015270763	11083	1689027	PUMP,HYDRAULIC RAM, INNER, IMPLEMENTS.....	1
					END OF FIGURE	

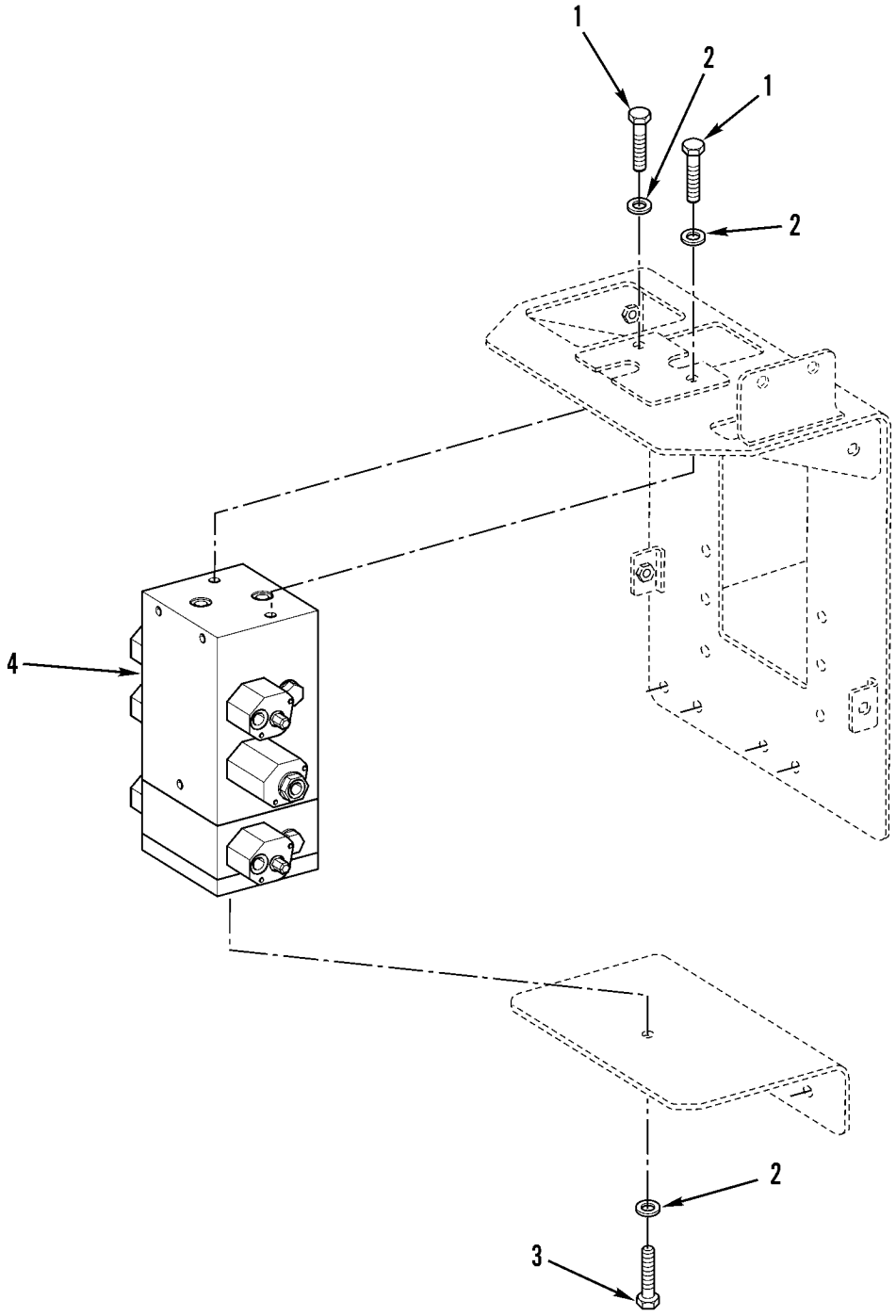

427-037

Figure 125. Main Hydraulic Control Valve

(1) ITEM NO	(2) SMR CODE	(3) NSN	(4) CAGEC	(5) PART NUMBER	(6) DESCRIPTION AND USABLE ON CODES(UOC)	(7) QTY
					GROUP 2402 MANIFOLD AND/OR CONTROL VALVES	
					FIG. 125 MAIN HYDRAULIC CONTROL VALVE	
1	PAOZZ	5306014734526	11083	8T4956	BOLT,MACHINE M12 X 1.75 X 35MM.....	2
2	PAOZZ	5310010976720	11083	5P1076	WASHER,SHOULDERED A 13.5 X 30 4 MM.	3
3	PAOZZ	5306014138771	11083	8T4192	BOLT,SHOULDER M12 X 1.75 X 25MM....	1
4	PAFHH	4820015512426	11083	2090271	VALVE,REGULATING,FL MAIN HYDRAULIC CONTROL VALVE.....	1
					END OF FIGURE	

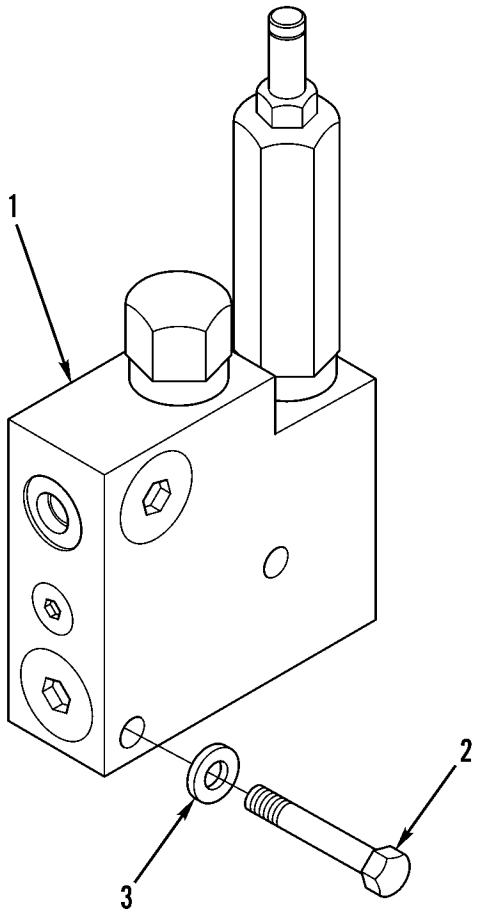

427-067

Figure 126. Tilt Control Valve (Combination)

(1) ITEM NO	(2) SMR CODE	(3) NSN	(4) CAGEC	(5) PART NUMBER	(6) DESCRIPTION AND USABLE ON CODES(UOC)	(7) QTY
					GROUP 2402 MANIFOLD AND/OR CONTROL VALVES	
					FIG. 126 TILT CONTROL VALVE (COMBINATION)	
1	PAOZZ	4820015439733	11083	1734032	VALVE,REGULATING,SY COMBINATION....	1
2	PAOZZ	5306014389854	11083	7X2534	BOLT,MACHINE M6 X 1 X 50MM.....	1
3	PAOZZ	5310014151606	11083	9X8256	WASHER,FLAT 6.6 X 12 X 2MM THK.....	1
					END OF FIGURE	

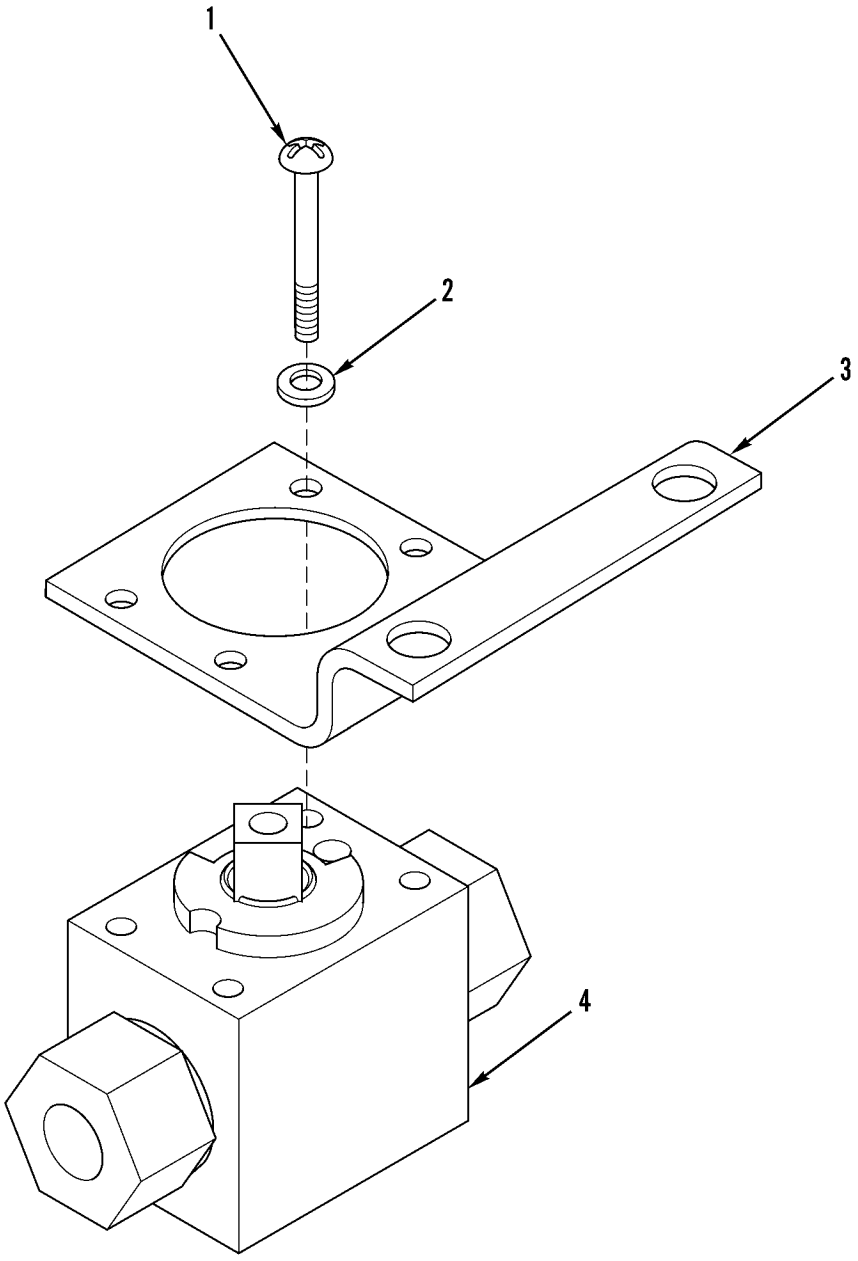

427-069

Figure 127. Dead Engine Lowering Control Valve

(1) ITEM NO	(2) SMR CODE	(3) NSN	(4) CAGEC	(5) PART NUMBER	(6) DESCRIPTION AND USABLE ON CODES(UOC)	(7) QTY
					GROUP 2402 MANIFOLD AND/OR CONTROL VALVES	
					FIG. 127 DEAD ENGINE LOWERING CONTROL VALVE	
1	PAOZZ	5305014384618	11083	7Y3173	SCREW,PANEL FASTENE M4 X 0.7 X 12MM	4
2	PAOZZ	5310001435722	3HKX1	1D4717	WASHER,FLAT 5.5 X 13 X 1.2MM THK...	4
3	PFOZZ	5340015444714	11083	2128136	BRACKET,MOUNTING.....	1
4	PAOZZ	4820015441863	11083	1121817	VALVE,FLOW CONTROL.....	1
					END OF FIGURE	

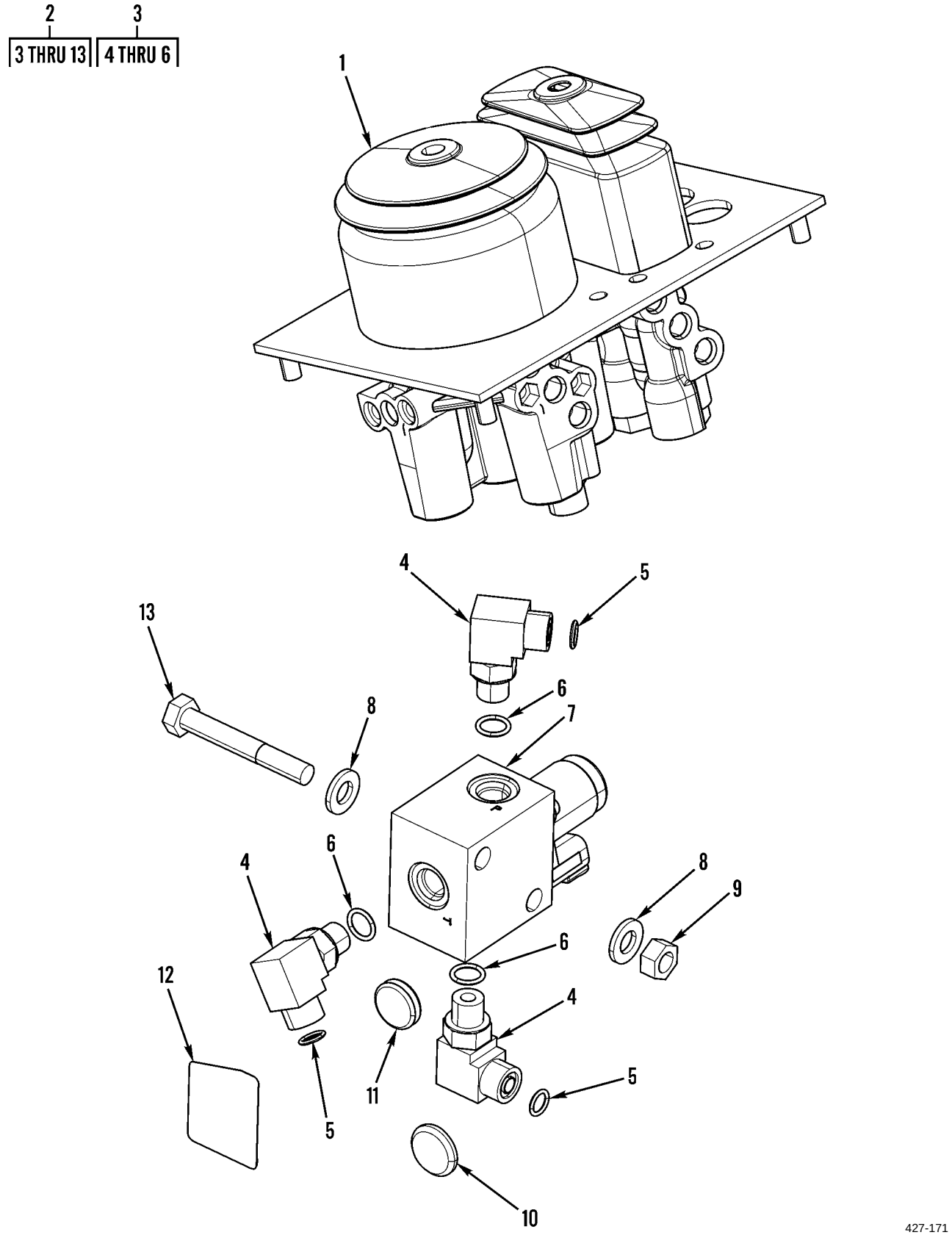

Figure 128. Pilot Operated Hydraulic Control Valve and Lockout Valve

(1) ITEM NO	(2) SMR CODE	(3) NSN	(4) CAGEC	(5) PART NUMBER	(6) DESCRIPTION AND USABLE ON CODES(UOC)	(7) QTY
					GROUP 2402 MANIFOLD AND/OR CONTROL VALVES	
					FIG. 128 PILOT OPERATED HYDRAULIC CONTROL VALVE AND LOCKOUT VALVE	
1	PAFHH	4810015512470	11083	2121305	VALVE,SOLENOID.....	1
2	AFFZZ		11083	2251057	VALVE GP-SHUTOFF.....	1
3	AFFZZ		11083	1488378	.ELBOW AS-90 DEG.....	3
4	PAFZZ	4730013604146	11083	6V8724	..ELBOW,PIPE.....	1
5	PAFZZ	5331005796495	11083	6V8397	..O-RING 12.83MM OD.....	1
6	PAFZZ	5331013336444	11083	3J1907	..O-RING 11.89MM ID.....	1
7	PAFZZ	4810015435051	11083	2337133	.VALVE,SOLENOID HYDRAULIC LOCKOUT..	1
8	PAFZZ	5310013600983	11083	6V5839	.WASHER,LOCK 11 X 21 X 2.5MM THK...	4
9	PAFZZ	5310013599329	11083	2Y5829	.NUT,PLAIN,HEXAGON M10 X 1.15MM THD	2
10	PAFZZ	5340011641271	11083	6V1178	.CAP-PLUG,PROTECTIVE.....	1
11	PFFZZ	5325015436549	11083	8R3695	.GROMMET,NONMETALLIC.....	1
12	PFFZZ	7690015444739	11083	2262095	.DECAL.....	1
13	PAFZZ	5305014715209	11083	6V7981	.SCREW,CAP,HEXAGON H M10 X 1.5 X 70MM.....	2
					END OF FIGURE	

1
2

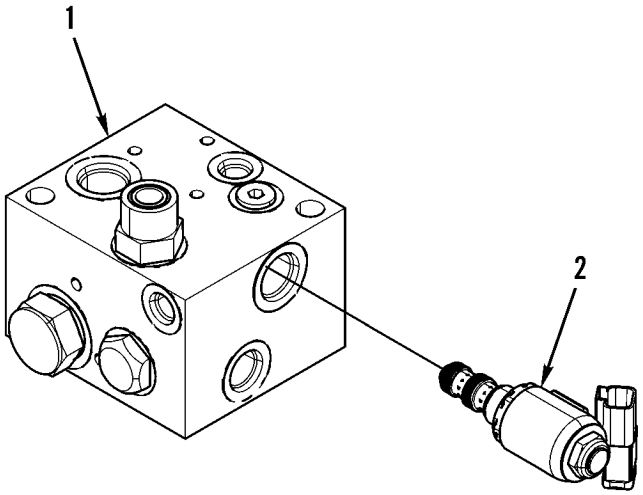

427-152

Figure 129. Ride Control Valve

(1) ITEM NO	(2) SMR CODE	(3) NSN	(4) CAGEC	(5) PART NUMBER	(6) DESCRIPTION AND USABLE ON CODES(UOC)	(7) QTY
					GROUP 2402 MANIFOLD AND/OR CONTROL VALVES	
					FIG. 129 RIDE CONTROL VALVE	
1	PAOZZ	4810015449516	11083	1920086	VALVE,FLOW CONTROL.....	1
2	PAOZZ	4810015267280	11083	2010950	.VALVE,SOLENOID.....	1
					END OF FIGURE	

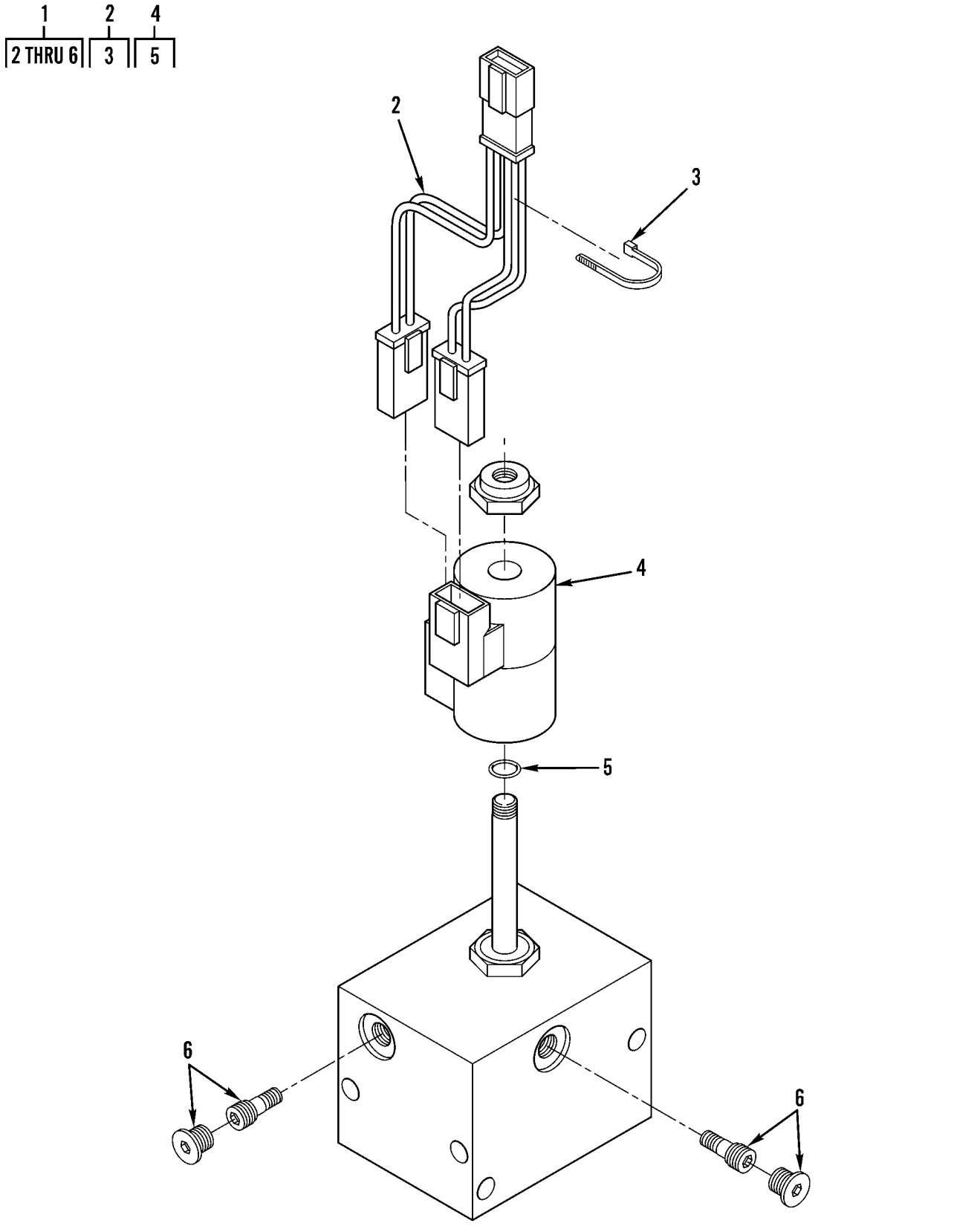

427-158

Figure 130. Coupler Valve

(1) ITEM NO	(2) SMR CODE	(3) NSN	(4) CAGEC	(5) PART NUMBER	(6) DESCRIPTION AND USABLE ON CODES(UOC)	(7) QTY
					GROUP 2402 MANIFOLD AND/OR CONTROL VALVES	
					FIG. 130 COUPLER VALVE	
1	PAFZZ	4820015449536	11083	2332549	VALVE ASSEMBLY COUPLER.....	1
2	PFFZZ	6150015434500	11083	2617997	.CABLE ASSEMBLY,SPEC.....	1
3	PAFZZ	5340011602464	11083	1S9593	..STRAP,LINE SUPPORTI.....	1
4	PFFZZ	4810015511610	11083	2497863	.VALVE,SOLENOID.....	1
5	PFFZZ	5330015438033	11083	1063108	..PARTS KIT,SEAL REPL.....	1
6	PFFZZ	4820015449534	11083	2497859	.VALVE,SHUTTLE.....	2
					END OF FIGURE	

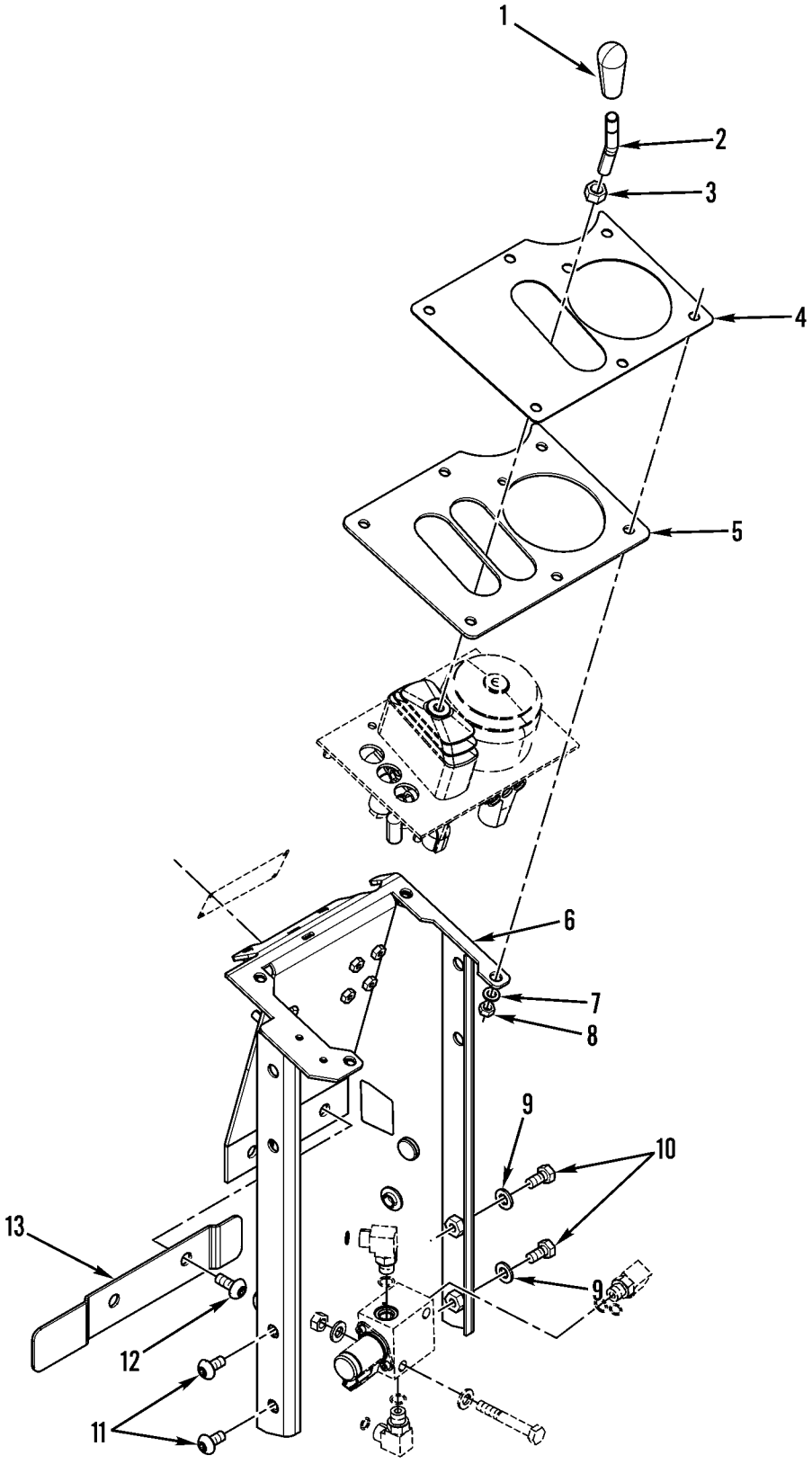

Figure 131. Pilot Operated Hydraulic Controls and Related Parts

(1) ITEM NO	(2) SMR CODE	(3) NSN	(4) CAGEC	(5) PART NUMBER	(6) DESCRIPTION AND USABLE ON CODES(UOC)	(7) QTY
					GROUP 2403 HYDRAULIC CONTROLS AND/ OR MANUAL CONTROLS	
					FIG. 131 PILOT OPERATED HYDRAULIC CONTROLS AND RELATED PARTS	
1	PFOZZ	5355015444729	11083	1244401	KNOB	1
2	PFOZZ	5342015441393	11083	1143937	CONTROL ROD	1
3	PAOZZ	5310013527374	11083	8T4244	NUT,PLAIN,HEXAGON M12 X 1.75 THD	1
4	PFOZZ	5340015441224	11083	2591160	PLATE,MOUNTING	1
5	PFOZZ	5330015437278	11083	2707612	SEAL,PLAIN	1
6	PFOZZ	2590015435091	11083	2621388	BRACKET,VEHICULAR C	1
7	PAOZZ	5310013598806	11083	8T4224	WASHER,FLAT 8.8 X 16 X 2MM THK	4
8	PAOZZ	5310013975100	11083	5C7261	NUT,PLAIN,HEXAGON M8 X 1.25 THD	4
9	PAOZZ	5310013522753	11083	8T4121	WASHER,FLAT 11 X 21 X 2.5MM THK	2
10	PAOZZ	5306013600928	11083	8T4137	BOLT,MACHINE M10 X 1.5 X 20MM	2
11	PAOZZ	5305014310871	11083	9X2041	SCREW,MACHINE M10 X 1.5 X 20MM	2
12	PAOZZ	5305014389805	11083	9X2040	SCREW,MACHINE M10 X 1.5 X 25MM	2
13	PFOZZ	5340015436466	11083	2234717	BRACKET,MOUNTING	1
					END OF FIGURE	

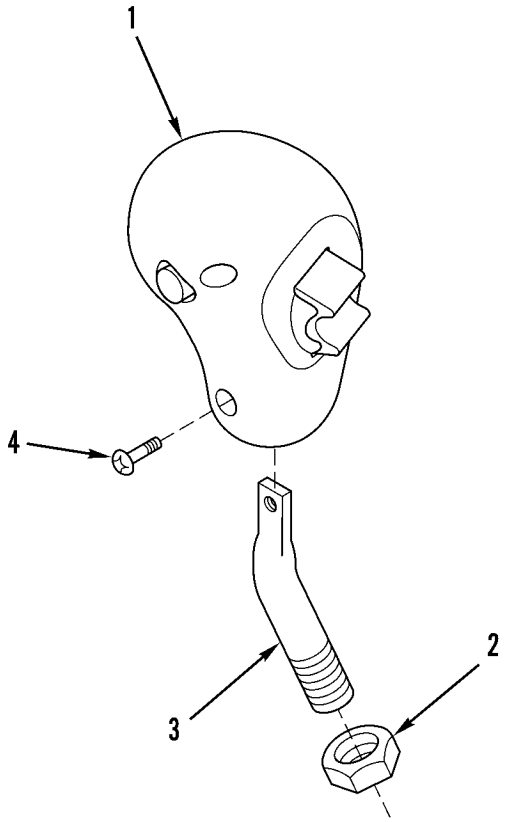

427-066

Figure 132. Directional Control Handle

(1) ITEM NO	(2) SMR CODE	(3) NSN	(4) CAGEC	(5) PART NUMBER	(6) DESCRIPTION AND USABLE ON CODES(UOC)	(7) QTY
					GROUP 2403 HYDRAULIC CONTROLS AND/ OR MANUAL CONTROLS	
					FIG. 132 DIRECTIONAL CONTROL HANDLE	
1	PFOZZ	5340015444726	11083	2086097	HANDLE,MANUAL CONTR.....	1
2	PAOZZ	5310013527374	11083	8T4244	NUT,PLAIN,HEXAGON M12 X 1.75 THD...	1
3	PFOZZ	5342015436610	11083	1494359	CONTROL ROD.....	1
4	PFOZZ	5305015440031	11083	1501293	SCREW,CAP,SOCKETHEA M4 X 0.7 X 12MM	2
					END OF FIGURE	

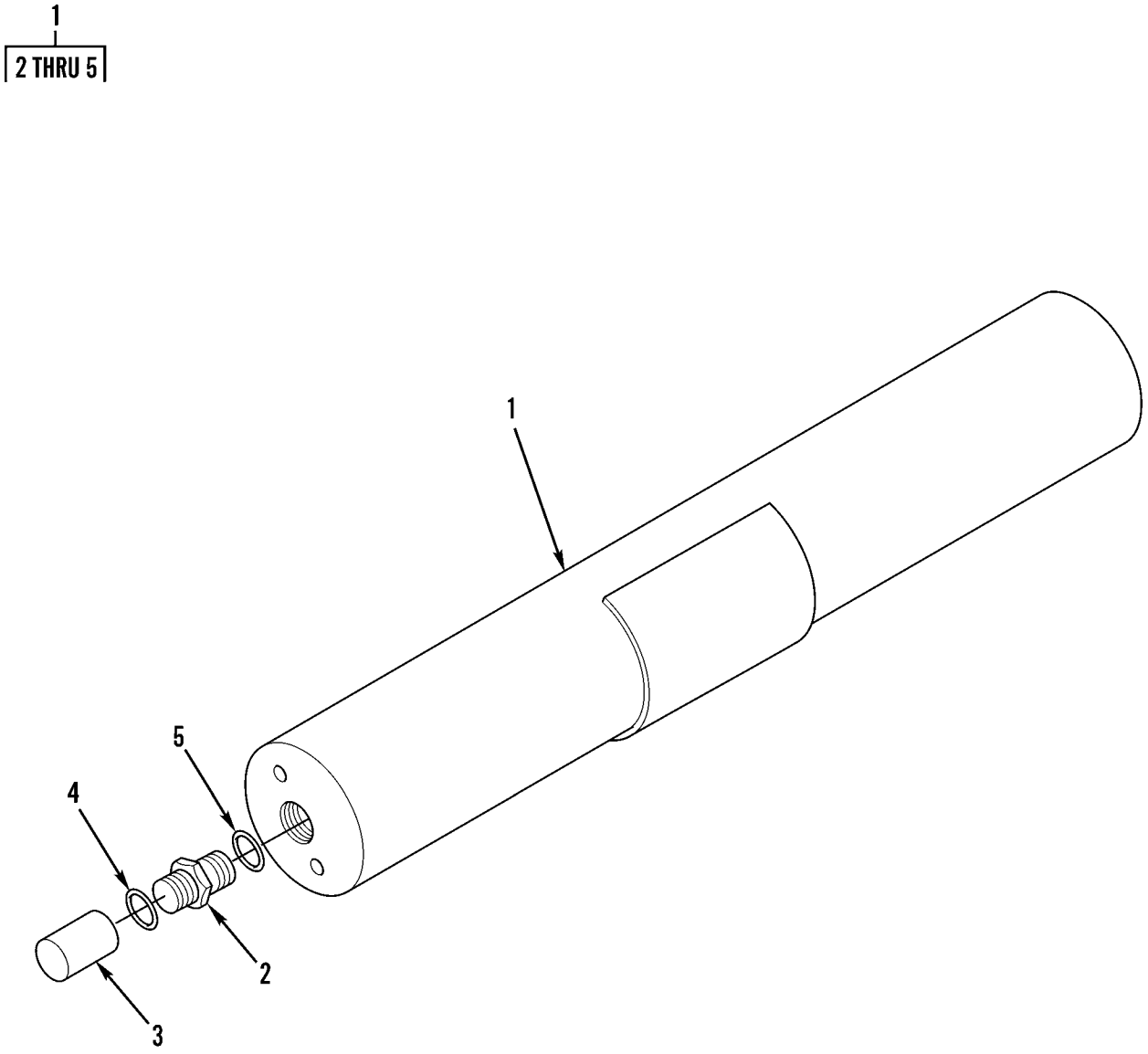

427-071

Figure 133. Pilot Oil Accumulator

(1) ITEM NO	(2) SMR CODE	(3) NSN	(4) CAGEC	(5) PART NUMBER	(6) DESCRIPTION AND USABLE ON CODES(UOC)	(7) QTY
					GROUP 2403 HYDRAULIC CONTROLS AND/ OR MANUAL CONTROLS	
					FIG. 133 PILOT OIL ACCUMULATOR	
1	PAOZZ	2590015438668	11083	2500393	ACCUMULATOR,HYDRAUL.....	1
2	PFOZZ	4820015441865	11083	2245152	.VALVE,FLOW CONTROL.....	1
3	PFOZZ		11083	2245132	.CAP.....	1
4	PAOZZ	5331010491292	81346	ASTM D2000 M6BG9 10	.O-RING 8.92MM ID.....	1
5	PAOZZ	5331014523208	11083	1J9671	.VALVE,FLOW CONTROL.....	1

END OF FIGURE

1
2 THRU 5

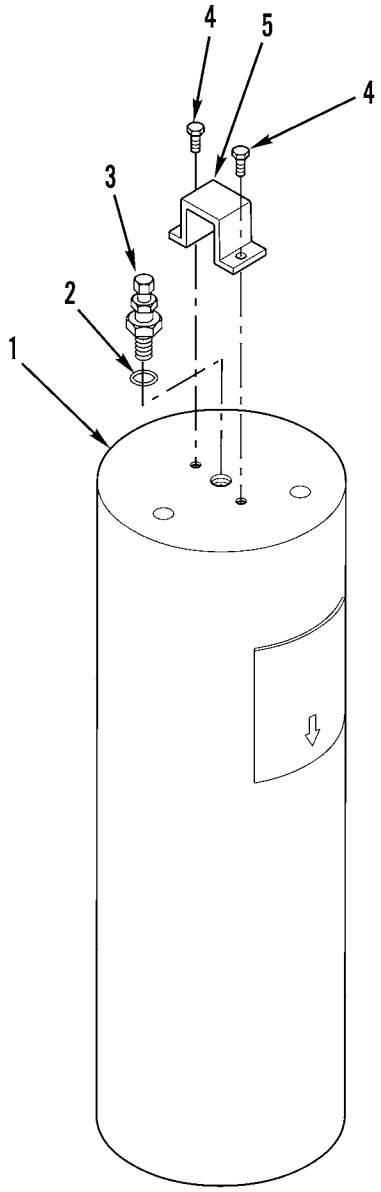

427-088

Figure 134. Ride Control Accumulator

(1) ITEM NO	(2) SMR CODE	(3) NSN	(4) CAGEC	(5) PART NUMBER	(6) DESCRIPTION AND USABLE ON CODES(UOC)	(7) QTY
					GROUP 2403 HYDRAULIC CONTROLS AND/ OR MANUAL CONTROLS	
					FIG. 134 RIDE CONTROL ACCUMULATOR	
1	PAOZZ	3040015435723	11083	2239699	ACCUMULATOR,REFRIGE.....	1
2	PAOZZ	5331014523208	11083	1J9671	.O-RING 10.52MM ID.....	1
3	PAOZZ	4820015423414	11083	0692535	.VALVE,CALIBRATED FL.....	1
4	PAOZZ	5305014381893	11083	0309613	.SCREW,MACHINE 10-24 X 0.37IN.....	2
5	PFOZZ	5340015441055	11083	0692536	.COVER,ACCESS.....	1
					END OF FIGURE	

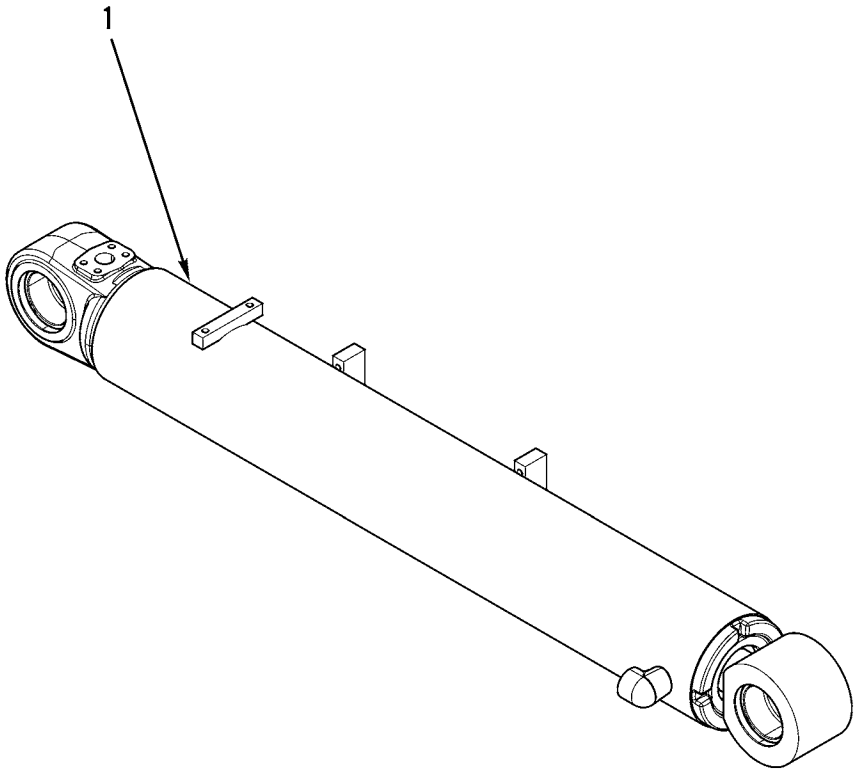

427-068

Figure 135. Tilt Cylinder

(1) ITEM NO	(2) SMR CODE	(3) NSN	(4) CAGEC	(5) PART NUMBER	(6) DESCRIPTION AND USABLE ON CODES(UOC)	(7) QTY
					GROUP 2404 TILT CYLINDERS AND TILT CRANK	
					FIG. 135 TILT CYLINDER	
1	PAOHH		11083	2689437	CYLINDER HYDRAULIC,.....	1
					END OF FIGURE	

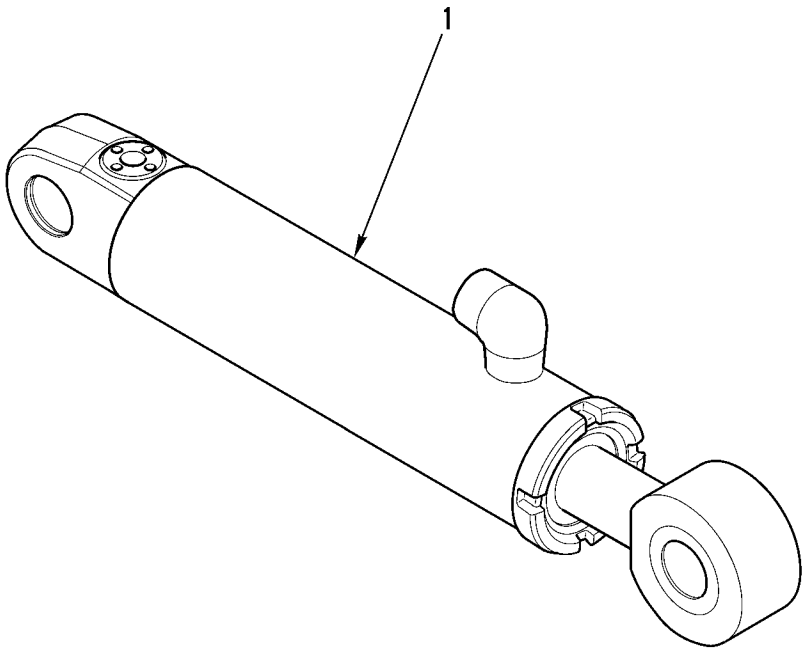

427-151

Figure 136. Hydraulic Lift Cylinder

(1) ITEM NO	(2) SMR CODE	(3) NSN	(4) CAGEC	(5) PART NUMBER	(6) DESCRIPTION AND USABLE ON CODES(UOC)	(7) QTY
					GROUP 2405 MAST COLUMN	
					FIG. 136 HYDRAULIC LIFT CYLINDER	
1	PAOHH	2540015505641	11083	1417483	CYLINDER ASSEMBLY,R LIFT.....	2
					END OF FIGURE	

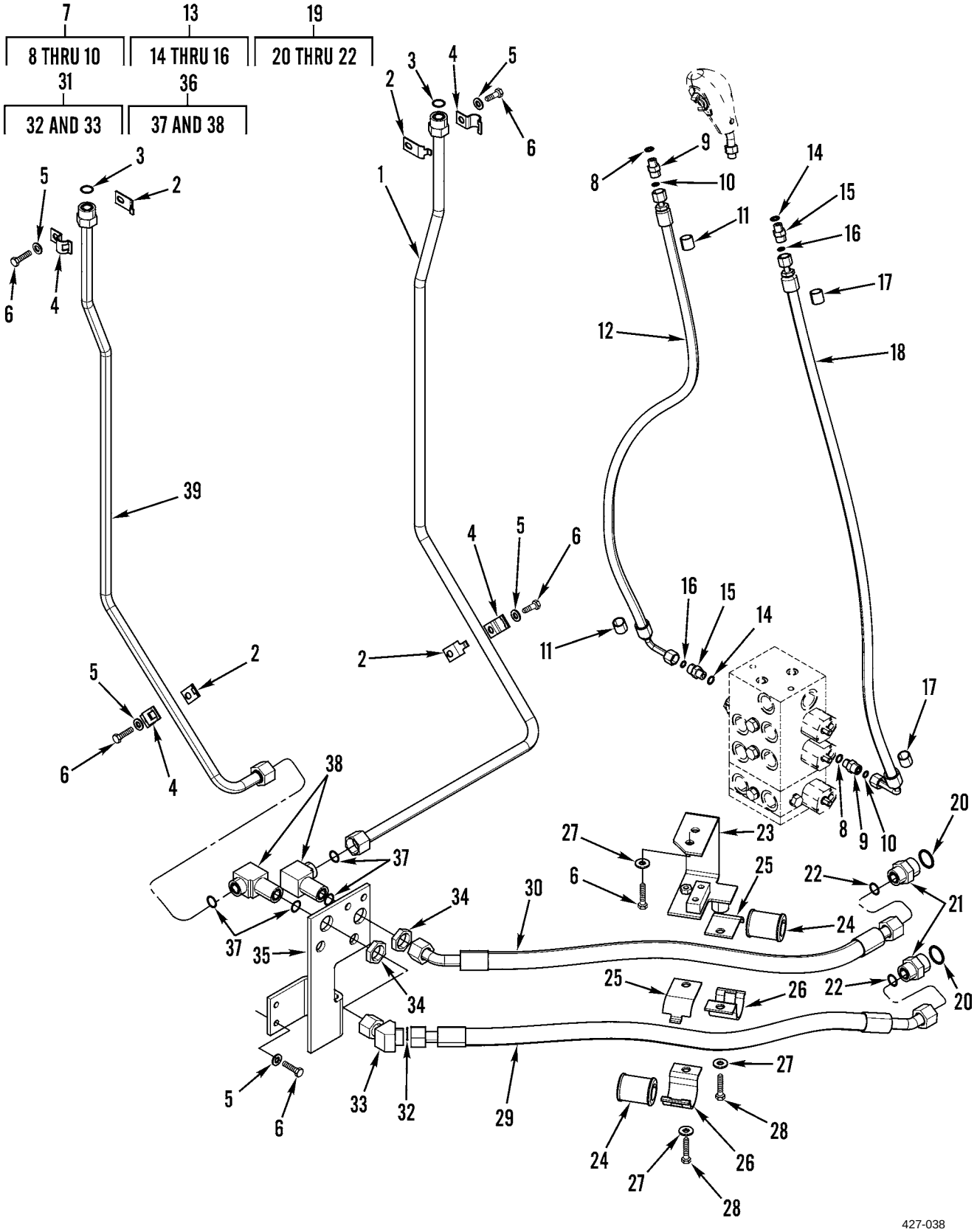

Figure 137. Hydraulic Lines

(1) ITEM NO	(2) SMR CODE	(3) NSN	(4) CAGEC	(5) PART NUMBER	(6) DESCRIPTION AND USABLE ON CODES(UOC)	(7) QTY
					GROUP 2406 STRAINERS, FILTERS, LINES AND FITTINGS, ETC.	
					FIG. 137 HYDRAULIC LINES	
1	PFOZZ	4710015436943	11083	2428808	TUBE ASSEMBLY,METAL	1
2	PAOZZ	5340015173362	11083	8T1888	STRAP,RETAINING	4
3	PAOZZ	5331010584030	11083	6V9746	O-RING 22.50MM OD	2
4	PAOZZ	5340015173360	11083	8T1887	STRAP,RETAINING	4
5	PAOZZ	5310013522753	11083	8T4121	WASHER,FLAT 11 X 21 X 2.5MM THK	6
6	PAOZZ	5306013601634	11083	8T4136	BOLT,MACHINE M10 X 1.5 X 25MM	8
7	AOOZZ		11083	1488321	CONNECTOR AS	2
8	PAOZZ	5331013336444	11083	3J1907	.O-RING 11.89MM ID	1
9	PAOZZ	5935014384252	11083	8C0564	.CONNECTOR,PLUG,ELEC	1
10	PAOZZ	5331005796495	11083	6V8397	.O-RING 12.83MM OD	1
11	PAOZZ	9905013066691	11083	4V9799	BAND,MARKER	2
12	PAOZZ	4720015436757	11083	1927949	HOSE ASSEMBLY,NONME	1
13	AOOZZ		11083	1488336	CONNECTOR AS	2
14	PAOZZ	5331013336444	11083	3J1907	.O-RING 11.89MM ID	1
15	PAOZZ	4730012699540	11083	6V8636	.ADAPTER,STRAIGHT,TU	1
16	PAOZZ	5331005796495	11083	6V8397	.O-RING 12.83MM OD	1
17	PAOZZ	9905012981664	11083	4V9798	BAND,MARKER	2
18	PAOZZ	4720015442844	11083	2522382	HOSE ASSEMBLY,NONME	1
19	AOOZZ		11083	1488339	CONNECTOR AS	2
20	PAOZZ	5330009309407	11083	7M8485	.SEAL,ADAPTER,MOTOR O-RING, 29.74MM ID	1
21	PAOZZ	4730014713789	11083	6V8716	.BUSHING,SLEEVE CONNECTOR	1
22	PAOZZ	5331010584030	11083	6V9746	.O-RING 22.50MM OD	1
23	PFOZZ	5340015435029	11083	1460117	BRACKET,MOUNTING	1
24	PAOZZ	5325011635972	11083	5P8112	GROMMET,NONMETALLIC	2
25	PAOZZ	5340011615766	11083	5P7467	CLIP,SPRING TENSION	2
26	PAOZZ	5340011636165	11083	5P7466	STRAP,RETAINING	2
27	PAOZZ	5310014309036	11083	7X7729	WASHER,FLAT 11 X 25 X 3MM THK	4
28	PAOZZ	5305013981284	11083	8T4195	SCREW,CAP,HEXAGON H M10 X 1.5 X 30MM	2
29	PAOZZ	4720015435658	11083	2140734	HOSE ASSEMBLY,NONME	1
30	PAOZZ	4720015442828	11083	1460112	HOSE ASSEMBLY,NONME	1
31	AOOZZ		11083	1716723	ELBOW AS	1
32	PAOZZ	5331010584030	11083	6V9746	.O-RING 22.50MM OD	1
33	PAOZZ	4730014734786	11083	8T8899	.ELBOW,HOSE	1
34	PAOZZ	5310012928365	11083	2P1293	NUT,SELF-LOCKING,HE	2
35	PFOZZ	5340015436465	11083	1460118	PLATE,MOUNTING	1
36	AOOZZ		11083	1488376	ELBOW AS	2
37	PAOZZ	5331010584030	11083	6V9746	.O-RING 22.50MM OD	2
38	PAOZZ	4730015436538	11083	6V8983	.ELBOW,HOSE	1
39	PFOZZ	4710015442798	11083	2428807	TUBE ASSEMBLY,METAL	1
					END OF FIGURE	

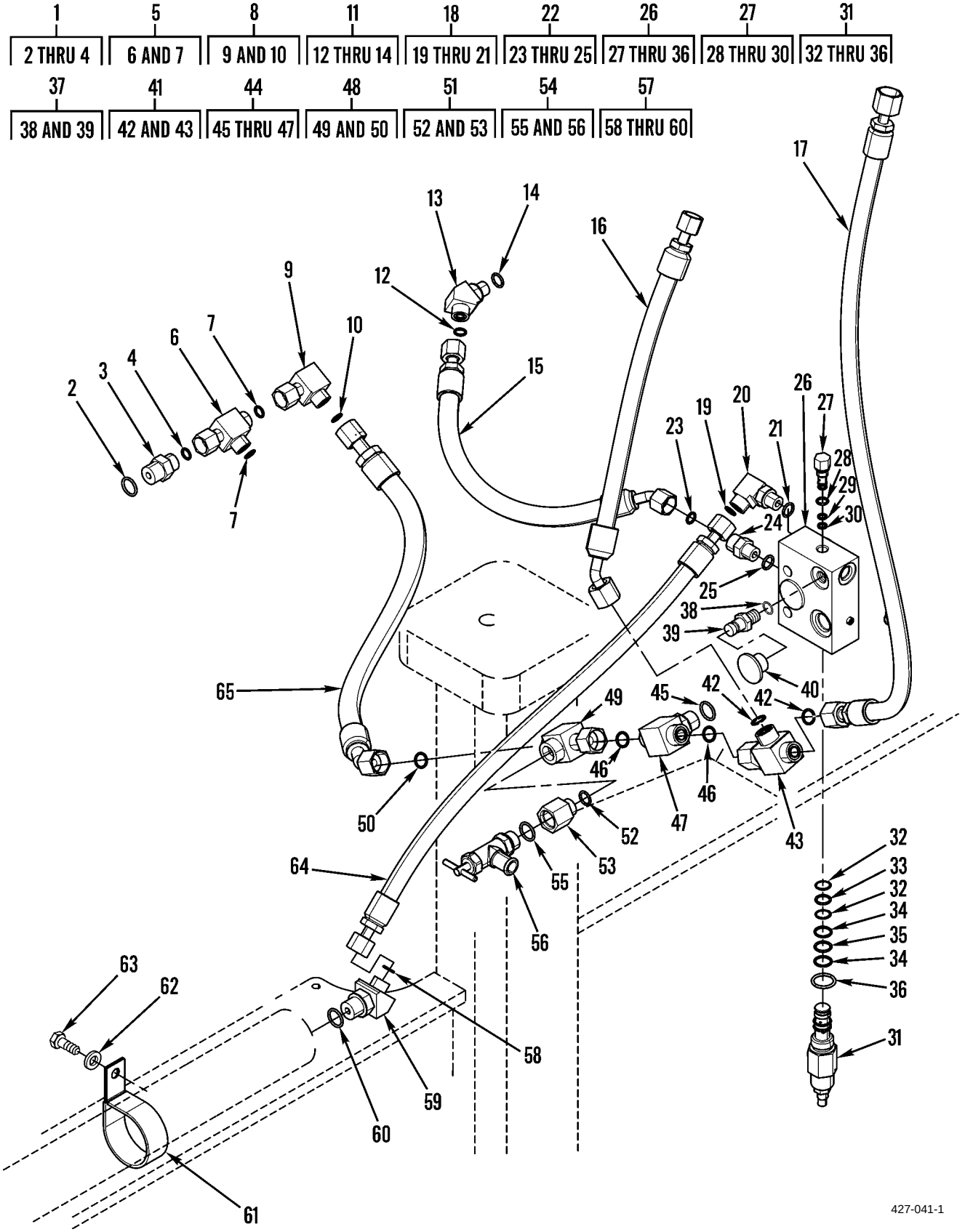

Figure 138. Pilot Lines (Hydraulic) (Sheet 1 of 2)

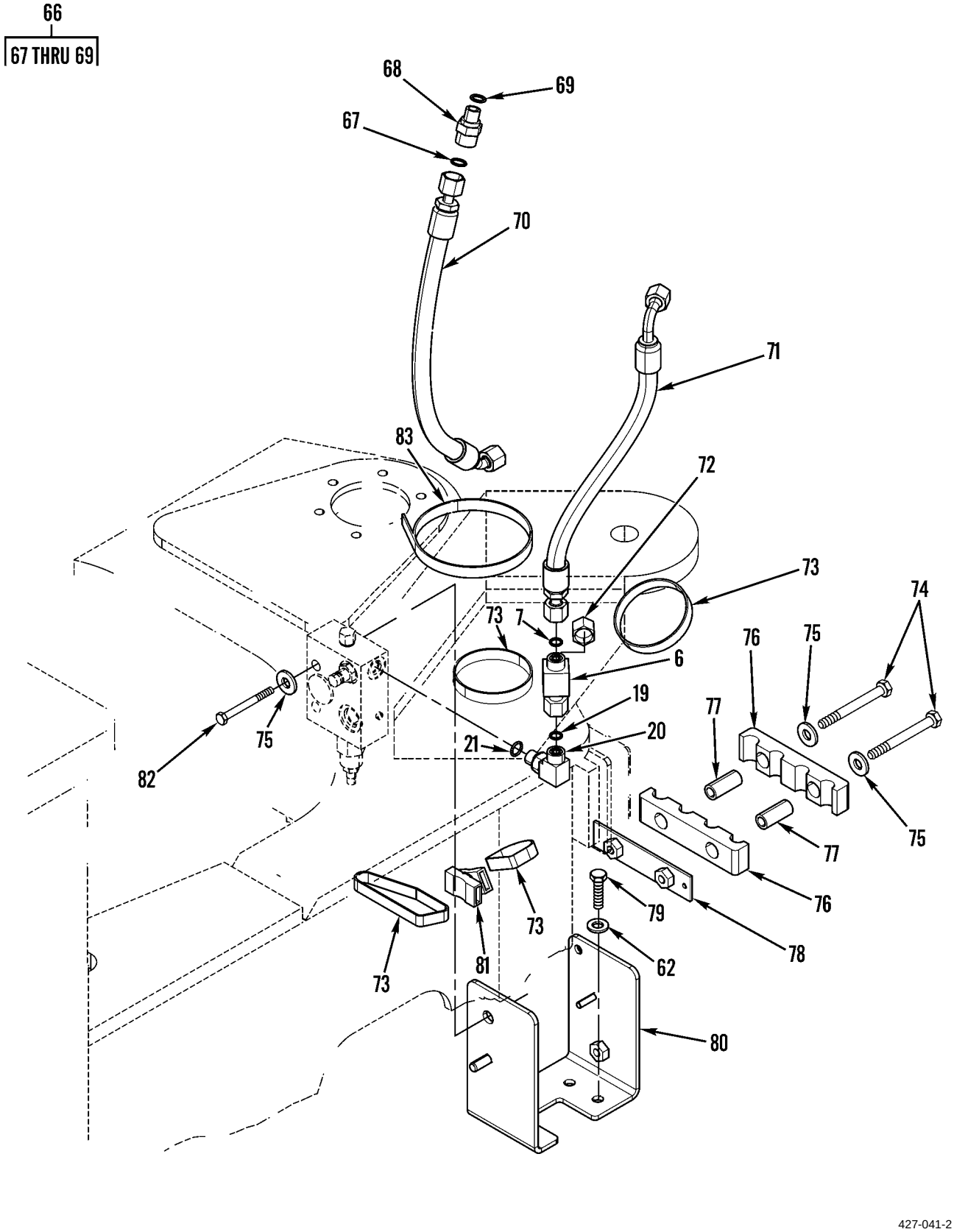

Figure 138. Pilot Lines (Hydraulic) (Sheet 2 of 2)

(1) ITEM NO	(2) SMR CODE	(3) NSN	(4) CAGEC	(5) PART NUMBER	(6) DESCRIPTION AND USABLE ON CODES(UOC)	(7) QTY
					GROUP 2406 STRAINERS, FILTERS, LINES AND FITTINGS, ETC.	
					FIG. 138 PILOT LINES (HYDRAULIC)	
1	AOOZZ		11083	1488318	CONNECTOR ASSEMBLY,.....	1
2	PAOZZ	5331009486482	11083	3K0360	.O-RING 16.36MM ID.....	1
3	PAOZZ	5935014379075	11083	6V8634	.CONNECTOR,PLUG,ELEC.....	1
4	PAOZZ	5331005796495	11083	6V8397	.O-RING 12.83MM OD.....	1
5	AOOZZ		11083	1488433	TEE AS-ORFS.....	2
6	PAOZZ	4730014380764	11083	6V9836	.TEE,TUBE.....	1
7	PAOZZ	5331005796495	11083	6V8397	.O-RING 12.83MM OD.....	2
8	AOOZZ		11083	1488367	ELBOW AS.....	1
9	PAOZZ	4730014117545	11083	6V9850	.ELBOW,TUBE.....	1
10	PAOZZ	5331005796495	11083	6V8397	.O-RING 12.83MM OD.....	1
11	AOOZZ		11083	1488353	ELBOW AS-45 DEG.....	1
12	PAOZZ	5331005796495	11083	6V8397	.O-RING 12.83MM OD.....	1
13	PAOZZ	4730013646397	11083	6V9001	.ELBOW,HOSE.....	1
14	PAOZZ	5331013336444	11083	3J1907	.O-RING 11.89MM ID.....	1
15	PAOZZ	4720015439266	11083	2147093	HOSE ASSEMBLY,NONME.....	1
16	PAOZZ	4720015439615	11083	2652167	HOSE ASSEMBLY,NONME.....	1
17	PAOZZ	4720015439715	11083	2522374	HOSE ASSEMBLY,NONME.....	1
18	AOOZZ		11083	1488378	ELBOW AS-90 DEG.....	2
19	PAOZZ	5331005796495	11083	6V8397	.O-RING 12.83MM OD.....	1
20	PAOZZ	4730013604146	11083	6V8724	.ELBOW,PIPE.....	1
21	PAOZZ	5331013336444	11083	3J1907	.O-RING 11.89MM ID.....	1
22	AOOZZ		11083	1488336	CONNECTOR AS.....	1
23	PAOZZ	5331005796495	11083	6V8397	.O-RING 12.83MM OD.....	1
24	PAOZZ	4730012699540	11083	6V8636	.ADAPTER,STRAIGHT,TU.....	1
25	PAOZZ	5331013336444	11083	3J1907	.O-RING 11.89MM ID.....	1
26	PAOZZ	4820015438830	11083	1855209	VALVE,SAFETY RELIEF IMPLEMENT RELIEF.....	1
27	PFOZZ	4820015393210	11083	1198397	.VALVE,CHECK.....	1
28	PFOZZ	5331014944282	11083	0335853	..O-RING 8.92MM ID.....	1
29	PFOZZ	5330015281617	11083	1265985	..BACK-UP RING,PREFOR 6.73MM ID....	1
30	PFOZZ		11083	9N1756	..O-RING 6.07MM ID.....	1
31	PFOZZ		11083	1849975	.VALVE,PRESSURE RELI.....	1
32	PFOZZ		11083	1852327	..RING,BACKUP.....	1
33	PFOZZ	5331014736093	11083	6V5758	..O-RING 12.42MM ID.....	1
34	PFOZZ		11083	6V6924	..RING,BACKUP 14.73MM ID.....	1
35	PFOZZ	5331015284358	11083	0336043	..O-RING 14MM ID.....	1
36	PFOZZ	5331014703092	11083	0336027	..O-RING 19.18MM ID.....	1
37	AOOZZ		11083	1645567	NIPPLE AS.....	2
38	PAOZZ	5331013336444	11083	3J1907	.O-RING 11.89MM ID.....	1
39	PAOZZ	4730011641777	01276	FD90-1102-05-04	.COUPLING HALF,QUICK.....	1
40	PAOZZ	5340011653715	11083	6V0852	CAP,PROTECTIVE,DUST.....	2
41	AOOZZ		11083	1488444	TEE AS-ORFS.....	1
42	PAOZZ	5331005806583	11083	6V8398	.O-RING 16.03MM OD.....	2
43	PAOZZ	4730014714239	11083	6V9837	.TEE,TUBE.....	1
44	AOOZZ		11083	1488436	TEE AS-ORFS.....	1
45	PAOZZ	5331009486482	11083	3K0360	.O-RING 16.36MM ID.....	1
46	PAOZZ	5331005806583	11083	6V8398	.O-RING 16.03MM OD.....	2

(1) ITEM NO	(2) SMR CODE	(3) NSN	(4) CAGEC	(5) PART NUMBER	(6) DESCRIPTION AND USABLE ON CODES(UOC)	(7) QTY
47	PAOZZ	4730015178779	11083	6V8775	.TEE,TUBE.....	1
48	AOOZZ		11083	1645586	TEE AS.....	1
49	PAOZZ	4730014714163	11083	7X0871	.SWIVEL JOINT,HYDRAU.....	1
50	PAOZZ	5331005806583	11083	6V8398	.O-RING 16.03MM OD.....	1
51	AOOZZ		11083	1488307	ADAPTER AS.....	1
52	PAOZZ	5331013336444	11083	3J1907	.O-RING 11.89MM ID.....	1
53	PAOZZ	4730012306610	11083	5P8874	.REDUCER,BOSS.....	1
54	AOOZZ		11083	1652273	VALVE AS.....	1
55	PAOZZ	5331009486482	11083	3K0360	.O-RING 16.36MM ID.....	1
56	PAOZZ	4820013436277	11083	6V7238	.COCK,POPPET DRAIN.....	1
57	AOOZZ		11083	1488363	ELBOW AS.....	1
58	PAOZZ	5331005796495	11083	6V8397	.O-RING 12.83MM OD.....	1
59	PAOZZ	4730014381943	11083	6V9876	.ELBOW,TUBE.....	1
60	PAOZZ	5331009486482	11083	3K0360	.O-RING 16.36MM ID.....	1
61	PFOZZ	5340015443495	11083	1564130	CLAMP,LOOP.....	2
62	PAOZZ	5310013522753	11083	8T4121	WASHER,FLAT 11 X 21 X 2.5MM THK....	5
63	PAOZZ	5306013601634	11083	8T4136	BOLT,MACHINE M10 X 1.5 X 25MM.....	2
64	PAOZZ	4720015438839	11083	1761579	HOSE ASSEMBLY,NONME.....	1
65	PAOZZ	4720015439256	11083	2147094	HOSE ASSEMBLY,NONME.....	1
66	AOOZZ		11083	1504043	CONNECTOR AS.....	1
67	PAOZZ	5331005806583	11083	6V8398	.O-RING 16.03MM OD.....	1
68	PAOZZ	4730014732894	11083	6V9873	.CONNECTOR,MULTIPLE,.....	1
69	PAOZZ	5331013336444	11083	3J1907	.O-RING 11.89MM ID.....	1
70	PAOZZ	4720015439728	11083	2522375	HOSE ASSEMBLY,NONME.....	1
71	PAOZZ	4720015439607	11083	2263863	HOSE ASSEMBLY,NONME.....	1
72	PAOZZ	5340014858574	11083	6V9829	CAP,PROTECTIVE,DUST.....	1
73	PAOZZ	2815010534712	11083	7K1181	STRAP.....	4
74	PAOZZ	5305014398526	11083	8T5005	SCREW,MACHINE M10 X 1.5 X 70MM.....	2
75	PAOZZ	5310014309036	11083	7X7729	WASHER,FLAT 11 X 25 X 3MM THK.....	3
76	PFOZZ	5340015436537	11083	8Y8387	CLAMP,BLOCK,SECTION.....	2
77	PFOZZ	5365015436601	11083	1116940	SPACER,SLEEVE 13.1 X 15.9 X 36.5MM THK.....	2
78	PFOZZ	5340015436450	11083	1409289	PLATE,MOUNTING.....	1
79	PAOZZ	5306013600928	11083	8T4137	BOLT,MACHINE M10 X 1.5 X 20MM.....	2
80	PFOZZ	5340015436172	11083	2197845	BRACKET,MOUNTING.....	1
81	PFOZZ	4730015449103	11083	2006345	ELBOW,SWIVEL,FLANGE.....	1
82	PAOZZ	5305014195181	11083	8T4172	SCREW,CAP,HEXAGON H M10 X 1.5 X 80MM.....	1
83	PAOZZ	5975015085704	11083	5P5148	STRAP,TIEDOWN,ELECT.....	1

END OF FIGURE

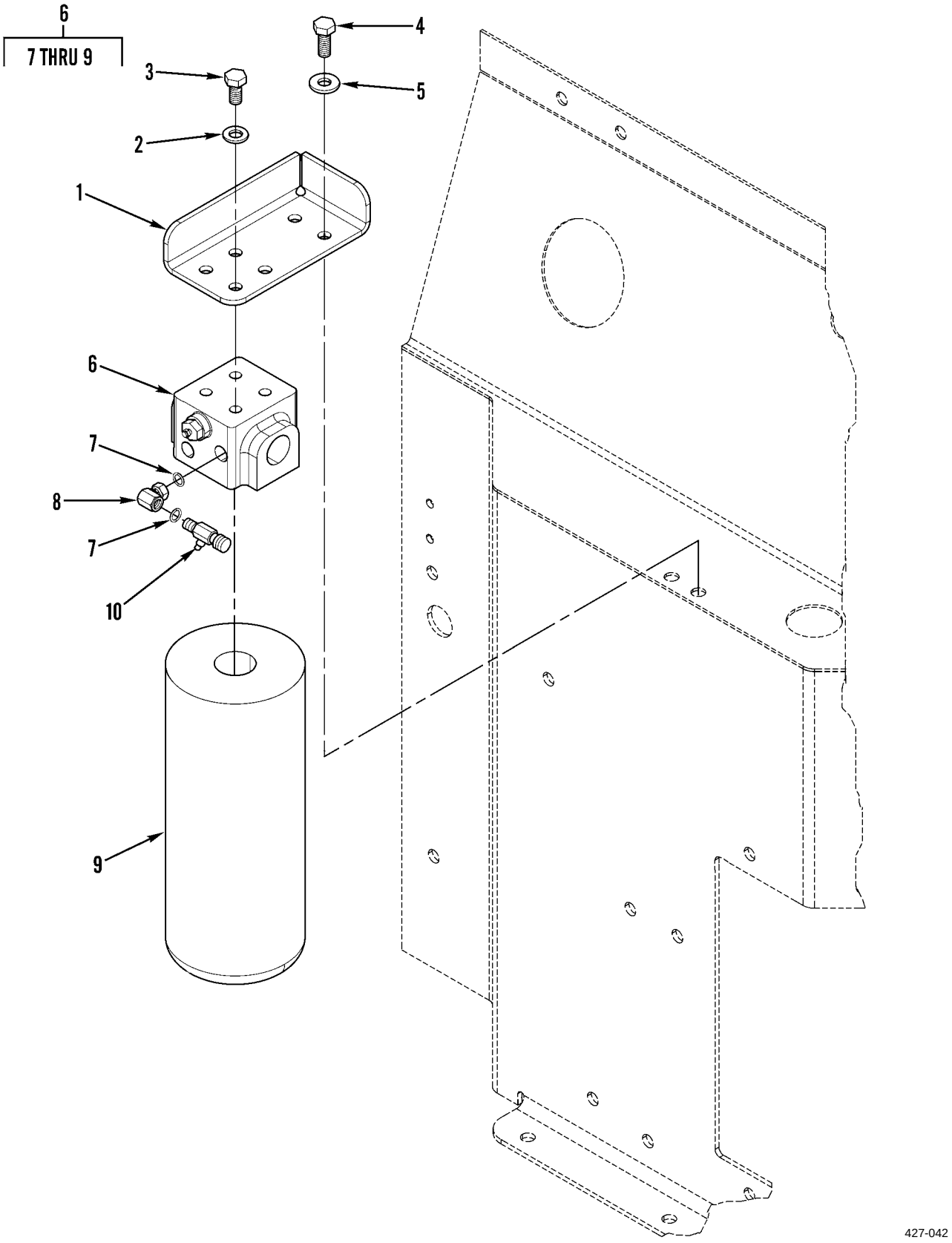

Figure 139. Hydraulic Oil Filter and Sampling Valve

(1) ITEM NO	(2) SMR CODE	(3) NSN	(4) CAGEC	(5) PART NUMBER	(6) DESCRIPTION AND USABLE ON CODES(UOC)	(7) QTY
					GROUP 2406 STRAINERS, FILTERS, LINES AND FITTINGS, ETC.	
					FIG. 139 HYDRAULIC OIL FILTER AND SAMPLING VALVE	
1	PFOZZ	5340015440035	11083	2292939	BRACKET,MOUNTING.....	1
2	PAOZZ	5310013522753	11083	8T4121	WASHER,FLAT 11 X 21 X 2.5MM THK....	4
3	PAOZZ	5306013600928	11083	8T4137	BOLT,MACHINE M10 X 1.5 X 20MM.....	4
4	PAOZZ	5306013601634	11083	8T4136	BOLT,MACHINE M10 X 1.5 X 25MM.....	2
5	PAOZZ	5310014309036	11083	7X7729	WASHER,FLAT 11 X 25 X 3MM THK.....	2
6	PAOZZ	2940015437941	11083	2093149	FILTER BODY,FLUID.....	1
7	PAOZZ	5331010491292	81346	ASTM D2000 M6BG9 10	.O-RING 8.92MM ID.....	2
8	PAOZZ	4730015343393	11083	1515145	.ELBOW,PIPE TO HOSE.....	1
9	PAOZZ	4330015172814	11083	1261818	.FILTER ELEMENT,FLUI.....	1
10	PAOZZ	4820014735061	11083	1246889	VALVE,PURGE HYDRAULIC OIL SAMPLING VALVE (BLUE TAG).....	1
					END OF FIGURE	

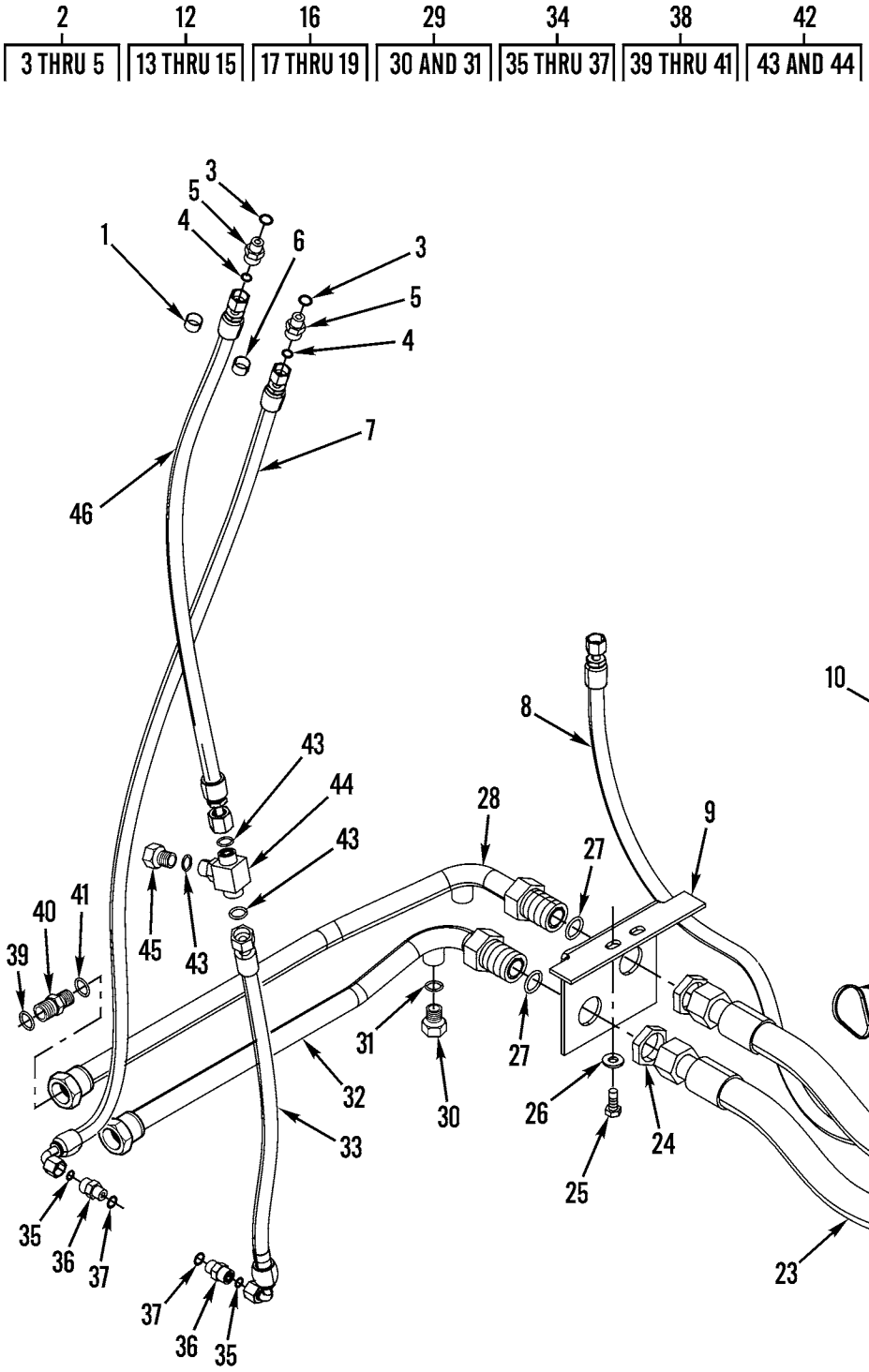

427-044-1

Figure 140. Lift Cylinder Lines (Sheet 1 of 2)

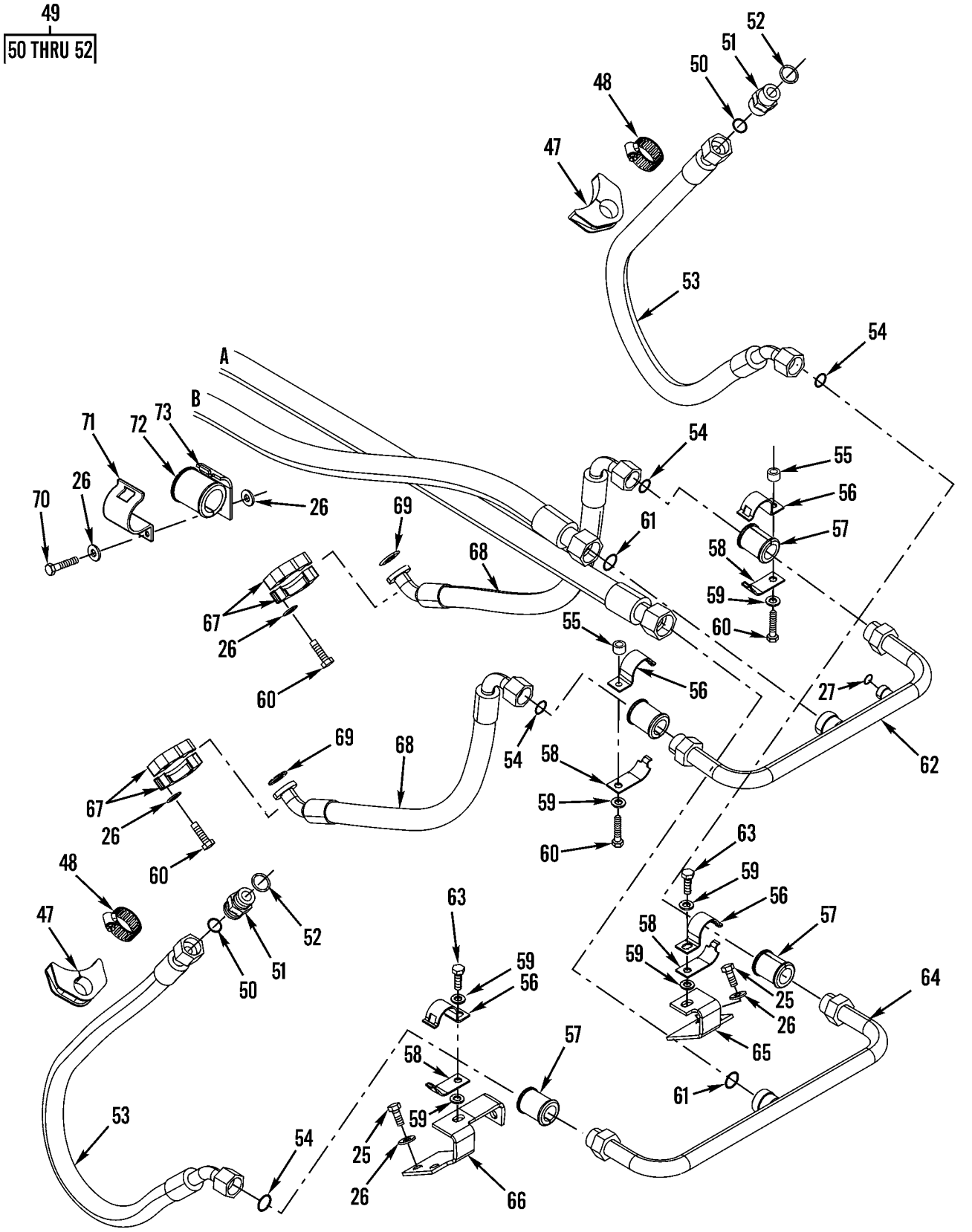

427-044-2

Figure 140. Lift Cylinder Lines (Sheet 2 of 2)

(1) ITEM NO	(2) SMR CODE	(3) NSN	(4) CAGEC	(5) PART NUMBER	(6) DESCRIPTION AND USABLE ON CODES(UOC)	(7) QTY
					GROUP 2406 STRAINERS, FILTERS, LINES AND FITTINGS, ETC.	
					FIG. 140 LIFT CYLINDER LINES	
1	PAOZZ	9905013066692	11083	7K3971	BAND,MARKER.....	4
2	AOOZZ		11083	1488321	CONNECTOR AS.....	2
3	PAOZZ	5331013336444	11083	3J1907	.O-RING 11.89MM ID.....	1
4	PAOZZ	5331005796495	11083	6V8397	.O-RING 12.83MM OD.....	1
5	PAOZZ	5935014384252	11083	8C0564	.CONNECTOR,PLUG,ELEC.....	1
6	PAOZZ	9905013066690	11083	7K3972	BAND,MARKER.....	2
7	PAOZZ	4720015438836	11083	2522376	HOSE ASSEMBLY,NONME.....	1
8	PAOZZ	4720015435062	11083	2309800	HOSE ASSEMBLY,NONME.....	1
9	PFOZZ	5340015435025	11083	2138783	BRACKET,MOUNTING.....	1
10	PAOZZ	5342004982946	11083	8M2773	CLIP.....	1
11	PFOZZ	5340015439426	11083	1853596	BRACKET,DOUBLE ANGL.....	1
12	AOOZZ		11083	1645545	CONNECTOR AS.....	1
13	PAOZZ	5331013336444	11083	3J1907	.O-RING 11.89MM ID.....	1
14	PAOZZ	4730015439271	11083	3E2335	.ADAPTER,STRAIGHT,PI.....	1
15	PAOZZ	5331005796495	11083	6V8397	.O-RING 12.83MM OD.....	1
16	AOOZZ		11083	1504043	CONNECTOR AS.....	1
17	PAOZZ	5331013336444	11083	3J1907	.O-RING 11.89MM ID.....	1
18	PAOZZ	4730014732894	11083	6V9873	.CONNECTOR,MULTIPLE,.....	1
19	PAOZZ	5331005806583	11083	6V8398	.O-RING 16.03MM OD.....	1
20	PAOZZ	4720015435638	11083	2213234	HOSE ASSEMBLY,NONME.....	1
21	PAOZZ	2815010534712	11083	7K1181	STRAP.....	2
22	PAOZZ	4720014732899	11083	6V9973	HOSE ASSEMBLY,NONME.....	2
23	PAOZZ	4720015436530	11083	1487783	HOSE ASSEMBLY,NONME.....	1
24	PAOZZ	4730014732114	11083	6V9172	NUT,UNION 1-7/16-12 THD.....	2
25	PAOZZ	5306013601634	11083	8T4136	BOLT,MACHINE M10 X 1.5 X 25MM.....	7
26	PAOZZ	5310014309036	11083	7X7729	WASHER,FLAT 11 X 25 X 3MM THK.....	12
27	PAOZZ	5330014381387	11083	5K9090	GASKET 27.22MM OD.....	4
28	PFOZZ	4710015439374	11083	2111058	TUBE ASSEMBLY,METAL.....	1
29	AOOZZ		11083	1488410	PLUG AS.-STO.....	2
30	PAOZZ	5365010530180	11083	9S4190	.PLUG,MACHINE THREAD.....	1
31	PAOZZ	5330009390687	11083	2M9780	.PACKING,PREFORMED 19.18MM ID.....	1
32	PFOZZ	4710015441968	11083	2114230	TUBE ASSEMBLY,METAL.....	1
33	PAOZZ	4720015439560	11083	1002789	HOSE ASSEMBLY,NONME.....	1
34	AOOZZ		11083	1488336	CONNECTOR AS.....	2
35	PAOZZ	5331013336444	11083	3J1907	.O-RING 11.89MM ID.....	1
36	PAOZZ	4730012699540	11083	6V8636	.ADAPTER,STRAIGHT,TU.....	1
37	PAOZZ	5331005796495	11083	6V8397	.O-RING 12.83MM OD.....	1
38	AOOZZ		11083	1488335	CONNECTOR AS.....	2
39	PAOZZ	5330014381387	11083	5K9090	.GASKET 27.22MM OD.....	1
40	PAOZZ	5935014379076	11083	6V8635	.CONNECTOR,PLUG,ELEC.....	1
41	PAOZZ	5330009309407	11083	7M8485	.SEAL,ADAPTER,MOTOR O-RING, 29.74MM ID.....	1
42	AOOZZ		11083	1503056	TEE AS.....	1
43	PAOZZ	5331005796495	11083	6V8397	.O-RING 12.83MM OD.....	3
44	PAOZZ	4730014380758	11083	6V8788	.TEE,TUBE.....	1
45	PAOZZ	5340014858574	11083	6V9829	CAP,PROTECTIVE,DUST.....	1
46	PAOZZ	4720015435063	11083	2522377	HOSE ASSEMBLY,NONME.....	1

(1) ITEM NO	(2) SMR CODE	(3) NSN	(4) CAGEC	(5) PART NUMBER	(6) DESCRIPTION AND USABLE ON CODES(UOC)	(7) QTY
47	PFOZZ	5340015444177	11083	9R9572	STRAP,RETAINING.....	2
48	PAOZZ	5340015082904	11083	5P0599	CLAMP,SYNCHRO.....	2
49	AOOZZ		11083	1488327	CONNECTOR ASSEMBLY.....	2
50	PAOZZ	5331009448281	11083	3D2824	.O-RING 23.47MM ID.....	1
51	PAOZZ	4730012918501	11083	6V8637	.REDUCER,BOSS.....	1
52	PAOZZ	5331010584030	11083	6V9746	.O-RING 22.50MM OD.....	1
53	PAOZZ	4720015435057	11083	1460111	HOSE ASSEMBLY,NONME.....	2
54	PAOZZ	5331010584030	11083	6V9746	O-RING 22.50MM OD.....	4
55	PFOZZ	5365015436976	11083	0910081	SPACER,SLEEVE 10.5 X 20 X 10MM THK.	2
56	PFOZZ	5340015437143	11083	8T1899	CLIP,SPRING TENSION.....	4
57	PAOZZ	5325015173276	11083	6V7359	GROMMET,NONMETALLIC.....	4
58	PFOZZ	5340015441221	11083	8T1900	CLIP,SPRING TENSION.....	4
59	PAOZZ	5310013522753	11083	8T4121	WASHER,FLAT 11 X 21 X 2.5MM THK....	15
60	PAOZZ	5305013601996	11083	8T4196	SCREW,CAP,HEXAGON H M10 X 1.5 X 35MM.....	10
61	PAOZZ	5331005806583	11083	6V8398	O-RING 16.03MM OD.....	1
62	PFOZZ	4710015436956	11083	2210852	TUBE ASSEMBLY,METAL.....	1
63	PAOZZ	5305013981284	11083	8T4195	SCREW,CAP,HEXAGON H M10 X 1.5 X 30MM.....	4
64	PFOZZ	4710015439368	11083	2178112	TUBE ASSEMBLY,METAL.....	1
65	PFOZZ	5340015444720	11083	2180256	BRACKET,MOUNTING.....	1
66	PFOZZ	5340015436463	11083	2180255	BRACKET,MOUNTING.....	1
67	PAOZZ	2590015066947	11083	8C3205	KIT SUPPORT FLANGE,HALF.....	4
68	PAOZZ	4720015439621	11083	1322367	HOSE ASSEMBLY,NONME.....	2
69	PAOZZ	5331010176535	11083	4J5267	O-RING.....	2
70	PAOZZ	5306014149639	11083	8T4182	BOLT,SHOULDER M10 X 1.5 X 45MM.....	2
71	PAOZZ	5340011639459	11083	5P7468	CLIP,SPRING TENSION.....	2
72	PAOZZ	5325011647555	11083	5P8444	GROMMET,NONMETALLIC.....	2
73	PAOZZ	5340011636175	11083	5P7469	CLIP,SPRING TENSION.....	2

END OF FIGURE

11
12 THRU 14

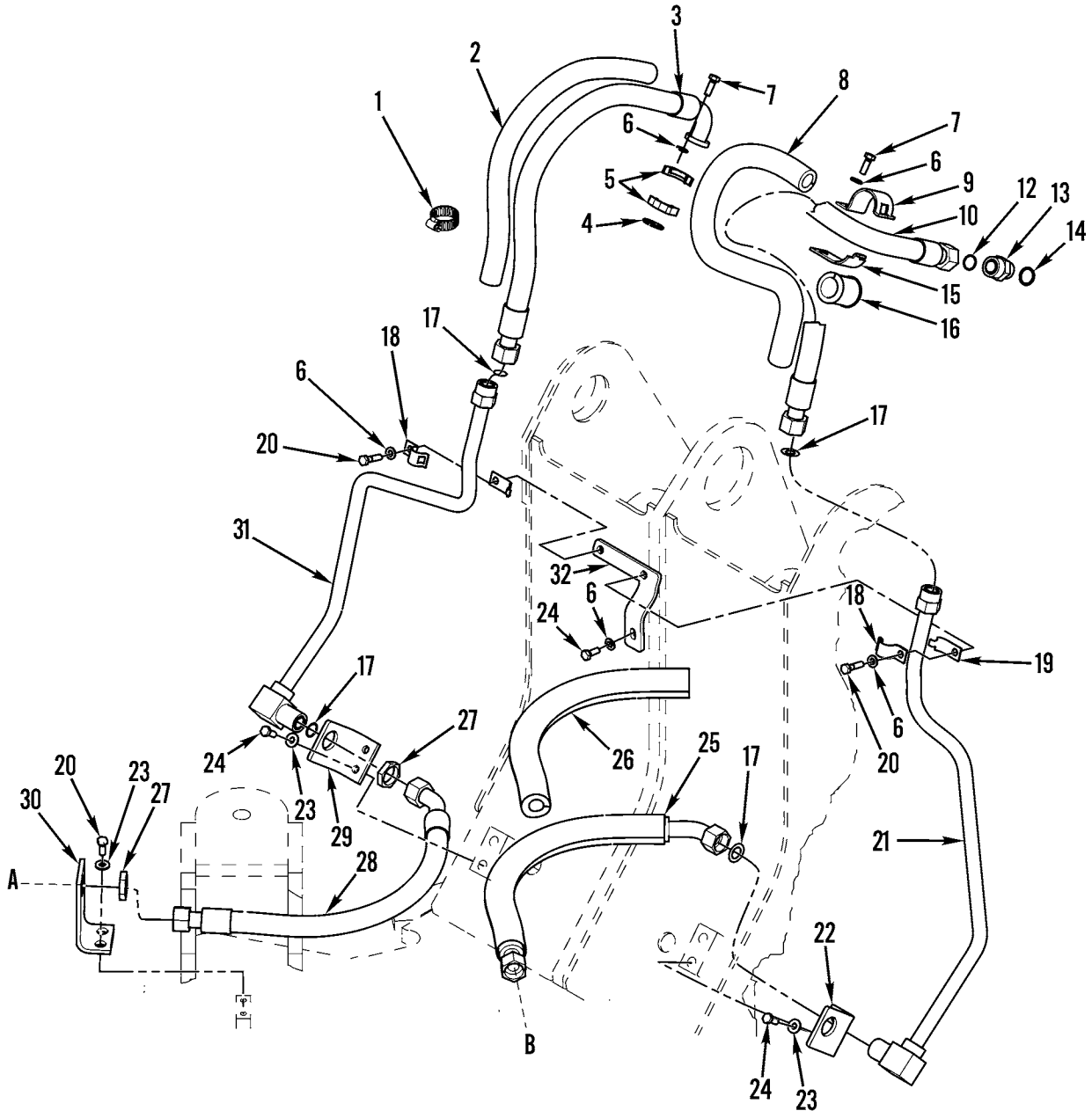

427-045-1

Figure 141. Tilt Cylinder Lines (Sheet 1 of 2)

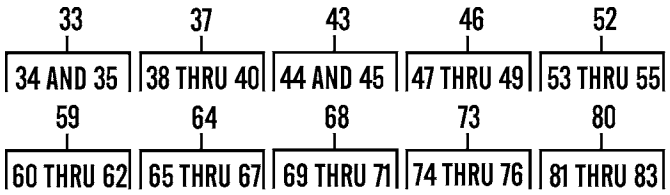

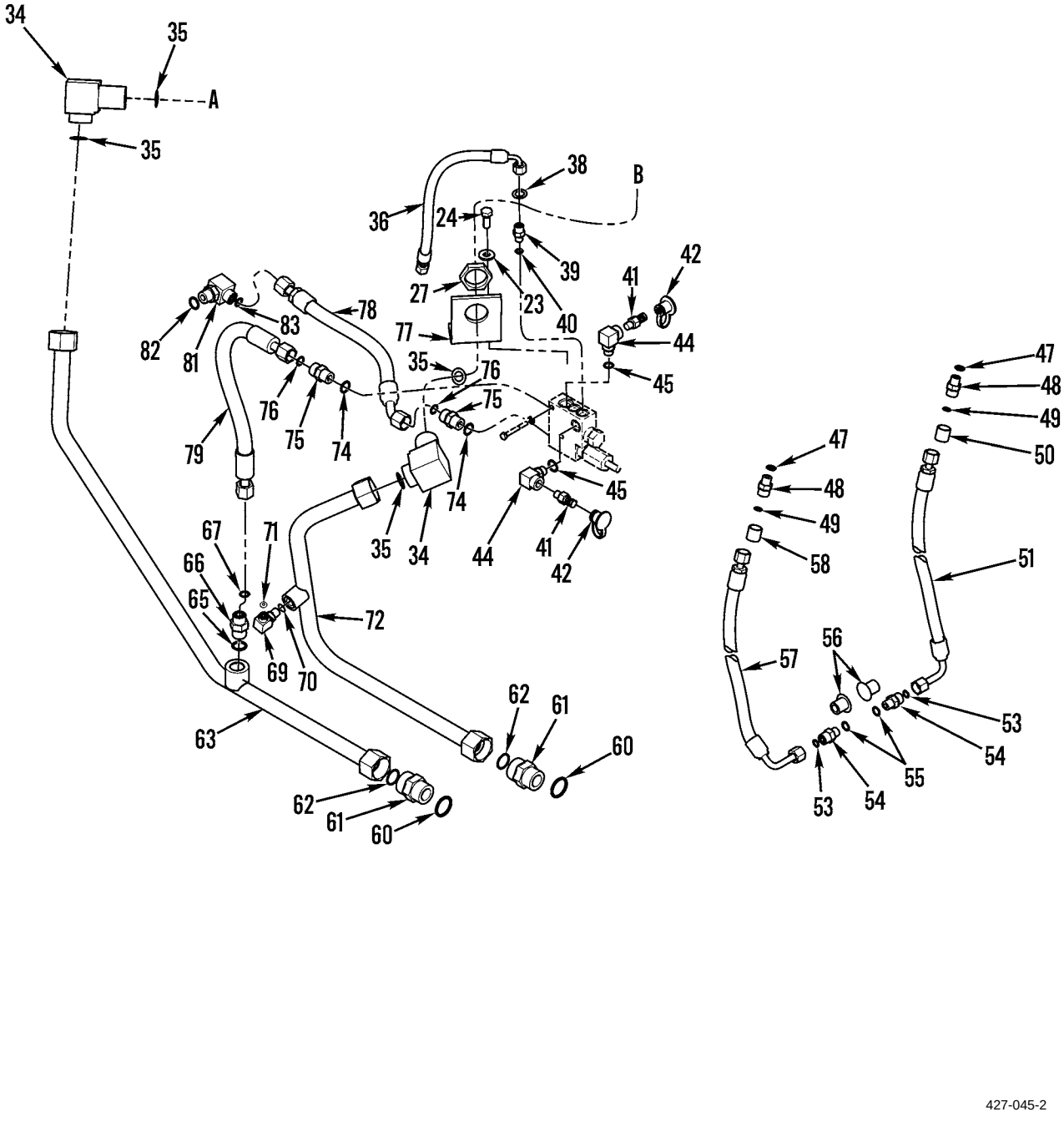

427-045-2

Figure 141. Tilt Cylinder Lines (Sheet 2 of 2)

(1) ITEM NO	(2) SMR CODE	(3) NSN	(4) CAGEC	(5) PART NUMBER	(6) DESCRIPTION AND USABLE ON CODES(UOC)	(7) QTY
					GROUP 2406 STRAINERS, FILTERS, LINES AND FITTINGS, ETC.	
					FIG. 141 TILT CYLINDER LINES	
1	PAOZZ	2815010534712	11083	7K1181	STRAP	8
2	PAOZZ		11083	2785642	TUBING,NONMETALLIC	1
3	PAOZZ	4720015439659	11083	2533549	HOSEASSEMBLY,NONME	1
4	PAOZZ	5331009136144	11083	4J0520	O-RING 32.92MM ID	1
5	PFOZZ	4730015450590	11083	8C3206	FLANGE,PIPE	2
6	PAOZZ	5310013522753	11083	8T4121	WASHER,FLAT 11 X 21 X 2.5MM THK	8
7	PAOZZ	5305013981284	11083	8T4195	SCREW,CAP,HEXAGON H M10 X 1.5 X 30MM	5
8	PAOZZ	4720015511641	11083	2785641	TUBING,NONMETALLIC	1
9	PAOZZ	5340011639459	11083	5P7468	CLIP,SPRING TENSION	1
10	PAOZZ	4720015442822	11083	2533542	HOSEASSEMBLY,NONME	1
11	AOOZZ		11083	1488329	CONNECTOR AS	1
12	PAOZZ	5330014381387	11083	5K9090	.GASKET 27.22MM OD	1
13	PFOZZ	4730015442414	11083	8T6453	.ADAPTER,STRAIGHT,TU	1
14	PAOZZ	5330009333305	11083	4K1388	.SEAL,CONNECTOR TUBE	1
15	PAOZZ	5340011636175	11083	5P7469	CLIP,SPRING TENSION	1
16	PAOZZ	5325011647555	11083	5P8444	GROMMET,NONMETALLIC	1
17	PAOZZ	5330014381387	11083	5K9090	GASKET 27.22MM OD	4
18	PAOZZ	5340015238934	11083	8T1889	CLIP,RETAINING	2
19	PAOZZ	5340015238935	11083	8T1890	CLIP,RETAINING	2
20	PAOZZ	5306013600932	11083	8T4186	BOLT,MACHINE M10 X 1.5 X 40MM	2
21	PFOZZ	4710015436947	11083	2533526	TUBE ASSEMBLY,METAL	1
22	PFOZZ	5340015439438	11083	1846352	BRACKET,MOUNTING	1
23	PAOZZ	5310014309036	11083	7X7729	WASHER,FLAT 11 X 25 X 3MM THK	8
24	PAOZZ	5306013601634	11083	8T4136	BOLT,MACHINE M10 X 1.5 X 25MM	9
25	PAOZZ	4720015435644	11083	1322399	HOSE ASSEMBLY,NONME	1
26	MOOZZ		11083	1602248-49	INSULATION SLEEVING MAKE FROM SLEEVING P/N 1602248, 19.3 INCHE S (49CM)	1
27	PAOZZ	4730014732114	11083	6V9172	NUT,UNION 1-7/16 -12 THD	4
28	PAOZZ	4720015438834	11083	1419242	HOSE ASSEMBLY,NONME	1
29	PFOZZ	5340015437172	11083	1846353	BRACKET,MOUNTING	1
30	PFOZZ	5340015436464	11083	1322393	BRACKET,MOUNTING	1
31	PFOZZ	4710015442819	11083	2533524	TUBE ASSEMBLY,METAL	1
32	PFOZZ	5340015444372	11083	2632908	BRACKET,ANGLE	1
33	AOOZZ		11083	1645577	ELBOW AS	2
34	PAOZZ	4730015147075	11083	6V8984	.ELBOW,PIPE	1
35	PAOZZ	5330014381387	11083	5K9090	.GASKET 27.22MM OD	2
36	PAOZZ	4720015439636	11083	1487778	HOSE ASSEMBLY,NONME	1
37	AOOZZ		11083	1488316	CONNECTOR AS	1
38	PAOZZ	5331008558059	11083	4J5477	.O-RING 11.23MM OD	1
39	PAOZZ	4730013609109	11083	6V8647	.ADAPTER,STRAIGHT,TU	1
40	PAOZZ	5331010491292	81346	ASTM D2000 M6BG9 10	.O-RING 8.92MM ID	1
41	PFOZZ	4730012227576	01276	FD90-1044-04-04	COUPLING HALF,QUICK	2
42	PAOZZ	5340011653715	11083	6V0852	CAP,PROTECTIVE,DUST	2
43	AOOZZ		11083	1695862	ELBOW AS	2

(1) ITEM NO	(2) SMR CODE	(3) NSN	(4) CAGEC	(5) PART NUMBER	(6) DESCRIPTION AND USABLE ON CODES(UOC)	(7) QTY
44	PAOZZ	4730015143463	11083	8C6712	.ELBOW,TUBE.....	1
45	PAOZZ	5331013336444	11083	3J1907	.O-RING 11.89MM ID.....	1
46	AOOZZ		11083	1488321	CONNECTOR AS.....	2
47	PAOZZ	5331013336444	11083	3J1907	.O-RING 11.89MM ID.....	1
48	PAOZZ	5935014384252	11083	8C0564	.CONNECTOR,PLUG,ELEC.....	1
49	PAOZZ	5331005796495	11083	6V8397	.O-RING 12.83MM OD.....	1
50	PAOZZ	9905011773025	11083	7K3974	BAND,MARKER.....	2
51	PAOZZ	4720015436055	11083	2522379	HOSE ASSEMBLY,NONME.....	1
52	AOOZZ		11083	1488336	CONNECTOR AS.....	2
53	PAOZZ	5331013336444	11083	3J1907	.O-RING 11.89MM ID.....	1
54	PAOZZ	4730012699540	11083	6V8636	.ADAPTER,STRAIGHT,TU.....	1
55	PAOZZ	5331005796495	11083	6V8397	.O-RING 12.83MM OD.....	1
56	PFOZZ	5340015441222	11083	2170288	CAP,PROTECTIVE,DUST.....	1
57	PAOZZ	4720015435655	11083	2522378	HOSE ASSEMBLY,NONME.....	1
58	PAOZZ	9905012981223	11083	7K3975	BAND,MARKER.....	2
59	AOOZZ		11083	1488335	CONNECTOR AS.....	2
60	PAOZZ	5330014381387	11083	5K9090	.GASKET 27.22MM OD.....	1
61	PAOZZ	5935014379076	11083	6V8635	.CONNECTOR,PLUG,ELEC.....	1
62	PAOZZ	5330009309407	11083	7M8485	.SEAL,ADAPTER,MOTOR O-RING, 29.74MM ID.....	1
63	PFOZZ	4710015436948	11083	2213206	TUBE ASSEMBLY,METAL.....	1
64	AOOZZ		11083	1488345	CONNECTOR AS.....	1
65	PAOZZ	5330009390687	11083	2M9780	.PACKING,PREFORMED 19.18MM ID.....	1
66	PAOZZ	4730014714915	11083	6V8638	.BUSHING,HOSE.....	1
67	PAOZZ	5331005806583	11083	6V8398	.O-RING 16.03MM OD.....	1
68	AOOZZ		11083	1746118	ELBOW AS.....	1
69	PFOZZ	4730015436941	11083	1007603	.ELBOW,TUBE TO BOSS.....	1
70	PAOZZ	5331008558059	11083	4J5477	.O-RING 11.23MM OD.....	1
71	PAOZZ	5331014523208	11083	1J9671	.O-RING 10.52MM ID.....	1
72	PFOZZ	4710015442816	11083	2105545	TUBE ASSEMBLY,METAL.....	1
73	AOOZZ		11083	1488340	CONNECTOR AS.....	2
74	PAOZZ	5331009486482	11083	3K0360	.O-RING 16.36MM ID.....	1
75	PAOZZ	4730012918500	11083	6V8639	.REDUCER,BOSS.....	1
76	PAOZZ	5331005806583	11083	6V8398	.O-RING 16.03MM OD.....	1
77	PFOZZ	5340015436177	11083	1322398	BRACKET,MOUNTING.....	1
78	PAOZZ	4720015436046	11083	2147096	HOSE ASSEMBLY,NONME.....	1
79	PAOZZ	4720015435651	11083	1518451	HOSE ASSEMBLY,NONME.....	1
80	AOOZZ		11083	1488364	ELBOW AS.....	1
81	PAOZZ	4730013497772	11083	6V8625	.ELBOW,TUBE TO BOSS.....	1
82	PAOZZ	5331009486482	11083	3K0360	.O-RING 16.36MM ID.....	1
83	PAOZZ	5331005806583	11083	6V8398	.O-RING 16.03MM OD.....	1

END OF FIGURE

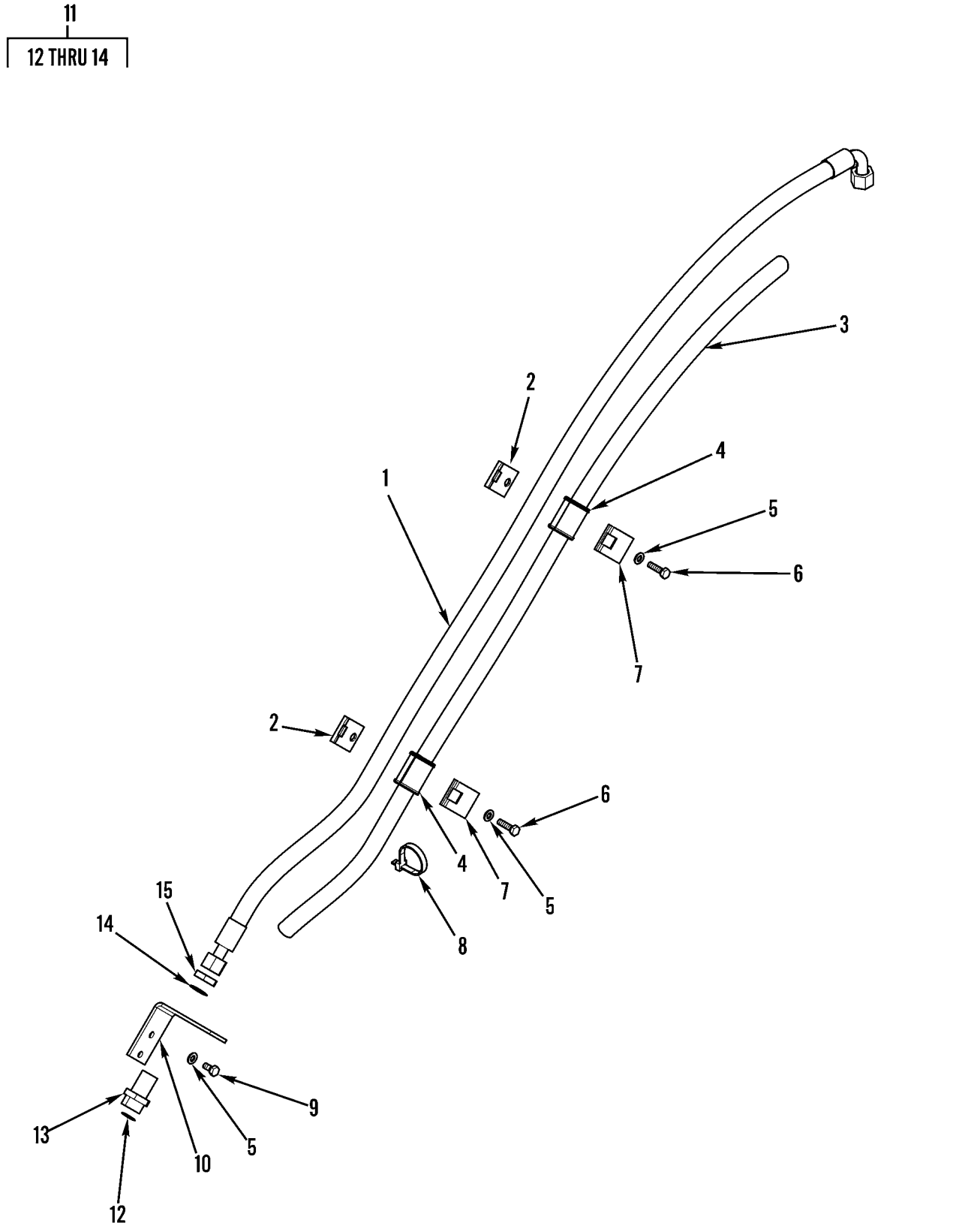

Figure 142. Quick Coupler Lines

(1) ITEM NO	(2) SMR CODE	(3) NSN	(4) CAGEC	(5) PART NUMBER	(6) DESCRIPTION AND USABLE ON CODES(UOC)	(7) QTY
					GROUP 2406 STRAINERS, FILTERS, LINES AND FITTINGS, ETC.	
					FIG. 142 QUICK COUPLER LINES	
1	PAOZZ	4720015436759	11083	2166969	HOSE ASSEMBLY,NONME.....	2
2	PAOZZ	5340011636175	11083	5P7469	CLIP,SPRING TENSION.....	4
3	MOOZZ		11083	1634356-190	SLEEVE-ABRASION MAKE FROM TUBING PN 1634356, 75 INCHES (19 0CM).....	2
4	PAOZZ	5325011647555	11083	5P8444	GROMMET,NONMETALLIC.....	4
5	PAOZZ	5310013522753	11083	8T4121	WASHER,FLAT 11 X 21 X 2.5MM THK....	8
6	PAOZZ	5305013601996	11083	8T4196	SCREW,CAP,HEXAGON H M10 X 1.5 X 35MM.....	4
7	PAOZZ	5340011639459	11083	5P7468	CLIP,SPRING TENSION.....	4
8	PAOZZ	2815010534712	11083	7K1181	STRAP.....	8
9	PAOZZ	5306013600928	11083	8T4137	BOLT,MACHINE M10 X 1.5 X 20MM.....	4
10	PFOZZ	5340015436153	11083	2135065	BRACKET,MOUNTING.....	2
11	AOOZZ		11083	2681514	UNION AS-ORFS.....	2
12	PAOZZ	5330014381387	11083	5K9090	.GASKET 27.22MM OD.....	1
13	PFOZZ	4730015442413	11083	8C8493	.UNION,PIPE TO HOSE.....	1
14	PAOZZ	5331010584030	11083	6V9746	.O-RING 22.50MM OD.....	1
15	PAOZZ	5310012928365	11083	2P1293	NUT,SELF-LOCKING,HE 1-3/16-12 THD..	2
					END OF FIGURE	

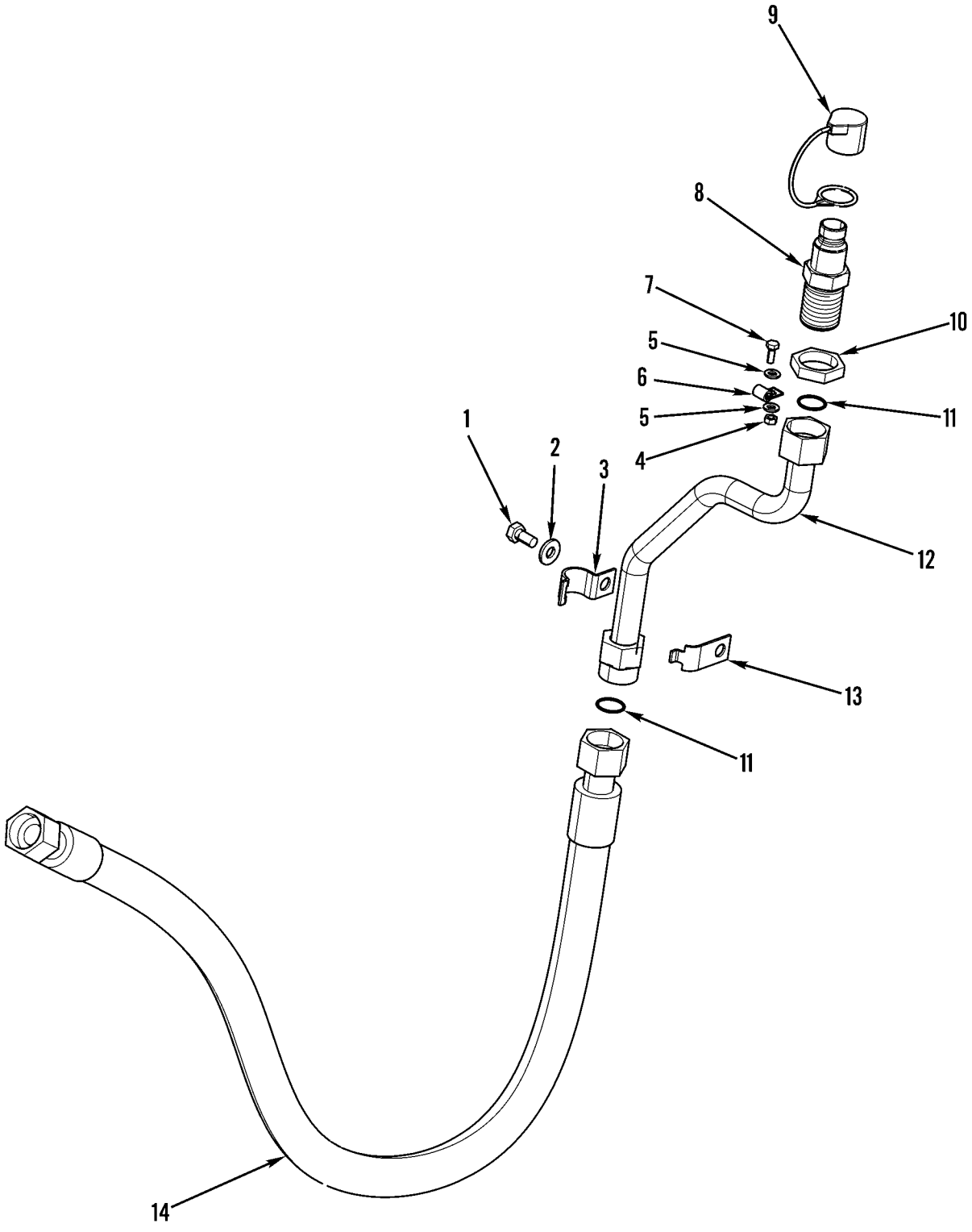

427-051

Figure 143. Coupler Lines (Third Function, Secondary)

(1) ITEM NO	(2) SMR CODE	(3) NSN	(4) CAGEC	(5) PART NUMBER	(6) DESCRIPTION AND USABLE ON CODES(UOC)	(7) QTY
					GROUP 2406 STRAINERS, FILTERS, LINES AND FITTINGS, ETC.	
					FIG. 143 COUPLER LINES (THIRD FUNCTION, SECONDARY)	
1	PAOZZ	5306013600928	11083	8T4137	BOLT,MACHINE M10 X 1.5 X 20MM.....	2
2	PAOZZ	5310014309036	11083	7X7729	WASHER,FLAT 11 X 25 X 3MM THK.....	2
3	PAOZZ	5340015238934	11083	8T1889	CLIP,RETAINING.....	2
4	PAOZZ	5310013533404	11083	5C2890	NUT,PLAIN,HEXAGON M6 X 1 THD.....	2
5	PAOZZ	5310008412576	11083	8T4205	WASHER,FLAT 7.2 X 14.5 X 2MM THK...	4
6	PAOZZ	5340011666926	11083	8M2771	CLAMP,LOOP.....	2
7	PAOZZ	5306011817849	11083	5C9553	BOLT,MACHINE M6 X 1 X 16MM.....	2
8	PAOZZ	4730015441873	11083	2416189	COUPLING ASSEMBLY,Q MALE.....	1
8	PAOZZ	4730015435689	11083	2416190	COUPLING ASSEMBLY,Q FEMALE.....	1
9	PAOZZ	5340015238938	11083	1525717	CAP,PROTECTIVE,DUST FEMALE.....	1
9	PAOZZ	5340015265222	11083	1525718	CAP,PROTECTIVE,DUST MALE.....	1
10	PAOZZ	4730014732114	11083	6V9172	NUT,UNION 1-7/16 -12 THD.....	2
11	PAOZZ	5330014381387	11083	5K9090	GASKET 27.22MM OD.....	4
12	PFOZZ	4710015435739	11083	2617855	TUBE ASSEMBLY,METAL.....	2
13	PAOZZ	5340015238935	11083	8T1890	CLIP,RETAINING.....	2
14	PAOZZ	4720015442836	11083	2617854	HOSE ASSEMBLY,NONME.....	2
					END OF FIGURE	

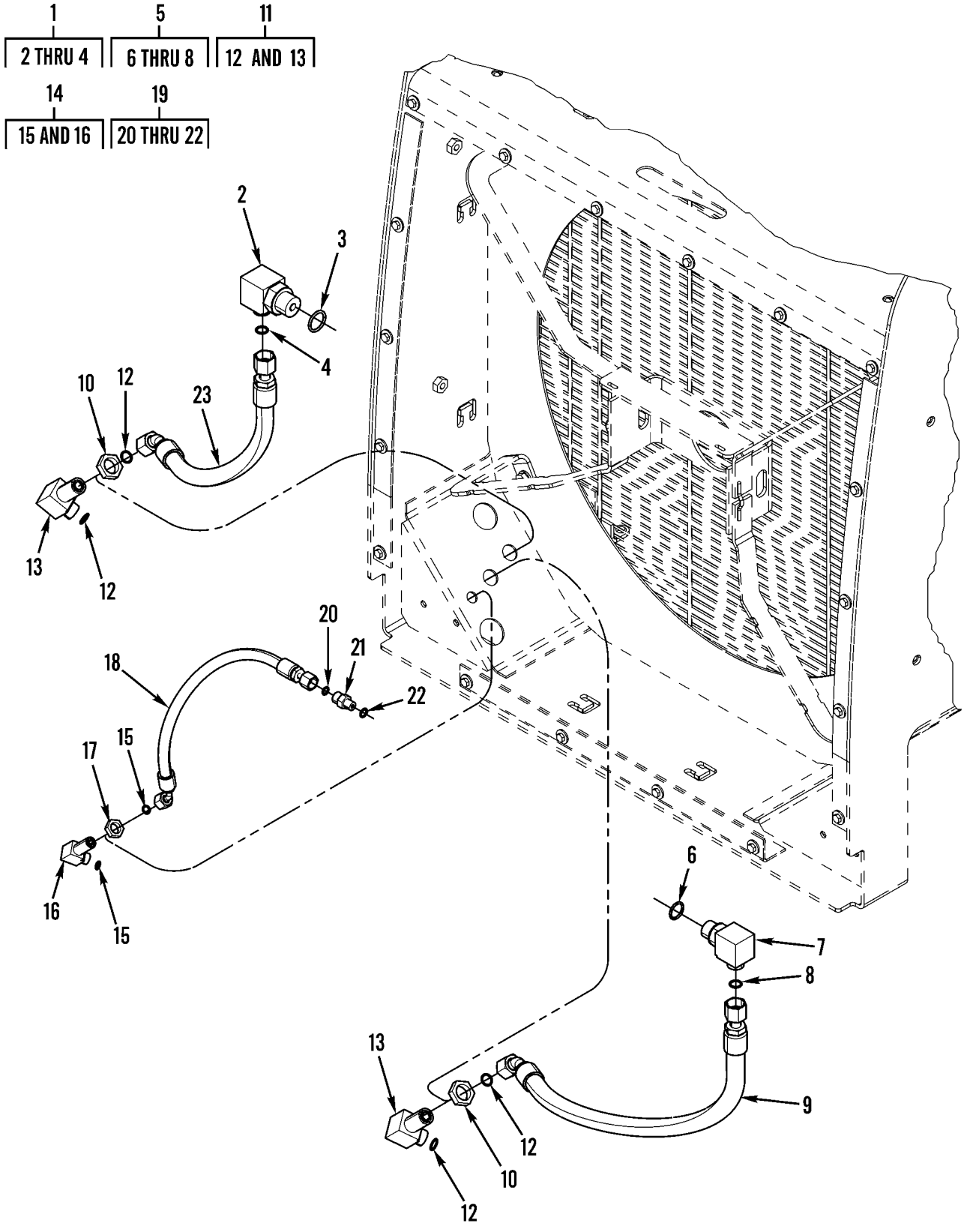

Figure 144. Hydraulic Fan Motor Lines

(1) ITEM NO	(2) SMR CODE	(3) NSN	(4) CAGEC	(5) PART NUMBER	(6) DESCRIPTION AND USABLE ON CODES(UOC)	(7) QTY
					GROUP 2406 STRAINERS, FILTERS, LINES AND FITTINGS, ETC.	
					FIG. 144 HYDRAULIC FAN MOTOR LINES	
1	AOOZZ		11083	1488381	ELBOW AS.....	1
2	PAOZZ	4730014398532	11083	8T5429	.ELBOW,TUBE.....	1
3	PAOZZ	5331009448281	11083	3D2824	.O-RING 23.47MM ID.....	1
4	PAOZZ	5331005806583	11083	6V8398	.O-RING 16.03MM OD.....	1
5	AOOZZ		11083	1488372	ELBOW AS.....	1
6	PAOZZ	5330009390687	11083	2M9780	.PACKING,PREFORMED 19.18MM ID.....	1
7	PAOZZ	4730014135918	11083	6V8721	.ELBOW,TUBE.....	1
8	PAOZZ	5331005806583	11083	6V8398	.O-RING 16.03MM OD.....	1
9	PAOZZ	4720015442833	11083	2147091	HOSE ASSEMBLY,NONME.....	1
10	PAOZZ	5310012932892	11083	6V9169	NUT,PLAIN,HEXAGON 13/16-16 THD.....	2
11	AOOZZ		11083	1488375	ELBOW AS.....	2
12	PAOZZ	5331005806583	11083	6V8398	.O-RING 16.03MM OD.....	2
13	PAOZZ	4730014732076	11083	6V8981	.ELBOW,TUBE.....	1
14	AOOZZ		11083	1488384	ELBOW AS.....	1
15	PAOZZ	5331008558059	11083	4J5477	.O-RING 11.23MM OD.....	2
16	PFOZZ	4730015436939	11083	6V8979	.ELBOW,TUBE.....	1
17	PAOZZ	5310001869550	11083	2P1279	NUT,PLAIN,HEXAGON 9/16-18 THD.....	1
18	PAOZZ	4720015441892	11083	2147092	HOSE ASSEMBLY,NONME.....	1
19	AOOZZ		11083	1488316	CONNECTOR AS.....	1
20	PAOZZ	5331008558059	11083	4J5477	.O-RING 11.23MM OD.....	1
21	PAOZZ	4730013609109	11083	6V8647	.ADAPTER,STRAIGHT,TU.....	1
22	PAOZZ	5331010491292	81346	ASTM D2000 M6BG9 10	.O-RING 8.92MM ID.....	1
23	PAOZZ	4720015436173	11083	1641908	HOSE ASSEMBLY,NONME.....	1
					END OF FIGURE	

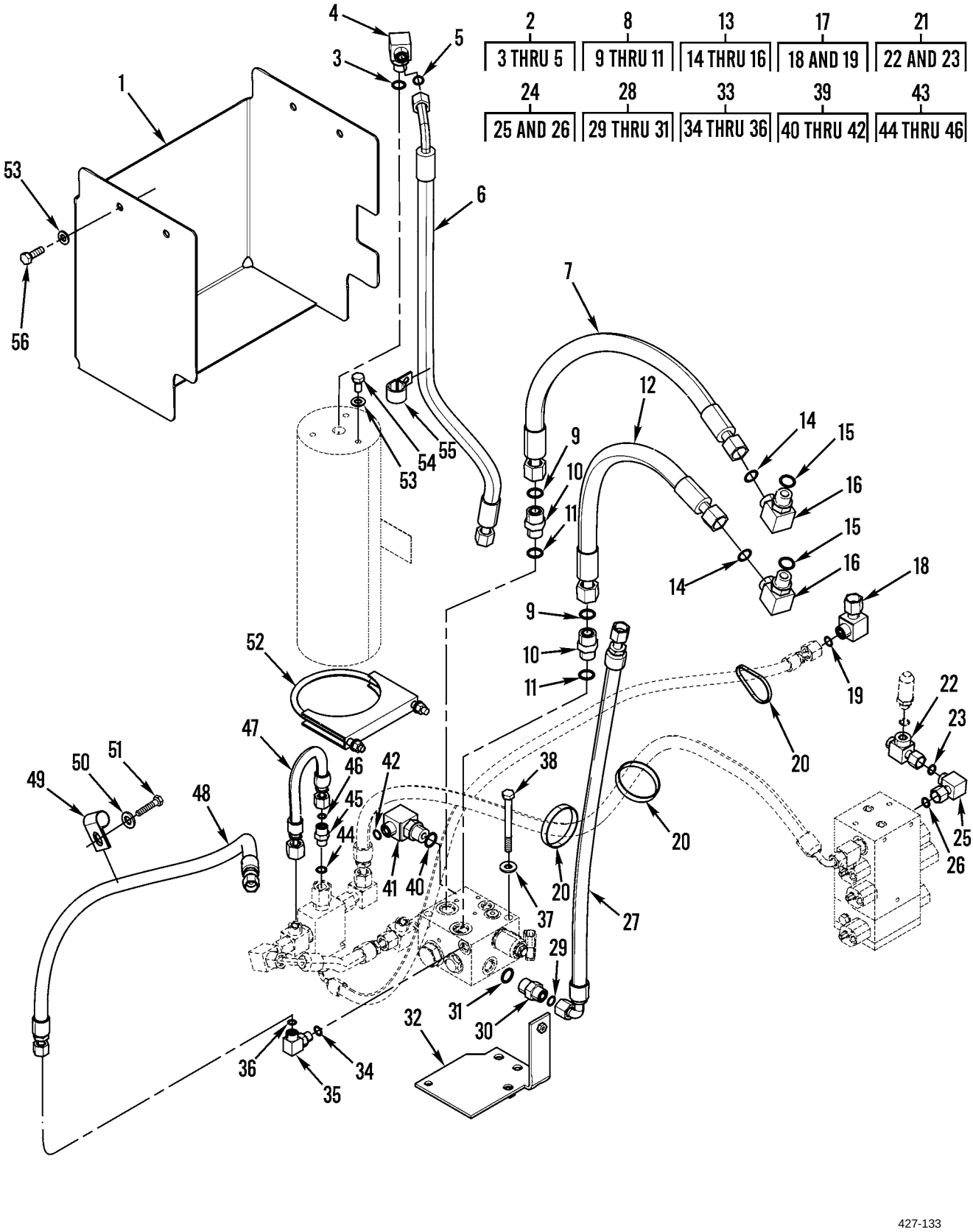

Figure 145. Ride Control Lines

(1) ITEM NO	(2) SMR CODE	(3) NSN	(4) CAGEC	(5) PART NUMBER	(6) DESCRIPTION AND USABLE ON CODES(UOC)	(7) QTY
					GROUP 2406 STRAINERS, FILTERS, LINES AND FITTINGS, ETC.	
					FIG. 145 RIDE CONTROL LINES	
1	PFOZZ	5340015436164	11083	2525597	COVER,ACCESS	1
2	AOOZZ		11083	1488364	ELBOW AS	1
3	PAOZZ	5331009486482	11083	3K0360	.O-RING 16.36MM ID	1
4	PAOZZ	5331005806583	11083	6V8398	.O-RING 16.03MM OD	1
5	PAOZZ	4730013497772	11083	6V8625	.ELBOW,TUBE TO BOSS	1
6	PAOZZ	4720015449228	11083	1911678	HOSE ASSEMBLY,NONME	1
7	PAOZZ	4720015453476	11083	1334824	HOSE ASSEMBLY,NONME	1
8	AOOZZ		11083	1488315	CONNECTOR AS	2
9	PAOZZ	5330011244370	11083	7J9108	.SEAL	1
10	PAOZZ	4730014697599	11083	6V8642	.REDUCER,PIPE	1
11	PAOZZ	5330009390687	11083	2M9780	.PACKING,PREFORMED 19.18MM ID	1
12	PAOZZ	3010000092372	11083	1943751	HOSE ASSEMBLY,NONME	1
13	AOOZZ		11083	1488390	ELBOW AS	2
14	PAOZZ	5330009390687	11083	2M9780	.PACKING,PREFORMED 19.18MM ID	1
15	PAOZZ	5330011244370	11083	7J9108	.SEAL	1
16	PAOZZ	4730014380760	11083	6V8626	.ELBOW,TUBE	1
17	AOOZZ		11083	1488371	ELBOW AS	1
18	PAOZZ	4730014735433	11083	8C8988	.ELBOW,HOSE	1
19	PAOZZ	5331005796495	11083	6V8397	.O-RING 12.83MM OD	1
20	PAOZZ	2815010534712	11083	7K1181	STRAP	3
21	AOOZZ		11083	1488424	TEE AS.-ORFS	1
22	PAOZZ	4730014143294	11083	8T8902	.TEE,TUBE	1
23	PAOZZ	5331005796495	11083	6V8397	.O-RING 12.83MM OD	1
24	AOOZZ		11083	1488367	ELBOW ASSEMBLY	1
25	PAOZZ	4730014117545	11083	6V9850	.ELBOW,TUBE	1
26	PAOZZ	5331005796495	11083	6V8397	.O-RING 12.83MM OD	1
27	PAOZZ	4720015449499	11083	1911679	HOSE ASSEMBLY,NONME	1
28	AOOZZ		11083	1488345	CONNECTOR AS	1
29	PAOZZ	5330009390687	11083	2M9780	.PACKING,PREFORMED 19.18MM ID	1
30	PAOZZ	4730014714915	11083	6V8638	.BUSHING,HOSE	1
31	PAOZZ	5331005806583	11083	6V8398	.O-RING 16.03MM OD	1
32	PFOZZ	5340015445560	11083	2158188	PLATE,MOUNTING	1
33	AOOZZ		11083	1488378	ELBOW AS-90 DEG	1
34	PAOZZ	5331013336444	11083	3J1907	.O-RING 11.89MM ID	1
35	PAOZZ	4730013604146	11083	6V8724	.ELBOW,PIPE	1
36	PAOZZ	5331005796495	11083	6V8397	.O-RING 12.83MM OD	1
37	PAOZZ	5310014309036	11083	7X7729	WASHER,FLAT 11 X 25 X 3MM THK	2
38	PAOZZ	5306014143290	11083	8T4198	BOLT,SHOULDER M10 X 1.5 X 100MM	2
39	AOOZZ		11083	1488372	ELBOW AS	1
40	PAOZZ	5331005806583	11083	6V8398	.O-RING 16.03MM OD	1
41	PAOZZ	4730014135918	11083	6V8721	.ELBOW,TUBE	1
42	PAOZZ	5330009390687	11083	2M9780	.PACKING,PREFORMED 19.18MM ID	1
43	AOOZZ		11083	1488336	CONNECTOR AS	1
44	PAOZZ	5331005796495	11083	6V8397	.O-RING 12.83MM OD	1
45	PAOZZ	4730012699540	11083	6V8636	.ADAPTER,STRAIGHT,TU	1
46	PAOZZ	5331013336444	11083	3J1907	.O-RING 11.89MM ID	1
47	PAOZZ	4720015450588	11083	2191389	HOSE ASSEMBLY,NONME	1
48	PAOZZ	4720015512379	11083	2191388	HOSE ASSEMBLY,NONME	1

(1) ITEM NO	(2) SMR CODE	(3) NSN	(4) CAGEC	(5) PART NUMBER	(6) DESCRIPTION AND USABLE ON CODES(UOC)	(7) QTY
49	PAOZZ	5342004656799	11083	7S1912	CLIP.....	1
50	PAOZZ	5310010980624	11083	8T4223	WASHER,FLAT 13.5 X 25.5 X 3MM THK..	1
51	PAOZZ	5306014734526	11083	8T4956	BOLT,MACHINE M12 X 1.75 X 35MM.....	1
52	PFOZA	5340015436161	11083	6U5219	CLAMP,LOOP.....	1
53	PAOZZ	5310013522753	11083	8T4121	WASHER,FLAT 11 X 21 X 2.5MM THK....	10
54	PAOZZ	5306013600928	11083	8T4137	BOLT,MACHINE M10 X 1.5 X 20MM.....	5
55	PAOZZ	5340014294011	11083	9X8250	CLIP,END,STRAP.....	1
56	PAOZZ	5305013981284	11083	8T4195	SCREW,CAP,HEXAGON H M10 X 1.5 X 30MM.....	5

END OF FIGURE

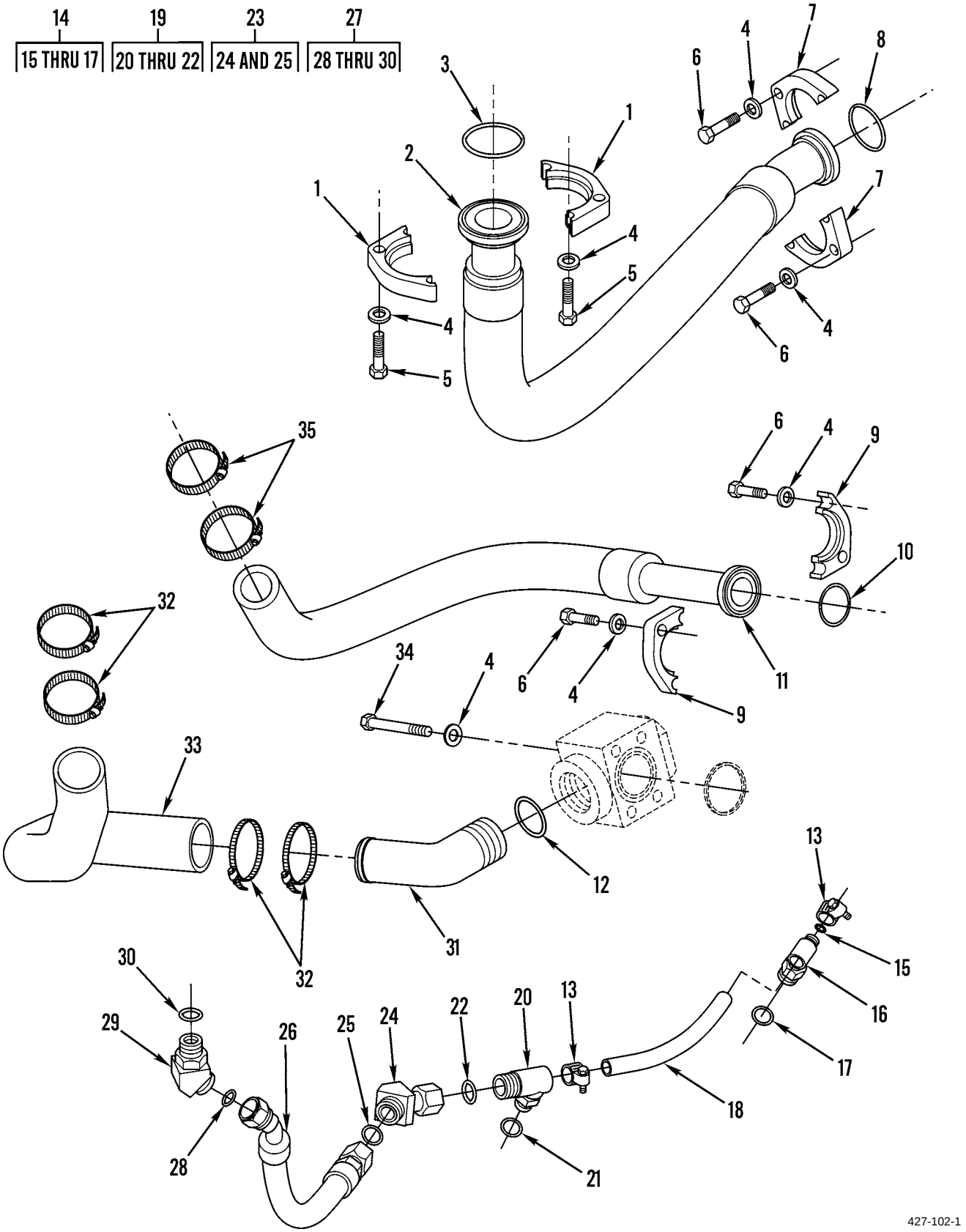

Figure 146. Hydraulic Oil Lines (Sheet 1 of 2)

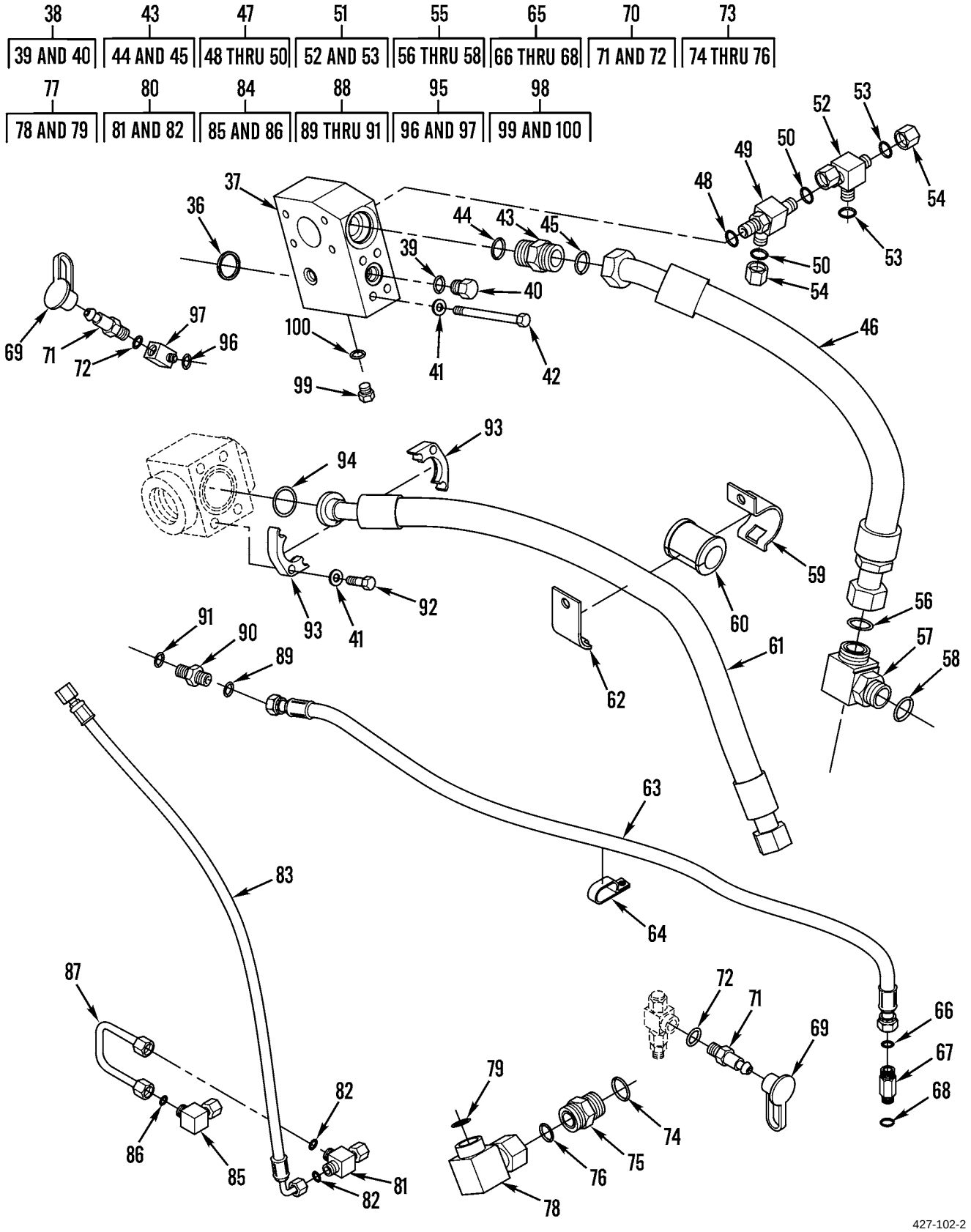

Figure 146. Hydraulic Oil Lines (Sheet 2 of 2)

(1) ITEM NO	(2) SMR CODE	(3) NSN	(4) CAGEC	(5) PART NUMBER	(6) DESCRIPTION AND USABLE ON CODES(UOC)	(7) QTY
					GROUP 2406 STRAINERS, FILTERS, LINES AND FITTINGS, ETC.	
					FIG. 146 HYDRAULIC OIL LINES	
1	PAOZZ	2520011769574	11083	1P4584	FLANGE,HALF	2
2	PAOZZ	4720015449658	11083	2057108	HOSE ASSEMBLY,NONME	1
3	PAOZZ	5331010301825	81343	AS568-232/M3CH71 4A25B34E016E036	O-RING 69.44MM ID	1
4	PAOZZ	5310010980624	11083	8T4223	WASHER,FLAT 13.5 X 25.5 X 3MM THK	16
5	PAOZZ	5306014293174	11083	8T4194	BOLT,MACHINE M12 X 1.75 X 50MM	4
6	PAOZZ	5306014138770	11083	8T4183	BOLT,SHOULDER M12 X 1.75 X 40MM	8
7	PAOZZ	4730010532692	11083	1P4582	FLANGE,PIPE	2
8	PAOZZ	5331009145820	11083	4J0527	O-RING 56.74MM ID	1
9	PAOZZ	5340010600309	11083	1P4579	FLANGE	2
10	PAOZZ	5331009145846	78640	4J0524	O-RING 47.22MM ID	1
11	PAOZZ	4720015449496	11083	2057105	HOSE ASSEMBLY,NONME	1
12	PAOZZ	5330011074646	11083	1P3708	PACKING,PREFORMED	1
13	PAOZZ	4730011223338	11083	5D1026	CLAMP,HOSE	2
14	AOOZZ		11083	2501447	TEE AS-STOR	1
15	PAOZZ	5331005796495	11083	6V8397	.O-RING 12.83MM OD	1
16	PFOZZ	4730015439377	11083	2519304	.TEE,HOSE	1
17	PAOZZ	5330009390687	11083	2M9780	.PACKING,PREFORMED 19.18MM ID	1
18	MOOZZ		11083	5P1505-21	HOSE,NONMETALLIC MAKE FROM HOSE P/N: 5P1505, 8.3 INCHES (2 1CM)	1
19	AOOZZ		11083	2501446	TEE AS-ORFS	1
20	PFOZZ	4730015439541	11083	2519303	.TEE,PIPE TO HOSE	1
21	PAOZZ	5330009390687	11083	2M9780	.PACKING,PREFORMED 19.18MM ID	1
22	PAOZZ	5331010584030	11083	6V9746	.O-RING 22.50MM OD	1
23	AOOZZ		11083	1716723	ELBOW AS	1
24	PAOZZ	4730014734786	11083	8T8899	.ELBOW,HOSE	1
25	PAOZZ	5331010584030	11083	6V9746	.O-RING 22.50MM OD	1
26	PAOZZ	4720015449657	11083	1879023	HOSE ASSEMBLY,NONME	1
27	AOOZZ		11083	1536237	ELBOW AS	1
28	PAOZZ	5331009448281	11083	3D2824	.O-RING 23.47MM ID	1
29	PAOZZ	4730014380762	11083	6V9004	.ELBOW,TUBE	1
30	PAOZZ	5331010584030	11083	6V9746	.O-RING 22.50MM OD	1
31	PFOZZ	4710015450593	11083	2057110	TUBE ASSEMBLY,METAL	1
32	PAOZZ	5340014398525	11083	8T4984	CLAMP,LOOP	4
33	PAOZZ	4720015438964	11083	2278234	HOSE,NONMETALLIC	1
34	PAOZZ	5306014137709	11083	7X2549	BOLT,SHOULDER M12 X 1.75 X 100MM	4
35	PAOZZ	5340014293148	11083	8T6703	CLAMP,LOOP	2
36	PAOZZ	5330010435565	11083	1P3703	PACKING,PREFORMED	1
37	PFOZZ	4730015449660	11083	2090789	MANIFOLD ASSEMBLY,H	1
38	AOOZZ		11083	1488411	PLUG AS.-STO	2
39	PAOZZ	5331009486482	11083	3K0360	.O-RING 16.36MM ID	1
40	PFOZZ	5365007630120	11083	9S4185	.PLUG,MACHINE THREAD	1
41	PAOZZ	5310013522753	11083	8T4121	WASHER,FLAT 11 X 21 X 2.5MM THK	8
42	PFOZZ	5306015444710	11083	8C2926	BOLT,MACHINE M10 X 1.5 X 140MM	4
43	PFOZZ	4820015449532	11083	2127521	VALVE,CHECK	1
44	PAOZZ	5331004293542	11083	2S4078	.O-RING 37.46MM ID	1
45	PAOZZ	5330014381759	11083	6V8400	.GASKET 33.57MM OD	1

(1) ITEM NO	(2) SMR CODE	(3) NSN	(4) CAGEC	(5) PART NUMBER	(6) DESCRIPTION AND USABLE ON CODES(UOC)	(7) QTY
46	PAOZZ	4720015438967	11083	2142232	HOSE ASSEMBLY,NONME.....	1
47	AOOZZ		11083	1488428	TEE AS.-ORFS.....	1
48	PAOZZ	5331009486482	11083	3K0360	.O-RING 16.36MM ID.....	1
49	PAOZZ	4730013497776	11083	6V8782	.TEE,TUBE TO BOSS.....	1
50	PAOZZ	5331005806583	11083	6V8398	.O-RING 16.03MM OD.....	2
51	AOOZZ		11083	1488444	TEE AS-ORFS.....	1
52	PAOZZ	4730014714239	11083	6V9837	.TEE,TUBE.....	1
53	PAOZZ	5331005806583	11083	6V8398	.O-RING 16.03MM OD.....	2
54	PAOZZ	2930014577377	11083	6V9830	CAP,FILLER OPENING.....	2
55	AOOZZ		11083	1488373	ELBOW AS.....	1
56	PAOZZ	5330014381759	11083	6V8400	.GASKET 33.57MM OD.....	1
57	PAOZZ	4730014734148	11083	8C3364	.ELBOW,HOSE.....	1
58	PAOZZ	5330009309407	11083	7M8485	.SEAL,ADAPTER,MOTOR O-RING, 29.74MM ID.....	1
59	PAOZZ	5340011639459	11083	5P7468	CLIP,SPRING TENSION.....	1
60	PAOZZ	5325011647555	11083	5P8444	GROMMET,NONMETALLIC.....	1
61	PAOZZ	4720015449661	11083	2114793	HOSE ASSEMBLY,NONME.....	1
62	PAOZZ	5340011636175	11083	5P7469	CLIP,SPRING TENSION.....	1
63	PFOZZ	4720015449550	11083	1322376	HOSE ASSEMBLY,NONME.....	1
64	PAOZZ	5340010538024	11083	6D4246	CLIP.....	1
65	AOOZZ		11083	1488338	CONNECTOR ASSEMBLY.....	1
66	PAOZZ	5331013336444	11083	3J1907	.O-RING 11.89MM ID.....	1
67	PAOZZ	4730014751290	11083	8T0075	.ELBOW,BOSS.....	1
68	PAOZZ	5331005796495	11083	6V8397	.O-RING 12.83MM OD.....	1
69	PAOZZ	5340011653715	11083	6V0852	CAP,PROTECTIVE,DUST CAP,PROTECTIVE.	2
70	AOOZZ		11083	1645567	NIPPLE ASSEMBLY.....	2
71	PAOZZ	4730011641777	11083	6V3965	.COUPLING HALF,QUICK.....	1
72	PAOZZ	5331013336444	11083	3J1907	.O-RING 11.89MM ID.....	1
73	AOOZZ		11083	1488335	CONNECTOR AS.....	1
74	PAOZZ	5330014381387	11083	5K9090	.GASKET 27.22MM OD.....	1
75	PAOZZ	5935014379076	11083	6V8635	.CONNECTOR,PLUG,ELEC ADAPTER, STRAIGHT,HOSE.....	1
76	PAOZZ	5330009309407	11083	7M8485	.SEAL,ADAPTER,MOTOR O-RING,29.74MM ID.....	1
77	AOOZZ		11083	1488352	ELBOW AS.....	1
78	PAOZZ	4730014713928	11083	6V9854	.ELBOW,SWIVEL FLANGE.....	1
79	PAOZZ	5330014381387	11083	5K9090	.GASKET 27.22MM OD.....	1
80	AOOZZ		11083	1488433	TEE AS-ORFS.....	1
81	PAOZZ	4730014380764	11083	6V9836	.TEE,TUBE.....	1
82	PAOZZ	5331005796495	11083	6V8397	.O-RING 12.83MM OD.....	2
83	PAOZZ	4720015444175	11083	2200497	HOSE ASSEMBLY,NONME.....	1
84	AOOZZ		11083	1488367	ELBOW ASSEMBLY.....	1
85	PAOZZ	4730014117545	11083	6V9850	.ELBOW,TUBE.....	1
86	PAOZZ	5331005796495	11083	6V8397	.O-RING 12.83MM OD.....	1
87	PFOZZ	4710015439375	11083	2174101	TUBE ASSEMBLY,METAL.....	1
88	AOOZZ		11083	1488326	CONNECTOR AS.....	1
89	PAOZZ	5331005796495	11083	6V8397	.O-RING 12.83MM OD.....	1
90	PAOZZ	4730015056812	11083	6V9872	.COUPLING,TUBE.....	1
91	PAOZZ	5331010491292	11083	3J7354	.O-RING 8.92MM ID.....	1
92	PAOZZ	5305013601996	11083	8T4196	SCREW,CAP,HEXAGON H M10 X 1.5 X 35MM.....	4
93	PFOZZ	4730015450590	11083	8C3206	FLANGE,PIPE.....	2

(1) ITEM NO	(2) SMR CODE	(3) NSN	(4) CAGEC	(5) PART NUMBER	(6) DESCRIPTION AND USABLE ON CODES(UOC)	(7) QTY
94	PAOZZ	5331009136144	11083	4J0520	O-RING 32.92MM ID.....	1
95	AOOZZ		11083	1809933	ADAPTER GP.....	1
96	PAOZZ	5331010491292	11083	3J7354	.O-RING 8.92MM ID.....	1
97	PFOZZ	4730015449531	11083	1359941	.ELBOW,HOSE.....	1
98	AOOZZ		11083	1488407	PLUG AS-STOR.....	1
99	PAOZZ	5365004114584	11083	9S4191	.PLUG,MACHINE THREAD.....	1
100	PAOZZ	5331013336444	11083	3J1907	.O-RING 11.89MM ID.....	1

END OF FIGURE

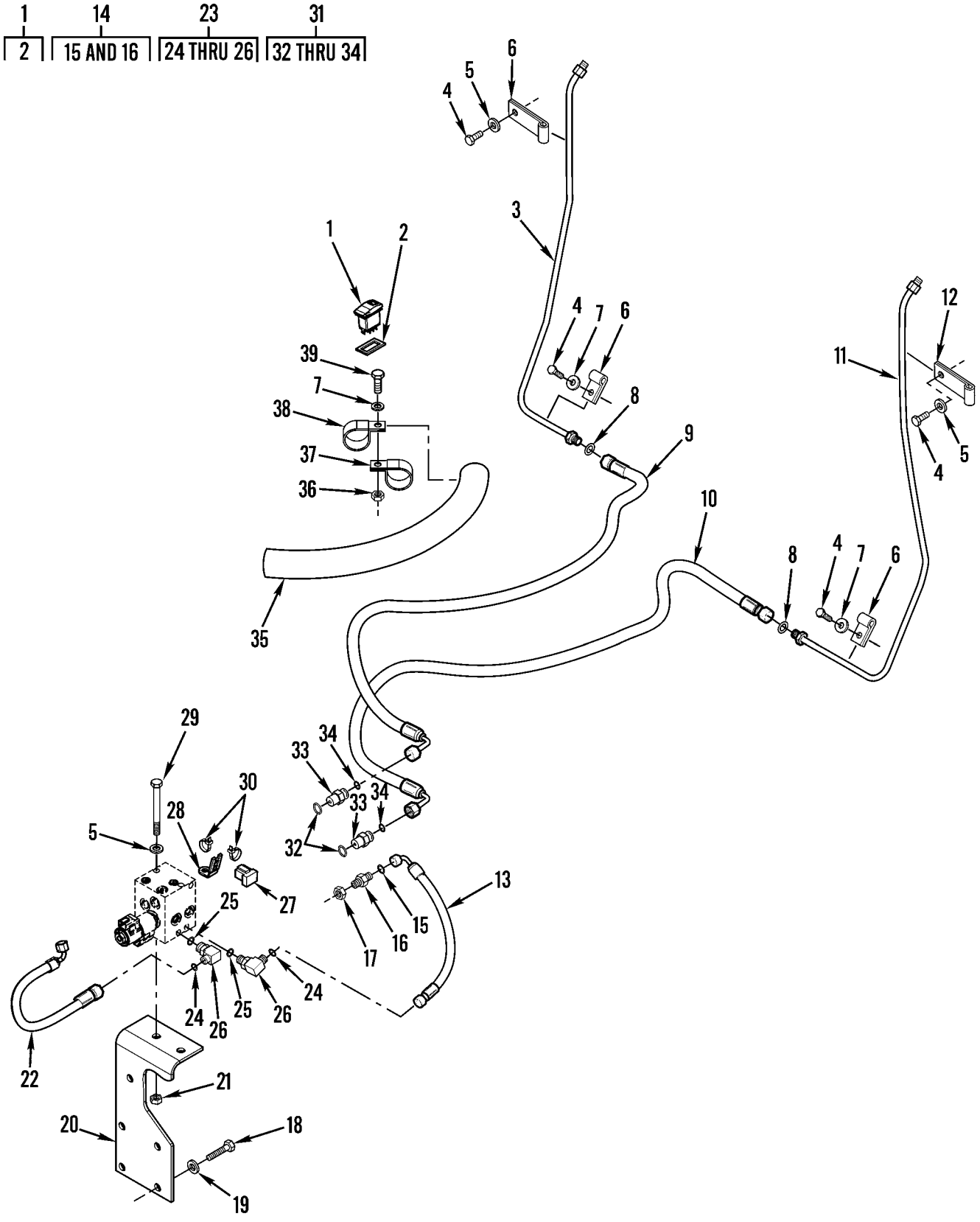

Figure 147. Coupler Lines (Sheet 1 of 2)

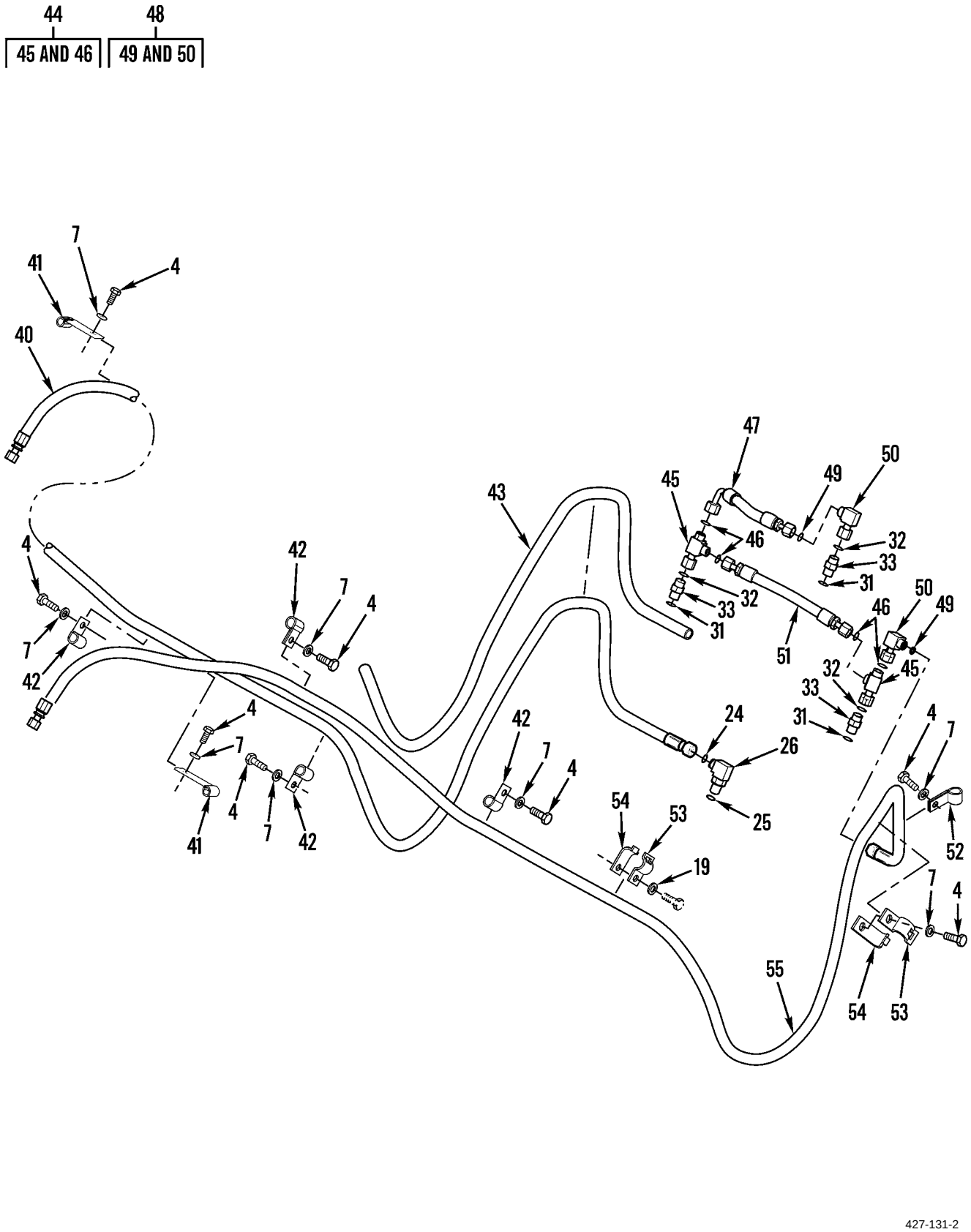

427-131-2

Figure 147. Coupler Lines (Sheet 2 of 2)

(1) ITEM NO	(2) SMR CODE	(3) NSN	(4) CAGEC	(5) PART NUMBER	(6) DESCRIPTION AND USABLE ON CODES(UOC)	(7) QTY
					GROUP 2406 STRAINERS, FILTERS, LINES AND FITTINGS, ETC.	
					FIG. 147 COUPLER LINES	
1	PAOZZ	5930015437946	11083	1927625	SWITCH,TOGGLE QUICK COUPLER.....	1
2	PAOZZ	5330015277212	11083	1117899	.GASKET.....	1
3	PFOZZ	4710015449150	11083	2238185	TUBE ASSEMBLY,METAL.....	1
4	PAOZZ	5306013600928	11083	8T4137	BOLT,MACHINE M10 X 1.5 X 20MM.....	14
5	PAOZZ	5310013522753	11083	8T4121	WASHER,FLAT 11 X 21 X 2.5MM THK....	4
6	PFOZZ	5340015437015	11083	1860357	CLAMP,LOOP.....	3
7	PAOZZ	5310014309036	11083	7X7729	WASHER,FLAT 11 X 25 X 3MM THK.....	16
8	PAOZZ	5331008558059	11083	4J5477	O-RING 11.23MM OD.....	4
9	PAOZZ	4720015235130	11083	1699049	HOSE ASSEMBLY,NONME.....	1
10	PAOZZ	4720015449495	11083	2172769	HOSE ASSEMBLY,NONME.....	2
11	PFOZZ	4710015449184	11083	2238186	TUBE ASSEMBLY,METAL.....	1
12	PFOZZ	5340015441080	11083	1860359	CLAMP,LOOP.....	1
13	PAOZZ	4720015449505	11083	2172768	HOSE ASSEMBLY,NONME.....	1
14	AOOZZ		11083	1488419	REDUCER AS.-ORFS.....	1
15	PAOZZ	5331008558059	11083	4J5477	.O-RING 11.23MM OD.....	1
16	PAOZZ	4730014741965	11083	6V8935	.REDUCER,HOSE.....	1
17	PAOZZ	5310014380755	11083	6V8554	NUT,PLAIN,HEXAGON 13/16-16 THD.....	1
18	PAOZZ	5306013646384	11083	8T4139	BOLT,MACHINE M 12 X 1.75 X 30MM....	3
19	PAOZZ	5310010980624	11083	8T4223	WASHER,FLAT 13.5 X 25.5 X 3MM THK..	5
20	PFOZZ	5340015444157	11083	1958673	PLATE,MOUNTING.....	1
21	PAOZZ	5310013527374	11083	8T4244	NUT,PLAIN,HEXAGON M12 X 1.75 THD...	1
22	PAOZZ	4720015449501	11083	1767558	HOSE ASSEMBLY,NONME.....	1
23	AOOZZ		11083	1488368	ELBOW ASSEMBLY.....	4
24	PAOZZ	5331008558059	11083	4J5477	.O-RING 11.23MM OD.....	1
25	PAOZZ	5331013336444	11083	3J1907	.O-RING 11.89MM ID.....	1
26	PAOZZ	4730014380756	11083	6V8627	.ELBOW,TUBE.....	1
27	PFOZZ	5970015437976	11083	2001898	INSULATOR,STANDOFF.....	1
28	PAOZZ	5340014715243	11083	4P8134	CLIP,SPRING TENSION.....	1
29	PAOZZ	5306014292861	11083	8T5436	BOLT,MACHINE M10 X 1.5 X 130MM.....	2
30	PAOZZ	2815010534712	11083	7K1181	STRAP.....	2
31	AOOZZ		11083	1488325	CONNECTOR ASSEMBLY,.....	7
32	PAOZZ	5331008558059	11083	4J5477	.O-RING 11.23MM OD.....	1
33	PAOZZ	4730014135916	11083	6V8641	.UNION,PIPE.....	1
34	PAOZZ	5331013336444	11083	3J1907	.O-RING 11.89MM ID.....	1
35	MOOZZ		11083	1602247-50	GUARD,HOSE.....	1
36	PAOZZ	5310013527726	11083	8T4133	NUT,PLAIN,HEXAGON M10 X 1.5 THD....	2
37	PAOZZ	5340015276630	11083	1745907	CLIP,RETAINING.....	4
38	PAOZZ	5340010608686	11083	7D7233	CLAMP,LOOP.....	2
39	PAOZZ	5305013981284	11083	8T4195	SCREW,CAP,HEXAGON H M10 X 1.5 X 30MM.....	2
40	PAOZZ	4720015449535	11083	2238188	HOSE ASSEMBLY,NONME LEFT.....	1
41	PFOZZ	5340015436613	11083	5K4778	CLAMP,LOOP.....	2
42	PAOZZ	5340010599345	11083	6D3479	CLIP.....	6
43	MOOZZ		11083	1602243-66	TUBING,NONMETALLIC MAKE FROM SLEEVE PN 1602243, 26 INCHES (66 CM)	2
44	AOOZZ		11083	1505968	TEE ASSEMBLY.....	2
45	PAOZZ	4730014135919	11083	6V9835	.TEE,TUBE.....	1

(1) ITEM NO	(2) SMR CODE	(3) NSN	(4) CAGEC	(5) PART NUMBER	(6) DESCRIPTION AND USABLE ON CODES(UOC)	(7) QTY
46	PAOZZ	5331008558059	11083	4J5477	.O-RING 11.23MM OD.....	2
47	PAOZZ	4720015512404	11083	2145389	HOSE ASSEMBLY,NONME.....	1
48	AOOZZ		11083	1488351	ELBOW ASSEMBLY.....	2
49	PAOZZ	5331008558059	11083	4J5477	.O-RING 11.23MM OD.....	1
50	PAOZZ	4730014714238	11083	6V9849	.ELBOW,SWIVEL FLANGE.....	1
51	PAOZZ	4720015449502	11083	2145390	HOSE ASSEMBLY,NONME.....	1
52	PAOZZ	5342011033664	11083	6K8178	CLIP.....	2
53	PAOZZ	5340014296197	11083	3P5904	CLIP,RETAINING.....	4
54	PAOZZ	5340014296198	11083	3P5903	CLIP,RETAINING.....	4
55	PAOZZ	4720015449533	11083	2238187	HOSE ASSEMBLY,NONME RIGHT.....	1

END OF FIGURE

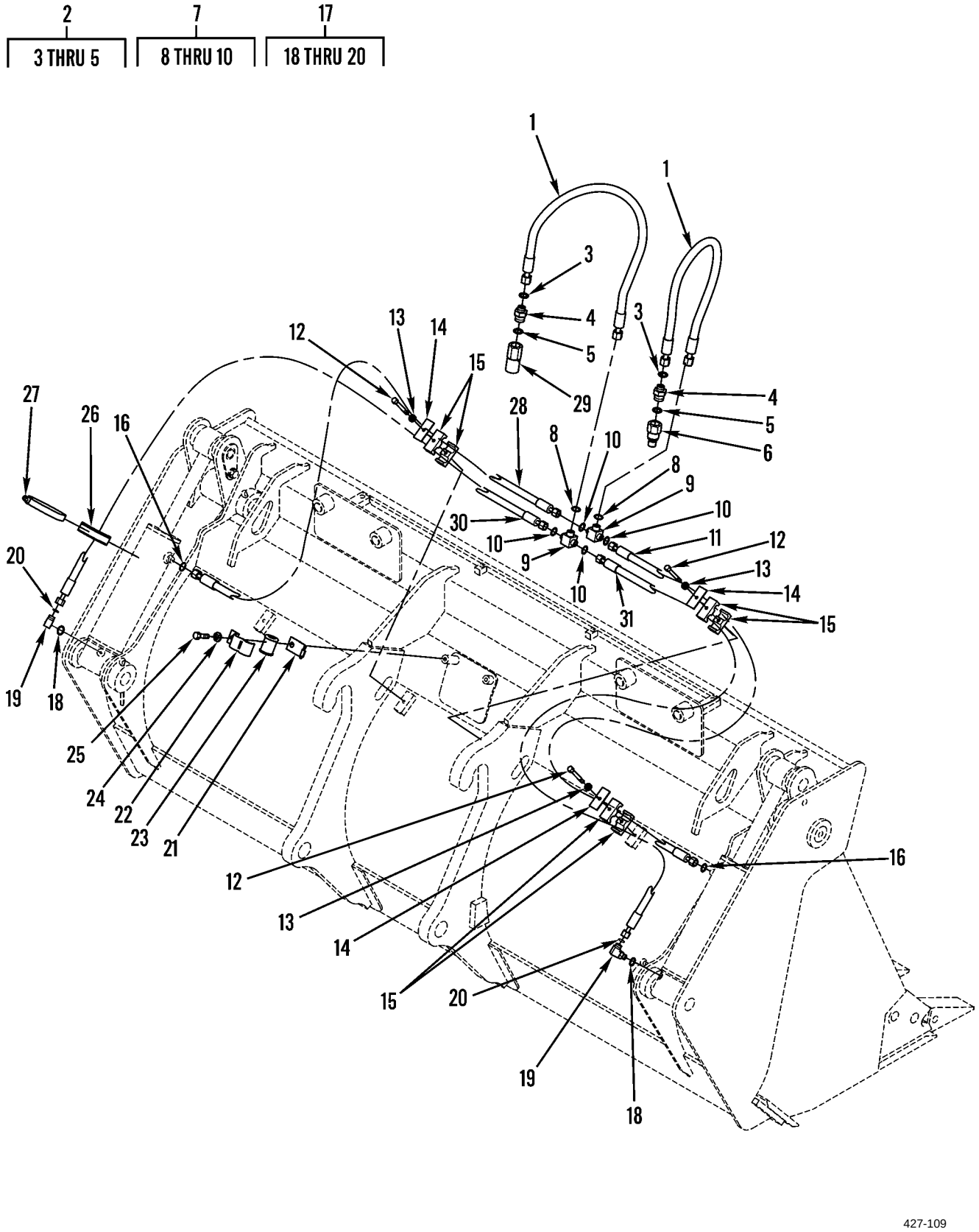

Figure 148. Bucket Hydraulic Lines

(1) ITEM NO	(2) SMR CODE	(3) NSN	(4) CAGEC	(5) PART NUMBER	(6) DESCRIPTION AND USABLE ON CODES(UOC)	(7) QTY
					GROUP 2406 STRAINERS, FILTERS, LINES AND FITTINGS, ETC.	
					FIG. 148 BUCKET HYDRAULIC LINES	
1	PAOZZ	4720015450453	11083	1508982	HOSE ASSEMBLY,NONME.....	2
2	AOOZZ		11083	1488328	CONNECTOR AS.....	2
3	PAOZZ	5331005806583	11083	6V8398	.O-RING 16.03MM OD.....	1
4	PAOZZ	4730014714128	11083	6V8633	.HYDRAULIC CONNECTOR.....	1
5	PAOZZ	5331009448281	11083	3D2824	.O-RING 23.47MM ID.....	1
6	PAOZZ	4730015239375	11083	1956526	COUPLING,HOSE.....	1
7	AOOZZ		11083	1503060	TEE AS.....	2
8	PAOZZ	5331005806583	11083	6V8398	.O-RING 16.03MM OD.....	1
9	PAOZZ	4730015239745	11083	8T3444	.TEE,TUBE.....	1
10	PAOZZ	5331005796495	11083	6V8397	.O-RING 12.83MM OD.....	2
11	PAOZZ	4720015449180	11083	5T9986	HOSE ASSEMBLY,NONME.....	1
12	PAOZZ	5305013981285	11083	8T6869	SCREW,CAP,HEXAGON H M8 X 1.25 X 60MM.....	4
13	PAOZZ	5310013598806	11083	8T4224	WASHER,FLAT 8.8 X 16 X 2MM THK.....	4
14	PAOZZ	3040011756498	11083	4V0612	BRACKET,EYE,NONROTA.....	4
15	PAOZZ	5340014384221	11083	4V0611	CLAMP,LOOP.....	8
16	PAOZZ	5331005796495	11083	6V8397	O-RING 12.83MM OD.....	2
17	AOOZZ		11083	1488378	ELBOW AS-90 DEG.....	2
18	PAOZZ	5331013336444	11083	3J1907	.O-RING 11.89MM ID.....	1
19	PAOZZ	4730013604146	11083	6V8724	.ELBOW,PIPE.....	1
20	PAOZZ	5331005796495	11083	6V8397	.O-RING 12.83MM OD.....	1
21	PAOZZ	5325015056788	11083	5P7465	FASTENER,POSITIVE L.....	2
22	PAOZZ	5340011843669	11083	5P7464	STRAP,RETAINING.....	2
23	PAOZZ	5325011854762	11083	6V1249	GROMMET,NONMETALLIC.....	2
24	PAOZZ	5310010980624	11083	8T4223	WASHER,FLAT 13.5 X 25.5 X 3MM THK..	2
25	PAOZZ	5306013646384	11083	8T4139	BOLT,MACHINE M12 X 1.75 X 30MM.....	2
26	PFOZZ	5340015454208	11083	9R8870	SLIDING BLOCK.....	2
27	PAOZZ	4730011844274	11083	5P1717	CLAMP,HOSE.....	2
28	PAOZZ	4720015450545	11083	9C8990	HOSE ASSEMBLY,NONME.....	1
29	PAOZZ	4730015239373	11083	1956525	COUPLING,HOSE.....	1
30	PAOZZ	4720015450444	11083	9W3008	HOSE ASSEMBLY,NONME.....	1
31	PAOZZ	4720015449087	11083	9U3226	HOSE ASSEMBLY,NONME.....	1
					END OF FIGURE	

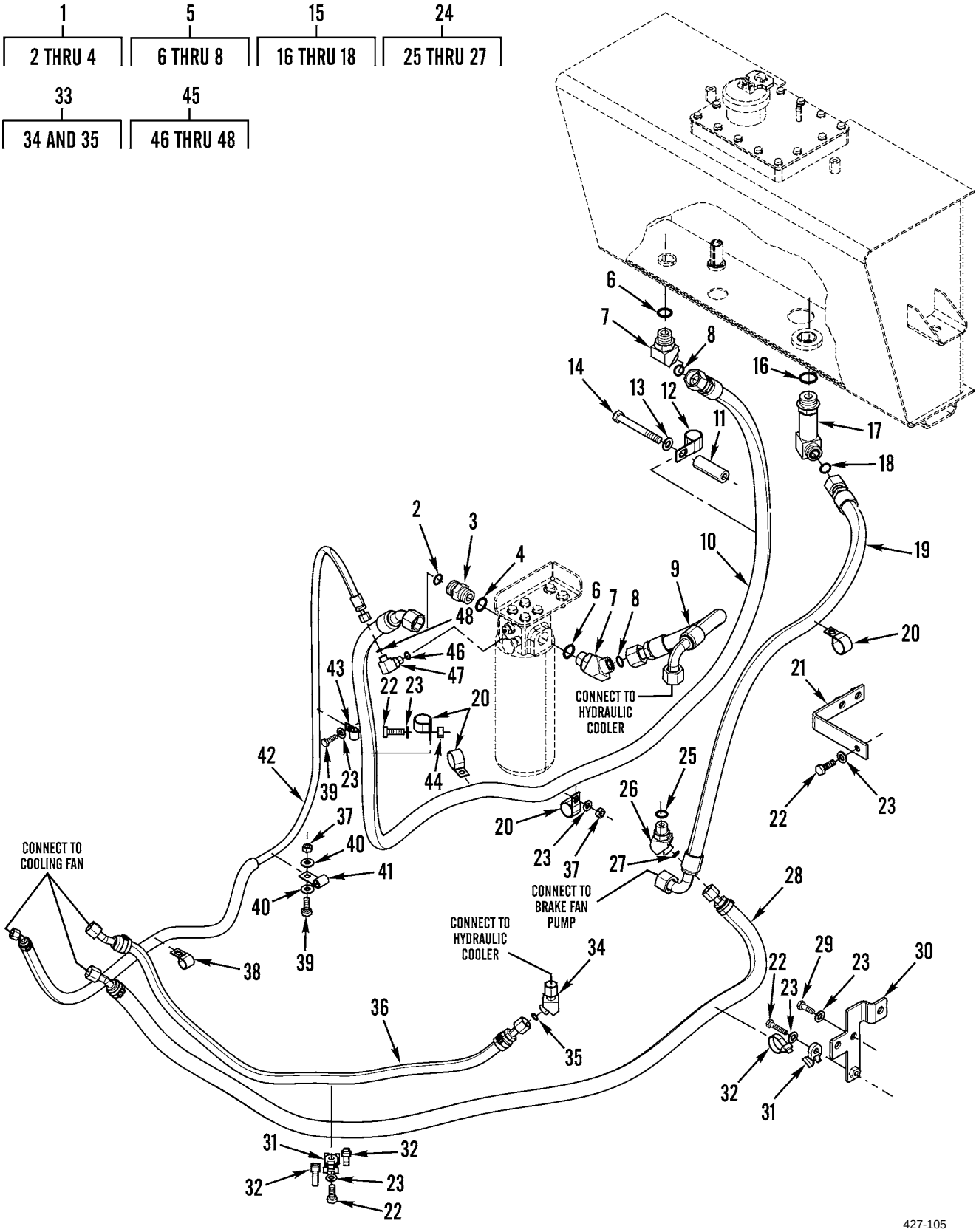

Figure 149. Fan Supply Lines (Standard)

(1) ITEM NO	(2) SMR CODE	(3) NSN	(4) CAGEC	(5) PART NUMBER	(6) DESCRIPTION AND USABLE ON CODES(UOC)	(7) QTY
					GROUP 2406 STRAINERS, FILTERS, LINES AND FITTINGS, ETC.	
					FIG. 149 FAN SUPPLY LINES (STANDARD)	
1	AOOZZ		11083	1488327	CONNECTOR ASSEMBLY	1
2	PAOZZ	5331009448281	11083	3D2824	.O-RING 23.47MM ID	1
3	PAOZZ	4730012918501	11083	6V8637	.REDUCER,BOSS	1
4	PAOZZ	5331010584030	11083	6V9746	.O-RING 22.50MM OD	1
5	AOOZZ		11083	1536237	ELBOW ASSEMBLY	2
6	PAOZZ	5331009448281	11083	3D2824	.O-RING 23.47MM ID	1
7	PAOZZ	4730014380762	11083	6V9004	.ELBOW,TUBE	1
8	PAOZZ	5331010584030	11083	6V9746	.O-RING 22.50MM OD	1
9	PAOZZ	4720015450553	11083	1095080	HOSE ASSEMBLY,NONME	1
10	PAOZZ	4720015450774	11083	2564539	HOSE ASSEMBLY,NONME	1
11	PFOZZ		11083	1754782	BOSS	1
12	PAOZZ	5340010614018	11083	3P2404	CLAMP,LOOP	1
13	PAOZZ	5310010980624	11083	8T4223	WASHER,FLAT 13.5 X 25.5 X 3MM THK	1
14	PAOZZ	5306014137709	11083	7X2549	BOLT,SHOULDER M12 X 1.75 X 100MM	1
15	AOOZZ		11083	2609172	ELBOW ASSEMBLY	1
16	PAOZZ	5331010584030	11083	6V9746	.O-RING 22.50MM OD	1
17	PFOZZ	4730015448080	11083	2021713	.ELBOW,HOSE TO BOSS	1
18	PAOZZ	5330009309407	11083	7M8485	.SEAL,ADAPTER,MOTOR O-RING, 29.74MM ID	1
19	PAOZZ	4720015450773	11083	1640351	HOSE ASSEMBLY,NONME	1
20	PAOZZ	5340012983216	11083	6V1889	CLAMP,LOOP	4
21	PFOZZ	5340015450598	11083	1634295	PLATE,MOUNTING	1
22	PAOZZ	5305013981284	11083	8T4195	SCREW,CAP,HEXAGON H M10 X 1.5 X 30MM	5
23	PAOZZ	5310013522753	11083	8T4121	WASHER,FLAT 11 X 21 X 2.5MM THK	8
24	AOOZZ		11083	1488358	ELBOW ASSEMBLY	1
25	PAOZZ	5330009390687	11083	2M9780	.PACKING,PREFORMED 19.18MM ID	1
26	PAOZZ	4730014713579	11083	6V8624	.ELBOW,HOSE TO BOSS	1
27	PAOZZ	5331005806583	11083	6V8398	.O-RING 16.03MM OD	1
28	PAOZZ	4720015450776	11083	2153810	HOSE ASSEMBLY,NONME	1
29	PAOZZ	5306013600928	11083	8T4137	BOLT,MACHINE M10 X 1.5 X 20MM	2
30	PFOZZ	5340015450192	11083	2141042	PLATE,MOUNTING	1
31	PFOZZ	5975015437985	11083	2048000	MOUNTING BASE,TIEDO	3
32	PAOZZ	2815010534712	11083	7K1181	STRAP	3
33	AOOZZ		11083	1536241	ELBOW ASSEMBLY	1
34	PAOZZ	4730014713916	11083	8C8989	.ELBOW,HOSE	1
35	PAOZZ	5331005806583	11083	6V8398	.O-RING 16.03MM OD	1
36	PAOZZ	4720015458641	11083	2430690	HOSE ASSEMBLY,NONME	1
37	PAOZZ	5310013527726	11083	8T4133	NUT,PLAIN,HEXAGON M10 X 1.5 THD	2
38	PAOZZ	5342004982946	11083	8M2773	CLIP	1
39	PAOZZ	5306013601634	11083	8T4136	BOLT,MACHINE M10 X 1.5 X 25MM	1
40	PAOZZ	5310014309036	11083	7X7729	WASHER,FLAT 11 X 25 X 3MM THK	2
41	PAOZZ	5340001698336	11083	4D9517	CLIP,OIL FILL	1
42	PAOZZ	4720015451389	11083	2125940	HOSE ASSEMBLY,NONME	1
43	PAOZZ	5340004264793	11083	8M2770	CLAMP,LOOP	1
44	PFOZZ	5365015436976	11083	0910081	SPACER,SLEEVE	1
45	AOOZZ		11083	1488368	ELBOW ASSEMBLY	1

(1) ITEM NO	(2) SMR CODE	(3) NSN	(4) CAGEC	(5) PART NUMBER	(6) DESCRIPTION AND USABLE ON CODES(UOC)	(7) QTY
46	PAOZZ	5331008558059	11083	4J5477	.O-RING 11.23MM OD.....	1
47	PAOZZ	4730014380756	11083	6V8627	.ELBOW,TUBE.....	1
48	PAOZZ	5331013336444	11083	3J1907	.O-RING 11.89MM ID.....	1

END OF FIGURE

1
2

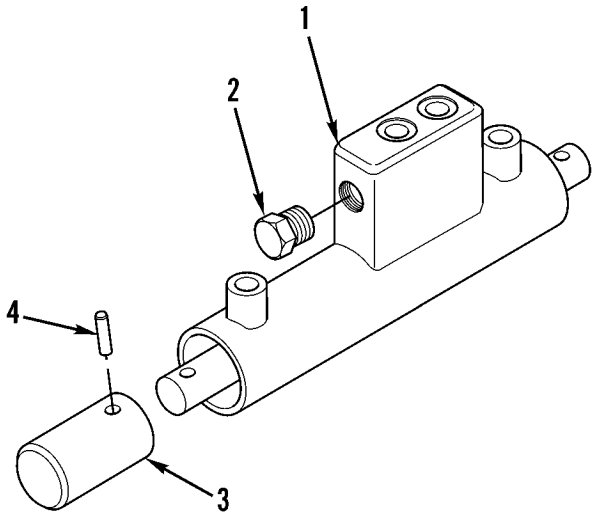

427-081

Figure 150. Coupler Cylinder

(1) ITEM NO	(2) SMR CODE	(3) NSN	(4) CAGEC	(5) PART NUMBER	(6) DESCRIPTION AND USABLE ON CODES(UOC)	(7) QTY
					GROUP 2407 HYDRAULIC CYLINDERS	
					FIG. 150 COUPLER CYLINDER	
1	PAOZZ	3040015460250	11083	1903085	CYLINDER ASSEMBLY,A.....	1
2	PAOZZ	4820015449500	11083	1903611	.VALVE,CHECK.....	1
3	PAOZZ	5340015240572	11083	6W5760	DOWEL,LOADER,BACKHO.....	2
4	PAOZZ	5315015238936	11083	6W5761	PIN,STRAIGHT,HEADED.....	2
					END OF FIGURE	

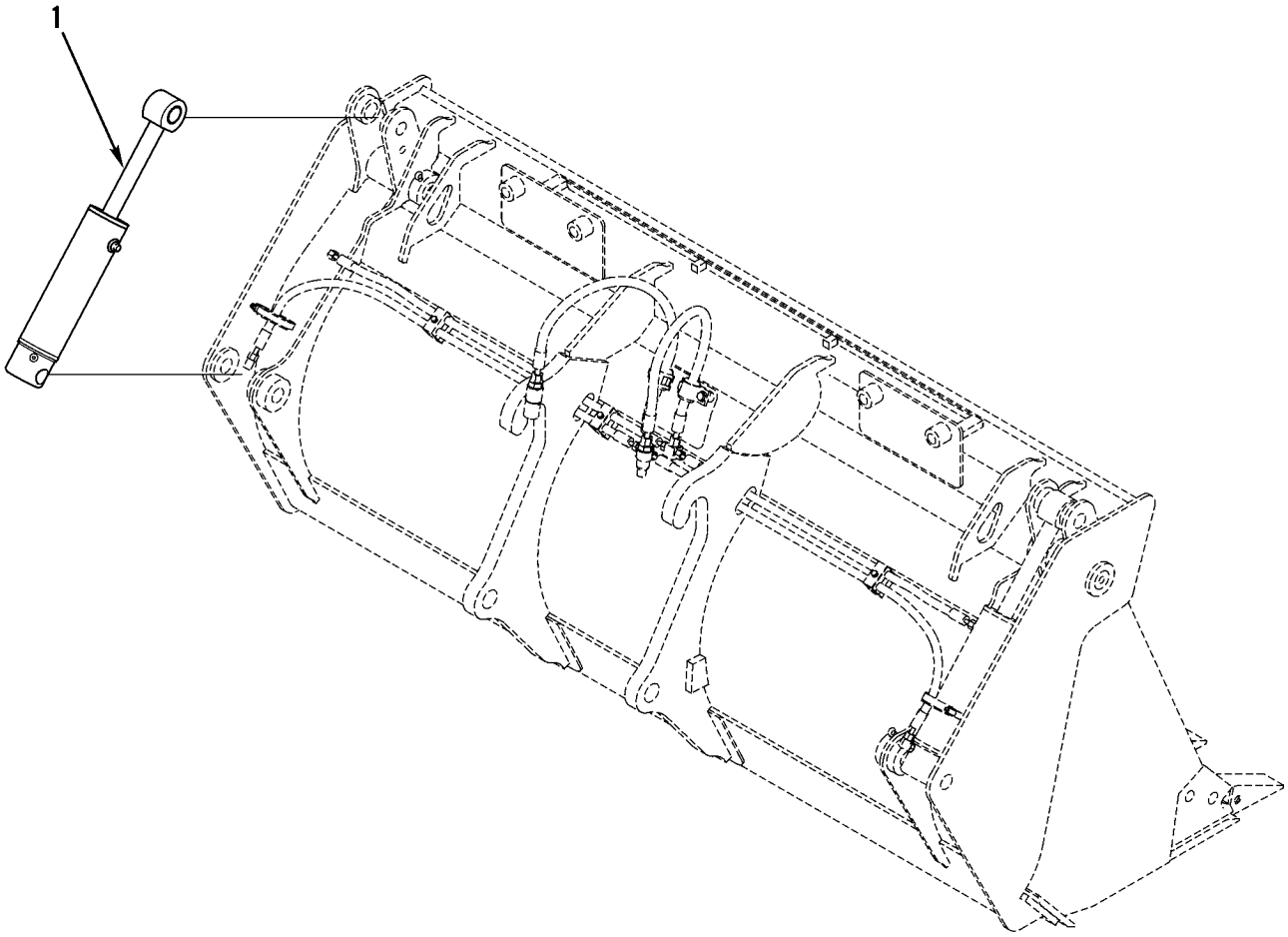

427-106

Figure 151. Bucket Hydraulic Cylinder

(1) ITEM NO	(2) SMR CODE	(3) NSN	(4) CAGEC	(5) PART NUMBER	(6) DESCRIPTION AND USABLE ON CODES(UOC)	(7) QTY
					GROUP 2407 HYDRAULIC CYLINDERS	
					FIG. 151 BUCKET HYDRAULIC CYLINDER	
1	PAOHH		11083	2681322	CYLINDER ASSEMBLY,R.....	2
					END OF FIGURE	

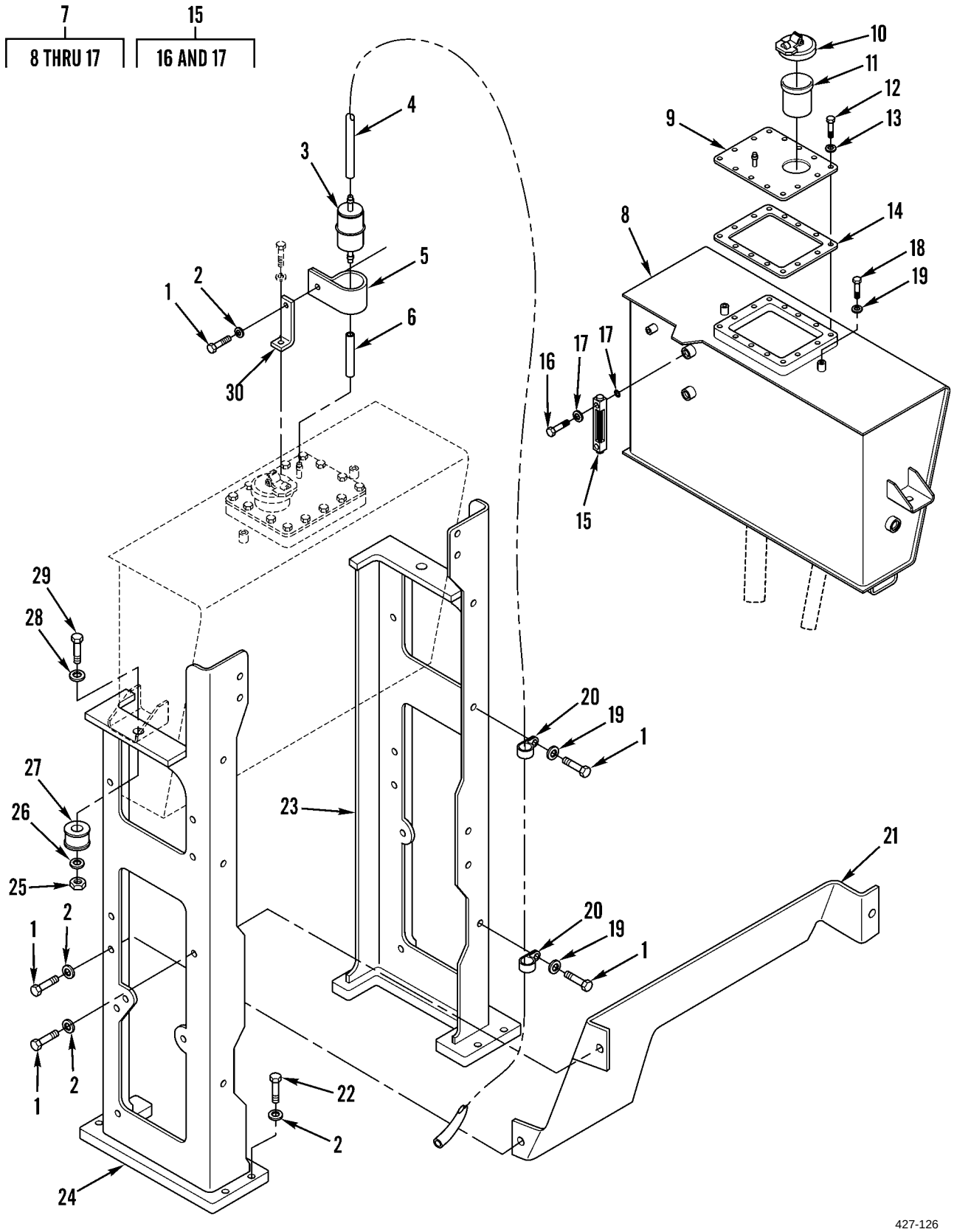

Figure 152. Hydraulic Tank and Mounting

(1) ITEM NO	(2) SMR CODE	(3) NSN	(4) CAGEC	(5) PART NUMBER	(6) DESCRIPTION AND USABLE ON CODES(UOC)	(7) QTY
					GROUP 2408 LIQUID TANKS OR RESERVOIRS	
					FIG. 152 HYDRAULIC TANK AND MOUNTING	
1	PAFZZ	5306013601634	11083	8T4136	BOLT,MACHINE M10 X 1.5 X 25MM.....	5
2	PAFZZ	5310014309036	11083	7X7729	WASHER,FLAT 11 X 25 X 3MM THK.....	11
3	PFOZZ	2815015458361	11083	1304634	BREATHER.....	1
4	MOOZZ		11083	5P1442-247	HOSE,NONMETALLIC MAKE FROM HOSE P/N 5P1442, 97.25 INCHES (247 CM).....	1
5	PFOZZ	5340015441094	11083	1S0833	CLAMP,LOOP.....	1
6	MOOZZ		11083	5P1442-8	HOSE,NONMETALLIC MAKE FROM HOSE P/N 5P1442, 3.5 INCHES (8CM).....	1
7	AOOZZ		11083	2280820	TANK GP-HYD.....	1
8	PAOZZ	2590015458363	11083	2348737	.TANK,OIL,HYDRAULIC CAPACITY: 70 LITERS OR 18.5 U.S. GALLONS.....	1
9	PFOZZ	5340015436447	11083	1850974	.COVER,ACCESS.....	1
10	PAOZZ	5340015176048	11083	1428937	.CAP,FILLER OPENING.....	1
11	PFOZZ	4730015449546	11083	2068818	.STRAINER,SEDIMENT.....	1
12	PAOZZ	5305013981282	11083	8T4908	.SCREW,CAP,HEXAGON H M8 X 1.25 X 25MM.....	14
13	PAOZZ	5310013598806	11083	8T4224	.WASHER,FLAT 8.8 X 16 X 2MM THK....	14
14	PAOZZ	5330015444703	11083	2069546	.GASKET.....	1
15	PFOZZ	6680015434473	11083	1532985	.INDICATOR,SIGHT,LIQ SIGHT GAUGE...	1
16	PFOZZ	5306015434959	11083	1228353	..BOLT,MACHINE M12 X 46.5MM.....	2
17	PAOZZ	5331009489774	11083	5J2974	..O-RING.....	4
18	PAFZZ	5306013600928	11083	8T4137	BOLT,MACHINE M10 X 1.5 X 20MM.....	2
19	PAFZZ	5310013522753	11083	8T4121	WASHER,FLAT 11 X 21 X 2.5MM THK....	4
20	PAFZZ	5342004982946	11083	8M2773	CLIP.....	2
21	PFOZZ		11083	2058439	PLATE,SUPPORT.....	1
22	PAFZZ	5306013600932	11083	8T4186	BOLT,MACHINE M10 X 1.5 X 40MM.....	8
23	PFOZZ	5340015440082	11083	2029801	BRACKET,MOUNTING.....	1
24	PFOZZ	5340015444702	11083	2029802	BRACKET,MOUNTING.....	1
25	PAFZZ	5310013527374	11083	8T4244	NUT,PLAIN,HEXAGON M12 X 1.75 THD...	4
26	PAFZZ	5310011701359	11083	8F6437	WASHER,FLAT 13.5 X 50.8 X 4.76MM...	4
27	PFOZZ	5340015444166	11083	7T8332	MOUNT,RESILIENT,GEN.....	4
28	PAFZZ	5310010980624	11083	8T4223	WASHER,FLAT 13.5 X 25.5 X 3MM THK..	8
29	PAFZZ	5305014714493	11083	8T4910	SCREW,CAP,HEXAGON H M12 X 1.75 X 80MM.....	4
30	PFOZZ		11083	2862659	BRACKET,MOUNTING.....	1
					END OF FIGURE	

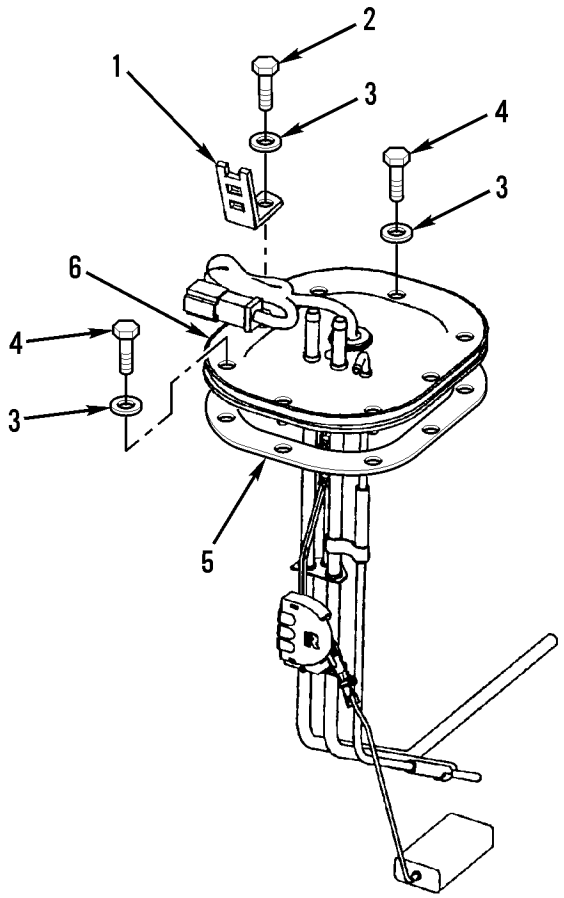

427-180

Figure 153. Fuel Level Sending Unit (Arctic)

(1) ITEM NO	(2) SMR CODE	(3) NSN	(4) CAGEC	(5) PART NUMBER	(6) DESCRIPTION AND USABLE ON CODES(UOC)	(7) QTY
					GROUP 33 SPECIAL PURPOSE KITS	
					GROUP 3303 WINTERIZATION KITS	
					FIG. 153 FUEL LEVEL SENDING UNIT (ARCTIC)	
1	PAFZZ	5340014715243	11083	4P8134	CLIP,SPRING TENSION.....	1
2	PAFZZ	5305014398527	11083	8T4971	SCREW,MACHINE M6 X 1 X 30MM.....	3
3	PAFZZ	5310008412576	11083	8T4205	WASHER,FLAT 7.2 X 14.5 X 2MM THK...	8
4	PAFZZ	5306011817849	11083	5C9553	BOLT,MACHINE M6 X 1 X 16MM.....	5
5	PAFZZ	5330015265164	11083	2041370	GASKET.....	1
6	PAFZZ	6680015515332	11083	2833536	TRANSMITTER,LIQUID.....	1
					END OF FIGURE	

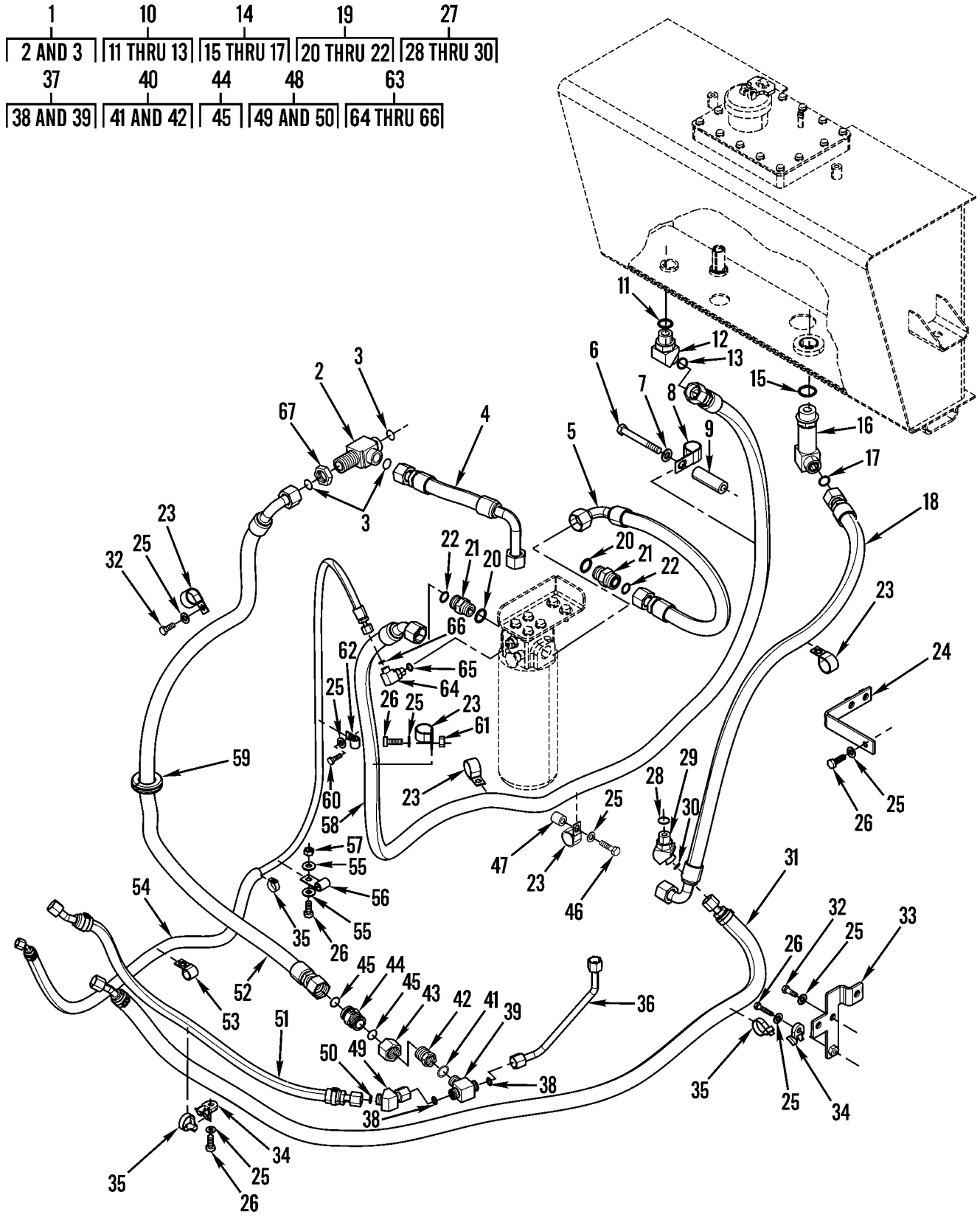

Figure 154. Fan Supply Lines (Arctic)

(1) ITEM NO	(2) SMR CODE	(3) NSN	(4) CAGEC	(5) PART NUMBER	(6) DESCRIPTION AND USABLE ON CODES(UOC)	(7) QTY
					GROUP 3303 WINTERIZATION KITS	
					FIG. 154 FAN SUPPLY LINES (ARCTIC)	
1	AOOZZ		11083	1646862	TEE ASSEMBLY	1
2	PFOZZ	5330015454942	11083	6V9160	.TEE,PIPE	1
3	PAOZZ	5331010584030	11083	6V9746	.O-RING 22.50MM OD	3
4	PAOZZ	4720015511617	11083	2306142	HOSE ASSEMBLY,NONME	1
5	PAOZZ	4720015512476	11083	2125942	HOSE ASSEMBLY,NONME	1
6	PAOZZ	5306014137709	11083	7X2549	BOLT,SHOULDER M12 X 1.75 X 100MM	1
7	PAOZZ	5310010980624	11083	8T4223	WASHER,FLAT 13.5 X 25.5 X 3MM THK	1
8	PAOZZ	5340010614018	11083	3P2404	CLAMP,LOOP	1
9	PFOZZ		11083	1754782	BOSS	1
10	AOOZZ		11083	1536237	ELBOW ASSEMBLY	1
11	PAOZZ	5331009448281	11083	3D2824	.O-RING 23.47MM ID	1
12	PAOZZ	4730014380762	11083	6V9004	.ELBOW,TUBE	1
13	PAOZZ	5331010584030	11083	6V9746	.O-RING 22.50MM OD	1
14	AOOZZ		11083	2609172	ELBOW ASSEMBLY	1
15	PAOZZ	5331010584030	11083	6V9746	.O-RING 22.50MM OD	2
16	PFOZZ	4730015448080	11083	2021713	.ELBOW,HOSE TO BOSS	1
17	PAOZZ	5330009309407	11083	7M8485	.SEAL,ADAPTER,MOTOR O-RING, 29.74MM ID	1
18	PAOZZ	4720015450773	11083	1640351	HOSE ASSEMBLY,NONME	1
19	AOOZZ		11083	1488327	CONNECTOR ASSEMBLY	2
20	PAOZZ	5331009448281	11083	3D2824	.O-RING 23.47MM ID	1
21	PAOZZ	4730012918501	11083	6V8637	.REDUCER,BOSS	1
22	PAOZZ	5331010584030	11083	6V9746	.O-RING 22.50MM OD	1
23	PAOZZ	5340012983216	11083	6V1889	CLAMP,LOOP	6
24	PFOZZ	5340015450598	11083	1634295	PLATE,MOUNTING	1
25	PAOZZ	5310013522753	11083	8T4121	WASHER,FLAT 11 X 21 X 2.5MM THK	11
26	PAOZZ	5305013981284	11083	8T4195	SCREW,CAP,HEXAGON H M10 X 1.5 X 30MM	4
27	AOOZZ		11083	1488358	ELBOW ASSEMBLY	1
28	PAOZZ	5330009390687	11083	2M9780	.PACKING,PREFORMED 19.18MM ID	1
29	PAOZZ	4730014713579	11083	6V8624	.ELBOW,HOSE TO BOSS	1
30	PAOZZ	5331005806583	11083	6V8398	.O-RING 16.03MM OD	1
31	PAOZZ	4720015450776	11083	2153810	HOSE ASSEMBLY,NONME	1
32	PAOZZ	5306013600928	11083	8T4137	BOLT,MACHINE M10 X 1.5 X 20MM	3
33	PFOZZ	5340015450192	11083	2141042	PLATE,MOUNTING	1
34	PFOZZ	5975015437985	11083	2048000	MOUNTING BASE,TIEDO	3
35	PAOZZ	2815010534712	11083	7K1181	STRAP	3
36	PFOZZ	4710015453435	11083	2274306	TUBE ASSEMBLY,METAL	1
37	AOOZZ		11083	1504037	TEE ASSEMBLY	1
38	PAOZZ	5331005806583	11083	6V8398	.O-RING 16.03MM OD	2
39	PAOZZ	4730014714224	11083	6V9844	.TEE,PIPE	1
40	AOOZZ		11083	1488418	REDUCER AS.-ORFS	1
41	PAOZZ	5331005806583	11083	6V8398	.O-RING 16.03MM OD	1
42	PAOZZ	4730014713599	11083	6V8942	.REDUCER BODY,TUBE	1
43	PAOZZ	4730014715004	11083	6V8556	INVERTED NUT,TUBE C	1
44	PFOZZ	4820015453429	11083	2261354	VALVE,CHECK	1
45	PAOZZ	5331010584030	11083	6V9746	.O-RING 22.50MM OD	2
46	PAOZZ	5306013600932	11083	8T4186	BOLT,MACHINE M10 X 1.5 X 40MM	1

(1) ITEM NO	(2) SMR CODE	(3) NSN	(4) CAGEC	(5) PART NUMBER	(6) DESCRIPTION AND USABLE ON CODES(UOC)	(7) QTY
47	PFOZZ	5365015451401	11083	1298087	SPACER,STRAIGHT.....	1
48	AOOZZ		11083	1536241	ELBOW ASSEMBLY.....	1
49	PAOZZ	4730014713916	11083	8C8989	.ELBOW,HOSE.....	1
50	PAOZZ	5331005806583	11083	6V8398	.O-RING 16.03MM OD.....	1
51	PAOZZ	4720015511633	11083	2097801	HOSE ASSEMBLY,NONME.....	1
52	PAOZZ	4720015512735	11083	2295115	HOSE ASSEMBLY,NONME.....	1
53	PAOZZ	5342004982946	11083	8M2773	CLIP.....	1
54	PAOZZ	4720015451389	11083	2125940	HOSE ASSEMBLY,NONME.....	1
55	PAOZZ	5310014309036	11083	7X7729	WASHER,FLAT 11 X 25 X 3MM THK.....	2
56	PAOZZ	5340001698336	11083	4D9517	CLIP,OIL FILL.....	1
57	PAOZZ	5310013527726	11083	8T4133	NUT,PLAIN,HEXAGON M10 X 1.5 THD....	1
58	PAOZZ	4720015450774	11083	2564539	HOSE ASSEMBLY,NONME.....	1
59	PAOZZ	5325014741559	11083	8D1470	GROMMET,NONMETALLIC.....	1
60	PAOZZ	5306013601634	11083	8T4136	BOLT,MACHINE M10 X 1.5 X 25MM.....	3
61	PFOZZ	5365015436976	11083	0910081	SPACER,SLEEVE.....	1
62	PAOZZ	5340004264793	11083	8M2770	CLAMP,LOOP.....	1
63	AOOZZ		11083	1488368	ELBOW ASSEMBLY.....	1
64	PAOZZ	4730014380756	11083	6V8627	.ELBOW,TUBE.....	1
65	PAOZZ	5331013336444	11083	3J1907	.O-RING 11.89MM ID.....	1
66	PAOZZ	5331008558059	11083	4J5477	.O-RING 11.23MM OD.....	1
67	PAOZZ	5310012928365	11083	2P1293	NUT,SELF-LOCKING,HE.....	1

END OF FIGURE

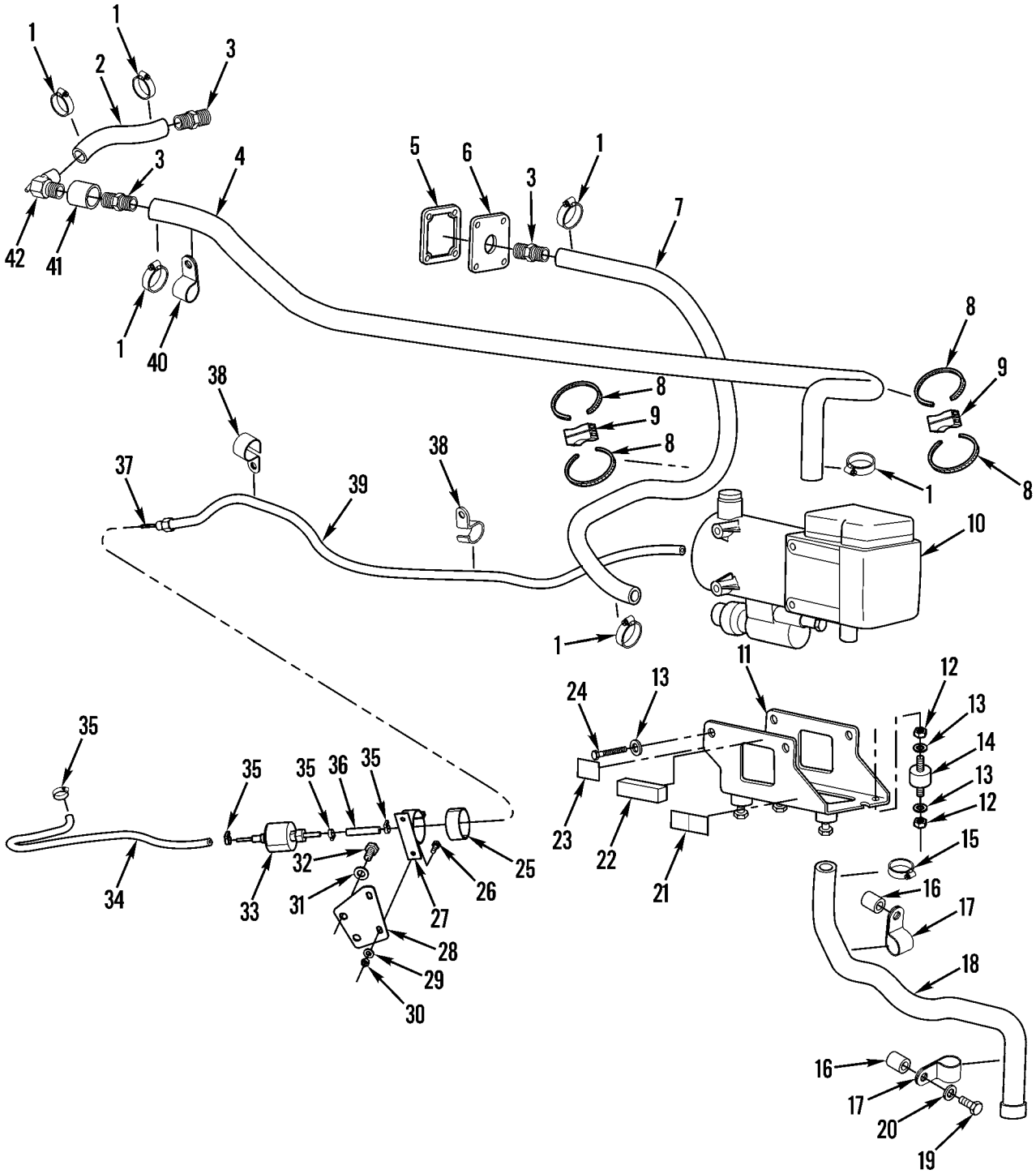

Figure 155. Heater (Arctic)

(1) ITEM NO	(2) SMR CODE	(3) NSN	(4) CAGEC	(5) PART NUMBER	(6) DESCRIPTION AND USABLE ON CODES(UOC)	(7) QTY
					GROUP 3303 WINTERIZATION KITS	
					FIG. 155 HEATER (ARCTIC)	
1	PAOZZ	4730015234669	11083	8T0154	CLAMP,HOSE.....	6
2	MOOZZ		11083	5P0765-16	HOSE,NONMETALLIC MAKE FROM HOSE P/N 5P0765, 6.3 INCHES (16C M).....	1
3	PAOZZ	4730014290853	11083	1H9779	ADAPTER,STRAIGHT,PI.....	3
4	MOOZZ		11083	5P0765-194	HOSE,NONMETALLIC MAKE FROM HOSE P/N 5P0765, 76.4 INCHES (19 4CM).....	1
5	PAOZZ	5330014714711	11083	1407506	GASKET.....	1
6	PFOZZ	5340015448183	11083	1862799	COVER,ACCESS.....	1
7	MOOZZ		11083	5P0765-125	HOSE,NONMETALLIC MAKE FROM HOSE P/N 5P0765, 49.3 INCHES (12 5CM).....	1
8	PAOZZ	2920010589099	11083	3S2093	STRAP.....	4
9	PFOZZ	4730015449103	11083	2006345	ELBOW,SWIVEL,FLANGE.....	2
10	PAOZZ	2540015512461	11083	2832210	HEATER,VEHICULAR CO.....	1
11	PFOZZ	2590015457674	11083	2832205	BRACKET,VEHICULAR C.....	1
12	PAOZZ	5310013975100	11083	5C7261	NUT,PLAIN,HEXAGON M8 X 1.25 THD....	8
13	PAOZZ	5310013598806	11083	8T4224	WASHER,FLAT 8.8 X 16 X 2MM THK.....	12
14	PFOZZ	5340015448674	11083	7C7241	MOUNT RESILIENT,GEN.....	4
15	PFOZZ	5340015452360	11083	2832211	CLAMP,LOOP.....	1
16	PFOZZ	5365015439599	11083	1275447	SPACER,RING.....	2
17	PFOZZ	5340015454976	11083	6S8050	CLAMP,LOOP.....	2
18	PFOZZ	4720015448579	11083	2832208	TUBE ASSEMBLY,METAL.....	1
19	PAOZZ	5306013600932	11083	8T4186	BOLT,MACHINE M10 X 1.5 X 40MM.....	1
20	PAOZZ	5310014309036	11083	7X7729	WASHER,FLAT 11 X 25 X 3MM THK.....	1
21	PAOZZ	7690015515147	11083	2287316	MARKER,IDENTIFICATI.....	1
22	MOOZZ		11083	5P5755-10	SEAL MAKE FROM SEAL P/N 5P5755, 4 INCHES (10CM).....	1
23	PFOZZ	7690015448218	11083	1692867	MARKER,IDENTIFICATI.....	1
24	PAOZZ	5306013600927	11083	8T4189	BOLT,MACHINE M8 1.25 X 20MM.....	4
25	PAOZZ	2590015286682	11083	1720304	PAD,CUSHIONING.....	1
26	PAOZZ	5306011817849	11083	5C9553	BOLT,MACHINE M6 X 1 X 16MM.....	2
27	PAOZZ	5340015286253	11083	1720305	CLAMP,LOOP.....	1
28	PFOZZ	5340015450615	11083	2844835	PLATE,MOUNTING.....	1
29	PAOZZ	5310008412576	11083	8T4205	WASHER,FLAT 7.2 X 14.5 X 2MM THK...	2
30	PAOZZ	5310013533404	11083	5C2890	NUT,PLAIN,HEXAGON M6 X 1 THD.....	2
31	PAOZZ	5310013522753	11083	8T4121	WASHER,FLAT 11 X 21 X 2.5MM THK....	4
32	PAOZZ	5306013600928	11083	8T4137	BOLT,MACHINE M10 X 1.5 X 20MM.....	4
33	PAOZZ	2910015513549	11083	2364899	PUMP,FUEL,ELECTRICA.....	1
34	MOOZZ		11083	5P6442-67	HOSE,NONMETALLIC MAKE FROM HOSE P/N 5P6442, 26.4 INCHES (67 CM).....	1
35	PFOZZ	4730015448074	11083	1317708	CLAMP,HOSE.....	6
36	PFOZZ	4720015455045	11083	1317729	HOSE,NONMETALLIC.....	2
37	PAOZZ	4710015511636	11083	1140847	TUBE ASSEMBLY,METAL.....	1
38	PAOZZ	5340015335862	11083	1240174	STRAP,RETAINING.....	4
39	MOOZZ		11083	5P6442-180	HOSE,NONMETALLIC MAKE FROM HOSE P/N 5P6442, 71 INCHES (180C M).....	1
40	PAOZZ	5340012983216	11083	6V1889	CLAMP,LOOP.....	3
41	PAOZZ	4730015144755	11083	3B6490	COUPLING,PIPE.....	1
42	PFOZZ	4820015453437	11083	3D9981	COCK,DRAIN.....	1
					END OF FIGURE	

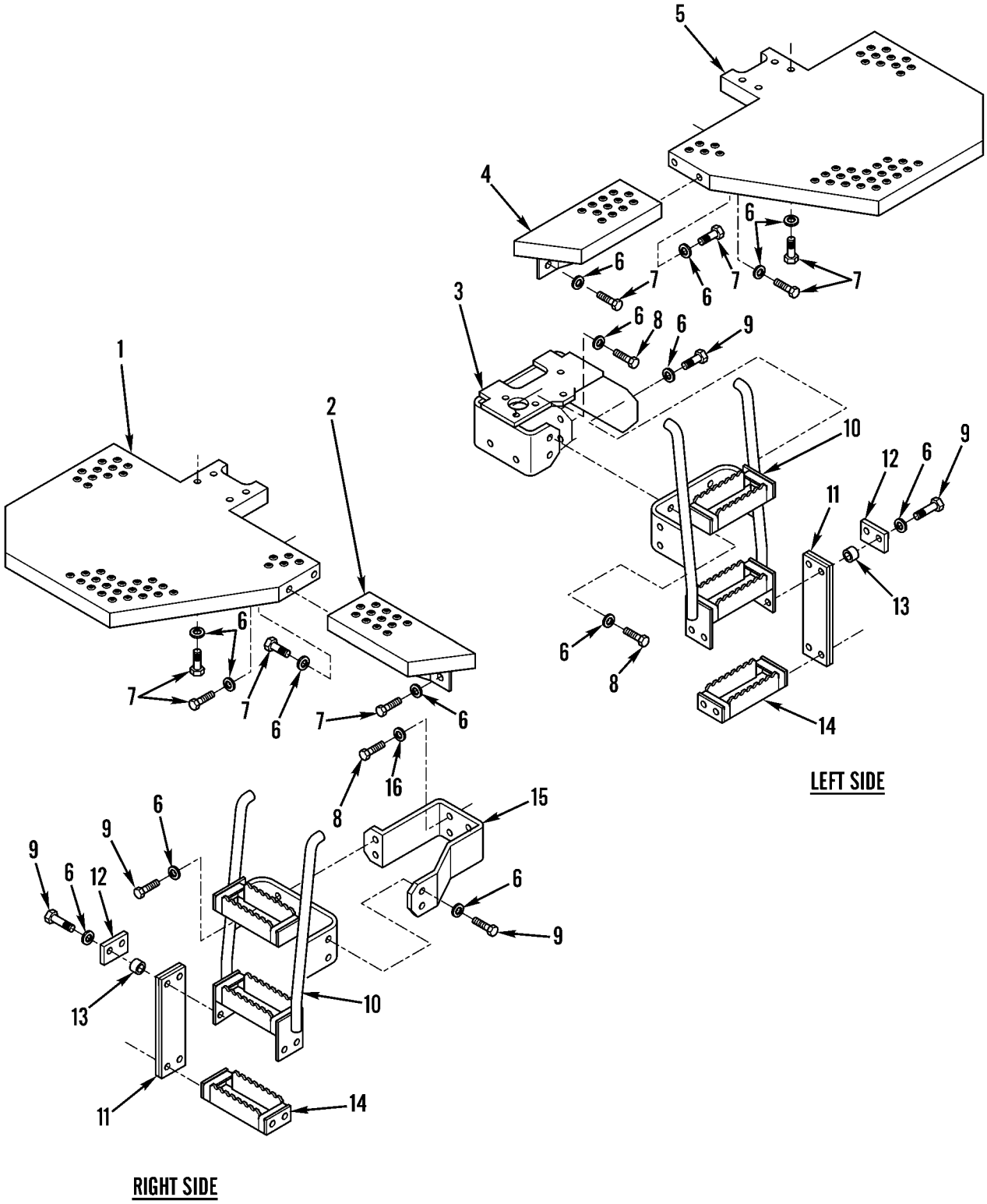

427-146

Figure 156. Ladder and Related Parts (Arctic)

(1) ITEM NO	(2) SMR CODE	(3) NSN	(4) CAGEC	(5) PART NUMBER	(6) DESCRIPTION AND USABLE ON CODES(UOC)	(7) QTY
					GROUP 3303 WINTERIZATION KITS	
					FIG. 156 LADDER AND RELATED PARTS (ARCTIC)	
1	PFOZZ	2510015448766	11083	2020392	FRAME,STRUCTURAL VE RH.....	1
2	PFOZZ	5440015449603	11083	1345215	LADDER,SAFETY STEP.....	1
3	PFOZZ	2590015451860	11083	2515641	BRACKET,VEHICULAR C.....	1
4	PFOZZ	5440015449595	11083	1345214	LADDER,SAFETY STEP.....	1
5	PFOZZ	2510015458111	11083	2020393	FRAME,STRUCTURAL,VE LH.....	1
6	PAOZZ	5310014309036	11083	7X7729	WASHER,FLAT 11 X 25 X 3MM THK.....	52
7	PAOZZ	5306013601634	11083	8T4136	BOLT,MACHINE M10 X 1.5 X 25MM.....	22
8	PAOZZ	5305013981284	11083	8T4195	SCREW,CAP,HEXAGON H M10 X 1.5 X 30MM.....	8
9	PAOZZ	5306013600932	11083	8T4186	BOLT,MACHINE M10 X 1.5 X 40MM.....	24
10	PFOZZ	2540015448760	11083	1409189	LADDER,VEHICLE BOAR.....	2
11	PFOZZ	5340015448180	11083	1534856	MOUNT,RESILIENT,GEN.....	4
12	PFOZZ	5340015452342	11083	1539706	PLATE,MOUNTING.....	8
13	PFOZZ	5365015439599	11083	1275447	SPACER,RING.....	16
14	PFOZZ	5440015449609	11083	2153886	LADDER,SAFETY STEP.....	2
15	PFOZZ	5340015450197	11083	2832213	BRACKET,MOUNTING.....	1
16	PAOZZ	5310014293253	11083	8T4222	WASHER,FLAT 11 X 32 X 3.5MM THK....	2
					END OF FIGURE	

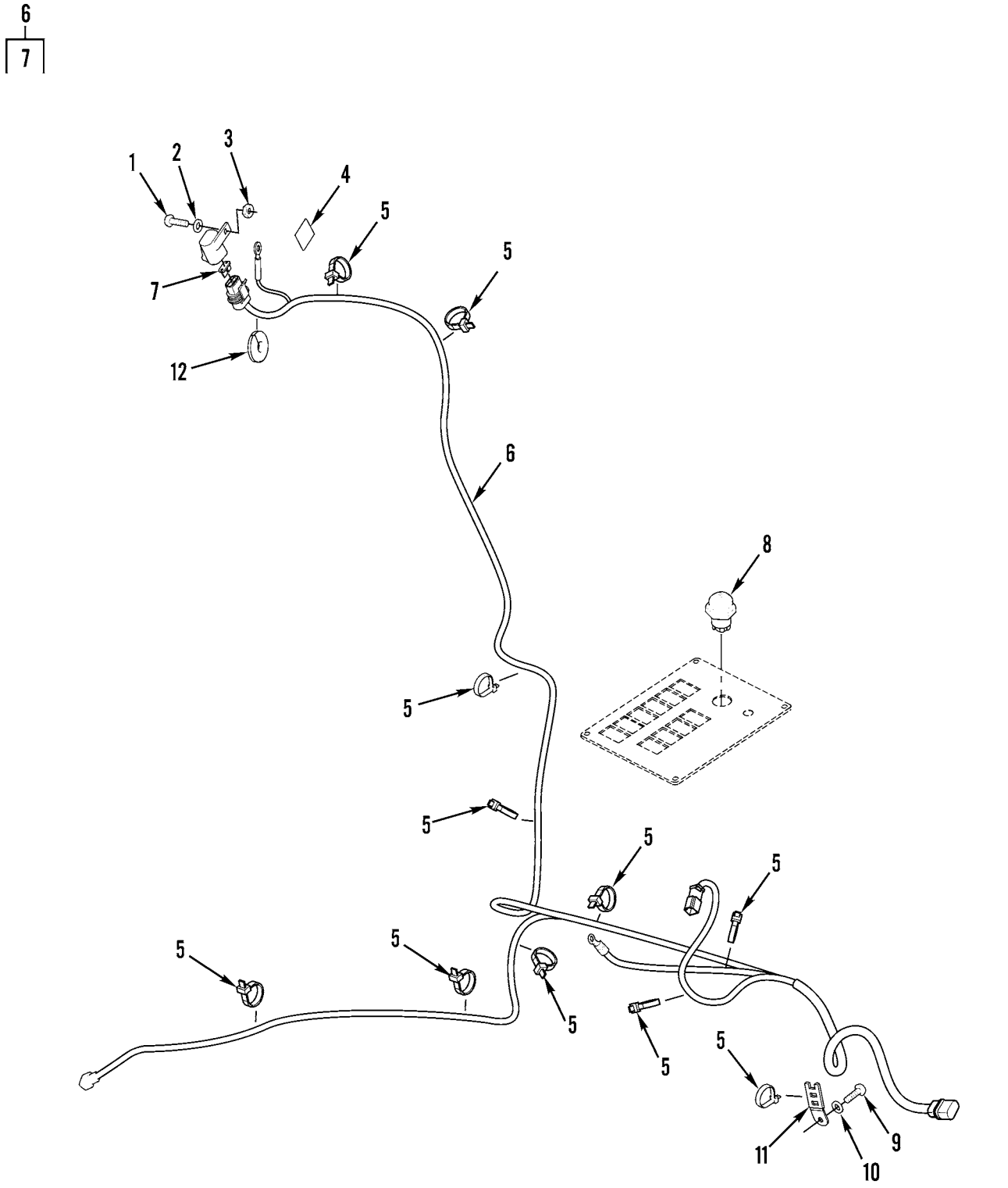

Figure 157. Heater Wiring (Arctic)

(1) ITEM NO	(2) SMR CODE	(3) NSN	(4) CAGEC	(5) PART NUMBER	(6) DESCRIPTION AND USABLE ON CODES(UOC)	(7) QTY
					GROUP 3303 WINTERIZATION KITS	
					FIG. 157 HEATER WIRING (ARCTIC)	
1	PAFZZ	5305014398535	11083	8T6631	SCREW,MACHINE 8-32 X 0.5IN.....	1
2	PAFZZ	5310004328001	11083	4B4863	WASHER,FLAT 4.7 X 11 X 1.2MM THK...	1
3	PAFZZ	5310010455588	11568	M925A	NUT,PLAIN,HEXAGON.....	1
4	PFFZZ	7690015448233	11083	2878810	MARKER,IDENTIFICATI.....	1
5	PAFZZ	2815010534712	11083	7K1181	STRAP.....	12
6	PAFZZ	6150015520324	11083	2832192	WIRING HARNESS,BRAN.....	1
7	PFFZZ		11083	9W1441	.FUSE.....	1
8	PAFZZ	2990014452352	11083	1Q1445	SWITCH,HEATER,VEHIC.....	1
9	PAFZZ	5306013600928	11083	8T4137	BOLT,MACHINE M10 X 1.5 X 20MM.....	1
10	PAFZZ	5310013522753	11083	8T4121	WASHER,FLAT 11 X 21 X 2.5MM THK....	2
11	PAFZZ	5999014708845	11083	4P7581	CLIP,ELECTRICAL.....	2
12	PFFZZ	5325015455021	11083	3E6753	GROMMET,NONMETALLIC.....	1
					END OF FIGURE	

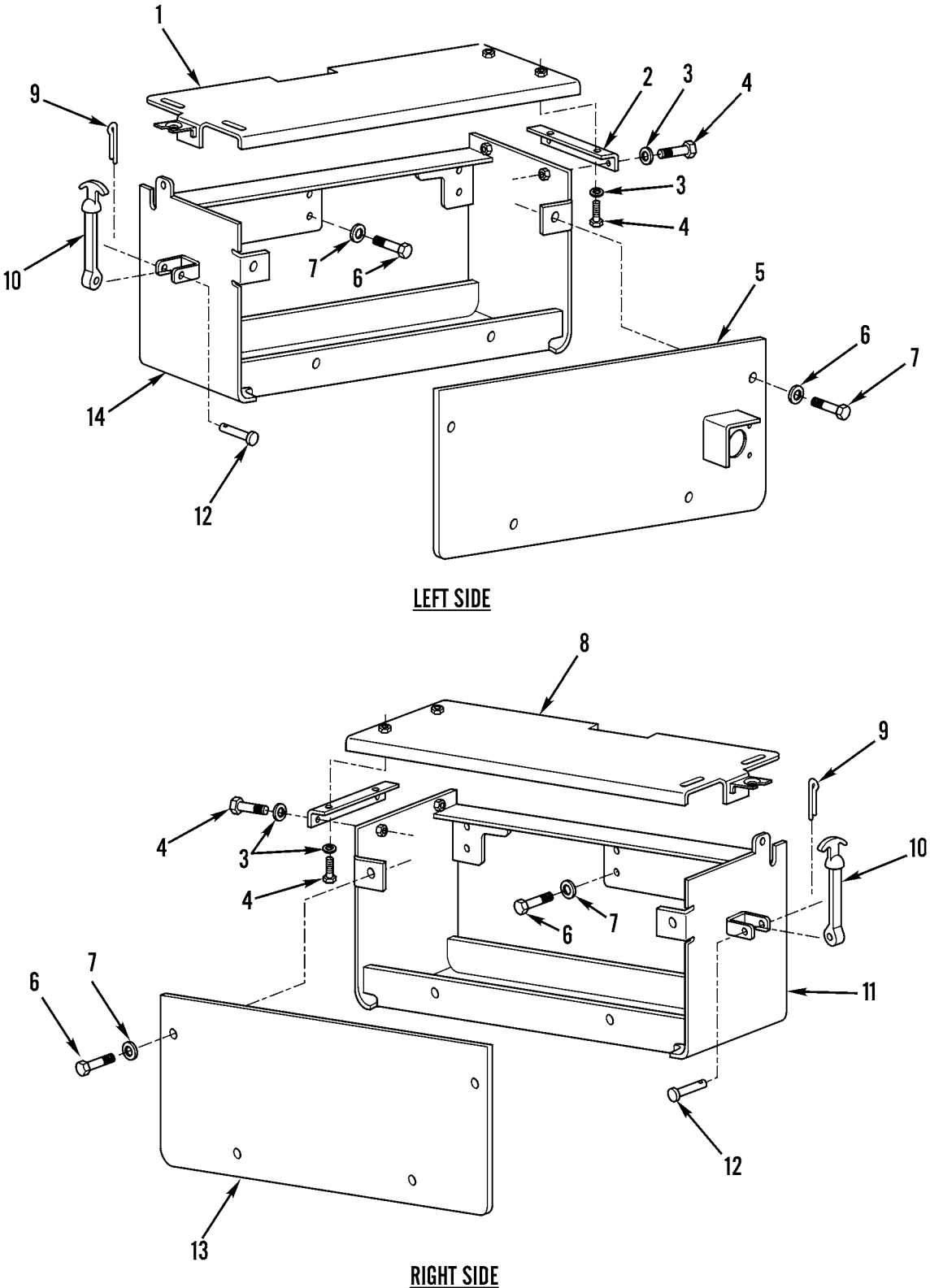

Figure 158. Battery Box (Arctic)

(1) ITEM NO	(2) SMR CODE	(3) NSN	(4) CAGEC	(5) PART NUMBER	(6) DESCRIPTION AND USABLE ON CODES(UOC)	(7) QTY
					GROUP 3303 WINTERIZATION KITS	
					FIG. 158 BATTERY BOX (ARCTIC)	
1	PFOZZ	6160015512416	11083	2832196	COVER,BATTERY LH	1
2	PFOZZ	5340015454991	11083	2673773	HINGE,BUTT	2
3	PAOZZ	5310014151606	11083	9X8256	WASHER,FLAT 6.6 X 12 X 2MM THK	8
4	PAOZZ	5306011817849	11083	5C9553	BOLT,MACHINE M6 X 1 X 16MM	8
5	PFOZZ	6160015450613	11083	2824426	COVER,BATTERY LH	1
6	PAOZZ	5310014309036	11083	7X7729	WASHER,FLAT 11 X 25 X 3MM THK	19
7	PAOZZ	5306013601634	11083	8T4136	BOLT,MACHINE M10 X 1.5 X 25MM	19
8	PFOZZ	6160015450782	11083	2809727	COVER,BATTERY RH	1
9	PAOZZ	5315010630738	11083	3B4609	PIN	2
10	PAOZZ	5342004101903	11083	9M3835	LATCH,HOOD	2
11	PFOZZ	5340015450525	11083	2795634	BATTERY BOX LH	1
12	PAOZZ	5315007161056	19204	7161056	PIN,STRAIGHT,HEADED	2
13	PFOZZ	5340015450526	11083	2795639	COVER,BATTERY RH	1
14	PFOZZ	6160015450785	11083	2809726	BATTERY BOX RH	1
					END OF FIGURE	

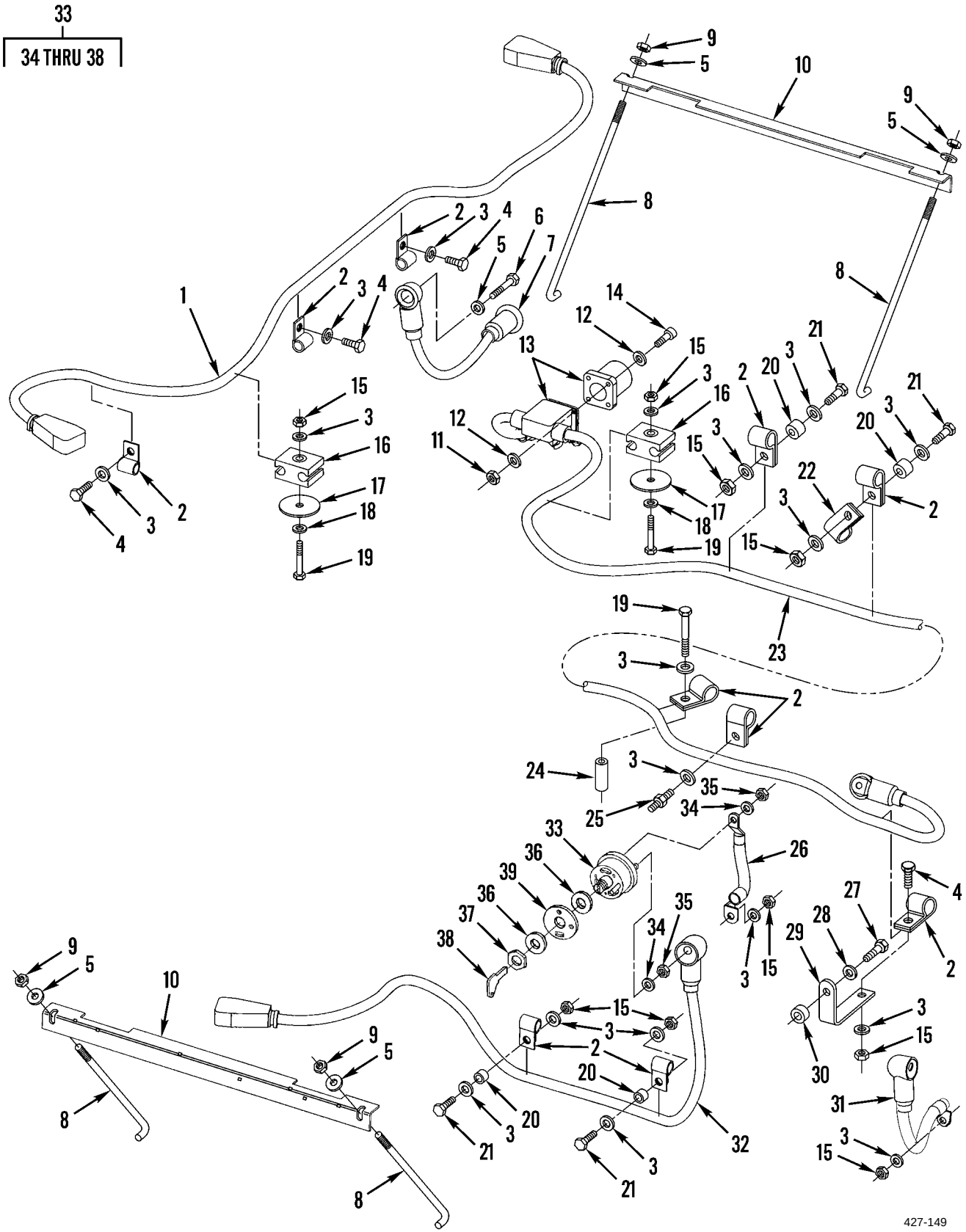

Figure 159. Battery Wiring (Arctic)

(1) ITEM NO	(2) SMR CODE	(3) NSN	(4) CAGEC	(5) PART NUMBER	(6) DESCRIPTION AND USABLE ON CODES(UOC)	(7) QTY
					GROUP 3303 WINTERIZATION KITS	
					FIG. 159 BATTERY WIRING (ARCTIC)	
1	PAFZZ	6150015516616	11083	2832191	LEAD,STORAGE BATTER.....	1
2	PAFZZ	5340010599345	11083	6D3479	CLIP.....	10
3	PAFZZ	5310013522753	11083	8T4121	WASHER,FLAT 11 X 21 X 2.5MM THK....	19
4	PAFZZ	5306013601634	11083	8T4136	BOLT,MACHINE M10 X 1.5 X 25MM.....	4
5	PAFZZ	5310014309036	11083	7X7729	WASHER,FLAT 11 X 25 X 3MM THK.....	5
6	PAFZZ	5305013981284	11083	8T4195	SCREW,CAP,HEXAGON H M10 X 1.5 X 30MM.....	1
7	PAFZZ	6150015523317	11083	2844863	LEAD,STORAGE BATTER.....	1
8	PFFZZ	6160015450611	11083	2824430	RETAINER,BATTERY.....	4
9	PAFZZ	5310014138761	11083	8T0389	NUT,PLAIN,HEXAGON M10 X 1.15 THD...	4
10	PFFZZ	5340015448677	11083	2824431	BRACKET,ANGLE.....	2
11	PAFZZ	5310012572204	11083	6V8127	NUT,PLAIN,HEXAGON.....	4
12	PAFZZ	5310014151606	11083	9X8256	WASHER,FLAT 6.6 X 12 X 2MM THK.....	8
13	PAFZZ	5935010979974	11083	5R4467	CONNECTOR,RECEPTACL.....	1
14	PAFZZ	5306015239002	11083	0965969	BOLT,MACHINE.....	4
15	PAFZZ	5310013527726	11083	8T4133	NUT,PLAIN,HEXAGON M10 X 1.5 THD....	9
16	PAFZZ	5342011852404	11083	6G2256	CLAMP.....	2
17	PAFZZ	5310011787414	11083	2G8767	WASHER,FLAT 10.5 X 60 X 3MM THK....	2
18	PAFZZ	5365011759326	11083	6G2263	SPACER,SLEEVE.....	2
19	PAFZZ	5305014398534	11083	8T6466	SCREW,MACHINE M10 X 1.5 X 60MM.....	3
20	PFFZZ	5365015451401	11083	1298087	SPACER,STRAIGHT.....	4
21	PAFZZ	5305013981286	11083	8T4185	SCREW,CAP,HEXAGON H M10 X 1.5 X 50MM.....	4
22	PAFZZ	5340004238320	11083	1B3057	CLIP,SPRING TENSION.....	1
23	PAFZZ	6150015523319	11083	2832190	LEAD,STORAGE BATTER.....	1
24	PFFZZ	5365015436601	11083	1116940	SPACER,SLEEVE.....	1
25	PAFZZ	5307014710426	11083	1013129	STUD,SHOULDERED.....	1
26	PAFZZ	6150015517248	11083	1808873	LEAD,STORAGE BATTER.....	1
27	PAFZZ	5305013601011	11083	8T7547	SCREW,CAP,HEXAGON H M8 X 1.25 X 30MM.....	1
28	PAFZZ	5310010955910	11083	5P4116	WASHER,SQUARE CONE 8.8 X 20.5 X 2MM THK.....	1
29	PFFZZ	5340015436645	11083	3W6188	BRACKET,MOUNTING.....	1
30	PFFZZ	5365015436976	11083	0910081	SPACER,SLEEVE.....	1
31	PAFZZ	6150015520355	11083	1808874	LEAD,STORAGE BATTER.....	1
32	PAFZZ	6150015516599	11083	1808872	LEAD,STORAGE BATTER.....	1
33	PAFZZ	2920007757691	11083	7N0718	SWITCH,LOCK,IGNITIO.....	1
34	PAFZZ	5310010635822	11083	9F5644	.WASHER,LOCK.....	2
35	PAFZZ	5310008339298	11083	6F7045	.NUT,PLAIN,HEXAGON 3/8 X 24 THD....	2
36	PAFZZ	5310005503714	80205	MS35333-47	.WASHER,LOCK 19.86 X 31.31 X 1.3MM THK.....	2
37	PAFZZ	5310010637852	11083	8H5303	.NUT 3/4-16 THD.....	1
38	PAFZZ	5930007151939	11083	8H5306	.KEY,SWITCH.....	1
39	PAFZZ	9905014290776	11083	3E8320	PLATE,IDENTIFICATIO.....	1
					END OF FIGURE	

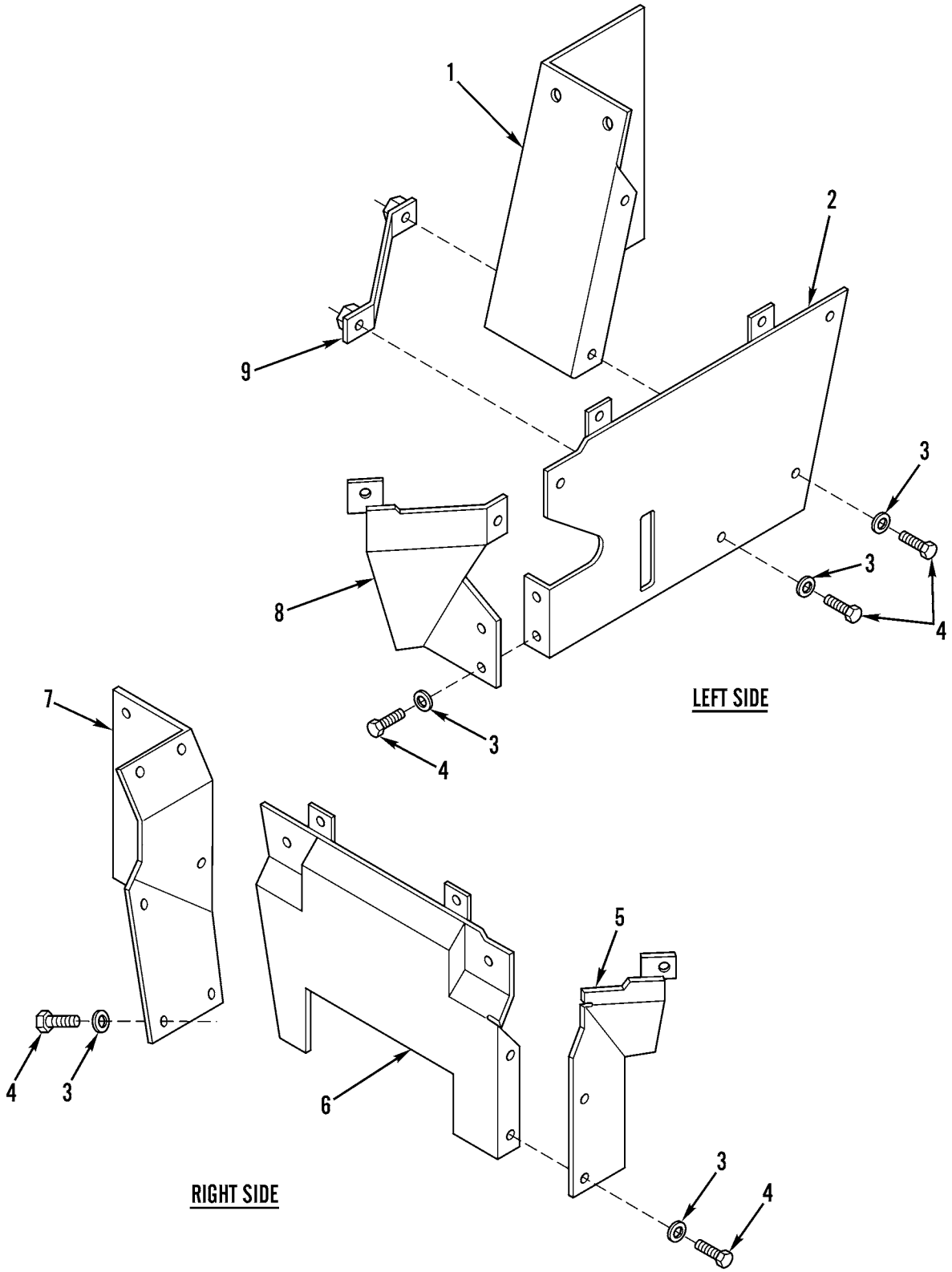

Figure 160. Chassis Guards and Covers (Arctic)

(1) ITEM NO	(2) SMR CODE	(3) NSN	(4) CAGEC	(5) PART NUMBER	(6) DESCRIPTION AND USABLE ON CODES(UOC)	(7) QTY
					GROUP 3303 WINTERIZATION KITS	
					FIG. 160 CHASSIS GUARDS AND COVERS (ARCTIC)	
1	PFOZZ	2510015448741	11083	1280782	PANEL,BODY,VEHICULA.....	1
2	PFOZZ	2510015451814	11083	1280784	PANEL,BODY,VEHICULA.....	1
3	PAOZZ	5310013522753	11083	8T4121	WASHER,FLAT 11 X 21 X 2.5MM THK....	23
4	PAOZZ	5306013600928	11083	8T4137	BOLT,MACHINE M10 X 1.5 X 20MM.....	23
5	PFOZZ	2510015451934	11083	2835015	PANEL,BODY,VEHICULA.....	1
6	PFOZZ	2510015451863	11083	2853766	PANEL,BODY,VEHICULA.....	1
7	PFOZZ	2510015456821	11083	2835016	PANEL,BODY,VEHICULA.....	1
8	PFOZZ	2510015458460	11083	1621984	PANEL,BODY,VEHICULA.....	1
9	PFOZZ	5340015448619	11083	1323543	BRACKET,ANGLE.....	1
					END OF FIGURE	

1
2 THRU 9

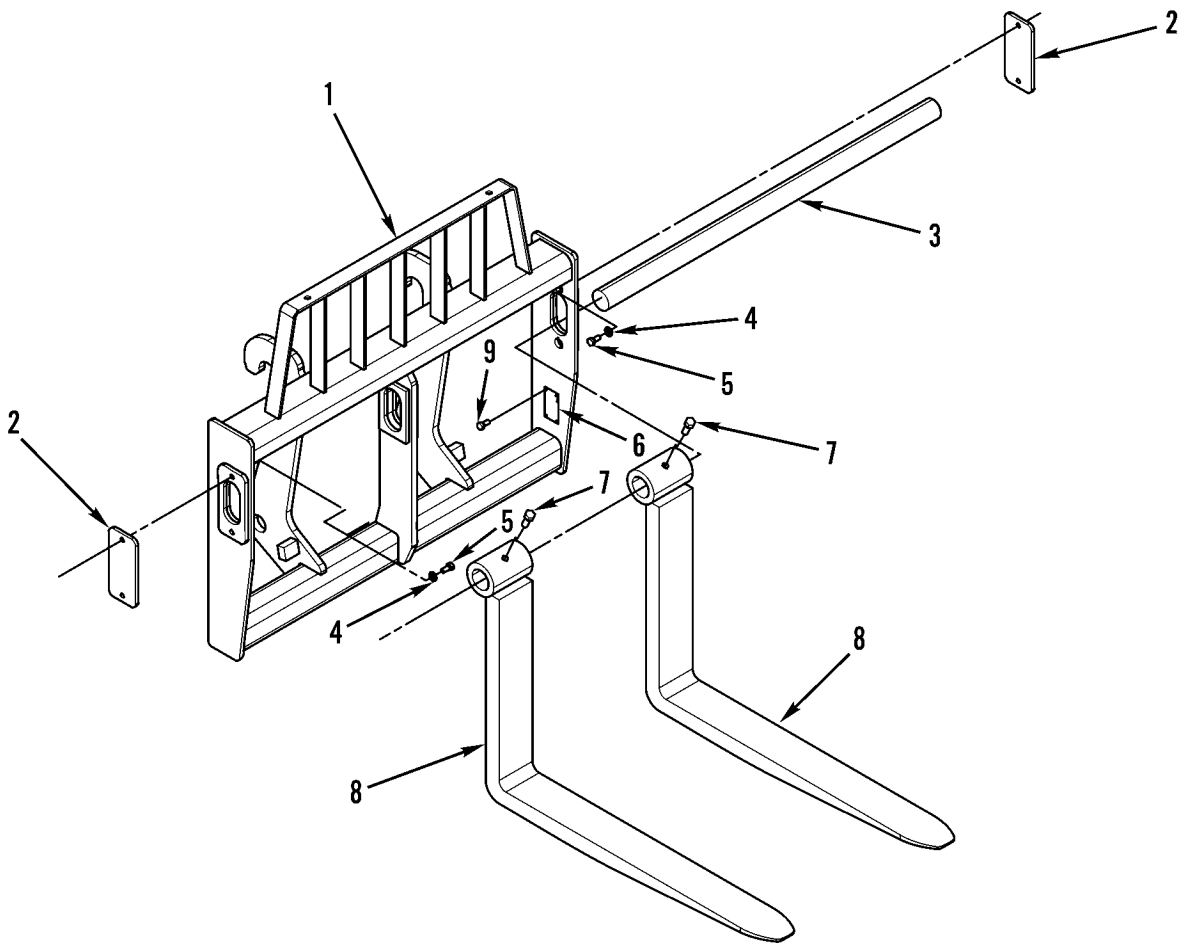

427-118

Figure 161. Forklift Assembly

(1) ITEM NO	(2) SMR CODE	(3) NSN	(4) CAGEC	(5) PART NUMBER	(6) DESCRIPTION AND USABLE ON CODES(UOC)	(7) QTY
					GROUP 3307 SPECIAL PURPOSE KITS	
					FIG. 161 FORKLIFT ASSEMBLY	
1	PAOZZ	3830015512654	11083	2154350	FORK LIFT,TRACTOR M.....	1
2	PFOZZ	5340015450219	11083	1633101	.PLATE,MOUNTING.....	2
3	PFOZZ	3040015460246	11083	1604657	.SHAFT,STRAIGHT.....	1
4	PAOZZ	5310010980624	11083	8T4223	.WASHER,FLAT 13.5 X 25.5 X 3MM THK.	4
5	PAOZZ	5306014138771	11083	8T4192	.BOLT,SHOULDER M12 X 1.25 X 20MM...	4
6	PFOZZ	9905015462185	11083	1574835	.PLATE,IDENTIFICATIO.....	1
7	PAOZZ	5306004238068	11083	2L1701	.BOLT,MACHINE.....	1
8	PAOZZ	3930015511845	11083	2836475	.FORK,LIFT TRUCK.....	2
9	PAOZZ	5325015240603	11083	1688389	.FASTENER,SNAP.....	4
					END OF FIGURE	

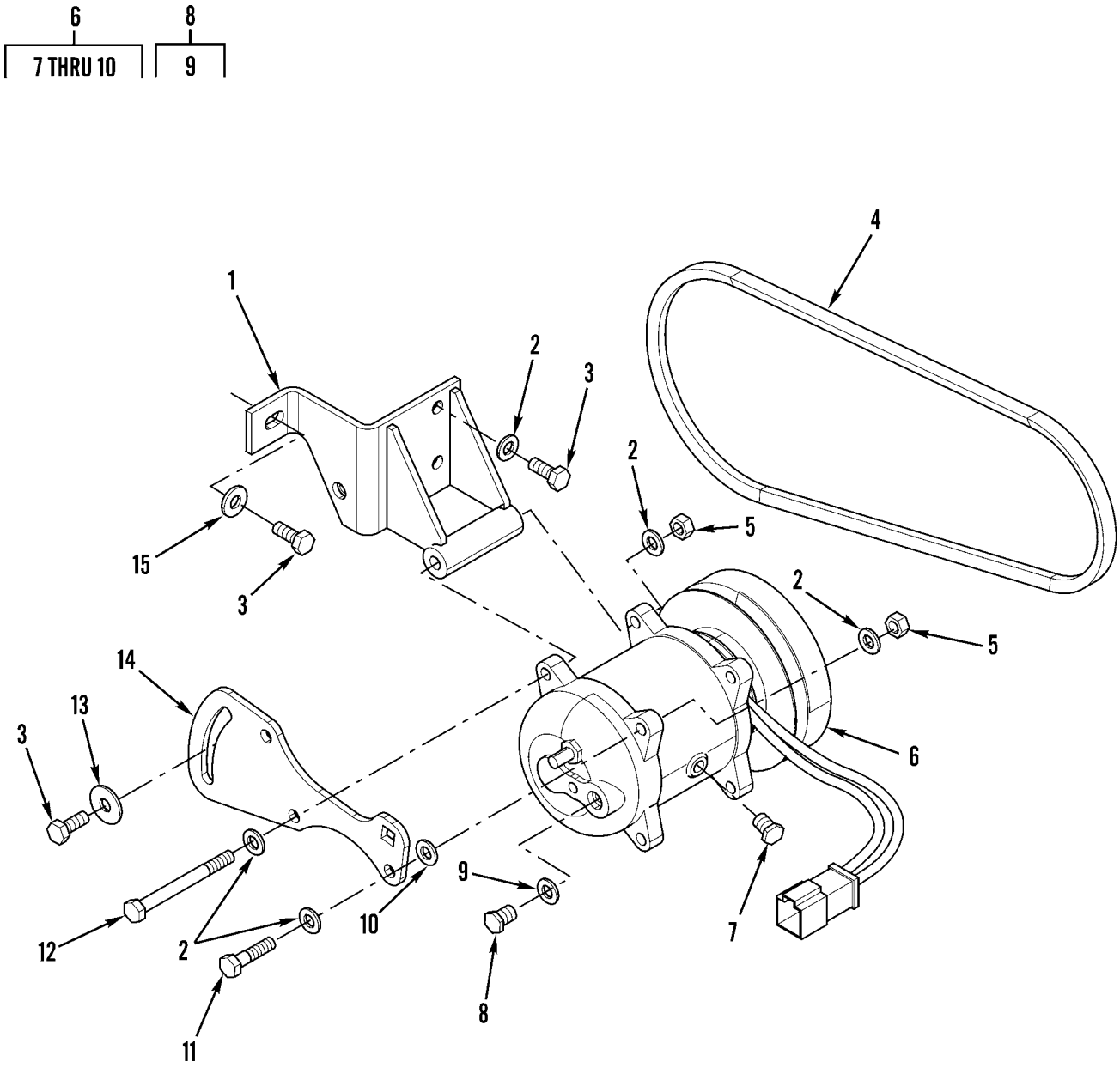

Figure 162. A/C Compressor

(1) ITEM NO	(2) SMR CODE	(3) NSN	(4) CAGEC	(5) PART NUMBER	(6) DESCRIPTION AND USABLE ON CODES(UOC)	(7) QTY
					GROUP 52 REFRIGERATION, AIR CONDITIONER HEATER, AND AIR CONDITIONING COMPONENTS	
					GROUP 5200 AIR CONDITIONER/HEATER ASSEMBLY AND GAS COMPRESSOR ASSEMBLY	
					FIG. 162 A/C COMPRESSOR	
1	PFOZZ	5340015445536	11083	1495624	BRACKET,MOUNTING.....	1
2	PAOZZ	5310013522753	11083	8T4121	WASHER,FLAT 11 X 21 X 2.5MM THK....	6
3	PAOZZ	5306013601634	11083	8T4136	BOLT,MACHINE M10 X 1.5 X 25MM.....	4
4	PAOZZ	2540015239468	11083	1W2934	BELT,VEHICULAR SAFE A/C BELT.....	1
5	PAOZZ	5310013527726	11083	8T4133	NUT,PLAIN,HEXAGON M10 X 1.5 THD....	2
6	PAFZZ	4130015435596	11083	1065122	COMPRESSOR,REFRIGER.....	1
7	PAOZZ	5365014303383	11083	7T4532	.PLUG,MACHINE THREAD.....	1
8	PAFZZ	4820015301880	11083	1143469	.VALVE,COMPRESSION R.....	1
9	PAFZZ	5331014392610	11083	9X7378	..O-RING 8.92MM ID.....	1
10	PAFZZ	5330014733308	11083	9X7385	.SEAL RING,METAL.....	2
11	PAOZZ	5306013600932	11083	8T4186	BOLT,MACHINE M10 X 1.5 X 40MM.....	1
12	PFOZZ	5306015434947	11083	1505984	BOLT,MACHINE M10 X 1.5 THD.....	1
13	PAOZZ	5310014293253	11083	8T4222	WASHER,FLAT 11.X 32 X 2.5MM.....	1
14	PFOZZ	5340015436087	11083	2011803	PLATE,MOUNTING.....	1
15	PAOZZ	5310014309036	11083	7X7729	WASHER,FLAT 11 X 25 X 3MM THK.....	1
					END OF FIGURE	

2
3

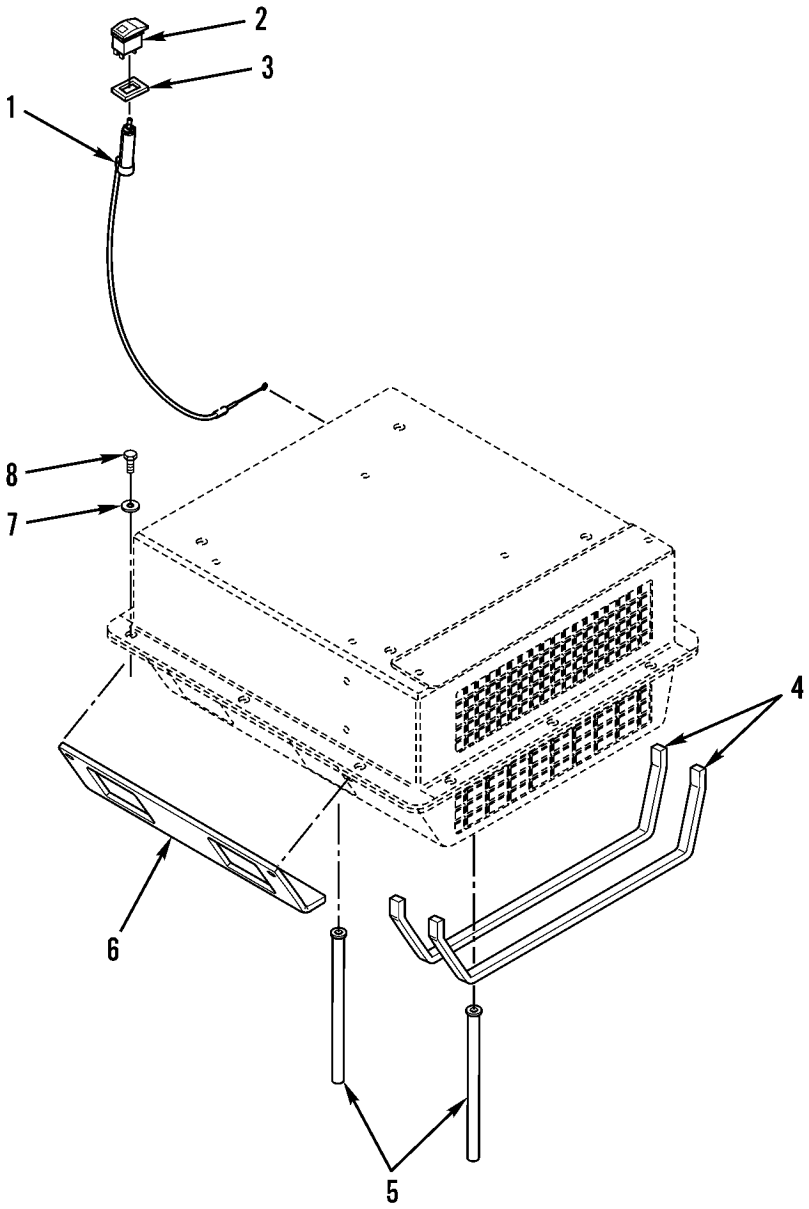

427-094-1

Figure 163. A/C and Mounting (Sheet 1 of 2)

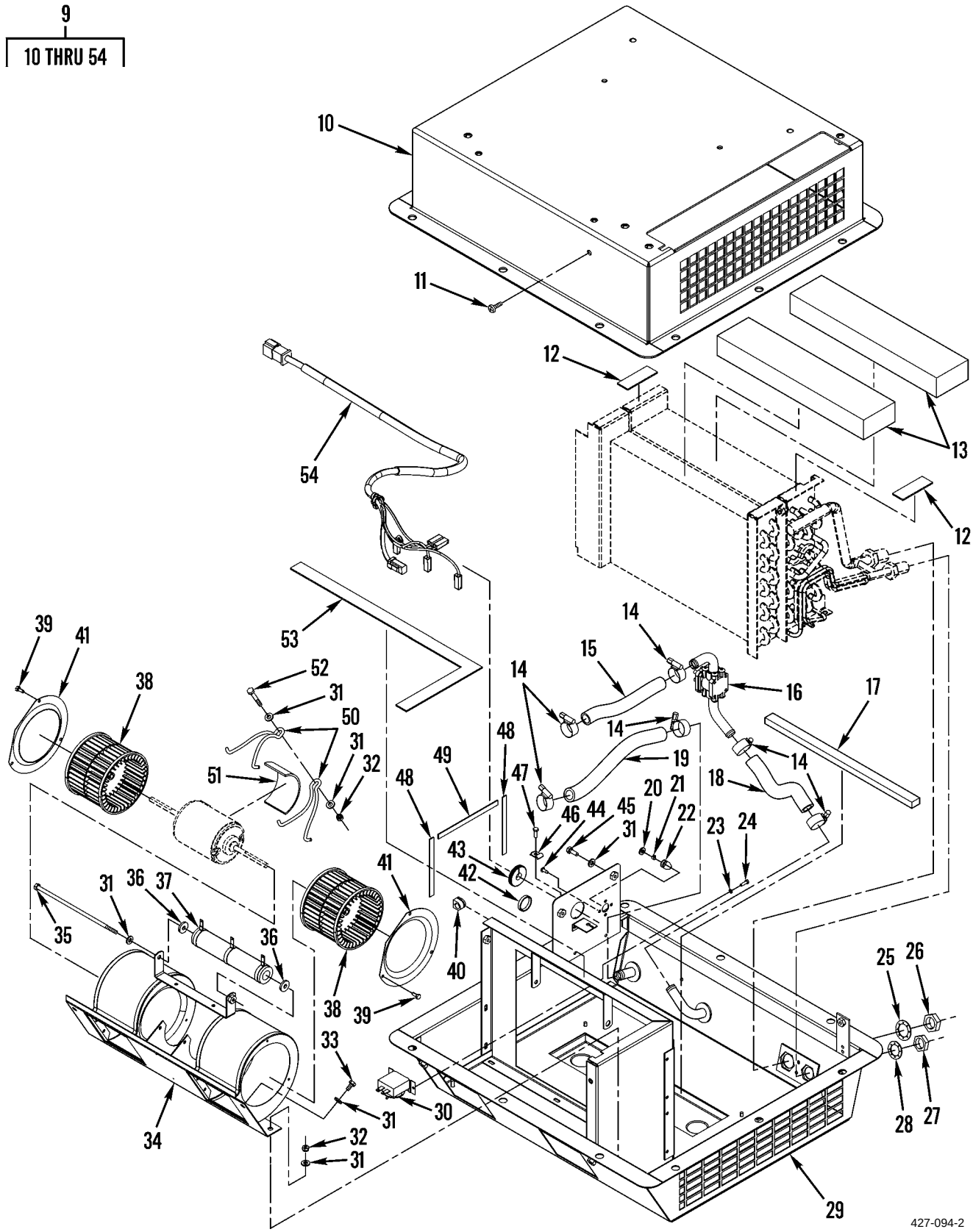

Figure 163. A/C and Mounting (Sheet 2 of 2)

(1) ITEM NO	(2) SMR CODE	(3) NSN	(4) CAGEC	(5) PART NUMBER	(6) DESCRIPTION AND USABLE ON CODES(UOC)	(7) QTY
					GROUP 5200 AIR CONDITIONER/HEATER ASSEMBLY AND GAS COMPRESSOR ASSEMBLY	
					FIG. 163 A/C AND MOUNTING	
1	PAOZZ	2590014458431	11083	1564449	CONTROL ASSEMBLY,PU HEATER TEMP CONTROL.....	1
2	PAOZZ	5930015437925	11083	2364233	SWITCH,TOGGLE.....	1
3	PAOZZ	5330015277212	11083	1117899	.GASKET.....	1
4	MOOZZ		11083	5P5643-0.8	SEAL,NONMETALLIC ST MAKE FROM SEAL P/N 5P5643, 31.5 INCHES (0. 8M).....	2
5	PFOZZ	4720015449497	11083	2362295	HOSE,NONMETALLIC DRAIN.....	2
6	PFOZZ	5330015444091	11083	1187259	GASKET.....	1
7	PAOZZ	5310014335837	11083	7X0579	WASHER,FLAT 8.8 X 25.5 X 2MM THK...	11
8	PAOZZ	5305013981282	11083	8T4908	SCREW,CAP,HEXAGON H M8 X 1.25 X 25MM.....	11
9	PAFFF	4120015522813	11083	1809873	AIRCONDITIONER.....	1
10	PFFZZ	2540015453179	11083	1510894	.HOUSING,HEATERCOMP.....	1
11	PAOZZ	5305014389808	11083	9X2044	.SCREW,MACHINE M6 X 1 X 16MM.....	1
12	MOOZZ		11083	6V1392-17	.SEAL,SPECIAL MAKE FROM SEAL P/N 6V1392, 6.7 INCHES (17M).....	2
13	PAOZZ	5330014734428	11083	1248494	.GASKET.....	2
14	PAOZZ	4730015234669	11083	8T0154	.CLAMP,HOSE.....	6
15	MOOZZ		11083	1361953-18	.HOSE,NONMETALLIC MAKE FROM HOSE P/N 1361953, 7.1 INCHES (18 CM).....	1
16	PAOZZ	2540014735042	11083	1248495	.VALVE,HEATER CONTRO.....	1
17	MOOZZ		11083	5P5643-0.4	.SEAL,NONMETALLIC ST MAKE FROM SEAL P/N 5P5643, 15.8 INCHES (0.4M).	1
18	MOOZZ		11083	1361953-15	.HOSE,NONMETALLIC MAKE FROM HOSE P/N 1361953, 6 INCHES (15CM).....	1
19	MOOZZ		11083	1361953-23	.HOSE,NONMETALLIC MAKE FROM HOSE P/N 1361953, 9.1 INCHES (23CM).....	1
20	PAOZZ	5330015288117	11083	0374426	.RETAINER,SEAL.....	1
21	PAOZZ	5340014735787	11083	8Y5737	.CLIP,SPRING TENSION.....	1
22	PAOZZ	5340014736130	11083	3E1841	.HANDLE,MANUAL CONTR.....	1
23	PAOZZ	5310012369974	11083	3B4501	.WASHER,LOCK #8.....	2
24	PAOZZ	5305014398535	11083	8T6631	.SCREW,MACHINE 8-32 X 0.5IN.....	2
25	PAFZZ	5310014735274	11083	2H3923	.WASHER,LOCK.....	1
26	PAFZZ	4730007278915	96906	MS51860-57SS	.LOCKNUT,TUBE FITTIN 7/8-14 THD....	1
27	PAFZZ	4730011439017	96906	MS51860-56Z	.LOCKNUT,TUBE FITTIN 3/4-16 THD....	1
28	PAFZZ	5310005503714	80205	MS35333-47	.WASHER,LOCK 19.86 X 31.31 X 1.3MM THK.....	1
29	PFOZZ	5340015435016	11083	1238851	.COVER,ACCESS.....	1
30	PAOZZ	5930014378575	11083	3E5464	.SWITCH,THERMOSTATIC REFRIGERANT...	1
31	PAOZZ	5310008412576	11083	8T4205	.WASHER,FLAT 7.2 X 14.5 X 2MM THK..	13
32	PAOZZ	5310014735503	11083	1293178	.NUT,SELF-LOCKING,RO M6 X 1 THD....	3
33	PAOZZ	5306014293167	11083	8T4171	.BOLT,MACHINE M6 X 1 X 12MM.....	4
34	PAOZZ	2540014764997	11083	1185046	.HOUSING,AIR INTAKE,.....	1
35	PAOZZ	5306015268480	11083	1419784	.BOLT,MACHINE M6 X 1 X 190MM.....	1
36	PAOZZ	5310014297105	11083	6V1668	.WASHER,FLAT 6.5 X 29.1 X 3MM THK..	2
37	PAOZZ	5905014294032	11083	9G1950	.RESISTOR ASSEMBLY.....	1

(1) ITEM NO	(2) SMR CODE	(3) NSN	(4) CAGEC	(5) PART NUMBER	(6) DESCRIPTION AND USABLE ON CODES(UOC)	(7) QTY
38	PAOZZ	4140014734985	11083	1003426	.FAN,CENTRIFUGAL.....	2
39	PAOZZ	5305014735601	11083	2S3745	.SCREW,TAPPING 10-16 X 0.5IN.....	6
40	PAOZZ	5325014735338	11083	1143140	.GROMMET,NONMETALLIC.....	1
41	PAOZZ	4130014736494	11083	1003143	.FILTER,FLUID PLATE-ORIFICE.....	2
42	PAOZZ	2920010589099	11083	3S2093	.STRAP.....	1
43	PAOZZ	5325014735755	11083	1P6522	.GROMMET,NONMETALLIC.....	1
44	PAOZZ	5305014390977	11083	9X2185	.SCREW,MACHINE 8-15 X 11.11MM.....	4
45	PAOZZ	5306011817849	11083	5C9553	.BOLT,MACHINE M6 X 1 X 16MM.....	4
46	PFOZZ	5340015445551	11083	1020341	.CLIP,SPRINGTENSION.....	1
47	PFOZZ	5305015437112	11083	8C8457	.SCREW,MACHINE M5 X 0.8 X 14MM.....	1
48	MOOZZ		11083	8T5372-0.12	.SEAL,PLAIN MAKE FROM SEAL P/N 8T5372, 4.8 INCHES (0.1 2M).....	2
49	MOOZZ		11083	8T5372-0.15	.SEAL,PLAIN MAKE FROM SEAL P/N 8T5372, 5.9 INCHES (0.15M).....	1
50	PAOZZ	5340014735680	11083	8C4586	.BRACKET,MOUNTING.....	2
51	MOOZZ		11083	5P5908-10	.RUBBER STRIP MAKE FROM RUBBER STRIP P/N 5P5908, 4 INCHES (10 CM)..	1
52	PAOZZ	5306014709585	11083	6V7728	.BOLT,MACHINE M6 X 1 X 45MM.....	1
53	MOOZZ		11083	6V1392-0.6	.SEAL,SPECIAL MAKE FROM SEAL P/N 6V1392, 23.6 INCHES (0.6M).....	1
54	PAOZZ	6150014736733	11083	1185044	.WIRING HARNESS.....	1

END OF FIGURE

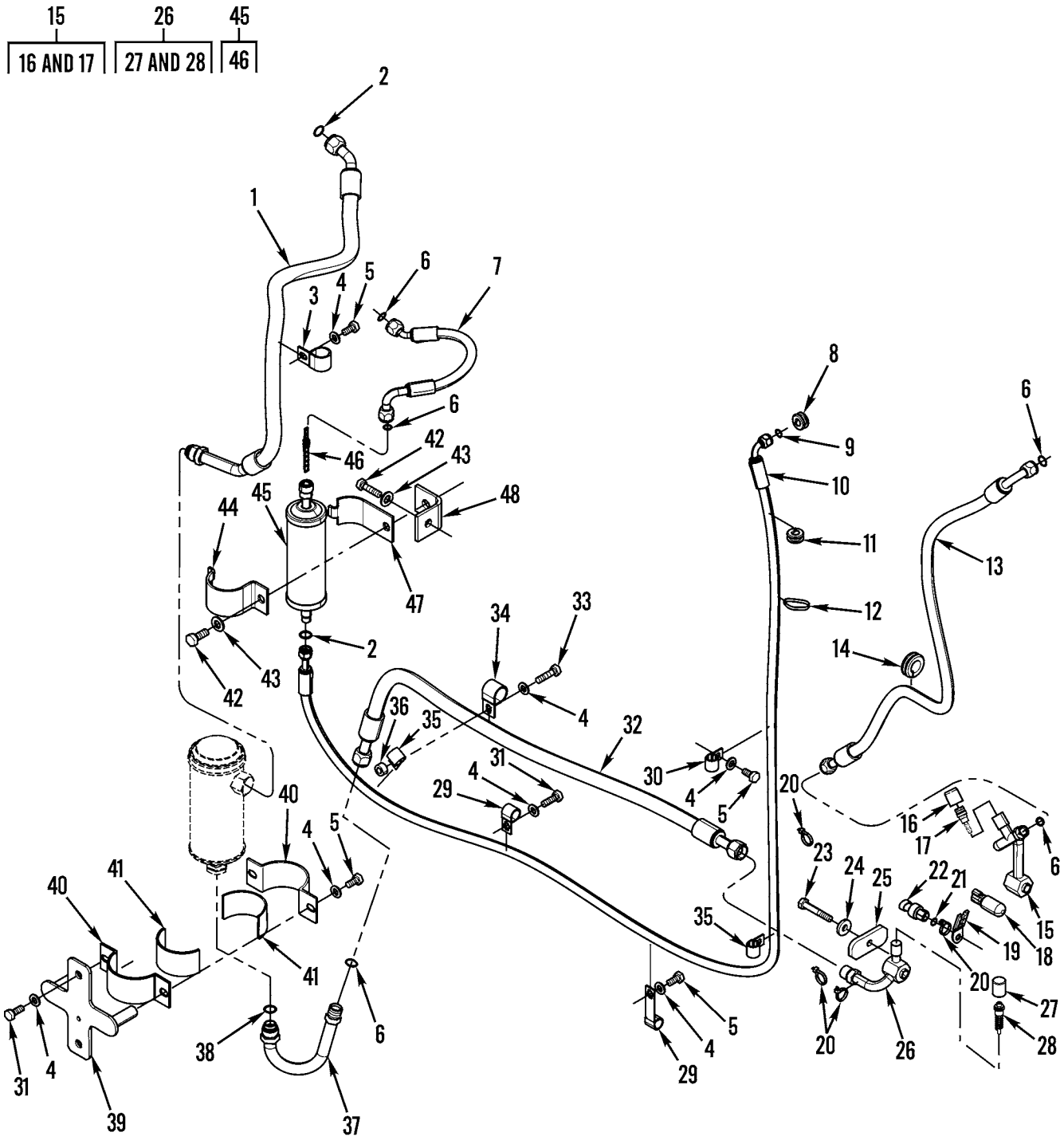

Figure 164. A/C Lines

(1) ITEM NO	(2) SMR CODE	(3) NSN	(4) CAGEC	(5) PART NUMBER	(6) DESCRIPTION AND USABLE ON CODES(UOC)	(7) QTY
					GROUP 5217 REFRIGERANT PIPING	
					FIG. 164 A/C LINES	
1	PAFZZ	4720015450580	11083	2064432	HOSE ASSEMBLY,NONME.....	1
2	PAFZZ	5331014392615	11083	9X7382	O-RING 14MM ID.....	3
3	PAOZZ	5342010632993	11083	4S1962	CLIP.....	1
4	PAOZZ	5310013522753	11083	8T4121	WASHER,FLAT 11 X 21 X 2.5MM THK....	9
5	PAOZZ	5306013600928	11083	8T4137	BOLT,MACHINE M10 X 1.5 X 20MM.....	5
6	PAFZZ	5331014392613	11083	9X7381	O-RING 10.82MM ID.....	4
7	PAFZZ	4720015450780	11083	2836407	HOSE ASSEMBLY,NONME.....	1
8	PFOZZ	5325015445549	11083	5P7648	GROMMET,NONMETALLIC.....	1
9	PAFZZ	5330014392612	11083	9X7380	O-RING 7.65MM ID.....	2
10	PAFZZ	4720015450778	11083	2836406	HOSE ASSEMBLY,NONME.....	1
11	PAOZZ	5325012857132	11083	9D3768	GROMMET,NONMETALLIC.....	1
12	PAOZZ	2815010534712	11083	7K1181	STRAP.....	1
13	PAFZZ	4720015450587	11083	2073366	HOSE ASSEMBLY,NONME.....	1
14	PAFZZ	5325009283375	11083	1M4543	GROMMET,NONMETALLIC.....	1
15	PFFZZ	4710015449513	11083	1559816	TUBE ASSEMBLY,METAL.....	1
16	PAFZZ	5365015057293	11083	3E4052	.PLUG,MACHINE THREAD.....	1
17	PAFZZ	4820015057294	11083	3E4058	.BODY,VALVE.....	1
18	PAOZZ	5970014734163	11083	1068704	INSULATOR,STANDOFF.....	1
19	PAOZZ	5999014708845	11083	4P7581	CLIP,ELECTRICAL.....	1
20	PAOZZ	2920010589099	11083	3S2093	STRAP.....	8
21	PAFZZ	5331014392610	11083	9X7378	O-RING 8.92MM ID.....	1
22	PAFZZ	5930015237888	11083	2366923	SWITCH,PRESSURE PRESSURE REFRIGERANT.....	1
23	PAFZZ	5305014398534	11083	8T6466	SCREW,MACHINE M10 X 1.5 X 60MM.....	1
24	PAFZZ	5310012573245	11083	8T2561	WASHER,FLAT 10.5 X 28.5 X 5MM.....	1
25	PAFZZ	5340014290918	11083	1P6356	PLATE,MOUNTING.....	1
26	PAFZZ	4730014381339	11083	3E4056	COUPLING,TUBE.....	1
27	PAFZZ	5365015057291	11083	3E4051	.PLUG,MACHINE THREAD.....	1
28	PAFZZ	4820015057292	11083	3E4057	.BODY,VALVE.....	1
29	PAOZZ	5340013149050	11083	1P7009	CLAMP,LOOP.....	4
30	PAOZZ	5342010643819	11083	9M8406	CLIP.....	2
31	PAOZZ	5305013981284	11083	8T4195	SCREW,CAP,HEXAGON H M10 X 1.5 X 30MM.....	3
32	PAFZZ	4720015449227	11083	2064431	HOSE ASSEMBLY,NONME.....	1
33	PAOZZ	5306013600932	11083	8T4186	BOLT,MACHINE M10 X 1.5 X 40MM.....	1
34	PAOZZ	5340000815647	11083	2L9653	CLAMP,LOOP.....	1
35	PAOZZ	5342004982946	11083	8M2773	CLIP.....	2
36	PFOZZ	5365015446076	11083	7W3447	SPACER,STRAIGHT.....	1
37	PFFZZ	4710015450788	11083	2073362	TUBE ASSEMBLY,METAL.....	1
38	PAFZZ	5330014392614	11083	9X7383	O-RING 17.17MM ID.....	2
39	PFOZZ	5340015436181	11083	2064435	BRACKET,MOUNTING.....	1
40	PAOZZ	5340015238924	11083	1018296	CLIP,RETAINING.....	2
41	PFOZZ	5330015436157	11083	6V2495	GASKET.....	2
42	PAFZZ	5306014734526	11083	8T4956	BOLT,MACHINE M12 X 1.75 X 35MM.....	2
43	PAFZZ	5310010980624	11083	8T4223	WASHER,FLAT 13.5 X 25.5 X 3MM THK..	2
44	PAFZZ	5340015238945	11083	1091633	CLIP,RETAINING.....	1
45	PAFZZ	4440015452989	11083	2573227	DRIER,AIR-GAS,DESIC.....	1
46	PFFZZ	4730015448178	11083	1891707	.PLATE,ORIFICE,FLUID.....	1

(1) ITEM NO	(2) SMR CODE	(3) NSN	(4) CAGEC	(5) PART NUMBER	(6) DESCRIPTION AND USABLE ON CODES(UOC)	(7) QTY
47	PAFZZ	5340015238946	11083	1091634	CLIP,RETAINING.....	1
48	PFFZZ	5340015453023	11083	2848306	BRACKET,MOUNTING.....	1

END OF FIGURE

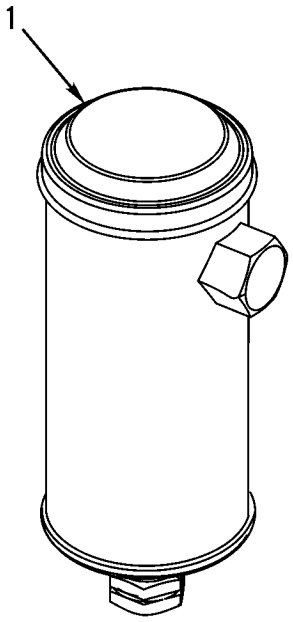

427-181

Figure 165. A/C Accumulator

(1) ITEM NO	(2) SMR CODE	(3) NSN	(4) CAGEC	(5) PART NUMBER	(6) DESCRIPTION AND USABLE ON CODES(UOC)	(7) QTY
					GROUP 5221 REFRIGERANT ACCUMULATOR	
					FIG. 165 A/C ACCUMULATOR	
1	PAFZZ	3040015239438	11083	1763900	ACCUMULATOR,HYDRAUL.....	1
					END OF FIGURE	

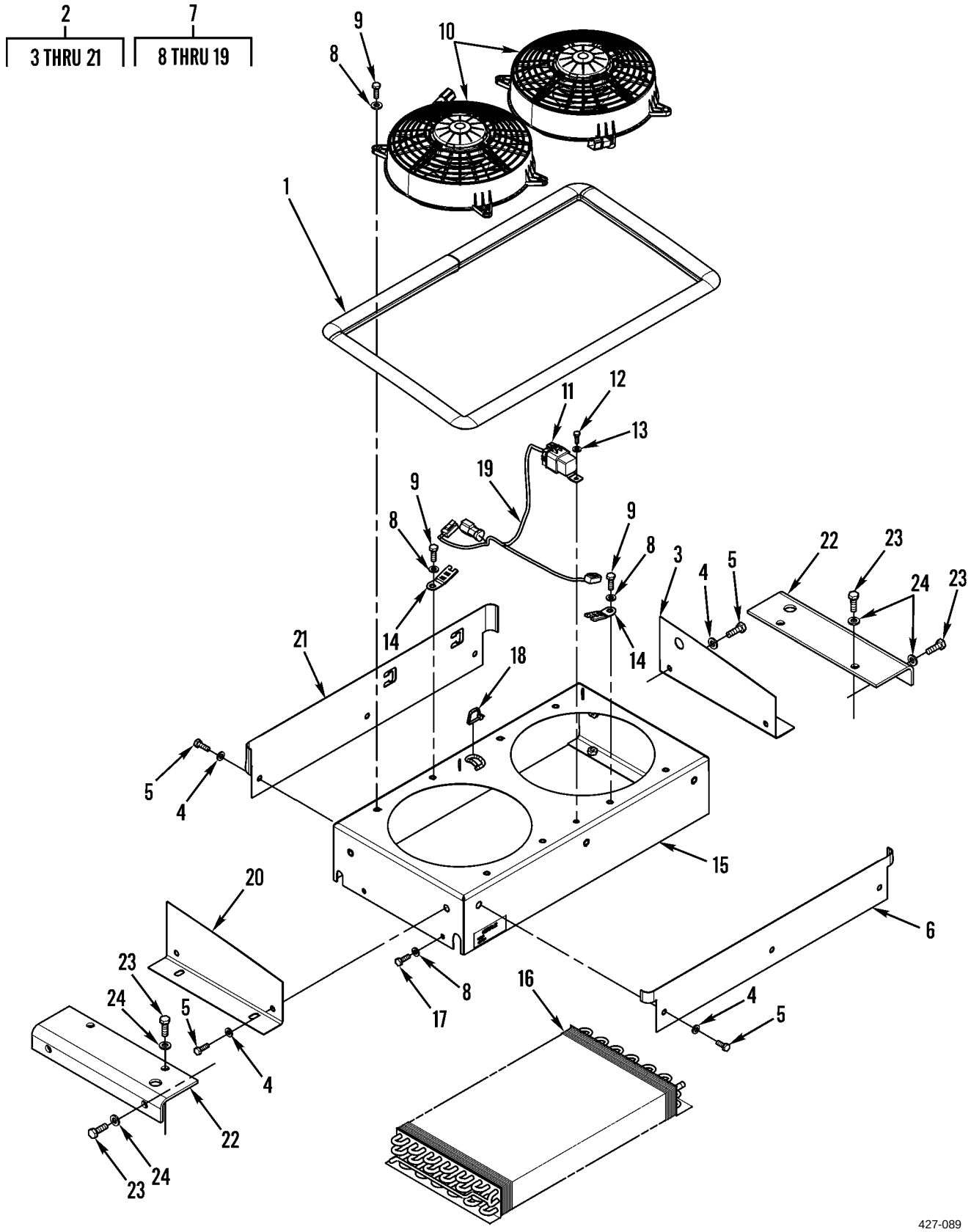

Figure 166. A/C Condenser and Mounting

(1) ITEM NO	(2) SMR CODE	(3) NSN	(4) CAGEC	(5) PART NUMBER	(6) DESCRIPTION AND USABLE ON CODES(UOC)	(7) QTY
					GROUP 5230 CONDENSER	
					FIG. 166 A/C CONDENSER AND MOUNTING	
1	MFFZZ		11083	1129736-193	SEAL MAKE FROM SEAL P/N 1129736, 76 INCHES (193 CM).....	1
2	AFFZZ		11083	2020363	CONDENSER GROUP.....	1
3	PFOZZ	5340015435694	11083	2056026	.BRACKET,ANGLE RH.....	1
4	PAOZZ	5310013598806	11083	8T4224	.WASHER,FLAT 8.8 X 16 X 2MM THK....	10
5	PAOZZ	5306013600927	11083	8T4189	.BOLT,MACHINE M8 X 1.25 X 20MM.....	10
6	PFOZZ	5340015435498	11083	2056028	.COVER,ELECTRICAL FA REAR.....	1
7	PAFFF	4130015522948	11083	1997041	.CONDENSER,REFRIGERA.....	1
8	PAOZZ	5310013598806	11083	8T4224	..WASHER,FLAT 8.8 X 16 X 2MM THK...	8
9	PAOZZ	5305015072644	11083	8T5093	..SCREW,TAPPING M8 X 1.25 X 25MM...	8
10	PAFZZ	4140015246666	11083	1697434	..FAN,VENTILATING.....	2
11	PAOZZ	5945014681267	11083	3E5239	..RELAY,ELECTROMAGNET.....	1
12	PAOZZ	5306011817849	11083	5C9553	..BOLT,MACHINE M6 X 1 X 16MM.....	1
13	PAOZZ	5310008412576	11083	8T4205	..WASHER,FLAT 7.2 X 14.5 X 2MM.....	1
14	PAOZZ	5999014708845	11083	4P7581	..CLIP,ELECTRICAL.....	2
15	XAFZZ		11083	1997042	..CASE ASSEMBLY.....	1
16	PAFZZ	4130015435614	11083	1997043	..CONDENSER COIL,REFR.....	1
17	PAFZZ	5305013601703	11083	8T4200	..SCREW,CAP,HEXAGON H M8 X 1.25 X 16MM.....	4
18	PAOZZ	2920010589099	11083	3S2093	..STRAP.....	5
19	PFOZZ	5995015435564	11083	1697435	..WIRING HARNESS,BRAN.....	1
20	PFOZZ	5340015437110	11083	2056025	.BRACKET,ANGLE LH.....	1
21	PFOZZ	5340015435060	11083	2056027	.COVER,ELECTRICAL FA FRONT.....	1
22	PFOZZ	5340015441060	11083	2056024	BRACKET,MOUNTING.....	2
23	PAFZZ	5305013981284	11083	8T4195	SCREW,CAP,HEXAGON H M10 X 1.5 X 30MM.....	8
24	PAFZZ	5310013522753	11083	8T4121	WASHER,FLAT 11 X 21 X 2.5MM THK....	8
					END OF FIGURE	

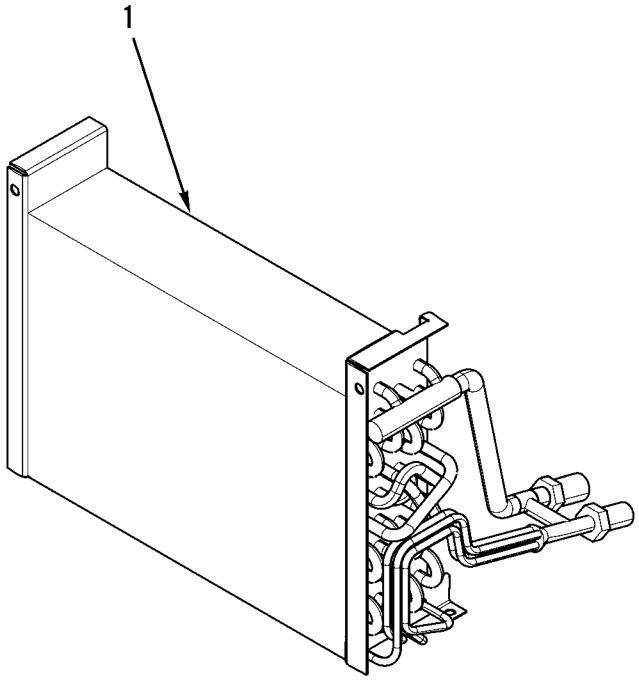

427-172

Figure 167. A/C Evaporator

(1) ITEM NO	(2) SMR CODE	(3) NSN	(4) CAGEC	(5) PART NUMBER	(6) DESCRIPTION AND USABLE ON CODES(UOC)	(7) QTY
					GROUP 5241 EVAPORATOR	
					FIG. 167 A/C EVAPORATOR	
1	PAFZZ	4130015435706	11083	1803528	EVAPORATOR COIL,REF.....	1
					END OF FIGURE	

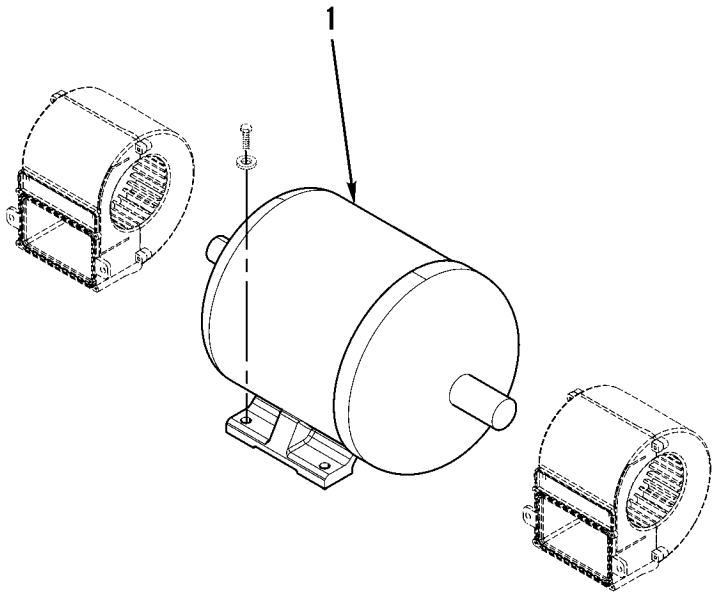

427-173

Figure 168. A/C Blower Motor

(1) ITEM NO	(2) SMR CODE	(3) NSN	(4) CAGEC	(5) PART NUMBER	(6) DESCRIPTION AND USABLE ON CODES(UOC)	(7) QTY
					GROUP 5243 BLOWER ASSEMBLY	
					FIG. 168 A/C BLOWER MOTOR	
1	XDOZZ		11083	1741486	MOTOR ASSEMBLY 24-VOLT, A/C, HEATER	1
					END OF FIGURE	

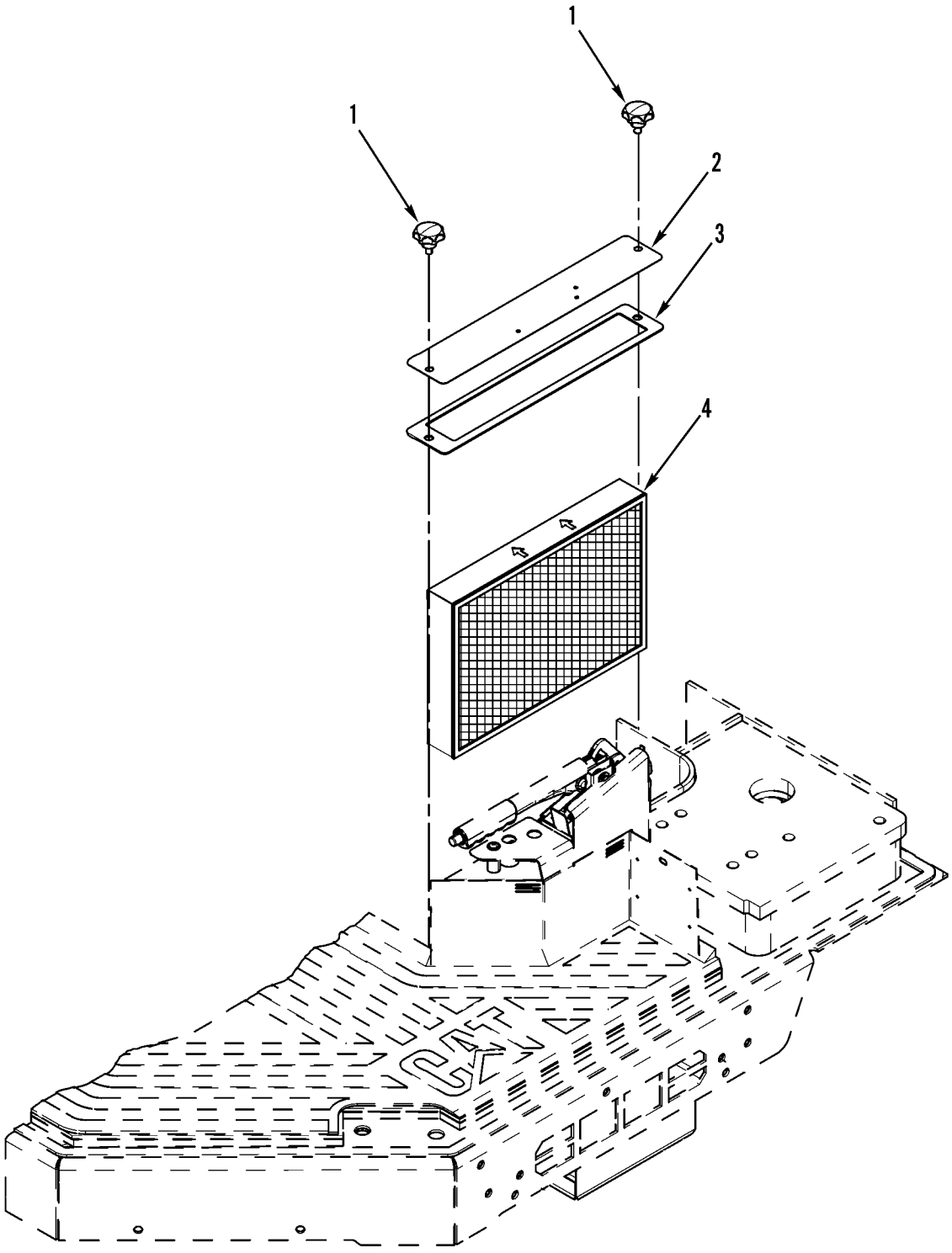

427-168

Figure 169. A/C Filter

(1) ITEM NO	(2) SMR CODE	(3) NSN	(4) CAGEC	(5) PART NUMBER	(6) DESCRIPTION AND USABLE ON CODES(UOC)	(7) QTY
					GROUP 5245 AIR FILTERS	
					FIG. 169 A/C FILTER	
1	PFOZZ	5365015436992	11083	1167856	KNOB	2
2	PFOZZ	5340015443385	11083	1807486	COVER,ACCESS	1
3	PFOZZ	5330015436620	11083	1278613	GASKET	1
4	PFOZZ	4130015435499	11083	1807487	FILTER ELEMENT,AIR AIR CLEANER	1
					END OF FIGURE	

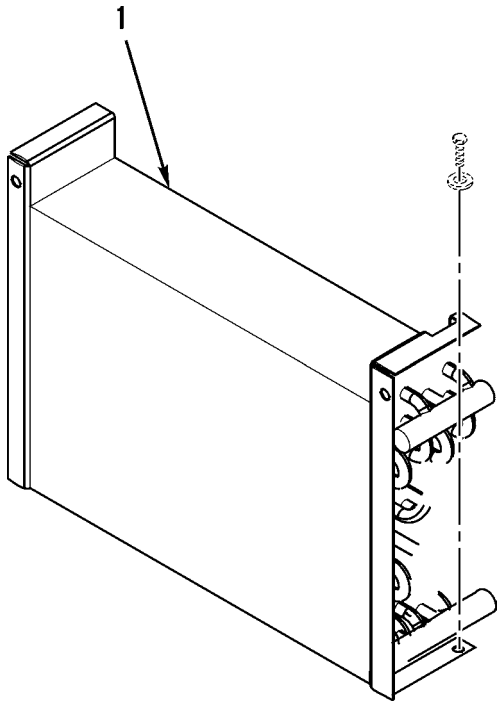

427-174

Figure 170. A/C Heater Coil

(1) ITEM NO	(2) SMR CODE	(3) NSN	(4) CAGEC	(5) PART NUMBER	(6) DESCRIPTION AND USABLE ON CODES(UOC)	(7) QTY
					GROUP 5247 HEATING UNITS	
					FIG. 170 A/C HEATER COIL	
1	PAFZZ	2930015457643	11083	1837528	CORE ASSEMBLY,FLUID.....	1
					END OF FIGURE	

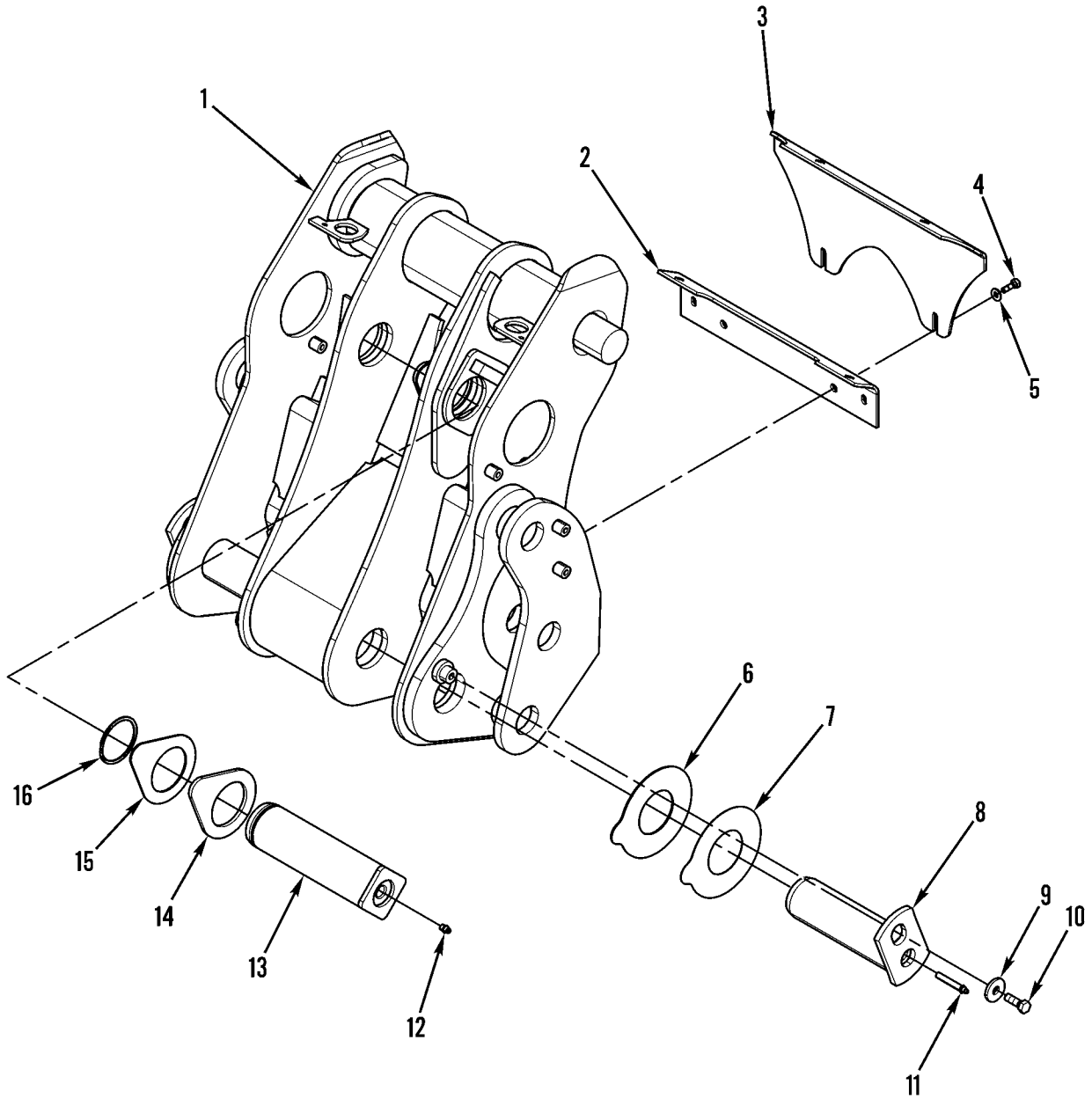

Figure 171. Quick Coupler

(1) ITEM NO	(2) SMR CODE	(3) NSN	(4) CAGEC	(5) PART NUMBER	(6) DESCRIPTION AND USABLE ON CODES(UOC)	(7) QTY
					GROUP 74 CRANES, SHOVELS, AND EARTH MOVING EQUIPMENT COMPONENTS	
					GROUP 7436 LIFT ARMS AND PIVOT ASSEMBLIES	
					FIG. 171 QUICK COUPLER	
1	PFFZZ	3040015455538	11083	2357401	CONNECTING LINK,RIG.....	1
2	PFFZZ	2590015513345	11083	1322441	COVER,VEHICULAR,COM.....	1
3	PFFZZ	5340015436171	11083	1322435	BRACKET,ANGLE.....	1
4	PAFZZ	5305013981282	11083	8T4908	SCREW,CAP,HEXAGON H M8 X 1.25 X 25MM.....	8
5	PAFZZ	5310010955910	11083	5P4116	WASHER,SQUARE CONE 8.8 X 20.5 X 2MM THK.....	8
6	PFFZZ	5365015435602	11083	1760624	SHIM.....	2
7	PFFZZ	5365015445940	11083	1760623	SHIM.....	2
8	PFFZZ	5315015444183	11083	1322419	PIN,STRAIGHT,HEADED.....	2
9	PFFZZ	5310015443388	11083	7X0618	WASHER,FLAT 13.5 X 40 X 5MM THK....	2
10	PAFZZ	5306014734526	11083	8T4956	BOLT,MACHINE M12 X 1.75 X 35MM.....	2
11	XDFZZ		11083	3B8491	FITTING,LUBRICATION.....	2
12	PAFZZ	4730000504208	11083	3B8489	FITTING,LUBRICATION.....	1
13	PFFZZ	5315015434623	11083	1322427	PIN,STRAIGHT,HEADED.....	1
14	PFFZZ	5365015436603	11083	1467987	SHIM.....	2
15	PFFZZ	5365015445940	11083	1467986	SHIM.....	2
16	PAFZZ	5325004900573	11083	9H5604	RING,RETAINING.....	1
					END OF FIGURE	

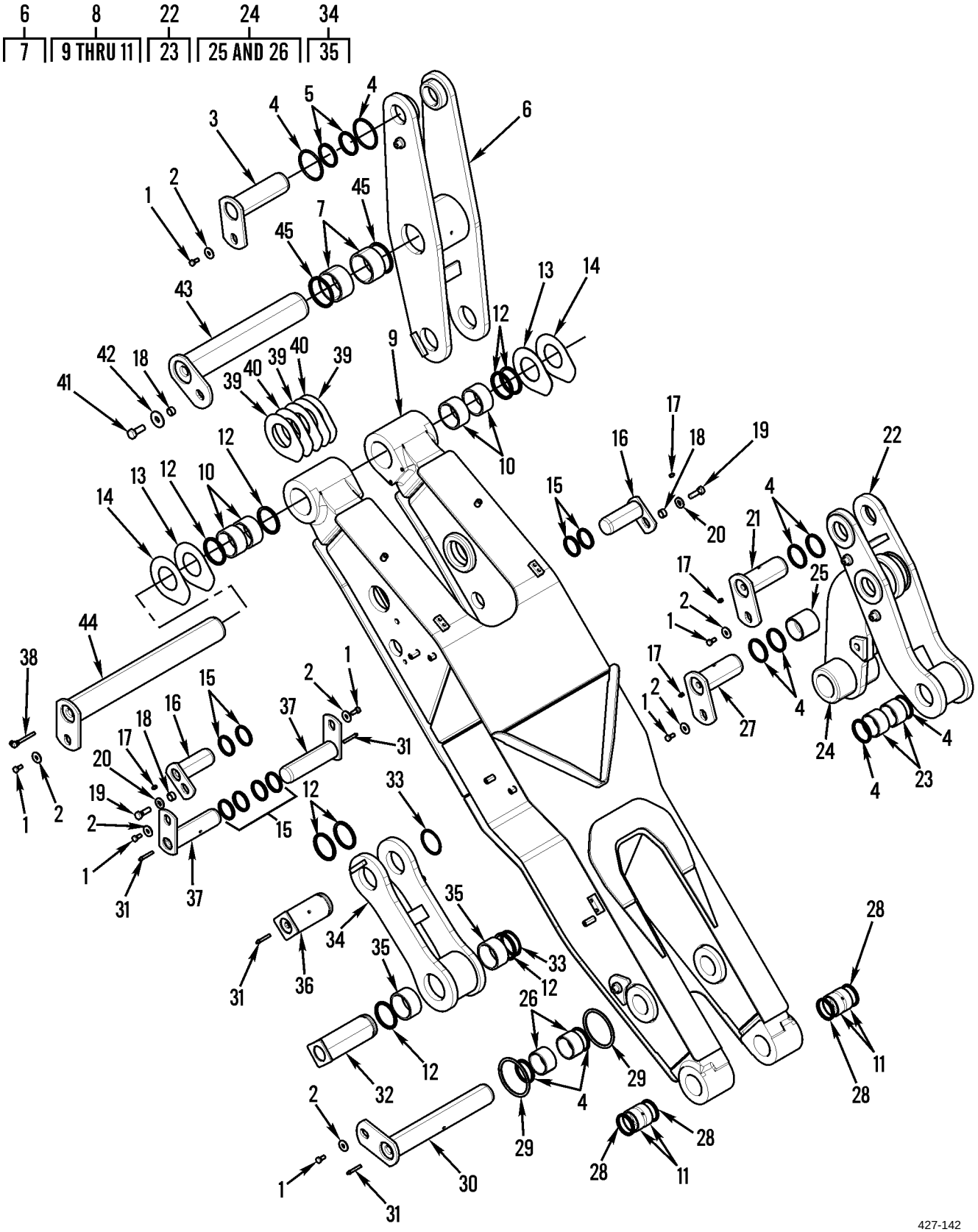

Figure 172. Implement Control

(1) ITEM NO	(2) SMR CODE	(3) NSN	(4) CAGEC	(5) PART NUMBER	(6) DESCRIPTION AND USABLE ON CODES(UOC)	(7) QTY
					GROUP 7436 LIFT ARMS AND PIVOT ASSEMBLIES	
					FIG. 172 IMPLEMENT CONTROL	
1	PAFZZ	5306014138771	11083	8T4192	BOLT,SHOULDER M12 X 1.75 X 25MM....	7
2	PFFZZ	5310015443388	11083	7X0618	WASHER,FLAT 13.5 X 40 X 5MM THK....	7
3	PFFZZ	5315015436168	11083	1468016	PIN,STRAIGHT,HEADED.....	1
4	PAFZZ	5330001611870	11083	5P0064	SEAL.....	10
5	PAFZZ	5331015444017	11083	1182722	O-RING.....	2
6	PAFZZ	3040015455546	11083	1434969	CONNECTING LINK,RIG REAR TILT.....	1
7	PFFZZ	3120015441388	11083	4V2879	.BEARING,SLEEVE.....	2
8	PAFZZ	2590015457646	11083	1322300	ARM ASSEMBLY,LIFT B.....	1
9	XAFZZ		11083	1322303	.ARM ASSEMBLY,LIFT B.....	1
10	PFFZZ	3120015438712	11083	4V4453	.BEARING,SLEEVE.....	4
11	PFFZZ	3120014081239	11083	7P3466	.BUSHING,SLEEVE.....	2
12	PAFZZ	5330010983169	11083	7K9212	SEAL,PLAIN ENCASED.....	8
13	PFFZZ	5365015434960	11083	1947112	SHIM 2MM THK.....	2
14	PFFZZ	5365015446000	11083	1947111	SHIM 4MM THK.....	2
15	PAFZZ	5330010538220	11083	7K9205	SEAL,LIP TYPE.....	8
16	PFFZZ	5315015441076	11083	1467996	PIN,STRAIGHT,HEADED.....	2
17	PAFZZ	4730000504208	11083	3B8489	FITTING,LUBRICATION.....	9
18	PFFZZ	5365015441386	11083	9C7907	SPACER,PLATE 14MM THK.....	3
19	PAFZZ	5306014293171	11083	8T4193	BOLT,MACHINE M16 X 2 X 50MM.....	2
20	PAFZZ	5310014290787	11083	3E9411	WASHER,FLAT 17.5 X 38 X 6MM THK....	2
21	PFFZZ	5315015436491	11083	2357390	PIN,STRAIGHT,HEADED.....	1
22	PAFZZ	3040015450549	11083	2357350	CONNECTING LINK,RIG FRONT TILT.....	1
23	PFFZZ	3120015436978	11083	4V8639	.BEARING,SLEEVE.....	2
24	PAFZZ	3040015450120	11083	2357353	CONNECTING LINK,RIG FRONT TILT.....	1
25	PFFZZ	3120011667992	11083	4V8674	.BEARING,SLEEVE.....	1
26	PFFZZ	3120015436978	11083	4V8639	.BEARING,SLEEVE.....	2
27	PFFZZ	5315015444020	11083	1468010	PIN,STRAIGHT,HEADED.....	1
28	PAFZZ	5330010435471	11083	7K9208	SEAL.....	4
29	PAFZZ	5331015143213	11083	1079976	O-RING.....	4
30	PFFZZ	5315015434943	11083	1468013	PIN,STRAIGHT,HEADED.....	1
31	XDFZZ		11083	3B8491	FITTING,LUBRICATION.....	4
32	PFFZZ	5315015436616	11083	1468009	PIN,STRAIGHT,HEADLE.....	1
33	PAFZZ	5325008521435	11083	1M8652	RING,RETAINING.....	2
34	PAFZZ	3040015450543	11083	1434979	CONNECTING LINK,RIG REAR TILT.....	1
35	PFFZZ	3120015438712	11083	4V4453	.BEARING,SLEEVE.....	2
36	PFFZZ	5315015444196	11083	1468019	PIN,STRAIGHT,HEADLE.....	1
37	PFFZZ	5315015437020	11083	1467993	PIN,STRAIGHT,HEADED.....	2
38	PAFZZ	4730014567784	11083	3B7734	NIPPLE,PIPE.....	1
39	PFFZZ	5365015444770	11083	1947109	SHIM 1MM THK.....	4
40	PFFZZ	5365015439648	11083	1947110	SHIM 0.5MM THK.....	2
41	PAFZZ	5306014734504	11083	8T6430	BOLT,MACHINE M20 X 2.5 X 50MM.....	2
42	PFFZZ	5310015436170	11083	1771452	WASHER,FLAT 22 X 60 X 6MM THK.....	2
43	PFFZZ	5315015436631	11083	1467990	PIN,STRAIGHT,HEADLE.....	1
44	PFFZZ	5315015444144	11083	1468000	PIN,STRAIGHT,HEADLE.....	1
45	PAFZZ	5330014081238	11083	7K9216	GASKET.....	2
					END OF FIGURE	

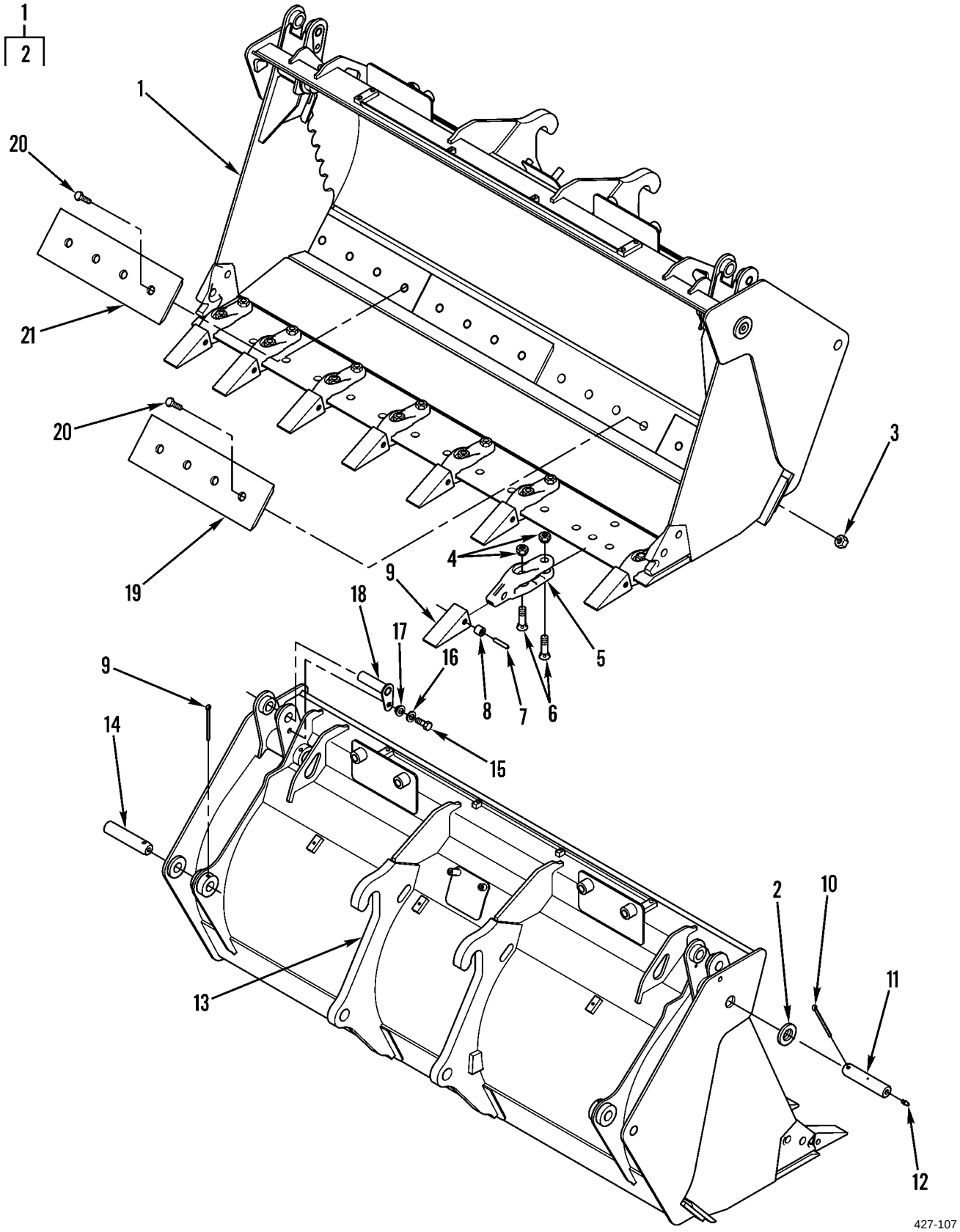

Figure 173. Bucket and Related Parts

(1) ITEM NO	(2) SMR CODE	(3) NSN	(4) CAGEC	(5) PART NUMBER	(6) DESCRIPTION AND USABLE ON CODES(UOC)	(7) QTY
					GROUP 7437 LOADER BUCKET ASSEMBLY OR FORKLIFT	
					FIG. 173 BUCKET AND RELATED PARTS	
1	PAOZZ	3830015513403	11083	2811574	BUCKET,SCOOP TYPE L.....	1
2	PAOZZ	3120015454190	11083	6Q2207	.BEARING,SLEEVE.....	2
3	PAOZZ	5310010214224	11083	4K0367	NUT,PLAIN,HEXAGON 5/8-11 THD.....	16
4	PAOZZ	5310010442069	11083	8J2933	NUT,PLAIN,SINGLE BA.....	16
5	PAOZZ	5340014292233	11083	1U0257	ADAPTER.....	8
6	PAOZZ	5306010445141	11083	8J2928	BOLT,SQUARE NECK.....	16
7	PAOZZ	5315014628877	11083	1324763	PIN,DRIVE,GUIDED.....	1
8	PAOZZ	2510015131119	11083	1495733	RETAINER,AS.....	1
9	PAOZZ	3830012309035	11083	1U3252	TOOTH,SURFACE RIPPI.....	1
10	PFOZZ	5315015448154	11083	0961820	PIN,COTTER.....	4
11	PFOZZ	5315015448623	11083	6Q2204	PIN,STRAIGHT,HEADLE.....	2
12	PAOZZ	4730015299779	11083	6V1506	FITTING,LUBRICATION.....	2
13	PAOZZ	3830015512651	11083	2811602	BULLDOZER,EARTH MOV.....	1
14	PFOZZ	5315015450470	11083	2826928	PIN,STRAIGHT,HEADLE.....	2
15	PAOZZ	5305013981284	11083	8T4195	SCREW,CAP,HEXAGON H M10 X 1.5 X 30MM.....	2
16	PAOZZ	5310013522753	11083	8T4121	WASHER,FLAT 11 X 21 X 2.5MM THK....	2
17	PFOZZ	5365015448630	11083	2826935	SPACER,RING.....	2
18	PFOZZ	5315015449159	11083	2380347	PIN STRAIGHT,HEADED.....	2
19	PAOZZ	3805015172251	11083	4T2972	CUTTING EDGE,SCOOP,.....	2
20	PAOZZ	5306005502101	11083	4F3654	BOLT,SQUARE NECK.....	16
21	PAOZZ	3805015172244	11083	8A8580	CUTTING EDGE,SCOOP,.....	2
					END OF FIGURE	

(1) ITEM NO	(2) SMR CODE	(3) NSN	(4) CAGEC	(5) PART NUMBER	(6) DESCRIPTION AND USABLE ON CODES(UOC)	(7) QTY
					GROUP 94 REPAIR KITS	
					GROUP 9401 REPAIR KITS	
					FIG. KITS	
	PAOZZ	2930015259752	11083	2192172	PARTS KIT,OIL COOLE.....	1
					GASKET (2) 12-2	
					GASKET (1) 12-3	
					GASKET (2) 12-13	
					SEAL,PLAIN (2) 12-7	
					END OF FIGURE	

(1) ITEM NO	(2) SMR CODE	(3) NSN	(4) CAGEC	(5) PART NUMBER	(6) DESCRIPTION AND USABLE ON CODES(UOC)	(7) QTY
					GROUP 95 GENERAL USE STANDARDIZED PARTS	
					GROUP 9501 HARDWARE SUPPLIES AND BULK MATERIEL, COMMON	
					FIG. BULK	
1	PAOZZ	3120015240586	11083	1602247	BEARING,SLEEVE.....	V
2	PAOZZ		11083	3E3892	GASKET.....	V
3	PAOZZ		11083	3E3805	GASKET.....	V
4	PAOZZ		11083	5P6038	GUARD,HOSE.....	V
5	PAOZZ	4720010627159	11083	5P0767	HOSE.....	V
6	PAOZZ		11083	1467453	HOSE ASSEMBLY,NONME.....	V
7	PAOZZ		11083	6V1363	HOSE ASSEMBLY,NONME.....	V
8	PAOZZ	4720011500880	11083	5P1506	HOSE ASSEMBLY,METAL.....	V
9	PFOZZ	4720015451406	11083	1437899	HOSE,NONMETALLIC.....	V
10	PAOZZ		11083	1361953	HOSE,NONMETALLIC.....	V
11	PAOZZ	4720014736295	11083	1440195	HOSE,NONMETALLIC.....	V
12	PAOZZ	4720014715025	11083	5P0743	HOSE,NONMETALLIC.....	V
13	PAOZZ	4720011921368	11083	5P1420	HOSE,NONMETALLIC.....	V
14	PAOZZ	4720010937331	11083	5P1442	HOSE,NONMETALLIC.....	V
15	PAOZZ	4720011321458	11083	5P1505	HOSE,NONMETALLIC.....	V
16	PAOZZ	4720014514501	11083	8C3681	HOSE,NONMETALLIC.....	V
17	PAOZZ	4720012876809	11083	5P0765	HOSE,NONMETALLIC.....	V
18	PAOZZ	4720011500883	11083	5P6442	HOSE,NONMETALLIC.....	V
19	PAOZZ	2510014302483	11083	5P7070	INSULATION PANEL,VE.....	V
20	PAOZZ	5640014770056	11083	1602248	INSULATION SLEEVING.....	V
21	PAOZZ	5330012098794	11083	5P5908	RUBBER STRIP.....	V
22	PAOZZ	5330010956804	11083	5P5927	RUBBER STRIP.....	V
23	PFOZZ		11083	1129736	SEAL.....	V
24	PAOZZ		11083	5P5755	SEAL.....	V
25	PAOZZ	5330012924301	11083	5P5643	SEAL,NONMETALLIC ST.....	V
26	PAOZZ	5330012924293	11083	5P7211	SEAL,NONMETALLIC SP.....	V
27	PFOZZ	5330015453010	11083	1032543	SEAL,NONMETALLIC ST.....	V
28	PFOZZ	5330015453406	11083	9X8699	SEAL,NONMETALLIC ST.....	V
29	PFOZZ	5330015450627	11083	1367728	SEAL,NONMETALLIC ST.....	V
30	PAOZZ	5330014764973	11083	8T5372	SEAL,PLAIN.....	V
31	PAOZZ	5330012173936	11083	5P5637	SEAL,RUBBER STRIP.....	V
32	PAOZZ	5330012776101	11083	6V1392	SEAL,SPECIAL.....	V
33	PAOZZ		11083	9X2133	TUBE ASSEMBLY,METAL.....	V
34	PFOZZ	4720015451408	11083	1602243	TUBING,NONMETALLIC.....	V
35	PAOZZ	4720011033700	11083	5P5630	TUBING,NONMETALLIC.....	V
36	PFOZZ	4720015454184	11083	1634356	TUBING,NONMETALLIC.....	V
37	PFOZZ	9330015449583	11083	1210199	TUBING,PLASTIC,SPIR.....	V
					END OF FIGURE	

END OF WORK PACKAGE

SPECIAL TOOLS LIST 0003 00

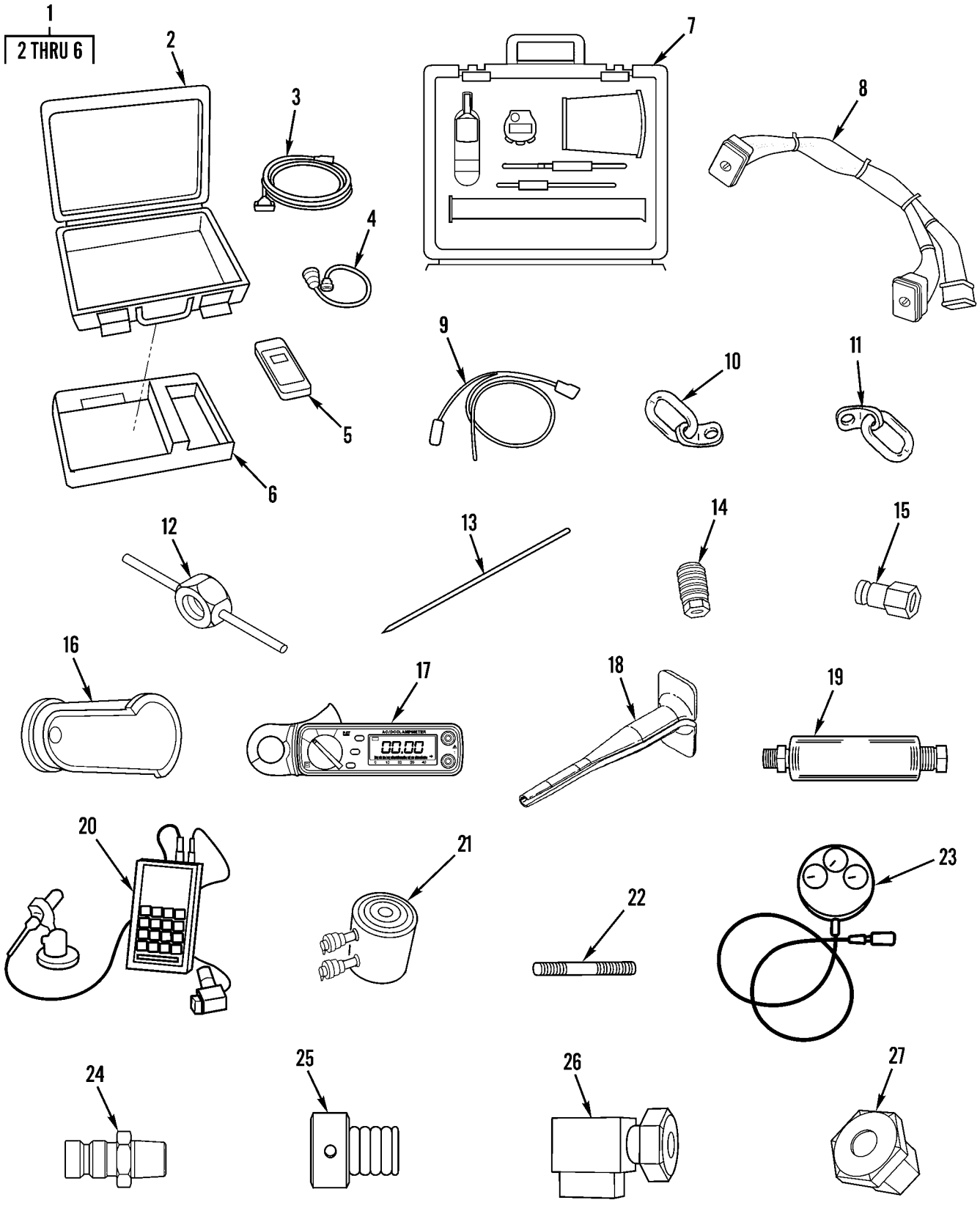

Figure 174. Unit Support Special Tools (Sheet 1 of 3)

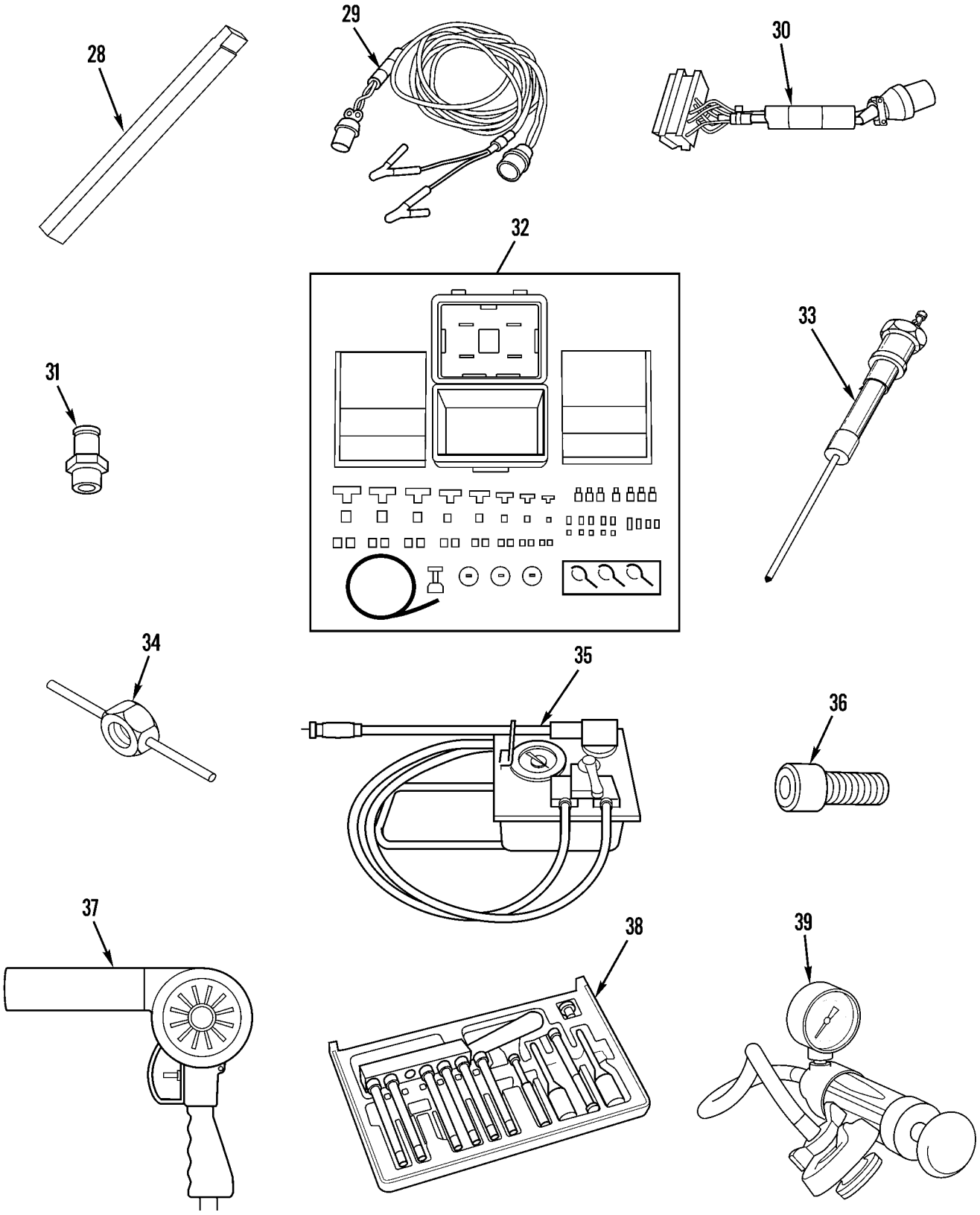

Figure 174. Unit Support Special Tools (Sheet 2 of 3)

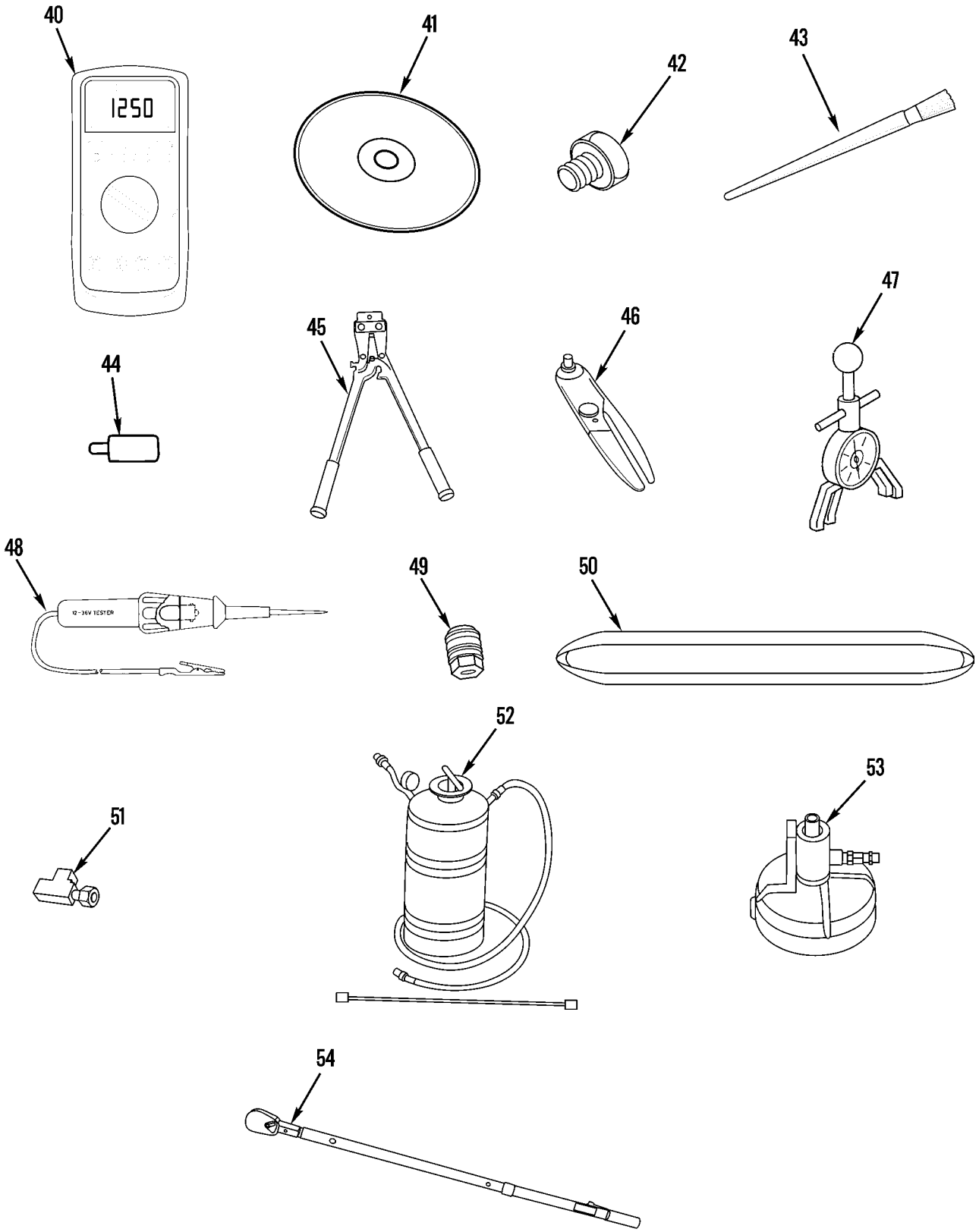

Figure 174. Unit Support Special Tools (Sheet 3 of 3)

(1) ITEM NO	(2) SMR CODE	(3) NSN	(4) CAGEC	(5) PART NUMBER	(6) DESCRIPTION AND USABLE ON CODES(UOC)	(7) QTY
					GROUP 26 TOOLS AND TEST EQUIPMENT	
					GROUP 2604 SPECIAL TOOLS	
					FIG. 174 UNIT SUPPORT SPECIAL TOOLS	
1	PEOOO		11083	2755120	ADAPTER,COMMUNICATI.....	
2	XDOZZ		11083	6V3072	.SHIPPING AND STORAG.....	
3	XDOZZ		11083	1960055	.SERIAL CABLE.....	
4	XDOZZ		11083	2755122	.DATALINK CABLE.....	
5	XDOZZ		11083	2755121	.ADAPTER,COMMUNICATI.....	
6	XDOZZ		11083	1774595	.INSERT,FOAM.....	
7	PEOZZ	6630015461870	11083	9U7840	TESTING KIT,PETROLE.....	
8	PEOZZ	6150015461006	11083	2080059	CABLE ASSEMBLY SET,.....	
9	PEOZZ	6625014849404	11083	8T8726	CABLE,3-PIN ASSEMBL.....	
10	PEOZZ	5120014511401	11083	1387575	LIFTING LINK.....	
11	PEOZZ	4940012682201	11083	1387573	LINK.....	
12	PEOZZ	5310015456642	11083	9U5345	NUT ASSEMBLY,FAST R.....	
13	PEOZZ	5120015463188	11083	9U5343	STUD,MECHANICAL PUL.....	
14	PEOZZ	4730013755884	11083	6V4143	COUPLING,HOSE.....	
15	PEOZZ	4730013579580	11083	6V4142	NIPPLE,PIPE.....	
16	PEOZZ	5120012882793	11083	6V4035	INSERTER AND REMOVE.....	
17	PEOZZ	6625013433370	11083	2258266	AMMETER.....	
18	PEOZZ	5120014910560	11083	1516320	REMOVER,ELECTRICAL.....	
19	PEOZZ	2910013438535	11083	2P8278	FILTER,FLUID.....	
20	PEOZZ	4940012682200	11083	9U7400	INDICATOR,POINT SET.....	
21	PEOZZ	5130003636680	11083	6V3160	PULLER,HYDRAULIC.....	
22	PEOZZ	5307014849378	11083	4C9633	STUD,PLAIN.....	
23	PEOZZ	4910015042154	11083	6V7830	TEST STAND,AUTOMOTI.....	
24	PEOZZ	4730014858578	11083	8T3613	NIPPLE.....	
25	PEOZZ	5315014858586	11083	9U5342	PIN,DRIVE,GUIDED.....	
26	PEOZZ	4730014143294	11083	8T8902	TEE,TUBE.....	
27	PEOZZ	4730014714393	11083	6H4746	ADAPTER BUSHING.....	
28	PEOZZ	5210015466980	11083	2216893	GAGE,BRAKE.....	
29	PEOZZ	6625015461095	11083	2170113	TEST SET,ELECTRICAL.....	
30	PEOZZ	6625015461114	11083	2244899	TEST SET,ELECTRICAL.....	
31	PEOZZ	4730011641777	11083	6V3965	COUPLING HALF,QUICK.....	
32	PEOZZ	5210013628593	11083	4C4890	MEASURING EQUIPMENT.....	
33	PEOZZ	4910015466287	11083	2262270	INDICATOR,PISTON PO.....	
34	PEOZZ	5310015456742	11083	9U6833	NUT ASSEMBLY,FAST R.....	
35	PEOZZ	4320003741403	11083	9U6600	PUMP,HYDRAULIC RAM,.....	
36	PEOZZ	5365014293163	11083	8T8737	PLUG,MACHINE THREAD.....	
37	PEOZZ	4940010287493	59164	EP-5UL	HEATER,GUN TYPE,ELE.....	
38	PEOZZ	5180014801268	11083	1455242	PULLER KIT,STEERING.....	
39	PEOZZ	4910007288227	56161	10513874	TEST KIT,RADIATOR-R.....	
40	PEOZZ		K6022	FLUKE 87	MULTIMETER.....	
41	PEOZZ		11083	EERE3500	SOFTWARE KIT.....	
42	PEOZZ	5340015462247	11083	9S5563	CAP,PIN DRIVING.....	
43	PEOZZ	7920005142417	7S147	803-12	BRUSH,ACID SWABBING.....	
44	PEOZZ	4730013755883	11083	6V4144	COUPLING,HOSE.....	
45	PEOZZ	5120015379251	11083	4C4075	CRIMPING TOOL,TERMI.....	
46	PEOZZ	5120014867811	11083	1U5804	CRIMPING TOOL,TERMI.....	

(1) ITEM NO	(2) SMR CODE	(3) NSN	(4) CAGEC	(5) PART NUMBER	(6) DESCRIPTION AND USABLE ON CODES(UOC)	(7) QTY
47	PEOZZ	5220014805571	45225	BT3397	GAGE,PROFILE.....	
48	PEOZZ	6625012602387	9A194	21300	LIGHT,TEST.....	
49	PEOZZ	5365015146500	11083	6V9510	PLUG,MACHINE THREAD.....	
50	PEOZZ	2835010782081	91796	4-8FTX2IN	SLING,NYLON.....	
51	PEOZZ	4730015238542	11083	7X0872	TEE,TUBE.....	
52	PEOZZ	5120012179642	11083	1P0540	TOOL GROUP,FLOW CHE.....	
53	PEOZZ		11083	5P0306	VACUUM TRANSDUCER.....	
54	PAOZZ	5120014628874	11083	1628718	WRENCH,TORQUE.....	

END OF FIGURE

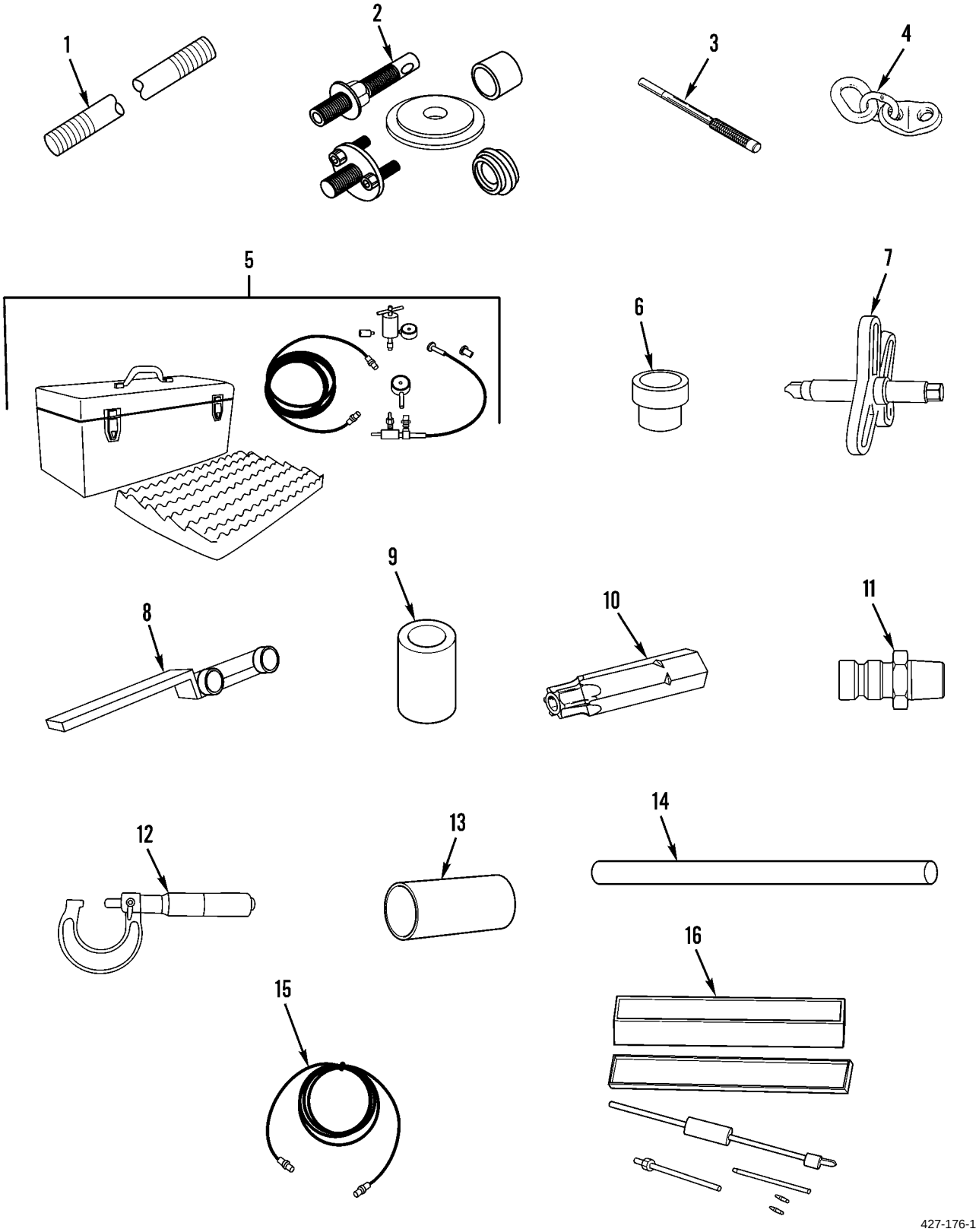

Figure 175. Direct Support Special Tools (Sheet 1 of 3)

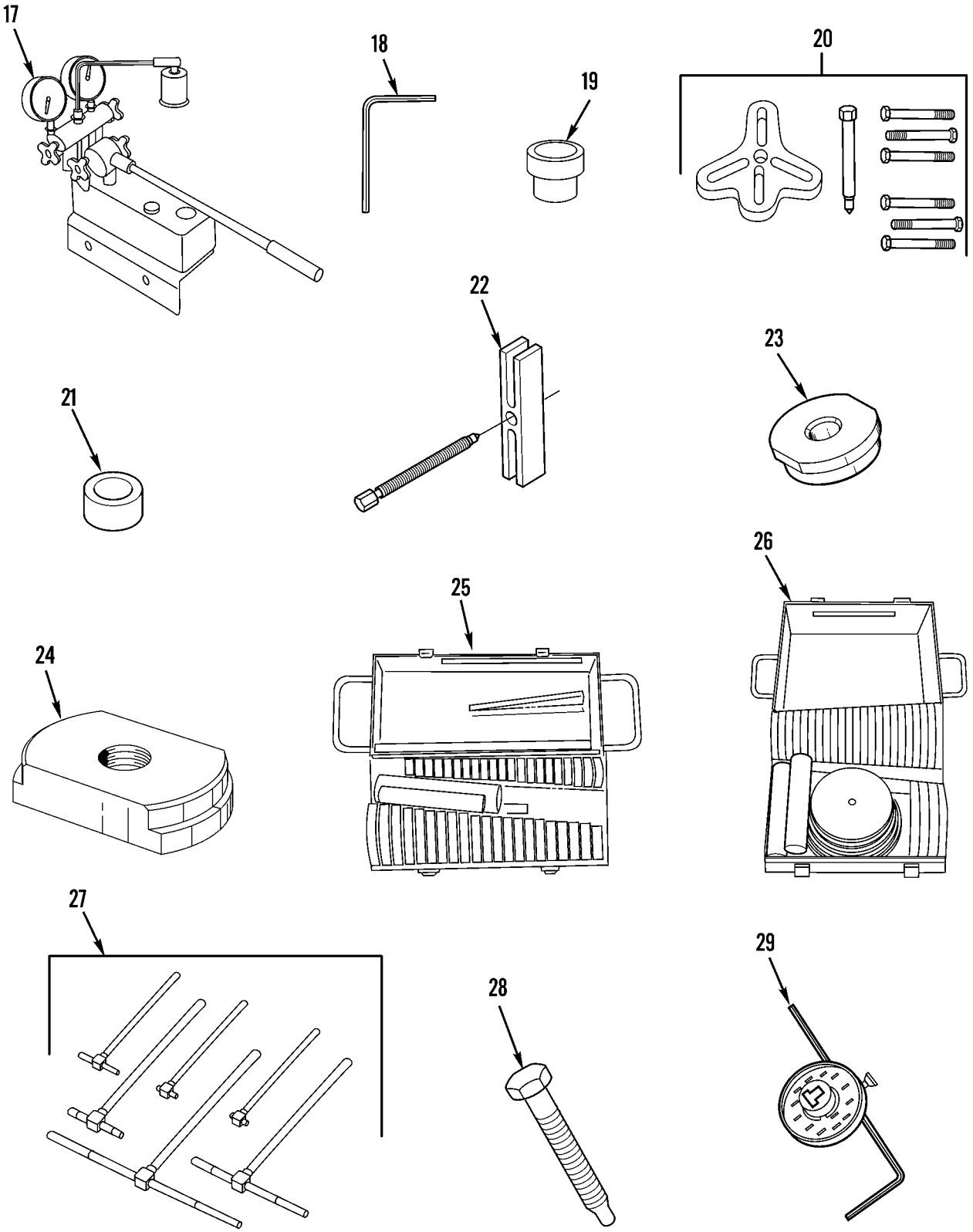

427-176-2

Figure 175. Direct Support Special Tools (Sheet 2 of 3)

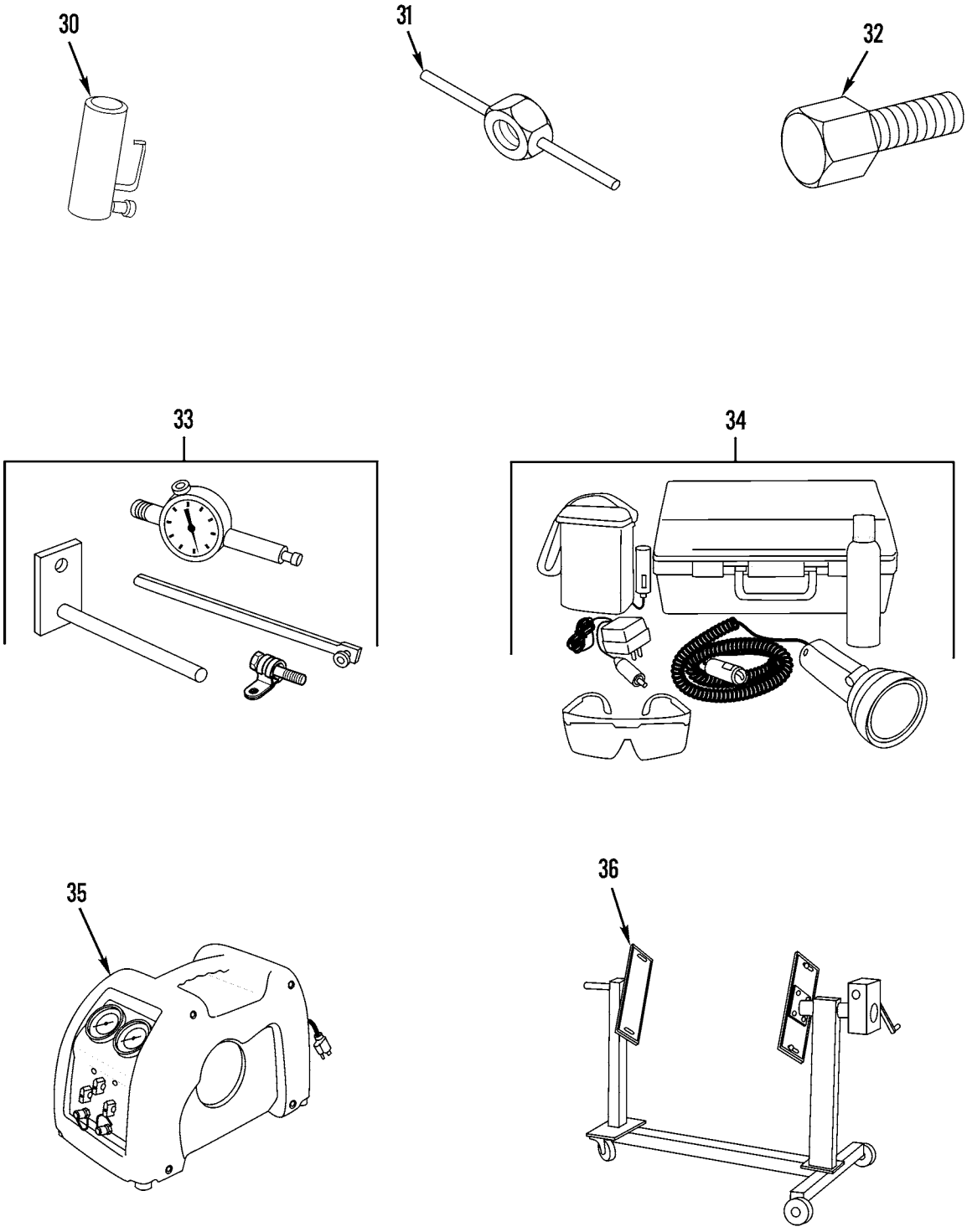

427-176-3

Figure 175. Direct Support Special Tools (Sheet 3 of 3)

(1) ITEM NO	(2) SMR CODE	(3) NSN	(4) CAGEC	(5) PART NUMBER	(6) DESCRIPTION AND USABLE ON CODES(UOC)	(7) QTY
					GROUP 2604 SPECIAL TOOLS	
					FIG. 175 DIRECT SUPPORT SPECIAL TOOLS	
1	XDFZZ		11083	4C9634	STUD,PLAIN.....	
2	PEFZZ	5120014370474	11083	9U6210	ADAPTER,MECHANICAL.....	
3	PEFZZ	4910015460552	11083	1503992	TIMING PIN,FUEL PUM.....	
4	PEFZZ	5340014761734	11083	1387574	BRACKET,LINK.....	
5	PEFZZ	4940010467109	19200	12252157	CHARGING KIT,PRESSU.....	
6	PEFZZ	8110013459803	11083	8S2270	CAN,SCREW CAP.....	
7	PEFZZ	5120011280725	11083	8S2264	PULLER GROUP.....	
8	PEFZZ	5120015466769	11083	7S7786	PULLER ATTACHMENT,M.....	
9	PEFZZ	5365014849383	11083	1M6756	SPACER,SLEEVE.....	
10	PEFZZ		11083	1739774	BIT,SCREWDRIVER.....	
11	PEFZZ	5120014489785	11083	5P7448	ADAPTER,INJECTOR NO.....	
12	PEFZZ	5210002211945	SA251	103217	CALIPER,MICROMETER,.....	
13	PEFZZ	4730014357174	11083	1U8857	COUPLING ASSEMBLY,H.....	
14	XDFZZ		11083	5P4184	ADAPTER,MECHANICAL.....	
15	PEFZZ	4720014857426	11083	1777860	HOSE.....	
16	PEFZZ	5180011241903	11083	1U7600	PULLER KIT,UNIVERSA.....	
17	PEFZZ	4320012639716	11083	5P4150	PUMPING UNIT,HYDRAU.....	
18	PEFZZ	4710012643509	11083	6V2170	TUBE ASSEMBLY,METAL.....	
19	PEFZZ	5120012868432	11083	1P1837	ADAPTER,MECHANICAL.....	
20	PEFZZ	5120015466420	11083	1U6671	PULLER,MECHANICAL.....	
21	PEFZZ	5365015456644	11083	5P7304	SPACER,STRAIGHT.....	
22	PEFZZ	5120015182383	11083	6V3010	PULLER,MECHANICAL.....	
23	PEFZZ	5120015456620	11083	9U5339	PULLER ATTACHMENT,M.....	
24	PEFZZ	5120014849382	11083	9U5336	ADAPTER,MECHANICAL.....	
25	PEFZZ	5120010301626	11083	1P0510	BUSHING DRIVER SET.....	
26	PEFZZ	5120010394811	11083	1P0520	BUSHING DRIVER SET.....	
27	PEFZZ	5210004739350	SA251	155-903	GAGE SET,TELESCOPIN.....	
28	PEFZZ	5120003025857	45225	24832	FORCING SCREW,MECHA.....	
29	PEFZZ	5210013882682	55719	TA360	GAGE,ANGLE.....	
30	XDFZZ		11083	6V3175	PULLER,HYDRAULIC.....	
31	PEFZZ	5310014806693	11083	9U6832	NUT,PLAIN,ROUND.....	
32	PEFZZ	2640015516511	11083	1U5551	VALVE EXTENSION,TIR.....	
33	PEFZZ	5210007949178	55509	J5959	DIAL INDICATOR SET.....	
34	PEFZZ		11083	1922331	LEAK DETECTION LAMP.....	
35	PEFZZ	4250013968928	55719	EEAC318A	RECLAIMER,REFRIGERA.....	
36	PEFZZ		11083	1U7502	STAND,MAINTENANCE,A.....	
					END OF FIGURE	

END OF WORK PACKAGE

CROSS-REFERENCE INDEXES

NATIONAL STOCK NUMBER INDEX

STOCK NUMBER	FIG.	ITEM	STOCK NUMBER	FIG.	ITEM
4820-00-005-7525	84	8	5310-00-432-4064	69	2
3010-00-009-2372	145	12	5310-00-432-8001	20	13
5315-00-010-8627	83	14		62	2
4730-00-050-4208	76	9		157	2
	95	7	5342-00-465-6799	145	49
	99	7	5210-00-473-9350	175	27
	171	12	5325-00-490-0573	171	16
	172	17	5342-00-498-2946	82	34
4730-00-057-5555	7	10		89	35
	8	9		140	10
5340-00-081-5647	164	34		149	38
2590-00-135-6277	53	1		152	20
5310-00-143-5722	46	14		154	53
	48	6		164	35
	127	2	5331-00-508-1373	124	16
5330-00-161-1870	172	4	7920-00-514-2417	174	43
5340-00-169-8336	149	41	5306-00-550-2101	173	20
	154	56	5310-00-550-3714	56	47
4730-00-172-0034	76	15		159	36
5360-00-175-2701	12	23		163	28
5310-00-186-9550	144	17	3110-00-554-9004	99	11
5210-00-221-1945	175	12	5331-00-557-8439	69	8
4730-00-227-7915	95	12	5310-00-559-0070	41	7
4730-00-231-5605	95	4		62	4
5325-00-249-6345	116	16	5331-00-561-8344	78	16
5310-00-253-7918	38	12	5310-00-576-5752	57	6
4730-00-263-3122	77	2		62	35
	78	11	5331-00-579-6495	81	17
5315-00-272-6760	25	20		81	30
4730-00-278-3383	8	10		81	37
	33	14		82	14
5331-00-291-9572	12	28		82	25
5120-00-302-5857	175	28		82	42
5310-00-362-8168	19	14		82	48
5130-00-363-6680	174	21		82	51
4320-00-374-1403	174	35		128	5
5342-00-410-1903	56	1		137	10
	158	10		137	16
5365-00-411-4584	146	99		138	4
5306-00-423-8068	161	7		138	7
5340-00-423-8320	34	6		138	10
	56	33		138	12
	159	22		138	19
5340-00-426-4644	24	27		138	23
5340-00-426-4646	95	20		138	58
5340-00-426-4793	149	43		140	4
	154	62		140	15
5331-00-429-3542	146	44		140	37
5331-00-431-7139	69	21		140	43
5310-00-432-4064	65	9		141	49

CROSS-REFERENCE INDEXES

NATIONAL STOCK NUMBER INDEX

STOCK NUMBER	FIG.	ITEM	STOCK NUMBER	FIG.	ITEM
5331-00-579-6495	141	55	5310-00-690-9146	83	7
	145	19	5331-00-713-8605	78	3
	145	23	5930-00-715-1939	56	49
	145	26		159	38
	145	36	5315-00-716-1056	56	11
	145	44		158	12
	146	15	4820-00-720-2096	15	1
	146	68	2610-00-726-5165	85	1
	146	82	4730-00-727-8915	163	26
	146	86	4910-00-728-8227	174	39
	146	89	5365-00-763-0120	146	40
	148	10	2920-00-775-7691	56	44
	148	16		159	33
	148	20	5210-00-794-9178	175	33
5331-00-580-1226	74	2	5315-00-816-1794	79	20
5331-00-580-6583	72	5	5310-00-833-9298	56	46
	87	5		159	35
	89	4	5315-00-839-5820	114	3
	89	9	5315-00-839-5822	81	6
	89	17	5310-00-841-2576	41	11
	89	46		42	17
	89	52		43	55
	89	55		46	12
	138	42		46	24
	138	46		52	2
	138	50		57	27
	138	67		101	19
	140	19		104	5
	140	61		105	15
	141	67		108	23
	141	76		109	5
	141	83		117	3
	144	4		118	4
	144	8		120	2
	144	12		143	5
	145	4		153	3
	145	31		155	29
	145	40		163	31
	146	50		166	13
	146	53	5310-00-851-2682	57	4
	148	3	5325-00-852-1435	172	33
	148	8	5310-00-853-9335	43	58
	149	27	5331-00-855-8059	89	31
	149	35		89	39
	154	30		141	38
	154	38		141	70
	154	41		144	15
	154	50		144	20
5315-00-616-5530	8	2		147	8
4730-00-647-3207	10	7		147	15

CROSS-REFERENCE INDEXES

NATIONAL STOCK NUMBER INDEX

STOCK NUMBER	FIG.	ITEM	STOCK NUMBER	FIG.	ITEM
5331-00-855-8059	147	24	5331-00-944-8281	89	3
	147	32		89	64
	147	46		124	7
	147	49		140	50
	149	46		144	3
	154	66		146	28
2640-00-859-0382	84	13		148	5
5360-00-861-9114	79	17		149	2
5360-00-864-0046	79	18		149	6
5310-00-877-5795	37	2		154	11
5330-00-898-6665	78	27		154	20
5331-00-913-6144	141	4	5331-00-948-6482	15	6
	146	94		51	5
5310-00-913-7020	46	10		78	10
	46	22		89	7
5331-00-914-5820	146	8		89	16
5331-00-914-5846	146	10		89	20
5330-00-923-6956	99	22		89	22
4730-00-924-7886	78	22		89	48
5325-00-928-3375	164	14		89	42
5330-00-930-9407	68	16		89	50
	75	4		89	57
	75	6		138	2
	75	14		138	45
	77	7		138	55
	78	5		138	60
	137	20		141	74
	140	41		141	82
	141	62		145	3
	146	58		146	39
	146	76		146	48
	149	18	5331-00-948-9774	68	12
	154	17		152	17
5330-00-933-3305	141	14	5331-00-968-5388	79	13
5330-00-939-0687	12	21	2530-00-972-8243	84	5
	25	5	5331-01-006-2129	70	12
	72	2	5331-01-017-6535	73	1
	87	7		140	69
	140	31	5310-01-021-4224	173	3
	141	65	4940-01-028-7493	174	37
	144	6	5120-01-030-1626	175	25
	145	11	5331-01-030-1825	146	3
	145	14	5365-01-031-8183	78	9
	145	29	5120-01-039-4811	175	26
	145	42	5330-01-043-5471	172	28
	146	17	5330-01-043-5565	146	36
	146	21	5310-01-044-2069	173	4
	149	25	5306-01-044-5141	173	6
	154	28	5310-01-045-5588	157	3
5331-00-944-8281	73	7	4940-01-046-7109	175	5

CROSS-REFERENCE INDEXES

NATIONAL STOCK NUMBER INDEX

STOCK NUMBER	FIG.	ITEM	STOCK NUMBER	FIG.	ITEM
5331-01-049-1292	10	2	5331-01-058-4030	124	9
	73	13		137	3
	81	24		137	22
	82	12		137	32
	82	23		137	37
	82	40		140	52
	89	32		140	54
	89	37		142	14
	139	7		146	22
	141	40		146	25
	144	22		146	30
	146	91		149	4
	146	96		149	8
5340-01-051-2357	82	15		149	16
4730-01-051-3134	73	2		154	3
5365-01-053-0180	25	6		154	13
	140	30		154	15
4730-01-053-2692	146	7		154	22
2815-01-053-4712	34	9		154	45
	42	22	2920-01-058-9099	51	13
	43	21		60	4
	46	7		62	9
	51	19		65	3
	54	4		82	35
	57	23		115	1
	59	1		116	15
	61	1		155	8
	62	8		163	42
	63	3		164	20
	64	2		166	18
	82	10	5305-01-058-9146	41	6
	89	12	5305-01-059-0875	80	6
	95	6	5340-01-059-9345	56	16
	138	73		147	42
	140	21		159	2
	141	1	5340-01-060-0309	146	9
	142	8	5340-01-060-8686	147	38
	51	45	5340-01-061-4018	149	12
	147	30		154	8
	149	32	4730-01-061-8216	33	13
	154	35	5325-01-062-7138	34	5
	157	5	4720-01-062-7159	BULK	5
	164	12	5310-01-062-9903	57	2
5306-01-053-7491	5	6	5342-01-063-0674	18	1
5340-01-053-8024	146	64		24	36
5330-01-053-8220	172	15	5310-01-063-0687	80	5
5331-01-058-4030	72	4	5315-01-063-0738	56	2
	73	9		158	9
	89	60	5310-01-063-2968	48	7
	89	66	5342-01-063-2993	164	3

CROSS-REFERENCE INDEXES

NATIONAL STOCK NUMBER INDEX

STOCK NUMBER	FIG.	ITEM	STOCK NUMBER	FIG.	ITEM
5310-01-063-5822	56	45	5310-01-098-0624	99	2
	159	34		145	50
5310-01-063-7852	56	48		146	4
	159	37		147	19
5342-01-064-2060	57	8		148	24
5342-01-064-3819	164	30		149	13
5342-01-064-7512	119	4		152	28
4330-01-066-7713	71	4		154	7
3110-01-066-9172	83	2		161	4
4730-01-068-6077	48	20		164	43
5331-01-068-6104	69	14	5310-01-098-0634	51	35
2940-01-068-7108	20	1		108	21
5307-01-069-1419	12	30	5330-01-098-3169	172	12
5365-01-069-1502	99	24	5340-01-098-6683	62	25
2835-01-078-2081	174	50	5365-01-100-8868	68	17
4720-01-093-7331	BULK	14		77	8
6220-01-093-7946	41	5		78	12
9390-01-094-7076	81	9	5340-01-102-1789	20	19
5310-01-095-5910	28	2		27	2
	43	24	5342-01-103-3664	147	52
	48	15	4720-01-103-3700	BULK	35
	51	39	5330-01-107-4646	146	12
	56	20	4730-01-122-3338	15	4
	57	16		21	10
	72	7		119	2
	82	6		146	13
	86	14	5180-01-124-1903	175	16
	100	2	5330-01-124-4370	89	24
	103	17		145	9
	113	13		145	15
	159	28	5120-01-128-0725	175	7
	171	5	4720-01-132-1458	BULK	15
5330-01-095-6804	BULK	22	4730-01-143-9017	163	27
5310-01-097-6720	38	2	4730-01-144-2386	10	3
	101	14	4720-01-150-0880	BULK	8
	125	2	4720-01-150-0883	BULK	18
5310-01-097-8955	124	11	4730-01-159-7840	71	5
5935-01-097-9974	56	29	5340-01-160-2464	130	3
	159	13	5325-01-160-4619	94	6
5310-01-098-0624	37	3	5340-01-161-2682	79	3
	38	5	3110-01-161-4027	78	23
	62	23	5340-01-161-5766	137	25
	68	9	5325-01-163-5972	137	24
	73	19	5340-01-163-6165	137	26
	78	19	5340-01-163-6175	70	3
	79	9		140	73
	79	25		141	15
	88	4		142	2
	92	2		146	62
	94	32	5340-01-163-9459	70	4

CROSS-REFERENCE INDEXES

NATIONAL STOCK NUMBER INDEX

STOCK NUMBER	FIG.	ITEM	STOCK NUMBER	FIG.	ITEM
5340-01-163-9459	140	71	5306-01-181-7849	153	4
	141	9		155	26
	142	7		158	4
	146	59		163	45
2520-01-164-0077	71	6		166	12
5340-01-164-1271	128	10	5925-01-184-0633	62	3
4730-01-164-1777	69	17	5340-01-184-3669	148	22
	73	23	4730-01-184-4274	20	2
	75	30		148	27
	81	28	5305-01-184-5919	62	5
	89	28	5342-01-185-2404	56	24
	138	39		159	16
	146	71	5360-01-185-4051	79	15
	174	31	5325-01-185-4762	148	23
5325-01-164-7555	140	72	4720-01-192-1368	BULK	13
	141	16	4820-01-202-9608	10	1
	142	4	5330-01-209-8794	BULK	21
	146	60	5305-01-211-1465	46	15
5355-01-165-3414	101	20	5310-01-212-4579	57	7
5340-01-165-3715	69	11		62	36
	73	21	4820-01-213-8015	73	14
	75	24	5330-01-217-3936	BULK	31
	81	27	5120-01-217-9642	174	52
	89	26	4730-01-222-7576	141	41
	138	40	9905-01-222-9884	41	26
	141	42	4730-01-229-9689	24	24
	146	69		34	2
5340-01-166-6926	143	6	4730-01-230-6610	138	53
3120-01-166-7992	172	25	3830-01-230-9035	173	9
5325-01-168-0914	82	20	5330-01-233-3555	84	16
5310-01-170-1359	94	33	5330-01-236-2375	99	8
	152	26	5310-01-236-9974	163	23
5310-01-170-1508	41	9	5310-01-257-2204	56	30
3040-01-175-6498	148	14		159	11
5365-01-175-9326	24	35	5310-01-257-3245	164	24
	56	26	6625-01-260-2387	174	48
	82	33	4320-01-263-9716	175	17
	159	18	4710-01-264-3509	175	18
2520-01-176-9574	146	1	4940-01-268-2200	174	20
9905-01-177-3025	141	50	4940-01-268-2201	174	11
5310-01-178-7414	56	25	4730-01-269-9540	81	36
	159	17		137	15
5331-01-181-4951	14	13		138	24
	15	8		140	36
5306-01-181-7849	44	7		141	54
	52	1		145	45
	56	6	5330-01-277-6101	BULK	32
	114	13	4820-01-284-5435	12	22
	117	4	5325-01-285-7132	164	11
	143	7	5325-01-286-1801	43	60

CROSS-REFERENCE INDEXES

NATIONAL STOCK NUMBER INDEX

STOCK NUMBER	FIG.	ITEM	STOCK NUMBER	FIG.	ITEM
5340-01-286-6208	57	10	5331-01-333-6444	138	25
5120-01-286-8432	175	19		138	38
4720-01-287-6809	BULK	17		138	52
5120-01-288-2793	174	16		138	69
4730-01-291-8498	73	8		140	3
	89	65		140	13
	124	8		140	17
4730-01-291-8500	89	8		140	35
	141	75		141	45
4730-01-291-8501	140	51		141	47
	149	3		141	53
	154	21		51	46
5330-01-292-4293	BULK	26		145	34
5330-01-292-4301	BULK	25		145	46
5310-01-292-8365	137	34		146	66
	142	15		146	72
	154	67		146	100
5310-01-293-2892	144	10		147	25
9905-01-298-1223	141	58		147	34
9905-01-298-1664	137	17		148	18
5340-01-298-3216	95	3		149	48
	149	20		154	65
	154	23	5340-01-342-2648	103	27
	155	40	6625-01-343-3370	174	17
9905-01-306-6690	140	6	4820-01-343-6277	15	5
9905-01-306-6691	137	11		138	56
9905-01-306-6692	140	1	5340-01-343-6678	12	20
5306-01-311-4592	74	4	2910-01-343-8535	174	19
5340-01-314-9050	164	29	5325-01-345-4589	22	4
5331-01-333-6444	49	2	8110-01-345-9803	175	6
	51	17	4730-01-349-7772	89	51
	69	15		141	81
	73	15		145	5
	73	24	4730-01-349-7776	89	56
	73	27		146	49
	75	26	5310-01-352-2753	22	6
	75	29		24	26
	81	19		25	7
	81	22		31	9
	81	26		34	7
	81	32		37	6
	81	35		39	3
	82	46		43	45
	82	52		46	5
	89	29		47	3
	128	6		48	18
	137	8		51	30
	137	14		56	17
	138	14		57	11
	138	21		61	3

CROSS-REFERENCE INDEXES

NATIONAL STOCK NUMBER INDEX

STOCK NUMBER	FIG.	ITEM	STOCK NUMBER	FIG.	ITEM
5310-01-352-2753	62	11	5310-01-352-7726	22	1
	63	9		25	11
	64	6		25	19
	68	2		31	3
	70	5		32	10
	73	3		37	7
	75	9		43	48
	79	4		56	23
	81	3		57	12
	82	8		61	4
	83	4		62	31
	89	49		81	7
	93	3		83	54
	94	15		94	35
	94	26		103	26
	95	14		108	32
	97	6		147	36
	99	20		149	37
	101	22		154	57
	103	3		159	15
	106	3		162	5
	115	3	5310-01-353-3404	41	12
	119	6		83	11
	131	9		103	10
	137	5		104	10
	138	62		105	12
	139	2		108	26
	140	59		143	4
	141	6		155	30
	142	5	4730-01-357-9580	174	15
	145	53	5310-01-359-8806	20	11
	146	41		32	5
	147	5		32	13
	149	23		37	13
	152	19		38	9
	154	25		42	21
	155	31		43	19
	157	10		51	21
	159	3		54	3
	160	3		62	14
	162	2		63	6
	164	4		80	4
	166	24		83	13
	173	16		87	2
5310-01-352-7374	101	13		103	4
	131	3		108	10
	132	2		113	20
	147	21		115	13
	152	25		124	2
5310-01-352-7562	57	5		131	7

CROSS-REFERENCE INDEXES

NATIONAL STOCK NUMBER INDEX

STOCK NUMBER	FIG.	ITEM
5310-01-359-8806	148	13
	152	13
	155	13
	166	4
	166	8
5306-01-359-9326	103	21
5310-01-359-9329	128	9
5306-01-360-0927	32	3
	37	12
	48	29
	51	20
	57	17
	62	19
	80	7
	83	12
	86	13
	103	14
	108	9
	113	18
	115	14
	155	24
	166	5
5306-01-360-0928	24	33
	25	8
	37	11
	43	53
	48	17
	51	29
	62	28
	63	10
	64	7
	73	10
	79	5
	81	44
	89	47
	93	6
	94	3
	94	27
	95	13
	97	5
	101	12
	103	29
	106	4
	114	7
	115	2
	119	5
	131	10
	138	79
	139	3
	142	9
5306-01-360-0928	143	1
	145	54
	147	4
	149	29
	152	18
	154	32
	155	32
	157	9
	160	4
	164	5
5306-01-360-0930	20	17
	44	8
5306-01-360-0931	65	8
	71	1
5306-01-360-0932	62	32
	68	3
	94	18
	107	7
	141	20
	152	22
	154	46
	155	19
	156	9
	162	11
	164	33
5310-01-360-0983	65	6
	67	4
	128	8
5305-01-360-1004	41	24
	113	5
5305-01-360-1005	69	12
5305-01-360-1006	69	3
5305-01-360-1007	69	1
5305-01-360-1011	56	39
	72	8
	159	27
5340-01-360-1316	34	11
	75	19
5306-01-360-1634	24	25
	34	10
	38	7
	46	4
	51	25
	56	9
	57	9
	70	6
	75	8
	82	16
	87	9
	93	8

CROSS-REFERENCE INDEXES

NATIONAL STOCK NUMBER INDEX

STOCK NUMBER	FIG.	ITEM	STOCK NUMBER	FIG.	ITEM
5306-01-360-1634	101	23	5306-01-364-6384	68	10
	107	6		73	18
	110	5		147	18
	137	6		148	25
	138	63	4730-01-364-6397	82	47
	139	4		138	13
	140	25	5325-01-364-6422	90	6
	141	24	5340-01-364-6549	82	18
	149	39	5310-01-364-7468	1	9
	152	1		76	1
	154	60		94	13
	156	7	4730-01-375-5883	174	44
	158	7	4730-01-375-5884	174	14
	159	4	4330-01-384-6317	12	29
	162	3	5210-01-388-2682	175	29
5305-01-360-1703	32	6	4250-01-396-8928	175	35
	32	14	5310-01-397-5100	20	10
	54	2		28	6
	62	13		72	9
	80	3		79	22
	166	17		82	62
5305-01-360-1707	72	5		87	12
5306-01-360-1940	69	10		103	32
5305-01-360-1990	65	7		104	18
5305-01-360-1992	69	4		105	4
5305-01-360-1996	18	9		108	29
	25	14		131	8
	31	8		155	12
	37	8	5305-01-398-1282	28	1
	70	11		42	27
	73	4		43	25
	75	20		82	21
	81	33		87	3
	82	57		100	3
	96	2		108	15
	103	28		113	19
	140	60		152	12
	142	6		163	8
	146	92		171	4
4730-01-360-4146	81	31	5305-01-398-1284	30	3
	128	4		31	6
	138	20		32	8
	145	35		43	44
	148	19		56	50
4730-01-360-4197	81	18		62	26
4730-01-360-9109	141	39		82	58
	144	21		93	4
4730-01-360-9206	89	38		94	30
5210-01-362-8593	174	32		101	7
5340-01-364-0372	81	40		107	13

CROSS-REFERENCE INDEXES

NATIONAL STOCK NUMBER INDEX

STOCK NUMBER	FIG.	ITEM	STOCK NUMBER	FIG.	ITEM
5305-01-398-1284	108	3	5306-01-413-7709	149	14
	137	28		154	6
	140	63	5310-01-413-8757	29	6
	141	7		62	34
	145	56	5310-01-413-8761	47	2
	147	39		81	5
	149	22		94	19
	154	26		159	9
	156	8	5310-01-413-8764	1	10
	159	6	5310-01-413-8767	102	6
	164	31	5310-01-413-8769	77	10
	166	23		78	14
	173	15		84	6
5305-01-398-1285	86	10		102	2
	148	12	5306-01-413-8770	38	15
5305-01-398-1286	24	31		146	6
	39	4	5306-01-413-8771	62	22
	56	31		90	1
	83	3		99	16
	159	21		125	3
5305-01-398-1287	20	18		161	5
	48	16		172	1
	62	21	2540-01-413-8918	116	1
5306-01-407-9016	62	29	5310-01-413-9703	48	13
	63	7	5310-01-414-3289	56	21
5306-01-408-0450	62	12	5306-01-414-3290	145	38
	86	17	4730-01-414-3294	145	22
5330-01-408-1238	172	45		174	26
3120-01-408-1239	172	11	5306-01-414-9639	22	7
4730-01-411-7545	138	9		89	10
	145	25		140	70
	146	85	5310-01-415-1606	44	6
5306-01-413-5287	59	6		46	2
	108	24		56	5
	109	6		103	11
	120	1		114	12
5310-01-413-5297	20	16		126	3
	41	10		158	3
	46	20		159	12
5310-01-413-5910	86	23	5325-01-415-1608	62	30
5305-01-413-5912	46	25	5305-01-419-5181	34	8
4730-01-413-5916	147	33		99	19
4730-01-413-5918	144	7		138	82
	145	41	6350-01-423-9687	41	13
4730-01-413-5919	147	45	5331-01-424-3524	71	3
5306-01-413-7702	101	18	5310-01-425-5408	24	6
5306-01-413-7703	77	11	5310-01-425-6246	22	5
	78	15		96	1
5306-01-413-7706	108	20	5365-01-425-8538	14	17
5306-01-413-7709	146	34	5310-01-425-9917	26	8

CROSS-REFERENCE INDEXES

NATIONAL STOCK NUMBER INDEX

STOCK NUMBER	FIG.	ITEM	STOCK NUMBER	FIG.	ITEM
5340-01-428-7027	5	2	5310-01-429-7105	163	36
5306-01-428-7030	36	5	5310-01-429-7858	86	7
5306-01-428-7032	36	4	5340-01-429-7873	113	7
5306-01-428-7034	58	9	5315-01-429-8652	80	8
5306-01-428-7041	45	11	5330-01-429-9771	116	20
	51	9	5310-01-429-9774	6	13
	58	2	2510-01-430-2483	BULK	19
5330-01-429-0769	BULK	3	5365-01-430-3383	162	7
9905-01-429-0776	123	20	2910-01-430-3418	27	1
	159	39	5306-01-430-9030	103	20
5310-01-429-0787	172	20	5310-01-430-9036	18	8
5340-01-429-0832	48	10		24	32
4730-01-429-0853	155	3		25	13
5340-01-429-0918	164	25		30	4
5340-01-429-2233	173	5		31	4
6240-01-429-2747	47	7		37	10
	48	25		38	8
5306-01-429-2861	147	29		43	52
5310-01-429-2862	1	3		51	24
	68	5		56	8
5340-01-429-3148	70	8		82	17
	146	35		87	10
5306-01-429-3162	76	2		93	7
5365-01-429-3163	174	36		101	6
5310-01-429-3166	86	6		107	5
5306-01-429-3167	42	18		108	2
	46	1		110	6
	57	26		114	8
	103	12		137	27
	163	33		138	75
5306-01-429-3171	94	12		139	5
	172	19		140	26
5306-01-429-3174	94	31		141	23
	99	1		143	2
	146	5		145	37
5310-01-429-3253	22	2		147	7
	32	9		149	40
	94	2		152	2
	107	16		154	55
	156	16		155	20
	162	13		156	6
5340-01-429-4011	145	55		158	6
5305-01-429-4024	47	9		159	5
5905-01-429-4032	163	37		162	15
5310-01-429-4717	41	23	5305-01-431-0871	103	2
5306-01-429-4756	38	3		112	21
5340-01-429-6197	147	53		131	11
5340-01-429-6198	147	54	5305-01-431-0874	29	1
5306-01-429-7098	67	6		41	2
	74	3		43	34

CROSS-REFERENCE INDEXES

NATIONAL STOCK NUMBER INDEX

STOCK NUMBER	FIG.	ITEM	STOCK NUMBER	FIG.	ITEM
5305-01-431-0874	86	9	5305-01-438-1893	134	4
	113	6	5310-01-438-1899	57	3
	116	12	5325-01-438-1900	82	60
5310-01-433-5837	163	7	4730-01-438-1943	138	59
4730-01-435-7174	175	13	5365-01-438-1967	102	4
5310-01-437-6101	46	19	5340-01-438-2007	30	2
5999-01-437-8468	84	11	5340-01-438-2813	104	19
5930-01-437-8575	163	30		105	3
6220-01-437-8990	48	27	5340-01-438-4221	148	15
6220-01-437-8992	48	11	5935-01-438-4252	137	9
5935-01-437-9075	138	3		140	5
5935-01-437-9076	75	13		141	48
	140	40	5305-01-438-4618	127	1
	141	61	5340-01-438-4644	34	3
	146	75		75	1
4730-01-438-0751	82	53	5306-01-438-4985	43	54
5310-01-438-0755	147	17	5340-01-438-5523	65	10
4730-01-438-0756	147	26	5306-01-438-5554	29	8
	149	47	5306-01-438-5559	78	25
	154	64	2910-01-438-7423	73	12
4730-01-438-0758	140	44	5340-01-438-8218	104	20
4730-01-438-0760	145	16		105	2
4730-01-438-0761	82	13	5360-01-438-9030	104	24
4730-01-438-0762	146	29		105	34
	149	7	5330-01-438-9044	104	25
	154	12		105	31
4730-01-438-0764	138	6	5310-01-438-9051	102	3
	146	81	4810-01-438-9599	84	9
4730-01-438-0767	82	41	4730-01-438-9714	77	3
5355-01-438-0856	86	3		78	31
4730-01-438-1339	164	26	5310-01-438-9728	101	17
4820-01-438-1385	77	4	5305-01-438-9730	104	29
	78	8		105	26
5330-01-438-1387	75	12	5305-01-438-9790	41	3
	75	17		42	4
	140	27		43	64
	140	39	5340-01-438-9799	102	5
	141	12	5310-01-438-9803	78	24
	141	17	5305-01-438-9805	131	12
	141	35	5305-01-438-9806	86	8
	141	60		104	2
	142	12		105	20
	143	11		109	9
	146	74		118	3
	146	79	5305-01-438-9807	113	22
5306-01-438-1750	79	11	5305-01-438-9808	43	56
5306-01-438-1755	78	35		163	11
5330-01-438-1759	146	45	5310-01-438-9809	113	21
	146	56	5306-01-438-9854	51	33
5305-01-438-1893	82	2		64	11

CROSS-REFERENCE INDEXES

NATIONAL STOCK NUMBER INDEX

STOCK NUMBER	FIG.	ITEM	STOCK NUMBER	FIG.	ITEM
5306-01-438-9854	126	2	5331-01-452-3208	141	71
5305-01-439-0977	163	44	4820-01-453-7824	11	21
6240-01-439-0994	48	12	2540-01-455-4896	116	4
5306-01-439-1003	38	6	4730-01-456-7784	172	38
5331-01-439-2610	162	9	2930-01-457-7377	146	54
	164	21	5340-01-460-0266	44	1
5330-01-439-2612	164	9	5315-01-462-8877	173	7
5331-01-439-2613	164	6	5945-01-468-1267	42	16
5330-01-439-2614	164	38		46	3
5331-01-439-2615	164	2		59	5
5310-01-439-2619	59	7		118	5
5305-01-439-8514	104	21		166	11
	105	30	5905-01-469-7259	51	12
5340-01-439-8521	104	28	4730-01-469-7599	145	10
	105	27	5331-01-470-3092	138	36
5340-01-439-8525	146	32	5999-01-470-8845	42	25
5305-01-439-8526	31	7		43	23
	138	74		46	6
5305-01-439-8527	52	4		51	27
	104	31		59	8
	105	29		62	7
	114	16		63	11
	153	2		64	3
5935-01-439-8530	116	13		65	2
4730-01-439-8532	144	2		157	11
2910-01-439-8533	115	9		164	19
5305-01-439-8534	56	27		166	14
	82	28	5306-01-470-9585	163	52
	159	19	5307-01-471-0426	56	37
	164	23		159	25
5305-01-439-8535	157	1	4730-01-471-3579	149	26
	163	24		154	29
5305-01-439-8537	38	11	4730-01-471-3599	154	42
	51	41	4730-01-471-3623	3	4
	124	1	5331-01-471-3780	13	6
5305-01-439-8544	46	8	4730-01-471-3789	137	21
5325-01-439-9355	115	8	5306-01-471-3871	24	11
5340-01-440-0525	51	32	4730-01-471-3916	149	34
	64	10		154	49
5340-01-440-0544	64	8	4730-01-471-3928	146	78
5930-01-444-0451	46	29	3040-01-471-3931	11	6
2990-01-445-2352	157	8	5305-01-471-3980	99	5
2590-01-445-8431	43	9	5310-01-471-3997	8	18
	163	1		11	16
5306-01-448-1550	79	10		12	11
5120-01-451-1401	174	10		14	6
4720-01-451-4501	BULK	16		19	12
5331-01-452-3208	50	2		45	8
	82	5	5365-01-471-3999	18	6
	134	2		24	5

CROSS-REFERENCE INDEXES

NATIONAL STOCK NUMBER INDEX

STOCK NUMBER	FIG.	ITEM	STOCK NUMBER	FIG.	ITEM
7690-01-471-4008	123	1	5340-01-471-4841	2	10
5305-01-471-4118	4	8	5305-01-471-4848	1	2
5305-01-471-4121	5	3	4320-01-471-4897	33	16
5305-01-471-4122	2	3	5306-01-471-4905	36	6
5305-01-471-4127	24	14	4730-01-471-4915	87	6
4730-01-471-4128	148	4		141	66
5930-01-471-4137	43	57		145	30
4820-01-471-4158	11	22	4730-01-471-5004	154	43
4730-01-471-4163	138	49	2815-01-471-5024	8	19
4730-01-471-4224	154	39	4720-01-471-5025	BULK	12
4730-01-471-4238	147	50	2815-01-471-5026	8	18
4730-01-471-4239	138	43	4730-01-471-5070	6	19
	146	52	4730-01-471-5110	6	18
2815-01-471-4372	6	21	5315-01-471-5141	8	4
4730-01-471-4393	174	27	5330-01-471-5143	124	3
2815-01-471-4400	6	9	5310-01-471-5163	21	4
5310-01-471-4476	1	15	5340-01-471-5164	24	15
	68	15	5306-01-471-5165	19	10
	103	22		24	2
5305-01-471-4487	2	4	5306-01-471-5199	8	7
5305-01-471-4489	2	2		11	10
5305-01-471-4491	75	31		13	9
5305-01-471-4493	152	29		33	8
4720-01-471-4539	33	12	5340-01-471-5202	33	10
5306-01-471-4547	14	19	5310-01-471-5203	21	20
5342-01-471-4629	24	13	5305-01-471-5209	128	13
5310-01-471-4665	6	6	5310-01-471-5216	8	26
2590-01-471-4674	13	5	5306-01-471-5217	7	1
5306-01-471-4703	8	13		8	25
	11	11		19	11
	12	12		21	1
	14	3	5331-01-471-5221	13	7
	16	8	5306-01-471-5222	8	20
	33	7		14	14
5330-01-471-4711	33	9	5340-01-471-5234	2	5
	155	5		24	3
5331-01-471-4712	33	6	5306-01-471-5239	3	5
5306-01-471-4726	11	3	5310-01-471-5241	24	9
5306-01-471-4728	11	16	5340-01-471-5243	9	3
	12	5		42	24
	14	4		43	18
	21	15		51	22
	33	11		52	3
5305-01-471-4735	8	27		57	22
5340-01-471-4758	11	8		59	3
4730-01-471-4792	24	10		62	15
	24	38		63	4
5307-01-471-4793	19	13		64	9
5325-01-471-4795	6	5		147	28
5340-01-471-4835	86	12		153	1

CROSS-REFERENCE INDEXES

NATIONAL STOCK NUMBER INDEX

STOCK NUMBER	FIG.	ITEM	STOCK NUMBER	FIG.	ITEM
5305-01-471-5272	5	11	5306-01-473-4526	145	51
5305-01-471-5274	68	4		164	42
5305-01-471-5279	5	12		171	10
	8	11	4730-01-473-4786	137	33
5325-01-471-5280	11	9		146	24
5315-01-471-5303	2	8	2540-01-473-4828	121	5
5340-01-471-5310	8	21	4140-01-473-4985	163	38
	36	3	2540-01-473-5042	163	16
5306-01-471-5418	5	14	4820-01-473-5061	139	10
5325-01-471-5434	33	4	5325-01-473-5253	63	13
5365-01-471-5460	14	12	5310-01-473-5274	163	25
5330-01-471-5561	33	3	5365-01-473-5331	123	29
5331-01-471-5581	13	2	5325-01-473-5338	163	40
5305-01-471-5602	6	17	4730-01-473-5433	145	18
4730-01-471-5711	89	61	5310-01-473-5503	41	22
5305-01-471-5761	6	20		163	32
5306-01-471-5762	14	18	5340-01-473-5536	89	13
5305-01-471-5830	8	5	5305-01-473-5601	163	39
5340-01-471-5840	9	6	5340-01-473-5680	163	50
5360-01-471-6174	6	12	5325-01-473-5755	163	43
5360-01-471-6176	6	15	5355-01-473-5758	40	3
5340-01-471-6178	6	4		43	8
5305-01-471-6189	8	17	5340-01-473-5787	163	21
5315-01-471-6190	5	15	5331-01-473-6093	138	33
4730-01-473-2076	144	13	5310-01-473-6099	116	8
4730-01-473-2114	75	15	5305-01-473-6110	42	9
	140	24	5340-01-473-6130	163	22
	141	27	5340-01-473-6179	81	4
	143	10	4730-01-473-6287	23	1
4730-01-473-2894	138	68	4730-01-473-6294	23	5
	140	18	4720-01-473-6295	BULK	11
4720-01-473-2899	140	22	5325-01-473-6372	26	9
5330-01-473-3308	162	10	4730-01-473-6383	51	31
4730-01-473-4034	119	3	5310-01-473-6481	38	13
5330-01-473-4105	26	12	4130-01-473-6494	163	41
4730-01-473-4148	146	57	4730-01-473-6582	69	16
5970-01-473-4163	42	23		75	27
	59	4	6150-01-473-6733	163	54
	164	18	2910-01-473-7044	26	11
5330-01-473-4428	163	13	2540-01-473-7050	101	15
5310-01-473-4445	32	2	5330-01-473-8725	26	6
5306-01-473-4472	102	1	7690-01-474-1520	41	14
5306-01-473-4504	172	41	5325-01-474-1559	154	59
5306-01-473-4513	88	3	5330-01-474-1586	86	15
5306-01-473-4524	28	8	5340-01-474-1594	86	18
	42	20	5340-01-474-1605	43	35
	43	20	5306-01-474-1626	89	33
5306-01-473-4526	79	23	5340-01-474-1673	86	24
	92	1	5340-01-474-1688	86	16
	125	1	3040-01-474-1720	108	6

CROSS-REFERENCE INDEXES

NATIONAL STOCK NUMBER INDEX

STOCK NUMBER	FIG.	ITEM	STOCK NUMBER	FIG.	ITEM
5310-01-474-1733	108	11	5365-01-505-5646	41	21
2540-01-474-1756	109	3	5310-01-505-5677	18	7
2920-01-474-1759	41	16	5310-01-505-5681	8	3
5306-01-474-1764	98	6	5305-01-505-5701	121	1
5306-01-474-1795	56	19	2510-01-505-6037	121	3
5306-01-474-1843	103	5	2590-01-505-6786	51	38
5310-01-474-1856	124	12	5340-01-505-6787	51	26
5306-01-474-1864	124	15	5325-01-505-6788	148	21
4730-01-474-1965	147	16	5310-01-505-6789	43	27
5340-01-474-2006	37	4	5330-01-505-6792	8	8
5340-01-474-2100	109	7	5305-01-505-6793	36	7
5310-01-474-3064	103	6	4730-01-505-6807	89	23
7690-01-474-3533	123	30	4730-01-505-6812	146	90
9905-01-474-5766	123	3	5310-01-505-6821	86	11
4730-01-475-1290	146	67	2510-01-505-6836	104	11
5325-01-475-7799	43	22		105	11
5340-01-476-1734	175	4	5325-01-505-6912	73	20
5330-01-476-4973	BULK	30	5365-01-505-6948	26	7
2540-01-476-4997	163	34	5365-01-505-6950	26	5
5640-01-477-0056	BULK	20	5305-01-505-6963	103	16
5306-01-479-2736	124	13	5365-01-505-7291	164	27
4720-01-479-5438	BULK	10	4820-01-505-7292	164	28
5310-01-479-8672	78	34	5365-01-505-7293	164	16
5340-01-480-0363	63	8	4820-01-505-7294	164	17
	65	4	5365-01-505-7374	6	16
3810-01-480-0985	84	10	5920-01-505-7409	43	41
5180-01-480-1268	174	38	5325-01-505-7419	43	38
5220-01-480-5571	174	47	5305-01-506-0722	6	14
5310-01-480-6693	175	31	5310-01-506-0726	101	2
5307-01-484-9378	174	22		120	4
5120-01-484-9382	175	24	2590-01-506-6947	140	67
5365-01-484-9383	175	9	5315-01-507-1544	25	17
6625-01-484-9404	174	9	5305-01-507-2644	166	9
4720-01-485-7426	175	15	5305-01-507-2645	86	4
5340-01-485-8574	138	72	5340-01-508-2904	140	48
	140	45	5975-01-508-5704	82	32
4730-01-485-8578	174	24		138	83
5315-01-485-8586	174	25	2510-01-513-1119	173	8
5120-01-486-7811	174	46	2940-01-513-1518	12	17
5120-01-491-0560	174	18	5340-01-514-1843	65	1
5305-01-494-3913	67	5	5331-01-514-3213	172	29
5331-01-494-4282	138	28	2590-01-514-3268	112	18
5365-01-496-0506	44	2	2590-01-514-3269	112	17
5330-01-497-5738	43	36	4730-01-514-3463	141	44
5925-01-498-1823	46	9	4730-01-514-4755	155	41
4910-01-504-2154	174	23	5930-01-514-6235	51	43
5365-01-505-5443	34	12	5365-01-514-6500	174	49
5310-01-505-5512	108	17	4730-01-514-7075	141	34
	120	6	5306-01-515-1611	124	14
5305-01-505-5576	121	4	5325-01-515-7957	94	7

CROSS-REFERENCE INDEXES

NATIONAL STOCK NUMBER INDEX

STOCK NUMBER	FIG.	ITEM	STOCK NUMBER	FIG.	ITEM
2590-01-516-7762	97	7	5340-01-523-8924	164	40
2510-01-516-9697	41	8	5340-01-523-8934	141	18
2520-01-516-9698	76	5		143	3
	76	13	5340-01-523-8935	141	19
2520-01-516-9700	76	17		143	13
2530-01-516-9703	79	16	5315-01-523-8936	150	4
3805-01-517-2244	173	21	5340-01-523-8938	143	9
3805-01-517-2251	173	19	5340-01-523-8945	164	44
2910-01-517-2749	17	1	5340-01-523-8946	164	47
2910-01-517-2754	19	18	5306-01-523-8995	20	12
4320-01-517-2804	74	1	5340-01-523-8996	29	12
4330-01-517-2814	139	9	5306-01-523-9002	56	28
5325-01-517-3276	140	57		159	14
4330-01-517-3279	26	3	4730-01-523-9373	148	29
2930-01-517-3282	25	4	4730-01-523-9375	148	6
5340-01-517-3360	137	4	3040-01-523-9438	165	1
5340-01-517-3362	137	2	4730-01-523-9451	18	10
5330-01-517-3382	7	5	2540-01-523-9468	162	4
5330-01-517-3400	36	2	5306-01-523-9677	3	3
2930-01-517-3410	36	1	4730-01-523-9745	148	9
5330-01-517-3412	17	2	5331-01-524-0182	51	4
5330-01-517-3431	79	6	5306-01-524-0303	12	24
2815-01-517-3834	11	17	5306-01-524-0325	12	14
2815-01-517-4210	51	14		58	3
2990-01-517-4837	30	1	5340-01-524-0572	150	3
2815-01-517-5399	51	15	3120-01-524-0586	BULK	1
6685-01-517-5762	33	5	5365-01-524-0590	9	5
3030-01-517-6047	38	16	5325-01-524-0603	123	22
5340-01-517-6048	152	10		161	9
4720-01-517-6890	35	1	4140-01-524-6666	166	10
4720-01-517-6895	35	3	2990-01-525-4676	50	1
4730-01-517-8779	89	44	3120-01-525-8560	3	2
	138	47	2930-01-525-9752	KITS	
6685-01-517-9295	51	8	2815-01-526-0116	3	1
5120-01-518-2383	175	22	6620-01-526-1478	52	5
4730-01-523-4669	155	1	5331-01-526-1832	51	11
	163	14	5330-01-526-1848	21	13
4720-01-523-5130	147	9	5330-01-526-1873	16	7
5307-01-523-5530	84	12	5330-01-526-1882	16	5
5340-01-523-6504	42	3	5330-01-526-1893	19	17
5306-01-523-7414	35	2	5331-01-526-1896	51	2
5930-01-523-7860	83	15	5330-01-526-1903	21	6
5930-01-523-7888	164	22	5330-01-526-1942	12	2
3020-01-523-8447	8	23	5330-01-526-1949	12	3
4730-01-523-8542	174	51	4730-01-526-2853	24	18
3020-01-523-8543	8	1	6620-01-526-2857	81	25
5340-01-523-8872	62	6	5945-01-526-4236	43	33
5310-01-523-8881	42	29		57	14
	43	49	5310-01-526-4838	24	16
5410-01-523-8889	25	18	5330-01-526-4858	77	6

CROSS-REFERENCE INDEXES

NATIONAL STOCK NUMBER INDEX

STOCK NUMBER	FIG.	ITEM	STOCK NUMBER	FIG.	ITEM
5330-01-526-4858	78	26	2590-01-528-6682	155	25
5330-01-526-5111	12	7	5330-01-528-8117	163	20
5331-01-526-5160	51	7	5330-01-529-2512	8	12
5330-01-526-5164	52	6	5340-01-529-3183	8	14
	153	5	5306-01-529-3358	13	8
5340-01-526-5222	143	9		14	9
4330-01-526-5246	25	2		33	15
2930-01-526-5256	32	1	2815-01-529-6489	6	7
2930-01-526-5314	22	3	2930-01-529-7675	32	12
5365-01-526-5508	78	17	2590-01-529-8989	13	4
5925-01-526-5964	62	33	4730-01-529-9779	173	12
5925-01-526-5965	46	21	2815-01-530-0825	6	10
6150-01-526-6755	62	10	4820-01-530-1880	162	8
6115-01-526-6757	38	4	9905-01-530-4638	123	16
4810-01-526-7280	129	2	9905-01-530-5591	123	11
4820-01-526-7286	81	38	5340-01-530-6463	114	17
2540-01-526-7380	116	3	5340-01-531-1009	47	4
2540-01-526-7381	116	2	5355-01-531-1641	86	21
5930-01-526-7609	29	4	2530-01-532-5377	86	22
3040-01-526-7619	79	8	2590-01-532-5687	29	3
2530-01-526-7640	87	8	5340-01-533-5862	155	38
5306-01-526-8480	163	35	4320-01-533-5977	18	11
3130-01-527-0159	76	8	6350-01-533-7015	54	1
5325-01-527-0351	60	3	5305-01-533-8049	78	20
				79	24
4320-01-527-0761	88	1	5935-01-534-1072	43	17
4320-01-527-0763	124	17		62	17
2990-01-527-1066	79	1	4730-01-534-3393	139	8
5340-01-527-6479	47	5	5325-01-537-8374	84	15
5340-01-527-6630	147	37	5310-01-537-8375	84	14
5330-01-527-7212	42	11	5120-01-537-9251	174	45
	42	13	4720-01-538-6803	12	8
	42	15	4720-01-538-7820	12	9
	43	3	3110-01-538-8484	99	25
	43	5	3110-01-538-8505	99	21
	43	7	6220-01-539-0923	42	30
	43	11		43	59
	43	13	4820-01-539-3210	138	27
	43	15	4130-01-539-5281	122	1
	57	20	4820-01-542-3414	82	4
	118	2		134	3
	147	2	2520-01-543-3599	76	16
	163	3	2540-01-543-3615	121	11
6220-01-527-7525	47	8	2530-01-543-3640	78	21
5340-01-527-7671	29	10	2540-01-543-3659	116	11
5330-01-528-1617	138	29	2540-01-543-3684	112	3
6140-01-528-2975	55	1	2540-01-543-3717	112	14
5331-01-528-4358	138	35	2540-01-543-3729	112	15
5306-01-528-4396	12	19	2540-01-543-3826	112	5
5340-01-528-6253	155	27	2590-01-543-3830	115	11

CROSS-REFERENCE INDEXES

NATIONAL STOCK NUMBER INDEX

STOCK NUMBER	FIG.	ITEM	STOCK NUMBER	FIG.	ITEM
2510-01-543-3909	94	11	2920-01-543-5506	39	2
3020-01-543-4039	124	10	2540-01-543-5512	112	19
6150-01-543-4465	57	24	4710-01-543-5519	21	19
6680-01-543-4473	152	15	6680-01-543-5546	70	1
6150-01-543-4500	130	2	5995-01-543-5564	166	19
6150-01-543-4503	59	2	6150-01-543-5565	59	9
5315-01-543-4623	171	13	4130-01-543-5596	162	6
5315-01-543-4943	172	30	5365-01-543-5602	171	6
5315-01-543-4944	114	2	4130-01-543-5614	166	16
5306-01-543-4947	162	12	5340-01-543-5622	82	19
5306-01-543-4949	11	20	4710-01-543-5630	70	10
5306-01-543-4951	16	11	5340-01-543-5631	62	24
5306-01-543-4959	68	11		82	43
	152	16	5340-01-543-5636	75	10
5365-01-543-4960	172	13	4720-01-543-5638	140	20
5325-01-543-4961	76	6	4720-01-543-5644	141	25
	76	14	4720-01-543-5651	141	79
	76	18	4720-01-543-5655	141	57
5340-01-543-4969	44	4	4720-01-543-5658	137	29
5340-01-543-4991	99	23	3040-01-543-5666	12	25
5340-01-543-4995	101	11	5340-01-543-5673	75	21
5340-01-543-5001	45	13	2540-01-543-5675	112	1
5340-01-543-5003	93	1	4730-01-543-5689	143	8
5340-01-543-5016	163	29	5340-01-543-5694	166	3
5340-01-543-5022	112	7	4130-01-543-5706	167	1
5340-01-543-5025	140	9	3040-01-543-5723	134	1
5340-01-543-5029	137	23	4710-01-543-5739	143	12
5340-01-543-5037	1	5	4720-01-543-5743	89	46
2520-01-543-5039	78	18	4820-01-543-5746	91	1
5330-01-543-5046	94	21	5340-01-543-5767	5	10
5330-01-543-5048	14	1		120	3
4810-01-543-5051	128	7	3040-01-543-5773	4	6
5330-01-543-5053	2	7	5306-01-543-5781	7	8
5330-01-543-5055	7	3	5340-01-543-5785	2	6
4720-01-543-5057	140	53	5340-01-543-5786	14	5
5340-01-543-5060	166	21	5306-01-543-5788	7	9
4720-01-543-5062	140	8	5306-01-543-5790	14	15
4720-01-543-5063	140	46	3020-01-543-5797	4	2
4720-01-543-5066	89	58	5307-01-543-5955	11	19
4720-01-543-5069	89	25	5306-01-543-5966	16	2
3110-01-543-5084	78	33	5307-01-543-5971	45	5
3120-01-543-5086	81	12	6105-01-543-5977	37	1
2590-01-543-5091	131	6	5340-01-543-5979	45	12
3120-01-543-5159	6	8	5340-01-543-5988	58	12
	6	11	6150-01-543-5989	57	21
2990-01-543-5230	21	14	6150-01-543-5992	57	13
5340-01-543-5498	166	6	6150-01-543-5997	57	18
4130-01-543-5499	169	4	5325-01-543-6001	70	2
4820-01-543-5500	32	4	5340-01-543-6005	38	14
2815-01-543-5502	16	3	5340-01-543-6008	44	5

CROSS-REFERENCE INDEXES

NATIONAL STOCK NUMBER INDEX

STOCK NUMBER	FIG.	ITEM	STOCK NUMBER	FIG.	ITEM
5340-01-543-6013	99	15	4710-01-543-6503	11	12
5340-01-543-6015	79	21	2510-01-543-6507	41	18
5325-01-543-6018	114	5	5340-01-543-6508	94	22
5325-01-543-6022	81	10	4710-01-543-6515	21	8
5340-01-543-6025	101	21	4710-01-543-6519	19	1
5340-01-543-6033	101	4	5340-01-543-6520	122	2
4720-01-543-6046	141	78	5340-01-543-6524	94	20
4720-01-543-6055	141	51	4710-01-543-6525	19	3
4720-01-543-6058	89	62	4720-01-543-6530	140	23
4720-01-543-6072	89	14	5310-01-543-6532	29	5
5340-01-543-6078	93	2	5340-01-543-6537	138	76
5340-01-543-6082	18	5	4730-01-543-6538	137	38
5340-01-543-6087	162	14	2520-01-543-6542	67	3
5330-01-543-6126	12	16	4720-01-543-6544	89	53
5330-01-543-6132	21	21	5325-01-543-6549	128	11
5340-01-543-6153	142	10	5340-01-543-6554	68	7
5330-01-543-6157	164	41	5331-01-543-6570	1	7
5340-01-543-6161	145	52	5340-01-543-6583	5	8
5340-01-543-6164	145	1	5310-01-543-6587	3	6
5315-01-543-6168	172	3	5310-01-543-6590	14	11
5310-01-543-6170	172	42	5340-01-543-6593	112	12
5340-01-543-6171	171	3	5340-01-543-6596	67	1
5340-01-543-6172	138	80	5365-01-543-6599	14	10
4720-01-543-6173	144	23	5365-01-543-6601	56	36
5340-01-543-6177	141	77		62	20
5340-01-543-6180	117	2		82	30
5340-01-543-6181	164	39		138	77
4730-01-543-6184	89	2		159	24
5331-01-543-6186	4	7	5365-01-543-6603	171	14
5340-01-543-6189	95	15	5310-01-543-6604	81	11
5325-01-471-6182	11	15			
5305-01-543-6190	29	7	5310-01-543-6607	80	12
5340-01-543-6195	110	4	5342-01-543-6610	132	3
5330-01-543-6197	33	17	5310-01-543-6612	24	4
5340-01-543-6203	19	7	5340-01-543-6613	147	41
5306-01-543-6217	110	3	5315-01-543-6616	172	32
5306-01-543-6219	58	11	5306-01-543-6617	24	19
5340-01-543-6447	152	9	5330-01-543-6620	169	3
5340-01-543-6450	138	78	5315-01-543-6631	172	43
5340-01-543-6463	140	66	5330-01-543-6636	21	7
5340-01-543-6464	141	30	5330-01-543-6642	14	7
5340-01-543-6465	137	35	5330-01-543-6644	12	26
5340-01-543-6466	131	13	5340-01-543-6645	56	40
5340-01-543-6469	79	2		57	15
5340-01-543-6476	68	18		159	29
5315-01-543-6482	81	42	5330-01-543-6647	12	13
5340-01-543-6485	82	7	4320-01-543-6649	24	17
5325-01-543-6488	24	29	4730-01-543-6653	24	7
5315-01-543-6491	172	21	5306-01-543-6655	81	2
5340-01-543-6492	1	12	4710-01-543-6657	24	21
5305-01-543-6495	109	2	5307-01-543-6658	21	2

CROSS-REFERENCE INDEXES

NATIONAL STOCK NUMBER INDEX

STOCK NUMBER	FIG.	ITEM	STOCK NUMBER	FIG.	ITEM
5307-01-543-6659	45	6	3120-01-543-6978	172	23
4710-01-543-6660	24	12		172	26
5306-01-543-6661	84	7	5340-01-543-6985	32	7
5307-01-543-6663	1	13	5355-01-543-6992	122	3
5307-01-543-6668	1	8		169	1
5355-01-543-6669	86	2	5340-01-543-7009	116	7
5340-01-543-6670	14	20	5340-01-543-7015	147	6
4710-01-543-6671	11	2	5315-01-543-7020	172	37
5340-01-543-6673	30	6	5310-01-543-7070	45	7
5340-01-543-6677	99	26	5340-01-543-7074	20	7
4730-01-543-6681	21	18	5340-01-543-7110	166	20
5340-01-543-6685	79	26	5305-01-543-7112	163	47
5340-01-543-6689	58	6	5340-01-543-7126	48	28
5340-01-543-6692	58	8	5340-01-543-7143	140	56
5340-01-543-6696	80	2	5340-01-543-7145	76	11
5340-01-543-6699	81	8	5340-01-543-7172	141	29
5340-01-543-6702	45	9	5330-01-543-7176	11	4
4730-01-543-6708	21	3	5306-01-543-7210	16	12
4710-01-543-6733	19	2	5330-01-543-7278	131	5
4710-01-543-6737	19	4	5306-01-543-7307	82	9
4730-01-543-6742	12	27	3040-01-543-7796	8	24
4710-01-543-6745	24	8	2815-01-543-7802	16	1
4720-01-543-6750	9	4	2815-01-543-7804	16	9
4720-01-543-6757	137	12	2520-01-543-7806	76	12
4720-01-543-6759	142	1	2520-01-543-7817	76	4
4710-01-543-6828	7	2	5340-01-543-7821	41	4
4720-01-543-6830	89	40	5365-01-543-7824	90	7
	89	41			
4720-01-543-6832	89	11	2540-01-543-7845	116	6
4730-01-543-6833	12	6	2540-01-543-7924	121	8
4720-01-543-6835	89	34	5930-01-543-7925	163	2
5307-01-543-6936	14	16	2520-01-543-7935	78	13
5310-01-543-6937	2	9	6220-01-543-7937	48	26
4730-01-543-6939	144	16	2940-01-543-7941	139	6
4730-01-543-6941	141	69	5930-01-543-7946	147	1
4710-01-543-6943	137	1	2930-01-543-7952	37	14
4710-01-543-6947	141	21	5961-01-543-7958	57	25
4710-01-543-6948	141	63	2950-01-543-7959	21	16
4720-01-543-6949	73	5	5930-01-543-7963	40	1
5330-01-543-6951	16	10	5930-01-543-7966	40	2
5331-01-543-6952	11	13	5930-01-543-7970	57	1
5331-01-543-6954	7	7	5930-01-543-7972	57	19
4710-01-543-6956	140	62	5975-01-543-7975	45	1
5365-01-543-6968	33	2	5970-01-543-7976	147	27
3110-01-543-6971	81	41	5930-01-543-7979	49	1
5365-01-543-6976	56	41	5975-01-543-7982	9	2
	82	61		58	4
	140	55	5975-01-543-7985	46	27
	149	44		62	27
	154	61		82	29
	159	30		149	31

CROSS-REFERENCE INDEXES

NATIONAL STOCK NUMBER INDEX

STOCK NUMBER	FIG.	ITEM	STOCK NUMBER	FIG.	ITEM
5975-01-543-7985	154	34	4720-01-543-9560	140	33
5975-01-543-8005	46	28	5365-01-543-9599	94	17
	48	5		155	16
	62	26		156	13
	82	37	4720-01-543-9607	138	71
5930-01-543-8008	118	1	4720-01-543-9615	138	16
5930-01-543-8014	51	45	4720-01-543-9621	140	68
5365-01-543-8022	1	6	4720-01-543-9636	141	36
5330-01-543-8033	130	5	5365-01-543-9648	172	40
6150-01-543-8342	66	3	4720-01-543-9659	141	3
2815-01-543-8651	5	4	4720-01-543-9715	138	17
2815-01-543-8658	2	1	5340-01-543-9719	94	1
2520-01-543-8663	76	7	4720-01-543-9728	138	70
2540-01-543-8666	121	2	4820-01-543-9733	126	1
2590-01-543-8668	133	1	5310-01-544-0013	1	4
2990-01-543-8671	31	1	5305-01-544-0031	132	4
2930-01-543-8675	32	11	5340-01-544-0035	139	1
2540-01-543-8677	112	6	5340-01-544-0082	152	23
2540-01-543-8682	112	10	3020-01-544-0545	19	16
5340-01-543-8695	94	4	5340-01-544-0929	24	22
5340-01-543-8699	115	12	5340-01-544-0939	12	10
2530-01-543-8700	87	1	5307-01-544-1009	21	5
5365-01-543-8707	99	9	5340-01-544-1021	19	8
3120-01-543-8712	172	10	5340-01-544-1023	58	1
	172	35	5306-01-544-1048	116	10
2540-01-543-8714	116	18	5315-01-544-1050	90	4
5365-01-543-8722	1	11	5340-01-544-1054	81	1
2540-01-543-8725	116	5	5340-01-544-1055	82	3
4820-01-543-8830	138	26		134	5
4720-01-543-8834	141	28	5340-01-544-1059	20	14
4720-01-543-8836	140	7	5340-01-544-1060	166	22
4720-01-543-8839	138	64	9330-01-544-1062	82	36
4720-01-543-8964	146	33	7690-01-544-1067	123	26
4720-01-543-8967	146	46	5315-01-544-1076	172	16
4820-01-543-9254	73	16	5340-01-544-1080	147	12
4720-01-543-9256	138	65	5340-01-544-1094	152	5
4720-01-543-9266	138	15	5340-01-544-1221	140	58
4730-01-543-9271	140	14	5340-01-544-1222	141	56
4720-01-543-9272	73	17	5340-01-544-1224	131	4
4710-01-543-9276	19	6	2815-01-544-1291	4	1
4710-01-543-9368	140	64	2815-01-544-1295	7	4
4710-01-543-9374	140	28	3040-01-544-1311	6	3
4710-01-543-9375	146	87	2930-01-544-1317	12	1
4730-01-543-9377	146	16	2930-01-544-1325	33	1
5340-01-543-9426	140	11	2815-01-544-1335	14	2
5340-01-543-9438	141	22	5340-01-544-1358	15	3
5340-01-543-9463	110	2	5340-01-544-1363	32	15
5340-01-543-9484	116	19	5340-01-544-1368	31	11
5325-01-543-9537	78	29	5340-01-544-1369	41	15
4730-01-543-9541	146	20	5340-01-544-1370	41	17

CROSS-REFERENCE INDEXES

NATIONAL STOCK NUMBER INDEX

STOCK NUMBER	FIG.	ITEM	STOCK NUMBER	FIG.	ITEM
5340-01-544-1373	67	2	5307-01-544-3288	21	12
5340-01-544-1375	115	4	5306-01-544-3296	19	15
4730-01-544-1377	21	17	5310-01-544-3379	116	9
5365-01-544-1381	45	10	5340-01-544-3385	169	2
5365-01-544-1384	99	14	5310-01-544-3388	90	2
5365-01-544-1386	172	18		99	17
3120-01-544-1388	172	7		171	9
5342-01-544-1393	131	2		172	2
5365-01-544-1398	31	10	5315-01-544-3390	90	3
4710-01-544-1811	19	5	5340-01-544-3433	81	45
3110-01-544-1813	99	10	5340-01-544-3495	83	55
4730-01-544-1817	73	26		138	61
2540-01-544-1825	112	8	5340-01-544-4013	20	8
4320-01-544-1828	124	5	5331-01-544-4017	172	5
3120-01-544-1835	78	28	5315-01-544-4020	172	27
3120-01-544-1840	78	2	2815-01-544-4087	5	1
4710-01-544-1862	70	7	2815-01-544-4090	6	2
4820-01-544-1863	127	4	5330-01-544-4091	163	6
4820-01-544-1865	133	2	2990-01-544-4098	7	6
4730-01-544-1873	143	8	2930-01-544-4117	12	4
5315-01-544-1878	4	3	5315-01-544-4144	172	44
4720-01-544-1892	144	18	5340-01-544-4157	147	20
5365-01-544-1899	4	5	5340-01-544-4166	32	17
4720-01-544-1901	89	67		94	34
5340-01-544-1941	24	1		152	27
5340-01-544-1946	12	18	4720-01-544-4175	146	83
4320-01-544-1954	124	4	5340-01-544-4177	140	47
2540-01-544-1956	112	9	5325-01-544-4180	23	6
4710-01-544-1968	140	32	5315-01-544-4183	171	8
2530-01-544-1970	84	1	5315-01-544-4196	172	36
5330-01-544-1978	11	1	5310-01-544-4205	68	6
4730-01-544-2411	89	19	5340-01-544-4371	94	14
4820-01-544-2412	89	15	5340-01-544-4372	141	32
4730-01-544-2413	142	13	7690-01-544-4374	41	1
4730-01-544-2414	141	13	5360-01-544-4388	81	43
2530-01-544-2698	84	4	5340-01-544-4687	78	30
2540-01-544-2701	115	10	5306-01-544-4691	78	32
4730-01-544-2795	15	7	5310-01-544-4693	29	9
4710-01-544-2798	137	39	5315-01-544-4695	80	11
4710-01-544-2816	141	72	5331-01-544-4698	88	2
4710-01-544-2819	141	31	5340-01-544-4702	152	24
4720-01-544-2822	141	10	5330-01-544-4703	152	14
4720-01-544-2828	137	30	5306-01-544-4710	146	42
4720-01-544-2829	89	5	5340-01-544-4714	127	3
4720-01-544-2833	144	9	5340-01-544-4720	140	65
4720-01-544-2836	143	14	5340-01-544-4726	132	1
4720-01-544-2844	137	18	5355-01-544-4729	131	1
5306-01-544-2847	4	9	7690-01-544-4739	128	12
5306-01-544-2851	21	9	5310-01-544-4746	1	14
5360-01-544-2858	11	7		68	14

CROSS-REFERENCE INDEXES

NATIONAL STOCK NUMBER INDEX

STOCK NUMBER	FIG.	ITEM	STOCK NUMBER	FIG.	ITEM
5340-01-544-4751	68	8	5365-01-544-6082	24	20
5340-01-544-4755	94	25		58	5
5330-01-544-4757	94	16	5340-01-544-6083	92	3
5305-01-544-4765	32	16	5340-01-544-6084	112	22
5340-01-544-4766	115	5	5340-01-544-6085	112	13
5365-01-544-4767	99	4	5340-01-544-6086	87	11
5365-01-544-4770	172	39	5305-01-544-6087	112	20
5365-01-544-4772	31	5	5340-01-544-6088	112	11
5895-01-544-5202	42	5	3020-01-544-6374	38	17
5340-01-544-5225	114	14	2815-01-544-7152	8	6
5340-01-544-5231	114	18	2815-01-544-7158	14	8
5340-01-544-5237	114	15	4730-01-544-8068	28	3
5340-01-544-5504	81	15	4730-01-544-8074	155	35
5340-01-544-5511	101	16	4730-01-544-8080	149	17
5306-01-544-5518	101	1		154	16
5340-01-544-5529	24	34	4730-01-544-8088	115	17
5340-01-544-5536	162	1	3040-01-544-8150	51	40
5307-01-544-5538	45	4	5315-01-544-8154	173	10
5340-01-544-5544	82	56	5340-01-544-8157	103	30
5340-01-544-5545	19	9	5365-01-544-8160	104	9
5325-01-544-5549	164	8		105	13
5340-01-544-5551	163	46	5340-01-544-8162	104	33
5340-01-544-5560	145	32		105	23
5340-01-544-5563	30	5	5340-01-544-8166	109	4
5340-01-544-5565	114	1	5340-01-544-8170	42	7
5306-01-544-5574	76	10	5340-01-544-8172	43	16
5340-01-544-5577	38	10	5340-01-544-8177	43	62
2590-01-544-5812	114	10	4730-01-544-8178	164	46
4820-01-544-5906	11	5	5340-01-544-8180	107	10
3040-01-544-5908	12	15		156	11
5305-01-544-5915	121	7	5340-01-544-8183	155	6
5306-01-544-5917	66	2	7690-01-544-8187	43	63
2815-01-544-5918	16	6	5305-01-544-8200	62	1
5340-01-544-5919	80	9	5340-01-544-8204	103	13
5340-01-544-5921	99	13	7690-01-544-8209	123	28
2815-01-544-5925	16	4	7690-01-544-8212	42	2
5315-01-544-5928	99	18	5325-01-544-8217	64	4
5315-01-544-5932	99	3	7690-01-544-8218	155	23
5315-01-544-5934	79	19	5340-01-544-8222	108	31
5365-01-544-5940	171	7	7690-01-544-8233	157	4
	171	15	7690-01-544-8259	46	18
2540-01-544-5954	112	4	7690-01-544-8265	46	16
2540-01-544-5959	112	16	7690-01-544-8271	123	2
2540-01-544-5962	112	2	7690-01-544-8275	123	5
5365-01-544-6000	172	14	7690-01-544-8283	123	9
5365-01-544-6076	4	4	5340-01-544-8303	48	1
	164	36	5340-01-544-8307	51	36
5365-01-544-6079	39	1	7690-01-544-8574	123	18
3110-01-544-6080	81	14	7690-01-544-8575	123	24
5365-01-544-6081	81	13	7690-01-544-8576	42	8

CROSS-REFERENCE INDEXES

NATIONAL STOCK NUMBER INDEX

STOCK NUMBER	FIG.	ITEM	STOCK NUMBER	FIG.	ITEM
7690-01-544-8577	123	25	4710-01-544-9111	75	16
4720-01-544-8579	155	18	4730-01-544-9116	20	22
4820-01-544-8617	69	13	4730-01-544-9119	20	21
5340-01-544-8619	106	9	4720-01-544-9145	95	18
	160	9	4730-01-544-9147	95	9
4720-01-544-8621	35	4	4720-01-544-9148	95	10
5315-01-544-8623	173	11	4710-01-544-9150	147	3
5310-01-544-8628	103	19	5315-01-544-9159	173	18
5365-01-544-8630	173	17	2940-01-544-9176	71	2
5365-01-544-8633	51	42	4720-01-544-9180	148	11
2540-01-544-8635	104	30	4710-01-544-9184	147	11
4710-01-544-8639	51	37	4720-01-544-9186	23	8
5305-01-544-8643	103	7	4720-01-544-9187	23	2
5325-01-544-8646	43	40	4720-01-544-9189	23	7
2540-01-544-8656	104	22	4720-01-544-9195	23	3
5325-01-544-8659	64	12	4720-01-544-9203	82	59
5340-01-544-8662	104	8	4720-01-544-9204	82	31
	105	14	4720-01-544-9208	82	49
5340-01-544-8667	42	6	4720-01-544-9209	82	44
5340-01-544-8671	43	61	5325-01-544-9216	103	8
5340-01-544-8674	155	14	5330-01-544-9220	104	34
5340-01-544-8677	159	10		105	22
5340-01-544-8681	108	28	4720-01-544-9221	82	26
5340-01-544-8683	48	31	4720-01-544-9222	75	18
2510-01-544-8696	113	8	4720-01-544-9223	75	22
5340-01-544-8707	113	9	4720-01-544-9227	164	32
5340-01-544-8718	28	4	4720-01-544-9228	145	6
2590-01-544-8720	113	14	4730-01-544-9492	75	3
5340-01-544-8722	25	12	4820-01-544-9493	75	23
2510-01-544-8738	106	7	4320-01-544-9494	72	3
2510-01-544-8741	106	1	4720-01-544-9495	147	10
	160	1	4720-01-544-9496	146	11
2510-01-544-8753	106	5	4720-01-544-9497	163	5
2540-01-544-8760	107	12	4720-01-544-9498	95	19
	156	10	4720-01-544-9499	145	27
2510-01-544-8766	107	1	4820-01-544-9500	150	2
	156	1	4720-01-544-9501	147	22
3040-01-544-8903	98	4	4720-01-544-9502	147	51
3040-01-544-8905	98	3	4720-01-544-9503	95	17
2540-01-544-8906	83	1	4720-01-544-9504	95	2
2510-01-544-8908	103	25	4720-01-544-9505	147	13
2540-01-544-8909	104	27	4720-01-544-9507	20	3
	105	25	4720-01-544-9508	23	11
2510-01-544-8952	104	13	4720-01-544-9509	23	4
	105	7	4710-01-544-9511	75	32
4720-01-544-9087	148	31	4710-01-544-9512	23	10
4730-01-544-9103	82	38	4710-01-544-9513	164	15
	138	81	5340-01-544-9515	114	4
	155	9	4810-01-544-9516	129	1
4710-01-544-9104	24	37	3130-01-544-9517	99	6

CROSS-REFERENCE INDEXES

NATIONAL STOCK NUMBER INDEX

STOCK NUMBER	FIG.	ITEM	STOCK NUMBER	FIG.	ITEM
5365-01-544-9518	99	12	5340-01-545-0192	149	30
5365-01-544-9519	77	9		154	33
	78	4	5340-01-545-0197	156	15
4320-01-544-9521	72	6	5340-01-545-0219	161	2
5306-01-544-9522	29	11	6150-01-545-0386	60	2
4730-01-544-9524	23	12	4720-01-545-0388	10	6
4730-01-544-9527	75	7	5330-01-545-0391	88	5
4730-01-544-9529	82	24	4720-01-545-0444	148	30
4730-01-544-9530	81	23	4720-01-545-0453	148	1
4730-01-544-9531	146	97	5365-01-545-0467	107	9
4820-01-544-9532	146	43	5315-01-545-0470	173	14
4720-01-544-9533	147	55	5360-01-545-0476	104	7
4820-01-544-9534	130	6		105	16
4720-01-544-9535	147	40	5340-01-545-0500	103	31
4820-01-544-9536	130	1		104	26
4730-01-544-9546	152	11	5340-01-545-0503	105	24
4720-01-544-9550	146	63	5307-01-545-0506	108	30
2540-01-544-9564	114	6	5340-01-545-0525	158	11
2930-01-544-9565	101	5	5340-01-545-0526	158	13
2510-01-544-9566	37	9	5340-01-545-0527	56	3
5999-01-544-9569	43	47	5340-01-545-0528	56	13
6220-01-544-9572	113	2	5340-01-545-0530	56	14
2930-01-544-9576	101	3	3040-01-545-0543	172	34
6240-01-544-9579	113	3	4720-01-545-0545	148	28
2590-01-544-9582	93	5	3040-01-545-0549	172	22
9330-01-544-9583	BULK	37	4720-01-545-0553	149	9
5440-01-544-9595	107	3	5340-01-545-0563	56	10
	156	4	6150-01-545-0564	58	7
5440-01-544-9603	107	2	5340-01-545-0567	63	5
	156	2	5340-01-545-0573	28	5
5440-01-544-9609	107	11	6160-01-545-0574	55	2
	156	14	5340-01-545-0577	109	11
4720-01-544-9657	146	26	4720-01-545-0580	164	1
4720-01-544-9658	146	2	5305-01-545-0586	25	10
4730-01-544-9660	146	37	4720-01-545-0587	164	13
4720-01-544-9661	146	61	4720-01-545-0588	145	47
2520-01-545-0041	79	7	5340-01-545-0589	43	29
5340-01-545-0078	104	4	4730-01-545-0590	141	5
	105	18		146	93
5340-01-545-0082	104	17	5340-01-545-0592	43	50
	105	10	4710-01-545-0593	146	31
2540-01-545-0084	103	15	5340-01-545-0594	103	24
2540-01-545-0088	83	5		113	11
2510-01-545-0094	108	1	5340-01-545-0598	149	21
2540-01-545-0103	83	6		154	24
5340-01-545-0104	42	1	6160-01-545-0611	159	8
5310-01-545-0115	43	39	6160-01-545-0613	158	5
3040-01-545-0120	172	24	5340-01-545-0615	155	28
5340-01-545-0125	83	9	5340-01-545-0616	62	18
5305-01-545-0174	113	12	5340-01-545-0617	103	9

CROSS-REFERENCE INDEXES

NATIONAL STOCK NUMBER INDEX

STOCK NUMBER	FIG.	ITEM	STOCK NUMBER	FIG.	ITEM
5340-01-545-0619	108	25	2510-01-545-1814	160	2
5340-01-545-0620	108	18	2590-01-545-1860	107	14
5340-01-545-0623	51	28		156	3
5340-01-545-0624	48	8	2510-01-545-1863	160	6
5330-01-545-0627	BULK	29	2510-01-545-1934	160	5
4720-01-545-0773	149	19	2510-01-545-1935	108	19
	154	18	2510-01-545-1937	108	16
4720-01-545-0774	149	10	2940-01-545-1946	20	5
	154	58	2940-01-545-1950	20	6
4720-01-545-0776	149	28	2940-01-545-1954	26	10
	154	31	2510-01-545-2042	108	22
4720-01-545-0778	164	10	5340-01-545-2309	43	46
4720-01-545-0780	164	7	5340-01-545-2338	113	4
6160-01-545-0782	158	8	5340-01-545-2342	107	8
4720-01-545-0784	82	27		156	12
6160-01-545-0785	158	14	5340-01-545-2360	155	15
6150-01-545-0787	60	1	3040-01-545-2740	72	1
4710-01-545-0788	164	37	4730-01-545-2975	69	18
5340-01-545-0824	56	12	4730-01-545-2978	69	20
6685-01-545-0829	51	16	4440-01-545-2989	164	45
2510-01-545-0868	100	1	5330-01-545-3010	BULK	27
2530-01-545-0869	86	5	5330-01-545-3012	79	12
2530-01-545-0872	86	1	5340-01-545-3019	25	21
2520-01-545-0875	66	1	5340-01-545-3023	164	48
6150-01-545-0894	48	22	5306-01-545-3042	108	13
6150-01-545-0899	48	21	5310-01-545-3049	98	2
6150-01-545-0902	65	5	5325-01-545-3055	104	6
3040-01-545-0907	79	27		105	17
6140-01-545-0940	55	3	5325-01-545-3062	104	16
4720-01-545-1389	149	42		105	6
	154	54	5340-01-545-3079	108	8
4730-01-545-1398	27	4	5305-01-545-3126	48	24
5365-01-545-1401	56	32	5340-01-545-3128	42	32
	154	47	5355-01-545-3134	43	37
	159	20	5340-01-545-3144	83	10
5306-01-545-1403	98	1	5330-01-545-3148	69	7
4720-01-545-1404	95	1	2940-01-545-3168	20	9
4720-01-545-1405	95	5	2590-01-545-3172	120	5
4720-01-545-1406	70	9	2540-01-545-3179	163	10
	BULK	9	5340-01-545-3405	51	23
4720-01-545-1408	BULK	34	5330-01-545-3406	BULK	28
5340-01-545-1476	104	15	4820-01-545-3429	154	44
	105	9	4710-01-545-3435	154	36
5340-01-545-1487	109	8	4820-01-545-3437	155	42
5306-01-545-1498	43	26	4720-01-545-3476	145	7
2540-01-545-1779	105	28	5340-01-545-3494	103	35
2510-01-545-1784	113	1	5340-01-545-3498	108	33
2540-01-545-1790	113	17	5340-01-545-3500	48	19
2540-01-545-1802	113	16	2510-01-545-4095	104	1
2510-01-545-1814	106	2	2510-01-545-4106	105	1

CROSS-REFERENCE INDEXES

NATIONAL STOCK NUMBER INDEX

STOCK NUMBER	FIG.	ITEM	STOCK NUMBER	FIG.	ITEM
2540-01-545-4133	105	32	2590-01-545-6672	48	30
4730-01-545-4182	25	3	2510-01-545-6677	108	16
4720-01-545-4184	BULK	36	2540-01-545-6693	86	20
4730-01-545-4187	35	5	5310-01-545-6705	10	5
3120-01-545-4190	173	2	2510-01-545-6712	110	1
5365-01-545-4193	25	15	5340-01-545-6738	103	36
5340-01-545-4208	148	26	5310-01-545-6742	174	34
5340-01-545-4212	96	3	2510-01-545-6758	108	12
5340-01-545-4217	104	3	2510-01-545-6821	160	7
	105	19	2510-01-545-6974	106	6
5325-01-545-4219	104	14	2930-01-545-7643	170	1
	105	8	2590-01-545-7646	172	8
5340-01-545-4621	48	4	2530-01-545-7649	78	1
5315-01-545-4627	69	6	2590-01-545-7674	155	11
6680-01-545-4654	77	5	2510-01-545-7688	108	27
	78	7	2510-01-545-7712	108	19
6680-01-545-4677	13	3	2540-01-545-7727	103	33
5340-01-545-4922	113	15	5340-01-545-7955	25	16
5330-01-545-4942	154	2	5340-01-545-7956	10	4
5340-01-545-4943	42	31	2510-01-545-8111	107	4
5325-01-545-4966	43	43		156	5
5340-01-545-4967	43	51	2540-01-545-8114	83	8
5340-01-545-4972	113	10	2940-01-545-8357	20	15
5340-01-545-4976	155	17	2910-01-545-8358	18	3
5340-01-545-4991	56	4	2530-01-545-8359	86	19
	158	2	2540-01-545-8360	29	2
5340-01-545-4994	56	22	2815-01-545-8361	152	3
5325-01-545-5021	157	12	2590-01-545-8363	152	8
5340-01-545-5030	46	17	2510-01-545-8460	106	8
5325-01-545-5035	63	1		160	8
4720-01-545-5045	155	36	2590-01-545-8482	107	15
5340-01-545-5047	63	12	4720-01-545-8641	149	36
6220-01-545-5466	47	1	2590-01-545-8672	82	1
6220-01-545-5479	47	10	2940-01-545-9577	20	4
6240-01-545-5518	48	14	5340-01-546-0178	79	14
6240-01-545-5521	47	6	3040-01-546-0246	161	3
3040-01-545-5538	171	1	3040-01-546-0250	150	1
3040-01-545-5546	172	6	3040-01-546-0253	41	25
3040-01-545-5549	80	10	3040-01-546-0258	80	1
5340-01-545-5552	64	5	4910-01-546-0552	175	3
5340-01-545-6297	108	4	6150-01-546-1006	174	8
5340-01-545-6300	25	9	2520-01-546-1084	44	3
5310-01-545-6304	27	5	6625-01-546-1095	174	29
5330-01-545-6305	69	19	6625-01-546-1114	174	30
5310-01-545-6457	46	11	6160-01-546-1134	56	7
	46	23	6630-01-546-1870	174	7
5120-01-545-6620	175	23	5340-01-546-2156	104	23
5340-01-545-6638	104	32		105	33
5310-01-545-6642	174	12	9905-01-546-2185	161	6
5365-01-545-6644	175	21	9905-01-546-2186	123	21

CROSS-REFERENCE INDEXES

NATIONAL STOCK NUMBER INDEX

STOCK NUMBER	FIG.	ITEM	STOCK NUMBER	FIG.	ITEM
5340-01-546-2247	174	42	9340-01-551-3390	111	2
5310-01-546-3169	43	28	3830-01-551-3403	173	1
5120-01-546-3188	174	13	9340-01-551-3412	111	5
9905-01-546-3189	123	19	2510-01-551-3418	111	6
4910-01-546-6287	174	33	2540-01-551-3428	108	14
5120-01-546-6420	175	20	2510-01-551-3487	97	2
5120-01-546-6769	175	8	2910-01-551-3537	25	1
2540-01-550-5641	136	1	2910-01-551-3549	155	33
4810-01-551-1610	130	4	2510-01-551-3575	97	1
4730-01-551-1614	23	9	2590-01-551-4550	51	18
4720-01-551-1617	154	4	2510-01-551-4636	103	1
4720-01-551-1633	154	51	7690-01-551-5082	123	13
4710-01-551-1636	155	37	7690-01-551-5086	123	7
4810-01-551-1639	69	9	7690-01-551-5147	155	21
4720-01-551-1641	141	8	7690-01-551-5151	123	12
5340-01-551-1835	103	18	7690-01-551-5279	123	15
5340-01-551-1837	103	34	7690-01-551-5282	123	17
5340-01-551-1839	42	28	7690-01-551-5286	123	14
3930-01-551-1845	161	8	6680-01-551-5332	153	6
4720-01-551-2379	145	48	6130-01-551-5333	46	26
4720-01-551-2404	147	47	3040-01-551-5549	98	5
5930-01-551-2407	42	14	5930-01-551-5602	43	14
5930-01-551-2411	43	4	6685-01-551-6235	51	6
6160-01-551-2416	158	1	2640-01-551-6511	175	32
5930-01-551-2421	43	12	6150-01-551-6599	56	43
4820-01-551-2426	125	4		159	32
2510-01-551-2458	105	5	6150-01-551-6616	159	1
2540-01-551-2461	155	10	6150-01-551-6623	64	1
4810-01-551-2470	128	1	2510-01-551-6639	104	12
4720-01-551-2476	154	5	6150-01-551-6671	43	1
5930-01-551-2490	43	10	6150-01-551-7243	42	19
6150-01-551-2535	61	2	6150-01-551-7248	56	38
3830-01-551-2651	173	13		159	26
3830-01-551-2654	161	1	6150-01-551-7253	56	18
4720-01-551-2735	154	52	5930-01-551-7899	43	2
6150-01-551-2786	62	16	4820-01-551-9292	28	7
6150-01-551-2792	56	34	6150-01-552-0314	51	34
6150-01-551-2808	56	15	6150-01-552-0324	157	6
6150-01-551-2833	46	13	6150-01-552-0355	56	42
6220-01-551-2888	48	23		159	31
5930-01-551-3132	43	6	4120-01-552-2813	163	9
5930-01-551-3133	42	12	4130-01-552-2948	166	7
5930-01-551-3134	42	10	6150-01-552-3317	56	35
9340-01-551-3180	111	1		159	7
2590-01-551-3345	171	2	6150-01-552-3319	159	23
3120-01-551-3346	97	3	6150-01-552-3321	63	2
3120-01-551-3349	97	4	6220-01-552-8746	48	9
9340-01-551-3370	111	4	5340-01-553-5835	114	11
9340-01-551-3379	111	3			
9340-01-551-3381	111	7			

CROSS-REFERENCE INDEXES

PART NUMBER INDEX

CAGEC	PART NUMBER	STOCK NUMBER	FIG.	ITEM
80059	AN380-4-4	5315-00-839-5822	81	6
81346	ASTM D2000 M6BG9 10	5331-01-049-1292	73	13
			81	24
			89	33
			89	38
			133	4
			139	7
			141	40
			144	22
81343	AS15003-6	4730-00-172-0034	76	15
81343	AS568-232/M3CH714A25B34E016E036	5331-01-030-1825	146	3
45225	BT3397	5220-01-480-5571	174	47
75272	COV-1913	5340-01-298-3216	95	3
55719	EEAC318A	4250-01-396-8928	175	35
11083	EERE3500		174	41
59164	EP-5UL	4940-01-028-7493	174	37
72216	E2019X4	4820-00-720-2096	15	1
01276	FD90-1044-04-04	4730-01-222-7576	141	41
01276	FD90-1102-05-04	4730-01-164-1777	89	29
			138	39
K6022	FLUKE 87		174	40
60038	HM212010	3110-00-554-9004	99	11
55509	J5959	5210-00-794-9178	175	33
80205	MS21044-N8	5310-00-877-5795	37	2
80205	MS24665-134	5315-00-839-5820	114	3
80205	MS35333-39	5310-00-576-5752	57	6
			62	35
80205	MS35333-47	5310-00-550-3714	56	47
			159	36
			163	28
96906	MS35489-69	5325-00-249-6345	116	16
96906	MS35691-13	5310-00-853-9335	43	58
96906	MS35691-17	5310-00-851-2682	57	4
80205	MS35756-15	5315-00-616-5530	8	2
96906	MS51860-56Z	4730-01-143-9017	163	27
96906	MS51860-57SS	4730-00-727-8915	163	26
61208	M2048F	5310-00-362-8168	19	14
11568	M925A	5310-01-045-5588	157	3
15235	PLG1	4730-00-278-3383	8	10
			33	14
81348	STYX/GP2/CL-E/TYBA/20.	2610-00-726-5165	85	1
55719	TA360	5210-01-388-2682	175	29
11083	0020639	4730-01-544-9147	95	9
11083	0068606	5325-01-471-4795	6	5
11083	0093101	5325-01-543-6018	114	5
11083	0309613	5305-01-438-1893	82	2
			134	4
11083	0328048	4730-01-543-6681	21	18
11083	0328100	5310-01-505-5677	18	7

CROSS-REFERENCE INDEXES

PART NUMBER INDEX

CAGEC	PART NUMBER	STOCK NUMBER	FIG.	ITEM
11083	0335853	5331-01-494-4282	138	28
11083	0336027	5331-01-470-3092	138	36
11083	0336043	5331-01-528-4358	138	35
11083	0337849	5365-01-471-3999	18	6
			24	5
11083	0374426	5330-01-528-8117	163	20
11083	0530189	5325-01-515-7957	94	7
11083	0676044	5340-01-471-4841	2	10
11083	0676083	5340-01-471-6178	6	4
11083	0676087	5360-01-471-6174	6	12
11083	0676088	5360-01-471-6176	6	15
11083	0676095	2815-01-471-4372	6	21
11083	0676123	5315-01-471-6190	5	15
11083	0676178	5310-01-505-5681	8	3
11083	0676179	5315-01-471-5141	8	4
11083	0676269	4730-01-471-4792	24	10
			24	38
11083	0676933	5330-01-543-7176	11	4
11083	0691124	4730-01-471-3623	3	4
11083	0692535	4820-01-542-3414	82	4
			134	3
11083	0692536	5340-01-544-1055	82	3
			134	5
11083	0694080	4730-01-523-9451	18	10
11083	0857356	4730-01-544-1817	73	26
11083	0910081	5365-01-543-6976	56	41
			82	61
			140	55
			149	44
			154	61
			159	30
11083	0961820	5315-01-544-8154	173	10
11083	0962323	5325-01-545-4219	104	14
			105	8
11083	0963772	5305-01-543-6190	29	7
11083	0965969	5306-01-523-9002	56	28
			159	14
11083	0966166	5310-01-437-6101	46	19
11083	1B0676	5315-00-272-6760	25	20
11083	1B3057	5340-00-423-8320	34	6
			56	33
			159	22
11083	1B8723	5315-00-010-8627	83	14
3HKX1	1D4717	5310-00-143-5722	46	14
			48	6
			127	2
11083	1G8878	2910-01-438-7423	73	12
11083	1H4393	5310-01-170-1508	41	9
11083	1H6227	5331-00-508-1373	124	16
11083	1H9696	5331-00-580-1226	74	2
11083	1H9779	4730-01-429-0853	155	3

CROSS-REFERENCE INDEXES

PART NUMBER INDEX

CAGEC	PART NUMBER	STOCK NUMBER	FIG.	ITEM
11083	1J9671	5331-01-452-3208	50	2
			82	5
			133	5
			134	2
			141	71
11083	1K8061	5310-01-479-8672	78	34
11083	1M4543	5325-00-928-3375	164	14
11083	1M6756	5365-01-484-9383	175	9
11083	1M8652	5325-00-852-1435	172	33
11083	1P0510	5120-01-030-1626	175	25
11083	1P0520	5120-01-039-4811	175	26
11083	1P0540	5120-01-217-9642	174	52
11083	1P1837	5120-01-286-8432	175	19
11083	1P3703	5330-01-043-5565	146	36
11083	1P3708	5330-01-107-4646	146	12
11083	1P4278	5342-01-063-0674	18	1
			24	36
11083	1P4576	4730-01-051-3134	73	2
11083	1P4579	5340-01-060-0309	146	9
11083	1P4582	4730-01-053-2692	146	7
11083	1P4584	2520-01-176-9574	146	1
11083	1P6356	5340-01-429-0918	164	25
11083	1P6522	5325-01-473-5755	163	43
11083	1P7009	5340-01-314-9050	164	29
11083	1Q1445	2990-01-445-2352	157	8
11083	1R0739	2940-01-513-1518	12	17
11083	1S0833	5340-01-544-1094	152	5
11083	1S9593	5340-01-160-2464	130	3
11083	1U0257	5340-01-429-2233	173	5
11083	1U3252	3830-01-230-9035	173	9
11083	1U5551	2640-01-551-6511	175	32
11083	1U5804	5120-01-486-7811	174	46
11083	1U6671	5120-01-546-6420	175	20
11083	1U7502		175	36
11083	1U7600	5180-01-124-1903	175	16
11083	1U8857	4730-01-435-7174	175	13
11083	1V2772	5360-01-185-4051	79	15
11083	1W2934	2540-01-523-9468	162	4
11083	0676928	5325-01-471-6182	11	15
11083	1002789	4720-01-543-9560	140	33
11083	1003143	4130-01-473-6494	163	41
11083	1003426	4140-01-473-4985	163	38
11083	1003751	5306-01-471-5762	14	18
11083	1004104	5330-01-543-5055	7	3
11083	1004453	5307-01-543-6658	21	2
11083	1004454	5310-01-471-5163	21	4
11083	1004461	5306-01-524-0303	12	24
11083	1004466	5330-01-543-6636	21	7
11083	1004830	5306-01-471-5165	19	10
			24	2
11083	1007603	4730-01-543-6941	141	69
11083	1013129	5307-01-471-0426	56	37
			159	25

CROSS-REFERENCE INDEXES

PART NUMBER INDEX

CAGEC	PART NUMBER	STOCK NUMBER	FIG.	ITEM
11083	1013450		9	1
11083	1013739	5310-01-425-9917	26	8
11083	1013740	5365-01-505-6948	26	7
11083	1013741	5330-01-473-8725	26	6
11083	1013742	5365-01-505-6950	26	5
11083	1013805	5306-01-428-7032	36	4
11083	1013877	5307-01-471-4793	19	13
11083	1013895	5306-01-528-4396	12	19
11083	1013906	5306-01-471-3871	24	11
11083	1017178	5306-01-543-6617	24	19
11083	1018296	5340-01-523-8924	164	40
11083	1019161	6150-01-543-8342	66	3
11083	1020341	5340-01-544-5551	163	46
11083	1021957	5340-01-543-5767	5	10
11083	1024176	5340-01-545-4994	56	22
11083	1029460	5340-01-543-6583	5	8
11083	1029941	5306-01-544-2847	4	9
11083	1029986	5340-01-544-0929	24	22
11083	1031074	5307-01-543-5971	45	5
11083	1032006		123	33
SA251	103217	5210-00-221-1945	175	12
11083	1032543	5330-01-545-3010	BULK	27
11083	1032543-30		43	42
24617	103374	5315-00-816-1794	79	20
11083	1035962	3110-01-066-9172	83	2
11083	1042091	5305-01-505-5701	121	1
56161	10513874	4910-00-728-8227	174	39
11083	1054776	2520-01-545-0041	79	7
11083	1058034	5930-01-523-7860	51	44
11083	1063108	5330-01-543-8033	130	5
11083	1065122	4130-01-543-5596	162	6
11083	1065727	4720-01-544-2829	89	5
11083	1068704	5970-01-473-4163	42	23
			59	4
			164	18
11083	1068916	5306-01-471-4726	11	3
11083	1073114	5330-01-545-3148	69	7
11083	1076007	2530-01-545-0869	86	5
11083	1076013	5330-01-497-5738	43	36
11083	1076032	6220-01-544-9572	113	2
11083	1076056	2540-01-544-8906	83	1
11083	1076072	5340-01-474-1605	43	35
11083	1076079	2540-01-543-7924	121	8
11083	1076104	5325-01-545-3062	104	16
			105	6
11083	1076117	5340-01-545-6638	104	32
11083	1076120	5340-01-545-0082	104	17
			105	10
11083	1076125	2510-01-544-8952	104	13
			105	7
11083	1076141	5340-01-474-1673	86	24

CROSS-REFERENCE INDEXES

PART NUMBER INDEX

CAGEC	PART NUMBER	STOCK NUMBER	FIG.	ITEM
11083	1076144	9340-01-551-3412	111	5
11083	1076145	2510-01-551-3418	111	6
11083	1076146	9340-01-551-3379	111	3
11083	1079976	5331-01-514-3213	172	29
11083	1080358		41	19
11083	1084311	5305-01-505-6963	103	16
11083	1091633	5340-01-523-8945	164	44
11083	1091634	5340-01-523-8946	164	47
11083	1095080	4720-01-545-0553	149	9
11083	1095351	4720-01-544-9186	23	8
11083	1097041	6220-01-551-2888	48	23
11083	1105056	2590-01-514-3268	112	18
11083	1105059	2590-01-514-3269	112	17
11083	1106109	5355-01-473-5758	40	3
			43	8
11083	1107628	5365-01-544-1384	99	14
11083	1107886	5930-01-543-7963	40	1
11083	1110132	2540-01-545-0088	83	5
11083	1110149	5340-01-544-8166	109	4
11083	1110177	9340-01-551-3381	111	7
11083	1110178	9340-01-551-3180	111	1
11083	1110202	5340-01-545-0503	105	24
11083	1110204	5340-01-551-1835	103	18
11083	1110209	5340-01-551-1837	103	34
11083	1115042	5340-01-429-0832	48	10
11083	1116940	5365-01-543-6601	56	36
			62	20
			82	30
			138	77
			159	24
11083	1117874	5330-01-474-1586	86	15
11083	1117875	5340-01-474-2100	109	7
11083	1117878	5340-01-474-1594	86	18
11083	1117881	5340-01-545-4922	113	15
11083	1117899	5330-01-527-7212	42	11
			42	13
			42	15
			43	3
			43	5
			43	7
			43	11
			43	13
			43	15
			57	20
			118	2
			147	2
			163	3
11083	1118738	4130-01-539-5281	122	1
11083	1119050	2530-01-516-9703	79	16
11083	1120885	2590-01-516-7762	97	7
11083	1121817	4820-01-544-1863	127	4

CROSS-REFERENCE INDEXES

PART NUMBER INDEX

CAGEC	PART NUMBER	STOCK NUMBER	FIG.	ITEM
11083	1125345	2540-01-473-7050	101	15
11083	1126174	5930-01-543-7966	40	2
11083	1126727	4720-01-545-0784	82	27
11083	1127294	6240-01-545-5518	48	14
11083	1127702	4820-01-544-5906	11	5
11083	1129401	2910-01-473-7044	26	11
11083	1129736		BULK	23
11083	1129736-193		166	1
11083	1131504	5331-01-471-3780	13	6
11083	1131505	5331-01-471-5221	13	7
11083	1133632	5340-01-474-2006	37	4
11083	1133791	5315-01-544-5932	99	3
11083	1133793	5340-01-543-6013	99	15
11083	1133794	5365-01-544-4767	99	4
11083	1137543	2815-01-543-8651	5	4
11083	1137913	5307-01-543-6668	1	8
11083	1138490		43	30
11083	1138491		43	31
11083	1138955	5307-01-543-6936	14	16
11083	1138957	5340-01-543-5786	14	5
11083	1139232	5305-01-544-6087	112	20
11083	1140847	4710-01-551-1636	155	37
11083	1143140	5325-01-473-5338	163	40
11083	1143469	4820-01-530-1880	162	8
11083	1143937	5342-01-544-1393	131	2
11083	1143944	5340-01-543-6520	122	2
11083	1143951	5340-01-545-0589	43	29
11083	1143956	5340-01-543-6180	117	2
11083	1151748	6220-01-539-0923	42	30
			43	59
11083	1152422	6140-01-528-2975	55	1
11083	1167471	5920-01-505-7409	43	41
11083	1167856	5355-01-543-6992	122	3
			169	1
11083	1173787	5355-01-545-3134	43	37
11083	1173788	5310-01-545-0115	43	39
11083	1173789	5325-01-505-7419	43	38
11083	1177798		81	39
11083	1180911	4730-01-544-2411	89	20
11083	1182722	5331-01-544-4017	172	5
11083	1183122	5331-01-544-4698	88	2
11083	1183534	5930-01-444-0451	46	29
11083	1185044	6150-01-473-6733	163	54
11083	1185046	2540-01-476-4997	163	34
11083	1185597	5961-01-543-7958	57	25
11083	1187236	5340-01-544-6084	112	22
11083	1187259	5330-01-544-4091	163	6
11083	1187362	5325-01-475-7799	43	22
11083	1188118	5325-01-473-6372	26	9
11083	1189587	3040-01-474-1720	108	6
11083	1195026		41	20

CROSS-REFERENCE INDEXES

PART NUMBER INDEX

CAGEC	PART NUMBER	STOCK NUMBER	FIG.	ITEM
11083	1198397	4820-01-539-3210	138	27
11083	1210199	9330-01-544-9583	BULK	37
11083	1210199-18		95	16
11083	1210199-29		95	11
11083	1210199-40		48	3
11083	1210883	5306-01-471-5418	5	14
11083	1217746	2940-01-068-7108	20	1
11083	1217897	5306-01-545-1403	98	1
19200	12252157	4940-01-046-7109	175	5
11083	1226246	5340-01-543-4995	101	11
11083	1226316	5340-01-545-5552	64	5
11083	1228353	5306-01-543-4959	68	11
			152	16
11083	1231373	6160-01-545-0574	55	2
11083	1238851	5340-01-543-5016	163	29
11083	1239056	3040-01-545-0907	79	27
11083	1240174	5340-01-533-5862	155	38
11083	1242528	5365-01-544-1398	31	10
11083	1243548		43	32
11083	1243708	5340-01-543-6203	19	7
11083	1243815	5306-01-471-4728	11	16
			12	5
			14	4
			21	15
			33	11
11083	1244401	5355-01-544-4729	131	1
11083	1246889	4820-01-473-5061	139	10
11083	1248494	5330-01-473-4428	163	13
11083	1248495	2540-01-473-5042	163	16
11083	1257484	5365-01-544-4772	31	5
11083	1260747	4820-01-544-9493	75	23
11083	1261818	4330-01-517-2814	139	9
11083	1265985	5330-01-528-1617	138	29
11083	1266916	5930-01-543-8014	51	45
11083	1271647	4730-01-543-6184	89	2
11083	1272170	5305-01-545-0174	113	12
11083	1275447	5365-01-543-9599	94	17
			155	16
			156	13
11083	1275660	2815-01-544-1335	14	2
11083	1275661	2815-01-544-7158	14	8
11083	1275662	5365-01-543-6599	14	10
11083	1276510	5340-01-545-4972	113	10
11083	1278162	5340-01-471-5164	24	15
11083	1278613	5330-01-543-6620	169	3
11083	1280168	5340-01-543-6699	81	8
11083	1280169	3110-01-543-6971	81	41
11083	1280219	2530-01-543-3640	78	21
11083	1280782	2510-01-544-8741	106	1
			160	1
11083	1280784	2510-01-545-1814	106	2

CROSS-REFERENCE INDEXES

PART NUMBER INDEX

CAGEC	PART NUMBER	STOCK NUMBER	FIG.	ITEM
11083	1280784	2510-01-545-1814	160	2
11083	1283792	5310-01-543-6590	14	11
11083	1288614	5330-01-473-4105	26	12
11083	1293178	5310-01-473-5503	41	22
			163	32
11083	1293493	4730-01-471-5110	6	18
11083	1297184	7690-01-474-1520	41	14
11083	1298087	5365-01-545-1401	56	32
			154	47
			159	20
11083	1301916	5307-01-545-0506	108	30
11083	1303216	3030-01-517-6047	38	16
11083	1304634	2815-01-545-8361	152	3
11083	1305300	5340-01-514-1843	65	1
11083	1309811	5905-01-469-7259	51	12
11083	1309888	2590-01-471-4674	13	5
11083	1311237	5340-01-544-1375	115	4
11083	1311238	5340-01-544-4766	115	5
11083	1312807	5365-01-473-5331	123	29
11083	1313201	5340-01-523-8872	62	6
11083	1313540	5310-01-474-1733	108	11
11083	1316143	4730-01-544-9116	20	22
11083	1317708	4730-01-544-8074	155	35
11083	1317729	4720-01-545-5045	155	36
11083	1317874	2590-01-545-6672	48	30
11083	1320988	5340-01-544-1054	81	1
11083	1320994	3110-01-544-6080	81	14
11083	1322300	2590-01-545-7646	172	8
11083	1322303		172	9
11083	1322349	5340-01-544-8683	48	31
11083	1322367	4720-01-543-9621	140	68
11083	1322376	4720-01-544-9550	146	63
11083	1322393	5340-01-543-6464	141	30
11083	1322398	5340-01-543-6177	141	77
11083	1322399	4720-01-543-5644	141	25
11083	1322419	5315-01-544-4183	171	8
11083	1322427	5315-01-543-4623	171	13
11083	1322435	5340-01-543-6171	171	3
11083	1322441	2590-01-551-3345	171	2
11083	1322466	4710-01-544-1862	70	7
11083	1322467	4710-01-543-5630	70	10
11083	1322493	5340-01-543-6685	79	26
11083	1322553	5315-01-544-1050	90	4
11083	1322554	5315-01-544-3390	90	3
11083	1322694	6150-01-552-0314	51	34
11083	1323543	5340-01-544-8619	106	9
			160	9
11083	1323789	5340-01-544-3433	81	45
11083	1324763	5315-01-462-8877	173	7
11083	1325789	5340-01-480-0363	63	8
			65	4

CROSS-REFERENCE INDEXES

PART NUMBER INDEX

CAGEC	PART NUMBER	STOCK NUMBER	FIG.	ITEM
11083	1331011	5310-01-471-5216	8	26
11083	1333235	3040-01-546-0253	41	25
11083	1333260	5365-01-505-5443	34	12
11083	1334294	5330-01-526-4858	77	6
			78	26
11083	1334297	5330-01-517-3431	79	6
11083	1334824	4720-01-545-3476	145	7
11083	1336105	4710-01-543-6671	11	2
11083	1336106	5306-01-543-4949	11	20
11083	1337675	5360-01-544-4388	81	43
11083	1340404	4820-01-543-9254	73	16
11083	1340673	5306-01-543-6655	81	2
11083	1341374	5306-01-544-5917	66	2
11083	1342252	6685-01-545-0829	51	16
11083	1342540	5935-01-534-1072	43	17
			62	17
11083	1344139	5307-01-543-5955	11	19
11083	1344735	5340-01-474-1688	86	16
11083	1345214	5440-01-544-9595	107	3
			156	4
11083	1345215	5440-01-544-9603	107	2
			156	2
11083	1347258	7690-01-471-4008	123	1
11083	1353327	5340-01-543-5631	62	24
			82	43
11083	1359941	4730-01-544-9531	146	97
11083	1361953	4720-01-479-5438	BULK	10
11083	1361953-15		163	18
11083	1361953-18		163	15
11083	1361953-23		163	19
11083	1363188	5340-01-543-7009	116	7
11083	1363190	2540-01-543-7845	116	6
11083	1364593	5340-01-543-6596	67	1
11083	1364595	5340-01-544-1373	67	2
11083	1364794	5340-01-544-8307	51	36
11083	1367728	5330-01-545-0627	BULK	29
11083	1367728-180		108	7
11083	1374234	9905-01-546-2186	123	21
11083	1382054	5310-01-471-4665	6	6
11083	1382726		77	1
11083	1383198	5340-01-544-8303	48	1
11083	1387573	4940-01-268-2201	174	11
11083	1387574	5340-01-476-1734	175	4
11083	1387575	5120-01-451-1401	174	10
11083	1406140	2520-01-543-5039	78	18
11083	1407444	2815-01-471-5026	8	18
11083	1407445	2815-01-471-5024	8	19
11083	1407505	5340-01-471-5202	33	10
11083	1407506	5330-01-471-4711	33	9
			155	5
11083	1407512	4720-01-471-4539	33	12

CROSS-REFERENCE INDEXES

PART NUMBER INDEX

CAGEC	PART NUMBER	STOCK NUMBER	FIG.	ITEM
11083	1407515	5331-01-471-4712	33	6
11083	1408783	5306-01-524-0325	12	14
			58	3
11083	1409189	2540-01-544-8760	107	12
			156	10
11083	1409289	5340-01-543-6450	138	78
11083	1409291	2590-01-544-9582	93	5
11083	1409296	5340-01-543-6195	110	4
11083	1414892	2530-01-545-7649	78	1
11083	1414984	2540-01-545-1790	113	17
11083	1416188	5330-01-471-5561	33	3
11083	1417316		68	13
11083	1417483	2540-01-550-5641	136	1
11083	1417844		26	1
11083	1417844-1		26	2
11083	1417844-2		26	4
11083	1418580	5325-01-545-3055	104	6
			105	17
11083	1418589	5330-01-526-1848	21	13
11083	1418597	5330-01-526-1903	21	6
11083	1418599	5307-01-544-1009	21	5
11083	1419242	4720-01-543-8834	141	28
11083	1419777	2990-01-543-5230	21	14
11083	1419784	5306-01-526-8480	163	35
11083	1422928	5310-01-546-3169	43	28
11083	1425789	5305-01-545-3126	48	24
11083	1426251		90	5
11083	1428828	2930-01-517-3282	25	4
11083	1428937	5340-01-517-6048	152	10
11083	1430026	6150-01-545-0894	48	22
11083	1430027	6150-01-545-0899	48	21
11083	1433193	2990-01-527-1066	79	1
11083	1434969	3040-01-545-5546	172	6
11083	1434979	3040-01-545-0543	172	34
11083	1437899	4720-01-545-1406	70	9
			BULK	9
11083	1439542	7690-01-544-8259	46	18
11083	1440195	4720-01-473-6295	BULK	11
11083	1440195-.7		116	17
11083	1440195-127		115	15
11083	1440195-142		115	16
11083	1440195-2.67		116	14
11083	1440367	4730-01-473-6294	23	5
11083	1448521	4820-01-526-7286	81	38
11083	1451135	5340-01-545-3128	42	32
11083	1454501	4330-01-517-3279	26	3
11083	1454911		5	5
11083	1455242	5180-01-480-1268	174	38
11083	1455307	5340-01-545-2338	113	4
11083	1458327	5330-01-526-1893	19	17
11083	1459377		123	23

CROSS-REFERENCE INDEXES

PART NUMBER INDEX

CAGEC	PART NUMBER	STOCK NUMBER	FIG.	ITEM
11083	1460066	5340-01-545-3405	51	23
11083	1460067	5340-01-545-0623	51	28
11083	1460111	4720-01-543-5057	140	53
11083	1460112	4720-01-544-2828	137	30
11083	1460117	5340-01-543-5029	137	23
11083	1460118	5340-01-543-6465	137	35
11083	1466822	5340-01-544-5504	81	15
11083	1467453		BULK	6
11083	1467453-55		75	2
11083	1467906	4720-01-543-5743	89	46
11083	1467908	4720-01-543-6544	89	53
11083	1467986	5365-01-544-5940	171	15
11083	1467987	5365-01-543-6603	171	14
11083	1467990	5315-01-543-6631	172	43
11083	1467993	5315-01-543-7020	172	37
11083	1467996	5315-01-544-1076	172	16
11083	1468000	5315-01-544-4144	172	44
11083	1468009	5315-01-543-6616	172	32
11083	1468010	5315-01-544-4020	172	27
11083	1468013	5315-01-543-4943	172	30
11083	1468016	5315-01-543-6168	172	3
11083	1468019	5315-01-544-4196	172	36
11083	1468956	2815-01-544-4090	6	2
11083	1468957	3040-01-544-1311	6	3
11083	1471773	5925-01-526-5964	62	33
11083	1475551	5307-01-543-6659	45	6
11083	1475553	5307-01-544-3288	21	12
11083	1475577	5340-01-544-6083	92	3
11083	1483026	4820-01-471-4158	11	22
11083	1483626	5305-01-505-5576	121	4
11083	1485318	7690-01-544-8265	46	16
11083	1485689	5325-01-545-4966	43	43
11083	1487778	4720-01-543-9636	141	36
11083	1487783	4720-01-543-6530	140	23
11083	1487860	3040-01-544-8150	51	40
11083	1488298	6150-01-526-6755	62	10
11083	1488307		138	51
11083	1488315		145	8
11083	1488316		141	37
			144	19
11083	1488318		138	1
11083	1488321		137	7
			140	2
			141	46
11083	1488325		147	31
11083	1488326		146	88
11083	1488327		140	49
			149	1
			154	19
11083	1488328		148	2
11083	1488329		141	11

CROSS-REFERENCE INDEXES

PART NUMBER INDEX

CAGEC	PART NUMBER	STOCK NUMBER	FIG.	ITEM
11083	1488335		75	11
			140	38
			141	59
			146	73
11083	1488336		81	34
			137	13
			138	22
			140	34
			141	52
			145	43
11083	1488338		146	65
11083	1488339		137	19
11083	1488340		89	6
			141	73
11083	1488342		89	22
11083	1488345		87	4
			141	64
			145	28
11083	1488347		73	6
			89	63
			124	6
11083	1488351		147	48
11083	1488352		146	77
11083	1488353		82	45
			138	11
11083	1488358		149	24
			154	27
11083	1488361		82	11
11083	1488363		138	57
11083	1488364		89	49
			141	80
			145	2
11083	1488367		138	8
			145	24
			146	84
11083	1488368		147	23
			149	45
			154	63
11083	1488369		89	37
11083	1488371		145	17
11083	1488372		144	5
			145	39
11083	1488373		146	55
11083	1488375		144	11
11083	1488376		137	36
11083	1488378		81	29
			128	3
			138	18
			145	33
			148	17
11083	1488381		144	1

CROSS-REFERENCE INDEXES

PART NUMBER INDEX

CAGEC	PART NUMBER	STOCK NUMBER	FIG.	ITEM
11083	1488384		144	14
11083	1488390		145	13
11083	1488407		146	98
11083	1488410		140	29
11083	1488411		146	38
11083	1488418		154	40
11083	1488419		147	14
11083	1488424		145	21
11083	1488428		89	54
			146	47
11083	1488433		138	5
			146	80
11083	1488435		82	50
11083	1488436		89	42
			138	44
11083	1488443		81	16
11083	1488444		138	41
			146	51
11083	1490777	5355-01-531-1641	86	21
11083	1492091	5331-01-526-5160	51	7
11083	1494359	5342-01-543-6610	132	3
11083	1495532	2590-01-545-8672	82	1
11083	1495624	5340-01-544-5536	162	1
11083	1495733	2510-01-513-1119	173	8
11083	1496117	5342-01-471-4629	24	13
11083	1499176	2815-01-544-4087	5	1
11083	1501293	5305-01-544-0031	132	4
11083	1503056		140	42
11083	1503060		148	7
11083	1503065		75	25
11083	1503992	4910-01-546-0552	175	3
11083	1504033		89	59
11083	1504036		89	19
11083	1504037		154	37
11083	1504043		138	66
			140	16
11083	1505968		147	44
11083	1505984	5306-01-543-4947	162	12
11083	1508982	4720-01-545-0453	148	1
11083	1510894	2540-01-545-3179	163	10
11083	1515145	4730-01-534-3393	139	8
11083	1515715	2510-01-505-6037	121	3
11083	1516320	5120-01-491-0560	174	18
11083	1518451	4720-01-543-5651	141	79
11083	1520983	4710-01-544-9104	24	37
11083	1522763	2540-01-544-2701	115	10
11083	1522764		115	6
11083	1525717	5340-01-523-8938	143	9
11083	1525718	5340-01-526-5222	143	9
11083	1532985	6680-01-543-4473	152	15
11083	1534856	5340-01-544-8180	107	10

CROSS-REFERENCE INDEXES

PART NUMBER INDEX

CAGEC	PART NUMBER	STOCK NUMBER	FIG.	ITEM
11083	1534856	5340-01-544-8180	156	11
11083	1535710	6140-01-545-0940	55	3
11083	1536237		146	27
			149	5
			154	10
11083	1536241		149	33
			154	48
11083	1539706	5340-01-545-2342	107	8
			156	12
11083	1541580	5310-01-544-8628	103	19
11083	1542302	5365-01-545-0467	107	9
SA251	155-903	5210-00-473-9350	175	27
11083	1550576	5340-01-543-6702	45	9
11083	1554957	2540-01-543-3684	112	3
11083	1555779	2540-01-543-3659	116	11
11083	1555781	2540-01-543-8714	116	18
11083	1555783	2540-01-526-7380	116	3
11083	1555784	2540-01-526-7381	116	2
11083	1556258		89	1
11083	1559816	4710-01-544-9513	164	15
11083	1561685	2540-01-544-5954	112	4
11083	1564130	5340-01-544-3495	83	55
			138	61
11083	1564281		82	22
11083	1564449	2590-01-445-8431	43	9
			163	1
11083	1572393	5340-01-544-5577	38	10
11083	1574835	9905-01-546-2185	161	6
11083	1582829	5340-01-543-6005	38	14
11083	1585089	5945-01-526-4236	43	33
			57	14
11083	1587864	7690-01-544-8271	123	2
11083	1592829	4720-01-544-9508	23	11
11083	1595255	4730-01-544-2795	15	7
11083	1600149		21	11
11083	1602243	4720-01-545-1408	BULK	34
11083	1602243-104		95	8
11083	1602243-66		147	43
11083	1602247	3120-01-524-0586	BULK	1
11083	1602247-50		147	35
11083	1602248	5640-01-477-0056	BULK	20
11083	1602248-49		141	26
11083	1602443	5930-01-526-7609	29	4
11083	1604657	3040-01-546-0246	161	3
11083	1606988	2590-01-529-8989	13	4
11083	1608499	5310-01-474-1856	124	12
11083	1608744	5306-01-543-7307	82	9
11083	1617620	5305-01-544-5915	121	7
11083	1618042	9340-01-551-3390	111	2
11083	1619639	5340-01-545-1476	104	15
			105	9

CROSS-REFERENCE INDEXES

PART NUMBER INDEX

CAGEC	PART NUMBER	STOCK NUMBER	FIG.	ITEM
11083	1619640	5340-01-545-0078	104	4
			105	18
11083	1619641	5340-01-545-4217	104	3
			105	19
11083	1619642	5340-01-544-8662	104	8
			105	14
11083	1619645	5340-01-544-8157	103	30
11083	1619647	5340-01-544-8162	104	33
			105	23
11083	1619820	5315-01-471-5303	2	8
11083	1620236	5325-01-471-5434	33	4
11083	1620237	5365-01-543-6968	33	2
11083	1620761	4730-01-543-6833	12	6
11083	1621504	5306-01-543-7210	16	12
11083	1621565	5365-01-524-0590	9	5
11083	1621981	2510-01-544-8738	106	7
11083	1621982	2510-01-545-6974	106	6
11083	1621983	2510-01-544-8753	106	5
11083	1621984	2510-01-545-8460	106	8
			160	8
11083	1622000	5310-01-543-6612	24	4
11083	1622189	9340-01-551-3370	111	4
11083	1628718		174	54
11083	1629754	5330-01-526-1942	12	2
11083	1629992	5340-01-544-1021	19	8
11083	1631201	2590-00-135-6277	53	1
11083	1633101	5340-01-545-0219	161	2
11083	1633234	9905-01-474-5766	123	3
11083	1634295	5340-01-545-0598	149	21
			154	24
11083	1634356	4720-01-545-4184	BULK	36
11083	1634356-190		142	3
11083	1634361	4720-01-544-9503	95	17
11083	1634362	4720-01-544-9148	95	10
11083	1636412	3040-01-546-0258	80	1
11083	1639324	7690-01-544-8577	123	25
11083	1640351	4720-01-545-0773	149	19
			154	18
11083	1641908	4720-01-543-6173	144	23
11083	1643207	5330-01-517-3412	17	2
11083	1645545		140	12
11083	1645567		73	22
			75	28
			89	28
			138	37
			146	70
11083	1645577		141	33
11083	1645586		138	48
11083	1646862		154	1
11083	1646874		73	25
11083	1647556	5340-01-527-6479	47	5

CROSS-REFERENCE INDEXES

PART NUMBER INDEX

CAGEC	PART NUMBER	STOCK NUMBER	FIG.	ITEM
11083	1652273		138	54
11083	1653133	4720-01-544-1901	89	67
11083	1656365		81	20
11083	1668725	5340-01-544-0939	12	10
11083	1669286	2540-01-543-3615	121	11
11083	1669287	2510-01-545-0868	100	1
11083	1682457	2540-01-544-8635	104	30
11083	1682458	2540-01-545-1779	105	28
11083	1683504	5330-01-545-0391	88	5
11083	1687873	4320-01-527-0761	88	1
11083	1688280	2920-01-474-1759	41	16
11083	1688389	5325-01-524-0603	123	22
			161	9
11083	1689027	4320-01-527-0763	124	17
11083	1692867	7690-01-544-8218	155	23
11083	1692943	4720-01-543-6830	89	41
11083	1693995	5330-01-544-9220	104	34
			105	22
11083	1694274		89	31
11083	1695862		141	43
11083	1697434	4140-01-524-6666	166	10
11083	1697435	5995-01-543-5564	166	19
11083	1699049	4720-01-523-5130	147	9
11083	1709220	7690-01-474-3533	123	30
11083	1709360	5325-01-544-8646	43	40
11083	1711411	5307-01-543-6663	1	13
11083	1712208	5925-01-498-1823	46	9
11083	1712211	5925-01-526-5965	46	21
11083	1713667	3120-01-551-3349	97	4
11083	1716029	6150-01-543-5565	59	9
11083	1716723		137	31
			146	23
11083	1720304	2590-01-528-6682	155	25
11083	1720305	5340-01-528-6253	155	27
11083	1722307	6150-01-551-2535	61	2
11083	1728591	5310-01-505-5512	108	17
			120	6
11083	1730064	4730-01-544-9527	75	7
11083	1733064	6220-01-093-7946	41	5
11083	1734032	4820-01-543-9733	126	1
11083	1737225		82	39
11083	1738277	5331-01-543-6570	1	7
11083	1739774		175	10
11083	1741486		168	1
11083	1744246	5340-01-543-6025	101	21
11083	1745907	5340-01-527-6630	147	37
11083	1746118		141	68
11083	1746381	5340-01-545-6297	108	4
11083	1749725	2540-01-545-8114	83	8
11083	1754782		149	11
			154	9

CROSS-REFERENCE INDEXES

PART NUMBER INDEX

CAGEC	PART NUMBER	STOCK NUMBER	FIG.	ITEM
11083	1760118	2530-01-544-2698	84	4
11083	1760623	5365-01-544-5940	171	7
11083	1760624	5365-01-543-5602	171	6
11083	1761579	4720-01-543-8839	138	64
11083	1763900	3040-01-523-9438	165	1
11083	1767558	4720-01-544-9501	147	22
11083	1770026	4820-01-544-8617	69	13
11083	1771452	5310-01-543-6170	172	42
11083	1772391	5330-01-529-2512	8	12
11083	1774595		174	6
11083	1777860	4720-01-485-7426	175	15
11083	1781781	5340-01-545-5047	63	12
11083	1782593	5340-01-545-0500	103	31
			104	26
11083	1790006	5930-01-543-7970	57	1
11083	1794324	5310-01-543-6532	29	5
11083	1796397		123	32
11083	1797071	5306-01-544-3296	19	15
11083	1798235	5315-01-507-1544	25	17
11083	1803528	4130-01-543-5706	167	1
11083	1803730	4330-01-526-5246	25	2
11083	1804686	5305-01-545-0586	25	10
11083	1805098	2510-01-544-8696	113	8
11083	1807486	5340-01-544-3385	169	2
11083	1807487	4130-01-543-5499	169	4
11083	1807503		68	1
11083	1808860	6150-01-543-5989	57	21
11083	1808871	6150-01-551-2808	56	15
11083	1808872	6150-01-551-6599	56	43
			159	32
11083	1808873	6150-01-551-7248	56	38
			159	26
11083	1808874	6150-01-552-0355	56	42
			159	31
11083	1809873	4120-01-552-2813	163	9
11083	1809933		146	95
11083	1836317	5340-01-529-3183	8	14
11083	1836318	4710-01-543-6503	11	12
11083	1837528	2930-01-545-7643	170	1
11083	1838597	2815-01-517-4210	51	14
11083	1845293	5365-01-505-5646	41	21
11083	1845484	3020-01-543-5797	4	2
11083	1846352	5340-01-543-9438	141	22
11083	1846353	5340-01-543-7172	141	29
11083	1849975		138	31
11083	1850974	5340-01-543-6447	152	9
11083	1851016	2930-01-526-5256	32	1
11083	1851017	2930-01-526-5314	22	3
11083	1851021	4720-01-544-8621	35	4
11083	1851023	4720-01-517-6890	35	1
11083	1851024	4720-01-517-6895	35	3

CROSS-REFERENCE INDEXES

PART NUMBER INDEX

CAGEC	PART NUMBER	STOCK NUMBER	FIG.	ITEM
11083	1851027	5340-01-543-6985	32	7
11083	1851036	5340-01-543-8695	94	4
11083	1851040	5340-01-543-6476	68	18
11083	1851041	5340-01-544-4751	68	8
11083	1851046	2930-01-543-7952	37	14
11083	1851049	5340-01-544-1363	32	15
11083	1851546	5305-01-506-0722	6	14
11083	1852327		138	32
11083	1852768	5930-01-543-7972	57	19
11083	1853596	5340-01-543-9426	140	11
11083	1855209	4820-01-543-8830	138	26
11083	1855629	5340-01-544-1369	41	15
11083	1860357	5340-01-543-7015	147	6
11083	1860359	5340-01-544-1080	147	12
11083	1860815	5306-01-544-5518	101	1
11083	1860817	5310-01-506-0726	101	2
			120	4
11083	1862799	5340-01-544-8183	155	6
11083	1864415	3040-01-545-5549	80	10
11083	1864943	2530-01-544-1970	84	1
11083	1872082	5340-01-545-1487	109	8
11083	1872868	2940-01-545-8357	20	15
11083	1879023	4720-01-544-9657	146	26
11083	1883823	6620-01-526-2857	81	25
11083	1890942	2590-01-545-8482	107	15
11083	1891707	4730-01-544-8178	164	46
11083	1895601	5331-01-543-6952	11	13
11083	1903085	3040-01-546-0250	150	1
11083	1903611	4820-01-544-9500	150	2
11083	1904555	2510-01-543-6507	41	18
11083	1904556	5340-01-543-7821	41	4
11083	1904559	5340-01-545-0104	42	1
11083	1904563	5340-01-544-1370	41	17
11083	1911678	4720-01-544-9228	145	6
11083	1911679	4720-01-544-9499	145	27
11083	1912226	2520-01-516-9700	76	17
11083	1912349	6680-01-545-4677	13	3
11083	1915049	4720-01-543-6750	9	4
11083	1918921	5306-01-544-1048	116	10
11083	1919177	2510-01-543-3909	94	11
11083	1919182	5340-01-544-4371	94	14
11083	1919184	5340-01-543-9719	94	1
11083	1919192	5340-01-544-4755	94	25
11083	1920086	4810-01-544-9516	129	1
11083	1922331		175	34
11083	1924342	4720-01-544-9187	23	2
11083	1927625	5930-01-543-7946	147	1
11083	1927949	4720-01-543-6757	137	12
11083	1934640	2520-01-516-9698	76	5
			76	13
11083	1938107	6220-01-543-7937	48	26

CROSS-REFERENCE INDEXES

PART NUMBER INDEX

CAGEC	PART NUMBER	STOCK NUMBER	FIG.	ITEM
11083	1938108	5340-01-543-7126	48	28
11083	1943751	3010-00-009-2372	145	12
11083	1947109	5365-01-544-4770	172	39
11083	1947110	5365-01-543-9648	172	40
11083	1947111	5365-01-544-6000	172	14
11083	1947112	5365-01-543-4960	172	13
11083	1947265	6620-01-526-1478	52	5
11083	1950916	5930-01-551-2490	43	10
11083	1950917	5930-01-551-3132	43	6
11083	1950921	5930-01-551-5602	43	14
11083	1950922	5930-01-551-2421	43	12
11083	1950925	5930-01-551-2407	42	14
11083	1951141	5365-01-545-4193	25	15
11083	1956525	4730-01-523-9373	148	29
11083	1956526	4730-01-523-9375	148	6
11083	1957004	5365-01-505-7374	6	16
11083	1958673	5340-01-544-4157	147	20
11083	1960055		174	3
11083	1961185	2815-01-517-5399	51	15
11083	1978820	6115-01-526-6757	38	4
11083	1983393	5325-01-544-9216	103	8
11083	1988933	2510-01-545-6758	108	12
11083	1988942	5340-01-544-8681	108	28
11083	1988943	5340-01-544-8222	108	31
11083	1988944	5340-01-545-3498	108	33
11083	1988945	2510-01-545-2042	108	22
11083	1988946	2510-01-545-7688	108	27
11083	1988954	2510-01-545-1935	108	19
11083	1988955	2510-01-545-7712	108	19
11083	1988959	5340-01-545-0620	108	18
11083	1988961	5340-01-545-3079	108	8
11083	1993108		5	7
11083	1993109		5	13
11083	1994152	5340-01-543-6492	1	12
11083	1994284	5340-01-543-6673	30	6
11083	1994297	5340-01-544-5563	30	5
11083	1995117	2990-01-517-4837	30	1
11083	1997041	4130-01-552-2948	166	7
11083	1997042		166	15
11083	1997043	4130-01-543-5614	166	16
11083	1999252	5331-01-526-1896	51	2
11083	1999267	5331-01-526-1832	51	11
11083	1999751	5331-01-524-0182	51	4
11083	2D2628	3810-01-480-0985	84	10
11083	2D2629	5325-01-537-8374	84	15
11083	2D2630	5310-01-537-8375	84	14
11083	2D2631	2640-00-859-0382	84	13
11083	2D2633	5999-01-437-8468	84	11
11083	2G8767	5310-01-178-7414	56	25
			159	17
11083	2H3923	5310-01-473-5274	163	25

CROSS-REFERENCE INDEXES

PART NUMBER INDEX

CAGEC	PART NUMBER	STOCK NUMBER	FIG.	ITEM
11083	2H7152	5310-01-063-2968	48	7
11083	2L1701	5306-00-423-8068	161	7
11083	2L9653	5340-00-081-5647	164	34
11083	2M3433	5325-01-544-8659	64	12
11083	2M9780	5330-00-939-0687	12	21
			25	5
			72	2
			87	7
			140	31
			141	65
			144	6
			145	11
			145	14
			145	29
			145	42
			146	17
			146	21
			149	25
			154	28
11083	2N1287	4730-00-647-3207	10	7
11083	2N3477	5305-01-059-0875	80	6
11083	2P1279	5310-00-186-9550	144	17
11083	2P1293	5310-01-292-8365	137	34
			142	15
			154	67
11083	2P1692	5331-01-068-6104	69	14
11083	2P2537	5307-01-069-1419	12	30
11083	2P8278	2910-01-343-8535	174	19
11083	2S3440	4730-01-061-8216	33	13
11083	2S3745	5305-01-473-5601	163	39
11083	2S4078	5331-00-429-3542	146	44
11083	2T3360	5355-01-438-0856	86	3
11083	2Y5829	5310-01-359-9329	128	9
11083	2001898	5970-01-543-7976	147	27
11083	2002044	4730-01-545-2975	69	18
11083	2002739	5365-01-543-8722	1	11
11083	2006345	4730-01-544-9103	82	38
			138	81
			155	9
11083	2010950	4810-01-526-7280	129	2
11083	2010952	2520-01-543-6542	67	3
11083	2011024	5340-01-545-4943	42	31
11083	2011803	5340-01-543-6087	162	14
11083	2013316	4730-01-545-2978	69	20
11083	2014825	2530-01-545-8359	86	19
11083	2018745	5330-01-517-3400	36	2
11083	2019515	2520-01-543-3599	76	16
11083	2019517	2520-01-543-7806	76	12
11083	2020360	5340-01-545-6300	25	9
11083	2020363		166	2
11083	2020392	2510-01-544-8766	107	1

CROSS-REFERENCE INDEXES

PART NUMBER INDEX

CAGEC	PART NUMBER	STOCK NUMBER	FIG.	ITEM
11083	2020392	2510-01-544-8766	156	1
11083	2020393	2510-01-545-8111	107	4
			156	5
11083	2021713	4730-01-544-8080	149	17
			154	16
11083	2024732	2540-01-543-8677	112	6
11083	2024736	2540-01-543-3717	112	14
11083	2024738	2540-01-543-8682	112	10
11083	2024739	5340-01-543-6593	112	12
11083	2026614	6220-01-527-7525	47	8
11083	2027216	2930-01-544-9565	101	5
11083	2027857	5340-01-543-6033	101	4
11083	2029801	5340-01-544-0082	152	23
11083	2029802	5340-01-544-4702	152	24
11083	2040358	7690-01-544-8212	42	2
11083	2040813	5306-01-543-6217	110	3
11083	2041126	5340-01-544-6085	112	13
11083	2041370	5330-01-526-5164	52	6
			153	5
11083	2042281	5975-01-543-8005	46	28
			48	5
			62	26
			82	37
11083	2044342	5340-01-544-5565	114	1
11083	2048000	5975-01-543-7985	46	27
			62	27
			82	29
			149	31
			154	34
11083	2048799	5930-01-543-8008	118	1
11083	2051627	5340-01-544-1059	20	14
11083	2052214	2510-01-544-9566	37	9
11083	2052345		5	9
11083	2053669	6105-01-543-5977	37	1
11083	2053961	5340-01-544-5544	82	56
11083	2054587	3020-01-543-4039	124	10
11083	2055266	2530-01-526-7640	87	8
11083	2055469	9330-01-544-1062	82	36
11083	2056024	5340-01-544-1060	166	22
11083	2056025	5340-01-543-7110	166	20
11083	2056026	5340-01-543-5694	166	3
11083	2056027	5340-01-543-5060	166	21
11083	2056028	5340-01-543-5498	166	6
11083	2057105	4720-01-544-9496	146	11
11083	2057108	4720-01-544-9658	146	2
11083	2057110	4710-01-545-0593	146	31
11083	2058439		152	21
11083	2061345	5340-01-544-8172	43	16
11083	2064431	4720-01-544-9227	164	32
11083	2064432	4720-01-545-0580	164	1
11083	2064435	5340-01-543-6181	164	39

CROSS-REFERENCE INDEXES

PART NUMBER INDEX

CAGEC	PART NUMBER	STOCK NUMBER	FIG.	ITEM
11083	2064441	4730-01-545-4182	25	3
11083	2067433	2520-01-545-0875	66	1
11083	2068818	4730-01-544-9546	152	11
11083	2069546	5330-01-544-4703	152	14
11083	2073362	4710-01-545-0788	164	37
11083	2073366	4720-01-545-0587	164	13
11083	2080059	6150-01-546-1006	174	8
11083	2082300	4720-01-544-9222	75	18
11083	2082301	4720-01-544-9223	75	22
11083	2086097	5340-01-544-4726	132	1
11083	2089645	6150-01-543-5992	57	13
11083	2089646	6150-01-543-5997	57	18
11083	2090091	2815-01-530-0825	6	10
11083	2090092	2815-01-529-6489	6	7
11083	2090093	3120-01-543-5159	6	8
			6	11
11083	2090271	4820-01-551-2426	125	4
11083	2090381	6130-01-551-5333	46	26
11083	2090789	4730-01-544-9660	146	37
11083	2093149	2940-01-543-7941	139	6
11083	2094578	4730-01-544-9524	23	12
11083	2094580	4720-01-544-9195	23	3
11083	2097801	4720-01-551-1633	154	51
11083	2099218	2815-01-526-0116	3	1
11083	2099219	5306-01-523-9677	3	3
11083	2105545	4710-01-544-2816	141	72
11083	2110052	5310-01-523-8881	42	29
			43	49
11083	2110608	5340-01-543-5003	93	1
11083	2110622	5340-01-543-6078	93	2
11083	2111058	4710-01-543-9374	140	28
11083	2112092		37	5
11083	2114230	4710-01-544-1968	140	32
11083	2114793	4720-01-544-9661	146	61
11083	2121305	4810-01-551-2470	128	1
11083	2125940	4720-01-545-1389	149	42
			154	54
11083	2125942	4720-01-551-2476	154	5
11083	2127521	4820-01-544-9532	146	43
11083	2128136	5340-01-544-4714	127	3
11083	2128743		38	1
9A194	21300	6625-01-260-2387	174	48
11083	2134574	5340-01-544-6088	112	11
11083	2134576	2540-01-544-5959	112	16
11083	2134579	2540-01-543-3729	112	15
11083	2135065	5340-01-543-6153	142	10
11083	2137436	4720-01-544-9208	82	49
11083	2137437	4720-01-544-9209	82	44
11083	2137438	4720-01-543-6058	89	62
11083	2138783	5340-01-543-5025	140	9
11083	2139100	6350-01-533-7015	54	1

CROSS-REFERENCE INDEXES

PART NUMBER INDEX

CAGEC	PART NUMBER	STOCK NUMBER	FIG.	ITEM
11083	2139710	5330-01-543-6642	14	7
11083	2140734	4720-01-543-5658	137	29
11083	2141042	5340-01-545-0192	149	30
			154	33
11083	2141542	4720-01-543-6832	89	12
11083	2142232	4720-01-543-8967	146	46
11083	2143203	5310-01-543-6587	3	6
11083	2144153	2530-01-543-8700	87	1
11083	2144768	5340-01-546-0178	79	14
11083	2144916	7690-01-544-4374	41	1
11083	2145389	4720-01-551-2404	147	47
11083	2145390	4720-01-544-9502	147	51
11083	2145514	5325-01-544-4180	23	6
11083	2145515	4710-01-544-9512	23	10
11083	2147091	4720-01-544-2833	144	9
11083	2147092	4720-01-544-1892	144	18
11083	2147093	4720-01-543-9266	138	15
11083	2147094	4720-01-543-9256	138	65
11083	2147096	4720-01-543-6046	141	78
11083	2147098	4720-01-543-5069	89	26
11083	2147458	5306-01-523-7414	35	2
11083	2147636	2540-01-543-8725	116	5
11083	2148917	4720-01-544-9221	82	26
11083	2149059	6150-01-545-0902	65	5
11083	2149563	2510-01-545-6712	110	1
11083	2149564	5340-01-543-9463	110	2
11083	2153810	4720-01-545-0776	149	28
			154	31
11083	2153886	5440-01-544-9609	107	11
			156	14
11083	2154012	4720-01-544-9189	23	7
11083	2154350	3830-01-551-2654	161	1
11083	2158188	5340-01-544-5560	145	32
11083	2162892	5306-01-544-2851	21	9
11083	2163446	6685-01-517-9295	51	8
11083	2164983	4730-01-551-1614	23	9
11083	2166945	4730-01-545-4187	35	5
11083	2166969	4720-01-543-6759	142	1
11083	2168335	2815-01-543-8658	2	1
11083	2168348		11	15
11083	2168396	4720-01-543-6835	89	35
11083	2168398	4720-01-543-6072	89	15
11083	2168619		6	1
11083	2168625	2815-01-517-3834	11	17
11083	2168632	2815-01-544-7152	8	6
11083	2168634	3020-01-523-8543	8	1
11083	2168690	4710-01-543-6515	21	8
11083	2168699	2815-01-543-7802	16	1
11083	2168703	5330-01-526-1873	16	7
11083	2168705	5306-01-543-4951	16	11
11083	2168708	2815-01-544-5918	16	6
11083	2168709	2815-01-543-5502	16	3

CROSS-REFERENCE INDEXES

PART NUMBER INDEX

CAGEC	PART NUMBER	STOCK NUMBER	FIG.	ITEM
11083	2168710	2815-01-544-5925	16	4
11083	2168712	5330-01-526-1882	16	5
11083	2169053	4730-01-543-6653	24	7
11083	2169069	5340-01-543-4969	44	4
11083	2169086	5365-01-544-6082	24	20
			58	5
11083	2169092	4320-01-543-6649	24	17
11083	2169600	5306-01-543-5788	7	9
11083	2169602	2990-01-544-4098	7	6
11083	2169604	5330-01-517-3382	7	5
11083	2169606	2815-01-544-1295	7	4
11083	2169638	5330-01-526-1949	12	3
11083	2169643	5330-01-543-6647	12	13
11083	2169737	6685-01-517-5762	33	5
11083	2169743	2930-01-544-1325	33	1
11083	2169752	5310-01-526-4838	24	16
11083	2169786	2910-01-517-2749	17	1
11083	2169790	3020-01-544-0545	19	16
11083	2169824	2910-01-517-2754	19	18
11083	2169826	4710-01-543-6519	19	1
11083	2169828	4710-01-543-6733	19	2
11083	2169830	4710-01-543-6525	19	3
11083	2169831	4710-01-543-6737	19	4
11083	2169834	4710-01-544-1811	19	5
11083	2169835	4710-01-543-9276	19	6
11083	2170099	5310-01-543-7070	45	7
11083	2170100	5365-01-544-1381	45	10
11083	2170113	6625-01-546-1095	174	29
11083	2170288	5340-01-544-1222	141	56
11083	2170595	2815-01-543-7804	16	9
11083	2170596	5330-01-543-6951	16	10
11083	2170721	4730-01-526-2853	24	18
11083	2170956	5340-01-543-6008	44	5
11083	2172768	4720-01-544-9505	147	13
11083	2172769	4720-01-544-9495	147	10
11083	2173609	4720-01-544-9204	82	31
11083	2174101	4710-01-543-9375	146	87
11083	2174154	2540-01-545-6693	86	20
11083	2174155	2530-01-532-5377	86	22
11083	2176316	4720-01-543-5066	89	58
11083	2176419	4720-01-543-6949	73	5
11083	2176729	6150-01-543-4503	59	2
11083	2178112	4710-01-543-9368	140	64
11083	2178477	5340-01-543-5988	58	12
11083	2179038	5306-01-543-6219	58	11
11083	2179039	5975-01-543-7982	9	2
			58	4
11083	2180255	5340-01-543-6463	140	66
11083	2180256	5340-01-544-4720	140	65
11083	2182401	2510-01-516-9697	41	8
11083	2190302		123	4

CROSS-REFERENCE INDEXES

PART NUMBER INDEX

CAGEC	PART NUMBER	STOCK NUMBER	FIG.	ITEM
11083	2191388	4720-01-551-2379	145	48
11083	2191389	4720-01-545-0588	145	47
11083	2191803	4710-01-543-6828	7	2
11083	2191818	4730-01-543-6742	12	27
11083	2192172	2930-01-525-9752	KITS	
11083	2192443	4710-01-543-6657	24	21
11083	2192450	5340-01-544-1941	24	1
11083	2192453	4710-01-543-6660	24	12
11083	2192512	3120-01-525-8560	3	2
11083	2197845	5340-01-543-6172	138	80
11083	2198604	5340-01-544-5529	24	34
11083	2200497	4720-01-544-4175	146	83
11083	2201241	5340-01-543-6554	68	7
11083	2201865	5340-01-543-6082	18	5
11083	2205574	7690-01-544-8275	123	5
11083	2207171	3040-01-544-5908	12	15
11083	2210852	4710-01-543-6956	140	62
11083	2213206	4710-01-543-6948	141	63
11083	2213234	4720-01-543-5638	140	20
11083	2214520	5330-01-543-6644	12	26
11083	2215278	3040-01-543-5666	12	25
11083	2216863	4710-01-543-5519	21	19
11083	2216864	4730-01-543-6708	21	3
11083	2216872	5340-01-543-5785	2	6
11083	2216893		174	28
11083	2229020	2940-01-545-1946	20	5
11083	2229021	2940-01-545-1950	20	6
11083	2234717	5340-01-543-6466	131	13
11083	2237937	2540-01-543-5512	112	19
11083	2238185	4710-01-544-9150	147	3
11083	2238186	4710-01-544-9184	147	11
11083	2238187	4720-01-544-9533	147	55
11083	2238188	4720-01-544-9535	147	40
11083	2239699	3040-01-543-5723	134	1
11083	2240672	7690-01-544-1067	123	26
11083	2241159	5895-01-544-5202	42	5
11083	2242262	5340-01-544-4013	20	8
11083	2242263	2940-01-545-3168	20	9
11083	2242738		58	10
11083	2244536	2990-01-525-4676	50	1
11083	2244899	6625-01-546-1114	174	30
11083	2245132		133	3
11083	2245152	4820-01-544-1865	133	2
11083	2246792	2520-01-543-7817	76	4
11083	2246793		76	3
11083	2247830		123	6
11083	2248629	5930-01-551-2411	43	4
11083	2248945	7690-01-551-5086	123	7
11083	2249021		123	8
11083	2249855	7690-01-544-8283	123	9
11083	2250313		123	10
11083	2251057		128	2

CROSS-REFERENCE INDEXES

PART NUMBER INDEX

CAGEC	PART NUMBER	STOCK NUMBER	FIG.	ITEM
11083	2253800	2510-01-545-1937	108	16
11083	2253801	2510-01-545-6677	108	16
11083	2254150	9905-01-530-5591	123	11
11083	2254256	7690-01-551-5151	123	12
11083	2254287	4820-01-543-5500	32	4
11083	2255224	6150-01-551-2833	46	13
11083	2258266	6625-01-343-3370	174	17
11083	2261242	7690-01-551-5082	123	13
11083	2261275	7690-01-551-5286	123	14
11083	2261354	4820-01-545-3429	154	44
11083	2261832	5340-01-545-0577	109	11
11083	2262095	7690-01-544-4739	128	12
11083	2262270	4910-01-546-6287	174	33
11083	2262869		73	11
11083	2262951	5340-01-545-2309	43	46
11083	2263378	5340-01-545-0592	43	50
11083	2263863	4720-01-543-9607	138	71
11083	2265923	5340-01-545-0616	62	18
11083	2268778	5340-01-543-6692	58	8
11083	2268780	5340-01-543-6689	58	6
11083	2269424	5325-01-543-6488	24	29
11083	2270104	2930-01-543-8675	32	11
11083	2274306	4710-01-545-3435	154	36
11083	2274321	2940-01-545-9577	20	4
11083	2274376	2930-01-529-7675	32	12
11083	2277392	5310-01-544-3379	116	9
11083	2278234	4720-01-543-8964	146	33
11083	2280820		152	7
11083	2285878	2510-01-544-8908	103	25
11083	2287316	7690-01-551-5147	155	21
11083	2287372	4320-01-544-9521	72	6
11083	2287477	5340-01-544-1023	58	1
11083	2287696	2540-01-551-3428	108	14
11083	2288943	5340-01-544-5545	19	9
11083	2288956	5340-01-543-5001	45	13
11083	2288960	5340-01-543-5979	45	12
11083	2289132	4320-01-533-5977	18	11
11083	2292935	4710-01-544-9111	75	16
11083	2292939	5340-01-544-0035	139	1
11083	2292940	5340-01-543-5636	75	10
11083	2292941	5340-01-543-5673	75	21
11083	2293557	5331-01-543-6954	7	7
11083	2293558	5306-01-543-5781	7	8
11083	2295115	4720-01-551-2735	154	52
11083	2299286	5330-01-543-5046	94	21
70052	2300		117	1
11083	2300917	4730-01-545-1398	27	4
11083	2303776	5330-01-526-5111	12	7
11083	2305771	5930-01-527-0723	51	48
11083	2306142	4720-01-551-1617	154	4
11083	2307246	5340-01-543-6508	94	22

CROSS-REFERENCE INDEXES

PART NUMBER INDEX

CAGEC	PART NUMBER	STOCK NUMBER	FIG.	ITEM
11083	2309800	4720-01-543-5062	140	8
13446	2314H001	5306-01-428-7034	58	9
13446	2314H102	5306-01-428-7041	45	11
			51	9
			58	2
13446	2314K166	5306-01-428-7030	36	5
11083	2315158		13	1
11083	2318047	4720-01-538-6803	12	8
11083	2318048	4720-01-538-7820	12	9
11083	2323368	4710-01-543-6745	24	8
11083	2326555	6150-01-551-2786	62	16
11083	2332549	4820-01-544-9536	130	1
11083	2335035	5340-01-545-0573	28	5
11083	2337133	4810-01-543-5051	128	7
11083	2337387	2540-01-543-5675	112	1
11083	2341814	2540-01-545-7727	103	33
11083	2342637	2920-01-543-5506	39	2
11083	2342862	2910-01-545-8358	18	3
11083	2344325	6220-01-545-5466	47	1
11083	2346110	2930-01-517-3410	36	1
11083	2346861	5330-01-543-6197	33	17
11083	2346862	4320-01-471-4897	33	16
11083	2347730	6240-01-545-5521	47	6
11083	2347731	5340-01-531-1009	47	4
11083	2347967	2940-01-545-1954	26	10
11083	2348737	2590-01-545-8363	152	8
11083	2355917	5307-01-544-5538	45	4
11083	2356281	5975-01-543-7975	45	1
11083	2356947	2590-01-545-3172	120	5
11083	2356948	5340-01-543-5767	120	3
11083	2357350	3040-01-545-0549	172	22
11083	2357353	3040-01-545-0120	172	24
11083	2357390	5315-01-543-6491	172	21
11083	2357401	3040-01-545-5538	171	1
11083	2359694	2950-01-543-7959	21	16
11083	2362295	4720-01-544-9497	163	5
11083	2364233	5930-01-543-7925	163	2
11083	2364234	5930-01-551-7899	43	2
11083	2364545	5310-01-545-6304	27	5
11083	2364899	2910-01-551-3549	155	33
11083	2365842	5340-01-544-5919	80	9
11083	2366581	2590-01-544-8720	113	14
11083	2366923	5930-01-523-7888	164	22
11083	2368013	5340-01-544-8718	28	4
11083	2380347	5315-01-544-9159	173	18
11083	2384864	5340-01-545-3144	83	10
11083	2388292	5306-01-543-5966	16	2
11083	2391134	4820-01-551-9292	28	7
11083	2393322	5340-01-544-9515	114	4
11083	2394233	7690-01-551-5279	123	15
11083	2396770	3040-01-545-2740	72	1

CROSS-REFERENCE INDEXES

PART NUMBER INDEX

CAGEC	PART NUMBER	STOCK NUMBER	FIG.	ITEM
11083	2396989	9905-01-530-4638	123	16
11083	2399891	2540-01-544-9564	114	6
11083	2400205	5330-01-543-5053	2	7
11083	2400362	5340-01-545-6738	103	36
11083	2402562	2510-01-545-1784	113	1
11083	2402563	5340-01-544-8707	113	9
11083	2404673	5340-01-543-6696	80	2
11083	2405843	4710-01-544-8639	51	37
11083	2407956	7690-01-551-5282	123	17
11083	2408159	5340-01-544-1368	31	11
13446	2415928	5310-01-425-5408	24	6
11083	2416172		75	5
11083	2416189	4730-01-544-1873	143	8
11083	2416190	4730-01-543-5689	143	8
11083	2418368	5930-01-471-4137	43	57
11083	2428764	2540-01-544-5962	112	2
11083	2428765	2540-01-543-3826	112	5
11083	2428807	4710-01-544-2798	137	39
11083	2428808	4710-01-543-6943	137	1
11083	2430062	2590-01-532-5687	29	3
11083	2430063	5340-01-527-7671	29	10
11083	2430686	4710-01-544-9511	75	32
11083	2430689	5330-01-544-4757	94	16
11083	2430690	4720-01-545-8641	149	36
11083	2432249	2815-01-544-1291	4	1
11083	2435054	5340-01-543-7074	20	7
11083	2435057	4720-01-544-9507	20	3
11083	2435060	4720-01-544-9509	23	4
11083	2443114	4810-01-551-1639	69	9
11083	2450768	5340-01-544-5225	114	14
11083	2450772	2590-01-544-5812	114	10
11083	2451106	5340-01-553-5835	114	11
11083	2451107	5340-01-544-5231	114	18
11083	2451108	5340-01-544-5237	114	15
11083	2451109	5340-01-530-6463	114	17
11083	2459088	5340-01-545-0125	83	9
11083	2463189	5340-01-544-1946	12	18
11083	2471361	7690-01-544-8574	123	18
11083	2474928	5310-01-543-6937	2	9
45225	24832	5120-00-302-5857	175	28
13446	2487Y005	5340-01-428-7027	5	2
11083	2490207	5340-01-543-6670	14	20
11083	2490800	2930-01-544-4117	12	4
11083	2490832	2930-01-544-1317	12	1
11083	2492757	5340-01-545-4967	43	51
11083	2492898		45	3
11083	2497859	4820-01-544-9534	130	6
11083	2497863	4810-01-551-1610	130	4
11083	2500393	2590-01-543-8668	133	1
11083	2501446		146	19
11083	2501447		146	14

CROSS-REFERENCE INDEXES

PART NUMBER INDEX

CAGEC	PART NUMBER	STOCK NUMBER	FIG.	ITEM
11083	2506011	2540-01-544-1825	112	8
11083	2506012	2540-01-544-1956	112	9
11083	2506013	5340-01-543-5022	112	7
11083	2508115	5930-01-551-3133	42	12
11083	2510907	4820-01-543-5746	91	1
11083	2514336	3020-01-523-8447	8	23
11083	2515641	2590-01-545-1860	107	14
			156	3
11083	2519303	4730-01-543-9541	146	20
11083	2519304	4730-01-543-9377	146	16
11083	2519345	6150-01-551-2792	56	34
11083	2522374	4720-01-543-9715	138	17
11083	2522375	4720-01-543-9728	138	70
11083	2522376	4720-01-543-8836	140	7
11083	2522377	4720-01-543-5063	140	46
11083	2522378	4720-01-543-5655	141	57
11083	2522379	4720-01-543-6055	141	51
11083	2522382	4720-01-544-2844	137	18
11083	2525597	5340-01-543-6164	145	1
11083	2527154	5340-01-544-6086	87	11
11083	2527173	2990-01-543-8671	31	1
11083	2531691		84	2
11083	2532111	5310-01-545-6457	46	11
			46	23
11083	2533524	4710-01-544-2819	141	31
11083	2533526	4710-01-543-6947	141	21
11083	2533542	4720-01-544-2822	141	10
11083	2533549	4720-01-543-9659	141	3
11083	2552355		31	2
11083	2552743	2530-01-545-0872	86	1
11083	2552748	5355-01-543-6669	86	2
11083	2553453	6150-01-545-0564	58	7
11083	2554692	4730-01-544-9119	20	21
11083	2564539	4720-01-545-0774	149	10
			154	58
11083	2567271	2930-01-544-9576	101	3
11083	2567516	3040-01-544-8903	98	4
11083	2567517	3040-01-544-8905	98	3
11083	2573227	4440-01-545-2989	164	45
11083	2590373	5365-01-543-8022	1	6
11083	2591160	5340-01-544-1224	131	4
11083	2591286	6240-01-544-9579	113	3
11083	2591456	5306-01-544-4691	78	32
11083	2609172		149	15
			154	14
11083	2617148	2540-01-545-8360	29	2
11083	2617854	4720-01-544-2836	143	14
11083	2617855	4710-01-543-5739	143	12
11083	2617997	6150-01-543-4500	130	2
11083	2621388	2590-01-543-5091	131	6
11083	2621408	2520-01-546-1084	44	3

CROSS-REFERENCE INDEXES

PART NUMBER INDEX

CAGEC	PART NUMBER	STOCK NUMBER	FIG.	ITEM
11083	2622875	4320-01-544-1954	124	4
11083	2632908	5340-01-544-4372	141	32
11083	2635513	4320-01-544-1828	124	5
11083	2644297	6685-01-551-6235	51	6
11083	2647734	5365-01-544-8633	51	42
11083	2652167	4720-01-543-9615	138	16
11083	2673773	5340-01-545-4991	56	4
			158	2
11083	2677368		78	6
11083	2681322		151	1
11083	2681514		142	11
11083	2684360		51	3
11083	2689437		135	1
11083	2705322		45	2
11083	2707612	5330-01-543-7278	131	5
11083	2746720		51	1
11083	2746721		51	10
11083	2755120		174	1
11083	2755121		174	5
11083	2755122		174	4
11083	2766596	4730-01-544-8068	28	3
11083	2785641	4720-01-551-1641	141	8
11083	2785642		141	2
11083	2788823	6150-01-551-6671	43	1
11083	2788832	6150-01-551-7243	42	19
11083	2788840	6150-01-551-6623	64	1
11083	2788841	6150-01-552-3321	63	2
11083	2795634	5340-01-545-0525	158	11
11083	2795639	5340-01-545-0526	158	13
11083	2797127	5340-01-545-7955	25	16
11083	2797128	5340-01-543-6524	94	20
11083	2804268	2510-01-551-3575	97	1
11083	2804276	2510-01-545-0094	108	1
11083	2804280	2910-01-551-3537	25	1
11083	2804288	5340-01-545-3500	48	19
11083	2806769	2510-01-551-3487	97	2
11083	2806965	5340-01-544-8671	43	61
11083	2806969	5340-01-544-8177	43	62
11083	2806970	7690-01-544-8187	43	63
11083	2806971	5340-01-544-8667	42	6
11083	2806976	5340-01-544-8170	42	7
11083	2806977	7690-01-544-8576	42	8
11083	2806978	5340-01-545-4212	96	3
11083	2806984	2540-01-545-1802	113	16
11083	2806988	5340-01-544-8204	103	13
11083	2806994	2510-01-551-4636	103	1
11083	2807895	6220-01-545-5479	47	10
11083	2809726	6160-01-545-0785	158	14
11083	2809727	6160-01-545-0782	158	8
11083	2809730	5340-01-545-5030	46	17
11083	2811574	3830-01-551-3403	173	1

CROSS-REFERENCE INDEXES

PART NUMBER INDEX

CAGEC	PART NUMBER	STOCK NUMBER	FIG.	ITEM
11083	2811602	3830-01-551-2651	173	13
11083	2815619	5340-01-545-3019	25	21
11083	2824415	3040-01-551-5549	98	5
11083	2824421	6150-01-545-0386	60	2
11083	2824422	6150-01-545-0787	60	1
11083	2824426	6160-01-545-0613	158	5
11083	2824430	6160-01-545-0611	159	8
11083	2824431	5340-01-544-8677	159	10
11083	2826928	5315-01-545-0470	173	14
11083	2826935	5365-01-544-8630	173	17
11083	2829861	3040-01-543-7796	8	24
11083	2832190	6150-01-552-3319	159	23
11083	2832191	6150-01-551-6616	159	1
11083	2832192	6150-01-552-0324	157	6
11083	2832194	5340-01-545-0527	56	3
11083	2832196	6160-01-551-2416	158	1
11083	2832205	2590-01-545-7674	155	11
11083	2832208	4720-01-544-8579	155	18
11083	2832210	2540-01-551-2461	155	10
11083	2832211	5340-01-545-2360	155	15
11083	2832213	5340-01-545-0197	156	15
11083	2833536	6680-01-551-5332	153	6
11083	2835015	2510-01-545-1934	160	5
11083	2835016	2510-01-545-6821	160	7
11083	2836406	4720-01-545-0778	164	10
11083	2836407	4720-01-545-0780	164	7
11083	2836475	3930-01-551-1845	161	8
11083	2844823	5340-01-545-0528	56	13
11083	2844827	5340-01-545-0530	56	14
11083	2844830	5340-01-545-0563	56	10
11083	2844832	5340-01-545-0824	56	12
11083	2844833	6160-01-546-1134	56	7
11083	2844835	5340-01-545-0615	155	28
11083	2844863	6150-01-552-3317	56	35
			159	7
11083	2844864	6150-01-551-7253	56	18
11083	2844866	5340-01-545-3494	103	35
11083	2844868	5340-01-545-0617	103	9
11083	2847981	9905-01-546-3189	123	19
11083	2848306	5340-01-545-3023	164	48
11083	2850620	5340-01-544-8722	25	12
11083	2853766	2510-01-545-1863	160	6
11083	2857785	2510-01-545-4095	104	1
11083	2857786	2510-01-551-6639	104	12
11083	2857787	2510-01-545-4106	105	1
11083	2857788	2510-01-551-2458	105	5
11083	2857790	2540-01-544-8656	104	22
11083	2857791	2540-01-545-4133	105	32
11083	2862659		152	30
11083	2863594	5930-01-551-3134	42	10
11083	2867094	5340-01-546-2156	104	23

CROSS-REFERENCE INDEXES

PART NUMBER INDEX

CAGEC	PART NUMBER	STOCK NUMBER	FIG.	ITEM
11083	2867094	5340-01-546-2156	105	33
11083	2868047		123	27
11083	2878809	7690-01-544-8209	123	28
11083	2878810	7690-01-544-8233	157	4
11083	2880422		3	7
11083	2890497	5340-01-545-0624	48	8
11083	2890499	5340-01-545-4621	48	4
11083	2907292	6220-01-552-8746	48	9
11083	2907294		48	2
11083	2935859	5340-01-545-7956	10	4
11083	2951711		8	22
11083	3B0551	4730-00-263-3122	77	2
			78	11
11083	3B4501	5310-01-236-9974	163	23
11083	3B4609	5315-01-063-0738	56	2
			158	9
11083	3B6490	4730-01-514-4755	155	41
11083	3B6552	4730-00-231-5605	95	4
11083	3B7734	4730-01-456-7784	172	38
11083	3B8489	4730-00-050-4208	76	9
			95	7
			99	7
			171	12
			172	17
11083	3B8491		171	11
			172	31
11083	3C3364	5310-01-544-4693	29	9
11083	3C4922	5306-01-544-9522	29	11
11083	3D2824	5331-00-944-8281	73	7
			89	3
			89	64
			124	7
			140	50
			144	3
			146	28
			148	5
			149	2
			149	6
			154	11
			154	20
11083	3D9981	4820-01-545-3437	155	42
11083	3E1841	5340-01-473-6130	163	22
11083	3E2332	4730-01-544-9530	81	23
11083	3E2335	4730-01-543-9271	140	14
11083	3E2338	5365-01-544-9519	77	9
			78	4
11083	3E3805	5330-01-429-0769	BULK	3
11083	3E3805-420		104	35
			105	21
11083	3E3892		BULK	2
11083	3E3892-120		109	10

CROSS-REFERENCE INDEXES

PART NUMBER INDEX

CAGEC	PART NUMBER	STOCK NUMBER	FIG.	ITEM
11083	3E3892-76		109	1
11083	3E4051	5365-01-505-7291	164	27
11083	3E4052	5365-01-505-7293	164	16
11083	3E4056	4730-01-438-1339	164	26
11083	3E4057	4820-01-505-7292	164	28
11083	3E4058	4820-01-505-7294	164	17
11083	3E5239	5945-01-468-1267	42	16
			46	3
			59	5
			118	5
			166	11
11083	3E5464	5930-01-437-8575	163	30
11083	3E6328	6350-01-423-9687	41	13
11083	3E6753	5325-01-545-5021	157	12
11083	3E7843	2590-01-505-6786	51	38
11083	3E7844	2590-01-551-4550	51	18
11083	3E8020	5305-01-543-6495	109	2
11083	3E8320	9905-01-429-0776	123	20
			159	39
11083	3E9411	5310-01-429-0787	172	20
11083	3G0572	4720-01-544-9145	95	18
11083	3H8538	5315-01-544-4695	80	11
11083	3J1907	5331-01-333-6444	49	2
			51	17
			69	15
			73	15
			73	24
			73	27
			75	26
			75	29
			81	19
			81	22
			81	26
			81	32
			81	35
			82	46
			82	52
			89	30
			128	6
			137	8
			137	14
			138	14
			138	21
			138	25
			138	38
			138	52
			138	69
			140	3
			140	13
			140	17
			140	35

CROSS-REFERENCE INDEXES

PART NUMBER INDEX

CAGEC	PART NUMBER	STOCK NUMBER	FIG.	ITEM
11083	3J1907	5331-01-333-6444	141	45
			141	47
			141	53
			51	46
			145	34
			145	46
			146	66
			146	72
			146	100
			147	25
			147	34
			148	18
			149	48
			154	65
11083	3J7354	5331-01-049-1292	10	2
			82	12
			82	23
			82	40
			146	91
			146	96
11083	3K0360	5331-00-948-6482	15	6
			51	5
			78	10
			89	7
			89	17
			89	21
			89	23
			51	47
			89	43
			89	50
			89	57
			138	2
			138	45
			138	55
			138	60
			141	74
			141	82
			145	3
			146	39
			146	48
11083	3K7056	5360-00-861-9114	79	17
11083	3K7057	5360-00-864-0046	79	18
11083	3K9520	5325-01-062-7138	34	5
11083	3P2404	5340-01-061-4018	149	12
			154	8
11083	3P5903	5340-01-429-6198	147	54
11083	3P5904	5340-01-429-6197	147	53
11083	3S2093	2920-01-058-9099	51	13
			60	4
			62	9
			65	3

CROSS-REFERENCE INDEXES

PART NUMBER INDEX

CAGEC	PART NUMBER	STOCK NUMBER	FIG.	ITEM
11083	3S2093	2920-01-058-9099	82	35
			115	1
			116	15
			155	8
			163	42
			164	20
			166	18
11083	3S8665	5340-01-098-6683	62	25
11083	3T0851	5310-01-413-9703	48	13
11083	3T2662	5925-01-184-0633	62	3
11083	3T5201	5365-01-544-8160	104	9
			105	13
11083	3W6188	5340-01-543-6645	56	40
			57	15
			159	29
11083	3020572		1	1
11083	3058107		123	31
13446	3181A081	7690-01-544-8575	123	24
91796	4-8FTX2IN	2835-01-078-2081	174	50
11083	4B4863	5310-00-432-8001	20	13
			62	2
			157	2
11083	4B5324	5310-01-063-0687	80	5
11083	4C4075	5120-01-537-9251	174	45
11083	4C4890	5210-01-362-8593	174	32
11083	4C9633	5307-01-484-9378	174	22
11083	4C9634		175	1
11083	4D1326	5310-01-438-1899	57	3
11083	4D6466	5340-00-426-4644	24	27
11083	4D7388	5340-01-360-1316	34	11
			75	19
11083	4D7735	5325-01-438-1900	82	60
11083	4D8123	5340-00-426-4646	95	20
11083	4D9517	5340-00-169-8336	149	41
			154	56
11083	4E1062	2540-01-474-1756	109	3
11083	4E1384	5340-01-438-2813	104	19
			105	3
11083	4E5984	5340-01-543-7145	76	11
11083	4E5985	5306-01-544-5574	76	10
11083	4E7316	5340-01-543-8699	115	12
11083	4E7540	5340-01-543-6485	82	7
11083	4F3654	5306-00-550-2101	173	20
11083	4F8824	5331-00-968-5388	79	13
11083	4I3038	5310-01-505-6789	43	27
11083	4J0520	5331-00-913-6144	141	4
			146	94
11083	4J0523	5331-01-006-2129	70	12
78640	4J0524	5331-00-914-5846	146	10
11083	4J0527	5331-00-914-5820	146	8
11083	4J5267	5331-01-017-6535	73	1

CROSS-REFERENCE INDEXES

PART NUMBER INDEX

CAGEC	PART NUMBER	STOCK NUMBER	FIG.	ITEM
11083	4J5267	5331-01-017-6535	140	69
11083	4J5477	5331-00-855-8059	89	32
			89	40
			141	38
			141	70
			144	15
			144	20
			147	8
			147	15
			147	24
			147	32
			147	46
			147	49
			149	46
			154	66
11083	4K0367	5310-01-021-4224	173	3
11083	4K1388	5330-00-933-3305	141	14
11083	4K4709	3120-01-551-3346	97	3
11083	4K4879	5330-01-233-3555	84	16
11083	4K4881	2530-00-972-8243	84	5
11083	4K7464	5365-01-069-1502	99	24
11083	4K7502	5306-01-053-7491	5	6
11083	4L6499	5310-01-062-9903	57	2
11083	4P7428	5340-01-473-5536	89	14
11083	4P7581	5999-01-470-8845	42	25
			43	23
			46	6
			51	27
			59	8
			62	7
			63	11
			64	3
			65	2
			157	11
			164	19
			166	14
11083	4P8134	5340-01-471-5243	9	3
			42	24
			43	18
			51	22
			52	3
			57	22
			59	3
			62	15
			63	4
			64	9
			147	28
			153	1
11083	4S1962	5342-01-063-2993	164	3
11083	4T2972	3805-01-517-2251	173	19
11083	4V0611	5340-01-438-4221	148	15

CROSS-REFERENCE INDEXES

PART NUMBER INDEX

CAGEC	PART NUMBER	STOCK NUMBER	FIG.	ITEM
11083	4V0612	3040-01-175-6498	148	14
11083	4V2879	3120-01-544-1388	172	7
11083	4V4453	3120-01-543-8712	172	10
			172	35
11083	4V8639	3120-01-543-6978	172	23
			172	26
11083	4V8674	3120-01-166-7992	172	25
11083	4V9798	9905-01-298-1664	137	17
11083	4V9799	9905-01-306-6691	137	11
11083	5C1777	5310-01-471-5241	24	9
11083	5C1796	5330-01-544-1978	11	1
11083	5C2890	5310-01-353-3404	41	12
			83	11
			103	10
			104	10
			105	12
			108	26
			143	4
			155	30
11083	5C7261	5310-01-397-5100	20	10
			28	6
			72	9
			79	22
			82	62
			87	12
			103	32
			104	18
			105	4
			108	29
			131	8
			155	12
11083	5C8312	5310-01-413-5297	20	16
			41	10
			46	20
11083	5C8811	2540-01-413-8918	116	1
11083	5C8964	6220-01-437-8990	48	27
11083	5C9029	6220-01-437-8992	48	11
11083	5C9553	5306-01-181-7849	44	7
			52	1
			56	6
			114	13
			117	4
			143	7
			153	4
			155	26
			158	4
			163	45
			166	12
11083	5D1026	4730-01-122-3338	15	4
			21	10
			119	2

CROSS-REFERENCE INDEXES

PART NUMBER INDEX

CAGEC	PART NUMBER	STOCK NUMBER	FIG.	ITEM
11083	5D1026	4730-01-122-3338	146	13
11083	5F9657	5331-00-291-9572	12	28
11083	5G7820	5340-01-505-6787	51	26
11083	5H1039	5331-00-713-8605	78	3
11083	5H3701	4820-01-438-1385	77	4
			78	8
11083	5J2974	5331-00-948-9774	68	12
			152	17
11083	5K4778	5340-01-543-6613	147	41
11083	5K5338	5340-01-051-2357	82	15
11083	5K9090	5330-01-438-1387	75	12
			75	17
			140	27
			140	39
			141	12
			141	17
			141	35
			141	60
			142	12
			143	11
			146	74
			146	79
11083	5L7200	5305-01-058-9146	41	6
11083	5M6214	4730-00-924-7886	78	22
11083	5P0064	5330-00-161-1870	172	4
11083	5P0306		174	53
11083	5P0599	5340-01-508-2904	140	48
11083	5P0743	4720-01-471-5025	BULK	12
11083	5P0743-51		15	2
11083	5P0765	4720-01-287-6809	BULK	17
11083	5P0765-125		155	7
11083	5P0765-16		155	2
11083	5P0765-194		155	4
11083	5P0767	4720-01-062-7159	BULK	5
11083	5P0767-118		119	7
11083	5P0767-138		119	1
11083	5P1076	5310-01-097-6720	38	2
			101	14
			125	2
11083	5P1420	4720-01-192-1368	BULK	13
11083	5P1420-150		24	30
11083	5P1420-16		18	4
11083	5P1420-177		24	28
11083	5P1420-28		18	2
11083	5P1442	4720-01-093-7331	BULK	14
11083	5P1442-247		152	4
11083	5P1442-8		152	6
11083	5P1505	4720-01-132-1458	BULK	15
11083	5P1505-21		146	18
11083	5P1506	4720-01-150-0880	BULK	8
11083	5P1506-172		34	13

CROSS-REFERENCE INDEXES

PART NUMBER INDEX

CAGEC	PART NUMBER	STOCK NUMBER	FIG.	ITEM
11083	5P1717	4730-01-184-4274	20	2
			148	27
11083	5P3723	3110-01-161-4027	78	23
11083	5P3863	5331-01-424-3524	71	3
11083	5P4115	5310-01-098-0634	51	35
			108	21
11083	5P4116	5310-01-095-5910	28	2
			43	24
			48	15
			51	39
			56	20
			57	16
			72	7
			82	6
			86	14
			100	2
			103	17
			113	13
			159	28
			171	5
11083	5P4150	4320-01-263-9716	175	17
11083	5P4184		175	14
11083	5P4362	4730-01-544-9492	75	3
11083	5P4484	5365-01-100-8868	68	17
			77	8
			78	12
11083	5P4965	5305-01-211-1465	46	15
11083	5P5148	5975-01-508-5704	82	32
			138	83
11083	5P5291	5325-01-543-9537	78	29
11083	5P5630	4720-01-103-3700	BULK	35
11083	5P5630-103		27	3
11083	5P5637	5330-01-217-3936	BULK	31
11083	5P5637-.3		114	9
11083	5P5637-10		108	5
11083	5P5643	5330-01-292-4301	BULK	25
11083	5P5643-0.4		163	17
11083	5P5643-0.8		163	4
11083	5P5643-550		103	23
11083	5P5755		BULK	24
11083	5P5755-10		155	22
11083	5P5755-225.8		94	9
11083	5P5755-235.3		94	10
11083	5P5755-305		94	29
11083	5P5755-85		94	8
11083	5P5908	5330-01-209-8794	BULK	21
11083	5P5908-10		163	51
11083	5P5927	5330-01-095-6804	BULK	22
11083	5P5927-.93		121	6
11083	5P5927-1.06		121	10
11083	5P5927-1.21		121	9

CROSS-REFERENCE INDEXES

PART NUMBER INDEX

CAGEC	PART NUMBER	STOCK NUMBER	FIG.	ITEM
11083	5P6038		BULK	4
11083	5P6038-150		42	26
11083	5P6264	5325-01-545-5035	63	1
11083	5P6442	4720-01-150-0883	BULK	18
11083	5P6442-180		155	39
11083	5P6442-67		155	34
11083	5P6718	5331-01-181-4951	14	13
			15	8
11083	5P6887	5325-01-160-4619	94	6
11083	5P7070	2510-01-430-2483	BULK	19
11083	5P7211	5330-01-292-4293	BULK	26
11083	5P7211-0.28		101	9
11083	5P7211-1.115		101	10
11083	5P7211-1.267		101	8
11083	5P7211-24.4		94	24
11083	5P7211-7		94	23
11083	5P7211-78		94	28
11083	5P7211-85		94	5
11083	5P7304	5365-01-545-6644	175	21
11083	5P7448		175	11
11083	5P7464	5340-01-184-3669	148	22
11083	5P7465	5325-01-505-6788	148	21
11083	5P7466	5340-01-163-6165	137	26
11083	5P7467	5340-01-161-5766	137	25
11083	5P7468	5340-01-163-9459	70	4
			140	71
			141	9
			142	7
			146	59
11083	5P7469	5340-01-163-6175	70	3
			140	73
			141	15
			142	2
			146	62
11083	5P7648	5325-01-544-5549	164	8
11083	5P8112	5325-01-163-5972	137	24
11083	5P8196	5340-01-343-6678	12	20
11083	5P8244	5310-01-097-8955	124	11
11083	5P8245	5310-01-098-0624	37	3
			78	19
11083	5P8347	5305-01-360-1005	69	12
11083	5P8444	5325-01-164-7555	140	72
			141	16
			142	4
			146	60
11083	5P8525	5325-01-286-1801	43	60
11083	5P8874	4730-01-230-6610	138	53
11083	5P9297	5340-01-161-2682	79	3
11083	5P9299	5340-01-286-6208	57	10
11083	5R4467	5935-01-097-9974	56	29
			159	13

CROSS-REFERENCE INDEXES

PART NUMBER INDEX

CAGEC	PART NUMBER	STOCK NUMBER	FIG.	ITEM
11083	5R5107	4730-01-144-2386	10	3
11083	5R6242	5340-01-342-2648	103	27
11083	5R6800	4820-01-213-8015	73	14
11083	5R6801	4820-01-202-9608	10	1
11083	5T3821	4720-01-544-9498	95	19
11083	5T9771	4720-01-545-1404	95	1
11083	5T9986	4720-01-544-9180	148	11
11083	5V2998	9905-01-222-9884	41	26
11083	5V4410	5365-01-544-6081	81	13
11083	5V8780	5355-01-165-3414	101	20
19428	520531	4730-01-229-9689	24	24
			34	2
11083	6D0337	4820-00-005-7525	84	8
11083	6D0443	4810-01-438-9599	84	9
11083	6D1641	5342-01-064-7512	119	4
11083	6D3479	5340-01-059-9345	56	16
			147	42
			159	2
11083	6D4244	5340-01-551-1839	42	28
11083	6D4246	5340-01-053-8024	146	64
11083	6D5801	5310-01-474-3064	103	6
11083	6F7045	5310-00-833-9298	56	46
			159	35
11083	6G0233	9390-01-094-7076	81	9
11083	6G2256	5342-01-185-2404	56	24
			159	16
11083	6G2263	5365-01-175-9326	24	35
			56	26
			82	33
			159	18
11083	6G4195	5930-01-514-6235	51	43
11083	6G9933	4720-01-545-1405	95	5
45152	6HA144	5365-01-496-0506	44	2
11083	6H4746	4730-01-471-4393	174	27
11083	6I0217	5306-01-471-5217	7	1
			8	25
			19	11
			21	1
11083	6I0235	5305-01-471-5761	6	20
11083	6I0254	5306-01-471-5222	8	20
			14	14
11083	6I0260	5306-01-471-4703	8	13
			11	11
			12	12
			14	3
			16	8
			33	7
11083	6I0289	5365-01-425-8538	14	17
11083	6I0291	5310-01-471-3997	8	16
			11	18
			12	11

CROSS-REFERENCE INDEXES

PART NUMBER INDEX

CAGEC	PART NUMBER	STOCK NUMBER	FIG.	ITEM
11083	6I0291	5310-01-471-3997	14	6
			19	12
			45	8
11083	6I0363	5306-01-471-4547	14	19
11083	6I0423	5305-01-471-4121	5	3
11083	6I0456	5306-01-529-3358	13	8
			14	9
			33	15
11083	6I0563	5310-01-471-5203	21	20
11083	6I0593	5305-01-471-5279	5	12
			8	11
11083	6I0631	5305-01-471-5272	5	11
11083	6I0645	5305-01-505-6793	36	7
11083	6I0646	5306-01-471-5239	3	5
11083	6I0650	5305-01-471-5830	8	5
11083	6I0654	5340-01-471-5234	2	5
			24	3
11083	6I0787	5325-01-471-5280	11	9
11083	6I0836	5330-01-505-6792	8	8
11083	6I0839	5340-01-471-5310	8	21
			36	3
11083	6I0840		8	15
11083	6I0846	5305-01-471-6189	8	17
11083	6I1074	4820-01-453-7824	11	21
11083	6I1090	5305-01-471-4127	24	14
11083	6I1132	5330-01-543-6132	21	21
11083	6I1206	2815-01-471-4400	6	9
11083	6I1497	5331-01-471-5581	13	2
11083	6I3717	5305-01-471-5602	6	17
11083	6I3718	4730-01-471-5070	6	19
11083	6I4374	5306-01-471-5199	8	7
			11	10
			13	9
			33	8
11083	6I4681	5330-01-543-5048	14	1
11083	6I4709	5306-01-543-5790	14	15
11083	6I4714	5365-01-544-6076	4	4
11083	6I4716	5315-01-544-1878	4	3
11083	6I4786	5330-01-543-6126	12	16
11083	6I4793	5306-01-471-4905	36	6
11083	6I8531	3130-01-527-0159	76	8
11083	6I8849	3110-01-544-1813	99	10
11083	6K0806	4730-01-068-6077	48	20
11083	6K4185	5365-01-544-9518	99	12
11083	6K4186	5330-01-236-2375	99	8
11083	6K4191	3130-01-544-9517	99	6
11083	6K6075	5340-01-544-4687	78	30
11083	6K8178	5342-01-103-3664	147	52
11083	6N6984	5325-01-345-4589	22	4
11083	6Q2204	5315-01-544-8623	173	11
11083	6Q2207	3120-01-545-4190	173	2

CROSS-REFERENCE INDEXES

PART NUMBER INDEX

CAGEC	PART NUMBER	STOCK NUMBER	FIG.	ITEM
11083	6S6646	5315-01-429-8652	80	8
11083	6S8050	5340-01-545-4976	155	17
11083	6U5219	5340-01-543-6161	145	52
11083	6V0484	4730-01-473-6582	69	16
			75	27
11083	6V0545	5325-01-543-6001	70	2
11083	6V0852	5340-01-165-3715	69	11
			73	21
			75	24
			81	27
			89	27
			138	40
			141	42
			146	69
11083	6V1178	5340-01-164-1271	128	10
11083	6V1194	3110-01-538-8484	99	25
11083	6V1249	5325-01-185-4762	148	23
11083	6V1363		BULK	7
11083	6V1363-1		20	20
11083	6V1392	5330-01-277-6101	BULK	32
11083	6V1392-0.6		163	53
11083	6V1392-17		163	12
11083	6V1506	4730-01-529-9779	173	12
11083	6V1668	5310-01-429-7105	163	36
11083	6V1820	5306-01-311-4592	74	4
11083	6V1889	5340-01-298-3216	149	20
			154	23
			155	40
11083	6V2170	4710-01-264-3509	175	18
11083	6V2313	5306-01-438-5554	29	8
11083	6V2495	5330-01-543-6157	164	41
11083	6V3010	5120-01-518-2383	175	22
11083	6V3072		174	2
11083	6V3160	5130-00-363-6680	174	21
11083	6V3175		175	30
11083	6V3213	5325-01-364-6422	90	6
11083	6V3668	5306-01-448-1550	79	10
11083	6V3821	5305-01-360-1992	69	4
11083	6V3822	5305-01-360-1990	65	7
11083	6V3965	4730-01-164-1777	69	17
			73	23
			75	30
			81	28
			146	71
			174	31
11083	6V4035	5120-01-288-2793	174	16
11083	6V4142	4730-01-357-9580	174	15
11083	6V4143	4730-01-375-5884	174	14
11083	6V4144	4730-01-375-5883	174	44
11083	6V4249	5306-01-429-7098	67	6
			74	3

CROSS-REFERENCE INDEXES

PART NUMBER INDEX

CAGEC	PART NUMBER	STOCK NUMBER	FIG.	ITEM
11083	6V5215	5305-01-360-1707	69	5
11083	6V5217	5306-01-360-0931	65	8
			71	1
11083	6V5218	5305-01-360-1006	69	3
11083	6V5223	5305-01-360-1007	69	1
11083	6V5696	5306-01-438-1750	79	11
11083	6V5758	5331-01-473-6093	138	33
11083	6V5839	5310-01-360-0983	65	6
			67	4
			128	8
11083	6V6210	5330-01-429-9771	116	20
11083	6V6924		138	34
11083	6V7238	4820-01-343-6277	15	5
			138	56
11083	6V7345	5305-01-544-8200	62	1
11083	6V7359	5325-01-517-3276	140	57
11083	6V7419	2540-01-455-4896	116	4
11083	6V7728	5306-01-470-9585	163	52
11083	6V7732	5306-01-438-5559	78	25
11083	6V7830	4910-01-504-2154	174	23
11083	6V7978	5305-01-473-6110	42	9
11083	6V7981	5305-01-471-5209	128	13
11083	6V8127	5310-01-257-2204	56	30
			159	11
11083	6V8183	5310-01-429-9774	6	13
11083	6V8187	5310-00-913-7020	46	10
			46	22
11083	6V8197	5306-01-438-1755	78	35
11083	6V8200	5306-01-515-1611	124	14
11083	6V8212	5305-01-494-3913	67	5
11083	6V8225	5310-01-473-6099	116	8
11083	6V8227	5310-01-413-5910	86	23
11083	6V8376	5305-01-184-5919	62	5
11083	6V8378	5310-01-212-4579	57	7
			62	36
11083	6V8397	5331-00-579-6495	81	17
			81	30
			81	37
			82	14
			82	25
			82	42
			82	48
			82	51
			128	5
			137	10
			137	16
			138	4
			138	7
			138	10
			138	12
			138	19

CROSS-REFERENCE INDEXES

PART NUMBER INDEX

CAGEC	PART NUMBER	STOCK NUMBER	FIG.	ITEM
11083	6V8397	5331-00-579-6495	138	23
			138	58
			140	4
			140	15
			140	37
			140	43
			141	49
			141	55
			145	19
			145	23
			145	26
			145	36
			145	44
			146	15
			146	68
			146	82
			146	86
			146	89
			148	10
			148	16
			148	20
11083	6V8398	5331-00-580-6583	72	5
			87	5
			89	4
			89	9
			89	18
			89	45
			89	52
			89	55
			138	42
			138	46
			138	50
			138	67
			140	19
			140	61
			141	67
			141	76
			141	83
			144	4
			144	8
			144	12
			145	4
			145	31
			145	40
			146	50
			146	53
			148	3
			148	8
			149	27
			149	35
			154	30

CROSS-REFERENCE INDEXES

PART NUMBER INDEX

CAGEC	PART NUMBER	STOCK NUMBER	FIG.	ITEM
11083	6V8398	5331-00-580-6583	154	38
			154	41
			154	50
11083	6V8400	5330-01-438-1759	146	45
			146	56
11083	6V8490	5305-01-360-1004	41	24
			113	5
11083	6V8554	5310-01-438-0755	147	17
11083	6V8556	4730-01-471-5004	154	43
11083	6V8624	4730-01-471-3579	149	26
			154	29
11083	6V8625	4730-01-349-7772	89	51
			141	81
			145	5
11083	6V8626	4730-01-438-0760	145	16
11083	6V8627	4730-01-438-0756	147	26
			149	47
			154	64
11083	6V8628	4730-01-360-9206	89	39
11083	6V8632	4730-01-505-6807	89	24
11083	6V8633	4730-01-471-4128	148	4
11083	6V8634	5935-01-437-9075	138	3
11083	6V8635	5935-01-437-9076	75	13
			140	40
			141	61
			146	75
11083	6V8636	4730-01-269-9540	81	36
			137	15
			138	24
			140	36
			141	54
			145	45
11083	6V8637	4730-01-291-8501	140	51
			149	3
			154	21
11083	6V8638	4730-01-471-4915	87	6
			141	66
			145	30
11083	6V8639	4730-01-291-8500	89	8
			141	75
11083	6V8641	4730-01-413-5916	147	33
11083	6V8642	4730-01-469-7599	145	10
11083	6V8647	4730-01-360-9109	141	39
			144	21
11083	6V8675	5305-01-533-8049	78	20
			79	24
11083	6V8716	4730-01-471-3789	137	21
11083	6V8721	4730-01-413-5918	144	7
			145	41
11083	6V8724	4730-01-360-4146	81	31
			128	4

CROSS-REFERENCE INDEXES

PART NUMBER INDEX

CAGEC	PART NUMBER	STOCK NUMBER	FIG.	ITEM
11083	6V8724	4730-01-360-4146	138	20
			145	35
			148	19
11083	6V8758	5315-01-544-5934	79	19
11083	6V8775	4730-01-517-8779	89	44
			138	47
11083	6V8781	4730-01-438-0751	82	53
11083	6V8782	4730-01-349-7776	89	56
			146	49
11083	6V8788	4730-01-438-0758	140	44
11083	6V8795	3110-01-538-8505	99	21
11083	6V8837	5306-01-438-4985	43	54
11083	6V8928	5340-01-429-7873	113	7
11083	6V8935	4730-01-474-1965	147	16
11083	6V8942	4730-01-471-3599	154	42
11083	6V8979	4730-01-543-6939	144	16
11083	6V8981	4730-01-473-2076	144	13
11083	6V8983	4730-01-543-6538	137	38
11083	6V8984	4730-01-514-7075	141	34
11083	6V9001	4730-01-364-6397	82	47
			138	13
11083	6V9004	4730-01-438-0762	146	29
			149	7
			154	12
11083	6V9007	4730-01-291-8498	73	8
			89	65
			124	8
11083	6V9160	5330-01-545-4942	154	2
11083	6V9161	4730-01-438-0767	82	41
11083	6V9169	5310-01-293-2892	144	10
11083	6V9172	4730-01-473-2114	75	15
			140	24
			141	27
			143	10
11083	6V9200	4730-01-438-0761	82	13
11083	6V9491	5305-01-413-5912	46	25
11083	6V9510	5365-01-514-6500	174	49
11083	6V9632	5310-01-429-7858	86	7
11083	6V9746	5331-01-058-4030	72	4
			73	9
			89	60
			89	66
			124	9
			137	3
			137	22
			137	32
			137	37
			140	52
			140	54
			142	14
			146	22

CROSS-REFERENCE INDEXES

PART NUMBER INDEX

CAGEC	PART NUMBER	STOCK NUMBER	FIG.	ITEM
11083	6V9746	5331-01-058-4030	146	25
			146	30
			149	4
			149	8
			149	16
			154	3
			154	13
			154	15
			154	22
			154	45
11083	6V9829	5340-01-485-8574	138	72
			140	45
11083	6V9830	2930-01-457-7377	146	54
11083	6V9835	4730-01-413-5919	147	45
11083	6V9836	4730-01-438-0764	138	6
			146	81
11083	6V9837	4730-01-471-4239	138	43
			146	52
11083	6V9844	4730-01-471-4224	154	39
11083	6V9846	4730-01-471-5711	89	61
11083	6V9849	4730-01-471-4238	147	50
11083	6V9850	4730-01-411-7545	138	9
			145	25
			146	85
11083	6V9854	4730-01-471-3928	146	78
11083	6V9872	4730-01-505-6812	146	90
11083	6V9873	4730-01-473-2894	138	68
			140	18
11083	6V9876	4730-01-438-1943	138	59
11083	6V9973	4720-01-473-2899	140	22
11083	6W5760	5340-01-524-0572	150	3
11083	6W5761	5315-01-523-8936	150	4
11083	6W8246	5365-01-543-8707	99	9
11083	6Y2525	5365-01-438-1967	102	4
11083	6Y6584	5999-01-544-9569	43	47
11083	6Y6712	4320-01-517-2804	74	1
11083	7C0351	5365-01-471-5460	14	12
11083	7C1281	5340-01-471-5840	9	6
11083	7C1493	4820-01-284-5435	12	22
11083	7C4616	5305-01-471-4735	8	27
11083	7C6467	5325-01-543-6022	81	10
11083	7C7241	5340-01-544-8674	155	14
11083	7D1728	5340-01-102-1789	20	19
			27	2
11083	7D6922	5310-01-543-6607	80	12
11083	7D7233	5340-01-060-8686	147	38
11083	7D8048	5331-01-543-6186	4	7
11083	7E1397	5340-01-438-2007	30	2
11083	7F6999	5310-01-545-6705	10	5
11083	7G3228	5325-01-544-8217	64	4
11083	7G5220	5330-01-545-3012	79	12

CROSS-REFERENCE INDEXES

PART NUMBER INDEX

CAGEC	PART NUMBER	STOCK NUMBER	FIG.	ITEM
11083	7G7053	5325-01-473-5253	63	13
11083	7J9108	5330-01-124-4370	89	25
			145	9
			145	15
11083	7K1181	2815-01-053-4712	34	9
			42	22
			43	21
			46	7
			51	19
			54	4
			57	23
			59	1
			61	1
			62	8
			63	3
			64	2
			82	10
			89	13
			95	6
			138	73
			140	21
			141	1
			142	8
			145	20
			147	30
			149	32
			154	35
			157	5
			164	12
11083	7K3436	5305-01-544-8643	103	7
11083	7K3971	9905-01-306-6692	140	1
11083	7K3972	9905-01-306-6690	140	6
11083	7K3974	9905-01-177-3025	141	50
11083	7K3975	9905-01-298-1223	141	58
11083	7K9205	5330-01-053-8220	172	15
11083	7K9208	5330-01-043-5471	172	28
11083	7K9212	5330-01-098-3169	172	12
11083	7K9216	5330-01-408-1238	172	45
11083	7M7410	4730-00-057-5555	7	10
			8	9
11083	7M8485	5330-00-930-9407	68	16
			75	4
			75	6
			75	14
			77	7
			78	5
			137	20
			140	41
			141	62
			146	58
			146	76

CROSS-REFERENCE INDEXES

PART NUMBER INDEX

CAGEC	PART NUMBER	STOCK NUMBER	FIG.	ITEM
11083	7M8485	5330-00-930-9407	149	18
			154	17
11083	7N0718	2920-00-775-7691	56	44
			159	33
11083	7P3466	3120-01-408-1239	172	11
11083	7S1912	5342-00-465-6799	145	49
11083	7S7786	5120-01-546-6769	175	8
11083	7T4532	5365-01-430-3383	162	7
11083	7T8332	5340-01-544-4166	32	17
			94	34
			152	27
11083	7T8890		115	7
11083	7V5626	4730-01-473-6383	51	31
11083	7V5628	5340-01-440-0525	51	32
			64	10
11083	7V6089	5340-01-440-0544	64	8
11083	7V6571	5325-01-168-0914	82	20
11083	7W2108	5360-01-545-0476	104	7
			105	16
11083	7W2518	5305-01-471-4489	2	2
11083	7W2519	5305-01-471-4487	2	4
11083	7W2520	5305-01-471-4122	2	3
11083	7W2628	4730-01-544-1377	21	17
11083	7W3447	5365-01-544-6076	164	36
11083	7W4540	5365-01-544-6079	39	1
11083	7W4632	5365-01-544-1899	4	5
11083	7W4634	5305-01-471-4118	4	8
11083	7W4635	3040-01-543-5773	4	6
11083	7W4648	5340-01-471-4758	11	8
11083	7W4650	5360-01-544-2858	11	7
11083	7W4782	3040-01-471-3931	11	6
11083	7W7381		81	21
11083	7W9028	4330-01-384-6317	12	29
11083	7X0338	5306-01-439-1003	38	6
11083	7X0579	5310-01-433-5837	163	7
11083	7X0599	5310-01-473-6481	38	13
11083	7X0603	5310-01-505-6821	86	11
11083	7X0618	5310-01-544-3388	90	2
			99	17
			171	9
			172	2
11083	7X0620	5310-01-352-7562	57	5
11083	7X0818	5306-01-360-0930	20	17
			44	8
11083	7X0838	4730-01-544-9529	82	24
11083	7X0871	4730-01-471-4163	138	49
11083	7X0872	4730-01-523-8542	174	51
11083	7X2459	4730-01-360-4197	81	18
11083	7X2465	5306-01-413-7703	77	11
			78	15
11083	7X2484	5340-01-545-0619	108	25

CROSS-REFERENCE INDEXES

PART NUMBER INDEX

CAGEC	PART NUMBER	STOCK NUMBER	FIG.	ITEM
11083	7X2497	5340-01-438-8218	104	20
			105	2
11083	7X2533	5306-01-413-7702	101	18
11083	7X2534	5306-01-438-9854	51	33
			64	11
			126	2
11083	7X2535	5306-01-413-7706	108	20
11083	7X2540	5306-01-545-3042	108	13
11083	7X2549	5306-01-413-7709	146	34
			149	14
			154	6
11083	7X2563	5306-01-430-9030	103	20
11083	7X2567	5306-01-473-4472	102	1
11083	7X2622	5310-01-544-4205	68	6
11083	7X3308	5306-01-545-1498	43	26
11083	7X3393	5310-01-473-4445	32	2
11083	7X6101	2910-01-430-3418	27	1
11083	7X7729	5310-01-430-9036	18	8
			24	32
			25	13
			30	4
			31	4
			37	10
			38	8
			43	52
			51	24
			56	8
			82	17
			87	10
			93	7
			101	6
			107	5
			108	2
			110	6
			114	8
			137	27
			138	75
			139	5
			140	26
			141	23
			143	2
			145	37
			147	7
			149	40
			152	2
			154	55
			155	20
			156	6
			158	6
			159	5
			162	15

CROSS-REFERENCE INDEXES

PART NUMBER INDEX

CAGEC	PART NUMBER	STOCK NUMBER	FIG.	ITEM
11083	7X7958	5340-01-438-4644	34	3
			75	1
11083	7X8549	5930-01-543-7979	49	1
11083	7Y1734	5310-01-544-0013	1	4
11083	7Y3173	5305-01-438-4618	127	1
19204	7161056	5315-00-716-1056	56	11
			158	12
11083	8A8580	3805-01-517-2244	173	21
11083	8B4884	4730-00-227-7915	95	12
11083	8C0564	5935-01-438-4252	137	9
			140	5
			141	48
11083	8C2926	5306-01-544-4710	146	42
11083	8C3205	2590-01-506-6947	140	67
11083	8C3206	4730-01-545-0590	141	5
			146	93
11083	8C3290	5306-01-474-1764	98	6
11083	8C3364	4730-01-473-4148	146	57
11083	8C3681	4720-01-451-4501	BULK	16
11083	8C3681-108		34	14
11083	8C3681-203		34	4
11083	8C3681-88		24	23
11083	8C4436	5306-01-429-4756	38	3
11083	8C4586	5340-01-473-5680	163	50
11083	8C4982	5306-01-523-8995	20	12
11083	8C5225	5340-01-544-1358	15	3
11083	8C6160	5340-01-543-6015	79	21
11083	8C6712	4730-01-514-3463	141	44
11083	8C8457	5305-01-543-7112	163	47
11083	8C8478	5305-01-471-4848	1	2
11083	8C8493	4730-01-544-2413	142	13
11083	8C8988	4730-01-473-5433	145	18
11083	8C8989	4730-01-471-3916	149	34
			154	49
11083	8C9987	5310-01-429-4717	41	23
11083	8D1470	5325-01-474-1559	154	59
11083	8D2707	5307-01-523-5530	84	12
11083	8D9671	5340-01-545-0567	63	5
11083	8E7841	5340-01-438-5523	65	10
11083	8E8292	2590-01-543-3830	115	11
11083	8E8296	3120-01-543-5086	81	12
11083	8E8300	5310-00-690-9146	83	7
11083	8F6437	5310-01-170-1359	94	33
			152	26
11083	8F8733	5331-00-561-8344	78	16
11083	8G1151	4730-01-544-8088	115	17
11083	8H5303	5310-01-063-7852	56	48
			159	37
11083	8H5306	5930-00-715-1939	56	49
			159	38
11083	8J2928	5306-01-044-5141	173	6

CROSS-REFERENCE INDEXES

PART NUMBER INDEX

CAGEC	PART NUMBER	STOCK NUMBER	FIG.	ITEM
11083	8J2933	5310-01-044-2069	173	4
11083	8M2770	5340-00-426-4793	149	43
			154	62
11083	8M2771	5340-01-166-6926	143	6
11083	8M2773	5342-00-498-2946	82	34
			89	36
			140	10
			149	38
			152	20
			154	53
			164	35
11083	8M5251	5331-00-557-8439	69	8
11083	8N9033	5340-01-545-0594	103	24
			113	11
11083	8R0512	6680-01-545-4654	77	5
			78	7
11083	8R0768	5306-01-474-1795	56	19
11083	8R2526	5365-01-526-5508	78	17
11083	8R2584	2520-01-543-7935	78	13
11083	8R3695	5325-01-543-6549	128	11
11083	8R6904	2540-01-545-0103	83	6
11083	8R7091	5340-01-543-6677	99	26
11083	8R7092	5340-01-544-5921	99	13
11083	8S0768	5331-00-431-7139	69	21
11083	8S0948		89	48
11083	8S2264	5120-01-128-0725	175	7
11083	8S2270	8110-01-345-9803	175	6
11083	8S9129	4330-01-066-7713	71	4
11083	8S9130	4730-01-159-7840	71	5
11083	8T0075	4730-01-475-1290	146	67
11083	8T0154	4730-01-523-4669	155	1
			163	14
11083	8T0328	5310-01-413-8757	29	6
			62	34
11083	8T0336	4730-01-438-9714	77	3
			78	31
11083	8T0389	5310-01-413-8761	47	2
			81	5
			94	19
			159	9
11083	8T1158	5306-01-474-1843	103	5
11083	8T1482	5310-01-545-3049	98	2
11083	8T1887	5340-01-517-3360	137	4
11083	8T1888	5340-01-517-3362	137	2
11083	8T1889	5340-01-523-8934	141	18
			143	3
11083	8T1890	5340-01-523-8935	141	19
			143	13
11083	8T1895	5340-01-543-5622	82	19
11083	8T1896	5340-01-364-6549	82	18
11083	8T1899	5340-01-543-7143	140	56

CROSS-REFERENCE INDEXES

PART NUMBER INDEX

CAGEC	PART NUMBER	STOCK NUMBER	FIG.	ITEM
11083	8T1900	5340-01-544-1221	140	58
11083	8T2561	5310-01-257-3245	164	24
11083	8T3313	5306-01-474-1626	89	34
11083	8T3444	4730-01-523-9745	148	9
11083	8T3490	5310-01-429-3166	86	6
11083	8T3613	4730-01-485-8578	174	24
11083	8T3957	5306-01-473-4513	88	3
11083	8T4001	5310-01-413-8767	102	6
11083	8T4121	5310-01-352-2753	22	6
			24	26
			25	7
			31	9
			34	7
			37	6
			39	3
			43	45
			46	5
			47	3
			48	18
			51	30
			56	17
			57	11
			61	3
			62	11
			63	9
			64	6
			68	2
			70	5
			73	3
			75	9
			79	4
			81	3
			82	8
			83	4
			89	11
			93	3
			94	15
			94	26
			95	14
			97	6
			99	20
			101	22
			103	3
			106	3
			115	3
			119	6
			131	9
			137	5
			138	62
			139	2
			140	59

CROSS-REFERENCE INDEXES

PART NUMBER INDEX

CAGEC	PART NUMBER	STOCK NUMBER	FIG.	ITEM
11083	8T4121	5310-01-352-2753	141	6
			142	5
			145	53
			146	41
			147	5
			149	23
			152	19
			154	25
			155	31
			157	10
			159	3
			160	3
			162	2
			164	4
			166	24
			173	16
11083	8T4122	5310-01-364-7468	1	9
			76	1
			94	13
11083	8T4131	5310-01-471-4476	1	15
			68	15
			103	22
11083	8T4132	5310-01-413-8764	1	10
11083	8T4133	5310-01-352-7726	22	1
			25	11
			25	19
			31	3
			32	10
			37	7
			43	48
			56	23
			57	12
			61	4
			62	31
			81	7
			83	54
			94	35
			103	26
			108	32
			147	36
			149	37
			154	57
			159	15
			162	5
11083	8T4136	5306-01-360-1634	24	25
			34	10
			38	7
			46	4
			51	25
			56	9
			57	9

CROSS-REFERENCE INDEXES

PART NUMBER INDEX

CAGEC	PART NUMBER	STOCK NUMBER	FIG.	ITEM
11083	8T4136	5306-01-360-1634	70	6
			75	8
			82	16
			87	9
			93	8
			101	23
			107	6
			110	5
			137	6
			138	63
			139	4
			140	25
			141	24
			149	39
			152	1
			154	60
			156	7
			158	7
			159	4
			162	3
11083	8T4137	5306-01-360-0928	24	33
			25	8
			37	11
			43	53
			48	17
			51	29
			62	28
			63	10
			64	7
			73	10
			79	5
			81	44
			89	47
			93	6
			94	3
			94	27
			95	13
			97	5
			101	12
			103	29
			106	4
			114	7
			115	2
			119	5
			131	10
			138	79
			139	3
			142	9
			143	1
			145	54
			147	4

CROSS-REFERENCE INDEXES

PART NUMBER INDEX

CAGEC	PART NUMBER	STOCK NUMBER	FIG.	ITEM
11083	8T4137	5306-01-360-0928	149	29
			152	18
			154	32
			155	32
			157	9
			160	4
			164	5
11083	8T4138	5306-01-413-5287	59	6
			108	24
			109	6
			120	1
11083	8T4139	5306-01-364-6384	68	10
			73	18
			147	18
			148	25
11083	8T4140	5306-01-429-3162	76	2
11083	8T4141	5306-01-359-9326	103	21
11083	8T4157	5340-01-544-5511	101	16
11083	8T4158	5310-01-438-9728	101	17
11083	8T4167	5310-01-413-8769	77	10
			78	14
			84	6
			102	2
11083	8T4170	5305-01-471-5274	68	4
11083	8T4171	5306-01-429-3167	42	18
			46	1
			57	26
			103	12
			163	33
11083	8T4172	5305-01-419-5181	34	8
			99	19
			138	82
11083	8T4177	5306-01-360-1940	69	10
11083	8T4178	5305-01-471-4491	75	31
11083	8T4180	5305-01-438-9730	104	29
			105	26
11083	8T4181	5305-01-439-8514	104	21
			105	30
11083	8T4182	5306-01-414-9639	22	7
			89	10
			140	70
11083	8T4183	5306-01-413-8770	38	15
			146	6
11083	8T4185	5305-01-398-1286	24	31
			39	4
			56	31
			83	3
			159	21
11083	8T4186	5306-01-360-0932	62	32
			68	3
			94	18

CROSS-REFERENCE INDEXES

PART NUMBER INDEX

CAGEC	PART NUMBER	STOCK NUMBER	FIG.	ITEM
11083	8T4186	5306-01-360-0932	107	7
			141	20
			152	22
			154	46
			155	19
			156	9
			162	11
			164	33
11083	8T4189	5306-01-360-0927	32	3
			37	12
			48	29
			51	20
			57	17
			62	19
			80	7
			83	12
			86	13
			103	14
			108	9
			113	18
			115	14
			155	24
			166	5
11083	8T4191	5306-01-408-0450	62	12
			86	17
11083	8T4192	5306-01-413-8771	62	22
			90	1
			99	16
			125	3
			161	5
			172	1
11083	8T4193	5306-01-429-3171	94	12
			172	19
11083	8T4194	5306-01-429-3174	94	31
			99	1
			146	5
11083	8T4195	5305-01-398-1284	30	3
			31	6
			32	8
			43	44
			56	50
			62	26
			82	58
			93	4
			94	30
			101	7
			107	13
			108	3
			137	28
			140	63
			141	7

CROSS-REFERENCE INDEXES

PART NUMBER INDEX

CAGEC	PART NUMBER	STOCK NUMBER	FIG.	ITEM
11083	8T4195	5305-01-398-1284	145	56
			147	39
			149	22
			154	26
			156	8
			159	6
			164	31
			166	23
			173	15
11083	8T4196	5305-01-360-1996	18	9
			25	14
			31	8
			37	8
			70	11
			73	4
			75	20
			81	33
			82	57
			96	2
			103	28
			140	60
			142	6
			146	92
11083	8T4197	5306-01-407-9016	62	29
			63	7
11083	8T4198	5306-01-414-3290	145	38
11083	8T4199	5306-01-473-4524	28	8
			42	20
			43	20
11083	8T4200	5305-01-360-1703	32	6
			32	14
			54	2
			62	13
			80	3
			166	17
11083	8T4205	5310-00-841-2576	41	11
			42	17
			43	55
			46	12
			46	24
			52	2
			57	27
			101	19
			104	5
			105	15
			108	23
			109	5
			117	3
			118	4
			120	2
			143	5

CROSS-REFERENCE INDEXES

PART NUMBER INDEX

CAGEC	PART NUMBER	STOCK NUMBER	FIG.	ITEM
11083	8T4205	5310-00-841-2576	153	3
			155	29
			163	31
			166	13
11083	8T4222	5310-01-429-3253	22	2
			32	9
			94	2
			107	16
			156	16
			162	13
11083	8T4223	5310-01-098-0624	38	5
			62	23
			68	9
			73	19
			79	9
			79	25
			88	4
			92	2
			94	32
			99	2
			145	50
			146	4
			147	19
			148	24
			149	13
			152	28
			154	7
			161	4
			164	43
11083	8T4224	5310-01-359-8806	20	11
			32	5
			32	13
			37	13
			38	9
			42	21
			43	19
			51	21
			54	3
			62	14
			63	6
			80	4
			83	13
			87	2
			103	4
			108	10
			113	20
			115	13
			124	2
			131	7
			148	13
			152	13

CROSS-REFERENCE INDEXES

PART NUMBER INDEX

CAGEC	PART NUMBER	STOCK NUMBER	FIG.	ITEM
11083	8T4224	5310-01-359-8806	155	13
			166	4
			166	8
11083	8T4226	5310-01-425-6246	22	5
			96	1
11083	8T4244	5310-01-352-7374	101	13
			131	3
			132	2
			147	21
			152	25
11083	8T4742	2510-01-505-6836	104	11
			105	11
11083	8T4747	5340-01-439-8521	104	28
			105	27
11083	8T4815	5410-01-523-8889	25	18
11083	8T4908	5305-01-398-1282	28	1
			42	27
			43	25
			82	21
			87	3
			100	3
			108	15
			113	19
			152	12
			163	8
			171	4
11083	8T4910	5305-01-471-4493	152	29
11083	8T4956	5306-01-473-4526	79	23
			92	1
			125	1
			145	51
			164	42
			171	10
11083	8T4971	5305-01-439-8527	52	4
			104	31
			105	29
			114	16
			153	2
11083	8T4984	5340-01-439-8525	146	32
11083	8T4986	4730-01-473-6287	23	1
11083	8T5005	5305-01-439-8526	31	7
			138	74
11083	8T5041	5305-01-471-3980	99	5
11083	8T5093	5305-01-507-2644	166	9
11083	8T5372-0.12		163	48
11083	8T5372-0.15		163	49
11083	8T53727	5330-01-476-4973	BULK	30
11083	8T5379	5306-01-543-6661	84	7
11083	8T5400	5935-01-439-8530	116	13
11083	8T5429	4730-01-439-8532	144	2
11083	8T5436	5306-01-429-2861	147	29

CROSS-REFERENCE INDEXES

PART NUMBER INDEX

CAGEC	PART NUMBER	STOCK NUMBER	FIG.	ITEM
11083	8T5439	5310-01-429-2862	1	3
			68	5
11083	8T5913	2910-01-439-8533	115	9
11083	8T5914	5325-01-439-9355	115	8
11083	8T6430	5306-01-473-4504	172	41
11083	8T6431	5340-01-473-6179	81	4
11083	8T6453	4730-01-544-2414	141	13
11083	8T6466	5305-01-439-8534	56	27
			82	28
			159	19
			164	23
11083	8T6631	5305-01-439-8535	157	1
			163	24
11083	8T6703	5340-01-429-3148	70	8
			146	35
11083	8T6869	5305-01-398-1285	86	10
			148	12
11083	8T6870	5305-01-439-8537	38	11
			51	41
			124	1
11083	8T6902	5340-01-523-8996	29	12
11083	8T6912	5305-01-398-1287	20	18
			48	16
			62	21
11083	8T7529	5325-01-505-6912	73	20
11083	8T7547	5305-01-360-1011	56	39
			72	8
			159	27
11083	8T7963	5310-01-414-3289	56	21
11083	8T7971	5306-01-474-1864	124	15
11083	8T8726	6625-01-484-9404	174	9
11083	8T8737	5365-01-429-3163	174	36
11083	8T8827	5305-01-439-8544	46	8
11083	8T8894	5305-01-507-2645	86	4
11083	8T8899	4730-01-473-4786	137	33
			146	24
11083	8T8902	4730-01-414-3294	145	22
			174	26
11083	8T9655	5340-01-460-0266	44	1
11083	8V7315	5325-01-543-4961	76	6
			76	14
			76	18
11083	8V7623	3040-01-526-7619	79	8
11083	8W2522	4720-01-544-9203	82	59
11083	8W4342	4720-01-544-9504	95	2
11083	8W9576		84	3
11083	8X9618	6150-01-543-4465	57	24
11083	8Y0711	4720-01-543-9272	73	17
11083	8Y4501	5360-01-438-9030	104	24
			105	34
11083	8Y5737	5340-01-473-5787	163	21

CROSS-REFERENCE INDEXES

PART NUMBER INDEX

CAGEC	PART NUMBER	STOCK NUMBER	FIG.	ITEM
11083	8Y6377	2540-01-545-0084	103	15
11083	8Y6386	5330-01-438-9044	104	25
			105	31
11083	8Y6388	2540-01-473-4828	121	5
11083	8Y6391	2540-01-543-8666	121	2
11083	8Y7047	5315-01-544-5928	99	18
11083	8Y7119	5310-01-438-9051	102	3
11083	8Y7730	6680-01-543-5546	70	1
11083	8Y8387	5340-01-543-6537	138	76
7S147	803-12	7920-00-514-2417	174	43
11083	9B7233	5310-00-559-0070	41	7
			62	4
11083	9C5048	3120-01-544-1835	78	28
11083	9C5049	3120-01-544-1840	78	2
11083	9C7907	5365-01-544-1386	172	18
11083	9C8990	4720-01-545-0545	148	28
11083	9D1535	5365-01-543-7824	90	7
11083	9D3768	5325-01-285-7132	164	11
11083	9D7924	5340-01-471-4835	86	12
11083	9F5644	5310-01-063-5822	56	45
			159	34
11083	9G1950	5905-01-429-4032	163	37
11083	9G2654	4720-01-545-0388	10	6
11083	9G2761	2540-01-544-8909	104	27
			105	25
11083	9G5127	2520-01-164-0077	71	6
45152	9HB895	5306-01-479-2736	124	13
11083	9H1129	5330-00-898-6665	78	27
11083	9H2258	5330-00-923-6956	99	22
11083	9H5604	5325-00-490-0573	171	16
11083	9L1566	5342-01-064-2060	57	8
11083	9L6246	3020-01-544-6374	38	17
11083	9L9068	5315-01-545-4627	69	6
11083	9L9188	5360-00-175-2701	12	23
11083	9M1974	5310-00-432-4064	65	9
			69	2
11083	9M3835	5342-00-410-1903	56	1
			158	10
11083	9M4814	4730-01-473-4034	119	3
11083	9M4972	5325-01-415-1608	62	30
11083	9M8406	5342-01-064-3819	164	30
11083	9N1756		138	30
11083	9R2596	5340-01-543-9484	116	19
11083	9R2620	5340-01-523-6504	42	3
11083	9R2807	5340-01-364-0372	81	40
11083	9R3067	5315-01-543-6482	81	42
11083	9R5878	5310-01-544-4746	1	14
			68	14
11083	9R8870	5340-01-545-4208	148	26
11083	9R9572	5340-01-544-4177	140	47
11083	9S1240	5310-00-253-7918	38	12

CROSS-REFERENCE INDEXES

PART NUMBER INDEX

CAGEC	PART NUMBER	STOCK NUMBER	FIG.	ITEM
11083	9S1305	5315-01-543-4944	114	2
11083	9S4185	5365-00-763-0120	146	40
11083	9S4190	5365-01-053-0180	25	6
			140	30
11083	9S4191	5365-00-411-4584	146	99
11083	9S5563	5340-01-546-2247	174	42
11083	9S8005	5365-01-031-8183	78	9
11083	9T1013	4820-01-544-2412	89	16
11083	9U0710	5340-01-543-6469	79	2
11083	9U3226	4720-01-544-9087	148	31
11083	9U3668	2520-01-543-8663	76	7
11083	9U5336	5120-01-484-9382	175	24
11083	9U5339	5120-01-545-6620	175	23
11083	9U5342	5315-01-485-8586	174	25
11083	9U5343	5120-01-546-3188	174	13
11083	9U5345	5310-01-545-6642	174	12
11083	9U6210		175	2
11083	9U6600	4320-00-374-1403	174	35
11083	9U6832	5310-01-480-6693	175	31
11083	9U6833	5310-01-545-6742	174	34
11083	9U7400	4940-01-268-2200	174	20
11083	9U7840	6630-01-546-1870	174	7
11083	9V1203	3110-01-543-5084	78	33
11083	9V6343	5340-01-543-4991	99	23
11083	9W1441		157	7
11083	9W1454	2940-01-544-9176	71	2
11083	9W3008	4720-01-545-0444	148	30
11083	9W9915	5340-01-543-5037	1	5
11083	9W9940	5340-01-438-9799	102	5
11083	9X1046	5305-01-438-9790	41	3
			42	4
			43	64
11083	9X2027	5310-01-438-9803	78	24
11083	9X2038	5310-01-438-9809	113	21
11083	9X2040	5305-01-438-9805	131	12
11083	9X2041	5305-01-431-0871	103	2
			112	21
			131	11
11083	9X2042	5305-01-438-9806	86	8
			104	2
			105	20
			109	9
			118	3
11083	9X2043	5305-01-438-9807	113	22
11083	9X2044	5305-01-438-9808	43	56
			163	11
11083	9X2045	5305-01-431-0874	29	1
			41	2
			43	34
			86	9
			113	6

CROSS-REFERENCE INDEXES

PART NUMBER INDEX

CAGEC	PART NUMBER	STOCK NUMBER	FIG.	ITEM
11083	9X2045	5305-01-431-0874	116	12
11083	9X2065	5310-01-543-6604	81	11
11083	9X2133		BULK	33
11083	9X2133-96		34	1
11083	9X2185	5305-01-439-0977	163	44
11083	9X3463	6240-01-429-2747	47	7
			48	25
11083	9X4244	5305-01-429-4024	47	9
11083	9X4493	6240-01-439-0994	48	12
11083	9X6165	5310-01-439-2619	59	7
11083	9X6656	4320-01-544-9494	72	3
11083	9X7345	5325-01-527-0351	60	3
11083	9X7378	5331-01-439-2610	162	9
			164	21
11083	9X7380	5330-01-439-2612	164	9
11083	9X7381	5331-01-439-2613	164	6
11083	9X7382	5331-01-439-2615	164	2
11083	9X7383	5330-01-439-2614	164	38
11083	9X7385	5330-01-473-3308	162	10
11083	9X7725	5330-01-545-6305	69	19
11083	9X8250	5340-01-429-4011	145	55
11083	9X8256	5310-01-415-1606	44	6
			46	2
			56	5
			103	11
			114	12
			126	3
			158	3
			159	12
11083	9X8482	5305-01-544-4765	32	16
11083	9X8582	5340-01-543-6189	95	15
11083	9X8699	5330-01-545-3406	BULK	28
11083	9X8699-306.3		108	35
11083	9X8699-91.2		108	34
11083	9Y9380	5330-01-471-5143	124	3

RECOMMENDED CHANGES TO PUBLICATIONS AND BLANK FORMS For use of this form, see AR 25-30; the proponent agency is OAASA	Use Part II *(reverse)* for Repair Parts and Special Tool Lists (RPSTL) and Supply Catalogs/Supply Manuals (SC/SM).	DATE **1 July 2009**

TO: *(Forward to proponent of publication or form) (Include ZIP Code)*	**FROM:** *(Activity and location) (Include ZIP Code)*
AMSTA-LC-LMPP/TECH PUBS 1 Rock Island Arsenal Rock Island, IL 61299-7630	

PART I - ALL PUBLICATIONS (EXCEPT RPSTL AND SC/SM) AND BLANK FORMS

PUBLICATION/FORM NUMBER	DATE	TITLE
TM 5-3805-290-23P	13 August 2007	Field Maintenance Manual (Includes Unit and DS Maintenance) for 924G Loader, Light, Scoop

ITEM	PAGE	PARA-	LINE	FIGURE NO.	TABLE	RECOMMENDED CHANGES AND REASON
				34		Part number supplied for item 2 is incorrect.

SAMPLE

TYPED NAME, GRADE OR TITLE	TELEPHONE EXCHANGE/AUTOVON, PLUS EXTENSION	SIGNATURE

TO: *(Forward direct to addressee listed in publication)*	FROM: *(Activity and location) (Include ZIP Code)*	DATE
AMSTA-LC-LMPP/TECH PUBS 1 Rock Island Arsenal Rock Island, IL 61299-7630		

PART II - REPAIR PARTS AND SPECIAL TOOL LISTS AND SUPPLY CATALOGS/SUPPLY MANUALS

PUBLICATION NUMBER	DATE	TITLE
TM 5-3805-290-23P	30 Nov 2007	Field Maintenance Manual (Includes Unit and DS Maintenance) for 924G Loader, Light, Scoop

PAGE NO.	COLM NO.	LINE NO.	NATIONAL STOCK NUMBER	REFERENCE NO.	FIGURE NO.	ITEM NO.	TOTAL NO. OF MAJOR ITEMS SUPPORTED	RECOMMENDED ACTION

SAMPLE

PART III - REMARKS *(Any general remarks or recommendations, or suggestions for improvement of publications and blank forms. Additional blank sheets may be used if more space is needed.)*

TYPED NAME, GRADE OR TITLE	TELEPHONE EXCHANGE/AUTOVON, PLUS EXTENSION	SIGNATURE

RECOMMENDED CHANGES TO PUBLICATIONS AND BLANK FORMS For use of this form, see AR 25-30; the proponent agency is OAASA	Use Part II *(reverse)* for Repair Parts and Special Tool Lists (RPSTL) and Supply Catalogs/Supply Manuals (SC/SM).	DATE

TO: *(Forward to proponent of publication or form) (Include ZIP Code)*	**FROM:** *(Activity and location) (Include ZIP Code)*
AMSTA-LC-LMPP/TECH PUBS 1 Rock Island Arsenal Rock Island, IL 61299-7630	

PART I - ALL PUBLICATIONS (EXCEPT RPSTL AND SC/SM) AND BLANK FORMS

PUBLICATION/FORM NUMBER	DATE	TITLE
TM 5-3805-290-23P	30 Nov 2007	Field Maintenance Manual (Includes Unit and DS Maintenance) for 924G Loader, Light, Scoop

ITEM	PAGE	PARA-	LINE	FIGURE NO.	TABLE	RECOMMENDED CHANGES AND REASON

TYPED NAME, GRADE OR TITLE	TELEPHONE EXCHANGE/AUTOVON, PLUS EXTENSION	SIGNATURE

TO: *(Forward direct to addressee listed in publication)*	FROM: *(Activity and location) (Include ZIP Code)*	DATE
AMSTA-LC-LMPP/TECH PUBS 1 Rock Island Arsenal Rock Island, IL 61299-7630		

PART II - REPAIR PARTS AND SPECIAL TOOL LISTS AND SUPPLY CATALOGS/SUPPLY MANUALS

PUBLICATION NUMBER	DATE	TITLE
TM 5-3805-290-23P	30 Nov 2007	Field Maintenance Manual (Includes Unit and DS Maintenance) for 924G Loader, Light, Scoop

PAGE NO.	COLM NO.	LINE NO.	NATIONAL STOCK NUMBER	REFERENCE NO.	FIGURE NO.	ITEM NO.	TOTAL NO. OF MAJOR ITEMS SUPPORTED	RECOMMENDED ACTION

PART III - REMARKS *(Any general remarks or recommendations, or suggestions for improvement of publications and blank forms. Additional blank sheets may be used if more space is needed.)*

TYPED NAME, GRADE OR TITLE	TELEPHONE EXCHANGE/AUTOVON, PLUS EXTENSION	SIGNATURE

APD V4.00

RECOMMENDED CHANGES TO PUBLICATIONS AND BLANK FORMS For use of this form, see AR 25-30; the proponent agency is OAASA	Use Part II *(reverse)* for Repair Parts and Special Tool Lists (RPSTL) and Supply Catalogs/Supply Manuals (SC/SM).	DATE

TO: *(Forward to proponent of publication or form) (Include ZIP Code)*	**FROM:** *(Activity and location) (Include ZIP Code)*
AMSTA-LC-LMPP/TECH PUBS 1 Rock Island Arsenal Rock Island, IL 61299-7630	

PART I - ALL PUBLICATIONS (EXCEPT RPSTL AND SC/SM) AND BLANK FORMS

PUBLICATION/FORM NUMBER	DATE	TITLE
TM 5-3805-290-23P	30 Nov 2007	Field Maintenance Manual (Includes Unit and DS Maintenance) for 924G Loader, Light, Scoop

ITEM	PAGE	PARA-	LINE	FIGURE NO.	TABLE	RECOMMENDED CHANGES AND REASON

TYPED NAME, GRADE OR TITLE	TELEPHONE EXCHANGE/AUTOVON, PLUS EXTENSION	SIGNATURE

TO: *(Forward direct to addressee listed in publication)*	FROM: *(Activity and location) (Include ZIP Code)*	DATE
AMSTA-LC-LMPP/TECH PUBS 1 Rock Island Arsenal Rock Island, IL 61299-7630		

PART II - REPAIR PARTS AND SPECIAL TOOL LISTS AND SUPPLY CATALOGS/SUPPLY MANUALS

PUBLICATION NUMBER	DATE	TITLE
TM 5-3805-290-23P	30 Nov 2007	Field Maintenance Manual (Includes Unit and DS Maintenance) for 924G Loader, Light, Scoop

PAGE NO.	COLM NO.	LINE NO.	NATIONAL STOCK NUMBER	REFERENCE NO.	FIGURE NO.	ITEM NO.	TOTAL NO. OF MAJOR ITEMS SUPPORTED	RECOMMENDED ACTION

PART III - REMARKS *(Any general remarks or recommendations, or suggestions for improvement of publications and blank forms. Additional blank sheets may be used if more space is needed.)*

TYPED NAME, GRADE OR TITLE	TELEPHONE EXCHANGE/AUTOVON, PLUS EXTENSION	SIGNATURE

RECOMMENDED CHANGES TO PUBLICATIONS AND BLANK FORMS For use of this form, see AR 25-30; the proponent agency is OAASA	Use Part II *(reverse)* for Repair Parts and Special Tool Lists (RPSTL) and Supply Catalogs/Supply Manuals (SC/SM).	DATE

TO: *(Forward to proponent of publication or form) (Include ZIP Code)*	**FROM:** *(Activity and location) (Include ZIP Code)*
AMSTA-LC-LMPP/TECH PUBS 1 Rock Island Arsenal Rock Island, IL 61299-7630	

PART I - ALL PUBLICATIONS (EXCEPT RPSTL AND SC/SM) AND BLANK FORMS

PUBLICATION/FORM NUMBER	DATE	TITLE
TM 5-3805-290-23P	30 Nov 2007	Field Maintenance Manual (Includes Unit and DS Maintenance) for 924G Loader, Light, Scoop

ITEM	PAGE	PARA-	LINE	FIGURE NO.	TABLE	RECOMMENDED CHANGES AND REASON

TYPED NAME, GRADE OR TITLE	TELEPHONE EXCHANGE/AUTOVON, PLUS EXTENSION	SIGNATURE

TO: *(Forward direct to addressee listed in publication)*	FROM: *(Activity and location) (Include ZIP Code)*	DATE
AMSTA-LC-LMPP/TECH PUBS 1 Rock Island Arsenal Rock Island, IL 61299-7630		

PART II - REPAIR PARTS AND SPECIAL TOOL LISTS AND SUPPLY CATALOGS/SUPPLY MANUALS

PUBLICATION NUMBER	DATE	TITLE
TM 5-3805-290-23P	30 Nov 2007	Field Maintenance Manual (Includes Unit and DS Maintenance) for 924G Loader, Light, Scoop

PAGE NO.	COLM NO.	LINE NO.	NATIONAL STOCK NUMBER	REFERENCE NO.	FIGURE NO.	ITEM NO.	TOTAL NO. OF MAJOR ITEMS SUPPORTED	RECOMMENDED ACTION

PART III - REMARKS *(Any general remarks or recommendations, or suggestions for improvement of publications and blank forms. Additional blank sheets may be used if more space is needed.)*

TYPED NAME, GRADE OR TITLE	TELEPHONE EXCHANGE/AUTOVON, PLUS EXTENSION	SIGNATURE

By Order of the Secretary of the Army:

GEORGE W. CASEY, JR.
General, United States Army
Chief of Staff

Official:

JOYCE E. MORROW
Administrative Assistant to the
Secretary of the Army
0714904

DISTRIBUTION: To be distributed in accordance with the initial distribution requirements for IDN: 256940, requirements for TM 5-3805-290-23P.

PIN: 084056-000