CATERPILLAR®

SEBP4957
November 2011

RUTHZIL TRATOR COMERCIAL DE PEÇAS LTDA 11 97083-6812 ROLANDO

Parts Manual

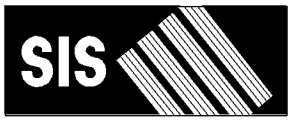

See "General Information" for New Parts Manual Features.

924H, 924HZ Wheel Loader

JRL1-Up (Machine)
RRS1-Up (Machine)
C6E1-Up (Engine)
J2Y1-Up (Transmission)

Powered By C6.6 Engine

Product and Dealer Information

Note: For product identification plate locations, see the section “Product Identification Information” in the Operation and Maintenance Manual.

Delivery Date: _____

Product Information

Model: _____

Product Identification Number: _____

Engine Serial Number: _____

Transmission Serial Number: _____

Generator Serial Number: _____

Attachment Serial Numbers: _____

Attachment Information: _____

Customer Equipment Number: _____

Dealer Equipment Number: _____

Dealer Information

Name: _____ Branch: _____

Address: _____

_____

_____

	Dealer Contact	Phone Number	Hours
Sales:	_____	_____	_____
Parts:	_____	_____	_____
Service:	_____	_____	_____

MEMORANDA

TABLE OF CONTENTS

Name	Page
GENERAL INFORMATION	A5
REPAIR ALTERNATIVES	A8
SUPPLEMENTAL COOLANT ADDITIVES	A9
MAINTENANCE PARTS	A10
INDEX	A13
MACHINE ARRANGEMENT	1
CHASSIS AR	1
COMMON AR	2
DISTRIBUTION AR	3
ENGINE ARRANGEMENT	5
ENGINE AR-PRIMARY	5
INSTALLATION AR-ENGINE	6
BASIC ENGINE	7
CAMSHAFT GP	7
COVER GP-ENGINE	8
COVER GP-VALVE MECHANISM	9
CRANKSHAFT GP	11
CYLINDER BLOCK GP	12
CYLINDER HEAD AS	15
CYLINDER HEAD GP	17
DRAIN GP-ENGINE OIL	19
DRIVE GP-FAN	20
FLYWHEEL GP	22
HOUSING GP-FLYWHEEL	23
HOUSING GP-FRONT	24
KIT-CRANKSHAFT BEARING	26
LIFTING GP-ENGINE	27
MOUNTING GP-ENGINE & XMSN	28
PAN GP-OIL	30
PISTON & ROD GP	32
PLUG GP-ENGINE	33
PLUG GP-FLYWHEEL HOUSING	34
PULLEY GP-CRANKSHAFT	35
ROCKER ARM GP	36
VALVE MECHANISM GP	38
LUBRICATION SYSTEM	40
FILLER GP-ENGINE OIL	40
FILTER GP-ENGINE OIL	42
FILTER GP-FUMES DISPOSAL	43
PUMP GP-ENGINE OIL	44
VALVE GP-FLUID SAMPLING	45
COOLING SYSTEM	46
CONNECTION GP-WATER	46
COOLER GP-ENGINE OIL	47
COOLER GP-FLTR BASE & ENG OIL	49
FAN GP-SUCTION	51
GUARD GP-FAN	52
LINES GP-WATER	54
PUMP GP-WATER	56
RADIATOR & AFTERCOOLER GP	58
RADIATOR & MOUNTING GP	62
RADIATOR GP	63
TANK GP-COOLANT	64
AIR INLET AND EXHAUST SYSTEM	65
AIR CLEANER GP	65
EXTENSION GP-EXHAUST	68
LINES GP-AIR	69
MANIFOLD GP-INLET	70
MUFFLER GP	71
PRECLEANER GP	72
TURBOCHARGER GP	75
FUEL SYSTEM	78
FILTER GP-SECONDARY FUEL	78
FILTER GP-WATER SEP & FUEL	79
INJECTOR GP-FUEL	80
LINES GP-FUEL	81
PUMP GP-FUEL INJECTION	87
PUMP GP-FUEL PRM & SEC FILTER	93
TANK & MTG GP-FUEL	94
TANK GP-FUEL	95
ELECTRICAL AND STARTING SYSTEM	96
ALARM GP	96
ALTERNATOR GP-CHARGING	97
BATTERY & WIRING GP	102
BATTERY GP	105
CONTROL GP-LIFT KICKOUT	106
CONTROL GP-POSITION	107
ELECTRONICS AR-MACHINE	108
ELECTRONICS GP-COMMUNICATION	108
ELECTRONICS GP-POWER TRAIN	108
GLOW PLUG GP	109
HEATER GP-JACKET WATER	110
INSTALLATION GP-COMMUNICATION	112
LAMP GP-FLOOD	115
LAMP GP-STOP & TAIL	119
LAMP GP-WARNING BEACON	120
LIGHTING GP-AUXILIARY	121
LIGHTING GP-FLOOD	122
LIGHTING GP-FLOOD & SIGNAL	128
LIGHTING GP-REAR	130
LIGHTING GP-WARNING BEACON	131
MODULE AS-FUSE	132
SENSOR GP-PRESSURE	134
SENSOR GP-SPEED	135
SENSOR GP-TEMPERATURE	136
STARTING AID GP-ETHER	137
STARTING MOTOR GP-ELECTRIC	139

TABLE OF CONTENTS

Name	Page
SWITCH GP-DISCONNECT	142
SWITCH GP-MAGNETIC	143
SWITCH GP-TOGGLE	144
SWITCH GP-WIPER	145
VALVE GP-ETHER STARTING	148
WARNING GP-BACKUP	149
WIRING GP-CAB	150
WIRING GP-ELECTRONIC CONTROL	159
WIRING GP-ENGINE	160
WIRING GP-FRONT	164
WIRING GP-REAR	168
WIRING GP-RIDE CONTROL	170
POWER TRAIN	173
AXLE AR-FIXED	173
AXLE AR-OSCILLATING	173
BRAKE & PLANETARY GP	175
CASE & PARTS GP-TRANSMISSION	179
CLUTCH GP	181
COOLER GP-AXLE OIL	188
COVER GP-TRANSMISSION	189
DIFFERENTIAL GP	191
DIFFERENTIAL GP-LIMITED SLIP	192
DRIVE GP-FLEXIBLE COUPLING	193
DRIVE GP-PUMP	194
FILLER GP-POWER TRAIN OIL	195
FILTER & LINES GP-TRANSMISSION	196
FILTER GP-OIL	198
GAUGE GP-SIGHT	199
GEAR GP-BEVEL & PINION	200
GEAR GP-INPUT TRANSFER	203
GEAR GP-OUTPUT TRANSFER	204
HOUSING GP-FIXED AXLE	205
HOUSING GP-OSCILLATING AXLE	207
LINES GP-AXLE OIL COOLER	211
LINES GP-TORQUE CONV COOLER	216
MOUNTING GP-AXLE	218
MOUNTING GP-RIM	219
POWER TRAIN AR	219
PUMP GP-TRANSMISSION	220
RIM AR	222
RIM GP-DEMOUNTABLE	223
SHAFT GP-DRIVE	229
SLIP JOINT GP	231
STOP GP-AXLE OSCILLATION	232
TIRE & RIM AR	232
TRANSMISSION AR	233
VALVE GP-BYPASS	234
VALVE GP-MODULATING	235
VALVE GP-RELIEF	236
VALVE GP-TIRE	239
VALVE GP-TRANSMISSION CONTROL	240
FRAME AND BODY	244
BOX GP-BATTERY	244
COUNTERWEIGHT GP	245
COVER GP-ACCESS	247
DOOR GP-ACCESS	248
FENDER GP-FRONT	249
FRAME GP-LOADER	251
GUARD GP-CRANKCASE	256
GUARD GP-DRIVE SHAFT	257
GUARD GP-LINES	258
GUARD GP-POWER TRAIN	264
GUARD GP-RADIATOR	265
HITCH GP-ARTICULATING	267
HOOD & GUARD GP	269
LADDER GP	272
LINES GP-GREASE	275
LINK GP-STEERING FRAME LOCK	277
PANEL GP-ACCESS	278
PANEL GP-TOP	280
BRAKING SYSTEM	281
ACCUMULATOR GP-BRAKE	281
ACCUMULATOR GP-HYDRAULIC	282
BRAKE GP-PARKING	283
CONTROL GP-PARKING BRAKE	284
CONTROL GP-SERVICE BRAKE	289
LINES GP-SERVICE BRAKE	292
STEERING SYSTEM	298
CYLINDER & MTG GP-STEERING	298
CYLINDER GP-STEERING	300
LINES GP-STEERING	302
PUMP GP-METERING	304
STEERING AR-STANDARD	305
STEERING COLUMN GP-ADJUSTABLE	306
HYDRAULIC SYSTEM	307
ACCUMULATOR GP-PILOT OIL	307
ACCUMULATOR GP-RIDE CONTROL	309
CONTROL AR-RIDE	311
CONTROL GP-RIDE	312
COOLER GP-HYD & TMSN OIL	313
COOLER GP-HYDRAULIC OIL	314
CYLINDER & MTG GP-COUPLER	315
CYLINDER GP-COUPLER	316
CYLINDER GP-LIFT	317
CYLINDER GP-TILT	321
FILTER & MTG GP-HYDRAULIC	323
FILTER GP-OIL	324
GAUGE GP-SIGHT	325
HYDRAULIC AR	326
HYDRAULIC AR-2 VALVE	326
HYDRAULIC AR-3 VALVE	327
HYDRAULIC AR-4 VALVE	328

TABLE OF CONTENTS

Name	Page
KICKOUT & POSITIONER GP	329
LINES GP-CONNECTING	333
LINES GP-COUPLER	335
LINES GP-FRONT	344
LINES GP-HYDRAULIC	346
LINES GP-HYDRAULIC FAN	354
LINES GP-LIFT CYLINDER	362
LINES GP-PILOT	371
LINES GP-RIDE CONTROL	374
LINES GP-TILT CYLINDER	379
MANIFOLD GP-CONTROL	385
MOTOR & MTG GP-HYDRAULIC FAN	386
MOTOR AR-HYDRAULIC FAN	387
MOTOR GP-GEAR	388
MOUNTING GP-CONTROL VALVE	393
PIVOT GP-PILOT VALVE	394
PLATE GP-PILOT VALVE	396
PUMP & MTG GP-BRAKE & HYD FAN	397
PUMP & MTG GP-IMPL & STEERING	398
PUMP GP-GEAR	399
PUMP GP-PISTON	402
ROTATING GP-PUMP	407
TANK & MTG GP-HYDRAULIC	409
TANK GP-HYDRAULIC	410
VALVE & MTG GP-RIDE CONTROL	411
VALVE & MTG GP-SOLENOID	412
VALVE GP-COMBINATION	413
VALVE GP-CONTROL	414
VALVE GP-MAIN CONTROL	415
VALVE GP-MANUAL	435
VALVE GP-PILOT	436
VALVE GP-PILOT CARTRIDGE	444
VALVE GP-PRESSURE REDUCING	446
VALVE GP-PUMP CONTROL	447
VALVE GP-SHUTOFF	451
VALVE GP-SOLENOID	453
IMPLEMENTS	455
CONTROL GP-BUCKET	455
CONTROL GP-WORK TOOL	457
OPERATOR STATION	461
AIR CONDITIONER & MOUNTING GP	461
AIR CONDITIONER AR	462
AIR CONDITIONER GP	463
ARM GP-WINDOW WIPER	466
CAB AR	468
CAB AR-ENCLOSED ROPS	469
CAB GP	470
CANOPY AR-OPEN ROPS	474
CANOPY GP-OPEN ROPS	474
COMPRESSOR GP-REFRIGERANT	475
CONDENSER & MTG GP-REFRIGERANT	477
CONDENSER GP-REFRIGERANT	479
CONSOLE GP-OPERATOR	481
CONTROL & MTG GP-JOYSTICK	483
CONTROL GP-JOYSTICK	484
CONTROL GP-PILOT OPERATED HYD	485
CONTROL GP-STEERING	489
CONTROL GP-TRANSMISSION	491
COVER GP-ACCESS	493
DASH GP	494
DEFROSTER GP-CAB	495
DOOR GP-CAB	496
DUCT GP-CAB AIR	502
FILTER GP-CAB AIR	504
FLOOR MAT GP	505
HEATER & MTG GP-CAB	511
HEATER AR-CAB	512
HEATER GP-CAB	513
LINER GP-CAB	515
LINES GP-AIR CONDITIONER	520
LINES GP-CAB HEATER	522
LITERATURE GP	523
MIRROR GP-REAR VIEW	524
MOTOR GP-WINDOW WIPER	526
MOUNTING GP-CAB	528
OPERATOR AR	529
OPERATOR AR-OPEN ROPS	530
OPERATOR GP	530
PANEL GP-INSTRUMENT	531
PEDAL GP-BRAKE	547
PEDAL GP-GOVERNOR	548
ROPS GP-ENCLOSED	549
ROPS GP-OPEN	550
SCREEN GP-SUN	551
SEAT & MOUNTING GP	552
SEAT GP-SUSPENSION	553
SKIRT GP-CAB	558
SUPPORT GP-SEAT	560
VISOR GP-CAB	562
WASHER GP-WINDOW	563
WIPER GP-WINDOW	566
WORK TOOLS	569
ADAPTER GP-TIP	569
ARM GP-MATERIAL HANDLING	570
BUCKET AR-GENERAL PURPOSE	571
BUCKET AR-LIGHT MATERIAL	573
BUCKET AS-GENERAL PURPOSE	575
BUCKET AS-LIGHT MATERIAL	585
BUCKET AS-PENETRATION	587
BUCKET GP-GENERAL PURPOSE	588
BUCKET GP-LIGHT MATERIAL	592
BUCKET GP-PENETRATION	594
CARRIAGE AS-FORK	595
COUPLER AR-QUICK	595
COUPLER GP-QUICK	596

TABLE OF CONTENTS

Name	Page	Name	Page
EDGE GP-CUTTING	598		
EDGE GP-SEGMENT	598		
FORK GP-PALLET	599		
MOUNTING GP-BUCKET	602		
TIP GP-LONG	603		
TIP GP-SHORT	605		
SERVICE EQUIPMENT AND SUPPLIES	607		
FILM GP	607		
FILM GP-INTERNATIONAL	609		
PLATE & FILM GP	611		
PLATE GP-AXLE IDENTIFICATION	613		
PART NUMBER INDEX	B1		

GENERAL INFORMATION

1. MACHINE IDENTIFICATION

Caterpillar machines are identified by Product Identification Numbers (PIN). Some components included in a machine may be identified by Serial Numbers (S/N). Typical components that will be serialized include engines, transmissions, bulldozers, and rippers. The machine and engine are further identified by arrangement numbers and in some cases modification numbers. These numbers are shown on the product identification plate(s) and on the master plate in the operator's compartment.

Caterpillar dealers need all of these numbers to determine accurate parts identification.

SIS *New Feature*

Effective First Quarter 2001 the Caterpillar Product Identification Number (PIN) changed from 8 to 17 characters. In an effort to provide uniform equipment identification, Caterpillar and other construction equipment manufacturers are moving to comply with the latest version of the product identification numbering standard. Non-road machine PINs are defined by ISO 10261. The new PIN format will apply to all Caterpillar machines and generator sets. The PIN plates and frame marking will display the 17 character PIN. The new format will look like the following:

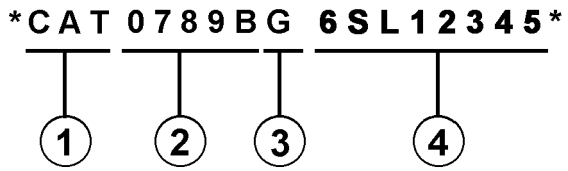

Where:

1. Caterpillar's World Manufacturing Code (characters 1-3)

2. Machine Descriptor (characters 4-8)

3. Check Character (character 9)

4. Machine Indicator Section (MIS) or Product Sequence Number (characters 10-17). These were previously referred to as the Serial Number.

Machines and generator sets produced before First Quarter 2001 will maintain their 8 character PIN format.

Components such as engines, transmissions, axles, etc. and work tools will continue to use an 8 character Serial Number (S/N).

2. ORDERING PARTS

WARNING

When replacement parts are required for this product Caterpillar recommends using Caterpillar replacement parts or parts with equivalent specifications including, but not limited to, physical dimensions, type, strength and material.

Failure to heed this warning can lead to premature failures, product damage, personal injury or death.

Quality Caterpillar replacement parts are available from Caterpillar dealers throughout the world. Their parts inventories are up to date and include all parts normally required to protect your investment in Caterpillar machines. Dealers may offer repair kits or remanufactured parts to allow selection of the most effective repair alternative for a particular situation. When ordering parts, your order should specify the quantity, part number, part name, and the serial number/product identification number of the machine for which the parts are needed.

3. PARTS MANUAL ORGANIZATION

Product information in this manual is presented as "information elements" that represent all of the components for the specific model. Engine Arrangement and Seat Group are examples of information elements. The information elements are organized alphabetically by part name and secondarily by part number within each major section of the manual.

4. TABLE OF CONTENTS

A table of contents (TOC) is found at the beginning of the manual. The TOC lists each section of the manual with a complete list of all information elements organized as they appear in the manual. Page numbers are provided for quick reference to detailed parts identification illustrations and serviceable consist lists.

5. MAINTENANCE PARTS INDEX

The Maintenance Parts Index, located near the beginning of the manual, references most frequently used maintenance part numbers, providing description, quantity, usage and page number. This information is organized alphabetically by part description.

GENERAL INFORMATION

6. INDEX

The index located near the front of the manual is an alphabetical listing of all information elements included in the manual. Page numbers are provided for quick reference to detailed parts identification illustrations and serviceable consist lists.

7. PART NUMBER INDEX

A numerical index listing all part numbers and the corresponding page number(s) appears at the back of the manual.

8. CAPTIONS

Captions located at the beginning of each information element identify the part number and part name along with additional descriptive information. PIN and S/N information found in each caption should be used to select correct information for a specific machine. Field replacement options, identification of optional attachment components, and where used ("part of") information is also provided.

The first line of a caption is shown in larger type font to indicate the beginning of an information element. Captions for additional pages that may be required to illustrate an information element will be shown in standard type font and will include the term *(contd.)* .

9. NON-SERVICED PARTS

In some instances it is necessary to display non-serviced parts that are a link to a lower level serviceable consist lists. These non-serviced part numbers are shown in *italic* type indicating that they are not available.

10. PARTS LIST REFERENCE NUMBERS

Numbers shown in the Ref No column correspond to numbers used in the associated graphic(s). An alphabetic suffix may be added to a reference number to identify lower level consist items. Numbers shown in the Graphic Ref column refer to the graphic number identifier displayed in the lower left corner of each illustration. The Graphic Ref number may be used in combination with the item Ref No to determine the correct part number. There may be intentional omission of a Ref No in a consist list as information is updated to reflect the latest serviceable part numbers.

11. INDENTED PART NAMES

When a part name is indented in a parts list, it is part of (included in) the group or assembly under which it is indented.

12. ILLUSTRATION REFERENCE LETTERS

When necessary, illustrations contain reference letters (A, B, C etc.) that are intended to track lines and harnesses from one point to another. They are also used to show where to reconnect illustrations that have been separated.

13. ABBREVIATIONS AND SYMBOLS

O.D. – Outside Diameter
I.D. – Inside Diameter
A – Not Part Of This Group
B – Use As Required
C – Change From Previous Type
D – Order By The Meter
E – Order By The Centimeter
F – Not Shown
G – Order By The Inch
I – Refer To Hydraulic Information System
M – Metric Part
R – Remfg Part May Be Available
Y – Separate Illustration
Z – Not Serviced Separately

SIS *New Feature*

14. DESCRIPTION OF TYPE CHANGES

Type - A type is defined as any configuration change that requires an additional Information Element for an Arrangement, Group, or Assembly. If serial number breaks for types are not available, a type # (Type 1, Type 2, etc.) will be displayed in the caption. These "type" changes are identified with a "C" note (change from previous type) in the Parts List. Only the "types" that apply to this Parts Manual will be included. Additional types may exist causing "C" notes to appear on an Information Element when no other types are shown.

15.<END>

This symbol indicates the end of an information element.

NOTE:

Continuing improvement and advancement of product design may cause changes to your machine which may not be included in this publication. Whenever a question arises regarding your Caterpillar product or this publication, please consult your Caterpillar dealer for the latest available information.

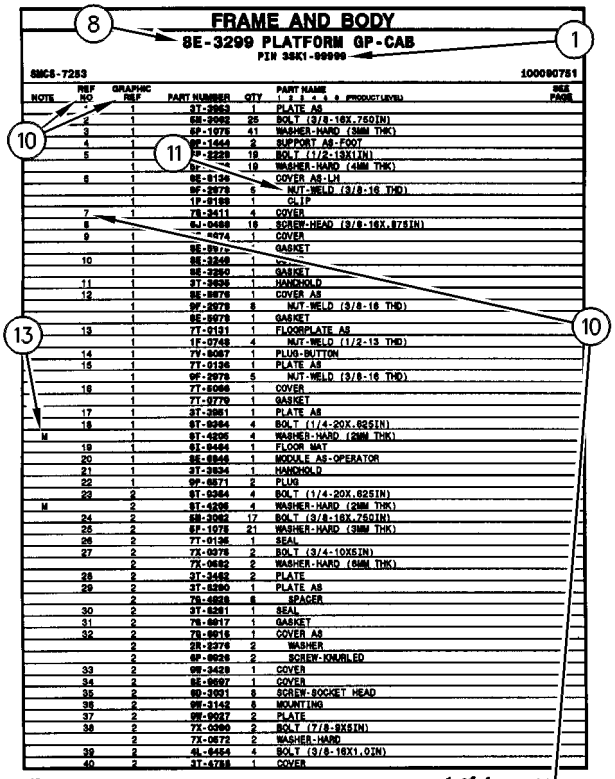

FRAME AND BODY

8E-3299 PLATFORM GP-CAB

PIN 3SK1-99999

SMCS-7253 100090751

NOTE	REF NO	GRAPHIC REF	PART NUMBER	QTY	PART NAME (1 2 3 4 5 6 PRODUCT LEVEL)	SEE PAGE
	*	1	3T-3863	1	PLATE AS	
	2	1	6E-2662	25	BOLT (3/8-16X.750IN)	
	3	1	6P-1076	41	WASHER-HARD (38MM THK)	
	4	1	9P-1644	2	SUPPORT AS-FOOT	
	5	1	7P-2229	18	BOLT (1/2-13X1IN)	
		1	6P-	18	WASHER-HARD (44MM THK)	
	6	1	6E-6136		COVER AS-LH	
		1	9F-2978	5	NUT-WELD (3/8-16 THD)	
		1	1P-0188	1	CLIP	
	7	1	7S-3411	4	COVER	
	8		9J-0488	18	SCREW-HEAD (3/8-16X.875IN)	
	9	1	-4474	1	COVER	
		1	6E-897		GASKET	
	10	1	6E-3249	1		
		1	6E-3250	1	GASKET	
	11	1	3T-3638	1	HANDHOLD	
	12	1	6E-8678	1	COVER AS	
		1	9F-2978	8	NUT-WELD (3/8-16 THD)	
		1	6E-8679	1	GASKET	
	13	1	7T-0131	1	FLOORPLATE AS	
		1	1F-0748	4	NUT-WELD (1/2-13 THD)	
	14	1	7V-8067	1	PLUG-BUTTON	
	15	1	7T-0136	1	PLATE AS	
		1	9F-2978	5	NUT-WELD (3/8-16 THD)	
	16	1	7T-8066	1	COVER	
		1	7T-8779	1	GASKET	
	17	1	3T-3861	1	PLATE AS	
	18	1	6T-8364	4	BOLT (1/4-20X.625IN)	
M		1	9T-4205	4	WASHER-HARD (28MM THK)	
	19	1	6L-8494	1	FLOOR MAT	
	20	1	8E-8846	1	MODULE AS-OPERATOR	
	21	1	3T-3834	1	HANDHOLD	
	22	1	9P-8671	2	PLUG	
	23	2	6T-8364	4	BOLT (1/4-20X.625IN)	
M		2	9T-4205	4	WASHER-HARD (28MM THK)	
	24	2	6E-3062	17	BOLT (3/8-16X.750IN)	
	26	2	6P-1076	21	WASHER-HARD (38MM THK)	
	26	2	7T-0135	1	SEAL	
	27	2	7X-0075	2	BOLT (3/4-10X5IN)	
		2	7X-0682	2	WASHER-HARD (64MM THK)	
	28	2	3T-3462	2	PLATE	
	29	2	3T-8290	1	PLATE AS	
		2	7S-4828	8	SPACER	
	30	2	3T-8281	1	SEAL	
	31	2	7S-8817	1	GASKET	
	32	2	7S-8816	1	COVER AS	
		2	2R-2276	2	WASHER	
		2	6P-8626	2	SCREW-KNURLED	
	33	2	9W-3429	1	COVER	
	34	2	8E-8697	1	COVER	
	35	2	6D-3931	8	SCREW-SOCKET HEAD	
	36	2	9W-3142	8	MOUNTING	
	37	2	9W-8027	2	PLATE	
	38	2	7X-0990	2	BOLT (7/8-9X5IN)	
		2	7X-0672	2	WASHER-HARD	
	39	2	4L-8454	4	BOLT (3/8-16X1.0IN)	
	40	2	3T-4788	1	COVER	

12 FRAME AND BODY 1 of 4 SELP4570-01

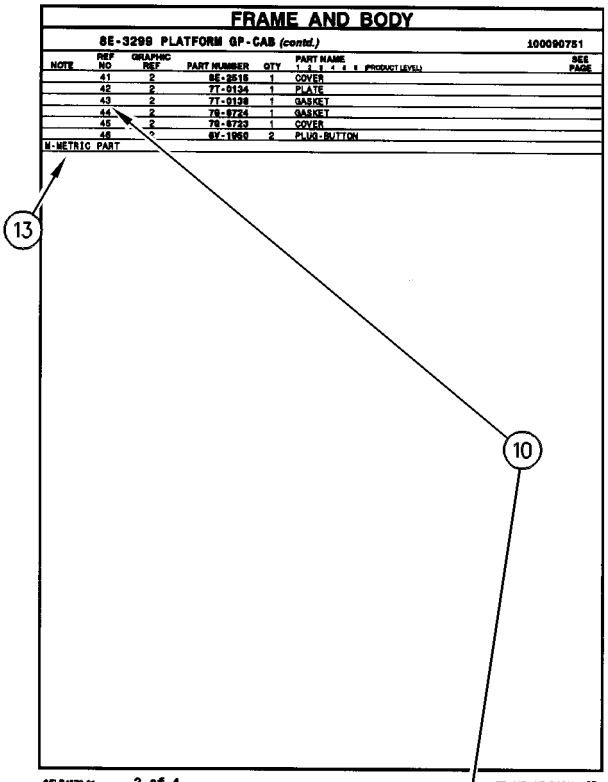

FRAME AND BODY

8E-3299 PLATFORM GP-CAB (contd.) 100090751

NOTE	REF NO	GRAPHIC REF	PART NUMBER	QTY	PART NAME (1 2 3 4 5 6 PRODUCT LEVEL)	SEE PAGE
	41	2	6E-2616	1	COVER	
	42	2	7T-0134	1	PLATE	
	43	2	7T-0138	1	GASKET	
	44	2	7S-8724	1	GASKET	
	45	2	7S-8723	1	COVER	
	46	2	6V-1950	2	PLUG-BUTTON	

M-METRIC PART

SELP4570-01 2 of 4 FRAME AND BODY 13

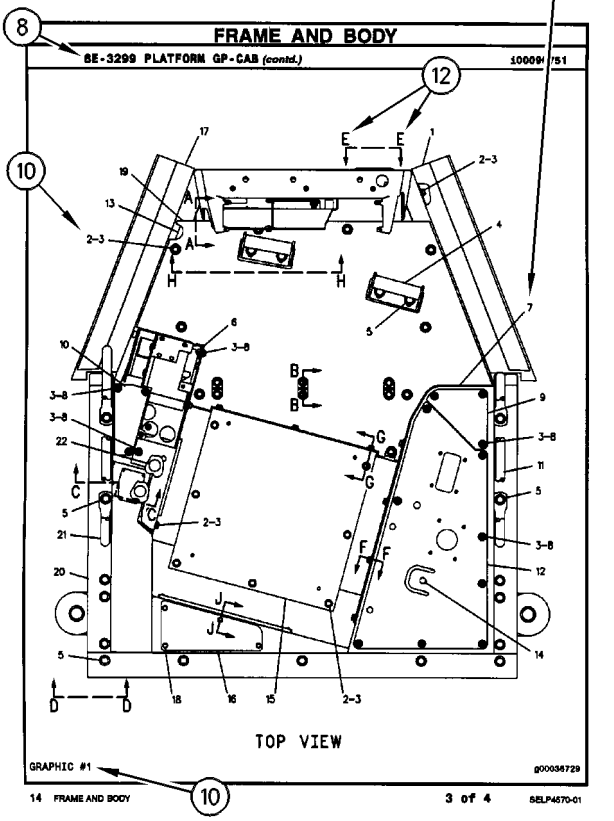

FRAME AND BODY

8E-3299 PLATFORM GP-CAB (contd.) 100090751

14 FRAME AND BODY 3 of 4 SELP4570-01

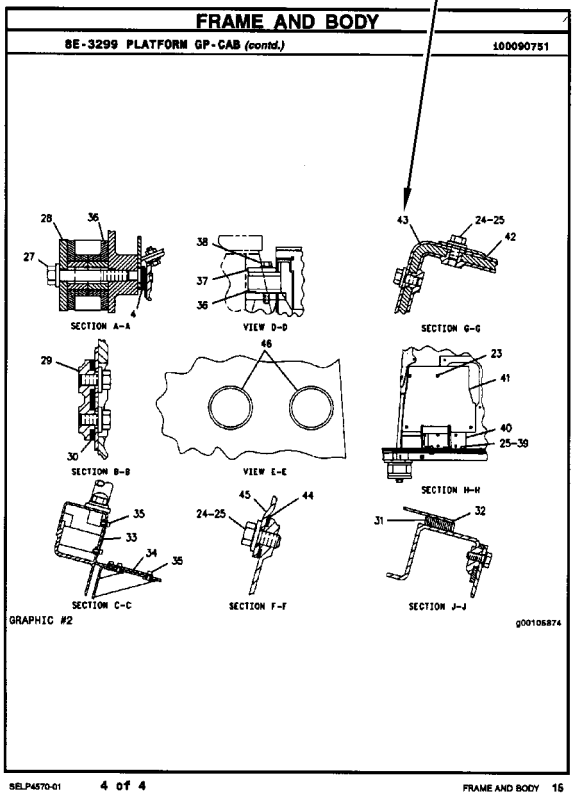

FRAME AND BODY

8E-3299 PLATFORM GP-CAB (contd.) 100090751

SELP4570-01 4 of 4 FRAME AND BODY 16

REPAIR ALTERNATIVES

REMANUFACTURED COMPONENTS

As an option when making repairs consider Caterpillar Remanufactured Components. Components that are available through the Caterpillar Remanufactured Program are identified three ways in the parts book:

- with the letter R in the note field of the parts list
- with an R* at the beginning of the first line of the caption
- with an *R at the end of the first line of the caption

Typical components included in the Remanufacturing Program include:

ALTERNATORS
CONNECTING RODS
CRANKSHAFTS - UNDERSIZE
CRANKSHAFTS - UPGRADE TO NEW
CYLINDER HEADS
ELECTRONIC CONTROL MODULES (ECM)
ELECTRONIC SENSORS
FUEL INJECTORS
FUEL NOZZLES
FUEL PUMPS
GOVERNORS
OIL PUMPS
PISTONS
SHORT BLOCKS
STARTERS
TURBOCHARGERS - COMPLETE
TURBOCHARGER CARTRIDGES
WATER PUMPS

Caterpillar Remanufactured engines for many engine arrangements are also available.

SUPPLEMENTAL COOLANT ADDITIVES

CUSTOMER BENEFITS:

Protects against cavitation, foam, erosion, corrosion, and scale buildup in cooling systems.

- Provides measured coolant conditioner.

DESCRIPTION:

Additives deplete from the coolant with normal operation. For this reason, Supplemental Coolant Additives (SCA) must be added to all heavy duty coolants at regular intervals. In addition, when not using a fully formulated, pre-charged antifreeze, like Caterpillar's DEAC, an initial charge of SCA must be added to the cooling system. The amount of SCA added to the system is dependent on the capacity of the system.

The SCA for initial fill is provided as a liquid. SCA's for maintenance intervals are available in liquid form and as a spin-on element. (No Spin-on available for 3600 Family of Engines)

NOTE:

The amount of SCA added at initial fill is not the same as the amount added at maintenance intervals.

The coolant additive elements can be used with any ethylene or propylene glycol type antifreeze which meets ASTM D4985 or ASTM D5345 Specifications.

NOTE:

For use with standard heavy duty coolant only, not for use with Extended Life Coolant.

PARTS NEEDED:

Cooling System Capacity		Liquid SCA at Initial Fill	Liquid SCA at Maintenance*	Spin-on SCA Maintenance Element*
Liters	Gallons			
22-30	(6-8)	3P-2044 (1)	6V-3542 (1)	111-2370 (1)
30-38	(8-10)	3P-2044 (1) 6V-3542 (1)	111-2372 (1)	111-2369 (1)
38-49	(10-13)	3P-2044 (1) 8T-1589 (1)	111-2372 (1)	111-2369 (1)
49-64	(13-17)	3P-2044 (2)	8T-1589 (1)	9N-3368 (1)
64-83	(17-22)	3P-2044 (2) 8T-1589 (1)	111-2372 (1) 6V-3542 (1)	111-2371 (1)
83-114	(22-30)	3P-2044 (3) 8T-1589 (1)	3P-2044 (1)	9N-3718 (1)
114-163	(30-43)	3P-2044 (5)	3P-2044 (1) 6V-3542 (1)	111-2371 (2)
163-242	(43-64)	3P-2044 (8)	3P-2044 (2)	9N-3718 (2)

** Normal maintenance period is 250 hrs. See your Operation and Maintenance Manual for complete coolant maintenance instructions.*

( ) Indicates quantity required.

MAINTENANCE PARTS

DESCRIPTION	PART NUMBER	QTY	WHERE USED	PAGE
AIR INLET AND EXHAUST SYSTEM				
FILTER ELEMENT AS-AIR (PRIMARY)	256-7902	1	AIR CLEANER GP	67
FILTER ELEMENT AS-AIR (SECONDARY)	256-7903	1	AIR CLEANER GP	67
BASIC ENGINE				
GASKET-COVER (VALVE MECHANISM)	317-3064	1	COVER GP-VALVE MECHANISM	9
PLUG-DRAIN (ENGINE OIL)	7C-0351	2	PAN GP-OIL	30
COOLING SYSTEM				
CAP AS-COOLANT TANK	251-3227	1	TANK GP-COOLANT	64
GASKET-WATER REGULATOR	281-8744	1	CONNECTION GP-WATER	46
HOSE-RADIATOR	185-1023	1	LINES GP-WATER	54
	185-1030	1	LINES GP-WATER	54
ELECTRICAL AND STARTING SYSTEM				
BATTERY (12-VOLT, MAINTENANCE FREE, WET)	9X-3404	2	BATTERY GP	105
BELT-SERPENTINE (ALTERNATOR)	226-0443	1	ALTERNATOR GP-CHARGING	99
	288-4641	1	ALTERNATOR GP-CHARGING	101
FILTER (ETHER START)	358-4889	1	VALVE GP-ETHER STARTING	148
FILTER-FOAM (ALTERNATOR AIR)	364-8305	1	ALTERNATOR GP-CHARGING	99
		1	ALTERNATOR GP-CHARGING	101
FLASHER AS (12 TO 24-VDC)	317-2284	1	LIGHTING GP-FLOOD & SIGNAL	128
FUSE (100-AMPERE)	235-1845	2	WIRING GP-ENGINE	160
FUSE (20-AMPERE)	267-2680	1	MODULE AS-FUSE	132
		1	WIRING GP-ENGINE	160
FUSE (30-AMPERE)	274-9872	1	MODULE AS-FUSE	132
		1	WIRING GP-ENGINE	160
FUSE (40-AMPERE)	278-6377	2	MODULE AS-FUSE	133
		1	WIRING GP-ENGINE	160
GLOW PLUG	361-9875	6	GLOW PLUG GP	109
KEY (BATTERY DISCONNECT)	8H-5306	1	SWITCH GP-DISCONNECT	142
LAMP (24-VOLT, 21-WATT)	242-0588	1	LAMP GP-FLOOD	117
		1	LAMP GP-FLOOD	118
LAMP (24-VOLT, 21-WATT) (STOP, TAIL)	9X-4493	1	LAMP GP-STOP & TAIL	119
LAMP (24-VOLT, 3-WATT)	115-1748	2	WIRING GP-CAB	150
		2	WIRING GP-CAB	153
LAMP (24-VOLT, 3-WATT) (ACTION LIGHT)	115-1748	2	WIRING GP-CAB	156
LAMP (24-VOLT, 5-WATT)	130-3515	1	LAMP GP-FLOOD	117
		1	LAMP GP-FLOOD	118
LAMP (24-VOLT, 5-WATT) (STOP, TAIL)	9X-4492	1	LAMP GP-STOP & TAIL	119
LAMP GP-WARNING BEACON (AMBER, STROBE)	140-3668	1	LIGHTING GP-WARNING BEACON	131
LAMP-HALOGEN (24-VOLT, 70-WATT)	351-9918	1	LAMP GP-FLOOD	115
		1	LIGHTING GP-FLOOD	122
	9X-3463	1	LAMP GP-FLOOD	116
		1	LAMP GP-FLOOD	117
		1	LAMP GP-FLOOD	118
		1	LIGHTING GP-FLOOD	126

MAINTENANCE PARTS

DESCRIPTION	PART NUMBER	QTY	WHERE USED	PAGE
FUEL SYSTEM				
CAP-FUEL (FILLER)	304-3885	1	TANK GP-FUEL	95
FILTER AS-FUEL (ULTRA HIGH EFFICIENCY)	346-0523	1	LINES GP-FUEL	81
FILTER AS-FUEL (ULTRA HIGH EFFICIENCY) (ULTRA HIGH EFFICIENCY)	368-5934	1	FILTER GP-SECONDARY FUEL	78
FILTER AS-WATER SEP & FUEL	326-1643	1	FILTER GP-WATER SEP & FUEL	79
FILTER ELEMENT-FUEL (ULTRA HIGH EFFICIENCY)	299-8229	1	FILTER GP-SECONDARY FUEL	78
		1	LINES GP-FUEL	81
STRAINER-FUEL (FILLER NECK SCREEN)	180-3730	1	TANK GP-FUEL	95
HYDRAULIC SYSTEM				
BREATHER (HYDRAULIC TANK)	258-2829	1	TANK GP-HYDRAULIC	410
CAP AS	6V-9830	1	LINES GP-TILT CYLINDER	383
CAP AS-FILLER (HYDRAULIC TANK)	142-8937	1	TANK GP-HYDRAULIC	410
FILTER-OIL (ULTRA HIGH EFFICIENCY) (HYDRAULIC)	126-1818	1	FILTER GP-OIL	324
SCREEN (HYDRAULIC OIL)	299-7997	1	TANK GP-HYDRAULIC	410
SCREEN AS (BLADE CONTROL VALVE)	141-9236	1	VALVE GP-PILOT	436
SCREEN AS (PILOT OIL)	141-9236	1	VALVE GP-PILOT	438
		1	VALVE GP-PILOT	441
SCREEN-SUCTION (FILTER)	255-0759	1	TANK GP-HYDRAULIC	410
STRAINER (HYDRAULIC OIL)	206-8818	1	TANK GP-HYDRAULIC	410
STRAINER (HYDRAULIC TANK)	262-5689	1	TANK GP-HYDRAULIC	410
LUBRICATION SYSTEM				
CAP-OIL FILLER (ENGINE)	130-9888	1	FILLER GP-ENGINE OIL	40
FILTER-ENGINE OIL	269-8325	1	FILTER GP-ENGINE OIL	42
FILTER-FUMES DISPOSAL	273-5711	1	FILTER GP-FUMES DISPOSAL	43

MAINTENANCE PARTS

DESCRIPTION	PART NUMBER	QTY	WHERE USED	PAGE
OPERATOR STATION				
BLADE AS-WIPER (503-MM) (REAR)	6V-6543	1	WIPER GP-WINDOW	566
BLADE AS-WIPER (700-MM) (FRONT)	6V-7419	1	WIPER GP-WINDOW	566
		1	WIPER GP-WINDOW	568
CAP-VENTED (WINDOW WASHER TANK)	322-4964	1	WASHER GP-WINDOW	564
CIRCUIT BREAKER AS (20-AMPERE, MANUAL RESET)	280-2710	1	CONDENSER & MTG GP-REFRIGERANT	478
CIRCUIT BREAKER AS (20-AMPERE, MANUAL RESET) (AIR CONDITIONER)	280-2710	1	AIR CONDITIONER & MOUNTING GP	461
CIRCUIT BREAKER AS (20-AMPERE, MANUAL RESET) (HEATER CONTROL)	280-2710	1	HEATER & MTG GP-CAB	511
DRYER AS-REFRIGERANT	257-3227	1	LINES GP-AIR CONDITIONER	520
FILTER ELEMENT-CAB AIR (OPTIONAL W/ ODOR REDUCTION)	180-7487	1	FILTER GP-CAB AIR	504
FILTER ELEMENT-CAB AIR (PRIMARY)	111-8738	1	FILTER GP-CAB AIR	504
FUSE (10-AMPERE)	113-8490	19	PANEL GP-INSTRUMENT	533
		19	PANEL GP-INSTRUMENT	538
		19	PANEL GP-INSTRUMENT	543
FUSE (15-AMPERE)	113-8491	6	PANEL GP-INSTRUMENT	533
		6	PANEL GP-INSTRUMENT	538
		6	PANEL GP-INSTRUMENT	543
FUSE (20-AMPERE)	113-8492	3	PANEL GP-INSTRUMENT	533
		3	PANEL GP-INSTRUMENT	538
		3	PANEL GP-INSTRUMENT	543
FUSE (25-AMPERE)	113-8493	2	PANEL GP-INSTRUMENT	533
		2	PANEL GP-INSTRUMENT	538
		2	PANEL GP-INSTRUMENT	543
LAMP (24-VOLT, 10-WATT)	112-5219	1	LINER GP-CAB	515
	259-1286		LINER GP-CAB	516
LAMP (24-VOLT, 3-WATT) (ACTION LIGHT)	115-1748	1	PANEL GP-INSTRUMENT	533
SCREEN-FILTER (WINDOW WASHER TANK)	8T-5913	2	WASHER GP-WINDOW	564
SEAT BELT GP (3-IN)	223-7937	1	SEAT & MOUNTING GP	552
		1	SEAT GP-SUSPENSION	557
POWER TRAIN				
BREATHER (TRANSMISSION)	9G-5127	1	CASE & PARTS GP-TRANSMISSION	179
CAP AS	6V-9832	1	LINES GP-AXLE OIL COOLER	213
CAP-FILL (POWER TRAIN OIL)	137-6727	1	FILLER GP-POWER TRAIN OIL	195
FILTER ELEMENT-OIL (ADVANCED EFFICIENCY) (POWER TRAIN)	341-6643	1	FILTER GP-OIL	198
FILTER-MAGNETIC (TRANSMISSION OIL)	8S-9129	1	CASE & PARTS GP-TRANSMISSION	179
PLUG-DRAIN (TRANSMISSION)	7T-2703	1	CASE & PARTS GP-TRANSMISSION	179
PLUG-MAGNETIC (AXLE HOUSING)	5P-4484	1	HOUSING GP-FIXED AXLE	205
PLUG-MAGNETIC (AXLE OIL DRAIN)	5P-4484	1	HOUSING GP-OSCILLATING AXLE	207
SCREEN AS (IN-LINE)	299-5499	1	LINES GP-AXLE OIL COOLER	211
SCREEN-SUCTION (TRANSMISSION OIL)	8S-9130	1	CASE & PARTS GP-TRANSMISSION	179

INDEX

Name	Page
A	
ACCUMULATOR GP-BRAKE–CHARGED	281
ACCUMULATOR GP-HYDRAULIC–UNCHARGED	282
ACCUMULATOR GP-PILOT OIL–CHARGED	307
ACCUMULATOR GP-PILOT OIL–UNCHARGED	308
ACCUMULATOR GP-RIDE CONTROL–CHARGED	309
	310
ACCUMULATOR-REFRIGERANT	520
ADAPTER GP-TIP	569
AIR CLEANER GP	65
	67
AIR CONDITIONER & MOUNTING GP–WITH CABLE CONTROL	461
AIR CONDITIONER AR	462
AIR CONDITIONER GP	463
ALARM GP	96
ALTERNATOR GP-CHARGING	97
	99
	101
ARM GP-MATERIAL HANDLING	570
ARM GP-WINDOW WIPER (FRONT)	566
	568
ARM GP-WINDOW WIPER (REAR)	566
ARM GP-WINDOW WIPER–FRONT	466
ARM GP-WINDOW WIPER–REAR	467
ATOMIZER GP-ETHER	138
AXLE AR-FIXED–FRONT, STANDARD DIFFERENTIAL	173
AXLE AR-OSCILLATING–REAR, LIMITED SLIP DIFFERENTIAL	174
AXLE AR-OSCILLATING–REAR, STANDARD DIFFERENTIAL	173
	174
B	
BASE GP-VALVE COVER & INJ HARN	9
BATTERY & WIRING GP	102
BATTERY (12-VOLT, MAINTENANCE FREE, WET)	105
BATTERY GP	105
BEARING GP-PILLOW BLOCK	229
BELT-SERPENTINE (ALTERNATOR)	99
	101
BLADE AS-WIPER (503-MM) (REAR)	566
BLADE AS-WIPER (700-MM) (FRONT)	566
	568
BOX GP-BATTERY	244
BRAKE & PLANETARY GP–DUAL DISC	178
BRAKE & PLANETARY GP–SINGLE DISC	175
	177
BRAKE GP-PARKING	283
BREATHER (HYDRAULIC TANK)	410
BREATHER (TRANSMISSION)	179
BUCKET AR-GENERAL PURPOSE	572
BUCKET AR-GENERAL PURPOSE–QUICK COUPLER	571
BUCKET AR-LIGHT MATERIAL	573
	574
BUCKET AS-GENERAL PURPOSE	575
	576
	577
	579
	580
	581
	582
	584
BUCKET AS-GENERAL PURPOSE–QUICK COUPLER	583
BUCKET AS-LIGHT MATERIAL	586
BUCKET AS-LIGHT MATERIAL–QUICK COUPLER	585
BUCKET AS-PENETRATION	587
BUCKET GP-GENERAL PURPOSE	588
	591
BUCKET GP-GENERAL PURPOSE–QUICK COUPLER	589
	590
BUCKET GP-LIGHT MATERIAL	593
BUCKET GP-LIGHT MATERIAL–QUICK COUPLER	592
BUCKET GP-PENETRATION	594
C	
CAB AR	468
CAB AR-ENCLOSED ROPS	469
CAB GP	470
	472
CAMSHAFT GP	7
CANOPY AR-OPEN ROPS	474
CANOPY GP-OPEN ROPS	474
CAP AS	213
	383
CAP AS-COOLANT TANK	64
CAP AS-FILLER (HYDRAULIC TANK)	410
CAP-FILL (POWER TRAIN OIL)	195
CAP-FUEL (FILLER)	95
CAP-OIL FILLER (ENGINE)	40
CAP-VENTED (WINDOW WASHER TANK)	564
CARRIAGE AS-FORK	595
CASE & PARTS GP-TRANSMISSION	179
CHASSIS AR	1
	2
CIRCUIT BREAKER AS (20-AMPERE, MANUAL RESET)	478

INDEX

Name	Page
CIRCUIT BREAKER AS (20-AMPERE, MANUAL RESET) (AIR CONDITIONER)	461
CIRCUIT BREAKER AS (20-AMPERE, MANUAL RESET) (HEATER CONTROL)	511
CLUTCH GP–FIRST, THIRD	181
CLUTCH GP– FORWARD HIGH, FORWARD LOW	185
CLUTCH GP–REVERSE, SECOND	183
COMMON AR	2
	3
COMPRESSOR GP-REFRIGERANT	475
	476
CONDENSER & MTG GP-REFRIGERANT	477
	478
CONDENSER GP-REFRIGERANT	479
CONNECTING ROD GP (F)	32
CONNECTING ROD GP (J)	32
CONNECTING ROD GP (L)	32
CONNECTION GP-WATER	46
CONNECTOR	354
CONSOLE GP-OPERATOR	481
CONTROL & MTG GP-JOYSTICK– 2-FUNCTION	483
CONTROL AR-RIDE	311
CONTROL GP-BUCKET	455
CONTROL GP-HANDLE (DIRECTION, DOWNSHIFT SWITCHES)	483
	484
	488
CONTROL GP-JOYSTICK–4-FUNCTION	484
CONTROL GP-LIFT KICKOUT	106
CONTROL GP-PARKING BRAKE	286
	288
CONTROL GP-PARKING BRAKE–HANDLE	284
CONTROL GP-PILOT OPERATED HYD– JOYSTICK, 2-FUNCTION	485
CONTROL GP-PILOT OPERATED HYD– JOYSTICK, 3-FUNCTION	486
CONTROL GP-PILOT OPERATED HYD– JOYSTICK, 4-FUNCTION	487
	488
CONTROL GP-POSITION	107
CONTROL GP-RIDE	312
CONTROL GP-SERVICE BRAKE	289
CONTROL GP-STEERING	489
CONTROL GP-TRANSMISSION	491
	492
CONTROL GP-UNPROGRAMMED (ENGINE)	87
CONTROL GP-UNPROGRAMMED (TRANSMISSION)	491
CONTROL GP-WORK TOOL– STANDARD LIFT MACHINES	457
COOLANT HEATER LINES	522
COOLER GP-AXLE OIL	188
COOLER GP-ENGINE OIL	47
COOLER GP-FLTR BASE & ENG OIL	49
COOLER GP-HYD & TMSN OIL	313
COOLER GP-HYDRAULIC OIL	314
CORE AS-POWER TRAIN OIL COOLER	313
COUNTERWEIGHT GP	245
	246
COUPLER AR-QUICK– STANDARD LIFT MACHINES	595
COUPLER GP-QUICK	596
COVER GP-ACCESS	247
COVER GP-ACCESS–CAB FLOOR	493
COVER GP-CYLINDER HEAD	9
COVER GP-ENGINE	8
COVER GP-TRANSMISSION	189
COVER GP-VALVE MECHANISM	9
CRANKSHAFT GP	11
CYLINDER & MTG GP-COUPLER	315
CYLINDER & MTG GP-STEERING	298
CYLINDER BLOCK GP	12
	13
CYLINDER GP-COUPLER	316
CYLINDER GP-LIFT	317
	319
CYLINDER GP-STEERING	300
CYLINDER GP-TILT	321
	322
CYLINDER HEAD AS	15
CYLINDER HEAD GP	17

D

Name	Page
DASH GP	494
DEFROSTER GP-CAB	495
DIFFERENTIAL GP–STANDARD	191
DIFFERENTIAL GP-LIMITED SLIP	192
DISTRIBUTION AR	3
	4
DOOR GP-ACCESS–HOOD SIDE	248
DOOR GP-CAB	501
DOOR GP-CAB–FIXED WINDOW, LH	496
DOOR GP-CAB–FIXED WINDOW, RH	500
DOOR GP-CAB–LH	498
DOOR GP-CAB–RH	499
DRAIN GP-ENGINE OIL	19
DRIVE GP-FAN	20
	21
DRIVE GP-FLEXIBLE COUPLING	193
DRIVE GP-PUMP–TRANSMISSION	194
DRYER AS-REFRIGERANT	520
DUCT GP-CAB AIR	502

INDEX

Name	Page
E	
EDGE GP-CUTTING	598
EDGE GP-SEGMENT	598
ELECTRONICS AR-MACHINE	108
ELECTRONICS GP-COMMUNICATION–PRODUCT LINK 121SR	108
ELECTRONICS GP-COMMUNICATION–PRODUCT LINK 300	108
ELECTRONICS GP-POWER TRAIN–MACHINE CONTROL	108
ENGINE AR-PRIMARY	5
EXTENSION GP-EXHAUST	68
F	
FAN GP-SUCTION	51
FENDER GP-FRONT	249, 250
FILLER GP-ENGINE OIL	40
FILLER GP-POWER TRAIN OIL	195
FILM (BLACK)	451, 549, 550
FILM GP	607, 608
FILM GP-INTERNATIONAL	610
FILM GP-INTERNATIONAL–INTERNATIONAL	609
FILM-CONTROLS (FUSE, RELAY PANEL)	538, 543
FILM-IDENTIFICATION (CONSOLE, RH)	533
FILM-IDENTIFICATION (FUSE, RELAY)	534, 540, 544
FILM-IDENTIFICATION (GROUP NO., SEQUENCE NO.)	479
FILM-IDENTIFICATION (PANEL, RH)	150, 156
FILM-INFORMATION (24-VOLT)	609, 610
FILM-INFORMATION (INSTRUMENT PANEL COVER)	531
FILM-INSTRUCTION (ENGINE START)	531
FILM-INSTRUCTION (LOAD CAPACITY, READ OMM)	570
FILM-INSTRUCTION (PULL RING, ALTERNATE EXIT)	500
FILM-INSTRUCTION (SOLENOID, ELECTRICAL POWER) (KICKOUT, POSITIONER CONTROL)	106, 107
FILM-PANEL (LH)	151, 154, 157
FILM-PANEL (RH)	153
FILM-WARNING (CRUSH HAZARD, STAY BACK, INTL)	610
FILM-WARNING (HIGH PRESSURE, READ OMM)	307, 308, 309, 310
FILM-WARNING (HIGH PRESSURE, READ OMM, INTL)	374, 376
FILM-WARNING (NO WELD, NO DRILL, READ OMM)	610
FILM-WINDOW (FRONT)	468, 530
FILTER & LINES GP-TRANSMISSION	196
FILTER & MTG GP-HYDRAULIC–OIL	323
FILTER (ETHER START)	148
FILTER AS-FUEL (ULTRA HIGH EFFICIENCY)	81
FILTER AS-FUEL (ULTRA HIGH EFFICIENCY) (ULTRA HIGH EFFICIENCY)	78
FILTER AS-WATER SEP & FUEL	79
FILTER BASE & ENG OIL COOLER	49
FILTER ELEMENT AS-AIR (PRIMARY)	67
FILTER ELEMENT AS-AIR (SECONDARY)	67
FILTER ELEMENT-CAB AIR (OPTIONAL W/ ODOR REDUCTION)	504
FILTER ELEMENT-CAB AIR (PRIMARY)	504
FILTER ELEMENT-FUEL (ULTRA HIGH EFFICIENCY)	78, 81
FILTER ELEMENT-OIL (ADVANCED EFFICIENCY) (POWER TRAIN)	198
FILTER GP-CAB AIR	504
FILTER GP-ENGINE OIL	42
FILTER GP-FUMES DISPOSAL–CRANKCASE	43
FILTER GP-OIL	198
FILTER GP-OIL–HYDRAULIC	324
FILTER GP-SECONDARY FUEL	78
FILTER GP-WATER SEP & FUEL	79
FILTER-ENGINE OIL	42
FILTER-FOAM (ALTERNATOR AIR)	99, 101
FILTER-FUMES DISPOSAL	43
FILTER-MAGNETIC (TRANSMISSION OIL)	179
FILTER-OIL (ULTRA HIGH EFFICIENCY) (HYDRAULIC)	324
FILTER-SECONDARY	93
FITTING AS	138
FITTING GP	216
FLASHER AS (12 TO 24-VDC)	128
FLOOR MAT	505, 508, 518

INDEX

Name	Page
FLOOR MAT GP	505
	508
FLYWHEEL GP	22
FORK GP-PALLET	599
	600
	601
FRAME GP-LOADER (NON-ENGINE END)	253
	255
FRAME GP-LOADER–ENGINE END	251
FRAME GP-LOADER–NON-ENGINE END	252
	253
	254
	255
FUSE (10-AMPERE)	533
	538
	543
FUSE (100-AMPERE)	160
FUSE (15-AMPERE)	533
	538
	543
FUSE (20-AMPERE)	132
	160
	533
	538
	543
FUSE (25-AMPERE)	533
	538
	543
FUSE (30-AMPERE)	132
	160
FUSE (40-AMPERE)	133
	160

G

Name	Page
GASKET-COVER (VALVE MECHANISM)	9
GASKET-WATER REGULATOR	46
GAUGE AS-OIL LEVEL (DIPSTICK)	205
GAUGE AS-OIL LEVEL (DIPSTICK) (AXLE)	207
GAUGE GP-OIL LEVEL (DIPSTICK) (ENGINE)	30
GAUGE GP-SIGHT	325
GAUGE GP-SIGHT (POWER TRAIN OIL)	219
GAUGE GP-SIGHT–POWER TRAIN OIL	199
GEAR GP-BEVEL & PINION–FRONT	201
GEAR GP-BEVEL & PINION–REAR	200
	202
GEAR GP-INPUT TRANSFER	203
GEAR GP-OUTPUT TRANSFER	204
GLOW PLUG	109
GLOW PLUG GP	109
GUARD AS	257
GUARD GP-CRANKCASE	256
GUARD GP-DRIVE SHAFT	257
GUARD GP-FAN	52
GUARD GP-LINES–3-VALVE	258
	259
GUARD GP-LINES–COUPLER	261
GUARD GP-LINES–TILT	262
	263
GUARD GP-POWER TRAIN	264
GUARD GP-RADIATOR	52
	265

H

Name	Page
HARNESS AS-CAB	533
	538
	543
HARNESS AS-CAB (MAIN)	150
	153
	156
HARNESS AS-CAB (UPPER)	150
	153
	156
HARNESS AS-CONTROL (JUMPER)	112
HARNESS AS-CONTROL (KICKOUT, POSITIONER)	329
	331
HARNESS AS-CONTROL (PRODUCT LINK)	112
HARNESS AS-CONTROL (TRANSMISSION)	242
HARNESS AS-ENGINE	160
HARNESS AS-ENGINE (ELECTRONIC CONTROL MODULE)	159
HARNESS AS-FRONT	164
	166
HARNESS AS-HEATER & AIR COND (CONDENSER FANS)	479
HARNESS AS-LIGHTING	122
	124
	126
	128
HARNESS AS-RADIO (PRODUCT LINK)	112
HARNESS AS-REAR	168
HARNESS AS-RIDE CONTROL (GROUND CIRCUIT)	170
HARNESS AS-RIDE CONTROL (PRESSURE SWITCH)	171
HARNESS AS-RIDE CONTROL (SOLENOID VALVE)	171
HARNESS AS-SENSOR (GOVERNOR PEDAL)	548
HARNESS AS-SOLENOID (LIFT CYLINDER)	362
HARNESS AS-WIRING (CAB HEATER)	463
	513
HARNESS AS-WIRING (INJECTOR)	9
HEATER & MTG GP-CAB–WITH CABLE CONTROL	511
HEATER AR-CAB	512
HEATER GP-CAB	513
HEATER GP-JACKET WATER	110

INDEX

Name	Page
	111
HITCH GP-ARTICULATING	267
HOOD & GUARD GP	269
HOSE-RADIATOR	54
HOUSING GP-FIXED AXLE–FRONT	205
HOUSING GP-FLYWHEEL	23
HOUSING GP-FRONT	24
HOUSING GP-OSCILLATING AXLE–REAR	207
HYDRAULIC AR	326
HYDRAULIC AR-2 VALVE–1-LEVER, WITH FNR	326 327
HYDRAULIC AR-3 VALVE–2-LEVER, WITH FNR	327
HYDRAULIC AR-4 VALVE–3-LEVER, WITH FNR	328
HYDRAULIC AR-4 VALVE–3-LEVER, WITH FNR, STANDARD LIFT MACHINES	328

I

Name	Page
INDICATOR AS-AIR FILTER CHANGE	65
INDICATOR GP-AIR FILTER CHANGE	65
INJECTOR GP-FUEL	80
INSTALLATION AR-ENGINE	6
INSTALLATION GP-COMMUNICATION	112

K

Name	Page
KEY (BATTERY DISCONNECT)	142
KICKOUT & POSITIONER GP	329 331
KIT-CRANKSHAFT BEARING	26
KIT-SENSOR (AIR PRESSURE)	87
KIT-SENSOR (COOLANT TEMPERATURE)	87
KIT-SENSOR (ENGINE OIL PRESSURE)	87
KIT-SENSOR (INTAKE AIR TEMPERATURE)	87
KIT-SPIDER & BEARING	229 231

L

Name	Page
LADDER GP	272
LAMP (24-VOLT, 10-WATT)	515 516
LAMP (24-VOLT, 21-WATT)	117 118
LAMP (24-VOLT, 21-WATT) (STOP, TAIL)	119
LAMP (24-VOLT, 3-WATT)	150 153
LAMP (24-VOLT, 3-WATT) (ACTION LIGHT)	156 533
LAMP (24-VOLT, 5-WATT)	117 118
LAMP (24-VOLT, 5-WATT) (STOP, TAIL)	119
LAMP GP-DOME (24-VOLT)	515
LAMP GP-DOME (24-VOLT) (CAB)	516
LAMP GP-FLOOD	115
LAMP GP-FLOOD (24-VOLT)	122 126
LAMP GP-FLOOD–LH	118
LAMP GP-FLOOD–RH	117
LAMP GP-FLOOD–SUSPENDED MOUNT	116
LAMP GP-STOP & TAIL–24-VOLT	119
LAMP GP-WARNING BEACON (AMBER, STROBE)	131
LAMP GP-WARNING BEACON–AMBER, STROBE	120
LAMP-HALOGEN (24-VOLT, 70-WATT)	115 116 117 118 122 126
LIFTING GP-ENGINE	27
LIGHTING GP-AUXILIARY–CAB FRONT	121
LIGHTING GP-FLOOD & SIGNAL–OFF ROAD W/SIGNAL	128
LIGHTING GP-FLOOD–CAB FRONT	124
LIGHTING GP-FLOOD–CAB FRONT, REAR	122
LIGHTING GP-FLOOD–CANOPY FRONT, REAR	126
LIGHTING GP-REAR	130
LIGHTING GP-WARNING BEACON	131
LINER GP-CAB–LOWER	518
LINER GP-CAB–UPPER	515 516
LINES GP-AIR	69
LINES GP-AIR CONDITIONER	520
LINES GP-AXLE OIL COOLER	211
LINES GP-CAB HEATER	522
LINES GP-CONNECTING	333
LINES GP-COUPLER	335 336 338
LINES GP-COUPLER–STANDARD LIFT MACHINES	342
LINES GP-COUPLER–STANDARD LIFT MACHINES, WIDE	339
LINES GP-FRONT–3RD FUNCTION	344
LINES GP-FUEL	81 84
LINES GP-GREASE	275
LINES GP-HYDRAULIC	350
LINES GP-HYDRAULIC–3RD FUNCTION	346
LINES GP-HYDRAULIC–4TH FUNCTION	348
LINES GP-HYDRAULIC FAN–REVERSING FAN	356
LINES GP-HYDRAULIC FAN–STANDARD	354

INDEX

Name	Page
LINES GP-HYDRAULIC FAN–WITHOUT AXLE OIL COOLER	358
LINES GP-LIFT CYLINDER	362, 367
LINES GP-PILOT	371
LINES GP-RIDE CONTROL	374, 376
LINES GP-SERVICE BRAKE	292, 295
LINES GP-STEERING	302
LINES GP-TILT CYLINDER	379, 382
LINES GP-TORQUE CONV COOLER	216
LINES GP-WATER–WITH AXLE OIL COOLER	54
LINES GP-WATER–WITHOUT AXLE OIL COOLER	55
LINK GP-STEERING FRAME LOCK	277
LITERATURE GP	1, 2, 523
LOCK GP-CYLINDER	505, 508

M

Name	Page
MANIFOLD GP-CONTROL–QUICK COUPLER	385
MANIFOLD GP-INLET	70
MIRROR GP-REAR VIEW–EXTERIOR	524
MIRROR GP-REAR VIEW–INTERIOR	525
MODULE AS-FUSE	132, 133
MODULE GP-DISPLAY (GAUGE CLUSTER)	531
MOTOR & MTG GP-HYDRAULIC FAN–REVERSING	386
MOTOR AR-HYDRAULIC FAN–REVERSING	387
MOTOR AR-HYDRAULIC FAN–STANDARD	387
MOTOR GP-GEAR–HYDRAULIC FAN	388, 390, 392
MOTOR GP-GEAR–REVERSING FAN	389, 391
MOTOR GP-WINDOW WIPER (24-VOLT, 2-SPEED)	526, 527
MOTOR GP-WINDOW WIPER–FRONT	526
MOTOR GP-WINDOW WIPER–REAR	527
MOUNTING GP-AXLE	218
MOUNTING GP-BUCKET	602
MOUNTING GP-CAB	528
MOUNTING GP-CONTROL VALVE	393
MOUNTING GP-ENGINE & XMSN	28, 219
MOUNTING GP-ETHER CANISTER	138
MOUNTING GP-RIM	219
MUFFLER GP	71

O

Name	Page
OPERATOR AR	529, 530
OPERATOR AR-OPEN ROPS	530
OPERATOR GP	530
ORIFICE AS-AIR CONDITIONER	520

P

Name	Page
PADLOCK GP	195, 409
PAN GP-OIL	30
PANEL GP-ACCESS–HOOD, CAB HEATER	278
PANEL GP-INSTRUMENT	533, 543
PANEL GP-INSTRUMENT–FRONT	531
PANEL GP-INSTRUMENT–OPEN ROPS	538
PANEL GP-TOP–HOOD, AIR CONDITIONER	280
PEDAL GP-BRAKE	547
PEDAL GP-GOVERNOR	548
PISTON & ROD GP	32
PIVOT GP-PILOT VALVE	395
PIVOT GP-PILOT VALVE–AUXILIARY	394
PLATE & FILM GP	611, 612
PLATE GP-AXLE IDENTIFICATION	174, 613
PLATE GP-PILOT VALVE–JOYSTICK	396
PLATE-IDENTIFICATION (CAT)	576, 583, 584, 585
PLATE-IDENTIFICATION (WORK TOOL)	591, 592, 593
PLATE-SERIAL NUMBER (TRANSMISSION)	179
PLUG GP-ENGINE	33
PLUG GP-FLYWHEEL HOUSING	34
PLUG-DRAIN (ENGINE OIL)	30
PLUG-DRAIN (TRANSMISSION)	179
PLUG-MAGNETIC (AXLE HOUSING)	205
PLUG-MAGNETIC (AXLE OIL DRAIN)	207
POSITIONER GP-WORK TOOL	600, 601
POWER TRAIN AR	219
PRECLEANER GP	72, 74
PRECLEANER GP–STANDARD	73
PROTECTION GP-FUEL SYSTEM	88
PROTECTION GP-FUEL SYSTEM (LINE, LOW PRESSURE)	84
PULLEY GP-CRANKSHAFT	35

INDEX

Name	Page
PUMP & MOTOR GP-AXLE OIL CLR	211
PUMP & MTG GP-BRAKE & HYD FAN	397
PUMP & MTG GP-IMPL & STEERING–IMPLEMENT,PILOT & STEERING	398
PUMP GP-ENGINE OIL	44
PUMP GP-FUEL INJECTION	87
	92
PUMP GP-FUEL PRM & SEC FILTER	93
PUMP GP-FUEL TRANSFER	92
PUMP GP-GEAR–BRAKE, HYDRAULIC FAN	399
	400
PUMP GP-METERING	304
PUMP GP-PISTON–FRONT	405
PUMP GP-PISTON–IMPLEMENT,PILOT & STEERING	402
PUMP GP-PISTON–REAR	403
PUMP GP-TRANSMISSION–1-SECTION GEAR	220
	221
PUMP GP-WATER	56

R

RADIATOR & AFTERCOOLER GP	58
RADIATOR & MOUNTING GP	62
RADIATOR GP	63
REGULATOR AS-VOLTAGE (24-VOLT)	97
RELAY AS (24-VOLT)	495
RELAY AS (24-VOLT) (ALARM)	533
	538
	543
RELAY AS (24-VOLT) (CONDENSER FAN)	479
RELAY AS (24-VOLT) (FRONT FLOODLIGHTS)	533
	538
	543
RELAY AS (24-VOLT) (LIFT)	362
RELAY AS (24-VOLT) (REVERSING FAN)	356
RELAY AS (24-VOLT) (RIDE CONTROL)	170
	171
RELAY AS (24-VOLT) (RIDE CONTROL, LOAD CHECK RELAY)	171
RIM AR	222
RIM GP-DEMOUNTABLE	223
	224
	225
	226
	227
	228
ROCKER ARM GP	36
ROPS GP-ENCLOSED	549
ROPS GP-OPEN	550
ROTATING GP-PUMP	407
	408

S

SCREEN (HYDRAULIC OIL)	410
SCREEN AS (BLADE CONTROL VALVE)	436
SCREEN AS (IN-LINE)	211
SCREEN AS (PILOT OIL)	438
	441
SCREEN GP-SUN	551
SCREEN-FILTER (WINDOW WASHER TANK)	564
SCREEN-SUCTION (FILTER)	410
SCREEN-SUCTION (TRANSMISSION OIL)	179
SEAL GP-DUO-CONE	205
	207
SEAT & MOUNTING GP–VINYL	552
SEAT BELT GP (3-IN)	552
	557
SEAT GP-SUSPENSION–CLOTH	555
	557
SEAT GP-SUSPENSION–VINYL	553
SENDER AS-FUEL LEVEL	94
SENSOR AS-TEMPERATURE (ENGINE COOLANT)	160
SENSOR AS-TEMPERATURE (TORQUE CONVERTER OIL)	242
SENSOR GP-POSITION (THROTTLE)	548
SENSOR GP-PRESSURE	134
SENSOR GP-PRESSURE (SERVICE BRAKE OIL)	289
SENSOR GP-SPEED	87
	135
SENSOR GP-SPEED (SECONDARY, TIMING)	92
SENSOR GP-SPEED (TRANSMISSION OUTPUT)	242
SENSOR GP-TEMPERATURE (TRANSMISSION OIL)	240
SENSOR GP-TEMPERATURE–PULSE WIDTH MODULATED	136
SENSOR-PRESSURE (FUEL RAIL PRESSURE)	87
SERVICE GP-POWER TRAIN	108
SHAFT GP-DRIVE	230
SHAFT GP-DRIVE–FRONT	229
SKIRT GP-CAB	558
	559
SLIP JOINT GP–CENTER	231
SOFTWARE GP-COMMUNICATION	108
SOFTWARE GP-COMMUNICATION (PRODUCT LINK 300)	108
SOFTWARE GP-POWER TRAIN	108
SOLENOID AS (WASTEGATE)	75
SPIDER & BEARING GP	230
SPRING AS-GAS (HOOD)	269
SPRING AS-GAS (STEERING COLUMN)	306
STARTING AID GP-ETHER	137
	138

INDEX

Name	Page
STARTING MOTOR GP-ELECTRIC	139, 140
STEERING AR-STANDARD	305
STEERING COLUMN GP-ADJUSTABLE	306
STOP GP-AXLE OSCILLATION	232
STRAINER (HYDRAULIC OIL)	410
STRAINER (HYDRAULIC TANK)	410
STRAINER-FUEL (FILLER NECK SCREEN)	95
SUN VISOR	562
SUPPORT GP-SEAT	560, 561
SWITCH AS (STARTER)	140
SWITCH AS-LIMIT (BRAKE PEDAL)	533, 538, 543
SWITCH AS-LIMIT (PARKING BRAKE)	284, 288
SWITCH AS-PRESSURE (AXLE OIL)	211
SWITCH AS-PRESSURE (HYDRAULIC OIL FILTER BYPASS)	324
SWITCH AS-PRESSURE (PARKING BRAKE)	362
SWITCH AS-PRESSURE (POWER TRAIN OIL FILTER BYPASS)	198
SWITCH AS-PRESSURE (REFRIGERANT)	520
SWITCH AS-ROCKER (24-VOLT)	170, 171
SWITCH AS-ROCKER (AIR CONDITIONER, HEATER CONT)	461
SWITCH AS-ROCKER (AUTOSHIFT CONTROL)	150, 153, 156
SWITCH AS-ROCKER (BLOWER FAN SPEED)	533
SWITCH AS-ROCKER (BUCKET/FORK SELECTOR)	331
SWITCH AS-ROCKER (FLOODLIGHTS, FRONT)	150, 153, 156
SWITCH AS-ROCKER (HAZARD WARNING LIGHTS)	150, 153, 156
SWITCH AS-ROCKER (HEATER CONTROL)	511
SWITCH AS-ROCKER (HYDRAULIC LOCKOUT)	339, 533, 538, 543
SWITCH AS-ROCKER (KICKOUT ON, OFF)	538, 543
SWITCH AS-ROCKER (KICKOUT ON/OFF)	533
SWITCH AS-ROCKER (REVERSING FAN ON, OFF)	356
SWITCH AS-ROCKER (ROADING LIGHTS)	151, 154, 157
SWITCH AS-ROCKER (THROTTLE LOCK ON, OFF)	538, 543
SWITCH AS-ROCKER (THROTTLE LOCK ON/OFF)	533
SWITCH AS-ROCKER (THROTTLE LOCK SET, RESUME)	533, 538, 543
SWITCH AS-ROCKER (WARNING BEACON)	131
SWITCH AS-ROCKER (XMSN NEUTRALIZER OVERRIDE CONT)	150, 153, 156
SWITCH AS-ROTARY (WIPER, WASHER) (REAR)	145
SWITCH AS-START (KEY) (ENGINE)	531
SWITCH AS-TURN SIGNAL	128
SWITCH GP-DISCONNECT–BATTERY	142
SWITCH GP-MAGNETIC	143
SWITCH GP-PRESSURE (RIDE CONTROL DISABLE)	376
SWITCH GP-TOGGLE	144
SWITCH GP-WIPER	146, 147
SWITCH GP-WIPER (24-VOLT)	146
SWITCH GP-WIPER (24-VOLT) (FRONT)	145
SWITCH GP-WIPER–INTERMITTENT	145

T

Name	Page
TANK & MTG GP-FUEL	94
TANK & MTG GP-HYDRAULIC	409
TANK GP-COOLANT	58, 64
TANK GP-FUEL	95
TANK GP-HYDRAULIC	410
TIP GP-LONG	603, 604
TIP GP-SHORT	605, 606
TIRE & RIM AR	232, 233
TORQUE CONVERTER GP (TRANSMISSION)	233
TRANSMISSION AR–STANDARD SPEED	233
TURBOCHARGER GP	75

U

Name	Page
UNIVERSAL JOINT GP	230

INDEX

Name	Page
V	
VALVE & MTG GP-RIDE CONTROL	411
VALVE & MTG GP-SOLENOID	412
VALVE AS-RELIEF (FUEL RAIL)	87
VALVE GP-ACCUMULATOR CHARGING (BRAKE)	400
VALVE GP-BRAKE CONTROL (SERVICE)	289
VALVE GP-BYPASS	234
VALVE GP-CHECK	415
	419
VALVE GP-CHECK (ANTICAVITATION)	427
VALVE GP-CHECK (BACK PRESSURE)	423
VALVE GP-CHECK (BACKPRESSURE)	415
	419
	431
VALVE GP-CHECK (COUPLER CYLINDER)	316
VALVE GP-CHECK (HYDRAULIC OIL COOLER BYPASS)	211
	358
VALVE GP-CHECK (IMPLEMENT)	423
VALVE GP-CHECK (LOAD)	414
	415
	419
	423
	427
	431
VALVE GP-CHECK (MAKEUP OIL)	415
	423
VALVE GP-CHECK (MAKEUP RELIEF)	427
VALVE GP-CHECK (REGENERATION)	415
	419
	423
	431
VALVE GP-CHECK (RETURN RESTRICTOR)	350
VALVE GP-COMBINATION–TILT RELIEF	413
VALVE GP-CONTROL–AUXILIARY	414
VALVE GP-DIVERTER (TILT)	413
VALVE GP-DRAIN	6
VALVE GP-ETHER STARTING	148
VALVE GP-FLOW CONTROL (SIGNAL DRAIN)	415
	419
	423
	427
	431
VALVE GP-FLUID SAMPLING–ENGINE OIL	45
VALVE GP-MAIN CONTROL	415
	419
VALVE GP-MAIN CONTROL–2-FUNCTION	427
VALVE GP-MAIN CONTROL–3-FUNCTION	431
VALVE GP-MAIN CONTROL–4-FUNCTION	423
VALVE GP-MANUAL	435
VALVE GP-MODULATING	235
VALVE GP-PILOT	441
VALVE GP-PILOT CARTRIDGE	444
	445
VALVE GP-PILOT–JOYSTICK, 2-FUNCTION	436
VALVE GP-PILOT–JOYSTICK, 4-FUNCTION	438
VALVE GP-PRESSURE REDUCING	446
VALVE GP-PUMP CONTROL–PRESSURE, FLOW COMPENSATOR	447
	449
VALVE GP-RADIATOR DRAIN	63
VALVE GP-RELIEF (HYDRAULIC FAN MOTOR)	389
VALVE GP-RELIEF (IMPLEMENT 1)	424
VALVE GP-RELIEF (IMPLEMENT 2)	424
VALVE GP-RELIEF (MAKEUP)	415
	416
	420
	427
	432
VALVE GP-RELIEF (PILOT OPERATED)	415
	419
	423
	427
	431
VALVE GP-RELIEF (PILOT OPERATED) (LINE, AUXILIARY)	423
VALVE GP-RELIEF (SIGNAL LIMITER)	415
	419
	423
	427
	431
VALVE GP-RELIEF (TILT)	413
VALVE GP-RELIEF–TORQUE CONVERTER OUTLET	236
VALVE GP-RELIEF–TRANSMISSION HYDRAULIC CONTROL	237
VALVE GP-SHUTOFF (RETURN MANIFOLD)	371
VALVE GP-SHUTOFF–HYDRAULIC LOCKOUT	451
VALVE GP-SOLENOID	453
	454
VALVE GP-SOLENOID (24-VOLT) (HYDRAULIC FAN)	388
	389
VALVE GP-SOLENOID (24-VOLT) (QUICK COUPLER)	385
VALVE GP-SOLENOID (FLOAT)	427
	431
VALVE GP-SOLENOID (HYDRAULIC LOCKOUT)	412
VALVE GP-SOLENOID (RIDE CONTROL)	312
VALVE GP-TIRE	224
	239
VALVE GP-TRANSMISSION CONTROL	240
	242
VALVE MECHANISM GP	38

INDEX

Name	Page	Name	Page
VISOR GP-CAB	562		

W

WARNING GP-BACKUP	149		
WASHER GP-WINDOW	563		
	564		
	565		
WIPER GP-WINDOW	566		
WIPER GP-WINDOW–FRONT	568		
WIRE AS-ALARM	149		
WIRING GP-CAB–ENCLOSED ROPS	150		
	156		
WIRING GP-CAB–OPEN ROPS	153		
WIRING GP-ELECTRONIC CONTROL	159		
WIRING GP-ENGINE	160		
WIRING GP-FRONT	164		
	166		
WIRING GP-REAR	168		
WIRING GP-RIDE CONTROL	170		
	171		

MACHINE ARRANGEMENT

372-7772 CHASSIS AR

S/N: JRL1-UP

PART OF 372-7774 COMMON AR

SMCS-7000 **i04509271**

NOTE	PART NUMBER	QTY	PART NAME 1 2 3 4 5 6 (PRODUCT LEVEL)	SEE PAGE
Y	*112-7167*	1	BATTERY GP (HEAVY-DUTY)	105
Y	*202-0420*	1	BOX GP-BATTERY	244
Y	*148-7790*	1	CONTROL GP-BUCKET	455
Y	*289-8930*	1	CONTROL GP-PARKING BRAKE	286
Y	*202-0430*	1	CONTROL GP-SERVICE BRAKE	289
Y	*132-2550*	1	CYLINDER & MTG GP-STEERING	298
Y	*289-8960*	1	DOOR GP-ACCESS (HOOD SIDE)	248
Y	*154-4914*	1	FENDER GP-FRONT	250
Y	*372-7760*	1	FRAME GP-LOADER (ENGINE END)	251
Y	*372-7763*	1	FRAME GP-LOADER (NON-ENGINE END)	252
Y	*290-7198*	1	GUARD GP-FAN	52
Y	*113-3790*	1	HITCH GP-ARTICULATING	267
Y	*289-8912*	1	HOOD & GUARD GP	269
Y	*148-7678*	1	KICKOUT & POSITIONER GP	329
Y	*289-8913*	1	LADDER GP	272
Y	*307-2578*	1	LINES GP-GREASE	275
Y	*289-8925*	1	LINES GP-SERVICE BRAKE	292
Y	*289-8923*	1	LINES GP-TORQUE CONV COOLER	216
Y	*7V-2885*	1	LINK GP-STEERING FRAME LOCK	277
Y	*6V-1970*	1	LITERATURE GP	523
Y	*132-2471*	1	MOUNTING GP-AXLE	218
Y	*211-4767*	1	MOUNTING GP-CONTROL VALVE	393
Y	*322-8431*	1	PLATE & FILM GP	612
Y	*289-8911*	1	TANK & MTG GP-FUEL	94
Y	*180-8807*	1	WARNING GP-BACKUP	149
Y	*289-8902*	1	WIRING GP-ENGINE	160
Y	*289-8955*	1	WIRING GP-FRONT	164
Y	*289-8959*	1	WIRING GP-REAR	168

Y-SEPARATE ILLUSTRATION

<END>

MACHINE ARRANGEMENT

372-7773 CHASSIS AR

S/N: RRS1-UP

PART OF 372-7775 COMMON AR

SMCS-7000 **i04509332**

NOTE	PART NUMBER	QTY	PART NAME 1 2 3 4 5 6 (PRODUCT LEVEL)	SEE PAGE
Y	*112-7167*	1	BATTERY GP (HEAVY-DUTY)	105
Y	*202-0420*	1	BOX GP-BATTERY	244
Y	*289-8930*	1	CONTROL GP-PARKING BRAKE	286
Y	*202-0430*	1	CONTROL GP-SERVICE BRAKE	289
Y	*132-2550*	1	CYLINDER & MTG GP-STEERING	298
Y	*289-8960*	1	DOOR GP-ACCESS (HOOD SIDE)	248
Y	*372-7760*	1	FRAME GP-LOADER (ENGINE END)	251
Y	*372-7766*	1	FRAME GP-LOADER (NON-ENGINE END)	254
Y	*290-7198*	1	GUARD GP-FAN	52
Y	*113-3790*	1	HITCH GP-ARTICULATING	267
Y	*289-8912*	1	HOOD & GUARD GP	269
Y	*218-9937*	1	KICKOUT & POSITIONER GP	331
Y	*289-8913*	1	LADDER GP	272
Y	*307-2578*	1	LINES GP-GREASE	275
Y	*344-7805*	1	LINES GP-SERVICE BRAKE	295
Y	*289-8923*	1	LINES GP-TORQUE CONV COOLER	216
Y	*7V-2885*	1	LINK GP-STEERING FRAME LOCK	277
Y	*132-2471*	1	MOUNTING GP-AXLE	218
Y	*211-4767*	1	MOUNTING GP-CONTROL VALVE	393
Y	*312-4574*	1	PLATE & FILM GP	611
Y	*289-8911*	1	TANK & MTG GP-FUEL	94
Y	*180-8807*	1	WARNING GP-BACKUP	149
Y	*289-8902*	1	WIRING GP-ENGINE	160
Y	*289-8956*	1	WIRING GP-FRONT	166
Y	*289-8959*	1	WIRING GP-REAR	168
	6V-1970	1	LITERATURE GP	
	5P-7958	1	SLEEVE-CABLE SPLICE	
	5P-8500	2	KEY	

Y-SEPARATE ILLUSTRATION

<END>

372-7774 COMMON AR

S/N: JRL1-UP

SMCS-7000 **i04509272**

NOTE	PART NUMBER	QTY	PART NAME 1 2 3 4 5 6 (PRODUCT LEVEL)	SEE PAGE
Y	*372-7772*	1	CHASSIS AR	1
Y	*289-8802*	1	ELECTRONICS AR-MACHINE	108
YR	**292-5306**	1	ENGINE AR-PRIMARY	5
Y	*289-8803*	1	HYDRAULIC AR	326
Y	*289-8894*	1	INSTALLATION AR-ENGINE	6
Y	*290-7223*	1	LIGHTING GP-FLOOD & SIGNAL	128
Y	*289-8815*	1	POWER TRAIN AR	219

R-REMFG PART MAY BE AVAILABLE
Y-SEPARATE ILLUSTRATION

<END>

MACHINE ARRANGEMENT

372-7775 COMMON AR

S/N: RRS1-UP

SMCS-7000 **i04509331**

NOTE	PART NUMBER	QTY	PART NAME 1 2 3 4 5 6 (PRODUCT LEVEL)	SEE PAGE
Y	*372-7773*	1	CHASSIS AR	2
Y	*289-8802*	1	ELECTRONICS AR-MACHINE	108
YR	**292-5306**	1	ENGINE AR-PRIMARY	5
Y	*289-8833*	1	HYDRAULIC AR	326
Y	*289-8894*	1	INSTALLATION AR-ENGINE	6
Y	*290-7223*	1	LIGHTING GP-FLOOD & SIGNAL (OFF ROAD W/SIGNAL)	128
Y	*289-8815*	1	POWER TRAIN AR	219

R-REMFG PART MAY BE AVAILABLE
Y-SEPARATE ILLUSTRATION

<END>

375-8357 DISTRIBUTION AR

S/N: RRS1-UP
AN ATTACHMENT

SMCS-7000 **i04491570**

NOTE	PART NUMBER	QTY	PART NAME 1 2 3 4 5 6 (PRODUCT LEVEL)	SEE PAGE
Y	**116-9713**	1	ADAPTER GP-TIP	569
Y	*372-8683*	1	AIR CONDITIONER AR	462
Y	*289-8991*	1	AXLE AR-OSCILLATING (REAR, STANDARD DIFFERENTIAL)	174
Y	**167-3963**	1	BUCKET GP-GENERAL PURPOSE	588
Y	*310-9955*	1	CAB AR-ENCLOSED ROPS	469
Y	*132-2350*	1	CONTROL GP-WORK TOOL (STANDARD LIFT MACHINES)	457
Y	*257-1625*	1	COUNTERWEIGHT GP	246
Y	**8E-4568**	1	EDGE GP-SEGMENT	598
Y	*140-9295*	1	FENDER GP-FRONT (ROADING)	249
Y	*290-6491*	1	FILM GP-INTERNATIONAL	609
Y	*203-3889*	1	HYDRAULIC AR-2 VALVE (1-LEVER, WITH FNR)	326
Y	*107-4642*	1	MIRROR GP-REAR VIEW (EXTERIOR)	524
Y	*107-4643*	1	MIRROR GP-REAR VIEW (INTERIOR)	525
Y	*289-8963*	1	MOTOR AR-HYDRAULIC FAN (STANDARD)	387
Y	*239-7396*	1	RADIATOR & MOUNTING GP	62
Y	*257-5103*	1	SEAT GP-SUSPENSION (CLOTH)	557
Y	*294-9439*	1	STEERING AR-STANDARD	305
Y	**9W-8142**	1	TIP GP-LONG	604
Y	*229-4970*	1	TIRE & RIM AR	232

Y-SEPARATE ILLUSTRATION

<END>

MACHINE ARRANGEMENT

375-8358 DISTRIBUTION AR

S/N: JRL1-UP

AN ATTACHMENT

SMCS-7000 **i04512009**

NOTE	PART NUMBER	QTY	PART NAME 1 2 3 4 5 6 (PRODUCT LEVEL)	SEE PAGE
Y	**116-9713**	1	ADAPTER GP-TIP	569
Y	*289-8991*	1	AXLE AR-OSCILLATING (REAR, STANDARD DIFFERENTIAL)	174
Y	**172-8568**	1	BUCKET AS-GENERAL PURPOSE	581
Y	*180-8984*	1	COUNTERWEIGHT GP	245
Y	**8E-4568**	1	EDGE GP-SEGMENT	598
Y	*328-8319*	1	FILM GP-INTERNATIONAL	610
Y	*203-3890*	1	HYDRAULIC AR-2 VALVE (1-LEVER, WITH FNR)	327
Y	*107-4642*	1	MIRROR GP-REAR VIEW (EXTERIOR)	524
Y	*107-4643*	1	MIRROR GP-REAR VIEW (INTERIOR)	525
Y	*289-8963*	1	MOTOR AR-HYDRAULIC FAN (STANDARD)	387
Y	*315-4654*	1	OPERATOR AR	529
Y	*239-7396*	1	RADIATOR & MOUNTING GP	62
Y	*257-5104*	1	SEAT & MOUNTING GP	552
Y	*294-9439*	1	STEERING AR-STANDARD	305
Y	**9W-8142**	1	TIP GP-LONG	604
Y	*229-4970*	1	TIRE & RIM AR	232

Y-SEPARATE ILLUSTRATION

<END>

375-8359 DISTRIBUTION AR

S/N: JRL1-UP

AN ATTACHMENT

SMCS-7000 **i04512010**

NOTE	PART NUMBER	QTY	PART NAME 1 2 3 4 5 6 (PRODUCT LEVEL)	SEE PAGE
Y	*116-9713*	1	ADAPTER GP-TIP	569
Y	*289-8991*	1	AXLE AR-OSCILLATING (REAR, STANDARD DIFFERENTIAL)	174
Y	**172-8568**	1	BUCKET AS-GENERAL PURPOSE	581
Y	*310-9955*	1	CAB AR-ENCLOSED ROPS	469
Y	*180-8984*	1	COUNTERWEIGHT GP	245
Y	*8E-4568*	1	EDGE GP-SEGMENT	598
Y	*290-6491*	1	FILM GP-INTERNATIONAL	609
Y	*372-8684*	1	HEATER AR-CAB	512
Y	*203-3890*	1	HYDRAULIC AR-2 VALVE (1-LEVER, WITH FNR)	327
Y	*107-4642*	1	MIRROR GP-REAR VIEW (EXTERIOR)	524
Y	*107-4643*	1	MIRROR GP-REAR VIEW (INTERIOR)	525
Y	*289-8963*	1	MOTOR AR-HYDRAULIC FAN (STANDARD)	387
Y	*239-7396*	1	RADIATOR & MOUNTING GP	62
Y	*257-5103*	1	SEAT GP-SUSPENSION (CLOTH)	557
Y	*294-9439*	1	STEERING AR-STANDARD	305
Y	*9W-8142*	1	TIP GP-LONG	604
Y	*229-4962*	1	TIRE & RIM AR	232

Y-SEPARATE ILLUSTRATION

<END>

ENGINE ARRANGEMENT

292-5306 ENGINE AR-PRIMARY*R

S/N: C6E1-UP
99 BRAKE KW (132 BHP) AT 2300 RPM
PART OF 372-7774, 372-7775 COMMON AR

SMCS-1000 **i03559489**

NOTE	PART NUMBER	QTY	PART NAME 1 2 3 4 5 6 (PRODUCT LEVEL)	SEE PAGE
Y	*280-2050*	1	FILTER GP-FUMES DISPOSAL	43
Y	*279-8837*	1	CAMSHAFT GP	7
Y	*281-8748*	1	CONNECTION GP-WATER	46
Y	*283-4558*	1	COOLER GP-FLTR BASE & ENG OIL	
			S/N: C6E1-11296	
Y	*330-4724*	1	COOLER GP-FLTR BASE & ENG OIL	49
			S/N: C6E11297-UP	
Y	*277-4224*	1	COVER GP-ENGINE (PTO)	
			S/N: C6E1-11296	
Y	*330-6501*	1	COVER GP-ENGINE	8
			S/N: C6E11297-UP	
Y	*320-6564*	1	COVER GP-VALVE MECHANISM	9
Y	*279-8762*	1	CRANKSHAFT GP	11
Y	*292-5856*	1	CYLINDER BLOCK GP	12
Y	*279-8821*	1	CYLINDER HEAD GP	17
Y	*291-2513*	1	DRAIN GP-ENGINE OIL	
			S/N: C6E1-7899	
Y	*291-2515*	1	DRIVE GP-FAN	20
Y	*297-5184*	1	DRIVE GP-FAN	21
Y	*277-1973*	1	FILLER GP-ENGINE OIL	40
Y	*277-2912*	1	FILTER GP-ENGINE OIL	42
Y	*280-1394*	1	FILTER GP-SECONDARY FUEL	78
Y	*286-7834*	1	FLYWHEEL GP	22
Y	*277-4410*	1	GLOW PLUG GP	109
Y	*281-6332*	1	HOUSING GP-FLYWHEEL	23
Y	*277-3014*	1	HOUSING GP-FRONT	24
Y	*279-9653*	1	LIFTING GP-ENGINE	27
Y	*308-9075*	1	LINES GP-FUEL	84
Y	*288-7985*	1	MANIFOLD GP-INLET	70
Y	*289-3268*	1	PAN GP-OIL	30
Y	*279-8780*	1	PISTON & ROD GP	32
Y	*277-5007*	1	PLUG GP-ENGINE	33
Y	*299-3949*	1	PLUG GP-FLYWHEEL HOUSING	34
Y	*274-1929*	1	PULLEY GP-CRANKSHAFT	35
Y	*277-4262*	1	PUMP GP-ENGINE OIL	44
Y	*303-2930*	1	PUMP GP-FUEL INJECTION	87
Y	*277-2939*	1	PUMP GP-WATER	56
Y	*331-8936*	1	TURBOCHARGER GP (INCLUDES EXHAUST MANIFOLD)	75
Y	*277-4694*	1	VALVE GP-FLUID SAMPLING (ENGINE OIL)	
			S/N: C6E1-11296	
Y	*330-6502*	1	VALVE GP-FLUID SAMPLING (ENGINE OIL)	45
			S/N: C6E11297-UP	
Y	*279-8825*	1	VALVE MECHANISM GP	38
Y	*299-3953*	1	WIRING GP-ELECTRONIC CONTROL (ENGINE)	159
	277-6990	1	CYLINDER BLOCK GP (SHORT)	

Y-SEPARATE ILLUSTRATION

ENGINE ARRANGEMENT

289-8894 INSTALLATION AR-ENGINE

S/N: JRL1-UP; RRS1-UP

PART OF 372-7774, 372-7775 COMMON AR

SMCS-1000 **i03021458**

NOTE	PART NUMBER	QTY	PART NAME 1 2 3 4 5 6 (PRODUCT LEVEL)	SEE PAGE
Y	*289-3322*	1	AIR CLEANER GP	65
Y	*257-6549*	1	DRAIN GP-ENGINE OIL	19
Y	*311-2236*	1	EXTENSION GP-EXHAUST	68
Y	*185-1045*	1	FAN GP-SUCTION	51
Y	*289-3533*	1	LINES GP-AIR	69
Y	*289-8938*	1	LINES GP-FUEL	81
Y	*290-0637*	1	MOUNTING GP-ENGINE & XMSN	28
Y	*289-3232*	1	MUFFLER GP	71
Y	*289-9075*	1	RADIATOR & AFTERCOOLER GP	58
Y	*234-2667*	1	STARTING MOTOR GP-ELECTRIC	139
	290-6483	1	VALVE GP-DRAIN	
	7X-7729	2	WASHER (11X25X3-MM THK)	
M	**8T-4195**	2	BOLT (M10X1.5X30-MM)	
	285-0620	1	COVER	

M-METRIC PART
Y-SEPARATE ILLUSTRATION

BASIC ENGINE

279-8837 CAMSHAFT GP

S/N: C6E1-UP

PART OF 292-5306 ENGINE AR-PRIMARY

SMCS-1210, 1211, 1212 **i04585093**

NOTE	REF NO	GRAPHIC REF	PART NUMBER	QTY	PART NAME 1 2 3 4 5 6 (PRODUCT LEVEL)	SEE PAGE
	1	1	**347-1132**	1	CAMSHAFT AS	
	1A	1	**1B-8736**	1	KEY-WOODRUFF	
	2	1	**278-5125**	12	TAPPET	
	3	1	**278-5126**	12	PUSHROD	

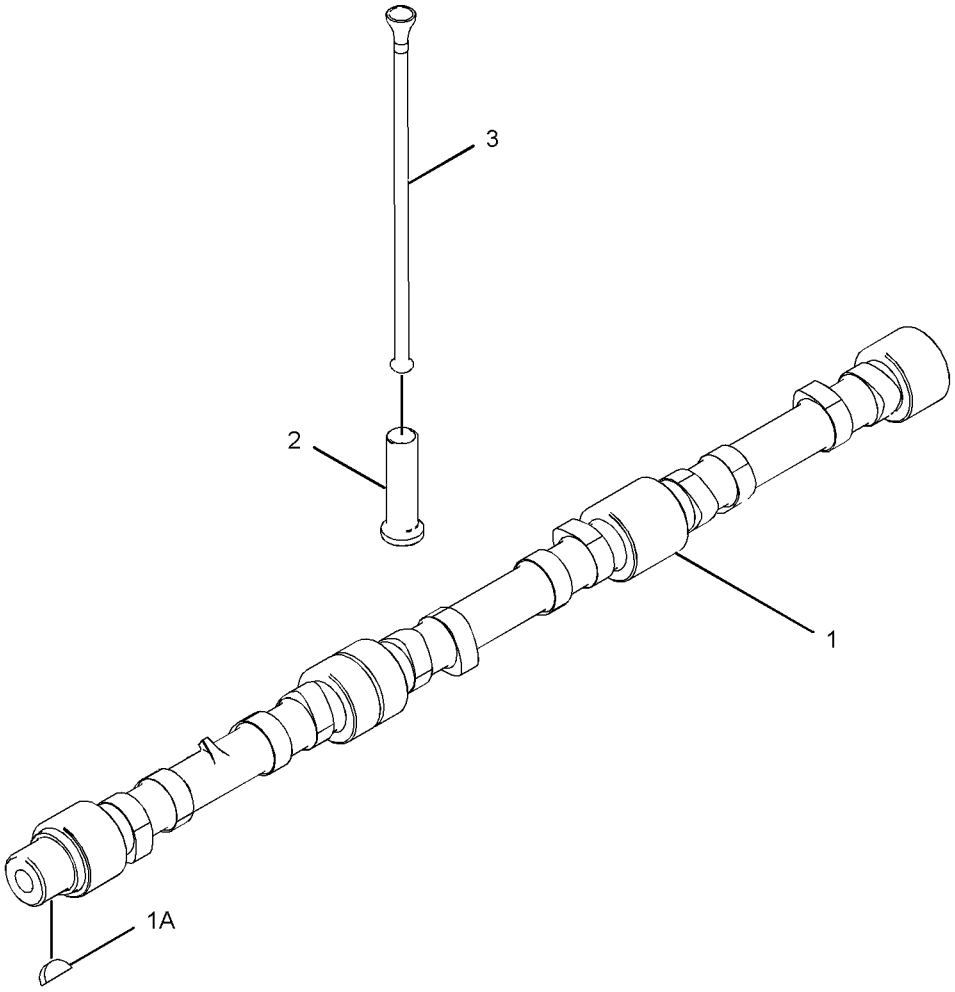

GRAPHIC #1 **<END>** g02739896

BASIC ENGINE

330-6501 COVER GP-ENGINE

S/N: C6E1-UP

PART OF 292-5306 ENGINE AR-PRIMARY

SMCS-1000 **i03246266**

NOTE	REF NO	GRAPHIC REF	PART NUMBER	QTY	PART NAME 1 2 3 4 5 6 (PRODUCT LEVEL)	SEE PAGE
M	1	1	**100-4830**	1	BOLT (M10X1.5X20-MM)	
	2	1	**111-8222**	5	BOLT (M8X16-MM)	
	3	1	**329-7854**	1	PLATE AS	
	3A	1	**329-7856**	1	SEAL-O-RING	

M-METRIC PART

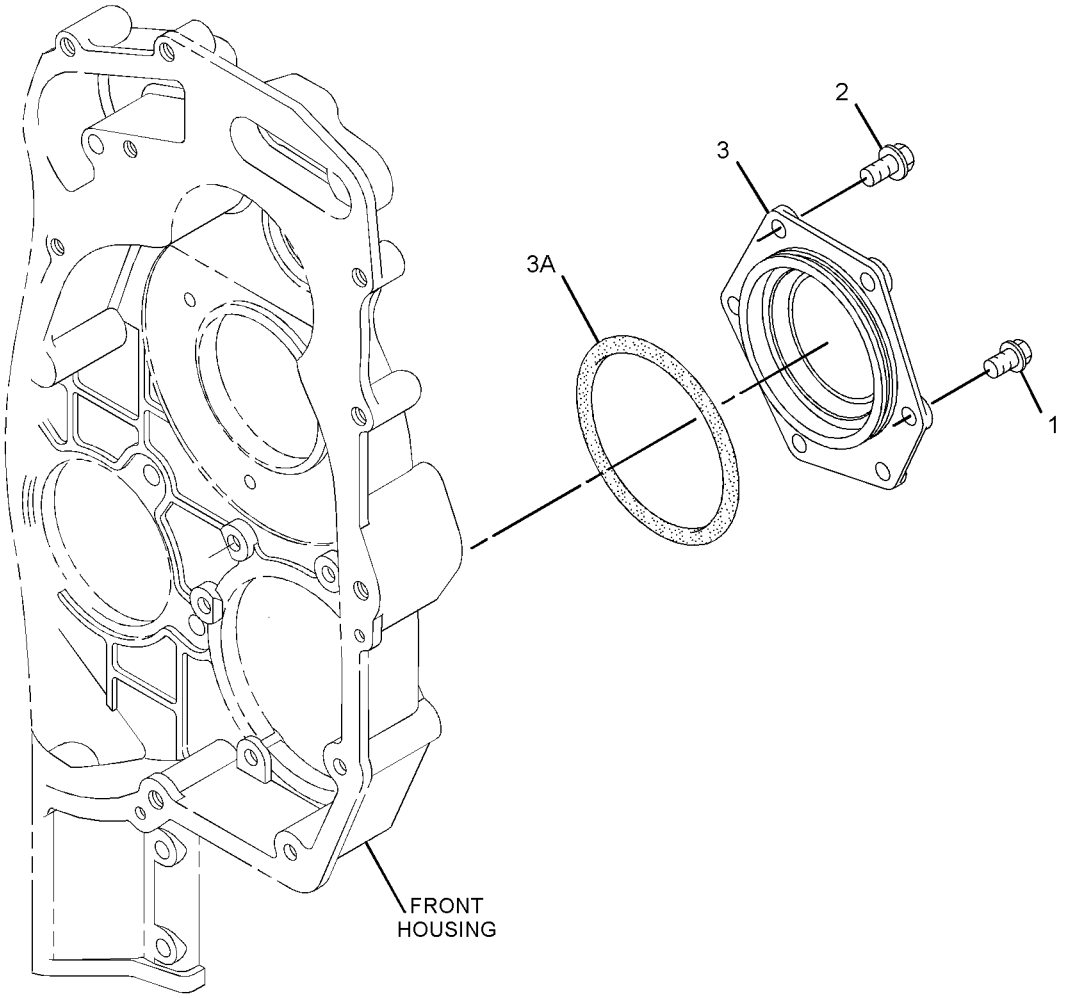

GRAPHIC #1 **<END>** g01800733

320-6564 COVER GP-VALVE MECHANISM

S/N: C6E1-UP

PART OF 292-5306 ENGINE AR-PRIMARY

SMCS-1107 **i03260780**

NOTE	REF NO	GRAPHIC REF	PART NUMBER	QTY	PART NAME 1 2 3 4 5 6 (PRODUCT LEVEL)	SEE PAGE
	1	1	**2S-3440**	2	CLAMP-HOSE	
	3	1	**7C-1281**	1	BRACKET	
M	4	1	**100-4841**	5	BOLT (M6X1X10-MM)	
	5	1	**5D-1026**	1	CLAMP-BAND	
M	6	1	**101-3895**	2	BOLT (M8X1.25X35-MM)	
	7	1	**277-5031**	9	BOLT-SPECIAL (SHOULDER)	
	8	1	**277-5067**	6	SLEEVE	
	10	1	**280-2023**	1	HOSE	
	11	1	**286-0014**	1	BASE AS-FILTER	
	11A	1	**286-0015**	1	STEM	
	12	1	**298-4550**	6	BOLT-SPECIAL (SHOULDER)	
	13	1	**311-2825**	1	SPACER	
	14	1	**317-2717**	1	BASE GP-VALVE COVER & INJ HARN	
	14A	1	**277-5064**	3	SEAL-O-RING	
	14B	1	**277-5065**	3	CLIP	
	14C	1	**285-1975**	3	HARNESS AS-WIRING (INJECTOR)	
	14D	1	**309-6664**	1	GASKET-COVER	
	15	1	**318-8038**	1	COVER GP-CYLINDER HEAD	
	15A	1	**317-3064**	1	GASKET-COVER (VALVE MECHANISM)	
	16	1	**320-6551**	1	SHIELD-HEAT	
	17	1	**320-9910**	1	HOSE	

M-METRIC PART

320-6564 **COVER GP-VALVE MECHANISM** *(contd.)* **i03260780**

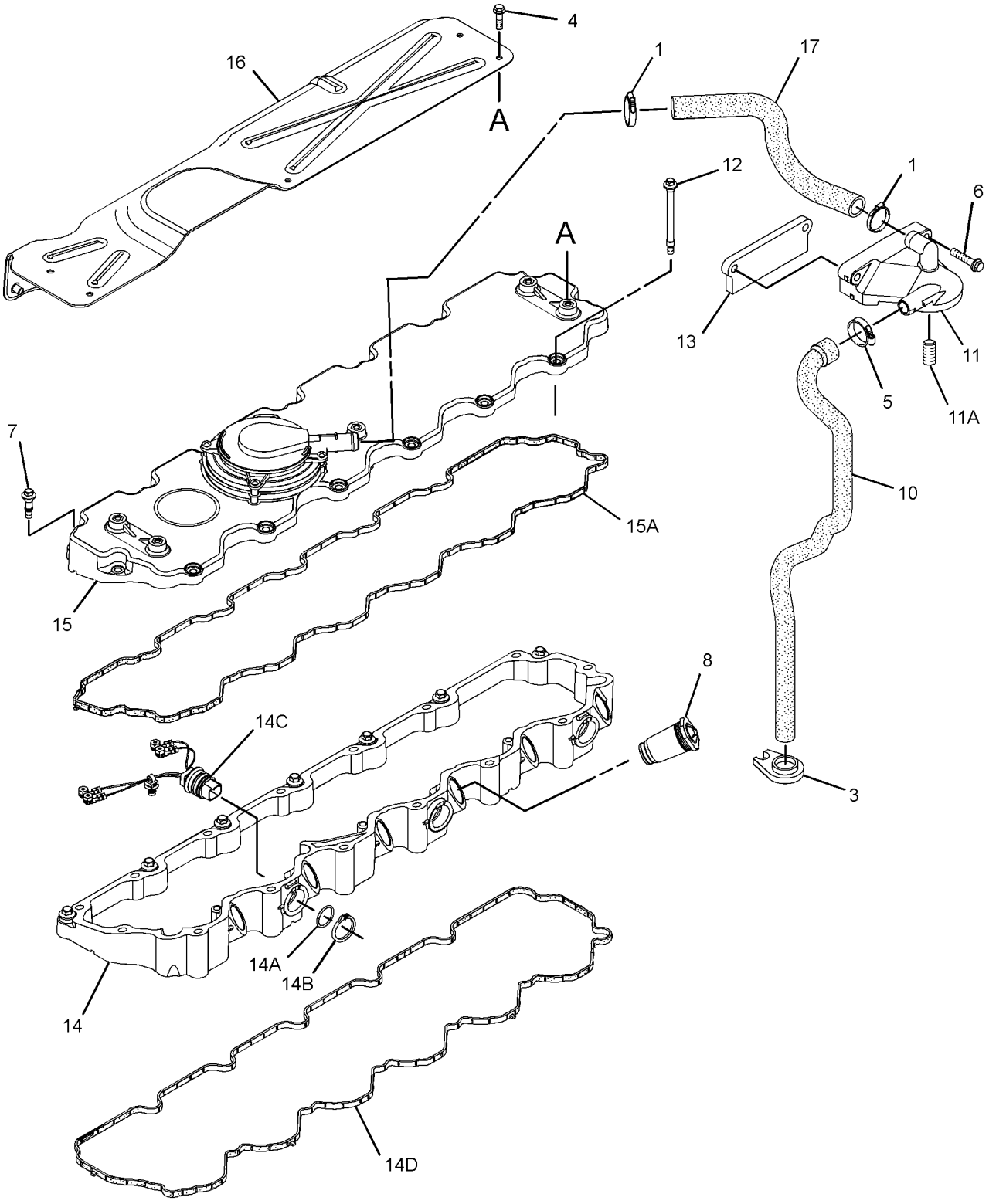

GRAPHIC #1 **<END>** g01728754

279-8762 CRANKSHAFT GP

S/N: C6E1-UP

PART OF 292-5306 ENGINE AR-PRIMARY

SMCS-1202 **i04618989**

NOTE	REF NO	GRAPHIC REF	PART NUMBER	QTY	PART NAME 1 2 3 4 5 6 (PRODUCT LEVEL)	SEE PAGE
CY	1	1	**374-9163**	1	KIT-CRANKSHAFT BEARING	26
	2	1	**348-9328**	1	DISC-TIMING	
	3	1	**276-7394**	3	BOLT	

C-CHANGE FROM PREVIOUS TYPE
Y-SEPARATE ILLUSTRATION

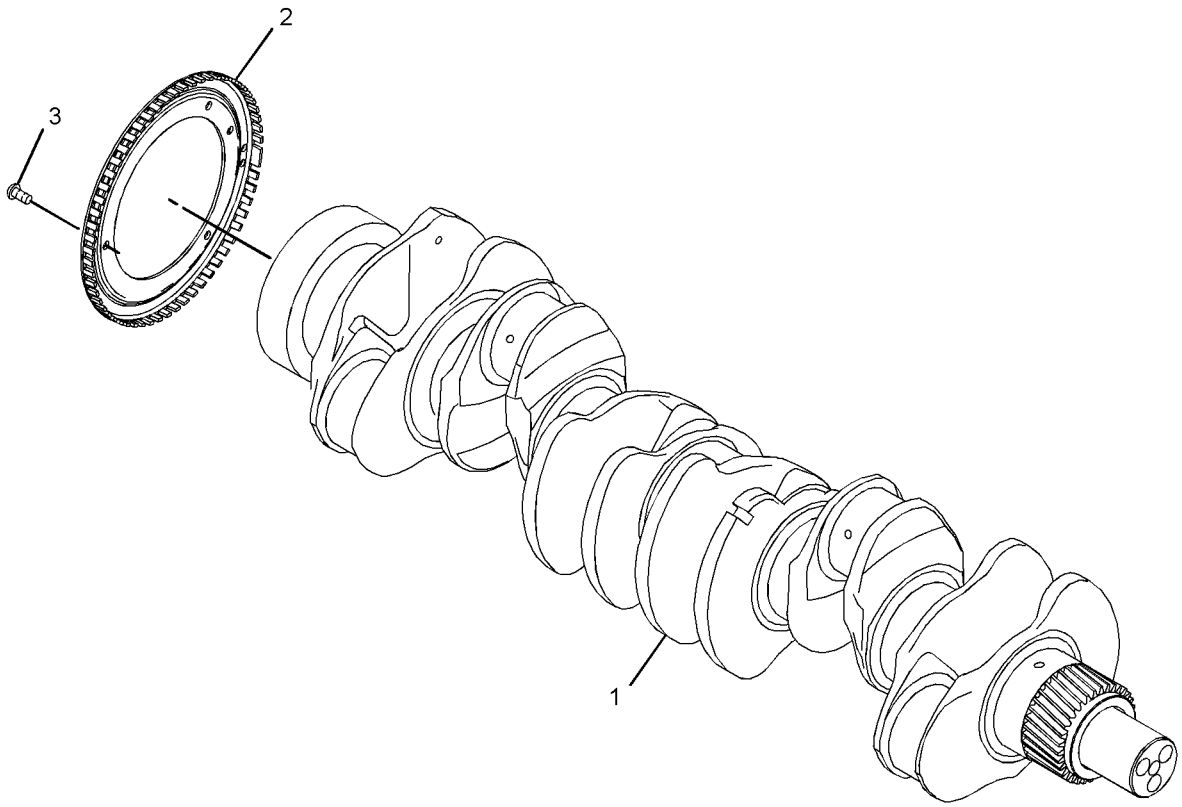

GRAPHIC #1 **<END>** g02770336

BASIC ENGINE

292-5856 CYLINDER BLOCK GP

S/N: C6E1-UP

PART OF 292-5306 ENGINE AR-PRIMARY

SMCS-1201 **i02750504**

NOTE	REF NO	GRAPHIC REF	PART NUMBER	QTY	PART NAME 1 2 3 4 5 6 (PRODUCT LEVEL)	SEE PAGE
M	1	1	**209-9219**	8	BOLT (M8X1.25X16-MM)	
	2	1	**292-0886**	1	HOUSING-REAR (INCLUDES SEAL)	
Y	3	1	**306-6845**	1	CYLINDER BLOCK GP	13

M-METRIC PART
Y-SEPARATE ILLUSTRATION

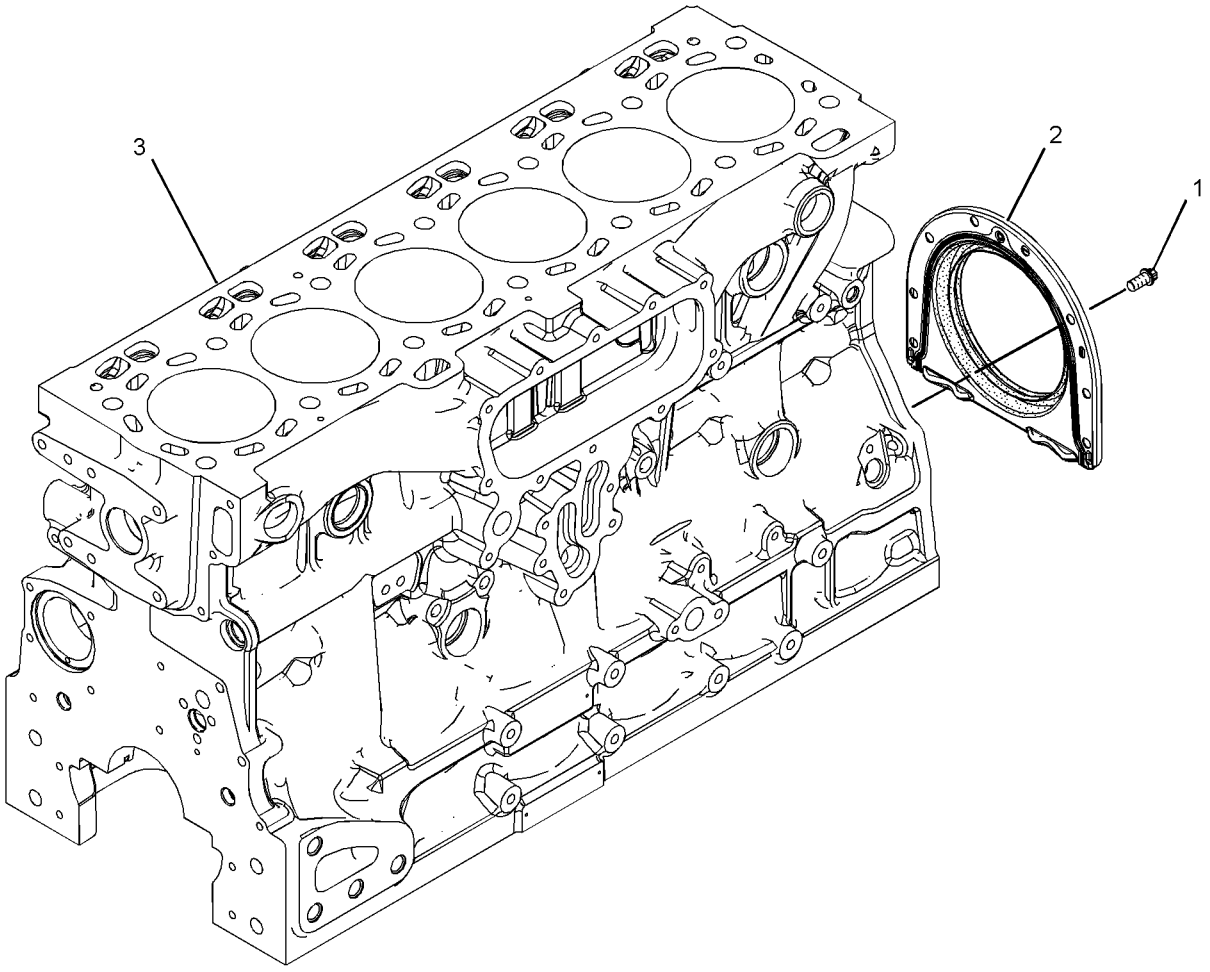

GRAPHIC #1 **<END>** g01355960

306-6845 CYLINDER BLOCK GP

S/N: C6E1-UP

PART OF 292-5856 CYLINDER BLOCK GP

SMCS-1201 **i02752448**

NOTE	REF NO	GRAPHIC REF	PART NUMBER	QTY	PART NAME 1 2 3 4 5 6 (PRODUCT LEVEL)	SEE PAGE
	1	1	**2B-0858**	1	PLUG-PIPE	
	2	1	**067-6043**	5	PLUG-SIDE	
M	3	1	**100-4841**	6	BOLT (M6X1X10-MM)	
	4	1	**185-0884**	2	DOWEL	
	5	1	**225-8858**	1	PLUG	
	6	1	**232-1322**	1	PLUG	
	7	1	**232-7596**	1	PLUG	
	8	1	**232-7597**	2	PLUG	
	9	1	**232-7599**	2	PLUG	
	10	1	**276-5600**	14	BOLT-SPECIAL (BEARING CAP)	
	11	1	**276-5601**	1	BUSHING-CAMSHAFT	
	12	1	**276-5602**	6	PLUG-CORE	
	13	1	**276-5603**	1	SEAL-O-RING	
	14	1	**276-5604**	1	DOWEL	
	15	1	**276-5605**	6	JET AS-PISTON COOLING	

M-METRIC PART

306-6845 **CYLINDER BLOCK GP** *(contd.)* **i02752448**

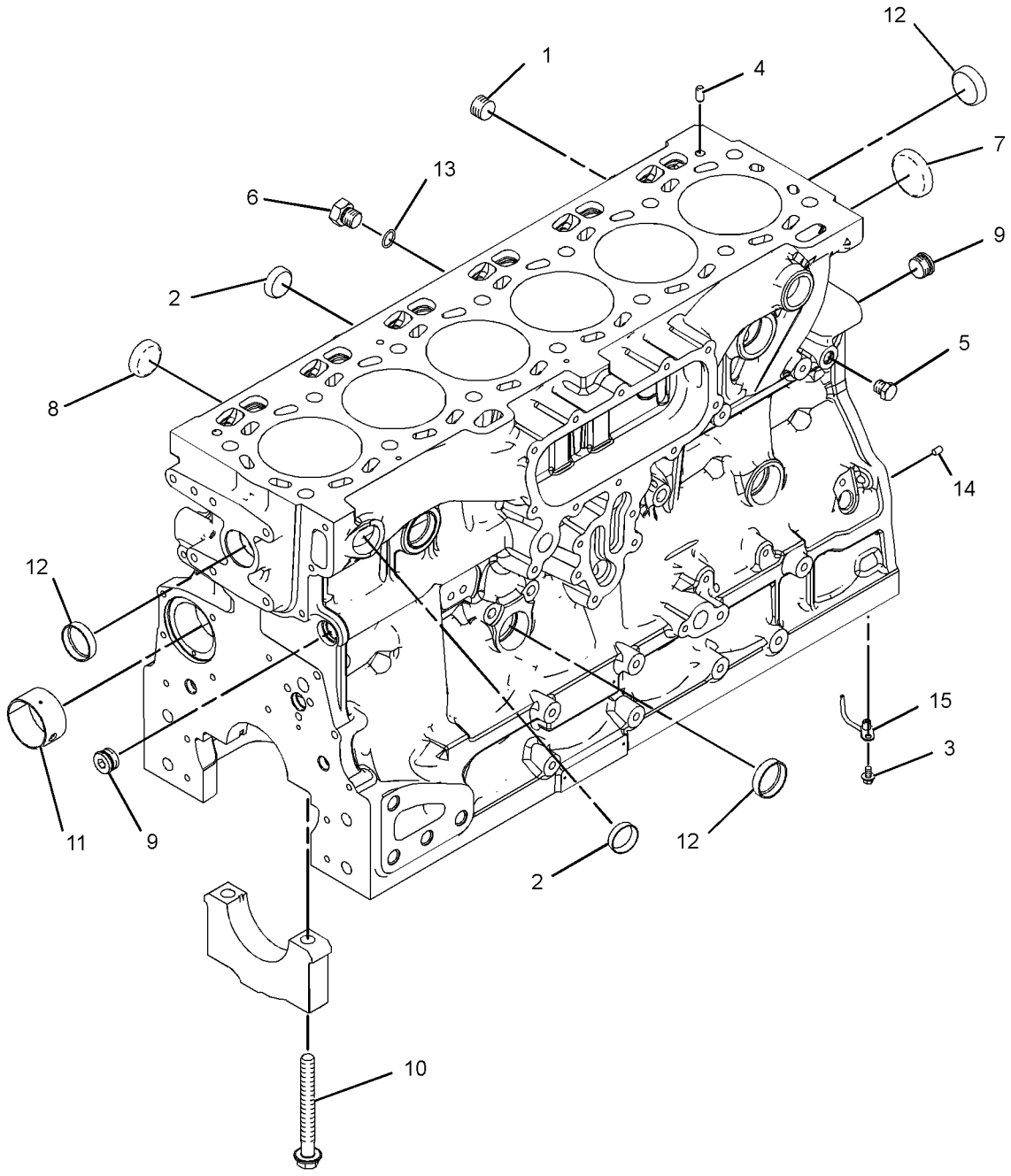

GRAPHIC #1 **<END>** g01339916

309-6663 CYLINDER HEAD AS

S/N: C6E1-UP

PART OF 279-8821 CYLINDER HEAD GP

SMCS-1100, 1101 **i03419106**

NOTE	REF NO	GRAPHIC REF	PART NUMBER	QTY	PART NAME 1 2 3 4 5 6 (PRODUCT LEVEL)	SEE PAGE
	1	1	**2B-0858**	2	PLUG-PIPE	
	2	1	**199-9751**	1	SEAL-O-RING	
	3	1	**232-1322**	1	PLUG	
	4	1	**276-8116**	6	PLUG-CORE	
	5	1	**276-8117**	13	PLUG-CORE	
	6	1	**276-8123**	48	RETAINER	
	7	1	**339-9637**	12	VALVE-EXHAUST	
J	8	1	**276-8132**	24	SPRING-VALVE	
	9	1	**276-8133**	24	CAP-VALVE	
	10	1	**295-6661**	1	PLUG	
	11	1	**299-5511**	24	SEAL-VALVE STEM	
	12	1	**309-6678**	12	VALVE-INLET	

J-SERVICED IN PAIRS

309-6663 CYLINDER HEAD AS *(contd.)* **i03419106**

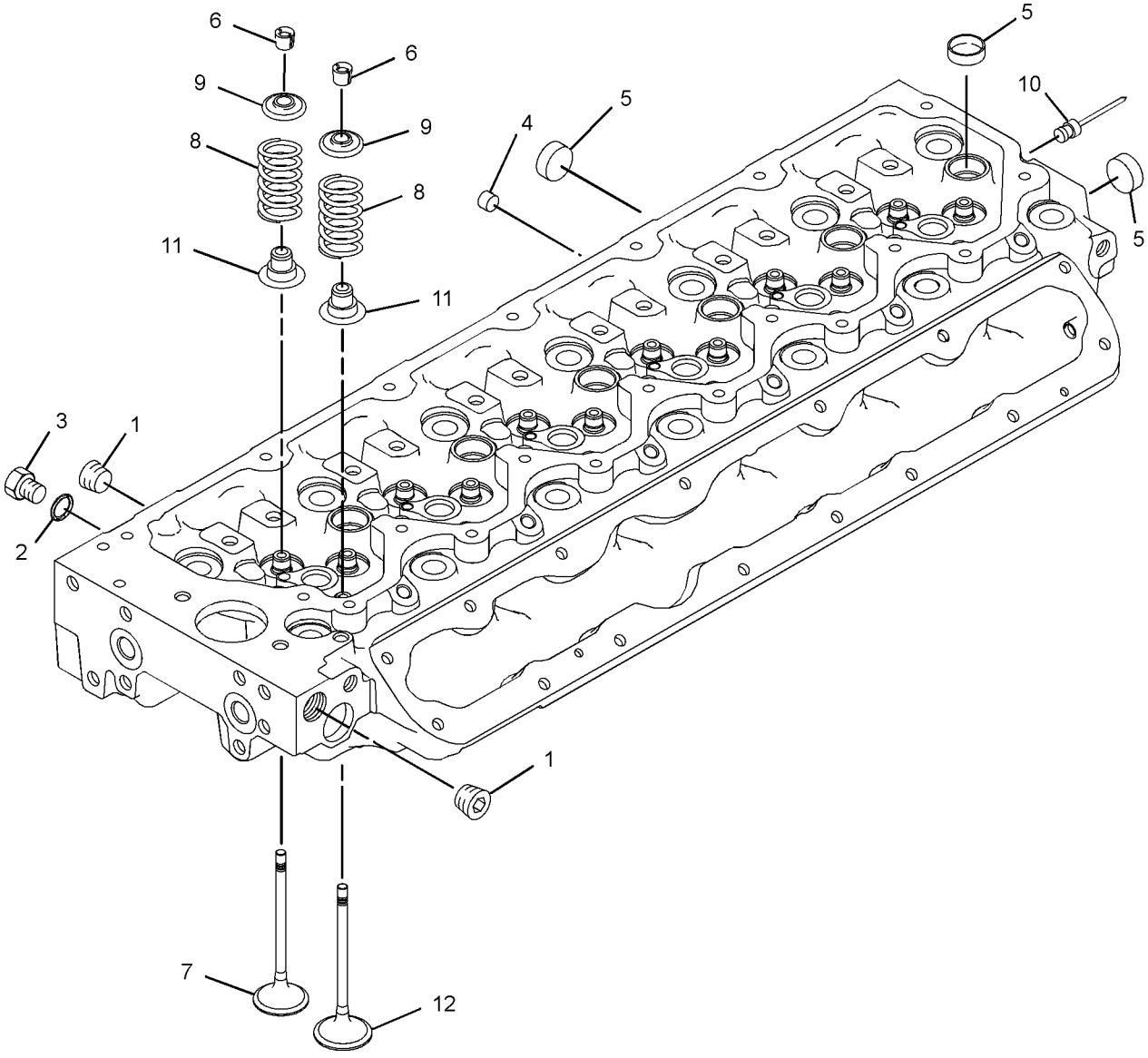

GRAPHIC #1 **<END>** g01400657

BASIC ENGINE

279-8821 CYLINDER HEAD GP

S/N: C6E1-UP

PART OF 292-5306 ENGINE AR-PRIMARY

SMCS-1100 **i02931731**

NOTE	REF NO	GRAPHIC REF	PART NUMBER	QTY	PART NAME 1 2 3 4 5 6 (PRODUCT LEVEL)	SEE PAGE
Y	1	1	**309-6663**	1	CYLINDER HEAD AS	15
	2	1	**276-8134**	14	BOLT-SPECIAL (CYLINDER HEAD)	
	3	1	**176-3141**	1	GASKET-HEAD	

Y-SEPARATE ILLUSTRATION

279-8821 **CYLINDER HEAD GP** *(contd.)* **i02931731**

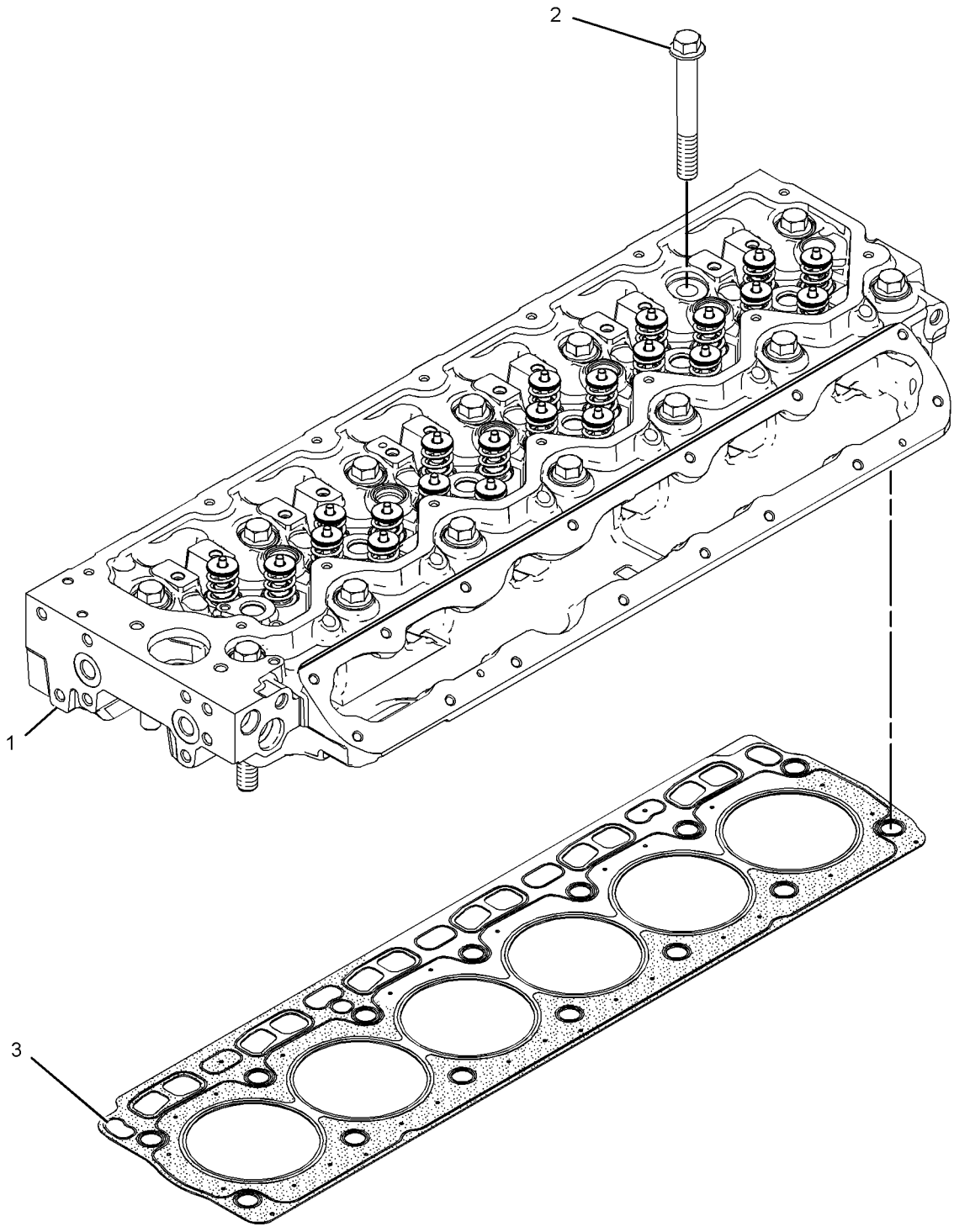

GRAPHIC #1 **<END>** g01291481

257-6549 DRAIN GP-ENGINE OIL

S/N: JRL1-UP; RRS1-UP

PART OF 289-8894 INSTALLATION AR-ENGINE

SMCS-1302 **i03105921**

NOTE	REF NO	GRAPHIC REF	PART NUMBER	QTY	PART NAME 1 2 3 4 5 6 (PRODUCT LEVEL)	SEE PAGE
	1	1	**2P-4173**	1	VALVE-SHUTOFF	
	2	1	**5D-1026**	2	CLAMP-BAND	
	3	1	**6V-7238**	1	VALVE-SHUTOFF (ENGINE OIL)	
	4	1	**7K-1181**	1	STRAP-CABLE	
	5	1	**8C-5224**	1	PLUG-SEAL	
	6	1	**8C-5225**	1	PLUG-SEAL	
	7	1	**157-0670**	1	CAP-DUST	
	8	1	**206-2423**	1	SADDLE	
	9	1	**159-5255**	1	ADAPTER	
	10	1	**3J-7354**	1	SEAL-O-RING	
	11	1	**3K-0360**	1	SEAL-O-RING	
	12	1	**3S-2093**	3	STRAP-CABLE	
	13	1	**5P-6718**	1	SEAL-O-RING	
	14	1	**5P-7814**	1	SEAL-O-RING	
	15	1	**8C-3446**	1	VALVE-FLUID SAMPLING	
	16	1	**8T-9357**	1	ADAPTER	
E	17	1	**5P-0743**		HOSE (30-CM)	
E	18	1	**5P-1505**		HOSE (94-CM)	

E-ORDER BY THE CENTIMETER

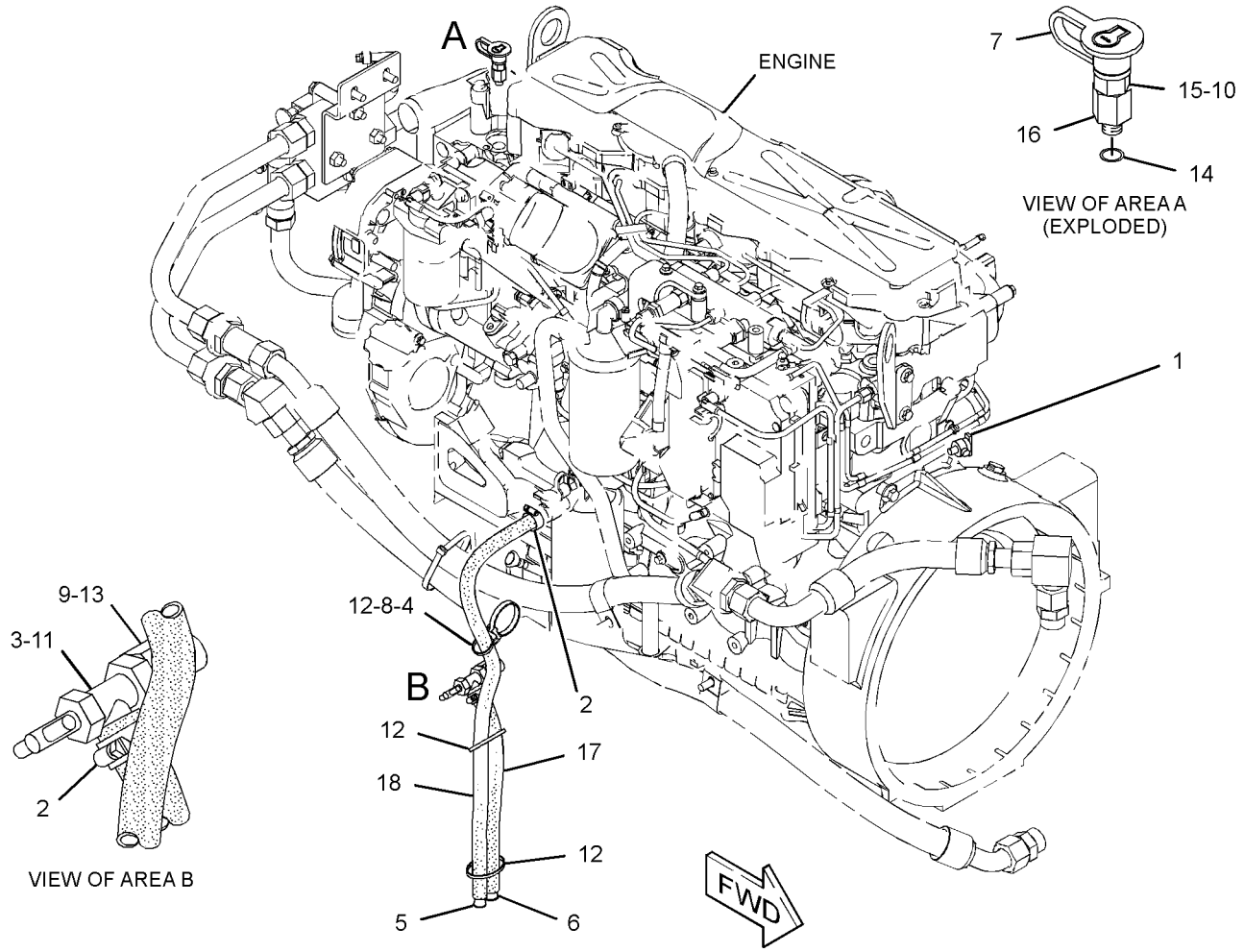

GRAPHIC #1 **<END>** g01785233

BASIC ENGINE

291-2515 DRIVE GP-FAN

S/N: C6E1-UP

PART OF 292-5306 ENGINE AR-PRIMARY

SMCS-1359 **i02930821**

NOTE	REF NO	GRAPHIC REF	PART NUMBER	QTY	PART NAME 1 2 3 4 5 6 (PRODUCT LEVEL)	SEE PAGE
	1	1	**289-8336**	1	HOUSING AS	
	2	1	**111-0859**	4	BOLT (M10X1.5X35-MM)	
	3	1	**284-1026**	1	PULLEY	

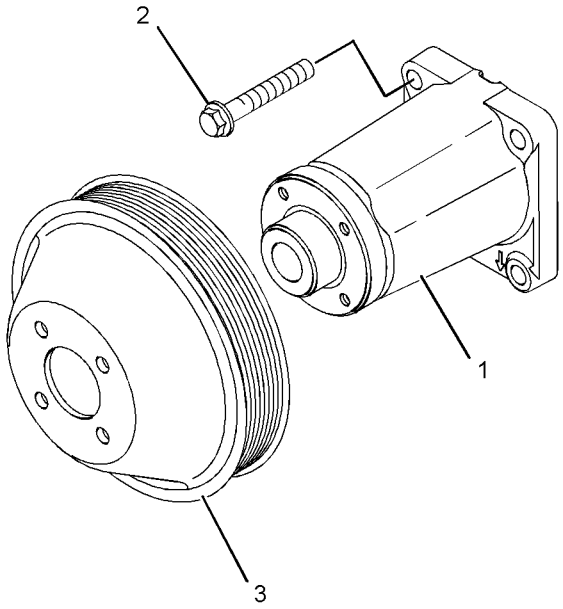

GRAPHIC #1 **<END>** g01289391

BASIC ENGINE

297-5184 DRIVE GP-FAN

S/N: C6E1-UP

PART OF 292-5306 ENGINE AR-PRIMARY

SMCS-1359 **i02930831**

NOTE	REF NO	GRAPHIC REF	PART NUMBER	QTY	PART NAME 1 2 3 4 5 6 (PRODUCT LEVEL)	SEE PAGE
	1	1	**179-7071**	4	BOLT (M8X1.25X20-MM)	

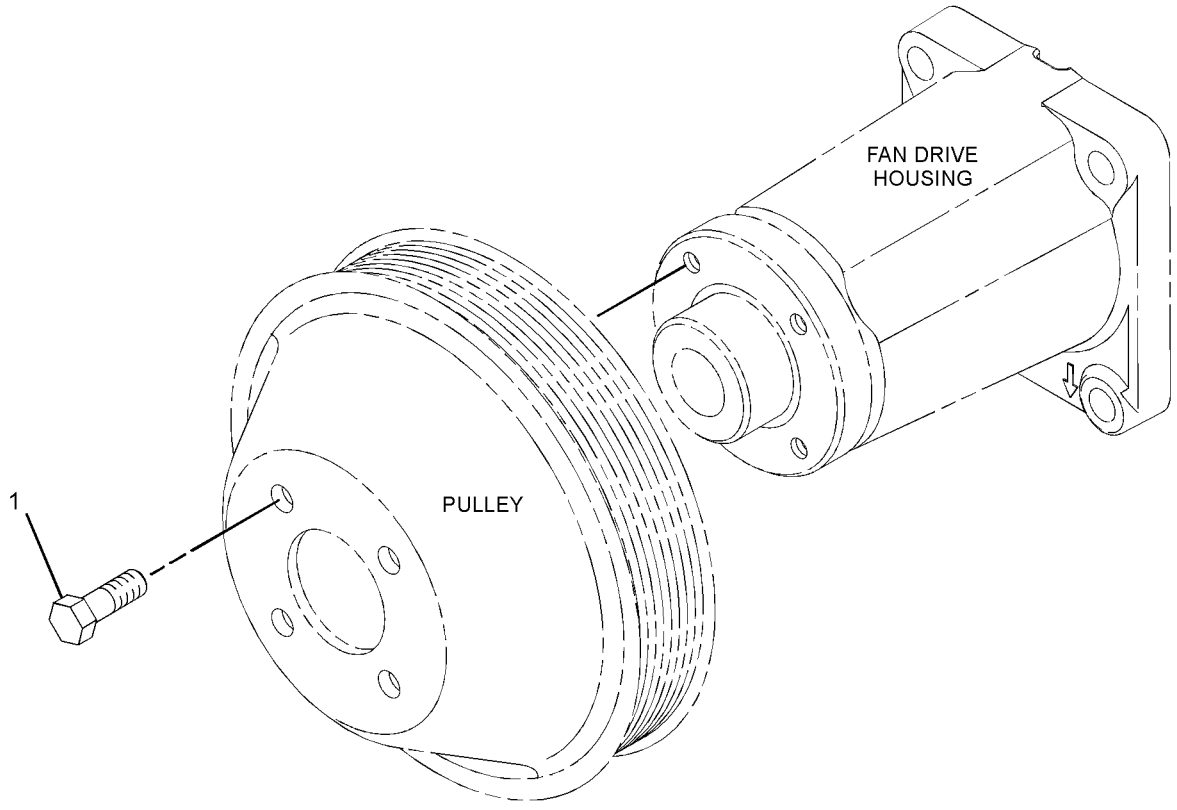

GRAPHIC #1 **<END>** g01340272

BASIC ENGINE

286-7834 FLYWHEEL GP

S/N: C6E1-UP

PART OF 292-5306 ENGINE AR-PRIMARY

SMCS-1156 **i02930674**

NOTE	REF NO	GRAPHIC REF	PART NUMBER	QTY	PART NAME 1 2 3 4 5 6 (PRODUCT LEVEL)	SEE PAGE
	1	1	**4K-7502**	12	BOLT (1/2-20X1.375-IN)	
	2	1	**113-7543**	1	FLYWHEEL AS	
	2A	1	**033-7687**	1	RING-STARTING MOTOR (126-TEETH)	
	3	1	**5P-8245**	12	WASHER-HARD (13.5X25.5X3-MM THK)	

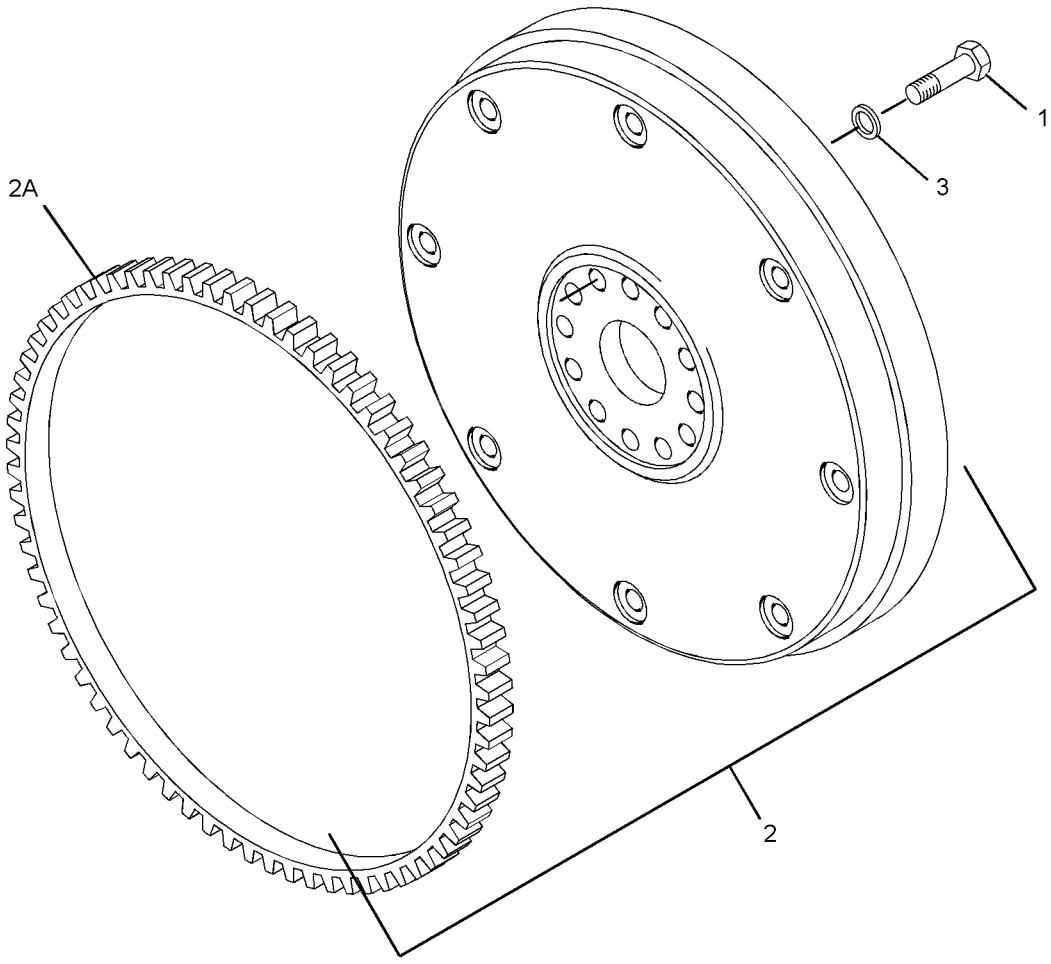

GRAPHIC #1 **<END>** g01276001

BASIC ENGINE

281-6332 HOUSING GP-FLYWHEEL

S/N: C6E1-UP

PART OF 292-5306 ENGINE AR-PRIMARY

SMCS-1157 **i02931728**

NOTE	REF NO	GRAPHIC REF	PART NUMBER	QTY	PART NAME 1 2 3 4 5 6 (PRODUCT LEVEL)	SEE PAGE
	1	1	**281-6331**	1	HOUSING-FLYWHEEL	
M	2	1	**121-0883**	6	BOLT (M10X1.5X30-MM)	
M	3	1	**6I-0423**	2	BOLT (M12X1.75X30-MM)	
	4	1	**102-1957**	1	PLATE	
	5	1	**6I-0631**	2	BOLT (M6X1X12-MM)	
	6	1	**277-0118**	1	SEAL	
	7	1	**287-8597**	2	DOWEL	
	8	1	**6I-0847**	1	PLUG	
	9	1	**199-3108**	1	PLUG	
	10	1	**199-3109**	1	PLUG	

M-METRIC PART

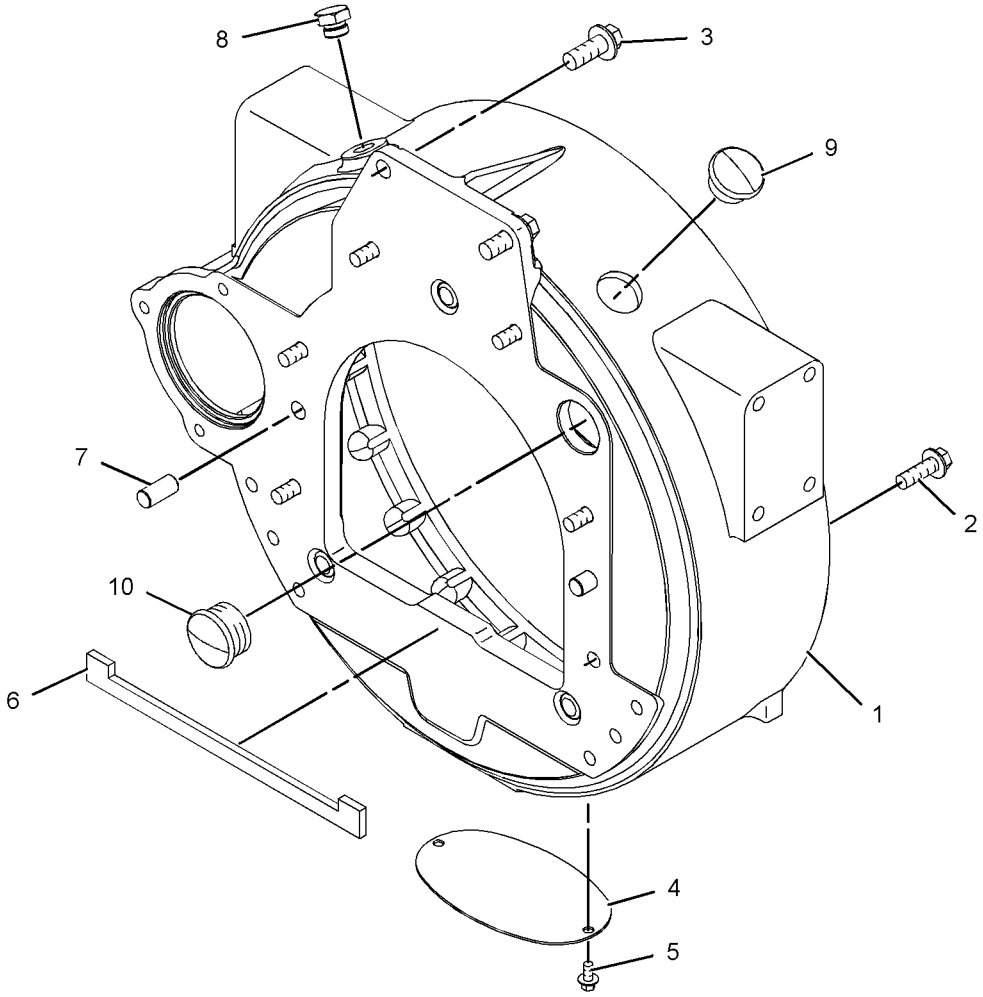

GRAPHIC #1 **<END>** g01218436

BASIC ENGINE

277-3014 HOUSING GP-FRONT

S/N: C6E1-UP

PART OF 292-5306 ENGINE AR-PRIMARY

SMCS-1151, 1162, 1206 **i03528250**

NOTE	REF NO	GRAPHIC REF	PART NUMBER	QTY	PART NAME 1 2 3 4 5 6 (PRODUCT LEVEL)	SEE PAGE
	1	1	**326-5063**	1	HOUSING-FRONT	
	2	1	**277-3012**	1	GASKET-COVER	
	3	1	**277-3013**	1	SEAL	
M	4	1	**6I-0217**	6	BOLT (M8X1.25X20-MM)	
M	5	1	**6I-0645**	4	BOLT (M8X1.25X25-MM)	
M	6	1	**101-3895**	2	BOLT (M8X1.25X35-MM)	
	7	1	**251-4336**	1	GEAR AS-IDLER (73-TEETH)	
M	8	1	**6I-0650**	3	BOLT (M10X1.5X65-MM)	
	9	1	**216-8634**	1	GEAR-CAMSHAFT (68-TEETH)	
	10	1	**1B-8736**	1	KEY-WOODRUFF	
	11	1	**133-1011**	1	WASHER	
	12	1	**067-6179**	1	DOWEL	
	13	1	**232-3666**	1	WASHER-THRUST	
M	14	1	**124-3815**	9	BOLT (M8X16X1.25-MM)	
M	15	1	**100-3751**	5	BOLT (M8X1.25X65-MM)	
M	16	1	**100-4830**	1	BOLT (M10X1.5X20-MM)	
	17	1	**7C-4616**	1	BOLT (M12X1.75X45-MM)	
	18	1	**324-0444**	1	HUB-IDLER GEAR	
	19	1	**295-1711**	1	PLATE-RETAINING	
	20	1	**226-8767**	1	COVER AS-FRONT	
	20A	1	**226-8766**	1	GASKET-COVER	

M-METRIC PART

277-3014 **HOUSING GP-FRONT** *(contd.)* **i03528250**

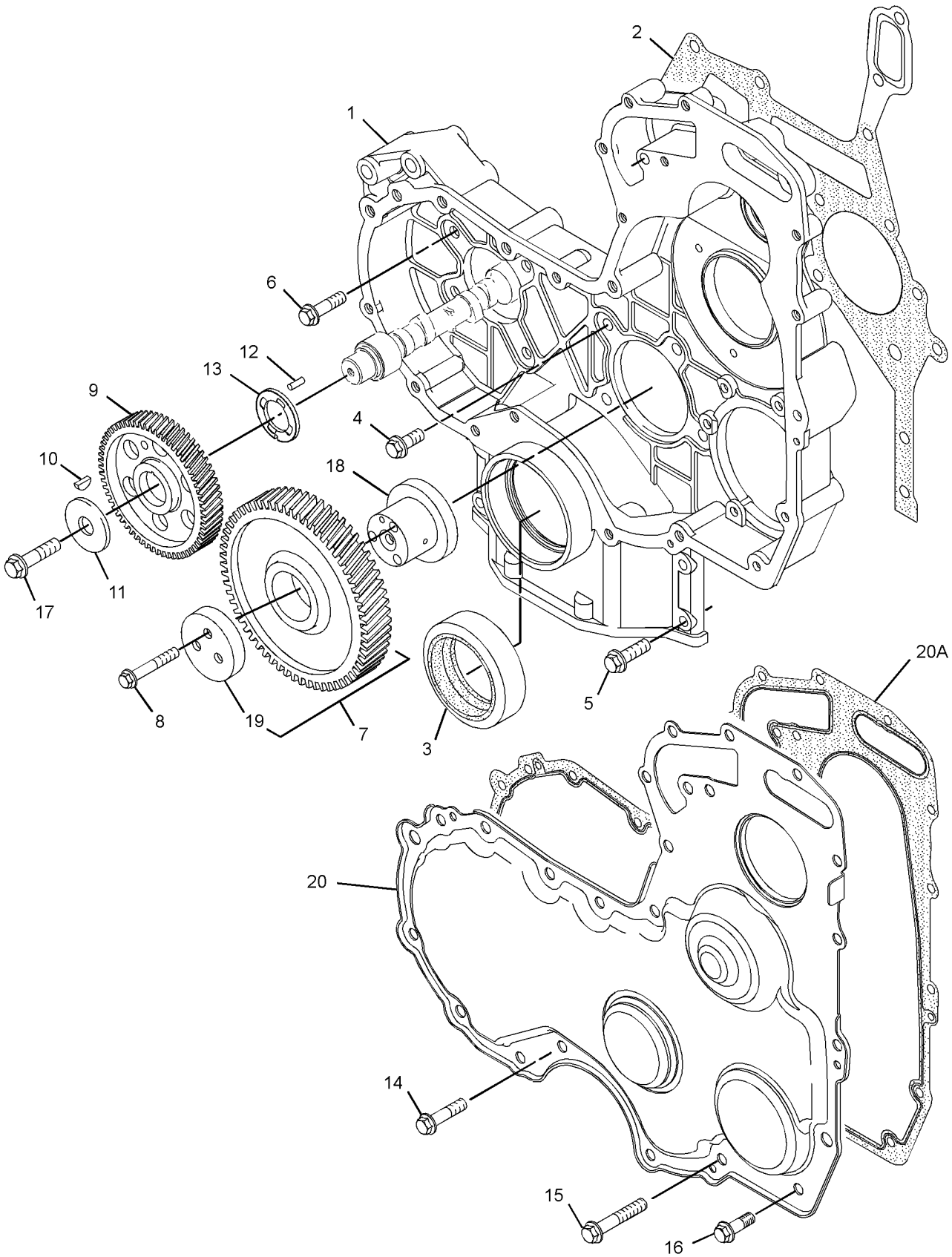

GRAPHIC #1 **<END>** g01379940

BASIC ENGINE

374-9163 KIT-CRANKSHAFT BEARING

S/N: C6E1-UP

PART OF 279-8762 CRANKSHAFT GP

SMCS-1202, 1203, 1230 **i04582630**

NOTE	REF NO	GRAPHIC REF	PART NUMBER	QTY	PART NAME 1 2 3 4 5 6 (PRODUCT LEVEL)	SEE PAGE
	1	1	**1B-8736**	1	KEY-WOODRUFF	
	2	1	**276-7391**	1	GEAR (34-TEETH)	
	3	1	**339-8780**	1	DOWEL	
	4	1	**342-6507**	1	SHIM (0.1-MM THK)	
	5	1	**342-6508**	1	SHIM (0.1-MM THK)	
	6	1	**347-0063**	1	CRANKSHAFT	
	7	1	**363-0559**	2	WASHER-THRUST	
	8	1	**360-1978**	1	KIT-BEARING (CRANKSHAFT)	

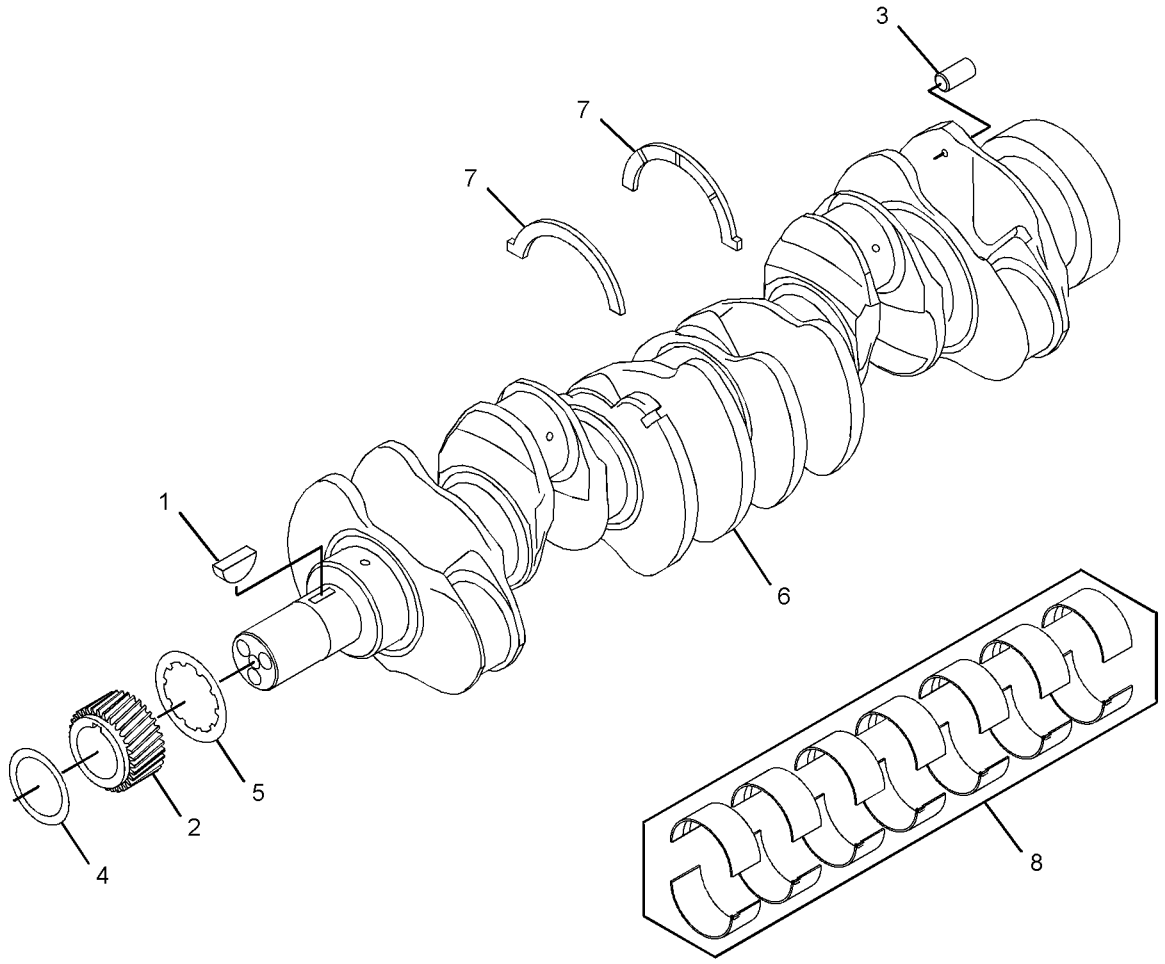

GRAPHIC #1 **<END>** g02714356

BASIC ENGINE

279-9653 LIFTING GP-ENGINE

S/N: C6E1-UP

PART OF 292-5306 ENGINE AR-PRIMARY

SMCS-1122 **i02854733**

NOTE	REF NO	GRAPHIC REF	PART NUMBER	QTY	PART NAME 1 2 3 4 5 6 (PRODUCT LEVEL)	SEE PAGE
	1	1	**279-9651**	1	PLATE-LIFTING	
M	2	1	**6I-0654**	4	BOLT (M10X1.5X25-MM)	
	3	1	**279-9652**	1	PLATE-LIFTING	

M-METRIC PART

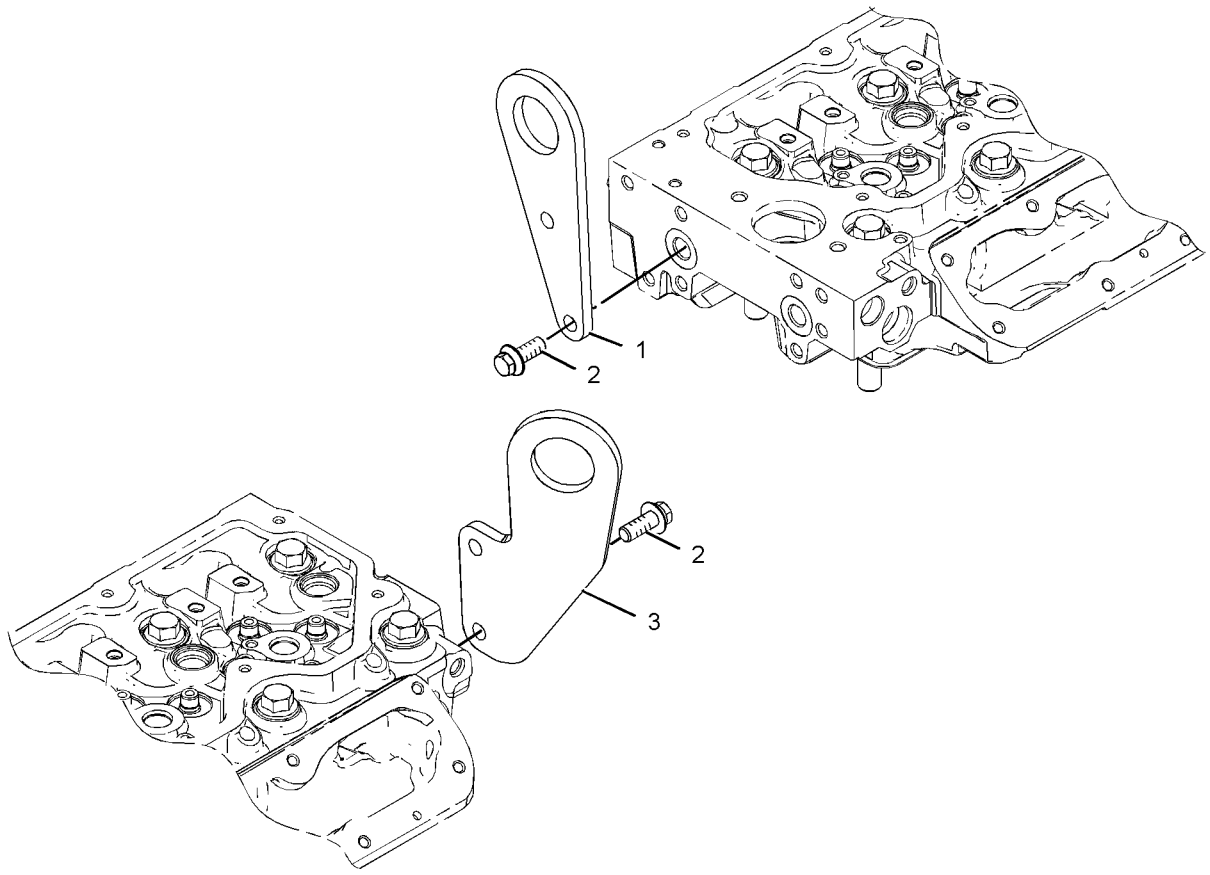

GRAPHIC #1 **<END>** g01195531

BASIC ENGINE

290-0637 MOUNTING GP-ENGINE & XMSN

S/N: JRL1-UP; RRS1-UP

PART OF 289-8894 INSTALLATION AR-ENGINE

SMCS-1152, 1154, 3082 **i03571131**

NOTE	REF NO	GRAPHIC REF	PART NUMBER	QTY	PART NAME 1 2 3 4 5 6 (PRODUCT LEVEL)	SEE PAGE
	1	1	**9W-6582**	2	SLEEVE	
	2	1	**9W-9930**	2	MOUNT AS	
	3	1	**220-1241**	2	MOUNT AS	
	4	1	**290-0643**	1	SUPPORT-ENGINE (LH)	
	5	1	**290-0644**	1	SUPPORT-ENGINE (RH)	
	6	1	**290-7895**	1	SUPPORT AS (TRANSMISSION,RH)	
	7	1	**290-7896**	1	SUPPORT AS (TRANSMISSION,LH)	
	8	1	**039-8557**	10	WASHER (13X26X6-MM THK)	
	9	1	**3E-4356**	8	WASHER-HARD (17.5X30X6-MM THK)	
M	10	1	**6V-4249**	8	BOLT (M10X1.5X50-MM)	
	11	1	**6V-5839**	8	WASHER (11X21X2.5-MM THK)	
	12	1	**6W-5760**	2	DOWEL	
M	13	1	**7X-2554**	4	BOLT (M16X2X70-MM)	
M	14	1	**8C-8478**	2	BOLT (M20X2.5X140-MM)	
	15	1	**8T-4121**	12	WASHER-HARD (11X21X2.5-MM THK)	
M	16	1	**8T-4131**	4	NUT (M20X2.5-THD)	
M	17	1	**8T-4170**	2	BOLT (M20X2.5X150-MM)	
M	18	1	**8T-4183**	10	BOLT (M12X1.75X40-MM)	
M	19	1	**8T-4186**	12	BOLT (M10X1.5X40-MM)	
	20	1	**8T-4223**	10	WASHER-HARD (13.5X25.5X3-MM THK)	
	21	1	**8T-5439**	8	WASHER-HARD (21.5X45X6-MM THK)	
M	22	1	**8T-7338**	4	BOLT (M16X2X45-MM)	
	23	1	**8X-0674**	2	WASHER (22X100X10-MM THK)	
	24	1	**9R-5878**	4	WASHER (21.5X114X3-MM THK)	
	25	1	**9W-6584**	2	WASHER (20.5X114X10-MM THK)	

M-METRIC PART

290-0637 **MOUNTING GP-ENGINE & XMSN** *(contd.)* **i03571131**

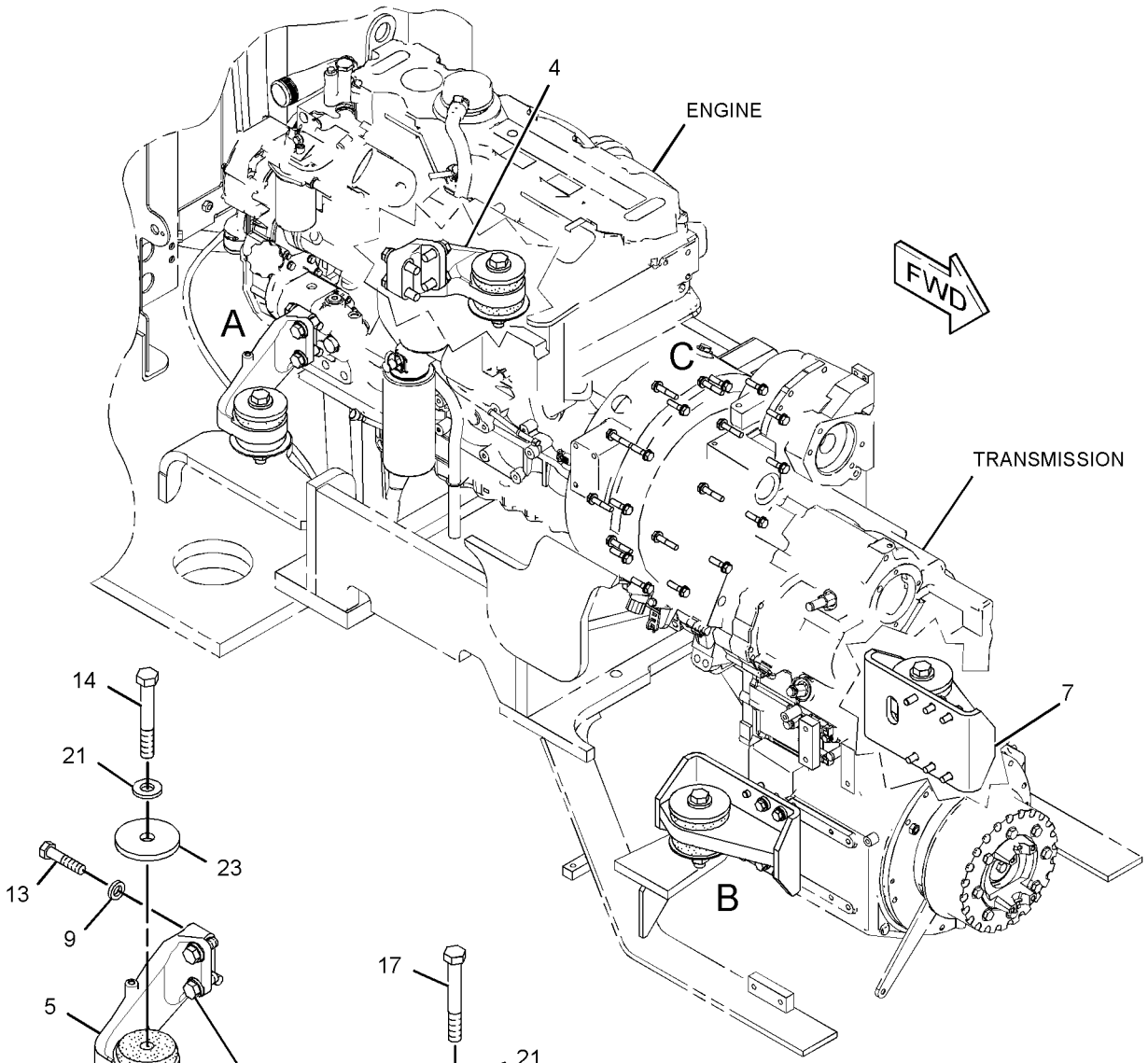

VIEW OF AREA A
(EXPLODED)

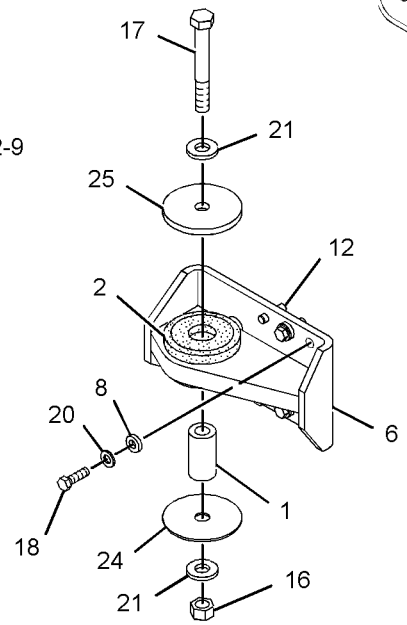

VIEW OF AREA B
(EXPLODED)

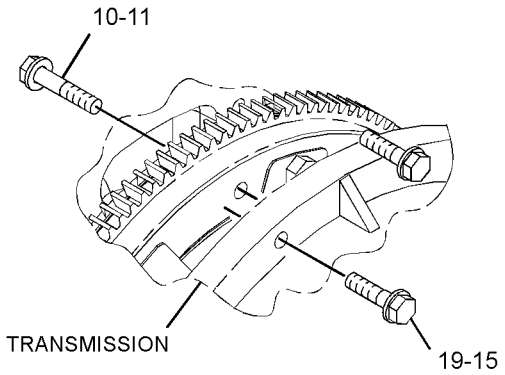

VIEW OF AREA C
(HOUSING REMOVED FOR CLARITY)
(EXPLODED)

GRAPHIC #1 **<END>** g01407672

BASIC ENGINE

289-3268 PAN GP-OIL

S/N: C6E1-UP

PART OF 292-5306 ENGINE AR-PRIMARY

SMCS-1302 **i04565931**

NOTE	REF NO	GRAPHIC REF	PART NUMBER	QTY	PART NAME 1 2 3 4 5 6 (PRODUCT LEVEL)	SEE PAGE
	1	1	**358-6979**	1	PAN GP-OIL	
		1	**7C-0351**	2	PLUG-DRAIN (ENGINE OIL)	
		1	**275-9884**	1	GASKET	
		1	**335-7585**	2	SEAL	
		1	**351-4685**	26	LIMITER	
M	2	1	**6I-0260**	2	BOLT (M8X1.25X25-MM)	
	3	1	**354-8322**	1	PLUG	
	4	1	**6I-1497**	1	SEAL	
	5	1	**6I-4681**	1	GASKET	
	6	1	**6I-1090**	2	BOLT (M8X1.25X40-MM)	
	7	1	**251-8336**	1	TUBE AS	
	8	1	**351-4685**	4	LIMITER	
	9	1	**6I-4374**	28	BOLT (M8X1.25X60-MM)	
	11	1	**276-0142**	6	BOLT-SPECIAL (TORX)	
	12	1	**331-4400**	1	GASKET	
	13	1	**289-3261**	1	GAUGE GP-OIL LEVEL (DIPSTICK) (ENGINE)	
	13A	1	**275-9891**	2	SEAL-O-RING	
	14	1	**351-2090**	1	FRAME	
	15	1	**286-8817**	1	TUBE-OIL SUCTION	

M-METRIC PART

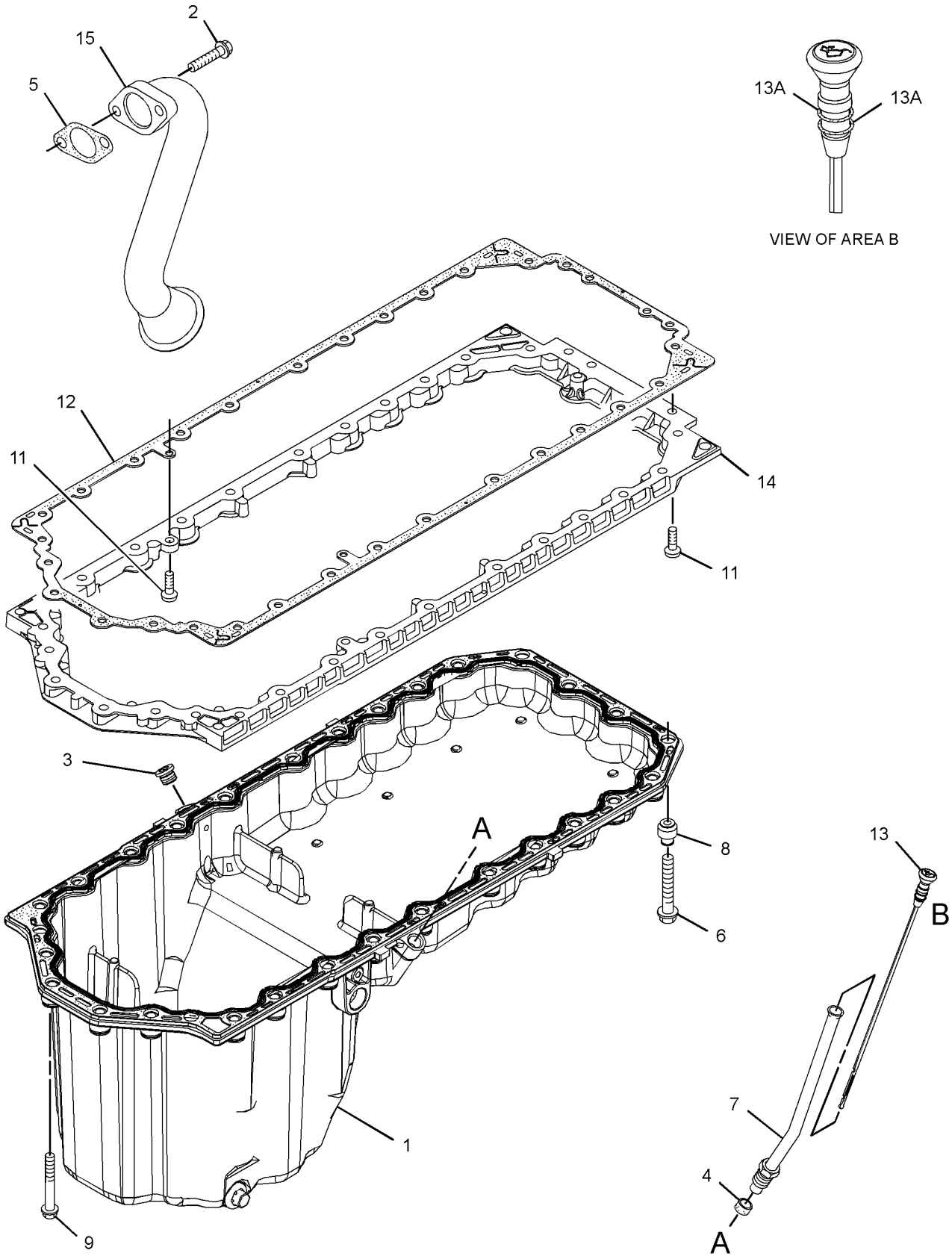

GRAPHIC #1 **<END>** g02762901

BASIC ENGINE

279-8780 PISTON & ROD GP

S/N: C6E1-UP

PART OF 292-5306 ENGINE AR-PRIMARY

SMCS-1225 **i04584632**

NOTE	REF NO	GRAPHIC REF	PART NUMBER	QTY	PART NAME 1 2 3 4 5 6 (PRODUCT LEVEL)	SEE PAGE
	1	1	**276-7475**	6	PISTON AS	
					(EACH INCLUDES)	
	2	1	**124-3536**	2	RING-RETAINING	
	3	1	**276-7476**	6	KIT-PISTON RING	
BJ	4	1	**331-0290**	6	CONNECTING ROD GP (F)	
					—OR—	
BJ			**331-0292**	6	CONNECTING ROD GP (L)	
					—OR—	
BJ			**331-0291**	6	CONNECTING ROD GP (J)	
					(EACH ROD GP INCLUDES)	
	5	1	**323-9312**	2	BOLT	
	6	1	**276-7478**	1	BUSHING	

B-USE AS REQUIRED
J-ENSURE THAT CORRECT ROD LENGTH IS FITTED

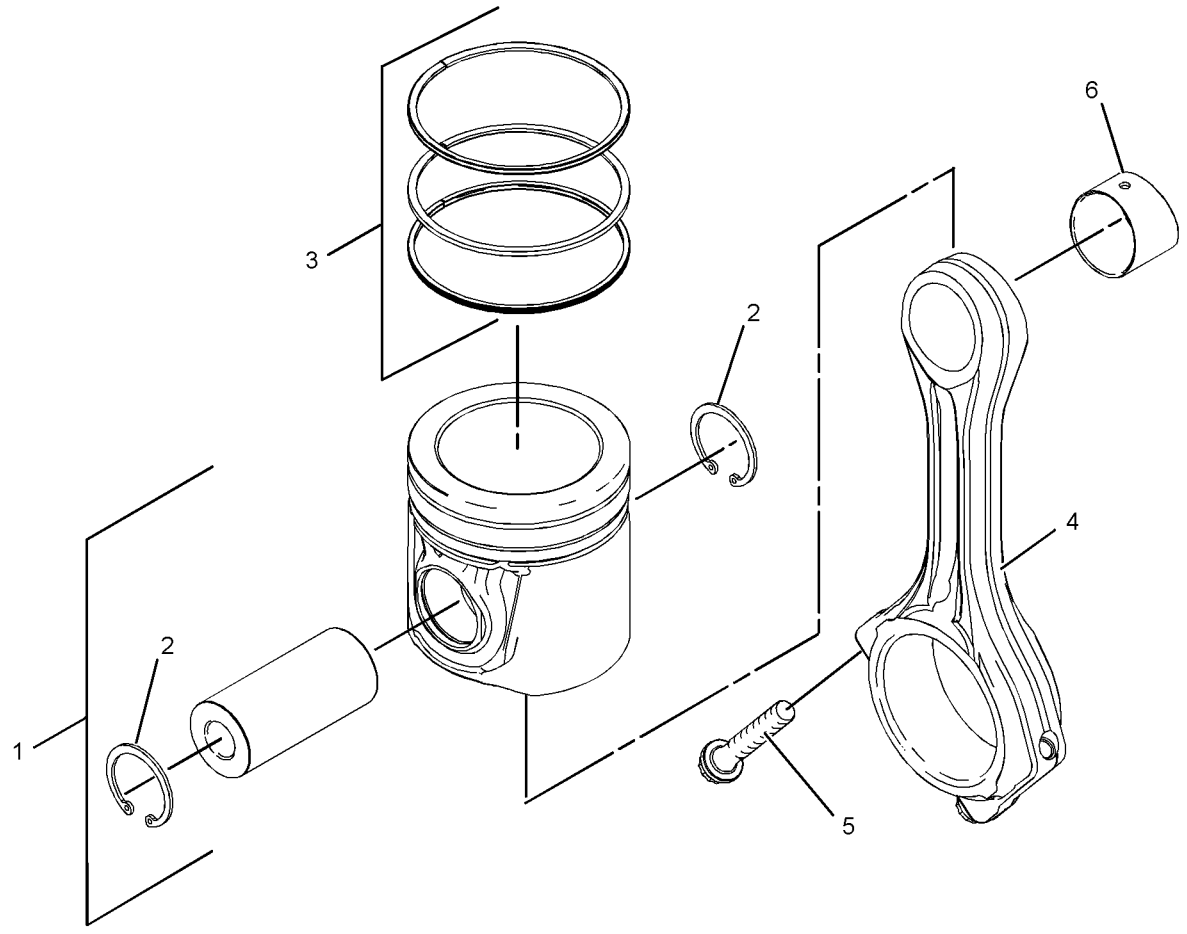

GRAPHIC #1 **<END>** g01214328

277-5007 PLUG GP-ENGINE

S/N: C6E1-UP

PART OF 292-5306 ENGINE AR-PRIMARY

SMCS-1000 **i02752431**

NOTE	REF NO	GRAPHIC REF	PART NUMBER	QTY	PART NAME 1 2 3 4 5 6 (PRODUCT LEVEL)	SEE PAGE
	1	1	**2B-0858**	3	PLUG-PIPE	

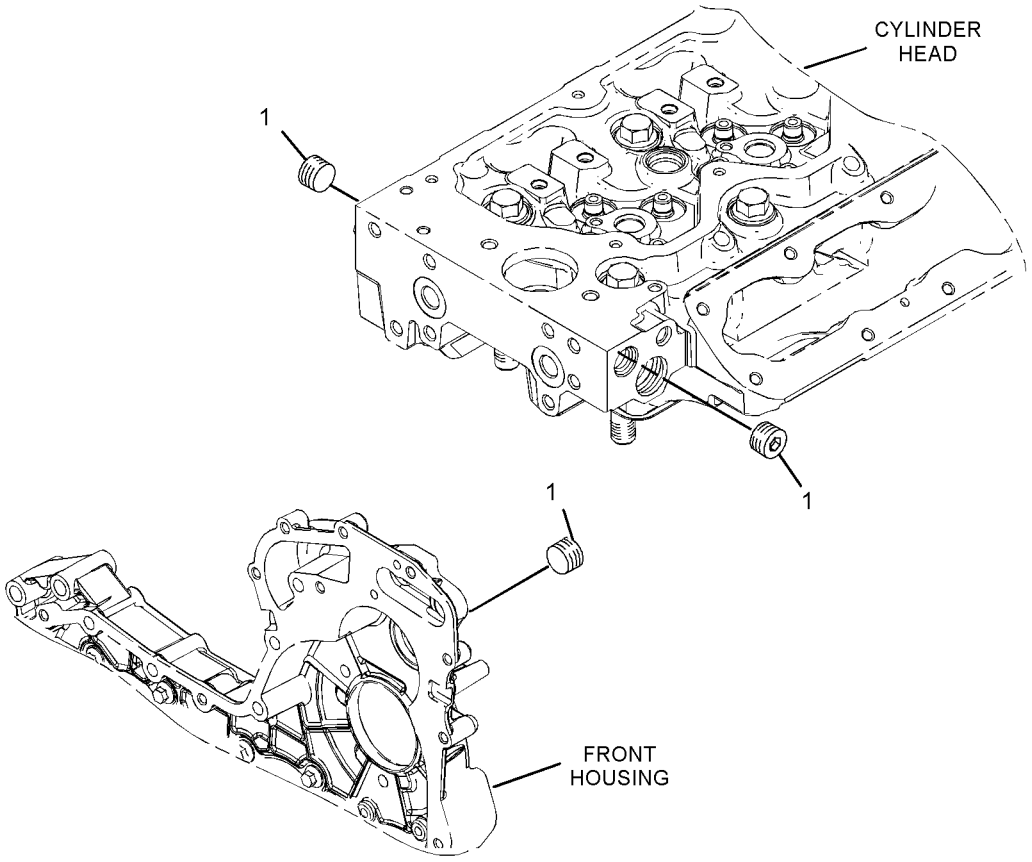

GRAPHIC #1 **<END>** g01209408

BASIC ENGINE

299-3949 PLUG GP-FLYWHEEL HOUSING

S/N: C6E1-UP

PART OF 292-5306 ENGINE AR-PRIMARY

SMCS-1157 **i04001376**

NOTE	REF NO	GRAPHIC REF	PART NUMBER	QTY	PART NAME 1 2 3 4 5 6 (PRODUCT LEVEL)	SEE PAGE
	1	1	**363-8048**	6	PLUG	
	1A	1	**363-8049**	1	SEAL-O-RING	

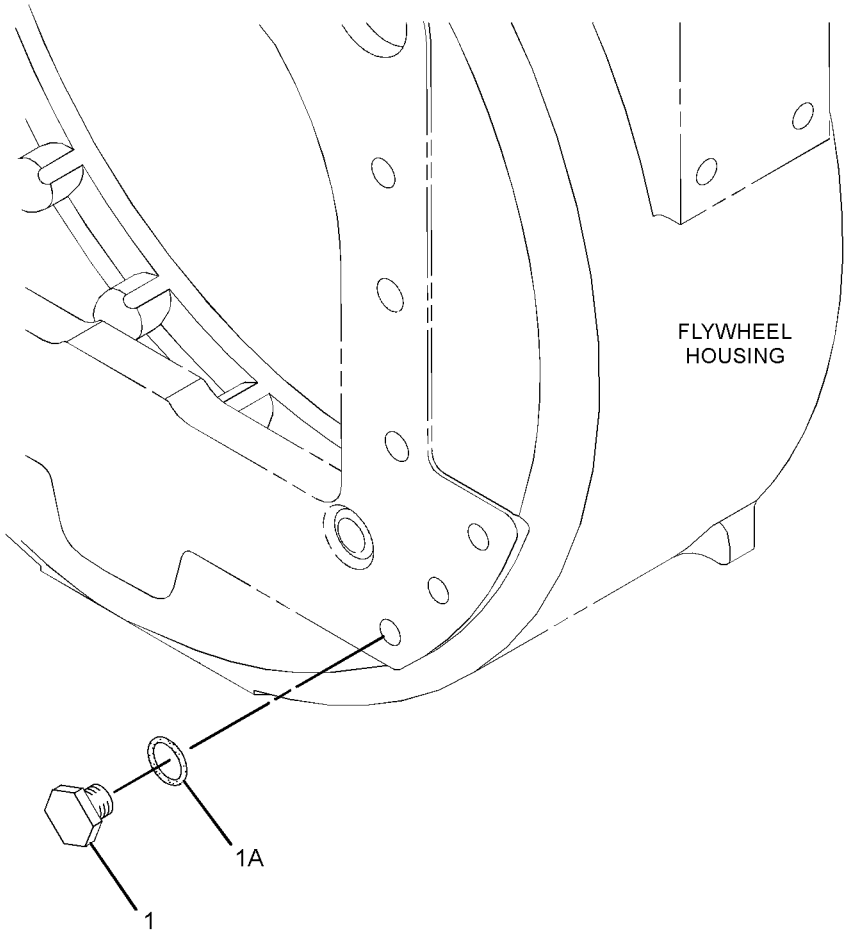

GRAPHIC #1 **<END>** g01333763

274-1929 PULLEY GP-CRANKSHAFT

S/N: C6E1-UP

PART OF 292-5306 ENGINE AR-PRIMARY

SMCS-1205 **i04588009**

NOTE	REF NO	GRAPHIC REF	PART NUMBER	QTY	PART NAME 1 2 3 4 5 6 (PRODUCT LEVEL)	SEE PAGE
	1	1	**274-1930**	1	DAMPER	
	2	1	**274-1931**	1	PULLEY (8-GROOVE)	
	3	1	**274-1935**	6	BOLT	
C	4	1	**342-6502**	1	ADAPTER	
C	5	1	**342-6510**	3	BOLT-TORX (M14X1.5X70-MM)	

C-CHANGE FROM PREVIOUS TYPE

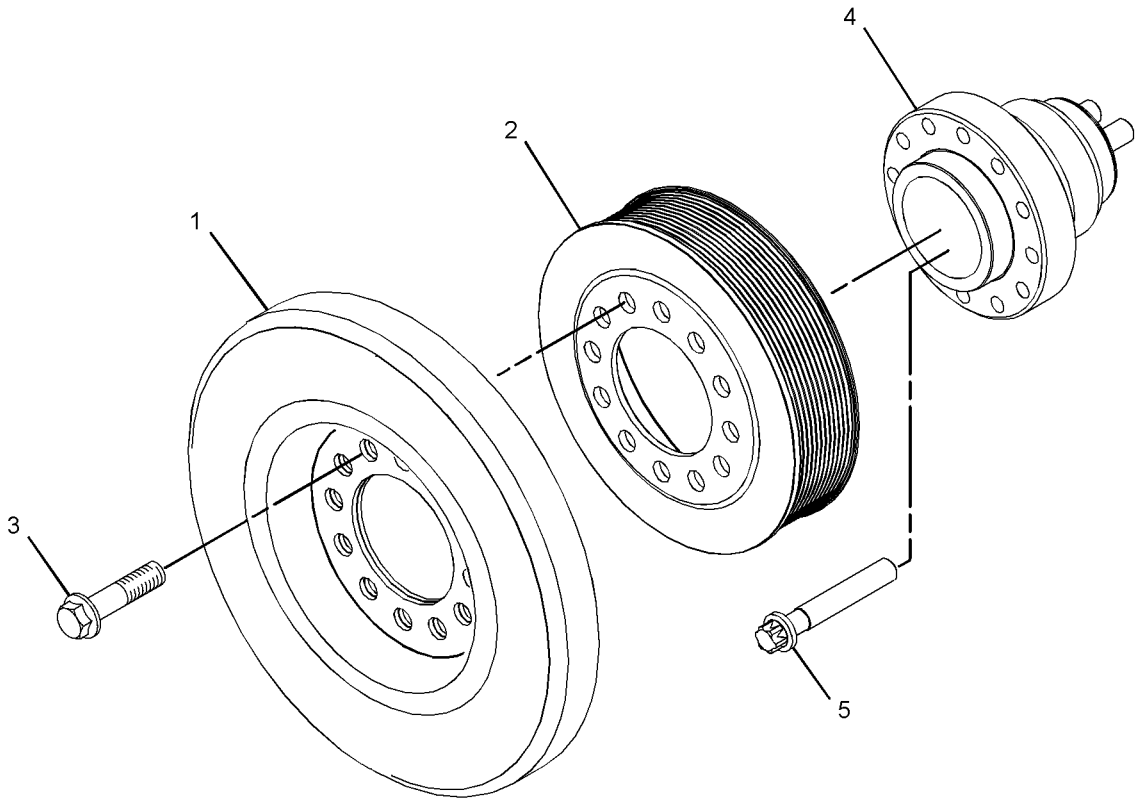

GRAPHIC #1 **<END>** g02756896

BASIC ENGINE

280-1911 ROCKER ARM GP

S/N: C6E1-UP

PART OF 279-8825 VALVE MECHANISM GP

SMCS-1123 **i02752423**

NOTE	REF NO	GRAPHIC REF	PART NUMBER	QTY	PART NAME 1 2 3 4 5 6 (PRODUCT LEVEL)	SEE PAGE
	1	1	**276-9201**	1	CLIP	
	2	1	**276-9206**	5	SPRING-SHAFT	
	3	1	**276-9207**	1	SPRING-SHAFT	
	4	1	**277-5307**	1	SHAFT AS-ROCKER ARM	
	4A	1	**276-9200**	1	PLUG-SHAFT END	
	5	1	**278-5111**	6	ROCKER ARM AS	
					(EACH INCLUDES)	
	5A	1	**276-9230**	1	NUT	
	5B	1	**278-5113**	1	ADJUSTING SCREW (TORX)	
	6	1	**278-5112**	6	ROCKER ARM AS	
					(EACH INCLUDES)	
	6A	1	**276-9230**	1	NUT	
	6B	1	**278-5113**	1	ADJUSTING SCREW (TORX)	
	7	1	**280-1912**	6	BRACKET	
	8	1	**280-1913**	6	RETAINER	
	9	1	**280-1914**	12	BOLT (M8X1.25X55-MM)	

280-1911 **ROCKER ARM GP** *(contd.)* **i02752423**

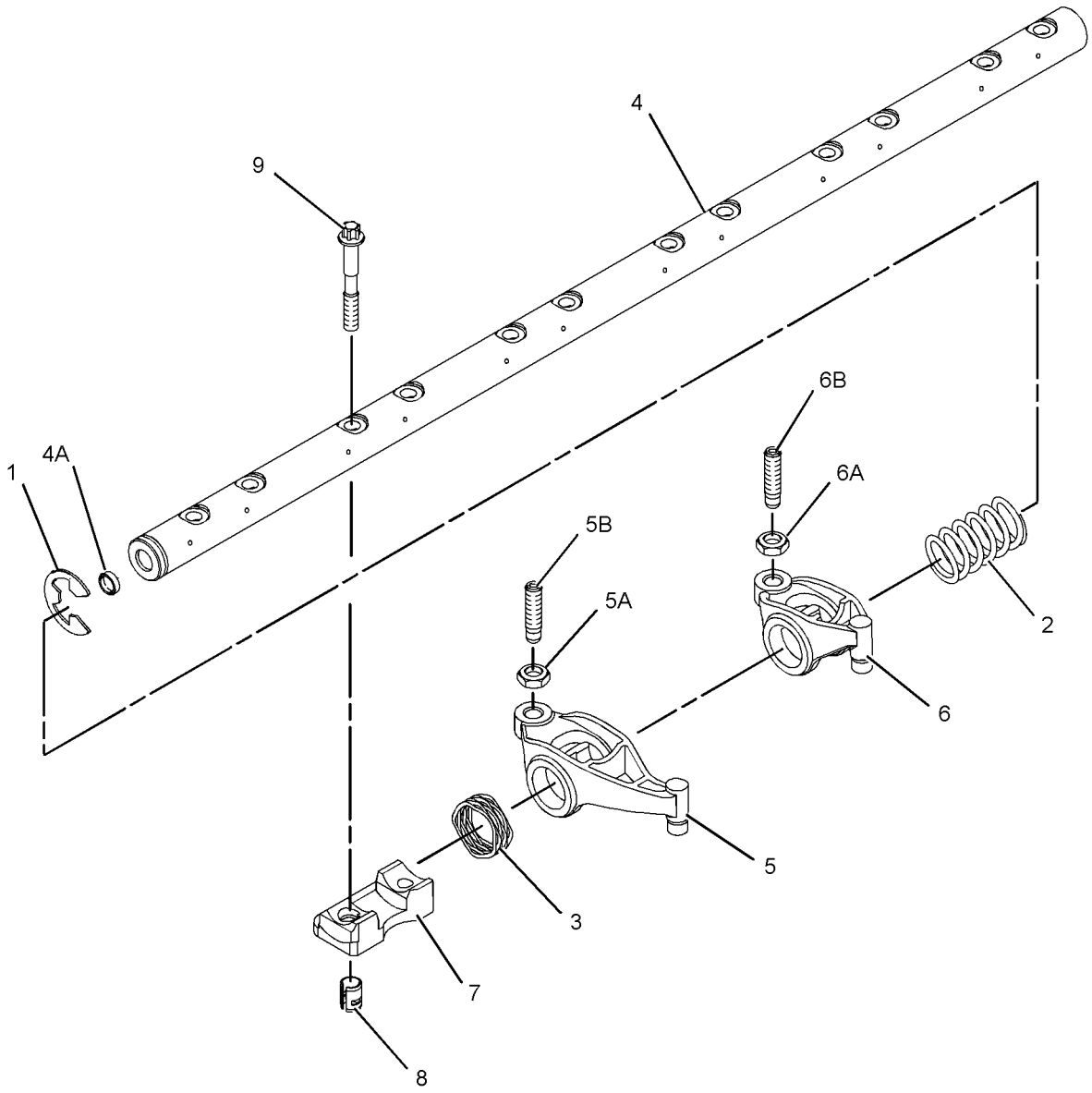

GRAPHIC #1 **<END>** g01235750

BASIC ENGINE

279-8825 VALVE MECHANISM GP

S/N: C6E1-UP

PART OF 292-5306 ENGINE AR-PRIMARY

SMCS-1102, 1121, 1123 **i04443593**

NOTE	REF NO	GRAPHIC REF	PART NUMBER	QTY	PART NAME 1 2 3 4 5 6 (PRODUCT LEVEL)	SEE PAGE
	1	1	**346-4709**	12	BRIDGE GP-VALVE	
Y	2	1	**280-1911**	1	ROCKER ARM GP	36

Y-SEPARATE ILLUSTRATION

279-8825 **VALVE MECHANISM GP** *(contd.)* **i04443593**

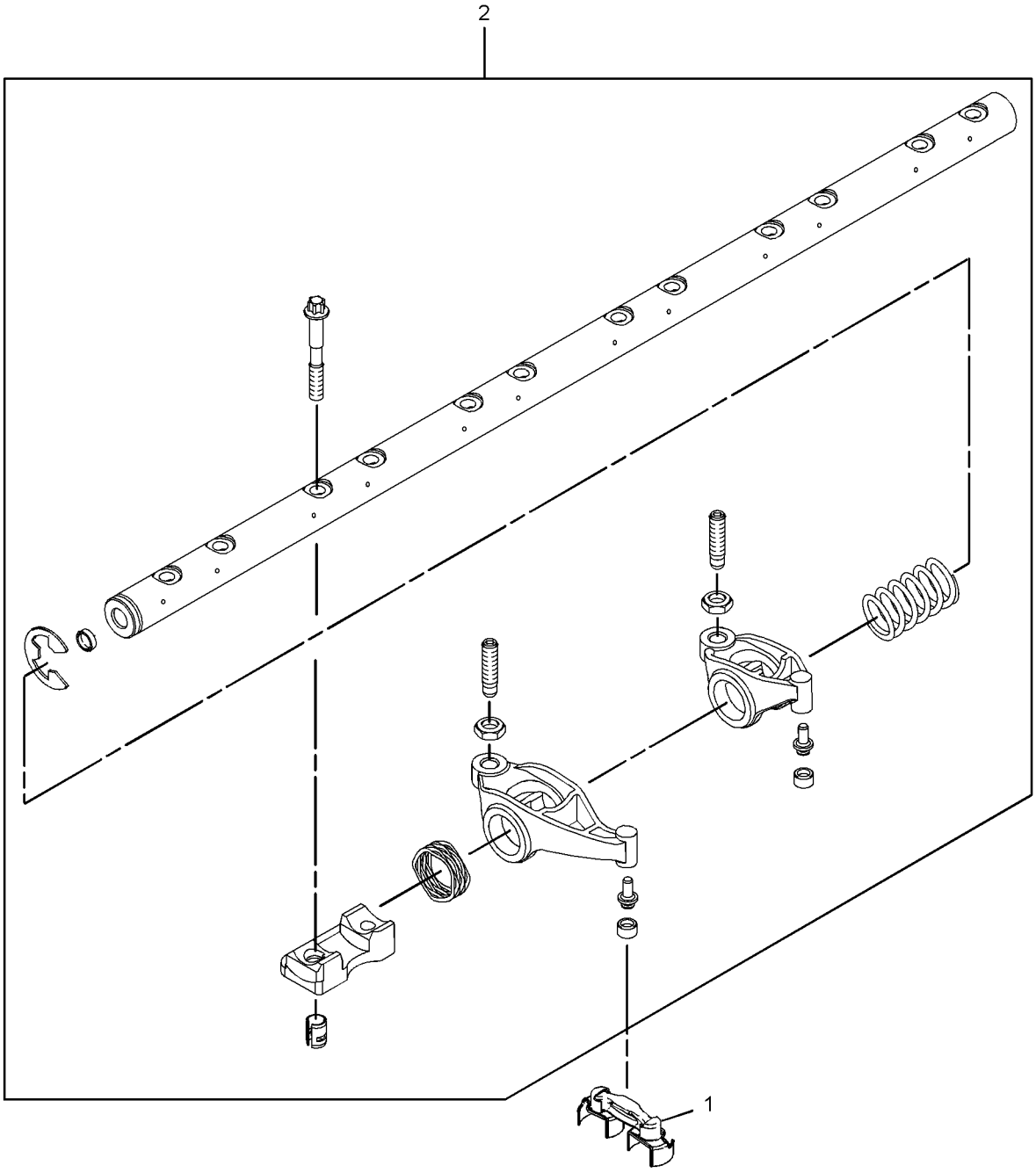

GRAPHIC #1 **<END>** g01923253

LUBRICATION SYSTEM

277-1973 FILLER GP-ENGINE OIL

S/N: C6E1-UP

PART OF 292-5306 ENGINE AR-PRIMARY

SMCS-1316 **i02896498**

NOTE	REF NO	GRAPHIC REF	PART NUMBER	QTY	PART NAME 1 2 3 4 5 6 (PRODUCT LEVEL)	SEE PAGE
	1	1	**321-2383**	1	FILLER GP-ENGINE OIL	
	1A	1	**306-2337**	1	SEAL-O-RING	
	1B	1	**130-9888**	1	CAP-OIL FILLER (ENGINE)	
	1C	1	**113-1504**	1	SEAL-O-RING	
	2	1	**6I-4374**	1	BOLT (M8X1.25X60-MM)	
M	3	1	**6I-0254**	1	BOLT (M8X1.25X30-MM)	
	4	1	**277-1974**	1	PLATE AS	
	4A	1	**277-1975**	1	SEAL-O-RING	
M	5	1	**6I-0217**	2	BOLT (M8X1.25X20-MM)	

M-METRIC PART

277-1973 **FILLER GP-ENGINE OIL** *(contd.)* **i02896498**

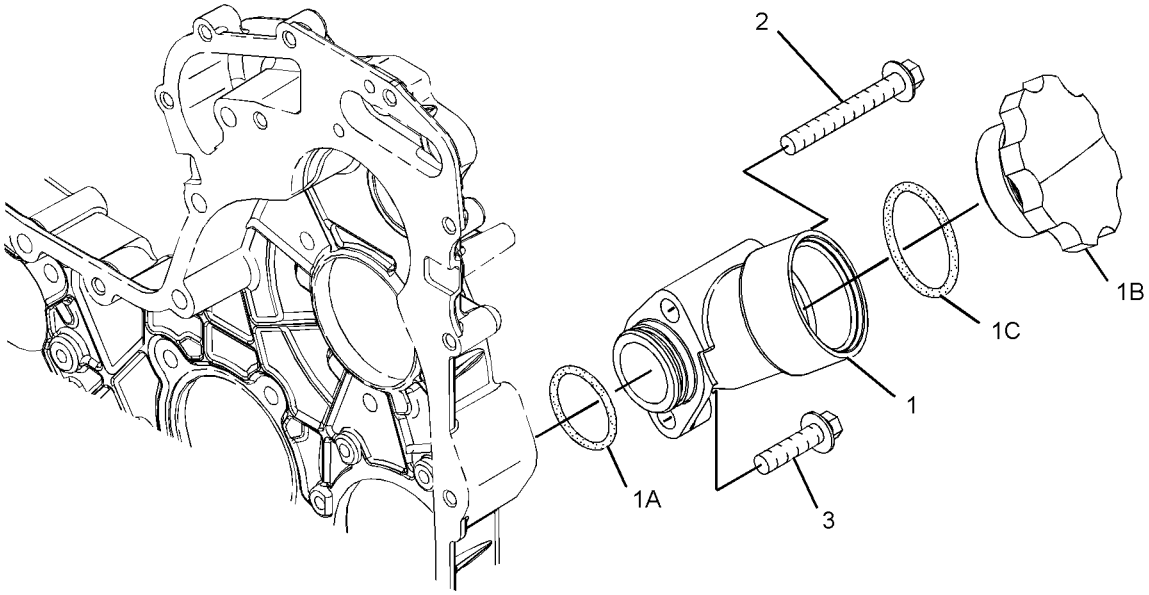

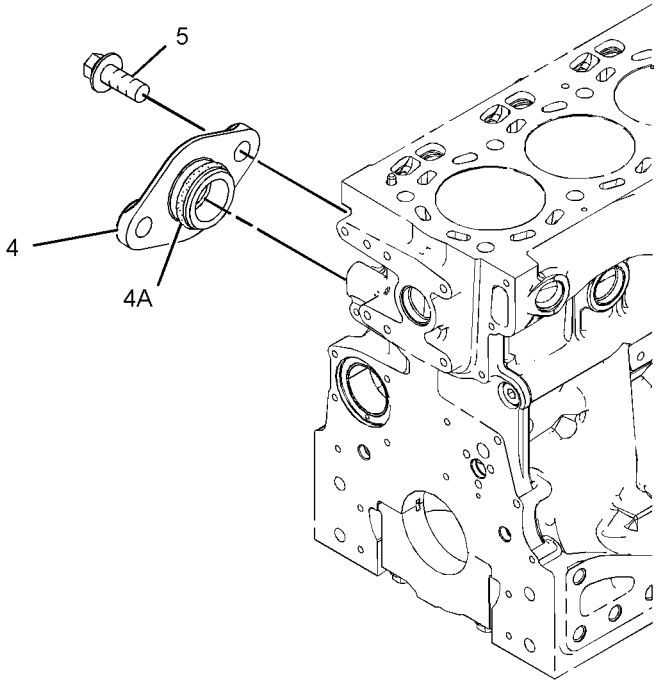

GRAPHIC #1 **<END>** g01208924

LUBRICATION SYSTEM

277-2912 FILTER GP-ENGINE OIL

S/N: C6E1-UP

PART OF 292-5306 ENGINE AR-PRIMARY

SMCS-1306, 1308 **i03327305**

NOTE	REF NO	GRAPHIC REF	PART NUMBER	QTY	PART NAME 1 2 3 4 5 6 (PRODUCT LEVEL)	SEE PAGE
	1	1	**269-8325**	1	FILTER-ENGINE OIL	

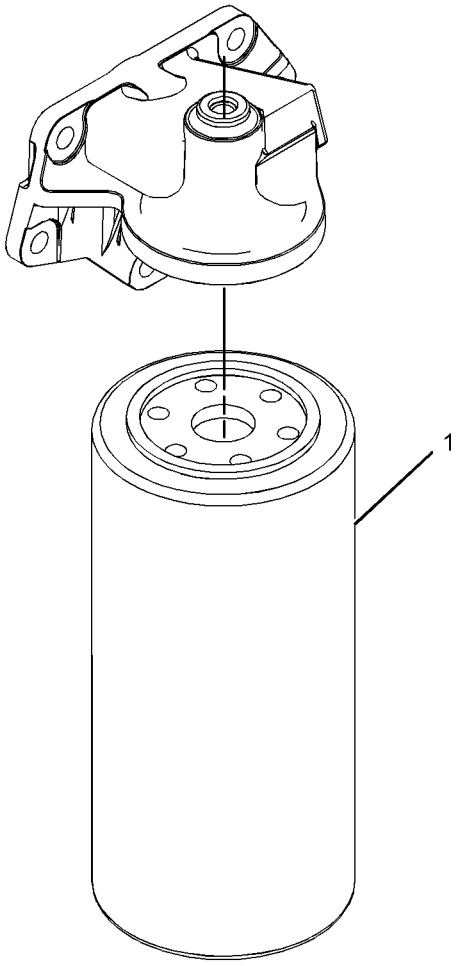

GRAPHIC #1 **<END>** g01198493

280-2050 FILTER GP-FUMES DISPOSAL–CRANKCASE

S/N: C6E1-UP

PART OF 292-5306 ENGINE AR-PRIMARY

SMCS-1074, 1317 **i02931726**

NOTE	REF NO	GRAPHIC REF	PART NUMBER	QTY	PART NAME 1 2 3 4 5 6 (PRODUCT LEVEL)	SEE PAGE
	1	1	**273-5711**	1	FILTER-FUMES DISPOSAL	

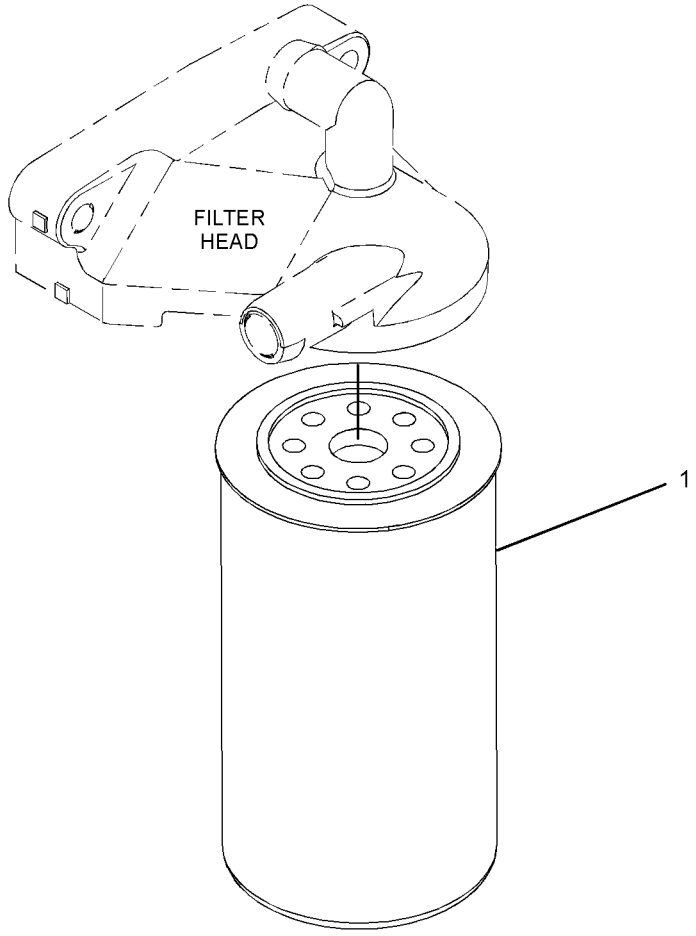

GRAPHIC #1 **<END>** g01290203

LUBRICATION SYSTEM

277-4262 PUMP GP-ENGINE OIL

S/N: C6E1-UP

PART OF 292-5306 ENGINE AR-PRIMARY

SMCS-1304, 1315 **i02751973**

NOTE	REF NO	GRAPHIC REF	PART NUMBER	QTY	PART NAME 1 2 3 4 5 6 (PRODUCT LEVEL)	SEE PAGE
	1	1	**312-4545**	1	PUMP-OIL (ENGINE)	
	2	1	**6I-1090**	4	BOLT (M8X1.25X40-MM)	

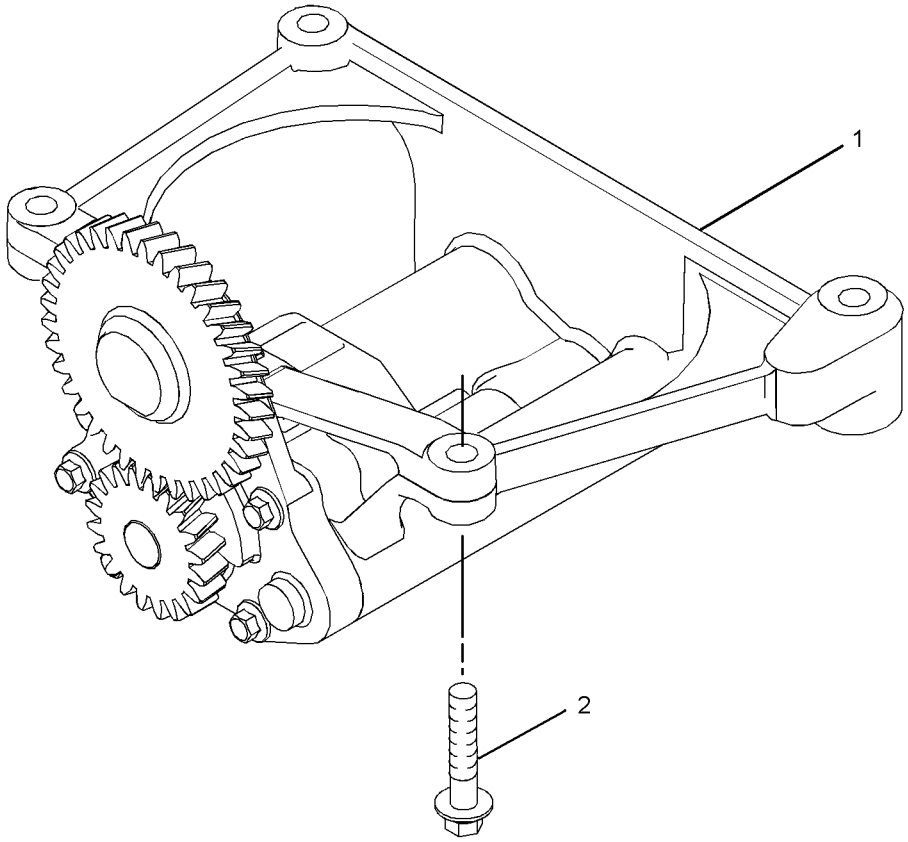

GRAPHIC #1 **<END>** g01380671

330-6502 VALVE GP-FLUID SAMPLING–ENGINE OIL

S/N: C6E1-UP

PART OF 292-5306 ENGINE AR-PRIMARY

SMCS-7542 **i03929417**

NOTE	REF NO	GRAPHIC REF	PART NUMBER	QTY	PART NAME 1 2 3 4 5 6 (PRODUCT LEVEL)	SEE PAGE
	1	1	**8C-3445**	1	CAP-DUST	
	2	1	**8T-7876**	1	SEAL-O-RING	
	3	1	**199-9267**	1	SEAL-O-RING	
	4	1	**216-9633**	1	VALVE AS-FLUID SAMPLING (ENGINE OIL)	
	5	1	**225-7941**	1	PLUG	
	6	1	**232-3861**	1	PLUG (BLANKING)	

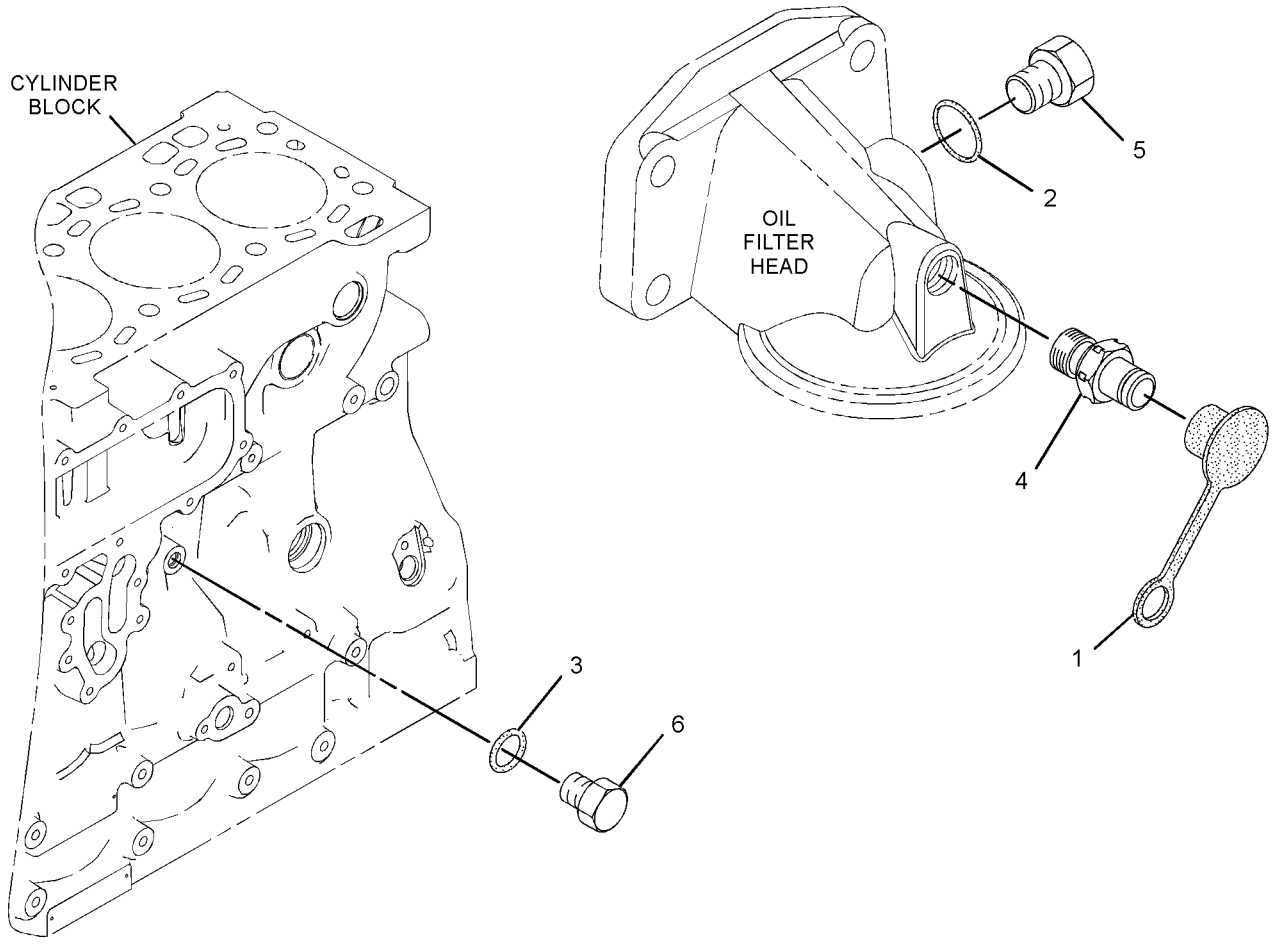

GRAPHIC #1 **<END>** g01800853

COOLING SYSTEM

281-8748 CONNECTION GP-WATER

S/N: C6E1-UP

PART OF 292-5306 ENGINE AR-PRIMARY

SMCS-1380 **i04205176**

NOTE	REF NO	GRAPHIC REF	PART NUMBER	QTY	PART NAME 1 2 3 4 5 6 (PRODUCT LEVEL)	SEE PAGE
M	1	1	**103-5687**	1	BOLT (M10X1.5X85-MM)	
	2	1	**123-2899**	1	BOLT (M10X1.5X40-MM)	
	3	1	**281-8744**	1	GASKET-WATER REGULATOR	
	4	1	**367-1817**	1	CONNECTION AS	
	4A	1	**281-8746**	1	PLUG	
	4B	1	**281-8747**	1	SEAL-O-RING	

M-METRIC PART

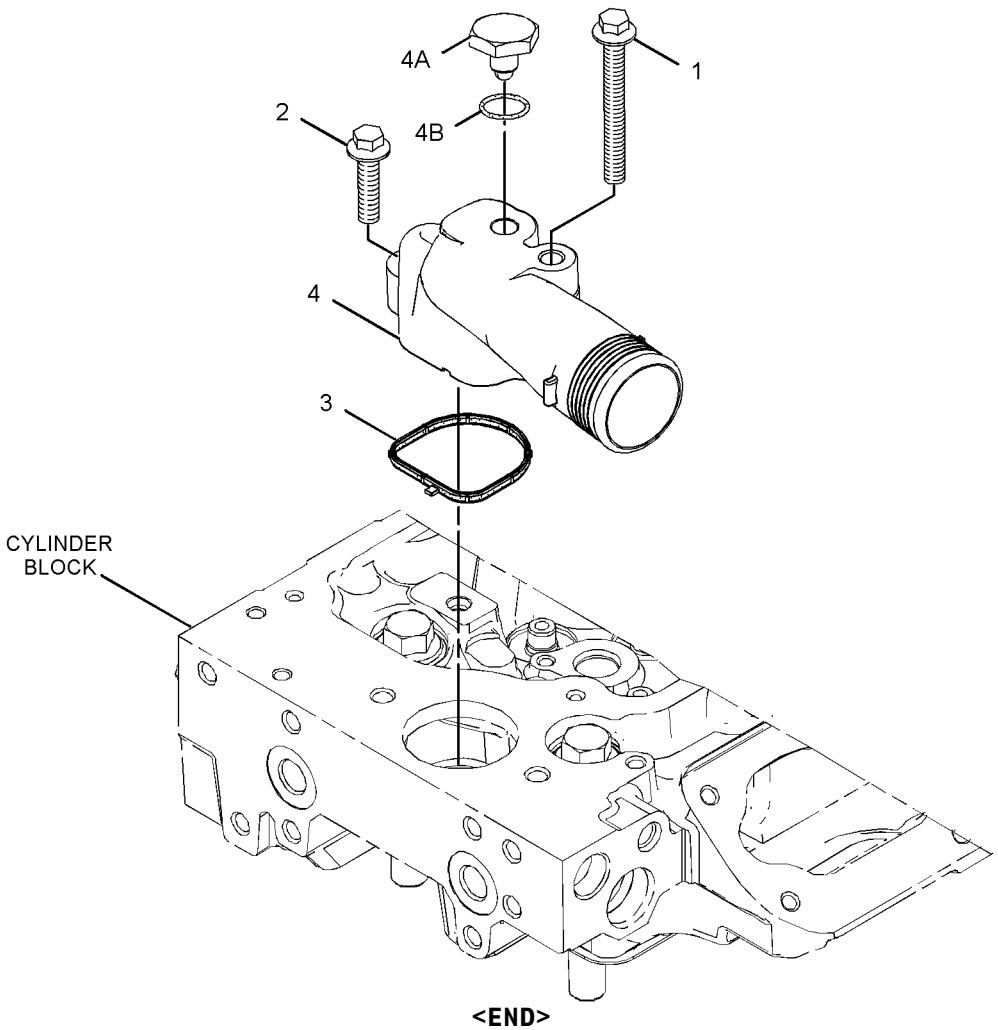

GRAPHIC #1 **<END>** g01417693

326-7401 COOLER GP-ENGINE OIL

S/N: C6E1-UP

PART OF 330-4724 COOLER GP-FLTR BASE & ENG OIL

SMCS-1378 **i03246403**

NOTE	REF NO	GRAPHIC REF	PART NUMBER	QTY	PART NAME 1 2 3 4 5 6 (PRODUCT LEVEL)	SEE PAGE
M	1	1	**6I-0260**	1	BOLT (M8X1.25X25-MM)	
	2	1	**6I-4793**	6	BOLT (M8X1.25X50-MM)	
	3	1	**277-2500**	1	GASKET	
	4	1	**281-7039**	1	COOLER-OIL	
	5	1	**281-7040**	1	GASKET	

M-METRIC PART

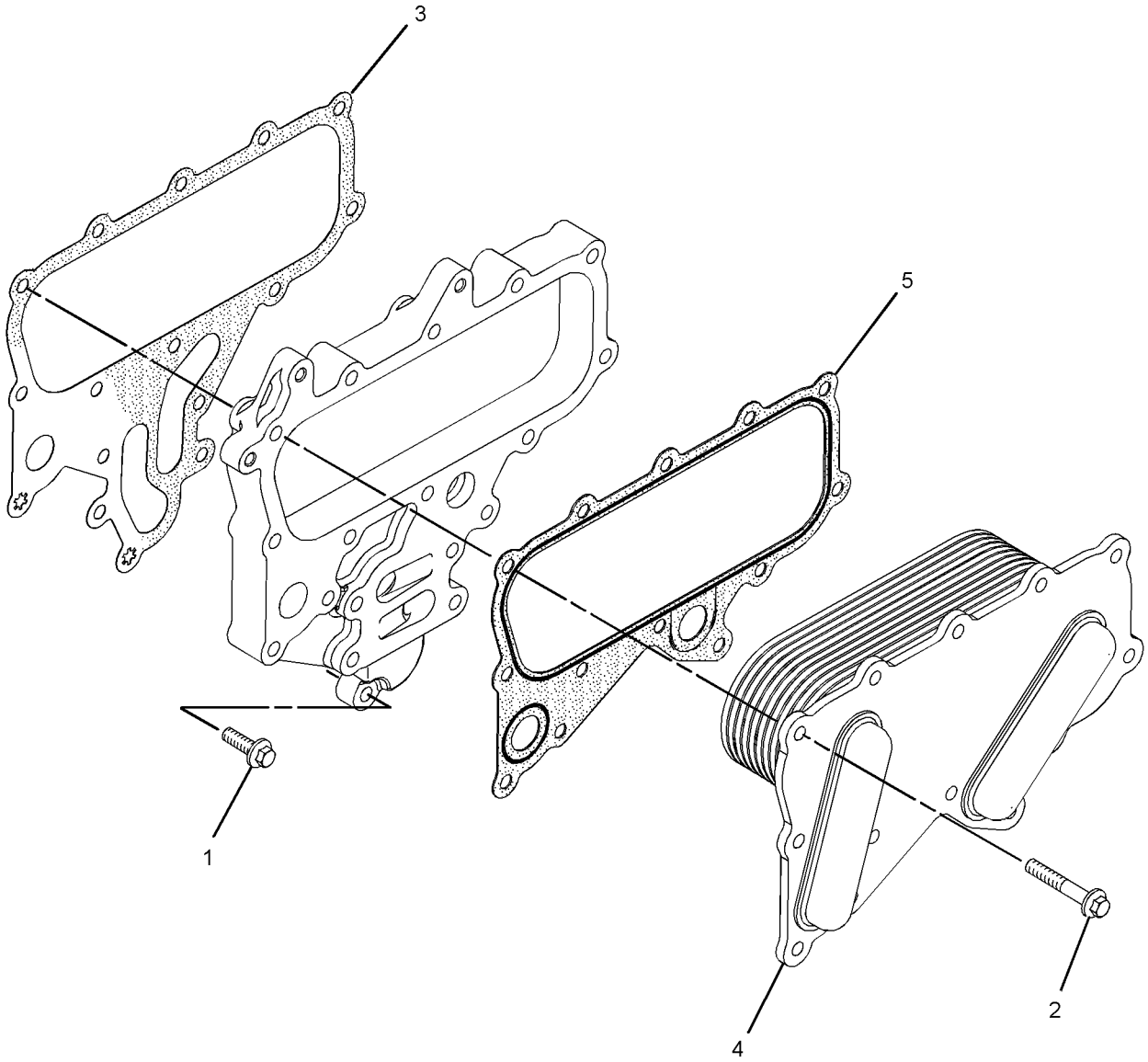

GRAPHIC #1 **<END>** g01508024

330-4724 COOLER GP-FLTR BASE & ENG OIL

S/N: C6E1-UP

PART OF 292-5306 ENGINE AR-PRIMARY

SMCS-1306, 1378 **i03246157**

NOTE	REF NO	GRAPHIC REF	PART NUMBER	QTY	PART NAME 1 2 3 4 5 6 (PRODUCT LEVEL)	SEE PAGE
M	1	1	**6I-0217**	10	BOLT (M8X1.25X20-MM)	
	2	2	**6I-0455**	4	BOLT (M8X1.25X55-MM)	
	3	2	**6I-4793**	7	BOLT (M8X1.25X50-MM)	
	4	2	**199-9252**	1	SEAL-O-RING	
	5	1,2	**225-7944**	3	GASKET (ENGINE OIL FILTER BASE)	
	6	1	**232-3751**	2	PLATE (BLANKING)	
	7	1	**277-2537**	1	PLATE	
	8	1	**277-2538**	1	GASKET	
Y	9	2	**326-7401**	1	COOLER GP-ENGINE OIL	47
	10	2	**330-4725**	1	HEAD-OIL FILTER	
	11	2	**330-4726**	1	TAP	
	12	2	**330-4727**	1	ADAPTER	
	13	2	**330-4728**	1	WASHER	
	14	2	**330-4729**	1	CAP	

M-METRIC PART
Y-SEPARATE ILLUSTRATION

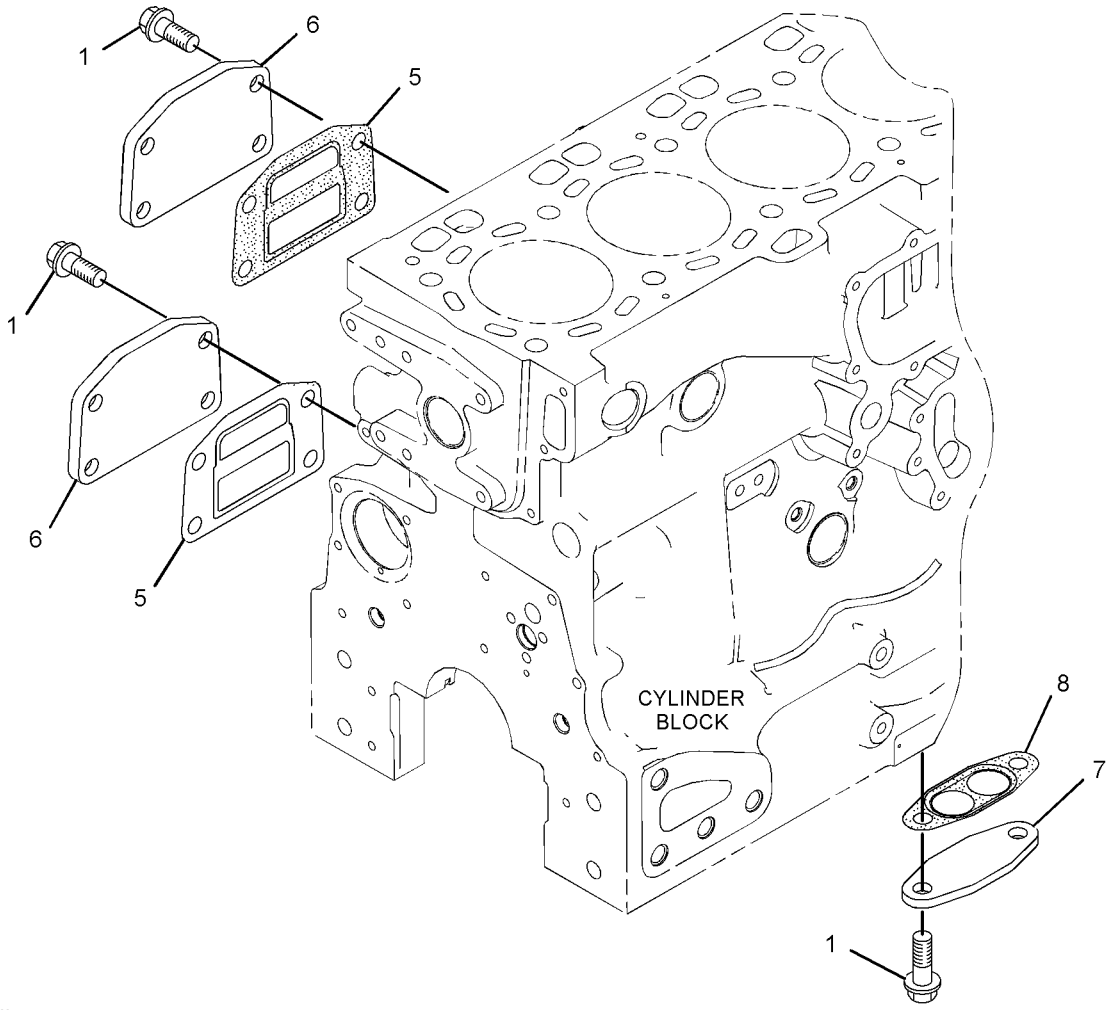

GRAPHIC #1 g01801341

330-4724 **COOLER GP-FLTR BASE & ENG OIL** *(contd.)* **i03246157**

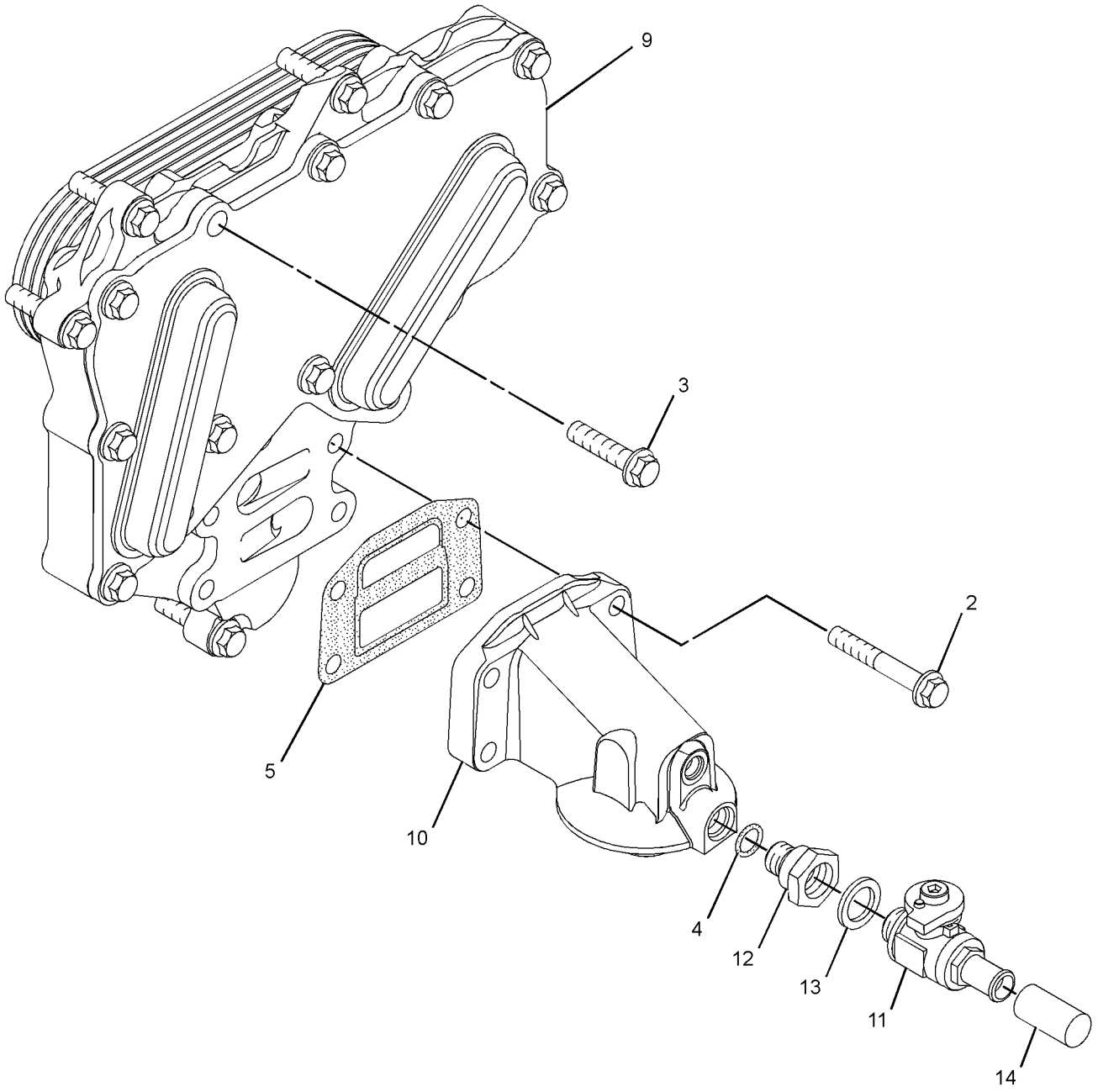

GRAPHIC #2 **<END>** g01801342

COOLING SYSTEM

185-1045 FAN GP-SUCTION

S/N: JRL1-UP; RRS1-UP

PART OF 289-8894 INSTALLATION AR-ENGINE

SMCS-1356 **i04156239**

NOTE	REF NO	GRAPHIC REF	PART NUMBER	QTY	PART NAME 1 2 3 4 5 6 (PRODUCT LEVEL)	SEE PAGE
	1	1	**185-1046**	1	SPIDER AS-FAN (9-BLADE)	
M	2	1	**8T-4189**	4	BOLT (M8X1.25X20-MM)	
	3	1	**8T-4224**	4	WASHER-HARD (8.8X16X2-MM THK)	

M-METRIC PART

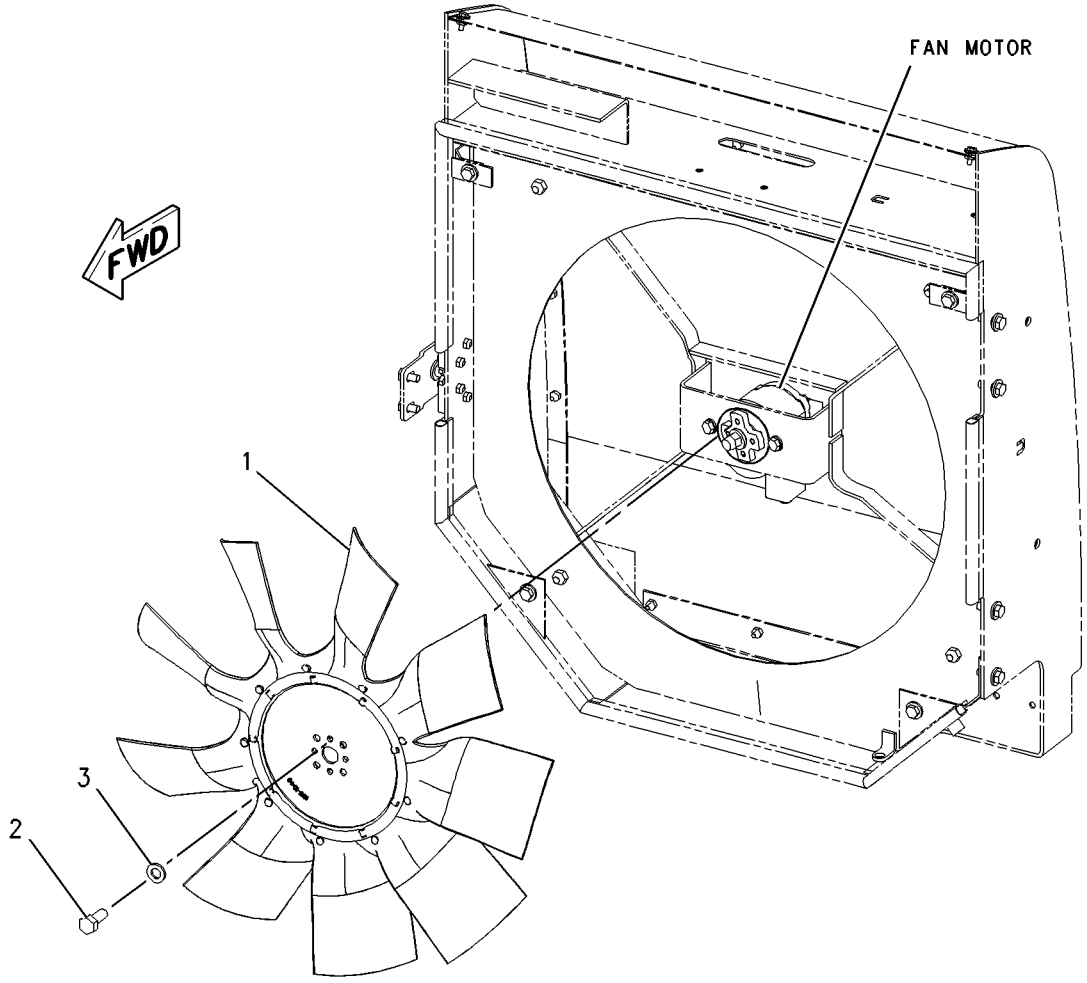

GRAPHIC #1 **<END>** g00923981

COOLING SYSTEM

290-7198 GUARD GP-FAN

S/N: JRL1-UP; RRS1-UP

PART OF 372-7772, 372-7773 CHASSIS AR

SMCS-1360 **i03023640**

NOTE	REF NO	GRAPHIC REF	PART NUMBER	QTY	PART NAME 1 2 3 4 5 6 (PRODUCT LEVEL)	SEE PAGE
	1	1	**5V-8780**	1	KNOB	
	2	1	**8T-4157**	1	STRIKER AS	
		1	**8T-4158**	1	WASHER-SPECIAL	
	3	1	**009-3101**	1	RING-RETAINING	
	4	1	**112-5345**	1	LATCH AS-DOOR	
	5	1	**122-6246**	1	PLATE	
	6	1	**174-4246**	1	BRACKET	
	7	1	**202-7857**	1	MOUNT AS	
	8	1	**205-2214**	1	GRILL AS	
	9	1	**239-3322**	1	ROD	
	10	1	**256-7271**	1	PLATE	
	11	1	**289-8794**	1	GUARD GP-RADIATOR	
	12	1	**290-7199**	1	BRACKET	
M	13	1	**186-0815**	20	BOLT (M6X1X20-MM)	
	14	1	**186-0817**	20	WASHER-HARD (7X19X2-MM THK)	
	15	1	**5P-1076**	1	WASHER-HARD (13.5X30X4-MM THK)	
M	16	1	**7X-2533**	4	BOLT (M6X1X35-MM)	
	17	1	**7X-7729**	14	WASHER (11X25X3-MM THK)	
	18	1	**8T-4121**	4	WASHER-HARD (11X21X2.5-MM THK)	
M	19	1	**8T-4136**	4	BOLT (M10X1.5X25-MM)	
M	20	1	**8T-4137**	10	BOLT (M10X1.5X20-MM)	
M	21	1	**8T-4195**	4	BOLT (M10X1.5X30-MM)	
	22	1	**8T-4205**	4	WASHER-HARD (7.2X14.5X2-MM THK)	
M	23	1	**8T-4244**	1	NUT (M12X1.75-THD)	
D	24	1	**5P-7211**		SEAL (0.3-M)	
D	24A	1	**5P-7211**		SEAL (1.2-M)	

D-ORDER BY THE METER
M-METRIC PART

290-7198 **GUARD GP-FAN** *(contd.)* **i03023640**

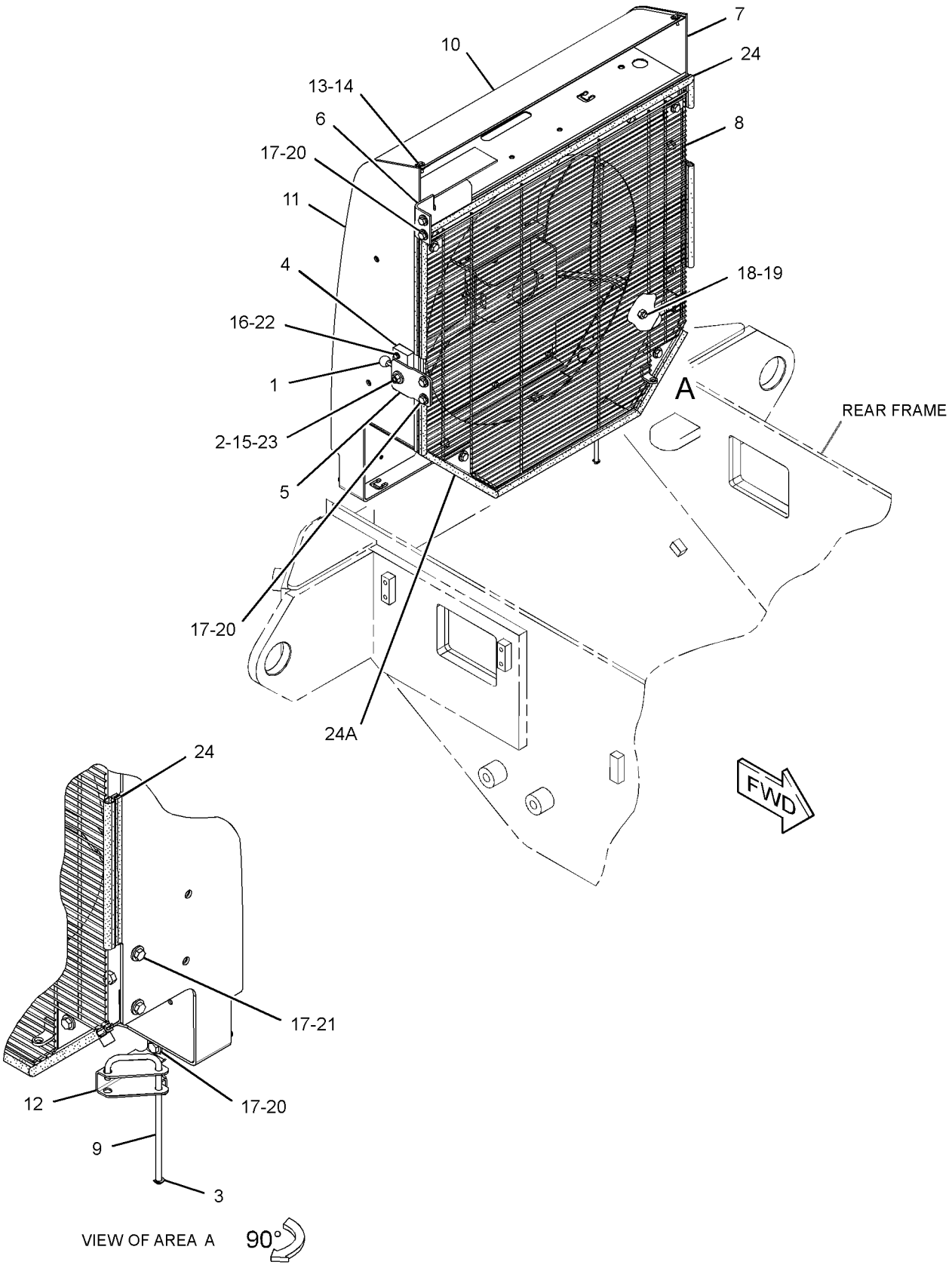

GRAPHIC #1 **<END>** g01398953

290-6406 LINES GP-WATER—WITH AXLE OIL COOLER

S/N: JRL1-UP; RRS1-UP
PART OF 289-8985 AXLE AR-OSCILLATING
AN ATTACHMENT

SMCS-1380 **i03626094**

NOTE	REF NO	GRAPHIC REF	PART NUMBER	QTY	PART NAME 1 2 3 4 5 6 (PRODUCT LEVEL)	SEE PAGE
	1	1	**8T-4986**	2	CLAMP-HOSE	
	2	1	**185-1023**	1	HOSE-RADIATOR	
	3	1	**185-1030**	1	HOSE-RADIATOR	
	4	1	**290-6403**	1	HOSE-RADIATOR	
	5	1	**290-6405**	1	HOSE	
	6	1	**8T-4984**	2	CLAMP-HOSE	
	7	1	**8T-6703**	3	CLAMP-HOSE	
	8	1	**335-9214**	1	CLAMP-BAND	

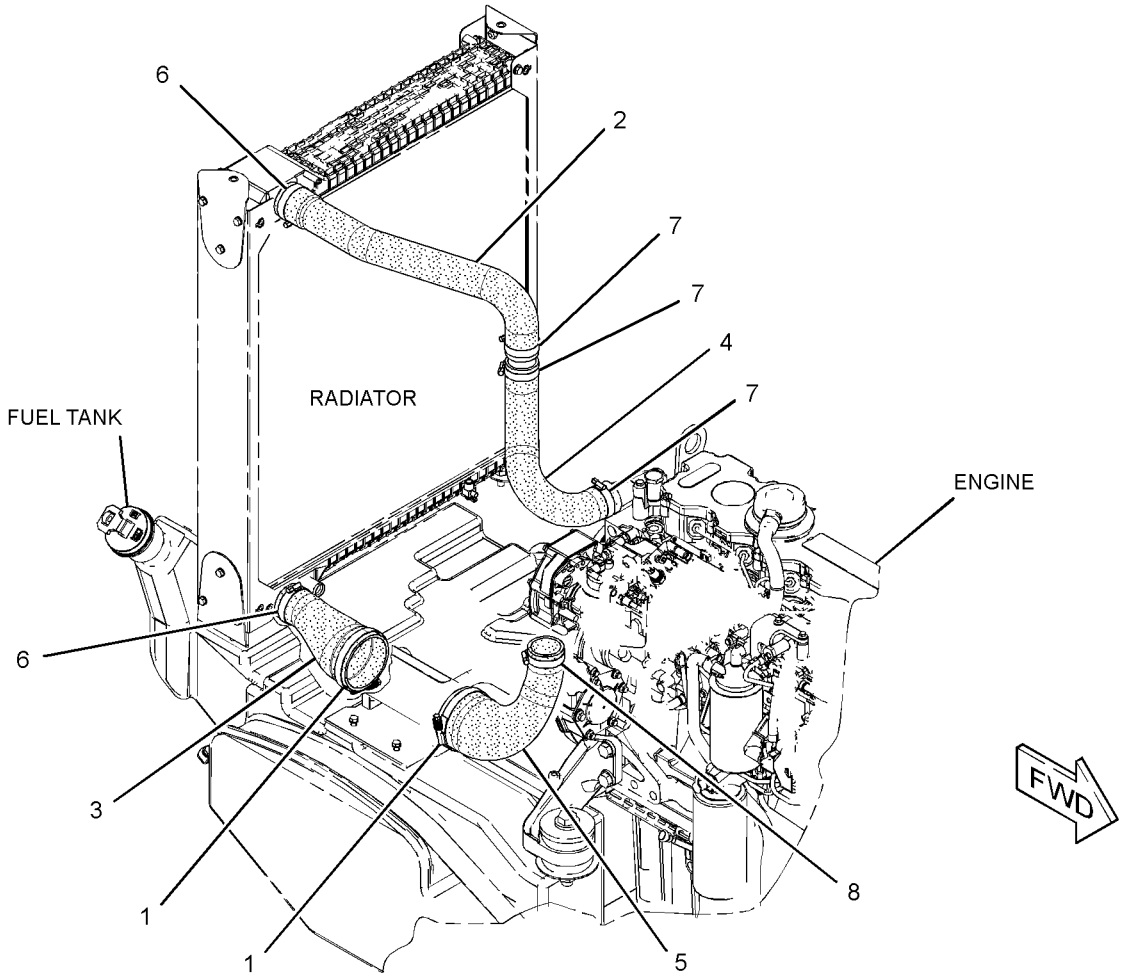

GRAPHIC #1 **<END>** g01826840

290-6407 LINES GP-WATER—WITHOUT AXLE OIL COOLER

S/N: JRL1-UP; RRS1-UP
PART OF 289-8991 AXLE AR-OSCILLATING
AN ATTACHMENT

SMCS-1380 **i03629363**

NOTE	REF NO	GRAPHIC REF	PART NUMBER	QTY	PART NAME 1 2 3 4 5 6 (PRODUCT LEVEL)	SEE PAGE
	1	1	**185-1023**	1	HOSE-RADIATOR (UPPER INLET)	
	2	1	**290-6403**	1	HOSE-RADIATOR (UPPER INLET)	
	3	1	**290-6404**	1	HOSE-RADIATOR (LOWER INLET)	
	4	1	**8T-4984**	2	CLAMP-HOSE	
	5	1	**8T-6703**	3	CLAMP-HOSE	
	6	1	**335-9214**	1	CLAMP-BAND	

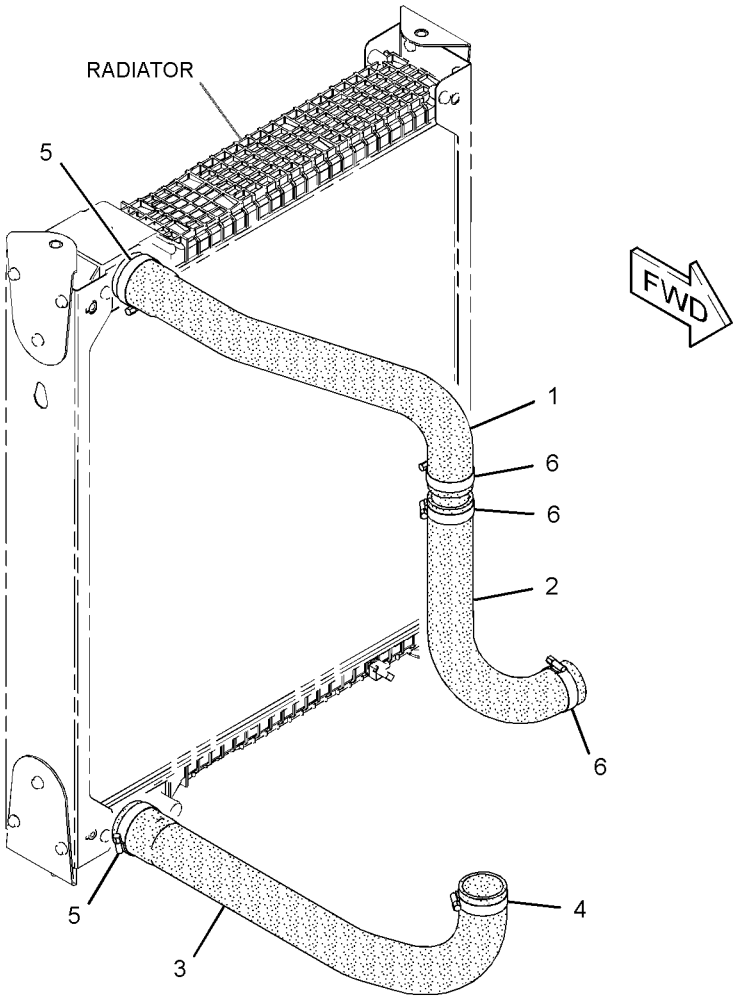

GRAPHIC #1 **<END>** g01826783

COOLING SYSTEM

277-2939 PUMP GP-WATER

S/N: C6E1-UP

PART OF 292-5306 ENGINE AR-PRIMARY

SMCS-1361 **i03998230**

NOTE	REF NO	GRAPHIC REF	PART NUMBER	QTY	PART NAME 1 2 3 4 5 6 (PRODUCT LEVEL)	SEE PAGE
C	1	1	**354-4754**	1	KIT-WATER PUMP	
	1A	1	**225-8019**	1	GASKET	
M	2	1	**6I-0254**	2	BOLT (M8X1.25X30-MM)	
	3	1	**113-8129**	2	BOLT (M8X1.25X75-MM)	
	4	1	**277-2925**	1	CONNECTION AS	
	4A	1	**225-7738**	1	SEAL-O-RING	
	4B	1	**277-2923**	1	GASKET	
M	5	1	**6I-0217**	2	BOLT (M8X1.25X20-MM)	
	6	1	**6I-0839**	5	BOLT (M8X1.25X70-MM)	

C-CHANGE FROM PREVIOUS TYPE
M-METRIC PART

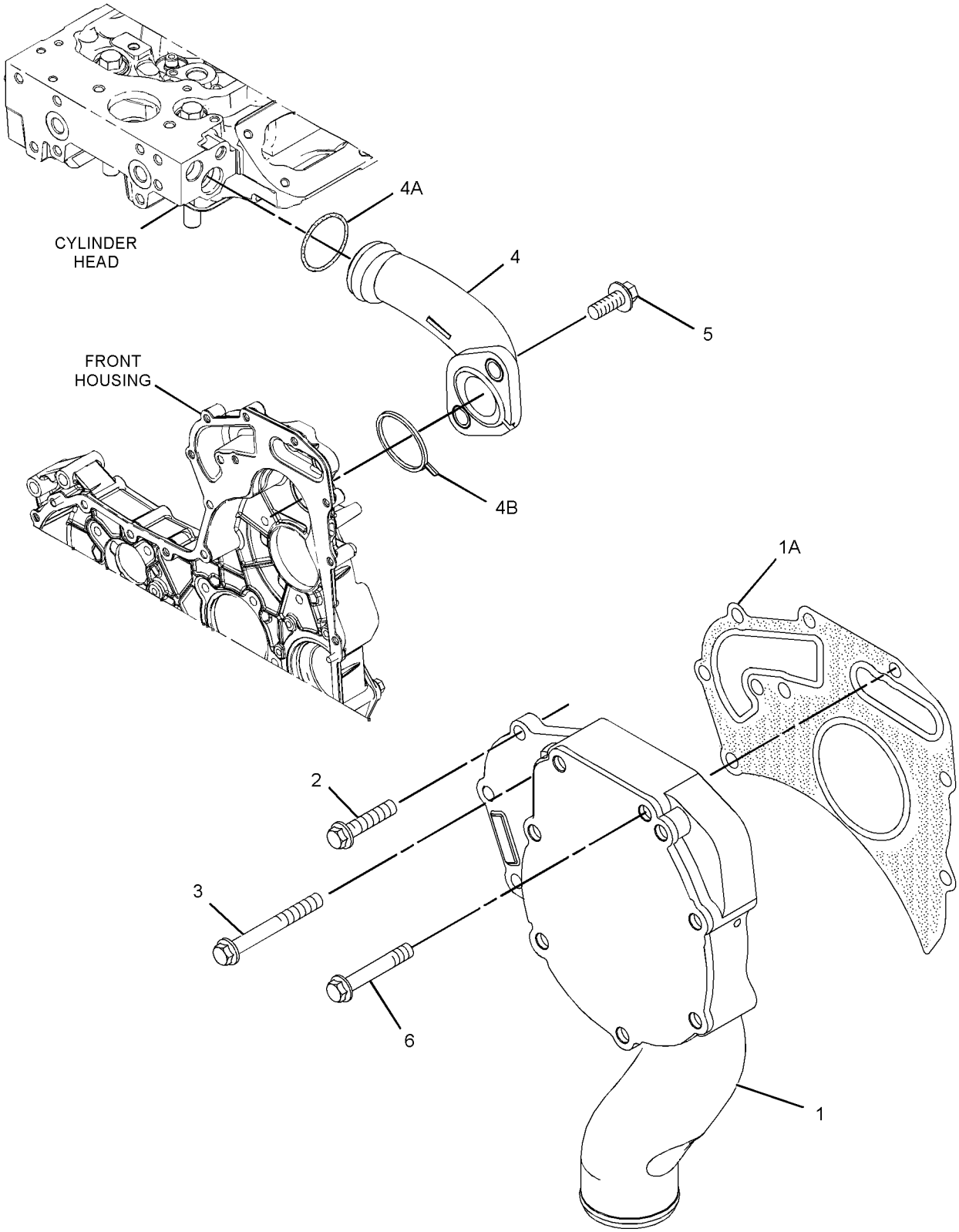

GRAPHIC #1 **<END>** g02177184

COOLING SYSTEM

289-9075 RADIATOR & AFTERCOOLER GP

S/N: JRL1-UP; RRS1-UP

PART OF 289-8894 INSTALLATION AR-ENGINE

SMCS-1063, 1353 **i03626090**

NOTE	REF NO	GRAPHIC REF	PART NUMBER	QTY	PART NAME 1 2 3 4 5 6 (PRODUCT LEVEL)	SEE PAGE
	1	2	**3S-2093**	2	STRAP-CABLE	
C	2	2	**5D-1026**	6	CLAMP-BAND	
	3	1,2	**6N-6984**	4	MOUNT-RUBBER	
	4	1	**7K-1181**	1	STRAP-CABLE	
	5	2	**7T-8332**	4	MOUNTING	
	6	2	**9X-3965**	1	TEE	
	7	1,2	**133-3260**	4	SPACER (11X19X10-MM THK)	
	8	1	**185-1017**	1	AFTERCOOLER AS	
	9	2	**185-1036**	1	BRACKET	
	10	2	**191-9182**	1	PLATE	
	11	2	**191-9184**	1	PLATE	
	12	2	**200-6345**	1	MOUNT (DUAL SWIVEL)	
	13	2	**212-3863**	1	TEE	
Y	14	2	**290-4074**	1	GUARD GP-RADIATOR	265
Y	15	2	*291-6621*	1	TANK GP-COOLANT	64
	16	2	**291-6629**	1	SUPPORT AS	
M		2	**8T-3490**	2	NUT-WELD (M10X1.5-THD)	
	17	2	**292-0239**	1	CHANNEL AS	
M		2	**8T-3490**	1	NUT-WELD (M10X1.5-THD)	
	18	1	**292-0240**	1	COOLER AS-FUEL	
	19	1	**292-0241**	1	SUPPORT AS	
M		1	**8T-3490**	2	NUT-WELD (M10X1.5-THD)	
	20	2	**292-8113**	1	HOSE	
Y	21	1	**293-2239**	1	COOLER GP-HYD & XMSN OIL	313
	22	1	**293-3032**	1	SEAL	
	23	2	**294-0565**	1	SEAL	
	24	2	**300-1576**	1	PLATE	
	25	2	**300-1631**	1	BAFFLE	
	26	2	**300-3174**	1	PLATE AS	
	27	2	**311-1723**	1	HOSE-MOLDED	
	28	2	**053-0189**	1	GROMMET	
	29	1,2	**091-0081**	6	SPACER (10.5X20X10-MM THK)	
	30	2	**123-4065**	6	RIVET-POP	
	31	2	**3K-9520**	1	GROMMET	
	32	1,2	**4B-0418**	3	CLIP	
	33	1	**4D-7388**	2	CLIP	
M	34	2	**5C-7261**	8	NUT (M8X1.25-THD)	
	35	2	**5P-4116**	16	WASHER-HARD (8.8X20.5X2-MM THK)	
	36	2	**5P-6887**	1	GROMMET	
	37	2	**7X-7729**	15	WASHER (11X25X3-MM THK)	
	38	2	**7X-7958**	4	CLAMP-HOSE	
	39	2	**8F-6437**	2	WASHER (13.5X50.8X4.76-MM THK)	
	40	2	**8T-0328**	6	WASHER-HARD (5.5X10X1-MM THK)	
	41	1,2	**8T-4121**	18	WASHER-HARD (11X21X2.5-MM THK)	
	42	2	**8T-4122**	4	WASHER-HARD (17X32X3.5-MM THK)	
M	43	2	**8T-4133**	8	NUT (M10X1.5-THD)	
M	44	1,2	**8T-4136**	6	BOLT (M10X1.5X25-MM)	
M	45	2	**8T-4137**	16	BOLT (M10X1.5X20-MM)	
M	46	2	**8T-4182**	3	BOLT (M10X1.5X45-MM)	
M	47	1,2	**8T-4186**	6	BOLT (M10X1.5X40-MM)	
M	48	2	**8T-4189**	4	BOLT (M8X1.25X20-MM)	
M	49	2	**8T-4193**	4	BOLT (M16X2X50-MM)	
M	50	2	**8T-4194**	2	BOLT (M12X1.75X50-MM)	
M	51	2	**8T-4195**	6	BOLT (M10X1.5X30-MM)	
M	52	1	**8T-4196**	1	BOLT (M10X1.5X35-MM)	
M	53	2	**8T-4200**	4	BOLT (M8X1.25X16-MM)	

289-9075 **RADIATOR & AFTERCOOLER GP** *(contd.)* **i03626090**

NOTE	REF NO	GRAPHIC REF	PART NUMBER	QTY	PART NAME 1 2 3 4 5 6 (PRODUCT LEVEL)	SEE PAGE
	54	1,2	**8T-4222**	14	WASHER-PLATED (11X32X2.5-MM THK)	
	55	2	**8T-4223**	2	WASHER-HARD (13.5X25.5X3-MM THK)	
	56	2	**8T-4224**	4	WASHER-HARD (8.8X16X2-MM THK)	
	57	1,2	**8T-4226**	4	WASHER-PLATED (10.5X45X3-MM THK)	
M	58	1	**8T-6466**	1	BOLT (M10X1.5X60-MM)	
M	59	2	**8T-7547**	4	BOLT (M8X1.25X30-MM)	
D	60	2	**5P-7211**		SEAL (0.28-M)	
D	60A	2	**5P-7211**		SEAL (0.04-M)	
D	60B	2	**5P-7211**		SEAL (0.76-M)	
D	60C	2	**5P-7211**		SEAL (0.045-M)	
D	60D	1	**5P-7211**		SEAL (0.85-M)	
D	61	2	**5P-5755**		SEAL (2.4-M)	
D	61A	1	**5P-5755**		SEAL (2.3-M)	
D	61B	2	**5P-5755**		SEAL (0.85-M)	
D	61C	2	**5P-5755**		SEAL (3.1-M)	
E	62	2	**5P-1506**		HOSE (135-CM)	
E	62A	2	**5P-1506**		HOSE (22-CM)	
E	63	1	**8C-3681**		HOSE (233-CM)	
E	63A	1	**8C-3681**		HOSE (118-CM)	
	64	2	**325-1277**	1	HOSE	

C-CHANGE FROM PREVIOUS TYPE
D-ORDER BY THE METER
E-ORDER BY THE CENTIMETER
M-METRIC PART
Y-SEPARATE ILLUSTRATION

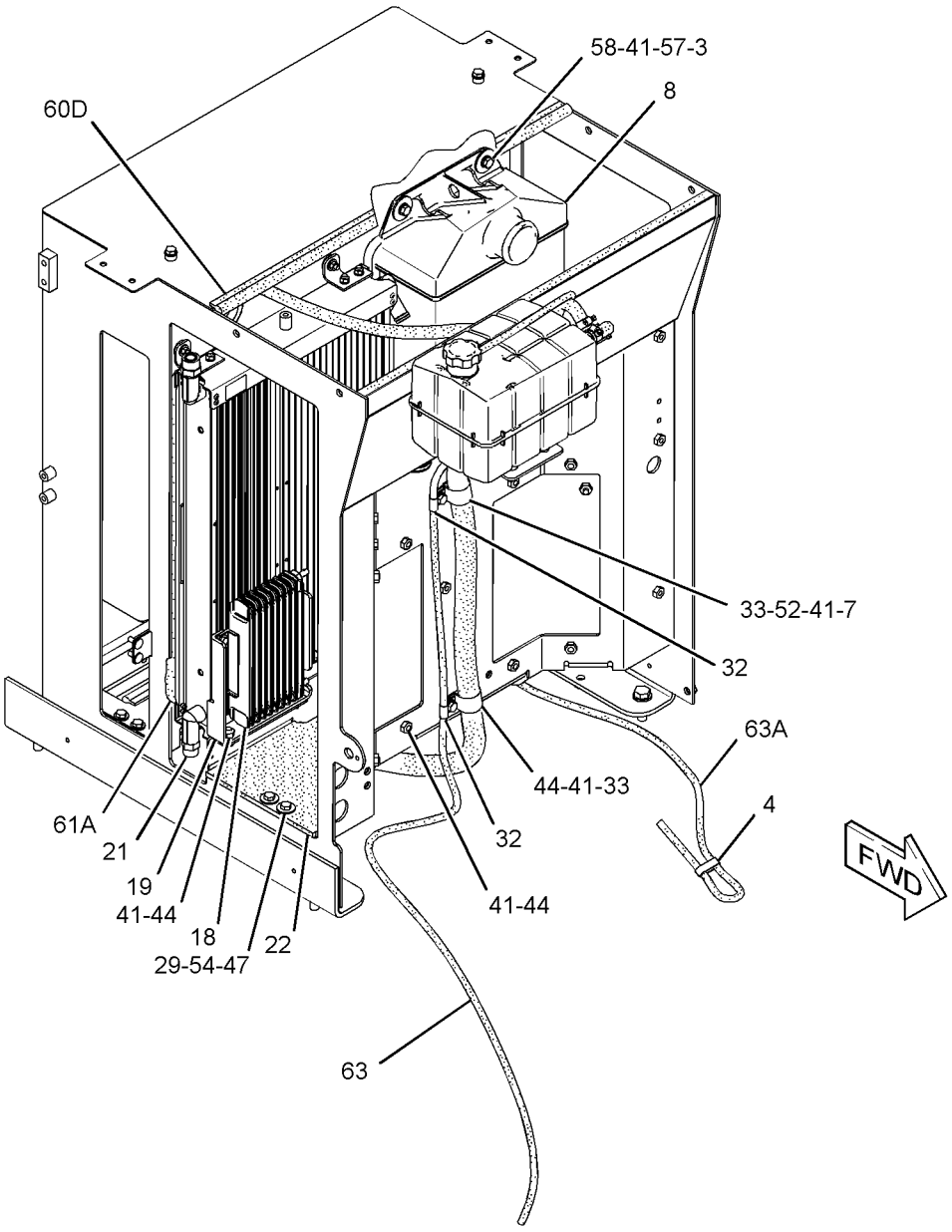

GRAPHIC #1

g01843635

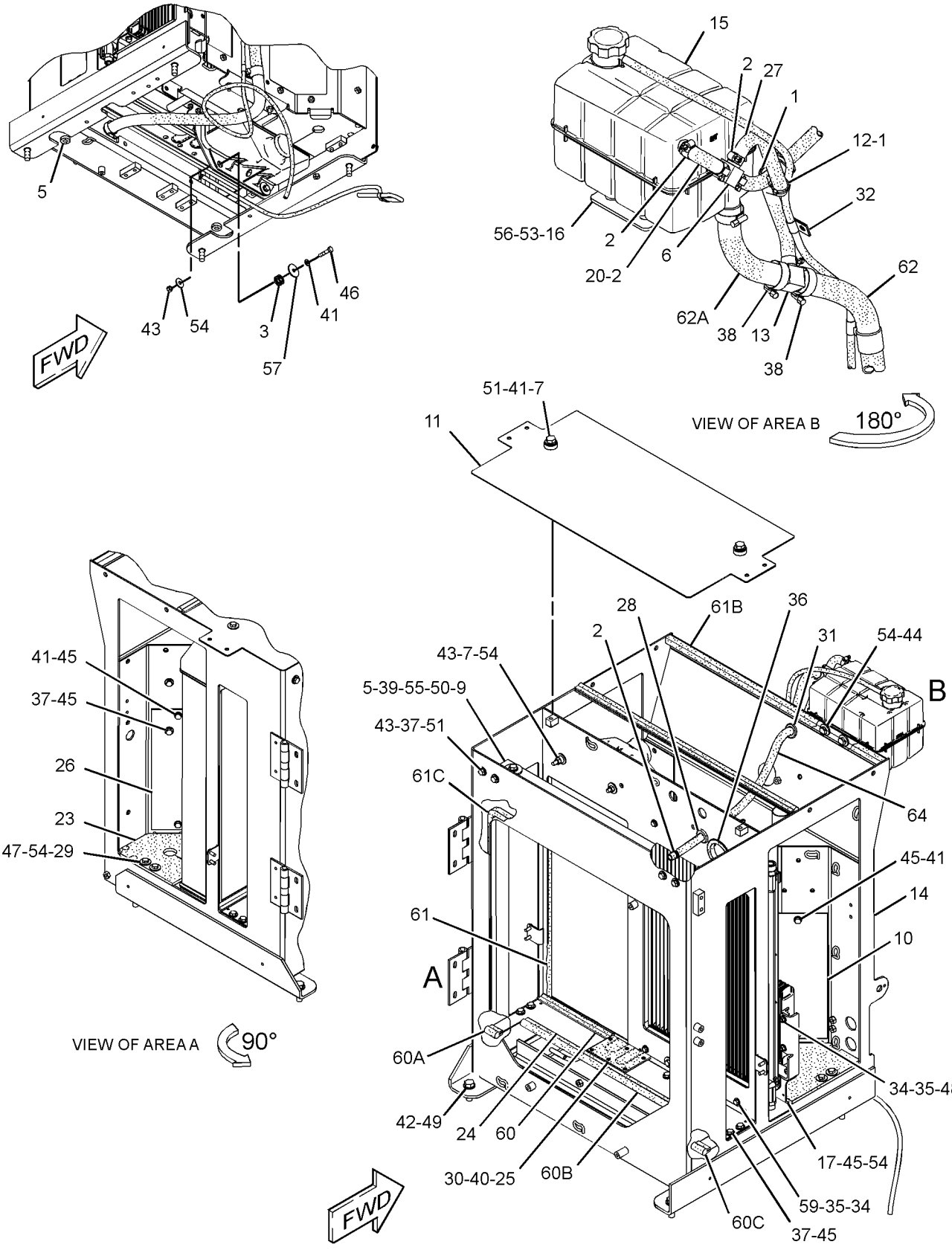

GRAPHIC #2 **<END>** g01905393

COOLING SYSTEM

239-7396 RADIATOR & MOUNTING GP

S/N: JRL1-UP; RRS1-UP
PART OF 375-8357, 375-8358, 375-8359 DISTRIBUTION AR
AN ATTACHMENT

SMCS-1353 **i02061886**

NOTE	REF NO	GRAPHIC REF	PART NUMBER	QTY	PART NAME 1 2 3 4 5 6 (PRODUCT LEVEL)	SEE PAGE
Y	1	1	**185-1016**	1	RADIATOR GP	63
M	2	1	**9X-8482**	2	SETSCREW-SOCKET (M12X1.75X70-MM)	

M-METRIC PART
Y-SEPARATE ILLUSTRATION

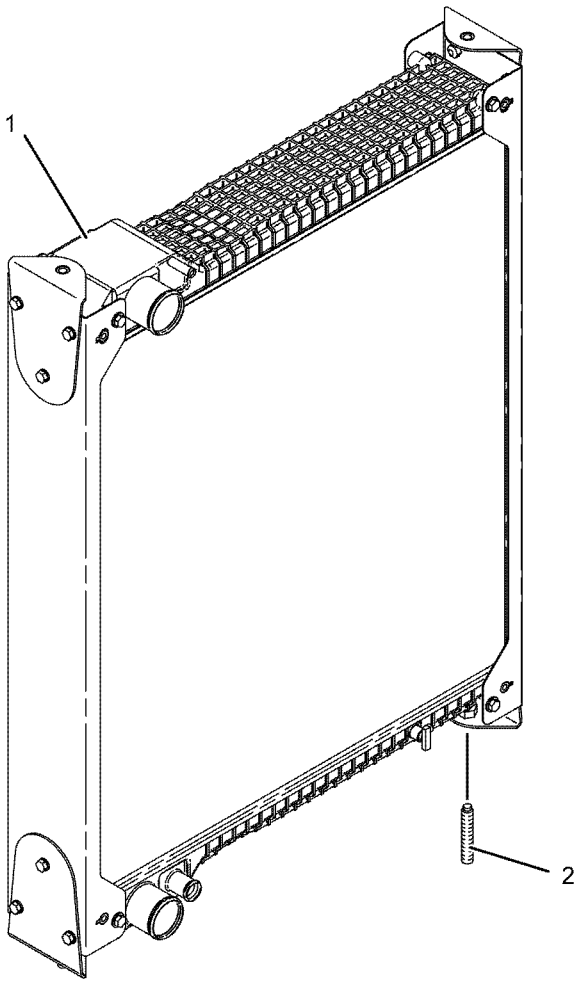

GRAPHIC #1 **<END>** g01087525

185-1016 RADIATOR GP

S/N: JRL1-UP; RRS1-UP
PART OF 239-7396 RADIATOR & MOUNTING GP
AN ATTACHMENT

SMCS-1353 **i02062053**

NOTE	REF NO	GRAPHIC REF	PART NUMBER	QTY	PART NAME 1 2 3 4 5 6 (PRODUCT LEVEL)	SEE PAGE
	1	1	**185-1027**	4	BRACKET AS	
	2	1	**225-4287**	1	VALVE GP-RADIATOR DRAIN	
	3	1	**7X-3393**	8	WASHER-HARD (8.3X19X1.83-MM THK)	
M	4	1	**8T-4189**	8	BOLT (M8X1.25X20-MM)	
M	5	1	**8T-4200**	12	BOLT (M8X1.25X16-MM)	
	6	1	**8T-4224**	12	WASHER-HARD (8.8X16X2-MM THK)	

M-METRIC PART

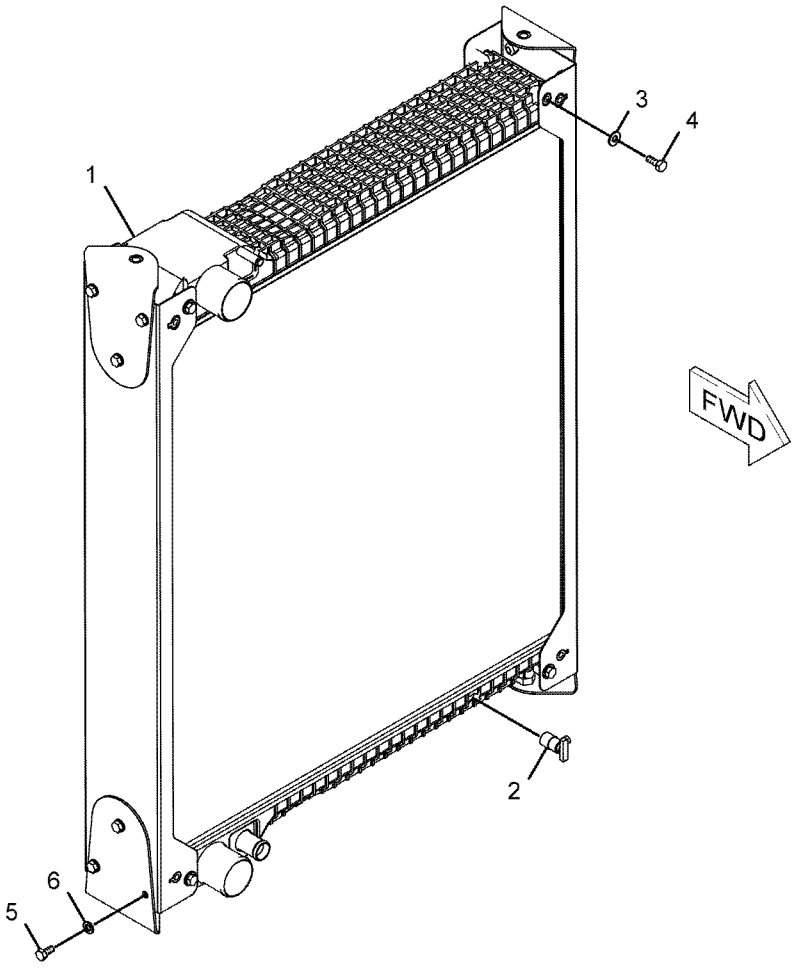

GRAPHIC #1 **<END>** g01013363

COOLING SYSTEM

291-6621 TANK GP-COOLANT

S/N: JRL1-UP; RRS1-UP

PART OF 289-9075 RADIATOR & AFTERCOOLER GP

SMCS-1377 **i03016524**

NOTE	REF NO	GRAPHIC REF	PART NUMBER	QTY	PART NAME 1 2 3 4 5 6 (PRODUCT LEVEL)	SEE PAGE
	1	1	**251-3227**	1	CAP AS-COOLANT TANK	

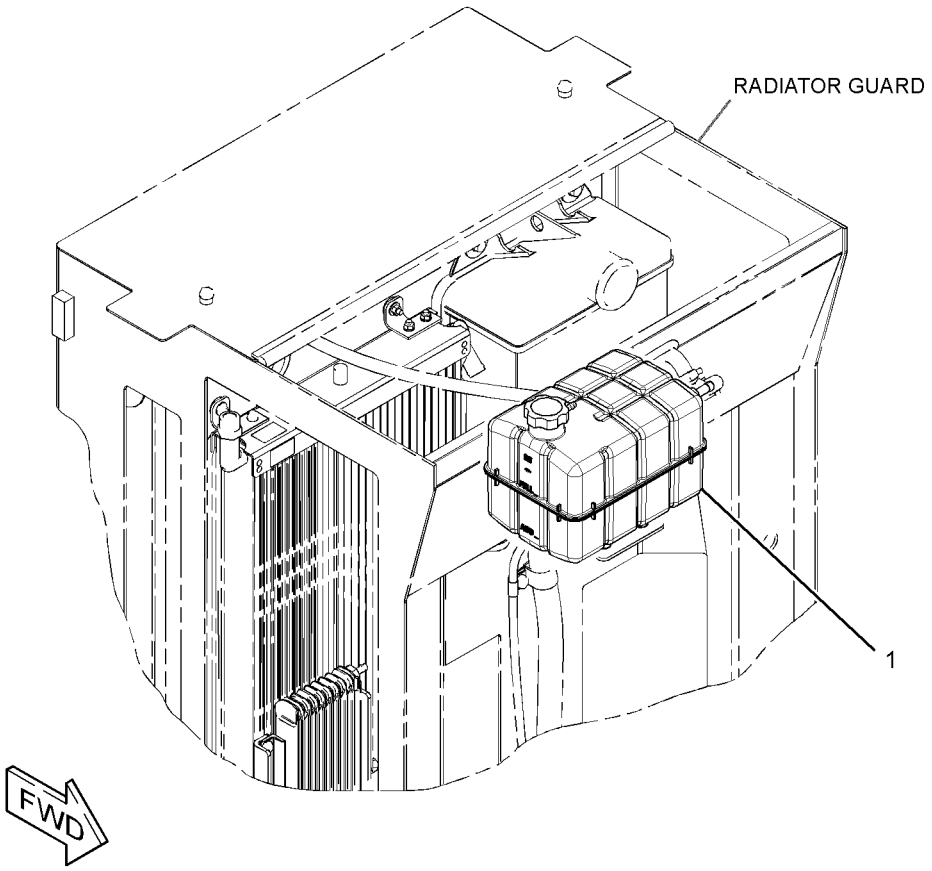

GRAPHIC #1 **<END>** g01530576

AIR INLET AND EXHAUST SYSTEM

289-3322 AIR CLEANER GP

S/N: JRL1-UP; RRS1-UP

PART OF 289-8894 INSTALLATION AR-ENGINE

SMCS-1051, 1054 **i03914710**

NOTE	REF NO	GRAPHIC REF	PART NUMBER	QTY	PART NAME 1 2 3 4 5 6 (PRODUCT LEVEL)	SEE PAGE
	1	1	**5P-1717**	2	CLAMP-HOSE	
M	2	1	**8C-4982**	2	BOLT-SOCKET HEAD (M4X0.7X20-MM)	
D	3	1	**6V-1363**		HOSE (0.4-M)	
	4	1	*218-2792*	1	INDICATOR GP-AIR FILTER CHANGE	
		1	**187-2868**	1	INDICATOR AS-AIR FILTER CHANGE	
		1	**205-1627**	1	BRACKET	
	5	1	**255-4692**	1	CONNECTOR-FILTER	
C	6	1	**313-2507**	1	HOSE	
C	7	1	**313-2510**	1	BRACKET AS	
CY	8	1	**314-6480**	1	AIR CLEANER GP	67
CM	9	1	**099-3649**	2	BOLT (M8X1.25X40-MM)	
	10	1	**4B-4863**	2	WASHER (4.7X11X1.2-MM THK)	
C	11	1	**5P-4116**	2	WASHER-HARD (8.8X20.5X2-MM THK)	
	12	1	**7X-7729**	2	WASHER (11X25X3-MM THK)	
M	13	1	**8T-4195**	2	BOLT (M10X1.5X30-MM)	

C-CHANGE FROM PREVIOUS TYPE
D-ORDER BY THE METER
M-METRIC PART
Y-SEPARATE ILLUSTRATION

289-3322 **AIR CLEANER GP** *(contd.)* **i03914710**

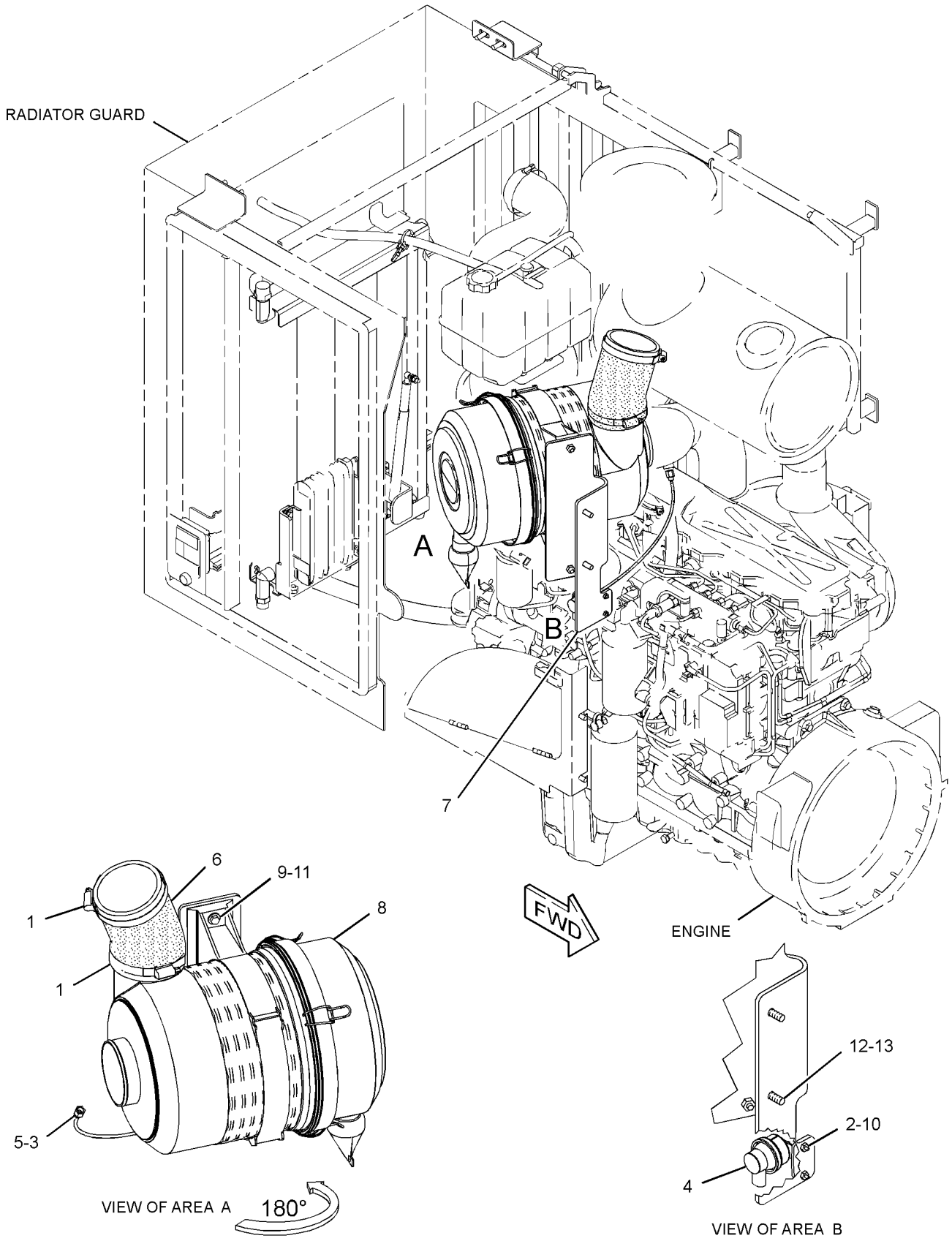

GRAPHIC #1 **<END>** g02174655

AIR INLET AND EXHAUST SYSTEM

314-6480 AIR CLEANER GP

S/N: JRL1-UP; RRS1-UP

PART OF 289-3322 AIR CLEANER GP

SMCS-1051, 1054 **i03859384**

NOTE	REF NO	GRAPHIC REF	PART NUMBER	QTY	PART NAME 1 2 3 4 5 6 (PRODUCT LEVEL)	SEE PAGE
	1	1	**224-2263**	1	VALVE AS-AIR	
	2	1	**256-7902**	1	FILTER ELEMENT AS-AIR (PRIMARY)	
	3	1	**256-7903**	1	FILTER ELEMENT AS-AIR (SECONDARY)	
	4	1	**256-7904**	1	BRACKET AS	
	5	1	**302-4393**	1	COVER AS	

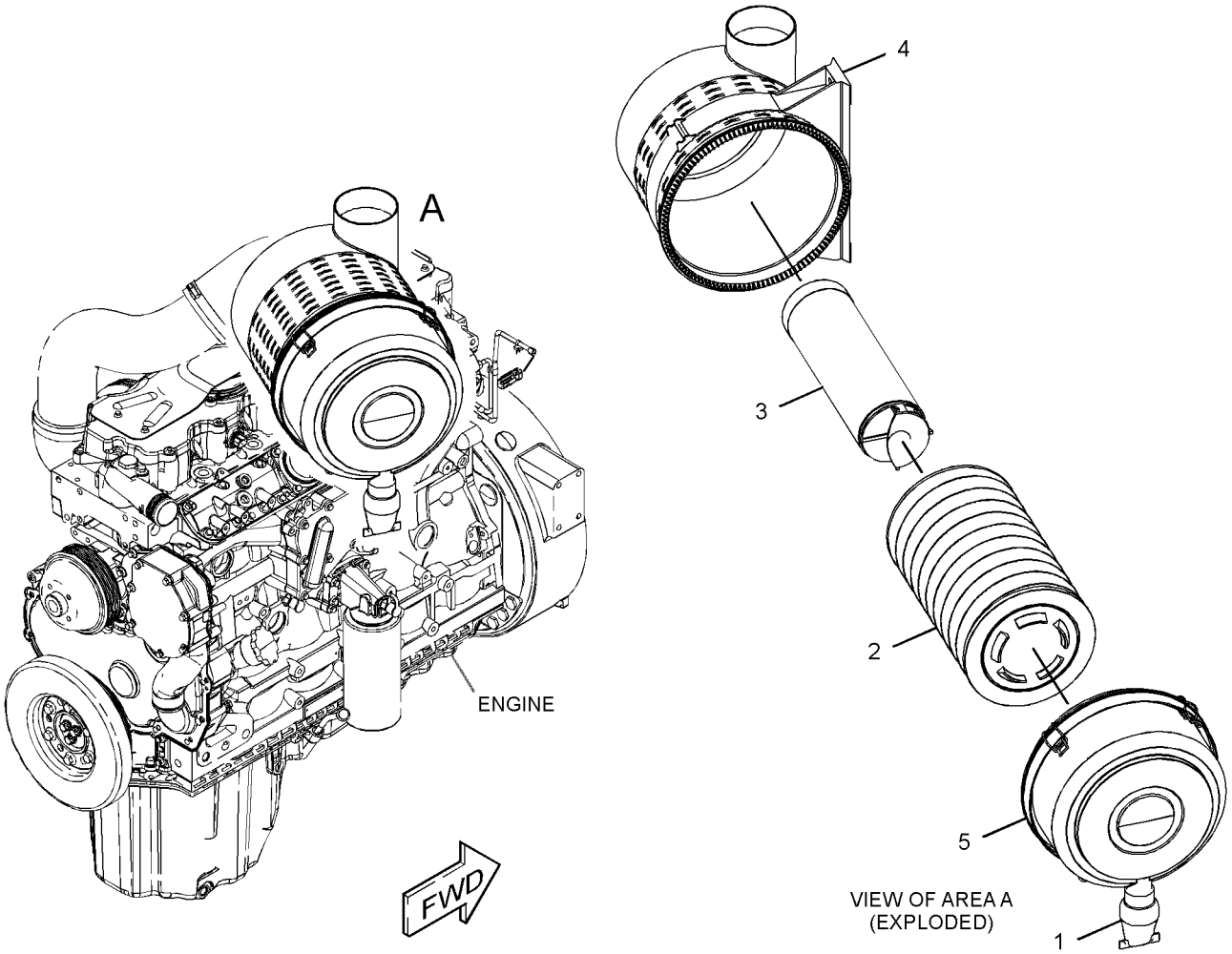

GRAPHIC #1 **<END>** g01545554

AIR INLET AND EXHAUST SYSTEM

311-2236 EXTENSION GP-EXHAUST

S/N: JRL1-UP; RRS1-UP

PART OF 289-8894 INSTALLATION AR-ENGINE

SMCS-1061 **i03038600**

NOTE	REF NO	GRAPHIC REF	PART NUMBER	QTY	PART NAME 1 2 3 4 5 6 (PRODUCT LEVEL)	SEE PAGE
	1	1	**302-5195**	1	TUBE AS	
	2	1	**311-2237**	1	SUPPORT AS	
	3	1	**311-2239**	1	PLATE	
	4	1	**7X-7729**	4	WASHER (11X25X3-MM THK)	
M	5	1	**8T-4195**	4	BOLT (M10X1.5X30-MM)	

M-METRIC PART

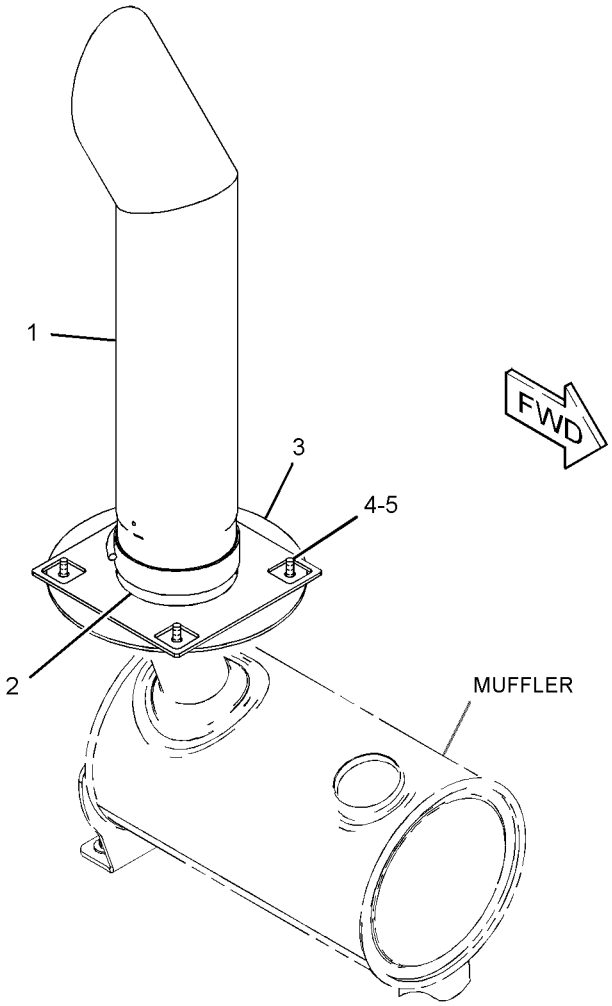

GRAPHIC #1 **<END>** g01413567

AIR INLET AND EXHAUST SYSTEM

289-3533 LINES GP-AIR

S/N: JRL1-UP; RRS1-UP

PART OF 289-8894 INSTALLATION AR-ENGINE

SMCS-1071 **i03753732**

NOTE	REF NO	GRAPHIC REF	PART NUMBER	QTY	PART NAME 1 2 3 4 5 6 (PRODUCT LEVEL)	SEE PAGE
	1	1	**109-5351**	1	HOSE	
	2	1	**159-2829**	1	HOSE	
	3	1	**209-4578**	1	CLAMP	
	4	1	**215-4012**	1	CLAMP	
	5	1	**216-4983**	2	CLAMP	
	6	1	**285-0824**	1	TUBE AS	
	7	1	**289-3534**	1	TUBE	
	8	1	**351-0196**	1	HOSE	
	9	1	**351-0197**	1	HOSE	
	10	1	**313-2508**	1	HOSE AS	
	11	1	**312-8743**	1	HOSE	
	12	1	**313-2509**	1	TUBE	
	13	1	**144-0367**	2	CLAMP-HOSE	
	14	1	**8T-4121**	2	WASHER-HARD (11X21X2.5-MM THK)	
M	15	1	**8T-4136**	2	BOLT (M10X1.5X25-MM)	
	16	1	**8T-4985**	2	CLAMP-HOSE	
	17	1	**9X-2201**	1	CLAMP-HOSE	
	18	1	**8T-4986**	3	CLAMP-HOSE	

M-METRIC PART

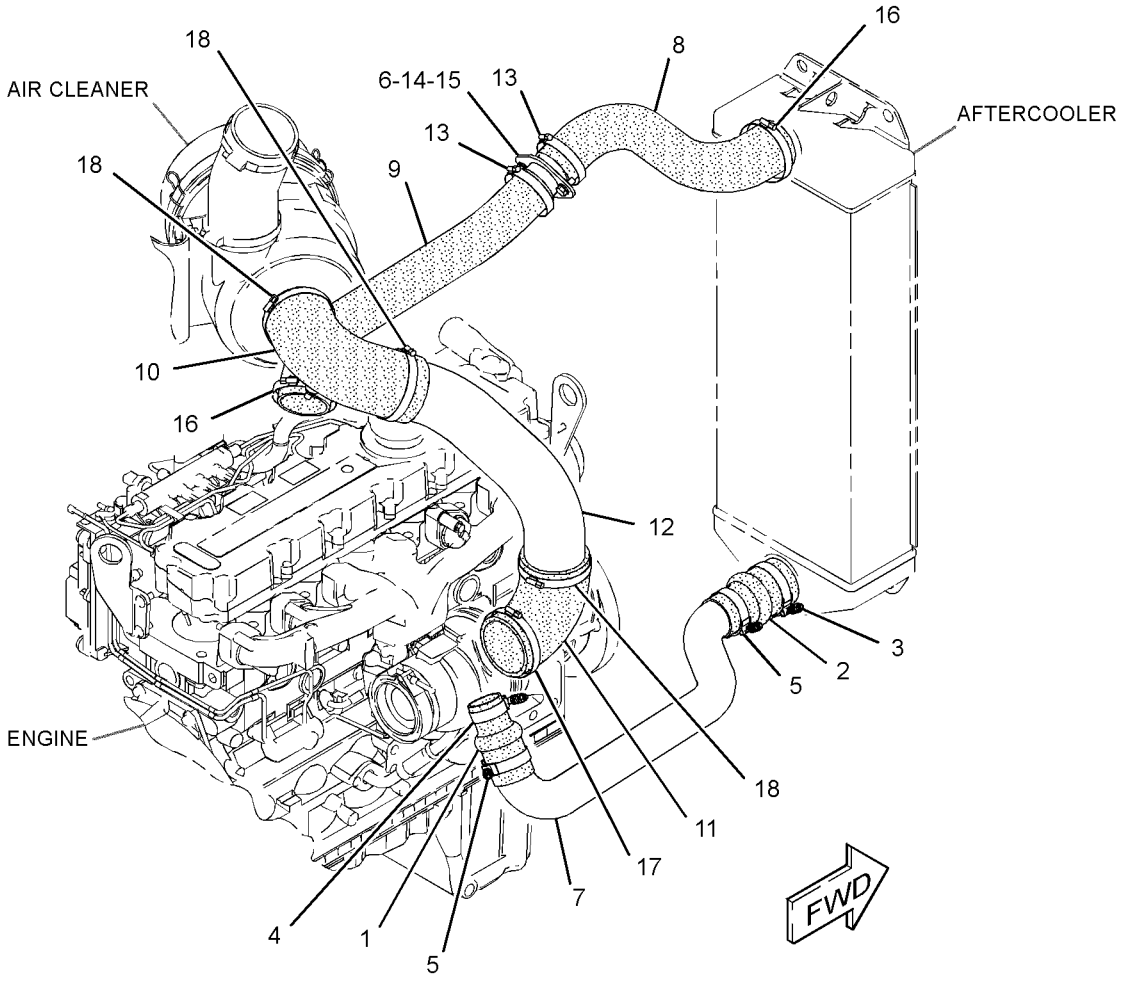

GRAPHIC #1 **<END>** g01615530

AIR INLET AND EXHAUST SYSTEM

288-7985 MANIFOLD GP-INLET

S/N: C6E1-UP

PART OF 292-5306 ENGINE AR-PRIMARY

SMCS-1058 **i03929316**

NOTE	REF NO	GRAPHIC REF	PART NUMBER	QTY	PART NAME 1 2 3 4 5 6 (PRODUCT LEVEL)	SEE PAGE
M	1	1	**6I-0645**	19	BOLT (M8X1.25X25-MM)	
	2	1	**295-0912**	1	COVER AS	
	2A	1	**277-4302**	2	DOWEL	
	2B	1	**278-5128**	1	GASKET-MANIFOLD	
	3	1	**317-2684**	1	ELBOW GP-AIR INLET	
	3A	1	**238-8288**	1	GASKET-INLET	
	3B	1	**292-3462**	1	PLUG-PIPE	

M-METRIC PART

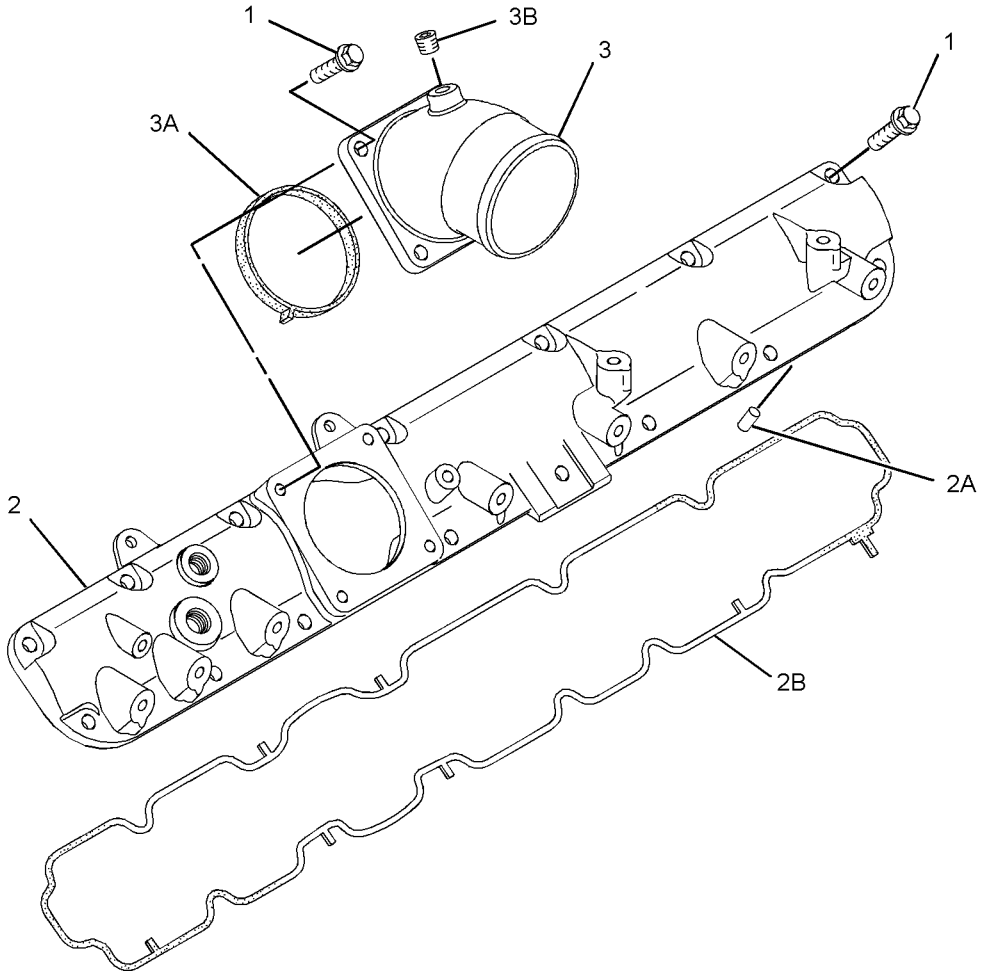

GRAPHIC #1 **<END>** g01526586

AIR INLET AND EXHAUST SYSTEM

289-3232 MUFFLER GP

S/N: JRL1-UP; RRS1-UP

PART OF 289-8894 INSTALLATION AR-ENGINE

SMCS-1062 **i04157731**

NOTE	REF NO	GRAPHIC REF	PART NUMBER	QTY	PART NAME 1 2 3 4 5 6 (PRODUCT LEVEL)	SEE PAGE
	1	1	**280-2424**	1	ADAPTER	
	2	1	**289-3233**	1	MUFFLER AS	
	3	1	**289-3234**	1	BRACKET	
	4	1	**289-3235**	1	ELBOW-EXHAUST	
	5	1	**7X-7729**	2	WASHER (11X25X3-MM THK)	
	6	1	**8T-4121**	2	WASHER-HARD (11X21X2.5-MM THK)	
M	7	1	**8T-4133**	2	NUT (M10X1.5-THD)	
M	8	1	**8T-4136**	2	BOLT (M10X1.5X25-MM)	
M	9	1	**8T-4185**	2	BOLT (M10X1.5X50-MM)	
M	10	1	**8T-4186**	2	BOLT (M10X1.5X40-MM)	
	11	1	**7X-0632**	4	WASHER-HARD (11X36X6-MM THK)	
	12	1	**9Y-8315**	1	CLAMP-PIPE	

M-METRIC PART

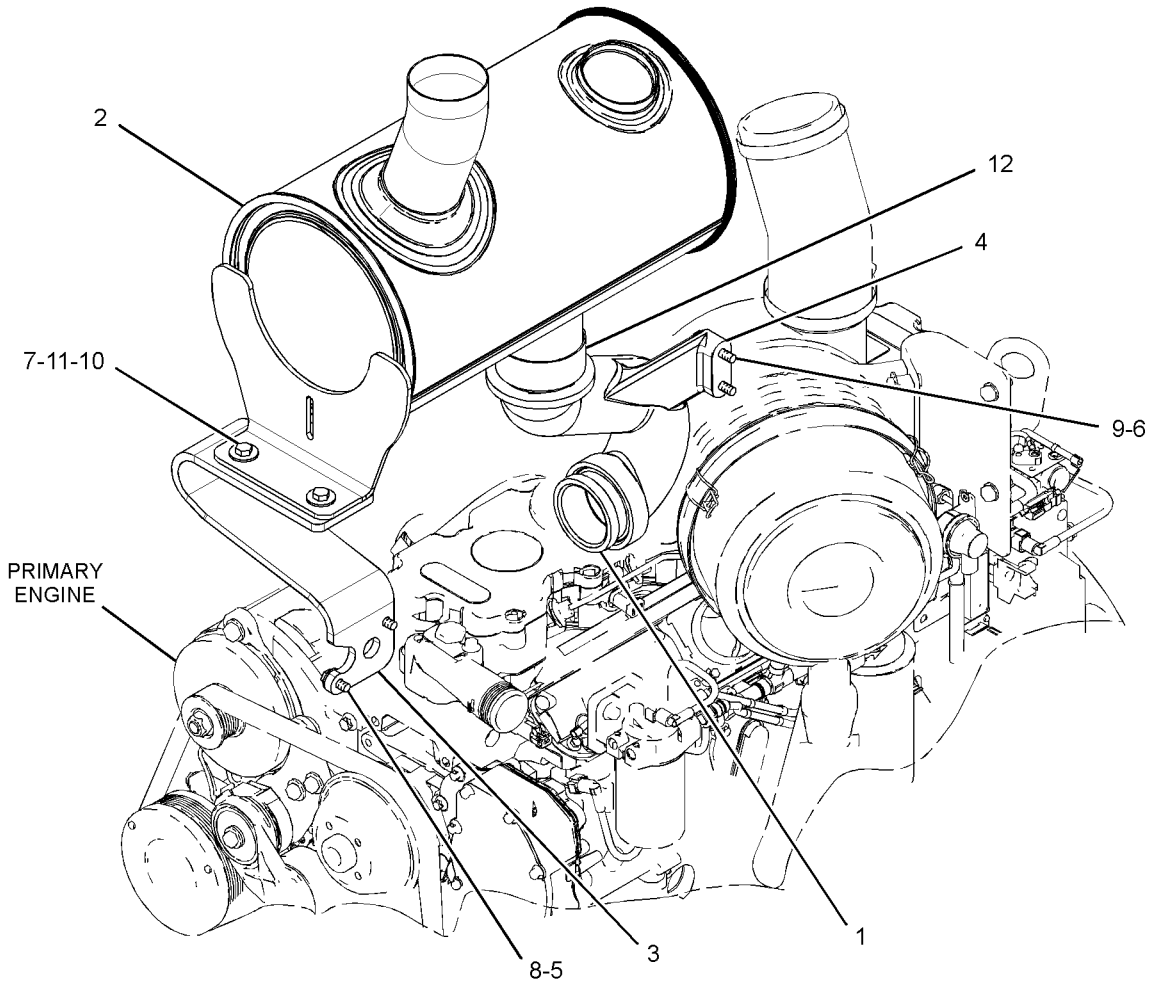

GRAPHIC #1 **<END>** g01442498

AIR INLET AND EXHAUST SYSTEM

121-7746 PRECLEANER GP

S/N: JRL1-UP; RRS1-UP
PART OF 332-3646 PRECLEANER GP
AN ATTACHMENT

SMCS-1055 **i03361344**

NOTE	REF NO	GRAPHIC REF	PART NUMBER	QTY	PART NAME 1 2 3 4 5 6 (PRODUCT LEVEL)	SEE PAGE
	1	1	**1M-7250**	1	BOWL	
	2	1	**9M-9439**	1	COVER AS	
	3	1	**131-6143**	1	CLAMP-HOSE	

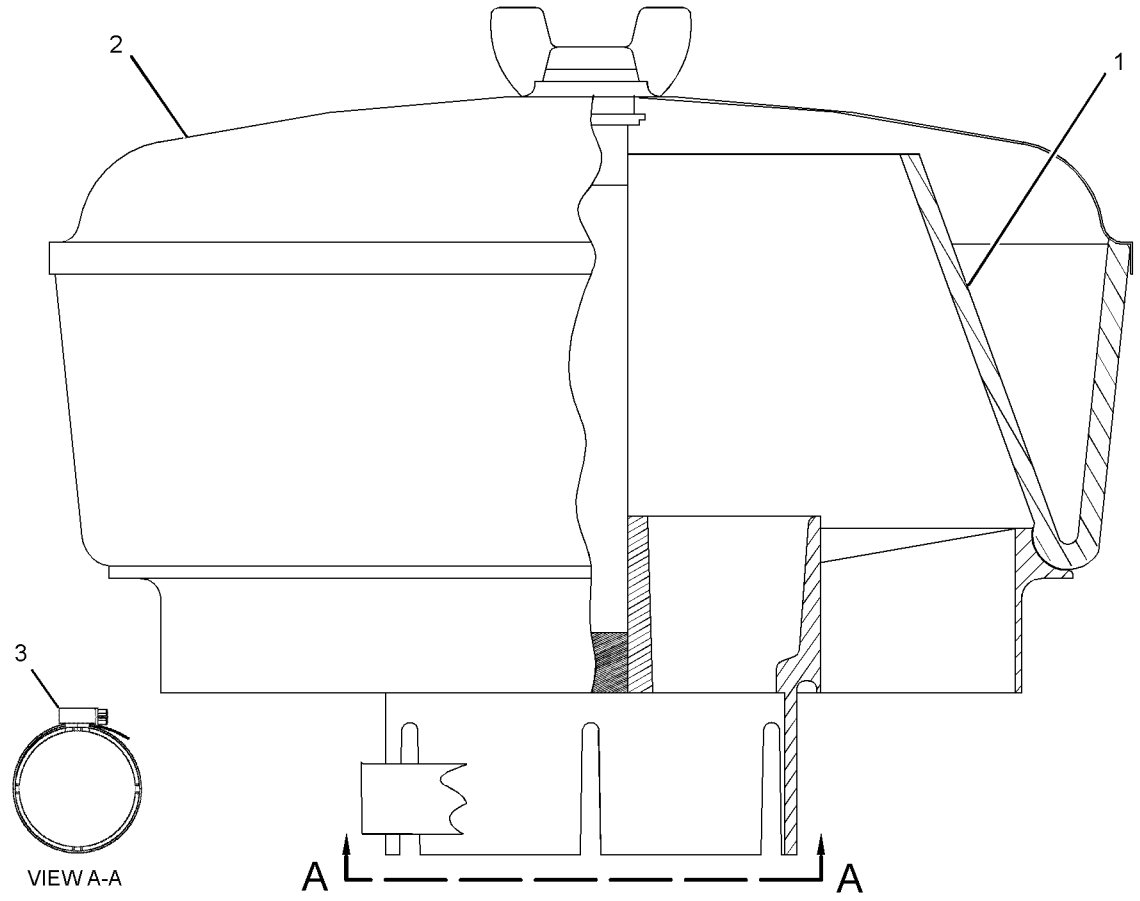

GRAPHIC #1 **<END>** g01737513

AIR INLET AND EXHAUST SYSTEM

332-3646 PRECLEANER GP–STANDARD

S/N: JRL1-UP; RRS1-UP
CANNOT BE USED WITH 332-3647–PAGE 74
AN ATTACHMENT

SMCS-1055 **i03825029**

NOTE	REF NO	GRAPHIC REF	PART NUMBER	QTY	PART NAME 1 2 3 4 5 6 (PRODUCT LEVEL)	SEE PAGE
Y	1	1	**121-7746**	1	PRECLEANER GP	72

Y-SEPARATE ILLUSTRATION

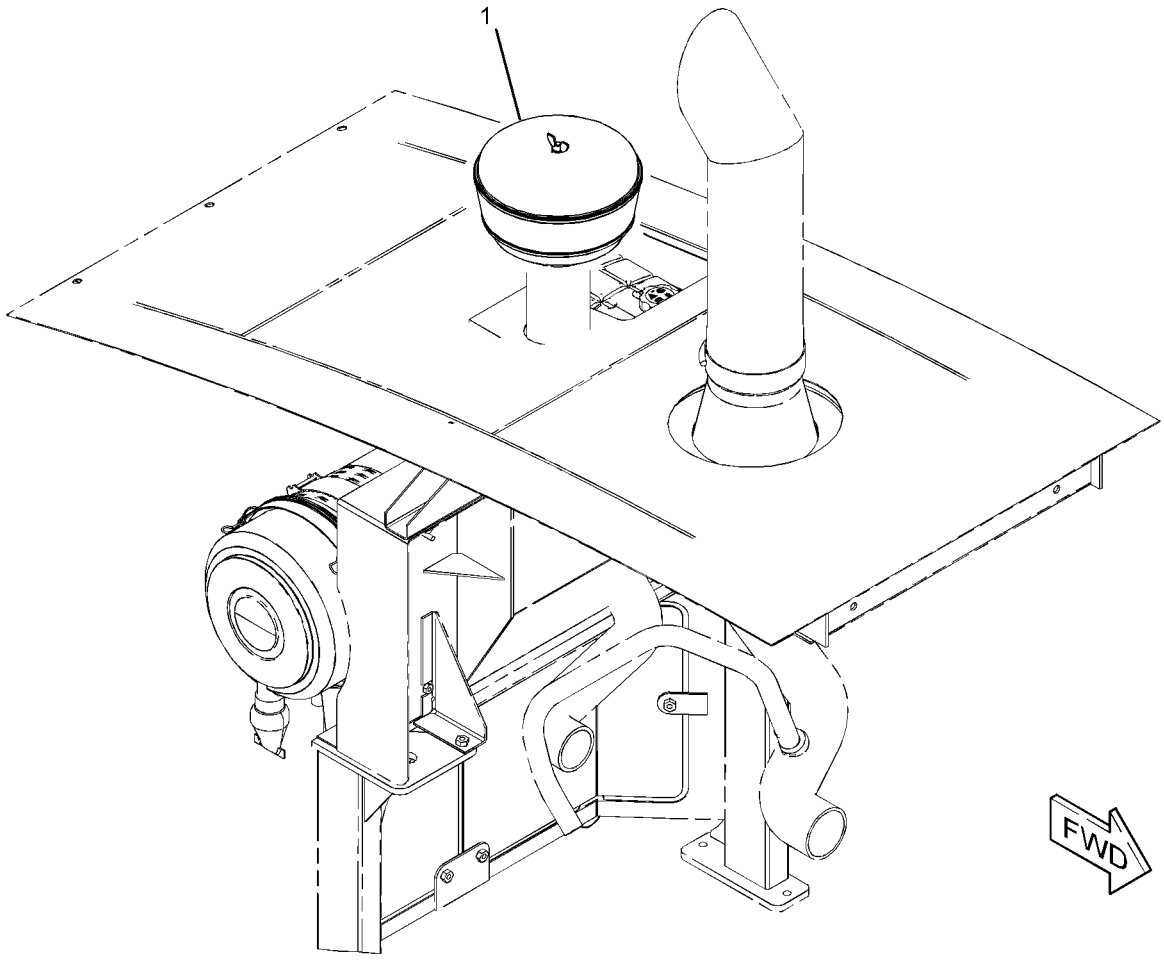

GRAPHIC #1 **<END>** g02052773

AIR INLET AND EXHAUST SYSTEM

332-3647 PRECLEANER GP

S/N: JRL1-UP; RRS1-UP
CANNOT BE USED WITH 332-3646—PAGE 73
AN ATTACHMENT

SMCS-1055 **i03825030**

NOTE	REF NO	GRAPHIC REF	PART NUMBER	QTY	PART NAME 1 2 3 4 5 6 (PRODUCT LEVEL)	SEE PAGE
	1	1	**351-6217**	1	PRECLEANER GP	
		1	**343-5645**	1	PRECLEANER AS	
		1	**222-2277**	1	CLAMP	
		1	**344-7517**	1	REDUCER	

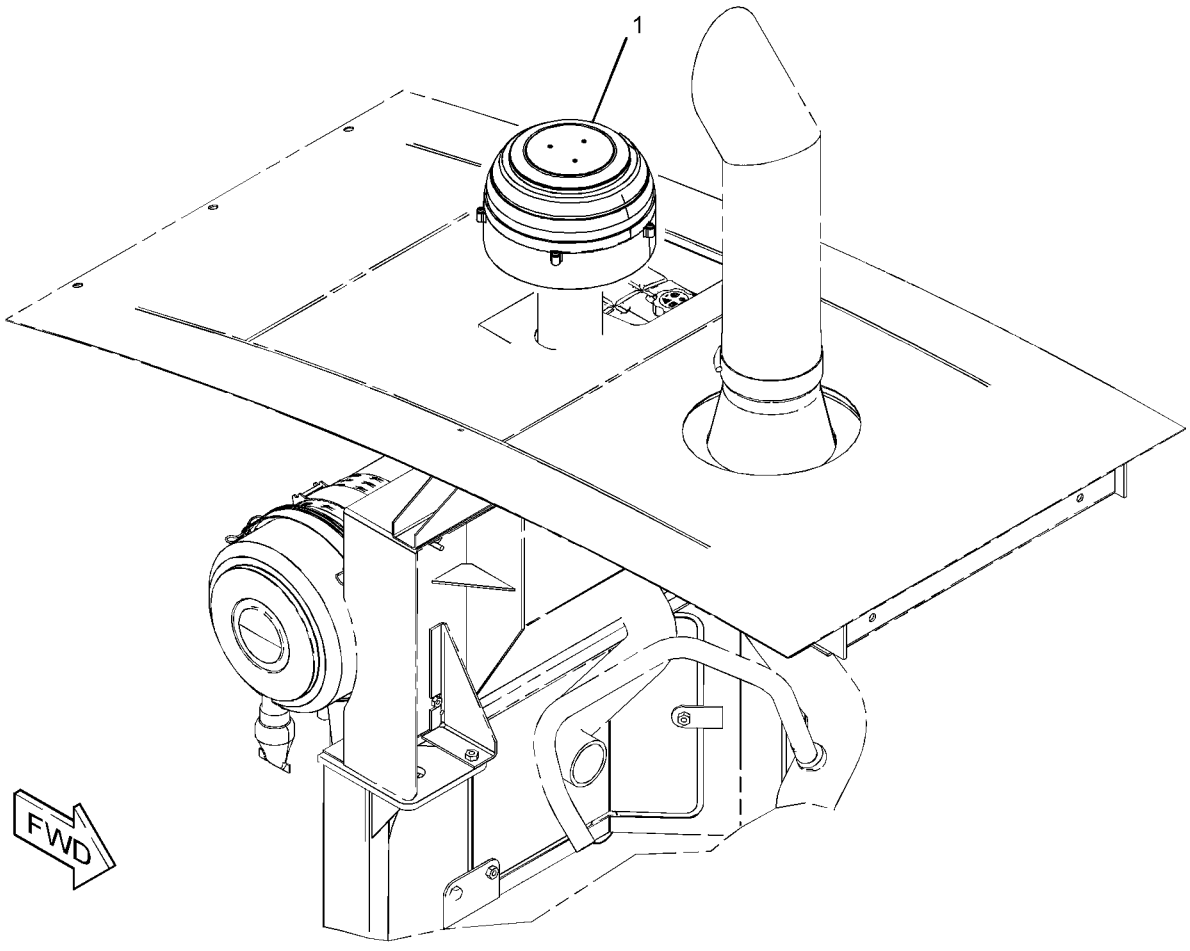

GRAPHIC #1 **<END>** g02050773

AIR INLET AND EXHAUST SYSTEM

331-8936 TURBOCHARGER GP

S/N: C6E1-UP

PART OF 292-5306 ENGINE AR-PRIMARY

SMCS-1052, 1053 **i03266715**

NOTE	REF NO	GRAPHIC REF	PART NUMBER	QTY	PART NAME 1 2 3 4 5 6 (PRODUCT LEVEL)	SEE PAGE
M	1	1	**6I-0217**	5	BOLT (M8X1.25X20-MM)	
	2	1	**6I-0563**	4	NUT (M10X1.5-THD)	
	3	2	**6I-0817**	1	ADAPTER	
	4	2	**9Y-9381**	1	WASHER-HARD	
M	5	2	**100-4830**	2	BOLT (M10X1.5X20-MM)	
	6	1	**141-8589**	1	GASKET	
	7	1	**147-5553**	4	STUD	
	8	1	**238-8292**	12	BOLT-FLANGE HEAD	
	9	1	**277-9941**	1	TUBE AS-TURBOCHARGER	
M	9A	1	**277-9938**	1	BOLT-SPECIAL (BANJO)	
	9B	1	**277-9939**	2	WASHER	
	9C	1	**277-9940**	1	SEAL-O-RING	
	10	1	**278-0015**	1	TUBE AS-TURBOCHARGER	
	11	1	**278-0016**	1	GASKET	
	12	1	**278-0017**	1	GASKET	
	13	2	**278-0310**	1	SOLENOID AS (WASTEGATE)	
	14	2	**278-0311**	1	TUBE AS	
	14A	2	**4B-8774**	1	NUT-FLARED	
	14B	2	**032-8047**	1	FERRULE	
	14C	2	**133-9469**	1	CLIP	
	14D	2	**300-6520**	1	HOSE AS	
	14E	2	**107-2348**	2	CLIP	
	15	1	**279-9361**	2	GASKET-EXHAUST	
	16	2	**285-3197**	1	TUBE AS	
	16A	2	**4B-8774**	1	NUT-FLARED	
	16B	2	**032-8047**	2	FERRULE	
	16C	2	**035-8014**	1	NUT (7/16-IN)	
	17	1	**286-7851**	12	SPACER	
	18	2	**303-2116**	6	CLIP	
	19	1	**315-9810**	1	TURBOCHARGER GP	
	19A	1	**277-9602**	1	CLAMP	
	19B	1	**277-9603**	1	CLAMP	
	20	1	**331-8917**	1	MANIFOLD-EXHAUST	

M-METRIC PART

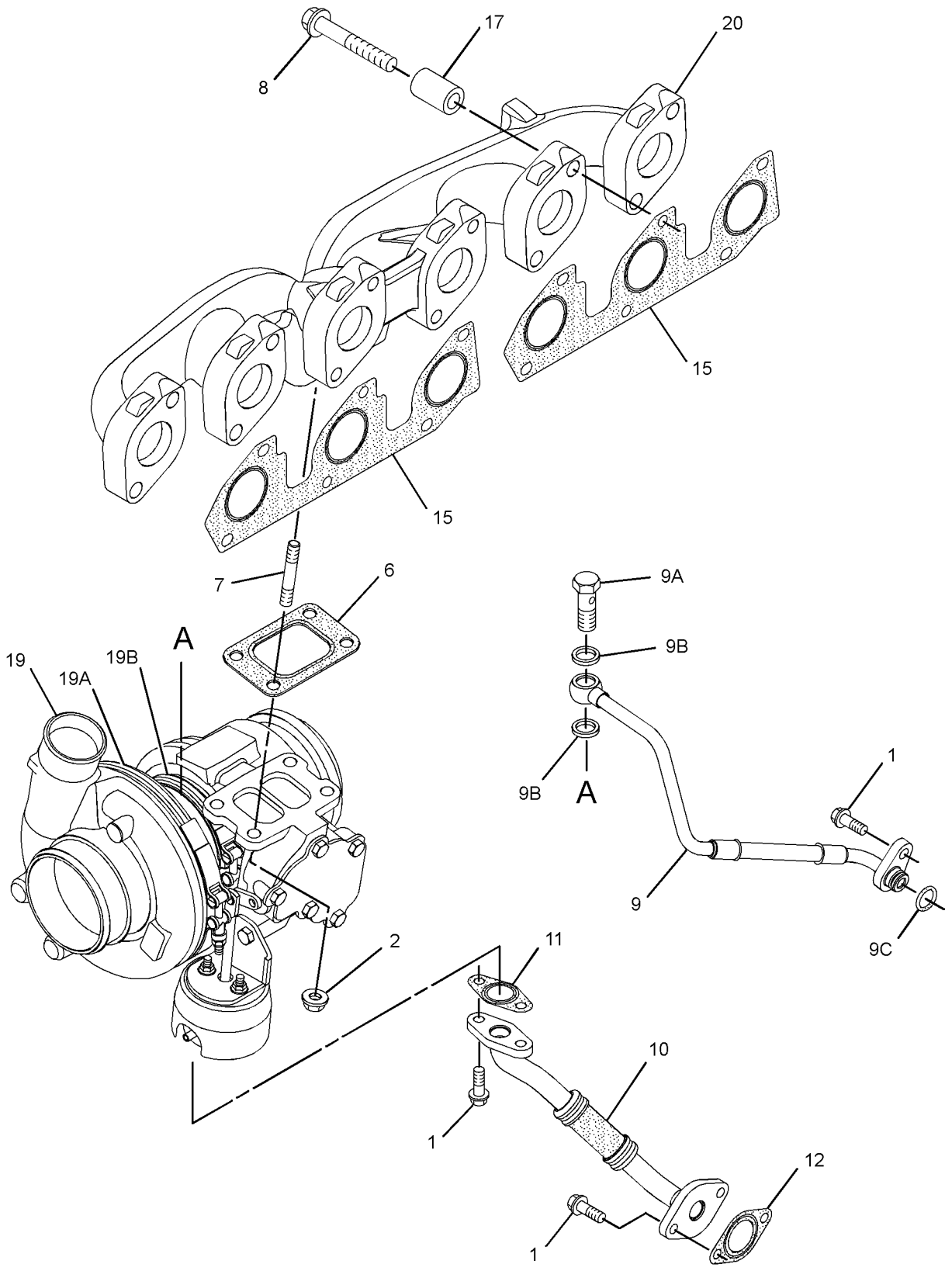

GRAPHIC #1

g01801417

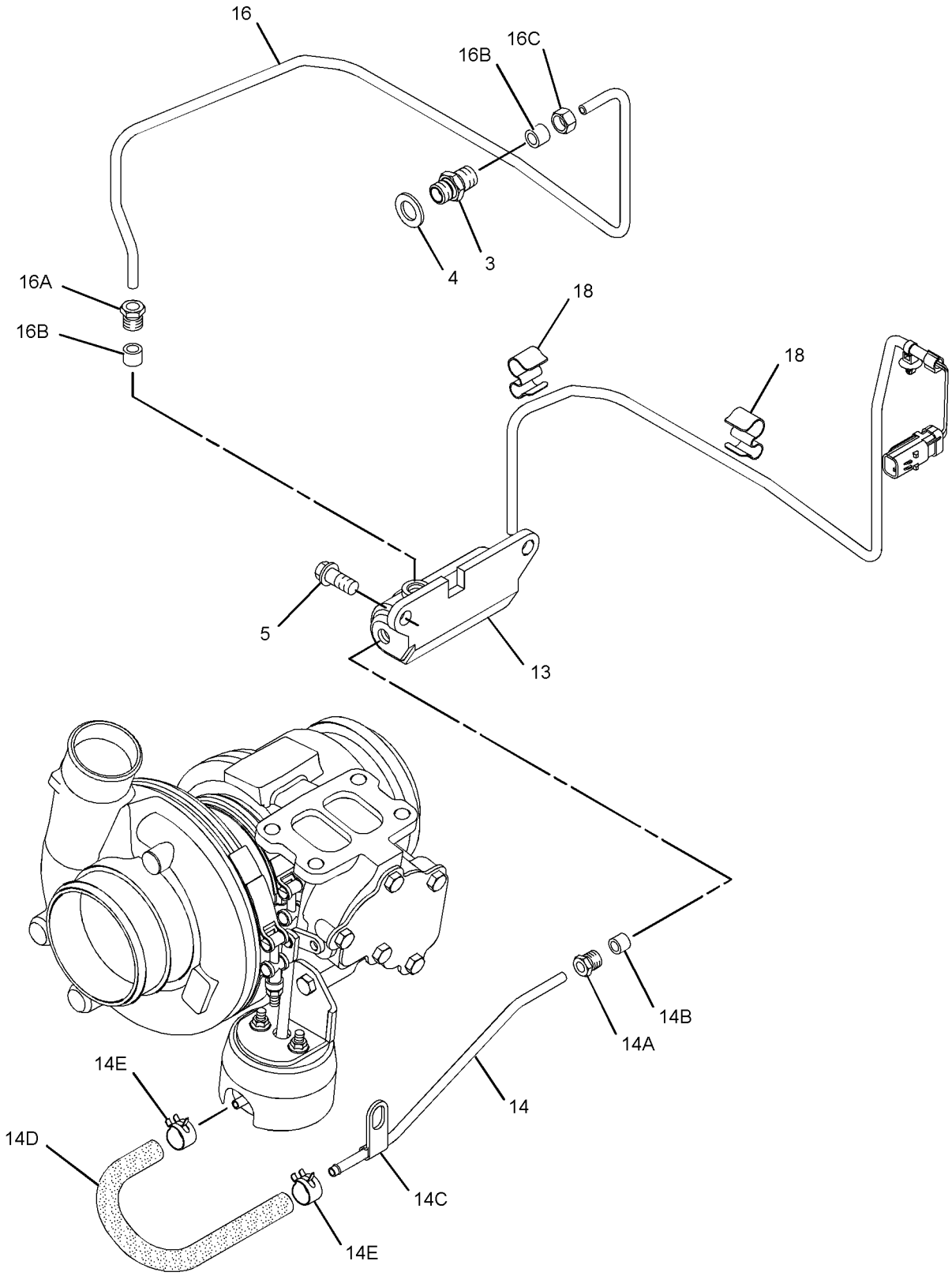

GRAPHIC #2 **<END>** g01801435

280-1394 FILTER GP-SECONDARY FUEL

S/N: C6E1-UP

PART OF 292-5306 ENGINE AR-PRIMARY

SMCS-1261 **i04589836**

NOTE	REF NO	GRAPHIC REF	PART NUMBER	QTY	PART NAME 1 2 3 4 5 6 (PRODUCT LEVEL)	SEE PAGE
C	1	1	**368-5934**	1	FILTER AS-FUEL (ULTRA HIGH EFFICIENCY) (ULTRA HIGH EFFICIENCY)	
C	1A	1	**299-8229**	1	FILTER ELEMENT-FUEL (ULTRA HIGH EFFICIENCY)	

C-CHANGE FROM PREVIOUS TYPE

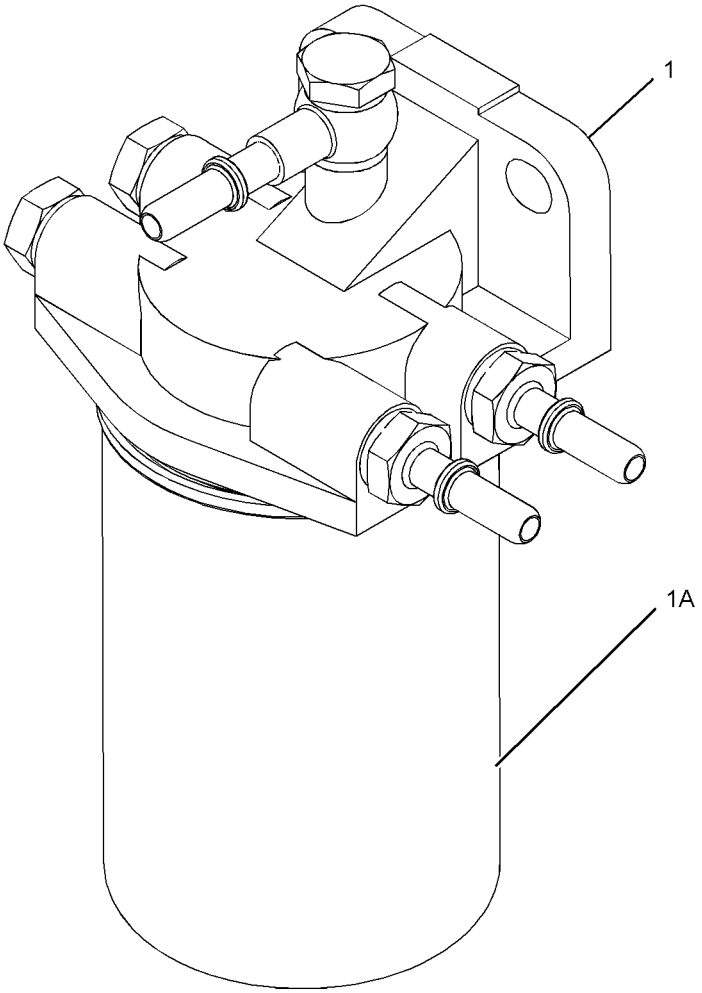

GRAPHIC #1 **<END>** g02743398

212-9580 FILTER GP-WATER SEP & FUEL

S/N: JRL1-UP; RRS1-UP

PART OF 217-8342 PUMP GP-FUEL PRM & SEC FILTER

SMCS-1260, 1261, 1263 **i03620161**

NOTE	REF NO	GRAPHIC REF	PART NUMBER	QTY	PART NAME 1 2 3 4 5 6 (PRODUCT LEVEL)	SEE PAGE
	1	1	**326-1643**	1	FILTER AS-WATER SEP & FUEL	
	1A	1	**220-8678**	1	SEAL-RING (FUEL FILTER)	
	2	1	**343-5527**	1	BOWL AS	
	2A	1	**3J-1907**	1	SEAL-O-RING	
	2B	1	**5F-9144**	1	SEAL-O-RING	
	2C	1	**8F-7219**	1	SEAL-O-RING	
	2D	1	**9S-8004**	1	PLUG-O-RING	

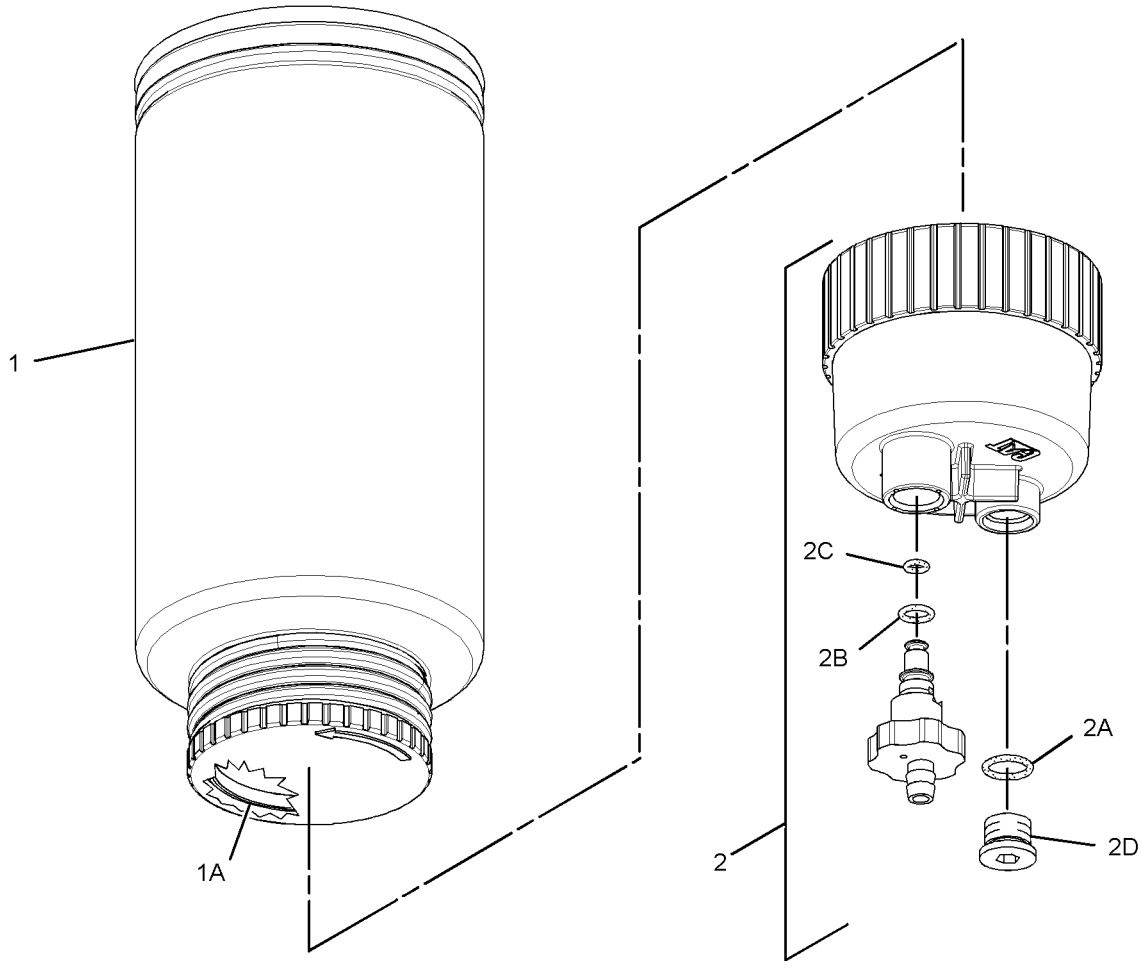

GRAPHIC #1 **<END>** g01944750

321-3600 INJECTOR GP-FUEL

S/N: C6E1-UP

PART OF 303-2930 PUMP GP-FUEL INJECTION

SMCS-1251, 1254, 1290, 1713 **i03158482**

NOTE	REF NO	GRAPHIC REF	PART NUMBER	QTY	PART NAME 1 2 3 4 5 6 (PRODUCT LEVEL)	SEE PAGE
	1	1	**287-7637**	1	WASHER	
	2	1	**274-1639**	1	SEAL	

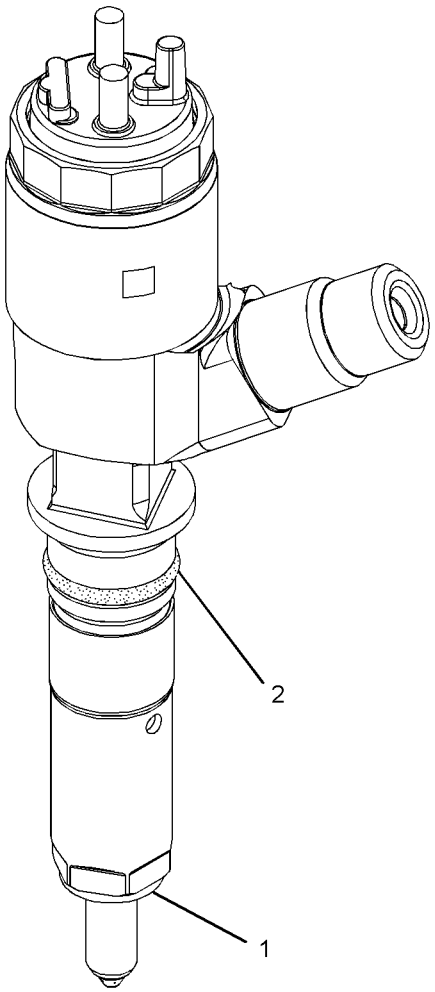

GRAPHIC #1 **<END>** g01321917

FUEL SYSTEM

289-8938 LINES GP-FUEL

S/N: JRL1-UP; RRS1-UP

PART OF 289-8894 INSTALLATION AR-ENGINE

SMCS-1274 **i04515689**

NOTE	REF NO	GRAPHIC REF	PART NUMBER	QTY	PART NAME 1 2 3 4 5 6 (PRODUCT LEVEL)	SEE PAGE
	1	1	**3S-2093**	2	STRAP-CABLE	
	2	1	**6S-8620**	8	CLAMP-HOSE	
	3	1	**6T-6969**	1	GUARD-SWITCH	
	4	1	**7K-1181**	2	STRAP-CABLE	
	5	1	**8T-7487**	3	CONNECTOR	
	6	1	**8T-9655**	8	MOUNT-ISOLATION	
Y	7	1	**165-5970**	1	SWITCH GP-TOGGLE (FUEL PRIMING PUMP ON, OFF)	144
	8	1	**185-1047**	1	ADAPTER	
	9	1	**191-1782**	1	SPACER (8.5X12.7X38.2-MM THK)	
CY	10	1	**217-8342**	1	PUMP GP-FUEL PRM & SEC FILTER (ELECTRIC)	93
	11	1	**232-1374**	1	BRACKET	
	12	1	**232-1376**	2	SPACER (8.5X12.7X139.1-MM THK)	
	13	1	**291-9943**	1	BRACKET AS	
	14	1	**293-9795**	1	BRACKET AS	
					(EACH BRACKET AS INCLUDES)	
M		1	**8T-3490**	1	NUT-WELD (M10X1.5-THD)	
	15	1	**295-4107**	1	ELBOW	
	16	1	**300-8841**	1	PLATE AS	
M		1	**8T-3490**	2	NUT-WELD (M10X1.5-THD)	
	17	1	**346-0523**	1	FILTER AS-FUEL (ULTRA HIGH EFFICIENCY)	
		1	**299-8229**	1	FILTER ELEMENT-FUEL (ULTRA HIGH EFFICIENCY)	
	18	1	*353-5142*	1	ADAPTER AS	
		1	**219-8136**	1	ADAPTER	
		1	**238-5081**	1	SEAL-O-RING	
	19	1	*353-5143*	2	ADAPTER AS	
					(EACH INCLUDES)	
		1	**6V-5653**	1	ELBOW	
		1	**238-5081**	1	SEAL-O-RING	
	20	1	**366-5405**	1	SUPPORT AS	
I	21	1	**366-5686**	1	HOSE AS	
I	22	1	**366-5687**	1	HOSE AS	
	23	1	*164-5619*	2	PLUG AS	
					(EACH INCLUDES)	
		1	**2M-9780**	1	SEAL-O-RING	
		1	**9S-8006**	1	PLUG-O-RING	
	24	1	**219-0669**	1	SEAL-O-RING	
	25	1	**228-7088**	5	SEAL-O-RING	
	26	1	**228-7100**	4	SEAL-O-RING	
	27	1	**5K-4778**	1	CLIP	
	28	1	**5K-5338**	1	CLIP	
	29	1	**5K-8451**	1	CLIP	
	30	1	**6D-3479**	2	CLIP	
	31	1	**6K-8178**	1	CLIP	
	32	1	**6V-9849**	1	ELBOW	
	33	1	**8S-0948**	1	CLIP	
	34	1	**8T-4121**	12	WASHER-HARD (11X21X2.5-MM THK)	
M	35	1	**8T-4136**	7	BOLT (M10X1.5X25-MM)	
M	36	1	**8T-4195**	3	BOLT (M10X1.5X30-MM)	
M	37	1	**8T-4196**	2	BOLT (M10X1.5X35-MM)	
M	38	1	**8T-6869**	1	BOLT (M8X1.25X60-MM)	
M	39	1	**8T-7352**	2	BOLT (M8X1.25X160-MM)	
	40	1	**9N-0869**	6	WASHER-HARD (8.8X25.5X2-MM THK)	
E	41	1	**7I-1024**		GUARD-HOSE (45-CM)	
E	42	1	**8C-3681**		HOSE (33-CM)	
E	43	1	**5P-1442**		HOSE (55-CM)	
E	43A	1	**5P-1442**		HOSE (190-CM)	

289-8938 **LINES GP-FUEL** *(contd.)* **i04515689**

NOTE	REF NO	GRAPHIC REF	PART NUMBER	QTY	PART NAME 1 2 3 4 5 6 (PRODUCT LEVEL)	SEE PAGE
E	44	1	**5P-1505**		HOSE (175-CM)	
E	44A	1	**5P-1505**		HOSE (83-CM)	

C-CHANGE FROM PREVIOUS TYPE
E-ORDER BY THE CENTIMETER
I-REFER TO HYDRAULIC INFORMATION SYSTEM
M-METRIC PART
Y-SEPARATE ILLUSTRATION

289-8938 **LINES GP-FUEL** *(contd.)* **i04515689**

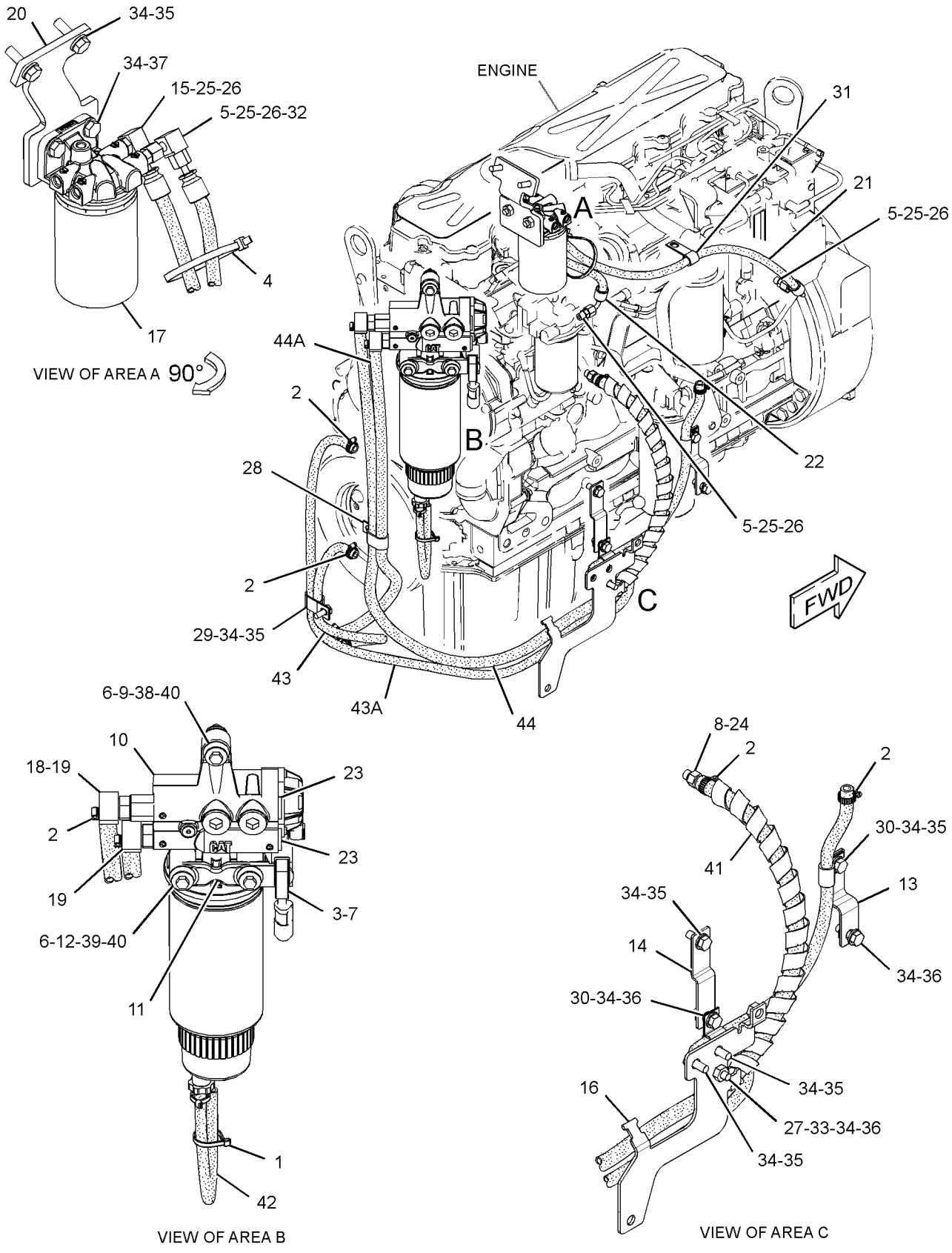

GRAPHIC #1 **<END>** g02696618

FUEL SYSTEM

308-9075 LINES GP-FUEL

S/N: C6E1-UP

PART OF 292-5306 ENGINE AR-PRIMARY

SMCS-1274 **i03509065**

NOTE	REF NO	GRAPHIC REF	PART NUMBER	QTY	PART NAME 1 2 3 4 5 6 (PRODUCT LEVEL)	SEE PAGE
M	1	1	**6I-0260**	4	BOLT (M8X1.25X25-MM)	
M	2	1	**6I-0593**	2	BOLT (M10X1.5X30-MM)	
M	4	2	**6I-0654**	1	BOLT (M10X1.5X25-MM)	
	5	2	**106-8916**	1	BOLT (M6X16-MM)	
M	6	2	**124-3815**	1	BOLT (M8X16X1.25-MM)	
	7	1	**215-9509**	1	FITTING (QUICK DISCONNECT, FEMALE)	
	8	2	**286-2890**	2	WASHER	
	9	2	**232-1115**	1	CLIP-PIPE	
C	10	1	**234-3063**	3	CLIP	
	11	1,2	**277-6165**	2	CONNECTION-FUEL	
	12	2	**278-0314**	1	SPACER	
	13	1	**311-1159**	1	TUBE	
	14	2	**311-1684**	1	TUBE	
	15	1	**311-1952**	1	BRACKET AS	
	15A	1	**232-1115**	4	CLIP-PIPE	
	16	2	**287-6853**	1	BRACKET AS	
	16A	2	**232-1115**	2	CLIP-PIPE	
	17	2	**290-5735**	1	BRACKET AS	
	17A	2	**278-0315**	1	CLIP-PIPE	
	18	2	**293-8068**	1	TUBE-FUEL	
	19	2	**309-0857**	1	TUBE	
	20	2	**295-4670**	1	BOLT-SPECIAL (BANJO)	
	21	1	**311-1666**	1	BRACKET	
	22	2	**306-5432**	1	BRACKET	
	23	2	**311-2262**	1	BRACKET AS	
	23A	2	**232-1115**	2	CLIP-PIPE	
C	24	1	**331-3187**	1	TUBE	
C	25	1	**311-2241**	1	BRACKET AS	
	25A	1	**232-1115**	7	CLIP-PIPE	
	26	2	**308-9079**	1	BRACKET AS	
	26A	2	**232-1115**	2	CLIP-PIPE	
C	27	1	**311-2232**	1	BRACKET AS	
	27A	1	**232-1115**	1	CLIP-PIPE	
F			**278-4138**	5	PROTECTION GP-FUEL SYSTEM (LINE, LOW PRESSURE)	

C-CHANGE FROM PREVIOUS TYPE
F-NOT SHOWN
M-METRIC PART

308-9075 **LINES GP-FUEL** *(contd.)* **i03509065**

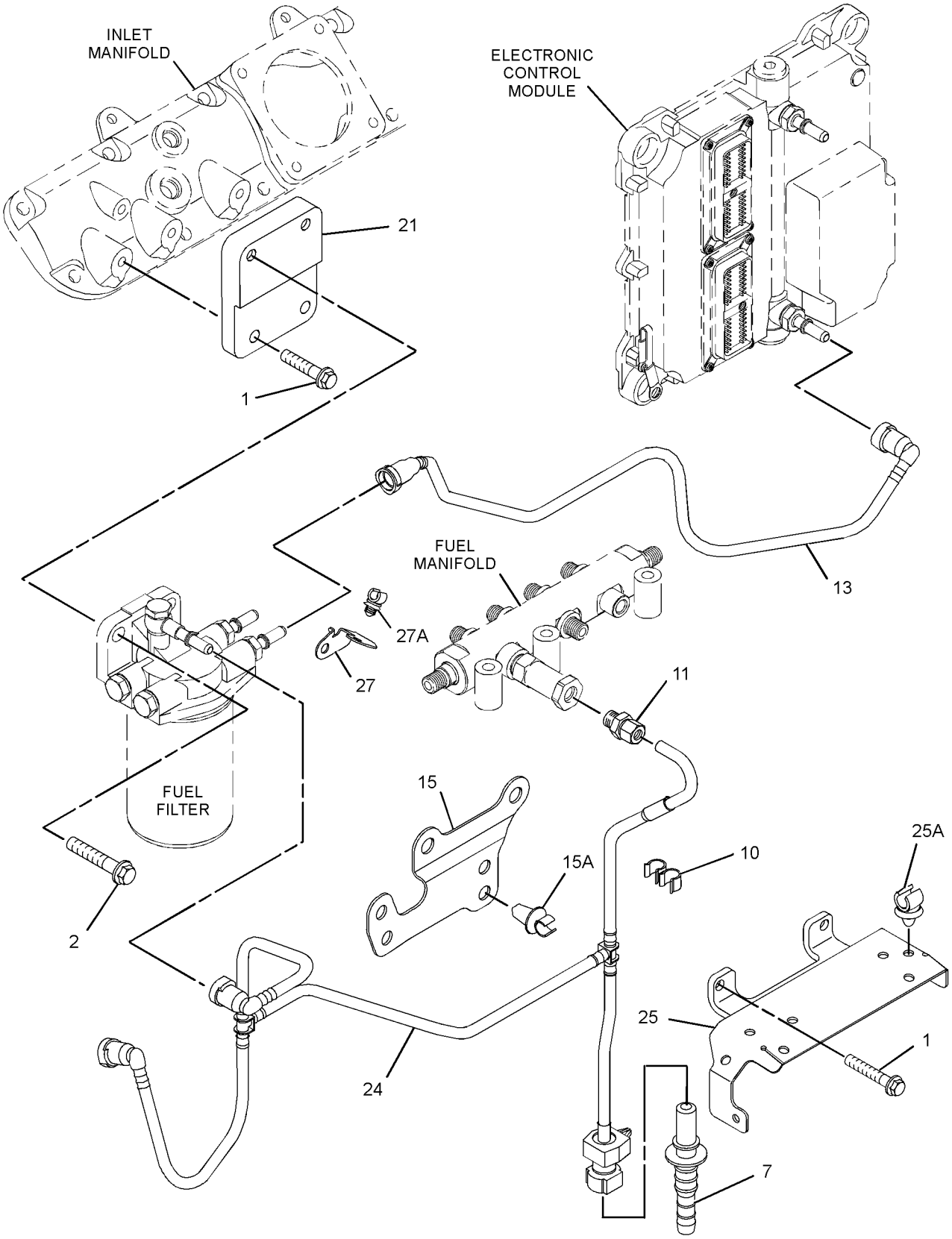

GRAPHIC #1 g01648596

308-9075 **LINES GP-FUEL** *(contd.)* **i03509065**

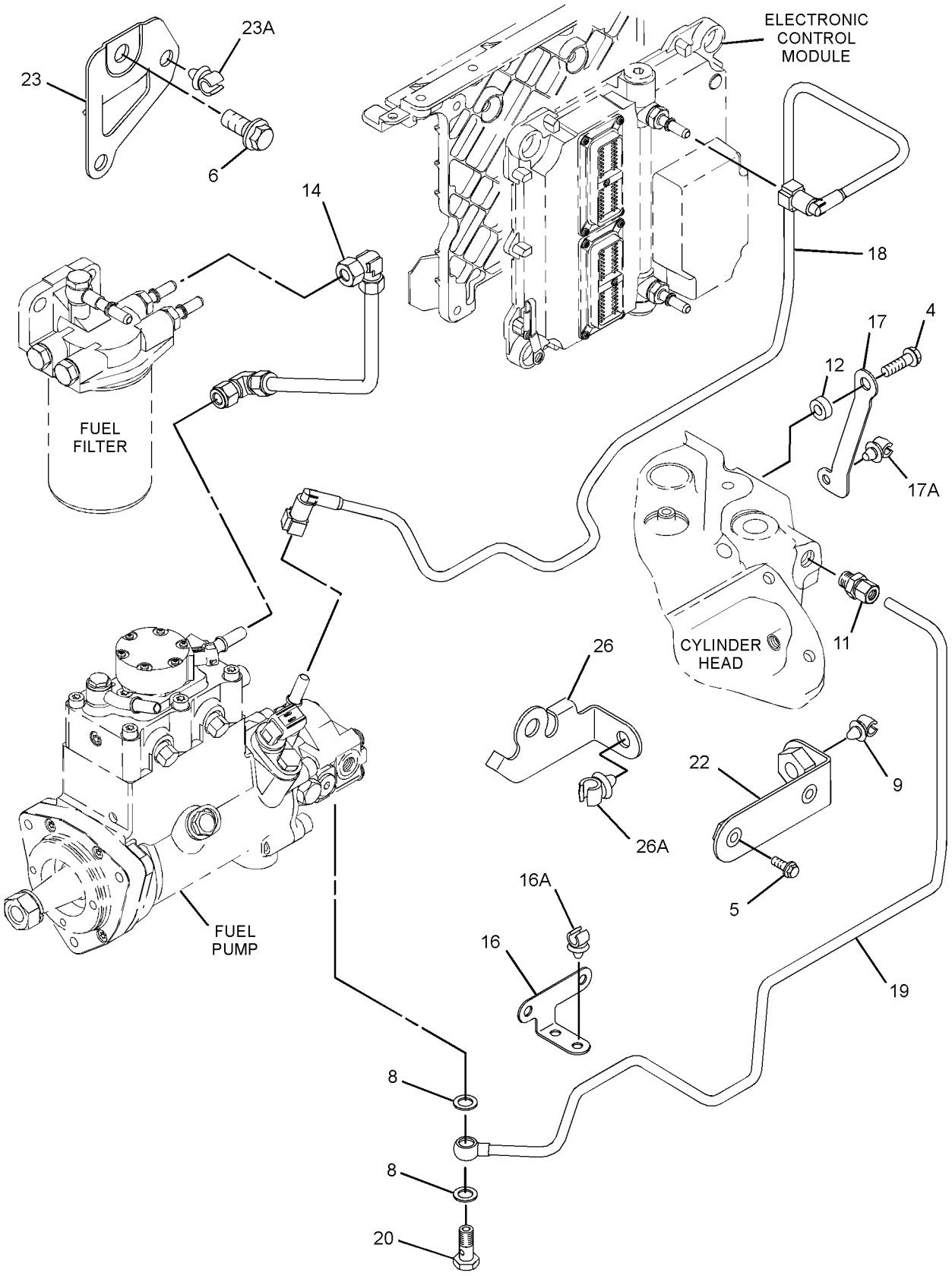

GRAPHIC #2 **<END>** g01444799

FUEL SYSTEM

303-2930 PUMP GP-FUEL INJECTION

S/N: C6E1-UP

PART OF 292-5306 ENGINE AR-PRIMARY

SMCS-1251, 1290 **i04505619**

NOTE	REF NO	GRAPHIC REF	PART NUMBER	QTY	PART NAME 1 2 3 4 5 6 (PRODUCT LEVEL)	SEE PAGE
M	1	1	**6I-0217**	6	BOLT (M8X1.25X20-MM)	
CM	2	2	**6I-0254**	3	BOLT (M8X1.25X30-MM)	
M	3	1	**6I-0260**	4	BOLT (M8X1.25X25-MM)	
	4	1	**6I-0456**	4	BOLT (M8X1.25X45-MM)	
C	6	2	**6I-4793**	3	BOLT (M8X1.25X50-MM)	
	7	1	**7W-2632**	1	WASHER (8.5X16.8X1.6-MM THK)	
M	8	3	**124-3815**	1	BOLT (M8X1.25X16-MM)	
	9	1	**155-0576**	8	MOUNT-ISOLATION	
	10	1	**160-0162**	2	WASHER	
	11	1	**217-0099**	4	SPACER (8.2X25X2-MM THK)	
	12	1	**225-8524**	1	BOLT-SPECIAL (BANJO)	
	13	1	**230-8989**	1	GEAR-FUEL PUMP (68-TEETH)	
	14	1	**232-3149**	3	WASHER (8.35X16.85X1.55-MM THK)	
C	17	2	**358-6634**	1	RAIL GP-FUEL	
	17A	2	**305-5291**	1	VALVE AS-RELIEF (FUEL RAIL)	
		2	**228-7102**	1	SEAL-O-RING	
	18	1	**268-6677**	1	BRACKET AS	
	18A	1	**260-3939**	1	SCREW-HEX HEAD	
	19	1	**268-6678**	1	BRACKET AS	
	19A	1	**260-3939**	1	SCREW-HEX HEAD	
CYR	20	1	**317-8021**	1	PUMP GP-FUEL INJECTION	92
	21	2	**278-5168**	6	CLAMP-INJECTOR	
	22	2	**278-5170**	6	BOLT	
	23	2	**278-5180**	2	CLIP	
	24	1	**278-5201**	2	CONNECTION	
C	25	1	**228-7100**	2	SEAL-O-RING	
	26	1	**278-5203**	4	SPACER	
	29	3	**278-5225**	1	KIT-SENSOR (ENGINE OIL PRESSURE)	
	29A	3	**199-9267**	1	SEAL-O-RING	
	30	3	**311-3858**	1	KIT-SENSOR (ENGINE SPEED)	
	30A	3	**274-1639**	1	SEAL	
		3	**238-0120**	1	SENSOR GP-SPEED	
	31	3	**278-5272**	1	KIT-SENSOR (INTAKE AIR TEMPERATURE)	
	31A	3	**278-5226**	1	SEAL-O-RING	
	32	3	**278-5273**	1	KIT-SENSOR (AIR PRESSURE)	
	32A	3	**199-9252**	1	SEAL-O-RING	
	33	3	**278-5307**	1	KIT-SENSOR (COOLANT TEMPERATURE)	
	33A	3	**199-9267**	1	SEAL-O-RING	
	34	2	**311-6342**	1	SENSOR-PRESSURE (FUEL RAIL PRESSURE)	
	34A	2	**309-8006**	1	WASHER	
C	35	2	**330-3685**	3	CLAMP	
C	36	2	**330-3687**	3	CLAMP	
C	37	2	**330-5467**	3	ISOLATOR	
	38	1	**310-7918**	1	BRACKET-SUPPORT	
R	39	1	**331-7539**	1	CONTROL GP-UNPROGRAMMED (ENGINE)	
	40	1	**287-6838**	1	BRACKET	
	41	1	**287-6839**	2	BOLT	
	42	2	**336-8174**	1	LINE-FUEL INJECTION (CYL NO. 1)	
	43	2	**336-8175**	1	LINE-FUEL INJECTION (CYL NO. 2)	
	44	2	**336-8176**	1	LINE-FUEL INJECTION (CYL NO. 3)	
	45	2	**336-8177**	1	LINE-FUEL INJECTION (CYL NO. 4)	
	46	2	**336-8178**	1	LINE-FUEL INJECTION (CYL NO. 5)	
	47	2	**336-8179**	1	LINE-FUEL INJECTION (CYL NO. 6)	
C	48	2	**355-1582**	1	TUBE AS	
	49	1	**321-1270**	1	TUBE-OIL	
YR	50	2	**321-3600**	6	INJECTOR GP-FUEL	80

303-2930 **PUMP GP-FUEL INJECTION** *(contd.)* **i04505619**

NOTE	REF NO	GRAPHIC REF	PART NUMBER	QTY	PART NAME 1 2 3 4 5 6 (PRODUCT LEVEL)	SEE PAGE
M	51	1	**101-3895**	1	BOLT (M8X1.25X35-MM)	
	53	1	**293-9901**	1	BRACKET	
C	54	2	**1N-3361**	1	SPACER	
C	55	2	**280-1892**	3	BOLT	
F			**278-4138**	5	PROTECTION GP-FUEL SYSTEM	

C-CHANGE FROM PREVIOUS TYPE
F-NOT SHOWN
M-METRIC PART
R-REMFG PART MAY BE AVAILABLE
Y-SEPARATE ILLUSTRATION

303-2930 **PUMP GP-FUEL INJECTION** *(contd.)* **i04505619**

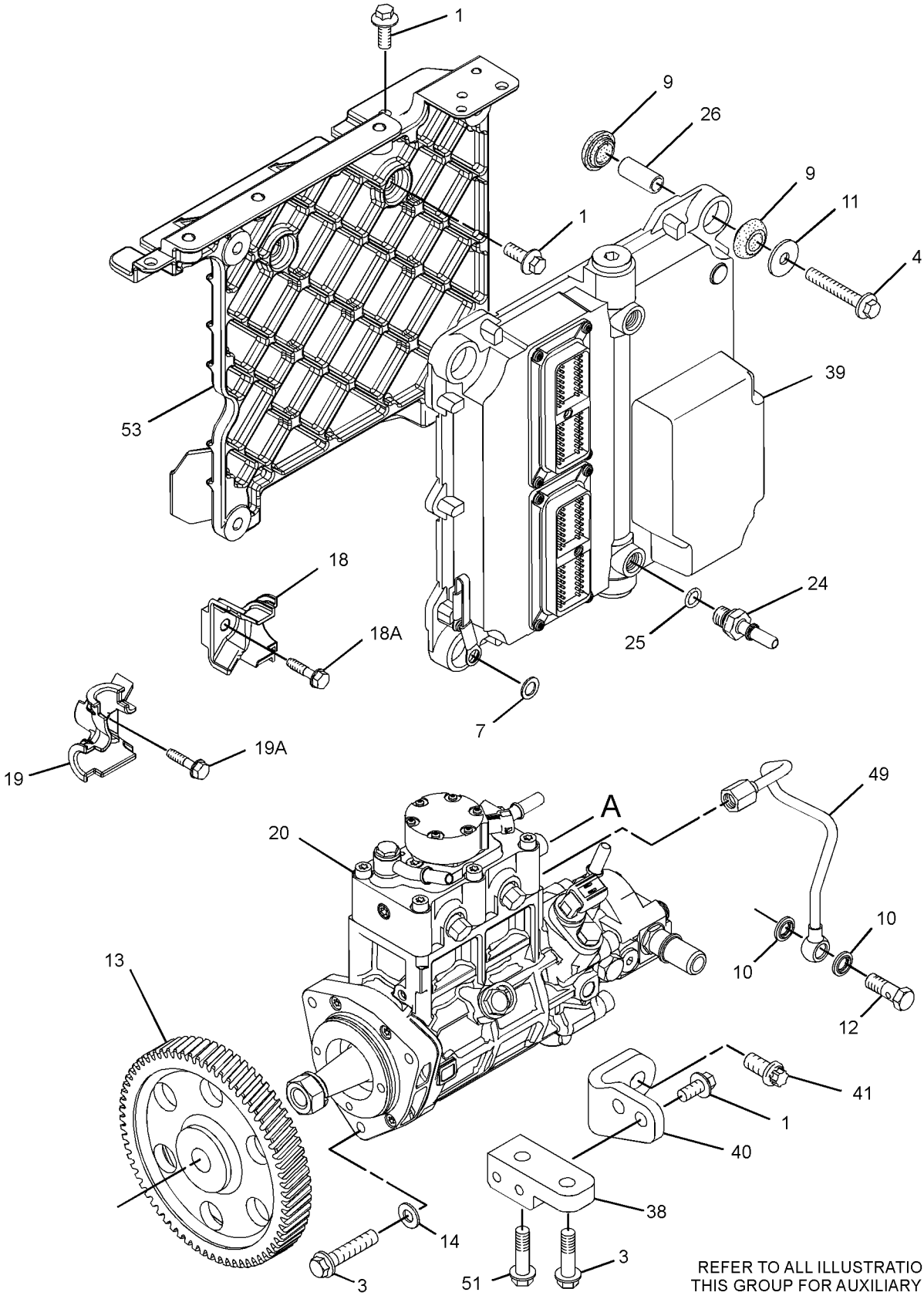

REFER TO ALL ILLUSTRATIONS OF THIS GROUP FOR AUXILIARY VIEWS

GRAPHIC #1

g02710736

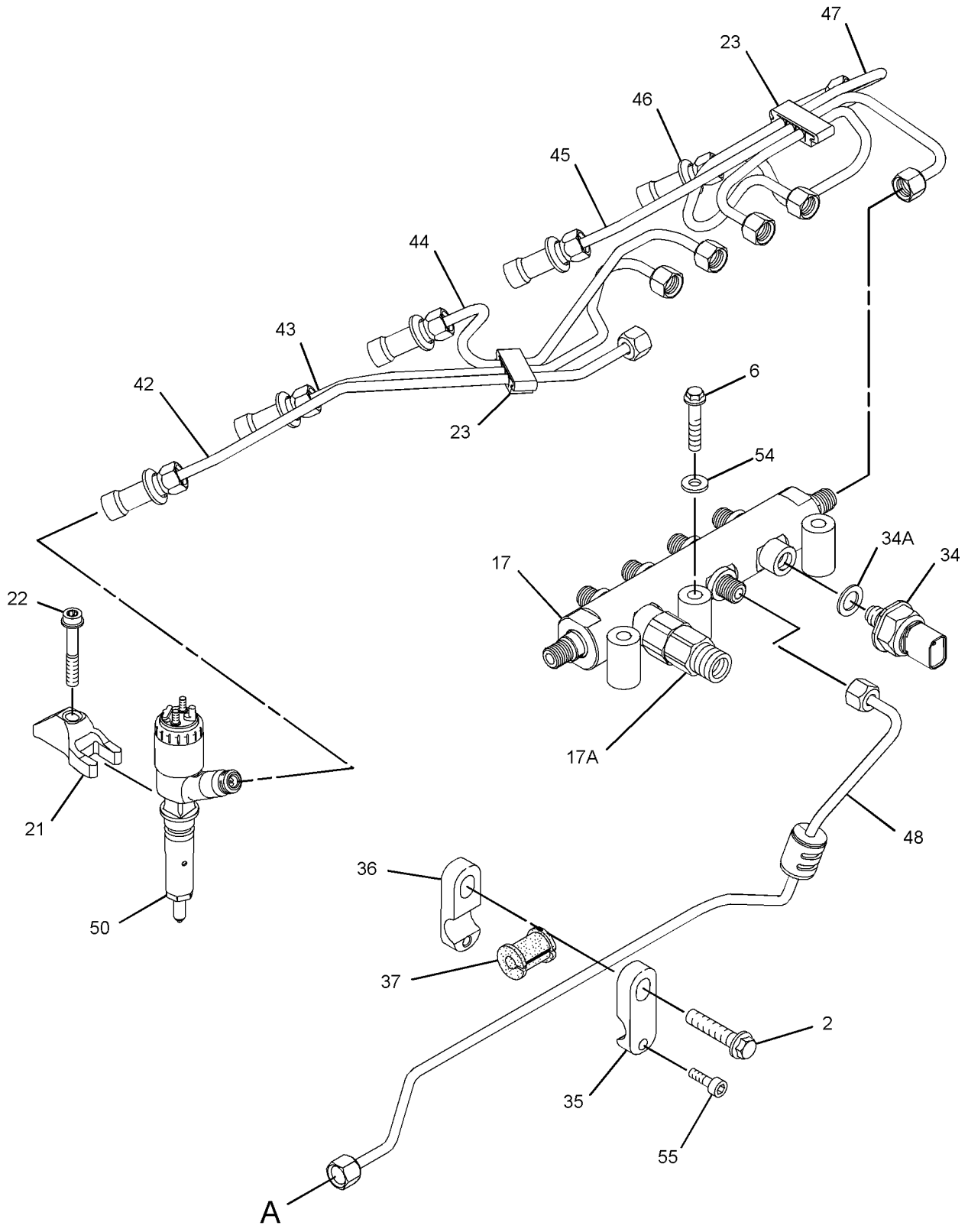

GRAPHIC #2 g02710737

303-2930 **PUMP GP-FUEL INJECTION** *(contd.)* **i04505619**

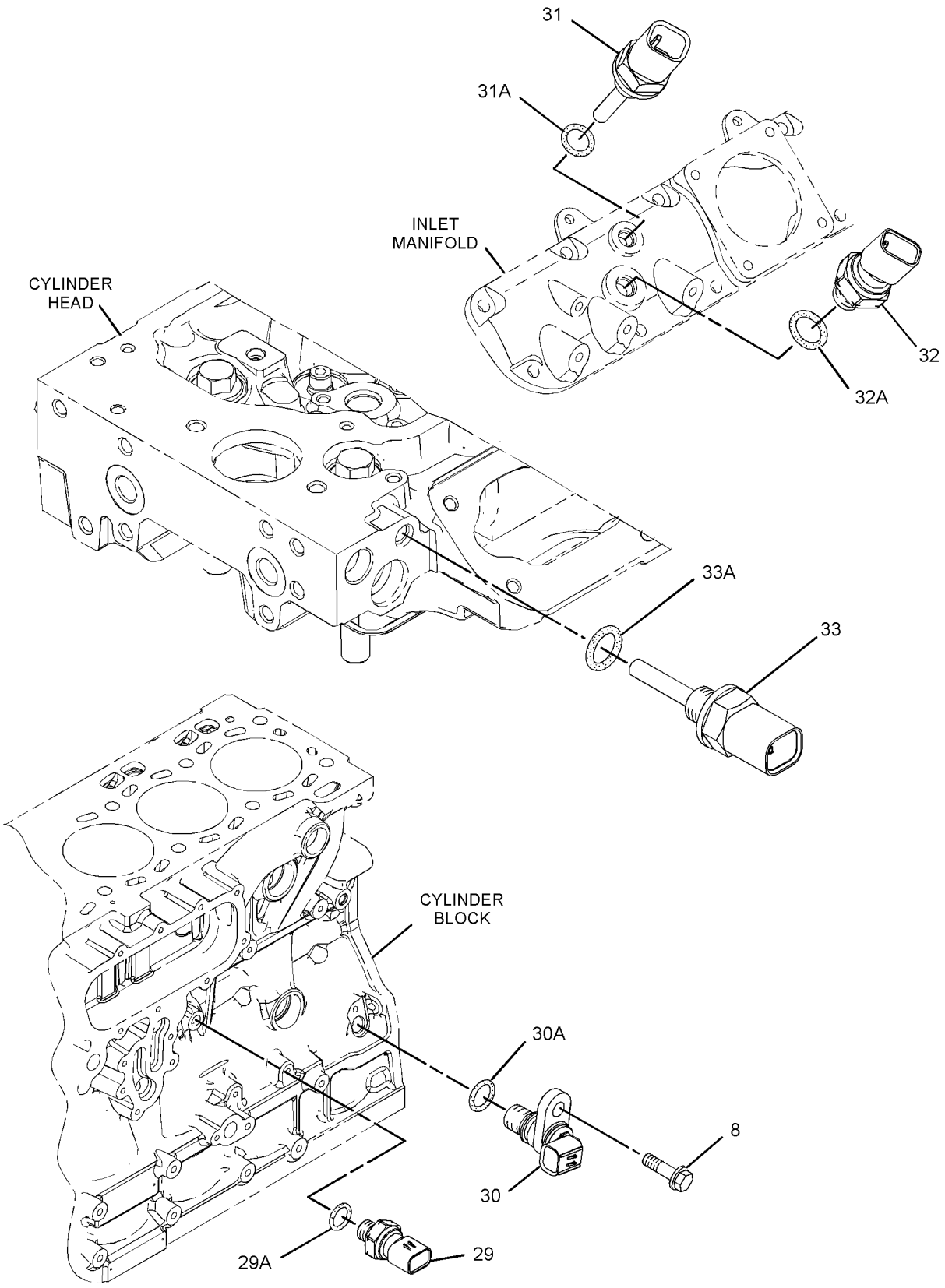

GRAPHIC #3 **<END>** g01603833

FUEL SYSTEM

317-8021 PUMP GP-FUEL INJECTION*R

S/N: C6E1-UP

PART OF 303-2930 PUMP GP-FUEL INJECTION

SMCS-1251, 1290 **i04216674**

NOTE	REF NO	GRAPHIC REF	PART NUMBER	QTY	PART NAME 1 2 3 4 5 6 (PRODUCT LEVEL)	SEE PAGE
	1	1	**228-0172**	1	FITTING-FUEL	
	2	1	**228-7100**	2	SEAL-O-RING	
	3	1	**238-0120**	1	SENSOR GP-SPEED (SECONDARY, TIMING)	
	4	1	**247-6019**	1	SEAL	
	5	1	**248-1066**	1	FITTING-FUEL	
	6	1	**293-0249**	1	PUMP GP-FUEL TRANSFER	
	7	1	**295-4801**	1	NUT (M14X1.5-THD)	
	8	1	**296-3542**	1	LOCKWASHER	
	9	1	**117-1385**	1	SEAL-O-RING	
M	10	1	**5A-3604**	5	BOLT-SOCKET HEAD (M8X1.25X25-MM)	
	11	1	**334-2932**	1	SEAL-O-RING	
	12	1	**8L-2779**	4	SEAL-O-RING	
M	13	1	**8T-4200**	1	BOLT (M8X1.25X16-MM)	
	14	1	**257-2381**	2	PIN	
	15	1	**257-2382**	2	PLUG	
	16	1	**258-8149**	2	SPRING	
	17	1	**294-3031**	1	BOLT-SPECIAL	
	18	1	**294-3032**	1	WASHER-SPECIAL	

M-METRIC PART

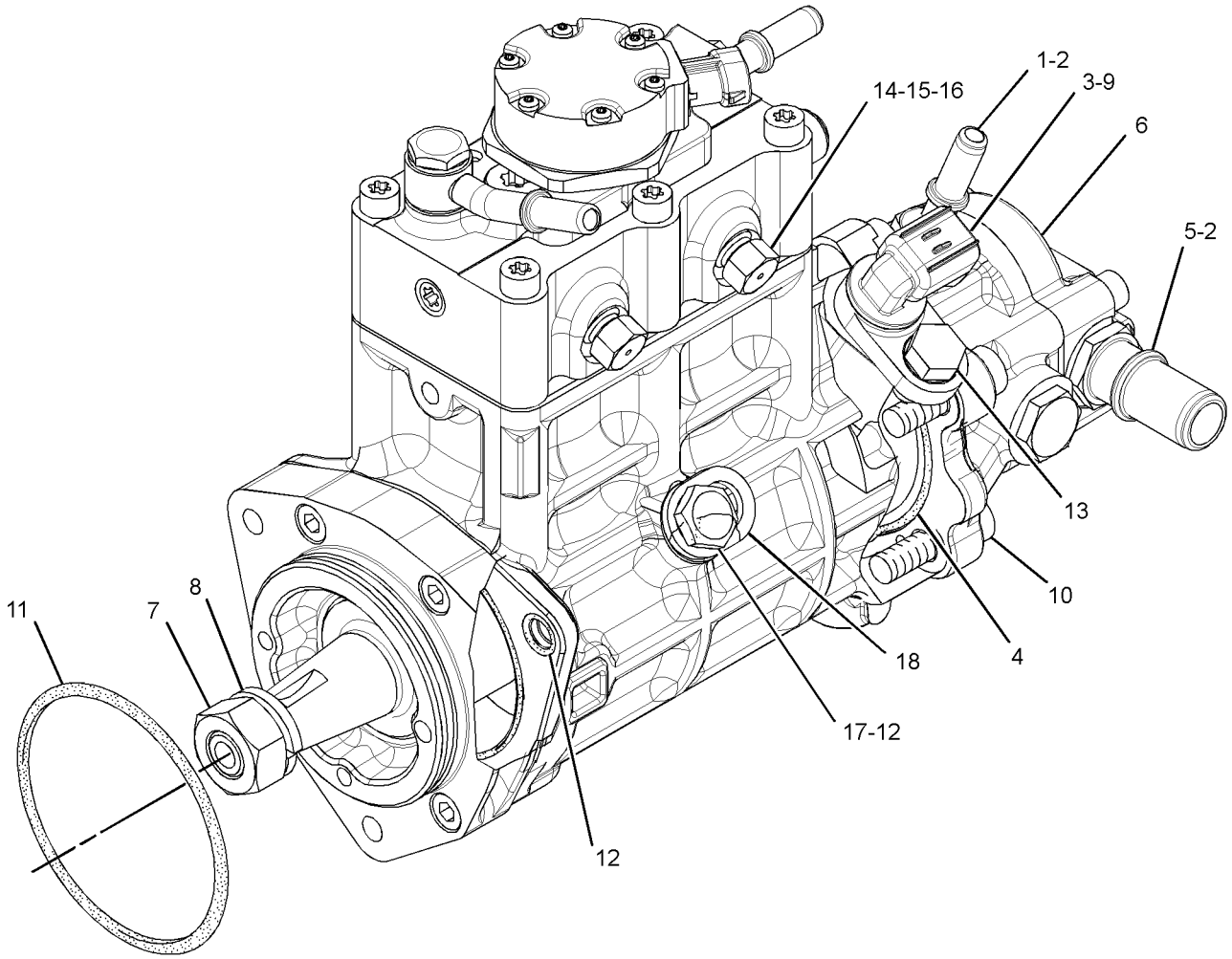

GRAPHIC #1 **<END>** g02398316

217-8342 PUMP GP-FUEL PRM & SEC FILTER

S/N: JRL1-UP; RRS1-UP

PART OF 289-8938 LINES GP-FUEL

SMCS-1258, 1261 **i03437502**

NOTE	REF NO	GRAPHIC REF	PART NUMBER	QTY	PART NAME 1 2 3 4 5 6 (PRODUCT LEVEL)	SEE PAGE
Y	1	1	*212-9580*	1	FILTER GP-WATER SEP & FUEL	79
	2	1	**217-8339**	1	PUMP AS-FUEL PRIMING (24-VOLT)	

Y-SEPARATE ILLUSTRATION

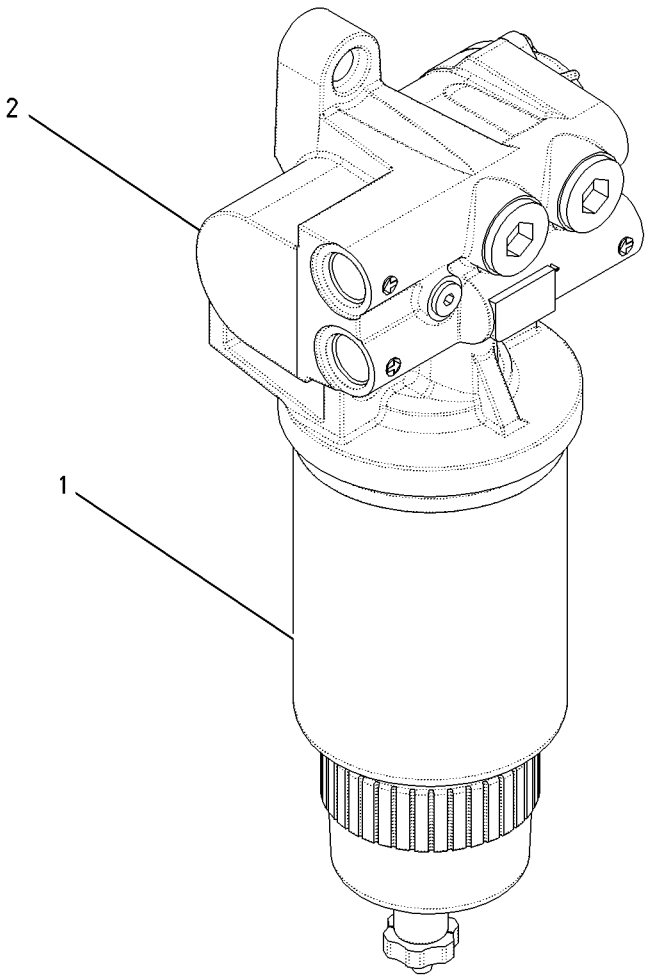

GRAPHIC #1 **<END>** g00929334

FUEL SYSTEM

289-8911 TANK & MTG GP-FUEL

S/N: JRL1-UP; RRS1-UP

PART OF 372-7772, 372-7773 CHASSIS AR

SMCS-1273 **i02989320**

NOTE	REF NO	GRAPHIC REF	PART NUMBER	QTY	PART NAME 1 2 3 4 5 6 (PRODUCT LEVEL)	SEE PAGE
	1	1	**202-0360**	2	STRAP AS	
					(EACH INCLUDES)	
		1	**202-0358**	1	STRAP	
	2	1	**204-1370**	1	GASKET	
	3	1	**242-8159**	1	PLATE AS	
Y	4	1	**290-3931**	1	TANK GP-FUEL	95
	5	1	**308-3458**	1	SENDER AS-FUEL LEVEL	
M	6	1	**180-4686**	2	BOLT (M10X1.5X60-MM)	
M	7	1	**5C-9553**	8	BOLT (M6X1X16-MM)	
	8	1	**8T-4121**	6	WASHER-HARD (11X21X2.5-MM THK)	
M	9	1	**8T-4133**	2	NUT (M10X1.5-THD)	
M	10	1	**8T-4137**	2	BOLT (M10X1.5X20-MM)	
	11	1	**8T-4205**	8	WASHER-HARD (7.2X14.5X2-MM THK)	

M-METRIC PART
Y-SEPARATE ILLUSTRATION

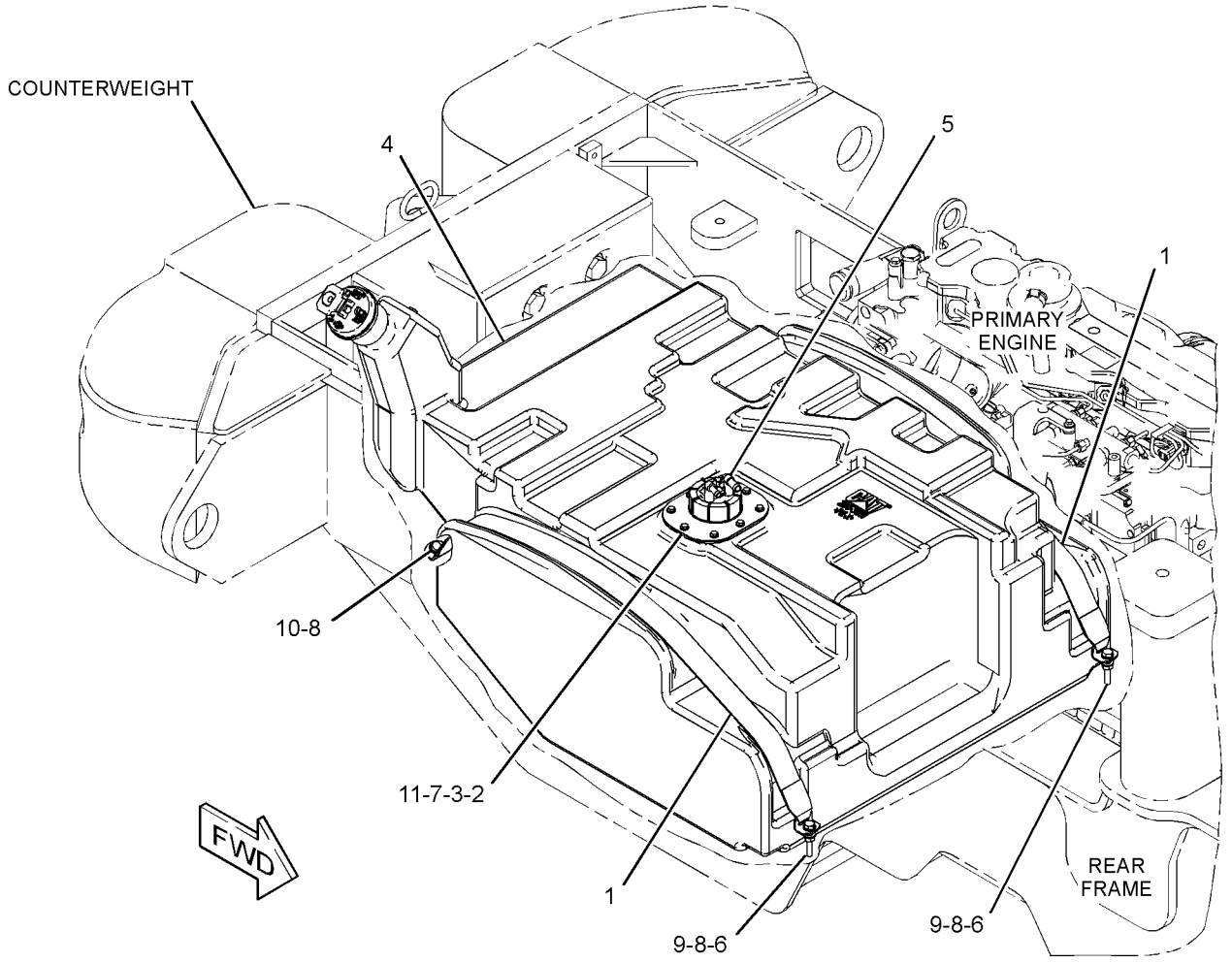

GRAPHIC #1 **<END>** g01389261

290-3931 TANK GP-FUEL

S/N: JRL1-UP; RRS1-UP

PART OF 289-8911 TANK & MTG GP-FUEL

SMCS-1273 **i03627169**

NOTE	REF NO	GRAPHIC REF	PART NUMBER	QTY	PART NAME 1 2 3 4 5 6 (PRODUCT LEVEL)	SEE PAGE
	1	1	**5M-6213**	1	PLUG-PIPE	
	2	1	**180-3730**	1	STRAINER-FUEL (FILLER NECK SCREEN)	
	3	1	**206-4441**	1	ADAPTER-FUEL CAP	
	4	1	**2M-9780**	1	SEAL-O-RING	
	5	1	**304-3885**	1	CAP-FUEL (FILLER)	
	6	1	**313-4553**	1	PLUG	

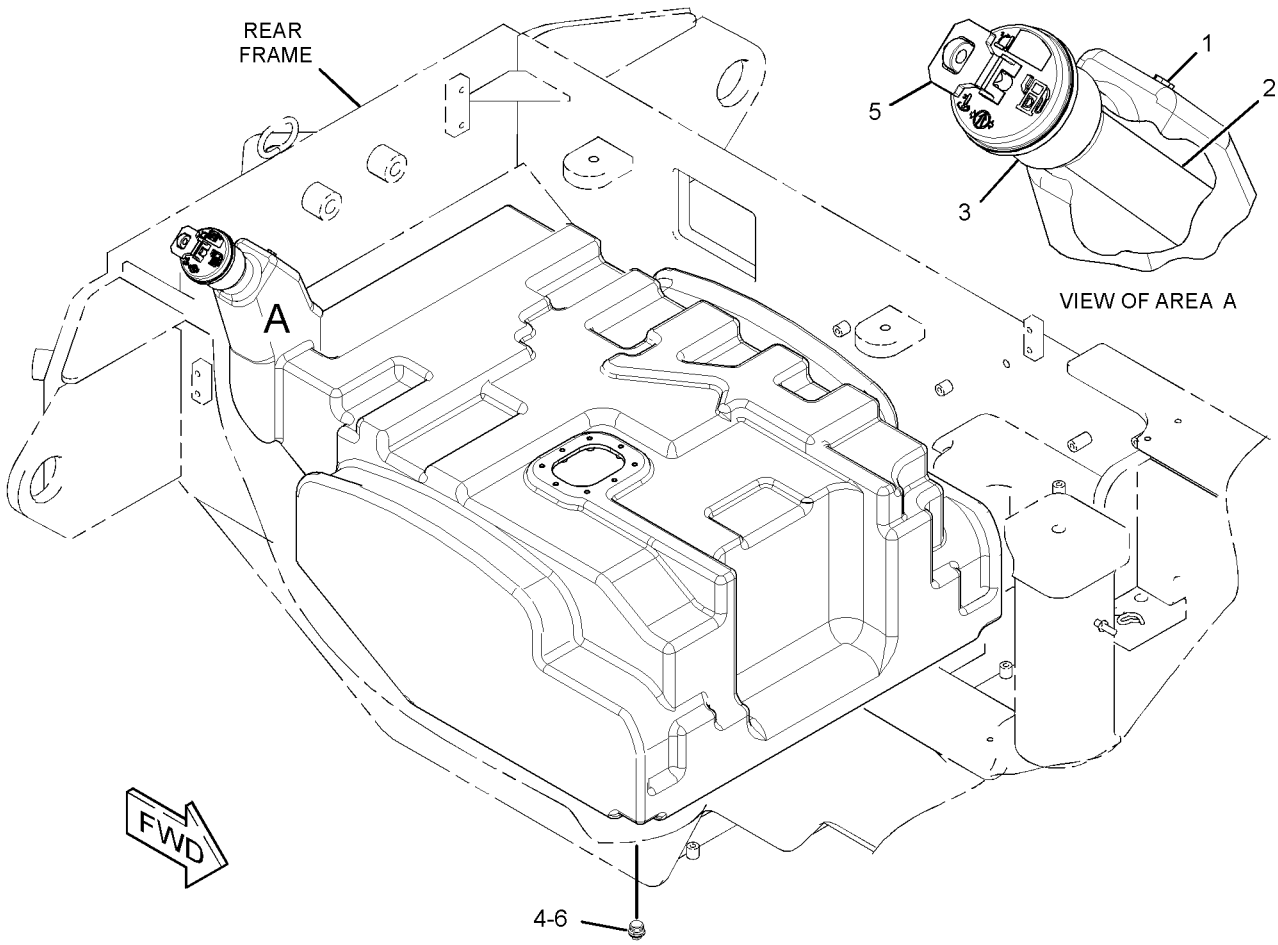

GRAPHIC #1 **<END>** g01946045

3E-6328 ALARM GP

S/N: JRL1-UP; RRS1-UP
24-VOLT
PART OF 290-7223 LIGHTING GP-FLOOD & SIGNAL

SMCS-7400, 7402, 7407 **i02942905**

NOTE	REF NO	GRAPHIC REF	PART NUMBER	QTY	PART NAME 1 2 3 4 5 6 (PRODUCT LEVEL)	SEE PAGE
	1	1	**102-8802**	1	KIT-RECEPTACLE (2-PIN)	
					(INCLUDES RECEPTACLE AS & WEDGE)	
	2	1	**186-3735**	2	PIN-CONNECTOR (16-GA TO 18-GA)	

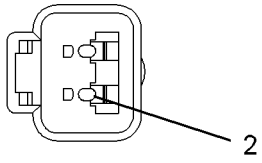

VIEW A–A

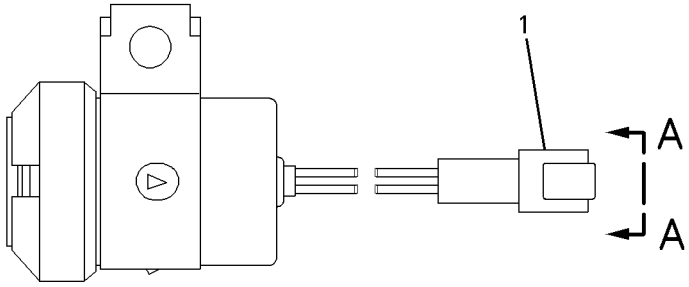

GRAPHIC #1 **<END>** g00697818

197-8820 ALTERNATOR GP-CHARGING*R

S/N: JRL1-UP; RRS1-UP
24-VOLT, 95-AMPERE
PART OF 259-4137, 267-3770 ALTERNATOR GP-CHARGING
AN ATTACHMENT

SMCS-1405 **i04141549**

NOTE	REF NO	GRAPHIC REF	PART NUMBER	QTY	PART NAME 1 2 3 4 5 6 (PRODUCT LEVEL)	SEE PAGE
	1	1	**185-2653**	1	FRAME	
	2	1	**5S-7349**	1	BOLT (1/4-20X0.5-IN)	
	3	1	**185-2639**	1	FAN AS	
	4	1	**1H-3244**	1	LOCKWASHER	
	5	1	**185-2645**	1	FRAME	
	6	1	**2K-4821**	1	LOCKNUT (5/8-18-THD)	
	7	1	**5P-8247**	1	WASHER-HARD (17X32X3.5-MM THK)	
	8	1	**185-2651**	1	COVER	
	9	1	**8T-4205**	1	WASHER-HARD (7.2X14.5X2-MM THK)	
	10	1	**185-2647**	1	GROMMET	
	11	1	**9L-6770**	1	CAP-DUST	
	12	1	**205-0626**	1	STATOR AS-ALTERNATOR	
	13	1	**185-2638**	2	COLLAR	
	14	1	**185-2654**	1	PLATE	
	15	1	**185-2650**	1	ROTOR AS	
	16	1	**185-2644**	1	COIL AS	
	17	1	**185-2648**	1	REGULATOR AS-VOLTAGE (24-VOLT)	
	18	1	**6V-8189**	1	NUT (5/16-18-THD)	
	19	1	**8T-4224**	1	WASHER-HARD (8.8X16X2-MM THK)	
	20	1	**3F-9556**	1	LOCKWASHER	
					AVAILABLE REPAIR KIT(S):	
			185-2655		KIT-BEARING	
					(INCLUDES BEARINGS)	
			199-8436		KIT-TERMINAL (ALTERNATOR AIR)	
					(INCLUDES HOLDER AS, PLATE, INSULATOR, PIN, BOLTS, GROMMET, & NUT)	
			199-7891		KIT-TERMINAL (ALTERNATOR AIR)	
					(INCLUDES INSULATORS, WASHERS, & NUTS)	
			185-2658		KIT-HARDWARE (ALTERNATOR AIR)	
					(INCLUDES BOLTS)	

197-8820 **ALTERNATOR GP-CHARGING** *(contd.)* **i04141549**

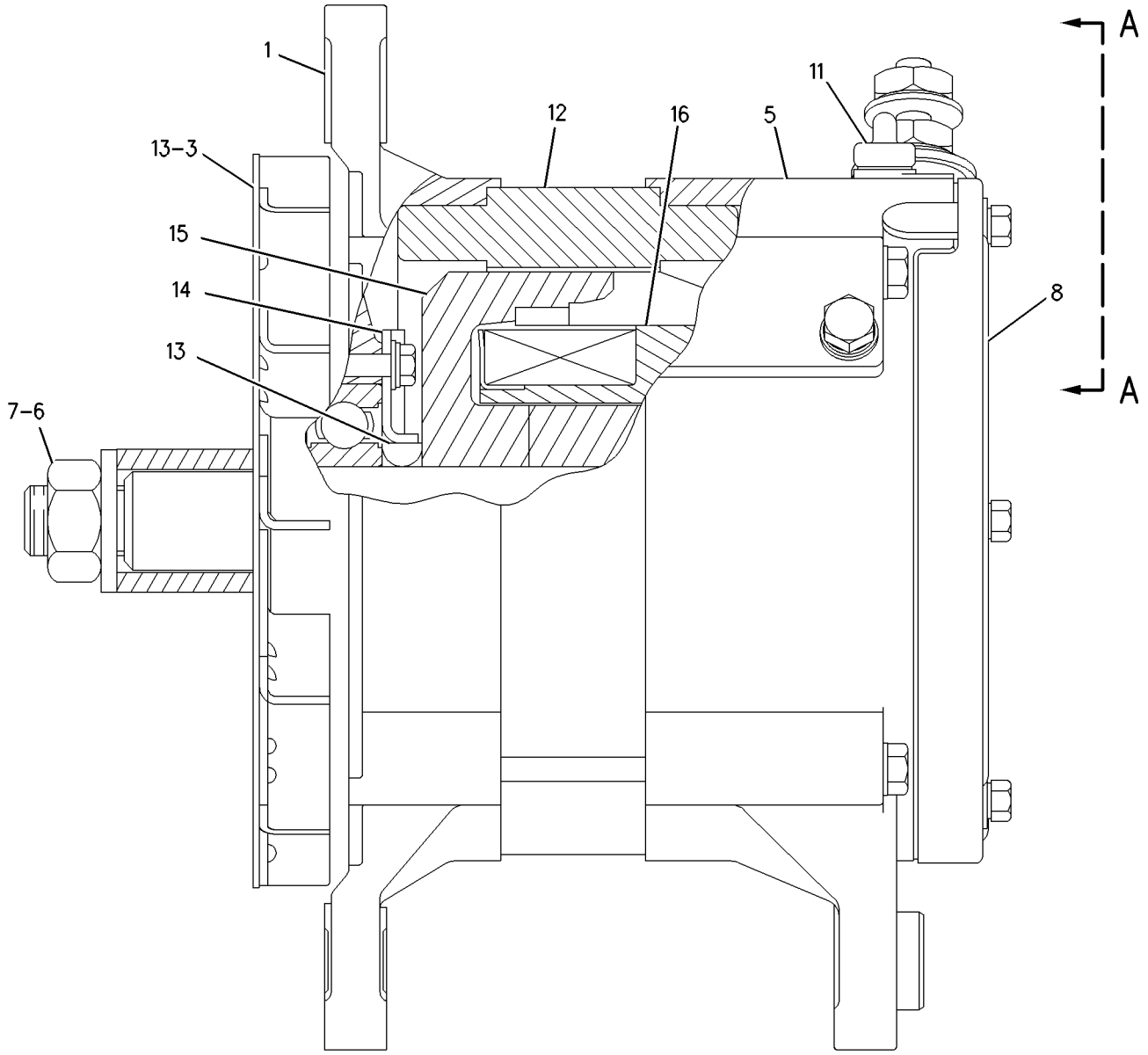

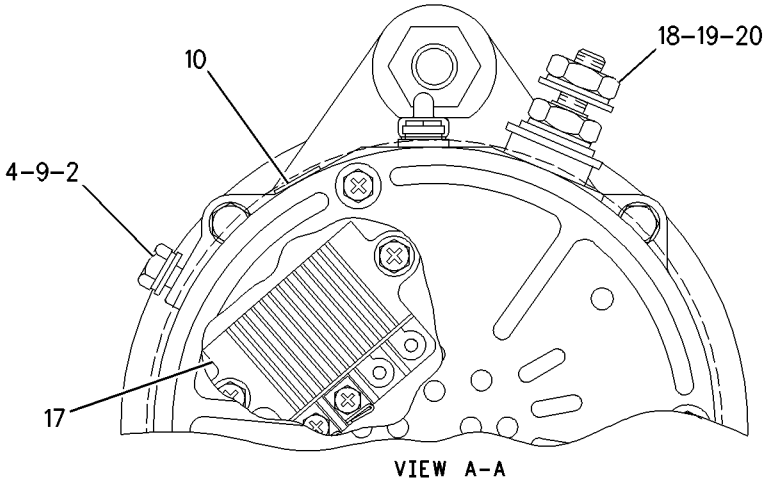

VIEW A-A

GRAPHIC #1 **<END>** g00873198

259-4137 ALTERNATOR GP-CHARGING

S/N: JRL1-UP; RRS1-UP
NON-A/C
PART OF 290-8189 CANOPY AR-OPEN ROPS, 372-8684 HEATER AR-CAB, 315-4654 OPERATOR AR
AN ATTACHMENT

SMCS-1405 **i04515651**

NOTE	REF NO	GRAPHIC REF	PART NUMBER	QTY	PART NAME 1 2 3 4 5 6 (PRODUCT LEVEL)	SEE PAGE
	1	1	**369-3663**	1	PULLEY-ALTERNATOR (8-GROOVE)	
	2	1	**190-0642**	1	BELT TENSIONER	
YR	3	1	**197-8820**	1	ALTERNATOR GP-CHARGING (24-VOLT, 95-AMPERE)	97
	4	1	**226-0443**	1	BELT-SERPENTINE (ALTERNATOR)	
	5	1	**262-7562**	1	BRACKET	
	6	1	**267-7283**	1	BRACKET	
	7	1	**7X-7729**	7	WASHER (11X25X3-MM THK)	
	8	1	**8C-4436**	1	BOLT (1/2-13X1.375-IN)	
M	9	1	**8T-4136**	3	BOLT (M10X1.5X25-MM)	
M	10	1	**8T-4172**	1	BOLT (M10X1.5X80-MM)	
M	11	1	**8T-4184**	2	BOLT (M12X1.75X45-MM)	
M	12	1	**8T-4195**	2	BOLT (M10X1.5X30-MM)	
M	13	1	**8T-4196**	1	BOLT (M10X1.5X35-MM)	
	14	1	**8T-4223**	3	WASHER-HARD (13.5X25.5X3-MM THK)	
	15	1	**364-8305**	1	FILTER-FOAM (ALTERNATOR AIR)	
	16	1	**359-5145**	1	GUARD-ALTERNATOR	

M-METRIC PART
R-REMFG PART MAY BE AVAILABLE
Y-SEPARATE ILLUSTRATION

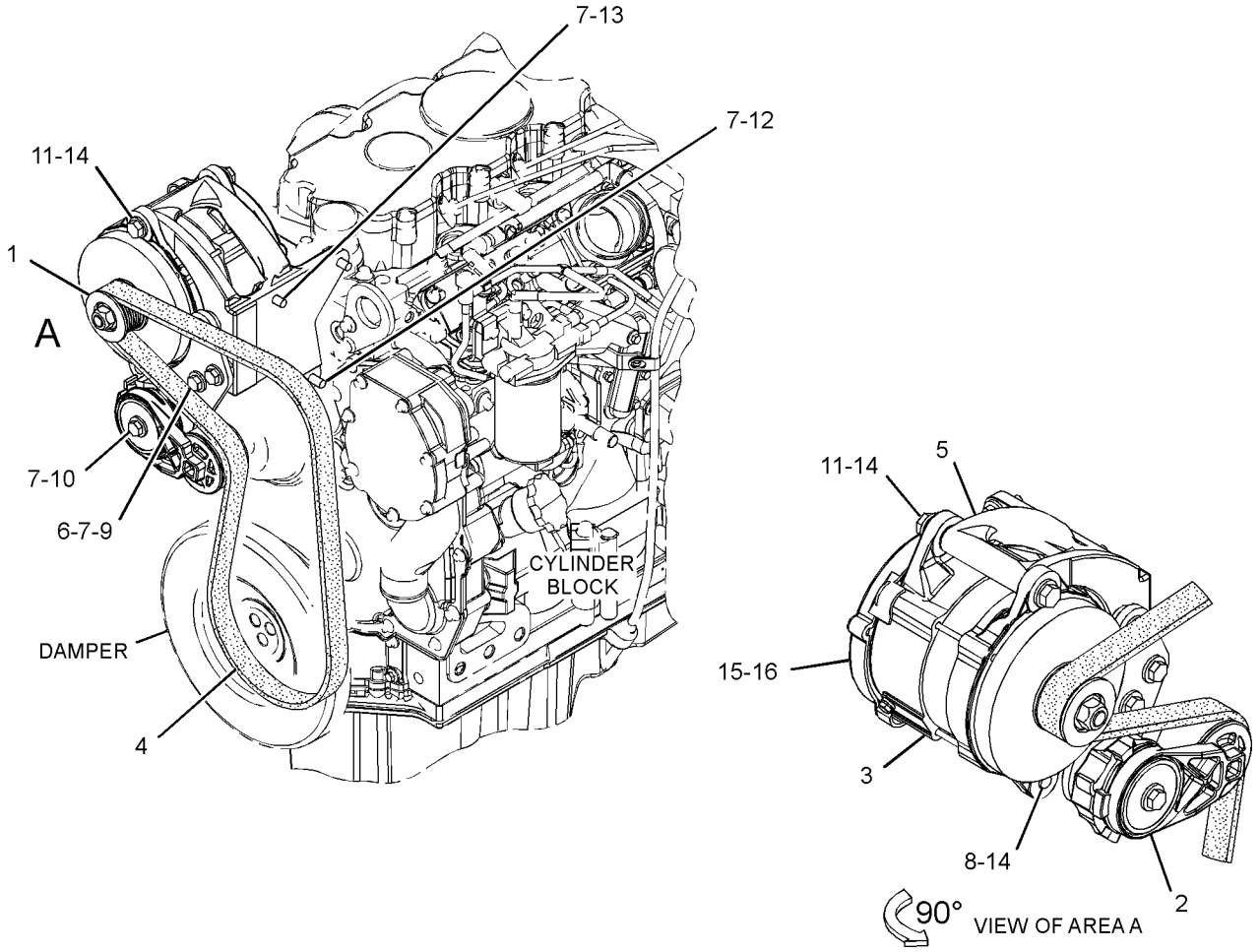

GRAPHIC #1 **<END>** g02365999

267-3770 ALTERNATOR GP-CHARGING

S/N: JRL1-UP; RRS1-UP
AIR CONDITIONER
PART OF 372-8683 AIR CONDITIONER AR
AN ATTACHMENT

SMCS-1405 **i04515650**

NOTE	REF NO	GRAPHIC REF	PART NUMBER	QTY	PART NAME 1 2 3 4 5 6 (PRODUCT LEVEL)	SEE PAGE
	1	1	**369-3663**	1	PULLEY-ALTERNATOR (8-GROOVE)	
	2	1	**190-0643**	1	BELT TENSIONER	
YR	3	1	**197-8820**	1	ALTERNATOR GP-CHARGING (24-VOLT, 95-AMPERE)	97
	4	1	**262-7562**	1	BRACKET	
	5	1	**267-7283**	1	BRACKET	
	6	1	**288-4641**	1	BELT-SERPENTINE (ALTERNATOR)	
	7	1	**7X-7729**	7	WASHER (11X25X3-MM THK)	
	8	1	**8C-4436**	1	BOLT (1/2-13X1.375-IN)	
M	9	1	**8T-4172**	1	BOLT (M10X1.5X80-MM)	
M	10	1	**8T-4184**	2	BOLT (M12X1.75X45-MM)	
M	11	1	**8T-4195**	2	BOLT (M10X1.5X30-MM)	
	12	1	**8T-4223**	3	WASHER-HARD (13.5X25.5X3-MM THK)	
M	13	1	**8T-4196**	1	BOLT (M10X1.5X35-MM)	
M	14	1	**8T-4136**	3	BOLT (M10X1.5X25-MM)	
	15	1	**364-8305**	1	FILTER-FOAM (ALTERNATOR AIR)	
	16	1	**359-5145**	1	GUARD-ALTERNATOR	

M-METRIC PART
R-REMFG PART MAY BE AVAILABLE
Y-SEPARATE ILLUSTRATION

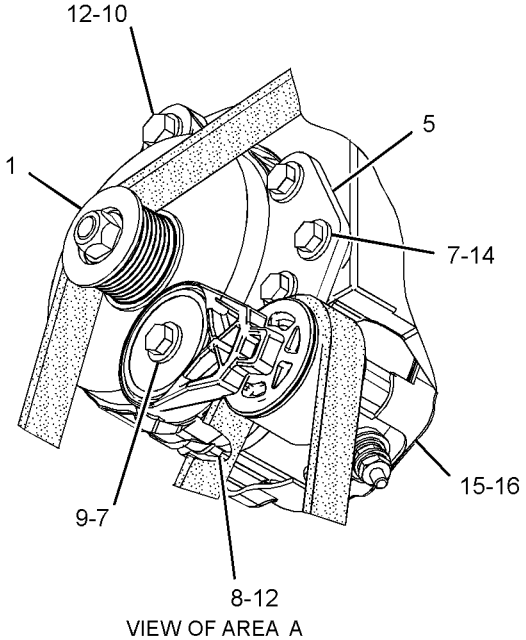

VIEW OF AREA A

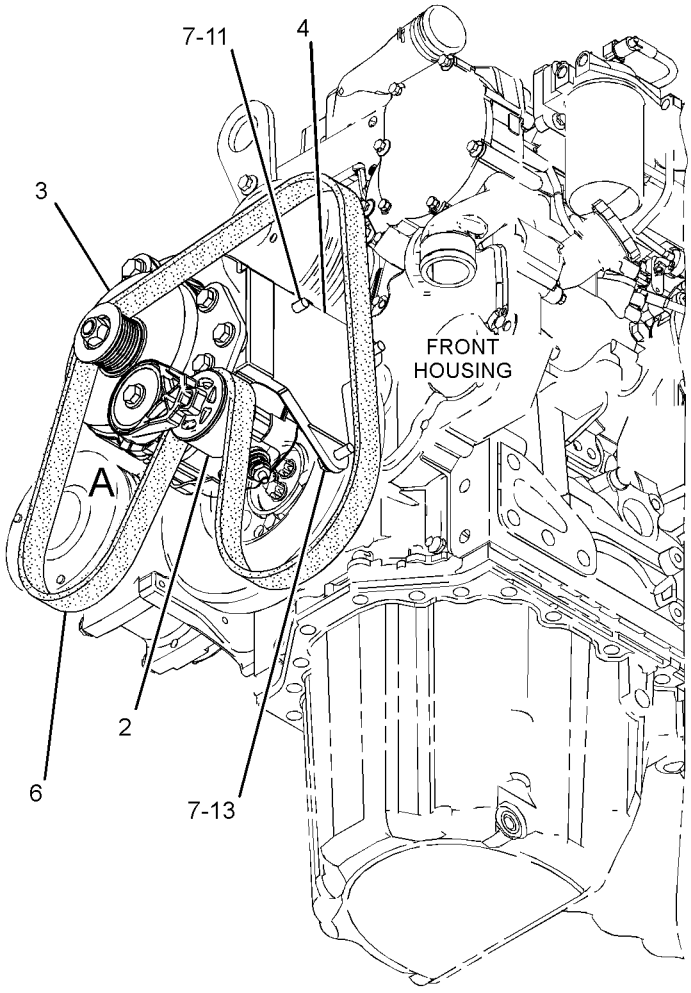

GRAPHIC #1 **<END>** g02366336

ELECTRICAL AND STARTING SYSTEM

290-7203 BATTERY & WIRING GP

S/N: JRL1-UP; RRS1-UP
PART OF 294-9439 STEERING AR-STANDARD
AN ATTACHMENT

SMCS-1401, 1402, 1408 **i03629346**

NOTE	REF NO	GRAPHIC REF	PART NUMBER	QTY	PART NAME 1 2 3 4 5 6 (PRODUCT LEVEL)	SEE PAGE
	1	1	**2G-8767**	2	WASHER (10.5X60X3-MM THK)	
	2	1	**3E-8320**	1	PLATE-INSTRUCTION (BATTERY)	
	3	1	**6G-2256**	2	CLAMP	
	4	1	**6G-2263**	2	SPACER (10.5X19X28.5-MM THK)	
	5	1	**7K-1181**	1	STRAP-CABLE	
Y	6	1	**7N-0718**	1	SWITCH GP-DISCONNECT (BATTERY) (12-VOLT)	142
	7	1	**8R-0768**	4	ROD-RETAINING	
	8	1	**102-4176**	2	HOLD-DOWN-BATTERY	
	9	1	**151-4841**	1	BLOCK	
	10	1	**180-8871**	1	CABLE AS	
E		1	**5P-0761**		CABLE (00-GA, RED) (145-CM)	
		1	**7N-5274**	1	COVER AS-TERMINAL (BLACK)	
		1	**8N-1725**	1	COVER AS-TERMINAL (RED)	
		1	**3S-6050**	1	TERMINAL AS-BATTERY (NEGATIVE)	
		1	**3S-6049**	1	TERMINAL AS-BATTERY (POSITIVE)	
B		1	**1P-0810**	1	TAPE-ELECTRICAL	
	11	1	**180-8874**	1	CABLE AS	
		1	**1S-7251**	1	TERMINAL-CABLE (00-GA, 1/2-IN SCREW)	
		1	**315-0180**	1	TERMINAL-RING	
		1	**9G-8909**	1	COVER-TERMINAL (BLACK)	
E		1	**159-8050**		CABLE (00-GA, BLACK) (30-CM)	
	12	1	**204-2281**	1	STRAP-CABLE	
	13	1	**293-5283**	1	CABLE AS	
E		1	**5P-0747**		CABLE (00-GA, BLACK) (36-CM)	
		1	**216-7790**	1	TERMINAL-CABLE (00-GA, 3/8-IN SCREW)	
		1	**315-0180**	1	TERMINAL-RING	
	14	1	**293-5284**	1	CABLE AS	
E		1	**125-7876**		TUBE-HEAT SHRINK (17.78-MM DIA) (4-CM)	
		1	**216-7790**	1	TERMINAL-CABLE (00-GA, 3/8-IN SCREW)	
		1	**9G-8909**	1	COVER-TERMINAL (BLACK)	
E		1	**5P-0747**		CABLE (00-GA, BLACK) (136-CM)	
		1	**7N-5274**	1	COVER AS-TERMINAL (BLACK)	
		1	**3S-6050**	1	TERMINAL AS-BATTERY (NEGATIVE)	
	15	1	**293-5532**	1	BRACKET	
	16	1	**299-9124**	1	BRACKET AS	
M		1	**8T-3490**	2	NUT-WELD (M10X1.5-THD)	
	17	1	**314-7513**	1	CABLE AS (170-CM)	
E		1	**159-8049**		CABLE (00-GA, RED) (170-CM)	
E		1	**125-7876**		TUBE-HEAT SHRINK (17.78-MM DIA) (4-CM)	
		1	**216-7790**	1	TERMINAL-CABLE (00-GA, 3/8-IN SCREW)	
		1	**8N-0869**	1	COVER-TERMINAL (RED)	
		1	**8N-1725**	1	COVER AS-TERMINAL (RED)	
		1	**3S-6049**	1	TERMINAL AS-BATTERY (POSITIVE)	
	18	1	**1B-3057**	1	CLIP	
	19	1	**5P-4116**	4	WASHER-HARD (8.8X20.5X2-MM THK)	
	20	1	**6D-3479**	7	CLIP	
	21	1	**8T-4121**	17	WASHER-HARD (11X21X2.5-MM THK)	
M	22	1	**8T-4133**	5	NUT (M10X1.5-THD)	
M	23	1	**8T-4136**	5	BOLT (M10X1.5X25-MM)	
M	24	1	**8T-4137**	4	BOLT (M10X1.5X20-MM)	
M	25	1	**8T-4195**	1	BOLT (M10X1.5X30-MM)	
M	26	1	**8T-6466**	2	BOLT (M10X1.5X60-MM)	
M	27	1	**8T-7963**	4	LOCKNUT (M8X1.25-THD)	

290-7203 **BATTERY & WIRING GP** *(contd.)* **i03629346**

B-USE AS REQUIRED
E-ORDER BY THE CENTIMETER
M-METRIC PART
Y-SEPARATE ILLUSTRATION

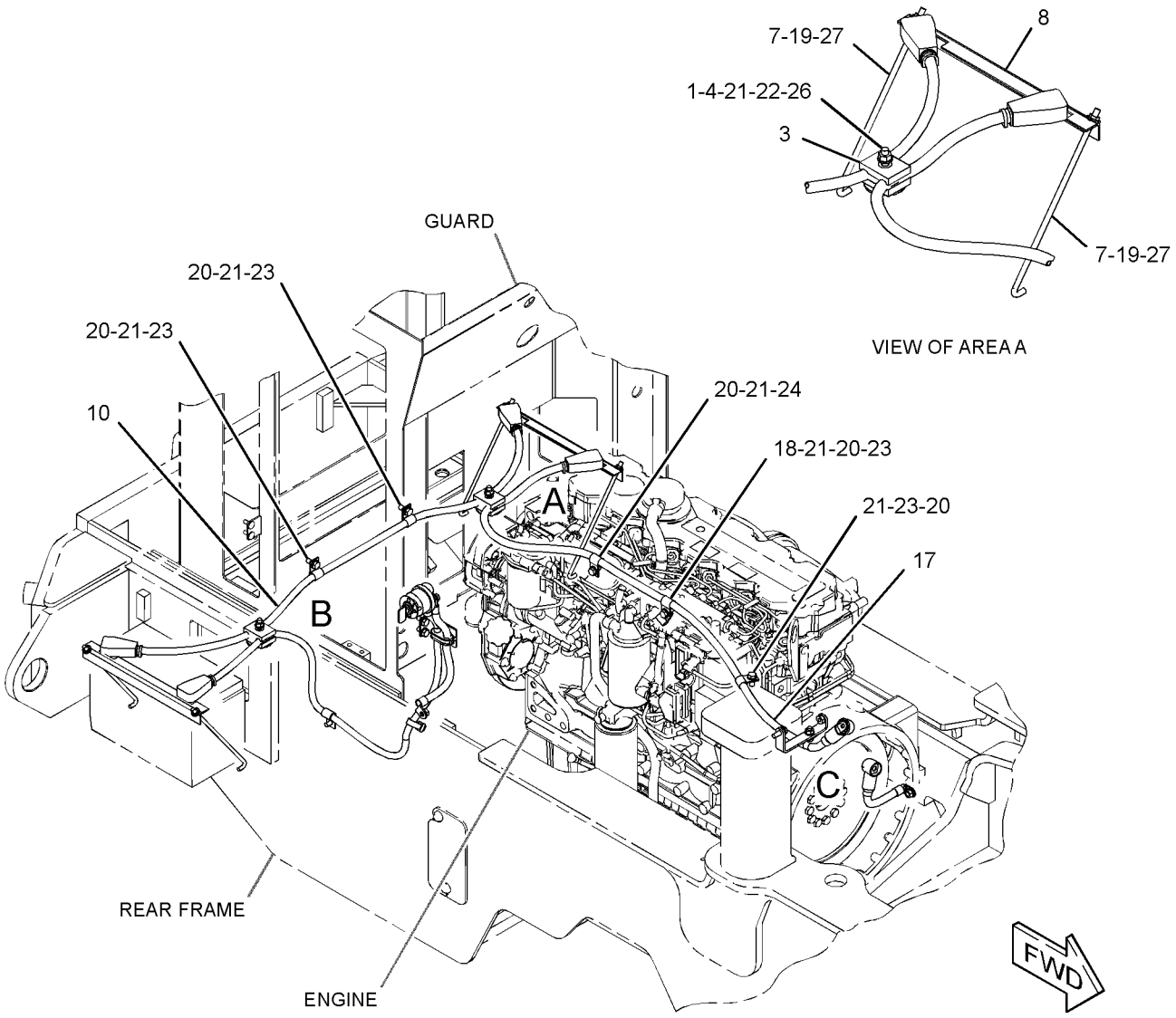

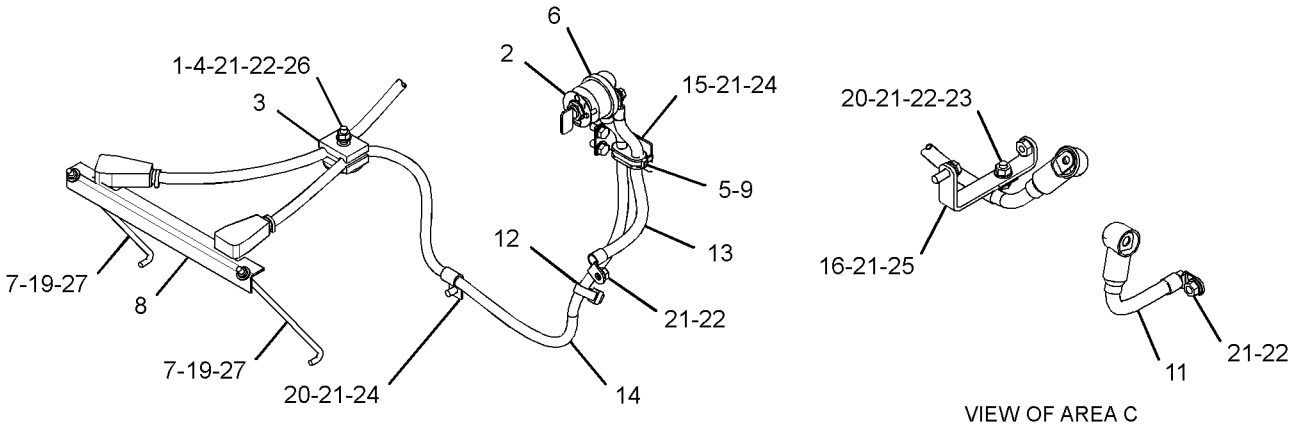

GRAPHIC #1 **<END>** g01408869

ELECTRICAL AND STARTING SYSTEM

112-7167 BATTERY GP

S/N: JRL1-UP; RRS1-UP

PART OF 372-7772, 372-7773 CHASSIS AR

SMCS-1401 **i00528382**

NOTE	PART NUMBER	QTY	PART NAME 1 2 3 4 5 6 (PRODUCT LEVEL)	SEE PAGE
	9X-3404	2	BATTERY (12-VOLT, MAINTENANCE FREE, WET)	

<END>

3E-7844 CONTROL GP-LIFT KICKOUT

S/N: JRL1-UP; RRS1-UP

PART OF 148-7678, 218-9937 KICKOUT & POSITIONER GP

SMCS-5109 **i03832009**

NOTE	REF NO	GRAPHIC REF	PART NUMBER	QTY	PART NAME 1 2 3 4 5 6 (PRODUCT LEVEL)	SEE PAGE
	1	1	**9X-5617**	1	FILM-INSTRUCTION (SOLENOID, ELECTRICAL POWER) (KICKOUT, POSITIONER CONTROL)	
	2	1	**102-8803**	1	KIT-RECEPTACLE (3-PIN)	
					(INCLUDES RECEPTACLE AS & WEDGE)	

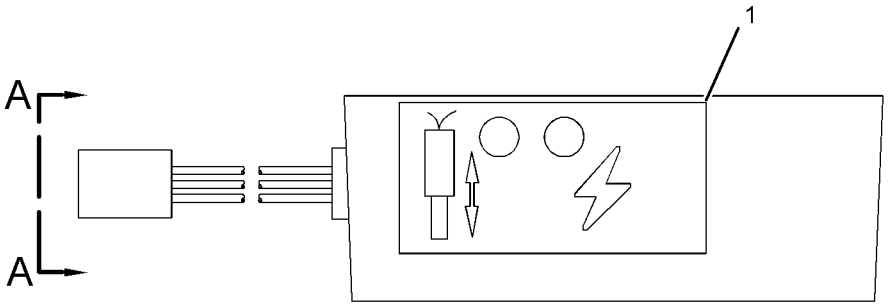

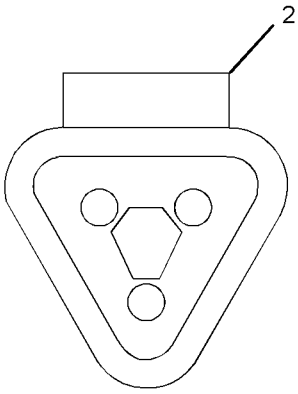

VIEW A-A

GRAPHIC #1 **<END>** g01960614

3E-7843 CONTROL GP-POSITION

S/N: JRL1-UP; RRS1-UP

PART OF 148-7678, 218-9937 KICKOUT & POSITIONER GP

SMCS-5112 **i03895575**

NOTE	REF NO	GRAPHIC REF	PART NUMBER	QTY	PART NAME 1 2 3 4 5 6 (PRODUCT LEVEL)	SEE PAGE
	1	1	**9X-5617**	1	FILM-INSTRUCTION (SOLENOID, ELECTRICAL POWER) (KICKOUT, POSITIONER CONTROL)	
	2	1	**155-2260**	1	KIT-CONNECTING PLUG (3-PIN)	
					(INCLUDES PLUG AS, WEDGE & INTERFACE SEAL)	

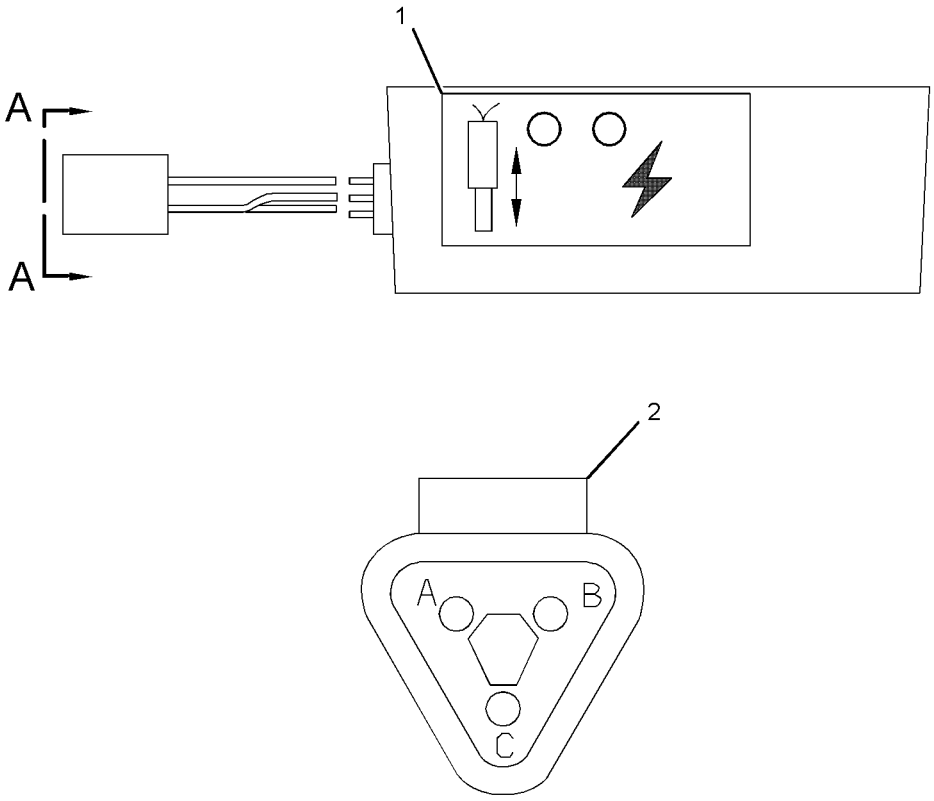

VIEW A-A

GRAPHIC #1 **<END>** g02035814

ELECTRICAL AND STARTING SYSTEM

289-8802 ELECTRONICS AR-MACHINE

S/N: JRL1-UP; RRS1-UP

PART OF 372-7774, 372-7775 COMMON AR

SMCS-7610, 7620 **i03038343**

NOTE	PART NUMBER	QTY	PART NAME 1 2 3 4 5 6 (PRODUCT LEVEL)	SEE PAGE
Y	*322-6842*	1	ELECTRONICS GP-POWER TRAIN	108

Y-SEPARATE ILLUSTRATION

<END>

262-1421 ELECTRONICS GP-COMMUNICATION–

PRODUCT LINK 300

S/N: JRL1-UP; RRS1-UP

PART OF 320-2503 INSTALLATION GP-COMMUNICATION

AN ATTACHMENT

SMCS-7606, 7610, 7620 **i04504516**

NOTE	PART NUMBER	QTY	PART NAME 1 2 3 4 5 6 (PRODUCT LEVEL)	SEE PAGE
	355-5105	1	SOFTWARE GP-COMMUNICATION (PRODUCT LINK 300)	
			-OR-	
	355-9764	1	SERVICE GP-COMMUNICATION (PRODUCT LINK 300)	
			(OPTIONAL SERVICE REPLACEMENT)(INCLUDES CONTROL GP & SOFTWARE)	
	7X-6315	1	STRAP AS-GROUND	
	126-7574	1	SCREW-PAN HEAD (8-32X9.52-MM)	
	134-4126	1	WASHER (4.52X8.28X0.76-MM THK)	

<END>

336-3545 ELECTRONICS GP-COMMUNICATION–

PRODUCT LINK 121SR

S/N: JRL1-UP; RRS1-UP

PART OF 320-2503 INSTALLATION GP-COMMUNICATION

AN ATTACHMENT

SMCS-7606, 7610, 7620 **i04515790**

NOTE	PART NUMBER	QTY	PART NAME 1 2 3 4 5 6 (PRODUCT LEVEL)	SEE PAGE
	377-4844	1	SOFTWARE GP-COMMUNICATION	

<END>

322-6842 ELECTRONICS GP-POWER TRAIN–MACHINE CONTROL

S/N: JRL1-UP; RRS1-UP

PART OF 289-8802 ELECTRONICS AR-MACHINE

SMCS-4800, 4808, 7610, 7620 **i04527115**

NOTE	PART NUMBER	QTY	PART NAME 1 2 3 4 5 6 (PRODUCT LEVEL)	SEE PAGE
	346-3635	1	SOFTWARE GP-POWER TRAIN	
			–OR–	
	346-3636	1	SERVICE GP-POWER TRAIN	
			(OPTIONAL SERVICE REPLACEMENT)(INCLUDES CONTROL GP & SOFTWARE)	

<END>

277-4410 GLOW PLUG GP

S/N: C6E1-UP

PART OF 292-5306 ENGINE AR-PRIMARY

SMCS-1412 **i04482377**

NOTE	REF NO	GRAPHIC REF	PART NUMBER	QTY	PART NAME 1 2 3 4 5 6 (PRODUCT LEVEL)	SEE PAGE
	1	1	**361-9875**	6	GLOW PLUG	
	2	1	**368-3150**	1	BUS BAR GP	
	2A	1	**277-4408**	1	CABLE AS	
	2B	1	**369-0473**	1	LOCKNUT	
	3	1	**100-4838**	1	BOLT (M6X20-MM)	
	4	1	**275-2428**	1	INSULATOR	
M	5	1	**5C-2890**	2	NUT (M6X1-THD)	
	6	1	**277-4409**	1	CAP	

M-METRIC PART

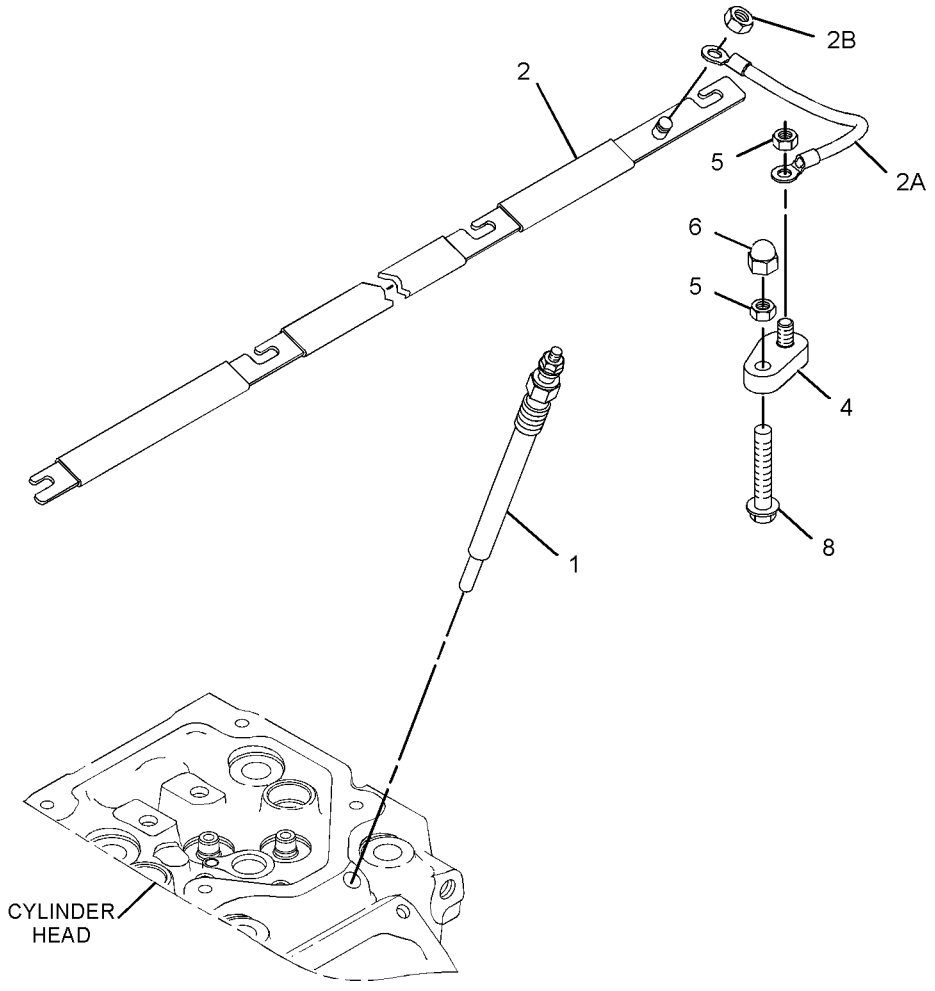

GRAPHIC #1 **<END>** g01636787

293-4050 HEATER GP-JACKET WATER

S/N: JRL1-UP; RRS1-UP
120-VOLT
AN ATTACHMENT

SMCS-1383 **i03043942**

NOTE	REF NO	GRAPHIC REF	PART NUMBER	QTY	PART NAME 1 2 3 4 5 6 (PRODUCT LEVEL)	SEE PAGE
	1	1	**6N-1604**	1	CAP AS-DUST	
	2	1	**9X-6772**	1	STRAP-CABLE	
	3	1	**260-1555**	1	ELEMENT AS-JACKET WATER HEATER (120-VOLT, 1000-WATT)	
		1	**4D-9986**	1	SEAL-O-RING	
	4	1	**260-1566**	1	CORD AS-HEATER	
	5	1	**3S-2093**	3	STRAP-CABLE	
M	6	1	**8T-4200**	1	BOLT (M8X1.25X16-MM)	
	7	1	**8T-4224**	1	WASHER-HARD (8.8X16X2-MM THK)	

M-METRIC PART

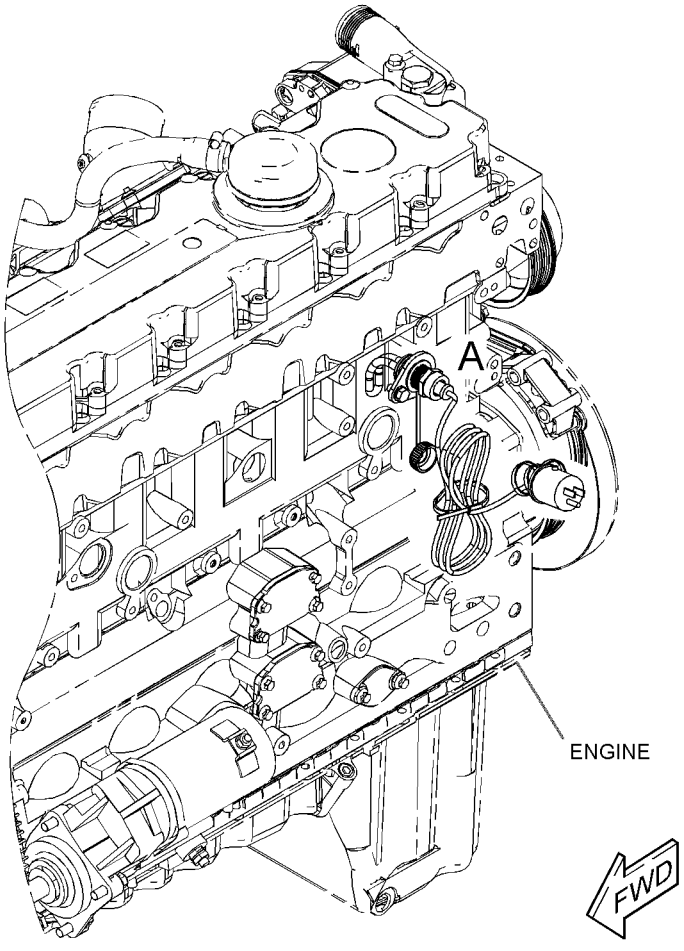

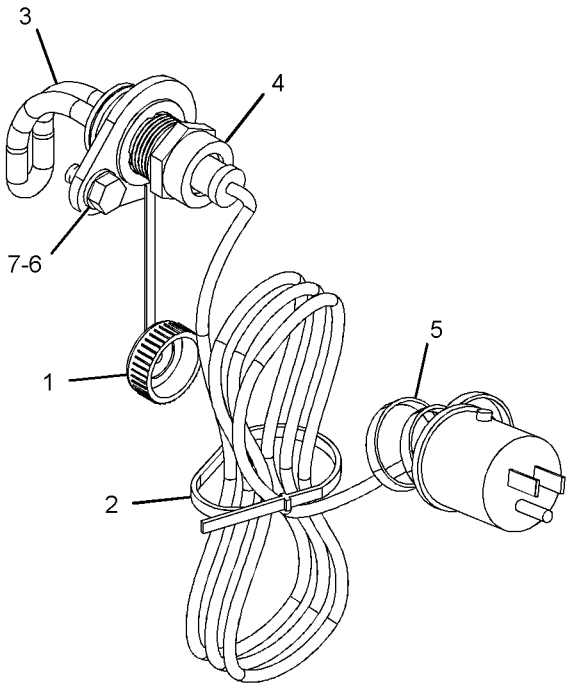

VIEW OF AREA A

GRAPHIC #1 **<END>** g01561457

293-4052 HEATER GP-JACKET WATER

S/N: JRL1-UP; RRS1-UP
220-VOLT
AN ATTACHMENT

SMCS-1383 **i03043941**

NOTE	REF NO	GRAPHIC REF	PART NUMBER	QTY	PART NAME 1 2 3 4 5 6 (PRODUCT LEVEL)	SEE PAGE
	1	1	**6N-1604**	1	CAP AS-DUST	
	2	1	**9X-6772**	1	STRAP-CABLE	
	3	1	**260-1556**	1	ELEMENT AS-JACKET WATER HEATER (240-VOLT, 1000-WATT)	
		1	**4D-9986**	1	SEAL-O-RING	
	4	1	**260-1569**	1	CORD AS-HEATER	
	5	1	**3S-2093**	3	STRAP-CABLE	
M	6	1	**8T-4200**	1	BOLT (M8X1.25X16-MM)	
	7	1	**8T-4224**	1	WASHER-HARD (8.8X16X2-MM THK)	

M-METRIC PART

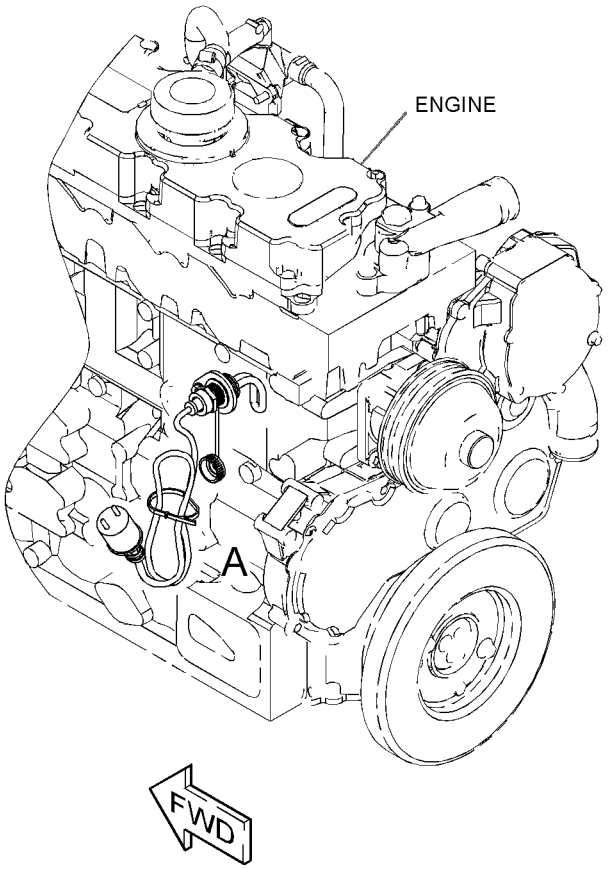

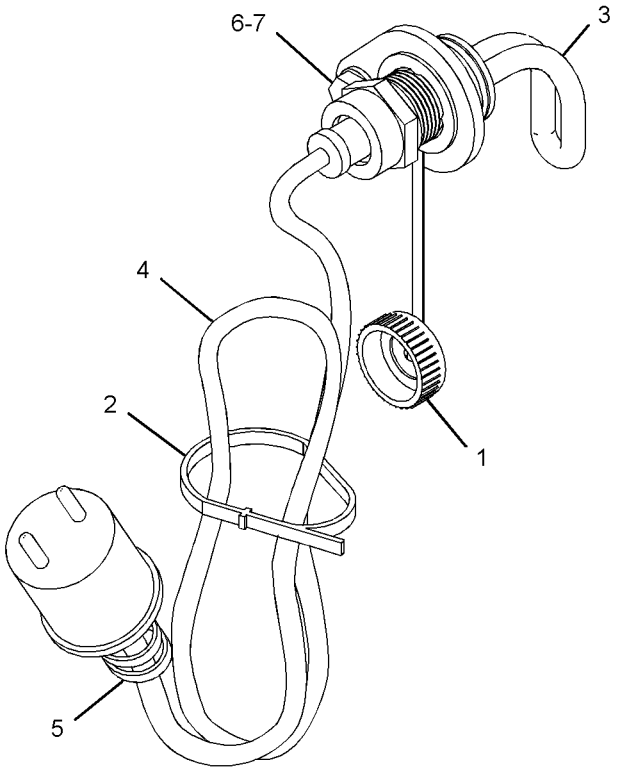

VIEW OF AREA A

GRAPHIC #1 **<END>** g01561279

ELECTRICAL AND STARTING SYSTEM

320-2503 INSTALLATION GP-COMMUNICATION

S/N: JRL1-UP; RRS1-UP

AN ATTACHMENT

SMCS-7606 **i03951510**

NOTE	REF NO	GRAPHIC REF	PART NUMBER	QTY	PART NAME 1 2 3 4 5 6 (PRODUCT LEVEL)	SEE PAGE
	1	1	**8C-5607**	8	MOUNT-ISOLATION	
	2	1	**8C-5608**	4	SPACER (6.5X9.5X25.4-MM THK)	
	3	1	**9R-4750**	1	BOSS (19.76X20X28-MM THK)	
	4	1	**249-9076**	9	CLIP	
	5	1	**256-6803**	1	HARNESS AS-RADIO (PRODUCT LINK)	
		1	**8T-8729**	9	PIN-CONNECTOR (16-GA TO 18-GA)	
		1	**155-2255**	1	KIT-CONNECTING PLUG (12-PIN)	
		1	**155-2270**	1	KIT-CONNECTING PLUG (2-PIN)	
					(EACH PLUG KIT INCLUDES PLUG AS, WEDGE & INTERFACE SEAL)	
		1	**8T-8737**	10	PLUG-SEAL	
		1	**102-8802**	1	KIT-RECEPTACLE (2-PIN)	
		1	**102-8801**	1	KIT-RECEPTACLE (12-PIN)	
					(EACH RECEPTACLE KIT INCLUDES RECEPTACLE AS & WEDGE)	
		1	**8T-8730**	9	SOCKET-CONNECTOR (16-GA TO 18-GA)	
	6	1	**256-6804**	1	HARNESS AS-CONTROL (PRODUCT LINK)	
		1	**126-1774**	1	COVER-CONNECTOR	
		1	**8T-8729**	11	PIN-CONNECTOR (16-GA TO 18-GA)	
		1	**155-2255**	1	KIT-CONNECTING PLUG (12-PIN)	
		1	**155-2270**	1	KIT-CONNECTING PLUG (2-PIN)	
					(EACH PLUG KIT INCLUDES PLUG AS, WEDGE & INTERFACE SEAL)	
		1	**160-7690**	1	PLUG AS-CONNECTOR (70-PIN)	
		1	**159-9322**	1	SEAL-O-RING	
		1	**8T-8737**	60	PLUG-SEAL	
		1	**102-8801**	1	KIT-RECEPTACLE (12-PIN)	
					(INCLUDES RECEPTACLE AS & WEDGE)	
		1	**8T-8730**	25	SOCKET-CONNECTOR (16-GA TO 18-GA)	
		1	**9X-6772**	2	STRAP-CABLE	
E		1	**125-7874**		TUBE-HEAT SHRINK (5.72-MM DIA) (20-CM)	
	7	1	**274-4284**	1	FILM-WARNING (EXPLOSION, RADIO PRODUCT LINK)	
Y	8	1	*262-1421*	1	ELECTRONICS GP-COMMUNICATION (PRODUCT LINK 300)	108
CY	9	1	**336-3545**	1	ELECTRONICS GP-COMMUNICATION (PRODUCT LINK 121SR)	108
	10	1	**273-4061**	1	BRACKET AS	
	11	1	**310-2393**	1	ANTENNA AS (450-CM)	
		1	**355-0598**	1	NUT-SPECIAL	
		1	**301-0589**	1	ANTENNA (FLEXIBLE)	
	12	1	**311-3204**	1	HARNESS AS-CONTROL (JUMPER)	
		1	**155-2255**	2	KIT-CONNECTING PLUG (12-PIN)	
					(EACH INCLUDES PLUG AS, WEDGE & INTERFACE SEAL)	
		1	**8T-8737**	8	PLUG-SEAL	
		1	**180-9340**	16	SOCKET-CONNECTOR (14-GA TO 18-GA)	
B		1	**141-8061**		TAPE	
	13	1	**311-3205**	1	PLATE	
	14	1	**7K-1181**	12	STRAP-CABLE	
	15	1	**3S-2093**	1	STRAP-CABLE	
M	16	1	**7X-2533**	4	BOLT (M6X1X35-MM)	
M	17	1	**8T-4138**	8	BOLT (M6X1X20-MM)	
M	18	1	**8T-4194**	1	BOLT (M12X1.75X50-MM)	
	19	1	**8T-4223**	1	WASHER-HARD (13.5X25.5X3-MM THK)	
	20	1	**9X-6165**	4	WASHER (6.5X22X2.5-MM THK)	
	21	1	**9X-8256**	8	WASHER (6.6X12X2-MM THK)	

B-USE AS REQUIRED
C-CHANGE FROM PREVIOUS TYPE
E-ORDER BY THE CENTIMETER
M-METRIC PART
Y-SEPARATE ILLUSTRATION

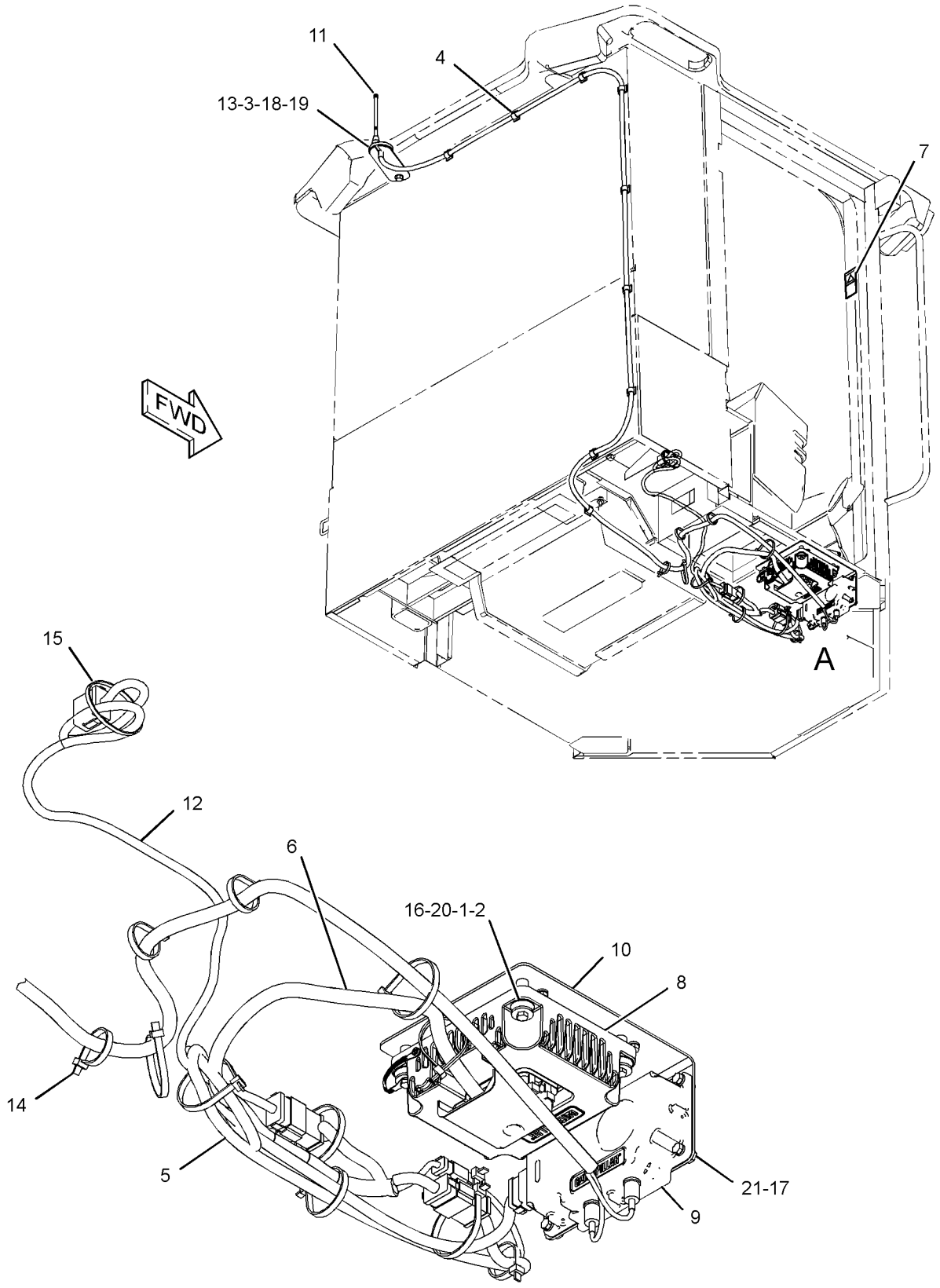

VIEW OF AREA A

GRAPHIC #1 **<END>** g01561446

234-4325 LAMP GP-FLOOD

S/N: JRL1-UP; RRS1-UP
24-VOLT
PART OF 115-1558 LIGHTING GP-AUXILIARY
AN ATTACHMENT

SMCS-1434 **i04506829**

NOTE	REF NO	GRAPHIC REF	PART NUMBER	QTY	PART NAME 1 2 3 4 5 6 (PRODUCT LEVEL)	SEE PAGE
	1	1	**351-9918**	1	LAMP-HALOGEN (24-VOLT, 70-WATT)	
M	2	1	**8T-0389**	1	LOCKNUT (M10X1.5-THD)	
	3	1	**9X-4244**	2	SCREW-SPECIAL (M4X1.79X25-MM)	
	4	1	**202-6614**	1	LENS AS (FLOODLIGHT)	
	5	1	**234-7730**	1	BODY AS	
	6	1	**164-7556**	1	BRACKET (LAMP RETAINING)	
	7	1	**234-7731**	1	BRACKET AS	
	8	1	**8T-4121**	1	WASHER-HARD (11X21X2.5-MM THK)	

M-METRIC PART

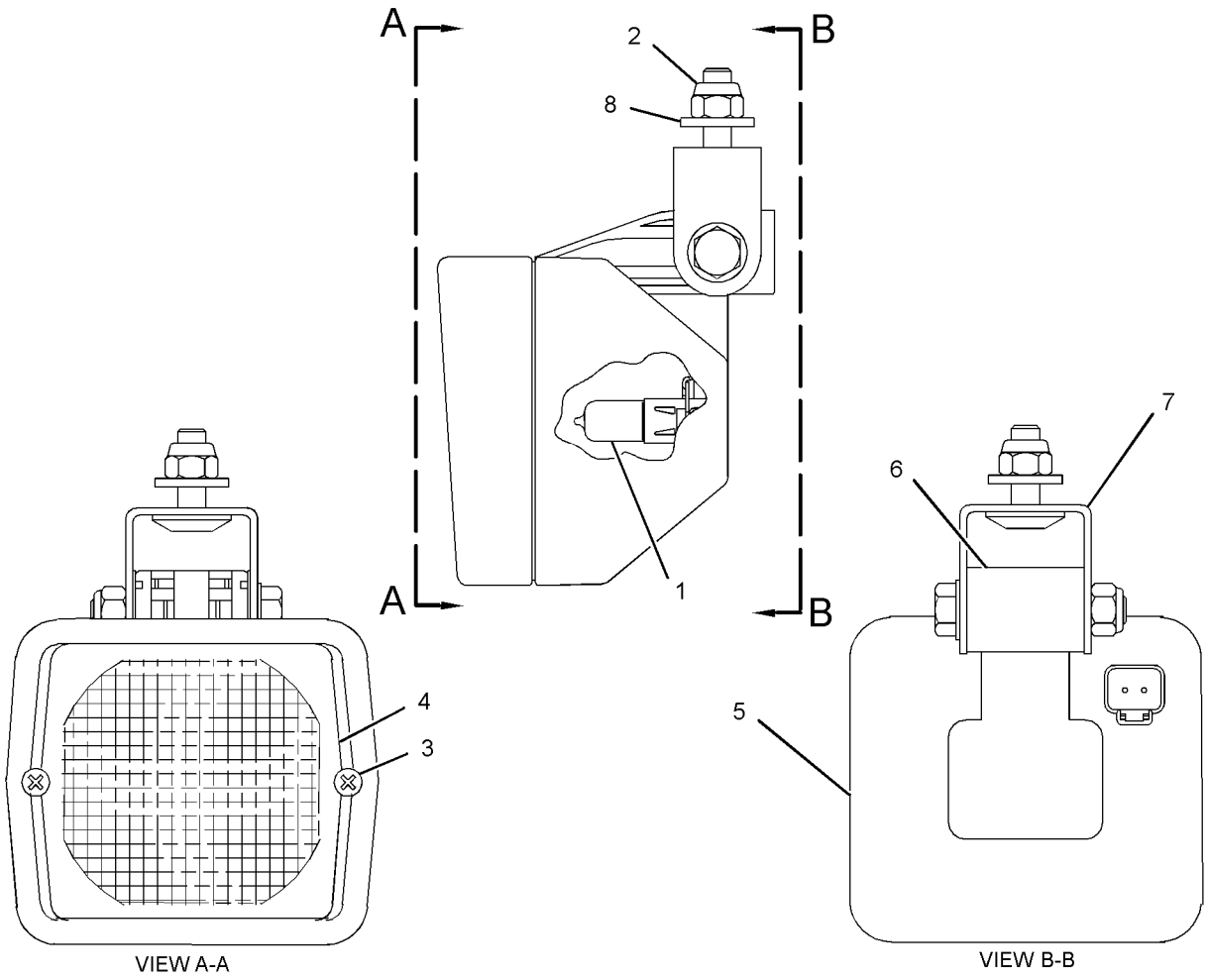

GRAPHIC #1 **<END>** g01246703

242-3519 LAMP GP-FLOOD—SUSPENDED MOUNT

S/N: JRL1-UP; RRS1-UP
24-VOLT
PART OF 311-8706 LIGHTING GP-FLOOD, 204-2004 LIGHTING GP-REAR
AN ATTACHMENT

SMCS-1434 **i03150381**

NOTE	REF NO	GRAPHIC REF	PART NUMBER	QTY	PART NAME 1 2 3 4 5 6 (PRODUCT LEVEL)	SEE PAGE
	1	1	**142-5789**	4	SCREW-SPECIAL	
M	2	1	**8T-4195**	1	BOLT (M10X1.5X30-MM)	
M	3	1	**6V-9189**	1	LOCKNUT (M8X1.25-THD)	
M	4	1	**8T-7329**	1	BOLT (M8X1.25X55-MM)	
	5	1	**9X-3463**	1	LAMP-HALOGEN (24-VOLT, 70-WATT)	

M-METRIC PART

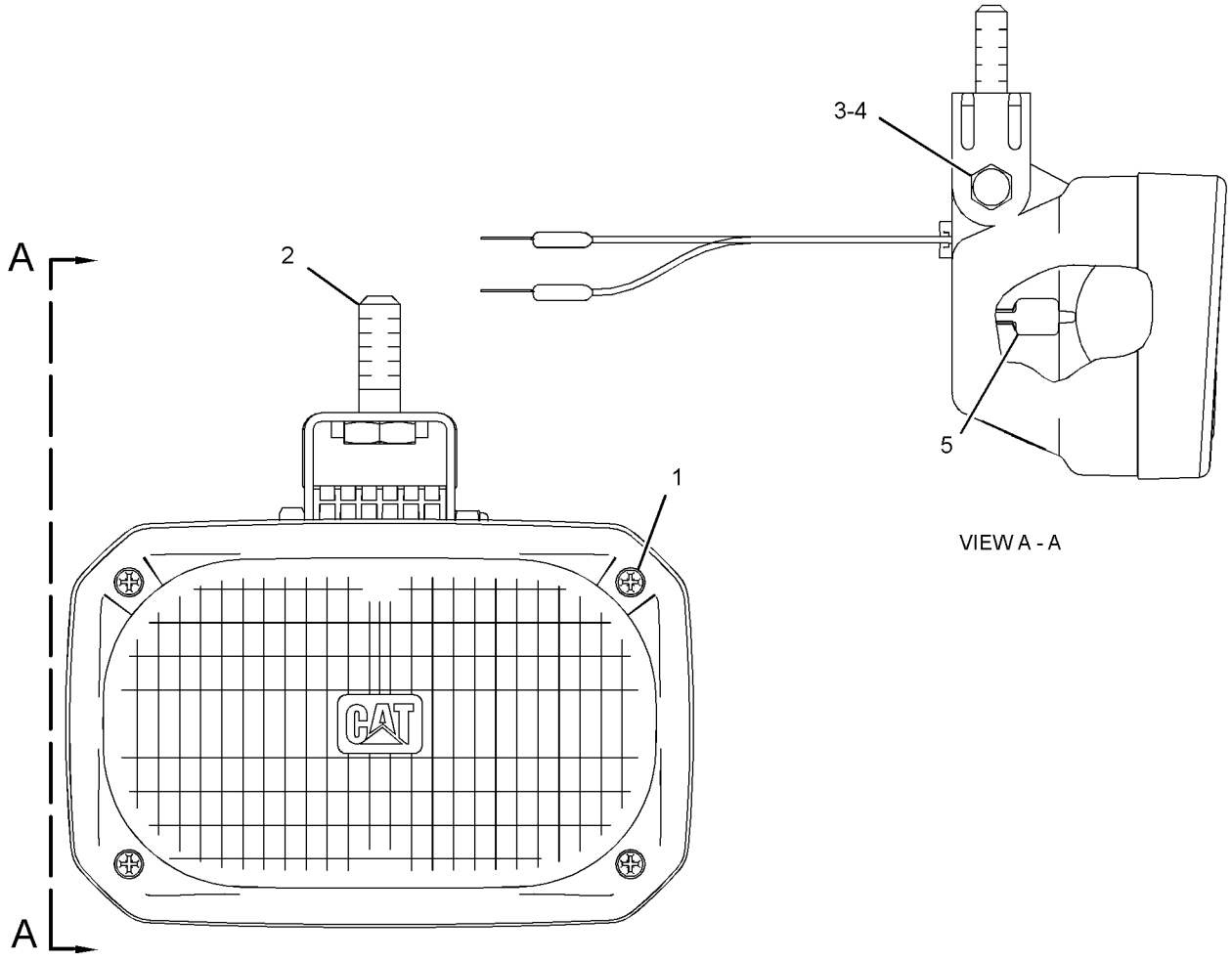

GRAPHIC #1

<END>

g01397703

302-0406 LAMP GP-FLOOD–RH

S/N: JRL1-UP; RRS1-UP

PART OF 290-7223 LIGHTING GP-FLOOD & SIGNAL

SMCS-1434 **i03045561**

NOTE	REF NO	GRAPHIC REF	PART NUMBER	QTY	PART NAME 1 2 3 4 5 6 (PRODUCT LEVEL)	SEE PAGE
	1	1	**319-7603**	1	BODY AS	
	2	1	**228-6054**	1	BEZEL	
	3	1	**319-8209**	1	LENS	
	4	1	**228-6052**	1	LENS AS (TURN SIGNAL)	
	5	1	**228-6056**	6	SCREW (4-32X1.26-IN)	
	6	1	**9X-3463**	1	LAMP-HALOGEN (24-VOLT, 70-WATT)	
	7	1	**130-3515**	1	LAMP (24-VOLT, 5-WATT)	
	8	1	**242-0588**	1	LAMP (24-VOLT, 21-WATT)	
M	9	1	**8T-0389**	1	LOCKNUT (M10X1.5-THD)	
	10	1	**100-3253**	1	SPACER (SPHERICAL)	
	11	1	**100-3254**	1	SPACER (SPHERICAL)	
	12	1	**100-3255**	1	WASHER (SPHERICAL)	
	13	1	**102-8805**	1	KIT-RECEPTACLE (6-PIN)	
					(INCLUDES RECEPTACLE AS & WEDGE)	
	14	1	**186-3735**	5	PIN-CONNECTOR (16-GA TO 18-GA)	
	15	1	**8T-8737**	1	PLUG-SEAL	

M-METRIC PART

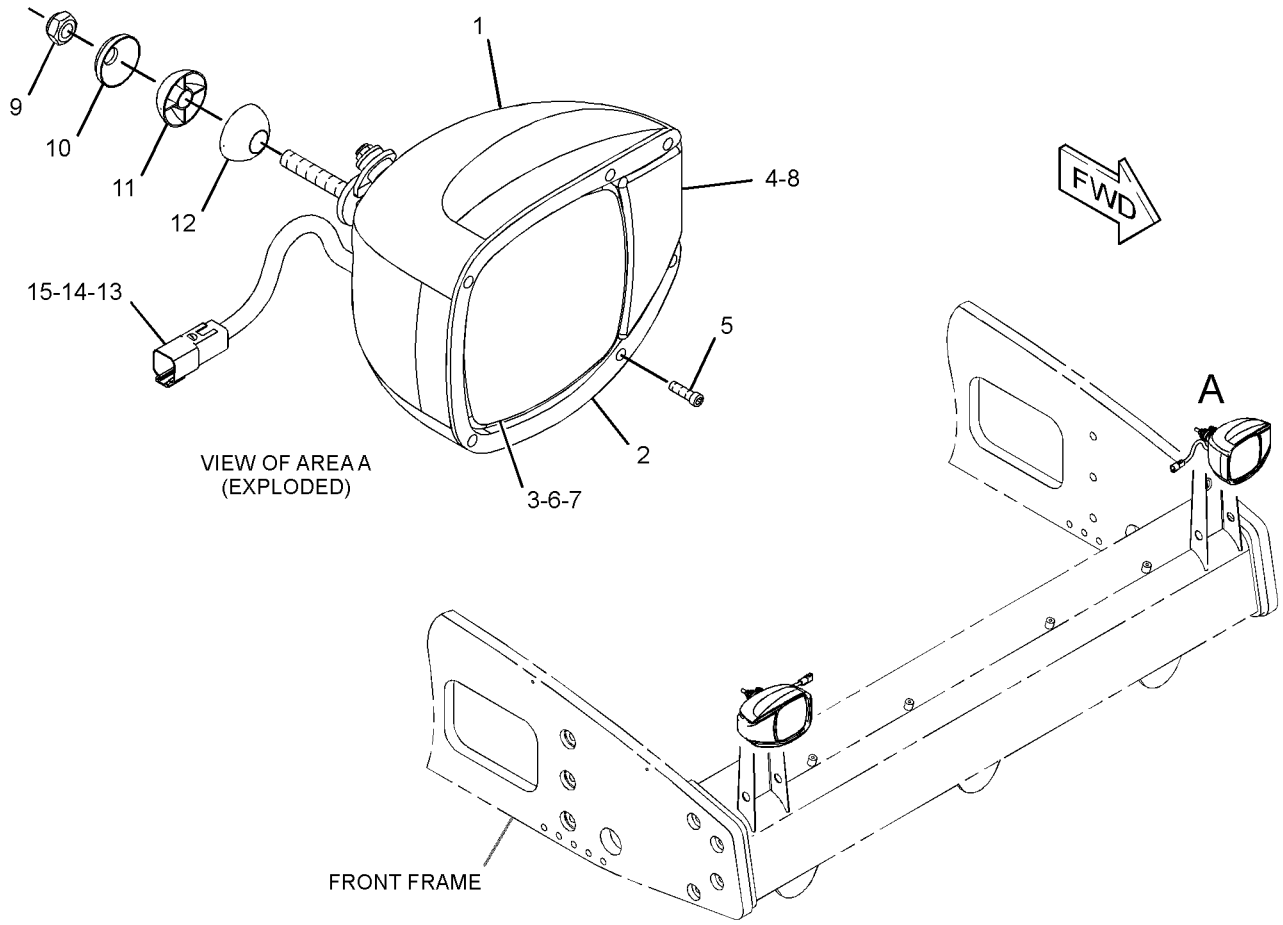

GRAPHIC #1 **<END>** g01561370

302-0408 LAMP GP-FLOOD–LH

S/N: JRL1-UP; RRS1-UP

PART OF 290-7223 LIGHTING GP-FLOOD & SIGNAL

SMCS-1434 **i03045552**

NOTE	REF NO	GRAPHIC REF	PART NUMBER	QTY	PART NAME 1 2 3 4 5 6 (PRODUCT LEVEL)	SEE PAGE
	1	1	**319-7603**	1	BODY AS	
	2	1	**228-6054**	1	BEZEL	
	3	1	**319-8209**	1	LENS	
	4	1	**228-6052**	1	LENS AS (TURN SIGNAL)	
	5	1	**228-6056**	6	SCREW (4-32X1.26-IN)	
	6	1	**9X-3463**	1	LAMP-HALOGEN (24-VOLT, 70-WATT)	
	7	1	**130-3515**	1	LAMP (24-VOLT, 5-WATT)	
	8	1	**242-0588**	1	LAMP (24-VOLT, 21-WATT)	
M	9	1	**8T-0389**	1	LOCKNUT (M10X1.5-THD)	
	10	1	**100-3253**	1	SPACER (SPHERICAL)	
	11	1	**100-3254**	1	SPACER (SPHERICAL)	
	12	1	**100-3255**	1	WASHER (SPHERICAL)	
	13	1	**102-8805**	1	KIT-RECEPTACLE (6-PIN)	
					(INCLUDES RECEPTACLE AS & WEDGE)	
	14	1	**186-3735**	5	PIN-CONNECTOR (16-GA TO 18-GA)	
	15	1	**8T-8737**	1	PLUG-SEAL	

M-METRIC PART

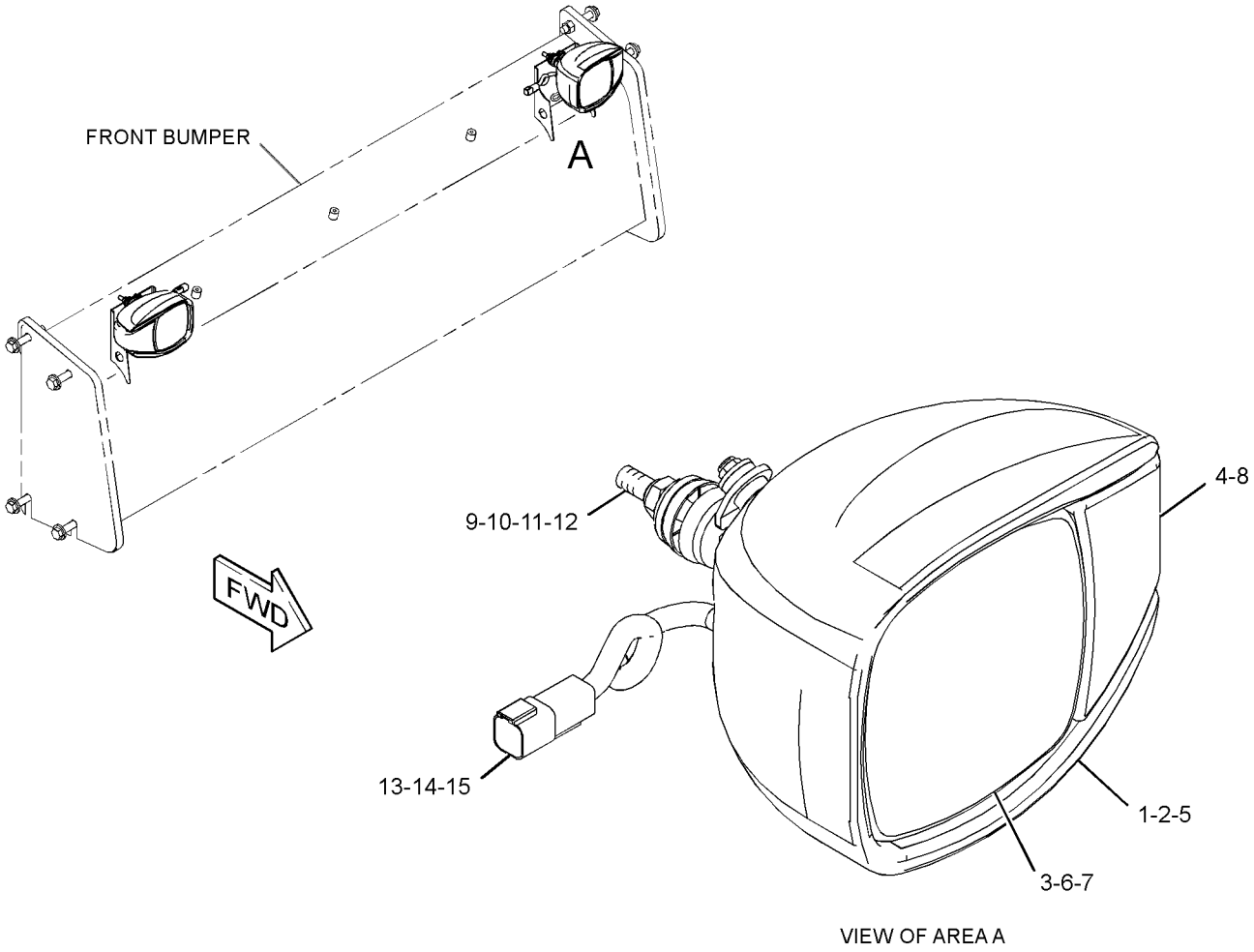

VIEW OF AREA A

GRAPHIC #1 **<END>** g01561139

145-6929 LAMP GP-STOP & TAIL–24-VOLT

S/N: JRL1-UP; RRS1-UP

PART OF 290-7223 LIGHTING GP-FLOOD & SIGNAL

SMCS-1432 **i04024682**

NOTE	REF NO	GRAPHIC REF	PART NUMBER	QTY	PART NAME 1 2 3 4 5 6 (PRODUCT LEVEL)	SEE PAGE
	1	1	**9X-4493**	1	LAMP (24-VOLT, 21-WATT) (STOP, TAIL)	
	2	1	**9X-4492**	1	LAMP (24-VOLT, 5-WATT) (STOP, TAIL)	
	3	1	**102-8802**	1	KIT-RECEPTACLE (2-PIN)	
					(INCLUDES RECEPTACLE AS & WEDGE)	
	4	1	**102-8803**	1	KIT-RECEPTACLE (3-PIN)	
					(INCLUDES RECEPTACLE AS & WEDGE)	
M	5	1	**5C-2890**	2	NUT (M6X1-THD)	
	6	1	**1H-3244**	2	LOCKWASHER	
	7	1	**8T-8729**	5	PIN-CONNECTOR (16-GA TO 18-GA)	
	8	1	**363-8597**	1	LENS (STOP, TAIL, TURN)	

M-METRIC PART

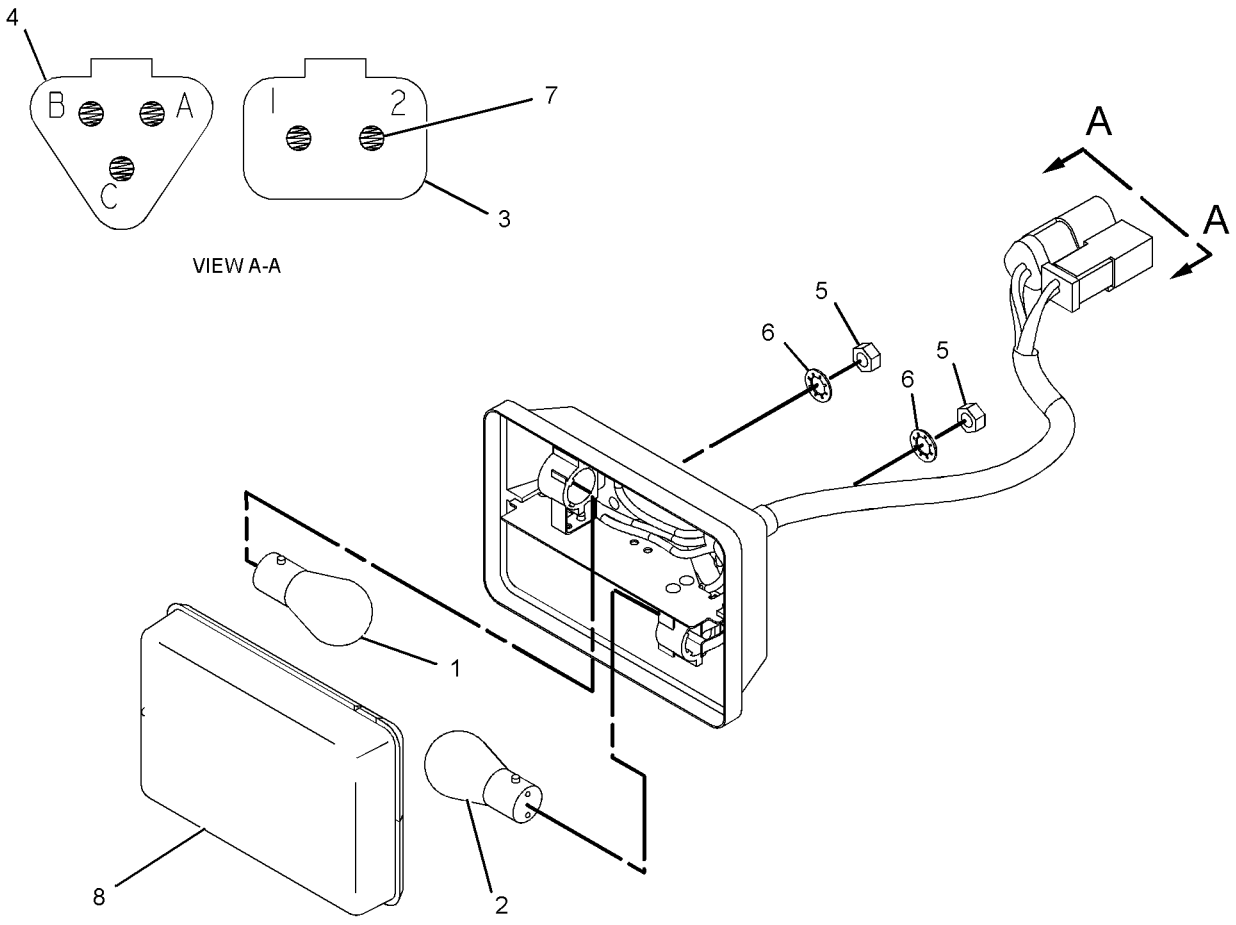

GRAPHIC #1 **<END>** g01344656

140-3668 LAMP GP-WARNING BEACON–AMBER, STROBE

S/N: JRL1-UP; RRS1-UP
12-24V
PART OF 289-8906 LIGHTING GP-WARNING BEACON
AN ATTACHMENT

SMCS-1431 **i03349883**

NOTE	REF NO	GRAPHIC REF	PART NUMBER	QTY	PART NAME 1 2 3 4 5 6 (PRODUCT LEVEL)	SEE PAGE
	1	1	**9R-7942**	1	PLUG AS	

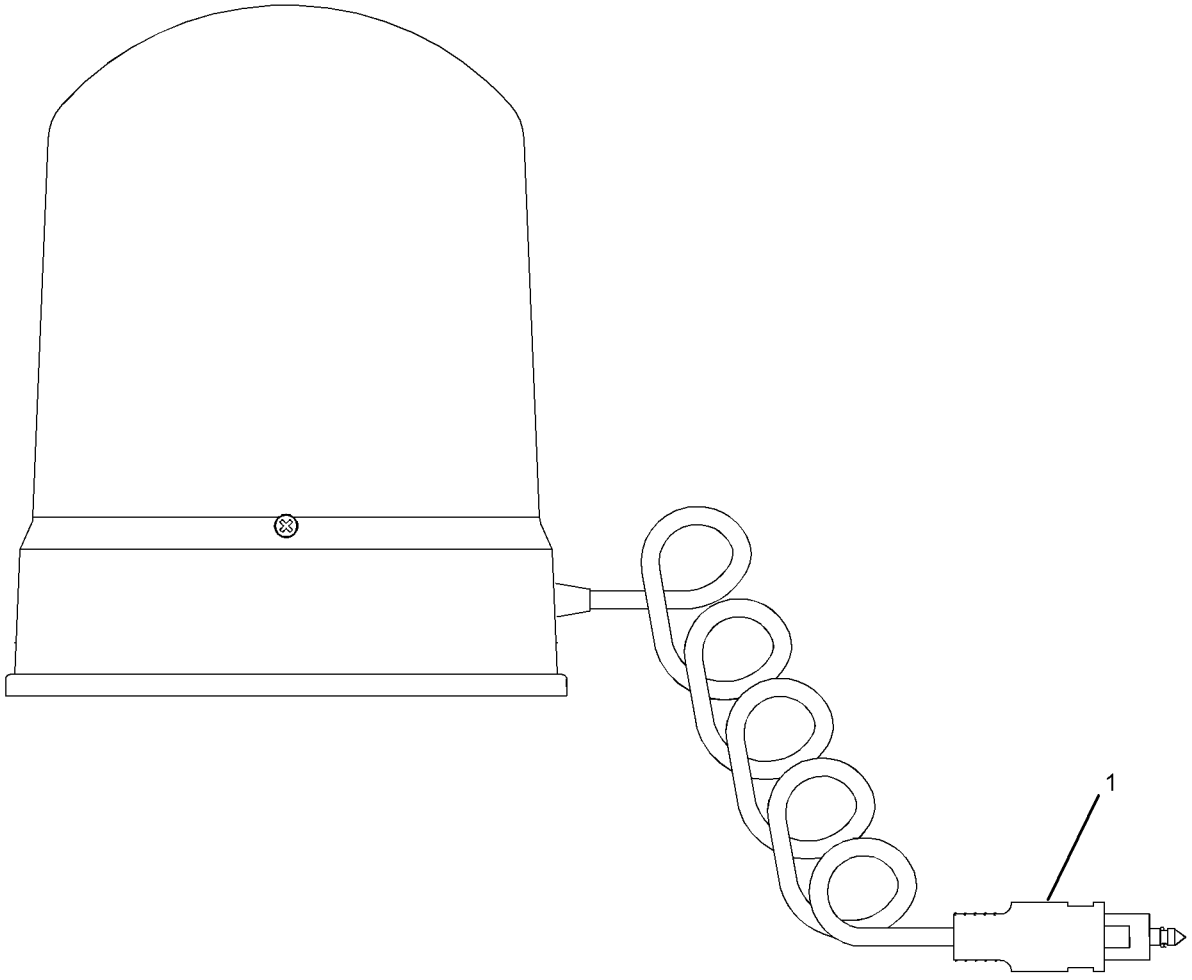

GRAPHIC #1 **<END>** g01232367

115-1558 LIGHTING GP-AUXILIARY—CAB FRONT

S/N: JRL1-UP; RRS1-UP
AN ATTACHMENT

SMCS-1429 **i03116520**

NOTE	REF NO	GRAPHIC REF	PART NUMBER	QTY	PART NAME 1 2 3 4 5 6 (PRODUCT LEVEL)	SEE PAGE
	1	1	**115-1559**	2	PLATE	
CY	2	1	**234-4325**	2	LAMP GP-FLOOD (24-VOLT) (SUSPENDED)	115
C	3	1	**235-5762**	2	WIRE AS	
M	4	1	**5C-2890**	4	NUT (M6X1-THD)	
M	5	1	**8T-4189**	4	BOLT (M8X1.25X20-MM)	
	6	1	**8T-4224**	4	WASHER-HARD (8.8X16X2-MM THK)	

C-CHANGE FROM PREVIOUS TYPE
M-METRIC PART
Y-SEPARATE ILLUSTRATION

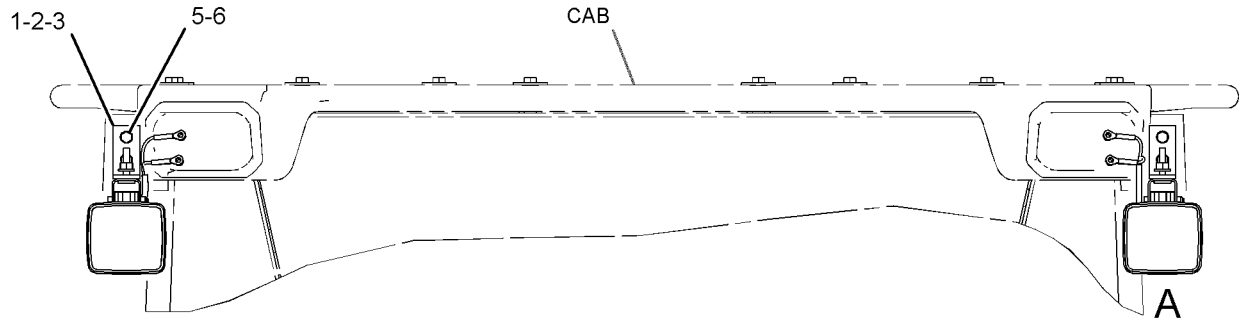

FRONT VIEW

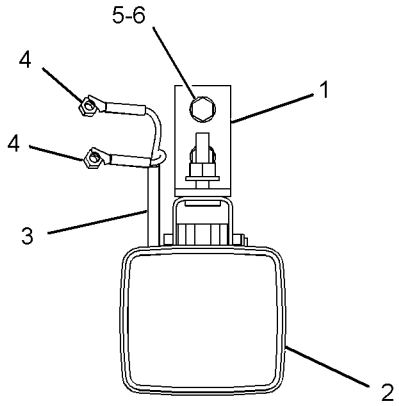

VIEW OF AREA A

GRAPHIC #1 **<END>** g01408481

290-8181 LIGHTING GP-FLOOD—CAB FRONT, REAR

S/N: JRL1-UP; RRS1-UP
PART OF 311-8698 CAB AR
AN ATTACHMENT

SMCS-1434 **i04439929**

NOTE	REF NO	GRAPHIC REF	PART NUMBER	QTY	PART NAME 1 2 3 4 5 6 (PRODUCT LEVEL)	SEE PAGE
D	1	1	**5P-5639**		SEAL (0.3-M EACH)	
D	1A	1	**5P-5639**		SEAL (0.4-M EACH)	
D	1B	1	**5P-5639**		SEAL (0.6-M)	
	2	1	**8E-1118**	1	ANTENNA AS	
	3	1	**9R-7941**	1	SOCKET AS	
		1	**9R-7980**	1	COVER	
	4	1	**109-7041**	4	LAMP GP-FLOOD (24-VOLT)	
					(EACH INCLUDES)	
		1	**351-9918**	1	LAMP-HALOGEN (24-VOLT, 70-WATT)	
		1	**142-5789**	4	SCREW-SPECIAL	
	5	1	**109-8981**	1	CABLE AS-COAXIAL	
	6	1	**114-6604**	16	NUT-SPEED	
	8	1	**164-5509**	1	BLOCK	
	9	1	**289-9167**	1	HARNESS AS-LIGHTING	
		1	**123-7615**	2	CONNECTOR	
		1	**9W-0852**	4	PIN-CONNECTOR (14-GA TO 16-GA)	
		1	**9X-3401**	2	PIN-CONNECTOR (16-GA TO 18-GA)	
					—OR—	
		1	**126-1767**	2	PIN-CONNECTOR (14-GA TO 16-GA)	
		1	**102-8805**	1	KIT-RECEPTACLE (6-PIN)	
					(INCLUDES RECEPTACLE AS & WEDGE)	
		1	**8L-8413**	40	STRAP-CABLE	
		1	**2L-8077**	4	TERMINAL-RING (14-GA TO 16-GA, 1/4-IN SCREW)	
		1	**2L-8078**	2	TERMINAL-RING (14-GA TO 16-GA, 5/16-IN SCREW)	
		1	**5P-4571**	8	TERMINAL-BLADE (14-GA TO 16-GA)	
		1	**6V-0491**	4	TERMINAL-BLADE (14-GA TO 18-GA)	
E		1	**329-3734**		TAPE (22-CM)	
E		1	**119-3662**		TUBE-HEAT SHRINK (10.85-MM DIA) (13-CM)	
E		1	**125-7874**		TUBE-HEAT SHRINK (5.72-MM DIA) (15-CM)	
E		1	**125-7875**		TUBE-HEAT SHRINK (7.44-MM DIA) (5-CM)	
	10	1	**292-0509**	1	ROOF	
	11	1	**129-0336**	1	PLATE	
M	12	1	**5C-2890**	4	NUT (M6X1-THD)	
M	13	1	**5C-7261**	2	NUT (M8X1.25-THD)	
M	14	1	**6V-7357**	4	BOLT (M6X1X25-MM)	
	15	1	**8C-6440**	4	SCREW-PAN HEAD (10-16X0.5-IN)	
M	16	1	**8T-4137**	12	BOLT (M10X1.5X20-MM)	
	17	1	**8T-4205**	8	WASHER-HARD (7.2X14.5X2-MM THK)	
	18	1	**8T-4224**	4	WASHER-HARD (8.8X16X2-MM THK)	
	19	1	**8T-4226**	12	WASHER-PLATED (10.5X45X3-MM THK)	
M	20	1	**8T-4908**	2	BOLT (M8X1.25X25-MM)	

D-ORDER BY THE METER
E-ORDER BY THE CENTIMETER
M-METRIC PART

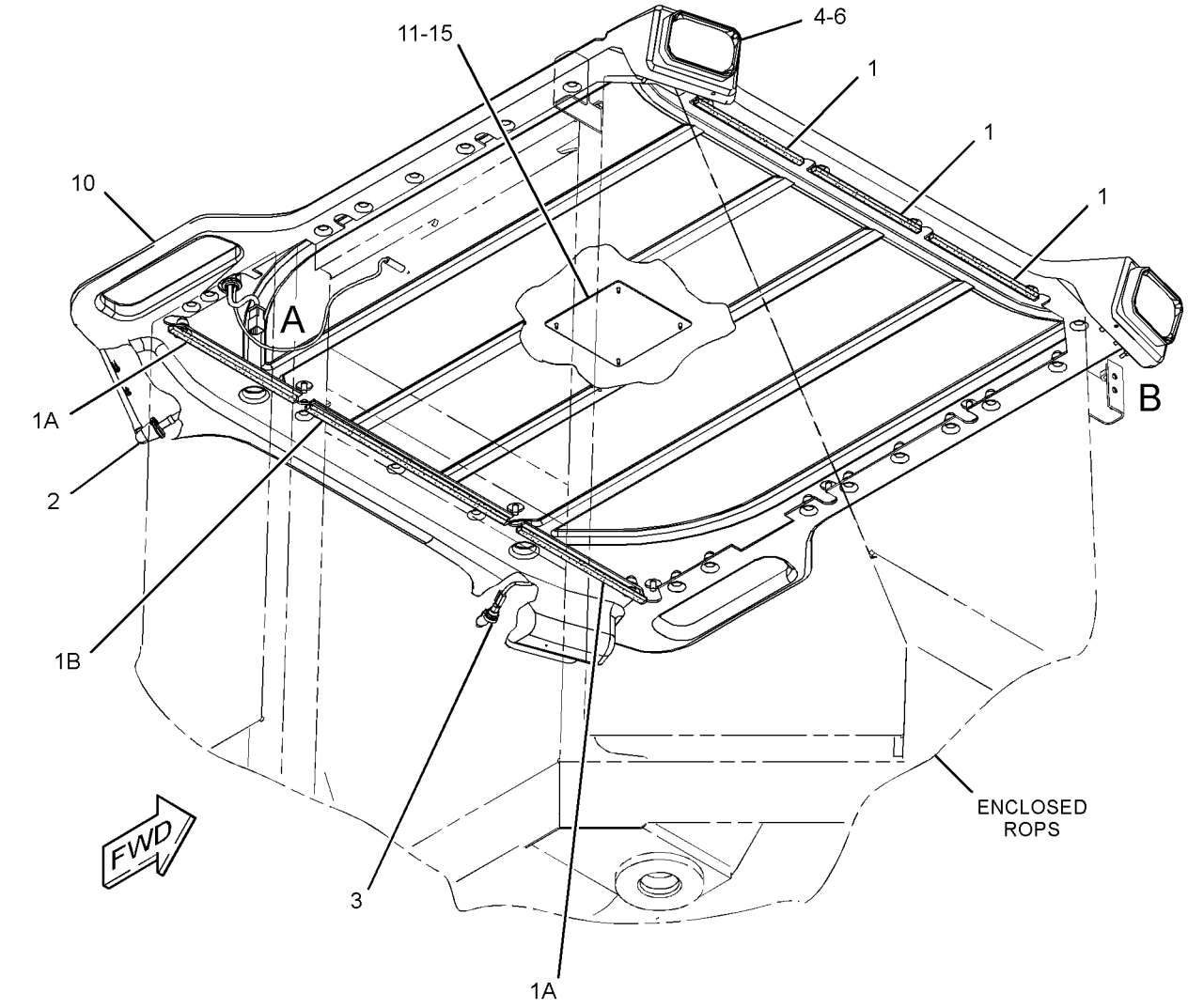

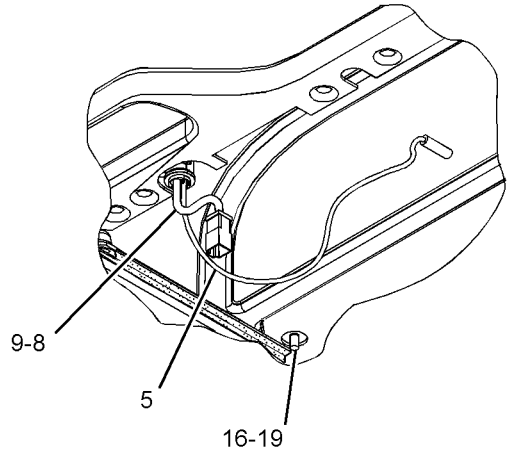

VIEW OF AREA A

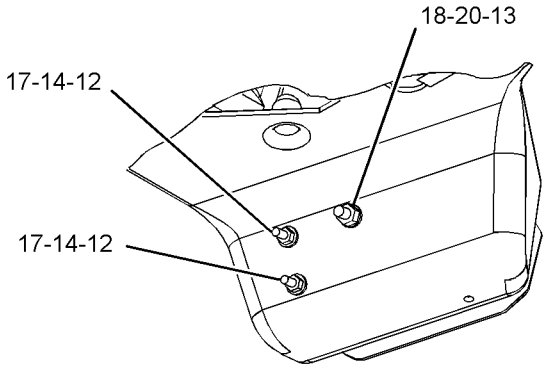

VIEW OF AREA B



GRAPHIC #1

<END>

g02720103

311-8706 LIGHTING GP-FLOOD—CAB FRONT

S/N: JRL1-UP; RRS1-UP
PART OF 310-9953 CAB AR
AN ATTACHMENT

SMCS-1434 **i03537661**

NOTE	REF NO	GRAPHIC REF	PART NUMBER	QTY	PART NAME 1 2 3 4 5 6 (PRODUCT LEVEL)	SEE PAGE
	1	1	**1H-3244**	4	LOCKWASHER	
M	2	1	**8T-4970**	8	BOLT (M6X1X14-MM)	
	3	1	**4B-4276**	8	WASHER (7X16X1.6-MM THK)	
	4	1	**115-1559**	2	PLATE	
Y	5	1	**242-3519**	2	LAMP GP-FLOOD (24-VOLT)	116
	6	1	**311-8707**	1	HARNESS AS-LIGHTING	
		1	**102-8805**	1	KIT-RECEPTACLE (6-PIN)	
					(KIT INCLUDES RECEPTACLE AS & WEDGE)	
		1	**186-3735**	2	PIN-CONNECTOR (16-GA TO 18-GA)	
		1	**8T-8737**	2	PLUG-SEAL	
		1	**9W-0852**	2	PIN-CONNECTOR (14-GA TO 16-GA)	
E		1	**114-8843**		SLEEVE-PLASTIC (220-CM)	
E		1	**119-3662**		TUBE-HEAT SHRINK (10.85-MM DIA) (7-CM)	
E		1	**125-7875**		TUBE-HEAT SHRINK (7.44-MM DIA) (20-CM)	
	7	1	**4B-4674**	8	WASHER (6.4X14.5X1.6-MM THK)	
M	8	1	**5C-2890**	8	NUT (M6X1-THD)	
	9	1	**5P-8525**	2	GROMMET	
B	10	1	**7K-1181**	9	STRAP-CABLE	
	11	1	**8T-4121**	2	WASHER-HARD (11X21X2.5-MM THK)	
M	12	1	**8T-4133**	2	NUT (M10X1.5-THD)	
M	13	1	**8T-4138**	4	BOLT (M6X1X20-MM)	
M	14	1	**8T-4189**	4	BOLT (M8X1.25X20-MM)	
	15	1	**8T-4224**	4	WASHER-HARD (8.8X16X2-MM THK)	

B-USE AS REQUIRED
E-ORDER BY THE CENTIMETER
M-METRIC PART
Y-SEPARATE ILLUSTRATION

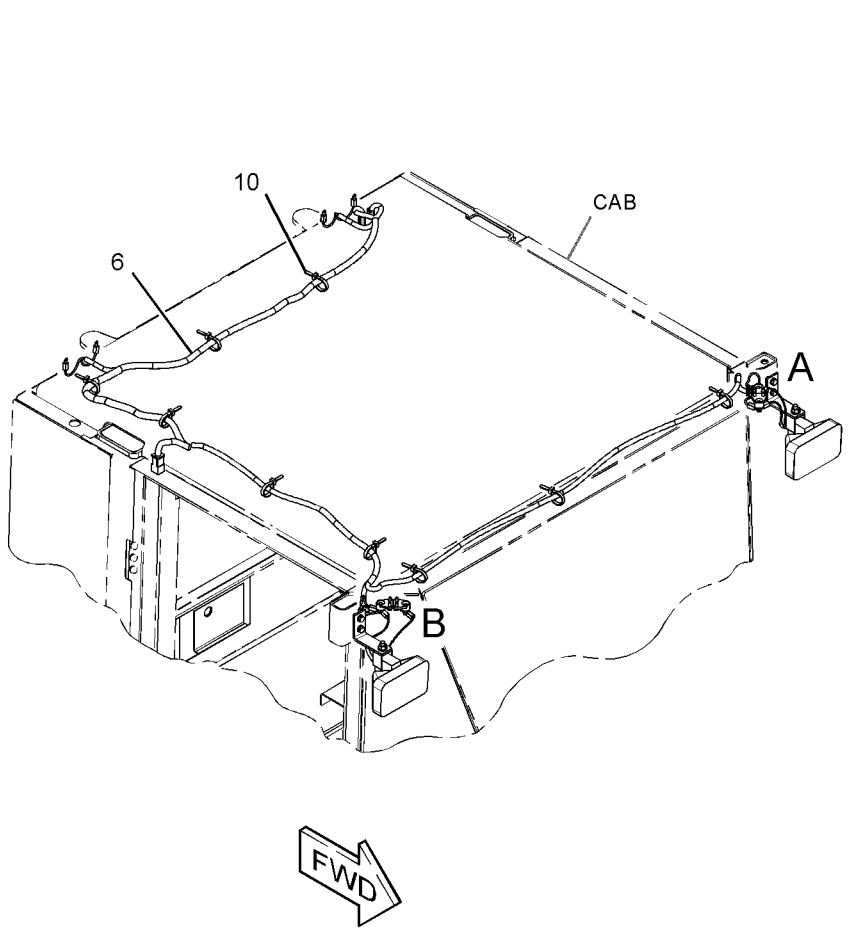

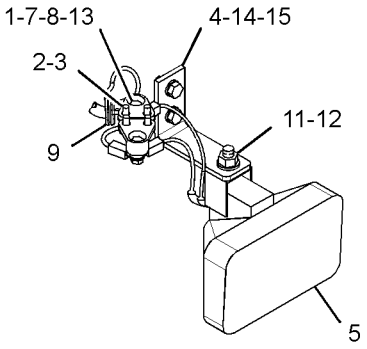

VIEW OF AREA A

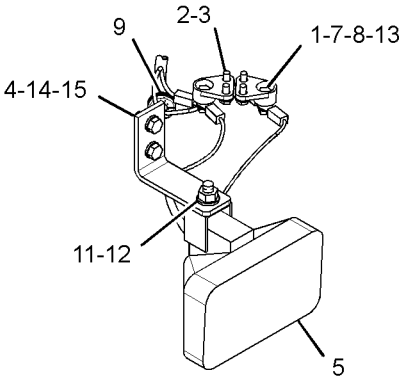

VIEW OF AREA B

GRAPHIC #1 **<END>** g01901935

ELECTRICAL AND STARTING SYSTEM

313-4572 LIGHTING GP-FLOOD—CANOPY FRONT, REAR

S/N: JRL1-UP; RRS1-UP
PART OF 290-8179 CANOPY GP-OPEN ROPS
AN ATTACHMENT

SMCS-1434 **i03994121**

NOTE	REF NO	GRAPHIC REF	PART NUMBER	QTY	PART NAME 1 2 3 4 5 6 (PRODUCT LEVEL)	SEE PAGE
D	1	1	**5P-5639**		SEAL (0.3-M EACH)	
D	1A	1	**5P-5639**		SEAL (0.4-M EACH)	
D	1B	1	**5P-5639**		SEAL (0.6-M)	
	2	1	**9R-7941**	1	SOCKET AS	
		1	**9R-7980**	1	COVER	
	3	1	**109-7041**	4	LAMP GP-FLOOD (24-VOLT)	
					(EACH INCLUDES)	
		1	**9X-3463**	1	LAMP-HALOGEN (24-VOLT, 70-WATT)	
		1	**142-5789**	4	SCREW-SPECIAL	
	4	1	**114-6604**	16	NUT-SPEED	
C	5	1	**307-2634**	1	ROOF	
C	6	1	**322-6837**	1	HARNESS AS-LIGHTING	
		1	**9X-3401**	2	PIN-CONNECTOR (16-GA TO 18-GA)	
		1	**123-7615**	2	CONNECTOR	
		1	**9W-0852**	4	PIN-CONNECTOR (14-GA TO 16-GA)	
		1	**180-9339**	2	PIN-CONNECTOR (14-GA TO 18-GA)	
		1	**155-2270**	4	KIT-CONNECTING PLUG (2-PIN)	
					(EACH INCLUDES PLUG AS, WEDGE & INTERFACE SEAL)	
		1	**8T-8737**	8	PLUG-SEAL	
		1	**102-8802**	4	KIT-RECEPTACLE (2-PIN)	
		1	**102-8805**	1	KIT-RECEPTACLE (6-PIN)	
					(EACH RECEPTACLE KIT INCLUDES PLUG AS & WEDGE)	
		1	**9W-0844**	2	SOCKET-CONNECTOR (14-GA TO 16-GA)	
		1	**180-9340**	6	SOCKET-CONNECTOR (14-GA TO 18-GA)	
B		1	**141-8061**		TAPE	
		1	**5P-4571**	8	TERMINAL-BLADE (14-GA TO 16-GA)	
		1	**6V-0491**	4	TERMINAL-BLADE (14-GA TO 18-GA)	
E		1	**119-3662**		TUBE-HEAT SHRINK (10.85-MM DIA) (13-CM)	
E		1	**125-7874**		TUBE-HEAT SHRINK (5.72-MM DIA) (15-CM)	
E		1	**125-7875**		TUBE-HEAT SHRINK (7.44-MM DIA) (5-CM)	
C	7	1	**5P-5774**	4	PLUG	
M	8	1	**8T-4137**	12	BOLT (M10X1.5X20-MM)	
	9	1	**8T-4226**	12	WASHER-PLATED (10.5X45X3-MM THK)	

B-USE AS REQUIRED
C-CHANGE FROM PREVIOUS TYPE
D-ORDER BY THE METER
E-ORDER BY THE CENTIMETER
M-METRIC PART

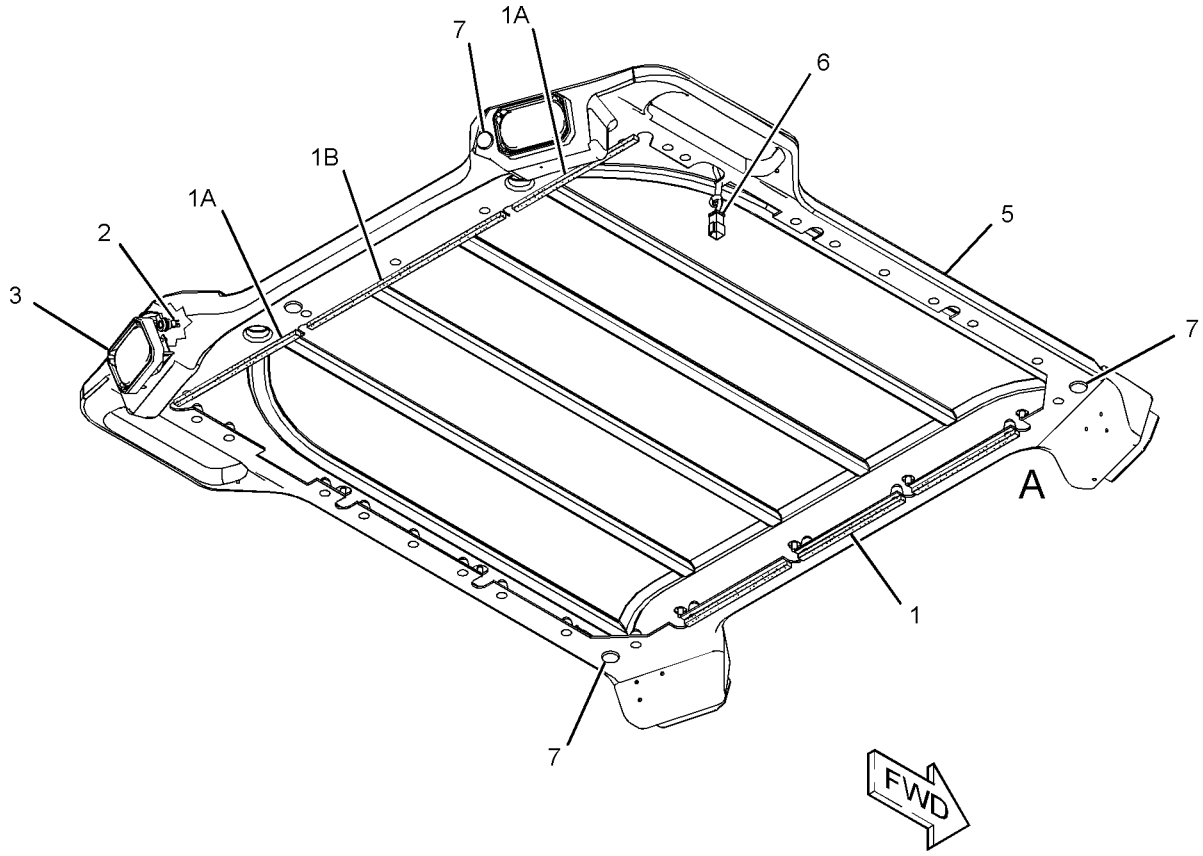

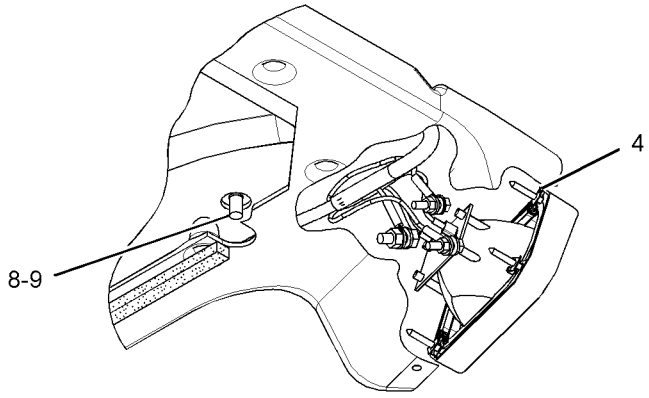

VIEW OF AREA A

GRAPHIC #1 **<END>** g02177645

ELECTRICAL AND STARTING SYSTEM

290-7223 LIGHTING GP-FLOOD & SIGNAL–

OFF ROAD W/SIGNAL

S/N: JRL1-UP; RRS1-UP

PART OF 372-7774, 372-7775 COMMON AR

SMCS-1430, 1434 **i03627144**

NOTE	REF NO	GRAPHIC REF	PART NUMBER	QTY	PART NAME 1 2 3 4 5 6 (PRODUCT LEVEL)	SEE PAGE
Y	1	1	**3E-6328**	1	ALARM GP (24-VOLT)	96
	2	1	**7K-1181**	5	STRAP-CABLE	
	3	1	**9R-1499**	2	REFLECTOR	
	4	1	**9R-2404**	6	REFLECTOR-AMBER	
	5	1	**134-9569**	1	SWITCH AS-TURN SIGNAL	
		1	**5L-7200**	1	SCREW (8-32X0.375-IN)	
		1	**9B-7233**	1	LOCKWASHER	
Y	6	1	**145-6929**	2	LAMP GP-STOP & TAIL (24-VOLT)	119
	7	1	**201-5555**	1	PLATE-INSTRUCTION (TURN SIGNAL)	
	8	1	**249-2895**	2	HARNESS AS-LIGHTING	
					(EACH INCLUDES)	
		1	**9X-3401**	4	PIN-CONNECTOR (16-GA TO 18-GA)	
					-OR-	
		1	**126-1767**	4	PIN-CONNECTOR (14-GA TO 16-GA)	
		1	**155-2274**	1	KIT-CONNECTING PLUG (6-PIN)	
					(INCLUDES PLUG AS, WEDGE & INTERFACE SEAL)	
		1	**8T-8737**	4	PLUG-SEAL	
		1	**102-8805**	1	KIT-RECEPTACLE (6-PIN)	
					(INCLUDES RECEPTACLE AS & WEDGE)	
		1	**180-9340**	4	SOCKET-CONNECTOR (14-GA TO 18-GA)	
	9	1	**298-6160**	2	BRACKET AS	
Y	10	1	**302-0406**	1	LAMP GP-FLOOD (24-VOLT) (RH)	117
Y	11	1	**302-0408**	1	LAMP GP-FLOOD (24-VOLT) (LH)	118
	12	1	**317-2284**	1	FLASHER AS (12 TO 24-VDC)	
	13	1	**133-3235**	1	LEVER	
	14	1	**1H-4393**	3	LOCKWASHER	
M	15	1	**5C-2890**	1	NUT (M6X1-THD)	
M	16	1	**5C-8312**	3	NUT (M4X0.7-THD)	
	17	1	**8T-4121**	8	WASHER-HARD (11X21X2.5-MM THK)	
M	18	1	**8T-4136**	8	BOLT (M10X1.5X25-MM)	
	19	1	**8T-4205**	5	WASHER-HARD (7.2X14.5X2-MM THK)	
M	20	1	**9X-2045**	1	SCREW-TRUSS HEAD (M6X1X20-MM)	
					PARTS SHOWN IN GRAPHIC(S) WITHOUT A REFERENCE NUMBER ARE NOT SERVICED SEPARATELY	

M-METRIC PART
Y-SEPARATE ILLUSTRATION

290-7223 **LIGHTING GP-FLOOD & SIGNAL** *(contd.)* **i03627144**

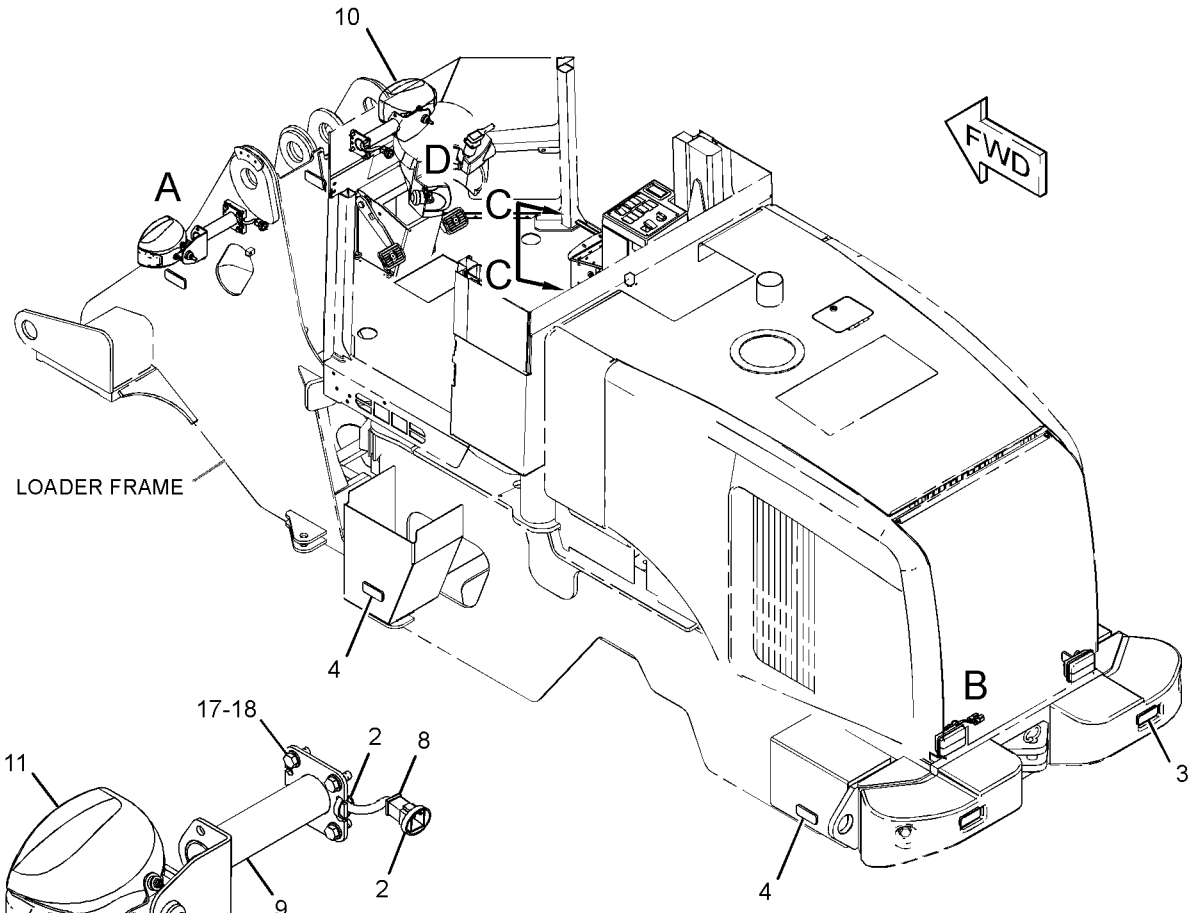

VIEW OF AREA A

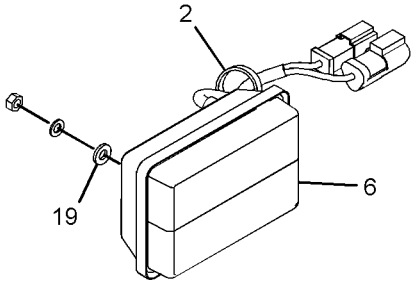

VIEW OF AREA B

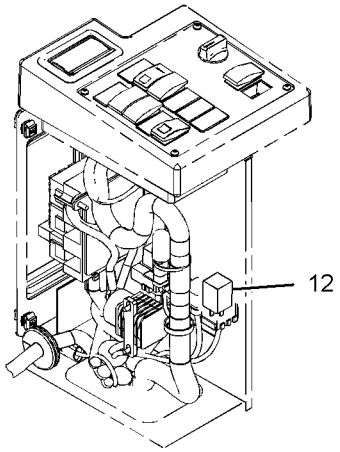

VIEW C-C
(COVER REMOVED FOR CLARITY)

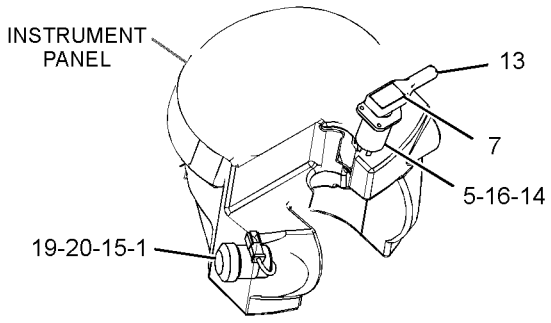

VIEW OF AREA D

GRAPHIC #1 **<END>** g01562858

204-2004 LIGHTING GP-REAR

S/N: JRL1-UP; RRS1-UP
PART OF 310-9953 CAB AR
AN ATTACHMENT

SMCS-1434 **i03629338**

NOTE	REF NO	GRAPHIC REF	PART NUMBER	QTY	PART NAME 1 2 3 4 5 6 (PRODUCT LEVEL)	SEE PAGE
	1	1	**098-8968**	8	WASHER (5X16X1.2-MM THK)	
	2	1	**4B-2048**	8	NUT (10-32-THD)	
	3	1	**4M-7470**	6	GROMMET	
	4	1	**4V-4164**	8	BUSHING-TERMINAL	
	5	1	**6D-6146**	4	SCREW-MACHINE (10-32X1.25-IN)	
	6	1	**7X-7729**	6	WASHER (11X25X3-MM THK)	
	7	1	**8T-4121**	2	WASHER-HARD (11X21X2.5-MM THK)	
M	8	1	**8T-4133**	4	NUT (M10X1.5-THD)	
M	9	1	**8T-4136**	2	BOLT (M10X1.5X25-MM)	
	10	1	**9F-8125**	8	LOCKWASHER (EXTERNAL TOOTH)	
Y	11	1	**242-3519**	2	LAMP GP-FLOOD (24-VOLT)	116
	12	1	**9X-9365**	2	BRACKET	
BF			**3S-2093**	4	STRAP-CABLE	

B-USE AS REQUIRED
F-NOT SHOWN
M-METRIC PART
Y-SEPARATE ILLUSTRATION

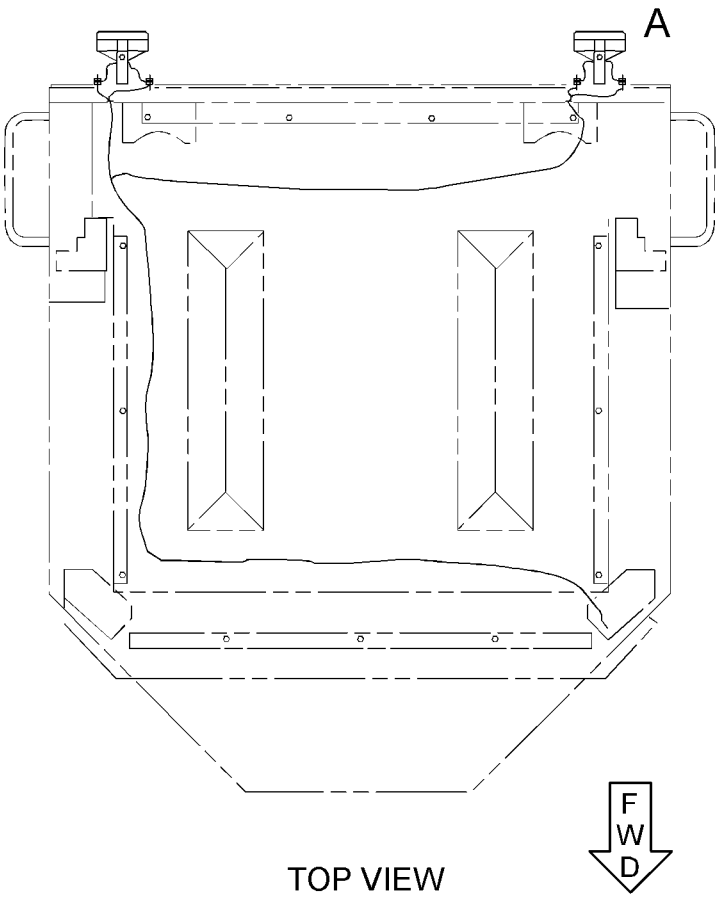

TOP VIEW

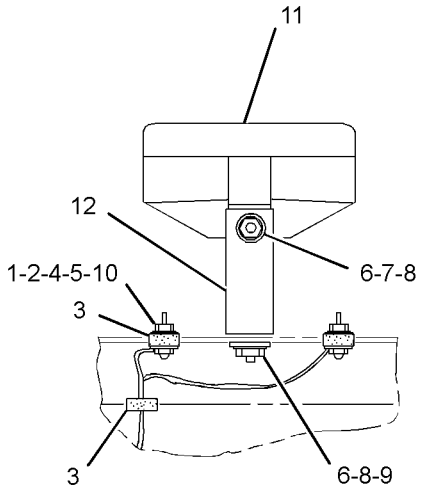

VIEW OF AREA A

GRAPHIC #1 **<END>** g01947261

289-8906 LIGHTING GP-WARNING BEACON

S/N: JRL1-UP; RRS1-UP
AN ATTACHMENT

SMCS-1431 **i03537675**

NOTE	REF NO	GRAPHIC REF	PART NUMBER	QTY	PART NAME 1 2 3 4 5 6 (PRODUCT LEVEL)	SEE PAGE
	1	1	**129-0336**	1	PLATE	
Y	2	1	**140-3668**	1	LAMP GP-WARNING BEACON (AMBER, STROBE)	120
	3	1	**195-0925**	1	SWITCH AS-ROCKER (WARNING BEACON)	
		1	**111-7899**	1	GASKET	
	4	1	**8C-6440**	4	SCREW-PAN HEAD (10-16X0.5-IN)	

Y-SEPARATE ILLUSTRATION

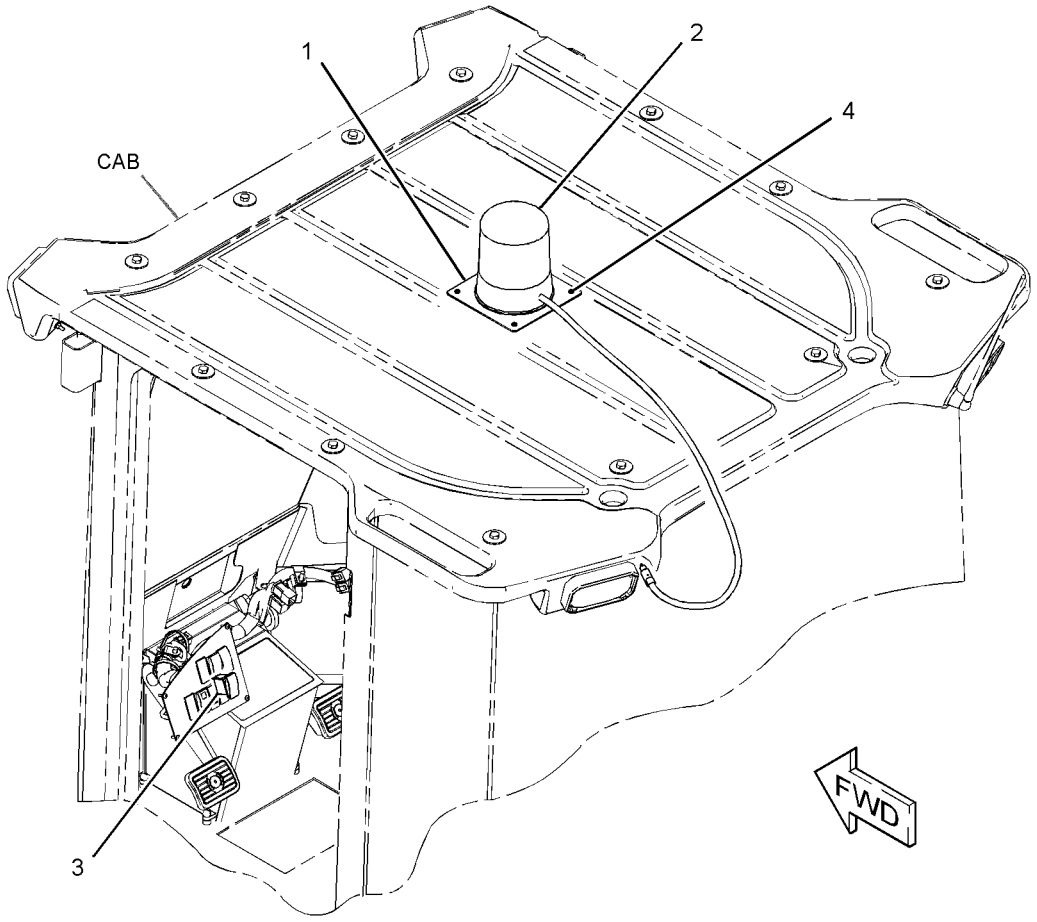

GRAPHIC #1 **<END>** g01409823

309-1620 MODULE AS-FUSE

S/N: JRL1-UP; RRS1-UP

PART OF 289-8902 WIRING GP-ENGINE

SMCS-1417 **i03085823**

NOTE	REF NO	GRAPHIC REF	PART NUMBER	QTY	PART NAME 1 2 3 4 5 6 (PRODUCT LEVEL)	SEE PAGE
	1	1	**267-2680**	1	FUSE (20-AMPERE)	
	2	1	**274-9872**	1	FUSE (30-AMPERE)	
M	3	1	**5C-2890**	2	NUT (M6X1-THD)	
	4	1	**8T-4205**	2	WASHER-HARD (7.2X14.5X2-MM THK)	
	5	1	**1H-3244**	2	LOCKWASHER	
M	6	1	**5C-7261**	1	NUT (M8X1.25-THD)	
	7	1	**8T-4224**	1	WASHER-HARD (8.8X16X2-MM THK)	
	8	1	**9F-5644**	1	LOCKWASHER	

M-METRIC PART

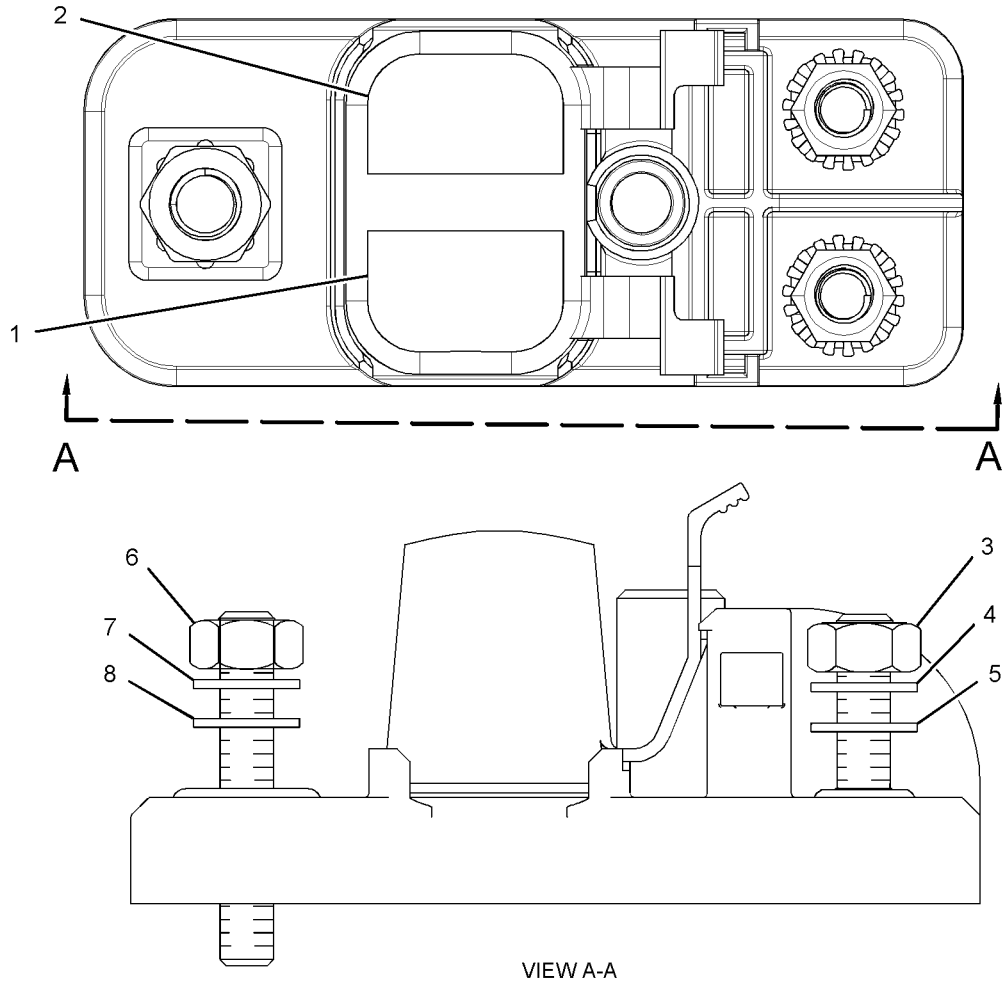

VIEW A-A

GRAPHIC #1 **<END>** g01427672

324-9712 MODULE AS-FUSE

S/N: JRL1-UP; RRS1-UP
GLOW PLUGS, START SOLENOID
PART OF 289-8902 WIRING GP-ENGINE

SMCS-1417 **i03539422**

NOTE	REF NO	GRAPHIC REF	PART NUMBER	QTY	PART NAME 1 2 3 4 5 6 (PRODUCT LEVEL)	SEE PAGE
	1	1	**9F-5644**	1	LOCKWASHER	
	2	1	**267-5211**	1	SEAL	
	3	1	**267-5213**	1	COVER	
	4	1	**278-6377**	2	FUSE (40-AMPERE)	
M	5	1	**5C-2890**	2	NUT (M6X1-THD)	
	6	1	**8T-4205**	2	WASHER-HARD (7.2X14.5X2-MM THK)	
	7	1	**1H-3244**	2	LOCKWASHER	
M	8	1	**5C-7261**	1	NUT (M8X1.25-THD)	
	9	1	**8T-4224**	1	WASHER-HARD (8.8X16X2-MM THK)	

M-METRIC PART

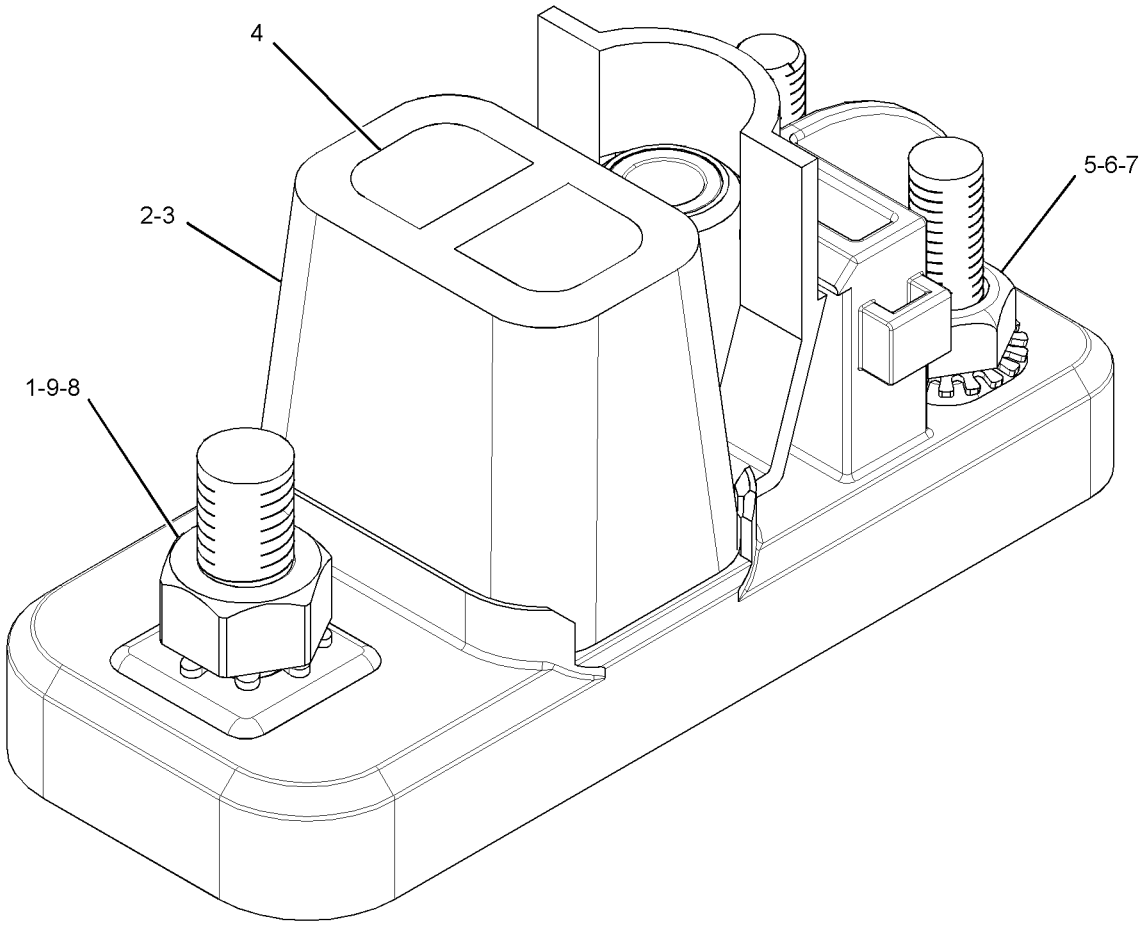

GRAPHIC #1 **<END>** g01784818

224-4536 SENSOR GP-PRESSURE

S/N: JRL1-UP; RRS1-UP

PART OF 288-4162 PUMP GP-GEAR

SMCS-1408, 1925, 7494 **i03979225**

NOTE	REF NO	GRAPHIC REF	PART NUMBER	QTY	PART NAME 1 2 3 4 5 6 (PRODUCT LEVEL)	SEE PAGE
E	1	1	**9X-1813**		SLEEVE (35-CM)	
	2	1	**155-2260**	1	KIT-CONNECTING PLUG (3-PIN)	
					(INCLUDES PLUG AS, WEDGE, & INTERFACE SEAL)	
	3	1	**194-5226**	1	WIRE AS (16-GA)	
					—OR—	
		1	**194-5227**	1	WIRE AS (14-GA)	
	4	1	**155-2276**	1	WEDGE-PLUG LOCK (3-PIN)	
E-ORDER BY THE CENTIMETER						

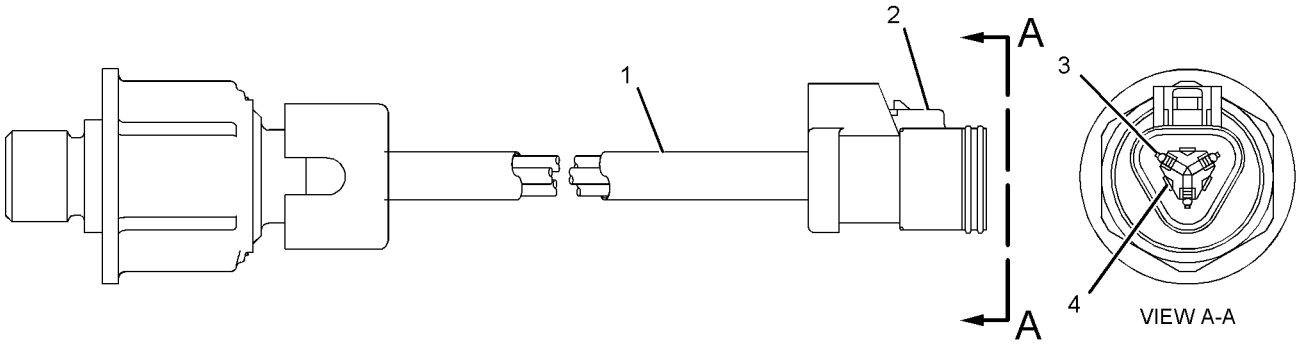

GRAPHIC #1 **<END>** g01040301

183-8597 SENSOR GP-SPEED

S/N: J2Y1-UP

PART OF 305-0635 VALVE GP-TRANSMISSION CONTROL

SMCS-1907, 1912, 3175, 4803, 7493 **i02914638**

NOTE	REF NO	GRAPHIC REF	PART NUMBER	QTY	PART NAME 1 2 3 4 5 6 (PRODUCT LEVEL)	SEE PAGE
	1	1	**171-5349**	1	STRAP-MARKER	
	2	1	**102-8802**	1	KIT-RECEPTACLE (2-PIN)	
					(INCLUDES RECEPTACLE AS & WEDGE)	
	3	1	**186-3735**	2	PIN-CONNECTOR (16-GA TO 18-GA)	
	4	1	**3E-3365**	1	WEDGE-RECEPTACLE LOCK (2-PIN)	
E	5	1	**9X-1813**		SLEEVE (14-CM)	

E-ORDER BY THE CENTIMETER

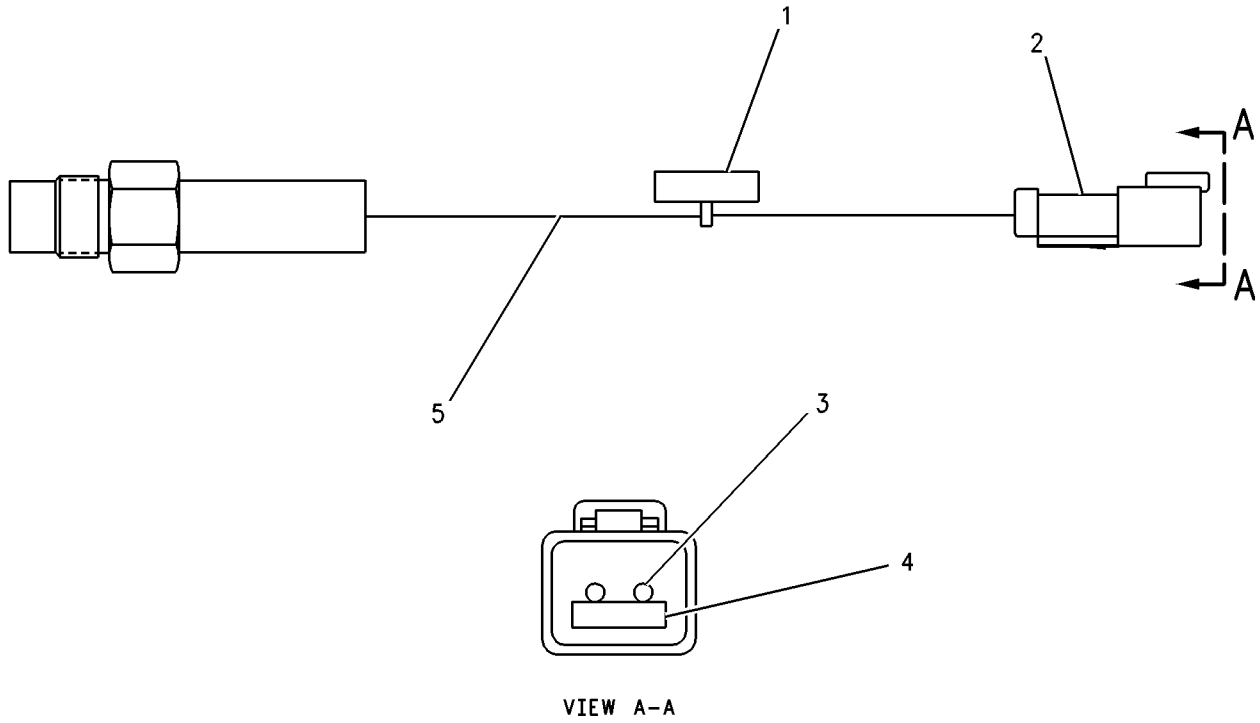

VIEW A-A

GRAPHIC #1 **<END>** g00680294

134-2252 SENSOR GP-TEMPERATURE–PULSE WIDTH MODULATED

S/N: J2Y1-UP

8-VOLT

PART OF 200-2043 VALVE GP-TRANSMISSION CONTROL

SMCS-1408, 1906, 1919, 1921, 1922, 1928, 1929, 301T, 3194, 429T, 509T

i03537678

NOTE	REF NO	GRAPHIC REF	PART NUMBER	QTY	PART NAME 1 2 3 4 5 6 (PRODUCT LEVEL)	SEE PAGE
	1	1	**8T-8729**	3	PIN-CONNECTOR (16-GA TO 18-GA)	
E	2	1	**112-4550**		SLEEVE (33-CM)	
	3	1	**102-8803**	1	KIT-RECEPTACLE (3-PIN)	
					(INCLUDES RECEPTACLE AS & WEDGE)	

E-ORDER BY THE CENTIMETER

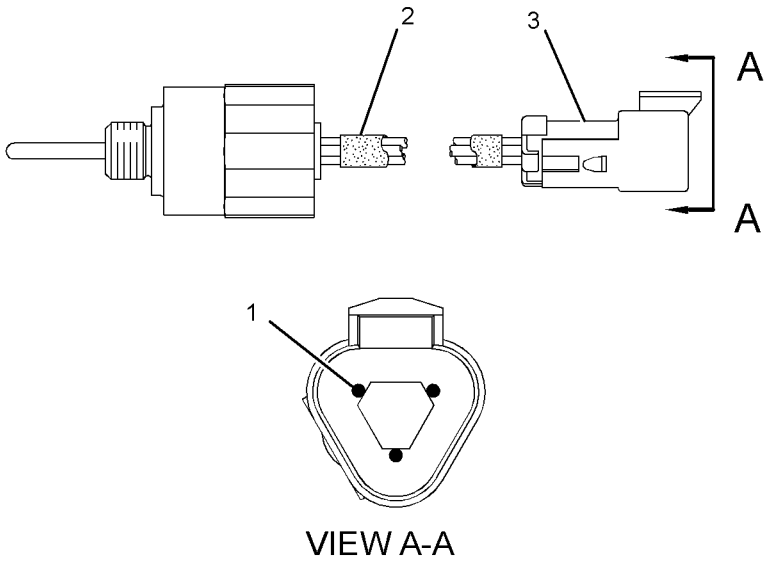

VIEW A-A

GRAPHIC #1

<END>

g01866333

290-4432 STARTING AID GP-ETHER

S/N: JRL1-UP; RRS1-UP
AN ATTACHMENT

SMCS-1456 **i03018423**

NOTE	REF NO	GRAPHIC REF	PART NUMBER	QTY	PART NAME 1 2 3 4 5 6 (PRODUCT LEVEL)	SEE PAGE
Y	1	1	*290-8781*	1	STARTING AID GP-ETHER	138
	2	1	**5P-4116**	4	WASHER-HARD (8.8X20.5X2-MM THK)	
M	3	1	**8T-4908**	4	BOLT (M8X1.25X25-MM)	

M-METRIC PART
Y-SEPARATE ILLUSTRATION

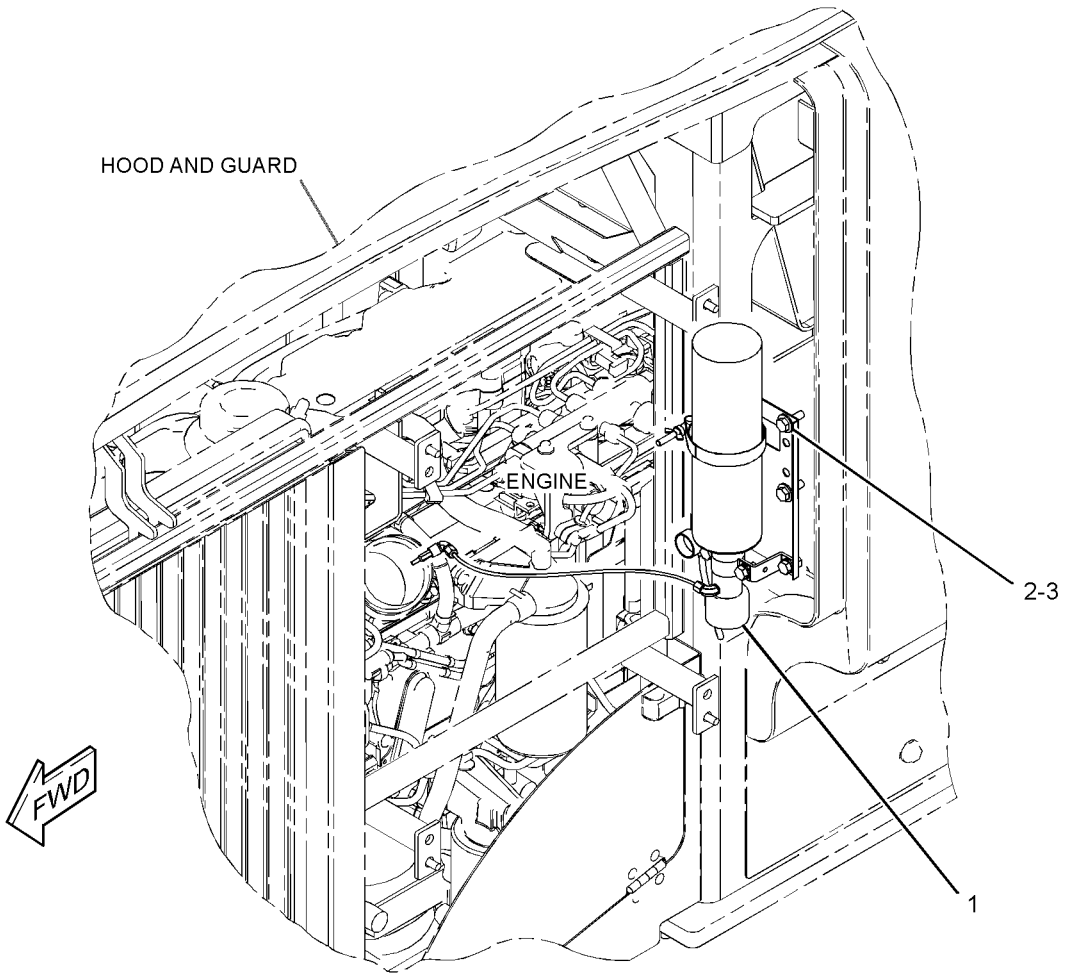

GRAPHIC #1 **<END>** g01399049

290-8781 STARTING AID GP-ETHER

S/N: JRL1-UP; RRS1-UP
PART OF 290-4432 STARTING AID GP-ETHER
AN ATTACHMENT

SMCS-1456 **i03736100**

NOTE	REF NO	GRAPHIC REF	PART NUMBER	QTY	PART NAME 1 2 3 4 5 6 (PRODUCT LEVEL)	SEE PAGE
Y	1	1	**239-1134**	1	VALVE GP-ETHER STARTING (24-VOLT)	148
	2	1	**276-3810**	1	ATOMIZER GP-ETHER	
		1	**236-4545**	1	NUT-SLEEVE (5/16-24-THD)	
	3	1	**276-5436**	1	FITTING AS	
		1	**236-4545**	1	NUT-SLEEVE (5/16-24-THD)	
	4	1	*276-6597*	1	MOUNTING GP-ETHER CANISTER	
		1	**236-8013**	1	BRACKET	
		1	**276-6596**	1	CLAMP	
M	5	1	**5C-7261**	2	NUT (M8X1.25-THD)	
M	6	1	**8T-4200**	2	BOLT (M8X1.25X16-MM)	
	7	1	**8T-4224**	4	WASHER-HARD (8.8X16X2-MM THK)	
D	8	1	**5P-5630**		TUBE (1-M)	

D-ORDER BY THE METER
M-METRIC PART
Y-SEPARATE ILLUSTRATION

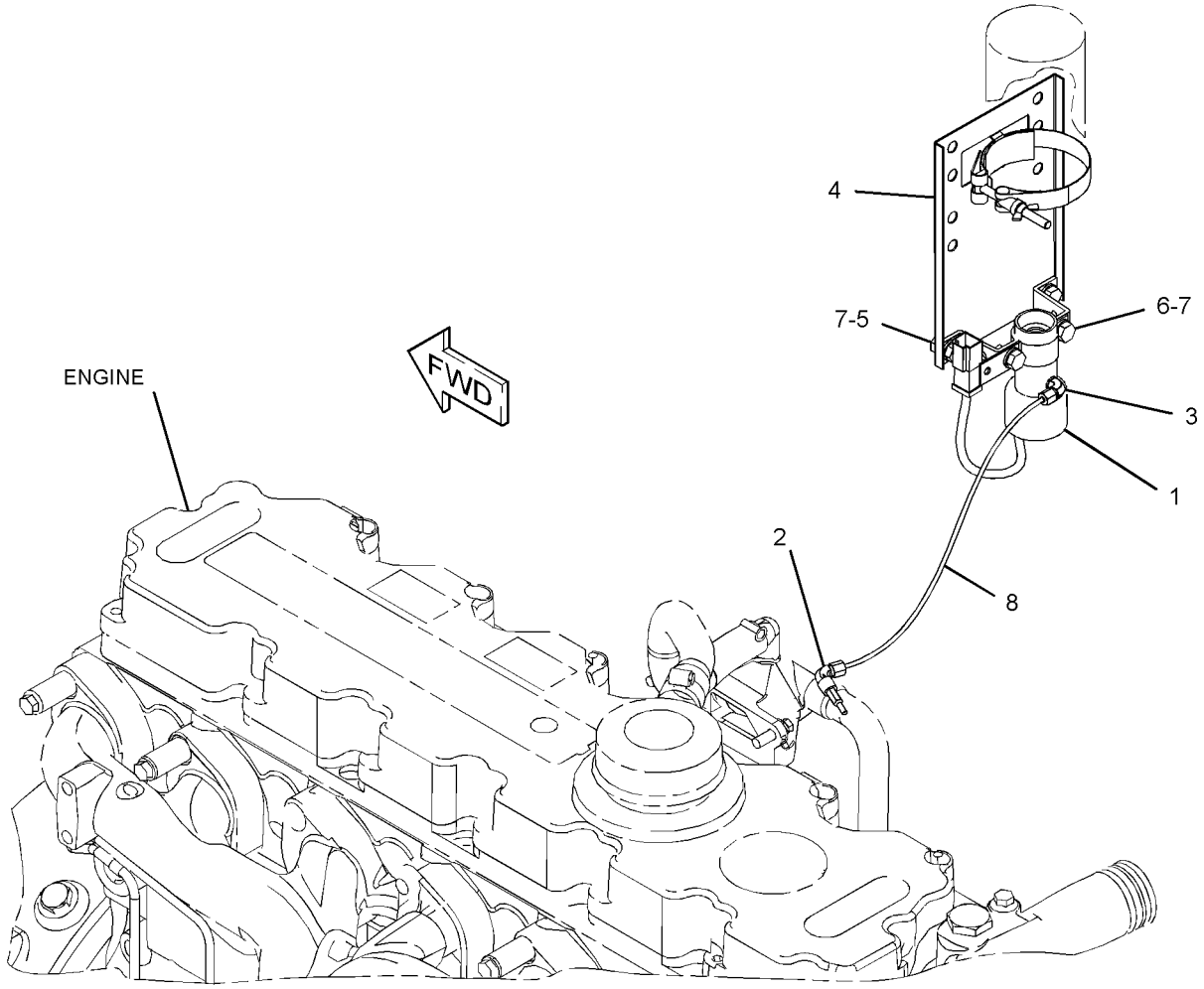

GRAPHIC #1 **<END>** g02106694

234-2667 STARTING MOTOR GP-ELECTRIC

S/N: JRL1-UP; RRS1-UP

PART OF 289-8894 INSTALLATION AR-ENGINE

SMCS-1453 **i03045441**

NOTE	REF NO	GRAPHIC REF	PART NUMBER	QTY	PART NAME 1 2 3 4 5 6 (PRODUCT LEVEL)	SEE PAGE
Y	1	1	**300-6868**	1	STARTING MOTOR GP-ELECTRIC	140
	2	1	**7W-4540**	1	SPACER	
	3	1	**8T-4121**	3	WASHER-HARD (11X21X2.5-MM THK)	
M	4	1	**8T-4185**	3	BOLT (M10X1.5X50-MM)	

M-METRIC PART
Y-SEPARATE ILLUSTRATION

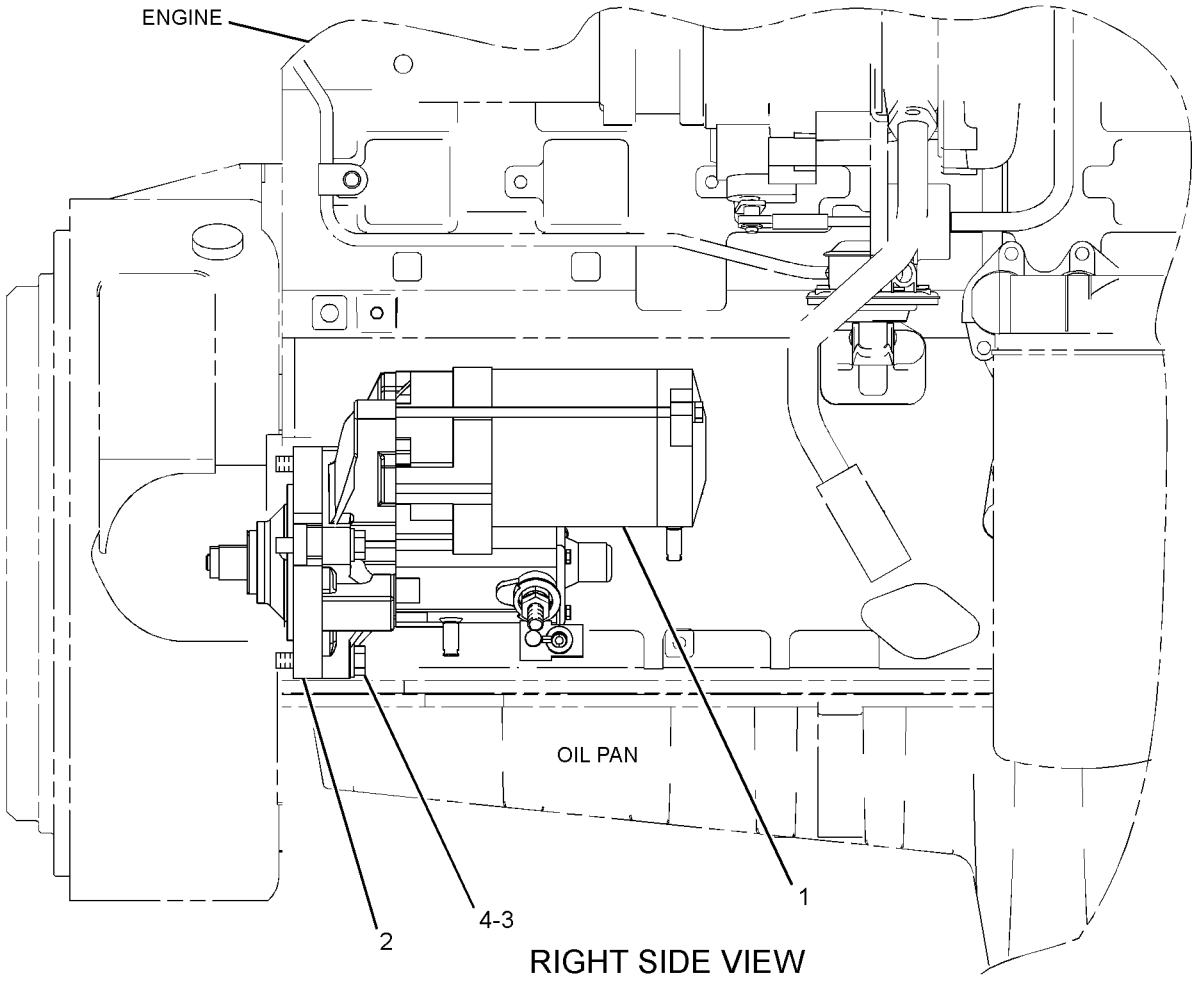

GRAPHIC #1 **<END>** g01407441

ELECTRICAL AND STARTING SYSTEM

300-6868 STARTING MOTOR GP-ELECTRIC

S/N: JRL1-UP; RRS1-UP

PART OF 234-2667 STARTING MOTOR GP-ELECTRIC

SMCS-1453 **i03043894**

NOTE	REF NO	GRAPHIC REF	PART NUMBER	QTY	PART NAME 1 2 3 4 5 6 (PRODUCT LEVEL)	SEE PAGE
	1	1	**9X-1279**	1	CASE AS-STARTING MOTOR	
	2	1	**9X-1280**	1	ARMATURE AS (STARTING MOTOR)	
	3	1	**242-5441**	1	DRIVE AS-STARTING MOTOR	
	4	1	**242-5443**	1	HOUSING-STARTING MOTOR	
	5	1	**242-5444**	1	SWITCH AS (STARTER)	
	6	1	**9X-1275**	1	HOLDER AS-BRUSH	
	7	1	**242-5445**	1	FRAME-STARTER	
	8	1	**8J-4455**	1	BALL	
	9	1	**7T-6090**	1	SPRING	
	10	1	**9X-1278**	1	BOOT	
	11	1	**7T-6087**	1	WASHER (15.2X40X0.5-MM THK)	
	12	1	**8T-4121**	2	WASHER-HARD (11X21X2.5-MM THK)	
M	13	1	**8T-4133**	2	NUT (M10X1.5-THD)	
M	14	1	**096-2617**	1	SCREW-MACHINE (M5X0.8X6-MM)	
	15	1	**3E-5153**	1	COVER-STARTING MOTOR	
	16	1	**8C-9778**	1	PLUNGER AS (STARTER)	
	17	1	**242-5442**	1	COVER-STARTER	
	18	1	**3E-5154**	1	BUSHING-STARTING MOTOR	
	19	1	**100-3685**	1	CAP	
	20	1	**2P-8104**	1	BEARING	
	21	1	**8L-4070**	1	BALL BEARING	
	22	1	**8F-1434**	1	LOCKWASHER	
					AVAILABLE REPAIR KIT(S):	
			9X-1282	1	KIT-STARTING MOTOR GEAR	
					(INCLUDES PINIONS, ROLLERS & RETAINER)	
			9X-1283	1	KIT-HARDWARE (STARTING MOTOR)	
					(INCLUDES BOLTS, NUT & SCREW AS)	
			9X-1284	1	KIT-STARTING MOTOR SEAL	
					(INCLUDES SEALS & GASKET)	
			9X-1285	1	KIT-BRUSH (STARTING MOTOR)	
					(INCLUDES BRUSH AS & SCREW AS)	

M-METRIC PART

300-6868 STARTING MOTOR GP-ELECTRIC *(contd.)* **i03043894**

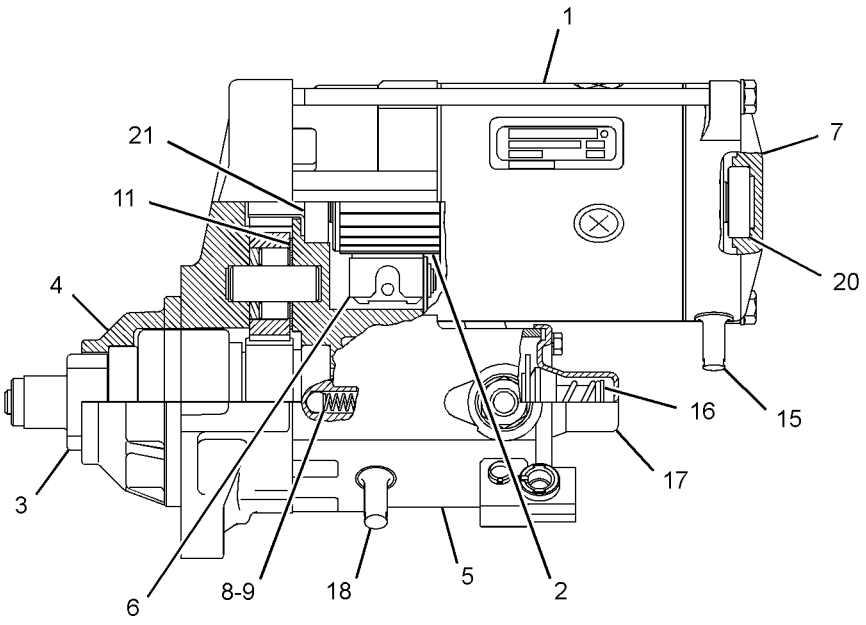

LEFT SIDE VIEW

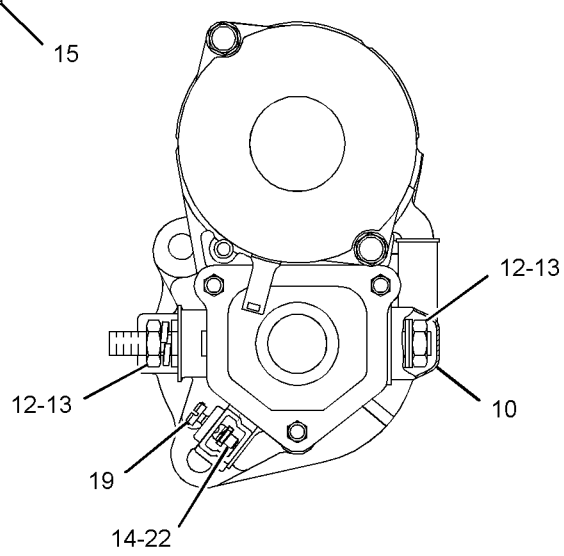

REAR VIEW

GRAPHIC #1 **<END>** g01389450

7N-0718 SWITCH GP-DISCONNECT–BATTERY

S/N: JRL1-UP; RRS1-UP
12-VOLT
PART OF 290-7203 BATTERY & WIRING GP
AN ATTACHMENT

SMCS-1411 **i02587657**

NOTE	REF NO	GRAPHIC REF	PART NUMBER	QTY	PART NAME 1 2 3 4 5 6 (PRODUCT LEVEL)	SEE PAGE
	1	1	**8H-5306**	1	KEY (BATTERY DISCONNECT)	
	2	1	**8H-5303**	1	NUT (3/4-16-THD)	
	3	1	**2H-3922**	2	LOCKWASHER	
	4	1	**9F-5644**	2	LOCKWASHER	
	5	1	**6F-7045**	2	NUT-FULL (3/8-24-THD)	

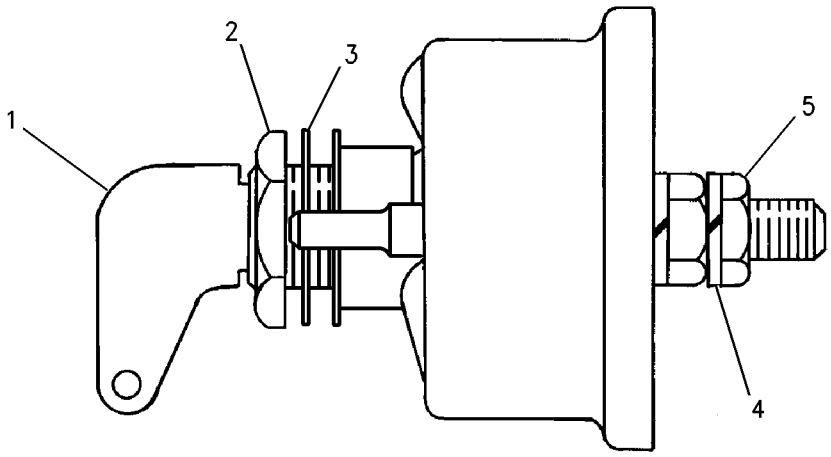

GRAPHIC #1 **<END>** g00715584

241-8368 SWITCH GP-MAGNETIC

S/N: JRL1-UP; RRS1-UP
24-VOLT
PART OF 290-8171, 290-8174, 311-8502 PANEL GP-INSTRUMENT, 289-8902 WIRING GP-ENGINE
ALSO AN ATTACHMENT

SMCS-7499 **i02290099**

NOTE	REF NO	GRAPHIC REF	PART NUMBER	QTY	PART NAME 1 2 3 4 5 6 (PRODUCT LEVEL)	SEE PAGE
	1	1	**155-2270**	1	KIT-CONNECTING PLUG (2-PIN)	
					(INCLUDES PLUG AS, WEDGE & INTERFACE SEAL)	
	2	1	**4F-2294**	2	NUT-JAM (5/16-24-THD)	
	3	1	**186-3736**	2	SOCKET-CONNECTOR (16-GA TO 18-GA)	

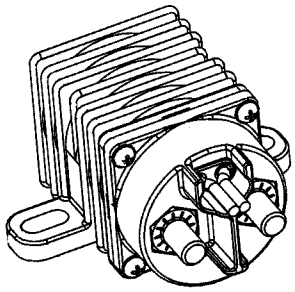

ISOMETRIC VIEW

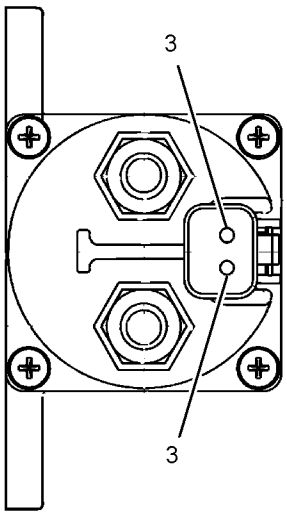

VIEW A-A

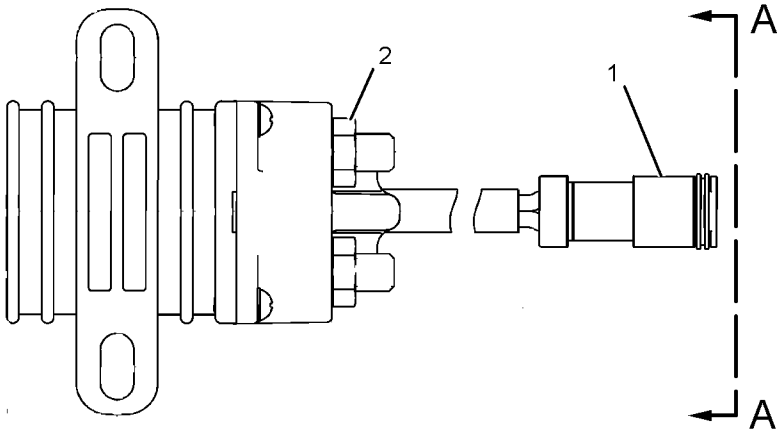

GRAPHIC #1 **<END>** g01077362

165-5970 SWITCH GP-TOGGLE

S/N: JRL1-UP; RRS1-UP
PART OF 289-8938 LINES GP-FUEL

SMCS-7332 **i04373748**

NOTE	REF NO	GRAPHIC REF	PART NUMBER	QTY	PART NAME 1 2 3 4 5 6 (PRODUCT LEVEL)	SEE PAGE
	1	1	**6T-3631**	2	NUT-HEX (15/32-32-THD)	
	2	1	**6T-3632**	1	LOCKWASHER	
	3	1	**6T-3633**	1	RING-LOCKING	
	4	1	**102-8803**	1	KIT-RECEPTACLE (3-PIN)	
					(INCLUDES RECEPTACLE AS & WEDGE)	
	5	1	**3E-3371**	1	WEDGE-RECEPTACLE LOCK (3-PIN)	
	6	1	**8T-8729**	3	PIN-CONNECTOR (16-GA TO 18-GA)	

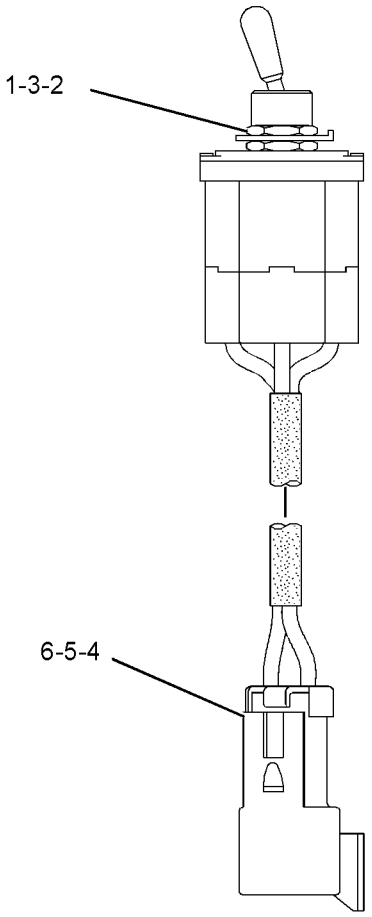

GRAPHIC #1 **<END>** g02539336

107-6133 SWITCH GP-WIPER–INTERMITTENT

S/N: JRL1-UP; RRS1-UP
PART OF 317-0770 OPERATOR AR
AN ATTACHMENT

SMCS-7332 **i02945078**

NOTE	REF NO	GRAPHIC REF	PART NUMBER	QTY	PART NAME 1 2 3 4 5 6 (PRODUCT LEVEL)	SEE PAGE
Y	1	1	**275-7741**	1	SWITCH GP-WIPER (24-VOLT) (FRONT)	147
	2	1	**112-6174**	1	SWITCH AS-ROTARY (WIPER, WASHER) (REAR)	
	2A	1	**2H-3920**	1	LOCKWASHER	
	2B	1	**3E-3389**	1	WEDGE-RECEPTACLE LOCK (8-PIN)	
	2C	1	**6V-8369**	1	NUT (7/16-28-THD)	
	2D	1	**186-3735**	6	PIN-CONNECTOR (16-GA TO 18-GA)	
	2E	1	**8T-8737**	2	PLUG-SEAL	
	2F	1	**102-8806**	1	KIT-RECEPTACLE (8-PIN)	
					(INCLUDES RECEPTACLE AS & WEDGE)	

Y-SEPARATE ILLUSTRATION

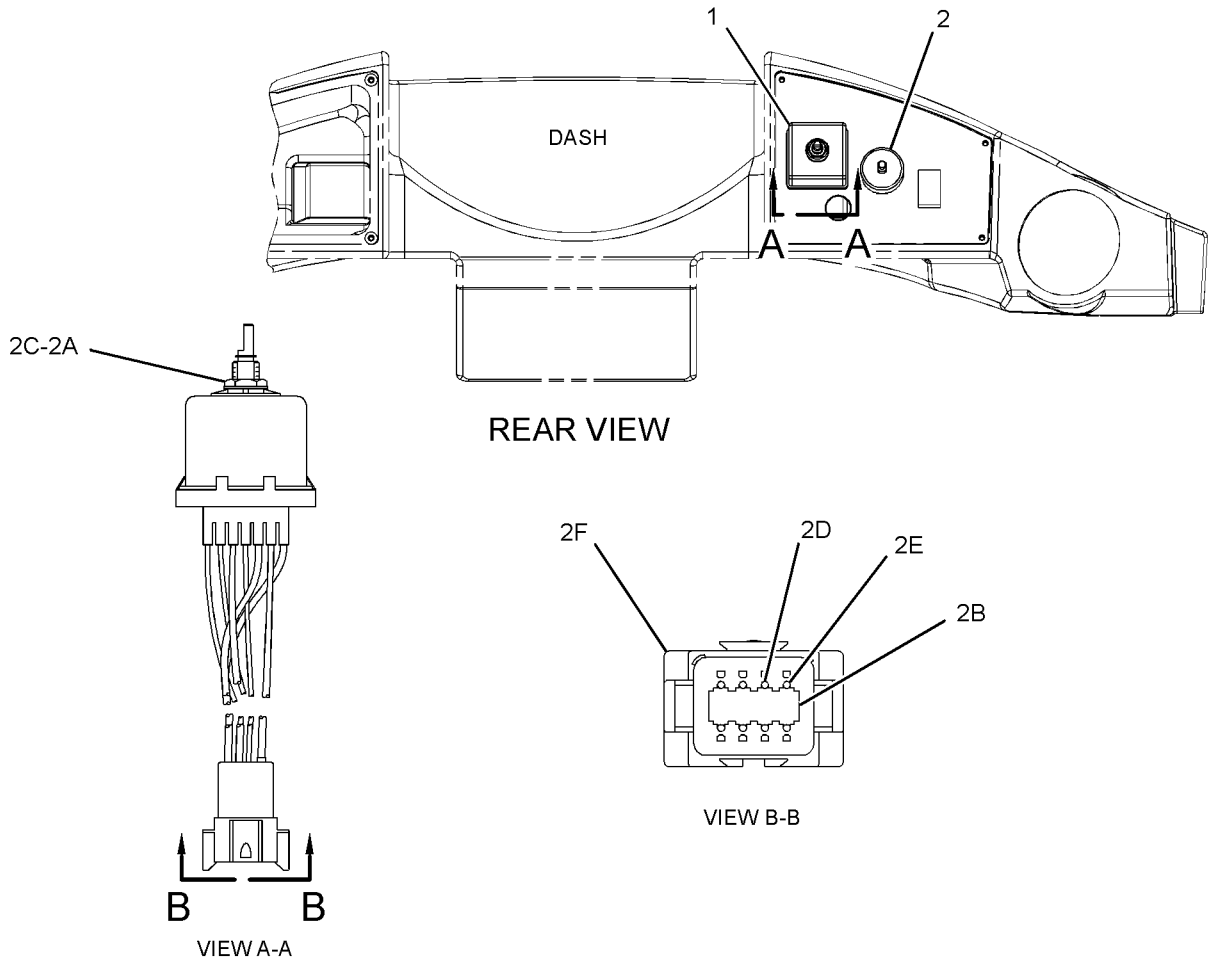

GRAPHIC #1 **<END>** g01509595

184-2463 SWITCH GP-WIPER

S/N: JRL1-UP; RRS1-UP
PART OF 310-9953 CAB AR
AN ATTACHMENT

SMCS-7332 **i03031881**

NOTE	REF NO	GRAPHIC REF	PART NUMBER	QTY	PART NAME 1 2 3 4 5 6 (PRODUCT LEVEL)	SEE PAGE
CY	1	1	**275-7741**	1	SWITCH GP-WIPER (24-VOLT)	147

C-CHANGE FROM PREVIOUS TYPE
Y-SEPARATE ILLUSTRATION

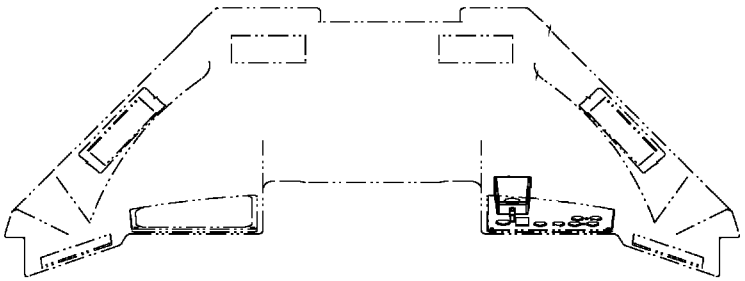

TOP VIEW

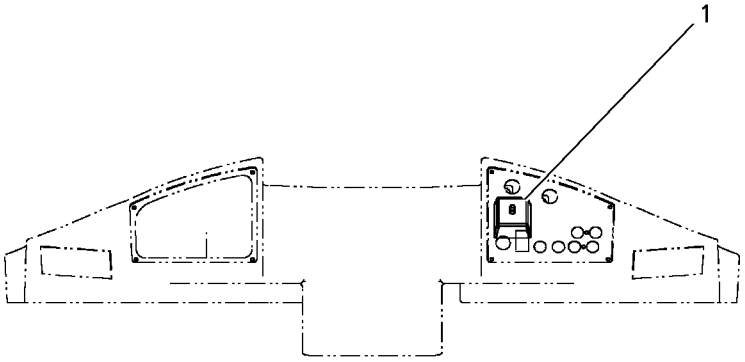

GRAPHIC #1 **<END>** g00676052

275-7741 SWITCH GP-WIPER

S/N: JRL1-UP; RRS1-UP
24-VOLT
PART OF 107-6133, 184-2463 SWITCH GP-WIPER
AN ATTACHMENT

SMCS-7332 **i02992478**

NOTE	REF NO	GRAPHIC REF	PART NUMBER	QTY	PART NAME 1 2 3 4 5 6 (PRODUCT LEVEL)	SEE PAGE
	1	1	**6V-8369**	1	NUT (7/16-28-THD)	
	2	1	**2H-3920**	1	LOCKWASHER	
	3	1	**8T-8737**	2	PLUG-SEAL	
	4	1	**186-3735**	6	PIN-CONNECTOR (16-GA TO 18-GA)	
	5	1	**102-8806**	1	KIT-RECEPTACLE (8-PIN)	
					(INCLUDES RECEPTACLE AS & WEDGE)	

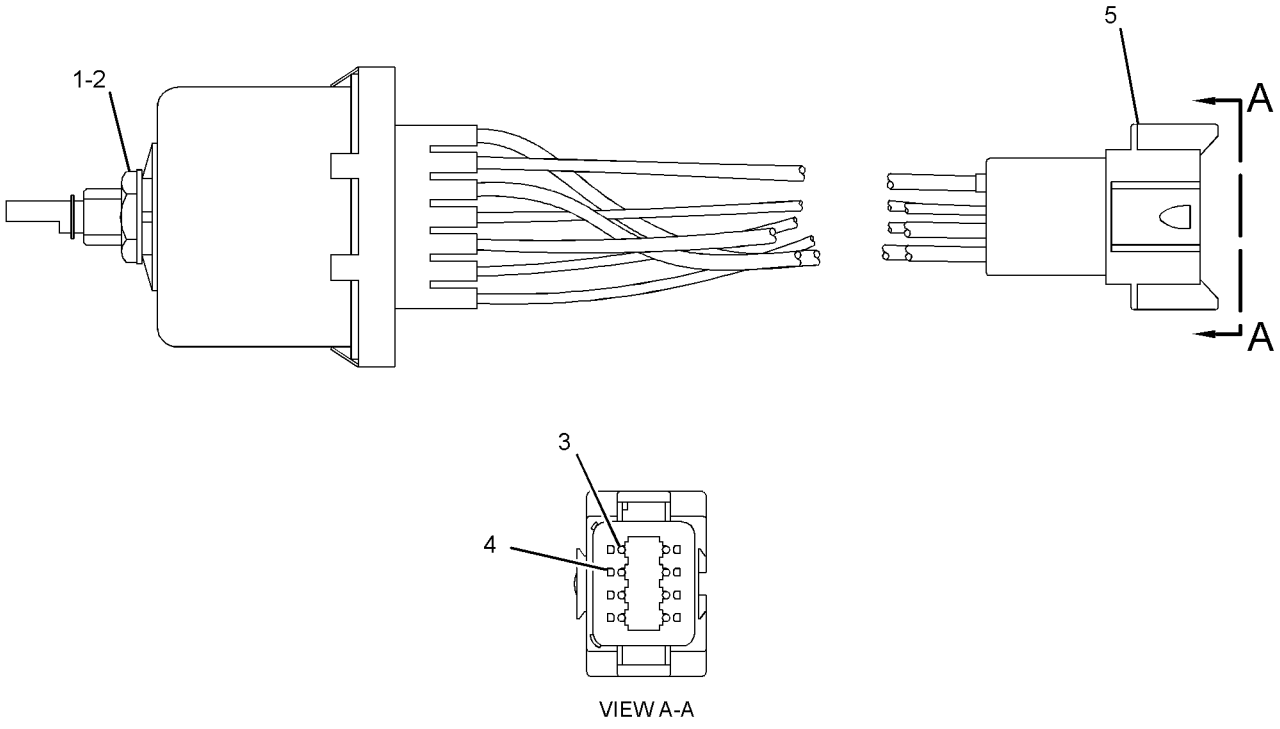

GRAPHIC #1 **<END>** g01445891

239-1134 VALVE GP-ETHER STARTING

S/N: JRL1-UP; RRS1-UP
24-VOLT
PART OF 290-8781 STARTING AID GP-ETHER
AN ATTACHMENT

SMCS-1456 **i03907816**

NOTE	REF NO	GRAPHIC REF	PART NUMBER	QTY	PART NAME 1 2 3 4 5 6 (PRODUCT LEVEL)	SEE PAGE
	1	1	**7N-9801**	1	GASKET	
	2	1	**102-8802**	1	KIT-RECEPTACLE (2-PIN)	
					(INCLUDES RECEPTACLE AS & WEDGE)	
	3	1	**8T-8729**	2	PIN-CONNECTOR (16-GA TO 18-GA)	
	4	1	**358-4889**	1	FILTER (ETHER START)	

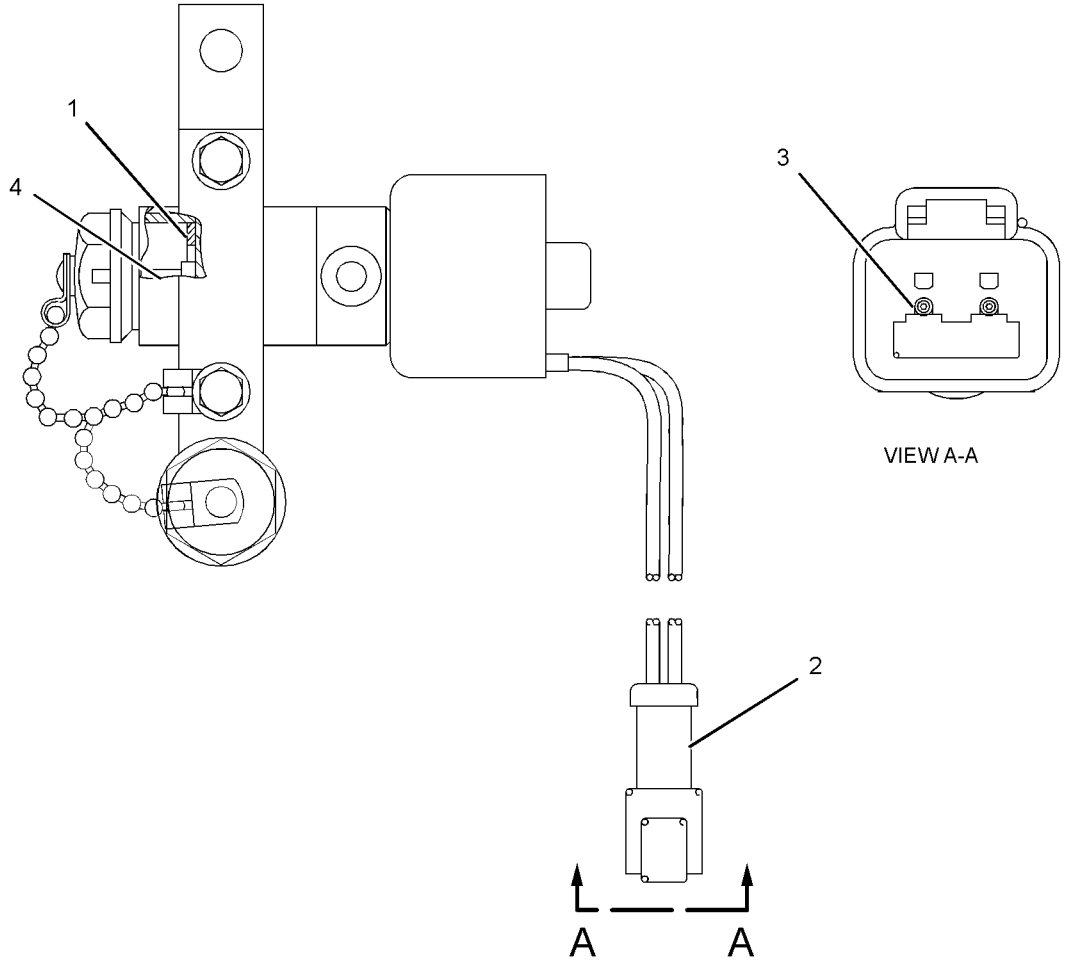

GRAPHIC #1 **<END>** g02138138

180-8807 WARNING GP-BACKUP

S/N: JRL1-UP; RRS1-UP

PART OF 372-7772, 372-7773 CHASSIS AR

SMCS-7406 **i03036735**

NOTE	REF NO	GRAPHIC REF	PART NUMBER	QTY	PART NAME 1 2 3 4 5 6 (PRODUCT LEVEL)	SEE PAGE
	1	1	**7K-1181**	2	STRAP-CABLE	
	2	1	**213-9100**	1	WIRE AS-ALARM	
D		1	**5P-5623**		WIRE-ELECTRICAL (16-GA, BLACK) (0.4-M)	
		1	**186-3735**	2	PIN-CONNECTOR (16-GA TO 18-GA)	
E		1	**9X-1813**		SLEEVE (31-CM)	
		1	**102-8802**	1	KIT-RECEPTACLE (2-PIN)	
					(INCLUDES RECEPTACLE AS & WEDGE)	
M	3	1	**8T-4200**	2	BOLT (M8X1.25X16-MM)	
	4	1	**8T-4224**	2	WASHER-HARD (8.8X16X2-MM THK)	
	5	1	**4P-8134**	1	CLIP	

D-ORDER BY THE METER
E-ORDER BY THE CENTIMETER
M-METRIC PART

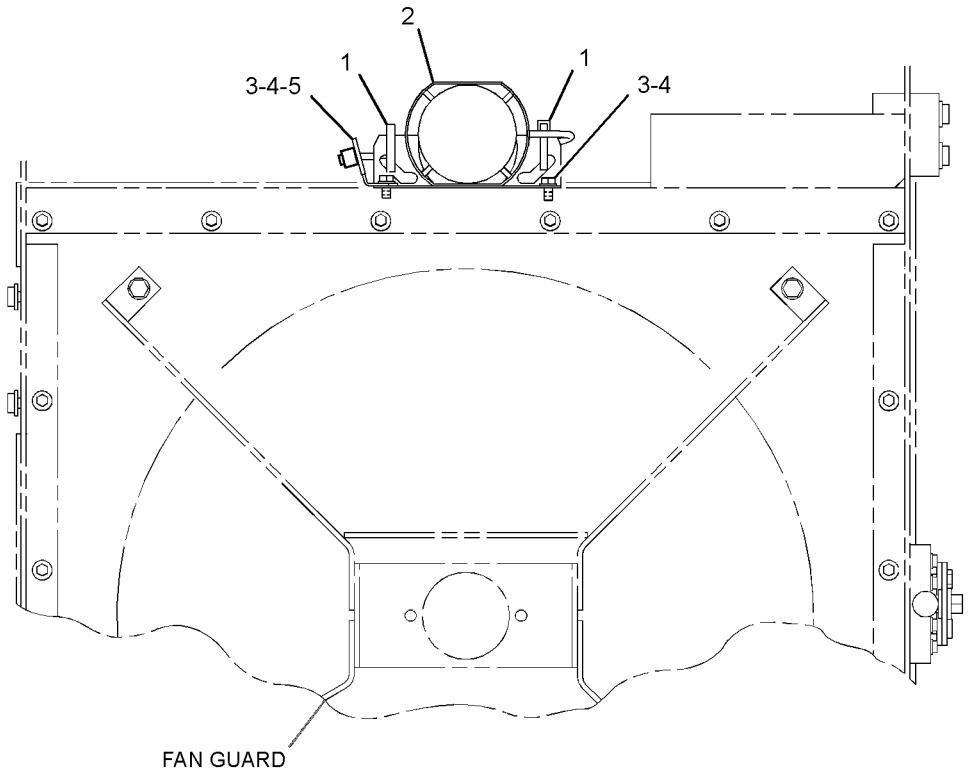

REAR VIEW

GRAPHIC #1 **<END>** g01543793

289-8903 WIRING GP-CAB—ENCLOSED ROPS

S/N: JRL1-UP; RRS1-UP
PART OF 311-8700 OPERATOR AR
AN ATTACHMENT

SMCS-1408, 7301 **i03630319**

NOTE	REF NO	GRAPHIC REF	PART NUMBER	QTY	PART NAME 1 2 3 4 5 6 (PRODUCT LEVEL)	SEE PAGE
	1	1	**110-6109**	2	KNOB-CONTROL (CONTROL PANEL SWITCHES)	
	2	1	**115-1748**	2	LAMP (24-VOLT, 3-WATT)	
B	3	1	**165-0311**	4	PLUG	
	4	1	**165-0312**	1	WIRE AS	
	5	1	**185-2766**	1	SWITCH AS-ROCKER (AUTOSHIFT CONTROL)	
		1	**111-7899**	1	GASKET	
	6	1	**190-4559**	1	PLATE AS	
	7	1	**193-9056**	1	SWITCH AS-ROCKER (HAZARD WARNING LIGHTS)	
		1	**111-7899**	1	GASKET	
	8	1	**201-1024**	1	BRACKET	
	9	1	**202-1129**	8	SCREW-TRUSS HEAD (M4X0.7X18-MM)	
	10	1	**204-0358**	1	FILM-IDENTIFICATION (PANEL, RH)	
	11	1	**211-0052**	1	NUT (1-11/16-18-THD)	
	12	1	**250-8115**	1	SWITCH AS-ROCKER (XMSN NEUTRALIZER OVERRIDE CONT)	
	13	1	**286-3594**	1	SWITCH AS-ROCKER (FLOODLIGHTS, FRONT)	
					(EACH SWITCH AS-ROCKER INCLUDES)	
		1	**111-7899**	1	GASKET	
	14	1	**289-9168**	1	HARNESS AS-CAB (UPPER)	
		1	**9W-0852**	2	PIN-CONNECTOR (14-GA TO 16-GA)	
		1	**9X-3401**	9	PIN-CONNECTOR (16-GA TO 18-GA)	
					-OR-	
		1	**126-1767**	9	PIN-CONNECTOR (14-GA TO 16-GA)	
		1	**155-2270**	1	KIT-CONNECTING PLUG (2-PIN)	
		1	**155-2260**	1	KIT-CONNECTING PLUG (3-PIN)	
		1	**155-2274**	2	KIT-CONNECTING PLUG (6-PIN)	
					(EACH PLUG KIT INCLUDES PLUG AS, WEDGE & INTERFACE SEAL)	
		1	**8T-8737**	4	PLUG-SEAL	
		1	**102-8802**	1	KIT-RECEPTACLE (2-PIN)	
		1	**102-8801**	1	KIT-RECEPTACLE (12-PIN)	
					(EACH RECEPTACLE KIT INCLUDES RECEPTACLE AS & WEDGE)	
		1	**180-9340**	12	SOCKET-CONNECTOR (14-GA TO 18-GA)	
		1	**9W-0844**	4	SOCKET-CONNECTOR (14-GA TO 16-GA)	
		1	**8L-8413**	33	STRAP-CABLE	
D		1	**141-8061**		TAPE	
		1	**3T-4696**	1	TERMINAL-RING (10-GA TO 12-GA, 7/16-IN SCREW)	
		1	**2L-8079**	1	TERMINAL-RING (14-GA TO 16-GA, 3/8-IN SCREW)	
		1	**5P-4571**	2	TERMINAL-BLADE (14-GA TO 16-GA)	
		1	*165-7097*	2	TERMINAL AS	
					(EACH INCLUDES)	
		1	**006-2884**	1	TERMINAL-BLADE (16-GA TO 20-GA)	
D		1	**6V-2689**		TUBE-HEAT SHRINK (6.35-MM DIA) (1-M)	
E		1	**119-3662**		TUBE-HEAT SHRINK (10.85-MM DIA) (7-CM)	
E		1	**125-7874**		TUBE-HEAT SHRINK (5.72-MM DIA) (10-CM)	
D		1	**6V-2689**		TUBE-HEAT SHRINK (6.35-MM DIA) (5-M)	
	15	1	**290-0659**	1	HARNESS AS-CAB (MAIN)	
		1	**110-0203**	4	CONNECTOR AS	
		1	**228-5856**	8	CONNECTOR	
		1	**5P-6271**	1	CONNECTOR AS	
		1	**9W-0852**	6	PIN-CONNECTOR (14-GA TO 16-GA)	
		1	**9X-3401**	30	PIN-CONNECTOR (16-GA TO 18-GA)	
					-OR-	

289-8903 **WIRING GP-CAB** ***(contd.)*** **i03630319**

NOTE	REF NO	GRAPHIC REF	PART NUMBER	QTY	PART NAME 1 2 3 4 5 6 (PRODUCT LEVEL)	SEE PAGE
		1	**126-1767**	30	PIN-CONNECTOR (14-GA TO 16-GA)	
		1	**155-2271**	1	KIT-CONNECTING PLUG (4-PIN)	
		1	**155-2265**	3	KIT-CONNECTING PLUG (8-PIN)	
		1	**155-2274**	1	KIT-CONNECTING PLUG (6-PIN)	
					(EACH PLUG KIT INCLUDES PLUG AS, WEDGE & INTERFACE SEAL)	
		1	**8T-8737**	10	PLUG-SEAL	
		1	**102-8804**	1	KIT-RECEPTACLE (4-PIN)	
		1	**102-8805**	1	KIT-RECEPTACLE (6-PIN)	
					(EACH RECEPTACLE KIT INCLUDES RECEPTACLE AS & WEDGE)	
		1	**167-3692**	1	RECEPTACLE AS-CONNECTOR (31-PIN)	
		1	**180-9340**	29	SOCKET-CONNECTOR (14-GA TO 18-GA)	
		1	**113-5183**	2	SOCKET-LAMP	
		1	**8L-8413**	36	STRAP-CABLE	
B		1	**141-8061**		TAPE	
		1	**5P-4571**	1	TERMINAL-BLADE (14-GA TO 16-GA)	
		1	**091-2436**	44	TERMINAL-BLADE (18-GA TO 22-GA)	
		1	**104-1995**	18	TERMINAL-BLADE (14-GA TO 18-GA)	
		1	**113-5184**	4	TERMINAL-RECEPTACLE (16-GA TO 18-GA)	
E		1	**119-3662**		TUBE-HEAT SHRINK (10.85-MM DIA) (20-CM)	
E		1	**125-7874**		TUBE-HEAT SHRINK (5.72-MM DIA) (30-CM)	
	16	1	**291-0638**	1	PLATE	
	17	1	**291-6008**	1	FILM-PANEL (LH)	
	18	1	**291-9121**	1	SWITCH AS-ROCKER (ROADING LIGHTS)	
		1	**111-7899**	1	GASKET	
	19	1	**7K-1181**	20	STRAP-CABLE	
	20	1	**204-6101**	8	WASHER-HARD (5.3X10X1-MM THK)	
	21	1	**4P-7581**	1	CLIP	
	22	1	**4P-8134**	1	CLIP	
	23	1	**6D-4244**	1	CLIP (SLOT)	
	24	1	**8T-4121**	1	WASHER-HARD (11X21X2.5-MM THK)	
M	25	1	**8T-4133**	1	NUT (M10X1.5-THD)	
M	26	1	**8T-4199**	2	BOLT (M8X1.25X12-MM)	
	27	1	**8T-4224**	3	WASHER-HARD (8.8X16X2-MM THK)	
M	28	1	**8T-4908**	1	BOLT (M8X1.25X25-MM)	
	29	1	**9W-0335**	1	LIGHTER AS-CIGAR (24-VOLT)	
D	30	1	**5P-6038**		WRAP (SPIRAL) (0.15-M)	

B-USE AS REQUIRED
D-ORDER BY THE METER
E-ORDER BY THE CENTIMETER
M-METRIC PART

289-8903 **WIRING GP-CAB** *(contd.)* **i03630319**

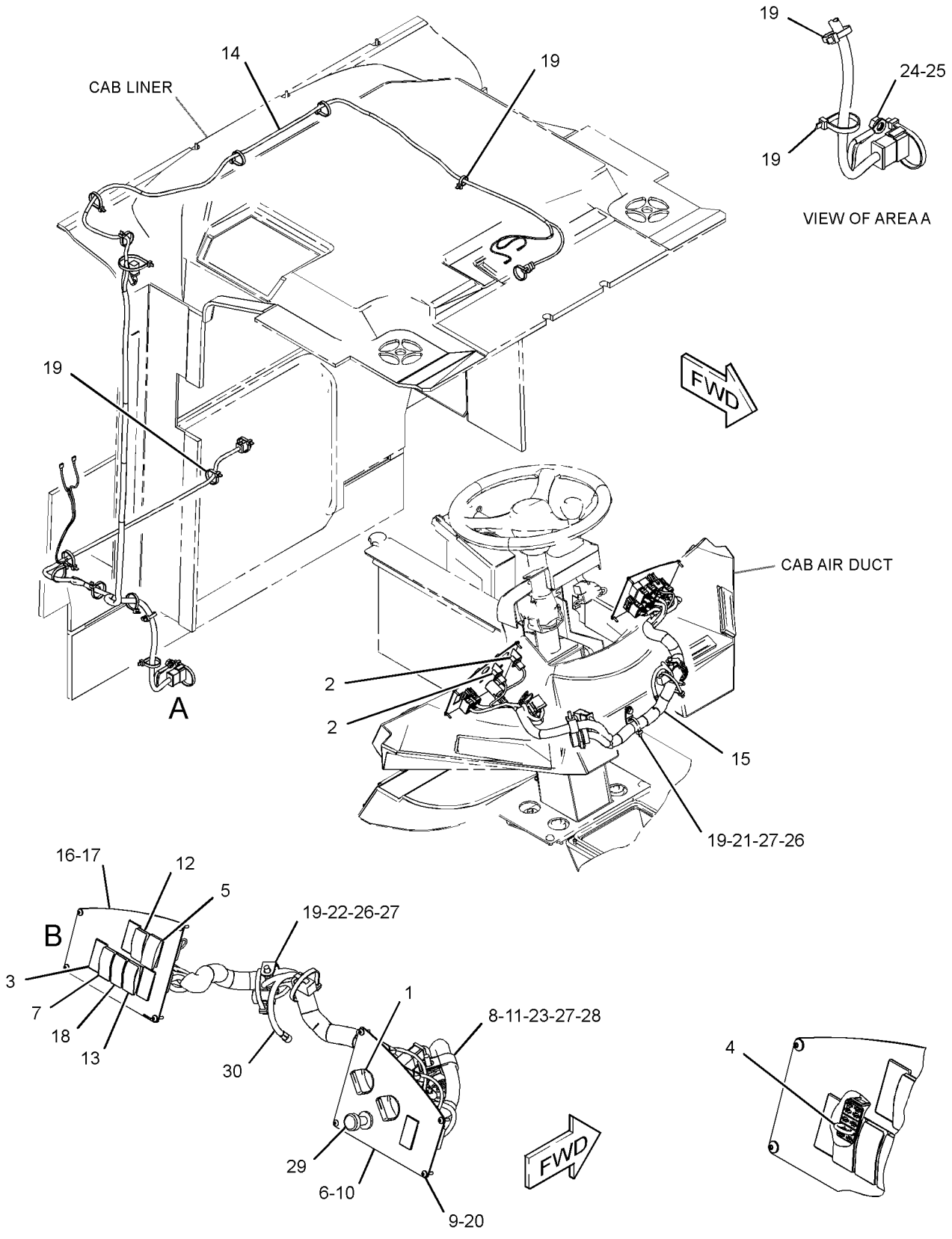

GRAPHIC #1 **<END>** g01406068

289-8904 WIRING GP-CAB–OPEN ROPS

S/N: JRL1-UP; RRS1-UP
PART OF 290-8186 OPERATOR AR-OPEN ROPS
AN ATTACHMENT

SMCS-1408, 7301 **i04515829**

NOTE	REF NO	GRAPHIC REF	PART NUMBER	QTY	PART NAME 1 2 3 4 5 6 (PRODUCT LEVEL)	SEE PAGE
	1	1	**115-1748**	2	LAMP (24-VOLT, 3-WATT)	
	2	1	**165-0311**	4	PLUG	
	3	1	**165-0312**	1	WIRE AS	
	4	1	**185-2766**	1	SWITCH AS-ROCKER (AUTOSHIFT CONTROL)	
		1	**111-7899**	1	GASKET	
	5	1	**190-4559**	1	PLATE AS	
	6	1	**193-9056**	1	SWITCH AS-ROCKER (HAZARD WARNING LIGHTS)	
		1	**111-7899**	1	GASKET	
	7	1	**201-1024**	1	BRACKET	
M	8	1	**9X-1046**	8	SCREW (M4X0.7X18-MM)	
	9	1	**204-0359**	1	FILM-PANEL (RH)	
	10	1	**211-0052**	1	NUT (1-11/16-18-THD)	
	11	1	**250-8115**	1	SWITCH AS-ROCKER (XMSN NEUTRALIZER OVERRIDE CONT)	
		1	**111-7899**	1	GASKET	
	12	1	**286-3594**	1	SWITCH AS-ROCKER (FLOODLIGHTS, FRONT)	
		1	**111-7899**	1	GASKET	
	13	1	**289-9172**	1	HARNESS AS-CAB (UPPER)	
		1	**9W-0852**	1	PIN-CONNECTOR (14-GA TO 16-GA)	
		1	**9X-3401**	2	PIN-CONNECTOR (16-GA TO 18-GA)	
					-OR-	
		1	**126-1767**	2	PIN-CONNECTOR (14-GA TO 16-GA)	
		1	**155-2274**	1	KIT-CONNECTING PLUG (6-PIN)	
					(INCLUDES PLUG AS, WEDGE & INTERFACE SEAL)	
		1	**8T-8737**	10	PLUG-SEAL	
		1	**102-8801**	1	KIT-RECEPTACLE (12-PIN)	
					(INCLUDES RECEPTACLE AS & WEDGE)	
		1	**180-9340**	2	SOCKET-CONNECTOR (14-GA TO 18-GA)	
		1	**9W-0844**	3	SOCKET-CONNECTOR (14-GA TO 16-GA)	
		1	**8L-8413**	2	STRAP-CABLE	
		1	**2L-8079**	2	TERMINAL-RING (14-GA TO 16-GA, 3/8-IN SCREW)	
	14	1	**290-0659**	1	HARNESS AS-CAB (MAIN)	
		1	**110-0203**	4	CONNECTOR AS	
		1	**228-5856**	8	CONNECTOR	
		1	**5P-6271**	1	CONNECTOR AS	
		1	**9W-0852**	6	PIN-CONNECTOR (14-GA TO 16-GA)	
		1	**9X-3401**	30	PIN-CONNECTOR (16-GA TO 18-GA)	
					-OR-	
		1	**126-1767**	30	PIN-CONNECTOR (14-GA TO 16-GA)	
		1	**155-2271**	1	KIT-CONNECTING PLUG (4-PIN)	
		1	**155-2265**	3	KIT-CONNECTING PLUG (8-PIN)	
		1	**155-2274**	1	KIT-CONNECTING PLUG (6-PIN)	
					(EACH PLUG KIT INCLUDES PLUG AS, WEDGE & INTERFACE SEAL)	
		1	**8T-8737**	10	PLUG-SEAL	
		1	**102-8804**	1	KIT-RECEPTACLE (4-PIN)	
		1	**102-8805**	1	KIT-RECEPTACLE (6-PIN)	
					(EACH RECEPTACLE KIT INCLUDES RECEPTACLE AS & WEDGE)	
		1	**167-3692**	1	RECEPTACLE AS-CONNECTOR (31-PIN)	
		1	**180-9340**	29	SOCKET-CONNECTOR (14-GA TO 18-GA)	
		1	**113-5183**	2	SOCKET-LAMP	
		1	**8L-8413**	36	STRAP-CABLE	
B		1	**141-8061**		TAPE	

289-8904 **WIRING GP-CAB** *(contd.)* **i04515829**

NOTE	REF NO	GRAPHIC REF	PART NUMBER	QTY	PART NAME 1 2 3 4 5 6 (PRODUCT LEVEL)	SEE PAGE
		1	**5P-4571**	1	TERMINAL-BLADE (14-GA TO 16-GA)	
		1	**091-2436**	44	TERMINAL-BLADE (18-GA TO 22-GA)	
		1	**104-1995**	18	TERMINAL-BLADE (14-GA TO 18-GA)	
		1	**113-5184**	4	TERMINAL-RECEPTACLE (16-GA TO 18-GA)	
E		1	**119-3662**		TUBE-HEAT SHRINK (10.85-MM DIA) (20-CM)	
E		1	**125-7874**		TUBE-HEAT SHRINK (5.72-MM DIA) (30-CM)	
	15	1	**291-0638**	1	PLATE	
	16	1	**291-6008**	1	FILM-PANEL (LH)	
	17	1	**291-9121**	1	SWITCH AS-ROCKER (ROADING LIGHTS)	
		1	**111-7899**	1	GASKET	
	18	1	**7K-1181**	12	STRAP-CABLE	
	19	1	**204-6101**	8	WASHER-HARD (5.3X10X1-MM THK)	
	21	1	**4P-7581**	1	CLIP	
	22	1	**4P-8134**	1	CLIP	
	23	1	**6D-4244**	1	CLIP	
	24	1	**8T-4121**	1	WASHER-HARD (11X21X2.5-MM THK)	
M	25	1	**8T-4133**	1	NUT (M10X1.5-THD)	
M	26	1	**8T-4199**	2	BOLT (M8X1.25X12-MM)	
	27	1	**8T-4224**	3	WASHER-HARD (8.8X16X2-MM THK)	
M	28	1	**8T-4908**	1	BOLT (M8X1.25X25-MM)	
	29	1	**9W-0335**	1	LIGHTER AS-CIGAR (24-VOLT)	
D	30	1	**5P-6038**		WRAP (SPIRAL) (0.2-M)	

B-USE AS REQUIRED
D-ORDER BY THE METER
E-ORDER BY THE CENTIMETER
M-METRIC PART

289-8904 **WIRING GP-CAB** *(contd.)* **i04515829**

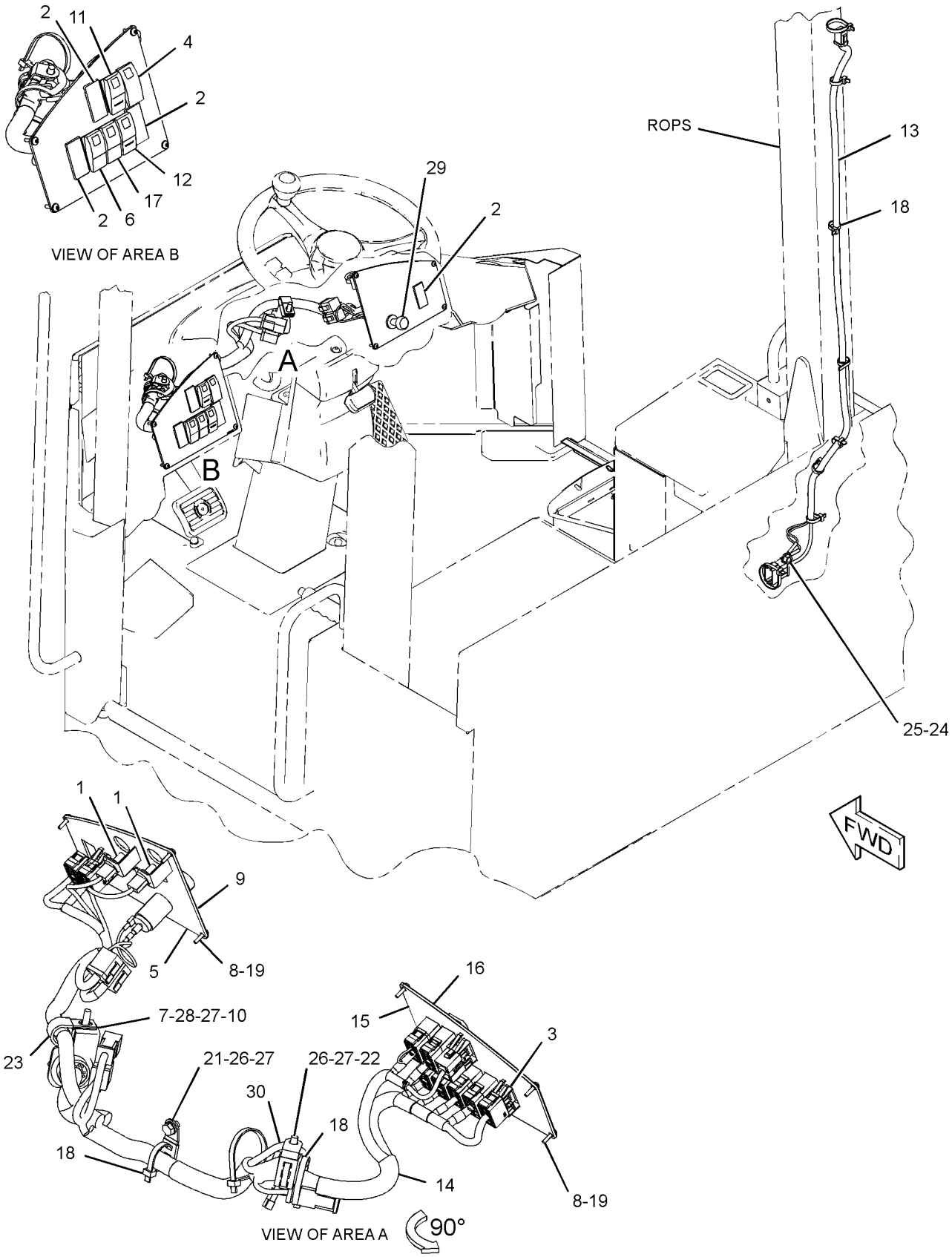

GRAPHIC #1 **<END>** g02709426

ELECTRICAL AND STARTING SYSTEM

311-8501 WIRING GP-CAB—ENCLOSED ROPS

S/N: JRL1-UP; RRS1-UP
PART OF 310-9954 OPERATOR AR
AN ATTACHMENT

SMCS-1408, 7301 **i03736180**

NOTE	REF NO	GRAPHIC REF	PART NUMBER	QTY	PART NAME 1 2 3 4 5 6 (PRODUCT LEVEL)	SEE PAGE
	1	1	**2V-3726**	1	BUMPER	
B	2	1	**7K-1181**	19	STRAP-CABLE	
	3	1	**8T-8737**	8	PLUG-SEAL	
	4	1	**110-6109**	1	KNOB-CONTROL (LIGHTS)	
	5	1	**115-1748**	2	LAMP (24-VOLT, 3-WATT) (ACTION LIGHT)	
B	6	1	**165-0311**	4	PLUG	
	7	1	**165-0312**	1	WIRE AS	
	8	1	**185-2766**	1	SWITCH AS-ROCKER (AUTOSHIFT CONTROL)	
		1	**111-7899**	1	GASKET	
	9	1	**190-4559**	1	PLATE AS	
	10	1	**193-9056**	1	SWITCH AS-ROCKER (HAZARD WARNING LIGHTS)	
		1	**111-7899**	1	GASKET	
	11	1	**201-1024**	1	BRACKET	
	12	1	**202-1129**	8	SCREW-TRUSS HEAD (M4X0.7X18-MM)	
	13	1	**204-0358**	1	FILM-IDENTIFICATION (PANEL, RH)	
	14	1	**211-0052**	1	NUT (1-11/16-18-THD)	
	15	1	**250-8115**	1	SWITCH AS-ROCKER (XMSN NEUTRALIZER OVERRIDE CONT)	
	16	1	**286-3594**	1	SWITCH AS-ROCKER (FLOODLIGHTS, FRONT)	
					(EACH SWITCH AS INCLUDES)	
		1	**111-7899**	1	GASKET	
	17	1	**289-9168**	1	HARNESS AS-CAB (UPPER)	
		1	**9W-0852**	2	PIN-CONNECTOR (14-GA TO 16-GA)	
		1	**9X-3401**	9	PIN-CONNECTOR (16-GA TO 18-GA)	
		1	**155-2270**	1	KIT-CONNECTING PLUG (2-PIN)	
		1	**155-2260**	1	KIT-CONNECTING PLUG (3-PIN)	
		1	**155-2274**	2	KIT-CONNECTING PLUG (6-PIN)	
					(EACH PLUG KIT INCLUDES PLUG AS, WEDGE & INTERFACE SEAL)	
		1	**8T-8737**	4	PLUG-SEAL	
		1	**102-8802**	1	KIT-RECEPTACLE (2-PIN)	
		1	**102-8801**	1	KIT-RECEPTACLE (12-PIN)	
					(EACH RECEPTACLE KIT INCLUDES RECEPTACLE AS & WEDGE)	
		1	**180-9340**	12	SOCKET-CONNECTOR (14-GA TO 18-GA)	
		1	**9W-0844**	4	SOCKET-CONNECTOR (14-GA TO 16-GA)	
		1	**8L-8413**	33	STRAP-CABLE	
D		1	**141-8061**		TAPE	
		1	**3T-4696**	1	TERMINAL-RING (10-GA TO 12-GA, 7/16-IN SCREW)	
		1	**2L-8079**	1	TERMINAL-RING (14-GA TO 16-GA, 3/8-IN SCREW)	
		1	**5P-4571**	2	TERMINAL-BLADE (14-GA TO 16-GA)	
		1	*165-7097*	2	TERMINAL AS	
					(EACH INCLUDES)	
		1	**006-2884**	1	TERMINAL-BLADE (16-GA TO 20-GA)	
D		1	**6V-2689**		TUBE-HEAT SHRINK (6.35-MM DIA) (1-M)	
E		1	**119-3662**		TUBE-HEAT SHRINK (10.85-MM DIA) (7-CM)	
E		1	**125-7874**		TUBE-HEAT SHRINK (5.72-MM DIA) (10-CM)	
D		1	**6V-2689**		TUBE-HEAT SHRINK (6.35-MM DIA) (5-M)	
	18	1	**290-0659**	1	HARNESS AS-CAB (MAIN)	
		1	**110-0203**	4	CONNECTOR AS	
		1	**228-5856**	8	CONNECTOR	
		1	**5P-6271**	1	CONNECTOR AS	
		1	**9W-0852**	6	PIN-CONNECTOR (14-GA TO 16-GA)	
		1	**9X-3401**	30	PIN-CONNECTOR (16-GA TO 18-GA)	

311-8501 **WIRING GP-CAB** ***(contd.)*** **i03736180**

NOTE	REF NO	GRAPHIC REF	PART NUMBER	QTY	PART NAME 1 2 3 4 5 6 (PRODUCT LEVEL)	SEE PAGE
		1	**155-2271**	1	KIT-CONNECTING PLUG (4-PIN)	
		1	**155-2265**	3	KIT-CONNECTING PLUG (8-PIN)	
		1	**155-2274**	1	KIT-CONNECTING PLUG (6-PIN)	
					(EACH PLUG KIT INCLUDES PLUG AS, WEDGE & INTERFACE SEAL)	
		1	**8T-8737**	10	PLUG-SEAL	
		1	**102-8804**	1	KIT-RECEPTACLE (4-PIN)	
		1	**102-8805**	1	KIT-RECEPTACLE (6-PIN)	
					(EACH RECEPTACLE KIT INCLUDES RECEPTACLE AS & WEDGE)	
		1	**167-3692**	1	RECEPTACLE AS-CONNECTOR (31-PIN)	
		1	**180-9340**	29	SOCKET-CONNECTOR (14-GA TO 18-GA)	
		1	**113-5183**	2	SOCKET-LAMP	
		1	**8L-8413**	36	STRAP-CABLE	
B		1	**141-8061**		TAPE	
		1	**5P-4571**	1	TERMINAL-BLADE (14-GA TO 16-GA)	
		1	**091-2436**	44	TERMINAL-BLADE (18-GA TO 22-GA)	
		1	**104-1995**	18	TERMINAL-BLADE (14-GA TO 18-GA)	
		1	**113-5184**	4	TERMINAL-RECEPTACLE (16-GA TO 18-GA)	
E		1	**119-3662**		TUBE-HEAT SHRINK (10.85-MM DIA) (20-CM)	
E		1	**125-7874**		TUBE-HEAT SHRINK (5.72-MM DIA) (30-CM)	
	19	1	**291-0638**	1	PLATE	
	20	1	**291-6008**	1	FILM-PANEL (LH)	
	21	1	**291-9121**	1	SWITCH AS-ROCKER (ROADING LIGHTS)	
		1	**111-7899**	1	GASKET	
	22	1	**204-6101**	8	WASHER-HARD (5.3X10X1-MM THK)	
	23	1	**102-8806**	1	KIT-RECEPTACLE (8-PIN)	
					(INCLUDES RECEPTACLE AS & WEDGE)	
	24	1	**4P-7581**	1	CLIP	
	25	1	**4P-8134**	1	CLIP	
	26	1	**6D-4244**	1	CLIP	
	27	1	**8T-4121**	1	WASHER-HARD (11X21X2.5-MM THK)	
M	28	1	**8T-4133**	1	NUT (M10X1.5-THD)	
M	29	1	**8T-4199**	2	BOLT (M8X1.25X12-MM)	
	30	1	**8T-4224**	3	WASHER-HARD (8.8X16X2-MM THK)	
M	31	1	**8T-4908**	1	BOLT (M8X1.25X25-MM)	
	32	1	**9W-0335**	1	LIGHTER AS-CIGAR (24-VOLT)	
D	33	1	**5P-6038**		WRAP (SPIRAL) (0.2-M)	

B-USE AS REQUIRED
D-ORDER BY THE METER
E-ORDER BY THE CENTIMETER
M-METRIC PART

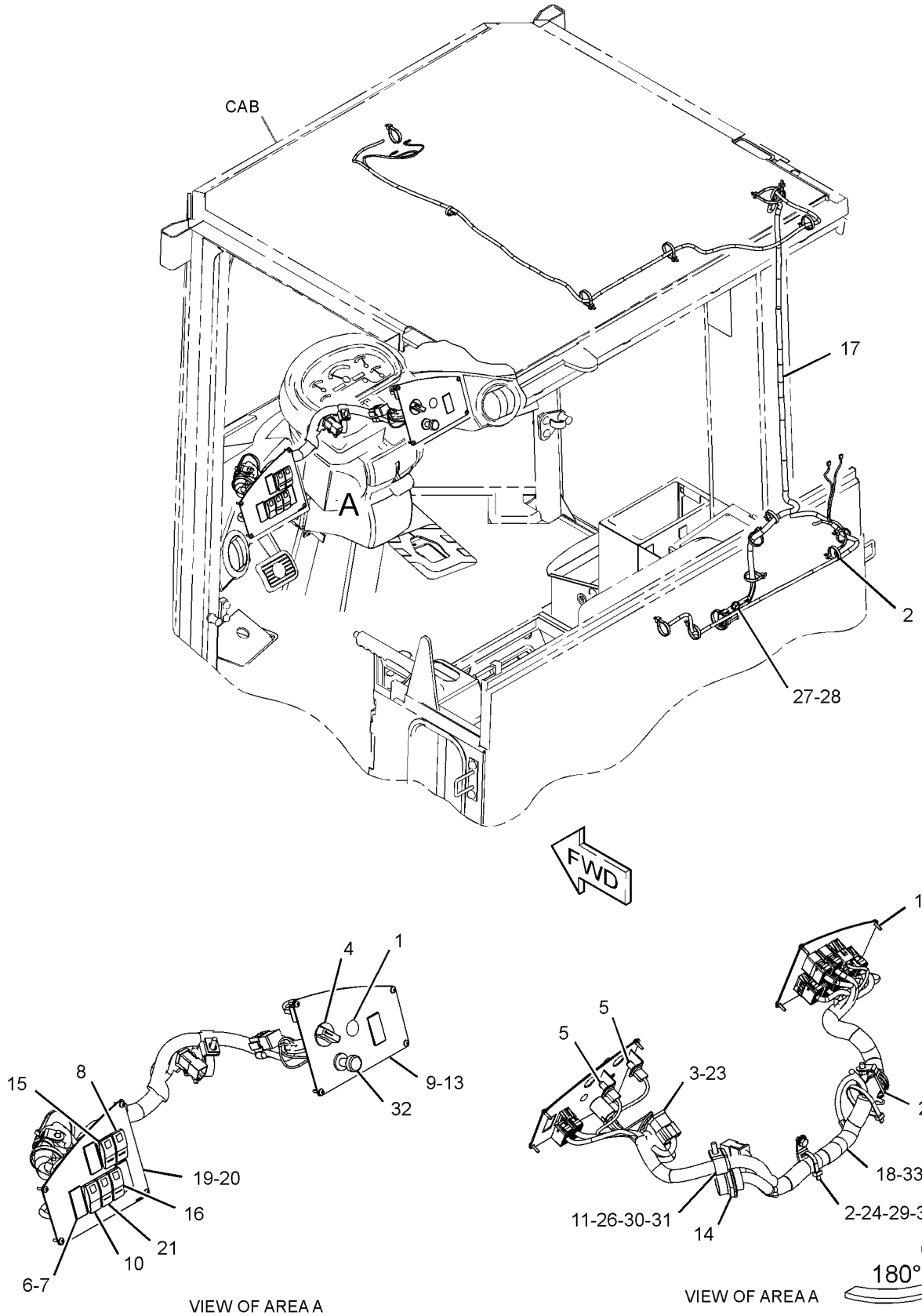

GRAPHIC #1 **<END>** g02108734

299-3953 WIRING GP-ELECTRONIC CONTROL

S/N: C6E1-UP

PART OF 292-5306 ENGINE AR-PRIMARY

SMCS-1408 **i04505730**

NOTE	REF NO	GRAPHIC REF	PART NUMBER	QTY	PART NAME 1 2 3 4 5 6 (PRODUCT LEVEL)	SEE PAGE
	1	1	**293-1880**	1	BRACKET	
	2	1	**260-5542**	1	HARNESS AS-ENGINE (ELECTRONIC CONTROL MODULE)	
	3	1	**217-9039**	3	STRAP-CABLE	
	4	1	**348-4637**	1	BOLT	
	5	1	**278-5209**	1	BRACKET	

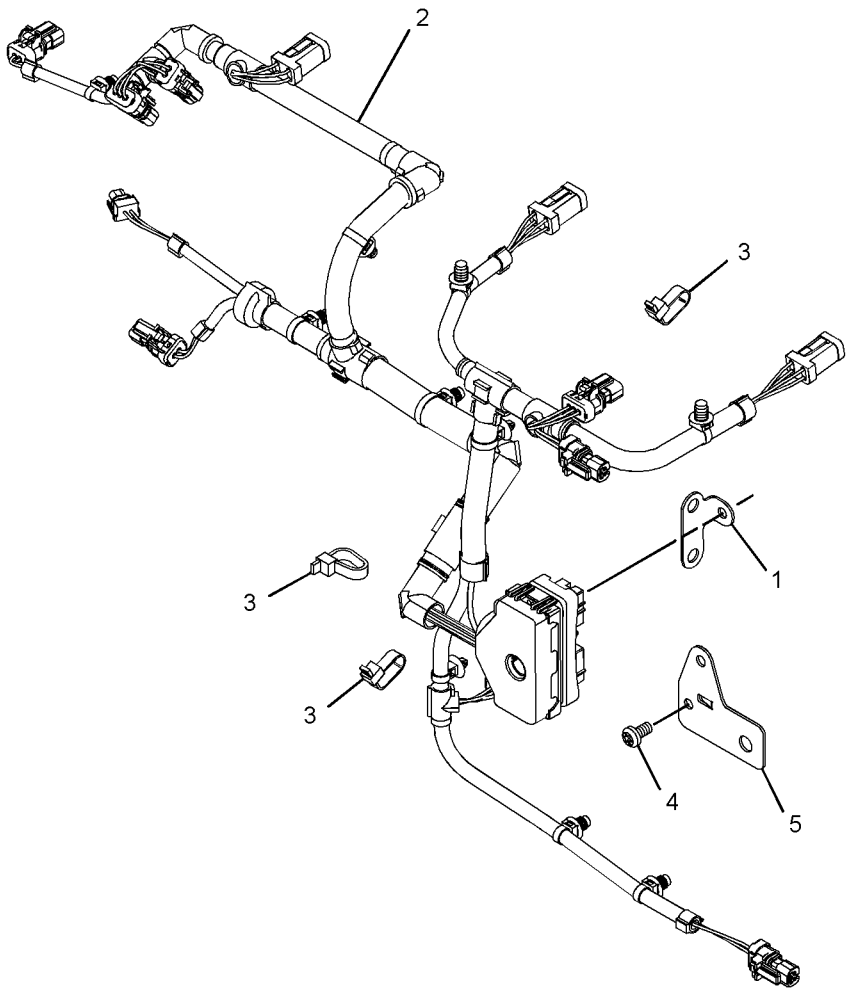

GRAPHIC #1 **<END>** g02674897

ELECTRICAL AND STARTING SYSTEM

289-8902 WIRING GP-ENGINE

S/N: JRL1-UP; RRS1-UP

PART OF 372-7772, 372-7773 CHASSIS AR

SMCS-1403, 1408 **i04515649**

NOTE	REF NO	GRAPHIC REF	PART NUMBER	QTY	PART NAME 1 2 3 4 5 6 (PRODUCT LEVEL)	SEE PAGE
C	1	1,2	**7K-1181**	22	STRAP-CABLE	
	2	2	**8T-8737**	4	PLUG-SEAL	
C	3	1,2	**8T-8799**	9	BOOT	
	4	2	**116-6161**	1	CAP-CONNECTOR	
	5	2	**129-8087**	4	SPACER (13.9X17.1X14-MM THK)	
	6	1	**135-3327**	1	PLATE AS	
M		1	**8T-3490**	1	NUT-WELD (M10X1.5-THD)	
C	7	1	**204-2281**	1	STRAP-CABLE	
	8	1	**232-1115**	1	CLIP-PIPE	
	9	2	**235-1845**	2	FUSE (100-AMPERE)	
Y	10	2	**241-8368**	1	SWITCH GP-MAGNETIC (24-VOLT) (GLOW PLUG RELAY)	143
Y	10A	2	**241-8368**	1	SWITCH GP-MAGNETIC (24-VOLT) (MAIN RELAY)	143
	11	2	**264-4297**	1	SENSOR AS-TEMPERATURE (ENGINE COOLANT)	
		2	**137-6645**	1	PAD-CONNECTOR	
	12	2	**267-2680**	1	FUSE (20-AMPERE)	
	13	2	**267-2744**	1	HOLDER AS-FUSE	
M		2	**5C-7261**	2	NUT (M8X1.25-THD)	
		2	**7X-0608**	2	WASHER-HARD (10.2X16X2-MM THK)	
		2	**9F-5644**	2	LOCKWASHER	
		2	**267-2746**	1	COVER AS	
	14	1	**269-3311**	1	BRACKET	
	15	2	**274-9872**	1	FUSE (30-AMPERE)	
C	16	2	**275-0553**	1	BAR-BUS	
C	17	2	**278-6377**	1	FUSE (40-AMPERE)	
	18	1	**297-8966**	1	WIRE AS (BLACK)	
	19	1	**300-1271**	1	BRACKET	
	20	2	**308-5075**	1	PLATE AS	
Y	21	2	**309-1620**	1	MODULE AS-FUSE (MAIN POWER)	132
C	22	2	**322-6839**	1	WIRE AS (RED)	
C	23	1	**322-6840**	1	HARNESS AS-ENGINE	
		1	**245-1045**	1	COVER	
		1	**245-1044**	2	LOCK-CONNECTOR	
		1	**213-0139**	4	PIN	
		1	**9W-0852**	1	PIN-CONNECTOR (14-GA TO 16-GA)	
		1	**9X-3401**	6	PIN-CONNECTOR (16-GA TO 18-GA)	
		1	**127-5483**	1	PLUG AS-CONNECTOR (1-PIN)	
		1	**155-2255**	1	KIT-CONNECTING PLUG (12-PIN)	
		1	**155-2260**	1	KIT-CONNECTING PLUG (3-PIN)	
		1	**155-2270**	3	KIT-CONNECTING PLUG (2-PIN)	
		1	**155-2274**	1	KIT-CONNECTING PLUG (6-PIN)	
					(EACH PLUG KIT INCLUDES PLUG AS, WEDGE & INTERFACE SEAL)	
		1	**197-7261**	1	PLUG AS-CONNECTOR (19-PIN)	
		1	**245-1042**	1	PLUG AS-CONNECTOR (64-PIN)	
M		1	**267-7207**	1	BOLT-SPECIAL	
		1	**267-7208**	1	RING-RETAINING	
		1	**274-4990**	1	SEAL	
		1	**245-1048**	38	PLUG-CONNECTOR	
		1	**8T-8737**	8	PLUG-SEAL	
		1	**102-8802**	2	KIT-RECEPTACLE (2-PIN)	
		1	**102-8803**	1	KIT-RECEPTACLE (3-PIN)	
					(EACH RECEPTACLE KIT INCLUDES RECEPTACLE AS & WEDGE)	
		1	**134-2540**	1	RESISTOR AS-CONNECTION (3-PIN)	
		1	**100-6674**	2	SEAL-CONNECTOR	

289-8902 **WIRING GP-ENGINE** *(contd.)* **i04515649**

NOTE	REF NO	GRAPHIC REF	PART NUMBER	QTY	PART NAME 1 2 3 4 5 6 (PRODUCT LEVEL)	SEE PAGE
		1	**8N-1549**	1	SOCKET-CONNECTOR (4-GA)	
		1	**9W-0844**	3	SOCKET-CONNECTOR (14-GA TO 16-GA)	
		1	**180-9340**	31	SOCKET-CONNECTOR (14-GA TO 18-GA)	
		1	**245-1047**	26	SOCKET-CONNECTOR	
		1	**124-5640**	2	TERMINAL-SOCKET	
		1	**8L-8413**	11	STRAP-CABLE	
B		1	**141-8061**		TAPE	
B		1	**1P-0810**		TAPE-ELECTRICAL	
		1	**6T-5598**	1	TERMINAL-RING (1-GA TO 2-GA, 5/16-IN SCREW)	
		1	**5P-3454**	1	TERMINAL-RING (4-GA, 5/16-IN SCREW)	
		1	**2L-8066**	1	TERMINAL-RING (10-GA TO 12-GA, NO. 10 SCREW)	
		1	**2L-8067**	4	TERMINAL-RING (10-GA TO 12-GA, 1/4-IN SCREW)	
		1	**2L-8068**	4	TERMINAL-RING (10-GA TO 12-GA, 5/16-IN SCREW)	
		1	**2L-8077**	1	TERMINAL-RING (14-GA TO 16-GA, 1/4-IN SCREW)	
		1	**311-6184**	1	TERMINAL-RING (2-GA, 3/8-IN SCREW)	
E		1	**125-7874**		TUBE-HEAT SHRINK (5.72-MM DIA) (20-CM)	
E		1	**125-7875**		TUBE-HEAT SHRINK (7.44-MM DIA) (10-CM)	
	24	1	**322-6841**	1	CABLE AS	
		1	*231-4476*	1	TERMINAL AS (DUAL HEAT)	
E		1	**125-7876**		TUBE-HEAT SHRINK (17.78-MM DIA) (4-CM)	
		1	**8T-8827**	1	BOOT (RED)	
CY	25	2	**324-9712**	1	MODULE AS-FUSE (GLOW PLUGS, START SOLENOID)	133
	26	1	**132-7551**	1	SPACER (11X19X6-MM THK)	
C	27	1,2	**204-8000**	2	MOUNTING-CABLE TIE	
	28	2	**102-8802**	2	KIT-RECEPTACLE (2-PIN) (EACH INCLUDES RECEPTACLE AS & WEDGE)	
	29	2	**3K-0360**	1	SEAL-O-RING	
C	30	2	**3S-2093**	10	STRAP-CABLE	
	31	1	**4P-7581**	7	CLIP	
	32	1,2	**4P-8134**	6	CLIP	
CM	33	2	**5C-2890**	4	NUT (M6X1-THD)	
CM	34	2	**5C-7261**	4	NUT (M8X1.25-THD)	
	35	1	**5P-4116**	1	WASHER-HARD (8.8X20.5X2-MM THK)	
CM	36	2	**6V-7728**	2	BOLT (M6X1X45-MM)	
C	37	2	**8C-3398**	4	LOCKWASHER	
	38	1,2	**8T-4121**	15	WASHER-HARD (11X21X2.5-MM THK)	
M	39	2	**8T-4133**	1	NUT (M10X1.5-THD)	
M	40	2	**8T-4136**	1	BOLT (M10X1.5X25-MM)	
M	41	1	**8T-4137**	9	BOLT (M10X1.5X20-MM)	
M	42	2	**8T-4138**	7	BOLT (M6X1X20-MM)	
M	43	2	**8T-4171**	1	BOLT (M6X1X12-MM)	
M	44	1	**8T-4189**	1	BOLT (M8X1.25X20-MM)	
M	45	1	**8T-4192**	1	BOLT (M12X1.75X25-MM)	
M	46	2	**8T-4196**	4	BOLT (M10X1.5X35-MM)	
C	47	2	**8T-4205**	12	WASHER-HARD (7.2X14.5X2-MM THK)	
	48	1	**8T-4223**	1	WASHER-HARD (13.5X25.5X3-MM THK)	
	49	2	**8T-4224**	8	WASHER-HARD (8.8X16X2-MM THK)	
	50	2	**9F-5644**	2	LOCKWASHER	
	51	2	**3F-9556**	4	LOCKWASHER	

B-USE AS REQUIRED
C-CHANGE FROM PREVIOUS TYPE
E-ORDER BY THE CENTIMETER
M-METRIC PART
Y-SEPARATE ILLUSTRATION

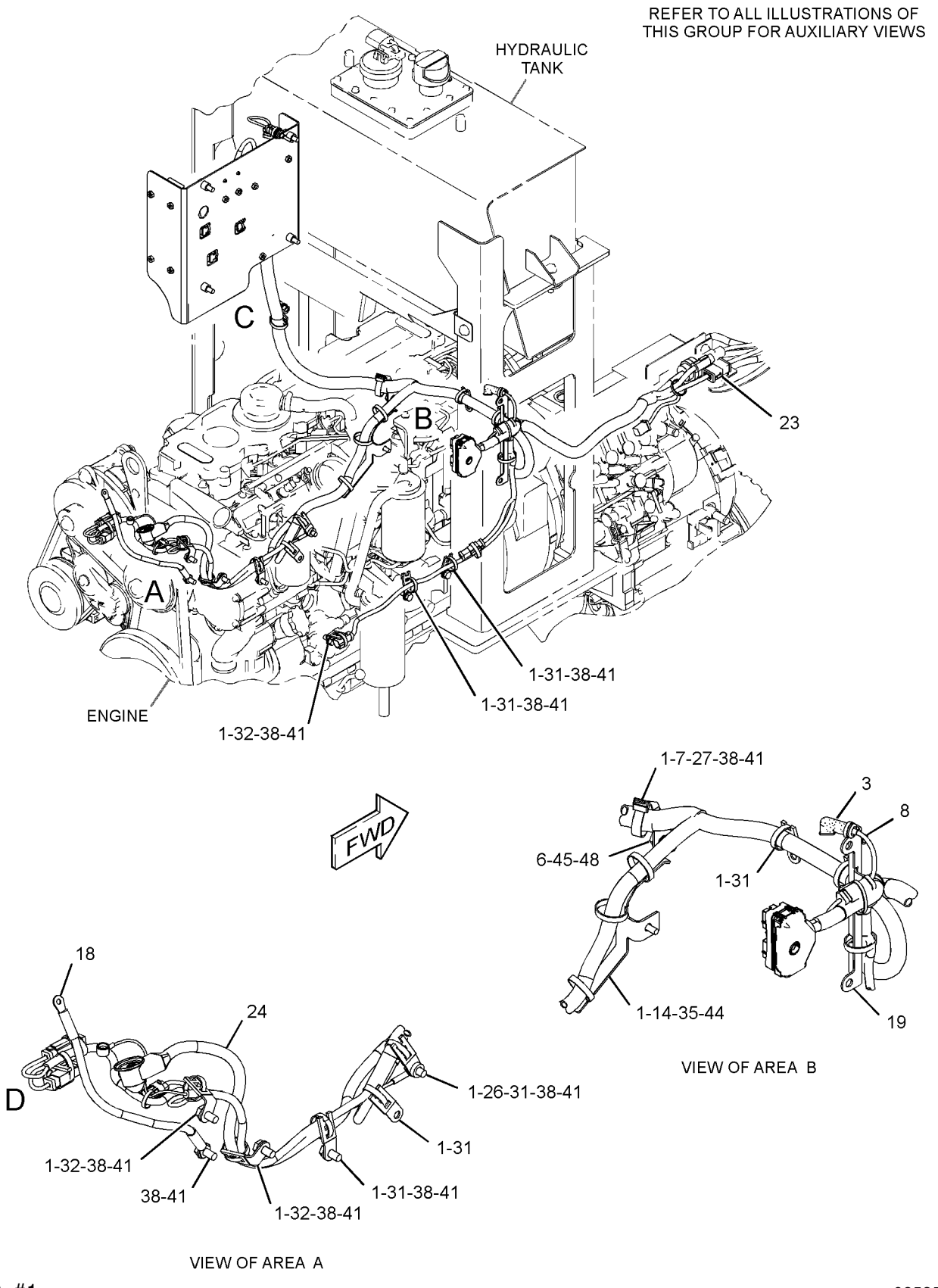

GRAPHIC #1 g02535597

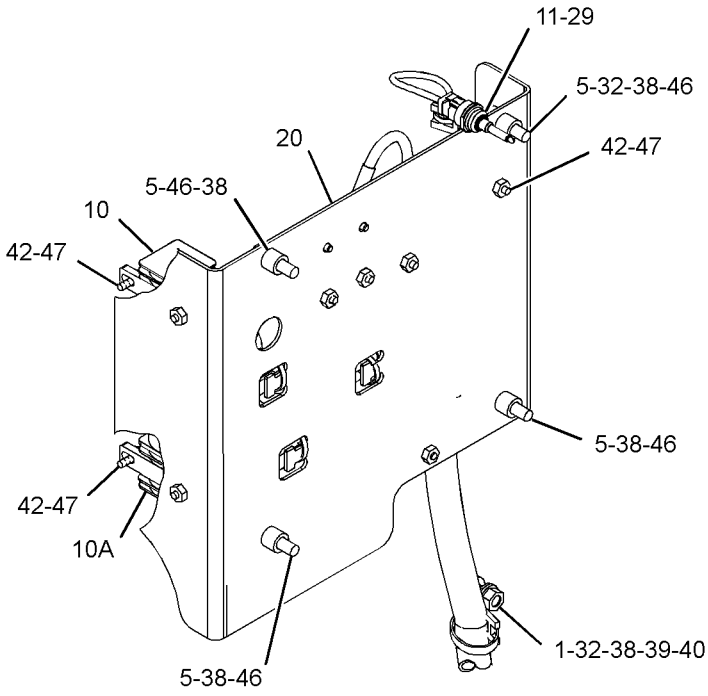

VIEW OF AREA C

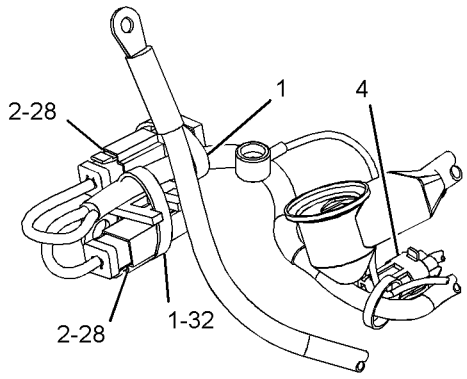

VIEW OF AREA D

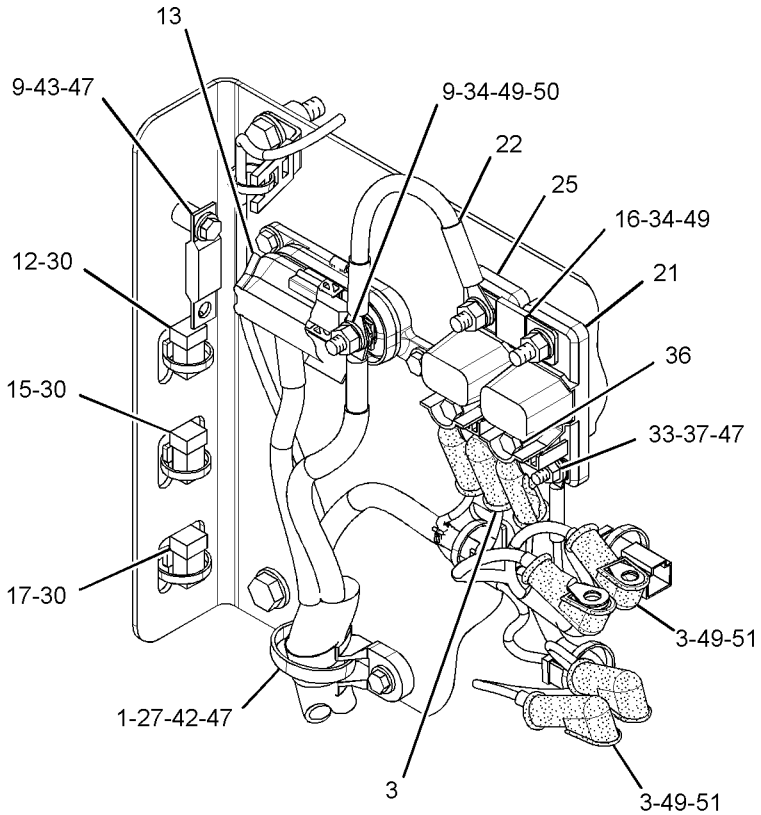

VIEW OF AREA C 90°

GRAPHIC #2 **<END>** g02535897

ELECTRICAL AND STARTING SYSTEM

289-8955 WIRING GP-FRONT

S/N: JRL1-UP

PART OF 372-7772 CHASSIS AR

SMCS-5734 **i03631060**

NOTE	REF NO	GRAPHIC REF	PART NUMBER	QTY	PART NAME 1 2 3 4 5 6 (PRODUCT LEVEL)	SEE PAGE
	1	1	**7K-1181**	28	STRAP-CABLE	
	2	1	**7V-5628**	2	PLATE	
	3	1	**7V-6089**	4	CLAMP (HALF)	
	4	1	**189-3158**	1	SUPPRESSOR-ARC	
	5	1	**122-6316**	1	BRACKET AS	
M		1	**6V-9632**	2	NUT-WELD (M6X1-THD)	
	6	1	**163-1201**	1	HORN AS (24-VOLT, LOW TONE)	
	7	1	**200-6345**	2	MOUNT (DUAL SWIVEL)	
	8	1	**204-2281**	3	STRAP-CABLE	
	9	1	**211-0052**	3	NUT (1-11/16-18-THD)	
	10	1	**226-2951**	1	BRACKET AS	
	11	1	**226-3378**	1	PLATE AS	
	12	1	**289-9174**	1	HARNESS AS-FRONT	
		1	**123-7615**	2	CONNECTOR	
E		1	**5P-0765**		HOSE (61-CM)	
		1	**9W-0852**	2	PIN-CONNECTOR (14-GA TO 16-GA)	
		1	**9X-3401**	7	PIN-CONNECTOR (16-GA TO 18-GA)	
					—OR—	
		1	**126-1767**	7	PIN-CONNECTOR (14-GA TO 16-GA)	
		1	**155-2255**	1	KIT-CONNECTING PLUG (12-PIN)	
		1	**155-2260**	2	KIT-CONNECTING PLUG (3-PIN)	
		1	**155-2274**	2	KIT-CONNECTING PLUG (6-PIN)	
		1	**155-2270**	8	KIT-CONNECTING PLUG (2-PIN)	
					(EACH PLUG KIT INCLUDES PLUG AS, WEDGE & INTERFACE SEAL)	
		1	**8T-8737**	14	PLUG-SEAL	
		1	**102-8802**	3	KIT-RECEPTACLE (2-PIN)	
		1	**102-8801**	1	KIT-RECEPTACLE (12-PIN)	
					(EACH RECEPTACLE KIT INCLUDES RECEPTACLE AS & WEDGE)	
		1	**9W-0844**	5	SOCKET-CONNECTOR (14-GA TO 16-GA)	
		1	**180-9340**	36	SOCKET-CONNECTOR (14-GA TO 18-GA)	
		1	**8L-8413**	11	STRAP-CABLE	
		1	**6V-0491**	4	TERMINAL-BLADE (14-GA TO 18-GA)	
E		1	**119-3662**		TUBE-HEAT SHRINK (10.85-MM DIA) (7-CM)	
E		1	**125-7874**		TUBE-HEAT SHRINK (5.72-MM DIA) (30-CM)	
E		1	**108-1304**		TUBE-HEAT SHRINK (33-MM DIA) (15-CM)	
	13	1	**204-8000**	1	MOUNTING-CABLE TIE	
	14	1	**2M-3432**	2	GROMMET	
	15	1	**3S-8665**	1	CLIP	
	16	1	**4P-7581**	4	CLIP	
	17	1	**4P-8134**	5	CLIP	
	18	1	**5P-4116**	1	WASHER-HARD (8.8X20.5X2-MM THK)	
M	19	1	**7X-2534**	4	BOLT (M6X1X50-MM)	
	20	1	**7X-7729**	1	WASHER (11X25X3-MM THK)	
	21	1	**8D-9671**	1	CLIP	
	22	1	**8T-4121**	6	WASHER-HARD (11X21X2.5-MM THK)	
M	23	1	**8T-4137**	4	BOLT (M10X1.5X20-MM)	
M	24	1	**8T-4195**	3	BOLT (M10X1.5X30-MM)	
	25	1	**8T-4224**	1	WASHER-HARD (8.8X16X2-MM THK)	
M	26	1	**8T-4908**	1	BOLT (M8X1.25X25-MM)	
M	27	1	**8T-7547**	1	BOLT (M8X1.25X30-MM)	
	28	1	**9G-4191**	2	GROMMET	

E-ORDER BY THE CENTIMETER
M-METRIC PART

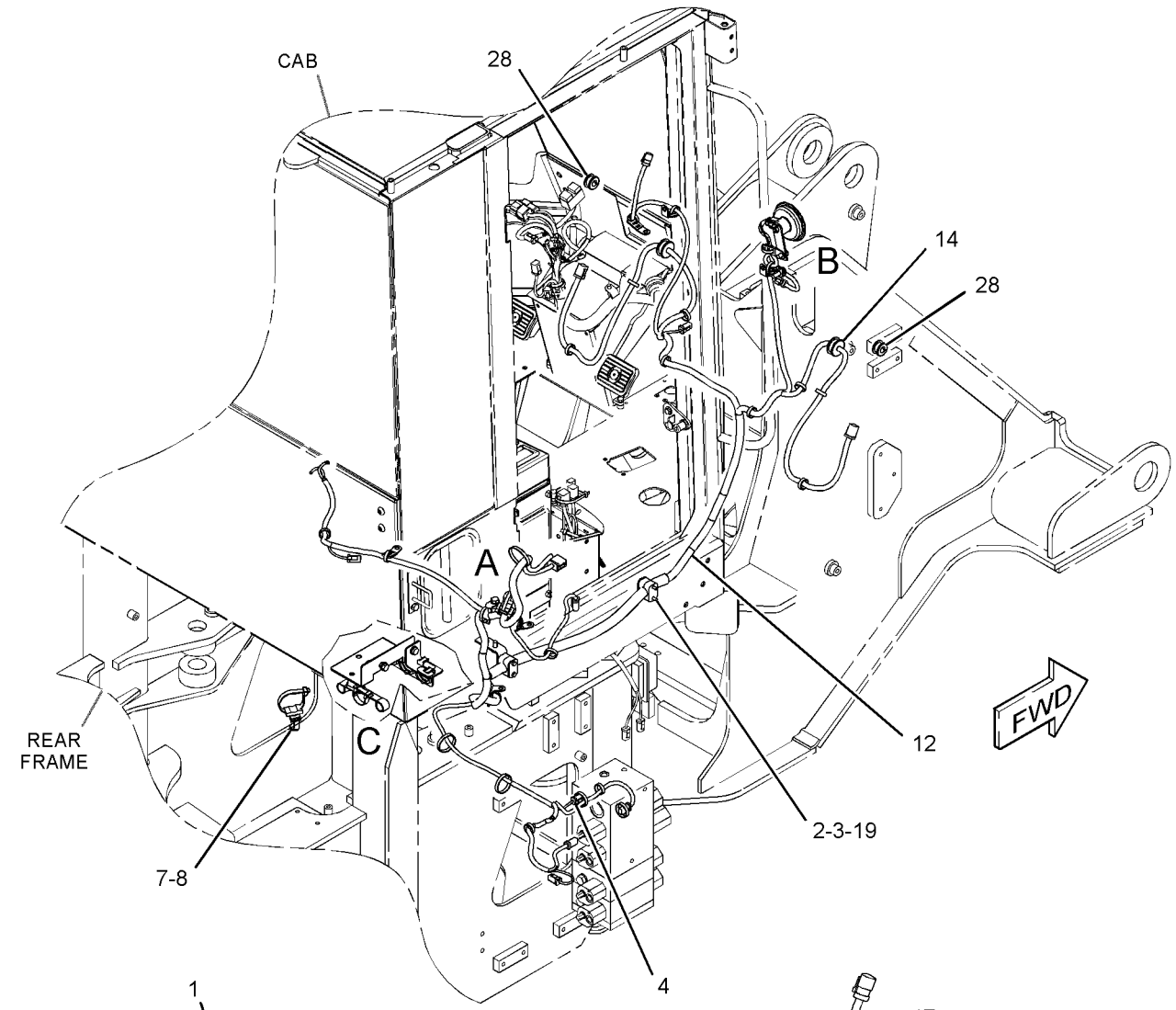

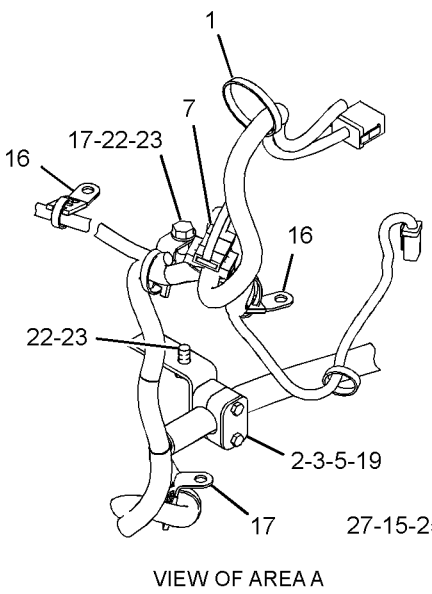

VIEW OF AREA A

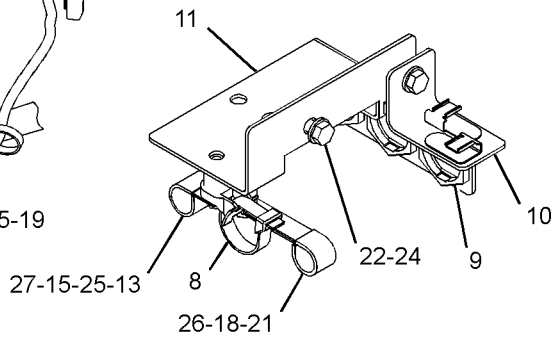

VIEW OF AREA C

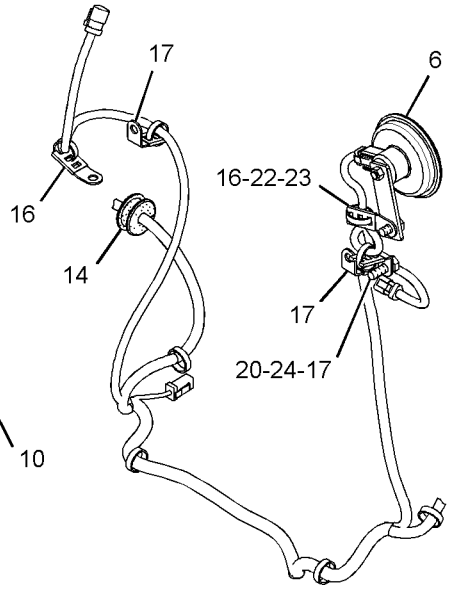

VIEW OF AREA B

GRAPHIC #1 **<END>** g01827393

ELECTRICAL AND STARTING SYSTEM

289-8956 WIRING GP-FRONT

S/N: RRS1-UP

PART OF 372-7773 CHASSIS AR

SMCS-5734 **i03580821**

NOTE	REF NO	GRAPHIC REF	PART NUMBER	QTY	PART NAME 1 2 3 4 5 6 (PRODUCT LEVEL)	SEE PAGE
	1	1	**7K-1181**	28	STRAP-CABLE	
	2	1	**7V-5628**	2	PLATE	
	3	1	**7V-6089**	4	CLAMP	
	4	1	**122-6316**	1	BRACKET AS	
M		1	**6V-9632**	2	NUT-WELD (M6X1-THD)	
	5	1	**163-1201**	1	HORN AS (24-VOLT, LOW TONE)	
	6	1	**200-6345**	2	MOUNT (DUAL SWIVEL)	
	7	1	**204-2281**	3	STRAP-CABLE	
	8	1	**211-0052**	3	NUT (1-11/16-18-THD)	
	9	1	**226-2951**	1	BRACKET AS	
	10	1	**226-3378**	1	PLATE AS	
	11	1	**290-0658**	1	HARNESS AS-FRONT	
		1	**102-8802**	3	KIT-RECEPTACLE (2-PIN)	
		1	**102-8803**	1	KIT-RECEPTACLE (3-PIN)	
		1	**102-8804**	1	KIT-RECEPTACLE (4-PIN)	
		1	**102-8801**	1	KIT-RECEPTACLE (12-PIN)	
					(EACH KIT INCLUDES RECEPTACLE AS & WEDGE)	
E		1	**5P-0765**		HOSE (60-CM)	
		1	**6V-0491**	4	TERMINAL-BLADE (14-GA TO 18-GA)	
		1	**8L-8413**	20	STRAP-CABLE	
		1	**8T-8737**	16	PLUG-SEAL	
		1	**189-3158**	2	SUPPRESSOR-ARC	
E		1	**108-1304**		TUBE-HEAT SHRINK (33-MM DIA) (20-CM)	
		1	**9W-0852**	2	PIN-CONNECTOR (14-GA TO 16-GA)	
		1	**9W-0844**	5	SOCKET-CONNECTOR (14-GA TO 16-GA)	
E		1	**119-3662**		TUBE-HEAT SHRINK (10.85-MM DIA) (7-CM)	
		1	**123-7615**	2	CONNECTOR	
E		1	**125-7874**		TUBE-HEAT SHRINK (5.72-MM DIA) (40-CM)	
D		1	**141-8061**		TAPE (1-M)	
		1	**155-2255**	1	KIT-CONNECTING PLUG (12-PIN)	
		1	**155-2270**	6	KIT-CONNECTING PLUG (2-PIN)	
		1	**155-2260**	2	KIT-CONNECTING PLUG (3-PIN)	
		1	**155-2271**	1	KIT-CONNECTING PLUG (4-PIN)	
		1	**155-2274**	3	KIT-CONNECTING PLUG (6-PIN)	
					(EACH KIT INCLUDES PLUG AS, WEDGE & INTERFACE SEAL))	
		1	**9X-3401**	10	PIN-CONNECTOR (16-GA TO 18-GA)	
					—OR—	
		1	**126-1767**	10	PIN-CONNECTOR (14-GA TO 16-GA)	
		1	**180-9340**	44	SOCKET-CONNECTOR (14-GA TO 18-GA)	
	12	1	**204-8000**	1	MOUNTING-CABLE TIE	
	13	1	**2M-3433**	1	GROMMET	
	14	1	**3S-8665**	1	CLIP	
	15	1	**4P-7581**	4	CLIP	
	16	1	**4P-8134**	2	CLIP	
	17	1	**5P-4116**	1	WASHER-HARD (8.8X20.5X2-MM THK)	
	18	1	**7G-3228**	1	GROMMET	
M	19	1	**7X-2534**	4	BOLT (M6X1X50-MM)	
	20	1	**8D-9671**	1	CLIP	
	21	1	**8T-4121**	7	WASHER-HARD (11X21X2.5-MM THK)	
M	22	1	**8T-4137**	5	BOLT (M10X1.5X20-MM)	
M	23	1	**8T-4195**	2	BOLT (M10X1.5X30-MM)	
	24	1	**8T-4224**	1	WASHER-HARD (8.8X16X2-MM THK)	
M	25	1	**8T-4908**	1	BOLT (M8X1.25X25-MM)	
M	26	1	**8T-7547**	1	BOLT (M8X1.25X30-MM)	

289-8956 **WIRING GP-FRONT** *(contd.)* **i03580821**

D-ORDER BY THE METER
E-ORDER BY THE CENTIMETER
M-METRIC PART

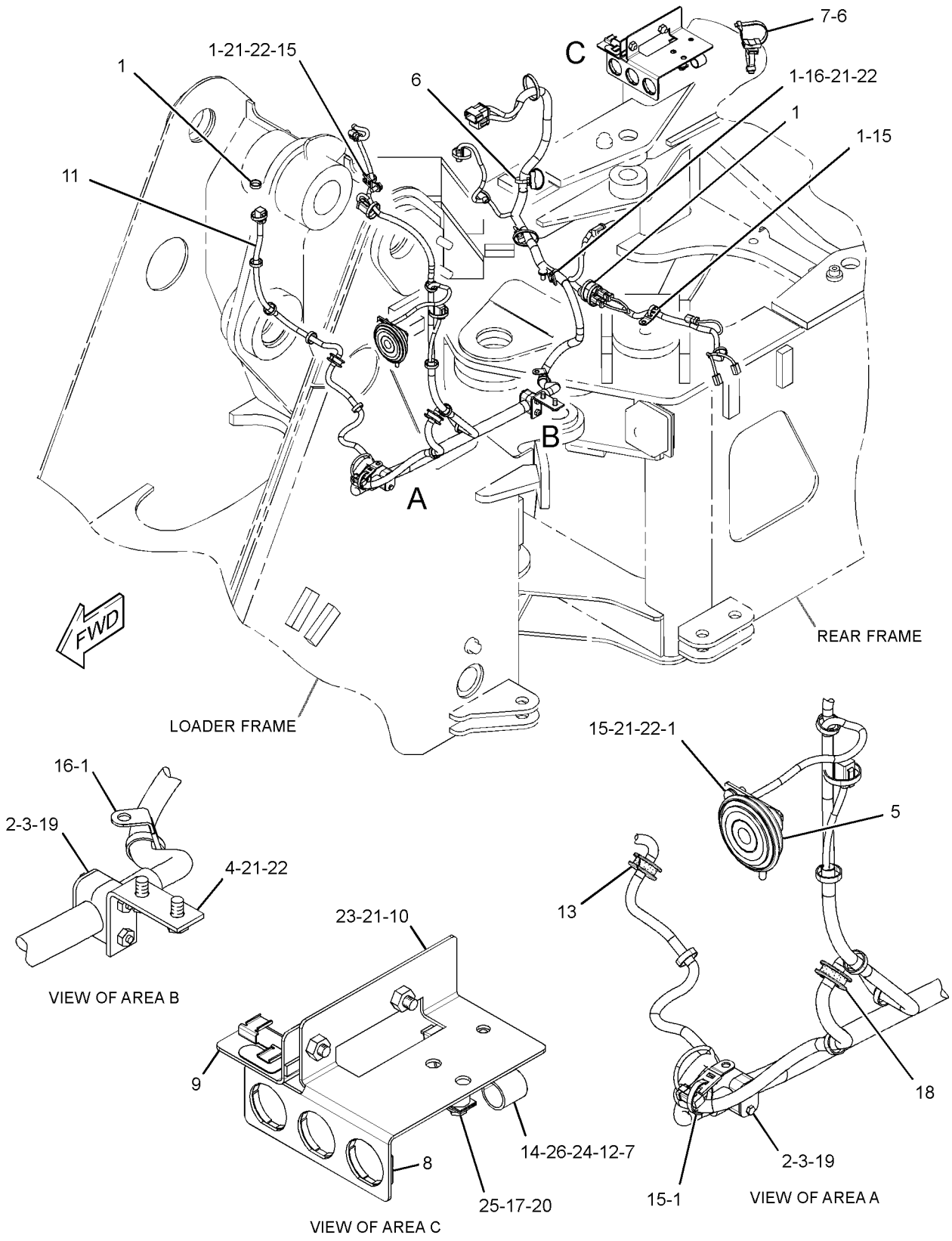

GRAPHIC #1 **<END>** g01784456

ELECTRICAL AND STARTING SYSTEM

289-8959 WIRING GP-REAR

S/N: JRL1-UP; RRS1-UP

PART OF 372-7772, 372-7773 CHASSIS AR

SMCS-1408 **i03629323**

NOTE	REF NO	GRAPHIC REF	PART NUMBER	QTY	PART NAME 1 2 3 4 5 6 (PRODUCT LEVEL)	SEE PAGE
	1	1	**7K-1181**	35	STRAP-CABLE	
	2	1	**206-1345**	2	STRAP-CABLE	
	3	1	**289-9169**	1	HARNESS AS-REAR	
		1	**9W-0852**	3	PIN-CONNECTOR (14-GA TO 16-GA)	
		1	**9X-3401**	27	PIN-CONNECTOR (16-GA TO 18-GA)	
					-OR-	
		1	**126-1767**	27	PIN-CONNECTOR (14-GA TO 16-GA)	
		1	**155-2270**	13	KIT-CONNECTING PLUG (2-PIN)	
		1	**155-2260**	5	KIT-CONNECTING PLUG (3-PIN)	
					(EACH PLUG KIT INCLUDES PLUG AS, WEDGE & INTERFACE SEAL)	
		1	**225-3854**	1	PLUG AS-CONNECTOR (31-PIN)	
		1	**8T-8737**	36	PLUG-SEAL	
		1	**102-8802**	8	KIT-RECEPTACLE (2-PIN)	
		1	**102-8803**	2	KIT-RECEPTACLE (3-PIN)	
		1	**102-8805**	1	KIT-RECEPTACLE (6-PIN)	
					(EACH RECEPTACLE KIT INCLUDES RECEPTACLE AS & WEDGE)	
		1	**100-6674**	2	SEAL-CONNECTOR	
		1	**180-9340**	32	SOCKET-CONNECTOR (14-GA TO 18-GA)	
		1	**9W-0844**	2	SOCKET-CONNECTOR (14-GA TO 16-GA)	
		1	**8L-8413**	23	STRAP-CABLE	
B		1	**1P-0810**		TAPE-ELECTRICAL	
		1	**2L-8076**	1	TERMINAL-RING (14-GA TO 16-GA, NO. 10 SCREW)	
		1	**2L-8079**	1	TERMINAL-RING (14-GA TO 16-GA, 3/8-IN SCREW)	
E		1	**119-3662**		TUBE-HEAT SHRINK (10.85-MM DIA) (7-CM)	
E		1	**125-7874**		TUBE-HEAT SHRINK (5.72-MM DIA) (25-CM)	
E		1	**125-7875**		TUBE-HEAT SHRINK (7.44-MM DIA) (5-CM)	
	4	1	**132-5789**	3	CLIP	
	5	1	**1M-4543**	1	GROMMET	
	6	1	**3S-2093**	11	STRAP-CABLE	
	7	1	**4P-7581**	5	CLIP	
	8	1	**5P-6264**	4	GROMMET	
	9	1	**8T-4121**	7	WASHER-HARD (11X21X2.5-MM THK)	
M	10	1	**8T-4137**	6	BOLT (M10X1.5X20-MM)	
M	11	1	**8T-4191**	1	BOLT (M10X1.5X16-MM)	

B-USE AS REQUIRED
E-ORDER BY THE CENTIMETER
M-METRIC PART

289-8959 **WIRING GP-REAR** *(contd.)* **i03629323**

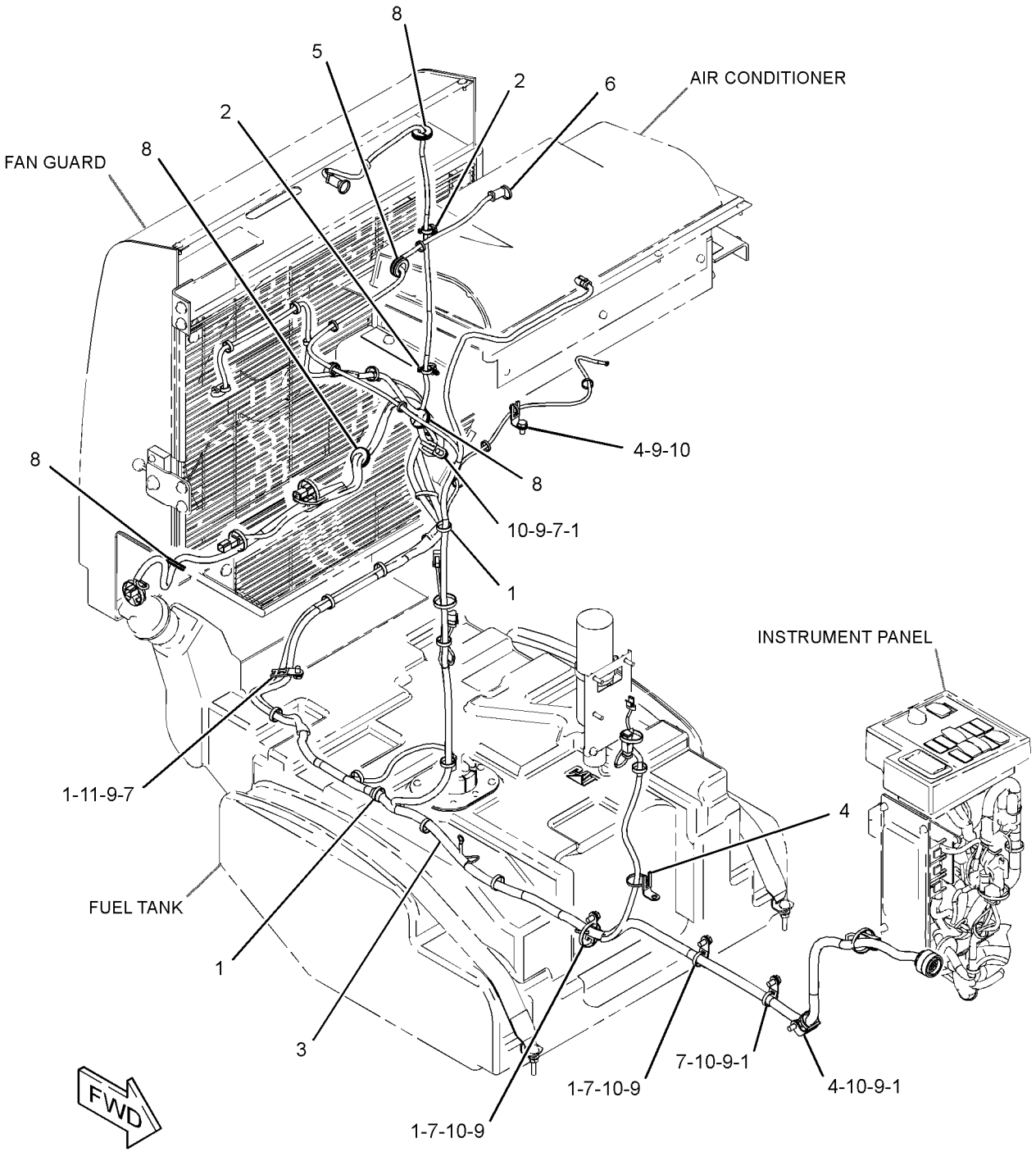

GRAPHIC #1 **<END>** g01826917

290-7187 WIRING GP-RIDE CONTROL

S/N: JRL1-UP
PART OF 289-8994 CONTROL AR-RIDE
AN ATTACHMENT

SMCS-5004, 5734 **i04591634**

NOTE	REF NO	GRAPHIC REF	PART NUMBER	QTY	PART NAME 1 2 3 4 5 6 (PRODUCT LEVEL)	SEE PAGE
	1	1	**7K-1181**	3	STRAP-CABLE	
	2	1	**106-8704**	1	SUPPRESSOR AS-ARC	
	3	1	**158-5089**	1	RELAY AS (24-VOLT) (RIDE CONTROL)	
	4	1	**174-1802**	1	HARNESS AS-RIDE CONTROL (GROUND CIRCUIT)	
		1	**9X-3401**	2	PIN-CONNECTOR (16-GA TO 18-GA)	
		1	**155-2270**	2	KIT-CONNECTING PLUG (2-PIN)	
					(EACH KIT INCLUDES PLUG AS, WEDGE & INTERFACE SEAL)	
		1	**102-8802**	1	KIT-RECEPTACLE (2-PIN)	
					(INCLUDES RECEPTACLE AS & WEDGE)	
		1	**9X-3402**	4	SOCKET-CONNECTOR (16-GA TO 18-GA)	
E		1	**125-7874**		TUBE-HEAT SHRINK (5.72-MM DIA) (10-CM)	
	5	1	**292-5606**	1	SWITCH AS-ROCKER (24-VOLT)	
		1	**111-7899**	1	GASKET	
	6	1	**4P-7581**	2	CLIP	
M	7	1	**8T-4138**	1	BOLT (M6X1X20-MM)	
	8	1	**9X-6165**	1	WASHER (6.5X22X2.5-MM THK)	

E-ORDER BY THE CENTIMETER
M-METRIC PART

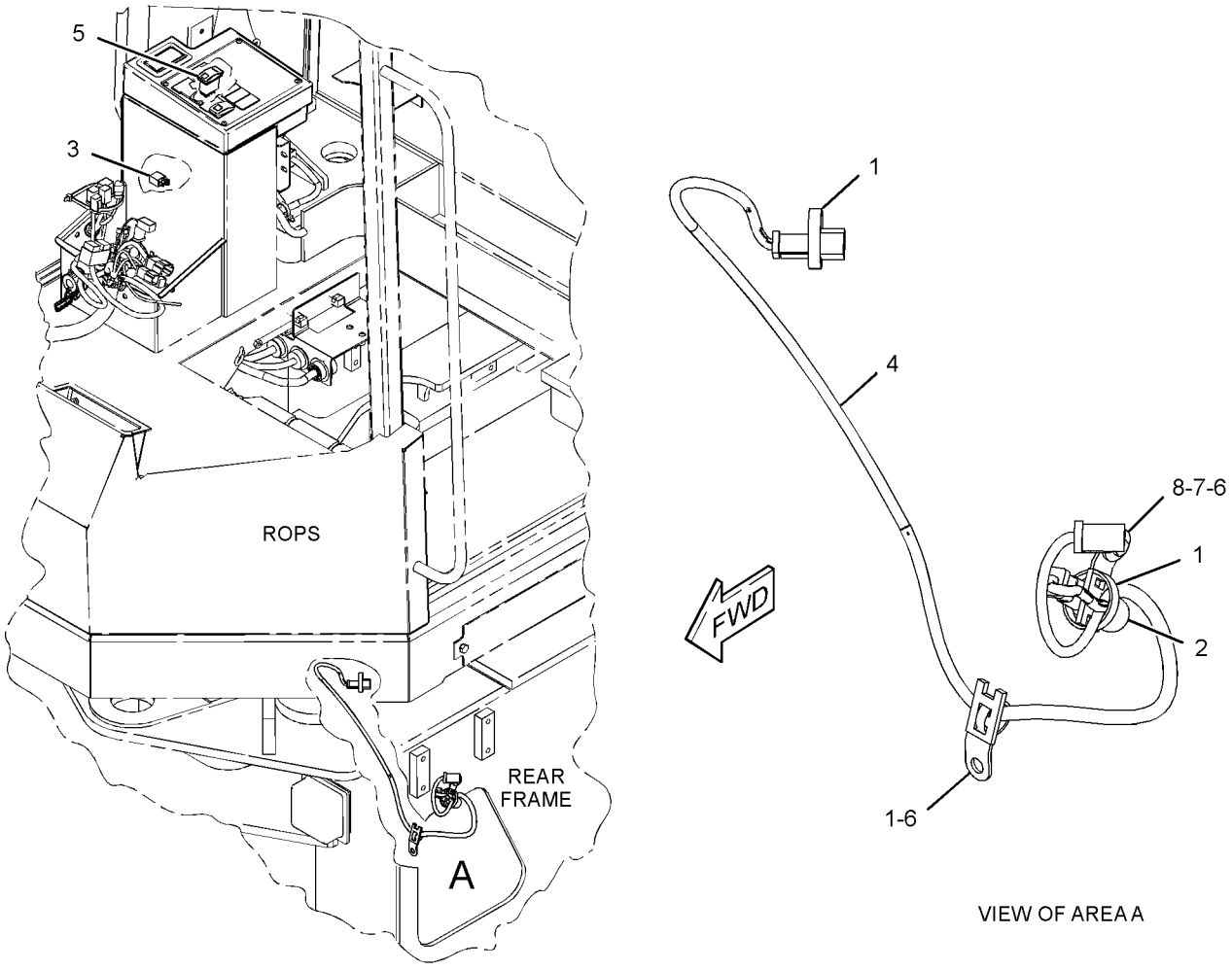

GRAPHIC #1 **<END>** g01404980

290-7188 WIRING GP-RIDE CONTROL

S/N: RRS1-UP
PART OF 289-8995 CONTROL AR-RIDE
AN ATTACHMENT

SMCS-5004, 5734 **i03571136**

NOTE	REF NO	GRAPHIC REF	PART NUMBER	QTY	PART NAME 1 2 3 4 5 6 (PRODUCT LEVEL)	SEE PAGE
	1	1	**3E-5239**	1	RELAY AS (24-VOLT) (RIDE CONTROL)	
	2	1	**7K-1181**	9	STRAP-CABLE	
	3	1	**189-3158**	1	SUPPRESSOR-ARC	
	4	1	**158-5089**	1	RELAY AS (24-VOLT) (RIDE CONTROL, LOAD CHECK RELAY)	
	5	1	**171-6029**	1	HARNESS AS-RIDE CONTROL (SOLENOID VALVE)	
		1	**102-8803**	1	KIT-RECEPTACLE (3-PIN)	
					(KIT INCLUDES RECEPTACLE AS & WEDGE)	
		1	**9X-1054**	1	PLUG AS-CONNECTOR (4-PIN)	
E		1	**125-7874**		TUBE-HEAT SHRINK (5.72-MM DIA) (5-CM)	
E		1	**125-7875**		TUBE-HEAT SHRINK (7.44-MM DIA) (5-CM)	
		1	**9X-3402**	4	SOCKET-CONNECTOR (16-GA TO 18-GA)	
		1	**144-1636**	3	PIN-CONNECTOR (14-GA TO 18-GA)	
		1	**155-2270**	2	KIT-CONNECTING PLUG (2-PIN)	
					(EACH KIT INCLUDES PLUG AS, WEDGE & INTERFACE SEAL)	
	6	1	**292-5606**	1	SWITCH AS-ROCKER (24-VOLT)	
		1	**111-7899**	1	GASKET	
	7	1	**217-6729**	1	HARNESS AS-RIDE CONTROL (PRESSURE SWITCH)	
		1	**102-8802**	1	KIT-RECEPTACLE (2-PIN)	
					(KIT INCLUDES RECEPTACLE AS & WEDGE)	
		1	**155-2270**	1	KIT-CONNECTING PLUG (2-PIN)	
					(KIT INCLUDES PLUG AS, WEDGE & INTERFACE SEAL)	
		1	**180-9339**	2	PIN-CONNECTOR (14-GA TO 18-GA)	
		1	**180-9340**	2	SOCKET-CONNECTOR (14-GA TO 18-GA)	
	8	1	**4P-7581**	2	CLIP	
	9	1	**4P-8134**	2	CLIP	
M	10	1	**8T-4133**	1	NUT (M10X1.5-THD)	
M	11	1	**8T-4138**	1	BOLT (M6X1X20-MM)	
M	12	1	**8T-4195**	1	BOLT (M10X1.5X30-MM)	
	13	1	**9X-6165**	1	WASHER (6.5X22X2.5-MM THK)	
	14	1	**8T-4121**	3	WASHER-HARD (11X21X2.5-MM THK)	
M	15	1	**8T-4137**	1	BOLT (M10X1.5X20-MM)	

E-ORDER BY THE CENTIMETER
M-METRIC PART

290-7188 **WIRING GP-RIDE CONTROL** *(contd.)* **i03571136**

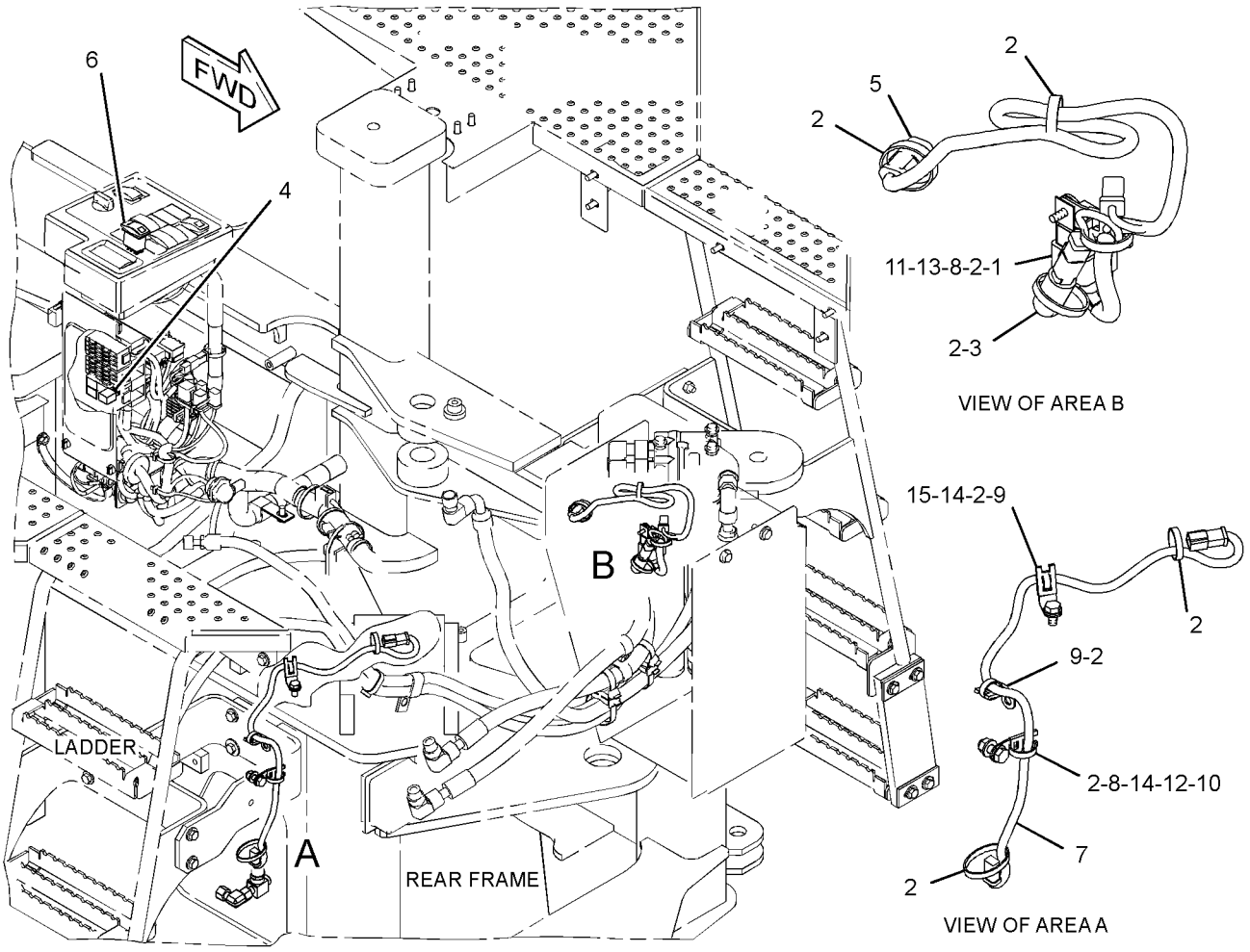

GRAPHIC #1 **<END>** g01767233

138-1615 AXLE AR-FIXED–FRONT, STANDARD DIFFERENTIAL

S/N: JRL1-UP; RRS1-UP

PART OF 289-8974 AXLE AR-FIXED

SMCS-3013, 3278 **i01216990**

NOTE	PART NUMBER	QTY	PART NAME 1 2 3 4 5 6 (PRODUCT LEVEL)	SEE PAGE
Y	*138-1614*	2	BRAKE & PLANETARY GP (SINGLE DISC)	175
Y	**138-1612**	1	DIFFERENTIAL GP (STANDARD)	191
Y	*138-1617*	1	GEAR GP-BEVEL & PINION (FRONT)	201
Y	*138-1616*	1	HOUSING GP-FIXED AXLE (FRONT)	205

Y-SEPARATE ILLUSTRATION

<END>

289-8974 AXLE AR-FIXED–FRONT, STANDARD DIFFERENTIAL

S/N: JRL1-UP; RRS1-UP

PART OF 289-8815 POWER TRAIN AR

SMCS-3013, 3278 **i03039649**

NOTE	PART NUMBER	QTY	PART NAME 1 2 3 4 5 6 (PRODUCT LEVEL)	SEE PAGE
Y	*138-1615*	1	AXLE AR-FIXED (FRONT, STANDARD DIFFERENTIAL) (SINGLE DISC BRAKE)	173
Y	*301-4353*	1	COVER GP-ACCESS (CAB FLOOR)	493

Y-SEPARATE ILLUSTRATION

<END>

267-7368 AXLE AR-OSCILLATING–REAR, STANDARD DIFFERENTIAL

S/N: JRL1-UP; RRS1-UP

PART OF 289-8991 AXLE AR-OSCILLATING AN ATTACHMENT

SMCS-3013, 3278 **i02587057**

NOTE	PART NUMBER	QTY	PART NAME 1 2 3 4 5 6 (PRODUCT LEVEL)	SEE PAGE
Y	*267-7413*	2	BRAKE & PLANETARY GP (SINGLE DISC)	177
Y	**138-1612**	1	DIFFERENTIAL GP (STANDARD)	191
Y	*138-1611*	1	GEAR GP-BEVEL & PINION (REAR)	200
Y	*203-2774*	1	HOUSING GP-OSCILLATING AXLE (REAR)	207

Y-SEPARATE ILLUSTRATION

<END>

267-7372 AXLE AR-OSCILLATING–
REAR, LIMITED SLIP DIFFERENTIAL
S/N: JRL1-UP; RRS1-UP
PART OF 289-8985 AXLE AR-OSCILLATING
AN ATTACHMENT

SMCS-3013, 3278 **i02489254**

NOTE	PART NUMBER	QTY	PART NAME 1 2 3 4 5 6 (PRODUCT LEVEL)	SEE PAGE
Y	*267-7414*	2	BRAKE & PLANETARY GP (DUAL DISC)	178
Y	**206-9670**	1	DIFFERENTIAL GP-LIMITED SLIP	192
Y	*138-2777*	1	GEAR GP-BEVEL & PINION (REAR)	202
Y	*203-2774*	1	HOUSING GP-OSCILLATING AXLE (REAR)	207
Y	**220-7925**	1	PLATE GP-AXLE IDENTIFICATION	613

Y-SEPARATE ILLUSTRATION

<END>

289-8985 AXLE AR-OSCILLATING–
REAR, LIMITED SLIP DIFFERENTIAL
S/N: JRL1-UP; RRS1-UP
AN ATTACHMENT

SMCS-3013, 3278 **i03043382**

NOTE	PART NUMBER	QTY	PART NAME 1 2 3 4 5 6 (PRODUCT LEVEL)	SEE PAGE
Y	*267-7372*	1	AXLE AR-OSCILLATING (REAR, LIMITED SLIP DIFF)	174
Y	*323-1653*	1	LINES GP-AXLE OIL COOLER (REAR)	211
Y	*290-6406*	1	LINES GP-WATER (WITH AXLE OIL COOLER)	54

Y-SEPARATE ILLUSTRATION

<END>

289-8991 AXLE AR-OSCILLATING–
REAR, STANDARD DIFFERENTIAL
S/N: JRL1-UP; RRS1-UP
PART OF 375-8357, 375-8358, 375-8359 DISTRIBUTION AR
AN ATTACHMENT

SMCS-3013, 3278 **i03038622**

NOTE	PART NUMBER	QTY	PART NAME 1 2 3 4 5 6 (PRODUCT LEVEL)	SEE PAGE
Y	**267-7368**	1	AXLE AR-OSCILLATING (REAR, STANDARD DIFFERENTIAL)	173
Y	*323-1652*	1	LINES GP-HYDRAULIC FAN (WITHOUT AXLE OIL COOLER)	358
Y	*290-6407*	1	LINES GP-WATER (WITHOUT AXLE OIL COOLER)	55

Y-SEPARATE ILLUSTRATION

<END>

138-1614 BRAKE & PLANETARY GP—SINGLE DISC

S/N: JRL1-UP; RRS1-UP

PART OF 138-1615 AXLE AR-FIXED

SMCS-4011, 4255 **i03628627**

NOTE	REF NO	GRAPHIC REF	PART NUMBER	QTY	PART NAME 1 2 3 4 5 6 (PRODUCT LEVEL)	SEE PAGE
	1	1	**143-4916**	1	PISTON	
	2	1	**250-1844**	1	DISC-FRICTION	
	3	1	**170-4697**	1	PLATE-REACTION	
	4	1	**9C-6020**	3	BEARING-SLEEVE	
	5	1	**253-8920**	3	GEAR-PLANETARY (29-TEETH)	
	6	1	**8R-0249**	6	WASHER-THRUST	
	7	1	**8T-2925**	3	PIN-SPRING	
	8	1	**8R-0248**	3	SHAFT-PLANETARY	
	9	1	**115-5327**	3	DOWEL	
	10	1	**8R-2537**	1	CARRIER-PLANETARY	
	11	1	**139-3584**	1	GEAR-RING (78-TEETH)	
	12	1	**148-7841**	3	SPRING	
	13	1	**4M-1677**	3	DOWEL-REACTION	
	14	1	**159-3589**	1	SEAL-D-RING	
	15	1	**165-6692**	1	SEAL-D-RING	
	16	1	**143-4918**	1	GEAR-SUN (18-TEETH)	
	17	1	**138-1645**	3	PIN-SPRING	

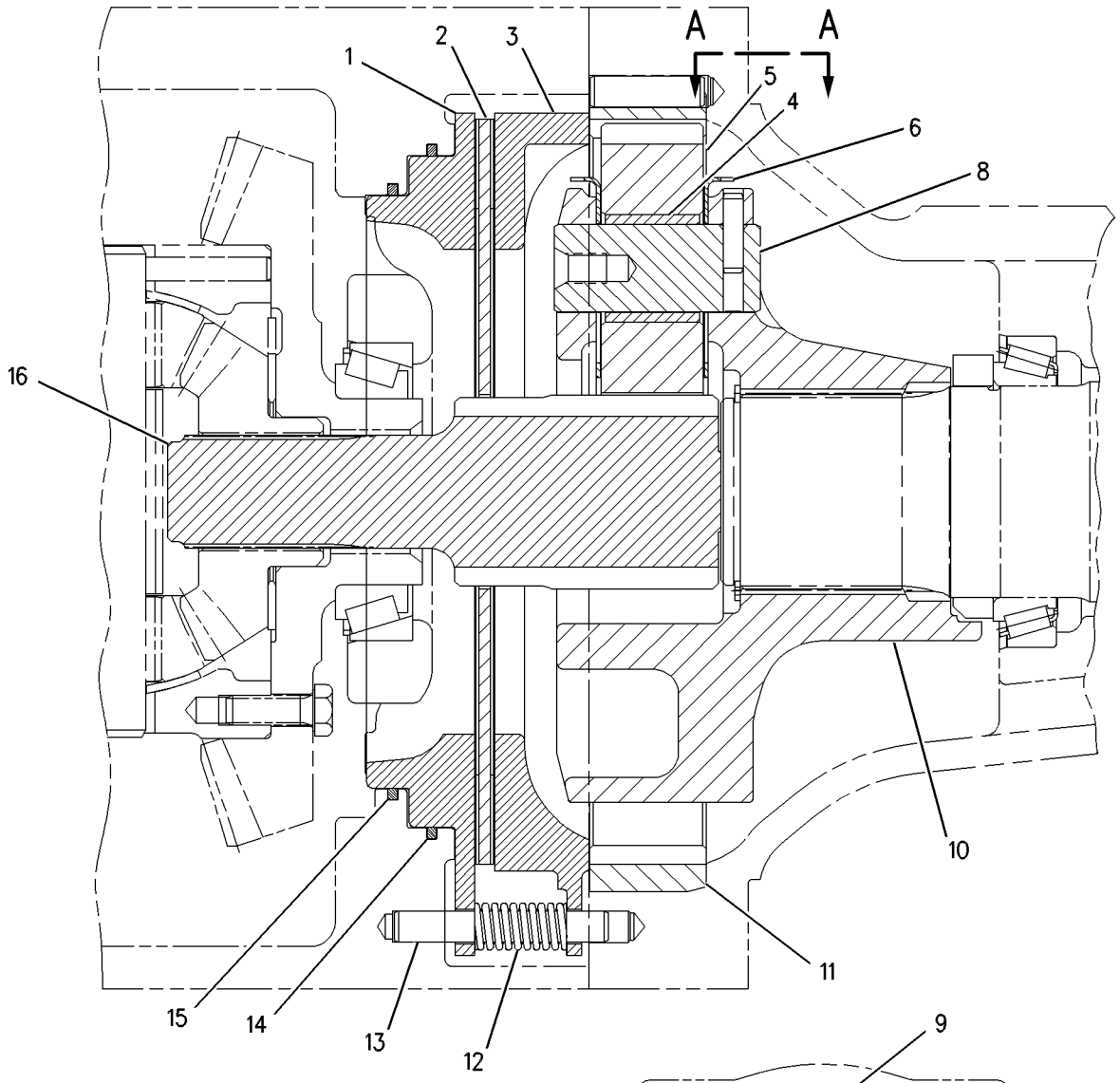

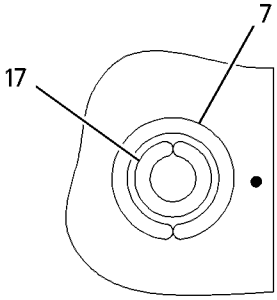

VIEW A-A

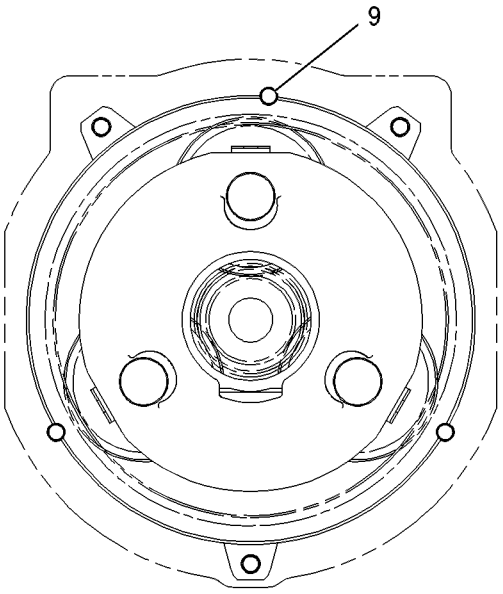

GRAPHIC #1 **<END>** g00618448

267-7413 BRAKE & PLANETARY GP–SINGLE DISC

S/N: JRL1-UP; RRS1-UP
PART OF 267-7368 AXLE AR-OSCILLATING
AN ATTACHMENT

SMCS-4011, 4255 **i03454121**

NOTE	REF NO	GRAPHIC REF	PART NUMBER	QTY	PART NAME 1 2 3 4 5 6 (PRODUCT LEVEL)	SEE PAGE
	1	1	**8R-0248**	3	SHAFT-PLANETARY	
	2	1	**8R-0249**	6	WASHER-THRUST	
	3	1	**8R-2537**	1	CARRIER-PLANETARY	
	4	1	**139-3584**	1	GEAR-RING (78-TEETH)	
	5	1	**143-4916**	1	PISTON	
	6	1	**143-4918**	1	GEAR-SUN (18-TEETH)	
	7	1	**148-7841**	3	SPRING	
	8	1	**159-3589**	1	SEAL-D-RING	
	9	1	**165-6692**	1	SEAL-D-RING	
	10	1	**170-4697**	1	PLATE-REACTION	
	11	1	**232-5170**	1	DISC-FRICTION	
	12	1	**253-8920**	3	GEAR-PLANETARY (29-TEETH)	
	13	1	**115-5327**	3	DOWEL	
	14	1	**138-1645**	3	PIN-SPRING	
	15	1	**4M-1677**	3	DOWEL-REACTION	
	16	1	**8T-2925**	3	PIN-SPRING	
	17	1	**9C-6020**	3	BEARING-SLEEVE	

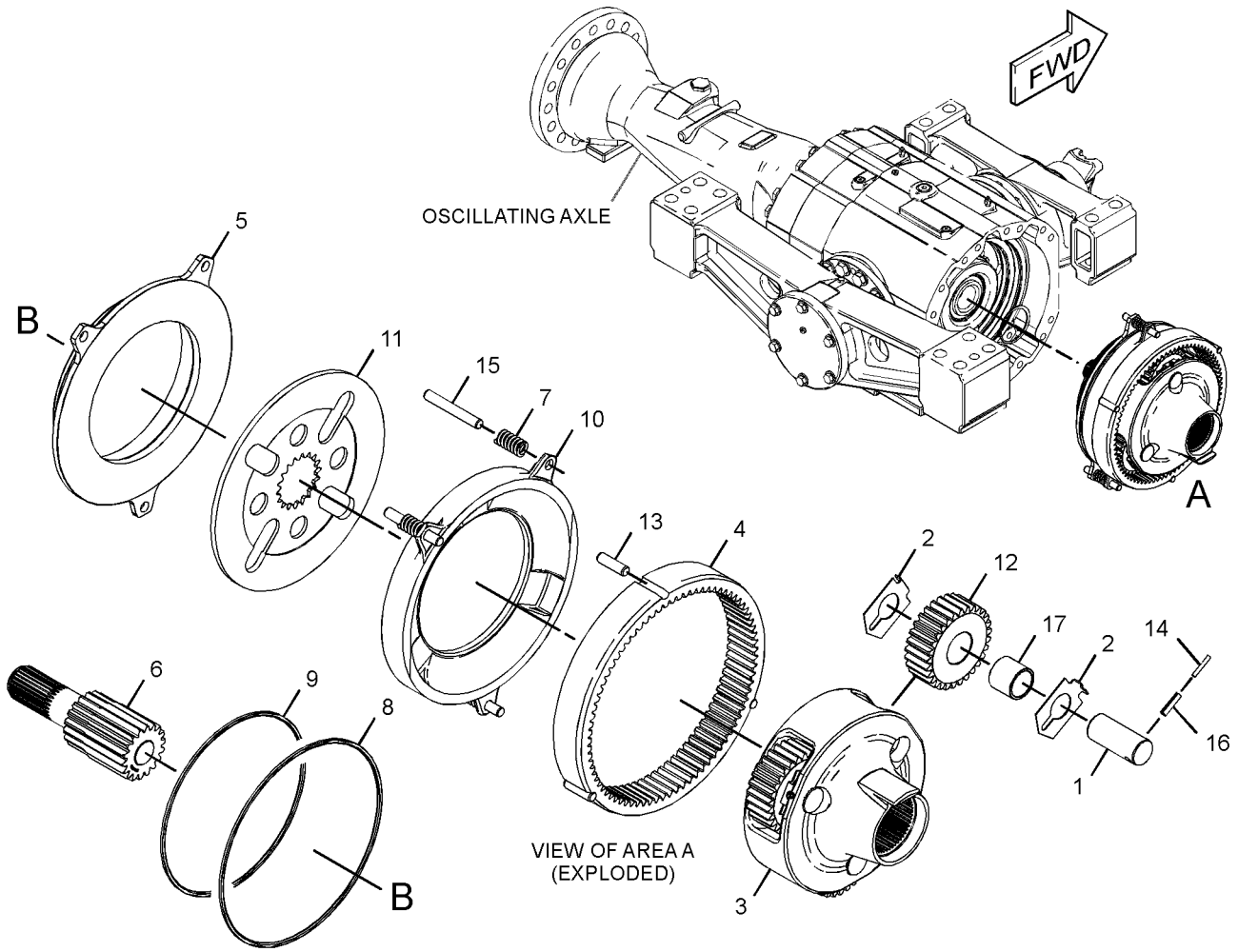

GRAPHIC #1 **<END>** g01810980

267-7414 BRAKE & PLANETARY GP—DUAL DISC

S/N: JRL1-UP; RRS1-UP
PART OF 267-7372 AXLE AR-OSCILLATING
AN ATTACHMENT

SMCS-4011, 4255 **i03454122**

NOTE	REF NO	GRAPHIC REF	PART NUMBER	QTY	PART NAME 1 2 3 4 5 6 (PRODUCT LEVEL)	SEE PAGE
	1	1	**8R-0248**	3	SHAFT-PLANETARY	
	2	1	**8R-0249**	6	WASHER-THRUST	
	3	1	**8R-2537**	1	CARRIER-PLANETARY	
	4	1	**139-3584**	1	GEAR-RING (78-TEETH)	
	5	1	**143-4916**	1	PISTON	
	6	1	**143-4918**	1	GEAR-SUN (18-TEETH)	
	7	1	**148-7841**	3	SPRING	
	8	1	**159-3589**	1	SEAL-D-RING	
	9	1	**165-6692**	1	SEAL-D-RING	
	10	1	**197-8896**	1	PLATE-REACTION	
	11	1	**197-8898**	1	PLATE-SEPARATOR	
	12	1	**253-8920**	3	GEAR-PLANETARY (29-TEETH)	
	13	1	**269-4750**	2	DISC-FRICTION	
	14	1	**115-5327**	3	DOWEL	
	15	1	**138-1645**	3	PIN-SPRING	
	16	1	**4M-1677**	6	DOWEL-REACTION	
	17	1	**8T-2925**	3	PIN-SPRING	
	18	1	**9C-6020**	3	BEARING-SLEEVE	

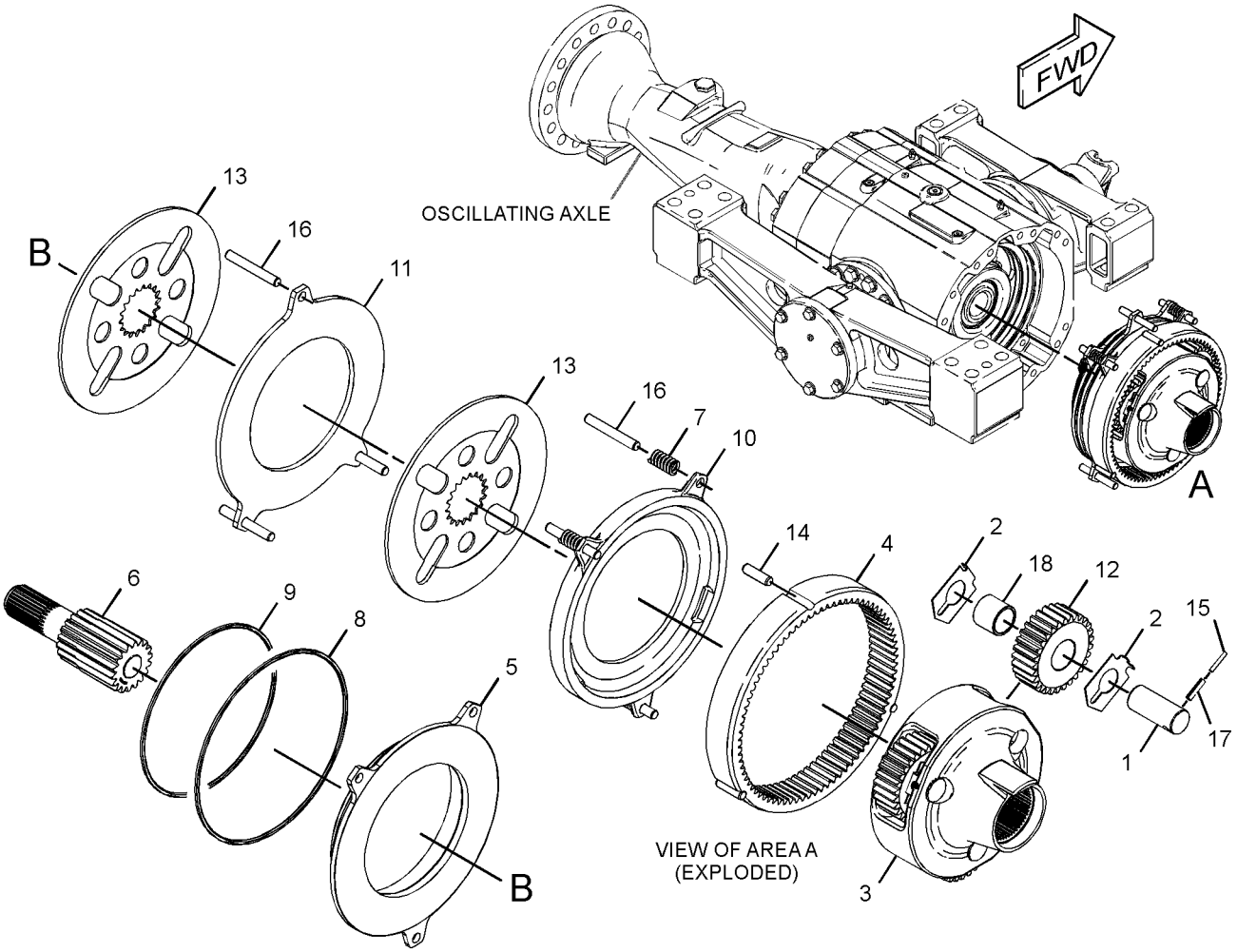

GRAPHIC #1 **<END>** g01811293

293-6018 CASE & PARTS GP-TRANSMISSION

S/N: J2Y1-UP

PART OF 290-1257 TRANSMISSION AR

SMCS-3064 **i04553777**

NOTE	REF NO	GRAPHIC REF	PART NUMBER	QTY	PART NAME 1 2 3 4 5 6 (PRODUCT LEVEL)	SEE PAGE
	1	1	**1B-3978**	1	CUP-BEARING (TAPERED ROLLER)	
	2	1	**2D-0598**	1	SEAL-O-RING	
	3	1	**2N-7006**	1	COVER	
	4	1	**2N-7007**	1	GASKET	
	5	1	**2W-1141**	4	BEARING-ROLLER	
	6	1	**3J-1907**	4	SEAL-O-RING	
	7	1	**4S-5879**	1	SEAL-O-RING	
	8	1	**5H-6005**	4	SEAL-O-RING	
	9	1	**5P-2304**	1	RACE & ROLLER AS	
	10	1	**5P-3863**	1	SEAL-O-RING	
	11	1	**5P-7684**	1	PLUG	
M	12	1	**6A-5591**	4	BOLT (M12X1.75X25-MM)	
Y	13	1	**6I-9806**	1	VALVE GP-RELIEF (TORQUE CONVERTER OUTLET)	236
	14	1	**6K-6307**	1	SEAL-O-RING	
	15	1	**6V-0852**	2	CAP-DUST	
	16	1	**6V-1720**	1	PLATE-SERIAL NUMBER (TRANSMISSION)	
M	17	1	**6V-1820**	12	BOLT (M10X1.5X30-MM)	
	18	1	**6V-3965**	2	FITTING (QUICK DISCONNECT)	
M	19	1	**6V-5217**	3	BOLT (M8X1.25X20-MM)	
M	20	1	**6V-5230**	13	BOLT (M10X1.5X60-MM)	
	21	1	**6V-5839**	12	WASHER (11X21X2.5-MM THK)	
M	22	1	**6V-5842**	8	BOLT (M10X1.5X40-MM)	
M	23	1	**6V-6317**	3	BOLT (M10X1.5X20-MM)	
	24	1	**6Y-0584**	1	RACE-ROLLER BEARING	
	25	1	**6Y-9017**	1	CAGE-BEARING	
	26	1	**7F-8268**	1	SEAL-O-RING	
	27	1	**7M-8485**	3	SEAL-O-RING	
	28	1	**148-1928**	1	VALVE-RELIEF (TRANSMISSION)	
M	29	1	**7X-0474**	2	BOLT (M10X1.5X22-MM)	
	30	1	**8J-0426**	1	PLUG	
	31	1	**8S-9129**	1	FILTER-MAGNETIC (TRANSMISSION OIL)	
	32	1	**8S-9130**	1	SCREEN-SUCTION (TRANSMISSION OIL)	
M	33	1	**8T-9085**	1	BOLT (M10X1.5X150-MM)	
	34	1	**9G-5127**	1	BREATHER (TRANSMISSION)	
	35	1	**9S-4181**	2	PLUG-O-RING	
	36	1	**9S-4191**	2	PLUG-O-RING	
	37	1	**9W-1454**	1	COVER	
	38	1	**005-0469**	2	CUP-BEARING	
	39	1	**146-6280**	1	COVER	
	40	1	**169-8352**	1	SHIELD AS	
	41	1	**7T-2703**	1	PLUG-DRAIN (TRANSMISSION)	
Y	42	1	**177-0019**	1	COVER GP-TRANSMISSION	189
	43	1	**293-6015**	1	CASE-TRANSMISSION	
	44	1	**5P-0713**	1	SEAL-LIP TYPE	
	45	1	**305-2215**	1	SEAL-LIP TYPE	
B	46	1	**1U-8846**		SEALANT-GASKET	
B	47	1	**9W-7159**	2	SHIM PACK (INCLUDES 12-SHIMS)	
	48	1	**8H-7521**	1	SEAL-O-RING	
	49	1	**8T-5452**	2	SEAL-O-RING	
	50	1	**9X-4609**	1	SEAL-O-RING	
B	51	1	**6Y-9016**	1	SHIM PACK (INCLUDES 12-SHIMS)	

B-USE AS REQUIRED
M-METRIC PART
Y-SEPARATE ILLUSTRATION

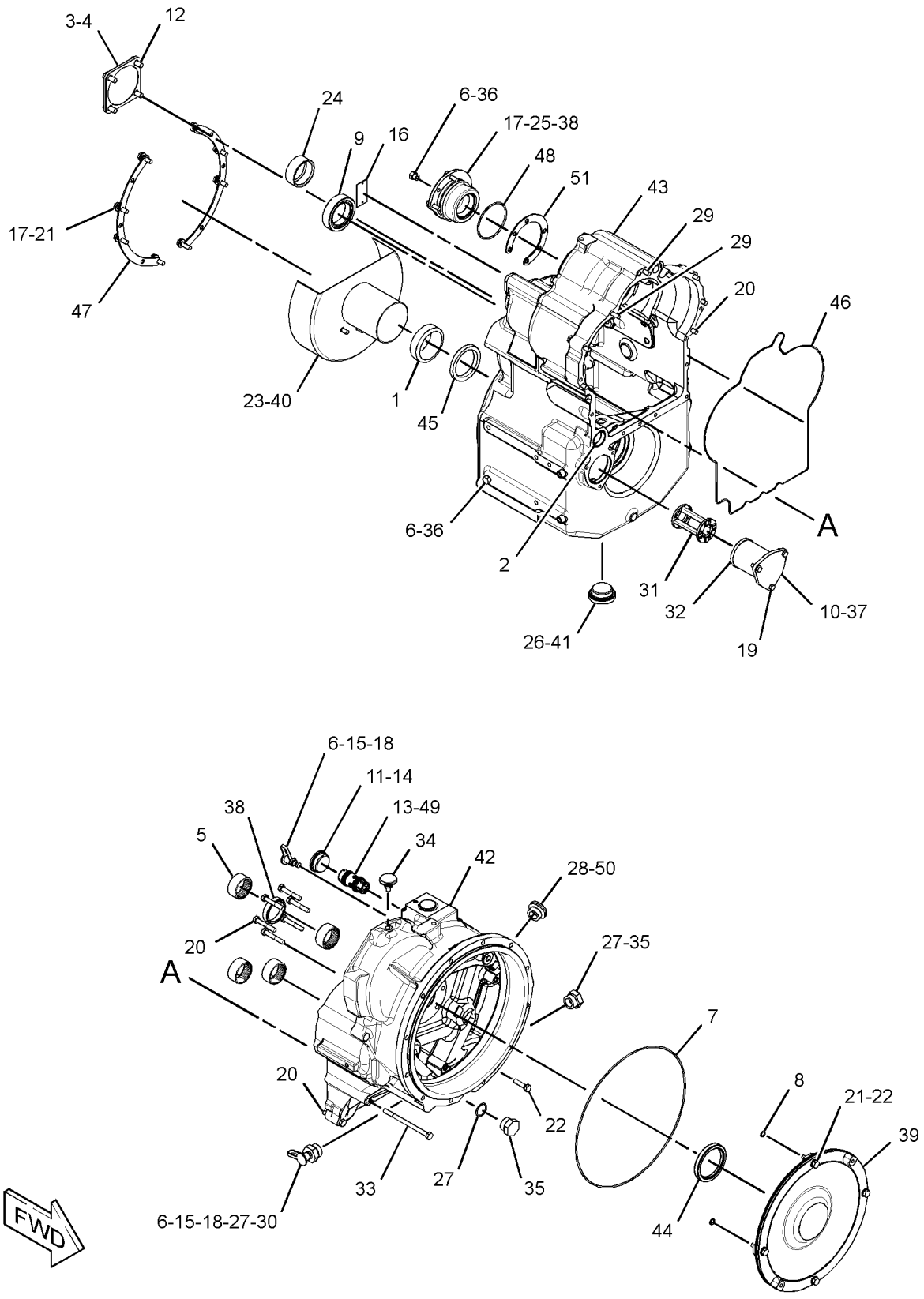

GRAPHIC #1 **<END>** g02766761

102-7540 CLUTCH GP–FIRST, THIRD

S/N: J2Y1-UP

PART OF 290-1257 TRANSMISSION AR

SMCS-3155 **i03900129**

NOTE	REF NO	GRAPHIC REF	PART NUMBER	QTY	PART NAME 1 2 3 4 5 6 (PRODUCT LEVEL)	SEE PAGE
	1	1	**267-4734**	3	RING-SEAL	
	2	1	**8C-3982**	2	RING-RETAINING	
	3	1	**8C-3979**	1	RING-RETAINING	
	4	1	**9W-7765**	1	GEAR (40-TEETH)	
	5	1	**109-4728**	1	HUB AS	
		1	**2W-1141**	1	BEARING-ROLLER	
		1	**7X-2495**	1	RING-RETAINING	
	6	1	**9W-9718**	1	RETAINER-SPRING	
	7	1	**6Y-7818**	1	SPRING	
	8	1	**9W-9372**	1	RING-SEAL	
	9	1	**6Y-8157**	1	PISTON	
	10	1	**9W-9371**	1	RING-SEAL	
	11	1	**6Y-8265**	1	SEAL AS-BALANCE	
	12	1	**6Y-5027**	1	RING-RETAINING	
	13	1	**9W-6922**	1	WASHER-THRUST	
	14	1	**8E-6117**	1	GEAR (93-TEETH)	
	15	1	**9W-7770**	1	GEAR (50-TEETH)	
	16	1	**9W-6466**	1	WASHER-THRUST (50.97X69.35X3.16-MM THK)	
	17	1	**8E-6558**	1	RACE-ROLLER BEARING	
	18	1	**147-1666**	1	SHAFT AS	
		1	**9W-0718**	2	PLUG	
	19	1	**8E-8317**	2	DISC-THRUST	
	20	1	**6V-2394**	1	RING-RETAINING	
	21	1	**8E-6120**	1	HUB AS	
		1	**8E-3416**	1	BUSHING	
	22	1	**6Y-8514**	1	PLATE-END	
	23	1	**236-2541**	1	RING-RETAINING	
	24	1	**9W-6927**	2	RING-RETAINING	
	25	1	**6Y-7922**	8	DISC-FRICTION	
	26	1	**6Y-8512**	8	PLATE-CLUTCH	
	27	1	**114-1071**	1	PISTON	
	28	1	**132-9623**	1	SPRING-WAVE	
	29	1	**6Y-5631**	5	PLATE-CLUTCH	
	30	1	**6Y-7968**	5	DISC-FRICTION	
	31	1	**270-8670**	1	RING-RETAINING	
	32	1	**8E-5707**	1	PLATE-END	
	33	1	**9W-6904**	1	RING-RETAINING	
	34	1	**8E-8313**	2	DISC-THRUST	
	35	1	**9W-9436**	1	RING-SEAL	
	36	1	**9W-9399**	1	RING-SEAL	

102-7540 **CLUTCH GP** *(contd.)* **i03900129**

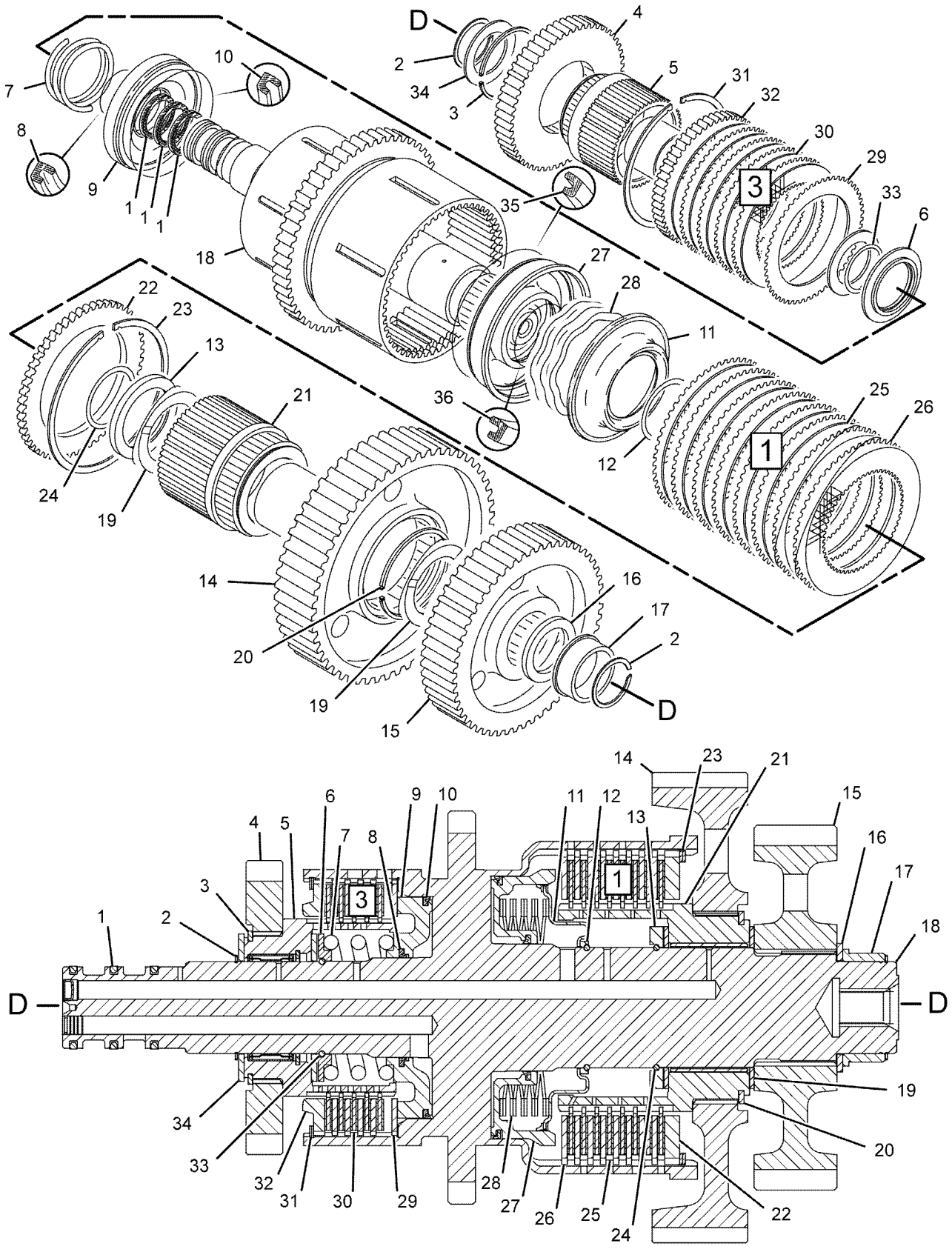

GRAPHIC #1 **<END>** g01060201

102-7548 CLUTCH GP–REVERSE, SECOND

S/N: J2Y1-UP

PART OF 290-1257 TRANSMISSION AR

SMCS-3155 **i02939934**

NOTE	REF NO	GRAPHIC REF	PART NUMBER	QTY	PART NAME 1 2 3 4 5 6 (PRODUCT LEVEL)	SEE PAGE
	1	1	**6I-8390**	3	RING-SEAL	
	2	1	**147-1657**	1	SHAFT AS	
	3	1	**8C-3979**	2	RING-RETAINING	
	4	1	**9W-7761**	1	GEAR (40-TEETH)	
	5	1	**8T-1742**	1	RING-RETAINING	
	6	1	**8E-5726**	1	PLATE-END	
	7	1	**6Y-1300**	6	DISC-FRICTION	
	8	1	**8E-5556**	6	PLATE-CLUTCH	
	9	1	**9W-9372**	2	RING-SEAL	
	10	1	**9W-9371**	1	RING-SEAL	
	11	1	**6Y-5631**	5	PLATE-CLUTCH	
	12	1	**6Y-7968**	5	DISC-FRICTION	
	13	1	**270-8670**	1	RING-RETAINING	
	14	1	**9W-7763**	1	GEAR (36-TEETH)	
	15	1	**9W-6912**	1	SPACER-SPECIAL	
	16	1	**9W-7764**	1	GEAR (33-TEETH)	
	17	1	**6Y-0928**	1	SPACER (36X50X6.5-MM THK)	
	18	1	**6Y-4890**	1	BEARING	
	19	1	**9W-9662**	1	WASHER-THRUST (50.1X80.0X3.0-MM THK)	
	20	1	**109-4728**	1	HUB AS	
		1	**2W-1141**	1	BEARING-ROLLER	
		1	**7X-2495**	1	RING-RETAINING	
	21	1	**8E-5707**	1	PLATE-END	
	22	1	**9W-6904**	2	RING-RETAINING	
	23	1	**9W-9718**	1	RETAINER-SPRING	
	24	1	**6Y-7818**	2	SPRING	
	25	1	**6Y-8157**	1	PISTON	
	26	1	**8E-5728**	1	RING-SEAL	
	27	1	**8E-5831**	1	PISTON	
	28	1	**8E-5727**	1	RETAINER-SPRING	
	29	1	**109-4727**	1	HUB AS	
		1	**2W-1141**	1	BEARING-ROLLER	
		1	**7X-2495**	1	RING-RETAINING	
	30	1	**8E-8313**	4	DISC-THRUST	
	31	1	**8C-3982**	1	RING-RETAINING	

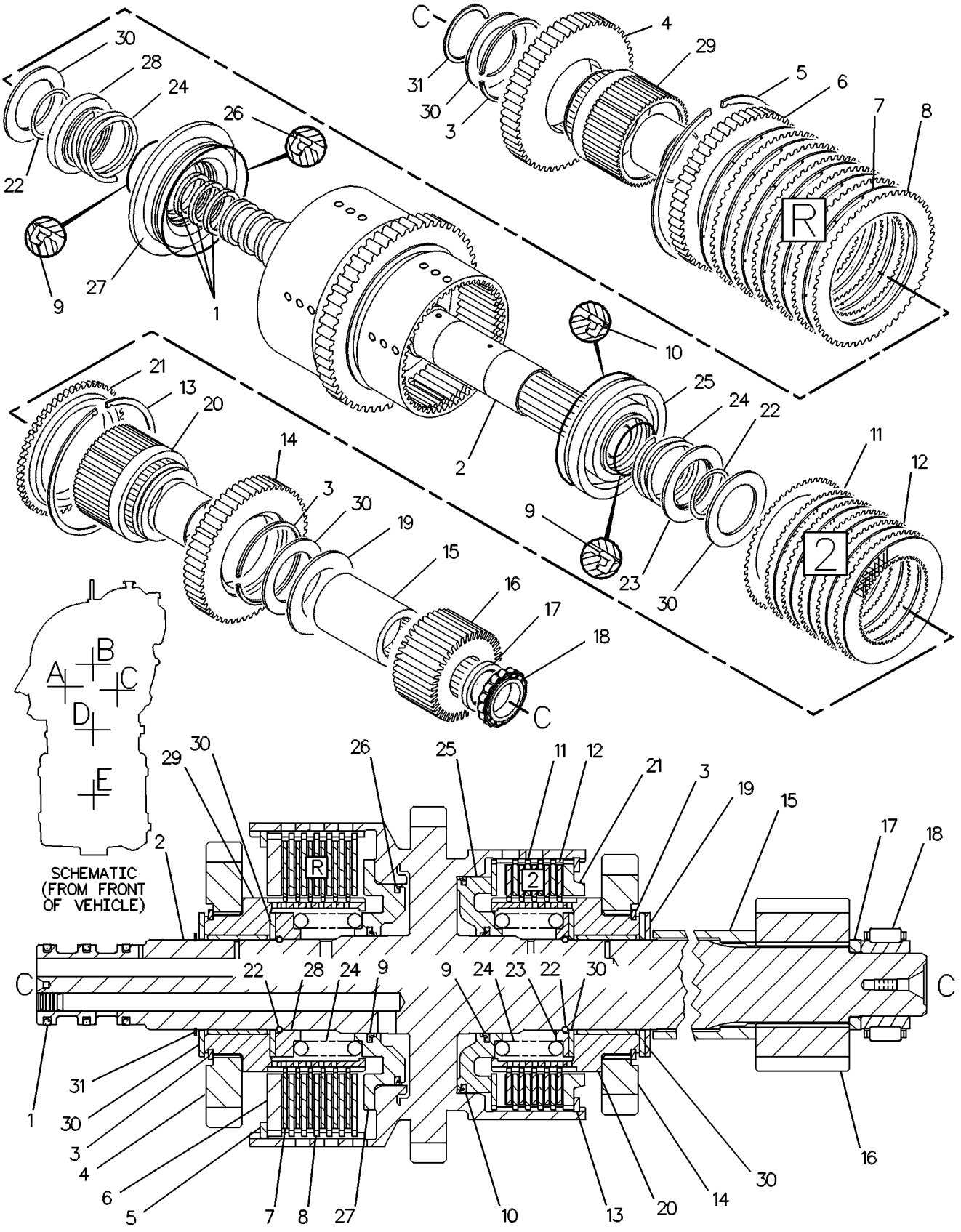

GRAPHIC #1 **<END>** g00129156

146-6283 CLUTCH GP—FORWARD HIGH, FORWARD LOW

S/N: J2Y1-UP

PART OF 290-1257 TRANSMISSION AR

SMCS-3155 **i03900133**

NOTE	REF NO	GRAPHIC REF	PART NUMBER	QTY	PART NAME 1 2 3 4 5 6 (PRODUCT LEVEL)	SEE PAGE
	1	1,2	**267-4734**	3	RING-SEAL	
	2	1,2	**147-1656**	1	SHAFT AS	
		1,2	**9W-0718**	2	PLUG	
	3	1,2	**8C-3982**	2	RING-RETAINING	
	4	1,2	**9W-7761**	1	GEAR (40-TEETH)	
	5	1,2	**8T-1742**	1	RING-RETAINING	
	6	1,2	**8E-5726**	1	PLATE-END	
	7	1,2	**6Y-1300**	6	DISC-FRICTION	
	8	1,2	**8E-5556**	6	PLATE-CLUTCH	
	9	1,2	**9W-9372**	2	RING-SEAL	
	10	1,2	**9W-9371**	1	RING-SEAL	
	11	1,2	**6Y-5631**	4	PLATE-CLUTCH	
	12	1,2	**6Y-7968**	4	DISC-FRICTION	
	13	1,2	**270-8670**	1	RING-RETAINING	
	14	1,2	**8E-5707**	1	PLATE-END	
	15	1,2	**8E-8313**	4	DISC-THRUST	
	16	1,2	**8C-3979**	1	RING-RETAINING	
	17	1,2	**141-9917**	1	GEAR AS (33-TEETH)	
		1,2	**2W-1141**	1	BEARING-ROLLER	
		1,2	**7X-2495**	1	RING-RETAINING	
	18	1,2	**9W-6904**	2	RING-RETAINING	
	19	1,2	**9W-9718**	1	RETAINER-SPRING	
	20	1,2	**6Y-7818**	2	SPRING	
	21	1,2	**6Y-8157**	1	PISTON	
	22	1,2	**8E-5728**	1	RING-SEAL	
	23	1,2	**8E-5831**	1	PISTON	
	24	1,2	**8E-5727**	1	RETAINER-SPRING	
	25	1,2	**109-4727**	1	HUB AS	
		1,2	**2W-1141**	1	BEARING-ROLLER	
		1,2	**7X-2495**	1	RING-RETAINING	

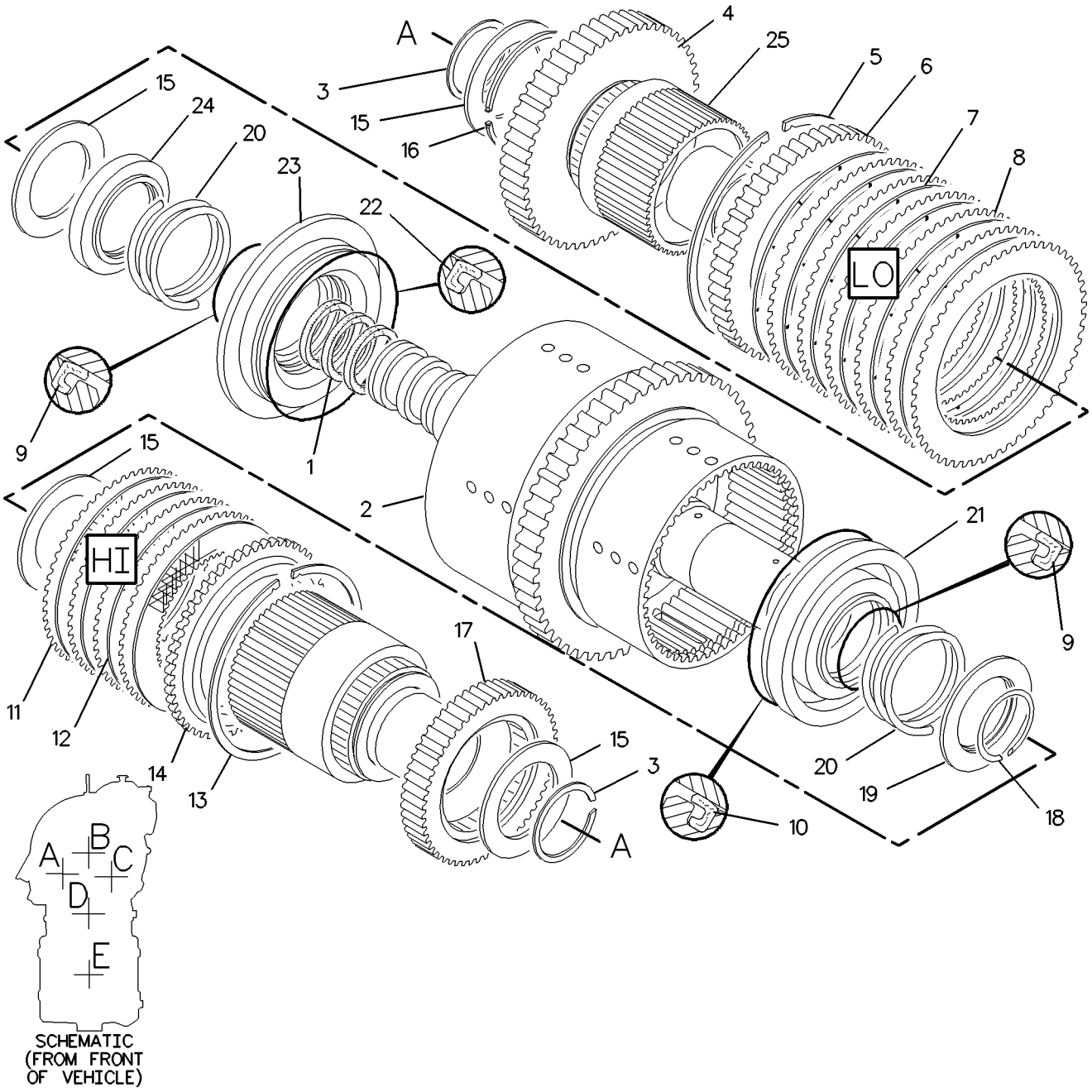

GRAPHIC #1 g00914598

146-6283 **CLUTCH GP** *(contd.)* **i03900133**

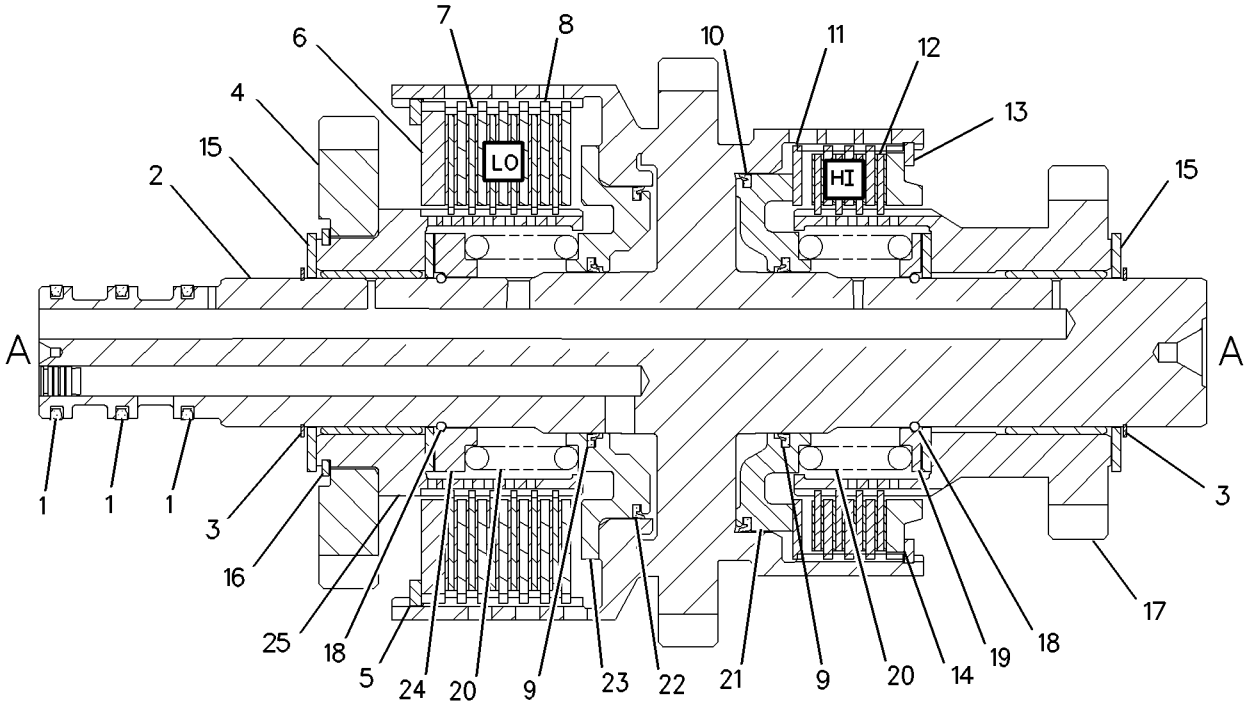

GRAPHIC #2 **<END>** g00922403

185-1028 COOLER GP-AXLE OIL

S/N: JRL1-UP; RRS1-UP
PART OF 323-1653 LINES GP-AXLE OIL COOLER
AN ATTACHMENT

SMCS-1365 **i02238861**

NOTE	REF NO	GRAPHIC REF	PART NUMBER	QTY	PART NAME 1 2 3 4 5 6 (PRODUCT LEVEL)	SEE PAGE
	1	1	**185-1039**	1	BRACKET AS	
M		1	**8T-3612**	2	NUT-WELD (M8X1.25-THD)	
	2	1	**205-3652**	1	CORE AS-AXLE OIL COOLER	
M	3	1	**8T-4189**	2	BOLT (M8X1.25X20-MM)	
	4	1	**8T-4224**	4	WASHER-HARD (8.8X16X2-MM THK)	
M	5	1	**8T-4908**	2	BOLT (M8X1.25X25-MM)	

M-METRIC PART

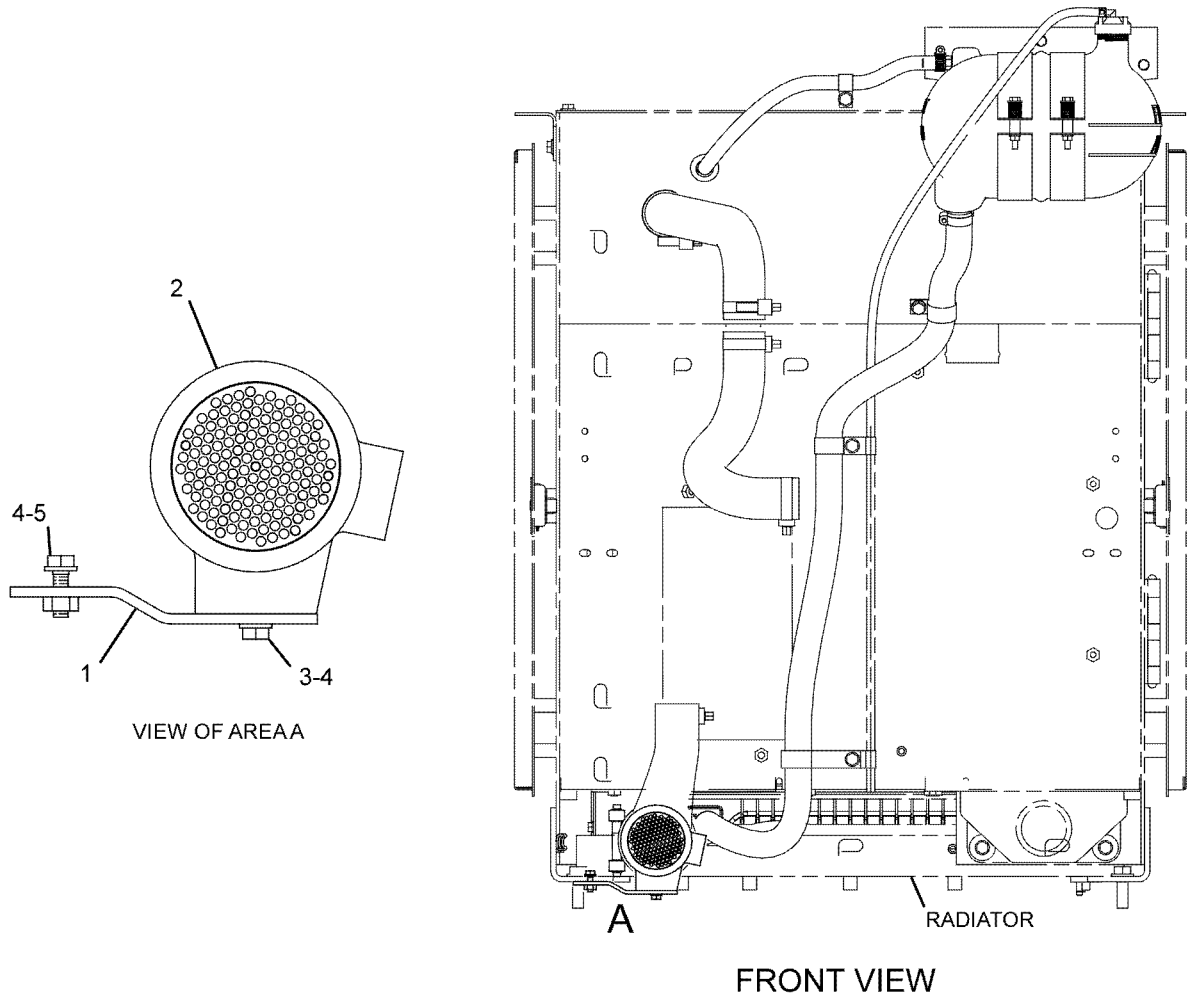

GRAPHIC #1

<END>

g01088727

177-0019 COVER GP-TRANSMISSION

S/N: J2Y1-UP

PART OF 293-6018 CASE & PARTS GP-TRANSMISSION

SMCS-3030 **i01822568**

NOTE	REF NO	GRAPHIC REF	PART NUMBER	QTY	PART NAME 1 2 3 4 5 6 (PRODUCT LEVEL)	SEE PAGE
	1	1	**200-2045**	1	COVER	
	2	1	**7T-6496**	2	PLUG	
	3	1	**6Y-0869**	4	PLUG	
	4	1	**8T-5353**	2	DOWEL	
	5	1	**9S-8008**	4	PLUG-O-RING	
	6	1	**3D-2824**	4	SEAL-O-RING	
	7	1	**9W-6068**	1	PLUG	

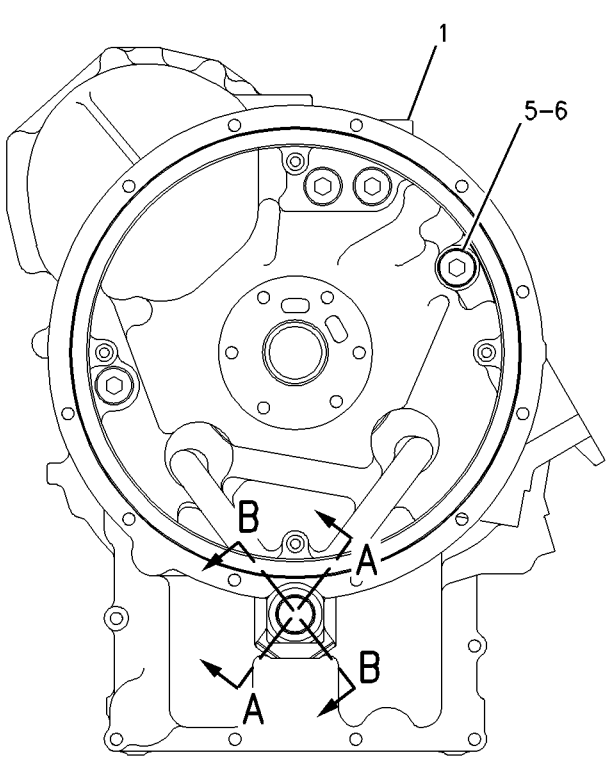

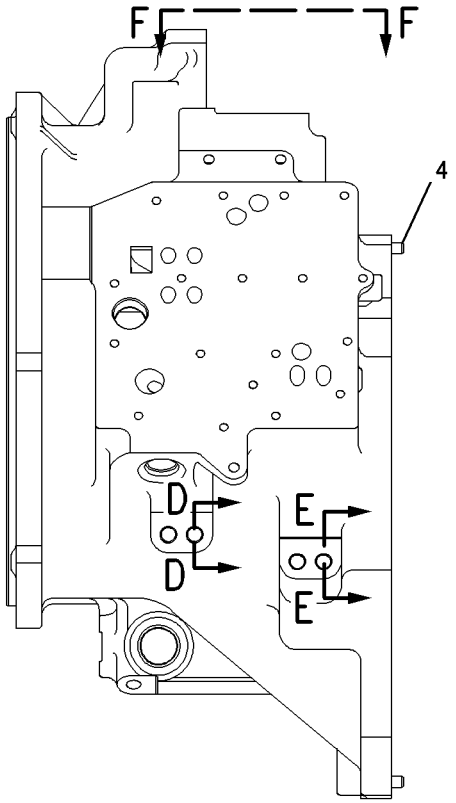

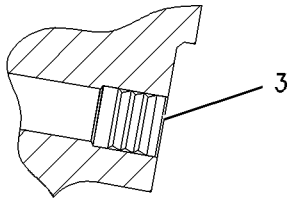

SECTION D-D

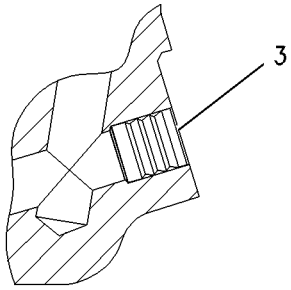

SECTION E-E

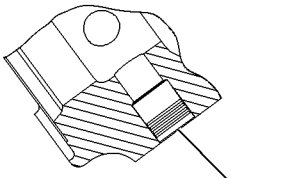

SECTION B-B

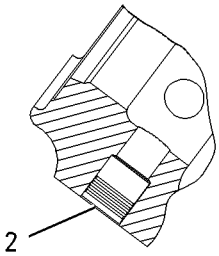

SECTION A-A

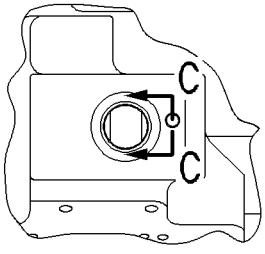

VIEW F-F

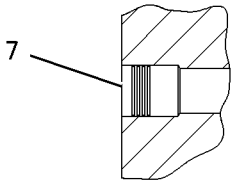

SECTION C-C

GRAPHIC #1 **<END>** g00921862

138-1612 DIFFERENTIAL GP–STANDARD

S/N: JRL1-UP; RRS1-UP

PART OF 138-1615 AXLE AR-FIXED, 267-7368 AXLE AR-OSCILLATING

ALSO AN ATTACHMENT

SMCS-3258 **i02560411**

NOTE	REF NO	GRAPHIC REF	PART NUMBER	QTY	PART NAME 1 2 3 4 5 6 (PRODUCT LEVEL)	SEE PAGE
	1	1	**8R-2538**	1	CASE-DIFFERENTIAL	
	2	1	**8R-1705**	2	GEAR-DIFFERENTIAL BEVEL (16-TEETH)	
	3	1	**9C-5040**	2	WASHER-THRUST (64.5X110.5X3.05-MM THK)	
	4	1	**8R-1703**	2	PINION-DIFFERENTIAL BEVEL (10-TEETH)	
	5	1	**6K-5614**	1	DOWEL	
	6	1	**8R-2211**	2	BEARING-SLEEVE	
	7	1	**8R-2212**	1	SPACER (29.4X34.9X82.0-MM THK)	
	8	1	**7V-8317**	1	SHAFT	
	9	1	**217-3680**	2	WASHER-THRUST	

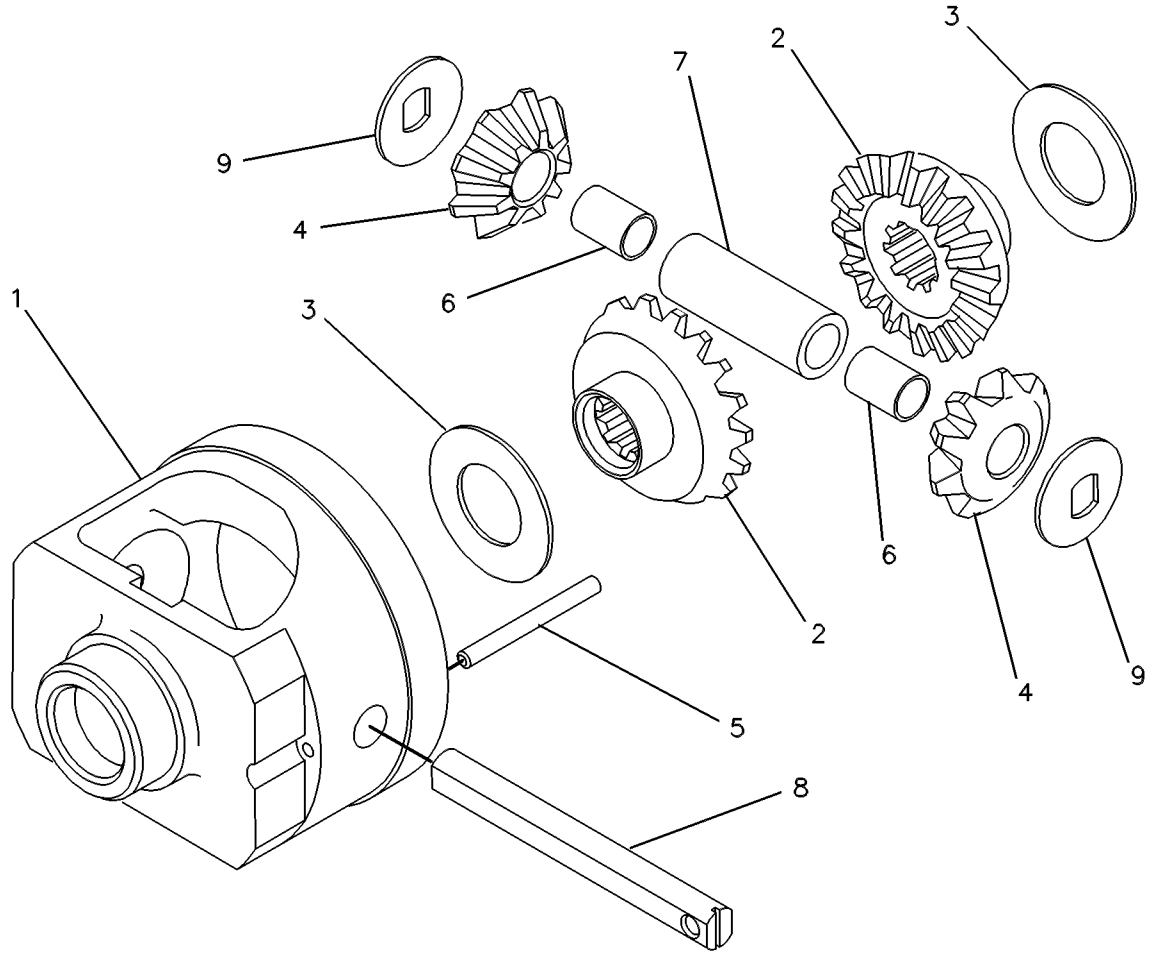

GRAPHIC #1 **<END>** g00130479

206-9670 DIFFERENTIAL GP-LIMITED SLIP

S/N: JRL1-UP; RRS1-UP
PART OF 267-7372 AXLE AR-OSCILLATING
AN ATTACHMENT

SMCS-3263 **i03571141**

NOTE	REF NO	GRAPHIC REF	PART NUMBER	QTY	PART NAME 1 2 3 4 5 6 (PRODUCT LEVEL)	SEE PAGE
	1	1	**104-6747**	2	GEAR-DIFFERENTIAL BEVEL (16-TEETH)	
	2	1	**104-6749**	4	PINION-DIFFERENTIAL BEVEL (9-TEETH)	
	3	1	**104-6750**	2	SHAFT-PINION	
	4	1	**104-6751**	2	HOUSING-ACTUATOR	
	5	1	**206-9672**	2	KIT-DISC (THIN)	
	6	1	**206-9673**	2	KIT-DISC (THICK)	
	7	1	**104-6754**	1	WASHER-THRUST (48.5X65.28X3.96-MM THK)	
	8	1	**104-6755**	1	CASE AS	
	9	1	**104-6757**	1	WASHER-THRUST (48.5X65.28X3.96-MM THK)	

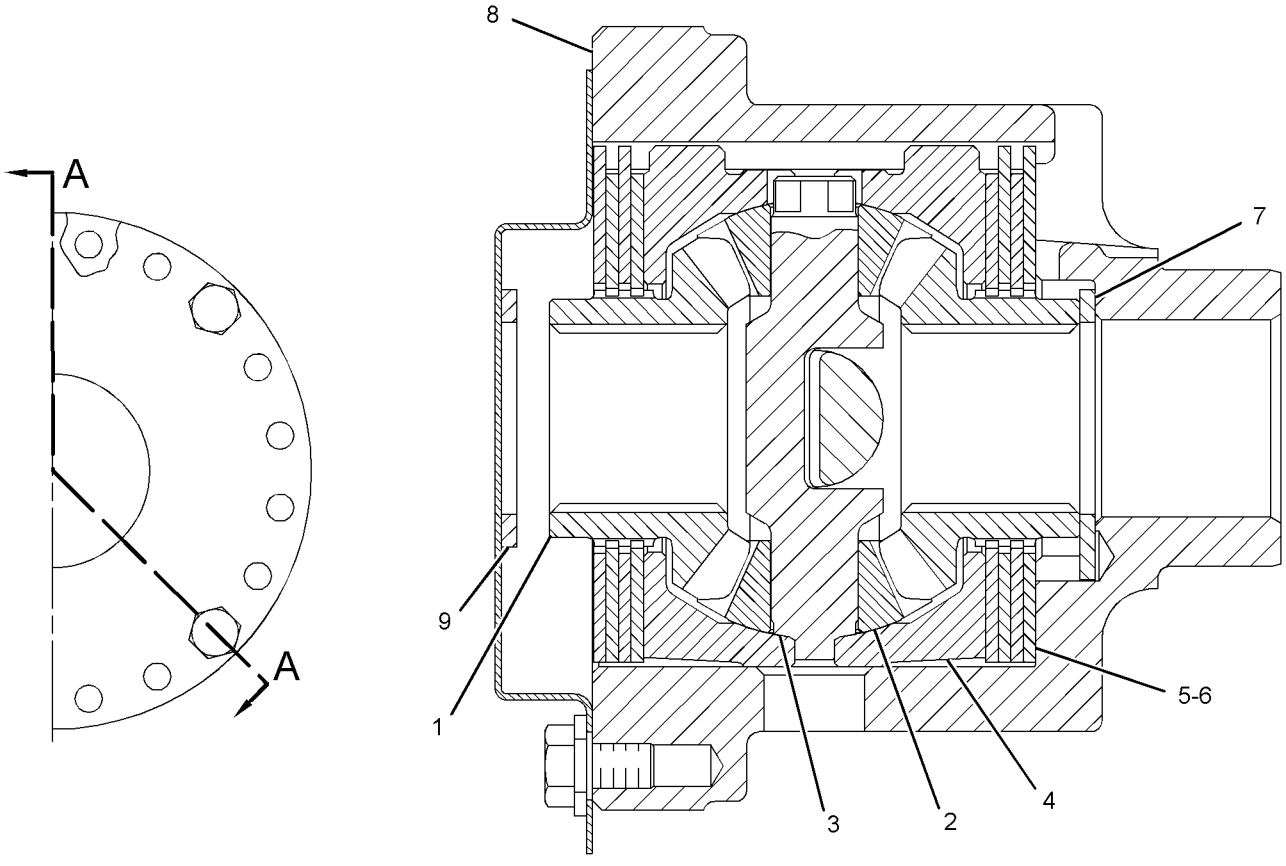

SECTION A-A

GRAPHIC #1 **<END>** g01905661

141-8615 DRIVE GP-FLEXIBLE COUPLING

S/N: J2Y1-UP

PART OF 290-1257 TRANSMISSION AR

SMCS-3252 **i03117786**

NOTE	REF NO	GRAPHIC REF	PART NUMBER	QTY	PART NAME 1 2 3 4 5 6 (PRODUCT LEVEL)	SEE PAGE
	1	1	**136-4595**	1	PLATE AS	
M	2	1	**6V-8212**	6	BOLT (M10X1.5X16-MM)	
	3	1	**6V-5839**	6	WASHER (11X21X2.5-MM THK)	
	4	1	**136-4593**	1	PLATE	

M-METRIC PART

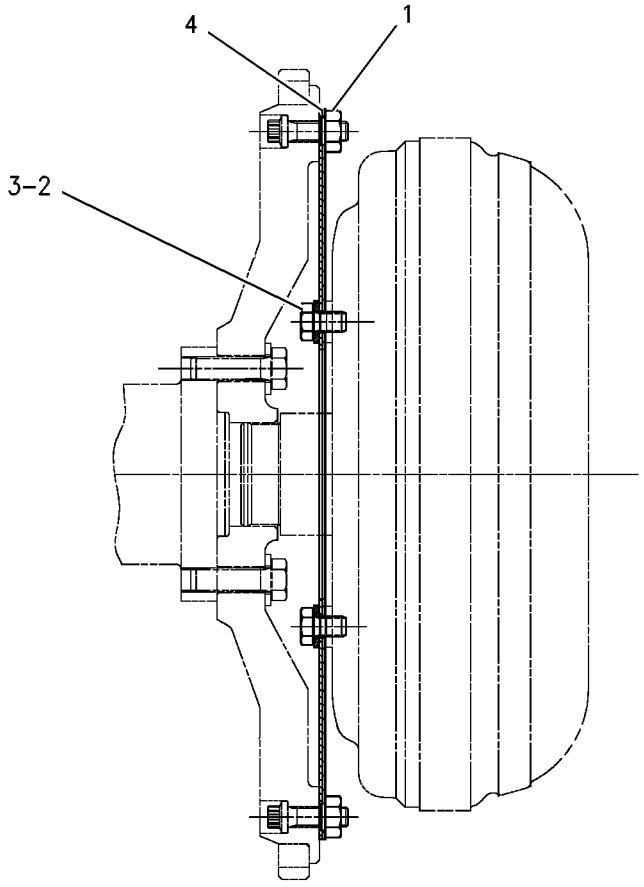

GRAPHIC #1 **<END>** g00572183

146-6274 DRIVE GP-PUMP–TRANSMISSION

S/N: J2Y1-UP

PART OF 290-1257 TRANSMISSION AR

SMCS-3108 **i03202142**

NOTE	REF NO	GRAPHIC REF	PART NUMBER	QTY	PART NAME 1 2 3 4 5 6 (PRODUCT LEVEL)	SEE PAGE
M	1	1	**6V-5683**	4	BOLT (M6X1X16-MM)	
	2	1	**2L-0043**	1	RING-RETAINING	
	3	1	**146-6275**	1	SUPPORT AS-BEARING	
	3A	1	**8E-8425**	2	BEARING-SLEEVE	
	4	1	**141-6821**	1	GEAR-DRIVE (72-TEETH)	
	5	1	**146-6277**	1	SUPPORT-STATOR	
	6	1	**5L-4753**	1	RING-RETAINING	
	7	1	**106-7799**	1	BALL BEARING	

M-METRIC PART

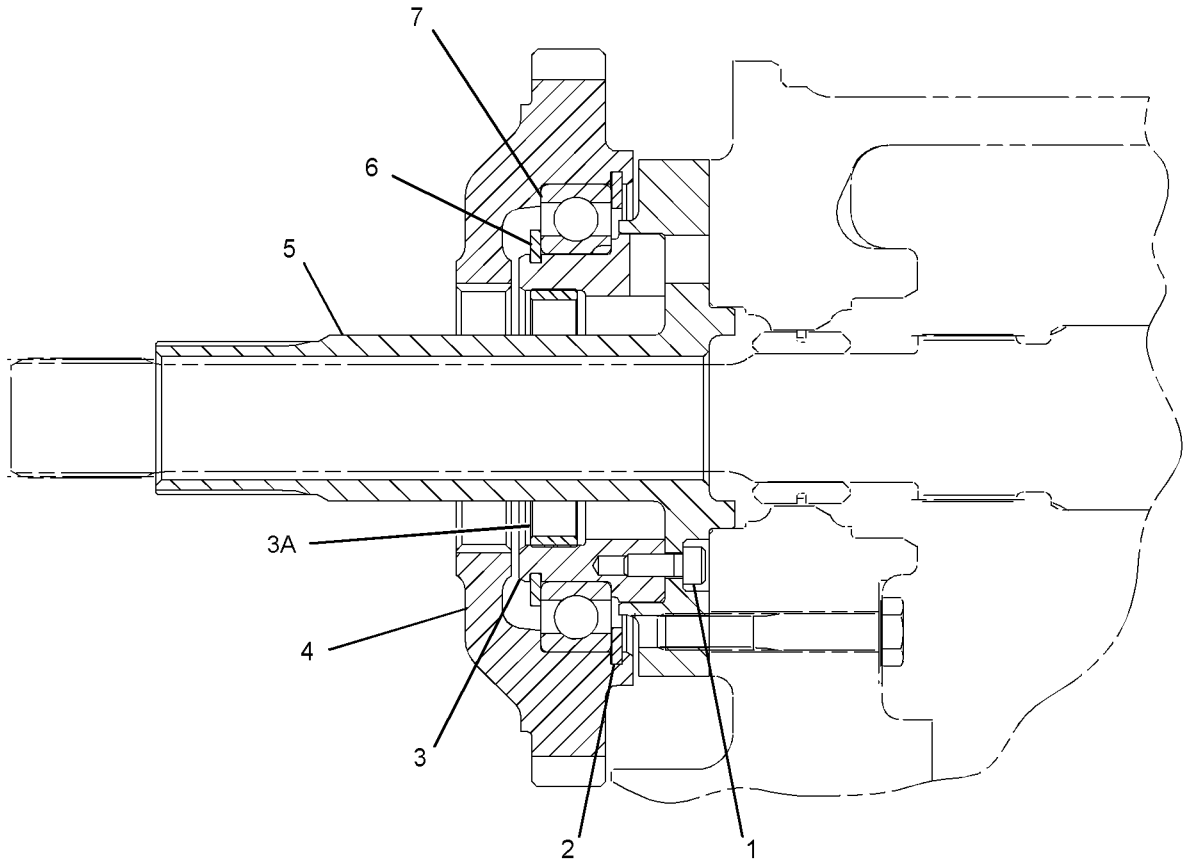

GRAPHIC #1 **<END>** g01634400

293-2837 FILLER GP-POWER TRAIN OIL

S/N: JRL1-UP; RRS1-UP
PART OF 289-8815 POWER TRAIN AR

SMCS-3005, 3081 **i04515789**

NOTE	REF NO	GRAPHIC REF	PART NUMBER	QTY	PART NAME 1 2 3 4 5 6 (PRODUCT LEVEL)	SEE PAGE
	1	1	**246-2641**	1	PADLOCK GP	
		1	**5P-8500**	1	KEY	
	2	1	**137-6727**	1	CAP-FILL (POWER TRAIN OIL)	
	3	1	**143-7899**	1	HOSE	
	4	1	**293-2838**	1	TUBE AS	
	5	1	**293-2839**	1	TUBE AS	
	6	1	**4J-0523**	1	SEAL-O-RING	
	7	1	**5P-7468**	1	CLIP (SLOT)	
	8	1	**5P-7469**	1	CLIP (TAB)	
	9	1	**8T-2525**	1	GROMMET	
	10	1	**7X-7729**	1	WASHER (11X25X3-MM THK)	
	11	1	**8T-4121**	2	WASHER-HARD (11X21X2.5-MM THK)	
M	12	1	**8T-4136**	1	BOLT (M10X1.5X25-MM)	
M	13	1	**8T-4196**	2	BOLT (M10X1.5X35-MM)	
	14	1	**8T-6703**	2	CLAMP-HOSE	

M-METRIC PART

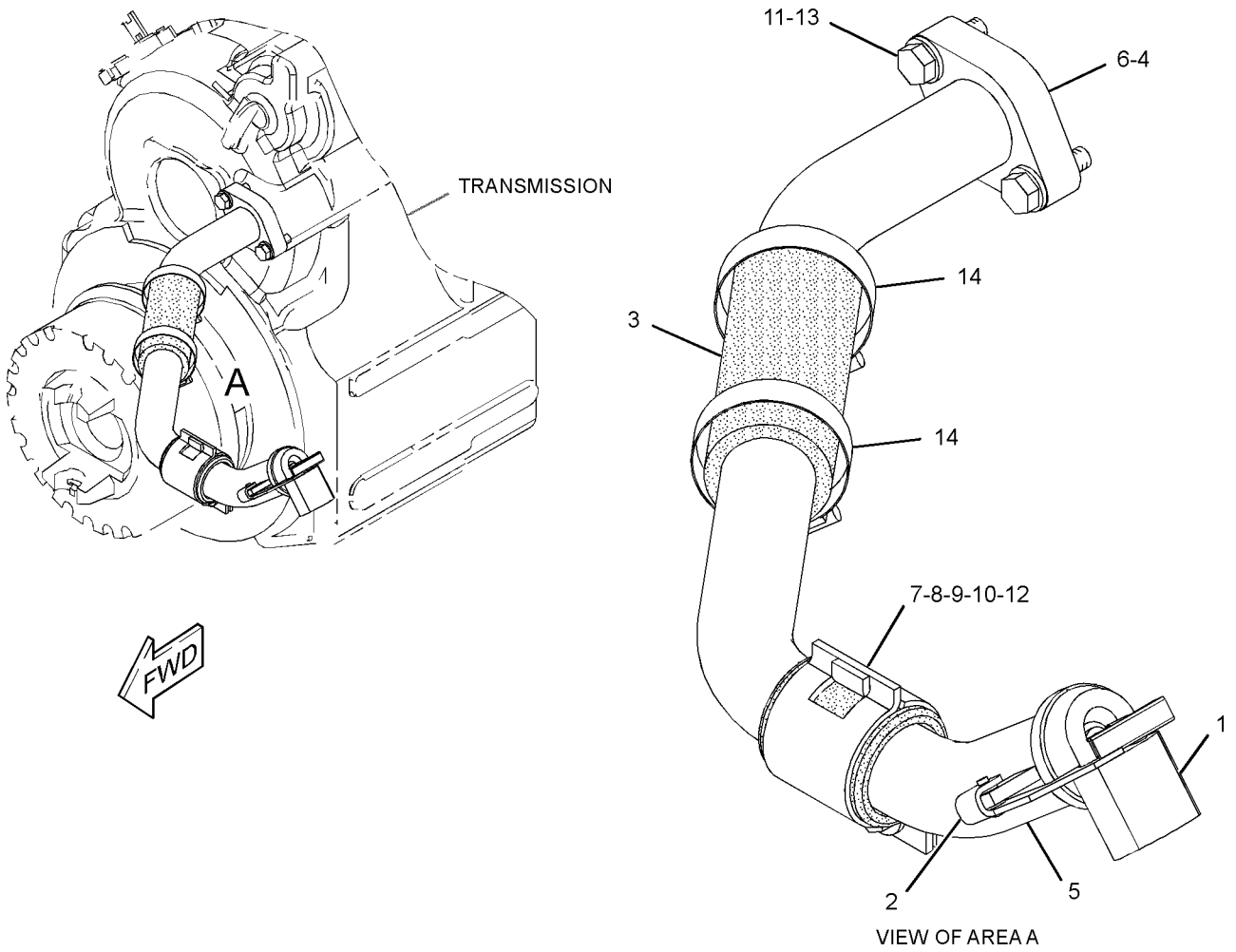

GRAPHIC #1 **<END>** g01560415

290-7186 FILTER & LINES GP-TRANSMISSION

S/N: JRL1-UP; RRS1-UP
PART OF 289-8815 POWER TRAIN AR

SMCS-3067, 3154 **i03629365**

NOTE	REF NO	GRAPHIC REF	PART NUMBER	QTY	PART NAME 1 2 3 4 5 6 (PRODUCT LEVEL)	SEE PAGE
	1	1	**6V-0852**	1	CAP-DUST (TRANSMISSION OIL)	
	2	1	**8C-3447**	1	CAP-DUST (TRANSMISSION OIL)	
I	3	1	**8Y-0711**	1	HOSE AS	
	4	1	*164-6874*	1	FITTING AS-ELBOW	
		1	**3J-1907**	1	SEAL-O-RING	
		1	**085-7356**	1	FITTING	
Y	5	1	**226-2869**	1	FILTER GP-OIL (POWER TRAIN)	198
I	6	1	**293-2467**	1	HOSE AS	
	7	1	*148-8327*	1	CONNECTOR AS	
		1	**3D-2824**	1	SEAL-O-RING	
		1	**6V-8637**	1	CONNECTOR	
		1	**6V-9746**	1	SEAL-O-RING	
	8	1	*148-8347*	2	ELBOW AS	
					(EACH INCLUDES)	
		1	**3D-2824**	1	SEAL-O-RING	
		1	**6V-9007**	1	ELBOW	
		1	**6V-9746**	1	SEAL-O-RING	
	9	1	*164-5567*	1	COUPLER AS-QUICK DISCONNECT (MALE)	
		1	**214-7568**	1	SEAL-O-RING	
		1	**6V-3965**	1	FITTING (QUICK DISCONNECT)	
	10	1	**1P-4576**	2	FLANGE-HALF	
	11	1	**8D-9947**	1	CLIP	
	12	1	**4J-5267**	1	SEAL-O-RING	
	13	1	**8T-4121**	8	WASHER-HARD (11X21X2.5-MM THK)	
M	14	1	**8T-4137**	4	BOLT (M10X1.5X20-MM)	
M	15	1	**8T-4196**	4	BOLT (M10X1.5X35-MM)	
	16	1	**8T-4223**	1	WASHER-HARD (13.5X25.5X3-MM THK)	
M	17	1	**8T-6868**	1	BOLT (M12X1.75X80-MM)	
	18	1	**4W-3753**	1	SPACER (13.5X25X38.1-MM THK)	

I-REFER TO HYDRAULIC INFORMATION SYSTEM
M-METRIC PART
Y-SEPARATE ILLUSTRATION

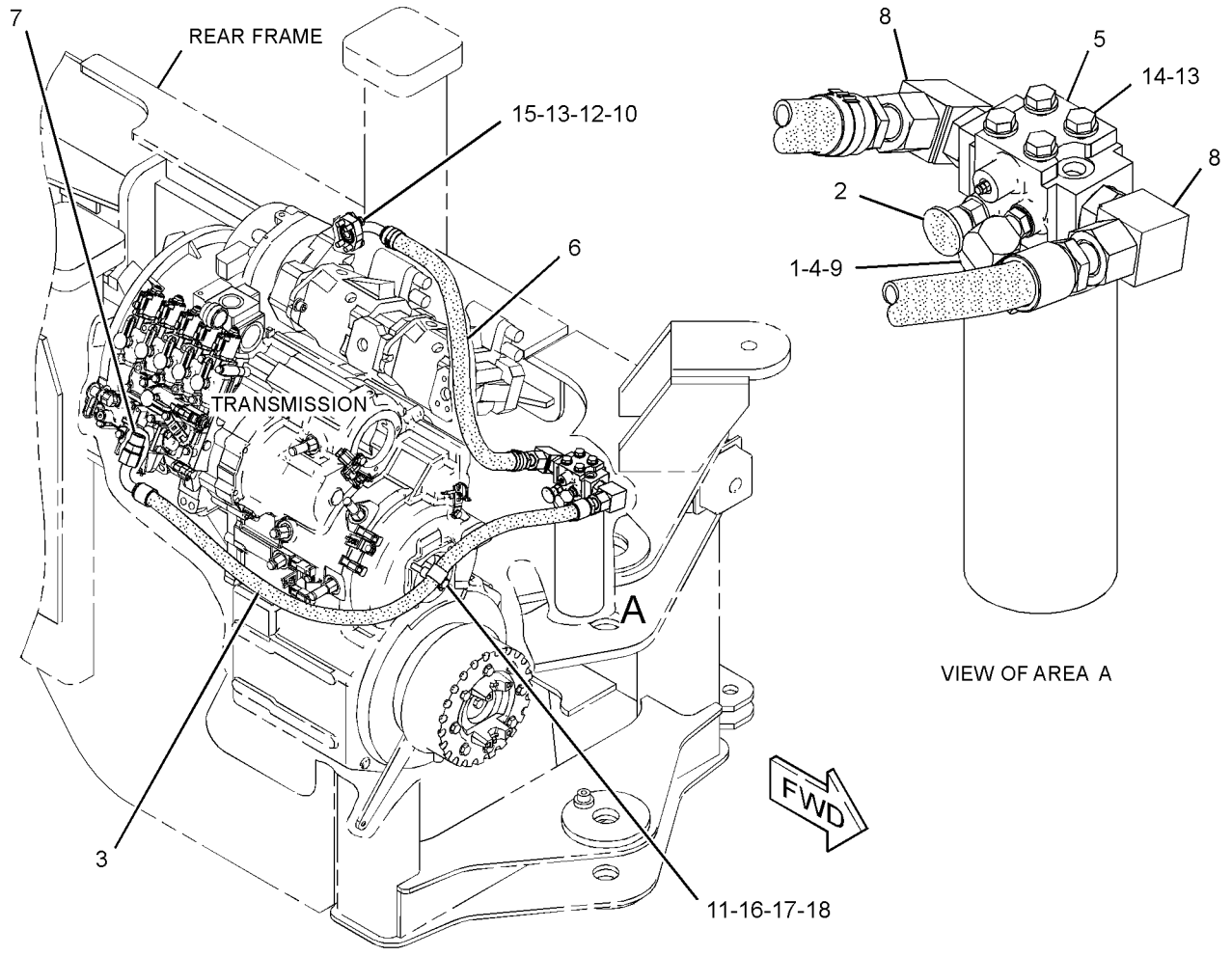

GRAPHIC #1 **<END>** g01393427

226-2869 FILTER GP-OIL

S/N: JRL1-UP; RRS1-UP

PART OF 290-7186 FILTER & LINES GP-TRANSMISSION

SMCS-3004, 3067 **i04337971**

NOTE	REF NO	GRAPHIC REF	PART NUMBER	QTY	PART NAME 1 2 3 4 5 6 (PRODUCT LEVEL)	SEE PAGE
	1	1	**341-6643**	1	FILTER ELEMENT-OIL (ADVANCED EFFICIENCY) (POWER TRAIN)	
	2	1	**134-0404**	1	SWITCH AS-PRESSURE (POWER TRAIN OIL FILTER BYPASS)	
	3	1	**3J-1907**	1	SEAL-O-RING	
	4	1	**3J-7354**	1	SEAL-O-RING	
	5	1	**8C-3446**	1	VALVE-FLUID SAMPLING (POWER TRAIN OIL)	

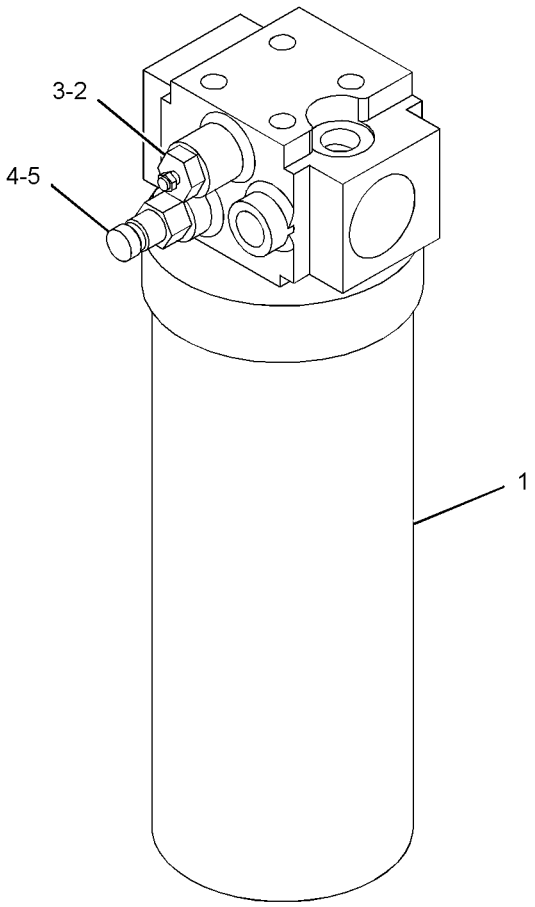

GRAPHIC #1 **<END>** g01410460

304-9464 GAUGE GP-SIGHT–POWER TRAIN OIL

S/N: JRL1-UP; RRS1-UP

PART OF 289-8815 POWER TRAIN AR

SMCS-7479 **i03039635**

NOTE	REF NO	GRAPHIC REF	PART NUMBER	QTY	PART NAME 1 2 3 4 5 6 (PRODUCT LEVEL)	SEE PAGE
	1	1	**122-8353**	2	BOLT (M12X46.5-MM)	
	2	1	**5J-2974**	4	SEAL-O-RING	

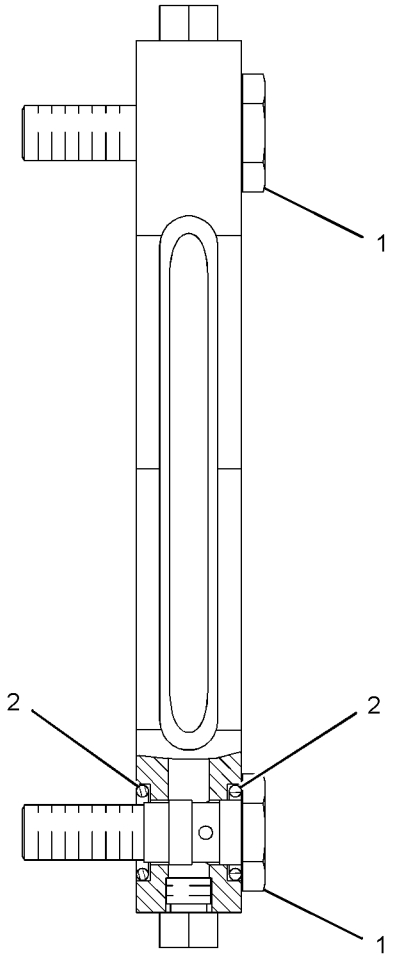

GRAPHIC #1 **<END>** g01438921

138-1611 GEAR GP-BEVEL & PINION–REAR

S/N: JRL1-UP; RRS1-UP
PART OF 267-7368 AXLE AR-OSCILLATING
AN ATTACHMENT

SMCS-3254, 3256 **i04022241**

NOTE	REF NO	GRAPHIC REF	PART NUMBER	QTY	PART NAME 1 2 3 4 5 6 (PRODUCT LEVEL)	SEE PAGE
	1	1	**9S-7949**	1	CUP-BEARING	
	2	1	**9S-7950**	1	CONE-BEARING	
	3	1	**9C-7292**	1	NUT-BEARING	
M	4	1	**6V-8210**	1	BOLT (M8X1.25X16-MM)	
	5	1	**109-5502**	1	LOCK-BEARING	
C	6	1	**306-5424**	1	BEARING AS	
M	7	1	**7X-3350**	20	BOLT-LOCKING (M12X1.75X35-MM)	
	8	1	**4L-7249**	1	CUP-BEARING	
	9	1	**6V-7527**	1	CONE-BEARING	
	10	1	**221-7117**	1	YOKE AS	
		1	**153-0702**	1	GUARD	
M	11	1	**9C-5206**	1	NUT-STAKE	
	12	1	**8R-2236**	1	WASHER (48.5X82.5X4-MM THK)	
	13	1	**138-1640**	1	GEAR SET-BEVEL	
	14	1	**7D-8636**	1	CONE-BEARING	
	15	1	**7D-8637**	1	CUP-BEARING	

C-CHANGE FROM PREVIOUS TYPE
M-METRIC PART

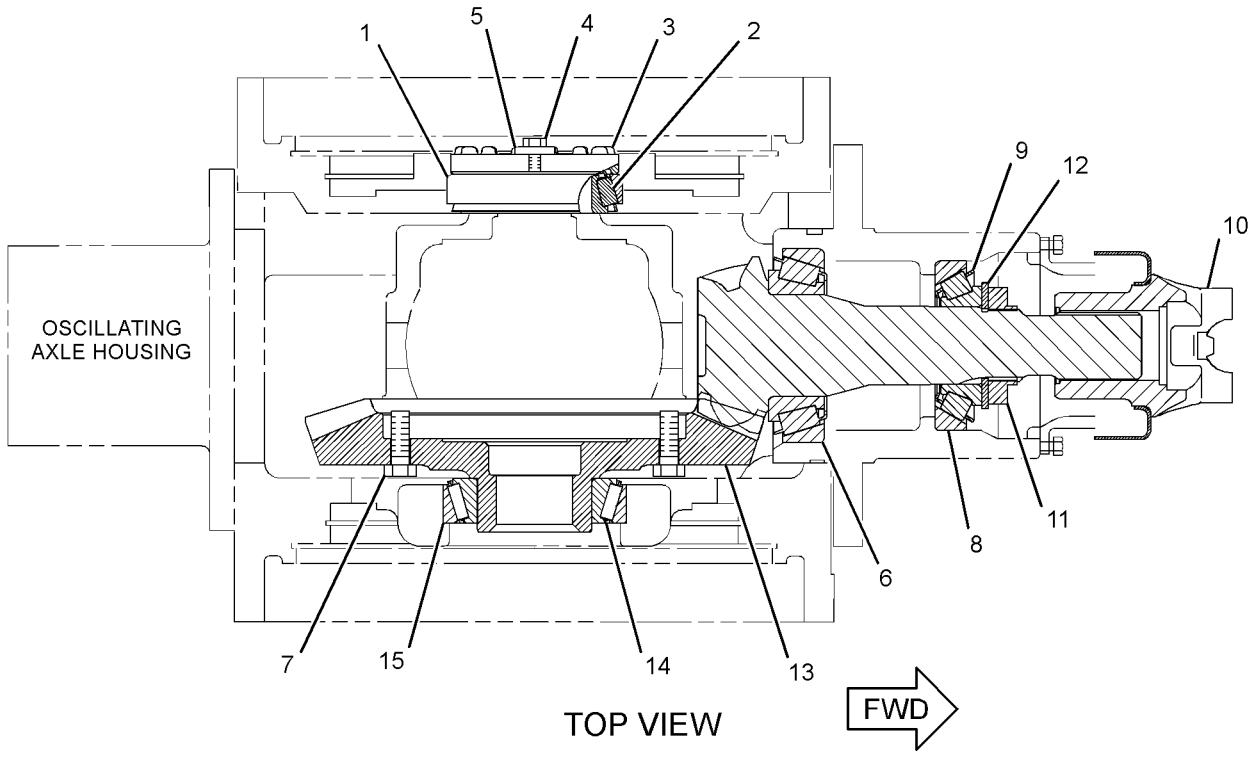

GRAPHIC #1 **<END>** g02200074

138-1617 GEAR GP-BEVEL & PINION–FRONT

S/N: JRL1-UP; RRS1-UP

PART OF 138-1615 AXLE AR-FIXED

SMCS-3254, 3256 **i03629316**

NOTE	REF NO	GRAPHIC REF	PART NUMBER	QTY	PART NAME 1 2 3 4 5 6 (PRODUCT LEVEL)	SEE PAGE
	1	1	**9S-7949**	1	CUP-BEARING	
	2	1	**9S-7950**	1	CONE-BEARING	
	3	1	**9C-7292**	1	NUT-BEARING	
M	4	1	**6V-8210**	1	BOLT (M8X1.25X16-MM)	
	5	1	**109-5502**	1	LOCK-BEARING	
	6	1	**4F-7389**	1	SEAL-O-RING	
	7	1	**306-5424**	1	BEARING AS	
	8	1	**4L-7249**	1	CUP-BEARING	
	9	1	**6V-7527**	1	CONE-BEARING	
	10	1	**138-1736**	1	YOKE AS	
		1	**153-0702**	1	GUARD	
	11	1	**138-1643**	1	GEAR SET-BEVEL (FIXED)	
	12	1	**7D-8637**	1	CUP-BEARING	
	13	1	**7D-8636**	1	CONE-BEARING	
M	14	1	**7X-3350**	20	BOLT-LOCKING (M12X1.75X35-MM)	
	15	1	**7G-5220**	1	RETAINER	
M	16	1	**6V-5696**	1	BOLT (M12X1.75X80-MM)	
B	17	1	**7I-3003**	1	SHIM PACK (INCLUDES 12-SHIMS)	

B-USE AS REQUIRED
M-METRIC PART

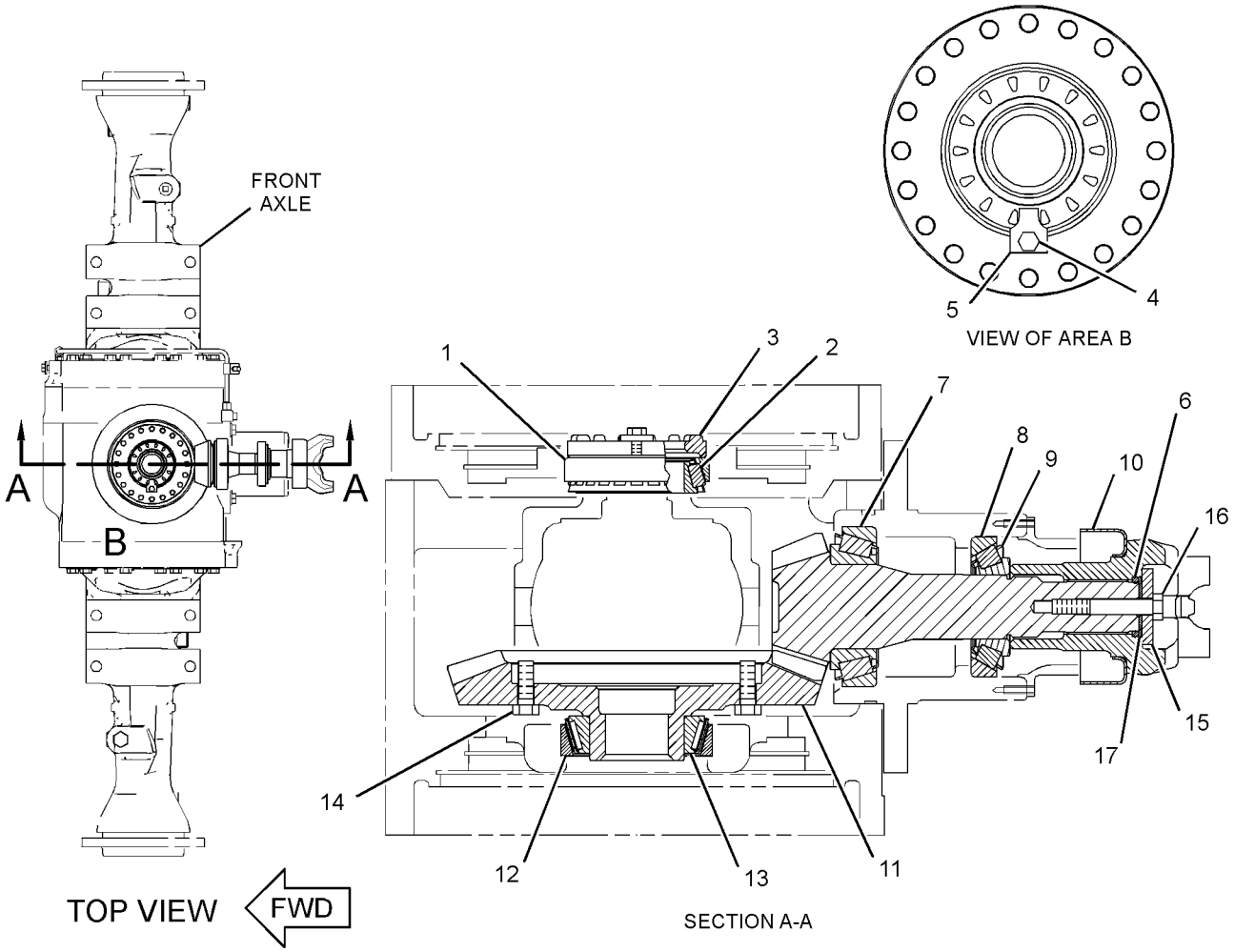

GRAPHIC #1 **<END>** g01947260

138-2777 GEAR GP-BEVEL & PINION–REAR

S/N: JRL1-UP; RRS1-UP
PART OF 267-7372 AXLE AR-OSCILLATING
AN ATTACHMENT

SMCS-3254, 3256 **i03033606**

NOTE	REF NO	GRAPHIC REF	PART NUMBER	QTY	PART NAME 1 2 3 4 5 6 (PRODUCT LEVEL)	SEE PAGE
	1	1	**4L-7249**	1	CUP-BEARING	
	2	1	**6V-7527**	1	CONE-BEARING	
	3	1	**7D-8636**	1	CONE-BEARING	
	4	1	**7D-8637**	1	CUP-BEARING	
	5	1	**8R-2236**	1	WASHER (48.5X82.5X4-MM THK)	
	6	1	**9C-7292**	1	NUT-BEARING	
	7	1	**109-5502**	1	LOCK-BEARING	
	8	1	**147-3624**	1	GEAR SET-BEVEL	
C	9	1	**306-5424**	1	BEARING AS	
	10	1	**221-7117**	1	YOKE AS	
		1	**153-0702**	1	GUARD	
M	11	1	**6V-8210**	1	BOLT (M8X1.25X16-MM)	
M	12	1	**6V-8197**	20	BOLT (M12X1.75X40-MM)	
M	13	1	**9C-5206**	1	NUT-STAKE	
	14	1	**9S-7949**	1	CUP-BEARING	
	15	1	**9S-7950**	1	CONE-BEARING	

C-CHANGE FROM PREVIOUS TYPE
M-METRIC PART

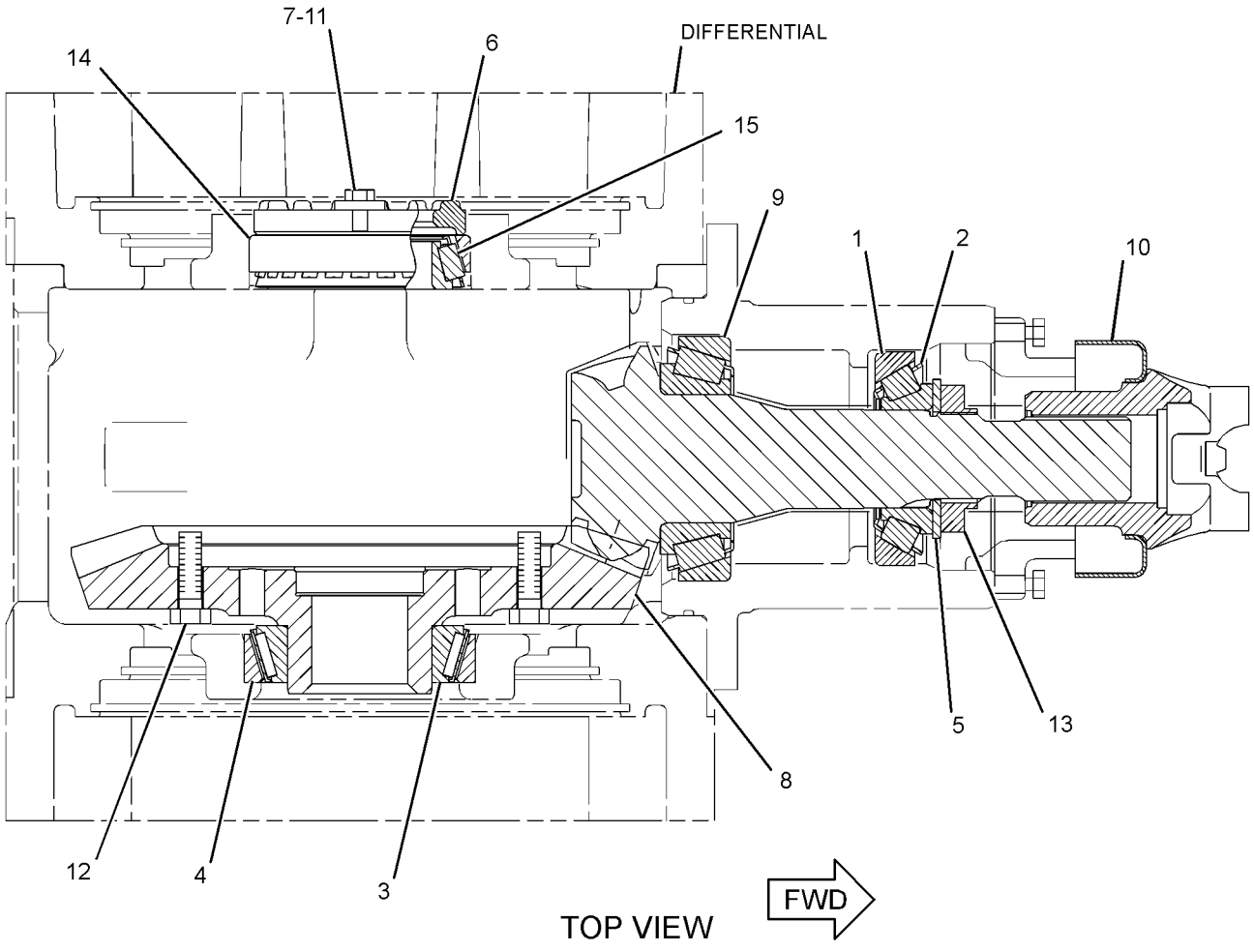

GRAPHIC #1 **<END>** g01418467

146-6282 GEAR GP-INPUT TRANSFER

S/N: J2Y1-UP

PART OF 290-1257 TRANSMISSION AR

SMCS-3159 **i03628629**

NOTE	REF NO	GRAPHIC REF	PART NUMBER	QTY	PART NAME 1 2 3 4 5 6 (PRODUCT LEVEL)	SEE PAGE
	1	1	**141-8619**	1	SHAFT-INPUT	
	2	1	**6Y-8069**	1	CARRIER-SEAL	
	3	1	**2K-5957**	1	RING-SEALING	
	4	1	**9W-7759**	1	GEAR (29-TEETH)	
	5	1	**141-6822**	1	GEAR (47-TEETH)	
	6	1	**005-0471**	2	CONE-BEARING	

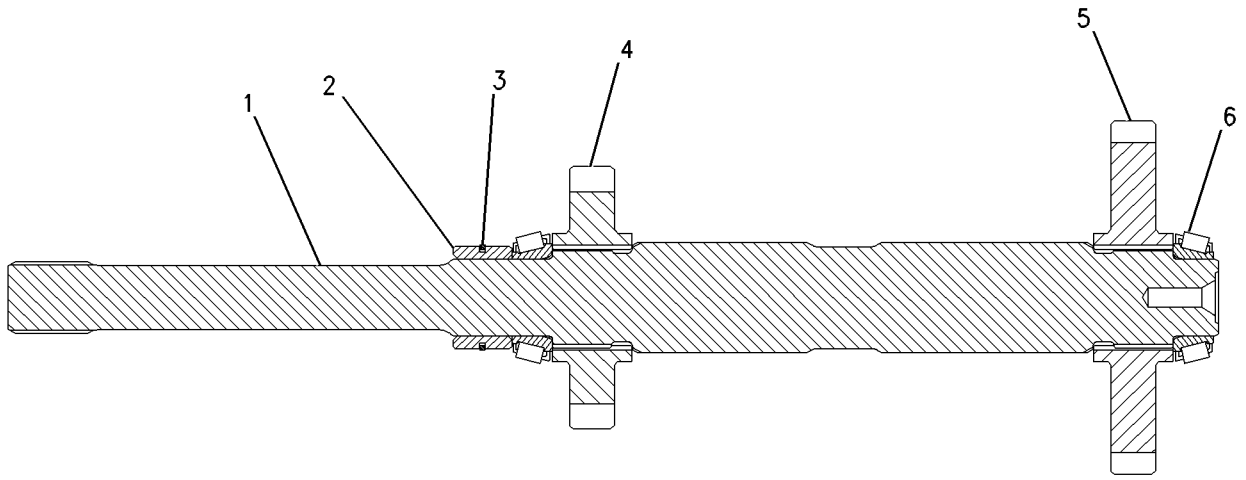

GRAPHIC #1 **<END>** g00632633

POWER TRAIN

293-6017 GEAR GP-OUTPUT TRANSFER

S/N: J2Y1-UP

PART OF 290-1257 TRANSMISSION AR

SMCS-3075, 3159 **i03043503**

NOTE	PART NUMBER	QTY	PART NAME 1 2 3 4 5 6 (PRODUCT LEVEL)	SEE PAGE
Y	**283-9971**	1	BRAKE GP-PARKING	283
	123-9056	1	LEVER AS	
M	**6V-3668**	8	BOLT (M12X1.75X30-MM)	
M	**6V-5696**	2	BOLT (M12X1.75X80-MM)	
M	**6V-8675**	4	BOLT (M12X1.75X35-MM)	
	9U-9551	1	CAGE-BEARING	
	1B-3980	2	CONE-BEARING (TAPERED ROLLER)	
	1B-3978	1	CUP-BEARING (TAPERED ROLLER)	
	8V-7623	1	DRUM-BRAKE	
	9W-7771	1	GEAR (75-TEETH)	
	7G-5220	2	RETAINER	
	8T-3293	1	RING-RETAINING	
	305-2215	1	SEAL-LIP TYPE	
	4F-8824	2	SEAL-O-RING	
	5P-2861	1	SEAL-O-RING	
	116-4858	1	SHAFT	
	5P-8245	12	WASHER-HARD (13.5X25.5X3-MM THK)	
	105-4776	1	YOKE-BRAKE FLANGE	
	105-4775	1	YOKE-OUTPUT	

M-METRIC PART
Y-SEPARATE ILLUSTRATION

<END>

138-1616 HOUSING GP-FIXED AXLE—FRONT

S/N: JRL1-UP; RRS1-UP

PART OF 138-1615 AXLE AR-FIXED

SMCS-3260 **i03629312**

NOTE	REF NO	GRAPHIC REF	PART NUMBER	QTY	PART NAME 1 2 3 4 5 6 (PRODUCT LEVEL)	SEE PAGE
	1	1	**138-1639**	1	HOUSING-FIXED AXLE (CENTER)	
	2	1	**9G-5311**	2	SEAL GP-DUO-CONE	
					(EACH INCLUDES)	
		1	**4K-0173**	2	RING-SEALING	
	3	1	**5P-3723**	2	CONE-BEARING	
	4	1	**6D-7690**	2	CUP-BEARING	
	5	1	**5H-3701**	2	SCREW-PURGE	
	6	1	**203-2776**	1	HOUSING-OSCILLATING AXLE (INTERMEDIATE)	
	7	1	**3B-0551**	1	PLUG-PIPE	
	8	1	**8R-0512**	1	GAUGE AS-OIL LEVEL (DIPSTICK)	
M	9	1	**6C-8648**	16	BOLT (M16X2-THD)	
	10	1	**5P-8247**	32	WASHER-HARD (17X32X3.5-MM THK)	
C	11	1	**165-4929**	1	PLUG AS	
		1	**5P-4484**	1	PLUG-MAGNETIC (AXLE HOUSING)	
		1	**7M-8485**	1	SEAL-O-RING	
M	12	1	**9X-6493**	16	BOLT (M16X2X180-MM)	
	13	1	**138-1635**	2	SHAFT-AXLE	
	14	1	**061-6712**	2	RING-RETAINING	
	15	1	**8R-2532**	2	NUT-BEARING (M85X2-THD)	
	16	1	**6V-0347**	2	CONE-BEARING	
	17	1	**6F-2956**	2	CUP-BEARING	
	18	1	**138-1687**	2	HOUSING-FIXED AXLE (OUTER)	
M	19	1	**6V-8675**	10	BOLT (M12X1.75X35-MM)	
	20	1	**5P-8245**	10	WASHER-HARD (13.5X25.5X3-MM THK)	
B	21	1	**8R-2526**	1	SHIM PACK (INCLUDES 8-SHIMS)	
	22	1	**8F-8733**	1	SEAL-O-RING	
M	23	1	**6V-7732**	6	BOLT (M10X1.5X25-MM)	
	24	1	**9X-2027**	6	WASHER (11X18X2-MM THK)	
	25	1	**216-0102**	1	RETAINER-SEAL	
	26	1	**133-4294**	1	SEAL-LIP TYPE	
M	27	1	**7X-2436**	2	BOLT (M12X1.75X100-MM)	
C	28	1	*148-8406*	2	PLUG AS	
					(EACH INCLUDES)	
		1	**7M-8485**	1	SEAL-O-RING	
		1	**9S-9334**	1	PLUG-O-RING	
	29	1	**153-3013**	1	HOUSING-PINION	
	30	1	**8T-0336**	1	FITTING-PRESSURE RELIEF	

B-USE AS REQUIRED
C-CHANGE FROM PREVIOUS TYPE
M-METRIC PART

138-1616 **HOUSING GP-FIXED AXLE** *(contd.)* **i03629312**

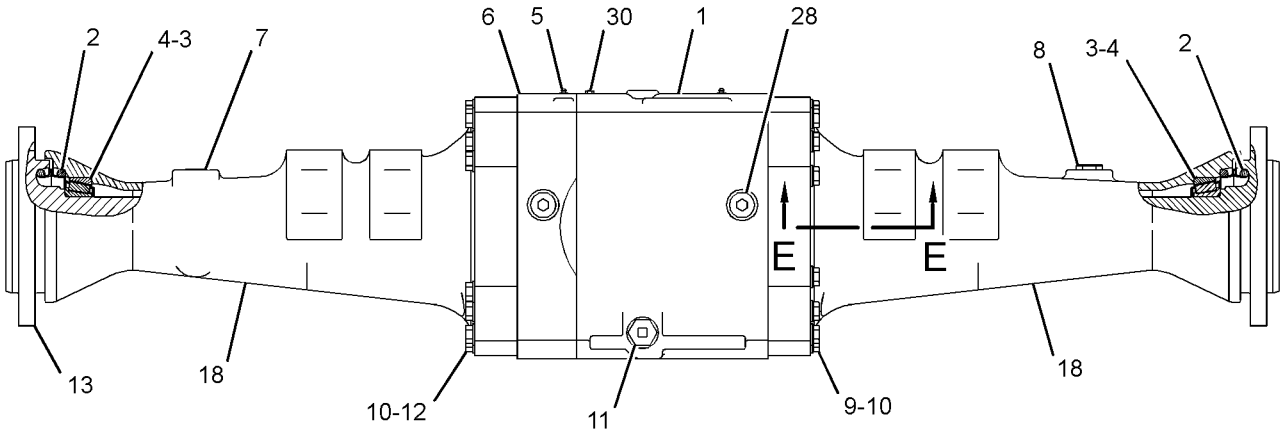

FRONT VIEW

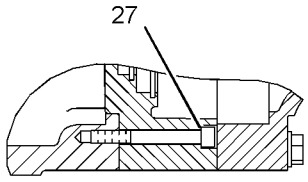

SECTION B-B

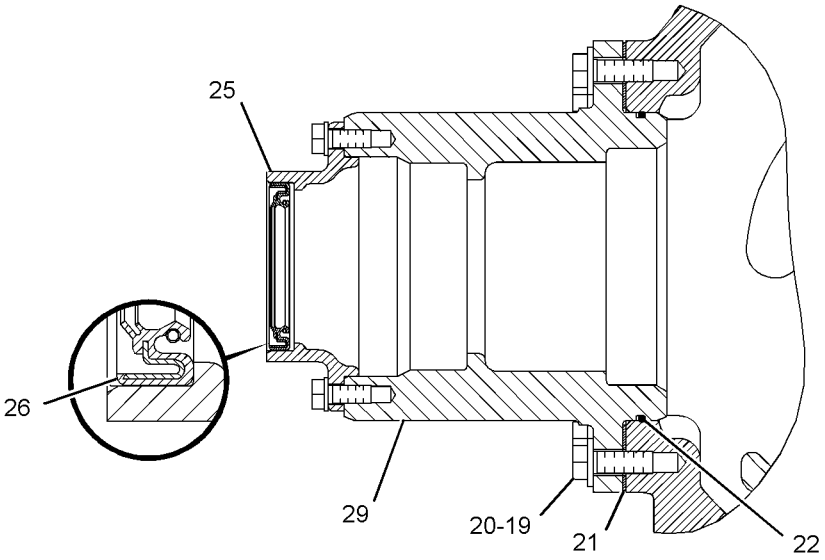

SECTION D-D

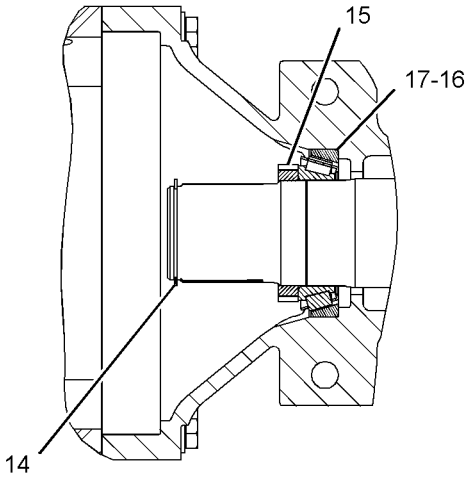

SECTION E-E

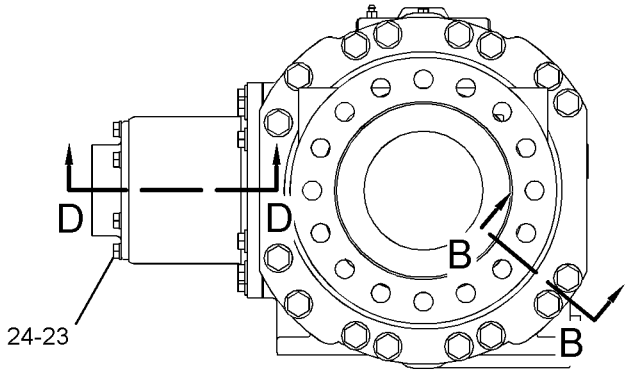

RIGHT SIDE VIEW

GRAPHIC #1 **<END>** g01949495

POWER TRAIN

203-2774 HOUSING GP-OSCILLATING AXLE—REAR

S/N: JRL1-UP; RRS1-UP
PART OF 267-7368, 267-7372 AXLE AR-OSCILLATING
AN ATTACHMENT

SMCS-3260, 3268 **i03961809**

NOTE	REF NO	GRAPHIC REF	PART NUMBER	QTY	PART NAME 1 2 3 4 5 6 (PRODUCT LEVEL)	SEE PAGE
	1	2	**3B-0551**	1	PLUG-PIPE	
	2	1	**5H-3701**	2	SCREW-PURGE	
	3	1	*268-9084*	1	SUPPORT AS-TRUNNION	
		1	**5P-5291**	1	RING-RETAINING	
		1	**9C-5048**	1	BUSHING	
		1	**9H-1129**	2	SEAL-LIP TYPE	
		1	**128-0219**	1	SUPPORT-TRUNNION (FRONT)	
	4	1	**216-0102**	1	RETAINER-SEAL	
M	5	1	**6V-7732**	6	BOLT (M10X1.5X25-MM)	
	6	1	**9X-2027**	6	WASHER (11X18X2-MM THK)	
	7	2	**203-2777**	2	HOUSING-OSCILLATING AXLE (OUTER)	
	8	1	*268-9082*	1	SUPPORT AS-TRUNNION	
		1	**5H-1039**	1	SEAL-O-RING	
		1	**9C-5049**	1	BUSHING	
		1	**141-4892**	1	SUPPORT-TRUNNION (REAR)	
M	9	1	**7X-2436**	2	BOLT (M12X1.75X100-MM)	
C	10	1	*165-4929*	1	PLUG AS	
		1	**5P-4484**	1	PLUG-MAGNETIC (AXLE OIL DRAIN)	
		1	**7M-8485**	1	SEAL-O-RING	
M	11	2	**9X-6493**	16	BOLT (M16X2X180-MM)	
	12	2	**5P-8247**	40	WASHER-HARD (17X32X3.5-MM THK)	
	13	2	**8R-2526**	1	SHIM PACK (INCLUDES 8-SHIMS)	
M	14	1	**6V-8197**	6	BOLT (M12X1.75X40-MM)	
	15	1,2	**5P-8245**	22	WASHER-HARD (13.5X25.5X3-MM THK)	
	16	2	**133-4294**	1	SEAL-LIP TYPE	
C	17	1	*148-8406*	2	PLUG AS	
					(EACH INCLUDES)	
		1	**7M-8485**	1	SEAL-O-RING	
		1	**9S-9334**	1	PLUG-O-RING	
	18	1	*148-8395*	1	PLUG AS	
		1	**3K-0360**	1	SEAL-O-RING	
		1	**9S-8005**	1	PLUG-O-RING	
	19	1	**8T-0336**	2	FITTING-PRESSURE RELIEF	
	20	2	**8F-8733**	1	SEAL-O-RING	
	21	2	**140-6140**	1	HOUSING-PINION	
M	22	2	**6C-8648**	16	BOLT (M16X2-THD)	
	23	2	**6D-7690**	2	CUP-BEARING	
	24	2	**5P-3723**	2	CONE-BEARING	
	25	2	**9G-5311**	2	SEAL GP-DUO-CONE	
					(EACH INCLUDES)	
		2	**4K-0173**	2	RING-SEALING	
	26	2	**138-1635**	2	SHAFT-AXLE	
M	27	2	**6V-4429**	8	BOLT (M16X2X40-MM)	
	28	2	**8R-2584**	1	TRUNNION	
	29	2	**8R-2532**	2	NUT-BEARING (M85X2-THD)	
	30	2	**061-6712**	2	RING-RETAINING	
	31	2	**1K-8061**	2	WASHER-THRUST (4.03X5.72X0.265-IN THK)	
	32	2	**203-2776**	1	HOUSING-OSCILLATING AXLE (INTERMEDIATE)	
	33	2	**203-2775**	1	HOUSING-OSCILLATING AXLE (CENTER)	
	34	2	**8R-0512**	1	GAUGE AS-OIL LEVEL (DIPSTICK) (AXLE)	
	35	2	**9V-1203**	1	PLATE-THRUST	
M	36	2	**6V-8675**	10	BOLT (M12X1.75X35-MM)	
	37	1	**6K-6075**	1	COVER	
	38	2	**6F-2956**	2	CUP-BEARING	
	39	2	**6V-0347**	2	CONE-BEARING	

203-2774 **HOUSING GP-OSCILLATING AXLE** *(contd.)* **i03961809**

NOTE	REF NO	GRAPHIC REF	PART NUMBER	QTY	PART NAME 1 2 3 4 5 6 (PRODUCT LEVEL)	SEE PAGE
	40	1	**5M-6214**	2	PLUG-PIPE	
M	41	2	**259-1456**	6	BOLT (12X1.75X35-MM)	

C-CHANGE FROM PREVIOUS TYPE
M-METRIC PART

203-2774 **HOUSING GP-OSCILLATING AXLE** *(contd.)* **i03961809**

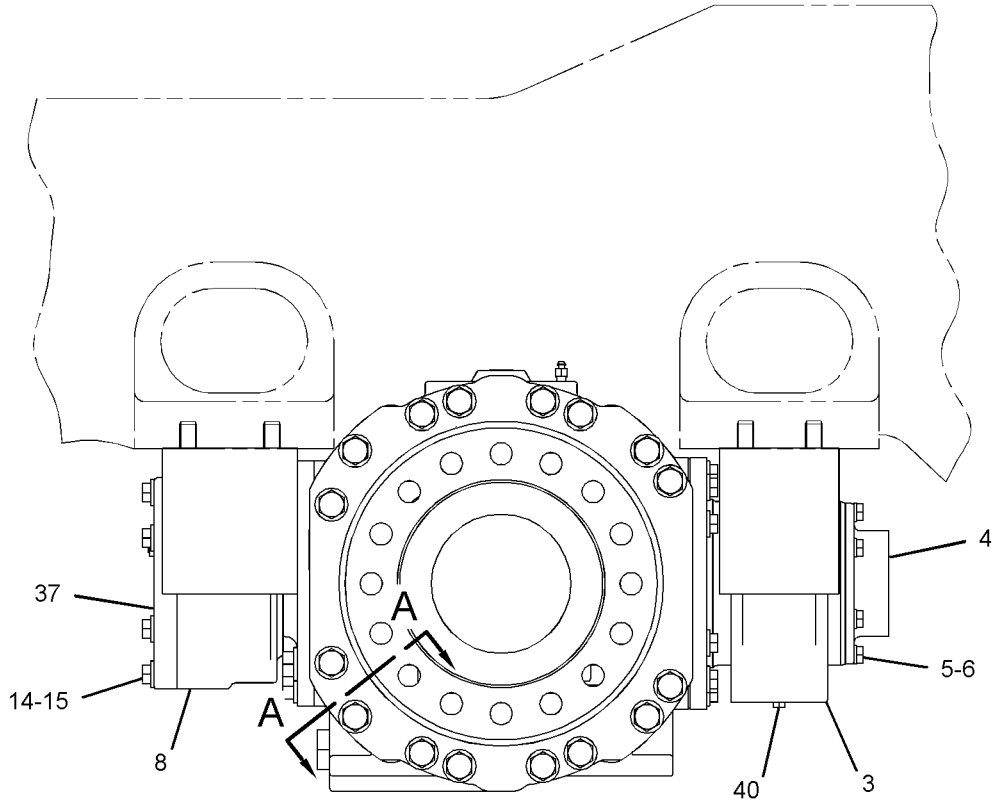

RIGHT SIDE VIEW

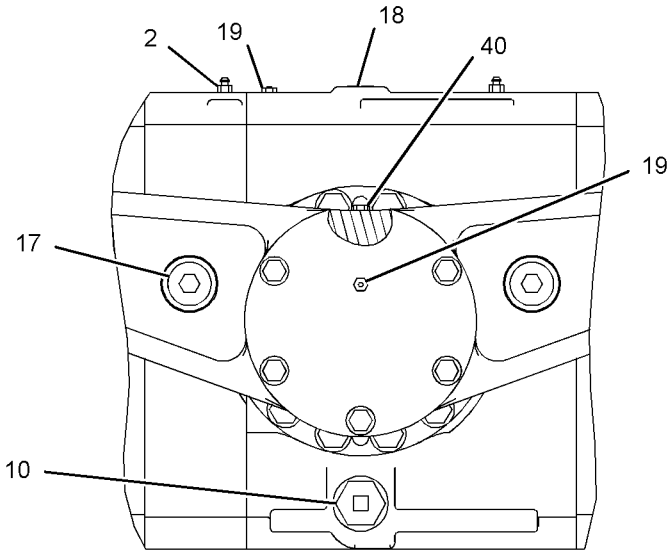

REAR VIEW

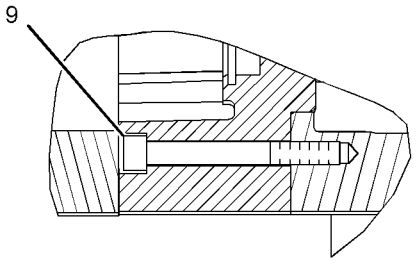

SECTION A-A

GRAPHIC #1 g02138871

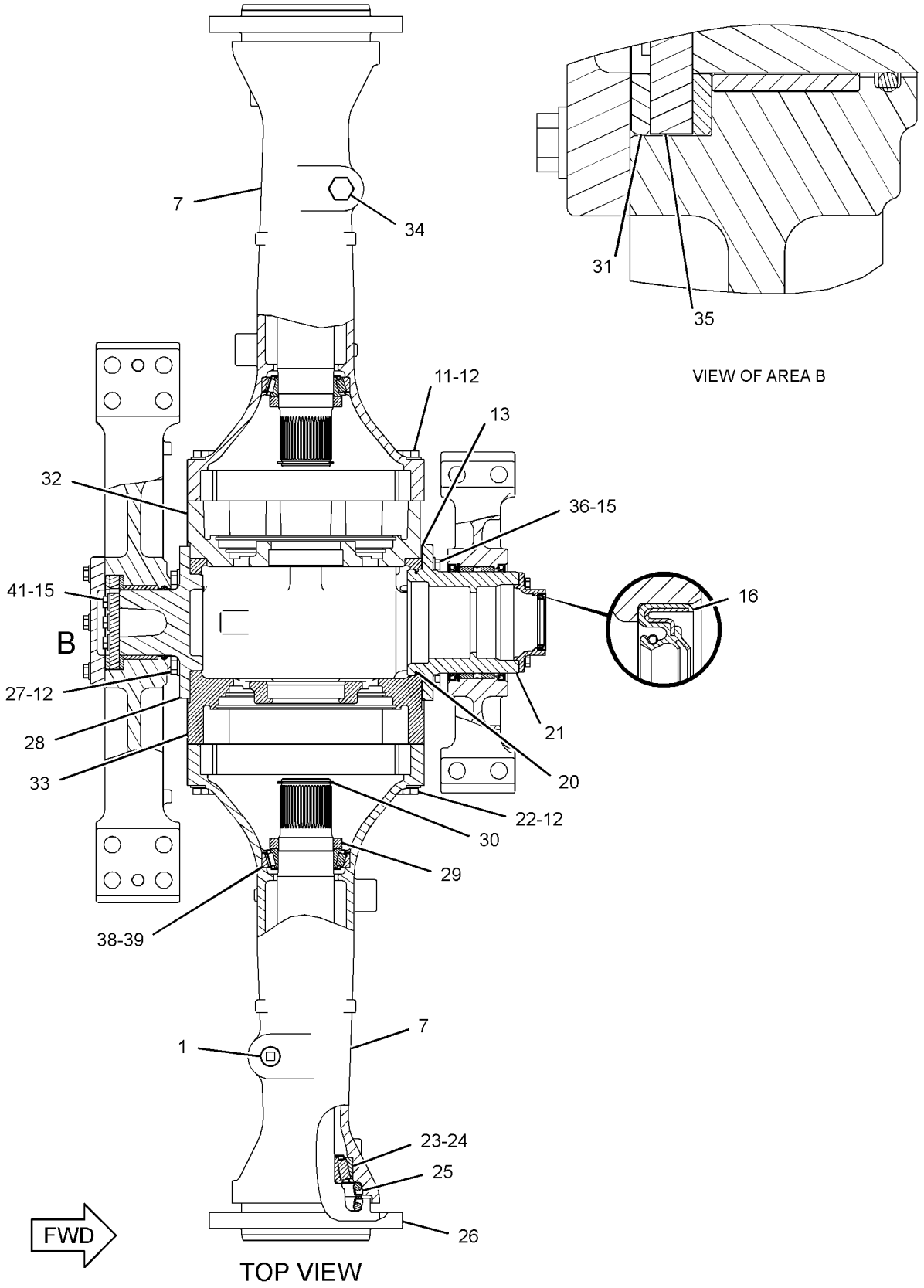

GRAPHIC #2 **<END>** g02138873

POWER TRAIN

323-1653 LINES GP-AXLE OIL COOLER

S/N: JRL1-UP; RRS1-UP
PART OF 289-8985 AXLE AR-OSCILLATING
AN ATTACHMENT

SMCS-1365, 3016 **i04519332**

NOTE	REF NO	GRAPHIC REF	PART NUMBER	QTY	PART NAME 1 2 3 4 5 6 (PRODUCT LEVEL)	SEE PAGE
	1	1	**3E-7690**	1	SWITCH AS-PRESSURE (AXLE OIL)	
		1	**102-8802**	1	KIT-RECEPTACLE (2-PIN)	
					(INCLUDES RECEPTACLE AS & WEDGE)	
		1	**8T-8729**	2	PIN-CONNECTOR (16-GA TO 18-GA)	
	2	2	**3S-2093**	2	STRAP-CABLE	
	3	1	**6V-0852**	1	CAP-DUST	
	4	1,2	**7K-1181**	10	STRAP-CABLE	
I	5	1	**7T-5554**	1	HOSE AS	
	6	2	**130-9984**	3	CLIP	
Y	7	2	*185-1028*	1	COOLER GP-AXLE OIL	188
	8	2	**200-6345**	1	MOUNT (DUAL SWIVEL)	
	9	2	**204-2281**	4	STRAP-CABLE	
	10	1	**240-0182**	1	PLATE (RH)	
	11	1	**240-0183**	1	PLATE (LH)	
	12	2	**259-0558**	1	VALVE GP-CHECK (HYDRAULIC OIL COOLER BYPASS)	
		2	**6V-9746**	2	SEAL-O-RING	
I	13	1	**262-5666**	1	HOSE AS	
I	14	1	**262-5695**	1	HOSE AS	
	15	1	**286-8274**	1	PLATE AS	
J	16	2	**288-4166**	1	PUMP & MOTOR GP-AXLE OIL CLR	
	17	2	**290-5562**	1	MOUNT (DUAL SWIVEL)	
I	18	1	**292-9687**	1	HOSE AS	
I	19	1	**292-9688**	1	HOSE AS	
I	20	2	**292-9698**	1	HOSE AS	
	21	2	**278-5698**	1	BRACKET AS	
M		2	**8T-3490**	1	NUT-WELD (M10X1.5-THD)	
I	22	1	**295-1466**	1	HOSE AS	
I	23	1	**295-1467**	1	HOSE AS	
I	24	1	**295-1468**	1	HOSE AS	
I	25	1	**295-4323**	1	HOSE AS	
	26	1	**299-5499**	1	SCREEN AS (IN-LINE)	
	27	2	**300-4148**	1	PLATE	
	28	2	**300-4459**	2	PLATE	
I	29	1	**300-8840**	1	HOSE AS	
	30	2	**301-0361**	1	BRACKET AS	
I	31	1	**323-1655**	1	HOSE AS	
I	32	2	**323-1656**	1	HOSE AS	
I	33	1	**323-1657**	1	HOSE AS	
I	34	1	**323-1658**	1	HOSE AS	
	35	2	*148-8316*	1	CONNECTOR AS	
		2	**3J-7354**	1	SEAL-O-RING	
		2	**4J-5477**	1	SEAL-O-RING	
		2	**6V-8647**	1	CONNECTOR	
	36	1	*148-8335*	1	CONNECTOR AS	
		1	**5K-9090**	1	SEAL-O-RING	
		1	**6V-8635**	1	CONNECTOR	
		1	**7M-8485**	1	SEAL-O-RING	
	37	1	*148-8346*	1	ELBOW AS	
		1	**3K-0360**	1	SEAL-O-RING	
		1	**6V-8398**	1	SEAL-O-RING	
		1	**8T-1686**	1	ELBOW	
	38	1	*148-8352*	1	ELBOW AS	
		1	**5K-9090**	1	SEAL-O-RING	
		1	**6V-9854**	1	ELBOW	
	39	2	*148-8356*	1	ELBOW AS	

323-1653 LINES GP-AXLE OIL COOLER *(contd.)* i04519332

NOTE	REF NO	GRAPHIC REF	PART NUMBER	QTY	PART NAME 1 2 3 4 5 6 (PRODUCT LEVEL)	SEE PAGE
		2	**2S-4078**	1	SEAL-O-RING	
		2	**6V-8400**	1	SEAL-O-RING	
		2	**6V-9009**	1	ELBOW	
	40	2	*148-8362*	1	ELBOW AS	
		2	**3D-2824**	1	SEAL-O-RING	
		2	**5K-9090**	1	SEAL-O-RING	
		2	**8T-6684**	1	ELBOW	
	41	2	*148-8364*	3	ELBOW AS	
					(EACH INCLUDES)	
		2	**3K-0360**	1	SEAL-O-RING	
		2	**6V-8398**	1	SEAL-O-RING	
		2	**6V-8625**	1	ELBOW	
	42	2	*148-8368*	1	ELBOW AS	
		2	**3J-1907**	1	SEAL-O-RING	
		2	**4J-5477**	1	SEAL-O-RING	
		2	**6V-8627**	1	ELBOW	
	43	2	*148-8373*	1	ELBOW AS	
		2	**6V-8400**	1	SEAL-O-RING	
		2	**7M-8485**	1	SEAL-O-RING	
		2	**8C-3364**	1	ELBOW	
	44	2	*148-8390*	1	ELBOW AS	
		2	**2M-9780**	1	SEAL-O-RING	
		2	**6V-8626**	1	ELBOW	
		2	**7J-9108**	1	SEAL-O-RING	
	45	2	*148-8392*	1	ELBOW AS	
		2	**6V-9746**	1	SEAL-O-RING	
		2	**6V-9853**	1	ELBOW	
	46	1	*148-8424*	1	TEE AS	
		1	**6V-8397**	1	SEAL-O-RING	
		1	**8T-8902**	1	TEE	
	47	1	*148-8429*	1	TEE AS	
		1	**5K-9090**	2	SEAL-O-RING	
		1	**6V-9840**	1	TEE-SWIVEL	
	48	2	*148-8444*	1	TEE AS-SWIVEL	
		2	**6V-8398**	2	SEAL-O-RING	
		2	**6V-9837**	1	TEE-SWIVEL	
	49	2	*148-8448*	1	FITTING AS	
		2	**4J-5477**	2	SEAL-O-RING	
		2	**6V-9842**	1	TEE-SWIVEL	
	50	2	*153-6230*	1	CONNECTOR AS	
		2	**2M-9780**	1	SEAL-O-RING	
		2	**5K-9090**	1	SEAL-O-RING	
		2	**8T-9386**	1	CONNECTOR	
	51	1	*153-6237*	1	ELBOW AS	
		1	**3D-2824**	1	SEAL-O-RING	
		1	**6V-9004**	1	ELBOW	
		1	**6V-9746**	1	SEAL-O-RING	
	52	1	*153-6248*	1	ADAPTER AS	
		1	**6V-8397**	1	SEAL-O-RING	
		1	**8T-6663**	1	ADAPTER-PORT	
	53	2	*155-3504*	2	ELBOW AS	
					(EACH INCLUDES)	
		2	**2M-9780**	1	SEAL-O-RING	
		2	**6V-9003**	1	ELBOW	
		2	**7J-9108**	1	SEAL-O-RING	
	54	2	**7I-8310**	1	COUPLING AS	
	55	1	*164-5567*	1	COUPLER AS-QUICK DISCONNECT (MALE)	
		1	**214-7568**	1	SEAL-O-RING	
		1	**6V-3965**	1	FITTING (QUICK DISCONNECT)	

323-1653 LINES GP-AXLE OIL COOLER *(contd.)* i04519332

NOTE	REF NO	GRAPHIC REF	PART NUMBER	QTY	PART NAME 1 2 3 4 5 6 (PRODUCT LEVEL)	SEE PAGE
	56	2	*164-5577*	1	ELBOW AS	
		2	**5K-9090**	2	SEAL-O-RING	
		2	**6V-8984**	1	ELBOW	
	57	1	*164-5641*	1	TEE AS	
		1	**3D-2824**	1	SEAL-O-RING	
		1	**5K-9090**	1	SEAL-O-RING	
		1	**6V-9746**	1	SEAL-O-RING	
		1	**128-7625**	1	TEE	
	58	2	*164-6860*	1	TEE AS	
		2	**6V-9350**	1	TEE-BULKHEAD	
		2	**7J-9108**	3	SEAL-O-RING	
	59	1	**1M-4543**	1	GROMMET	
	60	2	**1S-0396**	1	CLIP	
	61	2	**3D-2824**	1	SEAL-O-RING	
	62	1	**3J-1907**	1	SEAL-O-RING	
	63	1,2	**4D-7388**	3	CLIP	
	64	2	**4P-8134**	1	CLIP	
	65	1	**5K-9090**	1	SEAL-O-RING	
	66	2	**5P-7468**	1	CLIP (SLOT)	
	67	2	**5P-7469**	1	CLIP (TAB)	
	68	2	**5P-8444**	1	GROMMET	
	69	2	**6V-1889**	1	CLIP	
	70	2	**6V-9170**	1	NUT-BULKHEAD (1-14-THD)	
	71	2	**6V-9172**	1	NUT (1-7/16-12-THD)	
	72	1	**6V-9832**	1	CAP AS	
	73	1	**6V-9833**	1	CAP AS	
	74	1	**7X-0515**	4	WASHER-HARD (17X35X5-MM THK)	
M	75	1	**7X-2556**	2	BOLT (M16X2X100-MM)	
	76	2	**7X-7729**	4	WASHER (11X25X3-MM THK)	
M	77	1	**7Y-5227**	2	BOLT (M16X2X190-MM)	
	78	2	**8C-3174**	1	GROMMET	
	79	2	**8M-2770**	2	CLIP	
	80	1,2	**8M-2773**	2	CLIP	
	81	1	**8S-0948**	1	CLIP	
	82	1,2	**8T-4121**	20	WASHER-HARD (11X21X2.5-MM THK)	
M	83	1,2	**8T-4133**	3	NUT (M10X1.5-THD)	
M	84	1,2	**8T-4136**	8	BOLT (M10X1.5X25-MM)	
M	85	2	**8T-4137**	5	BOLT (M10X1.5X20-MM)	
M	86	2	**8T-4186**	1	BOLT (M10X1.5X40-MM)	
M	87	2	**8T-4195**	2	BOLT (M10X1.5X30-MM)	
M	88	1,2	**8T-4196**	4	BOLT (M10X1.5X35-MM)	
	89	1	**8T-4223**	4	WASHER-HARD (13.5X25.5X3-MM THK)	
M	90	1	**8T-4956**	4	BOLT (M12X1.75X35-MM)	
	91	2	**9C-5344**	1	SPACER (10.5X20X18-MM THK)	
	92	2	**9M-4972**	1	CLIP	
					AVAILABLE REPAIR KIT(S):	
J			**296-6706**	1	KIT-SEAL (AXLE OIL CLR, SYSTEMS CASE DR)	
					(INCLUDES SHAFT SEALS & O-RING SEALS)	

I-REFER TO HYDRAULIC INFORMATION SYSTEM
J-KIT MARKED J SERVICES PARTS MARKED J
M-METRIC PART
Y-SEPARATE ILLUSTRATION

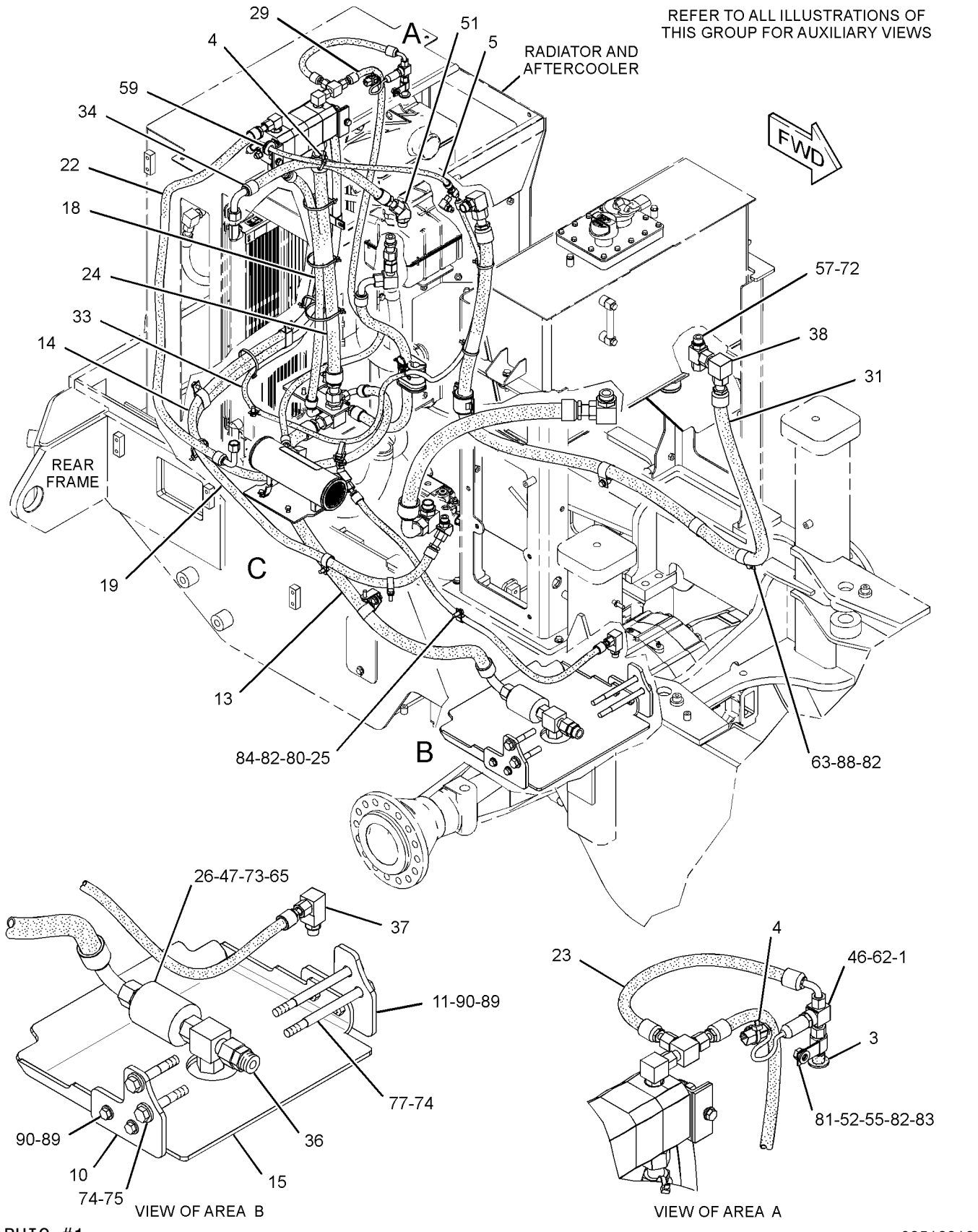

GRAPHIC #1 g02518919

323-1653 **LINES GP-AXLE OIL COOLER** *(contd.)* **i04519332**

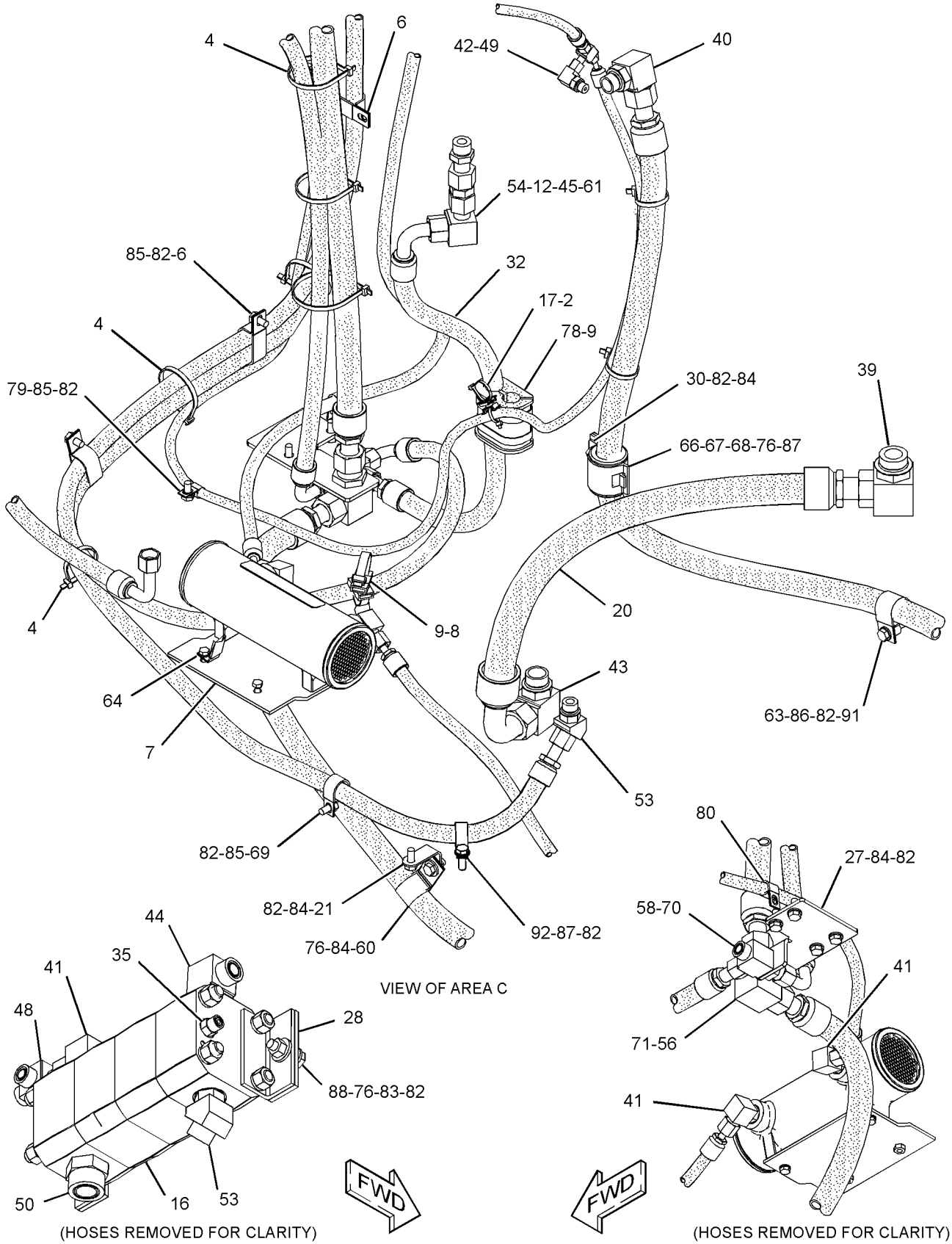

GRAPHIC #2 **<END>** g02518920

POWER TRAIN

289-8923 LINES GP-TORQUE CONV COOLER

S/N: JRL1-UP; RRS1-UP

PART OF 372-7772, 372-7773 CHASSIS AR

SMCS-1375, 3016 **i04459529**

NOTE	REF NO	GRAPHIC REF	PART NUMBER	QTY	PART NAME 1 2 3 4 5 6 (PRODUCT LEVEL)	SEE PAGE
	1	1	*9U-6994*	1	FITTING GP	
		1	**5P-4362**	1	CONNECTOR	
		1	**7M-8485**	1	SEAL-O-RING	
	2	1	**6V-0852**	1	CAP-DUST	
	3	1	**7K-1181**	1	STRAP-CABLE	
	4	1	**7X-7958**	4	CLAMP-HOSE	
Y	5	1	**126-0747**	1	VALVE GP-BYPASS (POWER TRAIN OIL COOLER)	234
E	6	1	**146-7453**		HOSE (53-CM)	
	7	1	*177-1061*	1	ELBOW AS	
		1	**5K-9090**	1	SEAL-O-RING	
		1	**142-0038**	1	ELBOW	
	8	1	**229-2940**	1	PLATE AS	
M		1	**8T-3490**	3	NUT-WELD (M10X1.5-THD)	
	9	1	*241-6172*	1	ELBOW AS	
		1	**7M-8485**	1	SEAL-O-RING	
		1	**173-0064**	1	ELBOW	
	10	1	**243-0686**	1	HOSE AS	
I	11	1	**262-5661**	1	HOSE AS	
I	12	1	**262-5663**	1	HOSE AS	
	13	1	**293-5828**	2	TUBE AS	
I	14	1	**314-7670**	1	HOSE AS	
	15	1	*148-8335*	5	CONNECTOR AS	
					(EACH INCLUDES)	
		1	**5K-9090**	1	SEAL-O-RING	
		1	**6V-8635**	1	CONNECTOR	
		1	**7M-8485**	1	SEAL-O-RING	
	16	1	*148-8352*	1	ELBOW AS	
		1	**5K-9090**	1	SEAL-O-RING	
		1	**6V-9854**	1	ELBOW	
	17	1	*150-3065*	1	ADAPTER AS	
		1	**3J-1907**	1	SEAL-O-RING	
		1	**6V-0484**	1	ELBOW	
	18	1	*155-2026*	1	UNION AS	
		1	**5K-9090**	2	SEAL-O-RING	
		1	**6V-8998**	1	UNION	
	19	1	*155-6344*	1	ELBOW AS	
		1	**5K-9090**	2	SEAL-O-RING	
		1	**6V-8991**	1	ELBOW	
	20	1	*164-5567*	1	COUPLER AS-QUICK DISCONNECT (MALE)	
		1	**214-7568**	1	SEAL-O-RING	
		1	**6V-3965**	1	FITTING (QUICK DISCONNECT)	
	21	1	*214-0095*	1	UNION AS	
		1	**5K-9090**	2	SEAL-O-RING	
		1	**7X-2464**	1	UNION	
	22	1	**4D-7388**	3	CLIP	
	23	1	**6V-9172**	3	NUT (1-7/16-12-THD)	
	25	1	**7X-0606**	6	WASHER-HARD (37X60X3-MM THK)	
	26	1	**8T-4121**	7	WASHER-HARD (11X21X2.5-MM THK)	
M	27	1	**8T-4136**	4	BOLT (M10X1.5X25-MM)	
M	28	1	**8T-4178**	3	BOLT (M10X1.5X90-MM)	

E-ORDER BY THE CENTIMETER
I-REFER TO HYDRAULIC INFORMATION SYSTEM
M-METRIC PART
Y-SEPARATE ILLUSTRATION

289-8923 **LINES GP-TORQUE CONV COOLER** *(contd.)* **i04459529**

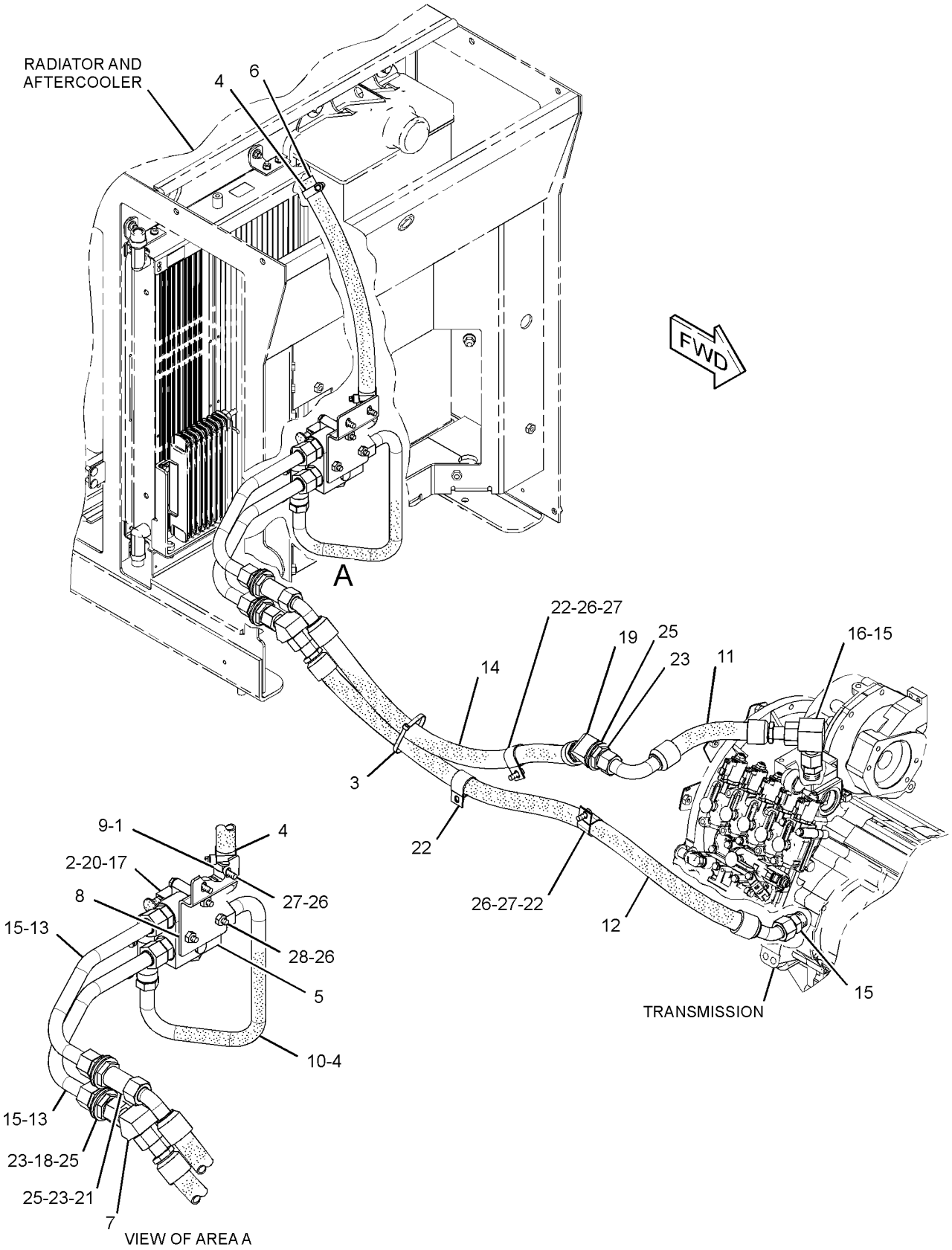

GRAPHIC #1 **<END>** g02513717

132-2471 MOUNTING GP-AXLE

S/N: JRL1-UP; RRS1-UP

PART OF 372-7772, 372-7773 CHASSIS AR

SMCS-3268, 3278 **i03117940**

NOTE	REF NO	GRAPHIC REF	PART NUMBER	QTY	PART NAME 1 2 3 4 5 6 (PRODUCT LEVEL)	SEE PAGE
	1	1	**6K-8987**	2	DOWEL	
M	2	1	**7X-2465**	20	BOLT (M24X3X180-MM)	
	3	1	**8T-4167**	20	WASHER-HARD (26X44X4-MM THK)	

M-METRIC PART

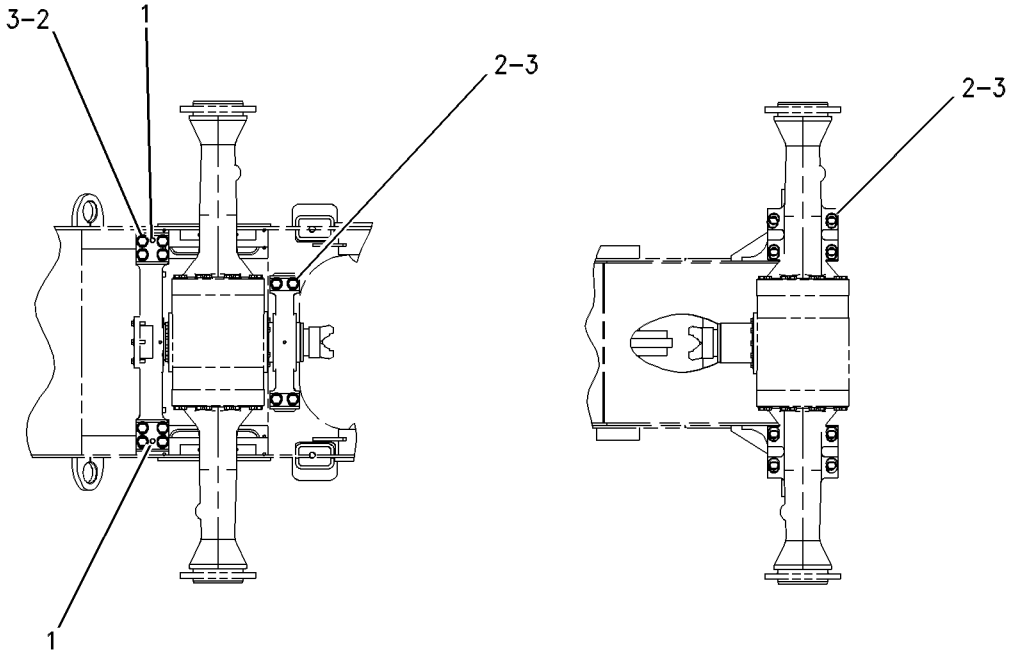

GRAPHIC #1 **<END>** g00598337

147-5071 MOUNTING GP-RIM

S/N: JRL1-UP; RRS1-UP
PART OF 117-7836, 117-7837, 146-6783 RIM AR
AN ATTACHMENT

SMCS-4202, 4209 **i03117943**

NOTE	PART NUMBER	QTY	PART NAME 1 2 3 4 5 6 (PRODUCT LEVEL)	SEE PAGE
M	**8T-5379**	16	BOLT (M24X3X50-MM) (LEFT FRONT)	
M	**8T-5379**	16	BOLT (M24X3X50-MM) (RIGHT FRONT)	
M	**8T-5379**	16	BOLT (M24X3X50-MM) (LEFT REAR)	
M	**8T-5379**	16	BOLT (M24X3X50-MM) (RIGHT REAR)	
	8T-4167	16	WASHER-HARD (26X44X4-MM THK) (LEFT FRONT)	
	8T-4167	16	WASHER-HARD (26X44X4-MM THK) (RIGHT FRONT)	
	8T-4167	16	WASHER-HARD (26X44X4-MM THK) (LEFT REAR)	
	8T-4167	16	WASHER-HARD (26X44X4-MM THK) (RIGHT REAR)	

M-METRIC PART

<END>

289-8815 POWER TRAIN AR

S/N: JRL1-UP; RRS1-UP
PART OF 372-7774, 372-7775 COMMON AR

SMCS-3000, 4000 **i03320963**

NOTE	PART NUMBER	QTY	PART NAME 1 2 3 4 5 6 (PRODUCT LEVEL)	SEE PAGE
Y	*289-8974*	1	AXLE AR-FIXED (FRONT, STANDARD DIFFERENTIAL)	173
Y	*293-2837*	1	FILLER GP-POWER TRAIN OIL	195
Y	*290-7186*	1	FILTER & LINES GP-TRANSMISSION	196
Y	**304-9464**	1	GAUGE GP-SIGHT (POWER TRAIN OIL)	199
Y	*290-1256*	1	SHAFT GP-DRIVE	230
Y	**290-1257**	1	TRANSMISSION AR (STANDARD SPEED)	233
	319-7412	1	MOUNTING GP-ENGINE & XMSN	
	9R-5878	2	WASHER (21.5X114X3-MM THK)	

Y-SEPARATE ILLUSTRATION

<END>

6Y-6712 PUMP GP-TRANSMISSION—1-SECTION GEAR

S/N: J2Y1-UP

PART OF 121-8917 PUMP GP-TRANSMISSION

SMCS-3066 **i00528693**

NOTE	REF NO	GRAPHIC REF	PART NUMBER	QTY	PART NAME 1 2 3 4 5 6 (PRODUCT LEVEL)	SEE PAGE
M	1	1	**6V-5842**	1	BOLT (M10X1.5X40-MM)	
M	2	1	**6V-7981**	5	BOLT (M10X1.5X70-MM)	
		1	**6Y-5010**	1	WASHER (10.16X19X0.84-MM THK)	
	3	1	**8E-9968**	1	BODY AS	
	4	1	**3T-2094**	2	BEARING-SLEEVE	
	5	1	**5M-4987**	2	DOWEL	
	6	1	**8T-5353**	2	DOWEL	
	7	1	**6Y-4464**	1	GEAR AS-OIL PUMP (17-TEETH)	
	8	1	**5H-3252**	1	SEAL-O-RING	
	9	1	**6Y-4997**	1	COVER AS	
	10	1	**3T-2094**	2	BEARING-SLEEVE	
	11	1	**6Y-4465**	1	GEAR (17-TEETH)	

M-METRIC PART

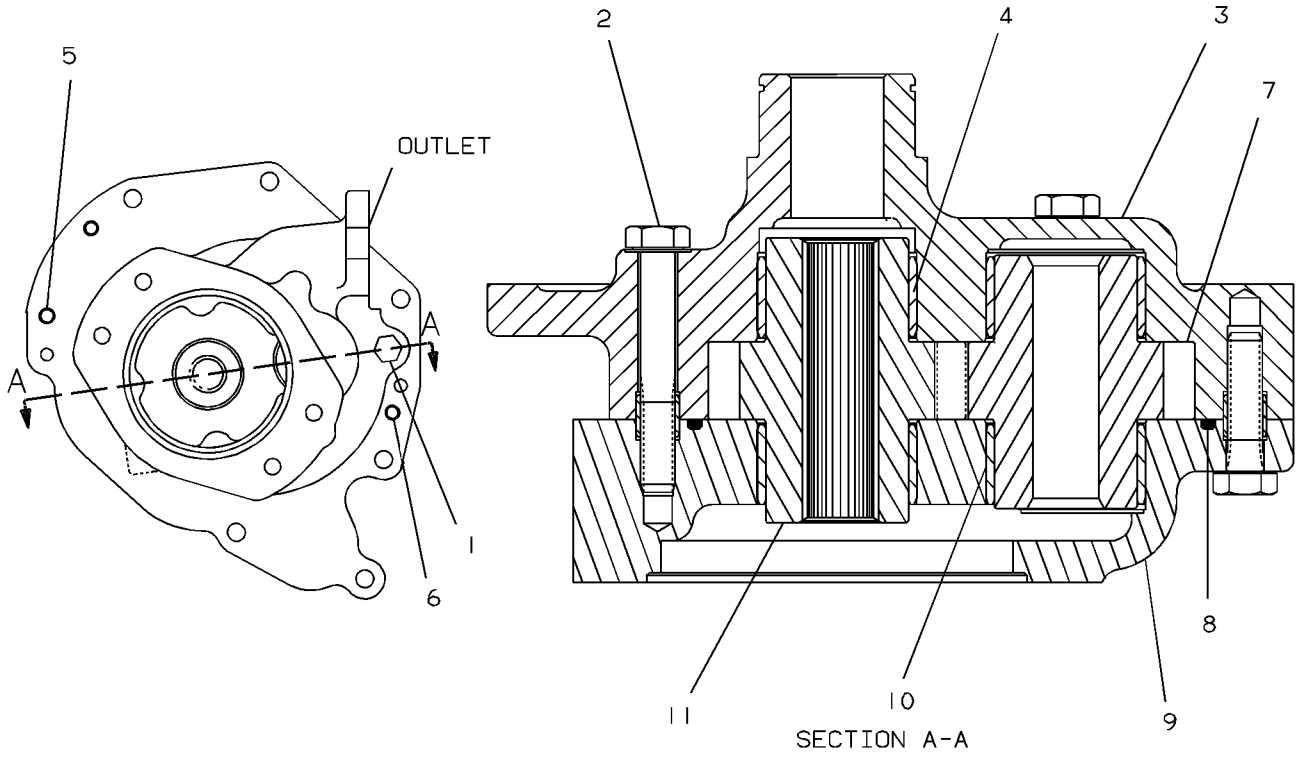

GRAPHIC #1 **<END>** g00126574

121-8917 PUMP GP-TRANSMISSION–1-SECTION GEAR

S/N: J2Y1-UP
TRANSMISSION
PART OF 290-1257 TRANSMISSION AR

SMCS-3066 **i03626671**

NOTE	REF NO	GRAPHIC REF	PART NUMBER	QTY	PART NAME 1 2 3 4 5 6 (PRODUCT LEVEL)	SEE PAGE
Y	1	1	**6Y-6712**	1	PUMP GP-TRANSMISSION (1-SECTION GEAR)	220
	2	1	**120-4483**	1	GEAR-DRIVE (68-TEETH)	
M	3	1	**6V-6317**	6	BOLT (M10X1.5X20-MM)	
	4	1	**2J-7550**	1	RING-RETAINING	
	5	1	**6Y-4618**	1	SHAFT	
	6	1	**4B-3665**	1	BALL BEARING	
	7	1	**1H-9696**	1	SEAL-O-RING	
M	8	1	**6V-4249**	2	BOLT (M10X1.5X50-MM)	
M	9	1	**6V-1820**	5	BOLT (M10X1.5X30-MM)	
B	10	1	**1U-8846**		SEALANT-GASKET	

B-USE AS REQUIRED
M-METRIC PART
Y-SEPARATE ILLUSTRATION

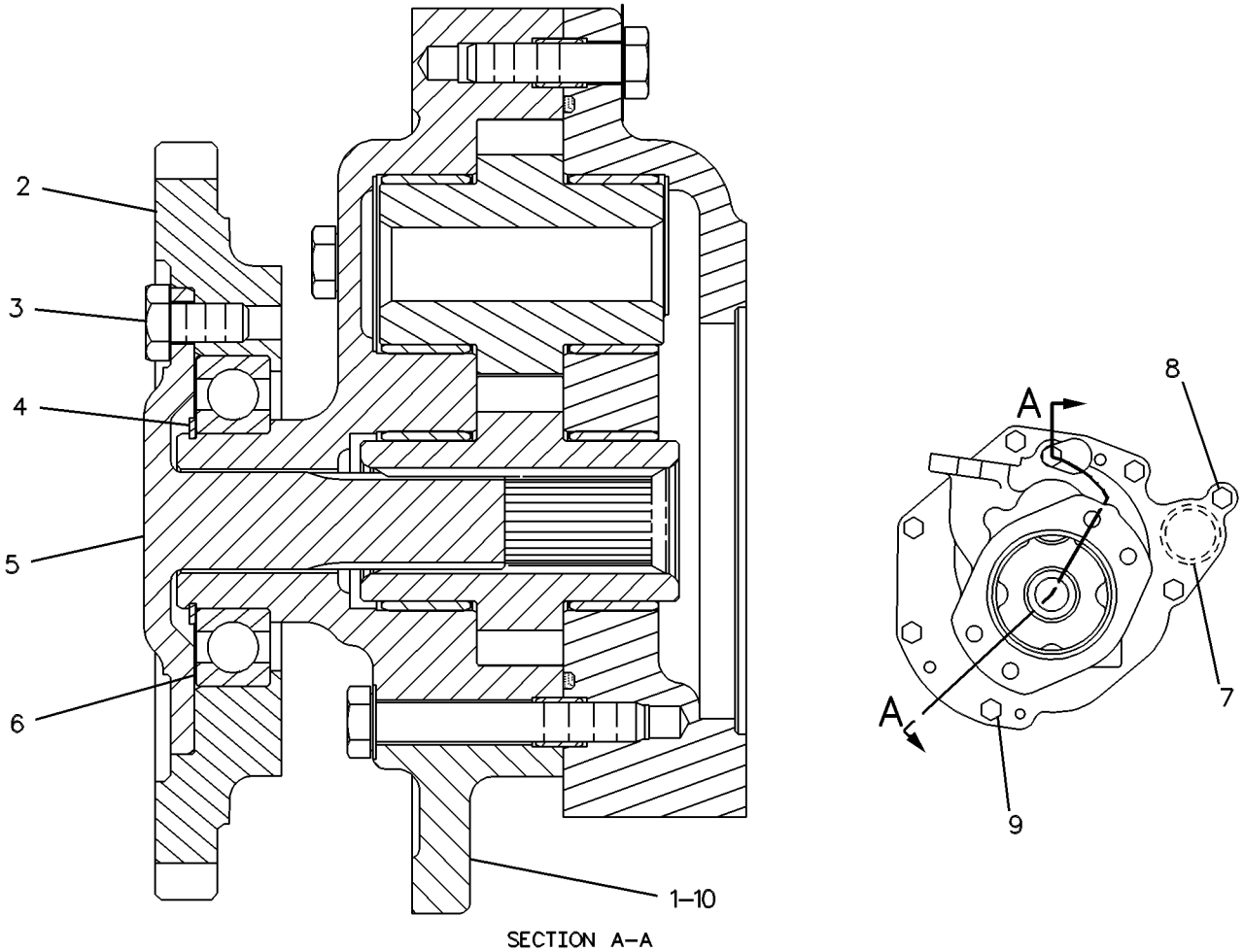

SECTION A–A

GRAPHIC #1 **<END>** g00103796

117-7836 RIM AR

S/N: JRL1-UP; RRS1-UP
13X25, 1-PIECE
PART OF 229-4962 TIRE & RIM AR
AN ATTACHMENT

SMCS-4209 **i02830847**

NOTE	PART NUMBER	QTY	PART NAME 1 2 3 4 5 6 (PRODUCT LEVEL)	SEE PAGE
Y	*146-6685*	1	MOUNTING GP-RIM	
			-OR-	
Y	*147-5071*	1	MOUNTING GP-RIM	219
Y	*117-7839*	4	RIM GP-DEMOUNTABLE (1-PIECE)	224
Y-SEPARATE ILLUSTRATION				

<END>

117-7837 RIM AR

S/N: JRL1-UP; RRS1-UP
14X25, 3-PIECE
PART OF 229-4970, 230-9667 TIRE & RIM AR
AN ATTACHMENT

SMCS-4209 **i03537708**

NOTE	PART NUMBER	QTY	PART NAME 1 2 3 4 5 6 (PRODUCT LEVEL)	SEE PAGE
Y	**146-6685**	1	MOUNTING GP-RIM	
			-OR-	
Y	*147-5071*	1	MOUNTING GP-RIM	219
Y	*117-7840*	4	RIM GP-DEMOUNTABLE (3-PIECE)	225
Y-SEPARATE ILLUSTRATION				

<END>

146-6783 RIM AR

S/N: JRL1-UP; RRS1-UP
17X25, 3-PIECE, CENTER MOUNT
PART OF 256-5049 TIRE & RIM AR
AN ATTACHMENT

SMCS-4209 **i03537711**

NOTE	PART NUMBER	QTY	PART NAME 1 2 3 4 5 6 (PRODUCT LEVEL)	SEE PAGE
Y	*147-5071*	1	MOUNTING GP-RIM	219
Y	*2Q-5979*	4	RIM GP-DEMOUNTABLE (3-PIECE, CENTER MOUNT)	223
Y-SEPARATE ILLUSTRATION				

<END>

2Q-5979 RIM GP-DEMOUNTABLE

S/N: JRL1-UP; RRS1-UP
17X25, 3-PIECE
PART OF 146-6783 RIM AR
AN ATTACHMENT

SMCS-4209 **i01505977**

NOTE	REF NO	GRAPHIC REF	PART NUMBER	QTY	PART NAME 1 2 3 4 5 6 (PRODUCT LEVEL)	SEE PAGE
CY	1	1	**186-4943**	1	RIM GP-DEMOUNTABLE	228
	2	1	**6D-0337**	1	VALVE GP-TIRE	
C	3	1	**6D-0443**	1	HOUSING AS-CORE	
		1	**2D-2628**	1	CORE-VALVE	
		1	**2D-2633**	1	CAP	
C	4	1	**8D-2707**	1	SPUD AS	
		1	**2D-2629**	1	GROMMET	
		1	**2D-2630**	1	WASHER	
		1	**2D-2631**	1	NUT (0.482-26-THD)	
	5	1	**4K-4879**	1	SEAL-O-RING	

C-CHANGE FROM PREVIOUS TYPE
Y-SEPARATE ILLUSTRATION

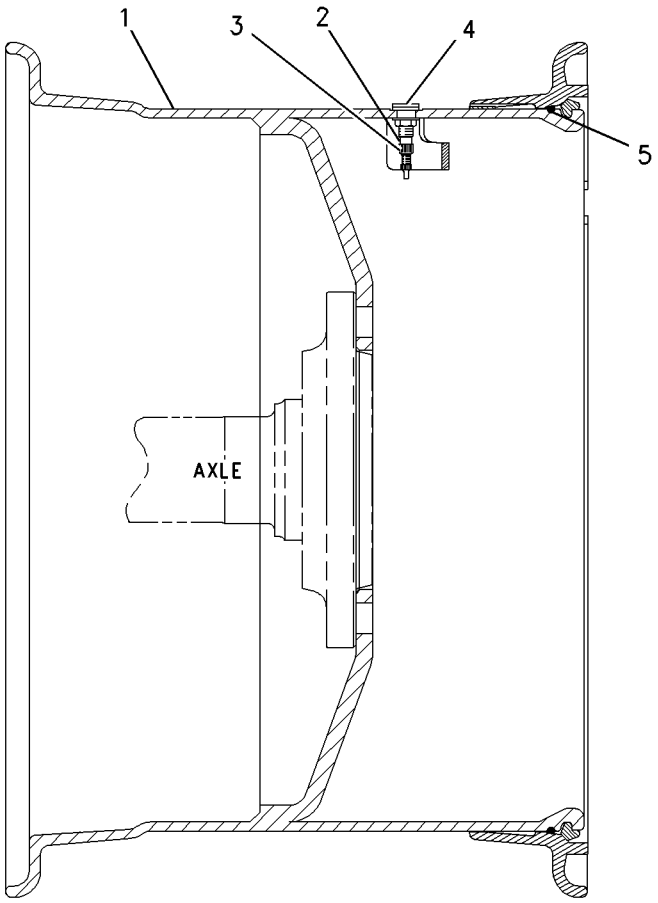

GRAPHIC #1 **<END>** g00781479

117-7839 RIM GP-DEMOUNTABLE

S/N: JRL1-UP; RRS1-UP
13X25, 1-PIECE
PART OF 117-7836 RIM AR
AN ATTACHMENT

SMCS-4209 **i00528258**

NOTE	REF NO	GRAPHIC REF	PART NUMBER	QTY	PART NAME 1 2 3 4 5 6 (PRODUCT LEVEL)	SEE PAGE
	1	1	**8R-5825**	1	RIM AS	
	2	1	**2G-6595**	1	VALVE GP-TIRE	
		1	**6F-3930**	1	CORE-VALVE	
		1	**9K-7951**	1	CAP-VALVE (STEM)	
		1	**7D-5252**	1	SPUD AS	
		1	**2D-2507**	1	SPUD	
		1	**2D-2508**	1	GROMMET	
		1	**2D-2509**	1	LOCKNUT (11/16-16-THD)	

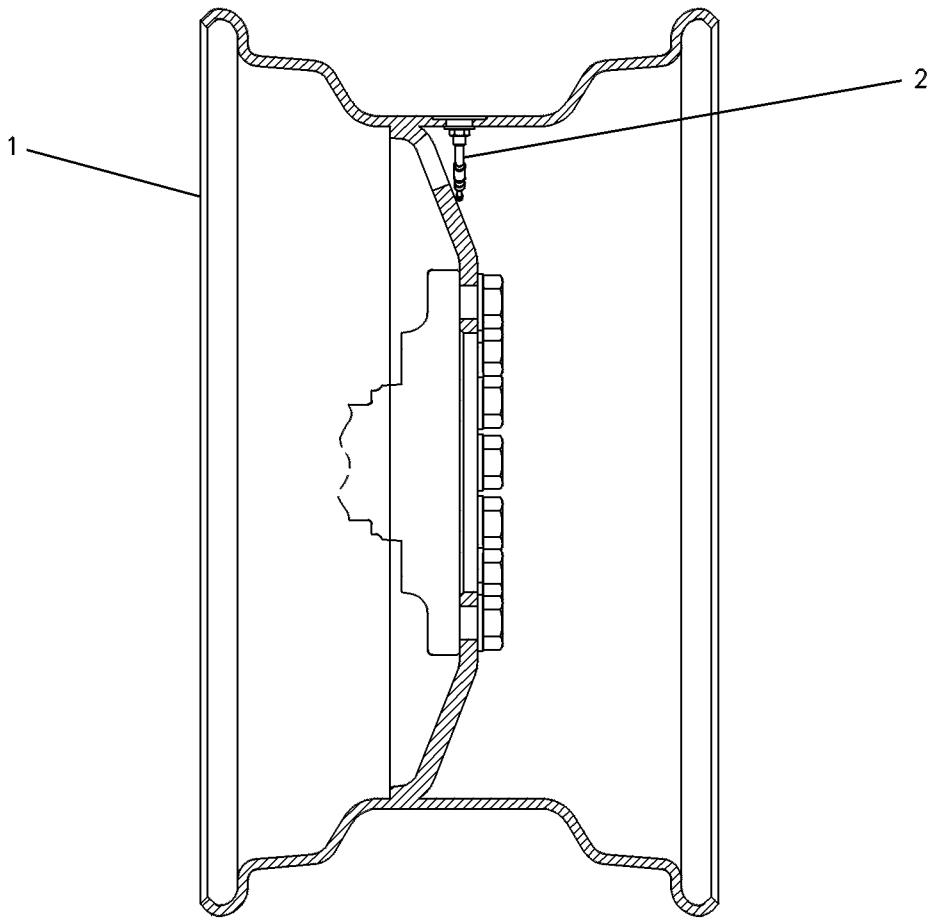

GRAPHIC #1 **<END>** g00129196

117-7840 RIM GP-DEMOUNTABLE

S/N: JRL1-UP; RRS1-UP
14X25, 3-PIECE
PART OF 117-7837 RIM AR
AN ATTACHMENT

SMCS-4209 **i03537712**

NOTE	REF NO	GRAPHIC REF	PART NUMBER	QTY	PART NAME 1 2 3 4 5 6 (PRODUCT LEVEL)	SEE PAGE
	1	1	**4K-4879**	1	SEAL-O-RING	
Y	2	1	**6D-0337**	1	VALVE GP-TIRE	239
CY	3	1	**186-4942**	1	RIM GP-DEMOUNTABLE (3-PIECE)	227

C-CHANGE FROM PREVIOUS TYPE
Y-SEPARATE ILLUSTRATION

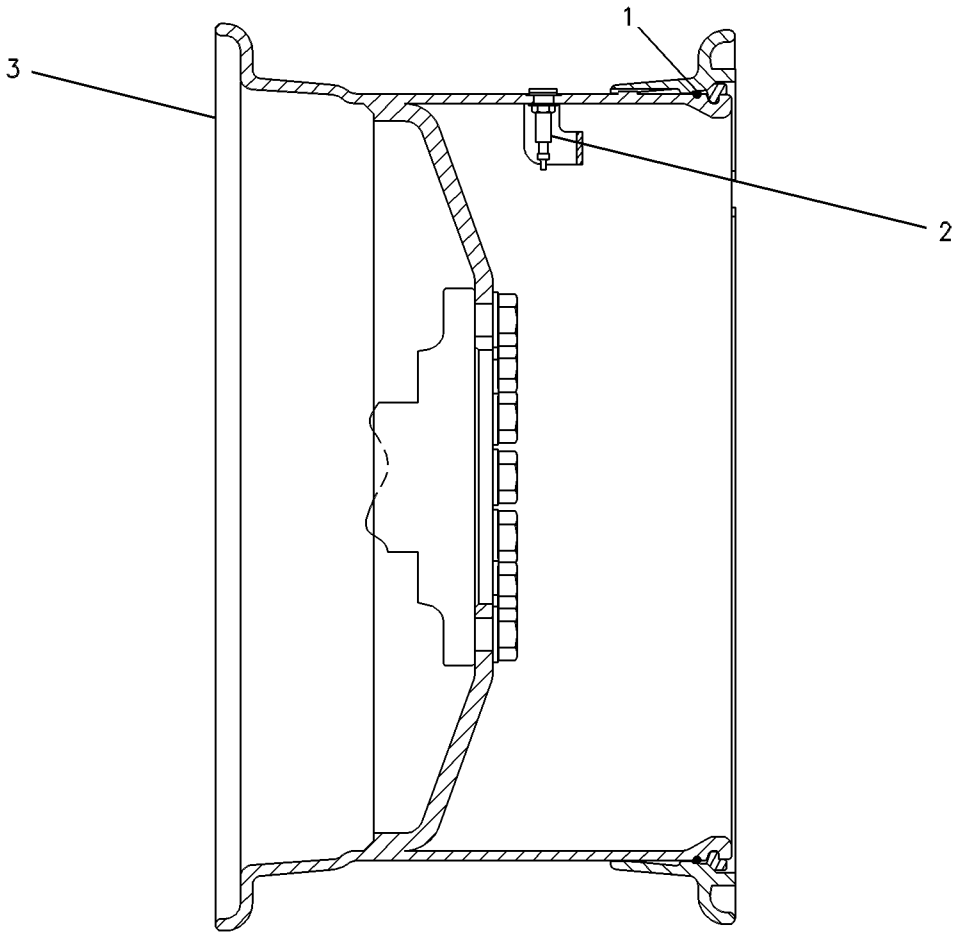

GRAPHIC #1 **<END>** g00276411

128-5436 RIM GP-DEMOUNTABLE

S/N: JRL1-UP; RRS1-UP
14X25, 3-PIECE
PART OF 186-4942 RIM GP-DEMOUNTABLE
AN ATTACHMENT

SMCS-4209 **i01487672**

NOTE	REF NO	GRAPHIC REF	PART NUMBER	QTY	PART NAME 1 2 3 4 5 6 (PRODUCT LEVEL)	SEE PAGE
	1	1	**102-2131**	1	RIM AS	
	2	1	**8X-9925**	1	FLANGE	
	3	1	**4K-4881**	1	RING-LOCK	

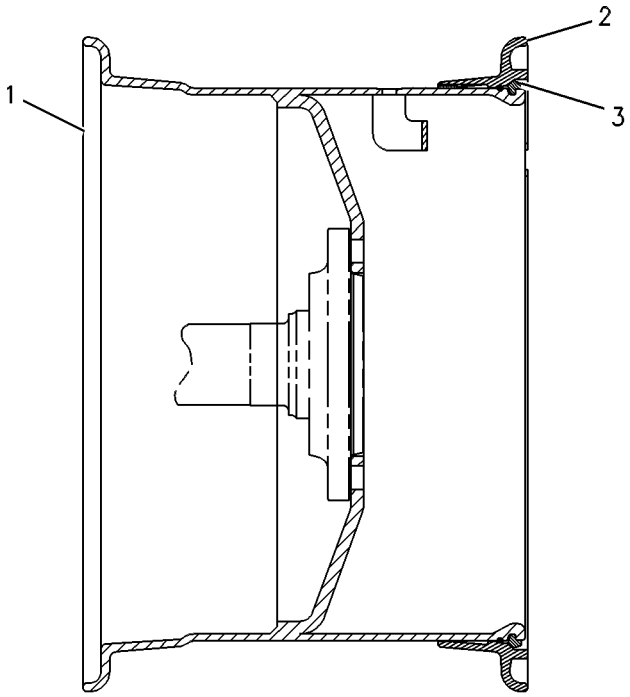

GRAPHIC #1 **<END>** g00276538

176-1705 RIM GP-DEMOUNTABLE

S/N: JRL1-UP; RRS1-UP
14X25, 3-PIECE
PART OF 186-4942 RIM GP-DEMOUNTABLE
FIELD REPLACEMENT ORDER 186-4942—PAGE 227
AN ATTACHMENT

SMCS-4209 **i01877827**

NOTE	PART NUMBER	QTY	PART NAME 1 2 3 4 5 6 (PRODUCT LEVEL)	SEE PAGE
	176-0118	1	DRIVER	
	171-7198	1	FLANGE AS	
	4K-4881	1	RING-LOCK	
	171-7199	1	RIM AS	

<END>

176-1706 RIM GP-DEMOUNTABLE

S/N: JRL1-UP; RRS1-UP
17X25, 3-PIECE
PART OF 186-4943 RIM GP-DEMOUNTABLE
FIELD REPLACEMENT ORDER 186-4943—PAGE 228
AN ATTACHMENT

SMCS-4209 **i02110567**

NOTE	PART NUMBER	QTY	PART NAME 1 2 3 4 5 6 (PRODUCT LEVEL)	SEE PAGE
	176-0118	1	DRIVER	
	171-8689	1	FLANGE AS	
	253-1691	1	RIM AS	
	4K-4881	1	RING-LOCK	

<END>

186-4942 RIM GP-DEMOUNTABLE

S/N: JRL1-UP; RRS1-UP
14X25, 3-PIECE
PART OF 117-7840 RIM GP-DEMOUNTABLE
FIELD REPLACEMENT FOR 176-1705—PAGE 227
AN ATTACHMENT

SMCS-4209 **i04008869**

NOTE	PART NUMBER	QTY	PART NAME 1 2 3 4 5 6 (PRODUCT LEVEL)	SEE PAGE
Y	**128-5436**	1	RIM GP-DEMOUNTABLE (3-PIECE)	226
			—OR—	
Y	*176-1705*	1	RIM GP-DEMOUNTABLE (3-PIECE)	227

Y-SEPARATE ILLUSTRATION

<END>

186-4943 RIM GP-DEMOUNTABLE

S/N: JRL1-UP; RRS1-UP
17X25, 3-PIECE
PART OF 2Q-5979 RIM GP-DEMOUNTABLE
FIELD REPLACEMENT FOR 176-1706—PAGE 227
AN ATTACHMENT

SMCS-4209 **i03537715**

NOTE	PART NUMBER	QTY	PART NAME 1 2 3 4 5 6 (PRODUCT LEVEL)	SEE PAGE
Y	*176-1706*	1	RIM GP-DEMOUNTABLE (3-PIECE)	227

Y-SEPARATE ILLUSTRATION

<END>

224-6793 SHAFT GP-DRIVE–FRONT

S/N: JRL1-UP; RRS1-UP

PART OF 290-1256 SHAFT GP-DRIVE

SMCS-3253 **i01812024**

NOTE	REF NO	GRAPHIC REF	PART NUMBER	QTY	PART NAME 1 2 3 4 5 6 (PRODUCT LEVEL)	SEE PAGE
	1	1	**6I-8531**	1	BEARING GP-PILLOW BLOCK	
		1	**3B-8489**	1	FITTING-GREASE	
		1	*197-7995*	1	KIT-SETSCREW	
		1	**9L-7712**	1	NUT (3/8-24-THD)	
		1	**022-3108**	1	SETSCREW	
		1	**197-6666**	1	SETSCREW	
	2	1	**9U-3668**	1	YOKE	
	3	1	**224-6792**	1	UNIVERSAL JOINT GP	
		1	**193-4640**	1	KIT-SPIDER & BEARING	
		1	**8V-7315**	4	RING	
M	4	1	**8T-0372**	1	BOLT (M12X1.75X90-MM)	
	5	1	**9V-2412**	1	RETAINER	

M-METRIC PART

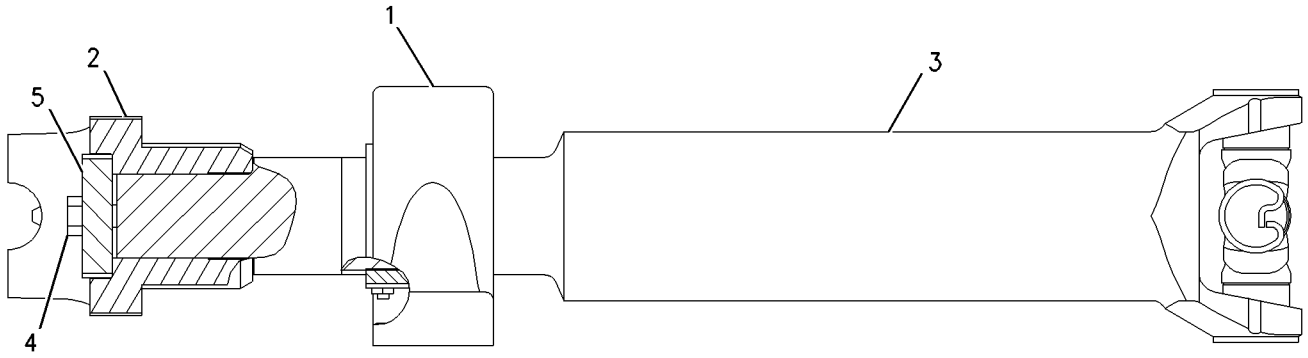

GRAPHIC #1 **<END>** g00914154

290-1256 SHAFT GP-DRIVE

S/N: JRL1-UP; RRS1-UP
PART OF 289-8815 POWER TRAIN AR

SMCS-3253 **i03039410**

NOTE	REF NO	GRAPHIC REF	PART NUMBER	QTY	PART NAME 1 2 3 4 5 6 (PRODUCT LEVEL)	SEE PAGE
	1	1	**4E-5984**	10	STRAP	
Y	2	1	**201-9517**	1	SLIP JOINT GP (CENTER)	231
Y	3	1	**224-6793**	1	SHAFT GP-DRIVE (FRONT)	229
	4	1	**312-6390**	1	UNIVERSAL JOINT GP	
		1	**191-2226**	2	SPIDER & BEARING GP	
					(EACH INCLUDES)	
		1	**8V-7315**	4	RING	
M	5	1	**4E-5985**	20	BOLT-12 POINT HEAD (M10X1.25X20-MM)	
	6	1	**8T-4122**	2	WASHER-HARD (17X32X3.5-MM THK)	
M	7	1	**8T-4140**	2	BOLT (M16X2X60-MM)	

M-METRIC PART
Y-SEPARATE ILLUSTRATION

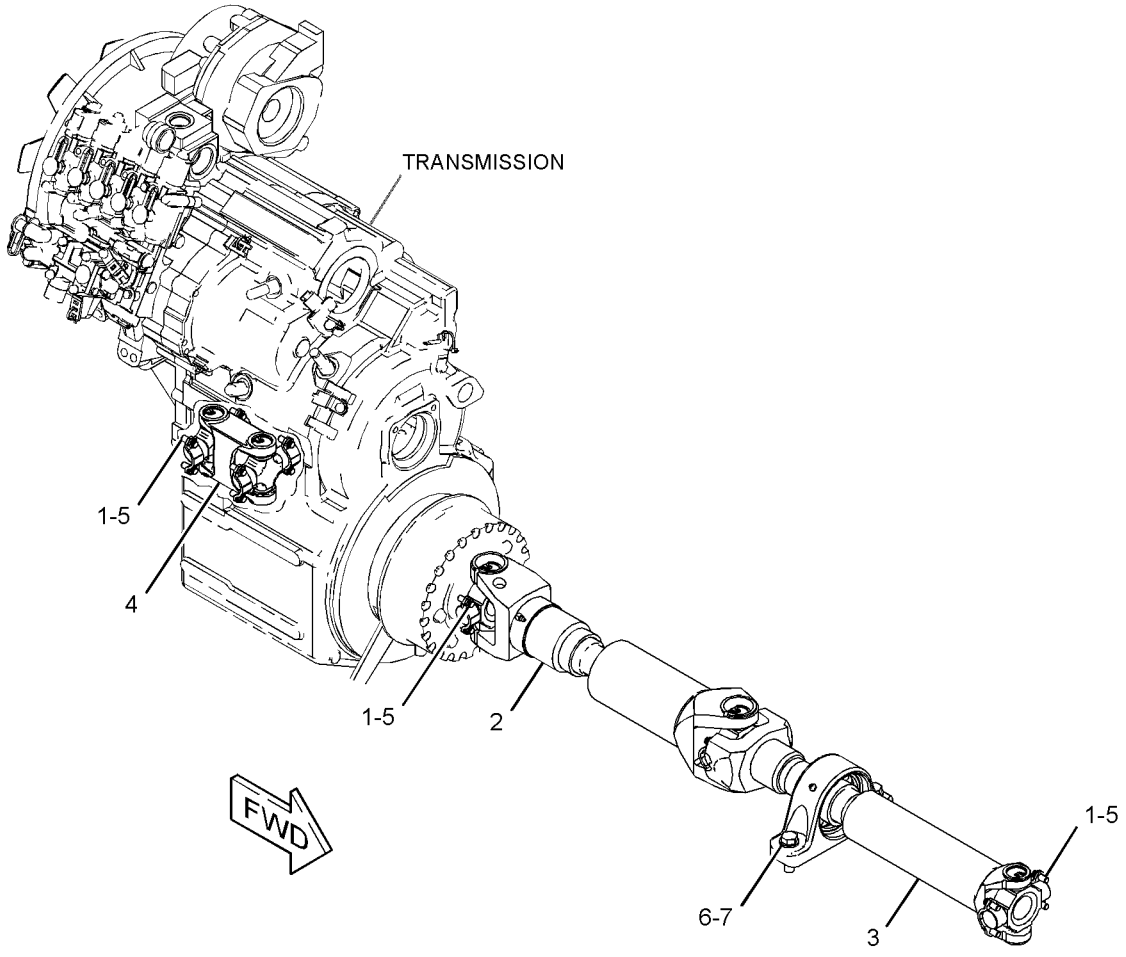

GRAPHIC #1 **<END>** g01398728

201-9517 SLIP JOINT GP–CENTER

S/N: JRL1-UP; RRS1-UP

PART OF 290-1256 SHAFT GP-DRIVE

SMCS-3251 **i03582585**

NOTE	REF NO	GRAPHIC REF	PART NUMBER	QTY	PART NAME 1 2 3 4 5 6 (PRODUCT LEVEL)	SEE PAGE
	1	1	**1K-6853**	1	FITTING-GREASE	
	2	1	**3B-8488**	1	FITTING-GREASE	
	3	1	**5V-5498**	1	RETAINER	
	4	1	**193-4640**	2	KIT-SPIDER & BEARING	
					(EACH INCLUDES)	
		1	**8V-7315**	4	RING	

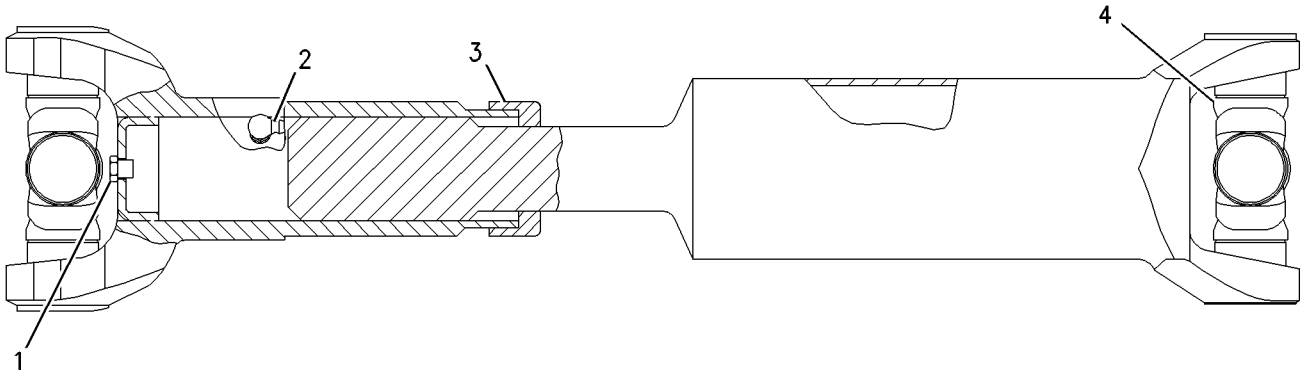

GRAPHIC #1 **<END>** g00914281

147-5576 STOP GP-AXLE OSCILLATION

S/N: JRL1-UP; RRS1-UP
PART OF 256-5049 TIRE & RIM AR
AN ATTACHMENT

SMCS-3259 **i01179919**

NOTE	PART NUMBER	QTY	PART NAME 1 2 3 4 5 6 (PRODUCT LEVEL)	SEE PAGE
	147-5577	2	BLOCK	
M	**8T-4956**	4	BOLT (M12X1.75X35-MM)	
	8T-4223	4	WASHER-HARD (13.5X25.5X3-MM THK)	

M-METRIC PART

<END>

229-4962 TIRE & RIM AR

S/N: JRL1-UP; RRS1-UP
PART OF 375-8359 DISTRIBUTION AR
AN ATTACHMENT

SMCS-4202 **i03569113**

NOTE	PART NUMBER	QTY	PART NAME 1 2 3 4 5 6 (PRODUCT LEVEL)	SEE PAGE
Y	*117-7836*	1	RIM AR (1-PIECE)	222
	142-6182	4	TIRE (17.5-25)	

Y-SEPARATE ILLUSTRATION

<END>

229-4970 TIRE & RIM AR

S/N: JRL1-UP; RRS1-UP
PART OF 375-8357, 375-8358 DISTRIBUTION AR
AN ATTACHMENT

SMCS-4202 **i03118993**

NOTE	PART NUMBER	QTY	PART NAME 1 2 3 4 5 6 (PRODUCT LEVEL)	SEE PAGE
Y	*117-7837*	1	RIM AR (3-PIECE)	222
	6W-6807	4	TIRE (17.5-25)	

Y-SEPARATE ILLUSTRATION

<END>

230-9667 TIRE & RIM AR

S/N: JRL1-UP; RRS1-UP
AN ATTACHMENT

SMCS-4202 **i03537719**

NOTE	PART NUMBER	QTY	PART NAME 1 2 3 4 5 6 (PRODUCT LEVEL)	SEE PAGE
Y	*117-7837*	1	RIM AR (3-PIECE)	222
	128-5450	4	TIRE (17.5-25)	

Y-SEPARATE ILLUSTRATION

<END>

256-5049 TIRE & RIM AR

S/N: JRL1-UP; RRS1-UP
AN ATTACHMENT

SMCS-4202 **i03629314**

NOTE	PART NUMBER	QTY	PART NAME 1 2 3 4 5 6 (PRODUCT LEVEL)	SEE PAGE
Y	*146-6783*	1	RIM AR (3-PIECE, CENTER MOUNT)	222
Y	*147-5576*	1	STOP GP-AXLE OSCILLATION	232
	119-0013	4	TIRE (20.5-R25)	

Y-SEPARATE ILLUSTRATION

<END>

290-1257 TRANSMISSION AR—STANDARD SPEED

S/N: J2Y1-UP
PART OF 289-8815 POWER TRAIN AR

SMCS-3030 **i03039672**

NOTE	PART NUMBER	QTY	PART NAME 1 2 3 4 5 6 (PRODUCT LEVEL)	SEE PAGE
Y	*293-6018*	1	CASE & PARTS GP-TRANSMISSION	179
Y	*102-7540*	1	CLUTCH GP (FIRST, THIRD)	181
Y	*102-7548*	1	CLUTCH GP (REVERSE, SECOND)	183
Y	*146-6283*	1	CLUTCH GP (FORWARD HIGH, FORWARD LOW)	185
Y	*141-8615*	1	DRIVE GP-FLEXIBLE COUPLING	193
Y	*146-6274*	1	DRIVE GP-PUMP (TRANSMISSION)	194
Y	*146-6282*	1	GEAR GP-INPUT TRANSFER	203
Y	*293-6017*	1	GEAR GP-OUTPUT TRANSFER	204
Y	*121-8917*	1	PUMP GP-TRANSMISSION (1-SECTION GEAR)	221
Y	*305-0635*	1	VALVE GP-TRANSMISSION CONTROL	242
	283-3305	1	TORQUE CONVERTER GP (TRANSMISSION)	

Y-SEPARATE ILLUSTRATION

<END>

126-0747 VALVE GP-BYPASS

S/N: JRL1-UP; RRS1-UP

PART OF 289-8923 LINES GP-TORQUE CONV COOLER

SMCS-3184 **i02252561**

NOTE	REF NO	GRAPHIC REF	PART NUMBER	QTY	PART NAME 1 2 3 4 5 6 (PRODUCT LEVEL)	SEE PAGE
	1	1	**124-8335**	1	VALVE AS-CONTROL	
	2	1	**126-0748**	1	BODY	
	3	1	*148-8407*	1	PLUG AS	
		1	**9S-4191**	1	PLUG-O-RING	
		1	**3J-1907**	1	SEAL-O-RING	
	4	1	**6V-8218**	1	SEAL-O-RING	

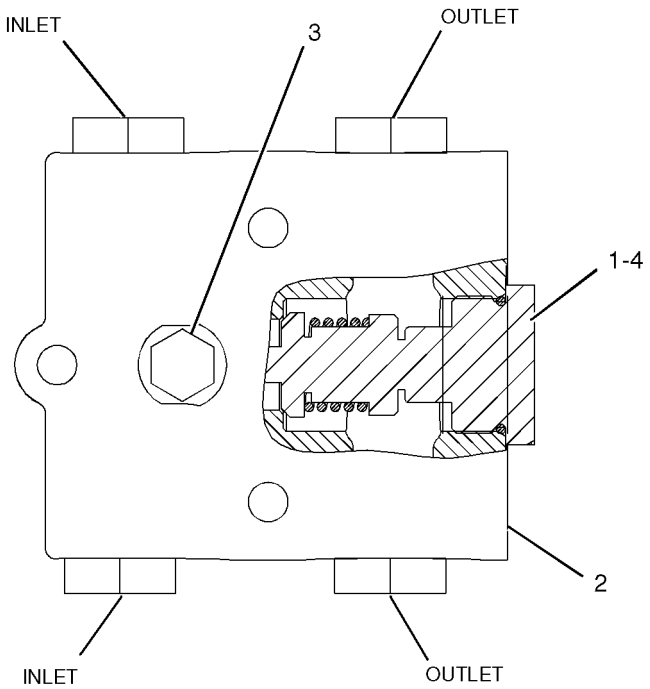

GRAPHIC #1 **<END>** g01044349

244-3114 VALVE GP-MODULATING

S/N: J2Y1-UP

24-VOLT

PART OF 200-2043 VALVE GP-TRANSMISSION CONTROL

SMCS-3139 **i03627113**

NOTE	REF NO	GRAPHIC REF	PART NUMBER	QTY	PART NAME 1 2 3 4 5 6 (PRODUCT LEVEL)	SEE PAGE
	1	1	**6V-3965**	1	FITTING (QUICK DISCONNECT)	
	2	1	**323-9531**	1	COIL AS (24-VOLT)	
	3	1	**214-7568**	1	SEAL-O-RING	
	4	1	**164-2108**	1	WASHER (13.03X25.4X2.38-MM THK)	
	5	1	**218-2373**	1	NUT (1/2-28-THD)	
					PARTS SHOWN IN GRAPHIC(S) WITHOUT A REFERENCE NUMBER ARE NOT SERVICED SEPARATELY	

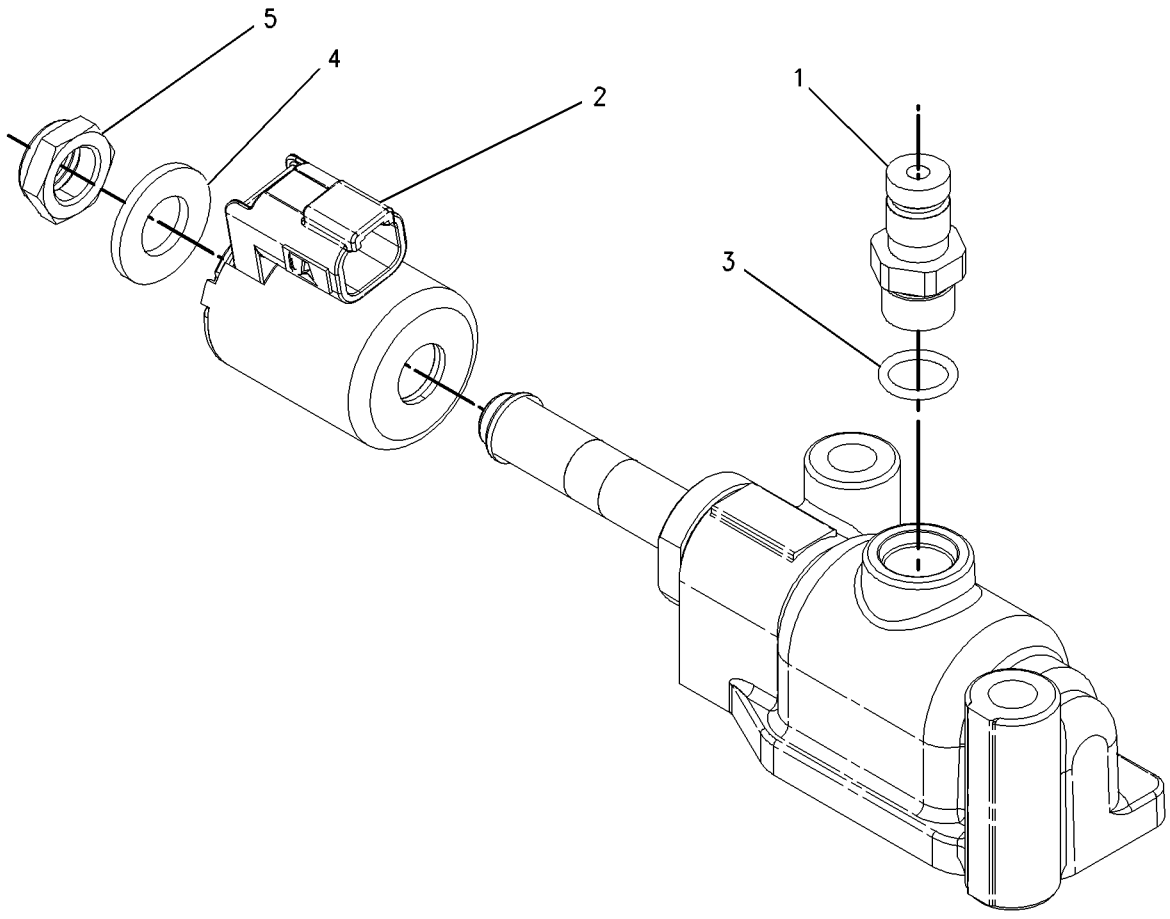

GRAPHIC #1 **<END>** g00919065

6I-9806 VALVE GP-RELIEF–TORQUE CONVERTER OUTLET

S/N: J2Y1-UP

PART OF 293-6018 CASE & PARTS GP-TRANSMISSION

SMCS-3133, 3182, 3210, 3213 **i00528685**

NOTE	REF NO	GRAPHIC REF	PART NUMBER	QTY	PART NAME 1 2 3 4 5 6 (PRODUCT LEVEL)	SEE PAGE
	1	1	**6I-9805**	1	BODY	
	2	1	**2S-1382**	1	SPRING	
	3	1	**6I-9804**	1	SPOOL	
	4	1	**2L-6726**	1	RING-RETAINING	

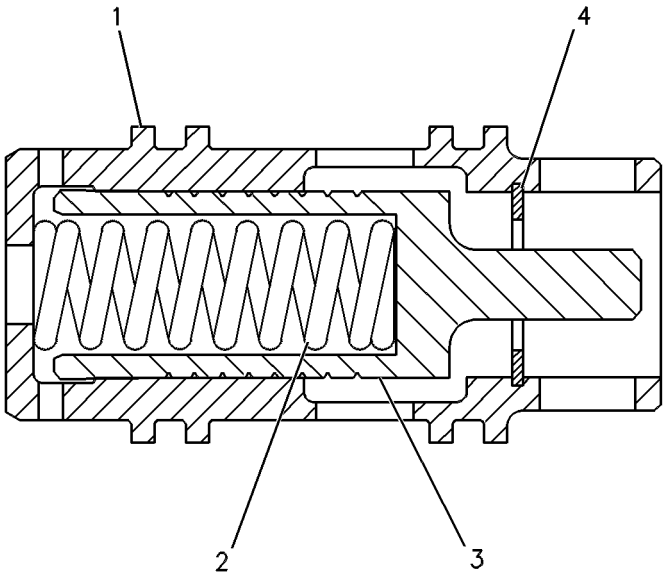

GRAPHIC #1 **<END>** g00128535

177-0026 VALVE GP-RELIEF—TRANSMISSION HYDRAULIC CONTROL

S/N: J2Y1-UP

PART OF 200-2043 VALVE GP-TRANSMISSION CONTROL

SMCS-3133, 3182, 3210, 3213 **i02603930**

NOTE	REF NO	GRAPHIC REF	PART NUMBER	QTY	PART NAME 1 2 3 4 5 6 (PRODUCT LEVEL)	SEE PAGE
	1	1	**2S-4663**	1	SEAL-O-RING	
	2	1	**2S-5835**	1	PISTON-LOAD	
	3	1	**3J-1907**	3	SEAL-O-RING	
	4	1	**3K-0360**	1	SEAL-O-RING	
	5	1	**4M-5905**	1	SCREW-ADJUSTMENT (5/16-18X1-IN)	
	6	1	**6V-0852**	1	CAP-DUST	
	7	1	**6V-3965**	1	FITTING (QUICK DISCONNECT)	
	8	1	**7B-3028**	1	SCREW-DRIVE (NO 4X 3/16-IN)	
	9	1	**8E-1143**	1	SLUG	
	10	1	**8M-5253**	1	SEAL-O-RING	
	11	1	**9M-2110**	1	COVER-ADJUSTMENT	
	12	1	**115-4550**	1	COVER	
	13	1	**172-7966**	1	BODY	
	14	1	**172-7968**	1	SPOOL AS	
		1	**3D-8317**	1	RING-RETAINING	
		1	**4B-9880**	1	BALL	
		1	**4M-2381**	1	SPRING	
		1	**9U-8669**	1	RETAINER	
	15	1	**174-7449**	1	SPRING	
	16	1	**241-6205**	1	PLUG	
	17	1	**6V-0484**	1	ELBOW	
M	18	1	**6V-3940**	2	BOLT (M8X1.25X25-MM)	
M	19	1	**6V-5218**	2	BOLT (M8X1.25X35-MM)	
	20	1	**9M-1974**	2	WASHER-HARD (8.8X16X2-MM THK)	
	21	1	**9S-8004**	1	PLUG-O-RING	

M-METRIC PART

177-0026 VALVE GP-RELIEF *(contd.)* **i02603930**

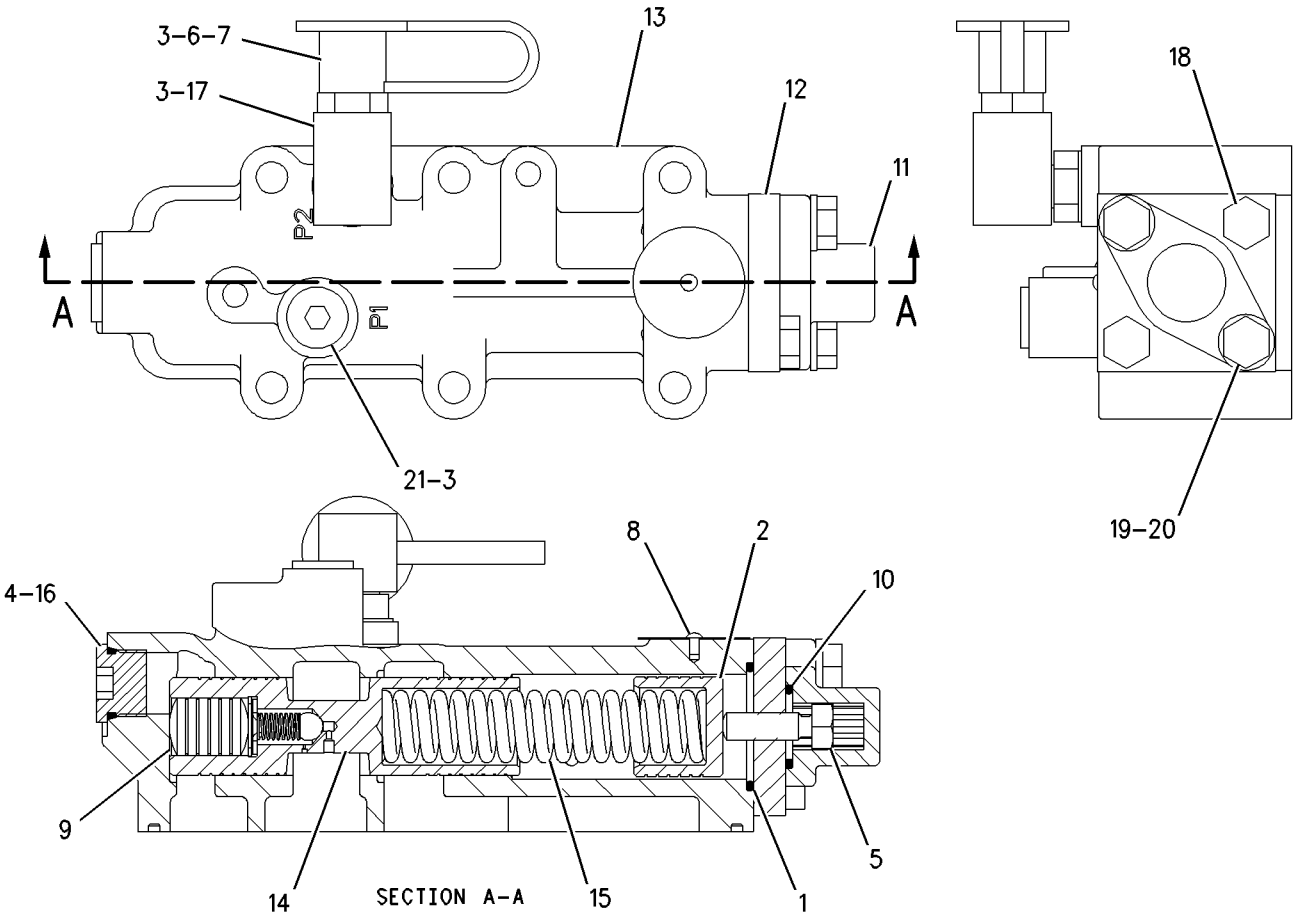

GRAPHIC #1 **<END>** g00989055

6D-0337 VALVE GP-TIRE

S/N: JRL1-UP; RRS1-UP
PART OF 117-7840 RIM GP-DEMOUNTABLE
AN ATTACHMENT

SMCS-4203 **i01683950**

NOTE	REF NO	GRAPHIC REF	PART NUMBER	QTY	PART NAME 1 2 3 4 5 6 (PRODUCT LEVEL)	SEE PAGE
	1	1	**6D-0443**	1	HOUSING AS-CORE	
	2	1	**2D-2628**	1	CORE-VALVE	
	3	1	**2D-2633**	1	CAP	
	4	1	**8D-2707**	1	SPUD AS	
	5	1	**2D-2629**	1	GROMMET	
	6	1	**2D-2630**	1	WASHER	
	7	1	**2D-2631**	1	NUT (0.482-26-THD)	

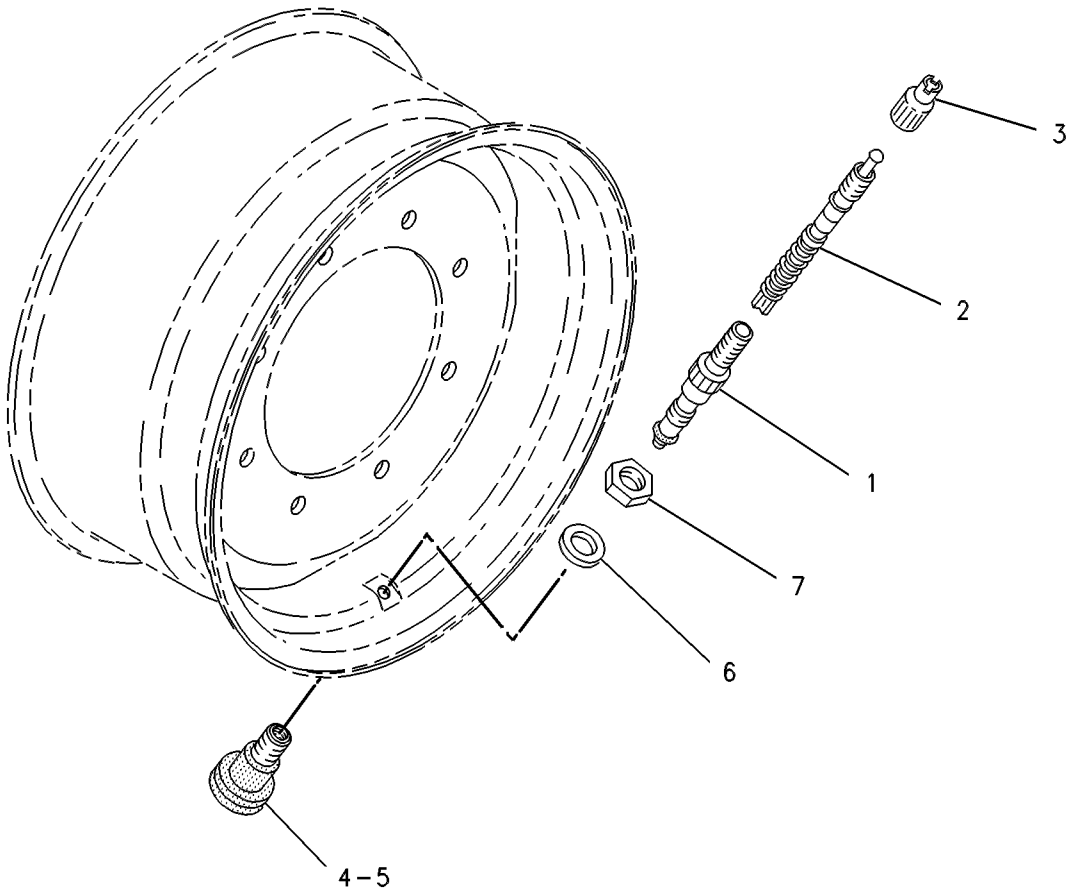

GRAPHIC #1 **<END>** g00121904

200-2043 VALVE GP-TRANSMISSION CONTROL

S/N: J2Y1-UP

PART OF 305-0635 VALVE GP-TRANSMISSION CONTROL

SMCS-3073, 3167 **i04591633**

NOTE	REF NO	GRAPHIC REF	PART NUMBER	QTY	PART NAME 1 2 3 4 5 6 (PRODUCT LEVEL)	SEE PAGE
	1	1	**9X-7725**	1	SEAL-O-RING	
	2	1	**6V-0852**	7	CAP-DUST	
	3	1	**6V-3965**	1	FITTING (QUICK DISCONNECT)	
	4	1	**8S-0768**	6	SEAL-O-RING	
	5	1	**9L-9068**	4	DOWEL	
Y	6	1	**177-0026**	1	VALVE GP-RELIEF (TRANSMISSION HYDRAULIC CONTROL)	237
	7	1	**201-3316**	1	MANIFOLD (TOP)	
	8	1	**200-2044**	1	MANIFOLD (BOTTOM)	
Y	9	1	**244-3114**	6	VALVE GP-MODULATING (24-VOLT) (TRANSMISSION CLUTCH)	235
Y	10	1	**134-2252**	1	SENSOR GP-TEMPERATURE (TRANSMISSION OIL)	136
C	11	1	**3J-1907**	3	SEAL-O-RING	
	12	1	**2P-1692**	1	SEAL-O-RING	
M	13	1	**8T-4177**	1	BOLT (M8X1.25X90-MM)	
CM	14	1	**5P-8347**	4	BOLT (M8X1.25X70-MM)	
	15	1	**9M-1974**	5	WASHER-HARD (8.8X16X2-MM THK)	
C	16	1	**6V-0484**	1	ELBOW	

C-CHANGE FROM PREVIOUS TYPE
M-METRIC PART
Y-SEPARATE ILLUSTRATION

200-2043 **VALVE GP-TRANSMISSION CONTROL** *(contd.)* **i04591633**

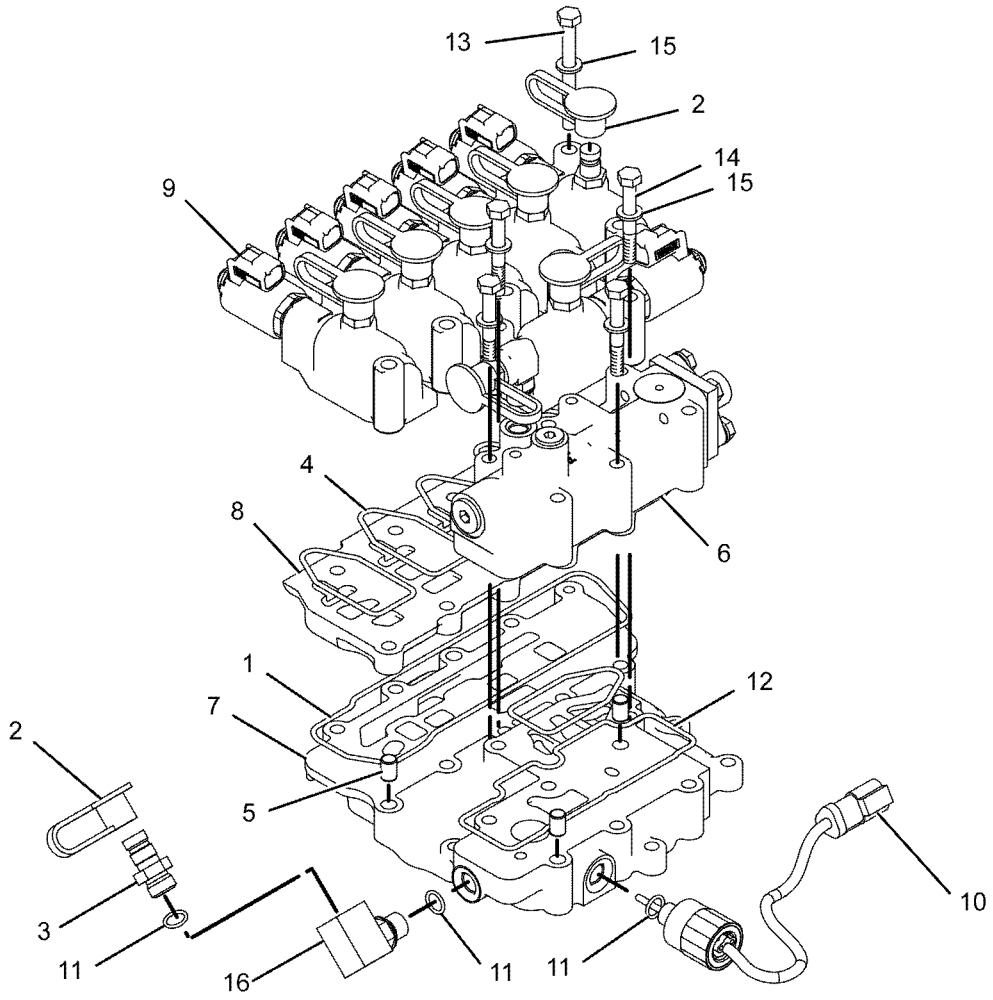

GRAPHIC #1 **<END>** g01085936

305-0635 VALVE GP-TRANSMISSION CONTROL

S/N: J2Y1-UP

PART OF 290-1257 TRANSMISSION AR

SMCS-3073, 3167 **i03626120**

NOTE	REF NO	GRAPHIC REF	PART NUMBER	QTY	PART NAME 1 2 3 4 5 6 (PRODUCT LEVEL)	SEE PAGE
	1	1	**3S-2093**	17	STRAP-CABLE	
	2	1	**8E-7841**	2	CLIP AS-CONNECTING	
	3	1	**9L-9068**	2	DOWEL	
Y	4	1	*200-2043*	1	VALVE GP-TRANSMISSION CONTROL (BASIC)	240
	5	1	**264-4297**	1	SENSOR AS-TEMPERATURE (TORQUE CONVERTER OIL)	
		1	**137-6645**	1	PAD-CONNECTOR (CONNECTOR)	
	6	1	**305-0632**	1	HARNESS AS-CONTROL (TRANSMISSION)	
		1	**155-2270**	12	KIT-CONNECTING PLUG (2-PIN)	
		1	**155-2260**	2	KIT-CONNECTING PLUG (3-PIN)	
					(EACH PLUG KIT INCLUDES PLUG AS, WEDGE & INTERFACE SEAL)	
		1	**167-3693**	1	PLUG AS-CONNECTOR (31-PIN)	
		1	**8T-8737**	7	PLUG-SEAL	
		1	**102-8803**	1	KIT-RECEPTACLE (3-PIN)	
					(INCLUDES RECEPTACLE AS & WEDGE)	
E		1	**114-8843**		SLEEVE-PLASTIC (310-CM)	
		1	**180-9340**	57	SOCKET-CONNECTOR (14-GA TO 18-GA)	
		1	**2L-8076**	1	TERMINAL-RING (14-GA TO 16-GA, NO. 10 SCREW)	
E		1	**125-7874**		TUBE-HEAT SHRINK (5.72-MM DIA) (15-CM)	
	7	1	**107-3114**	1	SEAL-O-RING	
	8	1	**130-5300**	2	CLIP	
	9	1	**132-5789**	7	CLIP	
Y	10	1	**183-8597**	3	SENSOR GP-SPEED (TRANSMISSION OUTPUT)	135
	11	1	**196-1185**	2	SENSOR GP-SPEED (TRANSMISSION OUTPUT)	
					(EACH INCLUDES)	
		1	**102-8802**	1	KIT-RECEPTACLE (2-PIN)	
					(INCLUDES RECEPTACLE AS & WEDGE)	
		1	**186-3735**	2	PIN-CONNECTOR (16-GA TO 18-GA)	
E		1	**9X-1813**		SLEEVE (14-CM)	
		1	**171-5349**	1	STRAP-MARKER	
	12	1	**3K-0360**	6	SEAL-O-RING	
	13	1	**4P-7581**	4	CLIP	
M	14	1	**6V-3821**	6	BOLT (M8X1.25X110-MM)	
M	15	1	**6V-3822**	1	BOLT (M10X1.5X35-MM)	
M	16	1	**6V-5215**	1	BOLT (M8X1.25X16-MM)	
M	17	1	**6V-5217**	2	BOLT (M8X1.25X20-MM)	
M	18	1	**6V-5218**	4	BOLT (M8X1.25X35-MM)	
M	19	1	**6V-5223**	7	BOLT (M8X1.25X100-MM)	
	20	1	**6V-5839**	1	WASHER (11X21X2.5-MM THK)	
	21	1	**8M-5251**	5	SEAL-O-RING	
	22	1	**9M-1974**	20	WASHER-HARD (8.8X16X2-MM THK)	

E-ORDER BY THE CENTIMETER
M-METRIC PART
Y-SEPARATE ILLUSTRATION

305-0635 **VALVE GP-TRANSMISSION CONTROL** *(contd.)* **i03626120**

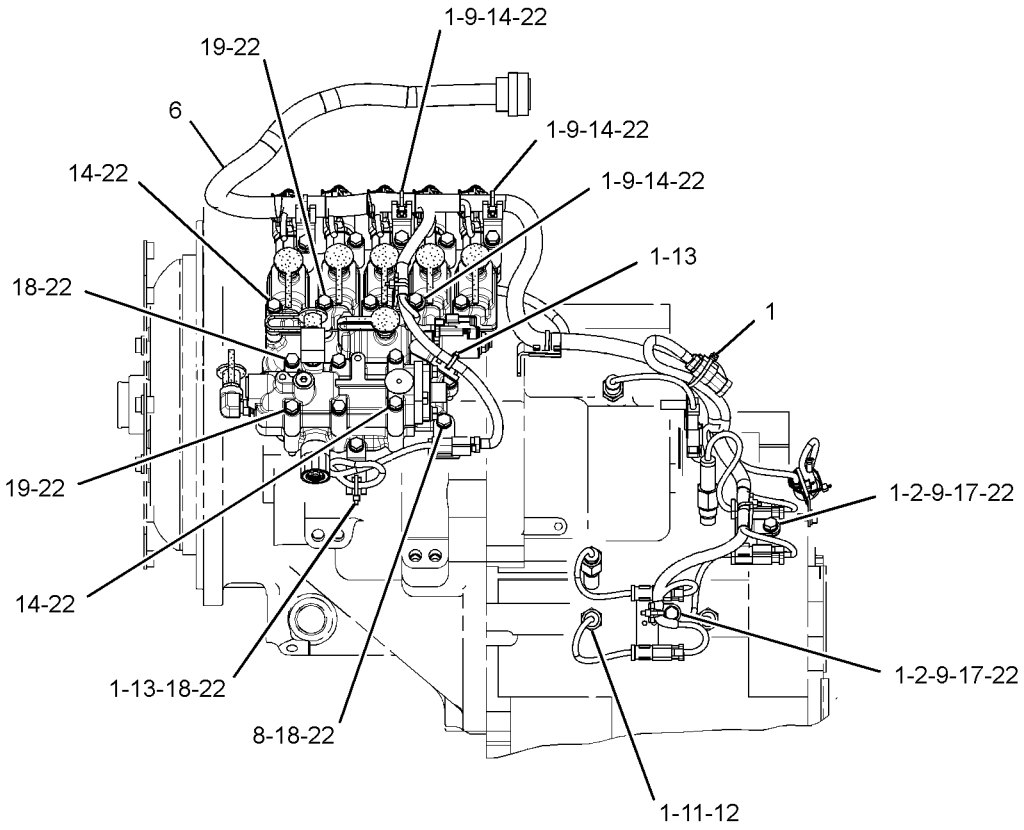

LEFT SIDE VIEW

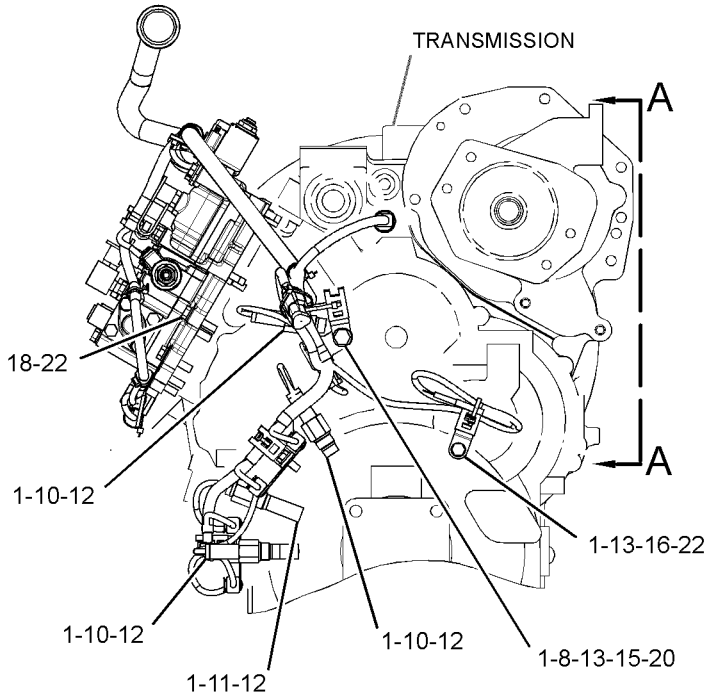

FRONT VIEW

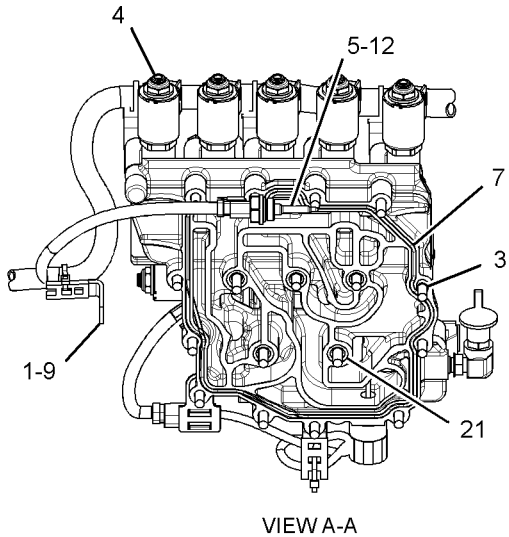

VIEW A-A

GRAPHIC #1 **<END>** g01398575

FRAME AND BODY

202-0420 BOX GP-BATTERY

S/N: JRL1-UP; RRS1-UP

PART OF 372-7772, 372-7773 CHASSIS AR

SMCS-7257 **i02106022**

NOTE	REF NO	GRAPHIC REF	PART NUMBER	QTY	PART NAME 1 2 3 4 5 6 (PRODUCT LEVEL)	SEE PAGE
C	1	1	**176-2435**	2	BOX AS	
					(EACH INCLUDES)	
M	1A	1	**8T-3490**	6	NUT-WELD (M10X1.5 THD)	
C	2	1	**237-0120**	2	COVER	
C	3	1	**7X-7729**	16	WASHER (11X25X3-MM THK)	
CM	4	1	**8T-4136**	16	BOLT (M10X1.5X25-MM)	

C-CHANGE FROM PREVIOUS TYPE
M-METRIC PART

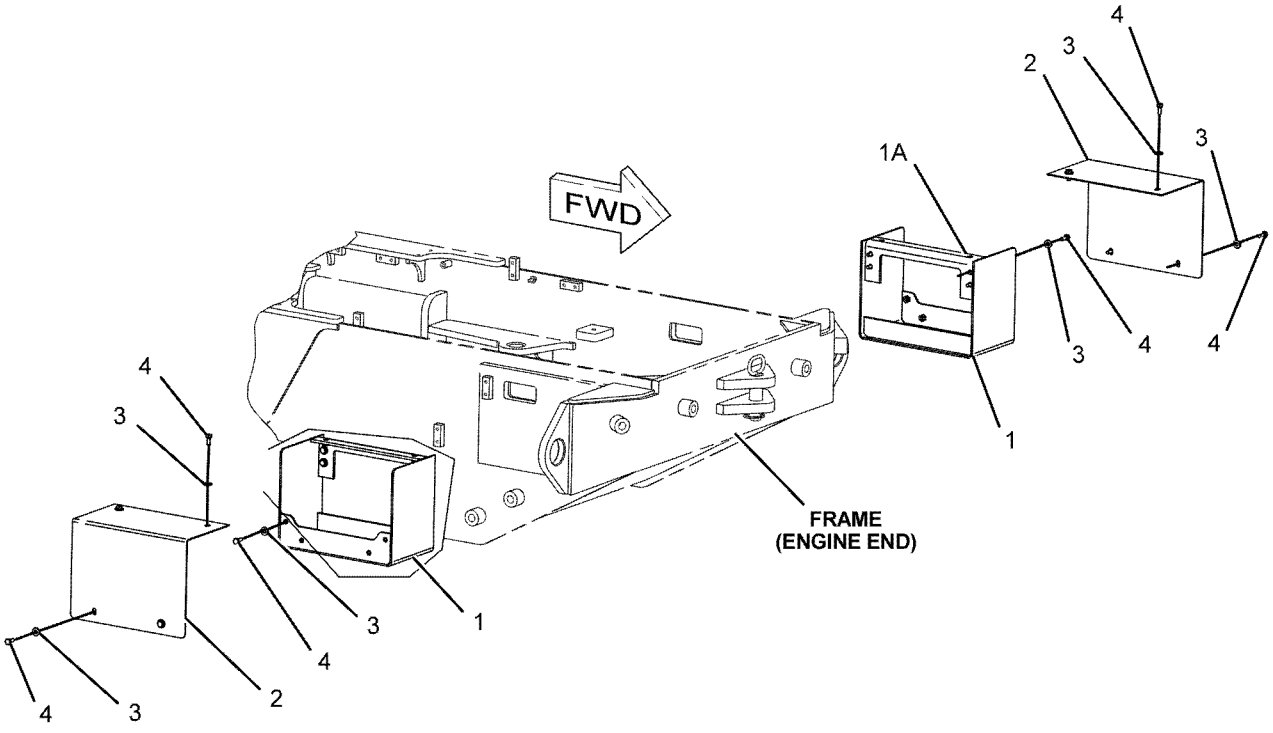

GRAPHIC #1 **<END>** g01077397

180-8984 COUNTERWEIGHT GP

S/N: JRL1-UP; RRS1-UP
PART OF 375-8358, 375-8359 DISTRIBUTION AR
CANNOT BE USED WITH 257-1645—PAGE 247
AN ATTACHMENT

SMCS-7056 **i03023631**

NOTE	REF NO	GRAPHIC REF	PART NUMBER	QTY	PART NAME 1 2 3 4 5 6 (PRODUCT LEVEL)	SEE PAGE
	1	1	**180-8996**	1	COUNTERWEIGHT AS (RH)	
	2	1	**180-8997**	1	COUNTERWEIGHT AS (LH)	
M	3	1	**8T-0363**	4	BOLT (M24X3X120-MM)	
	4	1	**8T-1482**	4	WASHER-HARD (26X50X8-MM THK)	
M	5	1	**8T-4179**	2	BOLT (M12X1.75X20-MM)	
	6	1	**8T-4223**	2	WASHER-HARD (13.5X25.5X3-MM THK)	

M-METRIC PART

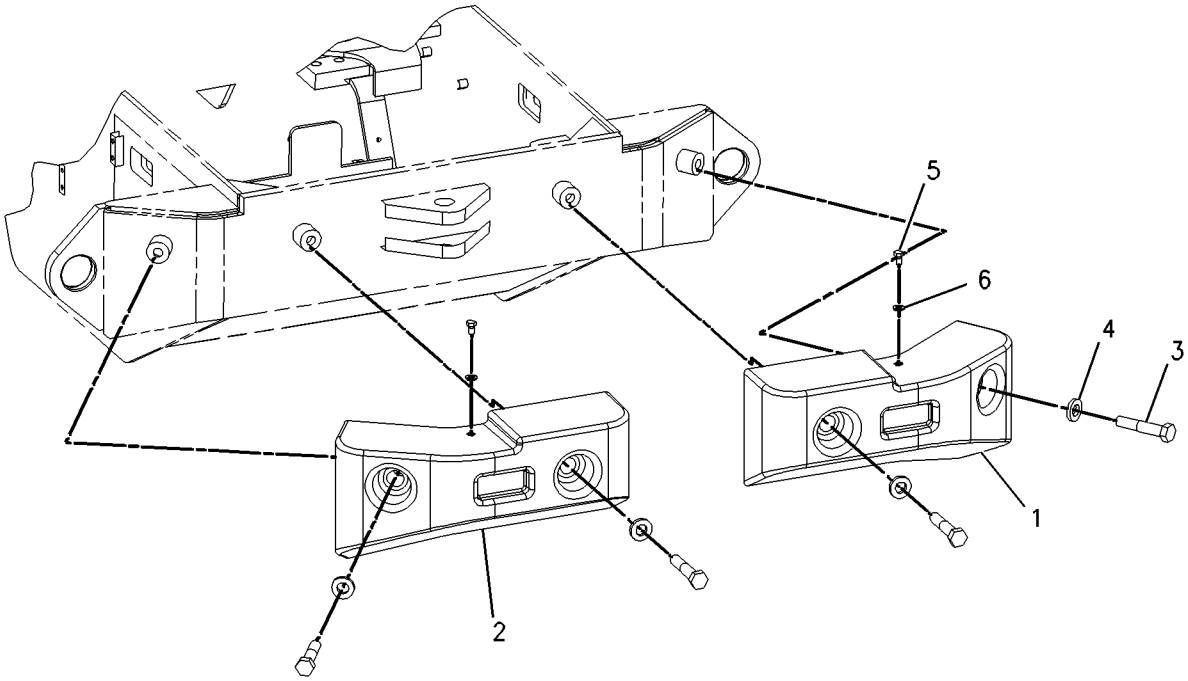

GRAPHIC #1 **<END>** g00894434

257-1625 COUNTERWEIGHT GP

S/N: RRS1-UP
PART OF 375-8357 DISTRIBUTION AR
CANNOT BE USED WITH 180-8984—PAGE 245
AN ATTACHMENT

SMCS-7056 **i03571149**

NOTE	REF NO	GRAPHIC REF	PART NUMBER	QTY	PART NAME 1 2 3 4 5 6 (PRODUCT LEVEL)	SEE PAGE
	1	1	**146-0058**	1	COUNTERWEIGHT (RH)	
	2	1	**148-7819**	1	COUNTERWEIGHT (LH)	
	3	1	**180-8996**	1	COUNTERWEIGHT AS (RH)	
	4	1	**180-8997**	1	COUNTERWEIGHT AS (LH)	
M	5	1	**8T-0363**	4	BOLT (M24X3X120-MM)	
	6	1	**8T-1482**	8	WASHER-HARD (26X50X8-MM THK)	
M	7	1	**8T-4179**	2	BOLT (M12X1.75X20-MM)	
	8	1	**8T-4223**	2	WASHER-HARD (13.5X25.5X3-MM THK)	
M	9	1	**8T-4649**	4	BOLT (M24X3X140-MM)	

M-METRIC PART

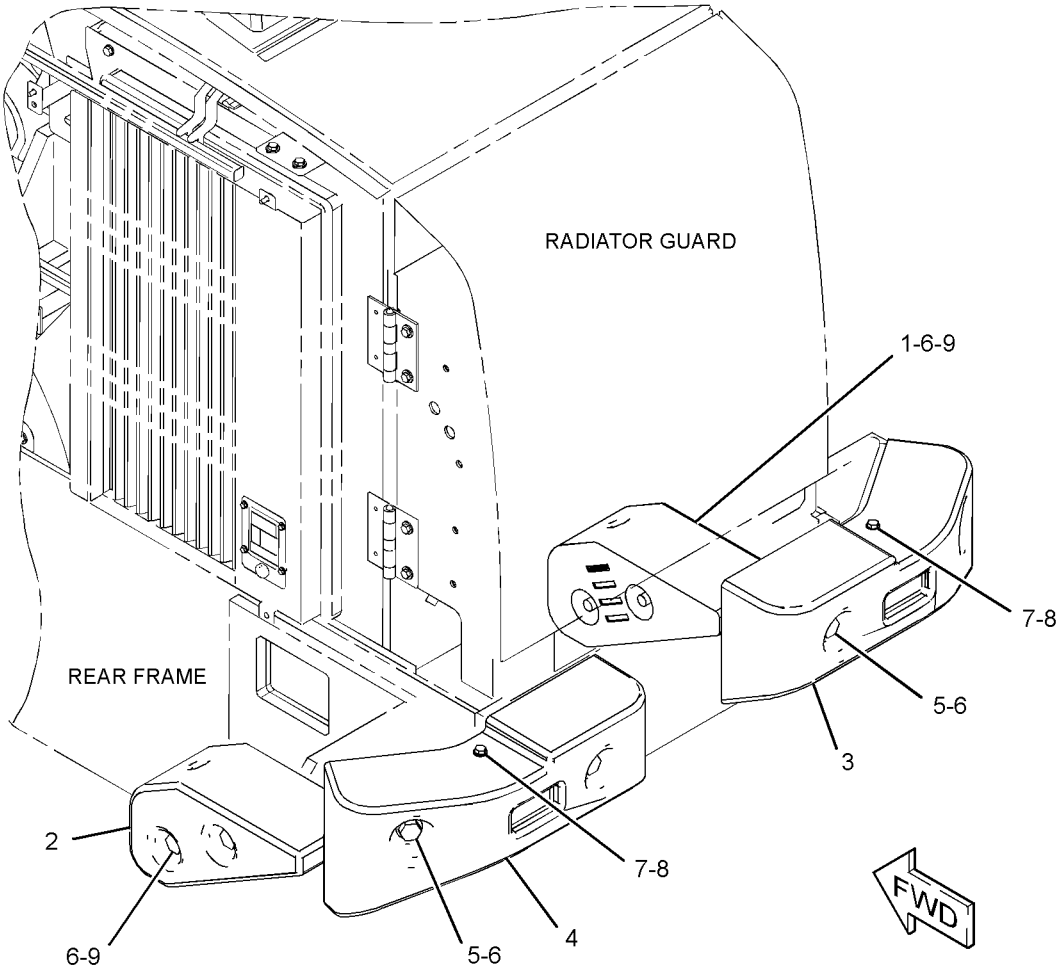

GRAPHIC #1 **<END>** g01407285

257-1645 COVER GP-ACCESS

S/N: JRL1-UP
CANNOT BE USED WITH 180-8984—PAGE 245
AN ATTACHMENT

SMCS-726A **i03016503**

NOTE	REF NO	GRAPHIC REF	PART NUMBER	QTY	PART NAME 1 2 3 4 5 6 (PRODUCT LEVEL)	SEE PAGE
	1	1	**257-1646**	1	PLATE	
	2	1	**257-1647**	1	PLATE	
	3	1	**8T-1482**	4	WASHER-HARD (26X50X8-MM THK)	
M	4	1	**8T-5379**	4	BOLT (M24X3X50-MM)	

M-METRIC PART

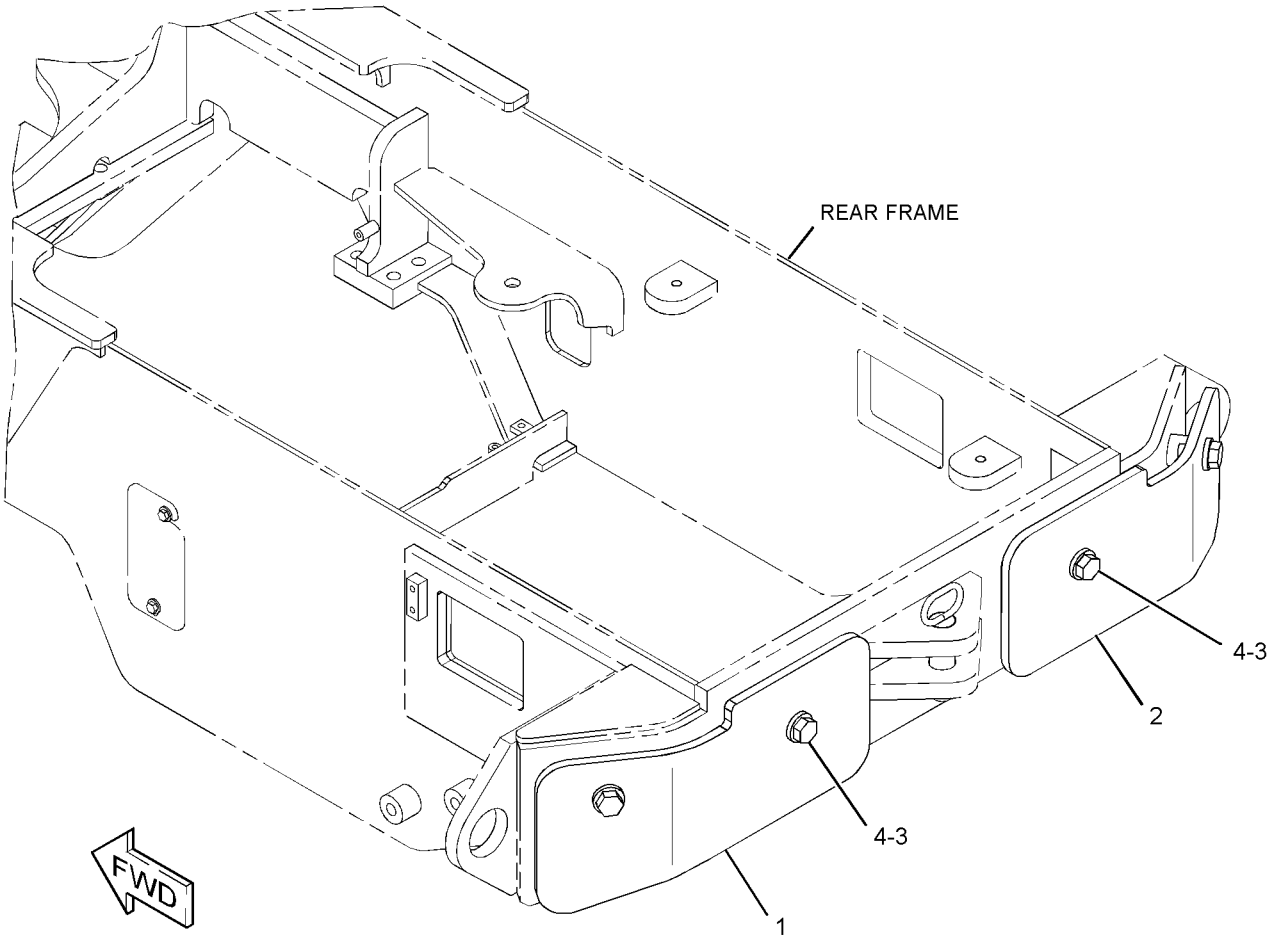

GRAPHIC #1 **<END>** g01391129

289-8960 DOOR GP-ACCESS—HOOD SIDE

S/N: JRL1-UP; RRS1-UP

PART OF 372-7772, 372-7773 CHASSIS AR

SMCS-7273 **i03409900**

NOTE	REF NO	GRAPHIC REF	PART NUMBER	QTY	PART NAME 1 2 3 4 5 6 (PRODUCT LEVEL)	SEE PAGE
	1	1	**198-8945**	1	DOOR AS-HOOD (RH)	
C	2	1	**198-8946**	1	DOOR AS-HOOD (LH)	
C	3	1	**315-5520**	1	INSULATION	

C-CHANGE FROM PREVIOUS TYPE

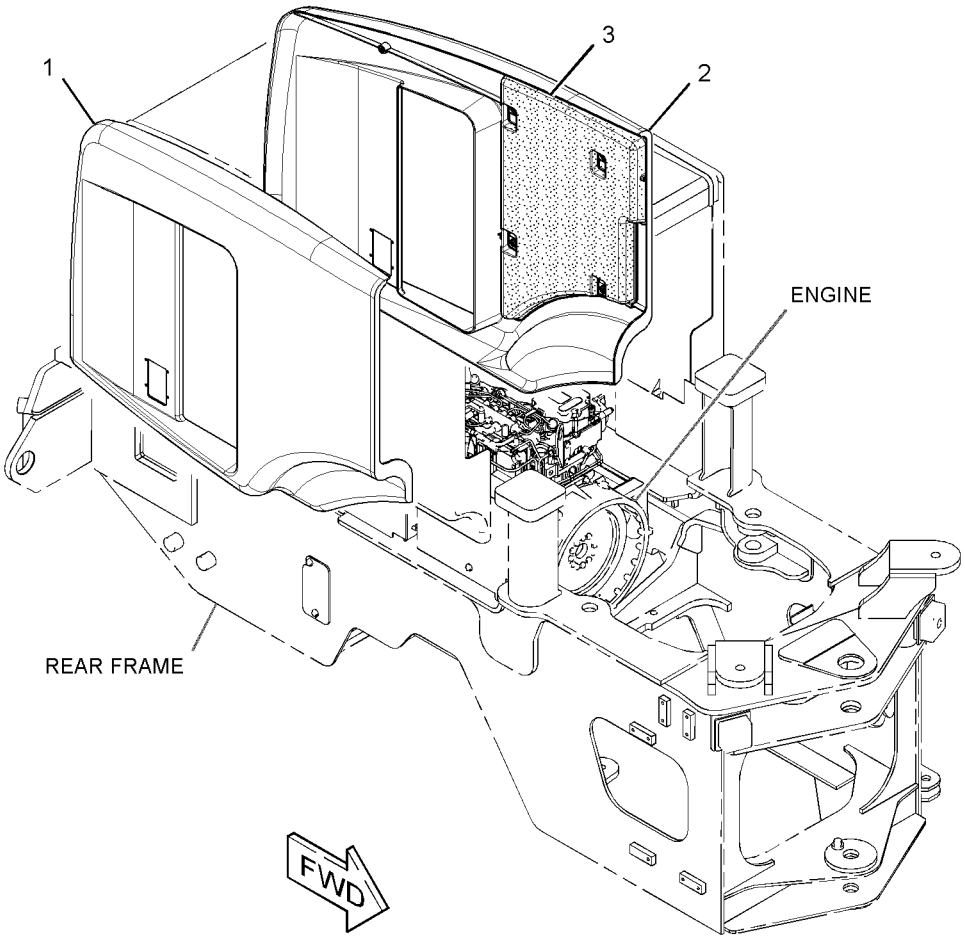

GRAPHIC #1 **<END>** g01792293

FRAME AND BODY

140-9295 FENDER GP-FRONT

S/N: RRS1-UP
PART OF 375-8357 DISTRIBUTION AR
AN ATTACHMENT

SMCS-7252 **i03885752**

NOTE	REF NO	GRAPHIC REF	PART NUMBER	QTY	PART NAME 1 2 3 4 5 6 (PRODUCT LEVEL)	SEE PAGE
	1	1	**140-9296**	2	BRACKET AS	
	2	1	**214-9563**	2	FENDER	
	3	1	**214-9564**	8	PLATE	
M	4	1	**8C-8451**	8	BOLT (M6X1X40-MM)	
	5	1	**7X-7729**	8	WASHER (11X25X3-MM THK)	
M	6	1	**8T-4136**	8	BOLT (M10X1.5X25-MM)	
	7	1	**8T-4205**	8	WASHER-HARD (7.2X14.5X2-MM THK)	

M-METRIC PART

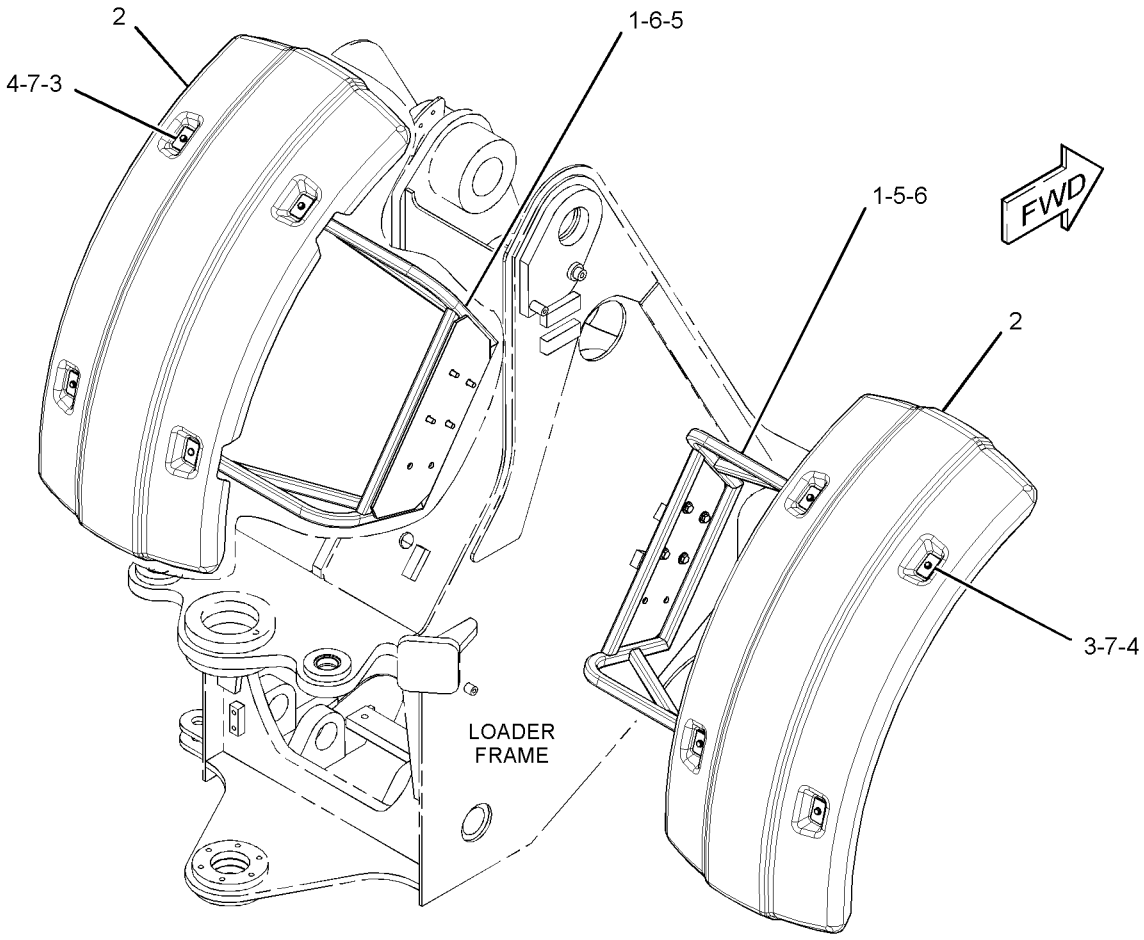

GRAPHIC #1 **<END>** g01471552

FRAME AND BODY

154-4914 FENDER GP-FRONT

S/N: JRL1-UP

PART OF 372-7772 CHASSIS AR

SMCS-7252 **i03036781**

NOTE	REF NO	GRAPHIC REF	PART NUMBER	QTY	PART NAME 1 2 3 4 5 6 (PRODUCT LEVEL)	SEE PAGE
	1	1	**214-9564**	8	PLATE	
	2	1	**8I-6603**	4	INSERT-SQUARE	
	3	1	**214-9563**	2	FENDER	
	4	1	**154-4917**	1	BRACKET AS (RH)	
	5	1	**154-4918**	1	BRACKET AS (LH)	
	6	1	**204-0814**	8	BOLT (M6X1X60-MM)	
	7	1	**7X-7729**	6	WASHER (11X25X3-MM THK)	
M	8	1	**8T-4182**	6	BOLT (M10X1.5X45-MM)	
	9	1	**8T-4205**	8	WASHER-HARD (7.2X14.5X2-MM THK)	

M-METRIC PART

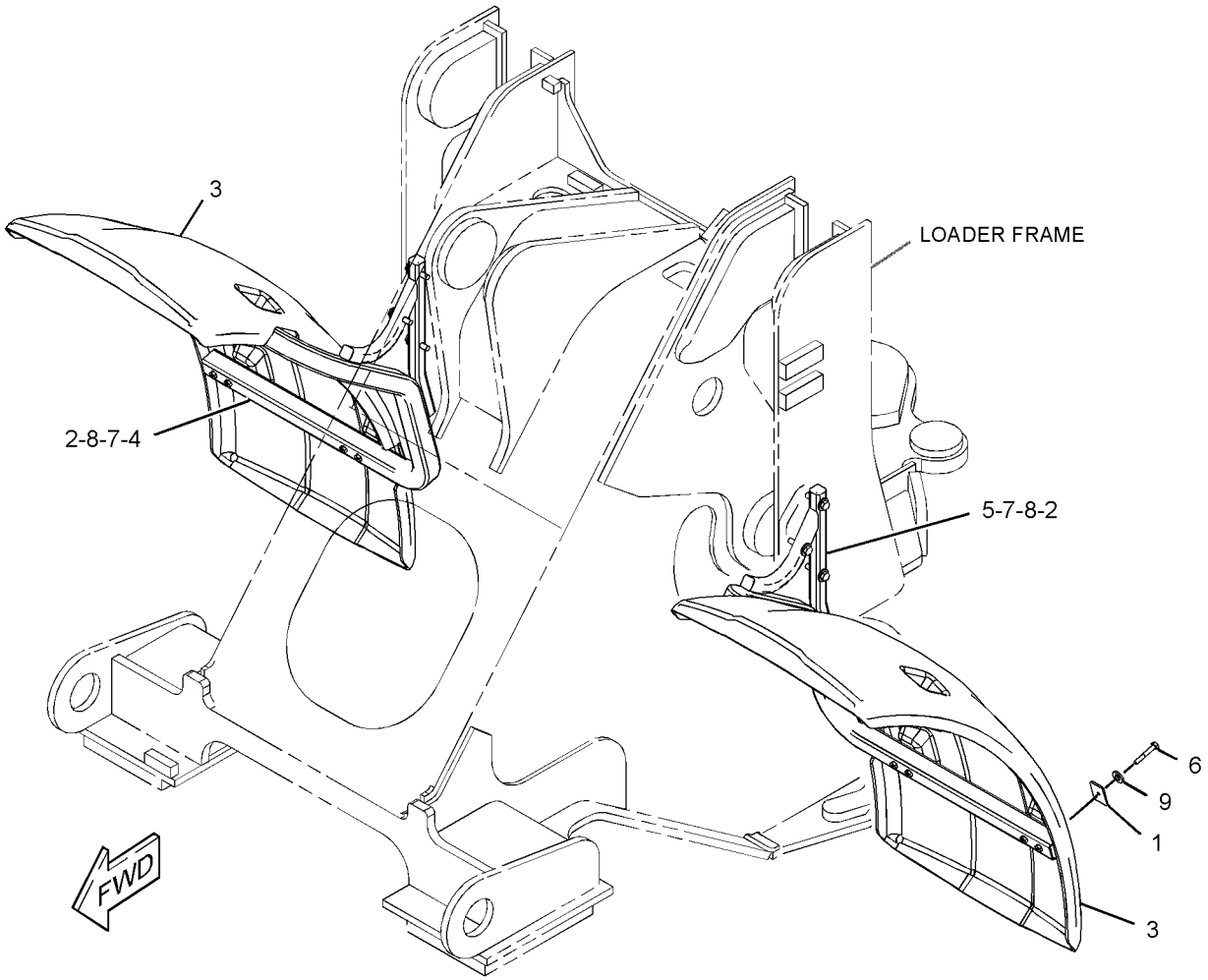

GRAPHIC #1 **<END>** g01545634

FRAME AND BODY

372-7760 FRAME GP-LOADER—ENGINE END

S/N: JRL1-UP; RRS1-UP

PART OF 372-7772, 372-7773 CHASSIS AR

SMCS-7054 **i04509249**

NOTE	REF NO	GRAPHIC REF	PART NUMBER	QTY	PART NAME 1 2 3 4 5 6 (PRODUCT LEVEL)	SEE PAGE
	1	1	**103-5796**	1	PIN-KEEPER	
	2	1	**112-0885**	2	PAD AS-RESILIENT	
	3	1	**132-2558**	1	PIN AS	
	4	1	**257-1615**	2	PLATE	
	5	1	**372-7761**	1	FRAME AS-ENGINE END	
	6	1	**7X-7729**	4	WASHER (11X25X3-MM THK)	
	7	1	**8T-4121**	2	WASHER-HARD (11X21X2.5-MM THK)	
M	8	1	**8T-4137**	2	BOLT (M10X1.5X20-MM)	
M	9	1	**8T-4196**	4	BOLT (M10X1.5X35-MM)	

M-METRIC PART

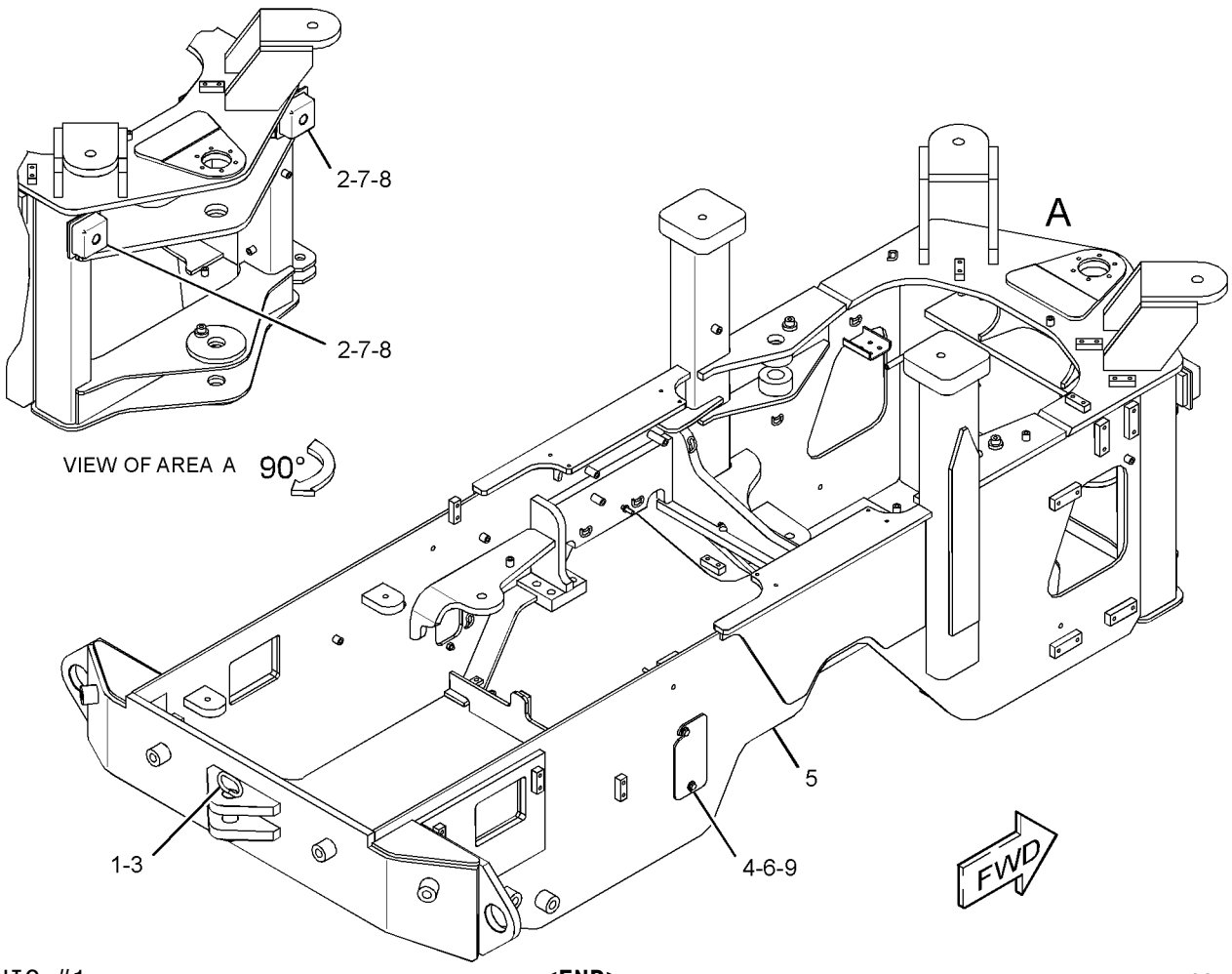

GRAPHIC #1 **<END>** g02718250

372-7763 FRAME GP-LOADER—NON-ENGINE END

S/N: JRL1-UP

PART OF 372-7772 CHASSIS AR

SMCS-7054 **i04509270**

NOTE	REF NO	GRAPHIC REF	PART NUMBER	QTY	PART NAME 1 2 3 4 5 6 (PRODUCT LEVEL)	SEE PAGE
	1	1	**148-7752**	1	PLATE	
Y	2	1	**372-7764**	1	FRAME GP-LOADER (NON-ENGINE END)	253
	3	1	**7X-7729**	4	WASHER (11X25X3-MM THK)	
M	4	1	**8T-4195**	4	BOLT (M10X1.5X30-MM)	

M-METRIC PART
Y-SEPARATE ILLUSTRATION

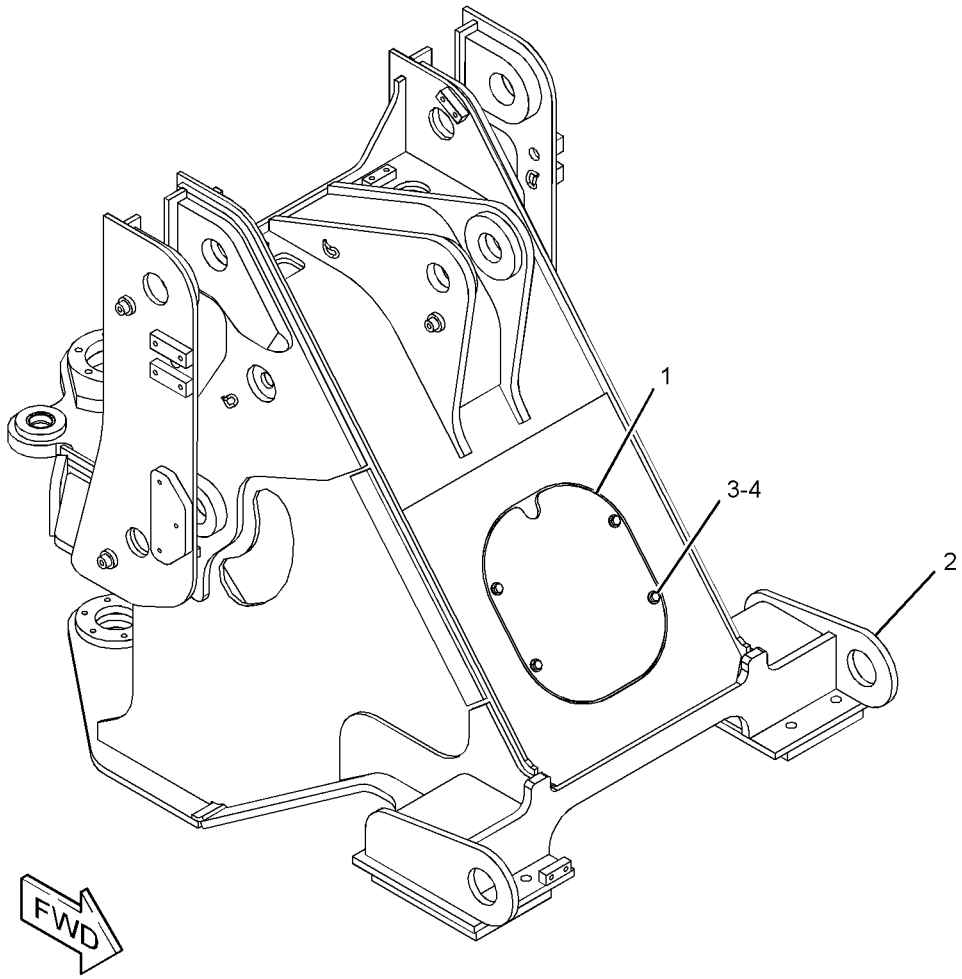

GRAPHIC #1 **<END>** g02718767

372-7764 FRAME GP-LOADER—NON-ENGINE END

S/N: JRL1-UP

PART OF 372-7763 FRAME GP-LOADER

SMCS-7054 **i04509269**

NOTE	REF NO	GRAPHIC REF	PART NUMBER	QTY	PART NAME 1 2 3 4 5 6 (PRODUCT LEVEL)	SEE PAGE
	1	1	**8Y-7023**	5	BOSS (M12X1.75-MM)	
	2	1	**092-1136**	1	BOSS (M10X1.5-THD)	
M	3	1	**9R-2672**	2	BOSS-THREADED (M10X1.5-THD)	
	4	1	**9T-3598**	6	BOSS (M10X1.5-THD)	
	5	1	*372-7769*	1	FRAME GP-LOADER (NON-ENGINE END)	
	5A	1	**4K-4709**	2	BUSHING	
M	6	1	**111-0483**	1	BOSS (M10X1.5-THD)	
	7	1	**7T-1099**	13	LINK	
M	8	1	**8Y-4489**	3	BOSS (M10X1.5-THD)	
M	9	1	**9C-6809**	7	BOSS (M10X1.5-MM)	

M-METRIC PART

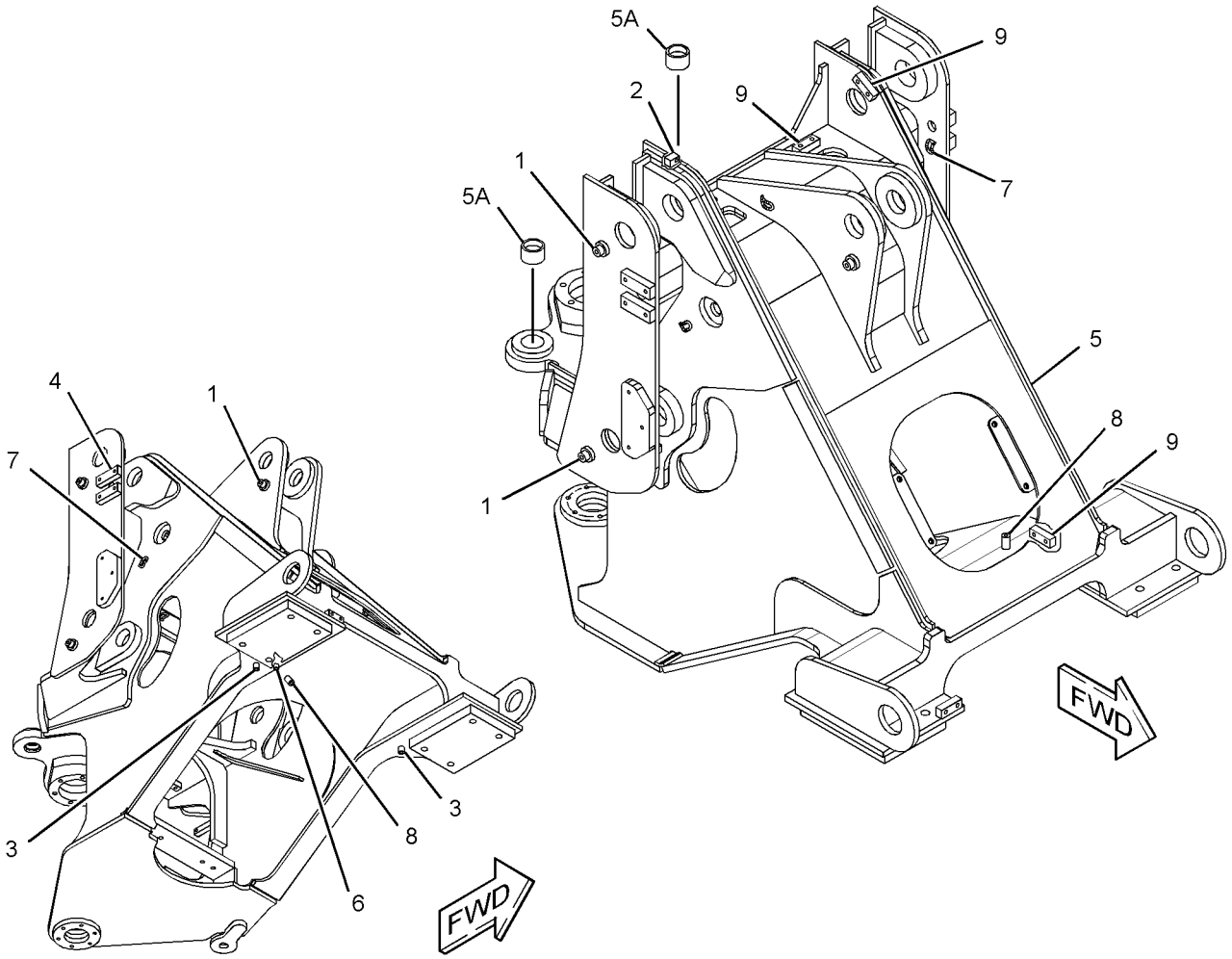

GRAPHIC #1 **<END>** g02718902

FRAME AND BODY

372-7766 FRAME GP-LOADER—NON-ENGINE END

S/N: RRS1-UP

PART OF 372-7773 CHASSIS AR

SMCS-7054 **i04509334**

NOTE	REF NO	GRAPHIC REF	PART NUMBER	QTY	PART NAME 1 2 3 4 5 6 (PRODUCT LEVEL)	SEE PAGE
Y	1	1	**372-7767**	1	FRAME GP-LOADER (NON-ENGINE END)	255

Y-SEPARATE ILLUSTRATION

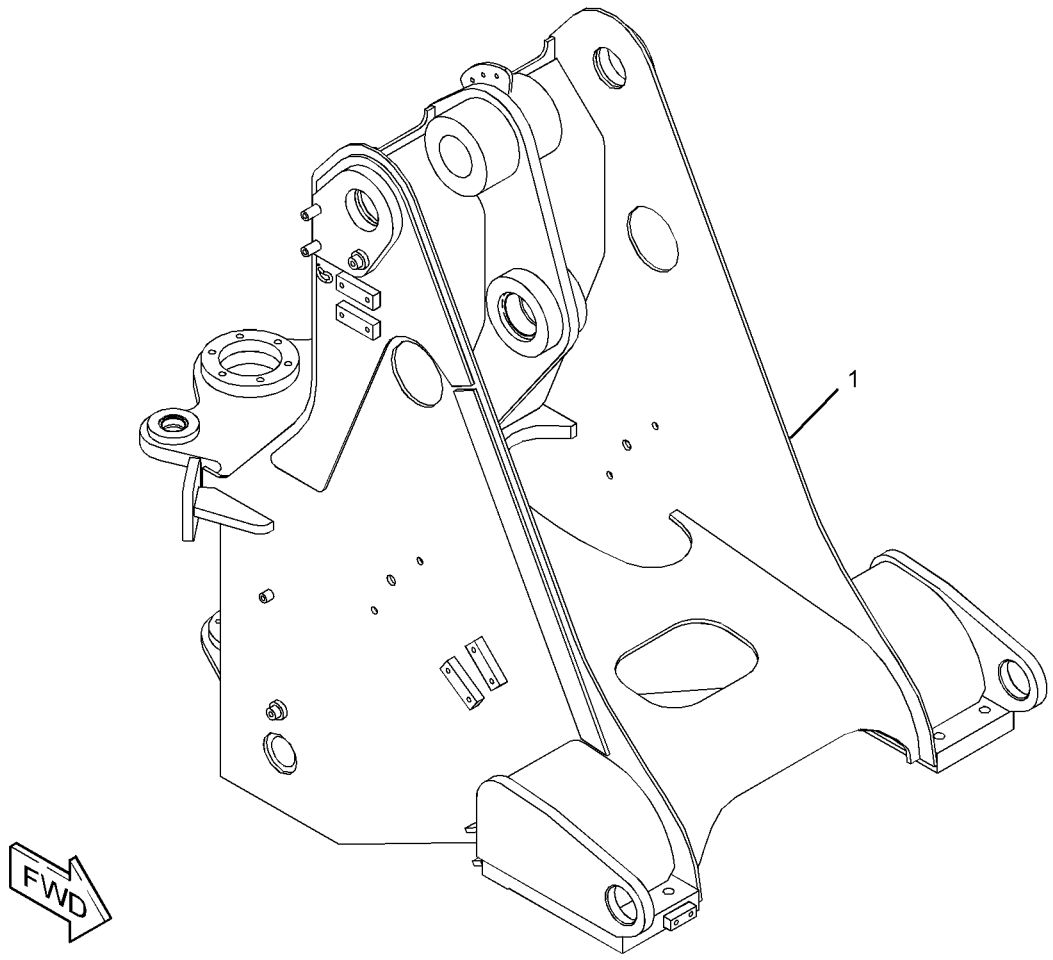

GRAPHIC #1 **<END>** g02718418

FRAME AND BODY

372-7767 FRAME GP-LOADER—NON-ENGINE END

S/N: RRS1-UP

PART OF 372-7766 FRAME GP-LOADER

SMCS-7054 **i04509333**

NOTE	REF NO	GRAPHIC REF	PART NUMBER	QTY	PART NAME 1 2 3 4 5 6 (PRODUCT LEVEL)	SEE PAGE
	1	1	**8Y-7023**	3	BOSS (M12X1.75-MM)	
	2	1	**092-1136**	1	BOSS (M10X1.5-THD)	
M	3	1	**9R-2613**	1	BOSS-WELD (M10X1.5X25-MM)	
M	4	1	**9R-2672**	3	BOSS-THREADED (M10X1.5-THD)	
	5	1	**9T-3598**	11	BOSS (M10X1.5-THD)	
	6	1	*372-7770*	1	FRAME GP-LOADER (NON-ENGINE END)	
	6A	1	**171-3667**	1	BUSHING	
	6B	1	**4K-4709**	2	BUSHING	
	7	1	**7T-1099**	18	LINK	
M	8	1	**8Y-4489**	9	BOSS (M10X1.5-THD)	
M	9	1	**9C-6809**	7	BOSS (M10X1.5-MM)	

M-METRIC PART

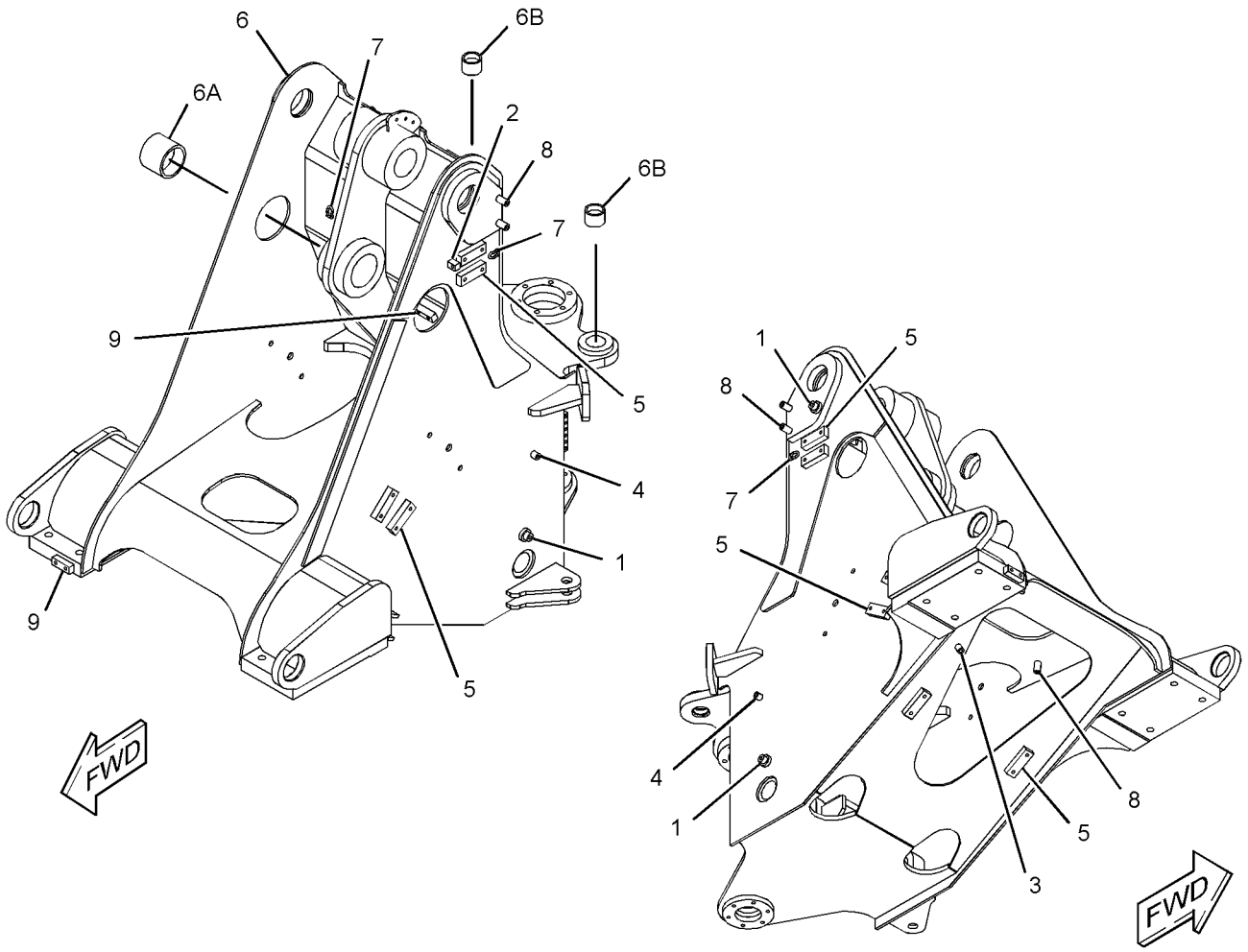

GRAPHIC #1 **<END>** g02718885

293-5221 GUARD GP-CRANKCASE

S/N: JRL1-UP; RRS1-UP

AN ATTACHMENT

SMCS-7151 **i03039637**

NOTE	REF NO	GRAPHIC REF	PART NUMBER	QTY	PART NAME 1 2 3 4 5 6 (PRODUCT LEVEL)	SEE PAGE
	1	1	**219-2418**	1	PLATE AS	
M		1	**8T-3490**	2	NUT-WELD (M10X1.5-THD)	
	2	1	**293-5222**	1	PLATE AS	
	3	1	**7X-7729**	4	WASHER (11X25X3-MM THK)	
M	4	1	**8T-4195**	4	BOLT (M10X1.5X30-MM)	

M-METRIC PART

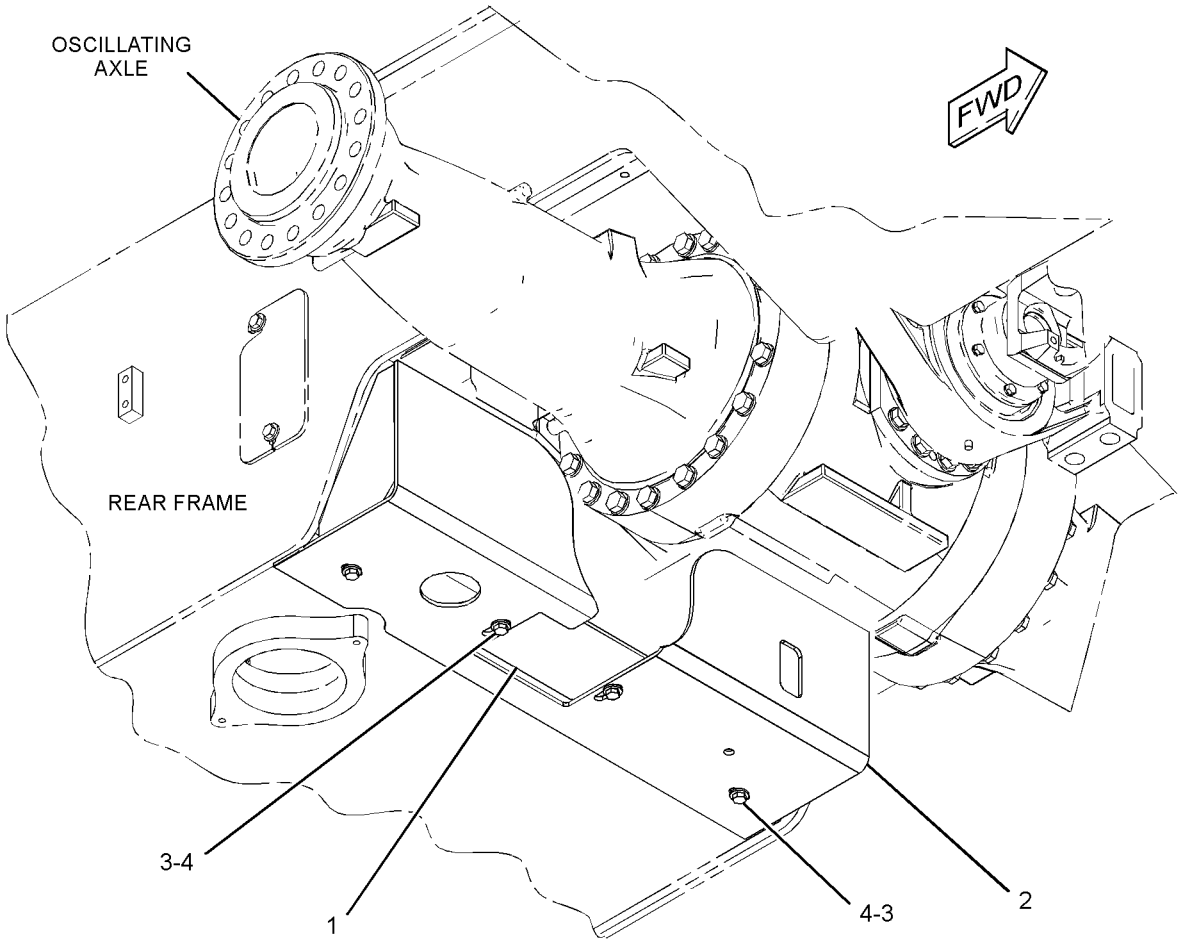

GRAPHIC #1 **<END>** g01444978

290-7213 GUARD GP-DRIVE SHAFT

S/N: RRS1-UP
AN ATTACHMENT

SMCS-7153 **i03018373**

NOTE	REF NO	GRAPHIC REF	PART NUMBER	QTY	PART NAME 1 2 3 4 5 6 (PRODUCT LEVEL)	SEE PAGE
	1	1	**295-0580**	1	GUARD AS	
	2	1	**7X-7729**	4	WASHER (11X25X3-MM THK)	
M	3	1	**8T-4136**	4	BOLT (M10X1.5X25-MM)	

M-METRIC PART

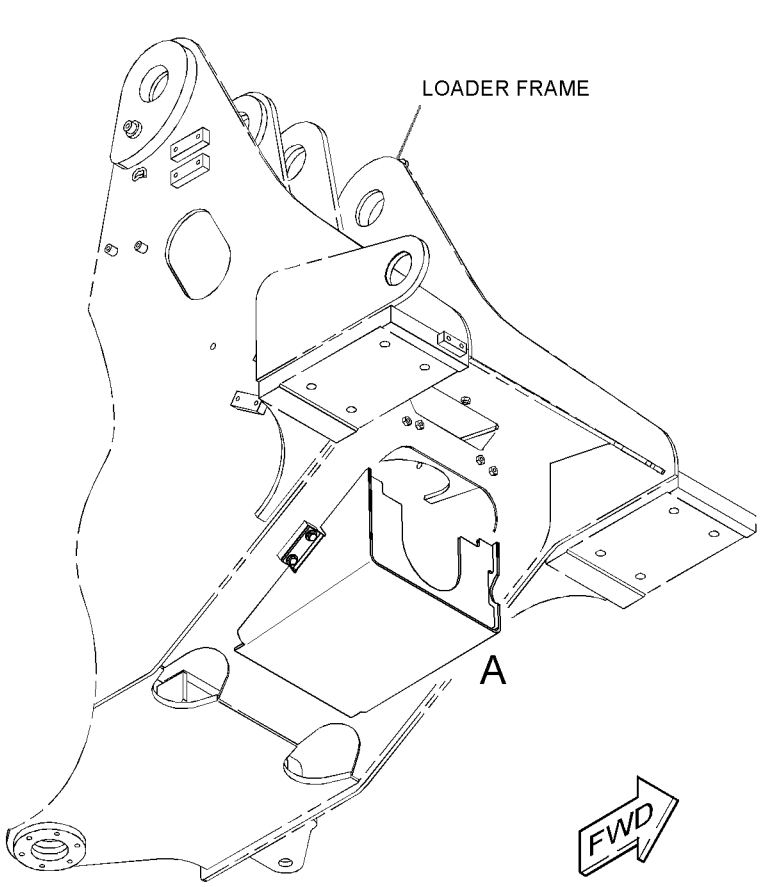

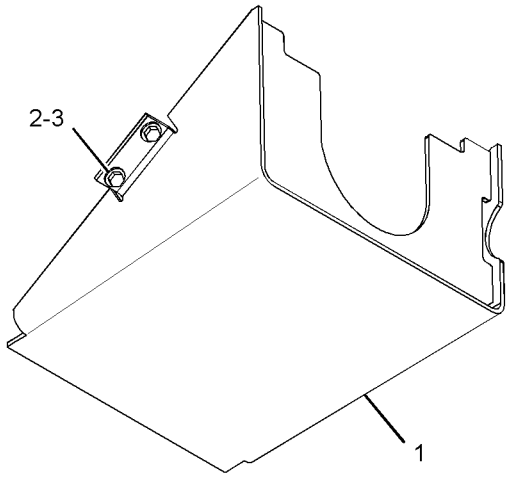

VIEW OF AREA A

GRAPHIC #1

<END>

g01529836

156-4555 GUARD GP-LINES–3-VALVE

S/N: JRL1-UP

AN ATTACHMENT

SMCS-7167 **i01196404**

NOTE	REF NO	GRAPHIC REF	PART NUMBER	QTY	PART NAME 1 2 3 4 5 6 (PRODUCT LEVEL)	SEE PAGE
	1	1	**7K-1181**	6	STRAP-CABLE	
	2	1	**5P-8444**	2	GROMMET	
	3	1	**5P-7468**	2	CLIP (SLOT)	
	4	1	**5P-7469**	2	CLIP (TAB)	

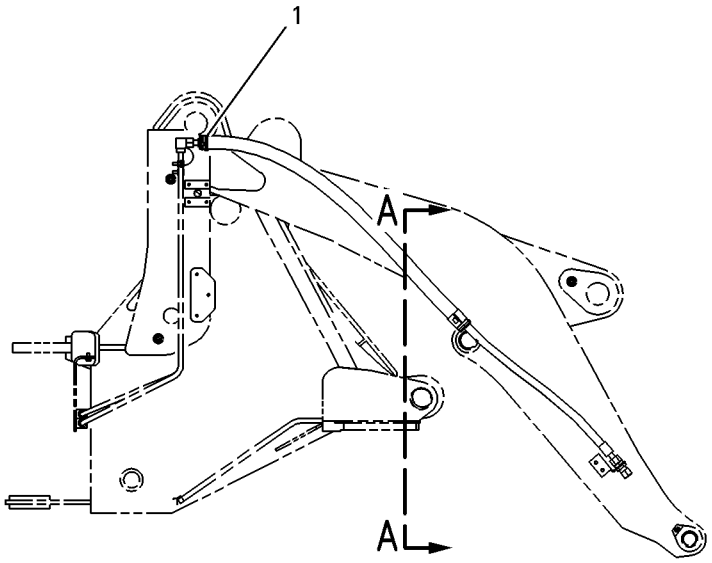

RIGHT SIDE VIEW

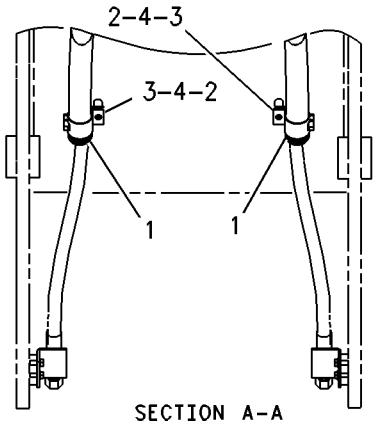

SECTION A-A

GRAPHIC #1 **<END>** g00639942

156-4556 GUARD GP-LINES—3-VALVE

S/N: RRS1-UP

FOR USE WITH 290-8189—PAGE 474

AN ATTACHMENT

SMCS-7167 **i01196406**

NOTE	REF NO	GRAPHIC REF	PART NUMBER	QTY	PART NAME 1 2 3 4 5 6 (PRODUCT LEVEL)	SEE PAGE
	1	1	**7K-1181**	8	STRAP-CABLE	
	2	1	**163-4356**	2	GUARD-HOSE	
	3	1	**5P-7468**	4	CLIP (SLOT)	
	4	1	**5P-7469**	4	CLIP (TAB)	
	5	1	**5P-8444**	4	GROMMET	

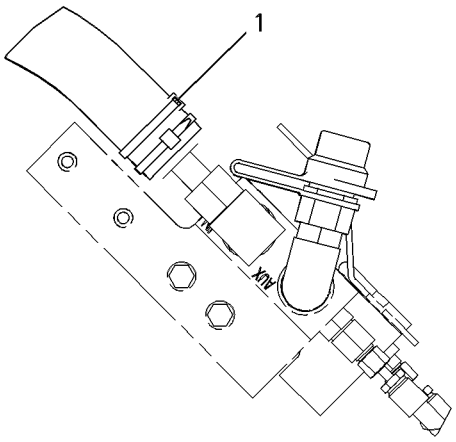

VIEW OF AREA A

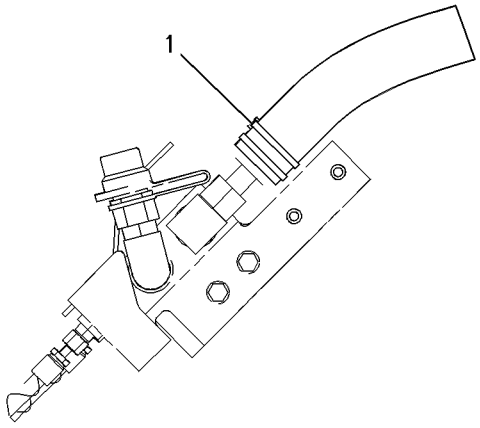

VIEW B-B

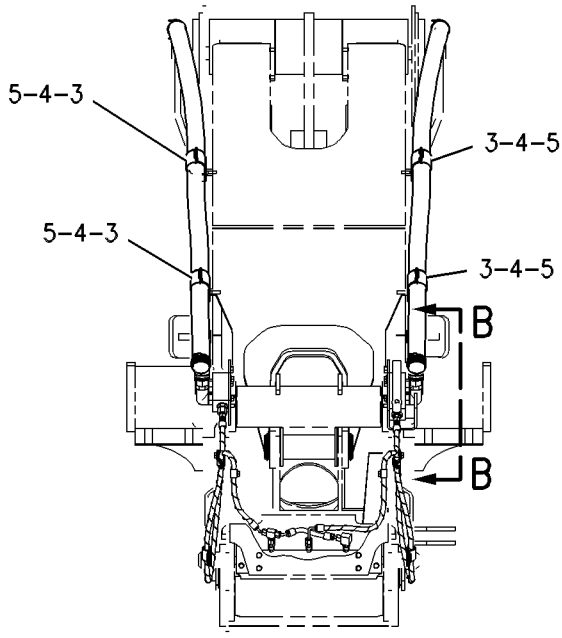

FRONT VIEW

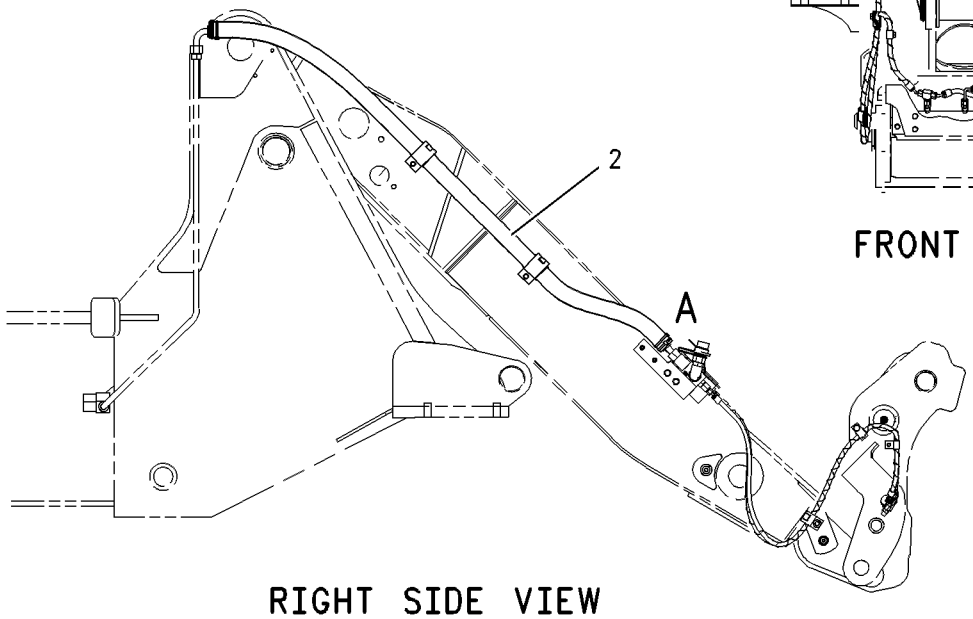

RIGHT SIDE VIEW

GRAPHIC #1 **<END>** g00632844

163-4384 GUARD GP-LINES–COUPLER

S/N: RRS1-UP

FOR USE WITH 290-8189–PAGE 474, 218-5113–PAGE 595

AN ATTACHMENT

SMCS-7167 **i03082418**

NOTE	REF NO	GRAPHIC REF	PART NUMBER	QTY	PART NAME 1 2 3 4 5 6 (PRODUCT LEVEL)	SEE PAGE
	1	1	**7K-1181**	8	STRAP - CABLE	
	2	1	**163-4386**	2	GUARD - HOSE	

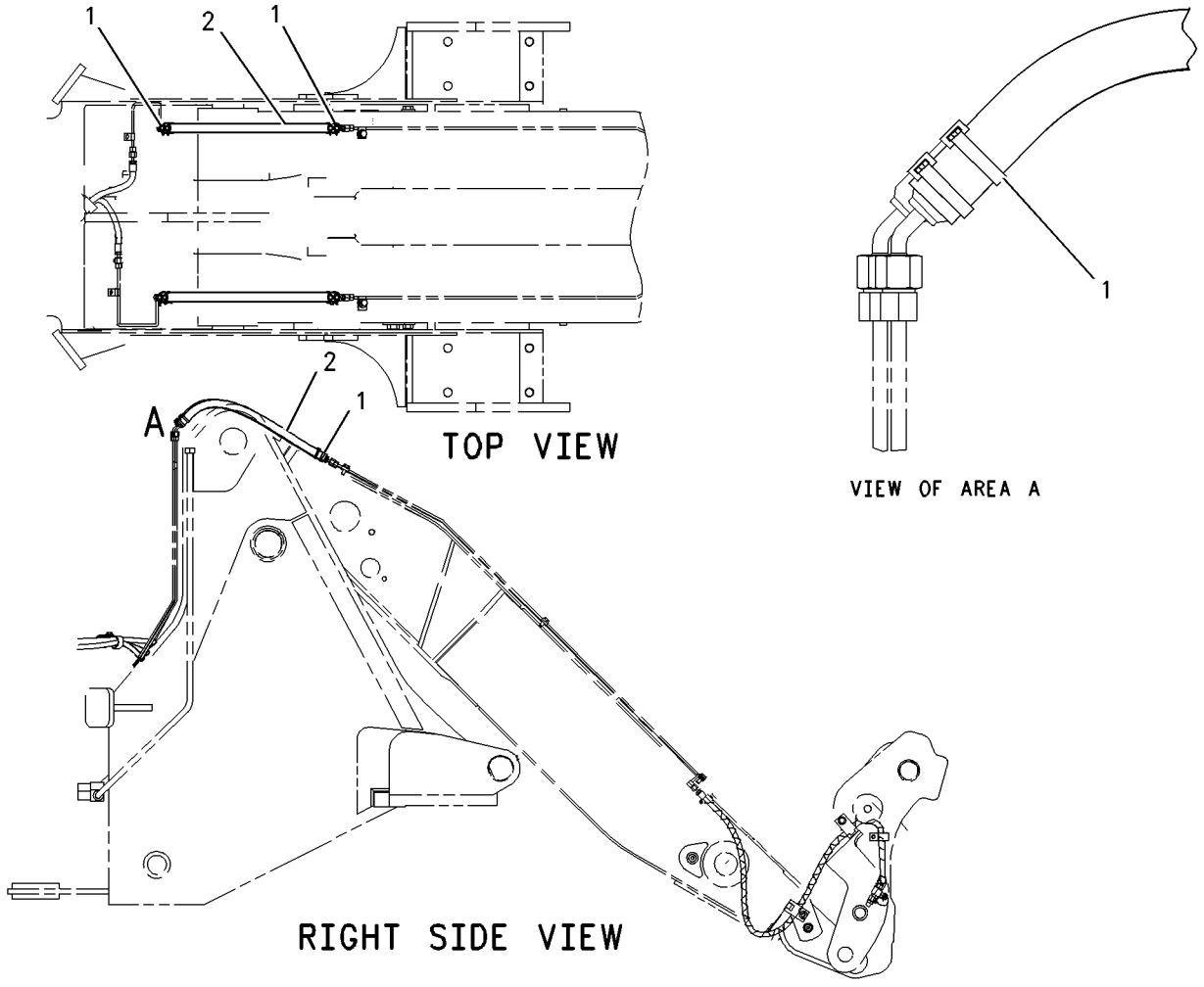

GRAPHIC #1 **<END>** g00812633

176-7584 GUARD GP-LINES–TILT

S/N: JRL1-UP
FOR USE WITH 290-8189–PAGE 474
AN ATTACHMENT

SMCS-7167 **i02112424**

NOTE	REF NO	GRAPHIC REF	PART NUMBER	QTY	PART NAME 1 2 3 4 5 6 (PRODUCT LEVEL)	SEE PAGE
	1	1	**7K-1181**	8	STRAP-CABLE	
	2	1	**180-0119**	2	GUARD-HOSE	

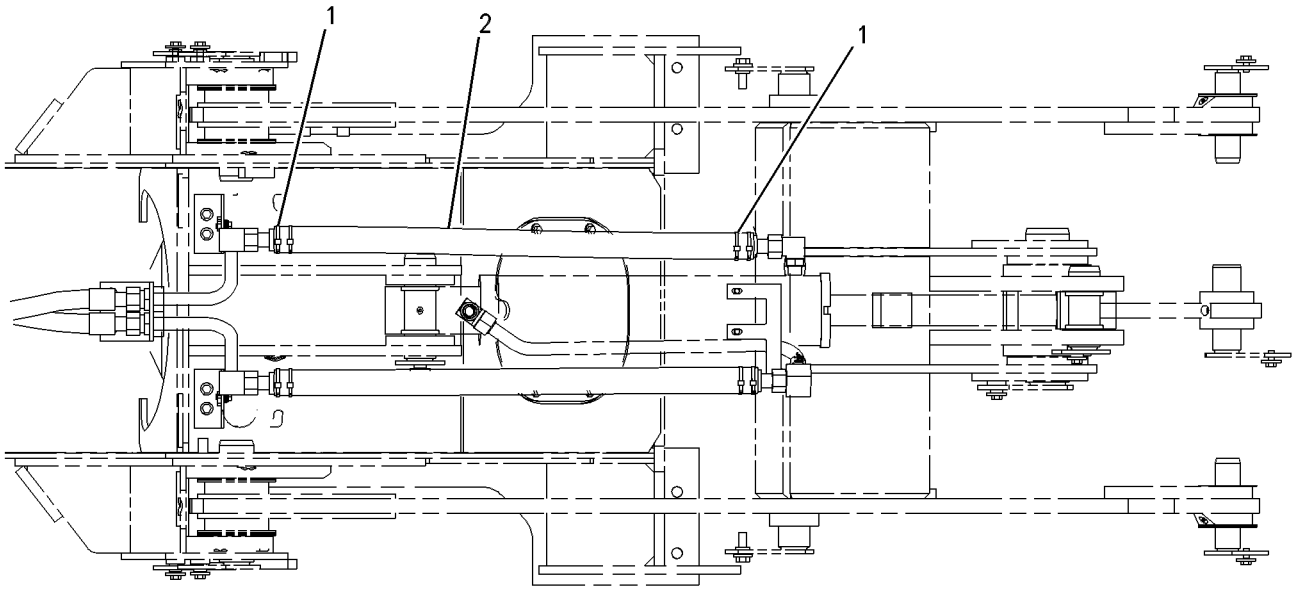

TOP VIEW

GRAPHIC #1 **<END>** g00636675

176-7585 GUARD GP-LINES–TILT

S/N: RRS1-UP
FOR USE WITH 290-8189–PAGE 474
AN ATTACHMENT

SMCS-7167 **i02674374**

NOTE	REF NO	GRAPHIC REF	PART NUMBER	QTY	PART NAME 1 2 3 4 5 6 (PRODUCT LEVEL)	SEE PAGE
	1	1	**7K-1181**	8	STRAP-CABLE	
C	2	1	**278-5641**	1	GUARD-HOSE	
C	3	1	**278-5642**	1	GUARD-HOSE	
	4	1	**6V-0545**	1	GROMMET	

C-CHANGE FROM PREVIOUS TYPE

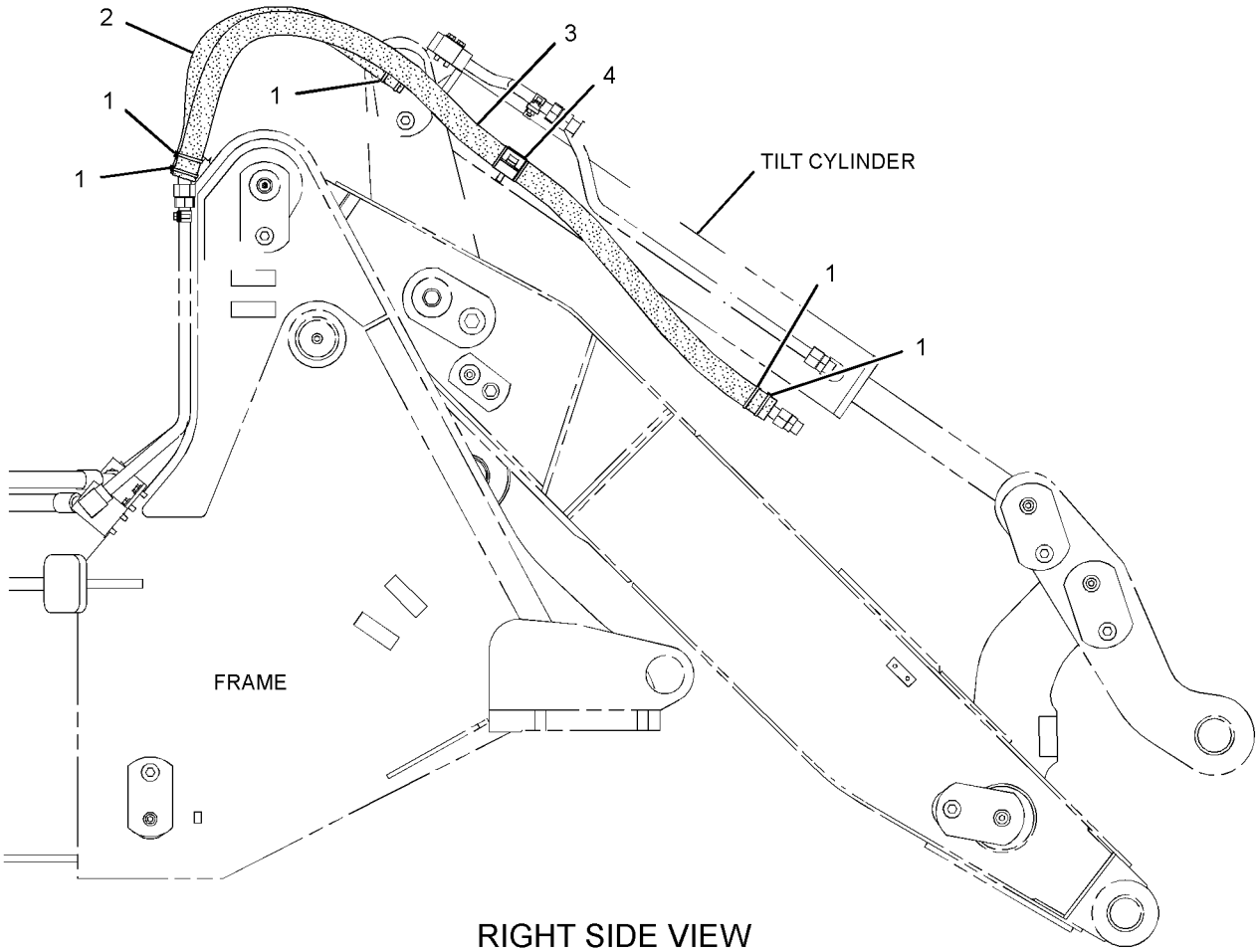

RIGHT SIDE VIEW

GRAPHIC #1 **<END>** g01336179

FRAME AND BODY

290-7207 GUARD GP-POWER TRAIN

S/N: JRL1-UP; RRS1-UP

AN ATTACHMENT

SMCS-7153 **i03038621**

NOTE	REF NO	GRAPHIC REF	PART NUMBER	QTY	PART NAME 1 2 3 4 5 6 (PRODUCT LEVEL)	SEE PAGE
	1	1	**7W-3447**	3	SPACER (10.2X19.05X10.2-MM THK)	
	2	1	**8R-8847**	1	RETAINER-SPRING	
	3	1	**218-2440**	1	PLATE	
	4	1	**294-0506**	1	PLATE AS	
	5	1	**1S-0994**	1	CLIP	
	6	1	**7X-0578**	3	WASHER-HARD (10.2X32X2.5-MM THK)	
	7	1	**8T-4121**	2	WASHER-HARD (11X21X2.5-MM THK)	
M	8	1	**8T-4133**	1	NUT (M10X1.5-THD)	
M	9	1	**8T-4186**	1	BOLT (M10X1.5X40-MM)	
M	10	1	**8T-4195**	2	BOLT (M10X1.5X30-MM)	
	11	1	**8T-4223**	2	WASHER-HARD (13.5X25.5X3-MM THK)	
M	12	1	**8T-4956**	2	BOLT (M12X1.75X35-MM)	

M-METRIC PART

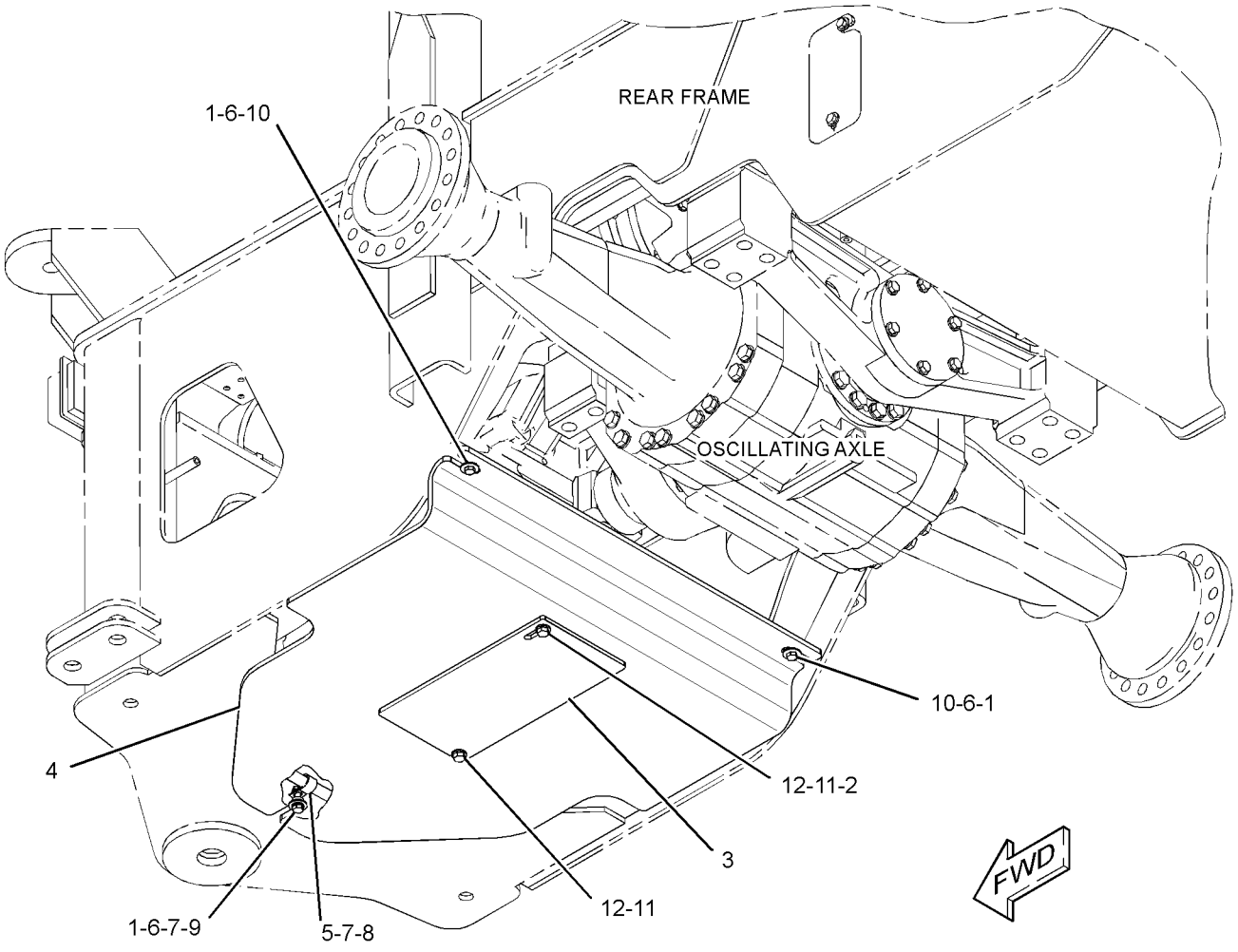

GRAPHIC #1 **<END>** g01395851

290-4074 GUARD GP-RADIATOR

S/N: JRL1-UP; RRS1-UP

PART OF 289-9075 RADIATOR & AFTERCOOLER GP

SMCS-7155 **i03085920**

NOTE	REF NO	GRAPHIC REF	PART NUMBER	QTY	PART NAME 1 2 3 4 5 6 (PRODUCT LEVEL)	SEE PAGE
	1	1	**092-1136**	2	BOSS (M10X1.5-THD)	
	2	1	**140-9312**	2	HINGE AS	
	3	1	*214-0620*	2	PLATE AS	
					(EACH INCLUDES)	
M		1	**3E-6908**	2	STUD-WELD (M8X1.25X20-MM)	
	4	1	*296-4322*	1	CHANNEL AS	
		1	**7T-1099**	1	LINK	
M		1	**8T-3490**	2	NUT-WELD (M10X1.5-THD)	
M		1	**9C-6809**	3	BOSS (M10X1.5-MM)	
M		1	**9R-2672**	1	BOSS-THREADED (M10X1.5-THD)	
	5	1	*300-1724*	1	PLATE AS	
		1	**5P-1076**	4	WASHER-HARD (13.5X30X4-MM THK)	
		1	**7T-1099**	5	LINK	
M		1	**8T-3490**	1	NUT-WELD (M10X1.5-THD)	
M		1	**9R-2672**	1	BOSS-THREADED (M10X1.5-THD)	
	6	1	**7T-1099**	7	LINK	
M	7	1	**8T-3490**	2	NUT-WELD (M10X1.5-THD)	
M	8	1	**8Y-4489**	1	BOSS (M10X1.5-THD)	
M	9	1	**9C-6809**	5	BOSS (M10X1.5-MM)	
M	10	1	**9R-2672**	3	BOSS-THREADED (M10X1.5-THD)	

M-METRIC PART

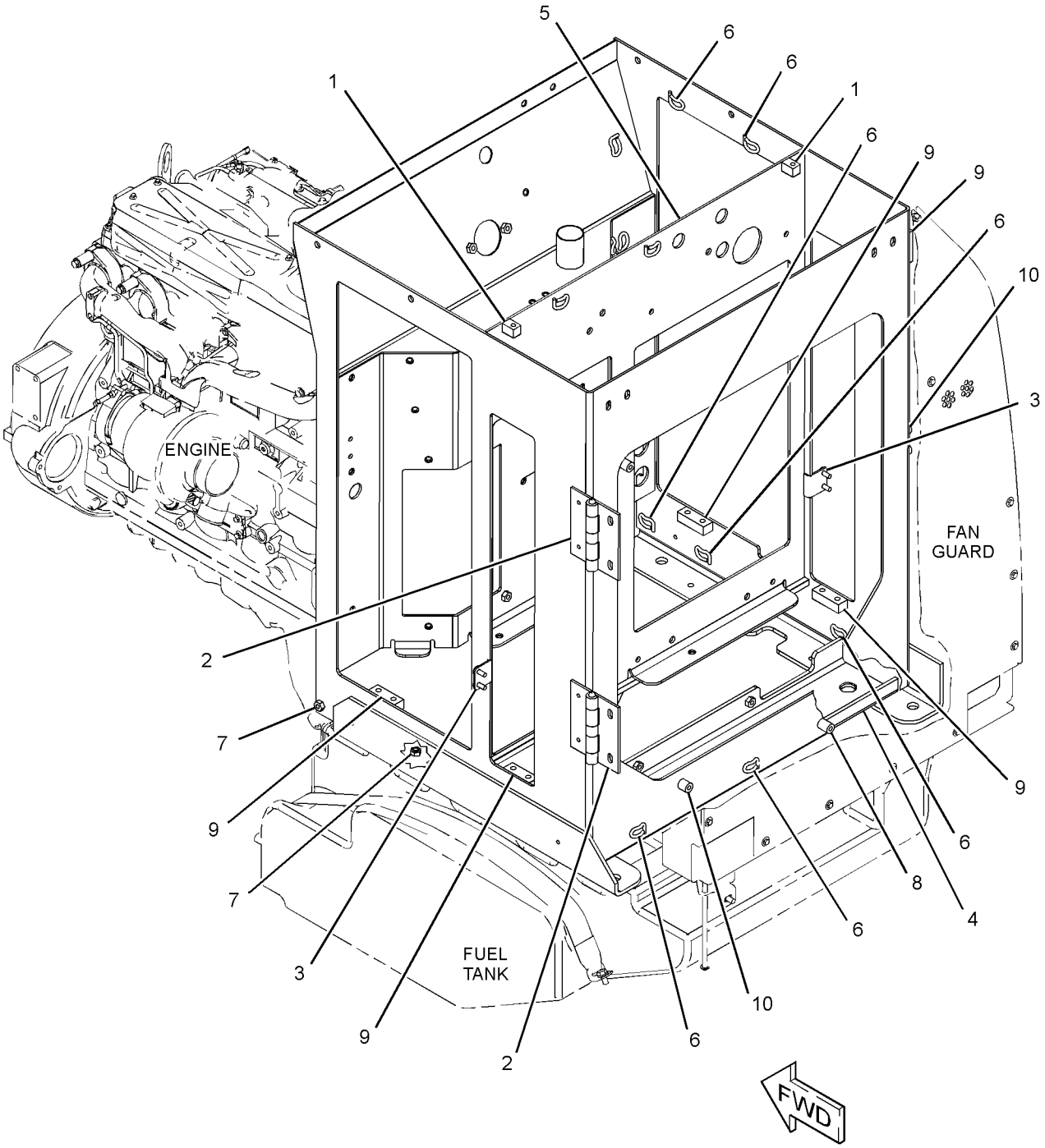

GRAPHIC #1 **<END>** g01406632

113-3790 HITCH GP-ARTICULATING

S/N: JRL1-UP; RRS1-UP

PART OF 372-7772, 372-7773 CHASSIS AR

SMCS-7057, 7100 **i03835809**

NOTE	REF NO	GRAPHIC REF	PART NUMBER	QTY	PART NAME 1 2 3 4 5 6 (PRODUCT LEVEL)	SEE PAGE
	1	1	**4K-7464**	1	SHIM PACK (INCLUDES 19-SHIMS)	
	2	1	**6I-8860**	2	CUP-BEARING	
	3	1	**6K-4185**	1	SPACER-SPECIAL	
	4	1	**6K-4191**	1	CAP-UPPER	
	5	1	**6V-1194**	2	CUP-BEARING	
	6	1	**6V-8795**	2	CONE-BEARING	
	7	1	**6W-8246**	1	SHIM PACK (INCLUDES 27-SHIMS)	
	8	1	**6I-8849**	2	CONE-BEARING (TAPERED ROLLER)	
	9	1	**8R-7091**	1	CAP	
	10	1	**8R-7092**	1	CAP	
	11	1	**8Y-7047**	1	PIN AS	
	12	1	**9V-6343**	1	CAP	
	13	1	**110-7628**	1	SHIM	
	14	1	**113-3793**	1	PLATE	
	15	1	**113-3791**	1	PIN AS	
	16	1	**113-3794**	2	SHIM PACK (INCLUDES 19-SHIMS)	
	17	1	**3B-8489**	2	FITTING-GREASE	
	18	1	**6K-4186**	2	SEAL-LIP TYPE	
	19	1	**7X-0618**	1	WASHER-HARD (13.5X40X5-MM THK)	
	20	1	**8T-4121**	6	WASHER-HARD (11X21X2.5-MM THK)	
M	21	1	**8T-4192**	1	BOLT (M12X1.75X25-MM)	
M	22	1	**8T-4172**	6	BOLT (M10X1.5X80-MM)	
M	23	1	**8T-4194**	10	BOLT (M12X1.75X50-MM)	
	24	1	**8T-4223**	16	WASHER-HARD (13.5X25.5X3-MM THK)	
M	25	1	**8T-5041**	6	BOLT (M12X1.75X120-MM)	
	26	1	**9H-2258**	2	SEAL-LIP TYPE	

M-METRIC PART

113-3790 **HITCH GP-ARTICULATING** *(contd.)* **i03835809**

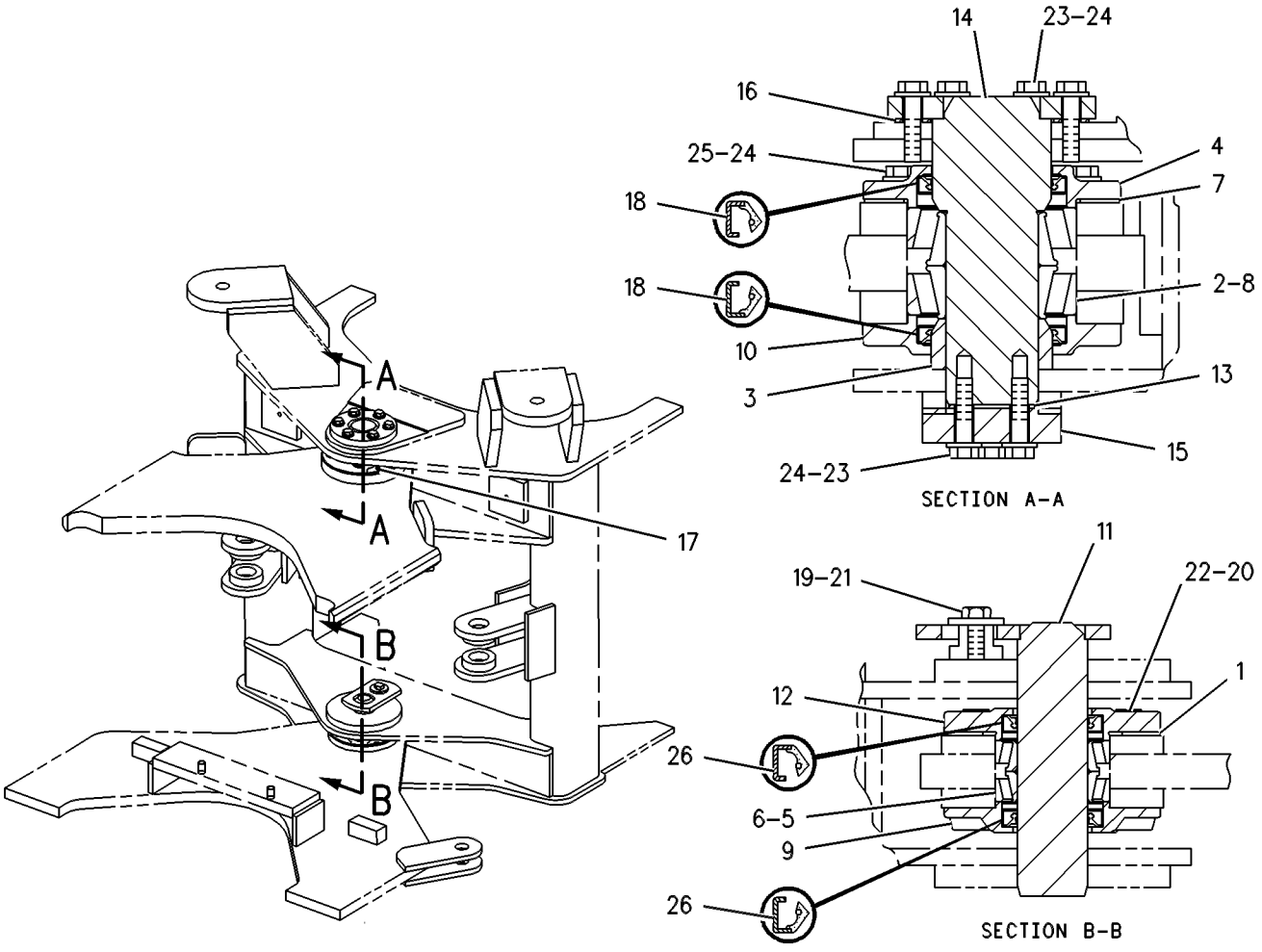

GRAPHIC #1 **<END>** g00131887

FRAME AND BODY

289-8912 HOOD & GUARD GP

S/N: JRL1-UP; RRS1-UP

PART OF 372-7772, 372-7773 CHASSIS AR

SMCS-7251 **i04591635**

NOTE	REF NO	GRAPHIC REF	PART NUMBER	QTY	PART NAME 1 2 3 4 5 6 (PRODUCT LEVEL)	SEE PAGE
D	1	1	**5P-5637**		SEAL (0.1-M)	
	2	1	*125-2086*	1	LOCK AS-CYLINDER	
J		1	**226-0294**	1	LOCK AS	
		1	**226-0339**	1	CAM	
	3	1	**130-1916**	4	STUD-BALL	
	4	1	**172-8591**	2	NUT-SPRING	
	5	1	**198-8933**	4	HINGE	
	6	1	**198-8942**	2	BRACKET	
	7	1	**198-8943**	2	BRACKET	
	8	1	**198-8944**	2	PLATE	
	9	1	**198-8954**	1	PANEL AS-HOOD (RH)	
	10	1	**198-8955**	1	PANEL AS-HOOD (LH)	
	11	1	**198-8961**	2	PLATE	
J	12	1	**9X-2299**	2	LATCH AS (PADDLE)	
	13	1	**318-3319**	1	HINGE AS-HOOD (RH)	
	14	1	**318-3320**	1	HINGE AS-HOOD (LH)	
					(EACH HINGE AS INCLUDES)	
		1	**9Y-7215**	2	SLEEVE-ISOLATOR	
	15	1	**228-7696**	2	SPRING AS-GAS (HOOD)	
	16	1	**290-4068**	1	HOOD AS	
	17	1	**290-4073**	2	PLATE	
	18	1	**291-5008**	1	PLATE AS	
		1	**327-7914**	5	RIVET-POP	
		1	**6C-3681**	8	RIVET-POP	
		1	**301-5754**	2	HINGE AS	
		1	**302-4285**	1	LATCH	
	19	1	**292-1086**	1	PLATE AS	
		1	**327-7914**	5	RIVET-POP	
		1	**6C-3681**	8	RIVET-POP	
		1	**301-5754**	2	HINGE AS	
		1	**302-4285**	1	LATCH	
	20	1	**292-2559**	1	RING	
M	21	1	**131-3540**	4	LOCKNUT (M8X1.25-THD)	
M	22	1	**5C-2890**	8	NUT (M6X1-THD)	
M	23	1	**5C-7261**	12	NUT (M8X1.25-THD)	
	24	1	**5P-4115**	2	WASHER-HARD (7.2X19X2-MM THK)	
M	25	1	**7X-2535**	2	BOLT (M6X1X60-MM)	
M	26	1	**7X-2540**	4	BOLT (M8X1.25X120-MM)	
	27	1	**7X-7729**	39	WASHER (11X25X3-MM THK)	
M	28	1	**8T-4133**	4	NUT (M10X1.5-THD)	
M	29	1	**8T-4137**	12	BOLT (M10X1.5X20-MM)	
M	30	1	**8T-4138**	8	BOLT (M6X1X20-MM)	
M	31	1	**8T-4189**	4	BOLT (M8X1.25X20-MM)	
M	32	1	**8T-4195**	23	BOLT (M10X1.5X30-MM)	
	33	1	**8T-4205**	16	WASHER-HARD (7.2X14.5X2-MM THK)	
	34	1	**8T-4224**	32	WASHER-HARD (8.8X16X2-MM THK)	
M	35	1	**8T-4908**	4	BOLT (M8X1.25X25-MM)	
E	36	1	**9X-8699**		SEAL (307-CM EACH)	
E	36A	1	**9X-8699**		SEAL (92-CM EACH)	
H	37	1	**136-7728**		SEAL-COMPOSITE (18-DM EACH)	
	38	1	**295-1038**	1	INSULATION (LH)	
M	39	1	**8T-4200**	14	BOLT (M8X1.25X16-MM)	
	40	1	**5P-4116**	10	WASHER-HARD (8.8X20.5X2-MM THK)	

D-ORDER BY THE METER
E-ORDER BY THE CENTIMETER
H-ORDER BY THE DECIMETER
J-REQUIRES CORPORATE KEY
M-METRIC PART

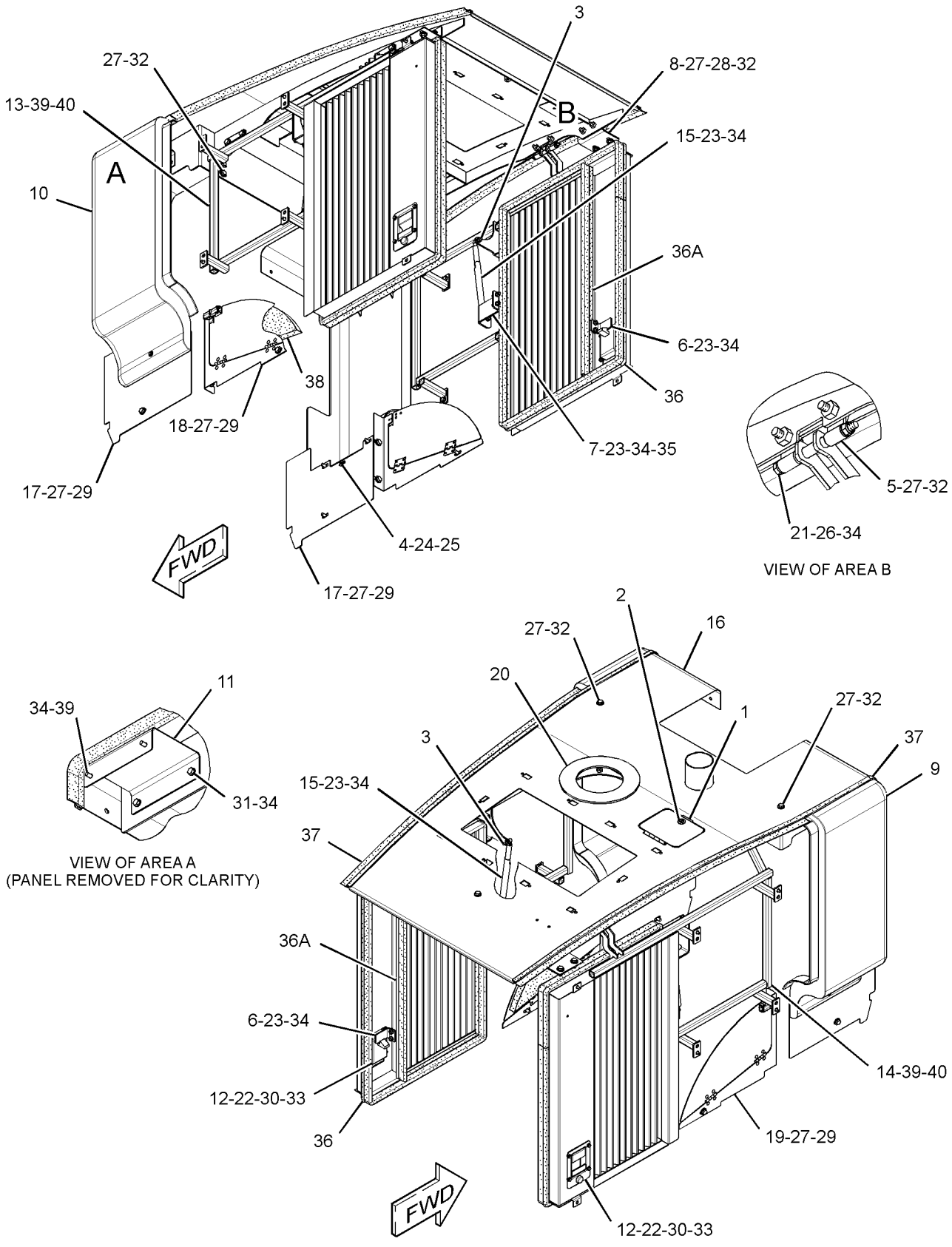

GRAPHIC #1 **<END>** g01536413

FRAME AND BODY

289-8913 LADDER GP

S/N: JRL1-UP; RRS1-UP

PART OF 372-7772, 372-7773 CHASSIS AR

SMCS-7254 **i04354171**

NOTE	REF NO	GRAPHIC REF	PART NUMBER	QTY	PART NAME 1 2 3 4 5 6 (PRODUCT LEVEL)	SEE PAGE
	1	2	**134-5214**	1	STEP AS (LH)	
	2	1	**134-5215**	1	STEP AS (RH)	
					(EACH STEP AS INCLUDES)	
M		1	**8T-3490**	2	NUT-WELD (M10X1.5-THD)	
	3	1,2	**153-9706**	8	PLATE	
	4	1,2	**154-2302**	16	SPACER (11X20X15-MM THK)	
	5	1	**189-0942**	1	BRACKET AS	
M		1	**8T-3490**	4	NUT-WELD (M10X1.5-THD)	
	6	1	**202-0392**	1	PLATFORM AS (RH)	
	7	2	**202-0393**	1	PLATFORM AS (LH)	
					(EACH PLATFORM AS INCLUDES)	
M		2	**6V-9632**	2	NUT-WELD (M6X1-THD)	
M		2	**8T-3490**	2	NUT-WELD (M10X1.5-THD)	
	8	1,2	**283-8385**	4	SUPPORT-STEP (RUBBER)	
	9	1,2	**284-8491**	2	STEP AS	
	10	1,2	**284-8497**	2	LADDER AS	
	11	2	**284-8504**	1	BRACKET AS	
	12	1,2	**7X-7729**	52	WASHER (11X25X3-MM THK)	
M	13	1,2	**8T-4136**	14	BOLT (M10X1.5X25-MM)	
M	14	1,2	**8T-4186**	24	BOLT (M10X1.5X40-MM)	
M	15	1,2	**8T-4195**	8	BOLT (M10X1.5X30-MM)	
	16	1	**8T-4222**	2	WASHER-PLATED (11X32X2.5-MM THK)	
M	17	1,2	**8T-4196**	8	BOLT (M10X1.5X35-MM)	

M-METRIC PART

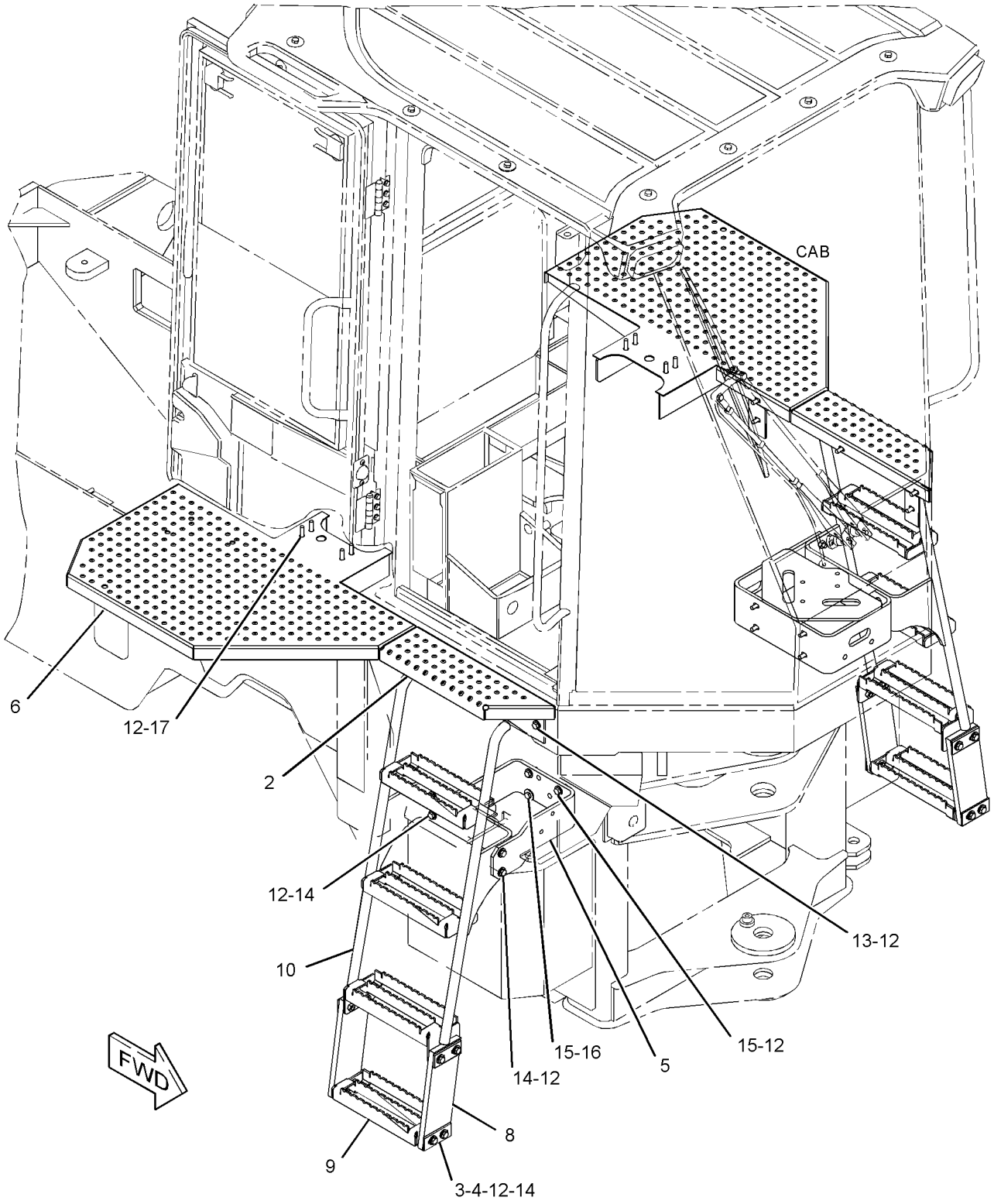

GRAPHIC #1 g02517037

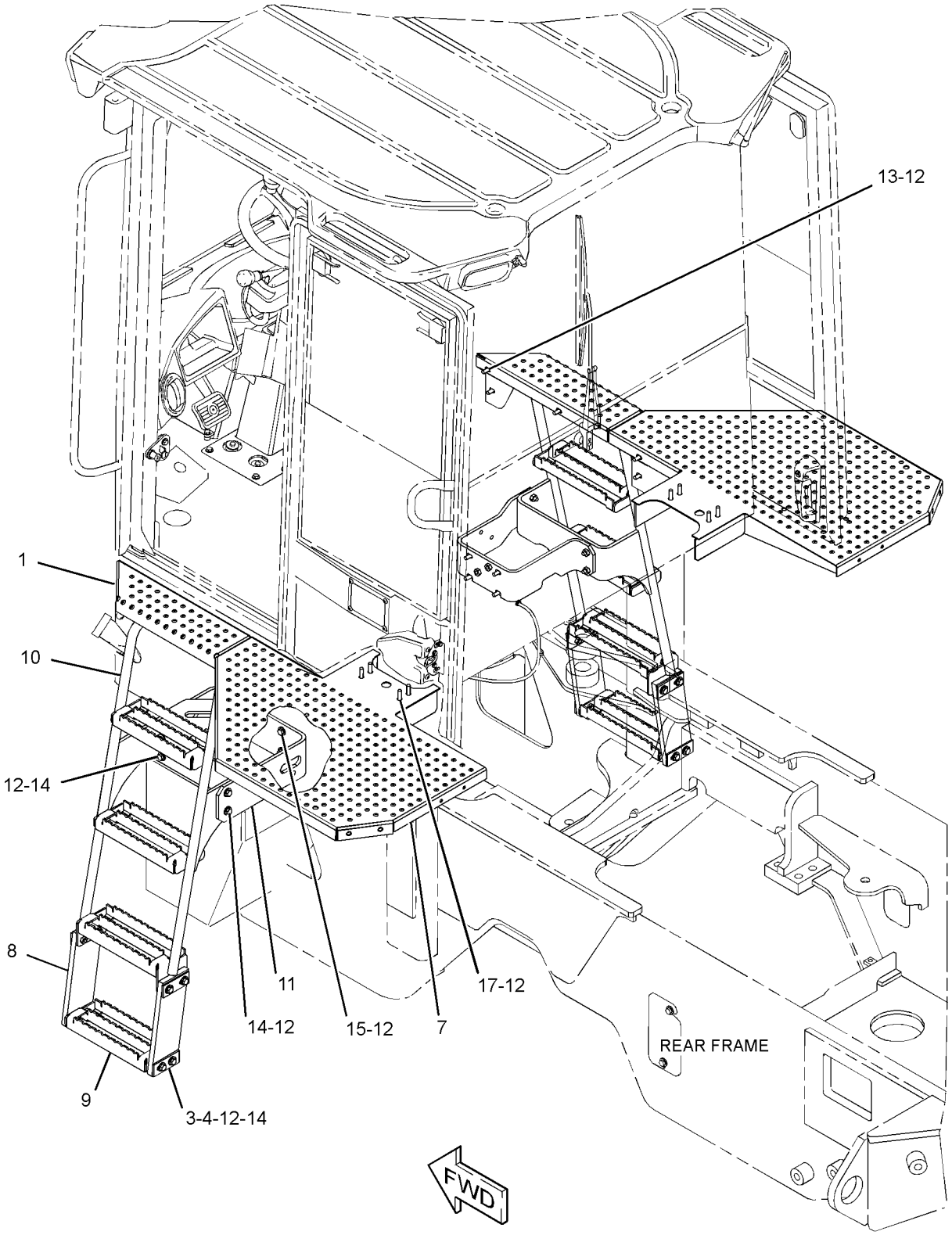

GRAPHIC #2 **<END>** g02517038

FRAME AND BODY

307-2578 LINES GP-GREASE

S/N: JRL1-UP; RRS1-UP

PART OF 372-7772, 372-7773 CHASSIS AR

SMCS-7510 **i03016265**

NOTE	REF NO	GRAPHIC REF	PART NUMBER	QTY	PART NAME 1 2 3 4 5 6 (PRODUCT LEVEL)	SEE PAGE
	1	1	**5T-9771**	1	HOSE AS	
	2	1	**7K-1181**	7	STRAP-CABLE	
	3	1	**8W-4342**	1	HOSE AS	
	4	1	**300-5443**	3	HOSE AS	
	5	1	**3B-6552**	5	ELBOW-PIPE (90-DEG)	
	6	1	**3B-8489**	7	FITTING-GREASE (HYDRAULIC)	

307-2578 **LINES GP-GREASE** *(contd.)* **i03016265**

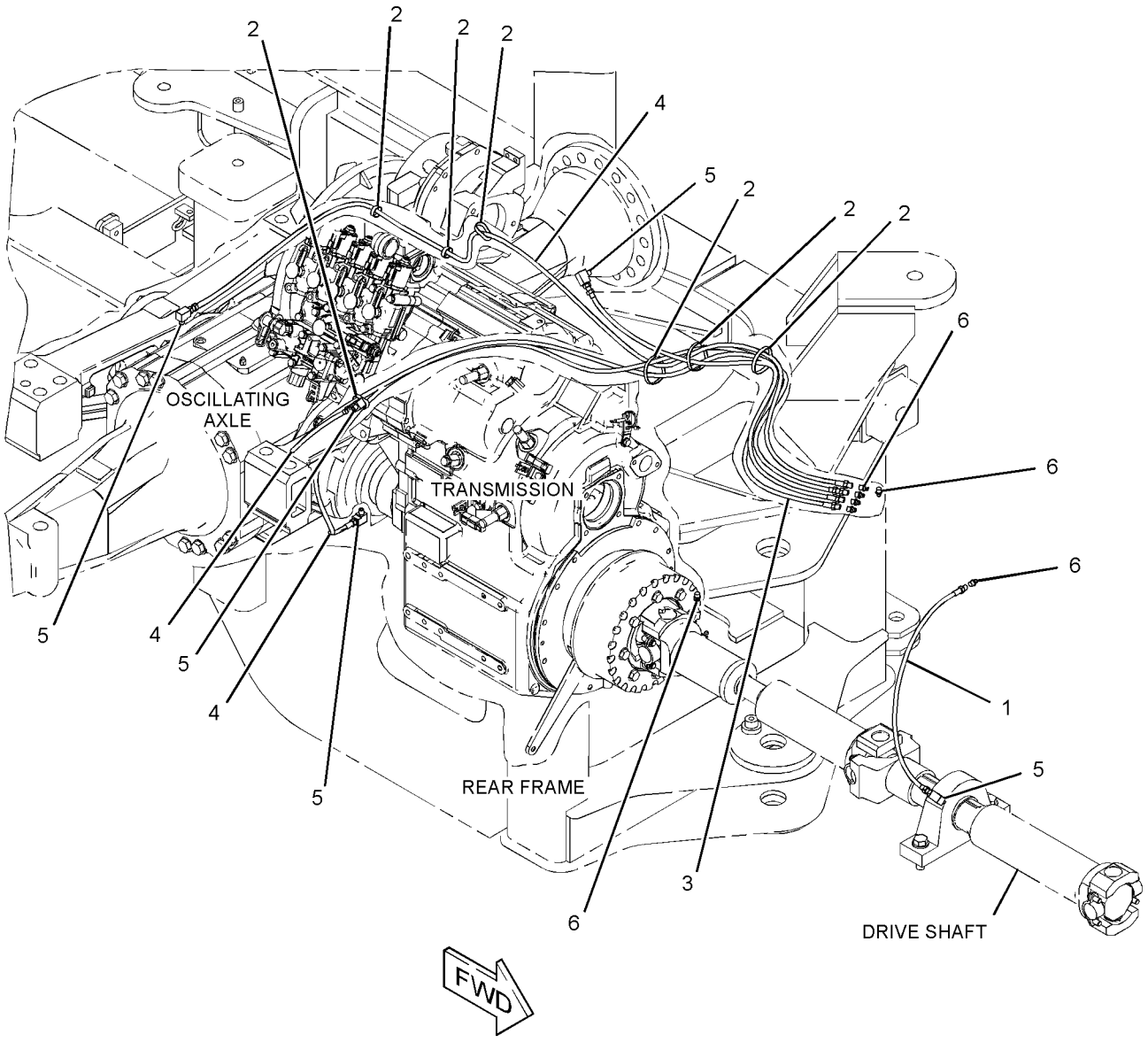

GRAPHIC #1 **<END>** g01398390

7V-2885 LINK GP-STEERING FRAME LOCK

S/N: JRL1-UP; RRS1-UP
PART OF 372-7772, 372-7773 CHASSIS AR

SMCS-7506 **i00634105**

NOTE	REF NO	GRAPHIC REF	PART NUMBER	QTY	PART NAME 1 2 3 4 5 6 (PRODUCT LEVEL)	SEE PAGE
	1	1	**5V-4998**	1	LINK	
	2	1	**5V-4999**	2	PIN	
	3	1	**5P-8837**	2	LOCKPIN	

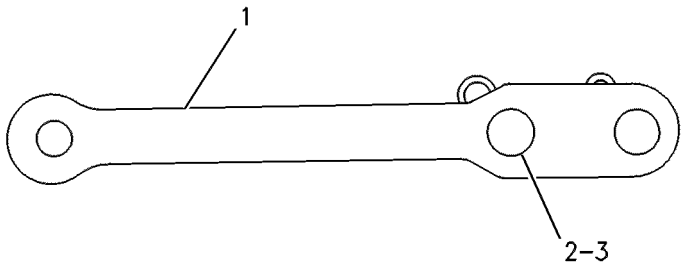

GRAPHIC #1 **<END>** g00120262

198-8964 PANEL GP-ACCESS—HOOD, CAB HEATER

S/N: JRL1-UP; RRS1-UP
PART OF 372-8684 HEATER AR-CAB, 310-9954 OPERATOR AR, 290-8186 OPERATOR AR-OPEN ROPS
AN ATTACHMENT

SMCS-7262, 726A **i01810904**

NOTE	REF NO	GRAPHIC REF	PART NUMBER	QTY	PART NAME 1 2 3 4 5 6 (PRODUCT LEVEL)	SEE PAGE
	1	1	**172-8591**	10	NUT-SPRING	
	2	1	**191-9188**	1	PLATE	
	3	1	**198-8957**	1	PLATE	
	4	1	**220-0691**	4	PLATE AS	
					(EACH INCLUDES)	
M		1	**8T-3490**	2	NUT-WELD (M10X1.5-THD)	
	5	1	**5P-9212**	1	PLUG	
	6	1	**8T-4121**	8	WASHER-HARD (11X21X2.5-MM THK)	
M	7	1	**8T-4137**	8	BOLT (M10X1.5X20-MM)	
M	8	1	**8T-4138**	10	BOLT (M6X1X20-MM)	
	9	1	**8T-4205**	10	WASHER-HARD (7.2X14.5X2-MM THK)	

M-METRIC PART

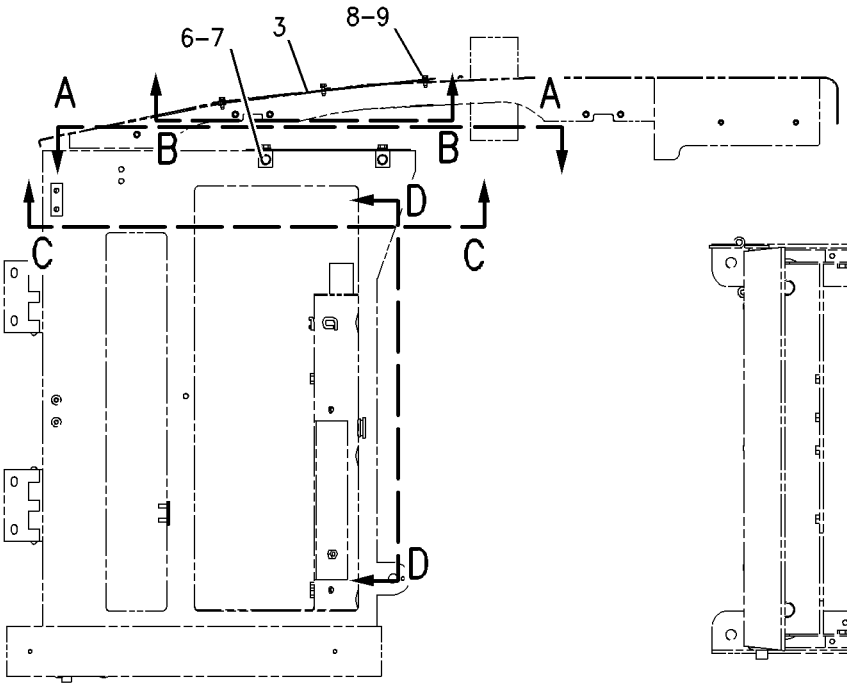

RIGHT SIDE VIEW

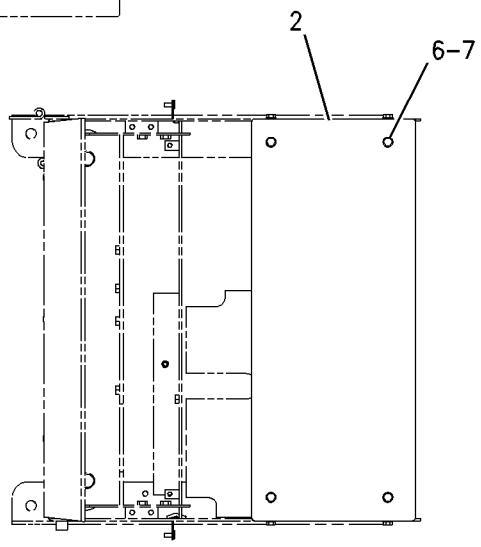

VIEW A-A

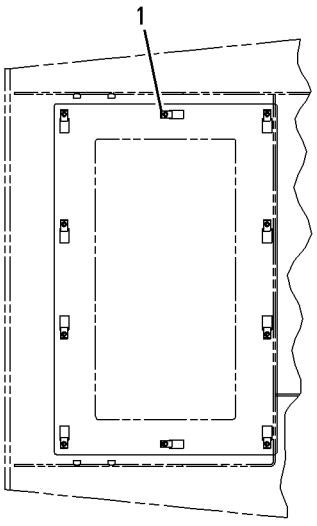

VIEW B-B

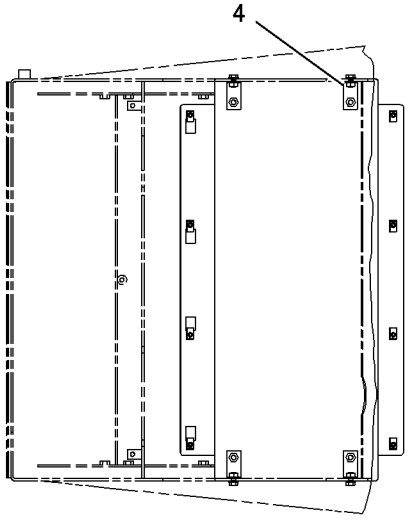

VIEW C-C

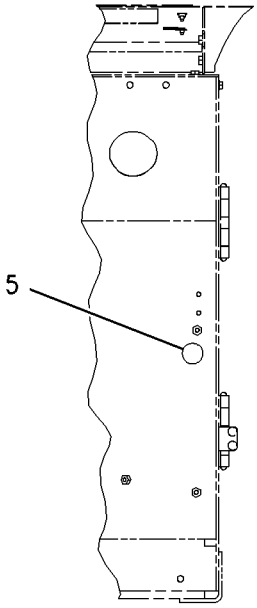

VIEW D-D

GRAPHIC #1 **<END>** g00917920

198-8965 PANEL GP-TOP—HOOD, AIR CONDITIONER

S/N: JRL1-UP; RRS1-UP
PART OF 372-8683 AIR CONDITIONER AR
AN ATTACHMENT

SMCS-7251 **i02751084**

NOTE	REF NO	GRAPHIC REF	PART NUMBER	QTY	PART NAME 1 2 3 4 5 6 (PRODUCT LEVEL)	SEE PAGE
	1	1	**172-8591**	10	NUT-SPRING	
C	2	1	**235-6947**	1	COVER AS	
C	3	1	**235-6948**	2	PLATE	
C	4	1	**186-0817**	2	WASHER-HARD (7X19X2-MM THK)	
M	5	1	**8T-4138**	10	BOLT (M6X1X20-MM)	
C	6	1	**8T-4205**	8	WASHER-HARD (7.2X14.5X2-MM THK)	

C-CHANGE FROM PREVIOUS TYPE
M-METRIC PART

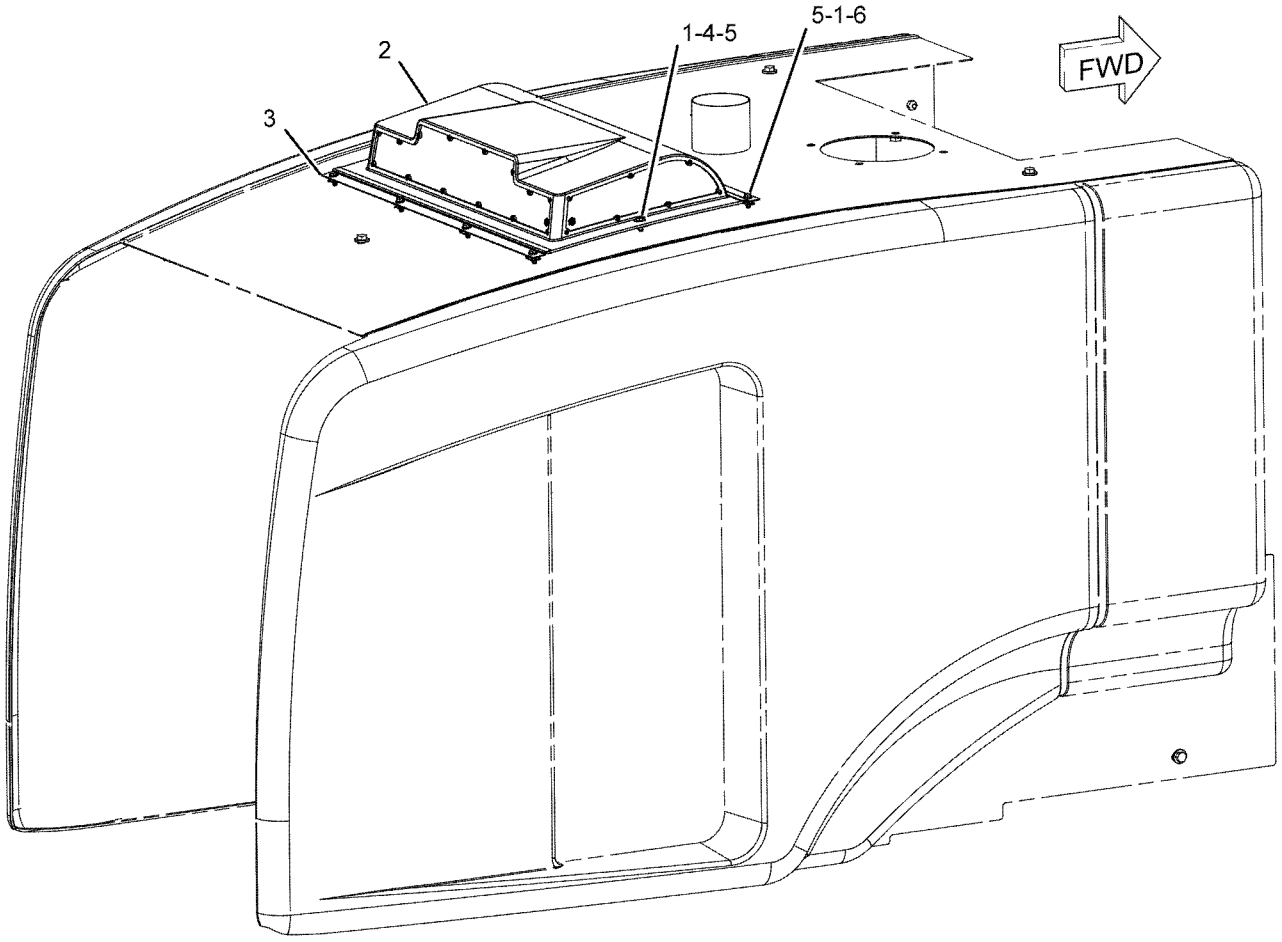

GRAPHIC #1 **<END>** g01091092

140-9251 ACCUMULATOR GP-BRAKE—CHARGED

S/N: JRL1-UP; RRS1-UP
PART OF 289-8925, 344-7805 LINES GP-SERVICE BRAKE
FIELD REPLACEMENT ORDER 149-5532—PAGE 282

SMCS-4263 **i03571157**

NOTE	REF NO	GRAPHIC REF	PART NUMBER	QTY	PART NAME 1 2 3 4 5 6 (PRODUCT LEVEL)	SEE PAGE
	1	1	**030-9613**	2	SCREW-FORMING (10-24XO.37-IN)	
	2	1	**1J-9671**	1	SEAL-O-RING	
	3	1	**069-2535**	1	VALVE-GAS	
	4	1	**069-2536**	1	PROTECTOR-GAS VALVE	
					AVAILABLE REPAIR KIT(S):	
			160-0496	1	KIT-SEAL (ACCUMULATOR)	

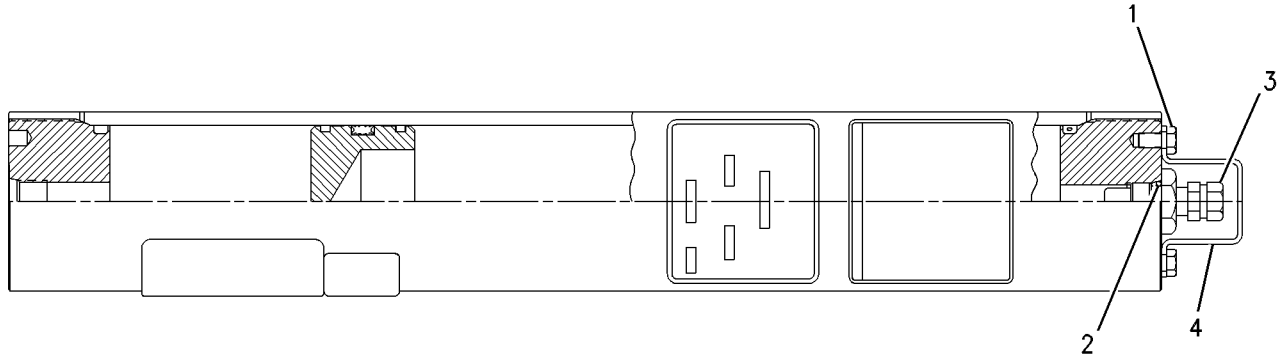

GRAPHIC #1 **<END>** g00649352

149-5532 ACCUMULATOR GP-HYDRAULIC—UNCHARGED

S/N: JRL1-UP; RRS1-UP

FIELD REPLACEMENT FOR 140-9251—PAGE 281

SMCS-4263 **i02844529**

NOTE	REF NO	GRAPHIC REF	PART NUMBER	QTY	PART NAME 1 2 3 4 5 6 (PRODUCT LEVEL)	SEE PAGE
	1	1	**030-9613**	2	SCREW-FORMING (10-24X0.37-IN)	
	2	1	**1J-9671**	1	SEAL-O-RING	
	3	1	**069-2535**	1	VALVE-GAS	
	4	1	**069-2536**	1	PROTECTOR-GAS VALVE	
					AVAILABLE REPAIR KIT(S):	
			160-0496	1	KIT-SEAL (ACCUMULATOR)	
					(INCLUDES SEALS)	

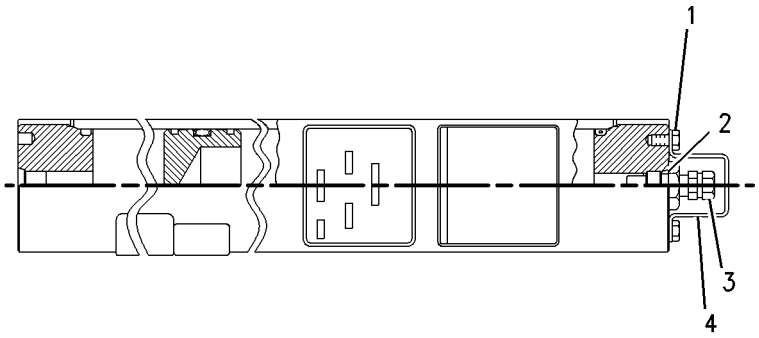

GRAPHIC #1 **<END>** g00683622

BRAKING SYSTEM

283-9971 BRAKE GP-PARKING

S/N: J2Y1-UP

PART OF 293-6017 GEAR GP-OUTPUT TRANSFER

SMCS-4267 **i03043582**

NOTE	REF NO	GRAPHIC REF	PART NUMBER	QTY	PART NAME 1 2 3 4 5 6 (PRODUCT LEVEL)	SEE PAGE
	1	1	**1V-2772**	1	SPRING-EXTENSION	
	2	1	**3K-7057**	1	SPRING-EXTENSION	
	3	1	**283-9972**	2	SHOE AS-LINED	
	4	1	**214-4768**	1	PLATE AS	
	5	1	**3K-7056**	1	SPRING-EXTENSION	

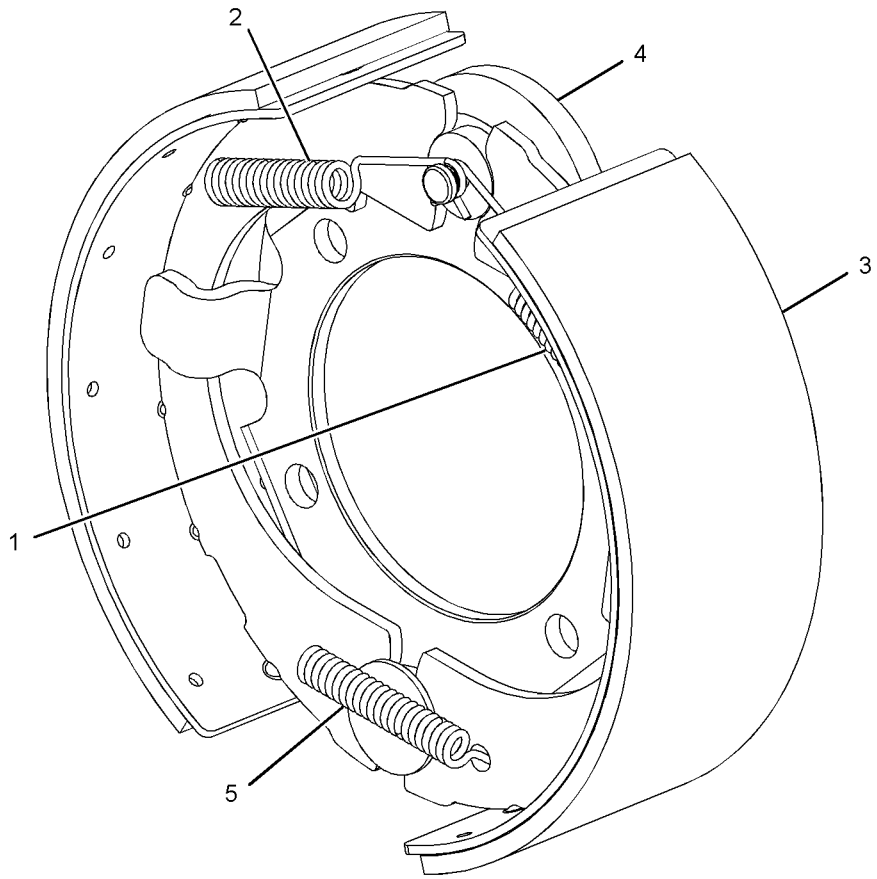

GRAPHIC #1 **<END>** g01291042

BRAKING SYSTEM

168-7000 CONTROL GP-PARKING BRAKE–HANDLE

S/N: JRL1-UP; RRS1-UP
PART OF 317-0770 OPERATOR AR
AN ATTACHMENT

SMCS-4282, 4284 **i01374826**

NOTE	REF NO	GRAPHIC REF	PART NUMBER	QTY	PART NAME 1 2 3 4 5 6 (PRODUCT LEVEL)	SEE PAGE
	1	1	**3H-8538**	1	PIN	
	2	1	**6G-4195**	1	SWITCH AS-LIMIT (PARKING BRAKE)	
		1	**3L-8187**	3	LOCKWASHER	
		1	**6V-8373**	3	SCREW-MACHINE (6-32X0.187-IN)	
	3	1	**6S-6646**	1	PIN-COTTER	
	4	1	**8K-1433**	1	GROMMET	
	5	1	**186-4415**	1	CLEVIS	
	6	1	**163-6408**	1	BRACKET AS	
		1	**7T-1099**	2	LINK	
M		1	**8T-3612**	3	NUT-WELD (M8X1.25-THD)	
	7	1	**163-6412**	1	LEVER AS	
		1	**9R-9110**	1	BUTTON	
		1	**9R-9111**	1	SPRING-COMPRESSION	
	8	1	**2N-3477**	2	SCREW-MACHINE (6-32X1.25-IN)	
	9	1	**4B-5324**	4	WASHER (3.9X9.6X1.2-MM THK)	
	10	1	**7D-6922**	2	LOCKNUT (6-32-THD)	
M	11	1	**8T-4189**	4	BOLT (M8X1.25X20-MM)	
	12	1	**8T-4224**	4	WASHER-HARD (8.8X16X2-MM THK)	

M-METRIC PART

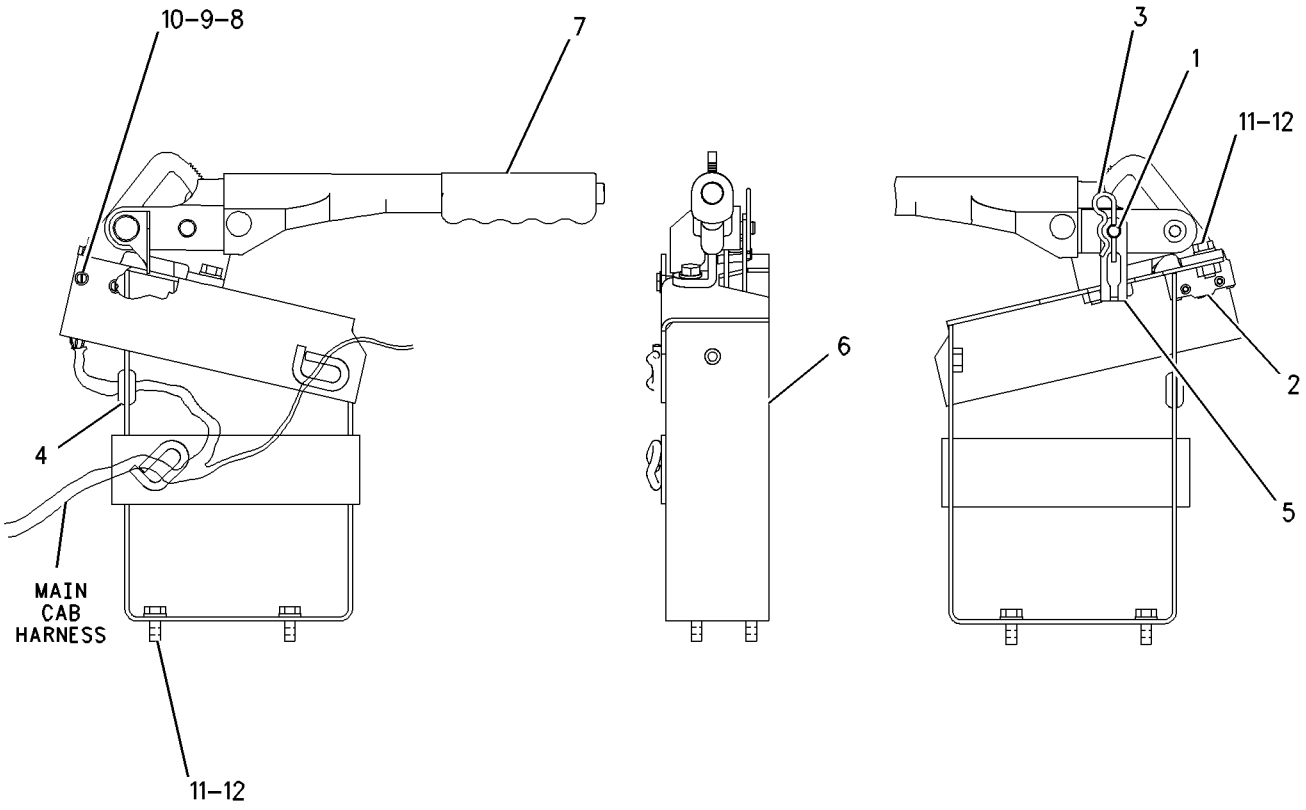

GRAPHIC #1 **<END>** g00729380

289-8930 CONTROL GP-PARKING BRAKE

S/N: JRL1-UP; RRS1-UP

PART OF 372-7772, 372-7773 CHASSIS AR

SMCS-4282, 4284 **i03016184**

NOTE	REF NO	GRAPHIC REF	PART NUMBER	QTY	PART NAME 1 2 3 4 5 6 (PRODUCT LEVEL)	SEE PAGE
	1	1	**8C-6160**	1	CLEVIS AS	
	2	1	**9U-0710**	2	CLIP	
	3	1	**143-3193**	1	CABLE AS-PARKING BRAKE CONTROL	
	4	1	**293-2840**	1	PLATE AS	
	5	1	**293-2841**	1	PLATE	
	6	1	**3B-4610**	1	PIN-COTTER	
M	7	1	**5C-7261**	1	NUT (M8X1.25-THD)	
	8	1	**5P-9297**	3	CLIP	
	9	1	**6V-8758**	1	PIN-CLEVIS	
	10	1	**8T-4121**	5	WASHER-HARD (11X21X2.5-MM THK)	
M	11	1	**8T-4136**	2	BOLT (M10X1.5X25-MM)	
M	12	1	**8T-4137**	3	BOLT (M10X1.5X20-MM)	
M	13	1	**8T-4192**	4	BOLT (M12X1.75X25-MM)	
	14	1	**8T-4223**	4	WASHER-HARD (13.5X25.5X3-MM THK)	

M-METRIC PART

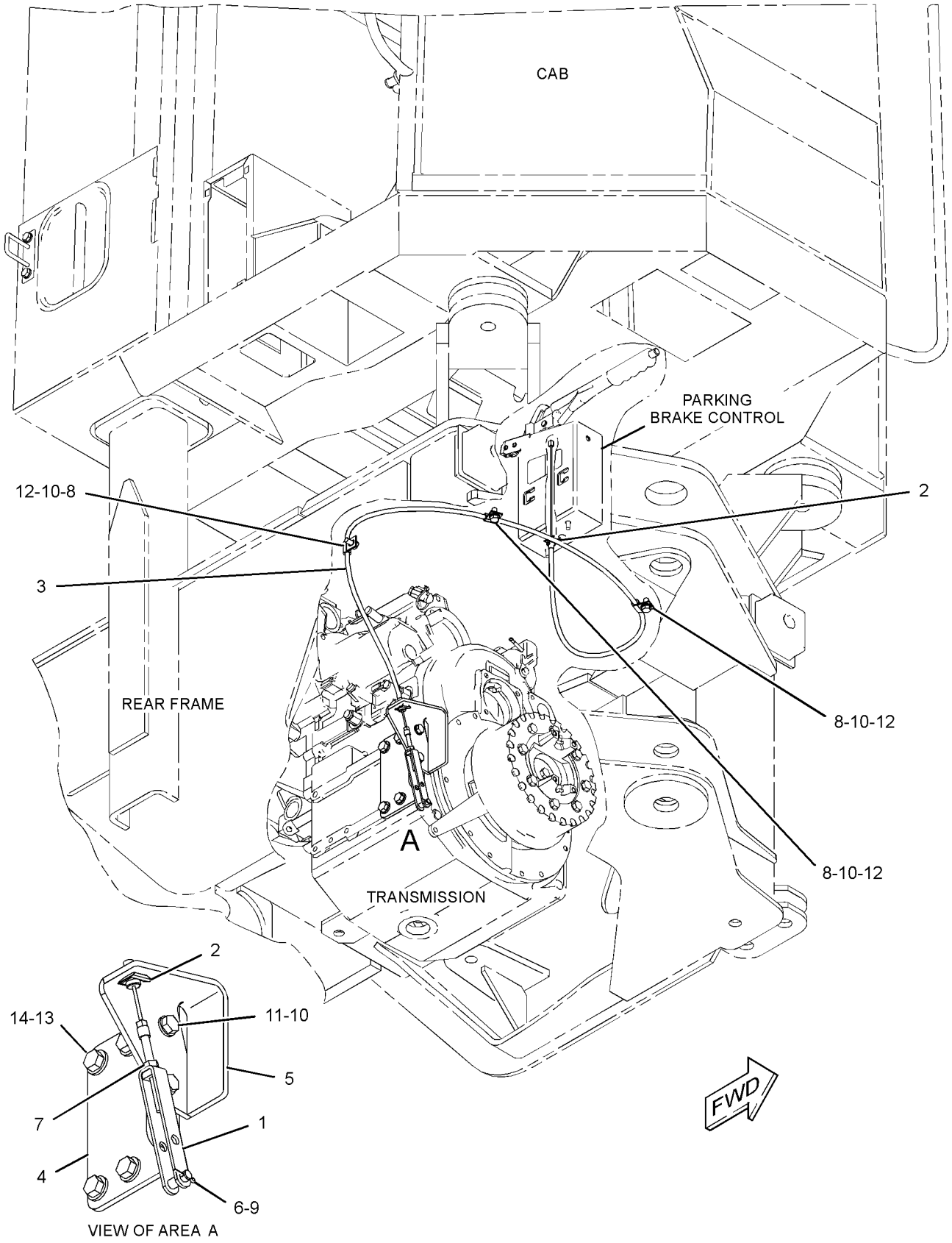

GRAPHIC #1 **<END>** g01390737

323-4078 CONTROL GP-PARKING BRAKE

S/N: JRL1-UP; RRS1-UP
PART OF 310-9953 CAB AR, 317-0771 OPERATOR GP
AN ATTACHMENT

SMCS-4282, 4284 **i03014091**

NOTE	REF NO	GRAPHIC REF	PART NUMBER	QTY	PART NAME 1 2 3 4 5 6 (PRODUCT LEVEL)	SEE PAGE
	1	1	**3H-8538**	1	PIN	
	2	1	**6G-4195**	1	SWITCH AS-LIMIT (PARKING BRAKE)	
		1	**3L-8187**	3	LOCKWASHER	
		1	**6V-8373**	3	SCREW-MACHINE (6-32X0.187-IN)	
	3	1	**6S-6646**	1	PIN-COTTER	
	4	1	**8K-1433**	1	GROMMET	
	5	1	**163-6408**	1	BRACKET AS	
	6	1	**186-4415**	1	CLEVIS	
	7	1	**323-4077**	1	LEVER AS	
		1	**9R-9110**	1	BUTTON	
		1	**9R-9111**	1	SPRING-COMPRESSION	
	8	1	**2N-3477**	2	SCREW-MACHINE (6-32X1.25-IN)	
	9	1	**4B-5324**	4	WASHER (3.9X9.6X1.2-MM THK)	
	10	1	**7D-6922**	2	LOCKNUT (6-32-THD)	
M	11	1	**8T-4189**	4	BOLT (M8X1.25X20-MM)	
	12	1	**8T-4224**	4	WASHER-HARD (8.8X16X2-MM THK)	

M-METRIC PART

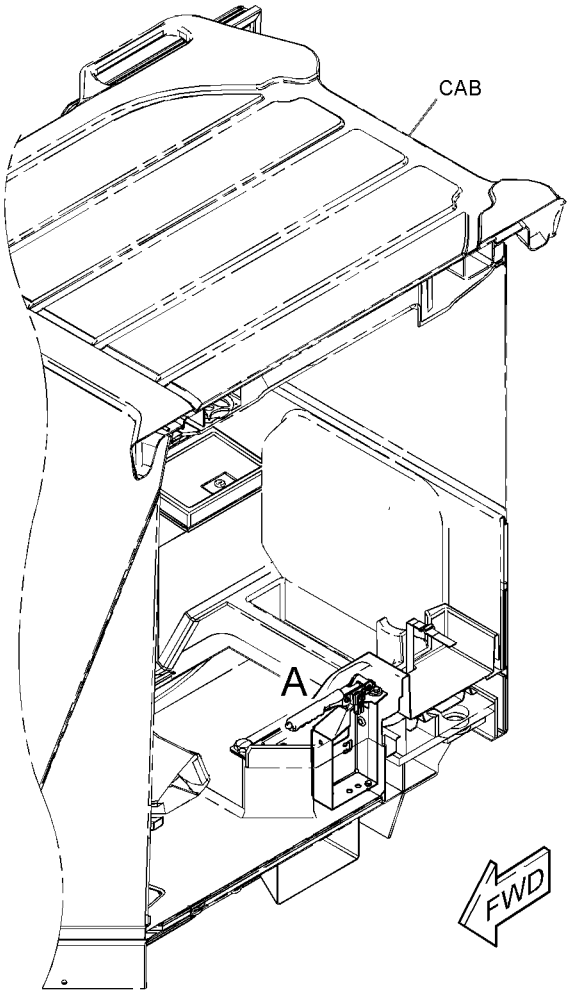

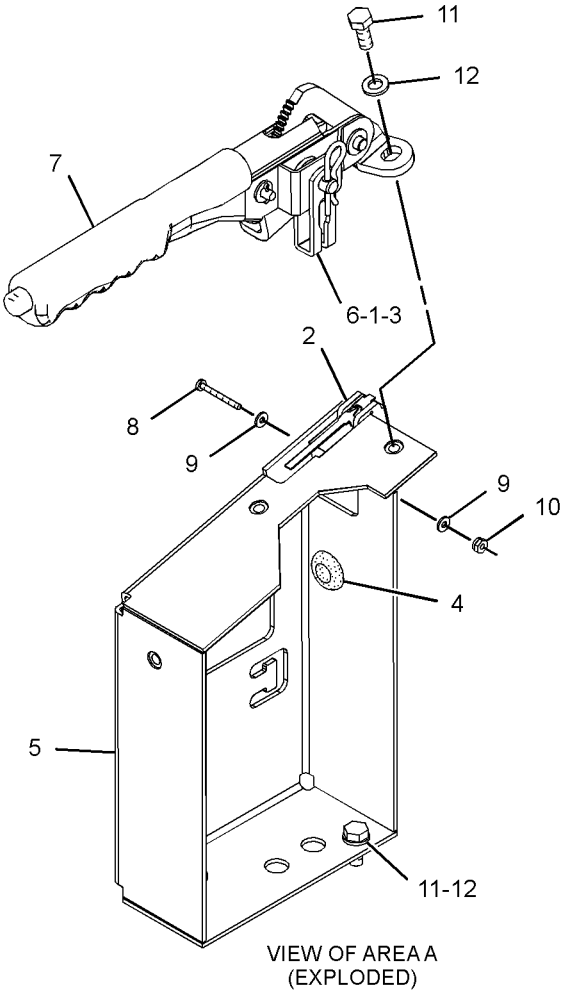

VIEW OF AREA A
(EXPLODED)

GRAPHIC #1 **<END>** g01546014

202-0430 CONTROL GP-SERVICE BRAKE

S/N: JRL1-UP; RRS1-UP

PART OF 372-7772, 372-7773 CHASSIS AR

SMCS-4257, 4258, 4263, 4265, 4269, 4280 **i04286691**

NOTE	REF NO	GRAPHIC REF	PART NUMBER	QTY	PART NAME 1 2 3 4 5 6 (PRODUCT LEVEL)	SEE PAGE
	1	1	**6S-6646**	1	PIN-COTTER	
	2	1	**3B-4617**	1	PIN-COTTER	
	3	1	**6G-0233**	1	BOOT	
	4	1	**6V-0852**	1	CAP-DUST	
C	5	1	*164-5567*	1	COUPLER AS-QUICK DISCONNECT (MALE)	
		1	**214-7568**	1	SEAL-O-RING	
		1	**6V-3965**	1	FITTING (QUICK DISCONNECT)	
	6	1	**7C-6467**	2	PLUG	
	7	1	**8E-8296**	2	DISC-THRUST	
	8	1	**8T-6431**	1	ROD END	
M	9	1	**9X-2065**	1	NUT (M10X1.5-THD, LH)	
	10	1	**128-0168**	1	ROD	
	11	1	**128-0169**	1	ROLLER	
	12	1	**132-0988**	1	BRACKET AS	
	13	1	**132-0994**	1	END-BEARING ROD	
	14	1	**294-2016**	1	PLATE	
	15	1	**133-7675**	1	SPRING	
M	16	1	**134-0673**	2	BOLT (M10X1.5X50-MM)	
	17	1	**144-8521**	1	VALVE GP-BRAKE CONTROL (SERVICE)	
		1	**117-7798**	1	BOOT	
		1	**117-7799**	1	KIT-SEAL (BRAKE VALVE)	
					(INCLUDES O-RINGS, QUAD RING, CUP & BOOT)	
	18	1	**294-2018**	1	LEVER AS	
	18A	1	**5V-4410**	2	BUSHING	
	20	1	**290-5825**	1	SENSOR GP-PRESSURE (SERVICE BRAKE OIL)	
		1	**102-8803**	1	KIT-RECEPTACLE (3-PIN)	
					(INCLUDES RECEPTACLE AS & WEDGE)	
		1	**8T-8729**	3	PIN-CONNECTOR (16-GA TO 18-GA)	
E		1	**9X-1813**		SLEEVE (34-CM)	
	21	1	*148-8336*	2	CONNECTOR AS	
					(EACH INCLUDES)	
		1	**6V-8636**	1	CONNECTOR	
		1	**3J-1907**	1	SEAL-O-RING	
		1	**6V-8397**	1	SEAL-O-RING	
	22	1	*148-8378*	1	ELBOW AS	
		1	**3J-1907**	1	SEAL-O-RING	
		1	**6V-8397**	1	SEAL-O-RING	
		1	**6V-8724**	1	ELBOW	
	23	1	*148-8443*	2	TEE AS	
					(EACH INCLUDES)	
		1	**3J-1907**	1	SEAL-O-RING	
		1	**6V-8397**	1	SEAL-O-RING	
		1	**7X-2459**	1	TEE-O-RING	
M	27	1	**8T-0389**	2	LOCKNUT (M10X1.5-THD)	
	28	1	**8T-4121**	13	WASHER-HARD (11X21X2.5-MM THK)	
M	29	1	**8T-4133**	1	NUT (M10X1.5-THD)	
M	30	1	**8T-4137**	5	BOLT (M10X1.5X20-MM)	
M	31	1	**8T-4196**	2	BOLT (M10X1.5X35-MM)	
	32	1	**9R-2807**	1	CLIP	
	33	1	**9R-3067**	1	PIN	
	34	1	**7K-1181**	1	STRAP-CABLE	
	35	1	**294-2017**	1	BEARING	
C	36	1	*173-7223*	1	ADAPTER AS	
		1	**3J-1907**	1	SEAL-O-RING	
		1	**3J-7354**	1	SEAL-O-RING	
		1	**9X-0261**	1	ADAPTER	

202-0430 CONTROL GP-SERVICE BRAKE *(contd.)* i04286691

NOTE	REF NO	GRAPHIC REF	PART NUMBER	QTY	PART NAME 1 2 3 4 5 6 (PRODUCT LEVEL)	SEE PAGE
	37	1	**238-4743**	1	WASHER (10.5X21X1.25-MM THK)	

C-CHANGE FROM PREVIOUS TYPE
E-ORDER BY THE CENTIMETER
M-METRIC PART

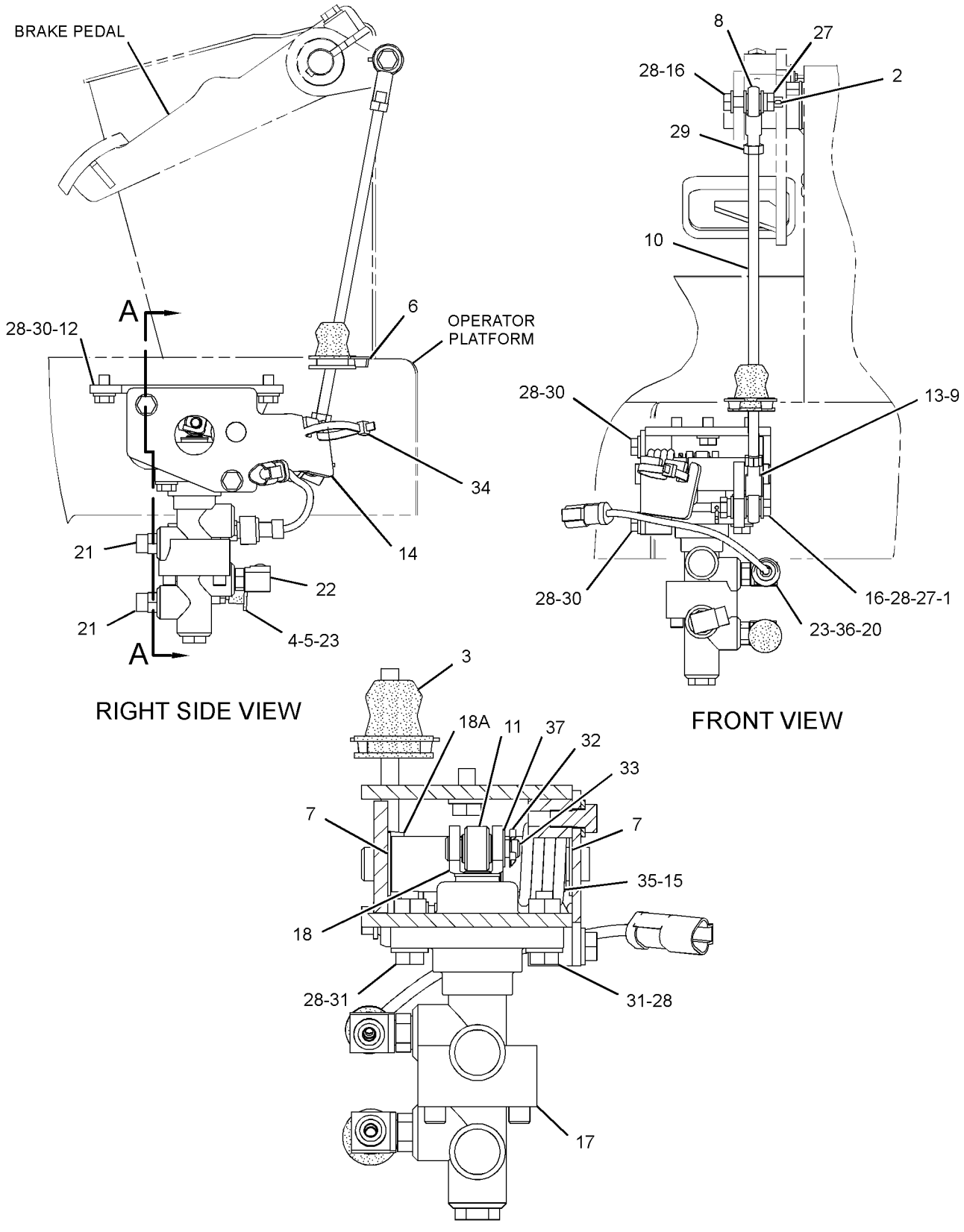

GRAPHIC #1

<END>

g02354816

BRAKING SYSTEM

289-8925 LINES GP-SERVICE BRAKE

S/N: JRL1-UP

PART OF 372-7772 CHASSIS AR

SMCS-4257 **i03740100**

NOTE	REF NO	GRAPHIC REF	PART NUMBER	QTY	PART NAME 1 2 3 4 5 6 (PRODUCT LEVEL)	SEE PAGE
	1	1	**3S-2093**	4	STRAP-CABLE	
	2	1	**4E-7540**	1	ANGLE	
	3	1	**9L-1566**	1	SUPPORT	
I	4	1	**090-8516**	2	HOSE AS	
	5	1	**091-0081**	1	SPACER (10.5X20X10-MM THK)	
	6	1	**111-6940**	1	SPACER (13.1X15.9X36.5-MM THK)	
I	7	1	**129-5844**	1	HOSE AS	
Y	8	1	*140-9251*	2	ACCUMULATOR GP-BRAKE (CHARGED)	281
I	9	1	**140-9273**	1	HOSE AS	
	10	1	**156-4130**	4	CLIP-TUBE	
	11	1	*156-4281*	1	TEE AS	
		1	**3J-7354**	1	SEAL-O-RING	
		1	**6V-8397**	2	SEAL-O-RING	
		1	**7X-0838**	1	TEE-O-RING	
M	12	1	**8T-4185**	1	BOLT (M10X1.5X50-MM)	
	13	1	**200-6345**	2	MOUNT (DUAL SWIVEL)	
	14	1	**204-2281**	5	STRAP-CABLE	
	15	1	**205-5469**	1	GUARD-HOSE	
I	16	1	**214-8917**	2	HOSE AS	
I	17	1	**218-0001**	2	HOSE AS	
I	18	1	**239-6182**	1	HOSE AS	
	19	1	**300-9097**	1	BRACKET AS	
	20	1	**7K-1181**	4	STRAP-CABLE	
	21	1	*148-8336*	1	CONNECTOR AS	
		1	**6V-8397**	1	SEAL-O-RING	
		1	**3J-1907**	1	SEAL-O-RING	
		1	**6V-8636**	1	CONNECTOR	
	22	1	*148-8361*	2	ELBOW AS	
					(EACH INCLUDES)	
		1	**3J-7354**	1	SEAL-O-RING	
		1	**6V-8397**	1	SEAL-O-RING	
		1	**6V-9200**	1	ELBOW	
	23	1	*148-8367*	1	ELBOW AS	
		1	**6V-8397**	1	SEAL-O-RING	
		1	**6V-9850**	1	ELBOW	
	24	1	*148-8378*	1	ELBOW AS	
		1	**3J-1907**	1	SEAL-O-RING	
		1	**6V-8397**	1	SEAL-O-RING	
		1	**6V-8724**	1	ELBOW	
	25	1	*148-8435*	2	TEE AS	
					(EACH INCLUDES)	
		1	**3J-1907**	1	SEAL-O-RING	
		1	**6V-8397**	2	SEAL-O-RING	
		1	**6V-8781**	1	TEE	
	26	1	*173-7225*	1	TEE AS	
		1	**3J-7354**	1	SEAL-O-RING	
		1	**6V-8397**	2	SEAL-O-RING	
		1	**6V-9161**	1	TEE	
	27	1	**204-8000**	1	MOUNTING-CABLE TIE	
	28	1	**5P-4295**	1	CLIP	
M	29	1	**5C-7261**	1	NUT (M8X1.25-THD)	
	30	1	**5K-5338**	2	CLIP	
	31	1	**5P-4116**	3	WASHER-HARD (8.8X20.5X2-MM THK)	
	32	1	**7V-6571**	1	GROMMET	
	33	1	**7X-7729**	9	WASHER (11X25X3-MM THK)	
	34	1	**8D-9671**	1	CLIP	

289-8925 **LINES GP-SERVICE BRAKE** *(contd.)* **i03740100**

NOTE	REF NO	GRAPHIC REF	PART NUMBER	QTY	PART NAME 1 2 3 4 5 6 (PRODUCT LEVEL)	SEE PAGE
	35	1	**8M-2773**	2	CLIP	
	36	1	**8T-1895**	1	CLIP (SLOT)	
	37	1	**8T-1896**	1	CLIP (TAB)	
	38	1	**8T-4121**	7	WASHER-HARD (11X21X2.5-MM THK)	
M	39	1	**8T-4133**	2	NUT (M10X1.5-THD)	
M	40	1	**8T-4136**	2	BOLT (M10X1.5X25-MM)	
M	41	1	**8T-4195**	8	BOLT (M10X1.5X30-MM)	
M	42	1	**8T-4196**	2	BOLT (M10X1.5X35-MM)	
M	43	1	**8T-4908**	1	BOLT (M8X1.25X25-MM)	
M	44	1	**8T-6466**	1	BOLT (M10X1.5X60-MM)	

I-REFER TO HYDRAULIC INFORMATION SYSTEM
M-METRIC PART
Y-SEPARATE ILLUSTRATION

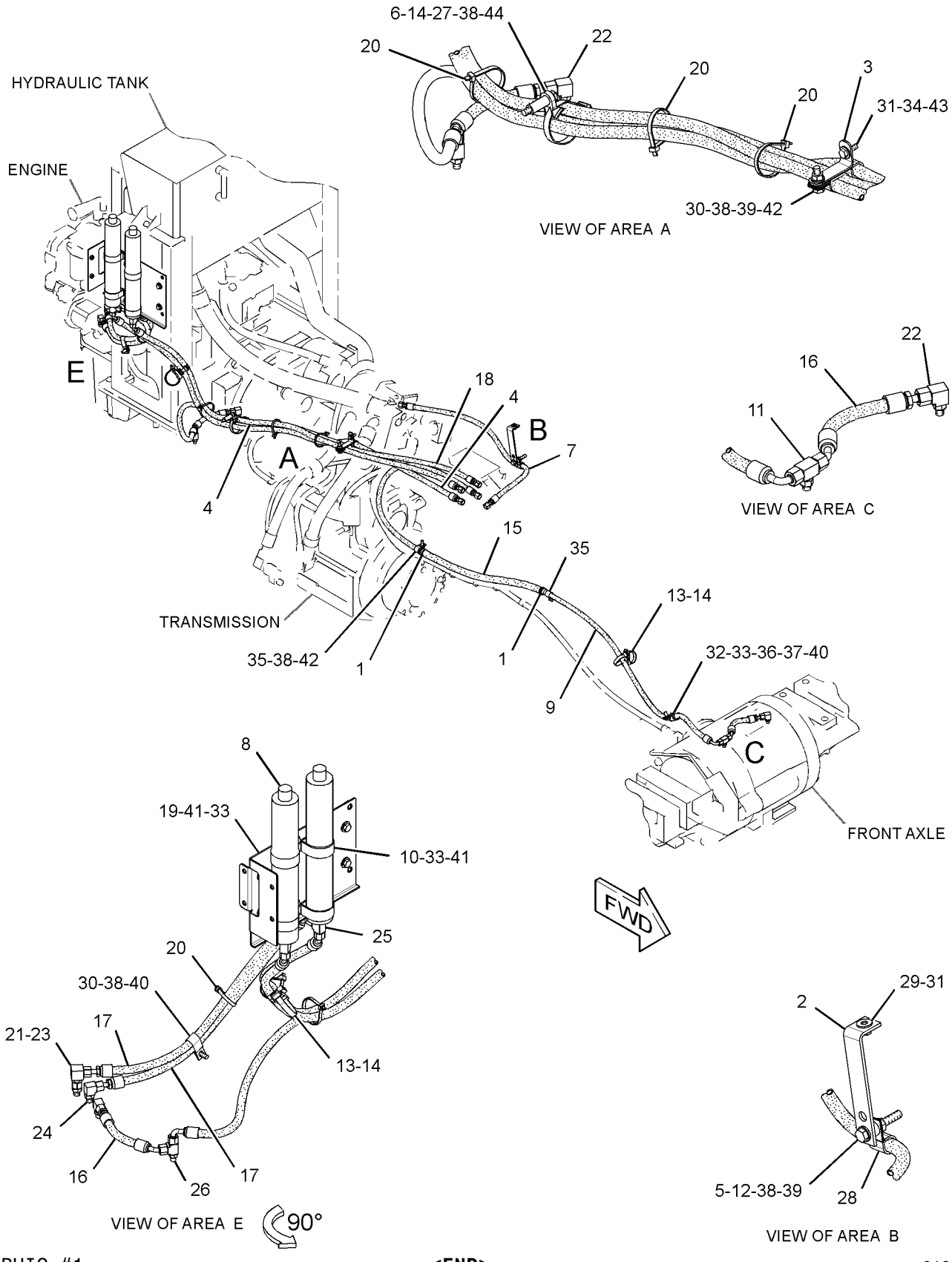

GRAPHIC #1 **<END>** g01965557

BRAKING SYSTEM

344-7805 LINES GP-SERVICE BRAKE

S/N: RRS1-UP

PART OF 372-7773 CHASSIS AR

SMCS-4257 **i04535763**

NOTE	REF NO	GRAPHIC REF	PART NUMBER	QTY	PART NAME 1 2 3 4 5 6 (PRODUCT LEVEL)	SEE PAGE
	1	1	**3S-2093**	4	STRAP-CABLE	
	2	1	**4E-7540**	1	ANGLE	
C	3	1	**7K-1181**	3	STRAP-CABLE	
	4	1	**9L-1566**	1	SUPPORT	
CI	5	1	**164-3873**	2	HOSE AS	
	6	1	**091-0081**	1	SPACER (10.5X20X10-MM THK)	
	7	1	**111-6940**	1	SPACER (13.1X15.9X36.5-MM THK)	
CI	8	1	**8W-6132**	1	HOSE AS	
Y	9	1	*140-9251*	2	ACCUMULATOR GP-BRAKE (CHARGED)	281
I	10	1	**140-9273**	1	HOSE AS	
	11	1	**156-4130**	4	CLIP-TUBE	
	12	1	**200-6345**	2	MOUNT (DUAL SWIVEL)	
	13	1	**204-2281**	5	STRAP-CABLE	
	14	1	**205-5469**	1	GUARD-HOSE	
I	15	1	**214-8917**	2	HOSE AS	
I	16	1	**218-0001**	2	HOSE AS	
	17	1	**218-0255**	1	BRACKET AS	
M		1	**8T-3490**	1	NUT-WELD (M10X1.5-THD)	
I	18	1	**239-6182**	1	HOSE AS	
	19	1	**300-9097**	1	BRACKET AS	
	20	1	*148-8336*	1	CONNECTOR AS	
		1	**3J-1907**	1	SEAL-O-RING	
		1	**6V-8397**	1	SEAL-O-RING	
		1	**6V-8636**	1	CONNECTOR	
	21	1	*148-8361*	2	ELBOW AS	
					(EACH INCLUDES)	
		1	**3J-7354**	1	SEAL-O-RING	
		1	**6V-8397**	1	SEAL-O-RING	
		1	**6V-9200**	1	ELBOW	
	22	1	*148-8367*	1	ELBOW AS	
		1	**6V-8397**	1	SEAL-O-RING	
		1	**6V-9850**	1	ELBOW	
	23	1	*148-8378*	1	ELBOW AS	
		1	**3J-1907**	1	SEAL-O-RING	
		1	**6V-8397**	1	SEAL-O-RING	
		1	**6V-8724**	1	ELBOW	
	24	1	*148-8435*	2	TEE AS	
					(EACH INCLUDES)	
		1	**3J-1907**	1	SEAL-O-RING	
		1	**6V-8397**	2	SEAL-O-RING	
		1	**6V-8781**	1	TEE	
	25	1	*156-4281*	1	TEE AS	
		1	**3J-7354**	1	SEAL-O-RING	
		1	**6V-8397**	2	SEAL-O-RING	
		1	**7X-0838**	1	TEE-O-RING	
	26	1	*173-7225*	1	TEE AS	
		1	**3J-7354**	1	SEAL-O-RING	
		1	**6V-8397**	2	SEAL-O-RING	
		1	**6V-9161**	1	TEE	
	27	1	**204-8000**	1	MOUNTING-CABLE TIE	
M	28	1	**5C-7261**	1	NUT (M8X1.25-THD)	
	29	1	**5K-5338**	2	CLIP	
	30	1	**5P-4116**	3	WASHER-HARD (8.8X20.5X2-MM THK)	
	31	1	**5P-4295**	1	CLIP	
	32	1	**7V-6571**	1	GROMMET	
	33	1	**7X-7729**	11	WASHER (11X25X3-MM THK)	

344-7805 **LINES GP-SERVICE BRAKE** *(contd.)* **i04535763**

NOTE	REF NO	GRAPHIC REF	PART NUMBER	QTY	PART NAME 1 2 3 4 5 6 (PRODUCT LEVEL)	SEE PAGE
	34	1	**8D-9671**	1	CLIP	
	35	1	**8M-2773**	2	CLIP	
	36	1	**8T-1895**	1	CLIP (SLOT)	
	37	1	**8T-1896**	1	CLIP (TAB)	
	38	1	**8T-4121**	7	WASHER-HARD (11X21X2.5-MM THK)	
M	39	1	**8T-4133**	2	NUT (M10X1.5-THD)	
M	40	1	**8T-4136**	4	BOLT (M10X1.5X25-MM)	
M	41	1	**8T-4185**	1	BOLT (M10X1.5X50-MM)	
M	42	1	**8T-4195**	8	BOLT (M10X1.5X30-MM)	
M	43	1	**8T-4196**	2	BOLT (M10X1.5X35-MM)	
M	44	1	**8T-4908**	1	BOLT (M8X1.25X25-MM)	
M	45	1	**8T-6466**	1	BOLT (M10X1.5X60-MM)	

C-CHANGE FROM PREVIOUS TYPE
I-REFER TO HYDRAULIC INFORMATION SYSTEM
M-METRIC PART
Y-SEPARATE ILLUSTRATION

344-7805 **LINES GP-SERVICE BRAKE** *(contd.)* **i04535763**

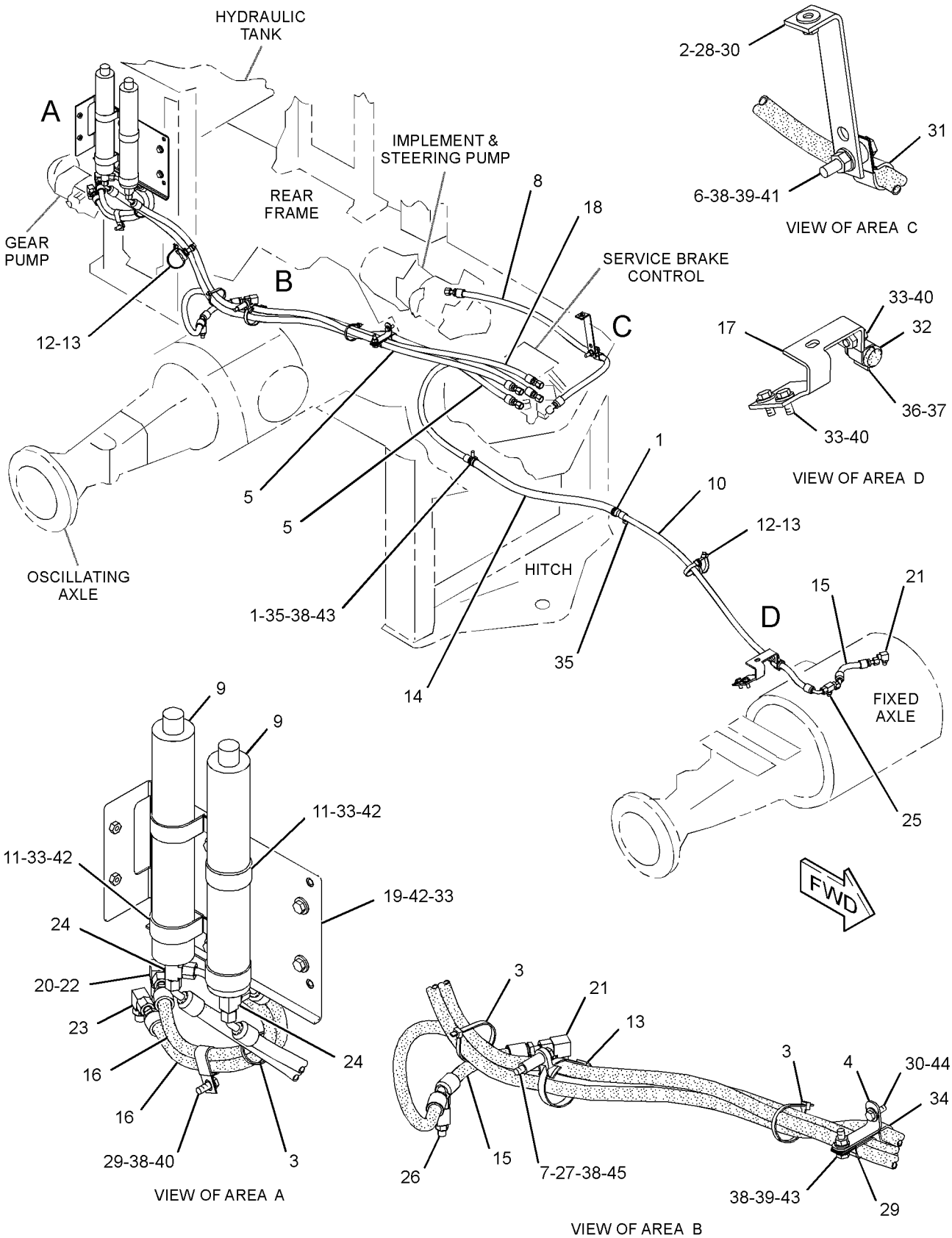

GRAPHIC #1 **<END>** g02718150

STEERING SYSTEM

132-2550 CYLINDER & MTG GP-STEERING

S/N: JRL1-UP; RRS1-UP

PART OF 372-7772, 372-7773 CHASSIS AR

SMCS-4303 **i01499448**

NOTE	REF NO	GRAPHIC REF	PART NUMBER	QTY	PART NAME 1 2 3 4 5 6 (PRODUCT LEVEL)	SEE PAGE
B	1	1	**9D-1535**	16	WASHER-THRUST (44.8X101.6X1.22-MM THK)	
	2	1	**132-2553**	2	PIN	
	3	1	**132-2554**	2	PIN AS	
Y	4	1	**142-6251**	2	CYLINDER GP-STEERING	300
	5	1	**6V-3213**	2	RING-RETAINING	
	6	1	**7X-0618**	2	WASHER-HARD (13.5X40X5-MM THK)	
M	7	1	**8T-4192**	2	BOLT (M12X1.75X25-MM)	

B-USE AS REQUIRED
M-METRIC PART
Y-SEPARATE ILLUSTRATION

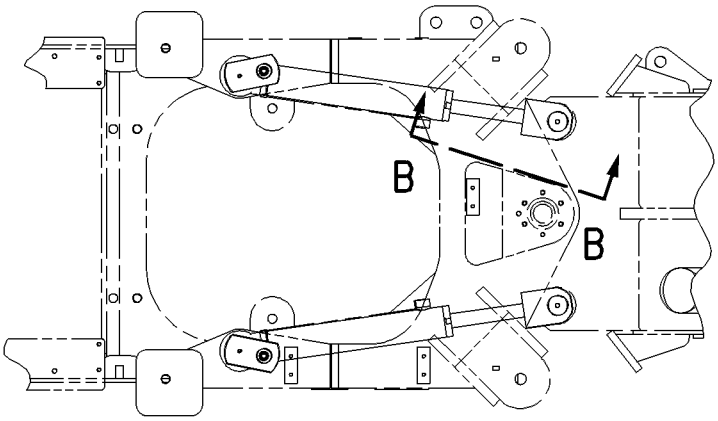

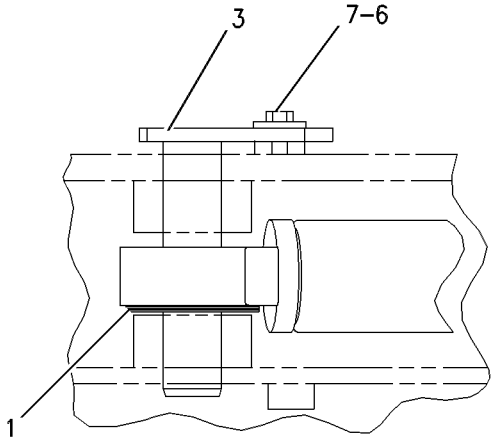

VIEW OF AREA A

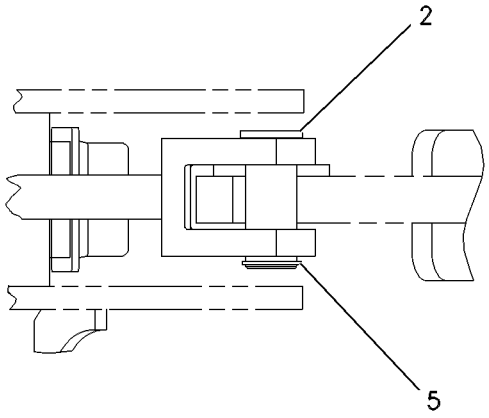

VIEW B-B

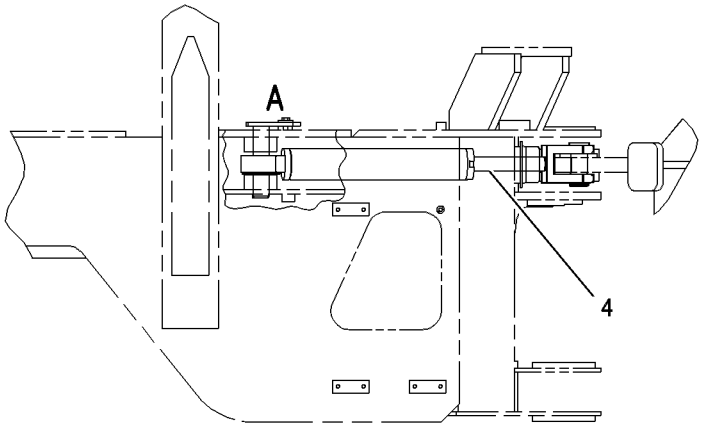

GRAPHIC #1 **<END>** g00623407

142-6251 CYLINDER GP-STEERING

S/N: JRL1-UP; RRS1-UP
69.85-MM (2.75-IN)BORE X 344.7-MM (13.6-IN) STROKE
PART OF 132-2550 CYLINDER & MTG GP-STEERING

SMCS-4303 **i04159443**

NOTE	REF NO	GRAPHIC REF	PART NUMBER	QTY	PART NAME 1 2 3 4 5 6 (PRODUCT LEVEL)	SEE PAGE
R	1	1	**142-6252**	1	CYLINDER AS	
	1A	1	**4D-4431**	1	BEARING-ALIGNING	
M	2	1	**173-9779**	1	BOLT (M24X3X80-MM)	
	3	1	**6V-8237**	1	WASHER (26X44X4-MM THK)	
J	4	1	**8J-0112**	1	RING-WEAR	
J	5	1	**5J-7010**	1	SEAL AS	
	6	1	**142-7568**	1	PISTON	
	7	1	**6E-4940**	1	HEAD	
	8	1	**142-6255**	1	ROD AS	
J	9	1	**4J-9225**	1	RING-BACKUP	
J	10	1	**175-7895**	1	SEAL-O-RING	
J	11	1	**4T-6780**	1	RING-WEAR	
J	12	1	**167-2186**	1	SEAL AS-BUFFER	
J	13	1	**167-2294**	1	SEAL-U-CUP	
CJ	14	1	**226-8202**	1	SEAL-WIPER	
					AVAILABLE REPAIR KIT(S):	
J			**233-9204**	1	KIT-SEAL	

C-CHANGE FROM PREVIOUS TYPE
J-KIT MARKED J INCLUDES PARTS MARKED J
M-METRIC PART
R-REMFG PART MAY BE AVAILABLE

142-6251 CYLINDER GP-STEERING *(contd.)* **i04159443**

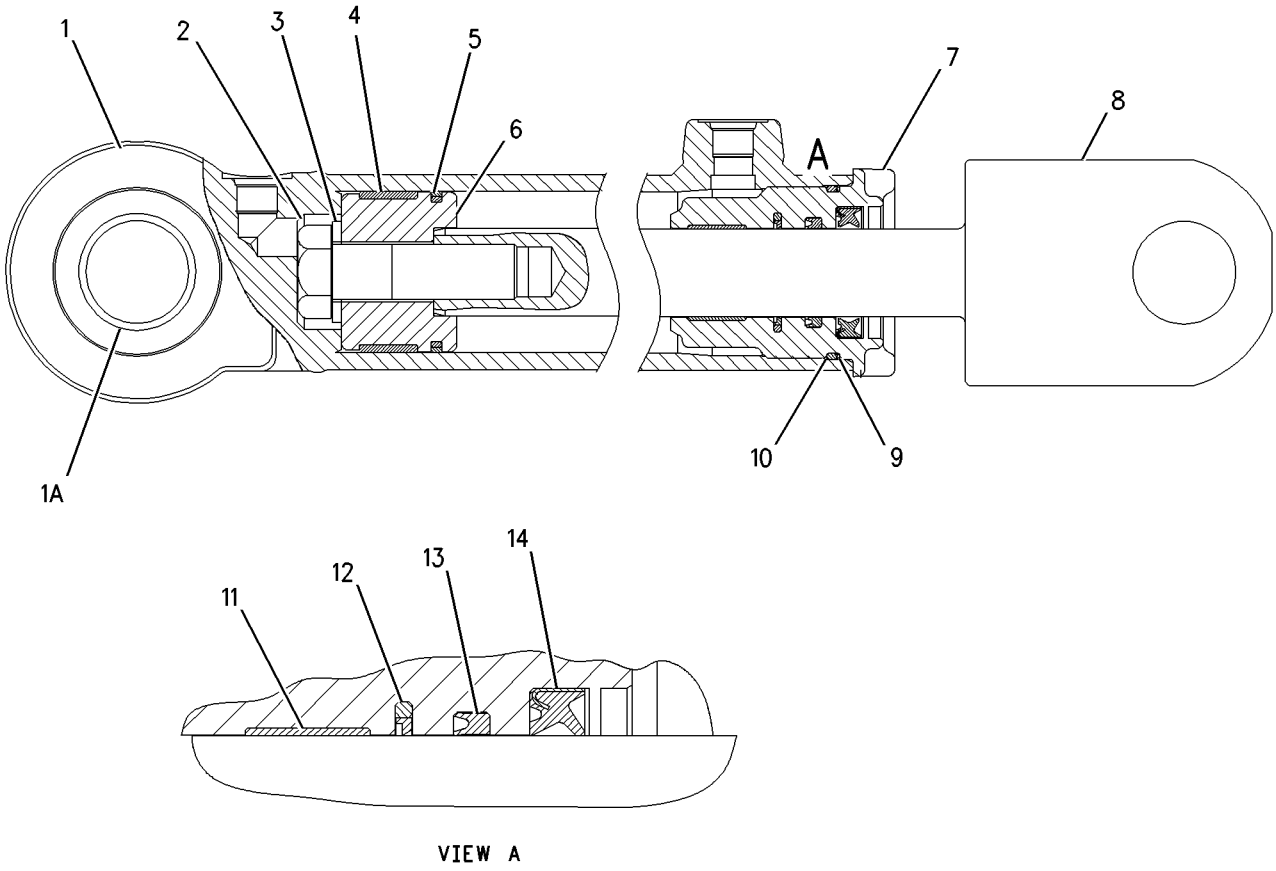

VIEW A

GRAPHIC #1 **<END>** g00943412

STEERING SYSTEM

354-2948 LINES GP-STEERING

S/N: JRL1-UP; RRS1-UP
PART OF 294-9439 STEERING AR-STANDARD
AN ATTACHMENT

SMCS-4304 **i04535789**

NOTE	REF NO	GRAPHIC REF	PART NUMBER	QTY	PART NAME 1 2 3 4 5 6 (PRODUCT LEVEL)	SEE PAGE
	1	1	**6V-0852**	1	CAP-DUST	
I	2	1	**146-7906**	1	HOSE AS	
I	3	1	**146-7907**	1	HOSE AS	
	4	1	*169-4274*	1	TEE AS	
		1	**3J-7354**	1	SEAL-O-RING	
		1	**4J-5477**	1	SEAL-O-RING	
		1	**8T-3313**	1	TEE-O-RING	
I	5	1	**172-6456**	1	HOSE AS	
	6	1	**217-0956**	1	COVER	
I	7	1	**249-1039**	1	HOSE AS	
I	8	1	**354-2628**	1	HOSE AS	
I	9	1	**354-2629**	1	HOSE AS	
I	10	1	**354-2630**	1	HOSE AS	
	11	1	*148-8340*	2	CONNECTOR AS	
					(EACH INCLUDES)	
		1	**3K-0360**	1	SEAL-O-RING	
		1	**6V-8398**	1	SEAL-O-RING	
		1	**6V-8639**	1	CONNECTOR	
	12	1	*148-8342*	1	CONNECTOR AS	
		1	**3K-0360**	1	SEAL-O-RING	
		1	**6V-8632**	1	CONNECTOR	
		1	**7J-9108**	1	SEAL-O-RING	
	13	1	*148-8364*	2	ELBOW AS	
					(EACH INCLUDES)	
		1	**3K-0360**	1	SEAL-O-RING	
		1	**6V-8398**	1	SEAL-O-RING	
		1	**6V-8625**	1	ELBOW	
	14	1	*148-8369*	1	ELBOW AS	
		1	**3J-7354**	1	SEAL-O-RING	
		1	**4J-5477**	1	SEAL-O-RING	
		1	**6V-8628**	1	ELBOW	
	15	1	*148-8408*	1	PLUG AS	
		1	**3D-2824**	1	SEAL-O-RING	
		1	**9S-4183**	1	PLUG	
	16	1	*148-8428*	1	TEE AS	
		1	**3K-0360**	1	SEAL-O-RING	
		1	**6V-8398**	2	SEAL-O-RING	
		1	**6V-8782**	1	TEE	
	17	1	*148-8436*	1	TEE AS	
		1	**3K-0360**	1	SEAL-O-RING	
		1	**6V-8398**	2	SEAL-O-RING	
		1	**6V-8775**	1	TEE-FACE SEAL	
	18	1	**164-4225**	1	CLIP	
	19	1	*164-5567*	1	COUPLER AS-QUICK DISCONNECT (MALE)	
		1	**214-7568**	1	SEAL-O-RING	
		1	**6V-3965**	1	FITTING (QUICK DISCONNECT)	
M	20	1	**5C-9553**	2	BOLT (M6X1X16-MM)	
	21	1	**8S-0948**	2	CLIP	
	22	1	**8T-4121**	2	WASHER-HARD (11X21X2.5-MM THK)	
M	23	1	**8T-4137**	2	BOLT (M10X1.5X20-MM)	
	24	1	**9X-8256**	2	WASHER (6.6X12X2-MM THK)	

I-REFER TO HYDRAULIC INFORMATION SYSTEM
M-METRIC PART

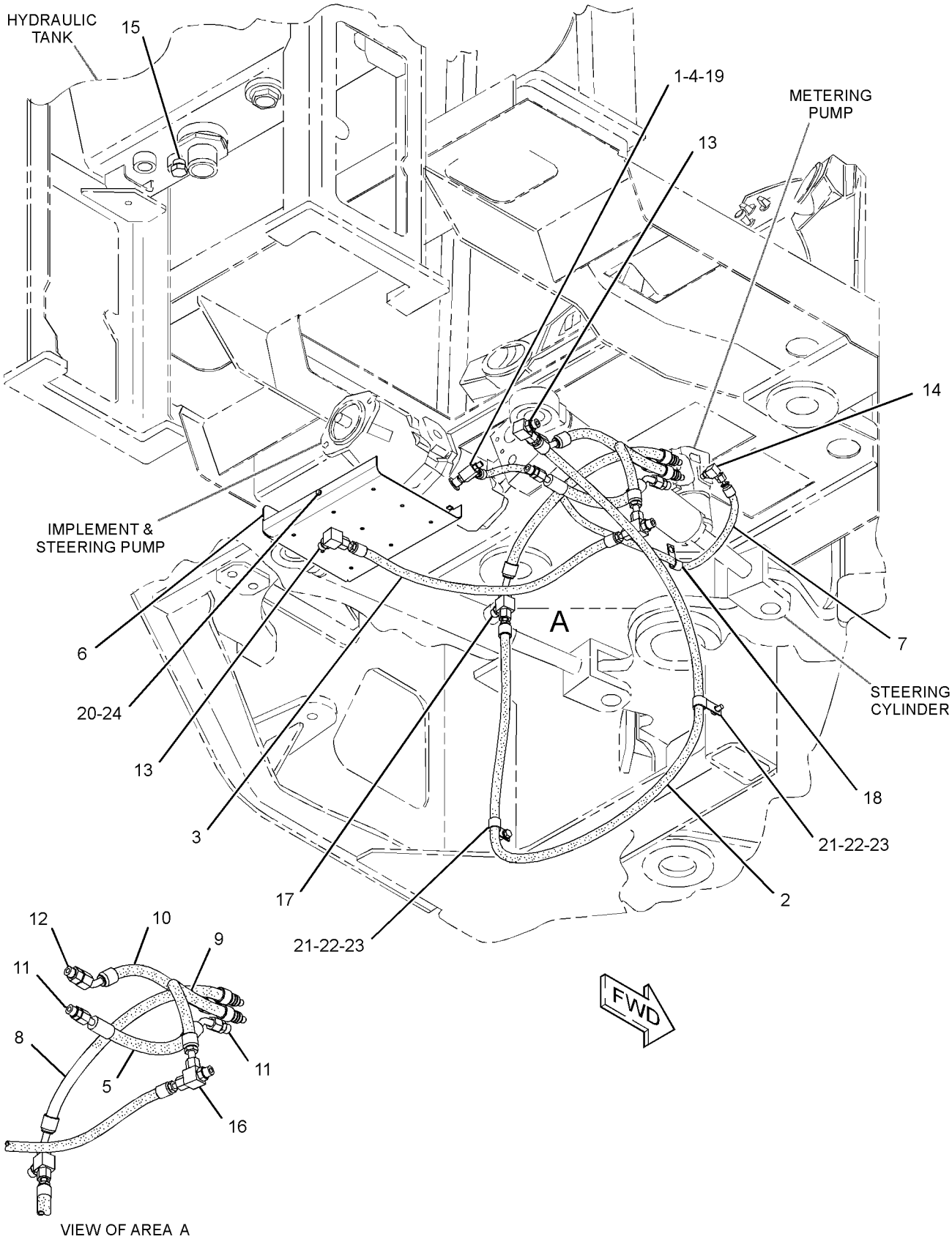

GRAPHIC #1 **<END>** g02338617

STEERING SYSTEM

354-2953 PUMP GP-METERING

S/N: JRL1-UP; RRS1-UP
PART OF 294-9439 STEERING AR-STANDARD
AN ATTACHMENT

SMCS-4312 **i04535769**

NOTE	REF NO	GRAPHIC REF	PART NUMBER	QTY	PART NAME 1 2 3 4 5 6 (PRODUCT LEVEL)	SEE PAGE
					AVAILABLE REPAIR KIT(S):	
			257-8471	1	KIT-SEAL (HMU)	
					(INCLUDES U-CUP SEAL, BACKUP RING, O-RING SEAL, RINGS & SEAL INSTALLER AS)	

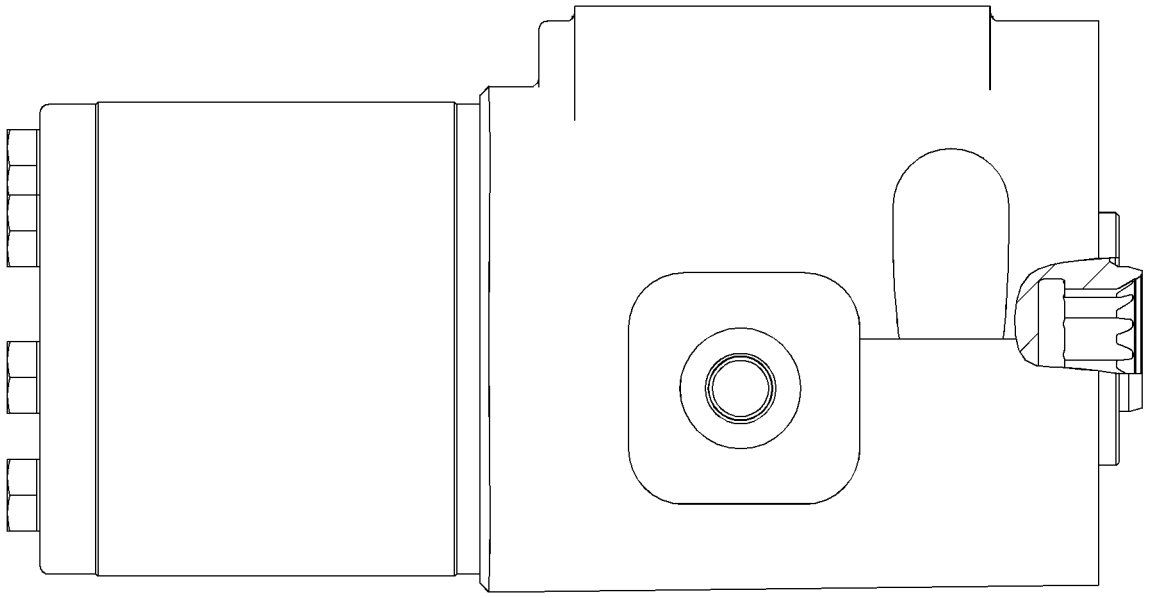

GRAPHIC #1 **<END>** g02316274

STEERING SYSTEM

294-9439 STEERING AR-STANDARD

S/N: JRL1-UP; RRS1-UP
PART OF 375-8357, 375-8358, 375-8359 DISTRIBUTION AR
AN ATTACHMENT

SMCS-4300, 4307 **i04535764**

NOTE	PART NUMBER	QTY	PART NAME 1 2 3 4 5 6 (PRODUCT LEVEL)	SEE PAGE
Y	*290-7203*	1	BATTERY & WIRING GP (STEERING)	102
Y	*354-2948*	1	LINES GP-STEERING	302
Y	**354-2953**	1	PUMP GP-METERING	304

Y-SEPARATE ILLUSTRATION

<END>

STEERING SYSTEM

319-1625 STEERING COLUMN GP-ADJUSTABLE

S/N: JRL1-UP; RRS1-UP
PART OF 190-4635 CONTROL GP-STEERING
AN ATTACHMENT

SMCS-4338 **i03569837**

NOTE	REF NO	GRAPHIC REF	PART NUMBER	QTY	PART NAME 1 2 3 4 5 6 (PRODUCT LEVEL)	SEE PAGE
	1	1	**9G-3695**	1	PLUG-SEAL	
	2	1	**102-8802**	1	KIT-RECEPTACLE (2-PIN)	
					(INCLUDES RECEPTACLE AS & WEDGE)	
	3	1	**186-3735**	1	PIN-CONNECTOR (16-GA TO 18-GA)	
	4	1	**149-0777**	1	KNOB (STEERING COLUMN TILT)	
	5	1	**319-9510**	1	SPRING AS-GAS (STEERING COLUMN)	
	6	1	**217-4155**	1	KIT-TILT LEVER (STEERING COLUMN)	
					(INCLUDES BOLTS, DOWEL, ROLL PIN, SPRING & TILT LEVER)	
	7	1	**332-6884**	1	KIT-CONTACT (HORN)	
					(INCLUDES HORN CONTACT AS & SCREWS)	
	8	1	**321-6951**	1	KIT-PIVOT (STEERING COLUMN TILT)	
					(INCLUDES PINS & BUSHINGS)	
	9	1	**311-8557**	1	COLUMN AS-STEERING	
M	10	1	**6V-8227**	1	NUT (M18X1.5-THD)	

M-METRIC PART

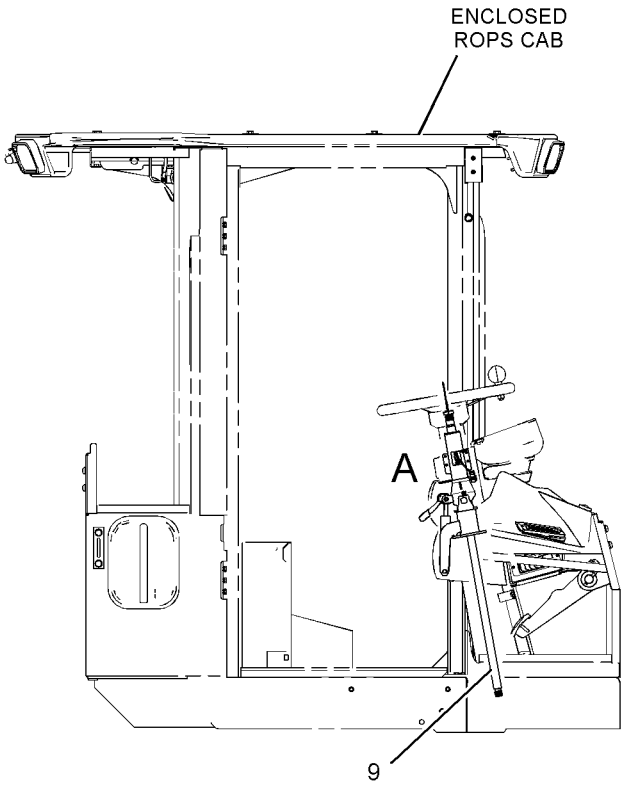

RIGHT SIDE VIEW

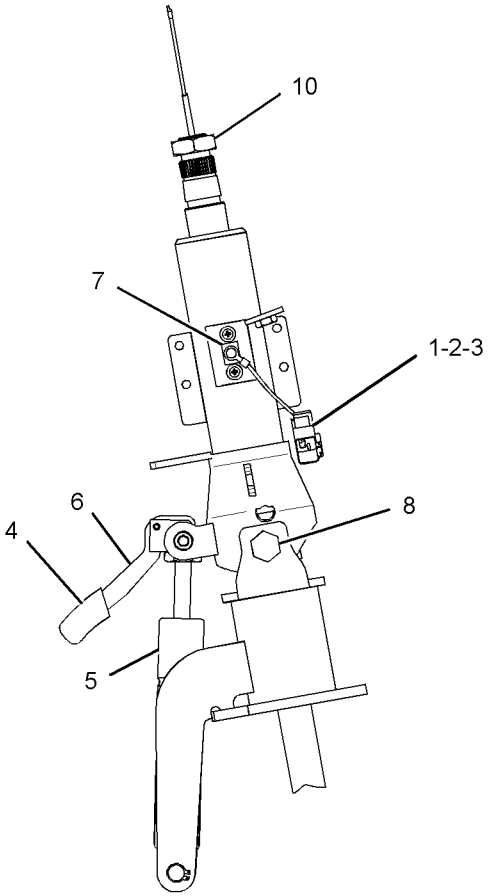

VIEW OF AREA A

GRAPHIC #1 **<END>** g01452575

243-4398 ACCUMULATOR GP-PILOT OIL–CHARGED

S/N: JRL1-UP; RRS1-UP
PART OF 289-8796 LINES GP-PILOT
FIELD REPLACEMENT ORDER 250-0393–PAGE 308

SMCS-5077 **i03996941**

NOTE	REF NO	GRAPHIC REF	PART NUMBER	QTY	PART NAME 1 2 3 4 5 6 (PRODUCT LEVEL)	SEE PAGE
	1	1	**224-5152**	1	VALVE-GAS (STEERING ACCUMULATOR)	
	2	1	**224-5132**	1	CAP (GAS VALVE)	
	3	1	**3J-7354**	1	SEAL-O-RING	
	4	1	**1J-9671**	1	SEAL-O-RING	
	5	1	**241-0037**	1	FILM-WARNING (HIGH PRESSURE, READ OMM)	

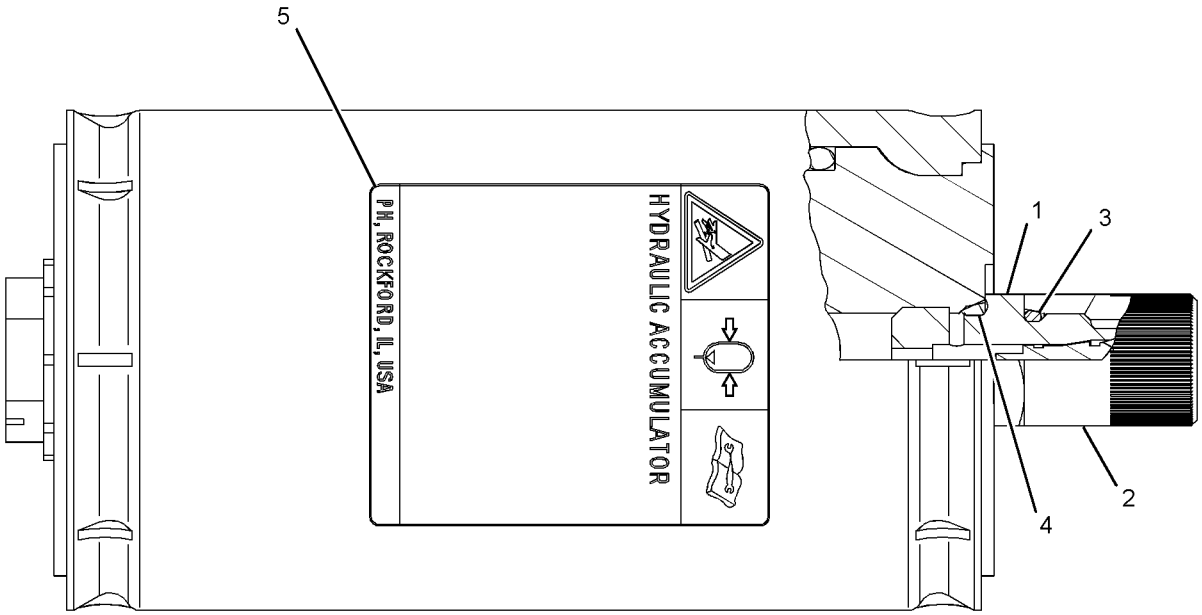

GRAPHIC #1 **<END>** g02178050

250-0393 ACCUMULATOR GP-PILOT OIL–UNCHARGED

S/N: JRL1-UP; RRS1-UP

FIELD REPLACEMENT FOR 243-4398–PAGE 307

SMCS-5077 **i04024728**

NOTE	REF NO	GRAPHIC REF	PART NUMBER	QTY	PART NAME 1 2 3 4 5 6 (PRODUCT LEVEL)	SEE PAGE
	1	1	**241-0037**	1	FILM-WARNING (HIGH PRESSURE, READ OMM)	
	2	1	**224-5152**	1	VALVE-GAS	
	3	1	**224-5132**	1	CAP (GAS VALVE)	
	4	1	**3J-7354**	1	SEAL-O-RING	
	5	1	**1J-9671**	1	SEAL-O-RING	

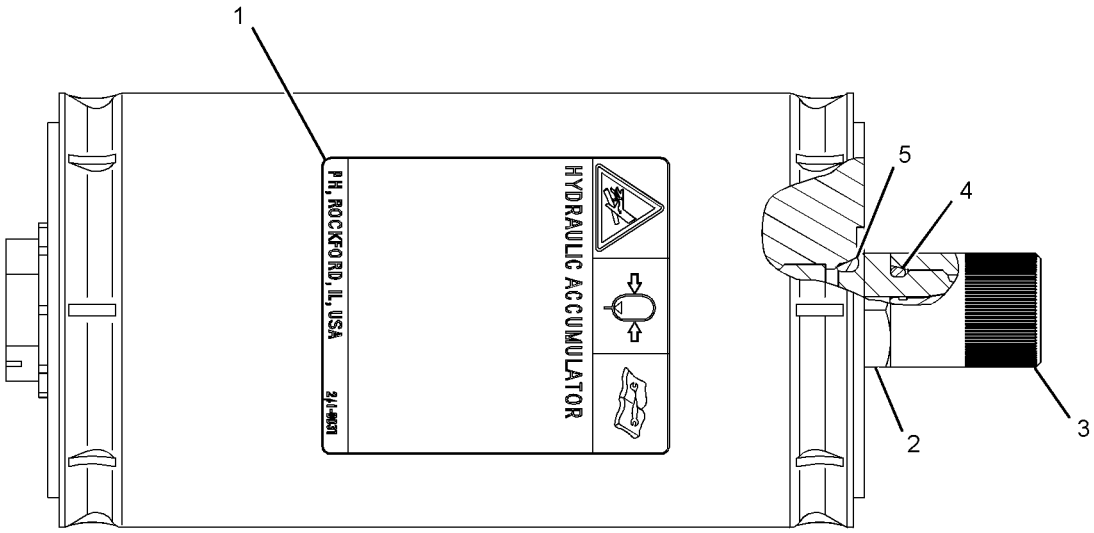

GRAPHIC #1 **<END>** g02207893

HYDRAULIC SYSTEM

283-4418 ACCUMULATOR GP-RIDE CONTROL–CHARGED

S/N: JRL1-UP; RRS1-UP
PART OF 293-6472 CONTROL GP-RIDE
AN ATTACHMENT

SMCS-5004, 5077 **i03042701**

NOTE	REF NO	GRAPHIC REF	PART NUMBER	QTY	PART NAME 1 2 3 4 5 6 (PRODUCT LEVEL)	SEE PAGE
	1	1	**224-5132**	1	CAP (GAS VALVE)	
	2	1	**224-5152**	1	VALVE-GAS	
	3	1	**3J-7354**	1	SEAL-O-RING	
	4	1	**1J-9671**	1	SEAL-O-RING	
	5	1	**3D-2824**	1	SEAL-O-RING	
	6	1	**241-0037**	1	FILM-WARNING (HIGH PRESSURE, READ OMM)	
					AVAILABLE REPAIR KIT(S):	
			160-0496	1	KIT-SEAL (ACCUMULATOR)	
					(INCLUDES END CAP SEALS, PISTON SEALS & GAS VALVE SEAL)	

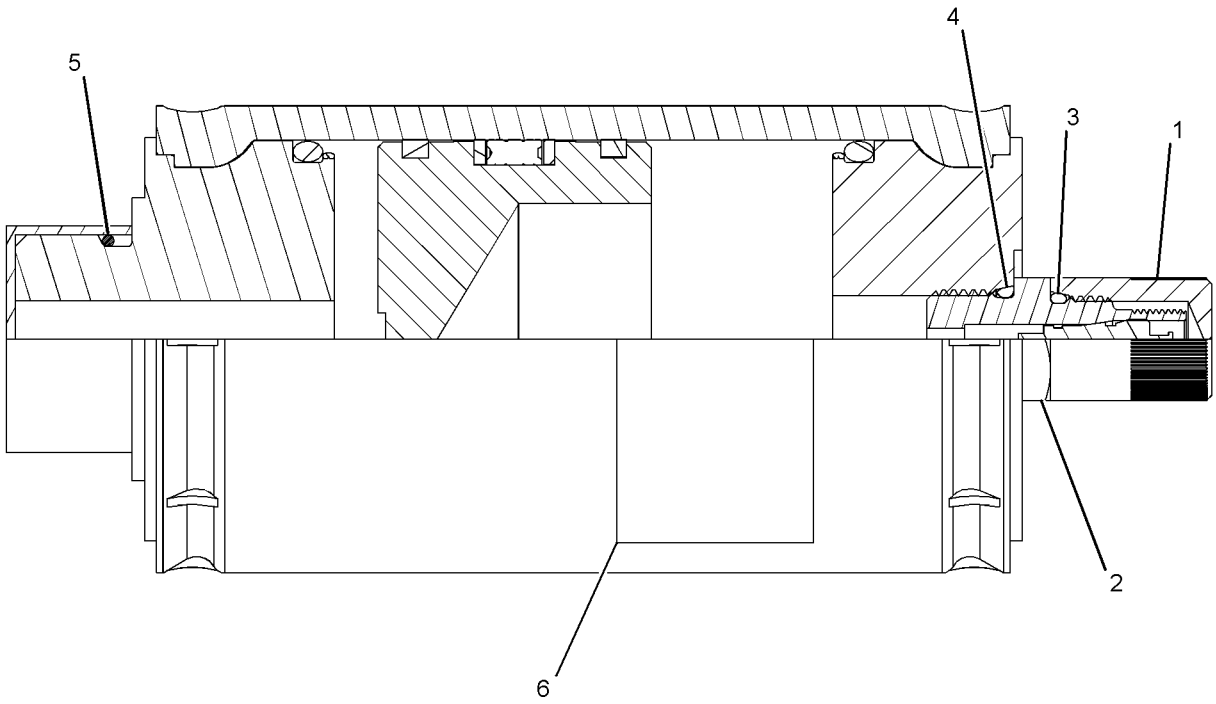

GRAPHIC #1 **<END>** g01393627

HYDRAULIC SYSTEM

298-2412 ACCUMULATOR GP-RIDE CONTROL–CHARGED

S/N: JRL1-UP; RRS1-UP
PART OF 293-6472 CONTROL GP-RIDE
AN ATTACHMENT

SMCS-5004, 5077 **i03039483**

NOTE	REF NO	GRAPHIC REF	PART NUMBER	QTY	PART NAME 1 2 3 4 5 6 (PRODUCT LEVEL)	SEE PAGE
	1	1	**224-5132**	1	CAP (GAS VALVE)	
	2	1	**224-5152**	1	VALVE-GAS	
	3	1	**3J-7354**	1	SEAL-O-RING	
	4	1	**1J-9671**	1	SEAL-O-RING	
	5	1	**3D-2824**	1	SEAL-O-RING	
	6	1	**241-0037**	1	FILM-WARNING (HIGH PRESSURE, READ OMM)	

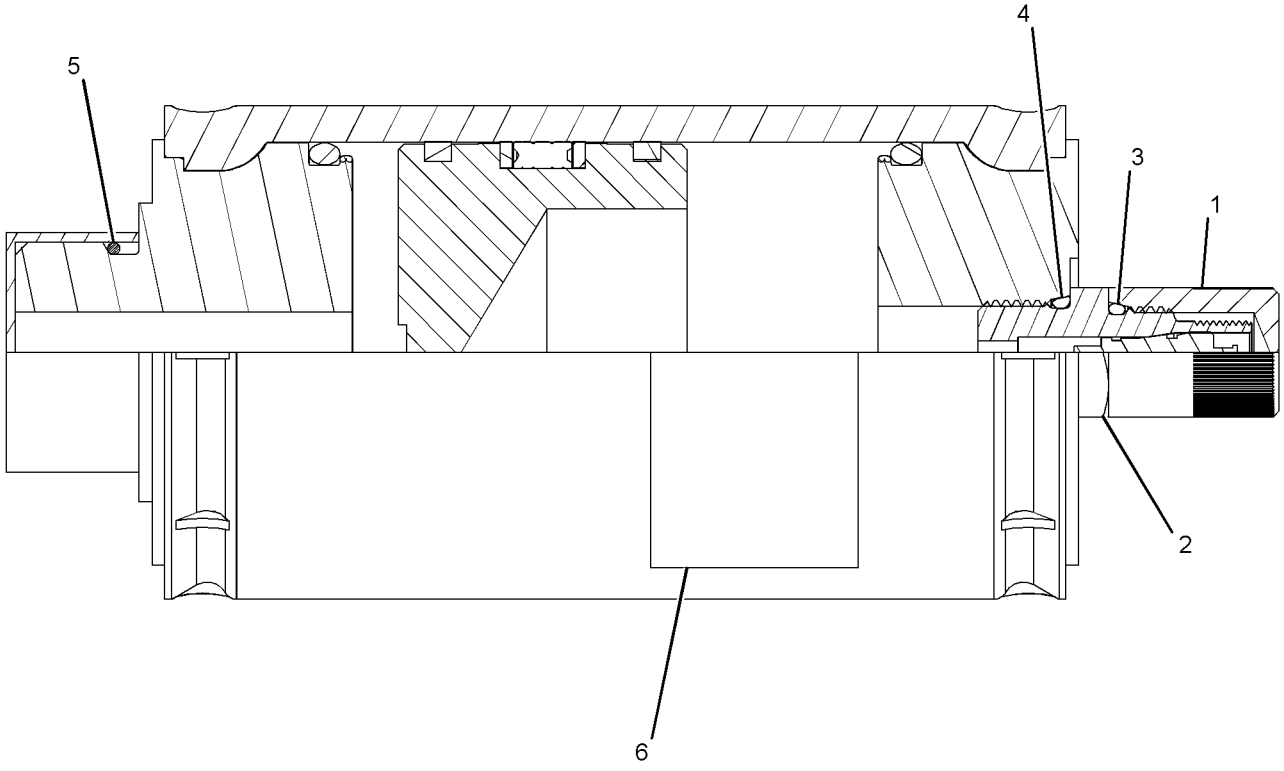

GRAPHIC #1 **<END>** g01395168

HYDRAULIC SYSTEM

289-8994 CONTROL AR-RIDE

S/N: JRL1-UP

AN ATTACHMENT

SMCS-5004 **i03039654**

NOTE	PART NUMBER	QTY	PART NAME 1 2 3 4 5 6 (PRODUCT LEVEL)	SEE PAGE
Y	*290-7183*	1	LINES GP-RIDE CONTROL	374
Y	*295-5544*	1	VALVE & MTG GP-RIDE CONTROL	411
Y	*290-7187*	1	WIRING GP-RIDE CONTROL	170
Y-SEPARATE ILLUSTRATION				

<END>

289-8995 CONTROL AR-RIDE

S/N: RRS1-UP

AN ATTACHMENT

SMCS-5004 **i03043962**

NOTE	PART NUMBER	QTY	PART NAME 1 2 3 4 5 6 (PRODUCT LEVEL)	SEE PAGE
Y	*290-7184*	1	LINES GP-RIDE CONTROL	376
Y	*295-5544*	1	VALVE & MTG GP-RIDE CONTROL	411
Y	*290-7188*	1	WIRING GP-RIDE CONTROL	171
Y-SEPARATE ILLUSTRATION				

<END>

HYDRAULIC SYSTEM

293-6472 CONTROL GP-RIDE

S/N: JRL1-UP; RRS1-UP
PART OF 295-5544 VALVE & MTG GP-RIDE CONTROL
AN ATTACHMENT

SMCS-5004 **i03039415**

NOTE	REF NO	GRAPHIC REF	PART NUMBER	QTY	PART NAME 1 2 3 4 5 6 (PRODUCT LEVEL)	SEE PAGE
	1	1	**9T-1013**	1	VALVE AS-CHECK	
		1	**3K-0360**	1	SEAL-O-RING	
		1	**6V-8398**	1	SEAL-O-RING	
	2	1	*148-8307*	1	ADAPTER AS	
		1	**3J-1907**	1	SEAL-O-RING	
		1	**5P-8874**	1	ADAPTER	
	3	1	**280-9978**	1	VALVE GP-RIDE CONTROL	
		1	**252-0741**	1	VALVE GP-SOLENOID (RIDE CONTROL)	
		1	**156-5970**	1	NUT (1/2-20-THD)	
		1	**252-0745**	1	COIL AS	
Y	4	1	*283-4418*	2	ACCUMULATOR GP-RIDE CONTROL (CHARGED)	309
Y	5	1	*298-2412*	2	ACCUMULATOR GP-RIDE CONTROL (CHARGED)	310
	6	1	**3D-2824**	4	SEAL-O-RING	

Y-SEPARATE ILLUSTRATION

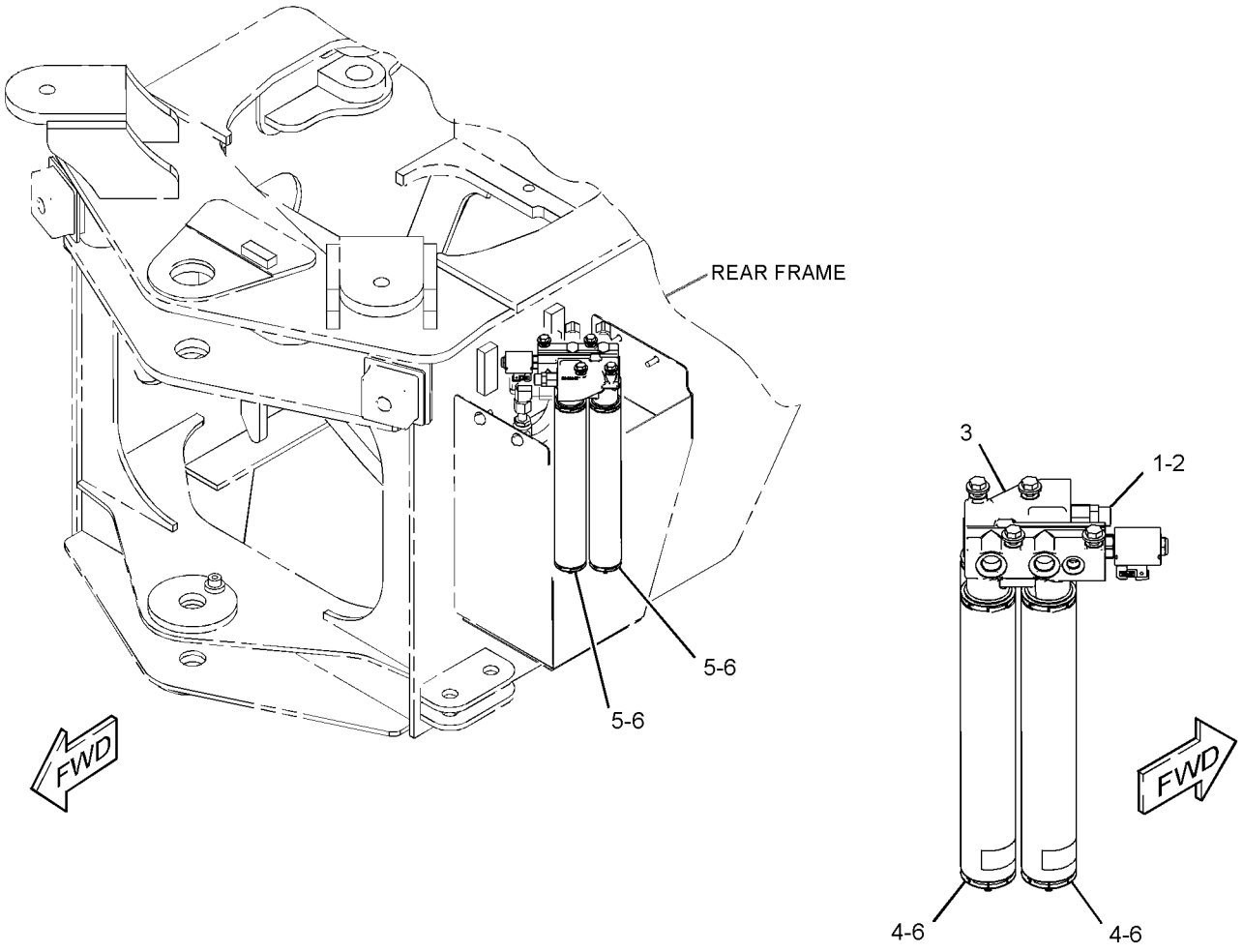

GRAPHIC #1 **<END>** g01393614

HYDRAULIC SYSTEM

293-2239 COOLER GP-HYD & TMSN OIL

S/N: JRL1-UP; RRS1-UP

PART OF 289-9075 RADIATOR & AFTERCOOLER GP

SMCS-1374, 1375 **i03016518**

NOTE	REF NO	GRAPHIC REF	PART NUMBER	QTY	PART NAME 1 2 3 4 5 6 (PRODUCT LEVEL)	SEE PAGE
	1	1	**123-4065**	32	RIVET-POP	
	2	1	**252-6841**	1	CORE AS-POWER TRAIN OIL COOLER	
Y	3	1	**293-2240**	1	COOLER GP-HYDRAULIC OIL	314

Y-SEPARATE ILLUSTRATION

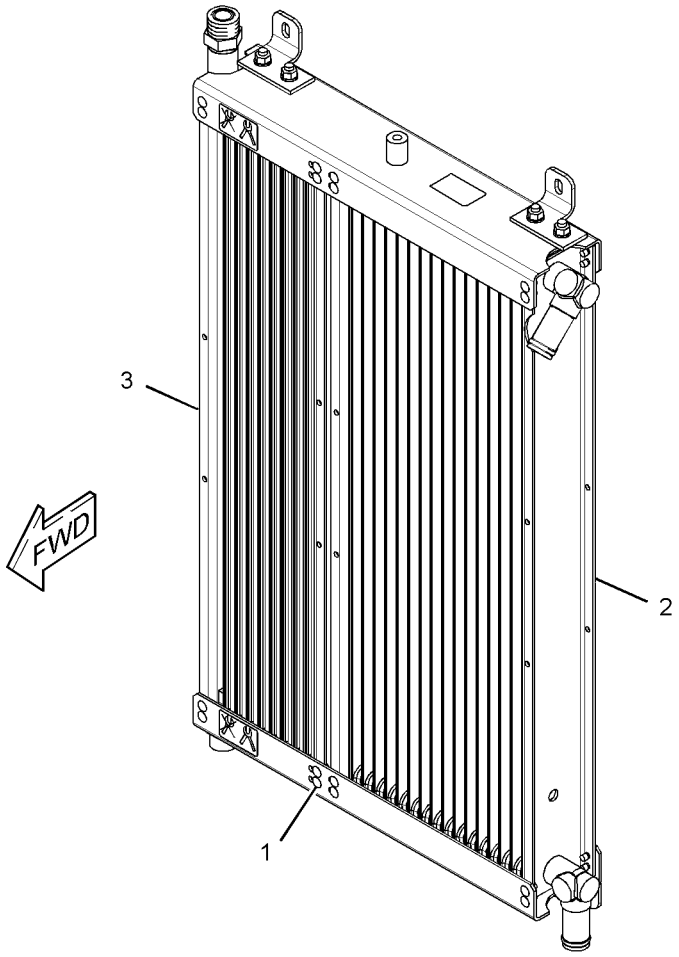

GRAPHIC #1 **<END>** g01391141

HYDRAULIC SYSTEM

293-2240 COOLER GP-HYDRAULIC OIL

S/N: JRL1-UP; RRS1-UP

PART OF 293-2239 COOLER GP-HYD & XMSN OIL

SMCS-1374 **i03016517**

NOTE	REF NO	GRAPHIC REF	PART NUMBER	QTY	PART NAME 1 2 3 4 5 6 (PRODUCT LEVEL)	SEE PAGE
	1	1	**2M-9780**	2	SEAL-O-RING	
	2	1	**6V-8640**	1	CONNECTOR (SEAL)	
	3	1	**6V-8642**	1	CONNECTOR (SEAL)	
	4	1	**6V-9746**	1	SEAL-O-RING	
	5	1	**7J-9108**	1	SEAL-O-RING	

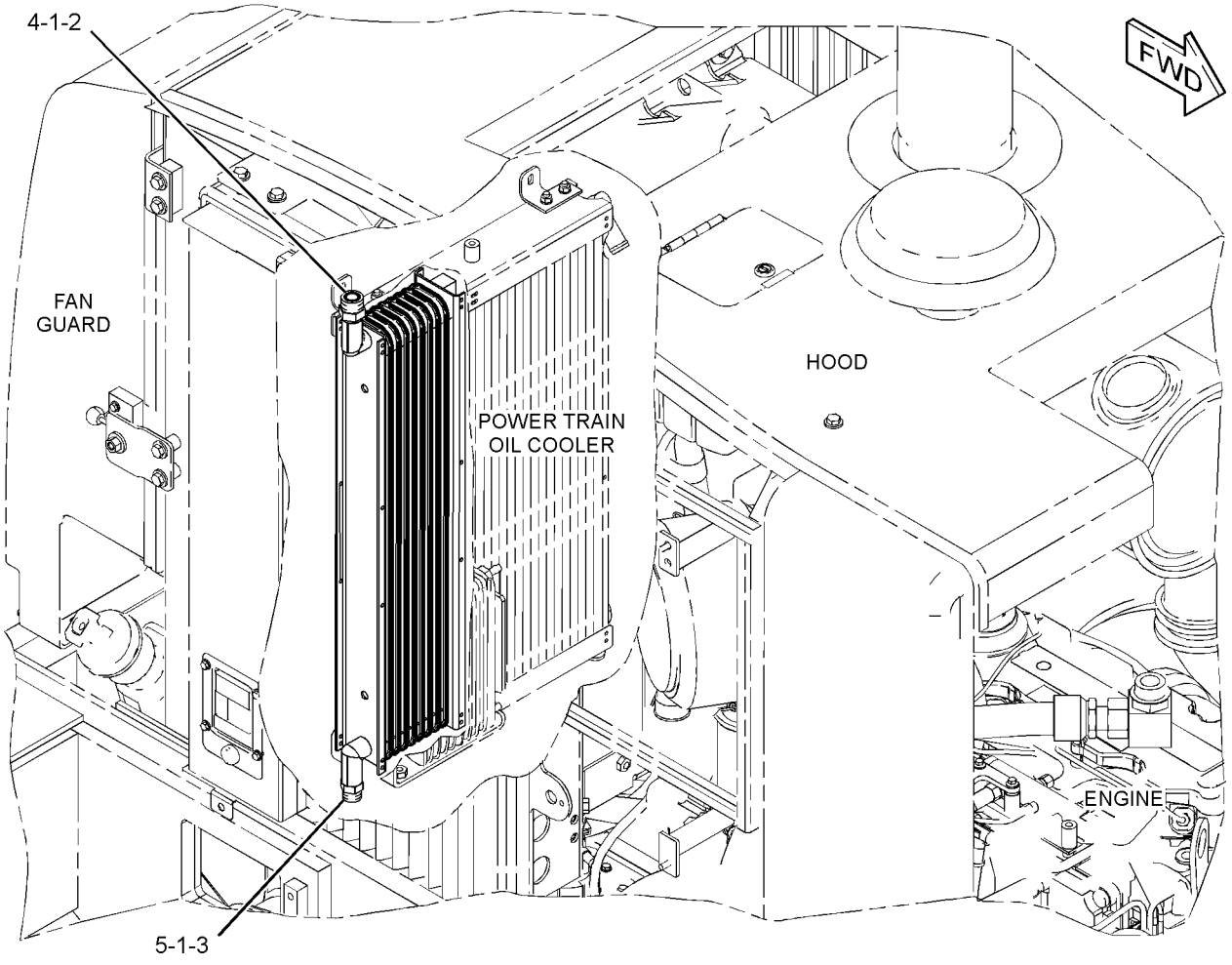

GRAPHIC #1 **<END>** g01391175

HYDRAULIC SYSTEM

148-7827 CYLINDER & MTG GP-COUPLER

S/N: RRS1-UP

PART OF 218-5113 COUPLER AR-QUICK

AN ATTACHMENT

SMCS-5133 **i03569109**

NOTE	REF NO	GRAPHIC REF	PART NUMBER	QTY	PART NAME 1 2 3 4 5 6 (PRODUCT LEVEL)	SEE PAGE
CY	1	1	**190-3085**	1	CYLINDER GP-COUPLER	316
F			**6W-5760**	2	DOWEL	
F			**6W-5761**	2	PIN	

C-CHANGE FROM PREVIOUS TYPE
F-NOT SHOWN
Y-SEPARATE ILLUSTRATION

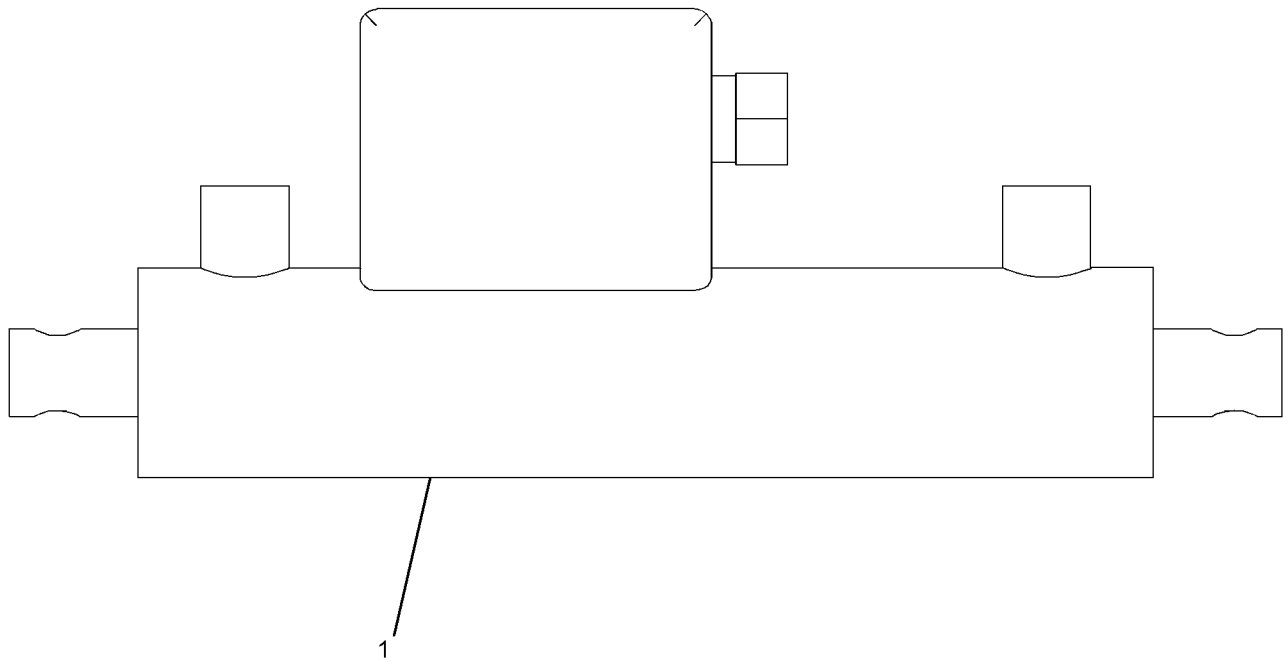

GRAPHIC #1 **<END>** g01896165

HYDRAULIC SYSTEM

190-3085 CYLINDER GP-COUPLER

S/N: RRS1-UP
51-MM (2-IN) BORE X 158-MM (6.2-IN) STROKE
PART OF 148-7827 CYLINDER & MTG GP-COUPLER
AN ATTACHMENT

SMCS-5133 **i03569106**

NOTE	REF NO	GRAPHIC REF	PART NUMBER	QTY	PART NAME 1 2 3 4 5 6 (PRODUCT LEVEL)	SEE PAGE
	1	1	**178-3893**	2	ROD	
	2	1	**190-3611**	1	VALVE GP-CHECK (COUPLER CYLINDER)	
					AVAILABLE REPAIR KIT(S):	
			180-9872	1	KIT-SEAL (COUPLER CYLINDER)	
					(INCLUDES LOCKNUTS, SEALS, RINGS, & RETAINERS)	

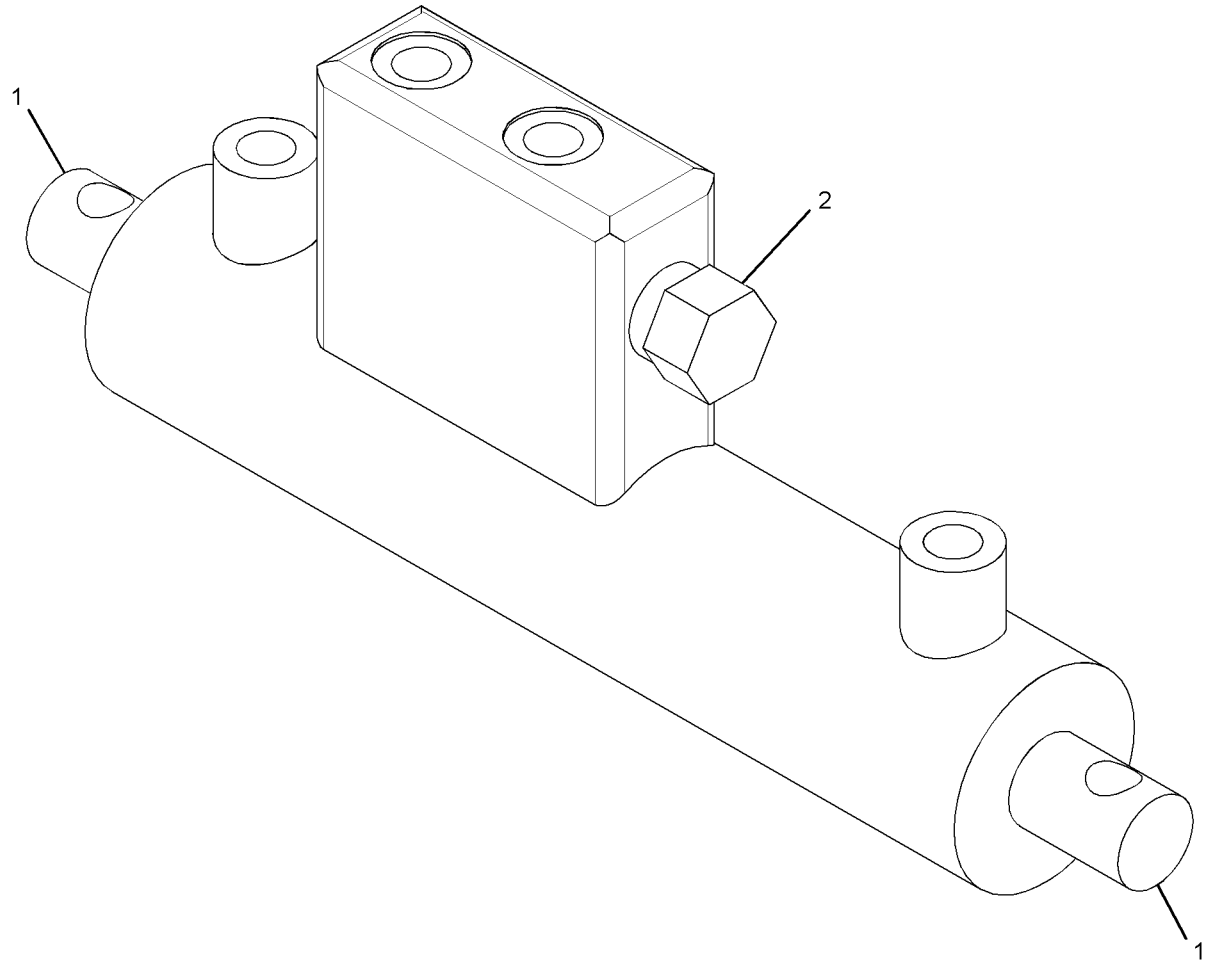

GRAPHIC #1 **<END>** g01896153

141-7483 CYLINDER GP-LIFT

S/N: RRS1-UP
101.6-MM (4-IN) BORE X 807-MM X(31.77-IN) STROKE
PART OF 289-8833 HYDRAULIC AR

SMCS-5102 **i04591670**

NOTE	REF NO	GRAPHIC REF	PART NUMBER	QTY	PART NAME 1 2 3 4 5 6 (PRODUCT LEVEL)	SEE PAGE
R	1	1	**141-7486**	1	CYLINDER AS	
		1	**7P-3454**	1	BUSHING	
M	2	1	**173-9682**	1	BOLT (M36X4X100-MM)	
	3	1	**7D-5238**	1	WASHER (37.5X62X6-MM THK)	
J	4	1	**6J-2797**	1	RING-WEAR	
J	5	1	**5J-5402**	1	SEAL AS	
	6	1	**121-3397**	1	HEAD	
	7	1	**175-7537**	1	ROD AS	
		1	**118-1008**	1	BEARING	
J	8	1	**2K-6830**	1	RING-BACKUP	
J	9	1	**175-7900**	1	SEAL-O-RING	
	10	1	**142-5893**	1	PISTON	
J	11	1	**8T-0785**	1	RING-WEAR	
J	12	1	**167-2201**	1	SEAL AS-BUFFER	
J	13	1	**167-2312**	1	SEAL-U-CUP	
J	14	1	**225-3281**	1	SEAL-WIPER	
					AVAILABLE REPAIR KIT(S):	
J			**234-1949**	2	KIT-SEAL (HYDRAULIC CYLINDER)	

J-KIT MARKED J SERVICES PARTS MARKED J
M-METRIC PART
R-REMFG PART MAY BE AVAILABLE

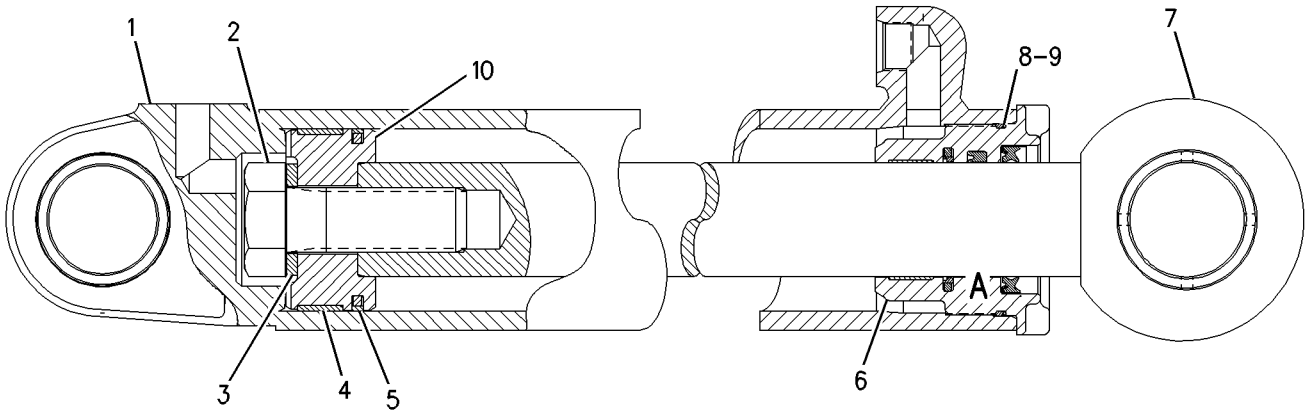

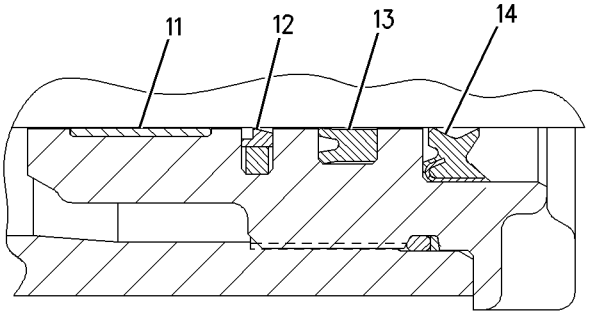

VIEW OF AREA A

GRAPHIC #1 **<END>** g00770206

HYDRAULIC SYSTEM

152-4187 CYLINDER GP-LIFT

S/N: JRL1-UP
108-MM (4.25-IN)BORE X 755-MM (29.72-IN) STROKE
PART OF 289-8803 HYDRAULIC AR

SMCS-5102 **i02030239**

NOTE	REF NO	GRAPHIC REF	PART NUMBER	QTY	PART NAME 1 2 3 4 5 6 (PRODUCT LEVEL)	SEE PAGE
R	1	1	**152-4189**	1	CYLINDER AS	
		1	**6E-1497**	1	BOSS	
		1	**174-7582**	1	CAP AS	
	1A	1	**7P-3454**	1	BUSHING	
M	2	1	**173-9682**	1	BOLT (M36X4X100-MM)	
	3	1	**7D-5238**	1	WASHER (37.5X62X6-MM THK)	
J	4	1	**6J-7264**	1	RING-WEAR	
J	5	1	**8C-9164**	1	SEAL AS	
	6	1	**152-4191**	1	PISTON	
J	7	1	**4M-0189**	1	SEAL-O-RING	
J	8	1	**4J-9220**	1	RING-BACKUP	
	9	1	**152-4192**	1	HEAD AS	
	10	1	**152-4195**	1	ROD AS	
J	11	1	**225-3281**	1	SEAL-WIPER	
J	12	1	**167-2312**	1	SEAL-U-CUP	
J	13	1	**167-2201**	1	SEAL AS-BUFFER	
J	14	1	**8T-0785**	1	RING-WEAR	
					AVAILABLE REPAIR KIT(S):	
J			**234-1951**	1	KIT-SEAL	

J-KIT MARKED J SERVICES PARTS MARKED J
M-METRIC PART
R-REMFG PART MAY BE AVAILABLE

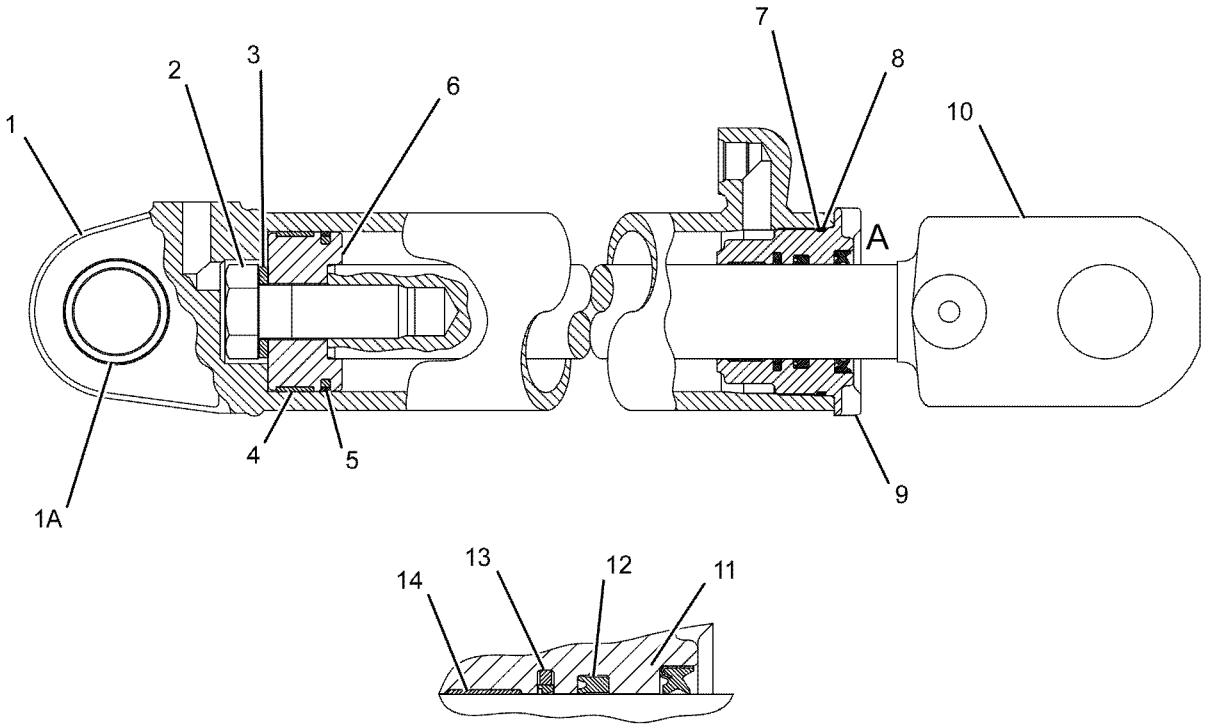

VIEW OF AREA A

GRAPHIC #1 **<END>** g01046928

HYDRAULIC SYSTEM

268-9437 CYLINDER GP-TILT

S/N: RRS1-UP
133.4-MM (5.3-IN) BORE X 945-MM (37.2-IN) STROKE
PART OF 289-8833 HYDRAULIC AR

SMCS-5104 **i02879978**

NOTE	REF NO	GRAPHIC REF	PART NUMBER	QTY	PART NAME 1 2 3 4 5 6 (PRODUCT LEVEL)	SEE PAGE
R	1	1	**141-7487**	1	ROD AS	
		1	**7P-8753**	1	BEARING	
C	2	1	**291-3835**	1	HEAD	
	3	1	**141-8185**	1	PISTON	
R	4	1	**268-9435**	1	CYLINDER AS	
J	5	1	**167-2201**	1	SEAL AS-BUFFER	
J	6	1	**167-2312**	1	SEAL-U-CUP	
J	7	1	**175-7905**	1	SEAL-O-RING	
J	8	1	**225-3281**	1	SEAL-WIPER	
J	9	1	**2D-0714**	1	RING-WEAR	
J	10	1	**2J-7767**	1	RING-BACKUP	
	11	1	**5J-7878**	1	NUT-SELF-LOCKING (1-7/8-12-THD)	
J	12	1	**8T-0763**	1	SEAL AS	
J	13	1	**8T-0785**	1	RING-WEAR	
					AVAILABLE REPAIR KIT(S):	
J			**234-1950**	1	KIT-SEAL	

C-CHANGE FROM PREVIOUS TYPE
J-KIT MARKED J SERVICE(S) PARTS MARKED J
R-REMFG PART MAY BE AVAILABLE

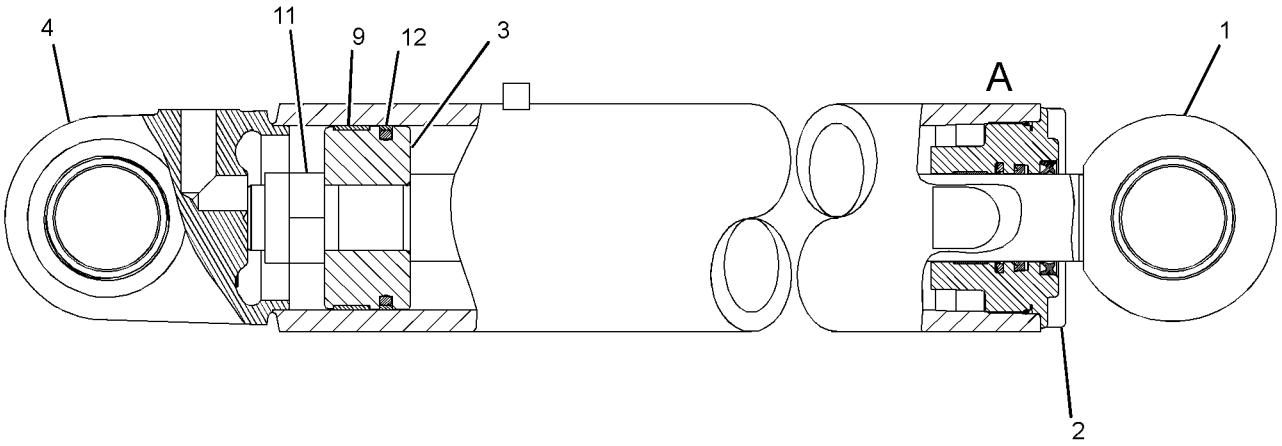

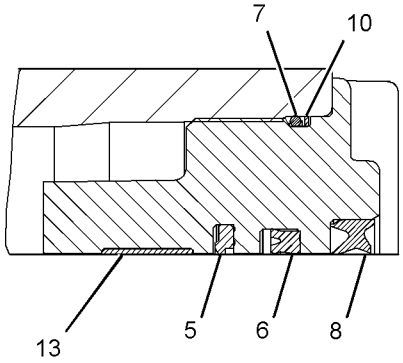

VIEW OF AREA A

GRAPHIC #1 **<END>** g01518114

HYDRAULIC SYSTEM

340-8871 CYLINDER GP-TILT

S/N: JRL1-UP
120.6-MM (4.75-IN) BORE X 525-MM (20.67-IN) STROKE
PART OF 289-8803 HYDRAULIC AR

SMCS-5104 **i04159690**

NOTE	REF NO	GRAPHIC REF	PART NUMBER	QTY	PART NAME 1 2 3 4 5 6 (PRODUCT LEVEL)	SEE PAGE
	1	1	**4T-8588**	1	SEAL AS	
	2	1	**133-8773**	1	PISTON	
	3	1	**225-3281**	1	SEAL-WIPER	
	4	1	**291-3833**	1	HEAD	
		1	**225-3281**	1	SEAL-WIPER	
	5	1	**340-8872**	1	CYLINDER AS	
	5A	1	**3G-2791**	1	BUSHING	
	6	1	**134-1396**	1	ROD AS	
	6A	1	**3G-2797**	1	BUSHING	
	7	1	**289-2937**	1	SEAL AS-BUFFER	
	8	1	**289-2948**	1	SEAL-U-CUP	
M	9	1	**173-9682**	1	BOLT (M36X4X100-MM)	
	10	1	**175-7903**	1	SEAL-O-RING	
	11	1	**2J-3961**	1	RING-BACKUP	
	12	1	**7D-5238**	1	WASHER (37.5X62X6-MM THK)	
	13	1	**8T-0785**	1	RING-WEAR	
	14	1	**8T-8390**	1	RING-WEAR	

M-METRIC PART

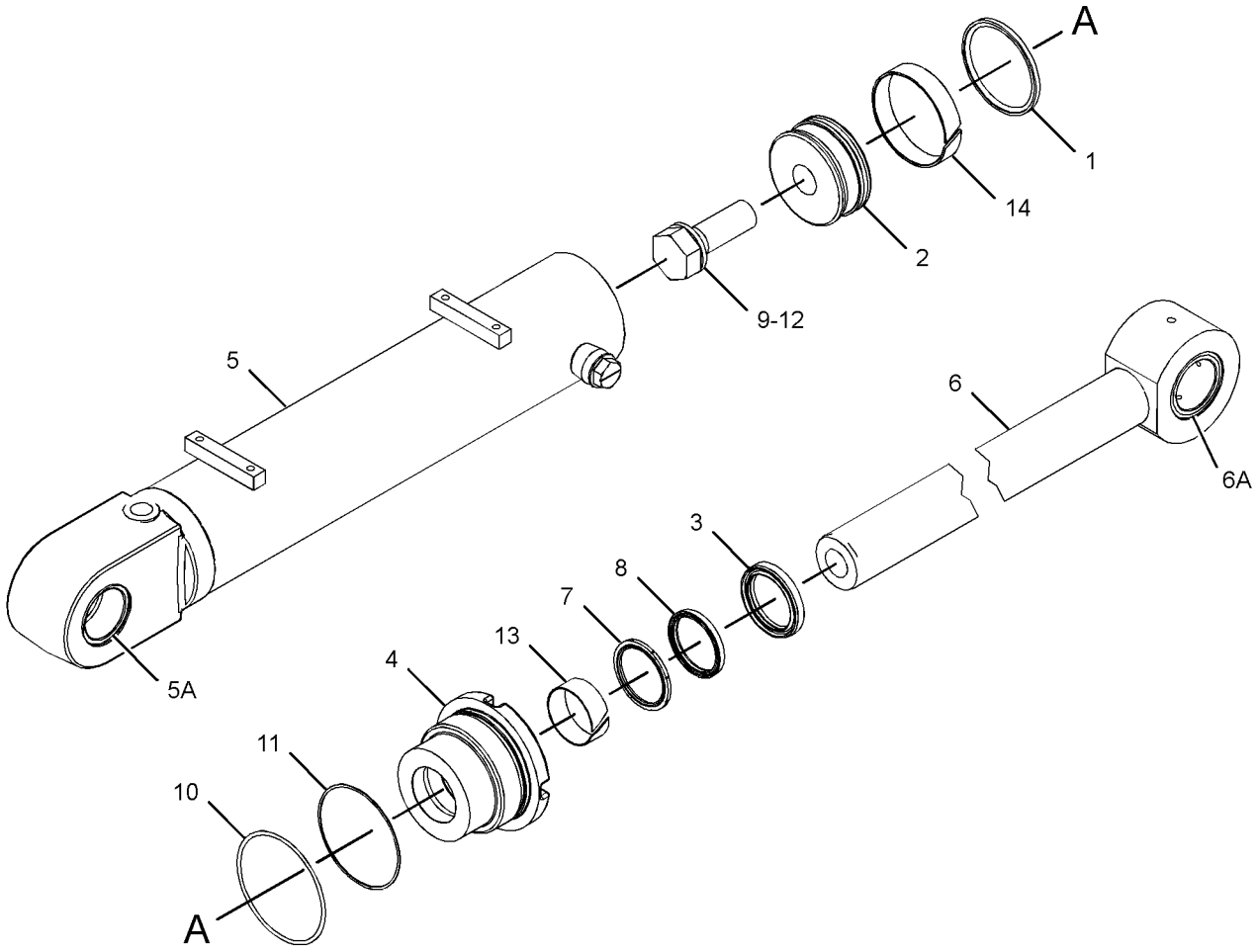

GRAPHIC #1 **<END>** g02281933

321-2543 FILTER & MTG GP-HYDRAULIC–OIL

S/N: JRL1-UP; RRS1-UP
PART OF 289-8803, 289-8833 HYDRAULIC AR

SMCS-5068 **i03105928**

NOTE	REF NO	GRAPHIC REF	PART NUMBER	QTY	PART NAME 1 2 3 4 5 6 (PRODUCT LEVEL)	SEE PAGE
Y	1	1	**209-3149**	1	FILTER GP-OIL (HYDRAULIC)	324
	2	1	**321-2542**	1	BRACKET	
	3	1	**322-5494**	1	MANIFOLD	
	4	1	**323-1650**	1	HOSE AS	
	5	1	*148-8347*	1	ELBOW AS	
		1	**3D-2824**	1	SEAL-O-RING	
		1	**6V-9007**	1	ELBOW	
		1	**6V-9746**	1	SEAL-O-RING	
	6	1	*148-8408*	2	PLUG AS	
					(EACH INCLUDES)	
		1	**3D-2824**	1	SEAL-O-RING	
		1	**9S-4183**	1	PLUG	
	7	1	**269-4958**	1	ADAPTER	
	8	1	**7X-7729**	2	WASHER (11X25X3-MM THK)	
	9	1	**8T-4121**	6	WASHER-HARD (11X21X2.5-MM THK)	
M	10	1	**8T-4136**	2	BOLT (M10X1.5X25-MM)	
M	11	1	**8T-4137**	4	BOLT (M10X1.5X20-MM)	
M	12	1	**8T-4178**	2	BOLT (M10X1.5X90-MM)	

M-METRIC PART
Y-SEPARATE ILLUSTRATION

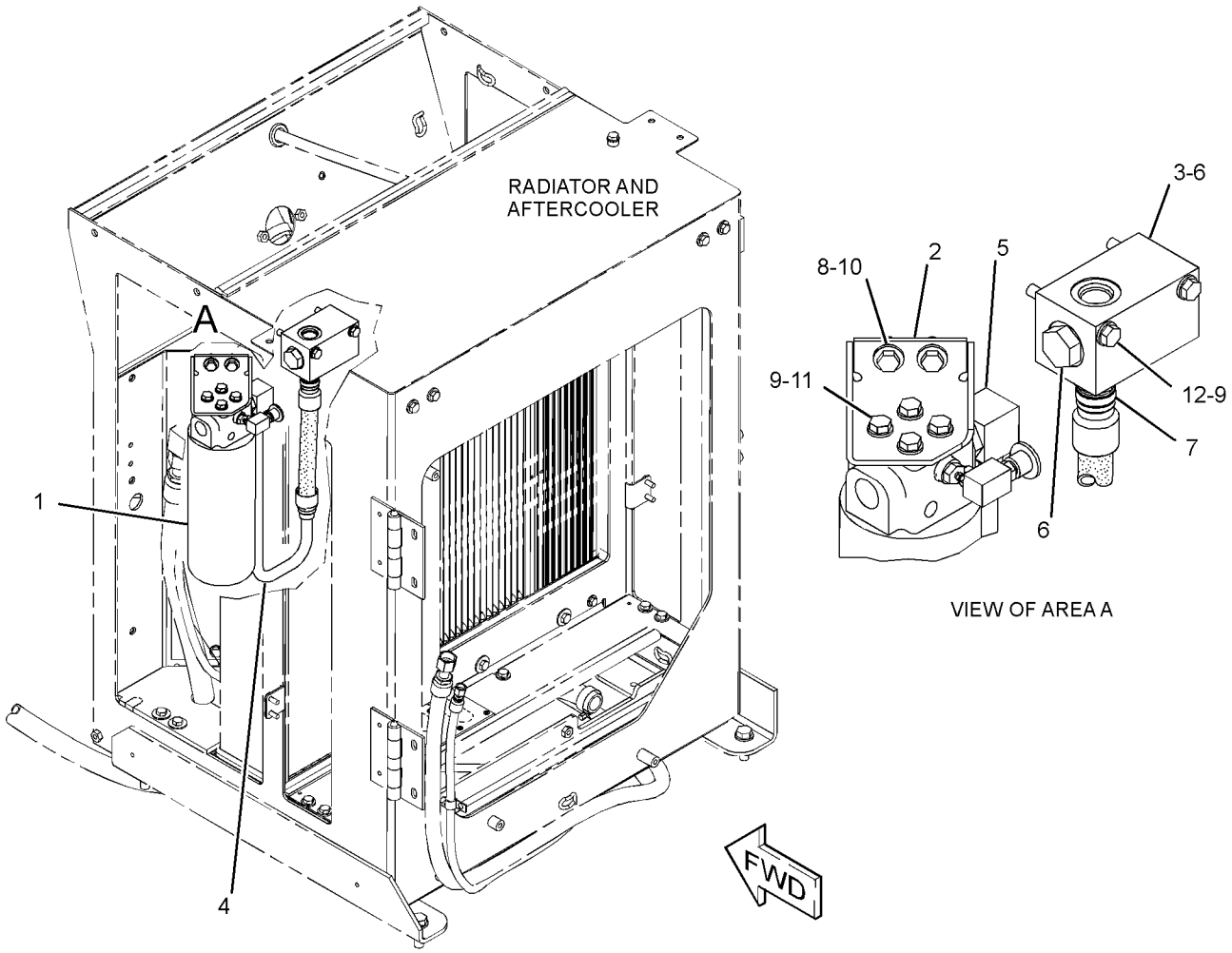

GRAPHIC #1 **<END>** g01827194

209-3149 FILTER GP-OIL–HYDRAULIC

S/N: JRL1-UP; RRS1-UP

PART OF 321-2543 FILTER & MTG GP-HYDRAULIC

SMCS-5068, 5091, 5092 **i04591649**

NOTE	REF NO	GRAPHIC REF	PART NUMBER	QTY	PART NAME 1 2 3 4 5 6 (PRODUCT LEVEL)	SEE PAGE
	1	1	**126-1818**	1	FILTER-OIL (ULTRA HIGH EFFICIENCY) (HYDRAULIC)	
	2	1	**3J-7354**	2	SEAL-O-RING	
	3	1	**7X-8549**	1	SWITCH AS-PRESSURE (HYDRAULIC OIL FILTER BYPASS)	
		1	**3J-1907**	1	SEAL-O-RING	
	4	1	**8C-3446**	1	VALVE-FLUID SAMPLING (HYDRAULIC OIL)	
	5	1	**8C-3451**	1	CAP-DUST (FLUID SAMPLING VALVE)	
	6	1	**3J-1907**	1	SEAL-O-RING	
	7	1	**151-5145**	1	ELBOW	

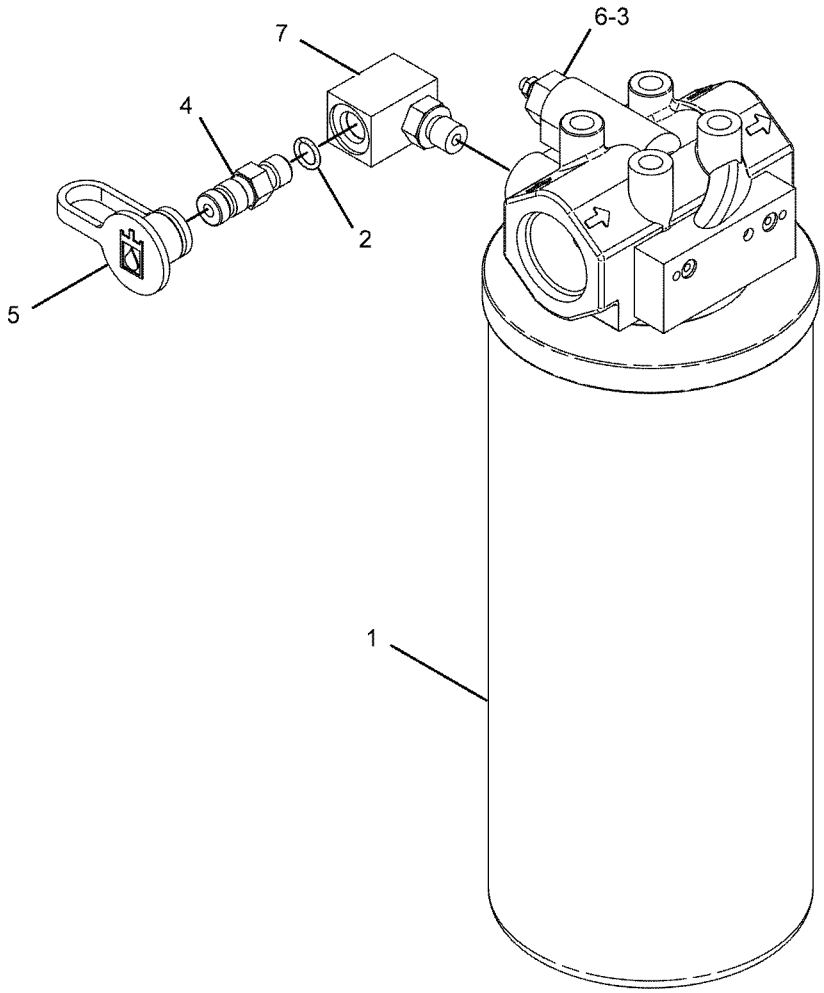

GRAPHIC #1 **<END>** g01013699

HYDRAULIC SYSTEM

153-2985 GAUGE GP-SIGHT

S/N: JRL1-UP; RRS1-UP

PART OF 262-5654 TANK GP-HYDRAULIC

SMCS-7479 **i02864321**

NOTE	REF NO	GRAPHIC REF	PART NUMBER	QTY	PART NAME 1 2 3 4 5 6 (PRODUCT LEVEL)	SEE PAGE
	1	1	**122-8353**	2	BOLT (M12X46.5-MM)	
	2	1	**5J-2974**	4	SEAL-O-RING	

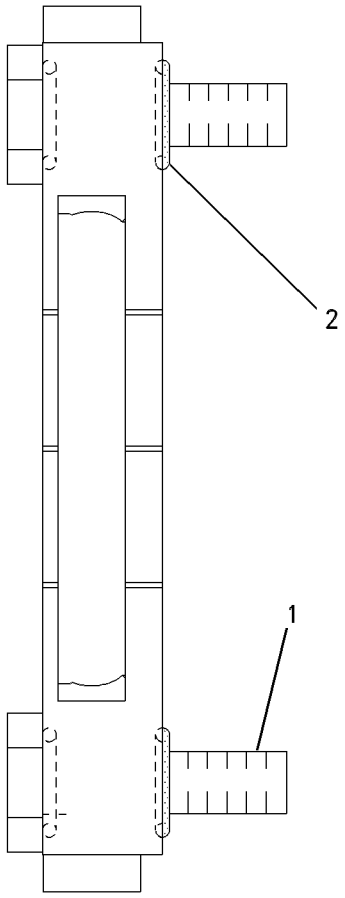

GRAPHIC #1 **<END>** g00560258

HYDRAULIC SYSTEM

289-8803 HYDRAULIC AR

S/N: JRL1-UP
PART OF 372-7774 COMMON AR

SMCS-5051 **i04159689**

NOTE	PART NUMBER	QTY	PART NAME 1 2 3 4 5 6 (PRODUCT LEVEL)	SEE PAGE
Y	**152-4187**	2	CYLINDER GP-LIFT	319
Y	**340-8871**	1	CYLINDER GP-TILT	322
Y	*321-2543*	1	FILTER & MTG GP-HYDRAULIC	323
Y	*289-8934*	1	LINES GP-HYDRAULIC	350
Y	*290-6474*	1	LINES GP-LIFT CYLINDER	362
Y	*289-8796*	1	LINES GP-PILOT (SUPPLY)	371
Y	*212-3354*	1	LINES GP-TILT CYLINDER	379
Y	*289-8919*	1	PUMP & MTG GP-BRAKE & HYD FAN	397
Y	*132-2476*	1	PUMP & MTG GP-IMPL & STEERING	398
Y	*289-8901*	1	TANK & MTG GP-HYDRAULIC	409
Y-SEPARATE ILLUSTRATION				

<END>

289-8833 HYDRAULIC AR

S/N: RRS1-UP
PART OF 372-7775 COMMON AR

SMCS-5051 **i03016557**

NOTE	PART NUMBER	QTY	PART NAME 1 2 3 4 5 6 (PRODUCT LEVEL)	SEE PAGE
Y	**141-7483**	2	CYLINDER GP-LIFT	317
Y	**268-9437**	1	CYLINDER GP-TILT	321
Y	*321-2543*	1	FILTER & MTG GP-HYDRAULIC (OIL)	323
Y	*289-8934*	1	LINES GP-HYDRAULIC	350
Y	*290-6475*	1	LINES GP-LIFT CYLINDER	367
Y	*289-8796*	1	LINES GP-PILOT (SUPPLY)	371
Y	*289-8795*	1	LINES GP-TILT CYLINDER	382
Y	*289-8919*	1	PUMP & MTG GP-BRAKE & HYD FAN	397
Y	*132-2476*	1	PUMP & MTG GP-IMPL & STEERING	398
Y	*289-8901*	1	TANK & MTG GP-HYDRAULIC	409
Y-SEPARATE ILLUSTRATION				

<END>

203-3889 HYDRAULIC AR-2 VALVE—1-LEVER, WITH FNR

S/N: RRS1-UP
PART OF 375-8357 DISTRIBUTION AR
CANNOT BE USED WITH 203-3891—PAGE 327
AN ATTACHMENT

SMCS-5051 **i03200363**

NOTE	PART NUMBER	QTY	PART NAME 1 2 3 4 5 6 (PRODUCT LEVEL)	SEE PAGE
Y	*235-6853*	1	CONTROL GP-PILOT OPERATED HYD (JOYSTICK, 2-FUNCTION)	485
Y	**209-0270**	1	VALVE GP-MAIN CONTROL (2-FUNCTION)	415
Y	*225-1057*	1	VALVE GP-SHUTOFF (HYDRAULIC LOCKOUT)	451
Y-SEPARATE ILLUSTRATION				

<END>

203-3890 HYDRAULIC AR-2 VALVE—1-LEVER, WITH FNR

S/N: JRL1-UP
PART OF 375-8358, 375-8359 DISTRIBUTION AR
AN ATTACHMENT

SMCS-5051 **i03200401**

NOTE	PART NUMBER	QTY	PART NAME 1 2 3 4 5 6 (PRODUCT LEVEL)	SEE PAGE
Y	*235-6853*	1	CONTROL GP-PILOT OPERATED HYD (JOYSTICK, 2-FUNCTION)	485
Y	**209-0273**	1	VALVE GP-MAIN CONTROL (2-FUNCTION)	427
Y	*225-1057*	1	VALVE GP-SHUTOFF (HYDRAULIC LOCKOUT)	451

Y-SEPARATE ILLUSTRATION

<END>

203-3891 HYDRAULIC AR-3 VALVE—2-LEVER, WITH FNR

S/N: RRS1-UP
CANNOT BE USED WITH 203-3889—PAGE 326
AN ATTACHMENT

SMCS-5051 **i03200420**

NOTE	PART NUMBER	QTY	PART NAME 1 2 3 4 5 6 (PRODUCT LEVEL)	SEE PAGE
Y	*235-6856*	1	CONTROL GP-PILOT OPERATED HYD (JOYSTICK, 3-FUNCTION)	486
Y	*211-1063*	1	LINES GP-HYDRAULIC (3RD FUNCTION)	346
Y	**209-0271**	1	VALVE GP-MAIN CONTROL (3-FUNCTION)	419
Y	*225-1057*	1	VALVE GP-SHUTOFF (HYDRAULIC LOCKOUT)	451

Y-SEPARATE ILLUSTRATION

<END>

203-3892 HYDRAULIC AR-3 VALVE—2-LEVER, WITH FNR

S/N: JRL1-UP
AN ATTACHMENT

SMCS-5051 **i03200290**

NOTE	PART NUMBER	QTY	PART NAME 1 2 3 4 5 6 (PRODUCT LEVEL)	SEE PAGE
Y	*235-6856*	1	CONTROL GP-PILOT OPERATED HYD (JOYSTICK, 3-FUNCTION)	486
Y	*212-3358*	1	LINES GP-FRONT (THIRD FUNCTION)	344
Y	**209-0274**	1	VALVE GP-MAIN CONTROL (3-FUNCTION)	431
Y	*225-1057*	1	VALVE GP-SHUTOFF (HYDRAULIC LOCKOUT)	451

Y-SEPARATE ILLUSTRATION

<END>

HYDRAULIC SYSTEM

203-3893 HYDRAULIC AR-4 VALVE—3-LEVER, WITH FNR

S/N: RRS1-UP
PART OF 303-2052 HYDRAULIC AR-4 VALVE
AN ATTACHMENT

SMCS-5051 **i03572217**

NOTE	PART NUMBER	QTY	PART NAME 1 2 3 4 5 6 (PRODUCT LEVEL)	SEE PAGE
Y	*235-6860*	1	CONTROL GP-PILOT OPERATED HYD (JOYSTICK, 4-FUNCTION)	487
Y	*211-1063*	1	LINES GP-HYDRAULIC (3RD FUNCTION)	346
Y	*223-0521*	1	LINES GP-HYDRAULIC (4TH FUNCTION)	348
Y	**209-0272**	1	VALVE GP-MAIN CONTROL (4-FUNCTION)	423
Y	*225-1057*	1	VALVE GP-SHUTOFF (HYDRAULIC LOCKOUT)	451

Y-SEPARATE ILLUSTRATION

<END>

303-2052 HYDRAULIC AR-4 VALVE—

3-LEVER, WITH FNR, STANDARD LIFT MACHINES
S/N: RRS1-UP
CANNOT BE USED WITH 270-7056—PAGE 338
AN ATTACHMENT

SMCS-5051 **i03202479**

NOTE	PART NUMBER	QTY	PART NAME 1 2 3 4 5 6 (PRODUCT LEVEL)	SEE PAGE
Y	*203-3893*	1	HYDRAULIC AR-4 VALVE (3-LEVER, WITH FNR)	328
Y	*223-0522*	1	LINES GP-CONNECTING	333
Y	*245-9020*	1	LINES GP-COUPLER (UPPER, STANDARD LIFT MACHINES)	335

Y-SEPARATE ILLUSTRATION

<END>

148-7678 KICKOUT & POSITIONER GP

S/N: JRL1-UP

PART OF 372-7772 CHASSIS AR

SMCS-5109, 5112 **i02270576**

NOTE	REF NO	GRAPHIC REF	PART NUMBER	QTY	PART NAME 1 2 3 4 5 6 (PRODUCT LEVEL)	SEE PAGE
BD	1	1	**5P-6039**		WRAP-SPIRAL	
Y	2	1	**3E-7843**	1	CONTROL GP-POSITION	107
Y	3	1	**3E-7844**	1	CONTROL GP-LIFT KICKOUT	106
	4	1	**5G-7820**	1	MAGNET AS	
	5	1	**6K-0806**	4	STRAP-CABLE	
	6	1	**9X-2132**	1	RETAINER	
	7	1	**106-6394**	1	CLAMP	
	8	1	**109-1297**	2	CLAMP	
	9	1	**110-8054**	1	CLAMP	
	10	1	**118-0885**	1	SHAFT AS	
	11	1	**118-0888**	1	TUBE	
	12	1	**132-2698**	1	HARNESS AS-CONTROL (KICKOUT, POSITIONER)	
		1	**102-8803**	2	KIT-RECEPTACLE (3-PIN)	
					(INCLUDES RECEPTACLE AS & WEDGE)	
	13	1	**154-4930**	1	BRACKET	
	14	1	**154-4937**	1	CLAMP AS	
	15	1	**187-3661**	1	CLIP	
	16	1	**4K-8302**	1	CLIP	
	17	1	**4P-8134**	2	CLIP	
M	18	1	**5C-7261**	3	NUT (M8X1.25-THD)	
	19	1	**5G-7822**	1	PLATE	
	20	1	**5P-4116**	9	WASHER-HARD (8.8X20.5X2-MM THK)	
	21	1	**6D-3479**	1	CLIP	
M	22	1	**6V-7744**	1	LOCKNUT (M10X1.5-THD)	
	23	1	**7X-7729**	2	WASHER (11X25X3-MM THK)	
	24	1	**8T-4121**	4	WASHER-HARD (11X21X2.5-MM THK)	
M	25	1	**8T-4136**	4	BOLT (M10X1.5X25-MM)	
M	26	1	**8T-4186**	1	BOLT (M10X1.5X40-MM)	
M	27	1	**8T-4189**	10	BOLT (M8X1.25X20-MM)	
	28	1	**8T-4223**	1	WASHER-HARD (13.5X25.5X3-MM THK)	
	29	1	**8T-4224**	4	WASHER-HARD (8.8X16X2-MM THK)	

B-USE AS REQUIRED
D-ORDER BY THE METER
M-METRIC PART
Y-SEPARATE ILLUSTRATION

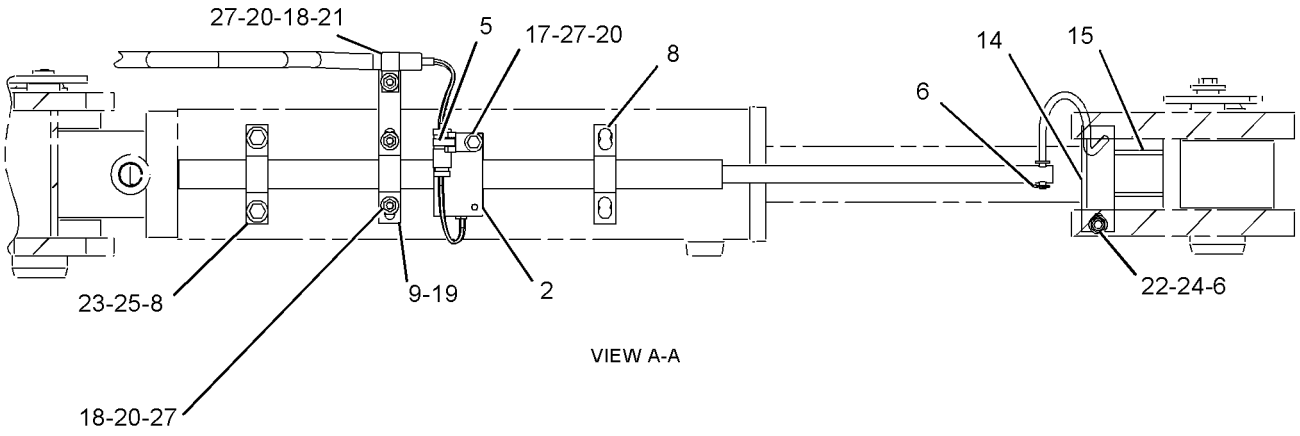

VIEW A-A

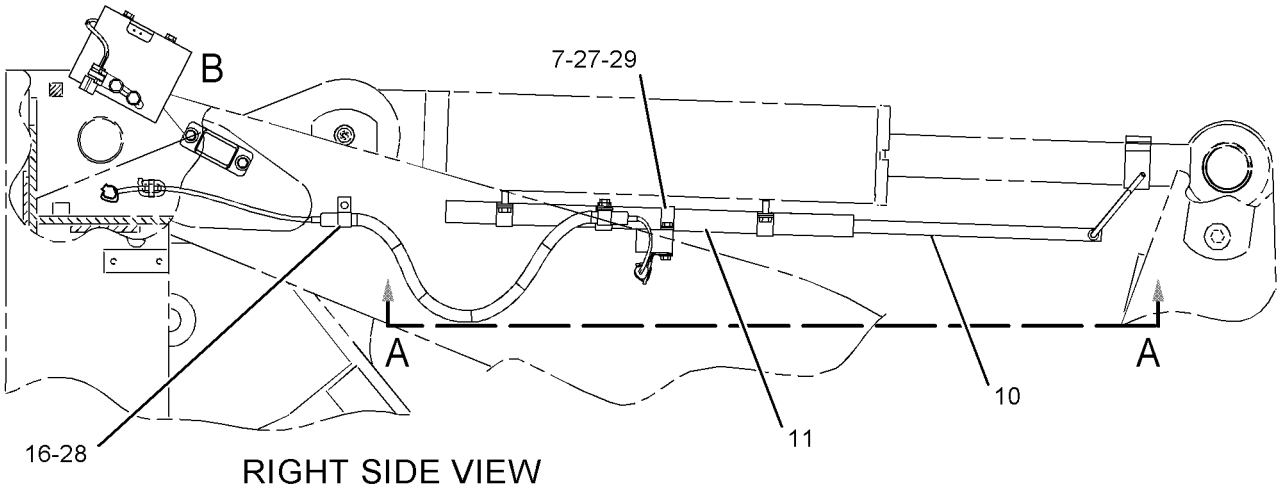

RIGHT SIDE VIEW

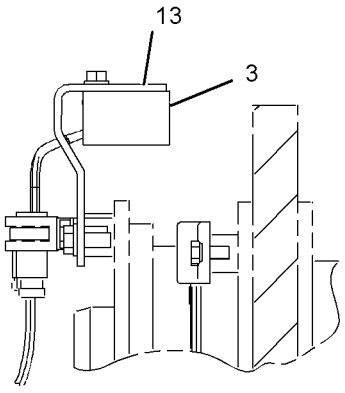

VIEW C-C

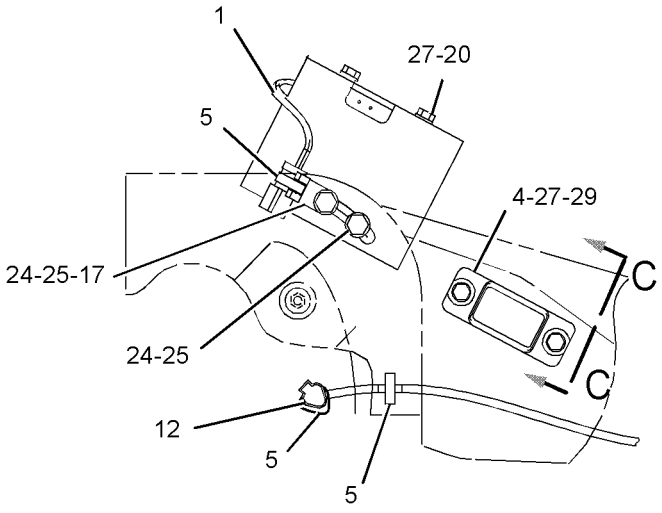

VIEW OF AREA B

GRAPHIC #1 **<END>** g01137651

HYDRAULIC SYSTEM

218-9937 KICKOUT & POSITIONER GP

S/N: RRS1-UP

PART OF 372-7773 CHASSIS AR

SMCS-5109, 5112 **i04018076**

NOTE	REF NO	GRAPHIC REF	PART NUMBER	QTY	PART NAME 1 2 3 4 5 6 (PRODUCT LEVEL)	SEE PAGE
Y	1	1	**3E-7843**	2	CONTROL GP-POSITION	107
Y	2	1	**3E-7844**	1	CONTROL GP-LIFT KICKOUT	106
	3	1	**5G-7820**	1	MAGNET AS	
	4	1	**7K-1181**	3	STRAP-CABLE	
	5	1	**7V-5626**	4	CLAMP	
	6	1	**7V-5628**	1	PLATE	
	7	1	**132-2694**	1	HARNESS AS-CONTROL (KICKOUT, POSITIONER)	
		1	**9X-3401**	14	PIN-CONNECTOR (16-GA TO 18-GA)	
G		1	**9X-2384**		HOSE (59.1-IN)	
D		1	**6V-2722**		TUBE-HEAT SHRINK (25.4-MM DIA) (0.1-M)	
		1	**102-8803**	2	KIT-RECEPTACLE (3-PIN)	
		1	**102-8805**	1	KIT-RECEPTACLE (6-PIN)	
					(EACH RECEPTACLE KIT INCLUDES RECEPTACLE AS & WEDGE)	
	8	1	**136-4794**	1	PLATE AS	
M		1	**6V-9632**	2	NUT-WELD (M6X1-THD)	
	9	1	**146-0066**	1	BRACKET	
	10	1	**146-0067**	1	BRACKET AS	
	11	1	**148-7860**	1	SHAFT AS	
	12	1	**195-0922**	1	SWITCH AS-ROCKER (BUCKET/FORK SELECTOR)	
		1	**111-7899**	1	GASKET	
	13	1	**240-5843**	1	TUBE AS	
	14	1	**4P-8134**	1	CLIP	
C	15	1	**264-7734**	1	SPACER	
	16	1	**5P-4115**	2	WASHER-HARD (7.2X19X2-MM THK)	
	17	1	**5P-4116**	6	WASHER-HARD (8.8X20.5X2-MM THK)	
M	18	1	**7X-2534**	4	BOLT (M6X1X50-MM)	
	19	1	**7X-7729**	2	WASHER (11X25X3-MM THK)	
CM	20	1	**8T-6870**	1	BOLT (M8X1.25X70-MM)	
	21	1	**8T-4121**	6	WASHER-HARD (11X21X2.5-MM THK)	
M	22	1	**8T-4136**	2	BOLT (M10X1.5X25-MM)	
M	23	1	**8T-4137**	6	BOLT (M10X1.5X20-MM)	
M	24	1	**8T-4189**	2	BOLT (M8X1.25X20-MM)	
C	25	1	**8T-4224**	3	WASHER-HARD (8.8X16X2-MM THK)	
M	26	1	**8T-4908**	6	BOLT (M8X1.25X25-MM)	

C-CHANGE FROM PREVIOUS TYPE
D-ORDER BY THE METER
G-ORDER BY THE INCH
M-METRIC PART
Y-SEPARATE ILLUSTRATION

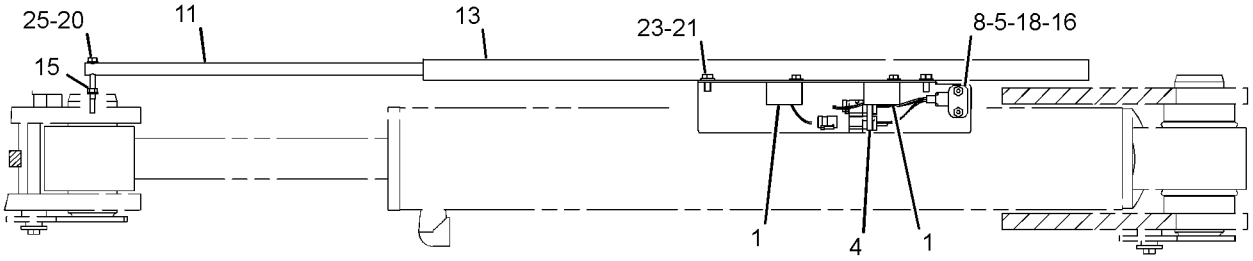

VIEW B-B

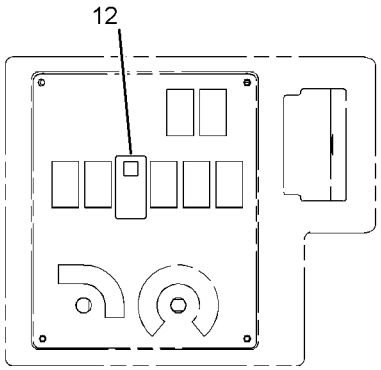

TOP VIEW FWD

(RIGHT SIDE CONSOLE)

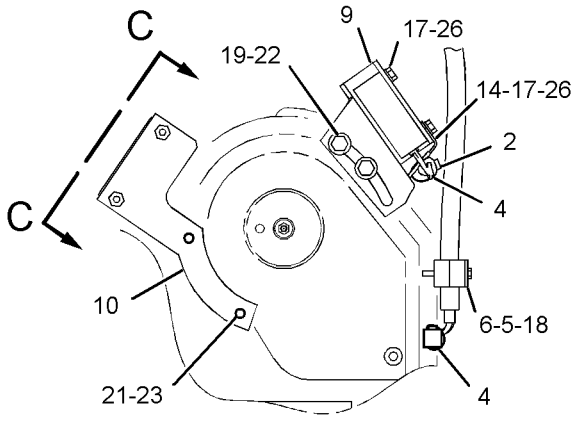

VIEW OF AREA A

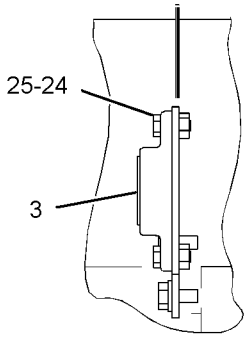

VIEW C-C

LEFT SIDE VIEW

GRAPHIC #1 **<END>** g02191966

HYDRAULIC SYSTEM

223-0522 LINES GP-CONNECTING

S/N: RRS1-UP
PART OF 303-2052 HYDRAULIC AR-4 VALVE
AN ATTACHMENT

SMCS-5057 **i02374928**

NOTE	REF NO	GRAPHIC REF	PART NUMBER	QTY	PART NAME 1 2 3 4 5 6 (PRODUCT LEVEL)	SEE PAGE
I	1	1	**146-0124**	2	HOSE AS	
	2	1	**152-5717**	1	CAP-DUST	
	3	1	**195-6525**	1	FITTING AS (QUICK DISCONNECT, FEMALE)	
	4	1	**195-6526**	1	FITTING AS (QUICK DISCONNECT, MALE)	
C	5	1	**152-5718**	1	CAP-DUST	
	6	1	*148-8418*	2	REDUCER AS	
					(EACH INCLUDES)	
		1	**6V-8398**	1	SEAL-O-RING	
		1	**6V-8942**	1	REDUCER-O-RING	
	7	1	*148-8455*	2	UNION AS	
					(EACH INCLUDES)	
		1	**6V-8997**	1	UNION	
		1	**6V-9746**	2	SEAL-O-RING	
	8	1	*171-6725*	2	ELBOW AS	
					(EACH INCLUDES)	
		1	**3D-2824**	1	SEAL-O-RING	
		1	**8T-6451**	1	ELBOW	
	9	1	**2P-1293**	2	LOCKNUT (1-3/16-12-THD)	
	10	1	**5P-7464**	4	CLIP (SLOT)	
	11	1	**5P-7465**	4	CLIP (TAB)	
	12	1	**6V-1249**	4	GROMMET	
	13	1	**9X-6580**	2	NUT (1-3/16-12-THD)	

C-CHANGE FROM PREVIOUS TYPE
I-REFER TO HYDRAULIC INFORMATION SYSTEM

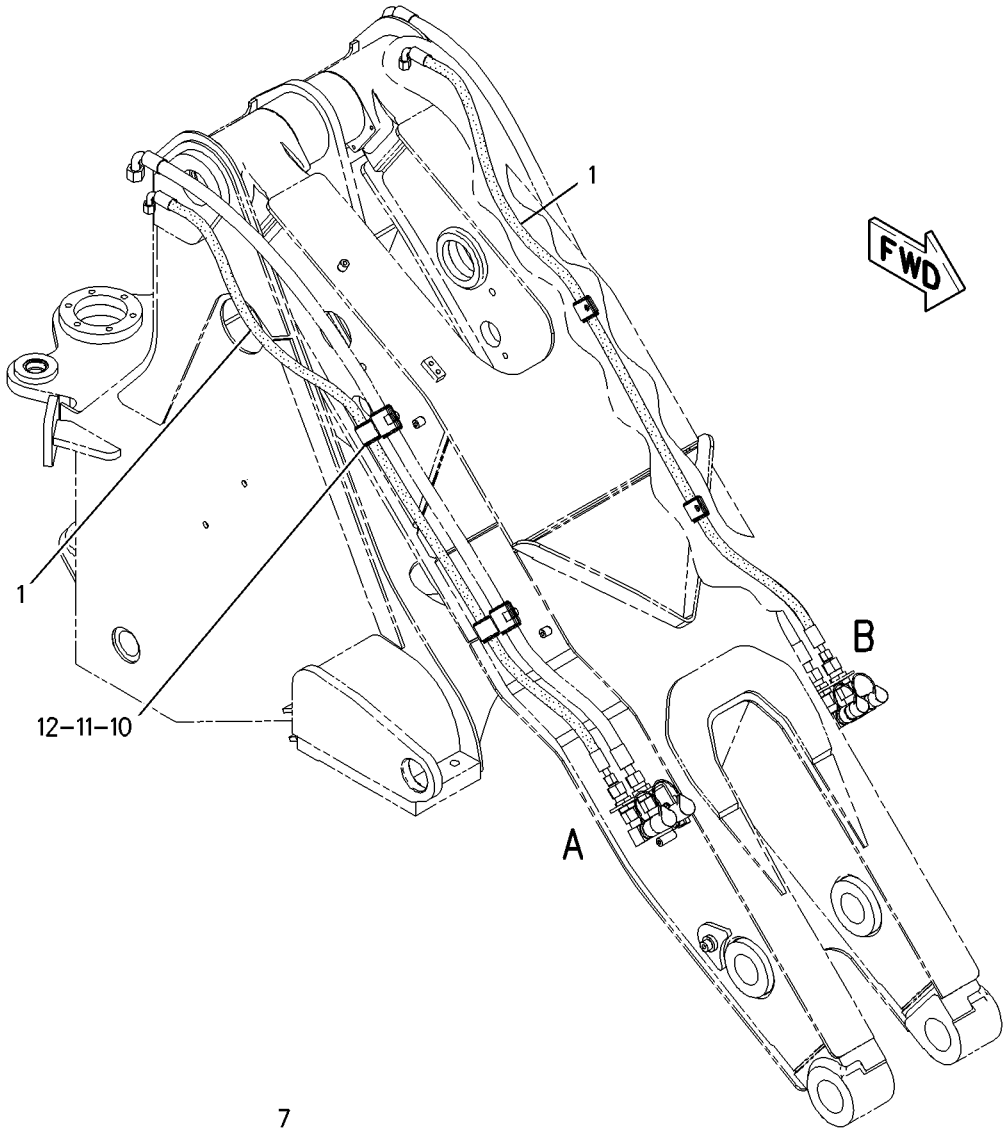

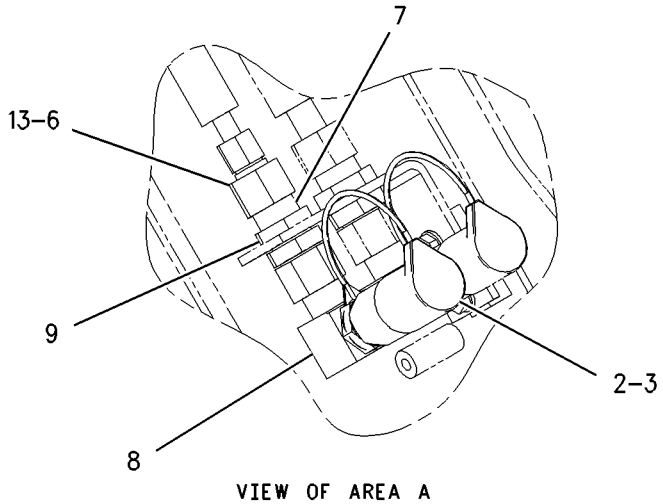

VIEW OF AREA A

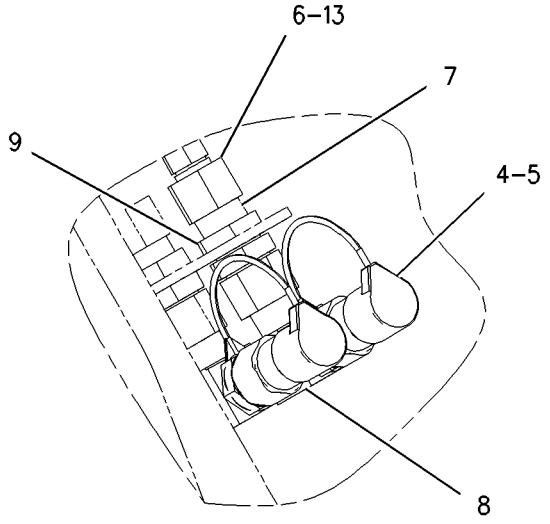

VIEW OF AREA B

GRAPHIC #1 **<END>** g01006088

HYDRAULIC SYSTEM

245-9020 LINES GP-COUPLER

S/N: RRS1-UP
PART OF 303-2052 HYDRAULIC AR-4 VALVE, 270-7056 LINES GP-COUPLER
FOR USE WITH 132-2350—PAGE 457
AN ATTACHMENT

SMCS-5057, 5133 **i02863501**

NOTE	REF NO	GRAPHIC REF	PART NUMBER	QTY	PART NAME 1 2 3 4 5 6 (PRODUCT LEVEL)	SEE PAGE
	1	1	**213-5065**	2	BRACKET	
I	2	1	**216-6969**	2	HOSE AS	
	3	1	**2P-1293**	2	LOCKNUT (1-3/16-12-THD)	
	4	1	*268-1514*	2	UNION AS	
					(EACH INCLUDES)	
		1	**5K-9090**	1	SEAL-O-RING	
		1	**6V-9746**	1	SEAL-O-RING	
		1	**8C-8493**	1	UNION	
	5	1	**5P-7466**	4	CLIP (SLOT)	
	6	1	**5P-7467**	4	CLIP (TAB)	
	7	1	**5P-8112**	4	GROMMET	
M	8	1	**8T-4136**	4	BOLT (M10X1.5X25-MM)	
M	9	1	**8T-4196**	4	BOLT (M10X1.5X35-MM)	
	10	1	**8T-4121**	8	WASHER-HARD (11X21X2.5-MM THK)	
B	11	1	**6V-9833**	2	CAP AS	

B-USE AS REQUIRED
I-REFER TO HYDRAULIC INFORMATION SYSTEM
M-METRIC PART

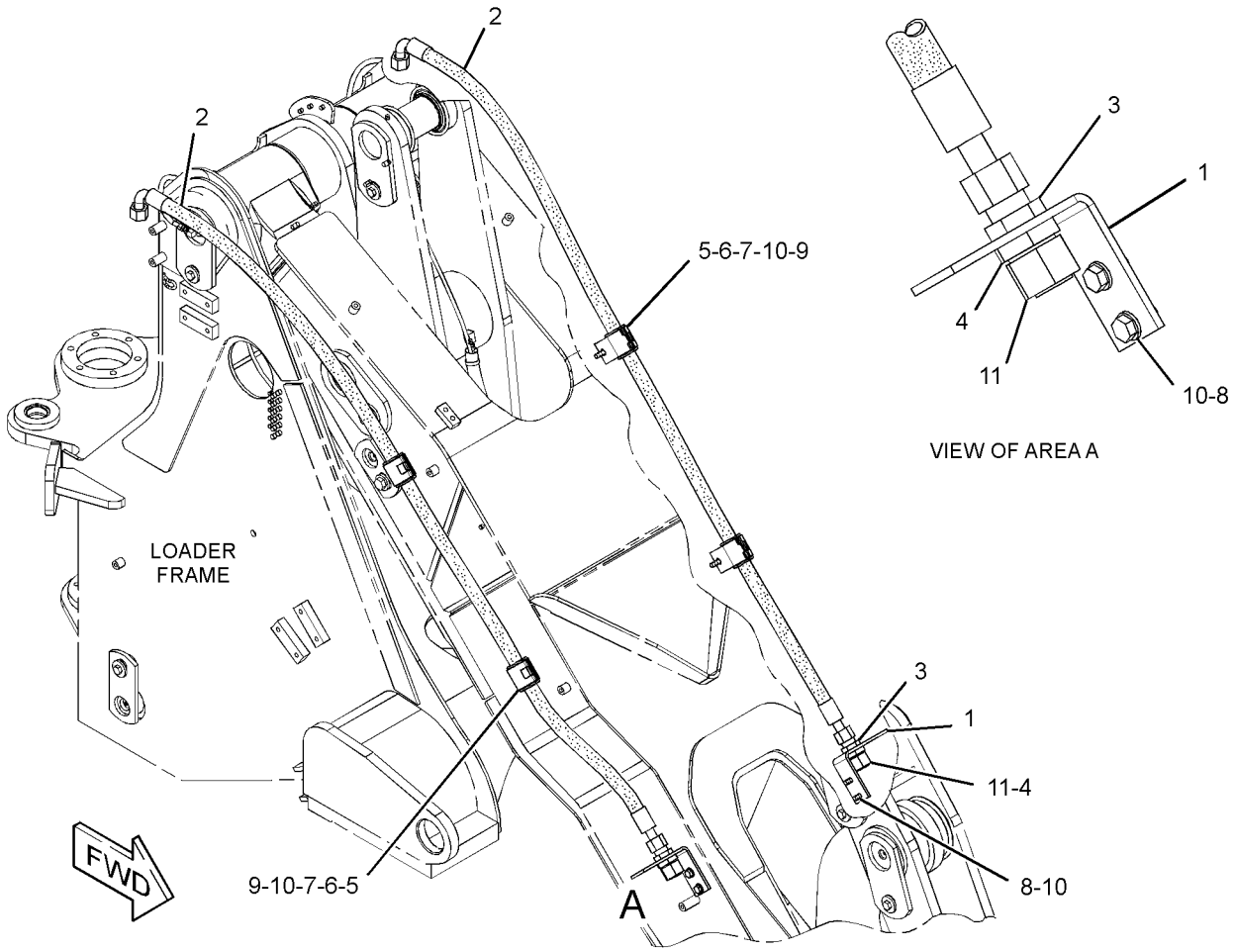

GRAPHIC #1 **<END>** g01405985

HYDRAULIC SYSTEM

248-5416 LINES GP-COUPLER

S/N: RRS1-UP
PART OF 270-7056 LINES GP-COUPLER
AN ATTACHMENT

SMCS-5057, 5133 **i02395197**

NOTE	REF NO	GRAPHIC REF	PART NUMBER	QTY	PART NAME 1 2 3 4 5 6 (PRODUCT LEVEL)	SEE PAGE
	1	1	**152-5717**	1	CAP-DUST	
	2	1	**152-5718**	1	CAP-DUST	
	3	1	**241-6189**	1	FITTING AS (QUICK DISCONNECT, MALE)	
	4	1	**241-6190**	1	FITTING AS (QUICK DISCONNECT, FEMALE)	
I	5	1	**261-7854**	2	HOSE AS	
	6	1	**261-7855**	2	TUBE AS	
M	7	1	**5C-2890**	2	NUT (M6X1-THD)	
M	8	1	**5C-9553**	2	BOLT (M6X1X16-MM)	
	9	1	**5K-9090**	4	SEAL-O-RING	
	10	1	**6V-9172**	2	NUT (1-7/16-12-THD)	
	11	1	**7X-7729**	2	WASHER (11X25X3-MM THK)	
	12	1	**8M-2771**	2	CLIP	
	13	1	**8T-1889**	2	CLIP (SLOT)	
	14	1	**8T-1890**	2	CLIP (TAB)	
M	15	1	**8T-4137**	2	BOLT (M10X1.5X20-MM)	
	16	1	**8T-4205**	4	WASHER-HARD (7.2X14.5X2-MM THK)	

I-REFER TO HYDRAULIC INFORMATION SYSTEM
M-METRIC PART

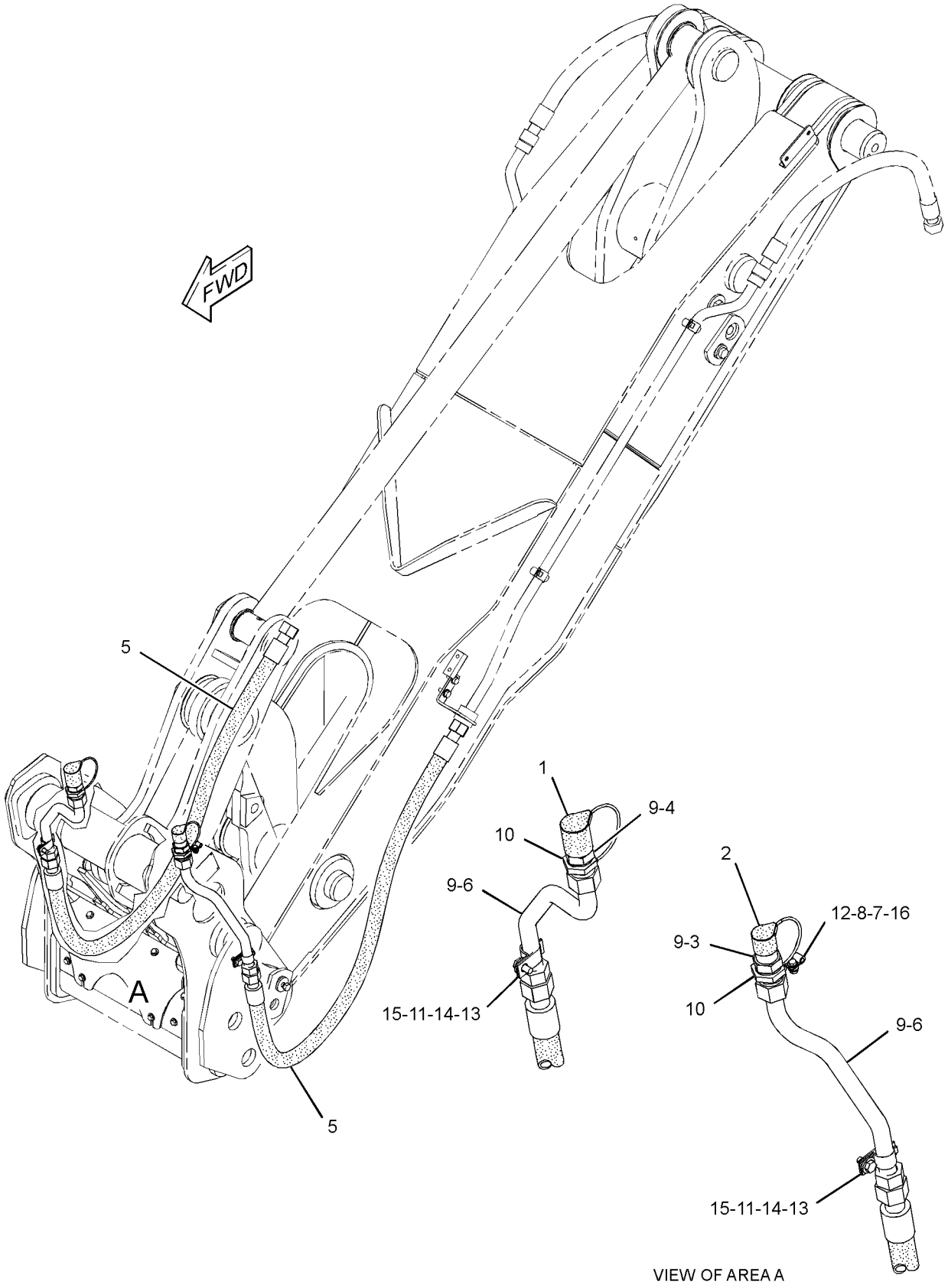

GRAPHIC #1 **<END>** g01285858

HYDRAULIC SYSTEM

270-7056 LINES GP-COUPLER

S/N: RRS1-UP

FOR USE WITH 218-5113—PAGE 595, 132-2350—PAGE 457. CANNOT BE USED WITH 303-2052—PAGE 328 AN ATTACHMENT

SMCS-5057, 5133 **i02395181**

NOTE	REF NO	GRAPHIC REF	PART NUMBER	QTY	PART NAME 1 2 3 4 5 6 (PRODUCT LEVEL)	SEE PAGE
Y	1	1	*245-9020*	1	LINES GP-COUPLER (UPPER, STANDARD LIFT MACHINES)	335
Y	2	1	*248-5416*	1	LINES GP-COUPLER (THIRD FUNCTION, LOWER)	336

Y-SEPARATE ILLUSTRATION

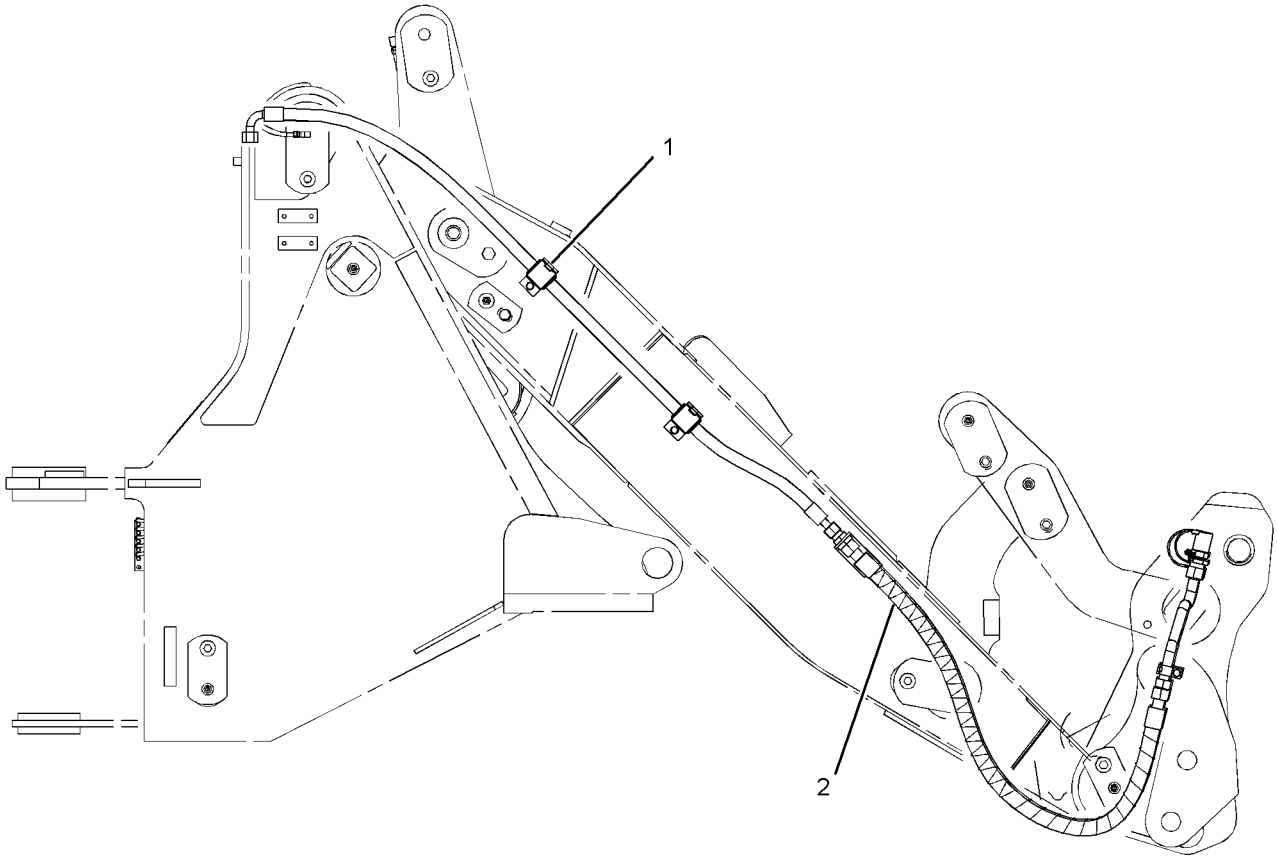

RIGHT SIDE VIEW

GRAPHIC #1 **<END>** g01185773

HYDRAULIC SYSTEM

296-6812 LINES GP-COUPLER—STANDARD LIFT MACHINES, WIDE

S/N: RRS1-UP

PART OF 218-5113 COUPLER AR-QUICK

AN ATTACHMENT

SMCS-5057, 5133 **i03576060**

NOTE	REF NO	GRAPHIC REF	PART NUMBER	QTY	PART NAME 1 2 3 4 5 6 (PRODUCT LEVEL)	SEE PAGE
	1	1	**7K-1181**	1	STRAP-CABLE	
CI	2	1	**317-7328**	1	HOSE AS	
I	3	1	**176-7558**	1	HOSE AS	
	4	1	**186-0357**	3	CLIP	
	5	1	**186-0359**	1	CLIP	
	6	1	**192-7625**	1	SWITCH AS-ROCKER (HYDRAULIC LOCKOUT)	
		1	**111-7899**	1	GASKET	
	7	1	**195-8673**	1	PLATE AS	
G	8	1	**160-2247**		SLEEVE-ABRASION (19.7-IN)	
I	9	1	**217-2768**	1	HOSE AS	
I	10	1	**217-2769**	2	HOSE AS	
	11	1	**223-8185**	1	TUBE AS	
	12	1	**223-8186**	1	TUBE AS	
Y	13	1	**233-2549**	1	MANIFOLD GP-CONTROL (QUICK COUPLER)	385
	14	1	**294-3046**	1	TUBE AS	
	15	1	**294-3047**	1	TUBE AS	
I	16	1	**294-8059**	2	HOSE AS	
	17	1	**295-4690**	1	BRACKET	
	18	1	**295-4691**	1	BRACKET	
C	19	1	*148-8325*	3	CONNECTOR AS	
					(EACH INCLUDES)	
		1	**3J-1907**	1	SEAL-O-RING	
		1	**4J-5477**	1	SEAL-O-RING	
		1	**6V-8641**	1	CONNECTOR	
	20	1	*148-8368*	3	ELBOW AS	
					(EACH INCLUDES)	
		1	**3J-1907**	1	SEAL-O-RING	
		1	**4J-5477**	1	SEAL-O-RING	
		1	**6V-8627**	1	ELBOW	
	21	1	*148-8419*	1	REDUCER AS	
		1	**4J-5477**	1	SEAL-O-RING	
		1	**6V-8935**	1	REDUCER-O-RING	
	22	1	*149-5452*	2	UNION AS (STRAIGHT)	
					(EACH INCLUDES)	
		1	**6V-8397**	2	SEAL-O-RING	
		1	**6V-8994**	1	UNION (STRAIGHT)	
	23	1	**174-5907**	4	CLIP	
	24	1	**4J-5477**	4	SEAL-O-RING	
	25	1	**4P-8134**	1	CLIP	
	26	1	**5P-9297**	6	CLIP	
	27	1	**6V-8397**	2	SEAL-O-RING	
	28	1	**6V-9168**	2	NUT (11/16-16-THD)	
B	29	1	**6V-9829**	2	CAP AS	
	30	1	**7D-7233**	2	CLIP	
	31	1	**7X-7729**	10	WASHER (11X25X3-MM THK)	
	32	1	**8T-4121**	8	WASHER-HARD (11X21X2.5-MM THK)	
M	33	1	**8T-4133**	2	NUT (M10X1.5-THD)	
BCM	34	1	**8T-4137**	12	BOLT (M10X1.5X20-MM)	
M	35	1	**8T-4139**	3	BOLT (M12X1.75X30-MM)	
M	36	1	**8T-4195**	2	BOLT (M10X1.5X30-MM)	
	37	1	**8T-4223**	3	WASHER-HARD (13.5X25.5X3-MM THK)	
M	39	1	**8T-5436**	2	BOLT (M10X1.5X130-MM)	
	40	1	**9X-6582**	1	NUT (13/16-16-THD)	
C	41	1	*164-9640*	1	CONNECTOR AS	
		1	**3J-1907**	1	SEAL-O-RING	

296-6812 **LINES GP-COUPLER** *(contd.)* **i03576060**

NOTE	REF NO	GRAPHIC REF	PART NUMBER	QTY	PART NAME 1 2 3 4 5 6 (PRODUCT LEVEL)	SEE PAGE
		1	**4J-5477**	1	SEAL-O-RING	
		1	**145-2237**	1	CONNECTOR	

B-USE AS REQUIRED
C-CHANGE FROM PREVIOUS TYPE
G-ORDER BY THE INCH
I-REFER TO HYDRAULIC INFORMATION SYSTEM
M-METRIC PART
Y-SEPARATE ILLUSTRATION

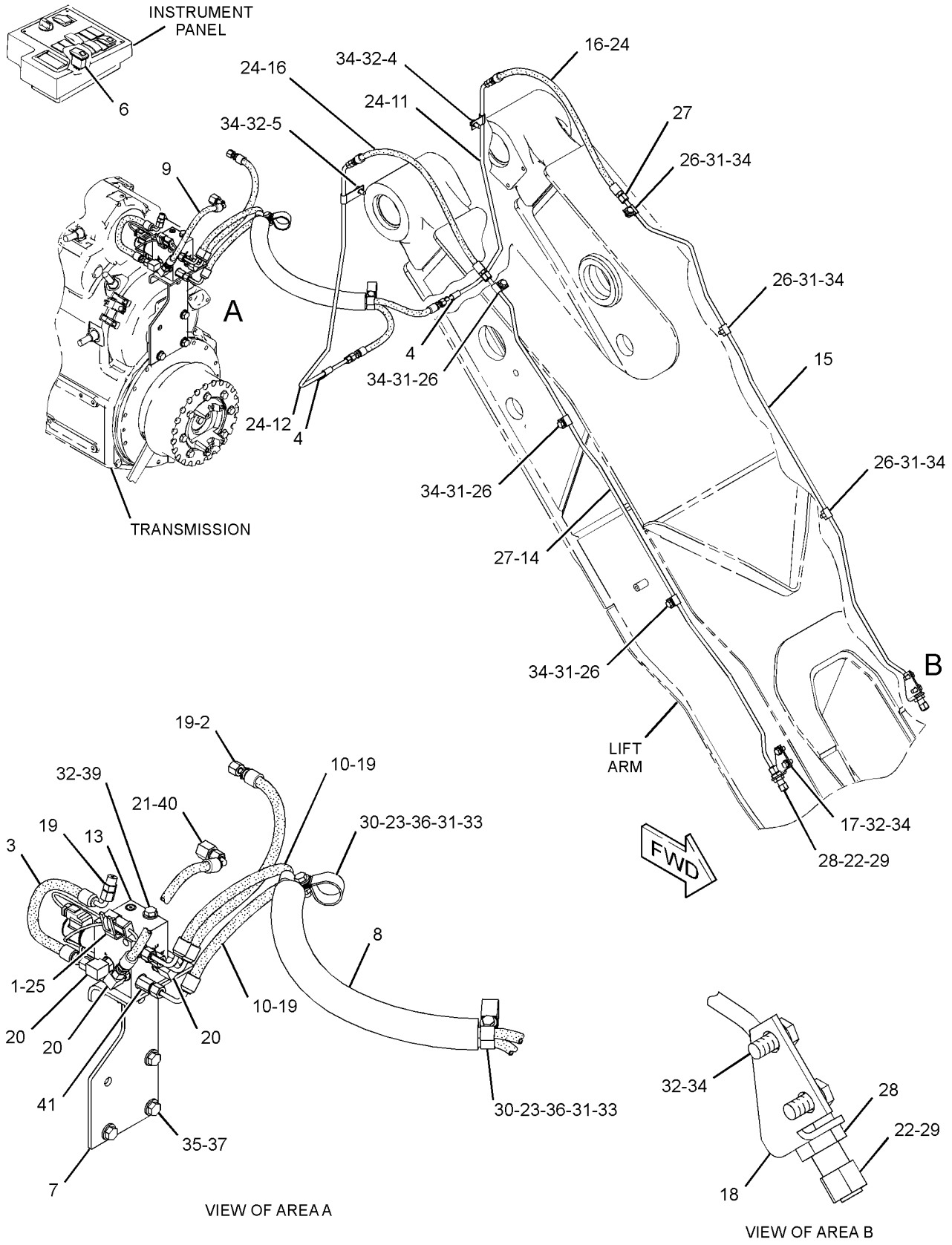

GRAPHIC #1 **<END>** g01909314

HYDRAULIC SYSTEM

297-2470 LINES GP-COUPLER—STANDARD LIFT MACHINES

S/N: RRS1-UP

PART OF 218-5113 COUPLER AR-QUICK

AN ATTACHMENT

SMCS-5057, 5133 **i03032331**

NOTE	REF NO	GRAPHIC REF	PART NUMBER	QTY	PART NAME 1 2 3 4 5 6 (PRODUCT LEVEL)	SEE PAGE
I	1	1	**214-5389**	1	HOSE AS	
I	2	1	**214-5390**	1	HOSE AS	
I	3	1	**297-2778**	1	HOSE AS	
I	4	1	**297-2779**	1	HOSE AS	
	5	1	*148-8325*	3	CONNECTOR AS	
					(EACH INCLUDES)	
		1	**3J-1907**	1	SEAL-O-RING	
		1	**4J-5477**	1	SEAL-O-RING	
		1	**6V-8641**	1	CONNECTOR	
	6	1	*148-8351*	1	ELBOW AS	
		1	**4J-5477**	1	SEAL-O-RING	
		1	**6V-9849**	1	ELBOW	
	7	1	*148-8368*	1	ELBOW AS	
		1	**3J-1907**	1	SEAL-O-RING	
		1	**4J-5477**	1	SEAL-O-RING	
		1	**6V-8627**	1	ELBOW	
	8	1	*150-5968*	2	TEE AS	
					(EACH INCLUDES)	
		1	**4J-5477**	2	SEAL-O-RING	
		1	**6V-9835**	1	TEE-SWIVEL	
	9	1	**5P-7462**	2	CLIP (SLOT)	
	10	1	**5P-7463**	2	CLIP (TAB)	
	11	1	**6V-0683**	2	GROMMET	
	12	1	**7X-7729**	4	WASHER (11X25X3-MM THK)	
	13	1	**8T-1893**	4	CLIP (SLOT)	
	14	1	**8T-1894**	4	CLIP (TAB)	
M	15	1	**8T-4137**	4	BOLT (M10X1.5X20-MM)	
	16	1	**8T-4223**	2	WASHER-HARD (13.5X25.5X3-MM THK)	

I-REFER TO HYDRAULIC INFORMATION SYSTEM
M-METRIC PART

297-2470 **LINES GP-COUPLER** *(contd.)* **i03032331**

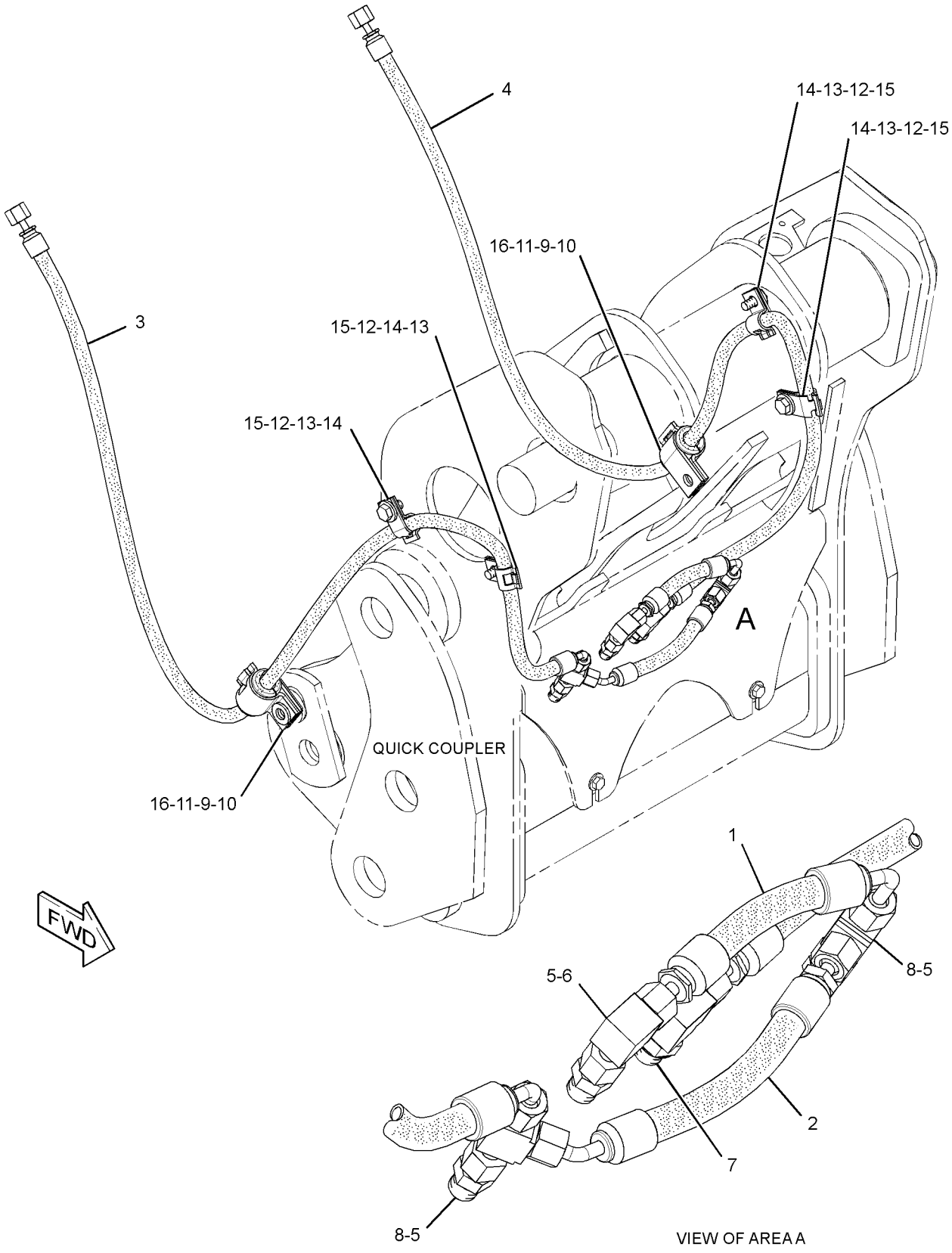

GRAPHIC #1 **<END>** g01371885

HYDRAULIC SYSTEM

212-3358 LINES GP-FRONT–3RD FUNCTION

S/N: JRL1-UP
PART OF 203-3892 HYDRAULIC AR-3 VALVE
AN ATTACHMENT

SMCS-5057 **i03503721**

NOTE	REF NO	GRAPHIC REF	PART NUMBER	QTY	PART NAME 1 2 3 4 5 6 (PRODUCT LEVEL)	SEE PAGE
M	1	1	**8T-4186**	2	BOLT (M10X1.5X40-MM)	
CM	2	1	**8T-4195**	3	BOLT (M10X1.5X30-MM)	
I	3	1	**146-0112**	1	HOSE AS	
I	4	1	**180-2390**	2	HOSE AS	
	5	1	**194-2915**	1	PLATE	
	6	1	**194-2921**	1	BRACKET	
	7	1	**194-3127**	1	BRACKET	
	8	1	**194-8731**	1	TUBE AS	
	9	1	**194-8734**	1	TUBE AS	
C	10	1	**146-0117**	1	PLATE AS	
I	11	1	**214-0734**	1	HOSE AS	
I	12	1	**214-0735**	1	HOSE AS	
I	13	1	**214-0736**	1	HOSE AS	
	14	1	*148-8321*	2	CONNECTOR AS	
					(EACH INCLUDES)	
		1	**3J-1907**	1	SEAL-O-RING	
		1	**6V-8397**	1	SEAL-O-RING	
		1	**8C-0564**	1	CONNECTOR	
	15	1	*148-8336*	2	CONNECTOR AS	
					(EACH INCLUDES)	
		1	**3J-1907**	1	SEAL-O-RING	
		1	**6V-8397**	1	SEAL-O-RING	
		1	**6V-8636**	1	CONNECTOR	
	16	1	*148-8339*	2	CONNECTOR AS	
					(EACH INCLUDES)	
		1	**6V-8716**	1	CONNECTOR	
		1	**6V-9746**	1	SEAL-O-RING	
		1	**7M-8485**	1	SEAL-O-RING	
	17	1	*148-8455*	2	UNION AS	
					(EACH INCLUDES)	
		1	**6V-8997**	1	UNION	
		1	**6V-9746**	2	SEAL-O-RING	
	18	1	*171-6723*	1	ELBOW AS	
		1	**6V-9746**	1	SEAL-O-RING	
		1	**8T-8899**	1	ELBOW	
	19	1	**2P-1293**	4	LOCKNUT (1-3/16-12-THD)	
	20	1	**5P-7466**	4	CLIP (SLOT)	
	21	1	**5P-7467**	4	CLIP (TAB)	
	22	1	**5P-8112**	4	GROMMET	
	23	1	**6V-9746**	4	SEAL-O-RING	
	24	1	**6V-9832**	2	CAP AS	
	25	1	**7X-7729**	9	WASHER (11X25X3-MM THK)	
	26	1	**8T-1887**	2	CLIP (SLOT)	
	27	1	**8T-1888**	2	CLIP (TAB)	
	28	1	**8T-4121**	4	WASHER-HARD (11X21X2.5-MM THK)	
M	29	1	**8T-4136**	8	BOLT (M10X1.5X25-MM)	
	30	1	**4V-9798**	2	TAG-IDENTIFICATION (LETTER, NUMBER C2)	
	31	1	**4V-9799**	2	TAG-IDENTIFICATION (LETTER, NUMBER C1)	
B	32	1	**217-0288**	2	CAP	

B-USE AS REQUIRED
C-CHANGE FROM PREVIOUS TYPE
I-REFER TO HYDRAULIC INFORMATION SYSTEM
M-METRIC PART

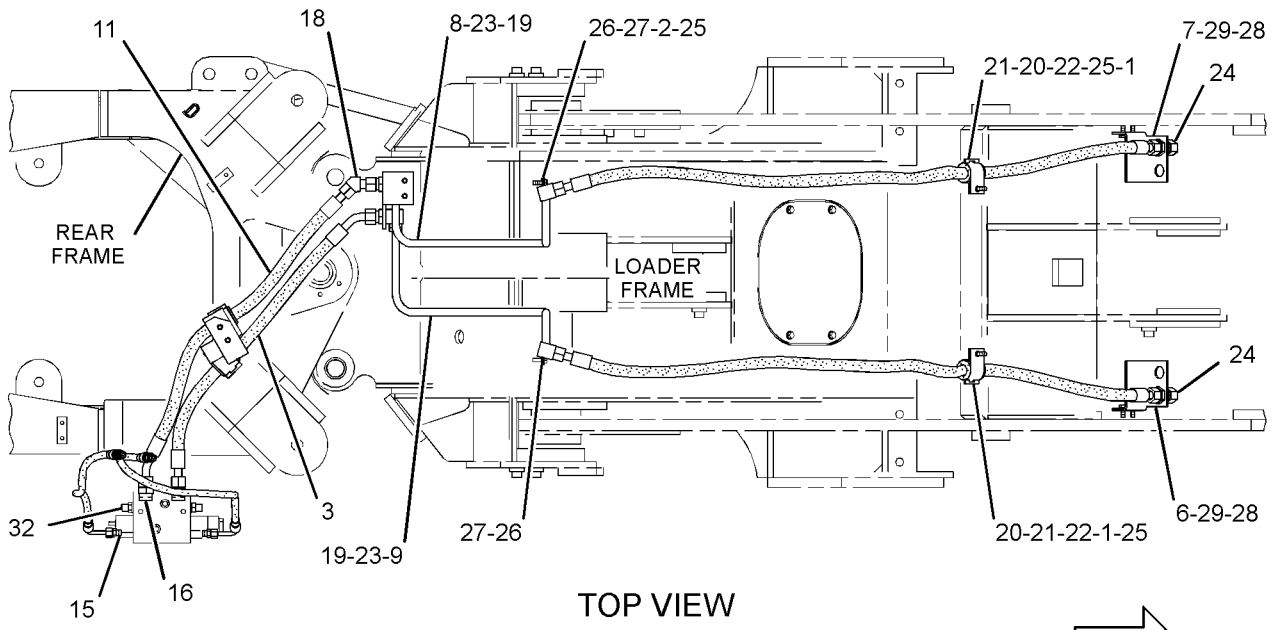

TOP VIEW

FWD

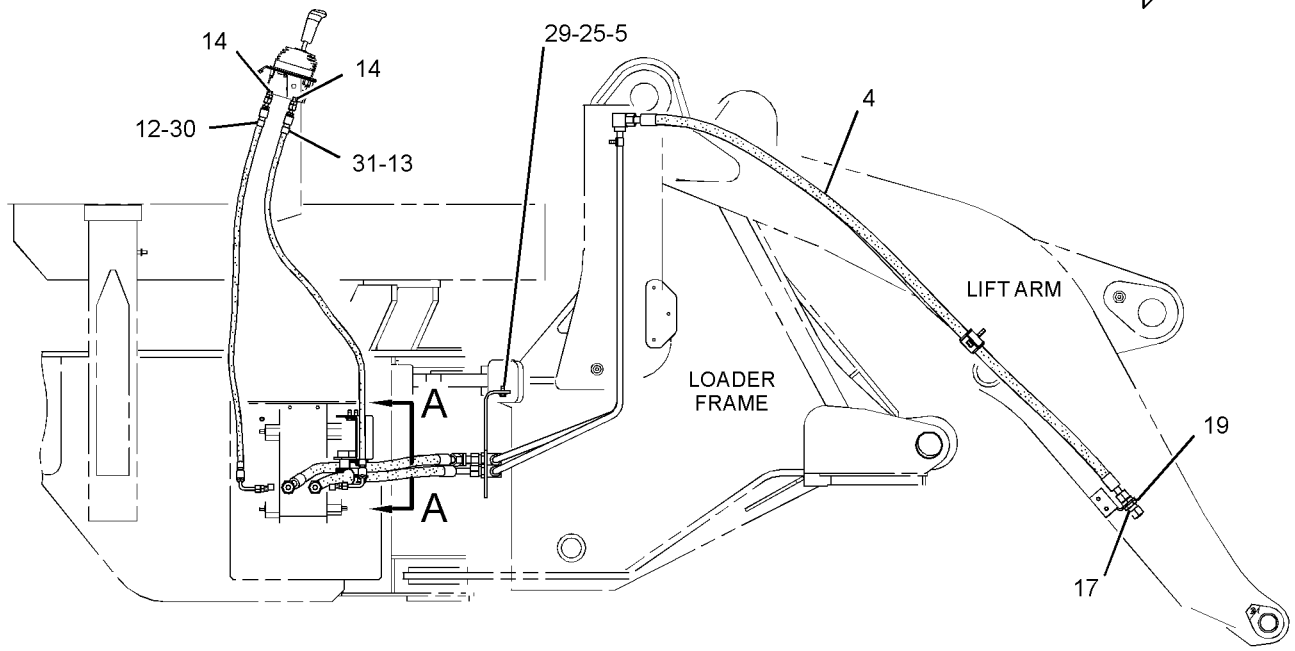

RIGHT SIDE VIEW

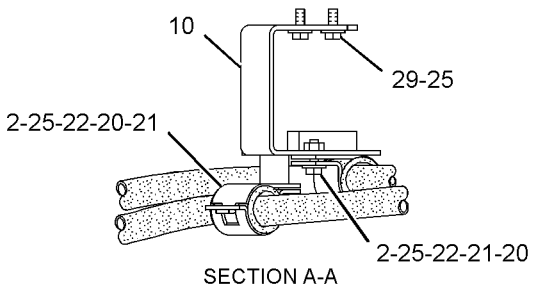

SECTION A-A

GRAPHIC #1 **<END>** g01391870

HYDRAULIC SYSTEM

211-1063 LINES GP-HYDRAULIC–3RD FUNCTION

S/N: RRS1-UP

PART OF 203-3891 HYDRAULIC AR-3 VALVE, 203-3893 HYDRAULIC AR-4 VALVE AN ATTACHMENT

SMCS-5057 **i02817788**

NOTE	REF NO	GRAPHIC REF	PART NUMBER	QTY	PART NAME 1 2 3 4 5 6 (PRODUCT LEVEL)	SEE PAGE
M	1	1	**8T-4195**	2	BOLT (M10X1.5X30-MM)	
M	2	1	**8T-4136**	8	BOLT (M10X1.5X25-MM)	
I	3	1	**146-0112**	1	HOSE AS	
	4	1	**242-8807**	1	TUBE AS	
	5	1	**242-8808**	1	TUBE AS	
	6	1	**146-0117**	1	PLATE AS	
	7	1	**146-0118**	1	PLATE	
I	8	1	**214-0734**	1	HOSE AS	
I	9	1	**252-2382**	1	HOSE AS	
I	10	1	**192-7949**	1	HOSE AS	
	11	1	*148-8321*	2	CONNECTOR AS	
					(EACH INCLUDES)	
		1	**3J-1907**	1	SEAL-O-RING	
		1	**6V-8397**	1	SEAL-O-RING	
		1	**8C-0564**	1	CONNECTOR	
	12	1	*148-8336*	2	CONNECTOR AS	
					(EACH INCLUDES)	
		1	**3J-1907**	1	SEAL-O-RING	
		1	**6V-8397**	1	SEAL-O-RING	
		1	**6V-8636**	1	CONNECTOR	
	13	1	*148-8339*	2	CONNECTOR AS	
					(EACH INCLUDES)	
		1	**6V-8716**	1	CONNECTOR	
		1	**6V-9746**	1	SEAL-O-RING	
		1	**7M-8485**	1	SEAL-O-RING	
	14	1	*171-6723*	1	ELBOW AS	
		1	**6V-9746**	1	SEAL-O-RING	
		1	**8T-8899**	1	ELBOW	
	15	1	**2P-1293**	2	LOCKNUT (1-3/16-12-THD)	
	16	1	**5P-7466**	2	CLIP (SLOT)	
	17	1	**5P-7467**	2	CLIP (TAB)	
	18	1	**5P-8112**	2	GROMMET	
	19	1	**6V-9746**	2	SEAL-O-RING	
	20	1	**7X-7729**	4	WASHER (11X25X3-MM THK)	
	21	1	**8T-1887**	4	CLIP (SLOT)	
	22	1	**8T-1888**	4	CLIP (TAB)	
	23	1	**8T-4121**	6	WASHER-HARD (11X21X2.5-MM THK)	
	24	1	*148-8376*	2	ELBOW AS	
					(EACH INCLUDES)	
		1	**6V-8983**	1	ELBOW	
		1	**6V-9746**	2	SEAL-O-RING	
B	25	1	**217-0288**	2	CAP	
	26	1	**4V-9798**	2	TAG-IDENTIFICATION (LETTER, NUMBER C2)	
	27	1	**4V-9799**	2	TAG-IDENTIFICATION (LETTER, NUMBER C1)	

B-USE AS REQUIRED
I-REFER TO HYDRAULIC INFORMATION SYSTEM
M-METRIC PART

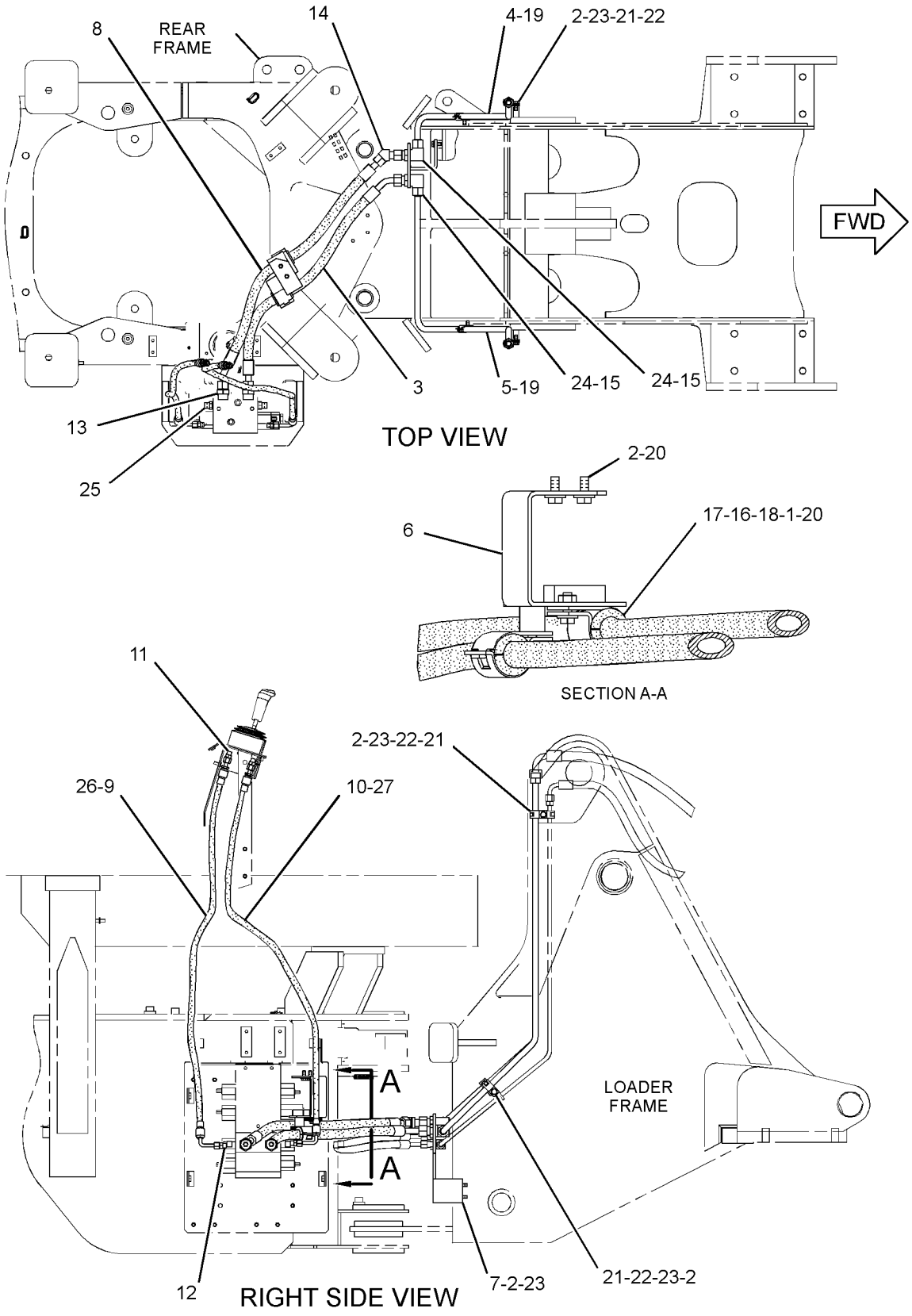

GRAPHIC #1

<END>

g01416377

HYDRAULIC SYSTEM

223-0521 LINES GP-HYDRAULIC–4TH FUNCTION

S/N: RRS1-UP
PART OF 203-3893 HYDRAULIC AR-4 VALVE
AN ATTACHMENT

SMCS-5057 **i04577390**

NOTE	REF NO	GRAPHIC REF	PART NUMBER	QTY	PART NAME 1 2 3 4 5 6 (PRODUCT LEVEL)	SEE PAGE
	1	1	**9F-6189**	2	TAG-IDENTIFICATION (A1)	
CM	2	1	**8T-4136**	6	BOLT (M10X1.5X25-MM)	
I	3	1	**146-0123**	1	HOSE AS	
C	4	1	**241-0941**	1	TUBE AS	
C	5	1	**241-0942**	1	TUBE AS	
	6	1	**146-7953**	1	PLATE AS	
	7	1	*153-6241*	1	ELBOW AS	
		1	**6V-8398**	1	SEAL-O-RING	
		1	**8C-8989**	1	ELBOW	
	8	1	*153-6252*	2	CONNECTOR AS	
					(EACH INCLUDES)	
		1	**6V-8398**	1	SEAL-O-RING	
		1	**7M-8485**	1	SEAL-O-RING	
		1	**9X-8408**	1	CONNECTOR	
I	9	1	**214-0737**	1	HOSE AS	
I	10	1	**252-2380**	1	HOSE AS	
I	11	1	**252-2381**	1	HOSE AS	
	12	1	*148-8321*	2	CONNECTOR AS	
					(EACH INCLUDES)	
		1	**3J-1907**	1	SEAL-O-RING	
		1	**6V-8397**	1	SEAL-O-RING	
		1	**8C-0564**	1	CONNECTOR	
	13	1	*148-8336*	2	CONNECTOR AS	
					(EACH INCLUDES)	
		1	**3J-1907**	1	SEAL-O-RING	
		1	**6V-8397**	1	SEAL-O-RING	
		1	**6V-8636**	1	CONNECTOR	
	14	1	*148-8375*	2	ELBOW AS	
					(EACH INCLUDES)	
		1	**6V-8398**	2	SEAL-O-RING	
		1	**6V-8981**	1	ELBOW	
	15	1	**5P-7464**	2	CLIP (SLOT)	
	16	1	**5P-7465**	2	CLIP (TAB)	
	17	1	**6V-1249**	2	GROMMET	
	18	1	**6V-8398**	2	SEAL-O-RING	
	19	1	**6V-9169**	2	NUT (13/16-16-THD)	
	20	1	**8T-1885**	4	CLIP (SLOT)	
	21	1	**8T-1886**	4	CLIP (TAB)	
C	22	1	**8T-4121**	6	WASHER-HARD (11X21X2.5-MM THK)	
C	23	1	**227-7474**	2	SPACER (13X20X7-MM THK)	
	24	1	**9F-6188**	2	TAG-IDENTIFICATION (A2)	

C-CHANGE FROM PREVIOUS TYPE
I-REFER TO HYDRAULIC INFORMATION SYSTEM
M-METRIC PART

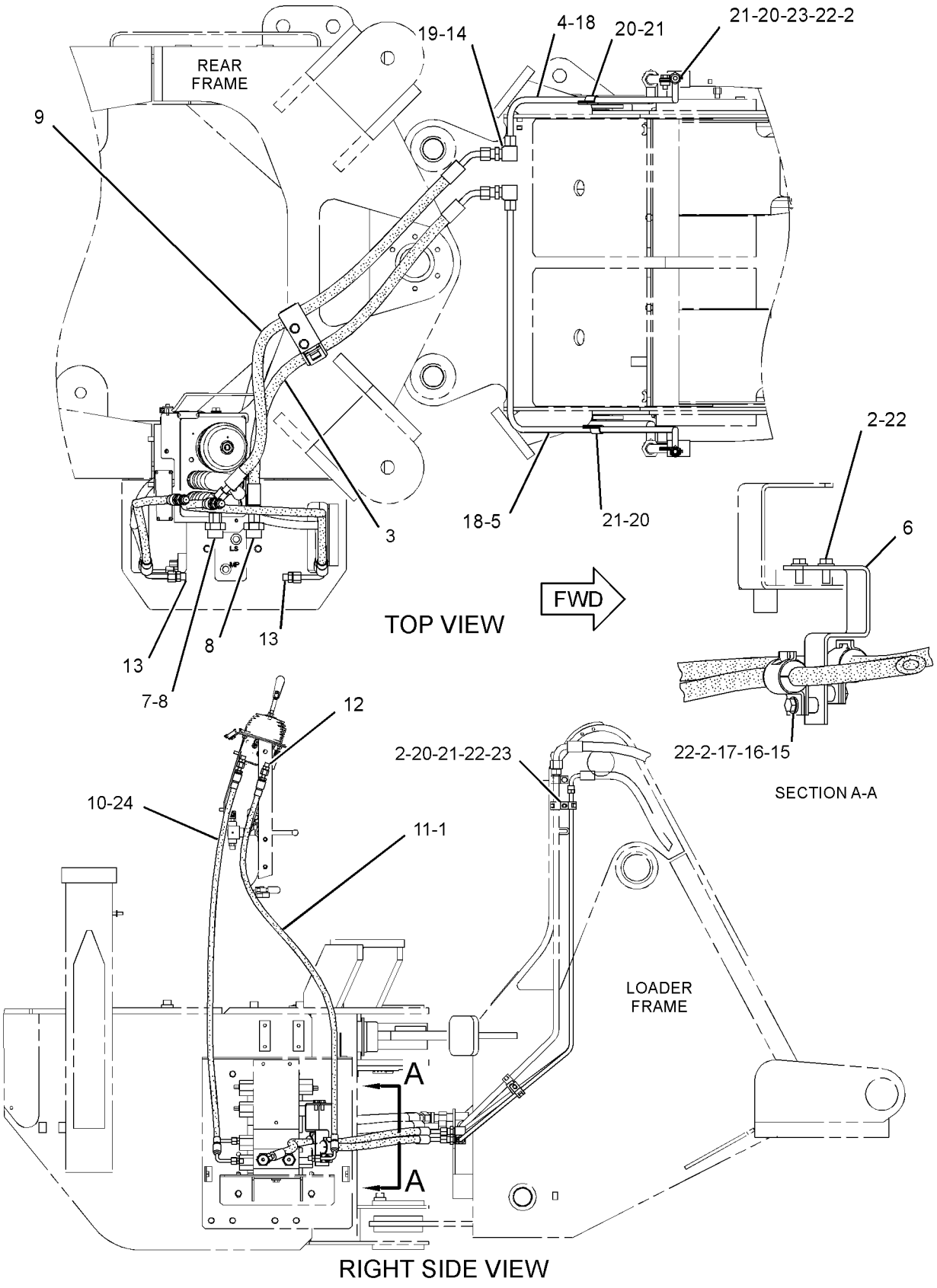

GRAPHIC #1

<END>

g02742616

HYDRAULIC SYSTEM

289-8934 LINES GP-HYDRAULIC

S/N: JRL1-UP; RRS1-UP

PART OF 289-8803, 289-8833 HYDRAULIC AR

SMCS-5057 **i04393010**

NOTE	REF NO	GRAPHIC REF	PART NUMBER	QTY	PART NAME 1 2 3 4 5 6 (PRODUCT LEVEL)	SEE PAGE
	1	2	**5D-1026**	2	CLAMP-BAND	
	2	1,2	**6V-0852**	3	CAP-DUST	
	3	2	**8T-4983**	2	CLAMP-HOSE	
	4	2	**9U-6996**	2	CONNECTOR AS	
	5	1,2	**144-0367**	4	CLAMP-HOSE	
	6	1	**204-2281**	1	STRAP-CABLE	
I	7	1	**205-7106**	1	HOSE AS	
	8	2	**209-0789**	1	MANIFOLD	
I	9	1	**211-4793**	1	HOSE AS	
	10	2	**212-7521**	1	VALVE GP-CHECK (RETURN RESTRICTOR)	
		2	**2S-4078**	1	SEAL-O-RING	
		2	**6V-8400**	1	SEAL-O-RING	
I	11	1	**214-2232**	1	HOSE AS	
	12	2	**217-4101**	1	TUBE AS	
	13	2	*250-1446*	1	TEE AS	
		2	**2M-9780**	1	SEAL-O-RING	
		2	**6V-9746**	1	SEAL-O-RING	
		2	**251-9303**	1	TEE	
	14	2	*250-1447*	1	TEE AS	
		2	**2M-9780**	1	SEAL-O-RING	
		2	**6V-8397**	1	SEAL-O-RING	
		2	**251-9304**	1	TEE	
	15	1	**262-5658**	1	HOSE	
I	16	1	**262-5660**	1	HOSE AS	
CI	17	1	**288-0746**	1	HOSE AS	
	18	2	**293-2455**	1	BLOCK	
	19	2	**293-2456**	1	BLOCK	
	20	1	**293-2457**	1	TUBE AS	
	21	2	**293-2465**	1	HOSE	
I	22	1	**293-2466**	1	HOSE AS	
	23	2	*148-8335*	1	CONNECTOR AS	
		2	**5K-9090**	1	SEAL-O-RING	
		2	**6V-8635**	1	CONNECTOR	
		2	**7M-8485**	1	SEAL-O-RING	
	24	2	*148-8338*	1	CONNECTOR AS	
		2	**3J-1907**	1	SEAL-O-RING	
		2	**6V-8397**	1	SEAL-O-RING	
		2	**8T-0075**	1	CONNECTOR	
	25	2	*148-8352*	1	ELBOW AS	
		2	**5K-9090**	1	SEAL-O-RING	
		2	**6V-9854**	1	ELBOW	
	26	2	*148-8367*	1	ELBOW AS	
		2	**6V-8397**	1	SEAL-O-RING	
		2	**6V-9850**	1	ELBOW	
	27	2	*148-8373*	1	ELBOW AS	
		2	**6V-8400**	1	SEAL-O-RING	
		2	**7M-8485**	1	SEAL-O-RING	
		2	**8C-3364**	1	ELBOW	
	28	2	*148-8407*	1	PLUG AS	
		2	**3J-1907**	1	SEAL-O-RING	
		2	**9S-4191**	1	PLUG-O-RING	
	29	2	*148-8411*	2	PLUG AS	
					(EACH INCLUDES)	
		2	**3K-0360**	1	SEAL-O-RING	
		2	**9S-4185**	1	PLUG-O-RING	
	30	2	*148-8428*	1	TEE AS	

289-8934 **LINES GP-HYDRAULIC** *(contd.)* **i04393010**

NOTE	REF NO	GRAPHIC REF	PART NUMBER	QTY	PART NAME 1 2 3 4 5 6 (PRODUCT LEVEL)	SEE PAGE
		2	**3K-0360**	1	SEAL-O-RING	
		2	**6V-8398**	2	SEAL-O-RING	
		2	**6V-8782**	1	TEE	
	31	2	*148-8433*	1	TEE AS	
		2	**6V-8397**	2	SEAL-O-RING	
		2	**6V-9836**	1	TEE-SWIVEL	
	32	2	*148-8444*	1	TEE AS-SWIVEL	
		2	**6V-8398**	2	SEAL-O-RING	
		2	**6V-9837**	1	TEE-SWIVEL	
	33	2	*153-6237*	1	ELBOW AS	
		2	**3D-2824**	1	SEAL-O-RING	
		2	**6V-9004**	1	ELBOW	
		2	**6V-9746**	1	SEAL-O-RING	
	34	1	*164-5567*	2	COUPLER AS-QUICK DISCONNECT (MALE)	
					(EACH INCLUDES)	
		1	**3J-1907**	1	SEAL-O-RING	
		1	**6V-3965**	1	FITTING (QUICK DISCONNECT)	
	35	2	*171-6723*	1	ELBOW AS	
		2	**6V-9746**	1	SEAL-O-RING	
		2	**8T-8899**	1	ELBOW	
	36	2	*180-9933*	1	ADAPTER AS (90-DEG)	
		2	**3J-7354**	1	SEAL-O-RING	
		2	**135-9941**	1	ADAPTER	
	37	2	**1P-3703**	1	SEAL-RECTANGULAR	
	38	2	**1P-3708**	1	SEAL-RECTANGULAR	
	39	2	**1P-4582**	2	FLANGE-HALF	
	40	1	**1P-4584**	4	FLANGE-HALF	
	41	1,2	**204-8000**	1	MOUNTING-CABLE TIE	
	42	1	**4J-0520**	1	SEAL-O-RING	
	43	2	**4J-0524**	1	SEAL-O-RING	
	44	2	**4J-0527**	1	SEAL-O-RING	
	45	1	**5P-7468**	1	CLIP (SLOT)	
	46	1	**5P-7469**	1	CLIP (TAB)	
	47	1	**5P-8444**	1	GROMMET	
	48	1	**6J-2680**	2	SEAL-O-RING	
B	50	1	**6V-9830**	2	CAP AS	
	51	2	**7S-1912**	1	CLIP	
M	52	2	**7X-2549**	8	BOLT (M12X1.75X100-MM)	
M	53	2	**8C-2926**	4	BOLT (M10X1.5X140-MM)	
	54	1,2	**8C-3206**	2	FLANGE-HALF	
	55	1	**8T-4121**	9	WASHER-HARD (11X21X2.5-MM THK)	
BM	56	1	**8T-4136**	1	BOLT (M10X1.5X25-MM)	
M	57	2	**8T-4183**	4	BOLT (M12X1.75X40-MM)	
M	58	1	**8T-4184**	4	BOLT (M12X1.75X45-MM)	
M	59	2	**8T-4194**	4	BOLT (M12X1.75X50-MM)	
M	60	1,2	**8T-4196**	4	BOLT (M10X1.5X35-MM)	
	61	2	**8T-4223**	20	WASHER-HARD (13.5X25.5X3-MM THK)	
E	62	2	**5P-1505**		HOSE (21-CM)	

B-USE AS REQUIRED
C-CHANGE FROM PREVIOUS TYPE
E-ORDER BY THE CENTIMETER
I-REFER TO HYDRAULIC INFORMATION SYSTEM
M-METRIC PART

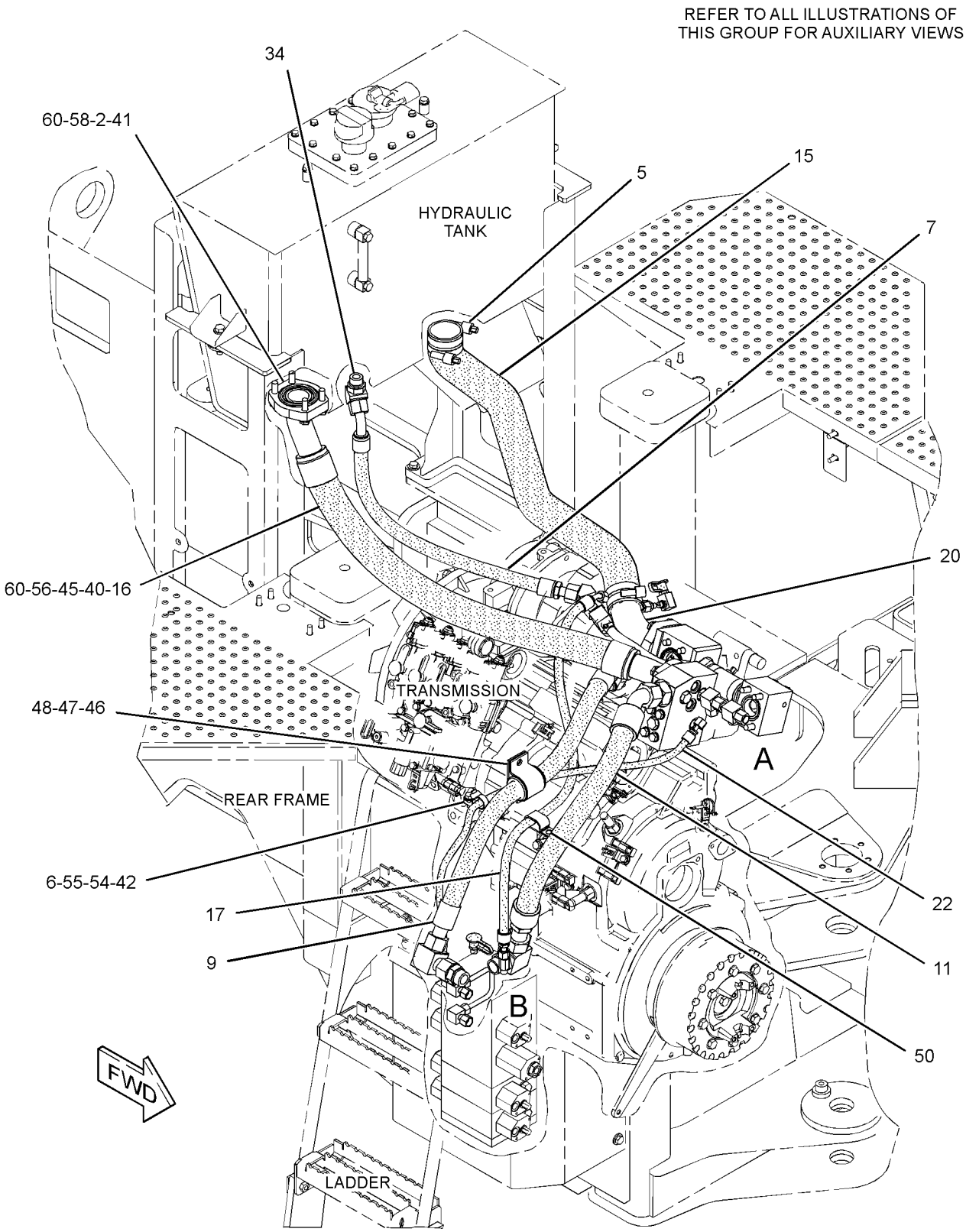

GRAPHIC #1

g02720969

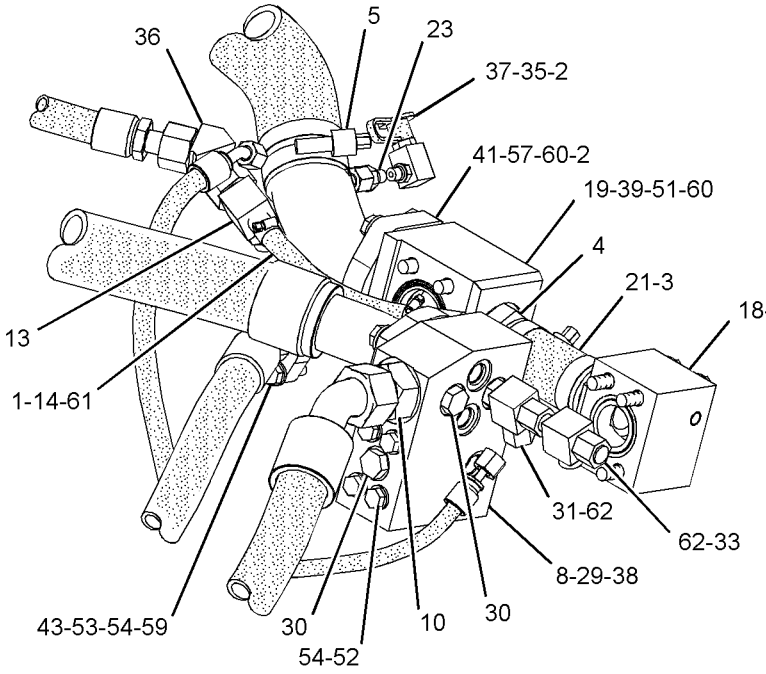

VIEW OF AREA A

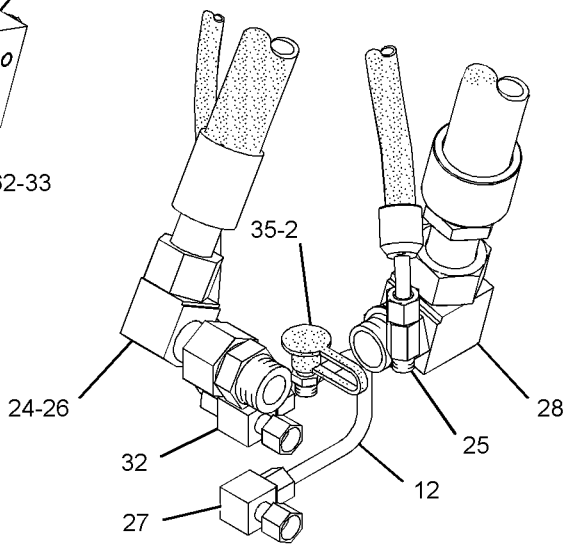

VIEW OF AREA B

GRAPHIC #2 **<END>** g02720970

HYDRAULIC SYSTEM

290-7200 LINES GP-HYDRAULIC FAN—STANDARD

S/N: JRL1-UP; RRS1-UP
PART OF 289-8963 MOTOR AR-HYDRAULIC FAN
AN ATTACHMENT

SMCS-1386, 1387, 5057 **i03038632**

NOTE	REF NO	GRAPHIC REF	PART NUMBER	QTY	PART NAME 1 2 3 4 5 6 (PRODUCT LEVEL)	SEE PAGE
I	1	1	**109-5363**	1	HOSE AS	
	2	1	**130-9984**	2	CLIP	
	3	1	**200-6345**	2	MOUNT (DUAL SWIVEL)	
	4	1	**204-2281**	4	STRAP-CABLE	
I	5	1	**293-2462**	1	HOSE AS	
I	6	1	**293-2463**	1	HOSE AS	
	7	1	*148-8316*	1	CONNECTOR AS	
		1	**3J-7354**	1	SEAL-O-RING	
		1	**4J-5477**	1	SEAL-O-RING	
		1	**6V-8647**	1	CONNECTOR	
	8	1	*148-8351*	1	ELBOW AS	
		1	**4J-5477**	1	SEAL-O-RING	
		1	**6V-9849**	1	ELBOW	
	9	1	*148-8382*	1	ELBOW AS	
		1	**3D-2824**	1	SEAL-O-RING	
		1	**7J-9108**	1	SEAL-O-RING	
		1	**8T-0404**	1	ELBOW	
	10	1	*148-8384*	1	ELBOW AS	
		1	**4J-5477**	2	SEAL-O-RING	
		1	**6V-8979**	1	ELBOW	
	11	1	*148-8390*	1	ELBOW AS	
		1	**2M-9780**	1	SEAL-O-RING	
		1	**6V-8626**	1	ELBOW	
		1	**7J-9108**	1	SEAL-O-RING	
	12	1	*169-7404*	2	ELBOW AS	
					(EACH INCLUDES)	
		1	**6V-8982**	1	ELBOW	
		1	**7J-9108**	2	SEAL-O-RING	
	13	1	**2P-1279**	1	LOCKNUT (9/16-18-THD)	
	14	1	**6V-9170**	2	NUT-BULKHEAD (1-14-THD)	
	15	1	**8T-4121**	2	WASHER-HARD (11X21X2.5-MM THK)	
M	16	1	**8T-4136**	2	BOLT (M10X1.5X25-MM)	

I-REFER TO HYDRAULIC INFORMATION SYSTEM
M-METRIC PART

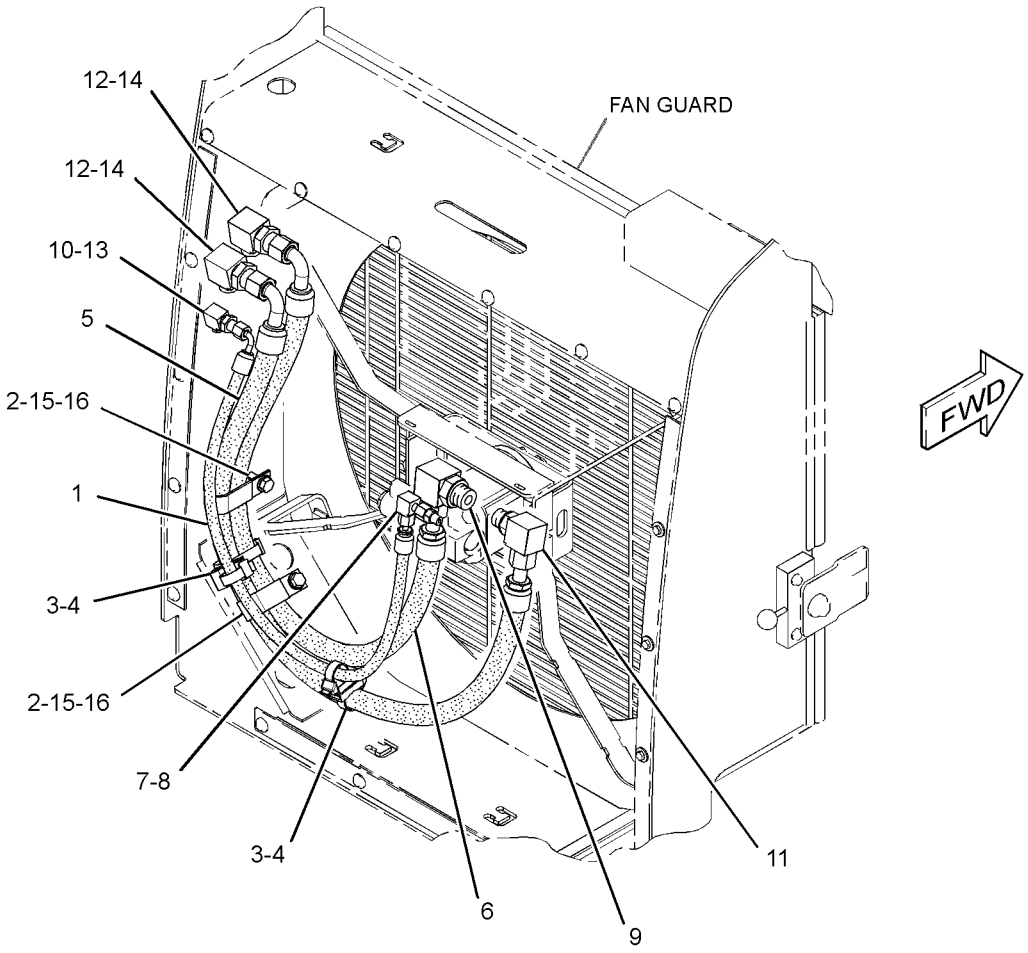

GRAPHIC #1 **<END>** g01548613

HYDRAULIC SYSTEM

290-7201 LINES GP-HYDRAULIC FAN—REVERSING FAN

S/N: JRL1-UP; RRS1-UP
PART OF 289-8965 MOTOR AR-HYDRAULIC FAN
AN ATTACHMENT

SMCS-1386, 1387, 5057 **i03537766**

NOTE	REF NO	GRAPHIC REF	PART NUMBER	QTY	PART NAME 1 2 3 4 5 6 (PRODUCT LEVEL)	SEE PAGE
	1	1	**7K-1181**	1	STRAP-CABLE	
	2	1	**106-8704**	1	SUPPRESSOR AS-ARC	
	3	1	**158-5089**	1	RELAY AS (24-VOLT) (REVERSING FAN)	
I	4	1	**180-6567**	1	HOSE AS	
	5	1	**185-2765**	1	SWITCH AS-ROCKER (REVERSING FAN ON, OFF)	
		1	**111-7899**	1	GASKET	
I	6	1	**202-8928**	1	HOSE AS	
	7	1	**204-2281**	2	STRAP-CABLE	
I	8	1	**293-2464**	1	HOSE AS	
	9	1	*148-8316*	1	CONNECTOR AS	
		1	**3J-7354**	1	SEAL-O-RING	
		1	**4J-5477**	1	SEAL-O-RING	
		1	**6V-8647**	1	CONNECTOR	
	10	1	*148-8341*	1	CONNECTOR AS	
		1	**3D-2824**	1	SEAL-O-RING	
		1	**6V-8713**	1	CONNECTOR	
		1	**7J-9108**	1	SEAL-O-RING	
	11	1	*148-8351*	1	ELBOW AS	
		1	**4J-5477**	1	SEAL-O-RING	
		1	**6V-9849**	1	ELBOW	
	12	1	*148-8384*	1	ELBOW AS	
		1	**4J-5477**	2	SEAL-O-RING	
		1	**6V-8979**	1	ELBOW	
	13	1	*148-8390*	1	ELBOW AS	
		1	**2M-9780**	1	SEAL-O-RING	
		1	**6V-8626**	1	ELBOW (FACE SEAL)	
		1	**7J-9108**	1	SEAL-O-RING	
	14	1	*148-8393*	1	ELBOW AS	
		1	**6V-9852**	1	ELBOW	
		1	**7J-9108**	1	SEAL-O-RING	
	15	1	*169-7404*	2	ELBOW AS	
					(EACH INCLUDES)	
		1	**6V-8982**	1	ELBOW (90-DEG)	
		1	**7J-9108**	2	SEAL-O-RING	
	16	1	**2P-1279**	1	LOCKNUT (9/16-18-THD)	
	17	1	**6V-9170**	2	NUT-BULKHEAD (1-14-THD)	

I-REFER TO HYDRAULIC INFORMATION SYSTEM

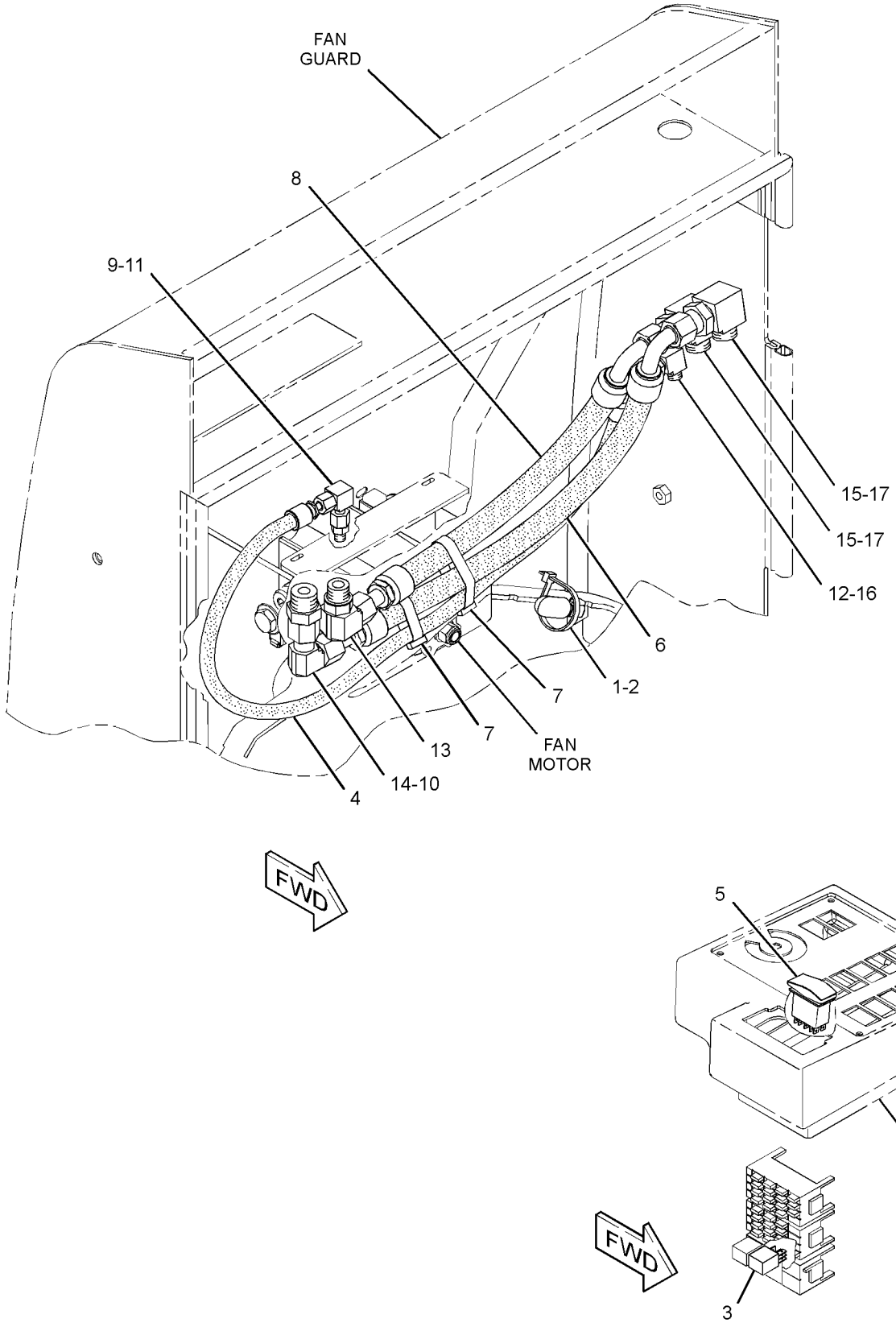

GRAPHIC #1 **<END>** g01397106

HYDRAULIC SYSTEM

323-1652 LINES GP-HYDRAULIC FAN–

WITHOUT AXLE OIL COOLER

S/N: JRL1-UP; RRS1-UP

PART OF 289-8991 AXLE AR-OSCILLATING

AN ATTACHMENT

SMCS-1386, 1387, 5057 **i03126425**

NOTE	REF NO	GRAPHIC REF	PART NUMBER	QTY	PART NAME 1 2 3 4 5 6 (PRODUCT LEVEL)	SEE PAGE
	1	2	**3S-2093**	2	STRAP-CABLE	
	2	1,2	**7K-1181**	5	STRAP-CABLE	
	3	1	**130-9984**	3	CLIP	
	4	2	**145-8983**	1	VALVE GP-CHECK (HYDRAULIC OIL COOLER BYPASS)	
		1	**6V-9746**	1	SEAL-O-RING	
		1	**3D-2824**	1	SEAL-O-RING	
	5	1	**200-6345**	1	MOUNT (DUAL SWIVEL)	
	6	1,2	**204-2281**	4	STRAP-CABLE	
I	7	1	**262-5695**	1	HOSE AS	
	8	2	**290-5562**	1	MOUNT (DUAL SWIVEL)	
I	9	1	**292-9688**	1	HOSE AS	
I	10	1	**292-9698**	1	HOSE AS	
	11	2	**300-4148**	1	PLATE	
	12	2	**301-0361**	1	BRACKET AS	
I	13	1	**302-6378**	1	HOSE AS	
I	14	1	**323-1655**	1	HOSE AS	
I	15	2	**323-1656**	1	HOSE AS	
I	16	1	**323-1657**	1	HOSE AS	
I	17	2	**323-1658**	1	HOSE AS	
	18	1	*148-8352*	1	ELBOW AS	
		1	**5K-9090**	1	SEAL-O-RING	
		1	**6V-9854**	1	ELBOW	
	19	1	*148-8356*	1	ELBOW AS	
		1	**2S-4078**	1	SEAL-O-RING	
		1	**6V-8400**	1	SEAL-O-RING	
		1	**6V-9009**	1	ELBOW	
	20	2	*148-8362*	1	ELBOW AS	
		2	**3D-2824**	1	SEAL-O-RING	
		2	**5K-9090**	1	SEAL-O-RING	
		2	**8T-6684**	1	ELBOW	
	21	2	*148-8368*	1	ELBOW AS	
		2	**3J-1907**	1	SEAL-O-RING	
		2	**4J-5477**	1	SEAL-O-RING	
		2	**6V-8627**	1	ELBOW	
	22	1	*148-8373*	1	ELBOW AS	
		1	**6V-8400**	1	SEAL-O-RING	
		1	**7M-8485**	1	SEAL-O-RING	
		1	**8C-3364**	1	ELBOW	
	23	2	*148-8392*	1	ELBOW AS	
		2	**6V-9746**	1	SEAL-O-RING	
		2	**6V-9853**	1	ELBOW	
	24	2	*153-6237*	1	ELBOW AS	
		2	**3D-2824**	1	SEAL-O-RING	
		2	**6V-9004**	1	ELBOW	
		2	**6V-9746**	1	SEAL-O-RING	
	25	1	*155-3504*	1	ELBOW AS	
		1	**2M-9780**	1	SEAL-O-RING	
		1	**6V-9003**	1	ELBOW	
		1	**7J-9108**	1	SEAL-O-RING	
	26	1	*164-5641*	1	TEE AS	
		1	**3D-2824**	1	SEAL-O-RING	
		1	**5K-9090**	1	SEAL-O-RING	
		1	**6V-9746**	1	SEAL-O-RING	
		1	**128-7625**	1	TEE	

323-1652 **LINES GP-HYDRAULIC FAN** *(contd.)* **i03126425**

NOTE	REF NO	GRAPHIC REF	PART NUMBER	QTY	PART NAME 1 2 3 4 5 6 (PRODUCT LEVEL)	SEE PAGE
	27	2	*164-6860*	1	TEE AS	
		2	**6V-9350**	1	TEE-BULKHEAD	
		2	**7J-9108**	3	SEAL-O-RING	
	28	1,2	**4D-7388**	3	CLIP	
	29	2	**5P-7468**	1	CLIP (SLOT)	
	30	2	**5P-7469**	1	CLIP (TAB)	
	31	2	**5P-8444**	1	GROMMET	
	32	1	**6V-1889**	1	CLIP	
	33	2	**6V-9170**	1	NUT-BULKHEAD (1-14-THD)	
B	34	1	**6V-9832**	1	CAP AS	
	35	2	**7X-7729**	1	WASHER (11X25X3-MM THK)	
	36	2	**8C-3174**	1	GROMMET	
	37	1,2	**8M-2770**	2	CLIP	
	38	1,2	**8T-4121**	15	WASHER-HARD (11X21X2.5-MM THK)	
M	39	2	**8T-4136**	5	BOLT (M10X1.5X25-MM)	
M	40	1,2	**8T-4137**	6	BOLT (M10X1.5X20-MM)	
M	41	2	**8T-4186**	1	BOLT (M10X1.5X40-MM)	
M	42	1,2	**8T-4195**	2	BOLT (M10X1.5X30-MM)	
M	43	1	**8T-4196**	2	BOLT (M10X1.5X35-MM)	
	44	2	**9C-5344**	1	SPACER (10.5X20X18-MM THK)	
	45	1	**9M-4972**	1	CLIP	

B-USE AS REQUIRED
I-REFER TO HYDRAULIC INFORMATION SYSTEM
M-METRIC PART

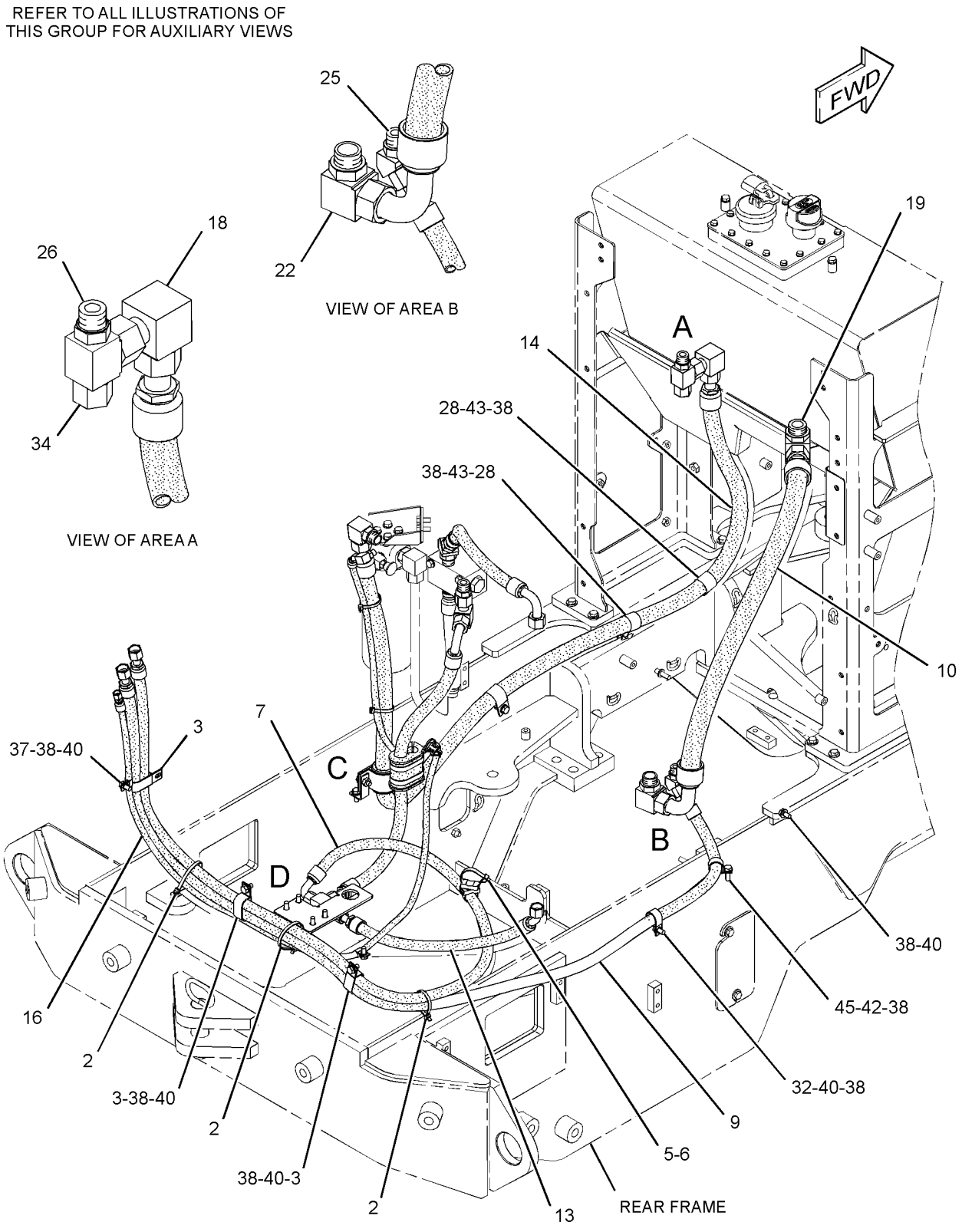

GRAPHIC #1 g01812135

323-1652 **LINES GP-HYDRAULIC FAN** *(contd.)* **i03126425**

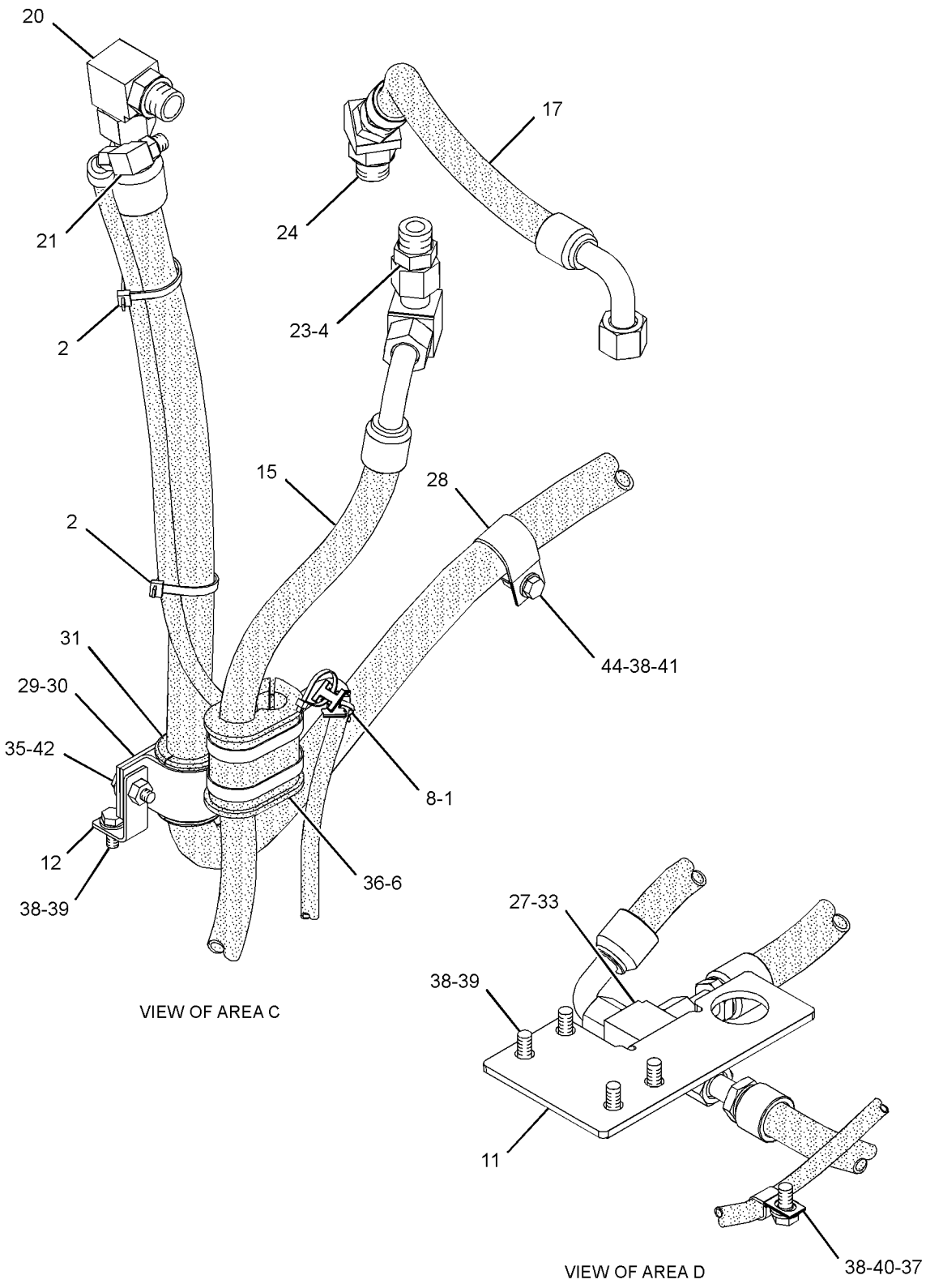

GRAPHIC #2 **<END>** g01812137

HYDRAULIC SYSTEM

290-6474 LINES GP-LIFT CYLINDER

S/N: JRL1-UP

PART OF 289-8803 HYDRAULIC AR

SMCS-5057, 5102 **i04157297**

NOTE	REF NO	GRAPHIC REF	PART NUMBER	QTY	PART NAME 1 2 3 4 5 6 (PRODUCT LEVEL)	SEE PAGE
	1	1	**3E-5239**	1	RELAY AS (24-VOLT) (LIFT)	
	2	1	**3S-2093**	2	STRAP-CABLE	
	3	1	**7K-3971**	2	TAG-IDENTIFICATION (LETTER, NUMBER L1)	
	4	1	**7K-3972**	2	TAG-IDENTIFICATION (LETTER, NUMBER L2)	
	5	2	**9C-6460**	1	ELBOW (RH)	
	6	1	**9C-6461**	1	ELBOW (LH)	
Y	7	2	**112-1817**	1	VALVE GP-MANUAL	435
I	8	1	**166-8554**	1	HOSE AS	
I	9	1	**154-4900**	2	HOSE AS	
	10	1	**154-4901**	1	TUBE AS	
	11	1	**154-4902**	1	TUBE AS	
I	12	1	**154-4903**	2	HOSE AS	
I	13	1	**154-4904**	2	HOSE AS	
	14	2	*164-5545*	1	CONNECTOR AS	
		2	**3E-2335**	1	CONNECTOR	
		2	**3J-1907**	1	SEAL-O-RING	
		2	**6V-8397**	1	SEAL-O-RING	
	15	1	*165-6365*	1	FITTING AS	
		1	**3J-1907**	1	SEAL-O-RING	
		1	**7W-7381**	1	FITTING-OUTLET	
	16	2	**185-3596**	1	BRACKET AS	
I	17	1	**200-3044**	1	HOSE AS	
	18	1	**204-2281**	3	STRAP-CABLE	
	19	1	**211-1058**	1	TUBE AS	
	20	1	**211-4230**	1	TUBE AS	
	21	2	**212-8136**	1	BRACKET	
	22	1	**213-8783**	1	BRACKET AS	
M		1	**8Y-4489**	2	BOSS (M10X1.5-THD)	
	23	1	*217-5293*	1	TEE AS	
		1	**3J-1907**	1	SEAL-O-RING	
		1	**6V-1625**	1	TEE-O-RING	
	24	2	**217-8113**	1	TUBE AS	
	25	2	**221-2831**	1	TUBE AS	
I	26	1	**221-2989**	1	HOSE AS	
	27	1	**228-7868**	1	HARNESS AS-SOLENOID (LIFT CYLINDER)	
		1	**9X-3401**	2	PIN-CONNECTOR (16-GA TO 18-GA)	
		1	**155-2260**	1	KIT-CONNECTING PLUG (3-PIN)	
					(INCLUDES PLUG AS, WEDGE & INTERFACE SEAL)	
		1	**3E-5519**	1	PLUG AS-CONNECTOR (5-PIN)	
		1	**8T-8737**	1	PLUG-SEAL	
		1	**102-8802**	1	KIT-RECEPTACLE (2-PIN)	
					(INCLUDES RECEPTACLE AS & WEDGE)	
		1	**9X-3402**	3	SOCKET-CONNECTOR (16-GA TO 18-GA)	
		1	**3S-2093**	5	STRAP-CABLE	
		1	**2L-8081**	1	TERMINAL-RING (14-GA TO 16-GA, 1/2-IN SCREW)	
		1	**9X-1056**	4	TERMINAL-RECEPTACLE (14-GA TO 16-GA)	
	28	1	**229-1537**	1	SWITCH AS-PRESSURE (PARKING BRAKE)	
		1	**102-8803**	1	KIT-RECEPTACLE (3-PIN)	
					(INCLUDES RECEPTACLE AS & WEDGE)	
		1	**8T-8729**	3	PIN-CONNECTOR (16-GA TO 18-GA)	
E		1	**9X-1813**		SLEEVE (15-CM)	
	29	2	**233-6601**	1	BRACKET AS	
	30	2	**233-6708**	1	BRACKET AS	
					(EACH BRACKET AS INCLUDES)	

HYDRAULIC SYSTEM

290-6474 LINES GP-LIFT CYLINDER *(contd.)* i04157297

NOTE	REF NO	GRAPHIC REF	PART NUMBER	QTY	PART NAME 1 2 3 4 5 6 (PRODUCT LEVEL)	SEE PAGE
M		2	**8T-3490**	1	NUT-WELD (M10X1.5-THD)	
I	31	1	**261-3163**	1	HOSE AS	
M	32	2	**116-6952**	4	BOLT (M4X0.7X10-MM)	
	33	1	*148-8321*	2	CONNECTOR AS	
					(EACH INCLUDES)	
		1	**3J-1907**	1	SEAL-O-RING	
		1	**6V-8397**	1	SEAL-O-RING	
		1	**8C-0564**	1	CONNECTOR	
	34	1	*148-8327*	2	CONNECTOR AS	
					(EACH INCLUDES)	
		1	**3D-2824**	1	SEAL-O-RING	
		1	**6V-8637**	1	CONNECTOR	
		1	**6V-9746**	1	SEAL-O-RING	
	35	1	*148-8335*	2	CONNECTOR AS	
					(EACH INCLUDES)	
		1	**5K-9090**	1	SEAL-O-RING	
		1	**6V-8635**	1	CONNECTOR	
		1	**7M-8485**	1	SEAL-O-RING	
	36	1	*148-8336*	2	CONNECTOR AS	
					(EACH INCLUDES)	
		1	**3J-1907**	1	SEAL-O-RING	
		1	**6V-8397**	1	SEAL-O-RING	
		1	**6V-8636**	1	CONNECTOR	
	37	1	*148-8410*	2	PLUG AS	
					(EACH INCLUDES)	
		1	**2M-9780**	1	SEAL-O-RING	
		1	**9S-4190**	1	PLUG-O-RING	
	38	2	*150-4043*	1	CONNECTOR AS	
		2	**3J-1907**	1	SEAL-O-RING	
		2	**6V-8398**	1	SEAL-O-RING	
		2	**6V-9873**	1	CONNECTOR	
	39	1,2	**1P-3703**	2	SEAL-RECTANGULAR	
	40	1	**3K-0360**	1	SEAL-O-RING	
	41	2	**4B-4274**	4	WASHER (5.5X13X1.2-MM THK)	
	42	1	**4D-7735**	1	CLIP	
	43	1,2	**4J-5267**	2	SEAL-O-RING	
M	44	1	**5C-9553**	1	BOLT (M6X1X16-MM)	
	45	1,2	**5K-9090**	4	SEAL-O-RING	
	46	2	**5P-7465**	4	CLIP (TAB)	
	47	2	**5P-7468**	2	CLIP (SLOT)	
	48	2	**5P-7469**	2	CLIP (TAB)	
	49	2	**5P-8444**	2	GROMMET	
	50	1,2	**5R-0939**	2	CLIP (TAB)	
	51	1,2	**5R-0940**	2	CLIP (SLOT)	
	52	2	**6V-7359**	4	GROMMET	
	53	2	**6V-8398**	1	SEAL-O-RING	
	54	1	**6V-9172**	2	NUT (1-7/16-12-THD)	
	55	1,2	**6V-9746**	6	SEAL-O-RING	
	56	1,2	**7X-7729**	10	WASHER (11X25X3-MM THK)	
	57	1,2	**8C-3205**	4	FLANGE-HALF	
	58	1,2	**8T-4121**	21	WASHER-HARD (11X21X2.5-MM THK)	
M	59	2	**8T-4133**	2	NUT (M10X1.5-THD)	
M	60	1	**8T-4136**	3	BOLT (M10X1.5X25-MM)	
M	61	1,2	**8T-4137**	2	BOLT (M10X1.5X20-MM)	
M	62	1,2	**8T-4182**	6	BOLT (M10X1.5X45-MM)	
M	63	1,2	**8T-4186**	8	BOLT (M10X1.5X40-MM)	
M	64	2	**8T-4195**	10	BOLT (M10X1.5X30-MM)	
	65	2	**8T-4646**	4	CLIP (SLOT)	
M	66	1,2	**8T-5005**	4	BOLT (M10X1.5X70-MM)	
	67	1	**9X-8256**	1	WASHER (6.6X12X2-MM THK)	

E-ORDER BY THE CENTIMETER
I-REFER TO HYDRAULIC INFORMATION SYSTEM
M-METRIC PART
Y-SEPARATE ILLUSTRATION

290-6474 **LINES GP-LIFT CYLINDER** *(contd.)* **i04157297**

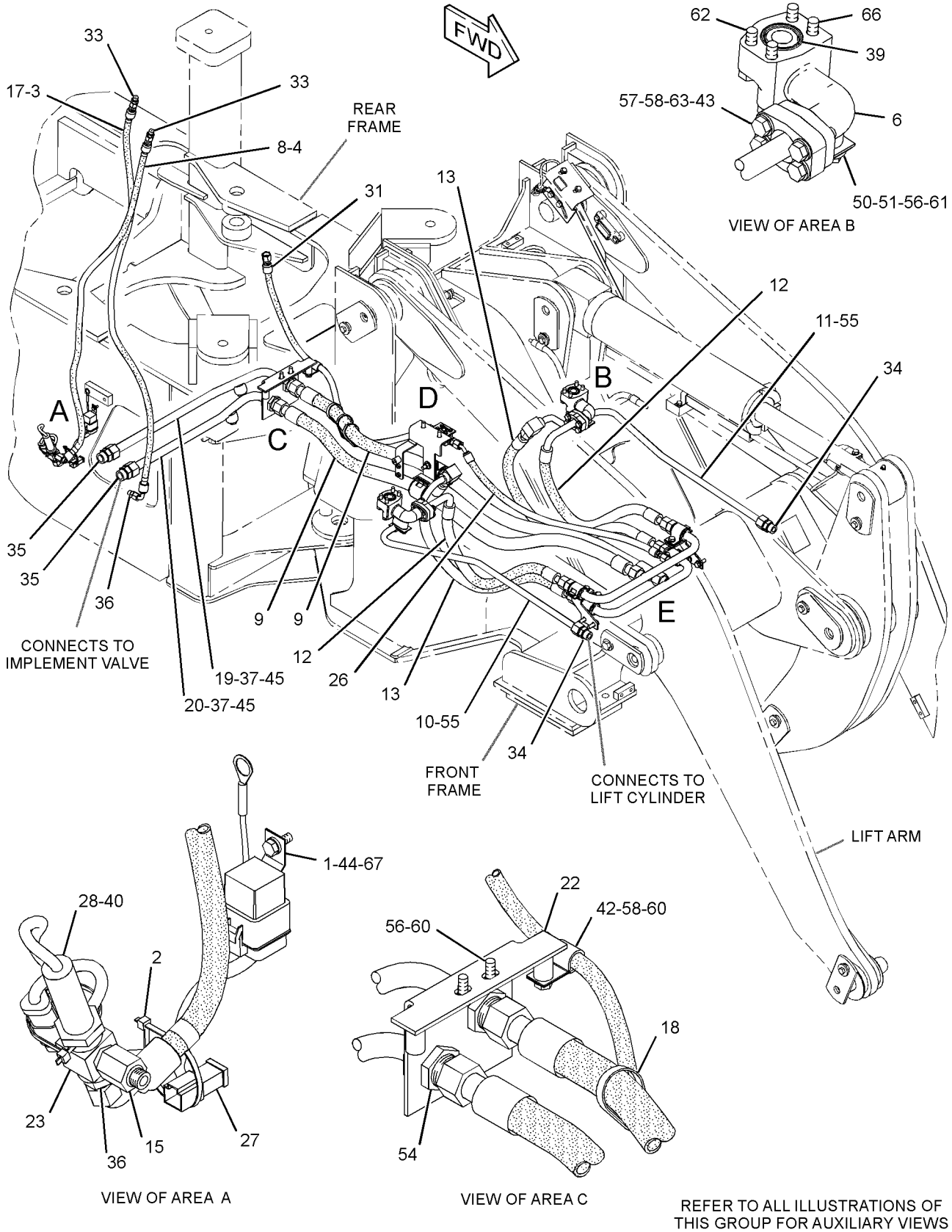

GRAPHIC #1

g02280640

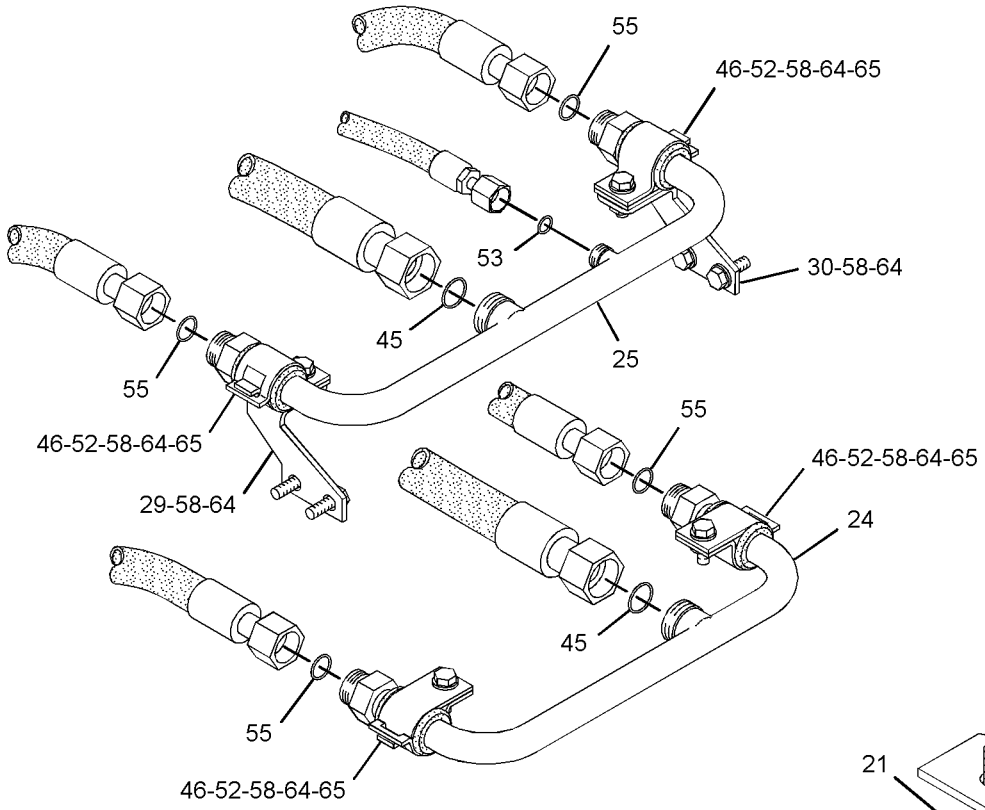

VIEW OF AREA E
(EXPLODED)

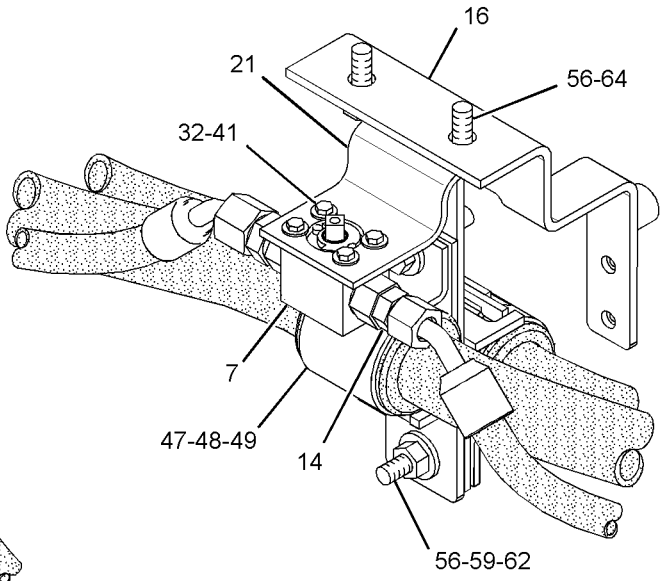

VIEW OF AREA F 180°

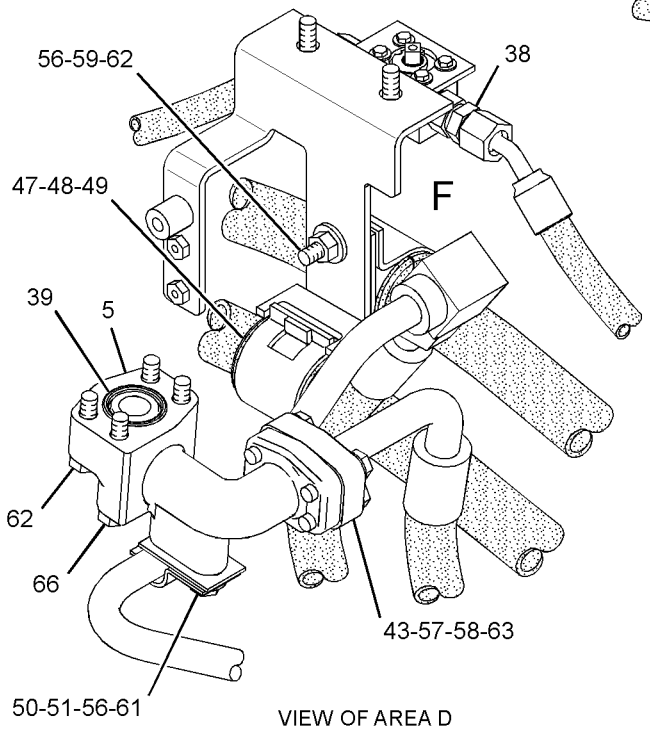

VIEW OF AREA D

GRAPHIC #2 **<END>** g02280641

HYDRAULIC SYSTEM

290-6475 LINES GP-LIFT CYLINDER

S/N: RRS1-UP

PART OF 289-8833 HYDRAULIC AR

SMCS-5057, 5102 **i04024683**

NOTE	REF NO	GRAPHIC REF	PART NUMBER	QTY	PART NAME 1 2 3 4 5 6 (PRODUCT LEVEL)	SEE PAGE
	1	1	**5P-0599**	2	CLAMP-BAND	
	2	1	**7K-3971**	2	TAG-IDENTIFICATION (LETTER, NUMBER L1)	
	3	1	**7K-3972**	2	TAG-IDENTIFICATION (LETTER, NUMBER L2)	
	4	1	**9R-9572**	2	BLOCK	
	5	2	**091-0081**	2	SPACER (10.5X20X10-MM THK)	
Y	6	2	**112-1817**	1	VALVE GP-MANUAL (HYDRAULIC LOCKOUT)	435
I	7	1	**132-2367**	2	HOSE AS	
I	8	1	**148-7783**	1	HOSE AS	
	9	2	*164-5545*	1	CONNECTOR AS	
		2	**3J-1907**	1	SEAL-O-RING	
		2	**6V-8397**	1	SEAL-O-RING	
		2	**3E-2335**	1	CONNECTOR	
	10	2	**185-3596**	1	BRACKET AS	
I	11	1	**200-3044**	1	HOSE AS	
	12	1	**204-2281**	3	STRAP-CABLE	
	13	1	**211-1058**	1	TUBE AS	
	14	1	**211-4230**	1	TUBE AS	
	15	2	**212-8136**	1	BRACKET	
	16	1	**213-8783**	1	BRACKET AS	
M		1	**8Y-4489**	2	BOSS (M10X1.5-THD)	
I	17	1	**261-3163**	1	HOSE AS	
	18	2	**221-0852**	1	TUBE AS	
I	19	1	**221-3234**	1	HOSE AS	
I	20	1	**252-2376**	1	HOSE AS	
CI	21	1	**337-8996**	1	HOSE AS	
CI	22	1	**337-8997**	2	HOSE AS	
M	23	2	**116-6952**	4	BOLT (M4X0.7X10-MM)	
	24	1	*148-8321*	2	CONNECTOR AS	
					(EACH INCLUDES)	
		1	**3J-1907**	1	SEAL-O-RING	
		1	**6V-8397**	1	SEAL-O-RING	
		1	**8C-0564**	1	CONNECTOR	
	25	1	*148-8327*	2	CONNECTOR AS	
					(EACH INCLUDES)	
		1	**3D-2824**	1	SEAL-O-RING	
		1	**6V-8637**	1	CONNECTOR	
		1	**6V-9746**	1	SEAL-O-RING	
	26	1	*148-8335*	2	CONNECTOR AS	
					(EACH INCLUDES)	
		1	**5K-9090**	1	SEAL-O-RING	
		1	**6V-8635**	1	CONNECTOR	
		1	**7M-8485**	1	SEAL-O-RING	
	27	1	*148-8336*	2	CONNECTOR AS	
					(EACH INCLUDES)	
		1	**3J-1907**	1	SEAL-O-RING	
		1	**6V-8397**	1	SEAL-O-RING	
		1	**6V-8636**	1	CONNECTOR	
B	28	1	*148-8410*	2	PLUG AS	
					(EACH INCLUDES)	
		1	**2M-9780**	1	SEAL-O-RING	
		1	**9S-4190**	1	PLUG-O-RING	
C	29	1	*148-8437*	1	TEE AS	
		1	**5K-9090**	1	SEAL-O-RING	
		1	**6V-9746**	2	SEAL-O-RING	
		1	**8T-1012**	1	TEE-FACE SEAL	
	30	2	*150-4043*	1	CONNECTOR AS	

290-6475 **LINES GP-LIFT CYLINDER** *(contd.)* **i04024683**

NOTE	REF NO	GRAPHIC REF	PART NUMBER	QTY	PART NAME 1 2 3 4 5 6 (PRODUCT LEVEL)	SEE PAGE
		2	**3J-1907**	1	SEAL-O-RING	
		2	**6V-8398**	1	SEAL-O-RING	
		2	**6V-9873**	1	CONNECTOR	
	31	2	**4B-4274**	4	WASHER (5.5X13X1.2-MM THK)	
	32	1,2	**4J-5267**	2	SEAL-O-RING	
	33	1	**4D-7735**	1	CLIP	
C	34	1,2	**5K-9090**	3	SEAL-O-RING	
	35	2	**5P-7468**	2	CLIP (SLOT)	
	36	2	**5P-7469**	2	CLIP (TAB)	
	37	2	**5P-8444**	2	GROMMET	
C	38	2	**6V-7359**	2	GROMMET	
	39	2	**6V-8398**	1	SEAL-O-RING	
	40	1	**6V-9172**	2	NUT (1-7/16-12-THD)	
C	41	2	**6V-9746**	2	SEAL-O-RING	
C	42	1,2	**7X-7729**	8	WASHER (11X25X3-MM THK)	
	43	1,2	**8C-3205**	4	FLANGE-HALF	
C	44	2	**8T-1899**	2	CLIP (SLOT)	
C	45	2	**8T-1900**	2	CLIP (TAB)	
C	46	1,2	**8T-4121**	11	WASHER-HARD (11X21X2.5-MM THK)	
CM	47	2	**8T-4133**	2	NUT (M10X1.5-THD)	
CM	48	1	**8T-4136**	3	BOLT (M10X1.5X25-MM)	
M	49	2	**8T-4182**	2	BOLT (M10X1.5X45-MM)	
CM	50	2	**8T-4195**	2	BOLT (M10X1.5X30-MM)	
M	51	1,2	**8T-4196**	10	BOLT (M10X1.5X35-MM)	

B-USE AS REQUIRED
C-CHANGE FROM PREVIOUS TYPE
I-REFER TO HYDRAULIC INFORMATION SYSTEM
M-METRIC PART
Y-SEPARATE ILLUSTRATION

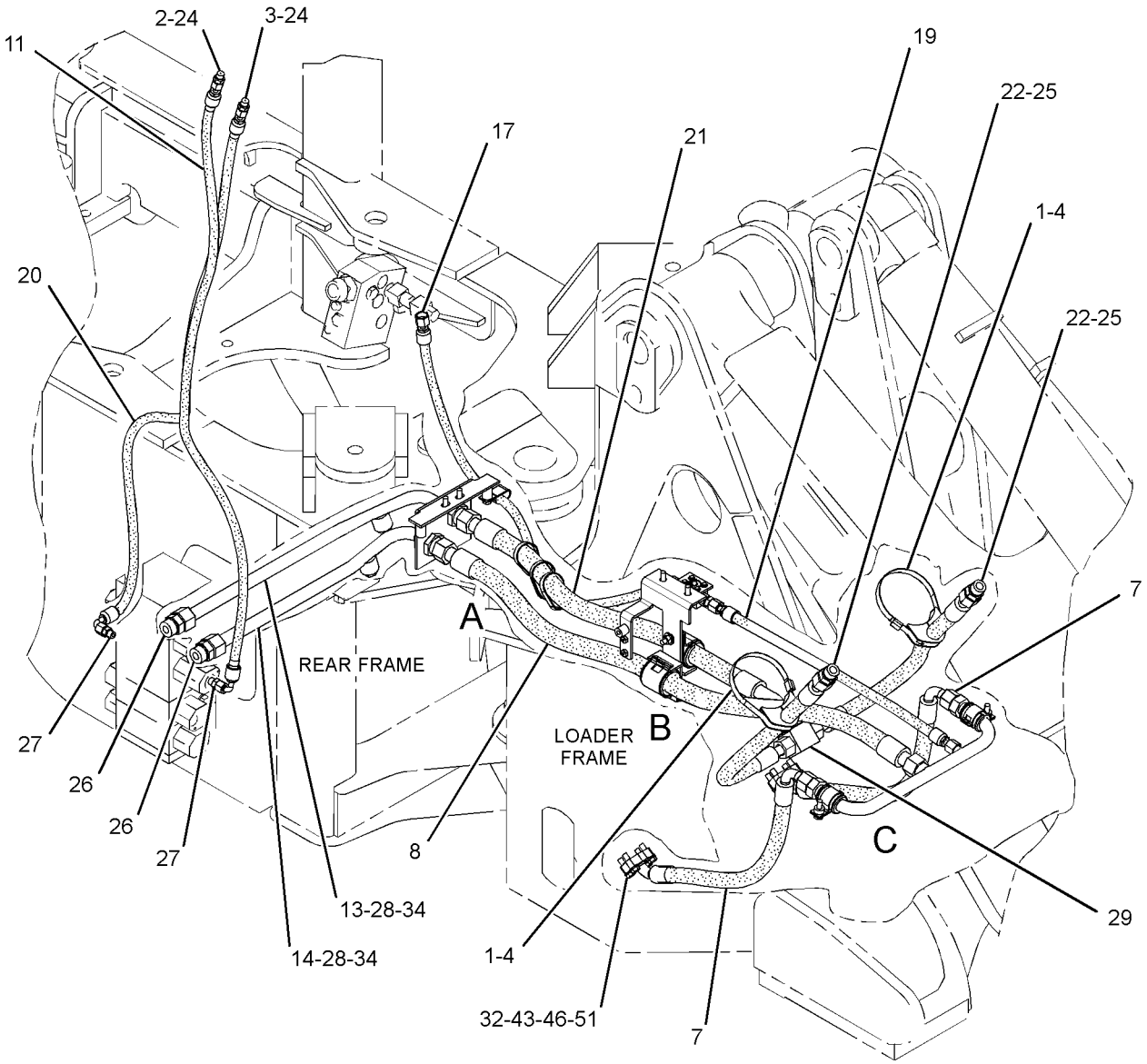

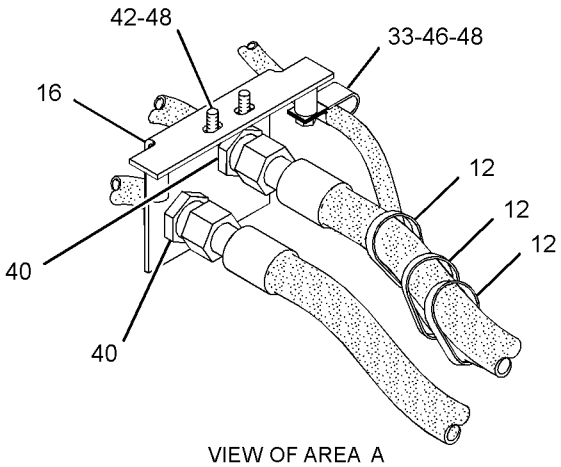

VIEW OF AREA A



REFER TO ALL ILLUSTRATIONS OF THIS GROUP FOR AUXILIARY VIEWS

GRAPHIC #1

g01993477

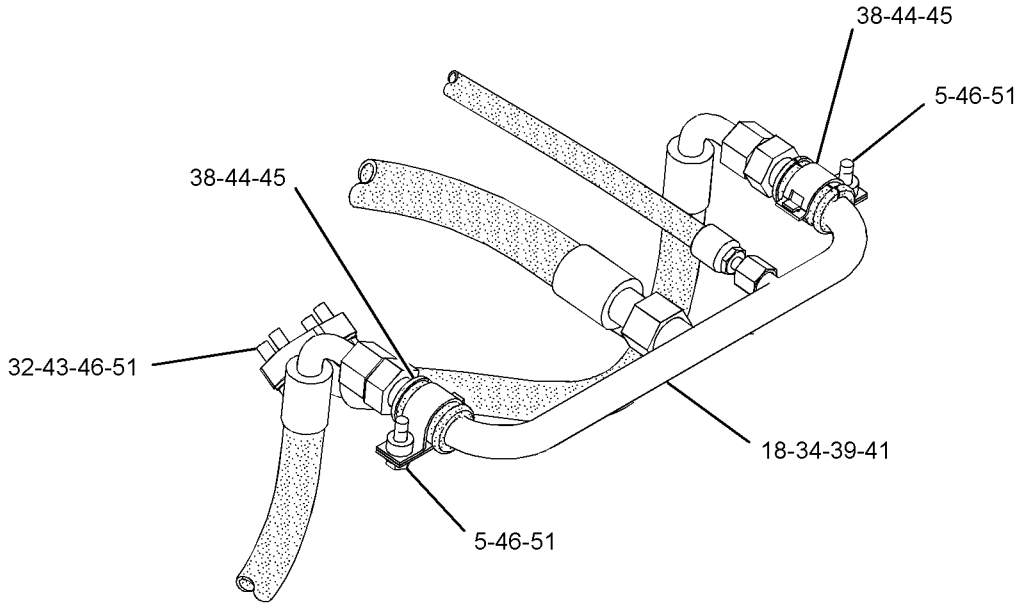

VIEW OF AREA C

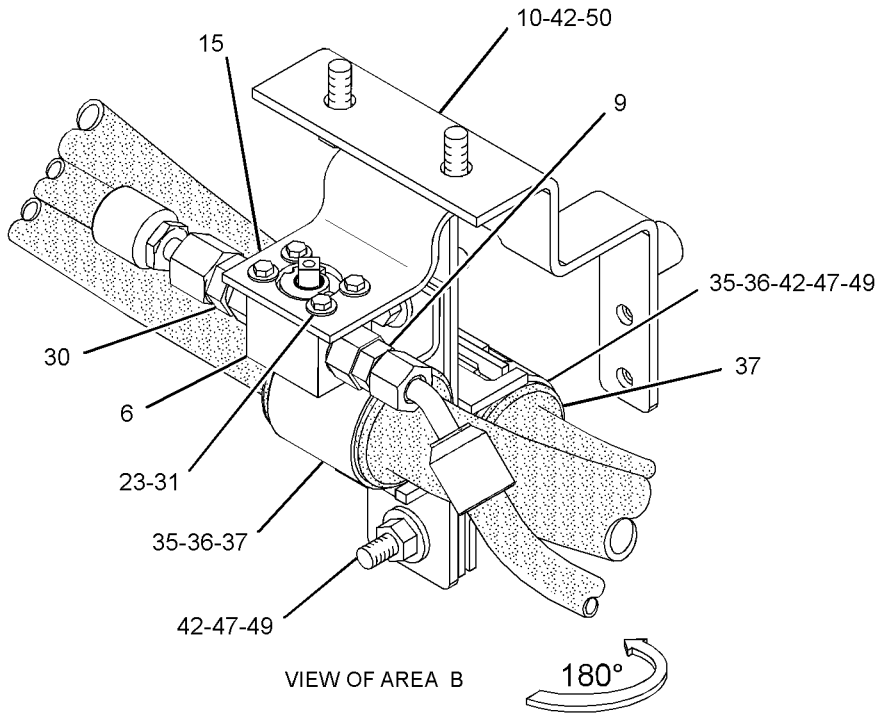

VIEW OF AREA B

GRAPHIC #2 **<END>** g01993476

HYDRAULIC SYSTEM

289-8796 LINES GP-PILOT

S/N: JRL1-UP; RRS1-UP

PART OF 289-8803, 289-8833 HYDRAULIC AR

SMCS-5057, 5059 **i03511200**

NOTE	REF NO	GRAPHIC REF	PART NUMBER	QTY	PART NAME 1 2 3 4 5 6 (PRODUCT LEVEL)	SEE PAGE
	1	2	**6V-0852**	2	CAP-DUST	
I	2	1	**128-2756**	1	HOSE AS	
	3	1	**156-4130**	2	CLIP-TUBE	
	4	2	*164-5586*	1	TEE AS	
		2	**6V-8398**	1	SEAL-O-RING	
		2	**7X-0871**	1	TEE	
	5	2	*165-2273*	1	VALVE GP-SHUTOFF (RETURN MANIFOLD)	
		2	**3K-0360**	1	SEAL-O-RING	
		2	**6V-7238**	1	VALVE-SHUTOFF	
Y	6	2	**185-5209**	1	VALVE GP-PRESSURE REDUCING (PILOT OIL)	446
I	7	1	**214-7094**	1	HOSE AS	
	8	2	**219-7845**	1	PLATE AS	
		2	**4H-4063**	1	PIN	
		2	**009-4499**	1	PIN-ALIGNMENT	
M		2	**6V-9632**	1	NUT-WELD (M6X1-THD)	
M		2	**8T-3490**	1	NUT-WELD (M10X1.5-THD)	
Y	9	1	*243-4398*	1	ACCUMULATOR GP-PILOT OIL (CHARGED)	307
I	10	1	**252-2374**	1	HOSE AS	
I	11	1	**252-2375**	1	HOSE AS	
I	12	1	**265-2167**	1	HOSE AS	
I	13	1	**303-1251**	1	HOSE AS	
I	14	1	**303-3126**	1	HOSE AS	
	15	2	*148-8307*	1	ADAPTER AS	
		2	**3J-1907**	1	SEAL-O-RING	
		2	**5P-8874**	1	ADAPTER	
	16	2	*148-8318*	1	CONNECTOR AS	
		2	**3K-0360**	1	SEAL-O-RING	
		2	**6V-8397**	1	SEAL-O-RING	
		2	**6V-8634**	1	CONNECTOR	
	17	1	*148-8336*	1	CONNECTOR AS	
		1	**3J-1907**	1	SEAL-O-RING	
		1	**6V-8397**	1	SEAL-O-RING	
		1	**6V-8636**	1	CONNECTOR	
	18	1	*148-8353*	1	ELBOW AS	
		1	**3J-1907**	1	SEAL-O-RING	
		1	**6V-8397**	1	SEAL-O-RING	
		1	**6V-9001**	1	ELBOW	
	19	1	*148-8363*	1	ELBOW AS	
		1	**3K-0360**	1	SEAL-O-RING	
		1	**6V-8397**	1	SEAL-O-RING	
		1	**6V-9876**	1	ELBOW	
	20	2	**148-8367**	1	ELBOW AS	
		2	**6V-8397**	1	SEAL-O-RING	
		2	**6V-9850**	1	ELBOW	
	21	2	*148-8378*	2	ELBOW AS	
					(EACH INCLUDES)	
		2	**3J-1907**	1	SEAL-O-RING	
		2	**6V-8397**	1	SEAL-O-RING	
		2	**6V-8724**	1	ELBOW	
	22	2	*148-8433*	3	TEE AS	
					(EACH INCLUDES)	
		2	**6V-8397**	2	SEAL-O-RING	
		2	**6V-9836**	1	TEE-SWIVEL	
	23	2	*148-8436*	1	TEE AS	
		2	**3K-0360**	1	SEAL-O-RING	
		2	**6V-8398**	2	SEAL-O-RING	

289-8796 **LINES GP-PILOT** *(contd.)* **i03511200**

NOTE	REF NO	GRAPHIC REF	PART NUMBER	QTY	PART NAME 1 2 3 4 5 6 (PRODUCT LEVEL)	SEE PAGE
		2	**6V-8775**	1	TEE-FACE SEAL	
	24	2	*148-8444*	1	TEE AS-SWIVEL	
		2	**6V-8398**	2	SEAL-O-RING	
		2	**6V-9837**	1	TEE-SWIVEL	
	25	1	*150-4043*	1	CONNECTOR AS	
		1	**3J-1907**	1	SEAL-O-RING	
		1	**6V-8398**	1	SEAL-O-RING	
		1	**6V-9873**	1	CONNECTOR	
	26	2	*164-5567*	2	COUPLER AS-QUICK DISCONNECT (MALE)	
					(EACH INCLUDES)	
		2	**3J-1907**	1	SEAL-O-RING	
		2	**6V-3965**	1	FITTING (QUICK DISCONNECT)	
	27	1,2	**7X-7729**	3	WASHER (11X25X3-MM THK)	
	28	1,2	**8T-4121**	3	WASHER-HARD (11X21X2.5-MM THK)	
M	29	1	**8T-4133**	1	NUT (M10X1.5-THD)	
M	30	2	**8T-4136**	1	BOLT (M10X1.5X25-MM)	
M	31	2	**8T-4137**	1	BOLT (M10X1.5X20-MM)	
M	32	1	**8T-4172**	1	BOLT (M10X1.5X80-MM)	
M	33	1	**8T-4195**	2	BOLT (M10X1.5X30-MM)	
B	34	2	**6V-9829**	2	CAP AS	

B-USE AS REQUIRED
I-REFER TO HYDRAULIC INFORMATION SYSTEM
M-METRIC PART
Y-SEPARATE ILLUSTRATION

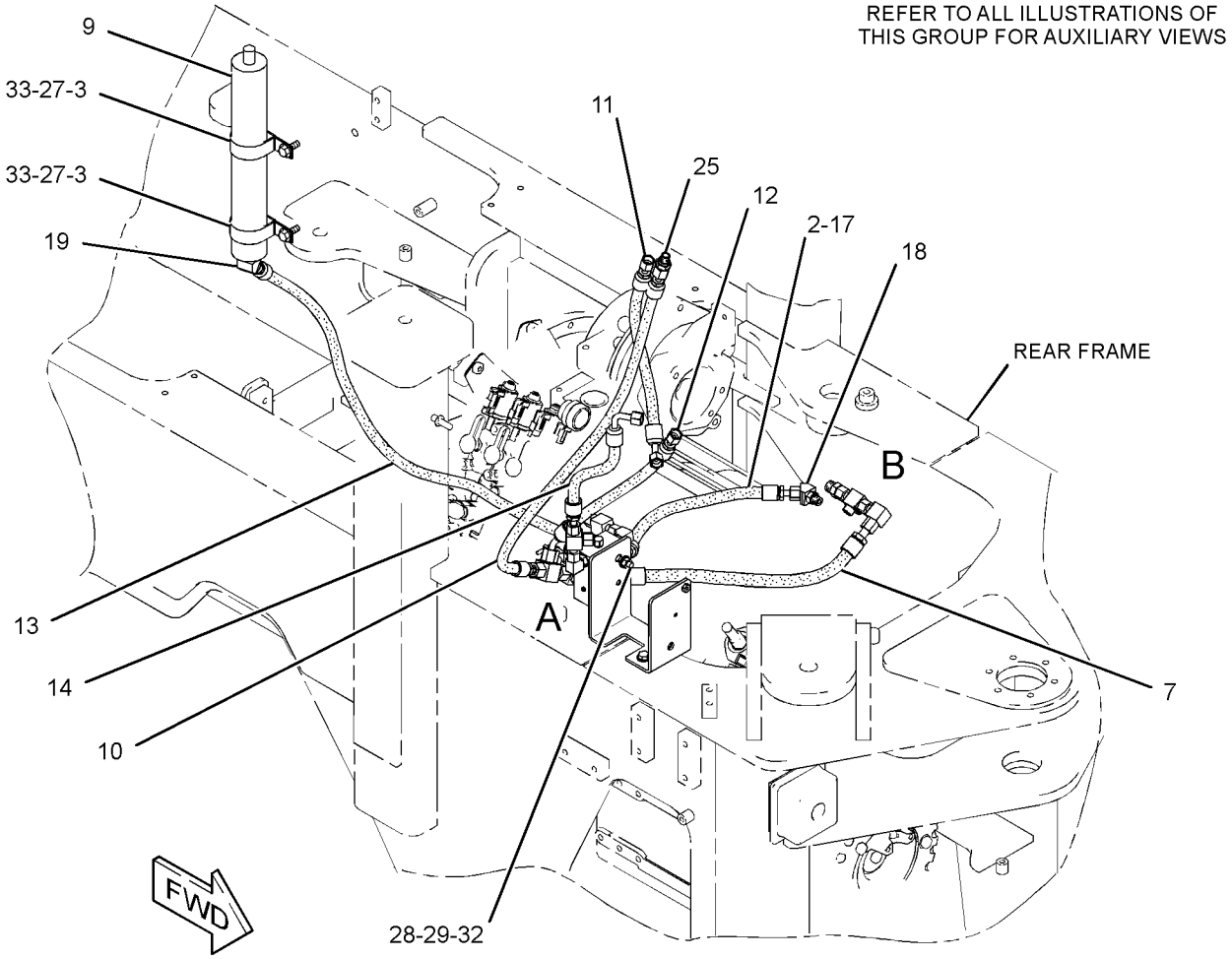

GRAPHIC #1 g01404188

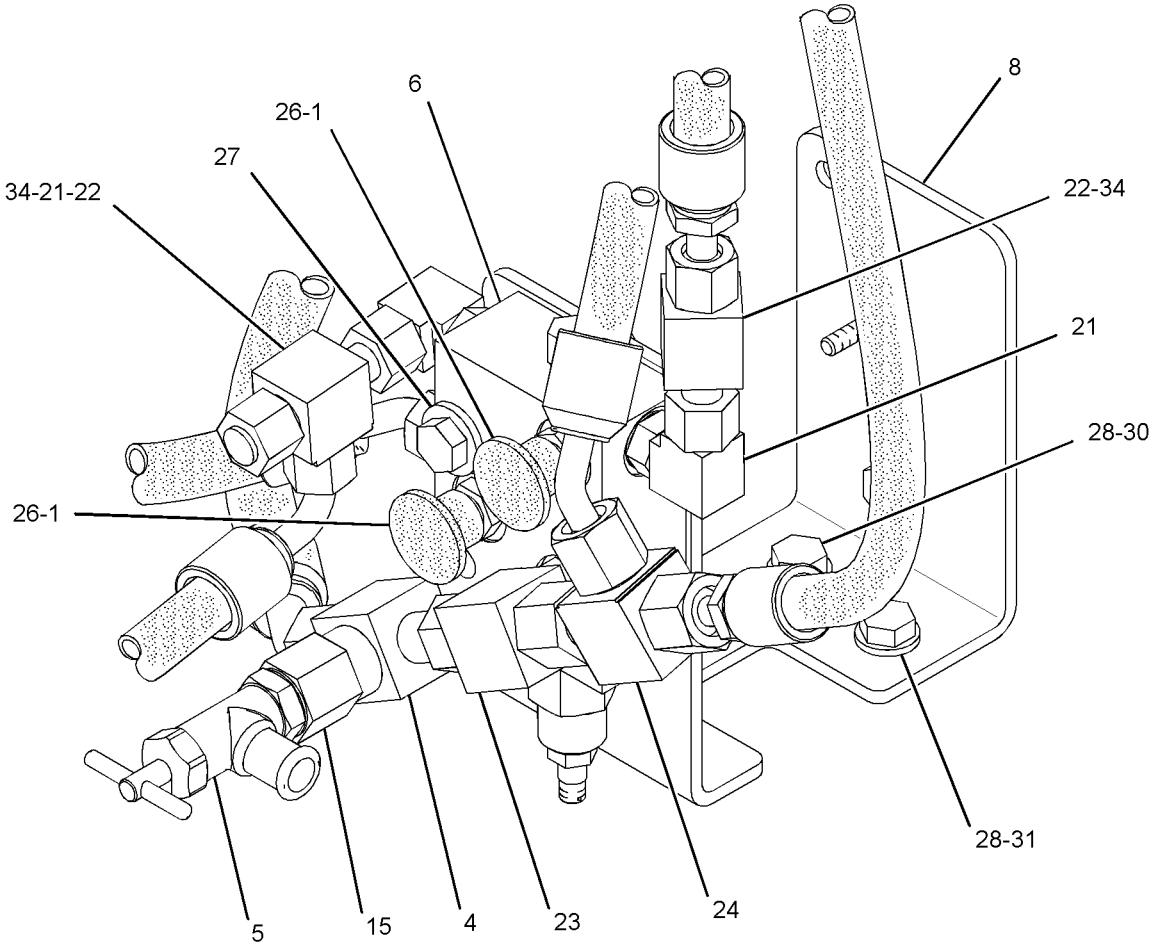

VIEW OF AREA A 90°

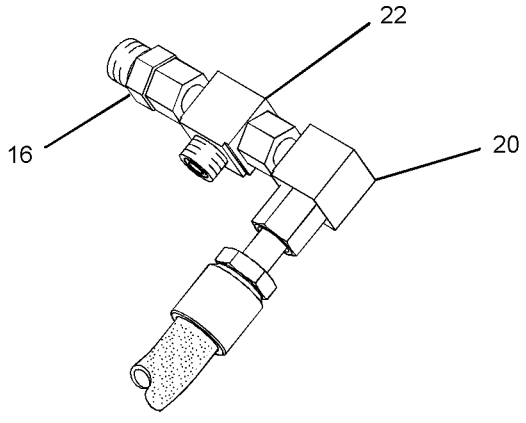

VIEW OF AREA B

GRAPHIC #2 **<END>** g01404193

HYDRAULIC SYSTEM

290-7183 LINES GP-RIDE CONTROL

S/N: JRL1-UP
PART OF 289-8994 CONTROL AR-RIDE
AN ATTACHMENT

SMCS-5004, 5057, 5077 **i03039638**

NOTE	REF NO	GRAPHIC REF	PART NUMBER	QTY	PART NAME 1 2 3 4 5 6 (PRODUCT LEVEL)	SEE PAGE
M	1	1	**101-3129**	1	STUD (M10X1.5-THD)	
I	2	1	**103-1243**	2	HOSE AS	
I	3	1	**149-0197**	1	HOSE AS	
	4	1	*165-6365*	1	FITTING AS	
		1	**3J-1907**	1	SEAL-O-RING	
		1	**7W-7381**	1	FITTING-OUTLET	
	5	1	*168-1968*	1	TEE AS	
		1	**3J-1907**	1	SEAL-O-RING	
		1	**6V-8397**	1	SEAL-O-RING	
		1	**126-6872**	1	TEE	
	6	1	**200-6345**	3	MOUNT (DUAL SWIVEL)	
	7	1	**204-2281**	8	STRAP-CABLE	
B	8	1	**224-7830**	1	FILM-WARNING (HIGH PRESSURE, READ OMM, U.S.)	
I	9	1	**250-6792**	1	HOSE AS	
I	10	1	**293-2458**	1	HOSE AS	
	11	1	**294-2858**	1	PLATE AS	
	12	1	*309-5127*	1	ELBOW AS	
		1	**6V-8397**	1	SEAL-O-RING	
		1	**152-3411**	1	ELBOW	
	13	1	*148-8315*	3	CONNECTOR AS	
					(EACH INCLUDES)	
		1	**2M-9780**	1	SEAL-O-RING	
		1	**6V-8642**	1	CONNECTOR	
		1	**7J-9108**	1	SEAL-O-RING	
	14	1	*148-8336*	1	CONNECTOR AS	
		1	**3J-1907**	1	SEAL-O-RING	
		1	**6V-8397**	1	SEAL-O-RING	
		1	**6V-8636**	1	CONNECTOR	
	15	1	*148-8367*	1	ELBOW AS	
		1	**6V-8397**	1	SEAL-O-RING	
		1	**6V-9850**	1	ELBOW	
	16	1	*148-8390*	2	ELBOW AS	
					(EACH INCLUDES)	
		1	**2M-9780**	1	SEAL-O-RING	
		1	**6V-8626**	1	ELBOW	
		1	**7J-9108**	1	SEAL-O-RING	
	17	1	*148-8393*	3	ELBOW AS	
					(EACH INCLUDES)	
		1	**6V-9852**	1	ELBOW	
		1	**7J-9108**	1	SEAL-O-RING	
	18	1	*198-0143*	1	ELBOW AS	
		1	**7J-9108**	1	SEAL-O-RING	
		1	**157-2348**	1	ELBOW	
B	19	1	**224-0672**	1	FILM-WARNING (HIGH PRESSURE, READ OMM, INTL)	
M	20	1	**8T-4133**	1	NUT (M10X1.5-THD)	
	21	1	**6V-1889**	2	CLIP	
	22	1	**7D-1649**	1	WASHER-HARD (13.5X32X5-MM THK)	
	23	1	**7S-1912**	1	CLIP	
	24	1	**7X-7729**	4	WASHER (11X25X3-MM THK)	
	25	1	**8T-4121**	2	WASHER-HARD (11X21X2.5-MM THK)	
M	26	1	**8T-4195**	4	BOLT (M10X1.5X30-MM)	

B-USE AS REQUIRED
I-REFER TO HYDRAULIC INFORMATION SYSTEM
M-METRIC PART

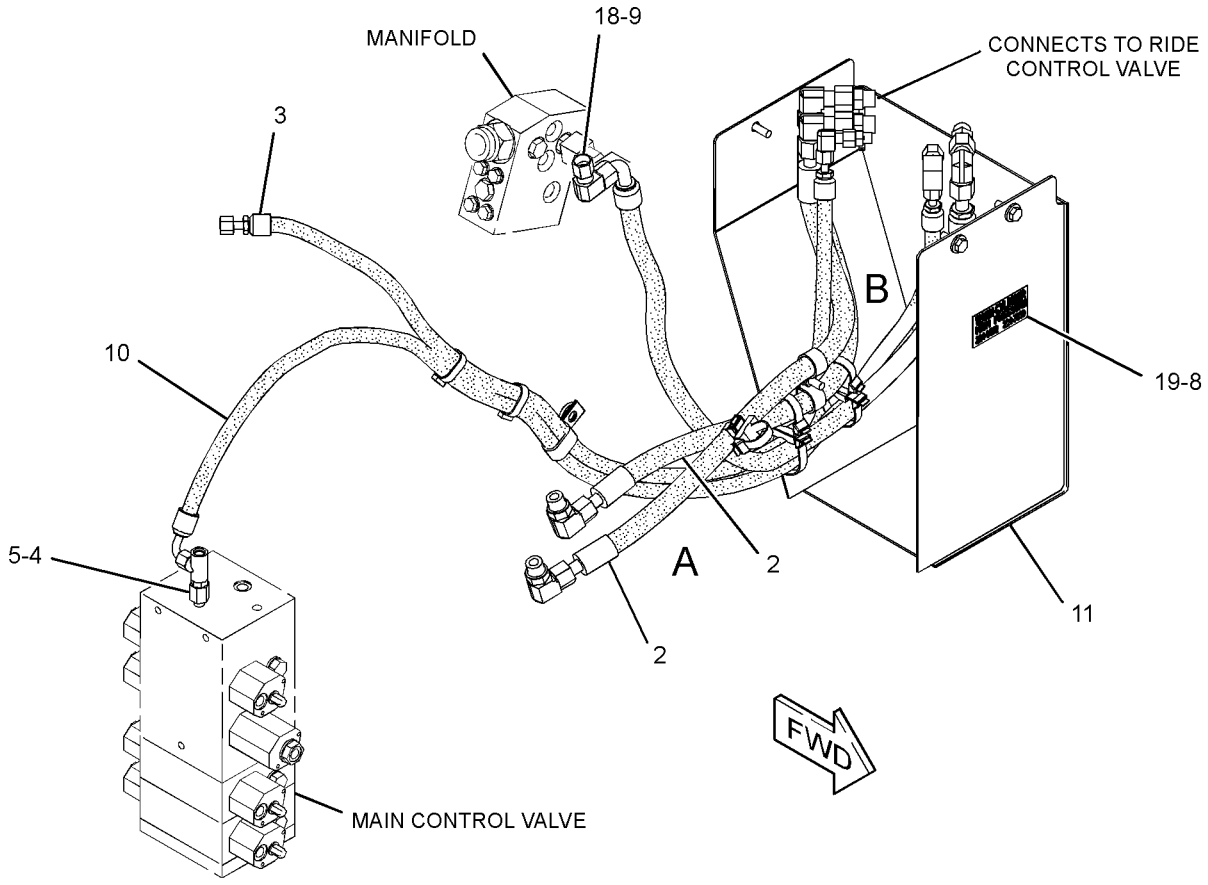

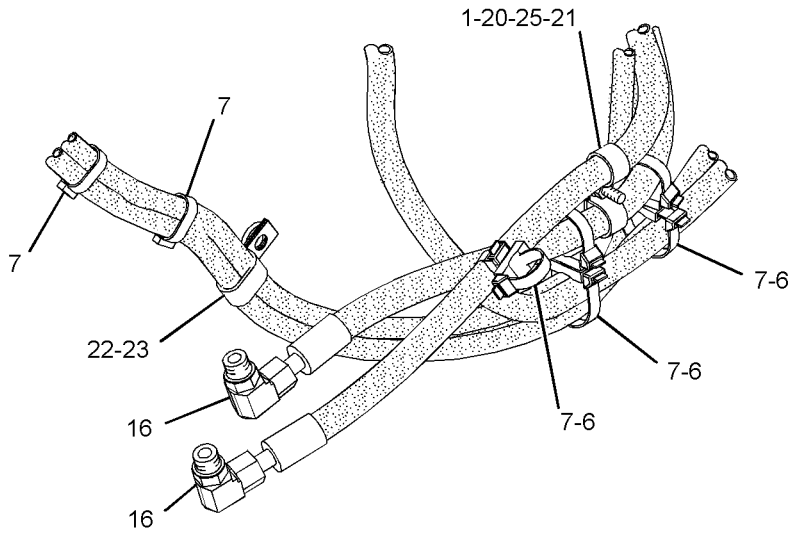

VIEW OF AREA A

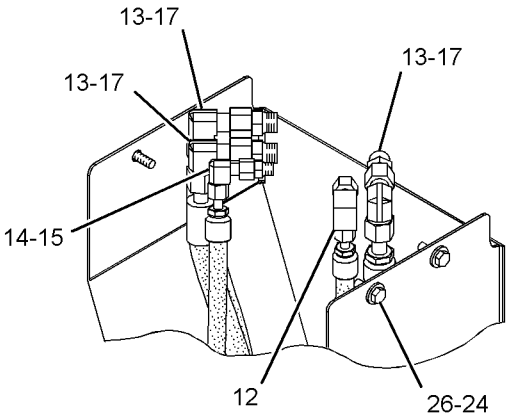

VIEW OF AREA B

GRAPHIC #1 **<END>** g01412056

HYDRAULIC SYSTEM

290-7184 LINES GP-RIDE CONTROL

S/N: RRS1-UP
PART OF 289-8995 CONTROL AR-RIDE
AN ATTACHMENT

SMCS-5004, 5057, 5077 **i03440460**

NOTE	REF NO	GRAPHIC REF	PART NUMBER	QTY	PART NAME 1 2 3 4 5 6 (PRODUCT LEVEL)	SEE PAGE
M	1	1	**101-3129**	1	STUD (M10X1.5-THD)	
I	2	1	**103-1243**	2	HOSE AS	
	3	1	**328-2973**	1	SWITCH GP-PRESSURE (RIDE CONTROL DISABLE)	
		1	**186-3735**	2	PIN-CONNECTOR (16-GA TO 18-GA)	
		1	**102-8802**	1	KIT-RECEPTACLE (2-PIN)	
					(INCLUDES RECEPTACLE AS & WEDGE)	
	4	1	*148-8424*	1	TEE AS	
		1	**6V-8397**	1	SEAL-O-RING	
		1	**8T-8902**	1	TEE	
I	5	1	**149-0197**	1	HOSE AS	
	6	1	*165-6365*	1	FITTING AS	
		1	**3J-1907**	1	SEAL-O-RING	
		1	**7W-7381**	1	FITTING-OUTLET	
	7	1	*168-1968*	1	TEE AS	
		1	**3J-1907**	1	SEAL-O-RING	
		1	**6V-8397**	1	SEAL-O-RING	
		1	**126-6872**	1	TEE	
	8	1	**200-6345**	3	MOUNT (DUAL SWIVEL)	
	9	1	**204-2281**	8	STRAP-CABLE	
	10	1	**224-7830**	1	FILM-WARNING (HIGH PRESSURE, READ OMM, U.S.)	
					—OR—	
			224-0672	1	FILM-WARNING (HIGH PRESSURE, READ OMM, INTL)	
I	11	1	**250-6792**	1	HOSE AS	
I	12	1	**293-2458**	1	HOSE AS	
	13	1	**294-2858**	1	PLATE AS	
	14	1	*309-5127*	1	ELBOW AS	
		1	**6V-8397**	1	SEAL-O-RING	
		1	**152-3411**	1	ELBOW	
	15	1	*148-8315*	3	CONNECTOR AS	
					(EACH INCLUDES)	
		1	**2M-9780**	1	SEAL-O-RING	
		1	**6V-8642**	1	CONNECTOR	
		1	**7J-9108**	1	SEAL-O-RING	
	16	1	*148-8336*	1	CONNECTOR AS	
		1	**3J-1907**	1	SEAL-O-RING	
		1	**6V-8397**	1	SEAL-O-RING	
		1	**6V-8636**	1	CONNECTOR	
	17	1	*148-8367*	2	ELBOW AS	
					(EACH INCLUDES)	
		1	**6V-8397**	1	SEAL-O-RING	
		1	**6V-9850**	1	ELBOW	
	18	1	*148-8390*	2	ELBOW AS	
					(EACH INCLUDES)	
		1	**2M-9780**	1	SEAL-O-RING	
		1	**6V-8626**	1	ELBOW	
		1	**7J-9108**	1	SEAL-O-RING	
	19	1	*148-8393*	3	ELBOW AS	
					(EACH INCLUDES)	
		1	**6V-9852**	1	ELBOW	
		1	**7J-9108**	1	SEAL-O-RING	
	20	1	*198-0143*	1	ELBOW AS	
		1	**7J-9108**	1	SEAL-O-RING	
		1	**157-2348**	1	ELBOW	
	22	1	**3J-1907**	1	SEAL-O-RING	
M	23	1	**8T-4133**	1	NUT (M10X1.5-THD)	

290-7184 **LINES GP-RIDE CONTROL** *(contd.)* **i03440460**

NOTE	REF NO	GRAPHIC REF	PART NUMBER	QTY	PART NAME 1 2 3 4 5 6 (PRODUCT LEVEL)	SEE PAGE
	24	1	**6V-1889**	2	CLIP	
	25	1	**7D-1649**	1	WASHER-HARD (13.5X32X5-MM THK)	
	26	1	**7S-1912**	1	CLIP	
	27	1	**7X-7729**	4	WASHER (11X25X3-MM THK)	
	28	1	**8T-4121**	2	WASHER-HARD (11X21X2.5-MM THK)	
M	29	1	**8T-4195**	4	BOLT (M10X1.5X30-MM)	

I-REFER TO HYDRAULIC INFORMATION SYSTEM
M-METRIC PART

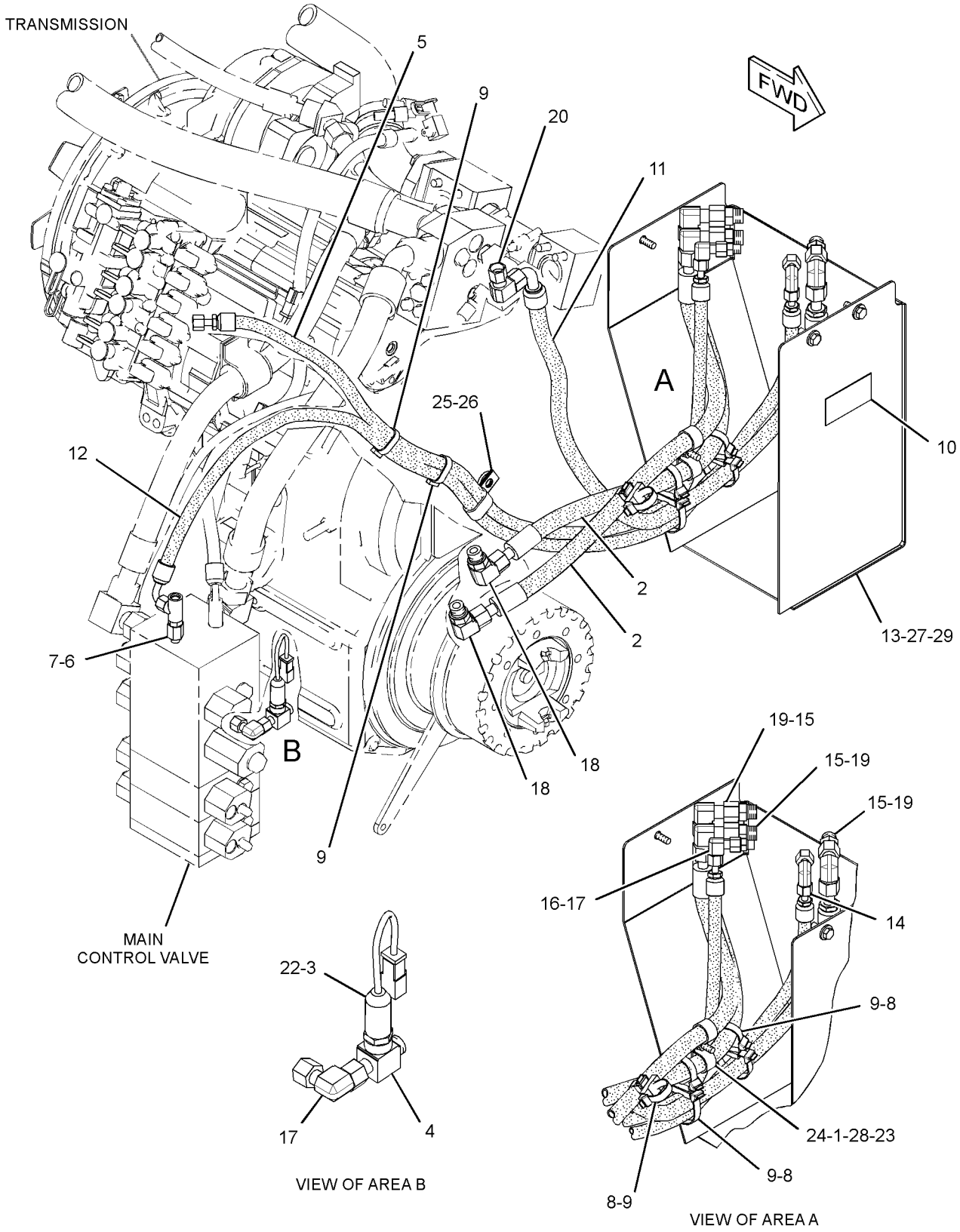

GRAPHIC #1 **<END>** g01443285

HYDRAULIC SYSTEM

212-3354 LINES GP-TILT CYLINDER

S/N: JRL1-UP

PART OF 289-8803 HYDRAULIC AR

SMCS-5057, 5104 **i03757516**

NOTE	REF NO	GRAPHIC REF	PART NUMBER	QTY	PART NAME 1 2 3 4 5 6 (PRODUCT LEVEL)	SEE PAGE
	1	1	**6V-0852**	1	CAP-DUST	
M	2	1	**8T-4136**	15	BOLT (M10X1.5X25-MM)	
	3	1	**8T-4121**	5	WASHER-HARD (11X21X2.5-MM THK)	
	4	1	**132-2393**	1	BRACKET	
	5	1	**132-2398**	1	BRACKET	
	6	1	**148-7761**	1	BRACKET AS	
I	7	1	**148-7762**	2	HOSE AS	
I	8	1	**148-7763**	2	HOSE AS	
	9	1	**148-7765**	1	PLATE	
	10	1	**148-7769**	1	TUBE AS	
C	11	1	*164-5567*	1	COUPLER AS-QUICK DISCONNECT (MALE)	
		1	**6V-3965**	1	FITTING (QUICK DISCONNECT)	
		1	**214-7568**	1	SEAL-O-RING	
	12	1	**184-7200**	1	GUARD-HOSE	
	13	1	**194-2917**	1	PLATE AS	
	14	1	**194-2918**	1	PLATE AS	
	15	1	**210-5545**	1	TUBE AS	
	16	1	**212-2238**	1	TUBE AS	
	17	1	**212-2239**	1	TUBE AS	
I	18	1	**213-5003**	1	HOSE AS	
I	19	1	**213-5004**	1	HOSE AS	
C	20	1	**221-3206**	1	TUBE AS	
	21	1	*148-8335*	2	CONNECTOR AS	
					(EACH INCLUDES)	
		1	**6V-8635**	1	CONNECTOR	
		1	**5K-9090**	1	SEAL-O-RING	
		1	**7M-8485**	1	SEAL-O-RING	
	22	1	*148-8336*	4	CONNECTOR AS	
					(EACH INCLUDES)	
		1	**6V-8636**	1	CONNECTOR	
		1	**3J-1907**	1	SEAL-O-RING	
		1	**6V-8397**	1	SEAL-O-RING	
	23	1	*148-8362*	2	ELBOW AS	
					(EACH INCLUDES)	
		1	**8T-6684**	1	ELBOW	
		1	**3D-2824**	1	SEAL-O-RING	
		1	**5K-9090**	1	SEAL-O-RING	
	24	1	*148-8405*	1	PLUG AS	
		1	**3K-8460**	1	PLUG	
		1	**1J-9671**	1	SEAL-O-RING	
B	25	1	*148-8411*	1	PLUG AS	
		1	**9S-4185**	1	PLUG-O-RING	
		1	**3K-0360**	1	SEAL-O-RING	
	26	1	*150-4046*	1	ADAPTER AS	
		1	**5P-1404**	1	ADAPTER	
		1	**2M-9780**	1	SEAL-O-RING	
	27	1	*164-5577*	2	ELBOW AS	
					(EACH INCLUDES)	
		1	**6V-8984**	1	ELBOW	
		1	**5K-9090**	2	SEAL-O-RING	
	28	1	**5K-9090**	5	SEAL-O-RING	
	29	1	**6V-9172**	4	NUT (1-7/16-12-THD)	
	30	1	**7X-7729**	12	WASHER (11X25X3-MM THK)	
	31	1	**8T-1889**	3	CLIP (SLOT)	
	32	1	**8T-1890**	3	CLIP (TAB)	
B	33	1	**217-0287**	2	CAP	

212-3354 **LINES GP-TILT CYLINDER** *(contd.)* **i03757516**

NOTE	REF NO	GRAPHIC REF	PART NUMBER	QTY	PART NAME 1 2 3 4 5 6 (PRODUCT LEVEL)	SEE PAGE
	34	1	**5P-5148**	1	STRAP-CABLE	
M	35	1	**8T-6466**	2	BOLT (M10X1.5X60-MM)	
	36	1	**8Y-8387**	2	BLOCK	
	37	1	**111-6940**	2	SPACER (13.1X15.9X36.5-MM THK)	
	38	1	**140-9289**	1	PLATE AS	
	39	1	**200-6345**	1	MOUNT (DUAL SWIVEL)	
	40	1	**204-2281**	4	STRAP-CABLE	
	41	1	**7K-3975**	2	TAG-IDENTIFICATION (LETTER, NUMBER T2)	
	42	1	**7K-3974**	2	TAG-IDENTIFICATION (LETTER, NUMBER T1)	

B-USE AS REQUIRED
C-CHANGE FROM PREVIOUS TYPE
I-REFER TO HYDRAULIC INFORMATION SYSTEM
M-METRIC PART

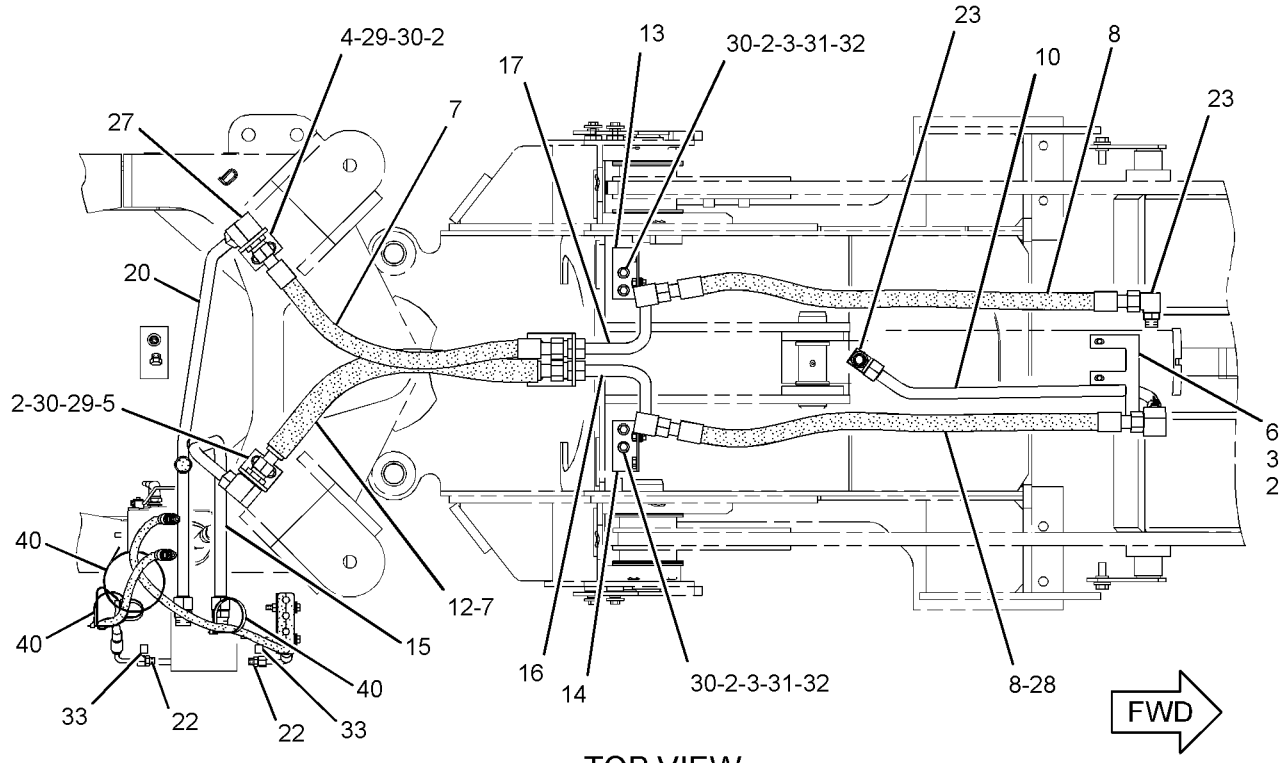

TOP VIEW

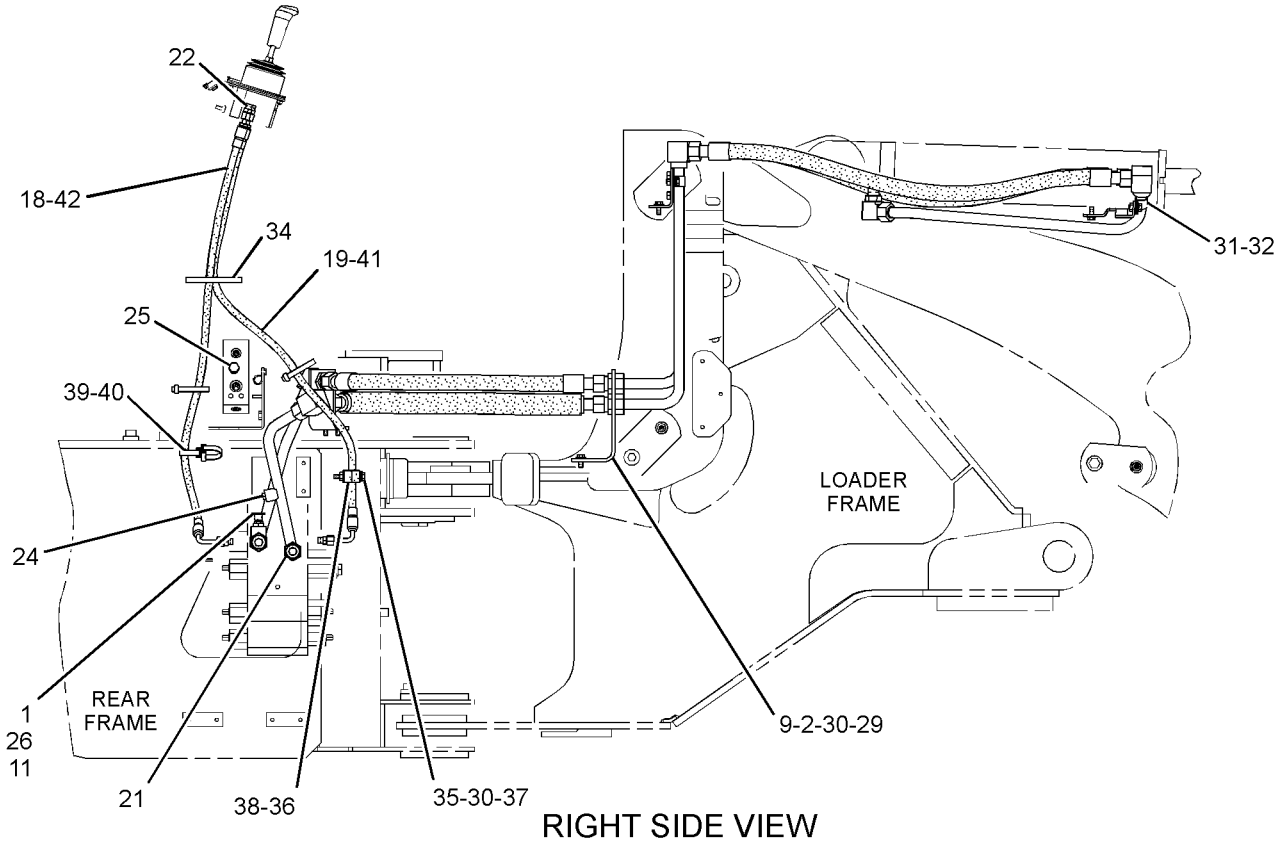

RIGHT SIDE VIEW

GRAPHIC #1 **<END>** g01365827

HYDRAULIC SYSTEM

289-8795 LINES GP-TILT CYLINDER

S/N: RRS1-UP

PART OF 289-8833 HYDRAULIC AR

SMCS-5057, 5104 **i03757533**

NOTE	REF NO	GRAPHIC REF	PART NUMBER	QTY	PART NAME 1 2 3 4 5 6 (PRODUCT LEVEL)	SEE PAGE
	1	1	**5P-5148**	1	STRAP-CABLE	
	2	1	**6V-0852**	2	CAP-DUST	
M	3	1	**8T-6466**	2	BOLT (M10X1.5X60-MM)	
	4	1	**9X-8256**	1	WASHER (6.6X12X2-MM THK)	
	5	1	**8Y-8387**	2	BLOCK	
I	6	1	**086-3757**	1	HOSE AS	
	7	1	*164-5567*	2	COUPLER AS-QUICK DISCONNECT (MALE)	
					(EACH INCLUDES)	
		1	**214-7568**	1	SEAL-O-RING	
		1	**6V-3965**	1	FITTING (QUICK DISCONNECT)	
	8	1	**111-6940**	2	SPACER (13.1X15.9X36.5-MM THK)	
I	9	1	**141-9242**	1	HOSE AS	
	10	1	**132-2393**	1	BRACKET	
	11	1	**132-2398**	1	BRACKET	
I	12	1	**132-2399**	1	HOSE AS	
	13	1	**140-9289**	1	PLATE AS	
I	14	1	**153-8072**	1	HOSE AS	
	15	1	*150-3065*	2	ADAPTER AS	
					(EACH INCLUDES)	
		1	**3J-1907**	1	SEAL-O-RING	
		1	**6V-0484**	1	ELBOW	
Y	16	1	**173-4032**	1	VALVE GP-COMBINATION (TILT RELIEF)	413
	17	1	**184-6352**	1	BRACKET	
	18	1	**184-6353**	1	BRACKET	
G	19	1	**160-2248**		SLEEVE-ABRASION (19.1-IN)	
	20	1	**200-6345**	2	MOUNT (DUAL SWIVEL)	
	21	1	**204-2281**	4	STRAP-CABLE	
	22	1	**210-5545**	1	TUBE AS	
I	23	1	**214-7096**	1	HOSE AS	
	24	1	**7K-3975**	2	TAG-IDENTIFICATION (LETTER, NUMBER T2)	
	25	1	**221-3206**	1	TUBE AS	
I	26	1	**252-2378**	1	HOSE AS	
I	27	1	**252-2379**	1	HOSE AS	
	28	1	**253-3524**	1	TUBE AS	
	29	1	**253-3526**	1	TUBE AS	
I	30	1	**253-3542**	1	HOSE AS	
I	31	1	**253-3549**	1	HOSE AS	
	32	1	**263-2908**	1	PLATE AS	
	33	1	*148-8316*	1	CONNECTOR AS	
		1	**3J-7354**	1	SEAL-O-RING	
		1	**4J-5477**	1	SEAL-O-RING	
		1	**6V-8647**	1	CONNECTOR	
	34	1	*148-8321*	2	CONNECTOR AS	
					(EACH INCLUDES)	
		1	**3J-1907**	1	SEAL-O-RING	
		1	**6V-8397**	1	SEAL-O-RING	
		1	**8C-0564**	1	CONNECTOR	
	35	1	*148-8329*	1	CONNECTOR AS	
		1	**4K-1388**	1	SEAL-O-RING	
		1	**5K-9090**	1	SEAL-O-RING	
		1	**8T-6453**	1	CONNECTOR	
	36	1	*148-8335*	2	CONNECTOR AS	
					(EACH INCLUDES)	
		1	**5K-9090**	1	SEAL-O-RING	
		1	**6V-8635**	1	CONNECTOR	
		1	**7M-8485**	1	SEAL-O-RING	

289-8795 **LINES GP-TILT CYLINDER** *(contd.)* **i03757533**

NOTE	REF NO	GRAPHIC REF	PART NUMBER	QTY	PART NAME 1 2 3 4 5 6 (PRODUCT LEVEL)	SEE PAGE
	37	1	*148-8336*	2	CONNECTOR AS	
					(EACH INCLUDES)	
		1	**3J-1907**	1	SEAL-O-RING	
		1	**6V-8397**	1	SEAL-O-RING	
		1	**6V-8636**	1	CONNECTOR	
	38	1	*148-8340*	2	CONNECTOR AS	
					(EACH INCLUDES)	
		1	**3K-0360**	1	SEAL-O-RING	
		1	**6V-8398**	1	SEAL-O-RING	
		1	**6V-8639**	1	CONNECTOR	
	39	1	*148-8345*	1	CONNECTOR AS	
		1	**2M-9780**	1	SEAL-O-RING	
		1	**6V-8398**	1	SEAL-O-RING	
		1	**6V-8638**	1	CONNECTOR	
	40	1	*148-8351*	1	ELBOW AS	
		1	**4J-5477**	1	SEAL-O-RING	
		1	**6V-9849**	1	ELBOW	
	41	1	*148-8428*	1	TEE AS	
		1	**3K-0360**	1	SEAL-O-RING	
		1	**6V-8398**	2	SEAL-O-RING	
		1	**6V-8782**	1	TEE	
	42	1	*164-5577*	2	ELBOW AS	
					(EACH INCLUDES)	
		1	**5K-9090**	2	SEAL-O-RING	
		1	**6V-8984**	1	ELBOW	
	43	1	*174-6118*	1	ELBOW AS	
		1	**1J-9671**	1	SEAL-O-RING	
		1	**4J-5477**	1	SEAL-O-RING	
		1	**100-7603**	1	ELBOW	
	44	1	**4J-0520**	1	SEAL-O-RING	
	45	1	**5K-9090**	4	SEAL-O-RING	
	46	1	**5P-7468**	1	CLIP (SLOT)	
	47	1	**5P-7469**	1	CLIP (TAB)	
	48	1	**5P-8444**	1	GROMMET	
	49	1	**6V-9172**	4	NUT (1-7/16-12-THD)	
	50	1	**6V-9830**	1	CAP AS	
M	51	1	**7X-2534**	1	BOLT (M6X1X50-MM)	
	52	1	**7X-7729**	10	WASHER (11X25X3-MM THK)	
	53	1	**8C-3206**	2	FLANGE-HALF	
	54	1	**8T-1889**	2	CLIP (SLOT)	
	55	1	**8T-1890**	2	CLIP (TAB)	
	56	1	**8T-4121**	10	WASHER-HARD (11X21X2.5-MM THK)	
M	57	1	**8T-4136**	9	BOLT (M10X1.5X25-MM)	
M	58	1	**8T-4186**	2	BOLT (M10X1.5X40-MM)	
M	59	1	**8T-4195**	5	BOLT (M10X1.5X30-MM)	
	60	1	**7K-3974**	2	TAG-IDENTIFICATION (LETTER, NUMBER T1)	

G-ORDER BY THE INCH
I-REFER TO HYDRAULIC INFORMATION SYSTEM
M-METRIC PART
Y-SEPARATE ILLUSTRATION

289-8795 **LINES GP-TILT CYLINDER** *(contd.)* **i03757533**

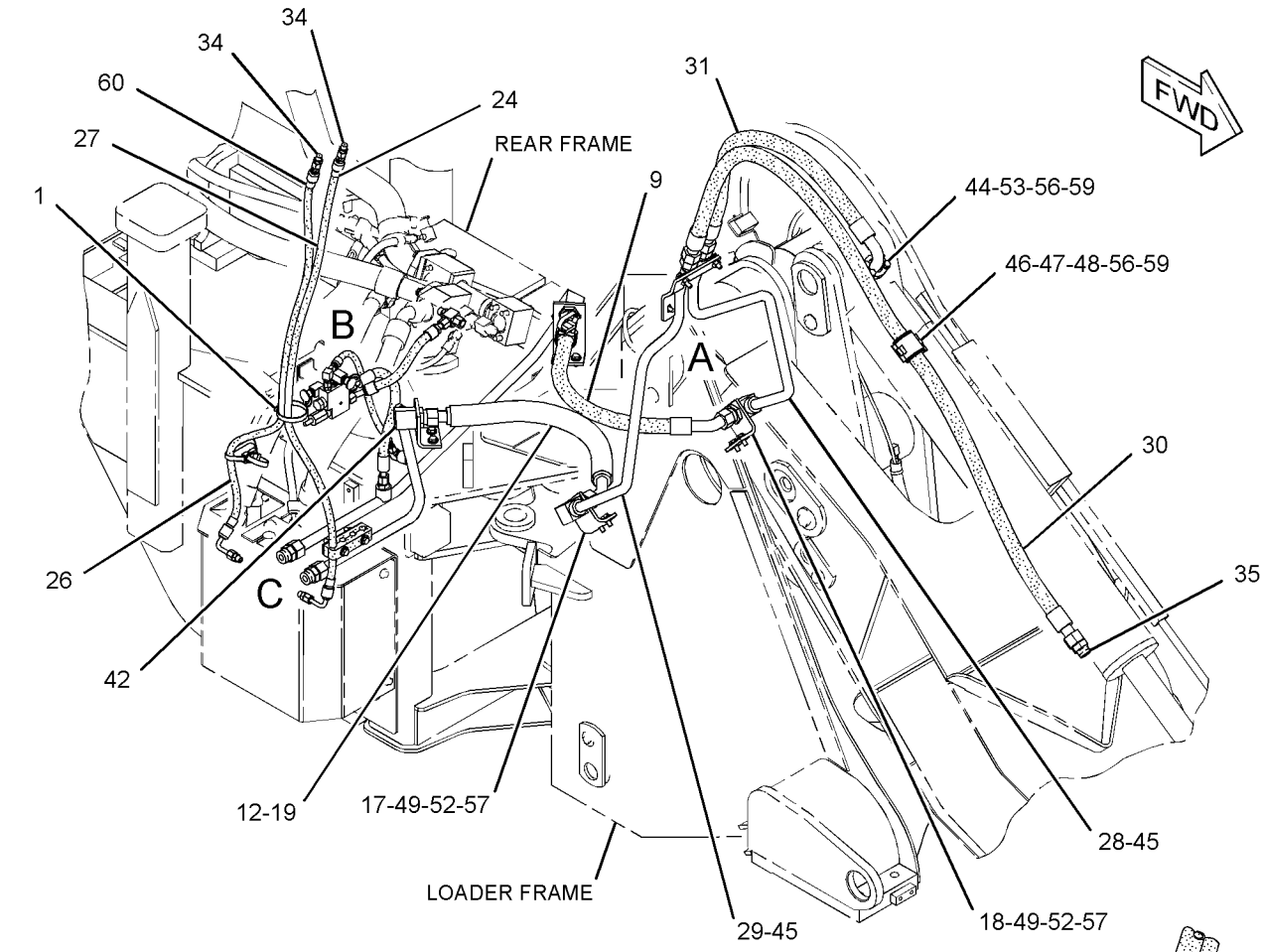

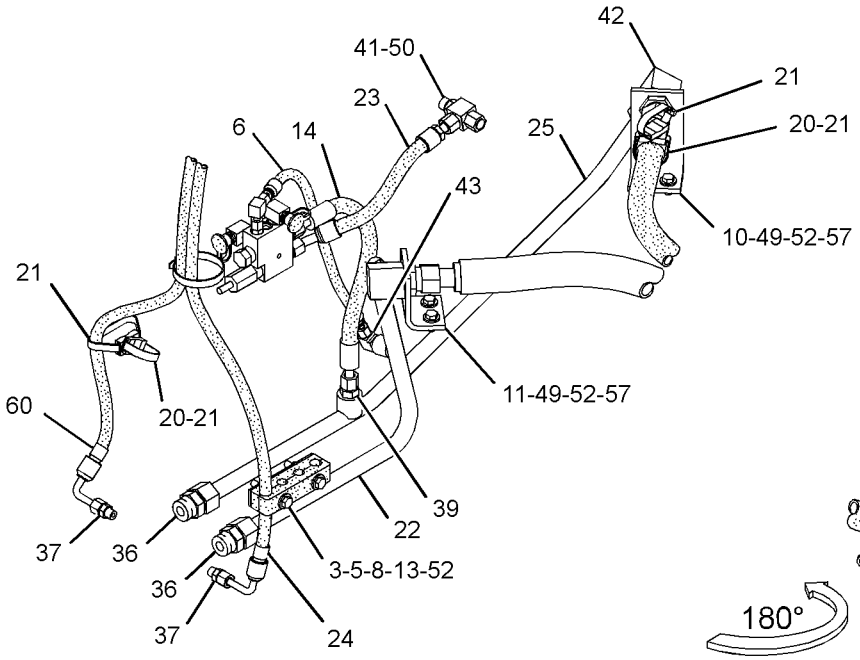

VIEW OF AREA C

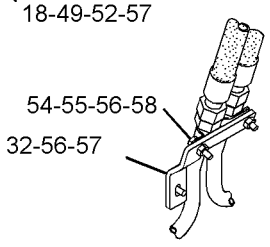

VIEW OF AREA A

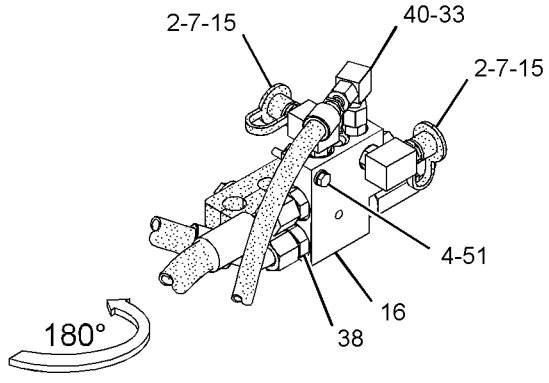

VIEW OF AREA B

GRAPHIC #1 **<END>** g01800779

HYDRAULIC SYSTEM

233-2549 MANIFOLD GP-CONTROL–QUICK COUPLER

S/N: RRS1-UP
24-VOLT
PART OF 296-6812 LINES GP-COUPLER
AN ATTACHMENT

SMCS-4264, 5072, 5264, 5467, 5479 **i03629300**

NOTE	REF NO	GRAPHIC REF	PART NUMBER	QTY	PART NAME 1 2 3 4 5 6 (PRODUCT LEVEL)	SEE PAGE
J	1	1	**249-7863**	1	VALVE GP-SOLENOID (24-VOLT) (QUICK COUPLER)	
		1	**250-6148**	2	COIL AS (24-VOLT)	
	2	1	**249-7859**	2	VALVE GP-SHUTTLE (QUICK COUPLER)	
	3	1	**261-7997**	1	WIRE AS-SOLENOID (JUMPER)	
					AVAILABLE REPAIR KIT(S):	
J			**106-3108**		KIT-SEAL	

J-KIT MARKED J SERVICES PART(S) MARKED J

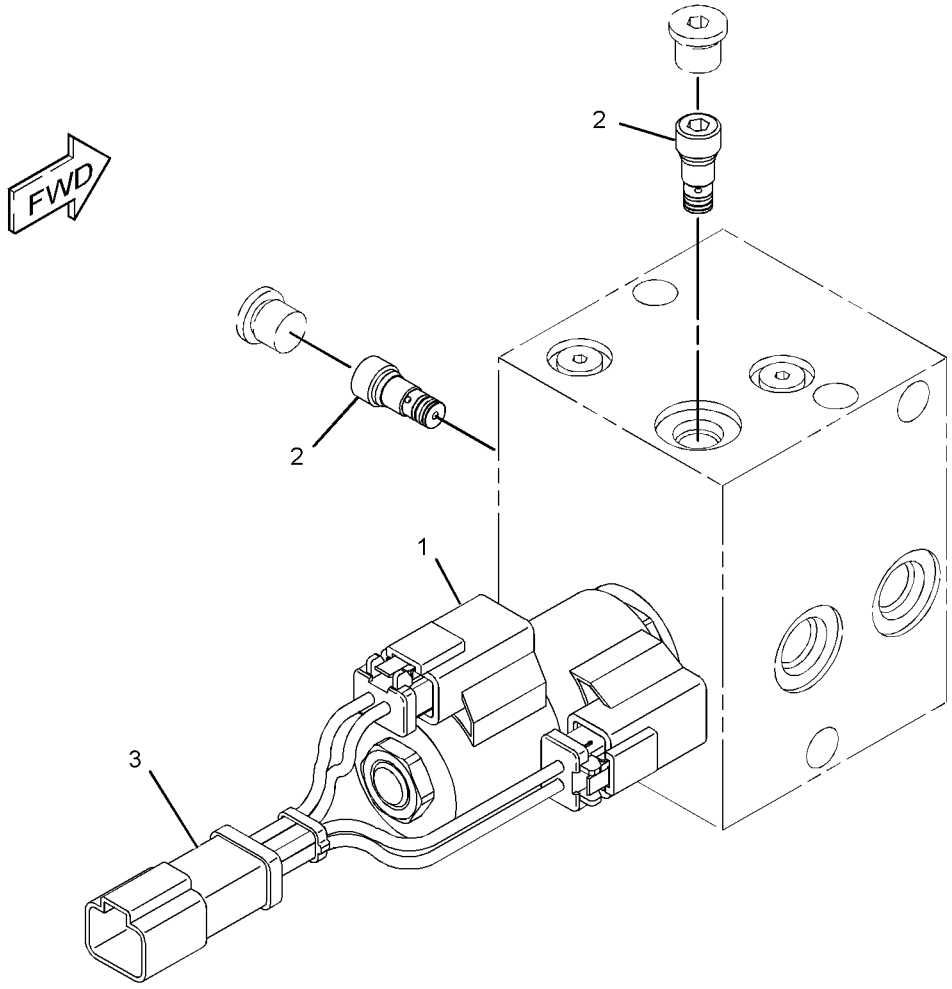

GRAPHIC #1 **<END>** g01190793

289-8964 MOTOR & MTG GP-HYDRAULIC FAN–REVERSING

S/N: JRL1-UP; RRS1-UP
PART OF 289-8965 MOTOR AR-HYDRAULIC FAN
AN ATTACHMENT

SMCS-1386 **i03038625**

NOTE	REF NO	GRAPHIC REF	PART NUMBER	QTY	PART NAME 1 2 3 4 5 6 (PRODUCT LEVEL)	SEE PAGE
Y	1	1	**289-6394**	1	MOTOR GP-GEAR (REVERSING FAN)	389
	2	1	**8T-4121**	4	WASHER-HARD (11X21X2.5-MM THK)	
M	3	1	**8T-4133**	2	NUT (M10X1.5-THD)	
M	4	1	**8T-4196**	2	BOLT (M10X1.5X35-MM)	

M-METRIC PART
Y-SEPARATE ILLUSTRATION

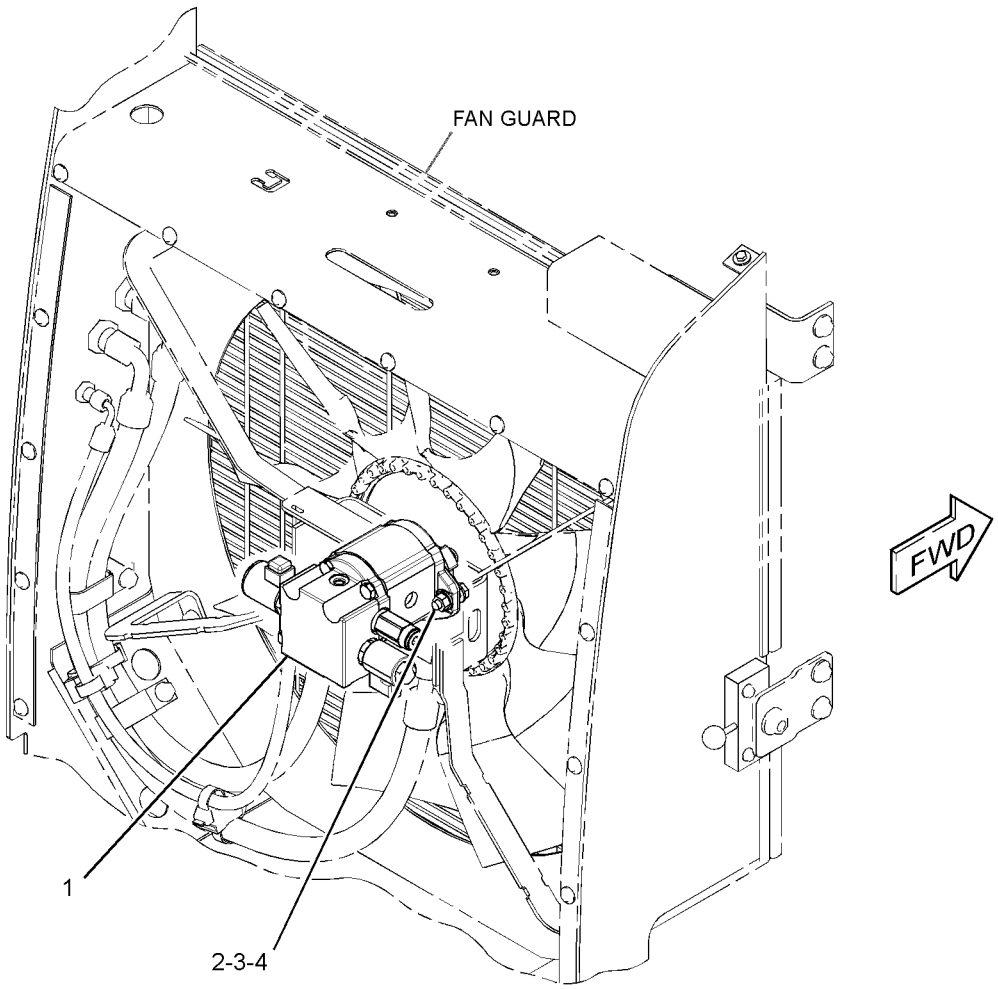

GRAPHIC #1 **<END>** g01543953

289-8963 MOTOR AR-HYDRAULIC FAN—STANDARD

S/N: JRL1-UP; RRS1-UP
PART OF 375-8357, 375-8358, 375-8359 DISTRIBUTION AR
CANNOT BE USED WITH 289-8965—PAGE 387
AN ATTACHMENT

SMCS-1386 **i03038626**

NOTE	PART NUMBER	QTY	PART NAME 1 2 3 4 5 6 (PRODUCT LEVEL)	SEE PAGE
Y	*290-7200*	1	LINES GP-HYDRAULIC FAN (STANDARD)	354
Y	*289-8962*	1	MOTOR GP-GEAR (HYDRAULIC FAN)	390
Y-SEPARATE ILLUSTRATION				

<END>

289-8965 MOTOR AR-HYDRAULIC FAN—REVERSING

S/N: JRL1-UP; RRS1-UP
CANNOT BE USED WITH 289-8963—PAGE 387
AN ATTACHMENT

SMCS-1386 **i03038623**

NOTE	PART NUMBER	QTY	PART NAME 1 2 3 4 5 6 (PRODUCT LEVEL)	SEE PAGE
Y	*290-7201*	1	LINES GP-HYDRAULIC FAN (REVERSING)	356
Y	*289-8964*	1	MOTOR & MTG GP-HYDRAULIC FAN (REVERSING)	386
Y-SEPARATE ILLUSTRATION				

<END>

289-6393 MOTOR GP-GEAR–HYDRAULIC FAN

S/N: JRL1-UP; RRS1-UP
PART OF 289-8962 MOTOR GP-GEAR
AN ATTACHMENT

SMCS-1386, 5061 **i03018466**

NOTE	REF NO	GRAPHIC REF	PART NUMBER	QTY	PART NAME 1 2 3 4 5 6 (PRODUCT LEVEL)	SEE PAGE
	1	1	**113-3632**	1	ADAPTER-FAN	
Y	2	1	**211-2092**	1	VALVE GP-SOLENOID (24-VOLT) (HYDRAULIC FAN)	454
	3	1	**087-0991**	1	VALVE AS-CHECK	
	4	1	**2M-2570**	1	LOCKNUT (1/2-20-THD)	
	5	1	**5P-8245**	1	WASHER-HARD (13.5X25.5X3-MM THK)	
Y	6	1	**299-3940**	1	MOTOR GP-GEAR (HYDRAULIC FAN)	392

Y-SEPARATE ILLUSTRATION

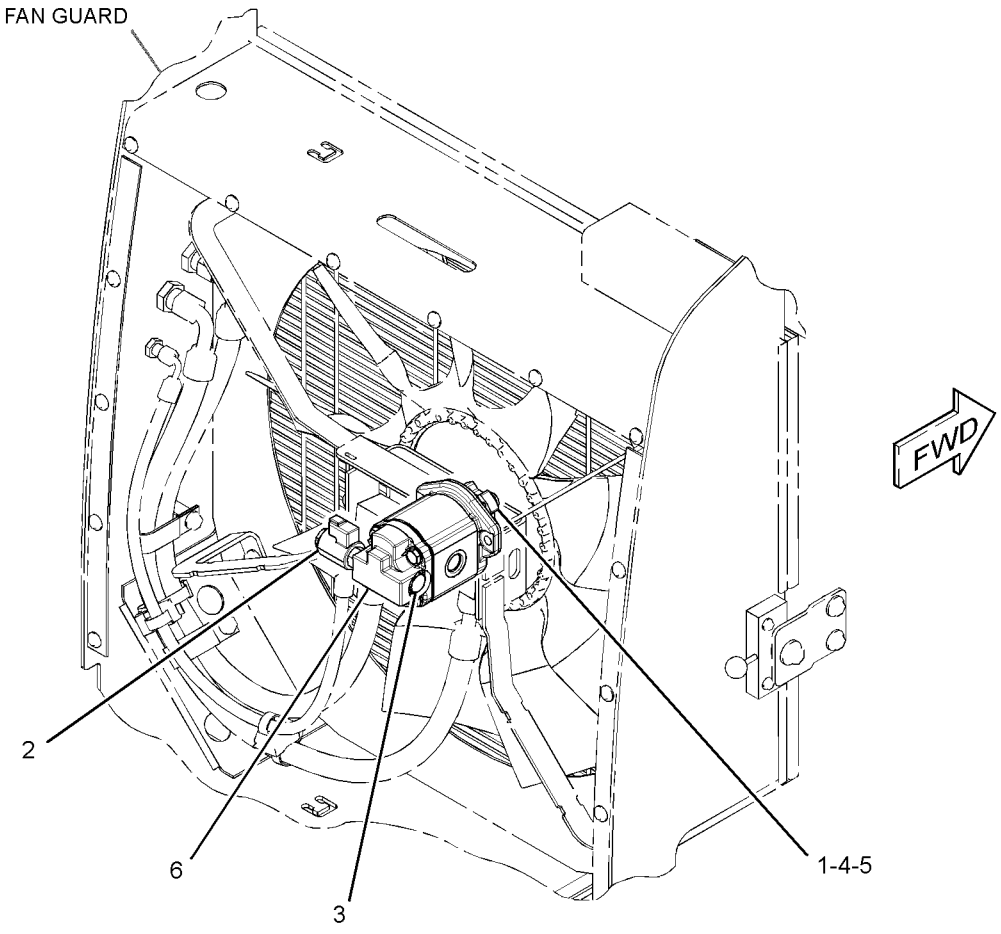

GRAPHIC #1 **<END>** g01548015

289-6394 MOTOR GP-GEAR–REVERSING FAN

S/N: JRL1-UP; RRS1-UP
PART OF 289-8964 MOTOR & MTG GP-HYDRAULIC FAN
AN ATTACHMENT

SMCS-1386, 5061 **i04029117**

NOTE	REF NO	GRAPHIC REF	PART NUMBER	QTY	PART NAME 1 2 3 4 5 6 (PRODUCT LEVEL)	SEE PAGE
	1	1	**113-3632**	1	ADAPTER-FAN	
Y	2	1	**211-2092**	1	VALVE GP-SOLENOID (24-VOLT) (HYDRAULIC FAN)	454
Y	3	1	**189-2100**	1	VALVE GP-SOLENOID (24-VOLT) (HYDRAULIC FAN)	453
J	4	1	**208-0886**	1	VALVE GP-RELIEF (HYDRAULIC FAN MOTOR)	
	5	1	**087-0991**	1	VALVE AS-CHECK	
	6	1	**2M-2570**	1	LOCKNUT (1/2-20-THD)	
	7	1	**5P-8245**	1	WASHER-HARD (13.5X25.5X3-MM THK)	
Y	8	1	**299-3939**	1	MOTOR GP-GEAR (REVERSING FAN) (BASIC)	391
					AVAILABLE REPAIR KIT(S):	
J			**264-5726**	1	KIT-SEAL	
					(ALSO INCLUDES O-RING SEAL & BACKUP RINGS)	

J-KIT MARKED J SERVICES PARTS MARKED J
Y-SEPARATE ILLUSTRATION

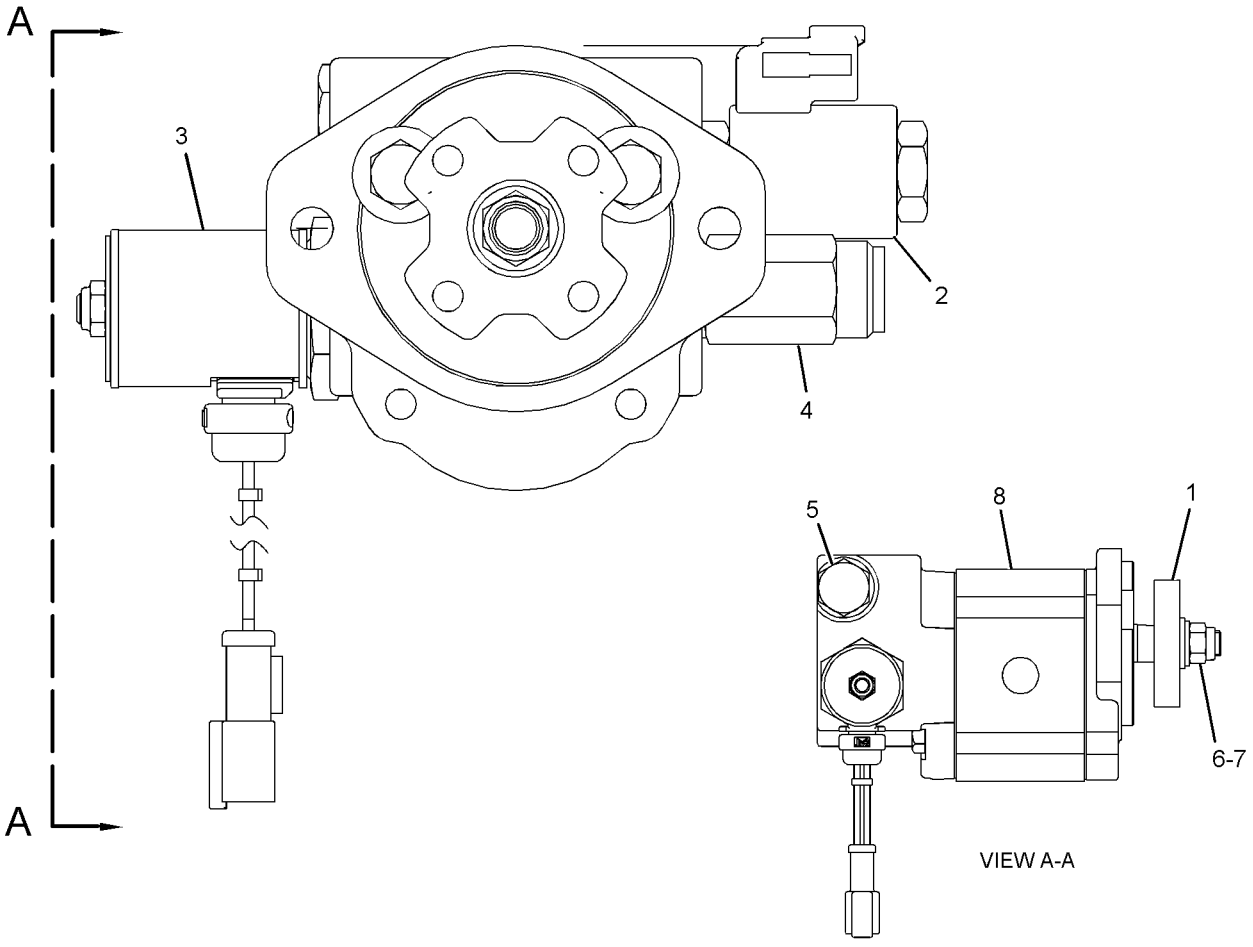

GRAPHIC #1 **<END>** g01410880

289-8962 MOTOR GP-GEAR–HYDRAULIC FAN

S/N: JRL1-UP; RRS1-UP
PART OF 289-8963 MOTOR AR-HYDRAULIC FAN
AN ATTACHMENT

SMCS-1386, 5061 **i03038627**

NOTE	REF NO	GRAPHIC REF	PART NUMBER	QTY	PART NAME 1 2 3 4 5 6 (PRODUCT LEVEL)	SEE PAGE
Y	1	1	**289-6393**	1	MOTOR GP-GEAR (HYDRAULIC FAN)	388
	2	1	**8T-4121**	4	WASHER-HARD (11X21X2.5-MM THK)	
M	3	1	**8T-4133**	2	NUT (M10X1.5-THD)	
M	4	1	**8T-4196**	2	BOLT (M10X1.5X35-MM)	

M-METRIC PART
Y-SEPARATE ILLUSTRATION

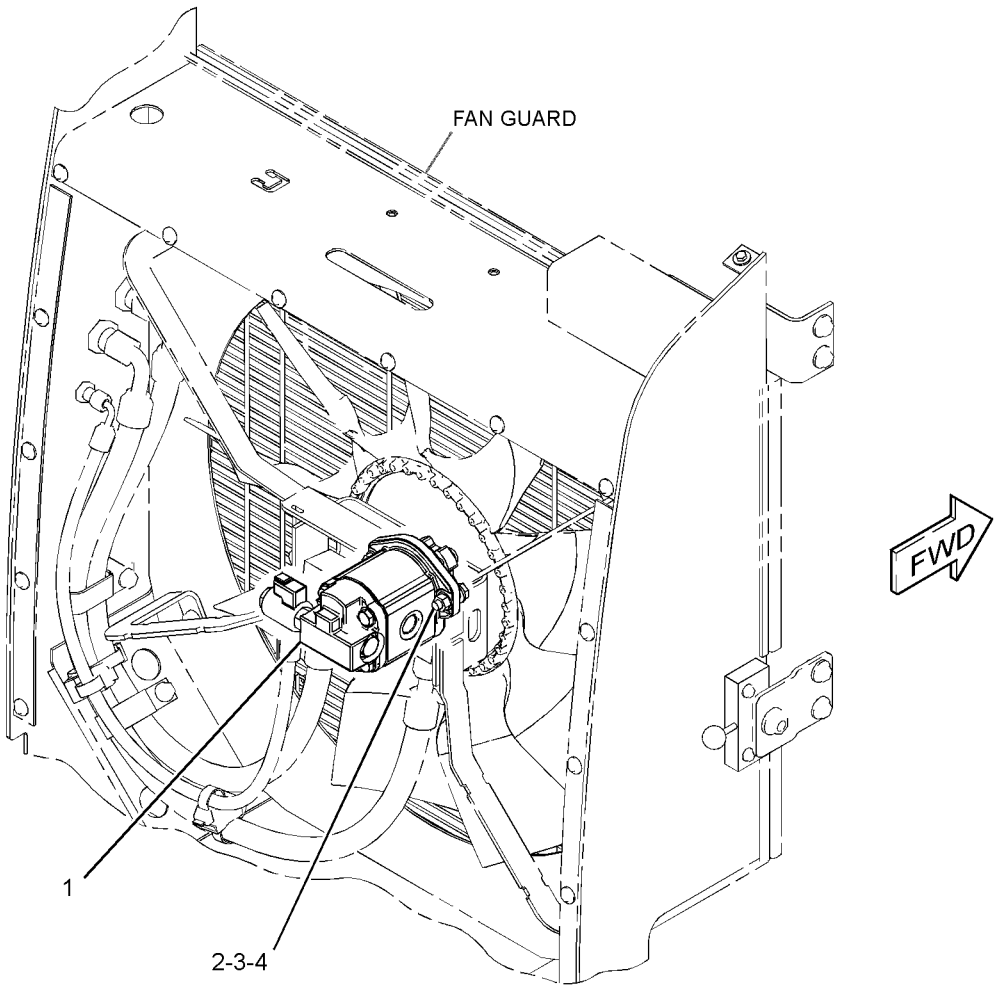

GRAPHIC #1 **<END>** g01543887

HYDRAULIC SYSTEM

299-3939 MOTOR GP-GEAR–REVERSING FAN

S/N: JRL1-UP; RRS1-UP
PART OF 289-6394 MOTOR GP-GEAR
AN ATTACHMENT

SMCS-1386, 5061 **i04029106**

NOTE	REF NO	GRAPHIC REF	PART NUMBER	QTY	PART NAME 1 2 3 4 5 6 (PRODUCT LEVEL)	SEE PAGE
	1	1	**208-2293**	4	BOLT (M10X1.5X97.8-MM)	
J	2	1	**296-6031**	1	SEAL-LIP TYPE	
J	3	1	**8J-6273**	1	RING-RETAINING	
	4	1	**135-5935**	1	SEAL-SHAFT	
	5	1	**208-0792**	1	FLANGE	
J	6	1	**4W-7356**	2	SEAL-O-RING	
	7	1	**099-3095**	4	DOWEL	
	8	1	**220-2680**	1	CAP-END	
					PARTS SHOWN IN GRAPHIC(S) WITHOUT A REFERENCE NUMBER ARE NOT SERVICED SEPARATELY	
					AVAILABLE REPAIR KIT(S):	
J			**293-5449**	1	KIT-SEAL	
					(ALSO INCLUDES SHAFT SEAL)	

J-KIT MARKED J INCLUDES PARTS MARKED J

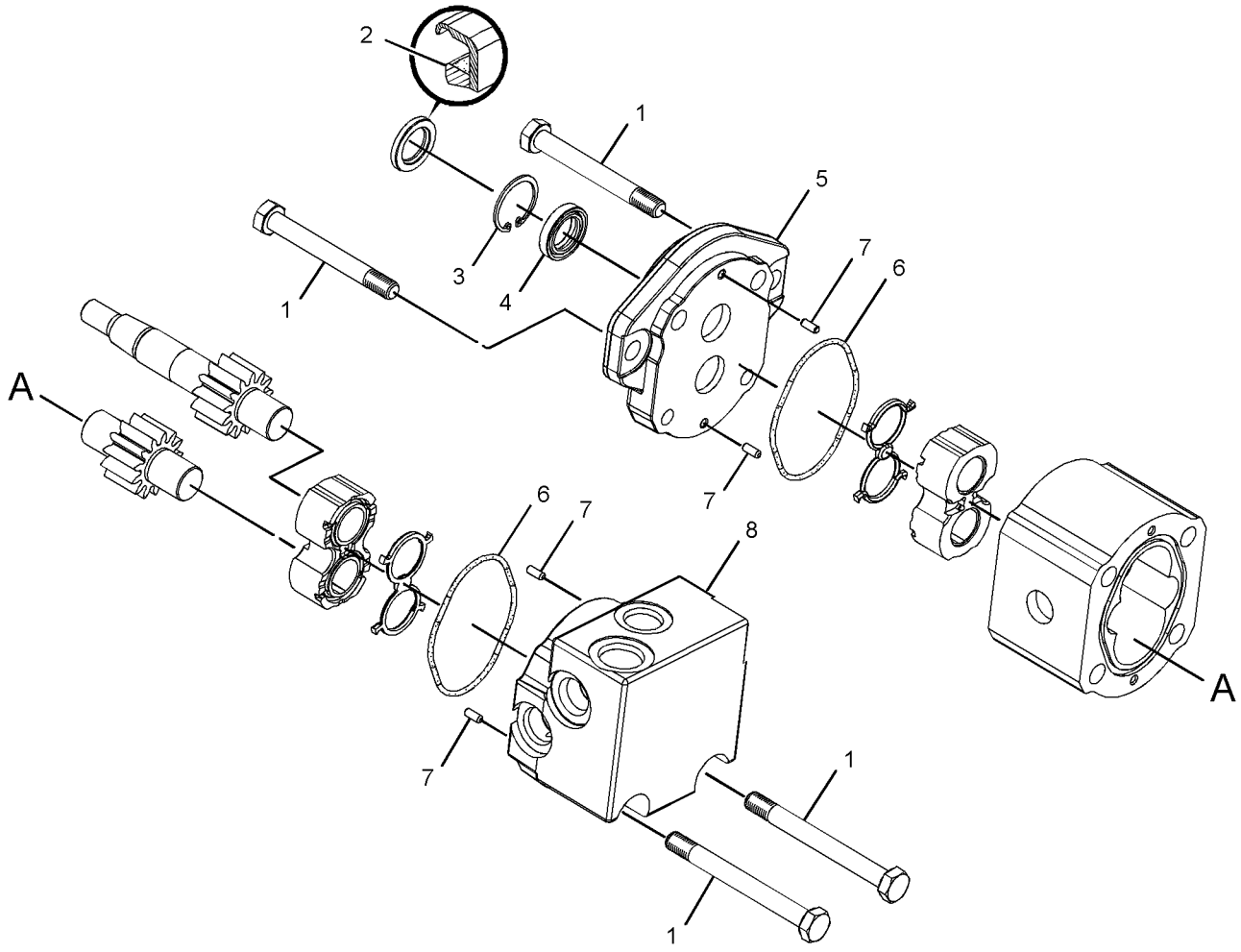

GRAPHIC #1 **<END>** g01405973

HYDRAULIC SYSTEM

299-3940 MOTOR GP-GEAR–HYDRAULIC FAN

S/N: JRL1-UP; RRS1-UP
PART OF 289-6393 MOTOR GP-GEAR
AN ATTACHMENT

SMCS-1386, 5061 **i04029105**

NOTE	REF NO	GRAPHIC REF	PART NUMBER	QTY	PART NAME 1 2 3 4 5 6 (PRODUCT LEVEL)	SEE PAGE
	1	1	**176-0210**	1	FLANGE	
	2	1	**099-3095**	4	DOWEL	
	3	1	**220-2681**	1	CAP-END	
	4	1	**304-5866**	4	BOLT (M10X1.5X101.6-MM)	
J	5	1	**296-6031**	1	SEAL-LIP TYPE	
J	6	1	**8J-6273**	1	RING-RETAINING	
	7	1	**135-5935**	1	SEAL-SHAFT	
J	8	1	**4W-7356**	2	SEAL-O-RING	
					PARTS SHOWN IN GRAPHIC(S) WITHOUT A REFERENCE NUMBER ARE NOT SERVICED SEPARATELY	
					AVAILABLE REPAIR KIT(S):	
J			**293-5449**	1	KIT-SEAL	
					(ALSO INCLUDES SHAFT SEAL)	

J-KIT MARKED J INCLUDES PARTS MARKED J

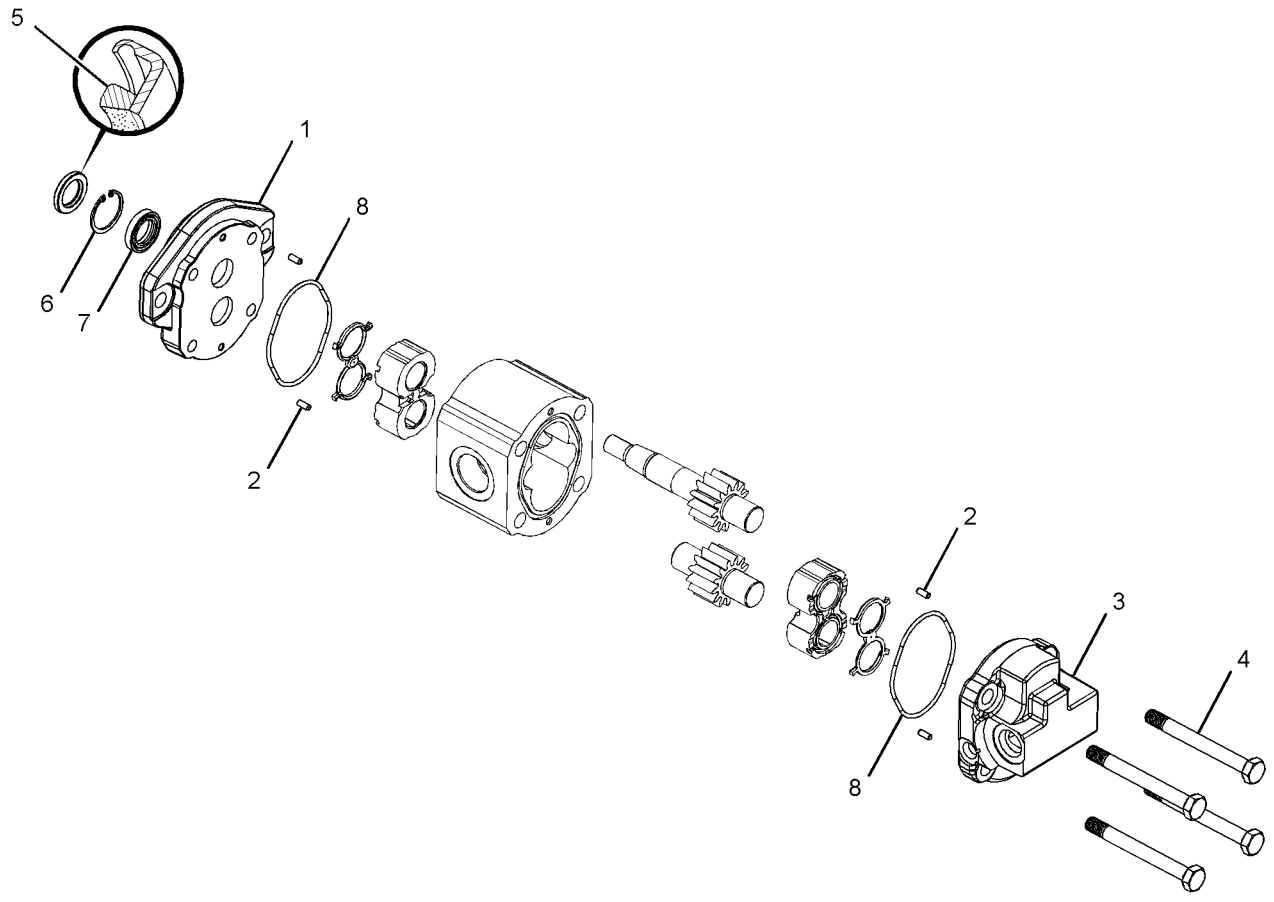

GRAPHIC #1 **<END>** g01391762

HYDRAULIC SYSTEM

211-4767 MOUNTING GP-CONTROL VALVE

S/N: JRL1-UP; RRS1-UP

PART OF 372-7772, 372-7773 CHASSIS AR

SMCS-5051 **i03847942**

NOTE	REF NO	GRAPHIC REF	PART NUMBER	QTY	PART NAME 1 2 3 4 5 6 (PRODUCT LEVEL)	SEE PAGE
	1	1	**140-9291**	1	COVER	
	2	1	**211-0608**	1	BRACKET AS	
		1	**7T-1099**	2	LINK	
M		1	**8T-3490**	8	NUT-WELD (M10X1.5-THD)	
	3	1	**211-0622**	1	BRACKET AS	
	4	1	**5P-1076**	3	WASHER-HARD (13.5X30X4-MM THK)	
	5	1	**7X-7729**	6	WASHER (11X25X3-MM THK)	
	6	1	**8T-4121**	7	WASHER-HARD (11X21X2.5-MM THK)	
M	7	1	**8T-4136**	7	BOLT (M10X1.5X25-MM)	
M	8	1	**8T-4137**	4	BOLT (M10X1.5X20-MM)	
M	9	1	**8T-4192**	1	BOLT (M12X1.75X25-MM)	
M	10	1	**8T-4195**	2	BOLT (M10X1.5X30-MM)	
M	11	1	**8T-4956**	2	BOLT (M12X1.75X35-MM)	

M-METRIC PART

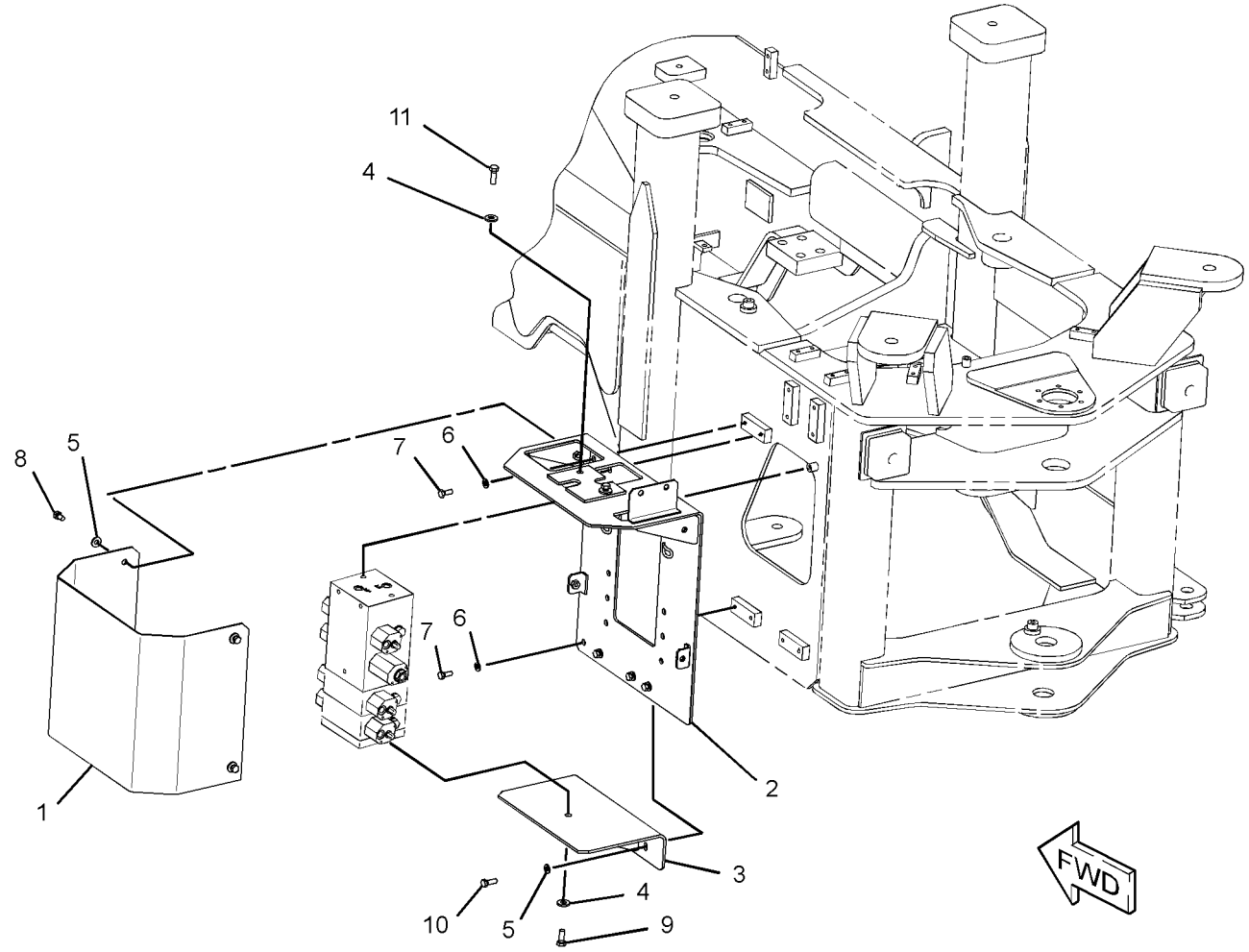

GRAPHIC #1 **<END>** g01960478

HYDRAULIC SYSTEM

147-3114 PIVOT GP-PILOT VALVE–AUXILIARY

S/N: RRS1-UP
PART OF 212-1307 VALVE GP-PILOT
AN ATTACHMENT

SMCS-5059 **i03893190**

NOTE	REF NO	GRAPHIC REF	PART NUMBER	QTY	PART NAME 1 2 3 4 5 6 (PRODUCT LEVEL)	SEE PAGE
	1	1	**174-1366**	1	PLATE	
	2	1	**141-7481**	1	SPACER	
	3	1	**146-8479**	1	SWIVEL	
	4	1	**146-6315**	2	PIN-ADJUSTMENT	
M	5	1	**5C-2890**	2	NUT (M6X1-THD)	

M-METRIC PART

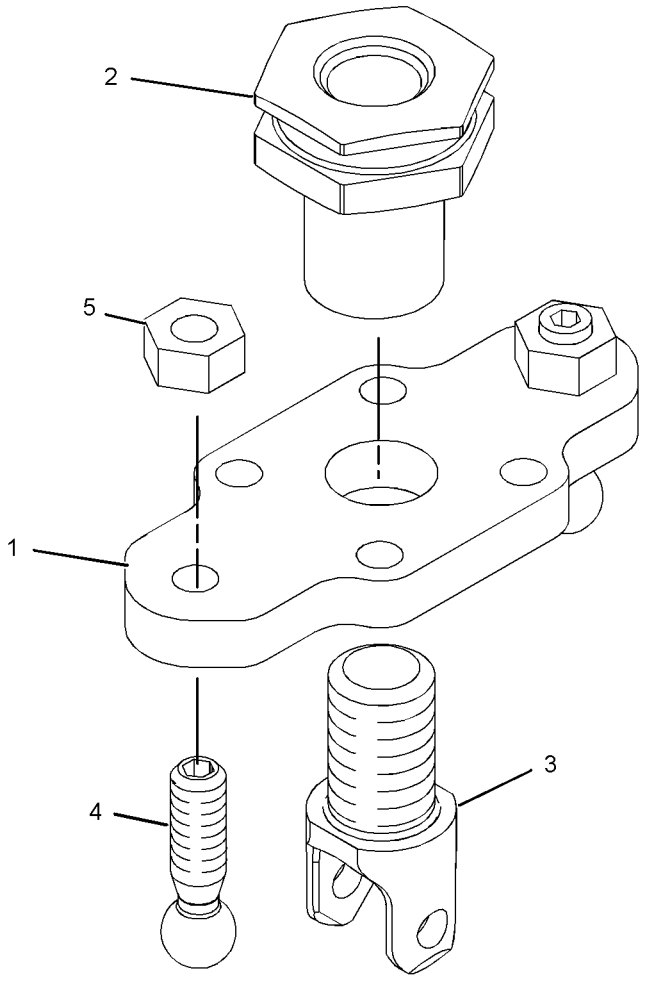

GRAPHIC #1 **<END>** g02139659

HYDRAULIC SYSTEM

160-6299 PIVOT GP-PILOT VALVE

S/N: JRL1-UP; RRS1-UP
PART OF 212-1305, 212-1307 VALVE GP-PILOT
AN ATTACHMENT

SMCS-5059 **i03657094**

NOTE	REF NO	GRAPHIC REF	PART NUMBER	QTY	PART NAME 1 2 3 4 5 6 (PRODUCT LEVEL)	SEE PAGE
	1	1	**141-7481**	1	SPACER	
	2	1	**146-6315**	2	PIN-ADJUSTMENT	
	3	1	**146-8479**	1	SWIVEL	
	4	1	**153-8945**	1	PLUNGER AS	
		1	**3H-7180**	1	SETSCREW (1/4-28X0.25-IN)	
		1	**6J-9996**	1	SPRING	
	5	1	**174-1366**	1	PLATE	
	6	1	**146-6317**	1	RETAINER	
	7	1	**159-3781**	1	SPRING	
M	8	1	**5C-2890**	2	NUT (M6X1-THD)	

M-METRIC PART

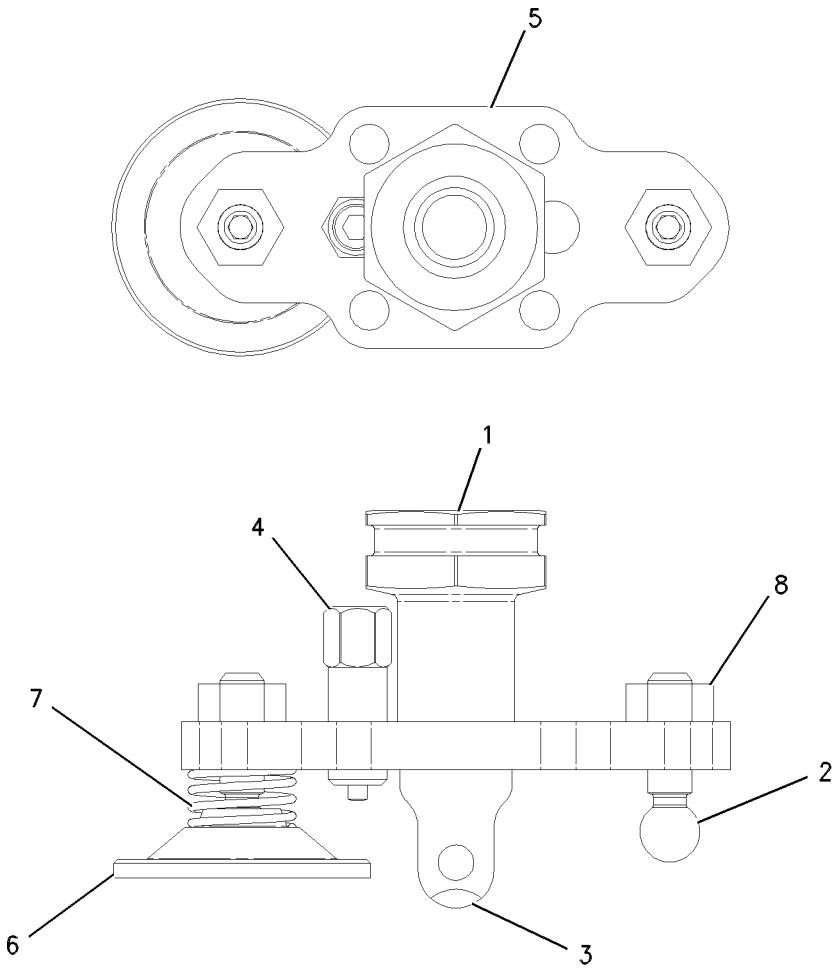

GRAPHIC #1 **<END>** g00620807

HYDRAULIC SYSTEM

147-3322 PLATE GP-PILOT VALVE–JOYSTICK

S/N: JRL1-UP; RRS1-UP
PART OF 212-1302, 212-1305, 212-1307 VALVE GP-PILOT
AN ATTACHMENT

SMCS-5059 **i01832303**

NOTE	REF NO	GRAPHIC REF	PART NUMBER	QTY	PART NAME 1 2 3 4 5 6 (PRODUCT LEVEL)	SEE PAGE
M	1	1	**5C-2890**	4	NUT (M6X1-THD)	
	2	1	**146-6315**	3	PIN-ADJUSTMENT	
	3	1	**153-8945**	3	PLUNGER AS	
					(EACH INCLUDES)	
		1	**3H-7180**	1	SETSCREW (1/4-28X0.25-IN)	
		1	**6J-9996**	1	SPRING	
M	4	1	**178-7877**	1	SETSCREW (M6X1X25-MM)	
	5	1	**146-6317**	3	RETAINER	
	6	1	**159-3781**	3	SPRING	

M-METRIC PART

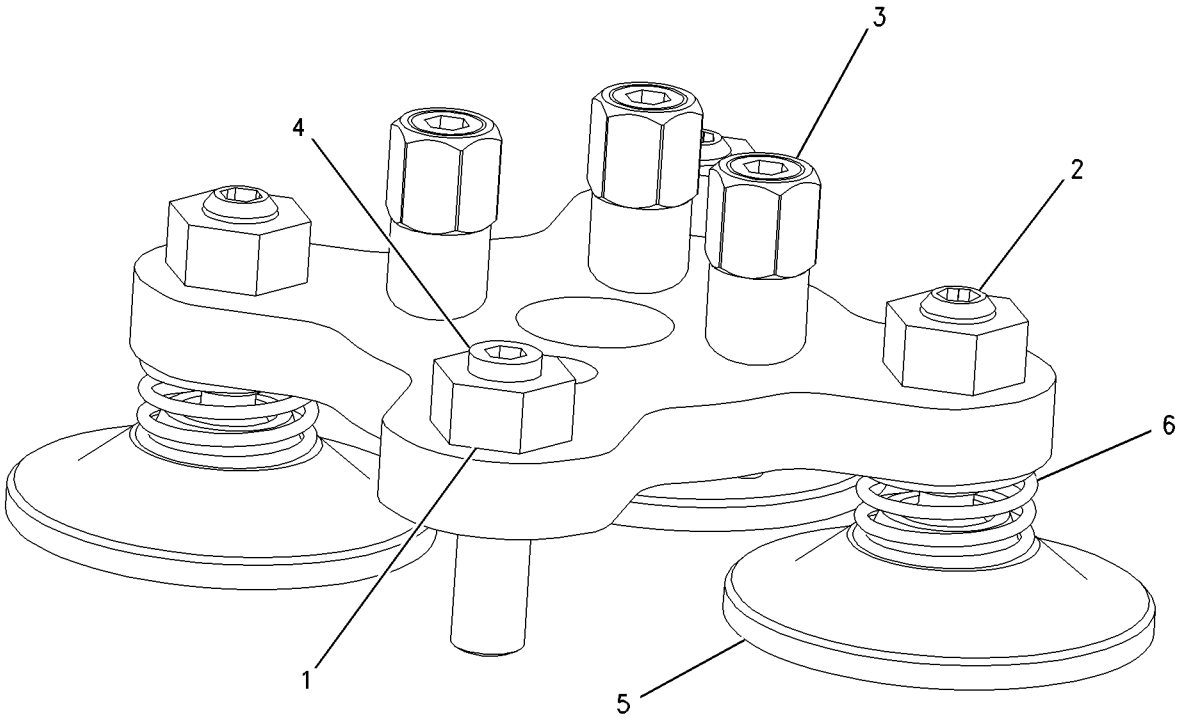

GRAPHIC #1 **<END>** g00810224

289-8919 PUMP & MTG GP-BRAKE & HYD FAN

S/N: JRL1-UP; RRS1-UP

PART OF 289-8803, 289-8833 HYDRAULIC AR

SMCS-1387, 4268 **i04560892**

NOTE	REF NO	GRAPHIC REF	PART NUMBER	QTY	PART NAME 1 2 3 4 5 6 (PRODUCT LEVEL)	SEE PAGE
	1	1	**9Y-9380**	1	GASKET	
Y	2	1	**288-4162**	1	PUMP GP-GEAR (BRAKE, HYDRAULIC FAN)	399
M	3	1	**3E-8016**	4	BOLT-SELF-LOCKING (M8X1.25X25-MM)	
M	4	1	**5A-3604**	1	BOLT-SOCKET HEAD (M8X1.25X25-MM)	
	5	1	**8T-4224**	8	WASHER-HARD (8.8X16X2-MM THK)	
M	6	1	**8T-6870**	1	BOLT (M8X1.25X70-MM)	

M-METRIC PART
Y-SEPARATE ILLUSTRATION

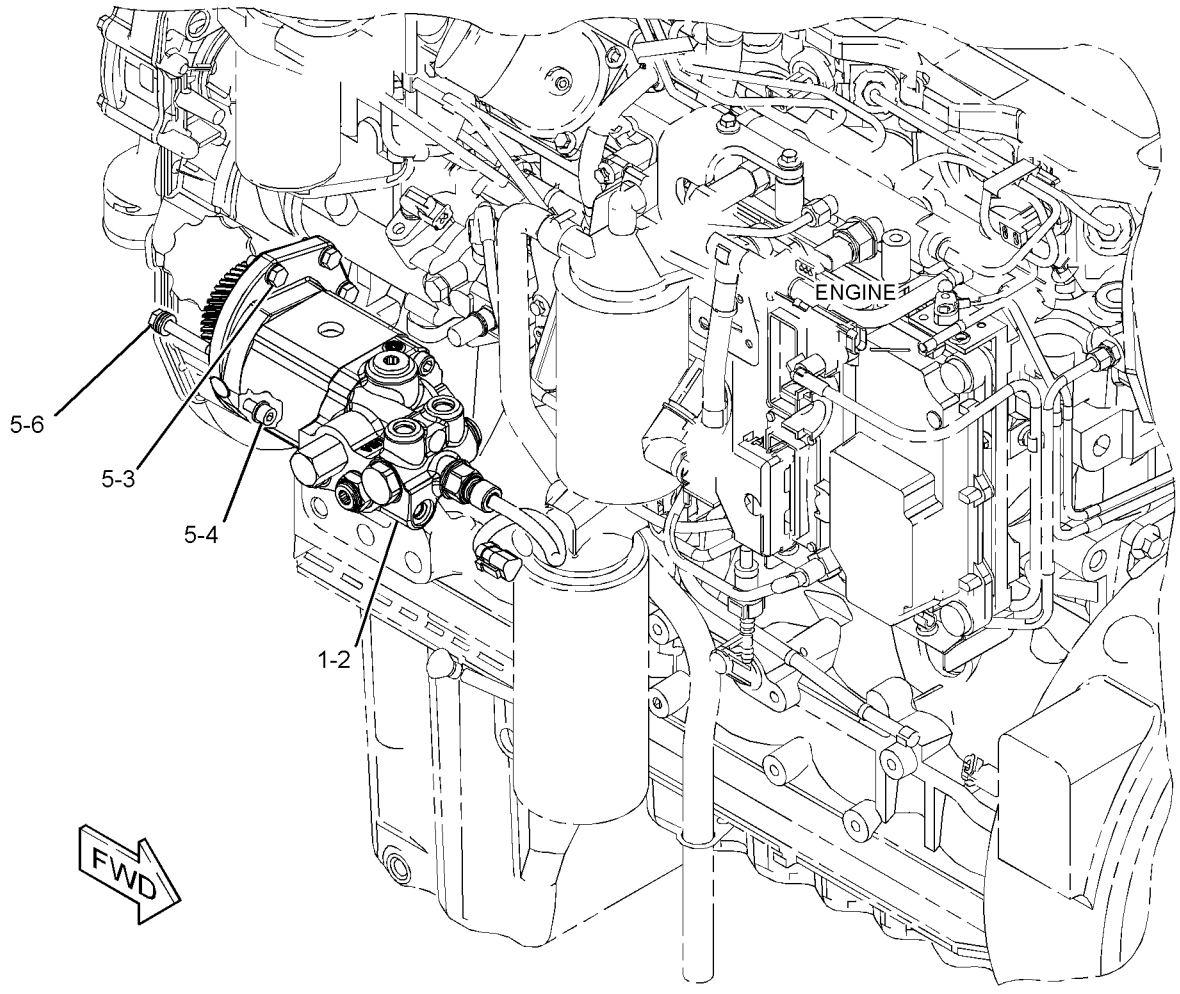

GRAPHIC #1 **<END>** g02749816

HYDRAULIC SYSTEM

132-2476 PUMP & MTG GP-IMPL & STEERING–
IMPLEMENT,PILOT & STEERING
S/N: JRL1-UP; RRS1-UP
PART OF 289-8803, 289-8833 HYDRAULIC AR

SMCS-4306, 5055, 5070, 5084 **i01859602**

NOTE	REF NO	GRAPHIC REF	PART NUMBER	QTY	PART NAME 1 2 3 4 5 6 (PRODUCT LEVEL)	SEE PAGE
Y	1	1	**163-2428**	1	PUMP GP-PISTON (IMPLEMENT, STEERING, PILOT)	402
	2	1	**1H-6227**	1	SEAL-O-RING	
M	3	1	**6V-8200**	2	BOLT-SOCKET HEAD (M12X1.75X35-MM)	
	4	1	**8T-7971**	2	WASHER-HARD (13.5X25.5X5-MM THK)	

M-METRIC PART
Y-SEPARATE ILLUSTRATION

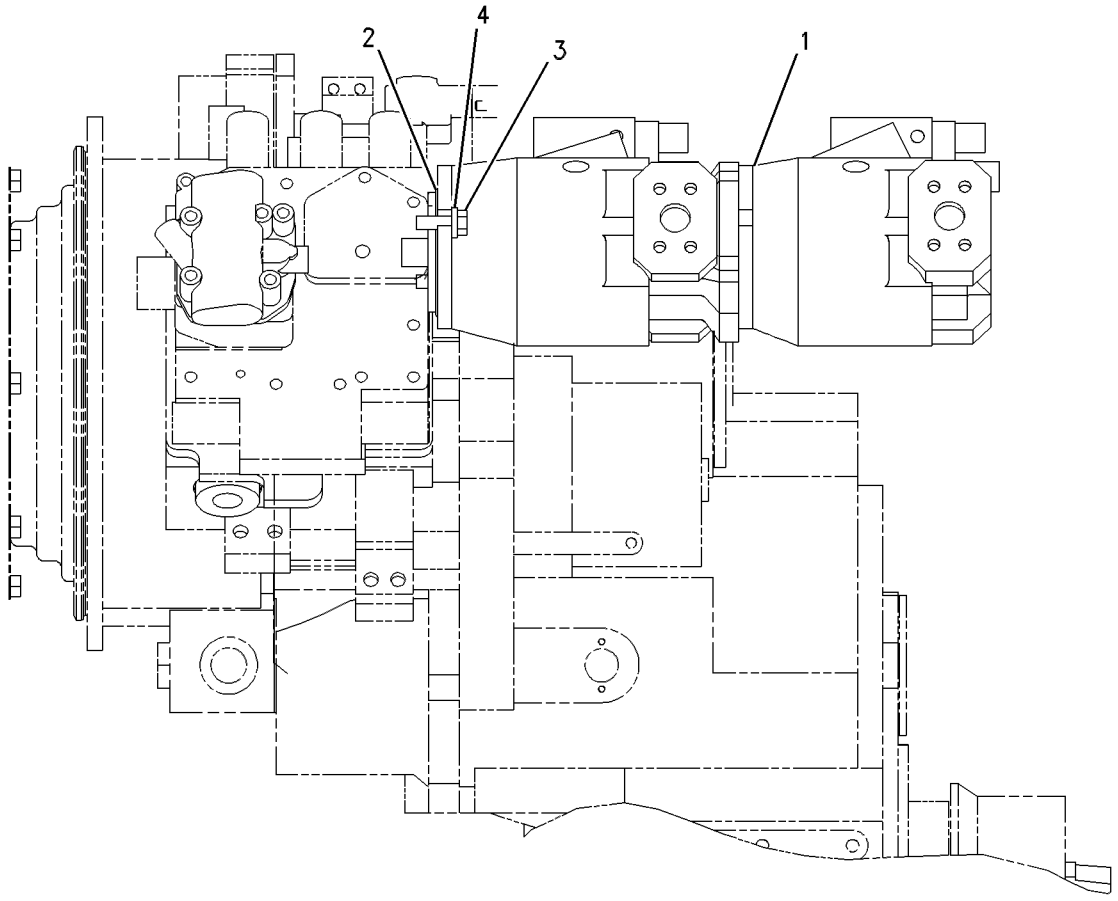

GRAPHIC #1 **<END>** g00605834

288-4162 PUMP GP-GEAR–BRAKE, HYDRAULIC FAN

S/N: JRL1-UP; RRS1-UP

PART OF 289-8919 PUMP & MTG GP-BRAKE & HYD FAN

SMCS-5073 **i03039404**

NOTE	REF NO	GRAPHIC REF	PART NUMBER	QTY	PART NAME 1 2 3 4 5 6 (PRODUCT LEVEL)	SEE PAGE
	1	1	**205-4587**	1	GEAR (33-TEETH)	
M	2	1	**160-8499**	1	NUT (M12X1.5-THD)	
	3	1	**5P-8244**	1	WASHER-HARD (12X22.5X2.5-MM THK)	
Y	4	1	**299-3941**	1	PUMP GP-GEAR (BRAKE, HYDRAULIC FAN)	400
	5	1	**1J-9671**	1	SEAL-O-RING	
Y	6	1	**224-4536**	1	SENSOR GP-PRESSURE (INJECTION ACTUATION)	134

M-METRIC PART
Y-SEPARATE ILLUSTRATION

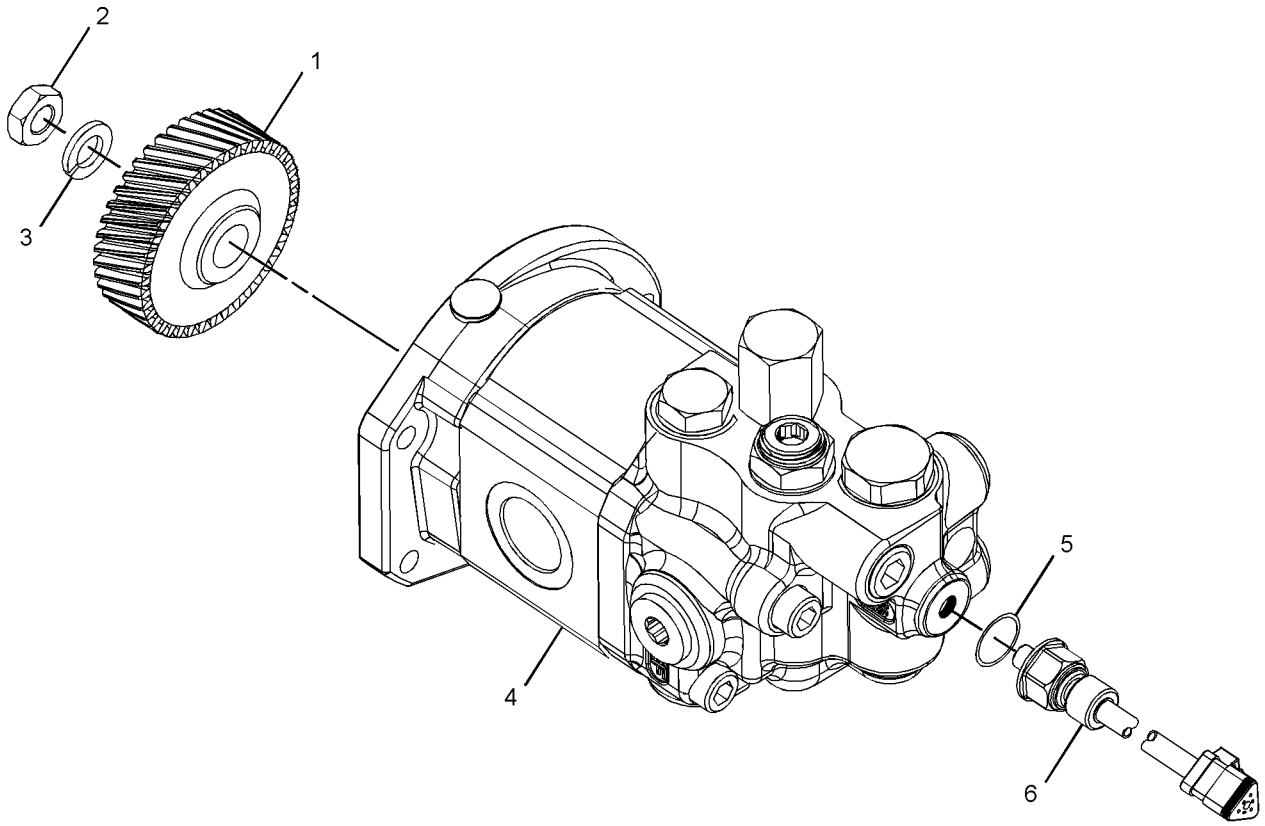

GRAPHIC #1 **<END>** g01398458

HYDRAULIC SYSTEM

299-3941 PUMP GP-GEAR–BRAKE, HYDRAULIC FAN

S/N: JRL1-UP; RRS1-UP

PART OF 288-4162 PUMP GP-GEAR

SMCS-5073 **i03039580**

NOTE	REF NO	GRAPHIC REF	PART NUMBER	QTY	PART NAME 1 2 3 4 5 6 (PRODUCT LEVEL)	SEE PAGE
	1	1	**204-4148**	1	SEAL-SHAFT	
	2	1	**131-0715**	1	SEAL-SHAFT	
	3	1	**220-2657**	1	FLANGE	
	4	1	**099-3095**	3	DOWEL	
	5	1	**4W-7356**	2	SEAL-O-RING	
	6	1	**6E-2943**	1	PLUG (DRAIN)	
L	7	1	**270-2615**	1	VALVE GP-ACCUMULATOR CHARGING (BRAKE)	
	8	1	**199-3778**	2	BOLT-SOCKET HEAD (M10X1.5X170-MM)	
M	9	1	**8T-0272**	1	BOLT-SOCKET HEAD (M10X1.5X110-MM)	
M	10	1	**086-2369**	1	BOLT-SOCKET HEAD (M10X1.5X130-MM)	
					PARTS SHOWN IN GRAPHIC(S) WITHOUT A REFERENCE NUMBER ARE NOT SERVICED SEPARATELY	
					AVAILABLE REPAIR KIT(S):	
			201-5242	1	KIT-SEAL (GEAR PUMP)	
					(INCLUDES DUST SEAL, BACKUP RINGS, E-SEALS, SHAFT SEAL & RETAINING RING)	
L			**270-2616**	1	KIT-SEAL	
					(INCLUDES SEALS, POPPETS, PLUG & FILTER)	

L-KIT MARKED L SERVICES PART MARKED L
M-METRIC PART

299-3941 **PUMP GP-GEAR** *(contd.)* **i03039580**

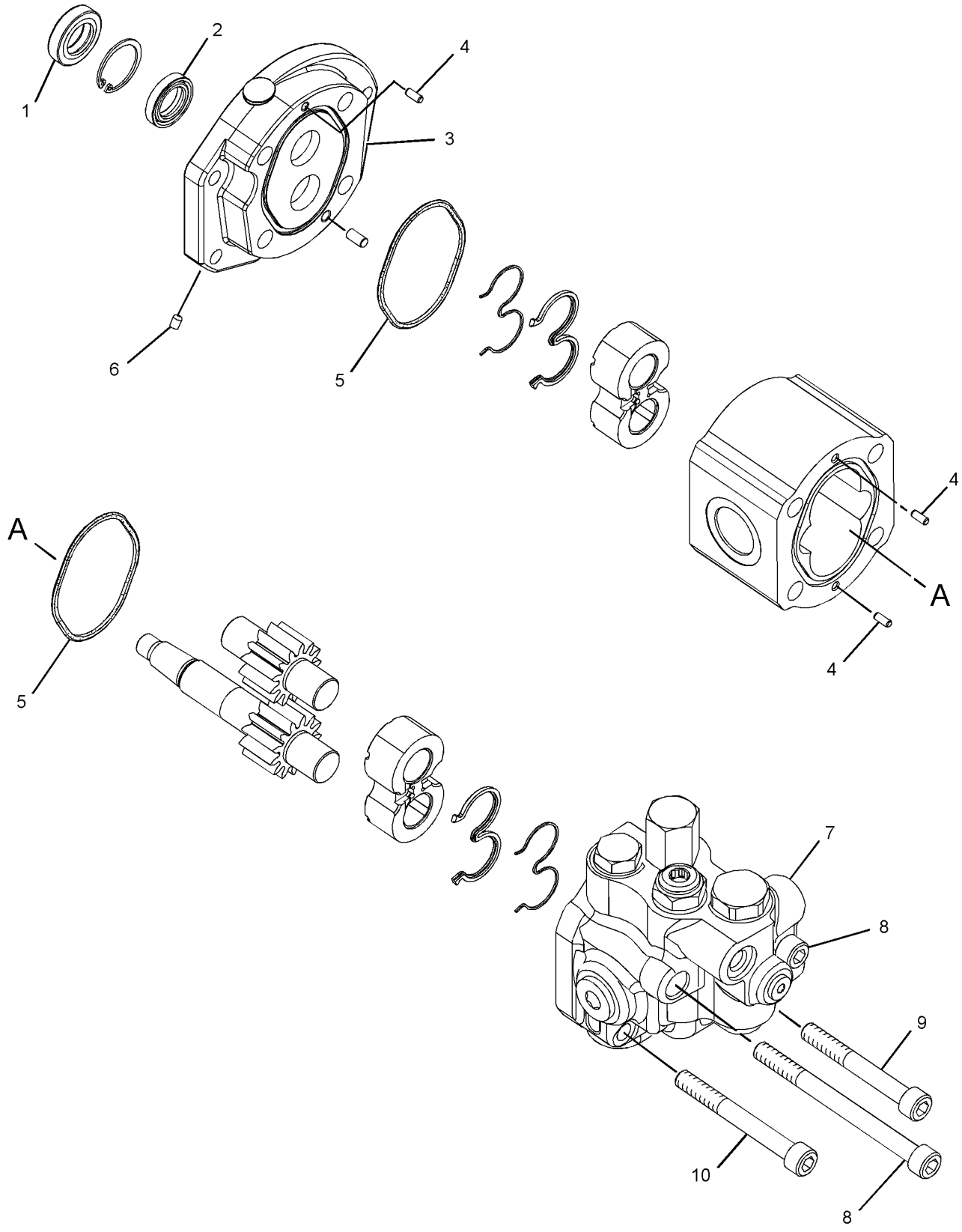

GRAPHIC #1 **<END>** g01398192

163-2428 PUMP GP-PISTON–IMPLEMENT,PILOT & STEERING

S/N: JRL1-UP; RRS1-UP

PART OF 132-2476 PUMP & MTG GP-IMPL & STEERING

SMCS-5070 **i03628851**

NOTE	PART NUMBER	QTY	PART NAME 1 2 3 4 5 6 (PRODUCT LEVEL)	SEE PAGE
YR	**168-9027**	1	PUMP GP-PISTON (FRONT) (IMPLEMENT, PILOT)	405
YR	**168-7873**	1	PUMP GP-PISTON (REAR) (STEERING, PILOT)	403

R-REMFG PART MAY BE AVAILABLE
Y-SEPARATE ILLUSTRATION

<END>

HYDRAULIC SYSTEM

168-7873 PUMP GP-PISTON—REAR*R

S/N: JRL1-UP; RRS1-UP

PART OF 163-2428 PUMP GP-PISTON

SMCS-5070 **i02573777**

NOTE	REF NO	GRAPHIC REF	PART NUMBER	QTY	PART NAME 1 2 3 4 5 6 (PRODUCT LEVEL)	SEE PAGE
	1	1	**168-7872**	1	SHAFT-PUMP	
	2	1	**8C-3110**	1	RING-RETAINING	
	3	1	**127-9471**	1	SEAL-PUMP SHAFT	
	4	1	**9S-8006**	1	PLUG-O-RING	
	5	1	**2M-9780**	1	SEAL-O-RING	
	6	1	**127-9490**	1	SPRING (BIAS)	
	7	1	**127-9472**	1	ROD	
	8	1	**168-7861**	1	PISTON-ACTUATOR	
	9	1	**168-7863**	1	PLUG-CONTROL	
	10	1	**8T-7525**	1	SEAL-O-RING	
	11	1	**083-4419**	1	PIN	
	12	1	**168-7864**	1	HEAD-PUMP	
	13	1	**168-3504**	1	SEAL	
	14	1	**136-8423**	1	PLUG-BREAK OFF	
M	15	1	**095-0670**	4	BOLT (M12X1.75X45-MM)	
	16	1	**105-3035**	1	CONE-BEARING	
C	17	1	**203-8609**	1	CUP-BEARING	
	18	1	**127-9485**	1	SEAL-O-RING	
CY	19	1	**224-3188**	1	VALVE GP-PUMP CONTROL (PRESSURE, FLOW COMPENSATOR)	449
	20	1	**127-9483**	1	SHIM (PRELOAD)	
Y	21	1	**168-7868**	1	ROTATING GP-PUMP	408
	22	1	**235-5677**	1	SWASHPLATE	
	23	1	**168-7869**	2	BEARING-CRADLE	
C	24	1	**203-9163**	1	CONE-BEARING	
	25	1	**6V-4636**	1	CUP-BEARING	
	26	1	**168-7871**	1	HOUSING-PUMP	
C	27	1	**9X-7680**	3	SEAL-O-RING	
CM	28	1	**8T-8442**	4	BOLT-SOCKET HEAD (M6X1X30-MM)	

C-CHANGE FROM PREVIOUS TYPE
M-METRIC PART
Y-SEPARATE ILLUSTRATION

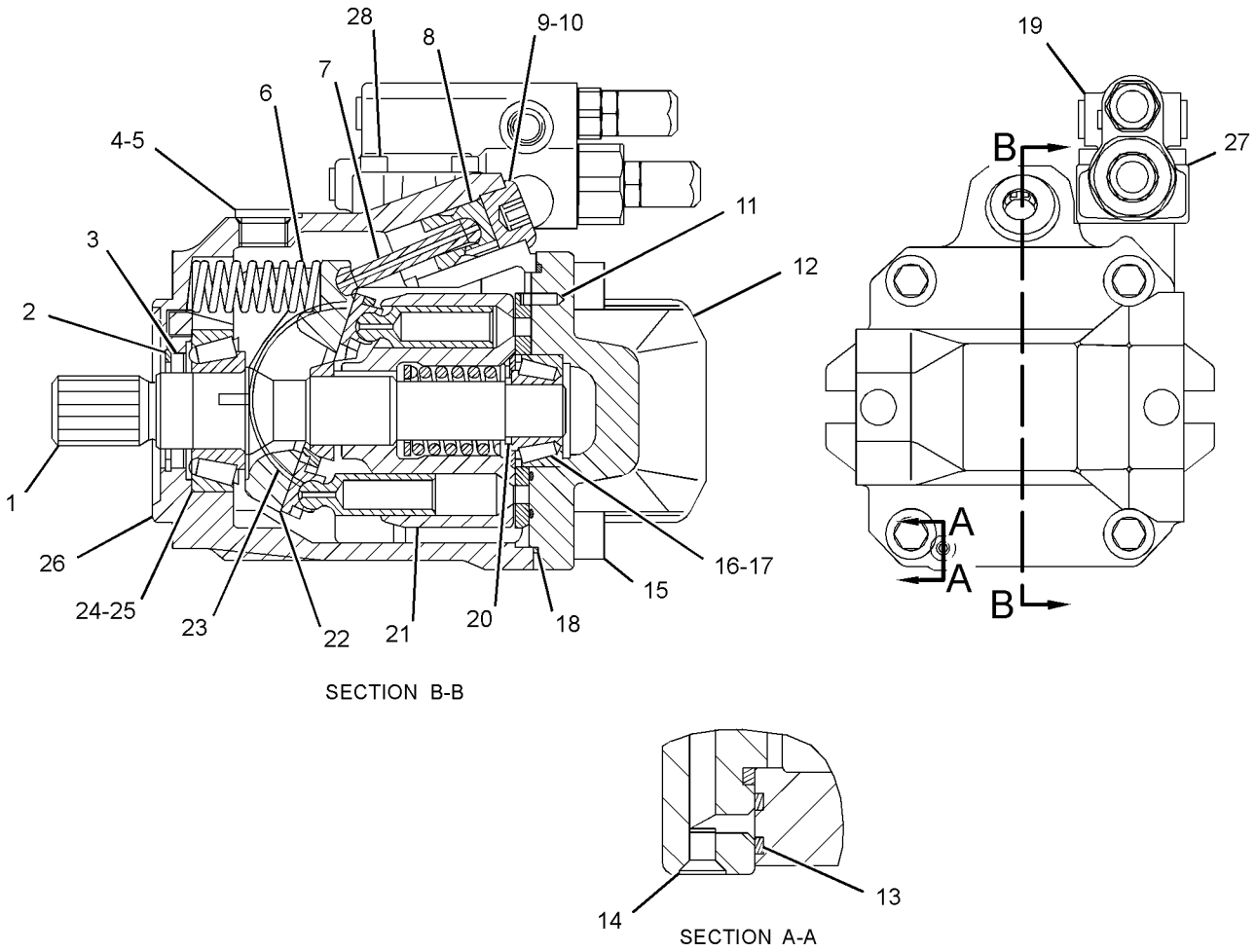

GRAPHIC #1 **<END>** g01289789

168-9027 PUMP GP-PISTON—FRONT*R

S/N: JRL1-UP; RRS1-UP
IMPLEMENT, PILOT
PART OF 163-2428 PUMP GP-PISTON

SMCS-5070 **i03629301**

NOTE	REF NO	GRAPHIC REF	PART NUMBER	QTY	PART NAME 1 2 3 4 5 6 (PRODUCT LEVEL)	SEE PAGE
M	1	1	**6R-7943**	2	SCREW (M5X0.8X15-MM)	
	2	1	**7Y-5267**	1	RING-RETAINING	
	3	1	**168-7319**	1	SEAL-SHAFT	
	4	1	**9S-8006**	1	PLUG-O-RING	
	5	1	**2M-9780**	1	SEAL-O-RING	
	6	1	**168-2197**	1	SPRING	
	7	1	**168-2198**	1	LINK-CONTROL	
	8	1	**168-2199**	1	PISTON-CONTROL	
	9	1	**168-2200**	1	PLUG-CONTROL	
	10	1	**8T-7525**	1	SEAL-O-RING	
	11	1	**083-4419**	1	PIN	
	12	1	**168-7316**	1	HEAD-PUMP	
	13	1	**168-3504**	1	SEAL	
	14	1	**136-8423**	2	PLUG-BREAK OFF	
M	15	1	**104-8085**	4	BOLT-SOCKET HEAD	
	16	1	**9W-2109**	1	CONE	
	17	1	**9W-2110**	1	CUP-TAPERED ROLLER	
	18	1	**117-8801**	1	SEAL-O-RING	
	19	1	**168-7321**	1	PLATE-PORT	
	20	1	**168-2203**	1	SHIM-SHAFT	
Y	21	1	**168-2204**	1	ROTATING GP-PUMP (IMPLEMENT, PILOT)	407
	22	1	**168-7317**	1	SWASHPLATE-PUMP	
	23	1	**168-2206**	2	BEARING-CRADLE	
	24	1	**3P-1210**	1	CONE-BEARING	
	25	1	**8J-0412**	1	CUP-BEARING	
	26	1	**168-7315**	1	HOUSING-PUMP	
	27	1	**168-7318**	1	SHAFT-PUMP	
	28	1	**118-3122**	1	SEAL-O-RING	
	29	1	**168-7320**	1	COUPLING-SHAFT	
M	30	1	**8T-3957**	2	BOLT-SOCKET HEAD (M12X1.75X30-MM)	
	31	1	**8T-4223**	2	WASHER-HARD (13.5X25.5X3-MM THK)	
FY			**168-7323**	1	VALVE GP-PUMP CONTROL (PRESSURE, FLOW COMPENSATOR)	447

F-NOT SHOWN
M-METRIC PART
Y-SEPARATE ILLUSTRATION

168-9027 **PUMP GP-PISTON** *(contd.)* **i03629301**

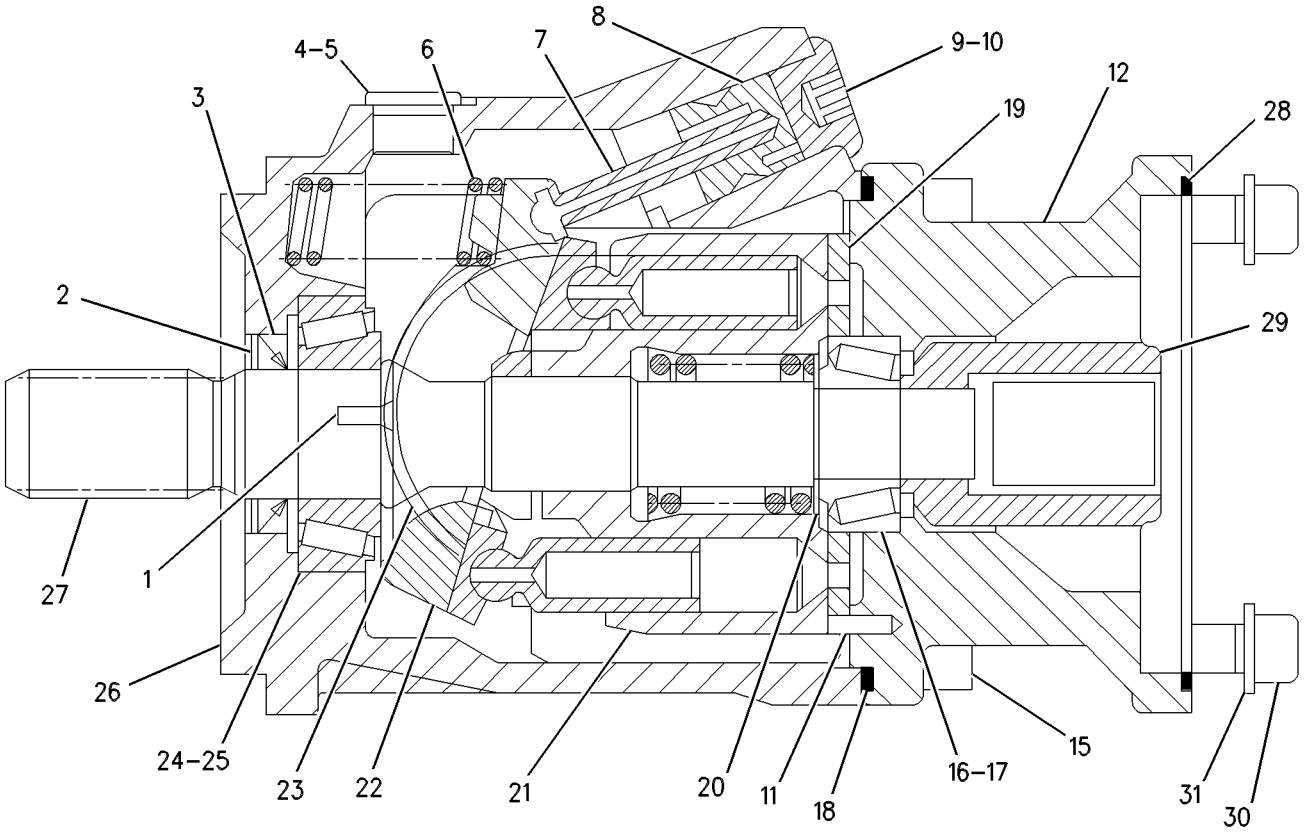

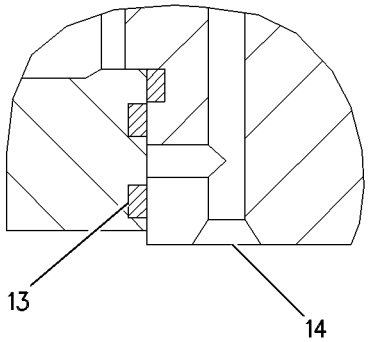

SECTION A–A

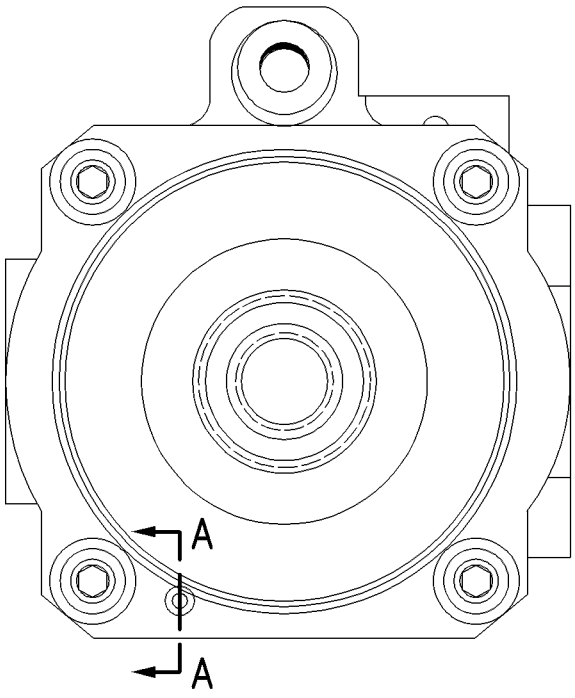

GRAPHIC #1 **<END>** g00618731

168-2204 ROTATING GP-PUMP

S/N: JRL1-UP; RRS1-UP

PART OF 168-9027 PUMP GP-PISTON

SMCS-1387, 5070, 5084 **i01229673**

NOTE	REF NO	GRAPHIC REF	PART NUMBER	QTY	PART NAME 1 2 3 4 5 6 (PRODUCT LEVEL)	SEE PAGE
	1	1	**168-3378**	1	BEARING-SPHERICAL	
	2	1	**168-3379**	3	PIN	
	3	1	**6V-7723**	1	RING-RETAINING	
	4	1	**168-3380**	1	BARREL-CYLINDER	
	5	1	**168-3381**	1	SPRING	
	6	1	**168-3382**	1	WASHER (42-MM ODX2.7-MM THK)	
	7	1	**168-3384**	9	PISTON AS-PUMP	
	8	1	**168-3385**	1	PLATE-RETRACTION	

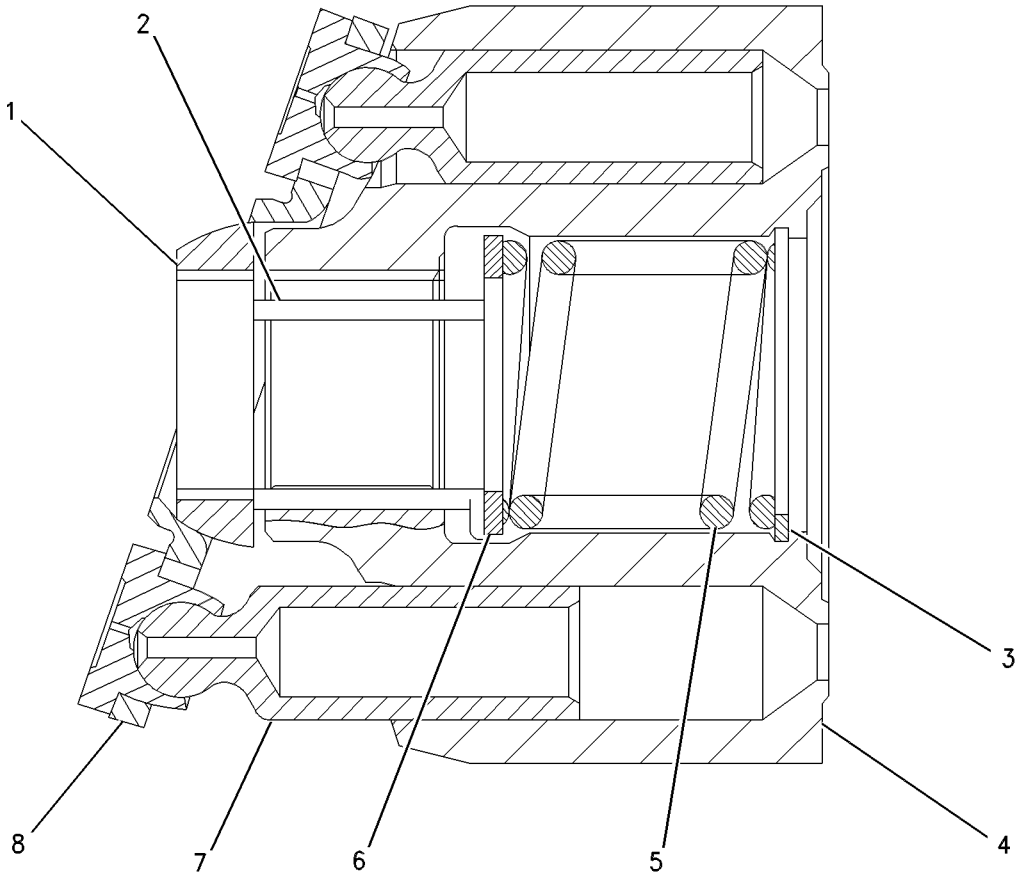

GRAPHIC #1 **<END>** g00538144

HYDRAULIC SYSTEM

168-7868 ROTATING GP-PUMP

S/N: JRL1-UP; RRS1-UP

PART OF 168-7873 PUMP GP-PISTON

SMCS-1387, 5070, 5084 **i04029153**

NOTE	REF NO	GRAPHIC REF	PART NUMBER	QTY	PART NAME 1 2 3 4 5 6 (PRODUCT LEVEL)	SEE PAGE
	1	1	**138-8175**	1	BEARING-SPHERICAL	
	2	1	**168-7940**	3	PIN	
	3	1	**096-0015**	1	RING-RETAINING	
	4	1	**128-7069**	1	BARREL-CYLINDER	
	5	1	**168-7941**	1	SPRING	
	6	1	**168-7942**	1	WASHER (36.5-MM ODX2.0-MM THK)	
	7	1	**168-7943**	9	PISTON AS-PUMP	
	8	1	**168-7944**	1	PLATE-RETRACTION	

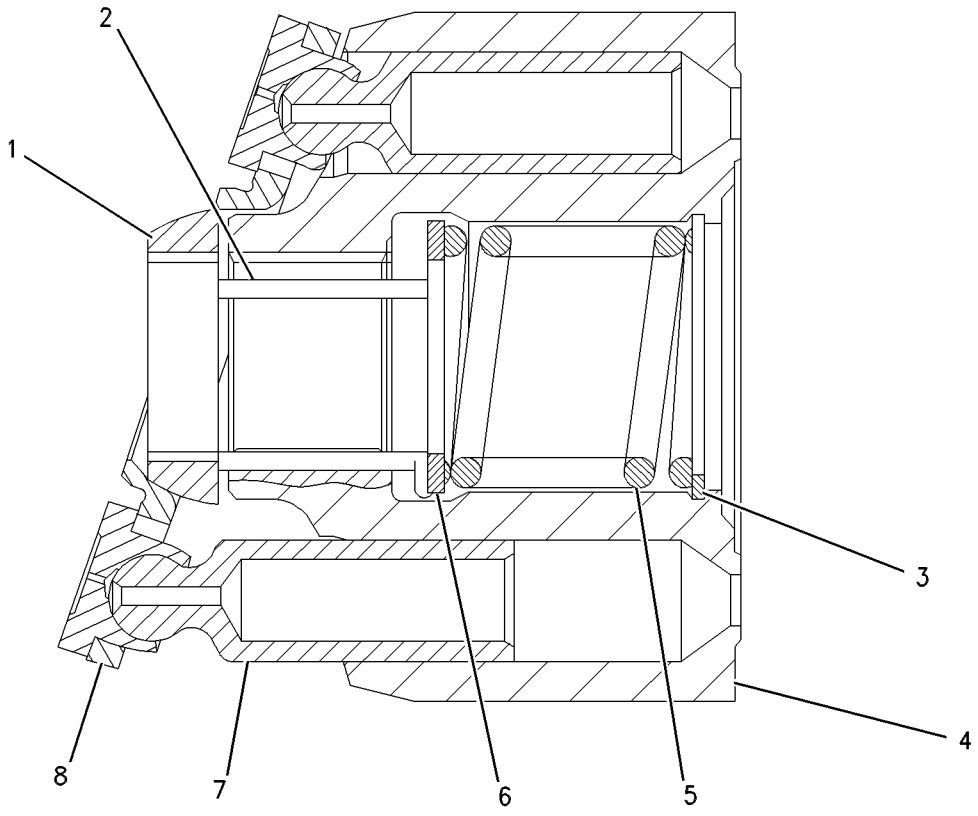

GRAPHIC #1 **<END>** g00616122

HYDRAULIC SYSTEM

289-8901 TANK & MTG GP-HYDRAULIC

S/N: JRL1-UP; RRS1-UP

PART OF 289-8803, 289-8833 HYDRAULIC AR

SMCS-5056 **i03628932**

NOTE	REF NO	GRAPHIC REF	PART NUMBER	QTY	PART NAME 1 2 3 4 5 6 (PRODUCT LEVEL)	SEE PAGE
	1	1	**246-2641**	1	PADLOCK GP	
		1	**5P-8500**	1	KEY	
	2	1	**7T-8332**	4	MOUNTING	
Y	3	1	*262-5654*	1	TANK GP-HYDRAULIC	410
	4	1	**289-9620**	1	PLATE AS	
	5	1	**289-9621**	1	PLATE AS	
	6	1	**320-0569**	1	PLATE	
	7	1	**7X-7729**	12	WASHER (11X25X3-MM THK)	
	8	1	**8F-6437**	4	WASHER (13.5X50.8X4.76-MM THK)	
	9	1	**8T-4121**	2	WASHER-HARD (11X21X2.5-MM THK)	
M	10	1	**8T-4136**	2	BOLT (M10X1.5X25-MM)	
M	11	1	**8T-4137**	2	BOLT (M10X1.5X20-MM)	
M	12	1	**8T-4186**	8	BOLT (M10X1.5X40-MM)	
	13	1	**8T-4223**	8	WASHER-HARD (13.5X25.5X3-MM THK)	
M	14	1	**8T-4244**	4	NUT (M12X1.75-THD)	
M	15	1	**8T-4910**	4	BOLT (M12X1.75X60-MM)	
M	16	1	**8T-4133**	2	NUT (M10X1.5-THD)	

M-METRIC PART
Y-SEPARATE ILLUSTRATION

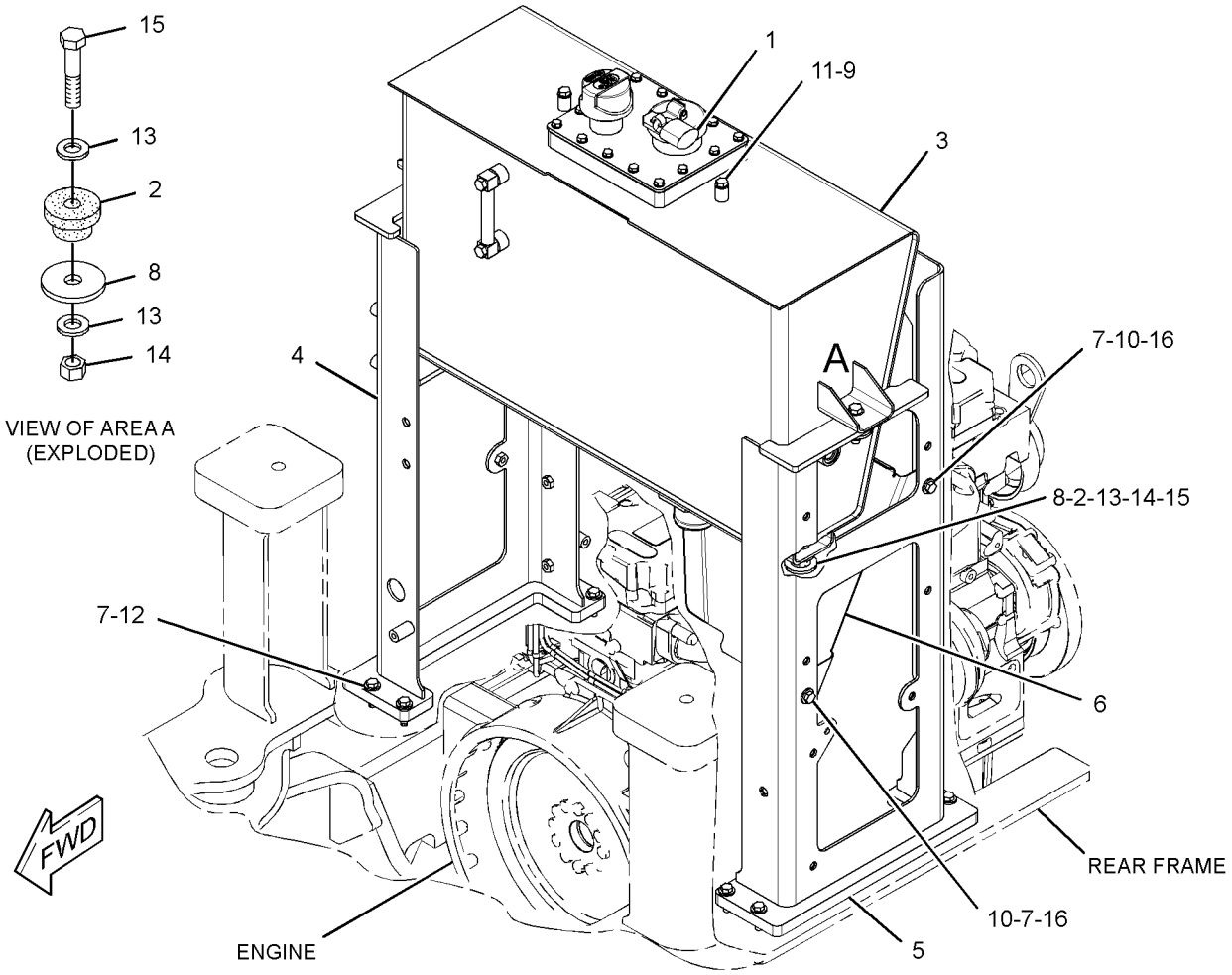

GRAPHIC #1 **<END>** g01589838

HYDRAULIC SYSTEM

262-5654 TANK GP-HYDRAULIC

S/N: JRL1-UP; RRS1-UP

PART OF 289-8901 TANK & MTG GP-HYDRAULIC

SMCS-5056 **i04157732**

NOTE	REF NO	GRAPHIC REF	PART NUMBER	QTY	PART NAME 1 2 3 4 5 6 (PRODUCT LEVEL)	SEE PAGE
	1	1	**142-8937**	1	CAP AS-FILLER (HYDRAULIC TANK)	
	2	1	**206-8818**	1	STRAINER (HYDRAULIC OIL)	
	3	1	**206-9546**	1	GASKET	
Y	4	1	**153-2985**	1	GAUGE GP-SIGHT (HYDRAULIC OIL LEVEL)	325
	5	1	**255-0759**	1	SCREEN-SUCTION (FILTER)	
		1	**030-4606**	1	SEAL-O-RING	
	6	1	**258-2829**	1	BREATHER (HYDRAULIC TANK)	
	7	1	**262-5653**	1	TANK AS-HYDRAULIC	
	8	1	**262-5689**	1	STRAINER (HYDRAULIC TANK)	
		1	**135-7940**	1	SEAL-O-RING	
	9	1	**300-1301**	1	COVER AS-HYDRAULIC TANK	
		1	**5P-4116**	1	WASHER-HARD (8.8X20.5X2-MM THK)	
M		1	**8T-6912**	1	BOLT (M8X1.25X50-MM)	
		1	**299-7996**	1	PLATE	
		1	**299-7997**	1	SCREEN (HYDRAULIC OIL)	
		1	**299-7998**	1	PLATE AS	
	10	1	**8T-4224**	14	WASHER-HARD (8.8X16X2-MM THK)	
M	11	1	**8T-4908**	14	BOLT (M8X1.25X25-MM)	

M-METRIC PART
Y-SEPARATE ILLUSTRATION

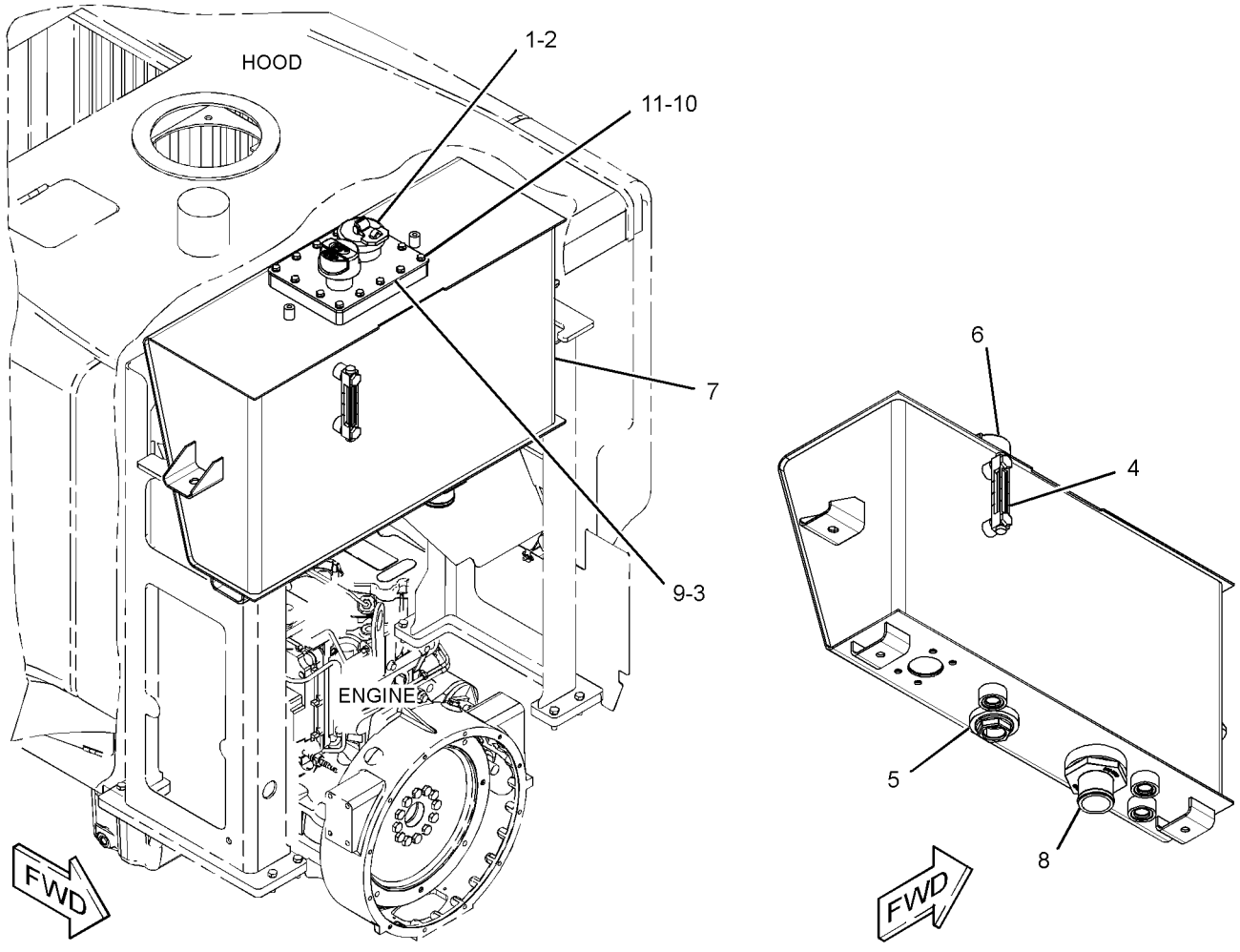

GRAPHIC #1 **<END>** g02266334

295-5544 VALVE & MTG GP-RIDE CONTROL

S/N: JRL1-UP; RRS1-UP
PART OF 289-8994, 289-8995 CONTROL AR-RIDE
AN ATTACHMENT

SMCS-5054, 5066 **i03039602**

NOTE	REF NO	GRAPHIC REF	PART NUMBER	QTY	PART NAME 1 2 3 4 5 6 (PRODUCT LEVEL)	SEE PAGE
Y	1	1	*293-6472*	1	CONTROL GP-RIDE	312
	2	1	**7X-7729**	4	WASHER (11X25X3-MM THK)	
M	3	1	**8T-4195**	4	BOLT (M10X1.5X30-MM)	

M-METRIC PART
Y-SEPARATE ILLUSTRATION

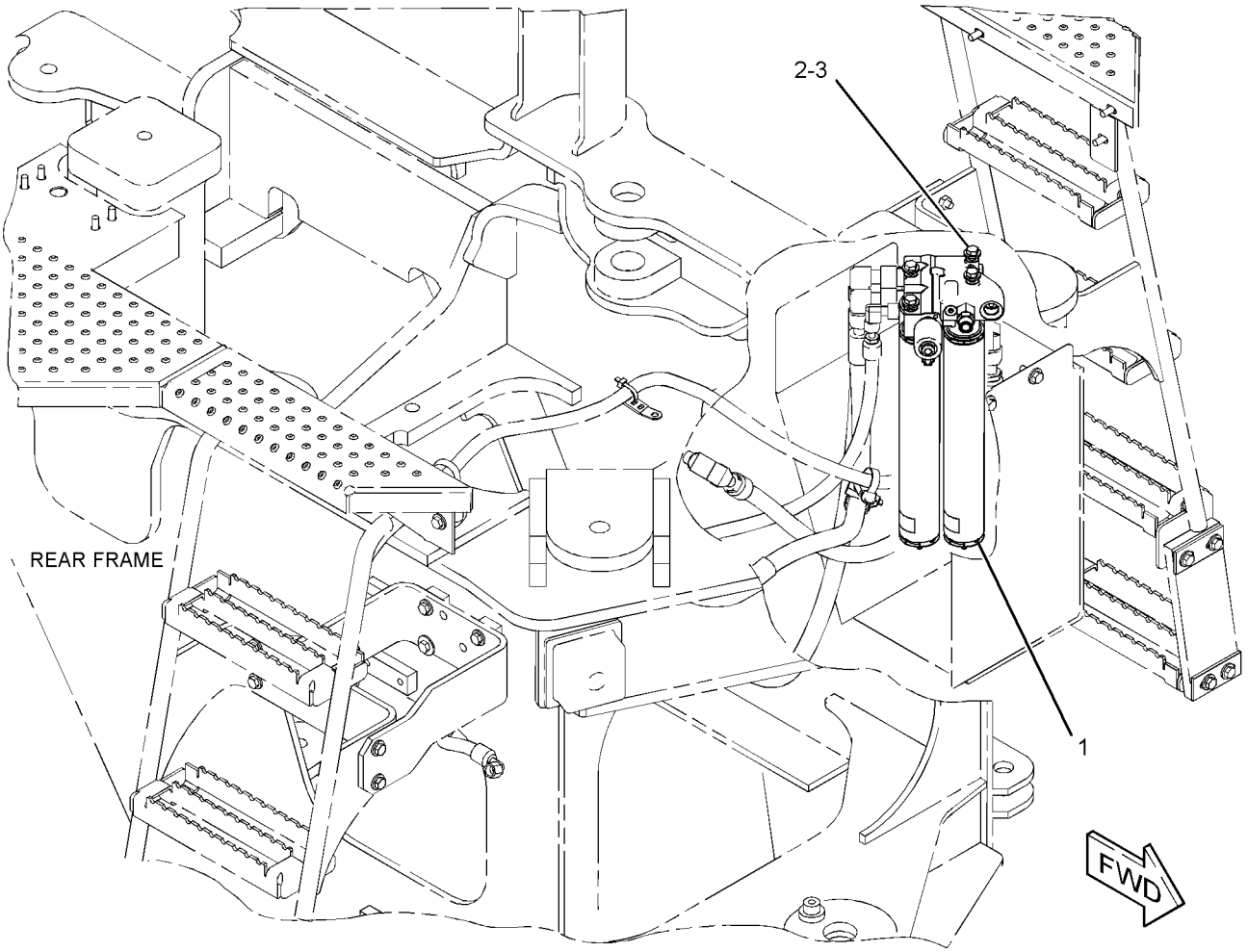

GRAPHIC #1 **<END>** g01389805

HYDRAULIC SYSTEM

233-7133 VALVE & MTG GP-SOLENOID

S/N: JRL1-UP; RRS1-UP
PART OF 225-1057 VALVE GP-SHUTOFF
AN ATTACHMENT

SMCS-4805, 5479 **i03583753**

NOTE	REF NO	GRAPHIC REF	PART NUMBER	QTY	PART NAME 1 2 3 4 5 6 (PRODUCT LEVEL)	SEE PAGE
J	1	1	**233-7126**	1	VALVE GP-SOLENOID (HYDRAULIC LOCKOUT)	
M	2	1	**096-5968**	2	BOLT-SOCKET HEAD (M5X0.8X8-MM)	
					AVAILABLE REPAIR KIT(S):	
J			**250-8330**	1	KIT-SEAL	
					(INCLUDES O-RINGS)	

J-KIT MARKED J AVAILABLE FOR PART MARKED J
M-METRIC PART

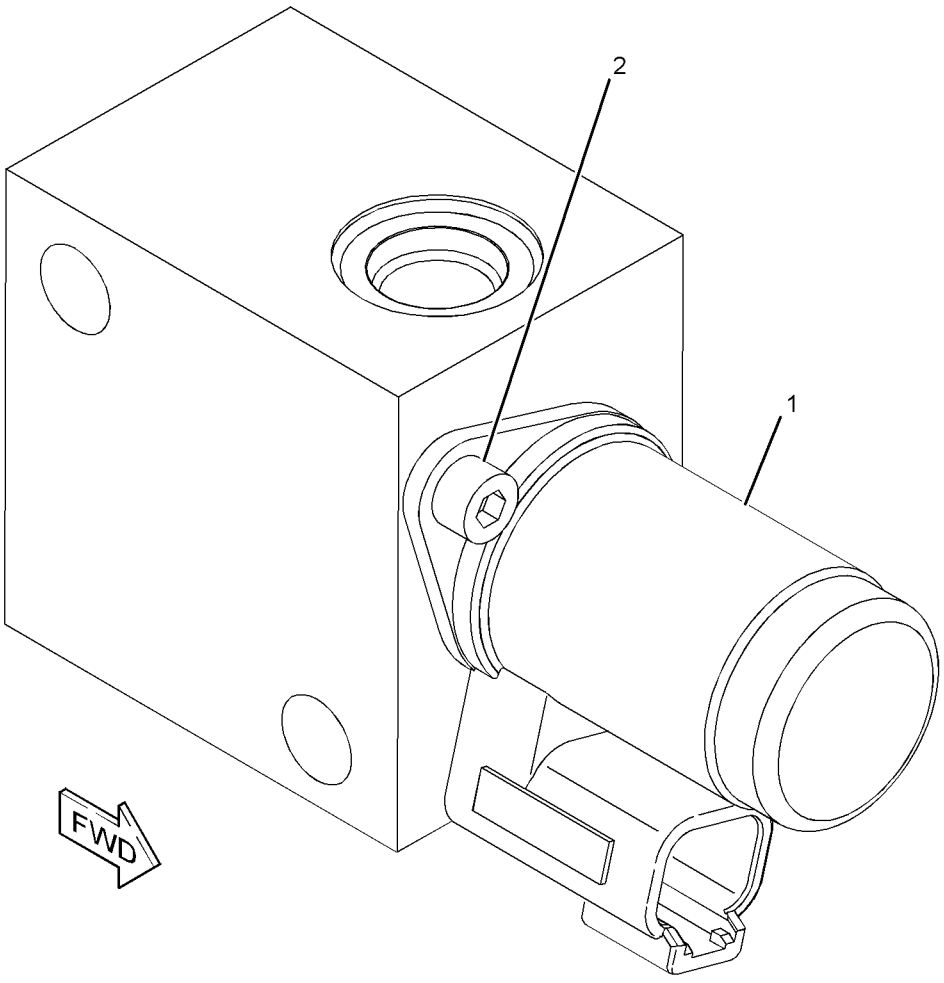

GRAPHIC #1 **<END>** g01183188

173-4032 VALVE GP-COMBINATION–TILT RELIEF

S/N: RRS1-UP

PART OF 289-8795 LINES GP-TILT CYLINDER

SMCS-5064 **i03629304**

NOTE	REF NO	GRAPHIC REF	PART NUMBER	QTY	PART NAME 1 2 3 4 5 6 (PRODUCT LEVEL)	SEE PAGE
	1	1	**173-7061**	1	VALVE GP-RELIEF (TILT)	
J		1	**2M-9780**	1	SEAL-O-RING	
J		1	**161-6149**	1	SEAL-O-RING	
J		1	**161-6161**	2	RING-BACKUP	
	2	1	**173-7062**	1	VALVE GP-DIVERTER (TILT)	
	3	1	**3J-7354**	1	SEAL-O-RING	
	4	1	**3K-0360**	2	SEAL-O-RING	
	5	1	**9S-8002**	1	PLUG-O-RING	
	6	1	**9S-8005**	2	PLUG-O-RING	
					AVAILABLE REPAIR KIT(S):	
J			**133-5545**	1	KIT-SEAL (RELIEF VALVE)	

J-KIT MARKED J SERVICES PART(S) MARKED J

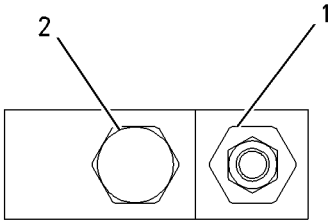

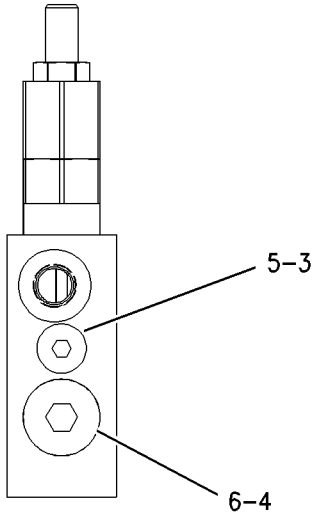

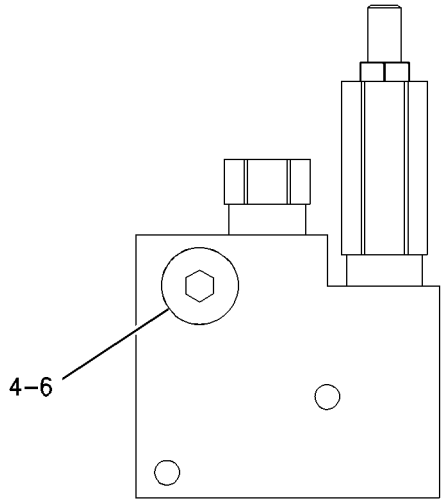

GRAPHIC #1 **<END>** g00640883

HYDRAULIC SYSTEM

216-7502 VALVE GP-CONTROL–AUXILIARY

S/N: JRL1-UP; RRS1-UP
PART OF 209-0271, 209-0272, 209-0274 VALVE GP-MAIN CONTROL
AN ATTACHMENT

SMCS-5051 **i03628894**

NOTE	REF NO	GRAPHIC REF	PART NUMBER	QTY	PART NAME 1 2 3 4 5 6 (PRODUCT LEVEL)	SEE PAGE
	1	1	**215-8137**	2	KIT-VALVE (CHECK VALVE)	
					(EACH KIT INCLUDES BLOCK, LOCKNUT, CAP & STUD)	
	2	1	**5P-3456**	2	SEAL-O-RING	
	3	1	**215-8131**	2	SPRING	
	4	1	**215-8129**	1	RETAINER	
	5	1	**211-5255**	4	BOLT-SOCKET HEAD (M5X0.8X55-MM)	
	6	1	**215-8128**	1	RETAINER	
	7	1	**215-8139**	1	VALVE GP-CHECK (LOAD)	
	8	1	**216-7523**	1	SPRING	
	9	1	**216-7525**	1	KIT-PLUG	
					(INCLUDES PLUG & SEAL)	
	10	1	**216-9729**	1	STEM	
	11	1	**8T-7524**	1	SEAL-O-RING	

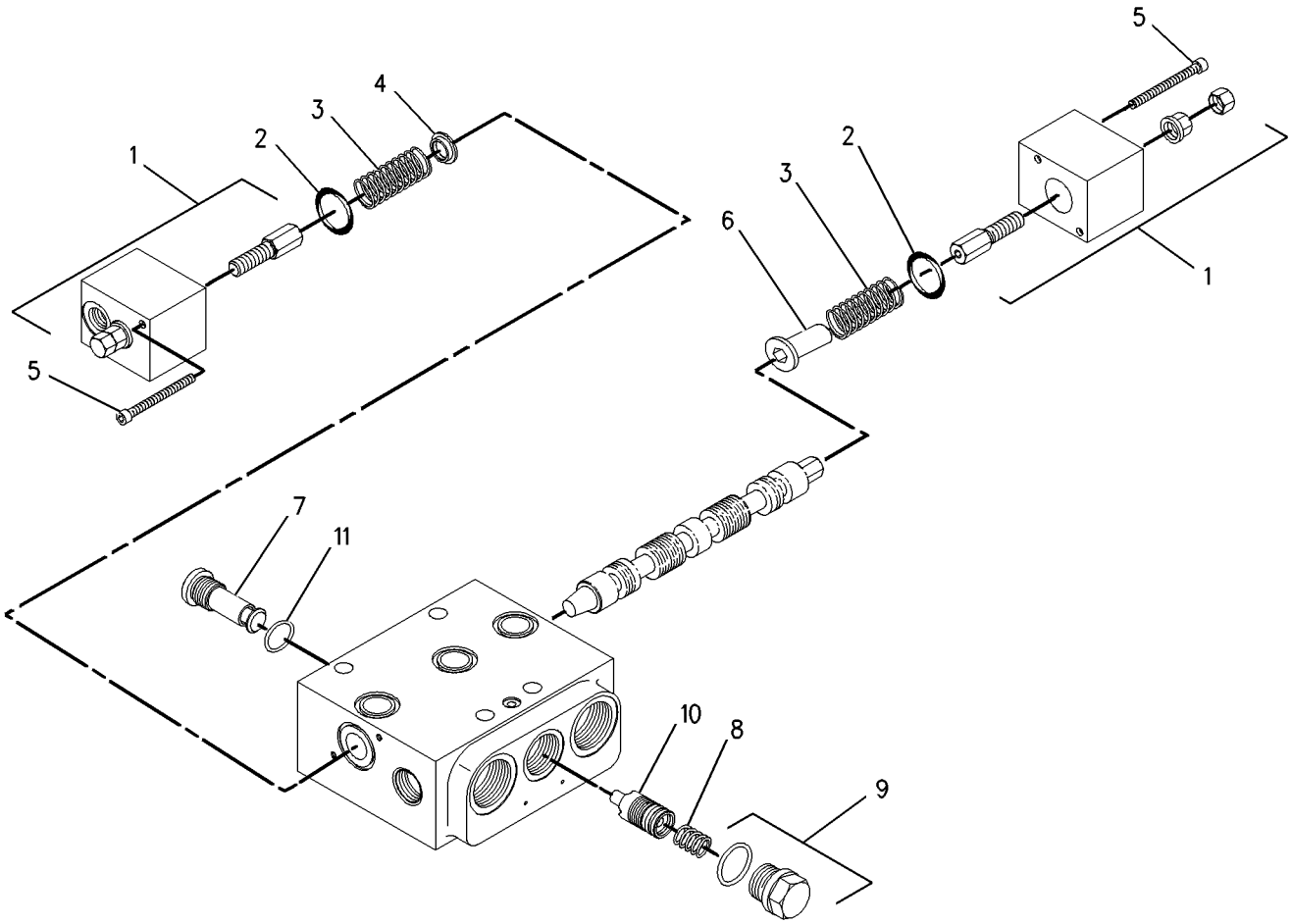

GRAPHIC #1 **<END>** g00927396

HYDRAULIC SYSTEM

209-0270 VALVE GP-MAIN CONTROL

S/N: RRS1-UP
2 FUNCTION
PART OF 203-3889 HYDRAULIC AR-2 VALVE
AN ATTACHMENT

SMCS-5051 **i03629307**

NOTE	REF NO	GRAPHIC REF	PART NUMBER	QTY	PART NAME 1 2 3 4 5 6 (PRODUCT LEVEL)	SEE PAGE
M	1	1	**5A-3604**	4	BOLT-SOCKET HEAD (M8X1.25X25-MM)	
	2	1	**216-9819**	1	PLATE	
	3	1	**6V-8397**	2	SEAL-O-RING	
	4	1	**229-9850**	1	VALVE GP-CHECK (MAKEUP OIL)	
		1	**033-6034**	1	SEAL-O-RING	
	5	1	**215-8115**	1	VALVE GP-FLOW CONTROL (SIGNAL DRAIN)	
		1	**033-5879**	1	SEAL-O-RING	
		1	**192-7111**	1	SEAL-O-RING	
	6	1	**6V-7970**	1	SEAL-O-RING	
	7	1	**8C-4424**	1	PLUG	
	8	1	**216-7913**	2	KIT-ORIFICE (CHECK VALVE)	
					(EACH KIT INCLUDES ORIFICE, SPRING & PLUG)	
	9	1	**215-8111**	1	KIT-VALVE (BOTTOM)	
					(KIT INCLUDES STEM, SPRING, PLUG & SEAL)	
	10	1	**215-8109**	1	KIT-VALVE (TOP)	
					(KIT INCLUDES STEM, SPRING, PLUG & SEAL)	
	11	1	**215-8116**	1	VALVE GP-RELIEF (SIGNAL LIMITER)	
		1	**033-5879**	1	SEAL-O-RING	
		1	**192-7111**	1	SEAL-O-RING	
	12	1	**217-3708**	2	VALVE GP-RELIEF (PILOT OPERATED)	
					(EACH INCLUDES)	
		1	**217-1994**	1	KIT-SEAL (RELIEF VALVE)	
					(KIT INCLUDES SEAL-O-RINGS)	
	13	1	**215-8138**	1	VALVE GP-CHECK	
	14	1	**3E-2331**	1	PLUG	
	15	1	**215-8139**	2	VALVE GP-CHECK (LOAD)	
	15A	1	**215-8139**	1	VALVE GP-CHECK (REGENERATION)	
	16	1	**8T-7524**	4	SEAL-O-RING	
	17	1	**215-8113**	1	VALVE GP-CHECK (BACKPRESSURE)	
		1	**6V-8352**	1	SEAL-O-RING	
	18	1	**5P-6718**	3	SEAL-O-RING	
	19	1	**061-7538**	1	SEAL-O-RING	
	20	1	**217-4598**	1	VALVE GP-RELIEF (MAKEUP)	
		1	**123-7531**	1	KIT-SEAL (RELIEF VALVE)	
					(KIT INCLUDES SEAL, THRUST RING & O-RINGS)	
M	21	1	**189-3014**	1	SCREW	
	22	1	**206-7655**	1	ORIFICE-SHUTTLE	
M	23	1	**206-7647**	1	PILOT	
	24	1	**6V-9507**	1	PLUG	
	25	1	**4J-5477**	1	SEAL-O-RING	
	26	2	**215-8135**	1	KIT-VALVE (CHECK VALVE)	
					(KIT INCLUDES BLOCK, STUD & LOCKNUT)	
	27	2	**215-8134**	1	KIT-VALVE (CHECK VALVE) (ORIFICE)	
					(KIT INCLUDES BLOCK, SEAL, ORIFICE, RETAINER, SPRING & CAP)	
	28	2	**215-8136**	1	KIT-VALVE (CHECK VALVE)	
					(KIT INCLUDES BLOCK, CAPS & STUD)	
	29	2	**215-8137**	1	KIT-VALVE (CHECK VALVE) (ORIFICE)	
					(KIT INCLUDES BLOCK, CAPS & STUD)	
	30	2	**215-8132**	1	KIT-VALVE (SHOCK REDUCING CHECK VALVE)	
					(KIT INCLUDES SPOOL & SEAL)	
M	31	2	**120-3956**	2	BOLT-SOCKET HEAD (M5X0.8X60-MM)	
M	32	2	**127-4832**	2	BOLT-SOCKET HEAD (M5X0.8X90-MM)	

209-0270 VALVE GP-MAIN CONTROL *(contd.)* i03629307

NOTE	REF NO	GRAPHIC REF	PART NUMBER	QTY	PART NAME 1 2 3 4 5 6 (PRODUCT LEVEL)	SEE PAGE
	33	2	**211-5255**	4	BOLT-SOCKET HEAD (M5X0.8X55-MM)	
	34	2	**5P-3456**	4	SEAL-O-RING	
	35	2	**215-8131**	4	SPRING	
	36	2	**215-8128**	2	RETAINER	
	37	2	**215-8133**	1	RING	
	38	2	**215-8129**	2	RETAINER	
	39	1	**217-4597**	1	VALVE GP-RELIEF (MAKEUP)	
		1	**123-7531**	1	KIT-SEAL (RELIEF VALVE)	
					(KIT INCLUDES SEAL, THRUST RING & O-RINGS)	

M-METRIC PART

209-0270 VALVE GP-MAIN CONTROL *(contd.)* i03629307

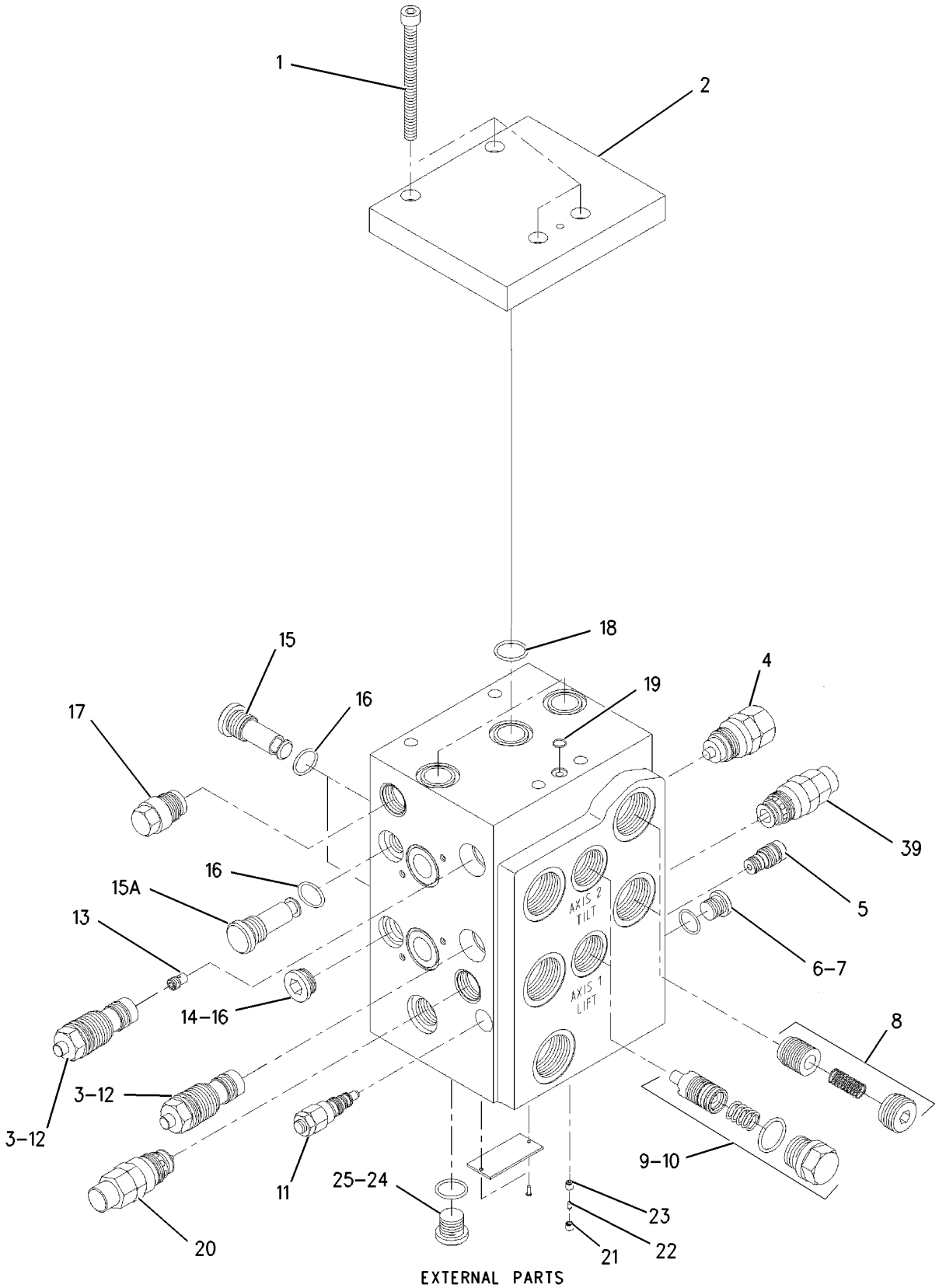

GRAPHIC #1 g00945088

209-0270 VALVE GP-MAIN CONTROL *(contd.)* i03629307

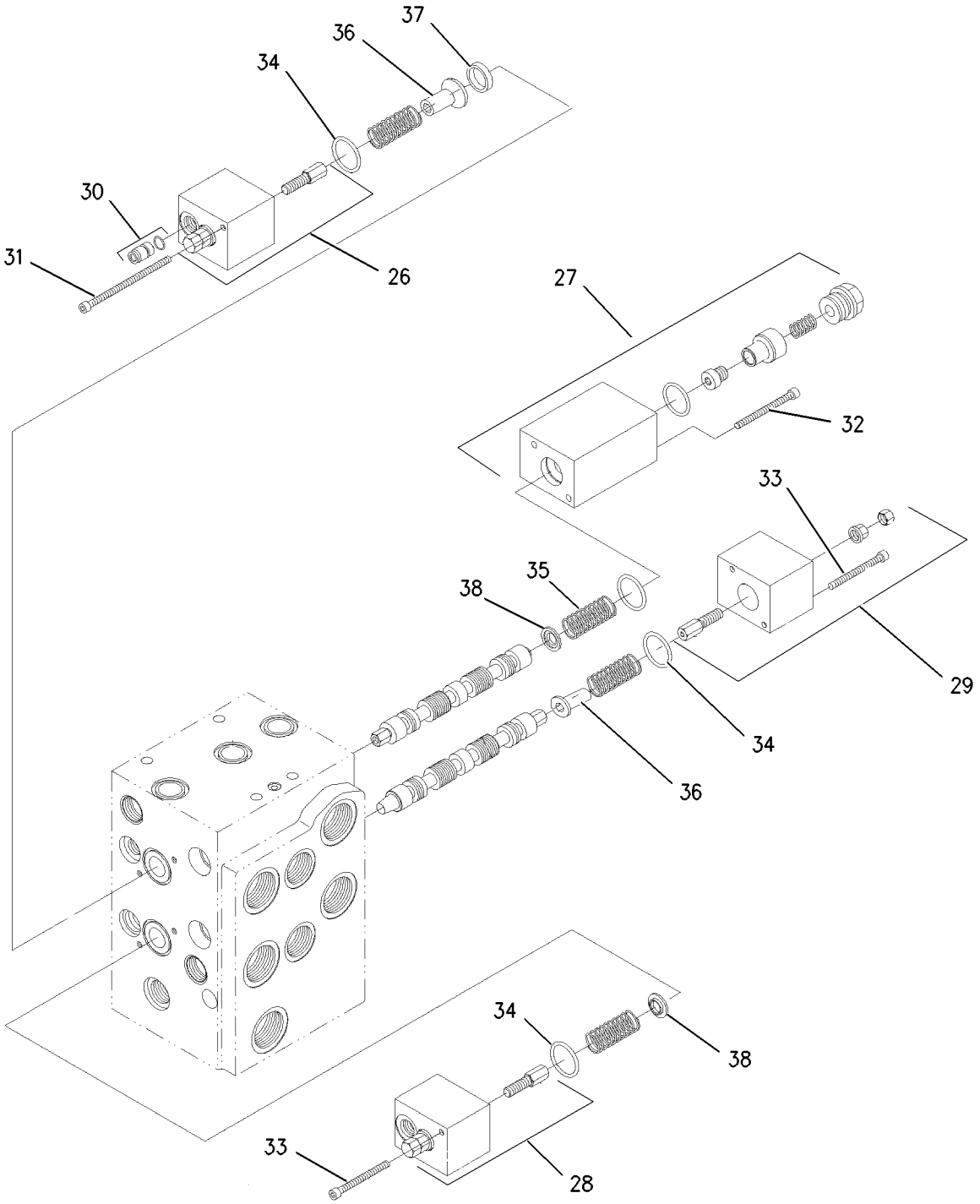

INTERNAL PARTS

GRAPHIC #2 **<END>** g00895485

HYDRAULIC SYSTEM

209-0271 VALVE GP-MAIN CONTROL

S/N: RRS1-UP
3 FUNCTION
PART OF 203-3891 HYDRAULIC AR-3 VALVE
AN ATTACHMENT

SMCS-5051 **i03571168**

NOTE	REF NO	GRAPHIC REF	PART NUMBER	QTY	PART NAME 1 2 3 4 5 6 (PRODUCT LEVEL)	SEE PAGE
M	1	1	**8T-2394**	4	BOLT-SOCKET HEAD (M8X1.25X90-MM)	
	2	1	**216-9819**	1	PLATE	
	3	1	**215-8119**	2	VALVE GP-RELIEF (PILOT OPERATED)	
					(EACH INCLUDES)	
		1	**123-7531**	1	KIT-SEAL (RELIEF VALVE)	
					(KIT INCLUDES SEAL, THRUST RING & O-RINGS)	
	4	1	**229-9850**	1	VALVE GP-CHECK	
	5	1	**215-8115**	1	VALVE GP-FLOW CONTROL (SIGNAL DRAIN)	
		1	**033-5879**	1	SEAL-O-RING	
		1	**192-7111**	1	SEAL-O-RING	
	6	1	**6V-7970**	1	SEAL-O-RING	
	7	1	**8C-4424**	1	PLUG	
	8	1	**216-7913**	2	KIT-ORIFICE (CHECK VALVE)	
					(EACH KIT INCLUDES ORIFICE, SPRING & PLUG)	
	9	1	**215-8111**	1	KIT-VALVE (BOTTOM)	
					(KIT INCLUDES STEM, SPRING, PLUG & SEAL)	
	10	1	**215-8109**	1	KIT-VALVE (TOP)	
					(KIT INCLUDES STEM, SPRING, PLUG & SEAL)	
	11	1	**215-8116**	1	VALVE GP-RELIEF (SIGNAL LIMITER)	
		1	**033-5879**	1	SEAL-O-RING	
		1	**192-7111**	1	SEAL-O-RING	
	12	1	**217-3708**	2	VALVE GP-RELIEF (PILOT OPERATED)	
					(EACH INCLUDES)	
		1	**217-1994**	1	KIT-SEAL	
					(KIT INCLUDES SEAL-O-RINGS)	
	13	1	**215-8138**	1	VALVE GP-CHECK	
	14	1	**3E-2331**	1	PLUG	
	15	1	**215-8139**	2	VALVE GP-CHECK (LOAD)	
	15A	1	**215-8139**	1	VALVE GP-CHECK (REGENERATION)	
	16	1	**8T-7524**	4	SEAL-O-RING	
	17	1	**215-8113**	1	VALVE GP-CHECK (BACKPRESSURE)	
		1	**6V-8352**	1	SEAL-O-RING	
	18	1	**5P-6718**	6	SEAL-O-RING	
	19	1	**061-7538**	2	SEAL-O-RING	
Y	20	1	**216-7502**	1	VALVE GP-CONTROL (AUXILIARY)	414
M	21	1	**189-3014**	1	SCREW	
	22	1	**206-7655**	1	ORIFICE-SHUTTLE	
M	23	1	**206-7647**	1	PILOT	
	24	1	**6V-9507**	1	PLUG	
	25	1	**4J-5477**	1	SEAL-O-RING	
	26	2	**215-8135**	1	KIT-VALVE (CHECK VALVE) (ORIFICE)	
					(KIT INCLUDES BLOCK, STUD & LOCKNUT)	
	27	2	**215-8134**	1	KIT-VALVE (CHECK VALVE) (ORIFICE)	
					(KIT INCLUDES BLOCK, SEAL, ORIFICE, RETAINER, SPRING & CAP)	
	28	2	**215-8136**	1	KIT-VALVE (CHECK VALVE) (ORIFICE)	
					(KIT INCLUDES BLOCK, CAPS & STUD)	
	29	2	**215-8137**	1	KIT-VALVE (CHECK VALVE) (ORIFICE)	
					(KIT INCLUDES BLOCK, CAPS & STUD)	
	30	2	**215-8132**	3	KIT-VALVE (SHOCK REDUCING CHECK VALVE)	
					(EACH KIT INCLUDES SPOOL & SEAL)	
M	31	2	**120-3956**	2	BOLT-SOCKET HEAD (M5X0.8X60-MM)	
M	32	2	**127-4832**	2	BOLT-SOCKET HEAD (M5X0.8X90-MM)	
	33	2	**211-5255**	4	BOLT-SOCKET HEAD (M5X0.8X55-MM)	

209-0271 VALVE GP-MAIN CONTROL *(contd.)* i03571168

NOTE	REF NO	GRAPHIC REF	PART NUMBER	QTY	PART NAME 1 2 3 4 5 6 (PRODUCT LEVEL)	SEE PAGE
	34	2	**5P-3456**	4	SEAL-O-RING	
	35	2	**215-8131**	4	SPRING	
	36	2	**215-8128**	2	RETAINER	
	37	2	**215-8133**	1	RING	
	38	2	**215-8129**	2	RETAINER	
	39	1	**217-4597**	1	VALVE GP-RELIEF (MAKEUP)	
		1	**123-7531**	1	KIT-SEAL (RELIEF VALVE)	
					(KIT INCLUDES SEAL, THRUST RING & O-RINGS)	
	40	1	**217-4598**	1	VALVE GP-RELIEF (MAKEUP)	
		1	**123-7531**	1	KIT-SEAL (RELIEF VALVE)	
					(KIT INCLUDES SEAL, THRUST RING & O-RINGS)	
	41	1	**6V-8397**	2	SEAL-O-RING	

M-METRIC PART
Y-SEPARATE ILLUSTRATION

209-0271 VALVE GP-MAIN CONTROL *(contd.)* i03571168

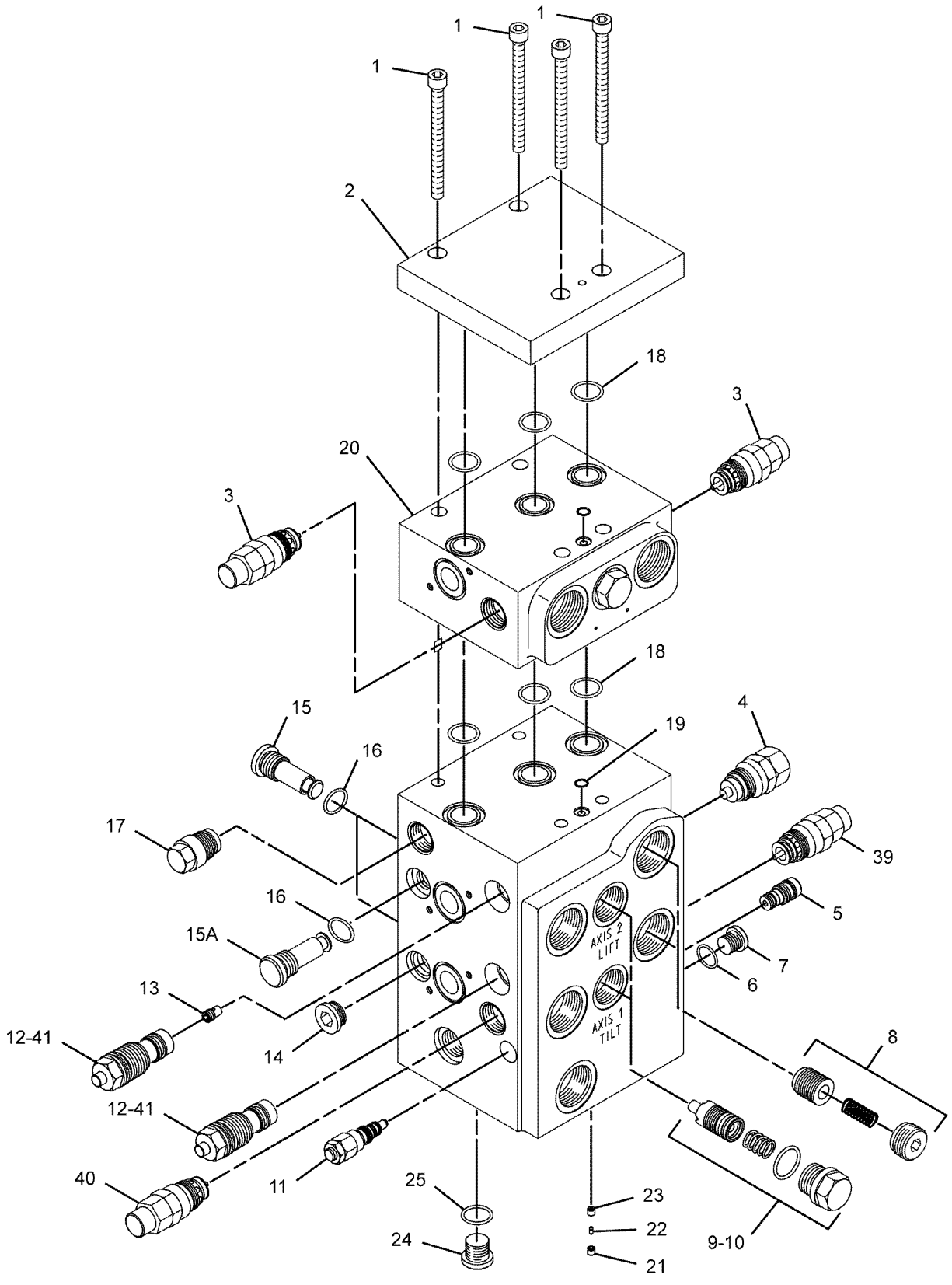

(EXTERNAL PARTS)

GRAPHIC #1 g01105723

209-0271 VALVE GP-MAIN CONTROL *(contd.)* i03571168

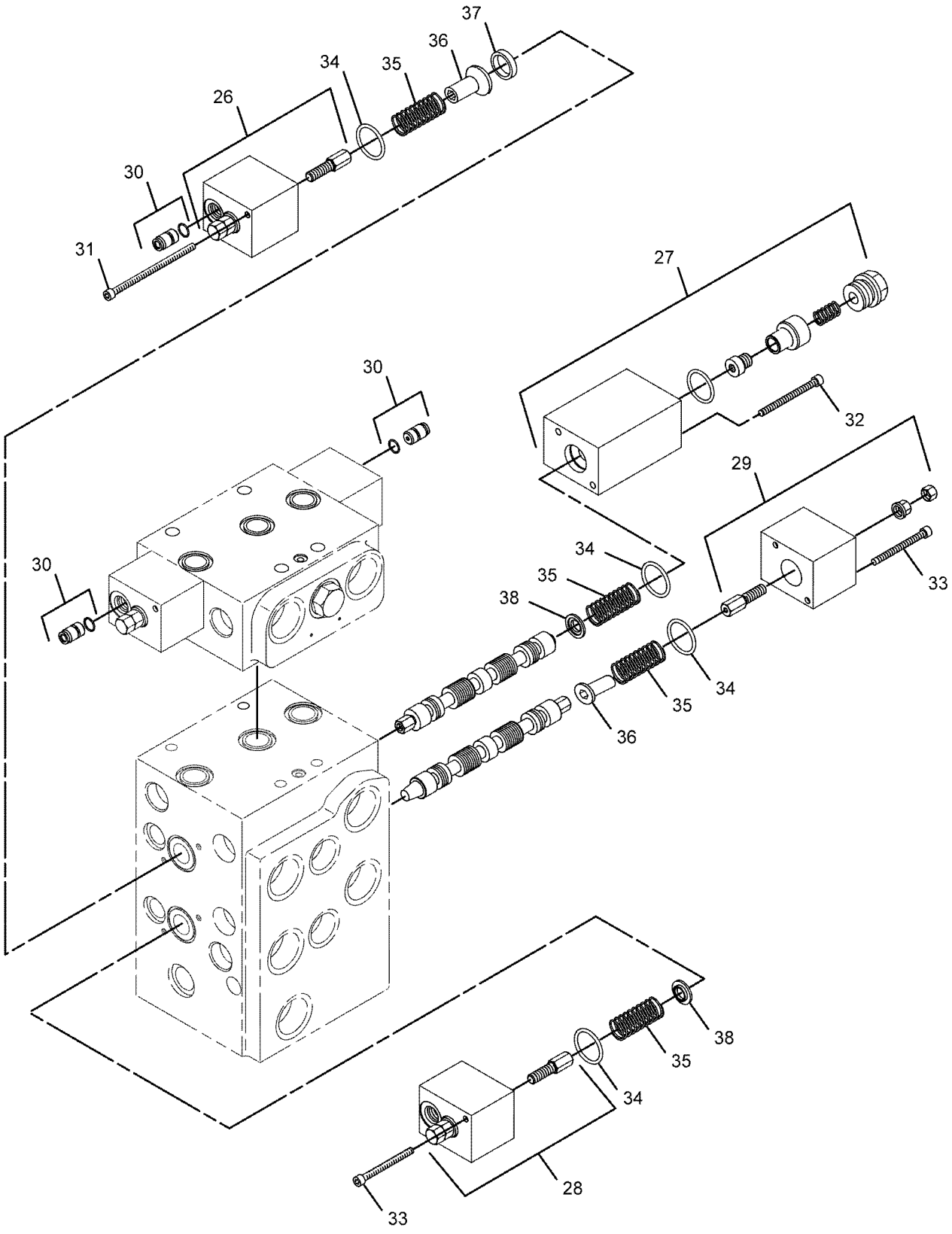

(INTERNAL PARTS)

GRAPHIC #2 **<END>** g01105724

HYDRAULIC SYSTEM

209-0272 VALVE GP-MAIN CONTROL–4-FUNCTION

S/N: RRS1-UP

PART OF 203-3893 HYDRAULIC AR-4 VALVE

AN ATTACHMENT

SMCS-5051 **i04276830**

NOTE	REF NO	GRAPHIC REF	PART NUMBER	QTY	PART NAME 1 2 3 4 5 6 (PRODUCT LEVEL)	SEE PAGE
	1	1	**217-3401**	4	BOLT	
	2	1	**216-9819**	1	PLATE	
	3	1	**215-8119**	4	VALVE GP-RELIEF (PILOT OPERATED) (LINE, AUXILIARY)	
					(EACH INCLUDES)	
		1	**202-8841**	1	KIT-SEAL (RELIEF VALVE)	
					(INCLUDES O-RING SEALS, THRUST RING & SPOOL SEAL)	
	4	1	**229-9850**	1	VALVE GP-CHECK (MAKEUP OIL)	
		1	**033-6034**	1	SEAL-O-RING	
	5	1	**215-8115**	1	VALVE GP-FLOW CONTROL (SIGNAL DRAIN)	
		1	**033-5879**	1	SEAL-O-RING	
		1	**192-7111**	1	SEAL-O-RING	
	6	1	**6V-7970**	1	SEAL-O-RING	
	7	1	**8C-4424**	1	PLUG	
	8	1	**216-7913**	2	KIT-ORIFICE (CHECK VALVE)	
					(EACH INCLUDES ORIFICE, SPRING & PLUG)	
	9	1	**215-8111**	1	KIT-VALVE (PRESSURE COMPENSATOR)	
					(INCLUDES STEM, SPRING, PLUG & SEAL)	
	10	1	**215-8109**	1	KIT-VALVE (PRESSURE COMPENSATOR)	
					(INCLUDES STEM, SPRING, PLUG & SEAL)	
	11	1	**215-8116**	1	VALVE GP-RELIEF (SIGNAL LIMITER)	
		1	**033-5879**	1	SEAL-O-RING	
		1	**192-7111**	1	SEAL-O-RING	
L	12	1	**217-3708**	2	VALVE GP-RELIEF (PILOT OPERATED)	
	13	1	**215-8138**	1	VALVE GP-CHECK (IMPLEMENT)	
	14	1	**3E-2331**	1	PLUG	
	15	1	**215-8139**	2	VALVE GP-CHECK (LOAD)	
	15A	1	**215-8139**	1	VALVE GP-CHECK (REGENERATION)	
	16	1	**8T-7524**	4	SEAL-O-RING	
	17	1	**215-8113**	1	VALVE GP-CHECK (BACK PRESSURE)	
		1	**6V-8352**	1	SEAL-O-RING	
	18	1	**5P-6718**	6	SEAL-O-RING	
	19	1	**061-7538**	3	SEAL-O-RING	
Y	20	1	**216-7502**	2	VALVE GP-CONTROL (AUXILIARY)	414
M	21	1	**189-3014**	1	SCREW	
	22	1	**206-7655**	1	ORIFICE-SHUTTLE	
M	23	1	**206-7647**	1	PILOT	
	24	1	**6V-9507**	1	PLUG	
	25	1	**4J-5477**	1	SEAL-O-RING	
	26	2	**215-8135**	1	KIT-VALVE (CHECK VALVE)	
					(INCLUDES BLOCK, STUD & LOCKNUT)	
	27	2	**215-8134**	1	KIT-VALVE (CHECK VALVE)	
					(INCLUDES BLOCK, SEAL, ORIFICE, RETAINER, SPRING & CAP)	
	28	2	**215-8136**	1	KIT-VALVE (CHECK VALVE)	
	29	2	**215-8137**	1	KIT-VALVE (CHECK VALVE)	
					(EACH VALVE KIT INCLUDES BLOCK, LOCKNUT CAP, CAP & STUD)	
	30	2	**215-8132**	5	KIT-VALVE (SHOCK REDUCING CHECK VALVE)	
					(EACH INCLUDES SPOOL & SEAL)	
M	31	2	**120-3956**	2	BOLT-SOCKET HEAD (M5X0.8X60-MM)	
M	32	2	**127-4832**	2	BOLT-SOCKET HEAD (M5X0.8X90-MM)	
	33	2	**211-5255**	4	BOLT-SOCKET HEAD (M5X0.8X55-MM)	
	34	2	**5P-3456**	4	SEAL-O-RING	
	35	2	**215-8131**	4	SPRING	

209-0272 VALVE GP-MAIN CONTROL *(contd.)* i04276830

NOTE	REF NO	GRAPHIC REF	PART NUMBER	QTY	PART NAME 1 2 3 4 5 6 (PRODUCT LEVEL)	SEE PAGE
	36	2	**215-8128**	2	RETAINER	
	37	2	**215-8133**	1	RING	
	38	2	**215-8129**	2	RETAINER	
	39	1	**217-4597**	1	VALVE GP-RELIEF (IMPLEMENT 1)	
	40	1	**217-4598**	1	VALVE GP-RELIEF (IMPLEMENT 2)	
					(EACH VALVE GP INCLUDES)	
		1	**202-8841**	1	KIT-SEAL (RELIEF VALVE)	
					(INCLUDES SPOOL SEAL, THRUST RING & O-RING SEALS)	
	41	1	**6V-8397**	2	SEAL-O-RING	
					AVAILABLE REPAIR KIT(S):	
L			**217-1994**	1	KIT-SEAL	
					(INCLUDES O-RING SEALS & THRUST RINGS)	

L-KIT MARKED L SERVICES PARTS MARKED L
M-METRIC PART
Y-SEPARATE ILLUSTRATION

209-0272 VALVE GP-MAIN CONTROL *(contd.)* i04276830

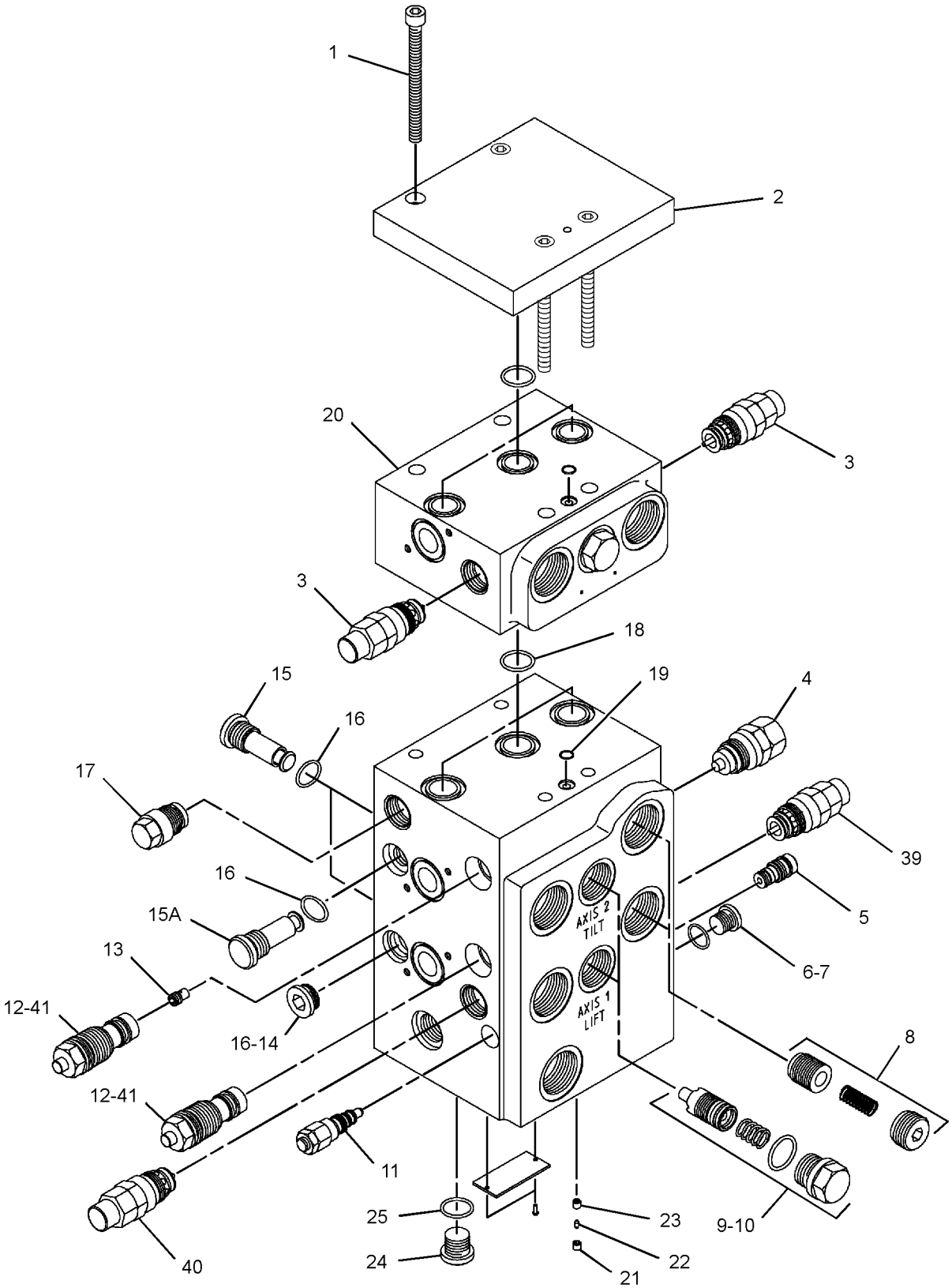

(EXTERNAL PARTS)

GRAPHIC #1 g02450856

209-0272 VALVE GP-MAIN CONTROL *(contd.)* i04276830

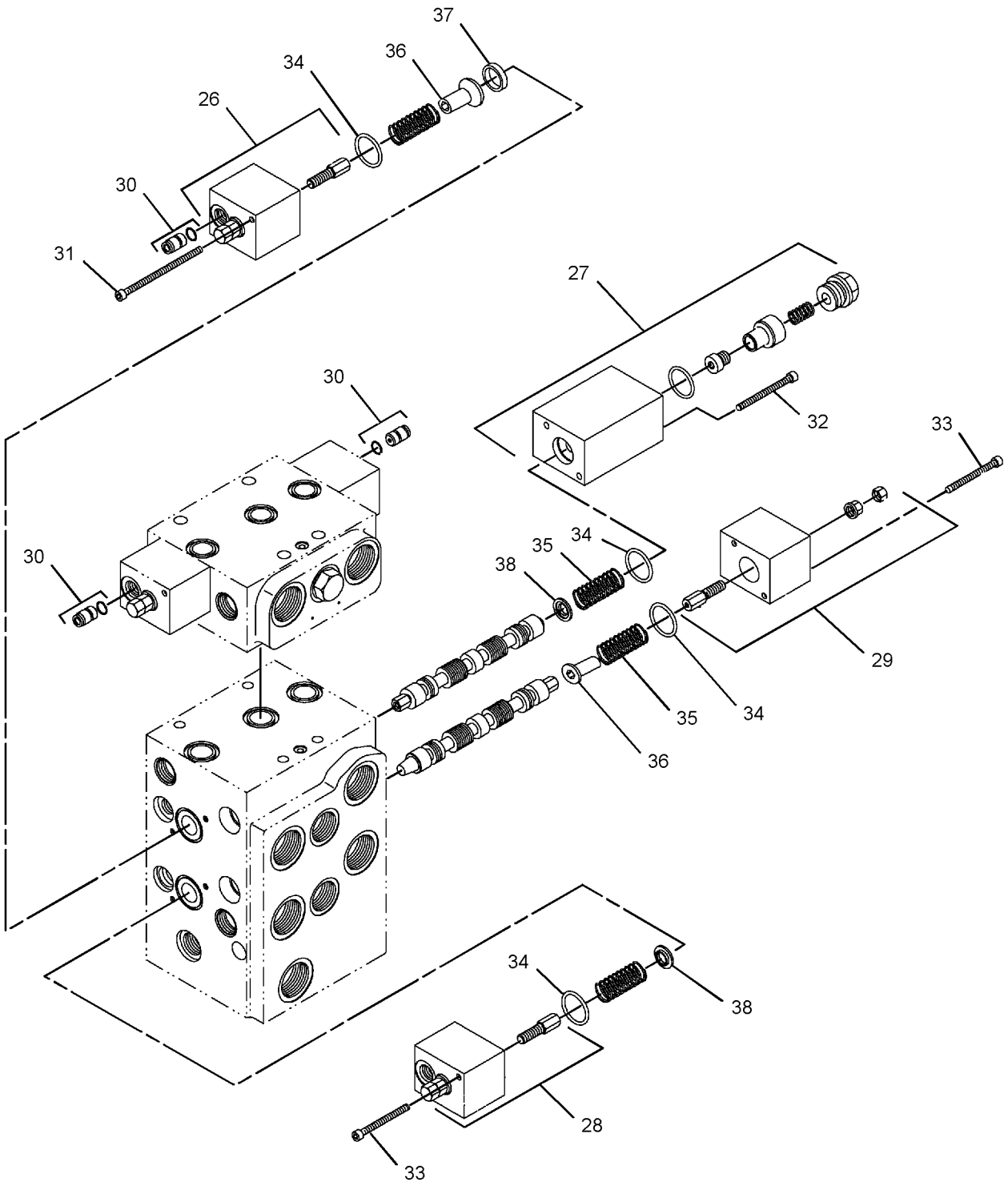

(INTERNAL PARTS)

GRAPHIC #2 **<END>** g02450857

HYDRAULIC SYSTEM

209-0273 VALVE GP-MAIN CONTROL–2-FUNCTION

S/N: JRL1-UP

PART OF 203-3890 HYDRAULIC AR-2 VALVE

AN ATTACHMENT

SMCS-5051 **i04591415**

NOTE	REF NO	GRAPHIC REF	PART NUMBER	QTY	PART NAME 1 2 3 4 5 6 (PRODUCT LEVEL)	SEE PAGE
M	1	1	**5A-3604**	4	BOLT-SOCKET HEAD (M8X1.25X25-MM)	
	2	1	**216-9819**	1	PLATE	
	3	1	**217-4597**	2	VALVE GP-RELIEF (MAKEUP)	
					(EACH INCLUDES)	
		1	**123-7531**	1	KIT-SEAL (RELIEF VALVE)	
	4	1	**215-8118**	2	VALVE GP-SOLENOID (FLOAT)	
					(EACH INCLUDES)	
		1	**102-8802**	1	KIT-RECEPTACLE (2-PIN)	
					(KIT INCLUDES RECEPTACLE AS & WEDGE)	
		1	**217-2106**	1	KIT-SEAL	
					(KIT INCLUDES SEAL & O-RING SEALS)	
	5	1	**215-8115**	1	VALVE GP-FLOW CONTROL (SIGNAL DRAIN)	
		1	**033-5879**	1	SEAL-O-RING	
		1	**192-7111**	1	SEAL-O-RING	
	6	1	**6V-7970**	1	SEAL-O-RING	
	7	1	**8C-4424**	1	PLUG	
	8	1	**216-7913**	2	KIT-ORIFICE (CHECK VALVE)	
					(EACH KIT INCLUDES ORIFICE, SPRING & PLUG)	
	9	1	**215-8111**	1	KIT-VALVE (TILT)	
					(KIT INCLUDES STEM, SPRING & PLUG AS)	
	10	1	**215-8109**	1	KIT-VALVE (LIFT)	
					(KIT INCLUDES STEM, SPRING & PLUG AS)	
	11	1	**215-8116**	1	VALVE GP-RELIEF (SIGNAL LIMITER)	
		1	**033-5879**	1	SEAL-O-RING	
		1	**192-7111**	1	SEAL-O-RING	
	12	1	**217-3708**	2	VALVE GP-RELIEF (PILOT OPERATED)	
					(EACH INCLUDES)	
		1	**217-1994**	1	KIT-SEAL	
					(KIT INCLUDES O-RING SEALS & THRUST RING)	
	13	1	**6V-8397**	2	SEAL-O-RING	
	14	1	**3E-2331**	1	PLUG	
	15	1	**215-8139**	2	VALVE GP-CHECK (LOAD)	
	15A	1	**215-8139**	1	VALVE GP-CHECK (ANTICAVITATION)	
	16	1	**8T-7524**	4	SEAL-O-RING	
	17	1	**215-8113**	1	VALVE GP-CHECK (MAKEUP RELIEF)	
		1	**6V-8352**	1	SEAL-O-RING	
	18	1	**5P-6718**	3	SEAL-O-RING	
	19	1	**061-7538**	1	SEAL-O-RING	
M	20	1	**189-3014**	1	SCREW	
	21	1	**206-7655**	1	ORIFICE-SHUTTLE	
M	22	1	**206-7647**	1	PILOT	
	23	1	**6V-9507**	1	PLUG	
	24	1	**4J-5477**	1	SEAL-O-RING	
	25	2	**215-8135**	1	KIT-VALVE (CHECK VALVE) (LOWER)	
					(KIT INCLUDES BLOCK, STUD & LOCKNUT)	
	26	2	**215-8134**	1	KIT-VALVE (CHECK VALVE) (RAISE)	
					(KIT INCLUDES BLOCK, SEAL, ORIFICE, RETAINER, SPRING & CAP)	
	27	2	**215-8136**	1	KIT-VALVE (CHECK VALVE) (TILT FORWARD)	
					(KIT INCLUDES BLOCK, LOCKNUT CAP, CAP & STUD)	
	28	2	**215-8137**	1	KIT-VALVE (CHECK VALVE) (TILT BACK)	
					(KIT INCLUDES BLOCK, LOCKNUT CAP, CAP & STUD)	

209-0273 VALVE GP-MAIN CONTROL *(contd.)* i04591415

NOTE	REF NO	GRAPHIC REF	PART NUMBER	QTY	PART NAME 1 2 3 4 5 6 (PRODUCT LEVEL)	SEE PAGE
	29	2	**215-8132**	3	KIT-VALVE (SHOCK REDUCING CHECK VALVE)	
					(EACH KIT INCLUDES SPOOL & SEAL)	
M	30	2	**120-3956**	2	BOLT-SOCKET HEAD (M5X0.8X60-MM)	
M	31	2	**127-4832**	2	BOLT-SOCKET HEAD (M5X0.8X90-MM)	
	32	2	**211-5255**	4	BOLT-SOCKET HEAD (M5X0.8X55-MM)	
	33	2	**5P-3456**	4	SEAL-O-RING	
	34	2	**215-8131**	4	SPRING	
	35	2	**215-8128**	2	RETAINER	
	36	2	**215-8133**	1	RING	
	37	2	**215-8129**	2	RETAINER	

M-METRIC PART

209-0273 VALVE GP-MAIN CONTROL *(contd.)* i04591415

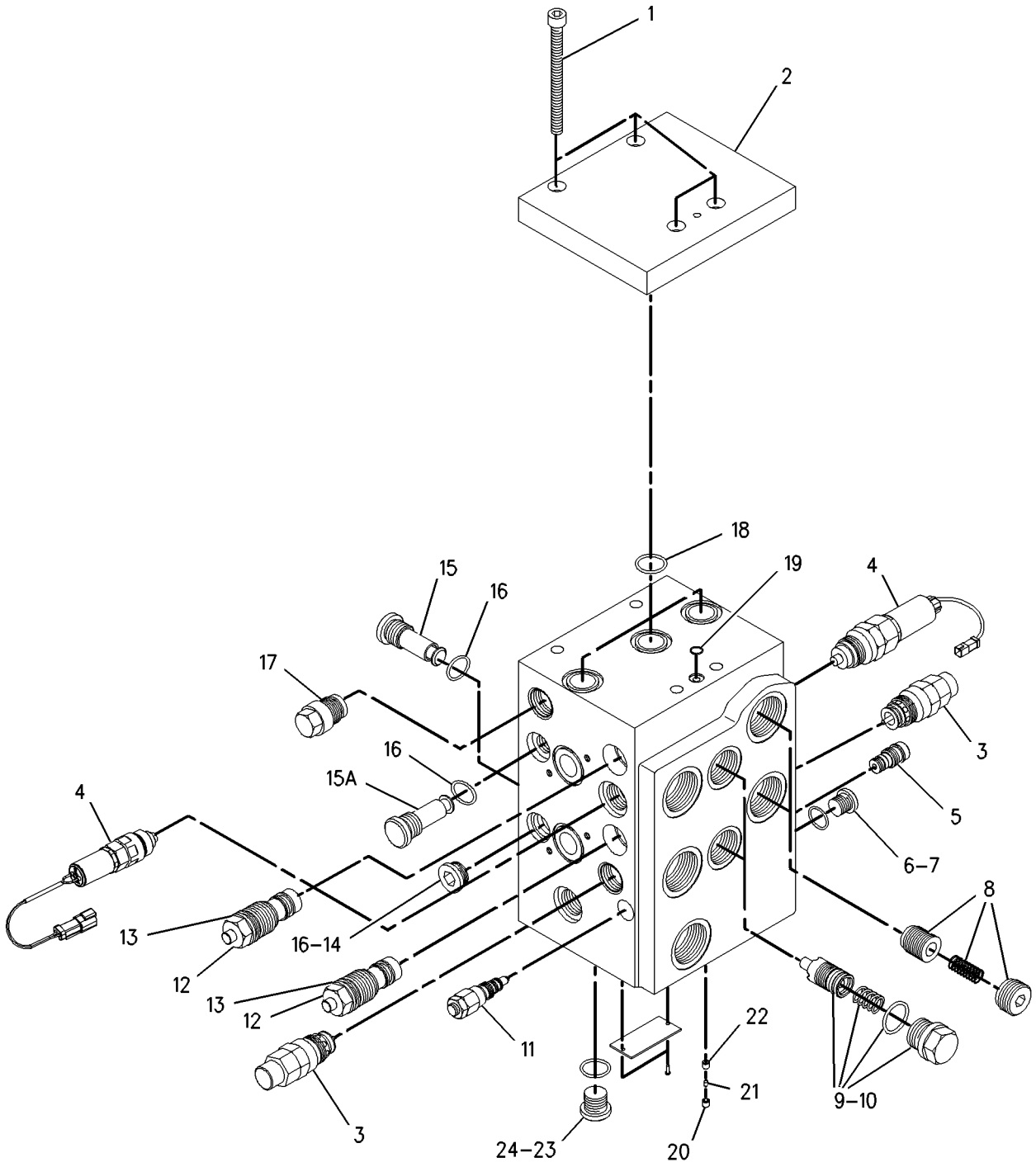

EXTERNAL PARTS

GRAPHIC #1 g00935553

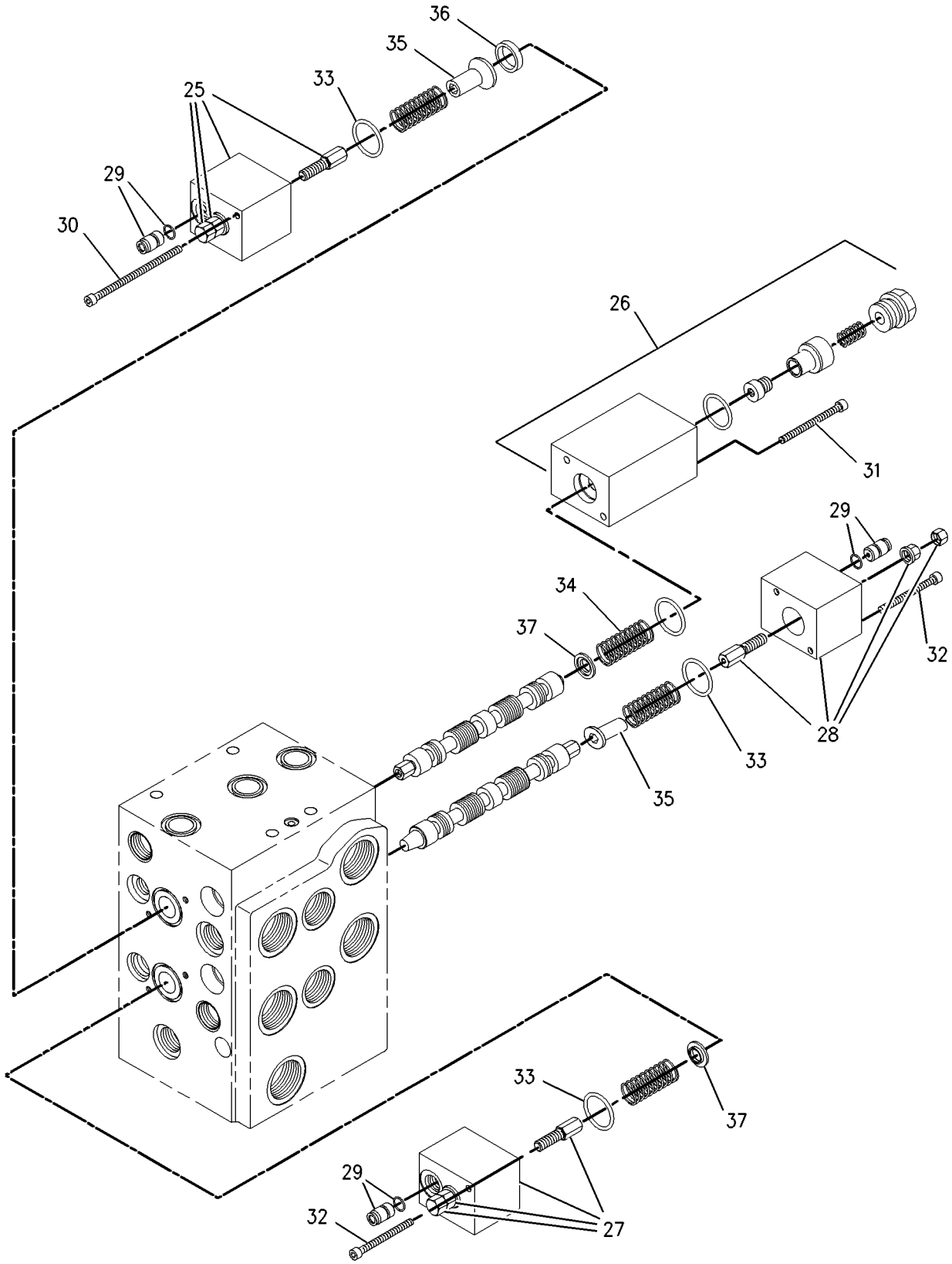

INTERNAL PARTS

GRAPHIC #2 **<END>** g00898239

HYDRAULIC SYSTEM

209-0274 VALVE GP-MAIN CONTROL–3-FUNCTION

S/N: JRL1-UP

PART OF 203-3892 HYDRAULIC AR-3 VALVE

AN ATTACHMENT

SMCS-5051 **i04591414**

NOTE	REF NO	GRAPHIC REF	PART NUMBER	QTY	PART NAME 1 2 3 4 5 6 (PRODUCT LEVEL)	SEE PAGE
M	1	1	**8T-2394**	4	BOLT-SOCKET HEAD (M8X1.25X90-MM)	
	2	1	**216-9819**	1	PLATE	
	3	1	**215-8119**	2	VALVE GP-RELIEF (PILOT OPERATED)	
					(EACH INCLUDES)	
		1	**123-7531**	1	KIT-SEAL (RELIEF VALVE)	
	4	1	**215-8118**	2	VALVE GP-SOLENOID (FLOAT)	
					(EACH INCLUDES)	
		1	**102-8802**	1	KIT-RECEPTACLE (2-PIN)	
					(KIT INCLUDES RECEPTACLE AS & WEDGE)	
		1	**217-2106**	1	KIT-SEAL	
					(KIT INCLUDES 4 SEAL RINGS)	
	5	1	**215-8115**	1	VALVE GP-FLOW CONTROL (SIGNAL DRAIN)	
		1	**033-5879**	1	SEAL-O-RING	
		1	**192-7111**	1	SEAL-O-RING	
	6	1	**6V-7970**	1	SEAL-O-RING	
	7	1	**8C-4424**	1	PLUG	
	8	1	**216-7913**	2	KIT-ORIFICE (CHECK VALVE)	
					(EACH KIT INCLUDES ORIFICE, SPRING & PLUG)	
	9	1	**215-8111**	1	KIT-VALVE (TILT)	
					(KIT INCLUDES STEM, SPRING & PLUG AS)	
	10	1	**215-8109**	1	KIT-VALVE (LIFT)	
					(KIT INCLUDES STEM, SPRING & PLUG AS)	
	11	1	**215-8116**	1	VALVE GP-RELIEF (SIGNAL LIMITER)	
		1	**033-5879**	1	SEAL-O-RING	
		1	**192-7111**	1	SEAL-O-RING	
	12	1	**217-3708**	2	VALVE GP-RELIEF (PILOT OPERATED)	
					(EACH INCLUDES)	
		1	**217-1994**	1	KIT-SEAL	
					(KIT INCLUDES O-RING SEALS & THRUST RING)	
	13	1	**6V-8397**	2	SEAL-O-RING	
	14	1	**3E-2331**	1	PLUG	
	15	1	**215-8139**	2	VALVE GP-CHECK (LOAD)	
	15A	1	**215-8139**	1	VALVE GP-CHECK (REGENERATION)	
	16	1	**8T-7524**	4	SEAL-O-RING	
	17	1	**215-8113**	1	VALVE GP-CHECK (BACKPRESSURE)	
		1	**6V-8352**	1	SEAL-O-RING	
	18	1	**5P-6718**	6	SEAL-O-RING	
	19	1	**061-7538**	2	SEAL-O-RING	
Y	20	1	**216-7502**	1	VALVE GP-CONTROL (AUXILIARY)	414
M	21	1	**189-3014**	1	SCREW	
	22	1	**206-7655**	1	ORIFICE-SHUTTLE	
M	23	1	**206-7647**	1	PILOT	
	24	1	**6V-9507**	1	PLUG	
	25	1	**4J-5477**	1	SEAL-O-RING	
	26	2	**215-8135**	1	KIT-VALVE (CHECK VALVE) (LOWER)	
					(KIT INCLUDES BLOCK, STUD & LOCKNUT)	
	27	2	**215-8134**	1	KIT-VALVE (CHECK VALVE) (RAISE)	
					(KIT INCLUDES BLOCK, SEAL, ORIFICE, RETAINER, SPRING & CAP)	
	28	2	**215-8136**	1	KIT-VALVE (CHECK VALVE) (TILT FORWARD)	
					(KIT INCLUDES BLOCK, CAP, STUD & LOCKNUT CAP)	
	29	2	**215-8137**	1	KIT-VALVE (CHECK VALVE) (TILT BACK)	
					(KIT INCLUDES BLOCK, CAP, STUD & LOCKNUT CAP)	

209-0274 VALVE GP-MAIN CONTROL *(contd.)* i04591414

NOTE	REF NO	GRAPHIC REF	PART NUMBER	QTY	PART NAME 1 2 3 4 5 6 (PRODUCT LEVEL)	SEE PAGE
	30	2	**215-8132**	5	KIT-VALVE (SHOCK REDUCING CHECK VALVE)	
					(EACH KIT INCLUDES SPOOL & SEAL)	
M	31	2	**120-3956**	2	BOLT-SOCKET HEAD (M5X0.8X60-MM)	
M	32	2	**127-4832**	2	BOLT-SOCKET HEAD (M5X0.8X90-MM)	
	33	2	**211-5255**	4	BOLT-SOCKET HEAD (M5X0.8X55-MM)	
	34	2	**5P-3456**	4	SEAL-O-RING	
	35	2	**215-8131**	4	SPRING	
	36	2	**215-8128**	2	RETAINER	
	37	2	**215-8133**	1	RING	
	38	2	**215-8129**	2	RETAINER	
	39	1	**217-4597**	2	VALVE GP-RELIEF (MAKEUP)	
					(EACH INCLUDES)	
		1	**123-7531**	1	KIT-SEAL (RELIEF VALVE)	

M-METRIC PART
Y-SEPARATE ILLUSTRATION

209-0274 VALVE GP-MAIN CONTROL *(contd.)* i04591414

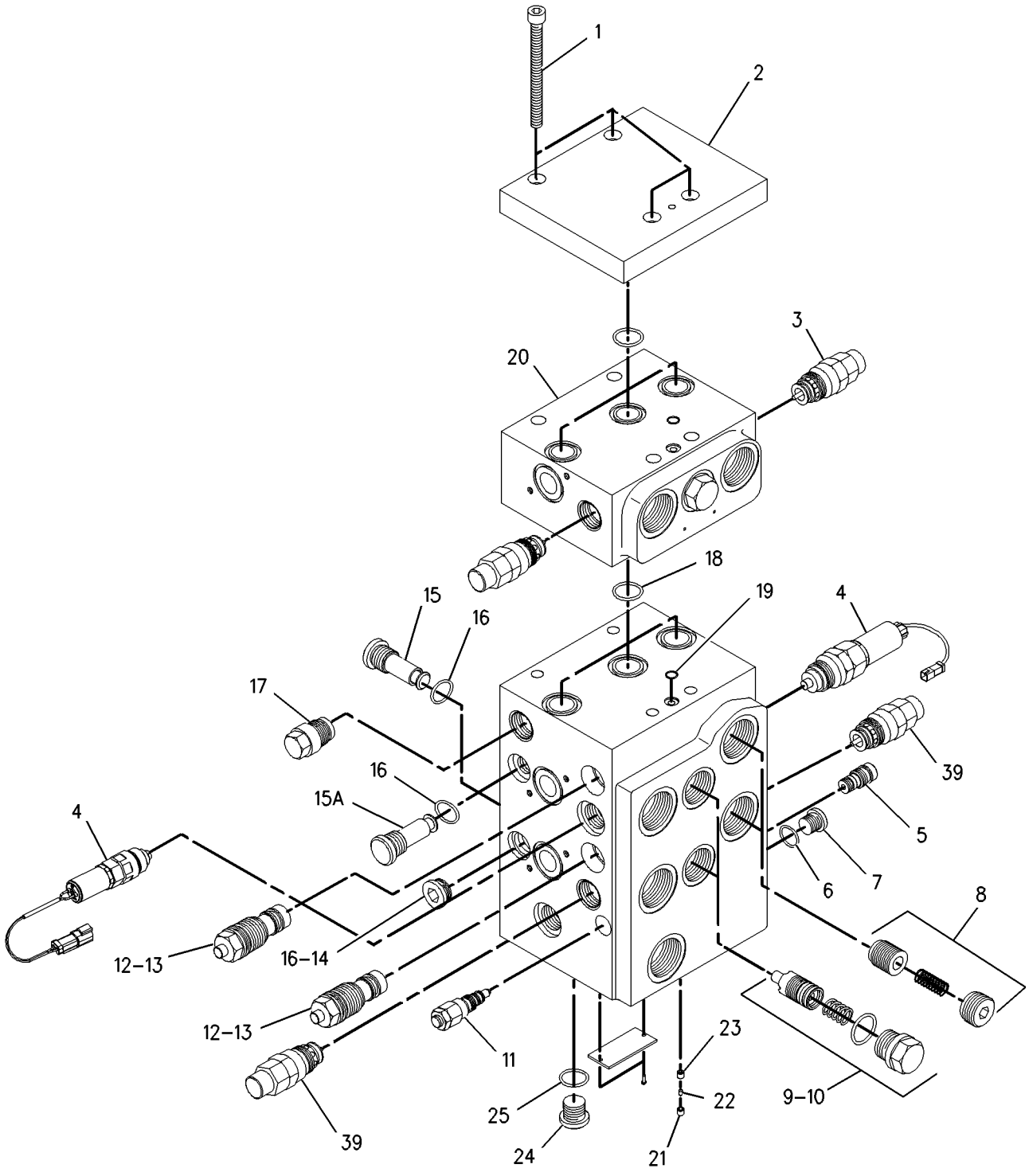

EXTERNAL PARTS

GRAPHIC #1 g00935919

209-0274 VALVE GP-MAIN CONTROL *(contd.)* i04591414

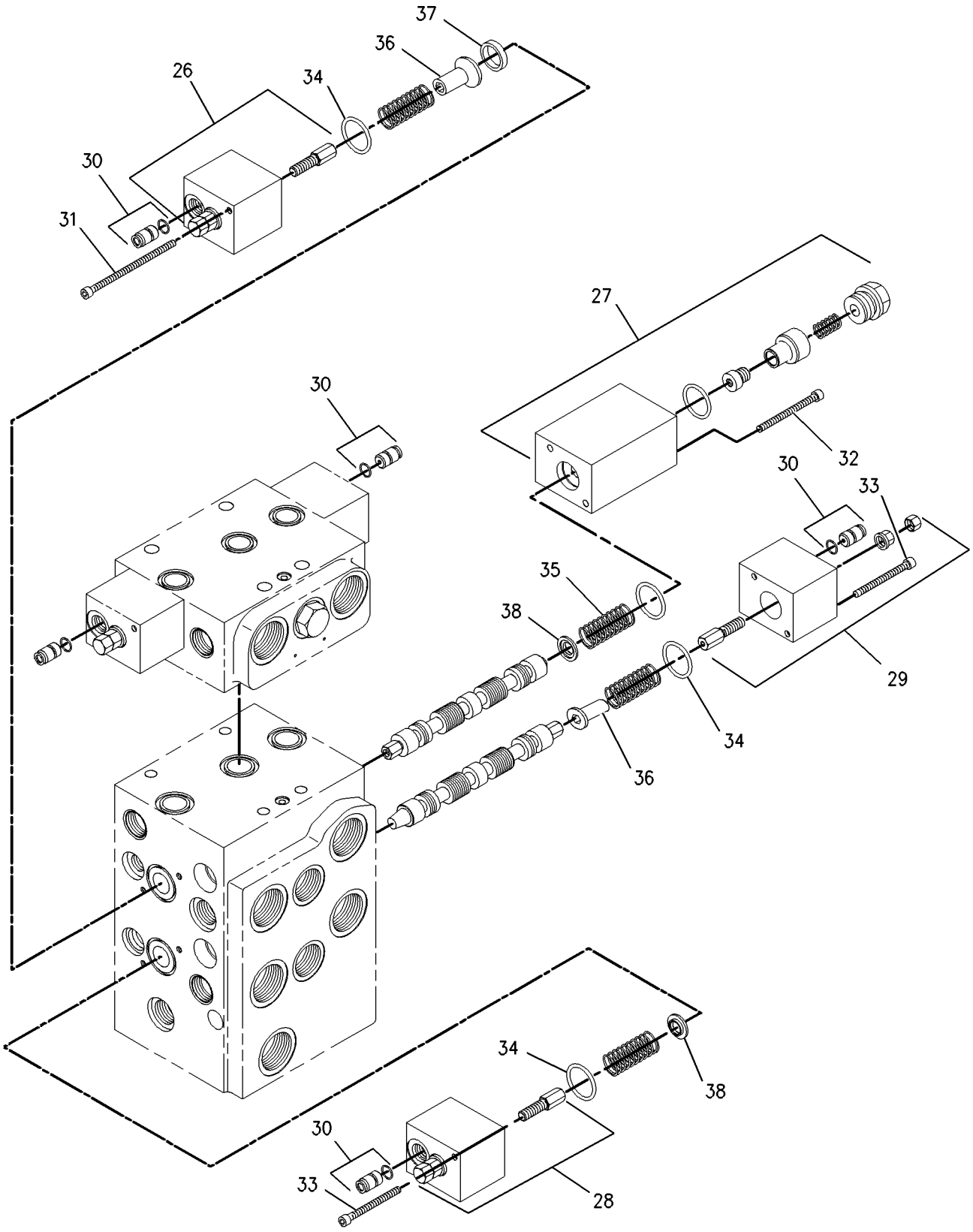

INTERNAL PARTS

GRAPHIC #2 **<END>** g00898258

112-1817 VALVE GP-MANUAL

S/N: JRL1-UP; RRS1-UP

PART OF 290-6474, 290-6475 LINES GP-LIFT CYLINDER

SMCS-5001, 5130, 5147 **i01859603**

NOTE	PART NUMBER	QTY	PART NAME 1 2 3 4 5 6 (PRODUCT LEVEL)	SEE PAGE
J	*202-0671*	1	VALVE GP-MANUAL	
			—OR—	
J	*202-0673*	1	VALVE GP-MANUAL	
			—OR—	
J	*202-0674*	1	VALVE GP-MANUAL	
			AVAILABLE REPAIR KIT(S):	
J	**112-9861**	1	KIT-SEAL	
			(INCLUDES SEALS, CONNECTORS & THRUST RING)	

J-KIT MARKED J SERVICES PARTS MARKED J

<END>

212-1302 VALVE GP-PILOT—JOYSTICK, 2-FUNCTION

S/N: JRL1-UP; RRS1-UP
PART OF 287-2058 CONTROL & MTG GP-JOYSTICK
AN ATTACHMENT

SMCS-5059 **i03757495**

NOTE	REF NO	GRAPHIC REF	PART NUMBER	QTY	PART NAME 1 2 3 4 5 6 (PRODUCT LEVEL)	SEE PAGE
	1	1	**141-4852**	1	BOOT	
	2	1	**141-7481**	1	SPACER	
	3	1	**141-9236**	1	SCREEN AS (BLADE CONTROL VALVE)	
	4	1	**142-2651**	1	PLATE AS	
	5	1	**146-8478**	1	CUP	
	6	1	**153-8947**	1	SWIVEL AS	
	7	1	**153-8952**	1	ADAPTER	
	8	1	**163-5512**	5	GROMMET	
	9	1	**102-8806**	1	KIT-RECEPTACLE (8-PIN)	
					(INCLUDES RECEPTACLE AS & WEDGE)	
	11	1	**136-9297**	1	PLATE	
	12	1	**136-9298**	1	RETAINER	
	13	1	**145-8428**	3	COIL AS-DETENT (CONTROL LEVER)	
Y	14	1	**147-3322**	1	PLATE GP-PILOT VALVE (JOYSTICK)	396
	15	1	**149-5470**	1	PLATE	
M	16	1	**191-8920**	4	BOLT-SOCKET HEAD (M6X1X12-MM)	
Y	17	1	**212-4962**	2	VALVE GP-PILOT CARTRIDGE (LIFT, LOWER)	444
Y	18	1	**212-4963**	2	VALVE GP-PILOT CARTRIDGE (DUMP, TILT BACK)	445
	20	1	**3J-1907**	1	SEAL-O-RING	
	22	1	**8T-8737**	2	PLUG-SEAL	
	23	1	**6V-8397**	1	SEAL-O-RING	
	24	1	**6V-8636**	1	CONNECTOR	
	25	1	**8L-2786**	1	SEAL-O-RING	
	26	1	*183-7263*	8	PLUG AS	
					(EACH INCLUDES)	
		1	**3J-7354**	1	SEAL-O-RING	
		1	**9S-8002**	1	PLUG-O-RING	

M-METRIC PART
Y-SEPARATE ILLUSTRATION

212-1302 **VALVE GP-PILOT** *(contd.)* **i03757495**

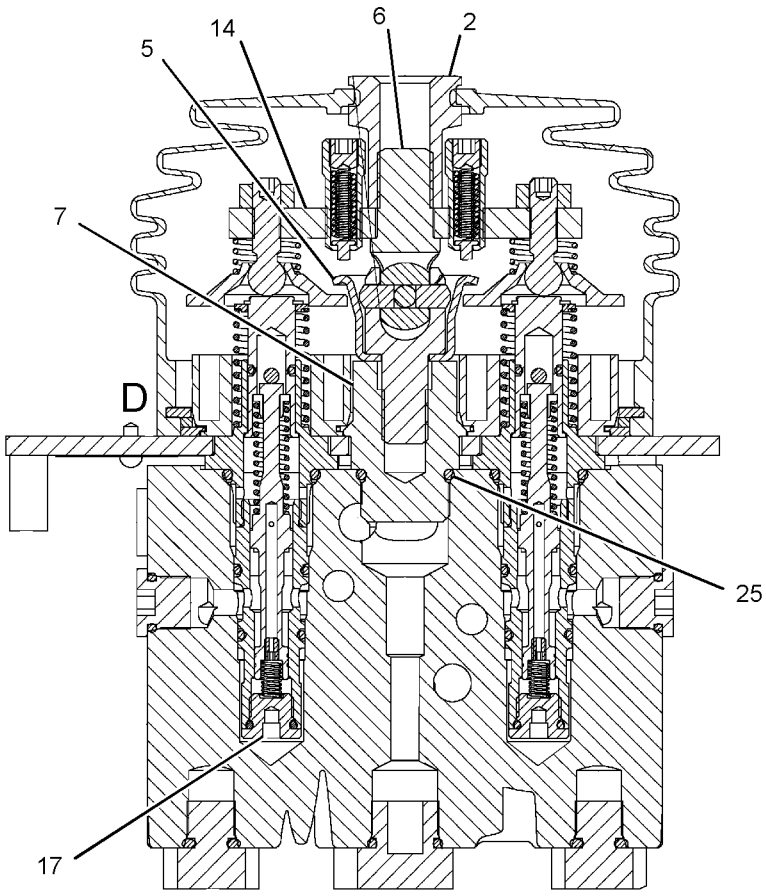

SECTION A-A

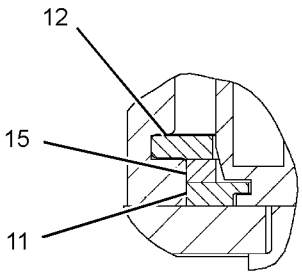

VIEW OF AREA D

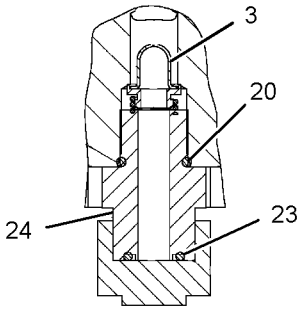

SECTION C-C

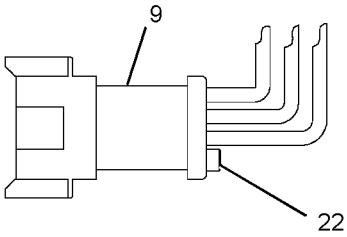

(PLUG DETAIL)

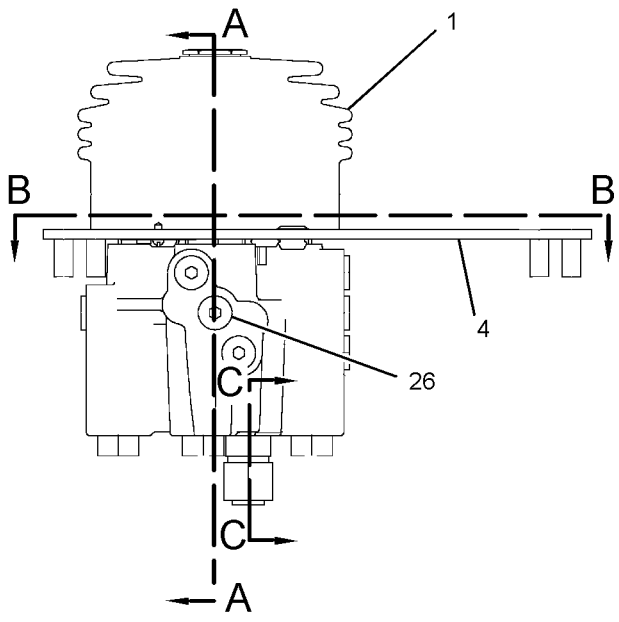

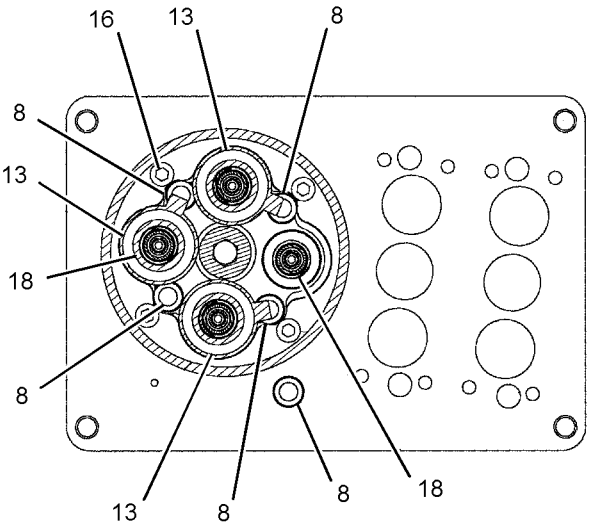

SECTION B-B

GRAPHIC #1 **<END>** g01905853

HYDRAULIC SYSTEM

212-1305 VALVE GP-PILOT—JOYSTICK, 4-FUNCTION

S/N: JRL1-UP; RRS1-UP
PART OF 287-2060 CONTROL GP-JOYSTICK
AN ATTACHMENT

SMCS-5059 **i03826769**

NOTE	REF NO	GRAPHIC REF	PART NUMBER	QTY	PART NAME 1 2 3 4 5 6 (PRODUCT LEVEL)	SEE PAGE
	1	2	**8L-2786**	2	SEAL-O-RING	
	2	2	**033-9139**	2	RING-RETAINING	
	3	1	**102-8806**	1	KIT-RECEPTACLE (8-PIN)	
					(INCLUDES RECEPTACLE AS & WEDGE)	
	4	2	**136-9297**	1	PLATE	
	5	2	**136-9298**	2	RETAINER	
M	6	1	**140-9926**	2	BOLT-SOCKET HEAD (M6X1X150-MM)	
	7	1	**141-1095**	2	ADAPTER	
	8	2	**141-1556**	1	RETAINER	
	9	2	**141-2032**	1	PLATE	
	10	2	**141-4852**	1	BOOT	
	11	2	**141-7481**	1	SPACER	
	12	1	**141-9236**	1	SCREEN AS (PILOT OIL)	
	13	2	**142-2651**	1	PLATE AS	
	14	2	**145-2334**	1	ADAPTER	
	15	1	**145-8428**	4	COIL AS-DETENT (CONTROL LEVER)	
	16	2	**146-8477**	1	BRACKET	
	17	2	**146-8478**	1	CUP	
	18	2	**146-8981**	1	PIN	
Y	19	2	**147-3322**	1	PLATE GP-PILOT VALVE (JOYSTICK)	396
	20	2	**148-7922**	1	PLATE	
	21	2	**149-5470**	1	PLATE	
	22	2	**153-8952**	1	ADAPTER	
Y	23	2	**160-6299**	1	PIVOT GP-PILOT VALVE (AUXILLARY)	395
	24	1	**163-5512**	7	GROMMET	
Y	25	1,2	**212-4962**	4	VALVE GP-PILOT CARTRIDGE (DUMP, TILT BACK)	444
Y	26	2	**212-4963**	2	VALVE GP-PILOT CARTRIDGE (LIFT, LOWER)	445
	29	2	**136-9292**	1	BOOT	
	30	1	*148-8407*	2	PLUG AS	
					(EACH INCLUDES)	
		1	**3J-1907**	1	SEAL-O-RING	
		1	**9S-4191**	1	PLUG-O-RING	
	31	2	**153-8947**	1	SWIVEL AS	
	32	1,2	*183-7263*	12	PLUG AS	
					(EACH INCLUDES)	
		1,2	**3J-7354**	1	SEAL-O-RING	
		1,2	**9S-8002**	1	PLUG-O-RING	
M	33	1	**191-8920**	8	BOLT-SOCKET HEAD (M6X1X12-MM)	
	35	1	**3J-1907**	1	SEAL-O-RING	
	36	1	**3J-7354**	4	SEAL-O-RING	
M	37	2	**5A-3604**	1	BOLT-SOCKET HEAD (M8X1.25X25-MM)	
M	38	1	**5C-2890**	2	NUT (M6X1-THD)	
	39	1	**6V-8397**	1	SEAL-O-RING	
	40	1	**6V-8636**	1	CONNECTOR	

M-METRIC PART
Y-SEPARATE ILLUSTRATION

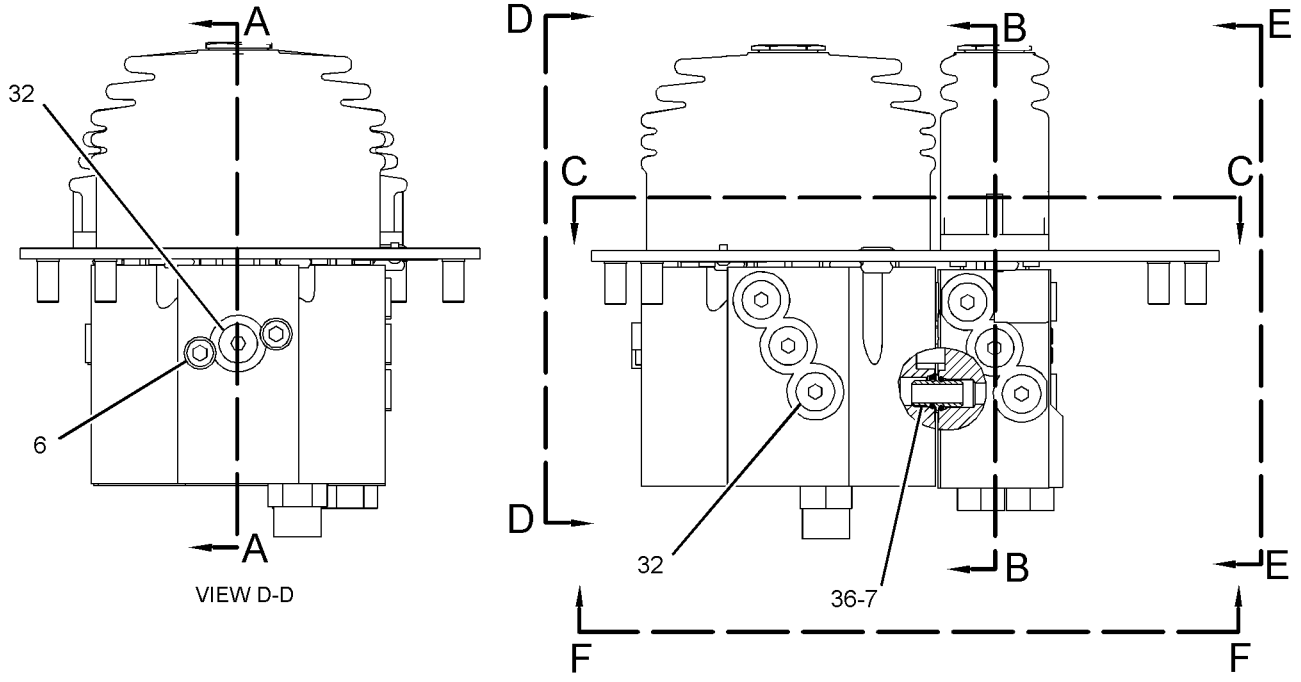

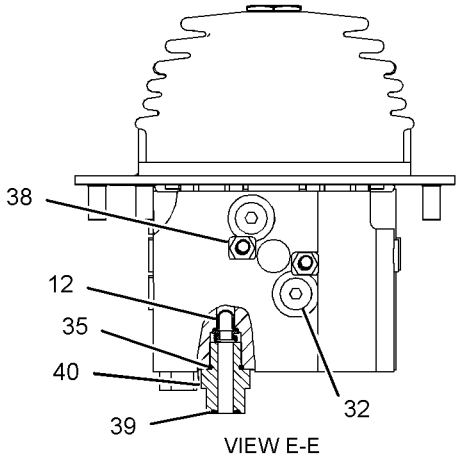

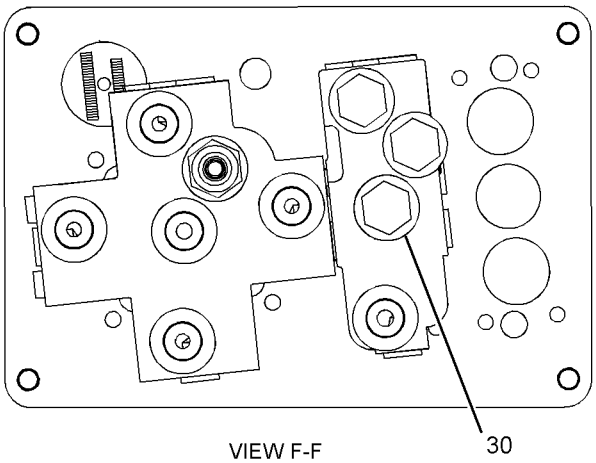

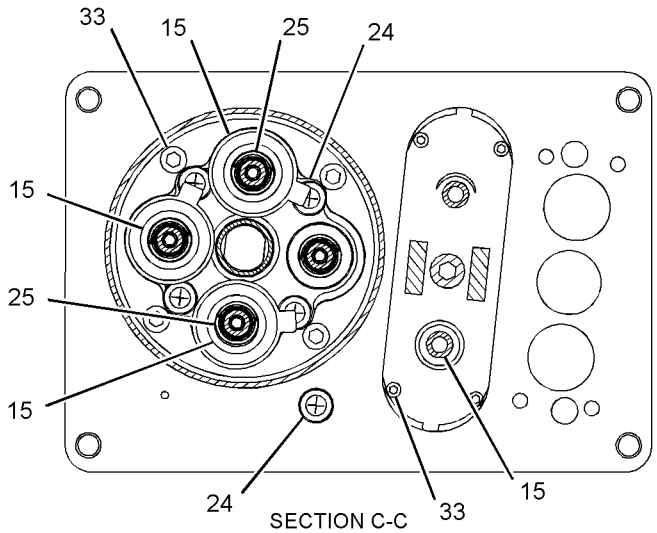

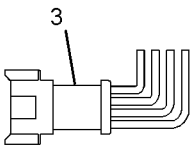

REFER TO ALL ILLUSTRATIONS OF THIS GROUP FOR AUXILIARY VIEWS

GRAPHIC #1

g01944837

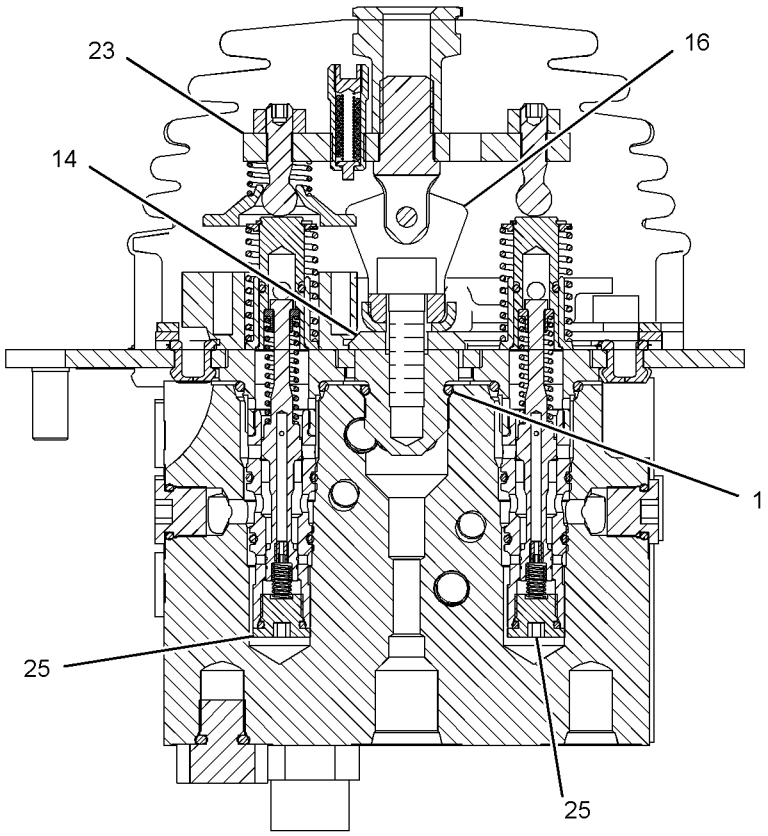

SECTION B-B

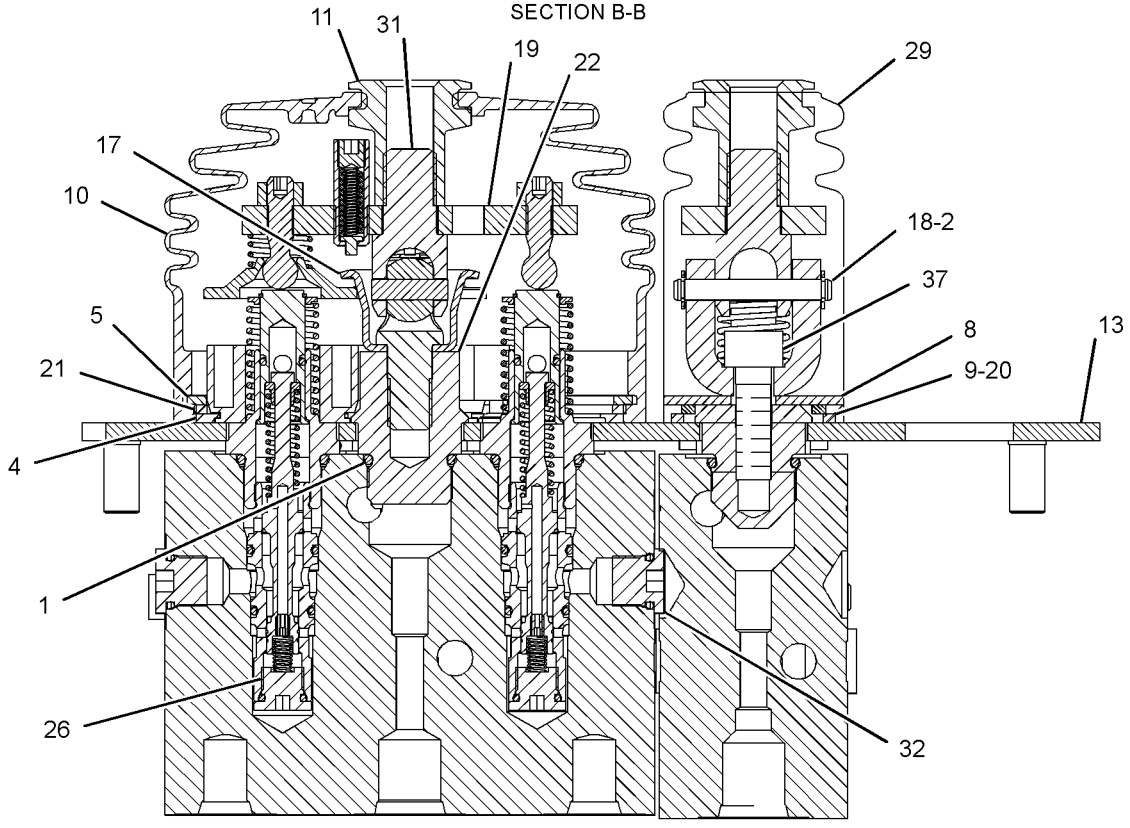

SECTION A-A

GRAPHIC #2 **<END>** g01947681

HYDRAULIC SYSTEM

212-1307 VALVE GP-PILOT

S/N: RRS1-UP
JOYSTICK,4 FUNCTION
PART OF 287-2064 CONTROL GP-PILOT OPERATED HYD
AN ATTACHMENT

SMCS-5059 **i03768409**

NOTE	REF NO	GRAPHIC REF	PART NUMBER	QTY	PART NAME 1 2 3 4 5 6 (PRODUCT LEVEL)	SEE PAGE
	1	2	**8L-2786**	3	SEAL-O-RING	
	2	1	**141-1095**	2	ADAPTER	
	3	2	**141-1556**	2	RETAINER	
	4	2	**141-2032**	2	PLATE	
	5	1	**141-4852**	1	BOOT	
	6	2	**141-7481**	1	SPACER	
	7	1	**141-9236**	1	SCREEN AS (PILOT OIL)	
	8	2	**142-2651**	1	PLATE AS	
	9	2	**145-2334**	2	ADAPTER	
	10	2	**146-8477**	2	BRACKET	
	11	2	**146-8478**	1	CUP	
	12	2	**146-8981**	2	PIN	
Y	13	2	**147-3114**	1	PIVOT GP-PILOT VALVE (AUXILIARY)	394
	14	2	**148-7922**	2	PLATE	
	15	2	**153-8947**	1	SWIVEL AS	
	16	2	**153-8952**	1	ADAPTER	
	17	1	**163-5512**	9	GROMMET	
Y	18	2	**160-6299**	1	PIVOT GP-PILOT VALVE (TILT, AUXILIARY)	395
	19	2	**033-9139**	4	RING-RETAINING	
	20	2	**102-8806**	1	KIT-RECEPTACLE (8-PIN)	
					(INCLUDES RECEPTACLE AS & WEDGE)	
	22	1	**136-9292**	2	BOOT	
	23	2	**136-9297**	1	PLATE	
	24	2	**136-9298**	1	RETAINER	
	25	2	**145-8428**	4	COIL AS-DETENT	
Y	26	2	**147-3322**	1	PLATE GP-PILOT VALVE (JOYSTICK)	396
	27	2	**149-5470**	1	PLATE	
	28	1	**157-6144**	2	ADAPTER	
M	29	1	**157-6155**	2	BOLT-SOCKET HEAD (M6X1X200-MM)	
M	30	1	**191-8920**	12	BOLT-SOCKET HEAD (M6X1X12-MM)	
Y	31	1,2	**212-4962**	6	VALVE GP-PILOT CARTRIDGE (LIFT, LOWER, AUXILIARY)	444
Y	32	1	**212-4963**	2	VALVE GP-PILOT CARTRIDGE (DUMP, TILT BACK)	445
	33	1,2	*183-7263*	16	PLUG AS	
					(EACH INCLUDES)	
		1,2	**3J-7354**	1	SEAL-O-RING	
		1,2	**9S-8002**	1	PLUG-O-RING	
	34	1	**3J-1907**	1	SEAL-O-RING	
	35	1	**3J-7354**	8	SEAL-O-RING	
	36	1	*148-8407*	4	PLUG AS	
					(EACH INCLUDES)	
		1	**3J-1907**	1	SEAL-O-RING	
		1	**9S-4191**	1	PLUG-O-RING	
M	37	2	**5A-3604**	2	BOLT-SOCKET HEAD (M8X1.25X25-MM)	
M	38	1	**5C-2890**	2	NUT (M6X1-THD)	
	39	1	**6V-8397**	1	SEAL-O-RING	
	40	1	**6V-8636**	1	CONNECTOR	

M-METRIC PART
Y-SEPARATE ILLUSTRATION

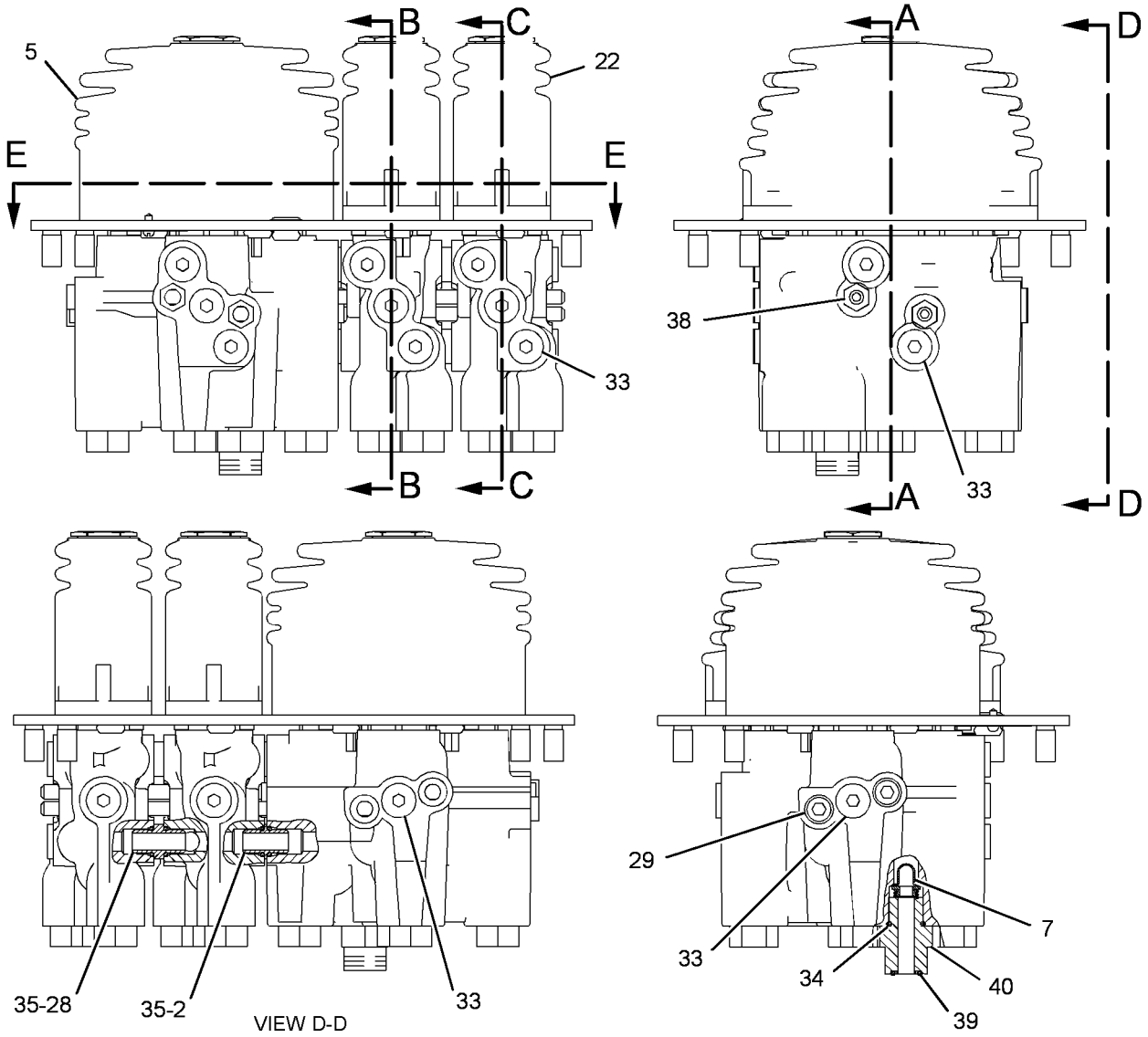

REFER TO ALL ILLUSTRATIONS OF THIS GROUP FOR AUXILIARY VIEWS

GRAPHIC #1

g01961653

212-1307 VALVE GP-PILOT *(contd.)* **i03768409**

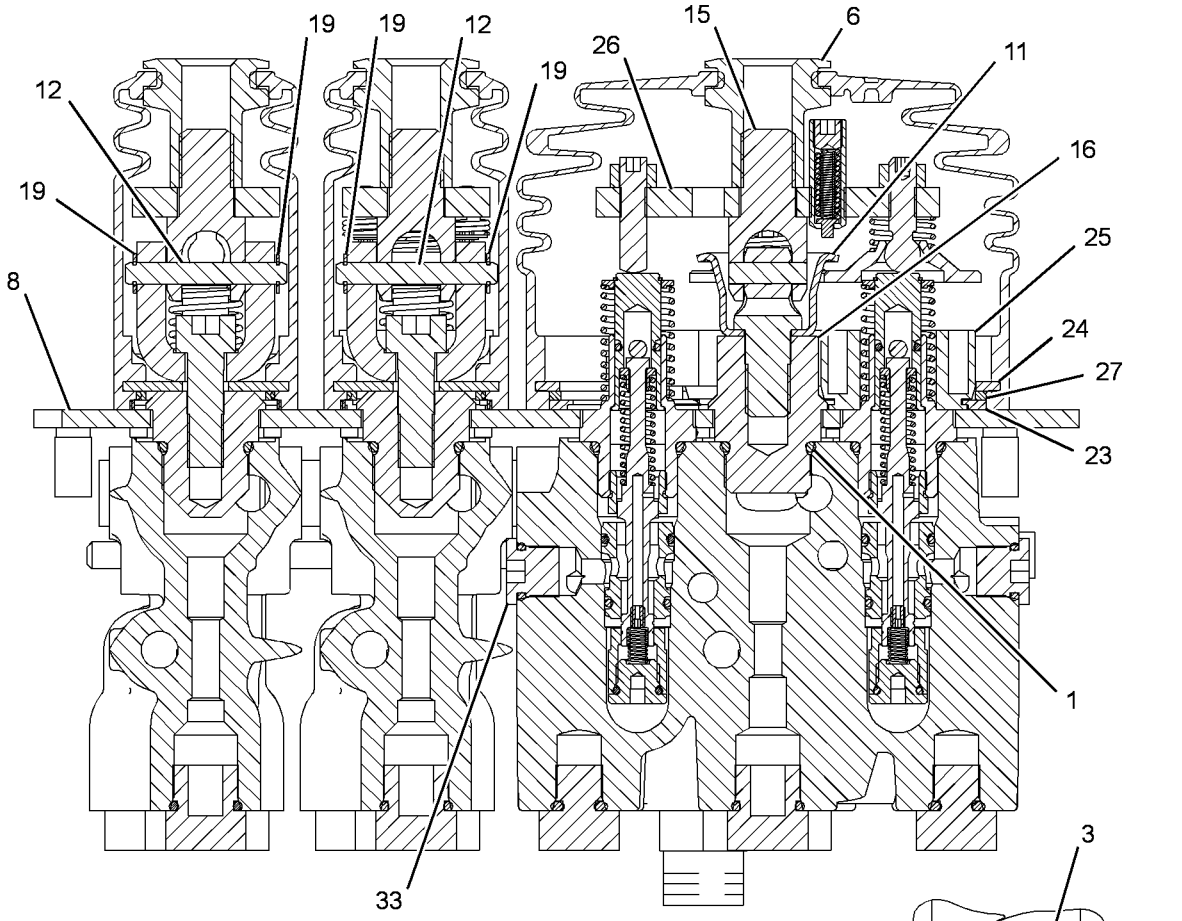

SECTION A-A

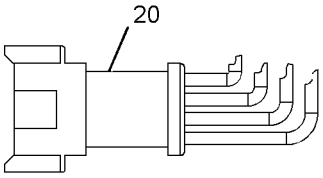

(PLUG DETAIL)

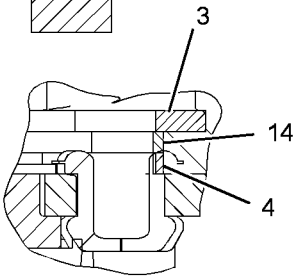

VIEW OF AREA D

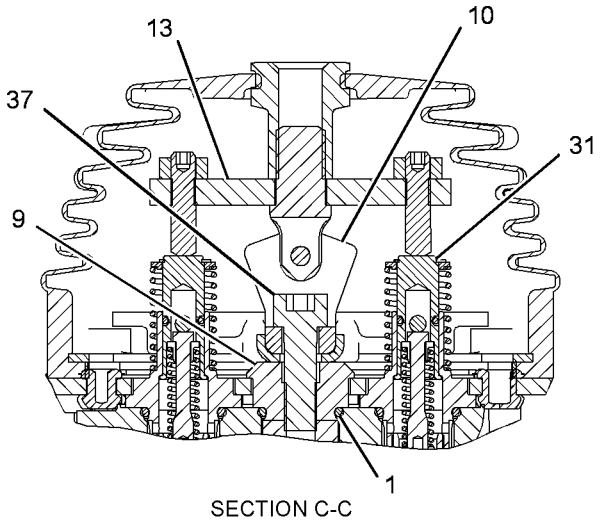

SECTION C-C

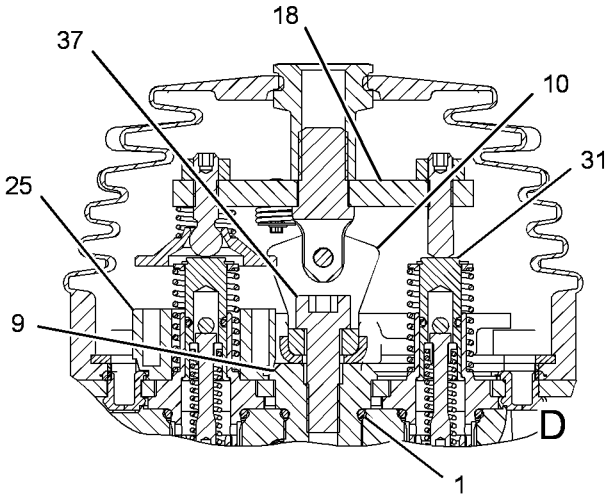

SECTION B-B

GRAPHIC #2 **<END>** g01961654

HYDRAULIC SYSTEM

212-4962 VALVE GP-PILOT CARTRIDGE

S/N: JRL1-UP; RRS1-UP
PART OF 212-1302, 212-1305, 212-1307 VALVE GP-PILOT
AN ATTACHMENT

SMCS-5059 **i01822324**

NOTE	REF NO	GRAPHIC REF	PART NUMBER	QTY	PART NAME 1 2 3 4 5 6 (PRODUCT LEVEL)	SEE PAGE
	1	1	**116-4527**	1	ORIFICE	
	2	1	**6M-5062**	1	SEAL-O-RING	
	3	1	**146-6316**	2	RETAINER	
	4	1	**7I-6601**	1	SEAL-O-RING	
	5	1	**146-6319**	1	RETAINER	
	6	1	**153-8924**	1	SPOOL	
	7	1	**153-8925**	1	STOP	
	8	1	**153-8926**	1	SPRING	
	9	1	**153-8929**	1	CAGE	
	10	1	**7J-0204**	1	SEAL-O-RING	
	11	1	**157-2152**	1	SPRING	
	12	1	**2H-3429**	1	RING-RETAINING	
	13	1	**3E-4354**	1	BALL	
	14	1	**3K-0360**	1	SEAL-O-RING	
	15	1	**4K-2039**	1	SEAL-O-RING	

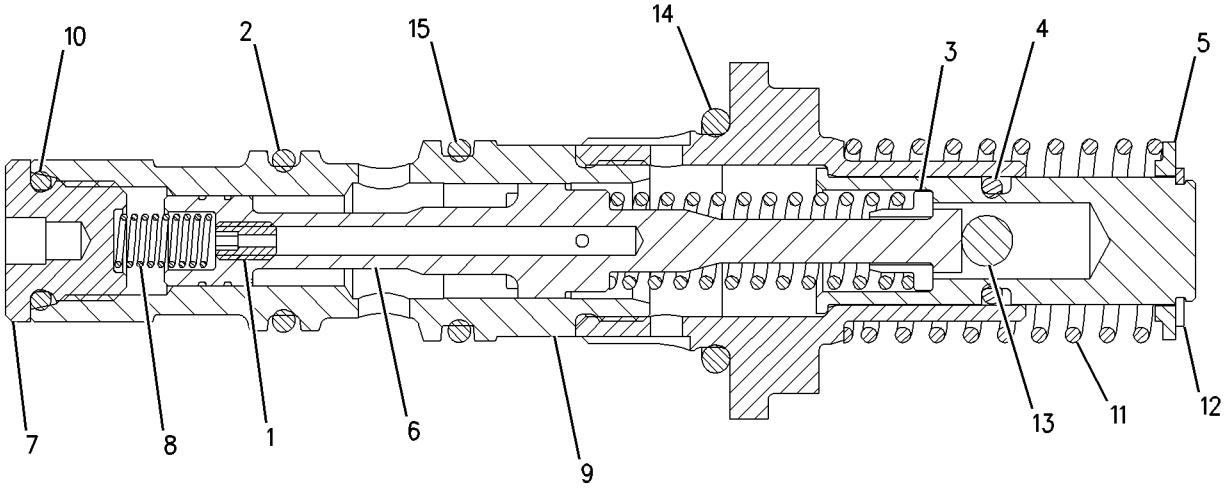

GRAPHIC #1 **<END>** g00930437

212-4963 VALVE GP-PILOT CARTRIDGE

S/N: JRL1-UP; RRS1-UP
PART OF 212-1302, 212-1305, 212-1307 VALVE GP-PILOT
AN ATTACHMENT

SMCS-5059 **i01822407**

NOTE	REF NO	GRAPHIC REF	PART NUMBER	QTY	PART NAME 1 2 3 4 5 6 (PRODUCT LEVEL)	SEE PAGE
	1	1	**116-4527**	1	ORIFICE	
	2	1	**6M-5062**	1	SEAL-O-RING	
	3	1	**146-6316**	2	RETAINER	
	4	1	**7I-6601**	1	SEAL-O-RING	
	5	1	**146-6319**	1	RETAINER	
	6	1	**153-8924**	1	SPOOL	
	7	1	**153-8925**	1	STOP	
	8	1	**153-8926**	1	SPRING	
	9	1	**153-8929**	1	CAGE	
	10	1	**157-2153**	1	SPRING	
	11	1	**7J-0204**	1	SEAL-O-RING	
	12	1	**2H-3429**	1	RING-RETAINING	
	13	1	**3E-4354**	1	BALL	
	14	1	**3K-0360**	1	SEAL-O-RING	
	15	1	**4K-2039**	1	SEAL-O-RING	

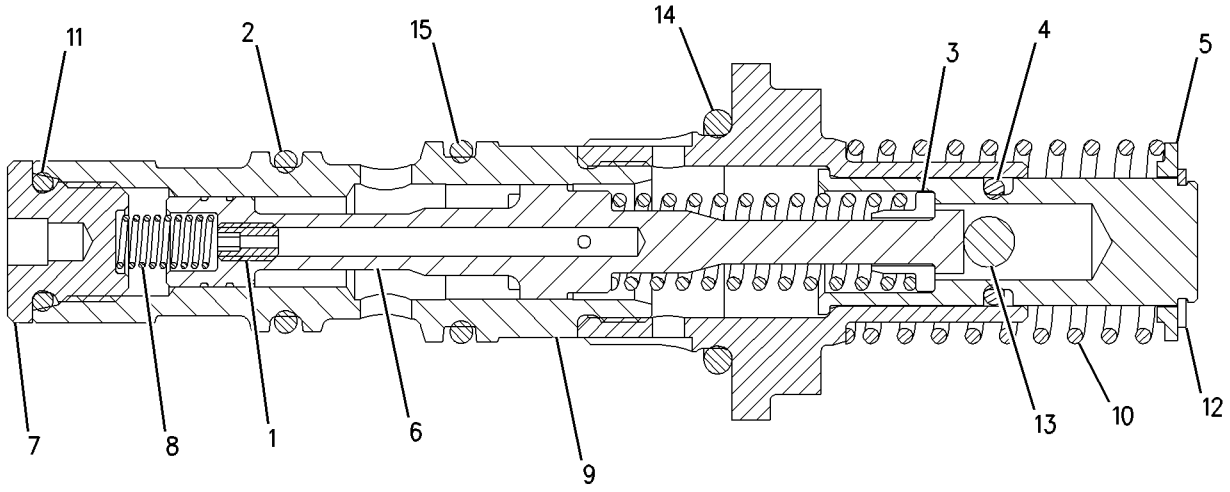

GRAPHIC #1 **<END>** g00930441

HYDRAULIC SYSTEM

185-5209 VALVE GP-PRESSURE REDUCING

S/N: JRL1-UP; RRS1-UP

PART OF 289-8796 LINES GP-PILOT

SMCS-5117 **i01862793**

NOTE	REF NO	GRAPHIC REF	PART NUMBER	QTY	PART NAME 1 2 3 4 5 6 (PRODUCT LEVEL)	SEE PAGE
	1	1	**119-8397**	1	VALVE GP-CHECK	
		1	**9N-1756**	1	SEAL-O-RING	
		1	**033-5853**	1	SEAL-O-RING	
		1	**126-5985**	1	RING-BACKUP	
	2	1	**184-9975**	1	VALVE GP-PRESSURE REDUCING	
		1	**6V-6924**	2	RING-BACKUP	
		1	**6V-5758**	1	SEAL-O-RING	
		1	**033-6027**	1	SEAL-O-RING	
		1	**033-6043**	1	SEAL-O-RING	
		1	**185-2327**	2	RING-BACKUP	

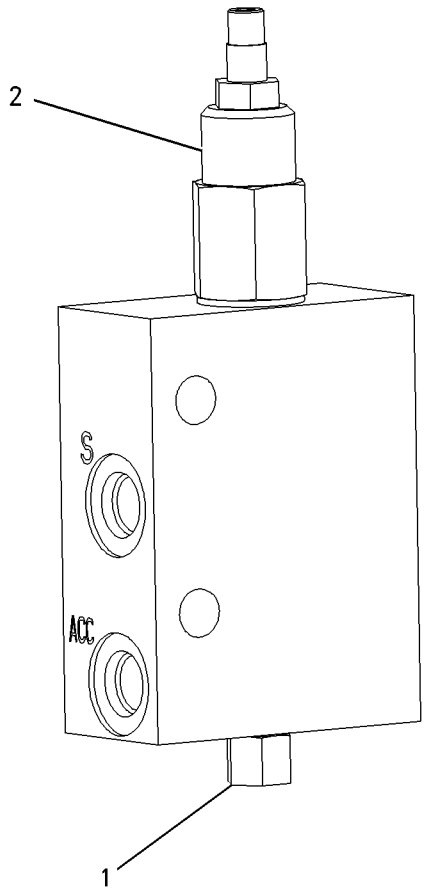

GRAPHIC #1 **<END>** g00685814

168-7323 VALVE GP-PUMP CONTROL–
PRESSURE, FLOW COMPENSATOR
S/N: JRL1-UP; RRS1-UP
PART OF 168-9027 PUMP GP-PISTON

SMCS-5455 **i01862748**

NOTE	REF NO	GRAPHIC REF	PART NUMBER	QTY	PART NAME 1 2 3 4 5 6 (PRODUCT LEVEL)	SEE PAGE
	1	1	**6E-6528**	6	SEAL	
	2	1	**6E-6527**	2	PLUG	
	3	1	**6E-3268**	1	RETAINER-SPRING	
	4	1	**6E-3275**	1	SPRING	
	5	1	**6E-3274**	1	SPRING	
	6	1	**033-6043**	1	SEAL-O-RING	
	7	1	**6E-3272**	1	SEAT	
	8	1	**6E-6540**	1	PLUG	
M	9	1	**6E-6538**	2	NUT-ADJUSTMENT (M8X1-THD)	
M	10	1	**6E-6537**	2	SCREW-ADJUSTMENT (M8X1X28-MM)	
M	11	1	**6E-6539**	2	NUT-CAP (M8X1-THD)	
	12	1	**6E-3273**	1	SEAT	
	13	1	**6E-6536**	1	PLUG	
	14	1	**6E-3269**	1	RETAINER-SPRING	
	15	1	**105-2145**	1	VALVE-ORIFICE	
	16	1	**5P-9262**	1	SEAL-O-RING	
	17	1	**9S-8002**	1	PLUG-O-RING	
	18	1	**3J-7354**	1	SEAL-O-RING	
	19	1	**6V-8352**	1	SEAL-O-RING	
M	20	1	**8T-8442**	4	BOLT-SOCKET HEAD (M6X1X30-MM)	
	21	1	**9X-7680**	3	SEAL-O-RING	
	22	1	**6E-3276**	1	SPRING	

M-METRIC PART

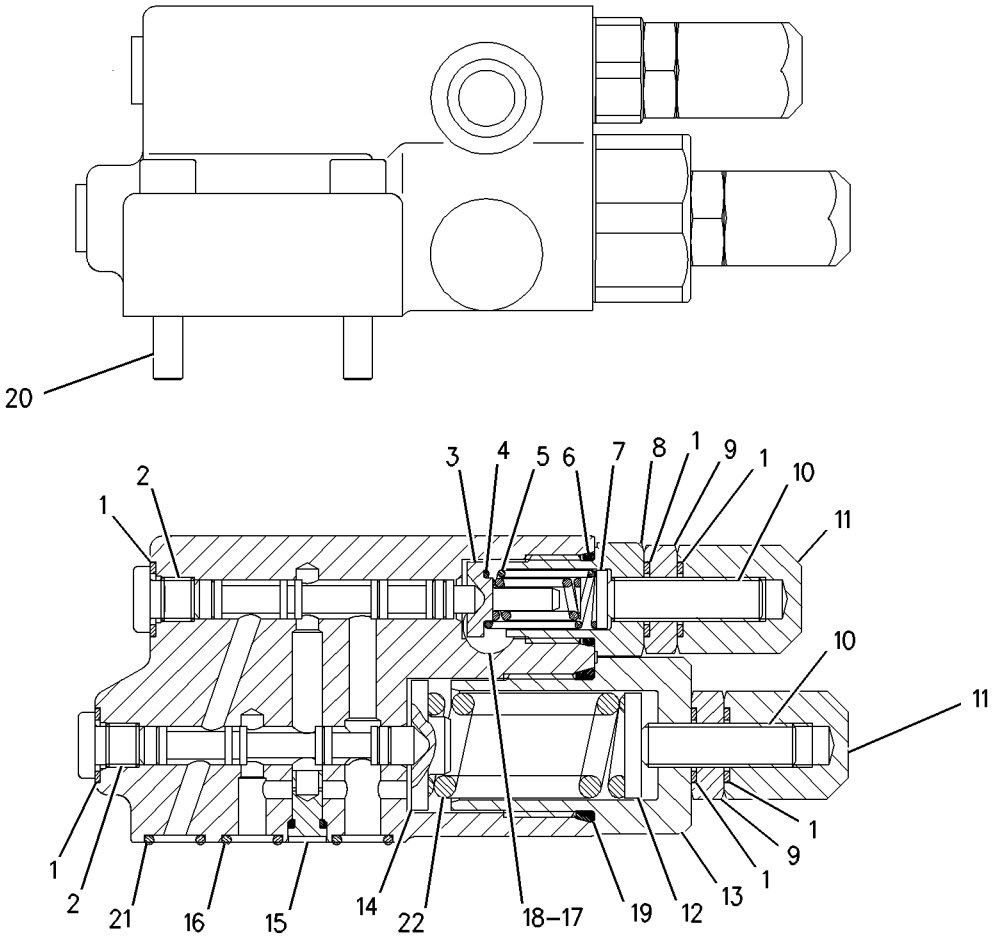

GRAPHIC #1 **<END>** g00831780

224-3188 VALVE GP-PUMP CONTROL–
PRESSURE, FLOW COMPENSATOR
S/N: JRL1-UP; RRS1-UP
PART OF 168-7873 PUMP GP-PISTON

SMCS-5455 **i02574373**

NOTE	REF NO	GRAPHIC REF	PART NUMBER	QTY	PART NAME 1 2 3 4 5 6 (PRODUCT LEVEL)	SEE PAGE
	1	1	**6E-3268**	1	RETAINER-SPRING	
	2	1	**6E-3269**	1	RETAINER-SPRING	
	3	1	**200-5359**	1	HOUSING	
	4	1	**200-5360**	1	HOUSING	
	5	1	**6E-3272**	1	SEAT	
	6	1	**6E-3273**	1	SEAT	
	7	1	**6E-3275**	1	SPRING	
	8	1	**6E-3276**	1	SPRING	
	9	1	**201-0780**	1	ORIFICE	
	10	1	**202-7503**	2	RETAINER	
	11	1	**6E-6527**	2	PLUG	
	12	1	**193-1036**	1	SPRING	
	13	1	**033-6043**	1	SEAL-O-RING	
	14	1	**6V-8352**	1	SEAL-O-RING	
	15	1	**6E-6528**	2	SEAL	
	16	1	**5P-9262**	1	SEAL-O-RING	
M	17	1	**200-5361**	2	NUT (M8X1-THD)	
	18	1	**200-5362**	2	SEAL-O-RING	
	19	1	**200-5363**	2	RING-THRUST	
	20	1	**200-5364**	2	CAP	

M-METRIC PART

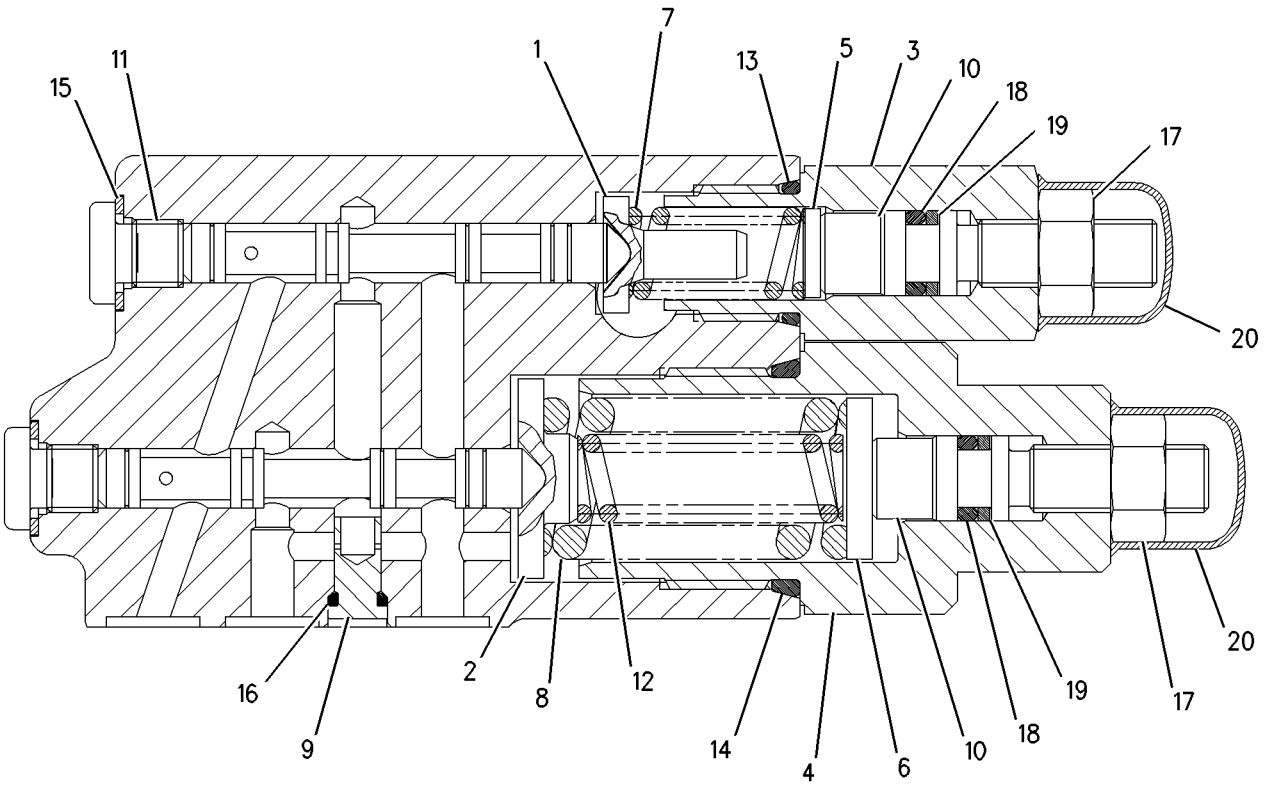

SECTION VIEW

GRAPHIC #1 **<END>** g00932169

225-1057 VALVE GP-SHUTOFF–HYDRAULIC LOCKOUT

S/N: JRL1-UP; RRS1-UP

PART OF 203-3889, 203-3890 HYDRAULIC AR-2 VALVE, 203-3892 HYDRAULIC AR-3 VALVE, 203-3893 HYDRAULIC AR-4 VALVE

AN ATTACHMENT

SMCS-5059, 5130 **i02818624**

NOTE	REF NO	GRAPHIC REF	PART NUMBER	QTY	PART NAME 1 2 3 4 5 6 (PRODUCT LEVEL)	SEE PAGE
	1	1	**6V-1178**	1	PLUG-BUTTON	
C	2	1	**091-0079**	1	PLUG	
	3	1	**226-2095**	1	FILM (BLACK)	
Y	4	1	**233-7133**	1	VALVE & MTG GP-SOLENOID (24-VOLT) (HYDRAULIC LOCKOUT)	412
C	5	1	**148-8378**	2	ELBOW AS	
					(EACH INCLUDES)	
		1	**3J-1907**	1	SEAL-O-RING	
		1	**6V-8397**	1	SEAL-O-RING	
		1	**6V-8724**	1	ELBOW	
C	6	1	**148-8435**	1	TEE AS	
		1	**3J-1907**	1	SEAL-O-RING	
		1	**6V-8397**	2	SEAL-O-RING	
		1	**6V-8781**	1	TEE	
C	7	1	**298-7736**	2	COLLAR	
M	8	1	**2Y-5829**	2	NUT (M10X1.5-THD)	
	9	1	**6V-5839**	4	WASHER (11X21X2.5-MM THK)	
C	10	1	**6V-9829**	1	CAP AS	
CM	11	1	**8T-0643**	2	BOLT (M10X1.5X80-MM)	

C-CHANGE FROM PREVIOUS TYPE
M-METRIC PART
Y-SEPARATE ILLUSTRATION

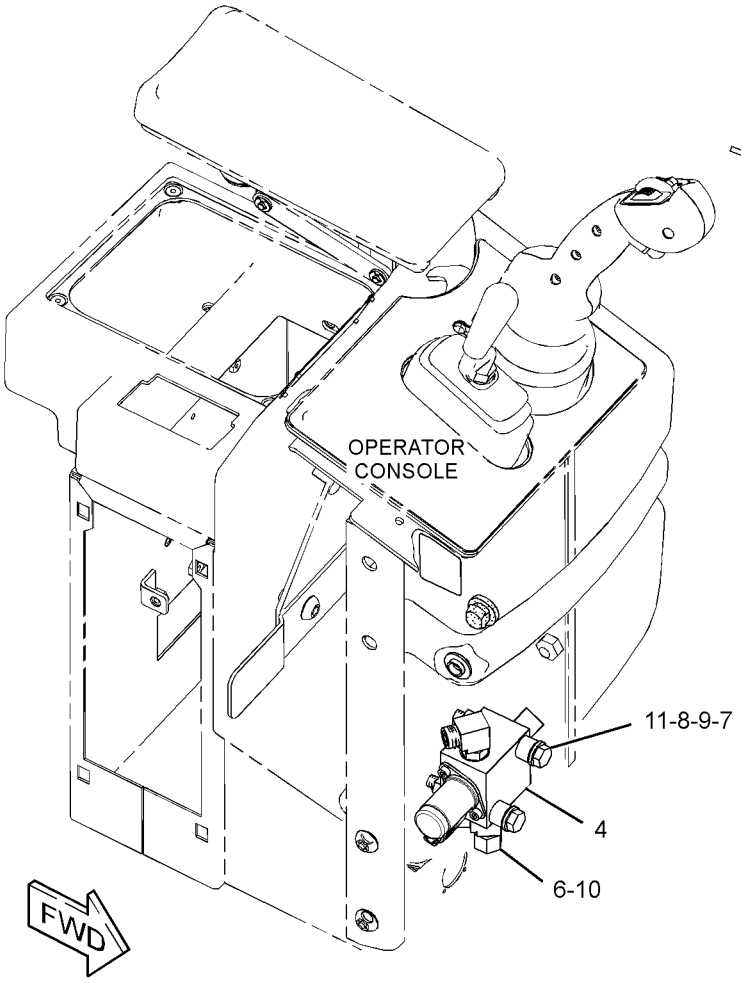

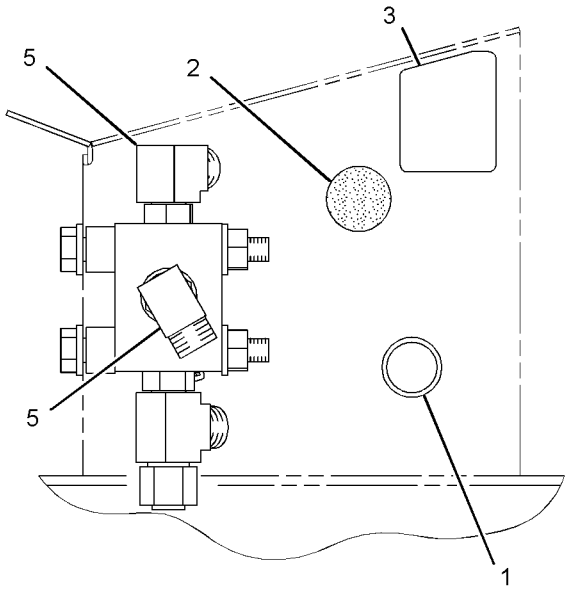

LEFT SIDE VIEW

GRAPHIC #1 **<END>** g01414777

HYDRAULIC SYSTEM

189-2100 VALVE GP-SOLENOID

S/N: JRL1-UP; RRS1-UP
24-VOLT
PART OF 289-6394 MOTOR GP-GEAR
AN ATTACHMENT

SMCS-5132, 5479 **i03537649**

NOTE	REF NO	GRAPHIC REF	PART NUMBER	QTY	PART NAME 1 2 3 4 5 6 (PRODUCT LEVEL)	SEE PAGE
	1	1	**8C-9987**	1	WASHER (8.3X28X2.5-MM THK)	
	2	1	**111-0343**	1	LOCKNUT (5/16-18-THD)	
	3	1	**189-0189**	1	COIL AS (24-VOLT)	
		1	**1S-9593**	2	STRAP-CABLE	
		1	**102-8802**	1	KIT-RECEPTACLE (2-PIN)	
					(INCLUDES RECEPTACLE AS & WEDGE)	
		1	**186-3735**	1	PIN-CONNECTOR (16-GA TO 18-GA)	
J	4	1	*189-2096*	1	CARTRIDGE AS-VALVE	
		1	**8C-9987**	1	WASHER (8.3X28X2.5-MM THK)	
		1	**111-0343**	1	LOCKNUT (5/16-18-THD)	
					AVAILABLE REPAIR KIT(S):	
J			**6T-7054**	1	KIT-SEAL (CARTRIDGE)	
					(INCLUDES SEALS & RINGS)	

J-KIT MARKED J SERVICES PART MARKED J

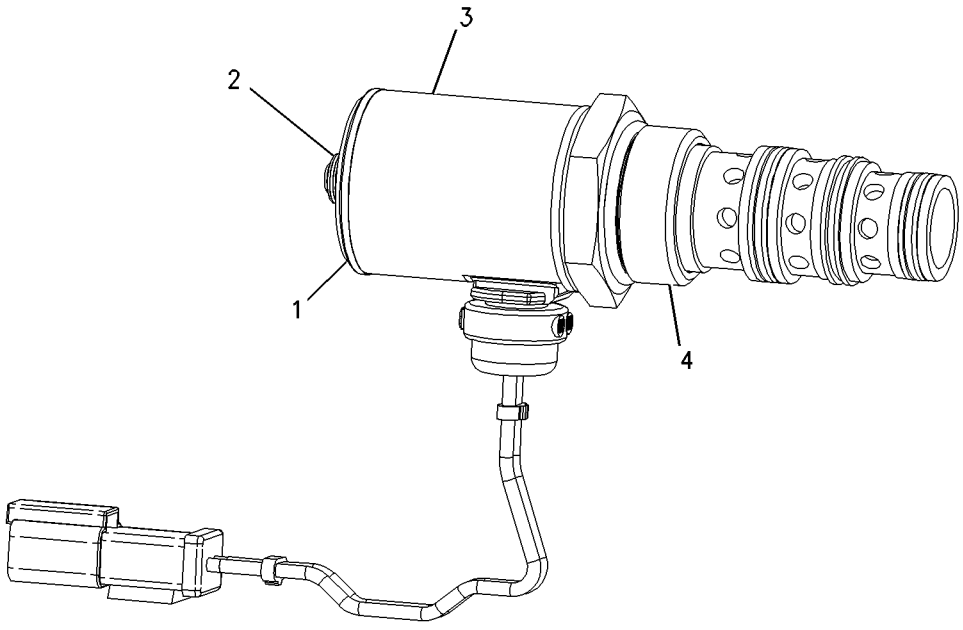

GRAPHIC #1 **<END>** g00891427

211-2092 VALVE GP-SOLENOID

S/N: JRL1-UP; RRS1-UP
24-VOLT
PART OF 289-6393, 289-6394 MOTOR GP-GEAR
AN ATTACHMENT

SMCS-5132, 5479 **i02348939**

NOTE	REF NO	GRAPHIC REF	PART NUMBER	QTY	PART NAME 1 2 3 4 5 6 (PRODUCT LEVEL)	SEE PAGE
	1	1	**123-3132**	1	RING-BACKUP	
	2	1	**8L-2779**	1	SEAL-O-RING	
	3	1	**230-0913**	1	COIL AS	
	4	1	**033-6028**	1	SEAL-O-RING	

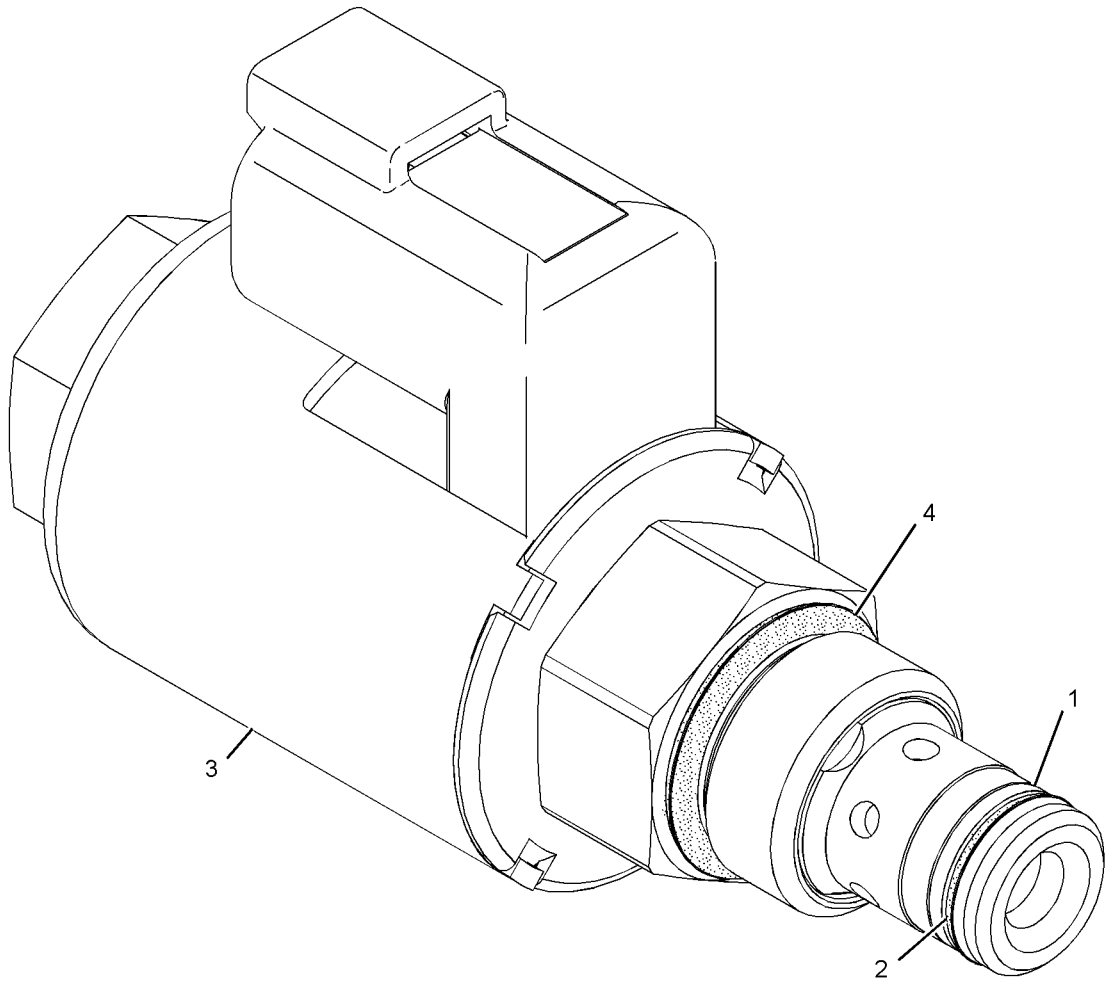

GRAPHIC #1 **<END>** g01181806

148-7790 CONTROL GP-BUCKET

S/N: JRL1-UP

PART OF 372-7772 CHASSIS AR

SMCS-6107 **i03451684**

NOTE	REF NO	GRAPHIC REF	PART NUMBER	QTY	PART NAME 1 2 3 4 5 6 (PRODUCT LEVEL)	SEE PAGE
	1	1	**3B-8488**	1	FITTING-GREASE	
	2	1	**3B-8491**	5	FITTING-GREASE	
	3	1	**9C-7907**	2	SPACER (21.5X28X14-MM THK)	
B	4	1	**5V-6454**	4	WASHER (52X120X1.6-MM THK)	
B	5	1	**5V-6455**	2	WASHER (52X120X3-MM THK)	
	6	1	**7K-9203**	4	SEAL-LIP TYPE	
	7	1	**7K-9204**	2	SEAL-LIP TYPE	
	8	1	**7K-9205**	14	SEAL-LIP TYPE	
	9	1	**7K-9208**	4	SEAL-LIP TYPE	
	10	1	**7K-9212**	2	SEAL-LIP TYPE	
B	11	1	**176-0623**	4	WASHER (78X160X1.6-MM THK)	
B	12	1	**176-0624**	10	WASHER (78X160X3-MM THK)	
	13	1	**148-7797**	1	LEVER AS	
	13A	1	**4V-4453**	2	BUSHING	
	14	1	**148-7798**	1	LINK AS	
	14A	1	**3G-2797**	1	BUSHING	
	14B	1	**4V-8643**	1	BUSHING	
	15	1	**148-7800**	1	ARM AS-LIFT	
	15A	1	**4V-8631**	2	BUSHING	
	15B	1	**9C-6003**	2	BEARING	
	15C	1	**9V-3404**	2	BUSHING	
M	15D	1	**9C-6809**	2	BOSS (M10X1.5-MM)	
	16	1	**148-7870**	2	PIN AS	
	17	1	**148-7871**	2	PIN AS	
	18	1	**148-7872**	1	PIN AS	
	19	1	**148-7873**	2	PIN AS	
	20	1	**148-7874**	1	PIN AS	
	21	1	**148-7875**	1	PIN AS	
	22	1	**257-1636**	2	PIN AS	
	23	1	**148-7877**	2	PIN AS	
	24	1	**2D-4867**	2	FITTING-GREASE	
	25	1	**3B-8489**	3	FITTING-GREASE	
	26	1	**3E-9411**	2	WASHER-HARD (17.5X38X6-MM THK)	
	27	1	**7X-0618**	11	WASHER-HARD (13.5X40X5-MM THK)	
M	28	1	**8T-4192**	11	BOLT (M12X1.75X25-MM)	
M	29	1	**8T-7338**	2	BOLT (M16X2X45-MM)	
	30	1	**3B-8485**	2	FITTING-GREASE	

B-USE AS REQUIRED
M-METRIC PART

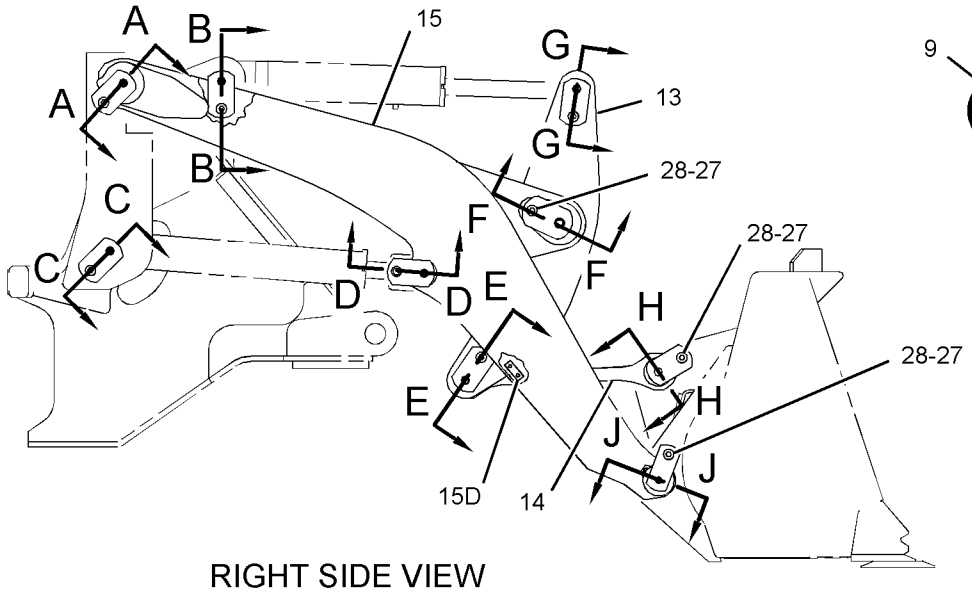

RIGHT SIDE VIEW

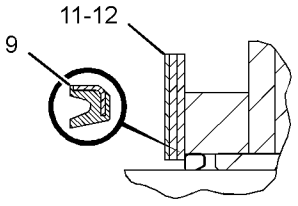

VIEW OF AREA K

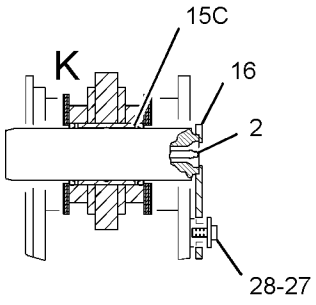

SECTION A-A

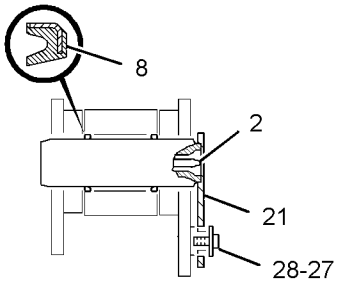

SECTION B-B

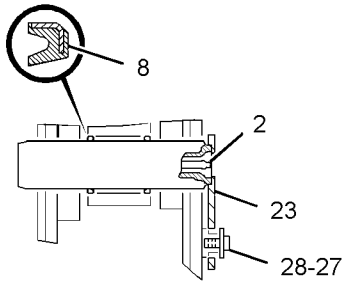

SECTION C-C

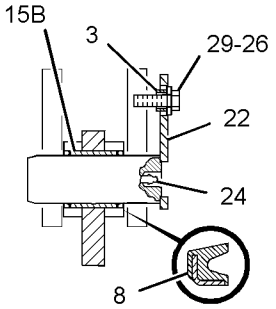

SECTION D-D

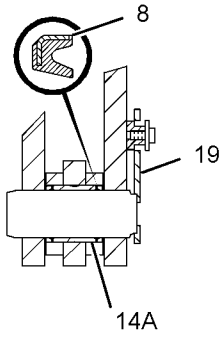

SECTION E-E

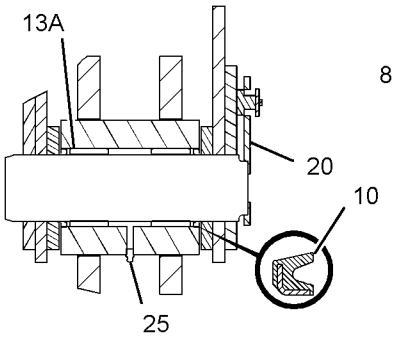

SECTION F-F

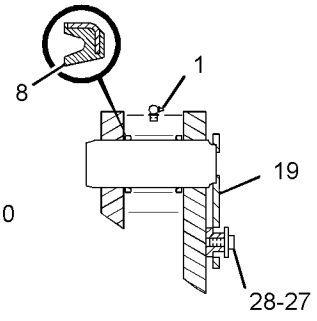

SECTION G-G

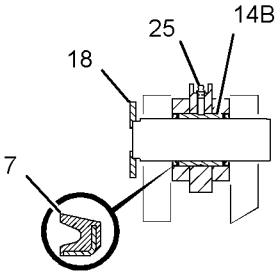

SECTION H-H

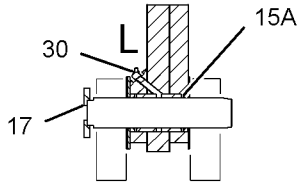

SECTION J-J

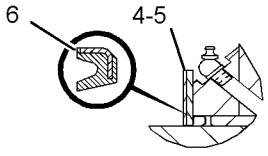

VIEW OF AREA L

GRAPHIC #1 **<END>** g01443681

132-2350 CONTROL GP-WORK TOOL—STANDARD LIFT MACHINES

S/N: RRS1-UP
PART OF 375-8357 DISTRIBUTION AR
AN ATTACHMENT

SMCS-6116, 6117, 6119, 6700 **i04408738**

NOTE	REF NO	GRAPHIC REF	PART NUMBER	QTY	PART NAME 1 2 3 4 5 6 (PRODUCT LEVEL)	SEE PAGE
E	1	2	**121-0199**		WRAP-SPIRAL (3/8-IN OD) (29-CM EACH)	
E	1A	2	**121-0199**		WRAP-SPIRAL (3/8-IN OD) (17.5-CM)	
	2	1,2	**3G-0572**	2	HOSE AS	
	3	1	**5T-3821**	1	HOSE AS	
	4	1,2	**7K-1181**	7	STRAP-CABLE	
	5	1	**107-9976**	4	SEAL-O-RING	
	6	1	**118-2722**	2	SEAL-O-RING	
	7	1	**356-3330**	1	ARM & BEARING AS	
	7A	1	**4V-4453**	4	BUSHING	
	7B	1	**7P-3466**	2	BUSHING	
	8	1	**143-4969**	1	LEVER & BUSHING AS (TILT, REAR)	
	8A	1	**4V-2879**	2	BUSHING	
	9	2	**143-4979**	1	LINK & BEARING AS (TILT, REAR)	
	9A	2	**4V-4453**	2	BUSHING	
M	9B	2	**9R-9866**	1	BOSS-THREADED (M10X1.5-THD)	
	10	1	**146-7990**	1	PIN AS	
	11	1	**146-7993**	2	PIN AS	
	12	2	**146-7996**	2	PIN AS	
	13	1	**146-8000**	1	PIN AS	
	14	2	**146-8009**	1	PIN AS	
	15	1	**146-8010**	1	PIN AS	
	16	1	**146-8013**	1	PIN AS	
	17	1	**146-8016**	1	PIN AS	
	18	2	**146-8019**	1	PIN AS	
G	19	1	**160-2243**		SLEEVE-ABRASION (41-IN)	
	20	1	**163-4361**	1	HOSE AS	
	21	2	**163-4362**	1	HOSE AS	
	22	1	**177-1452**	2	WASHER-HARD (22X60X6-MM THK)	
B	23	1	**194-7109**	4	SHIM (1-MM THK)	
B	24	1	**194-7110**	2	SHIM (0.5-MM THK)	
	25	1	**194-7111**	2	SHIM (4-MM THK)	
	26	1	**194-7112**	2	SHIM (2-MM THK)	
	27	1	**235-7350**	1	LEVER & BUSHING AS (TILT, FRONT)	
	27A	1	**4V-8639**	2	BUSHING	
	28	1	**235-7353**	1	LINK & BEARING AS (TILT, FRONT)	
	28A	1	**4V-8639**	2	BUSHING	
	28B	1	**4V-8674**	1	BUSHING	
	29	1	**235-7390**	1	PIN AS	
	30	2	**002-0639**	1	ADAPTER-PIPE	
	31	2	**1M-8652**	2	RING-RETAINING	
	32	1,2	**3B-6552**	4	ELBOW-PIPE	
	33	1	**4F-2861**	1	FITTING	
	34	1,2	**3B-8489**	9	FITTING-GREASE	
	35	1,2	**3B-8491**	4	FITTING-GREASE	
	36	2	**3E-9411**	2	WASHER-HARD (17.5X38X6-MM THK)	
	37	2	**4D-8123**	1	CLIP	
	38	2	**7K-9205**	8	SEAL-LIP TYPE	
	39	1	**7K-9208**	4	SEAL-LIP TYPE	
	40	1,2	**7K-9209**	10	SEAL-LIP TYPE	
	41	1,2	**7K-9212**	8	SEAL-LIP TYPE	
	42	1	**7K-9216**	2	SEAL-LIP TYPE	
	43	1	**7X-0618**	7	WASHER-HARD (13.5X40X5-MM THK)	
	44	1	**8B-4884**	1	ELBOW	
	45	2	**8T-4121**	3	WASHER-HARD (11X21X2.5-MM THK)	
M	46	2	**8T-4137**	3	BOLT (M10X1.5X20-MM)	

132-2350 **CONTROL GP-WORK TOOL** *(contd.)* **i04408738**

NOTE	REF NO	GRAPHIC REF	PART NUMBER	QTY	PART NAME 1 2 3 4 5 6 (PRODUCT LEVEL)	SEE PAGE
M	47	1	**8T-4192**	7	BOLT (M12X1.75X25-MM)	
M	48	2	**8T-7338**	2	BOLT (M16X2X45-MM)	
M	49	1	**8T-6430**	2	BOLT (M20X2.5X50-MM)	
	50	1,2	**9C-7907**	3	SPACER (21.5X28X14-MM THK)	
	51	2	**9X-8582**	3	CLIP	
	52	2	**215-9690**	2	WASHER (66X100X4-MM THK)	
	53	2	**271-3222**	2	SHIM (1-MM THK)	

B-USE AS REQUIRED
E-ORDER BY THE CENTIMETER
G-ORDER BY THE INCH
M-METRIC PART

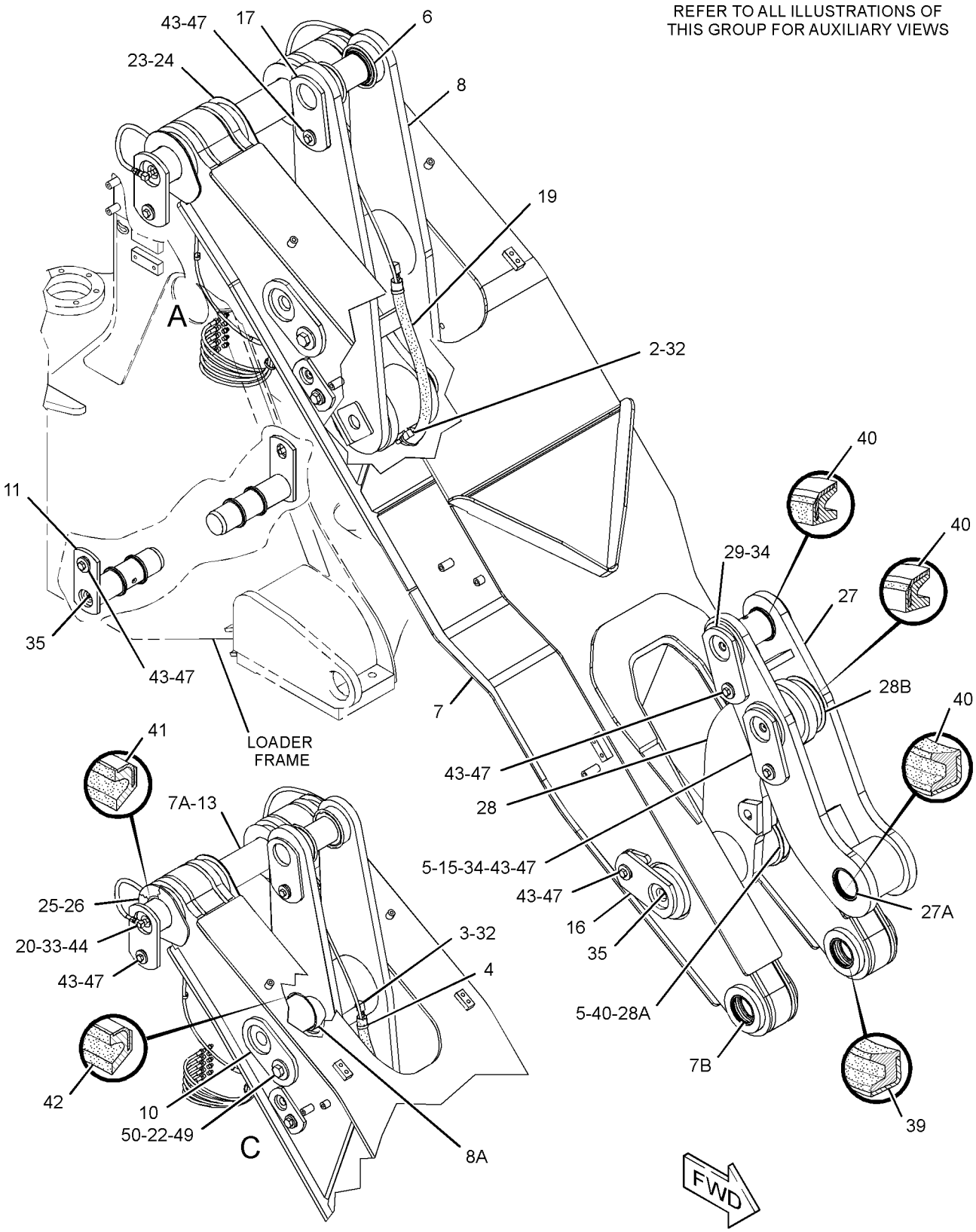

VIEW OF AREA A

GRAPHIC #1

g02528256

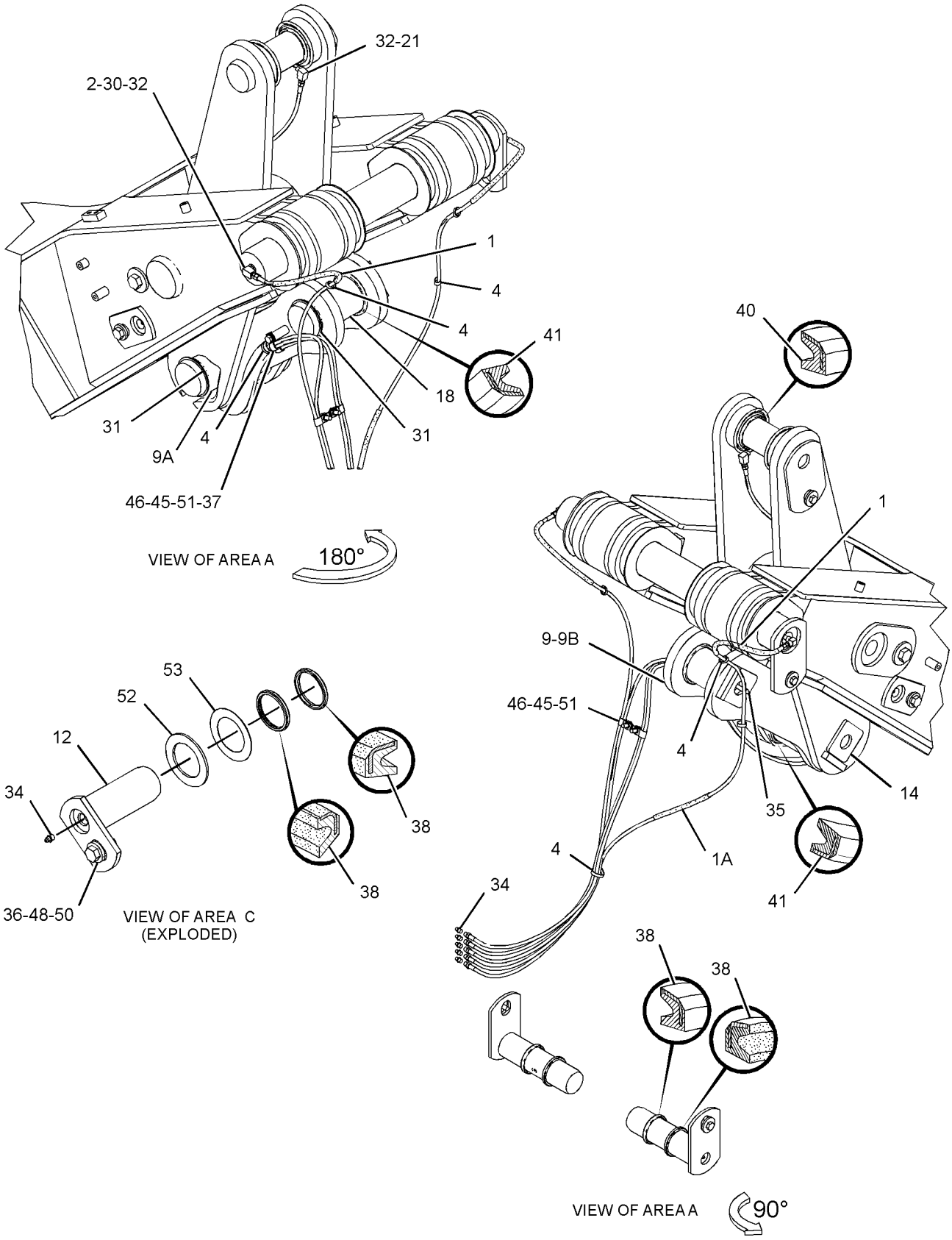

GRAPHIC #2 **<END>** g02647216

284-0506 AIR CONDITIONER & MOUNTING GP–

WITH CABLE CONTROL

S/N: JRL1-UP; RRS1-UP

PART OF 372-8683 AIR CONDITIONER AR

AN ATTACHMENT

SMCS-7320 **i03538566**

NOTE	REF NO	GRAPHIC REF	PART NUMBER	QTY	PART NAME 1 2 3 4 5 6 (PRODUCT LEVEL)	SEE PAGE
D	1	1	**5P-5643**		SEAL (0.7-M EACH)	
	2	1	**118-7259**	1	GASKET	
	3	1	**156-4449**	1	CABLE AS (HEATER TEMPERATURE CONTROL)	
		1	**2H-3920**	2	LOCKWASHER	
		1	**6V-8369**	1	NUT (7/16-28-THD)	
		1	**143-8874**	1	BOOT	
	4	1	**236-2295**	2	TUBE AS	
	5	1	**236-4233**	1	SWITCH AS-ROCKER (AIR CONDITIONER, HEATER CONT)	
		1	**111-7899**	1	GASKET	
	6	1	**280-2710**	1	CIRCUIT BREAKER AS (20-AMPERE, MANUAL RESET) (AIR CONDITIONER)	
Y	7	1	**306-8142**	1	AIR CONDITIONER GP	463
	8	1	**7X-0579**	11	WASHER-HARD (8.8X25.5X2-MM THK)	
M	9	1	**8T-4908**	11	BOLT (M8X1.25X25-MM)	

D-ORDER BY THE METER
M-METRIC PART
Y-SEPARATE ILLUSTRATION

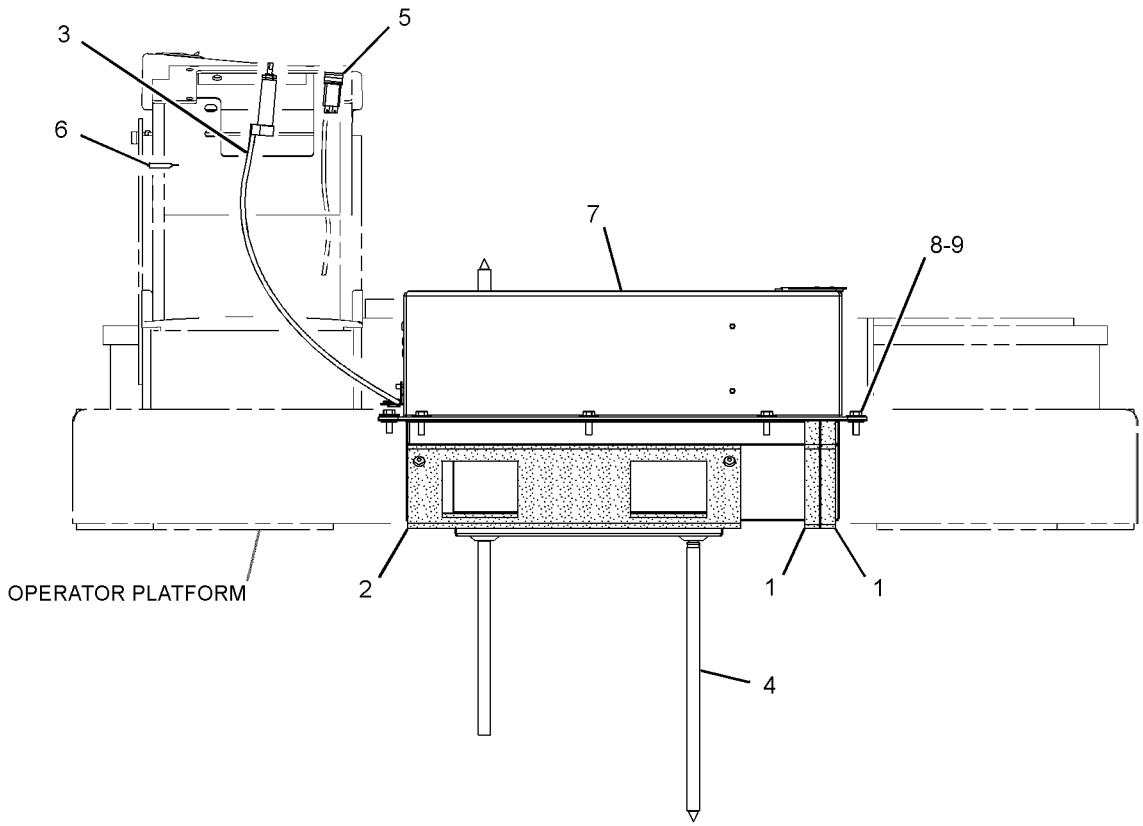

FRONT VIEW

GRAPHIC #1 **<END>** g01389726

OPERATOR STATION

372-8683 AIR CONDITIONER AR

S/N: JRL1-UP; RRS1-UP
PART OF 375-8357 DISTRIBUTION AR
FOR USE WITH 310-9955—PAGE 469. CANNOT BE USED WITH 290-8189—PAGE 474, 372-8684—PAGE 512
AN ATTACHMENT

SMCS-7320 **i04419832**

NOTE	PART NUMBER	QTY	PART NAME 1 2 3 4 5 6 (PRODUCT LEVEL)	SEE PAGE
Y	*284-0506*	1	AIR CONDITIONER & MOUNTING GP (WITH CABLE CONTROL)	461
Y	*267-3770*	1	ALTERNATOR GP-CHARGING (24-VOLT, 95-AMPERE)	101
Y	*262-0858*	1	COMPRESSOR GP-REFRIGERANT	476
Y	*203-5937*	1	CONDENSER & MTG GP-REFRIGERANT	478
Y	*294-9432*	1	LINES GP-AIR CONDITIONER	520
Y	*290-8753*	1	LINES GP-CAB HEATER	522
Y	*198-8965*	1	PANEL GP-TOP (HOOD, AIR CONDITIONER)	280

Y-SEPARATE ILLUSTRATION

<END>

OPERATOR STATION

306-8142 AIR CONDITIONER GP

S/N: JRL1-UP; RRS1-UP
PART OF 284-0506 AIR CONDITIONER & MOUNTING GP
AN ATTACHMENT

SMCS-7320 **i03879266**

NOTE	REF NO	GRAPHIC REF	PART NUMBER	QTY	PART NAME 1 2 3 4 5 6 (PRODUCT LEVEL)	SEE PAGE
	1	1	**3E-1841**	1	LEVER (HEATER TEMPERATURE CONTROL)	
	2	1	**6T-6708**	2	WASHER (7X28.6X4.1-MM THK)	
	3	1	**7F-2050**	1	LOCKNUT (3/4-16-THD)	
	4	1	**8Y-5737**	1	CLAMP	
	5	1	**9G-1950**	1	RESISTOR (CAB FAN SPEED)	
	6	1	**9X-2185**	4	SCREW (8-15X0.44-IN)	
	7	1	**9X-2488**	6	CLAMP-HOSE	
	8	1	**102-0341**	1	CLIP	
	9	1	**114-3140**	1	GROMMET	
	10	1	**118-5044**	1	HARNESS AS-WIRING (CAB HEATER)	
		1	**102-8805**	1	KIT-RECEPTACLE (6-PIN)	
					(INCLUDES RECEPTACLE AS & WEDGE)	
		1	**3S-2093**	3	STRAP-CABLE	
		1	**6T-6505**	5	HOUSING-RECEPTACLE (BLADE, POSITIVE LOCK)	
		1	**8T-8737**	1	PLUG-SEAL	
		1	**9W-0844**	2	SOCKET-CONNECTOR (14-GA TO 16-GA)	
		1	**9W-0852**	5	PIN-CONNECTOR (14-GA TO 16-GA)	
E		1	**119-3662**		TUBE-HEAT SHRINK (10.85-MM DIA) (13-CM)	
		1	**155-2270**	1	KIT-CONNECTING PLUG (2-PIN)	
					(INCLUDES PLUG AS, WEDGE & INTERFACE SEAL)	
	11	1	**124-8495**	1	VALVE AS-WATER (AIR CONDITIONER)	
	12	1	**151-0894**	1	COVER AS	
	13	1	**183-7528**	1	COIL AS-HEATER	
	14	1	**255-9138**	1	BRACKET AS	
M		1	**9X-2032**	8	NUT-WELD (M4X0.7-THD)	
	15	1	**275-6706**	1	MOTOR AS-BLOWER (24-VOLT)	
		1	**102-8802**	1	KIT-RECEPTACLE (2-PIN)	
					(INCLUDES RECEPTACLE AS & WEDGE)	
		1	**9W-0852**	2	PIN-CONNECTOR (14-GA TO 16-GA)	
	16	1	**283-2456**	1	COIL AS-EVAPORATOR	
	17	1	**309-8618**	1	CASE AS	
	18	1	**3S-2093**	3	STRAP-CABLE	
	19	1	**037-4426**	1	RETAINER	
	20	1	**124-8494**	2	GASKET	
M	21	1	**129-3178**	2	LOCKNUT (M6X1-THD)	
M	22	1	**141-9784**	1	BOLT (M6X1X190-MM)	
	23	1	**1P-6522**	1	GROMMET	
	24	1	**2H-3922**	1	LOCKWASHER	
	25	1	**2H-3923**	1	LOCKWASHER	
	26	1	**096-6166**	2	WASHER-HARD (4.5X9X1-MM THK)	
	27	1	**119-9631**	1	SWITCH-TEMPERATURE (AIR CONDITIONER)	
M	28	1	**5C-9553**	8	BOLT (M6X1X16-MM)	
	29	1	**6V-1668**	2	WASHER (6.5X29.1X3-MM THK)	
M	30	1	**6V-5210**	8	SCREW-MACHINE (M4X0.7X10-MM)	
	31	1	**7F-2060**	1	LOCKNUT (7/8-14-THD)	
M	32	1	**8C-8457**	1	SCREW-MACHINE (M5X0.8X14-MM)	
	33	1	**8T-4205**	11	WASHER-HARD (7.2X14.5X2-MM THK)	
M	34	1	**8T-0337**	2	SCREW-MACHINE (M4X0.7X12-MM)	
M	35	1	**9X-2044**	1	SCREW-TRUSS HEAD (M6X1X16-MM)	
E	36	1	**136-1953**		HOSE (23-CM)	
E	36A	1	**136-1953**		HOSE (18-CM)	
E	36B	1	**136-1953**		HOSE (15-CM)	
D	37	1	**5P-7070**		INSULATION-STRIP (0.31-M EACH)	
D	38	1	**5P-5643**		SEAL (0.36-M)	

306-8142 AIR CONDITIONER GP *(contd.)* i03879266

NOTE	REF NO	GRAPHIC REF	PART NUMBER	QTY	PART NAME 1 2 3 4 5 6 (PRODUCT LEVEL)	SEE PAGE
D	39	1	**8T-5372**		SEAL (0.14-M)	
D	39A	1	**8T-5372**		SEAL (0.12-M EACH)	
D	40	1	**6V-1392**		SEAL (0.6-M)	
D	40A	1	**6V-1392**		SEAL (0.2-M EACH)	
	41	1	**153-6932**	1	GASKET	
M	42	1	**5C-8312**	2	NUT (M4X0.7-THD)	

D-ORDER BY THE METER
E-ORDER BY THE CENTIMETER
M-METRIC PART

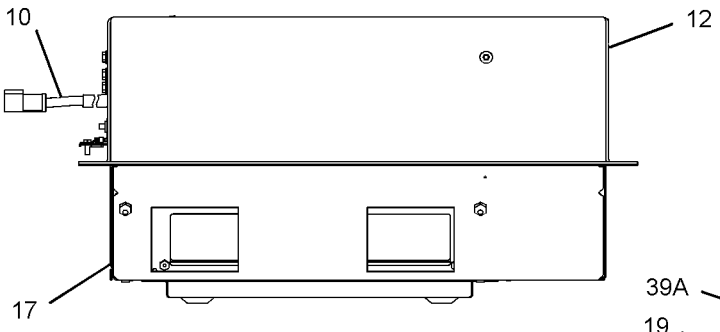

FRONT VIEW

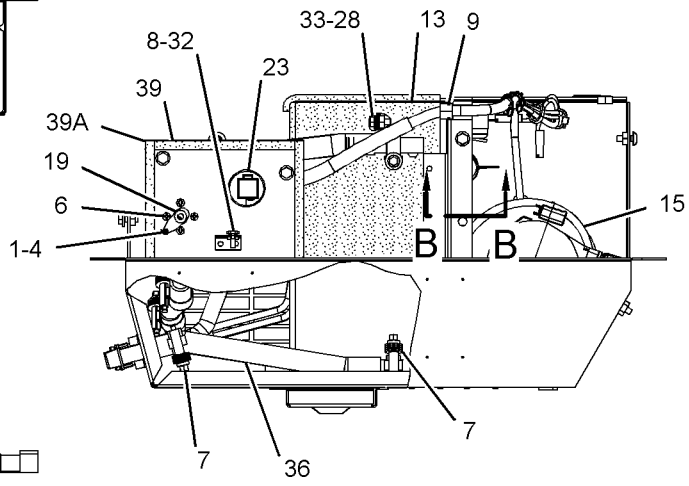

RIGHT SIDE VIEW
(COVER REMOVED FOR CLARITY)

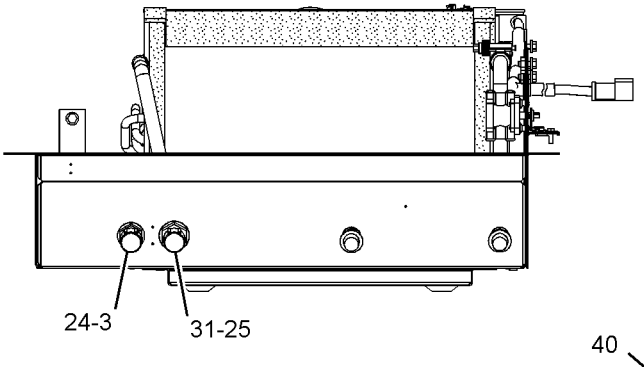

REAR VIEW
(COVER AND COIL GASKET
REMOVED FOR CLARITY)

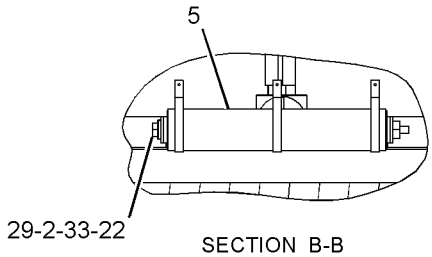

SECTION B-B

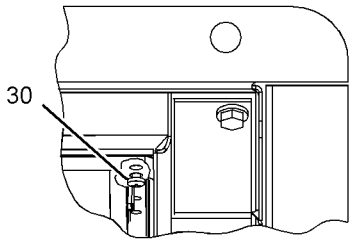

VIEW OF AREA A

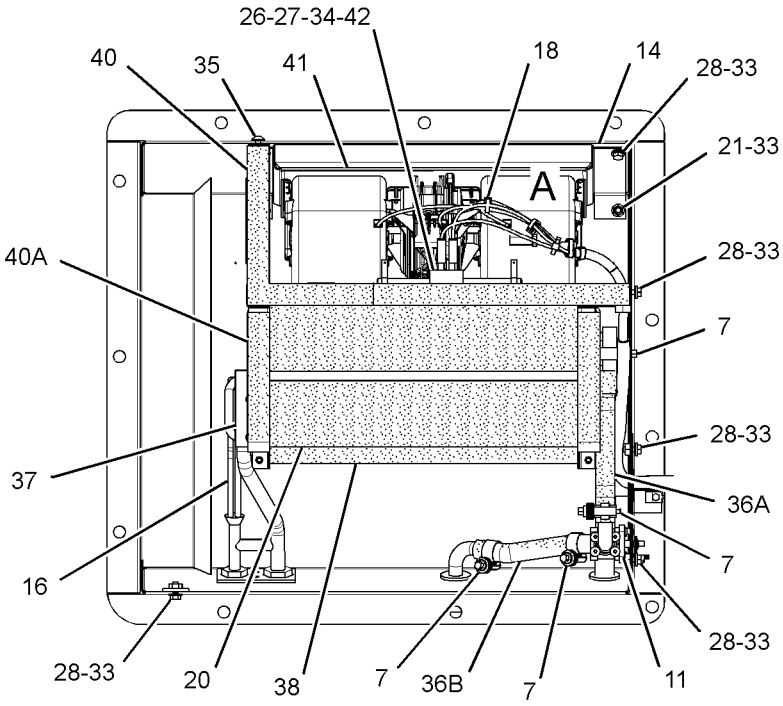

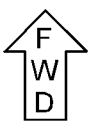

TOP VIEW
(COVER REMOVED FOR CLARITY)

GRAPHIC #1 **<END>** g02097901

OPERATOR STATION

214-7636 ARM GP-WINDOW WIPER—FRONT

S/N: JRL1-UP; RRS1-UP
PART OF 107-4628, 146-6908 WIPER GP-WINDOW
AN ATTACHMENT

SMCS-7305 **i01877471**

NOTE	REF NO	GRAPHIC REF	PART NUMBER	QTY	PART NAME 1 2 3 4 5 6 (PRODUCT LEVEL)	SEE PAGE
M	1	1	**191-8921**	4	BOLT-SOCKET HEAD (M6X1X25-MM)	
	2	1	**227-7392**	4	WASHER (6.3X10.3X0.4-MM THK)	
M	3	1	**6V-8225**	4	NUT (M6X1-THD)	
	4	1	**136-3190**	1	NOZZLE AS-WASHER	
	5	1	**136-3188**	3	CLIP	

M-METRIC PART

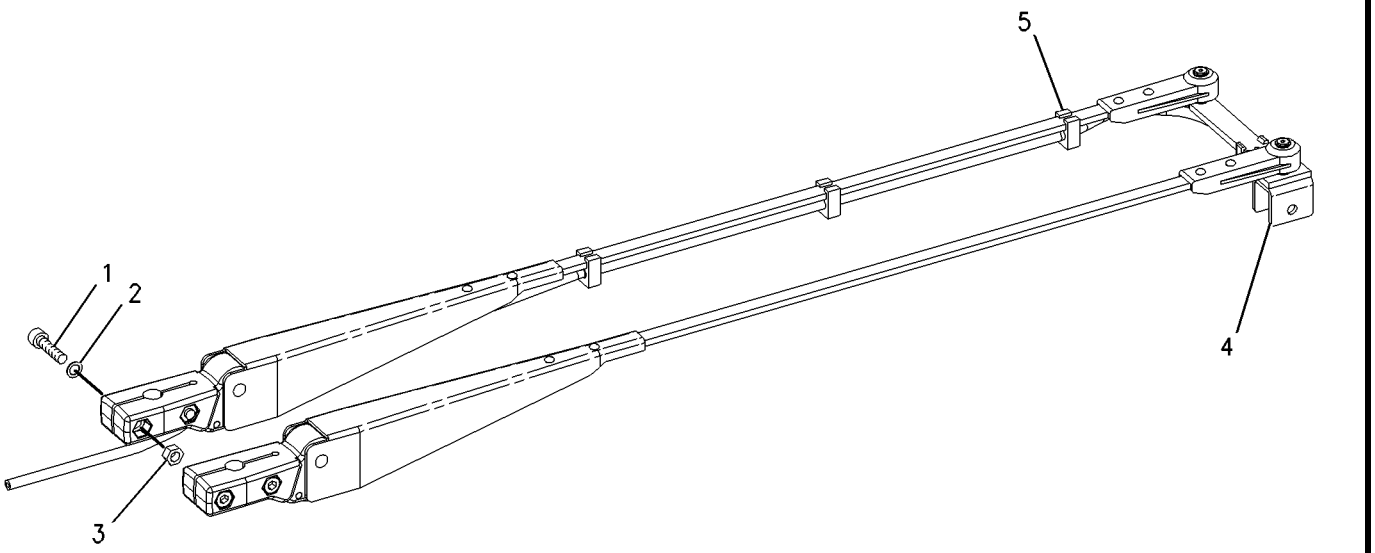

GRAPHIC #1 **<END>** g00958013

OPERATOR STATION

307-0205 ARM GP-WINDOW WIPER–REAR

S/N: JRL1-UP; RRS1-UP
PART OF 107-4628 WIPER GP-WINDOW
AN ATTACHMENT

SMCS-7305 **i02809008**

NOTE	REF NO	GRAPHIC REF	PART NUMBER	QTY	PART NAME 1 2 3 4 5 6 (PRODUCT LEVEL)	SEE PAGE
	1	1	**136-3188**	3	CLIP	
	2	1	**136-3195**	1	NOZZLE AS-WASHER	
M	3	1	**191-8921**	2	BOLT-SOCKET HEAD (M6X1X25-MM)	
	4	1	**227-7392**	2	WASHER (6.3X10.3X0.4-MM THK)	
M	5	1	**6V-8225**	2	NUT (M6X1-THD)	
E	6	1	**194-5171**		HOSE (75-CM)	

E-ORDER BY THE CENTIMETER
M-METRIC PART

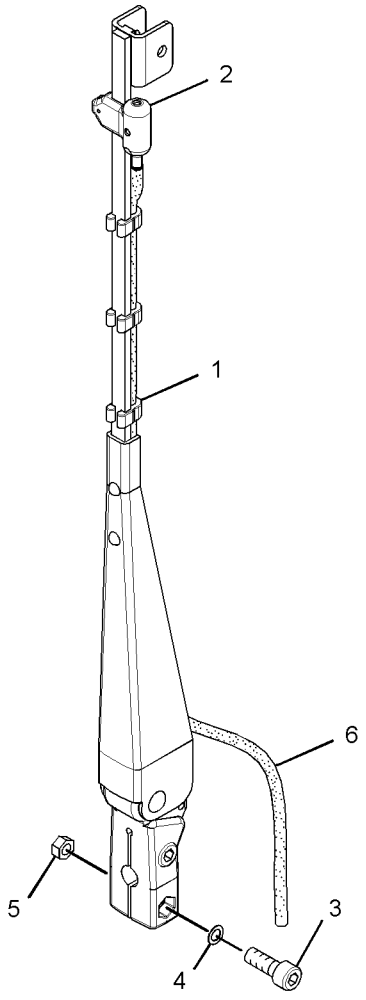

GRAPHIC #1

<END>

g01401957

OPERATOR STATION

310-9953 CAB AR

S/N: JRL1-UP; RRS1-UP
PART OF 310-9954 OPERATOR AR
AN ATTACHMENT

SMCS-7301 **i03084767**

NOTE	PART NUMBER	QTY	PART NAME 1 2 3 4 5 6 (PRODUCT LEVEL)	SEE PAGE
Y	*323-4078*	1	CONTROL GP-PARKING BRAKE (HANDLE)	288
Y	*190-4635*	1	CONTROL GP-STEERING	489
Y	*190-4690*	1	CONTROL GP-TRANSMISSION	491
Y	*118-0809*	1	DASH GP	494
Y	*204-2004*	1	LIGHTING GP-REAR	130
Y	*172-5512*	1	LINER GP-CAB	515
Y	*317-0720*	1	PEDAL GP-GOVERNOR	548
Y	*172-5507*	1	SUPPORT GP-SEAT	561
Y	*184-2463*	1	SWITCH GP-WIPER	146
Y	*146-6908*	1	WIPER GP-WINDOW (FRONT)	568
Y	*310-9952*	1	CAB GP	470
Y	*311-8706*	1	LIGHTING GP-FLOOD	124
	118-0626	1	FILM-WINDOW (FRONT)	

Y-SEPARATE ILLUSTRATION

<END>

311-8698 CAB AR

S/N: JRL1-UP; RRS1-UP
PART OF 311-8699 CAB AR
AN ATTACHMENT

SMCS-7301 **i03084726**

NOTE	PART NUMBER	QTY	PART NAME 1 2 3 4 5 6 (PRODUCT LEVEL)	SEE PAGE
Y	*311-8697*	1	DOOR GP-CAB	501
Y	*290-8181*	1	LIGHTING GP-FLOOD (CAB FRONT, REAR)	122
Y	*311-8693*	1	ROPS GP-ENCLOSED	549

Y-SEPARATE ILLUSTRATION

<END>

311-8699 CAB AR

S/N: JRL1-UP; RRS1-UP
PART OF 311-8700 OPERATOR AR
AN ATTACHMENT

SMCS-7301 **i03084723**

NOTE	PART NUMBER	QTY	PART NAME 1 2 3 4 5 6 (PRODUCT LEVEL)	SEE PAGE
Y	*311-8698*	1	CAB AR	468
Y	*317-0770*	1	OPERATOR AR	530

Y-SEPARATE ILLUSTRATION

<END>

OPERATOR STATION

310-9955 CAB AR-ENCLOSED ROPS

S/N: JRL1-UP; RRS1-UP
PART OF 375-8357, 375-8359 DISTRIBUTION AR
CANNOT BE USED WITH 290-8189—PAGE 474, 315-4654—PAGE 529
AN ATTACHMENT

SMCS-7301 **i03084720**

NOTE	PART NUMBER	QTY	PART NAME 1 2 3 4 5 6 (PRODUCT LEVEL)	SEE PAGE
Y	*311-8700*	1	OPERATOR AR	529
Y	*174-2215*	1	SKIRT GP-CAB	559

Y-SEPARATE ILLUSTRATION

<END>

OPERATOR STATION

310-9952 CAB GP

S/N: JRL1-UP; RRS1-UP
PART OF 310-9953 CAB AR
AN ATTACHMENT

SMCS-7301 **i03150320**

NOTE	REF NO	GRAPHIC REF	PART NUMBER	QTY	PART NAME 1 2 3 4 5 6 (PRODUCT LEVEL)	SEE PAGE
	1	1	**6K-8088**	4	BEARING-ROLLER	
	2	1	**8E-8300**	2	DISC-THRUST	
	3	1	**8R-6904**	2	TREAD-RUBBER	
	4	1	**107-6056**	1	PEDAL AS-LH	
	5	1	**107-6144**	1	GLASS-FRONT (LH)	
	6	1	**107-6145**	1	GLASS-FRONT (CENTER)	
	7	1	**110-7524**	21	BUTTON	
	8	1	**111-0132**	1	PEDAL AS-RH	
	9	1	**111-0177**	1	GLASS-FRONT (RH)	
	10	1	**166-8679**	1	PLATE	
	11	1	**169-9908**	1	GLASS-REAR	
	12	1	**169-9949**	1	SUPPORT AS	
		1	**169-9950**	1	PLATE AS	
M		1	**6V-9632**	6	NUT-WELD (M6X1-THD)	
M		1	**159-9540**	2	NUT-WELD (M8X1.25-THD)	
	13	1	**310-9951**	1	CAB AS	
	14	1	**1B-8723**	1	KEY-WOODRUFF	
M	15	1	**6V-3940**	4	BOLT (M8X1.25X25-MM)	
	16	1	**8T-4121**	1	WASHER-HARD (11X21X2.5-MM THK)	
M	17	1	**8T-4185**	1	BOLT (M10X1.5X50-MM)	
	18	1	**9M-1974**	4	WASHER-HARD (8.8X16X2-MM THK)	
M	19	1	**9X-2045**	4	SCREW-TRUSS HEAD (M6X1X20-MM)	

M-METRIC PART

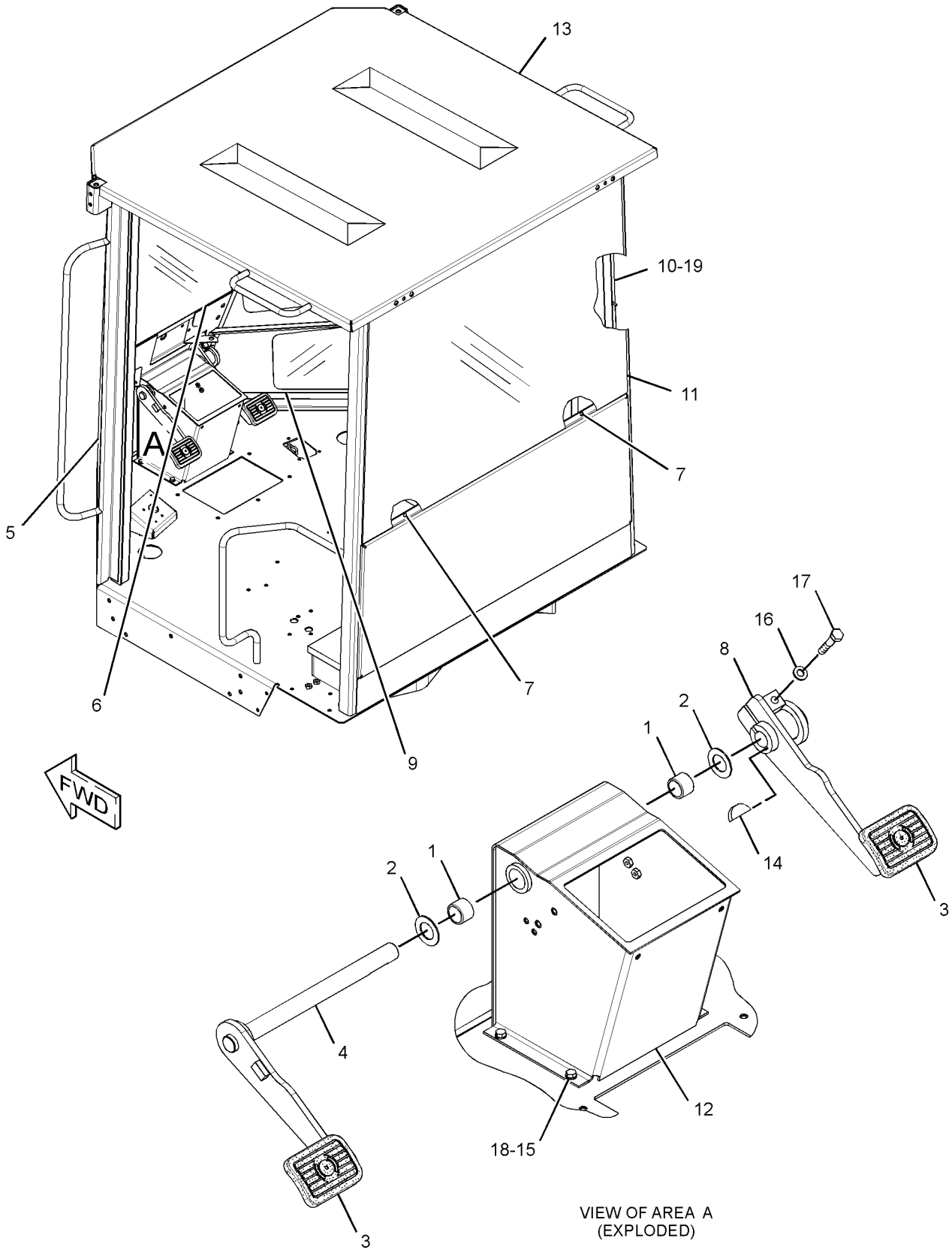

VIEW OF AREA A
(EXPLODED)

GRAPHIC #1 **<END>** g01621249

OPERATOR STATION

311-8691 CAB GP

S/N: JRL1-UP; RRS1-UP
PART OF 311-8693 ROPS GP-ENCLOSED
AN ATTACHMENT

SMCS-7301 **i04433034**

NOTE	REF NO	GRAPHIC REF	PART NUMBER	QTY	PART NAME 1 2 3 4 5 6 (PRODUCT LEVEL)	SEE PAGE
M	1	1	**8U-7051**	1	SCREW (M6X1X12-MM)	
	2	1	**8Y-6377**	1	STRIKER	
	3	1	**9R-8537**	1	SOCKET-LATCH	
	4	1	**107-6144**	1	GLASS-FRONT (LH)	
	5	1	**107-6145**	1	GLASS-FRONT (CENTER)	
	6	1	**107-6146**	1	GLASS-REAR (LH)	
	7	1	**110-7524**	4	BUTTON	
	8	1	**111-0177**	1	GLASS-FRONT (RH)	
	9	1	**111-0178**	1	GLASS-REAR (RH)	
	10	1	**111-0204**	1	PLATE AS	
	11	1	**161-8042**	1	WINDOW AS-REAR	
	12	1	**161-9645**	1	STRIKER AS	
	13	1	**198-3393**	8	INSERT	
	14	1	**214-9186**	28	BUTTON	
	15	1	**263-2062**	1	BRACKET AS	
	16	1	**311-8689**	1	CAB AS	
		1	**5D-9629**	1	ROD	
		1	**7T-1099**	21	LINK	
M		1	**8T-3734**	12	BOSS-WELD (M10X1.5X40-MM)	
M		1	**6V-9632**	1	NUT-WELD (M6X1-THD)	
		1	**8R-6132**	2	HANDLE AS	
	17	1	**364-5701**	12	BUMPER	
	18	1	**108-4311**	1	SCREW-MACHINE (3/8-16X0.75-IN)	
	19	1	**5P-4116**	2	WASHER-HARD (8.8X20.5X2-MM THK)	
	20	1	**8T-4121**	8	WASHER-HARD (11X21X2.5-MM THK)	
M	21	1	**8T-4137**	4	BOLT (M10X1.5X20-MM)	
M	22	1	**8T-4189**	14	BOLT (M8X1.25X20-MM)	
	23	1	**8T-4224**	12	WASHER-HARD (8.8X16X2-MM THK)	
M	24	1	**9X-2041**	4	SCREW-TRUSS HEAD (M10X1.5X20-MM)	
					AVAILABLE REPAIR KIT(S):	
B			**361-9133**	1	KIT-REPAIR (MIRROR MOUNTING BRACKETS, RH)	
B			**367-7167**	1	KIT-REPAIR (MIRROR MOUNTING BRACKETS, LH)	
					(EACH KIT INCLUDES PLATE AS, PLATE, ANGLE & SHEET)	

B-USE AS REQUIRED
M-METRIC PART

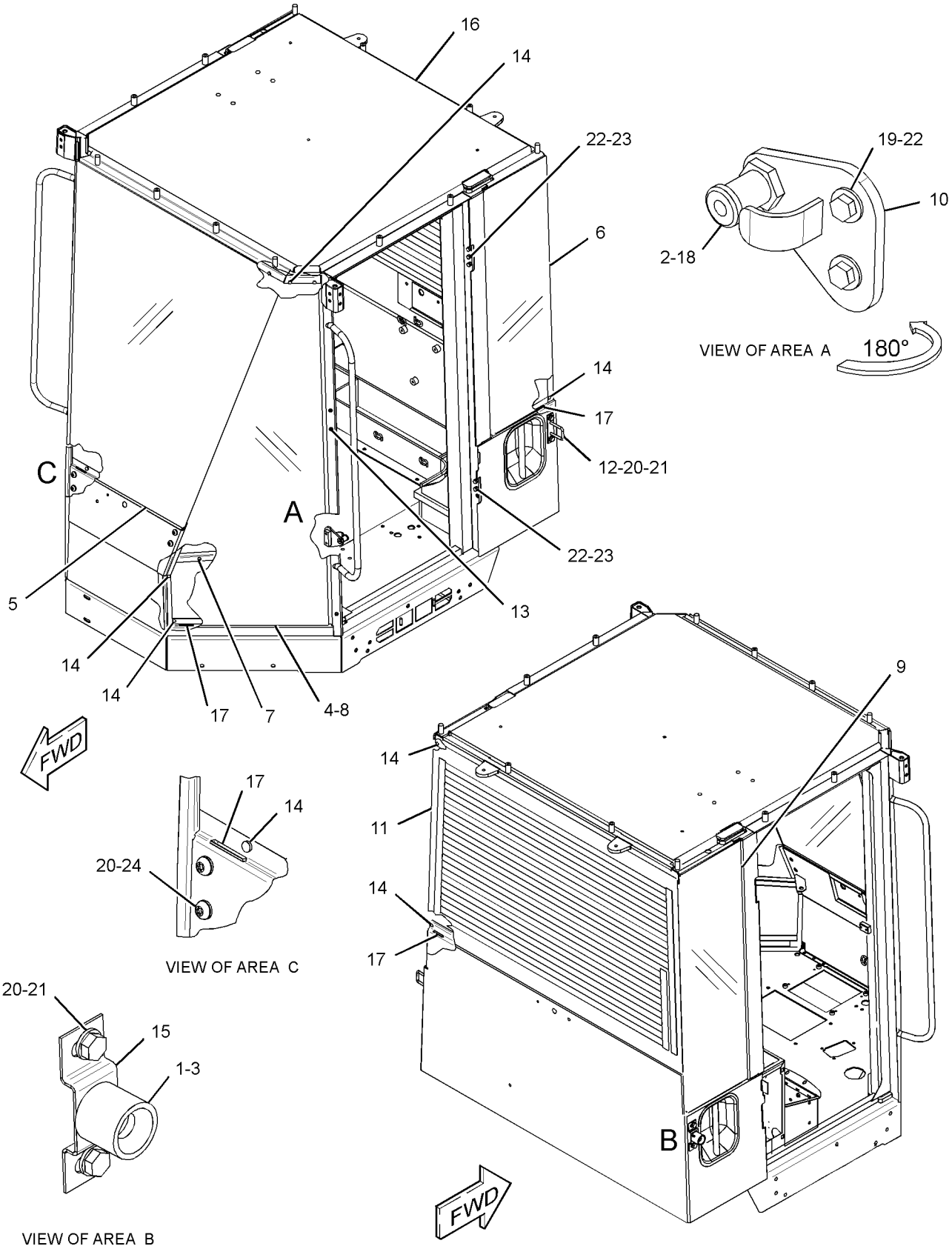

GRAPHIC #1

<END>

g02633519

OPERATOR STATION

290-8182 CANOPY AR-OPEN ROPS

S/N: JRL1-UP; RRS1-UP
PART OF 290-8186 OPERATOR AR-OPEN ROPS
AN ATTACHMENT

SMCS-7302, 7323 **i03043780**

NOTE	PART NUMBER	QTY	PART NAME 1 2 3 4 5 6 (PRODUCT LEVEL)	SEE PAGE
Y	*290-8179*	1	CANOPY GP-OPEN ROPS	474
Y	*317-0771*	1	OPERATOR GP	530

Y-SEPARATE ILLUSTRATION

<END>

290-8189 CANOPY AR-OPEN ROPS

S/N: JRL1-UP; RRS1-UP
AN ATTACHMENT

SMCS-7302, 7323 **i03043760**

NOTE	PART NUMBER	QTY	PART NAME 1 2 3 4 5 6 (PRODUCT LEVEL)	SEE PAGE
Y	*259-4137*	1	ALTERNATOR GP-CHARGING (24-VOLT, 95-AMPERE)	99
Y	*290-8186*	1	OPERATOR AR-OPEN ROPS	530
Y	*174-2213*	1	SKIRT GP-CAB	558

Y-SEPARATE ILLUSTRATION

<END>

290-8179 CANOPY GP-OPEN ROPS

S/N: JRL1-UP; RRS1-UP
PART OF 290-8182 CANOPY AR-OPEN ROPS
AN ATTACHMENT

SMCS-7323 **i03043820**

NOTE	PART NUMBER	QTY	PART NAME 1 2 3 4 5 6 (PRODUCT LEVEL)	SEE PAGE
Y	*313-4572*	1	LIGHTING GP-FLOOD (CANOPY FRONT, REAR)	126
Y	*290-8177*	1	ROPS GP-OPEN	550

Y-SEPARATE ILLUSTRATION

<END>

183-5106 COMPRESSOR GP-REFRIGERANT

S/N: JRL1-UP; RRS1-UP
PART OF 262-0858 COMPRESSOR GP-REFRIGERANT
AN ATTACHMENT

SMCS-1802 **i03437060**

NOTE	REF NO	GRAPHIC REF	PART NUMBER	QTY	PART NAME 1 2 3 4 5 6 (PRODUCT LEVEL)	SEE PAGE
	1	1	**180-9339**	2	PIN-CONNECTOR (14-GA TO 18-GA)	
	2	1	**102-8802**	1	KIT-RECEPTACLE (2-PIN)	
					(INCLUDES RECEPTACLE AS & WEDGE)	
	3	1	**314-4018**	1	VALVE AS-PRESSURE RELIEF (REFRIGERANT COMPRESSOR)	
		1	**9X-7378**	1	SEAL-O-RING	
	4	1	**7T-4532**	1	PLUG AS	
	5	1	**9X-7385**	2	SEAL-O-RING	

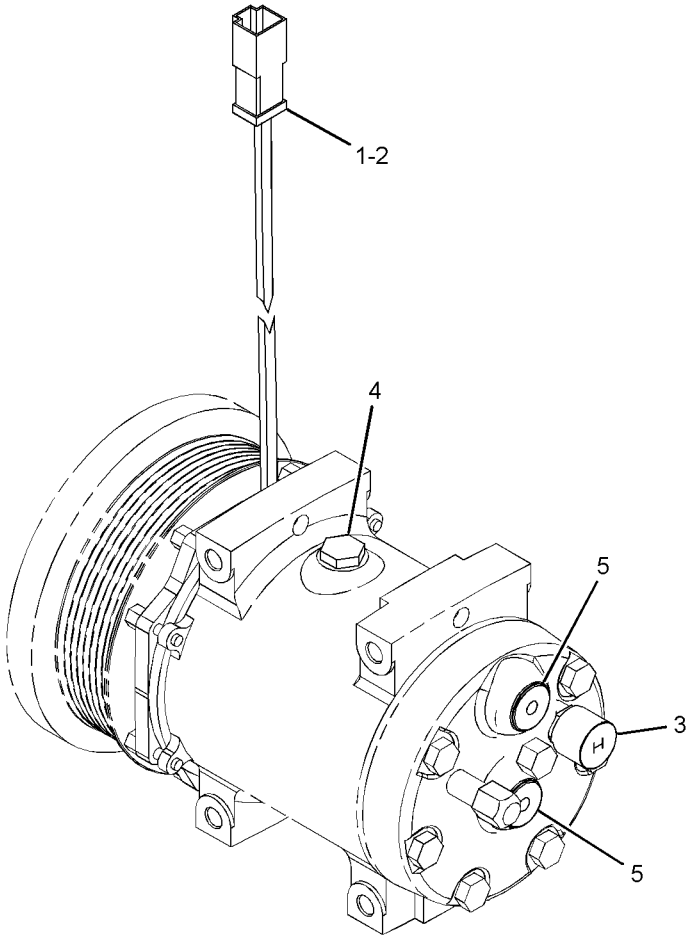

GRAPHIC #1 **<END>** g01419732

OPERATOR STATION

262-0858 COMPRESSOR GP-REFRIGERANT

S/N: JRL1-UP; RRS1-UP
PART OF 372-8683 AIR CONDITIONER AR
AN ATTACHMENT

SMCS-1802 **i03016507**

NOTE	REF NO	GRAPHIC REF	PART NUMBER	QTY	PART NAME 1 2 3 4 5 6 (PRODUCT LEVEL)	SEE PAGE
Y	1	1	**183-5106**	1	COMPRESSOR GP-REFRIGERANT	475
	2	1	**262-0849**	1	BRACKET	
	3	1	**3E-4356**	2	WASHER-HARD (17.5X30X6-MM THK)	
	4	1	**5P-4116**	4	WASHER-HARD (8.8X20.5X2-MM THK)	
M	5	1	**7X-2538**	4	BOLT (M8X1.25X100-MM)	
	6	1	**8T-4121**	1	WASHER-HARD (11X21X2.5-MM THK)	
M	7	1	**8T-4779**	2	BOLT (M16X2X35-MM)	
M	8	1	**8T-6466**	1	BOLT (M10X1.5X60-MM)	

M-METRIC PART
Y-SEPARATE ILLUSTRATION

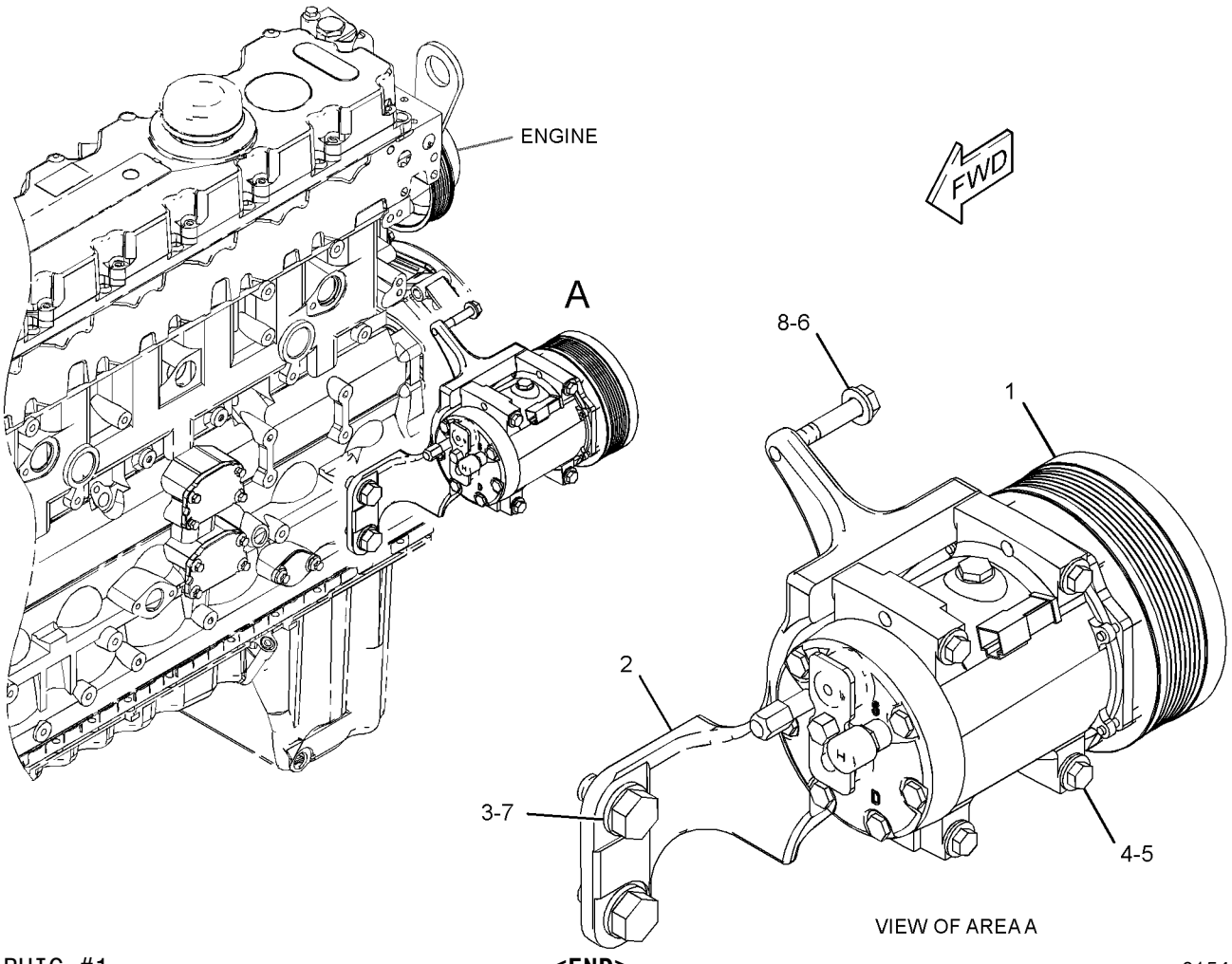

GRAPHIC #1 **<END>** g01541514

OPERATOR STATION

202-0363 CONDENSER & MTG GP-REFRIGERANT

S/N: JRL1-UP; RRS1-UP
PART OF 203-5937 CONDENSER & MTG GP-REFRIGERANT
AN ATTACHMENT

SMCS-1805 **i04029098**

NOTE	REF NO	GRAPHIC REF	PART NUMBER	QTY	PART NAME 1 2 3 4 5 6 (PRODUCT LEVEL)	SEE PAGE
Y	1	1	**199-7041**	1	CONDENSER GP-REFRIGERANT	479
	2	1	**205-6025**	1	BRACKET	
	3	1	**205-6026**	1	BRACKET	
	4	1	**205-6027**	1	BRACKET	
	5	1	**205-6028**	1	BRACKET	
M	6	1	**8T-4189**	10	BOLT (M8X1.25X20-MM)	
	7	1	**8T-4224**	10	WASHER-HARD (8.8X16X2-MM THK)	

M-METRIC PART
Y-SEPARATE ILLUSTRATION

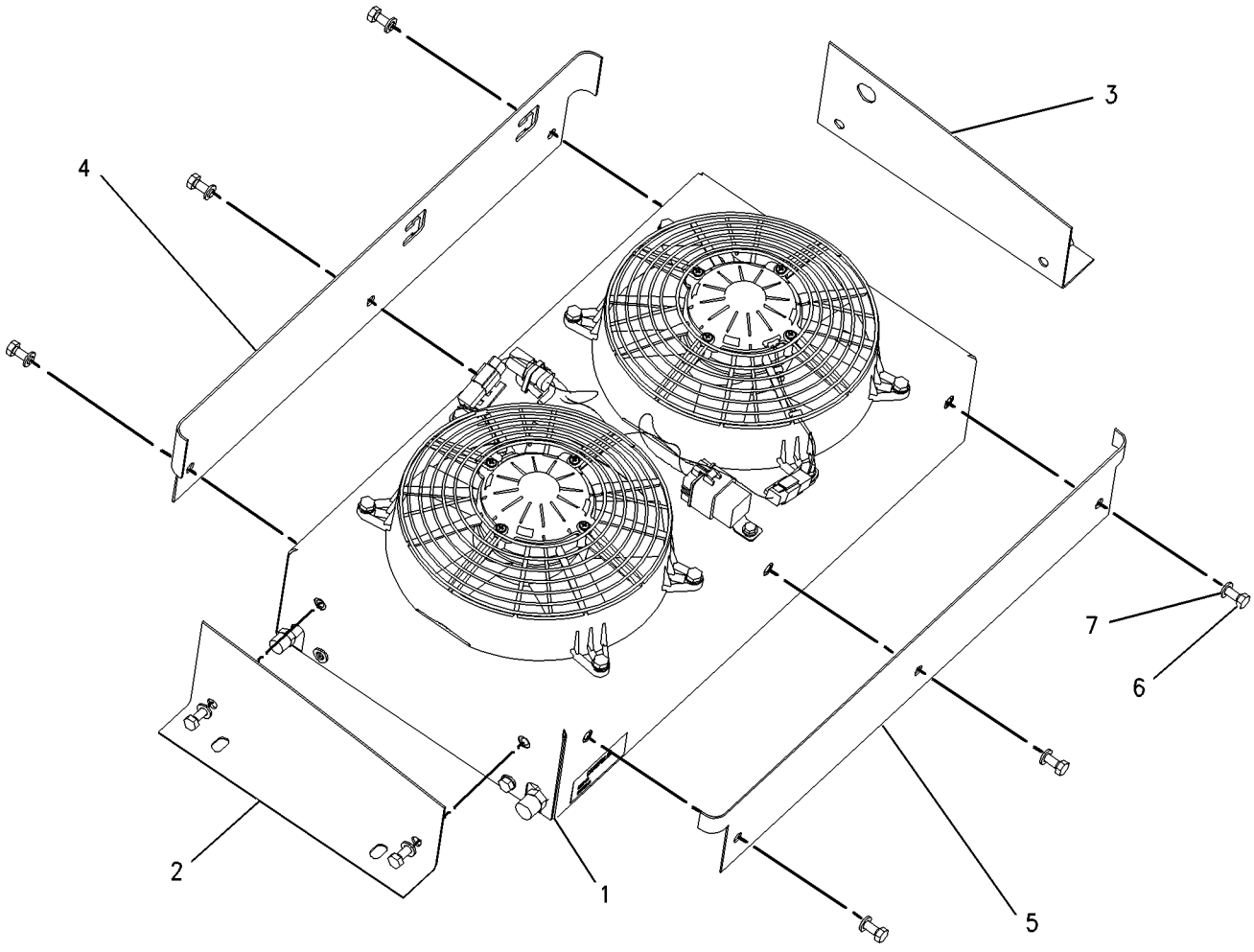

GRAPHIC #1 **<END>** g00895692

OPERATOR STATION

203-5937 CONDENSER & MTG GP-REFRIGERANT

S/N: JRL1-UP; RRS1-UP
PART OF 372-8683 AIR CONDITIONER AR
AN ATTACHMENT

SMCS-1805 **i03017517**

NOTE	REF NO	GRAPHIC REF	PART NUMBER	QTY	PART NAME 1 2 3 4 5 6 (PRODUCT LEVEL)	SEE PAGE
Y	1	1	*202-0363*	1	CONDENSER & MTG GP-REFRIGERANT	477
	2	1	**205-6024**	2	BRACKET AS	
					(EACH INCLUDES)	
M		1	**8T-3490**	4	NUT-WELD (M10X1.5-THD)	
	3	1	**8T-4121**	8	WASHER-HARD (11X21X2.5-MM THK)	
M	4	1	**8T-4195**	8	BOLT (M10X1.5X30-MM)	
CD	5	1	**5P-7211**		SEAL (0.2-M)	
	6	1	**280-2710**	1	CIRCUIT BREAKER AS (20-AMPERE, MANUAL RESET)	

C-CHANGE FROM PREVIOUS TYPE
D-ORDER BY THE METER
M-METRIC PART
Y-SEPARATE ILLUSTRATION

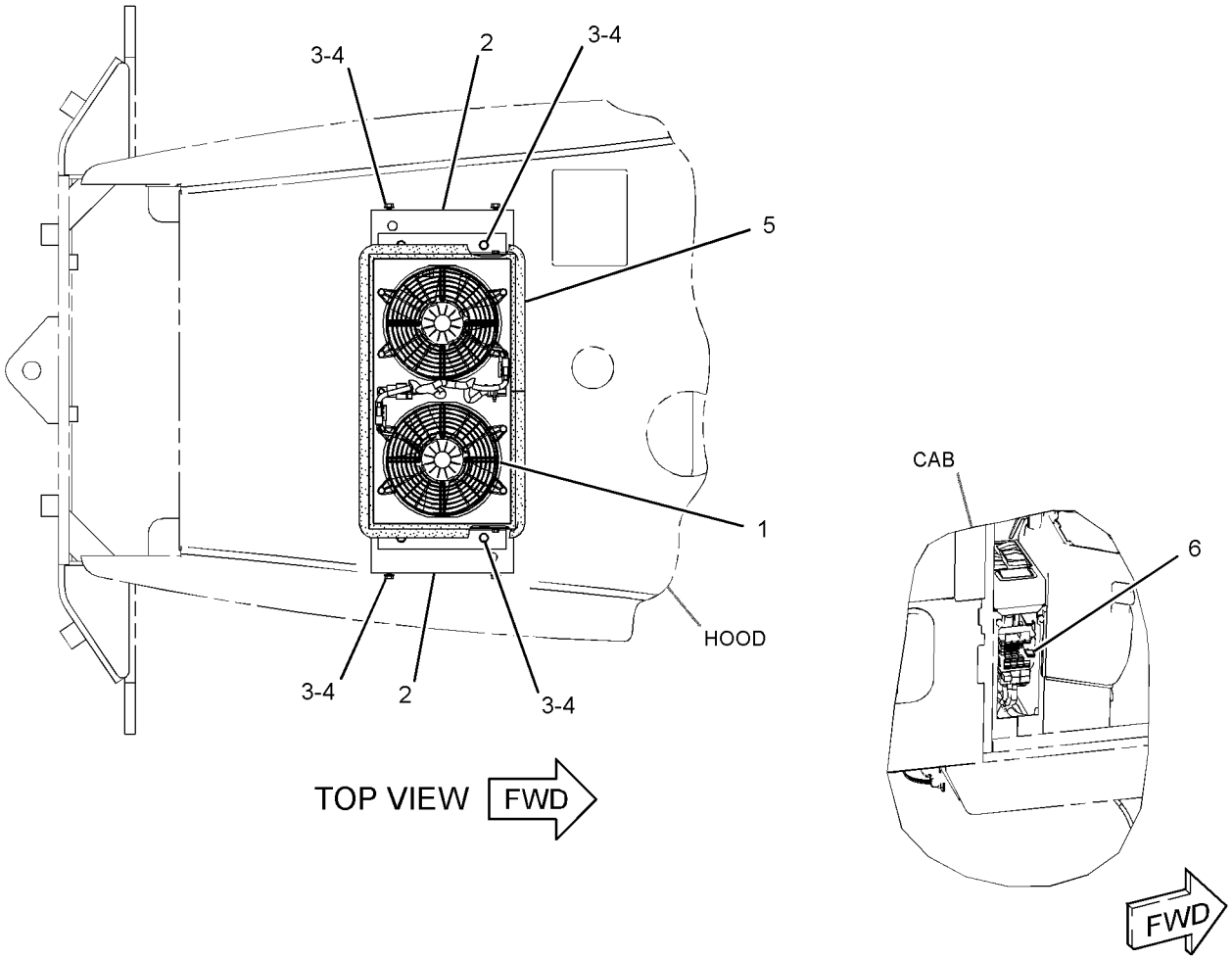

GRAPHIC #1 **<END>** g01535941

OPERATOR STATION

199-7041 CONDENSER GP-REFRIGERANT

S/N: JRL1-UP; RRS1-UP
PART OF 202-0363 CONDENSER & MTG GP-REFRIGERANT
AN ATTACHMENT

SMCS-1805 **i04421311**

NOTE	REF NO	GRAPHIC REF	PART NUMBER	QTY	PART NAME 1 2 3 4 5 6 (PRODUCT LEVEL)	SEE PAGE
	1	1	**3E-5239**	1	RELAY AS (24-VOLT) (CONDENSER FAN)	
	2	1	**3S-2093**	5	STRAP-CABLE	
	3	1	**8C-3756**	1	FILM-IDENTIFICATION (GROUP NO., SEQUENCE NO.)	
	4	1	**350-8687**	2	FAN AS-CONDENSER (24-VOLT, 5-BLADE)	
	5	1	**169-7435**	1	HARNESS AS-HEATER & AIR COND (CONDENSER FANS)	
		1	**9W-0852**	3	PIN-CONNECTOR (14-GA TO 16-GA)	
		1	**155-2270**	2	KIT-CONNECTING PLUG (2-PIN)	
					(EACH INCLUDES PLUG AS, WEDGE & INTERFACE SEAL)	
		1	**9X-1054**	1	PLUG AS-CONNECTOR (4-PIN)	
		1	**102-8803**	1	KIT-RECEPTACLE (3-PIN)	
					(INCLUDES RECEPTACLE AS & WEDGE)	
		1	**9W-0844**	4	SOCKET-CONNECTOR (14-GA TO 16-GA)	
		1	**9X-1056**	4	TERMINAL-RECEPTACLE (14-GA TO 16-GA)	
	6	1	**199-7042**	1	CASE AS	
	7	1	**199-7043**	1	COIL AS-CONDENSER	
	8	1	**4P-7581**	2	CLIP	
M	9	1	**5C-9553**	1	BOLT (M6X1X16-MM)	
M	10	1	**8T-4200**	4	BOLT (M8X1.25X16-MM)	
	11	1	**8T-4205**	1	WASHER-HARD (7.2X14.5X2-MM THK)	
	12	1	**8T-4224**	12	WASHER-HARD (8.8X16X2-MM THK)	
M	13	1	**8T-5093**	8	BOLT-LOCKING (M8X1.25X25-MM)	

M-METRIC PART

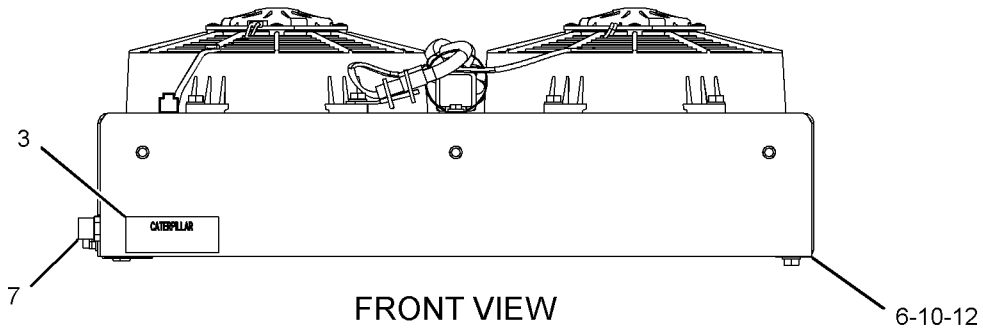

FRONT VIEW

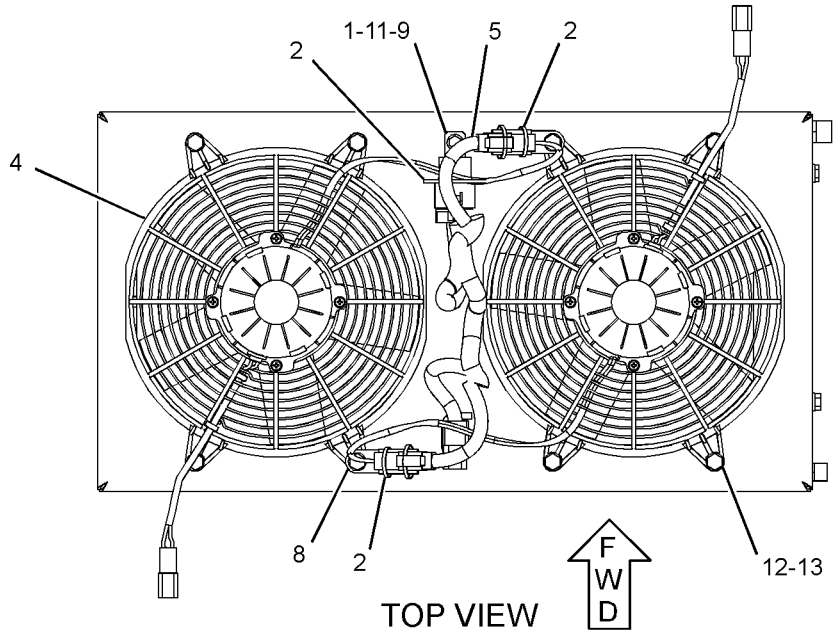

TOP VIEW

GRAPHIC #1

<END>

g02719157

OPERATOR STATION

291-3750 CONSOLE GP-OPERATOR

S/N: JRL1-UP; RRS1-UP

PART OF 310-9954, 311-8700 OPERATOR AR, 290-8186 OPERATOR AR-OPEN ROPS AN ATTACHMENT

SMCS-5258 **i03016492**

NOTE	REF NO	GRAPHIC REF	PART NUMBER	QTY	PART NAME 1 2 3 4 5 6 (PRODUCT LEVEL)	SEE PAGE
E	1	1	**3E-3892**		SEAL (20.4-CM EACH)	
E	1A	1	**3E-3892**		SEAL (18-CM EACH)	
E	1B	1	**3E-3892**		SEAL (29.8-CM)	
	2	1	**4E-1062**	1	CUSHION AS-ARMREST	
	3	1	**187-2082**	1	LEVER-CONTROL	
	4	1	**259-1155**	1	COVER AS	
	5	1	**291-3748**	1	SUPPORT	
	6	1	**291-3749**	1	BRACKET AS	
	7	1	**103-2006**	4	SCREW-PAN HEAD (6-19X0.37-IN)	
M	8	1	**6V-7357**	3	BOLT (M6X1X25-MM)	
	9	1	**8T-4205**	3	WASHER-HARD (7.2X14.5X2-MM THK)	
M	10	1	**9X-2041**	2	SCREW-TRUSS HEAD (M10X1.5X20-MM)	
M	11	1	**9X-2043**	2	SCREW-TRUSS HEAD (M6X1X14-MM)	
M	12	1	**9X-2045**	8	SCREW-TRUSS HEAD (M6X1X20-MM)	
	13	1	**114-6658**	6	WASHER (6.5X17X1-MM THK)	
	14	1	**8T-4121**	2	WASHER-HARD (11X21X2.5-MM THK)	

E-ORDER BY THE CENTIMETER
M-METRIC PART

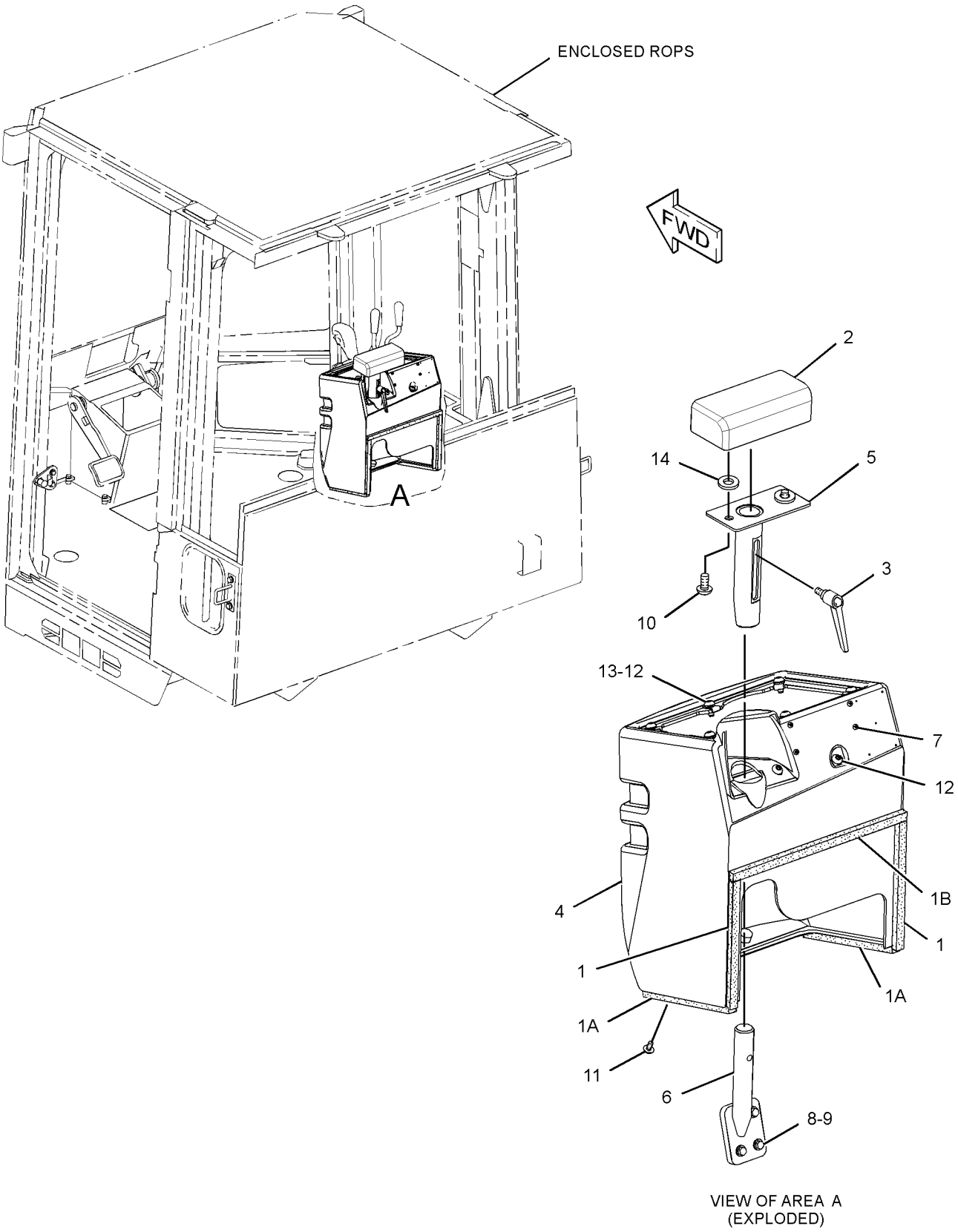

VIEW OF AREA A
(EXPLODED)

GRAPHIC #1 **<END>** g01406627

287-2058 CONTROL & MTG GP-JOYSTICK–2-FUNCTION

S/N: JRL1-UP; RRS1-UP
PART OF 235-6853 CONTROL GP-PILOT OPERATED HYD
AN ATTACHMENT

SMCS-5063, 5705 **i04029100**

NOTE	REF NO	GRAPHIC REF	PART NUMBER	QTY	PART NAME 1 2 3 4 5 6 (PRODUCT LEVEL)	SEE PAGE
	1	1	**149-4359**	1	ROD-CONTROL	
Y	2	1	**212-1302**	1	VALVE GP-PILOT (JOYSTICK, 2-FUNCTION)	436
	3	1	**287-0524**	1	CONTROL GP-HANDLE (DIRECTION, DOWNSHIFT SWITCHES)	
		1	**186-3735**	6	PIN-CONNECTOR (16-GA TO 18-GA)	
M	4	1	**150-1293**	2	SCREW-BUTTON HEAD (M4X0.7X12-MM)	
	5	1	**102-8805**	1	KIT-RECEPTACLE (6-PIN)	
					(INCLUDES RECEPTACLE AS & WEDGE)	
M	6	1	**8T-4244**	1	NUT (M12X1.75-THD)	
	7	1	**3S-2093**	2	STRAP-CABLE	

M-METRIC PART
Y-SEPARATE ILLUSTRATION

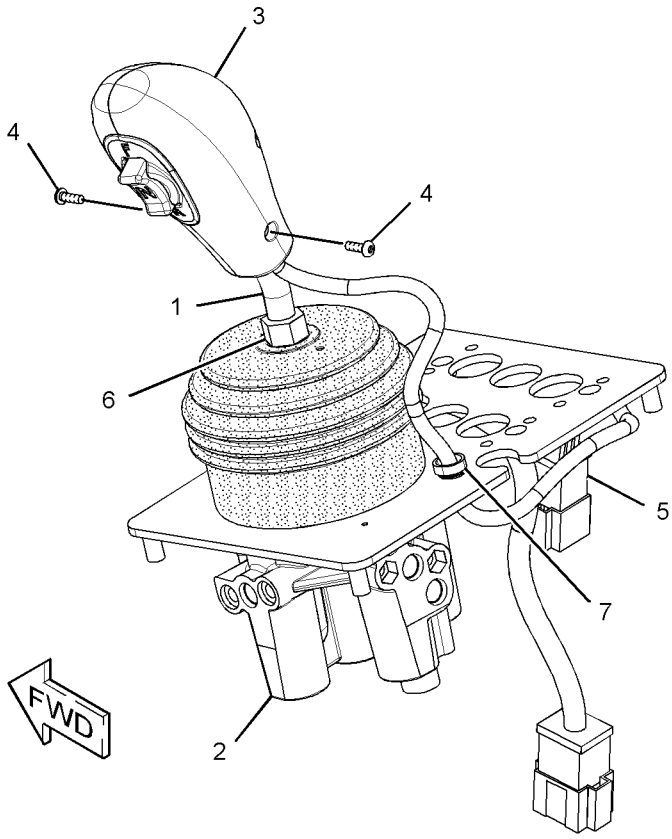

GRAPHIC #1 **<END>** g02214154

OPERATOR STATION

287-2060 CONTROL GP-JOYSTICK–4-FUNCTION

S/N: JRL1-UP; RRS1-UP
PART OF 235-6856 CONTROL GP-PILOT OPERATED HYD
AN ATTACHMENT

SMCS-5063, 5705 **i04029096**

NOTE	REF NO	GRAPHIC REF	PART NUMBER	QTY	PART NAME 1 2 3 4 5 6 (PRODUCT LEVEL)	SEE PAGE
	1	1	**114-3937**	1	ROD	
	2	1	**124-4401**	1	KNOB	
	3	1	**149-4359**	1	ROD-CONTROL	
Y	4	1	**212-1305**	1	VALVE GP-PILOT (JOYSTICK, 4-FUNCTION)	438
	5	1	**287-0524**	1	CONTROL GP-HANDLE (DIRECTION, DOWNSHIFT SWITCHES)	
		1	**186-3735**	6	PIN-CONNECTOR (16-GA TO 18-GA)	
M	6	1	**150-1293**	2	SCREW-BUTTON HEAD (M4X0.7X12-MM)	
	7	1	**102-8805**	1	KIT-RECEPTACLE (6-PIN)	
					(INCLUDES RECEPACLE AS & WEDGE)	
M	8	1	**8T-4244**	2	NUT (M12X1.75-THD)	
	9	1	**3S-2093**	2	STRAP-CABLE	

M-METRIC PART
Y-SEPARATE ILLUSTRATION

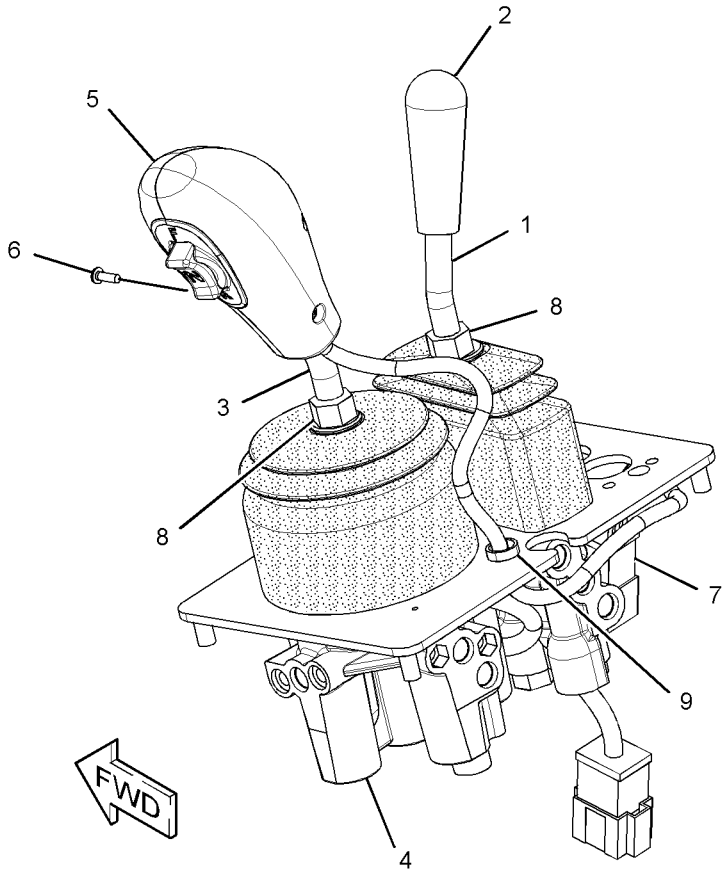

GRAPHIC #1 **<END>** g02214158

235-6853 CONTROL GP-PILOT OPERATED HYD–
JOYSTICK, 2-FUNCTION
S/N: JRL1-UP; RRS1-UP
PART OF 203-3889, 203-3890 HYDRAULIC AR-2 VALVE
AN ATTACHMENT

SMCS-5063 **i04029092**

NOTE	REF NO	GRAPHIC REF	PART NUMBER	QTY	PART NAME 1 2 3 4 5 6 (PRODUCT LEVEL)	SEE PAGE
	1	1	**179-6397**	1	PLATE-INSTRUCTION (IMPLEMENT WITH JOYSTICK)	
	2	1	**223-4717**	1	BRACKET	
	3	1	**262-1388**	1	SUPPORT AS	
Y	4	1	*287-2058*	1	CONTROL & MTG GP-JOYSTICK (2-FUNCTION)	483
	5	1	**270-7612**	1	SEAL	
	6	1	**259-1159**	1	PLATE	
M	7	1	**5C-7261**	4	NUT (M8X1.25-THD)	
M	8	1	**9X-2041**	2	SCREW-TRUSS HEAD (M10X1.5X20-MM)	
	9	1	**8T-4121**	2	WASHER-HARD (11X21X2.5-MM THK)	
M	10	1	**8T-4137**	2	BOLT (M10X1.5X20-MM)	
	11	1	**8T-4224**	4	WASHER-HARD (8.8X16X2-MM THK)	
M	12	1	**9X-2040**	2	SCREW-TRUSS HEAD (M10X1.5X25-MM)	

M-METRIC PART
Y-SEPARATE ILLUSTRATION

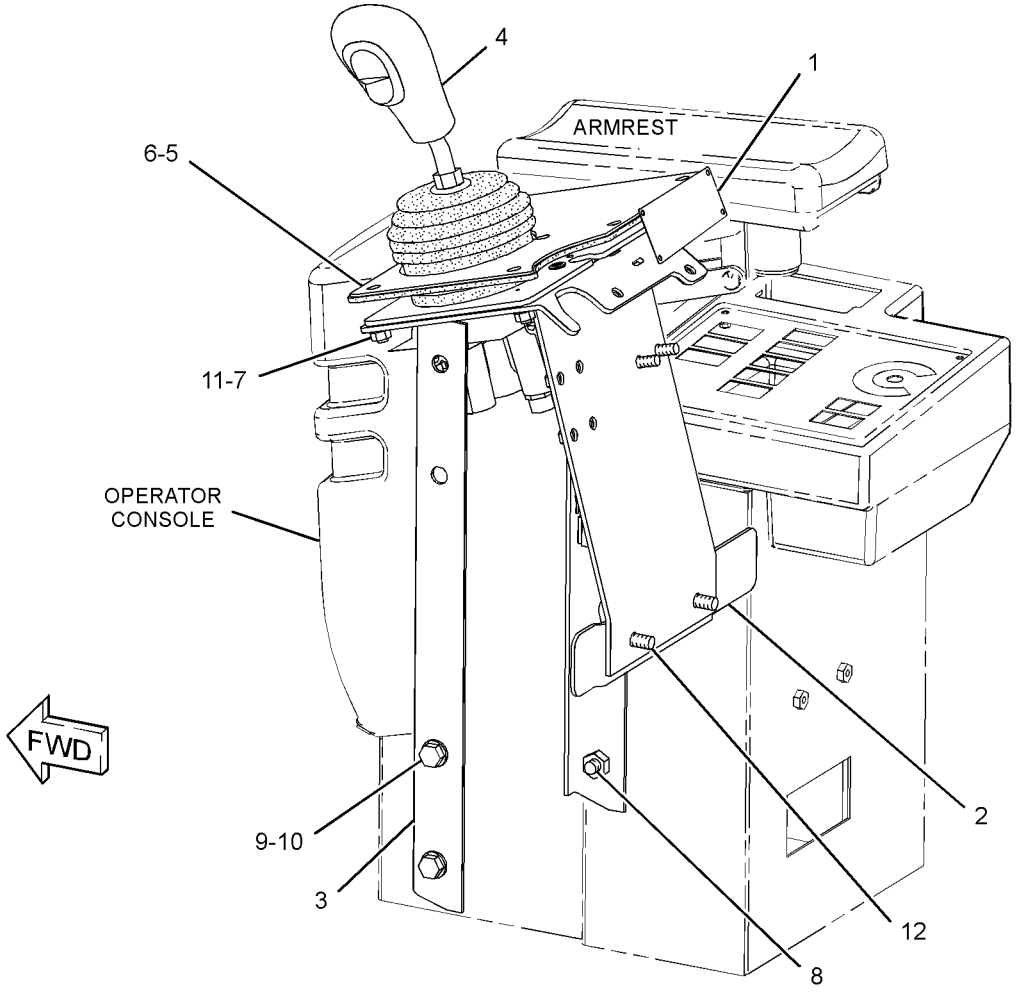

GRAPHIC #1 **<END>** g02214160

OPERATOR STATION

235-6856 CONTROL GP-PILOT OPERATED HYD–
JOYSTICK, 3-FUNCTION
S/N: JRL1-UP; RRS1-UP
PART OF 203-3891, 203-3892 HYDRAULIC AR-3 VALVE
AN ATTACHMENT

SMCS-5063 **i03032435**

NOTE	REF NO	GRAPHIC REF	PART NUMBER	QTY	PART NAME 1 2 3 4 5 6 (PRODUCT LEVEL)	SEE PAGE
	1	1	**179-6397**	1	PLATE-INSTRUCTION (IMPLEMENT WITH JOYSTICK)	
	2	1	**223-4717**	1	BRACKET	
	3	1	**259-1160**	1	PLATE	
	4	1	**262-1388**	1	SUPPORT AS (PILOT OPERATED HYDRAULIC)	
	5	1	**270-7612**	1	SEAL	
Y	6	1	*287-2060*	1	CONTROL GP-JOYSTICK (4-FUNCTION)	484
M	7	1	**5C-7261**	4	NUT (M8X1.25-THD)	
	8	1	**8T-4121**	2	WASHER-HARD (11X21X2.5-MM THK)	
M	9	1	**8T-4137**	2	BOLT (M10X1.5X20-MM)	
	10	1	**8T-4224**	4	WASHER-HARD (8.8X16X2-MM THK)	
M	11	1	**9X-2040**	2	SCREW-TRUSS HEAD (M10X1.5X25-MM)	
M	12	1	**9X-2041**	2	SCREW-TRUSS HEAD (M10X1.5X20-MM)	

M-METRIC PART
Y-SEPARATE ILLUSTRATION

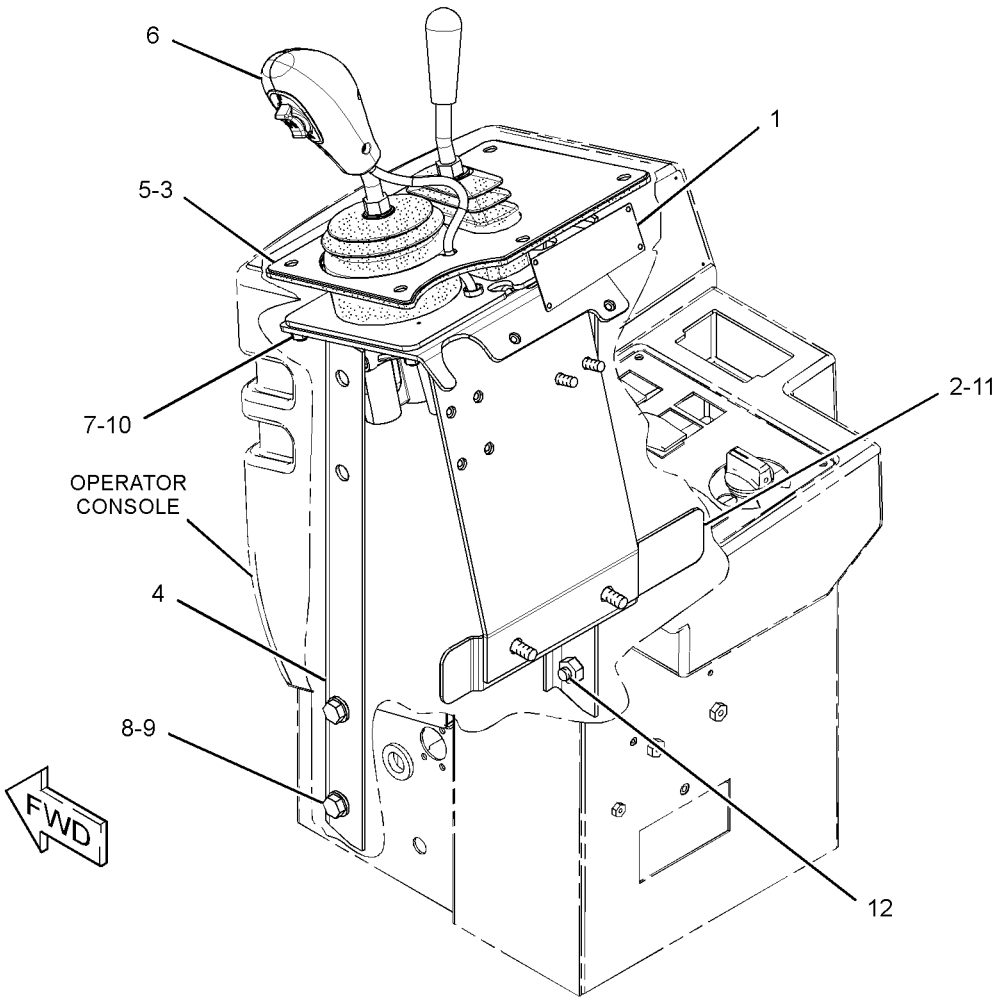

GRAPHIC #1 **<END>** g01508541

OPERATOR STATION

235-6860 CONTROL GP-PILOT OPERATED HYD–
JOYSTICK, 4-FUNCTION
S/N: RRS1-UP
PART OF 203-3893 HYDRAULIC AR-4 VALVE
AN ATTACHMENT

SMCS-5063 **i03572220**

NOTE	REF NO	GRAPHIC REF	PART NUMBER	QTY	PART NAME 1 2 3 4 5 6 (PRODUCT LEVEL)	SEE PAGE
	1	1	**179-6396**	1	PLATE-INSTRUCTION (IMPLEMENT WITH JOYSTICK)	
	2	1	**223-4717**	1	BRACKET	
	3	1	**259-1161**	1	PLATE	
	4	1	**262-1388**	1	SUPPORT AS	
	5	1	**270-7612**	1	SEAL	
Y	6	1	*287-2064*	1	CONTROL GP-PILOT OPERATED HYD (JOYSTICK, 4-FUNCTION)	488
M	7	1	**5C-7261**	4	NUT (M8X1.25-THD)	
	8	1	**8T-4121**	2	WASHER-HARD (11X21X2.5-MM THK)	
M	9	1	**8T-4137**	2	BOLT (M10X1.5X20-MM)	
	10	1	**8T-4224**	4	WASHER-HARD (8.8X16X2-MM THK)	
M	11	1	**9X-2040**	2	SCREW-TRUSS HEAD (M10X1.5X25-MM)	
M	12	1	**9X-2041**	2	SCREW-TRUSS HEAD (M10X1.5X20-MM)	

M-METRIC PART
Y-SEPARATE ILLUSTRATION

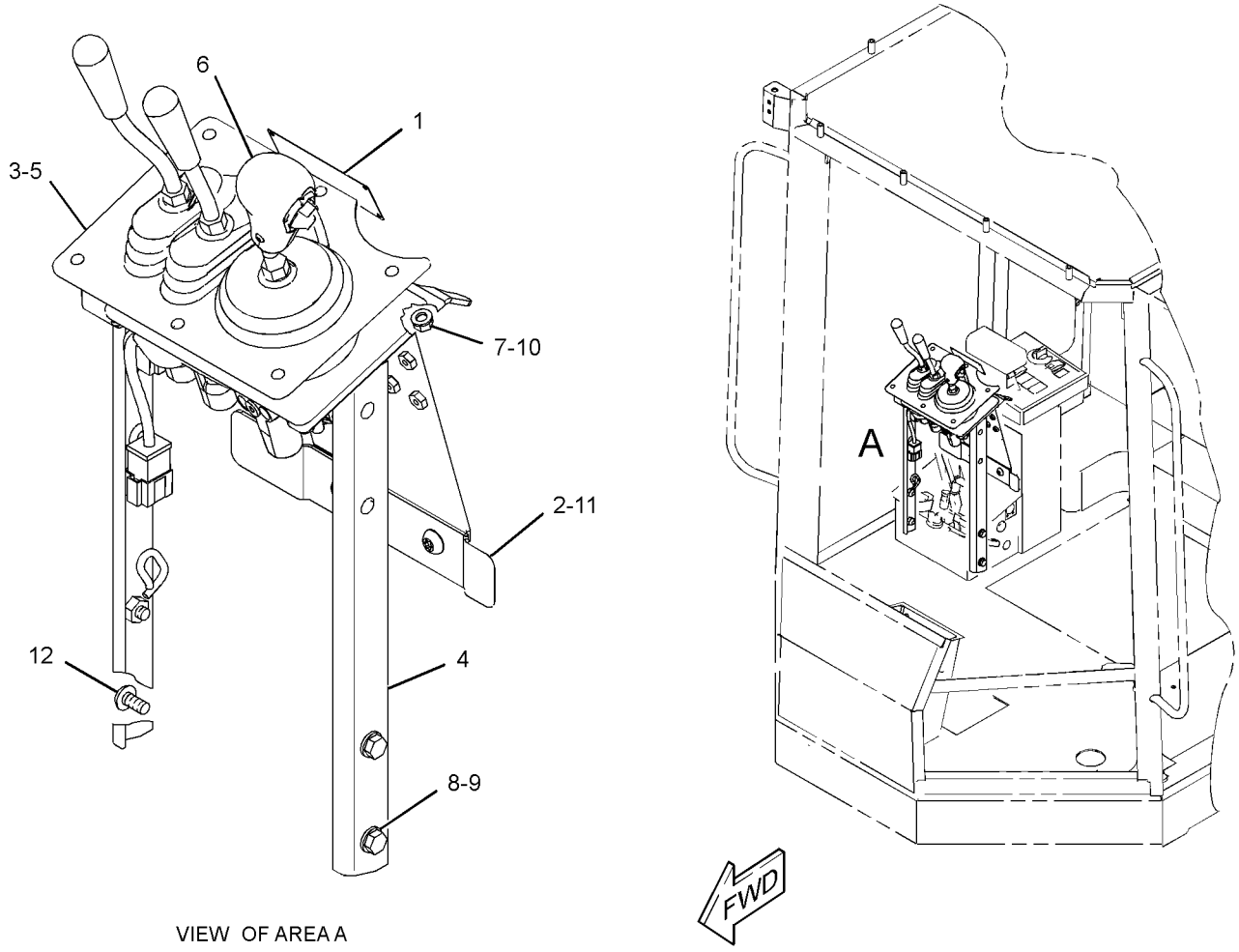

VIEW OF AREA A

GRAPHIC #1 **<END>** g01905554

OPERATOR STATION

287-2064 CONTROL GP-PILOT OPERATED HYD–
JOYSTICK, 4-FUNCTION
S/N: RRS1-UP
PART OF 235-6860 CONTROL GP-PILOT OPERATED HYD
AN ATTACHMENT

SMCS-5063 **i03996948**

NOTE	REF NO	GRAPHIC REF	PART NUMBER	QTY	PART NAME 1 2 3 4 5 6 (PRODUCT LEVEL)	SEE PAGE
	1	1	**114-3937**	1	ROD	
	2	1	**114-3940**	1	ROD	
	3	1	**124-4401**	2	KNOB	
	4	1	**149-4359**	1	ROD-CONTROL	
Y	5	1	**212-1307**	1	VALVE GP-PILOT (JOYSTICK, 4-FUNCTION)	441
	6	1	**102-8805**	1	KIT-RECEPTACLE (6-PIN)	
					(INCLUDES RECEPTACLE AS & WEDGE)	
	7	1	**3S-2093**	2	STRAP-CABLE	
	8	1	**287-0524**	1	CONTROL GP-HANDLE (DIRECTION, DOWNSHIFT SWITCHES)	
		1	**186-3735**	6	PIN-CONNECTOR (16-GA TO 18-GA)	
M	9	1	**150-1293**	2	SCREW-BUTTON HEAD (M4X0.7X12-MM)	
M	10	1	**8T-4244**	3	NUT (M12X1.75-THD)	

M-METRIC PART
Y-SEPARATE ILLUSTRATION

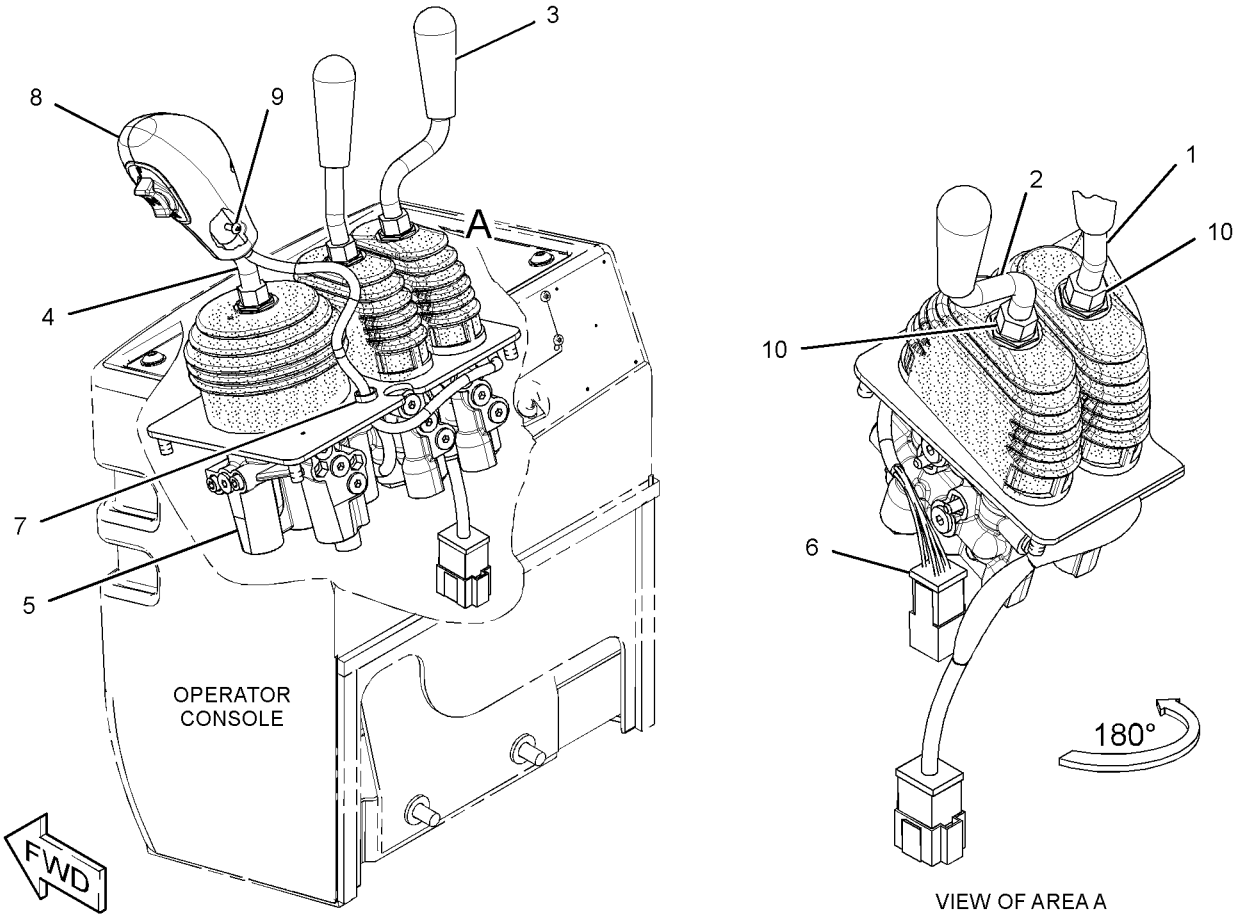

GRAPHIC #1 **<END>** g01522619

OPERATOR STATION

190-4635 CONTROL GP-STEERING

S/N: JRL1-UP; RRS1-UP

PART OF 310-9953 CAB AR, 317-0770 OPERATOR AR, 317-0771 OPERATOR GP

AN ATTACHMENT

SMCS-4310, 4338, 4343 **i04343050**

NOTE	REF NO	GRAPHIC REF	PART NUMBER	QTY	PART NAME 1 2 3 4 5 6 (PRODUCT LEVEL)	SEE PAGE
M	1	1	**9X-2045**	2	SCREW-TRUSS HEAD (M6X1X20-MM)	
	2	1	**322-8568**	1	BUTTON AS-HORN	
	3	1	**9D-7924**	4	MOUNTING	
	4	1	**107-6007**	1	SUPPORT AS	
	5	1	**107-6141**	1	COVER	
	6	1	**111-7874**	1	SEAL	
	7	1	**111-7878**	1	COVER	
	8	1	**134-4735**	1	PLATE AS	
M		1	**8T-3612**	4	NUT-WELD (M8X1.25-THD)	
	9	1	**129-3270**	1	STEERING WHEEL AS	
	10	1	**8R-2918**	1	KNOB AS (STEERING WHEEL)	
CY	11	1	**319-1625**	1	STEERING COLUMN GP-ADJUSTABLE	306
	12	1	**5P-4116**	5	WASHER-HARD (8.8X20.5X2-MM THK)	
	13	1	**7X-0603**	4	WASHER-HARD (9.9X35X2.5-MM THK)	
M	14	1	**8T-4908**	5	BOLT (M8X1.25X25-MM)	
M	15	1	**8T-4191**	4	BOLT (M10X1.5X16-MM)	
M	16	1	**8T-6869**	4	BOLT (M8X1.25X60-MM)	
M	17	1	**8T-8894**	4	BOLT-SOCKET HEAD (M10X1.5X20-MM)	
M	18	1	**9X-2042**	4	SCREW-TRUSS HEAD (M6X1X12-MM)	
B	19	1	**8T-4123**	1	WASHER (22X35X3.5-MM THK)	

B-USE AS REQUIRED
C-CHANGE FROM PREVIOUS TYPE
M-METRIC PART
Y-SEPARATE ILLUSTRATION

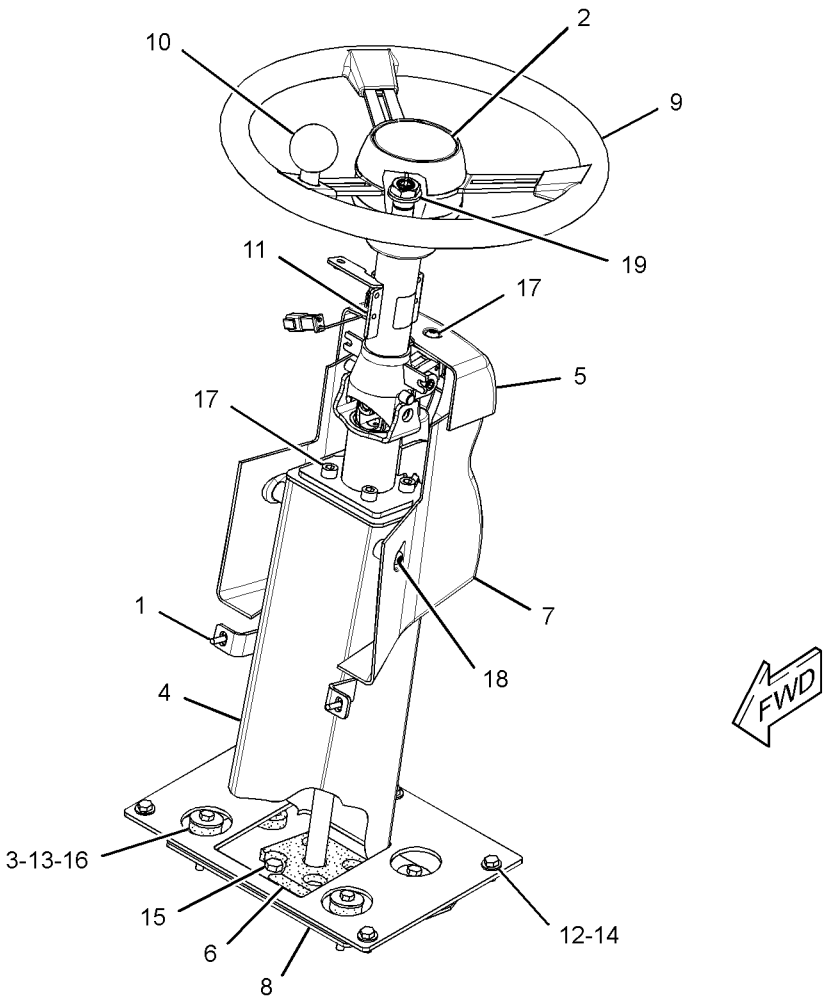

GRAPHIC #1 **<END>** g02153651

OPERATOR STATION

190-4690 CONTROL GP-TRANSMISSION

S/N: JRL1-UP; RRS1-UP
PART OF 310-9953 CAB AR, 317-0770 OPERATOR AR, 317-0771 OPERATOR GP
AN ATTACHMENT

SMCS-3065, 3168 **i03031701**

NOTE	REF NO	GRAPHIC REF	PART NUMBER	QTY	PART NAME 1 2 3 4 5 6 (PRODUCT LEVEL)	SEE PAGE
	1	1	**6I-1418**	4	SPACER (8.2X12.7X28.7-MM THK)	
	2	1	**8T-9655**	8	MOUNT-ISOLATION	
B	3	1	**101-9161**	1	WIRE AS	
M	4	1	**134-1374**	4	BOLT-SOCKET HEAD (M5X0.8X20-MM)	
CY	5	1	**299-5841**	1	CONTROL GP-TRANSMISSION	492
	6	1	**216-9069**	2	BRACKET AS	
					(EACH INCLUDES)	
M		1	**6V-9632**	1	NUT-WELD (M6X1-THD)	
	7	1	**217-0956**	1	COVER	
R	8	1	**304-5687**	1	CONTROL GP-UNPROGRAMMED (TRANSMISSION)	
M	9	1	**5C-9553**	2	BOLT (M6X1X16-MM)	
M	10	1	**7X-0818**	4	BOLT (M8X1.25X45-MM)	
	11	1	**9X-8256**	2	WASHER (6.6X12X2-MM THK)	

B-USE AS REQUIRED
C-CHANGE FROM PREVIOUS TYPE
M-METRIC PART
R-REMFG PART MAY BE AVAILABLE
Y-SEPARATE ILLUSTRATION

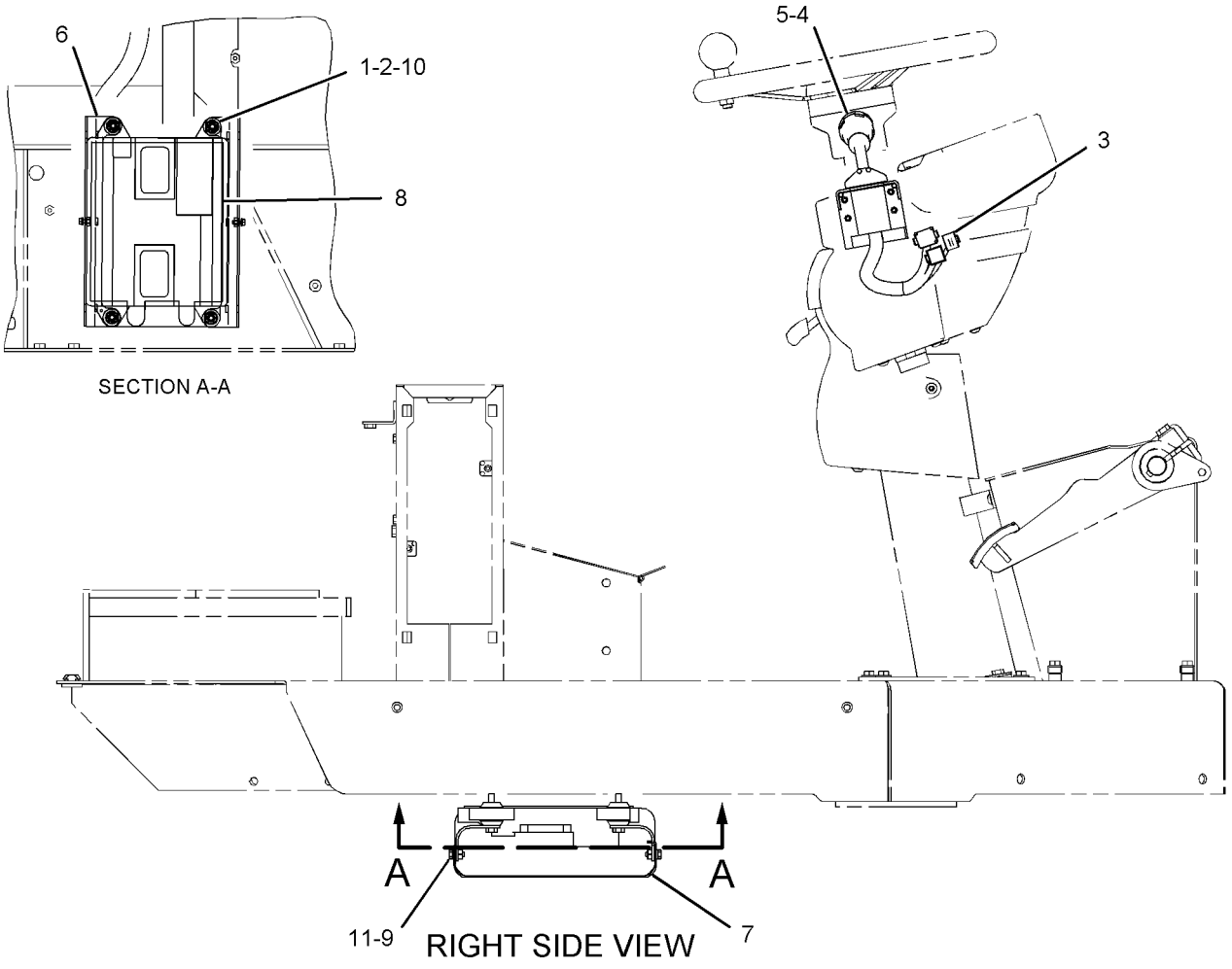

GRAPHIC #1

<END>

g01143784

OPERATOR STATION

299-5841 CONTROL GP-TRANSMISSION

S/N: JRL1-UP; RRS1-UP
PART OF 190-4690 CONTROL GP-TRANSMISSION
AN ATTACHMENT

SMCS-3065, 3168 **i03165923**

NOTE	REF NO	GRAPHIC REF	PART NUMBER	QTY	PART NAME 1 2 3 4 5 6 (PRODUCT LEVEL)	SEE PAGE
	1	1	**102-8805**	1	KIT-RECEPTACLE (6-PIN)	
					(INCLUDES RECEPTACLE AS & WEDGE)	
	2	1	**155-2265**	1	KIT-CONNECTING PLUG (8-PIN)	
	3	1	**155-2271**	1	KIT-CONNECTING PLUG (4-PIN)	
					(EACH PLUG KIT INCLUDES PLUG AS, WEDGE & INTERFACE SEAL)	
	4	1	**186-3736**	12	SOCKET-CONNECTOR (16-GA TO 18-GA)	
	5	1	**9G-3695**	2	PLUG-SEAL	
	6	1	**186-3735**	4	PIN-CONNECTOR (16-GA TO 18-GA)	

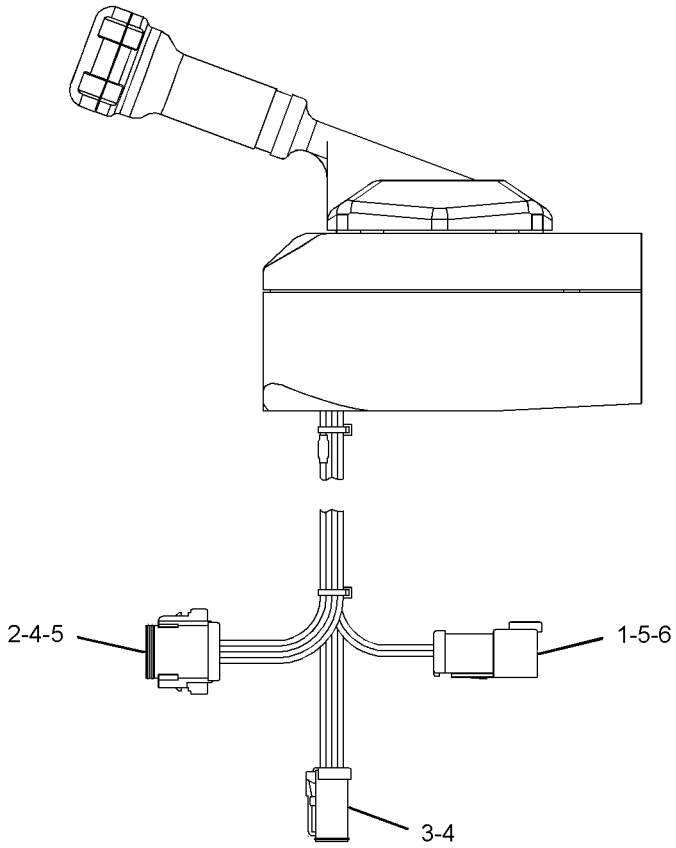

REAR VIEW

GRAPHIC #1 **<END>** g01400985

OPERATOR STATION

301-4353 COVER GP-ACCESS—CAB FLOOR

S/N: JRL1-UP; RRS1-UP

PART OF 289-8974 AXLE AR-FIXED

SMCS-726A **i03039661**

NOTE	REF NO	GRAPHIC REF	PART NUMBER	QTY	PART NAME 1 2 3 4 5 6 (PRODUCT LEVEL)	SEE PAGE
	1	1	**4H-3001**	1	PLUG-BUTTON	
	2	1	**301-4354**	1	PLATE	
	3	1	**301-4355**	1	TREAD	
	4	1	**9X-2038**	2	WASHER (7X19X2-MM THK)	
M	5	1	**9X-2045**	2	SCREW-TRUSS HEAD (M6X1X20-MM)	

M-METRIC PART

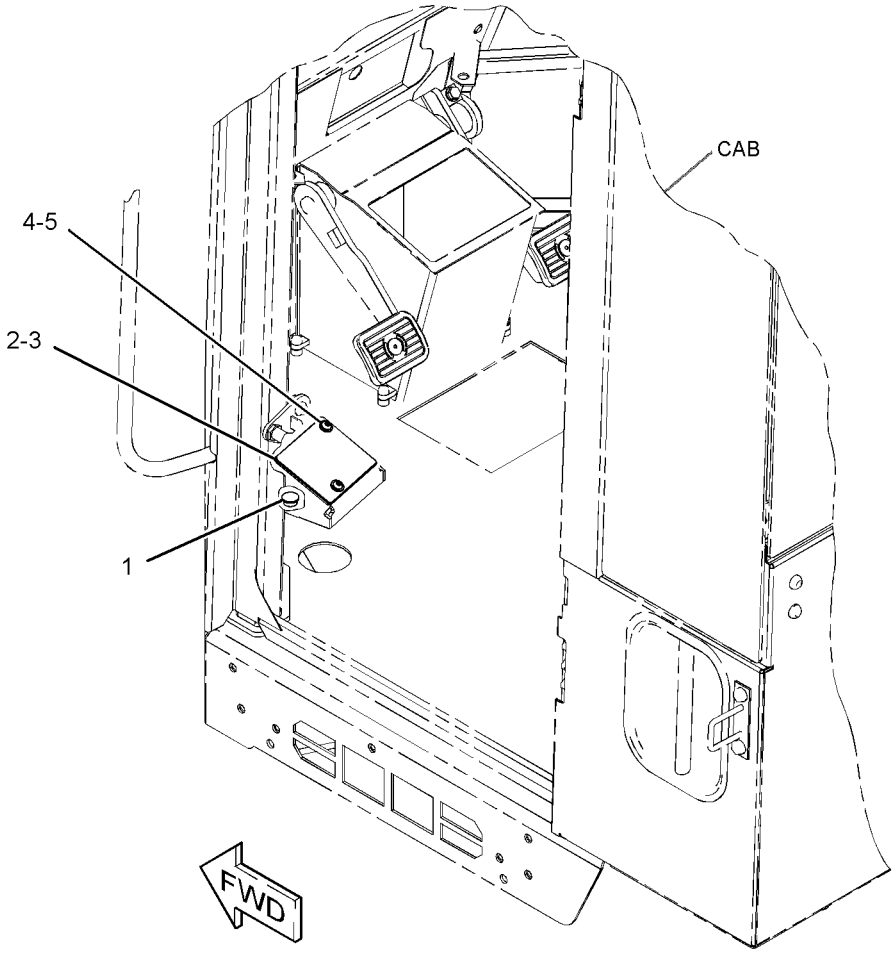

GRAPHIC #1 **<END>** g01391815

OPERATOR STATION

118-0809 DASH GP

S/N: JRL1-UP; RRS1-UP
PART OF 310-9953 CAB AR, 317-0771 OPERATOR GP
AN ATTACHMENT

SMCS-7314 **i04029091**

NOTE	REF NO	GRAPHIC REF	PART NUMBER	QTY	PART NAME 1 2 3 4 5 6 (PRODUCT LEVEL)	SEE PAGE
C	1	1	**166-9287**	1	DASH AS	
	2	1	**5P-4116**	4	WASHER-HARD (8.8X20.5X2-MM THK)	
M	3	1	**8T-4908**	4	BOLT (M8X1.25X25-MM)	

C-CHANGE FROM PREVIOUS TYPE
M-METRIC PART

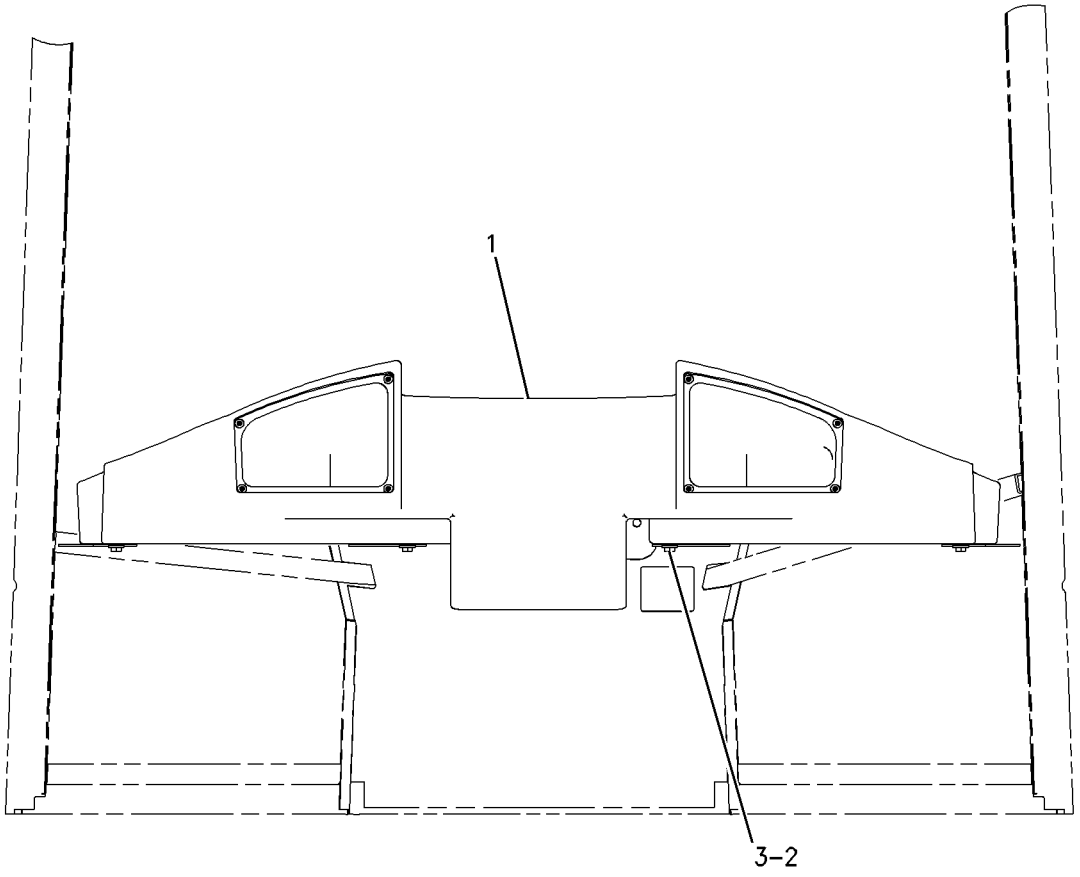

GRAPHIC #1 **<END>** g00729083

OPERATOR STATION

207-5948 DEFROSTER GP-CAB

S/N: JRL1-UP; RRS1-UP
PART OF 317-0770 OPERATOR AR
AN ATTACHMENT

SMCS-7304, 7316 **i01831651**

NOTE	REF NO	GRAPHIC REF	PART NUMBER	QTY	PART NAME 1 2 3 4 5 6 (PRODUCT LEVEL)	SEE PAGE
	1	1	**3E-5239**	1	RELAY AS (24-VOLT)	
	2	1	**204-8799**	1	SWITCH AS-ROCKER (DEFROSTER)	
		1	**111-7899**	1	GASKET	
	3	1	**8T-4205**	1	WASHER-HARD (7.2X14.5X2-MM THK)	
M	4	1	**9X-2042**	1	SCREW-TRUSS HEAD (M6X1X12-MM)	

M-METRIC PART

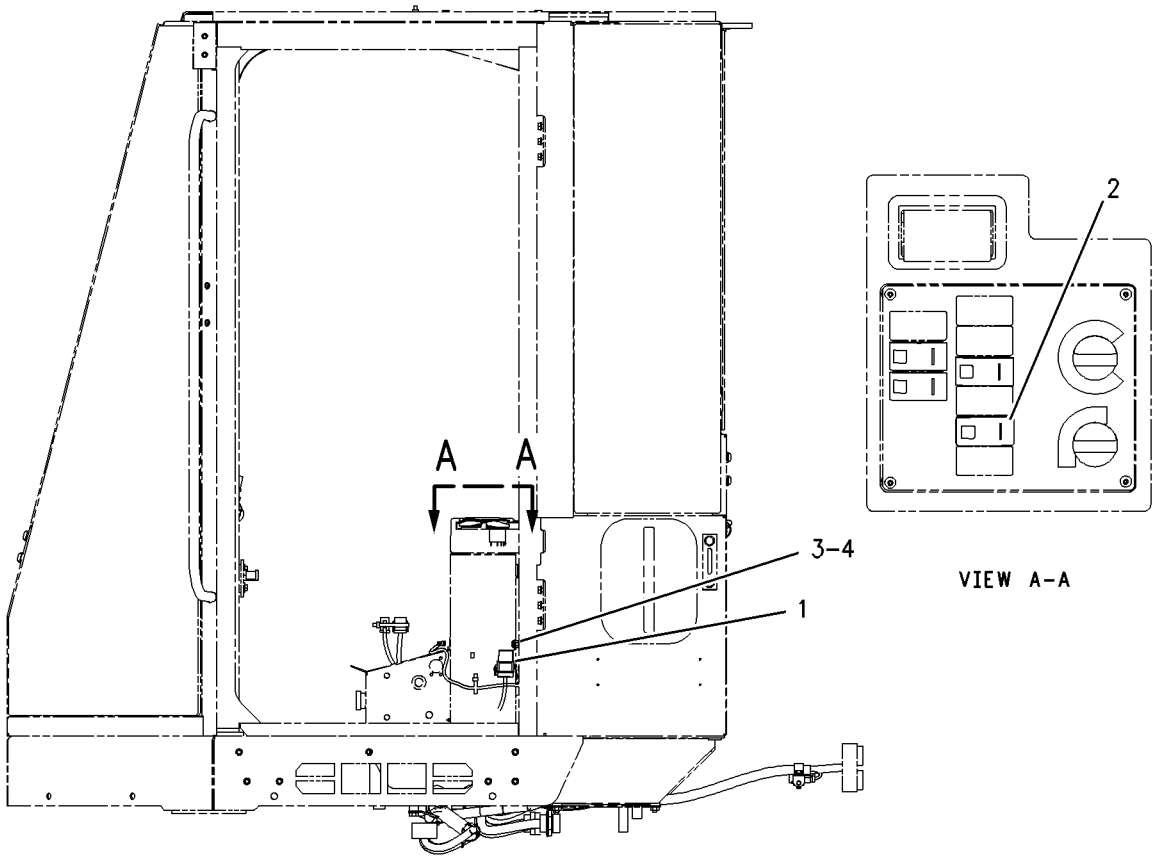

LEFT SIDE VIEW

GRAPHIC #1 **<END>** g00917880

OPERATOR STATION

290-8491 DOOR GP-CAB—FIXED WINDOW, LH

S/N: JRL1-UP; RRS1-UP
PART OF 311-8697 DOOR GP-CAB
AN ATTACHMENT

SMCS-7308 **i04029633**

NOTE	REF NO	GRAPHIC REF	PART NUMBER	QTY	PART NAME 1 2 3 4 5 6 (PRODUCT LEVEL)	SEE PAGE
E	1	1	**3E-3805**		SEAL (420-CM)	
	2	1	**3T-5201**	1	BEARING	
	3	1	**4E-1384**	1	BUMPER-CONICAL	
	4	1	**7W-2108**	1	SPRING-BYPASS VALVE	
	5	1	**8T-4742**	1	END-YOKE ROD	
M	6	1	**9X-2042**	11	SCREW-TRUSS HEAD (M6X1X12-MM)	
M	7	1	**8T-4971**	4	BOLT (M6X1X30-MM)	
	8	1	**8T-4205**	5	WASHER-HARD (7.2X14.5X2-MM THK)	
M	9	1	**8T-4181**	3	BOLT (M6X1X20-MM)	
	10	1	**141-8580**	1	RING-RETAINING	
	11	1	**161-9640**	1	COVER	
	12	1	**161-9641**	1	PLATE	
	13	1	**161-9642**	1	ROD AS	
	14	1	**161-9647**	1	PLATE	
	15	1	**162-2189**	1	GLASS-CAB (DOOR)	
	16	1	**168-2457**	1	LATCH AS-DOOR (HOLD OPEN)	
	17	1	**169-3995**	1	SEAL	
	18	1	**178-2593**	1	BUMPER	
J	19	1	**252-1862**	1	HANDLE AS (PULL)	
	20	1	**252-1863**	1	GASKET	
	21	1	**254-1127**	1	PLATE	
	22	1	**269-2890**	1	CLEVIS	
	23	1	**269-2892**	1	PIN	
	24	1	**332-0195**	1	CLIP	
Y	25	1	**290-8493**	1	DOOR GP-CAB (LH)	498
	26	1	**350-4517**	1	LATCH AS (LH)	
	27	1	**292-3254**	1	COVER (LH)	
M	28	1	**5C-2890**	1	NUT (M6X1-THD)	
M	29	1	**5C-7261**	2	NUT (M8X1.25-THD)	
	30	1	**5P-4116**	1	WASHER-HARD (8.8X20.5X2-MM THK)	
M	31	1	**8T-4138**	3	BOLT (M6X1X20-MM)	

E-ORDER BY THE CENTIMETER
J-REQUIRES CORPORATE KEY
M-METRIC PART
Y-SEPARATE ILLUSTRATION

290-8491 DOOR GP-CAB *(contd.)* **i04029633**

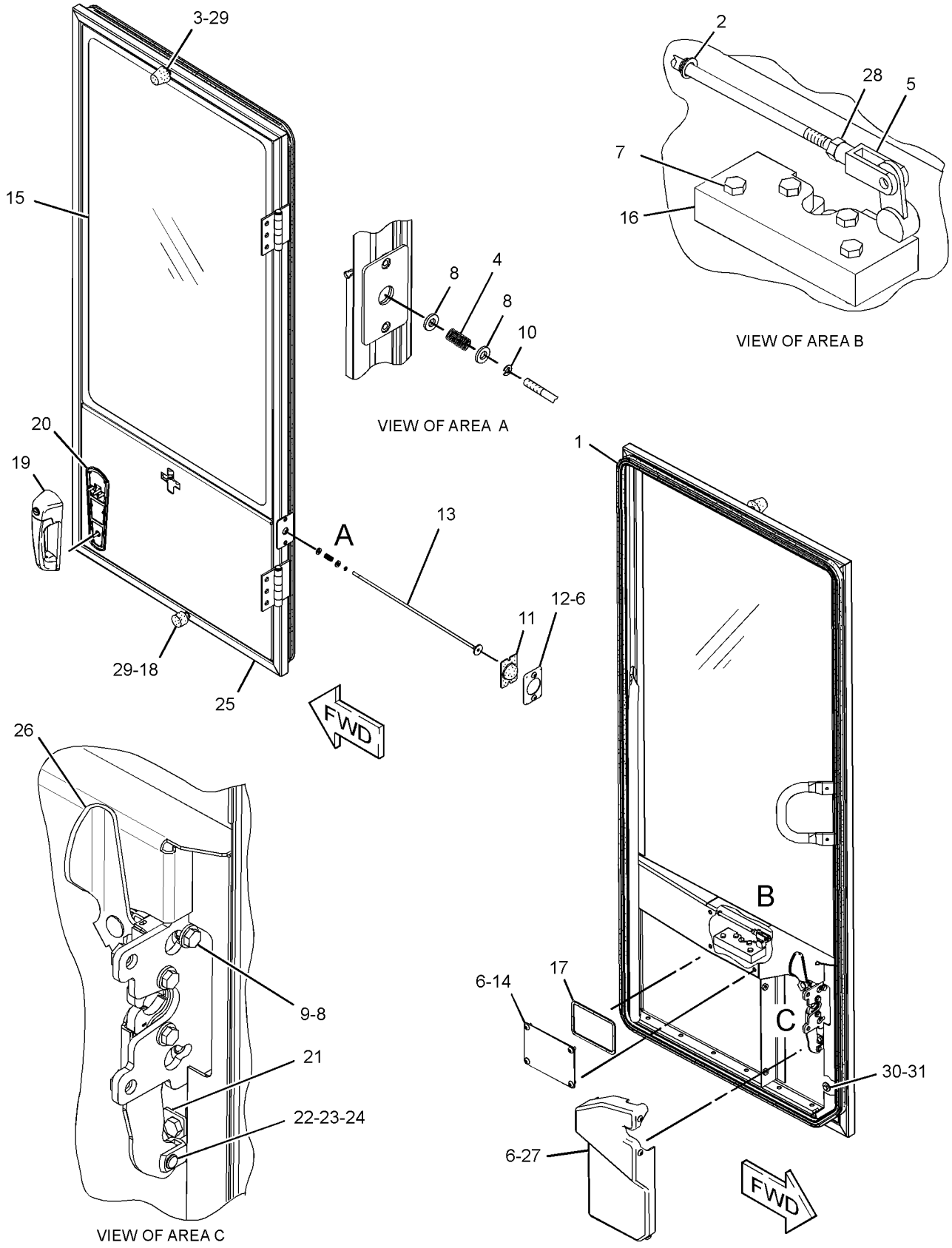

GRAPHIC #1 **<END>** g02215993

OPERATOR STATION

290-8493 DOOR GP-CAB–LH

S/N: JRL1-UP; RRS1-UP
PART OF 290-8491 DOOR GP-CAB
AN ATTACHMENT

SMCS-7308 **i02973987**

NOTE	REF NO	GRAPHIC REF	PART NUMBER	QTY	PART NAME 1 2 3 4 5 6 (PRODUCT LEVEL)	SEE PAGE
	1	1	*107-6120*	1	PLATE AS	
M		1	**159-9539**	2	NUT-WELD (M6X1-THD)	
	2	1	**111-0200**	1	HANDRAIL (GRAB)	
	3	1	**115-1552**	1	HANDLE-PULL	
	4	1	*233-8009*	1	SHEET AS	
M		1	**159-9539**	4	NUT-WELD (M6X1-THD)	
	5	1	**286-9593**	2	HINGE AS	
					(EACH INCLUDES)	
		1	**096-2323**	1	RING-RETAINING (EXTERNAL)	
	6	1	*291-9252*	1	PLATE AS (DOOR)	
M		1	**159-9539**	2	NUT-WELD (M6X1-THD)	

M-METRIC PART

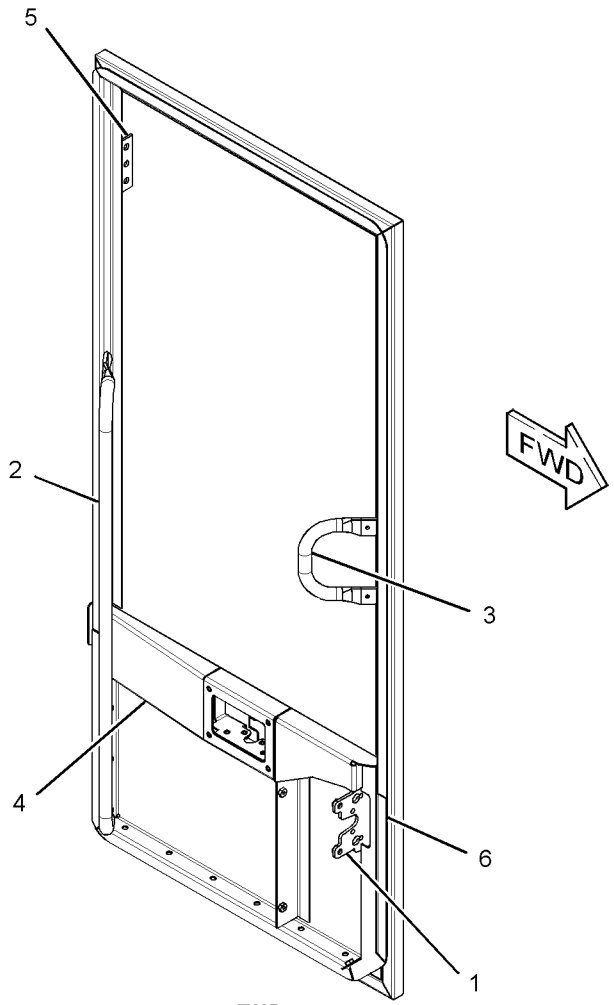

GRAPHIC #1 **<END>** g01400155

OPERATOR STATION

311-8695 DOOR GP-CAB–RH

S/N: JRL1-UP; RRS1-UP
PART OF 311-8696 DOOR GP-CAB
AN ATTACHMENT

SMCS-7308 **i03626672**

NOTE	REF NO	GRAPHIC REF	PART NUMBER	QTY	PART NAME 1 2 3 4 5 6 (PRODUCT LEVEL)	SEE PAGE
	1	1	**4E-1384**	1	BUMPER-CONICAL	
	2	1	**9R-8538**	1	PLUNGER (LATCH)	
	3	1	**162-2189**	1	GLASS-CAB (DOOR)	
	4	1	**178-2593**	1	BUMPER	
	5	1	**311-8694**	1	DOOR AS-CAB (RH)	
		1	**286-9592**	2	HINGE AS	
					(EACH INCLUDES)	
		1	**096-2323**	1	RING-RETAINING (EXTERNAL)	
		1	**318-0827**	1	PIN	
M	6	1	**5C-7261**	2	NUT (M8X1.25-THD)	
M	7	1	**6V-7743**	1	LOCKNUT (M6X1-THD)	
M	8	1	**8T-4971**	1	BOLT (M6X1X30-MM)	
	9	1	**9X-8256**	1	WASHER (6.6X12X2-MM THK)	
E	10	1	**3E-3805**		SEAL (420-CM)	

E-ORDER BY THE CENTIMETER
M-METRIC PART

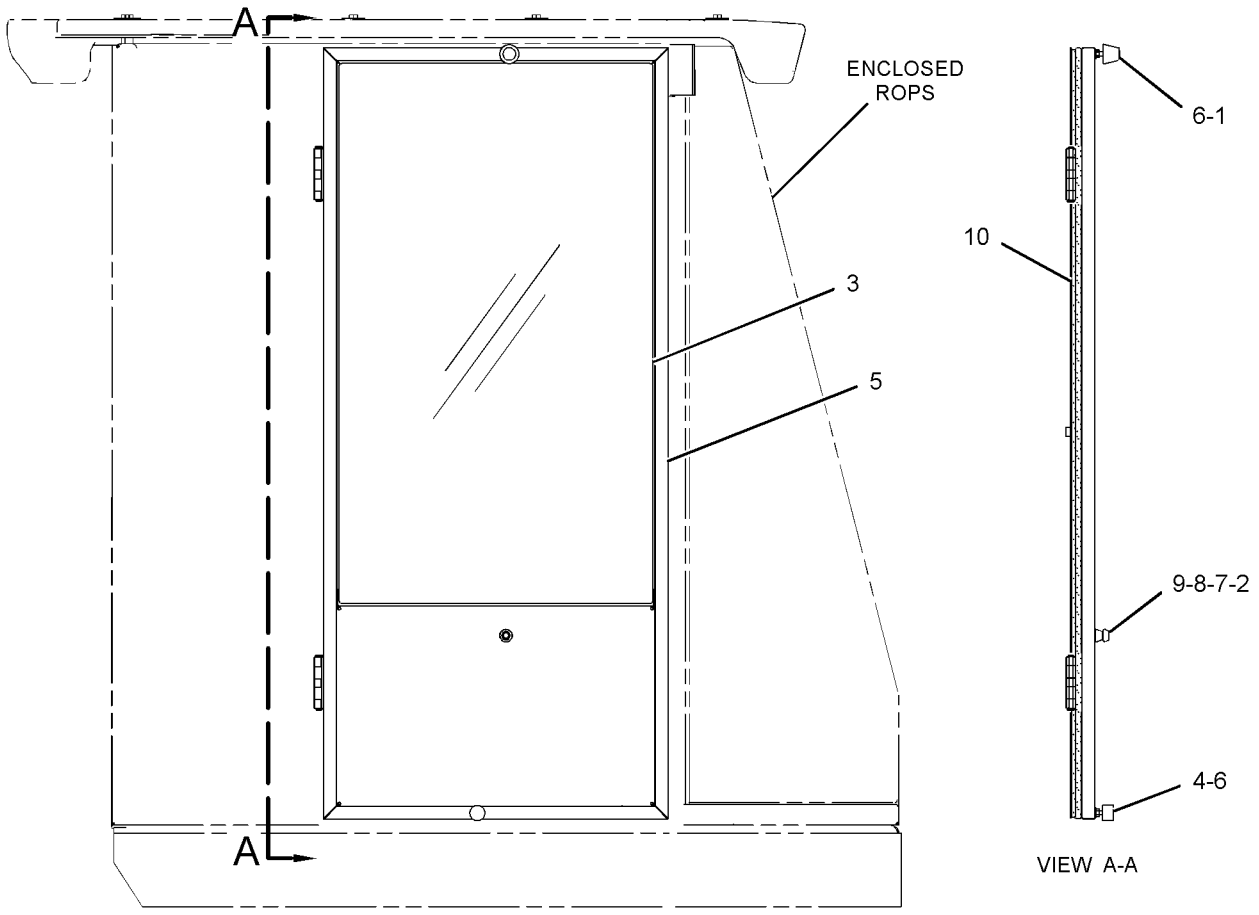

RIGHT SIDE VIEW

GRAPHIC #1 **<END>** g01646595

OPERATOR STATION

311-8696 DOOR GP-CAB—FIXED WINDOW, RH

S/N: JRL1-UP; RRS1-UP
PART OF 311-8697 DOOR GP-CAB
AN ATTACHMENT

SMCS-7308 **i03237767**

NOTE	REF NO	GRAPHIC REF	PART NUMBER	QTY	PART NAME 1 2 3 4 5 6 (PRODUCT LEVEL)	SEE PAGE
	1	1	**5P-7958**	1	SLEEVE-CABLE SPLICE	
	2	1	**8T-6842**	1	FILM-INSTRUCTION (PULL RING, ALTERNATE EXIT)	
	3	1	**126-1052**	1	PIN	
	4	1	**160-9925**	1	LANYARD	
	5	1	**209-5018**	1	LATCH AS	
Y	6	1	*311-8695*	1	DOOR GP-CAB (RH)	499
M	7	1	**9X-2044**	2	SCREW-TRUSS HEAD (M6X1X16-MM)	

M-METRIC PART
Y-SEPARATE ILLUSTRATION

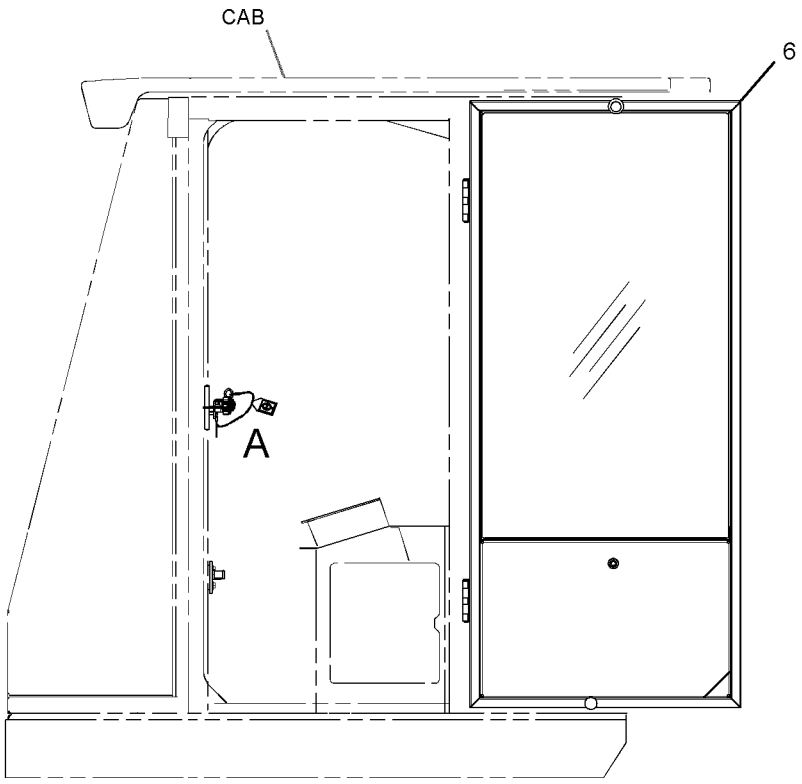

LEFT SIDE VIEW
(DOOR IN THE OPEN POSITION)

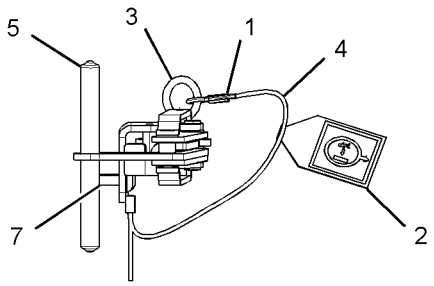

VIEW OF AREA A

GRAPHIC #1 **<END>** g01647716

OPERATOR STATION

311-8697 DOOR GP-CAB

S/N: JRL1-UP; RRS1-UP
PART OF 311-8698 CAB AR
AN ATTACHMENT

SMCS-7308 **i03084740**

NOTE	PART NUMBER	QTY	PART NAME 1 2 3 4 5 6 (PRODUCT LEVEL)	SEE PAGE
Y	**290-8491**	1	DOOR GP-CAB (FIXED WINDOW, LH)	496
Y	**311-8696**	1	DOOR GP-CAB (FIXED WINDOW, RH)	500

Y-SEPARATE ILLUSTRATION

<END>

OPERATOR STATION

107-4630 DUCT GP-CAB AIR

S/N: JRL1-UP; RRS1-UP
PART OF 317-0770 OPERATOR AR
AN ATTACHMENT

SMCS-734D **i03900589**

NOTE	REF NO	GRAPHIC REF	PART NUMBER	QTY	PART NAME 1 2 3 4 5 6 (PRODUCT LEVEL)	SEE PAGE
D	1	1	**5P-5927**		SEAL (0.8-M)	
D	1A	1	**5P-5927**		SEAL (1-M)	
D	1B	1	**5P-5927**		SEAL (1.2-M)	
C	2	1	**8Y-6388**	2	LOUVER AS-VENT (RH)	
C	3	1	**171-4046**	2	LOUVER AS (LH)	
	4	1	**104-2091**	12	SCREW-FLAT HEAD (6-20X0.5-IN)	
	5	1	**107-6079**	1	DUCT	
	6	1	**148-3626**	8	SCREW-FLAT HEAD (6-20X0.75-IN)	
C	7	1	**151-5715**	4	LOUVER AS-VENT	
	8	1	**161-7620**	12	SCREW-PAN HEAD	
C	9	1	**166-9286**	1	DUCT AS	
	10	1	**5P-4116**	4	WASHER-HARD (8.8X20.5X2-MM THK)	
M	11	1	**8T-4908**	4	BOLT (M8X1.25X25-MM)	

C-CHANGE FROM PREVIOUS TYPE
D-ORDER BY THE METER
M-METRIC PART

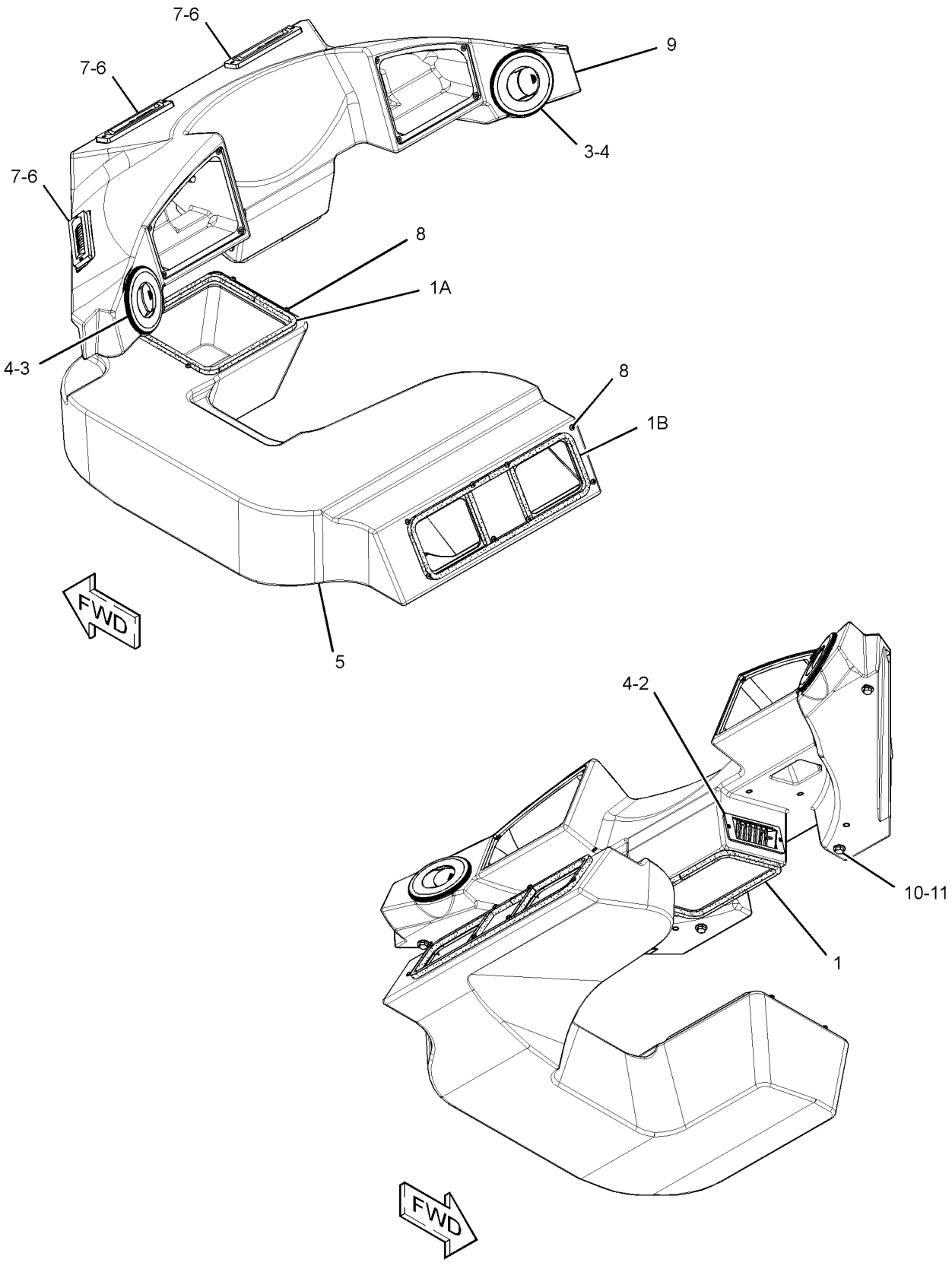

GRAPHIC #1 **<END>** g02149688

OPERATOR STATION

119-4769 FILTER GP-CAB AIR

S/N: JRL1-UP; RRS1-UP
PART OF 317-0770 OPERATOR AR
AN ATTACHMENT

SMCS-7342 **i03538601**

NOTE	REF NO	GRAPHIC REF	PART NUMBER	QTY	PART NAME 1 2 3 4 5 6 (PRODUCT LEVEL)	SEE PAGE
	1	1	**111-8738**	1	FILTER ELEMENT-CAB AIR (PRIMARY)	
	2	1	**180-7487**	1	FILTER ELEMENT-CAB AIR (OPTIONAL W/ ODOR REDUCTION)	
	3	1	**114-3944**	1	COVER	
	4	1	**116-7856**	4	KNOB	
	5	1	**127-8613**	1	GASKET	
	6	1	**180-7486**	1	COVER AS	

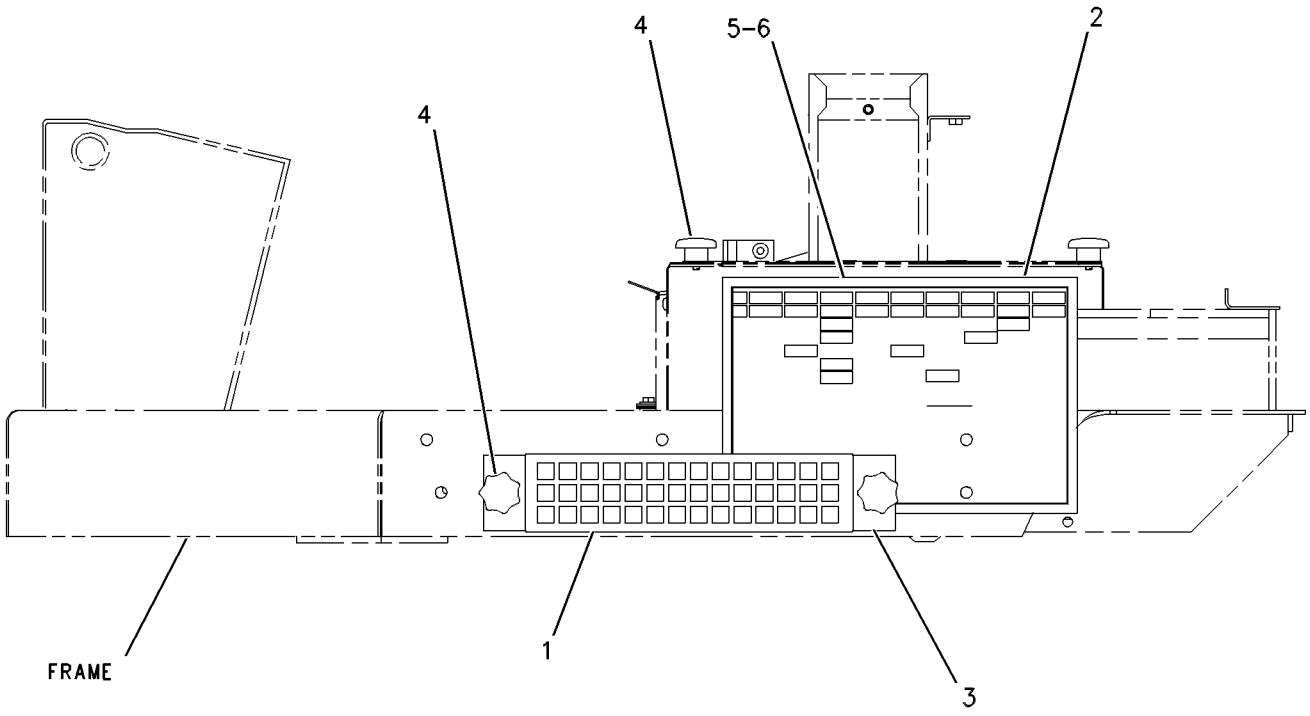

LEFT SIDE VIEW

GRAPHIC #1 **<END>** g00661567

OPERATOR STATION

317-0692 FLOOR MAT GP

S/N: JRL1-UP; RRS1-UP
PART OF 290-8186 OPERATOR AR-OPEN ROPS
AN ATTACHMENT

SMCS-726M **i03014096**

NOTE	REF NO	GRAPHIC REF	PART NUMBER	QTY	PART NAME 1 2 3 4 5 6 (PRODUCT LEVEL)	SEE PAGE
D	1	2	**5P-5637**		SEAL (0.8-M)	
	2	1	**4E-2161**	1	STRAP	
	3	2	*8C-3426*	1	LOCK GP-CYLINDER	
		2	**226-0294**	1	LOCK AS	
		2	**226-0341**	1	CAM	
	4	2	**8T-3995**	5	NUT (M6X1-THD)	
	5	1	**111-7881**	1	COVER AS	
	6	1	**125-7043**	1	BOX AS	
	7	1	**125-7045**	1	COVER AS	
	8	1	**125-7046**	1	PLATE AS	
	9	1	**126-1034**	1	LINER AS-CAB	
	10	1	**126-1035**	1	PLATE AS	
M		1	**6V-9632**	2	NUT-WELD (M6X1-THD)	
	11	1	**126-1036**	1	PLATE AS	
M		1	**6V-9632**	2	NUT-WELD (M6X1-THD)	
	12	1	**126-1367**	1	INSULATION	
	13	1	**127-7457**	1	INSULATION	
	14	1	**136-2109**	1	COVER AS	
		1	**4S-8264**	3	RIVET-POP	
		1	**9R-2620**	1	PLUG	
		1	**120-0596**	1	BRACKET	
		1	**124-9015**	1	KIT-BRUSH SEAL	
		1	**128-0899**	4	RIVET	
	15	1	**317-0694**	1	FLOOR MAT	
	16	2	**317-0695**	1	INSULATION AS	
M	17	2	**5C-2890**	2	NUT (M6X1-THD)	
M	18	1,2	**8T-4189**	3	BOLT (M8X1.25X20-MM)	
M	19	2	**8T-4200**	2	BOLT (M8X1.25X16-MM)	
	20	2	**8T-4205**	2	WASHER-HARD (7.2X14.5X2-MM THK)	
	21	1,2	**8T-4224**	5	WASHER-HARD (8.8X16X2-MM THK)	
	22	1	**9D-3769**	1	GROMMET	
	23	1	**9X-2038**	1	WASHER (7X19X2-MM THK)	
M	24	1,2	**9X-2043**	6	SCREW-TRUSS HEAD (M6X1X14-MM)	
M	25	1,2	**9X-2045**	9	SCREW-TRUSS HEAD (M6X1X20-MM)	

D-ORDER BY THE METER
M-METRIC PART

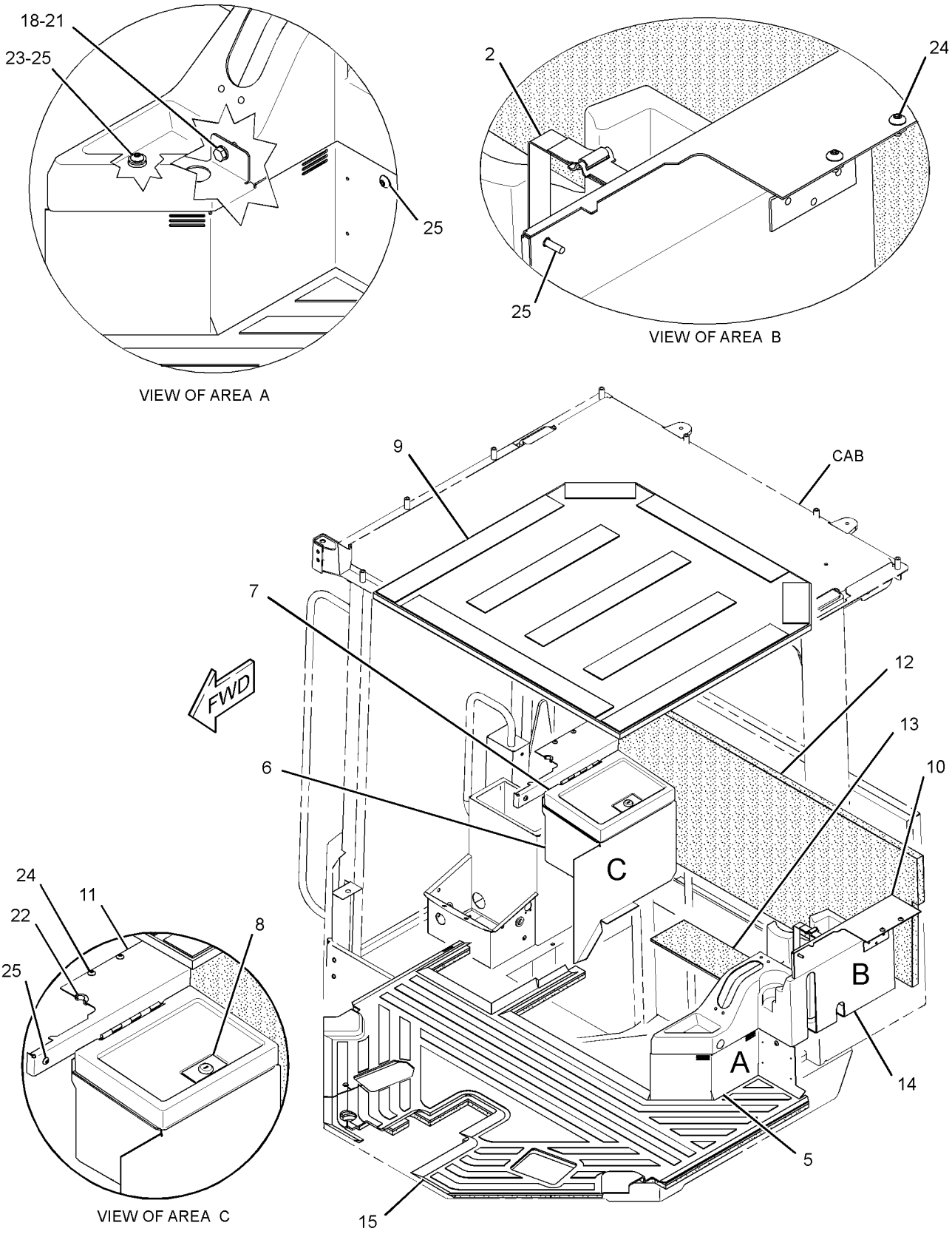

GRAPHIC #1

g01541534

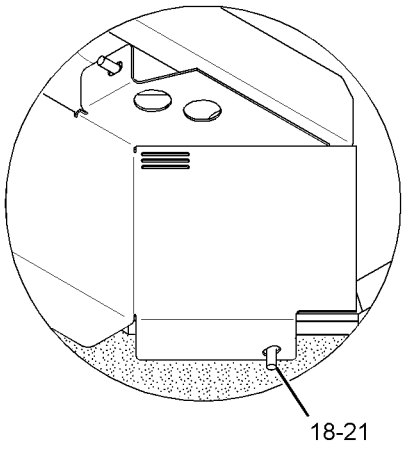

VIEW OF AREA F

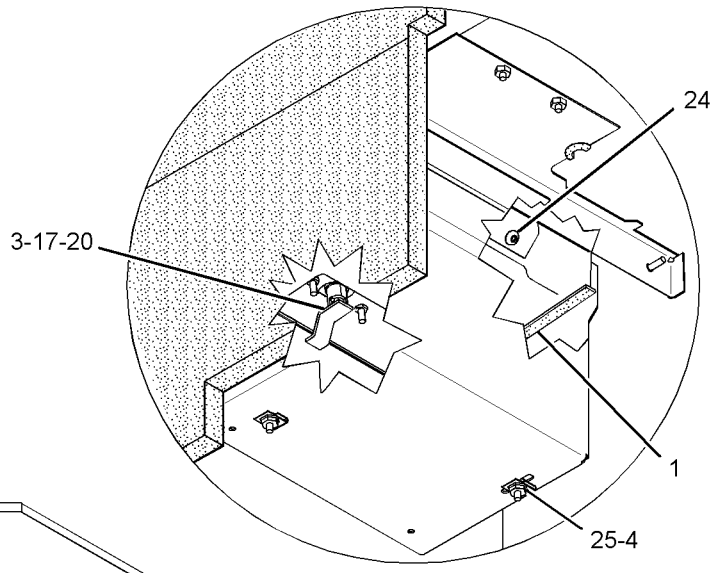

VIEW OF AREA D

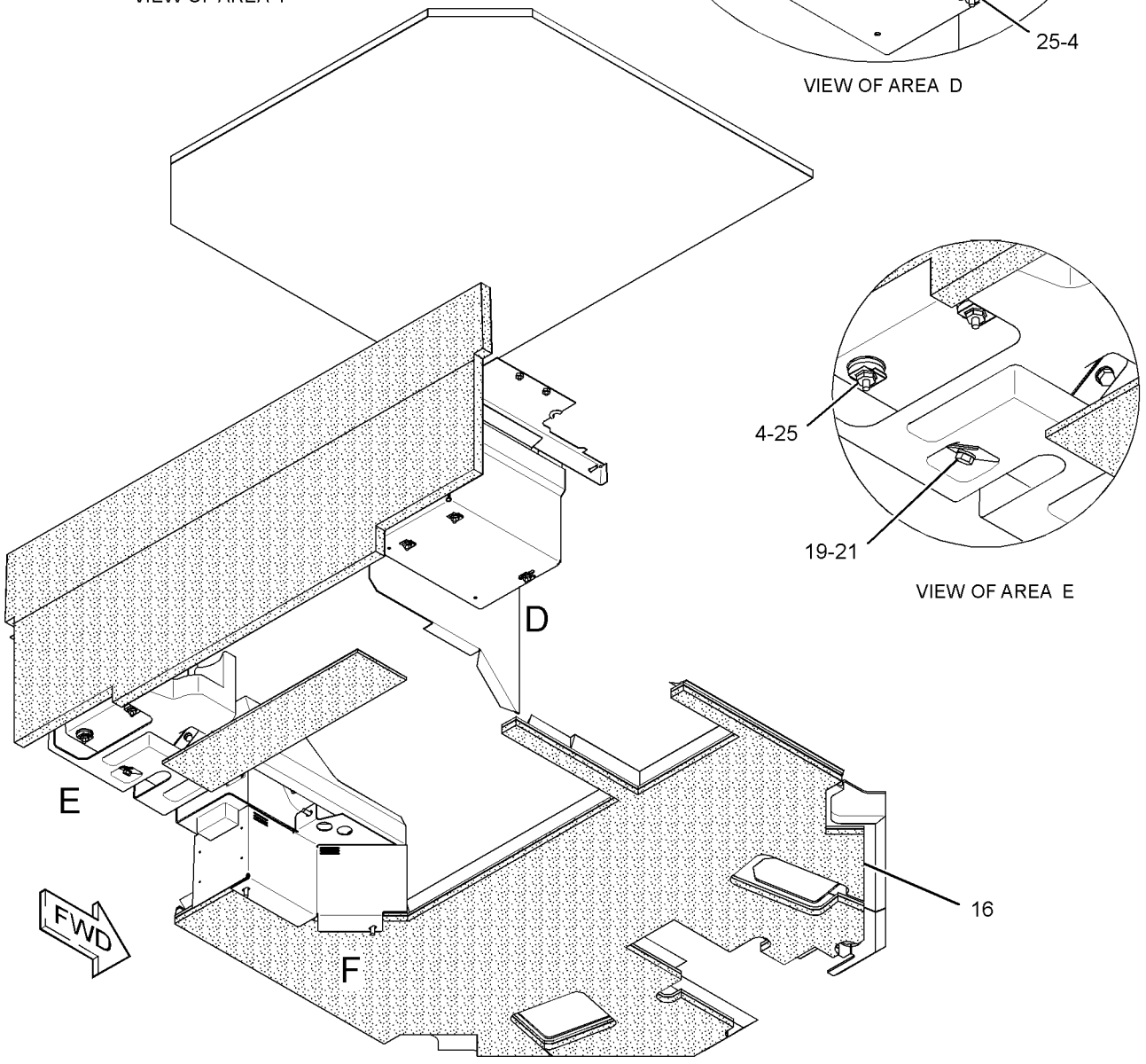

VIEW OF AREA E

GRAPHIC #2

<END>

g01541535

OPERATOR STATION

317-0769 FLOOR MAT GP

S/N: JRL1-UP; RRS1-UP
PART OF 311-8700 OPERATOR AR
AN ATTACHMENT

SMCS-726M **i03014094**

NOTE	REF NO	GRAPHIC REF	PART NUMBER	QTY	PART NAME 1 2 3 4 5 6 (PRODUCT LEVEL)	SEE PAGE
	1	1	**4E-2161**	1	STRAP	
D	2	2	**5P-5637**		SEAL (0.8-M)	
	3	2	*8C-3426*	1	LOCK GP-CYLINDER	
		2	**226-0294**	1	LOCK AS	
		2	**226-0341**	1	CAM	
	4	2	**8N-9033**	2	PLUG	
	5	2	**8T-3995**	5	NUT (M6X1-THD)	
	6	1	**111-7881**	1	COVER AS	
	7	1	**115-1561**	1	COVER	
	8	2	**125-7043**	1	BOX AS	
	9	2	**125-7045**	1	COVER AS	
	10	1	**125-7046**	1	PLATE AS	
	11	1	**127-6510**	2	COVER	
	12	1	**136-2109**	1	COVER AS	
		1	**4S-8264**	3	RIVET-POP	
		1	**9R-2620**	1	PLUG	
		1	**120-0596**	1	BRACKET	
		1	**124-9015**	1	KIT-BRUSH SEAL	
		1	**128-0899**	4	RIVET	
	13	1	**317-0694**	1	FLOOR MAT	
	14	2	**317-0695**	1	INSULATION AS	
	15	1	**317-0855**	1	MAT-PROTECTIVE	
M	16	2	**5C-2890**	2	NUT (M6X1-THD)	
M	17	2	**8T-4189**	3	BOLT (M8X1.25X20-MM)	
M	18	2	**8T-4200**	2	BOLT (M8X1.25X16-MM)	
	19	2	**8T-4205**	2	WASHER-HARD (7.2X14.5X2-MM THK)	
	20	2	**8T-4224**	5	WASHER-HARD (8.8X16X2-MM THK)	
	21	1	**9X-2038**	1	WASHER (7X19X2-MM THK)	
M	22	2	**9X-2043**	2	SCREW-TRUSS HEAD (M6X1X14-MM)	
M	23	1,2	**9X-2045**	7	SCREW-TRUSS HEAD (M6X1X20-MM)	

D-ORDER BY THE METER
M-METRIC PART

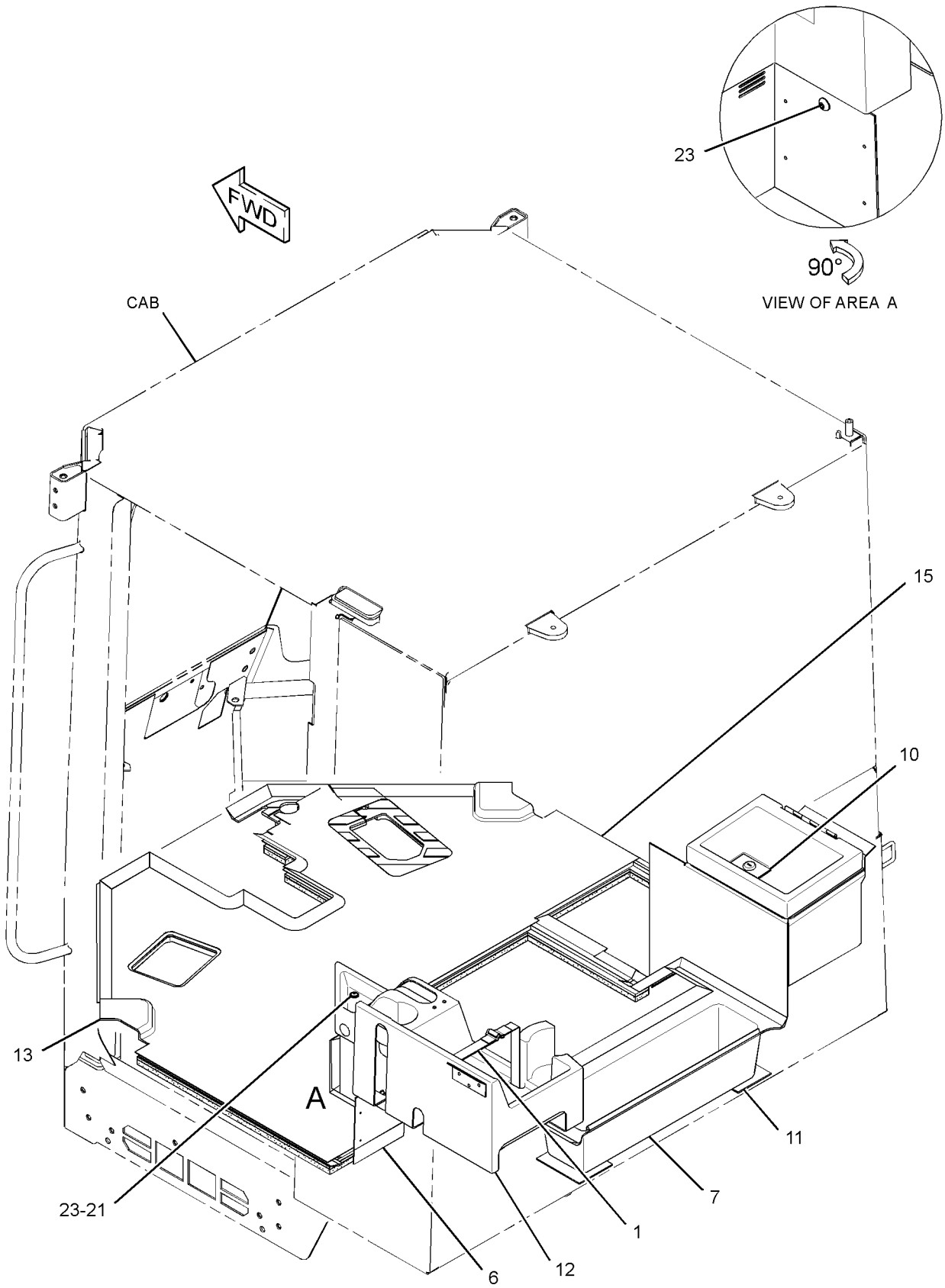

GRAPHIC #1 g01536434

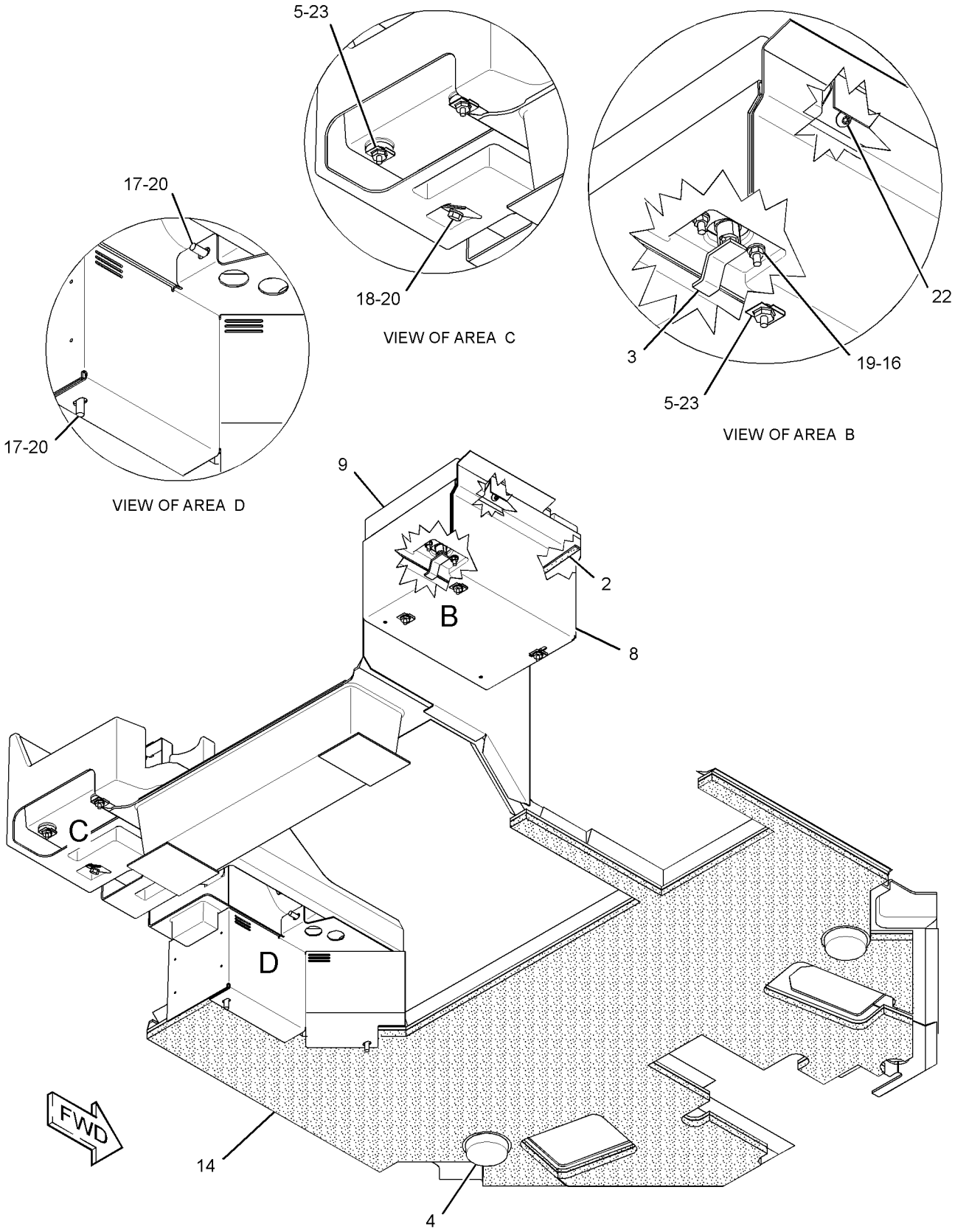

GRAPHIC #2 **<END>** g01536435

OPERATOR STATION

239-8103 HEATER & MTG GP-CAB—WITH CABLE CONTROL

S/N: JRL1-UP
PART OF 372-8684 HEATER AR-CAB
AN ATTACHMENT

SMCS-7304 **i04000865**

NOTE	REF NO	GRAPHIC REF	PART NUMBER	QTY	PART NAME 1 2 3 4 5 6 (PRODUCT LEVEL)	SEE PAGE
D	1	1	**5P-5643**		SEAL (0.8-M EACH)	
	2	1	**118-7259**	1	GASKET	
	3	1	**156-4449**	1	CABLE AS (HEATER TEMPERATURE CONTROL)	
		1	**2H-3920**	2	LOCKWASHER	
		1	**6V-8369**	1	NUT (7/16-28-THD)	
		1	**143-8874**	1	BOOT	
CY	4	1	**306-8141**	1	HEATER GP-CAB	513
	5	1	**236-4238**	1	SWITCH AS-ROCKER (HEATER CONTROL)	
		1	**111-7899**	1	GASKET	
	6	1	**7X-0579**	11	WASHER-HARD (8.8X25.5X2-MM THK)	
M	7	1	**8T-4908**	11	BOLT (M8X1.25X25-MM)	
C	8	1	**280-2710**	1	CIRCUIT BREAKER AS (20-AMPERE, MANUAL RESET) (HEATER CONTROL)	

C-CHANGE FROM PREVIOUS TYPE
D-ORDER BY THE METER
M-METRIC PART
Y-SEPARATE ILLUSTRATION

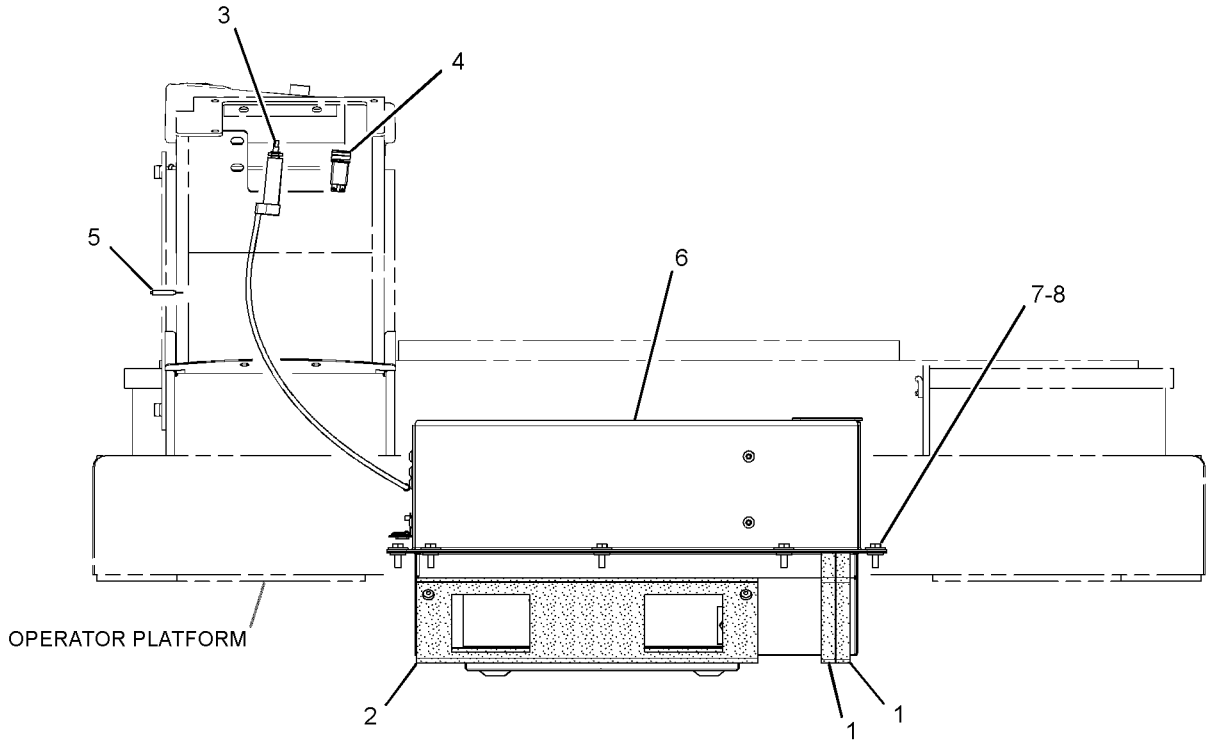

FRONT VIEW

GRAPHIC #1 **<END>** g01390303

OPERATOR STATION

372-8684 HEATER AR-CAB

S/N: JRL1-UP
PART OF 375-8359 DISTRIBUTION AR
FOR USE WITH 310-9955—PAGE 469. CANNOT BE USED WITH 290-8189—PAGE 474, 315-4654—PAGE 529, 372-8683—PAGE 462
AN ATTACHMENT

SMCS-7304 **i04491550**

NOTE	PART NUMBER	QTY	PART NAME 1 2 3 4 5 6 (PRODUCT LEVEL)	SEE PAGE
Y	*259-4137*	1	ALTERNATOR GP-CHARGING (24-VOLT, 95-AMPERE)	99
Y	*239-8103*	1	HEATER & MTG GP-CAB (WITH CABLE CONTROL)	511
Y	*290-8753*	1	LINES GP-CAB HEATER	522
Y	*198-8964*	1	PANEL GP-ACCESS (HOOD, CAB HEATER)	278

Y-SEPARATE ILLUSTRATION

<END>

OPERATOR STATION

306-8141 HEATER GP-CAB

S/N: JRL1-UP
PART OF 239-8103 HEATER & MTG GP-CAB
AN ATTACHMENT

SMCS-7304 **i04591653**

NOTE	REF NO	GRAPHIC REF	PART NUMBER	QTY	PART NAME 1 2 3 4 5 6 (PRODUCT LEVEL)	SEE PAGE
	1	1	**3E-1841**	1	LEVER	
	2	1	**6T-6708**	2	WASHER (7X28.6X4.1-MM THK)	
	3	1	**8Y-5737**	1	CLAMP	
	4	1	**9G-1950**	1	RESISTOR	
	5	1	**9X-2185**	4	SCREW (8-15X0.44-IN)	
	6	1	**102-0341**	1	CLIP	
	7	1	**114-3140**	1	GROMMET	
	8	1	**124-8495**	1	VALVE AS-WATER	
	9	1	**151-0894**	1	COVER AS	
	10	1	**183-7528**	1	COIL AS-HEATER	
	11	1	**255-9138**	1	BRACKET AS	
M		1	**9X-2032**	8	NUT-WELD (M4X0.7-THD)	
	12	1	**275-6706**	1	MOTOR AS-BLOWER (24-VOLT)	
		1	**102-8802**	1	KIT-RECEPTACLE (2-PIN)	
					(INCLUDES RECEPTACLE AS & WEDGE)	
		1	**9W-0852**	2	PIN-CONNECTOR (14-GA TO 16-GA)	
	13	1	**309-8677**	1	CASE AS	
	14	1	**3S-2093**	1	STRAP-CABLE	
	15	1	**037-4426**	1	RETAINER	
	16	1	**124-8494**	1	GASKET	
M	17	1	**129-3178**	2	LOCKNUT (M6X1-THD)	
M	18	1	**141-9784**	1	BOLT (M6X1X190-MM)	
	19	1	**1P-6522**	1	GROMMET	
M	20	1	**5C-9553**	6	BOLT (M6X1X16-MM)	
	21	1	**6V-1668**	2	WASHER (6.5X29.1X3-MM THK)	
M	22	1	**6V-5210**	8	SCREW-MACHINE (M4X0.7X10-MM)	
M	23	1	**8C-8457**	1	SCREW-MACHINE (M5X0.8X14-MM)	
	25	1	**8T-4205**	9	WASHER-HARD (7.2X14.5X2-MM THK)	
M	26	1	**9X-2044**	1	SCREW-TRUSS HEAD (M6X1X16-MM)	
	27	1	**9X-2488**	6	CLAMP-HOSE	
D	28	1	**6V-1392**		SEAL (0.6-M)	
D	28A	1	**6V-1392**		SEAL (0.07-M EACH)	
D	29	1	**8T-5372**		SEAL (0.13-M EACH)	
D	29A	1	**8T-5372**		SEAL (0.15-M)	
E	30	1	**136-1953**		HOSE (23-CM)	
E	30A	1	**136-1953**		HOSE (17.8-CM)	
E	30B	1	**136-1953**		HOSE (15.2-CM)	
	31	1	**118-5044**	1	HARNESS AS-WIRING (CAB HEATER)	
		1	**6T-6505**	5	HOUSING-RECEPTACLE (BLADE, POSITIVE LOCK)	
		1	**9W-0852**	5	PIN-CONNECTOR (14-GA TO 16-GA)	
		1	**155-2270**	1	KIT-CONNECTING PLUG (2-PIN)	
					(INCLUDES PLUG AS, WEDGE & INTERFACE SEAL)	
		1	**8T-8737**	1	PLUG-SEAL	
		1	**102-8805**	1	KIT-RECEPTACLE (6-PIN)	
					(INCLUDES RECEPTACLE AS & WEDGE)	
		1	**9W-0844**	2	SOCKET-CONNECTOR (14-GA TO 16-GA)	
		1	**3S-2093**	3	STRAP-CABLE	
		1	**6T-6506**	5	TERMINAL-BLADE (14-GA TO 18-GA)	
E		1	**119-3662**		TUBE-HEAT SHRINK (10.85-MM DIA) (13-CM)	

D-ORDER BY THE METER
E-ORDER BY THE CENTIMETER
M-METRIC PART

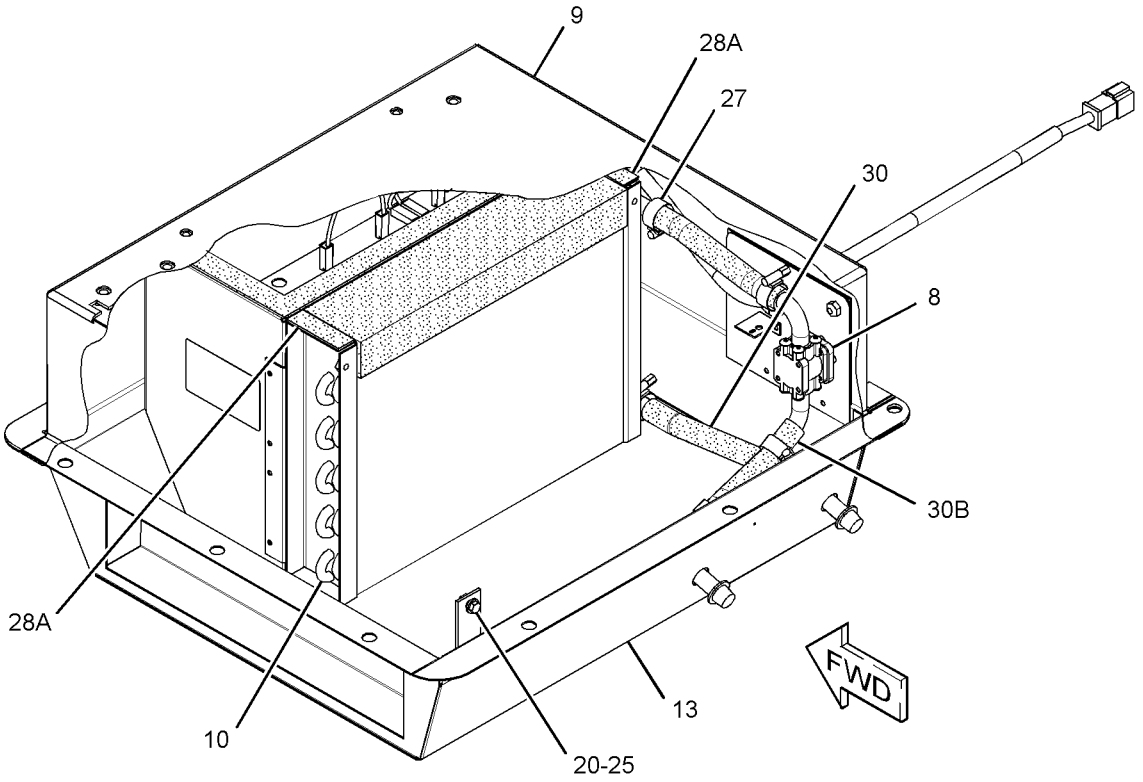

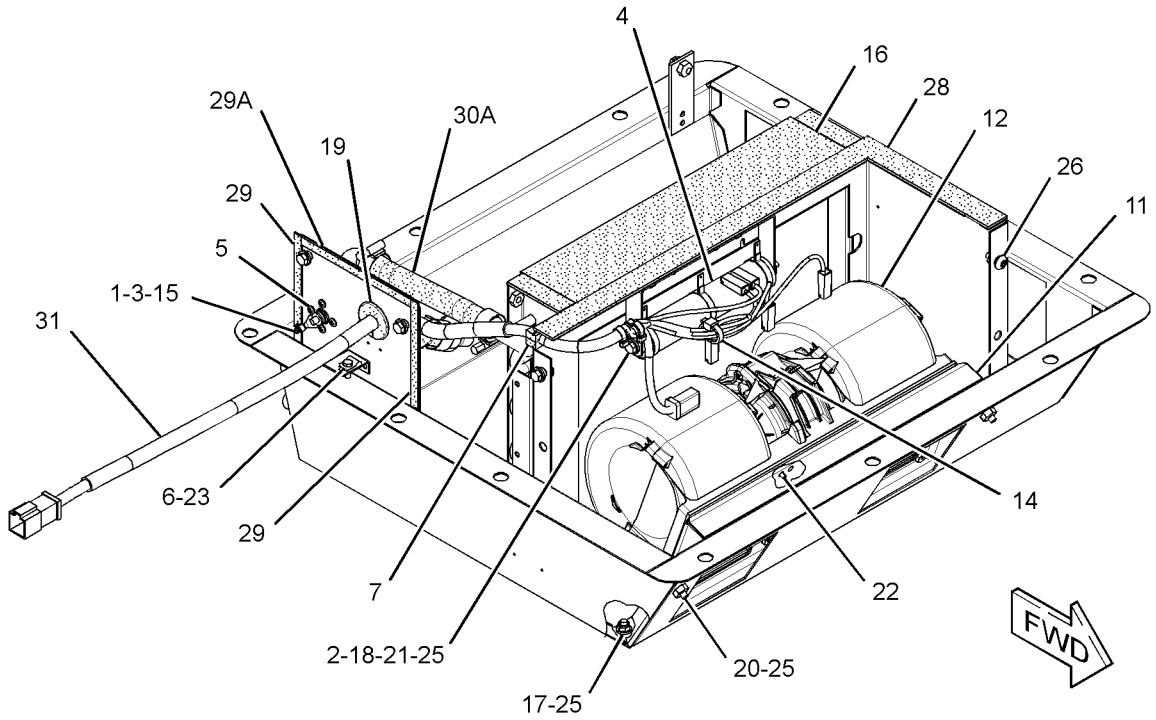

(COVER REMOVED FOR CLARITY)

GRAPHIC #1 **<END>** g01526354

OPERATOR STATION

172-5512 LINER GP-CAB–UPPER

S/N: JRL1-UP; RRS1-UP
PART OF 310-9953 CAB AR
AN ATTACHMENT

SMCS-7329 **i01212413**

NOTE	REF NO	GRAPHIC REF	PART NUMBER	QTY	PART NAME 1 2 3 4 5 6 (PRODUCT LEVEL)	SEE PAGE
	1	1	**9X-2038**	12	WASHER (7X19X2-MM THK)	
	2	1	**107-6032**	1	LAMP GP-DOME (24-VOLT)	
		1	**112-5219**	1	LAMP (24-VOLT, 10-WATT)	
	3	1	**174-0563**	1	LINER AS-CAB	
M	4	1	**9X-2045**	12	SCREW-TRUSS HEAD (M6X1X20-MM)	

M-METRIC PART

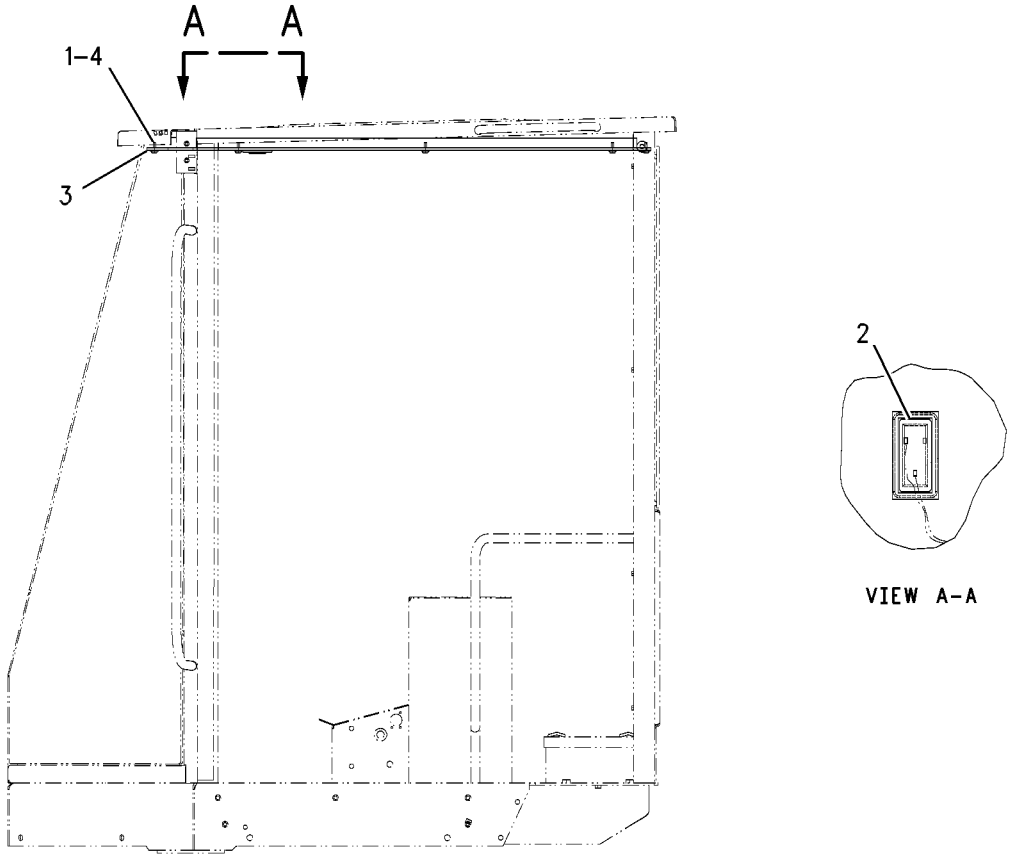

GRAPHIC #1 **<END>** g00661099

OPERATOR STATION

241-8564 LINER GP-CAB—UPPER

S/N: JRL1-UP; RRS1-UP
PART OF 317-0770 OPERATOR AR
AN ATTACHMENT

SMCS-7329 **i03453900**

NOTE	REF NO	GRAPHIC REF	PART NUMBER	QTY	PART NAME 1 2 3 4 5 6 (PRODUCT LEVEL)	SEE PAGE
	1	1	**6V-8928**	1	HOOK-COAT	
	2	1	**107-6032**	1	LAMP GP-DOME (24-VOLT) (CAB)	
		1	**259-1286**		LAMP (24-VOLT, 10-WATT)	
	3	1	**145-5307**	1	PLATE	
	4	1	**180-5098**	1	INSULATION	
C	5	1	**261-6778**	1	HEADLINER	
	6	1	**240-2563**	1	COVER	
	7	1	**240-2564**	1	COVER AS (RH)	
	8	1	**240-2565**	1	COVER AS (LH)	
					(EACH COVER AS INCLUDES)	
E		1	**121-0192**		FASTENER-HOOK (60-CM)	
E		1	**129-1854**		FASTENER-LOOP (60-CM)	
M	9	1	**6V-8490**	4	BOLT (M6X1X25-MM)	
M	10	1	**9X-2045**	1	SCREW-TRUSS HEAD (M6X1X20-MM)	
	11	1	**270-7618**	1	COVER AS	
	12	1	**272-3190**	1	COVER AS	
	13	1	**9U-8263**	1	COVER	
	14	1	**114-3953**	1	BRACKET AS	
	15	1	**114-3954**	1	COVER	
M	16	1	**5C-2890**	4	NUT (M6X1-THD)	
	17	1	**5P-4115**	4	WASHER-HARD (7.2X19X2-MM THK)	
	18	1	**5P-8524**	4	GROMMET	
M	19	1	**9X-2042**	4	SCREW-TRUSS HEAD (M6X1X12-MM)	

C-CHANGE FROM PREVIOUS TYPE
E-ORDER BY THE CENTIMETER
M-METRIC PART

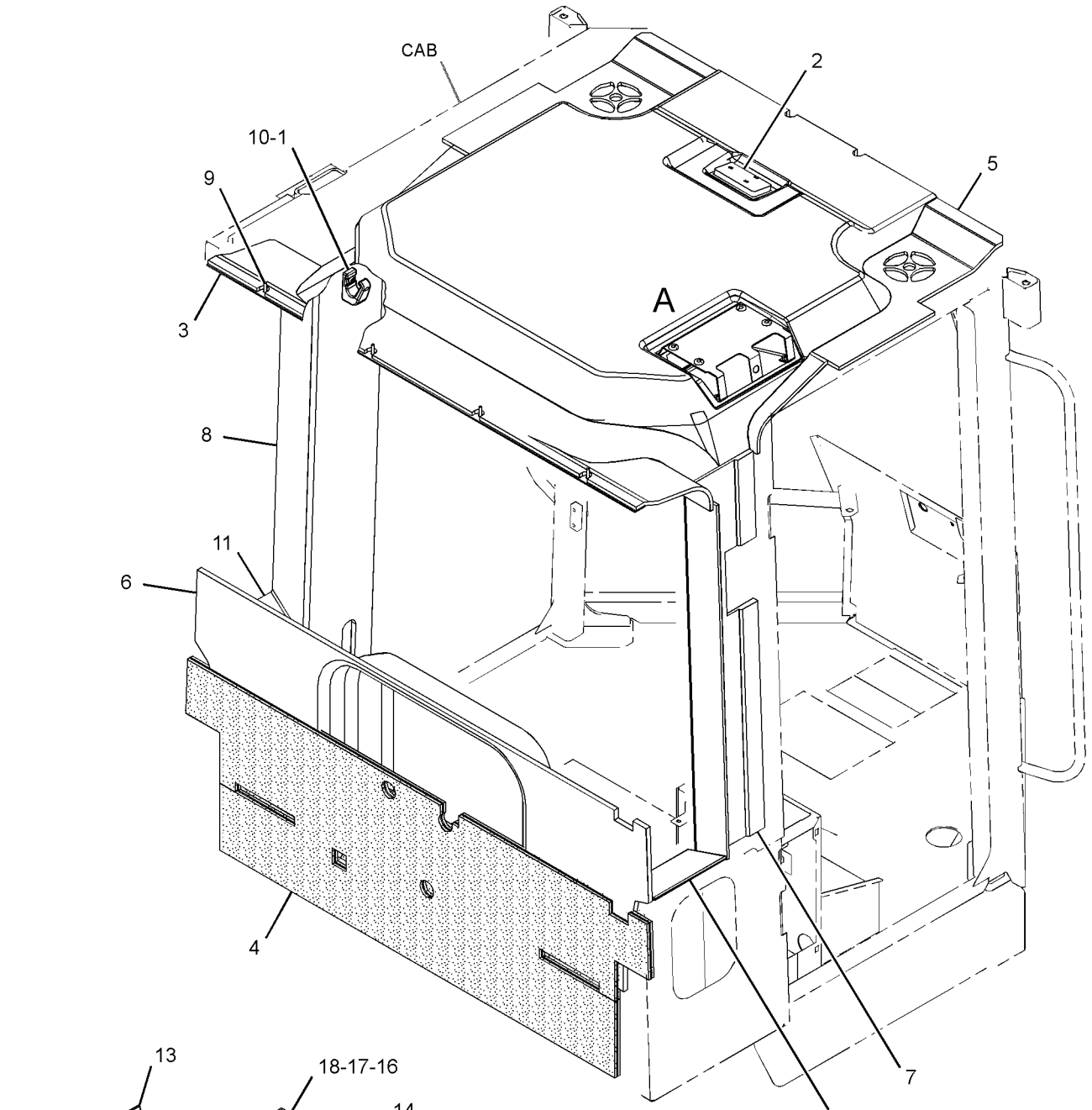

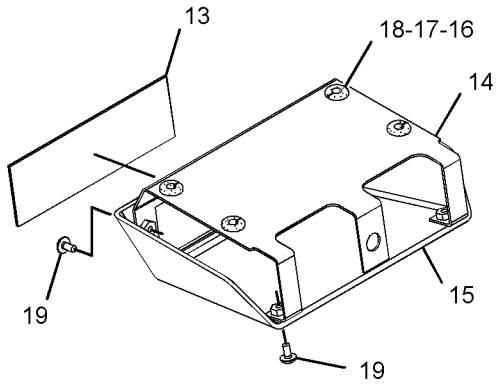

VIEW OF AREA A
(EXPLODED)

GRAPHIC #1 **<END>** g01863054

OPERATOR STATION

310-9947 LINER GP-CAB—LOWER

S/N: JRL1-UP; RRS1-UP
PART OF 310-9954 OPERATOR AR
AN ATTACHMENT

SMCS-7329 **i03988609**

NOTE	REF NO	GRAPHIC REF	PART NUMBER	QTY	PART NAME 1 2 3 4 5 6 (PRODUCT LEVEL)	SEE PAGE
	1	1	**8N-9033**	2	PLUG	
	2	1	**125-7045**	1	COVER AS	
	3	1	**125-7046**	1	PLATE AS	
	4	1	*172-5501*	1	COVER AS	
		1	**034-7044**	4	RIVET	
		1	**124-9015**	1	KIT-BRUSH SEAL	
		1	**172-5500**	1	PLATE AS	
	5	1	**172-5503**	1	BOX AS	
J	6	1	**226-0294**	1	LOCK AS	
	7	1	**310-9945**	1	FLOOR MAT	
M	8	1	**5C-2890**	2	NUT (M6X1-THD)	
M	9	1	**8T-4189**	7	BOLT (M8X1.25X20-MM)	
	10	1	**8T-4205**	2	WASHER-HARD (7.2X14.5X2-MM THK)	
	11	1	**8T-4224**	7	WASHER-HARD (8.8X16X2-MM THK)	
M	12	1	**9X-2043**	2	SCREW-TRUSS HEAD (M6X1X14-MM)	
D	13	1	**5P-5637**		SEAL (0.8-M)	
E	14	1	**126-8472**		SEAL (15-CM EACH)	
	15	1	**226-0341**	1	CAM	

D-ORDER BY THE METER
E-ORDER BY THE CENTIMETER
J-REQUIRES CORPORATE KEY
M-METRIC PART

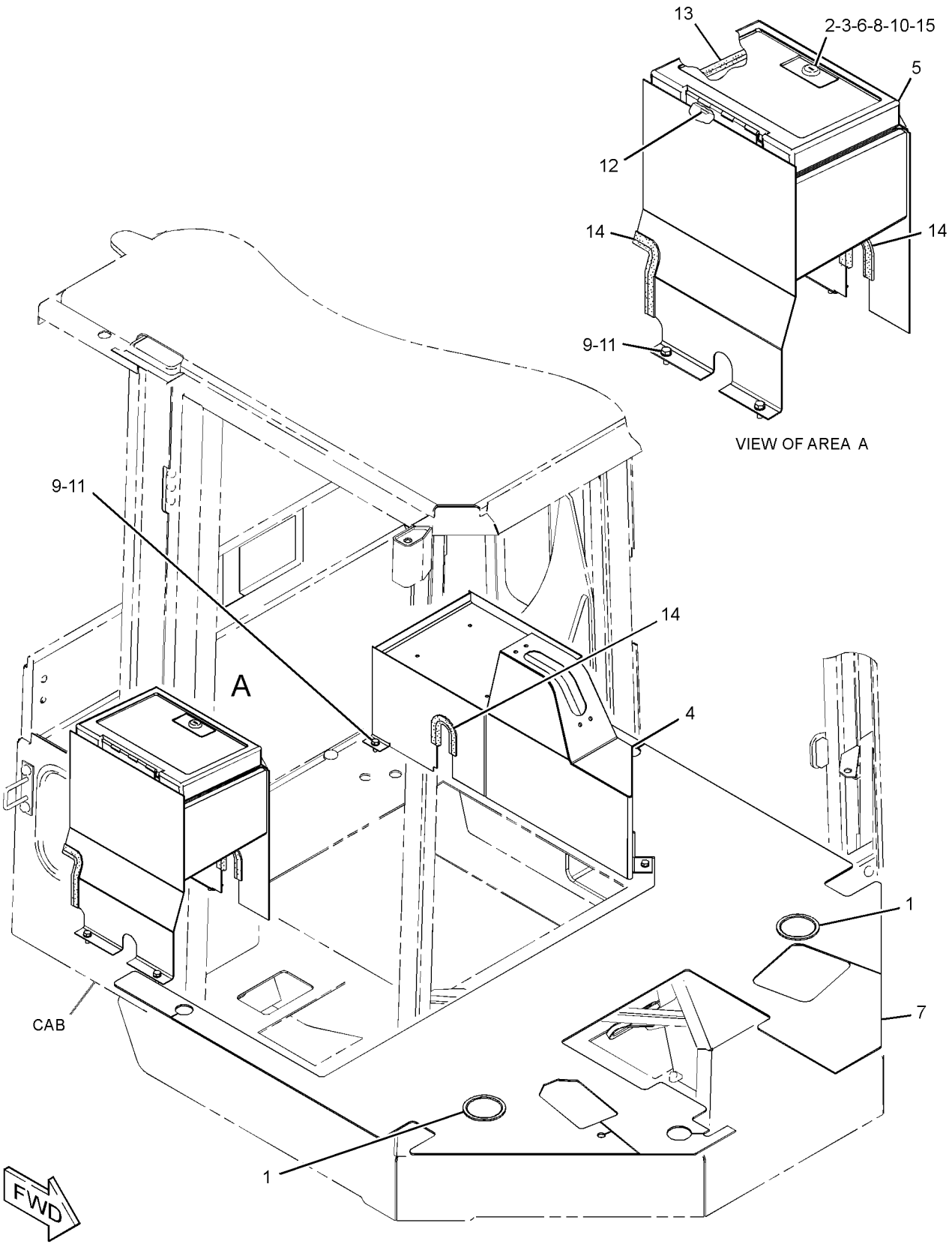

GRAPHIC #1 **<END>** g02179001

OPERATOR STATION

294-9432 LINES GP-AIR CONDITIONER

S/N: JRL1-UP; RRS1-UP
PART OF 372-8683 AIR CONDITIONER AR
AN ATTACHMENT

SMCS-1808 **i03504105**

NOTE	REF NO	GRAPHIC REF	PART NUMBER	QTY	PART NAME 1 2 3 4 5 6 (PRODUCT LEVEL)	SEE PAGE
	1	1	**3S-2093**	4	STRAP-CABLE	
M	2	1	**8T-4133**	2	NUT (M10X1.5-THD)	
	3	1	**315-7790**	1	PLATE	
	4	1	**189-3158**	1	SUPPRESSOR-ARC	
	5	1	**200-6345**	4	MOUNT (DUAL SWIVEL)	
	6	1	**217-7742**	1	GROMMET	
	7	1	**236-6923**	1	SWITCH AS-PRESSURE (REFRIGERANT)	
	8	1	**257-3227**	1	DRYER AS-REFRIGERANT	
		1	**189-1707**	1	ORIFICE AS-AIR CONDITIONER	
	9	1	**274-5909**	1	ACCUMULATOR-REFRIGERANT	
	10	1	**284-8306**	1	BRACKET AS	
	11	1	**291-2576**	1	TUBE AS	
	12	1	**292-2522**	1	TUBE AS	
I	13	1	**292-3592**	1	HOSE AS	
I	14	1	**292-3593**	1	HOSE AS	
I	15	1	**294-0976**	1	HOSE AS	
I	16	1	**299-9123**	1	HOSE AS	
I	17	1	**303-5190**	1	HOSE AS	
M	18	1	**8T-4185**	1	BOLT (M10X1.5X50-MM)	
	19	1	**109-1633**	1	CLIP (SLOT)	
	20	1	**109-1634**	1	CLIP (TAB)	
M	21	1	**8T-4195**	1	BOLT (M10X1.5X30-MM)	
	22	1	**1M-4543**	1	GROMMET	
	24	1	**4S-1962**	2	CLIP	
	25	1	**5P-7648**	1	GROMMET	
	26	1	**7X-7729**	3	WASHER (11X25X3-MM THK)	
	27	1	**7X-7910**	1	CLIP (SLOT)	
	28	1	**7X-7911**	1	CLIP (TAB)	
	29	1	**8M-2773**	1	CLIP	
	30	1	**8T-4121**	7	WASHER-HARD (11X21X2.5-MM THK)	
M	31	1	**8T-4136**	6	BOLT (M10X1.5X25-MM)	
M	32	1	**8T-4137**	1	BOLT (M10X1.5X20-MM)	
	33	1	**8T-4223**	2	WASHER-HARD (13.5X25.5X3-MM THK)	
M	34	1	**8T-4956**	2	BOLT (M12X1.75X35-MM)	
	35	1	**9D-3768**	1	GROMMET	
	36	1	**9M-8406**	6	CLIP	
	37	1	**9X-7378**	1	SEAL-O-RING	
	38	1	**9X-7380**	2	SEAL-O-RING	
	39	1	**9X-7381**	4	SEAL-O-RING	
	40	1	**9X-7382**	2	SEAL-O-RING	
	41	1	**9X-7383**	2	SEAL-O-RING	
	42	1	**204-2281**	8	STRAP-CABLE	
	43	1	**130-4677**	1	PLATE-INSTRUCTION (AIR CONDITIONER)	

I-REFER TO HYDRAULIC INFORMATION SYSTEM
M-METRIC PART

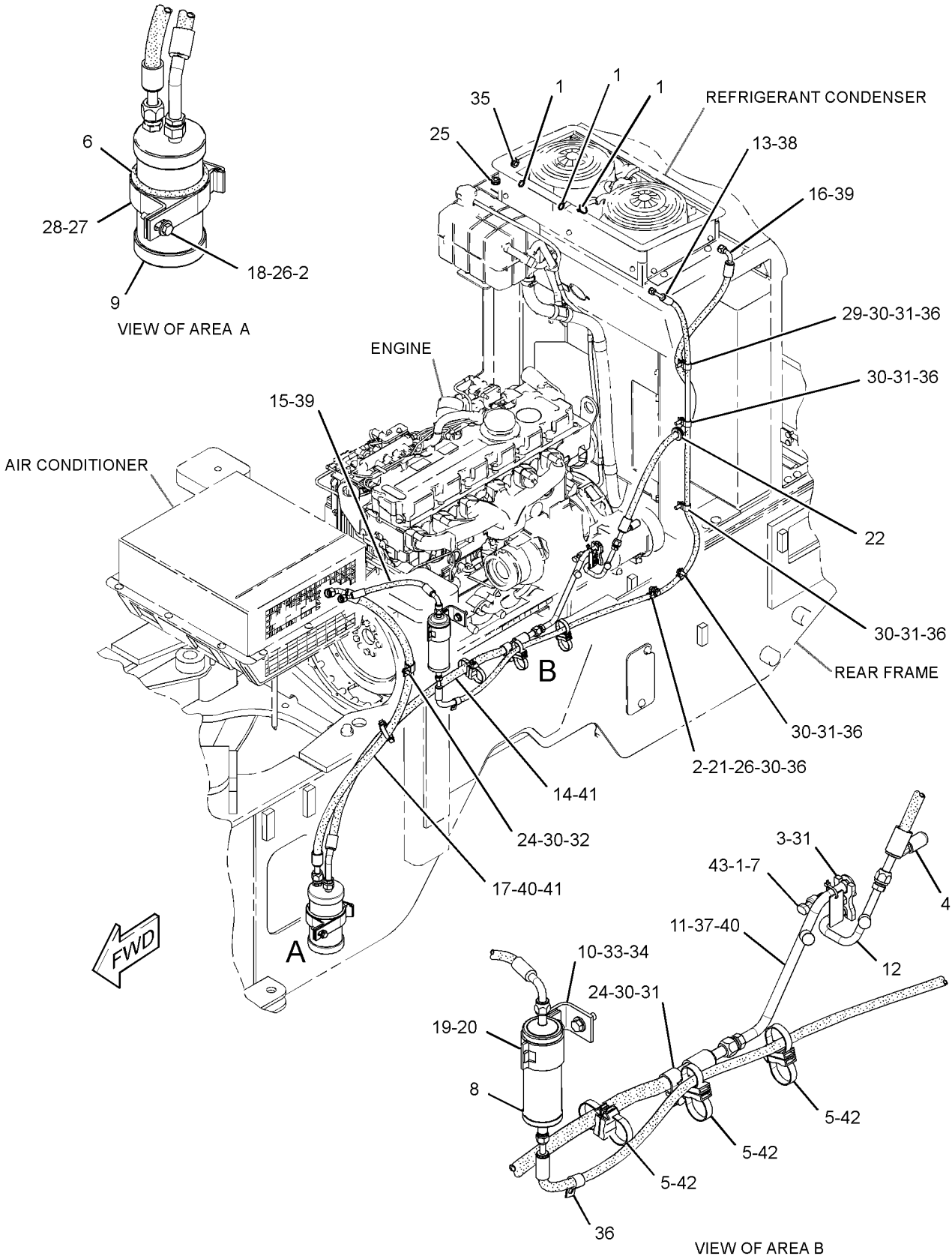

GRAPHIC #1 **<END>** g01841753

OPERATOR STATION

290-8753 LINES GP-CAB HEATER

S/N: JRL1-UP; RRS1-UP
PART OF 372-8683 AIR CONDITIONER AR, 372-8684 HEATER AR-CAB
AN ATTACHMENT

SMCS-7304 **i03626681**

NOTE	REF NO	GRAPHIC REF	PART NUMBER	QTY	PART NAME 1 2 3 4 5 6 (PRODUCT LEVEL)	SEE PAGE
	1	1	**5D-1026**	4	CLAMP-BAND	
E	2	1	**5P-0767**		HOSE (199-CM)	
E	2A	1	**5P-0767**		HOSE (223-CM)	
E	3	1	**7I-1024**		GUARD-HOSE (20-CM)	
	4	1	**7K-1181**	2	STRAP-CABLE	
	5	1	**9M-4814**	1	CONNECTOR-HOSE	
	6	1	**9X-3959**	1	ELBOW	
	7	1	**301-0361**	1	BRACKET AS	
M		1	**8T-3490**	1	NUT-WELD (M10X1.5-THD)	
	8	1	**205-8125**	1	CLIP	
	9	1	**6D-1641**	3	CLIP	
	10	1	**8T-4121**	2	WASHER-HARD (11X21X2.5-MM THK)	
M	11	1	**8T-4137**	2	BOLT (M10X1.5X20-MM)	
M	12	1	**8T-4139**	1	BOLT (M12X1.75X30-MM)	
	13	1	**8T-4223**	1	WASHER-HARD (13.5X25.5X3-MM THK)	

E-ORDER BY THE CENTIMETER
M-METRIC PART

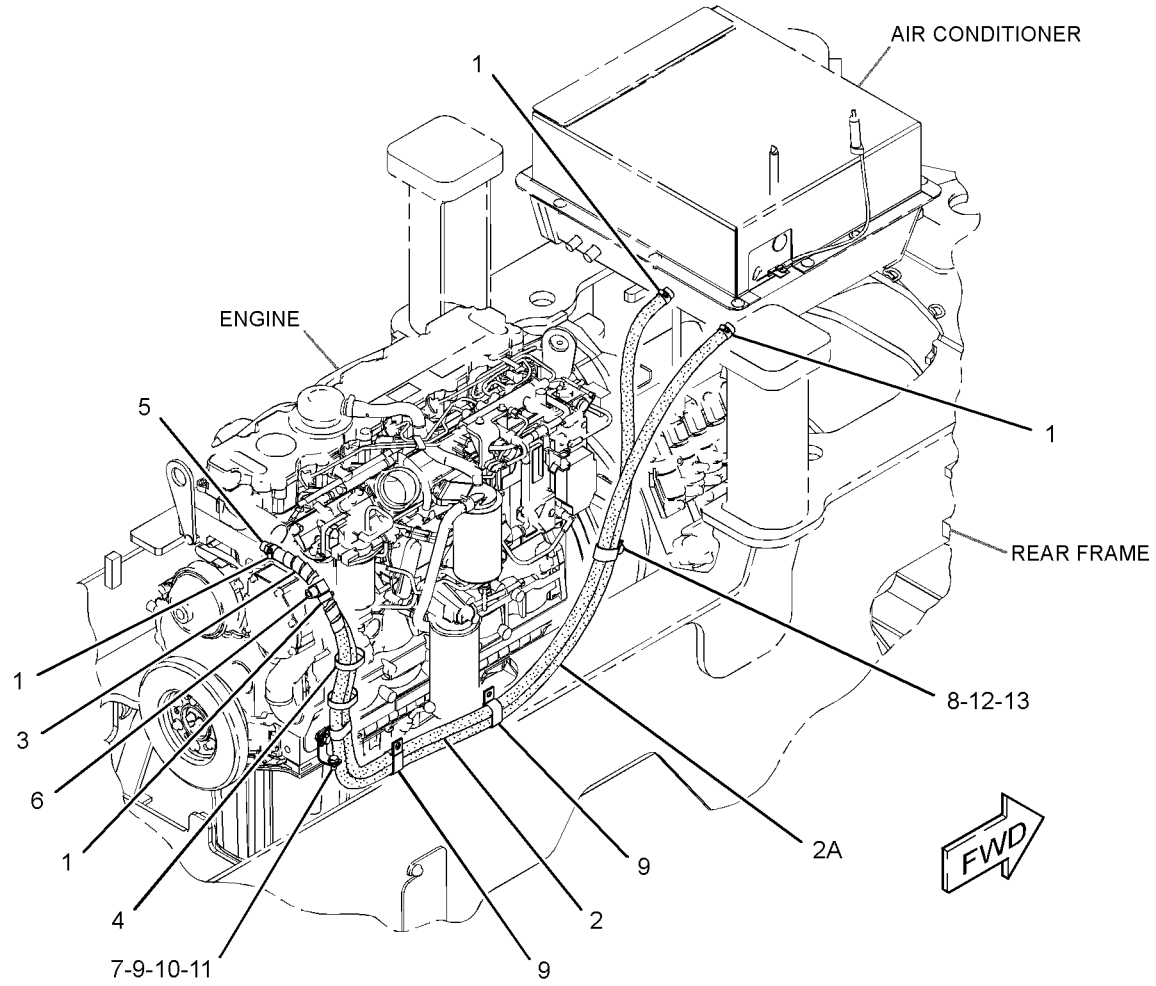

GRAPHIC #1 **<END>** g01398361

OPERATOR STATION

6V-1970 LITERATURE GP

S/N: JRL1-UP

PART OF 372-7772 CHASSIS AR

SMCS-7300, 7400 **i00607038**

NOTE	PART NUMBER	QTY	PART NAME 1 2 3 4 5 6 (PRODUCT LEVEL)	SEE PAGE
	5P-8500	2	KEY	
	2Y-3209	2	SEAL-WIRE	

<END>

OPERATOR STATION

107-4642 MIRROR GP-REAR VIEW—EXTERIOR

S/N: JRL1-UP; RRS1-UP
PART OF 375-8357, 375-8358, 375-8359 DISTRIBUTION AR
AN ATTACHMENT

SMCS-7319 **i00710783**

NOTE	REF NO	GRAPHIC REF	PART NUMBER	QTY	PART NAME 1 2 3 4 5 6 (PRODUCT LEVEL)	SEE PAGE
	1	1	**150-6582**	2	MIRROR AS	
	2	1	**123-6621**	1	BRACKET AS (LH)	
	3	1	**123-6622**	1	BRACKET AS (RH)	
M	4	1	**8T-4189**	4	BOLT (M8X1.25X20-MM)	
	5	1	**8T-4224**	4	WASHER-HARD (8.8X16X2-MM THK)	

M-METRIC PART

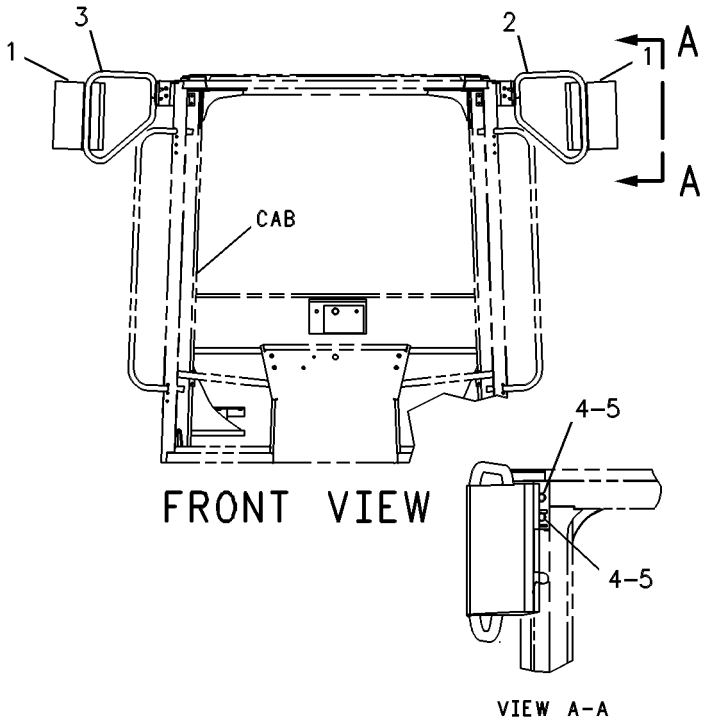

FRONT VIEW

VIEW A-A

GRAPHIC #1 **<END>** g00307313

107-4643 MIRROR GP-REAR VIEW–INTERIOR

S/N: JRL1-UP; RRS1-UP
PART OF 375-8357, 375-8358, 375-8359 DISTRIBUTION AR
AN ATTACHMENT

SMCS-7319 **i02857416**

NOTE	REF NO	GRAPHIC REF	PART NUMBER	QTY	PART NAME 1 2 3 4 5 6 (PRODUCT LEVEL)	SEE PAGE
	1	1	**5P-6872**	2	MIRROR AS	
	2	1	**114-3956**	2	PLATE	
M	3	1	**5C-9553**	4	BOLT (M6X1X16-MM)	
	4	1	**8T-4205**	4	WASHER-HARD (7.2X14.5X2-MM THK)	
	5	1	**3K-6060**	2	LOCKNUT (3/8-16-THD)	
	6	1	**235-4546**	2	NUT-JAM (3/8-16-THD)	
F			**9X-8256**	4	WASHER (6.6X12X2-MM THK)	
FM			**5C-2890**	2	NUT (M6X1-THD)	
FM			**5C-9553**	2	BOLT (M6X1X16-MM)	

F-NOT SHOWN
M-METRIC PART

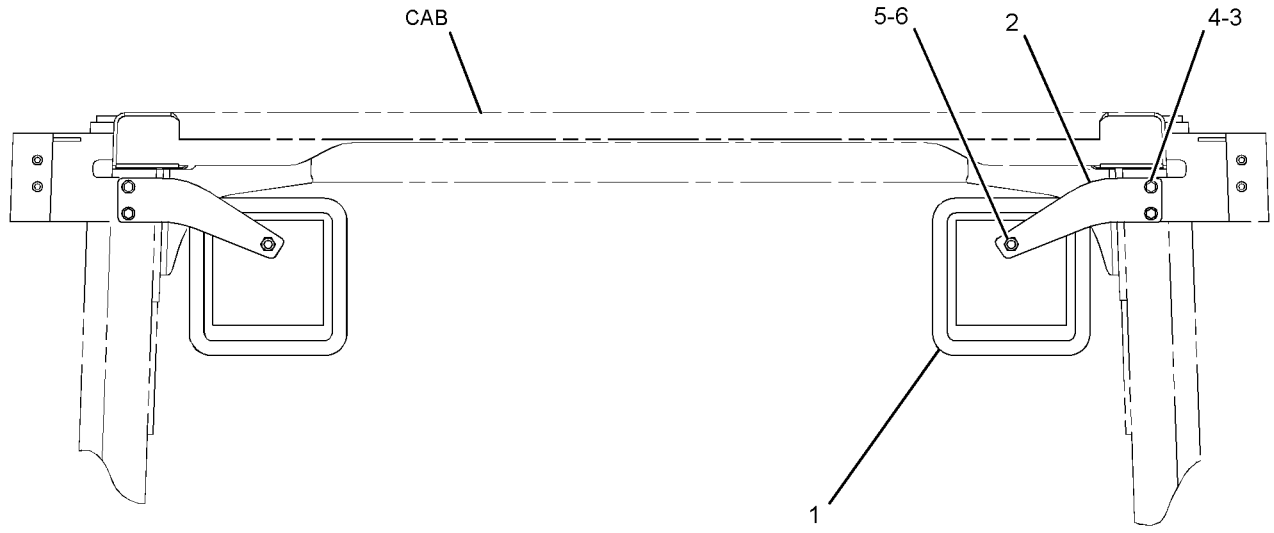

FRONT VIEW

GRAPHIC #1 **<END>** g01427257

OPERATOR STATION

155-5783 MOTOR GP-WINDOW WIPER–FRONT

S/N: JRL1-UP; RRS1-UP
24-VOLT
PART OF 107-4628, 146-6908 WIPER GP-WINDOW
AN ATTACHMENT

SMCS-7305 **i03590501**

NOTE	REF NO	GRAPHIC REF	PART NUMBER	QTY	PART NAME 1 2 3 4 5 6 (PRODUCT LEVEL)	SEE PAGE
	1	1	**135-0611**	1	MOTOR GP-WINDOW WIPER (24-VOLT, 2-SPEED)	
		1	**8T-8737**	1	PLUG-SEAL	
		1	**102-8805**	1	KIT-RECEPTACLE (6-PIN)	
					(KIT INCLUDES RECEPTACLE AS & WEDGE)	
		1	**186-3735**	5	PIN-CONNECTOR (16-GA TO 18-GA)	
	2	1	**206-5823**	1	CAP (MOTOR)	

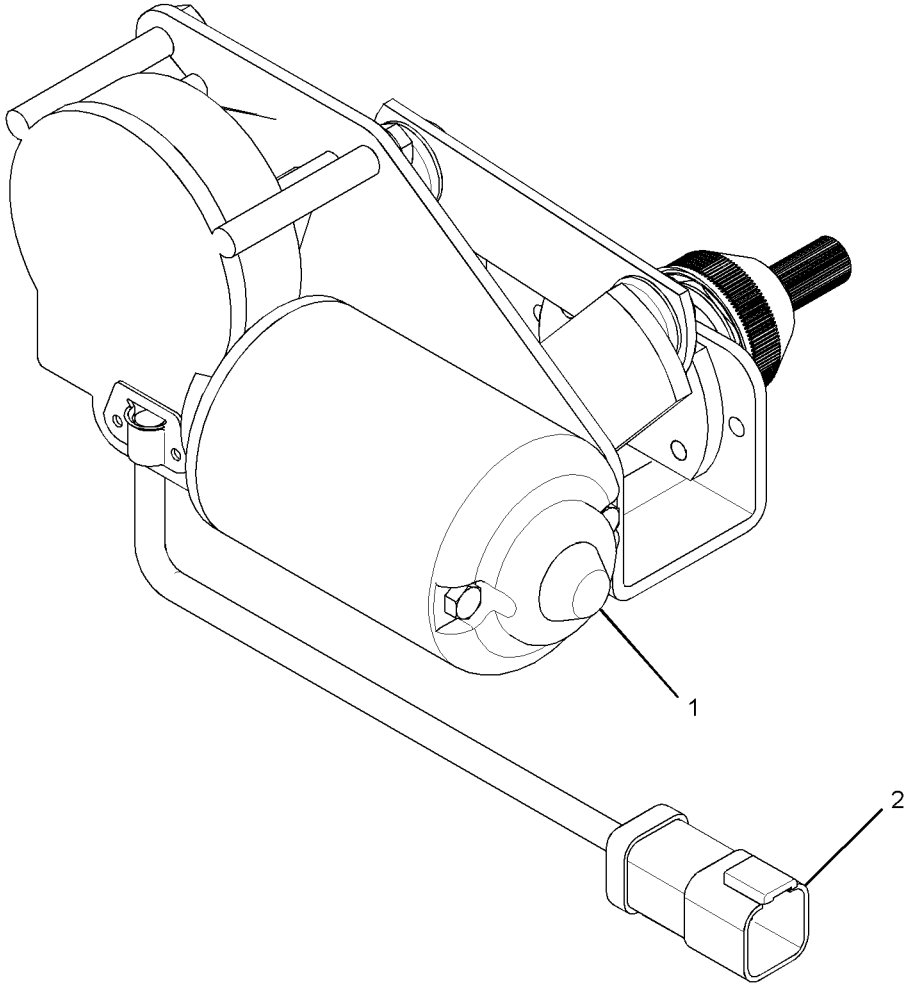

GRAPHIC #1 **<END>** g01908073

155-5784 MOTOR GP-WINDOW WIPER–REAR

S/N: JRL1-UP; RRS1-UP
24-VOLT
PART OF 107-4628 WIPER GP-WINDOW
AN ATTACHMENT

SMCS-7305 **i03009970**

NOTE	REF NO	GRAPHIC REF	PART NUMBER	QTY	PART NAME 1 2 3 4 5 6 (PRODUCT LEVEL)	SEE PAGE
C	1	1	**135-0611**	1	MOTOR GP-WINDOW WIPER (24-VOLT, 2-SPEED)	
		1	**102-8805**	1	KIT-RECEPTACLE (6-PIN)	
					(INCLUDES RECEPTACLE AS & WEDGE)	
		1	**8T-8737**	1	PLUG-SEAL	
		1	**186-3735**	5	PIN-CONNECTOR (16-GA TO 18-GA)	
C	2	1	**206-5823**	1	CAP	

C-CHANGE FROM PREVIOUS TYPE

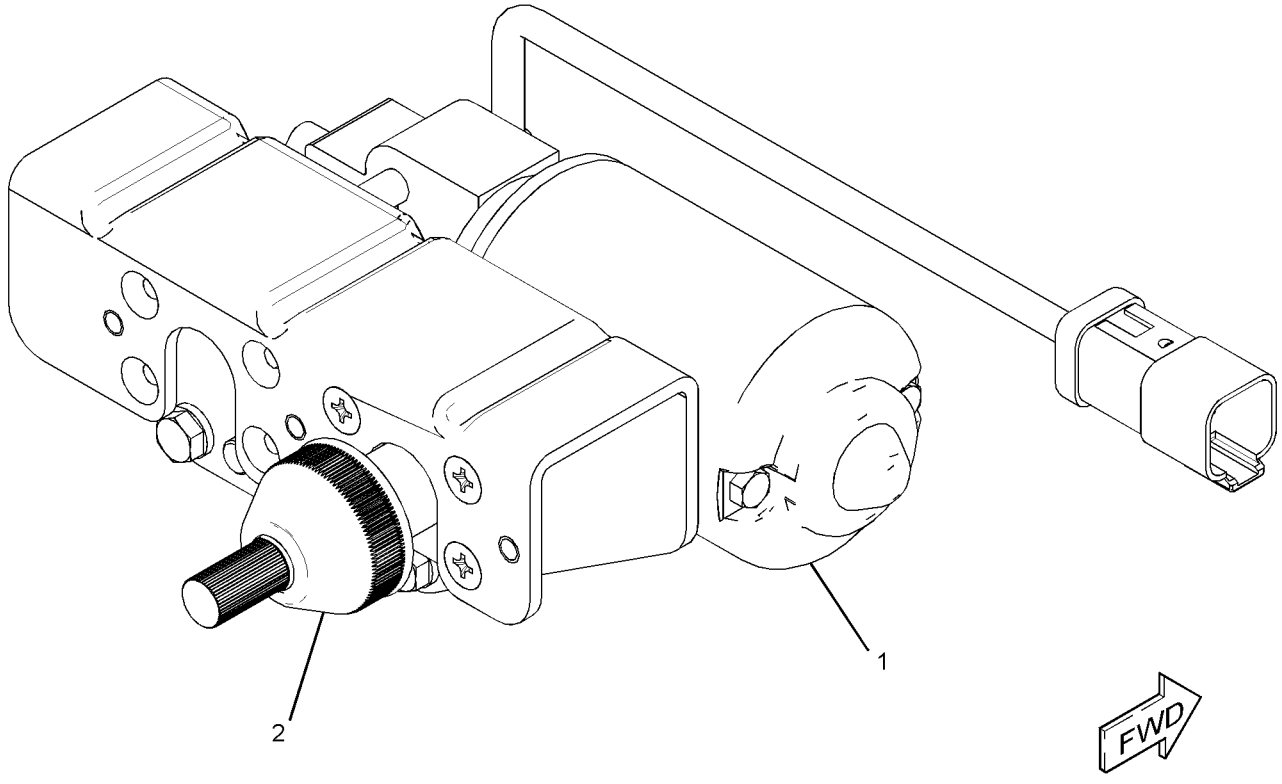

GRAPHIC #1 **<END>** g01423589

OPERATOR STATION

156-4271 MOUNTING GP-CAB

S/N: JRL1-UP; RRS1-UP

PART OF 310-9954, 311-8700 OPERATOR AR, 290-8186 OPERATOR AR-OPEN ROPS AN ATTACHMENT

SMCS-7301 **i01215188**

NOTE	REF NO	GRAPHIC REF	PART NUMBER	QTY	PART NAME 1 2 3 4 5 6 (PRODUCT LEVEL)	SEE PAGE
	1	1	**6Y-2525**	4	SLEEVE	
	2	1	**8Y-7119**	4	WASHER (26X144X12-MM THK)	
	3	1	**9W-9940**	4	MOUNT AS	
M	4	1	**7X-2567**	4	BOLT (M24X3X160-MM)	
M	5	1	**8T-4001**	2	NUT (M24X3-THD)	
	6	1	**8T-4167**	6	WASHER-HARD (26X44X4-MM THK)	

M-METRIC PART

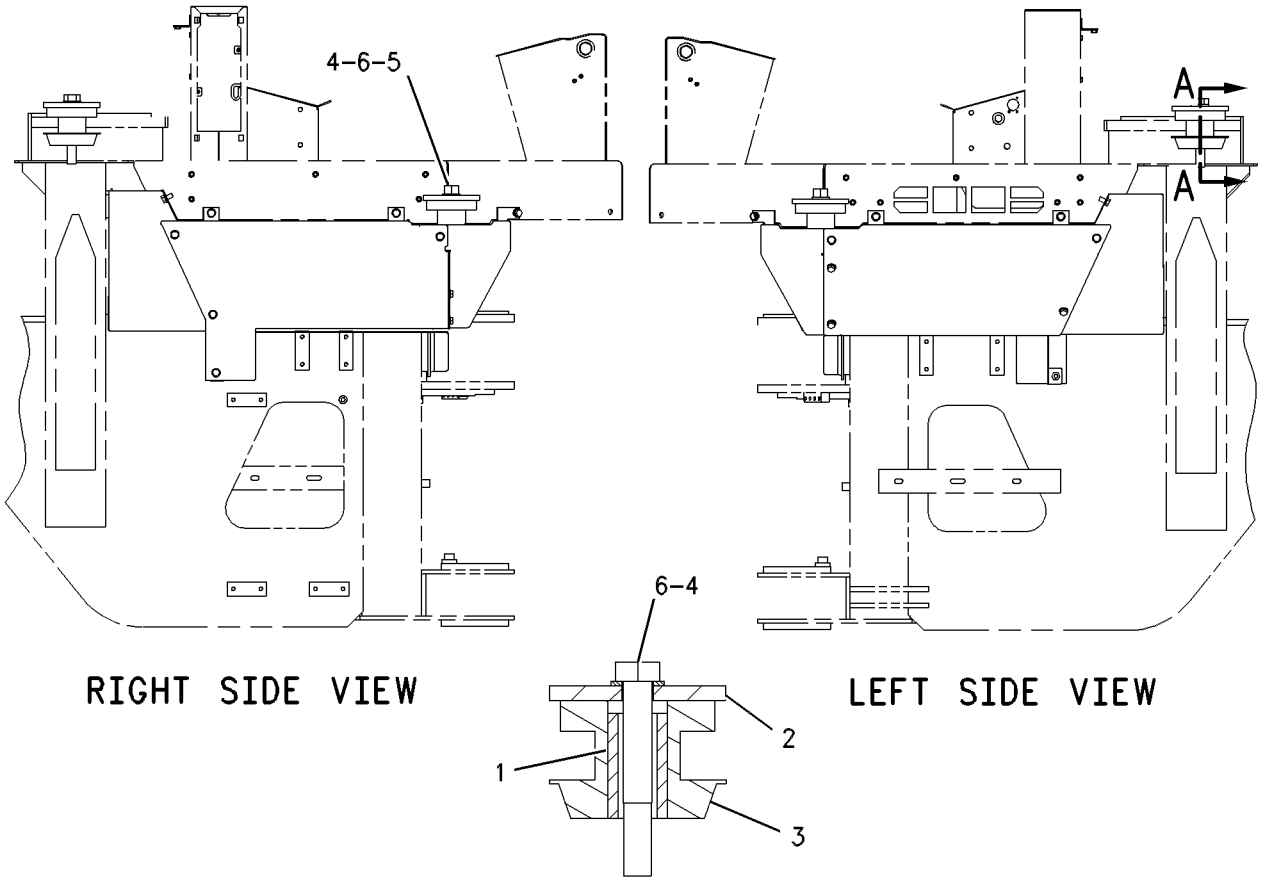

GRAPHIC #1 **<END>** g00648781

OPERATOR STATION

310-9954 OPERATOR AR

S/N: JRL1-UP; RRS1-UP
PART OF 315-4654 OPERATOR AR
AN ATTACHMENT

SMCS-7301 **i03084763**

NOTE	PART NUMBER	QTY	PART NAME 1 2 3 4 5 6 (PRODUCT LEVEL)	SEE PAGE
Y	*310-9953*	1	CAB AR	468
Y	*291-3750*	1	CONSOLE GP-OPERATOR	481
Y	*310-9947*	1	LINER GP-CAB	518
Y	*156-4271*	1	MOUNTING GP-CAB	528
Y	*198-8964*	1	PANEL GP-ACCESS (HOOD, CAB HEATER)	278
Y	*290-8169*	1	PANEL GP-INSTRUMENT (FRONT)	531
Y	*311-8502*	1	PANEL GP-INSTRUMENT	543
Y	*173-4311*	1	WASHER GP-WINDOW	565
Y	*311-8501*	1	WIRING GP-CAB	156
Y-SEPARATE ILLUSTRATION				

<END>

311-8700 OPERATOR AR

S/N: JRL1-UP; RRS1-UP
PART OF 310-9955 CAB AR-ENCLOSED ROPS
AN ATTACHMENT

SMCS-7301 **i03084722**

NOTE	PART NUMBER	QTY	PART NAME 1 2 3 4 5 6 (PRODUCT LEVEL)	SEE PAGE
Y	*311-8699*	1	CAB AR	468
Y	*291-3750*	1	CONSOLE GP-OPERATOR	481
Y	*317-0769*	1	FLOOR MAT GP	508
Y	*156-4271*	1	MOUNTING GP-CAB	528
Y	*290-8169*	1	PANEL GP-INSTRUMENT (FRONT)	531
Y	*290-8171*	1	PANEL GP-INSTRUMENT (ENCLOSED ROPS)	533
Y	*131-1236*	1	WASHER GP-WINDOW	563
Y	*289-8903*	1	WIRING GP-CAB (ENCLOSED ROPS)	150
Y-SEPARATE ILLUSTRATION				

<END>

315-4654 OPERATOR AR

S/N: JRL1-UP; RRS1-UP
PART OF 375-8358 DISTRIBUTION AR
AN ATTACHMENT

SMCS-7301 **i03084762**

NOTE	PART NUMBER	QTY	PART NAME 1 2 3 4 5 6 (PRODUCT LEVEL)	SEE PAGE
Y	*259-4137*	1	ALTERNATOR GP-CHARGING (24-VOLT, 95-AMPERE)	99
Y	*310-9954*	1	OPERATOR AR	529
Y	*174-2215*	1	SKIRT GP-CAB	559
Y-SEPARATE ILLUSTRATION				

<END>

OPERATOR STATION

317-0770 OPERATOR AR

S/N: JRL1-UP; RRS1-UP
PART OF 311-8699 CAB AR
AN ATTACHMENT

SMCS-7301 **i03038580**

NOTE	PART NUMBER	QTY	PART NAME 1 2 3 4 5 6 (PRODUCT LEVEL)	SEE PAGE
Y	*168-7000*	1	CONTROL GP-PARKING BRAKE (HANDLE)	284
Y	*190-4635*	1	CONTROL GP-STEERING	489
Y	*190-4690*	1	CONTROL GP-TRANSMISSION	491
Y	*207-5948*	1	DEFROSTER GP-CAB	495
Y	*107-4630*	1	DUCT GP-CAB AIR	502
Y	*119-4769*	1	FILTER GP-CAB AIR	504
Y	*241-8564*	1	LINER GP-CAB (UPPER)	516
Y	*317-0720*	1	PEDAL GP-GOVERNOR	548
Y	*107-6133*	1	SWITCH GP-WIPER (INTERMITTENT)	145
Y	*107-4628*	1	WIPER GP-WINDOW	566
	118-0626	1	FILM-WINDOW (FRONT)	

Y-SEPARATE ILLUSTRATION

<END>

290-8186 OPERATOR AR-OPEN ROPS

S/N: JRL1-UP; RRS1-UP
PART OF 290-8189 CANOPY AR-OPEN ROPS
AN ATTACHMENT

SMCS-7323 **i03043762**

NOTE	PART NUMBER	QTY	PART NAME 1 2 3 4 5 6 (PRODUCT LEVEL)	SEE PAGE
Y	*290-8182*	1	CANOPY AR-OPEN ROPS	474
Y	*291-3750*	1	CONSOLE GP-OPERATOR	481
Y	*317-0692*	1	FLOOR MAT GP	505
Y	*156-4271*	1	MOUNTING GP-CAB	528
Y	*198-8964*	1	PANEL GP-ACCESS (HOOD, CAB HEATER)	278
Y	*290-8169*	1	PANEL GP-INSTRUMENT (FRONT)	531
Y	*290-8174*	1	PANEL GP-INSTRUMENT (OPEN ROPS)	538
Y	*289-8904*	1	WIRING GP-CAB (OPEN ROPS)	153

Y-SEPARATE ILLUSTRATION

<END>

317-0771 OPERATOR GP

S/N: JRL1-UP; RRS1-UP
PART OF 290-8182 CANOPY AR-OPEN ROPS
AN ATTACHMENT

SMCS-7300, 7301 **i03038542**

NOTE	PART NUMBER	QTY	PART NAME 1 2 3 4 5 6 (PRODUCT LEVEL)	SEE PAGE
Y	*323-4078*	1	CONTROL GP-PARKING BRAKE	288
Y	*190-4635*	1	CONTROL GP-STEERING	489
Y	*190-4690*	1	CONTROL GP-TRANSMISSION	491
Y	*118-0809*	1	DASH GP	494
Y	*317-0720*	1	PEDAL GP-GOVERNOR	548
Y	*118-0808*	1	SUPPORT GP-SEAT	560

Y-SEPARATE ILLUSTRATION

<END>

OPERATOR STATION

290-8169 PANEL GP-INSTRUMENT–FRONT

S/N: JRL1-UP; RRS1-UP

PART OF 310-9954, 311-8700 OPERATOR AR, 290-8186 OPERATOR AR-OPEN ROPS AN ATTACHMENT

SMCS-7451 **i03016535**

NOTE	REF NO	GRAPHIC REF	PART NUMBER	QTY	PART NAME 1 2 3 4 5 6 (PRODUCT LEVEL)	SEE PAGE
	1	1	**110-7887**	1	SWITCH AS-START (KEY) (ENGINE)	
		1	**7T-6799**	1	NUT-MOUNTING (1-32-THD)	
		1	**102-8804**	1	KIT-RECEPTACLE (4-PIN)	
					(INCLUDES RECEPTACLE AS & WEDGE)	
		1	**186-3735**	4	PIN-CONNECTOR (16-GA TO 18-GA)	
	2	1	**204-6101**	6	WASHER-HARD (5.3X10X1-MM THK)	
	3	1	**129-7184**	1	FILM-INSTRUCTION (ENGINE START)	
B	4	1	**184-5293**	1	PLUG	
	5	1	**185-5629**	1	PLATE AS	
	6	1	**190-4563**	1	PLATE AS	
M		1	**6V-9632**	2	NUT-WELD (M6X1-THD)	
	7	1	**222-0574**	1	FILM-INFORMATION (INSTRUMENT PANEL COVER)	
	8	1	**270-9442**	1	SCREW-TRUSS HEAD (M6X1X20-MM)	
	9	1	**313-2157**	1	MODULE GP-DISPLAY (GAUGE CLUSTER)	
	10	1	**291-0639**	1	PLATE AS	
M		1	**9X-2032**	8	NUT-WELD (M4X0.7-THD)	
	11	1	**291-0640**	1	HOUSING AS-GAUGE	
M	12	1	**129-3178**	2	LOCKNUT (M6X1-THD)	
M	13	1	**5C-2890**	2	NUT (M6X1-THD)	
M	14	1	**5C-8312**	4	NUT (M4X0.7-THD)	
M	15	1	**6V-8490**	2	BOLT (M6X1X25-MM)	
	16	1	**8C-9987**	2	WASHER (8.3X28X2.5-MM THK)	
	17	1	**8T-4205**	4	WASHER-HARD (7.2X14.5X2-MM THK)	
M	18	1	**9X-1046**	6	SCREW (M4X0.7X18-MM)	
M	19	1	**9X-2045**	2	SCREW-TRUSS HEAD (M6X1X20-MM)	
	20	1	**9X-2038**	1	WASHER (7X19X2-MM THK)	
M	21	1	**213-7315**	12	SCREW-TRUSS HEAD (M4X0.7X25-MM)	

B-USE AS REQUIRED
M-METRIC PART

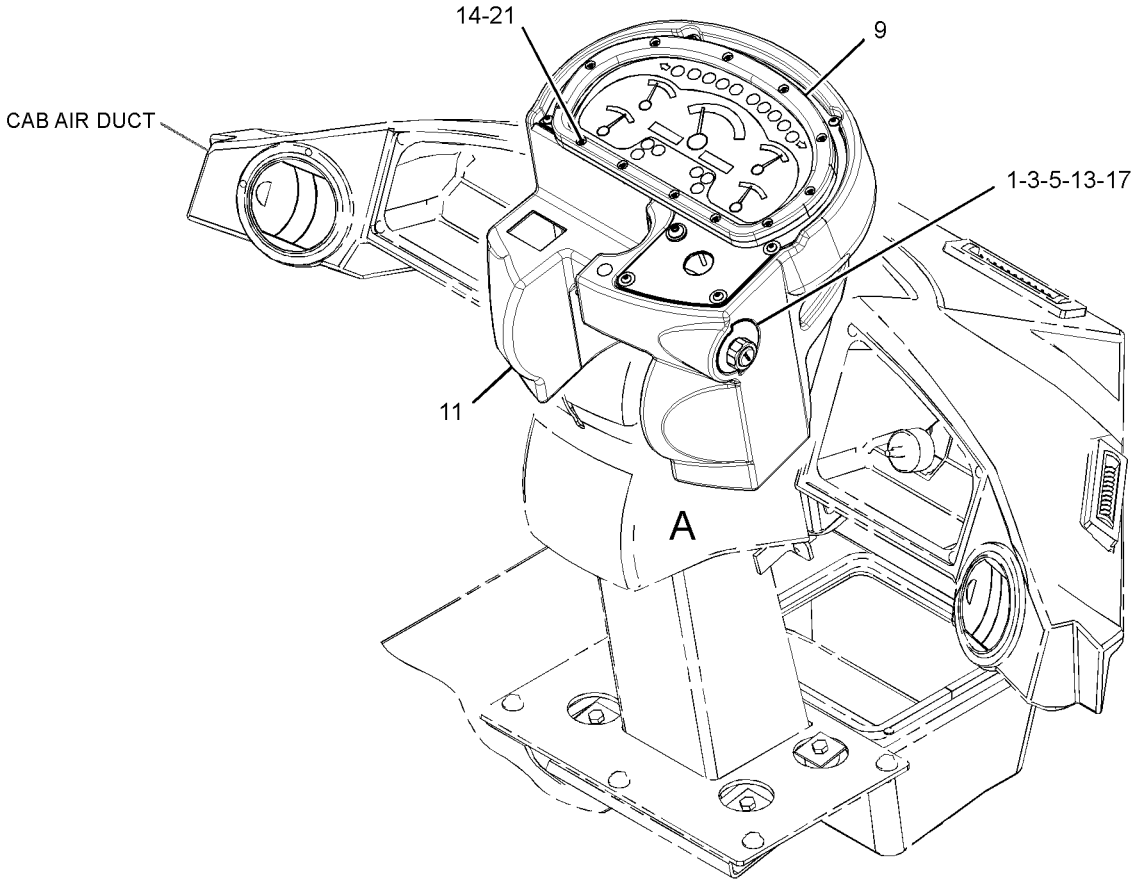

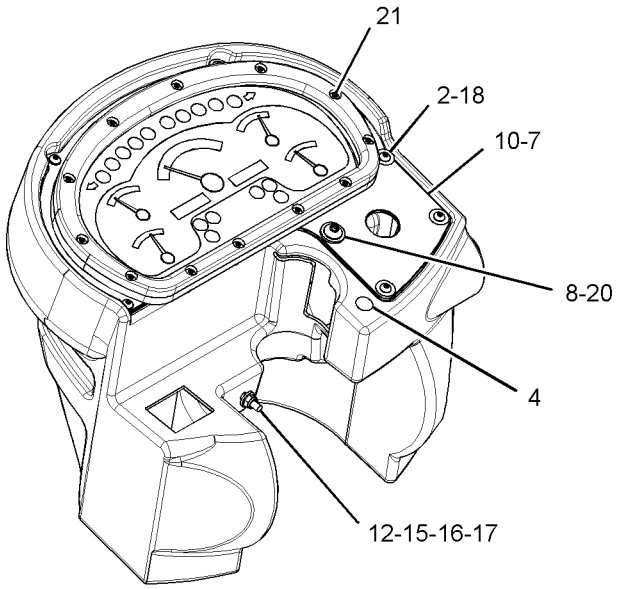

VIEW OF AREA A 90°

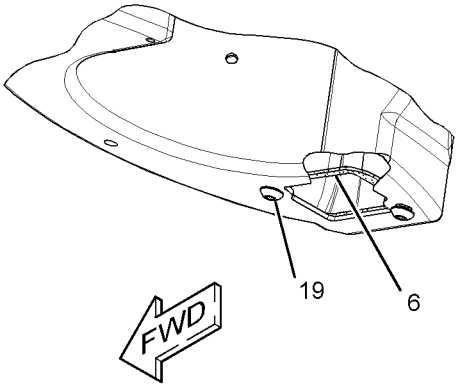

GRAPHIC #1 **<END>** g01406018

OPERATOR STATION

290-8171 PANEL GP-INSTRUMENT

S/N: JRL1-UP; RRS1-UP
PART OF 311-8700 OPERATOR AR
AN ATTACHMENT

SMCS-7451 **i04392929**

NOTE	REF NO	GRAPHIC REF	PART NUMBER	QTY	PART NAME 1 2 3 4 5 6 (PRODUCT LEVEL)	SEE PAGE
D	1	1	**8T-3425**		CHANNEL-TRIM (0.1-M)	
	2	2	**154-5629**	1	ASHTRAY AS	
B	3	2	**2G-5298**	1	WIRE AS	
	4	2	**3E-5239**	1	RELAY AS (24-VOLT) (FRONT FLOODLIGHTS)	
	5	2	**6Y-6584**	1	STRAP AS-GROUND	
	6	1	**7K-1181**	42	STRAP-CABLE	
	7	1	**105-8034**	1	SWITCH AS-LIMIT (BRAKE PEDAL)	
	8	2	**107-6013**	1	SEAL	
	9	2	**107-6021**	1	HOUSING AS	
	10	2	**110-6109**	1	KNOB-CONTROL (CONTROL PANEL SWITCHES)	
	11	2	**114-3951**	1	PLATE	
	12	2	**115-1748**	1	LAMP (24-VOLT, 3-WATT) (ACTION LIGHT)	
	13	2	**116-7471**	1	PULLER-MINIFUSE	
	14	2	**117-3787**	4	KNOB (COVER FASTENERS)	
	15	2	**117-3788**	4	RECEPTACLE	
	16	2	**117-3789**	4	RETAINER	
	17	1	**118-7362**	1	GROMMET-SPLIT	
	18	2	**148-5689**	1	GROMMET-SPLIT	
	19	2	**158-5089**	1	RELAY AS (24-VOLT) (ALARM)	
B	20	2	**165-0311**	7	PLUG	
	21	1	**180-9900**	1	CAP AS	
		1	**5P-7958**	1	SLEEVE-CABLE SPLICE	
		1	**8C-6354**	1	CAP-RECEPTACLE	
		1	**179-9392**	1	LANYARD	
	22	2	**195-0916**	1	SWITCH AS-ROCKER (THROTTLE LOCK SET, RESUME)	
		2	**111-7899**	1	GASKET	
	23	2	**195-0917**	1	SWITCH AS-ROCKER (THROTTLE LOCK ON/OFF)	
	24	2	**195-0921**	1	SWITCH AS-ROCKER (KICKOUT ON/OFF)	
		2	**111-7899**	1	GASKET	
	25	1	**203-9007**	1	NUT (1-1/2-18-THD)	
	26	1	**206-1345**	2	STRAP-CABLE	
	27	2	**236-4232**	1	PLATE AS	
	28	2	**236-4234**	1	SWITCH AS-ROCKER (BLOWER FAN SPEED)	
		1	**111-7899**	1	GASKET	
	29	1	**238-4864**	1	BRACKET AS	
M		1	**159-9539**	1	NUT-WELD (M6X1-THD)	
Y	30	2	**241-8368**	1	SWITCH GP-MAGNETIC (24-VOLT) (MAIN RELAY)	143
	31	1	**245-9088**	1	BUMPER	
	32	2	**252-4575**	1	FILM-IDENTIFICATION (CONSOLE, RH)	
	33	2	**266-7620**	1	SWITCH AS-ROCKER (HYDRAULIC LOCKOUT)	
		2	**111-7899**	1	GASKET	
	34	1	**270-2679**	1	LOCKWASHER	
	35	1	**289-9171**	1	HARNESS AS-CAB	
		1	**116-4159**	1	BASE	
		1	**112-9609**	1	BLOCK-MICRORELAY	
		1	**124-9636**	2	BLOCK-MINIFUSE	
		1	**123-7615**	1	CONNECTOR	
		1	**113-8490**	19	FUSE (10-AMPERE)	
		1	**113-8491**	6	FUSE (15-AMPERE)	
		1	**113-8492**	3	FUSE (20-AMPERE)	
		1	**113-8493**	2	FUSE (25-AMPERE)	
		1	**111-6795**	1	HOUSING-RELAY	
		1	**112-9610**	2	LOCK-MICRORELAY	
		1	**124-9637**	2	LOCK-MINIFUSE	
		1	**111-6816**	1	LOCK	

OPERATOR STATION

290-8171 **PANEL GP-INSTRUMENT** *(contd.)* **i04392929**

NOTE	REF NO	GRAPHIC REF	PART NUMBER	QTY	PART NAME 1 2 3 4 5 6 (PRODUCT LEVEL)	SEE PAGE
		1	**9W-0852**	3	PIN-CONNECTOR (14-GA TO 16-GA)	
		1	**8N-1546**	1	PIN-CONNECTOR (6-GA)	
		1	**7X-6222**	1	PLUG AS-CONNECTOR (24-PIN)	
M		1	**3E-8558**	1	BOLT (M5X0.8X39.37-MM)	
		1	**3E-4367**	1	RING-RETAINING	
		1	**9X-3265**	2	SEAL-CONNECTOR (24-PIN)	
		1	**9X-1054**	2	PLUG AS-CONNECTOR (4-PIN)	
		1	**8T-8737**	157	PLUG-SEAL	
		1	**102-8802**	8	KIT-RECEPTACLE (2-PIN)	
		1	**102-8803**	4	KIT-RECEPTACLE (3-PIN)	
		1	**102-8804**	2	KIT-RECEPTACLE (4-PIN)	
			102-8806	2	KIT-RECEPTACLE (8-PIN)	
		1	**102-8801**	3	KIT-RECEPTACLE (12-PIN)	
		1	**102-8805**	2	KIT-RECEPTACLE (6-PIN)	
					(EACH RECEPTACLE KIT INCLUDES RECEPTACLE AS & WEDGE)	
		1	**127-5484**	1	RECEPTACLE AS-CONNECTOR (1-PIN)	
		1	**9X-3402**	97	SOCKET-CONNECTOR (16-GA TO 18-GA)	
		1	**9W-0844**	19	SOCKET-CONNECTOR (14-GA TO 16-GA)	
		1	**113-5183**	1	SOCKET-LAMP	
		1	**3S-2093**	3	STRAP-CABLE	
		1	**8L-8413**	74	STRAP-CABLE	
		1	**189-3158**	3	SUPPRESSOR-ARC	
		1	*128-4168*	3	TERMINAL AS	
					(EACH INCLUDES)	
		1	**6H-3592**	1	TERMINAL-RING (6-GA TO 8-GA, 5/16-IN SCREW)	
E		1	**6V-9023**		TUBE-HEAT SHRINK (12.7-MM DIA) (4-CM)	
		1	**2L-8069**	1	TERMINAL-RING (2-GA TO 10-GA, 3/8-IN SCREW)	
		1	**2L-8079**	3	TERMINAL-RING (14-GA TO 16-GA, 3/8-IN SCREW)	
		1	**6V-0491**	2	TERMINAL-BLADE (14-GA TO 18-GA)	
		1	**091-2436**	59	TERMINAL-BLADE (18-GA TO 22-GA)	
		1	**104-1995**	14	TERMINAL-BLADE (14-GA TO 18-GA)	
		1	**112-9611**	7	TERMINAL-BLADE	
		1	**112-9612**	10	TERMINAL-BLADE	
		1	**116-4160**	6	TERMINAL-BLADE (12-GA TO 14-GA)	
		1	**116-4161**	22	TERMINAL-BLADE (16-GA TO 18-GA)	
		1	**113-5100**	4	TERMINAL-BUS	
		1	**127-5460**	3	TERMINAL-BUS	
		1	**113-5184**	2	TERMINAL-RECEPTACLE (16-GA TO 18-GA) (POWER TRAIN)	
		1	**3E-9179**	3	TERMINAL-RECEPTACLE (14-GA TO 18-GA)	
		1	**9X-1056**	4	TERMINAL-RECEPTACLE (14-GA TO 16-GA)	
		1	**100-5041**	4	TERMINAL-RECEPTACLE (18-GA TO 20-GA)	
		1	**111-6793**	3	TERMINAL-RECEPTACLE	
E		1	**119-3662**		TUBE-HEAT SHRINK (10.85-MM DIA) (59-CM)	
E		1	**125-7874**		TUBE-HEAT SHRINK (5.72-MM DIA) (205-CM)	
E		1	**125-7875**		TUBE-HEAT SHRINK (7.44-MM DIA) (50-CM)	
	36	2	**293-6135**	1	COVER	
	37	2	**295-2665**	1	FILM-IDENTIFICATION (FUSE, RELAY)	
	38	1	**302-2182**	1	BRACKET	
	39	2	**170-9360**	1	GROMMET	
	40	2	**204-6101**	4	WASHER-HARD (5.3X10X1-MM THK)	
	41	1	**3S-2093**	9	STRAP-CABLE	
	42	2	**4B-4863**	1	WASHER (4.7X11X1.2-MM THK)	
	43	1	**4P-7581**	1	CLIP	
	44	1,2	**4P-8134**	4	CLIP	
M	45	1	**5C-2890**	1	NUT (M6X1-THD)	
M	46	1	**5C-9553**	1	BOLT (M6X1X16-MM)	

290-8171 **PANEL GP-INSTRUMENT** *(contd.)* **i04392929**

NOTE	REF NO	GRAPHIC REF	PART NUMBER	QTY	PART NAME 1 2 3 4 5 6 (PRODUCT LEVEL)	SEE PAGE
	47	2	**5P-4115**	4	WASHER-HARD (7.2X19X2-MM THK)	
	48	1	**5P-4116**	1	WASHER-HARD (8.8X20.5X2-MM THK)	
M	49	2	**6V-8837**	1	BOLT (M6X1X16-MM)	
	50	1,2	**8T-4121**	4	WASHER-HARD (11X21X2.5-MM THK)	
M	51	2	**8T-4133**	2	NUT (M10X1.5-THD)	
M	52	1	**8T-4137**	2	BOLT (M10X1.5X20-MM)	
M	53	1	**8T-4189**	3	BOLT (M8X1.25X20-MM)	
M	54	1	**8T-4199**	2	BOLT (M8X1.25X12-MM)	
	55	1,2	**8T-4205**	6	WASHER-HARD (7.2X14.5X2-MM THK)	
	56	1	**8T-4224**	4	WASHER-HARD (8.8X16X2-MM THK)	
M	57	2	**8T-9405**	1	BOLT-SOCKET HEAD (M4X0.7X16-MM)	
M	58	2	**9X-1046**	4	SCREW (M4X0.7X18-MM)	
M	59	2	**9X-2042**	5	SCREW-TRUSS HEAD (M6X1X12-MM)	
M	60	2	**9X-2044**	2	SCREW-TRUSS HEAD (M6X1X16-MM)	
M	61	2	**9X-2045**	2	SCREW-TRUSS HEAD (M6X1X20-MM)	
E	62	2	**103-2543**		SEAL (3-CM)	

B-USE AS REQUIRED
D-ORDER BY THE METER
E-ORDER BY THE CENTIMETER
M-METRIC PART
Y-SEPARATE ILLUSTRATION

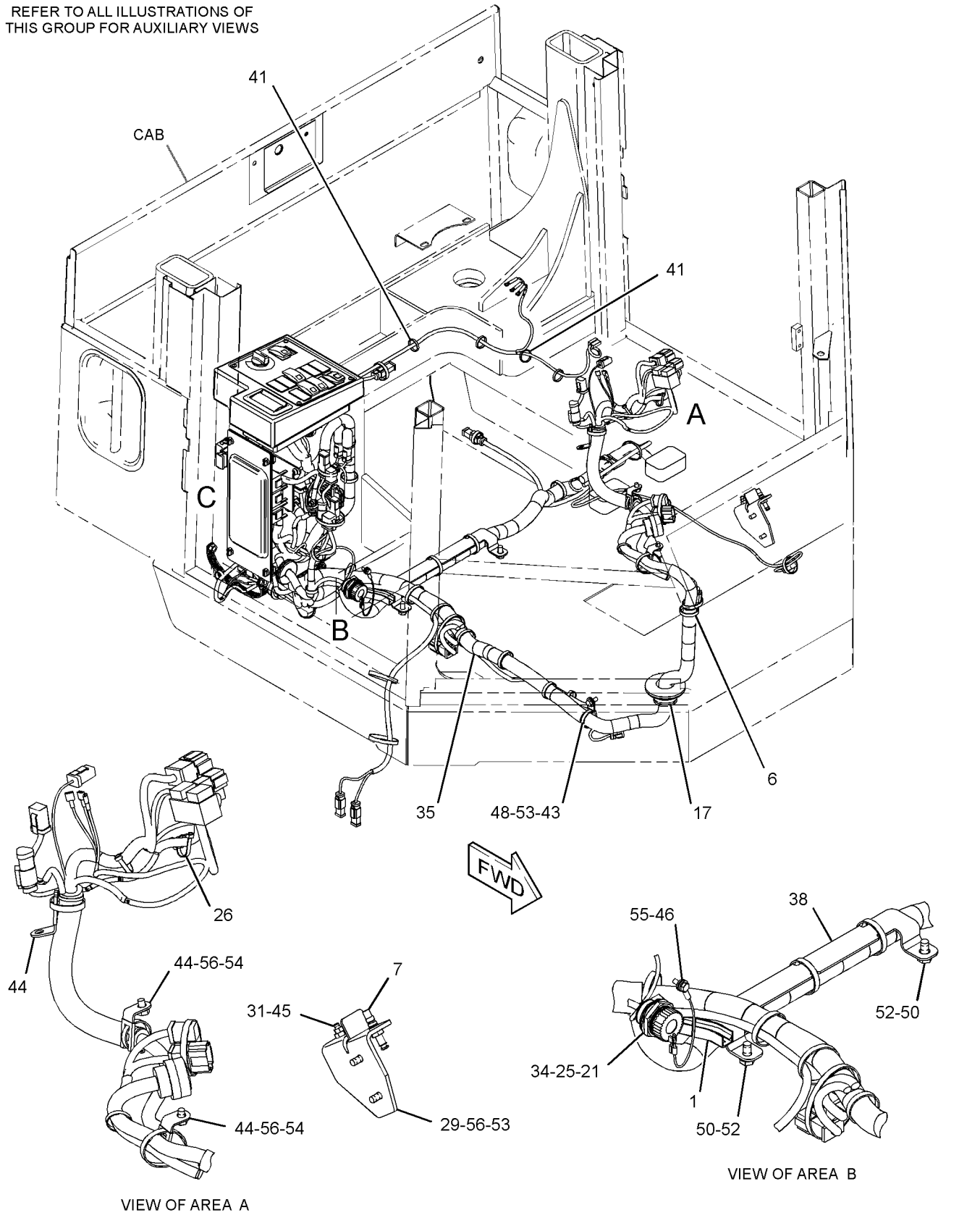

GRAPHIC #1 g02718903

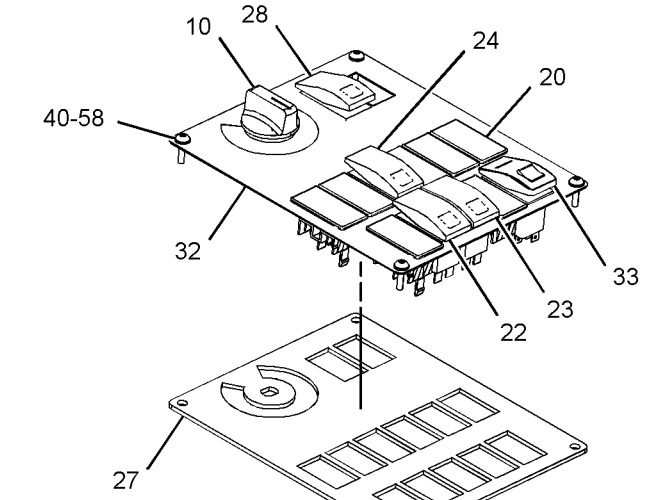

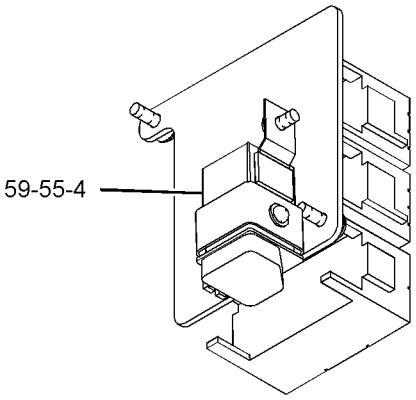

VIEW OF AREA D
(HARNESS REMOVED FOR CLARITY)

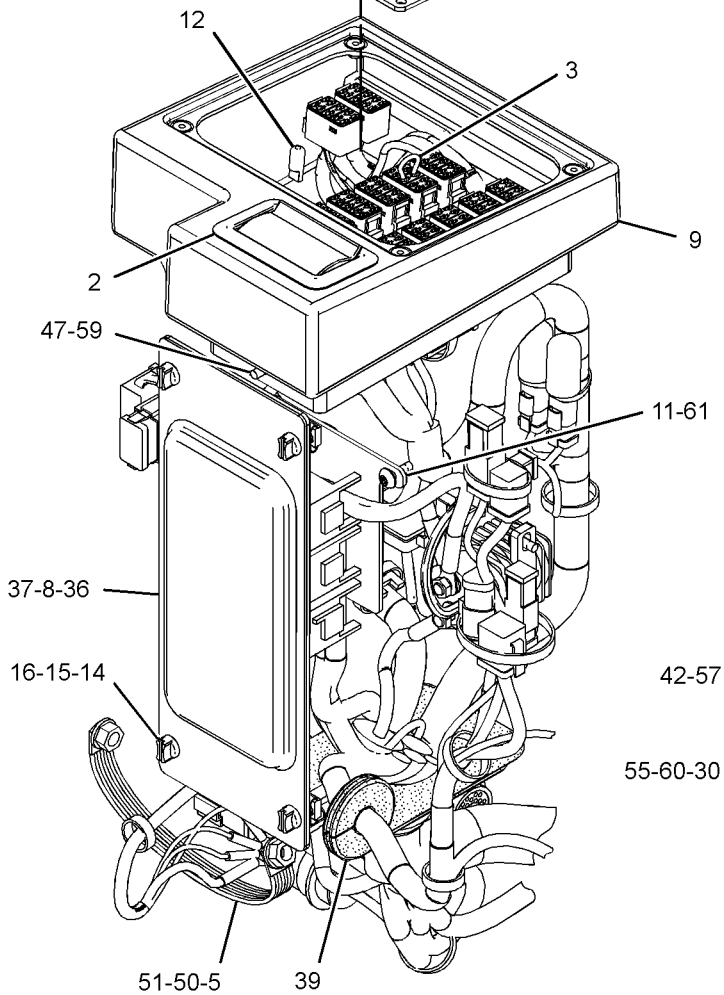

VIEW OF AREA C
(EXPLODED)

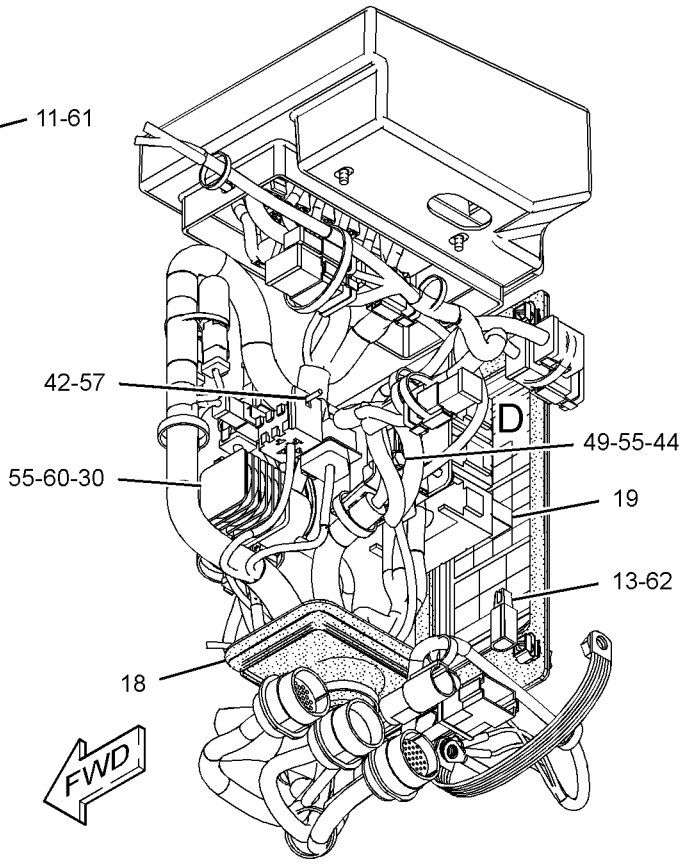

GRAPHIC #2 **<END>** g02718904

OPERATOR STATION

290-8174 PANEL GP-INSTRUMENT—OPEN ROPS

S/N: JRL1-UP; RRS1-UP
PART OF 290-8186 OPERATOR AR-OPEN ROPS
AN ATTACHMENT

SMCS-7451 **i04392879**

NOTE	REF NO	GRAPHIC REF	PART NUMBER	QTY	PART NAME 1 2 3 4 5 6 (PRODUCT LEVEL)	SEE PAGE
E	1	2	**126-8472**		SEAL (14-CM)	
D	2	2	**8T-3425**		CHANNEL-TRIM (0.1-M)	
	3	2	**154-5629**	1	ASHTRAY AS	
B	4	2	**2G-5298**	1	WIRE AS	
	5	2	**3E-5239**	1	RELAY AS (24-VOLT) (FRONT FLOODLIGHTS)	
	6	2	**6Y-6584**	1	STRAP AS-GROUND	
	7	1	**105-8034**	1	SWITCH AS-LIMIT (BRAKE PEDAL)	
	8	2	**107-6013**	1	SEAL	
	9	2	**107-6021**	1	HOUSING AS	
	10	2	**116-7471**	1	PULLER-MINIFUSE	
	11	2	**117-3787**	4	KNOB	
	12	2	**117-3788**	4	RECEPTACLE	
	13	2	**117-3789**	4	RETAINER	
	14	1	**118-7362**	1	GROMMET-SPLIT	
	15	2	**135-2602**	1	FILM-CONTROLS (FUSE, RELAY PANEL)	
	16	2	**148-5689**	1	GROMMET-SPLIT	
	17	2	**158-5089**	1	RELAY AS (24-VOLT) (ALARM)	
	18	2	**160-6520**	1	PLATE	
B	19	2	**165-0311**	7	PLUG	
	20	1	**180-9900**	1	CAP AS	
		1	**5P-7958**	1	SLEEVE-CABLE SPLICE	
		1	**8C-6354**	1	CAP-RECEPTACLE	
		1	**179-9392**	1	LANYARD	
	21	2	**195-0916**	1	SWITCH AS-ROCKER (THROTTLE LOCK SET, RESUME)	
		2	**111-7899**	1	GASKET	
	22	2	**195-0917**	1	SWITCH AS-ROCKER (THROTTLE LOCK ON, OFF)	
	23	2	**195-0921**	1	SWITCH AS-ROCKER (KICKOUT ON, OFF)	
		2	**111-7899**	1	GASKET	
	25	1	**203-9007**	1	NUT (1-1/2-18-THD)	
	26	1	**206-1345**	2	STRAP-CABLE	
	30	2	**236-4232**	1	PLATE AS	
	31	1	**238-4864**	1	BRACKET AS	
M		1	**159-9539**	1	NUT-WELD (M6X1-THD)	
Y	32	2	**241-8368**	1	SWITCH GP-MAGNETIC (24-VOLT) (MAIN RELAY)	143
	33	1	**245-9088**	1	BUMPER	
	34	2	**266-7620**	1	SWITCH AS-ROCKER (HYDRAULIC LOCKOUT)	
		2	**111-7899**	1	GASKET	
	35	1	**270-2679**	1	LOCKWASHER	
	36	1	**289-9171**	1	HARNESS AS-CAB	
		1	**116-4159**	1	BASE	
		1	**112-9609**	1	BLOCK-MICRORELAY	
		1	**124-9636**	2	BLOCK-MINIFUSE	
		1	**123-7615**	1	CONNECTOR	
		1	**228-5856**	12	CONNECTOR	
		1	**113-8490**	19	FUSE (10-AMPERE)	
		1	**113-8491**	6	FUSE (15-AMPERE)	
		1	**113-8492**	3	FUSE (20-AMPERE)	
		1	**113-8493**	2	FUSE (25-AMPERE)	
		1	**111-6795**	1	HOUSING-RELAY	
		1	**112-9610**	2	LOCK-MICRORELAY	
		1	**124-9637**	2	LOCK-MINIFUSE	
		1	**111-6816**	1	LOCK	
		1	**8N-1546**	1	PIN-CONNECTOR (6-GA)	
		1	**9W-0852**	3	PIN-CONNECTOR (14-GA TO 16-GA)	
		1	**9X-3401**	91	PIN-CONNECTOR (16-GA TO 18-GA)	

OPERATOR STATION

290-8174 **PANEL GP-INSTRUMENT** *(contd.)* **i04392879**

NOTE	REF NO	GRAPHIC REF	PART NUMBER	QTY	PART NAME 1 2 3 4 5 6 (PRODUCT LEVEL)	SEE PAGE
		1	**7X-6222**	1	PLUG AS-CONNECTOR (24-PIN)	
M		1	**3E-8558**	1	BOLT (M5X0.8X39.37-MM)	
		1	**3E-4367**	1	RING-RETAINING	
		1	**9X-3265**	2	SEAL-CONNECTOR (24-PIN)	
		1	**9X-1054**	2	PLUG AS-CONNECTOR (4-PIN)	
		1	**147-1445**	1	PLUG AS-CONNECTOR (70-PIN)	
		1	**159-9322**	1	SEAL-O-RING	
		1	**147-1446**	1	PLUG AS-CONNECTOR (70-PIN)	
		1	**159-9322**	1	SEAL-O-RING	
		1	**155-2255**	4	KIT-CONNECTING PLUG (12-PIN)	
		1	**155-2265**	1	KIT-CONNECTING PLUG (8-PIN)	
		1	**155-2260**	7	KIT-CONNECTING PLUG (3-PIN)	
		1	**155-2270**	14	KIT-CONNECTING PLUG (2-PIN)	
		1	**155-2271**	3	KIT-CONNECTING PLUG (4-PIN)	
		1	**155-2274**	5	KIT-CONNECTING PLUG (6-PIN)	
					(EACH PLUG KIT INCLUDES PLUG AS, WEDGE & INTERFACE SEAL)	
		1	*218-3623*	1	PLUG AS-CONNECTOR (2-PIN)	
		1	**180-9339**	4	PIN-CONNECTOR (14-GA TO 18-GA)	
		1	**8T-8737**	8	PLUG-SEAL	
		1	**102-8801**	1	KIT-RECEPTACLE (12-PIN)	
					(INCLUDES RECEPTACLE AS & WEDGE)	
		1	**167-3693**	1	PLUG AS-CONNECTOR (31-PIN)	
		1	**8T-8737**	155	PLUG-SEAL	
		1	**102-8802**	9	KIT-RECEPTACLE (2-PIN)	
		1	**102-8803**	4	KIT-RECEPTACLE (3-PIN)	
		1	**102-8804**	2	KIT-RECEPTACLE (4-PIN)	
		1	**102-8805**	2	KIT-RECEPTACLE (6-PIN)	
		1	**102-8806**	2	KIT-RECEPTACLE (8-PIN)	
		1	**102-8801**	3	KIT-RECEPTACLE (12-PIN)	
					(EACH RECEPTACLE KIT INCLUDES RECEPTACLE AS & WEDGE)	
		1	**127-5484**	1	RECEPTACLE AS-CONNECTOR (1-PIN)	
		1	**134-2540**	1	RESISTOR AS-CONNECTION (3-PIN)	
		1	**167-3692**	1	RECEPTACLE AS-CONNECTOR (31-PIN)	
		1	**197-7259**	1	RECEPTACLE AS-CONNECTOR (19-PIN)	
		1	**225-3861**	1	RECEPTACLE AS (31-PIN)	
		1	**9W-0844**	19	SOCKET-CONNECTOR (14-GA TO 16-GA)	
		1	**9X-3402**	100	SOCKET-CONNECTOR (16-GA TO 18-GA)	
		1	**180-9340**	162	SOCKET-CONNECTOR (14-GA TO 18-GA)	
		1	**113-5183**	1	SOCKET-LAMP	
		1	**3S-2093**	3	STRAP-CABLE	
		1	**8L-8413**	74	STRAP-CABLE	
		1	**189-3158**	3	SUPPRESSOR-ARC	
B		1	**141-8061**		TAPE	
B		1	**1P-0810**		TAPE-ELECTRICAL	
		1	*128-4168*	3	TERMINAL AS	
					(EACH INCLUDES)	
		1	**6H-3592**	1	TERMINAL-RING (6-GA TO 8-GA, 5/16-IN SCREW)	
E		1	**6V-9023**		TUBE-HEAT SHRINK (12.7-MM DIA) (4-CM)	
		1	**2L-8069**	1	TERMINAL-RING (2-GA TO 10-GA, 3/8-IN SCREW)	
		1	**2L-8079**	3	TERMINAL-RING (14-GA TO 16-GA, 3/8-IN SCREW)	
		1	**5P-4571**	3	TERMINAL-BLADE (14-GA TO 16-GA)	
		1	*286-7194*	3	TERMINAL AS	
					(EACH INCLUDES)	
E		1	**125-7874**		TUBE-HEAT SHRINK (5.72-MM DIA) (3-CM)	
		1	**6V-0491**	2	TERMINAL-BLADE (14-GA TO 18-GA)	
		1	**091-2436**	59	TERMINAL-BLADE (18-GA TO 22-GA)	

290-8174 **PANEL GP-INSTRUMENT** *(contd.)* **i04392879**

NOTE	REF NO	GRAPHIC REF	PART NUMBER	QTY	PART NAME 1 2 3 4 5 6 (PRODUCT LEVEL)	SEE PAGE
		1	**104-1995**	14	TERMINAL-BLADE (14-GA TO 18-GA)	
		1	**112-9611**	7	TERMINAL-BLADE	
		1	**112-9612**	10	TERMINAL-BLADE	
		1	**116-4160**	6	TERMINAL-BLADE (12-GA TO 14-GA)	
		1	**116-4161**	22	TERMINAL-BLADE (16-GA TO 18-GA)	
		1	**113-5100**	4	TERMINAL-BUS	
		1	**127-5460**	3	TERMINAL-BUS	
		1	**113-5184**	2	TERMINAL-RECEPTACLE (16-GA TO 18-GA)	
		1	**3E-9179**	3	TERMINAL-RECEPTACLE (14-GA TO 18-GA)	
		1	**9X-1056**	4	TERMINAL-RECEPTACLE (14-GA TO 16-GA)	
		1	**100-5041**	4	TERMINAL-RECEPTACLE (18-GA TO 20-GA)	
		1	**111-6793**	3	TERMINAL-RECEPTACLE	
E		1	**119-3662**		TUBE-HEAT SHRINK (10.85-MM DIA) (59-CM)	
E		1	**125-7874**		TUBE-HEAT SHRINK (5.72-MM DIA) (215-CM)	
E		1	**125-7875**		TUBE-HEAT SHRINK (7.44-MM DIA) (50-CM)	
	37	2	**293-6135**	1	COVER	
	38	2	**295-2665**	1	FILM-IDENTIFICATION (FUSE, RELAY)	
	39	2	**302-2182**	1	BRACKET	
	40	1	**7K-1181**	41	STRAP-CABLE	
	41	2	**170-9360**	1	GROMMET	
	42	2	**204-6101**	4	WASHER-HARD (5.3X10X1-MM THK)	
	43	2	**4B-4863**	1	WASHER (4.7X11X1.2-MM THK)	
	44	1	**4P-7581**	1	CLIP	
	45	1,2	**4P-8134**	4	CLIP	
M	46	1	**5C-2890**	1	NUT (M6X1-THD)	
M	47	1	**5C-9553**	1	BOLT (M6X1X16-MM)	
	48	2	**5P-4115**	4	WASHER-HARD (7.2X19X2-MM THK)	
	49	1	**5P-4116**	1	WASHER-HARD (8.8X20.5X2-MM THK)	
M	50	2	**6V-8837**	1	BOLT (M6X1X16-MM)	
	51	2	**8T-4121**	4	WASHER-HARD (11X21X2.5-MM THK)	
M	52	2	**8T-4133**	2	NUT (M10X1.5-THD)	
M	53	2	**8T-4137**	2	BOLT (M10X1.5X20-MM)	
M	54	1	**8T-4189**	3	BOLT (M8X1.25X20-MM)	
M	56	1	**8T-4199**	2	BOLT (M8X1.25X12-MM)	
	57	1,2	**8T-4205**	6	WASHER-HARD (7.2X14.5X2-MM THK)	
	58	1	**8T-4224**	4	WASHER-HARD (8.8X16X2-MM THK)	
M	59	2	**8T-9405**	1	BOLT-SOCKET HEAD (M4X0.7X16-MM)	
M	60	2	**9X-1046**	4	SCREW (M4X0.7X18-MM)	
M	61	2	**9X-2042**	5	SCREW-TRUSS HEAD (M6X1X12-MM)	
M	62	2	**9X-2044**	2	SCREW-TRUSS HEAD (M6X1X16-MM)	
M	63	2	**9X-2045**	2	SCREW-TRUSS HEAD (M6X1X20-MM)	
E	64	2	**103-2543**		SEAL (3-CM)	
	65	1	**3S-2093**	6	STRAP-CABLE	

B-USE AS REQUIRED
D-ORDER BY THE METER
E-ORDER BY THE CENTIMETER
M-METRIC PART
Y-SEPARATE ILLUSTRATION

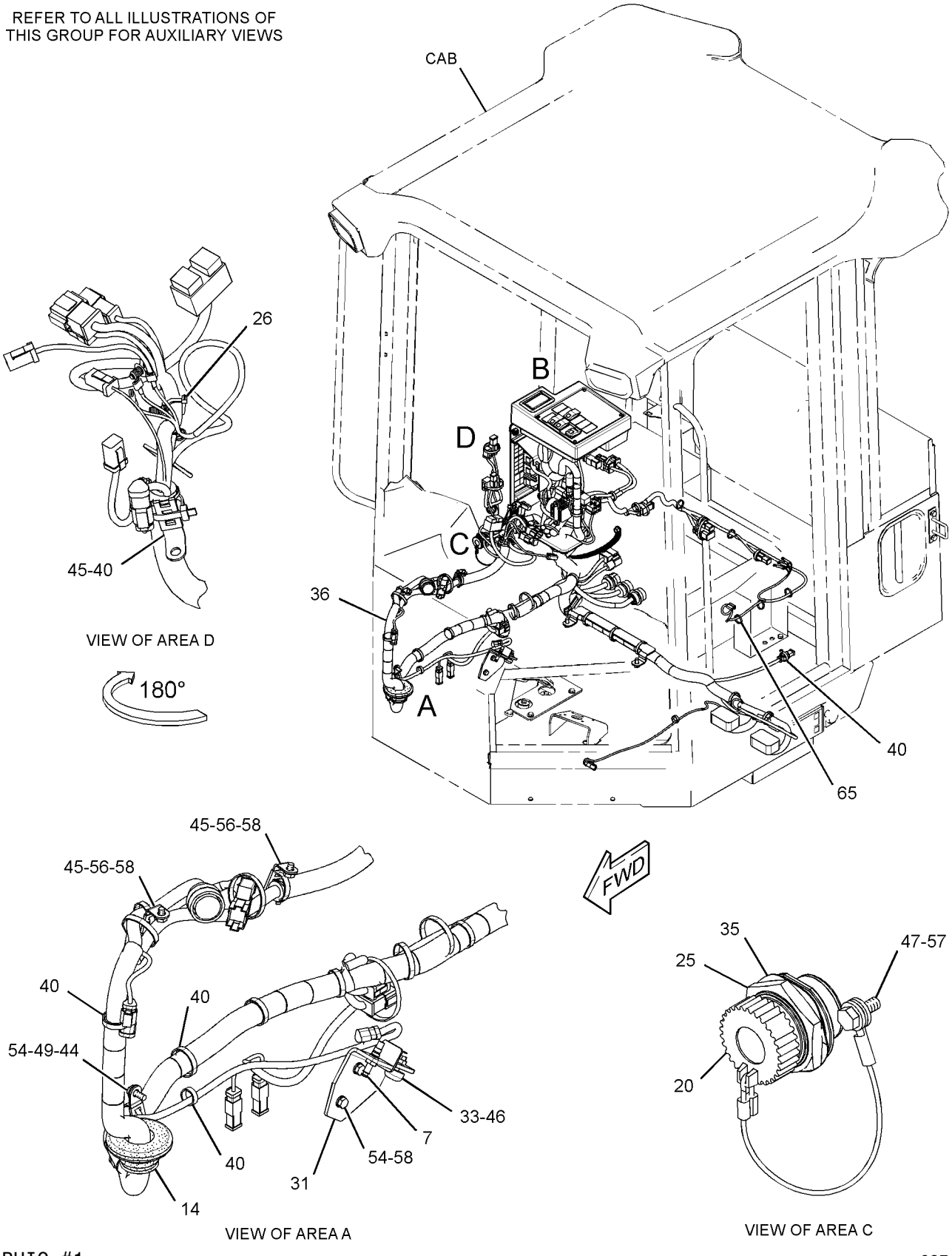

GRAPHIC #1

g02718745

290-8174 **PANEL GP-INSTRUMENT** *(contd.)* **i04392879**

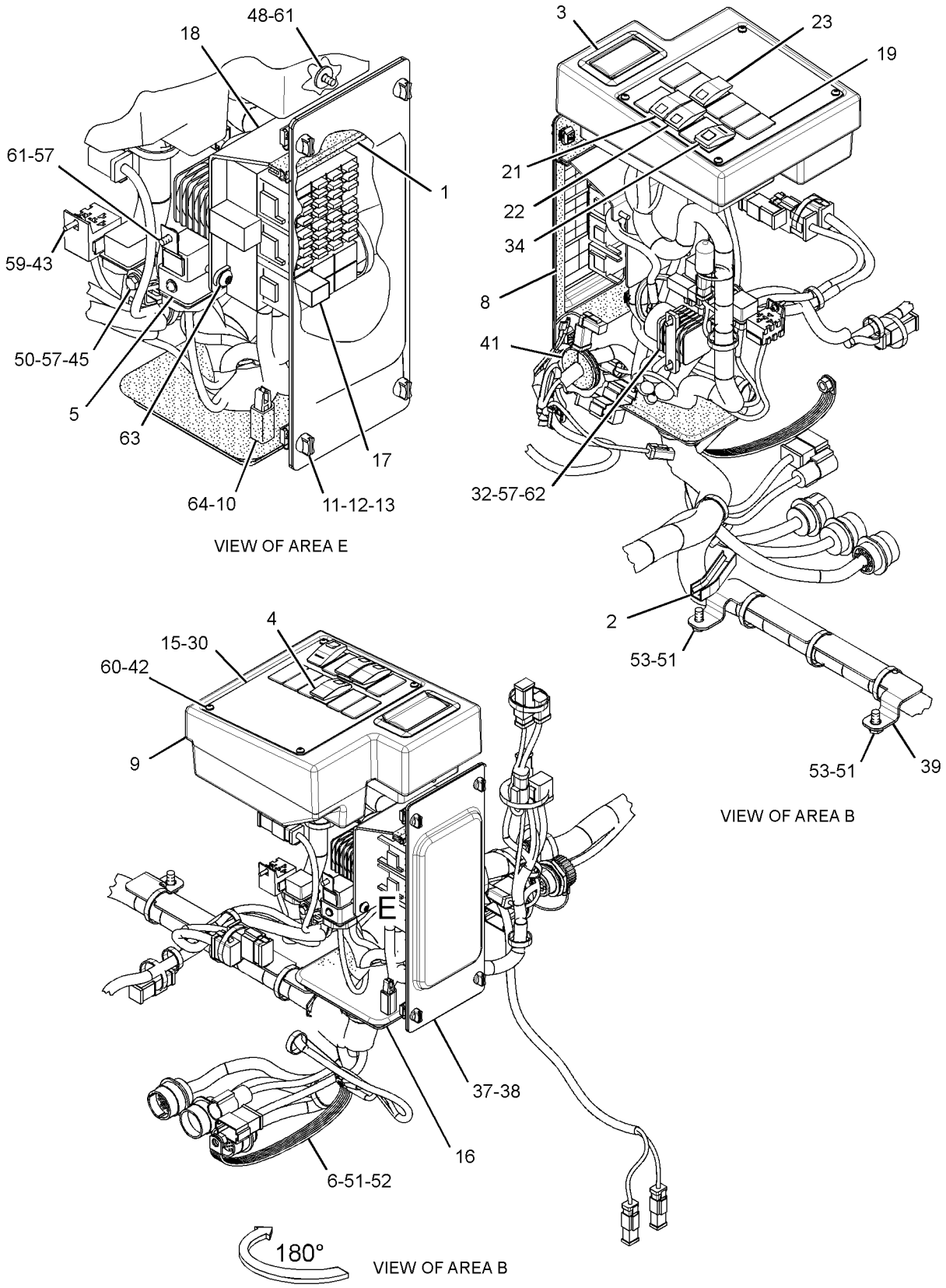

GRAPHIC #2 **<END>** g01628854

OPERATOR STATION

311-8502 PANEL GP-INSTRUMENT

S/N: JRL1-UP; RRS1-UP
PART OF 310-9954 OPERATOR AR
AN ATTACHMENT

SMCS-7451 **i03627193**

NOTE	REF NO	GRAPHIC REF	PART NUMBER	QTY	PART NAME 1 2 3 4 5 6 (PRODUCT LEVEL)	SEE PAGE
E	1	2	**126-8472**		SEAL (14-CM)	
D	2	2	**8T-3425**		CHANNEL-TRIM (0.1-M)	
B	3	2	**2G-5298**	1	WIRE AS	
	4	2	**3E-5239**	1	RELAY AS (24-VOLT) (FRONT FLOODLIGHTS)	
	5	1	**6Y-6584**	1	STRAP AS-GROUND	
B	6	2	**7K-1181**	48	STRAP-CABLE	
	7	2	**105-8034**	1	SWITCH AS-LIMIT (BRAKE PEDAL)	
	8	2	**107-6013**	1	SEAL	
	9	2	**116-7471**	1	PULLER-MINIFUSE	
	10	2	**117-3787**	4	KNOB	
	11	2	**117-3788**	4	RECEPTACLE	
	12	2	**117-3789**	4	RETAINER	
	13	1	**118-7362**	1	GROMMET-SPLIT	
	14	2	**135-2602**	1	FILM-CONTROLS (FUSE, RELAY PANEL)	
	15	2	**148-5689**	1	GROMMET-SPLIT	
	16	2	**158-5089**	1	RELAY AS (24-VOLT) (ALARM)	
	17	2	**160-6520**	1	PLATE	
B	18	2	**165-0311**	7	PLUG	
	19	1	**180-9900**	1	CAP AS	
		1	**5P-7958**	1	SLEEVE-CABLE SPLICE	
		1	**8C-6354**	1	CAP-RECEPTACLE	
		1	**179-9392**	1	LANYARD	
	20	2	**195-0916**	1	SWITCH AS-ROCKER (THROTTLE LOCK SET, RESUME)	
		1	**111-7899**	1	GASKET	
	21	2	**195-0917**	1	SWITCH AS-ROCKER (THROTTLE LOCK ON, OFF)	
	22	2	**195-0921**	1	SWITCH AS-ROCKER (KICKOUT ON, OFF)	
		1	**111-7899**	1	GASKET	
	23	1	**200-6345**	1	MOUNT (DUAL SWIVEL)	
	24	1	**203-9007**	1	NUT (1-1/2-18-THD)	
	25	1	**206-1345**	2	STRAP-CABLE	
	26	2	**211-0052**	3	NUT (1-11/16-18-THD)	
	27	1	**226-2951**	1	BRACKET AS	
	28	1	**226-3378**	1	PLATE AS	
	29	2	**236-4232**	1	PLATE AS	
	30	2	**238-4864**	1	BRACKET AS	
M		2	**159-9539**	1	NUT-WELD (M6X1-THD)	
Y	31	2	**241-8368**	1	SWITCH GP-MAGNETIC (24-VOLT) (MAIN RELAY)	143
	32	2	**245-9088**	1	BUMPER	
	33	2	**266-7620**	1	SWITCH AS-ROCKER (HYDRAULIC LOCKOUT)	
		1	**111-7899**	1	GASKET	
	34	1	**270-2679**	1	LOCKWASHER	
	35	1	**289-9171**	1	HARNESS AS-CAB	
		1	**116-4159**	1	BASE	
		1	**112-9609**	1	BLOCK-MICRORELAY	
		1	**124-9636**	2	BLOCK-MINIFUSE	
		1	**123-7615**	1	CONNECTOR	
		1	**113-8490**	19	FUSE (10-AMPERE)	
		1	**113-8491**	6	FUSE (15-AMPERE)	
		1	**113-8492**	3	FUSE (20-AMPERE)	
		1	**113-8493**	2	FUSE (25-AMPERE)	
		1	**111-6795**	1	HOUSING-RELAY	
		1	**112-9610**	2	LOCK-MICRORELAY	
		1	**124-9637**	2	LOCK-MINIFUSE	
		1	**111-6816**	1	LOCK	
		1	**9W-0852**	3	PIN-CONNECTOR (14-GA TO 16-GA)	

OPERATOR STATION

311-8502 **PANEL GP-INSTRUMENT** *(contd.)* **i03627193**

NOTE	REF NO	GRAPHIC REF	PART NUMBER	QTY	PART NAME 1 2 3 4 5 6 (PRODUCT LEVEL)	SEE PAGE
		1	**8N-1546**	1	PIN-CONNECTOR (6-GA)	
		1	**7X-6222**	1	PLUG AS-CONNECTOR (24-PIN)	
M		1	**3E-8558**	1	BOLT (M5X0.8X39.37-MM)	
		1	**3E-4367**	1	RING-RETAINING	
		1	**9X-3265**	2	SEAL-CONNECTOR (24-PIN)	
		1	**9X-1054**	2	PLUG AS-CONNECTOR (4-PIN)	
		1	**8T-8737**	157	PLUG-SEAL	
		1	**102-8802**	8	KIT-RECEPTACLE (2-PIN)	
		1	**102-8803**	4	KIT-RECEPTACLE (3-PIN)	
		1	**102-8804**	2	KIT-RECEPTACLE (4-PIN)	
			102-8806	2	KIT-RECEPTACLE (8-PIN)	
		1	**102-8801**	3	KIT-RECEPTACLE (12-PIN)	
		1	**102-8805**	2	KIT-RECEPTACLE (6-PIN)	
					(EACH RECEPTACLE KIT INCLUDES RECEPTACLE AS & WEDGE)	
		1	**127-5484**	1	RECEPTACLE AS-CONNECTOR (1-PIN)	
		1	**9X-3402**	97	SOCKET-CONNECTOR (16-GA TO 18-GA)	
		1	**9W-0844**	19	SOCKET-CONNECTOR (14-GA TO 16-GA)	
		1	**113-5183**	1	SOCKET-LAMP	
		1	**3S-2093**	3	STRAP-CABLE	
		1	**8L-8413**	74	STRAP-CABLE	
		1	**189-3158**	3	SUPPRESSOR-ARC	
		1	**128-4168**	3	TERMINAL AS	
					(EACH INCLUDES)	
		1	**6H-3592**	1	TERMINAL-RING (6-GA TO 8-GA, 5/16-IN SCREW)	
E		1	**6V-9023**		TUBE-HEAT SHRINK (12.7-MM DIA) (4-CM)	
		1	**2L-8069**	1	TERMINAL-RING (2-GA TO 10-GA, 3/8-IN SCREW)	
		1	**2L-8079**	3	TERMINAL-RING (14-GA TO 16-GA, 3/8-IN SCREW)	
		1	**6V-0491**	2	TERMINAL-BLADE (14-GA TO 18-GA)	
		1	**091-2436**	59	TERMINAL-BLADE (18-GA TO 22-GA)	
		1	**104-1995**	14	TERMINAL-BLADE (14-GA TO 18-GA)	
		1	**112-9611**	7	TERMINAL-BLADE	
		1	**112-9612**	10	TERMINAL-BLADE	
		1	**116-4160**	6	TERMINAL-BLADE (12-GA TO 14-GA)	
		1	**116-4161**	22	TERMINAL-BLADE (16-GA TO 18-GA)	
		1	**113-5100**	4	TERMINAL-BUS	
		1	**127-5460**	3	TERMINAL-BUS	
		1	**113-5184**	2	TERMINAL-RECEPTACLE (16-GA TO 18-GA) (POWER TRAIN)	
		1	**3E-9179**	3	TERMINAL-RECEPTACLE (14-GA TO 18-GA)	
		1	**9X-1056**	4	TERMINAL-RECEPTACLE (14-GA TO 16-GA)	
		1	**100-5041**	4	TERMINAL-RECEPTACLE (18-GA TO 20-GA)	
		1	**111-6793**	3	TERMINAL-RECEPTACLE	
E		1	**119-3662**		TUBE-HEAT SHRINK (10.85-MM DIA) (59-CM)	
E		1	**125-7874**		TUBE-HEAT SHRINK (5.72-MM DIA) (205-CM)	
E		1	**125-7875**		TUBE-HEAT SHRINK (7.44-MM DIA) (50-CM)	
	36	2	**293-6135**	1	COVER	
	37	2	**295-2665**	1	FILM-IDENTIFICATION (FUSE, RELAY)	
B	38	2	**302-2182**	1	BRACKET	
	39	2	**170-9360**	1	GROMMET	
	40	1,2	**204-6101**	4	WASHER-HARD (5.3X10X1-MM THK)	
	41	2	**4B-4863**	1	WASHER (4.7X11X1.2-MM THK)	
	42	1	**4P-7581**	1	CLIP	
	43	1,2	**4P-8134**	4	CLIP	
M	44	2	**5C-2890**	1	NUT (M6X1-THD)	
M	45	1	**5C-9553**	1	BOLT (M6X1X16-MM)	
	46	1	**5P-4116**	1	WASHER-HARD (8.8X20.5X2-MM THK)	
M	47	2	**6V-8837**	1	BOLT (M6X1X16-MM)	

311-8502 **PANEL GP-INSTRUMENT** *(contd.)* **i03627193**

NOTE	REF NO	GRAPHIC REF	PART NUMBER	QTY	PART NAME 1 2 3 4 5 6 (PRODUCT LEVEL)	SEE PAGE
	48	1,2	**8T-4121**	6	WASHER-HARD (11X21X2.5-MM THK)	
M	49	1	**8T-4133**	2	NUT (M10X1.5-THD)	
M	50	2	**8T-4137**	2	BOLT (M10X1.5X20-MM)	
M	51	1,2	**8T-4189**	3	BOLT (M8X1.25X20-MM)	
M	52	1	**8T-4195**	2	BOLT (M10X1.5X30-MM)	
M	53	1	**8T-4199**	2	BOLT (M8X1.25X12-MM)	
	54	1,2	**8T-4205**	6	WASHER-HARD (7.2X14.5X2-MM THK)	
	55	1,2	**8T-4224**	4	WASHER-HARD (8.8X16X2-MM THK)	
M	56	2	**8T-9405**	1	BOLT-SOCKET HEAD (M4X0.7X16-MM)	
M	57	2	**9X-1046**	4	SCREW (M4X0.7X18-MM)	
M	58	2	**9X-2042**	1	SCREW-TRUSS HEAD (M6X1X12-MM)	
M	59	2	**9X-2044**	2	SCREW-TRUSS HEAD (M6X1X16-MM)	
M	60	2	**9X-2045**	2	SCREW-TRUSS HEAD (M6X1X20-MM)	
E	61	2	**103-2543**		SEAL (3-CM)	

B-USE AS REQUIRED
D-ORDER BY THE METER
E-ORDER BY THE CENTIMETER
M-METRIC PART
Y-SEPARATE ILLUSTRATION

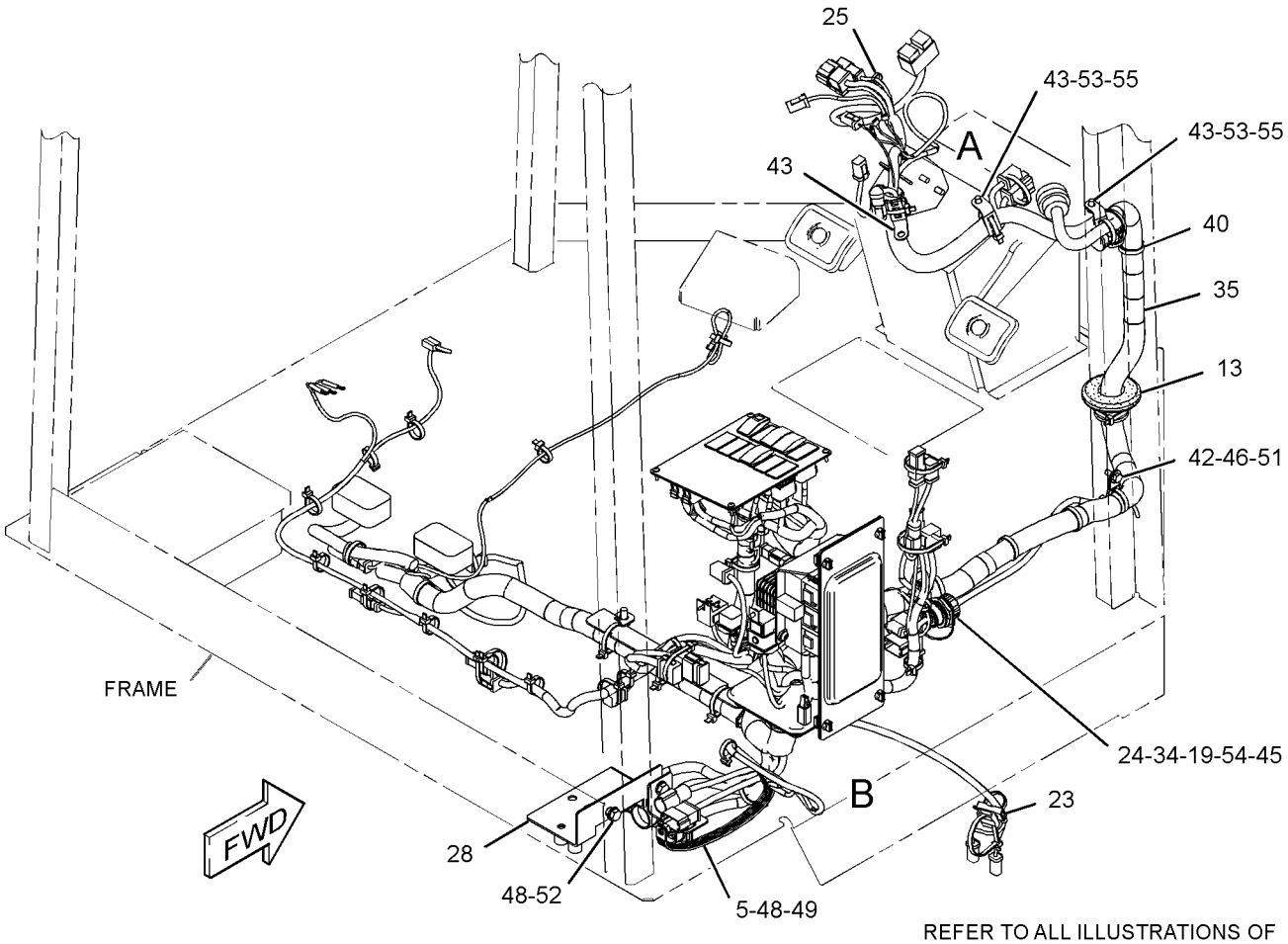

REFER TO ALL ILLUSTRATIONS OF THIS GROUP FOR AUXILIARY VIEWS

GRAPHIC #1

g01627527

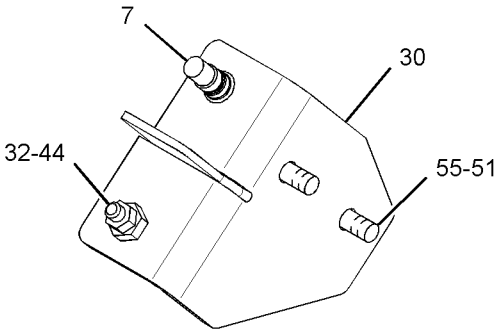

VIEW OF AREA A
(WIRING HARNESS
REMOVED FOR CLARITY)

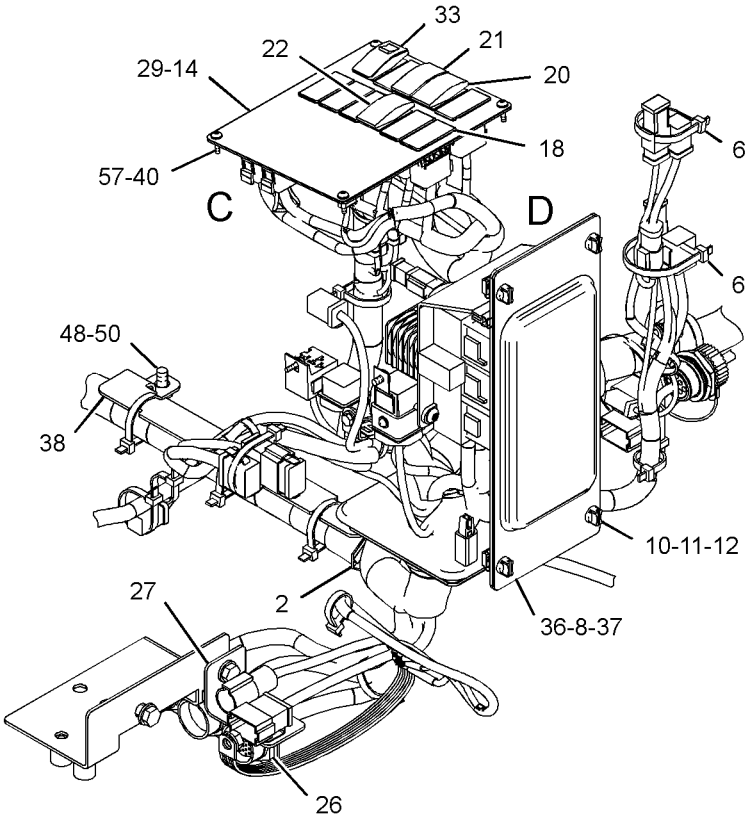

VIEW OF AREA B

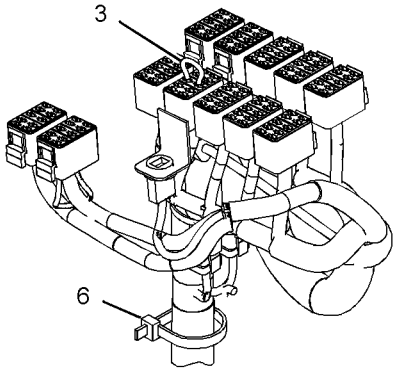

VIEW OF AREA C
(COVER REMOVED FOR CLARITY)

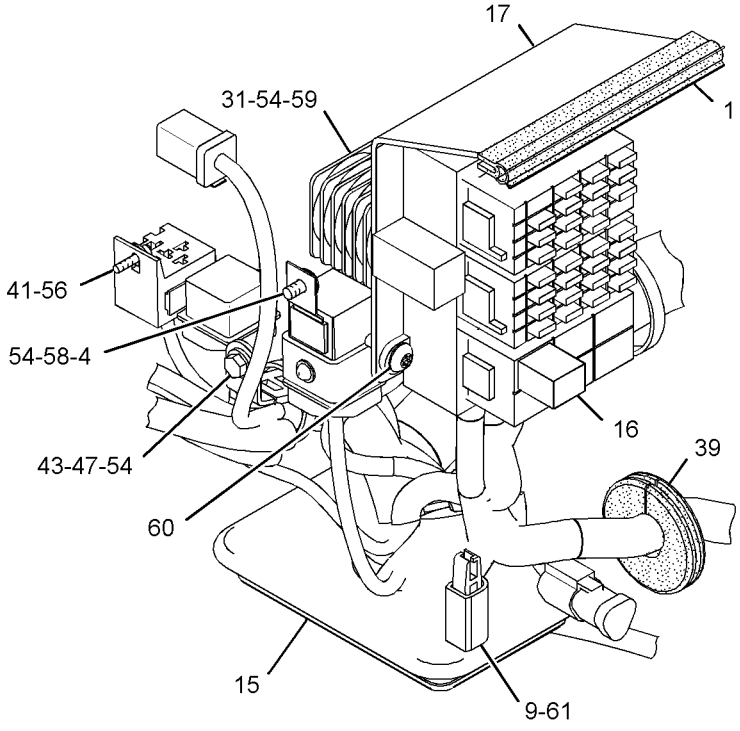

VIEW OF AREA D
(COVER REMOVED FOR CLARITY)

GRAPHIC #2 **<END>** g01627528

OPERATOR STATION

174-9730 PEDAL GP-BRAKE

S/N: JRL1-UP; RRS1-UP
PART OF 311-8693 ROPS GP-ENCLOSED, 290-8177 ROPS GP-OPEN
AN ATTACHMENT

SMCS-4269, 4290 **i01860062**

NOTE	REF NO	GRAPHIC REF	PART NUMBER	QTY	PART NAME 1 2 3 4 5 6 (PRODUCT LEVEL)	SEE PAGE
	1	1	**1B-8723**	1	KEY-WOODRUFF	
	2	1	**6K-8088**	4	BEARING-ROLLER	
	3	1	**8E-8300**	2	DISC-THRUST	
	4	1	**8R-6904**	2	TREAD-RUBBER	
	5	1	**107-6056**	1	PEDAL AS-LH	
	6	1	**111-0132**	1	PEDAL AS-RH	
	7	1	**174-9725**	1	SUPPORT AS	
M		1	**159-9539**	2	NUT-WELD (M6X1-THD)	
M		1	**159-9540**	2	NUT-WELD (M8X1.25-THD)	
	8	1	**8T-4121**	1	WASHER-HARD (11X21X2.5-MM THK)	
M	9	1	**8T-4185**	1	BOLT (M10X1.5X50-MM)	

M-METRIC PART

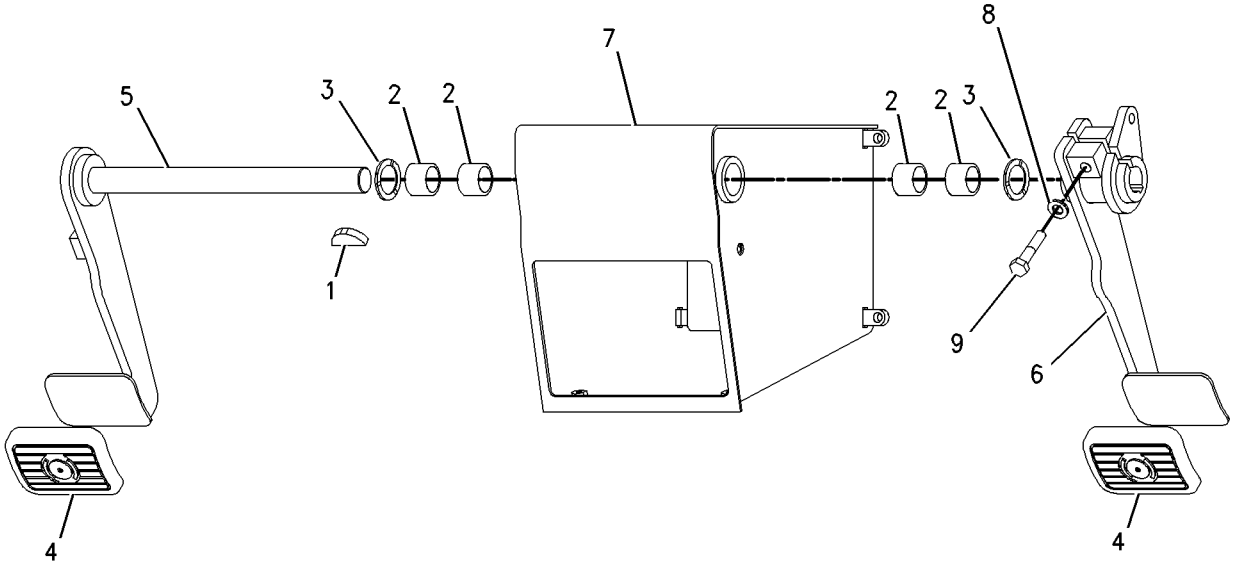

GRAPHIC #1 **<END>** g00748414

OPERATOR STATION

317-0720 PEDAL GP-GOVERNOR

S/N: JRL1-UP; RRS1-UP

PART OF 310-9953 CAB AR, 317-0770 OPERATOR AR, 317-0771 OPERATOR GP AN ATTACHMENT

SMCS-1276 **i03996947**

NOTE	REF NO	GRAPHIC REF	PART NUMBER	QTY	PART NAME 1 2 3 4 5 6 (PRODUCT LEVEL)	SEE PAGE
	1	1	**7K-1181**	3	STRAP-CABLE	
	2	1	*262-5778*	1	PEDAL GP-GOVERNOR	
		1	**269-1983**	1	SENSOR GP-POSITION (THROTTLE)	
		1	**292-9802**	1	COVER	
	3	1	**311-7491**	1	SPACER	
		1	**290-7046**	4	INSERT	
	4	1	**317-4218**	1	HARNESS AS-SENSOR (GOVERNOR PEDAL)	
		1	**102-8803**	1	KIT-RECEPTACLE (3-PIN)	
					(INCLUDES RECEPTACLES AS & WEDGE)	
E		1	**119-3662**		TUBE-HEAT SHRINK (10.85-MM DIA) (7-CM)	
		1	**9X-3401**	3	PIN-CONNECTOR (16-GA TO 18-GA)	
		1	**9X-3402**	3	SOCKET-CONNECTOR (16-GA TO 18-GA)	
		1	**230-4013**	1	PLUG AS-CONNECTOR (3-PIN)	
		1	**264-7030**	1	SEAL-CONNECTOR	
E		1	**232-0893**		CONDUIT-FLEXIBLE (6.2-MM ID) (51-CM)	
M	5	1	**7Y-9099**	4	SCREW-TRUSS HEAD (M8X1.25X25-MM)	
	6	1	**9X-2038**	3	WASHER (7X19X2-MM THK)	
M	7	1	**3E-8020**	3	SCREW-TRUSS HEAD (M6X1X25-MM)	

E-ORDER BY THE CENTIMETER
M-METRIC PART

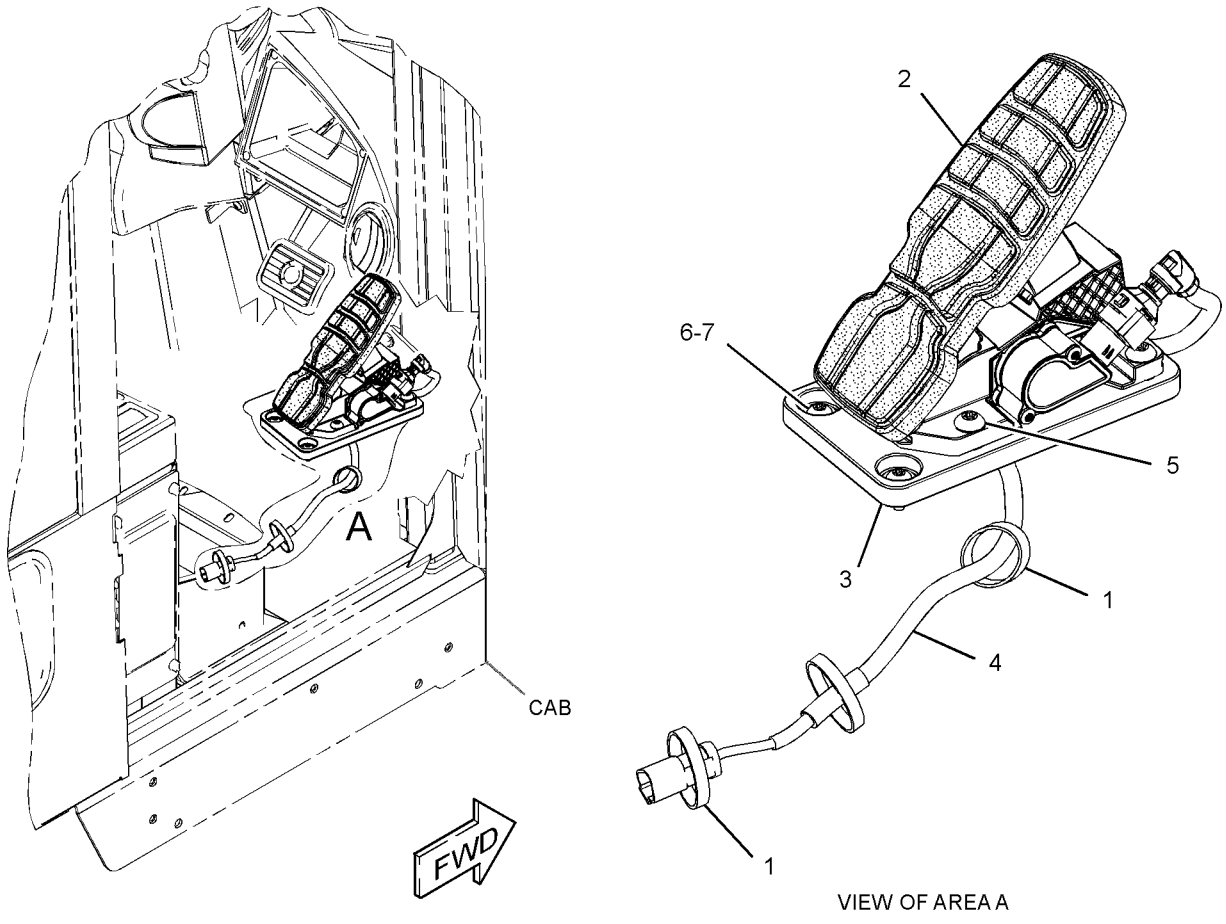

VIEW OF AREA A

GRAPHIC #1 **<END>** g01605653

OPERATOR STATION

311-8693 ROPS GP-ENCLOSED

S/N: JRL1-UP; RRS1-UP
PART OF 311-8698 CAB AR
AN ATTACHMENT

SMCS-7301 **i04412873**

NOTE	REF NO	GRAPHIC REF	PART NUMBER	QTY	PART NAME 1 2 3 4 5 6 (PRODUCT LEVEL)	SEE PAGE
Y	1	1	*174-9730*	1	PEDAL GP-BRAKE	547
Y	2	1	*311-8691*	1	CAB GP	472
	3	1	**091-0079**	8	PLUG	
M	4	1	**8T-4189**	4	BOLT (M8X1.25X20-MM)	
	5	1	**8T-4224**	4	WASHER-HARD (8.8X16X2-MM THK)	
	6	1	**226-2095**	3	FILM (BLACK)	

M-METRIC PART
Y-SEPARATE ILLUSTRATION

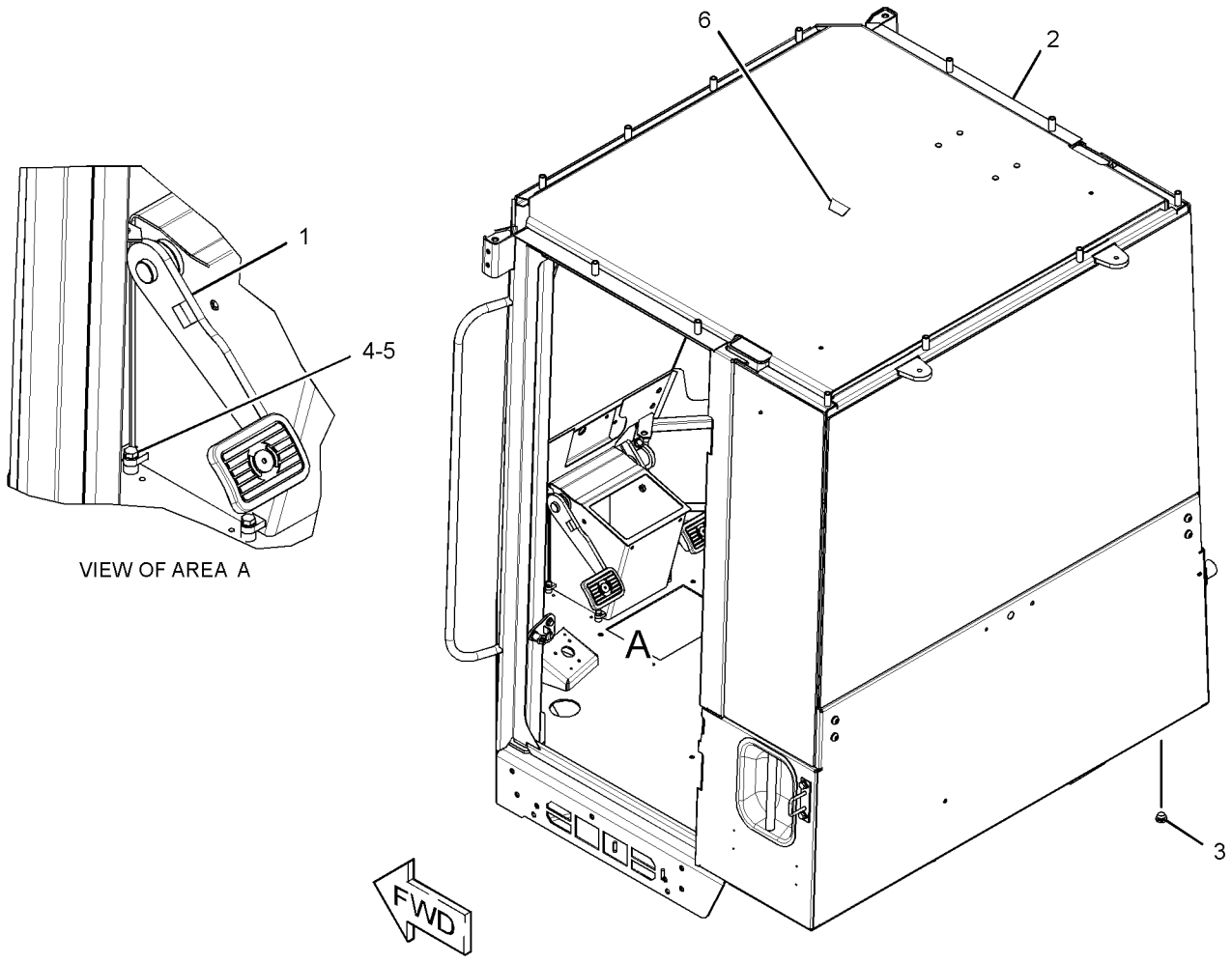

VIEW OF AREA A

GRAPHIC #1 **<END>** g02613077

OPERATOR STATION

290-8177 ROPS GP-OPEN

S/N: JRL1-UP; RRS1-UP
PART OF 290-8179 CANOPY GP-OPEN ROPS
AN ATTACHMENT

SMCS-7323 **i04509210**

NOTE	REF NO	GRAPHIC REF	PART NUMBER	QTY	PART NAME 1 2 3 4 5 6 (PRODUCT LEVEL)	SEE PAGE
	1	1	**118-7255**	1	COVER	
Y	2	1	*174-9730*	1	PEDAL GP-BRAKE	547
	3	1	**290-8175**	1	CANOPY AS	
D		1	**6V-0352**		SEAL (0.3-M)	
		1	**7T-1099**	8	LINK	
M		1	**8T-3734**	12	BOSS-WELD (M10X1.5X40-MM)	
	4	1	**8T-4121**	2	WASHER-HARD (11X21X2.5-MM THK)	
M	5	1	**8T-4137**	2	BOLT (M10X1.5X20-MM)	
M	6	1	**8T-4189**	4	BOLT (M8X1.25X20-MM)	
	7	1	**8T-4224**	4	WASHER-HARD (8.8X16X2-MM THK)	
	8	1	**226-2095**	3	FILM (BLACK)	

D-ORDER BY THE METER
M-METRIC PART
Y-SEPARATE ILLUSTRATION

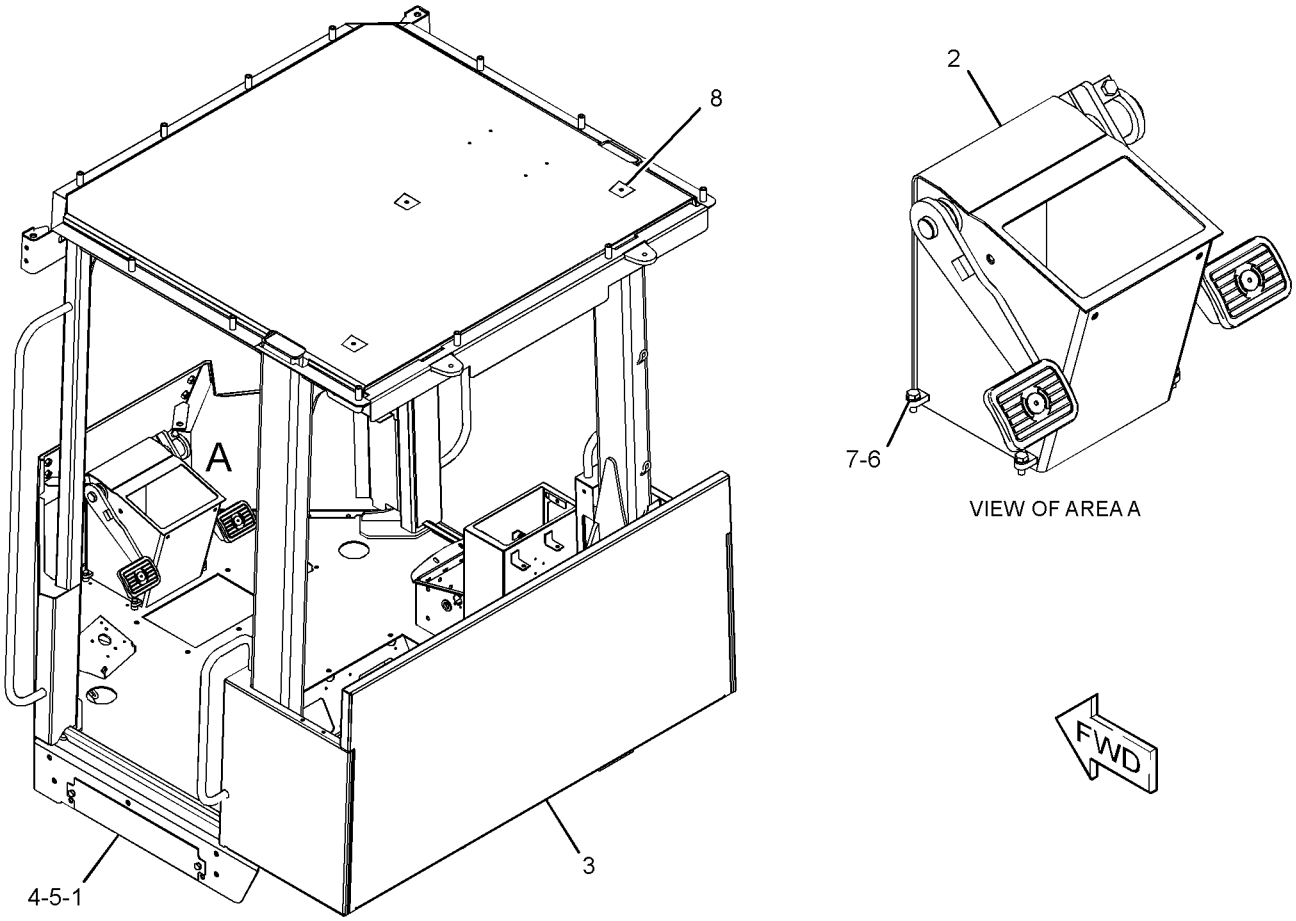

GRAPHIC #1 **<END>** g02711862

OPERATOR STATION

118-7250 SCREEN GP-SUN

S/N: JRL1-UP; RRS1-UP
CANNOT BE USED WITH 290-8189—PAGE 474
AN ATTACHMENT

SMCS-7165 **i01850342**

NOTE	REF NO	GRAPHIC REF	PART NUMBER	QTY	PART NAME 1 2 3 4 5 6 (PRODUCT LEVEL)	SEE PAGE
	1	1	**119-2073**	2	HOOK-RETAINER	

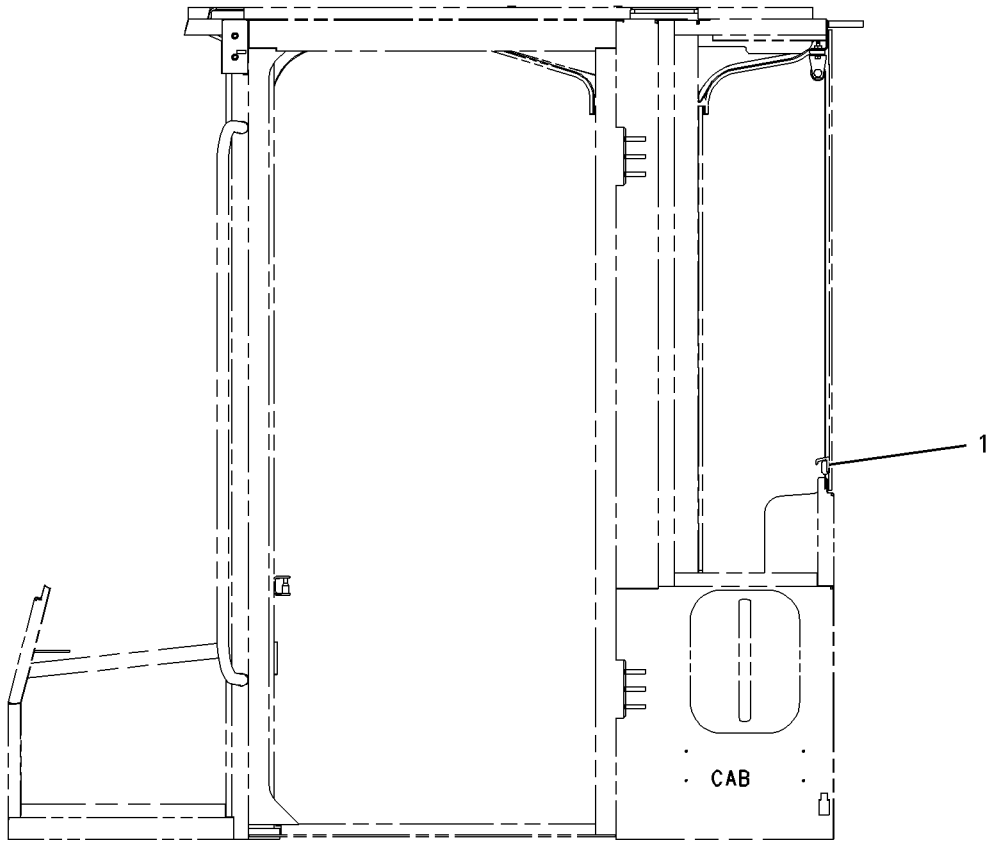

LEFT SIDE VIEW

GRAPHIC #1 **<END>** g00942564

257-5104 SEAT & MOUNTING GP–VINYL

S/N: JRL1-UP; RRS1-UP
PART OF 375-8358 DISTRIBUTION AR
AN ATTACHMENT

SMCS-7312 **i03793391**

NOTE	REF NO	GRAPHIC REF	PART NUMBER	QTY	PART NAME 1 2 3 4 5 6 (PRODUCT LEVEL)	SEE PAGE
	1	1	**223-7937**	1	SEAT BELT GP (3-IN)	
		1	**8S-4726**	1	BOLT (7/16-20X3-IN)	
		1	**8T-5360**	2	WASHER (12X22.5X2.5-MM THK)	
		1	**8T-9381**	1	BOLT (7/16-20X1-IN)	
		1	**261-7651**	1	SPACER (12X20X4-MM THK)	
Y	2	1	**233-7387**	1	SEAT GP-SUSPENSION (VINYL)	553
M	3	1	**113-9232**	4	BOLT (8X1.25X30-MM)	
	4	1	**118-7236**	1	PLATE	
M	5	1	**9X-2041**	4	SCREW-TRUSS HEAD (M10X1.5X20-MM)	
	6	1	**8T-4224**	4	WASHER-HARD (8.8X16X2-MM THK)	

M-METRIC PART
Y-SEPARATE ILLUSTRATION

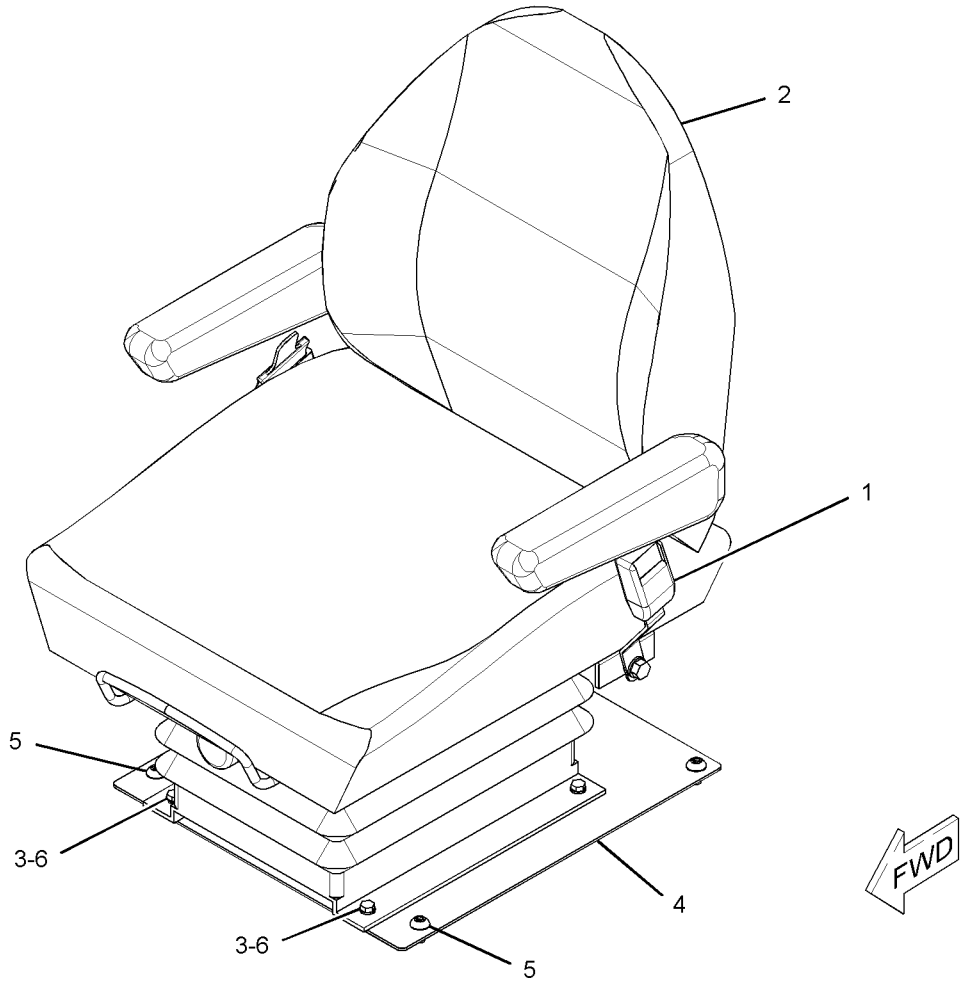

GRAPHIC #1 **<END>** g01843434

OPERATOR STATION

233-7387 SEAT GP-SUSPENSION—VINYL

S/N: JRL1-UP; RRS1-UP
PART OF 257-5104 SEAT & MOUNTING GP
AN ATTACHMENT

SMCS-7324, 7336 **i02471593**

NOTE	REF NO	GRAPHIC REF	PART NUMBER	QTY	PART NAME 1 2 3 4 5 6 (PRODUCT LEVEL)	SEE PAGE
	1	1	**110-5056**	1	KIT-SEAT (BACK)	
	2	1	**110-5059**	1	KIT-SEAT (BOTTOM)	
	3	1	**155-4957**	1	KIT-COVER (BACK)	
					(INCLUDES TRIM BARS, HOG RINGS & BACK COVER)	
	4	1	**156-1685**	1	KIT-COVER (BOTTOM)	
					(INCLUDES WIRE, D-CLIPS & SEAT COVER)	
	5	1	**202-4732**	1	KIT-FRAME (SEAT)	
					(INCLUDES STOP CLIPS, HEADREST GUIDES, SCREWS & SEAT FRAME)	
	6	1	**202-4736**	1	KIT-DAMPER	
					(INCLUDES DAMPER, SPACERS, PINS, BUSHING, WASHERS & NUT)	
	7	1	**202-4738**	1	KIT-SUSPENSION	
					(INCLUDES SUSPENSION AS)	
	8	1	**202-4739**	1	KIT-STOP (SUSPENSION SEAT)	
					(INCLUDES UPSTOPS & BUMPSTOP)	
	9	1	**204-1126**	1	KIT-PLATE (SEAT)	
					(INCLUDES PLATE, SCREWS & WASHERS)	
	10	1	**213-4574**	1	KIT-BOOT (SUSPENSION SEAT)	
	11	1	**213-4576**	1	KIT-RIDE CONTROL (SUSPENSION SEAT)	
	12	1	**213-4579**	1	KIT-WEIGHT ADJUSTER (SUSPENSION SEAT)	
	13	1	**242-8764**	1	SUPPORT (RH)	
	14	1	**242-8765**	1	SUPPORT (LH)	
	15	1	**250-6011**	1	KIT-STRAP (SEAT)	
	16	1	**250-6012**	1	KIT-SLIDE RAIL (SEAT)	
	17	1	**250-6013**	1	KIT-LEVER (SEAT)	

233-7387 SEAT GP-SUSPENSION *(contd.)* i02471593

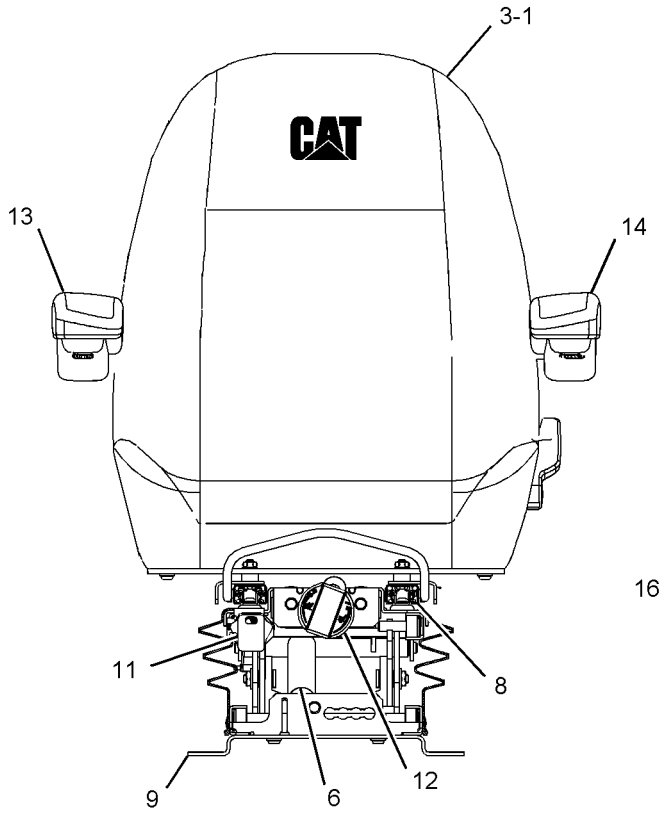

FRONT VIEW

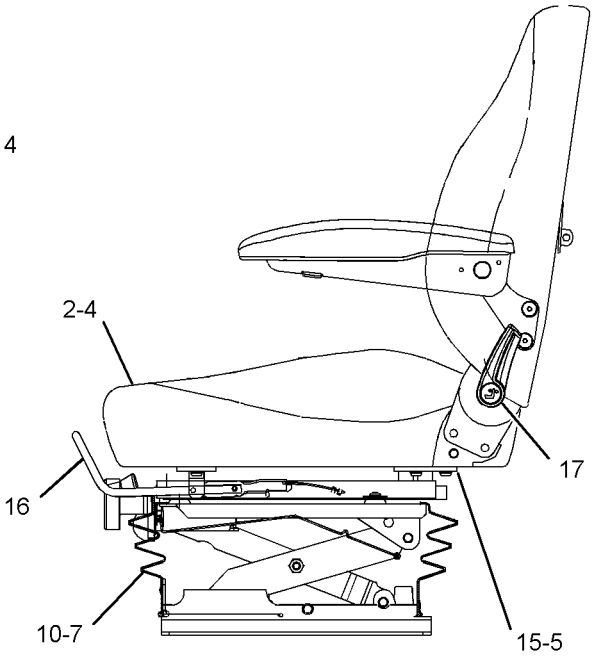

LEFT SIDE VIEW

GRAPHIC #1 **<END>** g01118776

OPERATOR STATION

233-7388 SEAT GP-SUSPENSION—CLOTH

S/N: JRL1-UP; RRS1-UP
PART OF 257-5103 SEAT GP-SUSPENSION
AN ATTACHMENT

SMCS-7324, 7336 **i02471595**

NOTE	REF NO	GRAPHIC REF	PART NUMBER	QTY	PART NAME 1 2 3 4 5 6 (PRODUCT LEVEL)	SEE PAGE
	1	1	**110-5056**	1	KIT-SEAT (BACK)	
	2	1	**110-5059**	1	KIT-SEAT (BOTTOM)	
	3	1	**156-1686**	1	KIT-COVER (SEAT)	
					(INCLUDES WIRE, D-CLIPS & SEAT COVER)	
	4	1	**156-1687**	1	KIT-COVER (BACK)	
					(INCLUDES TRIM BARS, HOG RINGS & BACK COVER)	
	5	1	**202-4732**	1	KIT-FRAME (SEAT)	
					(INCLUDES STOP CLIPS, HEADREST GUIDES, SCREWS & SEAT FRAME)	
	6	1	**202-4736**	1	KIT-DAMPER	
					(INCLUDES DAMPER, SPACERS, PINS, WASHERS & NUT)	
	7	1	**202-4738**	1	KIT-SUSPENSION	
					(INCLUDES SUSPENSION AS)	
	8	1	**202-4739**	1	KIT-STOP (SUSPENSION SEAT)	
					(INCLUDES UPSTOPS AND BUMPSTOP)	
	9	1	**204-1126**	1	KIT-PLATE (SEAT)	
					(INCLUDES PLATE, SCREWS & WASHERS)	
	10	1	**213-4574**	1	KIT-BOOT (SUSPENSION SEAT)	
	11	1	**213-4576**	1	KIT-RIDE CONTROL (SUSPENSION SEAT)	
	12	1	**213-4579**	1	KIT-WEIGHT ADJUSTER (SUSPENSION SEAT)	
	13	1	**242-8764**	1	SUPPORT (RH)	
	14	1	**242-8765**	1	SUPPORT (LH)	
	15	1	**250-6011**	1	KIT-STRAP (SEAT)	
	16	1	**250-6012**	1	KIT-SLIDE RAIL (SEAT)	
	17	1	**250-6013**	1	KIT-LEVER (SEAT)	

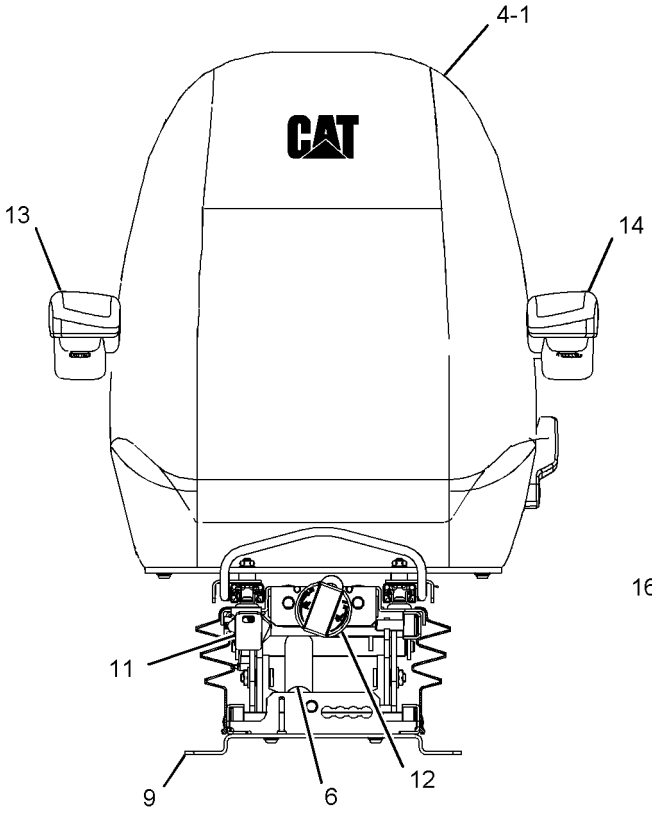

FRONT VIEW

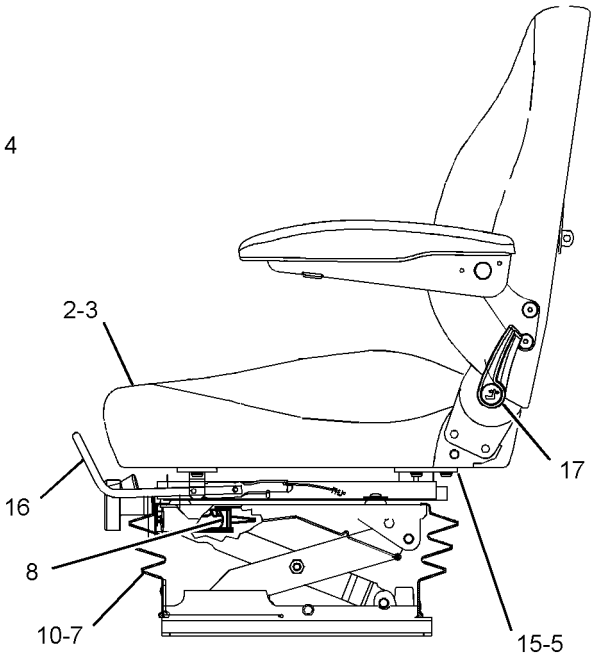

LEFT SIDE VIEW

GRAPHIC #1 **<END>** g01097915

257-5103 SEAT GP-SUSPENSION–CLOTH

S/N: JRL1-UP; RRS1-UP
PART OF 375-8357, 375-8359 DISTRIBUTION AR
AN ATTACHMENT

SMCS-7324, 7336 **i03832109**

NOTE	REF NO	GRAPHIC REF	PART NUMBER	QTY	PART NAME 1 2 3 4 5 6 (PRODUCT LEVEL)	SEE PAGE
Y	1	1	**233-7388**	1	SEAT GP-SUSPENSION (CLOTH)	555
M	2	1	**113-9232**	4	BOLT (8X1.25X30-MM)	
	3	1	**118-7236**	1	PLATE	
M	4	1	**9X-2041**	4	SCREW-TRUSS HEAD (M10X1.5X20-MM)	
	5	1	**223-7937**	1	SEAT BELT GP (3-IN)	
		1	**8S-4726**	1	BOLT (7/16-20X3-IN)	
		1	**8T-5360**	2	WASHER (12X22.5X2.5-MM THK)	
		1	**8T-9381**	1	BOLT (7/16-20X1-IN)	
		1	**261-7651**	1	SPACER (12X20X4-MM THK)	
	6	1	**8T-4224**	4	WASHER-HARD (8.8X16X2-MM THK)	

M-METRIC PART
Y-SEPARATE ILLUSTRATION

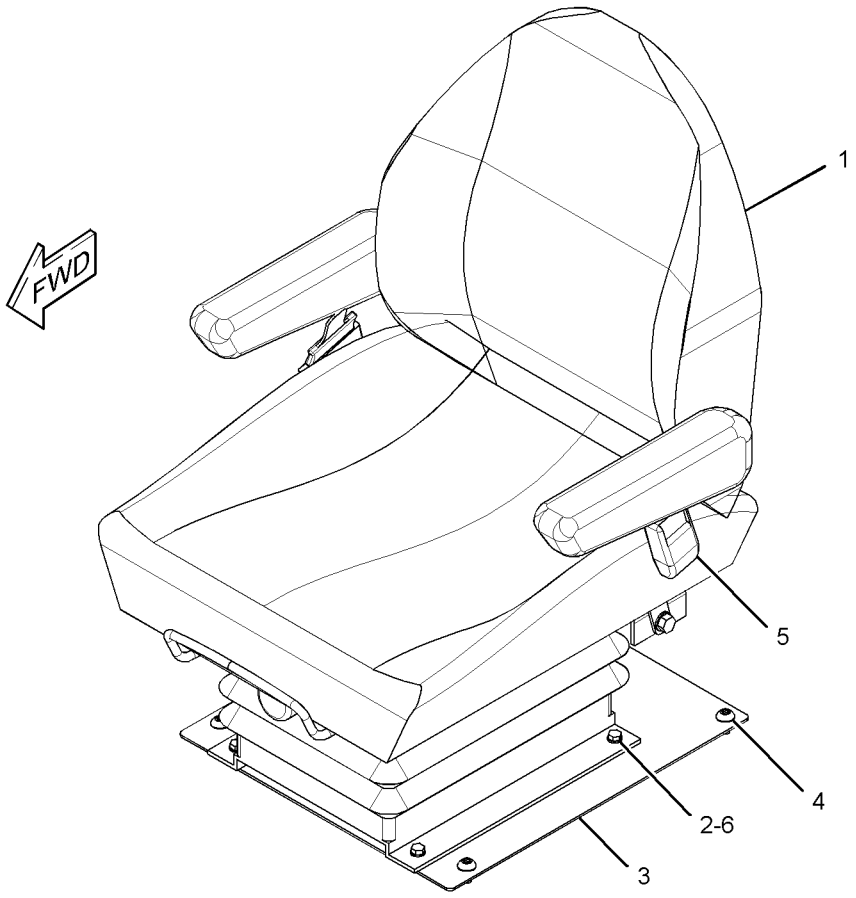

GRAPHIC #1 **<END>** g01819815

OPERATOR STATION

174-2213 SKIRT GP-CAB

S/N: JRL1-UP; RRS1-UP
VERSALINK
PART OF 290-8189 CANOPY AR-OPEN ROPS
AN ATTACHMENT

SMCS-7301 **i01219606**

NOTE	REF NO	GRAPHIC REF	PART NUMBER	QTY	PART NAME 1 2 3 4 5 6 (PRODUCT LEVEL)	SEE PAGE
	1	1	**128-0782**	1	SHEET AS	
	2	1	**132-3543**	1	STRAP AS	
	3	1	**162-1981**	1	SHEET AS	
	4	1	**162-1982**	1	SHEET AS	
	5	1	**162-1983**	1	SHEET AS	
	6	1	**162-1984**	1	SHEET AS	
	7	1	**174-2211**	1	SHEET AS	
	8	1	**8T-4121**	23	WASHER-HARD (11X21X2.5-MM THK)	
M	9	1	**8T-4137**	23	BOLT (M10X1.5X20-MM)	

M-METRIC PART

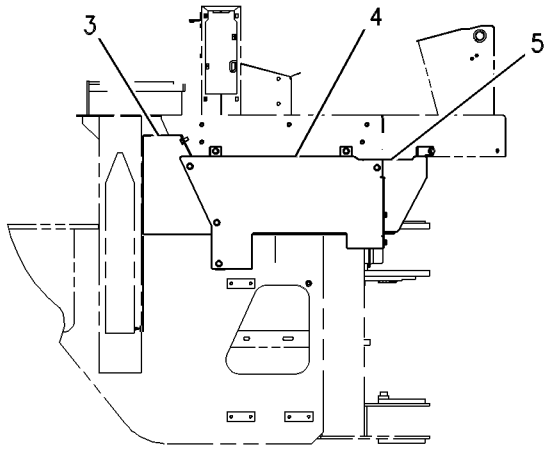

RIGHT SIDE VIEW

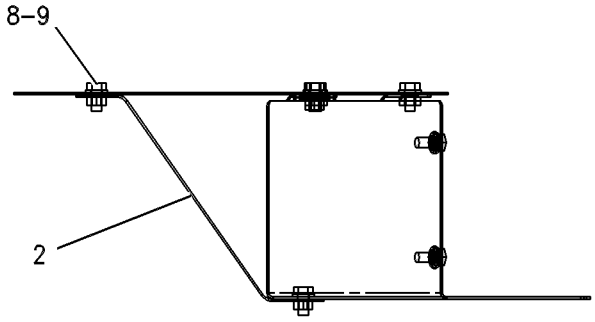

VIEW A-A

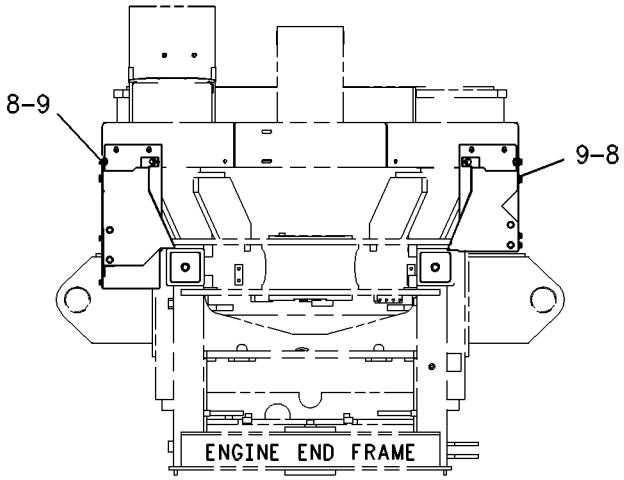

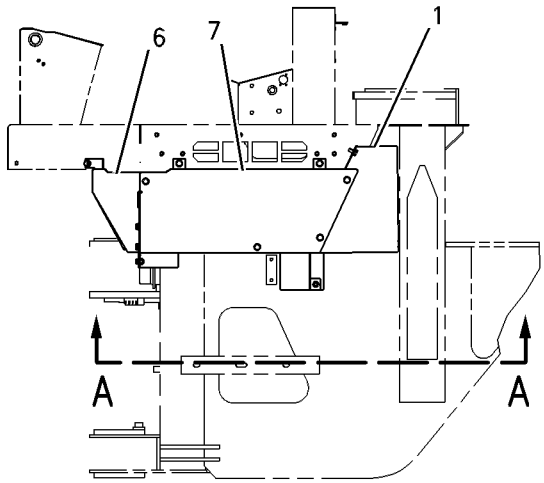

LEFT SIDE VIEW

GRAPHIC #1 **<END>** g00637750

174-2215 SKIRT GP-CAB

S/N: JRL1-UP; RRS1-UP
VERSALINK
PART OF 310-9955 CAB AR-ENCLOSED ROPS, 315-4654 OPERATOR AR
AN ATTACHMENT

SMCS-7301 **i01219617**

NOTE	REF NO	GRAPHIC REF	PART NUMBER	QTY	PART NAME 1 2 3 4 5 6 (PRODUCT LEVEL)	SEE PAGE
	1	1	**128-0782**	1	SHEET AS	
	2	1	**128-0784**	1	SHEET AS	
	3	1	**132-3543**	1	STRAP AS	
	4	1	**162-1981**	1	SHEET AS	
	5	1	**162-1982**	1	SHEET AS	
	6	1	**162-1983**	1	SHEET AS	
	7	1	**162-1984**	1	SHEET AS	
	8	1	**8T-4121**	23	WASHER-HARD (11X21X2.5-MM THK)	
M	9	1	**8T-4137**	23	BOLT (M10X1.5X20-MM)	

M-METRIC PART

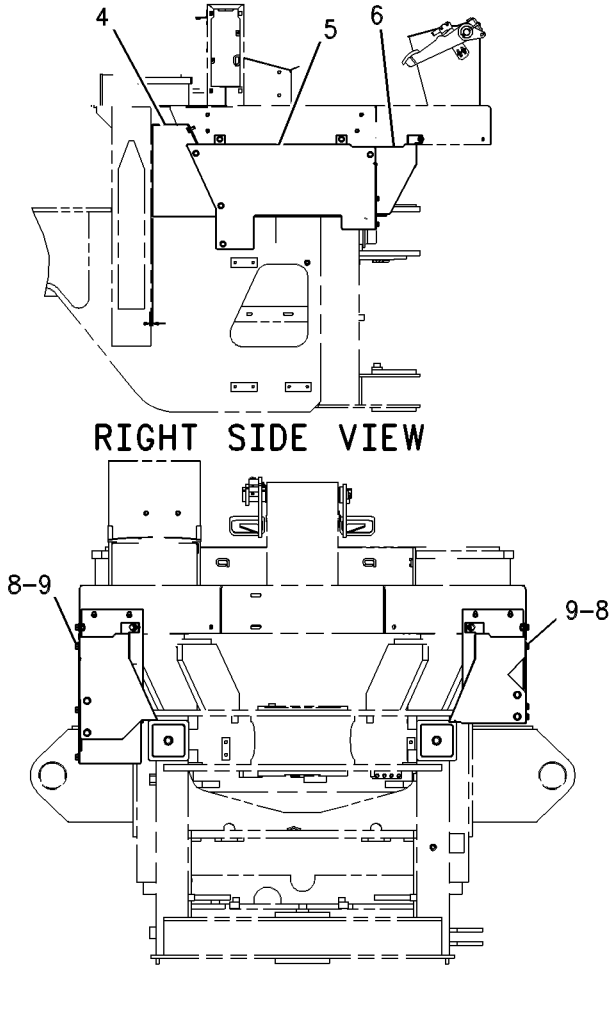

GRAPHIC #1 **<END>** g00634153

OPERATOR STATION

118-0808 SUPPORT GP-SEAT

S/N: JRL1-UP; RRS1-UP
PART OF 317-0771 OPERATOR GP
AN ATTACHMENT

SMCS-7321 **i00717796**

NOTE	REF NO	GRAPHIC REF	PART NUMBER	QTY	PART NAME 1 2 3 4 5 6 (PRODUCT LEVEL)	SEE PAGE
	1	1	**119-8310**	1	COVER AS	
M		1	**8T-3490**	2	NUT-WELD (M10X1.5-THD)	
M		1	**8T-3612**	2	NUT-WELD (M8X1.25-THD)	
	2	1	**7X-0579**	11	WASHER-HARD (8.8X25.5X2-MM THK)	
M	3	1	**8T-4908**	11	BOLT (M8X1.25X25-MM)	

M-METRIC PART

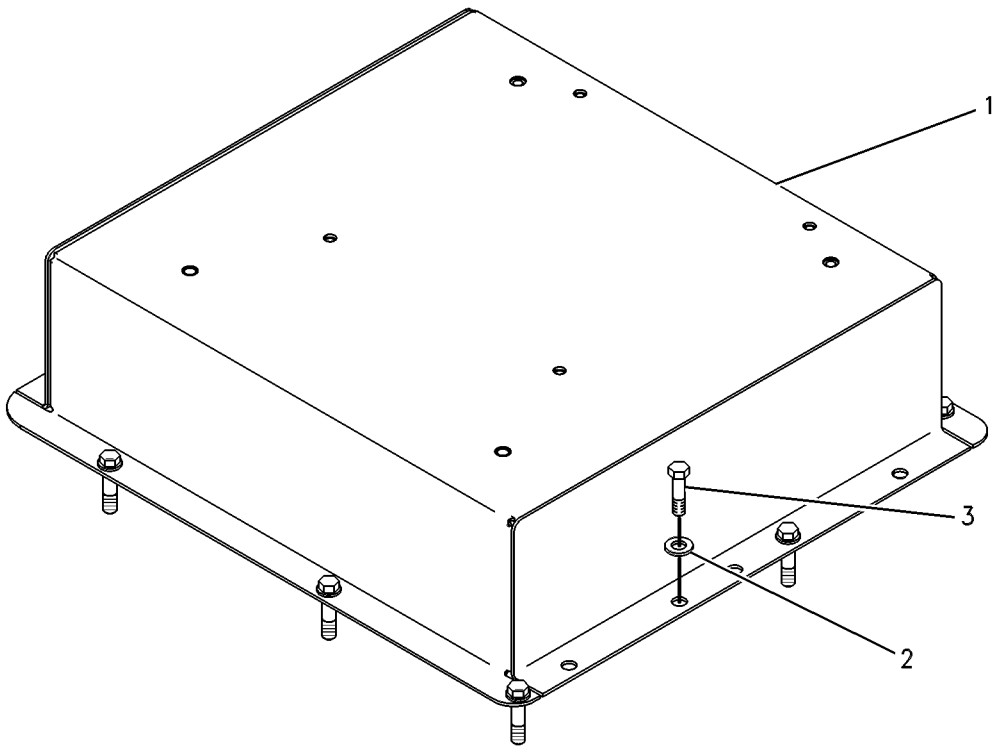

GRAPHIC #1 **<END>** g00131738

OPERATOR STATION

172-5507 SUPPORT GP-SEAT

S/N: JRL1-UP; RRS1-UP
PART OF 310-9953 CAB AR
AN ATTACHMENT

SMCS-7321 **i04029643**

NOTE	REF NO	GRAPHIC REF	PART NUMBER	QTY	PART NAME 1 2 3 4 5 6 (PRODUCT LEVEL)	SEE PAGE
	1	1	**119-8310**	1	COVER AS	
		1	**7T-1099**	3	LINK	
	2	1	**7X-0579**	11	WASHER-HARD (8.8X25.5X2-MM THK)	
M	3	1	**8T-4908**	11	BOLT (M8X1.25X25-MM)	

M-METRIC PART

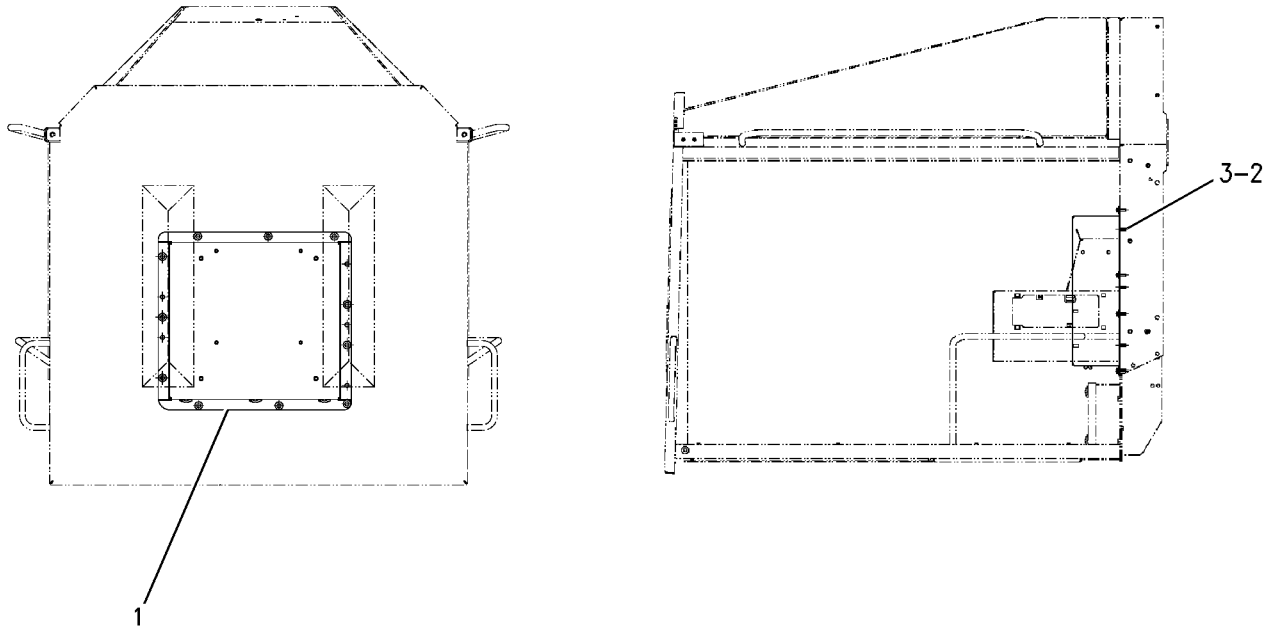

GRAPHIC #1 **<END>** g00680267

OPERATOR STATION

107-4641 VISOR GP-CAB

S/N: JRL1-UP; RRS1-UP
AN ATTACHMENT

SMCS-7301 **i01130547**

NOTE	REF NO	GRAPHIC REF	PART NUMBER	QTY	PART NAME 1 2 3 4 5 6 (PRODUCT LEVEL)	SEE PAGE
	1	1	**9R-3203**	2	PLATE	
	2	1	**9R-3204**	1	PLATE AS	
	3	1	**9R-3205**	1	VISOR AS	
M	4	1	**9X-2042**	2	SCREW-TRUSS HEAD (M6X1X12-MM)	
M	5	1	**9X-2045**	2	SCREW-TRUSS HEAD (M6X1X20-MM)	

M-METRIC PART

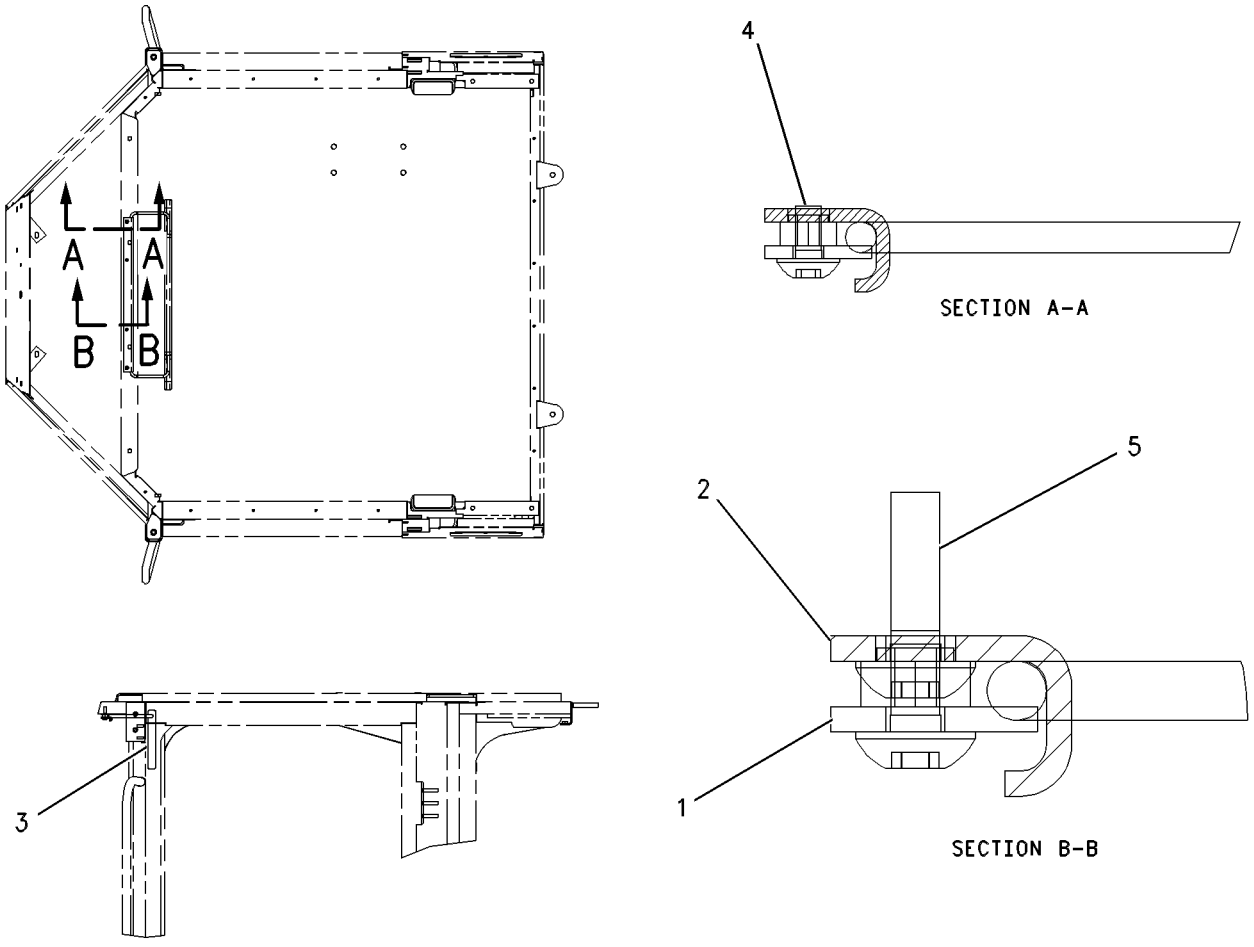

GRAPHIC #1 **<END>** g00599031

OPERATOR STATION

131-1236 WASHER GP-WINDOW

S/N: JRL1-UP; RRS1-UP
PART OF 311-8700 OPERATOR AR
AN ATTACHMENT

SMCS-7306 **i02945075**

NOTE	REF NO	GRAPHIC REF	PART NUMBER	QTY	PART NAME 1 2 3 4 5 6 (PRODUCT LEVEL)	SEE PAGE
E	1	1	**144-0195**		HOSE (152-CM)	
E	1A	1	**144-0195**		HOSE (137-CM)	
	2	1	**4E-7316**	1	STRAP AS	
M		1	**8T-3612**	2	NUT-WELD (M8X1.25-THD)	
	3	1	**131-1237**	1	BRACKET AS	
M		1	**8T-3490**	2	NUT-WELD (M10X1.5-THD)	
	4	1	**131-1238**	1	BRACKET AS	
Y	5	1	**152-2764**	1	WASHER GP-WINDOW	564
	6	1	**3S-2093**	2	STRAP-CABLE	
	7	1	**8T-4121**	4	WASHER-HARD (11X21X2.5-MM THK)	
M	8	1	**8T-4137**	4	BOLT (M10X1.5X20-MM)	
M	9	1	**8T-4189**	2	BOLT (M8X1.25X20-MM)	
	10	1	**8T-4224**	2	WASHER-HARD (8.8X16X2-MM THK)	

E-ORDER BY THE CENTIMETER
M-METRIC PART
Y-SEPARATE ILLUSTRATION

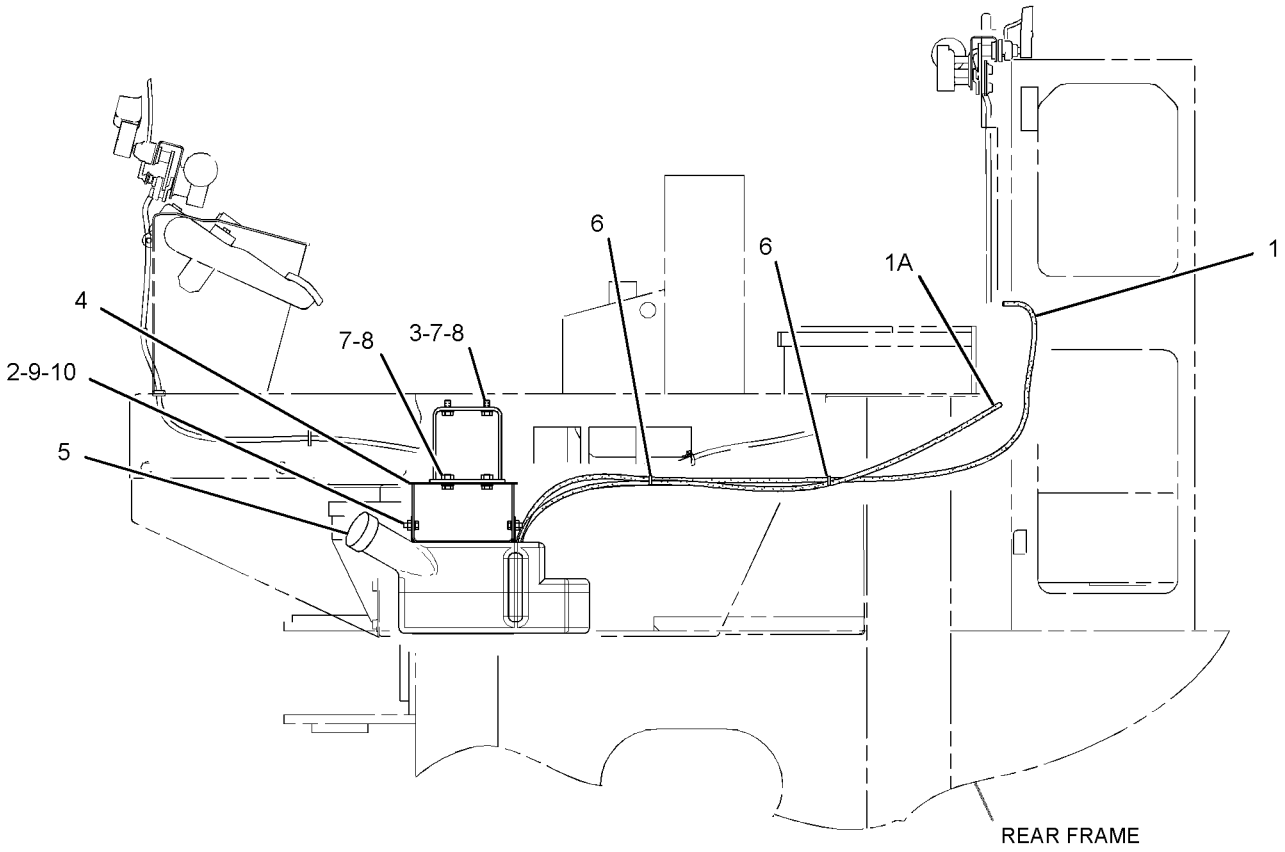

LEFT SIDE VIEW

GRAPHIC #1 **<END>** g01432363

OPERATOR STATION

152-2764 WASHER GP-WINDOW

S/N: JRL1-UP; RRS1-UP
PART OF 131-1236, 173-4311 WASHER GP-WINDOW
AN ATTACHMENT

SMCS-7306 **i04491792**

NOTE	REF NO	GRAPHIC REF	PART NUMBER	QTY	PART NAME 1 2 3 4 5 6 (PRODUCT LEVEL)	SEE PAGE
	1	1	**152-2763**	1	RESERVOIR	
	2	1	**322-4964**	1	CAP-VENTED (WINDOW WASHER TANK)	
	3	1	**7T-8890**	2	PUMP AS-WASHER (24-VOLT)	
	4	1	**8T-5914**	2	GROMMET	
	5	1	**8T-5913**	2	SCREEN-FILTER (WINDOW WASHER TANK)	

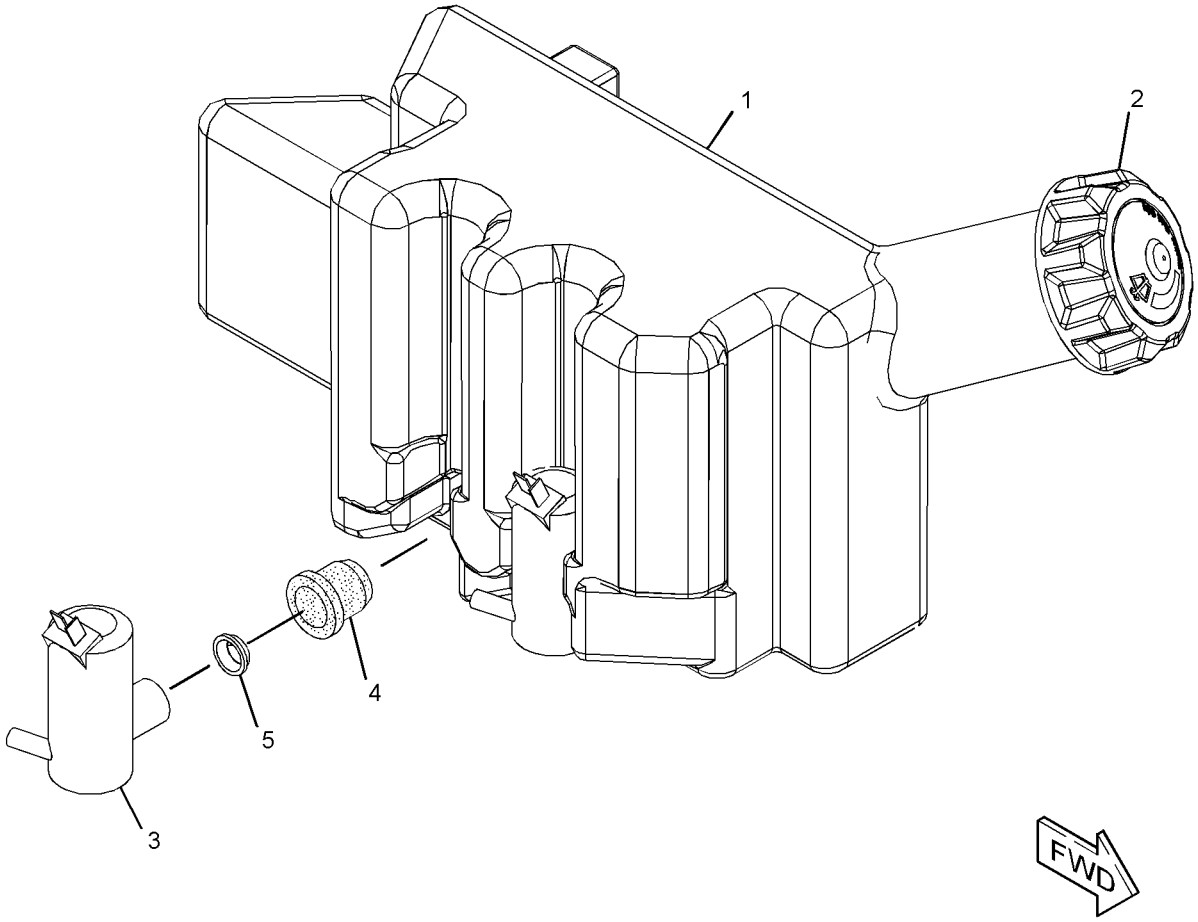

GRAPHIC #1 **<END>** g02719926

OPERATOR STATION

173-4311 WASHER GP-WINDOW

S/N: JRL1-UP; RRS1-UP
PART OF 310-9954 OPERATOR AR
AN ATTACHMENT

SMCS-7306 **i03626683**

NOTE	REF NO	GRAPHIC REF	PART NUMBER	QTY	PART NAME 1 2 3 4 5 6 (PRODUCT LEVEL)	SEE PAGE
	1	1	**4E-7316**	1	STRAP AS	
M		1	**8T-3612**	2	NUT-WELD (M8X1.25-THD)	
	2	1	**131-1237**	1	BRACKET AS	
M		1	**8T-3490**	2	NUT-WELD (M10X1.5-THD)	
	3	1	**131-1238**	1	BRACKET AS	
Y	4	1	**152-2764**	1	WASHER GP-WINDOW	564
	5	1	**8T-4121**	4	WASHER-HARD (11X21X2.5-MM THK)	
M	6	1	**8T-4137**	4	BOLT (M10X1.5X20-MM)	
M	7	1	**8T-4189**	2	BOLT (M8X1.25X20-MM)	
	8	1	**8T-4224**	2	WASHER-HARD (8.8X16X2-MM THK)	

M-METRIC PART
Y-SEPARATE ILLUSTRATION

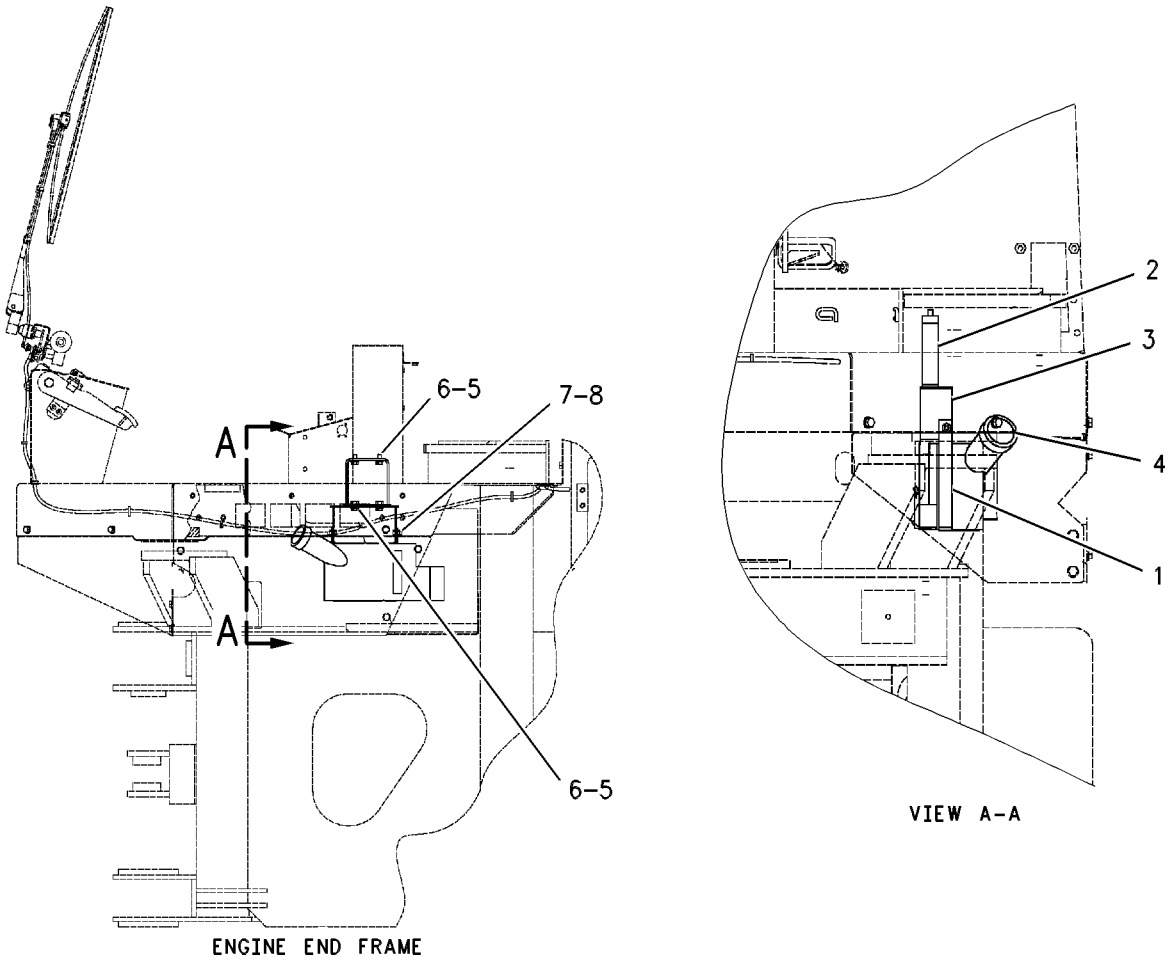

GRAPHIC #1 **<END>** g00661083

OPERATOR STATION

107-4628 WIPER GP-WINDOW

S/N: JRL1-UP; RRS1-UP
PART OF 317-0770 OPERATOR AR
AN ATTACHMENT

SMCS-7305 **i03412894**

NOTE	REF NO	GRAPHIC REF	PART NUMBER	QTY	PART NAME 1 2 3 4 5 6 (PRODUCT LEVEL)	SEE PAGE
	1	1	**6V-6543**	1	BLADE AS-WIPER (503-MM) (REAR)	
	2	1	**6V-6210**	1	GASKET-SHAFT	
	3	1	**6V-7419**	1	BLADE AS-WIPER (700-MM) (FRONT)	
	4	1	**8T-5400**	4	CONNECTOR AS	
	5	1	**9R-2596**	2	PLATE	
C	6	1	**155-5779**	1	WIPER PIVOT AS	
CY	7	1	**307-0205**	1	ARM GP-WINDOW WIPER (REAR)	467
CY	8	1	**214-7636**	1	ARM GP-WINDOW WIPER (FRONT)	466
CY	9	1	**155-5783**	1	MOTOR GP-WINDOW WIPER (24-VOLT) (FRONT)	526
CY	10	1	**155-5784**	1	MOTOR GP-WINDOW WIPER (24-VOLT) (REAR)	527
	11	1	**3S-2093**	7	STRAP-CABLE	
	12	1	**4M-7470**	1	GROMMET	
M	13	1	**3E-8020**	2	SCREW-TRUSS HEAD (M6X1X25-MM)	
E	14	1	**144-0195**		HOSE (267-CM)	
E	14A	1	**144-0195**		HOSE (70-CM)	

C-CHANGE FROM PREVIOUS TYPE
E-ORDER BY THE CENTIMETER
M-METRIC PART
Y-SEPARATE ILLUSTRATION

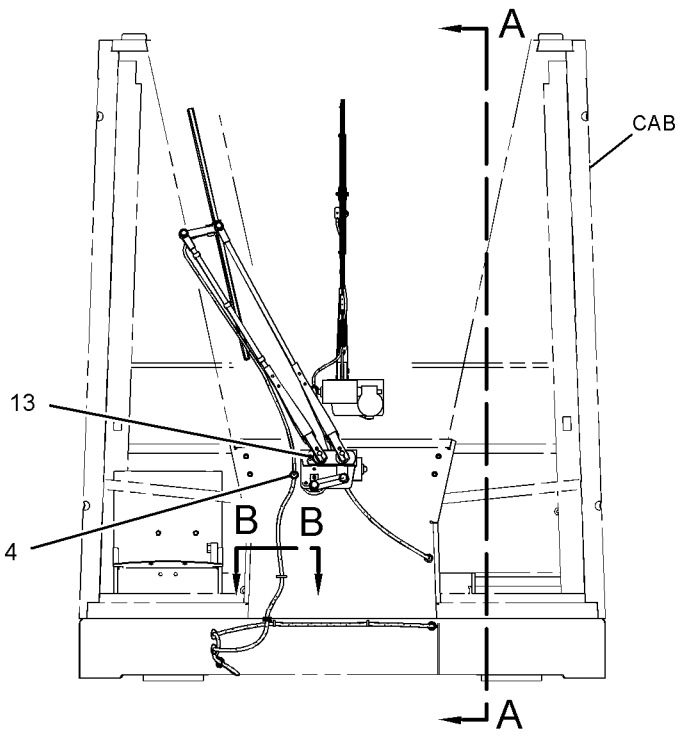

FRONT VIEW

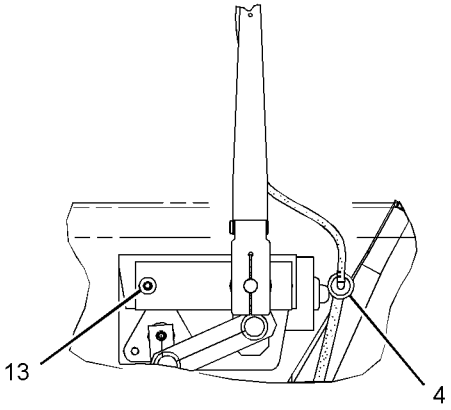

VIEW E-E

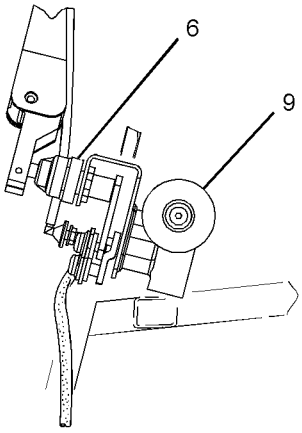

VIEW OF AREA C

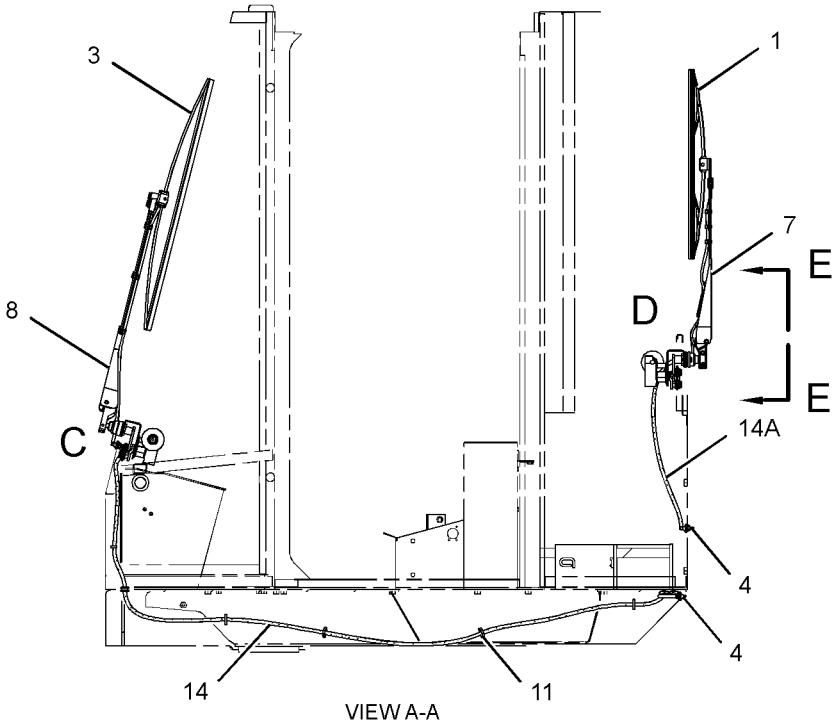

VIEW A-A

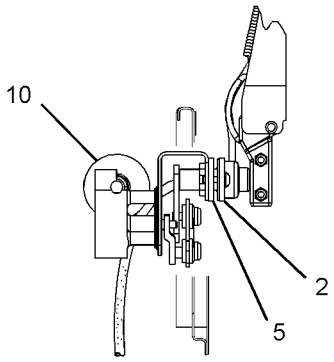

VIEW OF AREA D

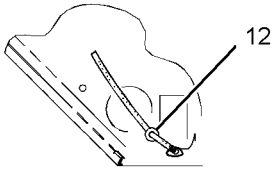

SECTION B-B

GRAPHIC #1 **<END>** g01411066

OPERATOR STATION

146-6908 WIPER GP-WINDOW–FRONT

S/N: JRL1-UP; RRS1-UP
PART OF 310-9953 CAB AR
AN ATTACHMENT

SMCS-7305 **i03626685**

NOTE	REF NO	GRAPHIC REF	PART NUMBER	QTY	PART NAME 1 2 3 4 5 6 (PRODUCT LEVEL)	SEE PAGE
	1	1	**6V-7419**	1	BLADE AS-WIPER (700-MM) (FRONT)	
C	2	1	**8T-5400**	1	CONNECTOR AS	
	3	1	**155-5779**	1	WIPER PIVOT AS	
Y	4	1	**214-7636**	1	ARM GP-WINDOW WIPER (FRONT)	466
Y	5	1	**155-5783**	1	MOTOR GP-WINDOW WIPER (24-VOLT) (FRONT)	526
	6	1	**3S-2093**	7	STRAP-CABLE	
	7	1	**4M-7470**	1	GROMMET	
M	8	1	**9X-2045**	1	SCREW-TRUSS HEAD (M6X1X20-MM)	
CE	9	1	**144-0195**		HOSE (311-CM)	
C	10	1	**6K-9632**	1	TEE	
C	11	1	**9R-3469**	1	DIAPHRAGM	

C-CHANGE FROM PREVIOUS TYPE
E-ORDER BY THE CENTIMETER
M-METRIC PART
Y-SEPARATE ILLUSTRATION

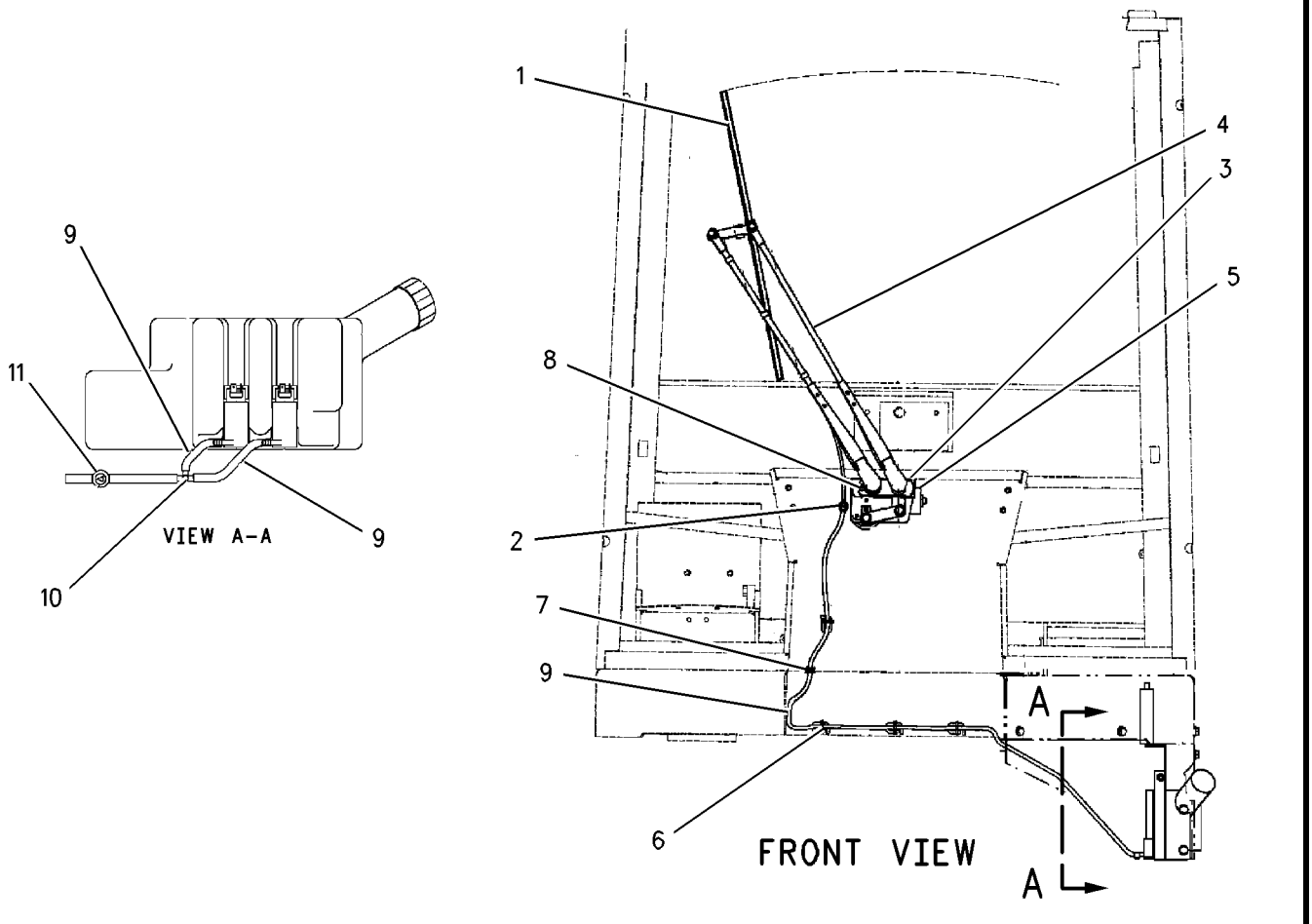

GRAPHIC #1 **<END>** g00929225

WORK TOOLS

116-9713 ADAPTER GP-TIP

S/N: JRL1-UP; RRS1-UP
PART OF 375-8357, 375-8358, 375-8359 DISTRIBUTION AR
AN ATTACHMENT

SMCS-6803 **i04589229**

NOTE	PART NUMBER	QTY	PART NAME 1 2 3 4 5 6 (PRODUCT LEVEL)	SEE PAGE
	1U-0257	6	ADAPTER-STRAP	
	6I-9250	1	ADAPTER-TIP (LH)	
	6I-9251	1	ADAPTER-TIP (RH)	
	8J-2928	12	BOLT-PLOW (1-8X3.75-IN)	
	4F-4042	2	BOLT-PLOW (1-8X3-IN)	
	4J-9058	2	BOLT-PLOW (1-8X3.25-IN)	
	8J-2933	12	NUT (1-8-THD)	
	2J-3507	4	NUT-FULL (1-8-THD)	

<END>

WORK TOOLS

229-9714 ARM GP-MATERIAL HANDLING

S/N: RRS1-UP

AN ATTACHMENT

SMCS-6542 **i04335449**

NOTE	REF NO	GRAPHIC REF	PART NUMBER	QTY	PART NAME 1 2 3 4 5 6 (PRODUCT LEVEL)	SEE PAGE
	1	1	**6W-5652**	1	EXTENSION AS (MIDDLE)	
	2	1	**6W-5656**	1	EXTENSION AS (OUTER)	
	3	1	**6W-5678**	1	RETAINER AS	
	4	1	**6W-5679**	1	RETAINER AS	
					(EACH RETAINER AS INCLUDES)	
		1	**6W-5677**	1	ROD	
	5	1	**8D-3791**	2	PIN	
	6	1	**9V-2714**	1	HOOK	
	7	1	**9V-2715**	1	SHACKLE AS	
	8	1	**7X-0371**	1	BOLT (3/4-10X3.75-IN)	
	9	1	**8T-4896**	2	WASHER-HARD (10.2X18.5X2.5-MM THK)	
	10	1	**229-9715**	1	BASE AS	
	10A	1	**161-4130**	1	PLATE-IDENTIFICATION (CAT)	
	11	1	**233-2944**	2	FILM-INSTRUCTION (LOAD CAPACITY, READ OMM)	
	12	1	**1K-6870**	1	LOCKNUT (3/4-10-THD)	
	13	1	**5G-2373**	2	PIN	
	14	1	**5M-3062**	2	BOLT (3/8-16X0.75-IN)	
	16	1	**180-3516**	1	PLATE-IDENTIFICATION (MATERIAL HANDLING)	
	17	1	**168-8389**	4	TACK-FASTENER	

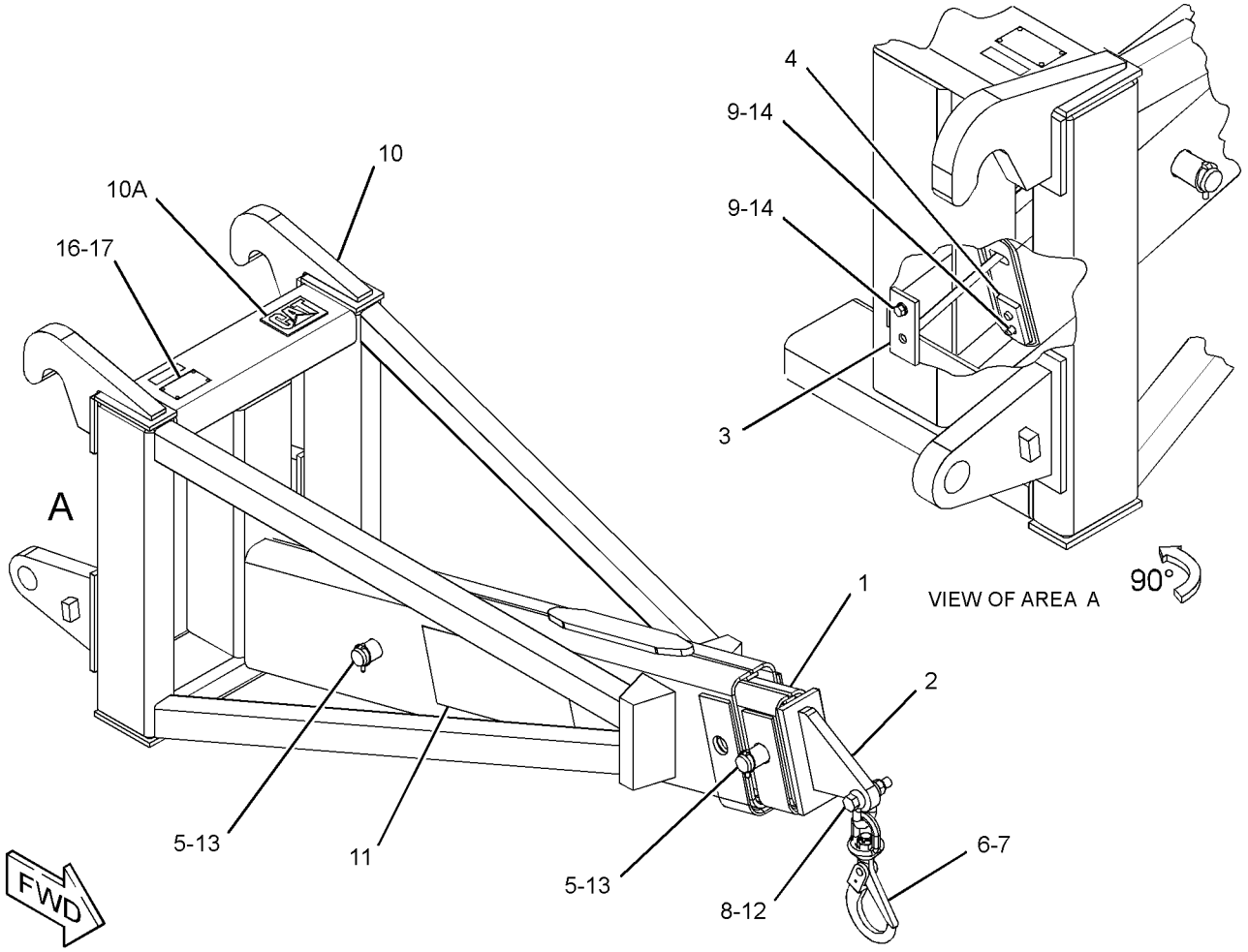

GRAPHIC #1 **<END>** g02496896

WORK TOOLS

241-0935 BUCKET AR-GENERAL PURPOSE–QUICK COUPLER

S/N: RRS1-UP
2.1-CU M (2.8-CU YD) CAPACITY
AN ATTACHMENT

SMCS-6101 **i03825031**

NOTE	REF NO	GRAPHIC REF	PART NUMBER	QTY	PART NAME 1 2 3 4 5 6 (PRODUCT LEVEL)	SEE PAGE
	1	1	**208-1032**	1	PLATE AS	
Y	2	1	**241-0936**	1	BUCKET GP-GENERAL PURPOSE (QUICK COUPLER)	590
	3	1	**8T-7934**	6	WASHER-HARD (11X21X5-MM THK)	
M	4	1	**8T-4136**	6	BOLT (M10X1.5X25-MM)	

M-METRIC PART
Y-SEPARATE ILLUSTRATION

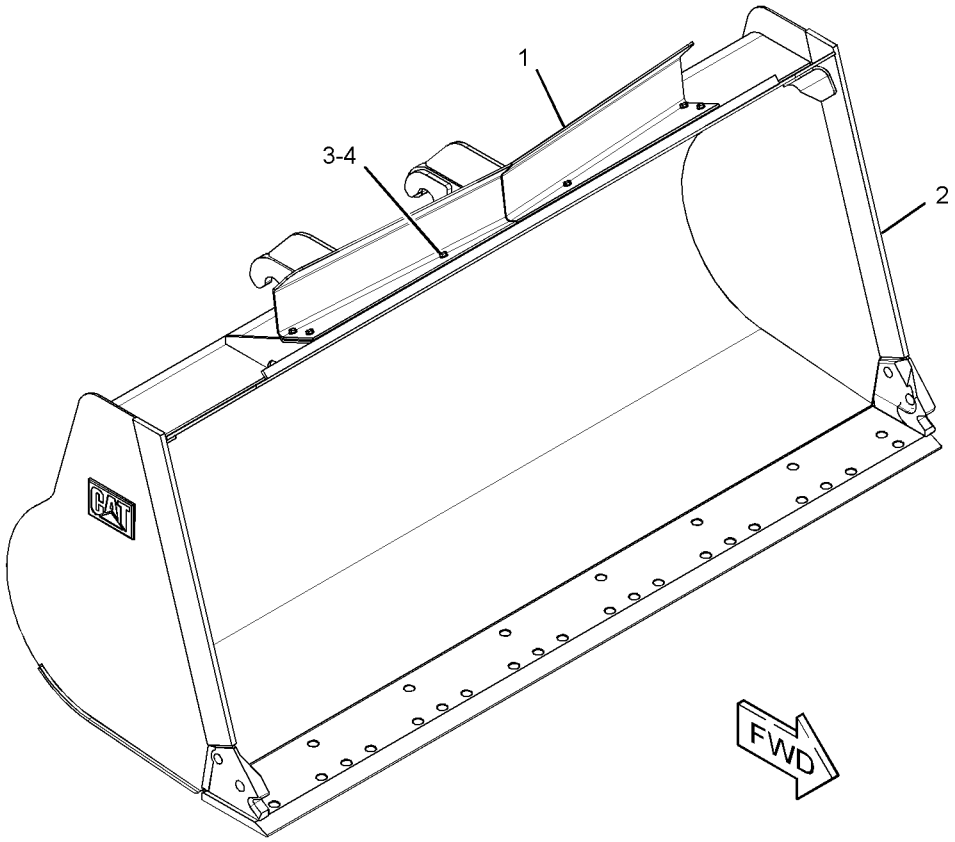

GRAPHIC #1 **<END>** g01547740

WORK TOOLS

252-6909 BUCKET AR-GENERAL PURPOSE

S/N: RRS1-UP
2.1-CU M (2.8-CU YD) CAPACITY
AN ATTACHMENT

SMCS-6101 **i03825037**

NOTE	REF NO	GRAPHIC REF	PART NUMBER	QTY	PART NAME 1 2 3 4 5 6 (PRODUCT LEVEL)	SEE PAGE
	1	1	**143-4973**	1	PLATE AS	
Y	2	1	*148-7900*	1	MOUNTING GP-BUCKET	602
Y	3	1	**252-6910**	1	BUCKET GP-GENERAL PURPOSE	591
	4	1	**8T-7934**	6	WASHER-HARD (11X21X5-MM THK)	
M	5	1	**8T-4136**	6	BOLT (M10X1.5X25-MM)	

M-METRIC PART
Y-SEPARATE ILLUSTRATION

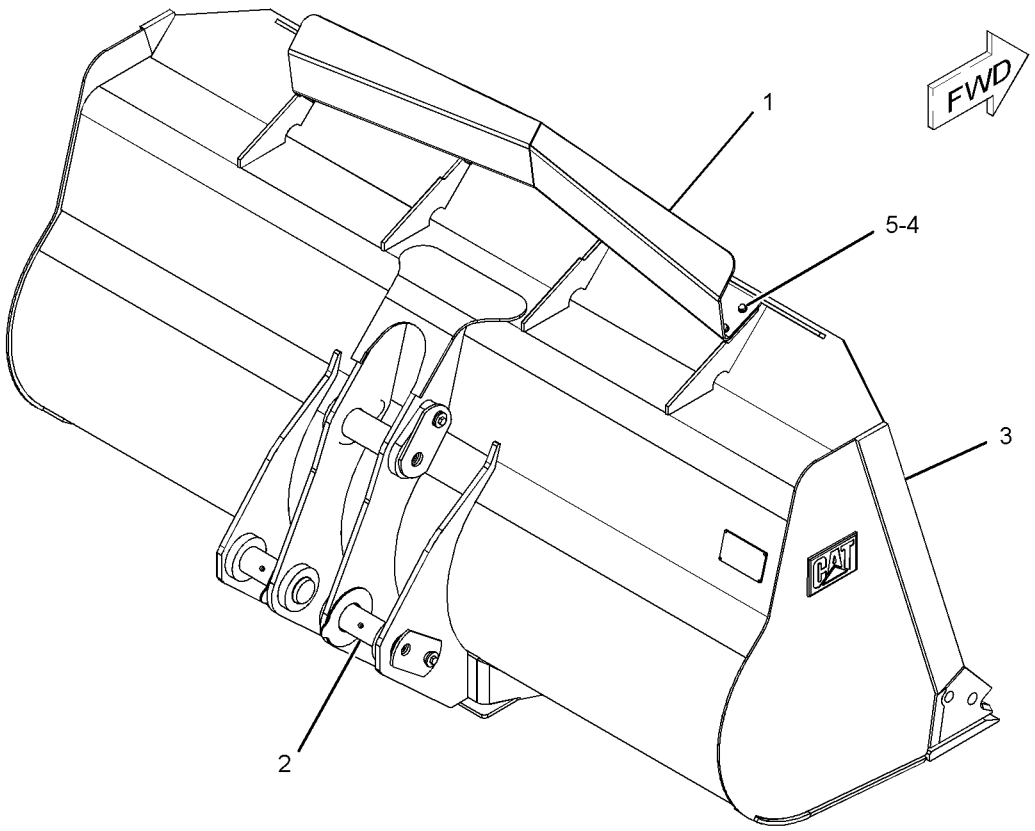

GRAPHIC #1 **<END>** g01119525

251-5412 BUCKET AR-LIGHT MATERIAL

S/N: RRS1-UP
2.8-CU M (3.7-CU YD) CAPACITY
FOR USE WITH 218-5113—PAGE 595
AN ATTACHMENT

SMCS-6103 **i03825034**

NOTE	REF NO	GRAPHIC REF	PART NUMBER	QTY	PART NAME 1 2 3 4 5 6 (PRODUCT LEVEL)	SEE PAGE
	1	1	**208-1032**	1	PLATE AS	
Y	2	1	**251-5413**	1	BUCKET GP-LIGHT MATERIAL (QUICK COUPLER)	592
	3	1	**8T-7934**	6	WASHER-HARD (11X21X5-MM THK)	
M	4	1	**8T-4136**	6	BOLT (M10X1.5X25-MM)	

M-METRIC PART
Y-SEPARATE ILLUSTRATION

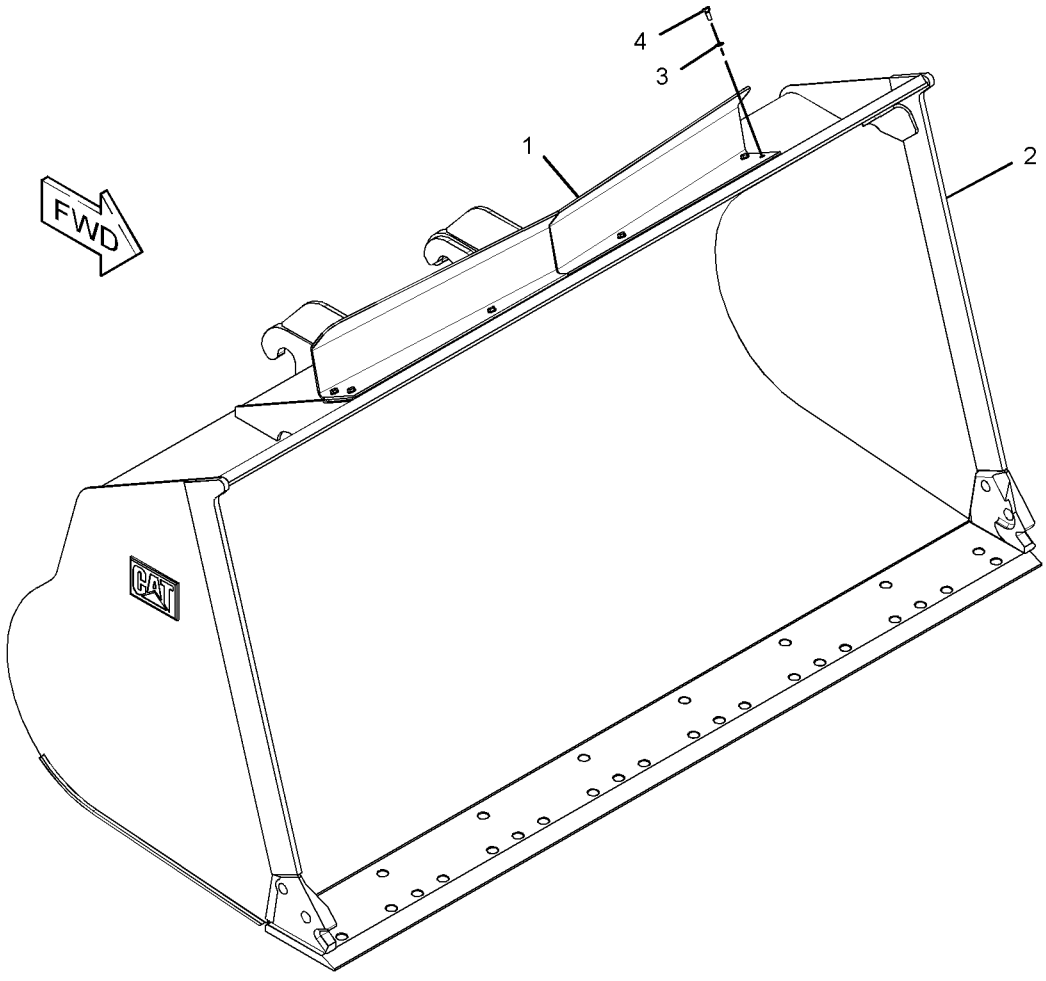

GRAPHIC #1 **<END>** g01535274

WORK TOOLS

252-6903 BUCKET AR-LIGHT MATERIAL

S/N: RRS1-UP
2.8-CU M (3.7-CU YD) CAPACITY
AN ATTACHMENT

SMCS-6103 **i03825036**

NOTE	REF NO	GRAPHIC REF	PART NUMBER	QTY	PART NAME 1 2 3 4 5 6 (PRODUCT LEVEL)	SEE PAGE
	1	1	**143-4973**	1	PLATE AS	
Y	2	1	*148-7900*	1	MOUNTING GP-BUCKET	602
Y	3	1	**252-6904**	1	BUCKET GP-LIGHT MATERIAL	593
	4	1	**8T-7934**	6	WASHER-HARD (11X21X5-MM THK)	
M	5	1	**8T-4136**	6	BOLT (M10X1.5X25-MM)	

M-METRIC PART
Y-SEPARATE ILLUSTRATION

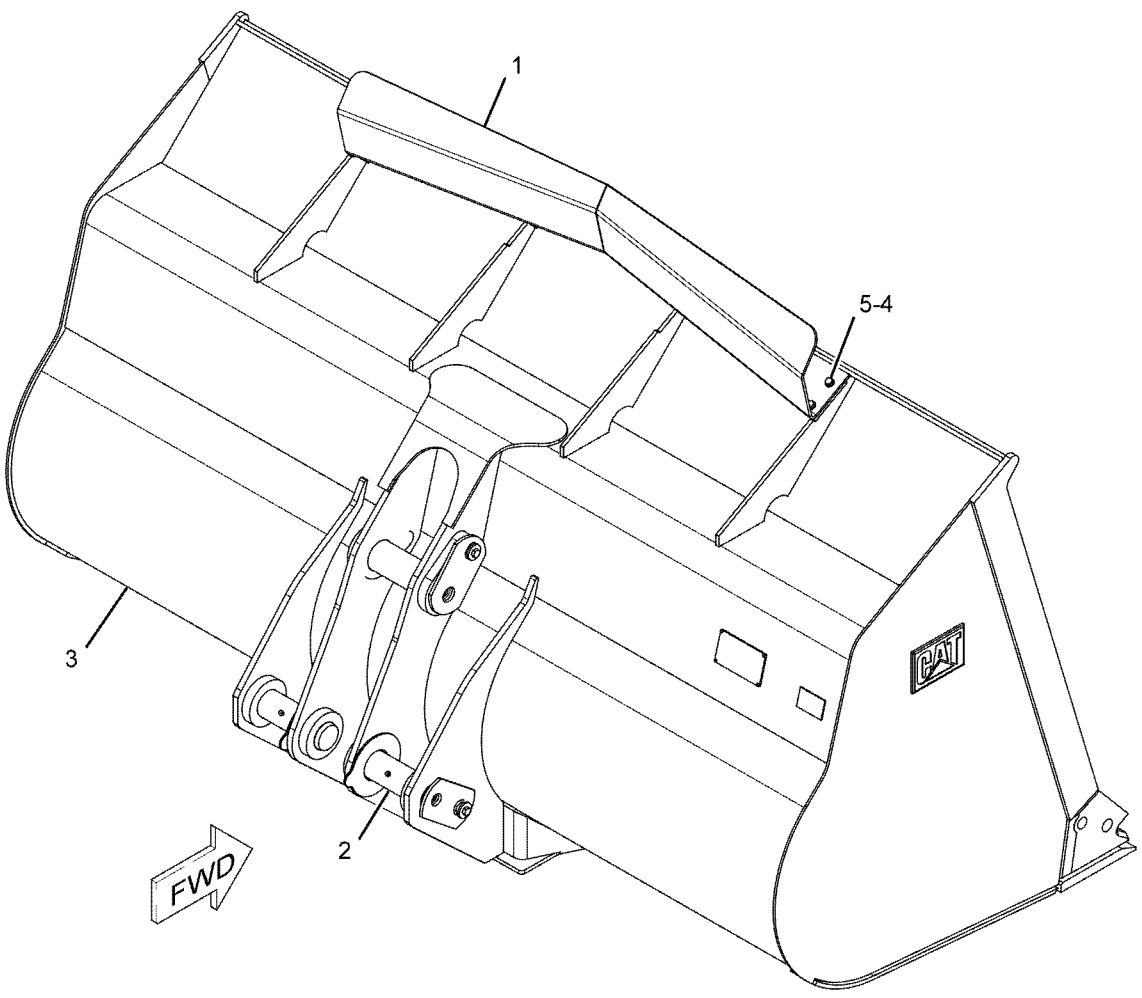

GRAPHIC #1 **<END>** g01092817

145-5163 BUCKET AS-GENERAL PURPOSE

S/N: RRS1-UP
2532-MM (99.7-IN) WIDE X 1.7-CU M (2.2-CU YD) CAPACITY
PART OF 172-8563 BUCKET AS-GENERAL PURPOSE
AN ATTACHMENT

SMCS-6101 **i03875230**

NOTE	REF NO	GRAPHIC REF	PART NUMBER	QTY	PART NAME 1 2 3 4 5 6 (PRODUCT LEVEL)	SEE PAGE
	1	1	**4E-0659**	1	EDGE-CUTTING	
	2	1	**145-5201**	1	HINGE AS (TILT, RH)	
	3	1	**162-1961**	2	PLATE	
	4	1	**9T-3598**	2	BOSS (M10X1.5-THD)	
	5	1	**9V-9480**	2	PLATE	
	6	1	**145-5202**	1	HINGE AS (TILT, LH)	
	7	1	**6I-8311**	1	CORNER (RH)	
	8	1	**6I-8310**	1	CORNER (LH)	
	9	1	**164-4022**	1	HINGE AS (LIFT, OUTER, RH)	
	10	1	**164-4024**	1	HINGE AS (LIFT, OUTER, LH)	
	11	1	**2C-9259**	2	PLATE-IDENTIFICATION (CAT)	

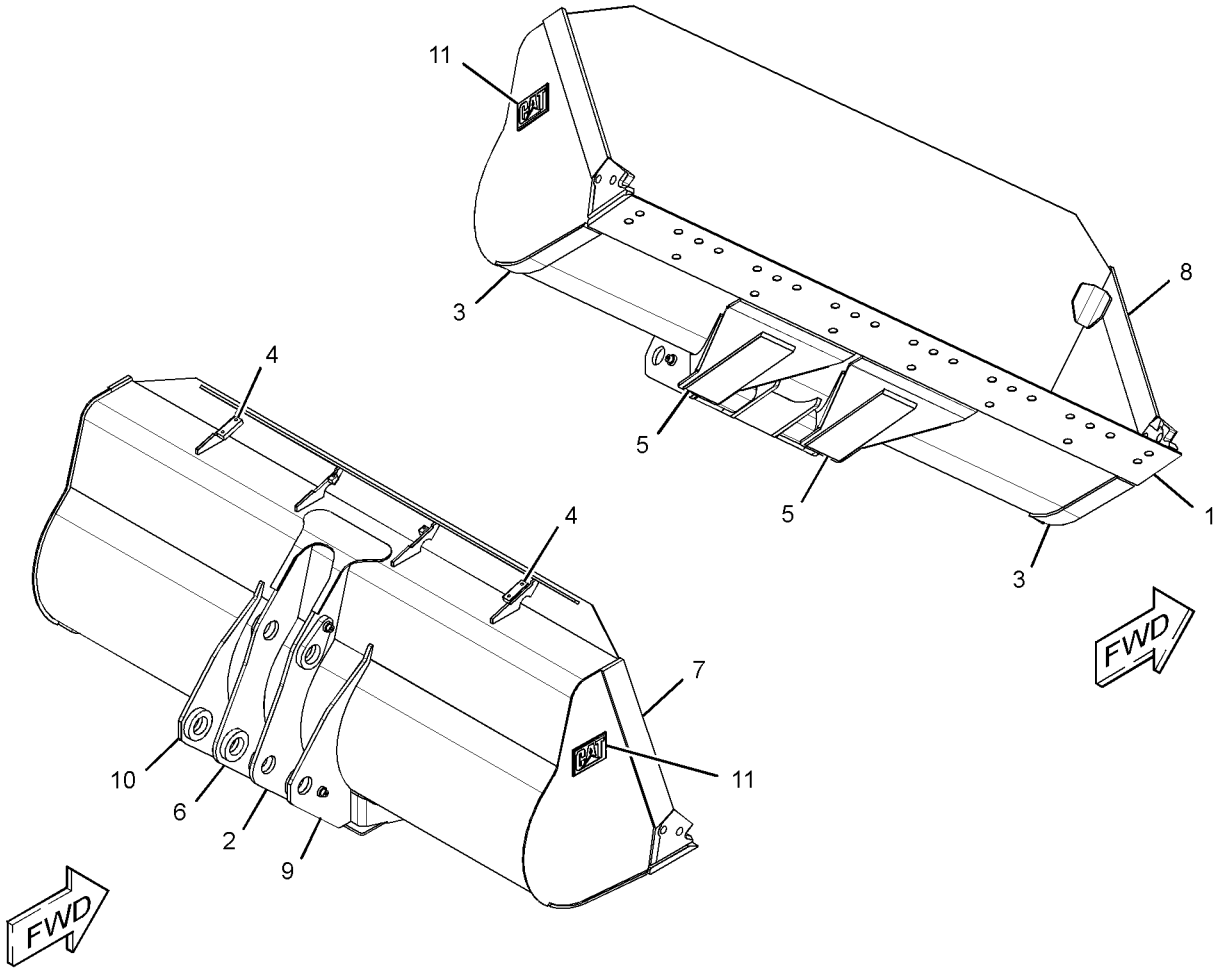

GRAPHIC #1 **<END>** g02178702

WORK TOOLS

145-5166 BUCKET AS-GENERAL PURPOSE

S/N: RRS1-UP

PART OF 172-8559 BUCKET AS-GENERAL PURPOSE

AN ATTACHMENT

SMCS-6101 **i02199169**

NOTE	REF NO	GRAPHIC REF	PART NUMBER	QTY	PART NAME 1 2 3 4 5 6 (PRODUCT LEVEL)	SEE PAGE
	1	1	**4E-0659**	1	EDGE-CUTTING	
	2	1	**9V-9480**	2	PLATE	
	3	1	**092-1136**	2	BOSS (M10X1.5-THD)	
	4	1	**111-9758**	1	PLATE	
	5	1	*145-5196*	1	PLATE AS	
		1	**2C-9259**	1	PLATE-IDENTIFICATION (CAT)	
		1	**6I-8311**	1	CORNER (RH)	
	6	1	*145-5197*	1	PLATE AS	
		1	**2C-9259**	1	PLATE-IDENTIFICATION (CAT)	
		1	**6I-8310**	1	CORNER (LH)	
	7	1	**162-1961**	2	PLATE	
	8	1	**168-7551**	2	PLATE	
	9	1	**9T-3598**	2	BOSS (M10X1.5-THD)	

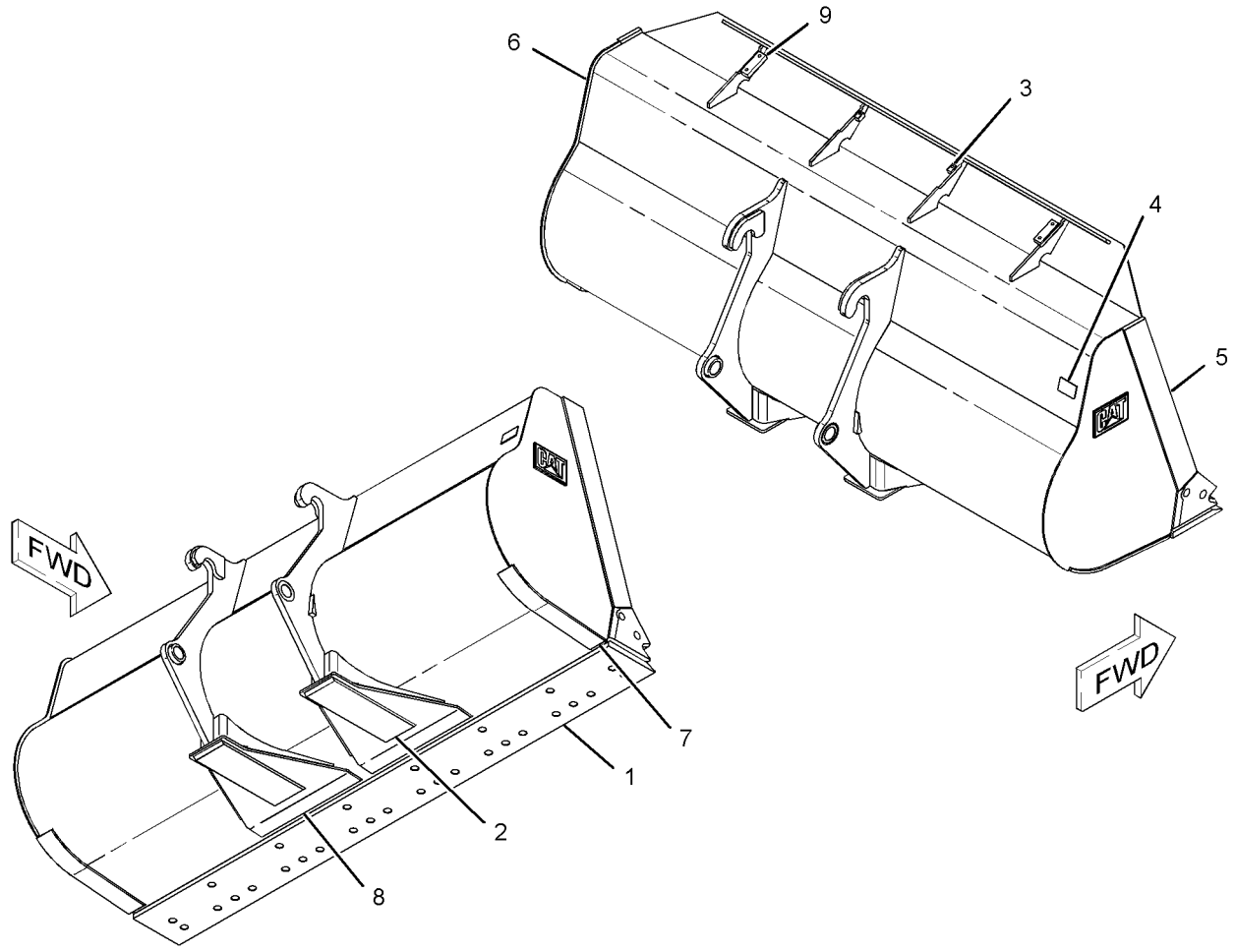

GRAPHIC #1 **<END>** g01127813

147-7331 BUCKET AS-GENERAL PURPOSE

S/N: JRL1-UP

PART OF 172-8568 BUCKET AS-GENERAL PURPOSE

AN ATTACHMENT

SMCS-6101 **i01161894**

NOTE	REF NO	GRAPHIC REF	PART NUMBER	QTY	PART NAME 1 2 3 4 5 6 (PRODUCT LEVEL)	SEE PAGE
	1	1	**4E-0659**	1	EDGE-CUTTING (2.4M)	
	2	1	**111-9758**	1	PLATE	
	3	1	**6I-8311**	1	CORNER (RH)	
	4	1	**6I-8310**	1	CORNER (LH)	
	5	1	**145-5220**	1	PLATE-WEAR	
	6	1	**145-5221**	2	PLATE-WEAR	
	7	1	**152-4014**	1	HINGE AS	
	8	1	**152-4015**	1	HINGE AS (CENTER, LH)	
	9	1	**152-4020**	1	HINGE AS	
	10	1	**152-4021**	1	HINGE AS	
	11	1	**152-4022**	1	HINGE AS	
	12	1	**152-4023**	1	HINGE AS	

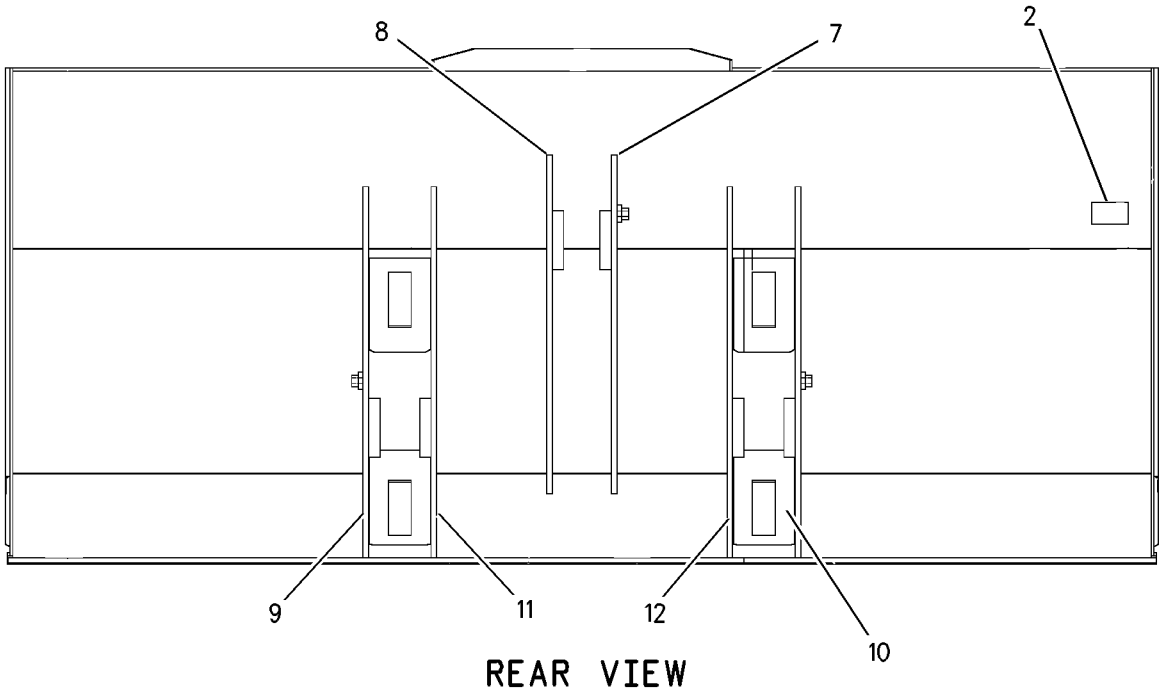

REAR VIEW

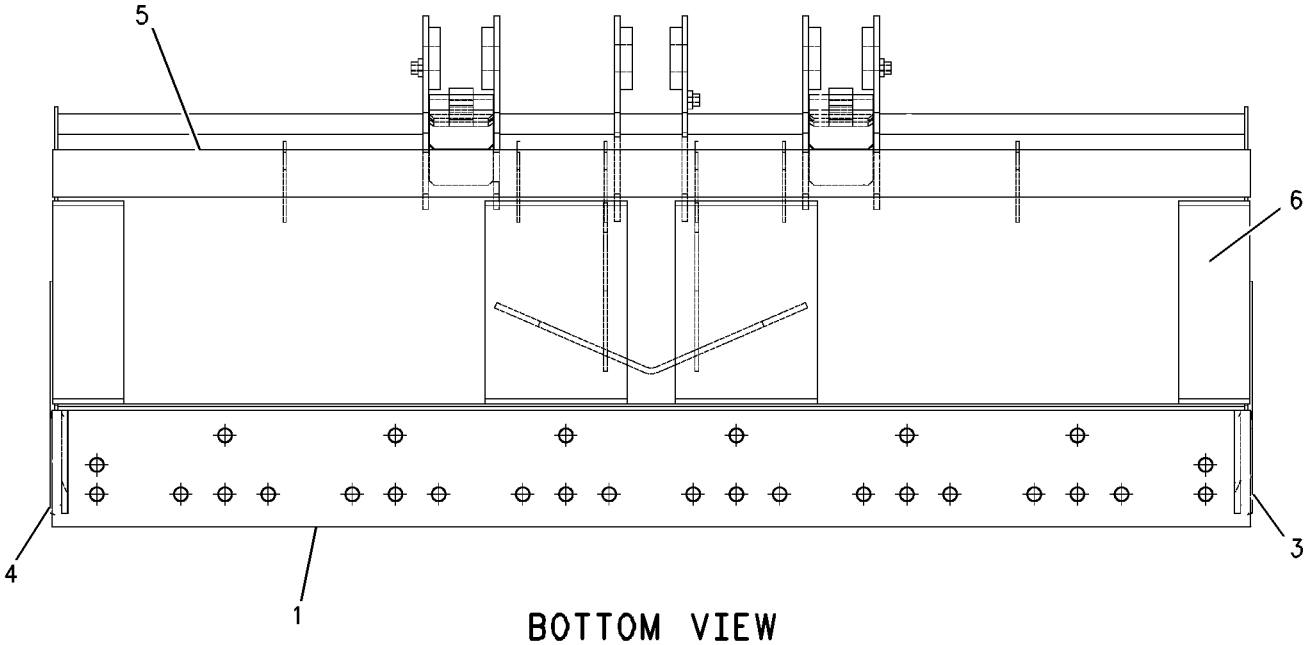

BOTTOM VIEW

GRAPHIC #1 **<END>** g00663936

172-8559 BUCKET AS-GENERAL PURPOSE

S/N: RRS1-UP
1.8-CU M (2.4-CU YD) CAPACITY
PART OF 167-3966 BUCKET GP-GENERAL PURPOSE
AN ATTACHMENT

SMCS-6101 **i01382631**

NOTE	REF NO	GRAPHIC REF	PART NUMBER	QTY	PART NAME 1 2 3 4 5 6 (PRODUCT LEVEL)	SEE PAGE
Y	1	1	*145-5166*	1	BUCKET AS-GENERAL PURPOSE	576

Y-SEPARATE ILLUSTRATION

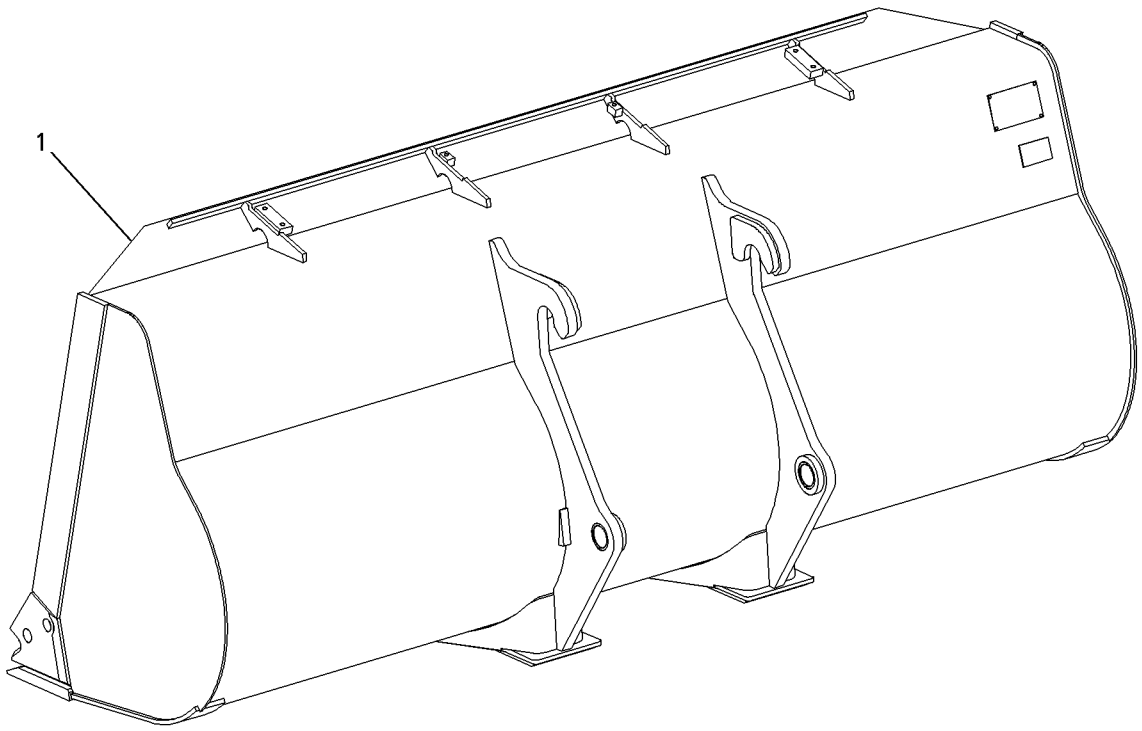

GRAPHIC #1 **<END>** g00730789

172-8563 BUCKET AS-GENERAL PURPOSE

S/N: RRS1-UP
1.68-CU M (2.2-CU YD) CAPACITY
PART OF 167-3963 BUCKET GP-GENERAL PURPOSE
AN ATTACHMENT

SMCS-6101 **i01505695**

NOTE	REF NO	GRAPHIC REF	PART NUMBER	QTY	PART NAME 1 2 3 4 5 6 (PRODUCT LEVEL)	SEE PAGE
Y	1	1	*145-5163*	1	BUCKET AS-GENERAL PURPOSE	575

Y-SEPARATE ILLUSTRATION

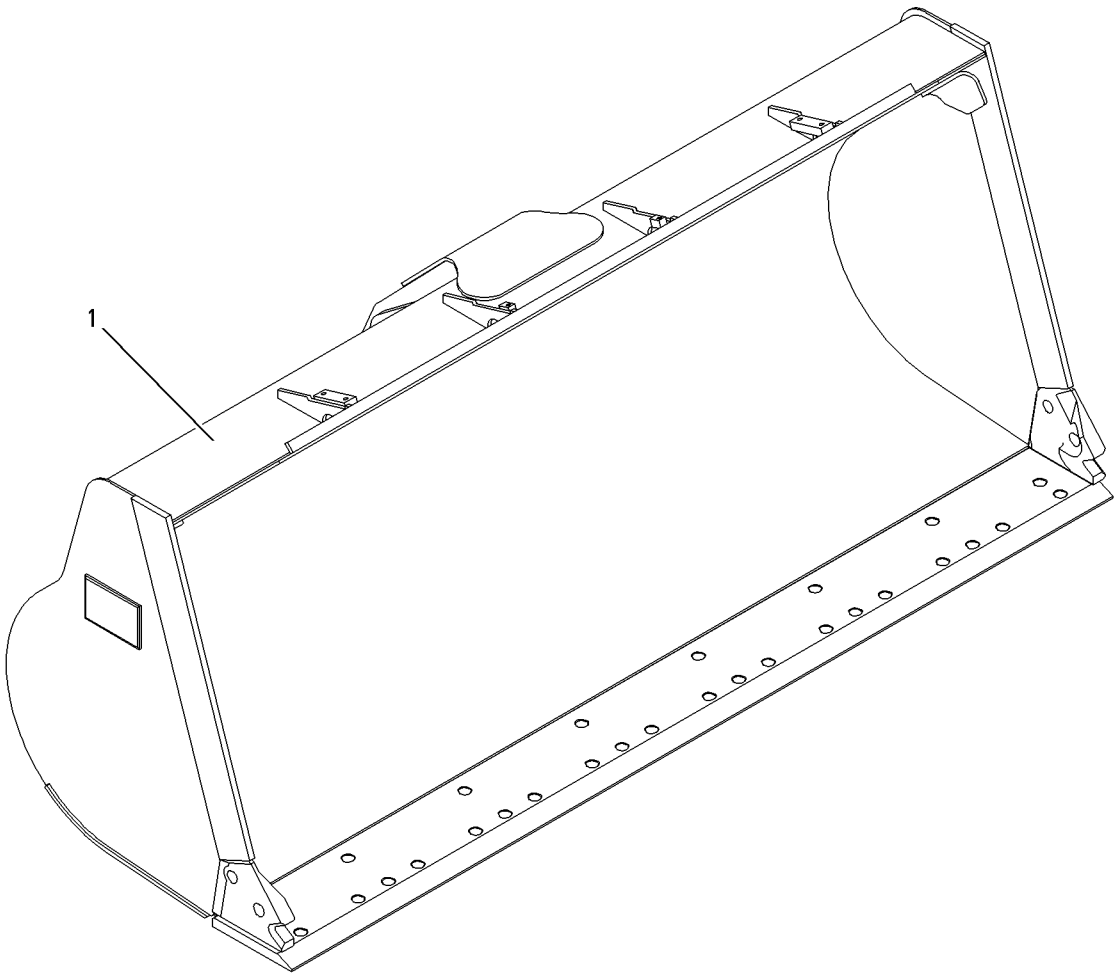

GRAPHIC #1 **<END>** g00782875

WORK TOOLS

172-8568 BUCKET AS-GENERAL PURPOSE

S/N: JRL1-UP
1.8-CU M (2.35-CU YD) CAPACITY
PART OF 375-8358, 375-8359 DISTRIBUTION AR
AN ATTACHMENT

SMCS-6101 **i04560195**

NOTE	REF NO	GRAPHIC REF	PART NUMBER	QTY	PART NAME 1 2 3 4 5 6 (PRODUCT LEVEL)	SEE PAGE
	1	1	**137-4234**	1	PLATE-IDENTIFICATION (WORK TOOL)	
Y	2	1	*147-7331*	1	BUCKET AS-GENERAL PURPOSE	577
	3	1	**168-8389**	4	TACK-FASTENER	

Y-SEPARATE ILLUSTRATION

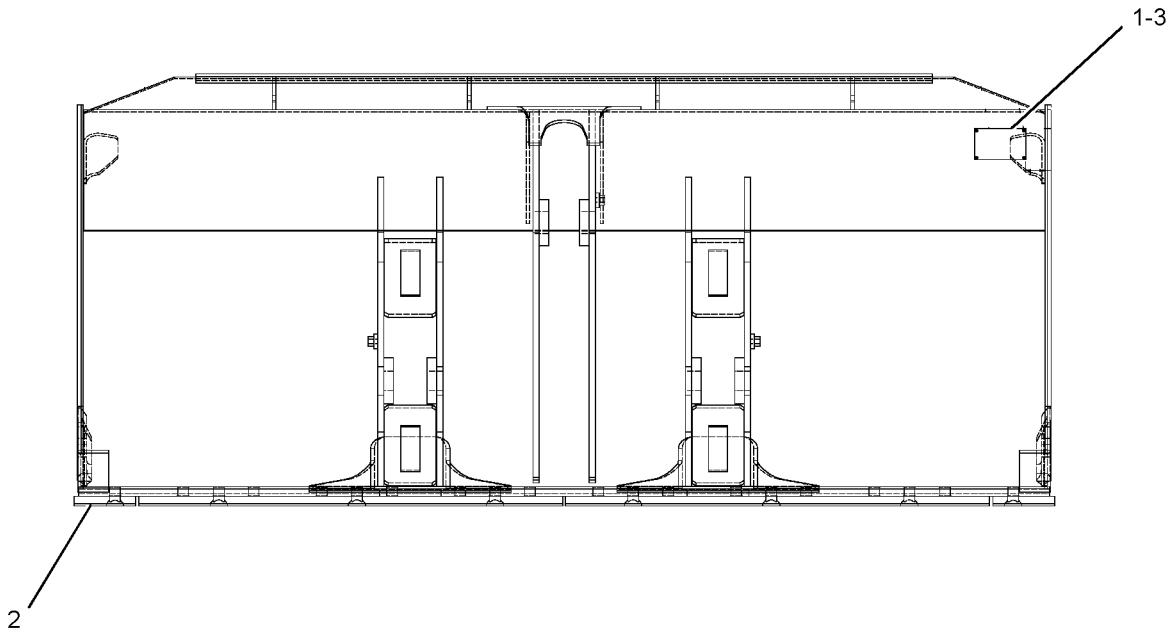

GRAPHIC #1 **<END>** g01956079

173-3635 BUCKET AS-GENERAL PURPOSE

S/N: JRL1-UP
2.1-CU M (2.75-CU YD) CAPACITY
AN ATTACHMENT

SMCS-6101 **i04589209**

NOTE	REF NO	GRAPHIC REF	PART NUMBER	QTY	PART NAME 1 2 3 4 5 6 (PRODUCT LEVEL)	SEE PAGE
	1	1	**4E-0659**	1	EDGE-CUTTING (243-CM)	
	2	1	**9V-4484**	2	PLATE	
	3	1	**111-9758**	1	PLATE	
	4	1	**152-4014**	1	HINGE AS (CENTER, RH)	
	5	1	**152-4015**	1	HINGE AS (CENTER, LH)	
	6	1	**152-4020**	1	HINGE AS (OUTER, LH)	
	7	1	**152-4021**	1	HINGE AS (OUTER, RH)	
	8	1	**152-4022**	1	HINGE AS (INNER, LH)	
	9	1	**152-4023**	1	HINGE AS (INNER, RH)	
	10	1	**162-7790**	2	PLATE	
	11	1	**164-4021**	2	PLATE	
	12	1	**164-9316**	2	PLATE	
	13	1	**169-4952**	2	PLATE	

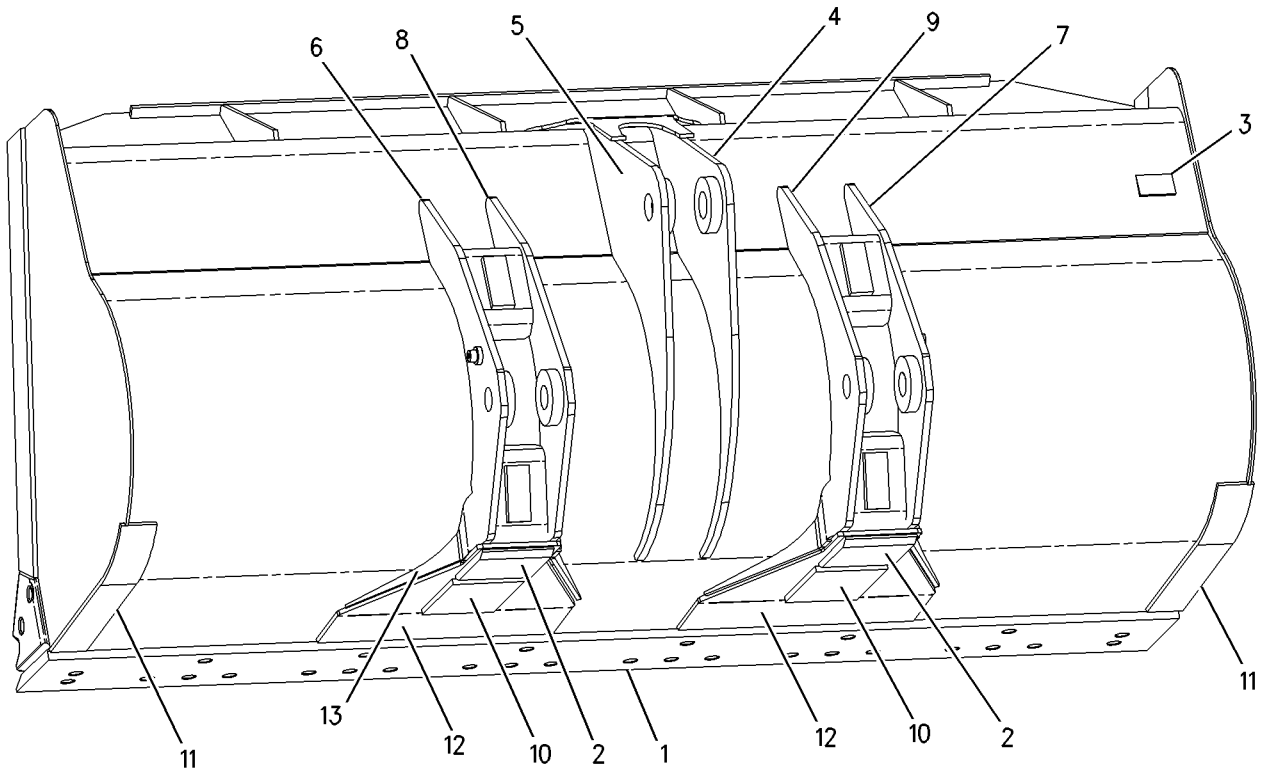

GRAPHIC #1 **<END>** g00646579

241-0937 BUCKET AS-GENERAL PURPOSE—QUICK COUPLER

S/N: RRS1-UP
2524-MM (99.4-IN) WIDE X 2.1-CU M (2.8-CU YD) CAPACITY
PART OF 241-0936 BUCKET GP-GENERAL PURPOSE
AN ATTACHMENT

SMCS-6101 **i02973992**

NOTE	REF NO	GRAPHIC REF	PART NUMBER	QTY	PART NAME 1 2 3 4 5 6 (PRODUCT LEVEL)	SEE PAGE
	1	1	**4E-0659**	1	EDGE-CUTTING	
	2	1	**9V-9480**	2	PLATE	
	3	1	**092-1136**	2	BOSS (M10X1.5-THD)	
	4	1	*154-8410*	1	PLATE AS (RH)	
		1	**2C-9259**	1	PLATE-IDENTIFICATION (CAT)	
		1	**6I-8311**	1	CORNER (RH)	
		1	**154-8413**	1	BAR	
	5	1	*154-8411*	1	PLATE AS (LH)	
		1	**2C-9259**	1	PLATE-IDENTIFICATION (CAT)	
		1	**6I-8310**	1	CORNER (LH)	
		1	**154-8413**	1	BAR	
	6	1	**164-4021**	2	PLATE	
	7	1	**164-9316**	2	PLATE	
	8	1	**9T-3598**	2	BOSS (M10X1.5-THD)	

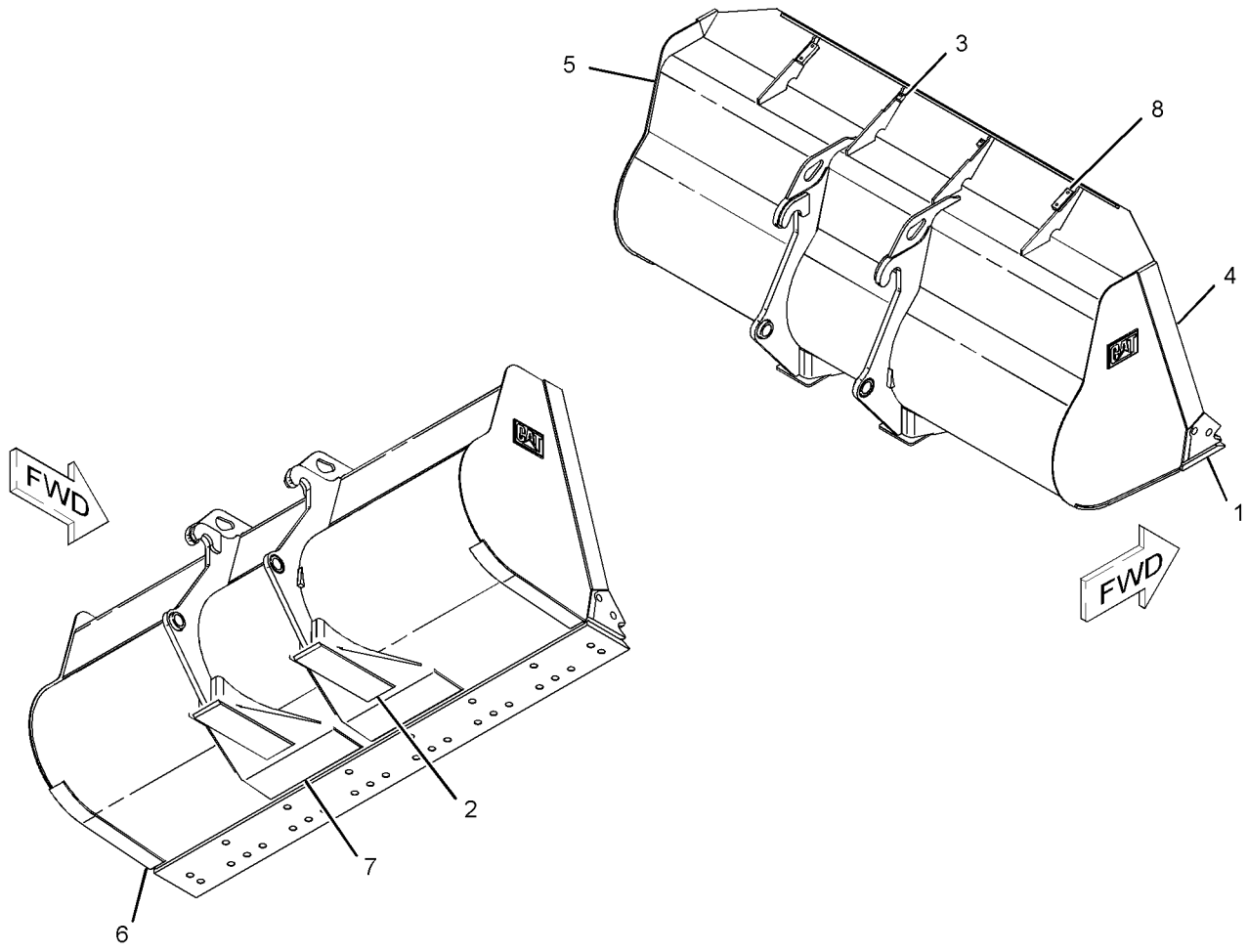

GRAPHIC #1 **<END>** g01116263

WORK TOOLS

252-6911 BUCKET AS-GENERAL PURPOSE

S/N: RRS1-UP
2524-MM (99.N-IN) WIDE X 2.1-CU M (2.8-CU YD) CAPACITY
PART OF 252-6910 BUCKET GP-GENERAL PURPOSE
AN ATTACHMENT

SMCS-6101 **i03066298**

NOTE	REF NO	GRAPHIC REF	PART NUMBER	QTY	PART NAME 1 2 3 4 5 6 (PRODUCT LEVEL)	SEE PAGE
	1	1	**4E-0659**	1	EDGE-CUTTING	
	2	1	**9V-9480**	2	PLATE	
	3	1	**092-1136**	2	BOSS (M10X1.5-THD)	
	4	1	**9T-3598**	2	BOSS (M10X1.5-THD)	
	5	1	**145-5201**	1	HINGE AS (TILT, RH)	
	6	1	**145-5202**	1	HINGE AS (TILT, LH)	
	7	1	*154-8410*	1	PLATE AS (RH)	
		1	**154-8413**	1	BAR	
		1	**2C-9259**	1	PLATE-IDENTIFICATION (CAT)	
		1	**6I-8311**		CORNER (RH)	
	8	1	*154-8411*	1	PLATE AS (LH)	
		1	**154-8413**	1	BAR	
		1	**2C-9259**	1	PLATE-IDENTIFICATION (CAT)	
		1	**6I-8310**	1	CORNER (LH)	
	9	1	**164-4021**	2	PLATE	
	10	1	**164-4022**	1	HINGE AS (LIFT, OUTER, RH)	
	11	1	**164-4024**	1	HINGE AS (LIFT, OUTER, LH)	
	12	1	**164-9316**	2	PLATE	

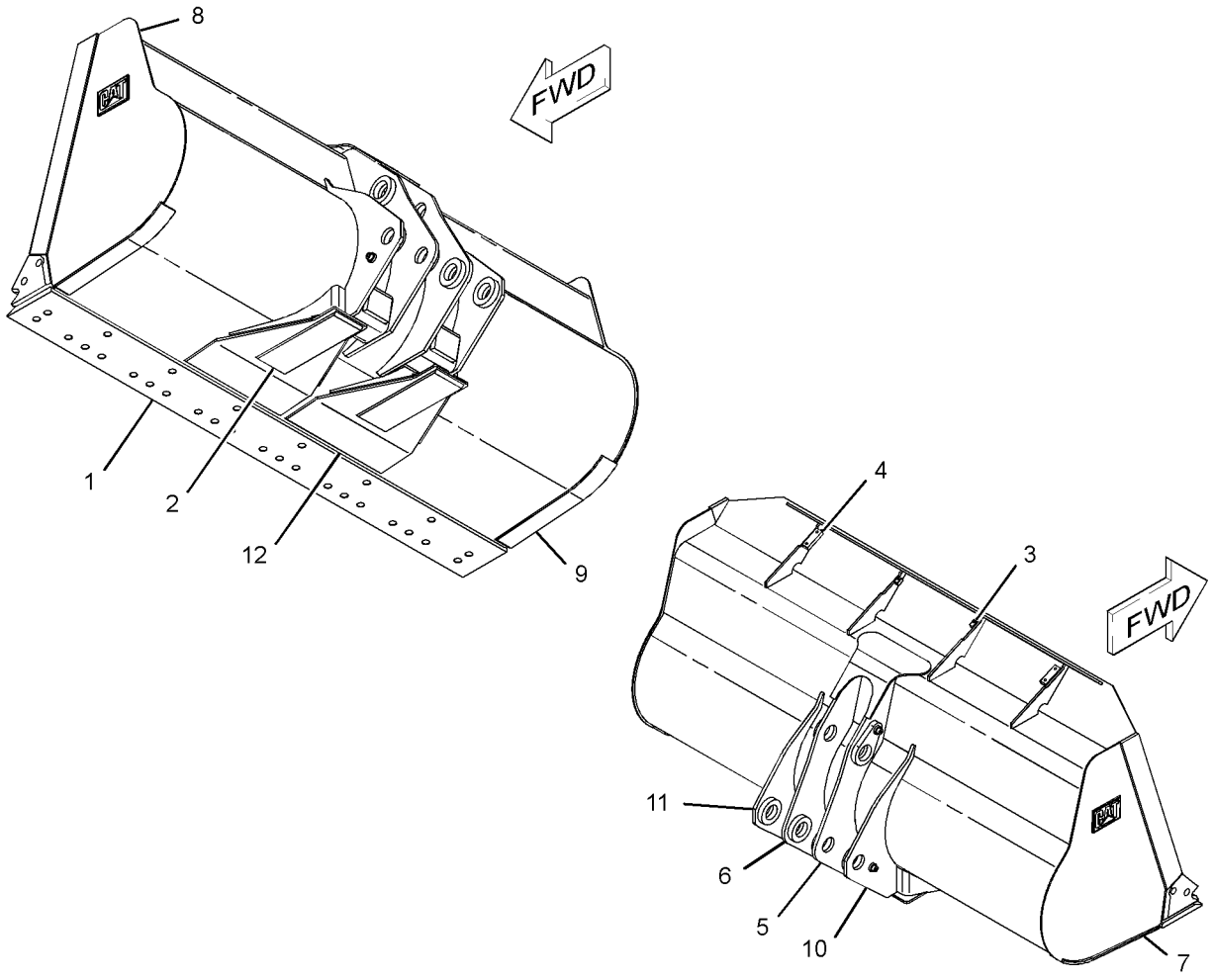

GRAPHIC #1 **<END>** g01557274

251-5414 BUCKET AS-LIGHT MATERIAL—QUICK COUPLER

S/N: RRS1-UP
2532-MM (99.7-IN) WIDE X 2.8-CU M (3.7-CU YD) CAPACITY
PART OF 251-5413 BUCKET GP-LIGHT MATERIAL
AN ATTACHMENT

SMCS-6103 **i03016471**

NOTE	REF NO	GRAPHIC REF	PART NUMBER	QTY	PART NAME 1 2 3 4 5 6 (PRODUCT LEVEL)	SEE PAGE
	1	1	**4E-0659**	1	EDGE-CUTTING	
	2	1	**9V-9480**	2	PLATE	
	3	1	**092-1136**	2	BOSS (M10X1.5-THD)	
	5	1	**164-9316**	2	PLATE	
	6	1	*174-4426*	1	PLATE AS (LH)	
	6A	1	**2C-9259**	1	PLATE-IDENTIFICATION (CAT)	
	6B	1	**6I-8310**	1	CORNER (LH)	
	7	1	*174-4427*	1	PLATE AS (RH)	
	7A	1	**2C-9259**	1	PLATE-IDENTIFICATION (CAT)	
	7B	1	**6I-8311**	1	CORNER (RH)	
	8	1	**174-4726**	2	PLATE	
	9	1	**9T-3598**	2	BOSS (M10X1.5-THD)	

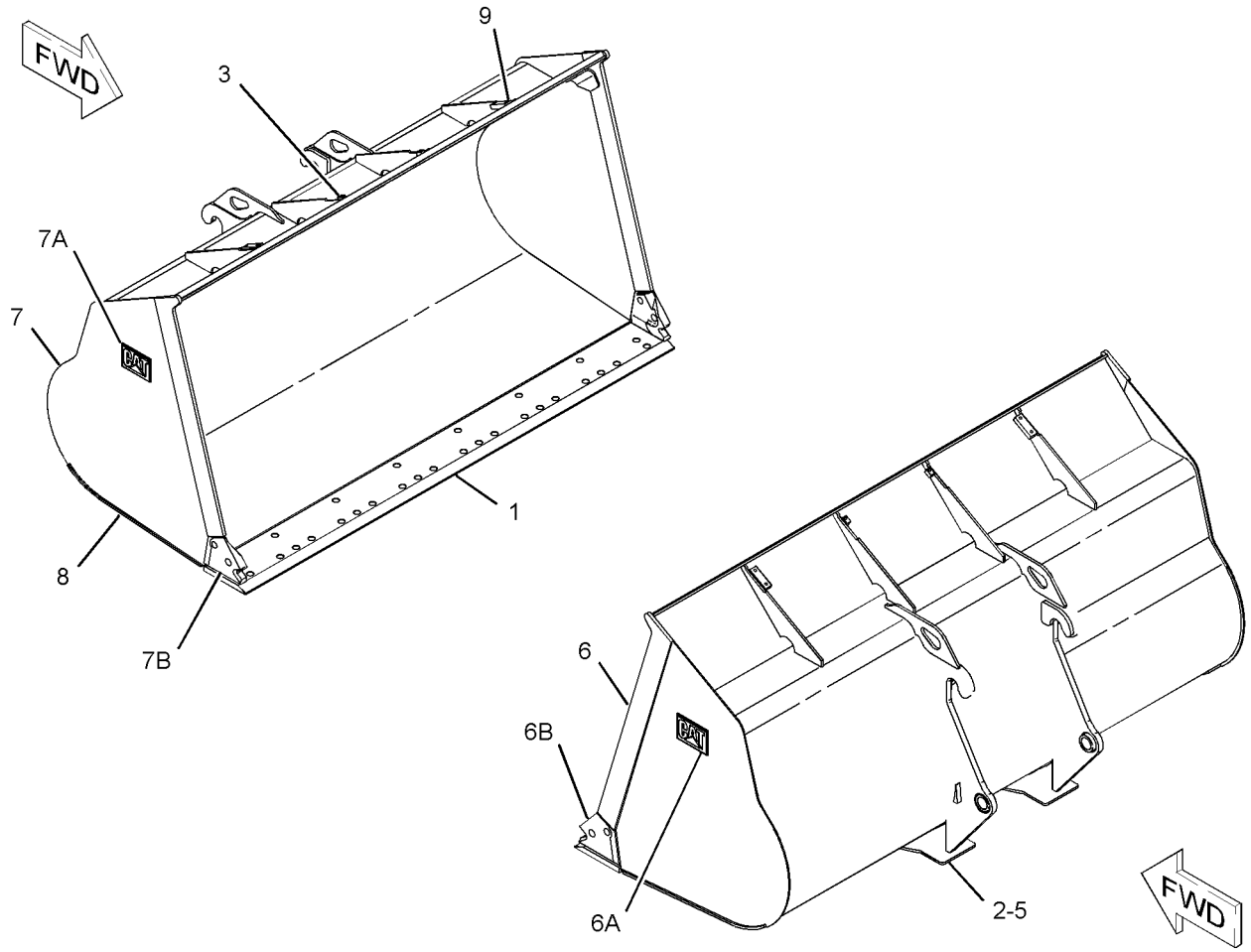

GRAPHIC #1 **<END>** g01119131

WORK TOOLS

252-6905 BUCKET AS-LIGHT MATERIAL

S/N: RRS1-UP
2532-MM (99.6-IN) WIDE X 2.8-CU M (3.7-CU YD) CAPACITY
PART OF 252-6904 BUCKET GP-LIGHT MATERIAL
AN ATTACHMENT

SMCS-6103 **i03066291**

NOTE	REF NO	GRAPHIC REF	PART NUMBER	QTY	PART NAME 1 2 3 4 5 6 (PRODUCT LEVEL)	SEE PAGE
	1	1	**4E-0659**	1	EDGE-CUTTING	
	2	1	**9V-9480**	2	PLATE	
	3	1	**092-1136**	2	BOSS (M10X1.5-THD)	
	4	1	**145-5201**	1	HINGE AS (TILT, RH)	
	5	1	**145-5202**	1	HINGE AS (TILT, LH)	
	6	1	**162-7790**	4	PLATE	
	7	1	**164-4022**	1	HINGE AS (LIFT, OUTER, RH)	
	8	1	**164-4024**	1	HINGE AS (LIFT, OUTER, LH)	
	9	1	**164-9316**	2	PLATE	
	10	1	**174-4726**	2	PLATE	
	11	1	**9T-3598**	2	BOSS (M10X1.5-THD)	

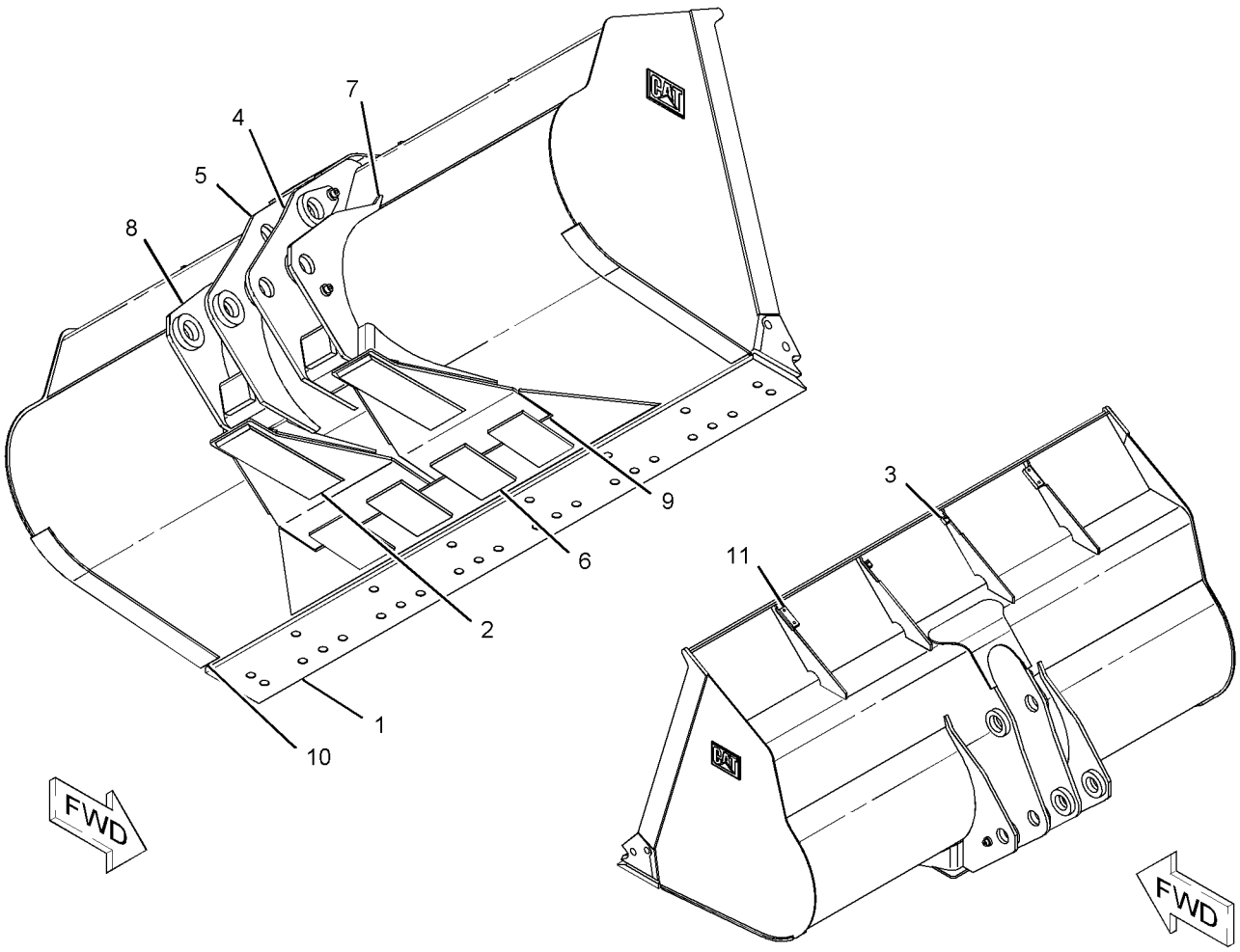

GRAPHIC #1 **<END>** g01141732

WORK TOOLS

172-8556 BUCKET AS-PENETRATION

S/N: RRS1-UP
2594-MM (102.1-IN) WIDE X 1.7-CU M (2.2-CU YD) CAPACITY
PART OF 167-3964 BUCKET GP-PENETRATION
AN ATTACHMENT

SMCS-6131 **i01397950**

NOTE	REF NO	GRAPHIC REF	PART NUMBER	QTY	PART NAME 1 2 3 4 5 6 (PRODUCT LEVEL)	SEE PAGE
	1	1	**4E-2482**	1	EDGE AS-CUTTING	
		1	**1U-1254**	8	ADAPTER	
		1	**4E-2483**	1	EDGE-CUTTING	
	2	1	**145-5201**	1	HINGE AS (TILT, RH)	
	3	1	**145-5202**	1	HINGE AS (TILT, LH)	
	4	1	**145-5220**	1	PLATE-WEAR	
	5	1	**145-5221**	4	PLATE-WEAR	
	6	1	**164-4022**	1	HINGE AS (LIFT, OUTER, RH)	
	7	1	**164-4024**	1	HINGE AS (LIFT, OUTER, LH)	
	8	1	**9T-3598**	2	BOSS (M10X1.5-THD)	
	9	1	**4V-8285**	1	CORNER (RH)	
	10	1	**4V-8286**	1	CORNER (LH)	

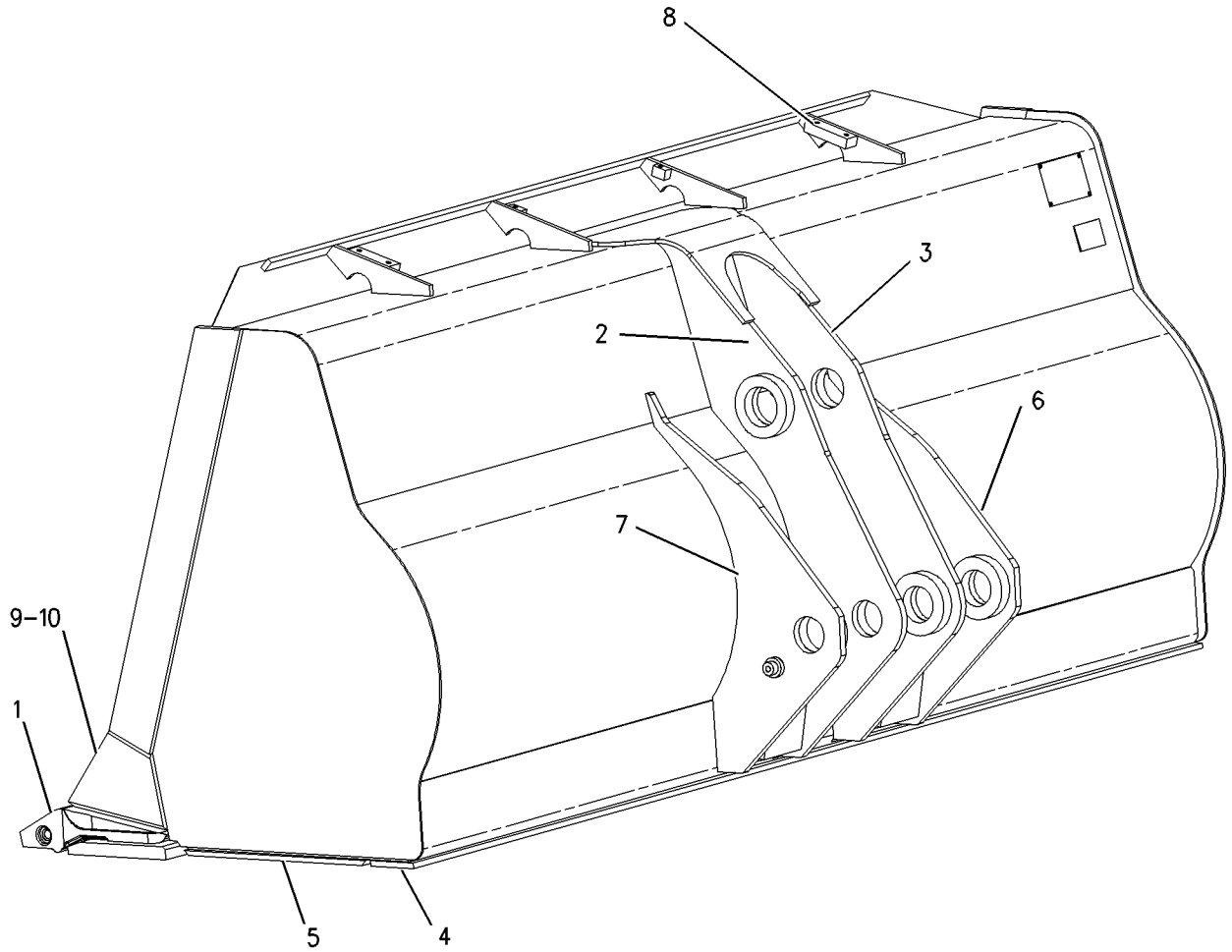

GRAPHIC #1 **<END>** g00736719

167-3963 BUCKET GP-GENERAL PURPOSE

S/N: RRS1-UP
1.7-CU M (2.2-CU YD) CAPACITY
PART OF 375-8357 DISTRIBUTION AR
AN ATTACHMENT

SMCS-6101 **i03743111**

NOTE	REF NO	GRAPHIC REF	PART NUMBER	QTY	PART NAME 1 2 3 4 5 6 (PRODUCT LEVEL)	SEE PAGE
	1	1	**208-1032**	1	PLATE AS	
Y	2	1	*148-7900*	1	MOUNTING GP-BUCKET	602
Y	3	1	**172-8563**	1	BUCKET AS-GENERAL PURPOSE	580
	4	1	**8T-7934**	6	WASHER-HARD (11X21X5-MM THK)	
M	5	1	**8T-4136**	6	BOLT (M10X1.5X25-MM)	

M-METRIC PART
Y-SEPARATE ILLUSTRATION

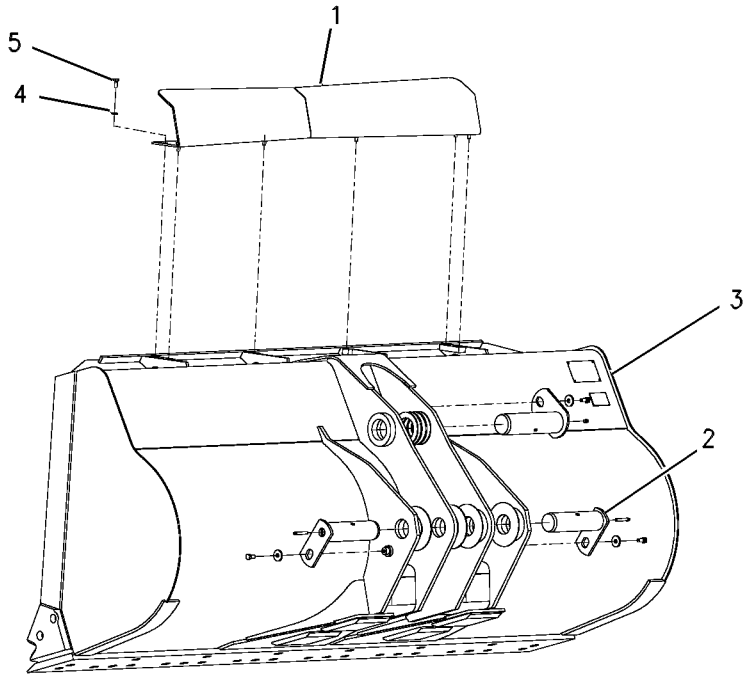

GRAPHIC #1 **<END>** g00605267

167-3966 BUCKET GP-GENERAL PURPOSE–QUICK COUPLER

S/N: RRS1-UP
2532-MM (99.6-IN) WIDE X 1.7-CU M (2.2-CU YD) CAPACITY
AN ATTACHMENT

SMCS-6101 **i03996960**

NOTE	REF NO	GRAPHIC REF	PART NUMBER	QTY	PART NAME 1 2 3 4 5 6 (PRODUCT LEVEL)	SEE PAGE
	1	1	**143-4973**	1	PLATE AS	
Y	2	1	*172-8559*	1	BUCKET AS-GENERAL PURPOSE	579
	3	1	**8T-7934**	6	WASHER-HARD (11X21X5-MM THK)	
M	4	1	**8T-4136**	6	BOLT (M10X1.5X25-MM)	

M-METRIC PART
Y-SEPARATE ILLUSTRATION

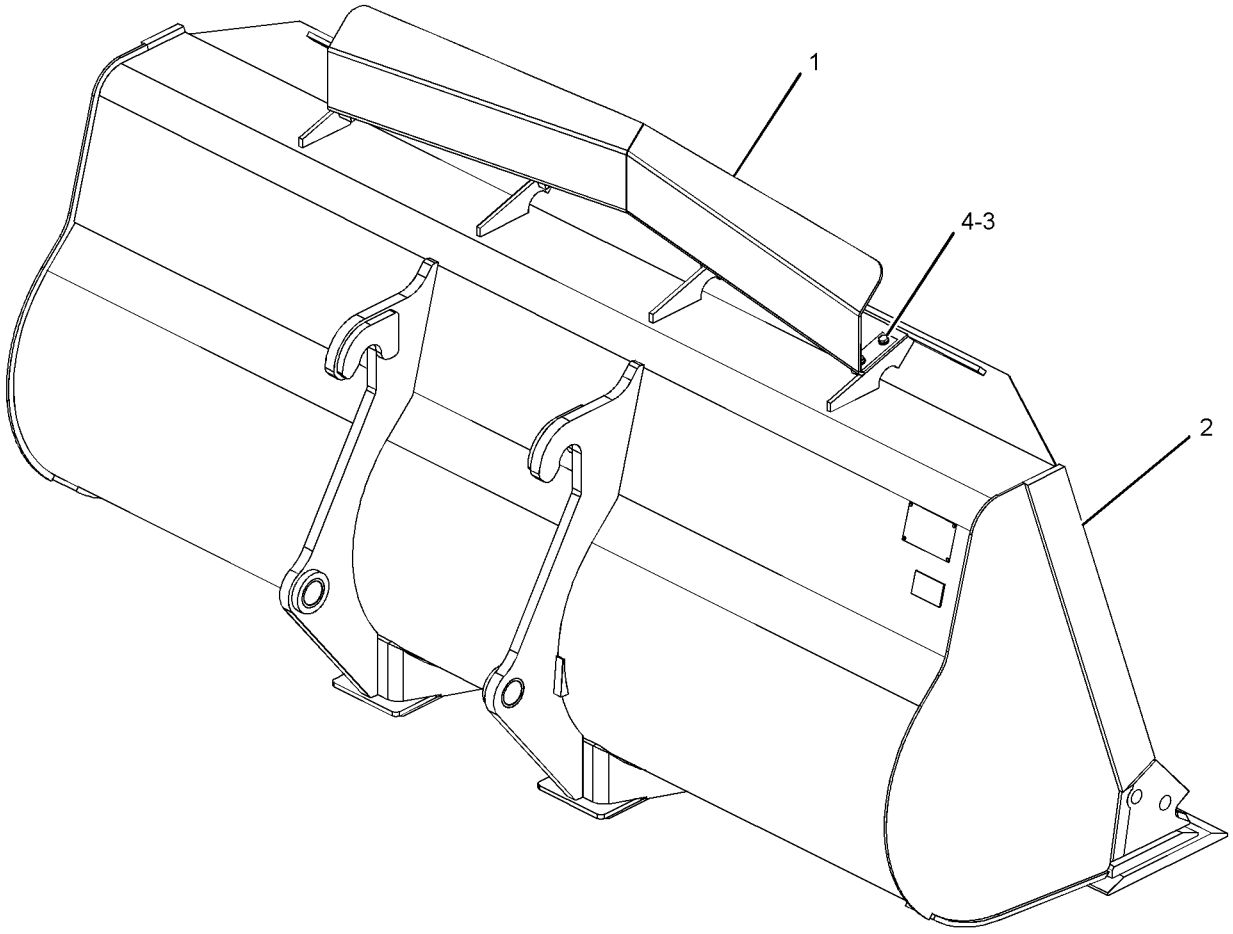

GRAPHIC #1 **<END>** g02177636

241-0936 BUCKET GP-GENERAL PURPOSE—QUICK COUPLER

S/N: RRS1-UP
2524-MM (99.4-IN) WIDE X 2.1-CU M (2.8-CU YD) CAPACITY
PART OF 241-0935 BUCKET AR-GENERAL PURPOSE
AN ATTACHMENT

SMCS-6101 **i03016433**

NOTE	REF NO	GRAPHIC REF	PART NUMBER	QTY	PART NAME 1 2 3 4 5 6 (PRODUCT LEVEL)	SEE PAGE
	1	1	**137-4234**	1	PLATE-IDENTIFICATION (WORK TOOL)	
	2	1	**168-8389**	4	TACK-FASTENER	
Y	3	1	*241-0937*	1	BUCKET AS-GENERAL PURPOSE (QUICK COUPLER)	583

Y-SEPARATE ILLUSTRATION

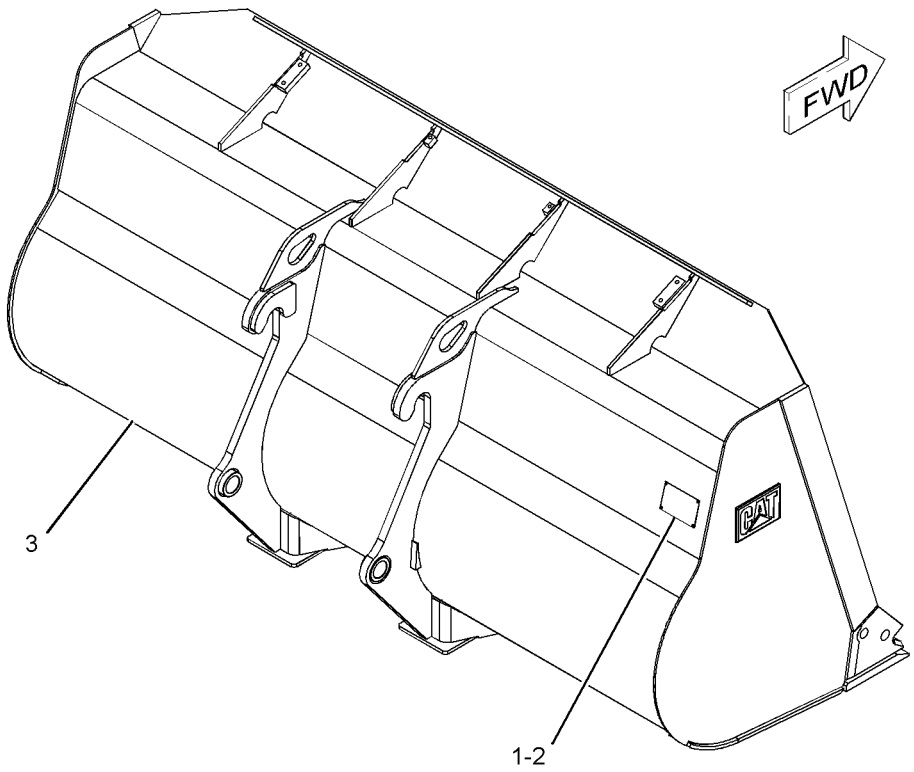

GRAPHIC #1 **<END>** g01116212

252-6910 BUCKET GP-GENERAL PURPOSE

S/N: RRS1-UP
2524-MM (99.4-IN) WIDE X 2.1-CU M (2.8-CU YD) CAPACITY
PART OF 252-6909 BUCKET AR-GENERAL PURPOSE
AN ATTACHMENT

SMCS-6101 **i03066294**

NOTE	REF NO	GRAPHIC REF	PART NUMBER	QTY	PART NAME 1 2 3 4 5 6 (PRODUCT LEVEL)	SEE PAGE
	1	1	**137-4234**	1	PLATE-IDENTIFICATION (WORK TOOL)	
	2	1	**168-8389**	4	TACK-FASTENER	
Y	3	1	*252-6911*	1	BUCKET AS-GENERAL PURPOSE	584

Y-SEPARATE ILLUSTRATION

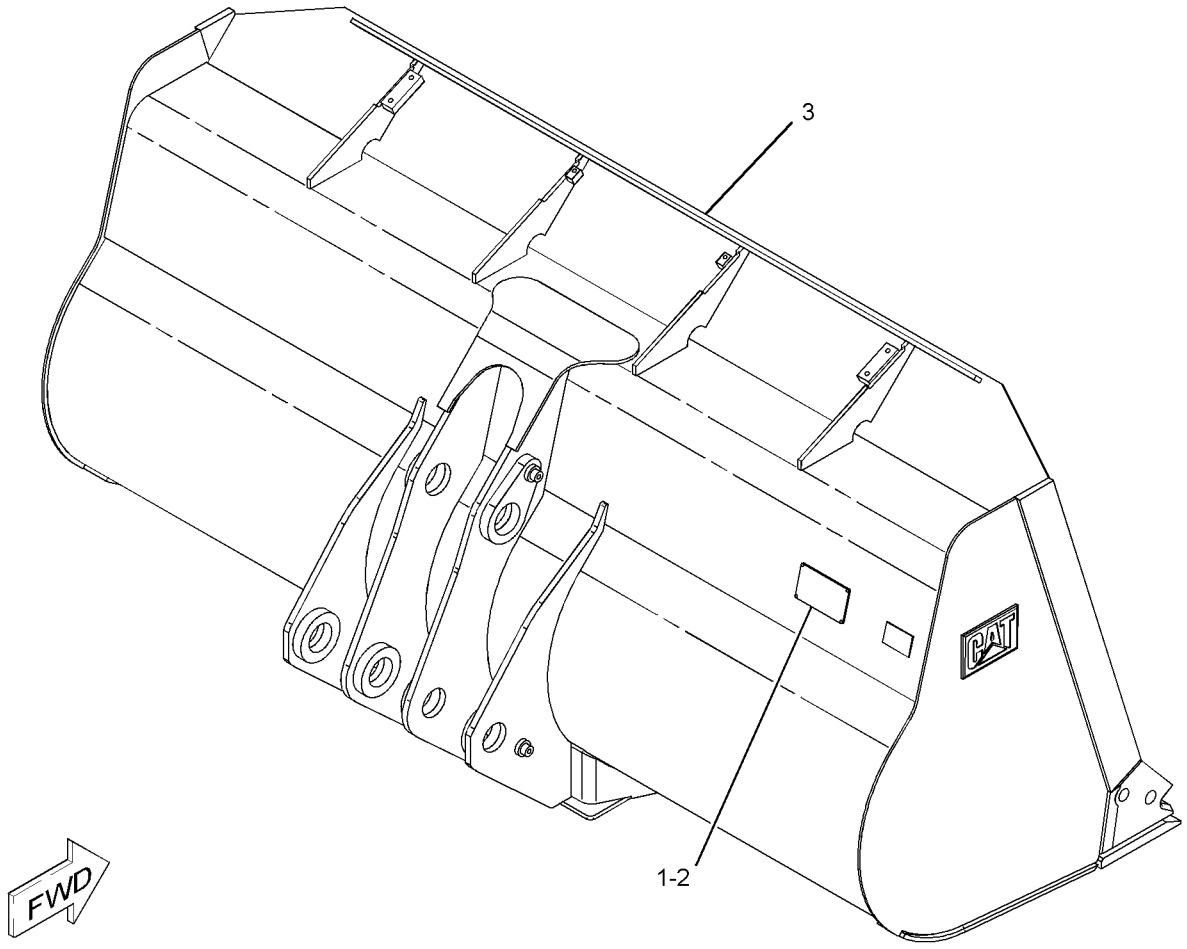

GRAPHIC #1 **<END>** g01119273

251-5413 BUCKET GP-LIGHT MATERIAL–QUICK COUPLER

S/N: RRS1-UP
2.8-CU M (3.7-CU YD) CAPACITY
PART OF 251-5412 BUCKET AR-LIGHT MATERIAL
AN ATTACHMENT

SMCS-6103 **i03016461**

NOTE	REF NO	GRAPHIC REF	PART NUMBER	QTY	PART NAME 1 2 3 4 5 6 (PRODUCT LEVEL)	SEE PAGE
	1	1	**137-4234**	1	PLATE-IDENTIFICATION (WORK TOOL)	
	2	1	**168-8389**	4	TACK-FASTENER	
Y	3	1	*251-5414*	1	BUCKET AS-LIGHT MATERIAL (QUICK COUPLER)	585

Y-SEPARATE ILLUSTRATION

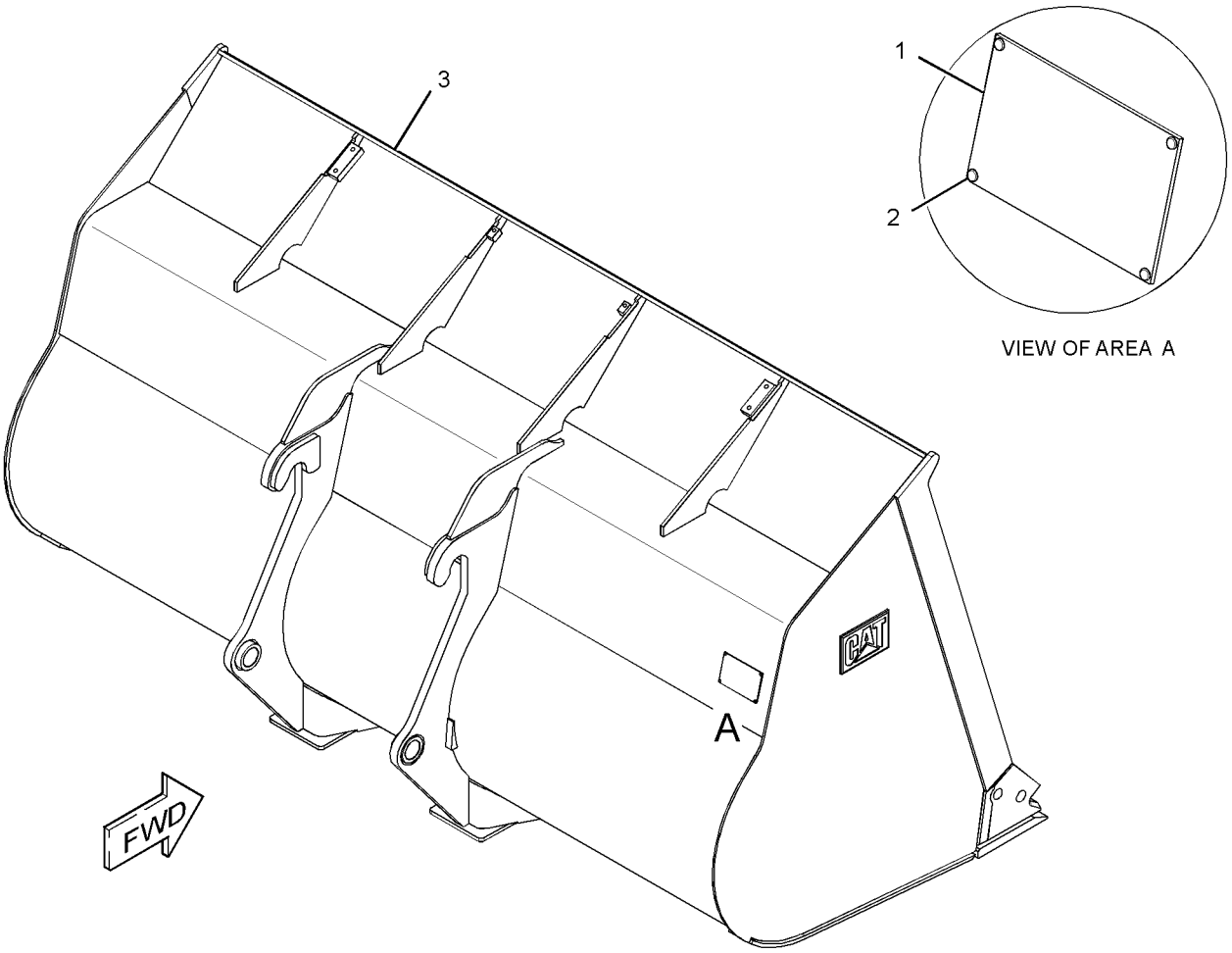

GRAPHIC #1 **<END>** g01535873

WORK TOOLS

252-6904 BUCKET GP-LIGHT MATERIAL

S/N: RRS1-UP
2.8-CU M (3.7-CU YD) CAPACITY
PART OF 252-6903 BUCKET AR-LIGHT MATERIAL
AN ATTACHMENT

SMCS-6103 **i03066288**

NOTE	REF NO	GRAPHIC REF	PART NUMBER	QTY	PART NAME 1 2 3 4 5 6 (PRODUCT LEVEL)	SEE PAGE
	1	1	**137-4234**	1	PLATE-IDENTIFICATION (WORK TOOL)	
	2	1	**168-8389**	4	TACK-FASTENER	
Y	3	1	*252-6905*	1	BUCKET AS-LIGHT MATERIAL	586

Y-SEPARATE ILLUSTRATION

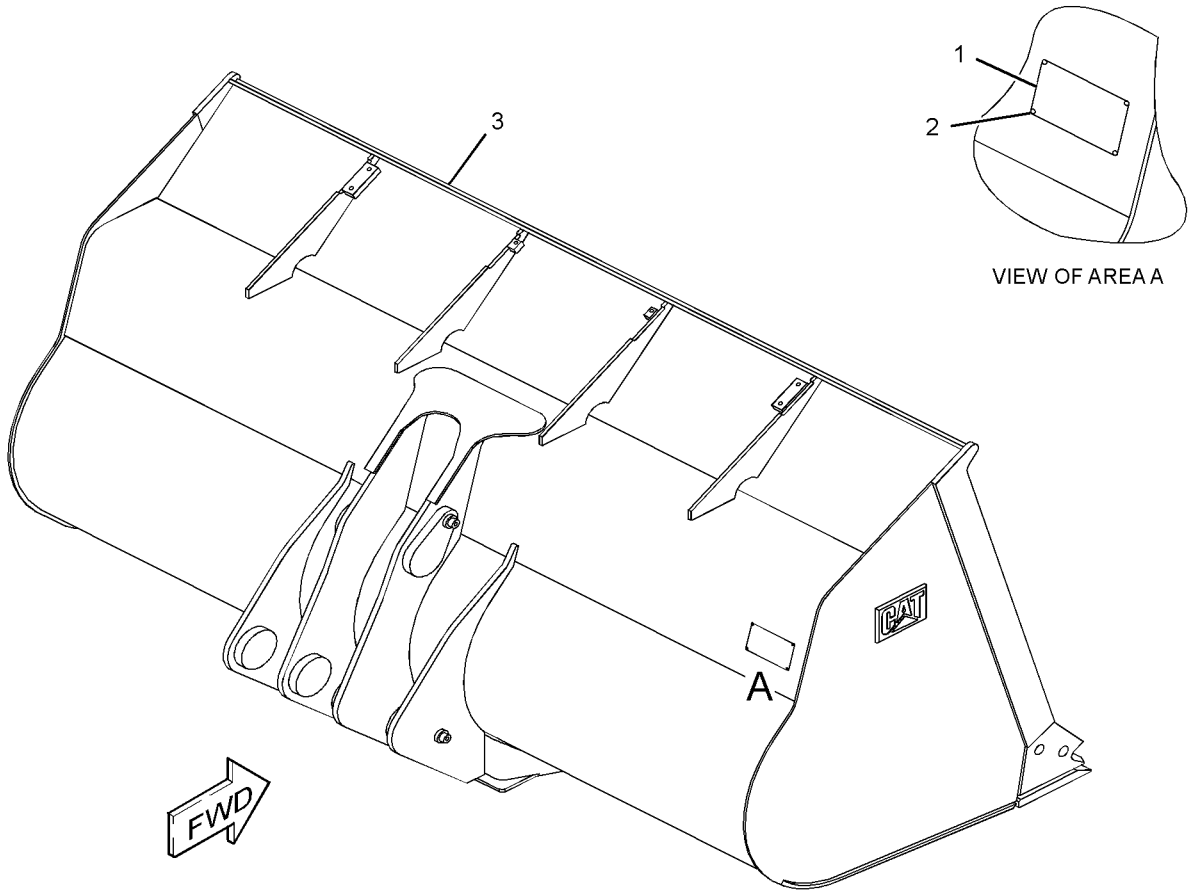

GRAPHIC #1 **<END>** g01301966

WORK TOOLS

167-3964 BUCKET GP-PENETRATION

S/N: RRS1-UP
1.7-CU M (2.2-CU YD) CAPACITY
AN ATTACHMENT

SMCS-6131 **i01378934**

NOTE	REF NO	GRAPHIC REF	PART NUMBER	QTY	PART NAME 1 2 3 4 5 6 (PRODUCT LEVEL)	SEE PAGE
	1	1	**143-4973**	1	PLATE AS	
Y	2	1	*148-7900*	1	MOUNTING GP-BUCKET	602
Y	3	1	*172-8556*	1	BUCKET AS-PENETRATION	587
	4	1	**8T-4121**	6	WASHER-HARD (11X21X2.5-MM THK)	
M	5	1	**8T-4136**	6	BOLT (M10X1.5X25-MM)	

M-METRIC PART
Y-SEPARATE ILLUSTRATION

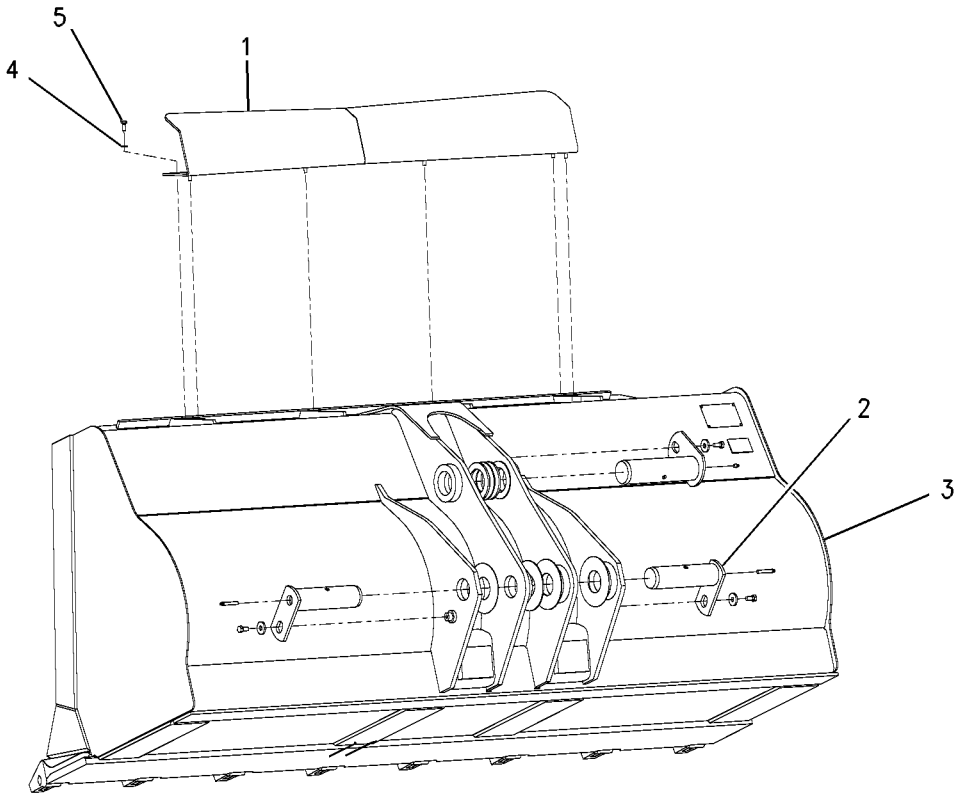

GRAPHIC #1 **<END>** g00636976

132-2443 CARRIAGE AS-FORK

S/N: RRS1-UP

AN ATTACHMENT

SMCS-6402 **i01259162**

NOTE	PART NUMBER	QTY	PART NAME 1 2 3 4 5 6 (PRODUCT LEVEL)	SEE PAGE
			(NO SERVICED PARTS)	

<END>

218-5113 COUPLER AR-QUICK—STANDARD LIFT MACHINES

S/N: RRS1-UP

FOR USE WITH 132-2350—PAGE 457. CANNOT BE USED WITH 148-7900—PAGE 602

AN ATTACHMENT

SMCS-6129 **i03031954**

NOTE	PART NUMBER	QTY	PART NAME 1 2 3 4 5 6 (PRODUCT LEVEL)	SEE PAGE
Y	*235-7400*	1	COUPLER GP-QUICK	596
Y	*148-7827*	1	CYLINDER & MTG GP-COUPLER	315
Y	*296-6812*	1	LINES GP-COUPLER (STANDARD LIFT MACHINES, WIDE)	339
Y	*297-2470*	1	LINES GP-COUPLER (STANDARD LIFT MACHINES)	342
Y-SEPARATE ILLUSTRATION				

<END>

WORK TOOLS

235-7400 COUPLER GP-QUICK

S/N: RRS1-UP

PART OF 218-5113 COUPLER AR-QUICK

AN ATTACHMENT

SMCS-6129 **i02585763**

NOTE	REF NO	GRAPHIC REF	PART NUMBER	QTY	PART NAME 1 2 3 4 5 6 (PRODUCT LEVEL)	SEE PAGE
	1	1	**132-2419**	2	PIN AS	
	2	1	**132-2427**	1	PIN AS	
	3	1	**132-2435**	1	PLATE	
	4	1	**132-2441**	1	PLATE AS	
	5	1	**146-7986**	2	SHIM (3.18-MM THK)	
	6	1	**146-7987**	2	SHIM (6.35-MM THK)	
	7	1	**176-0623**	2	WASHER (78X160X1.6-MM THK)	
	8	1	**176-0624**	2	WASHER (78X160X3-MM THK)	
	9	1	**235-7401**	1	COUPLER AS	
M		1	**9R-2672**	4	BOSS-THREADED (M10X1.5-THD)	
	11	1	**3B-8489**	1	FITTING-GREASE	
	12	1	**3B-8491**	2	FITTING-GREASE	
	13	1	**5P-4116**	8	WASHER-HARD (8.8X20.5X2-MM THK)	
	14	1	**7X-0618**	2	WASHER-HARD (13.5X40X5-MM THK)	
M	15	1	**8T-4908**	8	BOLT (M8X1.25X25-MM)	
M	16	1	**8T-4956**	2	BOLT (M12X1.75X35-MM)	
	17	1	**9H-5604**	1	RING-RETAINING	

M-METRIC PART

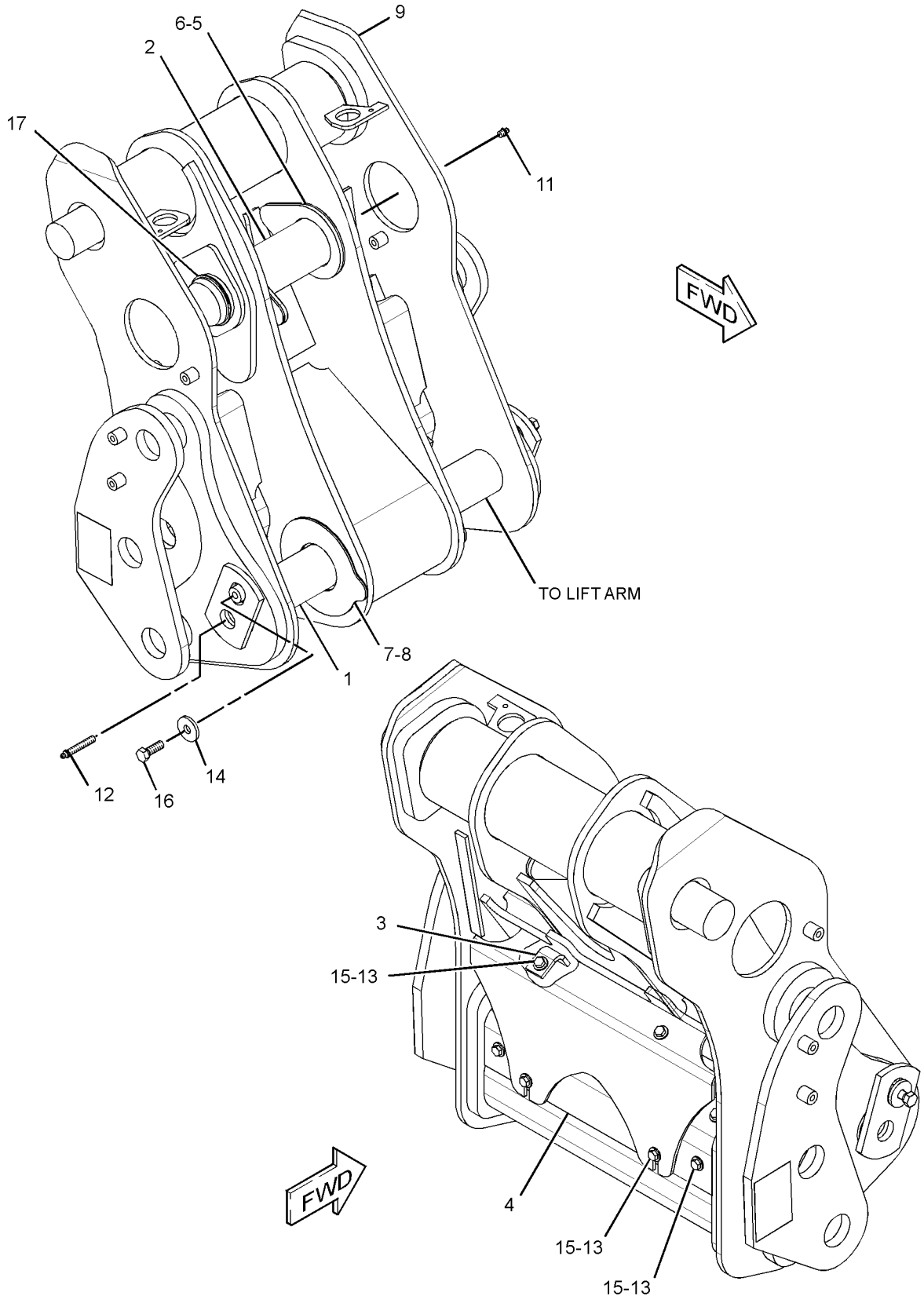

GRAPHIC #1 **<END>** g01323025

WORK TOOLS

8E-4566 EDGE GP-CUTTING

S/N: JRL1-UP; RRS1-UP
AN ATTACHMENT

SMCS-6801 **i01130561**

NOTE	PART NUMBER	QTY	PART NAME 1 2 3 4 5 6 (PRODUCT LEVEL)	SEE PAGE
	1J-5607	10	BOLT-PLOW	
	8E-4567	2	EDGE-CUTTING	
	4T-8091	2	EDGE-END	
	2J-3507	10	NUT-FULL (1-8 THD)	

<END>

8E-4568 EDGE GP-SEGMENT

S/N: JRL1-UP; RRS1-UP
PART OF 375-8357, 375-8358, 375-8359 DISTRIBUTION AR
AN ATTACHMENT

SMCS-6818 **i01130557**

NOTE	PART NUMBER	QTY	PART NAME 1 2 3 4 5 6 (PRODUCT LEVEL)	SEE PAGE
	1J-5607	14	BOLT-PLOW	
	8E-4569	7	EDGE-SEGMENT	
	2J-3507	14	NUT-FULL (1-8 THD)	

<END>

WORK TOOLS

195-6935 FORK GP-PALLET

S/N: RRS1-UP
1220-MM (48.03-IN) LONG
AN ATTACHMENT

SMCS-6136 **i01738109**

NOTE	REF NO	GRAPHIC REF	PART NUMBER	QTY	PART NAME 1 2 3 4 5 6 (PRODUCT LEVEL)	SEE PAGE
	1	1	**221-3424**	1	POSITIONER GP-WORK TOOL	
	2	1	**195-6961**	1	INSERT	
	3	1	**195-6962**	1	PIN	

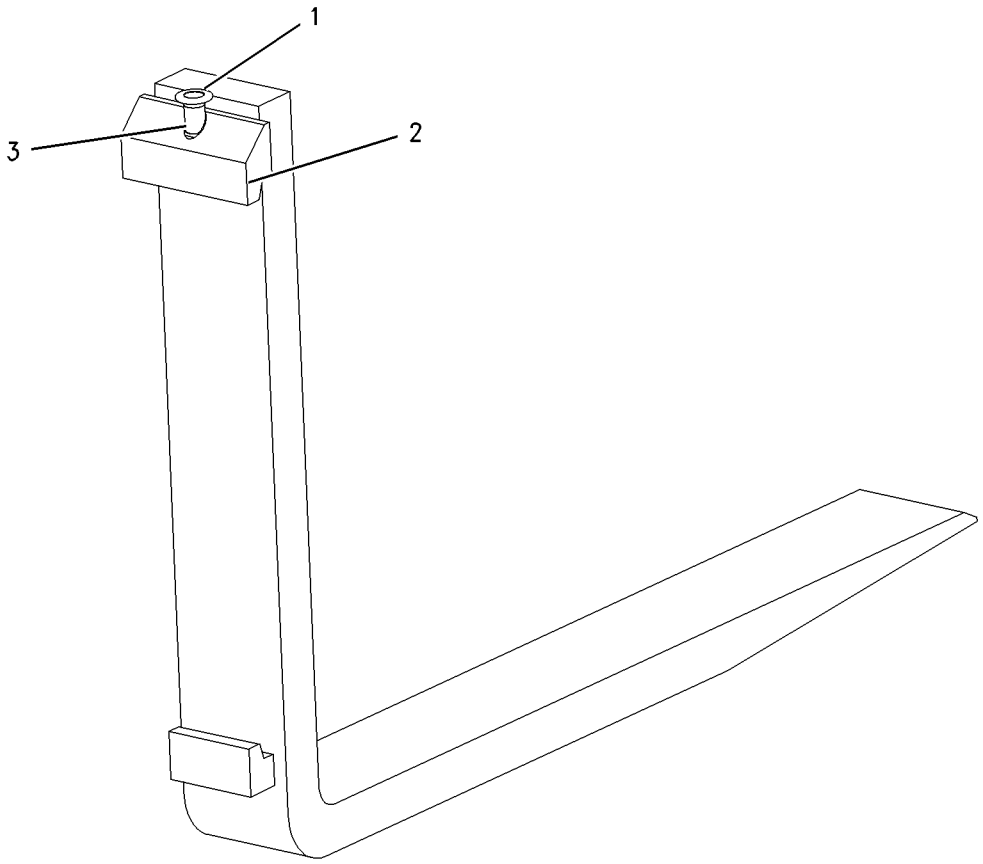

GRAPHIC #1 **<END>** g00811797

WORK TOOLS

195-6937 FORK GP-PALLET

S/N: RRS1-UP
1070-MM (42.12-IN) LONG
AN ATTACHMENT

SMCS-6136 **i01738133**

NOTE	REF NO	GRAPHIC REF	PART NUMBER	QTY	PART NAME 1 2 3 4 5 6 (PRODUCT LEVEL)	SEE PAGE
	1	1	**221-3424**	1	POSITIONER GP-WORK TOOL	
		1	**195-6961**	1	INSERT	
		1	**221-3428**	1	PIN	

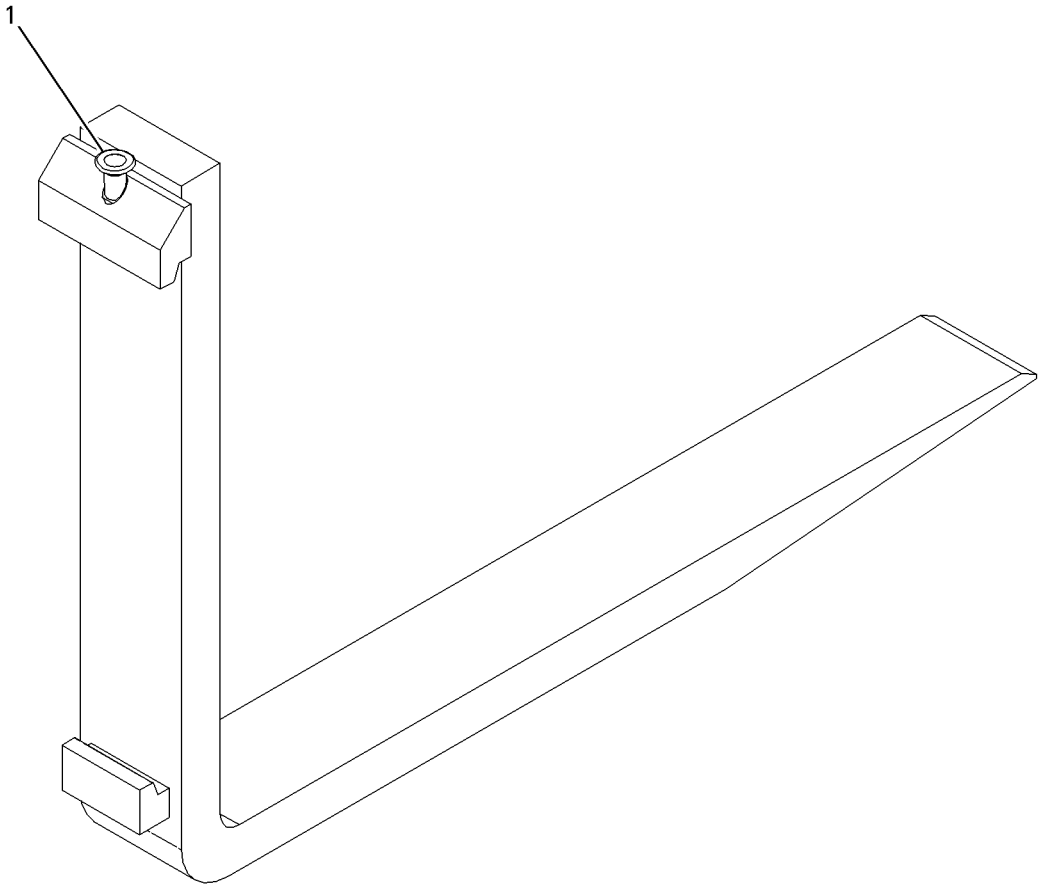

GRAPHIC #1 **<END>** g00798608

WORK TOOLS

195-6938 FORK GP-PALLET

S/N: RRS1-UP
1370-MM (54-IN) LONG
AN ATTACHMENT

SMCS-6136 **i01738134**

NOTE	REF NO	GRAPHIC REF	PART NUMBER	QTY	PART NAME 1 2 3 4 5 6 (PRODUCT LEVEL)	SEE PAGE
	1	1	**221-3424**	1	POSITIONER GP-WORK TOOL	
		1	**195-6961**	1	INSERT	
		1	**221-3428**	1	PIN	

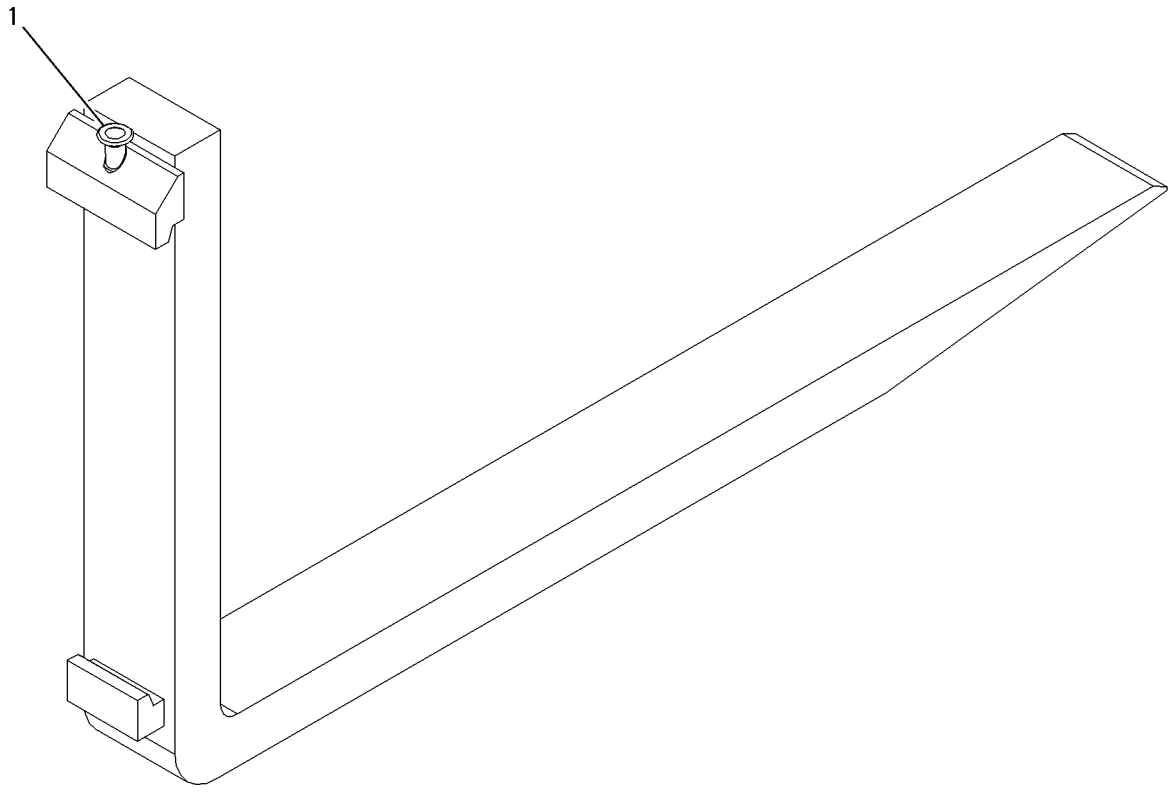

GRAPHIC #1 **<END>** g00797945

WORK TOOLS

148-7900 MOUNTING GP-BUCKET

S/N: RRS1-UP

PART OF 252-6909 BUCKET AR-GENERAL PURPOSE, 252-6903 BUCKET AR-LIGHT MATERIAL, 167-3963 BUCKET GP-GENERAL PURPOSE, 167-3964 BUCKET GP-PENETRATION AN ATTACHMENT

SMCS-6101, 6102, 6103, 6131, 6523 **i02007074**

NOTE	REF NO	GRAPHIC REF	PART NUMBER	QTY	PART NAME 1 2 3 4 5 6 (PRODUCT LEVEL)	SEE PAGE
	1	1	**3B-8489**	1	FITTING-GREASE	
	2	1	**3B-8491**	2	FITTING-GREASE	
B	3	1	**176-0623**	2	WASHER (78X160X1.6-MM THK)	
B	4	1	**176-0624**	2	WASHER (78X160X3-MM THK)	
B	5	1	**146-7986**	2	SHIM (3.18-MM THK)	
B	6	1	**146-7987**	2	SHIM (6.35-MM THK)	
	7	1	**146-8003**	2	PIN AS	
	8	1	**146-8006**	1	PIN AS	
	9	1	**7X-0618**	3	WASHER-HARD (13.5X40X5-MM THK)	
M	10	1	**8T-4192**	3	BOLT (M12X1.75X25-MM)	

B-USE AS REQUIRED
M-METRIC PART

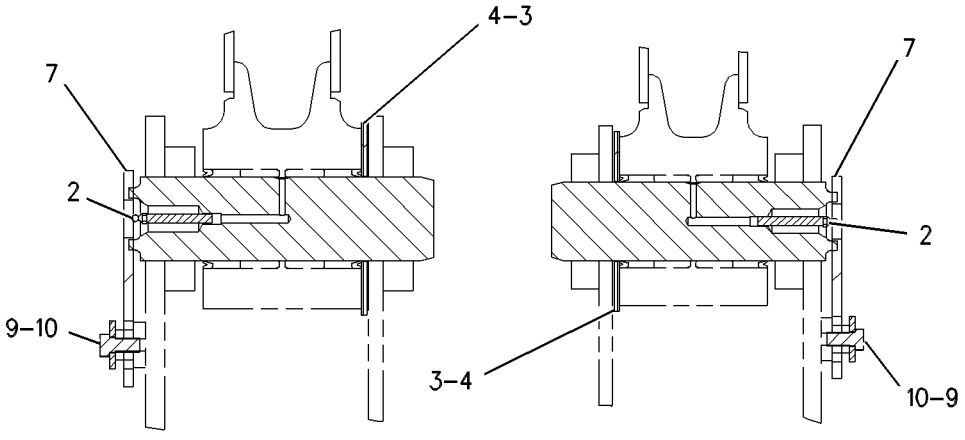

SECTION B-B

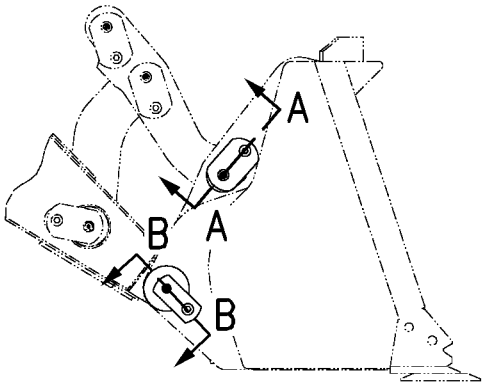

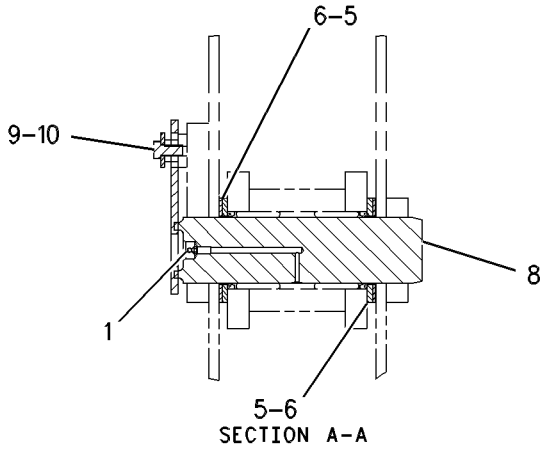

SECTION A-A

GRAPHIC #1 **<END>** g00605231

9J-3169 TIP GP-LONG

S/N: JRL1-UP; RRS1-UP
PART OF 9W-8142 TIP GP-LONG
AN ATTACHMENT

SMCS-6805 **i03627194**

NOTE	REF NO	GRAPHIC REF	PART NUMBER	QTY	PART NAME 1 2 3 4 5 6 (PRODUCT LEVEL)	SEE PAGE
	1	1	**132-4763**	1	PIN	
	2	1	**149-5733**	1	RETAINER AS (G.E.T.)	
	3	1	**1U-3252**	1	TIP-LONG	

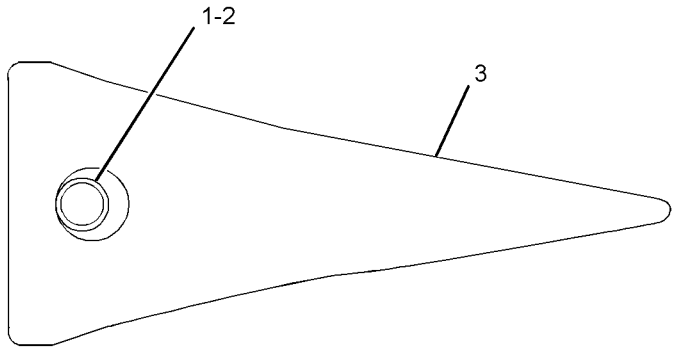

GRAPHIC #1 **<END>** g01946215

WORK TOOLS

9W-8142 TIP GP-LONG

S/N: JRL1-UP; RRS1-UP
PART OF 375-8357, 375-8358, 375-8359 DISTRIBUTION AR
FOR USE WITH 116-9713—PAGE 569
AN ATTACHMENT

SMCS-6805 **i00448280**

NOTE	PART NUMBER	QTY	PART NAME 1 2 3 4 5 6 (PRODUCT LEVEL)	SEE PAGE
Y	*9J-3169*	1	TIP GP-LONG	603

Y-SEPARATE ILLUSTRATION

<END>

WORK TOOLS

9J-3178 TIP GP-SHORT

S/N: JRL1-UP; RRS1-UP
PART OF 9W-8143 TIP GP-SHORT
AN ATTACHMENT

SMCS-6805 **i03627178**

NOTE	REF NO	GRAPHIC REF	PART NUMBER	QTY	PART NAME 1 2 3 4 5 6 (PRODUCT LEVEL)	SEE PAGE
	1	1	**132-4763**	1	PIN	
	2	1	**149-5733**	1	RETAINER AS (G.E.T.)	
C	3	1	**1U-3251**	1	TIP-SHORT	

C-CHANGE FROM PREVIOUS TYPE

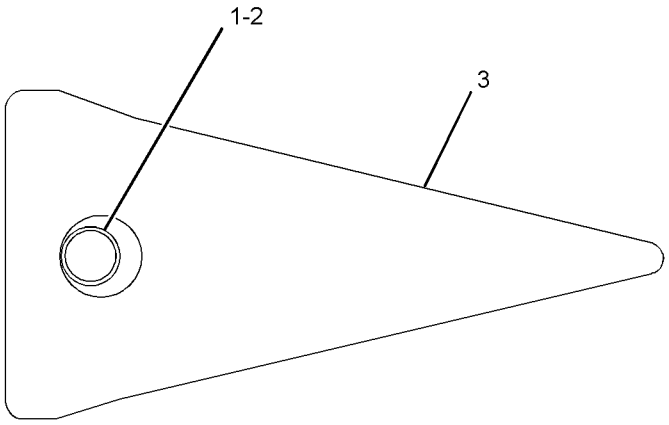

GRAPHIC #1 **<END>** g01946227

WORK TOOLS

9W-8143 TIP GP-SHORT

S/N: JRL1-UP; RRS1-UP

AN ATTACHMENT

SMCS-6805 **i00448272**

NOTE	PART NUMBER	QTY	PART NAME 1 2 3 4 5 6 (PRODUCT LEVEL)	SEE PAGE
Y	*9J-3178*	1	TIP GP-SHORT	605

Y-SEPARATE ILLUSTRATION

<END>

SERVICE EQUIPMENT AND SUPPLIES

293-4929 FILM GP

S/N: RRS1-UP

PART OF 312-4574 PLATE & FILM GP

SMCS-7405, 7557 **i04029630**

NOTE	REF NO	GRAPHIC REF	PART NUMBER	QTY	PART NAME 1 2 3 4 5 6 (PRODUCT LEVEL)	SEE PAGE
	1	1	**293-4922**	1	FILM-STRIPE (924H, CAT, RH)	
	2	1	**293-4919**	2	FILM-STRIPE (FILLER, HOOD)	
	3	1	**293-4921**	1	FILM-STRIPE (924H, CAT, LH)	
	4	1	**253-0861**	2	FILM-INFORMATION (CAT POWER, ACERT TECHNOLOGY)	
	5	1	**9X-2447**	1	FILM-INFORMATION (CATERPILLAR)	

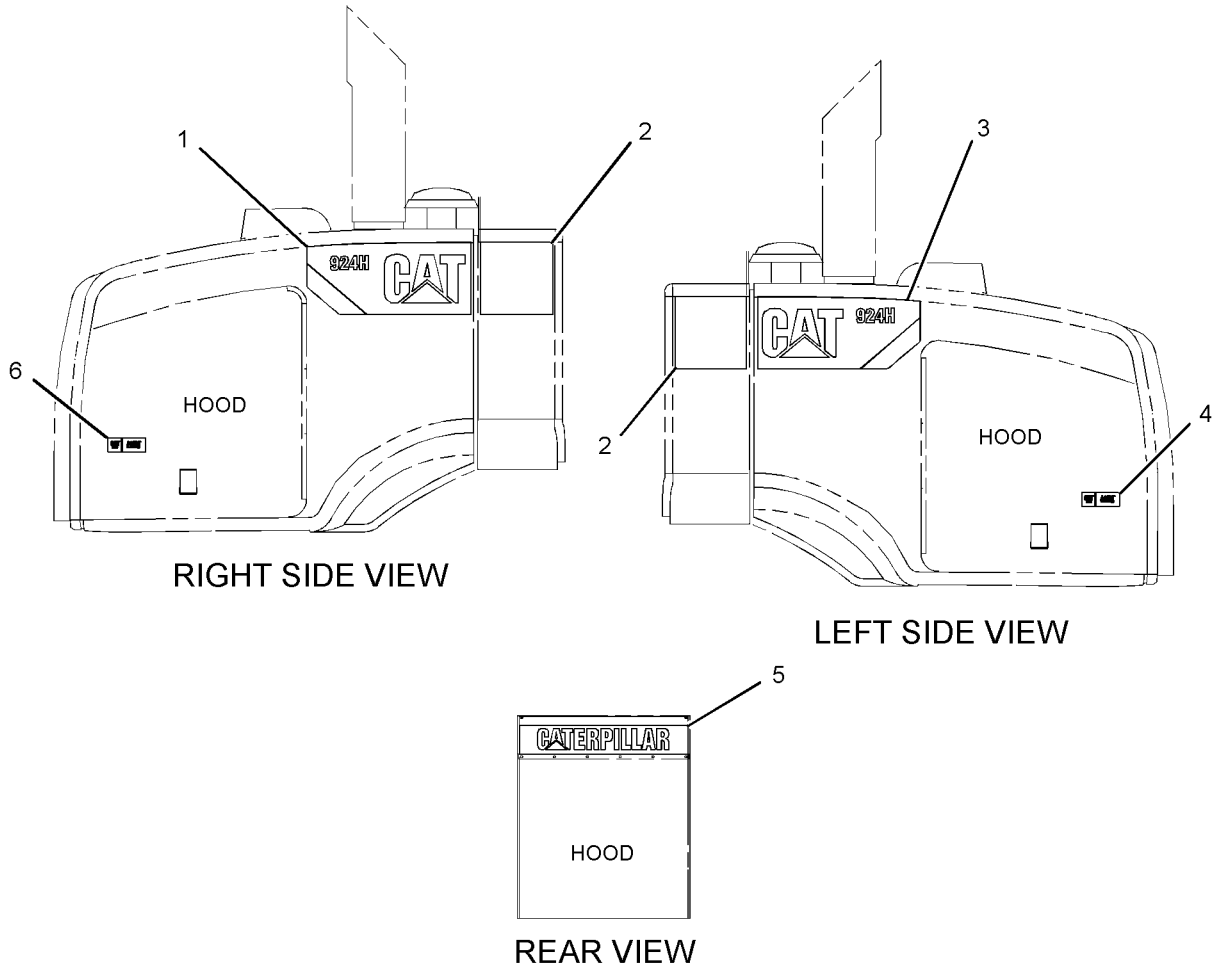

GRAPHIC #1

<END>

g02215974

SERVICE EQUIPMENT AND SUPPLIES

293-4930 FILM GP

S/N: JRL1-UP

PART OF 322-8431 PLATE & FILM GP

SMCS-7405, 7557 **i02807452**

NOTE	REF NO	GRAPHIC REF	PART NUMBER	QTY	PART NAME 1 2 3 4 5 6 (PRODUCT LEVEL)	SEE PAGE
	1	1	**293-4923**	1	FILM-STRIPE (924H, CAT, LH)	
	2	1	**293-4919**	2	FILM-STRIPE (FILLER, HOOD)	
	3	1	**293-4924**	1	FILM-STRIPE (924H, CAT, RH)	
	4	1	**9X-2447**	1	FILM-INFORMATION (CATERPILLAR)	
	5	1	**253-0861**	2	FILM-INFORMATION (CAT POWER, ACERT TECHNOLOGY)	

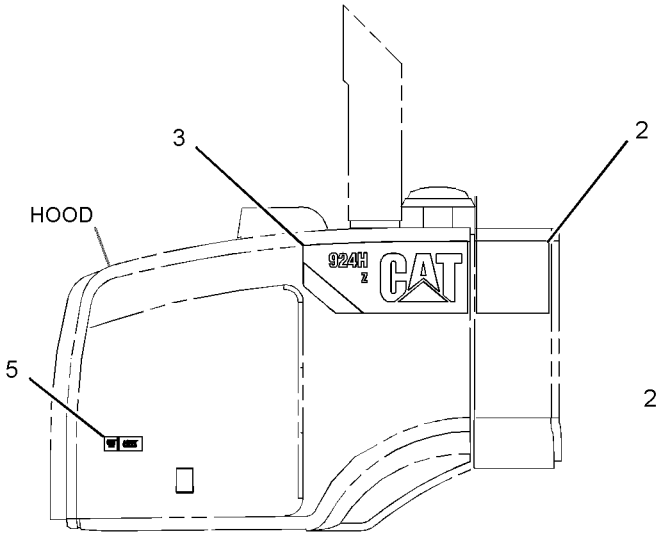

RIGHT SIDE VIEW

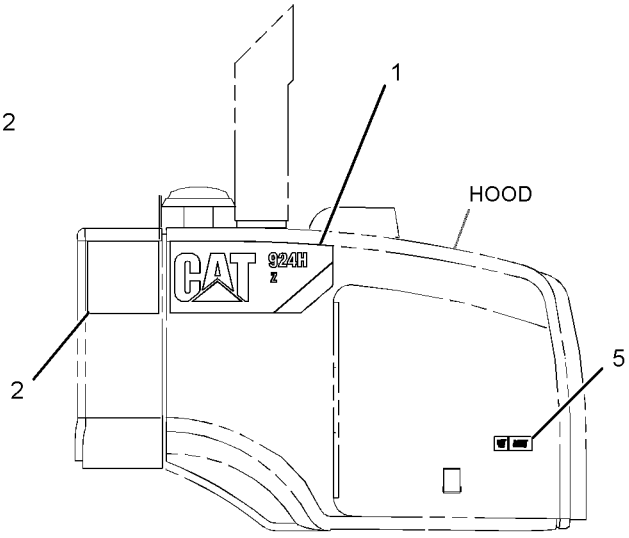

LEFT SIDE VIEW

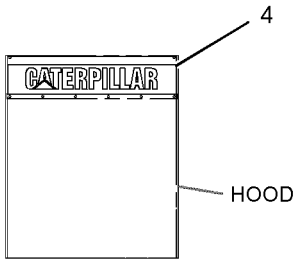

REAR VIEW

GRAPHIC #1 **<END>** g01401314

SERVICE EQUIPMENT AND SUPPLIES

290-6491 FILM GP-INTERNATIONAL—INTERNATIONAL

S/N: JRL1-UP; RRS1-UP

PART OF 375-8357, 375-8359 DISTRIBUTION AR

AN ATTACHMENT

SMCS-7405, 7557 **i03891269**

NOTE	PART NUMBER	QTY	PART NAME 1 2 3 4 5 6 (PRODUCT LEVEL)	SEE PAGE
	159-3590	1	FILM-IDENTIFICATION (WATER SEPARATOR)	
			(DIRECTLY TO THE RIGHT OF THE FUEL WATER SEPERATOR BOWL ON REAR COOLING STRUCTURE)	
	146-6747	2	FILM-INFORMATION (24-VOLT)	
			(ON THE INSIDE OF THE BATTERY BOX ON THE FRONT SIDE PLATE NEAR THE TOP)	
	224-9855	1	FILM-INSTRUCTION (START AID, READ OMM)	
			(ON BRACKET ON RH 'B' POST INSIDE OF CAB)	
	276-2604	1	FILM-INSTRUCTION (BELT ROUTING)	
			(60-MM INWARDS FROM THE LEFT SIDE OF THE REAR STRUCTURE & 290-MM UP FROM THE NON-METALLIC MAT & PLACE ON SURFACE FACING	
			REAR OF MACHINE WITHIN RADIATOR STRUCTURE TO THE LEFT OF THE LEFT SIDE REMOVABLE ACCESS PANEL & BELOW HOSE GROMMET)	
	219-0302	1	FILM-WARNING (NO WELD, NO DRILL, READ OMM)	
			(ON LH B-POST INSIDE OF CAB, FLUSH WITH PARKING BRAKE CONSOLE)	
	224-8946	1	FILM-WARNING (NO ETHER SPRAY/AIR INTK, INTL)	
			(ONE FILM ON RH SIDE OF ENGINE COMPARTMENT HOOD NEAR PRE-AIRCLEANER, ORIENT TO BE READ WHILE STANDING ON	
			RH SIDE PLATFORM)	
	225-0312	2	FILM-WARNING (JUMP START, READ OMM, INTL)	
			(ON THE INSIDE OF THE BATTERY BOX ON THE FRONT SIDE PLATE NEAR THE TOP)	
	225-4257	1	FILM-WARNING (HOT FLUID UNDER PRESS, INTL)	
			(ON UNDERSIDE OF THE SHUNT TANK ACCESS DOOR, ORIENT TO BE READ FROM RH SIDE OF MACHINE)	
	226-1240	2	FILM-WARNING (CRUSH HAZARD, STAY BACK, INTL)	
			(5-MM ABOVE BOTTOM EDGE OF BLACK PLATE OF CAB & CENTER BETWEEN FRONT CAB SKIRT MOUNTING BOLTS)	
	239-4234	1	FILM-WARNING (QUICK COUPLER, READ OMM)	
			(ON BRACKET ON RH 'B' POST INSIDE OF CAB)	
	240-7957	1	FILM-WARNING (DO NOT OPERATE, READ OMM, INTL)	
			(ON BRACKET ON RH 'B' POST INSIDE OF CAB)	
	327-0802	1	FILM-WARNING (CRUSH HAZARD, FASTEN SEAT BELT)	
			(ON RH A-POST INSIDE OF CAB, FLUSH WITH TOP OF STEERING WHEEL FACING OPERATOR)	
	305-4467	1	FILM-WARNING (HIGH PRESSURE, READ MANUAL)	
			(ONE FILM VERTICALLY ON AIR CLEANER BRACKET BETWEEN HARDWARE ON RH SIDE OF MACHINE ADJACENT TO THE BRAKE ACCUMULATORS)	
	305-4472	1	FILM-WARNING (CRUSH HAZARD, READ OMM, INTL)	
			(180-MM UP FROM THE ARTICULATION LOCK PLATE & 25-MM FROM FRONT EDGE OF ENGINE END FRAME)	

<END>

SERVICE EQUIPMENT AND SUPPLIES

328-8319 FILM GP-INTERNATIONAL

S/N: JRL1-UP; RRS1-UP
PART OF 375-8358 DISTRIBUTION AR
AN ATTACHMENT

SMCS-7405, 7557 **i03038530**

NOTE	PART NUMBER	QTY	PART NAME 1 2 3 4 5 6 (PRODUCT LEVEL)	SEE PAGE
	159-3590	1	FILM-IDENTIFICATION (WATER SEPARATOR)	
			(TO THE RIGHT OF THE FUEL WATER SEPERATOR BOWL ON REAR COOLING STRUCTURE)	
	146-6747	2	FILM-INFORMATION (24-VOLT)	
			(ON THE INSIDE OF THE BATTEY BOX ON THE FRONT SIDE PLATE NEAR THE TOP)	
	276-2604	1	FILM-INSTRUCTION (BELT ROUTING)	
			(60-MM INWARDS FROM THE LEFT SIDE OF THE REAR STRUCTURE & 290-MM UP FROM THE NON-METALIC MAT & PLACE ON SURFACE FACING	
			REAR OF MACHINE WITHIN RADIATOR STRUCTURE TO THE LEFT OF THE LEFT SIDE REMOVABLE ACCESS PANEL & BELOW HOSE GORMMET)	
	327-0803	1	FILM-START AID	
			(ON RH-A POST INSIDE OF CAB & 5-MM ABOVE THE SEAT BELT FILM)	
	219-0302	1	FILM-WARNING (NO WELD, NO DRILL, READ OMM)	
			(ON LH B-POST INSIDE OF CAB, FLUSH WITH PARKING BRAKE CONSOLE)	
	224-8946	1	FILM-WARNING (NO ETHER SPRAY/AIR INTK, INTL)	
			(ON RH SIDE OF ENGINE COMPARTMENT HOOD NEAR PRE-AIRCLEANER. ORIENTED TO BE READ WHILE STANDING ON RH SIDE PLATFORM)	
	225-0312	2	FILM-WARNING (JUMP START, READ OMM, INTL)	
			(ON THE INSIDE OF THE BATTEY BOX ON THE FRONT SIDE PLATE NEAR THE TOP)	
	225-4257	1	FILM-WARNING (HOT FLUID UNDER PRESS, INTL)	
			(ON UNDERSIDE OF THE SHUNT TANK ACCESS DOOR. ORIENT TO BE READ FROM RH SIDE OF MACHINE)	
	226-1240	2	FILM-WARNING (CRUSH HAZARD, STAY BACK, INTL)	
			(5-MM ABOVE BOTTOM EDGE OF BLACK PLATE OF CAB & CENTER BETWEEN FRONT CAB SKIRT MOUNTING BOLTS)	
	305-4467	1	FILM-WARNING (HIGH PRESSURE, READ MANUAL)	
			(VERTICALLY ON AIR CLEANER BRACKET BETWEEN HARDWARE ON RH SIDE OF MACHINE ADJACENT TO THE BRAKE ACCUMULATORS)	
	305-4472	1	FILM-WARNING (CRUSH HAZARD, READ OMM, INTL)	
			(180-MM UP FROM THE ARTICULATION LOCK PLATE & 25-MM FROM FRONT EDGE OF ENGINE END FRAME)	
	327-0802	1	FILM-WARNING (CRUSH HAZARD, FASTEN SEAT BELT)	
			(ON RH-A POST INSIDE CAB, 950-MM UP FROM THE FLOORPLATE. AVOID PLACING DECAL OVER FILLET WELD FOR PROPER FITTING)	
	327-0804	1	FILM-WARNING (CRUSH HAZARD, READ OMM)	
			(ON RH-A POST INSIDE CAB & 5-MM ABOVE STARTING AID FILM)	
	327-0805	1	FILM-WARNING (DO NOT OPERATE, READ OMM)	
			(ON RH-A POST INSIDE OF THE CAB & 5-MM ABOVE QUICK COUPLER FILM. AVOID PLACING DECAL OVER FILLET WELD, FOR PROPER	
			FITTING)	

<END>

SERVICE EQUIPMENT AND SUPPLIES

312-4574 PLATE & FILM GP

S/N: RRS1-UP

PART OF 372-7773 CHASSIS AR

SMCS-7405, 7557 **i03928049**

NOTE	PART NUMBER	QTY	PART NAME 1 2 3 4 5 6 (PRODUCT LEVEL)	SEE PAGE
Y	*293-4929*	1	FILM GP	607
	239-6989	1	PLATE-SERIAL NUMBER (MACHINE)	
			(ON LH SIDE OF THE NON-ENGINE END FRAME (OUTSIDE). 235-MM ABOVE THE BOTTOM EDGE OF THE OUTER PLATE. 235-MM FROM THE	
			EDGE ADJACENT TO THE HITCH)	
	225-4150	1	PLATE-SERVICE INFORMATION (MACHINE)	
			(ON COMBO PIN PLATE)	
B	**193-5913**	8	PLUG	
B	**193-5914**	50	PLUG	
B	**193-5918**	4	PLUG	
	309-6899	1	FILM-INSTRUCTION (BATTERY)	
			(IN CENTER OF FRONT GLASS, VISIBLE FROM SEATED POSITION IN CAB. FOR OROPS CAB, ON LH B-POST, AT EYE LEVEL OF OPERATOR	
			FROM SEATED POSITION IN CAB)	
	202-9824	1	FILM-INFORMATION (BRAZIL)	
			(ON THE LH SIDE OF THE NON-ENGINE END FRAME (OUTSIDE). BESIDE THE TOP-LEFT CORNER OF THE COMBO PIN PLATE)	
	312-7713	1	FILM-INSTRUCTION (DOOR, READ OMM)	
			(ON RH ENGINE ACCESS FOLD DOWN PANEL. ON INSIDE OF PANEL ALIGNED WITH HINGES. 100-MM FROM BOTTOM EDGE OF FOLD DOWN	
			PANEL & ALIGNED FORE/AFT WITH FRONT EDGE OF HINGE)	
	134-7258	1	FILM-INFORMATION (EXTENDED LIFE COOLANT)	
			(ON UNDERSIDE OF THE SHUNT TANK ACCESS DOOR. ORIENT TO READ FROM RH SIDE OF MACHINE)	
	334-4603	2	FILM-INFORMATION (HYDO ADVANCED 10)	
			(1-ON TOP OF HYDRAULIC TANK,CENTERED ON SIGHT GUAGE. ORIENT TO BE READ FROM RH SIDE OF MACHINE)	
			(1-ON RH SIDE OF CAB 255-MM UP FROM THE BOTTOM OF CAB & 16-MM FROM BACK EDGE OF CAB)	
	7X-3229	4	FILM-INSTRUCTION (LIFT EYE, TIE-DOWN LOCATION)	
			(ABOVE EACH TIE DOWN EYE. CENTERED ON THE HOLE ON THE ENGINE END FRAME, OR COUNTER WEIGHT (IF FITTED) & ADJACENT TO	
			EACH EYE TOWARD THE INSIDE OF THE NON-ENGINE END FRAME)	
	220-5574	1	FILM-INSTRUCTION (RADIATOR DOOR)	
			(ON FAN GUARD BELOW THE LATCH. POSITION SO THAT IT IS COVER WHEN SERVICE DOOR IS CLOSED)	
	179-3609	1	FILM-INSTRUCTION (REMOTE GREASE POINTS)	
			(ON MACHINE LEFT SIDE SKIRT 70-MM FROM FRONT EDGE & 15-MM FROM TOP EDGE OF SKIRT)	
	179-3610	1	FILM-INSTRUCTION (REMOTE GREASE POINT LOCATIONS)	
			(ABOVE GREASE BLOCK ON ENGINE END FRAME)	
	179-3612	1	FILM-INSTRUCTION (REMOTE GREASE POINT LOCATIONS)	
			(BESIDE GREASE BLOCK ON NON-ENGINE END FRAME)	

312-4574 **PLATE & FILM GP** *(contd.)* **i03928049**

NOTE	PART NUMBER	QTY	PART NAME 1 2 3 4 5 6 (PRODUCT LEVEL)	SEE PAGE
	220-5573	1	FILM-INSTRUCTION (REMOTE GREASE POINTS)	
			(ON MACHINE LEFT SIDE SKIRT 10-MM FROM FRONT EDGE & 10-MM FROM TOP EDGE OF SKIRT)	
	236-7230	1	TAG-WARNING (STEERING FRAME LOCK)	
			(TO THE STEERING WHEEL)	

B-USE AS REQUIRED
Y-SEPARATE ILLUSTRATION

<END>

322-8431 PLATE & FILM GP

S/N: JRL1-UP
PART OF 372-7772 CHASSIS AR

SMCS-7405, 7557 **i03891409**

NOTE	PART NUMBER	QTY	PART NAME 1 2 3 4 5 6 (PRODUCT LEVEL)	SEE PAGE
Y	*293-4930*	1	FILM GP	608
	239-6989	1	PLATE-SERIAL NUMBER (MACHINE)	
			(ON THE LH SIDE OF THE NON-ENGINE END FRAME OUTSIDE. 175-MM FROM TOP OF BOTTOM HITCH PLATE & WITHIN 50-MM OF VERTICAL	
			EDGE OF TOWER)	
	225-4150	1	PLATE-SERVICE INFORMATION (MACHINE)	
			(TO BE ADHERED TO COMBO PIN PLATE)	
B	**193-5913**	8	PLUG	
B	**193-5914**	42	PLUG	
B	**193-5918**	4	PLUG	
	297-5493	1	FILM-CERTIFICATION (OPS, READ OMM)	
			(ON LH B POST INSIDE OF CAB)	
	134-7258	1	FILM-INFORMATION (EXTENDED LIFE COOLANT)	
			(ON UNDERSIDE OF THE SHUNT TANK ACCESS DOOR. ORIENT TO BE READ FROM RH SIDE OF MACHINE)	
	179-3610	1	FILM-INSTRUCTION (REMOTE GREASE POINT LOCATIONS)	
			(ABOVE GREASE BLOCK ON ENGINE END FRAME)	
	179-3611	1	FILM-INFORMATION (NO. 5)	
			(BESIDE GREASE BLOCK ON NON-ENGINE END FRAME)	
	7X-3229	4	FILM-INSTRUCTION (LIFT EYE, TIE-DOWN LOCATION)	
			(ABOVE EACH TIE DOWN EYE. CENTERED ON THE HOLE ON THE ENGINE END FRAME, OR COUNTER WEIGHT IF FITTED & ADJACENT TO EACH	
			EYE TOWARD THE INSIDE OF THE NON-ENGINE END FRAME)	
	202-9824	1	FILM-INFORMATION (BRAZIL)	
			(ON THE LH SIDE OF THE NON-ENGINE END FRAME, BESIDE THE TOP LEFT CORNER OF THE COMBO PIN PLATE)	
	220-5573	1	FILM-INSTRUCTION (REMOTE GREASE POINTS)	
			(ON LEFT SIDE OF NON-ENGINE END FRAME BELOW THE A PIN FLAG)	
	220-5574	1	FILM-INSTRUCTION (RADIATOR DOOR)	
			(ON THE FAN GUARD BELOW THE LATCH. POSITION SO THAT IT IS COVERED WHEN THE SERVICE DOOR IS CLOSED)	

322-8431 **PLATE & FILM GP** ***(contd.)*** **i03891409**

NOTE	PART NUMBER	QTY	PART NAME 1 2 3 4 5 6 (PRODUCT LEVEL)	SEE PAGE
	334-4603	2	FILM-INFORMATION (HYDO ADVANCED 10)	
			(1-ON TOP OF HYDRAULIC TANK, CENTERED ON SIGHT GAUGE. ORIENT TO BE READ FROM RH SIDE OF MACHINE)	
			(1-ON RH SIDE OF CAB 255-MM UP FROM THE BOTTOM OF CAB & 16-MM FROM BACK EDGE OF CAB)	
	309-6899	1	FILM-INSTRUCTION (BATTERY)	
			(IN CENTER OF FRONT GLASS, VISIBLE FROM SEATED POSITION IN CAB. FOR OROPS CAB, ON LH B POST, AT EYE LEVEL OF OPERATOR	
			FROM SEATED POSITION IN CAB)	
	312-7713	1	FILM-INSTRUCTION (DOOR, READ OMM)	
			(ON RH ENGINE ACCESS FOLD DOWN PANEL. ON INSIDE OF PANEL ALIGNED WITH HINGES. UP 100-MM FROM BOTTOM EDGE OF FOLD DOWN	
			PANEL & ALIGNED FORE/AFT WITH FRONT EDGE OF HINGE)	
	236-7230	1	TAG-WARNING (STEERING FRAME LOCK)	
			(TO THE STEERING WHEEL)	

B-USE AS REQUIRED
Y-SEPARATE ILLUSTRATION

<END>

220-7925 PLATE GP-AXLE IDENTIFICATION

S/N: JRL1-UP; RRS1-UP
PART OF 267-7372 AXLE AR-OSCILLATING
AN ATTACHMENT

SMCS-7557 **i03787153**

NOTE	PART NUMBER	QTY	PART NAME 1 2 3 4 5 6 (PRODUCT LEVEL)	SEE PAGE
			(NO SERVICED PARTS)	

<END>

MEMORANDA

PART NUMBER INDEX

Part	Page
1	
1B-3057	102
1B-3978	179
	204
1B-3980	204
1B-8723	470
	547
1B-8736	7
	24
	26
1H-3244	97
	119
	124
	132
	133
1H-4393	128
1H-6227	398
1H-9696	221
1J-5607	598
1J-9671	281
	282
	307
	308
	309
	310
	379
	383
	399
1K-6853	231
1K-6870	570
1K-8061	207
1M-4543	168
	213
	520
1M-7250	72
1M-8652	457
1N-3361	88
1P-0810	102
	161
	168
	539
1P-3703	351
	363
1P-3708	351
1P-4576	196
1P-4582	351
1P-4584	351
1P-6522	463
	513
1S-0396	213
1S-0994	264
1S-7251	102
1S-9593	453
1U-0257	569
1U-1254	587
1U-3251	605
1U-3252	603
1U-8846	179
	221
1V-2772	283

Part	Page
2	
2B-0858	13
	15
	33
2C-9259	575
	576
	583
	584
	585
2D-0598	179
2D-0714	321
2D-2507	224
2D-2508	224
2D-2509	224
2D-2628	223
	239
2D-2629	223
	239
2D-2630	223
	239
2D-2631	223
	239
2D-2633	223
	239
2D-4867	455
2G-5298	533
	538
	543
2G-6595	224
2G-8767	102
2H-3429	444
	445
2H-3920	145
	147
	461
	511
2H-3922	142
	463
2H-3923	463
2J-3507	569
	598
2J-3961	322
2J-7550	221
2J-7767	321
2K-4821	97
2K-5957	203
2K-6830	317
2L-0043	194
2L-6726	236
2L-8066	161
2L-8067	161
2L-8068	161
2L-8069	534
	539
	544
2L-8076	168
	242
2L-8077	122
	161
2L-8078	122
2L-8079	150
	153
	156
	168

Part	Page
	534
	539
	544
2L-8081	362
2M-2570	388
	389
2M-3432	164
2M-3433	166
2M-9780	81
	95
	212
	314
	350
	354
	356
	358
	363
	367
	374
	376
	379
	383
	403
	405
	413
2N-3477	284
	288
2N-7006	179
2N-7007	179
2P-1279	354
	356
2P-1293	333
	335
	344
	346
2P-1692	240
2P-4173	19
2P-8104	140
2Q-5979	222
	▶223
2S-1382	236
2S-3440	9
2S-4078	212
	350
	358
2S-4663	237
2S-5835	237
2V-3726	156
2W-1141	179
	181
	183
	185
2Y-3209	523
2Y-5829	451
3	
3B-0551	205
	207
3B-4610	286
3B-4617	289
3B-6552	275
	457
3B-8485	455

Part	Page
3B-8488	231
	455
3B-8489	229
	267
	275
	455
	457
	596
	602
3B-8491	455
	457
	596
	602
3D-2824	189
	196
	212
	213
	302
	309
	310
	312
	323
	333
	351
	354
	356
	358
	363
	367
	379
3D-8317	237
3E-1841	463
	513
3E-2331	415
	419
	423
	427
	431
3E-2335	362
	367
3E-3365	135
3E-3371	144
3E-3389	145
3E-3805	496
	499
3E-3892	481
3E-4354	444
	445
3E-4356	28
	476
3E-4367	534
	539
	544
3E-5153	140
3E-5154	140
3E-5239	171
	362
	479
	495
	533
	538
	543
3E-5519	362
3E-6328	▶96
	128

▶ **PRIMARY REFERENCE**

PART NUMBER INDEX

Part	Page
3E-6908	265
3E-7690	211
3E-7843	▶107
	329
	331
3E-7844	▶106
	329
	331
3E-8016	397
3E-8020	548
	566
3E-8320	102
3E-8558	534
	539
	544
3E-9179	534
	540
	544
3E-9411	455
	457
3F-9556	97
	161
3G-0572	457
3G-2791	322
3G-2797	322
	455
3H-7180	395
	396
3H-8538	284
	288
3J-1907	79
	179
	196
	198
	212
	213
	216
	234
	237
	240
	289
	292
	295
	312
	324
	339
	342
	344
	346
	348
	350
	351
	358
	362
	363
	367
	368
	371
	372
	374
	376
	379
	382
	383
	436
	438
	441
	451
3J-7354	19
	198
	211
	289
	292
	295
	302
	307
	308
	309
	310
	324
	351
	354
	356
	382
	413
	436
	438
	441
	447
3K-0360	19
	161
	207
	211
	212
	237
	242
	302
	312
	350
	351
	363
	371
	379
	383
	413
	444
	445
3K-6060	525
3K-7056	283
3K-7057	283
3K-8460	379
3K-9520	58
3L-8187	284
	288
3P-1210	405
3S-2093	19
	58
	81
	110
	111
	112
	130
	161
	168
	211
	242
	292
	295
	358
	362
	463
	479
	483
	484
	488
	513
	520
	534
	539
	540
	544
	563
	566
	568
3S-6049	102
3S-6050	102
3S-8665	164
	166
3T-2094	220
3T-4696	150
	156
3T-5201	496
4	
4B-0418	58
4B-2048	130
4B-3665	221
4B-4274	363
	368
4B-4276	124
4B-4674	124
4B-4863	65
	534
	540
	544
4B-5324	284
	288
4B-8774	75
4B-9880	237
4D-4431	300
4D-7388	58
	213
	216
	359
4D-7735	363
	368
4D-8123	457
4D-9986	110
	111
4E-0659	575
	576
	577
	582
	583
	584
	585
	586
4E-1062	481
4E-1384	496
	499
4E-2161	505
	508
4E-2482	587
4E-2483	587
4E-5984	230
4E-5985	230
4E-7316	563
	565
4E-7540	292
	295
4F-2294	143
4F-2861	457
4F-4042	569
4F-7389	201
4F-8824	204
4H-3001	493
4H-4063	371
4J-0520	351
	383
4J-0523	195
4J-0524	351
4J-0527	351
4J-5267	196
	363
	368
4J-5477	211
	212
	302
	339
	340
	342
	354
	356
	358
	382
	383
	415
	419
	423
	427
	431
4J-9058	569
4J-9220	319
4J-9225	300
4K-0173	205
	207
4K-1388	382
4K-2039	444
	445
4K-4709	253
	255
4K-4879	223
	225
4K-4881	226
	227
4K-7464	267
4K-7502	22
4K-8302	329
4L-7249	200
	201
	202
4M-0189	319
4M-1677	175
	177
	178
4M-2381	237
4M-5905	237
4M-7470	130

▶ **PRIMARY REFERENCE**

PART NUMBER INDEX

Part	Page	Part	Page	Part	Page	Part	Page
	566		441	5F-9144	79		428
	568	5C-2890	109	5G-2373	570		432
4P-7581	151		119	5G-7820	329	5P-3723	205
	154		121		331		207
	157		122	5G-7822	329	5P-3863	179
	161		124	5H-1039	207	5P-4115	269
	164		128	5H-3252	220		331
	166		132	5H-3701	205		516
	168		133		207		535
	170		161	5H-6005	179		540
	171		269	5J-2974	199	5P-4116	58
	242		336		325		65
	479		394	5J-5402	317		102
	534		395	5J-7010	300		137
	540		396	5J-7878	321		161
	544		438	5K-4778	81		164
4P-8134	149		441	5K-5338	81		166
	151		496		292		269
	154		505		295		292
	157		508	5K-8451	81		295
	161		516	5K-9090	211		329
	164		518		212		331
	166		525		213		410
	171		531		216		472
	213		534		335		476
	329		540		336		489
	331		544		350		494
	339	5C-7261	58		358		496
	534		122		363		502
	540		132		367		535
	544		133		368		540
4S-1962	520		138		379		544
4S-5879	179		160		382		596
4S-8264	505		161		383	5P-4295	292
	508		269	5L-4753	194		295
4T-6780	300		286	5L-7200	128	5P-4362	216
4T-8091	598		292	5M-3062	570	5P-4484	205
4T-8588	322		295	5M-4987	220		207
4V-2879	457		329	5M-6213	95	5P-4571	122
4V-4164	130		485	5M-6214	208		126
4V-4453	455		486	5P-0599	367		150
	457		487	5P-0713	179		151
4V-8285	587		496	5P-0743	19		154
4V-8286	587		499	5P-0747	102		156
4V-8631	455	5C-8312	128	5P-0761	102		157
4V-8639	457		464	5P-0765	164		539
4V-8643	455		531		166	5P-5148	380
4V-8674	457	5C-9553	94	5P-0767	522		382
4V-9798	344		302	5P-1076	52	5P-5291	207
	346		336		265	5P-5623	149
4V-9799	344		363		393	5P-5630	138
	346		463	5P-1404	379	5P-5637	269
4W-3753	196		479	5P-1442	81		505
4W-7356	391		491	5P-1505	19		508
	392		513		82		518
	400		525		351	5P-5639	122
			534	5P-1506	59		126
			540	5P-1717	65	5P-5643	461
5			544	5P-2304	179		463
		5D-1026	9	5P-2861	204		511
5A-3604	92		19	5P-3454	161	5P-5755	59
	397		58	5P-3456	414	5P-5774	126
	415		350		416	5P-5927	502
	427		522		420	5P-6038	151
	438	5D-9629	472		423		154

► **PRIMARY REFERENCE**

PART NUMBER INDEX

Part	Page
	157
5P-6039	329
5P-6264	168
5P-6271	150
	153
	156
5P-6718	19
	415
	419
	423
	427
	431
5P-6872	525
5P-6887	58
5P-7070	463
5P-7211	52
	59
	478
5P-7462	342
5P-7463	342
5P-7464	333
	348
5P-7465	333
	348
	363
5P-7466	335
	344
	346
5P-7467	335
	344
	346
5P-7468	195
	213
	258
	259
	351
	359
	363
	368
	383
5P-7469	195
	213
	258
	259
	351
	359
	363
	368
	383
5P-7648	520
5P-7684	179
5P-7814	19
5P-7958	2
	500
	533
	538
	543
5P-8112	335
	344
	346
5P-8244	399
5P-8245	22
	204
	205
	207
	388
	389
5P-8247	97
	205
	207
5P-8347	240
5P-8444	213
	258
	259
	351
	359
	363
	368
	383
5P-8500	2
	195
	409
	523
5P-8524	516
5P-8525	124
5P-8837	277
5P-8874	312
	371
5P-9212	278
5P-9262	447
	449
5P-9297	286
	339
5R-0939	363
5R-0940	363
5S-7349	97
5T-3821	457
5T-9771	275
5V-4410	289
5V-4998	277
5V-4999	277
5V-5498	231
5V-6454	455
5V-6455	455
5V-8780	52
6	
6A-5591	179
6C-3681	269
6C-8648	205
	207
6D-0337	223
	225
	▶239
6D-0443	223
	239
6D-1641	522
6D-3479	81
	102
	329
6D-4244	151
	154
	157
6D-6146	130
6D-7690	205
	207
6E-1497	319
6E-2943	400
6E-3268	447
	449
6E-3269	447
	449
6E-3272	447
	449
6E-3273	447
	449
6E-3274	447
6E-3275	447
	449
6E-3276	447
	449
6E-4940	300
6E-6527	447
	449
6E-6528	447
	449
6E-6536	447
6E-6537	447
6E-6538	447
6E-6539	447
6E-6540	447
6F-2956	205
	207
6F-3930	224
6F-7045	142
6G-0233	289
6G-2256	102
6G-2263	102
6G-4195	284
	288
6H-3592	534
	539
	544
6I-0217	24
	40
	49
	56
	75
	87
6I-0254	40
	56
	87
6I-0260	30
	47
	84
	87
6I-0423	23
6I-0455	49
6I-0456	87
6I-0563	75
6I-0593	84
6I-0631	23
6I-0645	24
	70
6I-0650	24
6I-0654	27
	84
6I-0817	75
6I-0839	56
6I-0847	23
6I-1090	30
	44
6I-1418	491
6I-1497	30
6I-4374	30
	40
6I-4681	30
6I-4793	47
	49
	87
6I-8310	575
	576
	577
	583
	584
	585
6I-8311	575
	576
	577
	583
	584
	585
6I-8390	183
6I-8531	229
6I-8849	267
6I-8860	267
6I-9250	569
6I-9251	569
6I-9804	236
6I-9805	236
6I-9806	179
	▶236
6J-2680	351
6J-2797	317
6J-7264	319
6J-9996	395
	396
6K-0806	329
6K-4185	267
6K-4186	267
6K-4191	267
6K-5614	191
6K-6075	207
6K-6307	179
6K-8088	470
	547
6K-8178	81
6K-8987	218
6K-9632	568
6M-5062	444
	445
6N-1604	110
	111
6N-6984	58
6R-7943	405
6S-6646	284
	288
	289
6S-8620	81
6T-3631	144
6T-3632	144
6T-3633	144
6T-5598	161
6T-6505	463
	513
6T-6506	513
6T-6708	463
	513

▶ **PRIMARY REFERENCE**

PART NUMBER INDEX

Part	Page	Part	Page	Part	Page	Part	Page
6T-6969	81		237	6V-8210	200	6V-8490	516
6T-7054	453		240		201		531
6V-0347	205		289		202	6V-8625	212
	207		302	6V-8212	193		302
6V-0352	550		351	6V-8218	234	6V-8626	212
6V-0484	216		372	6V-8225	466		354
	237		379		467		356
	240		382	6V-8227	306		374
	382	6V-4249	28	6V-8237	300		376
6V-0491	122		221	6V-8352	415	6V-8627	212
	126	6V-4429	207		419		339
	164	6V-4636	403		423		342
	166	6V-5210	463		427		358
	534		513		431	6V-8628	302
	539	6V-5215	242		447	6V-8632	302
	544	6V-5217	179		449	6V-8634	371
6V-0545	263		242	6V-8369	145	6V-8635	211
6V-0683	342	6V-5218	237		147		216
6V-0852	179		242		461		350
	196	6V-5223	242		511		363
	211	6V-5230	179	6V-8373	284		367
	216	6V-5653	81		288		379
	237	6V-5683	194	6V-8397	212		382
	240	6V-5696	201		289	6V-8636	289
	289		204		292		292
	302	6V-5758	446		295		295
	350	6V-5839	28		339		344
	371		179		344		346
	379		193		346		348
	382		242		348		363
6V-1178	451		451		350		367
6V-1194	267	6V-5842	179		351		371
6V-1249	333		220		362		374
	348	6V-6210	566		363		376
6V-1363	65	6V-6317	179		367		379
6V-1392	464		221		371		383
	513	6V-6543	566		374		436
6V-1625	362	6V-6924	446		376		438
6V-1668	463	6V-7238	19		379		441
	513		371		382	6V-8637	196
6V-1720	179	6V-7357	122		383		363
6V-1820	179		481		415		367
	221	6V-7359	363		420	6V-8638	383
6V-1889	213		368		424	6V-8639	302
	359	6V-7419	566		427		383
	374		568		431	6V-8640	314
	377	6V-7527	200		436	6V-8641	339
6V-1970	1		201		438		342
	2		202		441	6V-8642	314
	▶523	6V-7723	407		451		374
6V-2394	181	6V-7728	161	6V-8398	211		376
6V-2689	150	6V-7732	205		212	6V-8647	211
	156		207		302		354
6V-2722	331	6V-7743	499		312		356
6V-3213	298	6V-7744	329		333		382
6V-3668	204	6V-7970	415		348	6V-8675	204
6V-3821	242		419		351		205
6V-3822	242		423		363		207
6V-3940	237		427		368	6V-8713	356
	470		431		371	6V-8716	344
6V-3965	179	6V-7981	220		372		346
	196	6V-8189	97		383	6V-8724	289
	212	6V-8197	202	6V-8400	212		292
	216		207		350		295
	235	6V-8200	398		358		371

▶ **PRIMARY REFERENCE**

PART NUMBER INDEX

Part	Page
	451
6V-8758	286
6V-8775	302
	372
6V-8781	292
	295
	451
6V-8782	302
	351
	383
6V-8795	267
6V-8837	535
	540
	544
6V-8928	516
6V-8935	339
6V-8942	333
6V-8979	354
	356
6V-8981	348
6V-8982	354
	356
6V-8983	346
6V-8984	213
	379
	383
6V-8991	216
6V-8994	339
6V-8997	333
	344
6V-8998	216
6V-9001	371
6V-9003	212
	358
6V-9004	212
	351
	358
6V-9007	196
	323
6V-9009	212
	358
6V-9023	534
	539
	544
6V-9161	292
	295
6V-9168	339
6V-9169	348
6V-9170	213
	354
	356
	359
6V-9172	213
	216
	336
	363
	368
	379
	383
6V-9189	116
6V-9200	292
	295
6V-9350	213
	359
6V-9507	415
	419
	423
	427
	431
6V-9632	164
	166
	272
	331
	371
	470
	472
	491
	505
	531
6V-9746	196
	211
	212
	213
	314
	323
	333
	335
	344
	346
	350
	351
	358
	363
	367
	368
6V-9829	339
	372
	451
6V-9830	351
	383
6V-9832	213
	344
	359
6V-9833	213
	335
6V-9835	342
6V-9836	351
	371
6V-9837	212
	351
	372
6V-9840	212
6V-9842	212
6V-9849	81
	342
	354
	356
	383
6V-9850	292
	295
	350
	371
	374
	376
6V-9852	356
	374
	376
6V-9853	212
	358
6V-9854	211
	216
	350
	358
6V-9873	363
	368
	372
6V-9876	371
6W-5652	570
6W-5656	570
6W-5677	570
6W-5678	570
6W-5679	570
6W-5760	28
	315
6W-5761	315
6W-6807	232
6W-8246	267
6Y-0584	179
6Y-0869	189
6Y-0928	183
6Y-1300	183
	185
6Y-2525	528
6Y-4464	220
6Y-4465	220
6Y-4618	221
6Y-4890	183
6Y-4997	220
6Y-5010	220
6Y-5027	181
6Y-5631	181
	183
	185
6Y-6584	533
	538
	543
6Y-6712	▶220
	221
6Y-7818	181
	183
	185
6Y-7922	181
6Y-7968	181
	183
	185
6Y-8069	203
6Y-8157	181
	183
	185
6Y-8265	181
6Y-8512	181
6Y-8514	181
6Y-9016	179
6Y-9017	179

7

Part	Page
7B-3028	237
7C-0351	30
7C-1281	9
7C-4616	24
7C-6467	289
7D-1649	374
	377
7D-5238	317
	319
	322
7D-5252	224
7D-6922	284
	288
7D-7233	339
7D-8636	200
	201
	202
7D-8637	200
	201
	202
7F-2050	463
7F-2060	463
7F-8268	179
7G-3228	166
7G-5220	201
	204
7I-1024	81
	522
7I-3003	201
7I-6601	444
	445
7I-8310	212
7J-0204	444
	445
7J-9108	212
	213
	302
	314
	354
	356
	358
	359
	374
	376
7K-1181	19
	58
	81
	102
	112
	124
	128
	149
	151
	154
	156
	160
	164
	166
	168
	170
	171
	211
	216
	258
	259
	261
	262
	263
	275
	289
	292
	295

▶ **PRIMARY REFERENCE**

PART NUMBER INDEX

Part	Page
	331
	339
	356
	358
	457
	522
	533
	540
	543
	548
7K-3971	362
	367
7K-3972	362
	367
7K-3974	380
	383
7K-3975	380
	382
7K-9203	455
7K-9204	455
7K-9205	455
	457
7K-9208	455
	457
7K-9209	457
7K-9212	455
	457
7K-9216	457
7M-8485	179
	205
	207
	211
	212
	216
	344
	346
	348
	350
	358
	363
	367
	379
	382
7N-0718	102
	▶142
7N-5274	102
7N-9801	148
7P-3454	317
	319
7P-3466	457
7P-8753	321
7S-1912	351
	374
	377
7T-1099	253
	255
	265
	284
	393
	472
	550
	561
7T-2703	179
7T-4532	475
7T-5554	211
7T-6087	140
7T-6090	140
7T-6496	189
7T-6799	531
7T-8332	58
	409
7T-8890	564
7V-2885	1
	2
	▶277
7V-5626	331
7V-5628	164
	166
	331
7V-6089	164
	166
7V-6571	292
	295
7V-8317	191
7W-2108	496
7W-2632	87
7W-3447	264
7W-4540	139
7W-7381	362
	374
	376
7X-0371	570
7X-0474	179
7X-0515	213
7X-0578	264
7X-0579	461
	511
	560
	561
7X-0603	489
7X-0606	216
7X-0608	160
7X-0618	267
	298
	455
	457
	596
	602
7X-0632	71
7X-0818	491
7X-0838	292
	295
7X-0871	371
7X-2436	205
	207
7X-2459	289
7X-2464	216
7X-2465	218
7X-2495	181
	183
	185
7X-2533	52
	112
7X-2534	164
	166
	331
	383
7X-2535	269
7X-2538	476
7X-2540	269
7X-2549	351
7X-2554	28
7X-2556	213
7X-2567	528
7X-3229	611
	612
7X-3350	200
	201
7X-3393	63
7X-6222	534
	539
	544
7X-6315	108
7X-7729	6
	52
	58
	65
	68
	71
	99
	101
	130
	164
	195
	213
	244
	249
	250
	251
	252
	256
	257
	269
	272
	292
	295
	323
	329
	331
	336
	339
	342
	344
	346
	359
	363
	368
	372
	374
	377
	379
	383
	393
	409
	411
	520
7X-7910	520
7X-7911	520
7X-7958	58
	216
7X-8549	324
7Y-5227	213
7Y-5267	405
7Y-9099	548

8

Part	Page
8B-4884	457
8C-0564	344
	346
	348
	363
	367
	382
8C-2926	351
8C-3110	403
8C-3174	213
	359
8C-3205	363
	368
8C-3206	351
	383
8C-3364	212
	350
	358
8C-3398	161
8C-3426	505
	508
8C-3445	45
8C-3446	19
	198
	324
8C-3447	196
8C-3451	324
8C-3681	59
	81
8C-3756	479
8C-3979	181
	183
	185
8C-3982	181
	183
	185
8C-4424	415
	419
	423
	427
	431
8C-4436	99
	101
8C-4982	65
8C-5224	19
8C-5225	19
8C-5607	112
8C-5608	112
8C-6160	286
8C-6354	533
	538
	543
8C-6440	122
	131
8C-8451	249
8C-8457	463
	513
8C-8478	28
8C-8493	335
8C-8989	348
8C-9164	319
8C-9778	140
8C-9987	453

▶ **PRIMARY REFERENCE**

PART NUMBER INDEX

Part	Page	Part	Page	Part	Page	Part	Page
	531		454	8R-7092	267	8T-3425	533
8D-2707	223	8L-2786	436	8R-8847	264		538
	239		438	8S-0768	240		543
8D-3791	570		441	8S-0948	81	8T-3490	58
8D-9671	164	8L-4070	140		213		81
	166	8L-8413	122		302		102
	292		150	8S-4726	552		160
	296		151		557		211
8D-9947	196		153	8S-9129	179		216
8E-1118	122		156	8S-9130	179		244
8E-1143	237		157	8T-0075	350		256
8E-3416	181		161	8T-0272	400		265
8E-4566	▶598		164	8T-0328	58		272
8E-4567	598		166	8T-0336	205		278
8E-4568	3		168		207		295
	4		534	8T-0337	463		363
	▶598		539	8T-0363	245		371
8E-4569	598		544		246		393
8E-5556	183	8M-2770	213	8T-0372	229		478
	185		359	8T-0389	115		522
8E-5707	181	8M-2771	336		117		560
	183	8M-2773	213		118		563
	185		293		289		565
8E-5726	183		296	8T-0404	354	8T-3612	188
	185		520	8T-0643	451		284
8E-5727	183	8M-5251	242	8T-0763	321		489
	185	8M-5253	237	8T-0785	317		560
8E-5728	183	8N-0869	102		319		563
	185	8N-1546	534		321		565
8E-5831	183		538		322	8T-3734	472
	185		544	8T-1012	367		550
8E-6117	181	8N-1549	161	8T-1482	245	8T-3957	405
8E-6120	181	8N-1725	102		246	8T-3995	505
8E-6558	181	8N-9033	508		247		508
8E-7841	242		518	8T-1686	211	8T-4001	528
8E-8296	289	8R-0248	175	8T-1742	183	8T-4121	28
8E-8300	470		177		185		52
	547		178	8T-1885	348		58
8E-8313	181	8R-0249	175	8T-1886	348		69
	183		177	8T-1887	344		71
	185		178		346		81
8E-8317	181	8R-0512	205	8T-1888	344		94
8E-8425	194		207		346		102
8E-9968	220	8R-0768	102	8T-1889	336		115
8F-1434	140	8R-1703	191		379		124
8F-6437	58	8R-1705	191		383		128
	409	8R-2211	191	8T-1890	336		130
8F-7219	79	8R-2212	191		379		139
8F-8733	205	8R-2236	200		383		140
	207		202	8T-1893	342		151
8H-5303	142	8R-2526	205	8T-1894	342		154
8H-5306	142		207	8T-1895	293		157
8H-7521	179	8R-2532	205		296		161
8I-6603	250		207	8T-1896	293		164
8J-0112	300	8R-2537	175		296		166
8J-0412	405		177	8T-1899	368		168
8J-0426	179		178	8T-1900	368		171
8J-2928	569	8R-2538	191	8T-2394	419		195
8J-2933	569	8R-2584	207		431		196
8J-4455	140	8R-2918	489	8T-2525	195		213
8J-6273	391	8R-5825	224	8T-2925	175		216
	392	8R-6132	472		177		251
8K-1433	284	8R-6904	470		178		264
	288		547	8T-3293	204		267
8L-2779	92	8R-7091	267	8T-3313	302		278

▶ **PRIMARY REFERENCE**

PART NUMBER INDEX

Part	Page	Part	Page	Part	Page	Part	Page
	286		264		58		372
	289		269		94	8T-4177	240
	293		289		102	8T-4178	216
	296		293		122		323
	302		296		126	8T-4179	245
	323		339		161		246
	329		363		164	8T-4181	496
	331		368		166	8T-4182	58
	335		372		168		250
	339		374		171		363
	344		376		196		368
	346		386		213	8T-4183	28
	348		390		251		351
	351		409		269	8T-4184	99
	354		520		278		101
	359		535		286		351
	363		540		289	8T-4185	71
	368		545		302		139
	372	8T-4136	52		323		292
	374		58		331		296
	377		69		336		470
	379		71		339		520
	383		81		342		547
	386		99		359	8T-4186	28
	390		101		363		58
	393		102		372		71
	409		128		393		213
	457		130		409		264
	470		161		457		272
	472		195		472		329
	476		213		485		344
	478		216		486		359
	481		244		487		363
	485		249		520		383
	486		257		522		409
	487		272		535	8T-4189	51
	520		286		540		58
	522		293		545		63
	535		296		550		121
	540		323		558		124
	545		329		559		161
	547		331		563		188
	550		335		565		269
	558		344	8T-4138	112		284
	559		346		124		288
	563		348		161		329
	565		351		170		331
	594		354		171		472
8T-4122	58		359		269		477
	230		363		278		505
8T-4123	489		368		280		508
8T-4131	28		372		496		518
8T-4133	58		379	8T-4139	339		524
	71		383		522		535
	94		393	8T-4140	230		540
	102		409	8T-4157	52		545
	124		520	8T-4158	52		549
	130		571	8T-4167	218		550
	140		572		219		563
	151		573		528		565
	154		574	8T-4170	28	8T-4191	168
	157		588	8T-4171	161		489
	161		589	8T-4172	99	8T-4192	161
	171		594		101		267
	213	8T-4137	52		267		286

► **PRIMARY REFERENCE**

PART NUMBER INDEX

Part	Page	Part	Page	Part	Page	Part	Page
	298	8T-4199	151		405		151
	393		154		409		154
	455		157		520		157
	458		535		522		164
	602		540	8T-4224	51		166
8T-4193	58		545		59		188
8T-4194	58	8T-4200	58		63		269
	112		63		97		293
	267		92		110		296
	351		110		111		331
8T-4195	6		111		121		410
	52		138		122		461
	58		149		124		489
	65		269		132		494
	68		479		133		502
	81		505		138		511
	99		508		149		560
	101	8T-4205	52		151		561
	102		94		154		596
	116		97		157	8T-4910	409
	164		122		161	8T-4956	213
	166		128		164		232
	171		132		166		264
	213		133		188		393
	252		161		269		520
	256		249		284		596
	264		250		288	8T-4970	124
	269		269		329	8T-4971	496
	272		278		331		499
	293		280		397	8T-4983	350
	296		336		410	8T-4984	54
	339		463		472		55
	344		479		477	8T-4985	69
	346		481		479	8T-4986	54
	359		495		485		69
	363		496		486	8T-5005	363
	368		505		487	8T-5041	267
	372		508		505	8T-5093	479
	374		513		508	8T-5353	189
	377		518		518		220
	383		525		524	8T-5360	552
	393		531		535		557
	411		535		540	8T-5372	464
	478		540		545		513
	520		545		549	8T-5379	219
	545	8T-4222	59		550		247
8T-4196	58		272		552	8T-5400	566
	81	8T-4223	28		557		568
	99		59		563	8T-5436	339
	101		99		565	8T-5439	28
	161		101	8T-4226	59	8T-5452	179
	195		112		122	8T-5913	564
	196		161		126	8T-5914	564
	213		196	8T-4244	52	8T-6430	458
	251		213		409	8T-6431	289
	272		232		483	8T-6451	333
	289		245		484	8T-6453	382
	293		246		488	8T-6466	59
	296		264	8T-4646	363		102
	335		267	8T-4649	246		293
	351		286	8T-4742	496		296
	359		329	8T-4779	476		380
	368		339	8T-4896	570		382
	386		342	8T-4908	122		476
	390		351		137	8T-6663	212

PART NUMBER INDEX

Part	Page
8T-6684	212
	358
	379
8T-6703	54
	55
	195
8T-6842	500
8T-6868	196
8T-6869	81
	489
8T-6870	331
	397
8T-6912	410
8T-7329	116
8T-7338	28
	455
	458
8T-7352	81
8T-7487	81
8T-7524	414
	415
	419
	423
	427
	431
8T-7525	403
	405
8T-7547	59
	164
	166
8T-7876	45
8T-7934	571
	572
	573
	574
	588
	589
8T-7963	102
8T-7971	398
8T-8390	322
8T-8442	403
	447
8T-8729	112
	119
	136
	144
	148
	211
	289
	362
8T-8730	112
8T-8737	112
	117
	118
	124
	126
	128
	145
	147
	150
	151
	153
	156
	157
	160
	164
	166
	168
	242
	362
	436
	463
	513
	526
	527
	534
	539
	544
8T-8799	160
8T-8827	161
8T-8894	489
8T-8899	344
	346
	351
8T-8902	212
	376
8T-9085	179
8T-9357	19
8T-9381	552
	557
8T-9386	212
8T-9405	535
	540
	545
8T-9655	81
	491
8U-7051	472
8V-7315	229
	230
	231
8V-7623	204
8W-4342	275
8W-6132	295
8X-0674	28
8X-9925	226
8Y-0711	196
8Y-4489	253
	255
	265
	362
	367
8Y-5737	463
	513
8Y-6377	472
8Y-6388	502
8Y-7023	253
	255
8Y-7047	267
8Y-7119	528
8Y-8387	380
	382
9	
9B-7233	128
9C-5040	191
9C-5048	207
9C-5049	207
9C-5206	200
9C-5344	213
	359
9C-6003	455
9C-6020	175
	177
	178
9C-6460	362
9C-6461	362
9C-6809	253
	255
	265
	455
9C-7292	200
	201
	202
9C-7907	455
	458
9D-1535	298
9D-3768	520
9D-3769	505
9D-7924	489
9F-5644	132
	133
	142
	160
	161
9F-6188	348
9F-6189	348
9F-8125	130
9G-1950	463
	513
9G-3695	306
	492
9G-4191	164
9G-5127	179
9G-5311	205
	207
9G-8909	102
9H-1129	207
9H-2258	267
9H-5604	596
9J-3169	▶603
	604
9J-3178	▶605
	606
9K-7951	224
9L-1566	292
	295
9L-6770	97
9L-7712	229
9L-9068	240
	242
9M-1974	237
	240
	242
	470
9M-2110	237
9M-4814	522
9M-4972	213
	359
9M-8406	520
9M-9439	72
9N-0869	81
9N-1756	446
9R-1499	128
9R-2404	128
9R-2596	566
9R-2613	255
9R-2620	505
	508
9R-2672	253
	255
	265
	596
9R-2807	289
9R-3067	289
9R-3203	562
9R-3204	562
9R-3205	562
9R-3469	568
9R-4750	112
9R-5878	28
	219
9R-7941	122
	126
9R-7942	120
9R-7980	122
	126
9R-8537	472
9R-8538	499
9R-9110	284
	288
9R-9111	284
	288
9R-9572	367
9R-9866	457
9S-4181	179
9S-4183	302
	323
9S-4185	350
	379
9S-4190	363
	367
9S-4191	179
	234
	350
	438
	441
9S-7949	200
	201
	202
9S-7950	200
	201
	202
9S-8002	413
	436
	438
	441
	447
9S-8004	79
	237
9S-8005	207
	413
9S-8006	81
	403
	405
9S-8008	189
9S-9334	205
	207

▶ **PRIMARY REFERENCE**

PART NUMBER INDEX

Part	Page	Part	Page	Part	Page	Part	Page
9T-1013	312	9W-1454	179		135	9X-2384	331
9T-3598	253	9W-2109	405		149	9X-2447	607
	255	9W-2110	405		242		608
	575	9W-6068	189		289	9X-2488	463
	576	9W-6466	181		362		513
	583	9W-6582	28	9X-2027	205	9X-3265	534
	584	9W-6584	28		207		539
	585	9W-6904	181	9X-2032	463		544
	586		183		513	9X-3401	122
	587		185		531		126
9U-0710	286	9W-6912	183	9X-2038	493		128
9U-3668	229	9W-6922	181		505		150
9U-6994	216	9W-6927	181		508		153
9U-6996	350	9W-7159	179		515		156
9U-8263	516	9W-7759	203		531		160
9U-8669	237	9W-7761	183		548		164
9U-9551	204		185	9X-2040	485		166
9V-1203	207	9W-7763	183		486		168
9V-2412	229	9W-7764	183		487		170
9V-2714	570	9W-7765	181	9X-2041	472		331
9V-2715	570	9W-7770	181		481		362
9V-3404	455	9W-7771	204		485		538
9V-4484	582	9W-8142	3		486		548
9V-6343	267		4		487	9X-3402	170
9V-9480	575		▶604		552		171
	576	9W-8143	▶606		557		362
	583	9W-9371	181	9X-2042	489		534
	584		183		495		539
	585		185		496		544
	586	9W-9372	181		516		548
9W-0335	151		183		535	9X-3404	105
	154		185		540	9X-3463	116
	157	9W-9399	181		545		117
9W-0718	181	9W-9436	181		562		118
	185	9W-9662	183	9X-2043	481		126
9W-0844	126	9W-9718	181		505	9X-3959	522
	150		183		508	9X-3965	58
	153		185		518	9X-4244	115
	156	9W-9930	28	9X-2044	463	9X-4492	119
	161	9W-9940	528		500	9X-4493	119
	164	9X-0261	289		513	9X-4609	179
	166	9X-1046	153		535	9X-5617	106
	168		531		540		107
	463		535		545	9X-6165	112
	479		540	9X-2045	128		170
	513		545		470		171
	534	9X-1054	171		481	9X-6493	205
	539		479		489		207
	544		534		493	9X-6580	333
9W-0852	122		539		505	9X-6582	339
	124		544		508	9X-6772	110
	126	9X-1056	362		515		111
	150		479		516		112
	153		534		531	9X-7378	475
	156		540		535		520
	160		544		540	9X-7380	520
	164	9X-1275	140		545	9X-7381	520
	166	9X-1278	140		562	9X-7382	520
	168	9X-1279	140		568	9X-7383	520
	463	9X-1280	140	9X-2065	289	9X-7385	475
	479	9X-1282	140	9X-2132	329	9X-7680	403
	513	9X-1283	140	9X-2185	463		447
	534	9X-1284	140		513	9X-7725	240
	538	9X-1285	140	9X-2201	69	9X-8256	112
	543	9X-1813	134	9X-2299	269		302

▶ **PRIMARY REFERENCE**

PART NUMBER INDEX

Part	Page
	363
	382
	491
	499
	525
9X-8408	348
9X-8482	62
9X-8582	458
9X-8699	269
9X-9365	130
9Y-7215	269
9Y-8315	71
9Y-9380	397
9Y-9381	75
0	
002-0639	457
005-0469	179
005-0471	203
006-2884	150
	156
009-3101	52
009-4499	371
022-3108	229
030-4606	410
030-9613	281
	282
032-8047	75
033-5853	446
033-5879	415
	419
	423
	427
	431
033-6027	446
033-6028	454
033-6034	415
	423
033-6043	446
	447
	449
033-7687	22
033-9139	438
	441
034-7044	518
035-8014	75
037-4426	463
	513
039-8557	28
053-0189	58
061-6712	205
	207
061-7538	415
	419
	423
	427
	431
067-6043	13
067-6179	24
069-2535	281
	282
069-2536	281
	282
083-4419	403
	405
085-7356	196
086-2369	400
086-3757	382
087-0991	388
	389
090-8516	292
091-0079	451
	549
091-0081	58
	292
	295
	367
091-2436	151
	154
	157
	534
	539
	544
092-1136	253
	255
	265
	576
	583
	584
	585
	586
095-0670	403
096-0015	408
096-2323	498
	499
096-2617	140
096-5968	412
096-6166	463
098-8968	130
099-3095	391
	392
	400
099-3649	65
1	
100-3253	117
	118
100-3254	117
	118
100-3255	117
	118
100-3685	140
100-3751	24
100-4830	8
	24
	75
100-4838	109
100-4841	9
	13
100-5041	534
	540
	544
100-6674	160
	168
100-7603	383
101-3129	374
	376
101-3895	9
	24
	88
101-9161	491
102-0341	463
	513
102-1957	23
102-2131	226
102-4176	102
102-7540	▶181
	233
102-7548	▶183
	233
102-8801	112
	150
	153
	156
	164
	166
	534
	539
	544
102-8802	96
	112
	119
	126
	135
	148
	149
	150
	156
	160
	161
	164
	166
102-8803	106
	119
	136
	144
	160
	166
	168
	171
	242
	289
	329
	331
102-8804	151
	153
	157
	166
	531
	534
	539
	544
102-8805	117
	118
	122
	124
	126
	128
	151
	153
	157
	168
	331
	463
	483
	484
	488
	492
	513
	526
	527
	534
	539
	544
102-8806	145
	147
	157
	436
	438
	441
	534
	539
	544
103-1243	374
	376
103-2006	481
103-2543	535
	540
	545
103-5687	46
103-5796	251
104-1995	151
	154
	157
	534
	540
	544
104-2091	502
104-6747	192
104-6749	192
104-6750	192
104-6751	192
104-6754	192

▶ **PRIMARY REFERENCE**

PART NUMBER INDEX

Part	Page
104-6755	192
104-6757	192
104-8085	405
105-2145	447
105-3035	403
105-4775	204
105-4776	204
105-8034	533
	538
	543
106-3108	385
106-6394	329
106-7799	194
106-8704	170
	356
106-8916	84
107-2348	75
107-3114	242
107-4628	530
	▶566
107-4630	▶502
	530
107-4641	▶562
107-4642	3
	4
	▶524
107-4643	3
	4
	▶525
107-6007	489
107-6013	533
	538
	543
107-6021	533
	538
107-6032	515
	516
107-6056	470
	547
107-6079	502
107-6120	498
107-6133	▶145
	530
107-6141	489
107-6144	470
	472
107-6145	470
	472
107-6146	472
107-9976	457
108-1304	164
	166
108-4311	472
109-1297	329
109-1633	520
109-1634	520
109-4727	183
	185
109-4728	181
	183
109-5351	69
109-5363	354
109-5502	200
	201
	202
109-7041	122
	126
109-8981	122
110-0203	150
	153
	156
110-5056	553
	555
110-5059	553
	555
110-6109	150
	156
	533
110-7524	470
	472
110-7628	267
110-7887	531
110-8054	329
111-0132	470
	547
111-0177	470
	472
111-0178	472
111-0200	498
111-0204	472
111-0343	453
111-0483	253
111-0859	20
111-6793	534
	540
	544
111-6795	533
	538
	543
111-6816	533
	538
111-6940	292
	295
	380
	382
111-7874	489
111-7878	489
111-7881	505
	508
111-7899	131
	150
	151
	153
	154
	156
	157
	170
	171
	331
	339
	356
	461
	495
	511
	533
	538
	543
111-8222	8
111-8738	504
111-9758	576
	577
	582
112-0885	251
112-1817	362
	367
	▶435
112-4550	136
112-5219	515
112-5345	52
112-6174	145
112-7167	1
	2
	▶105
112-9609	533
	538
	543
112-9610	533
	538
	543
112-9611	534
	540
	544
112-9612	534
	540
	544
112-9861	435
113-1504	40
113-3632	388
	389
113-3790	1
	2
	▶267
113-3791	267
113-3793	267
113-3794	267
113-5100	534
	540
	544
113-5183	151
	153
	157
	534
	539
	544
113-5184	151
	154
	157
	534
	540
	544
113-7543	22
113-8129	56
113-8490	533
	538
	543
113-8491	533
	538
	543
113-8492	533
	538
	543
113-8493	533
	538
	543
113-9232	552
	557
114-1071	181
114-3140	463
	513
114-3937	484
	488
114-3940	488
114-3944	504
114-3951	533
114-3953	516
114-3954	516
114-3956	525
114-6604	122
	126
114-6658	481
114-8843	124
	242
115-1552	498
115-1558	▶121
115-1559	121
	124
115-1561	508
115-1748	150
	153
	156
	533
115-4550	237
115-5327	175
	177
	178
116-4159	533
	538
	543
116-4160	534
	540
	544
116-4161	534
	540
	544
116-4527	444
	445
116-4858	204
116-6161	160
116-6952	363
	367
116-7471	533
	538
	543
116-7856	504
116-9713	3
	4
	▶569
117-1385	92
117-3787	533
	538
	543
117-3788	533
	538
	543
117-3789	533
	538
	543
117-7798	289
117-7799	289

▶ **PRIMARY REFERENCE**

PART NUMBER INDEX

Part	Page
117-7836	▶222
	232
117-7837	▶222
	232
117-7839	222
	▶224
117-7840	222
	▶225
117-8801	405
118-0626	468
	530
118-0808	530
	▶560
118-0809	468
	▶494
	530
118-0885	329
118-0888	329
118-1008	317
118-2722	457
118-3122	405
118-5044	463
	513
118-7236	552
	557
118-7250	▶551
118-7255	550
118-7259	461
	511
118-7362	533
	538
	543
119-0013	233
119-2073	551
119-3662	122
	124
	126
	150
	151
	154
	156
	157
	164
	166
	168
	463
	513
	534
	540
	544
	548
119-4769	▶504
	530
119-8310	560
	561
119-8397	446
119-9631	463
120-0596	505
	508
120-3956	415
	419
	423
	428
	432
120-4483	221
121-0192	516
121-0199	457
121-0883	23
121-3397	317
121-7746	▶72
	73
121-8917	▶221
	233
122-6246	52
122-6316	164
	166
122-8353	199
	325
123-2899	46
123-3132	454
123-4065	58
	313
123-6621	524
123-6622	524
123-7531	415
	416
	419
	420
	427
	431
	432
123-7615	122
	126
	164
	166
	533
	538
	543
123-9056	204
124-3536	32
124-3815	24
	84
	87
124-4401	484
	488
124-5640	161
124-8335	234
124-8494	463
	513
124-8495	463
	513
124-9015	505
	508
	518
124-9636	533
	538
	543
124-9637	533
	538
	543
125-2086	269
125-7043	505
	508
125-7045	505
	508
	518
125-7046	505
	508
	518
125-7874	112
	122
	126
	150
	151
	154
	156
	157
	161
	164
	166
	168
	170
	171
	242
	534
	539
	540
	544
125-7875	122
	124
	126
	161
	168
	171
	534
	540
	544
125-7876	102
	161
126-0747	216
	▶234
126-0748	234
126-1034	505
126-1035	505
126-1036	505
126-1052	500
126-1367	505
126-1767	122
	128
	150
	151
	153
	164
	166
	168
126-1774	112
126-1818	324
126-5985	446
126-6872	374
	376
126-7574	108
126-8472	518
	538
	543
127-4832	415
	419
	423
	428
	432
127-5460	534
	540
	544
127-5483	160
127-5484	534
	539
127-6510	508
127-7457	505
127-8613	504
127-9471	403
127-9472	403
127-9483	403
127-9485	403
127-9490	403
128-0168	289
128-0169	289
128-0219	207
128-0782	558
	559
128-0784	559
128-0899	505
	508
128-2756	371
128-4168	534
	539
	544
128-5436	▶226
	227
128-5450	232
128-7069	408
128-7625	213
	358
129-0336	122
	131
129-1854	516
129-3178	463
	513
	531
129-3270	489
129-5844	292
129-7184	531
129-8087	160
130-1916	269
130-3515	117
	118
130-4677	520
130-5300	242
130-9888	40
130-9984	211
	354
	358
131-0715	400
131-1236	529
	▶563
131-1237	563
	565
131-1238	563
	565
131-3540	269
131-6143	72
132-0988	289
132-0994	289
132-2350	3
	▶457
132-2367	367
132-2393	379
	382
132-2398	379
	382
132-2399	382

▶ **PRIMARY REFERENCE**

PART NUMBER INDEX

Part	Page
132-2419	596
132-2427	596
132-2435	596
132-2441	596
132-2443	▶595
132-2471	1
	2
	▶218
132-2476	326
	▶398
132-2550	1
	2
	▶298
132-2553	298
132-2554	298
132-2558	251
132-2694	331
132-2698	329
132-3543	558
	559
132-4763	603
	605
132-5789	168
	242
132-7551	161
132-9623	181
133-1011	24
133-3235	128
133-3260	58
133-4294	205
	207
133-5545	413
133-7675	289
133-8773	322
133-9469	75
134-0404	198
134-0673	289
134-1374	491
134-1396	322
134-2252	▶136
	240
134-2540	160
	539
134-4126	108
134-4735	489
134-5214	272
134-5215	272
134-7258	611
	612
134-9569	128
135-0611	526
	527
135-2602	538
	543
135-3327	160
135-5935	391
	392
135-7940	410
135-9941	351
136-1953	463
	513
136-2109	505
	508
136-3188	466
	467
136-3190	466
136-3195	467
136-4593	193
136-4595	193
136-4794	331
136-7728	269
136-8423	403
	405
136-9292	438
	441
136-9297	436
	438
	441
136-9298	436
	438
	441
137-4234	581
	590
	591
	592
	593
137-6645	160
	242
137-6727	195
138-1611	173
	▶200
138-1612	173
	▶191
138-1614	173
	▶175
138-1615	173
138-1616	173
	▶205
138-1617	173
	▶201
138-1635	205
	207
138-1639	205
138-1640	200
138-1643	201
138-1645	175
	177
	178
138-1687	205
138-1736	201
138-2777	174
	▶202
138-8175	408
139-3584	175
	177
	178
140-3668	▶120
	131
140-6140	207
140-9251	▶281
	292
	295
140-9273	292
	295
140-9289	380
	382
140-9291	393
140-9295	3
	▶249
140-9296	249
140-9312	265
140-9926	438
141-1095	438
	441
141-1556	438
	441
141-2032	438
	441
141-4852	436
	438
	441
141-4892	207
141-6821	194
141-6822	203
141-7481	394
	395
	436
	438
	441
141-7483	▶317
	326
141-7486	317
141-7487	321
141-8061	112
	126
	150
	151
	153
	156
	157
	161
	166
	539
141-8185	321
141-8580	496
141-8589	75
141-8615	▶193
	233
141-8619	203
141-9236	436
	438
	441
141-9242	382
141-9784	463
	513
141-9917	185
142-0038	216
142-2651	436
	438
	441
142-5789	116
	122
	126
142-5893	317
142-6182	232
142-6251	298
	▶300
142-6252	300
142-6255	300
142-7568	300
142-8937	410
143-3193	286
143-4916	175
	177
	178
143-4918	175
	177
	178
143-4969	457
143-4973	572
	574
	589
	594
143-4979	457
143-7899	195
143-8874	461
	511
144-0195	563
	566
	568
144-0367	69
	350
144-1636	171
144-8521	289
145-2237	340
145-2334	438
	441
145-5163	▶575
	580
145-5166	▶576
	579
145-5196	576
145-5197	576
145-5201	575
	584
	586
	587
145-5202	575
	584
	586
	587
145-5220	577
	587
145-5221	577
	587
145-5307	516
145-6929	▶119
	128
145-8428	436
	438
	441
145-8983	358
146-0058	246
146-0066	331
146-0067	331
146-0112	344
	346
146-0117	344
	346
146-0118	346
146-0123	348
146-0124	333
146-6274	▶194
	233
146-6275	194
146-6277	194
146-6280	179
146-6282	▶203
	233
146-6283	▶185

▶ **PRIMARY REFERENCE**

PART NUMBER INDEX

Part	Page
	233
146-6315	394
	395
	396
146-6316	444
	445
146-6317	395
	396
146-6319	444
	445
146-6685	222
146-6747	609
	610
146-6783	▶222
	233
146-6908	468
	▶568
146-7453	216
146-7906	302
146-7907	302
146-7953	348
146-7986	596
	602
146-7987	596
	602
146-7990	457
146-7993	457
146-7996	457
146-8000	457
146-8003	602
146-8006	602
146-8009	457
146-8010	457
146-8013	457
146-8016	457
146-8019	457
146-8477	438
	441
146-8478	436
	438
	441
146-8479	394
	395
146-8981	438
	441
147-1445	539
147-1446	539
147-1656	185
147-1657	183
147-1666	181
147-3114	▶394
	441
147-3322	▶396
	436
	438
	441
147-3624	202
147-5071	▶219
	222
147-5553	75
147-5576	▶232
	233
147-5577	232
147-7331	▶577
	581
148-1928	179
148-3626	502
148-5689	533
	538
	543
148-7678	1
	▶329
148-7752	252
148-7761	379
148-7762	379
148-7763	379
148-7765	379
148-7769	379
148-7783	367
148-7790	1
	▶455
148-7797	455
148-7798	455
148-7800	455
148-7819	246
148-7827	▶315
	595
148-7841	175
	177
	178
148-7860	331
148-7870	455
148-7871	455
148-7872	455
148-7873	455
148-7874	455
148-7875	455
148-7877	455
148-7900	572
	574
	588
	594
	▶602
148-7922	438
	441
148-8307	312
	371
148-8315	374
	376
148-8316	211
	354
	356
	382
148-8318	371
148-8321	344
	346
	348
	363
	367
	382
148-8325	339
	342
148-8327	196
	363
	367
148-8329	382
148-8335	211
	216
	350
	363
	367
	379
	383
148-8336	289
	292
	295
	344
	346
	348
	363
	367
	371
	374
	376
	379
	383
148-8338	350
148-8339	344
	346
148-8340	302
	383
148-8341	356
148-8342	302
148-8345	383
148-8346	211
148-8347	196
	323
148-8351	342
	354
	356
	383
148-8352	211
	216
	350
	358
148-8353	371
148-8356	211
	358
148-8361	292
	295
148-8362	212
	358
	379
148-8363	371
148-8364	212
	302
148-8367	292
	295
	350
	371
	374
	376
148-8368	212
	339
	342
	358
148-8369	302
148-8373	212
	350
	358
148-8375	348
148-8376	346
148-8378	289
	292
	295
148-8382	354
148-8384	354
	356
148-8390	212
	354
	356
	374
	376
148-8392	212
	358
148-8393	356
	374
	376
148-8395	207
148-8405	379
148-8406	205
	207
148-8407	234
	350
	438
	441
148-8408	302
	323
148-8410	363
	367
148-8411	350
	379
148-8418	333
148-8419	339
148-8424	212
	376
148-8428	302
	350
148-8429	212
148-8433	351
	371
148-8435	292
	295
	451
148-8436	302
	371
148-8437	367
148-8443	289
148-8444	212
	351
	372
148-8448	212
148-8455	333
	344
149-0197	374
	376
149-0777	306
149-4359	483
	484
	488
149-5452	339
149-5470	436
	438
	441
149-5532	▶282
149-5733	603
	605

▶ **PRIMARY REFERENCE**

PART NUMBER INDEX

Part	Page
150-1293	483
	484
	488
150-3065	216
	382
150-4043	363
	367
	372
150-4046	379
150-5968	342
150-6582	524
151-0894	463
	513
151-4841	102
151-5145	324
151-5715	502
152-2763	564
152-2764	563
	▶564
	565
152-3411	374
	376
152-4014	577
	582
152-4015	577
	582
152-4020	577
	582
152-4021	577
	582
152-4022	577
	582
152-4023	577
	582
152-4187	▶319
	326
152-4189	319
152-4191	319
152-4192	319
152-4195	319
152-5717	333
	336
152-5718	333
	336
153-0702	200
	201
	202
153-2985	▶325
	410
153-3013	205
153-6230	212
153-6237	212
	351
	358
153-6241	348
153-6248	212
153-6252	348
153-6932	464
153-8072	382
153-8924	444
	445
153-8925	444
	445
153-8926	444
	445
153-8929	444
	445
153-8945	395
	396
153-8947	436
	438
	441
153-8952	436
	438
	441
153-9706	272
154-2302	272
154-4900	362
154-4901	362
154-4902	362
154-4903	362
154-4904	362
154-4914	1
	▶250
154-4917	250
154-4918	250
154-4930	329
154-4937	329
154-5629	533
	538
154-8410	583
	584
154-8411	583
	584
154-8413	583
	584
155-0576	87
155-2026	216
155-2255	112
	160
	164
	166
	539
155-2260	107
	134
	150
	156
	160
	164
	166
	168
	242
	362
	539
155-2265	151
	153
	157
	492
	539
155-2270	112
	126
	143
	150
	156
	160
	164
	166
	168
	170
	171
	242
	463
	479
	513
	539
155-2271	151
	153
	157
	166
	492
	539
155-2274	128
	150
	151
	153
	156
	157
	160
	164
	166
	539
155-2276	134
155-3504	212
	358
155-4957	553
155-5779	566
	568
155-5783	▶526
	566
	568
155-5784	▶527
	566
155-6344	216
156-1685	553
156-1686	555
156-1687	555
156-4130	292
	295
	371
156-4271	▶528
	529
	530
156-4281	292
	295
156-4449	461
	511
156-4555	▶258
156-4556	▶259
156-5970	312
157-0670	19
157-2152	444
157-2153	445
157-2348	374
	376
157-6144	441
157-6155	441
158-5089	170
	171
	356
	533
	538
	543
159-2829	69
159-3589	175
	177
	178
159-3590	609
	610
159-3781	395
	396
159-5255	19
159-8049	102
159-8050	102
159-9322	112
	539
159-9539	498
	533
	538
	543
	547
159-9540	470
	547
160-0162	87
160-0496	281
	282
	309
160-2243	457
160-2247	339
160-2248	382
160-6299	▶395
	438
	441
160-6520	538
	543
160-7690	112
160-8499	399
160-9925	500
161-4130	570
161-6149	413
161-6161	413
161-7620	502
161-8042	472
161-9640	496
161-9641	496
161-9642	496
161-9645	472
161-9647	496
162-1961	575
	576
162-1981	558
	559
162-1982	558
	559
162-1983	558
	559
162-1984	558
	559
162-2189	496
	499
162-7790	582
	586
163-1201	164
	166
163-2428	398
	▶402
163-4356	259
163-4361	457
163-4362	457
163-4384	▶261
163-4386	261

▶ **PRIMARY REFERENCE**

PART NUMBER INDEX

Part	Page
163-5512	436
	438
	441
163-6408	284
	288
163-6412	284
164-2108	235
164-3873	295
164-4021	582
	583
	584
164-4022	575
	584
	586
	587
164-4024	575
	584
	586
	587
164-4225	302
164-5509	122
164-5545	362
	367
164-5567	196
	212
	216
	289
	302
	351
	372
	379
	382
164-5577	213
	379
	383
164-5586	371
164-5619	81
164-5641	213
	358
164-6860	213
	359
164-6874	196
164-7556	115
164-9316	582
	583
	584
	585
	586
164-9640	339
165-0311	150
	153
	156
	533
	538
	543
165-0312	150
	153
	156
165-2273	371
165-4929	205
	207
165-5970	81
	▶144
165-6365	362
	374
	376
165-6692	175
	177
	178
165-7097	150
	156
166-8554	362
166-8679	470
166-9286	502
166-9287	494
167-2186	300
167-2201	317
	319
	321
167-2294	300
167-2312	317
	319
	321
167-3692	151
	153
	157
	539
167-3693	242
	539
167-3963	3
	▶588
167-3964	▶594
167-3966	▶589
168-1968	374
	376
168-2197	405
168-2198	405
168-2199	405
168-2200	405
168-2203	405
168-2204	405
	▶407
168-2206	405
168-2457	496
168-3378	407
168-3379	407
168-3380	407
168-3381	407
168-3382	407
168-3384	407
168-3385	407
168-3504	403
	405
168-7000	▶284
	530
168-7315	405
168-7316	405
168-7317	405
168-7318	405
168-7319	405
168-7320	405
168-7321	405
168-7323	405
	▶447
168-7551	576
168-7861	403
168-7863	403
168-7864	403
168-7868	403
	▶408
168-7869	403
168-7871	403
168-7872	403
168-7873	402
	▶403
168-7940	408
168-7941	408
168-7942	408
168-7943	408
168-7944	408
168-8389	570
	581
	590
	591
	592
	593
168-9027	402
	▶405
169-3995	496
169-4274	302
169-4952	582
169-7404	354
	356
169-7435	479
169-8352	179
169-9908	470
169-9949	470
169-9950	470
170-4697	175
	177
170-9360	534
	540
	544
171-3667	255
171-4046	502
171-5349	135
	242
171-6029	171
171-6723	344
	346
	351
171-6725	333
171-7198	227
171-7199	227
171-8689	227
172-5500	518
172-5501	518
172-5503	518
172-5507	468
	▶561
172-5512	468
	▶515
172-6456	302
172-7966	237
172-7968	237
172-8556	▶587
	594
172-8559	▶579
	589
172-8563	▶580
	588
172-8568	4
	▶581
172-8591	269
	278
173-0064	216
173-3635	▶582
173-4032	382
	▶413
173-4311	529
	▶565
173-7061	413
173-7062	413
173-7223	289
173-7225	292
	295
173-9682	317
	319
	322
173-9779	300
174-0563	515
174-1366	394
	395
174-1802	170
174-2211	558
174-2213	474
	▶558
174-2215	469
	529
	▶559
174-4246	52
174-4426	585
174-4427	585
174-4726	585
	586
174-5907	339
174-6118	383
174-7449	237
174-7582	319
174-9725	547
174-9730	▶547
	549
	550
175-7537	317
175-7895	300
175-7900	317
175-7903	322
175-7905	321
176-0118	227
176-0210	392
176-0623	455
	596
	602
176-0624	455
	596
	602
176-1705	227
176-1706	▶227
	228
176-2435	244
176-3141	17
176-7558	339
176-7584	▶262
176-7585	▶263
177-0019	179
	▶189
177-0026	▶237
	240
177-1061	216

▶ **PRIMARY REFERENCE**

PART NUMBER INDEX

Part	Page	Part	Page	Part	Page	Part	Page
177-1452	457		441		376		423
178-2593	496	183-7528	463		453		427
	499		513		483		431
178-3893	316	183-8597	▶135		484	192-7625	339
178-7877	396		242		488	192-7949	346
179-3609	611	184-2463	▶146		492	193-1036	449
179-3610	611		468		526	193-4640	229
	612	184-5293	531		527		231
179-3611	612	184-6352	382		531	193-5913	611
179-3612	611	184-6353	382	186-3736	143		612
179-6396	487	184-7200	379		492	193-5914	611
179-6397	485	184-9975	446	186-4415	284		612
	486	185-0884	13		288	193-5918	611
179-7071	21	185-1016	62	186-4942	225		612
179-9392	533		▶63		▶227	193-9056	150
	538	185-1017	58	186-4943	223		153
	543	185-1023	54		▶228		156
180-0119	262		55	187-2082	481	194-2915	344
180-2390	344	185-1027	63	187-2868	65	194-2917	379
180-3516	570	185-1028	▶188	187-3661	329	194-2918	379
180-3730	95		211	189-0189	453	194-2921	344
180-4686	94	185-1030	54	189-0942	272	194-3127	344
180-5098	516	185-1036	58	189-1707	520	194-5171	467
180-6567	356	185-1039	188	189-2096	453	194-5226	134
180-7486	504	185-1045	6	189-2100	389	194-5227	134
180-7487	504		▶51		▶453	194-7109	457
180-8807	1	185-1046	51	189-3014	415	194-7110	457
	2	185-1047	81		419	194-7111	457
	▶149	185-2327	446		423	194-7112	457
180-8871	102	185-2638	97		427	194-8731	344
180-8874	102	185-2639	97		431	194-8734	344
180-8984	4	185-2644	97	189-3158	164	195-0916	533
	▶245	185-2645	97		166		538
180-8996	245	185-2647	97		171		543
	246	185-2648	97		520	195-0917	533
180-8997	245	185-2650	97		534		538
	246	185-2651	97		539		543
180-9339	126	185-2653	97		544	195-0921	533
	171	185-2654	97	190-0642	99		538
	475	185-2655	97	190-0643	101		543
	539	185-2658	97	190-3085	315	195-0922	331
180-9340	112	185-2765	356		▶316	195-0925	131
	126	185-2766	150	190-3611	316	195-6525	333
	128		153	190-4559	150	195-6526	333
	150		156		153	195-6935	▶599
	151	185-3596	362		156	195-6937	▶600
	153		367	190-4563	531	195-6938	▶601
	156	185-5209	371	190-4635	468	195-6961	599
	157		▶446		▶489		600
	161	185-5629	531		530		601
	164	186-0357	339	190-4690	468	195-6962	599
	166	186-0359	339		▶491	195-8673	339
	168	186-0815	52		530	196-1185	242
	171	186-0817	52	191-1782	81	197-6666	229
	242		280	191-2226	230	197-7259	539
	539	186-3735	96	191-8920	436	197-7261	160
180-9872	316		117		438	197-7995	229
180-9900	533		118		441	197-8820	▶97
	538		124	191-8921	466		99
	543		135		467		101
180-9933	351		145	191-9182	58	197-8896	178
183-5106	▶475		147	191-9184	58	197-8898	178
	476		149	191-9188	278	198-0143	374
183-7263	436		242	192-7111	415		376
	438		306		419	198-3393	472

▶ PRIMARY REFERENCE

PART NUMBER INDEX

Part	Page
198-8933	269
198-8942	269
198-8943	269
198-8944	269
198-8945	248
198-8946	248
198-8954	269
198-8955	269
198-8957	278
198-8961	269
198-8964	▶278
	512
	529
	530
198-8965	▶280
	462
199-3108	23
199-3109	23
199-3778	400
199-7041	477
	▶479
199-7042	479
199-7043	479
199-7891	97
199-8436	97
199-9252	49
	87
199-9267	45
	87
199-9751	15
2	
200-2043	▶240
	242
200-2044	240
200-2045	189
200-3044	362
	367
200-5359	449
200-5360	449
200-5361	449
200-5362	449
200-5363	449
200-5364	449
200-6345	58
	164
	166
	211
	292
	295
	354
	358
	374
	376
	380
	382
	520
	543
201-0780	449
201-1024	150
	153
	156
201-3316	240
201-5242	400
201-5555	128
201-9517	230
	▶231
202-0358	94
202-0360	94
202-0363	▶477
	478
202-0392	272
202-0393	272
202-0420	1
	2
	▶244
202-0430	1
	2
	▶289
202-0671	435
202-0673	435
202-0674	435
202-1129	150
	156
202-4732	553
	555
202-4736	553
	555
202-4738	553
	555
202-4739	553
	555
202-6614	115
202-7503	449
202-7857	52
202-8841	423
	424
202-8928	356
202-9824	611
	612
203-2774	173
	174
	▶207
203-2775	207
203-2776	205
	207
203-2777	207
203-3889	3
	▶326
203-3890	4
	▶327
203-3891	▶327
203-3892	▶327
203-3893	328
203-5937	462
	▶478
203-8609	403
203-9007	533
	538
	543
203-9163	403
204-0358	150
	156
204-0359	153
204-0814	250
204-1126	553
	555
204-1370	94
204-2004	▶130
	468
204-2281	102
	160
	164
	166
	211
	292
	295
	350
	354
	356
	358
	362
	367
	374
	376
	380
	382
	520
204-4148	400
204-6101	151
	154
	157
	531
	534
	540
	544
204-8000	161
	164
	166
	292
	295
	351
204-8799	495
205-0626	97
205-1627	65
205-2214	52
205-3652	188
205-4587	399
205-5469	292
	295
205-6024	478
205-6025	477
205-6026	477
205-6027	477
205-6028	477
205-7106	350
205-8125	522
206-1345	168
	533
	538
	543
206-2423	19
206-4441	95
206-5823	526
	527
206-7647	415
	419
	423
	427
	431
206-7655	415
	419
	423
	427
	431
206-8818	410
206-9546	410
206-9670	174
	▶192
206-9672	192
206-9673	192
207-5948	▶495
	530
208-0792	391
208-0886	389
208-1032	571
	573
	588
208-2293	391
209-0270	326
	▶415
209-0271	327
	▶419
209-0272	328
	▶423
209-0273	327
	▶427
209-0274	327
	▶431
209-0789	350
209-3149	323
	▶324
209-4578	69
209-5018	500
209-9219	12
210-5545	379
	382
211-0052	150
	153
	156
	164
	166
	543
211-0608	393
211-0622	393
211-1058	362
	367
211-1063	327
	328
	▶346
211-2092	388
	389
	▶454
211-4230	362
	367
211-4767	1
	2
	▶393
211-4793	350
211-5255	414
	416
	419
	423
	428
	432
212-1302	▶436
	483
212-1305	▶438

▶ **PRIMARY REFERENCE**

PART NUMBER INDEX

Part	Page
	484
212-1307	▶441
	488
212-2238	379
212-2239	379
212-3354	326
	▶379
212-3358	327
	▶344
212-3863	58
212-4962	436
	438
	441
	▶444
212-4963	436
	438
	441
	▶445
212-7521	350
212-8136	362
	367
212-9580	▶79
	93
213-0139	160
213-4574	553
	555
213-4576	553
	555
213-4579	553
	555
213-5003	379
213-5004	379
213-5065	335
213-7315	531
213-8783	362
	367
213-9100	149
214-0095	216
214-0620	265
214-0734	344
	346
214-0735	344
214-0736	344
214-0737	348
214-2232	350
214-4768	283
214-5389	342
214-5390	342
214-7094	371
214-7096	382
214-7568	196
	212
	216
	235
	289
	302
	379
	382
214-7636	▶466
	566
	568
214-8917	292
	295
214-9186	472
214-9563	249
214-9564	249
	250
215-4012	69
215-8109	415
	419
	423
215-8111	415
	419
	423
	427
	431
215-8113	415
	419
	423
	427
	431
215-8115	415
	419
	423
	427
	431
215-8116	415
	419
	423
	427
	431
215-8118	427
	431
215-8119	419
	423
	431
215-8128	414
	416
	420
	424
	428
	432
215-8129	414
	416
	420
	424
	428
	432
215-8131	414
	416
	420
	423
	428
	432
215-8132	415
	419
	423
	428
	432
215-8133	416
	420
	424
	428
	432
215-8134	415
	419
	423
	427
	431
215-8135	415
	419
	423
	427
	431
215-8136	415
	419
	423
	427
	431
215-8137	414
	415
	419
	423
	427
	431
215-8138	415
	419
	423
215-8139	414
	415
	419
	423
	427
	431
215-9509	84
215-9690	458
216-0102	205
	207
216-4983	69
216-6969	335
216-7502	▶414
	419
	423
	431
216-7523	414
216-7525	414
216-7790	102
216-7913	415
	419
	423
	427
	431
216-8634	24
216-9069	491
216-9633	45
216-9729	414
216-9819	415
	419
	423
	427
	431
217-0099	87
217-0287	379
217-0288	344
	346
217-0956	302
	491
217-1994	415
	419
	424
	427
	431
217-2106	427
	431
217-2768	339
217-2769	339
217-3401	423
217-3680	191
217-3708	415
	419
	423
	427
	431
217-4101	350
217-4155	306
217-4597	416
	420
	424
	427
	432
217-4598	415
	420
	424
217-5293	362
217-6729	171
217-7742	520
217-8113	362
217-8339	93
217-8342	81
	▶93
217-9039	159
218-0001	292
	295
218-0255	295
218-2373	235
218-2440	264
218-2792	65
218-3623	539
218-5113	▶595
218-9937	2
	▶331
219-0302	609
	610
219-0669	81
219-2418	256
219-7845	371
219-8136	81
220-0691	278
220-1241	28
220-2657	400
220-2680	391
220-2681	392
220-5573	612
220-5574	611
	612
220-7925	174
	▶613
220-8678	79
221-0852	367
221-2831	362
221-2989	362
221-3206	379
	382
221-3234	367
221-3424	599
	600
	601

▶ **PRIMARY REFERENCE**

PART NUMBER INDEX

Part	Page	Part	Page	Part	Page	Part	Page
221-3428	600		508		15		613
	601		518	232-1374	81	236-8013	138
221-7117	200	226-0339	269	232-1376	81	237-0120	244
	202	226-0341	505	232-3149	87	238-0120	87
222-0574	531		508	232-3666	24		92
222-2277	74		518	232-3751	49	238-4743	290
223-0521	328	226-0443	99	232-3861	45	238-4864	533
	▶348	226-1240	609	232-5170	177		538
223-0522	328		610	232-7596	13		543
	▶333	226-2095	451	232-7597	13	238-5081	81
223-4717	485		549	232-7599	13	238-8288	70
	486		550	233-2549	339	238-8292	75
	487	226-2869	196		▶385	239-1134	138
223-7937	552		▶198	233-2944	570		▶148
	557	226-2951	164	233-6601	362	239-3322	52
223-8185	339		166	233-6708	362	239-4234	609
223-8186	339		543	233-7126	412	239-6182	292
224-0672	374	226-3378	164	233-7133	▶412		295
	376		166		451	239-6989	611
224-2263	67		543	233-7387	552		612
224-3188	403	226-8202	300		▶553	239-7396	3
	▶449	226-8766	24	233-7388	▶555		4
224-4536	▶134	226-8767	24		557		▶62
	399	227-7392	466	233-8009	498	239-8103	▶511
224-5132	307		467	233-9204	300		512
	308	227-7474	348	234-1949	317	240-0182	211
	309	228-0172	92	234-1950	321	240-0183	211
	310	228-5856	150	234-1951	319	240-2563	516
224-5152	307		153	234-2667	6	240-2564	516
	308		156		▶139	240-2565	516
	309		538	234-3063	84	240-5843	331
	310	228-6052	117	234-4325	▶115	240-7957	609
224-6792	229		118		121	241-0037	307
224-6793	▶229	228-6054	117	234-7730	115		308
	230		118	234-7731	115		309
224-7830	374	228-6056	117	235-1845	160		310
	376		118	235-4546	525	241-0935	▶571
224-8946	609	228-7088	81	235-5677	403	241-0936	571
	610	228-7100	81	235-5762	121		▶590
224-9855	609		87	235-6853	326	241-0937	▶583
225-0312	609		92		327		590
	610	228-7102	87		▶485	241-0941	348
225-1057	326	228-7696	269	235-6856	327	241-0942	348
	327	228-7868	362		▶486	241-6172	216
	328	229-1537	362	235-6860	328	241-6189	336
	▶451	229-2940	216		▶487	241-6190	336
225-3281	317	229-4962	4	235-6947	280	241-6205	237
	319		▶232	235-6948	280	241-8368	▶143
	321	229-4970	3	235-7350	457		160
	322		4	235-7353	457		533
225-3854	168		▶232	235-7390	457		538
225-3861	539	229-9714	▶570	235-7400	595		543
225-4150	611	229-9715	570		▶596	241-8564	▶516
	612	229-9850	415	235-7401	596		530
225-4257	609		419	236-2295	461	242-0588	117
	610		423	236-2541	181		118
225-4287	63	230-0913	454	236-4232	533	242-3519	▶116
225-7738	56	230-4013	548		538		124
225-7941	45	230-8989	87		543		130
225-7944	49	230-9667	▶232	236-4233	461	242-5441	140
225-8019	56	231-4476	161	236-4234	533	242-5442	140
225-8524	87	232-0893	548	236-4238	511	242-5443	140
225-8858	13	232-1115	84	236-4545	138	242-5444	140
226-0294	269		160	236-6923	520	242-5445	140
	505	232-1322	13	236-7230	612	242-8159	94

▶ **PRIMARY REFERENCE**

PART NUMBER INDEX

Part	Page	Part	Page	Part	Page	Part	Page
242-8764	553	252-2375	371	259-1161	487	267-7208	160
	555	252-2376	367	259-1286	516	267-7283	99
242-8765	553	252-2378	382	259-1456	208		101
	555	252-2379	382	259-4137	▶99	267-7368	▶173
242-8807	346	252-2380	348		474		174
242-8808	346	252-2381	348		512	267-7372	174
243-0686	216	252-2382	346		529	267-7413	173
243-4398	▶307	252-4575	533	260-1555	110		▶177
	371	252-6841	313	260-1556	111	267-7414	174
244-3114	▶235	252-6903	▶574	260-1566	110		▶178
	240	252-6904	574	260-1569	111	268-1514	335
245-1042	160		▶593	260-3939	87	268-6677	87
245-1044	160	252-6905	▶586	260-5542	159	268-6678	87
245-1045	160		593	261-3163	363	268-9082	207
245-1047	161	252-6909	▶572		367	268-9084	207
245-1048	160	252-6910	572	261-6778	516	268-9435	321
245-9020	328		▶591	261-7651	552	268-9437	▶321
	▶335	252-6911	▶584		557		326
	338		591	261-7854	336	269-1983	548
245-9088	533	253-0861	607	261-7855	336	269-2890	496
	538		608	261-7997	385	269-2892	496
	543	253-1691	227	262-0849	476	269-3311	160
246-2641	195	253-3524	382	262-0858	462	269-4750	178
	409	253-3526	382		▶476	269-4958	323
247-6019	92	253-3542	382	262-1388	485	269-8325	42
248-1066	92	253-3549	382		486	270-2615	400
248-5416	▶336	253-8920	175		487	270-2616	400
	338		177	262-1421	▶108	270-2679	533
249-1039	302		178		112		538
249-2895	128	254-1127	496	262-5653	410		543
249-7859	385	255-0759	410	262-5654	409	270-7056	▶338
249-7863	385	255-4692	65		▶410	270-7612	485
249-9076	112	255-9138	463	262-5658	350		486
250-0393	▶308		513	262-5660	350		487
250-1446	350	256-5049	▶233	262-5661	216	270-7618	516
250-1447	350	256-6803	112	262-5663	216	270-8670	181
250-1844	175	256-6804	112	262-5666	211		183
250-6011	553	256-7271	52	262-5689	410		185
	555	256-7902	67	262-5695	211	270-9442	531
250-6012	553	256-7903	67		358	271-3222	458
	555	256-7904	67	262-5778	548	272-3190	516
250-6013	553	257-1615	251	262-7562	99	273-4061	112
	555	257-1625	3		101	273-5711	43
250-6148	385		▶246	263-2062	472	274-1639	80
250-6792	374	257-1636	455	263-2908	382		87
	376	257-1645	▶247	264-4297	160	274-1929	5
250-8115	150	257-1646	247		242		▶35
	153	257-1647	247	264-5726	389	274-1930	35
	156	257-2381	92	264-7030	548	274-1931	35
250-8330	412	257-2382	92	264-7734	331	274-1935	35
251-3227	64	257-3227	520	265-2167	371	274-4284	112
251-4336	24	257-5103	3	266-7620	533	274-4990	160
251-5412	▶573		4		538	274-5909	520
251-5413	573		▶557		543	274-9872	132
	▶592	257-5104	4	267-2680	132		160
251-5414	▶585		▶552		160	275-0553	160
	592	257-6549	6	267-2744	160	275-2428	109
251-8336	30		▶19	267-2746	160	275-6706	463
251-9303	350	257-8471	304	267-3770	▶101		513
251-9304	350	258-2829	410		462	275-7741	145
252-0741	312	258-8149	92	267-4734	181		146
252-0745	312	259-0558	211		185		▶147
252-1862	496	259-1155	481	267-5211	133	275-9884	30
252-1863	496	259-1159	485	267-5213	133	275-9891	30
252-2374	371	259-1160	486	267-7207	160	276-0142	30

▶ **PRIMARY REFERENCE**

PART NUMBER INDEX

Part	Page
276-2604	609
	610
276-3810	138
276-5436	138
276-5600	13
276-5601	13
276-5602	13
276-5603	13
276-5604	13
276-5605	13
276-6596	138
276-6597	138
276-7391	26
276-7394	11
276-7475	32
276-7476	32
276-7478	32
276-8116	15
276-8117	15
276-8123	15
276-8132	15
276-8133	15
276-8134	17
276-9200	36
276-9201	36
276-9206	36
276-9207	36
276-9230	36
277-0118	23
277-1973	5
	▶40
277-1974	40
277-1975	40
277-2500	47
277-2537	49
277-2538	49
277-2912	5
	▶42
277-2923	56
277-2925	56
277-2939	5
	▶56
277-3012	24
277-3013	24
277-3014	5
	▶24
277-4224	5
277-4262	5
	▶44
277-4302	70
277-4408	109
277-4409	109
277-4410	5
	▶109
277-4694	5
277-5007	5
	▶33
277-5031	9
277-5064	9
277-5065	9
277-5067	9
277-5307	36
277-6165	84
277-6990	5
277-9602	75
277-9603	75
277-9938	75
277-9939	75
277-9940	75
277-9941	75
278-0015	75
278-0016	75
278-0017	75
278-0310	75
278-0311	75
278-0314	84
278-0315	84
278-4138	84
	88
278-5111	36
278-5112	36
278-5113	36
278-5125	7
278-5126	7
278-5128	70
278-5168	87
278-5170	87
278-5180	87
278-5201	87
278-5203	87
278-5209	159
278-5225	87
278-5226	87
278-5272	87
278-5273	87
278-5307	87
278-5641	263
278-5642	263
278-5698	211
278-6377	133
	160
279-8762	5
	▶11
279-8780	5
	▶32
279-8821	5
	▶17
279-8825	5
	▶38
279-8837	5
	▶7
279-9361	75
279-9651	27
279-9652	27
279-9653	5
	▶27
280-1394	5
	▶78
280-1892	88
280-1911	▶36
	38
280-1912	36
280-1913	36
280-1914	36
280-2023	9
280-2050	5
	▶43
280-2424	71
280-2710	461
	478
	511
280-9978	312
281-6331	23
281-6332	5
	▶23
281-7039	47
281-7040	47
281-8744	46
281-8746	46
281-8747	46
281-8748	5
	▶46
283-2456	463
283-3305	233
283-4418	▶309
	312
283-4558	5
283-8385	272
283-9971	204
	▶283
283-9972	283
284-0506	▶461
	462
284-1026	20
284-8306	520
284-8491	272
284-8497	272
284-8504	272
285-0620	6
285-0824	69
285-1975	9
285-3197	75
286-0014	9
286-0015	9
286-2890	84
286-3594	150
	153
	156
286-7194	539
286-7834	5
	▶22
286-7851	75
286-8274	211
286-8817	30
286-9592	499
286-9593	498
287-0524	483
	484
	488
287-2058	▶483
	485
287-2060	▶484
	486
287-2064	487
	▶488
287-6838	87
287-6839	87
287-6853	84
287-7637	80
287-8597	23
288-0746	350
288-4162	397
	▶399
288-4166	211
288-4641	101
288-7985	5
	▶70
289-2937	322
289-2948	322
289-3232	6
	▶71
289-3233	71
289-3234	71
289-3235	71
289-3261	30
289-3268	5
	▶30
289-3322	6
	▶65
289-3533	6
	▶69
289-3534	69
289-6393	▶388
	390
289-6394	386
	▶389
289-8336	20
289-8794	52
289-8795	326
	▶382
289-8796	326
	▶371
289-8802	2
	3
	▶108
289-8803	2
	▶326
289-8815	2
	3
	▶219
289-8833	3
	▶326
289-8894	2
	3
	▶6
289-8901	326
	▶409
289-8902	1
	2
	▶160
289-8903	▶150
	529
289-8904	▶153
	530
289-8906	▶131
289-8911	1
	2
	▶94
289-8912	1
	2
	▶269
289-8913	1
	2
	▶272
289-8919	326
	▶397
289-8923	1
	2
	▶216
289-8925	1

▶ **PRIMARY REFERENCE**

PART NUMBER INDEX

Part	Page	Part	Page	Part	Page	Part	Page
	▶292	290-4432	▶137		▶530	293-0249	92
289-8930	1	290-5562	211	290-8189	▶474	293-1880	159
	2		358	290-8491	▶496	293-2239	58
	▶286	290-5735	84		501		▶313
289-8934	326	290-5825	289	290-8493	496	293-2240	313
	▶350	290-6403	54		▶498		▶314
289-8938	6		55	290-8753	462	293-2455	350
	▶81	290-6404	55		512	293-2456	350
289-8955	1	290-6405	54		▶522	293-2457	350
	▶164	290-6406	▶54	290-8781	137	293-2458	374
289-8956	2		174		▶138		376
	▶166	290-6407	▶55	291-0638	151	293-2462	354
289-8959	1		174		154	293-2463	354
	2	290-6474	326		157	293-2464	356
	▶168		▶362	291-0639	531	293-2465	350
289-8960	1	290-6475	326	291-0640	531	293-2466	350
	2		▶367	291-2513	5	293-2467	196
	▶248	290-6483	6	291-2515	5	293-2837	▶195
289-8962	387	290-6491	3		▶20		219
	▶390		4	291-2576	520	293-2838	195
289-8963	3		▶609	291-3748	481	293-2839	195
	4	290-7046	548	291-3749	481	293-2840	286
	▶387	290-7183	311	291-3750	▶481	293-2841	286
289-8964	▶386		▶374		529	293-3032	58
	387	290-7184	311		530	293-4050	▶110
289-8965	▶387		▶376	291-3833	322	293-4052	▶111
289-8974	▶173	290-7186	▶196	291-3835	321	293-4919	607
	219		219	291-5008	269		608
289-8985	▶174	290-7187	▶170	291-6008	151	293-4921	607
289-8991	3		311		154	293-4922	607
	4	290-7188	▶171		157	293-4923	608
	▶174		311	291-6621	58	293-4924	608
289-8994	▶311	290-7198	1		▶64	293-4929	▶607
289-8995	▶311		2	291-6629	58		611
289-9075	6		▶52	291-9121	151	293-4930	▶608
	▶58	290-7199	52		154		612
289-9167	122	290-7200	▶354		157	293-5221	▶256
289-9168	150		387	291-9252	498	293-5222	256
	156	290-7201	▶356	291-9943	81	293-5283	102
289-9169	168		387	292-0239	58	293-5284	102
289-9171	533	290-7203	▶102	292-0240	58	293-5449	391
	538		305	292-0241	58		392
	543	290-7207	▶264	292-0509	122	293-5532	102
289-9172	153	290-7213	▶257	292-0886	12	293-5828	216
289-9174	164	290-7223	2	292-1086	269	293-6015	179
289-9620	409		3	292-2522	520	293-6017	▶204
289-9621	409		▶128	292-2559	269		233
290-0637	6	290-7895	28	292-3254	496	293-6018	▶179
	▶28	290-7896	28	292-3462	70		233
290-0643	28	290-8169	529	292-3592	520	293-6135	534
290-0644	28		530	292-3593	520		540
290-0658	166		▶531	292-5306	2		544
290-0659	150	290-8171	529		3	293-6472	▶312
	153		▶533		▶5		411
	156	290-8174	530	292-5606	170	293-8068	84
290-1256	219		▶538		171	293-9795	81
	▶230	290-8175	550	292-5856	5	293-9901	88
290-1257	219	290-8177	474		▶12	294-0506	264
	▶233		▶550	292-8113	58	294-0565	58
290-3931	94	290-8179	474	292-9687	211	294-0976	520
	▶95	290-8181	▶122	292-9688	211	294-2016	289
290-4068	269		468		358	294-2017	289
290-4073	269	290-8182	▶474	292-9698	211	294-2018	289
290-4074	58		530		358	294-2858	374
	▶265	290-8186	474	292-9802	548		376

▶ **PRIMARY REFERENCE**

PART NUMBER INDEX

Part	Page
294-3031	92
294-3032	92
294-3046	339
294-3047	339
294-8059	339
294-9432	462
	▶520
294-9439	3
	4
	▶305
295-0580	257
295-0912	70
295-1038	269
295-1466	211
295-1467	211
295-1468	211
295-1711	24
295-2665	534
	540
	544
295-4107	81
295-4323	211
295-4670	84
295-4690	339
295-4691	339
295-4801	92
295-5544	311
	▶411
295-6661	15
296-3542	92
296-4322	265
296-6031	391
	392
296-6706	213
296-6812	▶339
	595
297-2470	▶342
	595
297-2778	342
297-2779	342
297-5184	5
	▶21
297-5493	612
297-8966	160
298-2412	▶310
	312
298-4550	9
298-6160	128
298-7736	451
299-3939	389
	▶391
299-3940	388
	▶392
299-3941	399
	▶400
299-3949	5
	▶34
299-3953	5
	▶159
299-5499	211
299-5511	15
299-5841	491
	▶492
299-7996	410
299-7997	410
299-7998	410
299-8229	78
	81
299-9123	520
299-9124	102
300-1271	160
300-1301	410
300-1576	58
300-1631	58
300-1724	265
300-3174	58
300-4148	211
	358
300-4459	211
300-5443	275
300-6520	75
300-6868	139
	▶140
300-8840	211
300-8841	81
300-9097	292
	295
301-0361	211
	358
	522
301-0589	112
301-4353	173
	▶493
301-4354	493
301-4355	493
301-5754	269
302-0406	▶117
	128
302-0408	▶118
	128
302-2182	534
	540
	544
302-4285	269
302-4393	67
302-5195	68
302-6378	358
303-1251	371
303-2052	▶328
303-2116	75
303-2930	5
	▶87
303-3126	371
303-5190	520
304-3885	95
304-5687	491
304-5866	392
304-9464	▶199
	219
305-0632	242
305-0635	233
	▶242
305-2215	179
	204
305-4467	609
	610
305-4472	609
	610
305-5291	87
306-2337	40
306-5424	200
	201
	202
306-5432	84
306-6845	12
	▶13
306-8141	511
	▶513
306-8142	461
	▶463
307-0205	▶467
	566
307-2578	1
	2
	▶275
307-2634	126
308-3458	94
308-5075	160
308-9075	5
	▶84
308-9079	84
309-0857	84
309-1620	▶132
	160
309-5127	374
	376
309-6663	▶15
	17
309-6664	9
309-6678	15
309-6899	611
	613
309-8006	87
309-8618	463
309-8677	513
310-2393	112
310-7918	87
310-9945	518
310-9947	▶518
	529
310-9951	470
310-9952	468
	▶470
310-9953	▶468
	529
310-9954	▶529
310-9955	3
	4
	▶469
311-1159	84
311-1666	84
311-1684	84
311-1723	58
311-1952	84
311-2232	84
311-2236	6
	▶68
311-2237	68
311-2239	68
311-2241	84
311-2262	84
311-2825	9
311-3204	112
311-3205	112
311-3858	87
311-6184	161
311-6342	87
311-7491	548
311-8501	▶156
	529
311-8502	529
	▶543
311-8557	306
311-8689	472
311-8691	▶472
	549
311-8693	468
	▶549
311-8694	499
311-8695	▶499
	500
311-8696	▶500
	501
311-8697	468
	▶501
311-8698	▶468
311-8699	▶468
	529
311-8700	469
	▶529
311-8706	▶124
	468
311-8707	124
312-4545	44
312-4574	2
	▶611
312-6390	230
312-7713	611
	613
312-8743	69
313-2157	531
313-2507	65
313-2508	69
313-2509	69
313-2510	65
313-4553	95
313-4572	▶126
	474
314-4018	475
314-6480	65
	▶67
314-7513	102
314-7670	216
315-0180	102
315-4654	4
	▶529
315-5520	248
315-7790	520
315-9810	75
317-0692	▶505
	530
317-0694	505
	508
317-0695	505
	508
317-0720	468

PART NUMBER INDEX

Part	Page
	530
	▶548
317-0769	▶508
	529
317-0770	468
	▶530
317-0771	474
	▶530
317-0855	508
317-2284	128
317-2684	70
317-2717	9
317-3064	9
317-4218	548
317-7328	339
317-8021	87
	▶92
318-0827	499
318-3319	269
318-3320	269
318-8038	9
319-1625	▶306
	489
319-7412	219
319-7603	117
	118
319-8209	117
	118
319-9510	306
320-0569	409
320-2503	▶112
320-6551	9
320-6564	5
	▶9
320-9910	9
321-1270	87
321-2383	40
321-2542	323
321-2543	▶323
	326
321-3600	▶80
	87
321-6951	306
322-4964	564
322-5494	323
322-6837	126
322-6839	160
322-6840	160
322-6841	161
322-6842	108
322-8431	1
	▶612
322-8568	489
323-1650	323
323-1652	174
	▶358
323-1653	174
	▶211
323-1655	211
	358
323-1656	211
	358
323-1657	211
	358
323-1658	211
	358
323-4077	288
323-4078	▶288
	468
	530
323-9312	32
323-9531	235
324-0444	24
324-9712	▶133
	161
325-1277	59
326-1643	79
326-5063	24
326-7401	▶47
	49
327-0802	609
	610
327-0803	610
327-0804	610
327-0805	610
327-7914	269
328-2973	376
328-8319	4
	▶610
329-3734	122
329-7854	8
329-7856	8
330-3685	87
330-3687	87
330-4724	5
	▶49
330-4725	49
330-4726	49
330-4727	49
330-4728	49
330-4729	49
330-5467	87
330-6501	5
	▶8
330-6502	5
	▶45
331-0290	32
331-0291	32
331-0292	32
331-3187	84
331-4400	30
331-7539	87
331-8917	75
331-8936	5
	▶75
332-0195	496
332-3646	▶73
332-3647	▶74
332-6884	306
334-2932	92
334-4603	611
	613
335-7585	30
335-9214	54
	55
336-3545	▶108
	112
336-8174	87
336-8175	87
336-8176	87
336-8177	87
336-8178	87
336-8179	87
337-8996	367
337-8997	367
339-8780	26
339-9637	15
340-8871	▶322
	326
340-8872	322
341-6643	198
342-6502	35
342-6507	26
342-6508	26
342-6510	35
343-5527	79
343-5645	74
344-7517	74
344-7805	2
	▶295
346-0523	81
346-3635	108
346-3636	108
346-4709	38
347-0063	26
347-1132	7
348-4637	159
348-9328	11
350-4517	496
350-8687	479
351-0196	69
351-0197	69
351-2090	30
351-4685	30
351-6217	74
351-9918	115
	122
353-5142	81
353-5143	81
354-2628	302
354-2629	302
354-2630	302
354-2948	▶302
	305
354-2953	▶304
	305
354-4754	56
354-8322	30
355-0598	112
355-1582	87
355-5105	108
355-9764	108
356-3330	457
358-4889	148
358-6634	87
358-6979	30
359-5145	99
	101
360-1978	26
361-9133	472
361-9875	109
363-0559	26
363-8048	34
363-8049	34
363-8597	119
364-5701	472
364-8305	99
	101
366-5405	81
366-5686	81
366-5687	81
367-1817	46
367-7167	472
368-3150	109
368-5934	78
369-0473	109
369-3663	99
	101
372-7760	1
	2
	▶251
372-7761	251
372-7763	1
	▶252
372-7764	252
	▶253
372-7766	2
	▶254
372-7767	254
	▶255
372-7769	253
372-7770	255
372-7772	▶1
	2
372-7773	▶2
	3
372-7774	▶2
372-7775	▶3
372-8683	3
	▶462
372-8684	4
	▶512
374-9163	11
	▶26
375-8357	▶3
375-8358	▶4
375-8359	▶4
377-4844	108

▶ **PRIMARY REFERENCE**



© 2011 CATERPILLAR
ALL RIGHTS
RESERVED

CAT, CATERPILLAR, THEIR RESPECTIVE LOGOS, “CATERPILLAR YELLOW” AND THE POWER EDGE TRADE DRESS, AS WELL AS CORPORATE AND PRODUCT IDENTITY USED HEREIN, ARE TRADEMARKS OF CATERPILLAR AND MAY NOT BE USED WITHOUT PERMISSION.