SEBP4617-03
June 2009

RUTHZIL TRATOR COMERCIAL DE PEÇAS LTDA 11 97083-6812 ROLANDO

Parts Manual

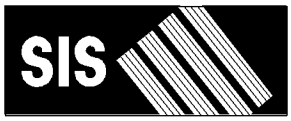

See "General Information" for New Parts Manual Features.

924H Wheel Loader

KLN1-Up (Machine)
C6E1-Up (Engine)
J2Y1-Up (Transmission)

Powered By C6.6 Engine

SAFETY.CAT.COM

Product and Dealer Information

Note: For product identification plate locations, see the section “Product Identification Information” in the Operation and Maintenance Manual.

Delivery Date: _____

Product Information

Model: _____

Product Identification Number: _____

Engine Serial Number: _____

Transmission Serial Number: _____

Generator Serial Number: _____

Attachment Serial Numbers: _____

Attachment Information: _____

Customer Equipment Number: _____

Dealer Equipment Number: _____

Dealer Information

Name: _____ Branch: _____

Address: _____

_____

_____

	Dealer Contact	Phone Number	Hours
Sales:	_____	_____	_____
Parts:	_____	_____	_____
Service:	_____	_____	_____

MEMORANDA

TABLE OF CONTENTS

Name	Page
GENERAL INFORMATION	A5
REPAIR ALTERNATIVES	A8
SUPPLEMENTAL COOLANT ADDITIVES	A9
MAINTENANCE PARTS	A10
INDEX	A14
MACHINE ARRANGEMENT	1
CHASSIS AR	1
COMMON AR	1
ENGINE ARRANGEMENT	2
ENGINE AR-PRIMARY	2
INSTALLATION AR-ENGINE	3
BASIC ENGINE	4
CAMSHAFT GP	4
COVER GP-ENGINE	5
COVER GP-VALVE MECHANISM	7
CRANKSHAFT GP	11
CYLINDER BLOCK GP	12
CYLINDER HEAD AS	15
CYLINDER HEAD GP	17
DRAIN GP-ENGINE OIL	19
DRIVE GP-FAN	21
FLYWHEEL GP	23
HOUSING GP-FLYWHEEL	24
HOUSING GP-FRONT	25
LIFTING GP-ENGINE	27
MOUNTING GP-ENGINE & XMSN	28
PAN GP-OIL	30
PISTON & ROD GP	32
PLUG GP-ENGINE	33
PLUG GP-FLYWHEEL HOUSING	34
PULLEY GP-CRANKSHAFT	35
ROCKER ARM GP	36
VALVE MECHANISM GP	38
LUBRICATION SYSTEM	40
BREATHER GP	40
FILLER GP-ENGINE OIL	41
FILTER GP-ENGINE OIL	43
PUMP GP-ENGINE OIL	44
VALVE GP-FLUID SAMPLING	45
COOLING SYSTEM	46
CONNECTION GP-WATER	46
COOLER GP-ENGINE OIL	47
COOLER GP-FLTR BASE & ENG OIL	49
FAN GP-SUCTION	52
GUARD GP-FAN	53
LINES GP-WATER	55
PUMP GP-WATER	57
RADIATOR & AFTERCOOLER GP	59
RADIATOR GP	67
TANK GP-COOLANT	71
AIR INLET AND EXHAUST SYSTEM	72
AIR CLEANER GP	72
EXTENSION GP-EXHAUST	74
LINES GP-AIR	75
MANIFOLD GP-INLET	76
MUFFLER GP	78
PRECLEANER GP	79
TURBOCHARGER GP	80
FUEL SYSTEM	83
FILTER GP-SECONDARY FUEL	83
FILTER GP-WATER SEP & FUEL	84
INJECTOR GP-FUEL	85
LINES GP-FUEL	87
PUMP & MTG GP-UNIT INJ HYD	98
PUMP GP-FUEL INJECTION	99
PUMP GP-FUEL PRM & WATER SEP	116
TANK & MTG GP-FUEL	117
TANK GP-FUEL	118
ELECTRICAL AND STARTING SYSTEM	119
ALARM GP	119
ALTERNATOR GP-CHARGING	120
BATTERY & WIRING GP	124
BATTERY GP	127
CONTROL GP-LIFT KICKOUT	128
CONTROL GP-POSITION	129
ELECTRONICS AR-MACHINE	130
ELECTRONICS GP-COMMUNICATION	130
ELECTRONICS GP-POWER TRAIN	130
GLOW PLUG GP	131
HEATER GP-JACKET WATER	132
INSTALLATION GP-COMMUNICATION	134
INSTALLATION GP-SECURITY	137
LAMP GP-FLOOD	139
LAMP GP-STOP & TAIL	143
LAMP GP-WARNING BEACON	144
LIGHTING GP-AUXILIARY	145
LIGHTING GP-FLOOD	146
LIGHTING GP-FLOOD & SIGNAL	152
LIGHTING GP-REAR	154
LIGHTING GP-WARNING BEACON	155
MODULE AS-FUSE	156
SENSOR GP-POSITION	158
SENSOR GP-PRESSURE	159
SENSOR GP-SPEED	160
SENSOR GP-TEMPERATURE	161
STARTING AID GP-ETHER	162
STARTING MOTOR GP-ELECTRIC	164

TABLE OF CONTENTS

Name	Page
SWITCH GP-DISCONNECT	167
SWITCH GP-MAGNETIC	169
SWITCH GP-PRESSURE	170
SWITCH GP-TOGGLE	171
SWITCH GP-WIPER	172
VALVE GP-ETHER STARTING	175
WARNING GP-BACKUP	176
WIRING GP-CAB	177
WIRING GP-ELECTRONIC CONTROL	186
WIRING GP-ENGINE	187
WIRING GP-FRONT	195
WIRING GP-REAR	197
WIRING GP-RIDE CONTROL	199
POWER TRAIN	201
AXLE AR-FIXED	201
AXLE AR-OSCILLATING	201
BRAKE & PLANETARY GP	203
CASE & PARTS GP-TRANSMISSION	207
CLUTCH GP	209
COOLER GP-AXLE OIL	215
COVER GP-TRANSMISSION	216
DIFFERENTIAL GP	218
DIFFERENTIAL GP-LIMITED SLIP	219
DRIVE GP-FLEXIBLE COUPLING	220
DRIVE GP-PUMP	221
FILLER GP-POWER TRAIN OIL	222
FILTER & LINES GP-TRANSMISSION	223
FILTER GP-OIL	225
GAUGE GP-SIGHT	226
GEAR GP-BEVEL & PINION	227
GEAR GP-INPUT TRANSFER	230
GEAR GP-OUTPUT TRANSFER	231
HOUSING GP-FIXED AXLE	232
HOUSING GP-OSCILLATING AXLE	236
LINES GP-AXLE OIL COOLER	242
LINES GP-TORQUE CONV COOLER	247
MOUNTING GP-AXLE	249
MOUNTING GP-RIM	250
POWER TRAIN AR	250
PUMP GP-TRANSMISSION	251
RIM AR	253
RIM GP-DEMOUNTABLE	254
SHAFT GP-DRIVE	259
SLIP JOINT GP	261
STOP GP-AXLE OSCILLATION	262
TIRE & RIM AR	262
TRANSMISSION AR	264
VALVE GP-BYPASS	265
VALVE GP-MODULATING	266
VALVE GP-RELIEF	267
VALVE GP-TIRE	268
VALVE GP-TRANSMISSION CONTROL	269
FRAME AND BODY	272
BOX GP-BATTERY	272
COUNTERWEIGHT GP	273
COVER GP-ACCESS	275
DOOR GP-ACCESS	276
FENDER GP-FRONT	278
FRAME AS-REAR	279
FRAME GP-LOADER	280
FRAME GP-REAR	283
GUARD GP-CRANKCASE	284
GUARD GP-DRIVE SHAFT	285
GUARD GP-LINES	286
GUARD GP-POWER TRAIN	290
GUARD GP-RADIATOR	291
HITCH GP-ARTICULATING	293
HOOD & GUARD GP	295
LADDER GP	298
LINES GP-GREASE	301
LINK GP-STEERING FRAME LOCK	303
PANEL GP-ACCESS	304
PANEL GP-TOP	306
BRAKING SYSTEM	307
ACCUMULATOR GP-BRAKE	307
ACCUMULATOR GP-HYDRAULIC	308
BRAKE GP-PARKING	309
CONTROL GP-PARKING BRAKE	310
CONTROL GP-SERVICE BRAKE	315
LINES GP-SERVICE BRAKE	317
STEERING SYSTEM	320
CYLINDER & MTG GP-STEERING	320
CYLINDER GP-HYDRAULIC	322
CYLINDER GP-STEERING	323
LINES GP-STEERING	325
STEERING AR-STANDARD	328
STEERING COLUMN GP-ADJUSTABLE	329
HYDRAULIC SYSTEM	330
ACCUMULATOR GP-PILOT OIL	330
ACCUMULATOR GP-RIDE CONTROL	332
CONTROL AR-RIDE	334
CONTROL GP-RIDE	335
COOLER GP-HYD & TMSN OIL	336
COOLER GP-HYDRAULIC OIL	337
CORROSION AR-PROTECTION	338
CYLINDER & MTG GP-COUPLER	339
CYLINDER GP-BUCKET	340
CYLINDER GP-COUPLER	341
CYLINDER GP-LIFT	342
CYLINDER GP-TILT	343
FILTER & MTG GP-HYDRAULIC	344
FILTER GP-OIL	345
HYDRAULIC AR	346

TABLE OF CONTENTS

Name	Page
HYDRAULIC AR-2 VALVE	346
HYDRAULIC AR-3 VALVE	346
HYDRAULIC AR-4 VALVE	347
KICKOUT & POSITIONER GP	348
LINES GP-CONNECTING	350
LINES GP-COUPLER	357
LINES GP-HYDRAULIC	369
LINES GP-HYDRAULIC FAN	377
LINES GP-LIFT CYLINDER	385
LINES GP-PILOT	389
LINES GP-RIDE CONTROL	392
LINES GP-TILT CYLINDER	395
MANIFOLD GP-CONTROL	398
MOTOR & MTG GP-HYDRAULIC FAN	399
MOTOR AR-HYDRAULIC FAN	400
MOTOR GP-GEAR	401
MOUNTING GP-CONTROL VALVE	406
PIVOT GP-PILOT VALVE	407
PLATE GP-PILOT VALVE	411
PUMP & MTG GP-BRAKE & HYD FAN	412
PUMP & MTG GP-IMPL & STEERING	413
PUMP GP-GEAR	414
PUMP GP-PISTON	417
ROTATING GP-PUMP	422
TANK & MTG GP-HYDRAULIC	424
TANK GP-HYDRAULIC	425
VALVE & MTG GP-RIDE CONTROL	426
VALVE & MTG GP-SOLENOID	427
VALVE GP-COMBINATION	428
VALVE GP-CONTROL	429
VALVE GP-MAIN CONTROL	430
VALVE GP-MANUAL	442
VALVE GP-PILOT	443
VALVE GP-PILOT CARTRIDGE	457
VALVE GP-PRESSURE REDUCING	465
VALVE GP-PUMP CONTROL	466
VALVE GP-RELIEF	470
VALVE GP-SHUTOFF	472
VALVE GP-SOLENOID	474
IMPLEMENTS	476
CONTROL GP-WORK TOOL	476
OPERATOR STATION	484
ADJUSTER GP-SEAT	484
AIR COMPRESSOR GP-SEAT	485
AIR CONDITIONER & MOUNTING GP	486
AIR CONDITIONER AR	487
AIR CONDITIONER GP	488
ARM GP-WINDOW WIPER	490
ARMREST GP	492
CAB AR	495
CAB AR-ENCLOSED ROPS	496
CAB GP	497
CAB GP-ENCLOSED ROPS	501
CANOPY AR-OPEN ROPS	504
CANOPY GP-OPEN ROPS	504
COMPRESSOR GP-REFRIGERANT	505
CONDENSER & MTG GP-REFRIGERANT	507
CONDENSER GP-REFRIGERANT	509
CONSOLE GP-OPERATOR	511
CONTROL GP-JOYSTICK	513
CONTROL GP-PILOT OPERATED HYD	514
CONTROL GP-STEERING	520
CONTROL GP-TRANSMISSION	522
CONVERSION GP-CAB	524
DASH GP	525
DEFROSTER GP-CAB	526
DOOR GP-CAB	527
DUCT GP-CAB AIR	542
FILTER GP-CAB AIR	544
FLOOR MAT GP	545
LINER GP-CAB	553
LINES GP-AIR CONDITIONER	558
LINES GP-CAB HEATER	560
LITERATURE GP	561
MIRROR GP	562
MIRROR GP-REAR VIEW	563
MOTOR GP-WINDOW WIPER	565
MOUNTING GP-CAB	567
OPERATOR AR	568
OPERATOR AR-ENCLOSED ROPS	570
OPERATOR AR-OPEN ROPS	570
OPERATOR GP	570
PAN GP-BACKREST	571
PANEL GP-INSTRUMENT	573
PEDAL GP-BRAKE	588
PEDAL GP-GOVERNOR	589
RADIO GP-COMMUNICATION	593
RECLINER GP-SEAT	594
ROPS GP-ENCLOSED	595
ROPS GP-OPEN	597
SCREEN GP-SUN	598
SEAT & MOUNTING GP	599
SEAT BELT GP	602
SEAT GP	603
SEAT GP-SUSPENSION	606
SKIRT GP-CAB	611
SUPPORT GP-SEAT	613
SUSPENSION GP-SEAT	615
VISOR GP-CAB	617
WASHER GP-WINDOW	618
WINDOW GP-DOOR	621
WIPER GP-WINDOW	622
WORK TOOLS	625
ADAPTER GP-TIP	625
ARM GP-MATERIAL HANDLING	626

TABLE OF CONTENTS

Name	Page	Name	Page
BUCKET AR-GENERAL PURPOSE	627		
BUCKET AR-LIGHT MATERIAL	629		
BUCKET AR-MULTIPURPOSE	631		
BUCKET AR-SIDE DUMP	634		
BUCKET AS-GENERAL PURPOSE	635		
BUCKET AS-LIGHT MATERIAL	640		
BUCKET AS-PENETRATION	642		
BUCKET GP-GENERAL PURPOSE	643		
BUCKET GP-LIGHT MATERIAL	647		
BUCKET GP-MULTIPURPOSE	649		
BUCKET GP-PENETRATION	651		
BUCKET GP-SIDE DUMP	652		
CARRIAGE AS-FORK	653		
COUPLER AR-QUICK	653		
COUPLER GP-QUICK	654		
EDGE GP-CUTTING	656		
EDGE GP-SEGMENT	656		
FORK GP-PALLET	657		
MOUNTING GP-BUCKET	660		
TIP GP-LONG	661		
TIP GP-SHORT	663		
SERVICE EQUIPMENT AND SUPPLIES	665		
FILM GP	665		
FILM GP-INTERNATIONAL	667		
PLATE & FILM GP	668		
PLATE GP-AXLE IDENTIFICATION	669		
PART NUMBER INDEX	B1		

GENERAL INFORMATION

1. MACHINE IDENTIFICATION

Caterpillar machines are identified by Product Identification Numbers (PIN). Some components included in a machine may be identified by Serial Numbers (S/N). Typical components that will be serialized include engines, transmissions, bulldozers, and rippers. The machine and engine are further identified by arrangement numbers and in some cases modification numbers. These numbers are shown on the product identification plate(s) and on the master plate in the operator's compartment.

Caterpillar dealers need all of these numbers to determine accurate parts identification.

SIS *New Feature*

Effective First Quarter 2001 the Caterpillar Product Identification Number (PIN) changed from 8 to 17 characters. In an effort to provide uniform equipment identification, Caterpillar and other construction equipment manufacturers are moving to comply with the latest version of the product identification numbering standard. Non-road machine PINs are defined by ISO 10261. The new PIN format will apply to all Caterpillar machines and generator sets. The PIN plates and frame marking will display the 17 character PIN. The new format will look like the following:

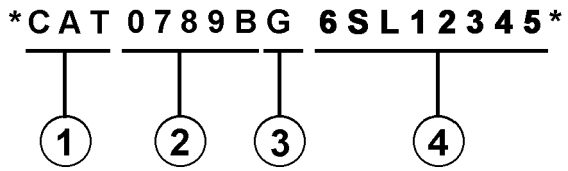

Where:

1. Caterpillar's World Manufacturing Code (characters 1-3)

2. Machine Descriptor (characters 4-8)

3. Check Character (character 9)

4. Machine Indicator Section (MIS) or Product Sequence Number (characters 10-17). These were previously referred to as the Serial Number.

Machines and generator sets produced before First Quarter 2001 will maintain their 8 character PIN format.

Components such as engines, transmissions, axles, etc. and work tools will continue to use an 8 character Serial Number (S/N).

2. ORDERING PARTS

WARNING

When replacement parts are required for this product Caterpillar recommends using Caterpillar replacement parts or parts with equivalent specifications including, but not limited to, physical dimensions, type, strength and material.

Failure to heed this warning can lead to premature failures, product damage, personal injury or death.

Quality Caterpillar replacement parts are available from Caterpillar dealers throughout the world. Their parts inventories are up to date and include all parts normally required to protect your investment in Caterpillar machines. Dealers may offer repair kits or remanufactured parts to allow selection of the most effective repair alternative for a particular situation. When ordering parts, your order should specify the quantity, part number, part name, and the serial number/product identification number of the machine for which the parts are needed.

3. PARTS MANUAL ORGANIZATION

Product information in this manual is presented as "information elements" that represent all of the components for the specific model. Engine Arrangement and Seat Group are examples of information elements. The information elements are organized alphabetically by part name and secondarily by part number within each major section of the manual.

4. TABLE OF CONTENTS

A table of contents (TOC) is found at the beginning of the manual. The TOC lists each section of the manual with a complete list of all information elements organized as they appear in the manual. Page numbers are provided for quick reference to detailed parts identification illustrations and serviceable consist lists.

5. MAINTENANCE PARTS INDEX

The Maintenance Parts Index, located near the beginning of the manual, references most frequently used maintenance part numbers, providing description, quantity, usage and page number. This information is organized alphabetically by part description.

6. INDEX

The index located near the front of the manual is an alphabetical listing of all information elements included in the manual. Page numbers are provided for quick reference to detailed parts identification illustrations and serviceable consist lists.

7. PART NUMBER INDEX

A numerical index listing all part numbers and the corresponding page number(s) appears at the back of the manual.

8. CAPTIONS

Captions located at the beginning of each information element identify the part number and part name along with additional descriptive information. PIN and S/N information found in each caption should be used to select correct information for a specific machine. Field replacement options, identification of optional attachment components, and where used ("part of") information is also provided.

The first line of a caption is shown in larger type font to indicate the beginning of an information element. Captions for additional pages that may be required to illustrate an information element will be shown in standard type font and will include the term *(contd.)* .

9. NON-SERVICED PARTS

In some instances it is necessary to display non-serviced parts that are a link to a lower level serviceable consist lists. These non-serviced part numbers are shown in *italic* type indicating that they are not available.

10. PARTS LIST REFERENCE NUMBERS

Numbers shown in the Ref No column correspond to numbers used in the associated graphic(s). An alphabetic suffix may be added to a reference number to identify lower level consist items. Numbers shown in the Graphic Ref column refer to the graphic number identifier displayed in the lower left corner of each illustration. The Graphic Ref number may be used in combination with the item Ref No to determine the correct part number. There may be intentional omission of a Ref No in a consist list as information is updated to reflect the latest serviceable part numbers.

11. INDENTED PART NAMES

When a part name is indented in a parts list, it is part of (included in) the group or assembly under which it is indented.

12. ILLUSTRATION REFERENCE LETTERS

When necessary, illustrations contain reference letters (A, B, C etc.) that are intended to track lines and harnesses from one point to another. They are also used to show where to reconnect illustrations that have been separated.

13. ABBREVIATIONS AND SYMBOLS

O.D. – Outside Diameter
I.D. – Inside Diameter
A – Not Part Of This Group
B – Use As Required
C – Change From Previous Type
D – Order By The Meter
E – Order By The Centimeter
F – Not Shown
G – Order By The Inch
I – Refer To Hydraulic Information System
M – Metric Part
R – Remfg Part May Be Available
Y – Separate Illustration
Z – Not Serviced Separately

SIS *New Feature*

14. DESCRIPTION OF TYPE CHANGES

Type - A type is defined as any configuration change that requires an additional Information Element for an Arrangement, Group, or Assembly. If serial number breaks for types are not available, a type # (Type 1, Type 2, etc.) will be displayed in the caption. These "type" changes are identified with a "C" note (change from previous type) in the Parts List. Only the "types" that apply to this Parts Manual will be included. Additional types may exist causing "C" notes to appear on an Information Element when no other types are shown.

15.<END>

This symbol indicates the end of an information element.

NOTE:

Continuing improvement and advancement of product design may cause changes to your machine which may not be included in this publication. Whenever a question arises regarding your caterpillar product or this publication, please consult your caterpillar dealer for the latest available information.

FRAME AND BODY

8E-3299 PLATFORM GP-CAB

PIN 3SK1-99999

SMCS-7253 — 100090751

NOTE	REF NO	GRAPHIC REF	PART NUMBER	QTY	PART NAME (1 2 3 4 5 6 PRODUCT LEVEL)	SEE PAGE
	*	1	3T-3863	1	PLATE AS	
	2	1	6E-2662	25	BOLT (3/8-16X.750IN)	
	3	1	6P-1076	41	WASHER-HARD (38MM THK)	
	4	1	9P-1644	2	SUPPORT AS-FOOT	
	5	1	7P-2229	19	BOLT (1/2-13X1IN)	
		1	6P-[illegible]	19	WASHER-HARD (41MM THK)	
	6	1	8E-6136	*	COVER AS-LH	
		1	9F-2978	5	NUT-WELD (3/8-16 THD)	
		1	1P-0188	1	CLIP	
	7	1	7S-3411	4	COVER	
	8		9J-0488	18	SCREW-HEAD (3/8-16X.875IN)	
	9	1	[illegible]-4474	1	COVER	
		1	8E-[illegible]	*	GASKET	
	10	1	8E-3248	1	[illegible]	
		1	8E-3250	1	GASKET	
	11	1	3T-3638	1	HANDHOLD	
	12	1	8E-8678	1	COVER AS	
		1	9F-2978	8	NUT-WELD (3/8-16 THD)	
		1	8E-8679	1	GASKET	
	13	1	7T-0131	1	FLOORPLATE AS	
		1	1F-0748	4	NUT-WELD (1/2-13 THD)	
	14	1	7V-8067	1	PLUG-BUTTON	
	15	1	7T-0136	1	PLATE AS	
		1	9F-2978	5	NUT-WELD (3/8-16 THD)	
	16	1	7T-8066	1	COVER	
		1	7T-8779	1	GASKET	
	17	1	3T-3861	1	PLATE AS	
	18	1	6T-8364	4	BOLT (1/4-20X.625IN)	
M		1	9T-4205	4	WASHER-HARD (28MM THK)	
	19	1	6L-8494	1	FLOOR MAT	
	20	1	8E-8846	1	MODULE AS-OPERATOR	
	21	1	3T-3834	1	HANDHOLD	
	22	1	9P-8671	2	PLUG	
	23	2	6T-8364	4	BOLT (1/4-20X.625IN)	
M		2	9T-4205	4	WASHER-HARD (28MM THK)	
	24	2	6E-2662	17	BOLT (3/8-16X.750IN)	
	26	2	6P-1076	21	WASHER-HARD (38MM THK)	
	26	2	7T-0135	1	SEAL	
	27	2	7X-0075	2	BOLT (3/4-10X5IN)	
		2	7X-0682	2	WASHER-HARD (64MM THK)	
	28	2	3T-3462	2	PLATE	
	29	2	3T-8290	1	PLATE AS	
		2	7S-4828	8	SPACER	
	30	2	3T-8281	1	SEAL	
	31	2	7S-8817	1	GASKET	
	32	2	7S-8816	1	COVER AS	
		2	2R-2276	2	WASHER	
		2	6P-8626	2	SCREW-KNURLED	
	33	2	9W-3429	1	COVER	
	34	2	8E-8697	1	COVER	
	35	2	6D-3931	8	SCREW-SOCKET HEAD	
	36	2	9W-3142	8	MOUNTING	
	37	2	9W-8027	2	PLATE	
	38	2	7X-0090	2	BOLT (7/8-9X5IN)	
		2	7X-0672	2	WASHER-HARD	
	39	2	4L-8454	4	BOLT (3/8-16X1.0IN)	
	40	2	3T-4788	1	COVER	

12 FRAME AND BODY — 1 of 4 — SELP4570-01

FRAME AND BODY

8E-3299 PLATFORM GP-CAB *(contd.)* — 100090751

NOTE	REF NO	GRAPHIC REF	PART NUMBER	QTY	PART NAME (1 2 3 4 5 6 PRODUCT LEVEL)	SEE PAGE
	41	2	8E-2516	1	COVER	
	42	2	7T-0134	1	PLATE	
	43	2	7T-0138	1	GASKET	
	44	2	7S-8724	1	GASKET	
	45	2	7S-8723	1	COVER	
	46	2	6V-1950	2	PLUG-BUTTON	

M-METRIC PART

SELP4570-01 — 2 of 4 — FRAME AND BODY 13

FRAME AND BODY

8E-3299 PLATFORM GP-CAB *(contd.)* — 100090751

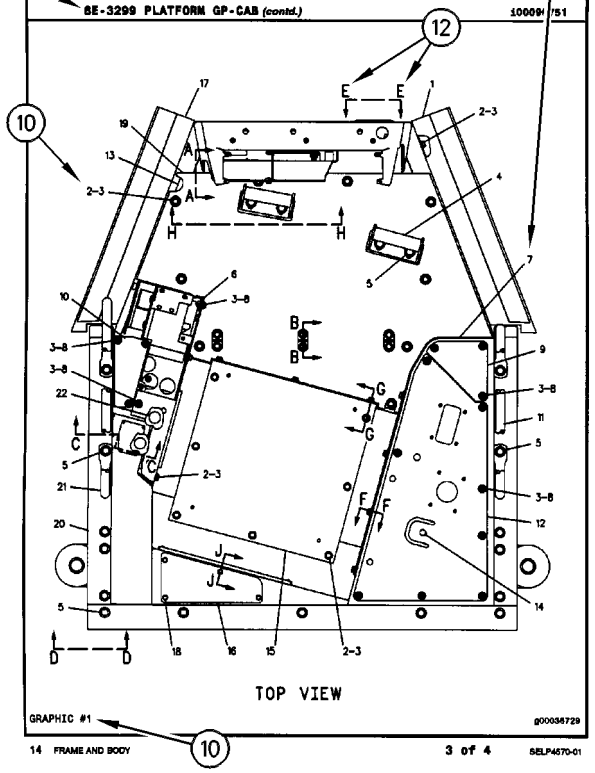

GRAPHIC #1 — g00036729

14 FRAME AND BODY — 3 of 4 — SELP4570-01

FRAME AND BODY

8E-3299 PLATFORM GP-CAB *(contd.)* — 100090751

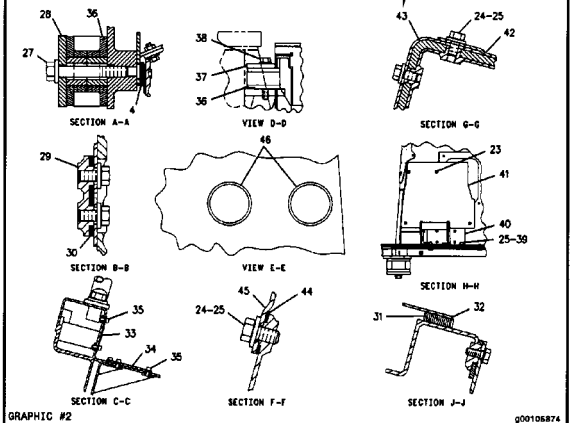

GRAPHIC #2 — g00105874

SELP4570-01 — 4 of 4 — FRAME AND BODY 16

REPAIR ALTERNATIVES

REMANUFACTURED COMPONENTS

As an option when making repairs consider Caterpillar Remanufactured Components. Components that are available through the Caterpillar Remanufactured Program are identified three ways in the parts book:

- with the letter R in the note field of the parts list
- with an R* at the beginning of the first line of the caption
- with an *R at the end of the first line of the caption

Typical components included in the Remanufacturing Program include:

ALTERNATORS
CONNECTING RODS
CRANKSHAFTS - UNDERSIZE
CRANKSHAFTS - UPGRADE TO NEW
CYLINDER HEADS
ELECTRONIC CONTROL MODULES (ECM)
ELECTRONIC SENSORS
FUEL INJECTORS
FUEL NOZZLES
FUEL PUMPS
GOVERNORS
OIL PUMPS
PISTONS
SHORT BLOCKS
STARTERS
TURBOCHARGERS - COMPLETE
TURBOCHARGER CARTRIDGES
WATER PUMPS

Caterpillar Remanufactured engines for many engine arrangements are also available.

SUPPLEMENTAL COOLANT ADDITIVES

CUSTOMER BENEFITS:

Protects against cavitation, foam, erosion, corrosion, and scale buildup in cooling systems.

- Provides measured coolant conditioner.

DESCRIPTION:

Additives deplete from the coolant with normal operation. For this reason, Supplemental Coolant Additives (SCA) must be added to all heavy duty coolants at regular intervals. In addition, when not using a fully formulated, pre-charged antifreeze, like Caterpillar's DEAC, an initial charge of SCA must be added to the cooling system. The amount of SCA added to the system is dependent on the capacity of the system.

The SCA for initial fill is provided as a liquid. SCA's for maintenance intervals are available in liquid form and as a spin-on element. (No Spin-on available for 3600 Family of Engines)

NOTE:

The amount of SCA added at initial fill is not the same as the amount added at maintenance intervals.

The coolant additive elements can be used with any ethylene or propylene glycol type antifreeze which meets ASTM D4985 or ASTM D5345 Specifications.

NOTE:

For use with standard heavy duty coolant only, not for use with Extended Life Coolant.

PARTS NEEDED:

Cooling System Capacity		Liquid SCA at Initial Fill	Liquid SCA at Maintenance*	Spin-on SCA Maintenance Element*
Liters	Gallons			
22-30	(6-8)	3P-2044 (1)	6V-3542 (1)	111-2370 (1)
30-38	(8-10)	3P-2044 (1) 6V-3542 (1)	111-2372 (1)	111-2369 (1)
38-49	(10-13)	3P-2044 (1) 8T-1589 (1)	111-2372 (1)	111-2369 (1)
49-64	(13-17)	3P-2044 (2)	8T-1589 (1)	9N-3368 (1)
64-83	(17-22)	3P-2044 (2) 8T-1589 (1)	111-2372 (1) 6V-3542 (1)	111-2371 (1)
83-114	(22-30)	3P-2044 (3) 8T-1589 (1)	3P-2044 (1)	9N-3718 (1)
114-163	(30-43)	3P-2044 (5)	3P-2044 (1) 6V-3542 (1)	111-2371 (2)
163-242	(43-64)	3P-2044 (8)	3P-2044 (2)	9N-3718 (2)

** Normal maintenance period is 250 hrs. See your Operation and Maintenance Manual for complete coolant maintenance instructions.*

( ) Indicates quantity required.

MAINTENANCE PARTS

DESCRIPTION	PART NUMBER	QTY	WHERE USED	PAGE
AIR INLET AND EXHAUST SYSTEM				
FILTER ELEMENT AS-AIR (PRIMARY)	256-7902	1	AIR CLEANER GP	73
FILTER ELEMENT AS-AIR (SECONDARY)	256-7903	1	AIR CLEANER GP	73
BASIC ENGINE				
BREATHER (CRANKCASE)	298-4547	1	COVER GP-VALVE MECHANISM	7
GASKET-COVER (VALVE MECHANISM)	317-3064	1	COVER GP-VALVE MECHANISM	7
		1	COVER GP-VALVE MECHANISM	9
PLUG-DRAIN (ENGINE OIL)	7C-0351	1	DRAIN GP-ENGINE OIL	20
		2	PAN GP-OIL	30
COOLING SYSTEM				
CAP AS-COOLANT TANK	251-3227	1	TANK GP-COOLANT	71
GASKET-WATER REGULATOR	281-8744	1	CONNECTION GP-WATER	46
REGULATOR AS-WATER TEMPERATURE (CONNECTOR INCLUDED)	281-8745	1	CONNECTION GP-WATER	46

MAINTENANCE PARTS

DESCRIPTION	PART NUMBER	QTY	WHERE USED	PAGE
ELECTRICAL AND STARTING SYSTEM				
BATTERY (12-VOLT, MAINTENANCE FREE, WET)	9X-3404	2	BATTERY GP	127
BELT-SERPENTINE	226-0443	1	ALTERNATOR GP-CHARGING	122
	288-4641	1	ALTERNATOR GP-CHARGING	123
CAP-DUST	8C-3445	1	SWITCH GP-PRESSURE	170
FLASHER AS (12 TO 24-VDC)	317-2284	1	LIGHTING GP-FLOOD & SIGNAL	152
FUSE (100-AMPERE)	235-1845	2	WIRING GP-ENGINE	187
		2	WIRING GP-ENGINE	191
FUSE (20-AMPERE)	267-2680	1	MODULE AS-FUSE	156
		1	WIRING GP-ENGINE	187
		1	WIRING GP-ENGINE	191
FUSE (30-AMPERE)	274-9872	1	MODULE AS-FUSE	156
		1	WIRING GP-ENGINE	187
		1	WIRING GP-ENGINE	191
FUSE (40-AMPERE)	278-6377	2	MODULE AS-FUSE	157
		1	WIRING GP-ENGINE	191
GLOW PLUG	292-9881	6	GLOW PLUG GP	131
KEY (BATTERY DISCONNECT)	8H-5306	1	SWITCH GP-DISCONNECT	167
KEY AS-ELECTRONIC (SECURITY)	206-5162	2	INSTALLATION GP-SECURITY	137
LAMP (24-VOLT, 21-WATT)	242-0588	1	LAMP GP-FLOOD	141
		1	LAMP GP-FLOOD	142
LAMP (24-VOLT, 21-WATT) (STOP, TAIL)	9X-4493	1	LAMP GP-STOP & TAIL	143
LAMP (24-VOLT, 3-WATT)	115-1748	2	WIRING GP-CAB	177
		2	WIRING GP-CAB	180
LAMP (24-VOLT, 3-WATT) (ACTION LIGHT)	115-1748	2	WIRING GP-CAB	183
LAMP (24-VOLT, 5-WATT)	130-3515	1	LAMP GP-FLOOD	141
		1	LAMP GP-FLOOD	142
LAMP (24-VOLT, 5-WATT) (STOP, TAIL)	9X-4492	1	LAMP GP-STOP & TAIL	143
LAMP GP-WARNING BEACON (AMBER, STROBE)	140-3668	1	LIGHTING GP-WARNING BEACON	155
LAMP-HALOGEN (24-VOLT, 70-WATT)	9X-3463	1	LAMP GP-FLOOD	140
		1	LAMP GP-FLOOD	141
		1	LAMP GP-FLOOD	142
		1	LIGHTING GP-FLOOD	146
		1	LIGHTING GP-FLOOD	150
LAMP-HALOGEN (24-VOLT, 70-WATT) (FLOODLIGHT)	9X-3463	1	LAMP GP-FLOOD	139
FUEL SYSTEM				
CAP-FUEL	304-3885	1	TANK GP-FUEL	118
FILTER AS-WATER SEP & FUEL (PRIMARY)	326-1644	1	FILTER GP-WATER SEP & FUEL	84
FILTER GP-FUEL (ULTRA HIGH EFFICIENCY)	308-7480	1	FILTER GP-SECONDARY FUEL	83
FILTER-FUEL (ULTRA HIGH EFFICIENCY)	299-8229	1	FILTER GP-SECONDARY FUEL	83
STRAINER-FUEL (FILLER NECK SCREEN)	180-3730	1	TANK GP-FUEL	118

MAINTENANCE PARTS

DESCRIPTION	PART NUMBER	QTY	WHERE USED	PAGE
HYDRAULIC SYSTEM				
BREATHER (HYDRAULIC TANK)	258-2829	1	TANK GP-HYDRAULIC	425
CAP AS-FILLER (HYDRAULIC TANK)	142-8937	1	TANK GP-HYDRAULIC	425
FILTER-OIL (ULTRA HIGH EFFICIENCY) (HYDRAULIC)	126-1818	1	FILTER GP-OIL	345
SCREEN (BREATHER)	299-7997	1	TANK GP-HYDRAULIC	425
SCREEN AS (PILOT OIL)	141-9236	1	VALVE GP-PILOT	443
		1	VALVE GP-PILOT	448
		1	VALVE GP-PILOT	450
		1	VALVE GP-PILOT	452
SCREEN-SUCTION (FILTER)	255-0759	1	TANK GP-HYDRAULIC	425
STRAINER (HYDRAULIC OIL)	206-8818	1	TANK GP-HYDRAULIC	425
STRAINER (HYDRAULIC TANK)	262-5689	1	TANK GP-HYDRAULIC	425
LUBRICATION SYSTEM				
BREATHER AS (CRANKCASE)	273-5711	1	BREATHER GP	40
CAP-OIL FILLER (ENGINE)	130-9888	1	FILLER GP-ENGINE OIL	41
FILTER-ENGINE OIL	269-8325	1	FILTER GP-ENGINE OIL	43
OPERATOR STATION				
BLADE AS-WIPER (503-MM) (REAR)	6V-6543	1	WIPER GP-WINDOW	622
BLADE AS-WIPER (700-MM) (FRONT)	6V-7419	1	WIPER GP-WINDOW	622
		1	WIPER GP-WINDOW	624
CAP-VENTED	8E-8292	1	WASHER GP-WINDOW	619
CIRCUIT BREAKER AS (20-AMPERE)	280-2710	1	CONDENSER & MTG GP-REFRIGERANT	508
CIRCUIT BREAKER AS (20-AMPERE) (AIR CONDITIONER)	280-2710	1	AIR CONDITIONER & MOUNTING GP	486
FILTER ELEMENT-CAB AIR (OPTIONAL W/ ODOR REDUCTION)	180-7487	1	FILTER GP-CAB AIR	544
FILTER ELEMENT-CAB AIR (PRIMARY)	111-8738	1	FILTER GP-CAB AIR	544
FUSE (10-AMPERE)	113-8490	19	PANEL GP-INSTRUMENT	575
		19	PANEL GP-INSTRUMENT	584
FUSE (15-AMPERE)	113-8491	6	PANEL GP-INSTRUMENT	575
		6	PANEL GP-INSTRUMENT	584
FUSE (20-AMPERE)	113-8492	3	PANEL GP-INSTRUMENT	575
		3	PANEL GP-INSTRUMENT	584
FUSE (25-AMPERE)	113-8493	2	PANEL GP-INSTRUMENT	575
		2	PANEL GP-INSTRUMENT	584
LAMP (24-VOLT, 10-WATT)	112-5219	1	LINER GP-CAB	553
	259-1286		LINER GP-CAB	554
LAMP (24-VOLT, 3-WATT)	115-1748	1	PANEL GP-INSTRUMENT	575
RECEIVER AS	257-3227	1	LINES GP-AIR CONDITIONER	558
SCREEN-FILTER	8T-5913	2	WASHER GP-WINDOW	619
SEAT BELT GP (3-IN)	223-7937	1	SEAT & MOUNTING GP	600
		1	SEAT & MOUNTING GP	601
SEAT BELT GP (RETRACTABLE)	183-3648	1	SEAT GP	605
	222-0345	1	SEAT & MOUNTING GP	599

MAINTENANCE PARTS

DESCRIPTION	PART NUMBER	QTY	WHERE USED	PAGE
POWER TRAIN				
BREATHER (TRANSMISSION CASE)	9G-5127	1	CASE & PARTS GP-TRANSMISSION	207
CAP-FILL (POWER TRAIN OIL)	137-6727	1	FILLER GP-POWER TRAIN OIL	222
FILTER-MAGNETIC (TRANSMISSION)	8S-9129	1	CASE & PARTS GP-TRANSMISSION	207
FILTER-OIL (ADVANCED EFFICIENCY) (POWER TRAIN)	1G-8878	1	FILTER GP-OIL	225
PLUG-DRAIN (TRANSMISSION)	7T-2703	1	CASE & PARTS GP-TRANSMISSION	207
PLUG-MAGNETIC (AXLE HOUSING)	5P-4484	1	HOUSING GP-FIXED AXLE	232
		1	HOUSING GP-FIXED AXLE	234
		1	HOUSING GP-OSCILLATING AXLE	236
		1	HOUSING GP-OSCILLATING AXLE	239
SCREEN AS (IN-LINE)	299-5499	1	LINES GP-AXLE OIL COOLER	242
SCREEN-SUCTION	8S-9130	1	CASE & PARTS GP-TRANSMISSION	207

INDEX

Name	Page
A	
ACCUMULATOR GP-BRAKE–CHARGED	307
ACCUMULATOR GP-HYDRAULIC–UNCHARGED	308
ACCUMULATOR GP-PILOT OIL–CHARGED	330
ACCUMULATOR GP-PILOT OIL–UNCHARGED	331
ACCUMULATOR GP-RIDE CONTROL–CHARGED	332, 333
ACCUMULATOR-REFRIGERANT	558
ADAPTER GP-OIL PAN DRAIN	30
ADAPTER GP-TIP	625
ADJUSTER GP-SEAT	484
AIR CLEANER GP	72, 73
AIR COMPRESSOR GP-SEAT	485
AIR CONDITIONER & MOUNTING GP–WITH CABLE CONTROL	486
AIR CONDITIONER AR	487
AIR CONDITIONER GP	488
ALARM GP	119, 176
ALTERNATOR GP-CHARGING	120, 122, 123
ARM GP-MATERIAL HANDLING	626
ARM GP-WINDOW WIPER	490
ARM GP-WINDOW WIPER–REAR	491
ARMREST GP	492
ARMREST GP–LH	493
ARMREST GP–RH	494
ATOMIZER GP-ETHER	163
AXLE AR-FIXED–FRONT, STANDARD DIFFERENTIAL	201
AXLE AR-OSCILLATING–REAR, LIMITED SLIP DIFFERENTIAL	202
AXLE AR-OSCILLATING–REAR, STANDARD DIFFERENTIAL	201, 202
B	
BASE GP-VALVE COVER & INJ HARN	7, 9
BATTERY & WIRING GP	124
BATTERY (12-VOLT, MAINTENANCE FREE, WET)	127
BATTERY COMPARTMENT DRIP PAN	30
BATTERY GP	127
BEARING GP-PILLOW BLOCK	259
BELT TENSIONER GP	123
BELT-SERPENTINE	122, 123
BLADE AS-WIPER (503-MM) (REAR)	622
BLADE AS-WIPER (700-MM) (FRONT)	622, 624
BOX GP-BATTERY	272
BRAKE & PLANETARY GP–DUAL DISC	206
BRAKE & PLANETARY GP–SINGLE DISC	203, 205
BRAKE GP-PARKING	309
BREATHER (CRANKCASE)	7
BREATHER (HYDRAULIC TANK)	425
BREATHER (TRANSMISSION CASE)	207
BREATHER AS (CRANKCASE)	40
BREATHER GP–CRANKCASE	40
BUCKET AR-GENERAL PURPOSE	628
BUCKET AR-GENERAL PURPOSE–QUICK COUPLER	627
BUCKET AR-LIGHT MATERIAL	629, 630
BUCKET AR-MULTIPURPOSE	631, 632, 633
BUCKET AR-SIDE DUMP	634
BUCKET AS-GENERAL PURPOSE	635, 637, 639
BUCKET AS-GENERAL PURPOSE–QUICK COUPLER	638
BUCKET AS-LIGHT MATERIAL	641
BUCKET AS-LIGHT MATERIAL–QUICK COUPLER	640
BUCKET AS-PENETRATION	642
BUCKET GP-GENERAL PURPOSE	643, 646
BUCKET GP-GENERAL PURPOSE–QUICK COUPLER	644, 645
BUCKET GP-LIGHT MATERIAL	648
BUCKET GP-LIGHT MATERIAL–QUICK COUPLER	647
BUCKET GP-MULTIPURPOSE	649, 650
BUCKET GP-PENETRATION	651
BUCKET GP-SIDE DUMP	652
C	
CAB AR	495
CAB AR-ENCLOSED ROPS	496
CAB AR-ENCLOSED ROPS–SLIDING WINDOWS	496
CAB GP	497, 499
CAB GP-ENCLOSED ROPS	501, 502, 504

INDEX

Name	Page
CAMSHAFT GP	4
CANOPY AR-OPEN ROPS	504
CANOPY GP-OPEN ROPS	504
CAP AS-COOLANT TANK	71
CAP AS-FILLER (HYDRAULIC TANK)	425
CAP-DUST	170
CAP-FILL (POWER TRAIN OIL)	222
CAP-FUEL	118
CAP-OIL FILLER (ENGINE)	41
CAP-VENTED	619
CARRIAGE AS-FORK	653
CASE & PARTS GP-TRANSMISSION	207
CHASSIS AR	1
CIRCUIT BREAKER AS (20-AMPERE)	508
CIRCUIT BREAKER AS (20-AMPERE) (AIR CONDITIONER)	486
CLUTCH GP–FIRST, THIRD	209
CLUTCH GP– FORWARD HIGH, FORWARD LOW	213
CLUTCH GP–REVERSE, SECOND	211
COMMON AR	1
COMPRESSOR GP-REFRIGERANT	505
	506
CONDENSER & MTG GP-REFRIGERANT	507
	508
CONDENSER GP-REFRIGERANT	509
CONNECTION GP-WATER	46
CONSOLE GP-OPERATOR	511
CONTROL AR-RIDE	334
CONTROL GP-HANDLE (DIRECTION, DOWNSHIFT SWITCHES)	455
	456
	513
CONTROL GP-JOYSTICK– JOYSTICK, 4-FUNCTION	513
CONTROL GP-LIFT KICKOUT	128
CONTROL GP-PARKING BRAKE	312
	314
CONTROL GP-PARKING BRAKE–HANDLE	310
CONTROL GP-PILOT OPERATED HYD	519
CONTROL GP-PILOT OPERATED HYD– JOYSTICK, 2-FUNCTION	514
	517
CONTROL GP-PILOT OPERATED HYD– JOYSTICK, 3-FUNCTION	515
	518
CONTROL GP-PILOT OPERATED HYD– JOYSTICK, 4-FUNCTION	516
CONTROL GP-POSITION	129
CONTROL GP-RIDE	335
CONTROL GP-SERVICE BRAKE	315
CONTROL GP-STEERING	520
CONTROL GP-TRANSMISSION	522
	523
CONTROL GP-UNPROGRAMMED (ENGINE)	100
	105
	110
CONTROL GP-UNPROGRAMMED (TRANSMISSION)	522
CONTROL GP-WORK TOOL– HIGH LIFT MACHINES	480
CONTROL GP-WORK TOOL– STANDARD LIFT MACHINES	476
CONVERSION GP-CAB	524
COOLANT HEATER LINES	560
COOLER GP-AXLE OIL	215
COOLER GP-ENGINE OIL	47
COOLER GP-FLTR BASE & ENG OIL	49
	50
COOLER GP-HYD & TMSN OIL	336
COOLER GP-HYDRAULIC OIL	337
CORE AS-POWER TRAIN OIL COOLER	336
CORROSION AR-PROTECTION	338
COUNTERWEIGHT GP	273
	274
COUPLER AR-QUICK	653
COUPLER GP-QUICK	654
COVER GP-ACCESS–CAB FLOOR	275
COVER GP-CYLINDER HEAD	7
	9
COVER GP-ENGINE	5
	6
COVER GP-TRANSMISSION	216
COVER GP-VALVE MECHANISM	7
	9
CRANKSHAFT GP	11
CYLINDER & MTG GP-COUPLER	339
CYLINDER & MTG GP-STEERING	320
CYLINDER BLOCK GP	12
	13
CYLINDER GP-BUCKET	340
CYLINDER GP-COUPLER	341
CYLINDER GP-HYDRAULIC	322
CYLINDER GP-LIFT	342
CYLINDER GP-STEERING	323
CYLINDER GP-TILT	343
CYLINDER HEAD AS	15
CYLINDER HEAD GP	17

D

DASH GP	525
DEFROSTER GP-CAB	526
DIFFERENTIAL GP–STANDARD	218
DIFFERENTIAL GP-LIMITED SLIP	219
DOOR GP-ACCESS–HOOD SIDE	276
	277
DOOR GP-CAB	532
	540
	541

INDEX

Name	Page
DOOR GP-CAB–FIXED WINDOW, LH	527
DOOR GP-CAB–LH	531
DOOR GP-CAB–RH	529, 539
DOOR GP-CAB–SLIDING WINDOW, LH	536
DOOR GP-CAB–SLIDING WINDOW, RH	533
DRAIN GP-ENGINE OIL	19, 20
DRIVE GP-FAN	21, 22
DRIVE GP-FLEXIBLE COUPLING	220
DRIVE GP-PUMP–TRANSMISSION	221
DUCT GP-CAB AIR	542
E	
EDGE GP-CUTTING	656
EDGE GP-SEGMENT	656
ELECTRONICS AR-MACHINE	130
ELECTRONICS GP-COMMUNICATION–PRODUCT LINK 300	130
ELECTRONICS GP-POWER TRAIN–MACHINE CONTROL	130
ENGINE AR-PRIMARY	2
EXTENSION GP-BACKREST (CLOTH)	605
EXTENSION GP-EXHAUST	74
F	
FAN GP-SUCTION	52
FENDER GP-FRONT	278
FILLER GP-ENGINE OIL	41
FILLER GP-POWER TRAIN OIL	222
FILM (BLACK)	472
FILM (HIGH LIFT)	480
FILM (INSTRUMENT PANEL COVER)	573
FILM GP	666
FILM GP–INTERNATIONAL	665
FILM GP-INTERNATIONAL	667
FILM-CONTROL (CONSOLE, RH)	575
FILM-CONTROLS (FUSE, RELAY PANEL)	580, 584
FILM-FUSE/RELAY	580, 585
FILM-FUSE/RELAY (IDENTIFICATION)	576
FILM-IDENTIFICATION (IGNITION SWITCH)	137
FILM-IDENTIFICATION (PANEL, RH)	177, 183
FILM-IDENTIFICATION (REFRIGERANT CONDENSER)	509
FILM-INFORMATION (24-VOLT)	665, 667
FILM-INFORMATION (BRAZIL)	668
FILM-INSTRUCTION	129, 168
FILM-INSTRUCTION (ENGINE START)	573
FILM-INSTRUCTION (LIFT EYE, TIE-DOWN LOCATION)	668
FILM-INSTRUCTION (LIFT KICKOUT)	128
FILM-INSTRUCTION (MACHINE SECURITY, CONSOLE)	137
FILM-INSTRUCTION (PULL RING, ALTERNATE EXIT)	540
FILM-INSTRUCTION (SEAT ADJUSTMENT)	615
FILM-PANEL (LH)	178, 181, 184
FILM-PANEL (RH)	180
FILM-RATING (LOAD)	626
FILM-WARNING (CRUSH HAZARD, STAY BACK)	631, 632, 633
FILM-WARNING (CRUSH HAZARD, STAY BACK, INTL)	665, 667
FILM-WARNING (HIGH PRESSURE, READ OMM)	332, 333
FILM-WARNING (HIGH PRESSURE, READ OMM, INTL)	392
FILM-WARNING (HIGH PRESSURE, READ OMM, U.S.)	392
FILM-WARNING (NO CLEARANCE, STAY BACK)	634
FILM-WARNING (NO WELD, NO DRILL, READ OMM)	665, 667
FILM-WARNING (PRODUCT LINK RADIO, INTL)	134
FILM-WINDOW (FRONT)	495, 568, 569
FILTER & LINES GP-TRANSMISSION	223
FILTER & MTG GP-HYDRAULIC–OIL	344
FILTER AS-WATER SEP & FUEL (PRIMARY)	84
FILTER BASE & ENG OIL COOLER	49, 50
FILTER ELEMENT AS-AIR (PRIMARY)	73
FILTER ELEMENT AS-AIR (SECONDARY)	73
FILTER ELEMENT-CAB AIR (OPTIONAL W/ ODOR REDUCTION)	544
FILTER ELEMENT-CAB AIR (PRIMARY)	544
FILTER GP-CAB AIR	544
FILTER GP-ENGINE OIL	43
FILTER GP-FUEL (ULTRA HIGH EFFICIENCY)	83
FILTER GP-OIL	225
FILTER GP-OIL–HYDRAULIC	345
FILTER GP-SECONDARY FUEL	83
FILTER GP-WATER SEP & FUEL	84

INDEX

Name	Page
FILTER-ENGINE OIL	43
FILTER-FUEL (ULTRA HIGH EFFICIENCY)	83
FILTER-MAGNETIC (TRANSMISSION)	207
FILTER-OIL (ADVANCED EFFICIENCY) (POWER TRAIN)	225
FILTER-OIL (ULTRA HIGH EFFICIENCY) (HYDRAULIC)	345
FITTING AS	163
FLASHER AS (12 TO 24-VDC)	152
FLOOR MAT	545
	547
	550
	556
FLOOR MAT GP	545
	547
	550
FLYWHEEL GP	23
FORK GP-PALLET	657
	658
	659
FRAME AS-REAR	279
FRAME GP-LOADER	280
	281
	282
FRAME GP-REAR	283
FUSE (10-AMPERE)	575
	584
FUSE (100-AMPERE)	187
	191
FUSE (15-AMPERE)	575
	584
FUSE (20-AMPERE)	156
	187
	191
	575
	584
FUSE (25-AMPERE)	575
	584
FUSE (30-AMPERE)	156
	187
	191
FUSE (40-AMPERE)	157
	191

G

GASKET-COVER (VALVE MECHANISM)	7
	9
GASKET-WATER REGULATOR	46
GAUGE AS-OIL LEVEL (DIPSTICK)	232
	234
	236
	239
GAUGE GP-OIL LEVEL (DIPSTICK) (ENGINE)	30
GAUGE GP-SIGHT (POWER TRAIN OIL)	250
GAUGE GP-SIGHT–POWER TRAIN OIL	226
GAUGE-SIGHT (FLUID LEVEL)	425
GEAR GP-BEVEL & PINION–FRONT	228
GEAR GP-BEVEL & PINION–REAR	227
	229
GEAR GP-INPUT TRANSFER	230
GEAR GP-OUTPUT TRANSFER	231
GLOW PLUG	131
GLOW PLUG GP	131
GUARD AS	285
GUARD GP-CRANKCASE	284
GUARD GP-DRIVE SHAFT	285
GUARD GP-FAN	53
GUARD GP-LINES	286
	289
GUARD GP-LINES–COUPLER	288
GUARD GP-POWER TRAIN	290
GUARD GP-RADIATOR	53
	291

H

HARNESS AS-CAB	575
	580
	584
HARNESS AS-CAB (MAIN)	177
	180
	183
HARNESS AS-CAB (UPPER)	177
	180
	183
HARNESS AS-CONTROL (JUMPER)	134
HARNESS AS-CONTROL (KICKOUT, POSITIONER)	348
HARNESS AS-CONTROL (MACHINE SECURITY)	137
HARNESS AS-CONTROL (PRODUCT LINK)	134
HARNESS AS-CONTROL (TRANSMISSION)	270
HARNESS AS-ENGINE	187
	191
HARNESS AS-ENGINE (ENGINE CONTROL MODULE)	186
HARNESS AS-FRONT	195
HARNESS AS-HEATER & AIR COND	488
HARNESS AS-HEATER & AIR COND (CONDENSER FANS)	509
HARNESS AS-LIGHTING	146
	148
	150
	152
HARNESS AS-RADIO (PRODUCT LINK)	134
HARNESS AS-REAR	197
HARNESS AS-RIDE CONTROL (PRESSURE SWITCH)	199

INDEX

Name	Page
HARNESS AS-RIDE CONTROL (SOLENOID VALVE)	199
HARNESS AS-SENSOR (GOVERNOR PEDAL)	591
HARNESS AS-VALVE (SEAT AIR COMPRESSOR)	615
HARNESS AS-WIRING (INJECTOR)	7 9
HEATER GP-JACKET WATER	132 133
HITCH GP-ARTICULATING	293
HOOD & GUARD GP	295
HOUSING GP-FIXED AXLE–FRONT	232 234
HOUSING GP-FLYWHEEL	24
HOUSING GP-FRONT	25
HOUSING GP-OSCILLATING AXLE–REAR	236 239
HYDRAULIC AR	346
HYDRAULIC AR-2 VALVE–JOYSTICK CONTROL	346
HYDRAULIC AR-3 VALVE–JOYSTICK CONTROL	346
HYDRAULIC AR-4 VALVE–3-LEVER, WITH FNR	347
HYDRAULIC AR-4 VALVE–3-LEVER, WITH FNR, STANDARD LIFT MACHINES	347

I

Name	Page
INDICATOR AS-AIR FILTER CHANGE	72
INDICATOR GP-AIR FILTER CHANGE	72
INJECTOR GP-FUEL	85 86
INSTALLATION AR-ENGINE	3
INSTALLATION GP-COMMUNICATION	134
INSTALLATION GP-SECURITY	137

K

Name	Page
KEY (BATTERY DISCONNECT)	167
KEY AS-ELECTRONIC (SECURITY)	137
KICKOUT & POSITIONER GP	348
KIT-REPAIR (GOVERNOR PEDAL)	590
KIT-SENSOR (AIR PRESSURE)	100 105
KIT-SENSOR (COOLANT TEMPERATURE)	100 105
KIT-SENSOR (ENGINE OIL PRESSURE)	100 105
KIT-SENSOR (ENGINE SPEED)	100 105
KIT-SENSOR (INTAKE AIR TEMPERATURE)	100 105 110

L

Name	Page
LADDER GP	298
LAMP (24-VOLT, 10-WATT)	553 554
LAMP (24-VOLT, 21-WATT)	141 142
LAMP (24-VOLT, 21-WATT) (STOP, TAIL)	143
LAMP (24-VOLT, 3-WATT)	177 180 575
LAMP (24-VOLT, 3-WATT) (ACTION LIGHT)	183
LAMP (24-VOLT, 5-WATT)	141 142
LAMP (24-VOLT, 5-WATT) (STOP, TAIL)	143
LAMP GP-DOME (24-VOLT)	553
LAMP GP-DOME (24-VOLT) (CAB)	554
LAMP GP-FLOOD (24-VOLT)	146 150
LAMP GP-FLOOD–LH	142
LAMP GP-FLOOD–RH	141
LAMP GP-FLOOD–SUSPENDED	139
LAMP GP-FLOOD–SUSPENDED MOUNT	140
LAMP GP-STOP & TAIL–24-VOLT	143
LAMP GP-WARNING BEACON (AMBER, STROBE)	155
LAMP GP-WARNING BEACON–AMBER, STROBE	144
LAMP-HALOGEN (24-VOLT, 70-WATT)	140 141 142 146 150
LAMP-HALOGEN (24-VOLT, 70-WATT) (FLOODLIGHT)	139
LIFTING GP-ENGINE	27
LIGHTING GP-AUXILIARY–CAB FRONT	145
LIGHTING GP-FLOOD & SIGNAL–OFF ROAD W/SIGNAL	152
LIGHTING GP-FLOOD–CAB FRONT	148
LIGHTING GP-FLOOD–CAB FRONT, REAR	146
LIGHTING GP-FLOOD–CANOPY FRONT, REAR	150
LIGHTING GP-REAR	154
LIGHTING GP-WARNING BEACON	155
LINER GP-CAB	553 554
LINER GP-CAB–LOWER	556
LINES GP-AIR	75
LINES GP-AIR CONDITIONER	558
LINES GP-AXLE OIL COOLER	242
LINES GP-CAB HEATER	560
LINES GP-CONNECTING	350 351 353

INDEX

Name	Page
	354
	356
LINES GP-COUPLER	357
	358
	360
LINES GP-COUPLER–STANDARD LIFT MACHINES	367
LINES GP-COUPLER–STANDARD LIFT MACHINES, WIDE	361
	364
LINES GP-FUEL	87
	89
	92
	95
LINES GP-GREASE	301
LINES GP-HYDRAULIC	373
LINES GP-HYDRAULIC–3RD FUNCTION	369
LINES GP-HYDRAULIC–4TH FUNCTION	371
LINES GP-HYDRAULIC FAN–REVERSING FAN	379
LINES GP-HYDRAULIC FAN–STANDARD	377
LINES GP-HYDRAULIC FAN–WITHOUT AXLE OIL COOLER	381
LINES GP-LIFT CYLINDER	385
LINES GP-PILOT	389
LINES GP-PROTECTION	338
LINES GP-RIDE CONTROL	392
LINES GP-SERVICE BRAKE	317
LINES GP-STEERING	325
LINES GP-TILT CYLINDER	395
LINES GP-TORQUE CONV COOLER	247
LINES GP-WATER–WITH AXLE OIL COOLER	55
LINES GP-WATER–WITHOUT AXLE OIL COOLER	56
LINK GP-STEERING FRAME LOCK	303
LITERATURE GP	1
	561
LOCK GP-CYLINDER	545
	547
	550

M

Name	Page
MANIFOLD GP-CONTROL–QUICK COUPLER	398
MANIFOLD GP-INLET	76
	77
MIRROR GP	562
MIRROR GP-REAR VIEW–EXTERIOR	563
MIRROR GP-REAR VIEW–INTERIOR	564
MODULE AS-FUSE	157
MODULE AS-FUSE–MAIN POWER	156
MODULE GP-DISPLAY (GAUGE CLUSTER)	573
MODULE GP-INTERFACE (KEY)	137
MOTOR & MTG GP-HYDRAULIC FAN–REVERSING	399
MOTOR AR-HYDRAULIC FAN–REVERSING	400
MOTOR AR-HYDRAULIC FAN–STANDARD	400
MOTOR GP-GEAR–HYDRAULIC FAN	401
	403
	405
MOTOR GP-GEAR–REVERSING FAN	402
	404
MOTOR GP-WINDOW WIPER (24-VOLT, 2-SPEED)	565
	566
MOTOR GP-WINDOW WIPER–FRONT	565
MOTOR GP-WINDOW WIPER–REAR	566
MOUNTING GP-AXLE	249
MOUNTING GP-BUCKET	660
MOUNTING GP-CAB	567
MOUNTING GP-CONTROL VALVE	406
MOUNTING GP-ENGINE & XMSN	28
	250
MOUNTING GP-ETHER CANISTER	163
MOUNTING GP-RIM	250
MUFFLER GP	78

O

Name	Page
OPERATOR AR	568
	569
OPERATOR AR-ENCLOSED ROPS–SLIDING WINDOWS	570
OPERATOR AR-OPEN ROPS	570
OPERATOR GP	570

P

Name	Page
PADLOCK GP	222
	424
PAN GP-BACKREST	572
PAN GP-BACKREST–LUMBAR	571
PAN GP-OIL	30
PANEL GP-ACCESS–HOOD, CAB HEATER	304
PANEL GP-INSTRUMENT	575
	584
PANEL GP-INSTRUMENT–FRONT	573
PANEL GP-INSTRUMENT–OPEN ROPS	580
PANEL GP-TOP–HOOD, AIR CONDITIONER	306
PEDAL GP-BRAKE	588
PEDAL GP-GOVERNOR	589
	590
	591
PISTON & ROD GP	32
PIVOT GP-PILOT VALVE–AUXILIARY	409
	410
PIVOT GP-PILOT VALVE–LIFT	407
PIVOT GP-PILOT VALVE–TILT	408

INDEX

Name	Page
PLATE & FILM GP	668
PLATE GP-AXLE IDENTIFICATION	202, 669
PLATE GP-PILOT VALVE–JOYSTICK	411
PLATE-IDENTIFICATION (CAT)	638, 639, 640
PLATE-IDENTIFICATION (WORK TOOL)	646, 647, 648
PLUG GP-ENGINE	33
PLUG GP-FLYWHEEL HOUSING	34
PLUG-DRAIN (ENGINE OIL)	20, 30
PLUG-DRAIN (TRANSMISSION)	207
PLUG-MAGNETIC (AXLE HOUSING)	232, 234, 236, 239
POSITIONER GP-WORK TOOL	658
POWER TRAIN AR	250
PRECLEANER GP	79
PROTECTION GP-FUEL SYSTEM	101, 106, 111
PROTECTION GP-FUEL SYSTEM (LINE, LOW PRESSURE)	89, 92, 95
PROTECTION GP-VANDALISM	338
PULLEY GP-CRANKSHAFT	35
PUMP & MOTOR GP-AXLE OIL CLR	242
PUMP & MTG GP-BRAKE & HYD FAN	412
PUMP & MTG GP-IMPL & STEERING–IMPLEMENT,PILOT & STEERING	413
PUMP & MTG GP-UNIT INJ HYD	98
PUMP GP-ENGINE OIL	44
PUMP GP-FUEL INJECTION	99, 100, 105, 110, 115
PUMP GP-FUEL PRM & WATER SEP–ELECTRIC	116
PUMP GP-FUEL TRANSFER	98, 99, 115
PUMP GP-GEAR–BRAKE, HYDRAULIC FAN	414, 415
PUMP GP-METERING (HMU)	325
PUMP GP-PISTON–FRONT	420
PUMP GP-PISTON–IMPLEMENT,PILOT & STEERING	417
PUMP GP-PISTON–REAR	418
PUMP GP-TRANSMISSION–1-SECTION GEAR	251, 252
PUMP GP-WATER	57

R

Name	Page
RADIATOR & AFTERCOOLER GP	59, 63
RADIATOR GP	67, 68, 69, 70
RADIO GP-COMMUNICATION–PRODUCT LINK 121SR	593
RECEIVER AS	558
RECLINER GP-SEAT	594
REGULATOR AS-VOLTAGE (24-VOLT)	120
REGULATOR AS-WATER TEMPERATURE (CONNECTOR INCLUDED)	46
RELAY AS (24-VOLT)	526
RELAY AS (24-VOLT) (ALARM)	575, 580, 584
RELAY AS (24-VOLT) (CONDENSER)	509
RELAY AS (24-VOLT) (FRONT FLOODLIGHTS)	575, 580, 584
RELAY AS (24-VOLT) (REVERSING FAN)	379
RELAY AS (24-VOLT) (RIDE CONTROL)	199
RELAY AS (24-VOLT) (RIDE CONTROL, LOAD CHECK RELAY)	199
RIM AR	253
RIM GP-DEMOUNTABLE	254, 255, 256, 257, 258
ROCKER ARM GP	36
ROPS GP-ENCLOSED	595, 596
ROPS GP-OPEN	597
ROTATING GP-PUMP	422, 423

S

Name	Page
SCREEN (BREATHER)	425
SCREEN AS (IN-LINE)	242
SCREEN AS (PILOT OIL)	443, 448, 450, 452
SCREEN GP-SUN	598

INDEX

Name	Page
SCREEN-FILTER	619
SCREEN-SUCTION	207
SCREEN-SUCTION (FILTER)	425
SEAL GP-DUO-CONE	232
	234
	236
	239
SEAT & MOUNTING GP	599
	600
	601
SEAT BELT GP (3-IN)	600
	601
SEAT BELT GP (RETRACTABLE)	599
	605
SEAT BELT GP–RETRACTABLE	602
SEAT GP	605
SEAT GP–CLOTH	603
SEAT GP-SUSPENSION–AIR	606
SEAT GP-SUSPENSION–CLOTH	609
SEAT GP-SUSPENSION–VINYL	607
SENDER AS-FUEL LEVEL	117
SENSOR GP-POSITION	158
	591
SENSOR GP-PRESSURE	159
SENSOR GP-PRESSURE (BRAKE OIL)	315
SENSOR GP-SPEED	160
SENSOR GP-SPEED (SECONDARY, TIMING)	98
	99
	115
SENSOR GP-SPEED (TRANSMISSION OUTPUT)	270
SENSOR GP-TEMPERATURE (ENGINE COOLANT)	187
	191
SENSOR GP-TEMPERATURE (TORQUE CONVERTER OIL)	270
SENSOR GP-TEMPERATURE (TRANSMISSION OIL)	269
SENSOR GP-TEMPERATURE–PULSE WIDTH MODULATED	161
SENSOR-PRESSURE (FUEL RAIL PRESSURE)	100
	105
	110
SERVICE GP-COMMUNICATION (PRODUCT LINK 300)	130
SERVICE GP-POWER TRAIN	130
SHAFT GP-DRIVE	260
SHAFT GP-DRIVE–FRONT	259
SKIRT GP-CAB	611
	612
SLIP JOINT GP–CENTER	261
SOFTWARE GP-COMMUNICATION (PRODUCT LINK 121SR)	593
SOFTWARE GP-COMMUNICATION (PRODUCT LINK 300)	130
SOFTWARE GP-POWER TRAIN	130
SOLENOID AS (WASTEGATE)	80
SPIDER & BEARING GP	259
	260
	261
SPRING AS-GAS (HOOD)	295
SPRING AS-GAS (STEERING COLUMN)	329
STARTING AID GP-ETHER	162
	163
STARTING MOTOR GP-ELECTRIC	164
	165
STEERING AR-STANDARD	328
STEERING COLUMN GP-ADJUSTABLE	329
STOP GP-AXLE OSCILLATION	262
STRAINER (HYDRAULIC OIL)	425
STRAINER (HYDRAULIC TANK)	425
STRAINER-FUEL (FILLER NECK SCREEN)	118
SUN VISOR	617
SUPPORT GP-SEAT	613
	614
SUSPENSION GP-SEAT–AIR	615
SWITCH AS (STARTER)	165
SWITCH AS-DISCONNECT	168
SWITCH AS-LIMIT (BRAKE PEDAL)	575
	580
	584
SWITCH AS-LIMIT (PARKING BRAKE)	310
	314
SWITCH AS-PRESSURE	242
SWITCH AS-PRESSURE (HYDRAULIC OIL FILTER BYPASS)	345
SWITCH AS-PRESSURE (POWER TRAIN OIL FILTER BYPASS)	225
SWITCH AS-PRESSURE (REFRIGERANT)	558
SWITCH AS-ROCKER (24-VOLT)	199
SWITCH AS-ROCKER (AIR CONDITIONER, HEATER CONT)	486
SWITCH AS-ROCKER (AUTOSHIFT CONTROL)	177
	180
	183
SWITCH AS-ROCKER (BLOWER FAN SPEED)	575
SWITCH AS-ROCKER (BUCKET/FORK SELECTOR)	348
SWITCH AS-ROCKER (FLOODLIGHTS, FRONT)	177
	180
	183
SWITCH AS-ROCKER (HAZARD WARNING LIGHTS)	177
	180
	183

INDEX

Name	Page
SWITCH AS-ROCKER (HYDRAULIC LOCKOUT)	361, 364, 575, 580, 584
SWITCH AS-ROCKER (KICKOUT ON, OFF)	580, 584
SWITCH AS-ROCKER (KICKOUT ON/OFF)	575
SWITCH AS-ROCKER (REVERSING FAN ON, OFF)	379
SWITCH AS-ROCKER (ROADING LIGHTS)	178, 181, 184
SWITCH AS-ROCKER (THROTTLE LOCK ON, OFF)	580, 584
SWITCH AS-ROCKER (THROTTLE LOCK ON/OFF)	575
SWITCH AS-ROCKER (THROTTLE LOCK SET, RESUME)	575, 580, 584
SWITCH AS-ROCKER (WARNING BEACON)	155
SWITCH AS-ROCKER (XMSN NEUTRALIZER OVERRIDE CONT)	177, 180, 183
SWITCH AS-ROTARY (WIPER, WASHER) (REAR)	172
SWITCH AS-START (KEY) (ENGINE)	573
SWITCH AS-TURN SIGNAL	152
SWITCH GP-DISCONNECT	168
SWITCH GP-DISCONNECT–BATTERY	167
SWITCH GP-MAGNETIC	169
SWITCH GP-PRESSURE	170
SWITCH GP-PRESSURE (RIDE CONTROL DISABLE)	392
SWITCH GP-TOGGLE	171
SWITCH GP-WIPER	173
SWITCH GP-WIPER (24-VOLT, INTERMITTENT) (FRONT)	172
SWITCH GP-WIPER–INTERMITTENT	172, 174

T

Name	Page
TANK & MTG GP-FUEL	117
TANK & MTG GP-HYDRAULIC	424
TANK GP-COOLANT	59, 63, 71
TANK GP-FUEL	118
TANK GP-HYDRAULIC	425
TIP GP-LONG	661, 662
TIP GP-SHORT	663, 664
TIRE & RIM AR	262, 263
TORQUE CONVERTER GP (TRANSMISSION)	264
TRANSMISSION AR–STANDARD SPEED	264
TUBE GP-HYDRAULIC PUMP	30
TURBOCHARGER GP	80

U

Name	Page
UNIVERSAL JOINT GP	260

V

Name	Page
VALVE & MTG GP-RIDE CONTROL	426
VALVE & MTG GP-SOLENOID	427
VALVE AS-RELIEF	110
VALVE GP-ACCUMULATOR CHARGING (BRAKE)	415
VALVE GP-BRAKE CONTROL (SERVICE)	315
VALVE GP-BYPASS	265
VALVE GP-CHECK	430, 434, 438
VALVE GP-CHECK (BACKPRESSURE)	430, 434, 438
VALVE GP-CHECK (COUPLER CYLINDER)	341
VALVE GP-CHECK (HYDRAULIC OIL COOLER BYPASS)	242, 381
VALVE GP-CHECK (LOAD)	429, 430, 434, 438
VALVE GP-CHECK (MAKEUP OIL)	430, 438
VALVE GP-CHECK (REGENERATION)	430, 434, 438
VALVE GP-CHECK (RETURN RESTRICTOR)	373
VALVE GP-COMBINATION–TILT RELIEF	428
VALVE GP-CONTROL–AUXILIARY	429
VALVE GP-COUNTERBALANCE	351
VALVE GP-DIVERTER (TILT)	428
VALVE GP-DRAIN	3
VALVE GP-ETHER STARTING	175
VALVE GP-FLOW CONTROL (SIGNAL DRAIN)	430, 434, 438
VALVE GP-FLUID SAMPLING–ENGINE OIL	45

INDEX

Name	Page
VALVE GP-MAIN CONTROL	430
	434
VALVE GP-MAIN CONTROL–4-FUNCTION	438
VALVE GP-MANUAL	442
VALVE GP-MODULATING	266
VALVE GP-PILOT	452
VALVE GP-PILOT (JOYSTICK, 4-FUNCTION)	516
VALVE GP-PILOT–2-FUNCTION	445
VALVE GP-PILOT CARTRIDGE	457
	459
	460
	461
	462
	463
	464
VALVE GP-PILOT–JOYSTICK, 2-FUNCTION	443
	448
	455
VALVE GP-PILOT–JOYSTICK, 4-FUNCTION	450
	456
VALVE GP-PRESSURE REDUCING	465
VALVE GP-PUMP CONTROL– PRESSURE, FLOW COMPENSATOR	466
	468
VALVE GP-RADIATOR DRAIN	67
VALVE GP-RELIEF (HYDRAULIC FAN MOTOR)	402
VALVE GP-RELIEF (MAKEUP)	430
	431
	435
	439
VALVE GP-RELIEF (PILOT OPERATED)	430
	434
	438
VALVE GP-RELIEF (SIGNAL LIMITER)	430
	434
	438
VALVE GP-RELIEF (TILT)	428
VALVE GP-RELIEF– TORQUE CONVERTER OUTLET	267
VALVE GP-RELIEF– TRANSMISSION HYDRAULIC CONTROL	470
VALVE GP-SHUTOFF (RETURN MANIFOLD)	389
VALVE GP-SHUTOFF– HYDRAULIC LOCKOUT	472
VALVE GP-SOLENOID	474
	475
VALVE GP-SOLENOID (24-VOLT) (HYDRAULIC FAN)	401
	402
VALVE GP-SOLENOID (24-VOLT) (QUICK COUPLER)	398
VALVE GP-SOLENOID (HYDRAULIC LOCKOUT)	427
VALVE GP-SOLENOID (RIDE CONTROL)	335
VALVE GP-TIRE	255
	268
VALVE GP-TRANSMISSION CONTROL	269
	270
VALVE MECHANISM GP	38
VISOR GP-CAB	617

W

Name	Page
WARNING GP-BACKUP	176
WASHER GP-WINDOW	618
	619
	620
WATER SEP & FUEL PRM PUMP GP	116
WINDOW GP-DOOR	621
WIPER GP-WINDOW	622
WIPER GP-WINDOW–FRONT	624
WIRING GP-CAB	183
WIRING GP-CAB–ENCLOSED ROPS	177
WIRING GP-CAB–OPEN ROPS	180
WIRING GP-ELECTRONIC CONTROL	186
WIRING GP-ENGINE	187
	191
WIRING GP-FRONT	195
WIRING GP-REAR	197
WIRING GP-RIDE CONTROL	199

MEMORANDA

MACHINE ARRANGEMENT

289-8841 CHASSIS AR

S/N: KLN1-UP

PART OF 289-8840 COMMON AR

SMCS-7000 **i02989122**

NOTE	PART NUMBER	QTY	PART NAME 1 2 3 4 5 6 (PRODUCT LEVEL)	SEE PAGE
Y	*112-7167*	1	BATTERY GP	127
Y	*202-0420*	1	BOX GP-BATTERY	272
Y	*289-8930*	1	CONTROL GP-PARKING BRAKE	312
Y	*202-0430*	1	CONTROL GP-SERVICE BRAKE	315
Y	*132-2550*	1	CYLINDER & MTG GP-STEERING	320
Y	*289-8960*	1	DOOR GP-ACCESS (HOOD SIDE)	276
Y	*257-1650*	1	FRAME GP-LOADER	280
Y	*257-1640*	1	FRAME GP-REAR	283
Y	*290-7198*	1	GUARD GP-FAN	53
Y	*113-3790*	1	HITCH GP-ARTICULATING	293
Y	*289-8912*	1	HOOD & GUARD GP	295
Y	*218-9937*	1	KICKOUT & POSITIONER GP	348
Y	*289-8913*	1	LADDER GP	298
Y	*307-2578*	1	LINES GP-GREASE	301
Y	*289-8925*	1	LINES GP-SERVICE BRAKE	317
Y	*289-8923*	1	LINES GP-TORQUE CONV COOLER	247
Y	*7V-2885*	1	LINK GP-STEERING FRAME LOCK	303
Y	*6V-1970*	1	LITERATURE GP	561
Y	*132-2471*	1	MOUNTING GP-AXLE	249
Y	*211-4767*	1	MOUNTING GP-CONTROL VALVE	406
Y	*312-4574*	1	PLATE & FILM GP	668
Y	*289-8911*	1	TANK & MTG GP-FUEL	117
Y	*180-8807*	1	WARNING GP-BACKUP	176
Y	*289-8902*	1	WIRING GP-ENGINE	187
Y	*289-8956*	1	WIRING GP-FRONT	195
Y	*289-8959*	1	WIRING GP-REAR	197

Y-SEPARATE ILLUSTRATION

<END>

289-8840 COMMON AR

S/N: KLN1-UP

SMCS-7000 **i03016511**

NOTE	PART NUMBER	QTY	PART NAME 1 2 3 4 5 6 (PRODUCT LEVEL)	SEE PAGE
Y	*289-8841*	1	CHASSIS AR	1
Y	*289-8802*	1	ELECTRONICS AR-MACHINE	130
Y	**292-5306**	1	ENGINE AR-PRIMARY	2
Y	*289-8833*	1	HYDRAULIC AR	346
Y	*289-8894*	1	INSTALLATION AR-ENGINE	3
Y	*290-7223*	1	LIGHTING GP-FLOOD & SIGNAL	152
Y	*289-8815*	1	POWER TRAIN AR	250

Y-SEPARATE ILLUSTRATION

<END>

ENGINE ARRANGEMENT

292-5306 ENGINE AR-PRIMARY

S/N: C6E1-UP
99 BRAKE KW (132 BHP) AT 2300 RPM
PART OF 289-8840 COMMON AR

SMCS-1000 **i03559489**

NOTE	PART NUMBER	QTY	PART NAME 1 2 3 4 5 6 (PRODUCT LEVEL)	SEE PAGE
Y	*280-2050*	1	BREATHER GP (CRANKCASE)	40
Y	*279-8837*	1	CAMSHAFT GP	4
Y	*281-8748*	1	CONNECTION GP-WATER	46
Y	*283-4558*	1	COOLER GP-FLTR BASE & ENG OIL	49
			S/N: C6E1-11296	
Y	*330-4724*	1	COOLER GP-FLTR BASE & ENG OIL	50
			S/N: C6E11297-UP	
Y	*277-4224*	1	COVER GP-ENGINE	5
			S/N: C6E1-11296	
Y	*330-6501*	1	COVER GP-ENGINE	6
			S/N: C6E11297-UP	
Y	*320-6564*	1	COVER GP-VALVE MECHANISM	7
Y	*279-8762*	1	CRANKSHAFT GP	11
Y	*292-5856*	1	CYLINDER BLOCK GP	12
Y	*279-8821*	1	CYLINDER HEAD GP	17
Y	*291-2513*	1	DRAIN GP-ENGINE OIL	20
			S/N: C6E1-7899	
Y	*291-2515*	1	DRIVE GP-FAN	21
Y	*297-5184*	1	DRIVE GP-FAN	22
Y	*277-1973*	1	FILLER GP-ENGINE OIL	41
Y	*277-2912*	1	FILTER GP-ENGINE OIL	43
Y	*280-1394*	1	FILTER GP-SECONDARY FUEL	83
Y	*286-7834*	1	FLYWHEEL GP	23
Y	*277-4410*	1	GLOW PLUG GP	131
Y	*281-6332*	1	HOUSING GP-FLYWHEEL	24
Y	*277-3014*	1	HOUSING GP-FRONT	25
Y	*279-9653*	1	LIFTING GP-ENGINE	27
Y	*308-9075*	1	LINES GP-FUEL	89
Y	*288-7985*	1	MANIFOLD GP-INLET	76
Y	*289-3268*	1	PAN GP-OIL	30
Y	*279-8780*	1	PISTON & ROD GP	32
Y	*277-5007*	1	PLUG GP-ENGINE	33
Y	*299-3949*	1	PLUG GP-FLYWHEEL HOUSING	34
Y	*274-1929*	1	PULLEY GP-CRANKSHAFT	35
Y	*277-4262*	1	PUMP GP-ENGINE OIL	44
Y	*303-2930*	1	PUMP GP-FUEL INJECTION	100
Y	*277-2939*	1	PUMP GP-WATER	57
Y	*331-8936*	1	TURBOCHARGER GP	80
Y	*277-4694*	1	VALVE GP-FLUID SAMPLING (ENGINE OIL)	45
			S/N: C6E1-11296	
Y	*330-6502*	1	SWITCH GP-PRESSURE (ENGINE OIL)	170
			S/N: C6E11297-UP	
Y	*279-8825*	1	VALVE MECHANISM GP	38
Y	*299-3953*	1	WIRING GP-ELECTRONIC CONTROL (ENGINE)	186
	277-6990	1	CYLINDER BLOCK GP (SHORT)	

Y-SEPARATE ILLUSTRATION

ENGINE ARRANGEMENT

289-8894 INSTALLATION AR-ENGINE

S/N: KLN1-UP

PART OF 289-8840 COMMON AR

SMCS-1000 **i03021458**

NOTE	PART NUMBER	QTY	PART NAME 1 2 3 4 5 6 (PRODUCT LEVEL)	SEE PAGE
Y	*289-3322*	1	AIR CLEANER GP	72
Y	*257-6549*	1	DRAIN GP-ENGINE OIL	19
Y	*311-2236*	1	EXTENSION GP-EXHAUST	74
Y	*185-1045*	1	FAN GP-SUCTION	52
Y	*289-3533*	1	LINES GP-AIR	75
Y	*289-8938*	1	LINES GP-FUEL	87
Y	*290-0637*	1	MOUNTING GP-ENGINE & XMSN	28
Y	*289-3232*	1	MUFFLER GP	78
Y	*289-9075*	1	RADIATOR & AFTERCOOLER GP	59
Y	*234-2667*	1	STARTING MOTOR GP-ELECTRIC	164
	290-6483	1	VALVE GP-DRAIN	
	7X-7729	2	WASHER (11X25X3-MM THK)	
M	**8T-4195**	2	BOLT (M10X1.5X30-MM)	
	285-0620	1	COVER	

M-METRIC PART
Y-SEPARATE ILLUSTRATION

BASIC ENGINE

279-8837 CAMSHAFT GP

S/N: C6E1-UP

PART OF 292-5306 ENGINE AR-PRIMARY

SMCS-1210, 1211, 1212 **i03568641**

NOTE	REF NO	GRAPHIC REF	PART NUMBER	QTY	PART NAME 1 2 3 4 5 6 (PRODUCT LEVEL)	SEE PAGE
	1	1	**347-1132**	1	CAMSHAFT AS	
	2	1	**1B-8736**	1	KEY-WOODRUFF	
	3	1	**278-5126**	12	PUSHROD	
	4	1	**278-5125**	12	TAPPET	

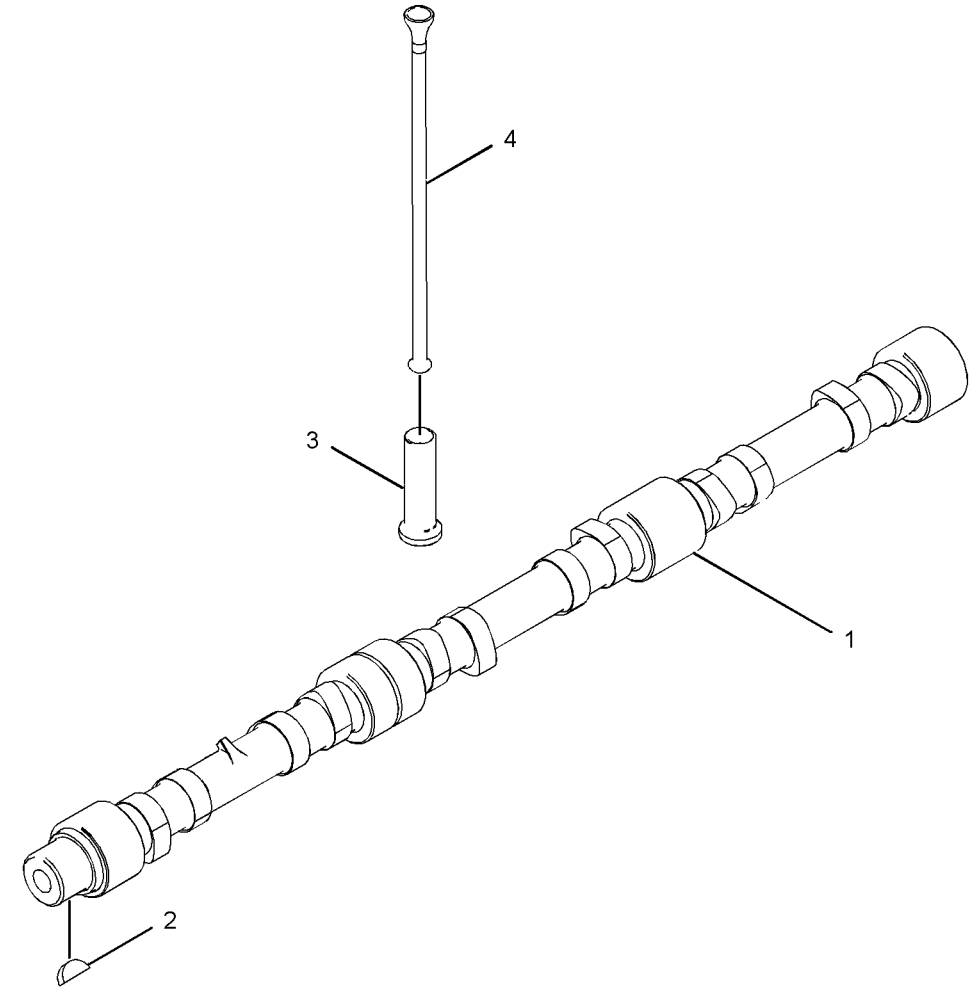

GRAPHIC #1 **<END>** g01210120

277-4224 COVER GP-ENGINE

S/N: C6E1-11296

PART OF 292-5306 ENGINE AR-PRIMARY

SMCS-1000 **i02752456**

NOTE	REF NO	GRAPHIC REF	PART NUMBER	QTY	PART NAME 1 2 3 4 5 6 (PRODUCT LEVEL)	SEE PAGE
	1	1	**209-5502**	1	COVER AS (POWER TAKE-OFF)	
	2	1	**209-5503**	1	SEAL-COVER	
	3	1	**111-8222**	5	BOLT (M8X16-MM)	
M	4	1	**100-4830**	1	BOLT (M10X1.5X20-MM)	
	5	1	**277-4223**	1	PLUG	

M-METRIC PART

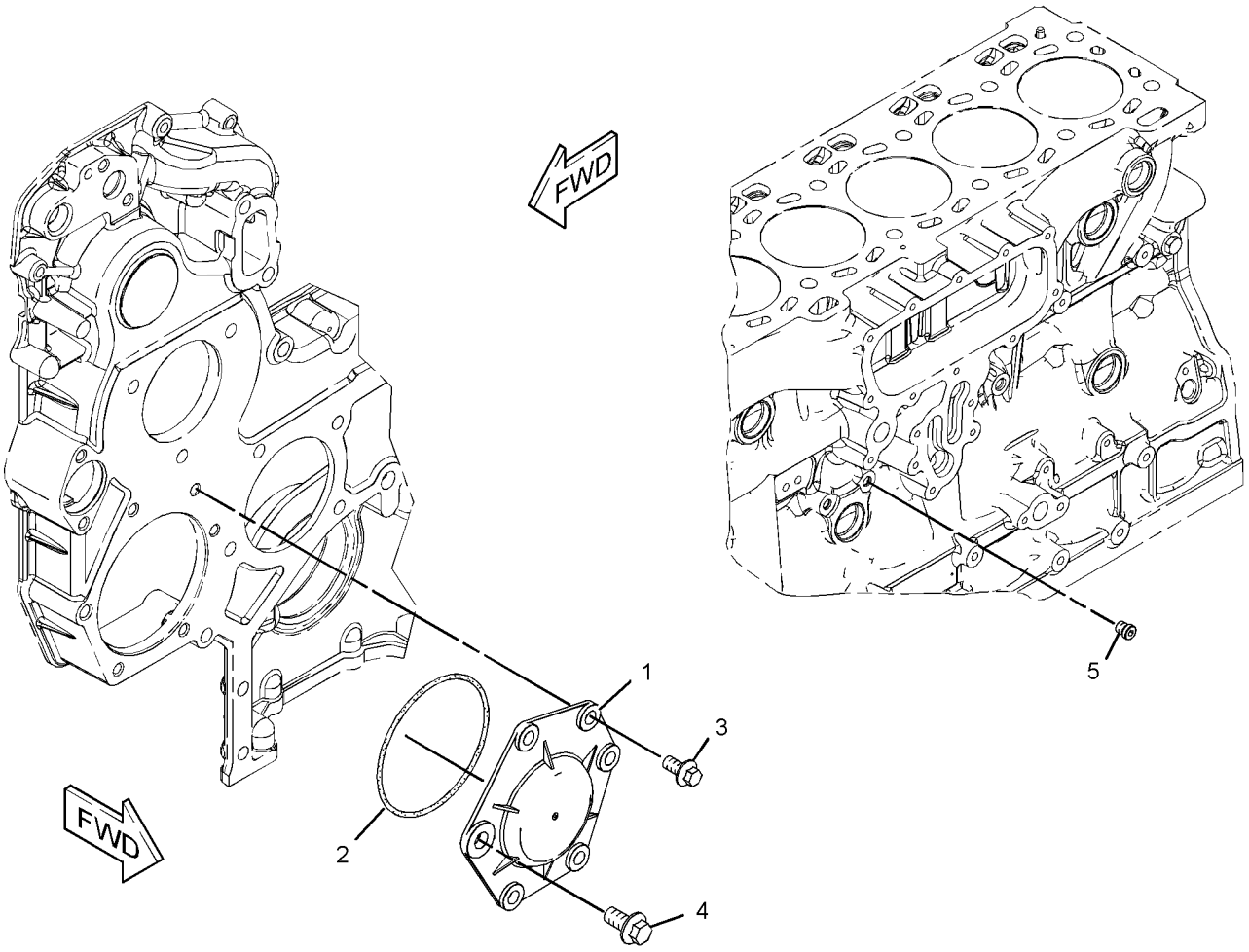

GRAPHIC #1 **<END>** g01195577

BASIC ENGINE

330-6501 COVER GP-ENGINE

S/N: C6E11297-UP

PART OF 292-5306 ENGINE AR-PRIMARY

SMCS-1000 **i03246266**

NOTE	REF NO	GRAPHIC REF	PART NUMBER	QTY	PART NAME 1 2 3 4 5 6 (PRODUCT LEVEL)	SEE PAGE
M	1	1	**100-4830**	1	BOLT (M10X1.5X20-MM)	
	2	1	**111-8222**	5	BOLT (M8X16-MM)	
	3	1	**329-7854**	1	PLATE AS	
	3A	1	**329-7856**	1	SEAL-O-RING	

M-METRIC PART

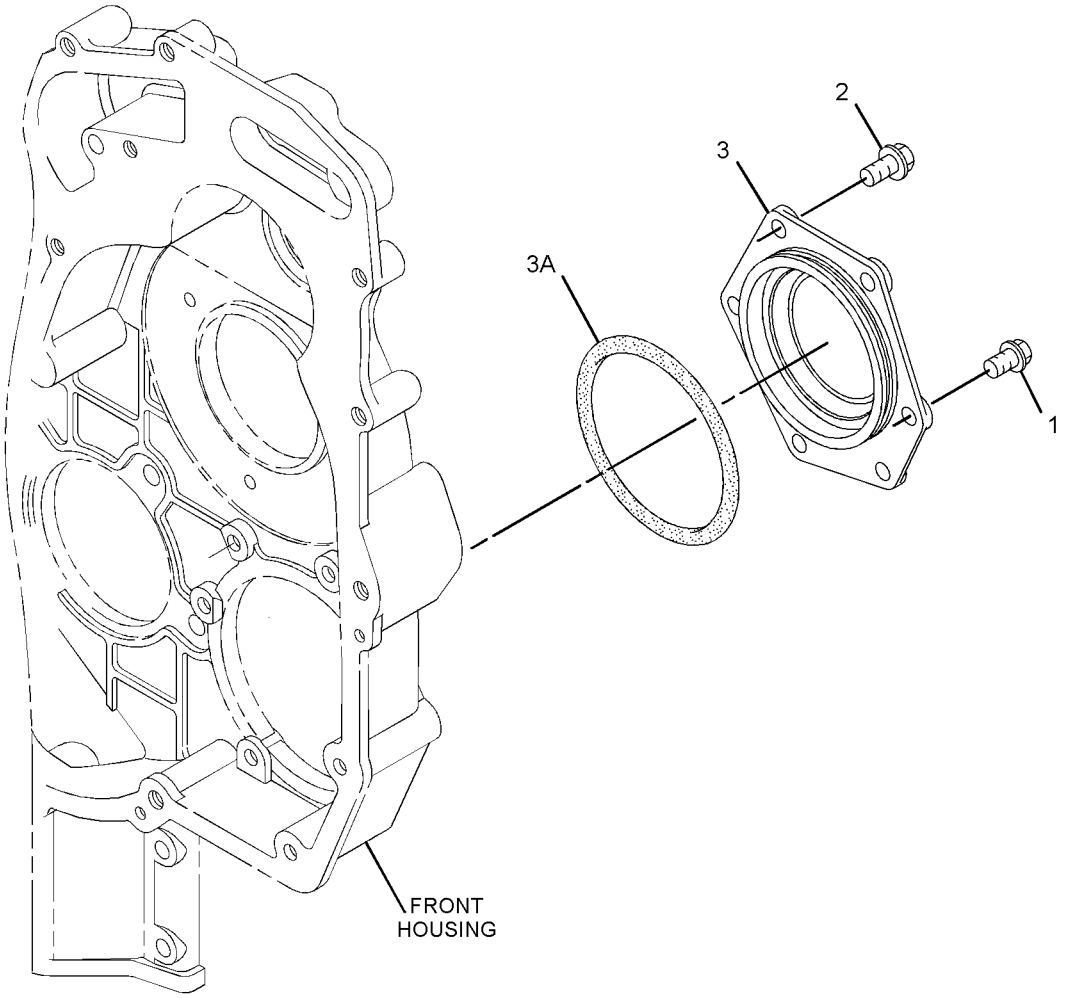

GRAPHIC #1 **<END>** g01800733

320-6564 COVER GP-VALVE MECHANISM

S/N: C6E1-6975

PART OF 292-5306 ENGINE AR-PRIMARY

SMCS-1107 **i03024881**

NOTE	REF NO	GRAPHIC REF	PART NUMBER	QTY	PART NAME 1 2 3 4 5 6 (PRODUCT LEVEL)	SEE PAGE
	1	1	**2S-3440**	2	CLAMP-HOSE	
M	2	1	**6I-0217**	1	BOLT (M8X1.25X20-MM)	
	3	1	**7C-1281**	1	BRACKET	
M	4	1	**100-4841**	5	BOLT (M6X1X10-MM)	
	5	1	**204-0302**	1	CLAMP-HOSE	
M	6	1	**101-3895**	2	BOLT (M8X1.25X35-MM)	
	7	1	**277-5031**	9	BOLT-SPECIAL (SHOULDER)	
	8	1	**277-5067**	6	SLEEVE	
	9	1	**277-5094**	1	COVER AS	
	9A	1	**277-5096**	1	SEAL-O-RING	
	10	1	**280-2023**	1	HOSE	
	11	1	**286-0014**	1	BASE AS-FILTER	
	11A	1	**286-0015**	1	STEM	
	12	1	**298-4550**	6	BOLT-SPECIAL (SHOULDER)	
	13	1	**311-2825**	1	SPACER	
	14	1	**317-2717**	1	BASE GP-VALVE COVER & INJ HARN	
	14A	1	**277-5064**	3	SEAL-O-RING	
	14B	1	**277-5065**	3	CLIP	
	14C	1	**285-1975**	3	HARNESS AS-WIRING (INJECTOR)	
	14D	1	**309-6664**	1	GASKET-COVER	
	15	1	**318-8038**	1	COVER GP-CYLINDER HEAD	
	15A	1	**317-3064**	1	GASKET-COVER (VALVE MECHANISM)	
	15B	1	**318-1726**	1	BOLT	
	15C	1	**326-7288**	4	BREATHER (CRANKCASE)	
	15D	1	**298-4547**	1	BREATHER (CRANKCASE)	
	15E	1	**326-7289**	1	SEAL-O-RING	
	16	1	**320-6551**	1	SHIELD-HEAT	
	17	1	**320-9910**	1	HOSE	

M-METRIC PART

320-6564 **COVER GP-VALVE MECHANISM** *(contd.)* **i03024881**

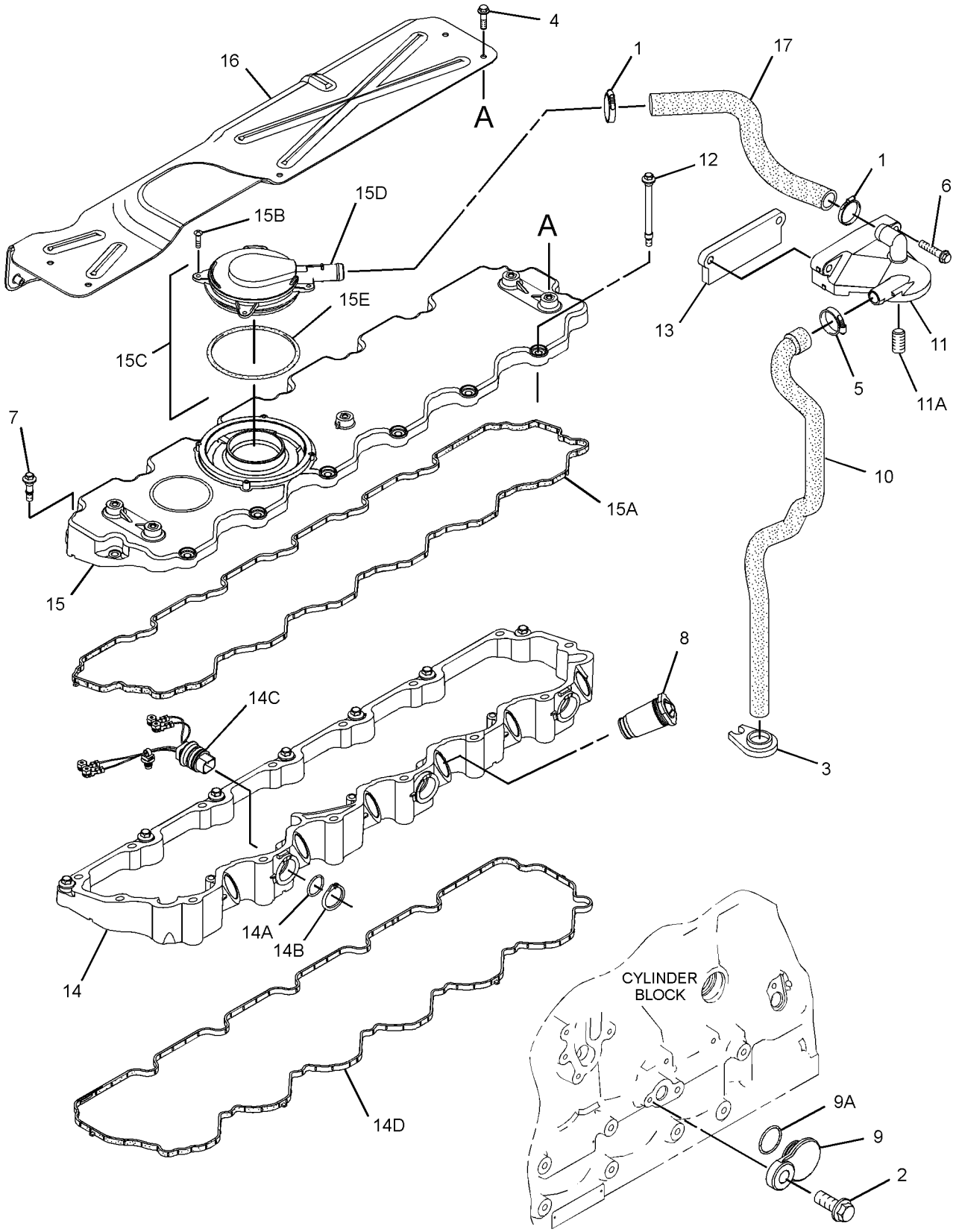

GRAPHIC #1 **<END>** g01545715

320-6564 COVER GP-VALVE MECHANISM

S/N: C6E6976-UP

PART OF 292-5306 ENGINE AR-PRIMARY

SMCS-1107 **i03260780**

NOTE	REF NO	GRAPHIC REF	PART NUMBER	QTY	PART NAME 1 2 3 4 5 6 (PRODUCT LEVEL)	SEE PAGE
	1	1	**2S-3440**	2	CLAMP-HOSE	
	3	1	**7C-1281**	1	BRACKET	
M	4	1	**100-4841**	5	BOLT (M6X1X10-MM)	
	5	1	**5D-1026**	1	CLAMP-HOSE	
M	6	1	**101-3895**	2	BOLT (M8X1.25X35-MM)	
	7	1	**277-5031**	9	BOLT-SPECIAL (SHOULDER)	
	8	1	**277-5067**	6	SLEEVE	
	10	1	**280-2023**	1	HOSE	
	11	1	**286-0014**	1	BASE AS-FILTER	
	11A	1	**286-0015**	1	STEM	
	12	1	**298-4550**	6	BOLT-SPECIAL (SHOULDER)	
	13	1	**311-2825**	1	SPACER	
	14	1	**317-2717**	1	BASE GP-VALVE COVER & INJ HARN	
	14A	1	**277-5064**	3	SEAL-O-RING	
	14B	1	**277-5065**	3	CLIP	
	14C	1	**285-1975**	3	HARNESS AS-WIRING (INJECTOR)	
	14D	1	**309-6664**	1	GASKET-COVER	
	15	1	**318-8038**	1	COVER GP-CYLINDER HEAD	
	15A	1	**317-3064**	1	GASKET-COVER (VALVE MECHANISM)	
	16	1	**320-6551**	1	SHIELD-HEAT	
	17	1	**320-9910**	1	HOSE	

M-METRIC PART

320-6564 **COVER GP-VALVE MECHANISM** *(contd.)* **i03260780**

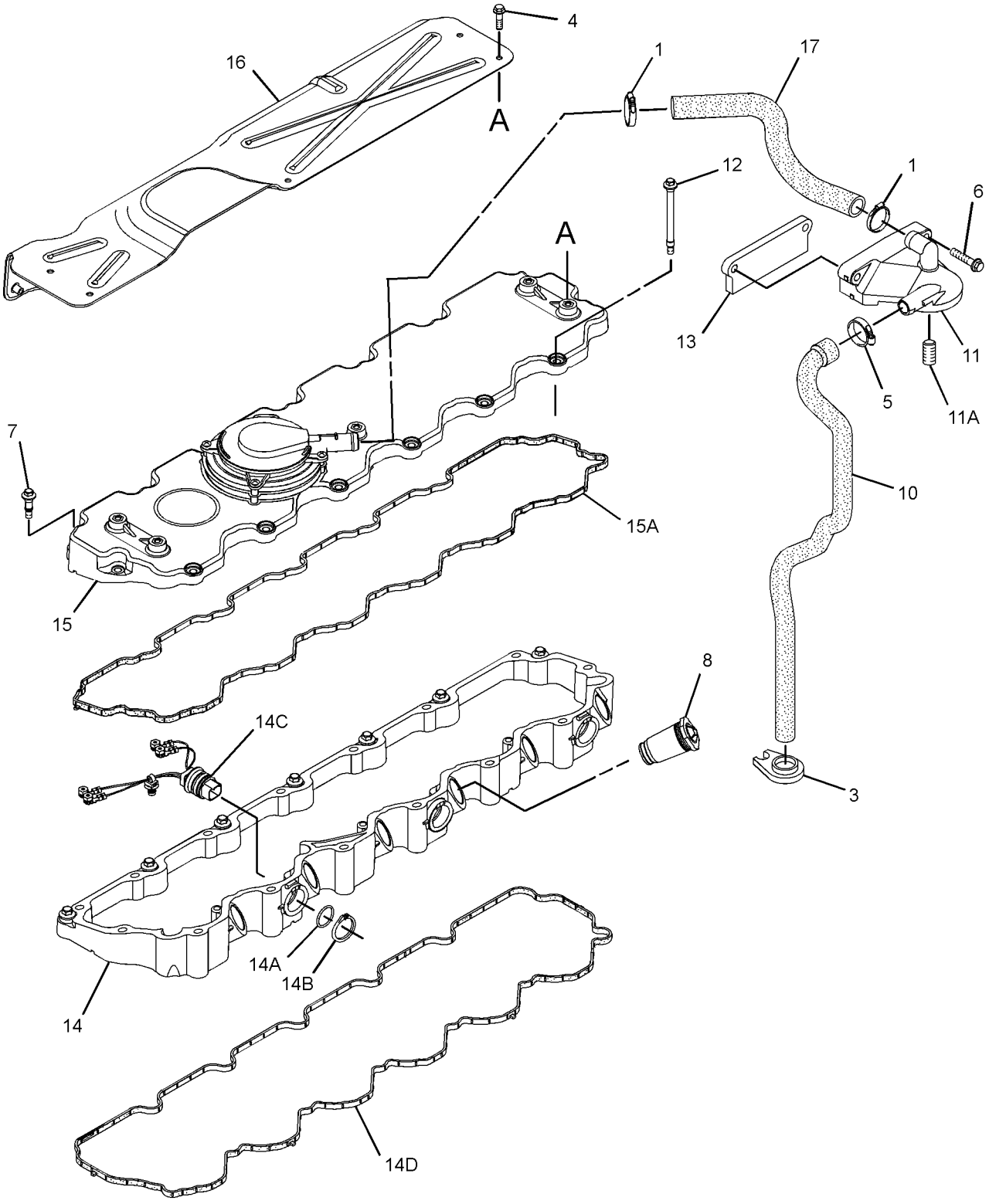

GRAPHIC #1 **<END>** g01728754

BASIC ENGINE

279-8762 CRANKSHAFT GP

S/N: C6E1-UP

PART OF 292-5306 ENGINE AR-PRIMARY

SMCS-1202 **i02931722**

NOTE	REF NO	GRAPHIC REF	PART NUMBER	QTY	PART NAME 1 2 3 4 5 6 (PRODUCT LEVEL)	SEE PAGE
	1	1	**276-7387**	1	CRANKSHAFT AS	
	1A	1	**1B-8736**	1	KEY-WOODRUFF	
	1B	1	**225-8839**	1	DOWEL	
	1C	1	**276-7388**	1	KIT-BEARING (CRANKSHAFT, MAIN)	
	1D	1	**276-7389**	1	KIT-BEARING (CRANKSHAFT, CONNECTING ROD)	
	1E	1	**276-7390**	2	WASHER-THRUST	
	1F	1	**276-7391**	1	GEAR (34-TEETH)	
	2	1	**276-7393**	1	RING-TIMING	
	3	1	**276-7394**	3	BOLT	

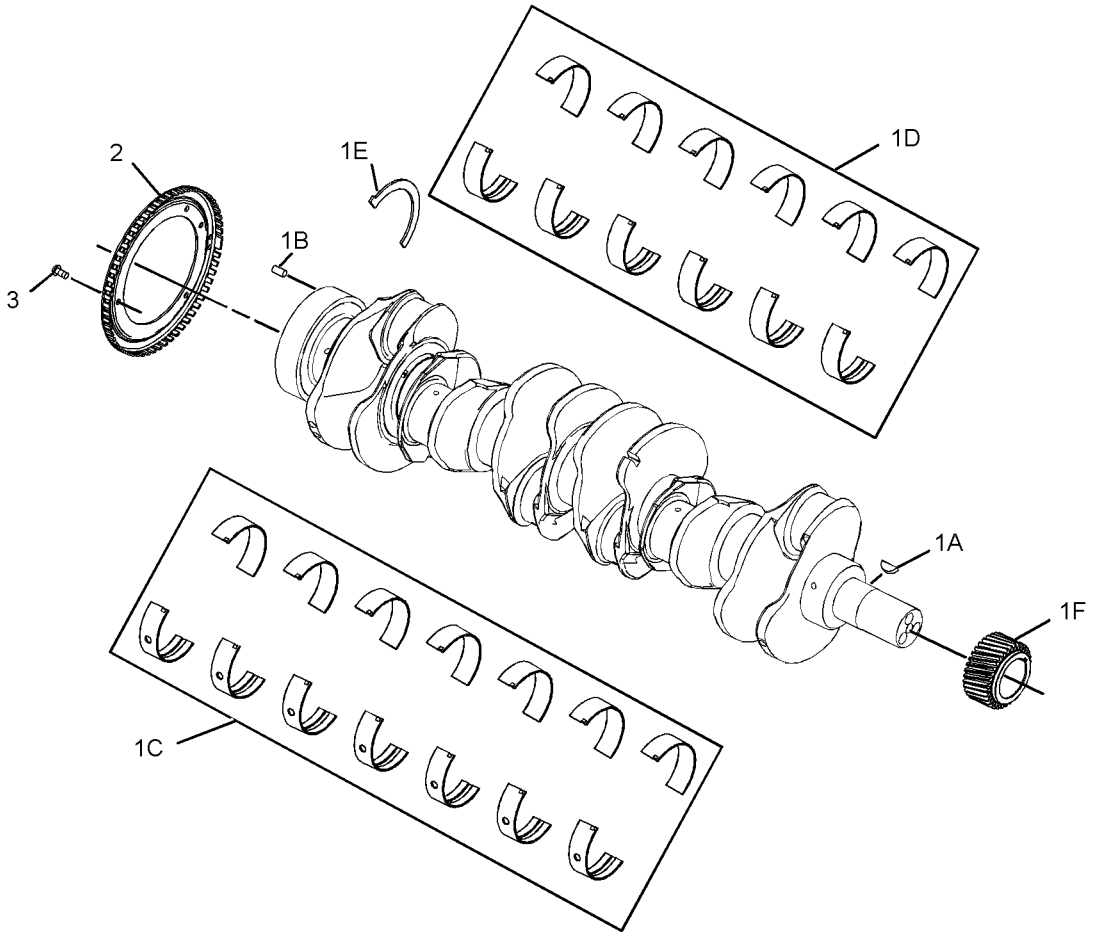

GRAPHIC #1 **<END>** g01366865

BASIC ENGINE

292-5856 CYLINDER BLOCK GP

S/N: C6E1-UP

PART OF 292-5306 ENGINE AR-PRIMARY

SMCS-1201 **i02750504**

NOTE	REF NO	GRAPHIC REF	PART NUMBER	QTY	PART NAME 1 2 3 4 5 6 (PRODUCT LEVEL)	SEE PAGE
M	1	1	**209-9219**	8	BOLT (M8X1.25X16-MM)	
	2	1	**292-0886**	1	HOUSING-REAR	
Y	3	1	**306-6845**	1	CYLINDER BLOCK GP	13

M-METRIC PART
Y-SEPARATE ILLUSTRATION

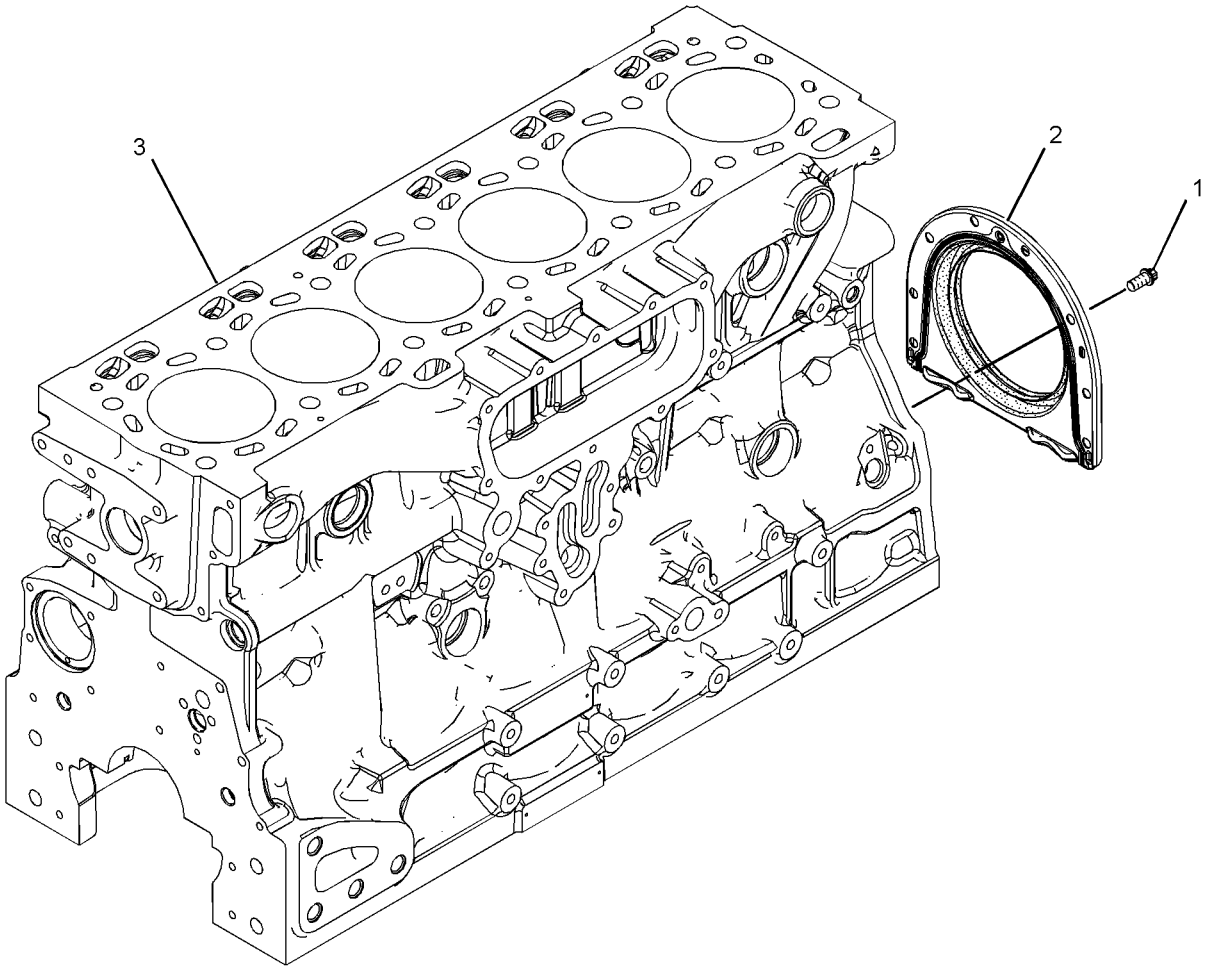

GRAPHIC #1 **<END>** g01355960

306-6845 CYLINDER BLOCK GP

S/N: C6E1-UP

PART OF 292-5856 CYLINDER BLOCK GP

SMCS-1201 **i02752448**

NOTE	REF NO	GRAPHIC REF	PART NUMBER	QTY	PART NAME 1 2 3 4 5 6 (PRODUCT LEVEL)	SEE PAGE
	1	1	**2B-0858**	1	PLUG-PIPE	
	2	1	**067-6043**	5	PLUG-SIDE	
M	3	1	**100-4841**	6	BOLT (M6X1X10-MM)	
	4	1	**185-0884**	2	DOWEL	
	5	1	**225-8858**	1	PLUG	
	6	1	**232-1322**	1	PLUG	
	7	1	**232-7596**	1	PLUG	
	8	1	**232-7597**	2	PLUG	
	9	1	**232-7599**	2	PLUG	
	10	1	**276-5600**	14	BOLT-SPECIAL (BEARING CAP)	
	11	1	**276-5601**	1	BUSHING-CAMSHAFT	
	12	1	**276-5602**	6	PLUG-CORE	
	13	1	**276-5603**	1	SEAL-O-RING	
	14	1	**276-5604**	1	DOWEL	
	15	1	**276-5605**	6	JET AS-PISTON COOLING	

M-METRIC PART

306-6845 **CYLINDER BLOCK GP** *(contd.)* **i02752448**

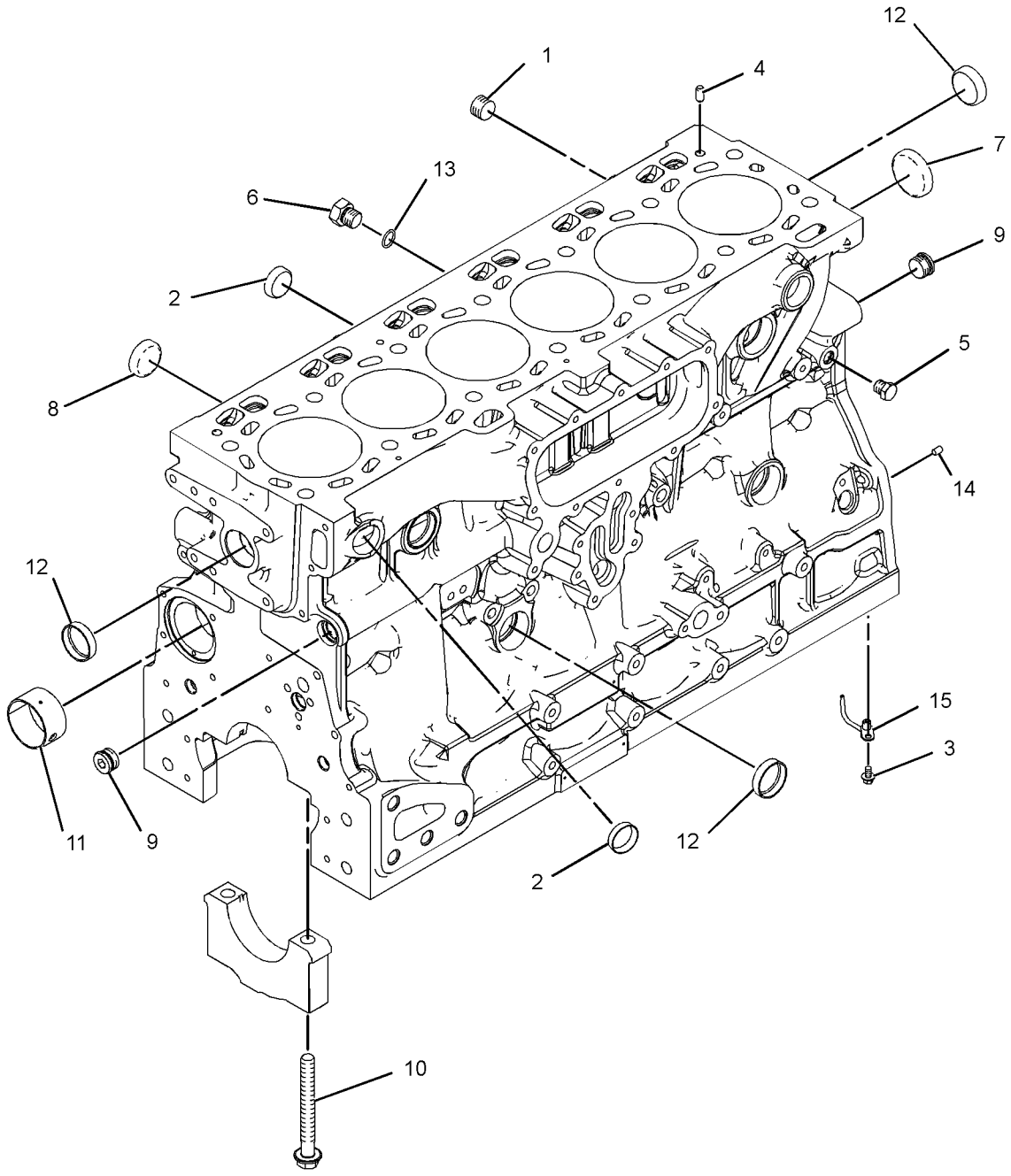

GRAPHIC #1 **<END>** g01339916

309-6663 CYLINDER HEAD AS

S/N: C6E1-UP

PART OF 279-8821 CYLINDER HEAD GP

SMCS-1100, 1101 **i03419106**

NOTE	REF NO	GRAPHIC REF	PART NUMBER	QTY	PART NAME 1 2 3 4 5 6 (PRODUCT LEVEL)	SEE PAGE
	1	1	**2B-0858**	2	PLUG-PIPE	
	2	1	**199-9751**	1	SEAL-O-RING	
	3	1	**232-1322**	1	PLUG	
	4	1	**276-8116**	6	PLUG-CORE	
	5	1	**276-8117**	13	PLUG-CORE	
	6	1	**276-8123**	48	RETAINER	
	7	1	**339-9637**	12	VALVE-EXHAUST	
J	8	1	**276-8132**	24	SPRING-VALVE	
	9	1	**276-8133**	24	CAP-VALVE	
	10	1	**295-6661**	1	PLUG	
	11	1	**299-5511**	24	SEAL-VALVE STEM	
	12	1	**309-6678**	12	VALVE-INLET	

J-SERVICED IN PAIRS

309-6663 CYLINDER HEAD AS *(contd.)* **i03419106**

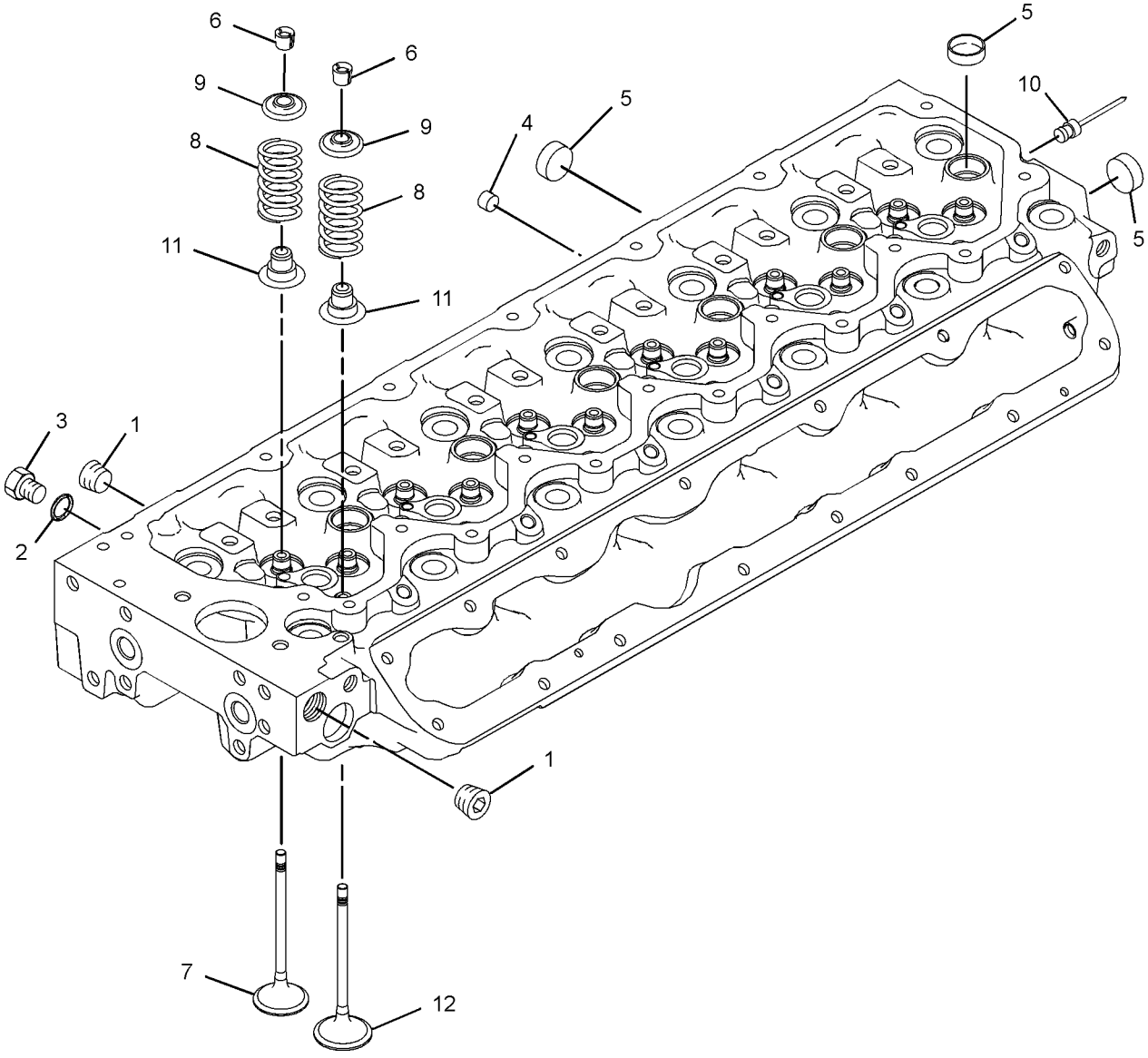

GRAPHIC #1 **<END>** g01400657

BASIC ENGINE

279-8821 CYLINDER HEAD GP

S/N: C6E1-UP

PART OF 292-5306 ENGINE AR-PRIMARY

SMCS-1100 **i02931731**

NOTE	REF NO	GRAPHIC REF	PART NUMBER	QTY	PART NAME 1 2 3 4 5 6 (PRODUCT LEVEL)	SEE PAGE
Y	1	1	**309-6663**	1	CYLINDER HEAD AS	15
	2	1	**276-8134**	14	BOLT-SPECIAL (CYLINDER HEAD)	
	3	1	**176-3141**	1	GASKET-HEAD	

Y-SEPARATE ILLUSTRATION

279-8821 **CYLINDER HEAD GP** *(contd.)* **i02931731**

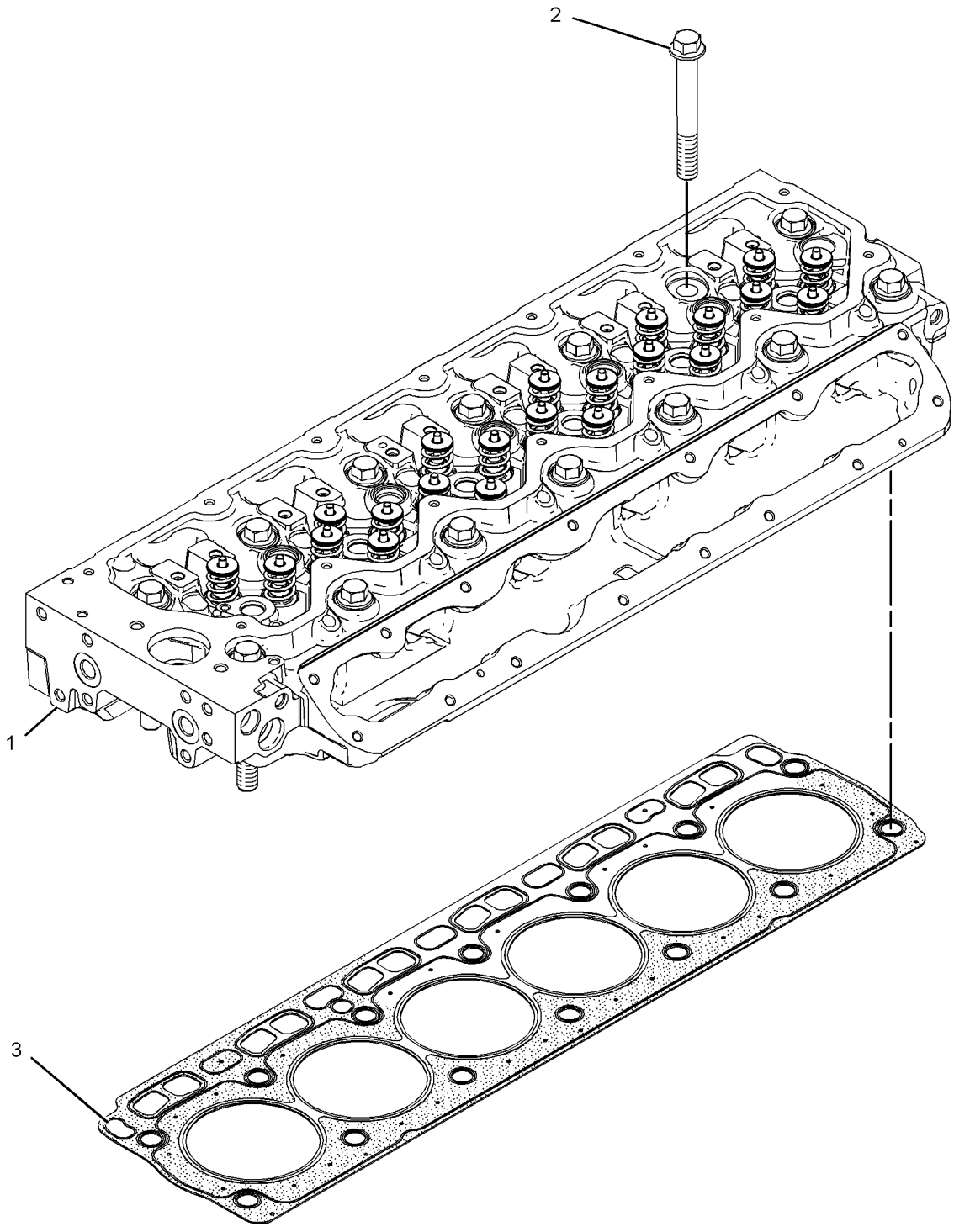

GRAPHIC #1 **<END>** g01291481

257-6549 DRAIN GP-ENGINE OIL

S/N: KLN1-UP

PART OF 289-8894 INSTALLATION AR-ENGINE

SMCS-1302 **i03105921**

NOTE	REF NO	GRAPHIC REF	PART NUMBER	QTY	PART NAME 1 2 3 4 5 6 (PRODUCT LEVEL)	SEE PAGE
	1	1	**2P-4173**	1	COCK-DRAIN	
	2	1	**5D-1026**	2	CLAMP-HOSE	
	3	1	**6V-7238**	1	VALVE-SHUTOFF (ENGINE OIL)	
	4	1	**7K-1181**	1	STRAP-CABLE	
	5	1	**8C-5224**	1	PLUG-SEAL	
	6	1	**8C-5225**	1	PLUG-SEAL	
	7	1	**157-0670**	1	CAP-DUST	
	8	1	**206-2423**	1	SADDLE	
	9	1	**159-5255**	1	ADAPTER	
	10	1	**3J-7354**	1	SEAL-O-RING	
	11	1	**3K-0360**	1	SEAL-O-RING	
	12	1	**3S-2093**	3	STRAP-CABLE	
	13	1	**5P-6718**	1	SEAL-O-RING	
	14	1	**5P-7814**	1	SEAL-O-RING	
	15	1	**8C-3446**	1	VALVE-FLUID SAMPLING	
	16	1	**8T-9357**	1	ADAPTER	
E	17	1	**5P-0743**		HOSE (30-CM)	
E	18	1	**5P-1505**		HOSE (94-CM)	

E-ORDER BY THE CENTIMETER

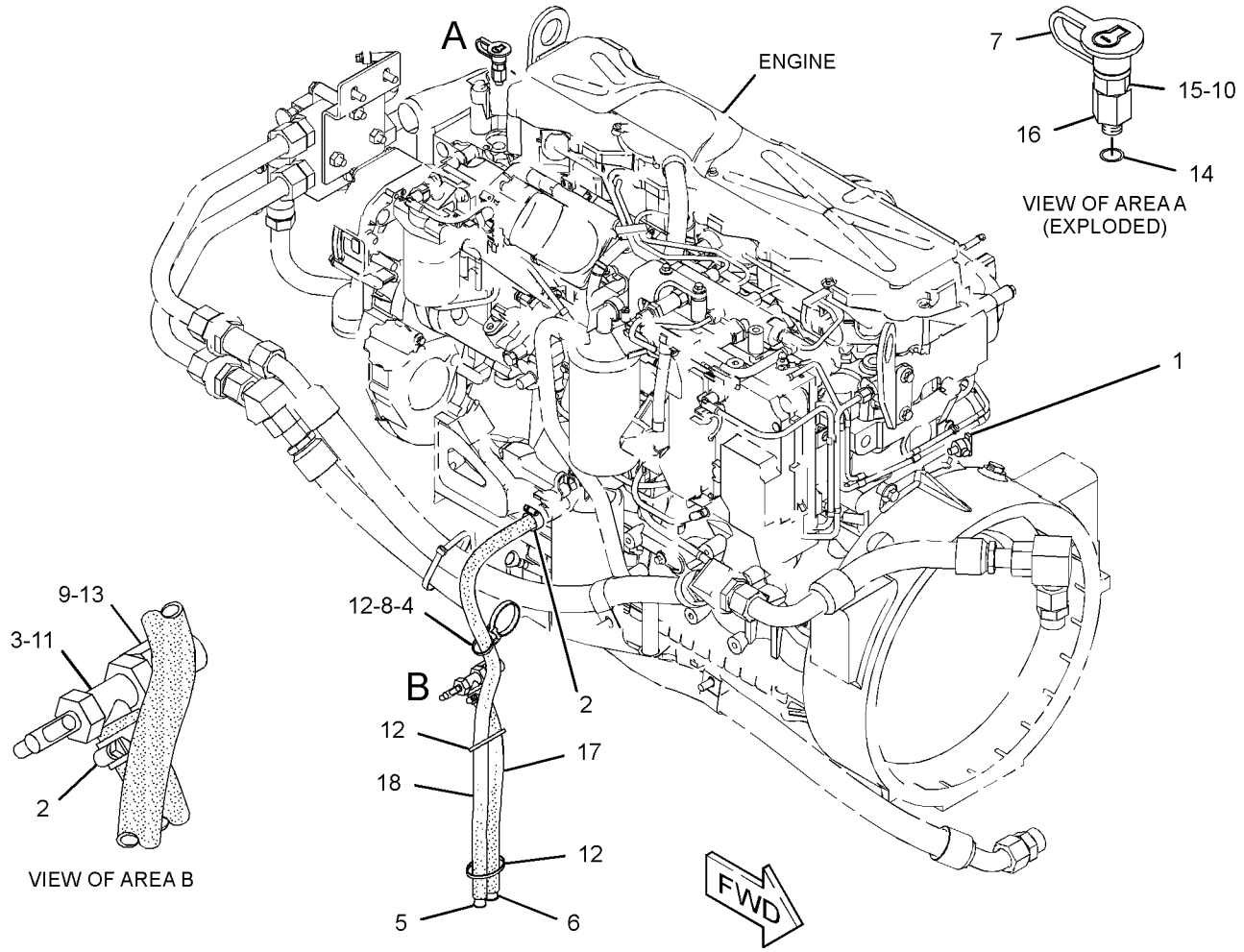

GRAPHIC #1 **<END>** g01785233

BASIC ENGINE

291-2513 DRAIN GP-ENGINE OIL

S/N: C6E1-7899

PART OF 292-5306 ENGINE AR-PRIMARY

SMCS-1302 **i02752445**

NOTE	REF NO	GRAPHIC REF	PART NUMBER	QTY	PART NAME 1 2 3 4 5 6 (PRODUCT LEVEL)	SEE PAGE
	1	1	**275-9883**	1	SEAL	
	2	1	**7C-0351**	1	PLUG-DRAIN (ENGINE OIL)	

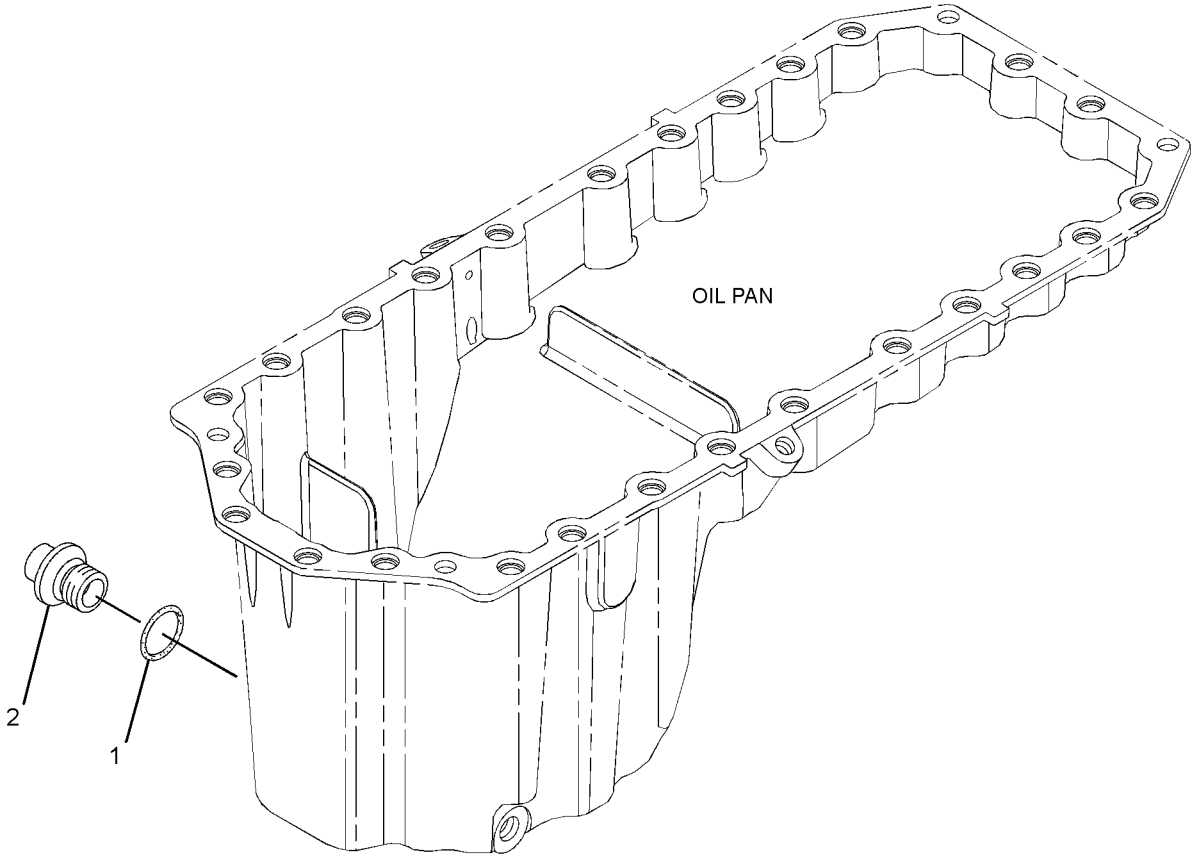

GRAPHIC #1 **<END>** g01266337

BASIC ENGINE

291-2515 DRIVE GP-FAN

S/N: C6E1-UP

PART OF 292-5306 ENGINE AR-PRIMARY

SMCS-1359 **i02930821**

NOTE	REF NO	GRAPHIC REF	PART NUMBER	QTY	PART NAME 1 2 3 4 5 6 (PRODUCT LEVEL)	SEE PAGE
	1	1	**289-8336**	1	HOUSING AS	
	2	1	**111-0859**	4	BOLT (M10X1.5X35-MM)	
	3	1	**284-1026**	1	PULLEY	

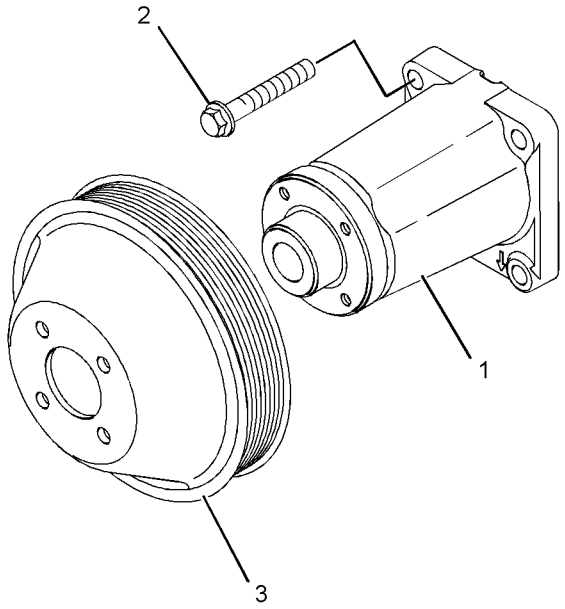

GRAPHIC #1 **<END>** g01289391

BASIC ENGINE

297-5184 DRIVE GP-FAN

S/N: C6E1-UP

PART OF 292-5306 ENGINE AR-PRIMARY

SMCS-1359 **i02930831**

NOTE	REF NO	GRAPHIC REF	PART NUMBER	QTY	PART NAME 1 2 3 4 5 6 (PRODUCT LEVEL)	SEE PAGE
	1	1	**179-7071**	4	BOLT (M8X1.25X20-MM)	

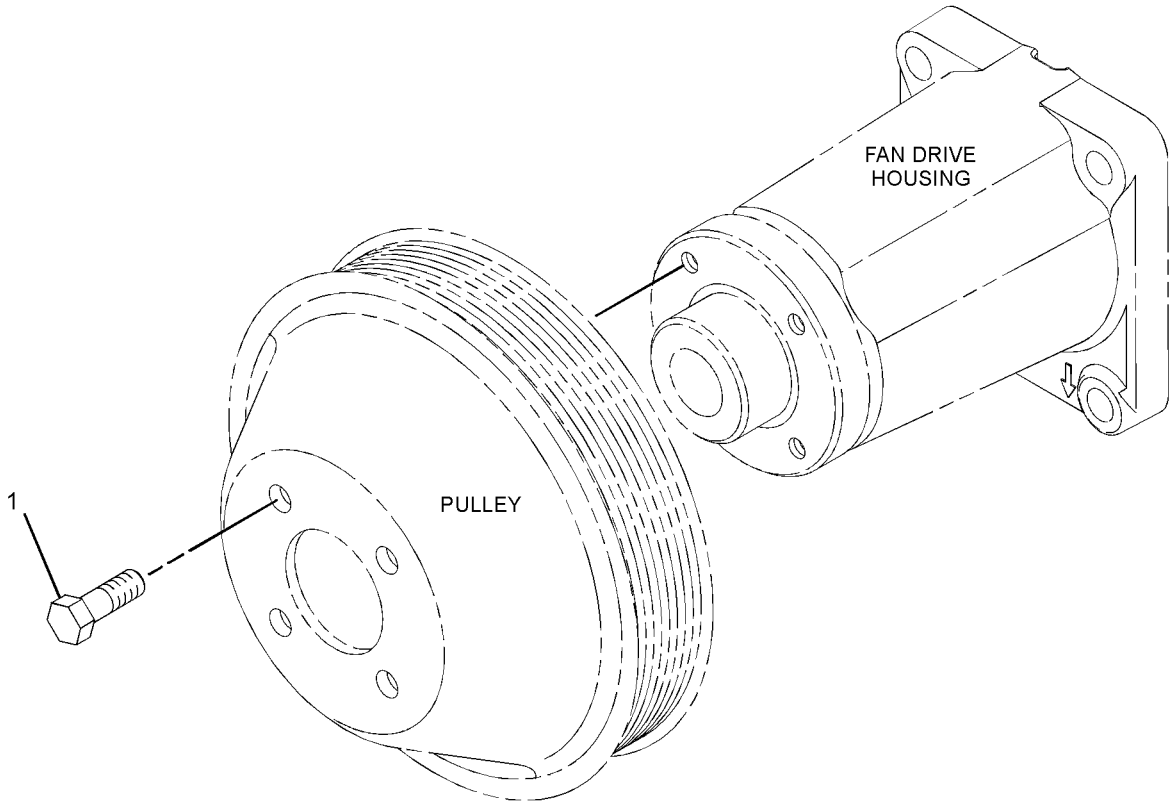

GRAPHIC #1 **<END>** g01340272

BASIC ENGINE

286-7834 FLYWHEEL GP

S/N: C6E1-UP

PART OF 292-5306 ENGINE AR-PRIMARY

SMCS-1156 **i02930674**

NOTE	REF NO	GRAPHIC REF	PART NUMBER	QTY	PART NAME 1 2 3 4 5 6 (PRODUCT LEVEL)	SEE PAGE
	1	1	**4K-7502**	12	BOLT (1/2-20X1.375-IN)	
	2	1	**113-7543**	1	FLYWHEEL AS	
	2A	1	**033-7687**	1	RING-STARTING MOTOR (126-TEETH)	
	3	1	**5P-8245**	12	WASHER-HARD (13.5X25.5X3-MM THK)	

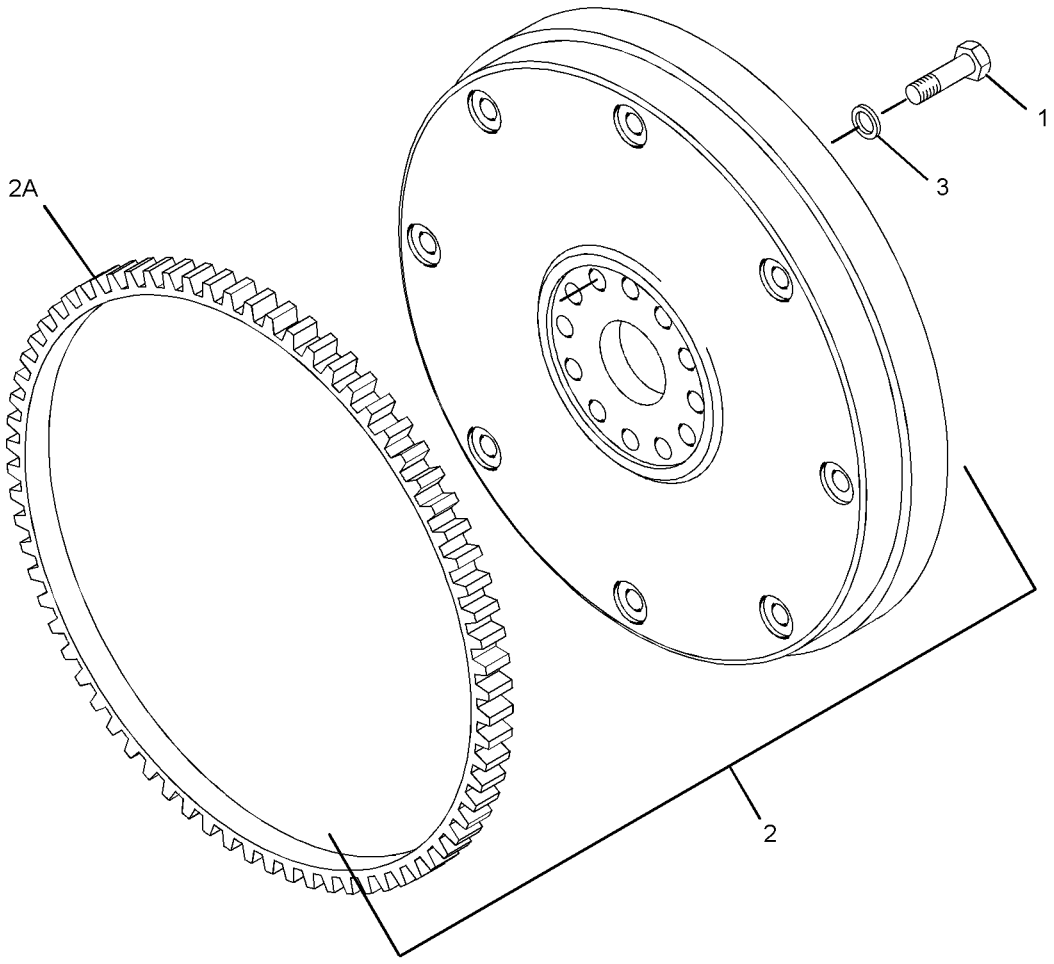

GRAPHIC #1 **<END>** g01276001

BASIC ENGINE

281-6332 HOUSING GP-FLYWHEEL

S/N: C6E1-UP

PART OF 292-5306 ENGINE AR-PRIMARY

SMCS-1157 **i02931728**

NOTE	REF NO	GRAPHIC REF	PART NUMBER	QTY	PART NAME 1 2 3 4 5 6 (PRODUCT LEVEL)	SEE PAGE
	1	1	**281-6331**	1	HOUSING-FLYWHEEL	
M	2	1	**121-0883**	6	BOLT (M10X1.5X30-MM)	
M	3	1	**6I-0423**	2	BOLT (M12X1.75X30-MM)	
	4	1	**102-1957**	1	PLATE	
	5	1	**6I-0631**	2	BOLT (M6X1X12-MM)	
	6	1	**277-0118**	1	SEAL	
	7	1	**287-8597**	2	DOWEL	
	8	1	**6I-0847**	1	PLUG	
	9	1	**199-3108**	1	PLUG	
	10	1	**199-3109**	1	PLUG	

M-METRIC PART

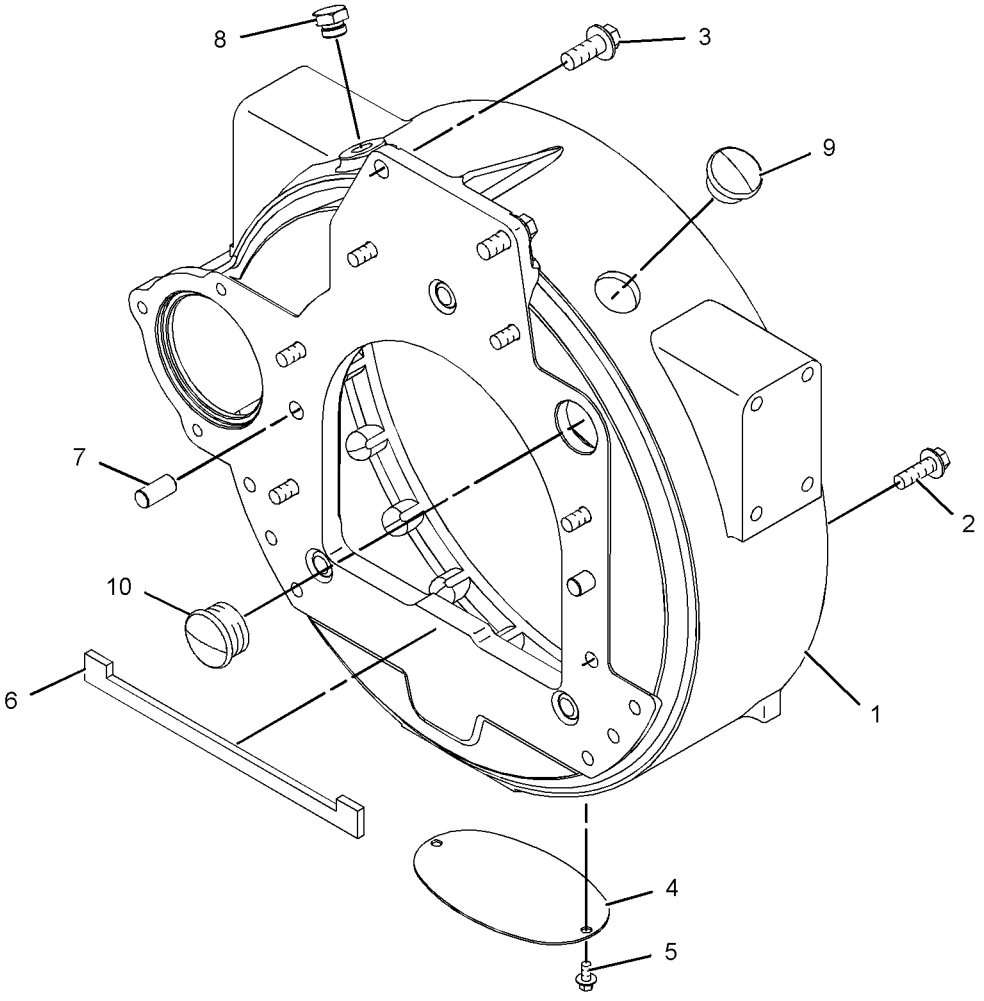

GRAPHIC #1 **<END>** g01218436

277-3014 HOUSING GP-FRONT

S/N: C6E1-UP

PART OF 292-5306 ENGINE AR-PRIMARY

SMCS-1151, 1162, 1206 **i03528250**

NOTE	REF NO	GRAPHIC REF	PART NUMBER	QTY	PART NAME 1 2 3 4 5 6 (PRODUCT LEVEL)	SEE PAGE
	1	1	**326-5063**	1	HOUSING-FRONT	
	2	1	**277-3012**	1	GASKET-COVER	
	3	1	**277-3013**	1	SEAL	
M	4	1	**6I-0217**	6	BOLT (M8X1.25X20-MM)	
M	5	1	**6I-0645**	4	BOLT (M8X1.25X25-MM)	
M	6	1	**101-3895**	2	BOLT (M8X1.25X35-MM)	
	7	1	**251-4336**	1	GEAR AS-IDLER (73-TEETH)	
M	8	1	**6I-0650**	3	BOLT (M10X1.5X65-MM)	
	9	1	**216-8634**	1	GEAR-CAMSHAFT (68-TEETH)	
	10	1	**1B-8736**	1	KEY-WOODRUFF	
	11	1	**133-1011**	1	WASHER	
	12	1	**067-6179**	1	DOWEL	
	13	1	**232-3666**	1	WASHER-THRUST	
M	14	1	**124-3815**	9	BOLT (M8X16X1.25-MM)	
M	15	1	**100-3751**	5	BOLT (M8X1.25X65-MM)	
M	16	1	**100-4830**	1	BOLT (M10X1.5X20-MM)	
	17	1	**7C-4616**	1	BOLT (M12X1.75X45-MM)	
	18	1	**324-0444**	1	HUB-IDLER GEAR	
	19	1	**295-1711**	1	PLATE-RETAINING	
	20	1	**226-8767**	1	COVER AS-FRONT	
	20A	1	**226-8766**	1	GASKET-COVER	

M-METRIC PART

277-3014 **HOUSING GP-FRONT** *(contd.)* **i03528250**

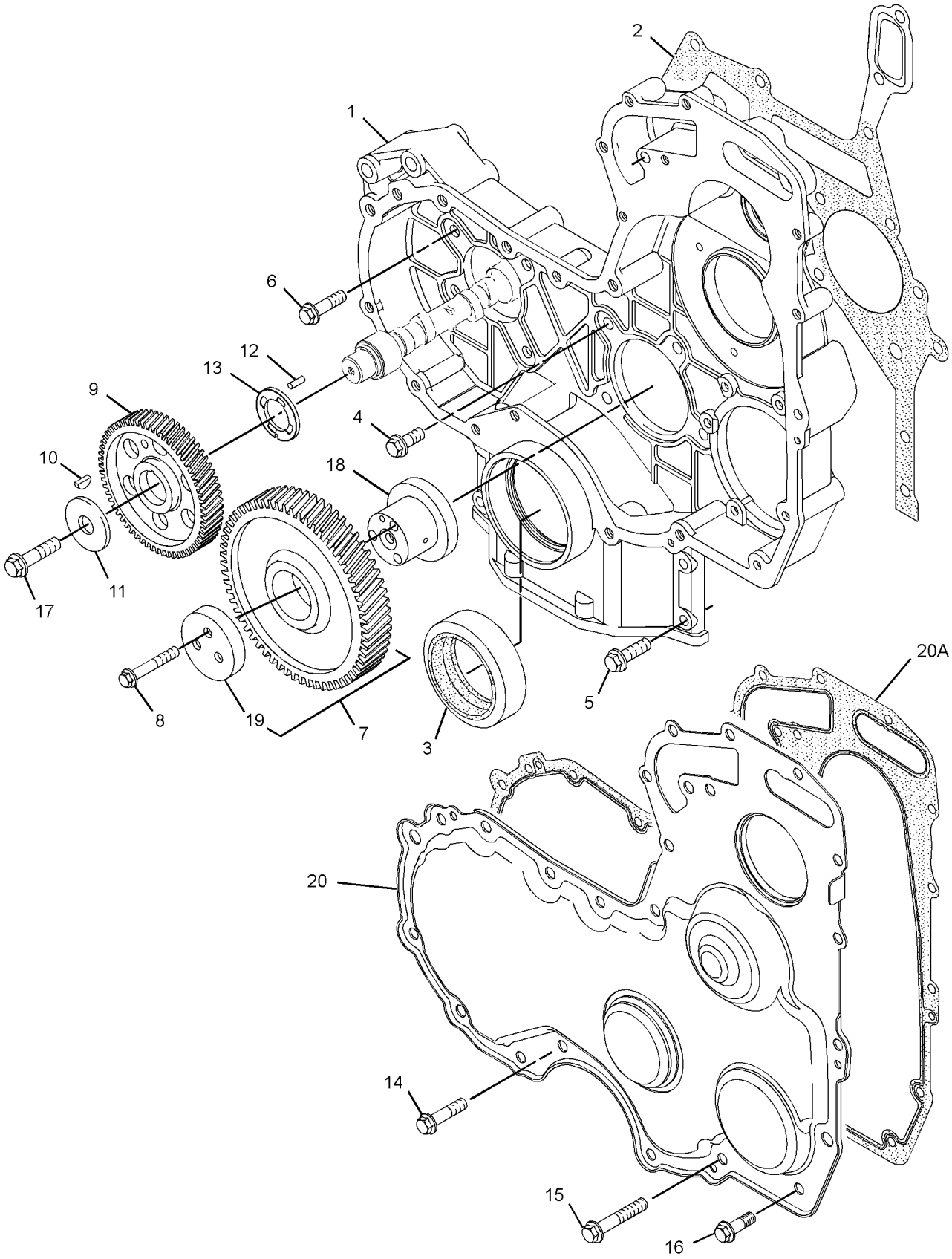

GRAPHIC #1 **<END>** g01379940

279-9653 LIFTING GP-ENGINE

S/N: C6E1-UP

PART OF 292-5306 ENGINE AR-PRIMARY

SMCS-1122 **i02854733**

NOTE	REF NO	GRAPHIC REF	PART NUMBER	QTY	PART NAME 1 2 3 4 5 6 (PRODUCT LEVEL)	SEE PAGE
	1	1	**279-9651**	1	PLATE-LIFTING	
M	2	1	**6I-0654**	4	BOLT (M10X1.5X25-MM)	
	3	1	**279-9652**	1	PLATE-LIFTING	

M-METRIC PART

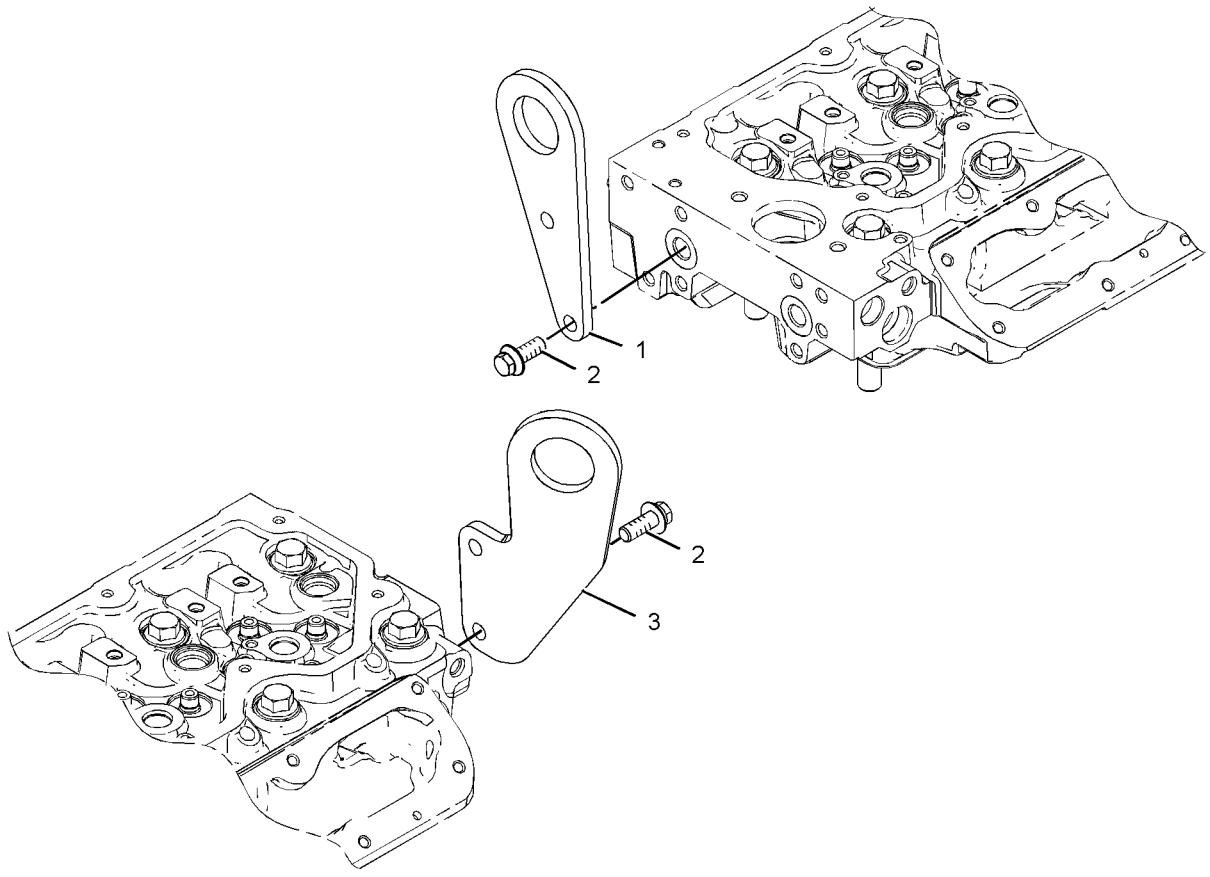

GRAPHIC #1 **<END>** g01195531

BASIC ENGINE

290-0637 MOUNTING GP-ENGINE & XMSN

S/N: KLN1-UP

PART OF 289-8894 INSTALLATION AR-ENGINE

SMCS-1152, 1154, 3082 **i03571131**

NOTE	REF NO	GRAPHIC REF	PART NUMBER	QTY	PART NAME 1 2 3 4 5 6 (PRODUCT LEVEL)	SEE PAGE
	1	1	**9W-6582**	2	SLEEVE	
	2	1	**9W-9930**	2	MOUNT AS	
	3	1	**220-1241**	2	MOUNT AS	
	4	1	**290-0643**	1	SUPPORT-ENGINE (LH)	
	5	1	**290-0644**	1	SUPPORT-ENGINE (RH)	
	6	1	**290-7895**	1	SUPPORT AS (TRANSMISSION,RH)	
	7	1	**290-7896**	1	SUPPORT AS (TRANSMISSION,LH)	
	8	1	**039-8557**	10	WASHER (13X26X6-MM THK)	
	9	1	**3E-4356**	8	WASHER-HARD (17.5X30X6-MM THK)	
M	10	1	**6V-4249**	8	BOLT (M10X1.5X50-MM)	
	11	1	**6V-5839**	8	WASHER (11X21X2.5-MM THK)	
	12	1	**6W-5760**	2	DOWEL	
M	13	1	**7X-2554**	4	BOLT (M16X2X70-MM)	
M	14	1	**8C-8478**	2	BOLT (M20X2.5X140-MM)	
	15	1	**8T-4121**	12	WASHER-HARD (11X21X2.5-MM THK)	
M	16	1	**8T-4131**	4	NUT (M20X2.5-THD)	
M	17	1	**8T-4170**	2	BOLT (M20X2.5X150-MM)	
M	18	1	**8T-4183**	10	BOLT (M12X1.75X40-MM)	
M	19	1	**8T-4186**	12	BOLT (M10X1.5X40-MM)	
	20	1	**8T-4223**	10	WASHER-HARD (13.5X25.5X3-MM THK)	
	21	1	**8T-5439**	8	WASHER-HARD (21.5X45X6-MM THK)	
M	22	1	**8T-7338**	4	BOLT (M16X2X45-MM)	
	23	1	**8X-0674**	2	WASHER (22X100X10-MM THK)	
	24	1	**9R-5878**	4	WASHER (21.5X114X3-MM THK)	
	25	1	**9W-6584**	2	WASHER (20.5X114X10-MM THK)	

M-METRIC PART

290-0637 **MOUNTING GP-ENGINE & XMSN** *(contd.)* **i03571131**

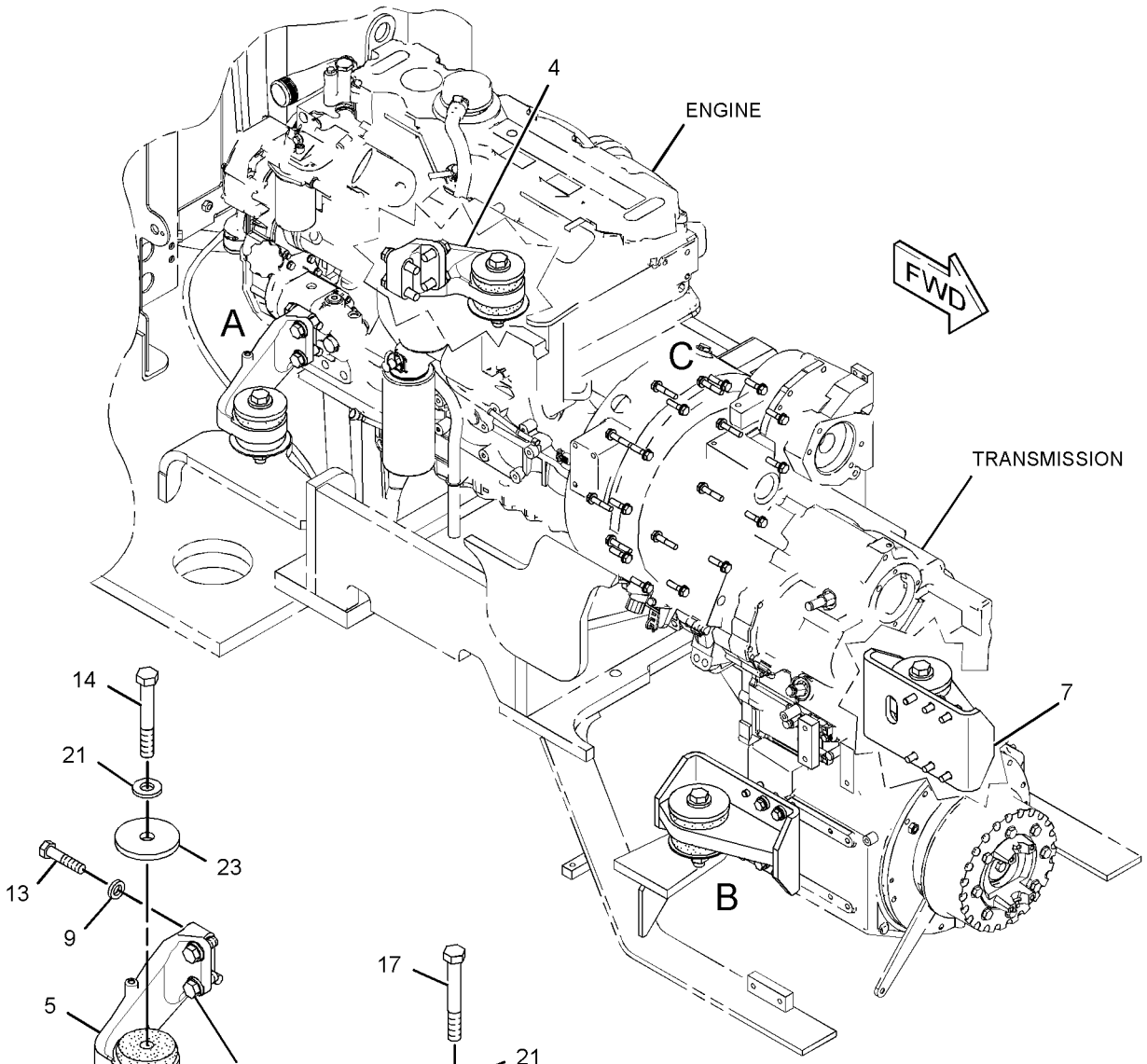

VIEW OF AREA A
(EXPLODED)

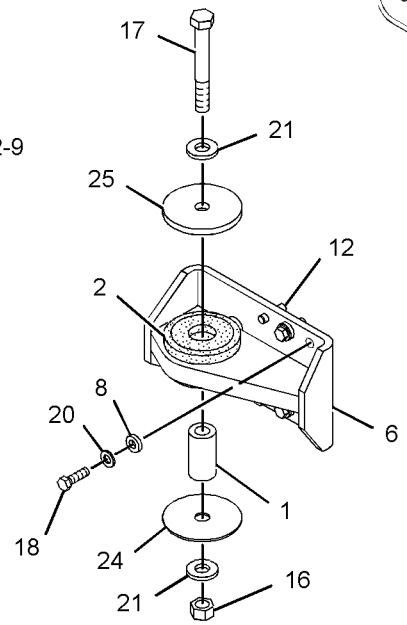

VIEW OF AREA B
(EXPLODED)

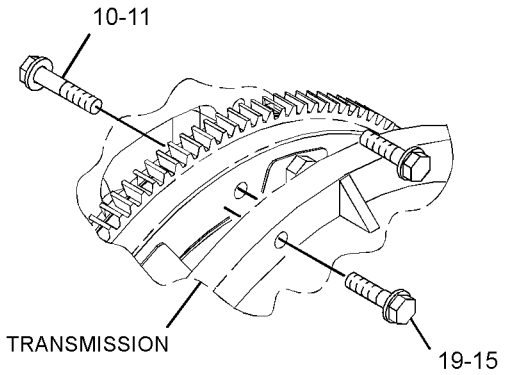

VIEW OF AREA C
(HOUSING REMOVED FOR CLARITY)
(EXPLODED)

GRAPHIC #1 **<END>** g01407672

BASIC ENGINE

289-3268 PAN GP-OIL

S/N: C6E1-UP

PART OF 292-5306 ENGINE AR-PRIMARY

SMCS-1302 **i03576703**

NOTE	REF NO	GRAPHIC REF	PART NUMBER	QTY	PART NAME 1 2 3 4 5 6 (PRODUCT LEVEL)	SEE PAGE
	1	1	**275-9883**	2	SEAL	
M	2	1	**6I-0260**	2	BOLT (M8X1.25X25-MM)	
	3	1	**102-9690**	1	PLUG	
	4	1	**6I-1497**	1	SEAL	
	5	1	**6I-4681**	1	GASKET	
	6	1	**7C-0351**	2	PLUG-DRAIN (ENGINE OIL)	
	7	1	**251-8336**	1	TUBE AS	
	8	1	**275-9884**	1	GASKET	
	9	1	**275-9888**	28	BOLT-SPECIAL	
	10	1	**275-9889**	2	BOLT-SPECIAL	
	11	1	**276-0142**	6	BOLT-SPECIAL (TORX)	
	12	1	**331-4400**	1	GASKET	
	13	1	**289-9430**	1	PAN-OIL	
	13A	1	**7C-1224**	1	INSERT	
	14	1	**286-7847**	1	ADAPTER GP-OIL PAN DRAIN	
	15	1	**286-8817**	1	TUBE GP-HYDRAULIC PUMP	
	16	1	**289-3261**	1	GAUGE GP-OIL LEVEL (DIPSTICK) (ENGINE)	
	16A	1	**275-9891**	2	SEAL-O-RING	

M-METRIC PART

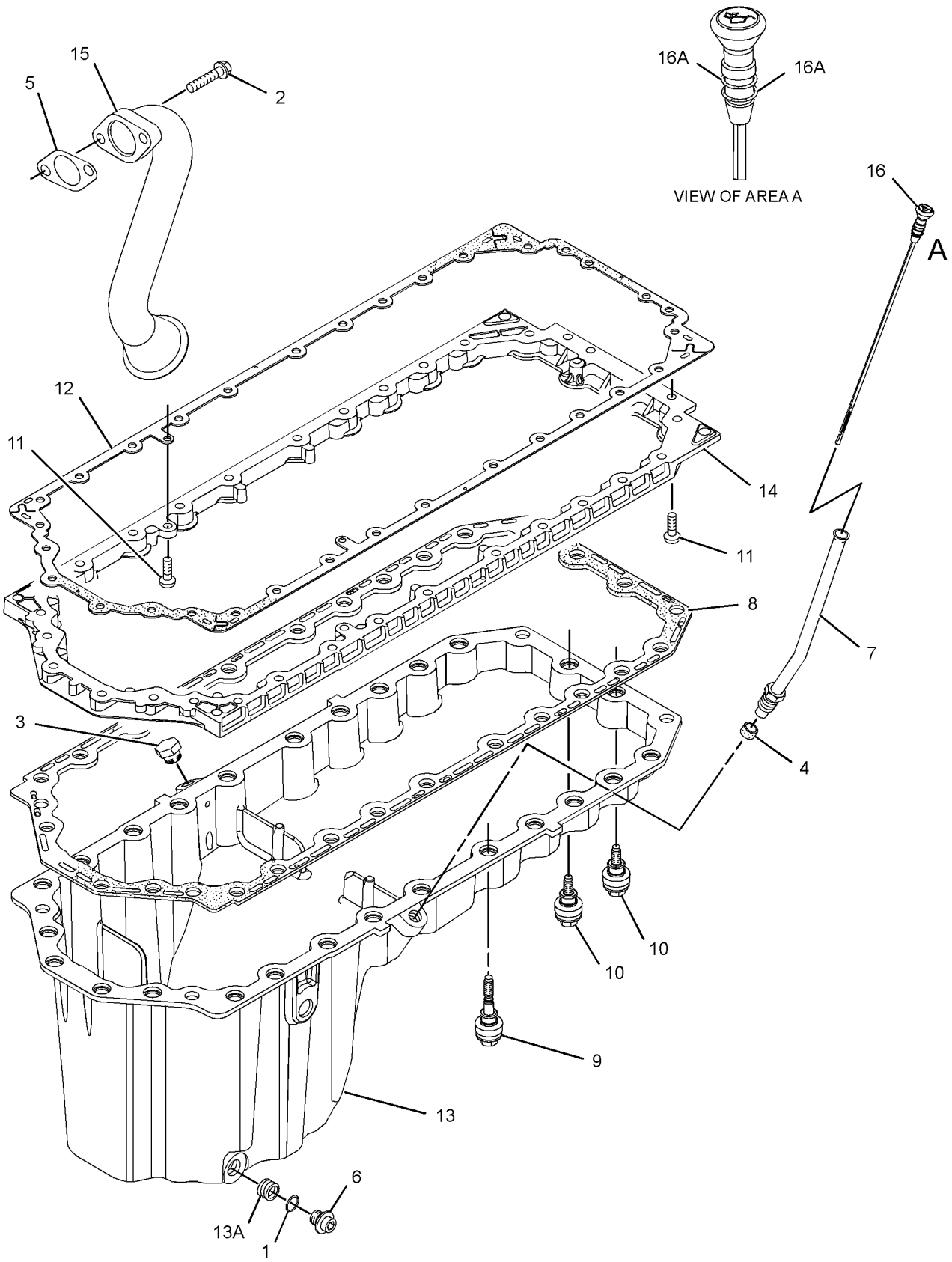

GRAPHIC #1 **<END>** g01737458

BASIC ENGINE

279-8780 PISTON & ROD GP

S/N: C6E1-UP

PART OF 292-5306 ENGINE AR-PRIMARY

SMCS-1225 **i02931723**

NOTE	REF NO	GRAPHIC REF	PART NUMBER	QTY	PART NAME 1 2 3 4 5 6 (PRODUCT LEVEL)	SEE PAGE
	1	1	**276-7475**	6	PISTON AS	
					(EACH INCLUDES)	
	2	1	**124-3536**	2	RING-RETAINING	
	3	1	**276-7476**	6	KIT-PISTON RING	
BJ	4	1	**276-7479**	6	ROD AS (F)	
					—OR—	
BJ			**276-7481**	6	ROD AS (L)	
					—OR—	
BJ			**276-7483**	6	ROD AS (J)	
					(EACH ROD AS INCLUDES)	
	5	1	**225-5439**	2	BOLT-SPECIAL (CONNECTING ROD)	
	6	1	**276-7478**	1	BUSHING	

B-USE AS REQUIRED
J-ENSURE THAT CORRECT ROD LENGTH IS FITTED

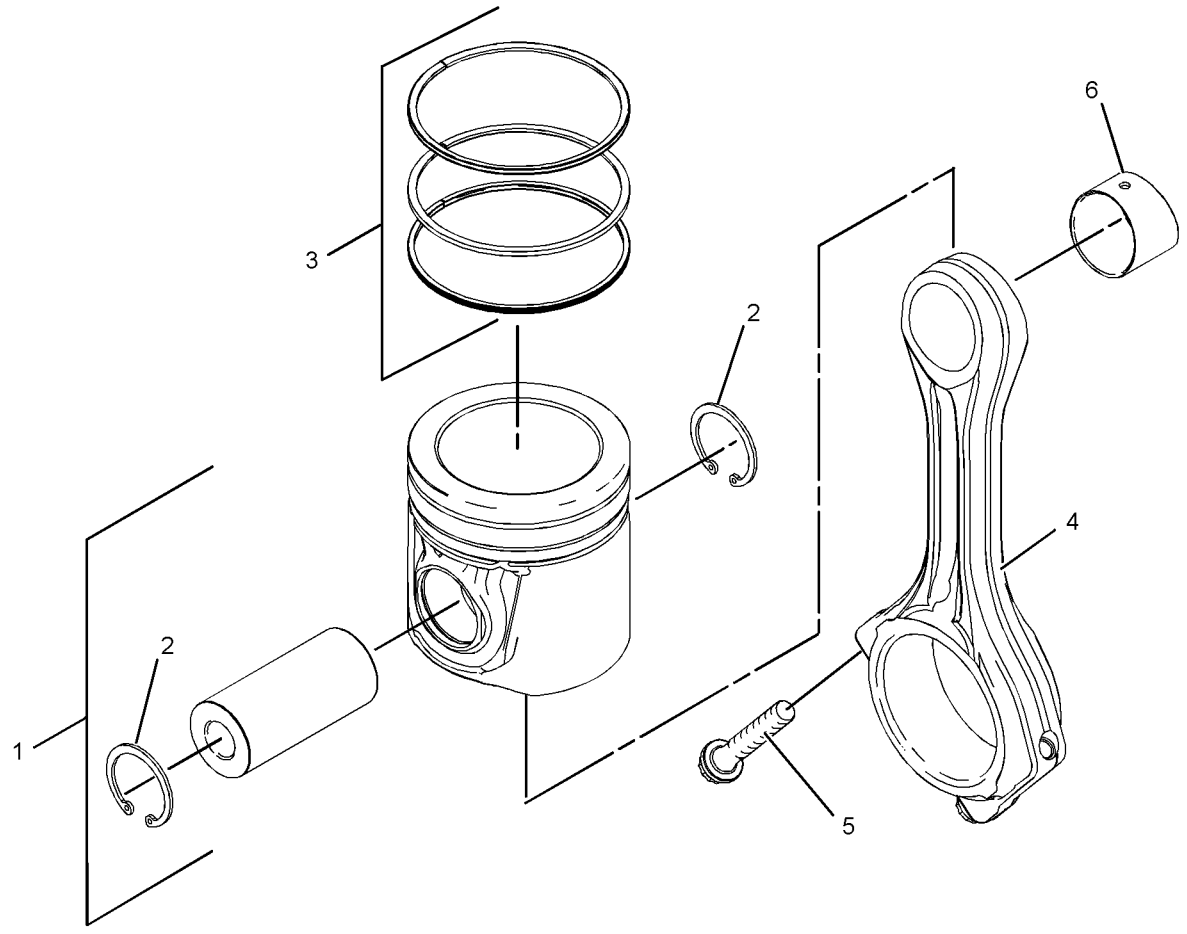

GRAPHIC #1 **<END>** g01214328

277-5007 PLUG GP-ENGINE

S/N: C6E1-UP

PART OF 292-5306 ENGINE AR-PRIMARY

SMCS-1000 **i02752431**

NOTE	REF NO	GRAPHIC REF	PART NUMBER	QTY	PART NAME 1 2 3 4 5 6 (PRODUCT LEVEL)	SEE PAGE
	1	1	**2B-0858**	3	PLUG-PIPE	

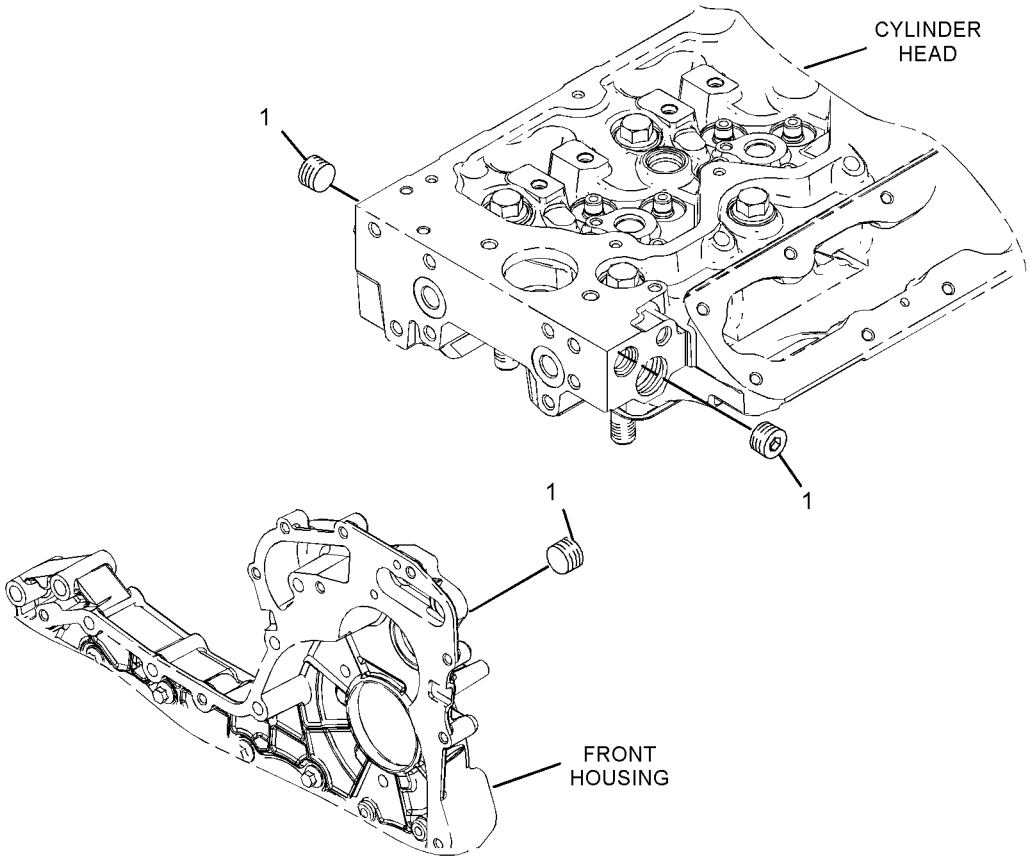

GRAPHIC #1 **<END>** g01209408

299-3949 PLUG GP-FLYWHEEL HOUSING

S/N: C6E1-UP

PART OF 292-5306 ENGINE AR-PRIMARY

SMCS-1157 **i02931654**

NOTE	REF NO	GRAPHIC REF	PART NUMBER	QTY	PART NAME 1 2 3 4 5 6 (PRODUCT LEVEL)	SEE PAGE
	1	1	**259-0374**	6	PLUG AS	
					(EACH INCLUDES)	
	1A	1	**216-8581**	1	SEAL-O-RING	

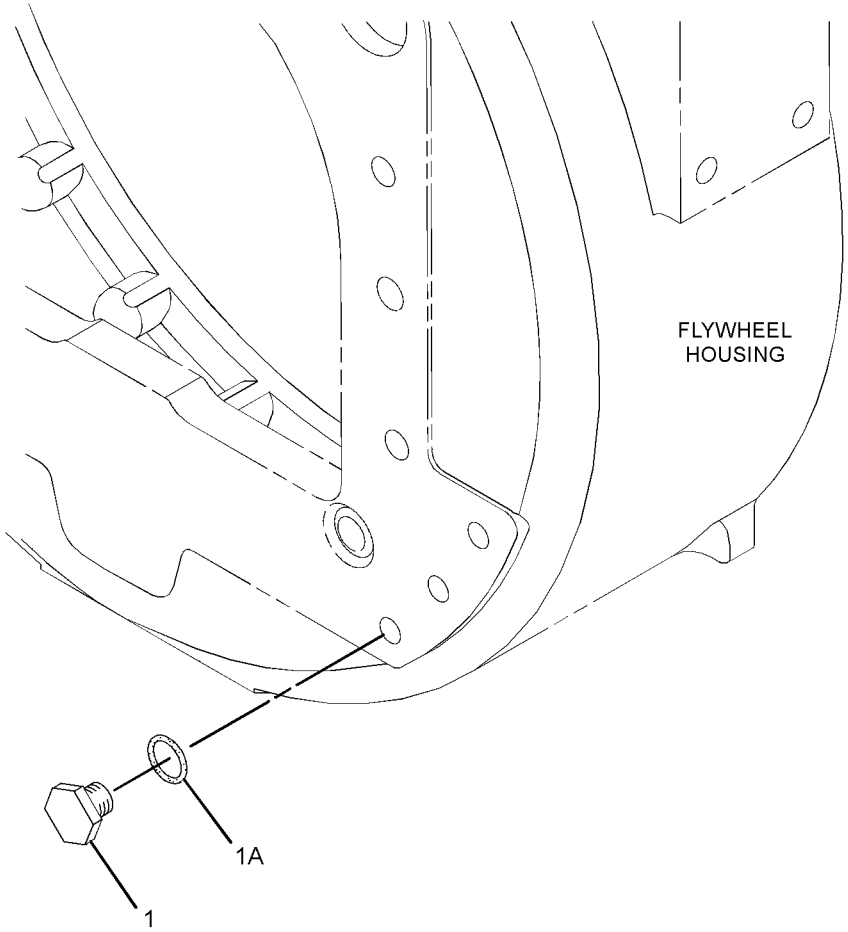

GRAPHIC #1 **<END>** g01333763

274-1929 PULLEY GP-CRANKSHAFT

S/N: C6E1-UP

PART OF 292-5306 ENGINE AR-PRIMARY

SMCS-1205 **i02752430**

NOTE	REF NO	GRAPHIC REF	PART NUMBER	QTY	PART NAME 1 2 3 4 5 6 (PRODUCT LEVEL)	SEE PAGE
	1	1	**274-1930**	1	DAMPER	
	2	1	**274-1931**	1	PULLEY	
	3	1	**274-1932**	1	HUB	
	4	1	**274-1933**	1	BLOCK	
	5	1	**274-1934**	3	BOLT-SPECIAL (TORX)	
	6	1	**274-1935**	6	BOLT	

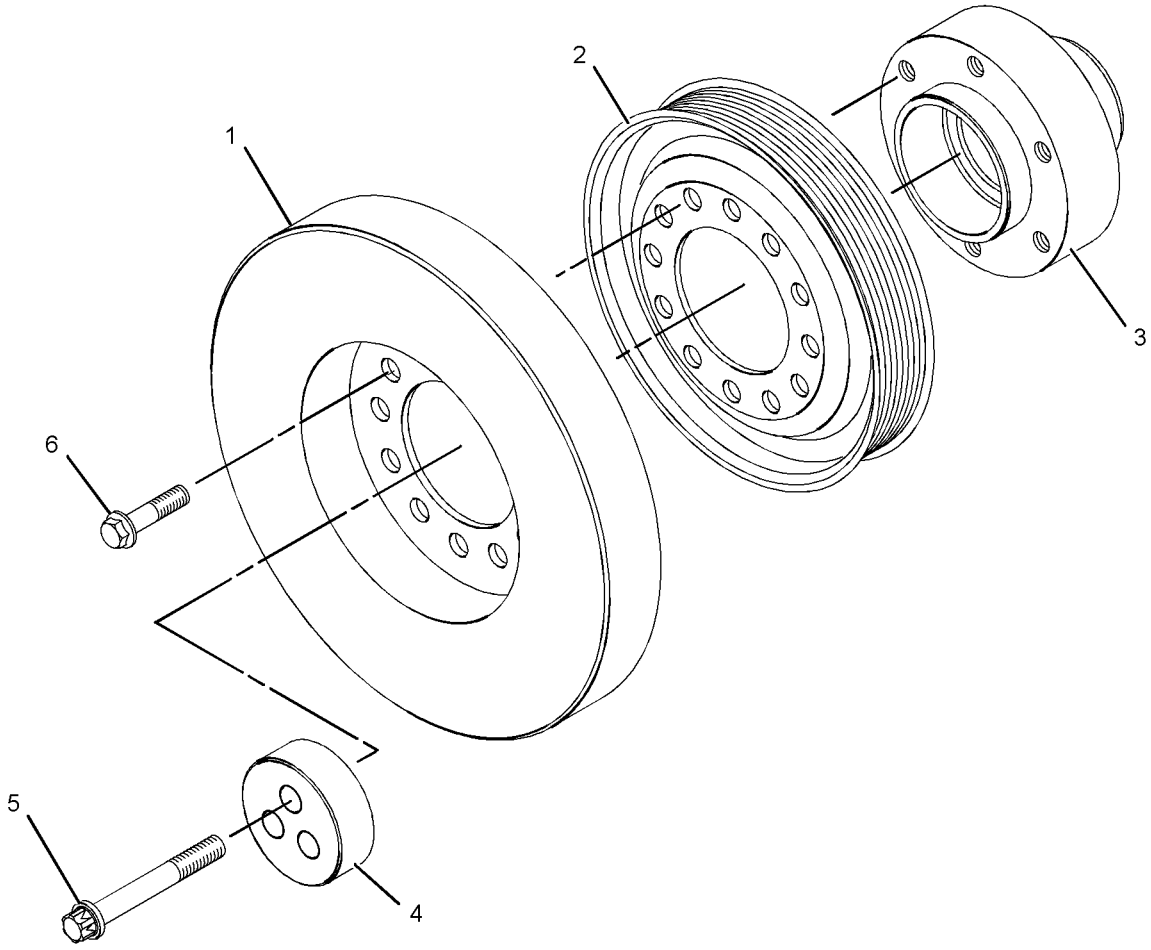

GRAPHIC #1 **<END>** g01157851

280-1911 ROCKER ARM GP

S/N: C6E1-UP

PART OF 279-8825 VALVE MECHANISM GP

SMCS-1123 **i02752423**

NOTE	REF NO	GRAPHIC REF	PART NUMBER	QTY	PART NAME 1 2 3 4 5 6 (PRODUCT LEVEL)	SEE PAGE
	1	1	**276-9201**	1	CLIP	
	2	1	**276-9206**	5	SPRING-SHAFT	
	3	1	**276-9207**	1	SPRING-SHAFT	
	4	1	**277-5307**	1	SHAFT AS-ROCKER ARM	
	4A	1	**276-9200**	1	PLUG-SHAFT END	
	5	1	**278-5111**	6	ROCKER ARM AS	
					(EACH INCLUDES)	
	5A	1	**276-9230**	1	NUT	
	5B	1	**278-5113**	1	ADJUSTING SCREW (TORX)	
	6	1	**278-5112**	6	ROCKER ARM AS	
					(EACH INCLUDES)	
	6A	1	**276-9230**	1	NUT	
	6B	1	**278-5113**	1	ADJUSTING SCREW (TORX)	
	7	1	**280-1912**	6	BRACKET	
	8	1	**280-1913**	6	RETAINER	
	9	1	**280-1914**	12	BOLT (M8X1.25X55-MM)	

280-1911 **ROCKER ARM GP** *(contd.)* **i02752423**

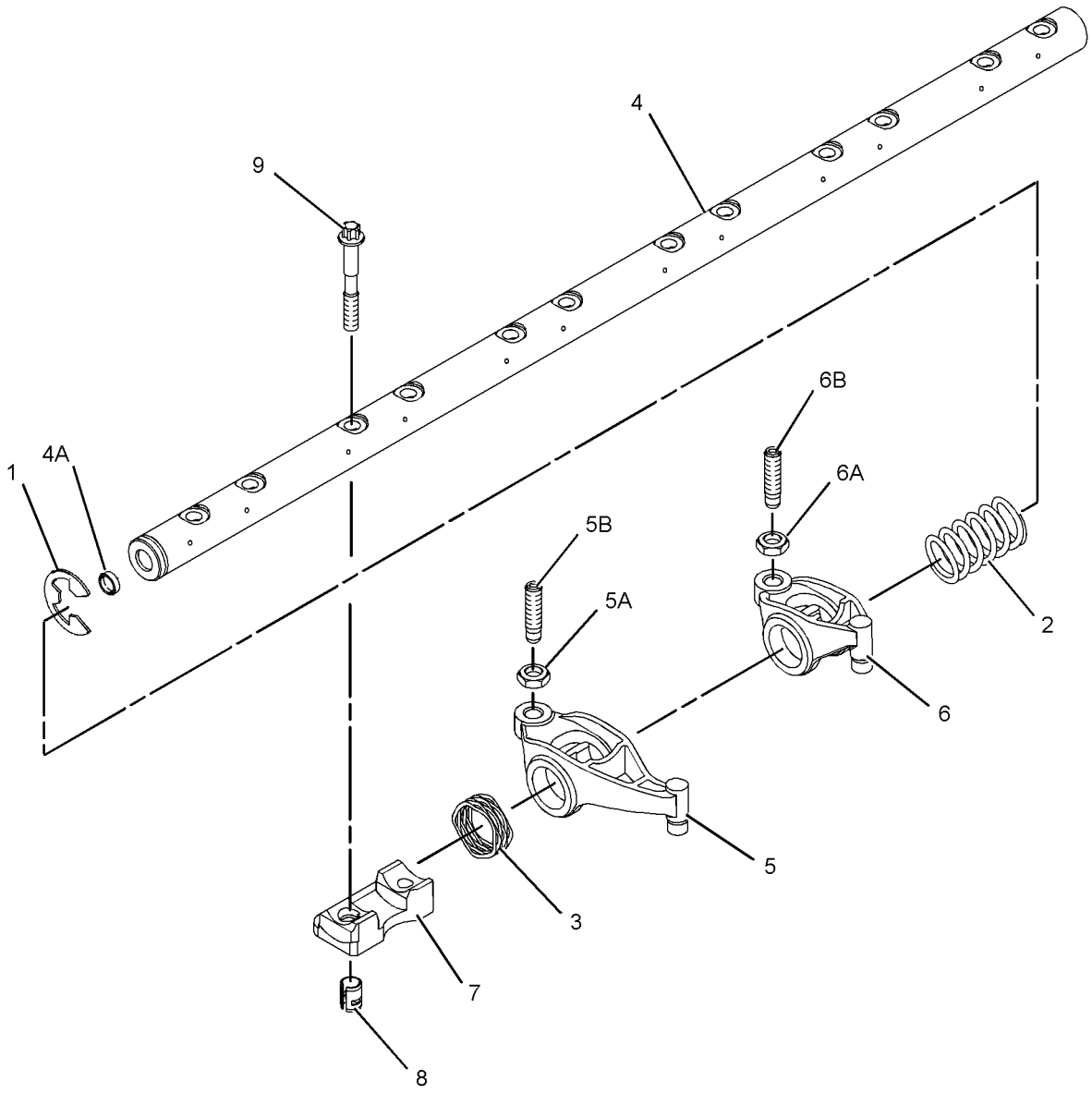

GRAPHIC #1 **<END>** g01235750

BASIC ENGINE

279-8825 VALVE MECHANISM GP

S/N: C6E1-UP

PART OF 292-5306 ENGINE AR-PRIMARY

SMCS-1102, 1121, 1123 **i03592496**

NOTE	REF NO	GRAPHIC REF	PART NUMBER	QTY	PART NAME 1 2 3 4 5 6 (PRODUCT LEVEL)	SEE PAGE
	1	1	**339-3397**	12	LINK	
Y	2	1	**280-1911**	1	ROCKER ARM GP	36

Y-SEPARATE ILLUSTRATION

279-8825 **VALVE MECHANISM GP** *(contd.)* **i03592496**

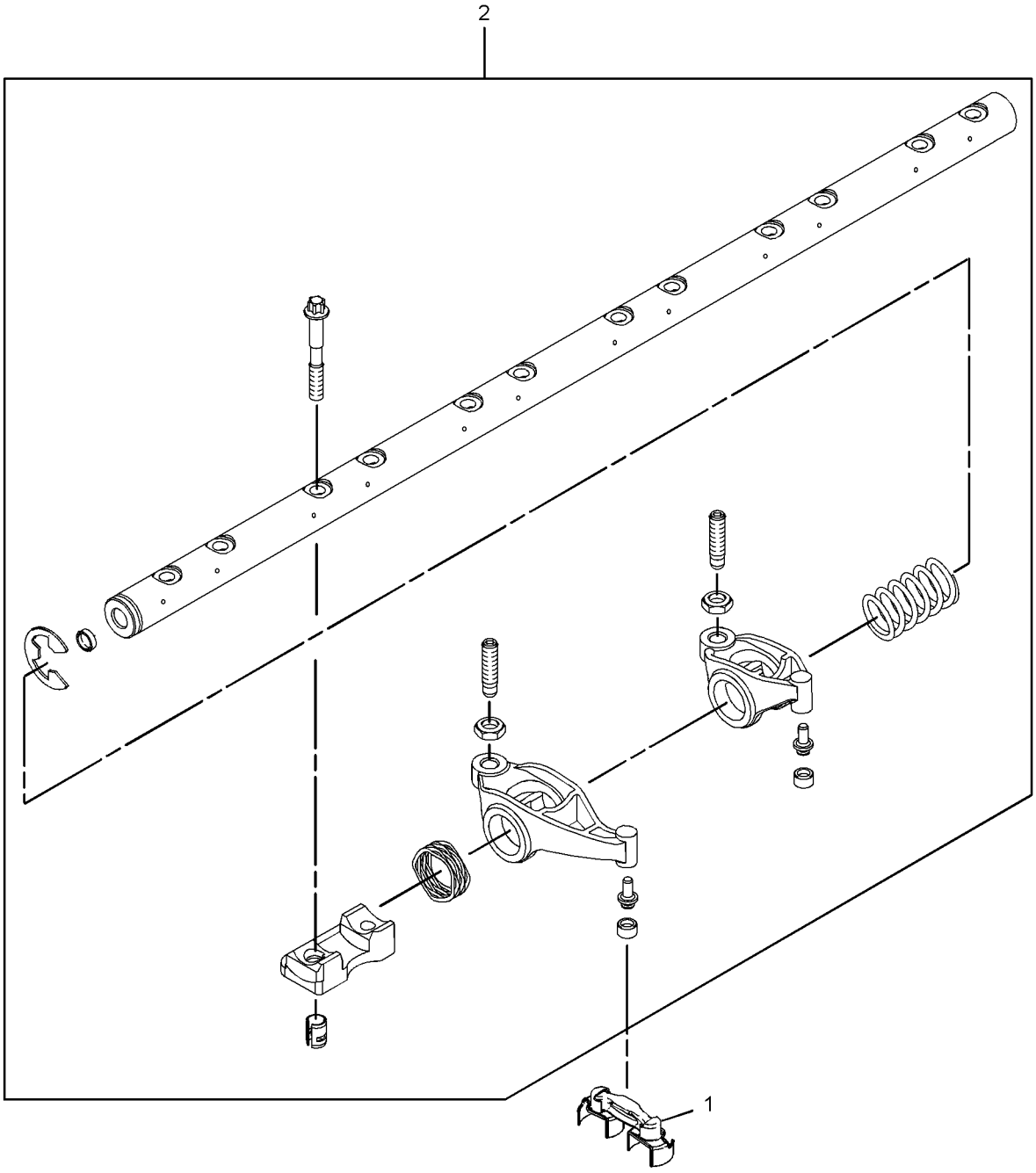

GRAPHIC #1 **<END>** g01923253

LUBRICATION SYSTEM

280-2050 BREATHER GP–CRANKCASE

S/N: C6E1-UP

PART OF 292-5306 ENGINE AR-PRIMARY

SMCS-1317 **i02931726**

NOTE	REF NO	GRAPHIC REF	PART NUMBER	QTY	PART NAME 1 2 3 4 5 6 (PRODUCT LEVEL)	SEE PAGE
	1	1	**273-5711**	1	BREATHER AS (CRANKCASE)	

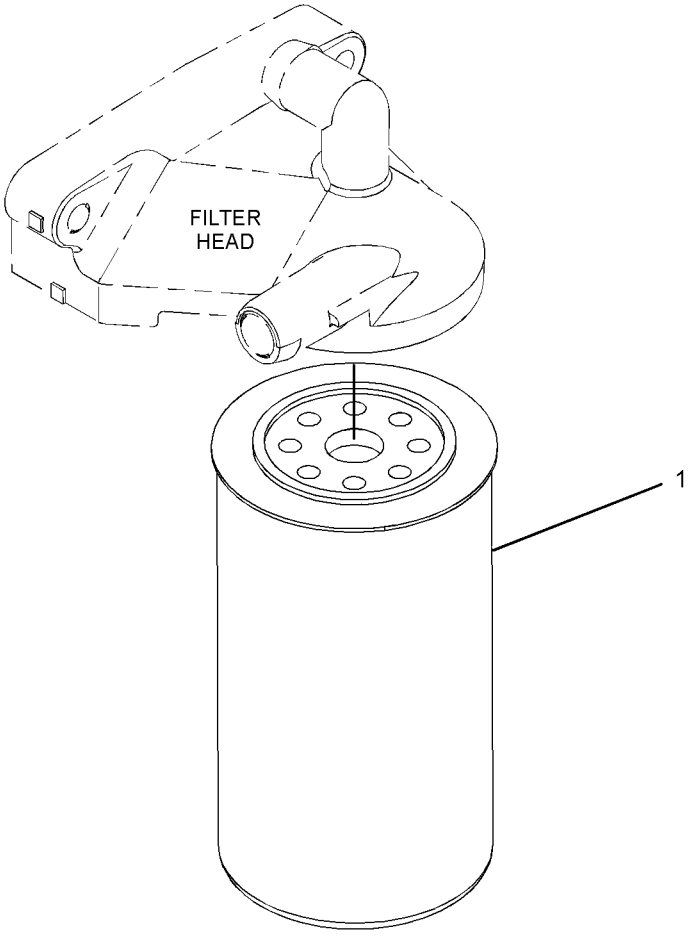

GRAPHIC #1 **<END>** g01290203

277-1973 FILLER GP-ENGINE OIL

S/N: C6E1-UP

PART OF 292-5306 ENGINE AR-PRIMARY

SMCS-1316 **i02896498**

NOTE	REF NO	GRAPHIC REF	PART NUMBER	QTY	PART NAME 1 2 3 4 5 6 (PRODUCT LEVEL)	SEE PAGE
	1	1	**321-2383**	1	FILLER GP-ENGINE OIL	
	1A	1	**306-2337**	1	SEAL-O-RING	
	1B	1	**130-9888**	1	CAP-OIL FILLER (ENGINE)	
	1C	1	**113-1504**	1	SEAL-O-RING	
	2	1	**6I-4374**	1	BOLT (M8X1.25X60-MM)	
M	3	1	**6I-0254**	1	BOLT (M8X1.25X30-MM)	
	4	1	**277-1974**	1	PLATE AS	
	4A	1	**277-1975**	1	SEAL-O-RING	
M	5	1	**6I-0217**	2	BOLT (M8X1.25X20-MM)	

M-METRIC PART

277-1973 **FILLER GP-ENGINE OIL** *(contd.)* **i02896498**

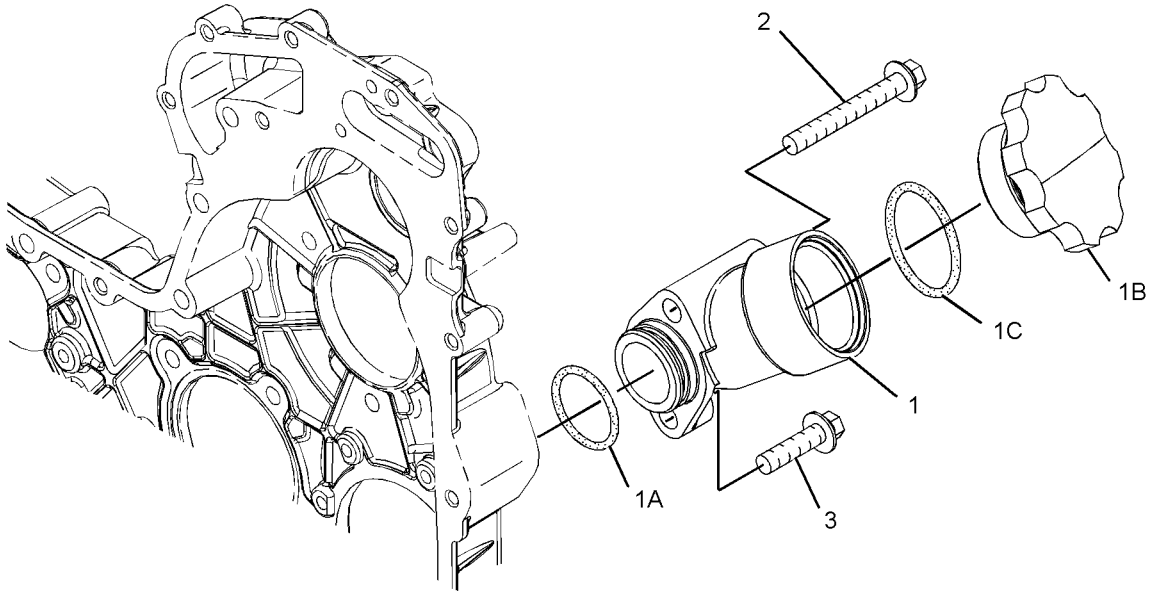

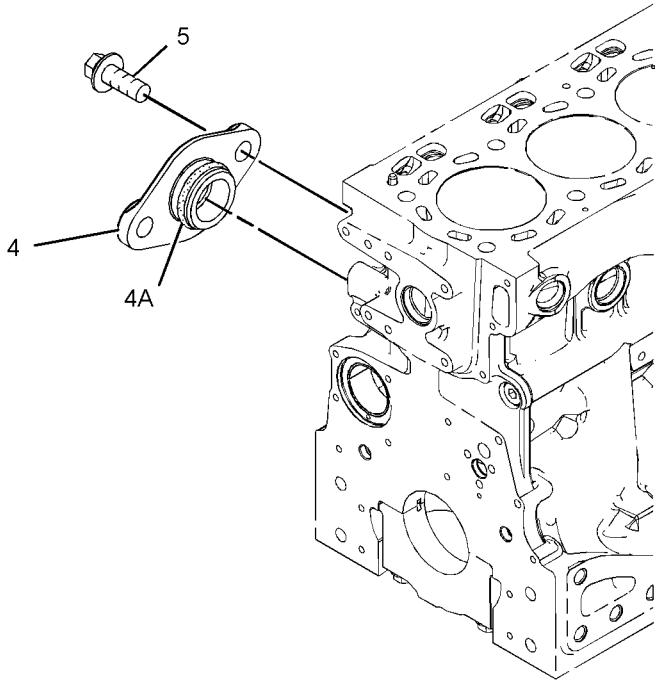

GRAPHIC #1 **<END>** g01208924

LUBRICATION SYSTEM

277-2912 FILTER GP-ENGINE OIL

S/N: C6E1-UP

PART OF 292-5306 ENGINE AR-PRIMARY

SMCS-1306, 1308 **i03327305**

NOTE	REF NO	GRAPHIC REF	PART NUMBER	QTY	PART NAME 1 2 3 4 5 6 (PRODUCT LEVEL)	SEE PAGE
	1	1	**269-8325**	1	FILTER-ENGINE OIL	

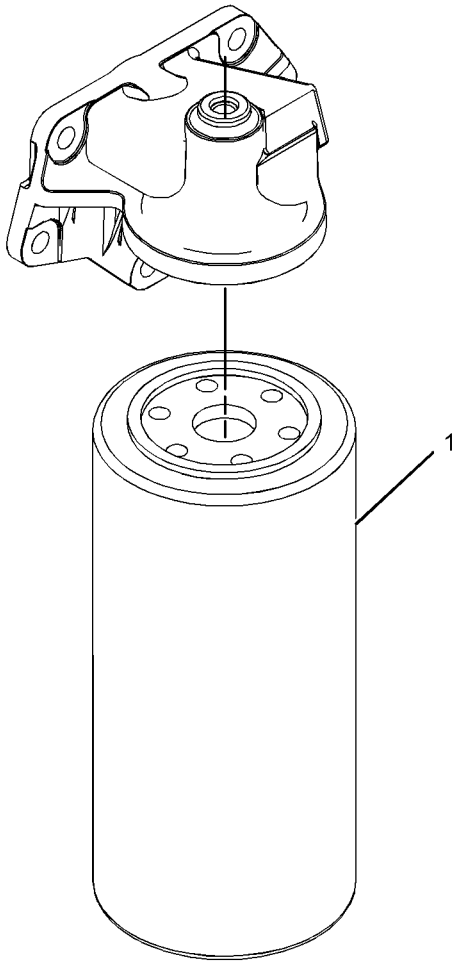

GRAPHIC #1 **<END>** g01198493

LUBRICATION SYSTEM

277-4262 PUMP GP-ENGINE OIL

S/N: C6E1-UP

PART OF 292-5306 ENGINE AR-PRIMARY

SMCS-1304, 1315 **i02751973**

NOTE	REF NO	GRAPHIC REF	PART NUMBER	QTY	PART NAME 1 2 3 4 5 6 (PRODUCT LEVEL)	SEE PAGE
	1	1	**312-4545**	1	PUMP-OIL (ENGINE)	
	2	1	**6I-1090**	4	BOLT (M8X1.25X40-MM)	

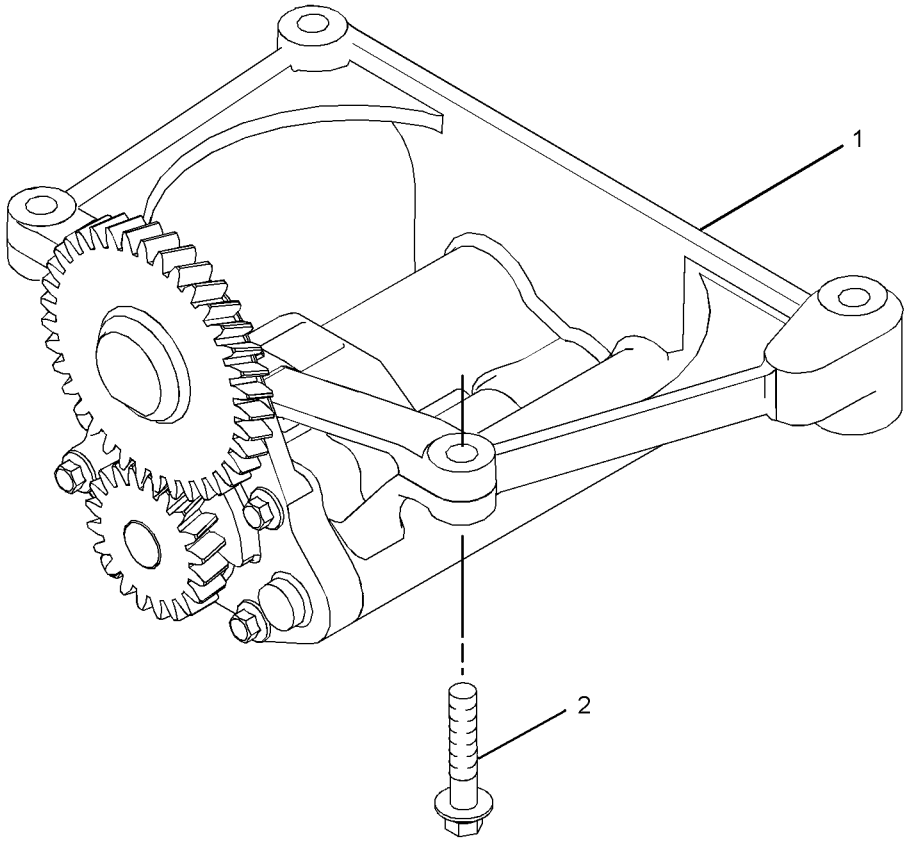

GRAPHIC #1 **<END>** g01380671

277-4694 VALVE GP-FLUID SAMPLING–ENGINE OIL

S/N: C6E1-11296

PART OF 292-5306 ENGINE AR-PRIMARY

SMCS-7542 **i02790076**

NOTE	REF NO	GRAPHIC REF	PART NUMBER	QTY	PART NAME 1 2 3 4 5 6 (PRODUCT LEVEL)	SEE PAGE
	1	1	**216-9633**	1	VALVE AS-FLUID SAMPLING (ENGINE OIL)	
	2	1	**8C-3445**	1	CAP-DUST	
	3	1	**232-3861**	1	PLUG (BLANKING)	
	4	1	**199-9267**	1	SEAL-O-RING	

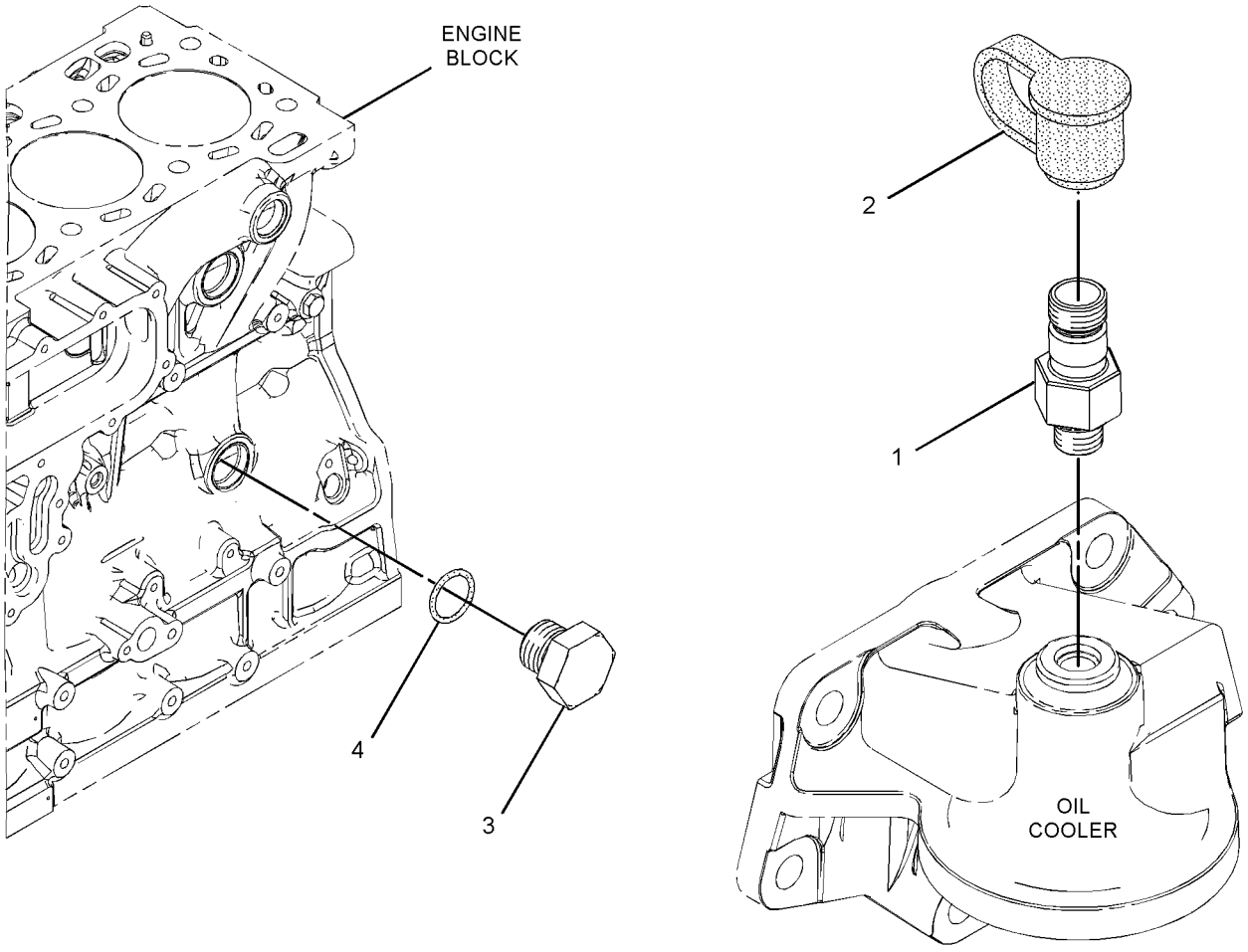

GRAPHIC #1 **<END>** g01198300

281-8748 CONNECTION GP-WATER

S/N: C6E1-UP

PART OF 292-5306 ENGINE AR-PRIMARY

SMCS-1380 **i02930671**

NOTE	REF NO	GRAPHIC REF	PART NUMBER	QTY	PART NAME 1 2 3 4 5 6 (PRODUCT LEVEL)	SEE PAGE
M	1	1	**103-5687**	1	BOLT (M10X1.5X85-MM)	
	2	1	**123-2899**	1	BOLT (M10X1.5X40-MM)	
	3	1	**281-8744**	1	GASKET-WATER REGULATOR	
	4A	1	**281-8745**	1	REGULATOR AS-WATER TEMPERATURE (CONNECTOR INCLUDED)	
	4B	1	**281-8746**	1	PLUG	
	4C	1	**281-8747**	1	SEAL-O-RING	

M-METRIC PART

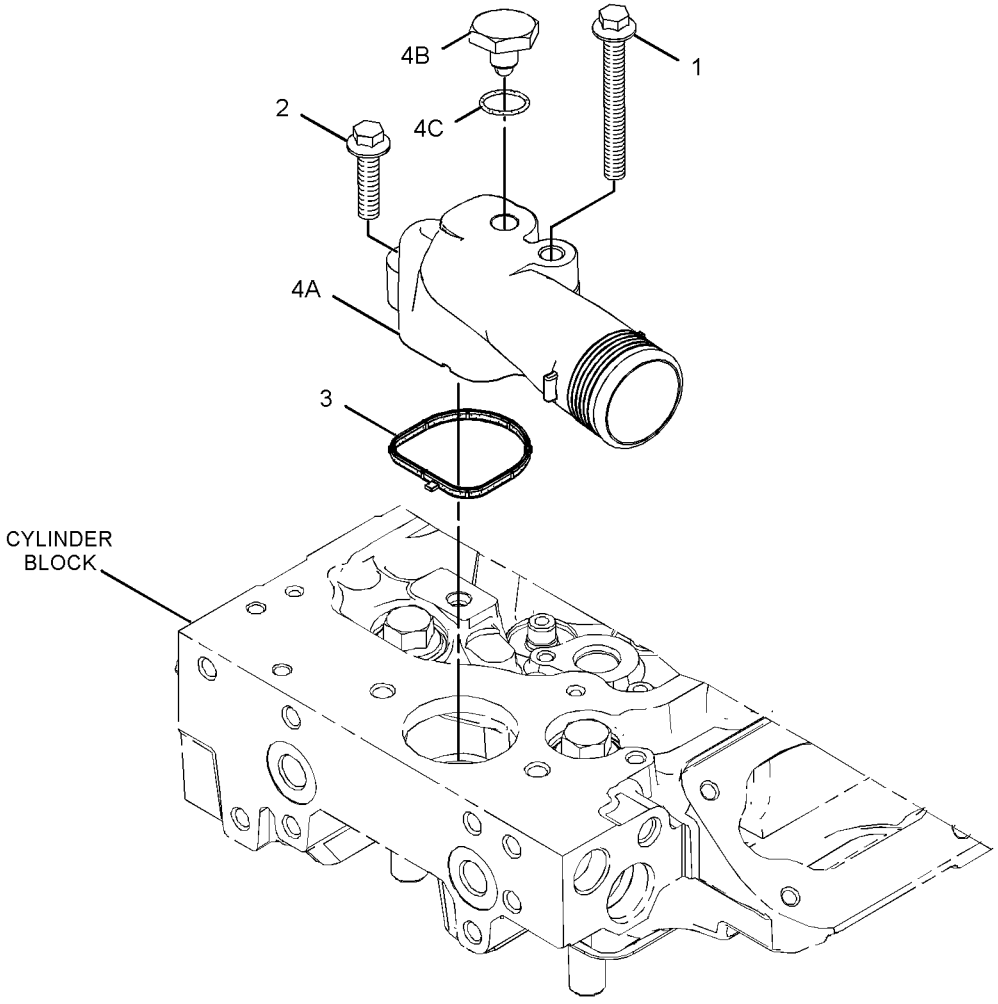

GRAPHIC #1 **<END>** g01217974

326-7401 COOLER GP-ENGINE OIL

S/N: C6E1-UP

PART OF 283-4558, 330-4724 COOLER GP-FLTR BASE & ENG OIL

SMCS-1378 **i03246403**

NOTE	REF NO	GRAPHIC REF	PART NUMBER	QTY	PART NAME 1 2 3 4 5 6 (PRODUCT LEVEL)	SEE PAGE
M	1	1	**6I-0260**	1	BOLT (M8X1.25X25-MM)	
	2	1	**6I-4793**	6	BOLT (M8X1.25X50-MM)	
	3	1	**277-2500**	1	GASKET	
	4	1	**281-7039**	1	COOLER-OIL	
	5	1	**281-7040**	1	GASKET	

M-METRIC PART

326-7401 **COOLER GP-ENGINE OIL** *(contd.)* **i03246403**

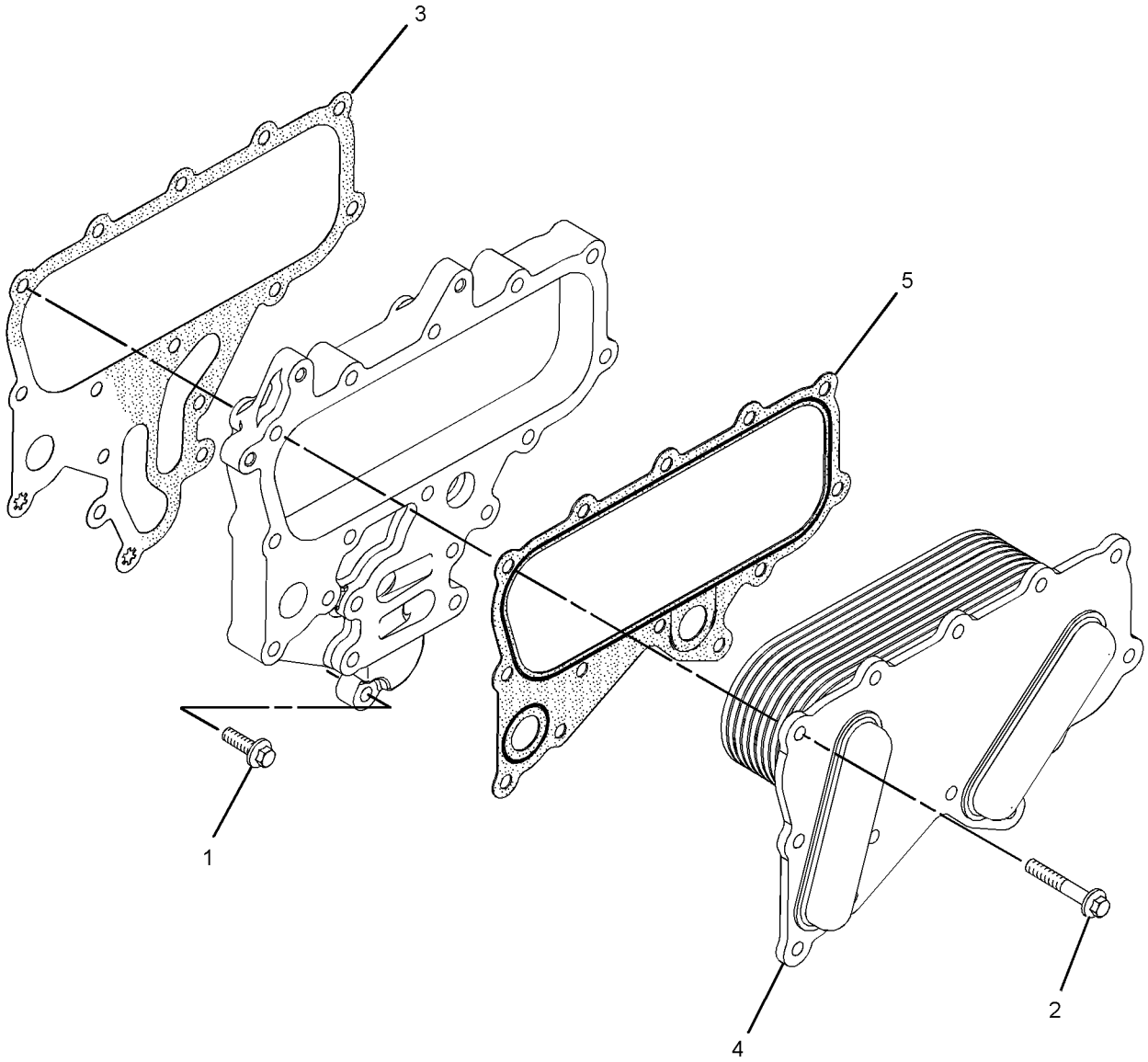

GRAPHIC #1 **<END>** g01508024

283-4558 COOLER GP-FLTR BASE & ENG OIL

S/N: C6E1-11296

PART OF 292-5306 ENGINE AR-PRIMARY

SMCS-1306, 1378 **i03632311**

NOTE	REF NO	GRAPHIC REF	PART NUMBER	QTY	PART NAME 1 2 3 4 5 6 (PRODUCT LEVEL)	SEE PAGE
Y	1	1	**326-7401**	1	COOLER GP-ENGINE OIL	47
	2	1	**225-7944**	3	GASKET	
	3	1	**6I-0455**	4	BOLT (M8X1.25X55-MM)	
	4	1	**232-3751**	2	PLATE	
	5	1	**277-2537**	1	PLATE	
	6	1	**277-2538**	1	GASKET	
M	7	1	**6I-0217**	10	BOLT (M8X1.25X20-MM)	
	8	1	**6I-4793**	7	BOLT (M8X1.25X50-MM)	
	9	1	**283-4559**	1	HEAD AS-OIL FILTER	

M-METRIC PART
Y-SEPARATE ILLUSTRATION

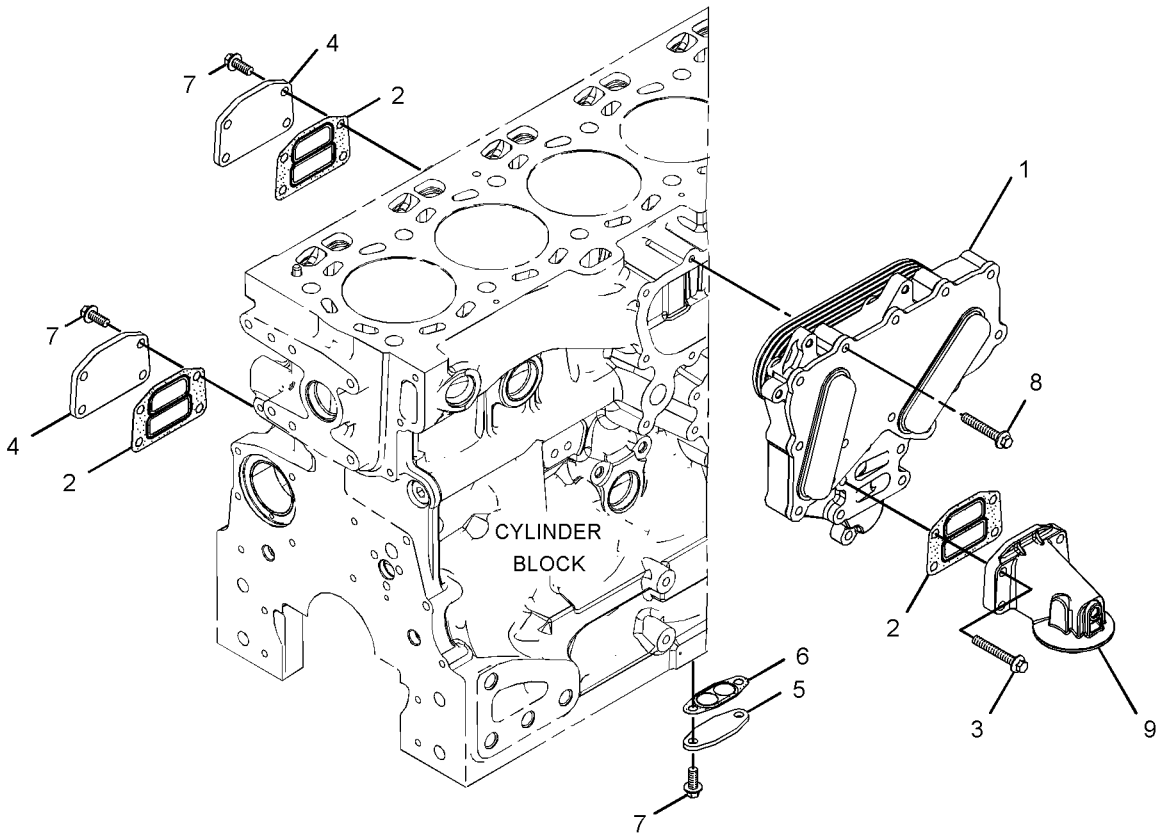

GRAPHIC #1 **<END>** g01948624

COOLING SYSTEM

330-4724 COOLER GP-FLTR BASE & ENG OIL

S/N: C6E11297-UP

PART OF 292-5306 ENGINE AR-PRIMARY

SMCS-1306, 1378 **i03246157**

NOTE	REF NO	GRAPHIC REF	PART NUMBER	QTY	PART NAME 1 2 3 4 5 6 (PRODUCT LEVEL)	SEE PAGE
M	1	1	**6I-0217**	10	BOLT (M8X1.25X20-MM)	
	2	2	**6I-0455**	4	BOLT (M8X1.25X55-MM)	
	3	2	**6I-4793**	7	BOLT (M8X1.25X50-MM)	
	4	2	**199-9252**	1	SEAL-O-RING	
	5	1,2	**225-7944**	3	GASKET (ENGINE OIL FILTER BASE)	
	6	1	**232-3751**	2	PLATE (BLANKING)	
	7	1	**277-2537**	1	PLATE	
	8	1	**277-2538**	1	GASKET	
Y	9	2	**326-7401**	1	COOLER GP-ENGINE OIL	47
	10	2	**330-4725**	1	HEAD-OIL FILTER	
	11	2	**330-4726**	1	TAP	
	12	2	**330-4727**	1	ADAPTER	
	13	2	**330-4728**	1	WASHER	
	14	2	**330-4729**	1	CAP	

M-METRIC PART
Y-SEPARATE ILLUSTRATION

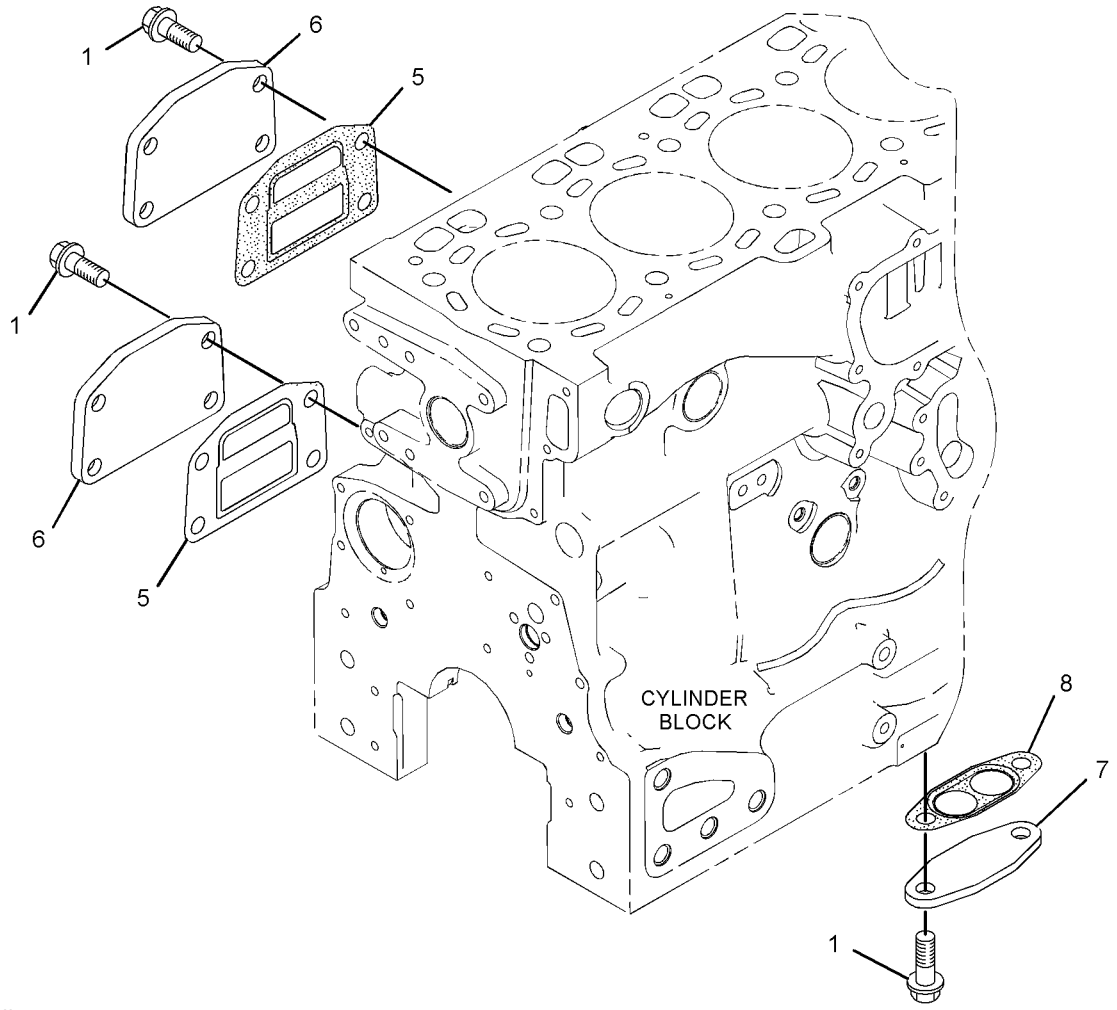

GRAPHIC #1 g01801341

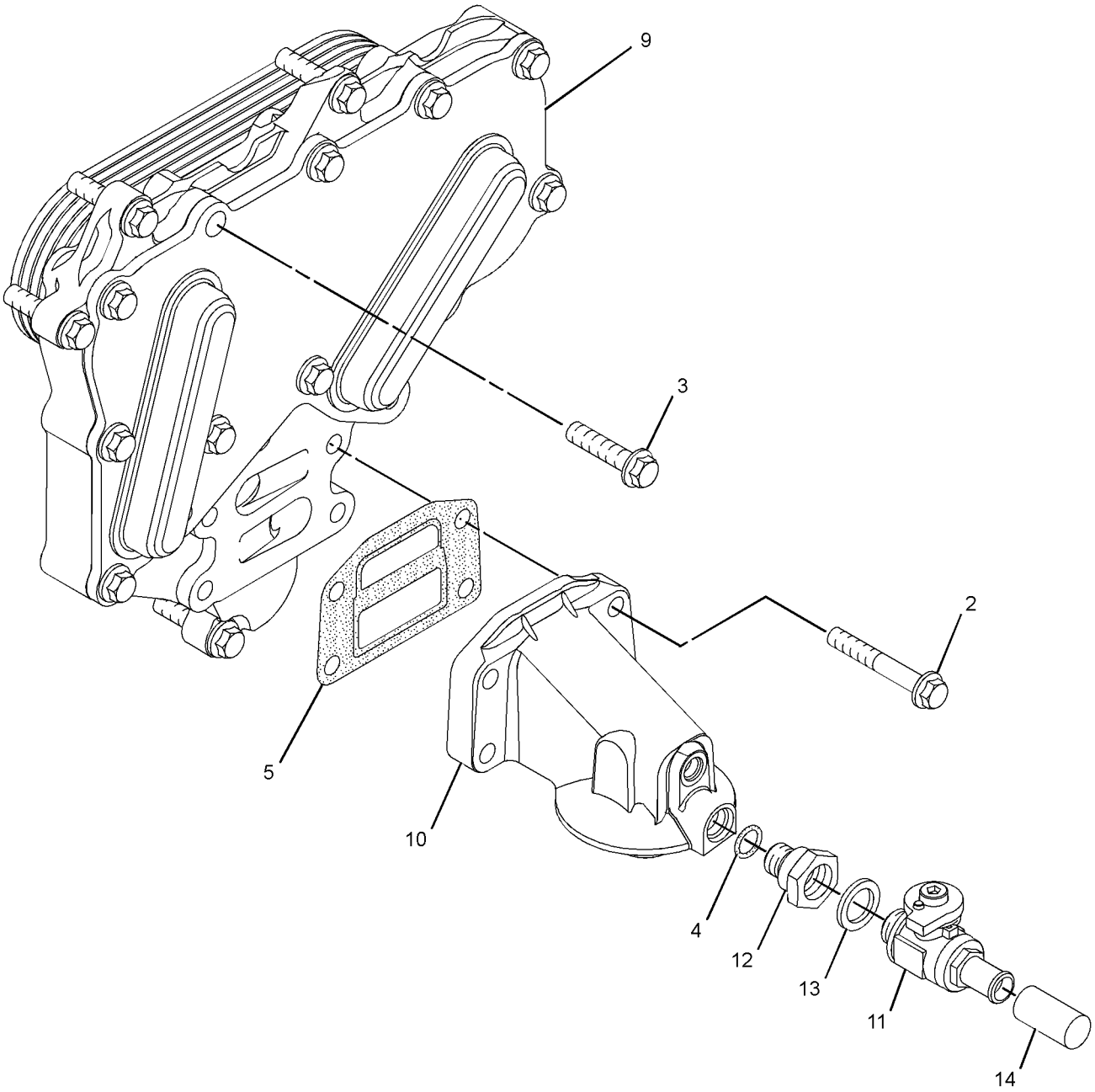

GRAPHIC #2 **<END>** g01801342

COOLING SYSTEM

185-1045 FAN GP-SUCTION

S/N: KLN1-UP

PART OF 289-8894 INSTALLATION AR-ENGINE

SMCS-1356 **i01804764**

NOTE	REF NO	GRAPHIC REF	PART NUMBER	QTY	PART NAME 1 2 3 4 5 6 (PRODUCT LEVEL)	SEE PAGE
	1	1	**185-1046**	1	SPIDER AS-FAN	
M	2	1	**8T-4189**	4	BOLT (M8X1.25X20MM)	
	3	1	**8T-4224**	4	WASHER-HARD (8.8X16X2MM THK)	

M-METRIC PART

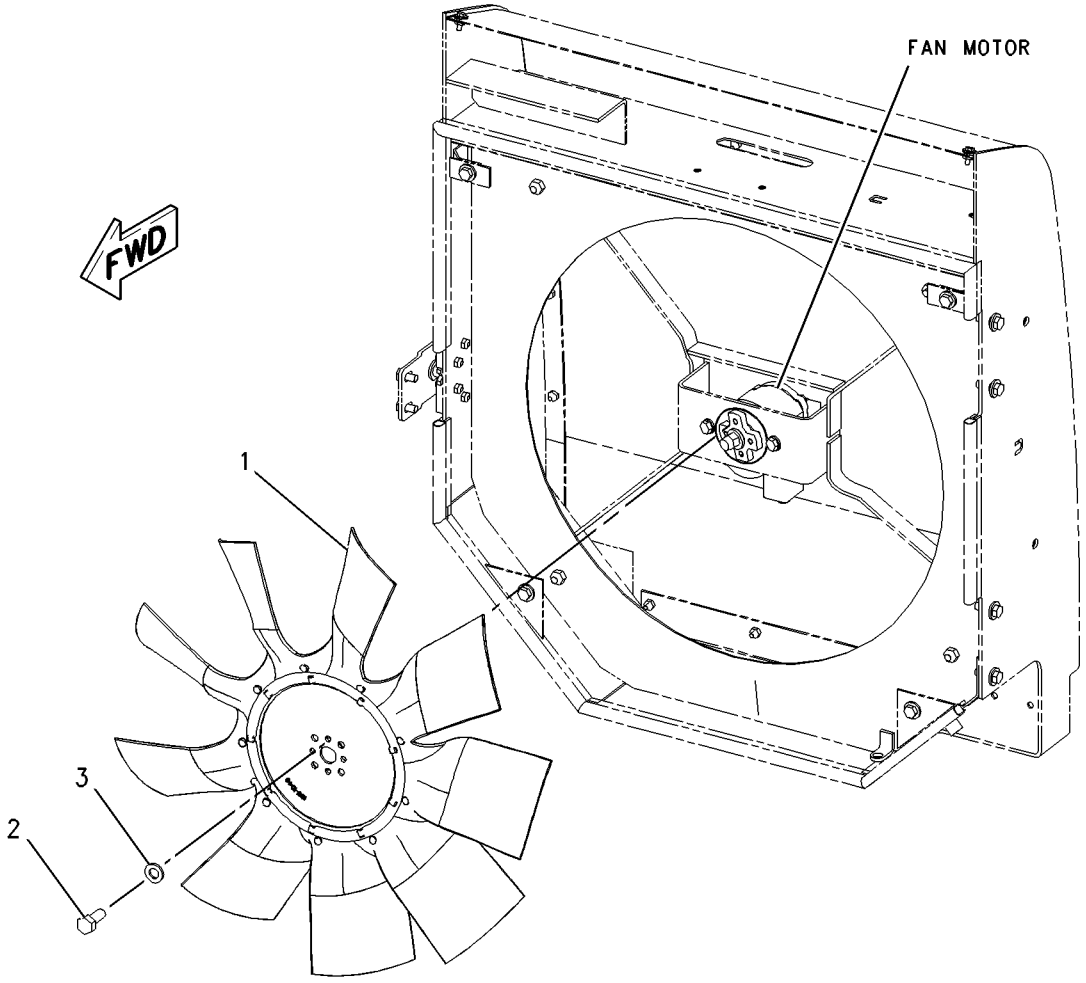

GRAPHIC #1 **<END>** g00923981

COOLING SYSTEM

290-7198 GUARD GP-FAN

S/N: KLN1-UP

PART OF 289-8841 CHASSIS AR

SMCS-1360 **i03023640**

NOTE	REF NO	GRAPHIC REF	PART NUMBER	QTY	PART NAME 1 2 3 4 5 6 (PRODUCT LEVEL)	SEE PAGE
	1	1	**5V-8780**	1	KNOB	
	2	1	**8T-4157**	1	STRIKER AS	
		1	**8T-4158**	1	WASHER-SPECIAL (CONICAL)	
	3	1	**009-3101**	1	RING-RETAINING	
	4	1	**112-5345**	1	LATCH AS-DOOR	
	5	1	**122-6246**	1	PLATE	
	6	1	**174-4246**	1	BRACKET	
	7	1	**202-7857**	1	MOUNT AS	
	8	1	**205-2214**	1	GRILL AS	
	9	1	**239-3322**	1	ROD	
	10	1	**256-7271**	1	PLATE	
	11	1	**289-8794**	1	GUARD GP-RADIATOR	
	12	1	**290-7199**	1	BRACKET	
M	13	1	**186-0815**	20	BOLT (M6X1X20-MM)	
	14	1	**186-0817**	20	WASHER-HARD (7X19X2-MM THK)	
	15	1	**5P-1076**	1	WASHER-HARD (13.5X30X4-MM THK)	
M	16	1	**7X-2533**	4	BOLT (M6X1X35-MM)	
	17	1	**7X-7729**	14	WASHER (11X25X3-MM THK)	
	18	1	**8T-4121**	4	WASHER-HARD (11X21X2.5-MM THK)	
M	19	1	**8T-4136**	4	BOLT (M10X1.5X25-MM)	
M	20	1	**8T-4137**	10	BOLT (M10X1.5X20-MM)	
M	21	1	**8T-4195**	4	BOLT (M10X1.5X30-MM)	
	22	1	**8T-4205**	4	WASHER-HARD (7.2X14.5X2-MM THK)	
M	23	1	**8T-4244**	1	NUT (M12X1.75-THD)	
D	24	1	**5P-7211**		SEAL (0.3-M)	
D	24A	1	**5P-7211**		SEAL (1.2-M)	

D-ORDER BY THE METER
M-METRIC PART

290-7198 **GUARD GP-FAN** *(contd.)* **i03023640**

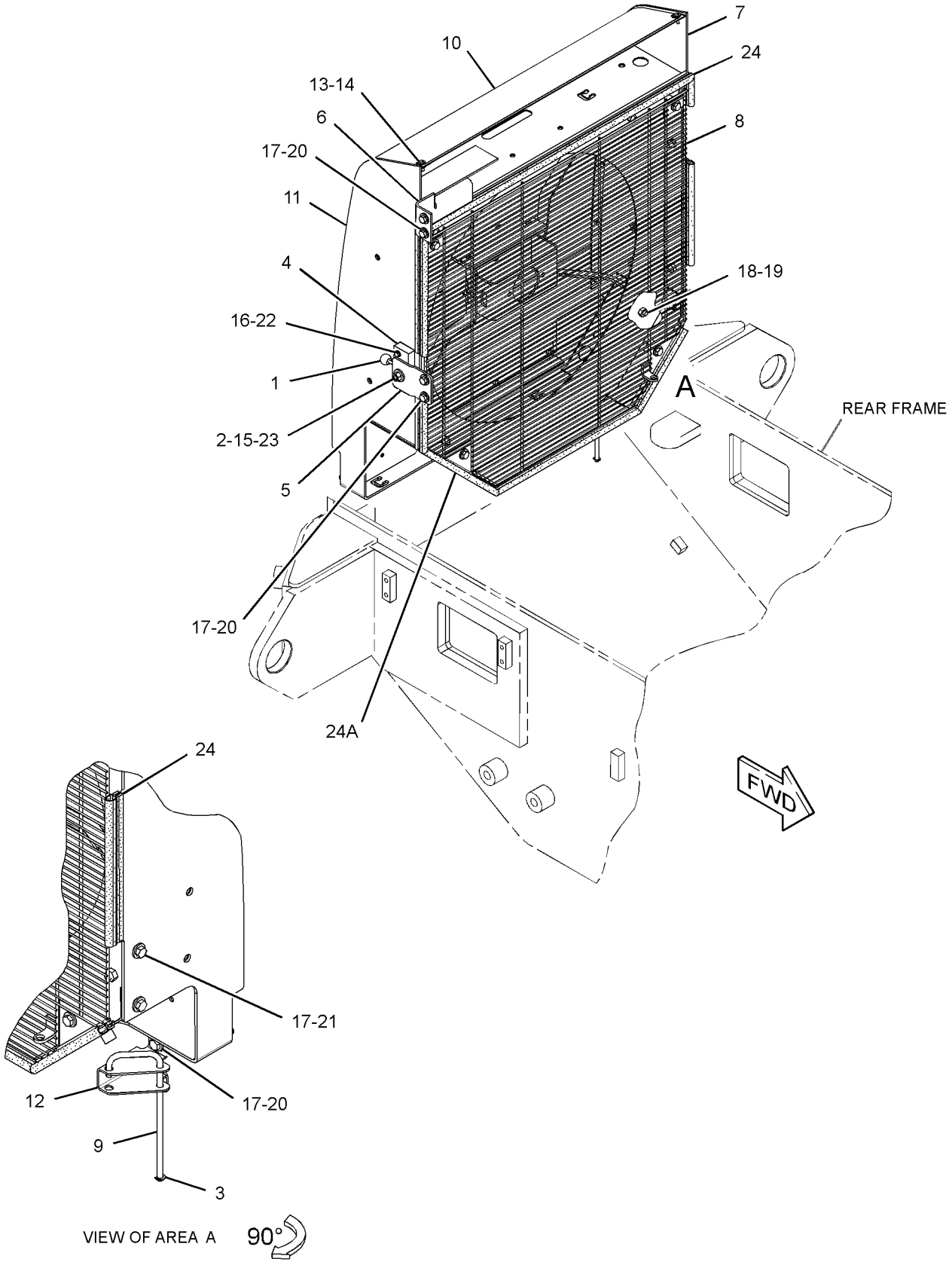

GRAPHIC #1 **<END>** g01398953

290-6406 LINES GP-WATER—WITH AXLE OIL COOLER

S/N: KLN1-UP

PART OF 289-8985 AXLE AR-OSCILLATING

AN ATTACHMENT

SMCS-1380 **i03626094**

NOTE	REF NO	GRAPHIC REF	PART NUMBER	QTY	PART NAME 1 2 3 4 5 6 (PRODUCT LEVEL)	SEE PAGE
	1	1	**8T-4986**	2	CLAMP-HOSE	
	2	1	**185-1023**	1	HOSE-RADIATOR	
	3	1	**185-1030**	1	HOSE	
	4	1	**290-6403**	1	HOSE-RADIATOR	
	5	1	**290-6405**	1	HOSE	
	6	1	**8T-4984**	2	CLAMP-HOSE	
	7	1	**8T-6703**	3	CLAMP-HOSE	
	8	1	**335-9214**	1	CLAMP-BAND	

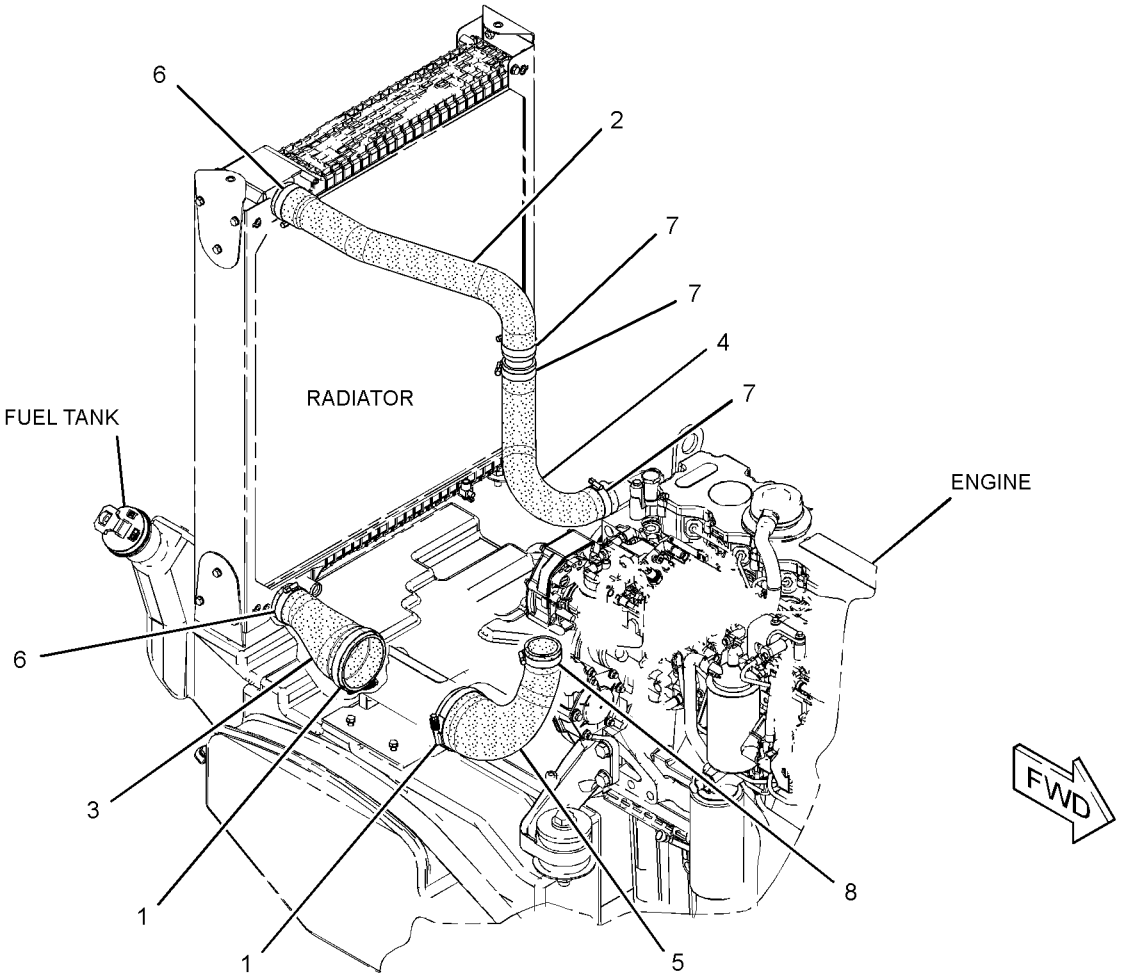

GRAPHIC #1 **<END>** g01826840

290-6407 LINES GP-WATER—WITHOUT AXLE OIL COOLER

S/N: KLN1-UP
PART OF 289-8991 AXLE AR-OSCILLATING
AN ATTACHMENT

SMCS-1380 **i03629363**

NOTE	REF NO	GRAPHIC REF	PART NUMBER	QTY	PART NAME 1 2 3 4 5 6 (PRODUCT LEVEL)	SEE PAGE
	1	1	**185-1023**	1	HOSE-RADIATOR (UPPER INLET)	
	2	1	**290-6403**	1	HOSE-RADIATOR (UPPER INLET)	
	3	1	**290-6404**	1	HOSE-RADIATOR (LOWER INLET)	
	4	1	**8T-4984**	2	CLAMP-HOSE	
	5	1	**8T-6703**	3	CLAMP-HOSE	
	6	1	**335-9214**	1	CLAMP-BAND	

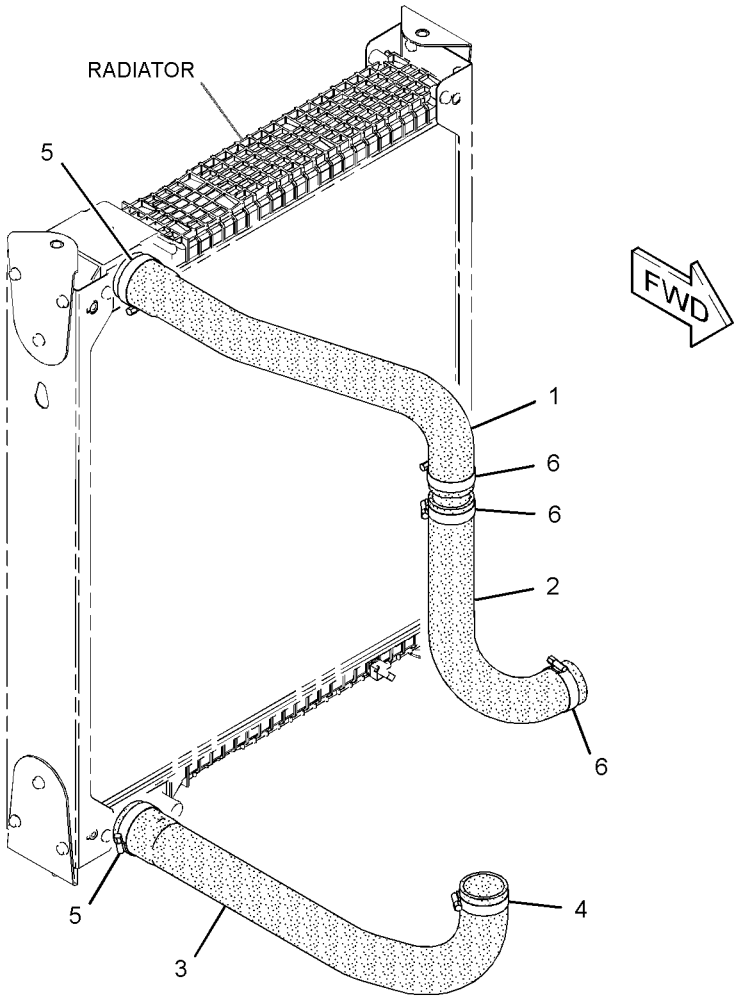

GRAPHIC #1 **<END>** g01826783

COOLING SYSTEM

277-2939 PUMP GP-WATER

S/N: C6E1-UP

PART OF 292-5306 ENGINE AR-PRIMARY

SMCS-1361 **i03630187**

NOTE	REF NO	GRAPHIC REF	PART NUMBER	QTY	PART NAME 1 2 3 4 5 6 (PRODUCT LEVEL)	SEE PAGE
C	1	1	**322-9662**	1	PUMP GP-WATER	
	1A	1	**225-8019**	1	GASKET	
M	2	1	**6I-0254**	2	BOLT (M8X1.25X30-MM)	
	3	1	**113-8129**	7	BOLT (M8X1.25X75-MM)	
	4	1	**277-2925**	1	CONNECTION AS	
	4A	1	**225-7738**	1	SEAL-O-RING	
	4B	1	**277-2923**	1	GASKET	
M	5	1	**6I-0217**	2	BOLT (M8X1.25X20-MM)	

C-CHANGE FROM PREVIOUS TYPE
M-METRIC PART

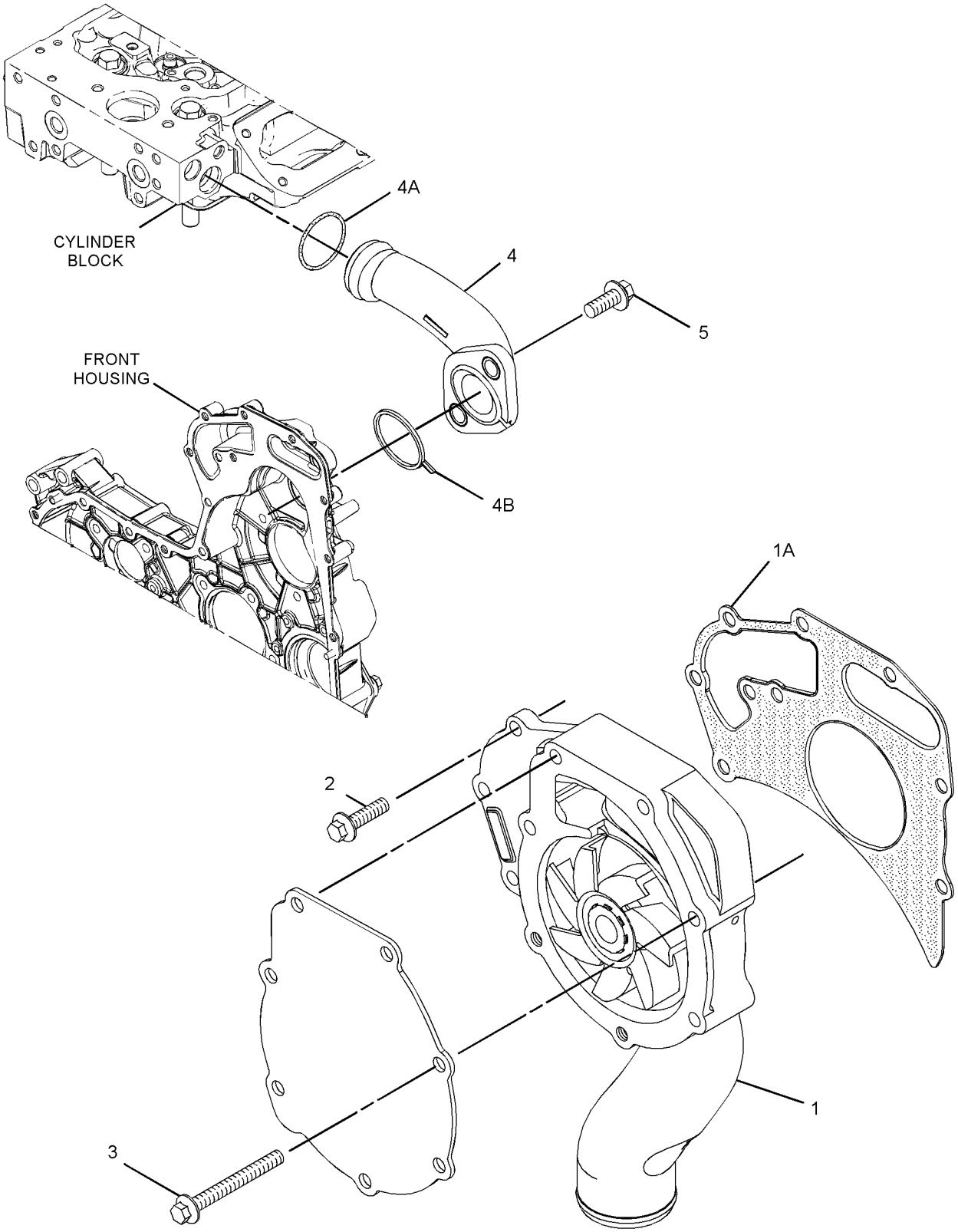

GRAPHIC #1 **<END>** g01947178

COOLING SYSTEM

289-9075 RADIATOR & AFTERCOOLER GP

S/N: KLN1-398

PART OF 289-8894 INSTALLATION AR-ENGINE

SMCS-1063, 1353 **i03626089**

NOTE	REF NO	GRAPHIC REF	PART NUMBER	QTY	PART NAME 1 2 3 4 5 6 (PRODUCT LEVEL)	SEE PAGE
	1	2	**3S-2093**	2	STRAP-CABLE	
	2	2	**5D-1026**	5	CLAMP-HOSE	
	3	1,2	**6N-6984**	4	MOUNT-RUBBER	
	4	1	**7K-1181**	1	STRAP-CABLE	
	5	2	**7T-8332**	4	MOUNTING	
	6	2	**9X-3965**	1	TEE	
	7	1,2	**133-3260**	4	SPACER (11X19X10-MM THK)	
	8	1	**185-1017**	1	AFTERCOOLER AS	
	9	2	**185-1036**	1	BRACKET	
	10	2	**191-9182**	1	PLATE	
	11	2	**191-9184**	1	PLATE	
	12	2	**200-6345**	1	MOUNT (DUAL SWIVEL)	
	13	2	**212-3863**	1	TEE	
Y	14	2	**290-4074**	1	GUARD GP-RADIATOR	291
Y	15	2	*291-6621*	1	TANK GP-COOLANT	71
	16	2	**291-6629**	1	SUPPORT AS	
M		2	**8T-3490**	2	NUT-WELD (M10X1.5-THD)	
	17	2	**292-0239**	1	CHANNEL AS	
M		2	**8T-3490**	1	NUT-WELD (M10X1.5-THD)	
	18	1	**292-0240**	1	COOLER AS-FUEL	
	19	1	**292-0241**	1	SUPPORT AS	
M		1	**8T-3490**	2	NUT-WELD (M10X1.5-THD)	
	20	2	**292-8113**	1	HOSE	
Y	21	1	**293-2239**	1	COOLER GP-HYD & XMSN OIL	336
	22	1	**293-3032**	1	SEAL	
	23	2	**294-0565**	1	SEAL	
	24	2	**300-1576**	1	PLATE	
	25	2	**300-1631**	1	BAFFLE	
	26	2	**300-3174**	1	PLATE AS	
	27	2	**311-1723**	1	HOSE-MOLDED	
	28	2	**053-0189**	1	GROMMET	
	29	1,2	**091-0081**	6	SPACER (10.5X20X10-MM THK)	
	30	2	**123-4065**	6	RIVET-POP	
	31	2	**3K-9520**	1	GROMMET	
	32	1,2	**4B-0418**	3	CLIP	
	33	1	**4D-7388**	2	CLIP	
M	34	2	**5C-7261**	8	NUT (M8X1.25-THD)	
	35	2	**5P-4116**	16	WASHER-HARD (8.8X20.5X2-MM THK)	
	36	2	**5P-6887**	1	GROMMET	
	37	2	**7X-7729**	15	WASHER (11X25X3-MM THK)	
	38	2	**7X-7958**	4	CLAMP-HOSE	
	39	2	**8F-6437**	2	WASHER (13.5X50.8X4.76-MM THK)	
	40	2	**8T-0328**	6	WASHER-HARD (5.5X10X1-MM THK)	
	41	1,2	**8T-4121**	18	WASHER-HARD (11X21X2.5-MM THK)	
	42	2	**8T-4122**	4	WASHER-HARD (17X32X3.5-MM THK)	
M	43	2	**8T-4133**	8	NUT (M10X1.5-THD)	
M	44	1,2	**8T-4136**	6	BOLT (M10X1.5X25-MM)	
M	45	2	**8T-4137**	16	BOLT (M10X1.5X20-MM)	
M	46	2	**8T-4182**	3	BOLT (M10X1.5X45-MM)	
M	47	1,2	**8T-4186**	6	BOLT (M10X1.5X40-MM)	
M	48	2	**8T-4189**	4	BOLT (M8X1.25X20-MM)	
M	49	2	**8T-4193**	4	BOLT (M16X2X50-MM)	
M	50	2	**8T-4194**	2	BOLT (M12X1.75X50-MM)	
M	51	2	**8T-4195**	6	BOLT (M10X1.5X30-MM)	
M	52	1	**8T-4196**	1	BOLT (M10X1.5X35-MM)	
M	53	2	**8T-4200**	4	BOLT (M8X1.25X16-MM)	

289-9075 **RADIATOR & AFTERCOOLER GP** *(contd.)* **i03626089**

NOTE	REF NO	GRAPHIC REF	PART NUMBER	QTY	PART NAME 1 2 3 4 5 6 (PRODUCT LEVEL)	SEE PAGE
	54	1,2	**8T-4222**	14	WASHER-PLATED (11X32X2.5-MM THK)	
	55	2	**8T-4223**	2	WASHER-HARD (13.5X25.5X3-MM THK)	
	56	2	**8T-4224**	4	WASHER-HARD (8.8X16X2-MM THK)	
	57	1,2	**8T-4226**	4	WASHER-PLATED (10.5X45X3-MM THK)	
M	58	1	**8T-6466**	1	BOLT (M10X1.5X60-MM)	
M	59	2	**8T-7547**	4	BOLT (M8X1.25X30-MM)	
D	60	2	**5P-7211**		SEAL (0.27-M)	
D	60A	2	**5P-7211**		SEAL (0.04-M)	
D	60B	2	**5P-7211**		SEAL (0.76-M)	
D	60C	2	**5P-7211**		SEAL (0.045-M)	
D	60D	1	**5P-7211**		SEAL (0.85-M)	
D	61	2	**5P-5755**		SEAL (2.4-M)	
D	61A	1	**5P-5755**		SEAL (2.2-M)	
D	61B	2	**5P-5755**		SEAL (0.85-M)	
D	61C	2	**5P-5755**		SEAL (3.1-M)	
E	62	2	**5P-1506**		HOSE (135-CM)	
E	62A	2	**5P-1506**		HOSE (22-CM)	
E	63	1	**8C-3681**		HOSE (233-CM)	
E	63A	1	**8C-3681**		HOSE (118-CM)	
	64	2	**325-1277**	1	HOSE	
	65	2	**6S-8620**	1	CLAMP-HOSE	

D-ORDER BY THE METER
E-ORDER BY THE CENTIMETER
M-METRIC PART
Y-SEPARATE ILLUSTRATION

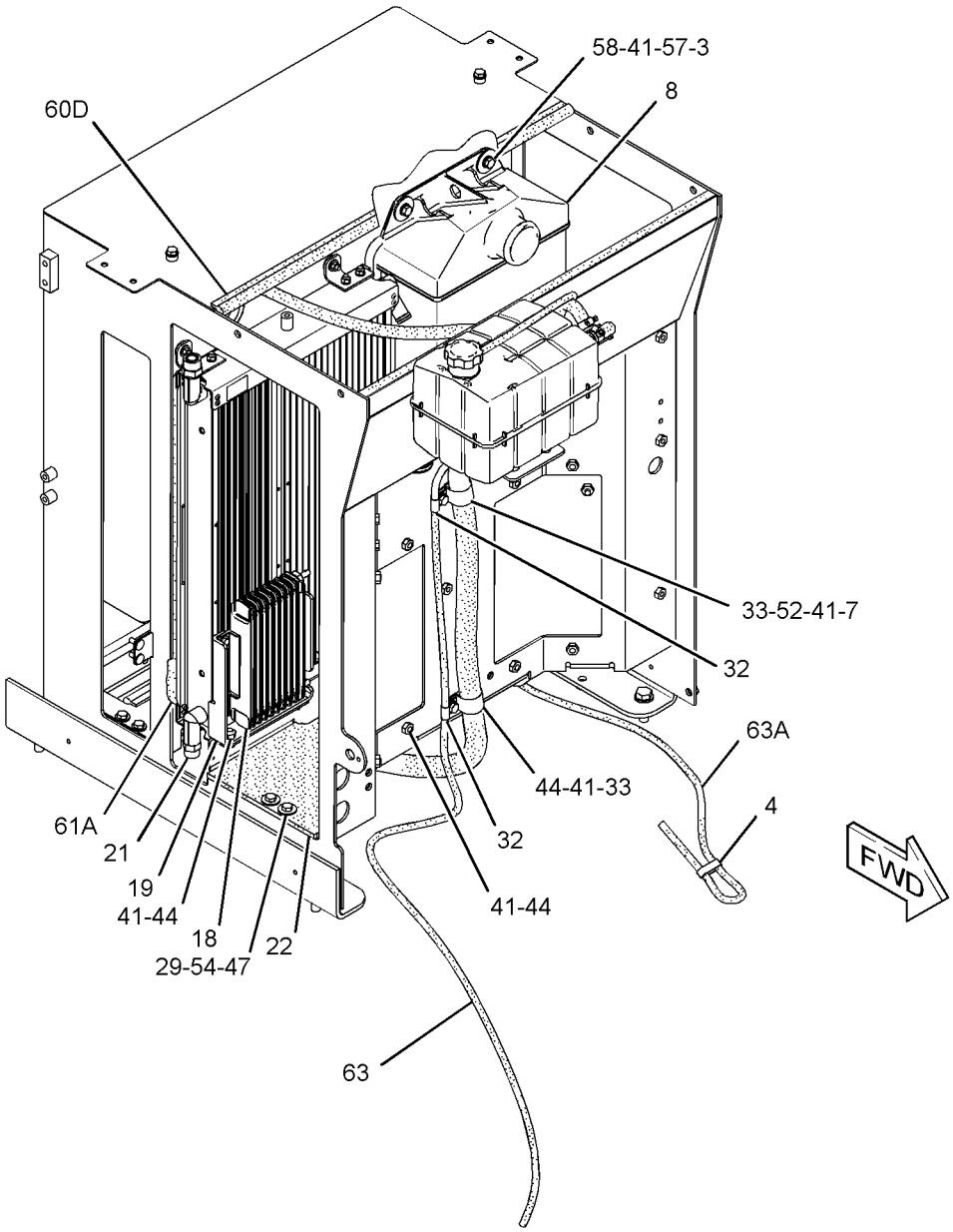

GRAPHIC #1

g01843635

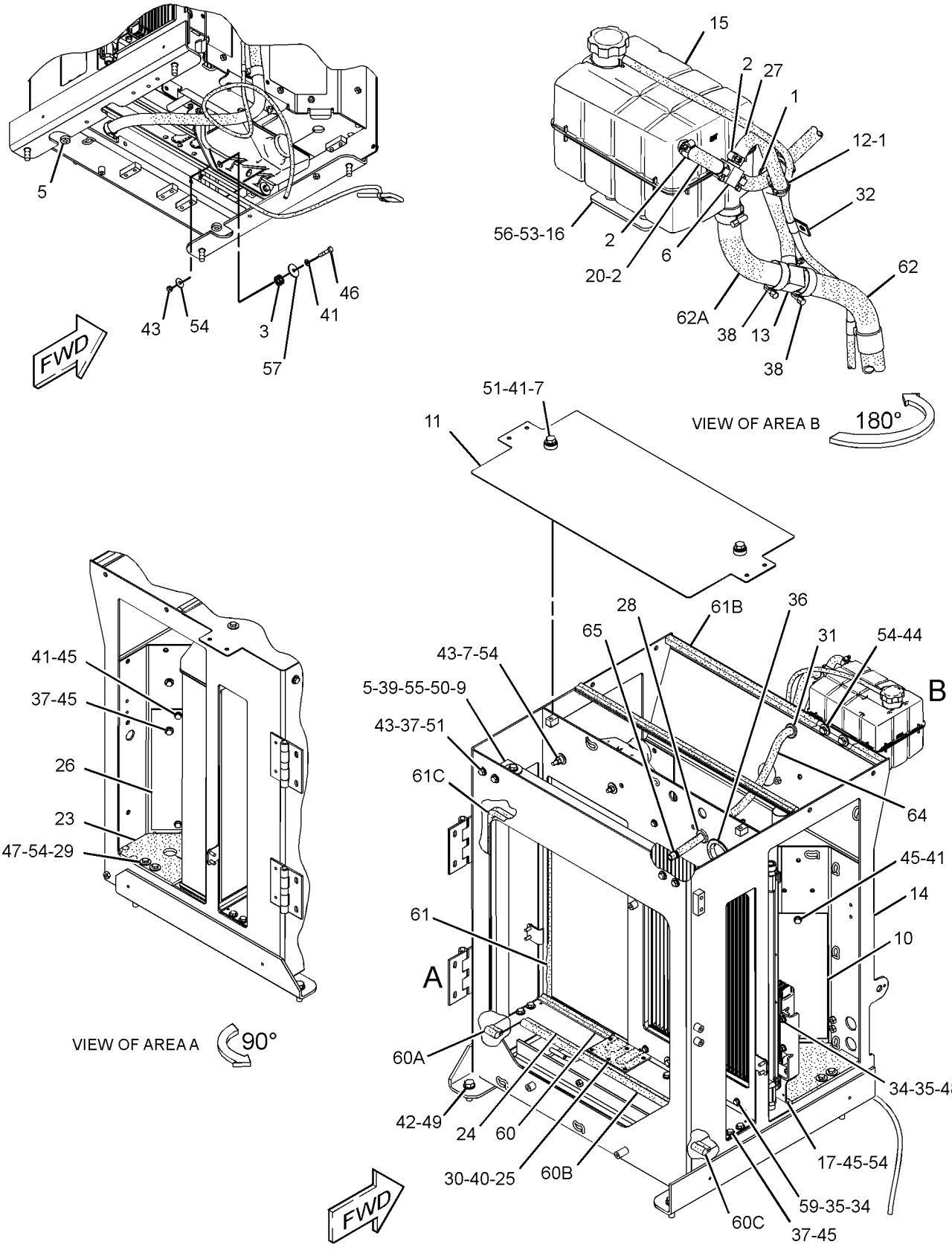

GRAPHIC #2 **<END>** g01843636

COOLING SYSTEM

289-9075 RADIATOR & AFTERCOOLER GP

S/N: KLN399-UP

PART OF 289-8894 INSTALLATION AR-ENGINE

SMCS-1063, 1353 **i03626090**

NOTE	REF NO	GRAPHIC REF	PART NUMBER	QTY	PART NAME 1 2 3 4 5 6 (PRODUCT LEVEL)	SEE PAGE
	1	2	**3S-2093**	2	STRAP-CABLE	
C	2	2	**5D-1026**	6	CLAMP-HOSE	
	3	1,2	**6N-6984**	4	MOUNT-RUBBER	
	4	1	**7K-1181**	1	STRAP-CABLE	
	5	2	**7T-8332**	4	MOUNTING	
	6	2	**9X-3965**	1	TEE	
	7	1,2	**133-3260**	4	SPACER (11X19X10-MM THK)	
	8	1	**185-1017**	1	AFTERCOOLER AS	
	9	2	**185-1036**	1	BRACKET	
	10	2	**191-9182**	1	PLATE	
	11	2	**191-9184**	1	PLATE	
	12	2	**200-6345**	1	MOUNT (DUAL SWIVEL)	
	13	2	**212-3863**	1	TEE	
Y	14	2	**290-4074**	1	GUARD GP-RADIATOR	291
Y	15	2	*291-6621*	1	TANK GP-COOLANT	71
	16	2	**291-6629**	1	SUPPORT AS	
M		2	**8T-3490**	2	NUT-WELD (M10X1.5-THD)	
	17	2	**292-0239**	1	CHANNEL AS	
M		2	**8T-3490**	1	NUT-WELD (M10X1.5-THD)	
	18	1	**292-0240**	1	COOLER AS-FUEL	
	19	1	**292-0241**	1	SUPPORT AS	
M		1	**8T-3490**	2	NUT-WELD (M10X1.5-THD)	
	20	2	**292-8113**	1	HOSE	
Y	21	1	**293-2239**	1	COOLER GP-HYD & XMSN OIL	336
	22	1	**293-3032**	1	SEAL	
	23	2	**294-0565**	1	SEAL	
	24	2	**300-1576**	1	PLATE	
	25	2	**300-1631**	1	BAFFLE	
	26	2	**300-3174**	1	PLATE AS	
	27	2	**311-1723**	1	HOSE-MOLDED	
	28	2	**053-0189**	1	GROMMET	
	29	1,2	**091-0081**	6	SPACER (10.5X20X10-MM THK)	
	30	2	**123-4065**	6	RIVET-POP	
	31	2	**3K-9520**	1	GROMMET	
	32	1,2	**4B-0418**	3	CLIP	
	33	1	**4D-7388**	2	CLIP	
M	34	2	**5C-7261**	8	NUT (M8X1.25-THD)	
	35	2	**5P-4116**	16	WASHER-HARD (8.8X20.5X2-MM THK)	
	36	2	**5P-6887**	1	GROMMET	
	37	2	**7X-7729**	15	WASHER (11X25X3-MM THK)	
	38	2	**7X-7958**	4	CLAMP-HOSE	
	39	2	**8F-6437**	2	WASHER (13.5X50.8X4.76-MM THK)	
	40	2	**8T-0328**	6	WASHER-HARD (5.5X10X1-MM THK)	
	41	1,2	**8T-4121**	18	WASHER-HARD (11X21X2.5-MM THK)	
	42	2	**8T-4122**	4	WASHER-HARD (17X32X3.5-MM THK)	
M	43	2	**8T-4133**	8	NUT (M10X1.5-THD)	
M	44	1,2	**8T-4136**	6	BOLT (M10X1.5X25-MM)	
M	45	2	**8T-4137**	16	BOLT (M10X1.5X20-MM)	
M	46	2	**8T-4182**	3	BOLT (M10X1.5X45-MM)	
M	47	1,2	**8T-4186**	6	BOLT (M10X1.5X40-MM)	
M	48	2	**8T-4189**	4	BOLT (M8X1.25X20-MM)	
M	49	2	**8T-4193**	4	BOLT (M16X2X50-MM)	
M	50	2	**8T-4194**	2	BOLT (M12X1.75X50-MM)	
M	51	2	**8T-4195**	6	BOLT (M10X1.5X30-MM)	
M	52	1	**8T-4196**	1	BOLT (M10X1.5X35-MM)	
M	53	2	**8T-4200**	4	BOLT (M8X1.25X16-MM)	

289-9075 **RADIATOR & AFTERCOOLER GP** *(contd.)* **i03626090**

NOTE	REF NO	GRAPHIC REF	PART NUMBER	QTY	PART NAME 1 2 3 4 5 6 (PRODUCT LEVEL)	SEE PAGE
	54	1,2	**8T-4222**	14	WASHER-PLATED (11X32X2.5-MM THK)	
	55	2	**8T-4223**	2	WASHER-HARD (13.5X25.5X3-MM THK)	
	56	2	**8T-4224**	4	WASHER-HARD (8.8X16X2-MM THK)	
	57	1,2	**8T-4226**	4	WASHER-PLATED (10.5X45X3-MM THK)	
M	58	1	**8T-6466**	1	BOLT (M10X1.5X60-MM)	
M	59	2	**8T-7547**	4	BOLT (M8X1.25X30-MM)	
D	60	2	**5P-7211**		SEAL (0.28-M)	
D	60A	2	**5P-7211**		SEAL (0.04-M)	
D	60B	2	**5P-7211**		SEAL (0.76-M)	
D	60C	2	**5P-7211**		SEAL (0.045-M)	
D	60D	1	**5P-7211**		SEAL (0.85-M)	
D	61	2	**5P-5755**		SEAL (2.4-M)	
D	61A	1	**5P-5755**		SEAL (2.3-M)	
D	61B	2	**5P-5755**		SEAL (0.85-M)	
D	61C	2	**5P-5755**		SEAL (3.1-M)	
E	62	2	**5P-1506**		HOSE (135-CM)	
E	62A	2	**5P-1506**		HOSE (22-CM)	
E	63	1	**8C-3681**		HOSE (233-CM)	
E	63A	1	**8C-3681**		HOSE (118-CM)	
	64	2	**325-1277**	1	HOSE	

C-CHANGE FROM PREVIOUS TYPE
D-ORDER BY THE METER
E-ORDER BY THE CENTIMETER
M-METRIC PART
Y-SEPARATE ILLUSTRATION

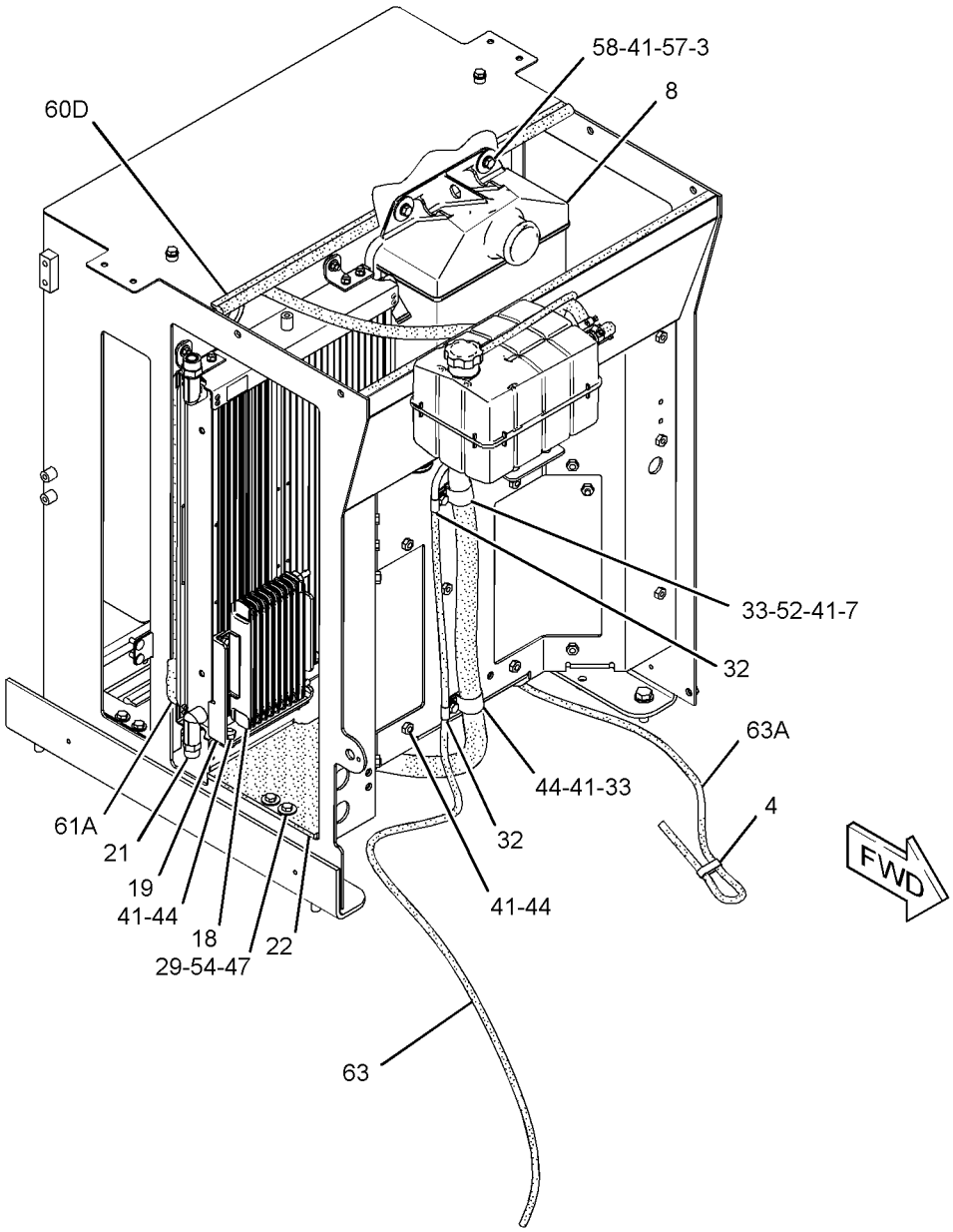

GRAPHIC #1

g01843635

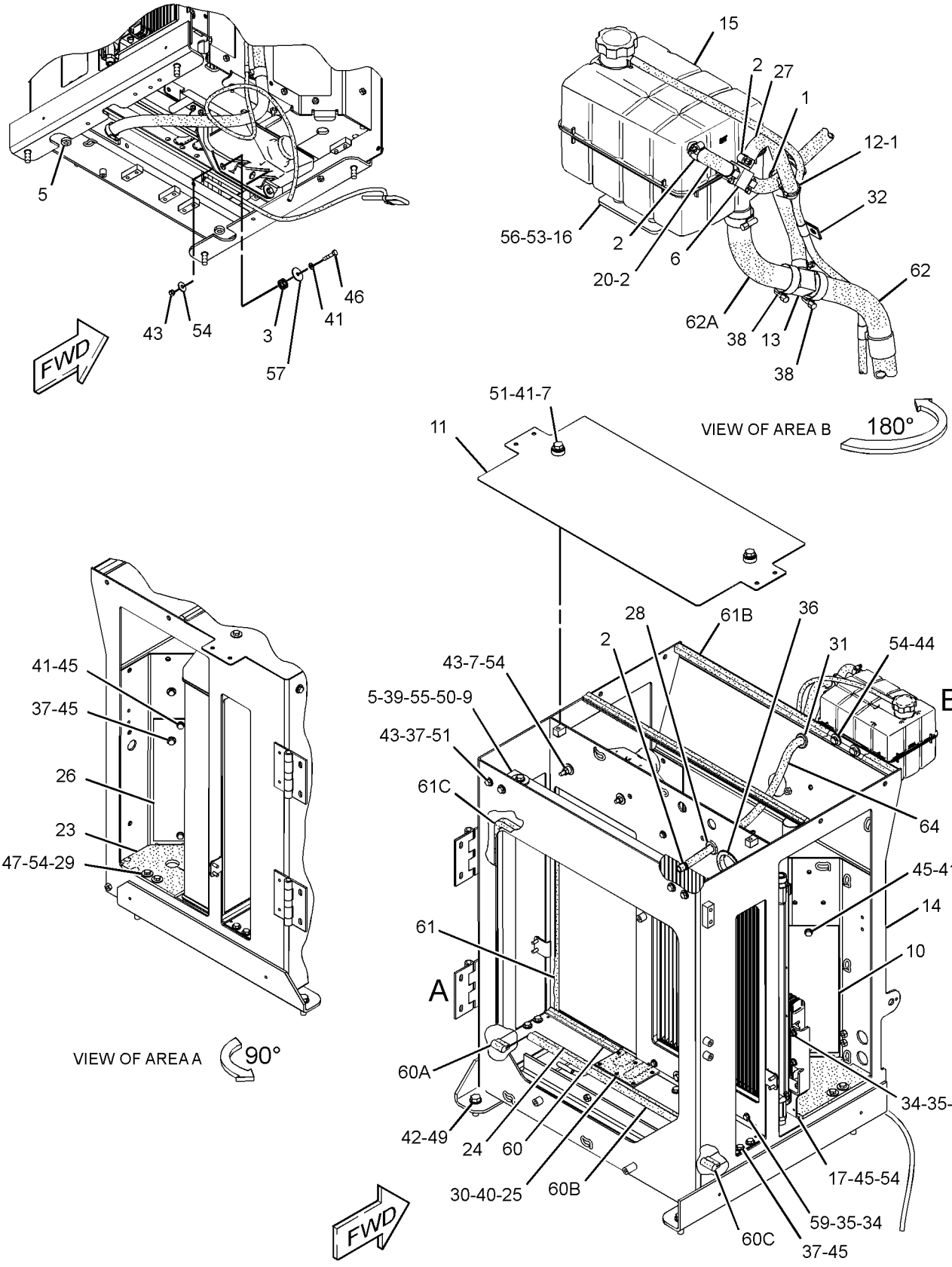

GRAPHIC #2 **<END>** g01905393

185-1016 RADIATOR GP

S/N: KLN1-UP

PART OF 231-7670, 239-7396 RADIATOR GP

AN ATTACHMENT

SMCS-1353 **i02062053**

NOTE	REF NO	GRAPHIC REF	PART NUMBER	QTY	PART NAME 1 2 3 4 5 6 (PRODUCT LEVEL)	SEE PAGE
	1	1	**185-1027**	4	BRACKET AS	
	2	1	**225-4287**	1	VALVE GP-RADIATOR DRAIN	
	3	1	**7X-3393**	8	WASHER-HARD (8.3X19X1.83-MM THK)	
M	4	1	**8T-4189**	8	BOLT (M8X1.25X20-MM)	
M	5	1	**8T-4200**	12	BOLT (M8X1.25X16-MM)	
	6	1	**8T-4224**	12	WASHER-HARD (8.8X16X2-MM THK)	

M-METRIC PART

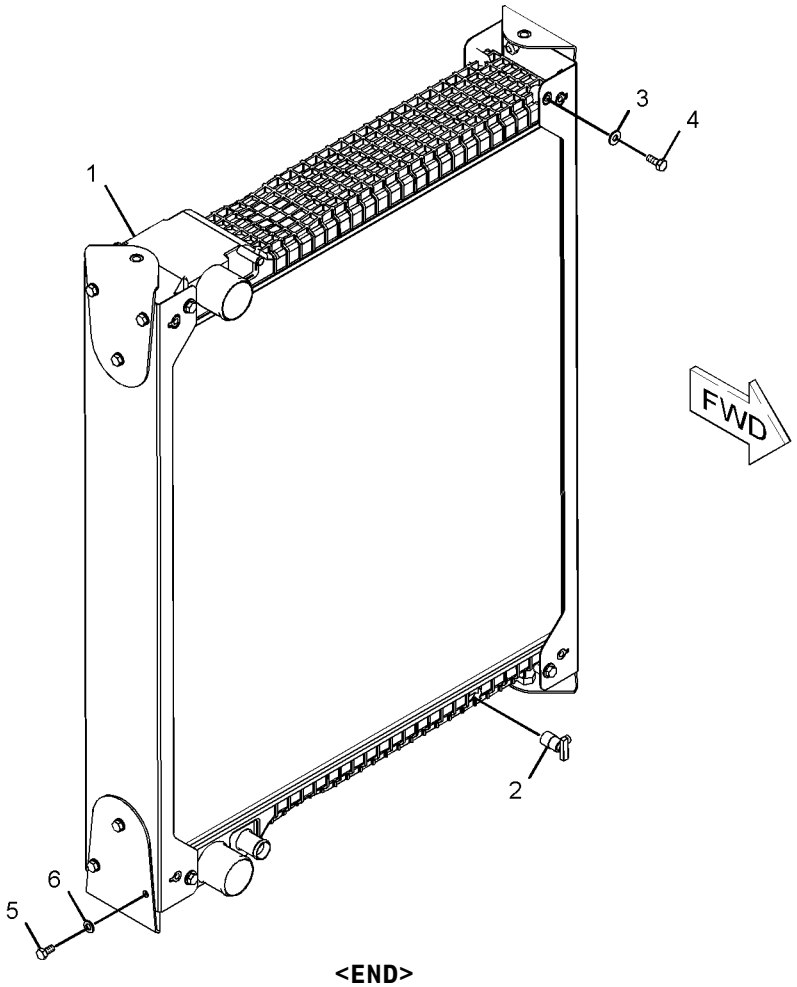

GRAPHIC #1 **<END>** g01013363

COOLING SYSTEM

231-7670 RADIATOR GP

S/N: KLN1-UP
PART OF 263-7701 RADIATOR GP
AN ATTACHMENT

SMCS-1353 **i02346106**

NOTE	PART NUMBER	QTY	PART NAME 1 2 3 4 5 6 (PRODUCT LEVEL)	SEE PAGE
Y	**185-1016**	1	RADIATOR GP	67

Y-SEPARATE ILLUSTRATION

<END>

COOLING SYSTEM

239-7396 RADIATOR GP

S/N: KLN1-UP
AN ATTACHMENT

SMCS-1353 **i02061886**

NOTE	REF NO	GRAPHIC REF	PART NUMBER	QTY	PART NAME 1 2 3 4 5 6 (PRODUCT LEVEL)	SEE PAGE
Y	1	1	**185-1016**	1	RADIATOR GP	67
M	2	1	**9X-8482**	2	SETSCREW-SOCKET (M12X1.75X70-MM)	

M-METRIC PART
Y-SEPARATE ILLUSTRATION

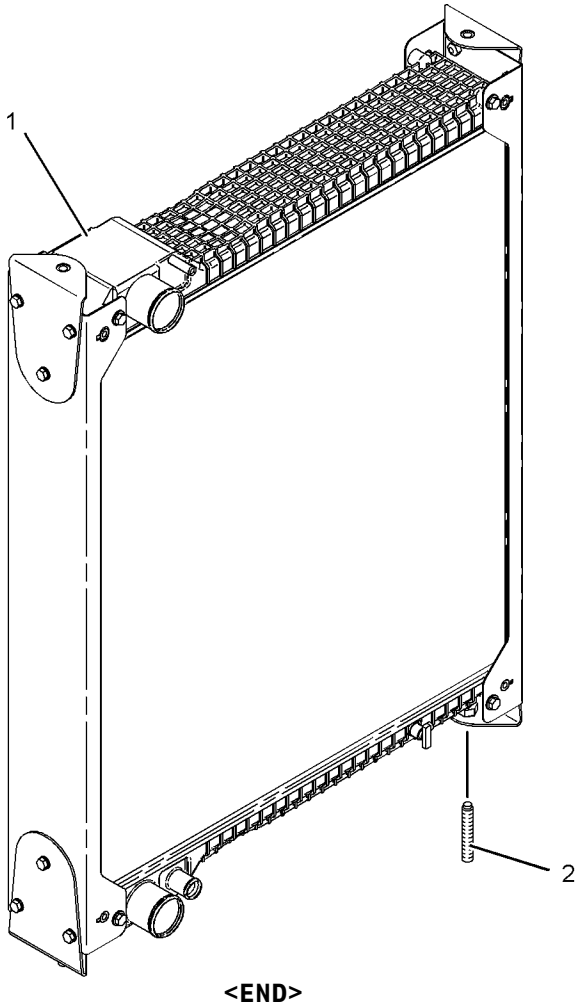

GRAPHIC #1 **<END>** g01087525

COOLING SYSTEM

263-7701 RADIATOR GP

S/N: KLN1-UP
AN ATTACHMENT

SMCS-1353 **i02346036**

NOTE	REF NO	GRAPHIC REF	PART NUMBER	QTY	PART NAME 1 2 3 4 5 6 (PRODUCT LEVEL)	SEE PAGE
Y	1	1	**231-7670**	1	RADIATOR GP	68
M	2	1	**9X-8482**	2	SETSCREW-SOCKET (M12X1.75X70-MM)	

M-METRIC PART
Y-SEPARATE ILLUSTRATION

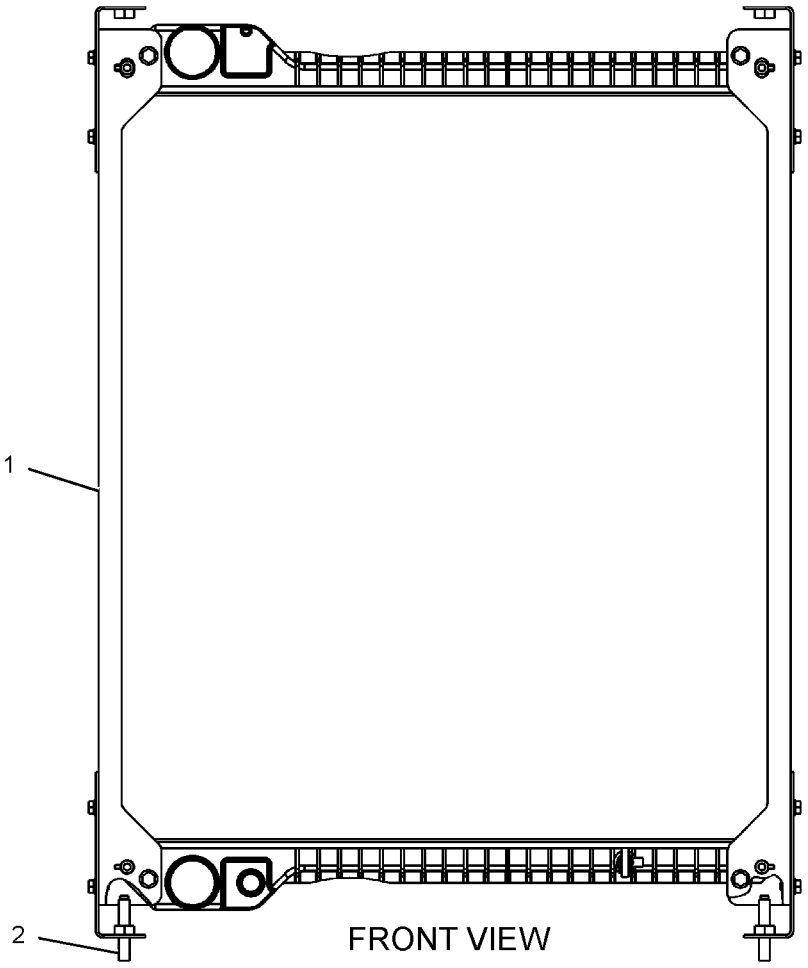

GRAPHIC #1

<END>

g01190972

291-6621 TANK GP-COOLANT

S/N: KLN1-UP

PART OF 289-9075 RADIATOR & AFTERCOOLER GP

SMCS-1377 **i03016524**

NOTE	REF NO	GRAPHIC REF	PART NUMBER	QTY	PART NAME 1 2 3 4 5 6 (PRODUCT LEVEL)	SEE PAGE
	1	1	**251-3227**	1	CAP AS-COOLANT TANK	

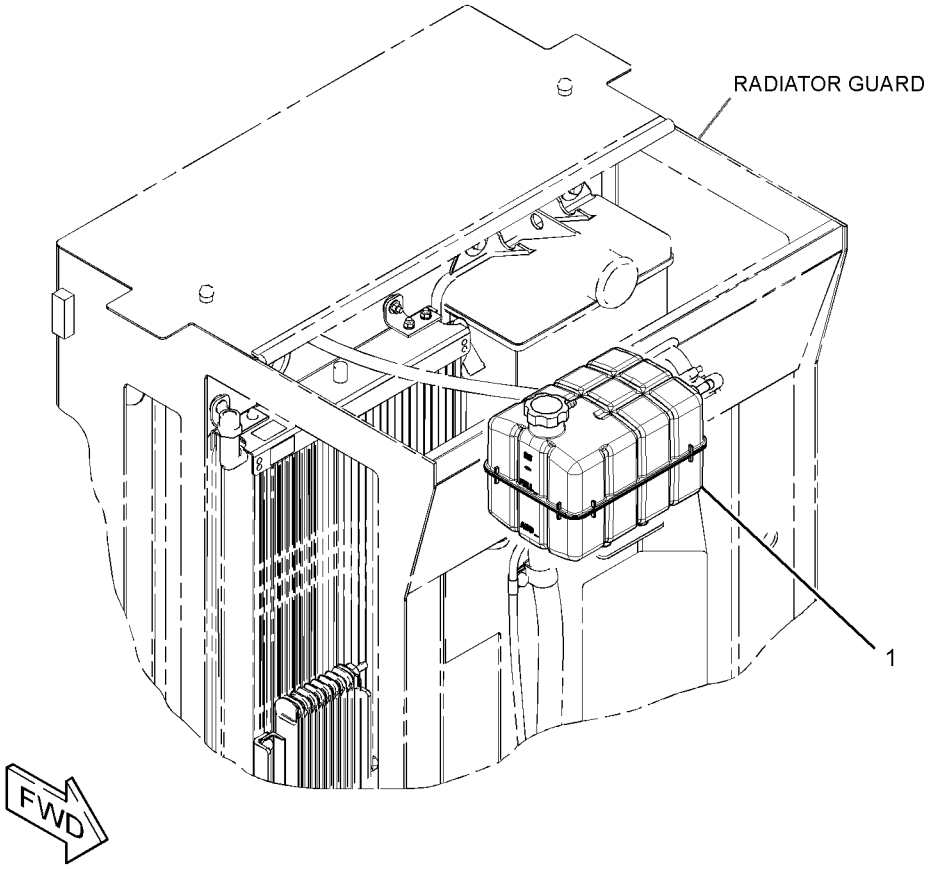

GRAPHIC #1 **<END>** g01530576

AIR INLET AND EXHAUST SYSTEM

289-3322 AIR CLEANER GP

S/N: KLN1-UP

PART OF 289-8894 INSTALLATION AR-ENGINE

SMCS-1051, 1054 **i03626073**

NOTE	REF NO	GRAPHIC REF	PART NUMBER	QTY	PART NAME 1 2 3 4 5 6 (PRODUCT LEVEL)	SEE PAGE
	1	1	**5P-1717**	2	CLAMP-HOSE	
M	2	1	**8C-4982**	2	BOLT-SOCKET HEAD (M4X0.7X20-MM)	
Y	3	1	**121-7746**	1	PRECLEANER GP	79
	4	1	*218-2792*	1	INDICATOR GP-AIR FILTER CHANGE	
		1	**187-2868**	1	INDICATOR AS-AIR FILTER CHANGE	
		1	**205-1627**	1	BRACKET	
	5	1	**255-4692**	1	CONNECTOR-FILTER	
	6	1	**313-2507**	1	HOSE	
	7	1	**313-2510**	1	BRACKET AS	
M		1	**8T-3612**	2	NUT-WELD (M8X1.25-THD)	
M		1	**9X-2032**	2	NUT-WELD (M4X0.7-THD)	
Y	8	1	**314-6480**	1	AIR CLEANER GP	73
M	9	1	**099-3649**	2	BOLT (M8X1.25X40-MM)	
	10	1	**4B-4863**	2	WASHER (4.7X11X1.2-MM THK)	
	11	1	**5P-4116**	2	WASHER-HARD (8.8X20.5X2-MM THK)	
	12	1	**7X-7729**	2	WASHER (11X25X3-MM THK)	
M	13	1	**8T-4195**	2	BOLT (M10X1.5X30-MM)	
D	14	1	**6V-1363**		HOSE (0.4-M)	

D-ORDER BY THE METER
M-METRIC PART
Y-SEPARATE ILLUSTRATION

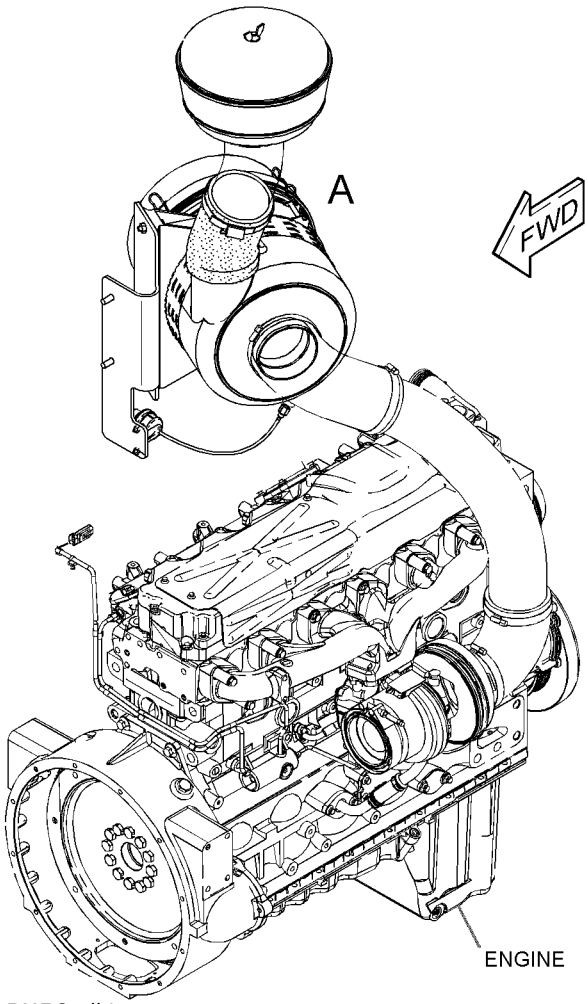

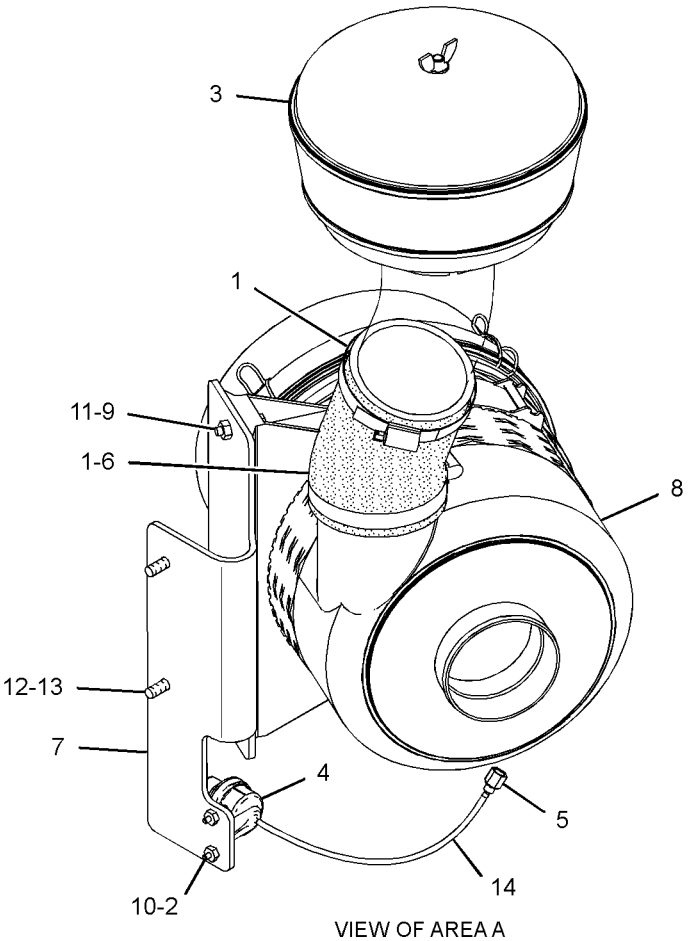

GRAPHIC #1 **<END>** g01544333

314-6480 AIR CLEANER GP

S/N: KLN1-UP

PART OF 289-3322 AIR CLEANER GP

SMCS-1051, 1054 **i03014097**

NOTE	REF NO	GRAPHIC REF	PART NUMBER	QTY	PART NAME 1 2 3 4 5 6 (PRODUCT LEVEL)	SEE PAGE
	1	1	**224-2263**	1	VALVE AS-AIR	
	2	1	**256-7902**	1	FILTER ELEMENT AS-AIR (PRIMARY)	
	3	1	**256-7903**	1	FILTER ELEMENT AS-AIR (SECONDARY)	
	4	1	**256-7904**	1	BRACKET AS	
	5	1	**269-1977**	1	COVER AS	

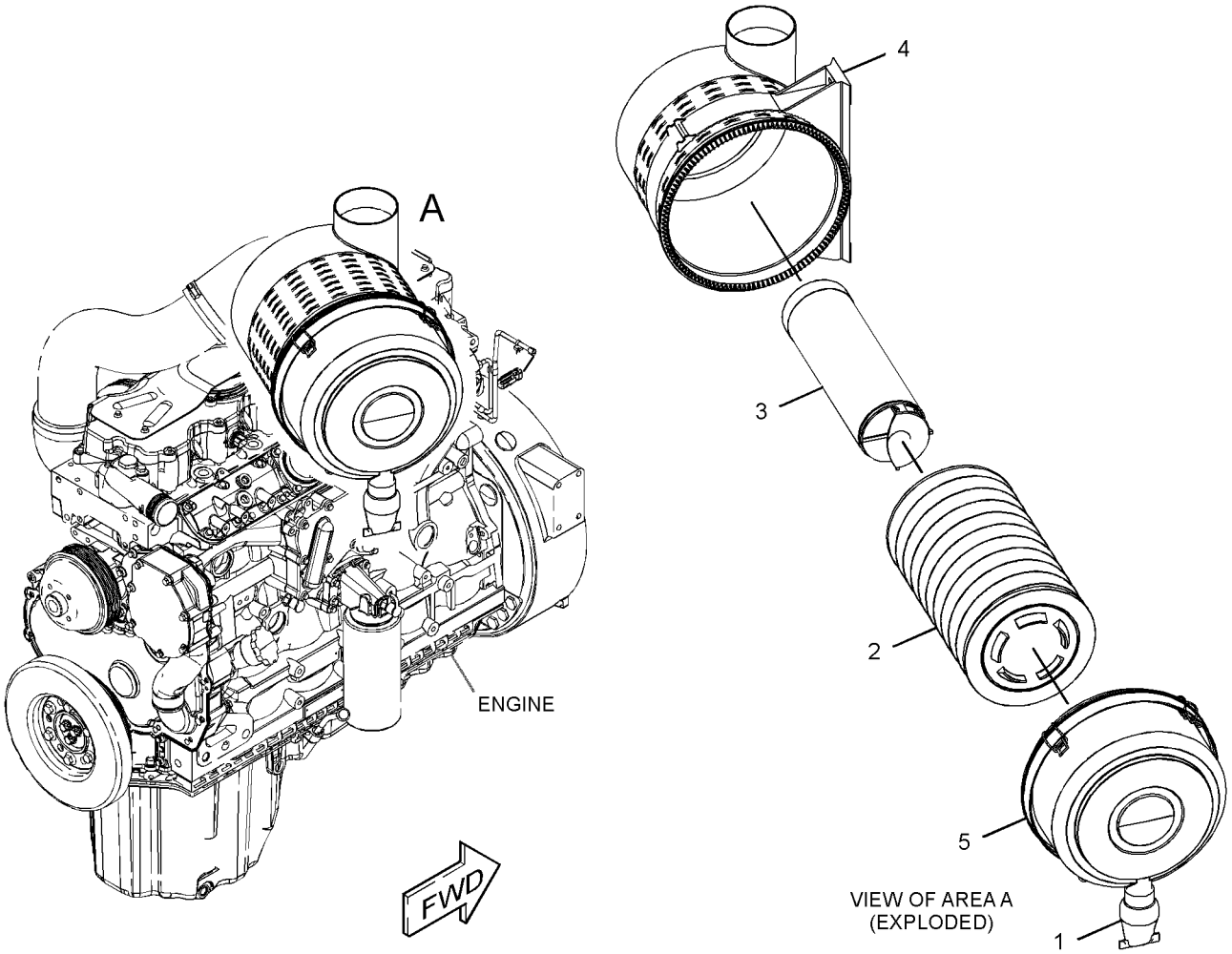

GRAPHIC #1 **<END>** g01545554

AIR INLET AND EXHAUST SYSTEM

311-2236 EXTENSION GP-EXHAUST

S/N: KLN1-UP

PART OF 289-8894 INSTALLATION AR-ENGINE

SMCS-1061 **i03038600**

NOTE	REF NO	GRAPHIC REF	PART NUMBER	QTY	PART NAME 1 2 3 4 5 6 (PRODUCT LEVEL)	SEE PAGE
	1	1	**302-5195**	1	TUBE AS	
	2	1	**311-2237**	1	SUPPORT AS	
	3	1	**311-2239**	1	PLATE	
	4	1	**7X-7729**	4	WASHER (11X25X3-MM THK)	
M	5	1	**8T-4195**	4	BOLT (M10X1.5X30-MM)	

M-METRIC PART

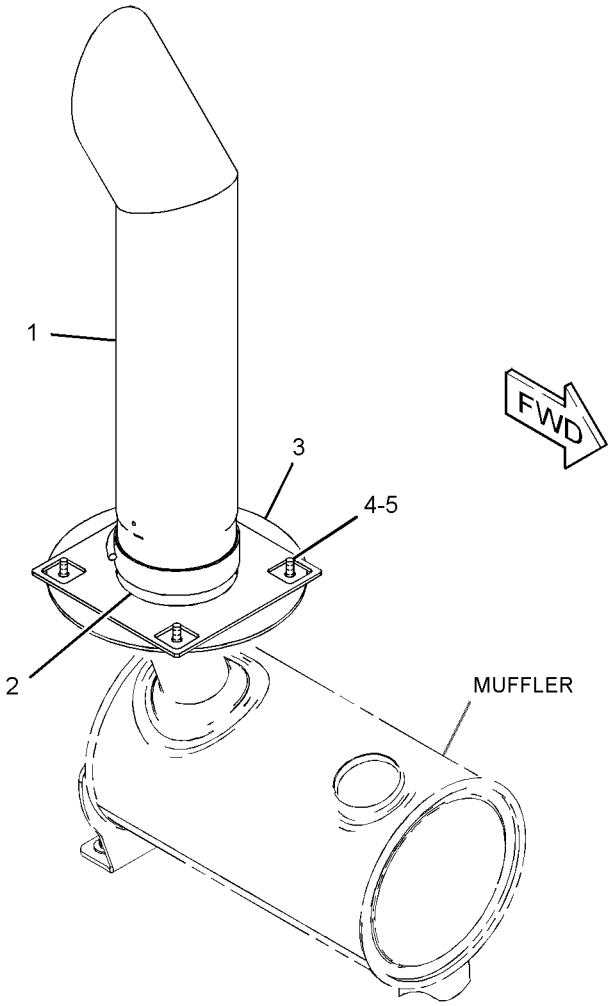

GRAPHIC #1 **<END>** g01413567

AIR INLET AND EXHAUST SYSTEM

289-3533 LINES GP-AIR

S/N: KLN1-UP

PART OF 289-8894 INSTALLATION AR-ENGINE

SMCS-1071 **i03136180**

NOTE	REF NO	GRAPHIC REF	PART NUMBER	QTY	PART NAME 1 2 3 4 5 6 (PRODUCT LEVEL)	SEE PAGE
	1	1	**109-5351**	1	HOSE	
	2	1	**159-2829**	1	HOSE	
	3	1	**209-4578**	1	CLAMP	
	4	1	**215-4012**	1	CLAMP	
	5	1	**216-4983**	2	CLAMP	
	6	1	**285-0824**	1	TUBE AS	
	7	1	**289-3534**	1	TUBE	
	8	1	**289-3536**	1	HOSE	
	9	1	**289-3537**	1	HOSE	
	10	1	**313-2508**	1	HOSE AS	
	11	1	**312-8743**	1	HOSE	
	12	1	**313-2509**	1	TUBE	
	13	1	**144-0367**	2	CLAMP-HOSE	
	14	1	**8T-4121**	2	WASHER-HARD (11X21X2.5-MM THK)	
M	15	1	**8T-4136**	2	BOLT (M10X1.5X25-MM)	
	16	1	**8T-4985**	2	CLAMP-HOSE	
	17	1	**9X-2201**	1	CLAMP-HOSE	
	18	1	**8T-4986**	3	CLAMP-HOSE	

M-METRIC PART

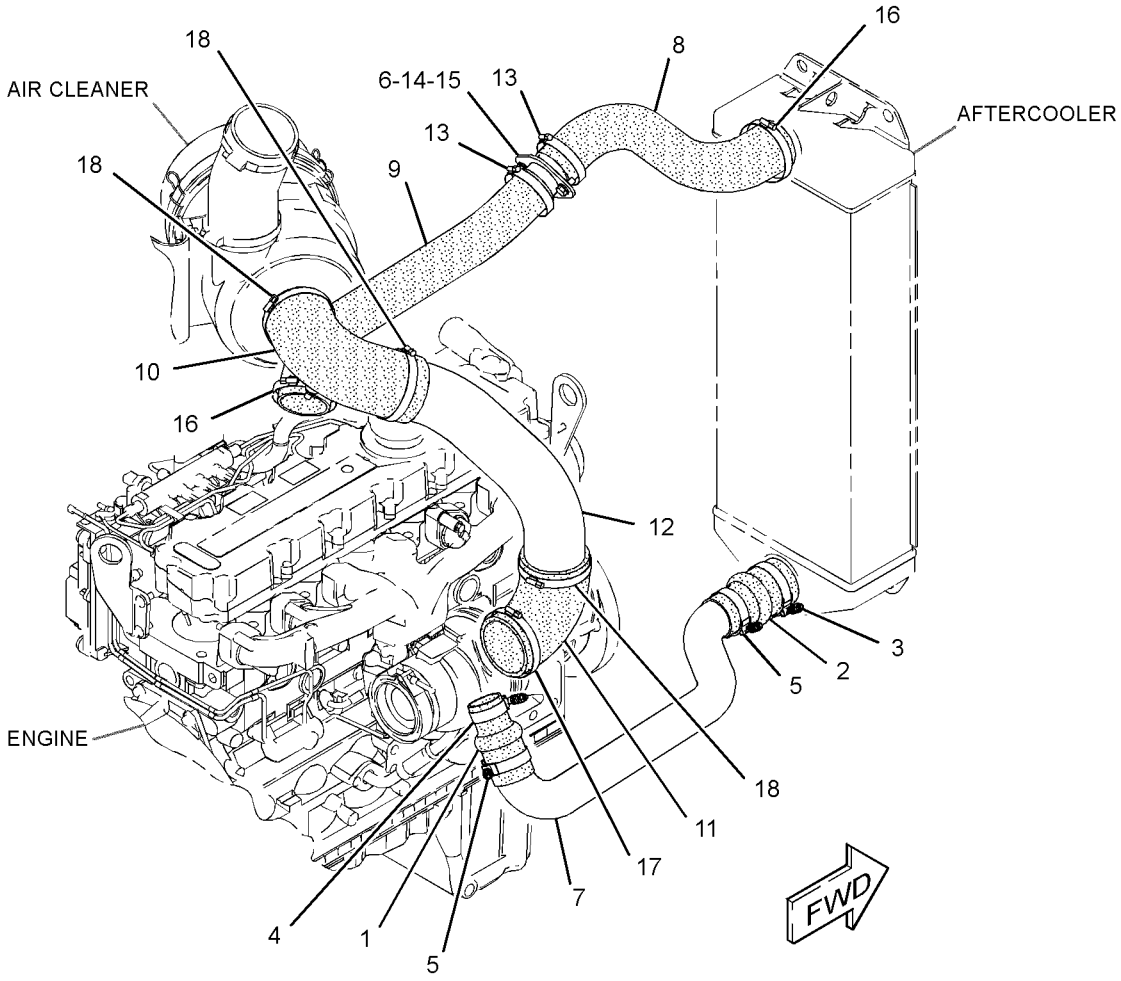

GRAPHIC #1 **<END>** g01615530

AIR INLET AND EXHAUST SYSTEM

288-7985 MANIFOLD GP-INLET

S/N: C6E1-11296

PART OF 292-5306 ENGINE AR-PRIMARY

SMCS-1058 **i02916942**

NOTE	REF NO	GRAPHIC REF	PART NUMBER	QTY	PART NAME 1 2 3 4 5 6 (PRODUCT LEVEL)	SEE PAGE
M	1	1	**6I-0645**	19	BOLT (M8X1.25X25-MM)	
	2	1	**9F-2247**	1	PLUG-PIPE	
	3	1	**234-3030**	1	GASKET	
	4	1	**295-0912**	1	COVER AS	
	4A	1	**277-4302**	2	DOWEL	
	4B	1	**278-5128**	1	GASKET-MANIFOLD	
	5	1	**280-1291**	1	ELBOW AS	

M-METRIC PART

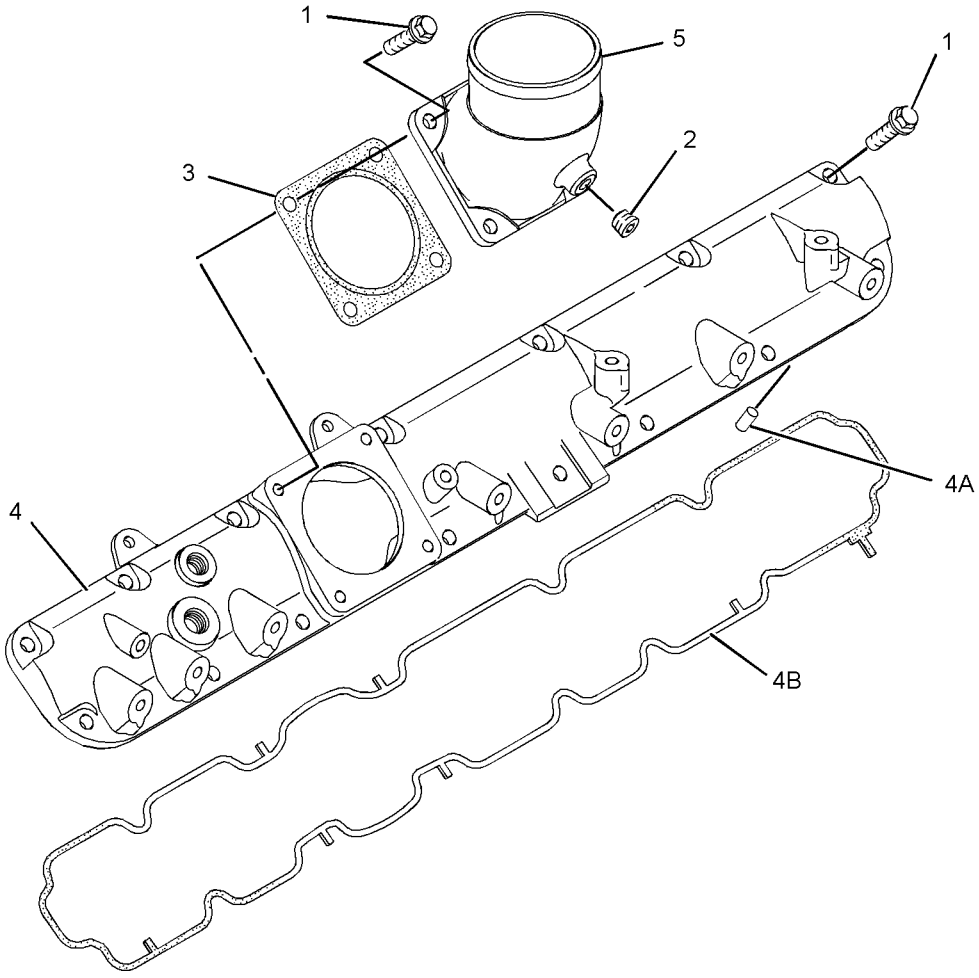

GRAPHIC #1 **<END>** g01271480

AIR INLET AND EXHAUST SYSTEM

288-7985 MANIFOLD GP-INLET

S/N: C6E11297-UP

PART OF 292-5306 ENGINE AR-PRIMARY

SMCS-1058 **i03197750**

NOTE	REF NO	GRAPHIC REF	PART NUMBER	QTY	PART NAME 1 2 3 4 5 6 (PRODUCT LEVEL)	SEE PAGE
M	1	1	**6I-0645**	19	BOLT (M8X1.25X25-MM)	
	2	1	**295-0912**	1	COVER AS	
	2A	1	**277-4302**	2	DOWEL	
	2B	1	**278-5128**	1	GASKET-MANIFOLD	
	3	1	**317-2684**	1	ELBOW GP-AIR INLET	
	3A	1	**238-8288**	1	GASKET-INLET	
	3B	1	**292-3462**	1	PLUG	

M-METRIC PART

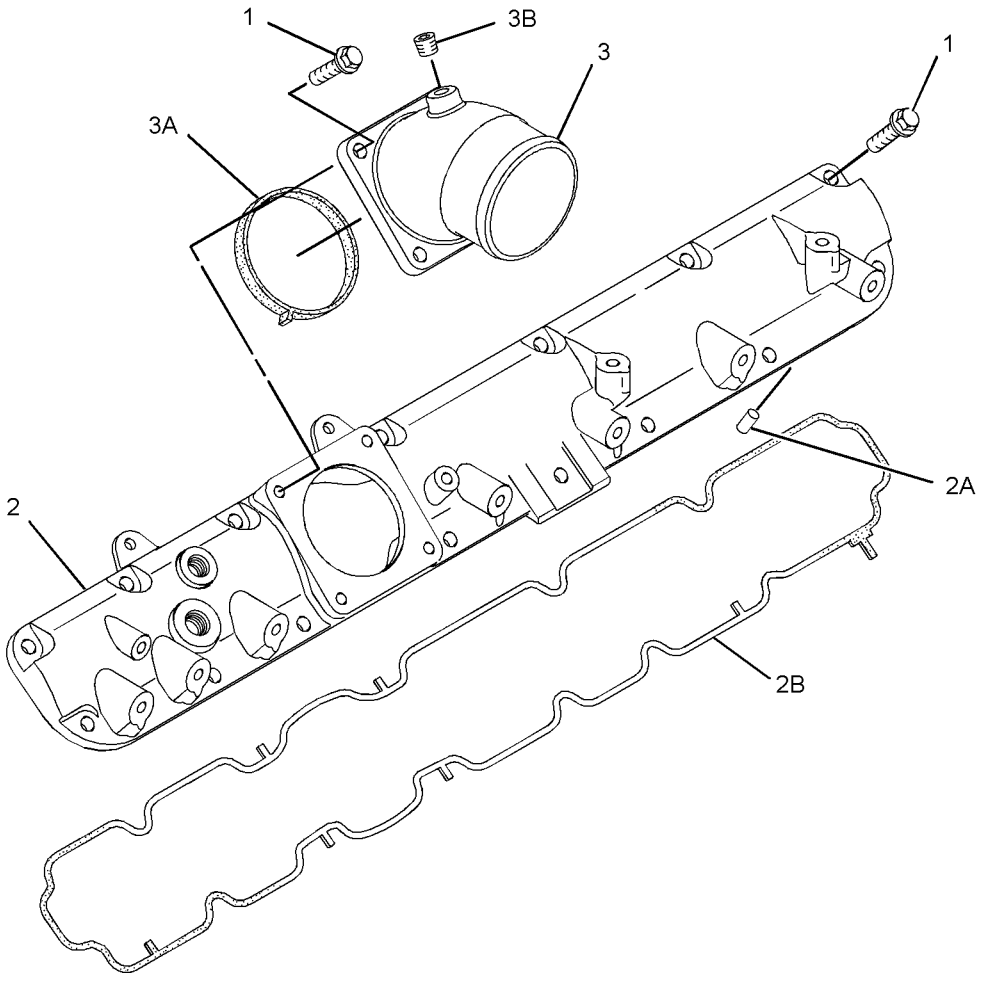

GRAPHIC #1 **<END>** g01526586

AIR INLET AND EXHAUST SYSTEM

289-3232 MUFFLER GP

S/N: KLN1-UP

PART OF 289-8894 INSTALLATION AR-ENGINE

SMCS-1062 **i03045733**

NOTE	REF NO	GRAPHIC REF	PART NUMBER	QTY	PART NAME 1 2 3 4 5 6 (PRODUCT LEVEL)	SEE PAGE
	1	1	**280-2424**	1	ADAPTER	
	2	1	**289-3233**	1	MUFFLER AS	
	3	1	**289-3234**	1	BRACKET	
	4	1	**289-3235**	1	ELBOW-EXHAUST	
	5	1	**7X-7729**	2	WASHER (11X25X3-MM THK)	
	6	1	**8T-4121**	2	WASHER-HARD (11X21X2.5-MM THK)	
M	7	1	**8T-4133**	2	NUT (M10X1.5-THD)	
M	8	1	**8T-4136**	2	BOLT (M10X1.5X25-MM)	
M	9	1	**8T-4185**	2	BOLT (M10X1.5X50-MM)	
M	10	1	**8T-4196**	2	BOLT (M10X1.5X35-MM)	
	11	1	**8T-4222**	4	WASHER-PLATED (11X32X2.5-MM THK)	
	12	1	**9Y-8315**	1	CLAMP-PIPE	

M-METRIC PART

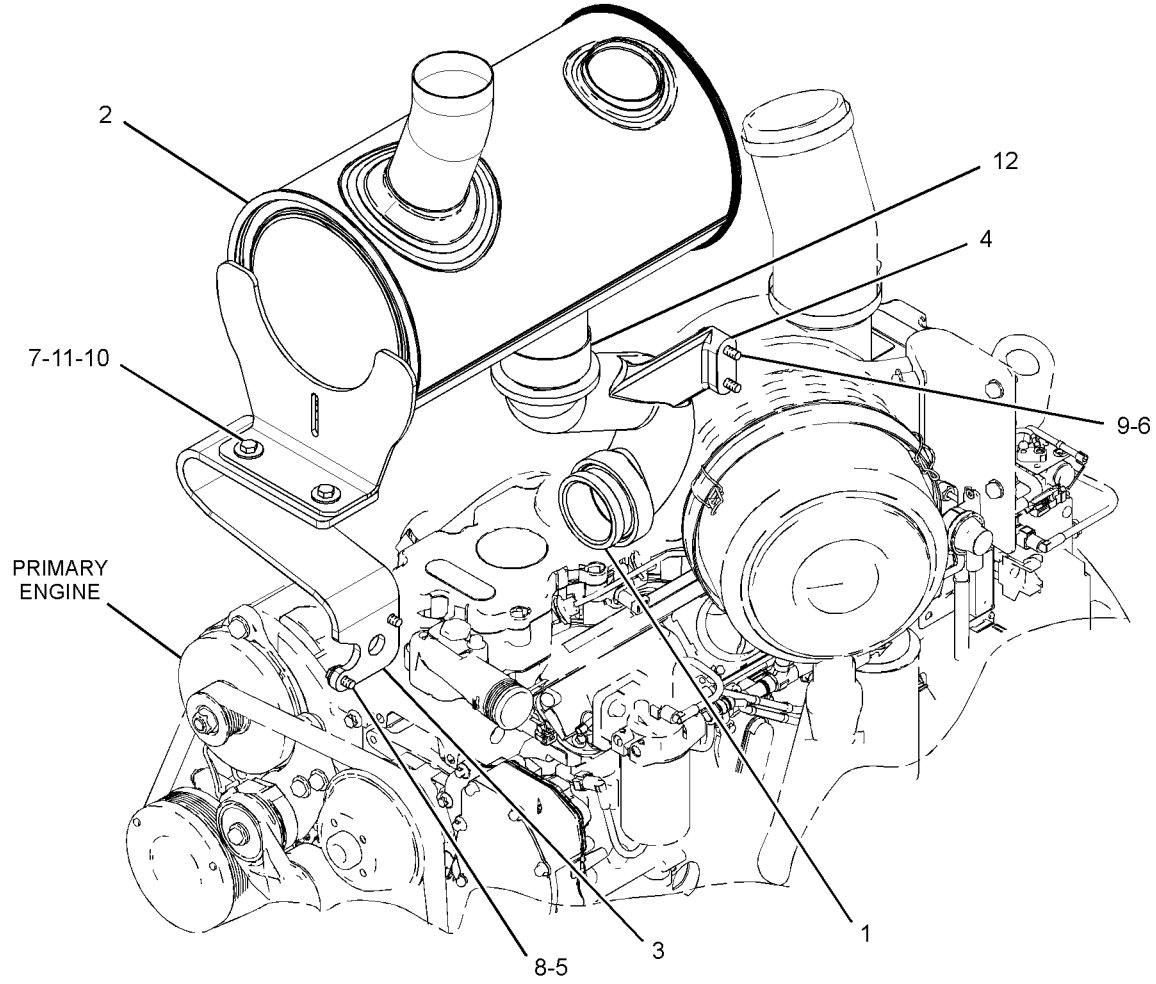

GRAPHIC #1 **<END>** g01442498

AIR INLET AND EXHAUST SYSTEM

121-7746 PRECLEANER GP

S/N: KLN1-UP

PART OF 289-3322 AIR CLEANER GP

SMCS-1055 **i03361344**

NOTE	REF NO	GRAPHIC REF	PART NUMBER	QTY	PART NAME 1 2 3 4 5 6 (PRODUCT LEVEL)	SEE PAGE
	1	1	**1M-7250**	1	BOWL	
	2	1	**9M-9439**	1	COVER AS	
	3	1	**131-6143**	1	CLAMP-HOSE	

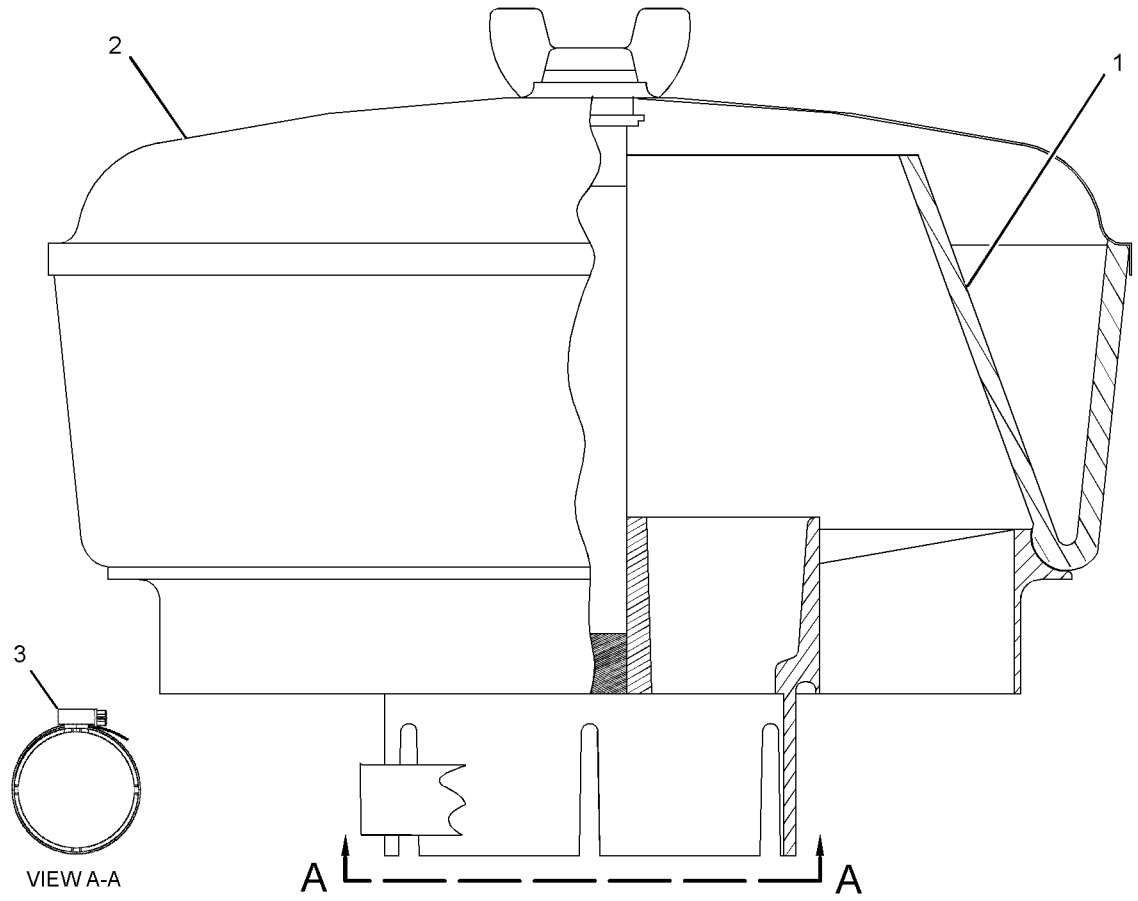

GRAPHIC #1 **<END>** g01737513

AIR INLET AND EXHAUST SYSTEM

331-8936 TURBOCHARGER GP

S/N: C6E1-UP

PART OF 292-5306 ENGINE AR-PRIMARY

SMCS-1052, 1053 **i03266715**

NOTE	REF NO	GRAPHIC REF	PART NUMBER	QTY	PART NAME 1 2 3 4 5 6 (PRODUCT LEVEL)	SEE PAGE
M	1	1	**6I-0217**	5	BOLT (M8X1.25X20-MM)	
	2	1	**6I-0563**	4	NUT (M10X1.5-THD)	
	3	2	**6I-0817**	1	ADAPTER	
	4	2	**9Y-9381**	1	WASHER-HARD	
M	5	2	**100-4830**	2	BOLT (M10X1.5X20-MM)	
	6	1	**141-8589**	1	GASKET	
	7	1	**147-5553**	4	STUD	
	8	1	**238-8292**	12	BOLT-FLANGE HEAD	
	9	1	**277-9941**	1	TUBE AS-TURBOCHARGER	
M	9A	1	**277-9938**	1	BOLT-SPECIAL (BANJO)	
	9B	1	**277-9939**	2	WASHER	
	9C	1	**277-9940**	1	SEAL-O-RING	
	10	1	**278-0015**	1	TUBE AS-TURBOCHARGER	
	11	1	**278-0016**	1	GASKET	
	12	1	**278-0017**	1	GASKET	
	13	2	**278-0310**	1	SOLENOID AS (WASTEGATE)	
	14	2	**278-0311**	1	TUBE AS	
	14A	2	**4B-8774**	1	NUT-FLARED	
	14B	2	**032-8047**	1	FERRULE	
	14C	2	**133-9469**	1	CLIP	
	14D	2	**300-6520**	1	HOSE AS	
	14E	2	**107-2348**	2	CLIP	
	15	1	**279-9361**	2	GASKET-EXHAUST	
	16	2	**285-3197**	1	TUBE AS	
	16A	2	**4B-8774**	1	NUT-FLARED	
	16B	2	**032-8047**	2	FERRULE	
	16C	2	**035-8014**	1	NUT (7/16-IN)	
	17	1	**286-7851**	12	SPACER	
	18	2	**303-2116**	6	CLIP	
	19	1	**315-9810**	1	TURBOCHARGER	
	19A	1	**277-9602**	1	CLAMP	
	19B	1	**277-9603**	1	CLAMP	
	20	1	**331-8917**	1	MANIFOLD-EXHAUST	

M-METRIC PART

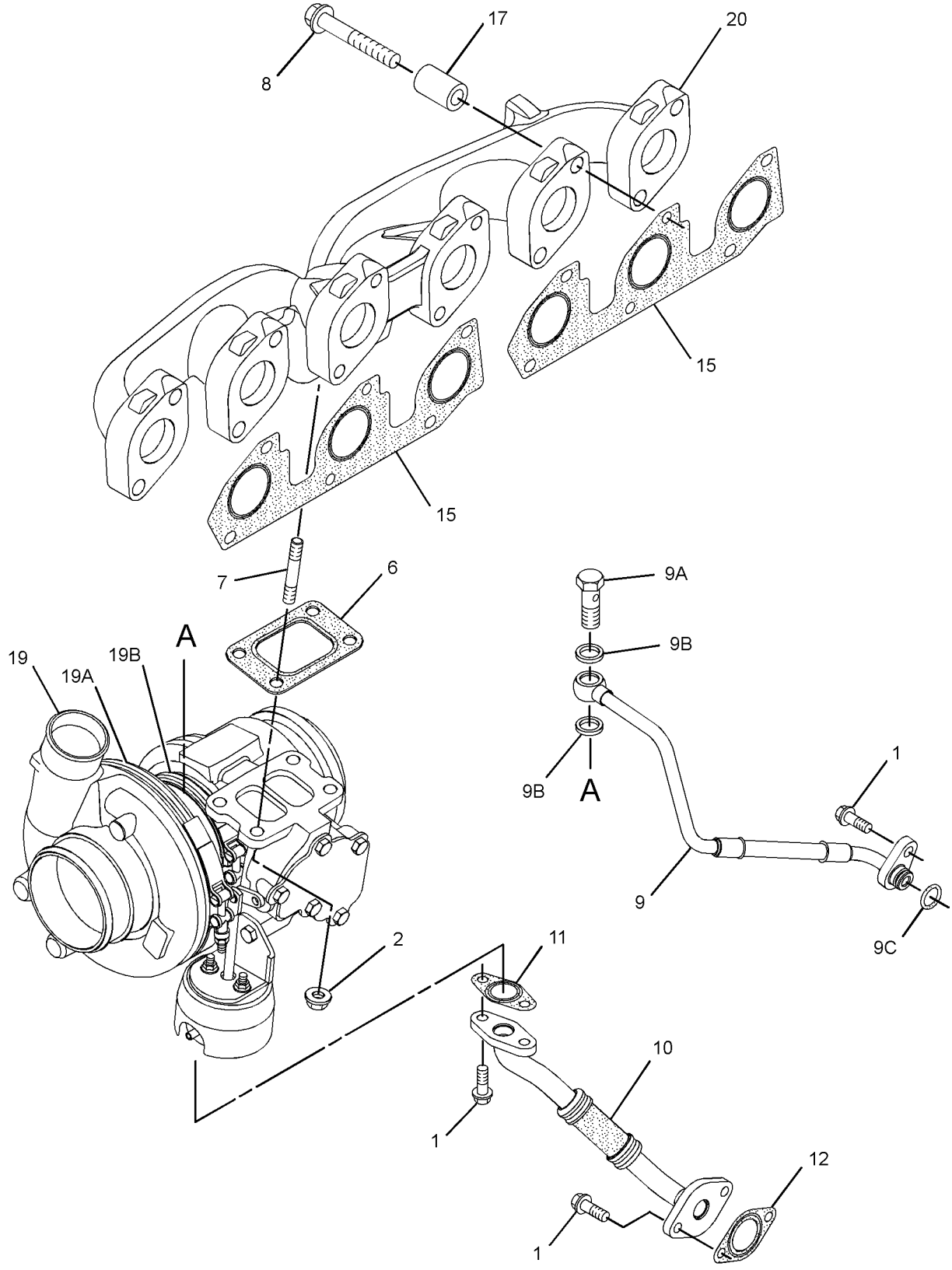

GRAPHIC #1 g01801417

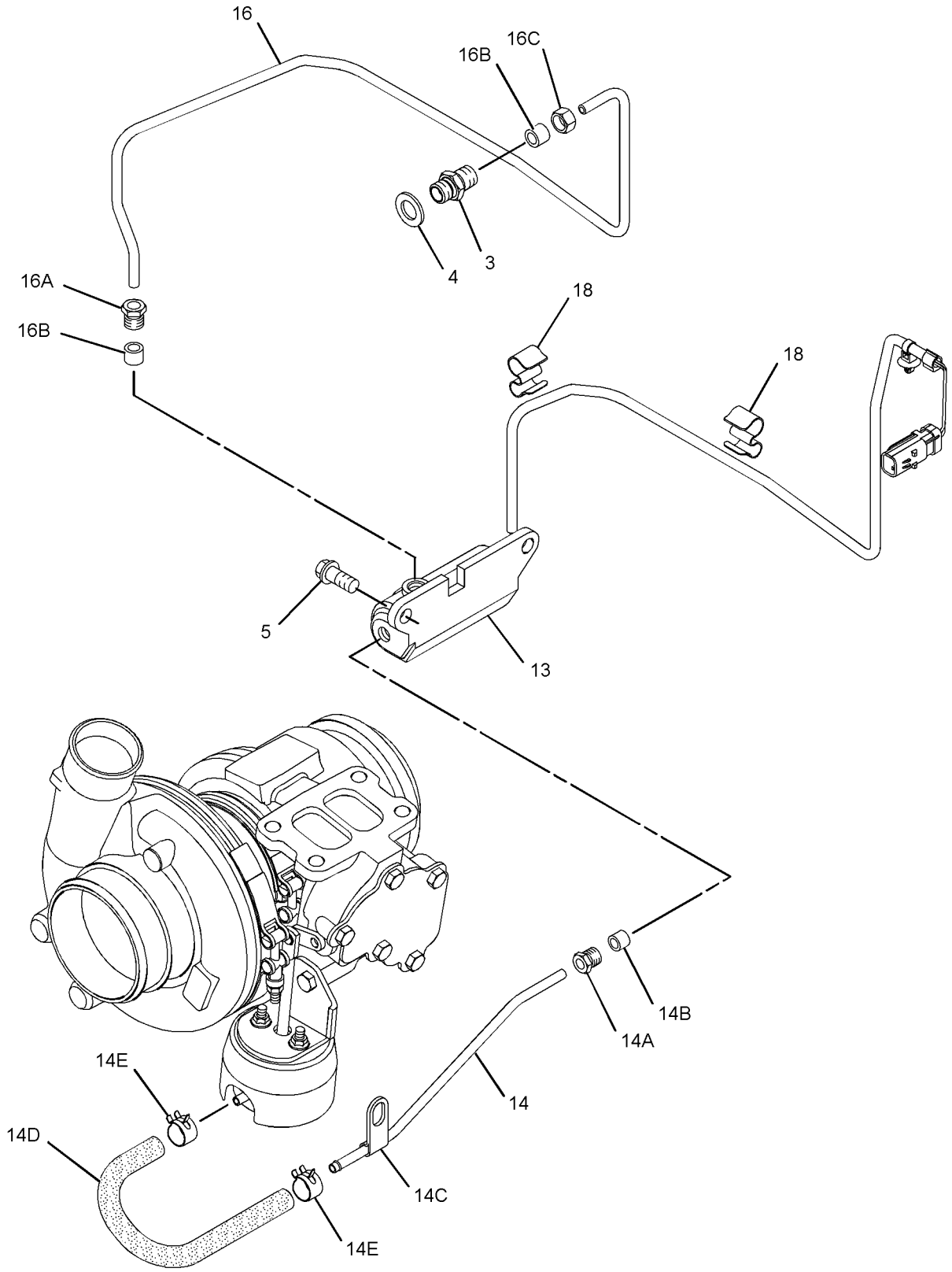

GRAPHIC #2 **<END>** g01801435

280-1394 FILTER GP-SECONDARY FUEL

S/N: C6E1-UP

PART OF 292-5306 ENGINE AR-PRIMARY

SMCS-1261 **i02895623**

NOTE	REF NO	GRAPHIC REF	PART NUMBER	QTY	PART NAME 1 2 3 4 5 6 (PRODUCT LEVEL)	SEE PAGE
C	1	1	**308-7480**	1	FILTER GP-FUEL (ULTRA HIGH EFFICIENCY)	
	1A	1	**299-8229**	1	FILTER-FUEL (ULTRA HIGH EFFICIENCY)	

C-CHANGE FROM PREVIOUS TYPE

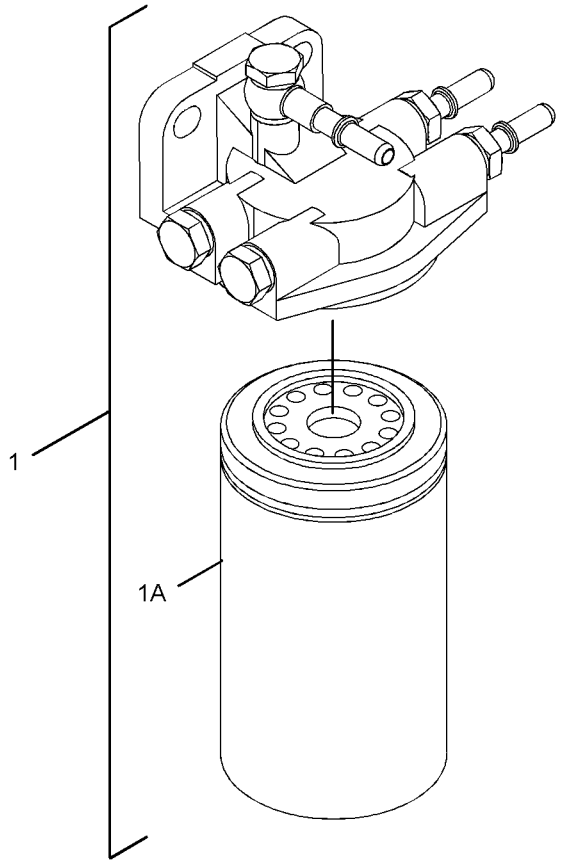

GRAPHIC #1 **<END>** g01416398

174-9570 FILTER GP-WATER SEP & FUEL

S/N: KLN1-UP

PART OF 212-3657 PUMP GP-FUEL PRM & WATER SEP

SMCS-1260, 1261, 1263 **i03181922**

NOTE	REF NO	GRAPHIC REF	PART NUMBER	QTY	PART NAME 1 2 3 4 5 6 (PRODUCT LEVEL)	SEE PAGE
	1	1	**326-1644**	1	FILTER AS-WATER SEP & FUEL (PRIMARY)	
	1A	1	**220-8678**	1	SEAL-RING (FUEL, WATER SEPARATOR)	
	2	1	**270-5320**	1	BOWL AS (FUEL, WATER SEPARATOR)	

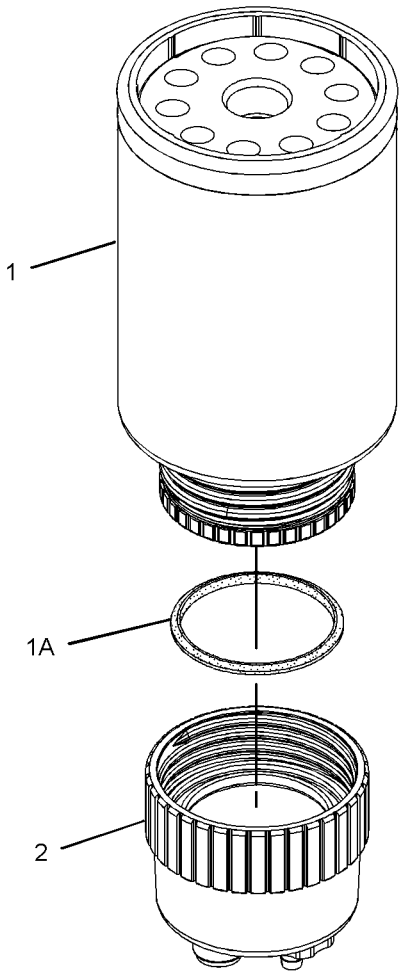

GRAPHIC #1 **<END>** g01179858

FUEL SYSTEM

306-9380 INJECTOR GP-FUEL

S/N: C6E1-6804

PART OF 303-2930 PUMP GP-FUEL INJECTION

SMCS-1251, 1254, 1290, 1713 **i02932961**

NOTE	REF NO	GRAPHIC REF	PART NUMBER	QTY	PART NAME 1 2 3 4 5 6 (PRODUCT LEVEL)	SEE PAGE
	1	1	**287-7637**	1	WASHER	
	2	1	**274-1639**	1	SEAL	

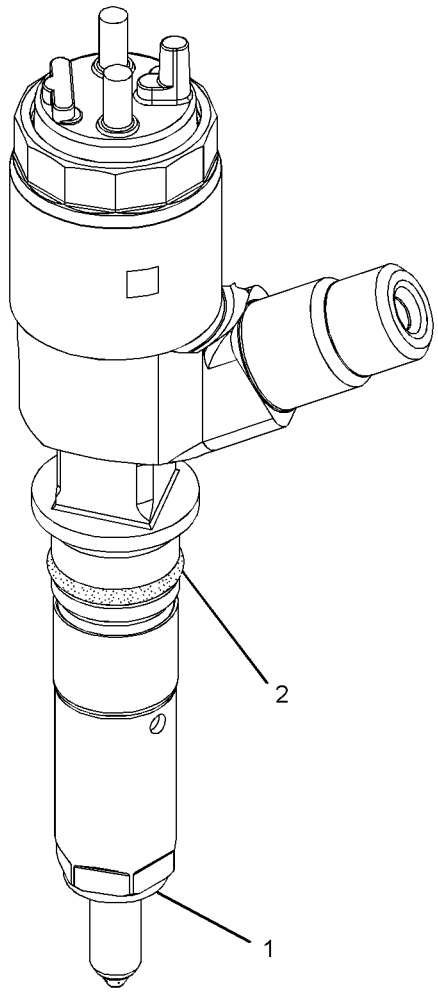

GRAPHIC #1 **<END>** g01321917

FUEL SYSTEM

321-3600 INJECTOR GP-FUEL

S/N: C6E6805-UP

PART OF 303-2930 PUMP GP-FUEL INJECTION

SMCS-1251, 1254, 1290, 1713 **i03158482**

NOTE	REF NO	GRAPHIC REF	PART NUMBER	QTY	PART NAME 1 2 3 4 5 6 (PRODUCT LEVEL)	SEE PAGE
	1	1	**287-7637**	1	WASHER	
	2	1	**274-1639**	1	SEAL	

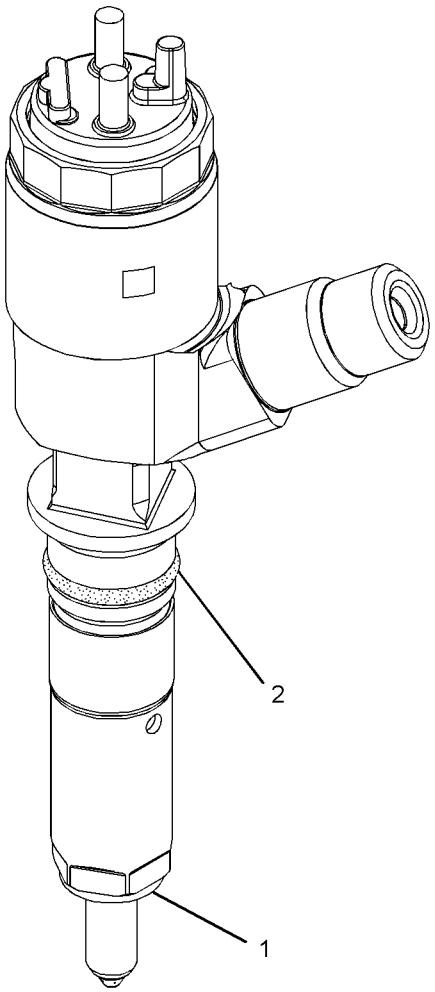

GRAPHIC #1 **<END>** g01321917

FUEL SYSTEM

289-8938 LINES GP-FUEL

S/N: KLN1-UP

PART OF 289-8894 INSTALLATION AR-ENGINE

SMCS-1274 **i03045732**

NOTE	REF NO	GRAPHIC REF	PART NUMBER	QTY	PART NAME 1 2 3 4 5 6 (PRODUCT LEVEL)	SEE PAGE
	1	1	**3S-2093**	2	STRAP-CABLE	
	2	1	**6S-8620**	8	CLAMP-HOSE	
	3	1	**6T-6969**	1	GUARD-SWITCH	
	4	1	**6V-5653**	2	ELBOW	
	5	1	**8T-9655**	8	MOUNT-ISOLATION	
	6	1	*164-5619*	2	PLUG AS	
					(EACH INCLUDES)	
		1	**2M-9780**	1	SEAL-O-RING	
		1	**9S-8006**	1	PLUG-O-RING	
Y	7	1	**165-5970**	1	SWITCH GP-TOGGLE (FUEL PRIMING PUMP ON, OFF)	171
	8	1	**185-1047**	1	ADAPTER	
Y	9	1	**212-3657**	1	PUMP GP-FUEL PRM & WATER SEP (ELECTRIC)	116
	10	1	**232-1374**	1	BRACKET	
	11	1	**232-1376**	2	SPACER (8.5X12.7X139.1-MM THK)	
	12	1	**291-9943**	1	BRACKET AS	
M		1	**8T-3490**	1	NUT-WELD (M10X1.5-THD)	
	13	1	**293-9795**	1	BRACKET AS	
M		1	**8T-3490**	1	NUT-WELD (M10X1.5-THD)	
	14	1	**300-8841**	1	PLATE AS	
M		1	**8T-3490**	2	NUT-WELD (M10X1.5-THD)	
	15	1	**301-4852**	1	ADAPTER	
	16	1	**191-1782**	1	SPACER (8.5X12.7X38.2-MM THK)	
	17	1	**219-0669**	1	SEAL-O-RING	
	18	1	**238-5081**	3	SEAL-O-RING	
	19	1	**5K-4778**	1	CLIP	
	20	1	**5K-5338**	1	CLIP	
	21	1	**5K-8451**	1	CLIP	
	22	1	**6D-3479**	2	CLIP	
	23	1	**8S-0948**	1	CLIP	
	24	1	**8T-4121**	8	WASHER-HARD (11X21X2.5-MM THK)	
M	25	1	**8T-4136**	5	BOLT (M10X1.5X25-MM)	
M	26	1	**8T-4195**	3	BOLT (M10X1.5X30-MM)	
M	27	1	**8T-6869**	1	BOLT (M8X1.25X60-MM)	
M	28	1	**8T-7352**	2	BOLT (M8X1.25X160-MM)	
	29	1	**9N-0869**	6	WASHER-HARD (8.8X25.5X2-MM THK)	
E	30	1	**7I-1024**		GUARD-HOSE (45-CM)	
E	31	1	**8C-3681**		HOSE (33-CM)	
E	32	1	**5P-1442**		HOSE (190-CM)	
E	32A	1	**5P-1442**		HOSE (55-CM)	
E	33	1	**5P-1505**		HOSE (175-CM)	
E	33A	1	**5P-1505**		HOSE (83-CM)	

E-ORDER BY THE CENTIMETER
M-METRIC PART
Y-SEPARATE ILLUSTRATION

289-8938 **LINES GP-FUEL** *(contd.)* **i03045732**

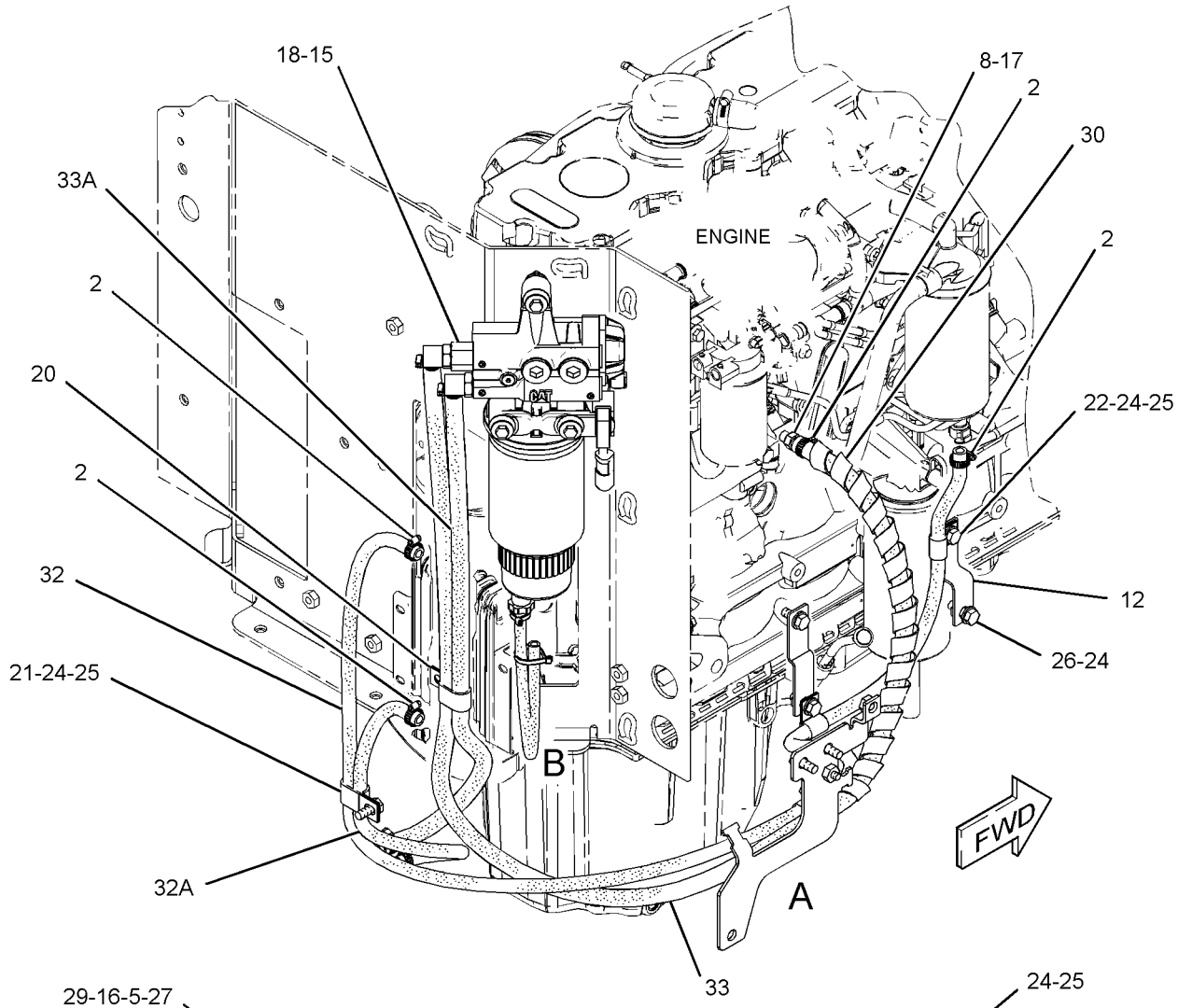

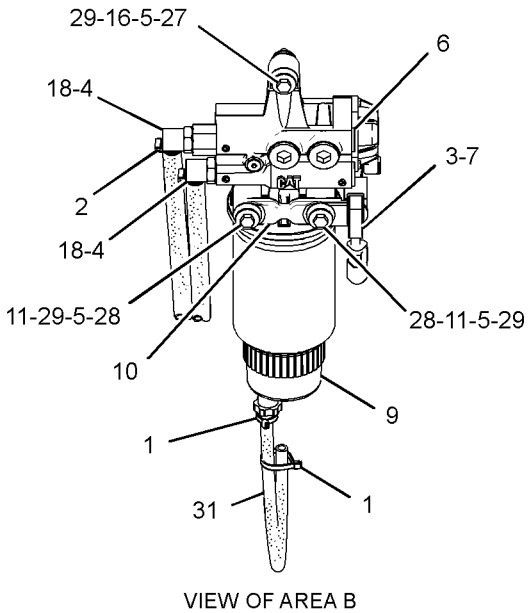

VIEW OF AREA B

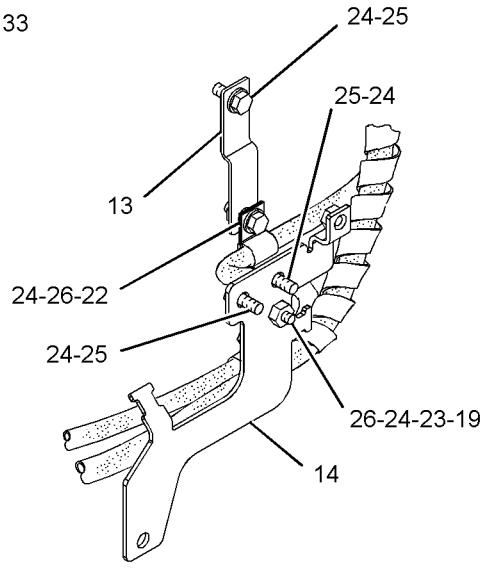

VIEW OF AREA A

GRAPHIC #1 **<END>** g01411999

308-9075 LINES GP-FUEL

S/N: C6E1-11296

PART OF 292-5306 ENGINE AR-PRIMARY

SMCS-1274 **i02931671**

NOTE	REF NO	GRAPHIC REF	PART NUMBER	QTY	PART NAME 1 2 3 4 5 6 (PRODUCT LEVEL)	SEE PAGE
M	1	1	**6I-0260**	4	BOLT (M8X1.25X25-MM)	
M	2	1	**6I-0593**	2	BOLT (M10X1.5X30-MM)	
M	4	2	**6I-0654**	1	BOLT (M10X1.5X25-MM)	
	5	2	**106-8916**	1	BOLT (M6X16-MM)	
M	6	2	**124-3815**	1	BOLT (M8X16X1.25-MM)	
	7	1	**215-9509**	1	FITTING (QUICK DISCONNECT, FEMALE)	
	8	2	**216-9752**	2	WASHER	
	9	2	**232-1115**	1	CLIP-PIPE	
	10	1	**234-3063**	1	CLIP	
	11	1,2	**277-6165**	2	CONNECTION-FUEL	
	12	2	**278-0314**	1	SPACER	
	13	1	**281-9106**	1	TUBE-FUEL	
	14	2	**281-9115**	1	TUBE-FUEL	
	15	1	**287-6849**	1	BRACKET AS	
	15A	1	**232-1115**	2	CLIP-PIPE	
	16	2	**287-6853**	1	BRACKET AS	
	16A	2	**232-1115**	2	CLIP-PIPE	
	17	2	**290-5735**	1	BRACKET AS	
	17A	2	**278-0315**	1	CLIP-PIPE	
	18	2	**293-8068**	1	TUBE-FUEL	
	19	2	**293-8069**	1	TUBE-FUEL	
	20	2	**295-4670**	1	BOLT-SPECIAL (BANJO)	
	21	1	**305-6157**	1	BRACKET	
	22	2	**306-5432**	1	BRACKET	
	23	2	**308-9076**	1	BRACKET AS	
	23A	2	**232-1115**	2	CLIP-PIPE	
	24	1	**308-9077**	1	TUBE	
	25	1	**308-9078**	1	BRACKET AS	
	25A	1	**232-1115**	5	CLIP-PIPE	
	26	2	**308-9079**	1	BRACKET AS	
	26A	2	**232-1115**	2	CLIP-PIPE	
F			**278-4138**	5	PROTECTION GP-FUEL SYSTEM (LINE, LOW PRESSURE)	

F-NOT SHOWN
M-METRIC PART

308-9075 **LINES GP-FUEL** *(contd.)* **i02931671**

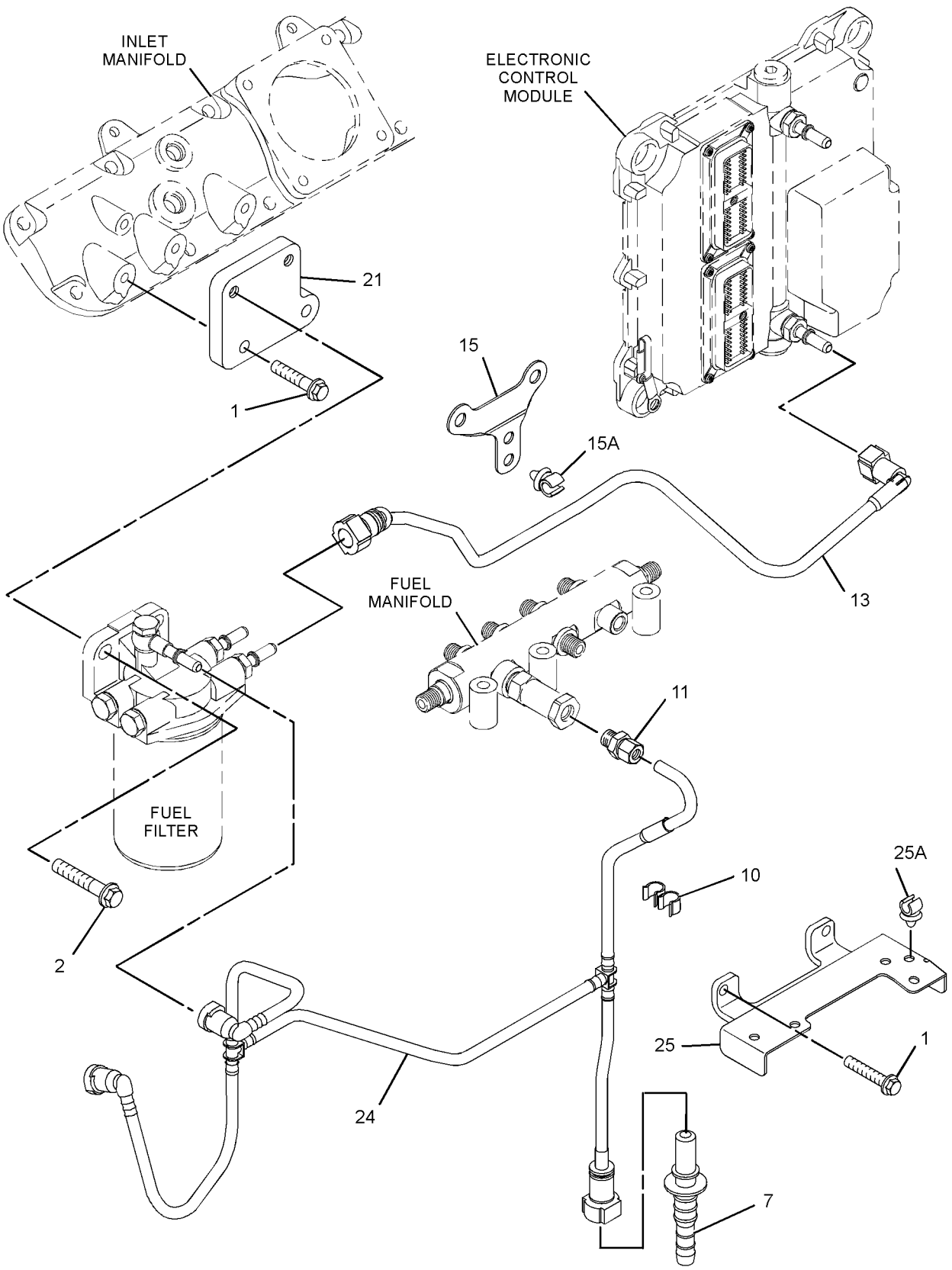

GRAPHIC #1

g01405296

308-9075 **LINES GP-FUEL** *(contd.)* **i02931671**

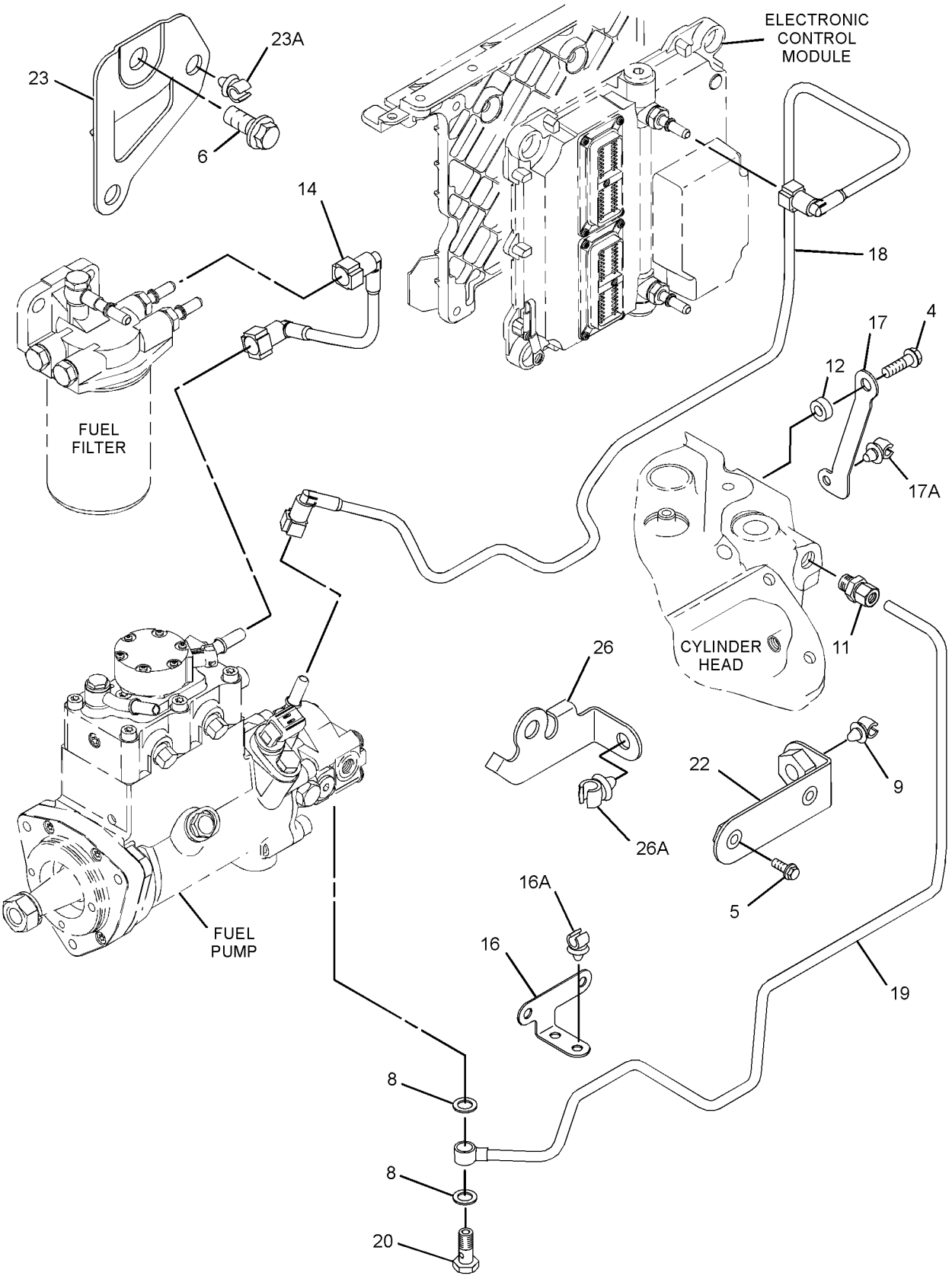

GRAPHIC #2

<END>

g01405297

FUEL SYSTEM

308-9075 LINES GP-FUEL

S/N: C6E11297-UP
PART OF 292-5306 ENGINE AR-PRIMARY
TYPE 1

SMCS-1274 **i03509074**

NOTE	REF NO	GRAPHIC REF	PART NUMBER	QTY	PART NAME 1 2 3 4 5 6 (PRODUCT LEVEL)	SEE PAGE
M	1	1	**6I-0260**	4	BOLT (M8X1.25X25-MM)	
M	2	1	**6I-0593**	2	BOLT (M10X1.5X30-MM)	
M	4	2	**6I-0654**	1	BOLT (M10X1.5X25-MM)	
	5	2	**106-8916**	1	BOLT (M6X16-MM)	
M	6	2	**124-3815**	1	BOLT (M8X16X1.25-MM)	
	7	1	**215-9509**	1	FITTING (QUICK DISCONNECT, FEMALE)	
	8	2	**216-9752**	2	WASHER	
	9	2	**232-1115**	1	CLIP-PIPE	
	10	1	**234-3063**	1	CLIP	
	11	1,2	**277-6165**	2	CONNECTION-FUEL	
	12	2	**278-0314**	1	SPACER	
C	13	1	**311-1159**	1	TUBE	
C	14	2	**311-1684**	1	TUBE	
C	15	1	**311-1952**	1	BRACKET AS	
	15A	1	**232-1115**	4	CLIP-PIPE	
	16	2	**287-6853**	1	BRACKET AS	
	16A	2	**232-1115**	2	CLIP-PIPE	
	17	2	**290-5735**	1	BRACKET AS	
	17A	2	**278-0315**	1	CLIP-PIPE	
	18	2	**293-8068**	1	TUBE-FUEL	
C	19	2	**309-0857**	1	TUBE	
	20	2	**295-4670**	1	BOLT-SPECIAL (BANJO)	
C	21	1	**311-1666**	1	BRACKET	
	22	2	**306-5432**	1	BRACKET	
	23	2	**311-2262**	1	BRACKET AS	
	23A	2	**232-1115**	2	CLIP-PIPE	
C	24	1	**311-1180**	1	TUBE	
C	25	1	**305-6471**	1	BRACKET AS	
	25A	1	**232-1115**	6	CLIP-PIPE	
	26	2	**308-9079**	1	BRACKET AS	
	26A	2	**232-1115**	2	CLIP-PIPE	
F			**278-4138**	5	PROTECTION GP-FUEL SYSTEM (LINE, LOW PRESSURE)	

C-CHANGE FROM PREVIOUS TYPE
F-NOT SHOWN
M-METRIC PART

308-9075 **LINES GP-FUEL** *(contd.)* **i03509074**

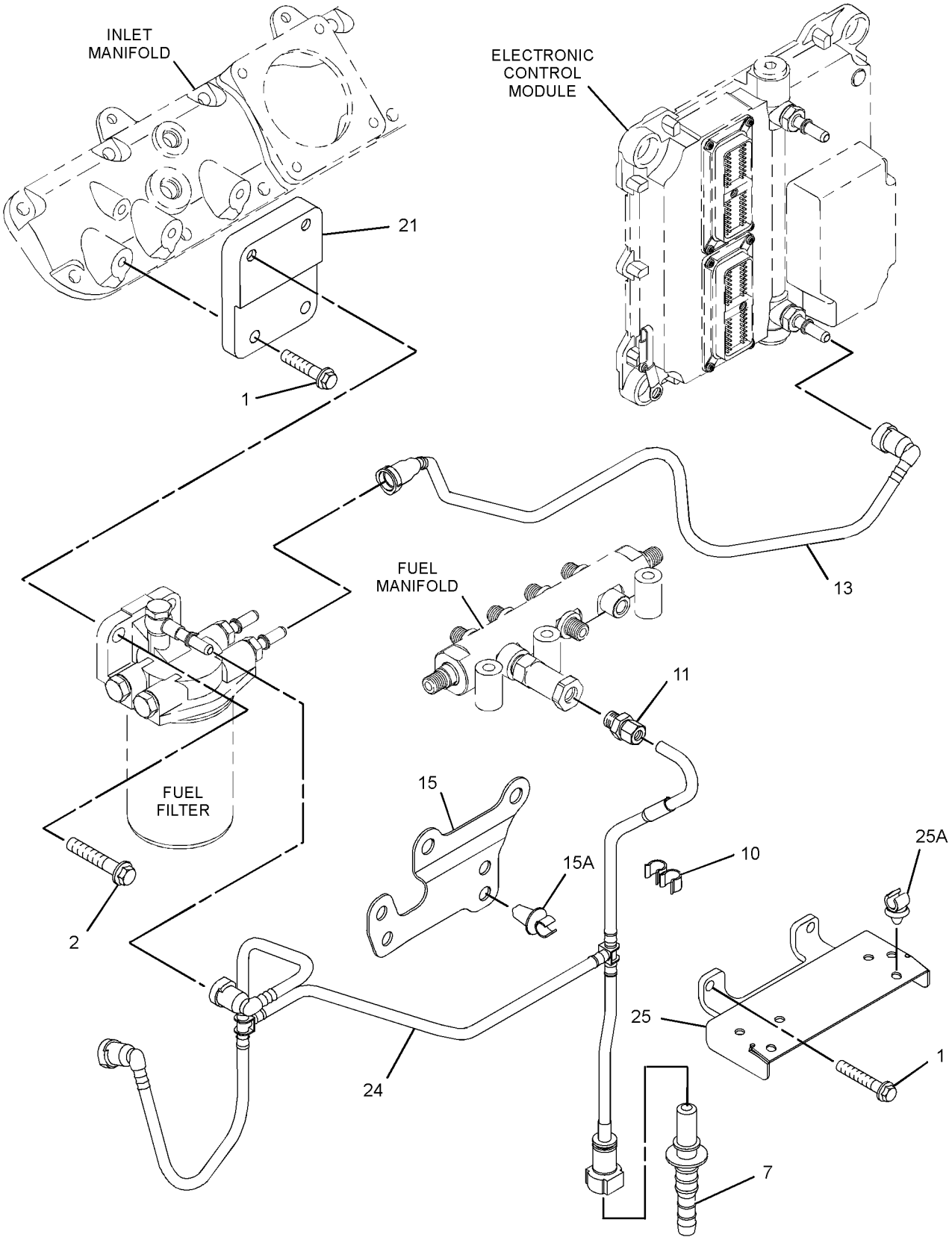

GRAPHIC #1 g01444798

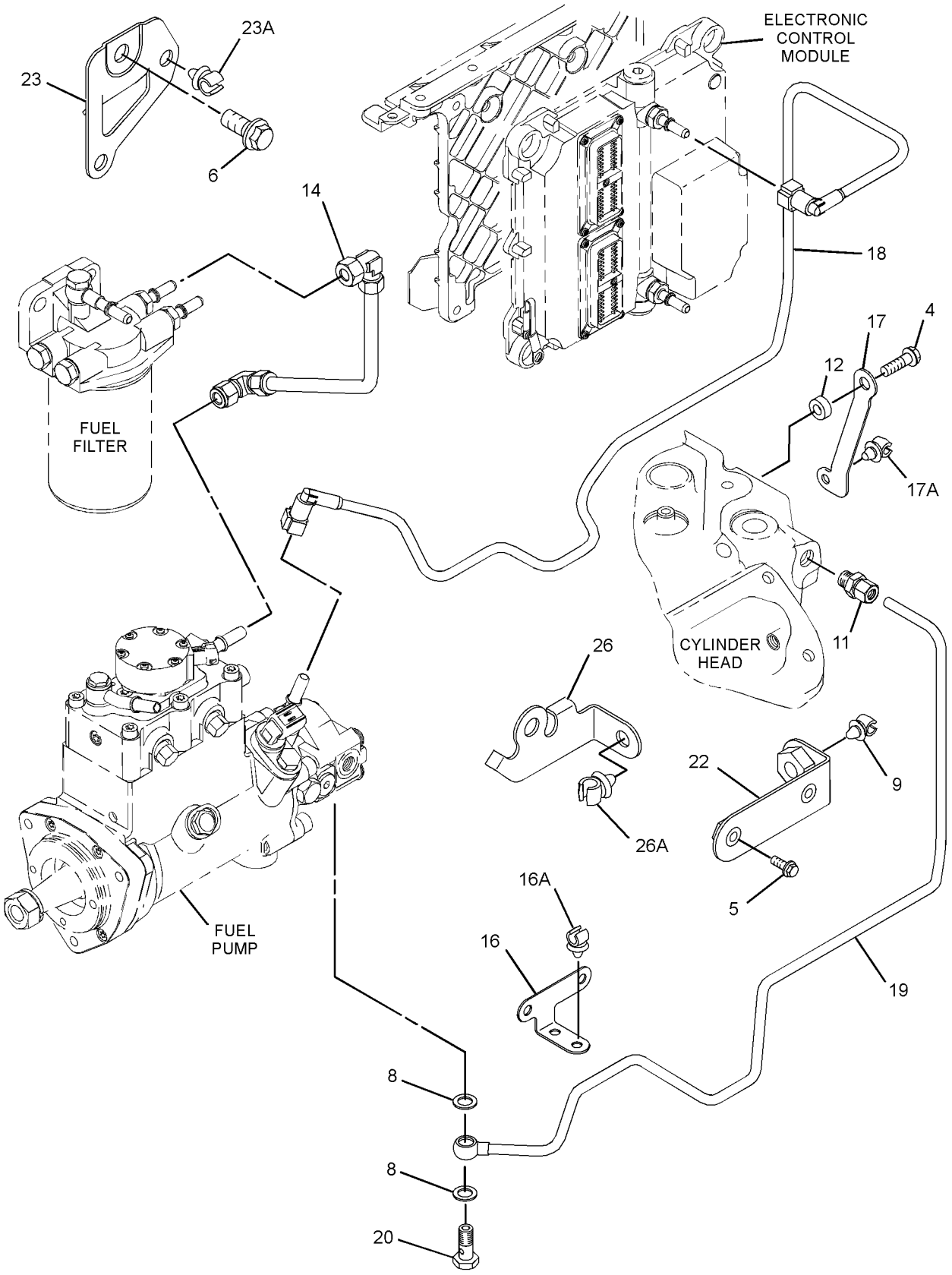

GRAPHIC #2 **<END>** g01444799

FUEL SYSTEM

308-9075 LINES GP-FUEL

S/N: C6E11297-UP

PART OF 292-5306 ENGINE AR-PRIMARY

TYPE 2

SMCS-1274 **i03509065**

NOTE	REF NO	GRAPHIC REF	PART NUMBER	QTY	PART NAME 1 2 3 4 5 6 (PRODUCT LEVEL)	SEE PAGE
M	1	1	**6I-0260**	4	BOLT (M8X1.25X25-MM)	
M	2	1	**6I-0593**	2	BOLT (M10X1.5X30-MM)	
M	4	2	**6I-0654**	1	BOLT (M10X1.5X25-MM)	
	5	2	**106-8916**	1	BOLT (M6X16-MM)	
M	6	2	**124-3815**	1	BOLT (M8X16X1.25-MM)	
	7	1	**215-9509**	1	FITTING (QUICK DISCONNECT, FEMALE)	
	8	2	**286-2890**	2	WASHER	
	9	2	**232-1115**	1	CLIP-PIPE	
C	10	1	**234-3063**	3	CLIP	
	11	1,2	**277-6165**	2	CONNECTION-FUEL	
	12	2	**278-0314**	1	SPACER	
	13	1	**311-1159**	1	TUBE	
	14	2	**311-1684**	1	TUBE	
	15	1	**311-1952**	1	BRACKET AS	
	15A	1	**232-1115**	4	CLIP-PIPE	
	16	2	**287-6853**	1	BRACKET AS	
	16A	2	**232-1115**	2	CLIP-PIPE	
	17	2	**290-5735**	1	BRACKET AS	
	17A	2	**278-0315**	1	CLIP-PIPE	
	18	2	**293-8068**	1	TUBE-FUEL	
	19	2	**309-0857**	1	TUBE	
	20	2	**295-4670**	1	BOLT-SPECIAL (BANJO)	
	21	1	**311-1666**	1	BRACKET	
	22	2	**306-5432**	1	BRACKET	
	23	2	**311-2262**	1	BRACKET AS	
	23A	2	**232-1115**	2	CLIP-PIPE	
C	24	1	**331-3187**	1	TUBE	
C	25	1	**311-2241**	1	BRACKET AS	
	25A	1	**232-1115**	7	CLIP-PIPE	
	26	2	**308-9079**	1	BRACKET AS	
	26A	2	**232-1115**	2	CLIP-PIPE	
C	27	1	**311-2232**	1	BRACKET AS	
	27A	1	**232-1115**	1	CLIP-PIPE	
F			**278-4138**	5	PROTECTION GP-FUEL SYSTEM (LINE, LOW PRESSURE)	

C-CHANGE FROM PREVIOUS TYPE
F-NOT SHOWN
M-METRIC PART

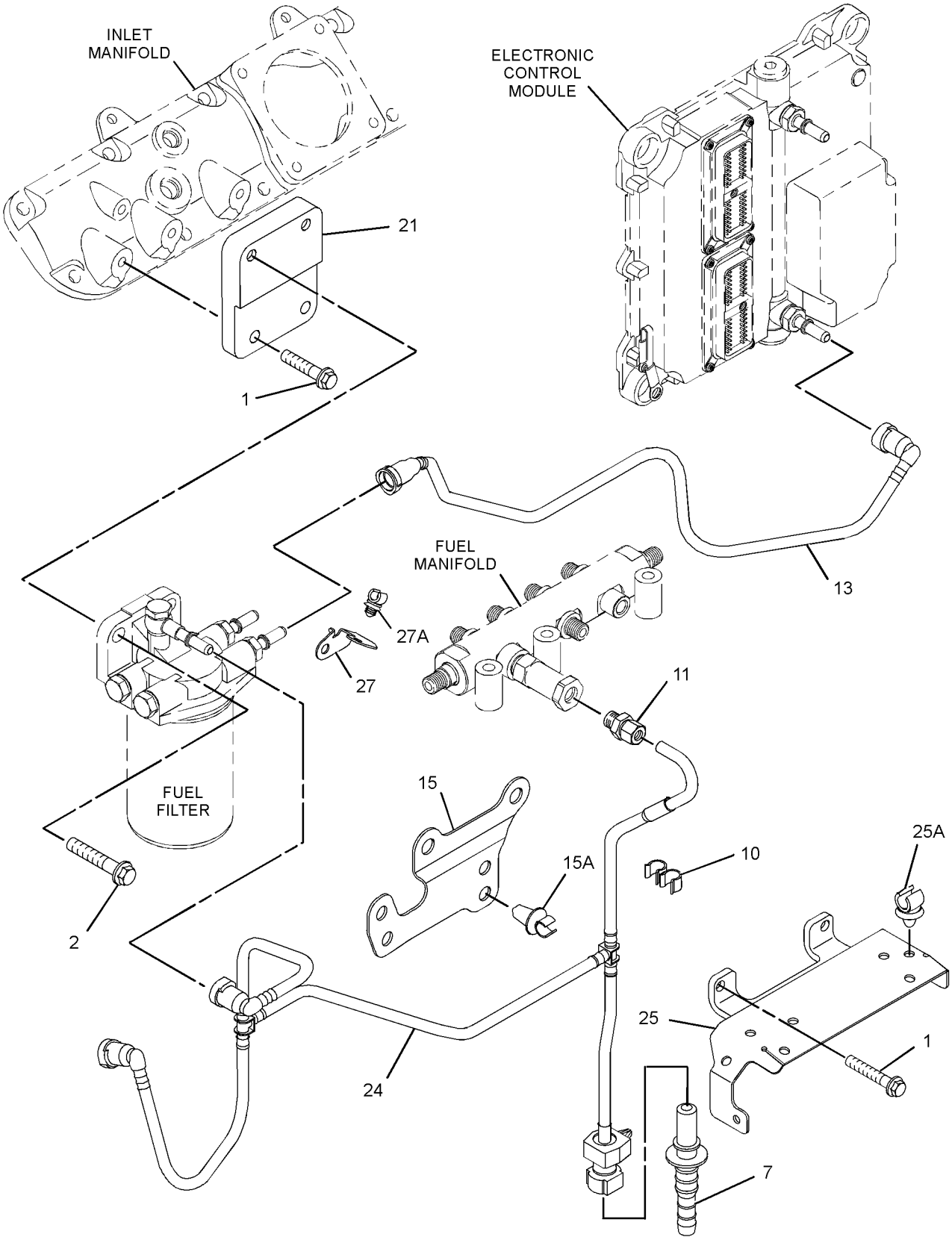

GRAPHIC #1 g01648596

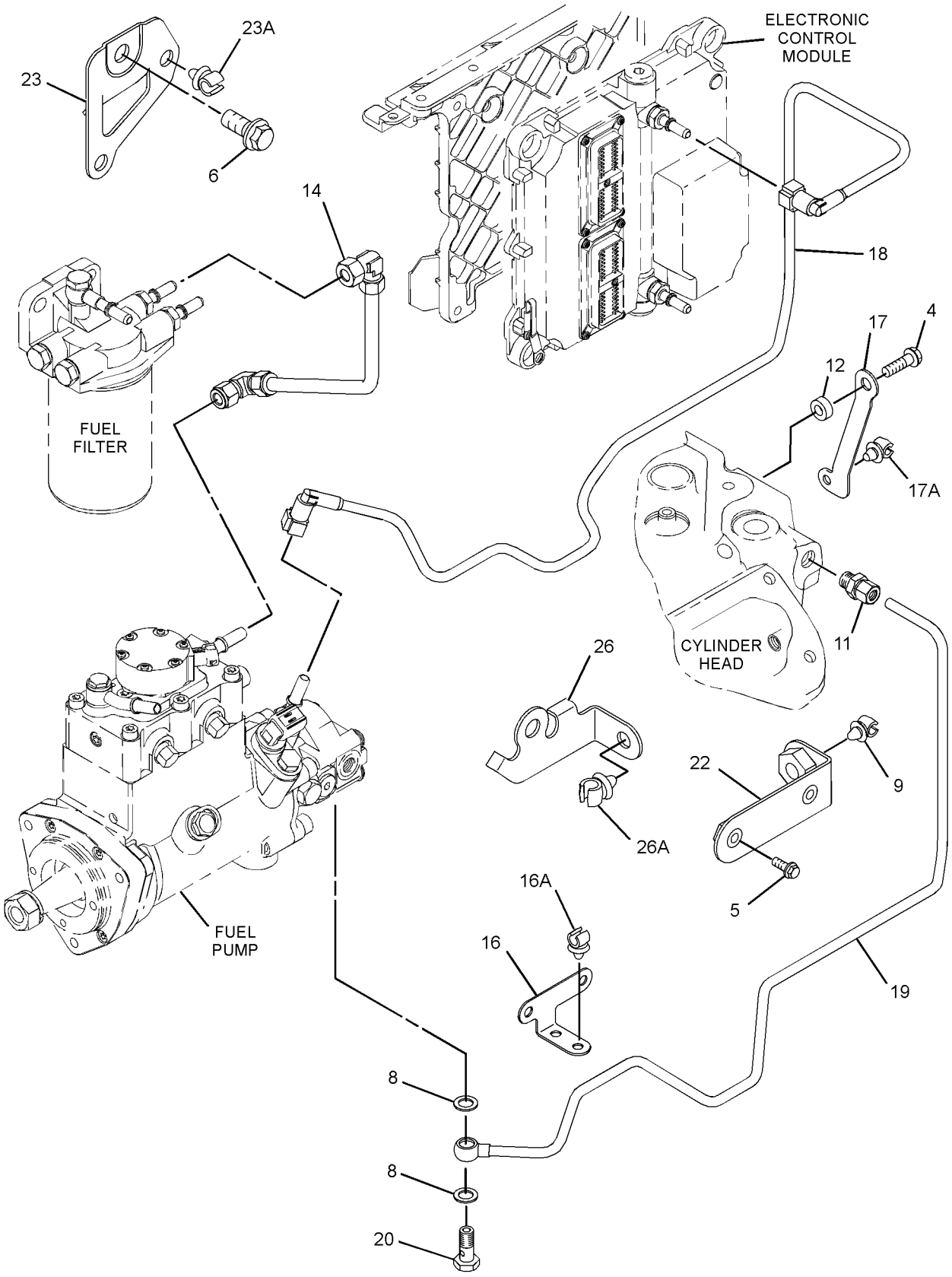

GRAPHIC #2 **<END>** g01444799

291-5919 PUMP & MTG GP-UNIT INJ HYD*R

S/N: C6E5433-6804

PART OF 303-2930 PUMP GP-FUEL INJECTION

SMCS-1714 **i03079022**

NOTE	REF NO	GRAPHIC REF	PART NUMBER	QTY	PART NAME 1 2 3 4 5 6 (PRODUCT LEVEL)	SEE PAGE
	1	1	**228-0172**	1	FITTING-FUEL	
	2	1	**228-7100**	3	SEAL-O-RING	
	3	1	**247-6019**	1	SEAL	
	4	1	**248-1066**	1	FITTING-FUEL	
	5	1	**293-0249**	1	PUMP GP-FUEL TRANSFER	
	6	1	**294-3031**	1	BOLT	
	7	1	**294-3032**	1	WASHER	
	8	1	**295-0189**	1	CONNECTOR AS	
	9	1	**295-4801**	1	NUT (M14X1.5-THD)	
	10	1	**296-3542**	1	LOCKWASHER	
	11	1	**117-1385**	1	SEAL-O-RING	
M	12	1	**5A-3604**	5	BOLT-SOCKET HEAD (M8X1.25X25-MM)	
	13	1	**6D-7889**	1	SEAL-O-RING	
	14	1	**8L-2779**	4	SEAL-O-RING	
M	15	1	**8T-4200**	1	BOLT (M8X1.25X16-MM)	
	16	1	**238-0120**	1	SENSOR GP-SPEED (SECONDARY, TIMING)	

M-METRIC PART

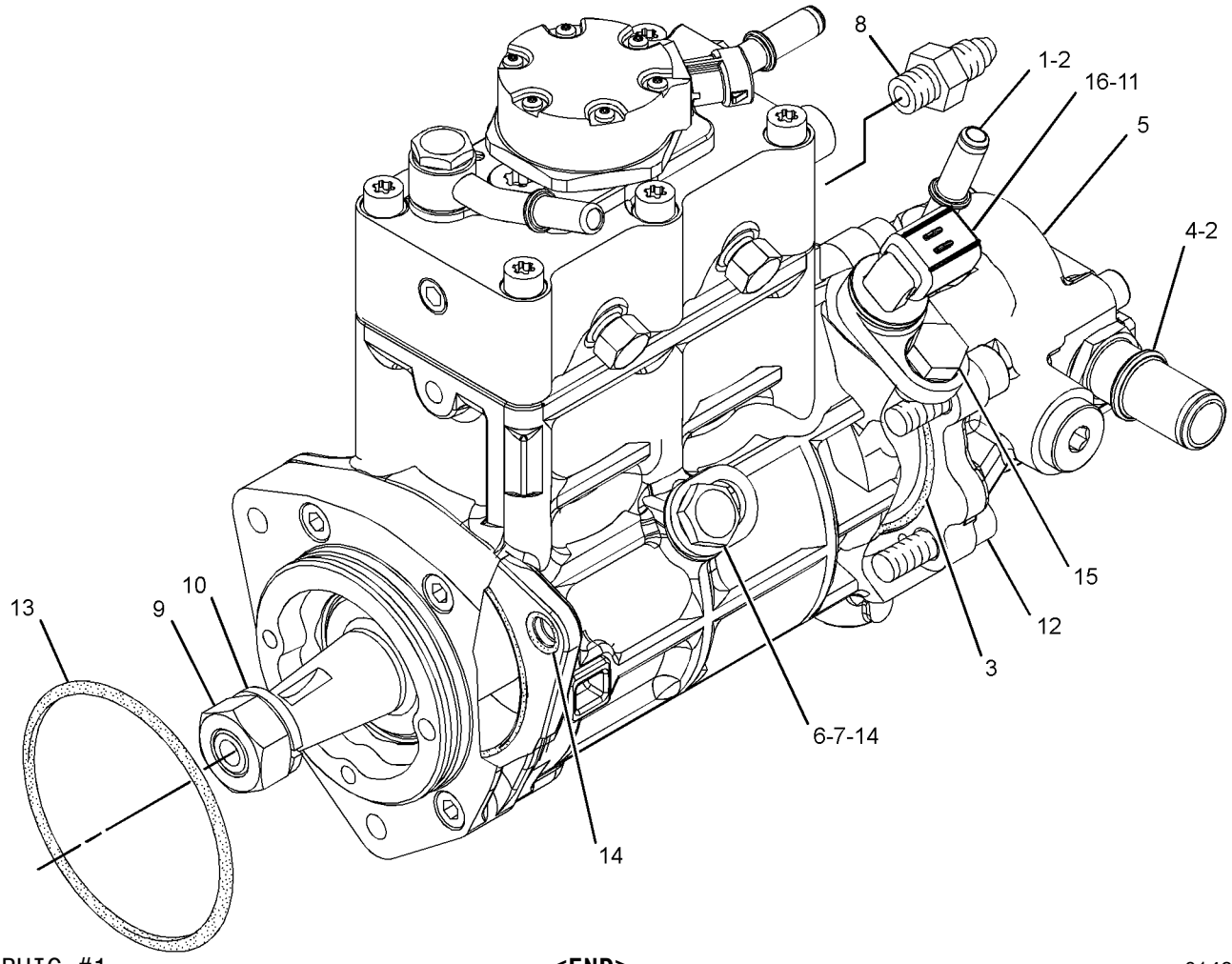

GRAPHIC #1 **<END>** g01490295

276-8398 PUMP GP-FUEL INJECTION

S/N: C6E1-5432

PART OF 303-2930 PUMP GP-FUEL INJECTION

SMCS-1251, 1290 **i03322764**

NOTE	REF NO	GRAPHIC REF	PART NUMBER	QTY	PART NAME 1 2 3 4 5 6 (PRODUCT LEVEL)	SEE PAGE
	1	1	**228-7100**	1	SEAL-O-RING	
	2	1	**238-0120**	1	SENSOR GP-SPEED (SECONDARY, TIMING)	
	3	1	**247-6019**	1	SEAL	
	4	1	**248-1066**	1	FITTING-FUEL	
	5	1	**293-0249**	1	PUMP GP-FUEL TRANSFER	
	6	1	**117-1385**	1	SEAL-O-RING	
M	7	1	**5A-3604**	5	BOLT-SOCKET HEAD (M8X1.25X25-MM)	
	8	1	**6D-7889**	1	SEAL-O-RING	
M	9	1	**8T-4200**	1	BOLT (M8X1.25X16-MM)	

M-METRIC PART

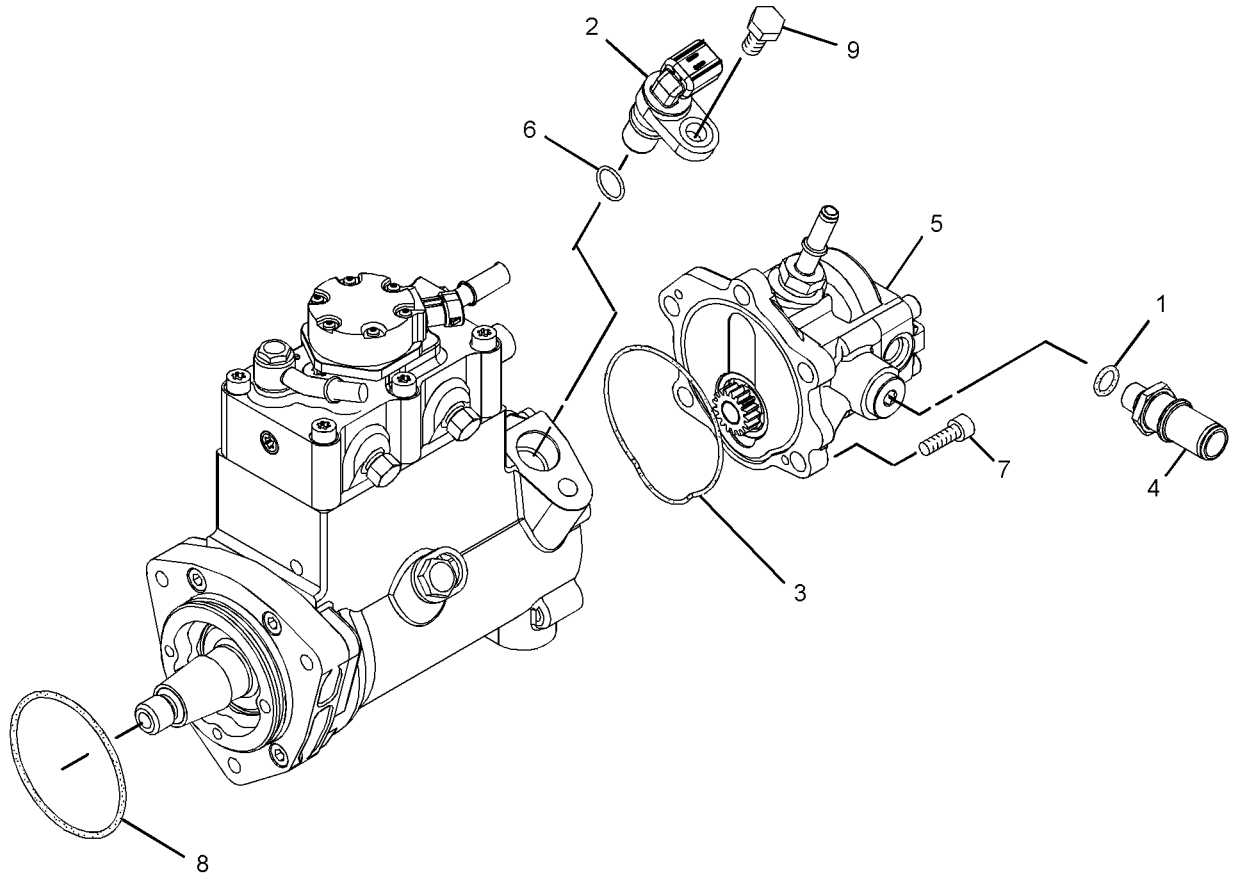

GRAPHIC #1 **<END>** g01427445

FUEL SYSTEM

303-2930 PUMP GP-FUEL INJECTION

S/N: C6E1-5432

PART OF 292-5306 ENGINE AR-PRIMARY

SMCS-1251, 1290 **i02994814**

NOTE	REF NO	GRAPHIC REF	PART NUMBER	QTY	PART NAME 1 2 3 4 5 6 (PRODUCT LEVEL)	SEE PAGE
M	1	1,2	**6I-0217**	6	BOLT (M8X1.25X20-MM)	
M	2	1	**6I-0254**	4	BOLT (M8X1.25X30-MM)	
M	3	1	**6I-0260**	4	BOLT (M8X1.25X25-MM)	
	4	2	**6I-0456**	4	BOLT (M8X1.25X45-MM)	
	5	1	**6I-4374**	2	BOLT (M8X1.25X60-MM)	
	6	1	**6I-4793**	1	BOLT (M8X1.25X50-MM)	
	7	2	**7W-2632**	1	WASHER (8.5X16.8X1.6-MM THK)	
M	8	3	**124-3815**	1	BOLT (M8X16X1.25-MM)	
	9	2	**155-0576**	8	MOUNT-ISOLATION	
	10	1	**320-2391**	2	WASHER	
	11	2	**217-0099**	4	SPACER (8.2X25X2-MM THK)	
	12	1	**225-8524**	1	BOLT-SPECIAL (BANJO)	
	13	1	**230-8989**	1	GEAR-FUEL PUMP (68-TEETH)	
	14	1	**232-3149**	6	WASHER (8.35X16.85X1.55-MM THK)	
	15	1	**217-9039**	1	STRAP-CABLE	
	16	1	**241-4291**	4	SCREW	
	17	1	**311-6632**	1	RAIL AS-FUEL	
	18	2	**268-6677**	1	BRACKET AS	
	18A	2	**260-3939**	1	SCREW-HEX HEAD	
	19	2	**268-6678**	1	BRACKET AS	
	19A	2	**260-3939**	1	SCREW-HEX HEAD	
Y	20	1	**276-8398**	1	PUMP GP-FUEL INJECTION	99
	21	1	**278-5168**	6	CLAMP-INJECTOR	
	22	1	**278-5170**	6	BOLT	
	23	1	**278-5180**	2	CLIP	
	24	2	**278-5201**	2	CONNECTION	
	25	2	**278-5202**	2	SEAL-O-RING	
	26	2	**278-5203**	4	SPACER	
	29	3	**278-5225**	1	KIT-SENSOR (ENGINE OIL PRESSURE)	
	29A	3	**278-5226**	1	SEAL-O-RING	
	30	3	**311-3858**	1	KIT-SENSOR (ENGINE SPEED)	
	30A	3	**274-1639**	1	SEAL	
	31	3	**278-5272**	1	KIT-SENSOR (INTAKE AIR TEMPERATURE)	
	31A	3	**278-5226**	1	SEAL-O-RING	
	32	3	**278-5273**	1	KIT-SENSOR (AIR PRESSURE)	
	32A	3	**199-9252**	1	SEAL-O-RING	
	33	3	**278-5307**	1	KIT-SENSOR (COOLANT TEMPERATURE)	
	33A	3	**199-9267**	1	SEAL-O-RING	
	34	1	**311-6342**	1	SENSOR-PRESSURE (FUEL RAIL PRESSURE)	
	34A	1	**309-8006**	1	WASHER	
	35	1	**280-1889**	4	CLAMP	
	36	1	**280-1890**	4	CLAMP	
	37	1	**280-1891**	4	ISOLATOR	
	38	1	**310-7918**	1	BRACKET-SUPPORT	
R	39	2	**286-3683**	1	CONTROL GP-UNPROGRAMMED (ENGINE)	
	40	1	**287-6838**	1	BRACKET	
	41	1	**287-6839**	2	BOLT	
	42	1	**290-3911**	1	TUBE-FUEL INJECTION (CYL NO. 1)	
	43	1	**290-3912**	1	TUBE-FUEL INJECTION (CYL NO. 2)	
	44	1	**290-3913**	1	TUBE-FUEL INJECTION (CYL NO. 3)	
	45	1	**290-3914**	1	TUBE-FUEL INJECTION (CYL NO. 4)	
	46	1	**290-3915**	1	TUBE-FUEL INJECTION (CYL NO. 5)	
	47	1	**290-3916**	1	TUBE-FUEL INJECTION (CYL NO. 6)	
	48	1	**290-3910**	1	TUBE-FUEL INJECTION	
	49	1	**321-1270**	1	TUBE-OIL	
YR	50	1	**306-9380**	6	INJECTOR GP-FUEL	85

303-2930 **PUMP GP-FUEL INJECTION** *(contd.)* **i02994814**

NOTE	REF NO	GRAPHIC REF	PART NUMBER	QTY	PART NAME 1 2 3 4 5 6 (PRODUCT LEVEL)	SEE PAGE
M	51	1	**101-3895**	1	BOLT (M8X1.25X35-MM)	
	52	1	**300-2940**	1	BRACKET	
	53	2	**293-9901**	1	BRACKET	
F			**278-4138**	5	PROTECTION GP-FUEL SYSTEM	

F-NOT SHOWN
M-METRIC PART
R-REMFG PART MAY BE AVAILABLE
Y-SEPARATE ILLUSTRATION

303-2930 **PUMP GP-FUEL INJECTION** *(contd.)* **i02994814**

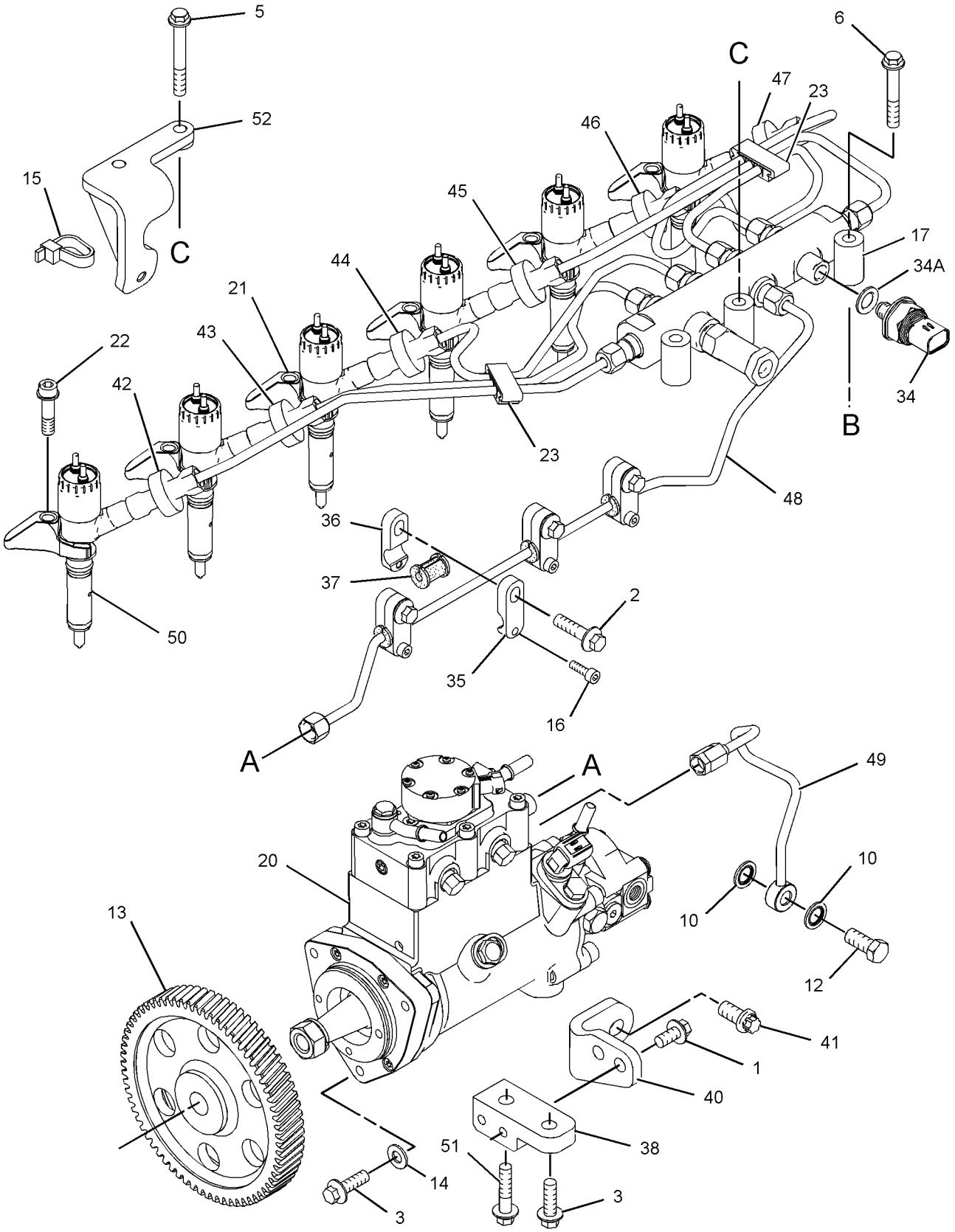

GRAPHIC #1 g01368286

303-2930 **PUMP GP-FUEL INJECTION** *(contd.)* **i02994814**

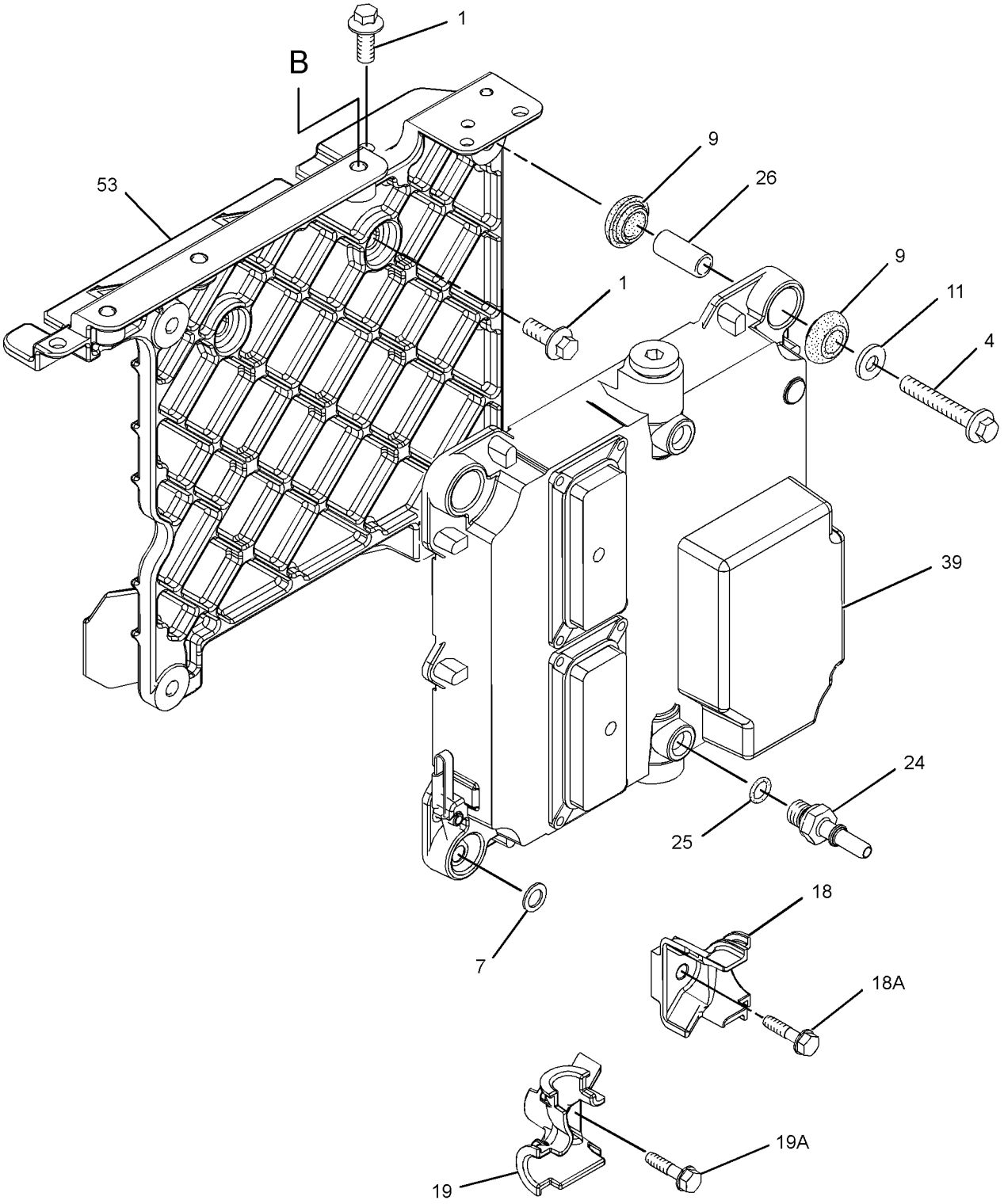

GRAPHIC #2 g01368290

303-2930 **PUMP GP-FUEL INJECTION** *(contd.)* **i02994814**

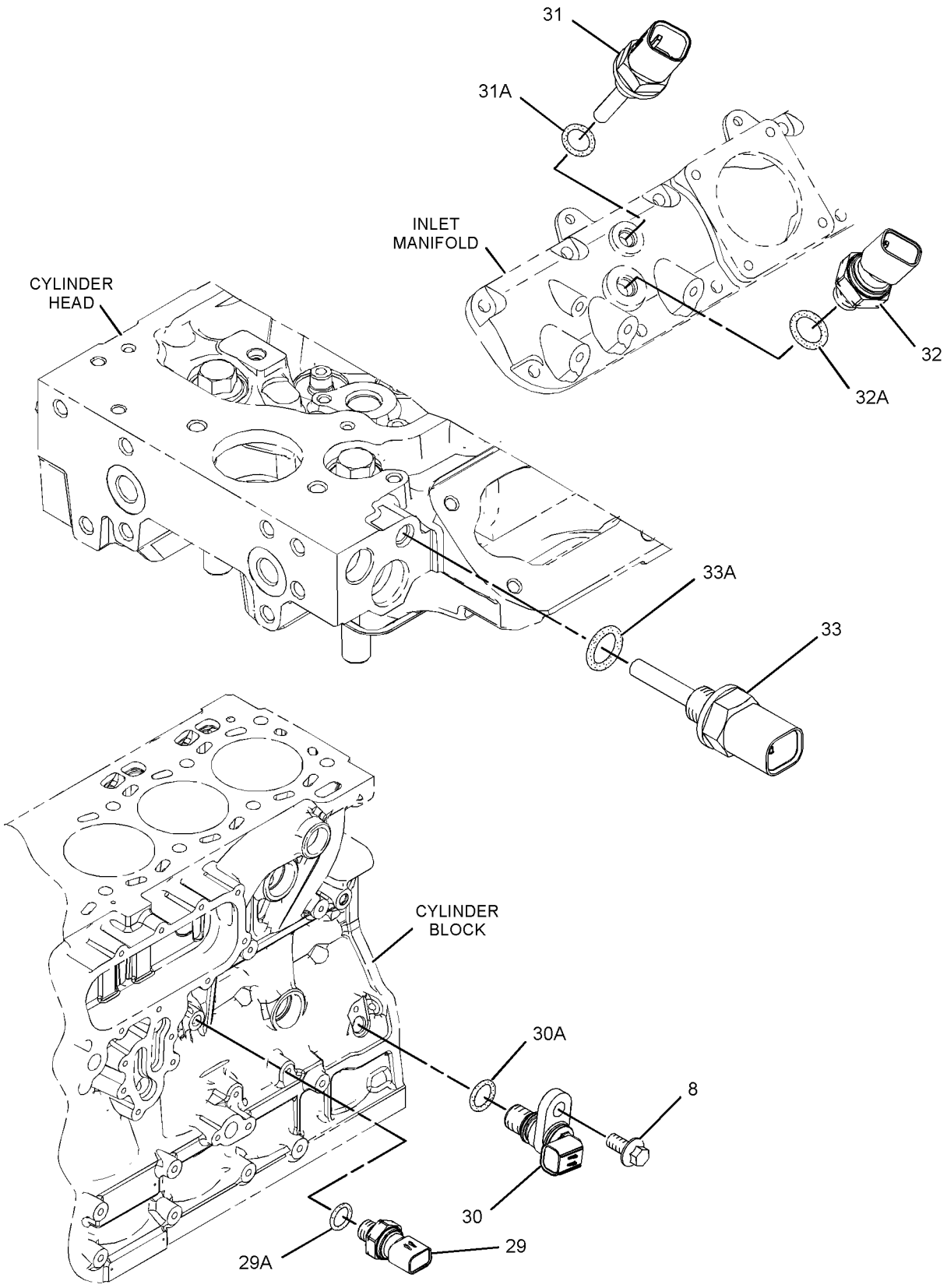

GRAPHIC #3 **<END>** g01330550

FUEL SYSTEM

303-2930 PUMP GP-FUEL INJECTION

S/N: C6E5433-6804

PART OF 292-5306 ENGINE AR-PRIMARY

SMCS-1251, 1290 **i03075308**

NOTE	REF NO	GRAPHIC REF	PART NUMBER	QTY	PART NAME 1 2 3 4 5 6 (PRODUCT LEVEL)	SEE PAGE
M	1	1,2	**6I-0217**	6	BOLT (M8X1.25X20-MM)	
M	2	1	**6I-0254**	4	BOLT (M8X1.25X30-MM)	
M	3	1	**6I-0260**	4	BOLT (M8X1.25X25-MM)	
	4	2	**6I-0456**	4	BOLT (M8X1.25X45-MM)	
	5	1	**6I-4374**	2	BOLT (M8X1.25X60-MM)	
	6	1	**6I-4793**	1	BOLT (M8X1.25X50-MM)	
	7	2	**7W-2632**	1	WASHER (8.5X16.8X1.6-MM THK)	
M	8	3	**124-3815**	1	BOLT (M8X16X1.25-MM)	
	9	2	**155-0576**	8	MOUNT-ISOLATION	
	10	1	**320-2391**	2	WASHER	
	11	2	**217-0099**	4	SPACER (8.2X25X2-MM THK)	
	12	1	**225-8524**	1	BOLT-SPECIAL (BANJO)	
	13	1	**230-8989**	1	GEAR-FUEL PUMP (68-TEETH)	
C	14	1	**232-3149**	3	WASHER (8.35X16.85X1.55-MM THK)	
	15	1	**217-9039**	1	STRAP-CABLE	
	16	1	**241-4291**	4	SCREW	
	17	1	**311-6632**	1	RAIL AS-FUEL	
	18	2	**268-6677**	1	BRACKET AS	
	18A	2	**260-3939**	1	SCREW-HEX HEAD	
	19	2	**268-6678**	1	BRACKET AS	
	19A	2	**260-3939**	1	SCREW-HEX HEAD	
CYR	20	1	**291-5919**	1	PUMP & MTG GP-UNIT INJ HYD	98
	21	1	**278-5168**	6	CLAMP-INJECTOR	
	22	1	**278-5170**	6	BOLT	
	23	1	**278-5180**	2	CLIP	
	24	2	**278-5201**	2	CONNECTION	
	25	2	**278-5202**	2	SEAL-O-RING	
	26	2	**278-5203**	4	SPACER	
	29	3	**278-5225**	1	KIT-SENSOR (ENGINE OIL PRESSURE)	
	29A	3	**278-5226**	1	SEAL-O-RING	
	30	3	**311-3858**	1	KIT-SENSOR (ENGINE SPEED)	
	30A	3	**274-1639**	1	SEAL	
	31	3	**278-5272**	1	KIT-SENSOR (INTAKE AIR TEMPERATURE)	
	31A	3	**278-5226**	1	SEAL-O-RING	
	32	3	**278-5273**	1	KIT-SENSOR (AIR PRESSURE)	
	32A	3	**199-9252**	1	SEAL-O-RING	
	33	3	**278-5307**	1	KIT-SENSOR (COOLANT TEMPERATURE)	
	33A	3	**199-9267**	1	SEAL-O-RING	
	34	1	**311-6342**	1	SENSOR-PRESSURE (FUEL RAIL PRESSURE)	
	34A	1	**309-8006**	1	WASHER	
	35	1	**280-1889**	4	CLAMP	
	36	1	**280-1890**	4	CLAMP	
	37	1	**280-1891**	4	ISOLATOR	
	38	1	**310-7918**	1	BRACKET-SUPPORT	
R	39	2	**286-3683**	1	CONTROL GP-UNPROGRAMMED (ENGINE)	
	40	1	**287-6838**	1	BRACKET	
	41	1	**287-6839**	2	BOLT	
	42	1	**290-3911**	1	TUBE-FUEL INJECTION (CYL NO. 1)	
	43	1	**290-3912**	1	TUBE-FUEL INJECTION (CYL NO. 2)	
	44	1	**290-3913**	1	TUBE-FUEL INJECTION (CYL NO. 3)	
	45	1	**290-3914**	1	TUBE-FUEL INJECTION (CYL NO. 4)	
	46	1	**290-3915**	1	TUBE-FUEL INJECTION (CYL NO. 5)	
	47	1	**290-3916**	1	TUBE-FUEL INJECTION (CYL NO. 6)	
	48	1	**290-3910**	1	TUBE-FUEL INJECTION	
	49	1	**321-1270**	1	TUBE-OIL	
YR	50	1	**306-9380**	6	INJECTOR GP-FUEL	85

303-2930 **PUMP GP-FUEL INJECTION** *(contd.)* **i03075308**

NOTE	REF NO	GRAPHIC REF	PART NUMBER	QTY	PART NAME 1 2 3 4 5 6 (PRODUCT LEVEL)	SEE PAGE
M	51	1	**101-3895**	1	BOLT (M8X1.25X35-MM)	
	52	1	**300-2940**	1	BRACKET	
	53	2	**293-9901**	1	BRACKET	
F			**278-4138**	5	PROTECTION GP-FUEL SYSTEM	

C-CHANGE FROM PREVIOUS TYPE
F-NOT SHOWN
M-METRIC PART
R-REMFG PART MAY BE AVAILABLE
Y-SEPARATE ILLUSTRATION

303-2930 **PUMP GP-FUEL INJECTION** *(contd.)* **i03075308**

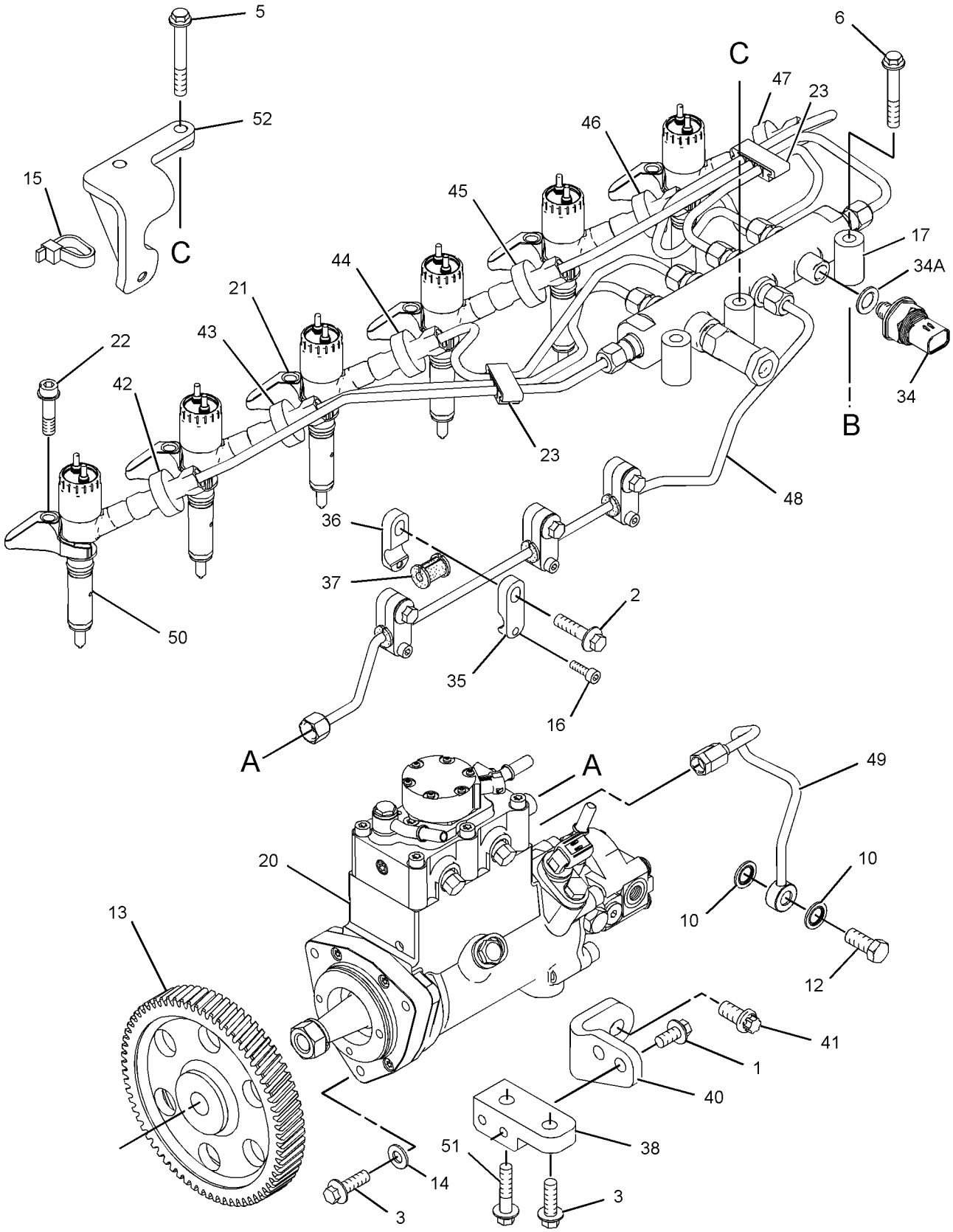

GRAPHIC #1 g01368286

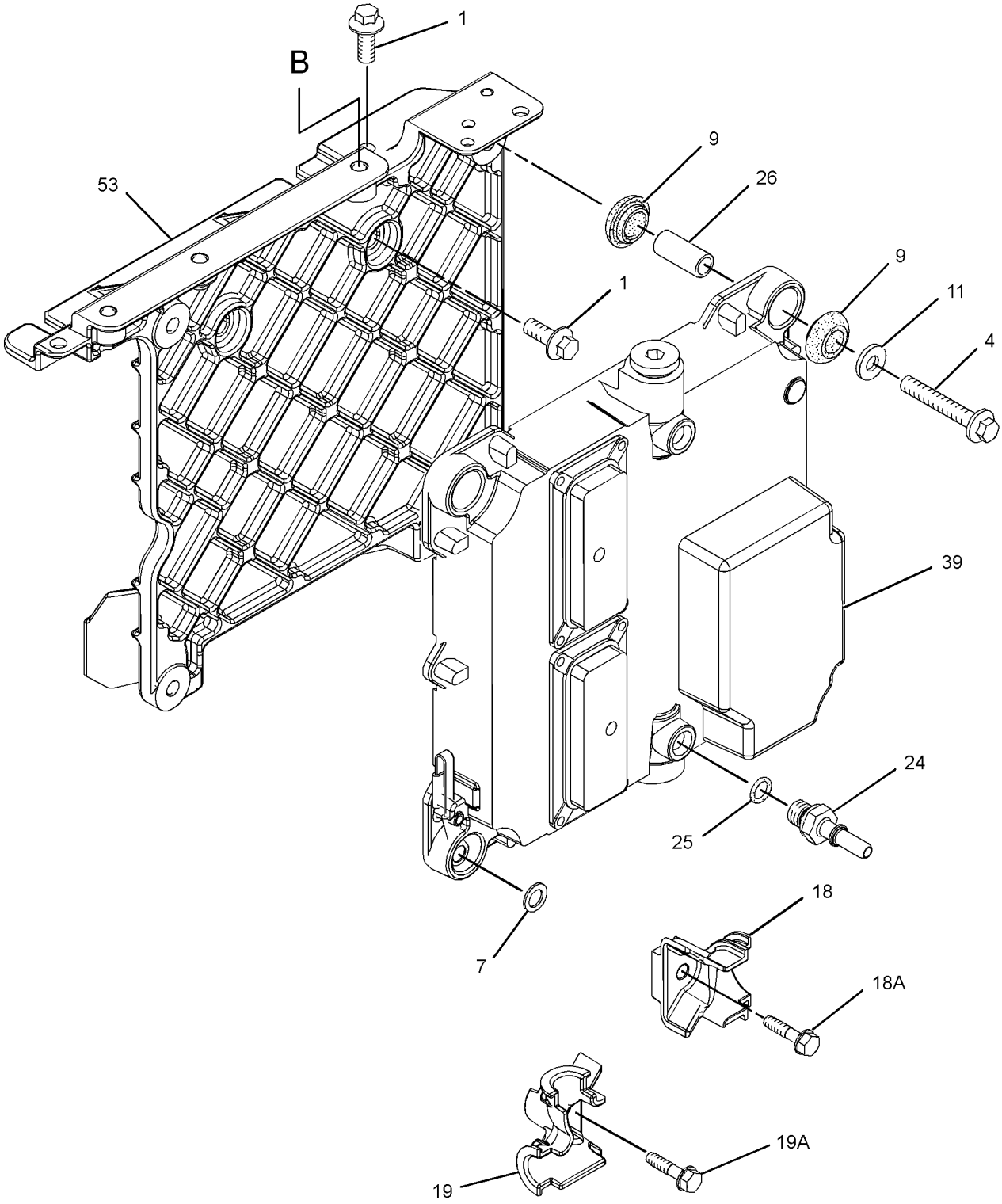

GRAPHIC #2 g01368290

303-2930 **PUMP GP-FUEL INJECTION** *(contd.)* **i03075308**

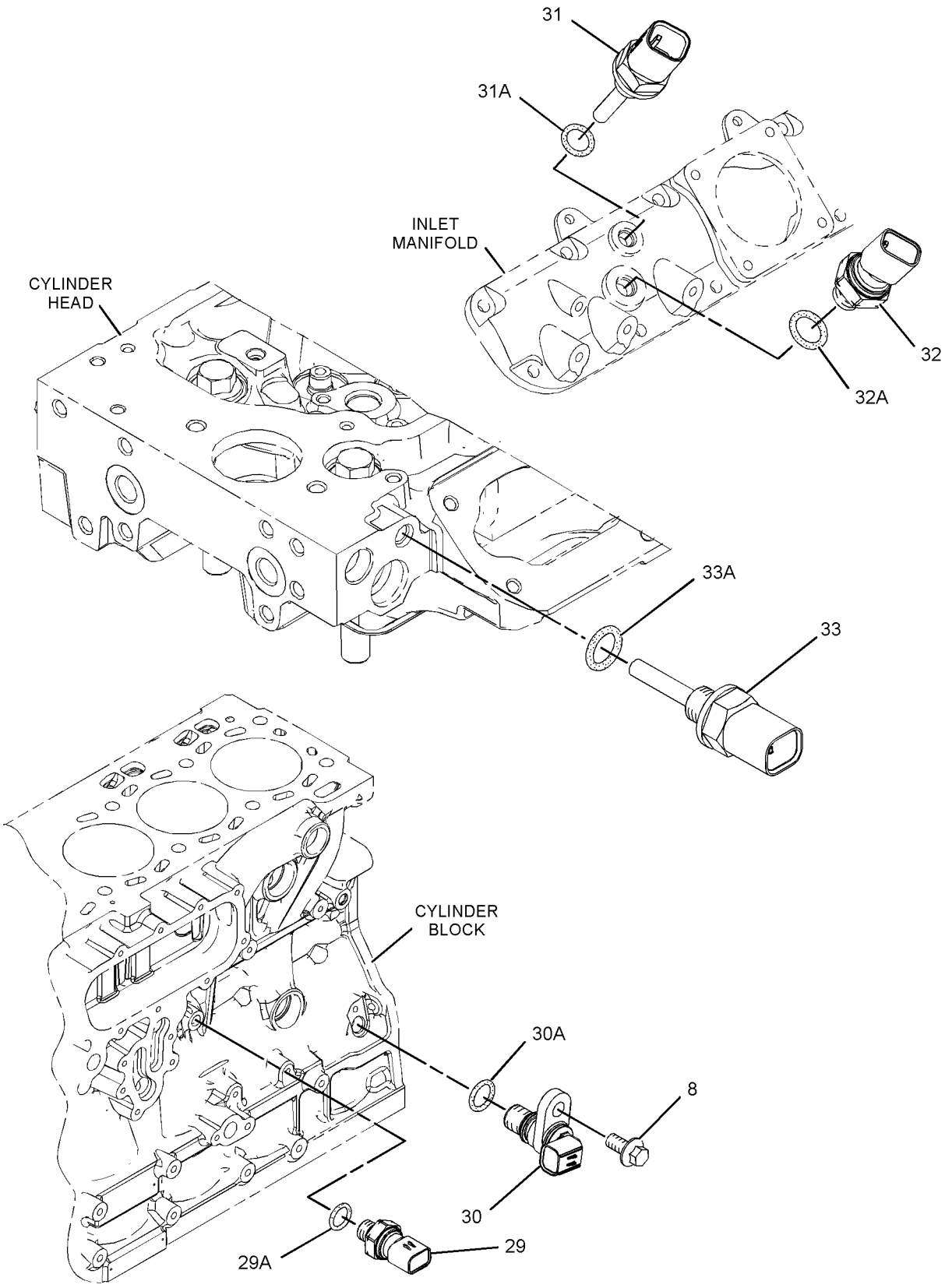

GRAPHIC #3 **<END>** g01330550

FUEL SYSTEM

303-2930 PUMP GP-FUEL INJECTION

S/N: C6E6805-UP

PART OF 292-5306 ENGINE AR-PRIMARY

SMCS-1251, 1290 **i03158464**

NOTE	REF NO	GRAPHIC REF	PART NUMBER	QTY	PART NAME 1 2 3 4 5 6 (PRODUCT LEVEL)	SEE PAGE
M	1	1	**6I-0217**	6	BOLT (M8X1.25X20-MM)	
M	2	2	**6I-0254**	4	BOLT (M8X1.25X30-MM)	
M	3	1	**6I-0260**	4	BOLT (M8X1.25X25-MM)	
	4	1	**6I-0456**	4	BOLT (M8X1.25X45-MM)	
	5	2	**6I-4374**	2	BOLT (M8X1.25X60-MM)	
	6	2	**6I-4793**	1	BOLT (M8X1.25X50-MM)	
	7	1	**7W-2632**	1	WASHER (8.5X16.8X1.6-MM THK)	
M	8	3	**124-3815**	1	BOLT (M8X16X1.25-MM)	
	9	1	**155-0576**	8	MOUNT-ISOLATION	
C	10	1	**160-0162**	2	WASHER	
	11	1	**217-0099**	4	SPACER (8.2X25X2-MM THK)	
	12	1	**225-8524**	1	BOLT-SPECIAL (BANJO)	
	13	1	**230-8989**	1	GEAR-FUEL PUMP (68-TEETH)	
	14	1	**232-3149**	3	WASHER (8.35X16.85X1.55-MM THK)	
	15	2	**217-9039**	1	STRAP-CABLE	
	16	2	**241-4291**	4	SCREW	
	17	2	**311-6632**	1	RAIL AS-FUEL	
	17A	2	**305-5291**	1	VALVE AS-RELIEF	
	17B	2	**228-7102**	1	SEAL-O-RING	
	18	1	**268-6677**	1	BRACKET AS	
	18A	1	**260-3939**	1	SCREW-HEX HEAD	
	19	1	**268-6678**	1	BRACKET AS	
	19A	1	**260-3939**	1	SCREW-HEX HEAD	
YR	20	1	**317-8021**	1	PUMP GP-FUEL INJECTION	115
	21	2	**278-5168**	6	CLAMP-INJECTOR	
	22	2	**278-5170**	6	BOLT	
	23	2	**278-5180**	2	CLIP	
	24	1	**278-5201**	2	CONNECTION	
	25	1	**278-5202**	2	SEAL-O-RING	
	26	1	**278-5203**	4	SPACER	
	29	3	**278-5225**	1	KIT-SENSOR (ENGINE OIL PRESSURE)	
	29A	3	**278-5226**	1	SEAL-O-RING	
	30	3	**311-3858**	1	KIT-SENSOR (ENGINE SPEED)	
	30A	3	**274-1639**	1	SEAL	
	31	3	**278-5272**	1	KIT-SENSOR (INTAKE AIR TEMPERATURE)	
	31A	3	**278-5226**	1	SEAL-O-RING	
	32	3	**278-5273**	1	KIT-SENSOR (AIR PRESSURE)	
	32A	3	**199-9252**	1	SEAL-O-RING	
	33	3	**278-5307**	1	KIT-SENSOR (COOLANT TEMPERATURE)	
	33A	3	**199-9267**	1	SEAL-O-RING	
	34	2	**311-6342**	1	SENSOR-PRESSURE (FUEL RAIL PRESSURE)	
	34A	2	**309-8006**	1	WASHER	
C	35	2	**330-3685**	4	CLAMP	
C	36	2	**330-3687**	4	CLAMP	
CD	37	2	**330-5467**	4	ISOLATOR	
	38	1	**310-7918**	1	BRACKET-SUPPORT	
R	39	1	**331-7539**	1	CONTROL GP-UNPROGRAMMED (ENGINE)	
	40	1	**287-6838**	1	BRACKET	
	41	1	**287-6839**	2	BOLT	
	42	2	**336-8174**	1	TUBE-FUEL INJECTION (CYL NO. 1) (CYL NO. 1)	
	43	2	**336-8175**	1	TUBE-FUEL INJECTION (CYL NO. 2) (CYL NO. 2)	
	44	2	**336-8176**	1	TUBE-FUEL INJECTION (CYL NO. 3) (CYL NO. 3)	
	45	2	**336-8177**	1	TUBE-FUEL INJECTION (CYL NO. 4) (CYL NO. 4)	
	46	2	**336-8178**	1	TUBE-FUEL INJECTION (CYL NO. 5) (CYL NO. 5)	
	47	2	**336-8179**	1	TUBE-FUEL INJECTION (CYL NO. 6) (CYL NO. 6)	
	48	2	**336-8180**	1	TUBE-FUEL INJECTION	

303-2930 PUMP GP-FUEL INJECTION *(contd.)* i03158464

NOTE	REF NO	GRAPHIC REF	PART NUMBER	QTY	PART NAME 1 2 3 4 5 6 (PRODUCT LEVEL)	SEE PAGE
	49	1	**321-1270**	1	TUBE-OIL	
CYR	50	2	**321-3600**	6	INJECTOR GP-FUEL	86
M	51	1	**101-3895**	1	BOLT (M8X1.25X35-MM)	
	52	2	**300-2940**	1	BRACKET	
	53	1	**293-9901**	1	BRACKET	
F			**278-4138**	5	PROTECTION GP-FUEL SYSTEM	

C-CHANGE FROM PREVIOUS TYPE
D-ORDER BY THE METER
F-NOT SHOWN
M-METRIC PART
R-REMFG PART MAY BE AVAILABLE
Y-SEPARATE ILLUSTRATION

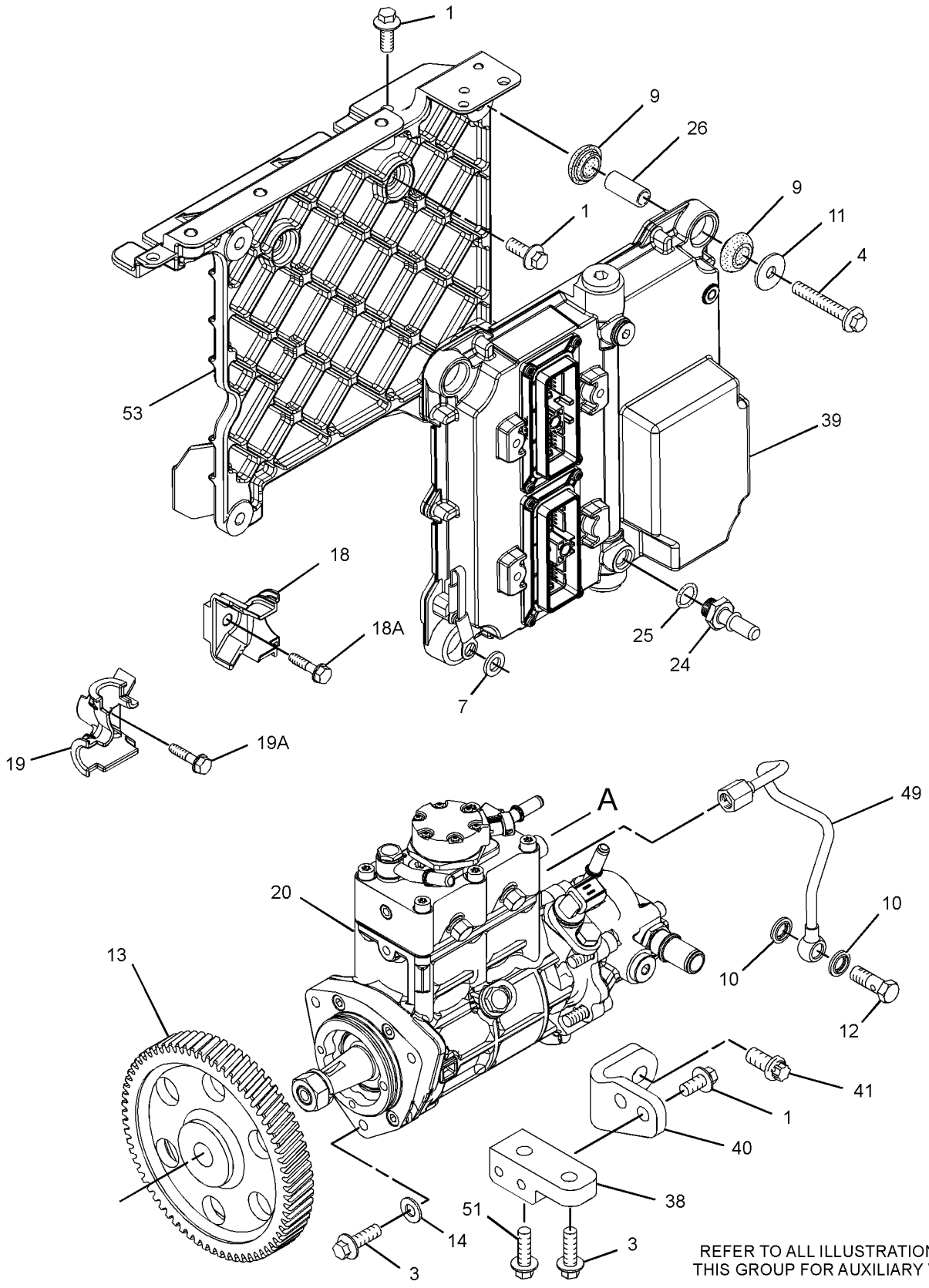

REFER TO ALL ILLUSTRATIONS OF THIS GROUP FOR AUXILIARY VIEWS

GRAPHIC #1

g01795854

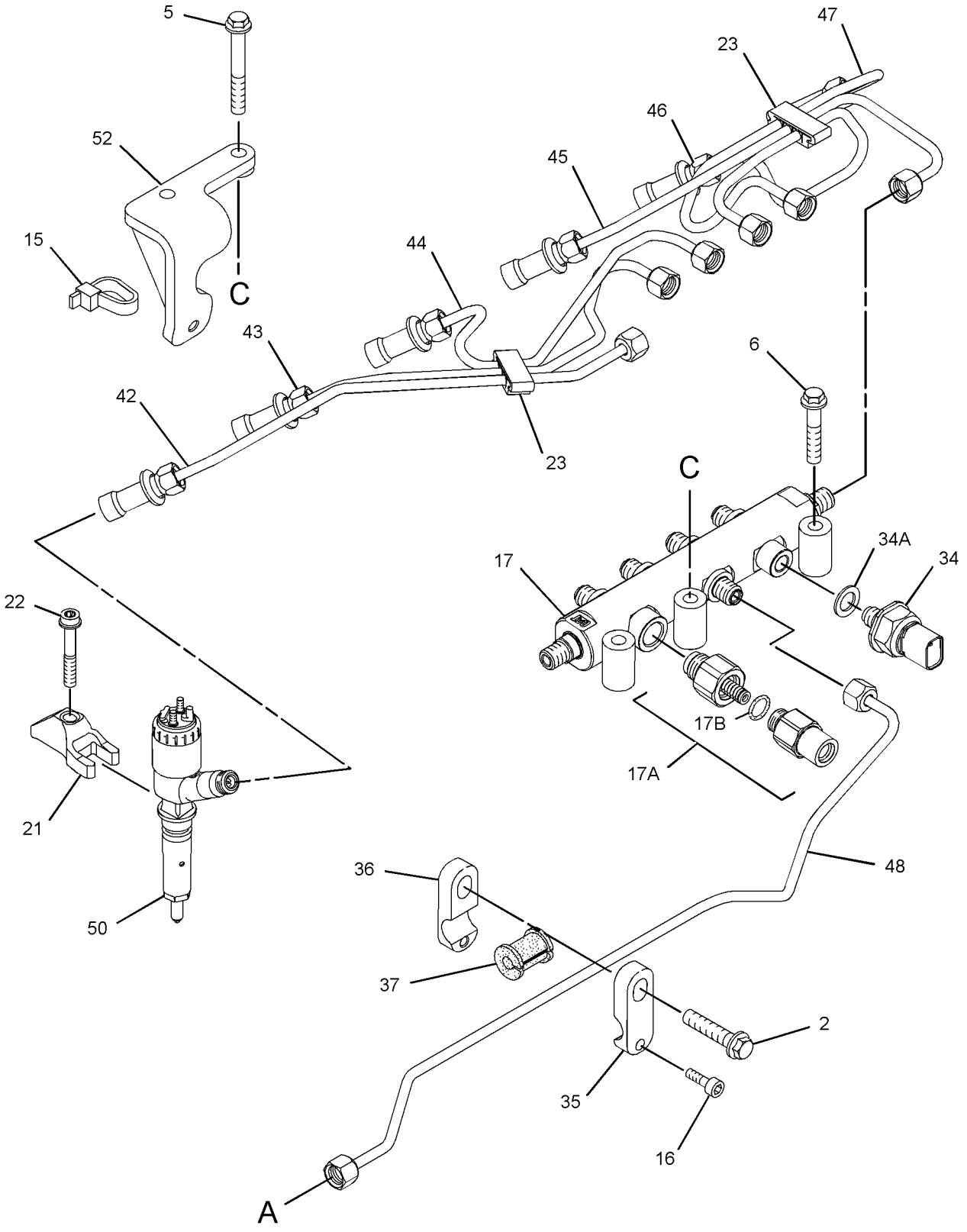

GRAPHIC #2

g01795858

303-2930 **PUMP GP-FUEL INJECTION** *(contd.)* **i03158464**

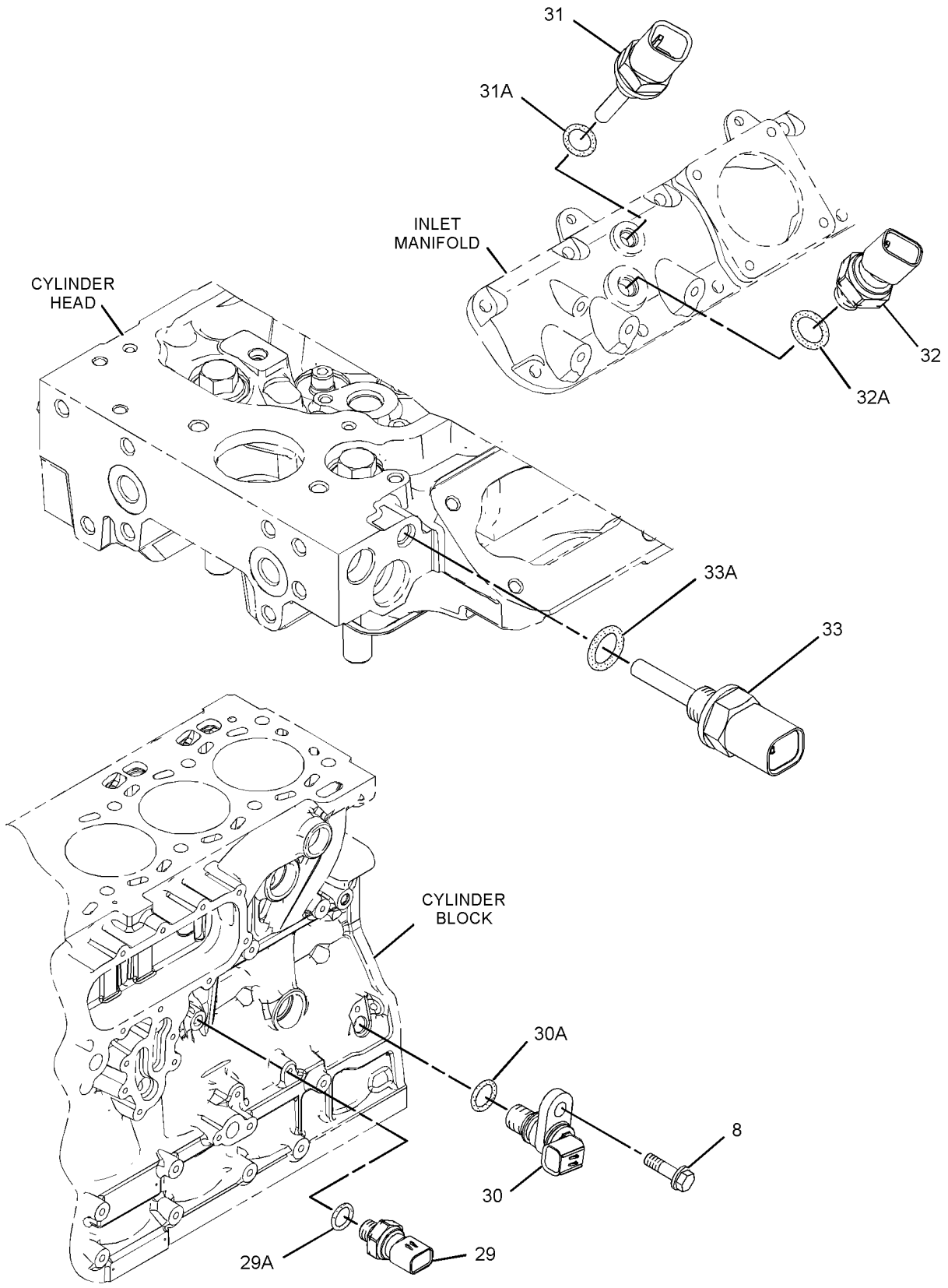

GRAPHIC #3 **<END>** g01603833

317-8021 PUMP GP-FUEL INJECTION*R

S/N: C6E6805-UP

PART OF 303-2930 PUMP GP-FUEL INJECTION

SMCS-1251, 1290 **i03490646**

NOTE	REF NO	GRAPHIC REF	PART NUMBER	QTY	PART NAME 1 2 3 4 5 6 (PRODUCT LEVEL)	SEE PAGE
	1	1	**228-0172**	1	FITTING-FUEL	
	2	1	**228-7100**	2	SEAL-O-RING	
	3	1	**238-0120**	1	SENSOR GP-SPEED (SECONDARY, TIMING)	
	4	1	**247-6019**	1	SEAL	
	5	1	**248-1066**	1	FITTING-FUEL	
	6	1	**293-0249**	1	PUMP GP-FUEL TRANSFER	
	7	1	**295-4801**	1	NUT (M14X1.5-THD)	
	8	1	**296-3542**	1	LOCKWASHER	
	9	1	**117-1385**	1	SEAL-O-RING	
M	10	1	**5A-3604**	5	BOLT-SOCKET HEAD (M8X1.25X25-MM)	
	11	1	**334-2932**	1	SEAL-O-RING	
	12	1	**8L-2779**	4	SEAL-O-RING	
M	13	1	**8T-4200**	1	BOLT (M8X1.25X16-MM)	

M-METRIC PART

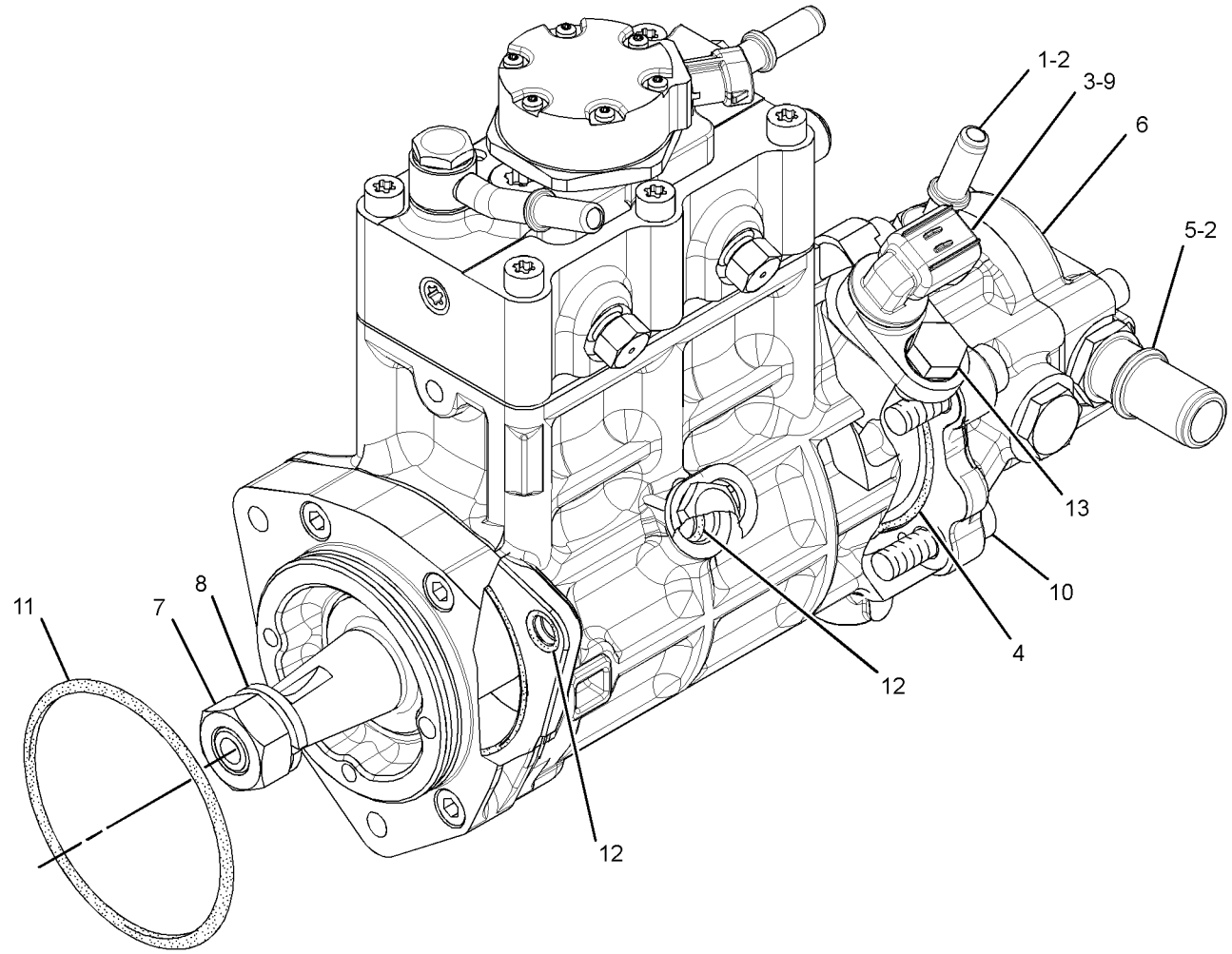

GRAPHIC #1 **<END>** g01701813

212-3657 PUMP GP-FUEL PRM & WATER SEP—ELECTRIC

S/N: KLN1-UP

PART OF 289-8938 LINES GP-FUEL

SMCS-1258, 1261, 1263 **i02259296**

NOTE	REF NO	GRAPHIC REF	PART NUMBER	QTY	PART NAME 1 2 3 4 5 6 (PRODUCT LEVEL)	SEE PAGE
Y	1	1	*174-9570*	1	FILTER GP-WATER SEP & FUEL	84
	2	1	**217-8339**	1	PUMP AS-FUEL PRIMING (24-VOLT)	

Y-SEPARATE ILLUSTRATION

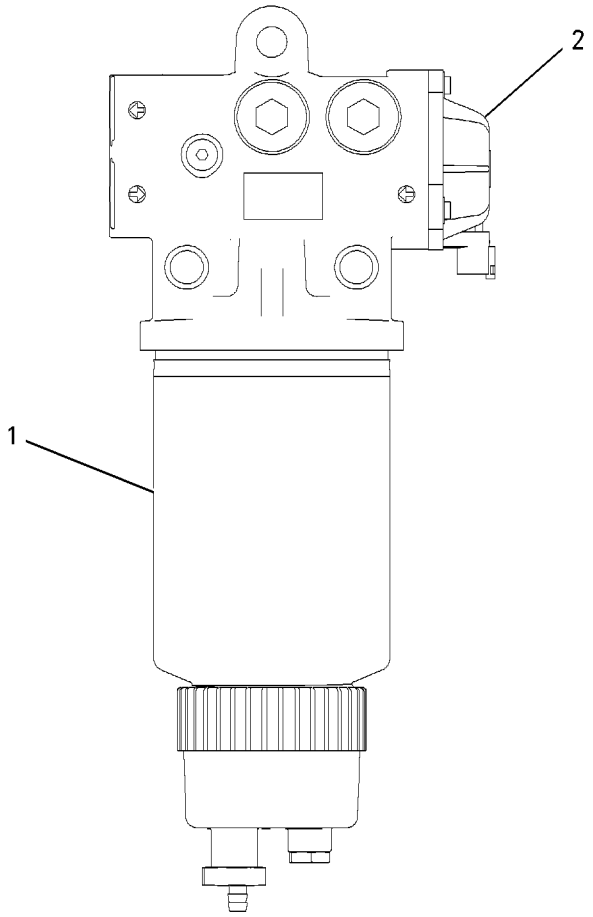

GRAPHIC #1 **<END>** g00875466

289-8911 TANK & MTG GP-FUEL

S/N: KLN1-UP

PART OF 289-8841 CHASSIS AR

SMCS-1273 **i02989320**

NOTE	REF NO	GRAPHIC REF	PART NUMBER	QTY	PART NAME 1 2 3 4 5 6 (PRODUCT LEVEL)	SEE PAGE
	1	1	**202-0360**	2	STRAP AS	
					(EACH INCLUDES)	
		1	**202-0358**	1	STRAP	
	2	1	**204-1370**	1	GASKET	
	3	1	**242-8159**	1	PLATE AS	
Y	4	1	**290-3931**	1	TANK GP-FUEL	118
	5	1	**308-3458**	1	SENDER AS-FUEL LEVEL	
M	6	1	**180-4686**	2	BOLT (M10X1.5X60-MM)	
M	7	1	**5C-9553**	8	BOLT (M6X1X16-MM)	
	8	1	**8T-4121**	6	WASHER-HARD (11X21X2.5-MM THK)	
M	9	1	**8T-4133**	2	NUT (M10X1.5-THD)	
M	10	1	**8T-4137**	2	BOLT (M10X1.5X20-MM)	
	11	1	**8T-4205**	8	WASHER-HARD (7.2X14.5X2-MM THK)	

M-METRIC PART
Y-SEPARATE ILLUSTRATION

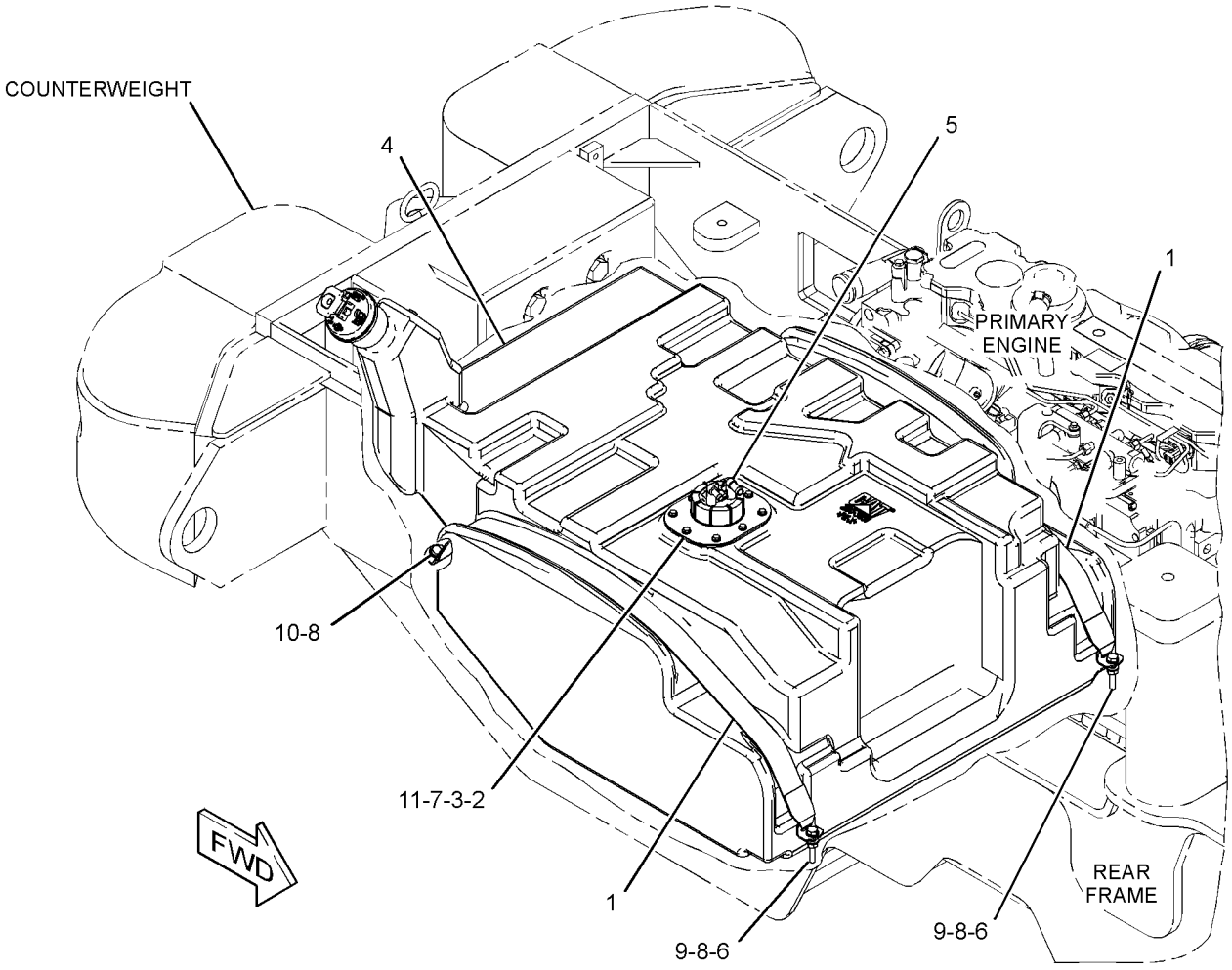

GRAPHIC #1 **<END>** g01389261

290-3931 TANK GP-FUEL

S/N: KLN1-UP

PART OF 289-8911 TANK & MTG GP-FUEL

SMCS-1273 **i03627169**

NOTE	REF NO	GRAPHIC REF	PART NUMBER	QTY	PART NAME 1 2 3 4 5 6 (PRODUCT LEVEL)	SEE PAGE
	1	1	**5M-6213**	1	PLUG-PIPE	
	2	1	**180-3730**	1	STRAINER-FUEL (FILLER NECK SCREEN)	
	3	1	**206-4441**	1	ADAPTER-FUEL CAP	
	4	1	**2M-9780**	1	SEAL-O-RING	
	5	1	**304-3885**	1	CAP-FUEL	
	6	1	**313-4553**	1	PLUG	

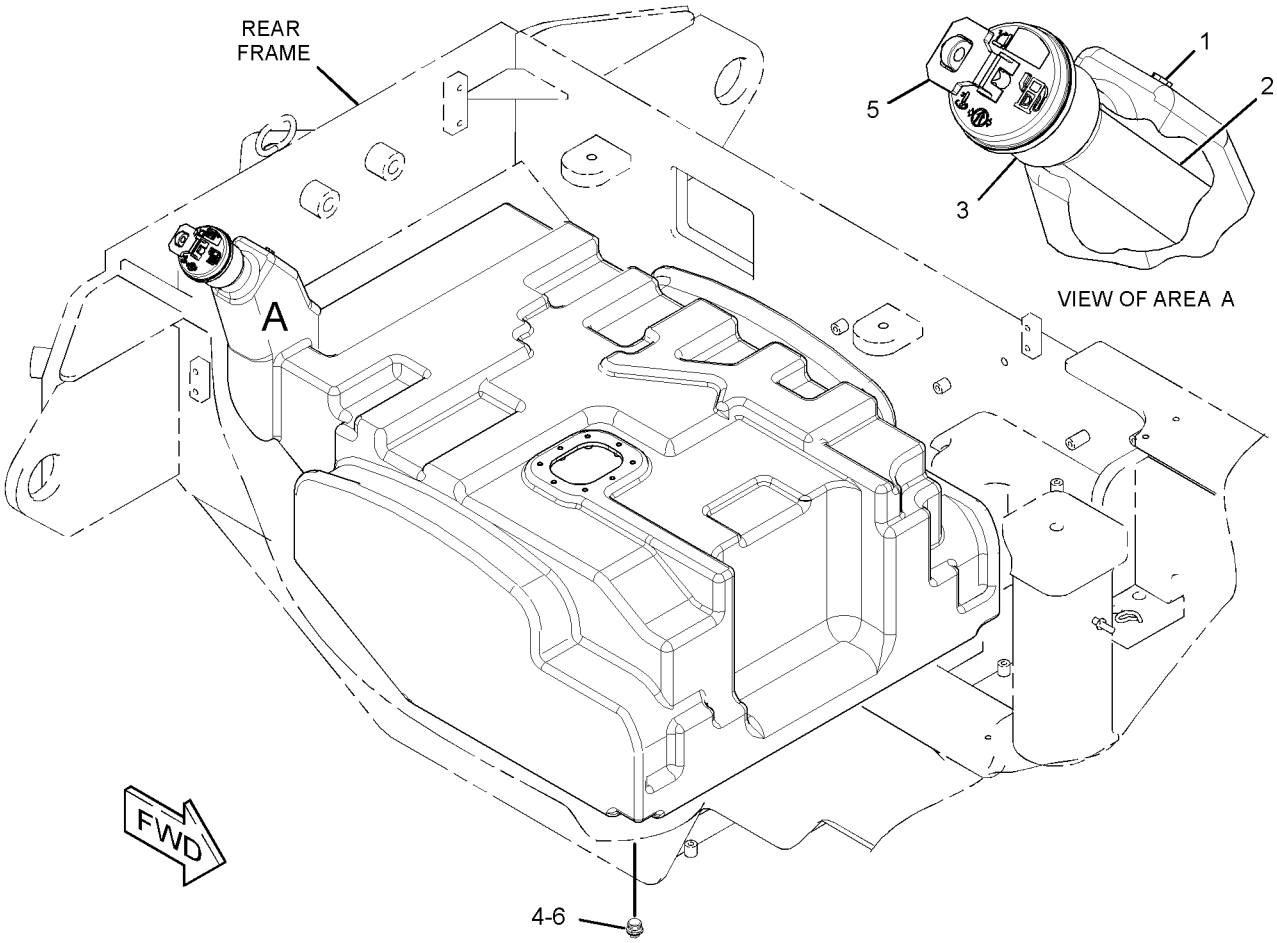

GRAPHIC #1 **<END>** g01946045

3E-6328 ALARM GP

S/N: KLN1-UP
24-VOLT
PART OF 290-7223 LIGHTING GP-FLOOD & SIGNAL

SMCS-7400, 7402, 7407 **i02942905**

NOTE	REF NO	GRAPHIC REF	PART NUMBER	QTY	PART NAME 1 2 3 4 5 6 (PRODUCT LEVEL)	SEE PAGE
	1	1	**102-8802**	1	KIT-RECEPTACLE (2-PIN)	
					(INCLUDES RECEPTACLE AS & WEDGE)	
	2	1	**186-3735**	2	PIN-CONNECTOR (16-GA TO 18-GA)	

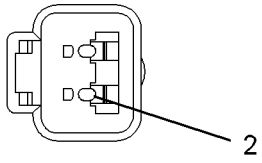

VIEW A–A

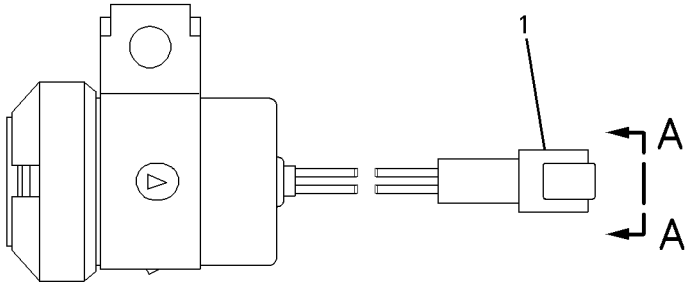

GRAPHIC #1 **<END>** g00697818

ELECTRICAL AND STARTING SYSTEM

197-8820 ALTERNATOR GP-CHARGING*R

S/N: KLN1-UP
24-VOLT, 95-AMPERE
PART OF 259-4137, 267-3770 ALTERNATOR GP-CHARGING
AN ATTACHMENT

SMCS-1405 **i03626650**

NOTE	REF NO	GRAPHIC REF	PART NUMBER	QTY	PART NAME 1 2 3 4 5 6 (PRODUCT LEVEL)	SEE PAGE
	1	1	**185-2653**	1	FRAME	
	2	1	**5S-7349**	1	BOLT (1/4-20X0.5-IN)	
	3	1	**185-2639**	1	FAN AS	
	4	1	**1H-3244**	1	LOCKWASHER	
	5	1	**185-2645**	1	FRAME	
	6	1	**2K-4821**	1	LOCKNUT (5/8-18-THD)	
	7	1	**5P-8247**	1	WASHER-HARD (17X32X3.5-MM THK)	
	8	1	**185-2651**	1	COVER	
	9	1	**8T-4205**	1	WASHER-HARD (7.2X14.5X2-MM THK)	
	10	1	**185-2647**	1	GROMMET	
	11	1	**9L-6770**	1	CAP-DUST (ALTERNATOR AC TAP)	
	12	1	**205-0626**	1	STATOR AS-ALTERNATOR	
	13	1	**185-2638**	2	COLLAR	
	14	1	**185-2654**	1	PLATE	
	15	1	**185-2650**	1	ROTOR AS	
	16	1	**185-2644**	1	COIL AS	
	17	1	**185-2648**	1	REGULATOR AS-VOLTAGE (24-VOLT)	
	18	1	**6V-8189**	1	NUT (5/16-18-THD)	
	19	1	**8T-4224**	1	WASHER-HARD (8.8X16X2-MM THK)	
	20	1	**3F-9556**	1	LOCKWASHER	
					AVAILABLE REPAIR KIT(S):	
			185-2655		KIT-BEARING (ALTERNATOR)	
					(INCLUDES BEARINGS)	
			199-8436		KIT-TERMINAL (ALTERNATOR)	
					(INCLUDES HOLDER AS, PLATE, INSULATOR, PIN, BOLTS, GROMMET, & NUT)	
			199-7891		KIT-TERMINAL (ALTERNATOR)	
					(INCLUDES INSULATORS, WASHERS, & NUTS)	
			185-2658		KIT-HARDWARE (ALTERNATOR)	
					(INCLUDES BOLTS)	

197-8820 **ALTERNATOR GP-CHARGING** ***(contd.)*** **i03626650**

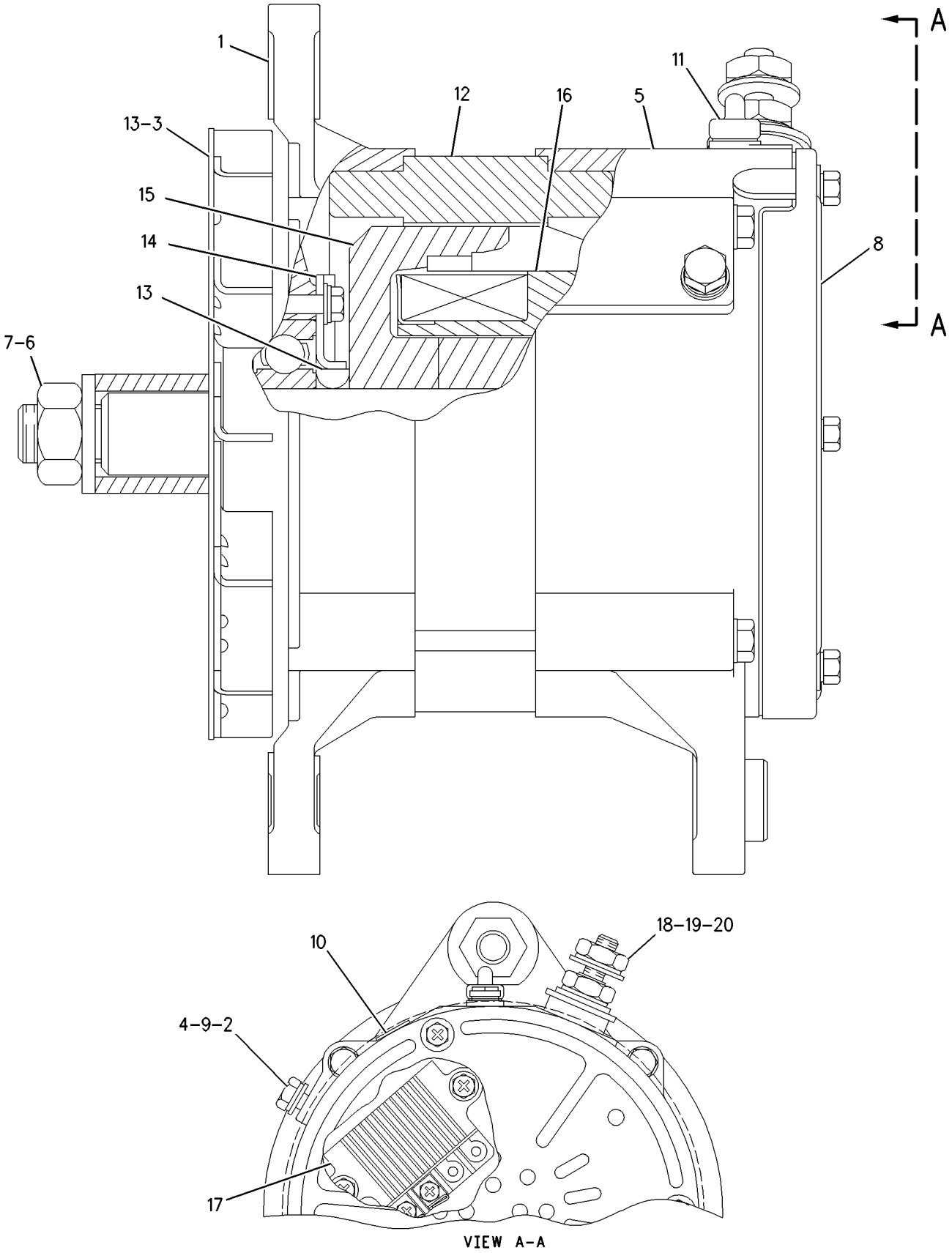

GRAPHIC #1 **<END>** g00873198

259-4137 ALTERNATOR GP-CHARGING

S/N: KLN1-UP
PART OF 290-8189 CANOPY AR-OPEN ROPS, 315-4654 OPERATOR AR
AN ATTACHMENT

SMCS-1405 **i03016506**

NOTE	REF NO	GRAPHIC REF	PART NUMBER	QTY	PART NAME 1 2 3 4 5 6 (PRODUCT LEVEL)	SEE PAGE
	1	1	**129-5096**	1	PULLEY-ALTERNATOR (8-GROOVE)	
	2	1	**190-0642**	1	BELT TENSIONER	
YR	3	1	**197-8820**	1	ALTERNATOR GP-CHARGING (24-VOLT, 95-AMPERE)	120
	4	1	**226-0443**	1	BELT-SERPENTINE	
	5	1	**262-7562**	1	BRACKET	
	6	1	**267-7283**	1	BRACKET	
	7	1	**7X-7729**	7	WASHER (11X25X3-MM THK)	
	8	1	**8C-4436**	1	BOLT (1/2-13X1.375-IN)	
M	9	1	**8T-4136**	3	BOLT (M10X1.5X25-MM)	
M	10	1	**8T-4172**	1	BOLT (M10X1.5X80-MM)	
M	11	1	**8T-4184**	2	BOLT (M12X1.75X45-MM)	
M	12	1	**8T-4195**	2	BOLT (M10X1.5X30-MM)	
M	13	1	**8T-4196**	1	BOLT (M10X1.5X35-MM)	
	14	1	**8T-4223**	3	WASHER-HARD (13.5X25.5X3-MM THK)	

M-METRIC PART
R-REMFG PART MAY BE AVAILABLE
Y-SEPARATE ILLUSTRATION

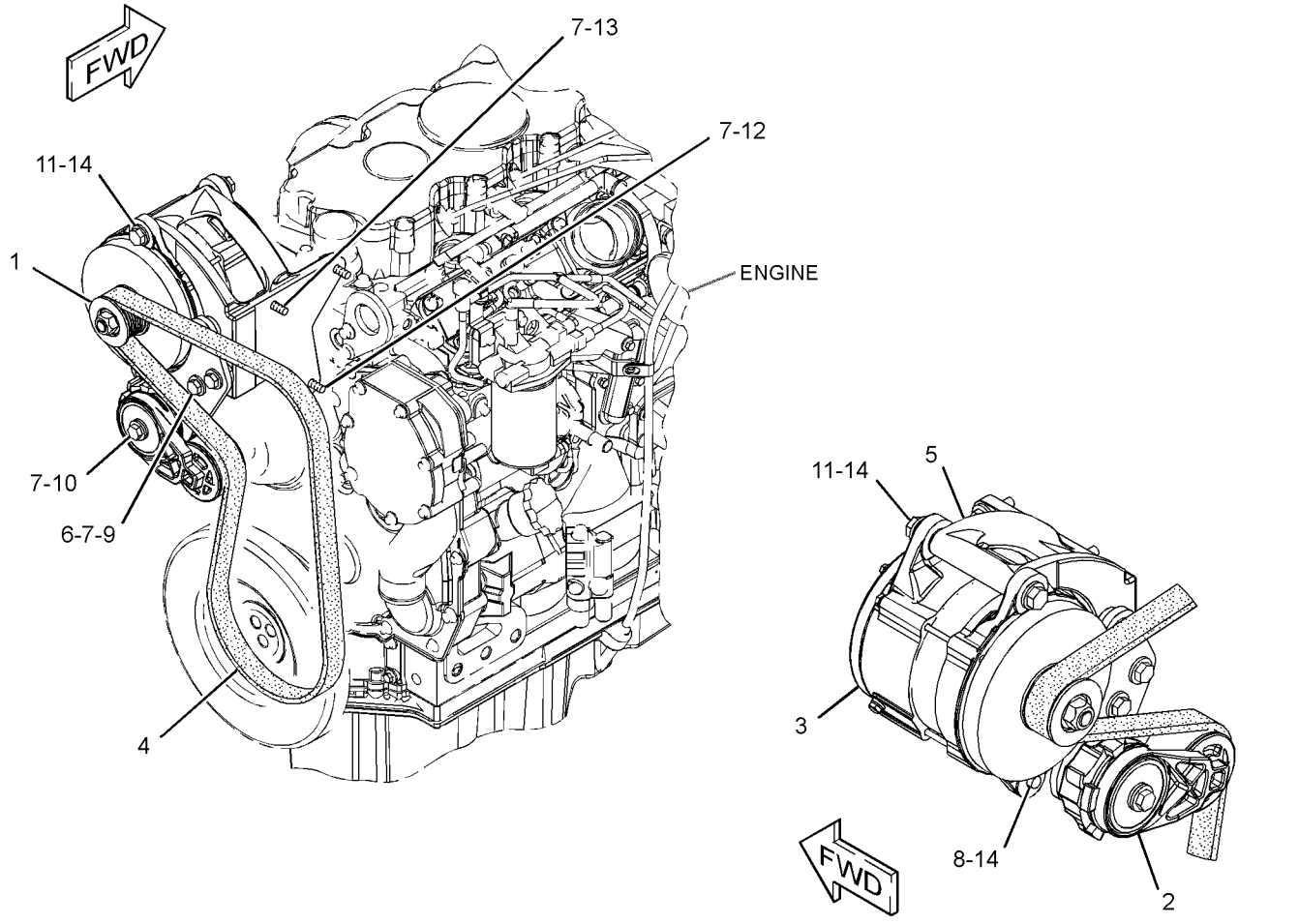

GRAPHIC #1 **<END>** g01391101

267-3770 ALTERNATOR GP-CHARGING

S/N: KLN1-UP
PART OF 294-9433 AIR CONDITIONER AR
AN ATTACHMENT

SMCS-1405 **i03042815**

NOTE	REF NO	GRAPHIC REF	PART NUMBER	QTY	PART NAME 1 2 3 4 5 6 (PRODUCT LEVEL)	SEE PAGE
	1	1	**129-5096**	1	PULLEY-ALTERNATOR (8-GROOVE)	
	2	1	**190-0643**	1	BELT TENSIONER GP	
YR	3	1	**197-8820**	1	ALTERNATOR GP-CHARGING (24-VOLT, 95-AMPERE)	120
	4	1	**262-7562**	1	BRACKET	
	5	1	**267-7283**	1	BRACKET	
	6	1	**288-4641**	1	BELT-SERPENTINE	
	7	1	**7X-7729**	7	WASHER (11X25X3-MM THK)	
	8	1	**8C-4436**	1	BOLT (1/2-13X1.375-IN)	
M	9	1	**8T-4172**	1	BOLT (M10X1.5X80-MM)	
M	10	1	**8T-4184**	2	BOLT (M12X1.75X45-MM)	
M	11	1	**8T-4195**	2	BOLT (M10X1.5X30-MM)	
	12	1	**8T-4223**	3	WASHER-HARD (13.5X25.5X3-MM THK)	
M	13	1	**8T-4196**	1	BOLT (M10X1.5X35-MM)	
M	14	1	**8T-4136**	3	BOLT (M10X1.5X25-MM)	

M-METRIC PART
R-REMFG PART MAY BE AVAILABLE
Y-SEPARATE ILLUSTRATION

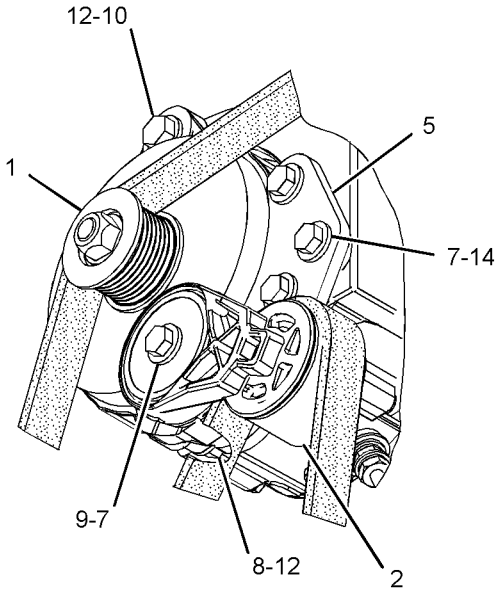

VIEW OF AREA A

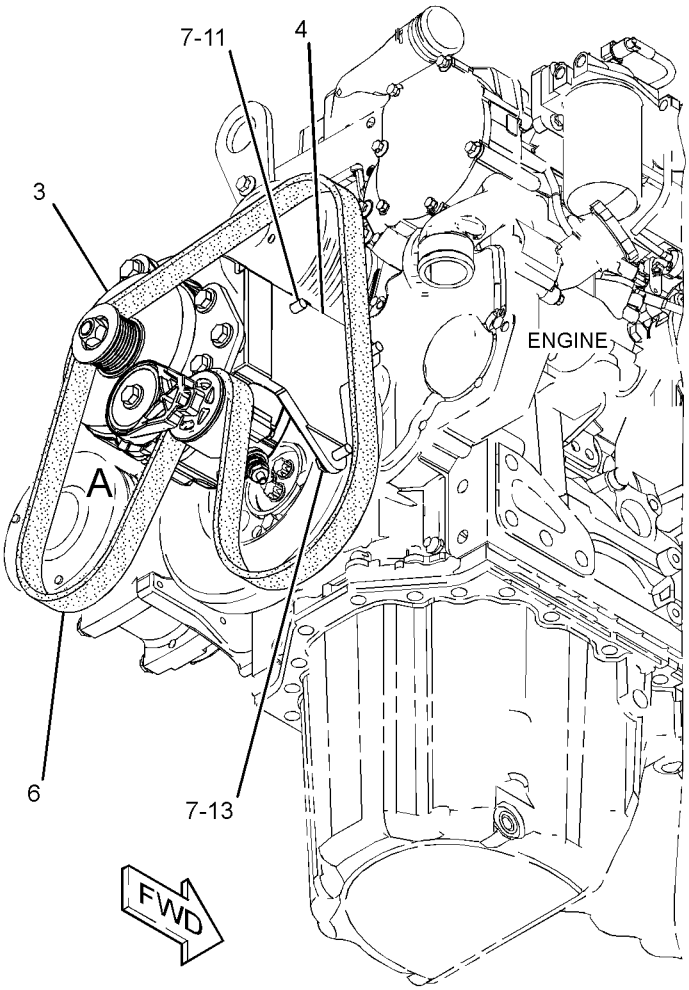

GRAPHIC #1 **<END>** g01395017

ELECTRICAL AND STARTING SYSTEM

290-7203 BATTERY & WIRING GP

S/N: KLN1-UP
PART OF 294-9439 STEERING AR-STANDARD
AN ATTACHMENT

SMCS-1401, 1402, 1408 **i03629346**

NOTE	REF NO	GRAPHIC REF	PART NUMBER	QTY	PART NAME 1 2 3 4 5 6 (PRODUCT LEVEL)	SEE PAGE
	1	1	**2G-8767**	2	WASHER (10.5X60X3-MM THK)	
	2	1	**3E-8320**	1	PLATE-INSTRUCTION (BATTERY)	
	3	1	**6G-2256**	2	CLAMP	
	4	1	**6G-2263**	2	SPACER (10.5X19X28.5-MM THK)	
	5	1	**7K-1181**	1	STRAP-CABLE	
Y	6	1	**7N-0718**	1	SWITCH GP-DISCONNECT (BATTERY) (12-VOLT)	167
	7	1	**8R-0768**	4	ROD-RETAINING	
	8	1	**102-4176**	2	HOLD-DOWN-BATTERY	
	9	1	**151-4841**	1	BLOCK	
	10	1	**180-8871**	1	CABLE AS	
E		1	**5P-0761**		CABLE (00-GA, RED) (145-CM)	
		1	**7N-5274**	1	COVER-TERMINAL (BLACK)	
		1	**8N-1725**	1	COVER-TERMINAL (RED)	
		1	**3S-6050**	1	TERMINAL AS-BATTERY (NEGATIVE)	
		1	**3S-6049**	1	TERMINAL AS-BATTERY (POSITIVE)	
B		1	**1P-0810**	1	TAPE-ELECTRICAL	
	11	1	**180-8874**	1	CABLE AS	
		1	**1S-7251**	1	TERMINAL-CABLE (00-GA, 1/2-IN BOLT)	
		1	**315-0180**	1	TERMINAL-RING	
		1	**9G-8909**	1	COVER-TERMINAL (BLACK)	
E		1	**159-8050**		CABLE (00-GA, BLACK) (30-CM)	
	12	1	**204-2281**	1	STRAP-TIE	
	13	1	**293-5283**	1	CABLE AS	
E		1	**5P-0747**		CABLE (00-GA, BLACK) (36-CM)	
		1	**216-7790**	1	TERMINAL-RING	
		1	**315-0180**	1	TERMINAL-RING	
	14	1	**293-5284**	1	CABLE AS	
E		1	**125-7876**		TUBE-HEAT SHRINK (17.78-MM) (4-CM)	
		1	**216-7790**	1	TERMINAL-RING	
		1	**9G-8909**	1	COVER-TERMINAL (BLACK)	
E		1	**5P-0747**		CABLE (00-GA, BLACK) (136-CM)	
		1	**7N-5274**	1	COVER-TERMINAL (BLACK)	
		1	**3S-6050**	1	TERMINAL AS-BATTERY (NEGATIVE)	
	15	1	**293-5532**	1	BRACKET	
	16	1	**299-9124**	1	BRACKET AS	
M		1	**8T-3490**	2	NUT-WELD (M10X1.5-THD)	
	17	1	**314-7513**	1	CABLE AS (170-CM)	
E		1	**159-8049**		CABLE (00-GA, RED) (170-CM)	
E		1	**125-7876**		TUBE-HEAT SHRINK (17.78-MM) (4-CM)	
		1	**216-7790**	1	TERMINAL-RING	
		1	**8N-0869**	1	COVER-TERMINAL (RED)	
		1	**8N-1725**	1	COVER-TERMINAL (RED)	
		1	**3S-6049**	1	TERMINAL AS-BATTERY (POSITIVE)	
	18	1	**1B-3057**	1	CLIP	
	19	1	**5P-4116**	4	WASHER-HARD (8.8X20.5X2-MM THK)	
	20	1	**6D-3479**	7	CLIP	
	21	1	**8T-4121**	17	WASHER-HARD (11X21X2.5-MM THK)	
M	22	1	**8T-4133**	5	NUT (M10X1.5-THD)	
M	23	1	**8T-4136**	5	BOLT (M10X1.5X25-MM)	
M	24	1	**8T-4137**	4	BOLT (M10X1.5X20-MM)	
M	25	1	**8T-4195**	1	BOLT (M10X1.5X30-MM)	
M	26	1	**8T-6466**	2	BOLT (M10X1.5X60-MM)	
M	27	1	**8T-7963**	4	LOCKNUT (M8X1.25-THD)	

290-7203 **BATTERY & WIRING GP** *(contd.)* **i03629346**

B-USE AS REQUIRED
E-ORDER BY THE CENTIMETER
M-METRIC PART
Y-SEPARATE ILLUSTRATION

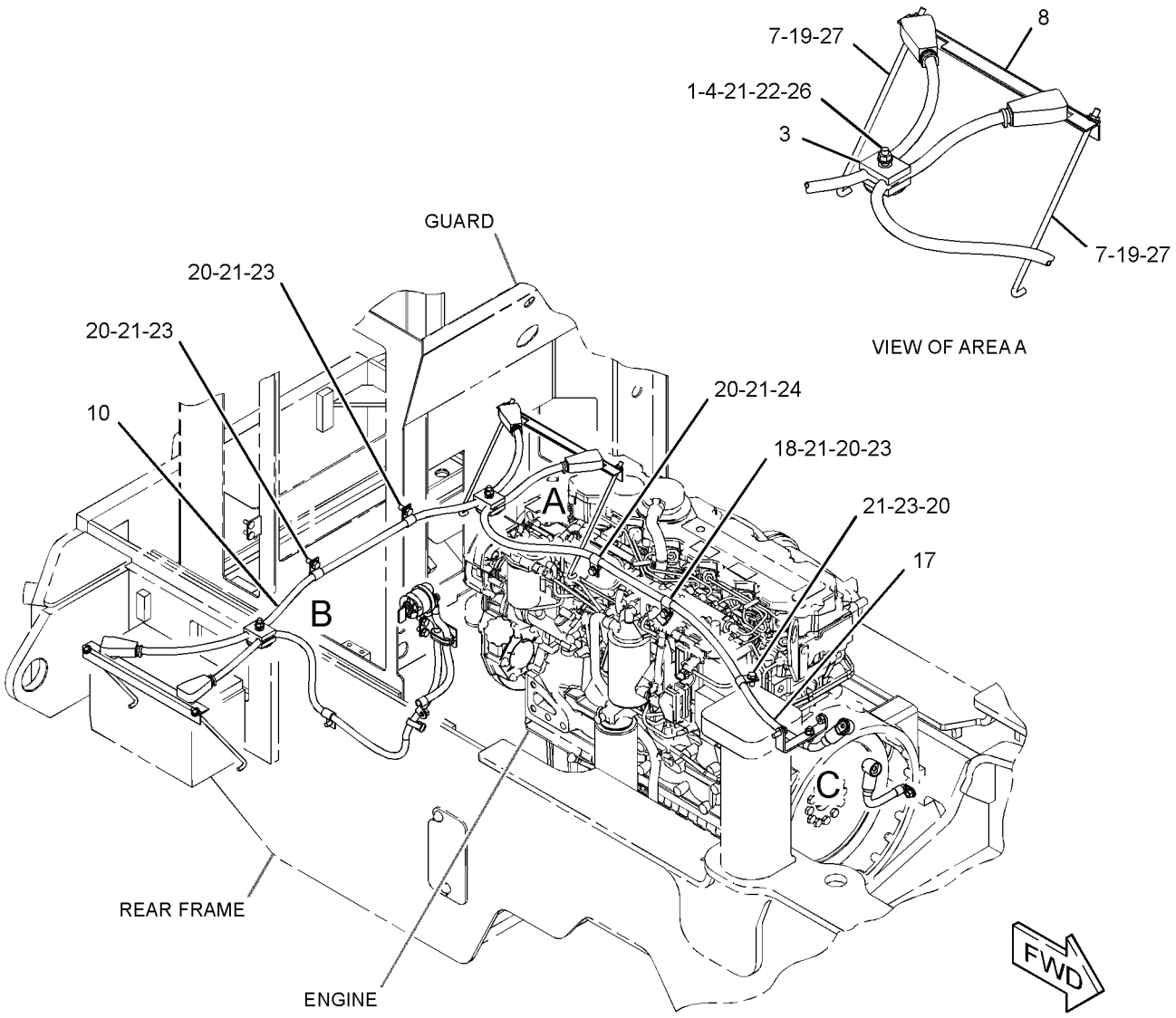

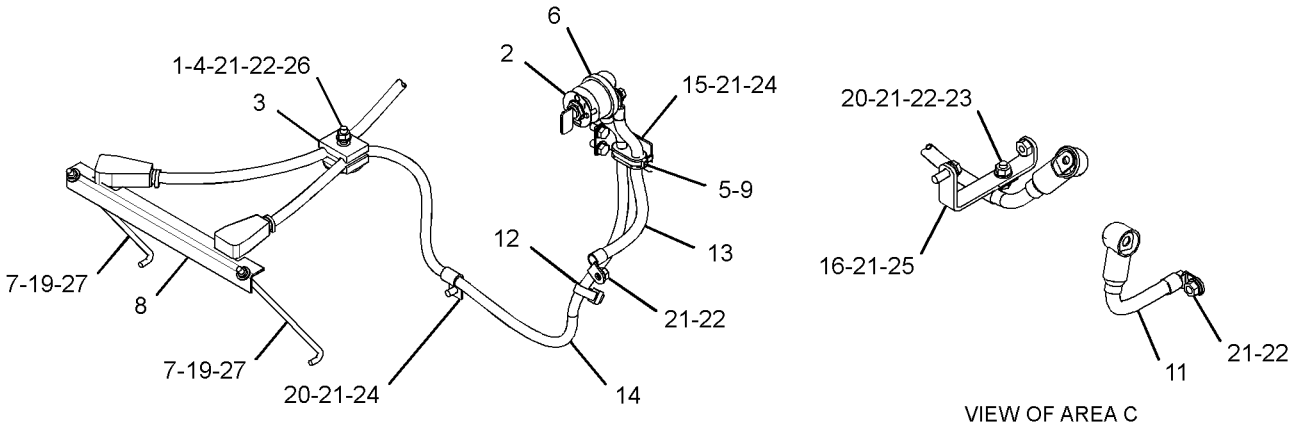

GRAPHIC #1 **<END>** g01408869

ELECTRICAL AND STARTING SYSTEM

112-7167 BATTERY GP

S/N: KLN1-UP

PART OF 289-8841 CHASSIS AR

SMCS-1401 **i00528382**

NOTE	PART NUMBER	QTY	PART NAME 1 2 3 4 5 6 (PRODUCT LEVEL)	SEE PAGE
	9X-3404	2	BATTERY (12-VOLT, MAINTENANCE FREE, WET)	

<END>

3E-7844 CONTROL GP-LIFT KICKOUT

S/N: KLN1-UP

PART OF 218-9937 KICKOUT & POSITIONER GP

SMCS-5109 **i03537653**

NOTE	REF NO	GRAPHIC REF	PART NUMBER	QTY	PART NAME 1 2 3 4 5 6 (PRODUCT LEVEL)	SEE PAGE
	1	1	**9X-5617**	1	FILM-INSTRUCTION (LIFT KICKOUT)	
	2	1	**102-8803**	1	KIT-RECEPTACLE (3-PIN)	
					(INCLUDES RECEPTACLE AS & WEDGE)	
	3	1	**8T-8729**	3	PIN-CONNECTOR (16-GA TO 18-GA)	
	4	1	**3E-3371**	1	WEDGE-RECEPTACLE LOCK (3-PIN)	

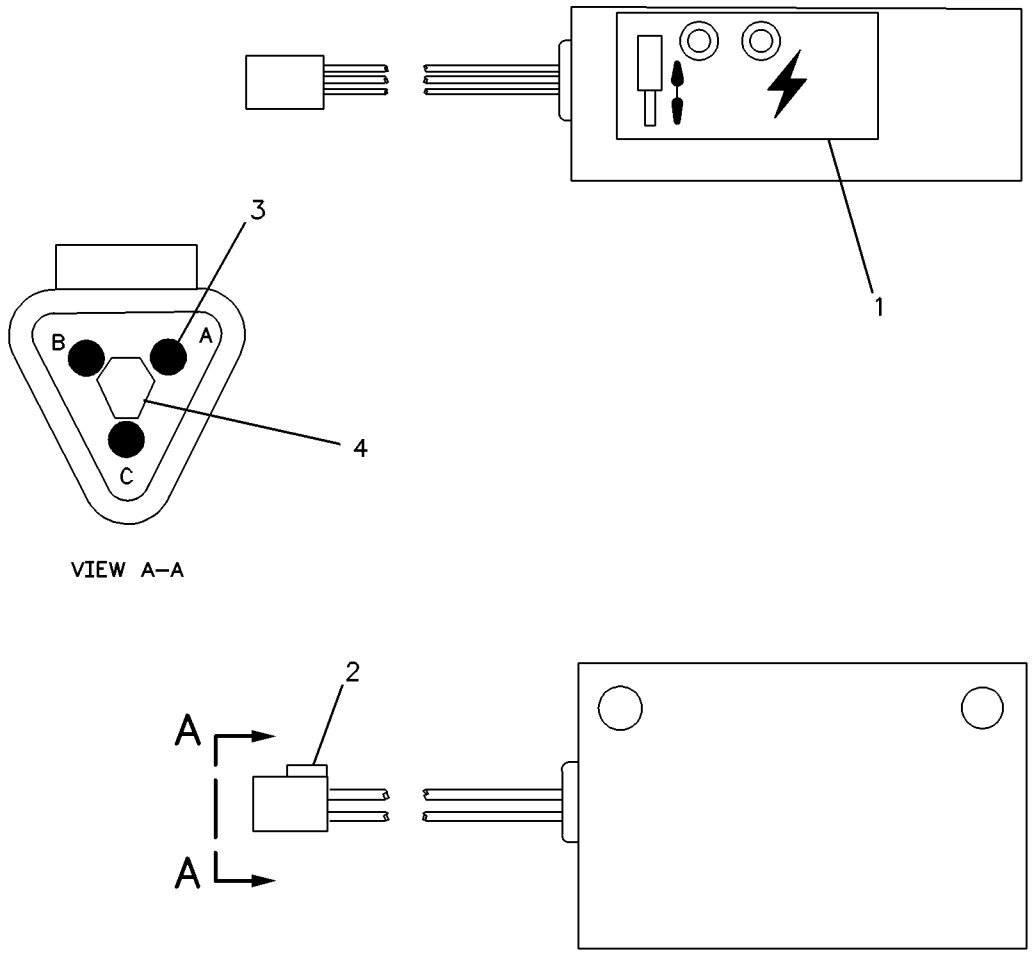

GRAPHIC #1 **<END>** g00119271

3E-7843 CONTROL GP-POSITION

S/N: KLN1-UP

PART OF 218-9937 KICKOUT & POSITIONER GP

SMCS-5112 **i02610079**

NOTE	REF NO	GRAPHIC REF	PART NUMBER	QTY	PART NAME 1 2 3 4 5 6 (PRODUCT LEVEL)	SEE PAGE
	1	1	**9X-5617**	1	FILM-INSTRUCTION	
	2	1	**8T-8730**	3	SOCKET-CONNECTOR	
	3	1	**3E-3368**	1	WEDGE-PLUG LOCK (3-PIN)	
	4	1	**3E-3367**	1	PLUG AS-CONNECTOR	

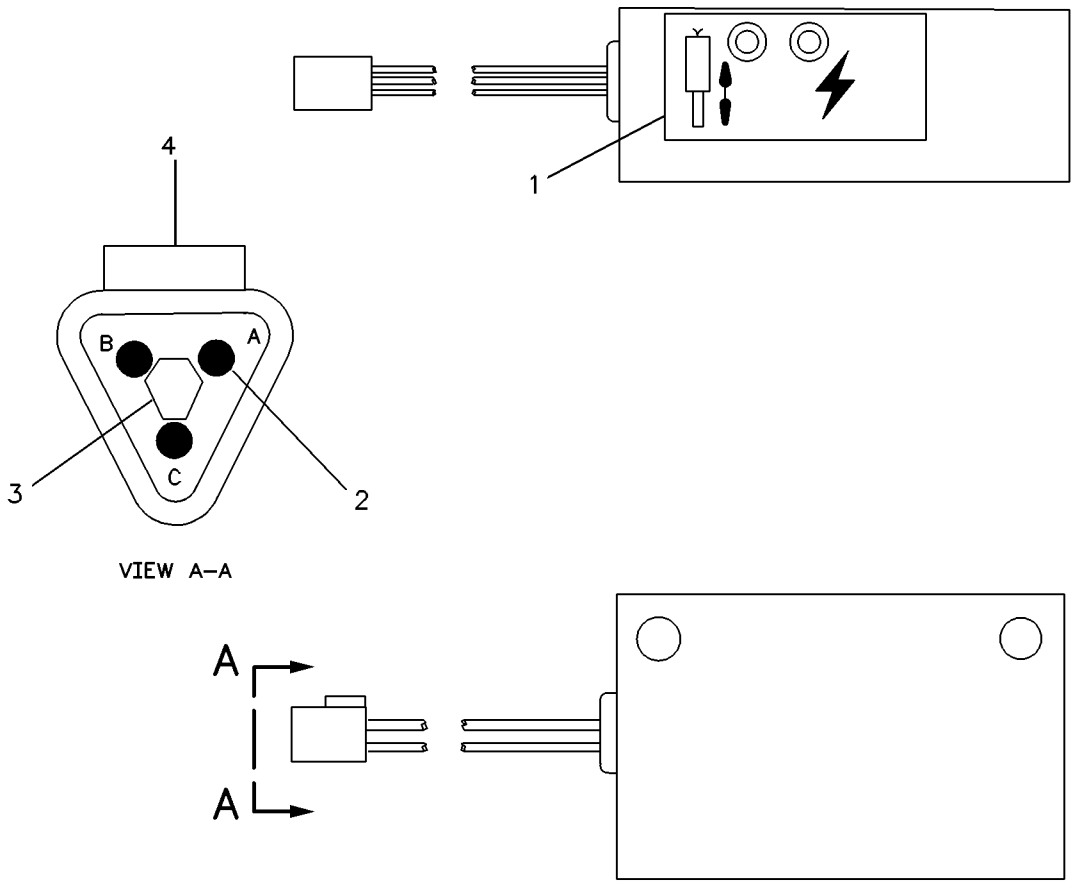

GRAPHIC #1 **<END>** g00119265

289-8802 ELECTRONICS AR-MACHINE

S/N: KLN1-UP

PART OF 289-8840 COMMON AR

SMCS-7610, 7620 **i03038343**

NOTE	PART NUMBER	QTY	PART NAME 1 2 3 4 5 6 (PRODUCT LEVEL)	SEE PAGE
Y	*322-6842*	1	ELECTRONICS GP-POWER TRAIN	130
Y-SEPARATE ILLUSTRATION				

<END>

262-1421 ELECTRONICS GP-COMMUNICATION–

PRODUCT LINK 300

S/N: KLN1-UP

PART OF 320-2503 INSTALLATION GP-COMMUNICATION

AN ATTACHMENT

SMCS-7606, 7610, 7620 **i03601391**

NOTE	PART NUMBER	QTY	PART NAME 1 2 3 4 5 6 (PRODUCT LEVEL)	SEE PAGE
	330-3409	1	SOFTWARE GP-COMMUNICATION (PRODUCT LINK 300)	
			-OR-	
	330-3410	1	SERVICE GP-COMMUNICATION (PRODUCT LINK 300)	
			(OPTIONAL SERVICE REPLACEMENT)(INCLUDES CONTROL GP & SOFTWARE)	
	7X-6315	1	STRAP AS-GROUND	
	126-7574	1	SCREW-PAN HEAD (8-32X9.52-MM)	
	134-4126	1	WASHER (4.52X8.28X0.76-MM THK)	

<END>

322-6842 ELECTRONICS GP-POWER TRAIN–MACHINE CONTROL

S/N: KLN1-UP

PART OF 289-8802 ELECTRONICS AR-MACHINE

SMCS-4800, 4808, 7610, 7620 **i03429902**

NOTE	PART NUMBER	QTY	PART NAME 1 2 3 4 5 6 (PRODUCT LEVEL)	SEE PAGE
	340-3641	1	SOFTWARE GP-POWER TRAIN	
			–OR–	
	340-3642	1	SERVICE GP-POWER TRAIN	
			(OPTIONAL SERVICE REPLACEMENT)(INCLUDES CONTROL GP & SOFTWARE)	

<END>

277-4410 GLOW PLUG GP

S/N: C6E1-UP

PART OF 292-5306 ENGINE AR-PRIMARY

SMCS-1412 **i03092228**

NOTE	REF NO	GRAPHIC REF	PART NUMBER	QTY	PART NAME 1 2 3 4 5 6 (PRODUCT LEVEL)	SEE PAGE
	1	1	**292-9881**	6	GLOW PLUG	
	2	1	**316-9073**	1	CABLE GP (GLOW PLUG)	
	2A	1	**277-4408**	1	CABLE AS	
M	2B	1	**5C-2890**	1	NUT (M6X1-THD)	
	4	1	**275-2428**	1	INSULATOR	
M	5	1	**5C-2890**	2	NUT (M6X1-THD)	
	6	1	**277-4409**	1	CAP	
	8	1	**100-4838**	1	BOLT (M6X20-MM)	

M-METRIC PART

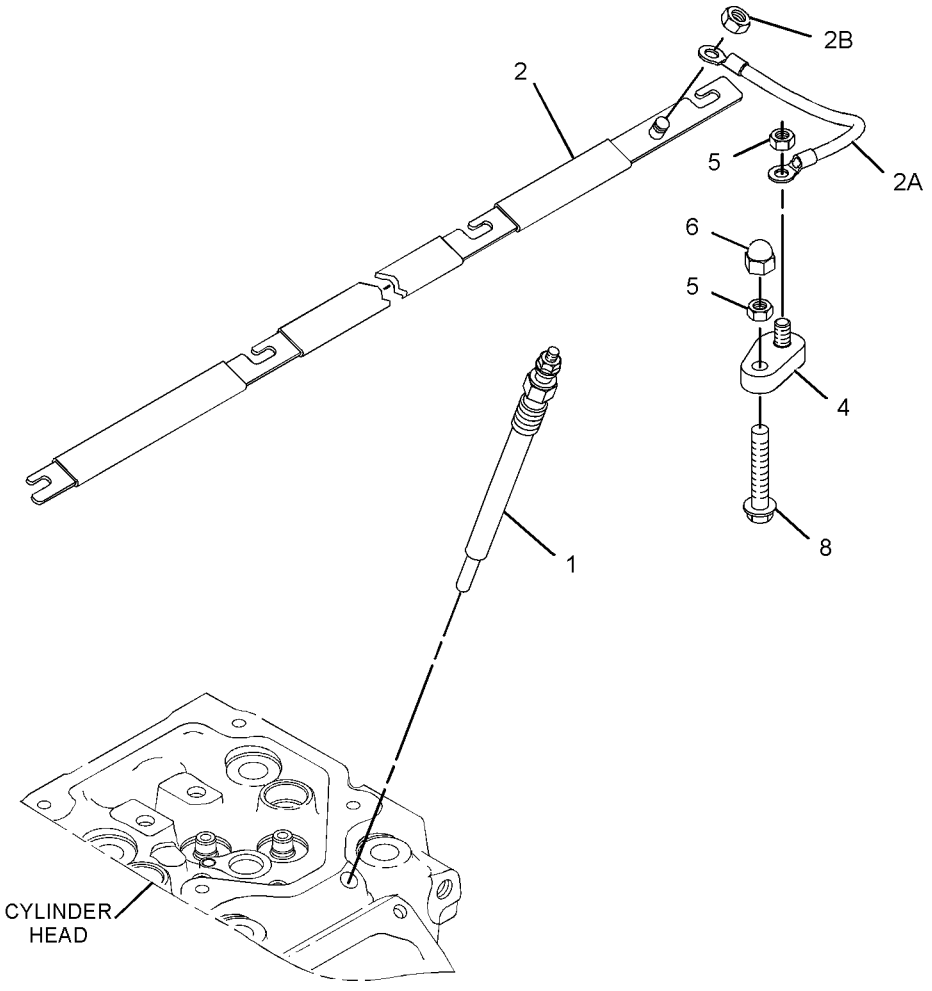

GRAPHIC #1 **<END>** g01636787

293-4050 HEATER GP-JACKET WATER

S/N: KLN1-UP
120-VOLT
AN ATTACHMENT

SMCS-1383 **i03043942**

NOTE	REF NO	GRAPHIC REF	PART NUMBER	QTY	PART NAME 1 2 3 4 5 6 (PRODUCT LEVEL)	SEE PAGE
	1	1	**6N-1604**	1	CAP AS-DUST	
	2	1	**9X-6772**	1	STRAP-CABLE	
	3	1	**260-1555**	1	ELEMENT AS-JACKET WATER HEATER (120-VOLT, 1000-WATT)	
		1	**4D-9986**	1	SEAL-O-RING	
	4	1	**260-1566**	1	CORD AS-HEATER	
	5	1	**3S-2093**	3	STRAP-CABLE	
M	6	1	**8T-4200**	1	BOLT (M8X1.25X16-MM)	
	7	1	**8T-4224**	1	WASHER-HARD (8.8X16X2-MM THK)	

M-METRIC PART

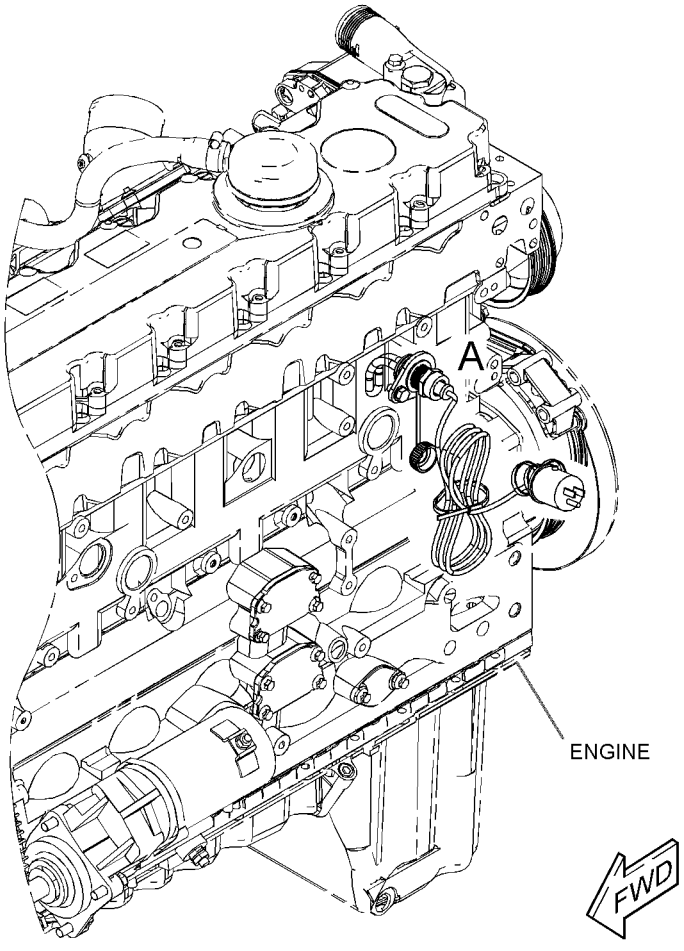

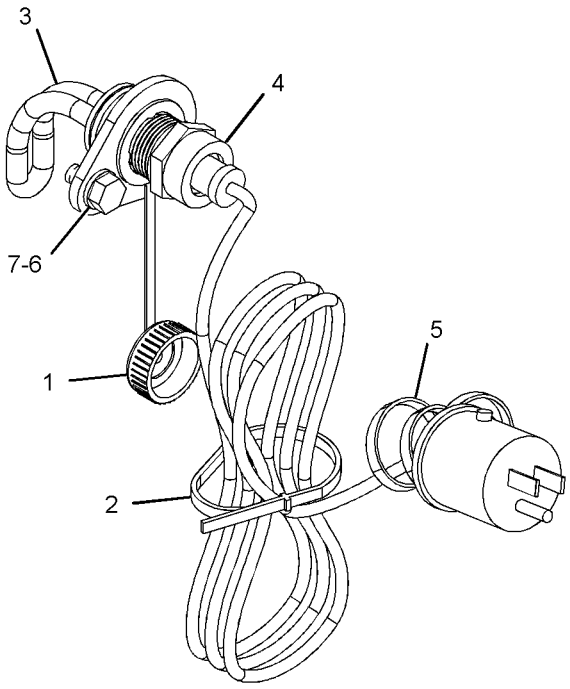

VIEW OF AREA A

GRAPHIC #1 **<END>** g01561457

293-4052 HEATER GP-JACKET WATER

S/N: KLN1-UP
220-VOLT
AN ATTACHMENT

SMCS-1383 **i03043941**

NOTE	REF NO	GRAPHIC REF	PART NUMBER	QTY	PART NAME 1 2 3 4 5 6 (PRODUCT LEVEL)	SEE PAGE
	1	1	**6N-1604**	1	CAP AS-DUST	
	2	1	**9X-6772**	1	STRAP-CABLE	
	3	1	**260-1556**	1	ELEMENT AS-JACKET WATER HEATER (240-VOLT, 1000-WATT)	
		1	**4D-9986**	1	SEAL-O-RING	
	4	1	**260-1569**	1	CORD AS-HEATER	
	5	1	**3S-2093**	3	STRAP-CABLE	
M	6	1	**8T-4200**	1	BOLT (M8X1.25X16-MM)	
	7	1	**8T-4224**	1	WASHER-HARD (8.8X16X2-MM THK)	

M-METRIC PART

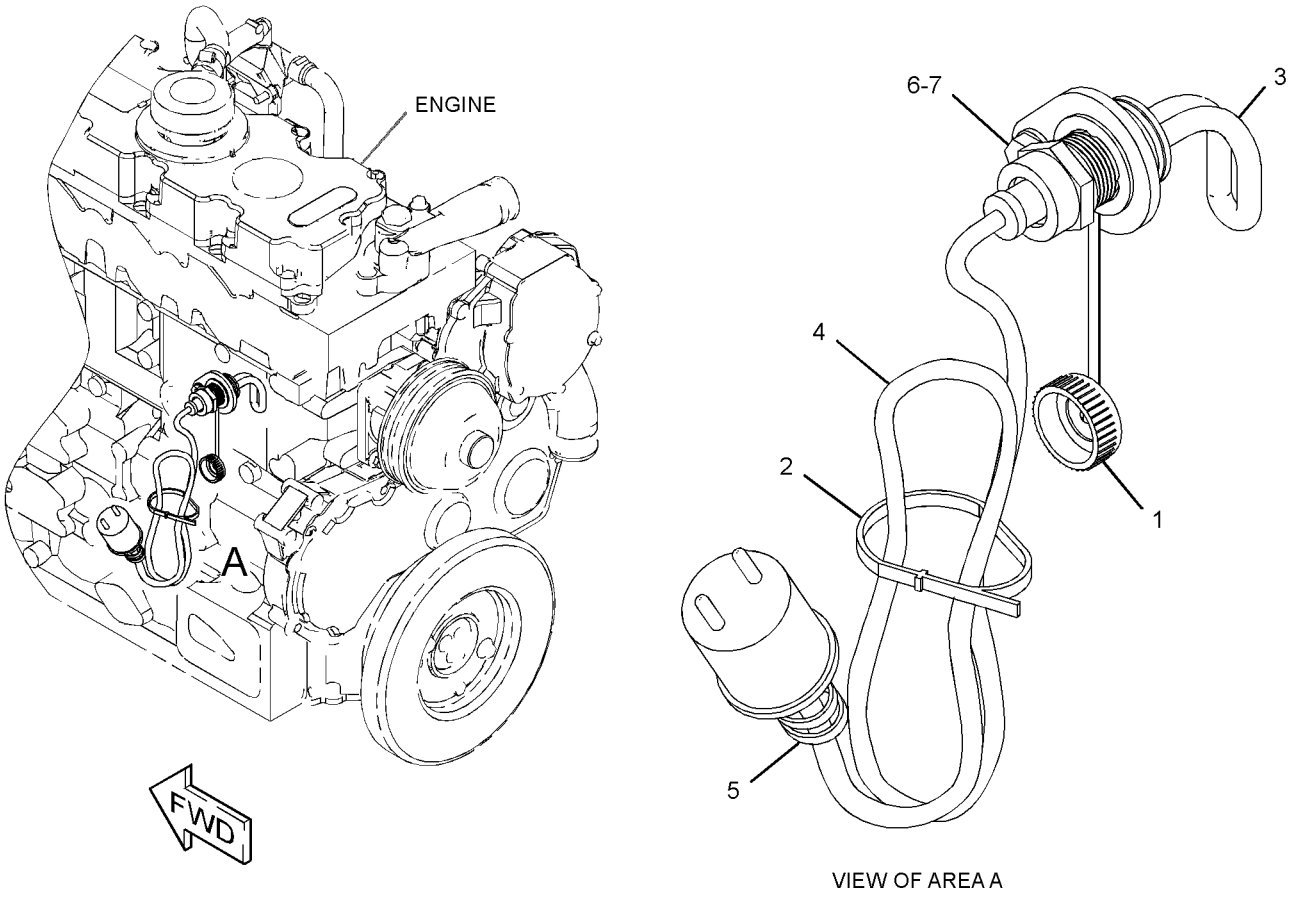

VIEW OF AREA A

GRAPHIC #1 **<END>** g01561279

ELECTRICAL AND STARTING SYSTEM

320-2503 INSTALLATION GP-COMMUNICATION

S/N: KLN1-UP

AN ATTACHMENT

SMCS-7606 **i03629331**

NOTE	REF NO	GRAPHIC REF	PART NUMBER	QTY	PART NAME 1 2 3 4 5 6 (PRODUCT LEVEL)	SEE PAGE
	1	1	**8C-5607**	8	MOUNT-ISOLATION	
	2	1	**8C-5608**	4	SPACER (6.5X9.5X25.4-MM THK)	
	3	1	**9R-4750**	1	BOSS (19.76X20X28-MM THK)	
	4	1	**249-9076**	9	CLIP	
	5	1	**256-6803**	1	HARNESS AS-RADIO (PRODUCT LINK)	
		1	**186-3735**	9	PIN-CONNECTOR (16-GA TO 18-GA)	
		1	**155-2255**	1	KIT-CONNECTING PLUG (12-PIN)	
		1	**155-2270**	1	KIT-CONNECTING PLUG (2-PIN)	
					(EACH PLUG KIT INCLUDES PLUG AS, WEDGE & INTERFACE SEAL)	
		1	**8T-8737**	10	PLUG-SEAL	
		1	**102-8802**	1	KIT-RECEPTACLE (2-PIN)	
		1	**102-8801**	1	KIT-RECEPTACLE (12-PIN)	
					(EACH RECEPTACLE KIT INCLUDES RECEPTACLE AS & WEDGE)	
		1	**186-3736**	9	SOCKET-CONNECTOR (16-GA TO 18-GA)	
	6	1	**256-6804**	1	HARNESS AS-CONTROL (PRODUCT LINK)	
		1	**126-1774**	1	COVER-CONNECTOR	
		1	**186-3735**	11	PIN-CONNECTOR (16-GA TO 18-GA)	
		1	**155-2255**	1	KIT-CONNECTING PLUG (12-PIN)	
		1	**155-2270**	1	KIT-CONNECTING PLUG (2-PIN)	
					(EACH PLUG KIT INCLUDES PLUG AS, WEDGE & INTERFACE SEAL)	
		1	**160-7690**	1	PLUG AS-CONNECTOR (70-PIN)	
		1	**159-9322**	1	SEAL-O-RING	
		1	**8T-8737**	60	PLUG-SEAL	
		1	**102-8801**	1	KIT-RECEPTACLE (12-PIN)	
					(INCLUDES RECEPTACLE AS & WEDGE)	
		1	**186-3736**	25	SOCKET-CONNECTOR (16-GA TO 18-GA)	
		1	**9X-6772**	2	STRAP-CABLE	
E		1	**125-7874**		TUBE-HEAT SHRINK (5.72-MM DIA) (20-CM)	
	7	1	**274-4284**	1	FILM-WARNING (PRODUCT LINK RADIO, INTL)	
Y	8	1	*262-1421*	1	ELECTRONICS GP-COMMUNICATION (PRODUCT LINK 300)	130
Y	9	1	**263-9088**	1	RADIO GP-COMMUNICATION (PRODUCT LINK 121SR)	593
	10	1	**273-4061**	1	BRACKET AS	
	11	1	**310-2393**	1	ANTENNA AS	
		1	**301-0589**	1	ANTENNA (FLEXIBLE)	
	12	1	**311-3204**	1	HARNESS AS-CONTROL (JUMPER)	
		1	**155-2255**	2	KIT-CONNECTING PLUG (12-PIN)	
					(EACH INCLUDES PLUG AS, WEDGE & INTERFACE SEAL)	
		1	**8T-8737**	8	PLUG-SEAL	
		1	**180-9340**	16	SOCKET-CONNECTOR (14-GA TO 18-GA)	
B		1	**141-8061**		TAPE	
	13	1	**311-3205**	1	PLATE	
	14	1	**7K-1181**	12	STRAP-CABLE	
	15	1	**3S-2093**	1	STRAP-CABLE	
M	16	1	**7X-2533**	4	BOLT (M6X1X35-MM)	
M	17	1	**8T-4138**	8	BOLT (M6X1X20-MM)	
M	18	1	**8T-4194**	1	BOLT (M12X1.75X50-MM)	
	19	1	**8T-4223**	1	WASHER-HARD (13.5X25.5X3-MM THK)	
	20	1	**9X-6165**	4	WASHER (6.5X22X2.5-MM THK)	
	21	1	**9X-8256**	8	WASHER (6.6X12X2-MM THK)	

B-USE AS REQUIRED
E-ORDER BY THE CENTIMETER
M-METRIC PART
Y-SEPARATE ILLUSTRATION

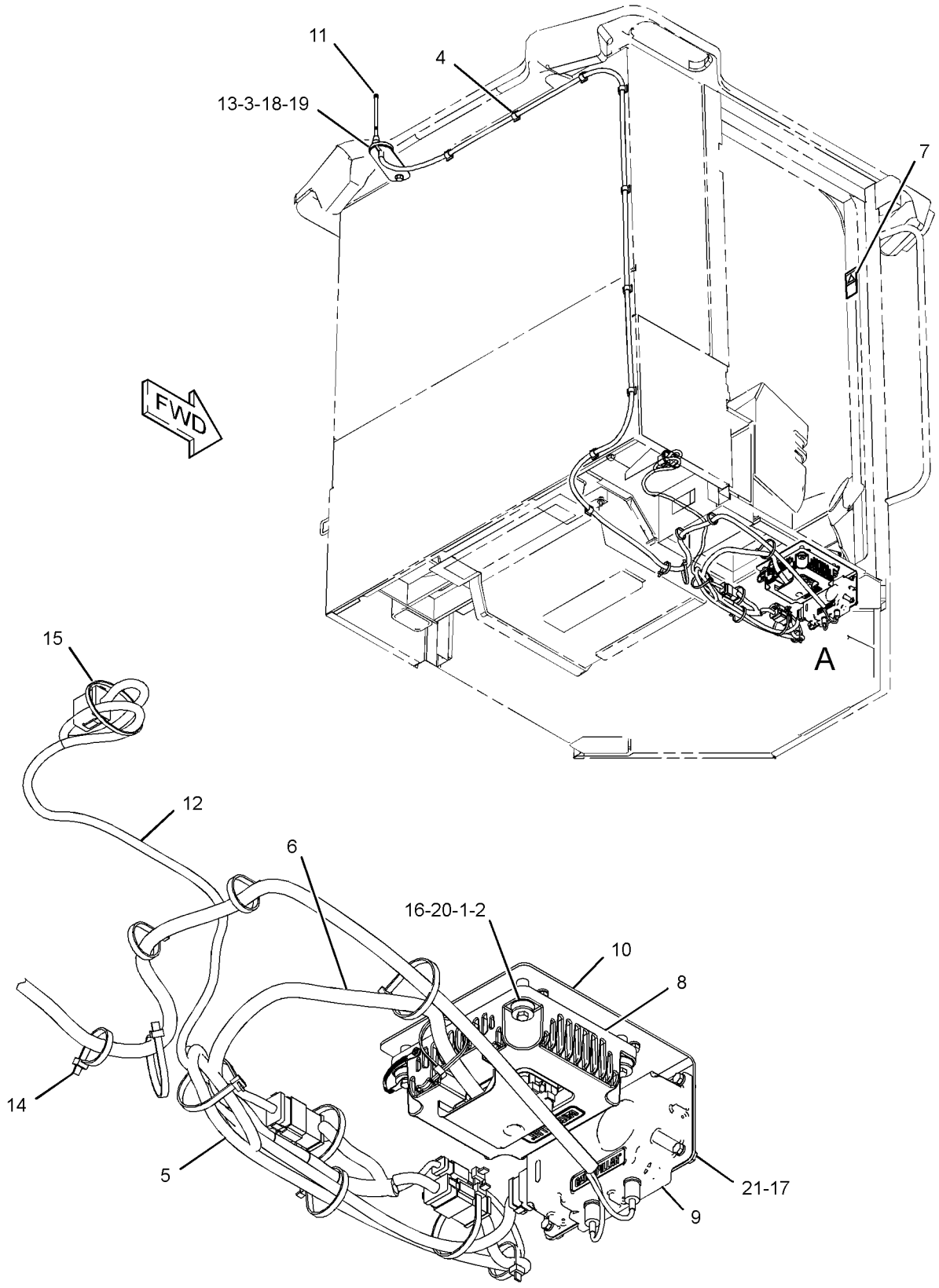

VIEW OF AREA A

GRAPHIC #1 **<END>** g01561446

243-0516 INSTALLATION GP-SECURITY

S/N: KLN1-UP

AN ATTACHMENT

SMCS-7631 **i02672655**

NOTE	REF NO	GRAPHIC REF	PART NUMBER	QTY	PART NAME 1 2 3 4 5 6 (PRODUCT LEVEL)	SEE PAGE
	1	1	**198-5389**	1	FILM-IDENTIFICATION (IGNITION SWITCH)	
	2	1	**205-0826**	1	FILM-INSTRUCTION (MACHINE SECURITY, CONSOLE)	
	3	1	**206-5162**	2	KEY AS-ELECTRONIC (SECURITY)	
	4	1	*206-5208*	1	COIL AS (EXCITER)	
		1	**102-8802**	1	KIT-RECEPTACLE (2-PIN)	
					(INCLUDES RECEPTACLE AS & WEDGE)	
		1	**205-8257**	1	COIL AS (EXCITER)	
D		1	**5P-5677**		WIRE (18-GA, BLACK) (0.4-M)	
		1	**186-3735**	2	PIN-CONNECTOR (16-GA TO 18-GA)	
	5	1	**218-0404**	1	MODULE GP-INTERFACE (KEY)	
	6	1	**219-6314**	2	KEY RING (IDENTIFICATION)	
	7	1	**243-0517**	1	HARNESS AS-CONTROL (MACHINE SECURITY)	
		1	**102-8802**	1	KIT-RECEPTACLE (2-PIN)	
		1	**102-8803**	1	KIT-RECEPTACLE (3-PIN)	
		1	**102-8804**	1	KIT-RECEPTACLE (4-PIN)	
					(EACH RECEPTACLE KIT INCLUDES RECEPTACLE AS & WEDGE)	
		1	**8L-8413**	21	STRAP-CABLE	
E		1	**125-7874**		TUBE-HEAT SHRINK (5.72-MM DIA) (20-CM)	
		1	**155-2265**	1	KIT-CONNECTING PLUG (8-PIN)	
		1	**155-2260**	1	KIT-CONNECTING PLUG (3-PIN)	
		1	**155-2270**	2	KIT-CONNECTING PLUG (2-PIN)	
		1	**155-2271**	1	KIT-CONNECTING PLUG (4-PIN)	
					(EACH PLUG KIT INCLUDES PLUG AS, WEDGE & INTERFACE SEAL)	
FJ			*238-5014*	1	CONFIGURATION-PREMIUM	

D-ORDER BY THE METER
E-ORDER BY THE CENTIMETER
F-NOT SHOWN
J-DLR INSTALL CONFIG:SEE IRM:EESO3-01

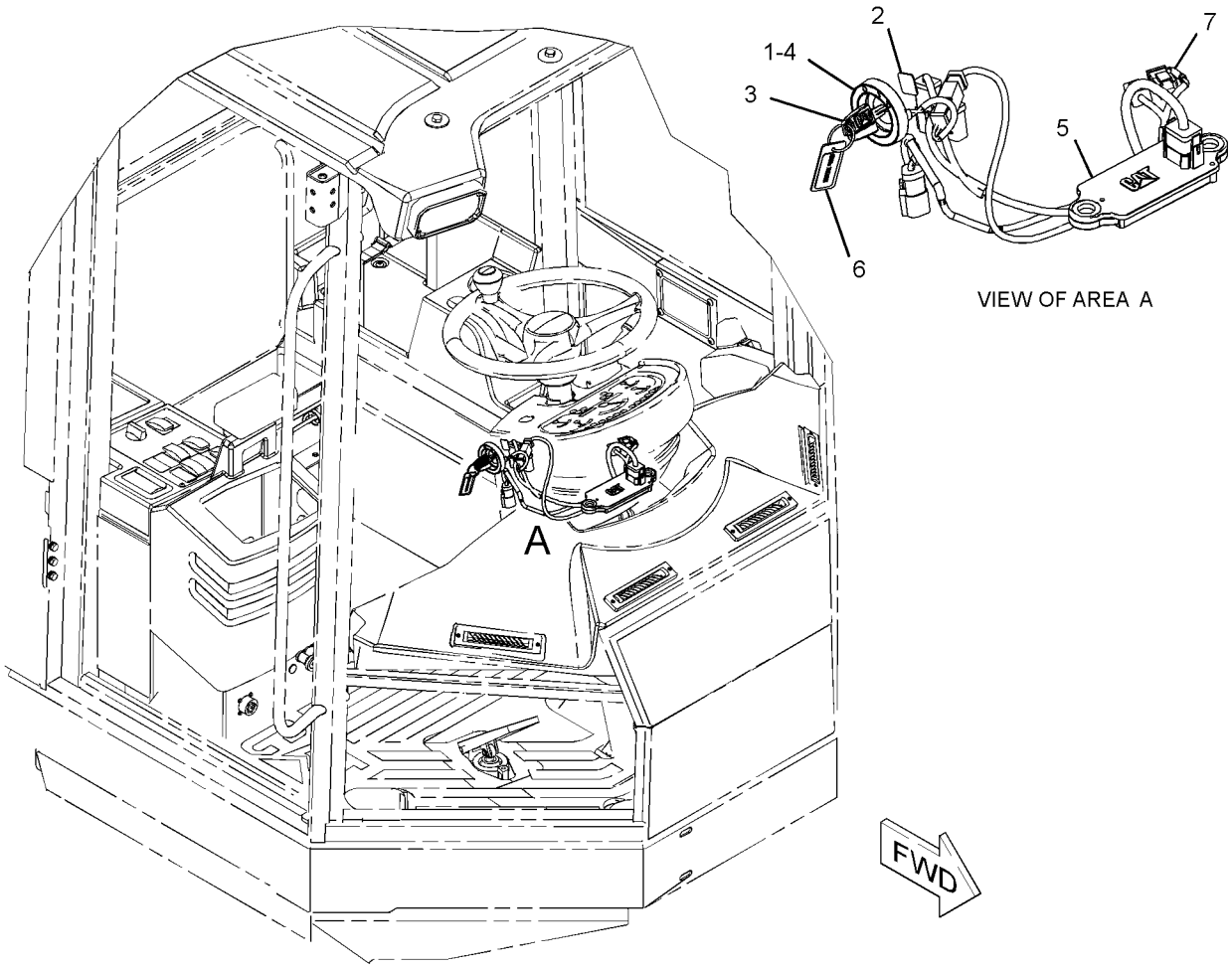

GRAPHIC #1 **<END>** g01351427

234-4325 LAMP GP-FLOOD–SUSPENDED

S/N: KLN1-UP
24-VOLT
PART OF 115-1558 LIGHTING GP-AUXILIARY
AN ATTACHMENT

SMCS-1434 **i03537655**

NOTE	REF NO	GRAPHIC REF	PART NUMBER	QTY	PART NAME 1 2 3 4 5 6 (PRODUCT LEVEL)	SEE PAGE
	1	1	**9X-3463**	1	LAMP-HALOGEN (24-VOLT, 70-WATT) (FLOODLIGHT)	
M	2	1	**8T-0389**	1	LOCKNUT (M10X1.5-THD)	
	3	1	**9X-4244**	2	SCREW-SPECIAL (M4X1.79X25-MM)	
	4	1	**202-6614**	1	LENS AS (FLOODLIGHT)	
	5	1	**234-7730**	1	BODY AS (FLOODLIGHT)	
	6	1	**164-7556**	1	BRACKET (LAMP RETAINING)	
	7	1	**234-7731**	1	BRACKET AS	
	8	1	**8T-4121**	1	WASHER-HARD (11X21X2.5-MM THK)	

M-METRIC PART

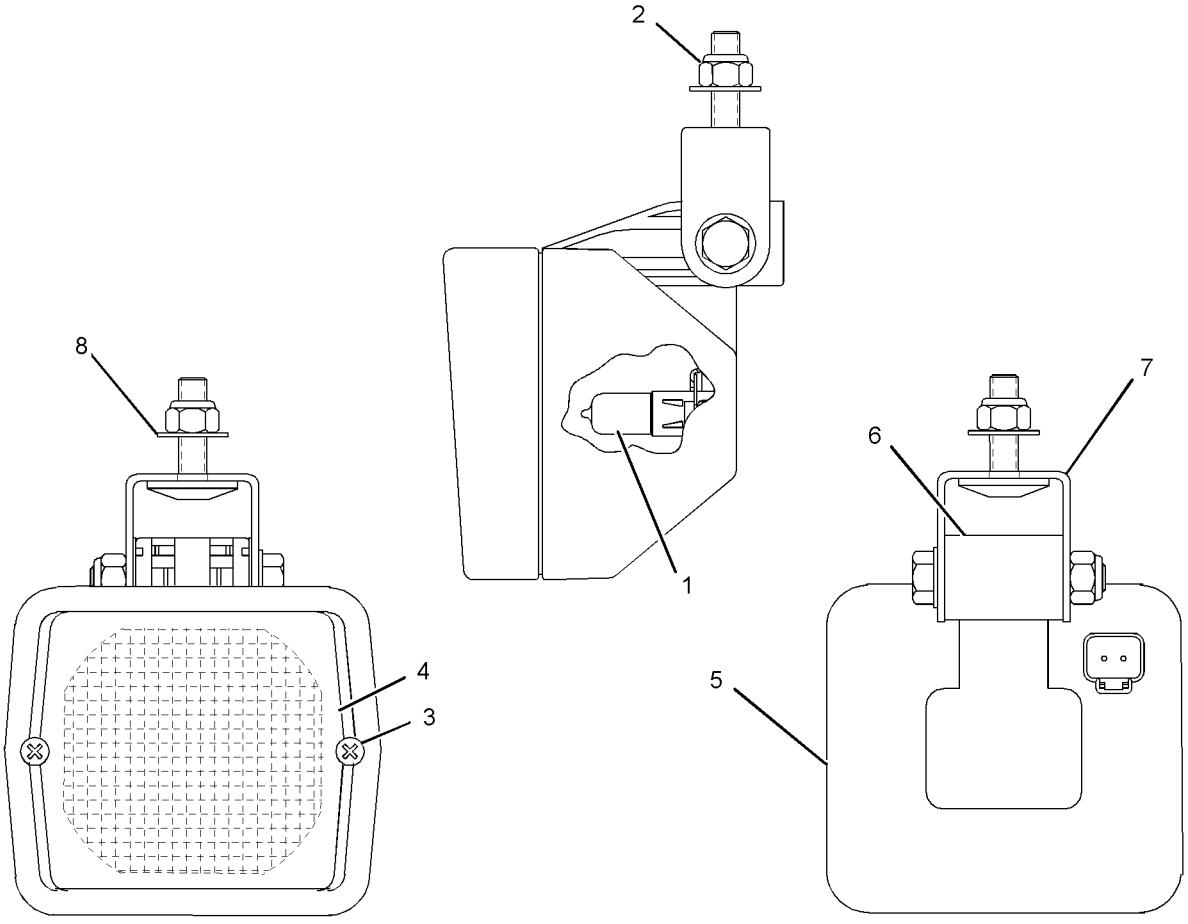

GRAPHIC #1 **<END>** g01329238

242-3519 LAMP GP-FLOOD–SUSPENDED MOUNT

S/N: KLN1-UP
24-VOLT
PART OF 311-8706 LIGHTING GP-FLOOD, 204-2004 LIGHTING GP-REAR
AN ATTACHMENT

SMCS-1434 **i03150381**

NOTE	REF NO	GRAPHIC REF	PART NUMBER	QTY	PART NAME 1 2 3 4 5 6 (PRODUCT LEVEL)	SEE PAGE
	1	1	**142-5789**	4	SCREW	
M	2	1	**8T-4195**	1	BOLT (M10X1.5X30-MM)	
M	3	1	**6V-9189**	1	LOCKNUT (M8X1.25-THD)	
M	4	1	**8T-7329**	1	BOLT (M8X1.25X55-MM)	
	5	1	**9X-3463**	1	LAMP-HALOGEN (24-VOLT, 70-WATT)	

M-METRIC PART

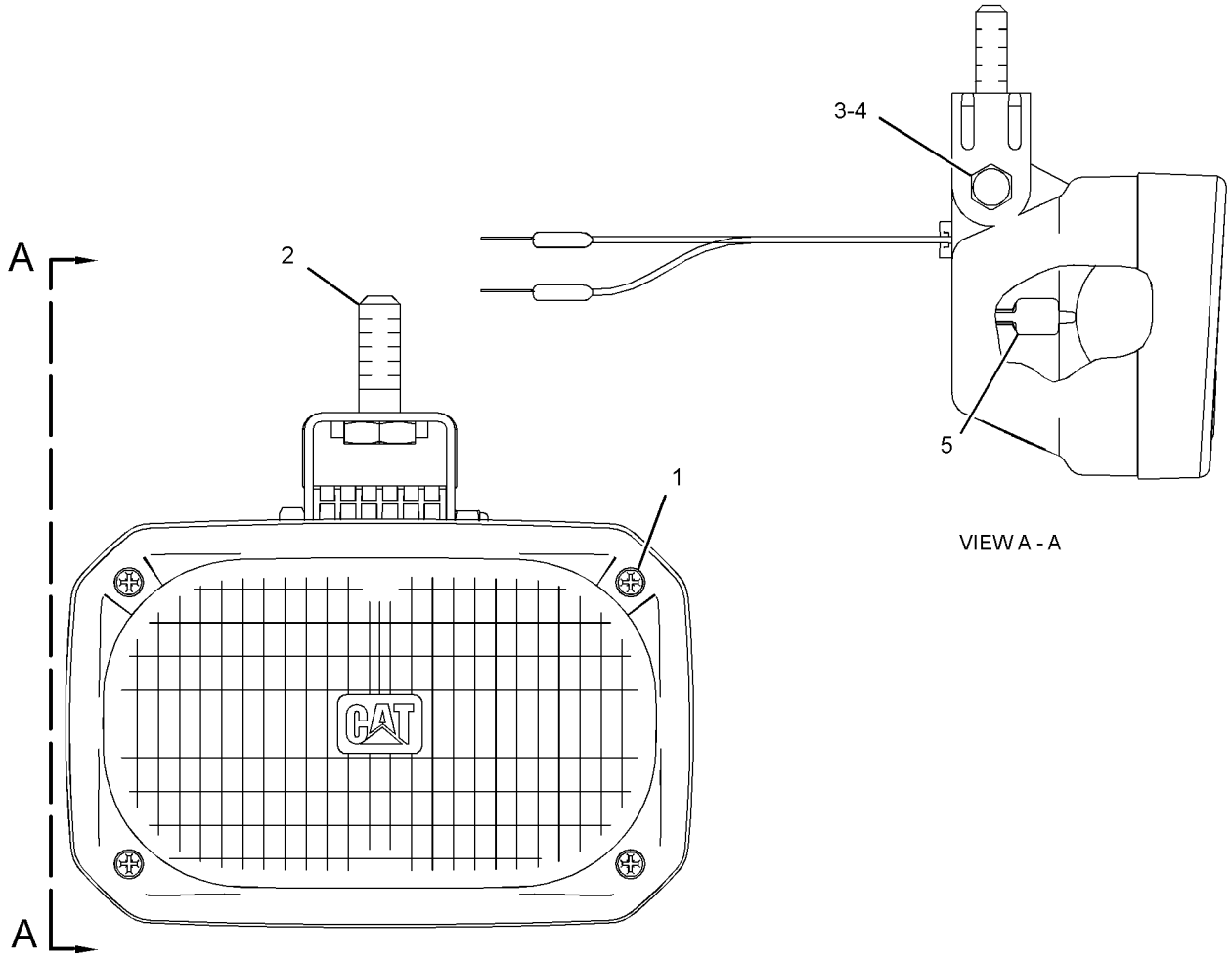

GRAPHIC #1 **<END>** g01397703

302-0406 LAMP GP-FLOOD–RH

S/N: KLN1-UP

PART OF 290-7223 LIGHTING GP-FLOOD & SIGNAL

SMCS-1434 **i03045561**

NOTE	REF NO	GRAPHIC REF	PART NUMBER	QTY	PART NAME 1 2 3 4 5 6 (PRODUCT LEVEL)	SEE PAGE
	1	1	**319-7603**	1	BODY AS	
	2	1	**228-6054**	1	BEZEL	
	3	1	**319-8209**	1	LENS	
	4	1	**228-6052**	1	LENS AS (TURN SIGNAL)	
	5	1	**228-6056**	6	SCREW (4-32X1.26-IN)	
	6	1	**9X-3463**	1	LAMP-HALOGEN (24-VOLT, 70-WATT)	
	7	1	**130-3515**	1	LAMP (24-VOLT, 5-WATT)	
	8	1	**242-0588**	1	LAMP (24-VOLT, 21-WATT)	
M	9	1	**8T-0389**	1	LOCKNUT (M10X1.5-THD)	
	10	1	**100-3253**	1	SPACER	
	11	1	**100-3254**	1	SPACER	
	12	1	**100-3255**	1	WASHER (SPHERICAL)	
	13	1	**102-8805**	1	KIT-RECEPTACLE (6-PIN)	
					(INCLUDES RECEPTACLE AS & WEDGE)	
	14	1	**186-3735**	5	PIN-CONNECTOR (16-GA TO 18-GA)	
	15	1	**8T-8737**	1	PLUG-SEAL	

M-METRIC PART

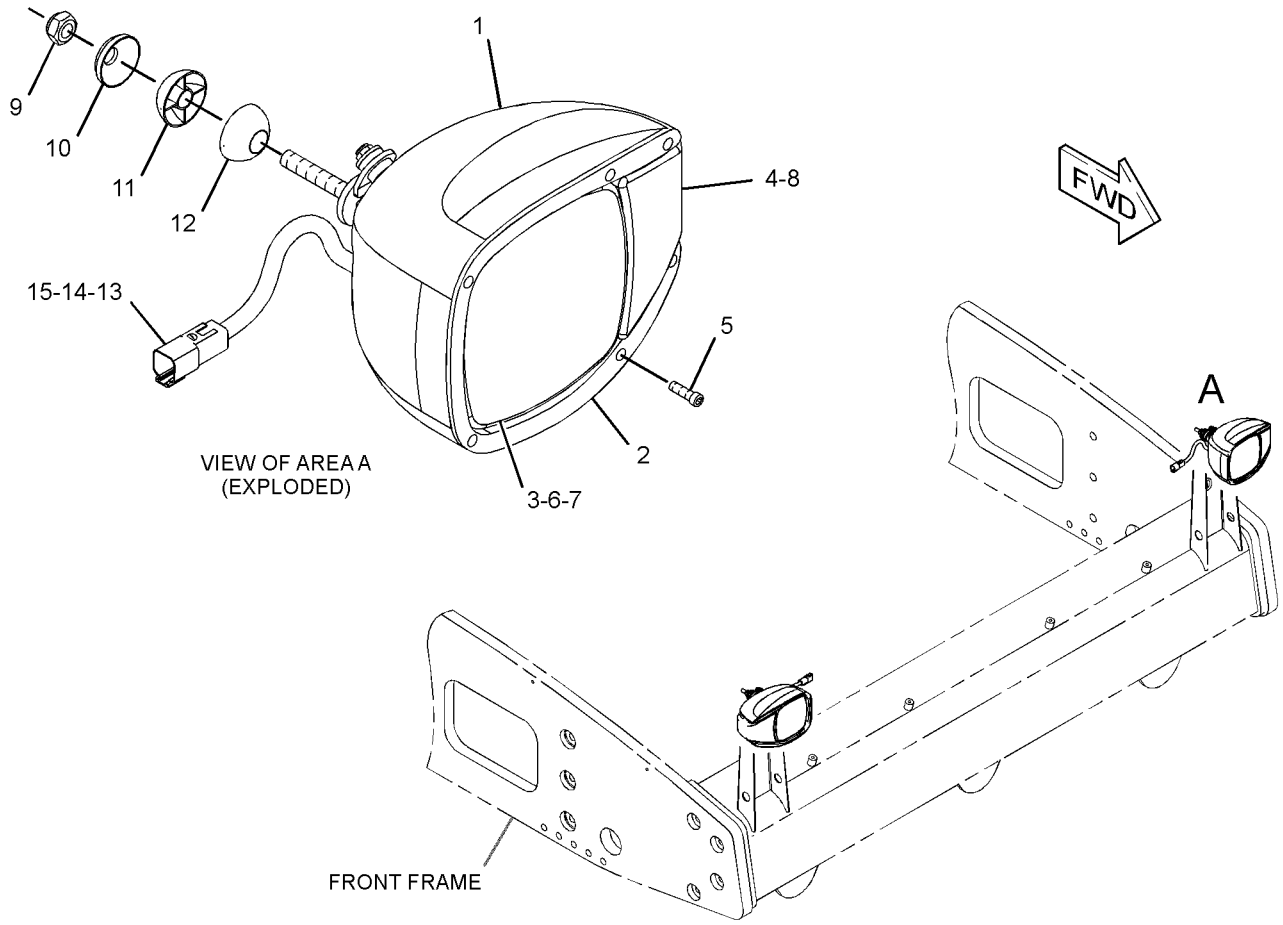

GRAPHIC #1 **<END>** g01561370

302-0408 LAMP GP-FLOOD–LH

S/N: KLN1-UP

PART OF 290-7223 LIGHTING GP-FLOOD & SIGNAL

SMCS-1434 **i03045552**

NOTE	REF NO	GRAPHIC REF	PART NUMBER	QTY	PART NAME 1 2 3 4 5 6 (PRODUCT LEVEL)	SEE PAGE
	1	1	**319-7603**	1	BODY AS	
	2	1	**228-6054**	1	BEZEL	
	3	1	**319-8209**	1	LENS	
	4	1	**228-6052**	1	LENS AS (TURN SIGNAL)	
	5	1	**228-6056**	6	SCREW (4-32X1.26-IN)	
	6	1	**9X-3463**	1	LAMP-HALOGEN (24-VOLT, 70-WATT)	
	7	1	**130-3515**	1	LAMP (24-VOLT, 5-WATT)	
	8	1	**242-0588**	1	LAMP (24-VOLT, 21-WATT)	
M	9	1	**8T-0389**	1	LOCKNUT (M10X1.5-THD)	
	10	1	**100-3253**	1	SPACER	
	11	1	**100-3254**	1	SPACER	
	12	1	**100-3255**	1	WASHER (SPHERICAL)	
	13	1	**102-8805**	1	KIT-RECEPTACLE (6-PIN)	
					(INCLUDES RECEPTACLE AS & WEDGE)	
	14	1	**186-3735**	5	PIN-CONNECTOR (16-GA TO 18-GA)	
	15	1	**8T-8737**	1	PLUG-SEAL	

M-METRIC PART

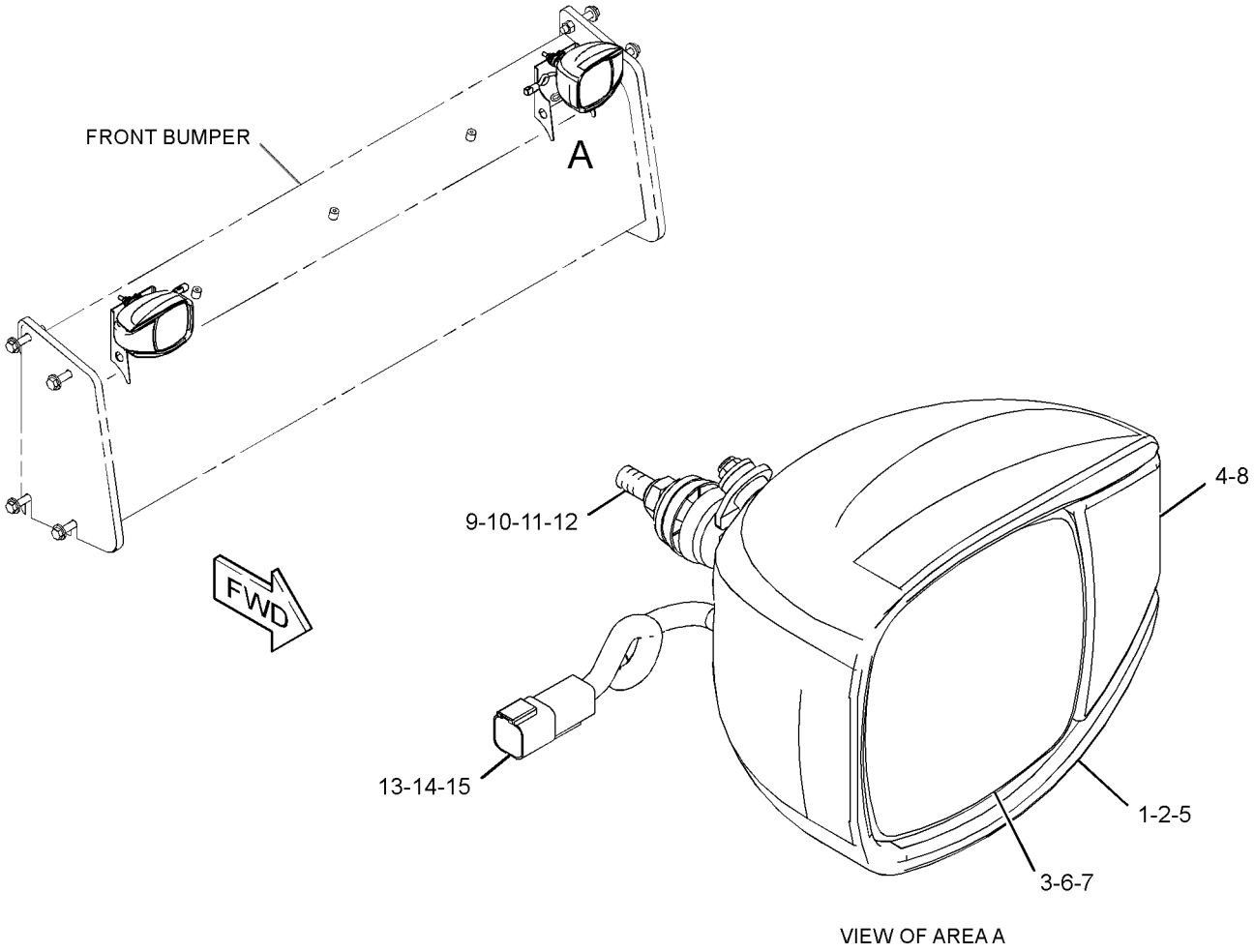

VIEW OF AREA A

GRAPHIC #1 **<END>** g01561139

145-6929 LAMP GP-STOP & TAIL–24-VOLT

S/N: KLN1-UP

PART OF 290-7223 LIGHTING GP-FLOOD & SIGNAL

SMCS-1432 **i03116460**

NOTE	REF NO	GRAPHIC REF	PART NUMBER	QTY	PART NAME 1 2 3 4 5 6 (PRODUCT LEVEL)	SEE PAGE
	1	1	**9X-4493**	1	LAMP (24-VOLT, 21-WATT) (STOP, TAIL)	
	2	1	**9X-4492**	1	LAMP (24-VOLT, 5-WATT) (STOP, TAIL)	
	3	1	**102-8802**	1	KIT-RECEPTACLE (2-PIN)	
					(KIT INCLUDES RECEPTACLE AS & WEDGE)	
	4	1	**102-8803**	1	KIT-RECEPTACLE (3-PIN)	
					(KIT INCLUDES RECEPTACLE AS & WEDGE)	
M	5	1	**5C-2890**	2	NUT (M6X1-THD)	
	6	1	**1H-3244**	2	LOCKWASHER	
	7	1	**186-3735**	5	PIN-CONNECTOR (16-GA TO 18-GA)	
	8	1	**267-2809**	1	LENS (STOP, TAIL, TURN)	

M-METRIC PART

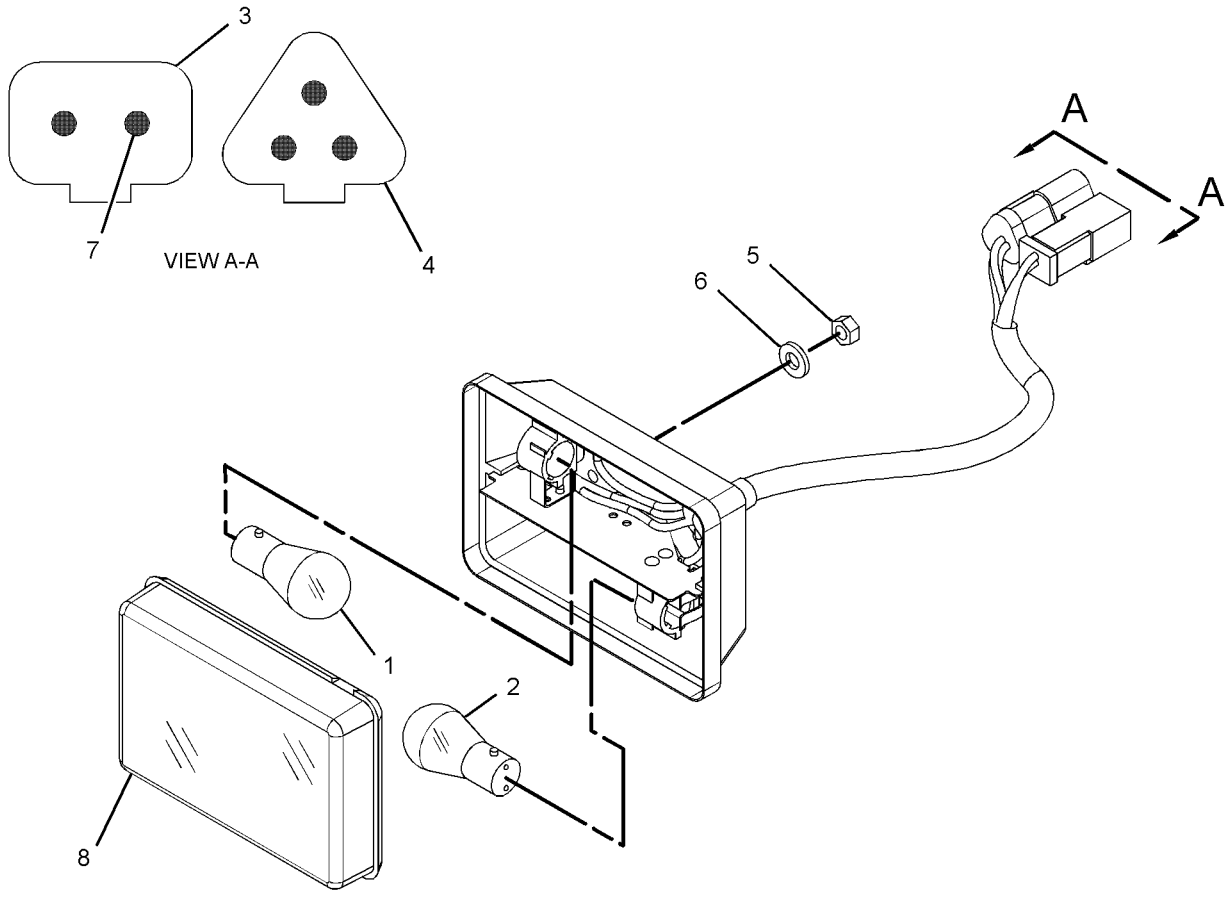

GRAPHIC #1 **<END>** g01393133

140-3668 LAMP GP-WARNING BEACON—AMBER, STROBE

S/N: KLN1-UP
12-24V
PART OF 289-8906 LIGHTING GP-WARNING BEACON
AN ATTACHMENT

SMCS-1431 **i03349883**

NOTE	REF NO	GRAPHIC REF	PART NUMBER	QTY	PART NAME 1 2 3 4 5 6 (PRODUCT LEVEL)	SEE PAGE
	1	1	**9R-7942**	1	PLUG AS	

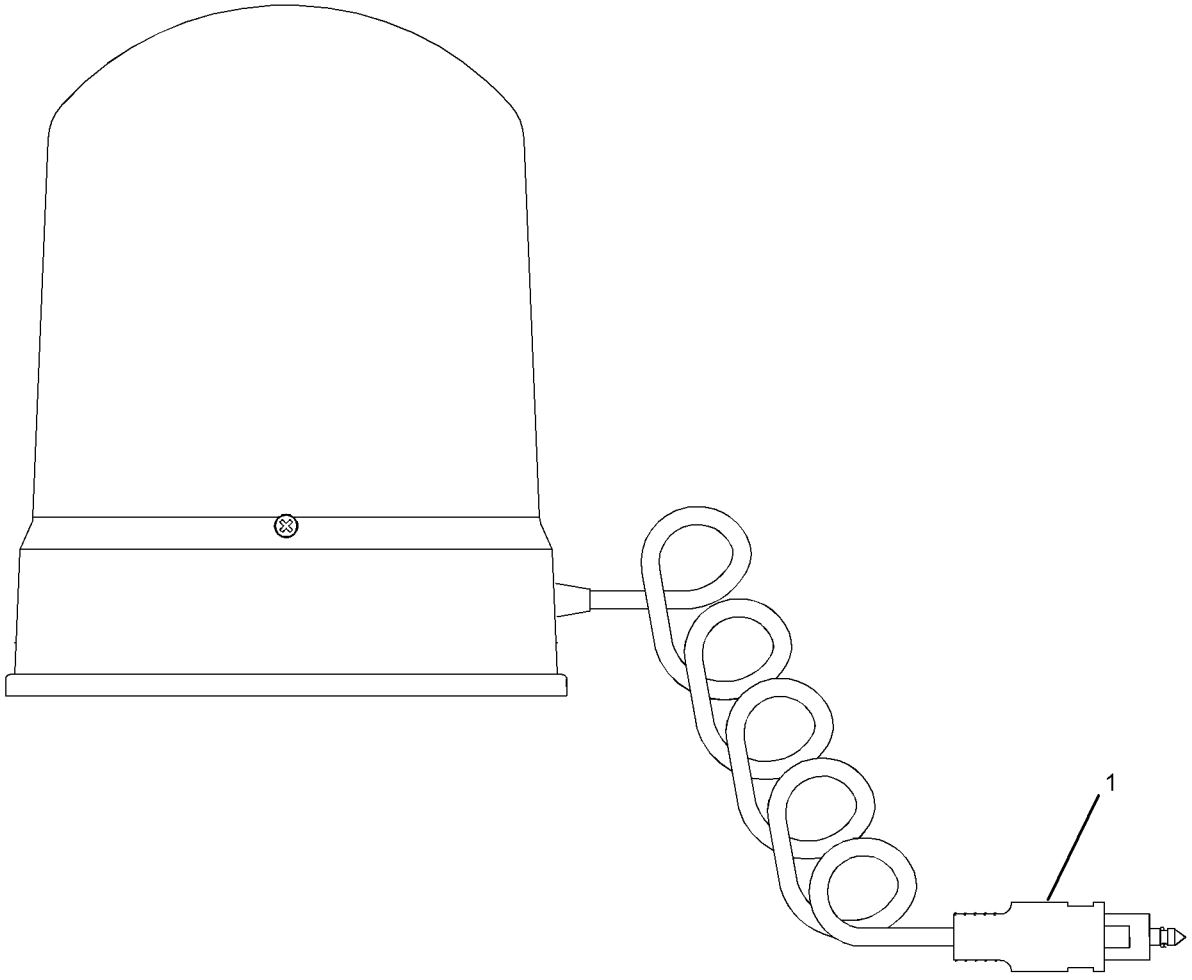

GRAPHIC #1 **<END>** g01232367

115-1558 LIGHTING GP-AUXILIARY–CAB FRONT

S/N: KLN1-UP
AN ATTACHMENT

SMCS-1429 **i03116520**

NOTE	REF NO	GRAPHIC REF	PART NUMBER	QTY	PART NAME 1 2 3 4 5 6 (PRODUCT LEVEL)	SEE PAGE
	1	1	**115-1559**	2	PLATE	
CY	2	1	**234-4325**	2	LAMP GP-FLOOD (24-VOLT) (SUSPENDED)	139
C	3	1	**235-5762**	2	WIRE AS	
M	4	1	**5C-2890**	4	NUT (M6X1-THD)	
M	5	1	**8T-4189**	4	BOLT (M8X1.25X20-MM)	
	6	1	**8T-4224**	4	WASHER-HARD (8.8X16X2-MM THK)	

C-CHANGE FROM PREVIOUS TYPE
M-METRIC PART
Y-SEPARATE ILLUSTRATION

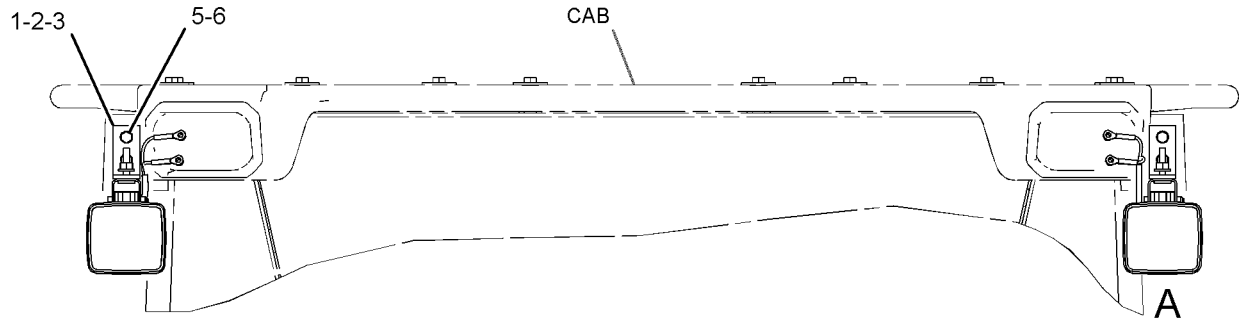

FRONT VIEW

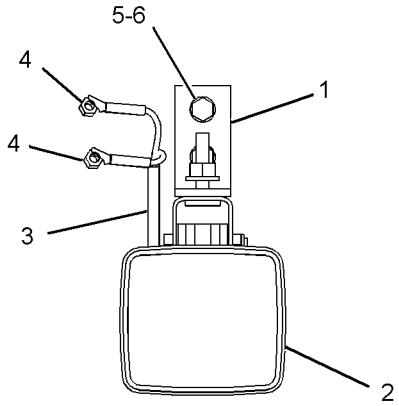

VIEW OF AREA A

GRAPHIC #1 **<END>** g01408481

ELECTRICAL AND STARTING SYSTEM

290-8181 LIGHTING GP-FLOOD—CAB FRONT, REAR

S/N: KLN1-UP

PART OF 311-8698 CAB AR, 290-8520 CAB GP-ENCLOSED ROPS AN ATTACHMENT

SMCS-1434 **i03627143**

NOTE	REF NO	GRAPHIC REF	PART NUMBER	QTY	PART NAME 1 2 3 4 5 6 (PRODUCT LEVEL)	SEE PAGE
	1	1	**8E-1118**	1	ANTENNA AS	
	2	1	**9R-7941**	1	SOCKET AS	
		1	**9R-7980**	1	COVER	
	3	1	**109-7041**	4	LAMP GP-FLOOD (24-VOLT)	
					(EACH INCLUDES)	
		1	**9X-3463**	1	LAMP-HALOGEN (24-VOLT, 70-WATT)	
		1	**142-5789**	4	SCREW	
	4	1	**109-8981**	1	CABLE AS-COAXIAL	
	5	1	**114-6604**	16	NUT-SPEED	
M	6	1,1	**8T-4908**	2	BOLT (M8X1.25X25-MM)	
	7	1	**164-5509**	1	BLOCK	
	8	1	**289-9167**	1	HARNESS AS-LIGHTING	
		1	**123-7615**	2	CONNECTOR	
		1	**9W-0852**	4	PIN-CONNECTOR (14-GA)	
		1	**9X-3401**	2	PIN-CONNECTOR (16-GA TO 18-GA)	
					-OR-	
		1	**126-1767**	2	PIN-CONNECTOR (14-GA)	
		1	**102-8805**	1	KIT-RECEPTACLE (6-PIN)	
					(INCLUDES RECEPTACLE AS & WEDGE)	
		1	**8L-8413**	40	STRAP-CABLE	
		1	**2L-8077**	4	TERMINAL (14-GA TO 16-GA)	
		1	**2L-8078**	2	TERMINAL-RING (14-GA TO 16-GA, 5/16-IN SCREW)	
		1	**5P-4571**	8	TERMINAL-BLADE (14-GA TO 16-GA)	
		1	**6V-0491**	4	TERMINAL-BLADE (14-GA TO 18-GA)	
E		1	**119-3662**		TUBE-HEAT SHRINK (10.85-MM DIA) (13-CM)	
E		1	**125-7874**		TUBE-HEAT SHRINK (5.72-MM DIA) (15-CM)	
E		1	**125-7875**		TUBE-HEAT SHRINK (7.44-MM DIA) (5-CM)	
	9	1	**292-0509**	1	ROOF	
M	10	1	**5C-2890**	4	NUT (M6X1-THD)	
M	11	1	**5C-7261**	2	NUT (M8X1.25-THD)	
M	12	1	**6V-7357**	4	BOLT (M6X1X25-MM)	
M	13	1	**8T-4137**	12	BOLT (M10X1.5X20-MM)	
	14	1	**8T-4205**	8	WASHER-HARD (7.2X14.5X2-MM THK)	
	15	1	**8T-4224**	4	WASHER-HARD (8.8X16X2-MM THK)	
	16	1	**8T-4226**	12	WASHER-PLATED (10.5X45X3-MM THK)	
D	17	1	**5P-5639**		SEAL (0.27-M EACH)	
D	17A	1	**5P-5639**		SEAL (0.32-M EACH)	
D	17B	1	**5P-5639**		SEAL (0.51-M)	

D-ORDER BY THE METER
E-ORDER BY THE CENTIMETER
M-METRIC PART

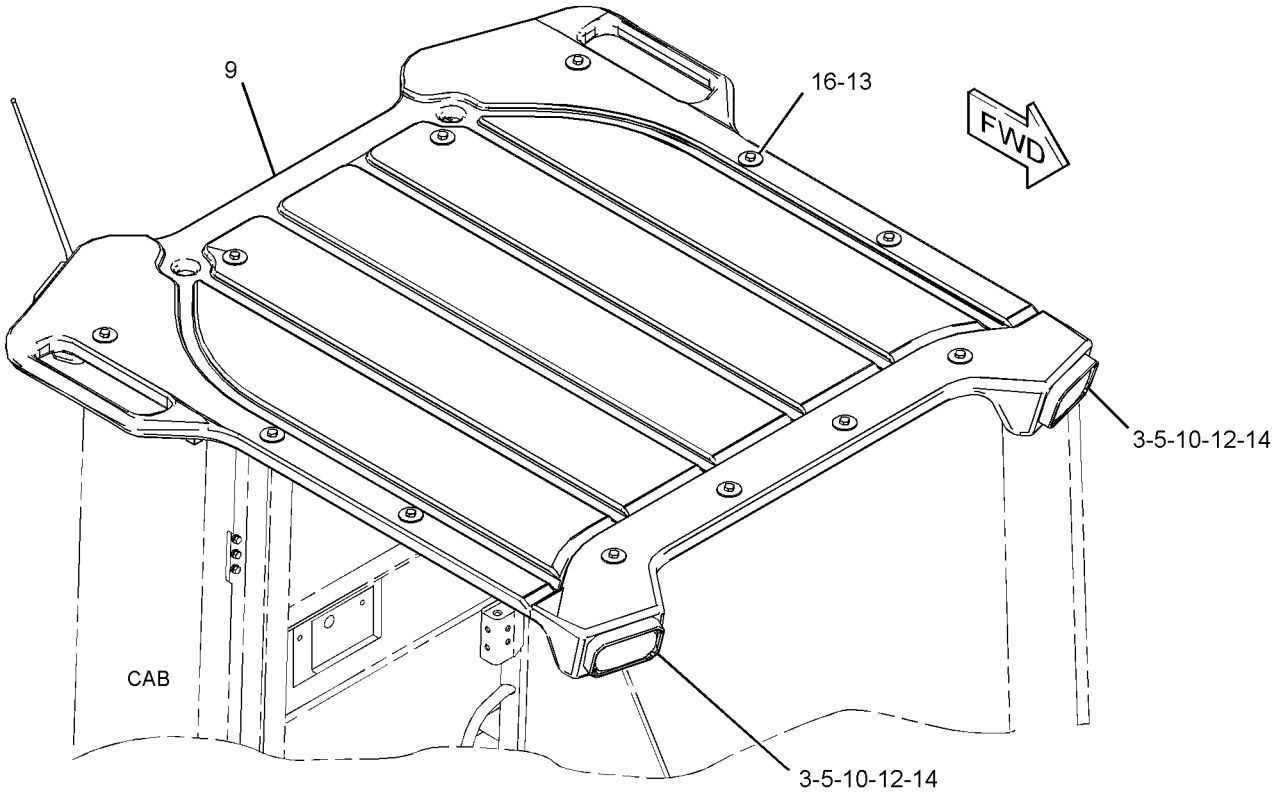

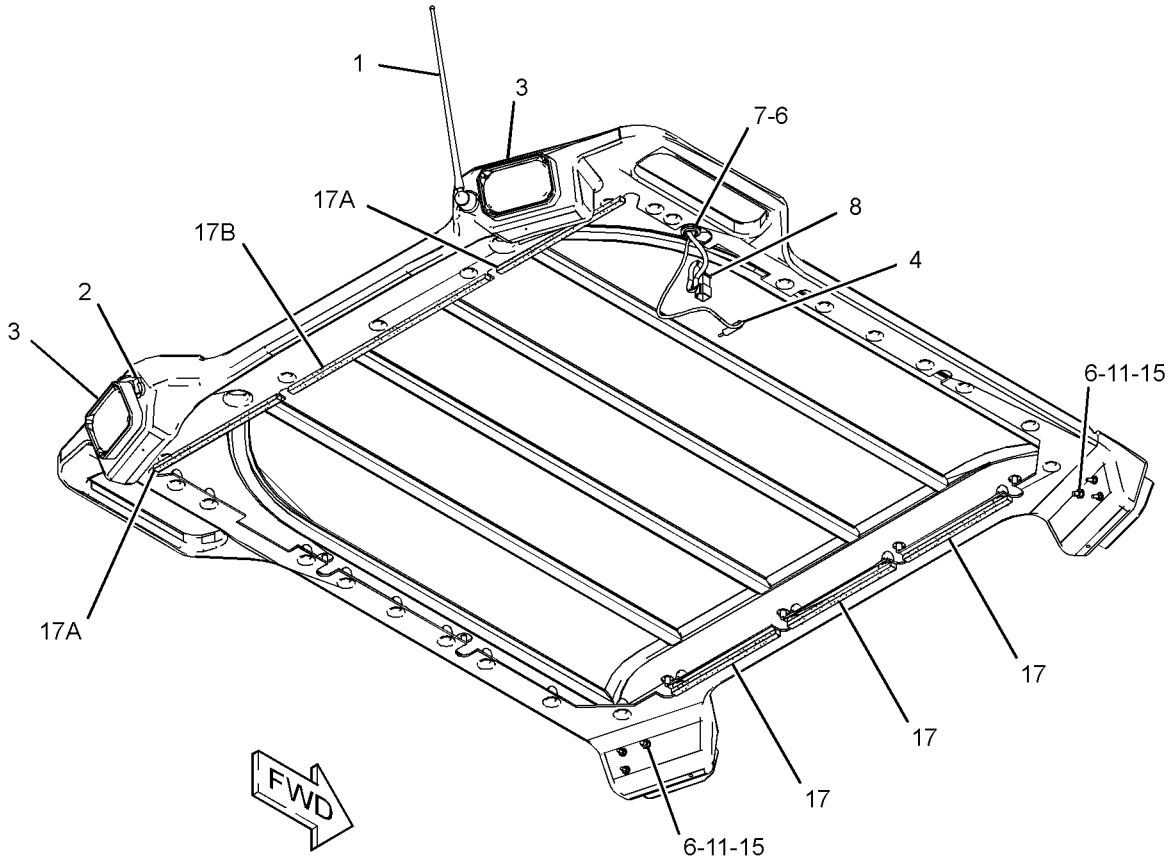

GRAPHIC #1 **<END>** g01397126

311-8706 LIGHTING GP-FLOOD—CAB FRONT

S/N: KLN1-UP
PART OF 310-9953 CAB AR
AN ATTACHMENT

SMCS-1434 **i03537661**

NOTE	REF NO	GRAPHIC REF	PART NUMBER	QTY	PART NAME 1 2 3 4 5 6 (PRODUCT LEVEL)	SEE PAGE
	1	1	**1H-3244**	4	LOCKWASHER	
M	2	1	**8T-4970**	8	BOLT (M6X1X14-MM)	
	3	1	**4B-4276**	8	WASHER (7X16X1.6-MM THK)	
	4	1	**115-1559**	2	PLATE	
Y	5	1	**242-3519**	2	LAMP GP-FLOOD (24-VOLT)	140
	6	1	**311-8707**	1	HARNESS AS-LIGHTING	
		1	**102-8805**	1	KIT-RECEPTACLE (6-PIN)	
					(KIT INCLUDES RECEPTACLE AS & WEDGE)	
		1	**186-3735**	2	PIN-CONNECTOR (16-GA TO 18-GA)	
		1	**8T-8737**	2	PLUG-SEAL	
		1	**9W-0852**	2	PIN-CONNECTOR (14-GA)	
E		1	**114-8843**		SLEEVE-PLASTIC (220-CM)	
E		1	**119-3662**		TUBE-HEAT SHRINK (10.85-MM DIA) (7-CM)	
E		1	**125-7875**		TUBE-HEAT SHRINK (7.44-MM DIA) (20-CM)	
	7	1	**4B-4674**	8	WASHER (6.4X14.5X1.6-MM THK)	
M	8	1	**5C-2890**	8	NUT (M6X1-THD)	
	9	1	**5P-8525**	2	GROMMET	
B	10	1	**7K-1181**	9	STRAP-CABLE	
	11	1	**8T-4121**	2	WASHER-HARD (11X21X2.5-MM THK)	
M	12	1	**8T-4133**	2	NUT (M10X1.5-THD)	
M	13	1	**8T-4138**	4	BOLT (M6X1X20-MM)	
M	14	1	**8T-4189**	4	BOLT (M8X1.25X20-MM)	
	15	1	**8T-4224**	4	WASHER-HARD (8.8X16X2-MM THK)	

B-USE AS REQUIRED
E-ORDER BY THE CENTIMETER
M-METRIC PART
Y-SEPARATE ILLUSTRATION

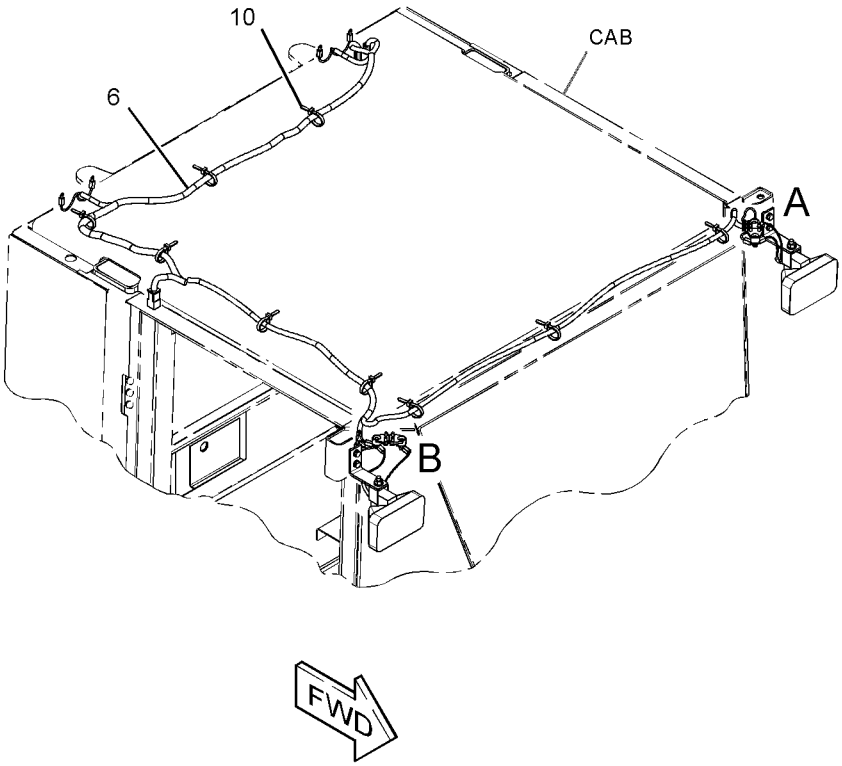

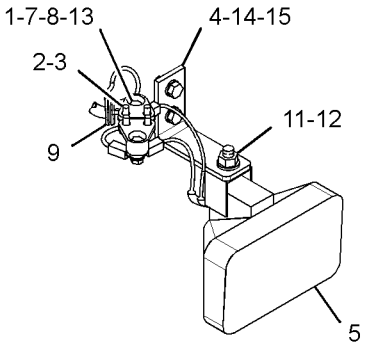

VIEW OF AREA A

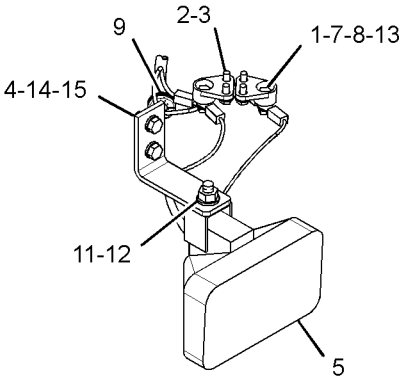

VIEW OF AREA B

GRAPHIC #1 **<END>** g01901935

ELECTRICAL AND STARTING SYSTEM

313-4572 LIGHTING GP-FLOOD—CANOPY FRONT, REAR

S/N: KLN1-UP
PART OF 290-8179 CANOPY GP-OPEN ROPS
AN ATTACHMENT

SMCS-1434 **i03627198**

NOTE	REF NO	GRAPHIC REF	PART NUMBER	QTY	PART NAME 1 2 3 4 5 6 (PRODUCT LEVEL)	SEE PAGE
D	1	1	**5P-5639**		SEAL (0.32-M EACH)	
D	1A	1	**5P-5639**		SEAL (0.51-M)	
D	1B	1	**5P-5639**		SEAL (0.27-M EACH)	
	2	1	**5P-5774**	1	PLUG	
	3	1	**9R-7941**	1	SOCKET AS	
		1	**9R-7980**	1	COVER	
	4	1	**109-7041**	4	LAMP GP-FLOOD (24-VOLT)	
					(EACH INCLUDES)	
		1	**9X-3463**	1	LAMP-HALOGEN (24-VOLT, 70-WATT)	
		1	**142-5789**	4	SCREW	
	5	1	**114-6604**	16	NUT-SPEED	
	6	1	**289-9167**	1	HARNESS AS-LIGHTING	
		1	**123-7615**	2	CONNECTOR	
		1	**9W-0852**	4	PIN-CONNECTOR (14-GA)	
		1	**9X-3401**	2	PIN-CONNECTOR (16-GA TO 18-GA)	
					-OR-	
		1	**126-1767**	2	PIN-CONNECTOR (14-GA)	
		1	**102-8805**	1	KIT-RECEPTACLE (6-PIN)	
					(INCLUDES RECEPTACLE AS & WEDGE)	
		1	**8L-8413**	40	STRAP-CABLE	
		1	**2L-8077**	4	TERMINAL (14-GA TO 16-GA)	
		1	**2L-8078**	2	TERMINAL-RING (14-GA TO 16-GA, 5/16-IN SCREW)	
		1	**5P-4571**	8	TERMINAL-BLADE (14-GA TO 16-GA)	
		1	**6V-0491**	4	TERMINAL-BLADE (14-GA TO 18-GA)	
E		1	**119-3662**		TUBE-HEAT SHRINK (10.85-MM DIA) (13-CM)	
E		1	**125-7874**		TUBE-HEAT SHRINK (5.72-MM DIA) (15-CM)	
E		1	**125-7875**		TUBE-HEAT SHRINK (7.44-MM DIA) (5-CM)	
	7	1	**292-0509**	1	ROOF	
M	8	1	**5C-2890**	4	NUT (M6X1-THD)	
M	9	1	**5C-7261**	2	NUT (M8X1.25-THD)	
M	10	1	**6V-7357**	4	BOLT (M6X1X25-MM)	
M	11	1	**8T-4137**	12	BOLT (M10X1.5X20-MM)	
	12	1	**8T-4205**	8	WASHER-HARD (7.2X14.5X2-MM THK)	
	13	1	**8T-4224**	4	WASHER-HARD (8.8X16X2-MM THK)	
	14	1	**8T-4226**	12	WASHER-PLATED (10.5X45X3-MM THK)	
M	15	1	**8T-4908**	2	BOLT (M8X1.25X25-MM)	

D-ORDER BY THE METER
E-ORDER BY THE CENTIMETER
M-METRIC PART

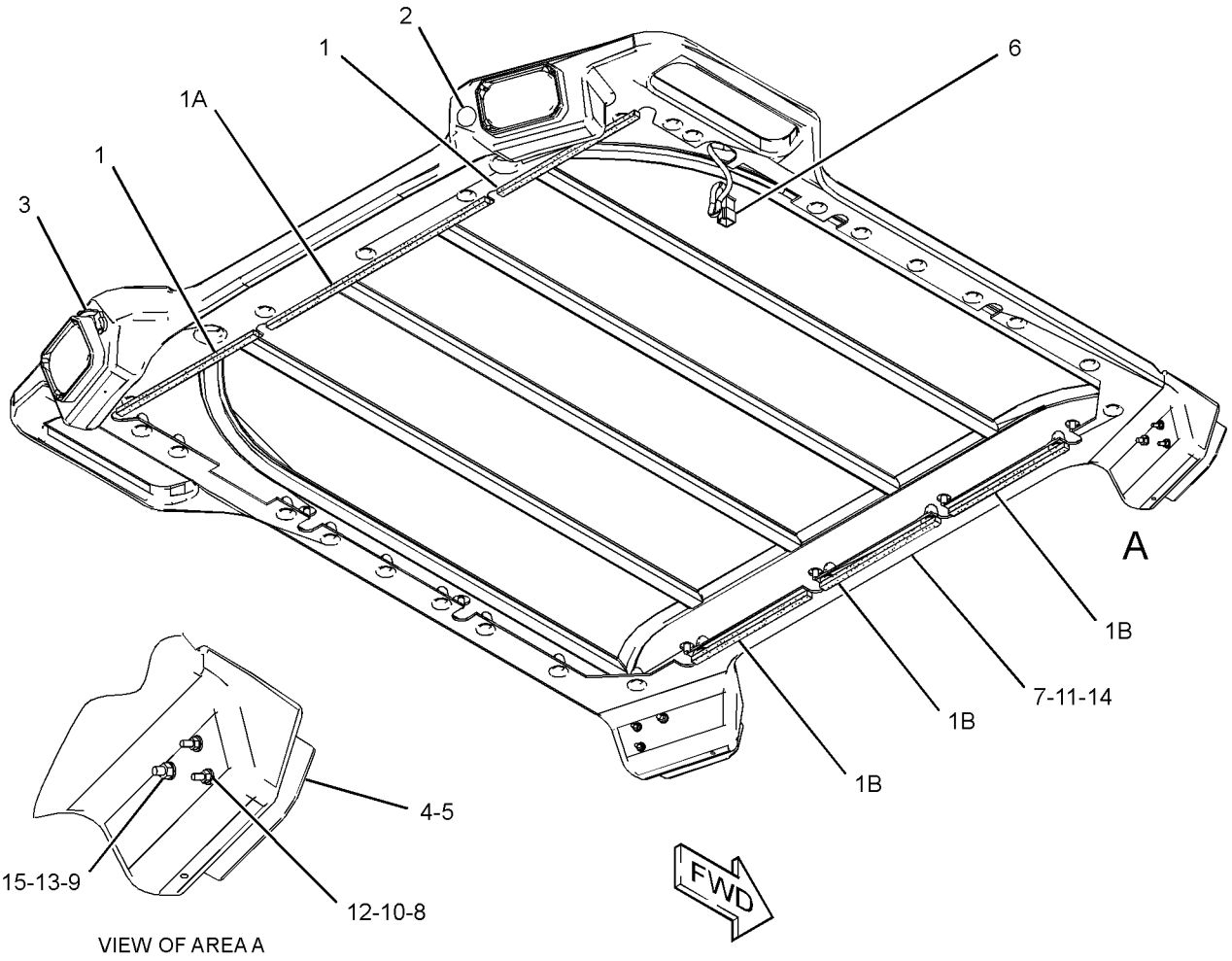

VIEW OF AREA A

GRAPHIC #1 **<END>** g01399573

ELECTRICAL AND STARTING SYSTEM

290-7223 LIGHTING GP-FLOOD & SIGNAL–

OFF ROAD W/SIGNAL

S/N: KLN1-UP

PART OF 289-8840 COMMON AR

SMCS-1430, 1434 **i03627144**

NOTE	REF NO	GRAPHIC REF	PART NUMBER	QTY	PART NAME 1 2 3 4 5 6 (PRODUCT LEVEL)	SEE PAGE
Y	1	1	**3E-6328**	1	ALARM GP (24-VOLT)	119
	2	1	**7K-1181**	5	STRAP-CABLE	
	3	1	**9R-1499**	2	REFLECTOR	
	4	1	**9R-2404**	6	REFLECTOR-AMBER	
	5	1	**134-9569**	1	SWITCH AS-TURN SIGNAL	
		1	**5L-7200**	1	SCREW (8-32X0.375-IN)	
		1	**9B-7233**	1	LOCKWASHER	
Y	6	1	**145-6929**	2	LAMP GP-STOP & TAIL (24-VOLT)	143
	7	1	**201-5555**	1	PLATE-INSTRUCTION (TURN SIGNAL)	
	8	1	**249-2895**	2	HARNESS AS-LIGHTING	
					(EACH INCLUDES)	
		1	**9X-3401**	4	PIN-CONNECTOR (16-GA TO 18-GA)	
					-OR-	
		1	**126-1767**	4	PIN-CONNECTOR (14-GA)	
		1	**155-2274**	1	KIT-CONNECTING PLUG (6-PIN)	
					(INCLUDES PLUG AS, WEDGE & INTERFACE SEAL)	
		1	**8T-8737**	4	PLUG-SEAL	
		1	**102-8805**	1	KIT-RECEPTACLE (6-PIN)	
					(INCLUDES RECEPTACLE AS & WEDGE)	
		1	**180-9340**	4	SOCKET-CONNECTOR (14-GA TO 18-GA)	
	9	1	**298-6160**	2	BRACKET AS	
Y	10	1	**302-0406**	1	LAMP GP-FLOOD (RH)	141
Y	11	1	**302-0408**	1	LAMP GP-FLOOD (LH)	142
	12	1	**317-2284**	1	FLASHER AS (12 TO 24-VDC)	
	13	1	**133-3235**	1	LEVER	
	14	1	**1H-4393**	3	LOCKWASHER	
M	15	1	**5C-2890**	1	NUT (M6X1-THD)	
M	16	1	**5C-8312**	3	NUT (M4X0.7-THD)	
	17	1	**8T-4121**	8	WASHER-HARD (11X21X2.5-MM THK)	
M	18	1	**8T-4136**	8	BOLT (M10X1.5X25-MM)	
	19	1	**8T-4205**	5	WASHER-HARD (7.2X14.5X2-MM THK)	
M	20	1	**9X-2045**	1	SCREW-TRUSS HEAD (M6X1X20-MM)	
					PARTS SHOWN IN GRAPHIC(S) WITHOUT A REFERENCE NUMBER ARE NOT SERVICED SEPARATELY	

M-METRIC PART
Y-SEPARATE ILLUSTRATION

290-7223 **LIGHTING GP-FLOOD & SIGNAL** *(contd.)* **i03627144**

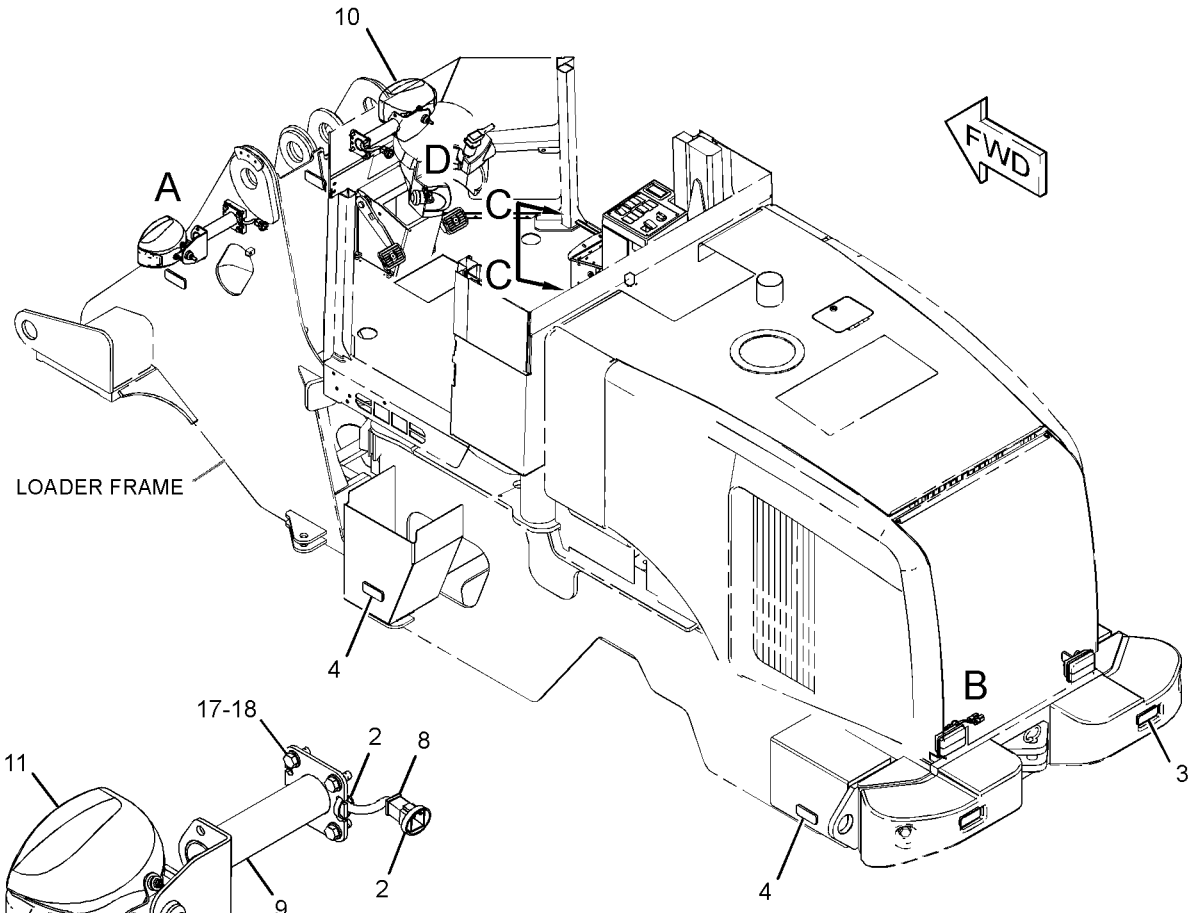

VIEW OF AREA A

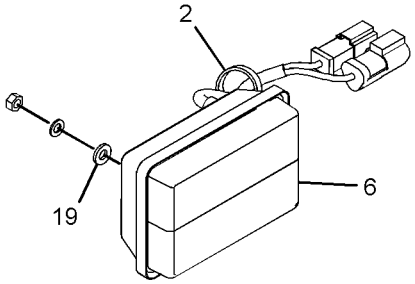

VIEW OF AREA B

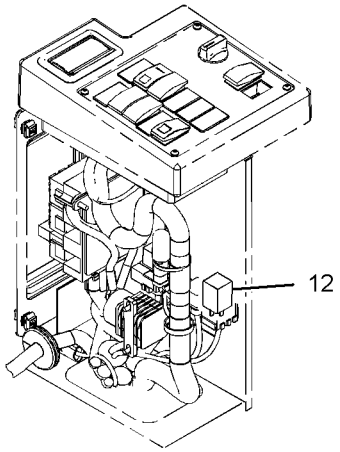

VIEW C-C
(COVER REMOVED FOR CLARITY)

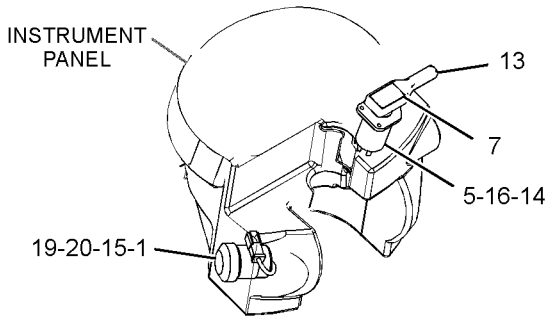

VIEW OF AREA D

GRAPHIC #1 **<END>** g01562858

204-2004 LIGHTING GP-REAR

S/N: KLN1-UP
PART OF 310-9953 CAB AR
AN ATTACHMENT

SMCS-1434 **i03629338**

NOTE	REF NO	GRAPHIC REF	PART NUMBER	QTY	PART NAME 1 2 3 4 5 6 (PRODUCT LEVEL)	SEE PAGE
	1	1	**098-8968**	8	WASHER (5X16X1.2-MM THK)	
	2	1	**4B-2048**	8	NUT (10-32-THD)	
	3	1	**4M-7470**	6	GROMMET	
	4	1	**4V-4164**	8	BUSHING-TERMINAL	
	5	1	**6D-6146**	4	SCREW-MACHINE (10-32X1.25-IN)	
	6	1	**7X-7729**	6	WASHER (11X25X3-MM THK)	
	7	1	**8T-4121**	2	WASHER-HARD (11X21X2.5-MM THK)	
M	8	1	**8T-4133**	4	NUT (M10X1.5-THD)	
M	9	1	**8T-4136**	2	BOLT (M10X1.5X25-MM)	
	10	1	**9F-8125**	8	LOCKWASHER	
Y	11	1	**242-3519**	2	LAMP GP-FLOOD (24-VOLT)	140
	12	1	**9X-9365**	2	BRACKET	
BF			**3S-2093**	4	STRAP-CABLE	

B-USE AS REQUIRED
F-NOT SHOWN
M-METRIC PART
Y-SEPARATE ILLUSTRATION

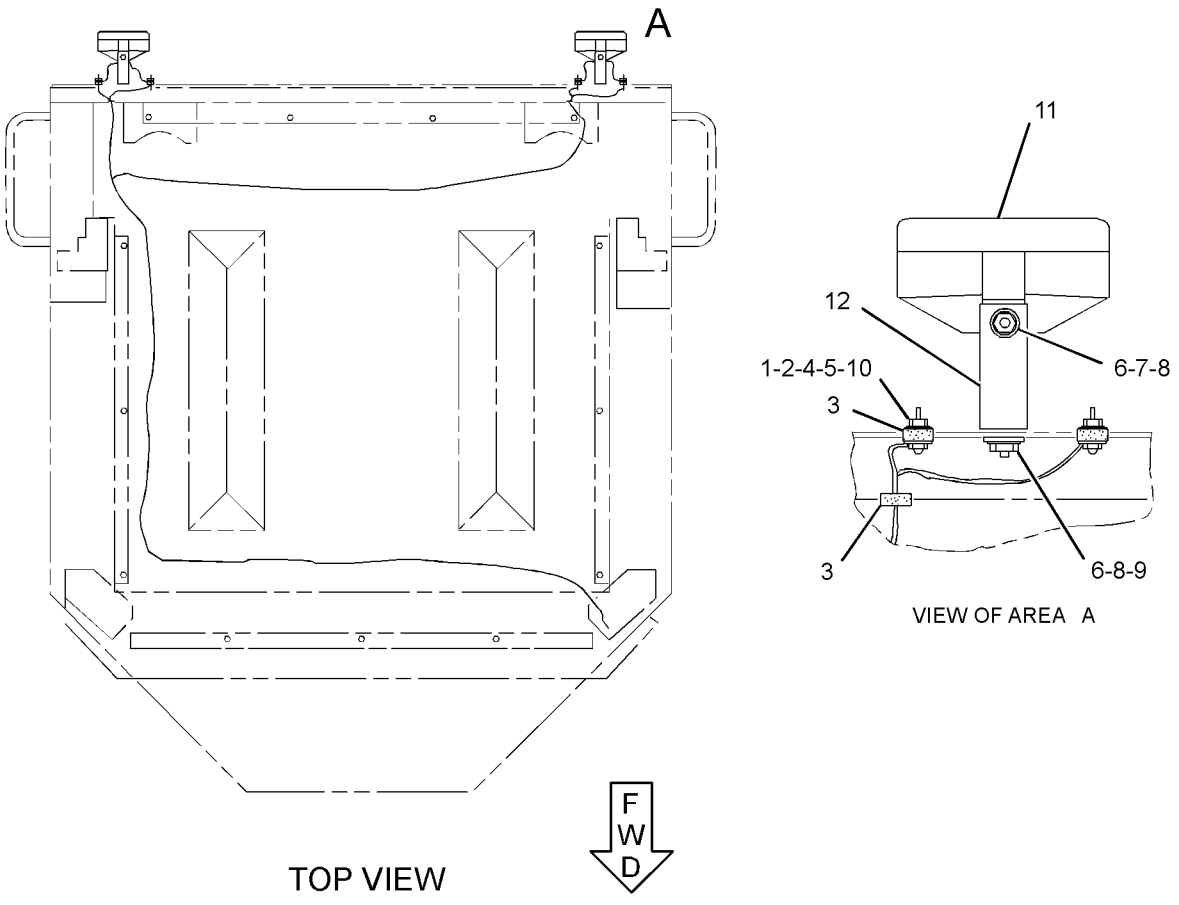

GRAPHIC #1 **<END>** g01947261

289-8906 LIGHTING GP-WARNING BEACON

S/N: KLN1-UP
AN ATTACHMENT

SMCS-1431 **i03537675**

NOTE	REF NO	GRAPHIC REF	PART NUMBER	QTY	PART NAME 1 2 3 4 5 6 (PRODUCT LEVEL)	SEE PAGE
	1	1	**129-0336**	1	PLATE	
Y	2	1	**140-3668**	1	LAMP GP-WARNING BEACON (AMBER, STROBE)	144
	3	1	**195-0925**	1	SWITCH AS-ROCKER (WARNING BEACON)	
		1	**111-7899**	1	GASKET	
	4	1	**8C-6440**	4	SCREW-PAN HEAD (10-16X0.5-IN)	

Y-SEPARATE ILLUSTRATION

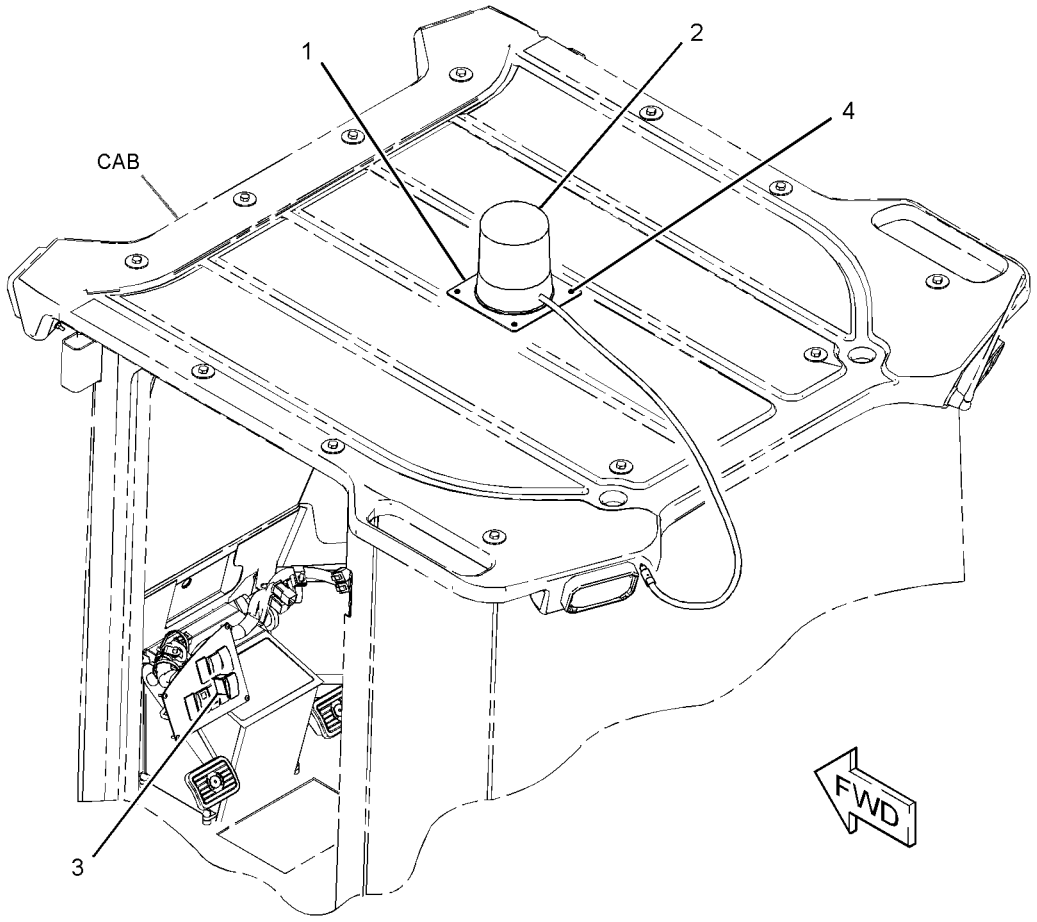

GRAPHIC #1 **<END>** g01409823

309-1620 MODULE AS-FUSE–MAIN POWER

S/N: KLN1-UP

PART OF 289-8902 WIRING GP-ENGINE

SMCS-1417 **i03085823**

NOTE	REF NO	GRAPHIC REF	PART NUMBER	QTY	PART NAME 1 2 3 4 5 6 (PRODUCT LEVEL)	SEE PAGE
	1	1	**267-2680**	1	FUSE (20-AMPERE)	
	2	1	**274-9872**	1	FUSE (30-AMPERE)	
M	3	1	**5C-2890**	2	NUT (M6X1-THD)	
	4	1	**8T-4205**	2	WASHER-HARD (7.2X14.5X2-MM THK)	
	5	1	**1H-3244**	2	LOCKWASHER	
M	6	1	**5C-7261**	1	NUT (M8X1.25-THD)	
	7	1	**8T-4224**	1	WASHER-HARD (8.8X16X2-MM THK)	
	8	1	**9F-5644**	1	LOCKWASHER	

M-METRIC PART

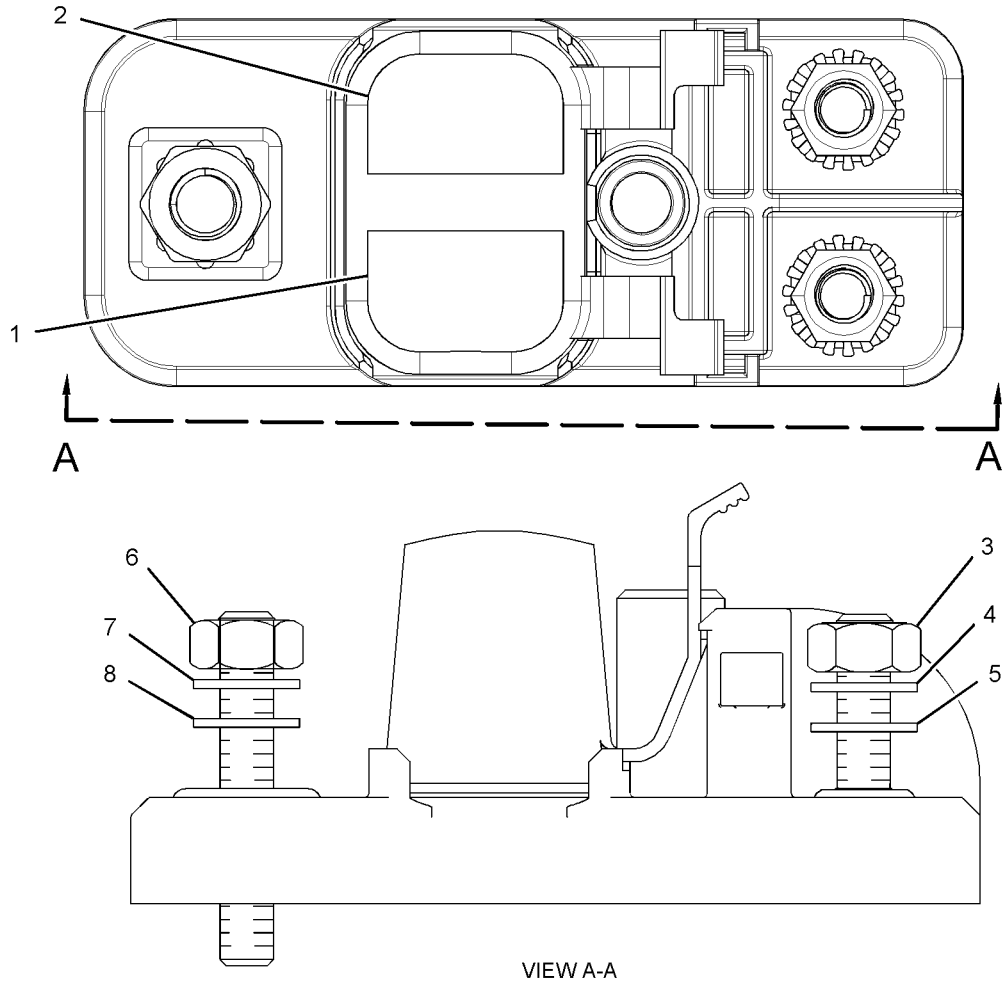

VIEW A-A

GRAPHIC #1 **<END>** g01427672

324-9712 MODULE AS-FUSE

S/N: KLN1-UP
GLOW PLUGS, START SOLENOID
PART OF 289-8902 WIRING GP-ENGINE

SMCS-1417 **i03539422**

NOTE	REF NO	GRAPHIC REF	PART NUMBER	QTY	PART NAME 1 2 3 4 5 6 (PRODUCT LEVEL)	SEE PAGE
	1	1	**9F-5644**	1	LOCKWASHER	
	2	1	**267-5211**	1	SEAL	
	3	1	**267-5213**	1	COVER	
	4	1	**278-6377**	2	FUSE (40-AMPERE)	
M	5	1	**5C-2890**	2	NUT (M6X1-THD)	
	6	1	**8T-4205**	2	WASHER-HARD (7.2X14.5X2-MM THK)	
	7	1	**1H-3244**	2	LOCKWASHER	
M	8	1	**5C-7261**	1	NUT (M8X1.25-THD)	
	9	1	**8T-4224**	1	WASHER-HARD (8.8X16X2-MM THK)	

M-METRIC PART

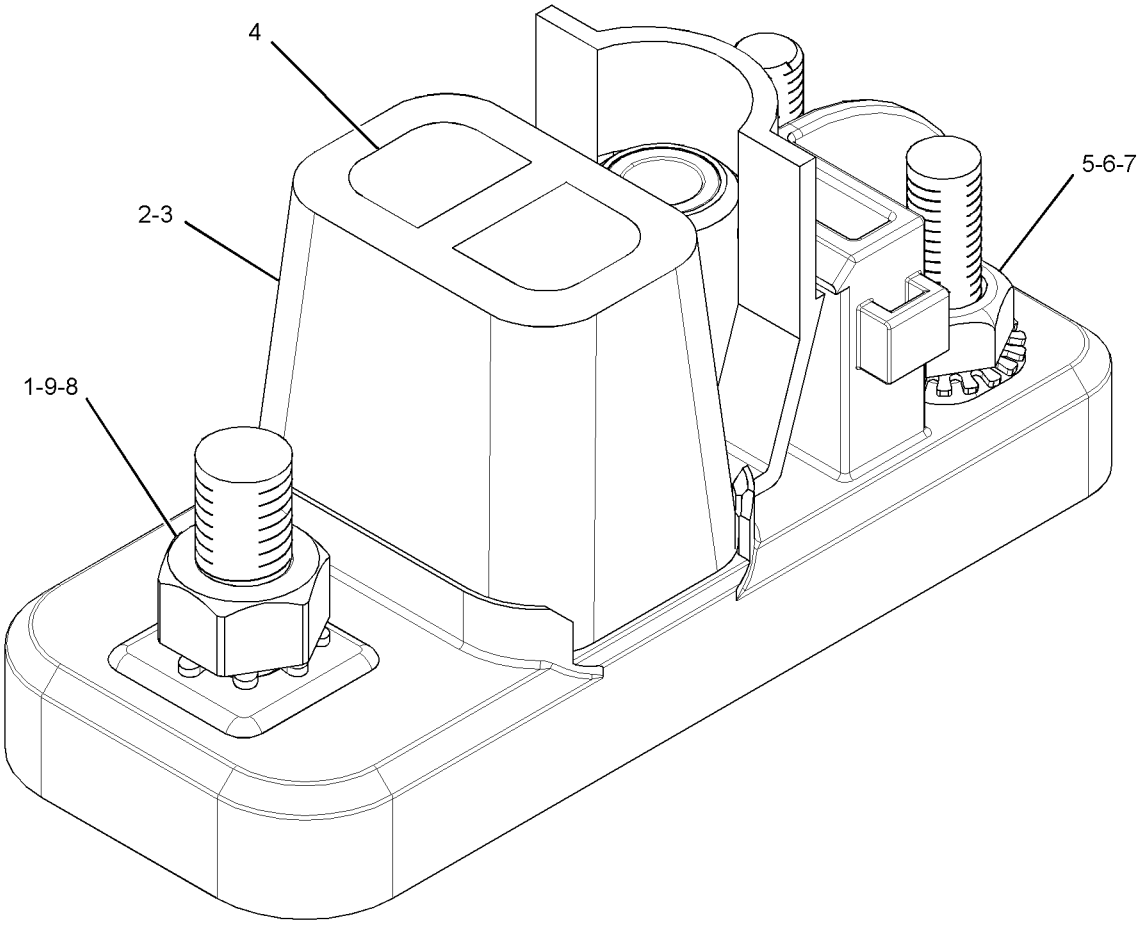

GRAPHIC #1 **<END>** g01784818

160-2443 SENSOR GP-POSITION

S/N: KLN1-UP
ROTARY
PART OF 243-0061 PEDAL GP-GOVERNOR
AN ATTACHMENT

SMCS-4269, 5702, 5736, 5737, 7494 **i01431988**

NOTE	REF NO	GRAPHIC REF	PART NUMBER	QTY	PART NAME 1 2 3 4 5 6 (PRODUCT LEVEL)	SEE PAGE
	1	1	**102-8803**	1	KIT-RECEPTACLE (3-PIN)	
					(INCLUDES RECEPTACLE AS & WEDGE)	
	2	1	**8T-8729**	3	PIN-CONNECTOR	
	3	1	**3E-3371**	1	WEDGE-RECEPTACLE LOCK (3-PIN)	

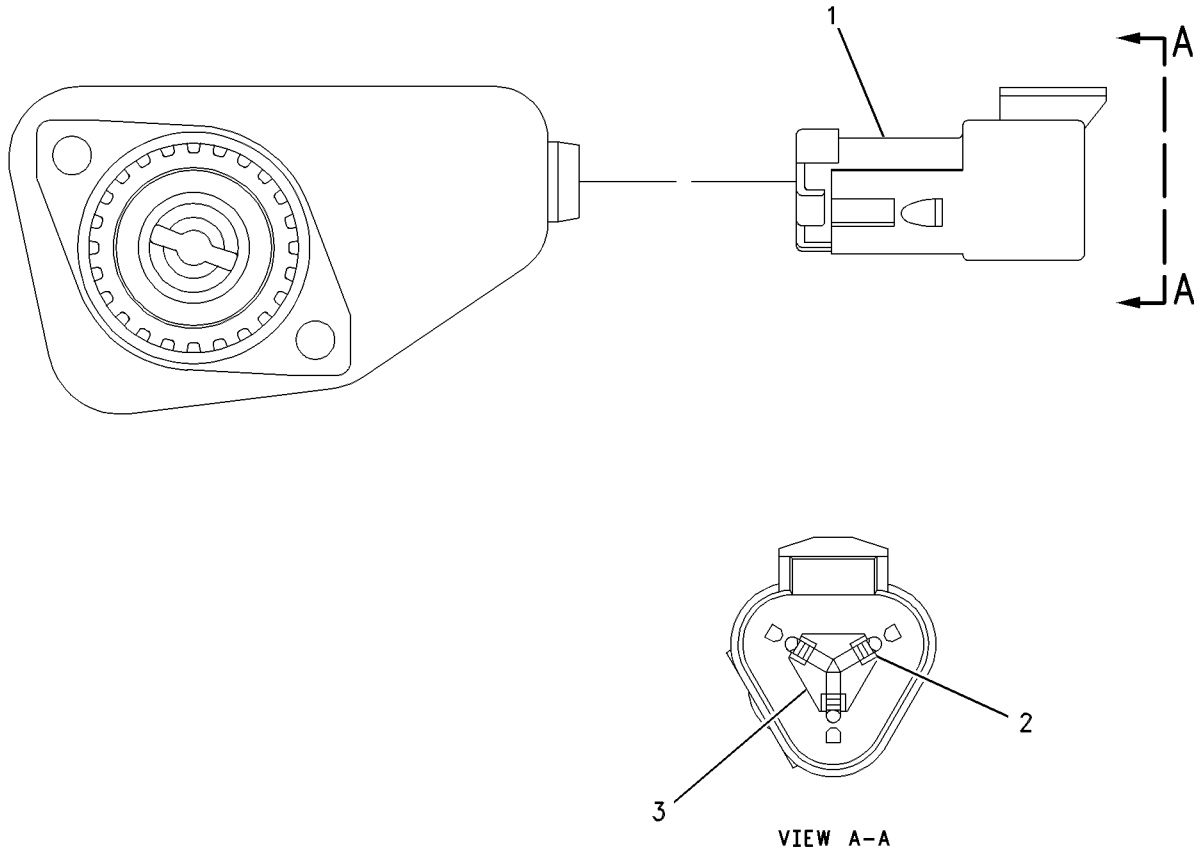

GRAPHIC #1 **<END>** g00637818

224-4536 SENSOR GP-PRESSURE

S/N: KLN1-UP

PART OF 288-4162 PUMP GP-GEAR

SMCS-1408, 1925, 7494 **i03172043**

NOTE	REF NO	GRAPHIC REF	PART NUMBER	QTY	PART NAME 1 2 3 4 5 6 (PRODUCT LEVEL)	SEE PAGE
BE	1	1	**9X-1813**		SLEEVE	
	2	1	**155-2260**	1	KIT-CONNECTING PLUG (3-PIN)	
					(INCLUDES PLUG AS, WEDGE, & INTERFACE SEAL)	
	3	1	**194-5226**	1	WIRE AS	
					—OR—	
		1	**194-5227**	1	WIRE AS (14-GA)	
	4	1	**155-2276**	1	WEDGE-PLUG LOCK (3-PIN)	

B-USE AS REQUIRED
E-ORDER BY THE CENTIMETER

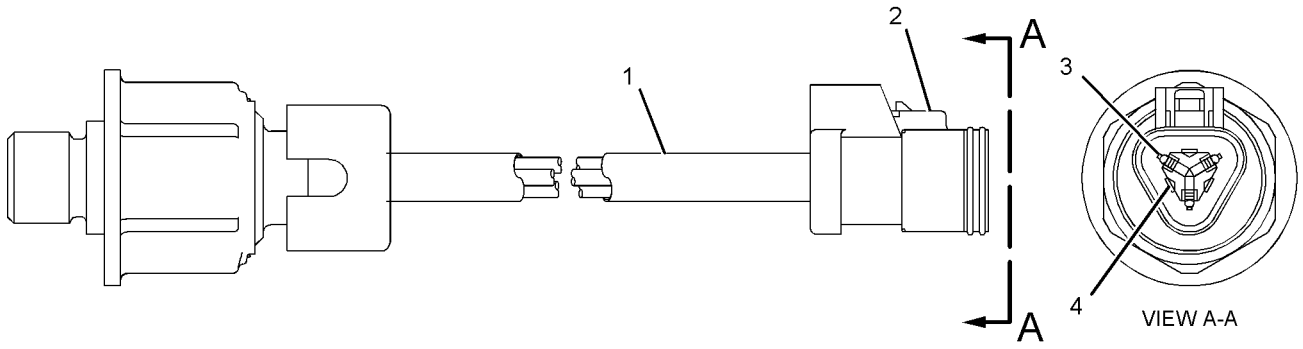

GRAPHIC #1 **<END>** g01040301

183-8597 SENSOR GP-SPEED

S/N: J2Y1-UP

PART OF 305-0635 VALVE GP-TRANSMISSION CONTROL

SMCS-1907, 1912, 3175, 4803, 7493 **i02914638**

NOTE	REF NO	GRAPHIC REF	PART NUMBER	QTY	PART NAME 1 2 3 4 5 6 (PRODUCT LEVEL)	SEE PAGE
	1	1	**171-5349**	1	STRAP-MARKER	
	2	1	**102-8802**	1	KIT-RECEPTACLE (2-PIN)	
					(INCLUDES RECEPTACLE AS & WEDGE)	
	3	1	**186-3735**	2	PIN-CONNECTOR (16-GA TO 18-GA)	
	4	1	**3E-3365**	1	WEDGE-RECEPTACLE LOCK (2-PIN)	
E	5	1	**9X-1813**		SLEEVE (14-CM)	

E-ORDER BY THE CENTIMETER

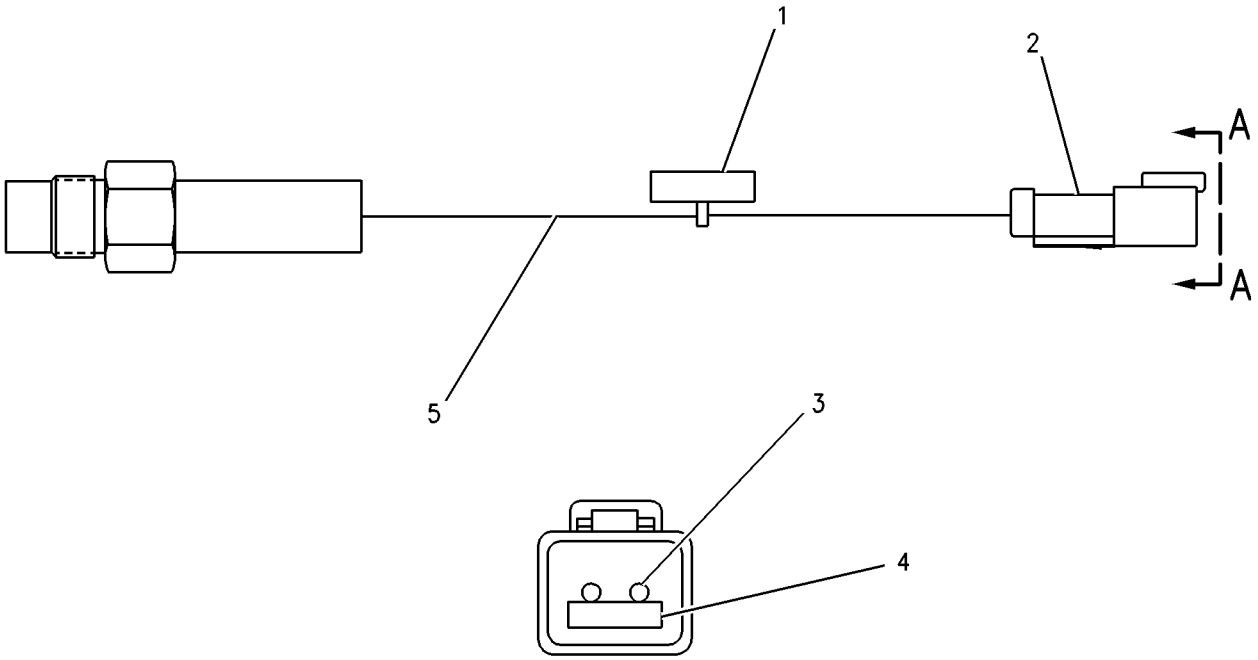

VIEW A-A

GRAPHIC #1 **<END>** g00680294

134-2252 SENSOR GP-TEMPERATURE–PULSE WIDTH MODULATED

S/N: J2Y1-UP

8-VOLT

PART OF 200-2043 VALVE GP-TRANSMISSION CONTROL

SMCS-1408, 1906, 1919, 1921, 1922, 1928, 1929, 301T, 3194, 429T, 509T

i03537678

NOTE	REF NO	GRAPHIC REF	PART NUMBER	QTY	PART NAME 1 2 3 4 5 6 (PRODUCT LEVEL)	SEE PAGE
	1	1	**8T-8729**	3	PIN-CONNECTOR (16-GA TO 18-GA)	
E	2	1	**112-4550**		SLEEVE (33-CM)	
	3	1	**102-8803**	1	KIT-RECEPTACLE (3-PIN)	
					(INCLUDES RECEPTACLE AS & WEDGE)	

E-ORDER BY THE CENTIMETER

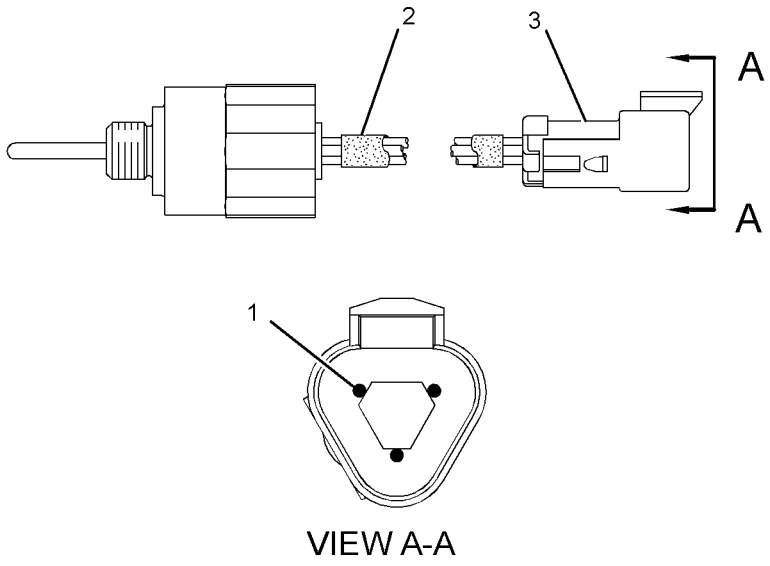

VIEW A-A

GRAPHIC #1

<END>

g01866333

290-4432 STARTING AID GP-ETHER

S/N: KLN1-UP

AN ATTACHMENT

SMCS-1456 **i03018423**

NOTE	REF NO	GRAPHIC REF	PART NUMBER	QTY	PART NAME 1 2 3 4 5 6 (PRODUCT LEVEL)	SEE PAGE
Y	1	1	*290-8781*	1	STARTING AID GP-ETHER	163
	2	1	**5P-4116**	4	WASHER-HARD (8.8X20.5X2-MM THK)	
M	3	1	**8T-4908**	4	BOLT (M8X1.25X25-MM)	

M-METRIC PART
Y-SEPARATE ILLUSTRATION

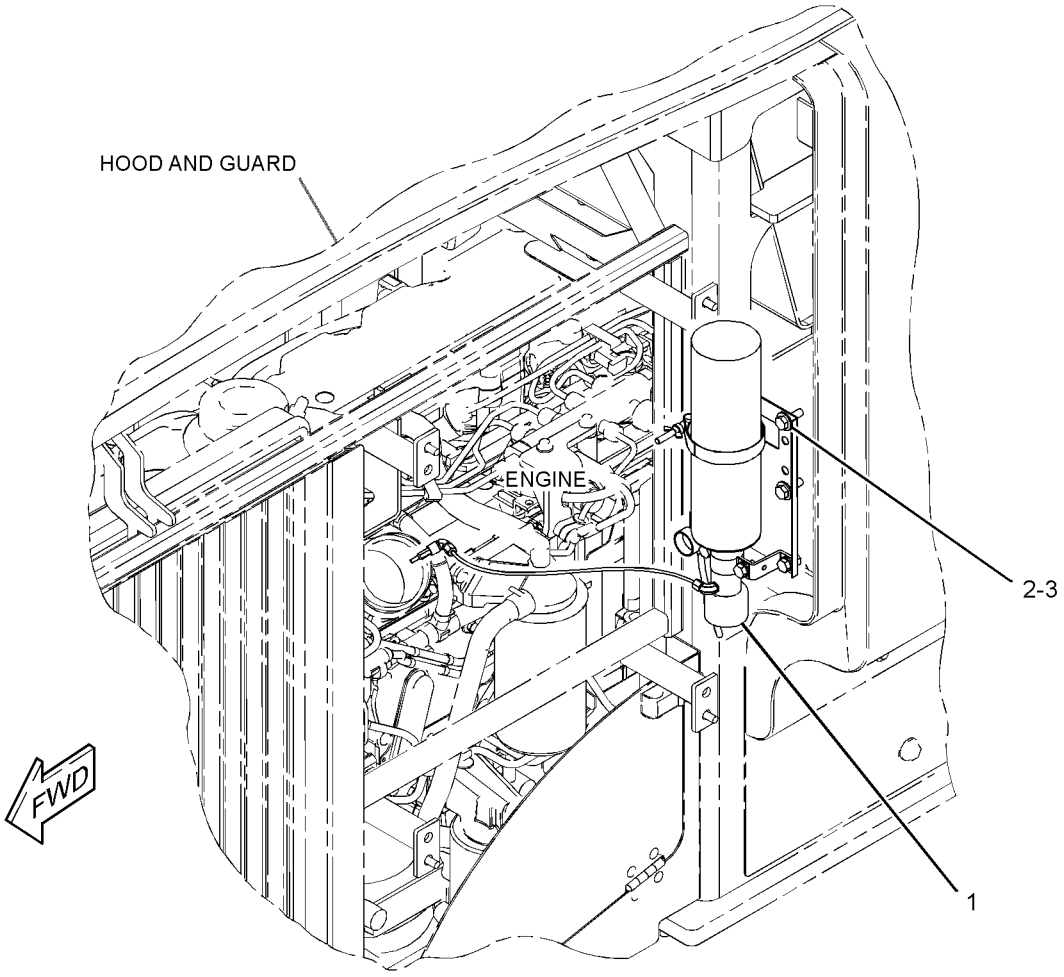

GRAPHIC #1 **<END>** g01399049

290-8781 STARTING AID GP-ETHER

S/N: KLN1-UP
PART OF 290-4432 STARTING AID GP-ETHER
AN ATTACHMENT

SMCS-1456 **i03511201**

NOTE	REF NO	GRAPHIC REF	PART NUMBER	QTY	PART NAME 1 2 3 4 5 6 (PRODUCT LEVEL)	SEE PAGE
Y	1	1	**239-1134**	1	VALVE GP-ETHER STARTING (24-VOLT)	175
	2	1	**276-3810**	1	ATOMIZER GP-ETHER	
		1	**236-4545**	1	NUT-SLEEVE (5/16-24-THD)	
	3	1	**276-5436**	1	FITTING AS	
		1	**236-4545**	1	NUT-SLEEVE (5/16-24-THD)	
	4	1	*276-6597*	1	MOUNTING GP-ETHER CANISTER	
		1	**236-8013**	1	BRACKET	
		1	**276-6596**	1	CLAMP	
M	5	1	**5C-7261**	2	NUT (M8X1.25-THD)	
M	6	1	**8T-4200**	4	BOLT (M8X1.25X16-MM)	
	7	1	**8T-4224**	6	WASHER-HARD (8.8X16X2-MM THK)	
D	8	1	**5P-5630**		TUBE (1-M)	

D-ORDER BY THE METER
M-METRIC PART
Y-SEPARATE ILLUSTRATION

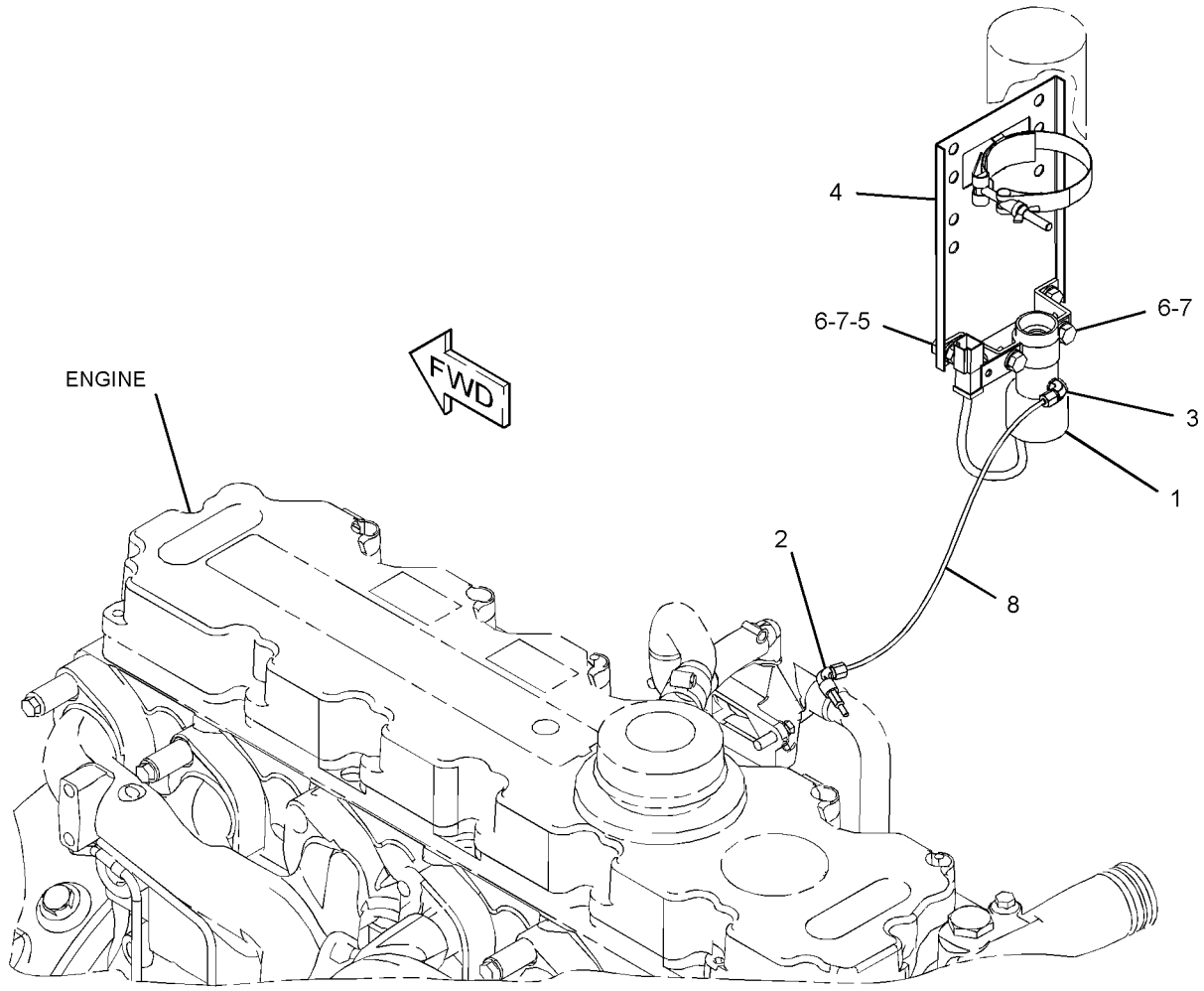

GRAPHIC #1 **<END>** g01415041

234-2667 STARTING MOTOR GP-ELECTRIC

S/N: KLN1-UP

PART OF 289-8894 INSTALLATION AR-ENGINE

SMCS-1453 **i03045441**

NOTE	REF NO	GRAPHIC REF	PART NUMBER	QTY	PART NAME 1 2 3 4 5 6 (PRODUCT LEVEL)	SEE PAGE
Y	1	1	**300-6868**	1	STARTING MOTOR GP-ELECTRIC	165
	2	1	**7W-4540**	1	SPACER	
	3	1	**8T-4121**	3	WASHER-HARD (11X21X2.5-MM THK)	
M	4	1	**8T-4185**	3	BOLT (M10X1.5X50-MM)	

M-METRIC PART
Y-SEPARATE ILLUSTRATION

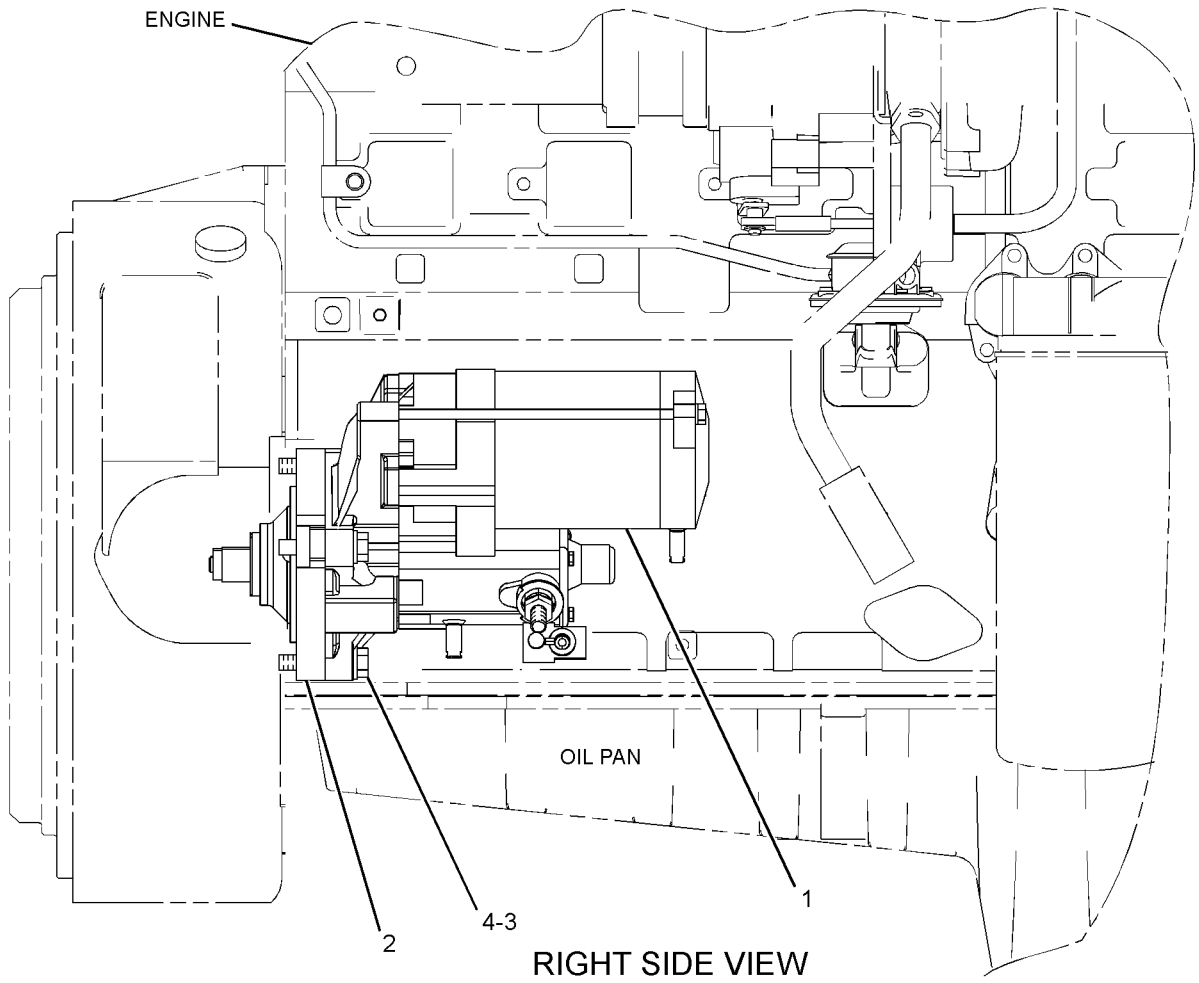

GRAPHIC #1 **<END>** g01407441

ELECTRICAL AND STARTING SYSTEM

300-6868 STARTING MOTOR GP-ELECTRIC

S/N: KLN1-UP

PART OF 234-2667 STARTING MOTOR GP-ELECTRIC

SMCS-1453 **i03043894**

NOTE	REF NO	GRAPHIC REF	PART NUMBER	QTY	PART NAME 1 2 3 4 5 6 (PRODUCT LEVEL)	SEE PAGE
	1	1	**9X-1279**	1	CASE AS-STARTING MOTOR	
	2	1	**9X-1280**	1	ARMATURE AS (STARTING MOTOR)	
	3	1	**242-5441**	1	DRIVE AS-STARTING MOTOR	
	4	1	**242-5443**	1	HOUSING-STARTING MOTOR	
	5	1	**242-5444**	1	SWITCH AS (STARTER)	
	6	1	**9X-1275**	1	HOLDER AS-BRUSH	
	7	1	**242-5445**	1	FRAME-STARTER	
	8	1	**8J-4455**	1	BALL	
	9	1	**7T-6090**	1	SPRING	
	10	1	**9X-1278**	1	BOOT	
	11	1	**7T-6087**	1	WASHER (15.2X40X0.5-MM THK)	
	12	1	**8T-4121**	2	WASHER-HARD (11X21X2.5-MM THK)	
M	13	1	**8T-4133**	2	NUT (M10X1.5-THD)	
M	14	1	**096-2617**	1	SCREW-MACHINE (M5X0.8X6-MM)	
	15	1	**3E-5153**	1	COVER-STARTING MOTOR	
	16	1	**8C-9778**	1	PLUNGER AS (STARTER)	
	17	1	**242-5442**	1	COVER-STARTER	
	18	1	**3E-5154**	1	BUSHING-STARTING MOTOR	
	19	1	**100-3685**	1	CAP	
	20	1	**2P-8104**	1	BEARING	
	21	1	**8L-4070**	1	BALL BEARING	
	22	1	**8F-1434**	1	LOCKWASHER	
					AVAILABLE REPAIR KIT(S):	
			9X-1282	1	KIT-STARTING MOTOR GEAR	
					(INCLUDES PINIONS, ROLLERS & RETAINER)	
			9X-1283	1	KIT-HARDWARE (STARTING MOTOR)	
					(INCLUDES BOLTS, NUT & SCREW AS)	
			9X-1284	1	KIT-STARTING MOTOR SEAL	
					(INCLUDES SEALS & GASKET)	
			9X-1285	1	KIT-BRUSH (STARTING MOTOR)	
					(INCLUDES BRUSH AS & SCREW AS)	

M-METRIC PART

300-6868 STARTING MOTOR GP-ELECTRIC *(contd.)* **i03043894**

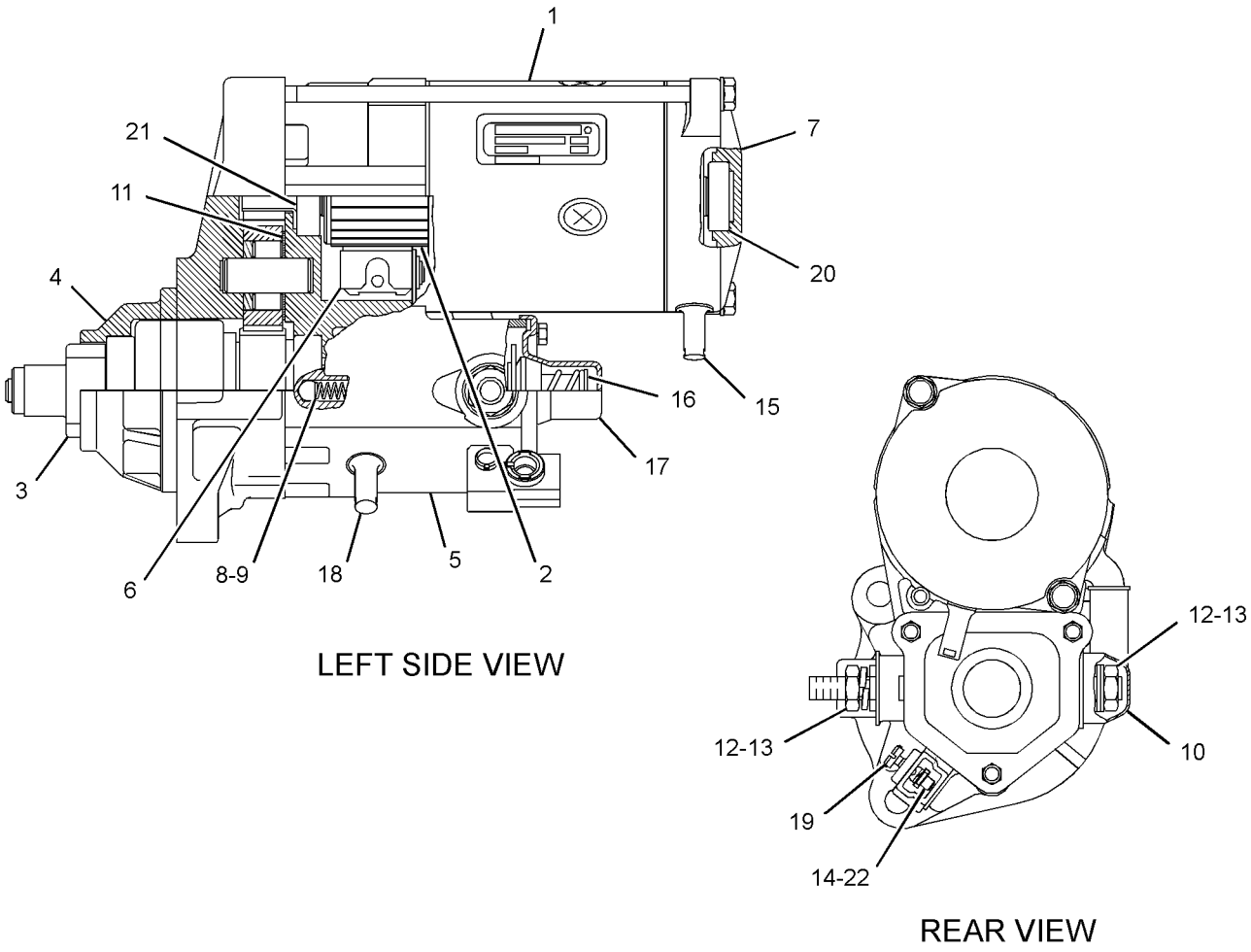

GRAPHIC #1 **<END>** g01389450

7N-0718 SWITCH GP-DISCONNECT–BATTERY

S/N: KLN1-UP
12-VOLT
PART OF 290-7203 BATTERY & WIRING GP
AN ATTACHMENT

SMCS-1411 **i02587657**

NOTE	REF NO	GRAPHIC REF	PART NUMBER	QTY	PART NAME 1 2 3 4 5 6 (PRODUCT LEVEL)	SEE PAGE
	1	1	**8H-5306**	1	KEY (BATTERY DISCONNECT)	
	2	1	**8H-5303**	1	NUT (3/4-16-THD)	
	3	1	**2H-3922**	2	LOCKWASHER	
	4	1	**9F-5644**	2	LOCKWASHER	
	5	1	**6F-7045**	2	NUT-FULL (3/8-24-THD)	

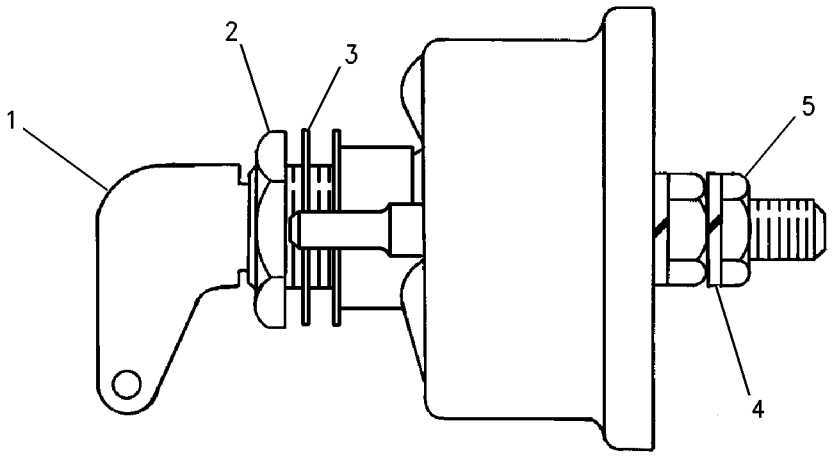

GRAPHIC #1 **<END>** g00715584

328-7483 SWITCH GP-DISCONNECT

S/N: KLN1-UP
PART OF 328-7484 CORROSION AR-PROTECTION
AN ATTACHMENT

SMCS-1411 **i03085121**

NOTE	PART NUMBER	QTY	PART NAME 1 2 3 4 5 6 (PRODUCT LEVEL)	SEE PAGE
	288-0476	1	PLATE AS	
	229-2458	1	SWITCH AS-DISCONNECT	
M	**7X-2552**	1	BOLT (M16X2X30-MM)	
	230-6177	1	FILM-INSTRUCTION	
	191-2063	2	NUT (M6X1-THD)	
	9X-8257	1	WASHER (17.5X30X3.5-MM THK)	
	187-0789	2	WASHER (6.4X12.5X1.6-MM THK)	

M-METRIC PART

<END>

241-8368 SWITCH GP-MAGNETIC

S/N: KLN1-UP
24-VOLT
PART OF 290-8171, 290-8174, 311-8502 PANEL GP-INSTRUMENT, 289-8902 WIRING GP-ENGINE
ALSO AN ATTACHMENT

SMCS-7499 **i02290099**

NOTE	REF NO	GRAPHIC REF	PART NUMBER	QTY	PART NAME 1 2 3 4 5 6 (PRODUCT LEVEL)	SEE PAGE
	1	1	**155-2270**	1	KIT-CONNECTING PLUG (2-PIN)	
					(INCLUDES PLUG AS, WEDGE & INTERFACE SEAL)	
	2	1	**4F-2294**	2	NUT-JAM (5/16-24-THD)	
	3	1	**186-3736**	2	SOCKET-CONNECTOR (16-GA TO 18-GA)	

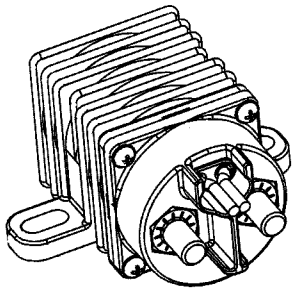

ISOMETRIC VIEW

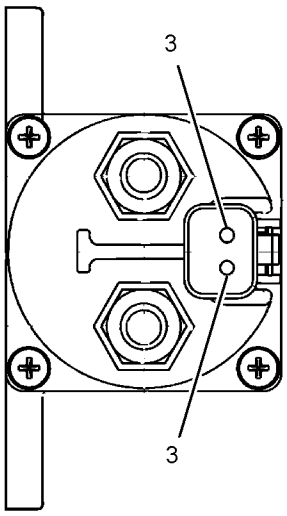

VIEW A-A

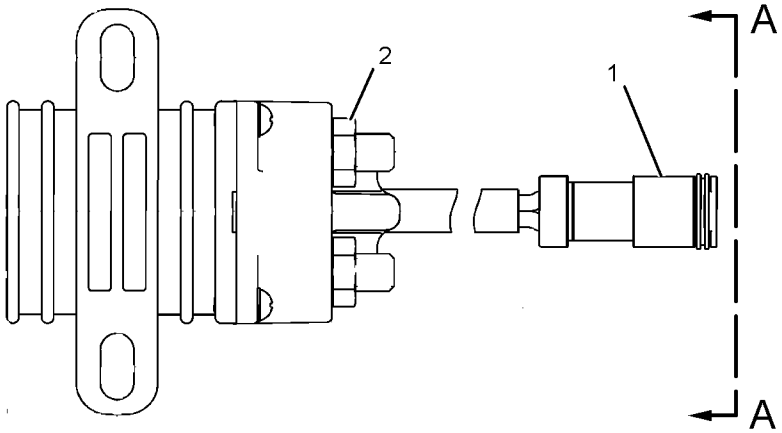

GRAPHIC #1 **<END>** g01077362

330-6502 SWITCH GP-PRESSURE

S/N: C6E11297-UP

PART OF 292-5306 ENGINE AR-PRIMARY

SMCS-1435 **i03246338**

NOTE	REF NO	GRAPHIC REF	PART NUMBER	QTY	PART NAME 1 2 3 4 5 6 (PRODUCT LEVEL)	SEE PAGE
	1	1	**8C-3445**	1	CAP-DUST	
	2	1	**8T-7876**	1	SEAL-O-RING	
	3	1	**199-9267**	1	SEAL-O-RING	
	4	1	**216-9633**	1	VALVE AS-FLUID SAMPLING	
	5	1	**225-7941**	1	PLUG	
	6	1	**232-3861**	1	PLUG (BLANKING)	

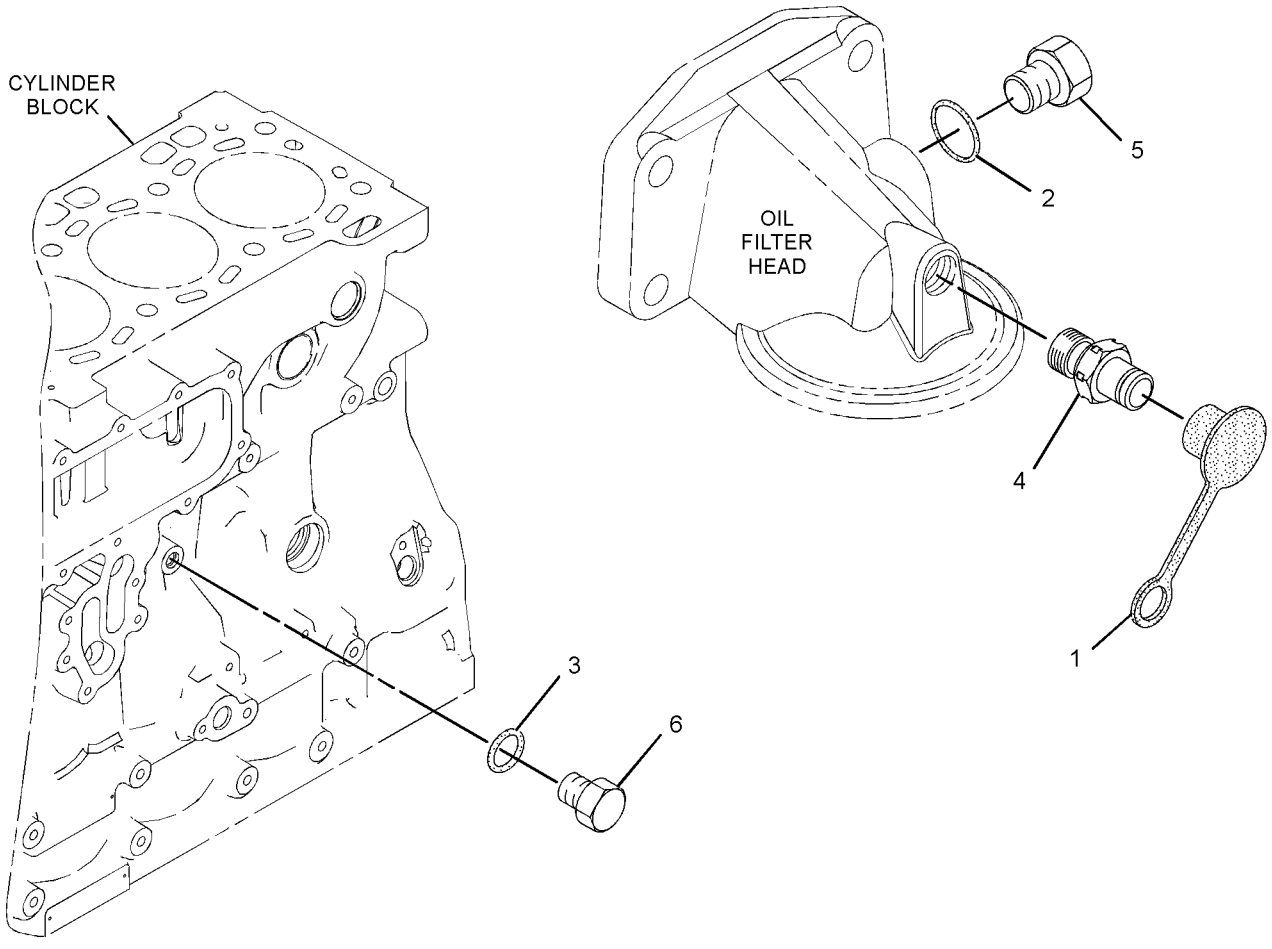

GRAPHIC #1 **<END>** g01800853

165-5970 SWITCH GP-TOGGLE

S/N: KLN1-UP

PART OF 289-8938 LINES GP-FUEL

SMCS-7332 **i02299813**

NOTE	REF NO	GRAPHIC REF	PART NUMBER	QTY	PART NAME 1 2 3 4 5 6 (PRODUCT LEVEL)	SEE PAGE
	1	1	**6T-3631**	2	NUT-HEX (15/32-32-THD)	
	2	1	**6T-3632**	1	LOCKWASHER	
	3	1	**6T-3633**	1	RING-LOCKING	
	4	1	**102-8803**	1	KIT-RECEPTACLE (3-PIN)	
					(INCLUDES RECEPTACLE AS & WEDGE)	
	5	1	**3E-3371**	1	WEDGE-RECEPTACLE LOCK (3-PIN)	
	6	1	**186-3735**	3	PIN-CONNECTOR (16-GA TO 18-GA)	

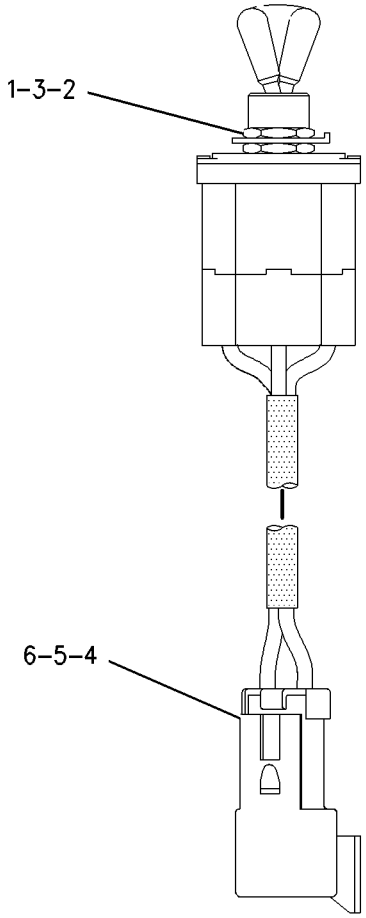

GRAPHIC #1 **<END>** g00749466

107-6133 SWITCH GP-WIPER–INTERMITTENT

S/N: KLN1-UP
PART OF 190-4405, 317-0770 OPERATOR AR
AN ATTACHMENT

SMCS-7332 **i02945078**

NOTE	REF NO	GRAPHIC REF	PART NUMBER	QTY	PART NAME 1 2 3 4 5 6 (PRODUCT LEVEL)	SEE PAGE
Y	1	1	**275-7741**	1	SWITCH GP-WIPER (24-VOLT, INTERMITTENT) (FRONT)	174
	2	1	**112-6174**	1	SWITCH AS-ROTARY (WIPER, WASHER) (REAR)	
	2A	1	**2H-3920**	1	LOCKWASHER	
	2B	1	**3E-3389**	1	WEDGE-RECEPTACLE LOCK	
	2C	1	**6V-8369**	1	NUT (7/16-28-THD)	
	2D	1	**186-3735**	6	PIN-CONNECTOR (16-GA TO 18-GA)	
	2E	1	**8T-8737**	2	PLUG-SEAL	
	2F	1	**102-8806**	1	KIT-RECEPTACLE (8-PIN)	
					(INCLUDES RECEPTACLE AS & WEDGE)	

Y-SEPARATE ILLUSTRATION

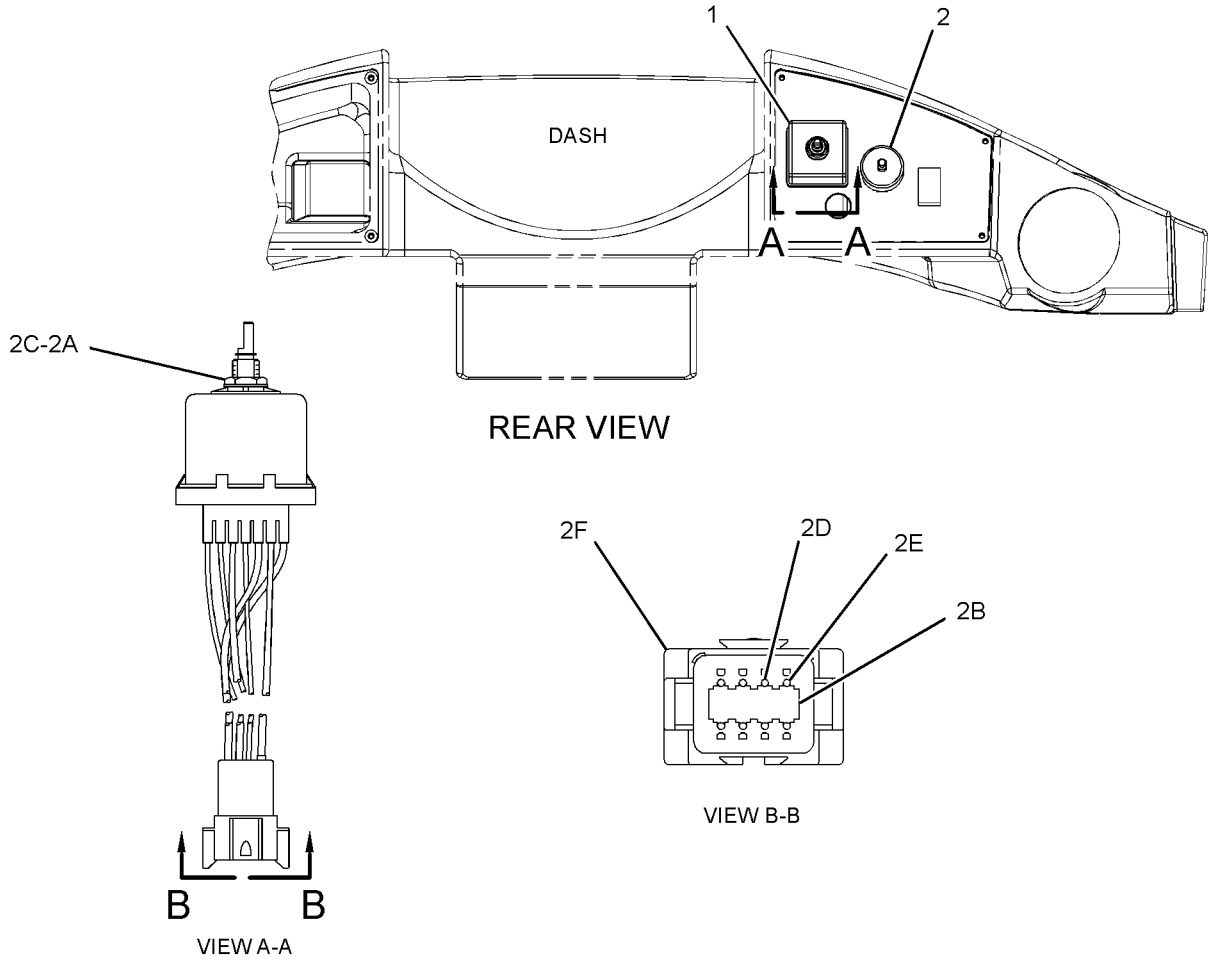

GRAPHIC #1 **<END>** g01509595

ELECTRICAL AND STARTING SYSTEM

184-2463 SWITCH GP-WIPER

S/N: KLN1-UP
PART OF 310-9953 CAB AR
AN ATTACHMENT

SMCS-7332 **i03031881**

NOTE	REF NO	GRAPHIC REF	PART NUMBER	QTY	PART NAME 1 2 3 4 5 6 (PRODUCT LEVEL)	SEE PAGE
CY	1	1	**275-7741**	1	SWITCH GP-WIPER (24-VOLT, INTERMITTENT)	174

C-CHANGE FROM PREVIOUS TYPE
Y-SEPARATE ILLUSTRATION

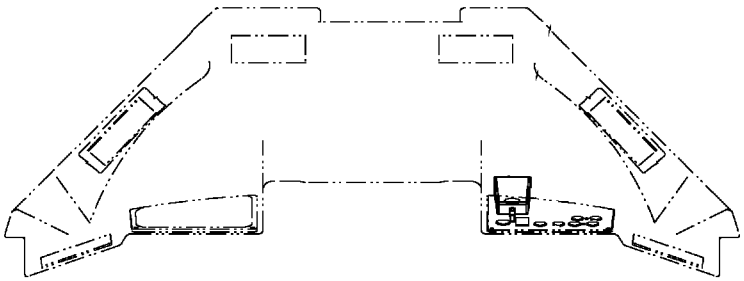

TOP VIEW

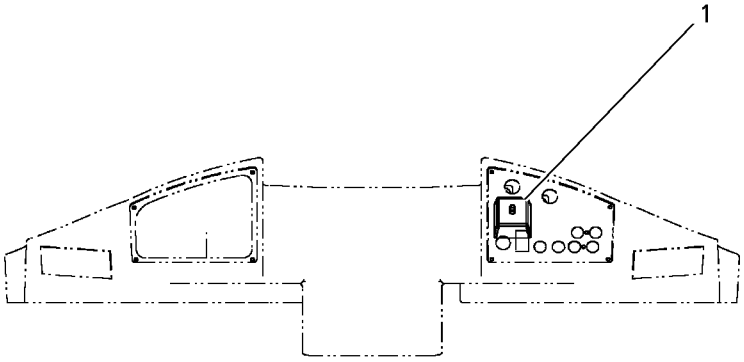

GRAPHIC #1 **<END>** g00676052

275-7741 SWITCH GP-WIPER–INTERMITTENT

S/N: KLN1-UP
PART OF 107-6133, 184-2463 SWITCH GP-WIPER
AN ATTACHMENT

SMCS-7332 **i02992478**

NOTE	REF NO	GRAPHIC REF	PART NUMBER	QTY	PART NAME 1 2 3 4 5 6 (PRODUCT LEVEL)	SEE PAGE
	1	1	**6V-8369**	1	NUT (7/16-28-THD)	
	2	1	**2H-3920**	1	LOCKWASHER	
	3	1	**8T-8737**	2	PLUG-SEAL	
	4	1	**186-3735**	6	PIN-CONNECTOR (16-GA TO 18-GA)	
	5	1	**102-8806**	1	KIT-RECEPTACLE (8-PIN)	
					(INCLUDES RECEPTACLE AS & WEDGE)	

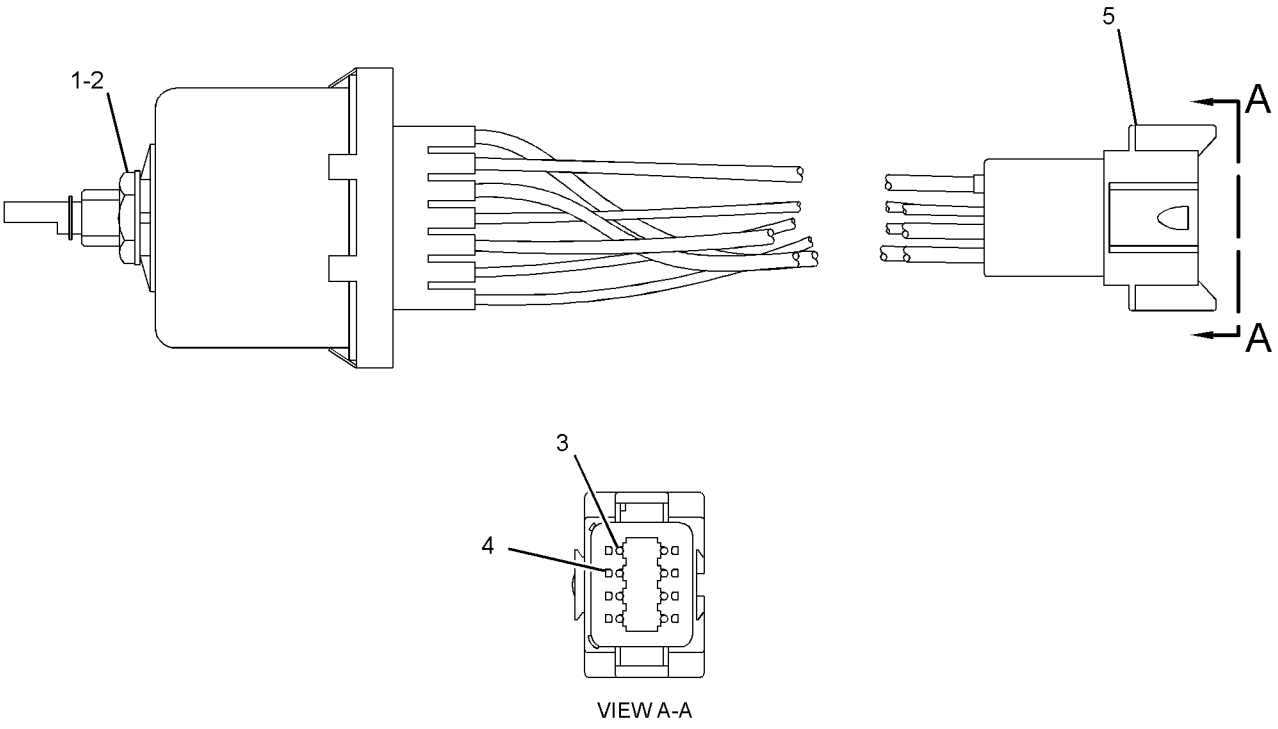

GRAPHIC #1 **<END>** g01445891

239-1134 VALVE GP-ETHER STARTING

S/N: KLN1-UP
24-VOLT
PART OF 290-8781 STARTING AID GP-ETHER
AN ATTACHMENT

SMCS-1456 **i03435882**

NOTE	REF NO	GRAPHIC REF	PART NUMBER	QTY	PART NAME 1 2 3 4 5 6 (PRODUCT LEVEL)	SEE PAGE
	1	1	**7N-9801**	1	GASKET	
	2	1	**102-8802**	1	KIT-RECEPTACLE (2-PIN)	
					(INCLUDES RECEPTACLE AS & WEDGE)	
	3	1	**186-3735**	2	PIN-CONNECTOR (16-GA TO 18-GA)	

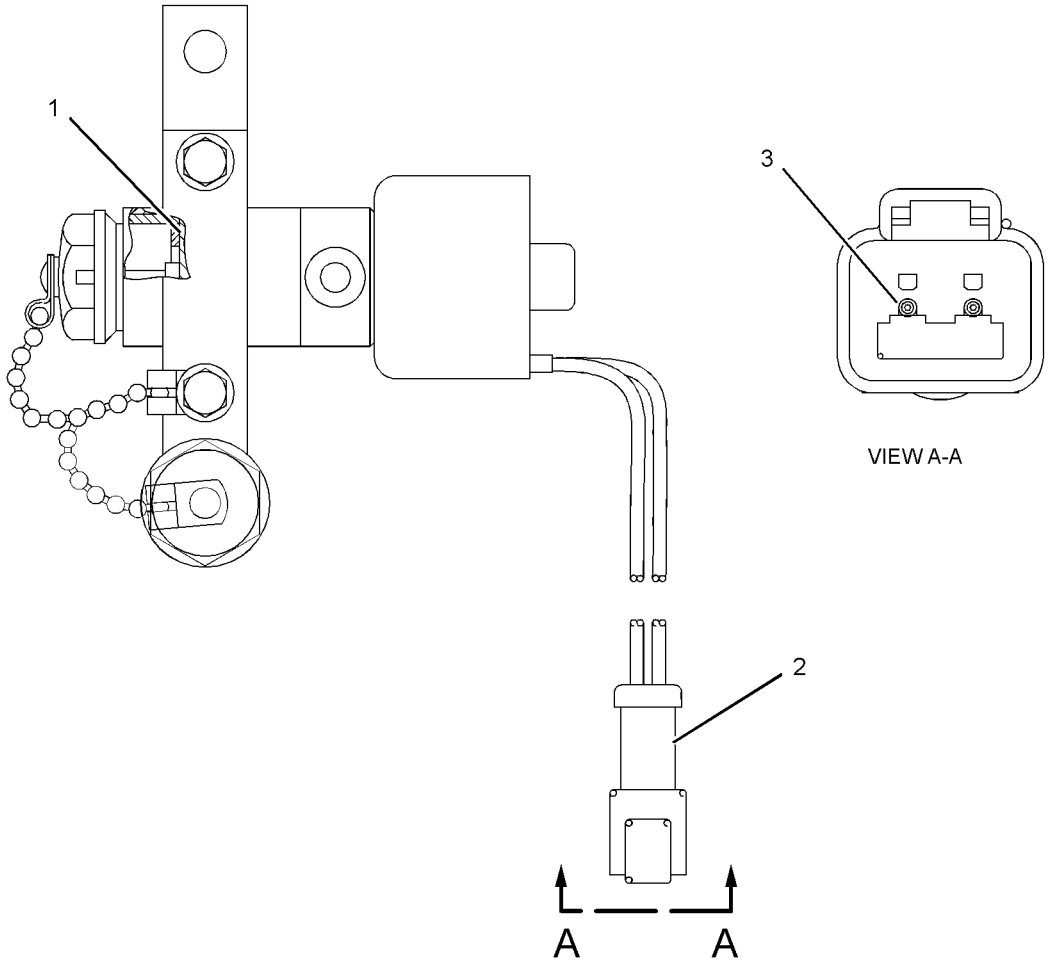

GRAPHIC #1 **<END>** g01375620

180-8807 WARNING GP-BACKUP

S/N: KLN1-UP

PART OF 289-8841 CHASSIS AR

SMCS-7406 **i03036735**

NOTE	REF NO	GRAPHIC REF	PART NUMBER	QTY	PART NAME 1 2 3 4 5 6 (PRODUCT LEVEL)	SEE PAGE
	1	1	**7K-1181**	2	STRAP-CABLE	
	2	1	**213-9100**	1	ALARM GP	
D		1	**5P-5623**		WIRE-ELECTRICAL (16-GA, BLACK) (0.4-M)	
		1	**186-3735**	2	PIN-CONNECTOR (16-GA TO 18-GA)	
E		1	**9X-1813**		SLEEVE (31-CM)	
		1	**102-8802**	1	KIT-RECEPTACLE (2-PIN)	
					(INCLUDES RECEPTACLE AS & WEDGE)	
M	3	1	**8T-4200**	2	BOLT (M8X1.25X16-MM)	
	4	1	**8T-4224**	2	WASHER-HARD (8.8X16X2-MM THK)	
	5	1	**4P-8134**	1	CLIP	

D-ORDER BY THE METER
E-ORDER BY THE CENTIMETER
M-METRIC PART

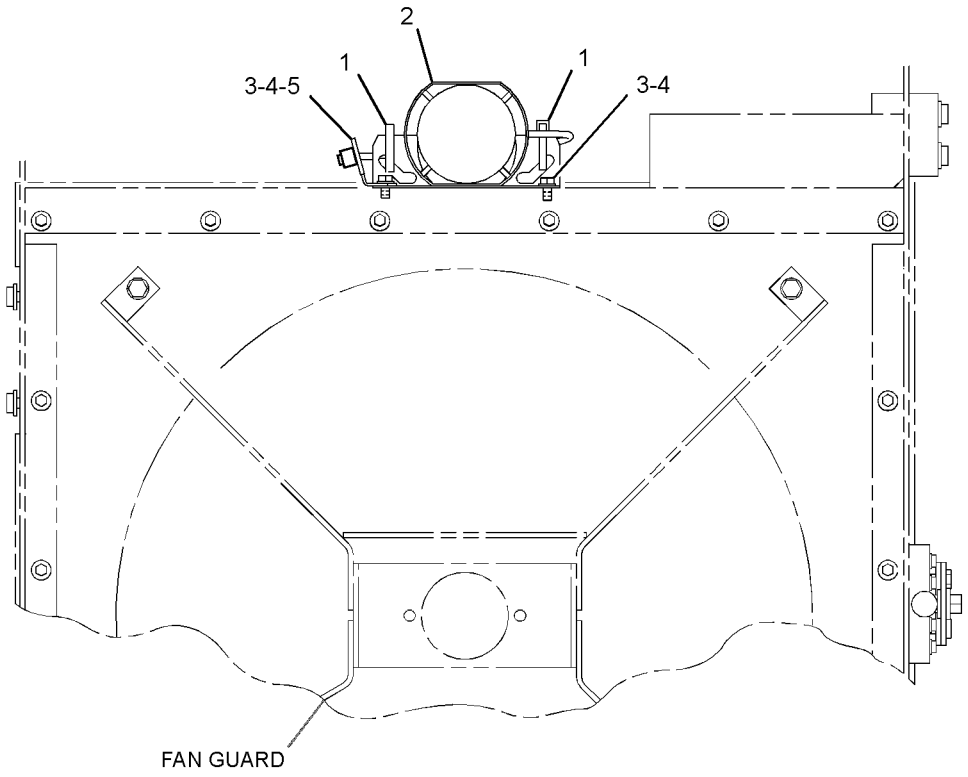

REAR VIEW

GRAPHIC #1 **<END>** g01543793

289-8903 WIRING GP-CAB–ENCLOSED ROPS

S/N: KLN1-UP

PART OF 311-8700 OPERATOR AR, 290-8525 OPERATOR AR-ENCLOSED ROPS AN ATTACHMENT

SMCS-1408, 7301 **i03630319**

NOTE	REF NO	GRAPHIC REF	PART NUMBER	QTY	PART NAME 1 2 3 4 5 6 (PRODUCT LEVEL)	SEE PAGE
	1	1	**110-6109**	2	KNOB-CONTROL (CONTROL PANEL SWITCHES)	
	2	1	**115-1748**	2	LAMP (24-VOLT, 3-WATT)	
B	3	1	**165-0311**	4	PLUG	
	4	1	**165-0312**	1	WIRE AS	
	5	1	**185-2766**	1	SWITCH AS-ROCKER (AUTOSHIFT CONTROL)	
		1	**111-7899**	1	GASKET	
	6	1	**190-4559**	1	PLATE AS	
	7	1	**193-9056**	1	SWITCH AS-ROCKER (HAZARD WARNING LIGHTS)	
		1	**111-7899**	1	GASKET	
	8	1	**201-1024**	1	BRACKET	
	9	1	**202-1129**	8	SCREW-TRUSS HEAD (M4X0.7X18-MM)	
	10	1	**204-0358**	1	FILM-IDENTIFICATION (PANEL, RH)	
	11	1	**211-0052**	1	NUT (11/16-18-THD)	
	12	1	**250-8115**	1	SWITCH AS-ROCKER (XMSN NEUTRALIZER OVERRIDE CONT)	
	13	1	**286-3594**	1	SWITCH AS-ROCKER (FLOODLIGHTS, FRONT)	
					(EACH SWITCH AS-ROCKER INCLUDES)	
		1	**111-7899**	1	GASKET	
	14	1	**289-9168**	1	HARNESS AS-CAB (UPPER)	
		1	**9W-0852**	2	PIN-CONNECTOR (14-GA)	
		1	**9X-3401**	9	PIN-CONNECTOR (16-GA TO 18-GA)	
					-OR-	
		1	**126-1767**	9	PIN-CONNECTOR (14-GA)	
		1	**155-2270**	1	KIT-CONNECTING PLUG (2-PIN)	
		1	**155-2260**	1	KIT-CONNECTING PLUG (3-PIN)	
		1	**155-2274**	2	KIT-CONNECTING PLUG (6-PIN)	
					(EACH PLUG KIT INCLUDES PLUG AS, WEDGE & INTERFACE SEAL)	
		1	**8T-8737**	4	PLUG-SEAL	
		1	**102-8802**	1	KIT-RECEPTACLE (2-PIN)	
		1	**102-8801**	1	KIT-RECEPTACLE (12-PIN)	
					(EACH RECEPTACLE KIT INCLUDES RECEPTACLE AS & WEDGE)	
		1	**180-9340**	12	SOCKET-CONNECTOR (14-GA TO 18-GA)	
		1	**9W-0844**	4	SOCKET-CONNECTOR (14-GA)	
		1	**8L-8413**	33	STRAP-CABLE	
D		1	**141-8061**		TAPE	
		1	**3T-4696**	1	TERMINAL (10-GA)	
		1	**2L-8079**	1	TERMINAL (14-GA TO 16-GA)	
		1	**5P-4571**	2	TERMINAL-BLADE (14-GA TO 16-GA)	
		1	*165-7097*	2	TERMINAL AS	
					(EACH INCLUDES)	
		1	**006-2884**	1	TERMINAL-BLADE (16-GA TO 20-GA)	
D		1	**6V-2689**		TUBE-HEAT SHRINK (6.35-MM DIA) (1-M)	
E		1	**119-3662**		TUBE-HEAT SHRINK (10.85-MM DIA) (7-CM)	
E		1	**125-7874**		TUBE-HEAT SHRINK (5.72-MM DIA) (10-CM)	
D		1	**6V-2689**		TUBE-HEAT SHRINK (6.35-MM DIA) (5-M)	
	15	1	**290-0659**	1	HARNESS AS-CAB (MAIN)	
		1	**110-0203**	4	CONNECTOR AS	
		1	**228-5856**	8	CONNECTOR	
		1	**5P-6271**	1	CONNECTOR AS	
		1	**9W-0852**	6	PIN-CONNECTOR (14-GA)	
		1	**9X-3401**	30	PIN-CONNECTOR (16-GA TO 18-GA)	
					-OR-	
		1	**126-1767**	30	PIN-CONNECTOR (14-GA)	

289-8903 **WIRING GP-CAB** *(contd.)* **i03630319**

NOTE	REF NO	GRAPHIC REF	PART NUMBER	QTY	PART NAME 1 2 3 4 5 6 (PRODUCT LEVEL)	SEE PAGE
		1	**155-2271**	1	KIT-CONNECTING PLUG (4-PIN)	
		1	**155-2265**	3	KIT-CONNECTING PLUG (8-PIN)	
		1	**155-2274**	1	KIT-CONNECTING PLUG (6-PIN)	
					(EACH PLUG KIT INCLUDES PLUG AS, WEDGE & INTERFACE SEAL)	
		1	**8T-8737**	10	PLUG-SEAL	
		1	**102-8804**	1	KIT-RECEPTACLE (4-PIN)	
		1	**102-8805**	1	KIT-RECEPTACLE (6-PIN)	
					(EACH RECEPTACLE KIT INCLUDES RECEPTACLE AS & WEDGE)	
		1	**167-3692**	1	RECEPTACLE AS-CONNECTOR (31-PIN)	
		1	**180-9340**	29	SOCKET-CONNECTOR (14-GA TO 18-GA)	
		1	**113-5183**	2	SOCKET-LAMP	
		1	**8L-8413**	36	STRAP-CABLE	
B		1	**141-8061**		TAPE	
		1	**5P-4571**	1	TERMINAL-BLADE (14-GA TO 16-GA)	
		1	**091-2436**	44	TERMINAL-BLADE (18-GA TO 22-GA)	
		1	**104-1995**	18	TERMINAL-BLADE (14-GA TO 18-GA)	
		1	**113-5184**	4	TERMINAL-RECEPTACLE (16-GA TO 18-GA)	
E		1	**119-3662**		TUBE-HEAT SHRINK (10.85-MM DIA) (20-CM)	
E		1	**125-7874**		TUBE-HEAT SHRINK (5.72-MM DIA) (30-CM)	
	16	1	**291-0638**	1	PLATE	
	17	1	**291-6008**	1	FILM-PANEL (LH)	
	18	1	**291-9121**	1	SWITCH AS-ROCKER (ROADING LIGHTS)	
		1	**111-7899**	1	GASKET	
	19	1	**7K-1181**	20	STRAP-CABLE	
	20	1	**204-6101**	8	WASHER-HARD (5.3X10X1-MM THK)	
	21	1	**4P-7581**	1	CLIP	
	22	1	**4P-8134**	1	CLIP	
	23	1	**6D-4244**	1	CLIP (SLOT)	
	24	1	**8T-4121**	1	WASHER-HARD (11X21X2.5-MM THK)	
M	25	1	**8T-4133**	1	NUT (M10X1.5-THD)	
M	26	1	**8T-4199**	2	BOLT (M8X1.25X12-MM)	
	27	1	**8T-4224**	3	WASHER-HARD (8.8X16X2-MM THK)	
M	28	1	**8T-4908**	1	BOLT (M8X1.25X25-MM)	
	29	1	**9W-0335**	1	LIGHTER AS-CIGAR (24-VOLT)	
D	30	1	**5P-6038**		WRAP (SPIRAL) (0.15-M)	

B-USE AS REQUIRED
D-ORDER BY THE METER
E-ORDER BY THE CENTIMETER
M-METRIC PART

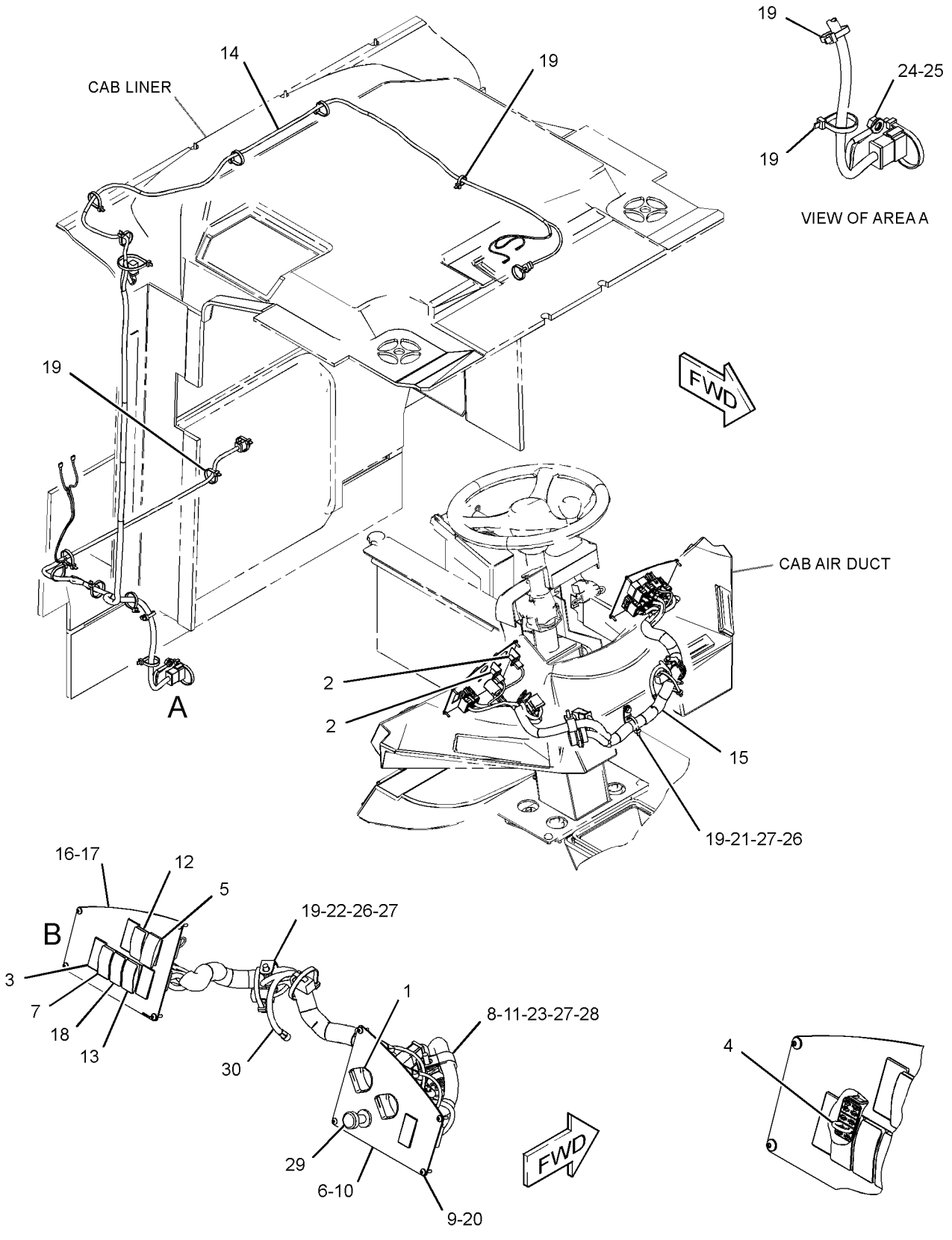

GRAPHIC #1 **<END>** g01406068

289-8904 WIRING GP-CAB–OPEN ROPS

S/N: KLN1-UP

PART OF 290-8186 OPERATOR AR-OPEN ROPS

AN ATTACHMENT

SMCS-1408, 7301 **i03630335**

NOTE	REF NO	GRAPHIC REF	PART NUMBER	QTY	PART NAME 1 2 3 4 5 6 (PRODUCT LEVEL)	SEE PAGE
	1	1	**115-1748**	2	LAMP (24-VOLT, 3-WATT)	
	2	1	**165-0311**	4	PLUG	
	3	1	**165-0312**	1	WIRE AS	
	4	1	**185-2766**	1	SWITCH AS-ROCKER (AUTOSHIFT CONTROL)	
		1	**111-7899**	1	GASKET	
	5	1	**190-4559**	1	PLATE AS	
	6	1	**193-9056**	1	SWITCH AS-ROCKER (HAZARD WARNING LIGHTS)	
		1	**111-7899**	1	GASKET	
	7	1	**201-1024**	1	BRACKET	
	8	1	**202-1129**	8	SCREW-TRUSS HEAD (M4X0.7X18-MM)	
	9	1	**204-0359**	1	FILM-PANEL (RH)	
	10	1	**211-0052**	1	NUT (11/16-18-THD)	
	11	1	**250-8115**	1	SWITCH AS-ROCKER (XMSN NEUTRALIZER OVERRIDE CONT)	
		1	**111-7899**	1	GASKET	
	12	1	**286-3594**	1	SWITCH AS-ROCKER (FLOODLIGHTS, FRONT)	
		1	**111-7899**	1	GASKET	
	13	1	**289-9172**	1	HARNESS AS-CAB (UPPER)	
		1	**9W-0852**	1	PIN-CONNECTOR (14-GA)	
		1	**9X-3401**	2	PIN-CONNECTOR (16-GA TO 18-GA)	
					-OR-	
		1	**126-1767**	2	PIN-CONNECTOR (14-GA)	
		1	**155-2274**	1	KIT-CONNECTING PLUG (6-PIN)	
					(INCLUDES PLUG AS, WEDGE & INTERFACE SEAL)	
		1	**8T-8737**	10	PLUG-SEAL	
		1	**102-8801**	1	KIT-RECEPTACLE (12-PIN)	
					(INCLUDES RECEPTACLE AS & WEDGE)	
		1	**180-9340**	2	SOCKET-CONNECTOR (14-GA TO 18-GA)	
		1	**9W-0844**	3	SOCKET-CONNECTOR (14-GA)	
		1	**8L-8413**	2	STRAP-CABLE	
		1	**2L-8079**	2	TERMINAL (14-GA TO 16-GA)	
	14	1	**290-0659**	1	HARNESS AS-CAB (MAIN)	
		1	**110-0203**	4	CONNECTOR AS	
		1	**228-5856**	8	CONNECTOR	
		1	**5P-6271**	1	CONNECTOR AS	
		1	**9W-0852**	6	PIN-CONNECTOR (14-GA)	
		1	**9X-3401**	30	PIN-CONNECTOR (16-GA TO 18-GA)	
					-OR-	
		1	**126-1767**	30	PIN-CONNECTOR (14-GA)	
		1	**155-2271**	1	KIT-CONNECTING PLUG (4-PIN)	
		1	**155-2265**	3	KIT-CONNECTING PLUG (8-PIN)	
		1	**155-2274**	1	KIT-CONNECTING PLUG (6-PIN)	
					(EACH PLUG KIT INCLUDES PLUG AS, WEDGE & INTERFACE SEAL)	
		1	**8T-8737**	10	PLUG-SEAL	
		1	**102-8804**	1	KIT-RECEPTACLE (4-PIN)	
		1	**102-8805**	1	KIT-RECEPTACLE (6-PIN)	
					(EACH RECEPTACLE KIT INCLUDES RECEPTACLE AS & WEDGE)	
		1	**167-3692**	1	RECEPTACLE AS-CONNECTOR (31-PIN)	
		1	**180-9340**	29	SOCKET-CONNECTOR (14-GA TO 18-GA)	
		1	**113-5183**	2	SOCKET-LAMP	
		1	**8L-8413**	36	STRAP-CABLE	
B		1	**141-8061**		TAPE	
		1	**5P-4571**	1	TERMINAL-BLADE (14-GA TO 16-GA)	

289-8904 **WIRING GP-CAB** ***(contd.)*** **i03630335**

NOTE	REF NO	GRAPHIC REF	PART NUMBER	QTY	PART NAME 1 2 3 4 5 6 (PRODUCT LEVEL)	SEE PAGE
		1	**091-2436**	44	TERMINAL-BLADE (18-GA TO 22-GA)	
		1	**104-1995**	18	TERMINAL-BLADE (14-GA TO 18-GA)	
		1	**113-5184**	4	TERMINAL-RECEPTACLE (16-GA TO 18-GA)	
E		1	**119-3662**		TUBE-HEAT SHRINK (10.85-MM DIA) (20-CM)	
E		1	**125-7874**		TUBE-HEAT SHRINK (5.72-MM DIA) (30-CM)	
	15	1	**291-0638**	1	PLATE	
	16	1	**291-6008**	1	FILM-PANEL (LH)	
	17	1	**291-9121**	1	SWITCH AS-ROCKER (ROADING LIGHTS)	
		1	**111-7899**	1	GASKET	
	18	1	**7K-1181**	12	STRAP-CABLE	
	19	1	**204-6101**	8	WASHER-HARD (5.3X10X1-MM THK)	
	20	1	**102-8802**	2	KIT-RECEPTACLE (2-PIN)	
					(EACH INCLUDES RECEPTACLE AS & WEDGE)	
	21	1	**4P-7581**	1	CLIP	
	22	1	**4P-8134**	1	CLIP	
	23	1	**6D-4244**	1	CLIP	
	24	1	**8T-4121**	1	WASHER-HARD (11X21X2.5-MM THK)	
M	25	1	**8T-4133**	1	NUT (M10X1.5-THD)	
M	26	1	**8T-4199**	2	BOLT (M8X1.25X12-MM)	
	27	1	**8T-4224**	3	WASHER-HARD (8.8X16X2-MM THK)	
M	28	1	**8T-4908**	1	BOLT (M8X1.25X25-MM)	
	29	1	**9W-0335**	1	LIGHTER AS-CIGAR (24-VOLT)	
D	30	1	**5P-6038**		WRAP (SPIRAL) (0.2-M)	

B-USE AS REQUIRED
D-ORDER BY THE METER
E-ORDER BY THE CENTIMETER
M-METRIC PART

289-8904 **WIRING GP-CAB** *(contd.)* **i03630335**

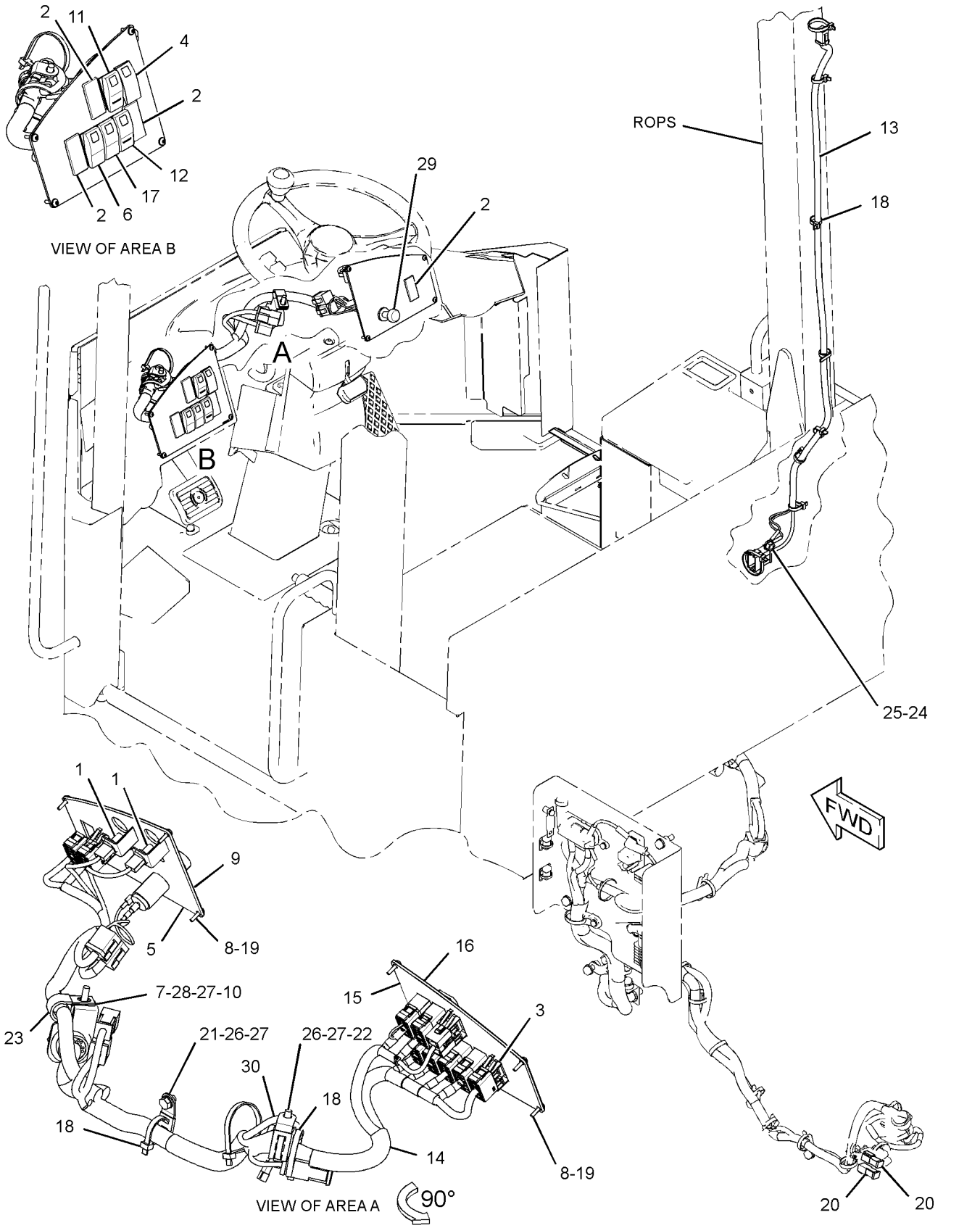

GRAPHIC #1 **<END>** g01947603

ELECTRICAL AND STARTING SYSTEM

311-8501 WIRING GP-CAB

S/N: KLN1-UP
ENCLOSED
PART OF 310-9954 OPERATOR AR
AN ATTACHMENT

SMCS-1408, 7301 **i03630329**

NOTE	REF NO	GRAPHIC REF	PART NUMBER	QTY	PART NAME 1 2 3 4 5 6 (PRODUCT LEVEL)	SEE PAGE
	1	1	**1R-0622**	1	PLUG-BUTTON	
B	2	1	**7K-1181**	19	STRAP-CABLE	
	3	1	**8T-8737**	8	PLUG-SEAL	
	4	1	**110-6109**	1	KNOB-CONTROL (LIGHTS)	
	5	1	**115-1748**	2	LAMP (24-VOLT, 3-WATT) (ACTION LIGHT)	
B	6	1	**165-0311**	4	PLUG	
	7	1	**165-0312**	1	WIRE AS	
	8	1	**185-2766**	1	SWITCH AS-ROCKER (AUTOSHIFT CONTROL)	
		1	**111-7899**	1	GASKET	
	9	1	**190-4559**	1	PLATE AS	
	10	1	**193-9056**	1	SWITCH AS-ROCKER (HAZARD WARNING LIGHTS)	
		1	**111-7899**	1	GASKET	
	11	1	**201-1024**	1	BRACKET	
	12	1	**202-1129**	8	SCREW-TRUSS HEAD (M4X0.7X18-MM)	
	13	1	**204-0358**	1	FILM-IDENTIFICATION (PANEL, RH)	
	14	1	**211-0052**	1	NUT (11/16-18-THD)	
	15	1	**250-8115**	1	SWITCH AS-ROCKER (XMSN NEUTRALIZER OVERRIDE CONT)	
	16	1	**286-3594**	1	SWITCH AS-ROCKER (FLOODLIGHTS, FRONT)	
					(EACH SWITCH AS INCLUDES)	
		1	**111-7899**	1	GASKET	
	17	1	**289-9168**	1	HARNESS AS-CAB (UPPER)	
		1	**9W-0852**	2	PIN-CONNECTOR (14-GA)	
		1	**9X-3401**	9	PIN-CONNECTOR (16-GA TO 18-GA)	
					-OR-	
		1	**126-1767**	9	PIN-CONNECTOR (14-GA)	
		1	**155-2270**	1	KIT-CONNECTING PLUG (2-PIN)	
		1	**155-2260**	1	KIT-CONNECTING PLUG (3-PIN)	
		1	**155-2274**	2	KIT-CONNECTING PLUG (6-PIN)	
					(EACH PLUG KIT INCLUDES PLUG AS, WEDGE & INTERFACE SEAL)	
		1	**8T-8737**	4	PLUG-SEAL	
		1	**102-8802**	1	KIT-RECEPTACLE (2-PIN)	
		1	**102-8801**	1	KIT-RECEPTACLE (12-PIN)	
					(EACH RECEPTACLE KIT INCLUDES RECEPTACLE AS & WEDGE)	
		1	**180-9340**	12	SOCKET-CONNECTOR (14-GA TO 18-GA)	
		1	**9W-0844**	4	SOCKET-CONNECTOR (14-GA)	
		1	**8L-8413**	33	STRAP-CABLE	
D		1	**141-8061**		TAPE	
		1	**3T-4696**	1	TERMINAL (10-GA)	
		1	**2L-8079**	1	TERMINAL (14-GA TO 16-GA)	
		1	**5P-4571**	2	TERMINAL-BLADE (14-GA TO 16-GA)	
		1	*165-7097*	2	TERMINAL AS	
					(EACH INCLUDES)	
		1	**006-2884**	1	TERMINAL-BLADE (16-GA TO 20-GA)	
D		1	**6V-2689**		TUBE-HEAT SHRINK (6.35-MM DIA) (1-M)	
E		1	**119-3662**		TUBE-HEAT SHRINK (10.85-MM DIA) (7-CM)	
E		1	**125-7874**		TUBE-HEAT SHRINK (5.72-MM DIA) (10-CM)	
D		1	**6V-2689**		TUBE-HEAT SHRINK (6.35-MM DIA) (5-M)	
	18	1	**290-0659**	1	HARNESS AS-CAB (MAIN)	
		1	**110-0203**	4	CONNECTOR AS	
		1	**228-5856**	8	CONNECTOR	
		1	**5P-6271**	1	CONNECTOR AS	

311-8501 **WIRING GP-CAB** *(contd.)* **i03630329**

NOTE	REF NO	GRAPHIC REF	PART NUMBER	QTY	PART NAME 1 2 3 4 5 6 (PRODUCT LEVEL)	SEE PAGE
		1	**9W-0852**	6	PIN-CONNECTOR (14-GA)	
		1	**9X-3401**	30	PIN-CONNECTOR (16-GA TO 18-GA)	
					-OR-	
		1	**126-1767**	30	PIN-CONNECTOR (14-GA)	
		1	**155-2271**	1	KIT-CONNECTING PLUG (4-PIN)	
		1	**155-2265**	3	KIT-CONNECTING PLUG (8-PIN)	
		1	**155-2274**	1	KIT-CONNECTING PLUG (6-PIN)	
					(EACH PLUG KIT INCLUDES PLUG AS, WEDGE & INTERFACE SEAL)	
		1	**8T-8737**	10	PLUG-SEAL	
		1	**102-8804**	1	KIT-RECEPTACLE (4-PIN)	
		1	**102-8805**	1	KIT-RECEPTACLE (6-PIN)	
					(EACH RECEPTACLE KIT INCLUDES RECEPTACLE AS & WEDGE)	
		1	**167-3692**	1	RECEPTACLE AS-CONNECTOR (31-PIN)	
		1	**180-9340**	29	SOCKET-CONNECTOR (14-GA TO 18-GA)	
		1	**113-5183**	2	SOCKET-LAMP	
		1	**8L-8413**	36	STRAP-CABLE	
B		1	**141-8061**		TAPE	
		1	**5P-4571**	1	TERMINAL-BLADE (14-GA TO 16-GA)	
		1	**091-2436**	44	TERMINAL-BLADE (18-GA TO 22-GA)	
		1	**104-1995**	18	TERMINAL-BLADE (14-GA TO 18-GA)	
		1	**113-5184**	4	TERMINAL-RECEPTACLE (16-GA TO 18-GA)	
E		1	**119-3662**		TUBE-HEAT SHRINK (10.85-MM DIA) (20-CM)	
E		1	**125-7874**		TUBE-HEAT SHRINK (5.72-MM DIA) (30-CM)	
	19	1	**291-0638**	1	PLATE	
	20	1	**291-6008**	1	FILM-PANEL (LH)	
	21	1	**291-9121**	1	SWITCH AS-ROCKER (ROADING LIGHTS)	
		1	**111-7899**	1	GASKET	
	22	1	**204-6101**	8	WASHER-HARD (5.3X10X1-MM THK)	
	23	1	**102-8806**	1	KIT-RECEPTACLE (8-PIN)	
					(INCLUDES RECEPTACLE AS & WEDGE)	
	24	1	**4P-7581**	1	CLIP	
	25	1	**4P-8134**	1	CLIP	
	26	1	**6D-4244**	1	CLIP	
	27	1	**8T-4121**	1	WASHER-HARD (11X21X2.5-MM THK)	
M	28	1	**8T-4133**	1	NUT (M10X1.5-THD)	
M	29	1	**8T-4199**	2	BOLT (M8X1.25X12-MM)	
	30	1	**8T-4224**	3	WASHER-HARD (8.8X16X2-MM THK)	
M	31	1	**8T-4908**	1	BOLT (M8X1.25X25-MM)	
	32	1	**9W-0335**	1	LIGHTER AS-CIGAR (24-VOLT)	
D	33	1	**5P-6038**		WRAP (SPIRAL) (0.2-M)	

B-USE AS REQUIRED
D-ORDER BY THE METER
E-ORDER BY THE CENTIMETER
M-METRIC PART

311-8501 **WIRING GP-CAB** *(contd.)* **i03630329**

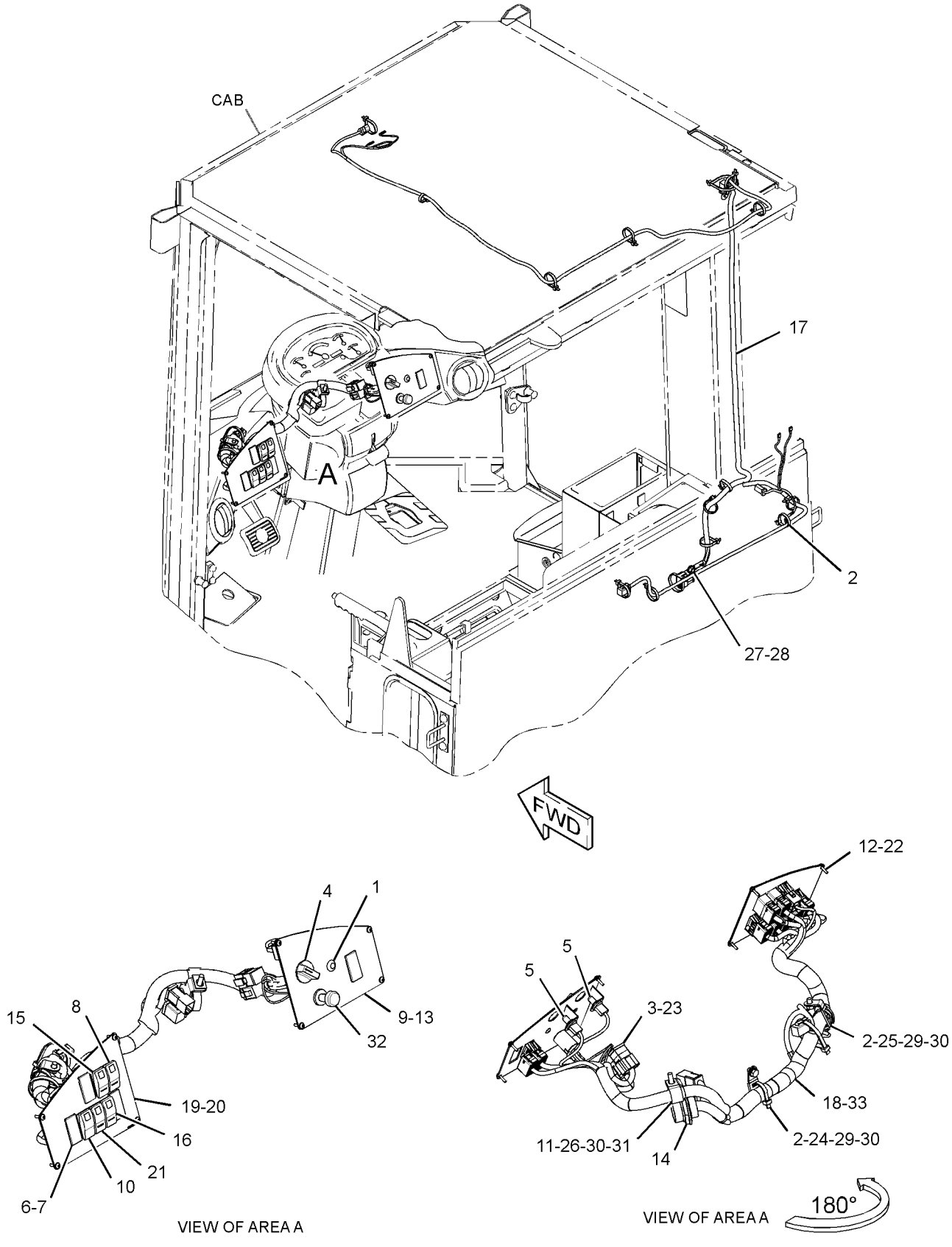

GRAPHIC #1 **<END>** g01867114

ELECTRICAL AND STARTING SYSTEM

299-3953 WIRING GP-ELECTRONIC CONTROL

S/N: C6E1-UP

PART OF 292-5306 ENGINE AR-PRIMARY

SMCS-1408 **i02931656**

NOTE	REF NO	GRAPHIC REF	PART NUMBER	QTY	PART NAME 1 2 3 4 5 6 (PRODUCT LEVEL)	SEE PAGE
	1	1	**293-1880**	1	BRACKET	
	2	1	**260-5542**	1	HARNESS AS-ENGINE (ENGINE CONTROL MODULE)	
	3	1	**217-9039**	3	STRAP-CABLE	
	5	1	**278-5209**	1	BRACKET	
	6	1	**278-5210**	1	BOLT	

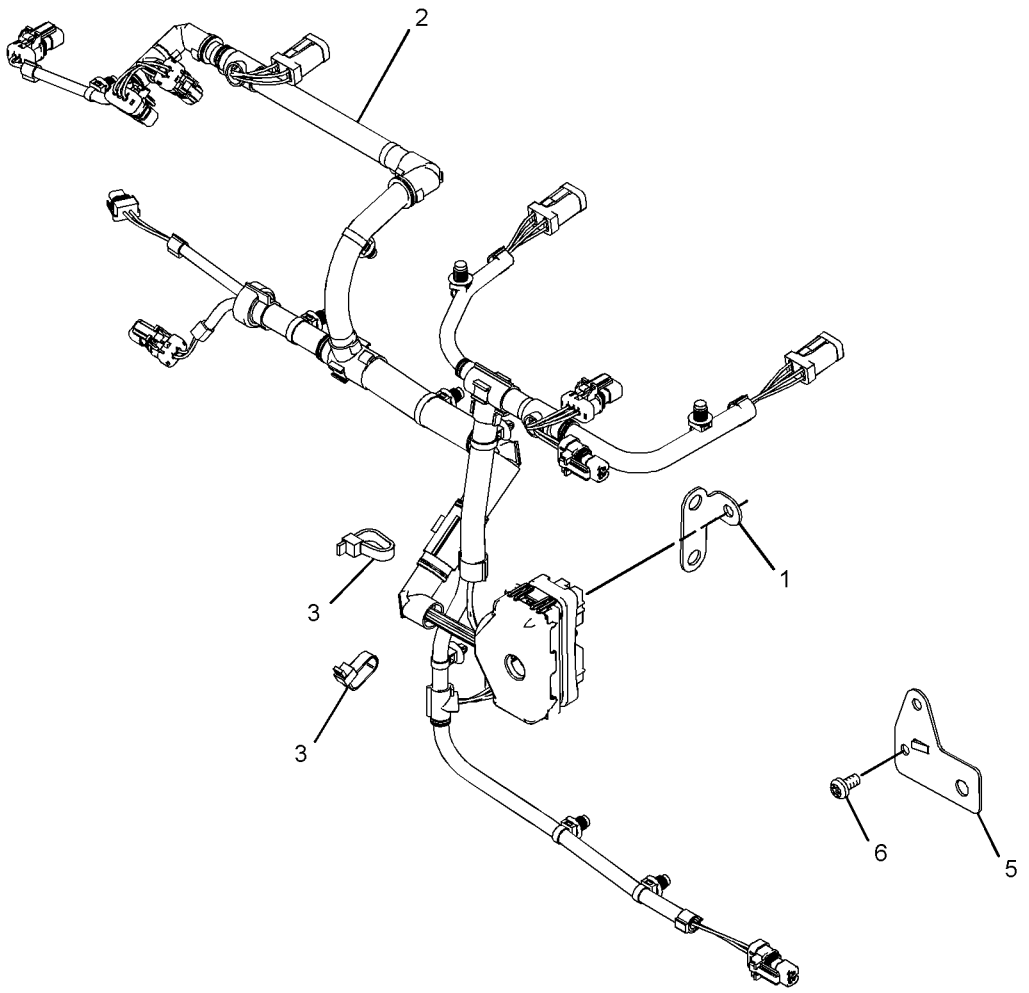

GRAPHIC #1 **<END>** g01416338

289-8902 WIRING GP-ENGINE

S/N: KLN1-UP
PART OF 289-8841 CHASSIS AR
TYPE 1

SMCS-1403, 1408 **i03631223**

NOTE	REF NO	GRAPHIC REF	PART NUMBER	QTY	PART NAME 1 2 3 4 5 6 (PRODUCT LEVEL)	SEE PAGE
	1	1,2	**7K-1181**	22	STRAP-CABLE	
	2	2	**8T-8799**	8	BOOT	
	3	2	**129-8087**	4	SPACER (13.9X17.1X14-MM THK)	
	4	1	**132-7551**	1	SPACER (11X19X6-MM THK)	
	5	1	**135-3327**	1	PLATE AS	
M		1	**8T-3490**	1	NUT-WELD (M10X1.5-THD)	
	6	1	**200-6345**	1	MOUNT (DUAL SWIVEL)	
	7	1	**204-2281**	4	STRAP-TIE	
	8	1	**232-1115**	1	CLIP-PIPE	
	9	2	**235-1845**	2	FUSE (100-AMPERE)	
Y	10	2	**241-8368**	1	SWITCH GP-MAGNETIC (24-VOLT) (GLOW PLUG RELAY)	169
Y	10A	2	**241-8368**	1	SWITCH GP-MAGNETIC (24-VOLT) (MAIN RELAY)	169
	11	2	**264-4297**	1	SENSOR GP-TEMPERATURE (ENGINE COOLANT)	
	12	2	**267-2680**	1	FUSE (20-AMPERE)	
	13	2	**267-2744**	1	HOLDER AS-FUSE	
M		2	**5C-7261**	2	NUT (M8X1.25-THD)	
		2	**7X-0608**	2	WASHER-HARD (10.2X16X2-MM THK)	
		2	**9F-5644**	2	LOCKWASHER	
		2	**267-2746**	1	COVER AS	
	14	1	**269-3311**	1	BRACKET	
	15	2	**274-9872**	1	FUSE (30-AMPERE)	
	16	1	**289-9166**	1	HARNESS AS-ENGINE	
		1	**245-1045**	1	COVER	
		1	**245-1044**	2	LOCK-CONNECTOR	
		1	**213-0139**	4	PIN	
		1	**9W-0852**	1	PIN-CONNECTOR (14-GA)	
		1	**9X-3401**	6	PIN-CONNECTOR (16-GA TO 18-GA)	
					—OR—	
		1	**126-1767**	6	PIN-CONNECTOR (14-GA)	
		1	**127-5483**	1	PLUG AS-CONNECTOR (1-PIN)	
		1	**155-2255**	1	KIT-CONNECTING PLUG (12-PIN)	
		1	**155-2260**	1	KIT-CONNECTING PLUG (3-PIN)	
		1	**155-2270**	3	KIT-CONNECTING PLUG (2-PIN)	
		1	**155-2274**	1	KIT-CONNECTING PLUG (6-PIN)	
		1	**197-7261**	1	PLUG AS-CONNECTOR (19-PIN)	
		1	**245-1042**	1	PLUG AS-CONNECTOR (64-PIN)	
M		1	**267-7207**	1	BOLT-SPECIAL (2)	
		1	**267-7208**	1	RING-RETAINING	
		1	**274-4990**	1	SEAL	
		1	**245-1048**	41	PLUG-CONNECTOR	
		1	**8T-8737**	8	PLUG-SEAL	
		1	**102-8802**	2	KIT-RECEPTACLE (2-PIN)	
		1	**102-8803**	1	KIT-RECEPTACLE (3-PIN)	
		1	**134-2540**	1	RESISTOR AS (3-PIN)	
		1	**100-6674**	2	SEAL-CONNECTOR	
		1	**8N-1549**	1	SOCKET-CONNECTOR (4-GA)	
		1	**9W-0844**	2	SOCKET-CONNECTOR (14-GA)	
		1	**180-9340**	32	SOCKET-CONNECTOR (14-GA TO 18-GA)	
		1	**267-9572**	23	SOCKET-CONNECTION (18-GA)	
		1	**124-5640**	2	TERMINAL-SOCKET	
		1	**8L-8413**	16	STRAP-CABLE	
B		1	**141-8061**		TAPE	
		1	**6T-5598**	1	TERMINAL-SOLDER (FOR 5/16-IN BOLT)	
		1	**9X-4998**	1	SOCKET (14-GA TO 16-GA)	

289-8902 **WIRING GP-ENGINE** *(contd.)* **i03631223**

NOTE	REF NO	GRAPHIC REF	PART NUMBER	QTY	PART NAME 1 2 3 4 5 6 (PRODUCT LEVEL)	SEE PAGE
		1	**5P-3454**	1	TERMINAL (4-GA)	
		1	**2L-8066**	1	TERMINAL-RING (10-GA TO 12-GA, NO. 10 SCREW)	
		1	**2L-8067**	2	TERMINAL-RING (10-GA TO 12-GA, 1/4-IN SCREW)	
		1	**2L-8068**	4	TERMINAL (10-GA TO 12-GA)	
		1	**2L-8077**	1	TERMINAL (14-GA TO 16-GA)	
		1	**311-6185**	1	TERMINAL AS	
E		1	**125-7874**		TUBE-HEAT SHRINK (5.72-MM DIA) (35-CM)	
	17	1	**322-6841**	1	CABLE AS	
		1	**6T-5598**	1	TERMINAL-SOLDER (FOR 5/16-IN BOLT)	
		1	**8T-8827**	1	BOOT (RED)	
	18	2	**292-2358**	1	WIRE AS (RED)	
	19	2	**295-1813**	1	WIRE AS (RED)	
	20	1	**297-8966**	1	WIRE AS (BLACK)	
	21	1	**300-1271**	1	BRACKET	
	22	2	**308-5075**	1	PLATE AS	
M		2	**6V-9632**	9	NUT-WELD (M6X1-THD)	
Y	23	2	**309-1620**	1	MODULE AS-FUSE (GLOW PLUGS, START SOLENOID)	156
	24	1,2	**204-8000**	3	MOUNT (TIE WRAP)	
	25	2	**3K-0360**	1	SEAL-O-RING	
	26	1,2	**3S-2093**	7	STRAP-CABLE	
	27	1	**3S-8665**	1	CLIP	
	28	1	**4P-7581**	7	CLIP	
	29	1,2	**4P-8134**	6	CLIP	
M	30	2	**5C-2890**	2	NUT (M6X1-THD)	
M	31	2	**5C-7261**	3	NUT (M8X1.25-THD)	
	32	1	**5P-4116**	1	WASHER-HARD (8.8X20.5X2-MM THK)	
M	33	2	**6V-7728**	1	BOLT (M6X1X45-MM)	
	34	2	**8C-3398**	2	LOCKWASHER	
	35	1,2	**8T-4121**	15	WASHER-HARD (11X21X2.5-MM THK)	
M	36	2	**8T-4133**	1	NUT (M10X1.5-THD)	
M	37	2	**8T-4136**	1	BOLT (M10X1.5X25-MM)	
M	38	1	**8T-4137**	9	BOLT (M10X1.5X20-MM)	
M	39	2	**8T-4138**	7	BOLT (M6X1X20-MM)	
M	40	2	**8T-4171**	1	BOLT (M6X1X12-MM)	
M	41	1	**8T-4189**	1	BOLT (M8X1.25X20-MM)	
M	42	1	**8T-4192**	1	BOLT (M12X1.75X25-MM)	
M	43	2	**8T-4196**	4	BOLT (M10X1.5X35-MM)	
	44	2	**8T-4205**	10	WASHER-HARD (7.2X14.5X2-MM THK)	
	45	1	**8T-4223**	1	WASHER-HARD (13.5X25.5X3-MM THK)	
	46	1,2	**8T-4224**	8	WASHER-HARD (8.8X16X2-MM THK)	
M	47	1	**8T-7547**	1	BOLT (M8X1.25X30-MM)	
	48	2	**9F-5644**	2	LOCKWASHER	
	50	2	**116-6161**	1	CAP-CONNECTOR	
	51	2	**8T-8737**	4	PLUG-SEAL	
	52	2	**102-8802**	2	KIT-RECEPTACLE (2-PIN) (EACH INCLUDES RECEPTACLE AS & WEDGE)	

B-USE AS REQUIRED
E-ORDER BY THE CENTIMETER
M-METRIC PART
Y-SEPARATE ILLUSTRATION

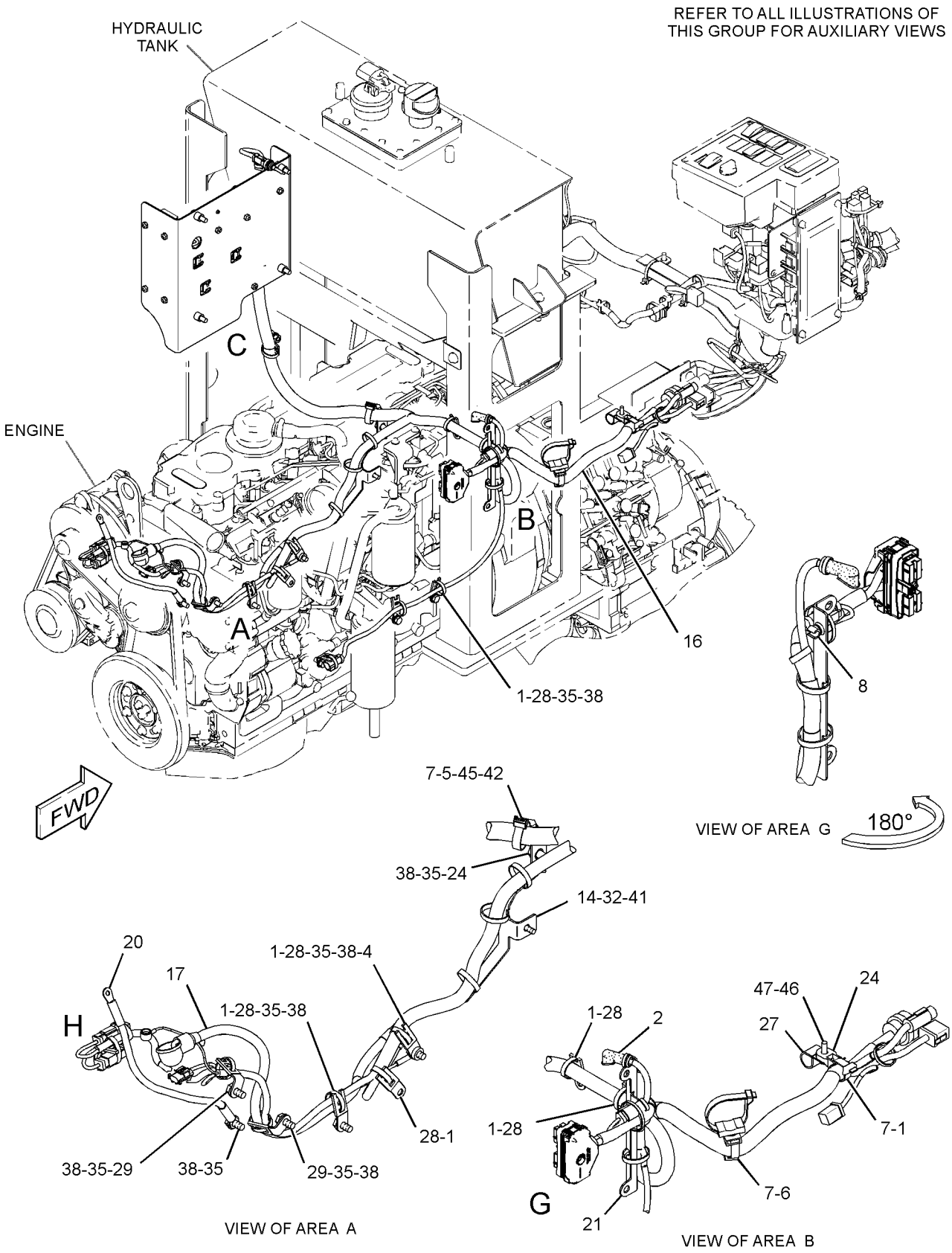

GRAPHIC #1 g01842623

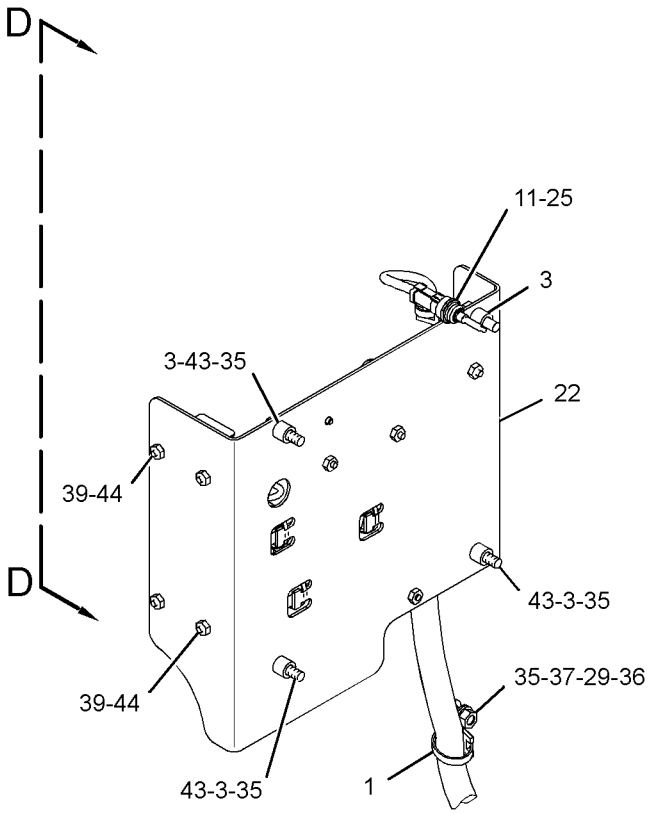

VIEW OF AREA C

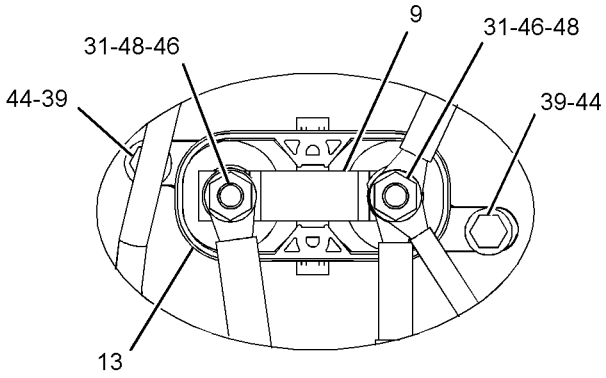

VIEW OF AREA F
(FUSE HOLDER COVER REMOVED FOR CLARITY)

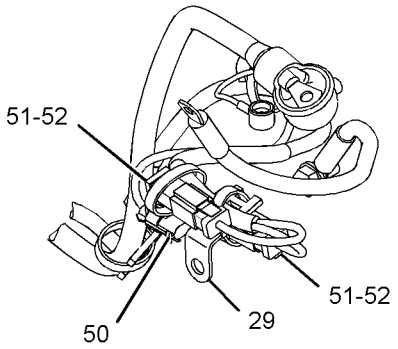

VIEW OF AREA H 90°

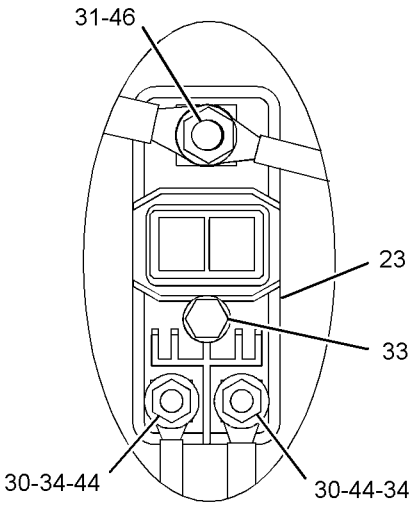

VIEW OF AREA E
(BOOTS REMOVED FOR CLARITY)

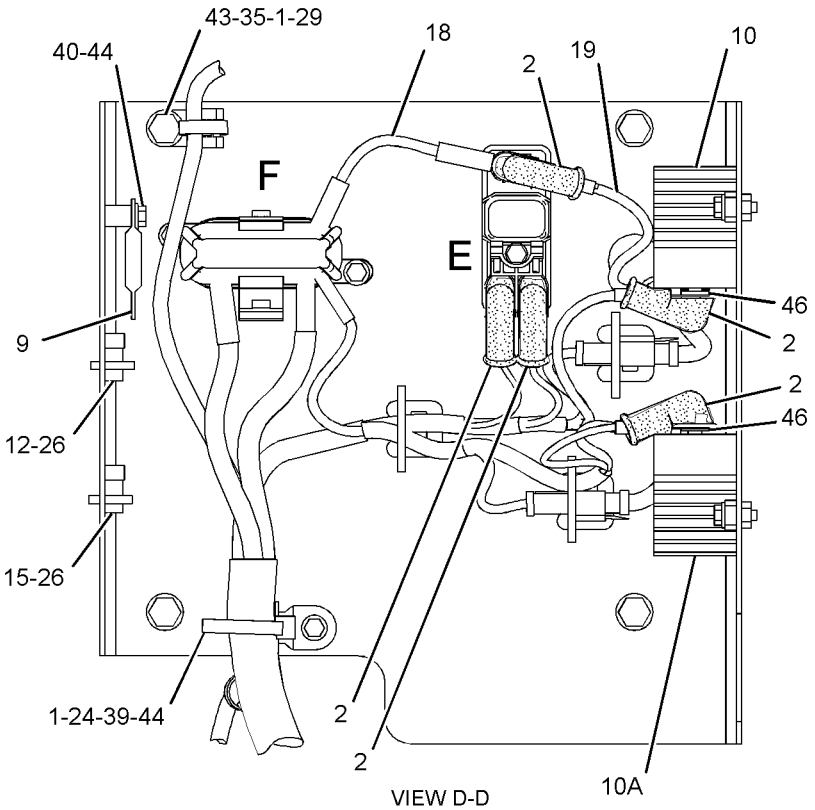

VIEW D-D

GRAPHIC #2 **<END>** g01842624

289-8902 WIRING GP-ENGINE

S/N: KLN1-UP
PART OF 289-8841 CHASSIS AR
TYPE 2

SMCS-1403, 1408 **i03631295**

NOTE	REF NO	GRAPHIC REF	PART NUMBER	QTY	PART NAME 1 2 3 4 5 6 (PRODUCT LEVEL)	SEE PAGE
C	1	1,2	**7K-1181**	21	STRAP-CABLE	
	2	2	**8T-8737**	4	PLUG-SEAL	
C	3	1,2	**8T-8799**	9	BOOT	
	4	2	**116-6161**	1	CAP-CONNECTOR	
	5	2	**129-8087**	4	SPACER (13.9X17.1X14-MM THK)	
	6	1	**135-3327**	1	PLATE AS	
M		1	**8T-3490**	1	NUT-WELD (M10X1.5-THD)	
C	7	1	**204-2281**	1	STRAP-TIE	
	8	1	**232-1115**	1	CLIP-PIPE	
	9	2	**235-1845**	2	FUSE (100-AMPERE)	
Y	10	2	**241-8368**	1	SWITCH GP-MAGNETIC (24-VOLT) (GLOW PLUG RELAY)	169
Y	10A	2	**241-8368**	1	SWITCH GP-MAGNETIC (24-VOLT) (MAIN RELAY)	169
	11	2	**264-4297**	1	SENSOR GP-TEMPERATURE (ENGINE COOLANT)	
	12	2	**267-2680**	1	FUSE (20-AMPERE)	
	13	2	**267-2744**	1	HOLDER AS-FUSE	
M		2	**5C-7261**	2	NUT (M8X1.25-THD)	
		2	**7X-0608**	2	WASHER-HARD (10.2X16X2-MM THK)	
		2	**9F-5644**	2	LOCKWASHER	
		2	**267-2746**	1	COVER AS	
	14	1	**269-3311**	1	BRACKET	
	15	2	**274-9872**	1	FUSE (30-AMPERE)	
C	16	2	**275-0553**	1	BAR-BUS	
C	17	2	**278-6377**	1	FUSE (40-AMPERE)	
	18	1	**297-8966**	1	WIRE AS (BLACK)	
	19	1	**300-1271**	1	BRACKET	
	20	2	**308-5075**	1	PLATE AS	
Y	21	2	**309-1620**	1	MODULE AS-FUSE (MAIN POWER)	156
C	22	2	**322-6839**	1	WIRE AS (RED)	
C	23	1	**322-6840**	1	HARNESS AS-ENGINE	
		1	**245-1045**	1	COVER	
		1	**245-1044**	2	LOCK-CONNECTOR	
		1	**213-0139**	4	PIN	
		1	**9W-0852**	1	PIN-CONNECTOR (14-GA)	
		1	**9X-3401**	6	PIN-CONNECTOR (16-GA TO 18-GA)	
					—OR—	
		1	**126-1767**	6	PIN-CONNECTOR (14-GA)	
		1	**127-5483**	1	PLUG AS-CONNECTOR (1-PIN)	
		1	**155-2255**	1	KIT-CONNECTING PLUG (12-PIN)	
		1	**155-2260**	1	KIT-CONNECTING PLUG (3-PIN)	
		1	**155-2270**	3	KIT-CONNECTING PLUG (2-PIN)	
		1	**155-2274**	1	KIT-CONNECTING PLUG (6-PIN)	
					(EACH PLUG KIT INCLUDES PLUG AS, WEDGE & INTERFACE SEAL)	
		1	**197-7261**	1	PLUG AS-CONNECTOR (19-PIN)	
		1	**245-1042**	1	PLUG AS-CONNECTOR (64-PIN)	
M		1	**267-7207**	1	BOLT-SPECIAL (2)	
		1	**267-7208**	1	RING-RETAINING	
		1	**274-4990**	1	SEAL	
		1	**245-1048**	38	PLUG-CONNECTOR	
		1	**8T-8737**	8	PLUG-SEAL	
		1	**102-8802**	2	KIT-RECEPTACLE (2-PIN)	
		1	**102-8803**	1	KIT-RECEPTACLE (3-PIN)	
					(EACH RECEPTACLE KIT INCLUDES RECEPTACLE AS & WEDGE)	

289-8902 **WIRING GP-ENGINE** *(contd.)* **i03631295**

NOTE	REF NO	GRAPHIC REF	PART NUMBER	QTY	PART NAME 1 2 3 4 5 6 (PRODUCT LEVEL)	SEE PAGE
		1	**134-2540**	1	RESISTOR AS (3-PIN)	
		1	**100-6674**	2	SEAL-CONNECTOR	
		1	**8N-1549**	1	SOCKET-CONNECTOR (4-GA)	
		1	**9W-0844**	3	SOCKET-CONNECTOR (14-GA)	
		1	**180-9340**	31	SOCKET-CONNECTOR (14-GA TO 18-GA)	
		1	**245-1047**	26	SOCKET-CONNECTOR	
		1	**124-5640**	2	TERMINAL-SOCKET	
		1	**8L-8413**	11	STRAP-CABLE	
B		1	**141-8061**		TAPE	
B		1	**1P-0810**		TAPE-ELECTRICAL	
		1	**6T-5598**	1	TERMINAL-SOLDER (FOR 5/16-IN BOLT)	
		1	**9X-4997**	1	TERMINAL AS	
		1	**5P-3454**	1	TERMINAL (4-GA)	
		1	**2L-8066**	1	TERMINAL-RING (10-GA TO 12-GA, NO. 10 SCREW)	
		1	**2L-8067**	4	TERMINAL-RING (10-GA TO 12-GA, 1/4-IN SCREW)	
		1	**2L-8068**	4	TERMINAL (10-GA TO 12-GA)	
		1	**2L-8077**	1	TERMINAL (14-GA TO 16-GA)	
		1	**311-6184**	1	TERMINAL-RING	
E		1	**125-7874**		TUBE-HEAT SHRINK (5.72-MM DIA) (20-CM)	
E		1	**125-7875**		TUBE-HEAT SHRINK (7.44-MM DIA) (10-CM)	
	24	1	**322-6841**	1	CABLE AS	
		1	**6T-5598**	1	TERMINAL-SOLDER (FOR 5/16-IN BOLT)	
		1	**8T-8827**	1	BOOT (RED)	
CY	25	2	**324-9712**	1	MODULE AS-FUSE (GLOW PLUGS, START SOLENOID)	157
	26	1	**132-7551**	1	SPACER (11X19X6-MM THK)	
C	27	1,2	**204-8000**	2	MOUNT (TIE WRAP)	
	28	2	**102-8802**	2	KIT-RECEPTACLE (2-PIN)	
					(EACH INCLUDES RECEPTACLE AS & WEDGE)	
	29	2	**3K-0360**	1	SEAL-O-RING	
C	30	2	**3S-2093**	10	STRAP-CABLE	
	31	1	**4P-7581**	7	CLIP	
	32	1,2	**4P-8134**	6	CLIP	
CM	33	2	**5C-2890**	4	NUT (M6X1-THD)	
CM	34	2	**5C-7261**	4	NUT (M8X1.25-THD)	
	35	1	**5P-4116**	1	WASHER-HARD (8.8X20.5X2-MM THK)	
CM	36	2	**6V-7728**	2	BOLT (M6X1X45-MM)	
C	37	2	**8C-3398**	4	LOCKWASHER	
	38	1,2	**8T-4121**	15	WASHER-HARD (11X21X2.5-MM THK)	
M	39	2	**8T-4133**	1	NUT (M10X1.5-THD)	
M	40	2	**8T-4136**	1	BOLT (M10X1.5X25-MM)	
M	41	1	**8T-4137**	9	BOLT (M10X1.5X20-MM)	
M	42	2	**8T-4138**	7	BOLT (M6X1X20-MM)	
M	43	2	**8T-4171**	1	BOLT (M6X1X12-MM)	
M	44	1	**8T-4189**	1	BOLT (M8X1.25X20-MM)	
M	45	1	**8T-4192**	1	BOLT (M12X1.75X25-MM)	
M	46	2	**8T-4196**	4	BOLT (M10X1.5X35-MM)	
C	47	2	**8T-4205**	12	WASHER-HARD (7.2X14.5X2-MM THK)	
	48	1	**8T-4223**	1	WASHER-HARD (13.5X25.5X3-MM THK)	
	49	2	**8T-4224**	8	WASHER-HARD (8.8X16X2-MM THK)	
	50	2	**9F-5644**	2	LOCKWASHER	

B-USE AS REQUIRED
C-CHANGE FROM PREVIOUS TYPE
E-ORDER BY THE CENTIMETER
M-METRIC PART
Y-SEPARATE ILLUSTRATION

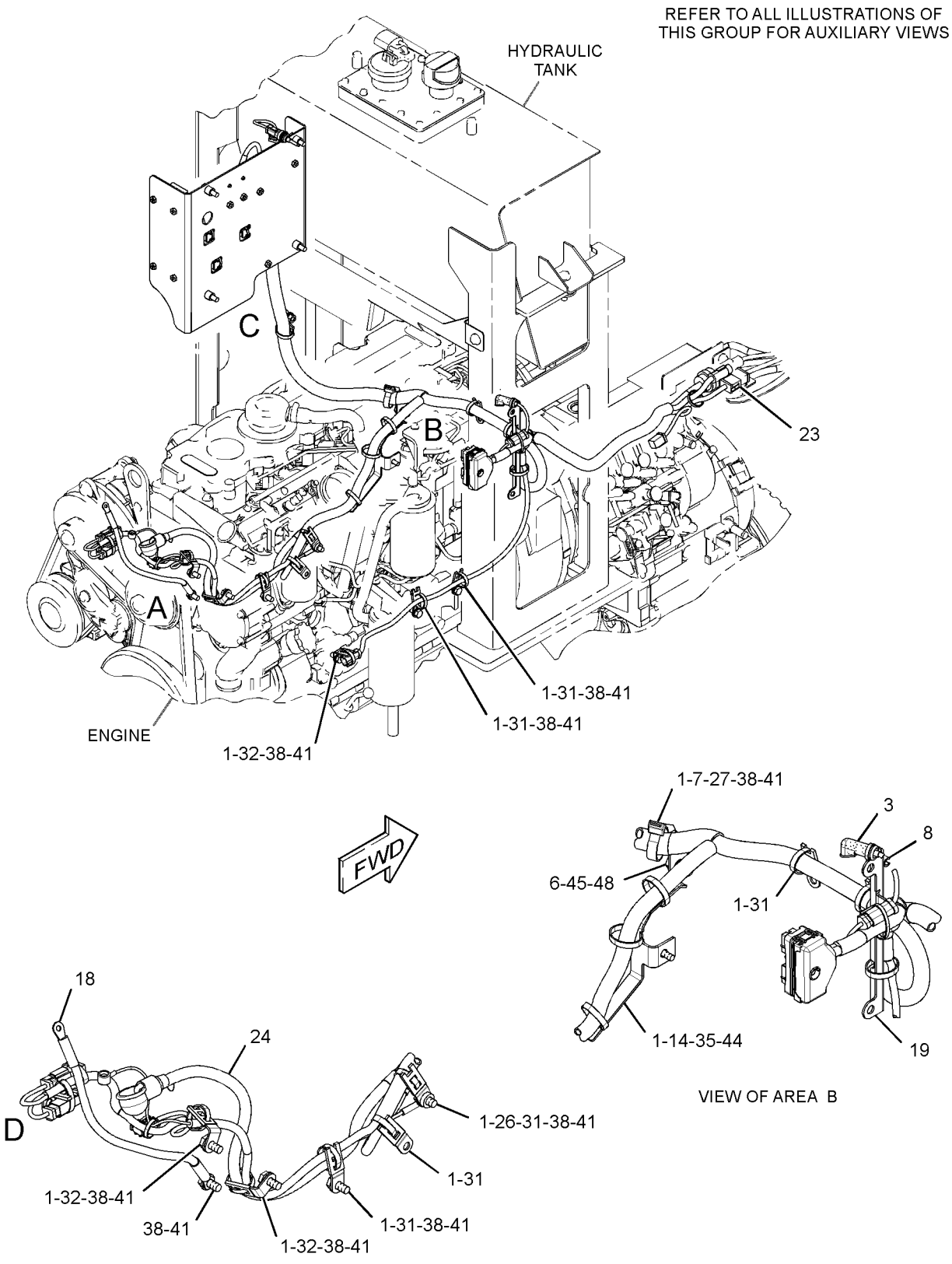

GRAPHIC #1 g01873874

289-8902 **WIRING GP-ENGINE** *(contd.)* **i03631295**

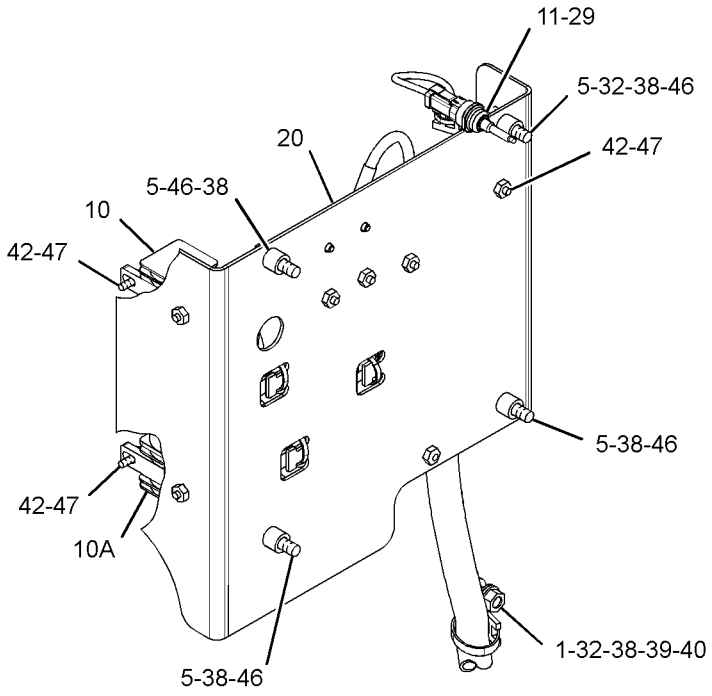

VIEW OF AREA C

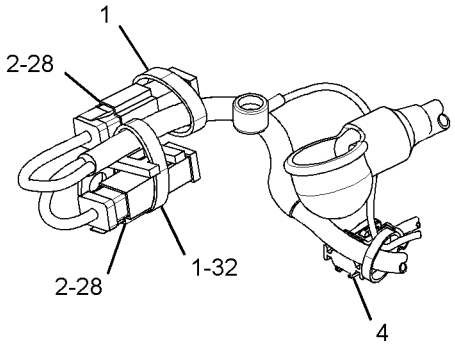

VIEW OF AREA D

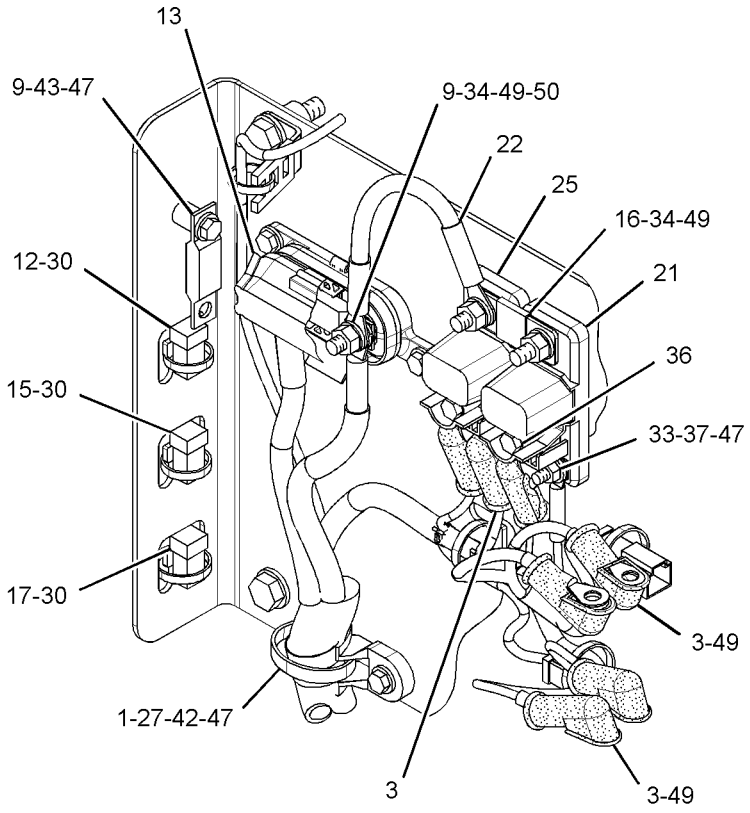

VIEW OF AREA C 90°

GRAPHIC #2 **<END>** g01873893

ELECTRICAL AND STARTING SYSTEM

289-8956 WIRING GP-FRONT

S/N: KLN1-UP

PART OF 289-8841 CHASSIS AR

SMCS-5734 **i03580821**

NOTE	REF NO	GRAPHIC REF	PART NUMBER	QTY	PART NAME 1 2 3 4 5 6 (PRODUCT LEVEL)	SEE PAGE
	1	1	**7K-1181**	28	STRAP-CABLE	
	2	1	**7V-5628**	2	PLATE	
	3	1	**7V-6089**	4	CLAMP	
	4	1	**122-6316**	1	BRACKET AS	
M		1	**6V-9632**	2	NUT-WELD (M6X1-THD)	
	5	1	**163-1201**	1	HORN AS (24-VOLT, LOW TONE)	
	6	1	**200-6345**	2	MOUNT (DUAL SWIVEL)	
	7	1	**204-2281**	3	STRAP-TIE	
	8	1	**211-0052**	3	NUT (11/16-18-THD)	
	9	1	**226-2951**	1	BRACKET AS	
	10	1	**226-3378**	1	PLATE AS	
	11	1	**290-0658**	1	HARNESS AS-FRONT	
		1	**102-8802**	3	KIT-RECEPTACLE (2-PIN)	
		1	**102-8803**	1	KIT-RECEPTACLE (3-PIN)	
		1	**102-8804**	1	KIT-RECEPTACLE (4-PIN)	
		1	**102-8801**	1	KIT-RECEPTACLE (12-PIN)	
					(EACH KIT INCLUDES RECEPTACLE AS & WEDGE)	
E		1	**5P-0765**		HOSE (60-CM)	
		1	**6V-0491**	4	TERMINAL-BLADE	
		1	**8L-8413**	20	STRAP-CABLE	
		1	**8T-8737**	16	PLUG-SEAL	
		1	**189-3158**	2	SUPPRESSOR-ARC	
E		1	**108-1304**		TUBE-HEAT SHRINK (33-MM DIA) (20-CM)	
		1	**9W-0852**	2	PIN-CONNECTOR (14-GA)	
		1	**9W-0844**	5	SOCKET-CONNECTOR (14-GA)	
E		1	**119-3662**		TUBE-HEAT SHRINK (10.85-MM DIA) (7-CM)	
		1	**123-7615**	2	CONNECTOR	
E		1	**125-7874**		TUBE-HEAT SHRINK (5.72-MM DIA) (40-CM)	
D		1	**141-8061**		TAPE (1-M)	
		1	**155-2255**	1	KIT-CONNECTING PLUG (12-PIN)	
		1	**155-2270**	6	KIT-CONNECTING PLUG (2-PIN)	
		1	**155-2260**	2	KIT-CONNECTING PLUG (3-PIN)	
		1	**155-2271**	1	KIT-CONNECTING PLUG (4-PIN)	
		1	**155-2274**	3	KIT-CONNECTING PLUG (6-PIN)	
					(EACH KIT INCLUDES PLUG AS, WEDGE & INTERFACE SEAL))	
		1	**9X-3401**	10	PIN-CONNECTOR (16-GA TO 18-GA)	
					—OR—	
		1	**126-1767**	10	PIN-CONNECTOR (14-GA)	
		1	**180-9340**	44	SOCKET-CONNECTOR (14-GA TO 18-GA)	
	12	1	**204-8000**	1	MOUNT (TIE WRAP)	
	13	1	**2M-3433**	1	GROMMET	
	14	1	**3S-8665**	1	CLIP	
	15	1	**4P-7581**	4	CLIP	
	16	1	**4P-8134**	2	CLIP	
	17	1	**5P-4116**	1	WASHER-HARD (8.8X20.5X2-MM THK)	
	18	1	**7G-3228**	1	GROMMET	
M	19	1	**7X-2534**	4	BOLT (M6X1X50-MM)	
	20	1	**8D-9671**	1	CLIP	
	21	1	**8T-4121**	7	WASHER-HARD (11X21X2.5-MM THK)	
M	22	1	**8T-4137**	5	BOLT (M10X1.5X20-MM)	
M	23	1	**8T-4195**	2	BOLT (M10X1.5X30-MM)	
	24	1	**8T-4224**	1	WASHER-HARD (8.8X16X2-MM THK)	
M	25	1	**8T-4908**	1	BOLT (M8X1.25X25-MM)	
M	26	1	**8T-7547**	1	BOLT (M8X1.25X30-MM)	

289-8956 **WIRING GP-FRONT** *(contd.)* **i03580821**

D-ORDER BY THE METER
E-ORDER BY THE CENTIMETER
M-METRIC PART

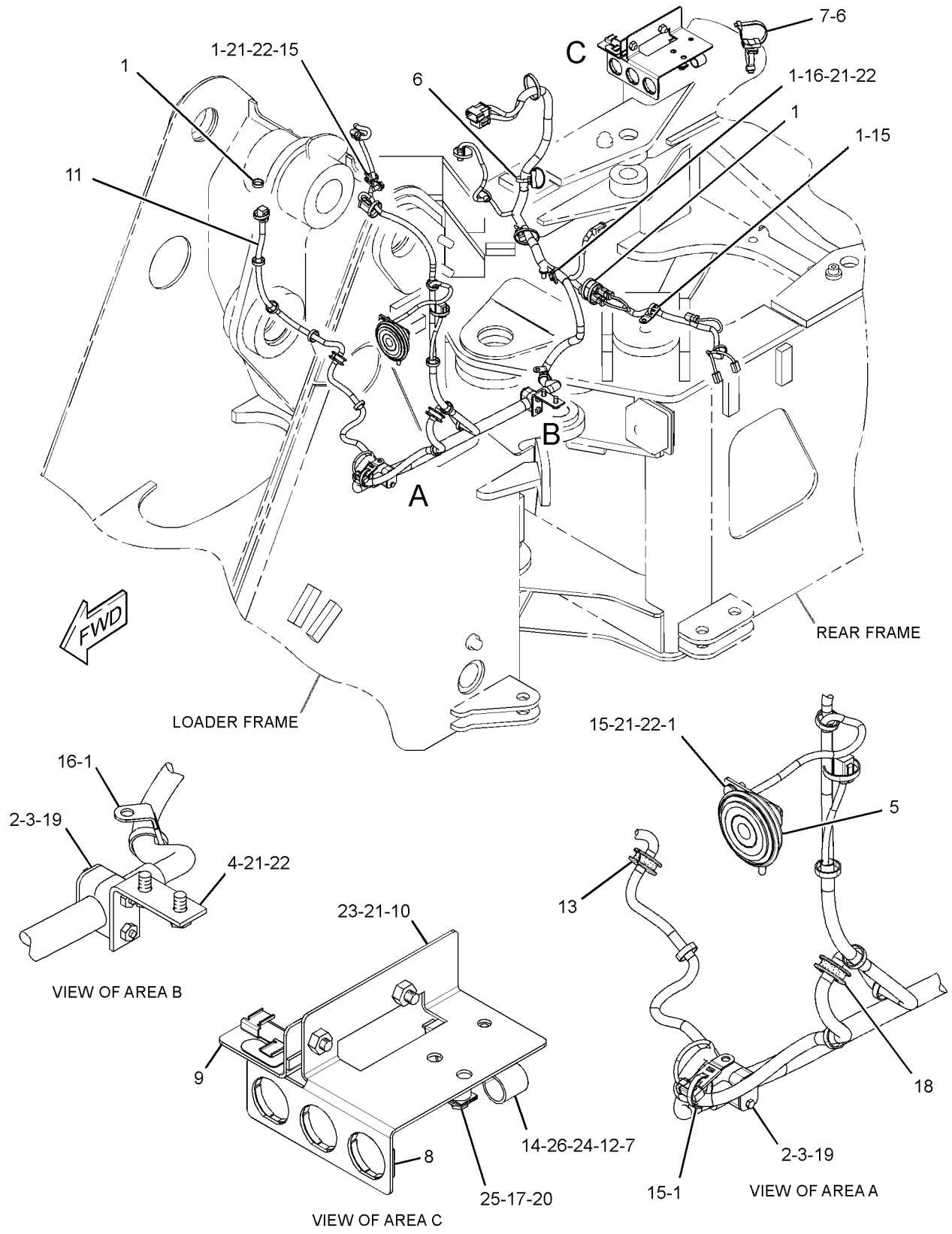

GRAPHIC #1 **<END>** g01784456

289-8959 WIRING GP-REAR

S/N: KLN1-UP

PART OF 289-8841 CHASSIS AR

SMCS-1408 **i03629323**

NOTE	REF NO	GRAPHIC REF	PART NUMBER	QTY	PART NAME 1 2 3 4 5 6 (PRODUCT LEVEL)	SEE PAGE
	1	1	**7K-1181**	35	STRAP-CABLE	
	2	1	**206-1345**	2	STRAP-CABLE	
	3	1	**289-9169**	1	HARNESS AS-REAR	
		1	**9W-0852**	3	PIN-CONNECTOR (14-GA)	
		1	**9X-3401**	27	PIN-CONNECTOR (16-GA TO 18-GA)	
					-OR-	
		1	**126-1767**	27	PIN-CONNECTOR (14-GA)	
		1	**155-2270**	13	KIT-CONNECTING PLUG (2-PIN)	
		1	**155-2260**	5	KIT-CONNECTING PLUG (3-PIN)	
					(EACH PLUG KIT INCLUDES PLUG AS, WEDGE & INTERFACE SEAL)	
		1	**225-3854**	1	PLUG AS	
		1	**8T-8737**	36	PLUG-SEAL	
		1	**102-8802**	8	KIT-RECEPTACLE (2-PIN)	
		1	**102-8803**	2	KIT-RECEPTACLE (3-PIN)	
		1	**102-8805**	1	KIT-RECEPTACLE (6-PIN)	
					(EACH RECEPTACLE KIT INCLUDES RECEPTACLE AS & WEDGE)	
		1	**100-6674**	2	SEAL-CONNECTOR	
		1	**180-9340**	32	SOCKET-CONNECTOR (14-GA TO 18-GA)	
		1	**9W-0844**	2	SOCKET-CONNECTOR (14-GA)	
		1	**8L-8413**	23	STRAP-CABLE	
B		1	**1P-0810**		TAPE-ELECTRICAL	
		1	**2L-8076**	1	TERMINAL-RING (14-GA TO 16-GA, NO. 10 SCREW)	
		1	**2L-8079**	1	TERMINAL (14-GA TO 16-GA)	
E		1	**119-3662**		TUBE-HEAT SHRINK (10.85-MM DIA) (7-CM)	
E		1	**125-7874**		TUBE-HEAT SHRINK (5.72-MM DIA) (25-CM)	
E		1	**125-7875**		TUBE-HEAT SHRINK (7.44-MM DIA) (5-CM)	
	4	1	**132-5789**	3	CLIP	
	5	1	**1M-4543**	1	GROMMET	
	6	1	**3S-2093**	11	STRAP-CABLE	
	7	1	**4P-7581**	5	CLIP	
	8	1	**5P-6264**	4	GROMMET	
	9	1	**8T-4121**	7	WASHER-HARD (11X21X2.5-MM THK)	
M	10	1	**8T-4137**	6	BOLT (M10X1.5X20-MM)	
M	11	1	**8T-4191**	1	BOLT (M10X1.5X16-MM)	

B-USE AS REQUIRED
E-ORDER BY THE CENTIMETER
M-METRIC PART

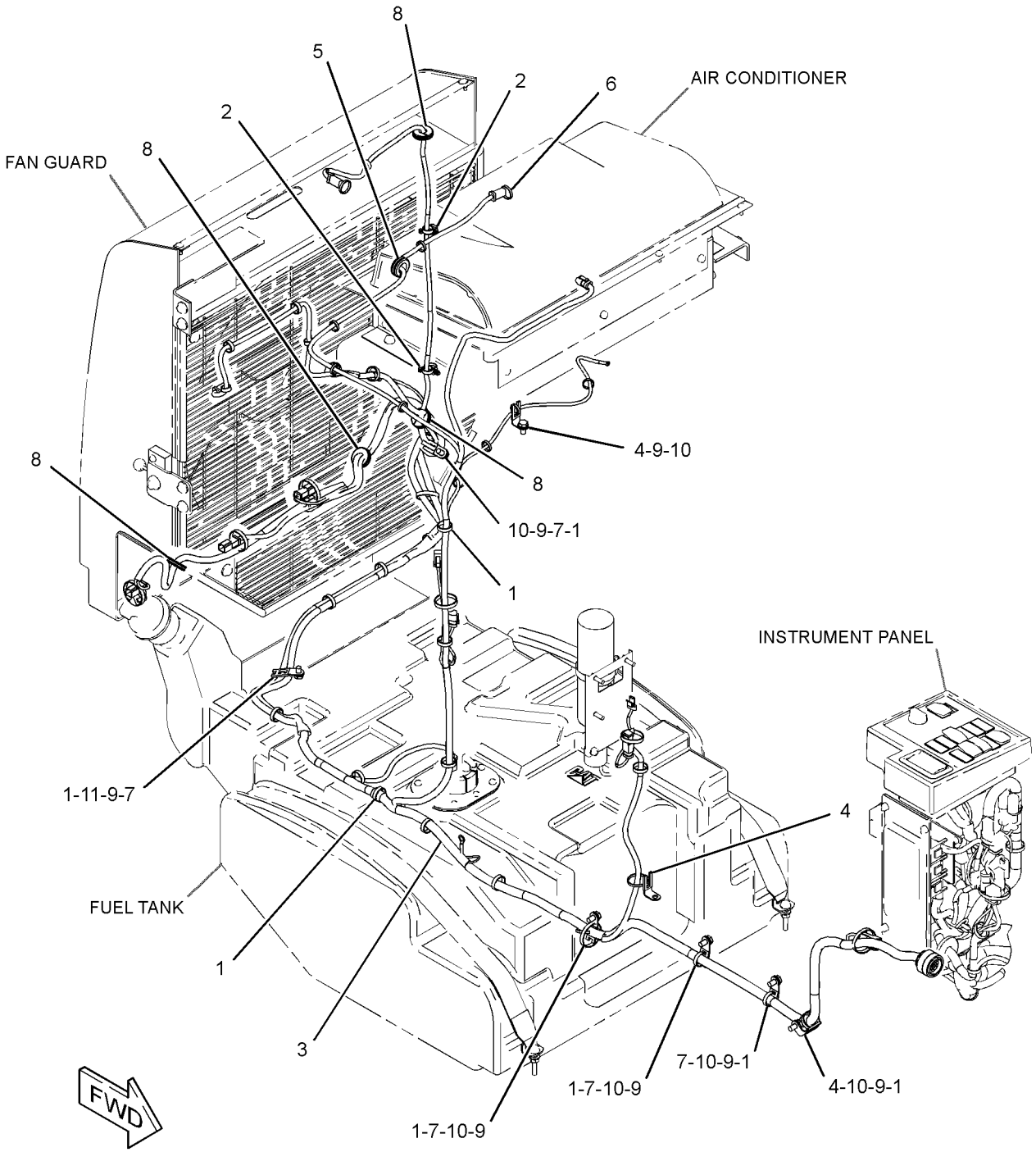

GRAPHIC #1 **<END>** g01826917

290-7188 WIRING GP-RIDE CONTROL

S/N: KLN1-UP
PART OF 289-8995 CONTROL AR-RIDE
AN ATTACHMENT

SMCS-5004, 5734 **i03571136**

NOTE	REF NO	GRAPHIC REF	PART NUMBER	QTY	PART NAME 1 2 3 4 5 6 (PRODUCT LEVEL)	SEE PAGE
	1	1	**3E-5239**	1	RELAY AS (24-VOLT) (RIDE CONTROL)	
	2	1	**7K-1181**	9	STRAP-CABLE	
	3	1	**189-3158**	1	SUPPRESSOR-ARC	
	4	1	**158-5089**	1	RELAY AS (24-VOLT) (RIDE CONTROL, LOAD CHECK RELAY)	
	5	1	**171-6029**	1	HARNESS AS-RIDE CONTROL (SOLENOID VALVE)	
		1	**102-8803**	1	KIT-RECEPTACLE (3-PIN)	
					(KIT INCLUDES RECEPTACLE AS & WEDGE)	
		1	**9X-1054**	1	PLUG AS-CONNECTOR (4-PIN)	
E		1	**125-7874**		TUBE-HEAT SHRINK (5.72-MM DIA) (5-CM)	
E		1	**125-7875**		TUBE-HEAT SHRINK (7.44-MM DIA) (5-CM)	
		1	**9X-3402**	4	SOCKET-CONNECTOR (16-GA TO 18-GA)	
		1	**144-1636**	3	PIN-CONNECTOR (14-GA TO 18-GA)	
		1	**155-2270**	2	KIT-CONNECTING PLUG (2-PIN)	
					(EACH KIT INCLUDES PLUG AS, WEDGE & INTERFACE SEAL)	
	6	1	**292-5606**	1	SWITCH AS-ROCKER (24-VOLT)	
		1	**111-7899**	1	GASKET	
	7	1	**217-6729**	1	HARNESS AS-RIDE CONTROL (PRESSURE SWITCH)	
		1	**102-8802**	1	KIT-RECEPTACLE (2-PIN)	
					(KIT INCLUDES RECEPTACLE AS & WEDGE)	
		1	**155-2270**	1	KIT-CONNECTING PLUG (2-PIN)	
					(KIT INCLUDES PLUG AS, WEDGE & INTERFACE SEAL)	
		1	**180-9339**	2	PIN-CONNECTOR (14-GA TO 18-GA)	
		1	**180-9340**	2	SOCKET-CONNECTOR (14-GA TO 18-GA)	
	8	1	**4P-7581**	2	CLIP	
	9	1	**4P-8134**	2	CLIP	
M	10	1	**8T-4133**	1	NUT (M10X1.5-THD)	
M	11	1	**8T-4138**	1	BOLT (M6X1X20-MM)	
M	12	1	**8T-4195**	1	BOLT (M10X1.5X30-MM)	
	13	1	**9X-6165**	1	WASHER (6.5X22X2.5-MM THK)	
	14	1	**8T-4121**	3	WASHER-HARD (11X21X2.5-MM THK)	
M	15	1	**8T-4137**	1	BOLT (M10X1.5X20-MM)	

E-ORDER BY THE CENTIMETER
M-METRIC PART

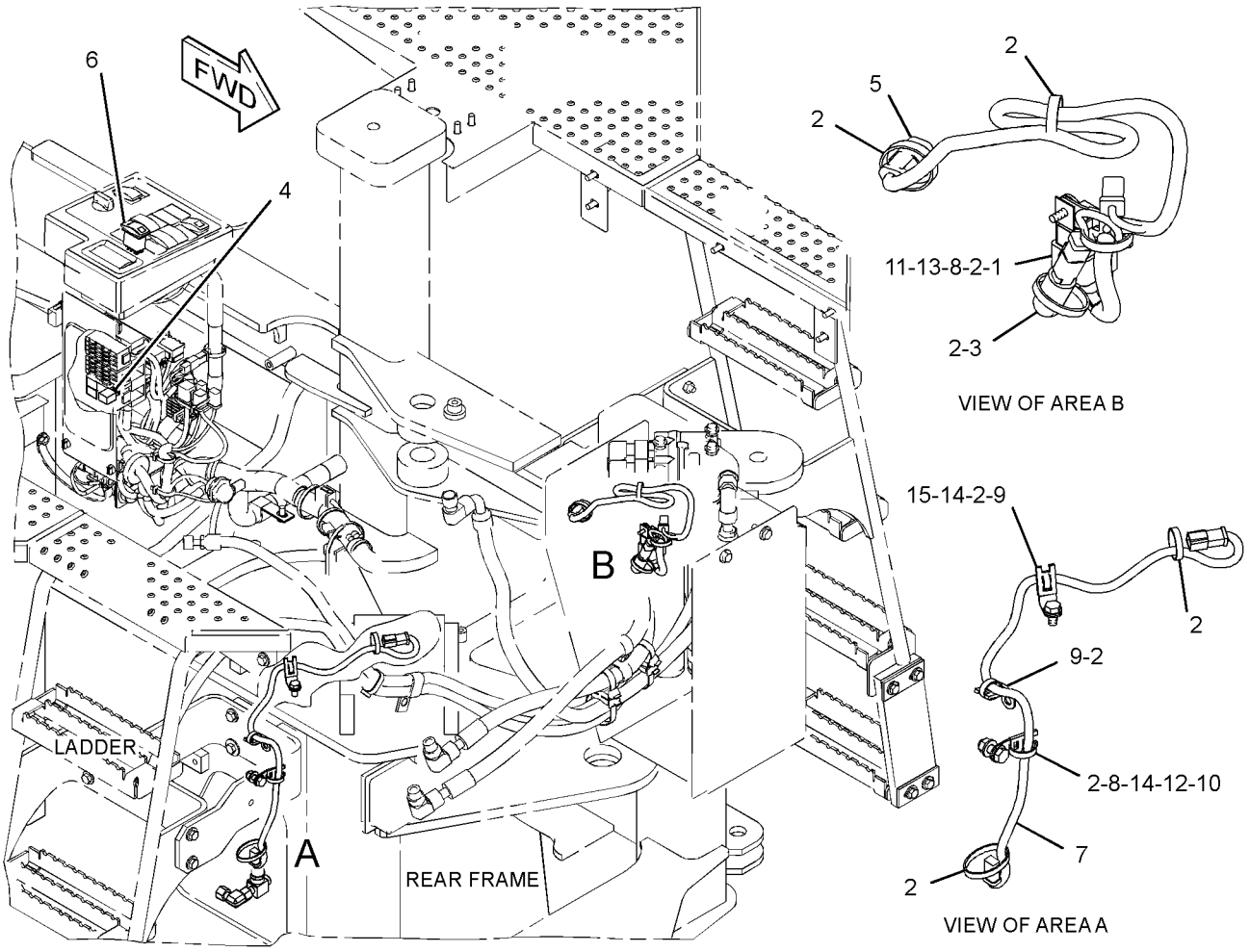

GRAPHIC #1 **<END>** g01767233

138-1615 AXLE AR-FIXED–FRONT, STANDARD DIFFERENTIAL

S/N: KLN1-UP

PART OF 289-8974 AXLE AR-FIXED

SMCS-3013, 3278 **i01216990**

NOTE	PART NUMBER	QTY	PART NAME 1 2 3 4 5 6 (PRODUCT LEVEL)	SEE PAGE
Y	*138-1614*	2	BRAKE & PLANETARY GP (SINGLE DISC)	203
Y	**138-1612**	1	DIFFERENTIAL GP (STANDARD)	218
Y	*138-1617*	1	GEAR GP-BEVEL & PINION (FRONT)	228
Y	*138-1616*	1	HOUSING GP-FIXED AXLE (FRONT)	232

Y-SEPARATE ILLUSTRATION

<END>

289-8974 AXLE AR-FIXED–FRONT, STANDARD DIFFERENTIAL

S/N: KLN1-UP

PART OF 289-8815 POWER TRAIN AR

SMCS-3013, 3278 **i03039649**

NOTE	PART NUMBER	QTY	PART NAME 1 2 3 4 5 6 (PRODUCT LEVEL)	SEE PAGE
Y	*138-1615*	1	AXLE AR-FIXED (FRONT, STANDARD DIFFERENTIAL) (SINGLE DISC BRAKE)	201
Y	*301-4353*	1	COVER GP-ACCESS (CAB FLOOR)	275

Y-SEPARATE ILLUSTRATION

<END>

267-7368 AXLE AR-OSCILLATING–REAR, STANDARD DIFFERENTIAL

S/N: KLN1-UP

PART OF 289-8991 AXLE AR-OSCILLATING AN ATTACHMENT

SMCS-3013, 3278 **i02587057**

NOTE	PART NUMBER	QTY	PART NAME 1 2 3 4 5 6 (PRODUCT LEVEL)	SEE PAGE
Y	*267-7413*	2	BRAKE & PLANETARY GP (SINGLE DISC)	205
Y	**138-1612**	1	DIFFERENTIAL GP (STANDARD)	218
Y	*138-1611*	1	GEAR GP-BEVEL & PINION (REAR)	227
Y	*203-2774*	1	HOUSING GP-OSCILLATING AXLE (REAR)	236

Y-SEPARATE ILLUSTRATION

<END>

267-7372 AXLE AR-OSCILLATING–
REAR, LIMITED SLIP DIFFERENTIAL
S/N: KLN1-UP
PART OF 289-8985 AXLE AR-OSCILLATING
AN ATTACHMENT

SMCS-3013, 3278 **i02489254**

NOTE	PART NUMBER	QTY	PART NAME 1 2 3 4 5 6 (PRODUCT LEVEL)	SEE PAGE
Y	*267-7414*	2	BRAKE & PLANETARY GP (DUAL DISC)	206
Y	**206-9670**	1	DIFFERENTIAL GP-LIMITED SLIP	219
Y	*138-2777*	1	GEAR GP-BEVEL & PINION (REAR)	229
Y	*203-2774*	1	HOUSING GP-OSCILLATING AXLE (REAR)	236
Y	**220-7925**	1	PLATE GP-AXLE IDENTIFICATION	669

Y-SEPARATE ILLUSTRATION

<END>

289-8985 AXLE AR-OSCILLATING–
REAR, LIMITED SLIP DIFFERENTIAL
S/N: KLN1-UP
AN ATTACHMENT

SMCS-3013, 3278 **i03043382**

NOTE	PART NUMBER	QTY	PART NAME 1 2 3 4 5 6 (PRODUCT LEVEL)	SEE PAGE
Y	*267-7372*	1	AXLE AR-OSCILLATING (REAR, LIMITED SLIP DIFF)	202
Y	*323-1653*	1	LINES GP-AXLE OIL COOLER (REAR)	242
Y	*290-6406*	1	LINES GP-WATER (WITH AXLE OIL COOLER)	55

Y-SEPARATE ILLUSTRATION

<END>

289-8991 AXLE AR-OSCILLATING–
REAR, STANDARD DIFFERENTIAL
S/N: KLN1-UP
AN ATTACHMENT

SMCS-3013, 3278 **i03038622**

NOTE	PART NUMBER	QTY	PART NAME 1 2 3 4 5 6 (PRODUCT LEVEL)	SEE PAGE
Y	**267-7368**	1	AXLE AR-OSCILLATING (REAR, STANDARD DIFFERENTIAL)	201
Y	*323-1652*	1	LINES GP-HYDRAULIC FAN (WITHOUT AXLE OIL COOLER)	381
Y	*290-6407*	1	LINES GP-WATER (WITHOUT AXLE OIL COOLER)	56

Y-SEPARATE ILLUSTRATION

<END>

138-1614 BRAKE & PLANETARY GP—SINGLE DISC

S/N: KLN1-UP

PART OF 138-1615 AXLE AR-FIXED

SMCS-4011, 4255 **i03628627**

NOTE	REF NO	GRAPHIC REF	PART NUMBER	QTY	PART NAME 1 2 3 4 5 6 (PRODUCT LEVEL)	SEE PAGE
	1	1	**143-4916**	1	PISTON	
	2	1	**250-1844**	1	DISC-FRICTION	
	3	1	**170-4697**	1	PLATE-REACTION	
	4	1	**9C-6020**	3	BEARING-SLEEVE	
	5	1	**253-8920**	3	GEAR-PLANETARY (29-TEETH)	
	6	1	**8R-0249**	6	WASHER-THRUST	
	7	1	**8T-2925**	3	PIN-SPRING	
	8	1	**8R-0248**	3	SHAFT-PLANETARY	
	9	1	**115-5327**	3	DOWEL	
	10	1	**8R-2537**	1	CARRIER-PLANETARY	
	11	1	**139-3584**	1	GEAR-RING (78-TEETH)	
	12	1	**148-7841**	3	SPRING	
	13	1	**4M-1677**	3	DOWEL-REACTION	
	14	1	**159-3589**	1	SEAL-D-RING	
	15	1	**165-6692**	1	SEAL-D-RING	
	16	1	**143-4918**	1	GEAR-SUN (18-TEETH)	
	17	1	**138-1645**	3	PIN-SPRING	

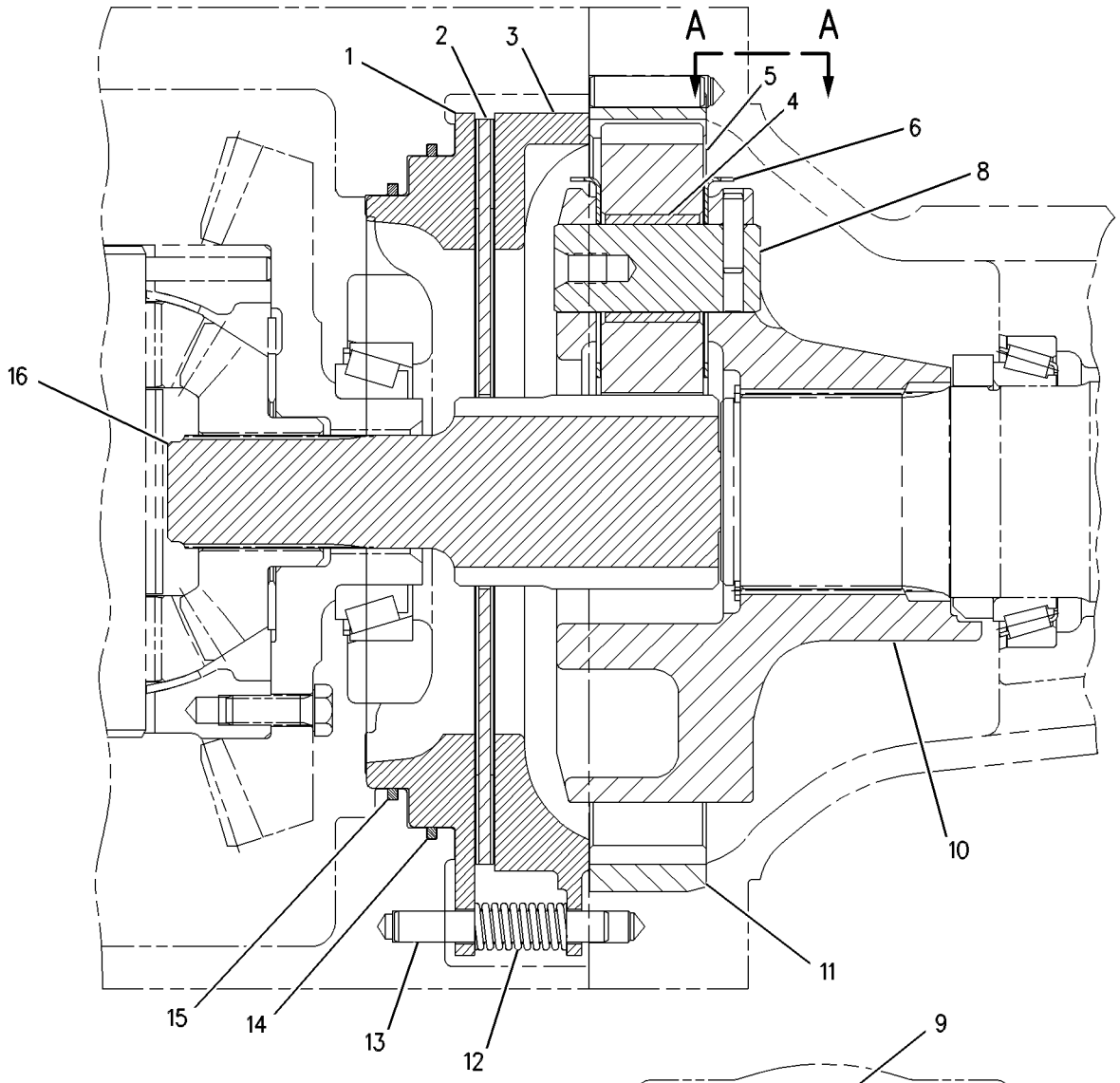

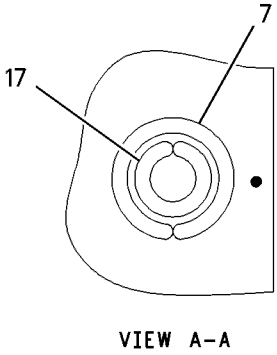

VIEW A-A

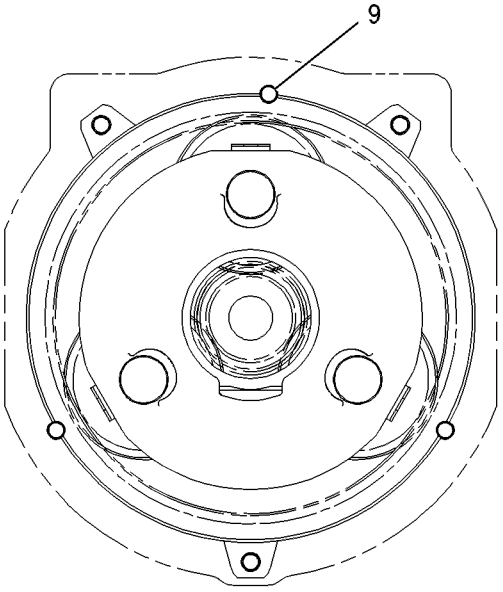

GRAPHIC #1 **<END>** g00618448

267-7413 BRAKE & PLANETARY GP—SINGLE DISC

S/N: KLN1-UP
PART OF 267-7368 AXLE AR-OSCILLATING
AN ATTACHMENT

SMCS-4011, 4255 **i03454121**

NOTE	REF NO	GRAPHIC REF	PART NUMBER	QTY	PART NAME 1 2 3 4 5 6 (PRODUCT LEVEL)	SEE PAGE
	1	1	**8R-0248**	3	SHAFT-PLANETARY	
	2	1	**8R-0249**	6	WASHER-THRUST	
	3	1	**8R-2537**	1	CARRIER-PLANETARY	
	4	1	**139-3584**	1	GEAR-RING (78-TEETH)	
	5	1	**143-4916**	1	PISTON	
	6	1	**143-4918**	1	GEAR-SUN (18-TEETH)	
	7	1	**148-7841**	3	SPRING	
	8	1	**159-3589**	1	SEAL-D-RING	
	9	1	**165-6692**	1	SEAL-D-RING	
	10	1	**170-4697**	1	PLATE-REACTION	
	11	1	**232-5170**	1	DISC-FRICTION	
	12	1	**253-8920**	3	GEAR-PLANETARY (29-TEETH)	
	13	1	**115-5327**	3	DOWEL	
	14	1	**138-1645**	3	PIN-SPRING	
	15	1	**4M-1677**	3	DOWEL-REACTION	
	16	1	**8T-2925**	3	PIN-SPRING	
	17	1	**9C-6020**	3	BEARING-SLEEVE	

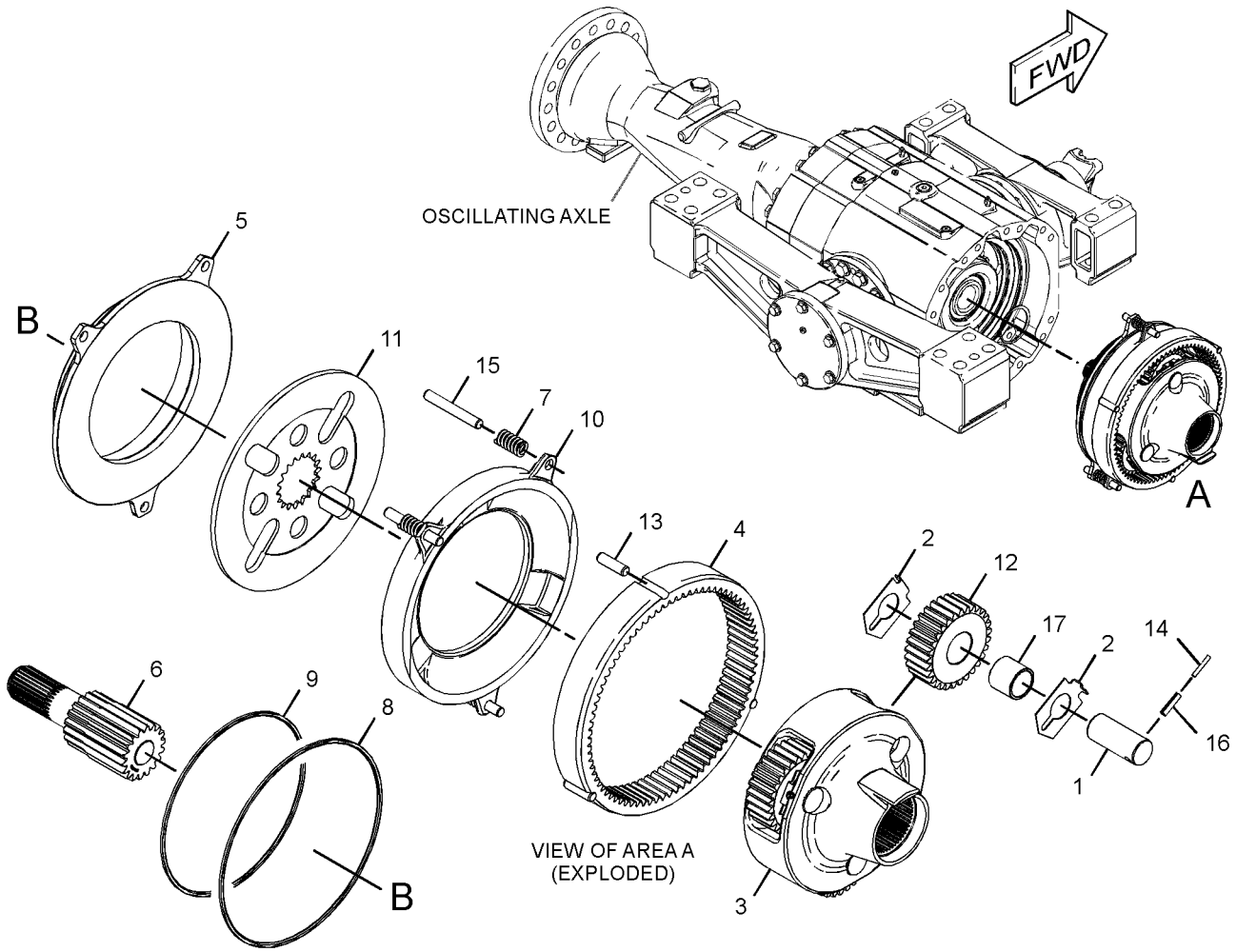

GRAPHIC #1 **<END>** g01810980

267-7414 BRAKE & PLANETARY GP—DUAL DISC

S/N: KLN1-UP
PART OF 267-7372 AXLE AR-OSCILLATING
AN ATTACHMENT

SMCS-4011, 4255 **i03454122**

NOTE	REF NO	GRAPHIC REF	PART NUMBER	QTY	PART NAME 1 2 3 4 5 6 (PRODUCT LEVEL)	SEE PAGE
	1	1	**8R-0248**	3	SHAFT-PLANETARY	
	2	1	**8R-0249**	6	WASHER-THRUST	
	3	1	**8R-2537**	1	CARRIER-PLANETARY	
	4	1	**139-3584**	1	GEAR-RING (78-TEETH)	
	5	1	**143-4916**	1	PISTON	
	6	1	**143-4918**	1	GEAR-SUN (18-TEETH)	
	7	1	**148-7841**	3	SPRING	
	8	1	**159-3589**	1	SEAL-D-RING	
	9	1	**165-6692**	1	SEAL-D-RING	
	10	1	**197-8896**	1	PLATE-REACTION	
	11	1	**197-8898**	1	PLATE-SEPARATOR	
	12	1	**253-8920**	3	GEAR-PLANETARY (29-TEETH)	
	13	1	**269-4750**	2	DISC-FRICTION	
	14	1	**115-5327**	3	DOWEL	
	15	1	**138-1645**	3	PIN-SPRING	
	16	1	**4M-1677**	6	DOWEL-REACTION	
	17	1	**8T-2925**	3	PIN-SPRING	
	18	1	**9C-6020**	3	BEARING-SLEEVE	

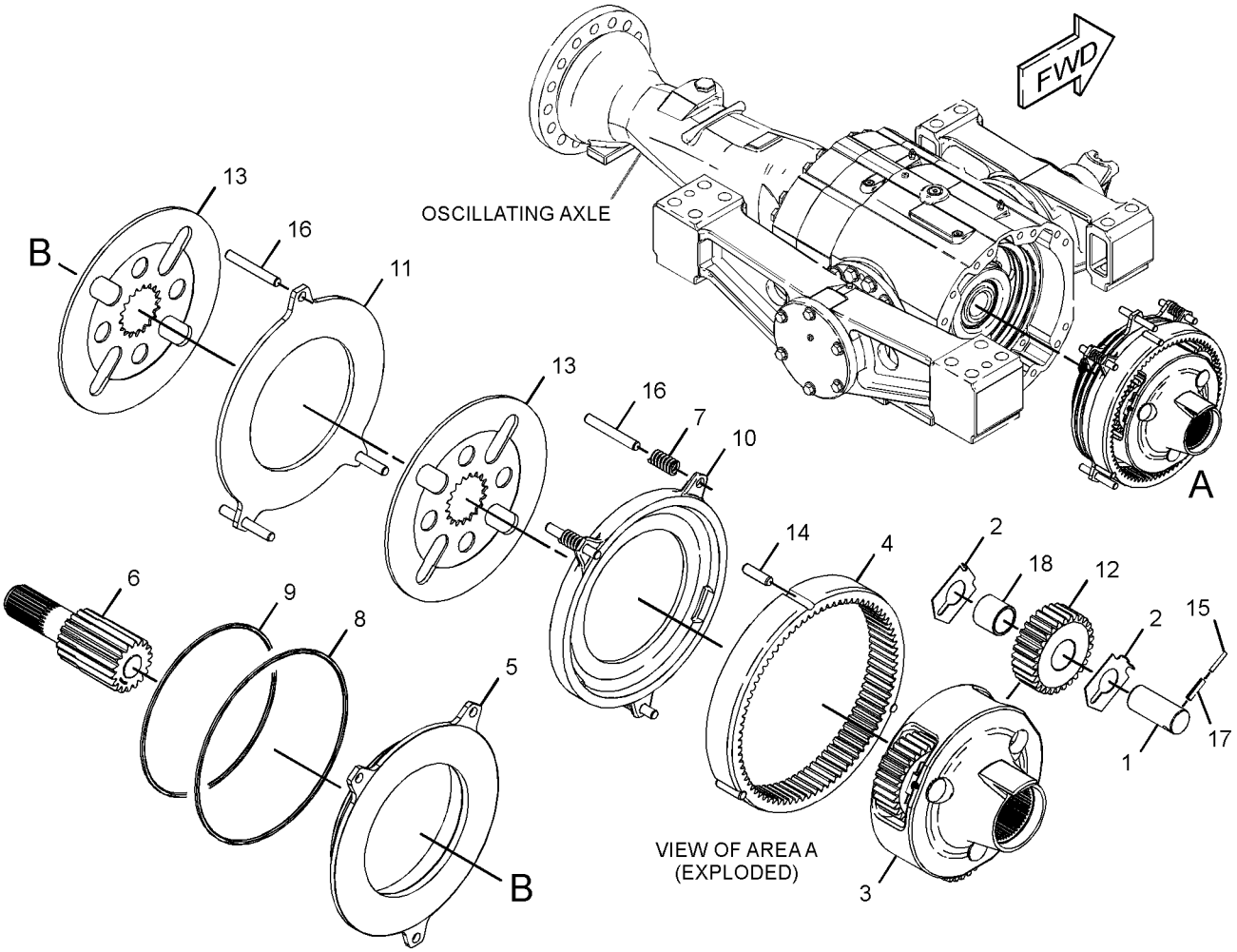

GRAPHIC #1 **<END>** g01811293

293-6018 CASE & PARTS GP-TRANSMISSION

S/N: J2Y1-UP

PART OF 290-1257 TRANSMISSION AR

SMCS-3064 **i03629342**

NOTE	PART NUMBER	QTY	PART NAME 1 2 3 4 5 6 (PRODUCT LEVEL)	SEE PAGE
Y	**177-0019**	1	COVER GP-TRANSMISSION	216
Y	**6I-9806**	1	VALVE GP-RELIEF (TORQUE CONVERTER OUTLET)	267
	2W-1141	4	BEARING-ROLLER	
M	**6A-5591**	4	BOLT (M12X1.75X25-MM)	
M	**6V-1820**	10	BOLT (M10X1.5X30-MM)	
M	**6V-5217**	3	BOLT (M8X1.25X20-MM)	
M	**6V-5230**	13	BOLT (M10X1.5X60-MM)	
M	**6V-5842**	8	BOLT (M10X1.5X40-MM)	
M	**6V-6317**	3	BOLT (M10X1.5X20-MM)	
M	**7X-0474**	2	BOLT (M10X1.5X220-MM)	
M	**8T-9085**	1	BOLT (M10X1.5X150-MM)	
	9G-5127	1	BREATHER (TRANSMISSION CASE)	
	6Y-9017	1	CAGE-BEARING	
	6V-0852	2	CAP-DUST	
	293-6015	1	CASE-TRANSMISSION	
	2N-7006	1	COVER	
	9W-1454	1	COVER	
	146-6280	1	COVER	
	1B-3978	1	CUP-BEARING (TAPERED ROLLER)	
	005-0469	2	CUP-BEARING	
	8S-9129	1	FILTER-MAGNETIC (TRANSMISSION)	
	6V-3965	2	FITTING (QUICK DISCONNECT)	
	2N-7007	1	GASKET	
	6V-1720	1	PLATE-SERIAL NUMBER (TRANSMISSION)	
	5P-7684	1	PLUG	
	8J-0426	1	PLUG	
	7T-2703	1	PLUG-DRAIN (TRANSMISSION)	
	9S-4181	2	PLUG-O-RING	
	9S-4191	2	PLUG-O-RING	
	5P-2304	1	RACE & ROLLER AS	
	6Y-0584	1	RACE-ROLLER BEARING	
	8S-9130	1	SCREEN-SUCTION	
	5P-0713	1	SEAL-LIP TYPE	
	305-2215	1	SEAL-LIP TYPE	
	2D-0598	1	SEAL-O-RING	
	3J-1907	4	SEAL-O-RING	
	4S-5879	1	SEAL-O-RING	
	5H-6005	4	SEAL-O-RING	
	5P-3863	1	SEAL-O-RING	
	6K-6307	1	SEAL-O-RING	
	7F-8268	1	SEAL-O-RING	
	7M-8485	3	SEAL-O-RING	
	8H-7521	1	SEAL-O-RING	
	8T-5452	2	SEAL-O-RING	
	9X-4609	1	SEAL-O-RING	
B	**1U-8846**		SEALANT-GASKET	
	169-8352	1	SHIELD AS	
B	**6Y-9016**	1	SHIM PACK (INCLUDES 12-SHIMS)	
B	**9W-7159**	2	SHIM PACK (INCLUDES 12-SHIMS)	
	148-1928	1	VALVE-RELIEF (TORQUE CONVERTER INLET)	
	6V-5839	12	WASHER (11X21X2.5-MM THK)	

B-USE AS REQUIRED
M-METRIC PART

293-6018 **CASE & PARTS GP-TRANSMISSION** *(contd.)* **i03629342**

Y-SEPARATE ILLUSTRATION

<END>

102-7540 CLUTCH GP–FIRST, THIRD

S/N: J2Y1-UP

PART OF 290-1257 TRANSMISSION AR

SMCS-3155 **i03537699**

NOTE	REF NO	GRAPHIC REF	PART NUMBER	QTY	PART NAME 1 2 3 4 5 6 (PRODUCT LEVEL)	SEE PAGE
	1	1	**6I-8390**	3	RING-SEAL	
	2	1	**8C-3982**	2	RING-RETAINING	
	3	1	**8C-3979**	1	RING-RETAINING	
	4	1	**9W-7765**	1	GEAR (40-TEETH)	
	5	1	**109-4728**	1	HUB AS	
		1	**2W-1141**	1	BEARING-ROLLER	
		1	**7X-2495**	1	RING-RETAINING	
	6	1	**9W-9718**	1	RETAINER-SPRING	
	7	1	**6Y-7818**	1	SPRING	
	8	1	**9W-9372**	1	RING-SEAL	
	9	1	**6Y-8157**	1	PISTON	
	10	1	**9W-9371**	1	RING-SEAL	
	11	1	**6Y-8265**	1	SEAL AS-BALANCE	
	12	1	**6Y-5027**	1	RING-RETAINING	
	13	1	**9W-6922**	1	WASHER-THRUST	
	14	1	**8E-6117**	1	GEAR (93-TEETH)	
	15	1	**9W-7770**	1	GEAR (50-TEETH)	
	16	1	**9W-6466**	1	WASHER-THRUST (50.97X69.35X3.16-MM THK)	
	17	1	**8E-6558**	1	RACE-ROLLER BEARING	
	18	1	**147-1666**	1	SHAFT AS	
	19	1	**8E-8317**	2	DISC-THRUST	
	20	1	**6V-2394**	1	RING-RETAINING	
	21	1	**8E-6120**	1	HUB AS	
		1	**8E-3416**	1	BEARING-SLEEVE	
	22	1	**6Y-8514**	1	PLATE-END	
	23	1	**9U-9797**	1	RING-RETAINING	
	24	1	**9W-6927**	2	RING-RETAINING	
	25	1	**6Y-7922**	8	DISC-FRICTION	
	26	1	**6Y-8512**	8	PLATE-CLUTCH	
	27	1	**114-1071**	1	PISTON	
	28	1	**132-9623**	1	SPRING-WAVE	
	29	1	**6Y-5631**	5	PLATE-CLUTCH	
	30	1	**6Y-7968**	5	DISC-FRICTION	
	31	1	**9U-8875**	1	RING-RETAINING	
	32	1	**8E-5707**	1	PLATE-END	
	33	1	**9W-6904**	1	RING-RETAINING	
	34	1	**8E-8313**	2	DISC-THRUST	
	35	1	**9W-9436**	1	RING-SEAL	
	36	1	**9W-9399**	1	RING-SEAL	

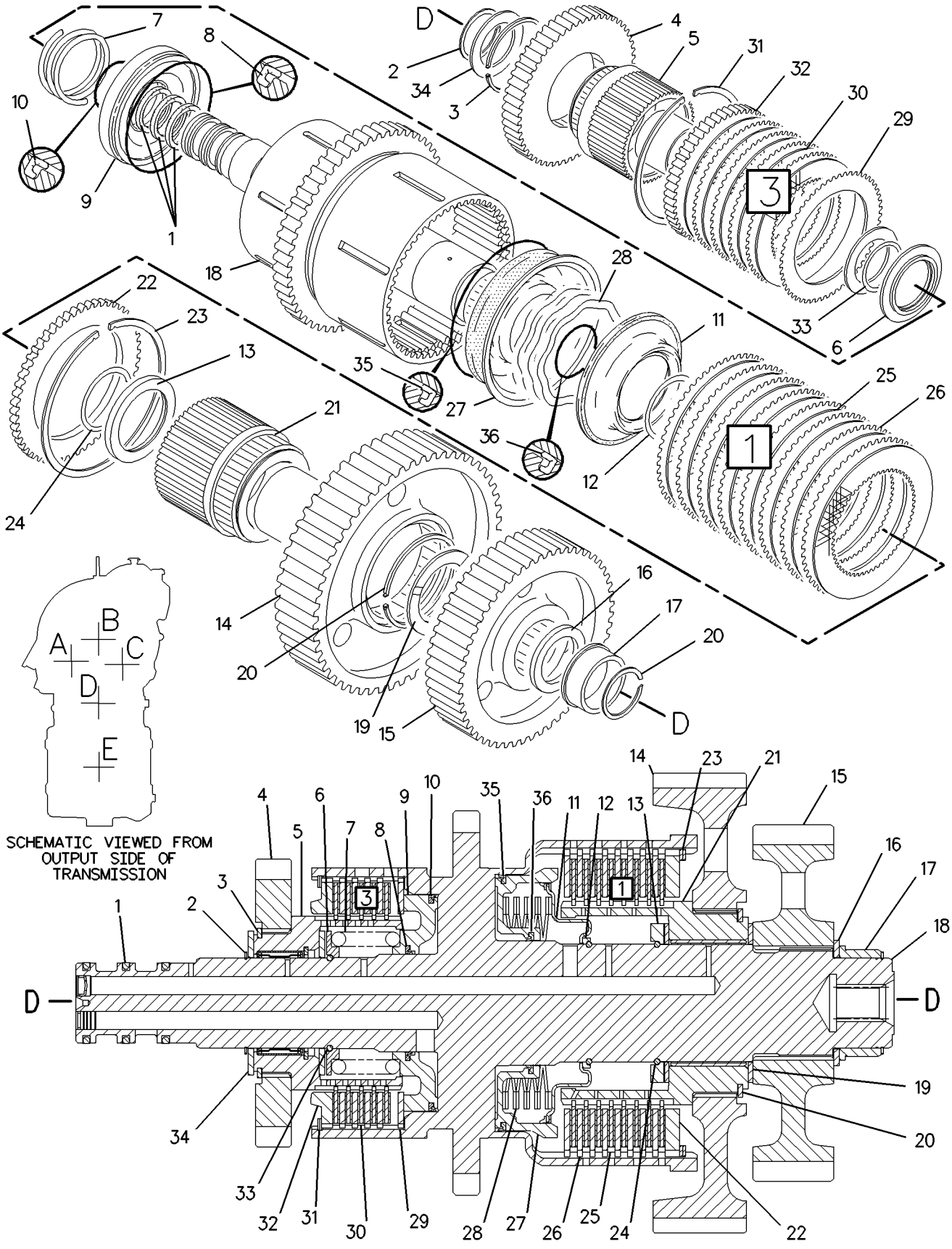

GRAPHIC #1 **<END>** g00947528

102-7548 CLUTCH GP–REVERSE, SECOND

S/N: J2Y1-UP

PART OF 290-1257 TRANSMISSION AR

SMCS-3155 **i02939934**

NOTE	REF NO	GRAPHIC REF	PART NUMBER	QTY	PART NAME 1 2 3 4 5 6 (PRODUCT LEVEL)	SEE PAGE
	1	1	**6I-8390**	3	RING-SEAL	
	2	1	**147-1657**	1	SHAFT AS	
	3	1	**8C-3979**	2	RING-RETAINING	
	4	1	**9W-7761**	1	GEAR (40-TEETH)	
	5	1	**8T-1742**	1	RING-RETAINING	
	6	1	**8E-5726**	1	PLATE-END	
	7	1	**6Y-1300**	6	DISC-FRICTION	
	8	1	**8E-5556**	6	PLATE-CLUTCH	
	9	1	**9W-9372**	2	RING-SEAL	
	10	1	**9W-9371**	1	RING-SEAL	
	11	1	**6Y-5631**	5	PLATE-CLUTCH	
	12	1	**6Y-7968**	5	DISC-FRICTION	
	13	1	**270-8670**	1	RING-RETAINING	
	14	1	**9W-7763**	1	GEAR (36-TEETH)	
	15	1	**9W-6912**	1	SPACER-SPECIAL	
	16	1	**9W-7764**	1	GEAR (28-TEETH)	
	17	1	**6Y-0928**	1	SPACER (36X50X6.5-MM THK)	
	18	1	**6Y-4890**	1	BEARING	
	19	1	**9W-9662**	1	WASHER-THRUST (50.1X80.0X3.0-MM THK)	
	20	1	**109-4728**	1	HUB AS	
		1	**2W-1141**	1	BEARING-ROLLER	
		1	**7X-2495**	1	RING-RETAINING	
	21	1	**8E-5707**	1	PLATE-END	
	22	1	**9W-6904**	2	RING-RETAINING	
	23	1	**9W-9718**	1	RETAINER-SPRING	
	24	1	**6Y-7818**	2	SPRING	
	25	1	**6Y-8157**	1	PISTON	
	26	1	**8E-5728**	1	RING-SEAL	
	27	1	**8E-5831**	1	PISTON	
	28	1	**8E-5727**	1	RETAINER-SPRING	
	29	1	**109-4727**	1	HUB AS	
		1	**2W-1141**	1	BEARING-ROLLER	
		1	**7X-2495**	1	RING-RETAINING	
	30	1	**8E-8313**	4	DISC-THRUST	
	31	1	**8C-3982**	1	RING-RETAINING	

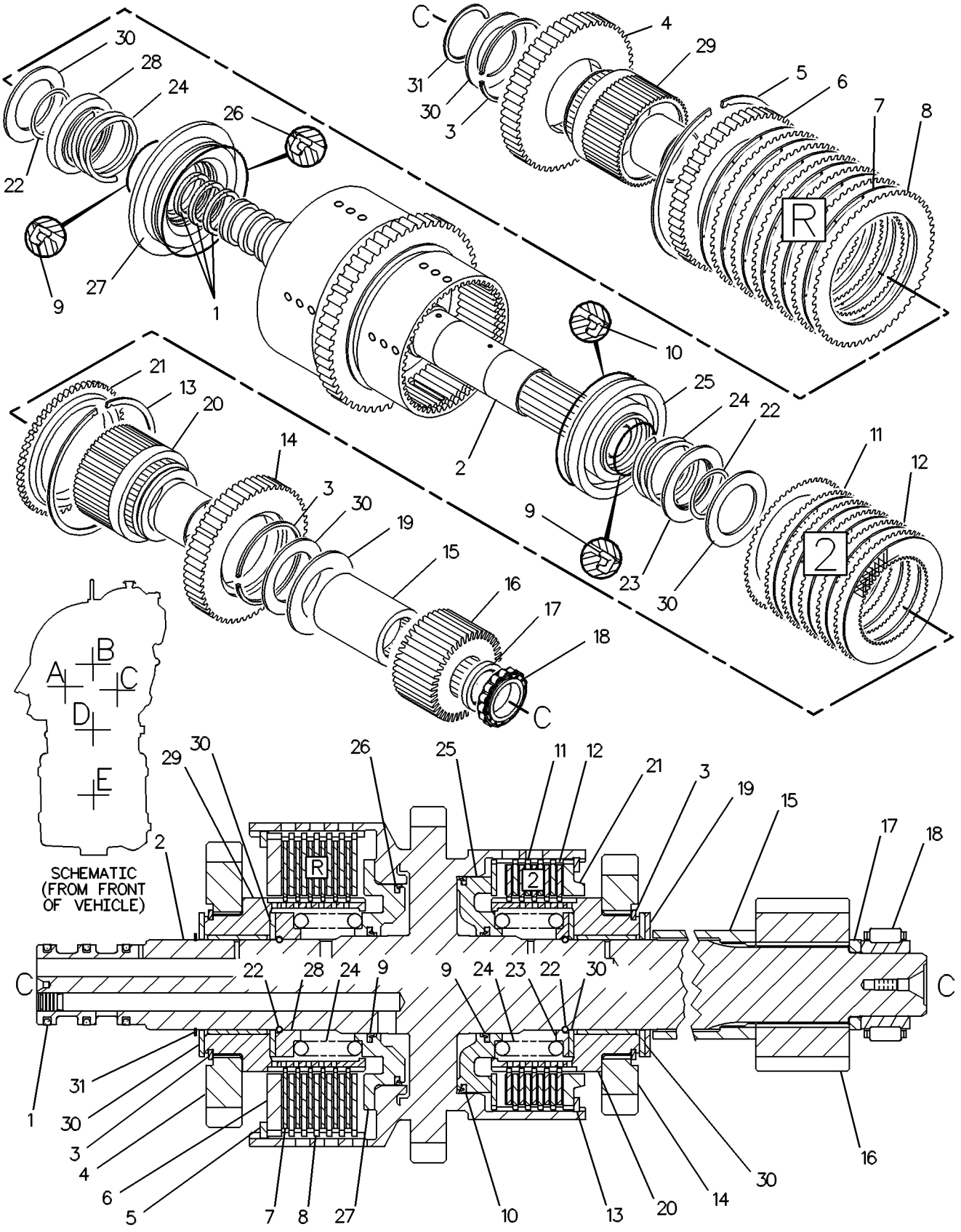

GRAPHIC #1 **<END>** g00129156

146-6283 CLUTCH GP—FORWARD HIGH, FORWARD LOW

S/N: J2Y1-UP

PART OF 290-1257 TRANSMISSION AR

SMCS-3155 **i03629348**

NOTE	REF NO	GRAPHIC REF	PART NUMBER	QTY	PART NAME 1 2 3 4 5 6 (PRODUCT LEVEL)	SEE PAGE
	1	1	**267-4734**	3	RING-SEAL	
	2	1	**147-1656**	1	SHAFT AS	
	3	1	**8C-3982**	2	RING-RETAINING	
	4	1	**9W-7761**	1	GEAR (40-TEETH)	
	5	1	**8C-4400**	1	RING-RETAINING	
	6	1	**8E-5726**	1	PLATE-END	
	7	1	**6Y-1300**	6	DISC-FRICTION	
	8	1	**8E-5556**	6	PLATE-CLUTCH	
	9	1	**9W-9372**	2	RING-SEAL	
	10	1	**9W-9371**	1	RING-SEAL	
	11	1	**6Y-5631**	4	PLATE-CLUTCH	
	12	1	**6Y-7968**	4	DISC-FRICTION	
	13	1	**9U-8875**	1	RING-RETAINING	
	14	1	**8E-5707**	1	PLATE-END	
	15	1	**8E-8313**	4	DISC-THRUST	
	16	1	**8C-3979**	1	RING-RETAINING	
	17	1	**141-9917**	1	GEAR AS (33-TEETH)	
		1	**2W-1141**	1	BEARING-ROLLER	
		1	**7X-2495**	1	RING-RETAINING	
	18	1	**9W-6904**	2	RING-RETAINING	
	19	1	**9W-9718**	1	RETAINER-SPRING	
	20	1	**6Y-7818**	2	SPRING	
	21	1	**6Y-8157**	1	PISTON	
	22	1	**8E-5728**	1	RING-SEAL	
	23	1	**8E-5831**	1	PISTON	
	24	1	**8E-5727**	1	RETAINER-SPRING	
	25	1	**109-4727**	1	HUB AS	
		1	**2W-1141**	1	BEARING-ROLLER	
		1	**7X-2495**	1	RING-RETAINING	

146-6283 **CLUTCH GP** *(contd.)* **i03629348**

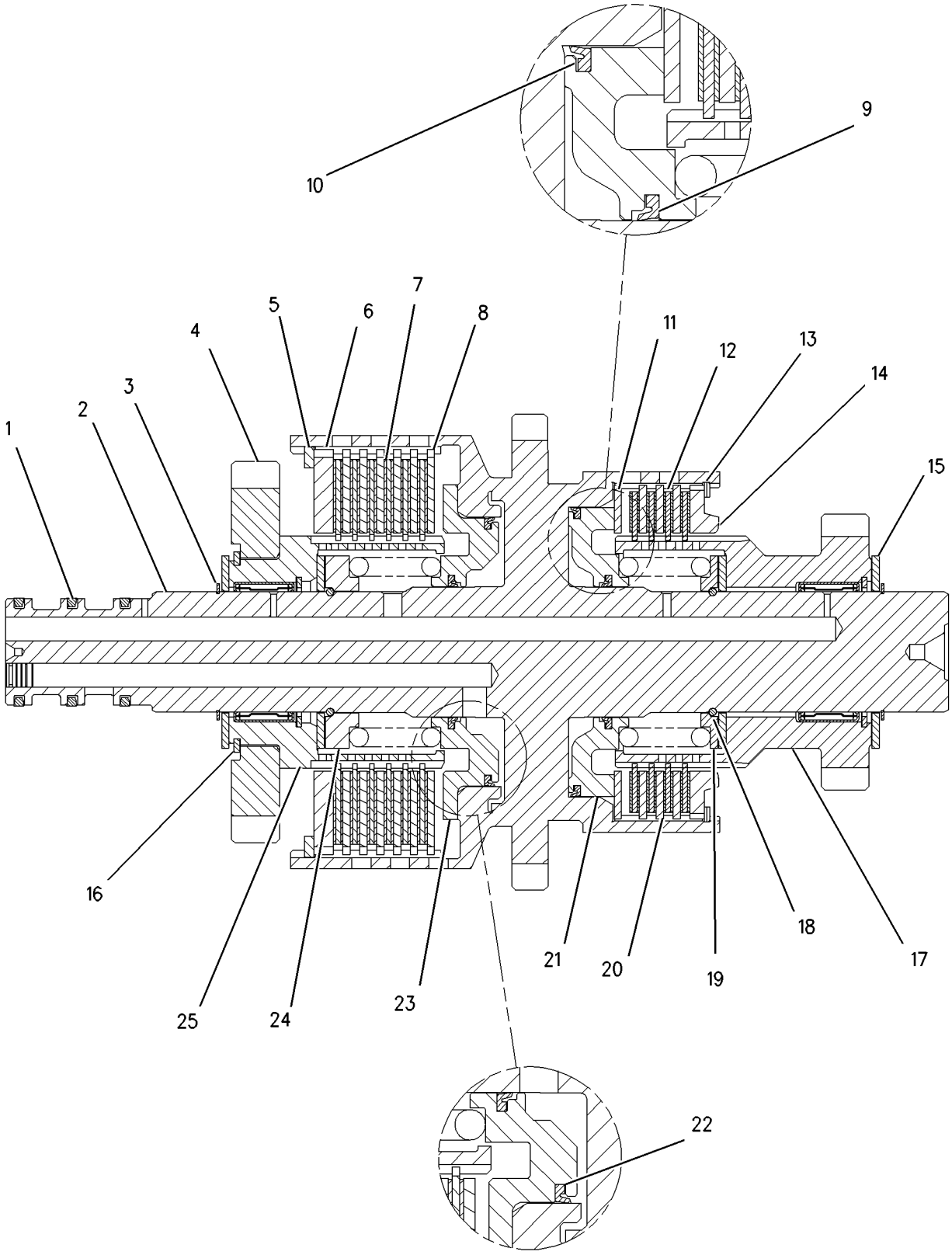

GRAPHIC #1 **<END>** g00684286

185-1028 COOLER GP-AXLE OIL

S/N: KLN1-UP

PART OF 323-1653 LINES GP-AXLE OIL COOLER

AN ATTACHMENT

SMCS-1365 **i02238861**

NOTE	REF NO	GRAPHIC REF	PART NUMBER	QTY	PART NAME 1 2 3 4 5 6 (PRODUCT LEVEL)	SEE PAGE
	1	1	**185-1039**	1	BRACKET AS	
M		1	**8T-3612**	2	NUT-WELD (M8X1.25-THD)	
	2	1	**205-3652**	1	CORE AS-AXLE OIL COOLER	
M	3	1	**8T-4189**	2	BOLT (M8X1.25X20-MM)	
	4	1	**8T-4224**	4	WASHER-HARD (8.8X16X2-MM THK)	
M	5	1	**8T-4908**	2	BOLT (M8X1.25X25-MM)	

M-METRIC PART

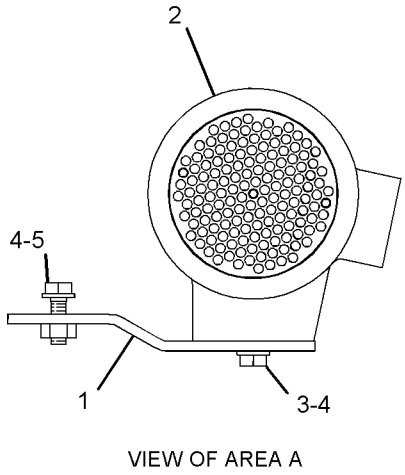

VIEW OF AREA A

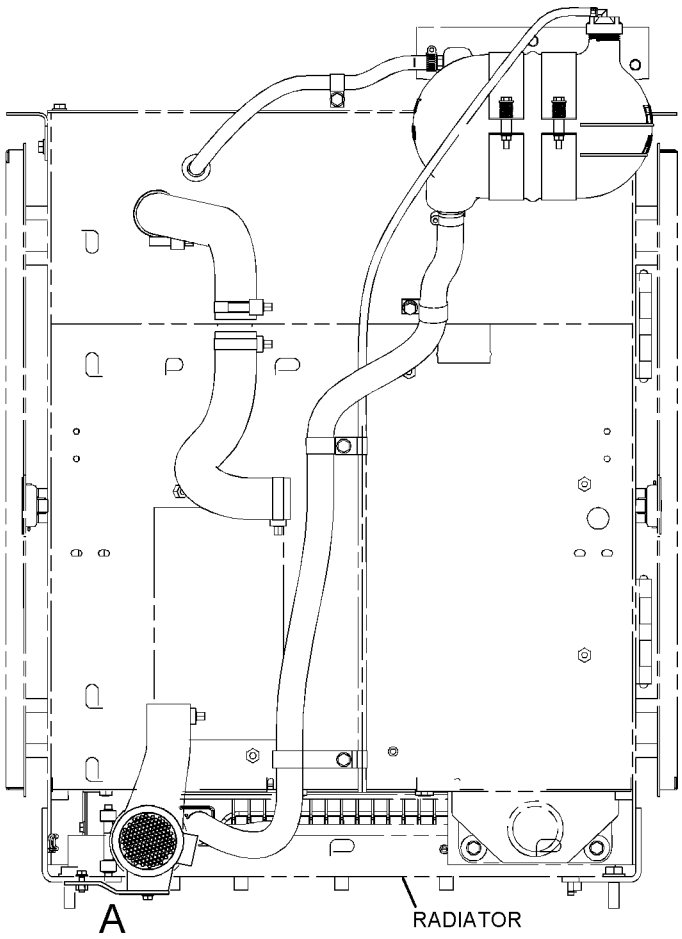

FRONT VIEW

GRAPHIC #1

<END>

g01088727

177-0019 COVER GP-TRANSMISSION

S/N: J2Y1-UP

PART OF 293-6018 CASE & PARTS GP-TRANSMISSION

SMCS-3030 **i01822568**

NOTE	REF NO	GRAPHIC REF	PART NUMBER	QTY	PART NAME 1 2 3 4 5 6 (PRODUCT LEVEL)	SEE PAGE
	1	1	**200-2045**	1	COVER	
	2	1	**7T-6496**	2	PLUG	
	3	1	**6Y-0869**	4	PLUG	
	4	1	**8T-5353**	2	DOWEL	
	5	1	**9S-8008**	4	PLUG-O-RING	
	6	1	**3D-2824**	4	SEAL-O-RING	
	7	1	**9W-6068**	1	PLUG	

177-0019 **COVER GP-TRANSMISSION** *(contd.)* **i01822568**

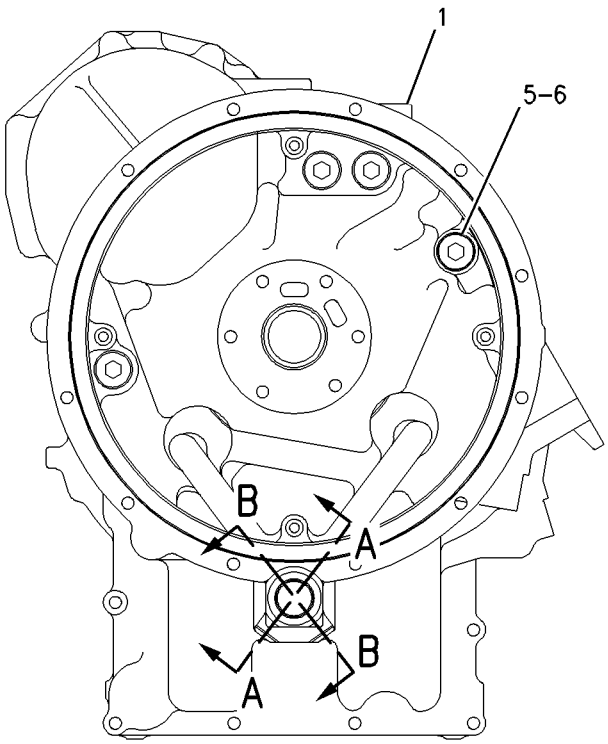

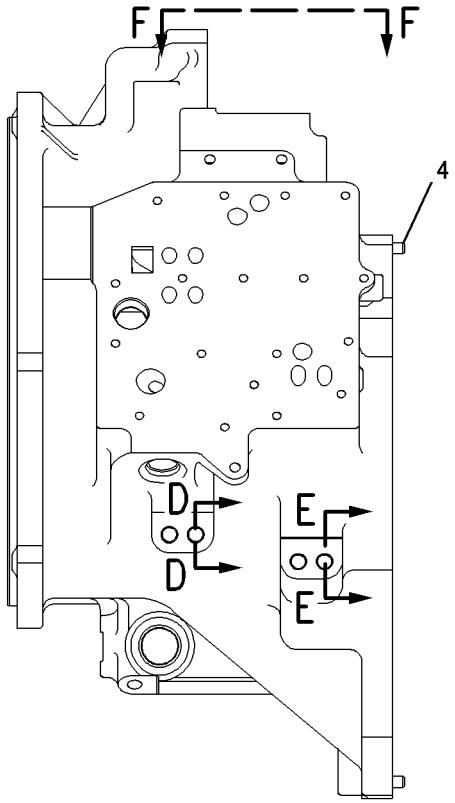

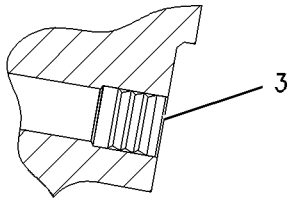

SECTION D-D

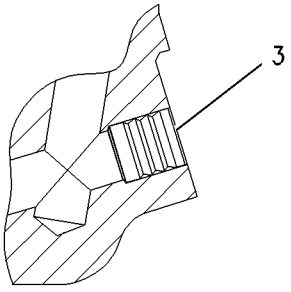

SECTION E-E

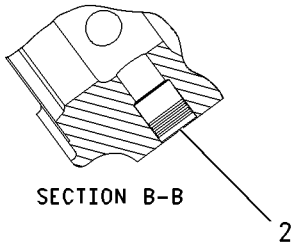

SECTION B-B

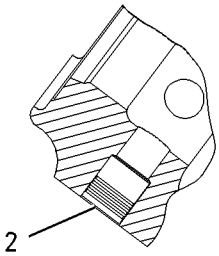

SECTION A-A

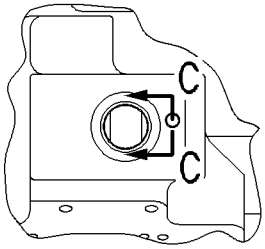

VIEW F-F

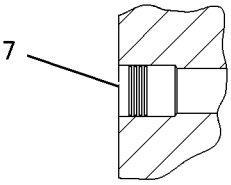

SECTION C-C

GRAPHIC #1 **<END>** g00921862

138-1612 DIFFERENTIAL GP–STANDARD

S/N: KLN1-UP

PART OF 138-1615 AXLE AR-FIXED, 267-7368 AXLE AR-OSCILLATING

ALSO AN ATTACHMENT

SMCS-3258 **i02560411**

NOTE	REF NO	GRAPHIC REF	PART NUMBER	QTY	PART NAME 1 2 3 4 5 6 (PRODUCT LEVEL)	SEE PAGE
	1	1	**8R-2538**	1	CASE-DIFFERENTIAL	
	2	1	**8R-1705**	2	GEAR-DIFFERENTIAL BEVEL (16-TEETH)	
	3	1	**9C-5040**	2	WASHER-THRUST (64.5X110.5X3.05-MM THK)	
	4	1	**8R-1703**	2	PINION-DIFFERENTIAL BEVEL (10-TEETH)	
	5	1	**6K-5614**	1	DOWEL	
	6	1	**8R-2211**	2	BEARING-SLEEVE	
	7	1	**8R-2212**	1	SPACER (29.4X34.9X82.0-MM THK)	
	8	1	**7V-8317**	1	SHAFT	
	9	1	**217-3680**	2	WASHER-THRUST	

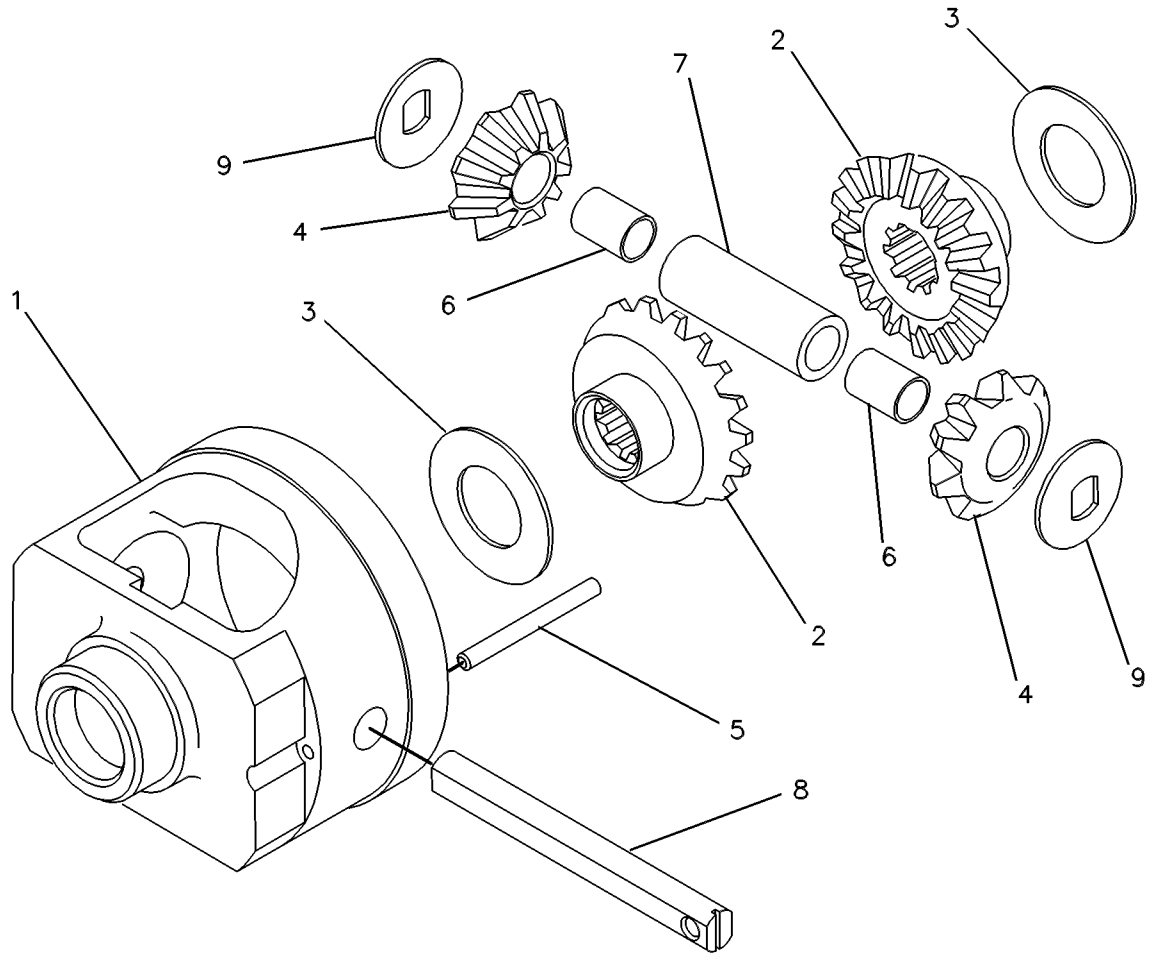

GRAPHIC #1 **<END>** g00130479

206-9670 DIFFERENTIAL GP-LIMITED SLIP

S/N: KLN1-UP
PART OF 267-7372 AXLE AR-OSCILLATING
AN ATTACHMENT

SMCS-3263 **i03571141**

NOTE	REF NO	GRAPHIC REF	PART NUMBER	QTY	PART NAME 1 2 3 4 5 6 (PRODUCT LEVEL)	SEE PAGE
	1	1	**104-6747**	2	GEAR-DIFFERENTIAL BEVEL (16-TEETH)	
	2	1	**104-6749**	4	PINION-DIFFERENTIAL BEVEL (9-TEETH)	
	3	1	**104-6750**	2	SHAFT-PINION	
	4	1	**104-6751**	2	HOUSING-ACTUATOR	
	5	1	**206-9672**	2	KIT-DISC (THIN)	
	6	1	**206-9673**	2	KIT-DISC (THICK)	
	7	1	**104-6754**	1	WASHER-THRUST (48.5X65.28X3.96-MM THK)	
	8	1	**104-6755**	1	CASE AS	
	9	1	**104-6757**	1	WASHER-THRUST (48.5X65.28X3.96-MM THK)	

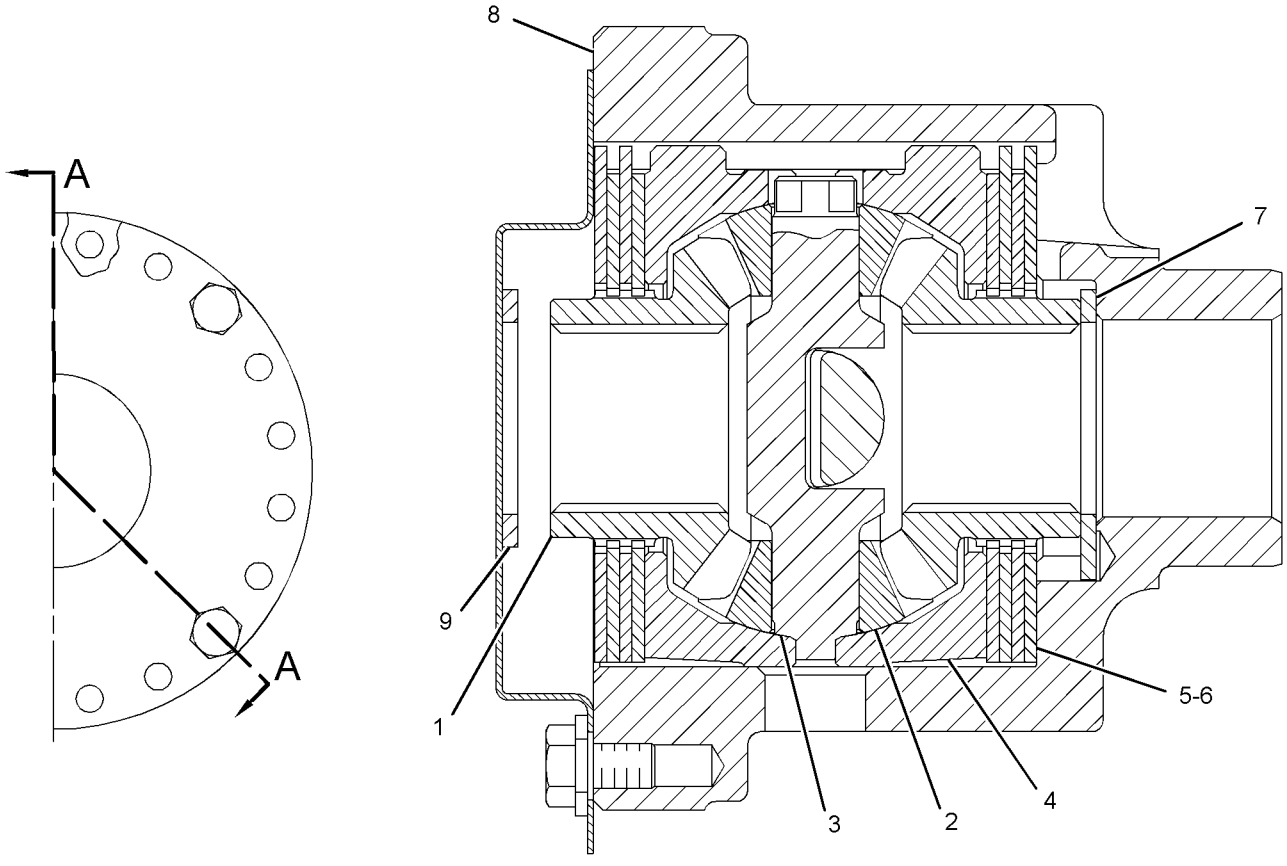

SECTION A-A

GRAPHIC #1 **<END>** g01905661

141-8615 DRIVE GP-FLEXIBLE COUPLING

S/N: J2Y1-UP

PART OF 290-1257 TRANSMISSION AR

SMCS-3252 **i03117786**

NOTE	REF NO	GRAPHIC REF	PART NUMBER	QTY	PART NAME 1 2 3 4 5 6 (PRODUCT LEVEL)	SEE PAGE
	1	1	**136-4595**	1	PLATE AS	
M	2	1	**6V-8212**	6	BOLT (M10X1.5X16-MM)	
	3	1	**6V-5839**	6	WASHER (11X21X2.5-MM THK)	
	4	1	**136-4593**	1	PLATE	

M-METRIC PART

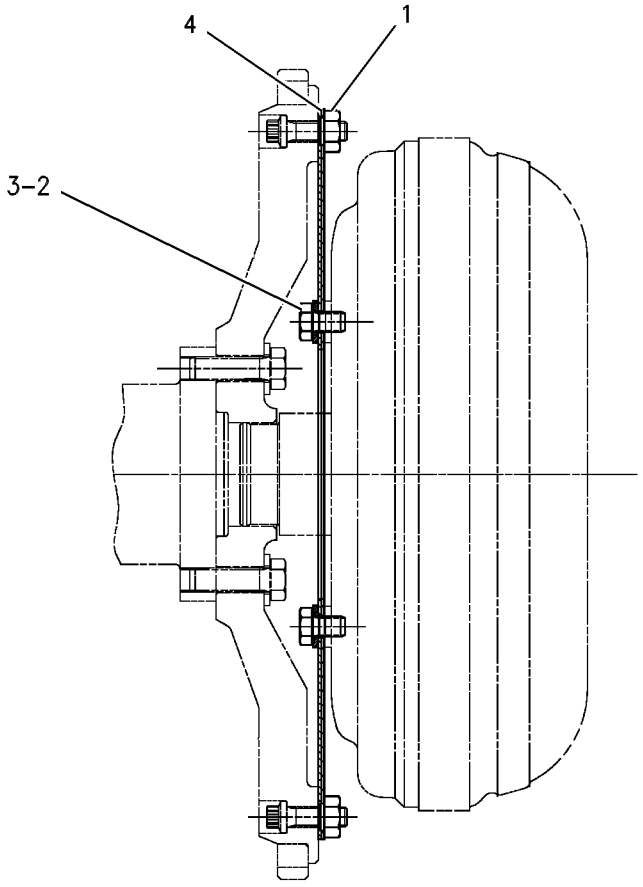

GRAPHIC #1 **<END>** g00572183

146-6274 DRIVE GP-PUMP–TRANSMISSION

S/N: J2Y1-UP

PART OF 290-1257 TRANSMISSION AR

SMCS-3108 **i03202142**

NOTE	REF NO	GRAPHIC REF	PART NUMBER	QTY	PART NAME 1 2 3 4 5 6 (PRODUCT LEVEL)	SEE PAGE
M	1	1	**6V-5683**	4	BOLT (M6X1X16-MM)	
	2	1	**2L-0043**	1	RING-RETAINING	
	3	1	**146-6275**	1	SUPPORT AS-BEARING	
	3A	1	**8E-8425**	2	BEARING-SLEEVE	
	4	1	**141-6821**	1	GEAR-DRIVE (72-TEETH)	
	5	1	**146-6277**	1	SUPPORT-STATOR	
	6	1	**5L-4753**	1	RING-RETAINING	
	7	1	**106-7799**	1	BALL BEARING	

M-METRIC PART

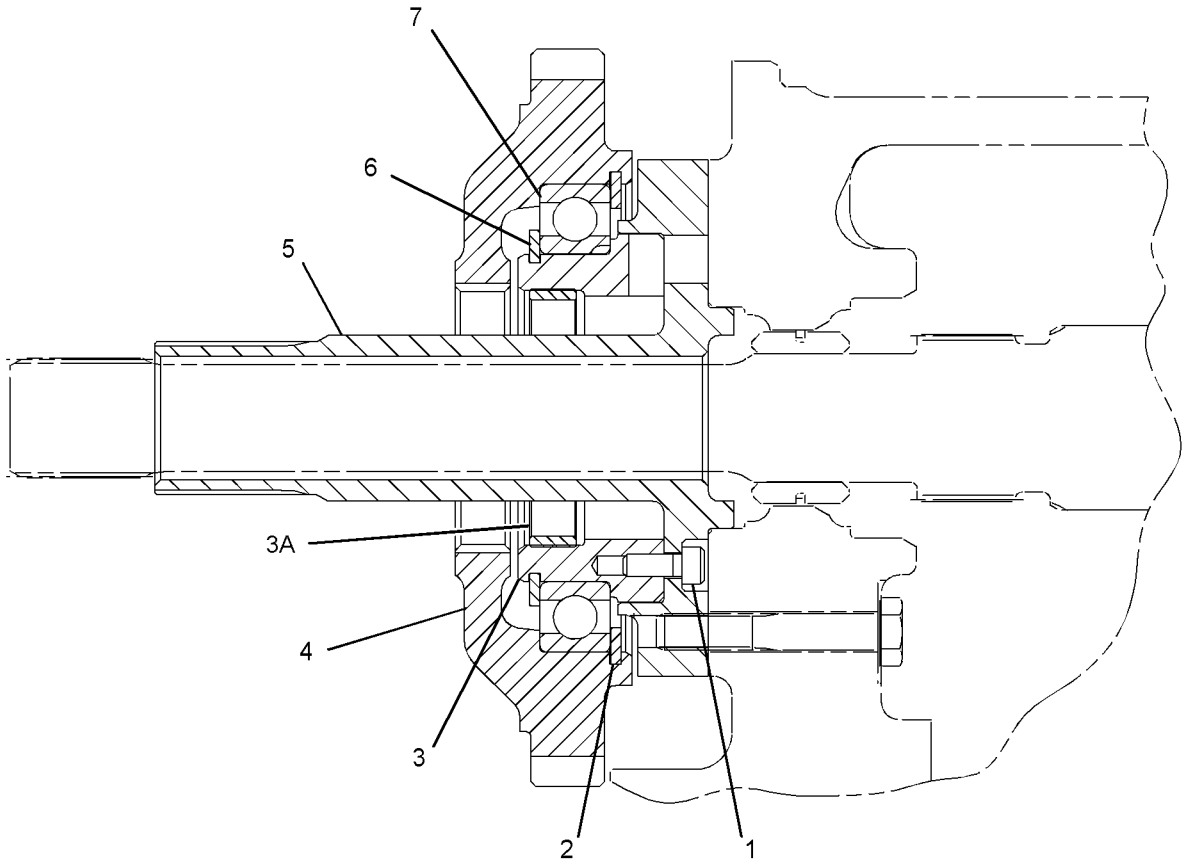

GRAPHIC #1 **<END>** g01634400

293-2837 FILLER GP-POWER TRAIN OIL

S/N: KLN1-UP

PART OF 289-8815 POWER TRAIN AR

SMCS-3005, 3081 **i03043683**

NOTE	REF NO	GRAPHIC REF	PART NUMBER	QTY	PART NAME 1 2 3 4 5 6 (PRODUCT LEVEL)	SEE PAGE
	1	1	**246-2641**	1	PADLOCK GP	
		1	**5P-8500**	1	KEY	
	2	1	**137-6727**	1	CAP-FILL (POWER TRAIN OIL)	
	3	1	**143-7899**	1	HOSE	
	4	1	**293-2838**	1	TUBE AS	
	5	1	**293-2839**	1	TUBE AS	
	6	1	**4J-0523**	1	SEAL-O-RING	
	7	1	**5P-7468**	1	CLIP (SLOT)	
	8	1	**5P-7469**	1	CLIP (TAB)	
	9	1	**6V-0545**	1	GROMMET	
	10	1	**7X-7729**	1	WASHER (11X25X3-MM THK)	
	11	1	**8T-4121**	2	WASHER-HARD (11X21X2.5-MM THK)	
M	12	1	**8T-4136**	1	BOLT (M10X1.5X25-MM)	
M	13	1	**8T-4196**	2	BOLT (M10X1.5X35-MM)	
	14	1	**8T-6703**	2	CLAMP-HOSE	

M-METRIC PART

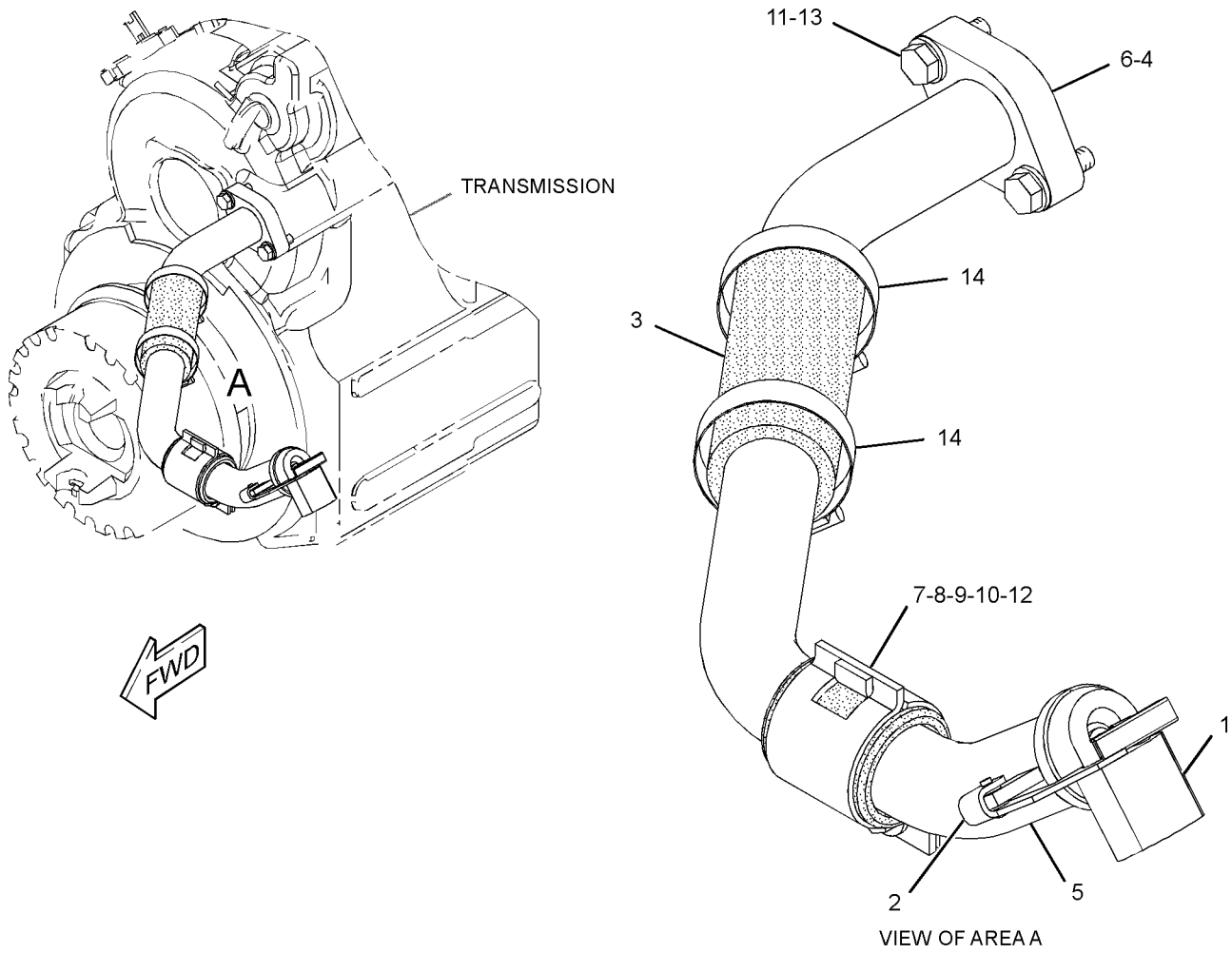

GRAPHIC #1 **<END>** g01560415

290-7186 FILTER & LINES GP-TRANSMISSION

S/N: KLN1-UP

PART OF 289-8815 POWER TRAIN AR

SMCS-3067, 3154 **i03629365**

NOTE	REF NO	GRAPHIC REF	PART NUMBER	QTY	PART NAME 1 2 3 4 5 6 (PRODUCT LEVEL)	SEE PAGE
	1	1	**6V-0852**	1	CAP-DUST (TRANSMISSION OIL)	
	2	1	**8C-3447**	1	CAP-DUST (TRANSMISSION OIL)	
I	3	1	**8Y-0711**	1	HOSE AS	
	4	1	*164-6874*	1	FITTING AS-ELBOW	
		1	**3J-1907**	1	SEAL-O-RING	
		1	**085-7356**	1	FITTING	
Y	5	1	**226-2869**	1	FILTER GP-OIL (POWER TRAIN)	225
I	6	1	**293-2467**	1	HOSE AS	
	7	1	*148-8327*	1	CONNECTOR AS	
		1	**3D-2824**	1	SEAL-O-RING	
		1	**6V-8637**	1	CONNECTOR	
		1	**6V-9746**	1	SEAL-O-RING	
	8	1	*148-8347*	2	ELBOW AS	
					(EACH INCLUDES)	
		1	**3D-2824**	1	SEAL-O-RING	
		1	**6V-9007**	1	ELBOW	
		1	**6V-9746**	1	SEAL-O-RING	
	9	1	*164-5567*	1	COUPLER AS-QUICK DISCONNECT	
		1	**214-7568**	1	SEAL-O-RING	
		1	**6V-3965**	1	FITTING (QUICK DISCONNECT)	
	10	1	**1P-4576**	2	FLANGE-HALF	
	11	1	**8D-9947**	1	CLIP	
	12	1	**4J-5267**	1	SEAL-O-RING	
	13	1	**8T-4121**	8	WASHER-HARD (11X21X2.5-MM THK)	
M	14	1	**8T-4137**	4	BOLT (M10X1.5X20-MM)	
M	15	1	**8T-4196**	4	BOLT (M10X1.5X35-MM)	
	16	1	**8T-4223**	1	WASHER-HARD (13.5X25.5X3-MM THK)	
M	17	1	**8T-6868**	1	BOLT (M12X1.75X80-MM)	
	18	1	**4W-3753**	1	SPACER (13.5X25X38.1-MM THK)	

I-REFER TO HYDRAULIC INFORMATION SYSTEM
M-METRIC PART
Y-SEPARATE ILLUSTRATION

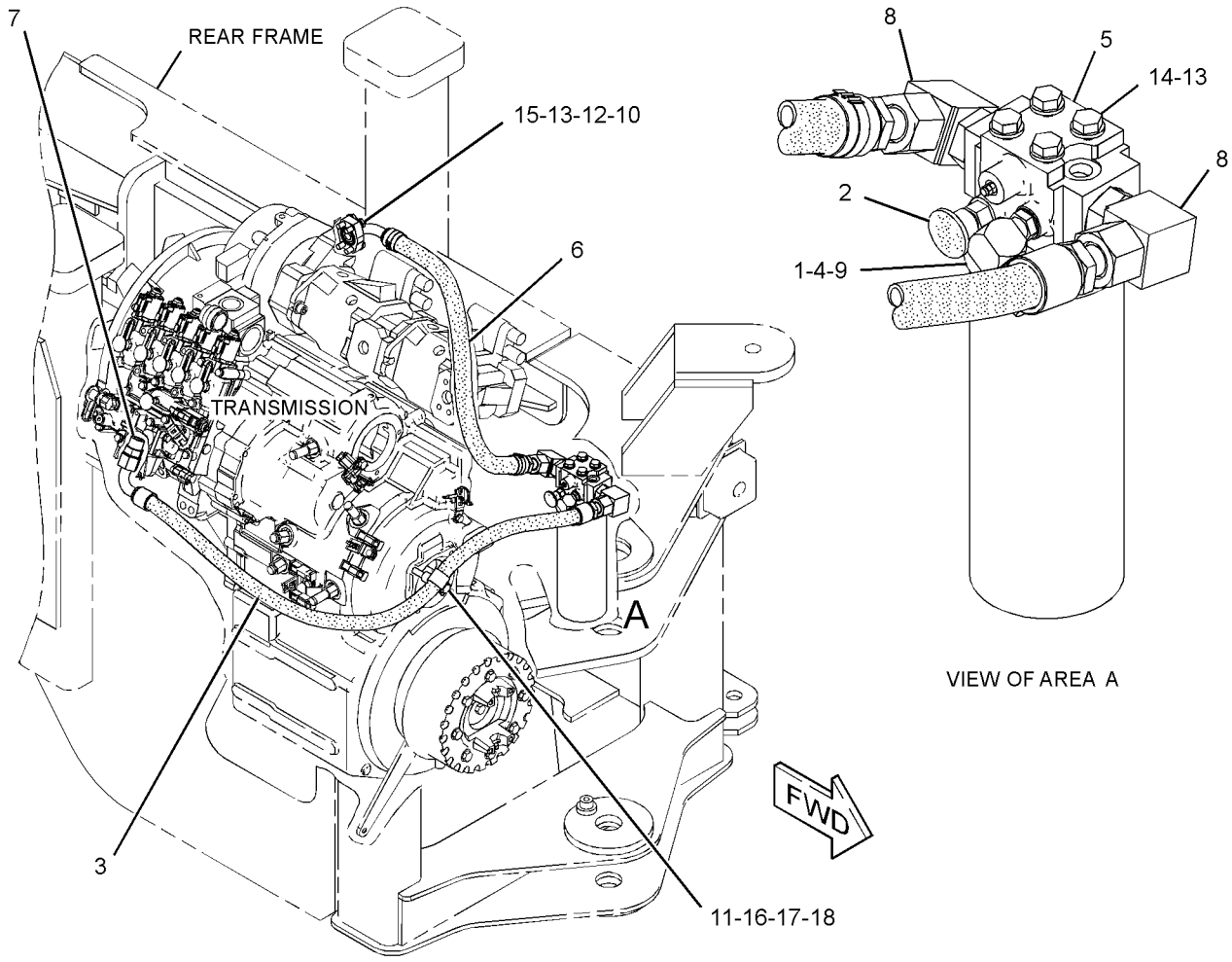

GRAPHIC #1 **<END>** g01393427

226-2869 FILTER GP-OIL

S/N: KLN1-UP

PART OF 290-7186 FILTER & LINES GP-TRANSMISSION

SMCS-3004, 3067 **i02820127**

NOTE	REF NO	GRAPHIC REF	PART NUMBER	QTY	PART NAME 1 2 3 4 5 6 (PRODUCT LEVEL)	SEE PAGE
	1	1	**1G-8878**	1	FILTER-OIL (ADVANCED EFFICIENCY) (POWER TRAIN)	
	2	1	**134-0404**	1	SWITCH AS-PRESSURE (POWER TRAIN OIL FILTER BYPASS)	
	3	1	**3J-1907**	1	SEAL-O-RING	
	4	1	**3J-7354**	1	SEAL-O-RING	
	5	1	**8C-3446**	1	VALVE-FLUID SAMPLING (POWER TRAIN OIL)	

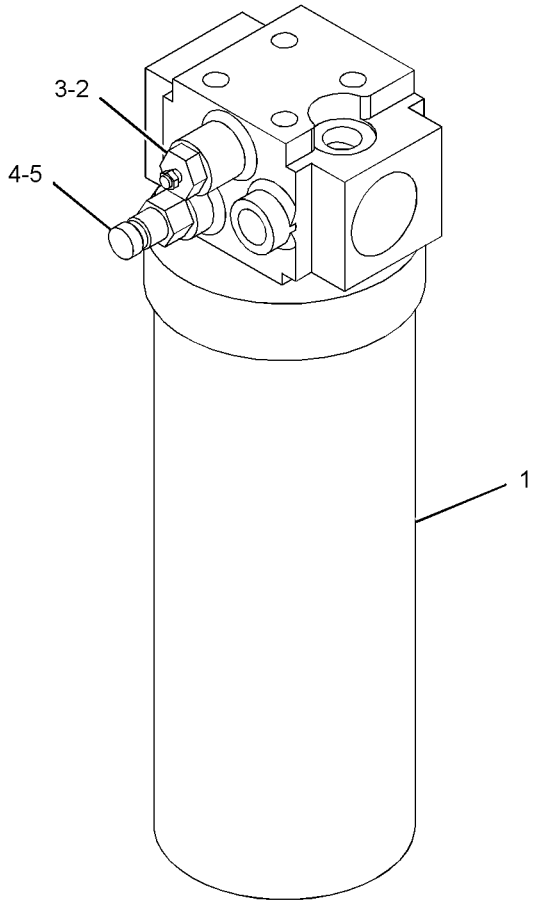

GRAPHIC #1 **<END>** g01410460

304-9464 GAUGE GP-SIGHT—POWER TRAIN OIL

S/N: KLN1-UP

PART OF 289-8815 POWER TRAIN AR

SMCS-7479 **i03039635**

NOTE	REF NO	GRAPHIC REF	PART NUMBER	QTY	PART NAME 1 2 3 4 5 6 (PRODUCT LEVEL)	SEE PAGE
	1	1	**122-8353**	2	BOLT (M12X46.5-MM)	
	2	1	**5J-2974**	4	SEAL-O-RING	

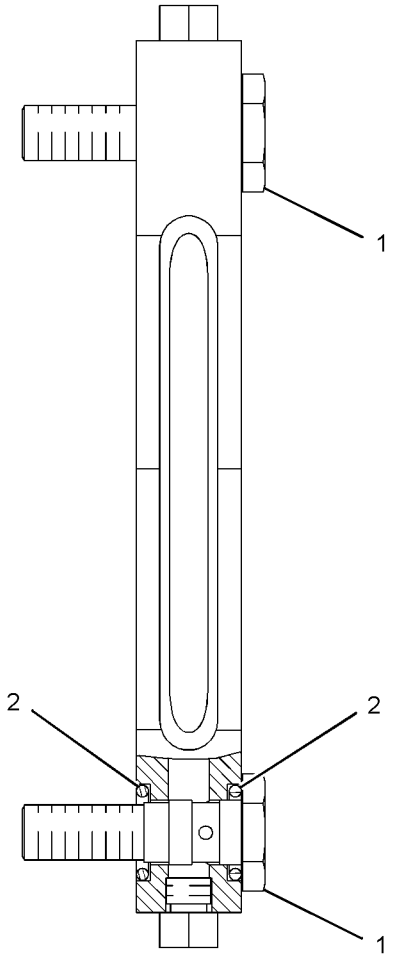

GRAPHIC #1 **<END>** g01438921

138-1611 GEAR GP-BEVEL & PINION–REAR

S/N: KLN1-UP
PART OF 267-7368 AXLE AR-OSCILLATING
AN ATTACHMENT

SMCS-3254, 3256 **i03033605**

NOTE	REF NO	GRAPHIC REF	PART NUMBER	QTY	PART NAME 1 2 3 4 5 6 (PRODUCT LEVEL)	SEE PAGE
	1	1	**9S-7949**	1	CUP-BEARING	
	2	1	**9S-7950**	1	CONE-BEARING	
	3	1	**9C-7292**	1	NUT-BEARING	
M	4	1	**6V-8210**	1	BOLT (M8X1.25X16-MM)	
	5	1	**109-5502**	1	LOCK-BEARING	
C	6	1	**306-5424**	1	BEARING AS	
	8	1	**4L-7249**	1	CUP-BEARING	
	9	1	**6V-7527**	1	CONE-BEARING	
	10	1	**221-7117**	1	YOKE AS	
		1	**153-0702**	1	GUARD	
M	11	1	**9C-5206**	1	NUT-STAKE	
	12	1	**8R-2236**	1	WASHER (48.5X82.5X4-MM THK)	
	13	1	**138-1640**	1	GEAR SET-BEVEL	
	14	1	**7D-8636**	1	CONE-BEARING	
	15	1	**7D-8637**	1	CUP-BEARING	
M	16	1	**7X-3350**	20	BOLT-LOCKING (M12X1.75X35-MM)	

C-CHANGE FROM PREVIOUS TYPE
M-METRIC PART

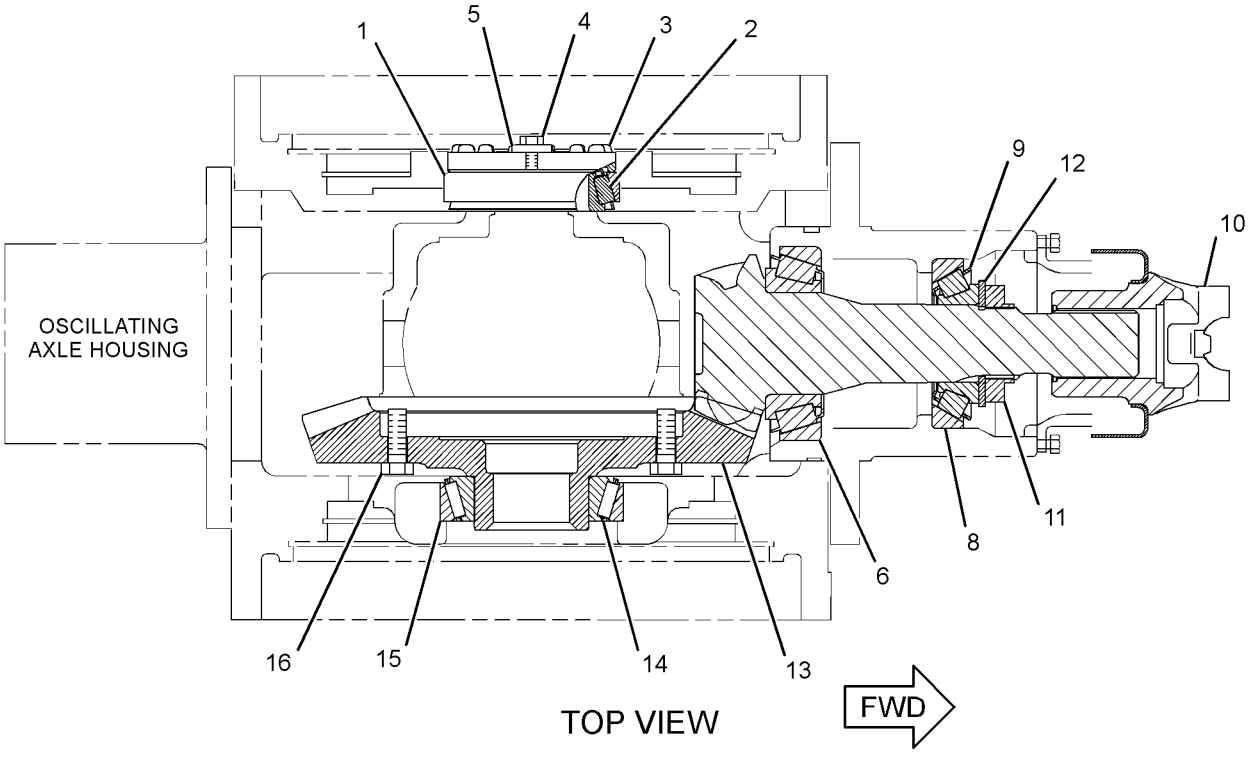

GRAPHIC #1 **<END>** g01423914

138-1617 GEAR GP-BEVEL & PINION–FRONT

S/N: KLN1-UP

PART OF 138-1615 AXLE AR-FIXED

SMCS-3254, 3256 **i03629316**

NOTE	REF NO	GRAPHIC REF	PART NUMBER	QTY	PART NAME 1 2 3 4 5 6 (PRODUCT LEVEL)	SEE PAGE
	1	1	**9S-7949**	1	CUP-BEARING	
	2	1	**9S-7950**	1	CONE-BEARING	
	3	1	**9C-7292**	1	NUT-BEARING	
M	4	1	**6V-8210**	1	BOLT (M8X1.25X16-MM)	
	5	1	**109-5502**	1	LOCK-BEARING	
	6	1	**4F-7389**	1	SEAL-O-RING	
	7	1	**306-5424**	1	BEARING AS	
	8	1	**4L-7249**	1	CUP-BEARING	
	9	1	**6V-7527**	1	CONE-BEARING	
	10	1	**138-1736**	1	YOKE AS	
		1	**153-0702**	1	GUARD	
	11	1	**138-1643**	1	GEAR SET-BEVEL (FIXED)	
	12	1	**7D-8637**	1	CUP-BEARING	
	13	1	**7D-8636**	1	CONE-BEARING	
M	14	1	**7X-3350**	20	BOLT-LOCKING (M12X1.75X35-MM)	
	15	1	**7G-5220**	1	RETAINER	
M	16	1	**6V-5696**	1	BOLT (M12X1.75X80-MM)	
B	17	1	**7I-3003**	1	SHIM PACK (INCLUDES 12-SHIMS)	

B-USE AS REQUIRED
M-METRIC PART

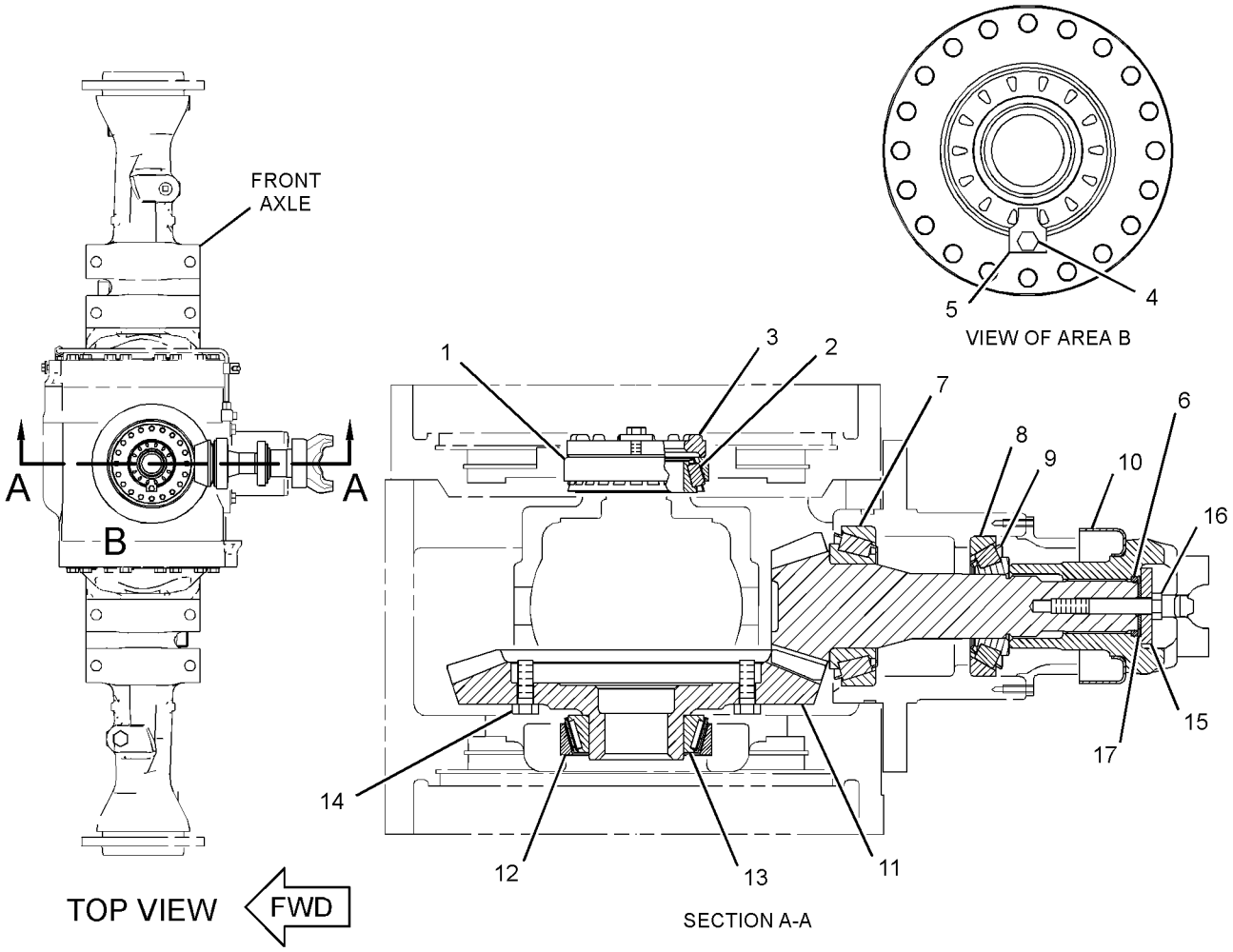

GRAPHIC #1 **<END>** g01947260

138-2777 GEAR GP-BEVEL & PINION–REAR

S/N: KLN1-UP
PART OF 267-7372 AXLE AR-OSCILLATING
AN ATTACHMENT

SMCS-3254, 3256 **i03033606**

NOTE	REF NO	GRAPHIC REF	PART NUMBER	QTY	PART NAME 1 2 3 4 5 6 (PRODUCT LEVEL)	SEE PAGE
	1	1	**4L-7249**	1	CUP-BEARING	
	2	1	**6V-7527**	1	CONE-BEARING	
	3	1	**7D-8636**	1	CONE-BEARING	
	4	1	**7D-8637**	1	CUP-BEARING	
	5	1	**8R-2236**	1	WASHER (48.5X82.5X4-MM THK)	
	6	1	**9C-7292**	1	NUT-BEARING	
	7	1	**109-5502**	1	LOCK-BEARING	
	8	1	**147-3624**	1	GEAR SET-BEVEL	
C	9	1	**306-5424**	1	BEARING AS	
	10	1	**221-7117**	1	YOKE AS	
		1	**153-0702**	1	GUARD	
M	11	1	**6V-8210**	1	BOLT (M8X1.25X16-MM)	
M	12	1	**6V-8197**	20	BOLT (M12X1.75X40-MM)	
M	13	1	**9C-5206**	1	NUT-STAKE	
	14	1	**9S-7949**	1	CUP-BEARING	
	15	1	**9S-7950**	1	CONE-BEARING	

C-CHANGE FROM PREVIOUS TYPE
M-METRIC PART

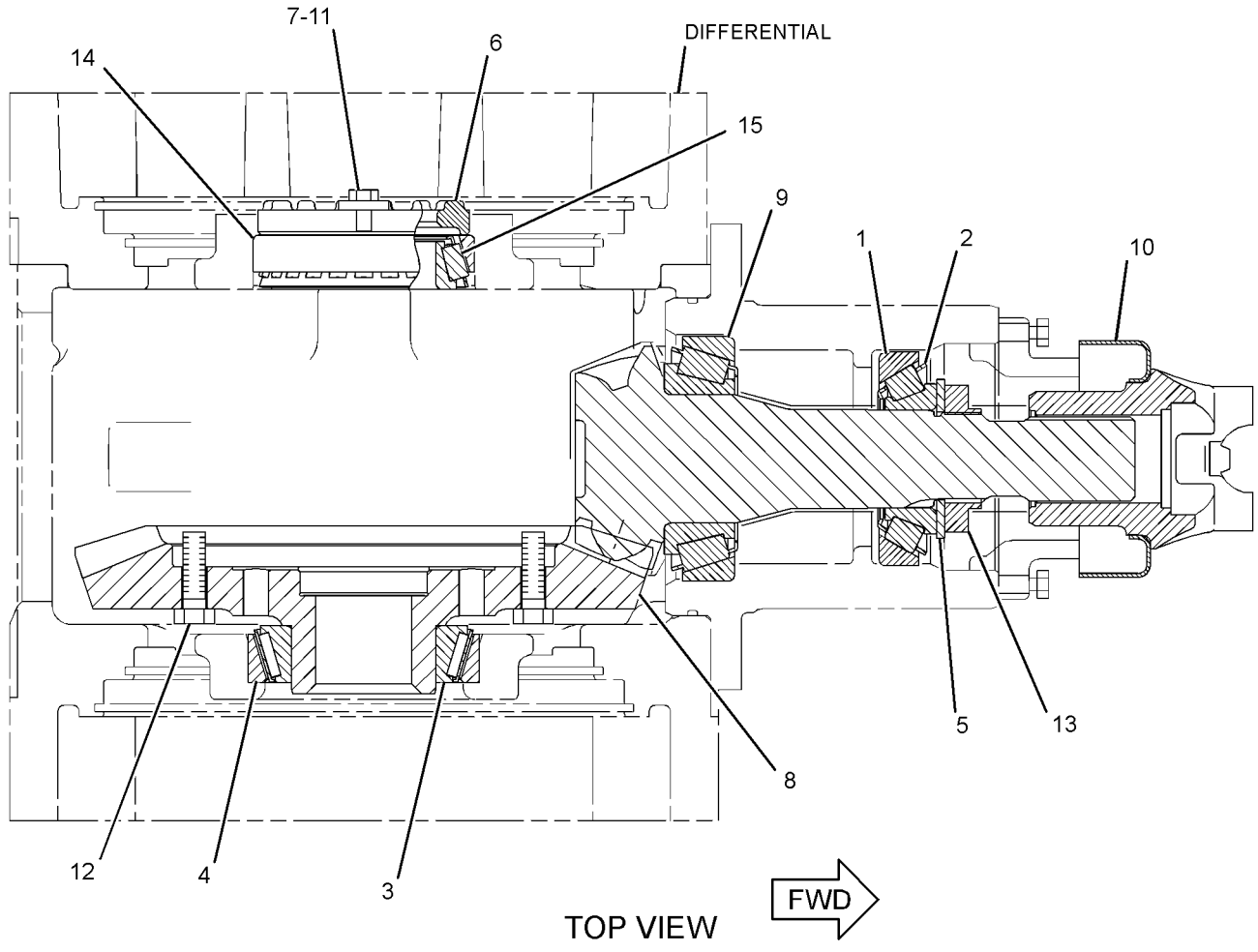

TOP VIEW

GRAPHIC #1 **<END>** g01418467

146-6282 GEAR GP-INPUT TRANSFER

S/N: J2Y1-UP

PART OF 290-1257 TRANSMISSION AR

SMCS-3159 **i03628629**

NOTE	REF NO	GRAPHIC REF	PART NUMBER	QTY	PART NAME 1 2 3 4 5 6 (PRODUCT LEVEL)	SEE PAGE
	1	1	**141-8619**	1	SHAFT-INPUT	
	2	1	**6Y-8069**	1	CARRIER-SEAL	
	3	1	**2K-5957**	1	RING-SEALING	
	4	1	**9W-7759**	1	GEAR (29-TEETH)	
	5	1	**141-6822**	1	GEAR (47-TEETH)	
	6	1	**005-0471**	2	CONE-BEARING	

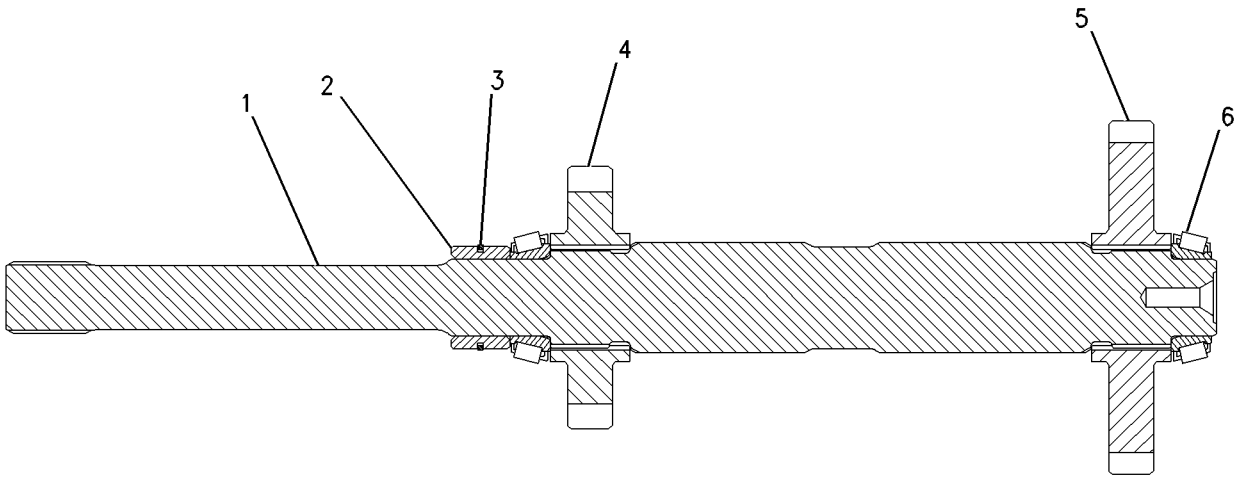

GRAPHIC #1 **<END>** g00632633

293-6017 GEAR GP-OUTPUT TRANSFER

S/N: J2Y1-UP

PART OF 290-1257 TRANSMISSION AR

SMCS-3075, 3159 **i03043503**

NOTE	PART NUMBER	QTY	PART NAME 1 2 3 4 5 6 (PRODUCT LEVEL)	SEE PAGE
Y	**283-9971**	1	BRAKE GP-PARKING	309
	123-9056	1	LEVER AS	
M	**6V-3668**	8	BOLT (M12X1.75X30-MM)	
M	**6V-5696**	2	BOLT (M12X1.75X80-MM)	
M	**6V-8675**	4	BOLT (M12X1.75X35-MM)	
	9U-9551	1	CAGE-BEARING	
	1B-3980	2	CONE-BEARING (TAPERED ROLLER)	
	1B-3978	1	CUP-BEARING (TAPERED ROLLER)	
	8V-7623	1	DRUM-BRAKE	
	9W-7771	1	GEAR (75-TEETH)	
	7G-5220	2	RETAINER	
	8T-3293	1	RING-RETAINING	
	305-2215	1	SEAL-LIP TYPE	
	4F-8824	2	SEAL-O-RING	
	5P-2861	1	SEAL-O-RING	
	116-4858	1	SHAFT	
	5P-8245	12	WASHER-HARD (13.5X25.5X3-MM THK)	
	105-4776	1	YOKE-BRAKE FLANGE	
	105-4775	1	YOKE-OUTPUT	

M-METRIC PART
Y-SEPARATE ILLUSTRATION

<END>

138-1616 HOUSING GP-FIXED AXLE—FRONT

S/N: KLN1-282

PART OF 138-1615 AXLE AR-FIXED

SMCS-3260 **i03629311**

NOTE	REF NO	GRAPHIC REF	PART NUMBER	QTY	PART NAME 1 2 3 4 5 6 (PRODUCT LEVEL)	SEE PAGE
	1	1	**138-1639**	1	HOUSING-FIXED AXLE (CENTER)	
	2	1	**9G-5311**	2	SEAL GP-DUO-CONE	
					(EACH INCLUDES)	
		1	**4K-0173**	2	RING-SEALING	
	3	1	**5P-3723**	2	CONE-BEARING	
	4	1	**6D-7690**	2	CUP-BEARING	
	5	1	**5H-3701**	2	SCREW-PURGE (7/16-20-THD)	
	6	1	**203-2776**	1	HOUSING-AXLE (INTERMEDIATE)	
	7	1	**3B-0551**	1	PLUG-PIPE	
	8	1	**8R-0512**	1	GAUGE AS-OIL LEVEL (DIPSTICK)	
M	9	1	**6C-8648**	16	BOLT (M16X2-THD)	
	10	1	**5P-8247**	32	WASHER-HARD (17X32X3.5-MM THK)	
	11	1	**5P-4484**	1	PLUG-MAGNETIC (AXLE HOUSING)	
M	12	1	**9X-6493**	16	BOLT (M16X2X180-MM)	
	13	1	**138-1635**	2	SHAFT-AXLE	
	14	1	**061-6712**	2	RING-RETAINING	
	15	1	**8R-2532**	2	NUT-BEARING (M85X2-THD)	
	16	1	**6V-0347**	2	CONE-BEARING	
	17	1	**6F-2956**	2	CUP-BEARING	
	18	1	**138-1687**	2	HOUSING-FIXED AXLE (OUTER)	
M	19	1	**6V-8675**	10	BOLT (M12X1.75X35-MM)	
	20	1	**5P-8245**	10	WASHER-HARD (13.5X25.5X3-MM THK)	
B	21	1	**8R-2526**	1	SHIM PACK (INCLUDES 8-SHIMS)	
	22	1	**8F-8733**	1	SEAL-O-RING	
M	23	1	**6V-7732**	6	BOLT (M10X1.5X25-MM)	
	24	1	**9X-2027**	6	WASHER (11X18X2-MM THK)	
	25	1	**216-0102**	1	RETAINER-SEAL	
	26	1	**133-4294**	1	SEAL-LIP TYPE	
M	27	1	**7X-2436**	2	BOLT (M12X1.75X100-MM)	
	28	1	**3E-2338**	2	PLUG-PIPE	
	29	1	**153-3013**	1	HOUSING-PINION	
	30	1	**8T-0336**	1	FITTING-PRESSURE RELIEF	
	31	1	**7M-8485**	3	SEAL-O-RING	

B-USE AS REQUIRED
M-METRIC PART

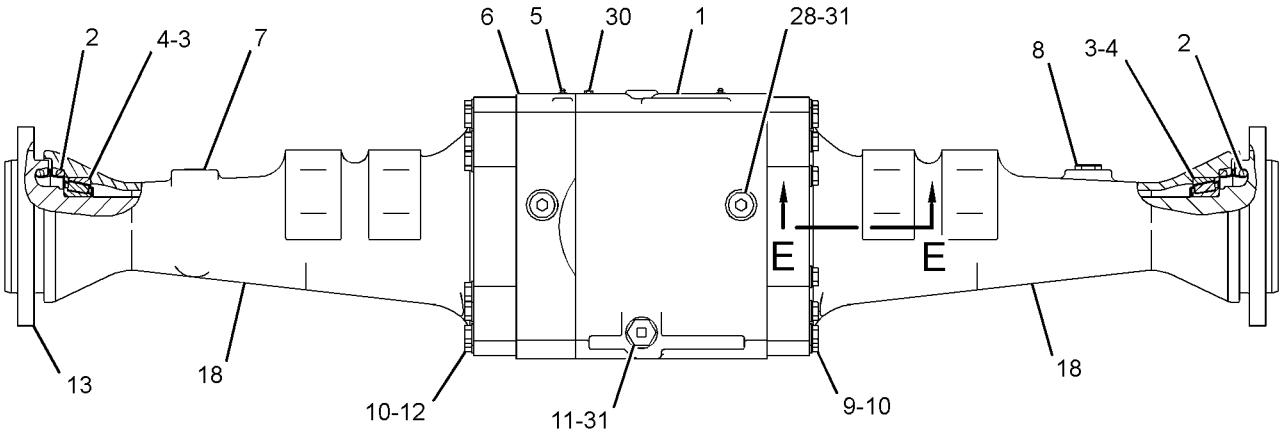

FRONT VIEW

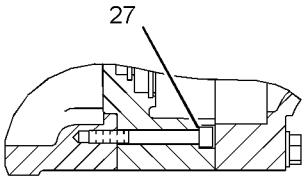

SECTION B-B

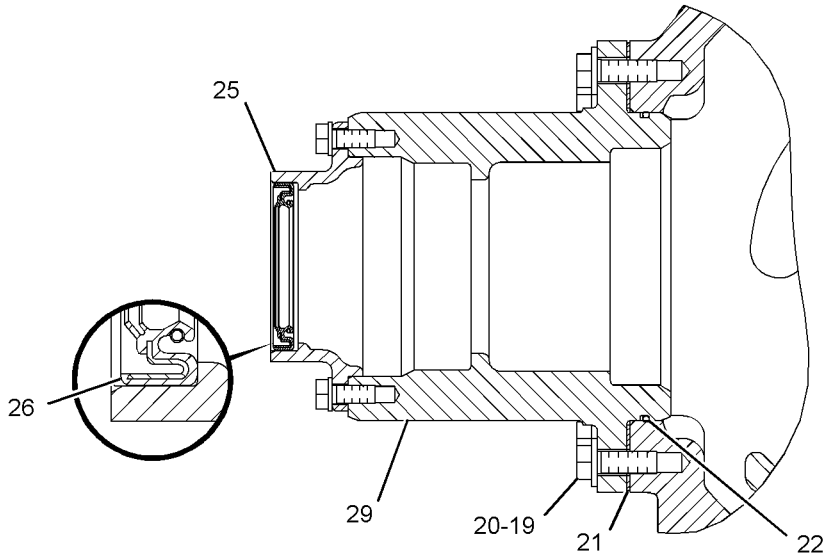

SECTION D-D

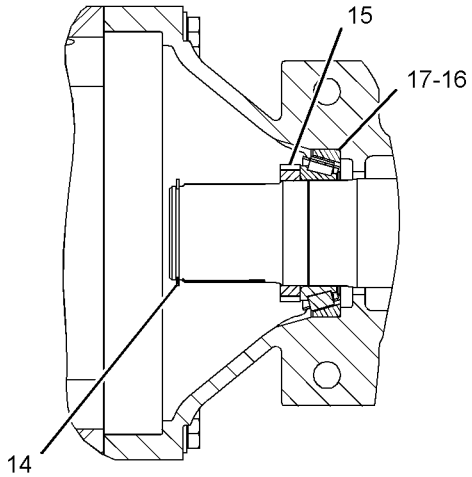

SECTION E-E

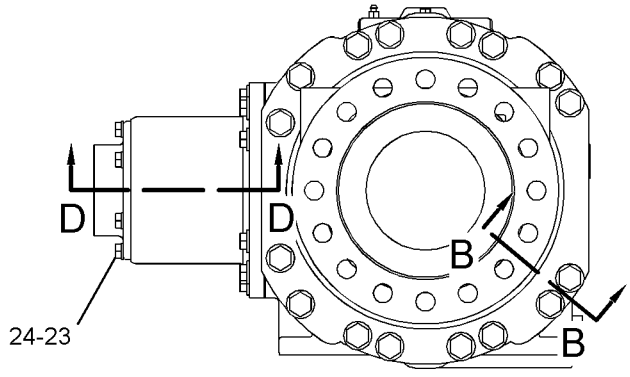

RIGHT SIDE VIEW

GRAPHIC #1 **<END>** g01948632

138-1616 HOUSING GP-FIXED AXLE—FRONT

S/N: KLN283-UP

PART OF 138-1615 AXLE AR-FIXED

SMCS-3260 **i03629312**

NOTE	REF NO	GRAPHIC REF	PART NUMBER	QTY	PART NAME 1 2 3 4 5 6 (PRODUCT LEVEL)	SEE PAGE
	1	1	**138-1639**	1	HOUSING-FIXED AXLE (CENTER)	
	2	1	**9G-5311**	2	SEAL GP-DUO-CONE	
					(EACH INCLUDES)	
		1	**4K-0173**	2	RING-SEALING	
	3	1	**5P-3723**	2	CONE-BEARING	
	4	1	**6D-7690**	2	CUP-BEARING	
	5	1	**5H-3701**	2	SCREW-PURGE (7/16-20-THD)	
	6	1	**203-2776**	1	HOUSING-AXLE (INTERMEDIATE)	
	7	1	**3B-0551**	1	PLUG-PIPE	
	8	1	**8R-0512**	1	GAUGE AS-OIL LEVEL (DIPSTICK)	
M	9	1	**6C-8648**	16	BOLT (M16X2-THD)	
	10	1	**5P-8247**	32	WASHER-HARD (17X32X3.5-MM THK)	
C	11	1	**165-4929**	1	PLUG AS	
		1	**5P-4484**	1	PLUG-MAGNETIC (AXLE HOUSING)	
		1	**7M-8485**	1	SEAL-O-RING	
M	12	1	**9X-6493**	16	BOLT (M16X2X180-MM)	
	13	1	**138-1635**	2	SHAFT-AXLE	
	14	1	**061-6712**	2	RING-RETAINING	
	15	1	**8R-2532**	2	NUT-BEARING (M85X2-THD)	
	16	1	**6V-0347**	2	CONE-BEARING	
	17	1	**6F-2956**	2	CUP-BEARING	
	18	1	**138-1687**	2	HOUSING-FIXED AXLE (OUTER)	
M	19	1	**6V-8675**	10	BOLT (M12X1.75X35-MM)	
	20	1	**5P-8245**	10	WASHER-HARD (13.5X25.5X3-MM THK)	
B	21	1	**8R-2526**	1	SHIM PACK (INCLUDES 8-SHIMS)	
	22	1	**8F-8733**	1	SEAL-O-RING	
M	23	1	**6V-7732**	6	BOLT (M10X1.5X25-MM)	
	24	1	**9X-2027**	6	WASHER (11X18X2-MM THK)	
	25	1	**216-0102**	1	RETAINER-SEAL	
	26	1	**133-4294**	1	SEAL-LIP TYPE	
M	27	1	**7X-2436**	2	BOLT (M12X1.75X100-MM)	
C	28	1	*148-8406*	2	PLUG AS	
					(EACH INCLUDES)	
		1	**7M-8485**	1	SEAL-O-RING	
		1	**9S-9334**	1	PLUG-O-RING	
	29	1	**153-3013**	1	HOUSING-PINION	
	30	1	**8T-0336**	1	FITTING-PRESSURE RELIEF	

B-USE AS REQUIRED
C-CHANGE FROM PREVIOUS TYPE
M-METRIC PART

138-1616 **HOUSING GP-FIXED AXLE** *(contd.)* **i03629312**

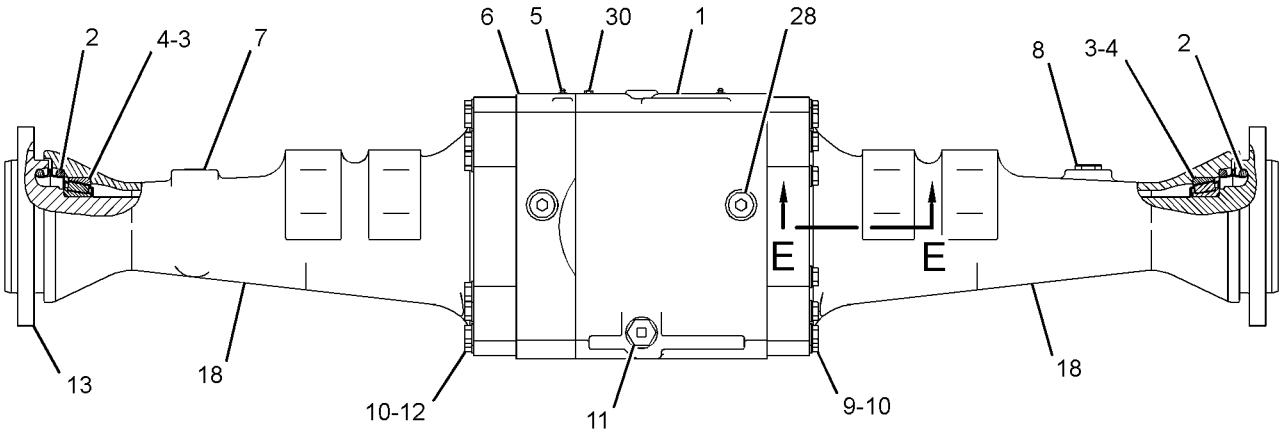

FRONT VIEW

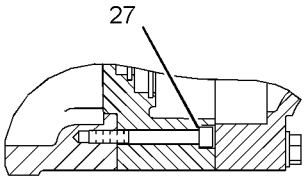

SECTION B-B

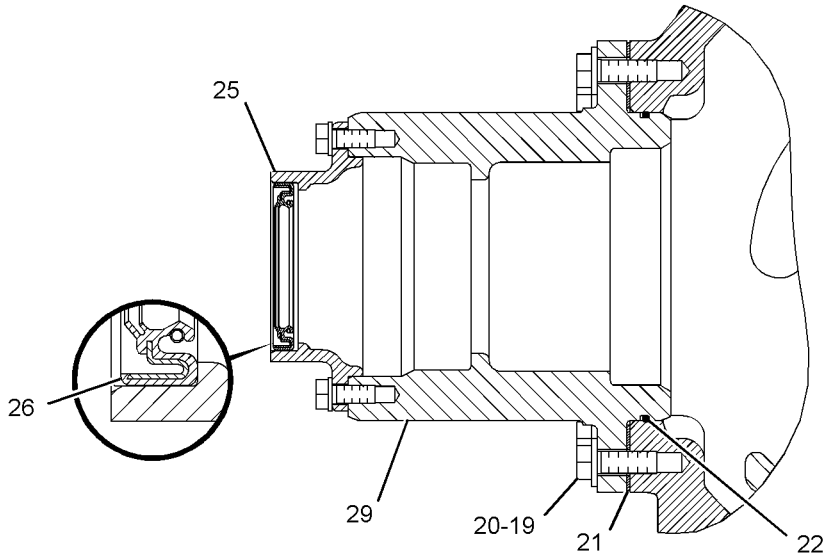

SECTION D-D

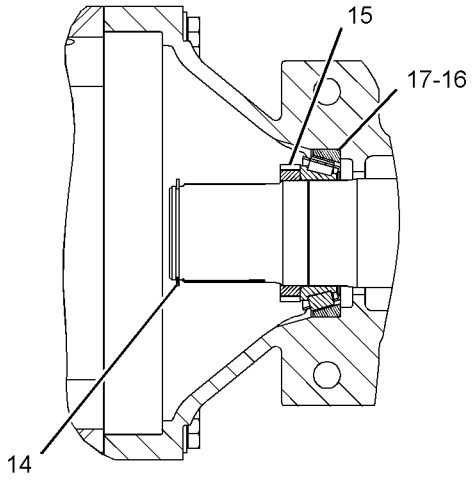

SECTION E-E

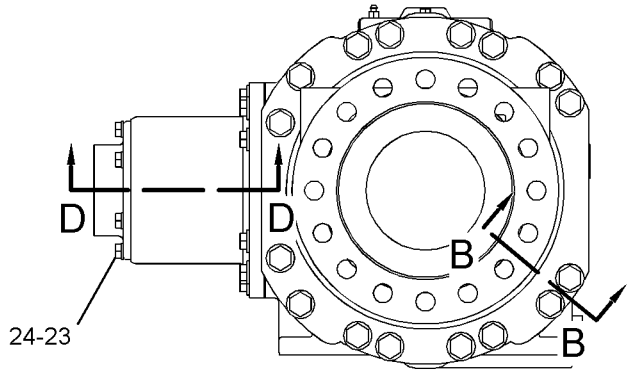

RIGHT SIDE VIEW

GRAPHIC #1 **<END>** g01949495

203-2774 HOUSING GP-OSCILLATING AXLE–REAR

S/N: KLN1-282

PART OF 267-7368, 267-7372 AXLE AR-OSCILLATING

AN ATTACHMENT

SMCS-3260, 3268 **i03629287**

NOTE	REF NO	GRAPHIC REF	PART NUMBER	QTY	PART NAME 1 2 3 4 5 6 (PRODUCT LEVEL)	SEE PAGE
	1	2	**3B-0551**	1	PLUG-PIPE	
	2	1	**5H-3701**	2	SCREW-PURGE (7/16-20-THD)	
	3	1	**141-4892**	1	SUPPORT-TRUNNION (REAR)	
	4	1	**216-0102**	1	RETAINER-SEAL	
M	5	1	**6V-7732**	6	BOLT (M10X1.5X25-MM)	
	6	1	**9X-2027**	6	WASHER (11X18X2-MM THK)	
	7	2	**203-2777**	2	HOUSING-OSCILLATING AXLE (OUTER)	
	8	1	**128-0219**	1	SUPPORT-TRUNNION (FRONT)	
M	9	1	**7X-2436**	2	BOLT (M12X1.75X100-MM)	
	10	1	**5P-4484**	1	PLUG-MAGNETIC (AXLE HOUSING)	
M	11	2	**9X-6493**	16	BOLT (M16X2X180-MM)	
	12	2	**5P-8247**	40	WASHER-HARD (17X32X3.5-MM THK)	
	13	2	**8R-2526**	1	SHIM PACK (INCLUDES 8-SHIMS)	
M	14	1	**6V-8197**	6	BOLT (M12X1.75X40-MM)	
	15	1,2	**5P-8245**	22	WASHER-HARD (13.5X25.5X3-MM THK)	
	16	2	**133-4294**	1	SEAL-LIP TYPE	
	17	2	**9H-1129**	2	SEAL-LIP TYPE	
	18	2	**5P-5291**	1	RING-RETAINING	
	19	2	**9C-5048**	1	BEARING-SLEEVE	
	20	2	**8F-8733**	1	SEAL-O-RING	
	21	2	**140-6140**	1	HOUSING-PINION	
M	22	2	**6C-8648**	16	BOLT (M16X2-THD)	
	23	2	**6D-7690**	2	CUP-BEARING	
	24	2	**5P-3723**	2	CONE-BEARING	
	25	2	**9G-5311**	2	SEAL GP-DUO-CONE	
					(EACH INCLUDES)	
		2	**4K-0173**	2	RING-SEALING	
	26	2	**138-1635**	2	SHAFT-AXLE	
M	27	2	**6V-4429**	8	BOLT (M16X2X40-MM)	
	28	2	**8R-2584**	1	TRUNNION	
	29	2	**8R-2532**	2	NUT-BEARING (M85X2-THD)	
	30	2	**061-6712**	2	RING-RETAINING	
	31	2	**1K-8061**	2	WASHER-THRUST (4.03X5.72X0.265-IN THK)	
	32	2	**203-2776**	1	HOUSING-AXLE (INTERMEDIATE)	
	33	2	**203-2775**	1	HOUSING-OSCILLATING AXLE (CENTER)	
	34	2	**8R-0512**	1	GAUGE AS-OIL LEVEL (DIPSTICK)	
	35	2	**9V-1203**	1	PLATE-THRUST	
	36	2	**9C-5049**	1	BEARING-SLEEVE	
	37	1	**6K-6075**	1	COVER	
	38	2	**5H-1039**	1	SEAL-O-RING	
	39	2	**6V-0347**	2	CONE-BEARING	
	40	1	**5M-6214**	2	PLUG-PIPE	
M	41	2	**259-1456**	6	BOLT (12X1.75X35-MM)	
	42	2	**6F-2956**	2	CUP-BEARING	
M	43	2	**6V-8675**	10	BOLT (M12X1.75X35-MM)	
	44	1	**8T-0336**	2	FITTING-PRESSURE RELIEF	
	45	1	**7M-8485**	3	SEAL-O-RING	
	46	1	**3E-2338**	2	PLUG-PIPE	
	47	1	**9S-8005**	1	PLUG-O-RING	
	48	1	**3K-0360**	1	SEAL-O-RING	

M-METRIC PART

203-2774 **HOUSING GP-OSCILLATING AXLE** *(contd.)* **i03629287**

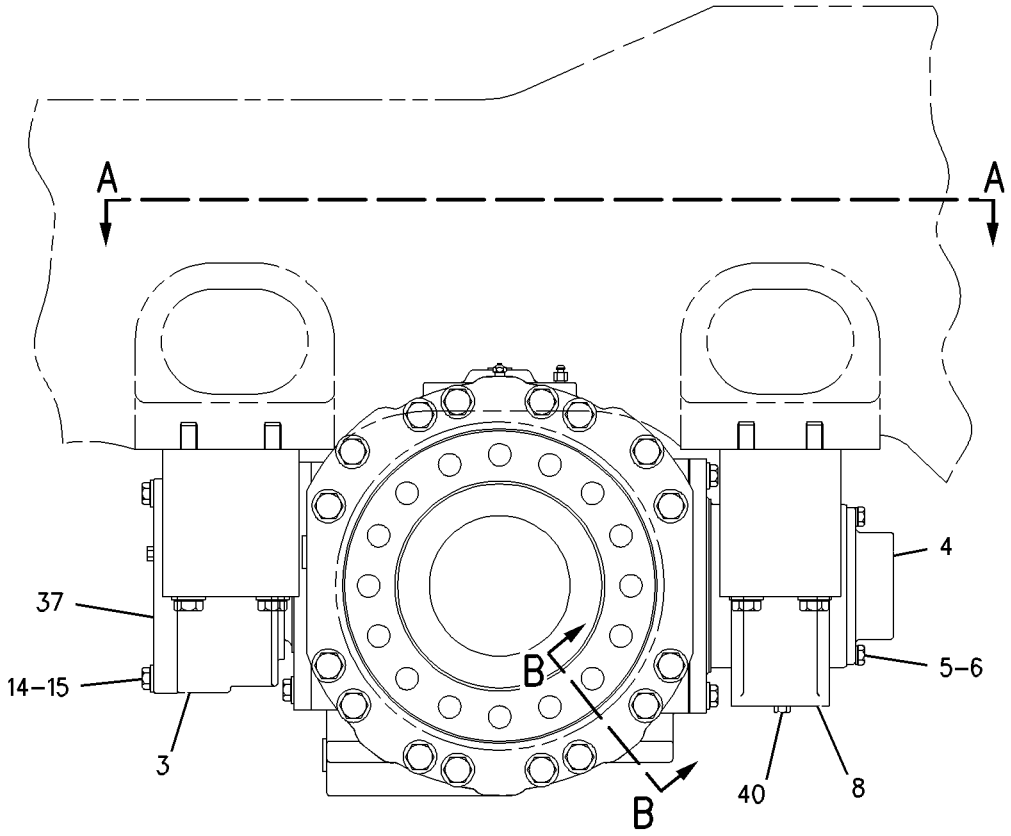

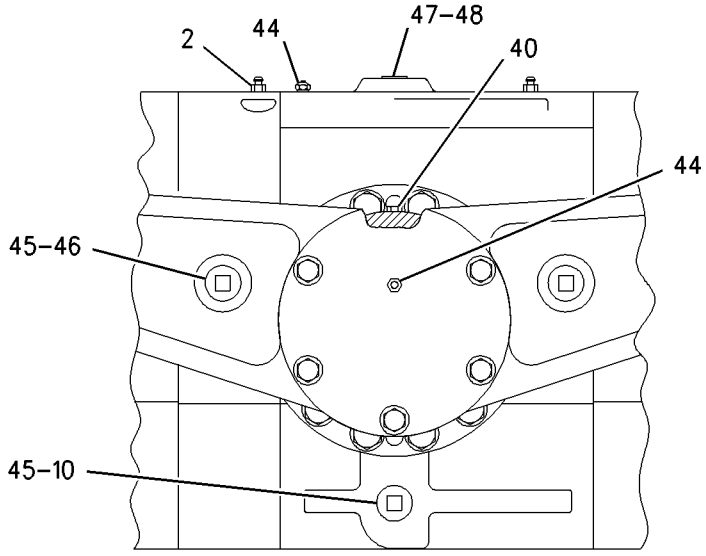

REFER TO ALL ILLUSTRATIONS
IN THIS GROUP FOR
AUXILIARY VIEWS

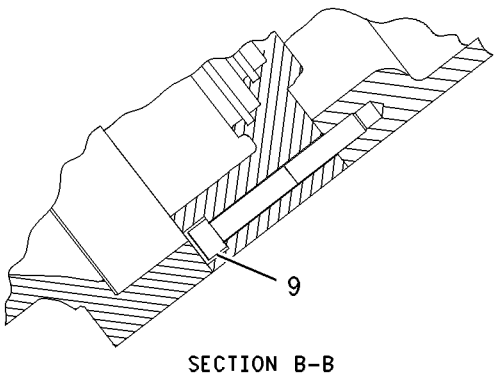

SECTION B-B

GRAPHIC #1 g00874933

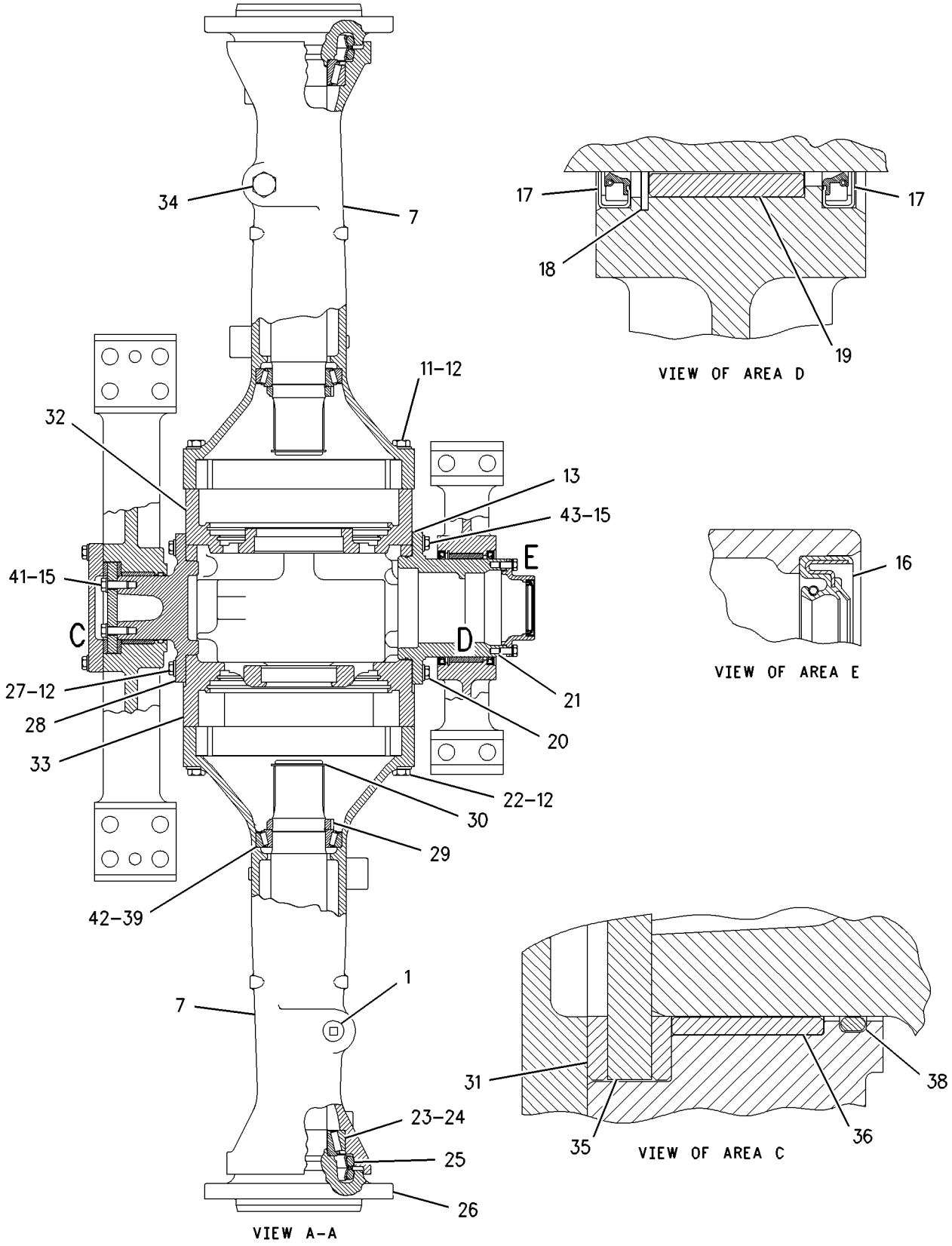

GRAPHIC #2 **<END>** g00874935

203-2774 HOUSING GP-OSCILLATING AXLE–REAR

S/N: KLN283-UP
PART OF 267-7368 AXLE AR-OSCILLATING
AN ATTACHMENT

SMCS-3260, 3268 **i03629281**

NOTE	REF NO	GRAPHIC REF	PART NUMBER	QTY	PART NAME 1 2 3 4 5 6 (PRODUCT LEVEL)	SEE PAGE
	1	2	**3B-0551**	1	PLUG-PIPE	
	2	1	**5H-3701**	2	SCREW-PURGE (7/16-20-THD)	
	3	1	**141-4892**	1	SUPPORT-TRUNNION (REAR)	
	4	1	**216-0102**	1	RETAINER-SEAL	
M	5	1	**6V-7732**	6	BOLT (M10X1.5X25-MM)	
	6	1	**9X-2027**	6	WASHER (11X18X2-MM THK)	
	7	2	**203-2777**	2	HOUSING-OSCILLATING AXLE (OUTER)	
	8	1	**128-0219**	1	SUPPORT-TRUNNION (FRONT)	
M	9	1	**7X-2436**	2	BOLT (M12X1.75X100-MM)	
C	10	1	**165-4929**	1	PLUG AS	
		1	**5P-4484**	1	PLUG-MAGNETIC (AXLE HOUSING)	
		1	**7M-8485**	1	SEAL-O-RING	
M	11	2	**9X-6493**	16	BOLT (M16X2X180-MM)	
	12	2	**5P-8247**	40	WASHER-HARD (17X32X3.5-MM THK)	
	13	2	**8R-2526**	1	SHIM PACK (INCLUDES 8-SHIMS)	
M	14	1	**6V-8197**	6	BOLT (M12X1.75X40-MM)	
	15	1,2	**5P-8245**	22	WASHER-HARD (13.5X25.5X3-MM THK)	
	16	2	**133-4294**	1	SEAL-LIP TYPE	
	17	2	**9H-1129**	2	SEAL-LIP TYPE	
	18	2	**5P-5291**	1	RING-RETAINING	
	19	2	**9C-5048**	1	BEARING-SLEEVE	
	20	2	**8F-8733**	1	SEAL-O-RING	
	21	2	**140-6140**	1	HOUSING-PINION	
M	22	2	**6C-8648**	16	BOLT (M16X2-THD)	
	23	2	**6D-7690**	2	CUP-BEARING	
	24	2	**5P-3723**	2	CONE-BEARING	
	25	2	**9G-5311**	2	SEAL GP-DUO-CONE	
					(EACH INCLUDES)	
		2	**4K-0173**	2	RING-SEALING	
	26	2	**138-1635**	2	SHAFT-AXLE	
M	27	2	**6V-4429**	8	BOLT (M16X2X40-MM)	
	28	2	**8R-2584**	1	TRUNNION	
	29	2	**8R-2532**	2	NUT-BEARING (M85X2-THD)	
	30	2	**061-6712**	2	RING-RETAINING	
	31	2	**1K-8061**	2	WASHER-THRUST (4.03X5.72X0.265-IN THK)	
	32	2	**203-2776**	1	HOUSING-AXLE (INTERMEDIATE)	
	33	2	**203-2775**	1	HOUSING-OSCILLATING AXLE (CENTER)	
	34	2	**8R-0512**	1	GAUGE AS-OIL LEVEL (DIPSTICK)	
	35	2	**9V-1203**	1	PLATE-THRUST	
	36	2	**9C-5049**	1	BEARING-SLEEVE	
	37	1	**6K-6075**	1	COVER	
	38	2	**5H-1039**	1	SEAL-O-RING	
	39	2	**6V-0347**	2	CONE-BEARING	
	40	1	**5M-6214**	2	PLUG-PIPE	
M	41	2	**259-1456**	6	BOLT (12X1.75X35-MM)	
	42	2	**6F-2956**	2	CUP-BEARING	
M	43	2	**6V-8675**	10	BOLT (M12X1.75X35-MM)	
	44	1	**8T-0336**	2	FITTING-PRESSURE RELIEF	
	45	1	**3K-0360**	1	SEAL-O-RING	
C	46	1	*148-8406*	2	PLUG AS	
					(EACH INCLUDES)	
		1	**7M-8485**	1	SEAL-O-RING	
		1	**9S-9334**	1	PLUG-O-RING	
	47	1	**9S-8005**	1	PLUG-O-RING	

C-CHANGE FROM PREVIOUS TYPE
M-METRIC PART

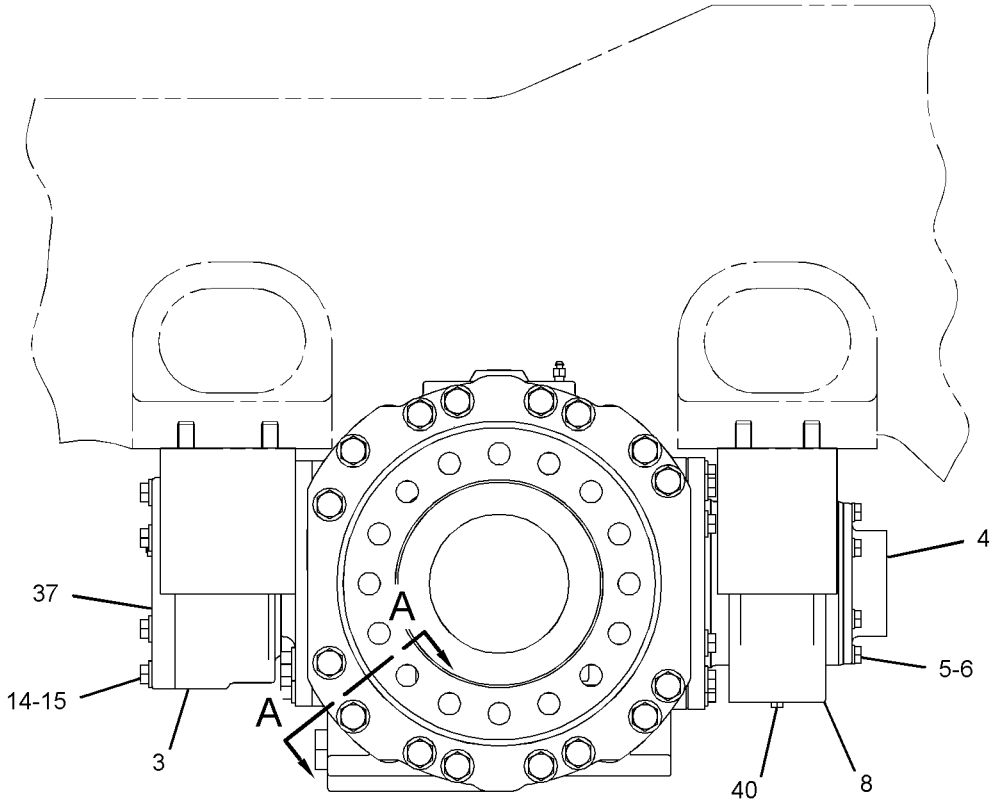

RIGHT SIDE VIEW

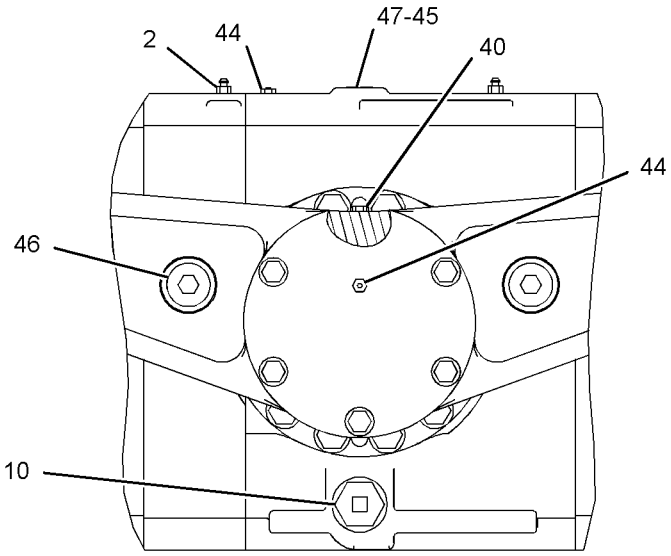

REAR VIEW

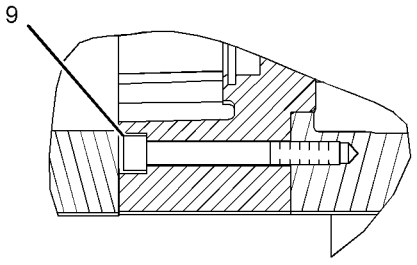

SECTION A-A

GRAPHIC #1 g01946641

203-2774 **HOUSING GP-OSCILLATING AXLE** *(contd.)* **i03629281**

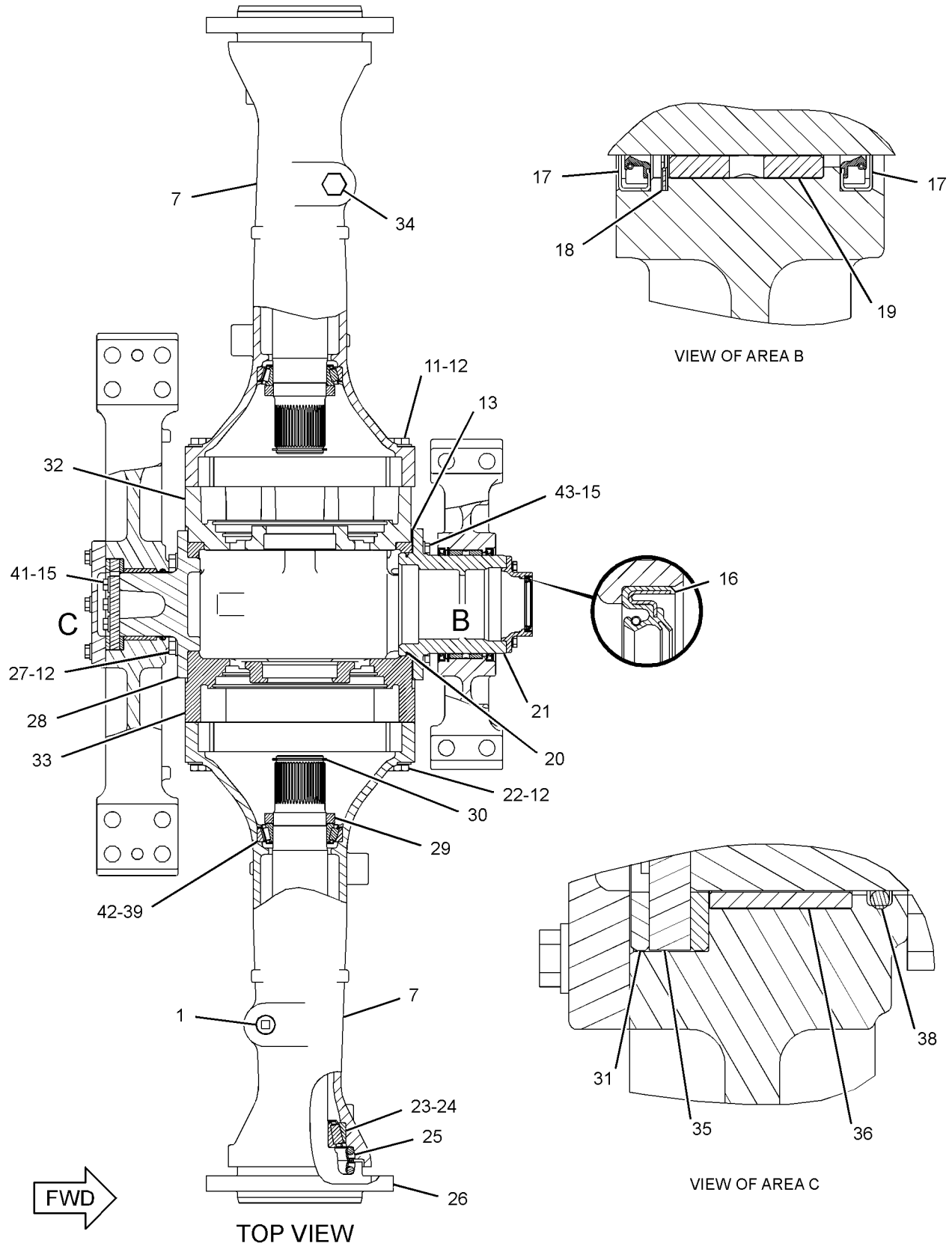

GRAPHIC #2 **<END>** g01791536

POWER TRAIN

323-1653 LINES GP-AXLE OIL COOLER

S/N: KLN1-UP
PART OF 289-8985 AXLE AR-OSCILLATING
AN ATTACHMENT

SMCS-1365, 3016 **i03113411**

NOTE	REF NO	GRAPHIC REF	PART NUMBER	QTY	PART NAME 1 2 3 4 5 6 (PRODUCT LEVEL)	SEE PAGE
	1	1	**3E-7690**	1	SWITCH AS-PRESSURE	
		1	**102-8802**	1	KIT-RECEPTACLE (2-PIN)	
					(INCLUDES RECEPTACLE AS & WEDGE)	
		1	**186-3735**	2	PIN-CONNECTOR (16-GA TO 18-GA)	
	2	2	**3S-2093**	2	STRAP-CABLE	
	3	1	**6V-0852**	1	CAP-DUST	
	4	1,2	**7K-1181**	10	STRAP-CABLE	
I	5	1	**7T-5554**	1	HOSE AS	
	6	2	**130-9984**	3	CLIP	
Y	7	2	*185-1028*	1	COOLER GP-AXLE OIL	215
	8	2	**200-6345**	1	MOUNT (DUAL SWIVEL)	
	9	2	**204-2281**	4	STRAP-TIE	
	10	1	**240-0182**	1	PLATE (RH)	
	11	1	**240-0183**	1	PLATE (LH)	
	12	2	**259-0558**	1	VALVE GP-CHECK (HYDRAULIC OIL COOLER BYPASS)	
		2	**6V-9746**	2	SEAL-O-RING	
I	13	1	**262-5666**	1	HOSE AS	
I	14	1	**262-5695**	1	HOSE AS	
	15	1	**286-8274**	1	PLATE AS	
J	16	2	**288-4166**	1	PUMP & MOTOR GP-AXLE OIL CLR	
	17	2	**290-5562**	1	MOUNT (DUAL SWIVEL)	
I	18	1	**292-9687**	1	HOSE AS	
I	19	1	**292-9688**	1	HOSE AS	
I	20	2	**292-9698**	1	HOSE AS	
	21	2	**293-6603**	1	BRACKET AS	
	22	1	**295-1466**	1	HOSE AS	
I	23	1	**295-1467**	1	HOSE AS	
I	24	1	**295-1468**	1	HOSE AS	
I	25	1	**295-4323**	1	HOSE AS	
	26	1	**299-5499**	1	SCREEN AS (IN-LINE)	
	27	2	**300-4148**	1	PLATE	
	28	2	**300-4459**	2	PLATE	
I	29	1	**300-8840**	1	HOSE AS	
	30	2	**301-0361**	1	BRACKET AS	
M		2	**8T-3490**	1	NUT-WELD (M10X1.5-THD)	
I	31	1	**323-1655**	1	HOSE AS	
I	32	2	**323-1656**	1	HOSE AS	
I	33	1	**323-1657**	1	HOSE AS	
I	34	1	**323-1658**	1	HOSE AS	
	35	2	*148-8316*	1	CONNECTOR AS	
		2	**3J-7354**	1	SEAL-O-RING	
		2	**4J-5477**	1	SEAL-O-RING	
		2	**6V-8647**	1	CONNECTOR	
	36	1	*148-8335*	1	CONNECTOR AS	
		1	**5K-9090**	1	SEAL-O-RING	
		1	**6V-8635**	1	CONNECTOR	
		1	**7M-8485**	1	SEAL-O-RING	
	37	1	*148-8346*	1	ELBOW AS	
		1	**3K-0360**	1	SEAL-O-RING	
		1	**6V-8398**	1	SEAL-O-RING	
		1	**8T-1686**	1	ELBOW	
	38	1	*148-8352*	1	ELBOW AS	
		1	**5K-9090**	1	SEAL-O-RING	
		1	**6V-9854**	1	ELBOW	
	39	2	*148-8356*	1	ELBOW AS	

323-1653 LINES GP-AXLE OIL COOLER *(contd.)* i03113411

NOTE	REF NO	GRAPHIC REF	PART NUMBER	QTY	PART NAME 1 2 3 4 5 6 (PRODUCT LEVEL)	SEE PAGE
		2	**2S-4078**	1	SEAL-O-RING	
		2	**6V-8400**	1	SEAL-O-RING	
		2	**6V-9009**	1	ELBOW	
	40	2	*148-8362*	1	ELBOW AS	
		2	**3D-2824**	1	SEAL-O-RING	
		2	**5K-9090**	1	SEAL-O-RING	
		2	**8T-6684**	1	ELBOW	
	41	2	*148-8364*	3	ELBOW AS	
					(EACH INCLUDES)	
		2	**3K-0360**	1	SEAL-O-RING	
		2	**6V-8398**	1	SEAL-O-RING	
		2	**6V-8625**	1	ELBOW	
	42	2	*148-8368*	1	ELBOW AS	
		2	**3J-1907**	1	SEAL-O-RING	
		2	**4J-5477**	1	SEAL-O-RING	
		2	**6V-8627**	1	ELBOW	
	43	2	*148-8373*	1	ELBOW AS	
		2	**6V-8400**	1	SEAL-O-RING	
		2	**7M-8485**	1	SEAL-O-RING	
		2	**8C-3364**	1	ELBOW	
	44	2	*148-8390*	1	ELBOW AS	
		2	**2M-9780**	1	SEAL-O-RING	
		2	**6V-8626**	1	ELBOW	
		2	**7J-9108**	1	SEAL-O-RING	
	45	2	*148-8392*	1	ELBOW AS	
		2	**6V-9746**	1	SEAL-O-RING	
		2	**6V-9853**	1	ELBOW	
	46	1	*148-8424*	1	TEE AS	
		1	**6V-8397**	1	SEAL-O-RING	
		1	**8T-8902**	1	TEE	
	47	1	*148-8429*	1	TEE AS	
		1	**5K-9090**	2	SEAL-O-RING	
		1	**6V-9840**	1	TEE-SWIVEL	
	48	2	*148-8444*	1	TEE AS-SWIVEL	
		2	**6V-8398**	2	SEAL-O-RING	
		2	**6V-9837**	1	TEE-SWIVEL	
	49	2	*148-8448*	1	FITTING AS	
		2	**4J-5477**	2	SEAL-O-RING	
		2	**6V-9842**	1	TEE-SWIVEL	
	50	2	*153-6230*	1	CONNECTOR AS	
		2	**2M-9780**	1	SEAL-O-RING	
		2	**5K-9090**	1	SEAL-O-RING	
		2	**8T-9386**	1	CONNECTOR	
	51	1	*153-6237*	1	ELBOW AS	
		1	**3D-2824**	1	SEAL-O-RING	
		1	**6V-9004**	1	ELBOW	
		1	**6V-9746**	1	SEAL-O-RING	
	52	1	*153-6248*	1	ADAPTER AS	
		1	**6V-8397**	1	SEAL-O-RING	
		1	**8T-6663**	1	ADAPTER-PORT	
	53	2	*155-3504*	2	ELBOW AS	
					(EACH INCLUDES)	
		2	**2M-9780**	1	SEAL-O-RING	
		2	**6V-9003**	1	ELBOW	
		2	**7J-9108**	1	SEAL-O-RING	
	54	2	**158-3049**	1	COUPLING	
	55	1	*164-5567*	1	COUPLER AS-QUICK DISCONNECT	
		1	**3J-1907**	1	SEAL-O-RING	
		1	**6V-3965**	1	FITTING (QUICK DISCONNECT)	

323-1653 LINES GP-AXLE OIL COOLER *(contd.)* i03113411

NOTE	REF NO	GRAPHIC REF	PART NUMBER	QTY	PART NAME 1 2 3 4 5 6 (PRODUCT LEVEL)	SEE PAGE
	56	2	*164-5577*	1	ELBOW AS	
		2	**5K-9090**	2	SEAL-O-RING	
		2	**6V-8984**	1	ELBOW	
	57	1	*164-5641*	1	TEE AS	
		1	**3D-2824**	1	SEAL-O-RING	
		1	**5K-9090**	1	SEAL-O-RING	
		1	**6V-9746**	1	SEAL-O-RING	
		1	**128-7625**	1	TEE	
	58	2	*164-6860*	1	TEE AS	
		2	**6V-9350**	1	TEE-BULKHEAD	
		2	**7J-9108**	3	SEAL-O-RING	
	59	1	**1M-4543**	1	GROMMET	
	60	2	**1S-0396**	1	CLIP	
	61	2	**3D-2824**	1	SEAL-O-RING	
	62	1	**3J-1907**	1	SEAL-O-RING	
	63	1,2	**4D-7388**	3	CLIP	
	64	2	**4P-8134**	1	CLIP	
	65	1	**5K-9090**	1	SEAL-O-RING	
	66	2	**5P-7468**	1	CLIP (SLOT)	
	67	2	**5P-7469**	1	CLIP (TAB)	
	68	2	**5P-8444**	1	GROMMET	
	69	2	**6V-1889**	1	CLIP	
	70	2	**6V-9170**	1	NUT-BULKHEAD (1-14-THD)	
	71	2	**6V-9172**	1	NUT (1-7/16-12-THD)	
B	72	1	**6V-9832**	1	CAP AS	
	73	1	**6V-9833**	1	CAP AS	
	74	1	**7X-0515**	4	WASHER-HARD (17X35X5-MM THK)	
M	75	1	**7X-2556**	2	BOLT (M16X2X100-MM)	
	76	2	**7X-7729**	4	WASHER (11X25X3-MM THK)	
M	77	1	**7Y-5227**	2	BOLT (M16X2X190-MM)	
	78	2	**8C-3174**	1	GROMMET	
	79	2	**8M-2770**	2	CLIP	
	80	1,2	**8M-2773**	2	CLIP	
	81	1	**8S-0948**	1	CLIP	
	82	1,2	**8T-4121**	20	WASHER-HARD (11X21X2.5-MM THK)	
M	83	1,2	**8T-4133**	3	NUT (M10X1.5-THD)	
M	84	1,2	**8T-4136**	8	BOLT (M10X1.5X25-MM)	
M	85	2	**8T-4137**	5	BOLT (M10X1.5X20-MM)	
M	86	2	**8T-4186**	1	BOLT (M10X1.5X40-MM)	
M	87	2	**8T-4195**	2	BOLT (M10X1.5X30-MM)	
M	88	1,2	**8T-4196**	4	BOLT (M10X1.5X35-MM)	
	89	1	**8T-4223**	4	WASHER-HARD (13.5X25.5X3-MM THK)	
M	90	1	**8T-4956**	4	BOLT (M12X1.75X35-MM)	
	91	2	**9C-5344**	1	SPACER (10.5X20X18-MM THK)	
	92	2	**9M-4972**	1	CLIP	
					AVAILABLE REPAIR KIT(S):	
J			**296-6706**	1	KIT-SEAL	
					(INCLUDES SHAFT SEALS & O-RINGS)	

B-USE AS REQUIRED
I-REFER TO HYDRAULIC INFORMATION SYSTEM
J-KIT MARKED J SERVICES PARTS MARKED J
M-METRIC PART
Y-SEPARATE ILLUSTRATION

323-1653 **LINES GP-AXLE OIL COOLER** *(contd.)* **i03113411**

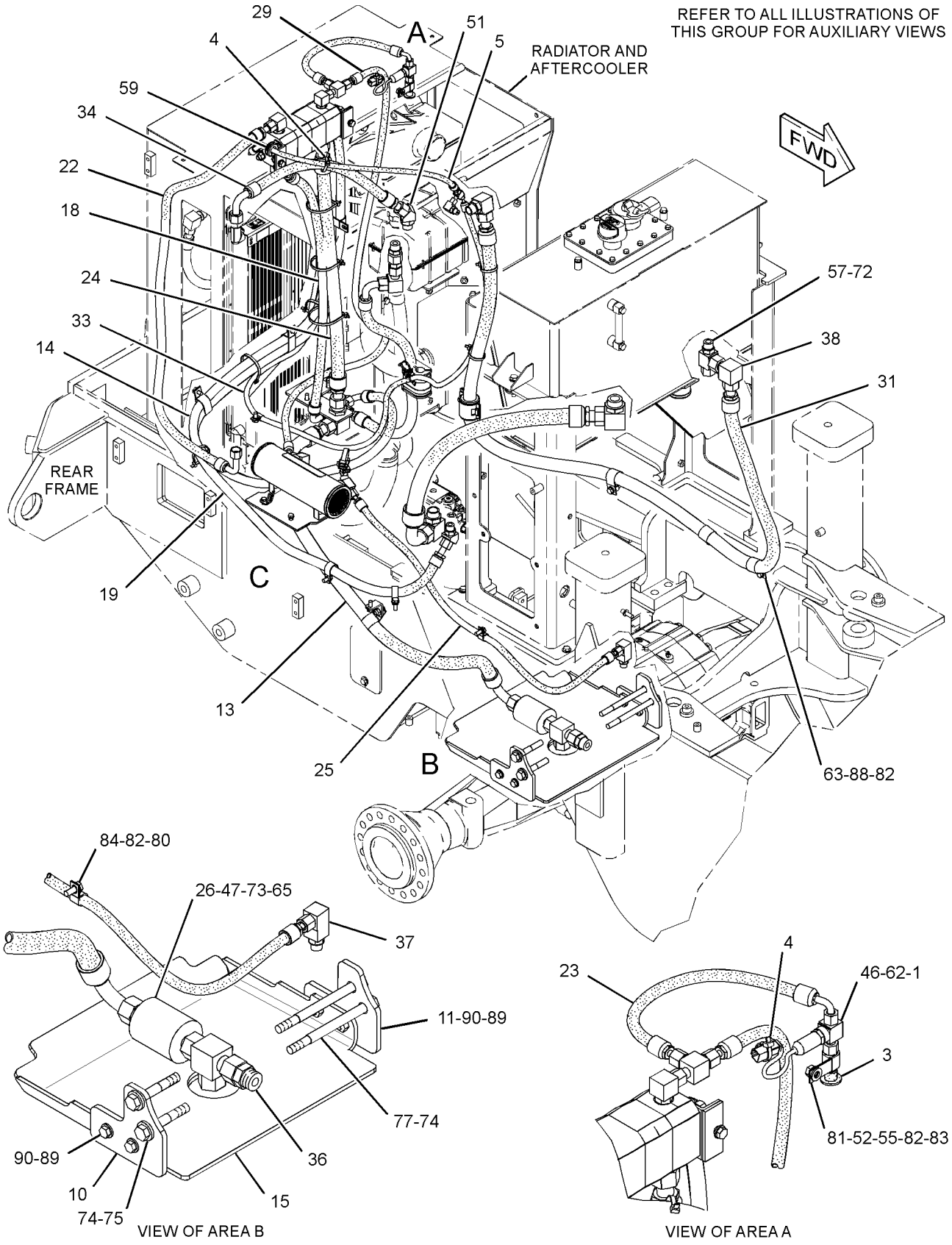

GRAPHIC #1 g01828654

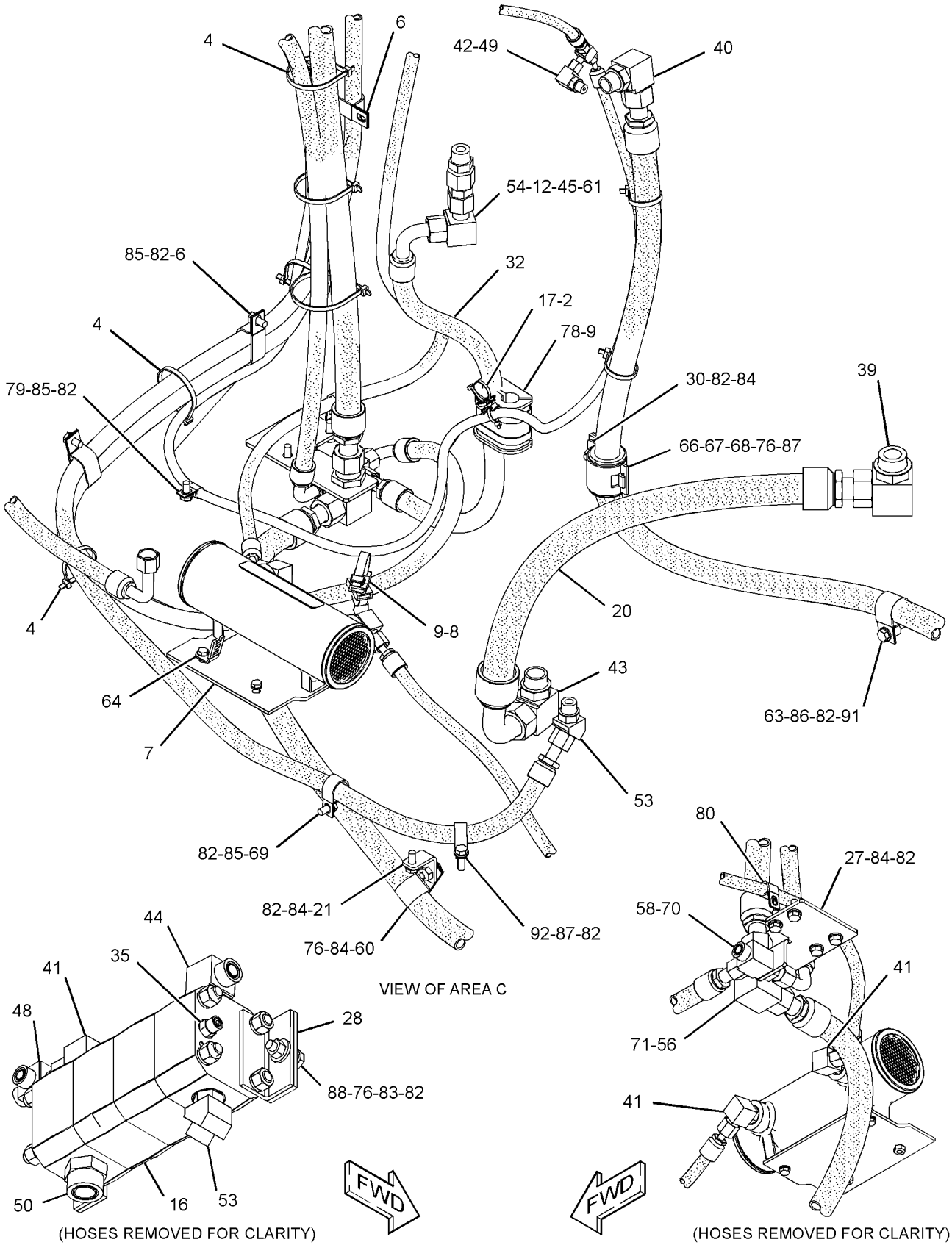

GRAPHIC #2 **<END>** g01828657

289-8923 LINES GP-TORQUE CONV COOLER

S/N: KLN1-UP

PART OF 289-8841 CHASSIS AR

SMCS-1375, 3016 **i03016241**

NOTE	REF NO	GRAPHIC REF	PART NUMBER	QTY	PART NAME 1 2 3 4 5 6 (PRODUCT LEVEL)	SEE PAGE
	1	1	**5P-4362**	1	CONNECTOR	
	2	1	**6V-0852**	1	CAP-DUST	
	3	1	**7K-1181**	1	STRAP-CABLE	
	4	1	**7X-7958**	4	CLAMP-HOSE	
Y	5	1	**126-0747**	1	VALVE GP-BYPASS (POWER TRAIN OIL COOLER)	265
E	6	1	**146-7453**		HOSE (53-CM)	
	7	1	*177-1061*	1	ELBOW AS	
		1	**5K-9090**	1	SEAL-O-RING	
		1	**142-0038**	1	ELBOW	
	8	1	**229-2940**	1	PLATE AS	
M		1	**8T-3490**	3	NUT-WELD (M10X1.5-THD)	
	9	1	*241-6172*	1	ELBOW AS	
		1	**7M-8485**	1	SEAL-O-RING	
		1	**173-0064**	1	ELBOW	
	10	1	**243-0686**	1	HOSE AS	
I	11	1	**262-5661**	1	HOSE AS	
I	12	1	**262-5663**	1	HOSE AS	
	13	1	**293-5828**	2	TUBE AS	
I	14	1	**314-7670**	1	HOSE AS	
	15	1	*148-8335*	5	CONNECTOR AS	
					(EACH INCLUDES)	
		1	**5K-9090**	1	SEAL-O-RING	
		1	**6V-8635**	1	CONNECTOR	
		1	**7M-8485**	1	SEAL-O-RING	
	16	1	*148-8352*	1	ELBOW AS	
		1	**5K-9090**	1	SEAL-O-RING	
		1	**6V-9854**	1	ELBOW	
	17	1	*150-3065*	1	ADAPTER AS	
		1	**3J-1907**	1	SEAL-O-RING	
		1	**6V-0484**	1	ADAPTER-O-RING	
	18	1	*155-2026*	1	UNION AS	
		1	**5K-9090**	2	SEAL-O-RING	
		1	**6V-8998**	1	UNION	
	19	1	*155-6344*	1	ELBOW AS	
		1	**5K-9090**	2	SEAL-O-RING	
		1	**6V-8991**	1	ELBOW	
	20	1	*164-5567*	1	COUPLER AS-QUICK DISCONNECT	
		1	**3J-1907**	1	SEAL-O-RING	
		1	**6V-3965**	1	FITTING (QUICK DISCONNECT)	
	21	1	*214-0095*	1	UNION AS	
		1	**5K-9090**	2	SEAL-O-RING	
		1	**7X-2464**	1	UNION	
	22	1	**4D-7388**	3	CLIP	
	23	1	**6V-9172**	3	NUT (1-7/16-12-THD)	
	24	1	**7M-8485**	1	SEAL-O-RING	
	25	1	**7X-0606**	6	WASHER-HARD (37X60X3-MM THK)	
	26	1	**8T-4121**	7	WASHER-HARD (11X21X2.5-MM THK)	
M	27	1	**8T-4136**	4	BOLT (M10X1.5X25-MM)	
M	28	1	**8T-4178**	3	BOLT (M10X1.5X90-MM)	

E-ORDER BY THE CENTIMETER
I-REFER TO HYDRAULIC INFORMATION SYSTEM
M-METRIC PART
Y-SEPARATE ILLUSTRATION

289-8923 **LINES GP-TORQUE CONV COOLER** *(contd.)* **i03016241**

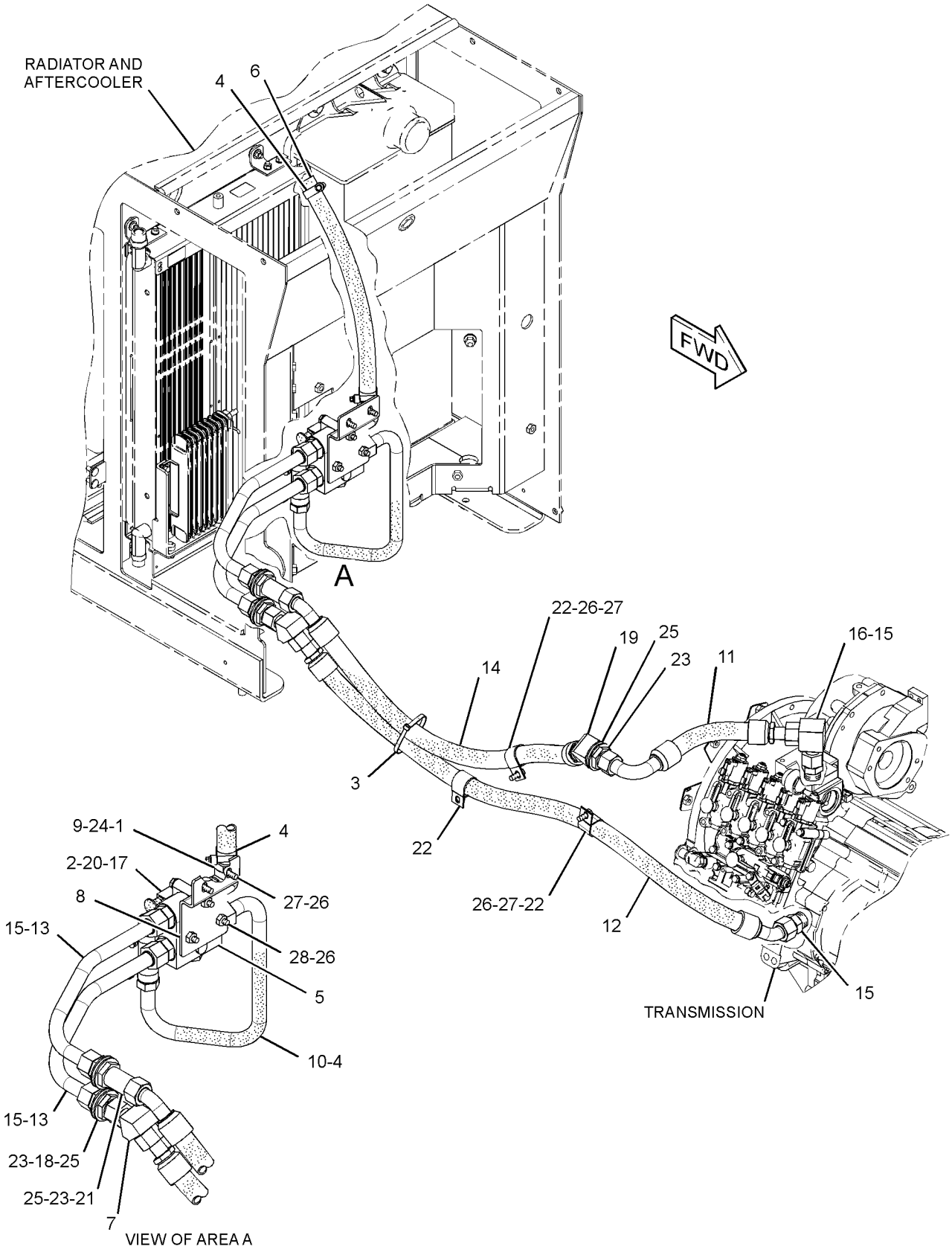

GRAPHIC #1 **<END>** g01482393

132-2471 MOUNTING GP-AXLE

S/N: KLN1-UP

PART OF 289-8841 CHASSIS AR

SMCS-3268, 3278 **i03117940**

NOTE	REF NO	GRAPHIC REF	PART NUMBER	QTY	PART NAME 1 2 3 4 5 6 (PRODUCT LEVEL)	SEE PAGE
	1	1	**6K-8987**	2	DOWEL	
M	2	1	**7X-2465**	20	BOLT (M24X3X180-MM)	
	3	1	**8T-4167**	20	WASHER-HARD (26X44X4-MM THK)	

M-METRIC PART

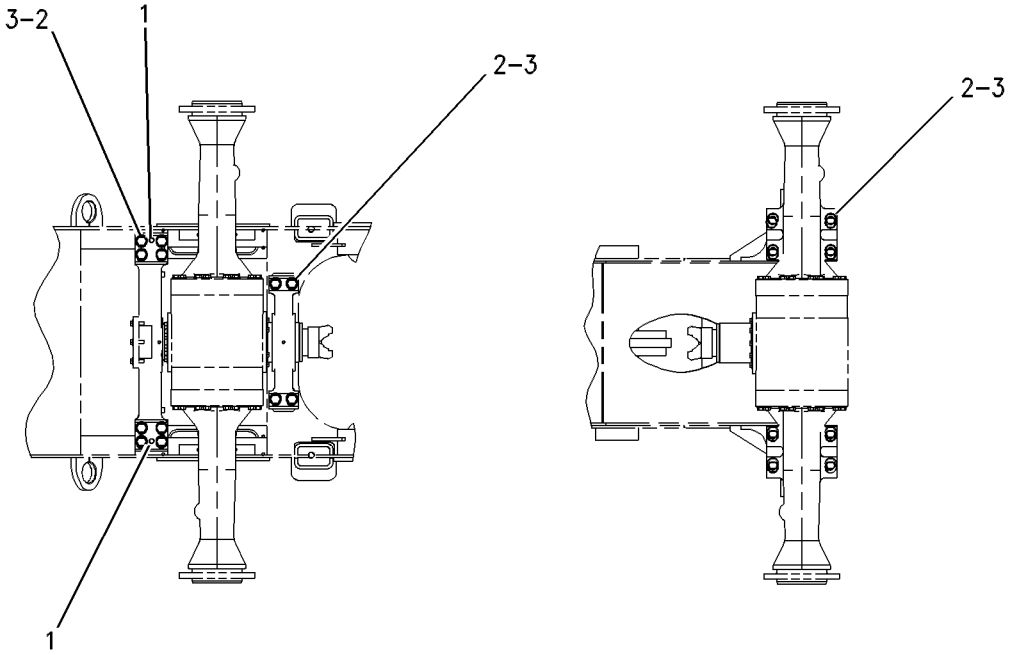

GRAPHIC #1 **<END>** g00598337

147-5071 MOUNTING GP-RIM

S/N: KLN1-UP
PART OF 117-7836, 117-7837, 146-6783 RIM AR
AN ATTACHMENT

SMCS-4202, 4209 **i03117943**

NOTE	PART NUMBER	QTY	PART NAME 1 2 3 4 5 6 (PRODUCT LEVEL)	SEE PAGE
M	**8T-5379**	16	BOLT (M24X3X50-MM) (LEFT FRONT)	
M	**8T-5379**	16	BOLT (M24X3X50-MM) (RIGHT FRONT)	
M	**8T-5379**	16	BOLT (M24X3X50-MM) (LEFT REAR)	
M	**8T-5379**	16	BOLT (M24X3X50-MM) (RIGHT REAR)	
	8T-4167	16	WASHER-HARD (26X44X4-MM THK) (LEFT FRONT)	
	8T-4167	16	WASHER-HARD (26X44X4-MM THK) (RIGHT FRONT)	
	8T-4167	16	WASHER-HARD (26X44X4-MM THK) (LEFT REAR)	
	8T-4167	16	WASHER-HARD (26X44X4-MM THK) (RIGHT REAR)	

M-METRIC PART

<END>

289-8815 POWER TRAIN AR

S/N: KLN1-UP
PART OF 289-8840 COMMON AR

SMCS-3000, 4000 **i03320963**

NOTE	PART NUMBER	QTY	PART NAME 1 2 3 4 5 6 (PRODUCT LEVEL)	SEE PAGE
Y	*289-8974*	1	AXLE AR-FIXED (FRONT, STANDARD DIFFERENTIAL)	201
Y	*293-2837*	1	FILLER GP-POWER TRAIN OIL	222
Y	*290-7186*	1	FILTER & LINES GP-TRANSMISSION	223
Y	**304-9464**	1	GAUGE GP-SIGHT (POWER TRAIN OIL)	226
Y	*290-1256*	1	SHAFT GP-DRIVE	260
Y	**290-1257**	1	TRANSMISSION AR (STANDARD SPEED)	264
	319-7412	1	MOUNTING GP-ENGINE & XMSN	
	9R-5878	2	WASHER (21.5X114X3-MM THK)	

Y-SEPARATE ILLUSTRATION

<END>

6Y-6712 PUMP GP-TRANSMISSION—1-SECTION GEAR

S/N: J2Y1-UP

PART OF 121-8917 PUMP GP-TRANSMISSION

SMCS-3066 **i00528693**

NOTE	REF NO	GRAPHIC REF	PART NUMBER	QTY	PART NAME 1 2 3 4 5 6 (PRODUCT LEVEL)	SEE PAGE
M	1	1	**6V-5842**	1	BOLT (M10X1.5X40-MM)	
M	2	1	**6V-7981**	5	BOLT (M10X1.5X70-MM)	
		1	**6Y-5010**	1	WASHER (10.16X19X0.84-MM THK)	
	3	1	**8E-9968**	1	BODY AS	
	4	1	**3T-2094**	2	BEARING-SLEEVE	
	5	1	**5M-4987**	2	DOWEL	
	6	1	**8T-5353**	2	DOWEL	
	7	1	**6Y-4464**	1	GEAR AS-OIL PUMP (17-TEETH)	
	8	1	**5H-3252**	1	SEAL-O-RING	
	9	1	**6Y-4997**	1	COVER AS	
	10	1	**3T-2094**	2	BEARING-SLEEVE	
	11	1	**6Y-4465**	1	GEAR (15-TEETH)	

M-METRIC PART

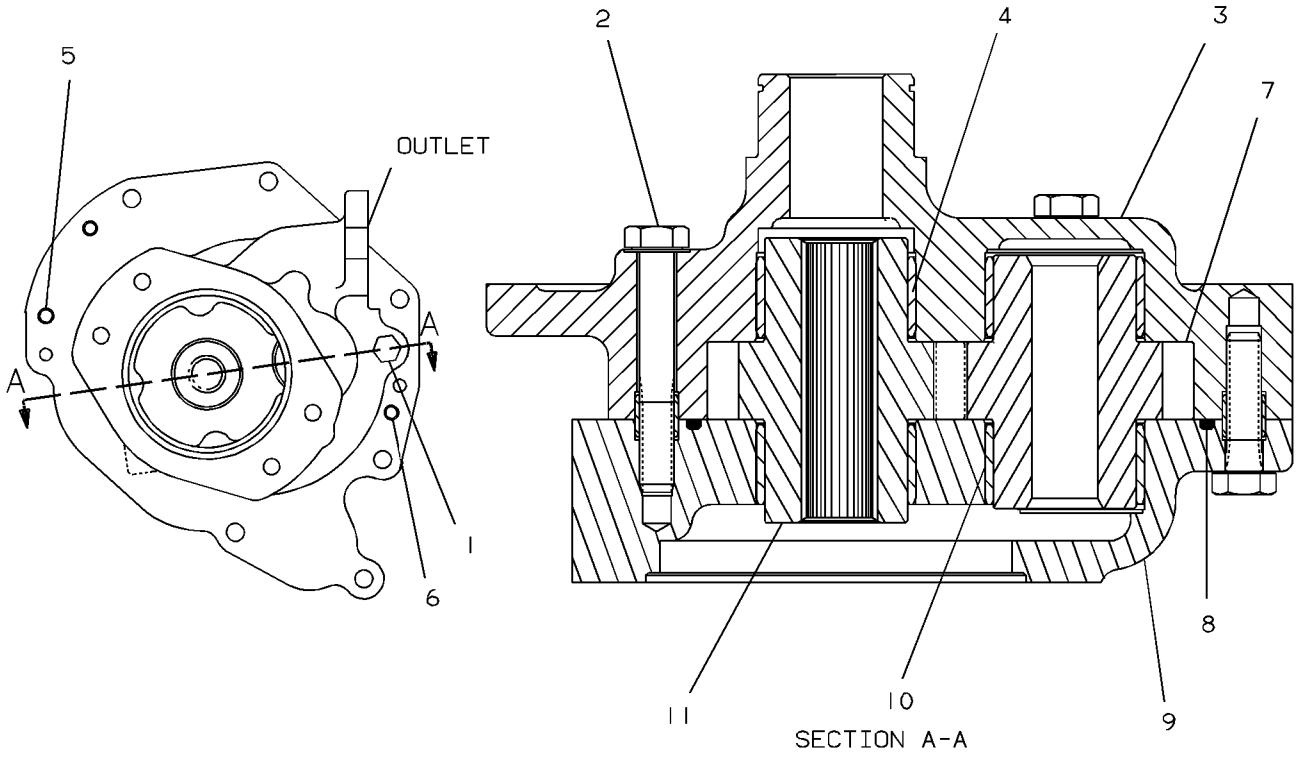

GRAPHIC #1 **<END>** g00126574

121-8917 PUMP GP-TRANSMISSION–1-SECTION GEAR

S/N: J2Y1-UP
TRANSMISSION
PART OF 290-1257 TRANSMISSION AR

SMCS-3066 **i03626671**

NOTE	REF NO	GRAPHIC REF	PART NUMBER	QTY	PART NAME 1 2 3 4 5 6 (PRODUCT LEVEL)	SEE PAGE
Y	1	1	**6Y-6712**	1	PUMP GP-TRANSMISSION (1-SECTION GEAR)	251
	2	1	**120-4483**	1	GEAR-DRIVE (68-TEETH)	
M	3	1	**6V-6317**	6	BOLT (M10X1.5X20-MM)	
	4	1	**2J-7550**	1	RING-RETAINING	
	5	1	**6Y-4618**	1	SHAFT	
	6	1	**4B-3665**	1	BALL BEARING	
	7	1	**1H-9696**	1	SEAL-O-RING	
M	8	1	**6V-4249**	2	BOLT (M10X1.5X50-MM)	
M	9	1	**6V-1820**	5	BOLT (M10X1.5X30-MM)	
B	10	1	**1U-8846**		SEALANT-GASKET	

B-USE AS REQUIRED
M-METRIC PART
Y-SEPARATE ILLUSTRATION

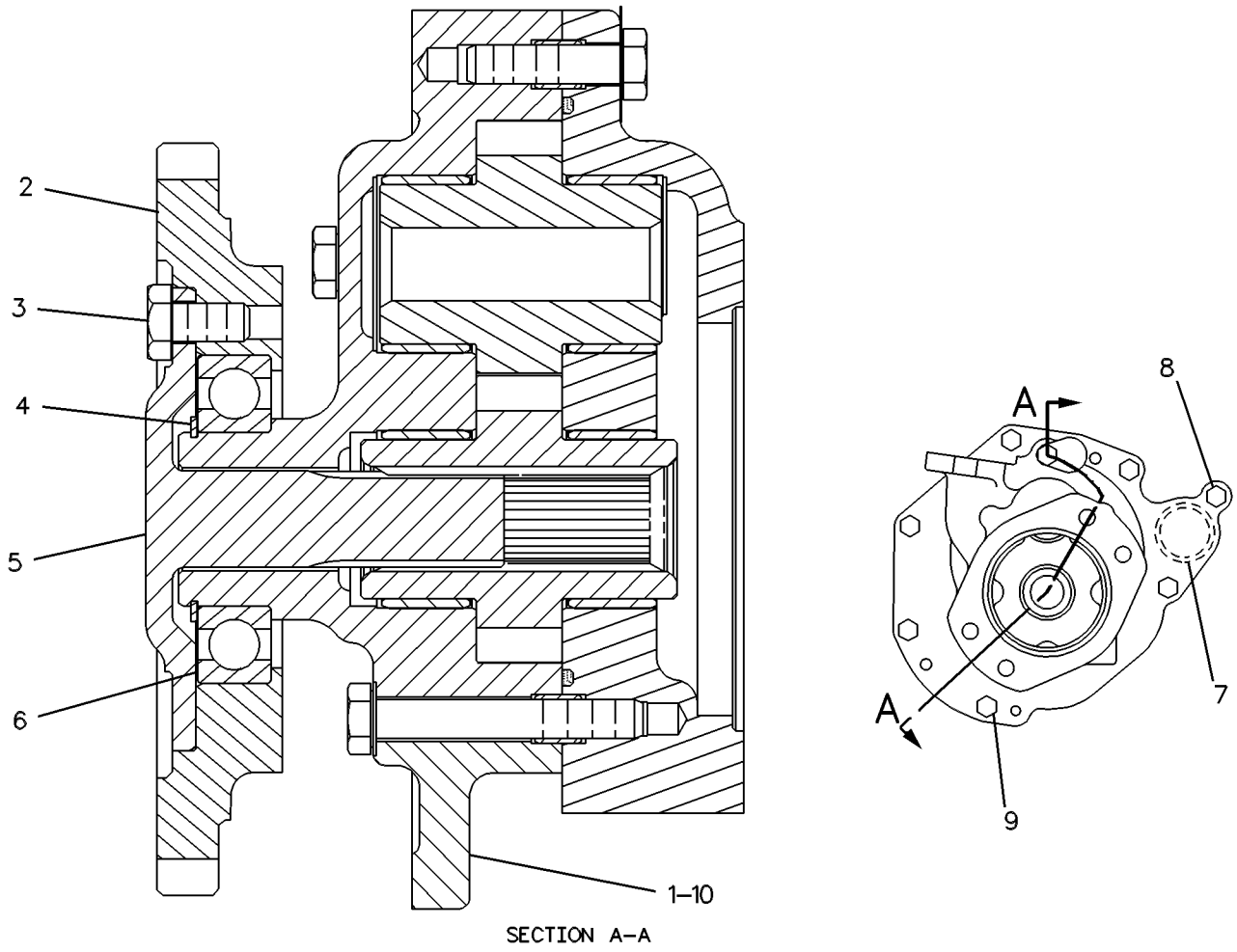

GRAPHIC #1 **<END>** g00103796

117-7836 RIM AR

S/N: KLN1-UP
13X25, 1-PIECE
PART OF 229-4962 TIRE & RIM AR
AN ATTACHMENT

SMCS-4209 **i02830847**

NOTE	PART NUMBER	QTY	PART NAME 1 2 3 4 5 6 (PRODUCT LEVEL)	SEE PAGE
Y	*146-6685*	1	MOUNTING GP-RIM	
			-OR-	
Y	*147-5071*	1	MOUNTING GP-RIM	250
Y	*117-7839*	4	RIM GP-DEMOUNTABLE (1-PIECE)	255

Y-SEPARATE ILLUSTRATION

<END>

117-7837 RIM AR

S/N: KLN1-UP
14X25, 3-PIECE
PART OF 128-5441, 229-4970, 230-9667 TIRE & RIM AR
AN ATTACHMENT

SMCS-4209 **i03537708**

NOTE	PART NUMBER	QTY	PART NAME 1 2 3 4 5 6 (PRODUCT LEVEL)	SEE PAGE
Y	**146-6685**	1	MOUNTING GP-RIM	
			-OR-	
Y	*147-5071*	1	MOUNTING GP-RIM	250
Y	*117-7840*	4	RIM GP-DEMOUNTABLE (3-PIECE)	256

Y-SEPARATE ILLUSTRATION

<END>

146-6783 RIM AR

S/N: KLN1-UP
17X25, 3-PIECE, CENTER MOUNT
PART OF 230-9670, 256-5049 TIRE & RIM AR
AN ATTACHMENT

SMCS-4209 **i03537711**

NOTE	PART NUMBER	QTY	PART NAME 1 2 3 4 5 6 (PRODUCT LEVEL)	SEE PAGE
Y	*147-5071*	1	MOUNTING GP-RIM	250
Y	*2Q-5979*	4	RIM GP-DEMOUNTABLE (3-PIECE, CENTER MOUNT)	254

Y-SEPARATE ILLUSTRATION

<END>

2Q-5979 RIM GP-DEMOUNTABLE

S/N: KLN1-UP
17X25, 3-PIECE
PART OF 146-6783 RIM AR
AN ATTACHMENT

SMCS-4209 **i01505977**

NOTE	REF NO	GRAPHIC REF	PART NUMBER	QTY	PART NAME 1 2 3 4 5 6 (PRODUCT LEVEL)	SEE PAGE
CY	1	1	**186-4943**	1	RIM GP-DEMOUNTABLE	258
	2	1	**6D-0337**	1	VALVE GP-TIRE	
C	3	1	**6D-0443**	1	HOUSING AS-CORE	
		1	**2D-2628**	1	CORE-VALVE	
		1	**2D-2633**	1	CAP	
C	4	1	**8D-2707**	1	SPUD AS	
		1	**2D-2629**	1	GROMMET	
		1	**2D-2630**	1	WASHER	
		1	**2D-2631**	1	NUT (0.482-26-THD)	
	5	1	**4K-4879**	1	SEAL-O-RING	

C-CHANGE FROM PREVIOUS TYPE
Y-SEPARATE ILLUSTRATION

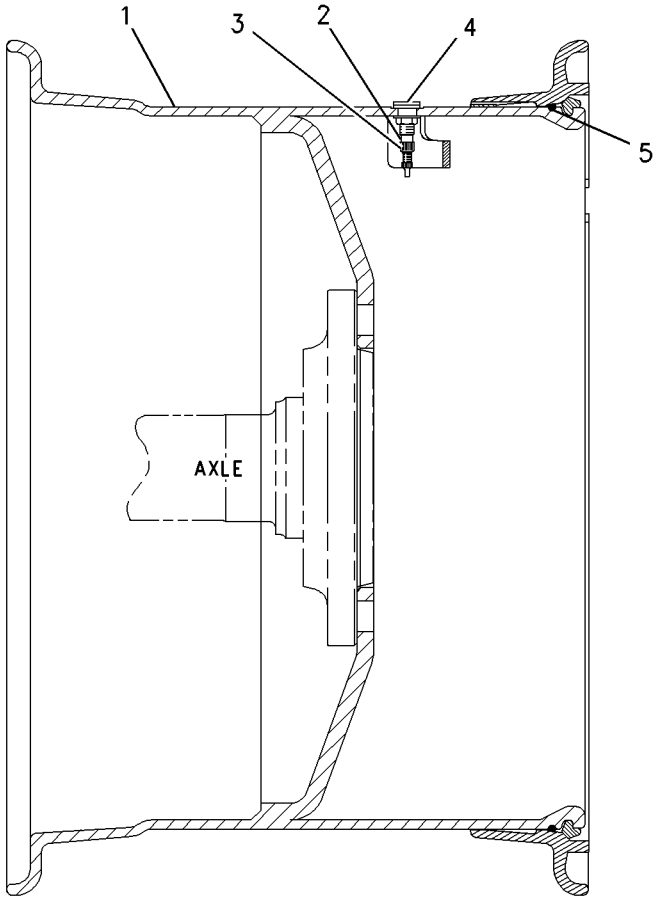

GRAPHIC #1 **<END>** g00781479

117-7839 RIM GP-DEMOUNTABLE

S/N: KLN1-UP
13X25, 1-PIECE
PART OF 117-7836 RIM AR
AN ATTACHMENT

SMCS-4209 **i00528258**

NOTE	REF NO	GRAPHIC REF	PART NUMBER	QTY	PART NAME 1 2 3 4 5 6 (PRODUCT LEVEL)	SEE PAGE
	1	1	**8R-5825**	1	RIM AS	
	2	1	**2G-6595**	1	VALVE GP-TIRE	
		1	**6F-3930**	1	CORE-VALVE	
		1	**9K-7951**	1	CAP-VALVE (STEM)	
		1	**7D-5252**	1	SPUD AS	
		1	**2D-2507**	1	SPUD	
		1	**2D-2508**	1	GROMMET	
		1	**2D-2509**	1	LOCKNUT (11/16-16-THD)	

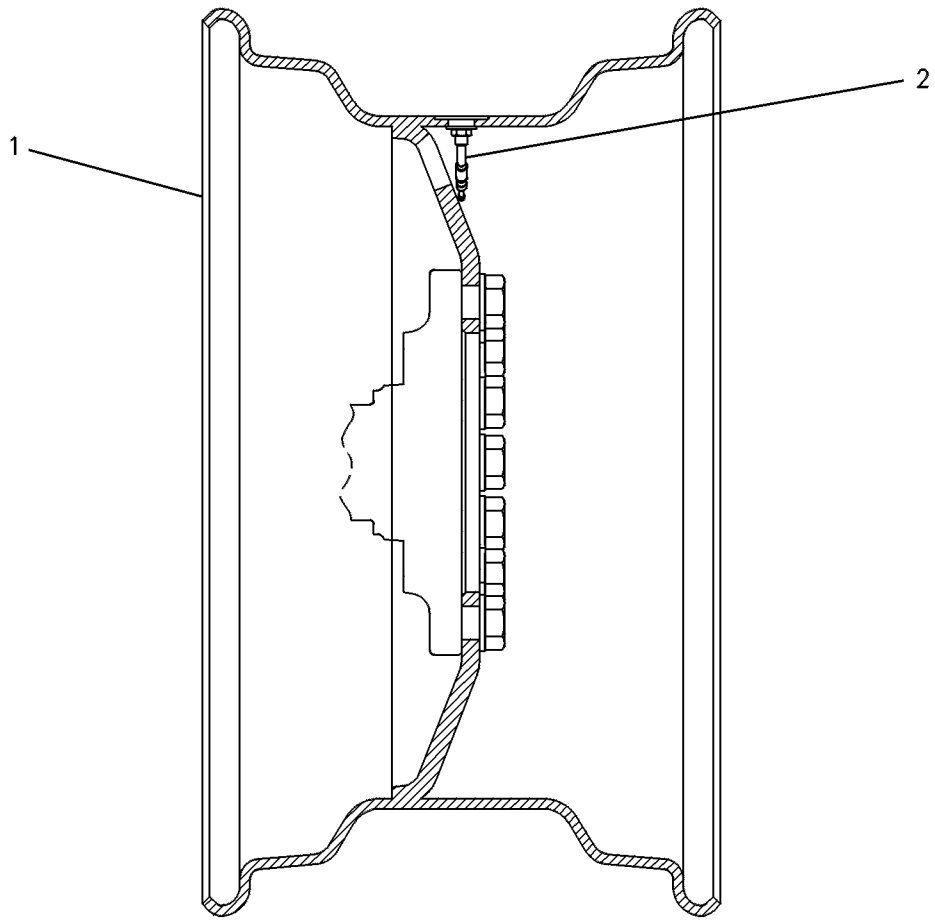

GRAPHIC #1 **<END>** g00129196

117-7840 RIM GP-DEMOUNTABLE

S/N: KLN1-UP
14X25, 3-PIECE
PART OF 117-7837 RIM AR
AN ATTACHMENT

SMCS-4209 **i03537712**

NOTE	REF NO	GRAPHIC REF	PART NUMBER	QTY	PART NAME 1 2 3 4 5 6 (PRODUCT LEVEL)	SEE PAGE
	1	1	**4K-4879**	1	SEAL-O-RING	
Y	2	1	**6D-0337**	1	VALVE GP-TIRE	268
CY	3	1	**186-4942**	1	RIM GP-DEMOUNTABLE (3-PIECE)	257

C-CHANGE FROM PREVIOUS TYPE
Y-SEPARATE ILLUSTRATION

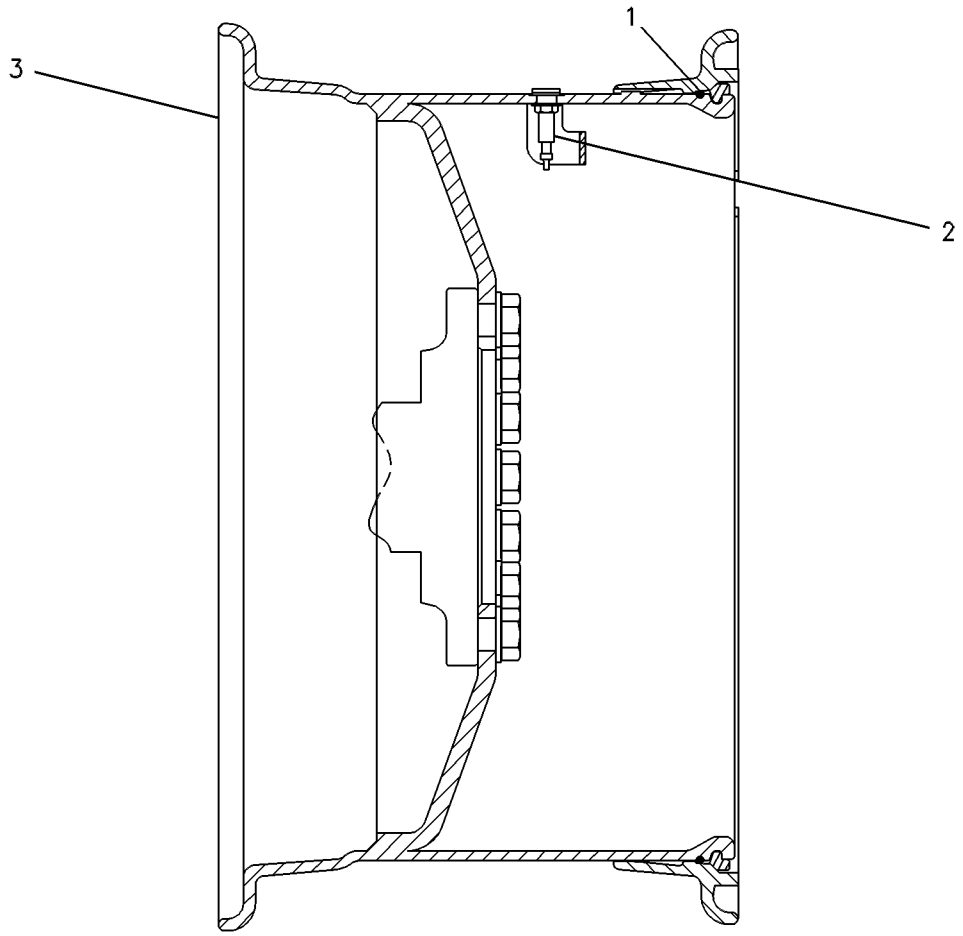

GRAPHIC #1 **<END>** g00276411

176-1705 RIM GP-DEMOUNTABLE

S/N: KLN1-UP
14X25, 3-PIECE
PART OF 186-4942 RIM GP-DEMOUNTABLE
FIELD REPLACEMENT ORDER 186-4942—PAGE 257
AN ATTACHMENT

SMCS-4209 **i01877827**

NOTE	PART NUMBER	QTY	PART NAME 1 2 3 4 5 6 (PRODUCT LEVEL)	SEE PAGE
	176-0118	1	DRIVER	
	171-7198	1	FLANGE AS	
	4K-4881	1	RING-LOCK	
	171-7199	1	RIM AS	

<END>

176-1706 RIM GP-DEMOUNTABLE

S/N: KLN1-UP
17X25, 3-PIECE
PART OF 186-4943 RIM GP-DEMOUNTABLE
FIELD REPLACEMENT ORDER 186-4943—PAGE 258
AN ATTACHMENT

SMCS-4209 **i02110567**

NOTE	PART NUMBER	QTY	PART NAME 1 2 3 4 5 6 (PRODUCT LEVEL)	SEE PAGE
	176-0118	1	DRIVER	
	171-8689	1	FLANGE AS	
	253-1691	1	RIM AS	
	4K-4881	1	RING-LOCK	

<END>

186-4942 RIM GP-DEMOUNTABLE

S/N: KLN1-UP
14X25, 3-PIECE
PART OF 117-7840 RIM GP-DEMOUNTABLE
FIELD REPLACEMENT FOR 176-1705—PAGE 257
AN ATTACHMENT

SMCS-4209 **i03537714**

NOTE	PART NUMBER	QTY	PART NAME 1 2 3 4 5 6 (PRODUCT LEVEL)	SEE PAGE
Y	*176-1705*	1	RIM GP-DEMOUNTABLE (3-PIECE)	257
Y-SEPARATE ILLUSTRATION				

<END>

186-4943 RIM GP-DEMOUNTABLE

S/N: KLN1-UP
17X25, 3-PIECE
PART OF 2Q-5979 RIM GP-DEMOUNTABLE
FIELD REPLACEMENT FOR 176-1706—PAGE 257
AN ATTACHMENT

SMCS-4209 **i03537715**

NOTE	PART NUMBER	QTY	PART NAME 1 2 3 4 5 6 (PRODUCT LEVEL)	SEE PAGE
Y	*176-1706*	1	RIM GP-DEMOUNTABLE (3-PIECE)	257

Y-SEPARATE ILLUSTRATION

<END>

224-6793 SHAFT GP-DRIVE–FRONT

S/N: KLN1-UP

PART OF 290-1256 SHAFT GP-DRIVE

SMCS-3253 **i01812024**

NOTE	REF NO	GRAPHIC REF	PART NUMBER	QTY	PART NAME 1 2 3 4 5 6 (PRODUCT LEVEL)	SEE PAGE
	1	1	**6I-8531**	1	BEARING GP-PILLOW BLOCK	
		1	**3B-8489**	1	FITTING-GREASE	
		1	*197-7995*	1	KIT-SETSCREW	
		1	**9L-7712**	1	NUT (3/8-24-THD)	
		1	**022-3108**	1	SETSCREW	
		1	**197-6666**	1	SETSCREW	
	2	1	**9U-3668**	1	YOKE	
	3	1	**224-6792**	1	UNIVERSAL JOINT GP	
		1	**193-4640**	1	SPIDER & BEARING GP	
		1	**8V-7315**	4	RING	
M	4	1	**8T-0372**	1	BOLT (M12X1.75X90-MM)	
	5	1	**9V-2412**	1	RETAINER	

M-METRIC PART

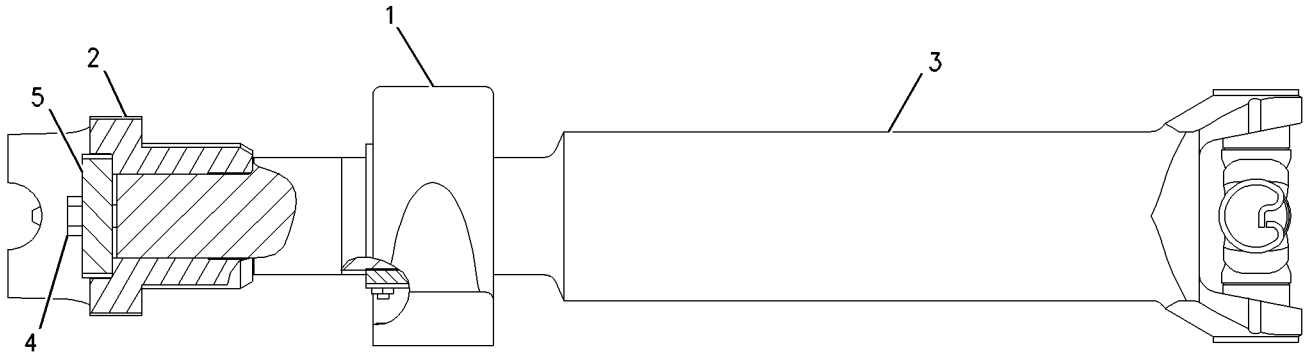

GRAPHIC #1 **<END>** g00914154

290-1256 SHAFT GP-DRIVE

S/N: KLN1-UP

PART OF 289-8815 POWER TRAIN AR

SMCS-3253 **i03039410**

NOTE	REF NO	GRAPHIC REF	PART NUMBER	QTY	PART NAME 1 2 3 4 5 6 (PRODUCT LEVEL)	SEE PAGE
	1	1	**4E-5984**	10	STRAP	
Y	2	1	**201-9517**	1	SLIP JOINT GP (CENTER)	261
Y	3	1	**224-6793**	1	SHAFT GP-DRIVE (FRONT)	259
	4	1	**312-6390**	1	UNIVERSAL JOINT GP	
		1	**191-2226**	2	SPIDER & BEARING GP	
					(EACH INCLUDES)	
		1	**8V-7315**	4	RING	
M	5	1	**4E-5985**	20	BOLT-12 POINT HEAD (M10X1.25X20-MM)	
	6	1	**8T-4122**	2	WASHER-HARD (17X32X3.5-MM THK)	
M	7	1	**8T-4140**	2	BOLT (M16X2X60-MM)	

M-METRIC PART
Y-SEPARATE ILLUSTRATION

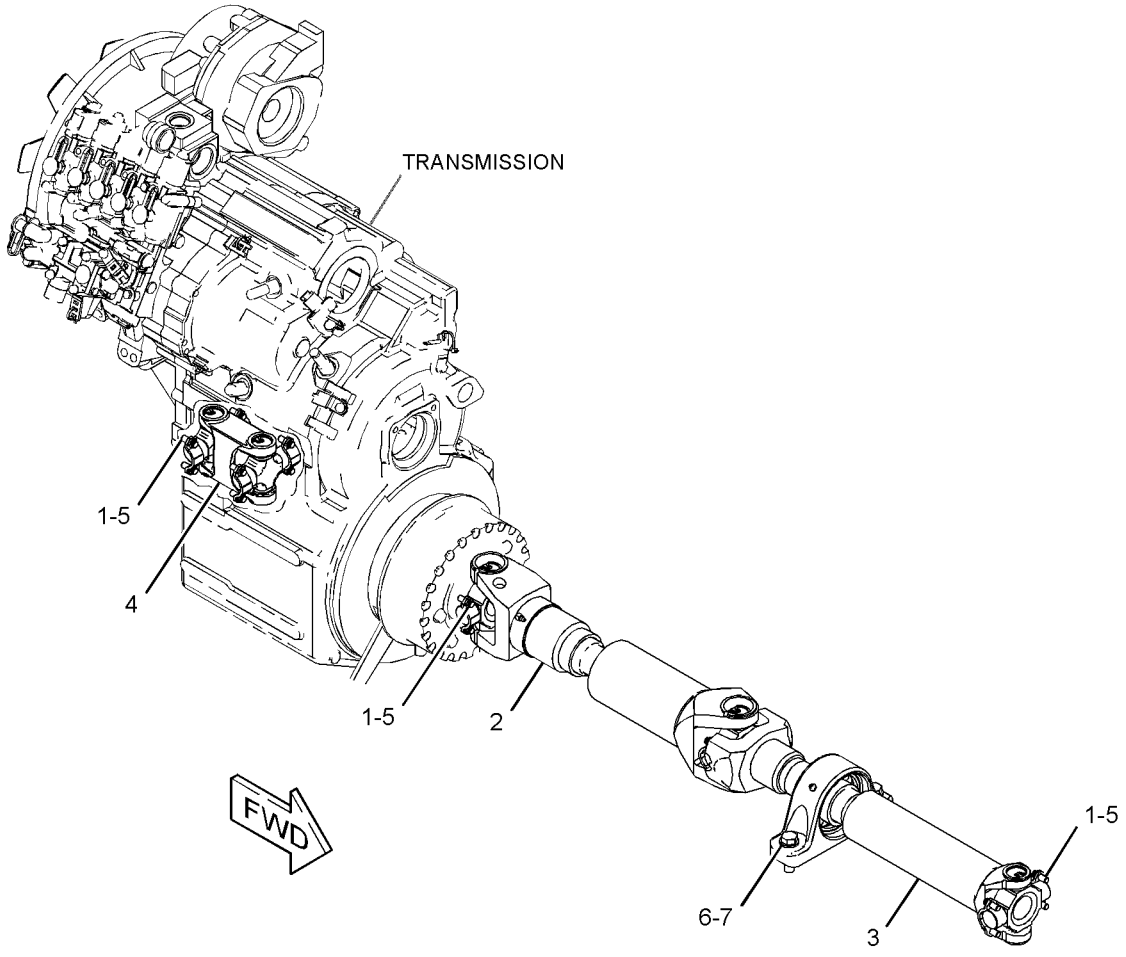

GRAPHIC #1 **<END>** g01398728

201-9517 SLIP JOINT GP–CENTER

S/N: KLN1-UP

PART OF 290-1256 SHAFT GP-DRIVE

SMCS-3251 **i03582585**

NOTE	REF NO	GRAPHIC REF	PART NUMBER	QTY	PART NAME 1 2 3 4 5 6 (PRODUCT LEVEL)	SEE PAGE
	1	1	**1K-6853**	1	FITTING-GREASE	
	2	1	**3B-8488**	1	FITTING-GREASE	
	3	1	**5V-5498**	1	RETAINER	
	4	1	**193-4640**	2	SPIDER & BEARING GP	
					(EACH INCLUDES)	
		1	**8V-7315**	4	RING	

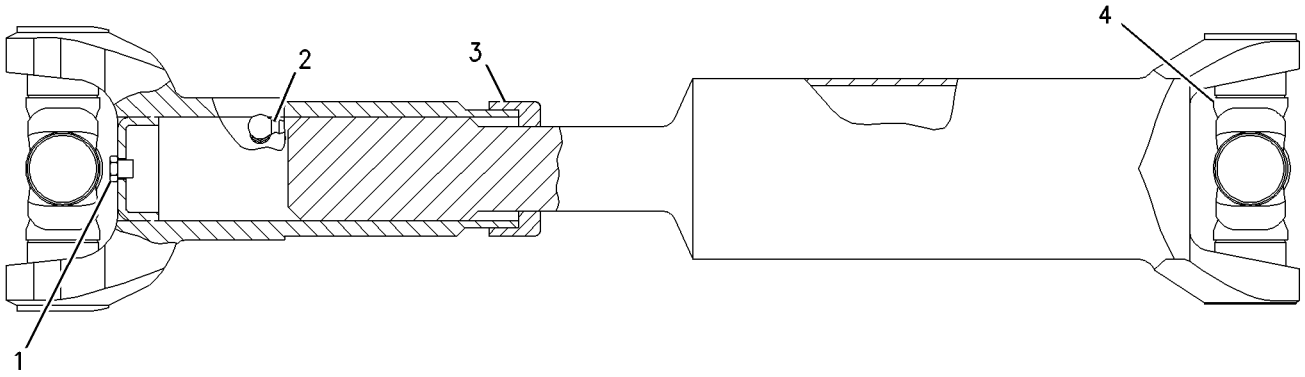

GRAPHIC #1 **<END>** g00914281

147-5576 STOP GP-AXLE OSCILLATION

S/N: KLN1-UP
PART OF 230-9670, 256-5049 TIRE & RIM AR
AN ATTACHMENT

SMCS-3259 **i01179919**

NOTE	PART NUMBER	QTY	PART NAME 1 2 3 4 5 6 (PRODUCT LEVEL)	SEE PAGE
	147-5577	2	BLOCK	
M	**8T-4956**	4	BOLT (M12X1.75X35-MM)	
	8T-4223	4	WASHER-HARD (13.5X25.5X3-MM THK)	

M-METRIC PART

<END>

128-5441 TIRE & RIM AR

S/N: KLN1-UP
AN ATTACHMENT

SMCS-4202 **i03537722**

NOTE	PART NUMBER	QTY	PART NAME 1 2 3 4 5 6 (PRODUCT LEVEL)	SEE PAGE
Y	*117-7837*	1	RIM AR (3-PIECE)	253
	128-5451	4	TIRE (17.5-25)	

Y-SEPARATE ILLUSTRATION

<END>

229-4962 TIRE & RIM AR

S/N: KLN1-UP
AN ATTACHMENT

SMCS-4202 **i03569113**

NOTE	PART NUMBER	QTY	PART NAME 1 2 3 4 5 6 (PRODUCT LEVEL)	SEE PAGE
Y	*117-7836*	1	RIM AR (1-PIECE)	253
	142-6182	4	TIRE (17.5-25)	

Y-SEPARATE ILLUSTRATION

<END>

229-4970 TIRE & RIM AR

S/N: KLN1-UP
AN ATTACHMENT

SMCS-4202 **i03118993**

NOTE	PART NUMBER	QTY	PART NAME 1 2 3 4 5 6 (PRODUCT LEVEL)	SEE PAGE
Y	*117-7837*	1	RIM AR (3-PIECE)	253
	6W-6807	4	TIRE (17.5-25)	

Y-SEPARATE ILLUSTRATION

<END>

230-9667 TIRE & RIM AR

S/N: KLN1-UP
AN ATTACHMENT

SMCS-4202 **i03537719**

NOTE	PART NUMBER	QTY	PART NAME 1 2 3 4 5 6 (PRODUCT LEVEL)	SEE PAGE
Y	*117-7837*	1	RIM AR (3-PIECE)	253
	128-5450	4	TIRE (17.5-25)	

Y-SEPARATE ILLUSTRATION

<END>

230-9670 TIRE & RIM AR

S/N: KLN1-UP
AN ATTACHMENT

SMCS-4202 **i03119006**

NOTE	PART NUMBER	QTY	PART NAME 1 2 3 4 5 6 (PRODUCT LEVEL)	SEE PAGE
Y	*146-6783*	1	RIM AR (3-PIECE, CENTER MOUNT)	253
Y	*147-5576*	1	STOP GP-AXLE OSCILLATION	262
	128-5167	4	TIRE (20.5-25)	

Y-SEPARATE ILLUSTRATION

<END>

256-5049 TIRE & RIM AR

S/N: KLN1-UP
AN ATTACHMENT

SMCS-4202 **i03629314**

NOTE	PART NUMBER	QTY	PART NAME 1 2 3 4 5 6 (PRODUCT LEVEL)	SEE PAGE
Y	*146-6783*	1	RIM AR (3-PIECE, CENTER MOUNT)	253
Y	*147-5576*	1	STOP GP-AXLE OSCILLATION	262
	119-0013	4	TIRE (20.5-R25)	

Y-SEPARATE ILLUSTRATION

<END>

POWER TRAIN

290-1257 TRANSMISSION AR—STANDARD SPEED

S/N: J2Y1-UP

PART OF 289-8815 POWER TRAIN AR

SMCS-3030 **i03039672**

NOTE	PART NUMBER	QTY	PART NAME 1 2 3 4 5 6 (PRODUCT LEVEL)	SEE PAGE
Y	*293-6018*	1	CASE & PARTS GP-TRANSMISSION	207
Y	*102-7540*	1	CLUTCH GP (FIRST, THIRD)	209
Y	*102-7548*	1	CLUTCH GP (REVERSE, SECOND)	211
Y	*146-6283*	1	CLUTCH GP (FORWARD HIGH, FORWARD LOW)	213
Y	*141-8615*	1	DRIVE GP-FLEXIBLE COUPLING	220
Y	*146-6274*	1	DRIVE GP-PUMP (TRANSMISSION)	221
Y	*146-6282*	1	GEAR GP-INPUT TRANSFER	230
Y	*293-6017*	1	GEAR GP-OUTPUT TRANSFER	231
Y	*121-8917*	1	PUMP GP-TRANSMISSION (1-SECTION GEAR)	252
Y	*305-0635*	1	VALVE GP-TRANSMISSION CONTROL	270
	283-3305	1	TORQUE CONVERTER GP (TRANSMISSION)	

Y-SEPARATE ILLUSTRATION

<END>

126-0747 VALVE GP-BYPASS

S/N: KLN1-UP

PART OF 289-8923 LINES GP-TORQUE CONV COOLER

SMCS-3184 **i02252561**

NOTE	REF NO	GRAPHIC REF	PART NUMBER	QTY	PART NAME 1 2 3 4 5 6 (PRODUCT LEVEL)	SEE PAGE
	1	1	**124-8335**	1	VALVE AS-CONTROL	
	2	1	**126-0748**	1	BODY	
	3	1	*148-8407*	1	PLUG AS	
		1	**9S-4191**	1	PLUG-O-RING	
		1	**3J-1907**	1	SEAL-O-RING	
	4	1	**6V-8218**	1	SEAL-O-RING	

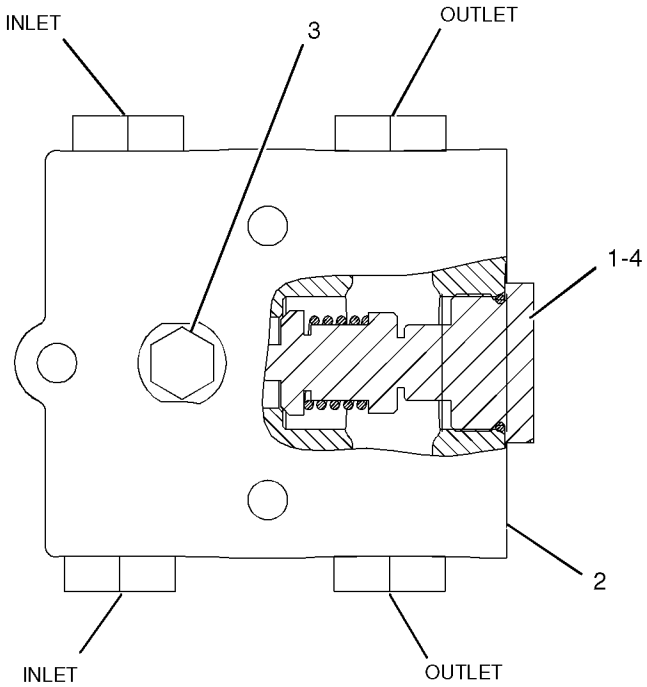

GRAPHIC #1 **<END>** g01044349

244-3114 VALVE GP-MODULATING

S/N: J2Y1-UP

24-VOLT

PART OF 200-2043 VALVE GP-TRANSMISSION CONTROL

SMCS-3139 **i03627113**

NOTE	REF NO	GRAPHIC REF	PART NUMBER	QTY	PART NAME 1 2 3 4 5 6 (PRODUCT LEVEL)	SEE PAGE
	1	1	**6V-3965**	1	FITTING (QUICK DISCONNECT)	
	2	1	**323-9531**	1	COIL AS (24-VOLT)	
	3	1	**214-7568**	1	SEAL-O-RING	
	4	1	**164-2108**	1	WASHER (13.03X25.4X2.38-MM THK)	
	5	1	**218-2373**	1	NUT (1/2-28-THD)	
					PARTS SHOWN IN GRAPHIC(S) WITHOUT A REFERENCE NUMBER ARE NOT SERVICED SEPARATELY	

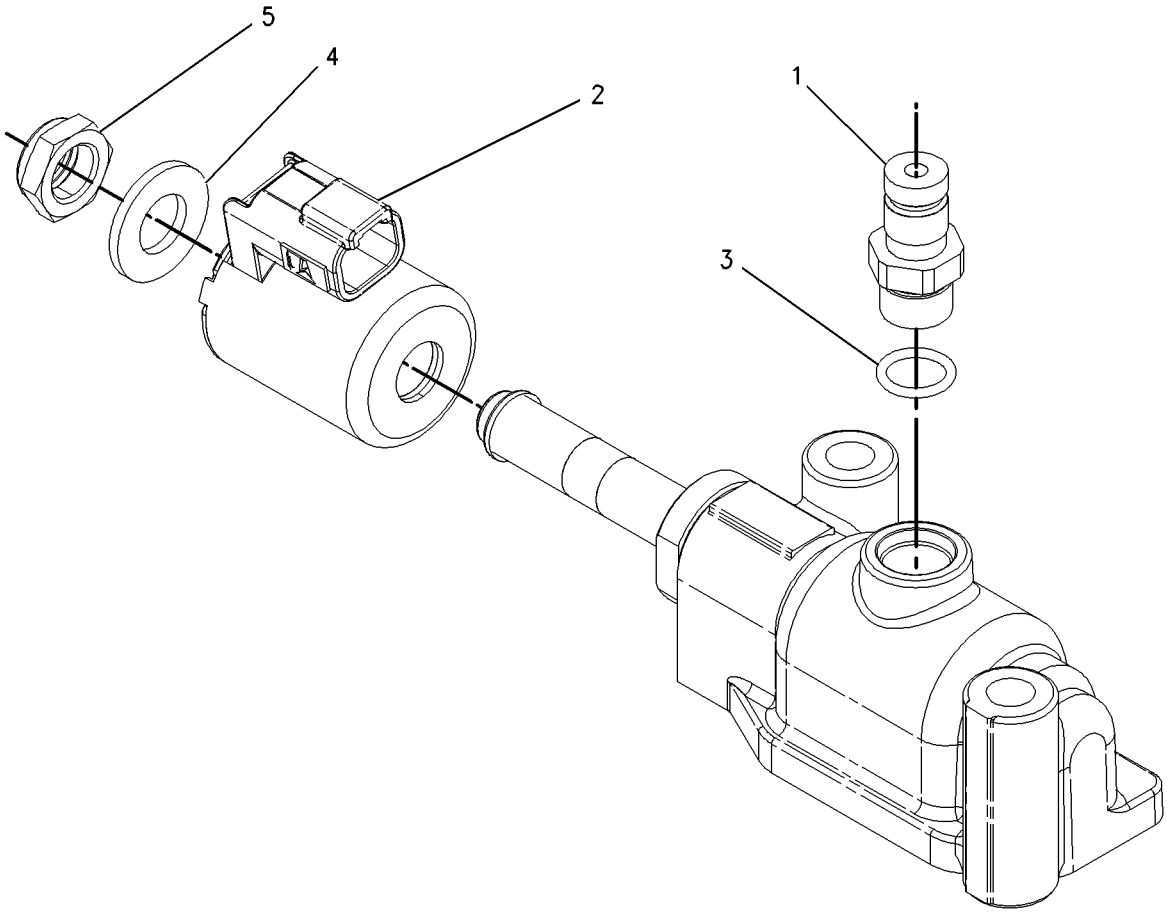

GRAPHIC #1 **<END>** g00919065

6I-9806 VALVE GP-RELIEF–TORQUE CONVERTER OUTLET

S/N: J2Y1-UP

PART OF 293-6018 CASE & PARTS GP-TRANSMISSION

SMCS-3133, 3182, 3210, 3213 **i00528685**

NOTE	REF NO	GRAPHIC REF	PART NUMBER	QTY	PART NAME 1 2 3 4 5 6 (PRODUCT LEVEL)	SEE PAGE
	1	1	**6I-9805**	1	BODY	
	2	1	**2S-1382**	1	SPRING	
	3	1	**6I-9804**	1	SPOOL	
	4	1	**2L-6726**	1	RING-RETAINING	

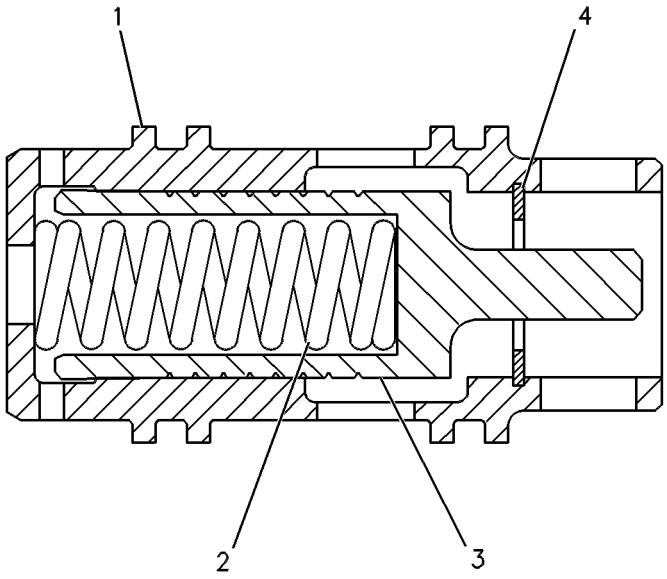

GRAPHIC #1 **<END>** g00128535

6D-0337 VALVE GP-TIRE

S/N: KLN1-UP
PART OF 117-7840 RIM GP-DEMOUNTABLE
AN ATTACHMENT

SMCS-4203 **i01683950**

NOTE	REF NO	GRAPHIC REF	PART NUMBER	QTY	PART NAME 1 2 3 4 5 6 (PRODUCT LEVEL)	SEE PAGE
	1	1	**6D-0443**	1	HOUSING AS-CORE	
	2	1	**2D-2628**	1	CORE-VALVE	
	3	1	**2D-2633**	1	CAP	
	4	1	**8D-2707**	1	SPUD AS	
	5	1	**2D-2629**	1	GROMMET	
	6	1	**2D-2630**	1	WASHER	
	7	1	**2D-2631**	1	NUT (0.482-26-THD)	

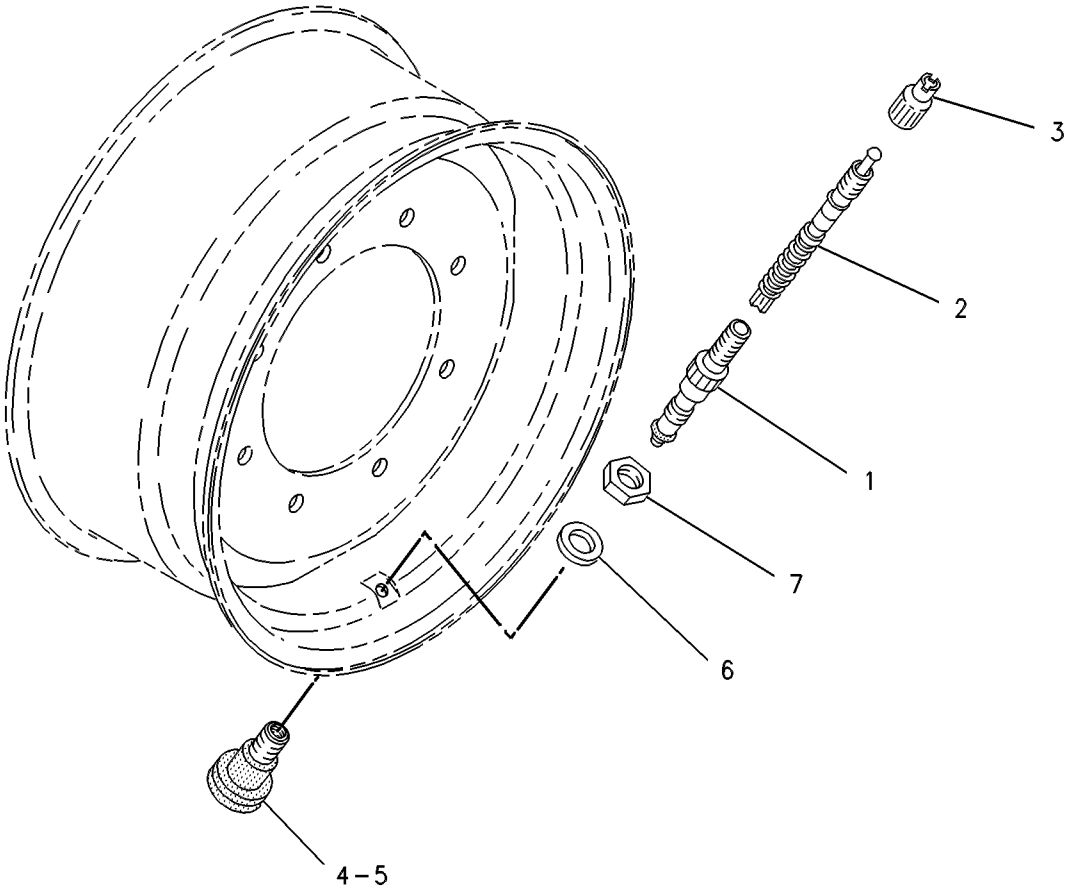

GRAPHIC #1 **<END>** g00121904

200-2043 VALVE GP-TRANSMISSION CONTROL

S/N: J2Y1-UP

PART OF 305-0635 VALVE GP-TRANSMISSION CONTROL

SMCS-3073, 3167 **i02603690**

NOTE	REF NO	GRAPHIC REF	PART NUMBER	QTY	PART NAME 1 2 3 4 5 6 (PRODUCT LEVEL)	SEE PAGE
	1	1	**9X-7725**	1	SEAL-O-RING	
	2	1	**6V-0852**	7	CAP-DUST	
	3	1	**6V-3965**	1	FITTING (QUICK DISCONNECT)	
	4	1	**8S-0768**	6	SEAL-O-RING	
	5	1	**9L-9068**	4	DOWEL	
Y	6	1	**177-0026**	1	VALVE GP-RELIEF (TRANSMISSION HYDRAULIC CONTROL)	470
	7	1	**201-3316**	1	MANIFOLD (TOP)	
	8	1	**200-2044**	1	MANIFOLD (BOTTOM)	
Y	9	1	**244-3114**	6	VALVE GP-MODULATING (24-VOLT) (TRANSMISSION CLUTCH)	266
Y	10	1	**134-2252**	1	SENSOR GP-TEMPERATURE (TRANSMISSION OIL)	161
C	11	1	**3J-1907**	3	SEAL-O-RING	
	12	1	**2P-1692**	1	SEAL-O-RING	
M	13	1	**8T-4177**	1	BOLT (M8X1.25X90-MM)	
CM	14	1	**5P-8347**	4	BOLT (M8X1.25X70-MM)	
	15	1	**9M-1974**	5	WASHER-HARD (8.8X16X2-MM THK)	
C	16	1	**6V-0484**	1	ADAPTER-O-RING	

C-CHANGE FROM PREVIOUS TYPE
M-METRIC PART
Y-SEPARATE ILLUSTRATION

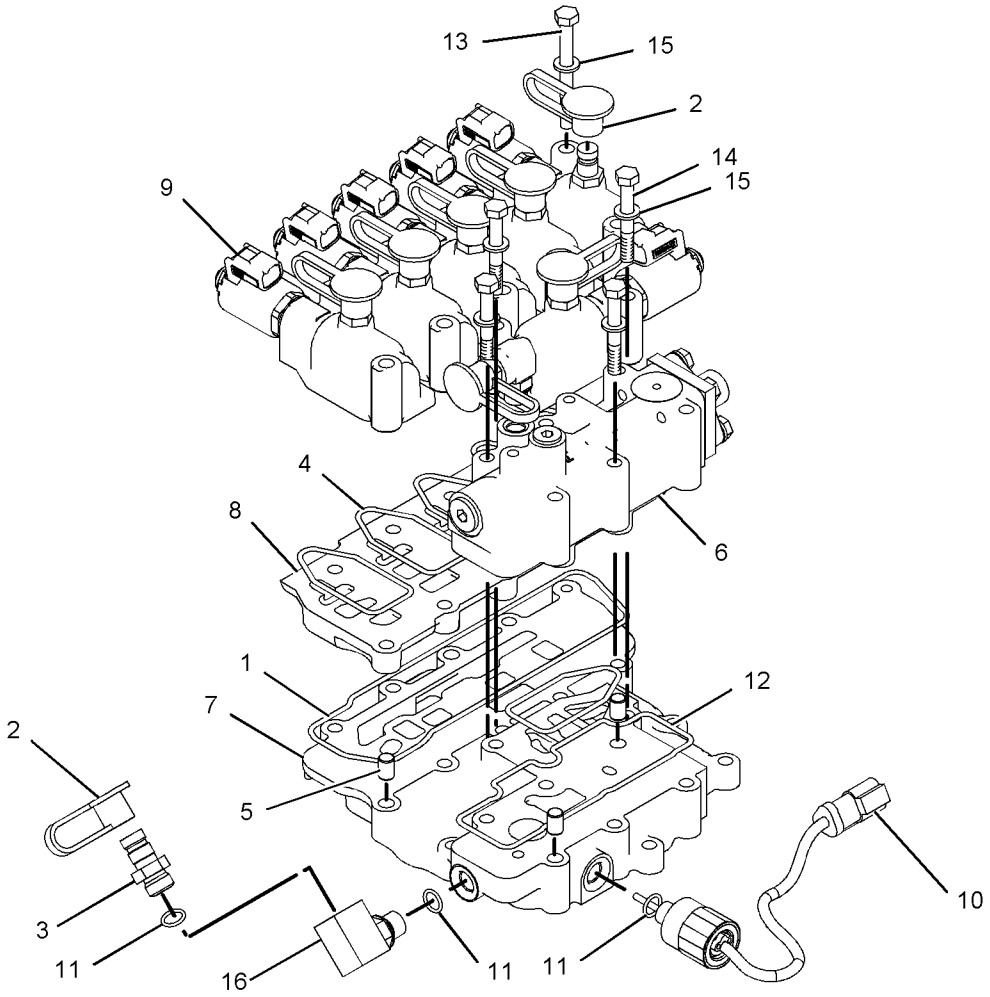

GRAPHIC #1 **<END>** g01085936

305-0635 VALVE GP-TRANSMISSION CONTROL

S/N: J2Y1-UP

PART OF 290-1257 TRANSMISSION AR

SMCS-3073, 3167 **i03626120**

NOTE	REF NO	GRAPHIC REF	PART NUMBER	QTY	PART NAME 1 2 3 4 5 6 (PRODUCT LEVEL)	SEE PAGE
	1	1	**3S-2093**	17	STRAP-CABLE	
	2	1	**8E-7841**	2	CLIP AS-CONNECTING	
	3	1	**9L-9068**	2	DOWEL	
Y	4	1	*200-2043*	1	VALVE GP-TRANSMISSION CONTROL (BASIC)	269
	5	1	**264-4297**	1	SENSOR GP-TEMPERATURE (TORQUE CONVERTER OIL)	
		1	**137-6645**	1	PAD (CONNECTOR)	
	6	1	**305-0632**	1	HARNESS AS-CONTROL (TRANSMISSION)	
		1	**155-2270**	12	KIT-CONNECTING PLUG (2-PIN)	
		1	**155-2260**	2	KIT-CONNECTING PLUG (3-PIN)	
					(EACH PLUG KIT INCLUDES PLUG AS, WEDGE & INTERFACE SEAL)	
		1	**167-3693**	1	PLUG AS-CONNECTOR (31-PIN)	
		1	**8T-8737**	7	PLUG-SEAL	
		1	**102-8803**	1	KIT-RECEPTACLE (3-PIN)	
					(INCLUDES RECEPTACLE AS & WEDGE)	
E		1	**114-8843**		SLEEVE-PLASTIC (310-CM)	
		1	**180-9340**	57	SOCKET-CONNECTOR (14-GA TO 18-GA)	
		1	**2L-8076**	1	TERMINAL-RING (14-GA TO 16-GA, NO. 10 SCREW)	
E		1	**125-7874**		TUBE-HEAT SHRINK (5.72-MM DIA) (15-CM)	
	7	1	**107-3114**	1	SEAL-O-RING	
	8	1	**130-5300**	2	CLIP	
	9	1	**132-5789**	7	CLIP	
Y	10	1	**183-8597**	3	SENSOR GP-SPEED (TRANSMISSION OUTPUT)	160
	11	1	**196-1185**	2	SENSOR GP-SPEED (TRANSMISSION OUTPUT)	
					(EACH INCLUDES)	
		1	**102-8802**	1	KIT-RECEPTACLE (2-PIN)	
					(INCLUDES RECEPTACLE AS & WEDGE)	
		1	**186-3735**	2	PIN-CONNECTOR (16-GA TO 18-GA)	
E		1	**9X-1813**		SLEEVE (14-CM)	
		1	**171-5349**	1	STRAP-MARKER	
	12	1	**3K-0360**	6	SEAL-O-RING	
	13	1	**4P-7581**	4	CLIP	
M	14	1	**6V-3821**	6	BOLT (M8X1.25X110-MM)	
M	15	1	**6V-3822**	1	BOLT (M10X1.5X35-MM)	
M	16	1	**6V-5215**	1	BOLT (M8X1.25X16-MM)	
M	17	1	**6V-5217**	2	BOLT (M8X1.25X20-MM)	
M	18	1	**6V-5218**	4	BOLT (M8X1.25X35-MM)	
M	19	1	**6V-5223**	7	BOLT (M8X1.25X100-MM)	
	20	1	**6V-5839**	1	WASHER (11X21X2.5-MM THK)	
	21	1	**8M-5251**	5	SEAL-O-RING	
	22	1	**9M-1974**	20	WASHER-HARD (8.8X16X2-MM THK)	

E-ORDER BY THE CENTIMETER
M-METRIC PART
Y-SEPARATE ILLUSTRATION

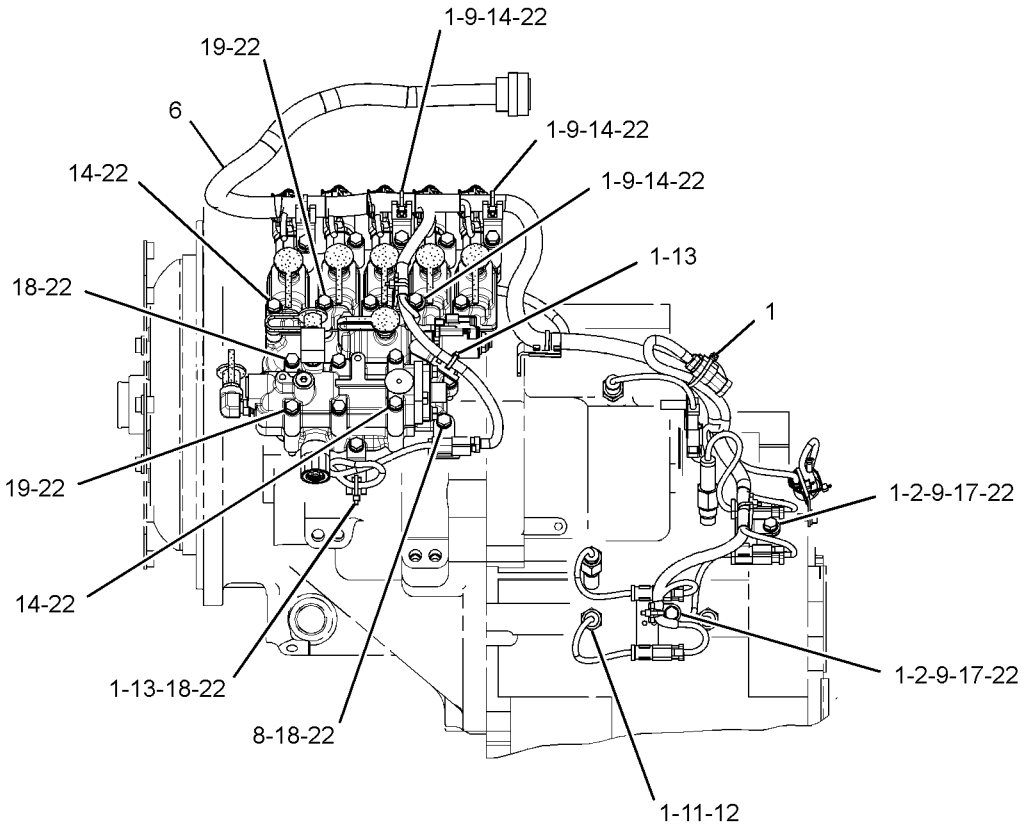

LEFT SIDE VIEW

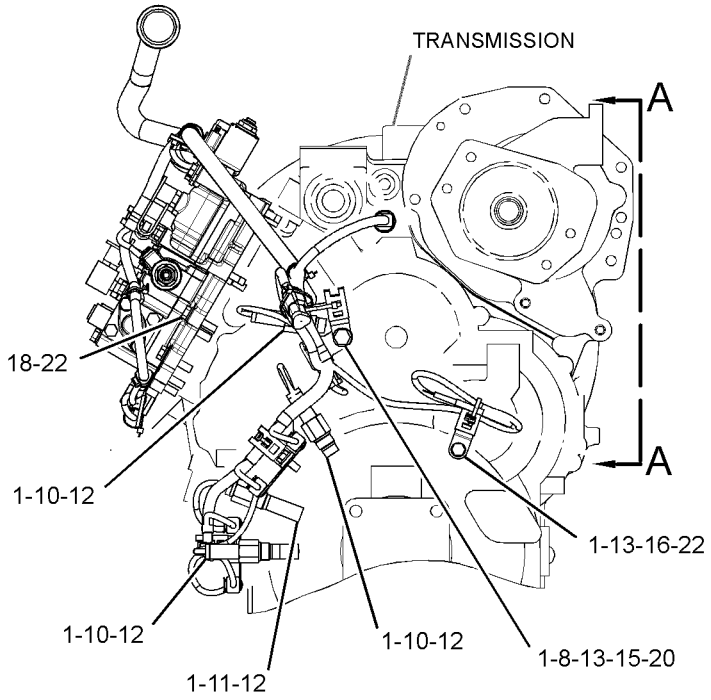

FRONT VIEW

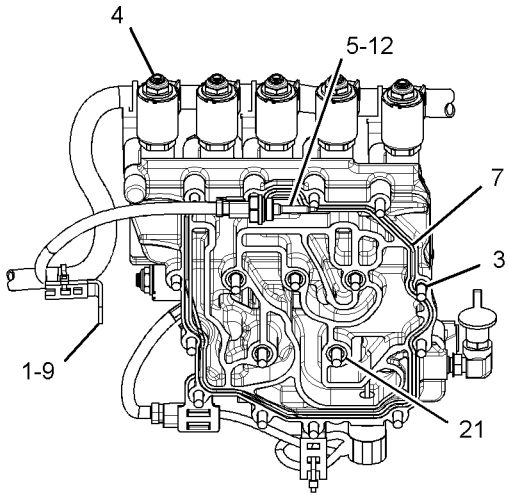

VIEW A-A

GRAPHIC #1 **<END>** g01398575

202-0420 BOX GP-BATTERY

S/N: KLN1-UP

PART OF 289-8841 CHASSIS AR

SMCS-7257 **i02106022**

NOTE	REF NO	GRAPHIC REF	PART NUMBER	QTY	PART NAME 1 2 3 4 5 6 (PRODUCT LEVEL)	SEE PAGE
C	1	1	**176-2435**	2	BOX AS	
					(EACH INCLUDES)	
M	1A	1	**8T-3490**	6	NUT-WELD (M10X1.5 THD)	
C	2	1	**237-0120**	2	COVER	
C	3	1	**7X-7729**	16	WASHER (11X25X3-MM THK)	
CM	4	1	**8T-4136**	16	BOLT (M10X1.5X25-MM)	

C-CHANGE FROM PREVIOUS TYPE
M-METRIC PART

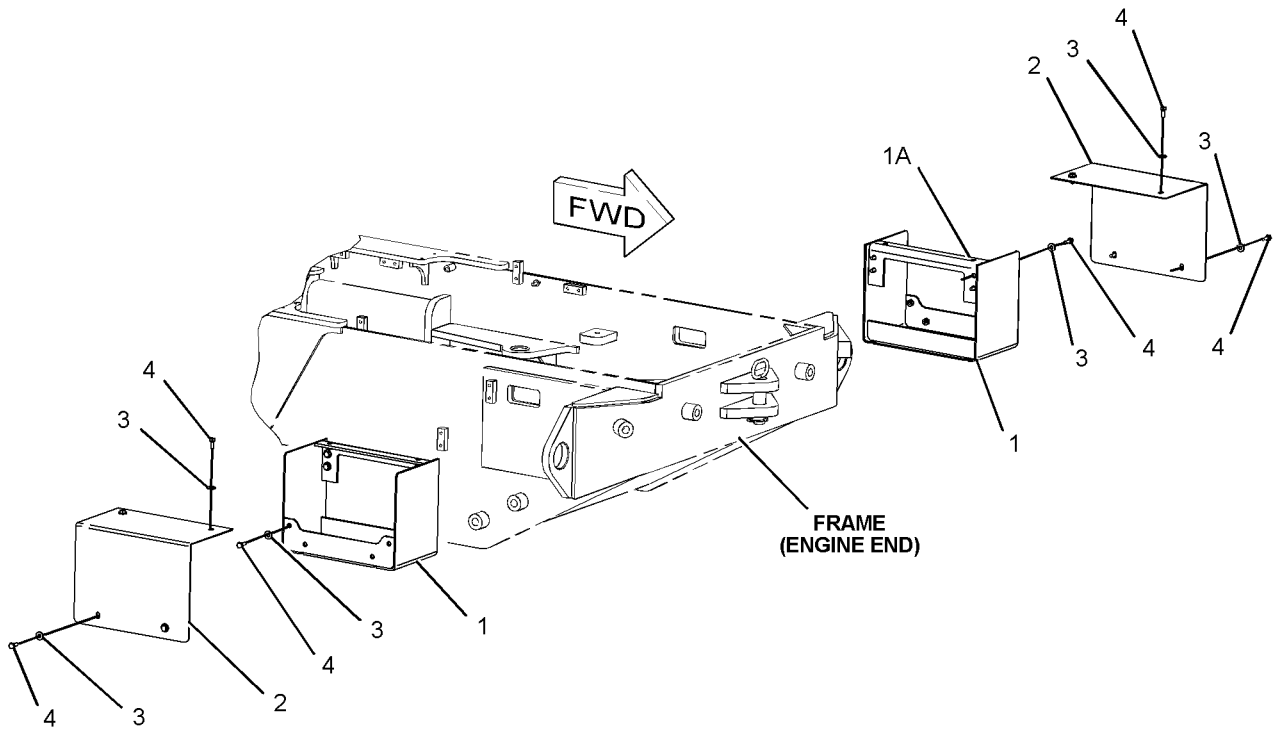

GRAPHIC #1 **<END>** g01077397

FRAME AND BODY

180-8984 COUNTERWEIGHT GP

S/N: KLN1-UP
AN ATTACHMENT

SMCS-7056 **i03023631**

NOTE	REF NO	GRAPHIC REF	PART NUMBER	QTY	PART NAME 1 2 3 4 5 6 (PRODUCT LEVEL)	SEE PAGE
	1	1	**180-8996**	1	COUNTERWEIGHT AS (RH)	
	2	1	**180-8997**	1	COUNTERWEIGHT AS (LH)	
M	3	1	**8T-0363**	4	BOLT (M24X3X120-MM)	
	4	1	**8T-1482**	4	WASHER-HARD (26X50X8-MM THK)	
M	5	1	**8T-4179**	2	BOLT (M12X1.75X20-MM)	
	6	1	**8T-4223**	2	WASHER-HARD (13.5X25.5X3-MM THK)	

M-METRIC PART

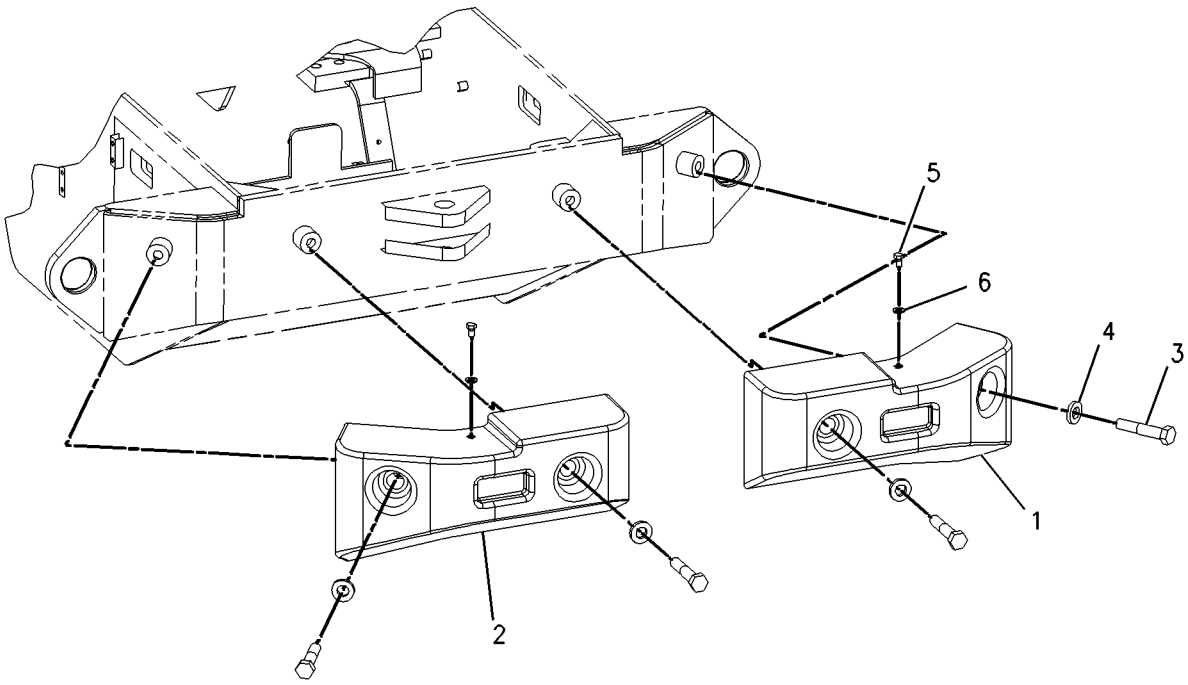

GRAPHIC #1 **<END>** g00894434

257-1625 COUNTERWEIGHT GP

S/N: KLN1-UP

CANNOT BE USED WITH 180-8984—PAGE 273

AN ATTACHMENT

SMCS-7056 **i03571149**

NOTE	REF NO	GRAPHIC REF	PART NUMBER	QTY	PART NAME 1 2 3 4 5 6 (PRODUCT LEVEL)	SEE PAGE
	1	1	**146-0058**	1	COUNTERWEIGHT (RH)	
	2	1	**148-7819**	1	COUNTERWEIGHT (LH)	
	3	1	**180-8996**	1	COUNTERWEIGHT AS (RH)	
	4	1	**180-8997**	1	COUNTERWEIGHT AS (LH)	
M	5	1	**8T-0363**	4	BOLT (M24X3X120-MM)	
	6	1	**8T-1482**	8	WASHER-HARD (26X50X8-MM THK)	
M	7	1	**8T-4179**	2	BOLT (M12X1.75X20-MM)	
	8	1	**8T-4223**	2	WASHER-HARD (13.5X25.5X3-MM THK)	
M	9	1	**8T-4649**	4	BOLT (M24X3X140-MM)	

M-METRIC PART

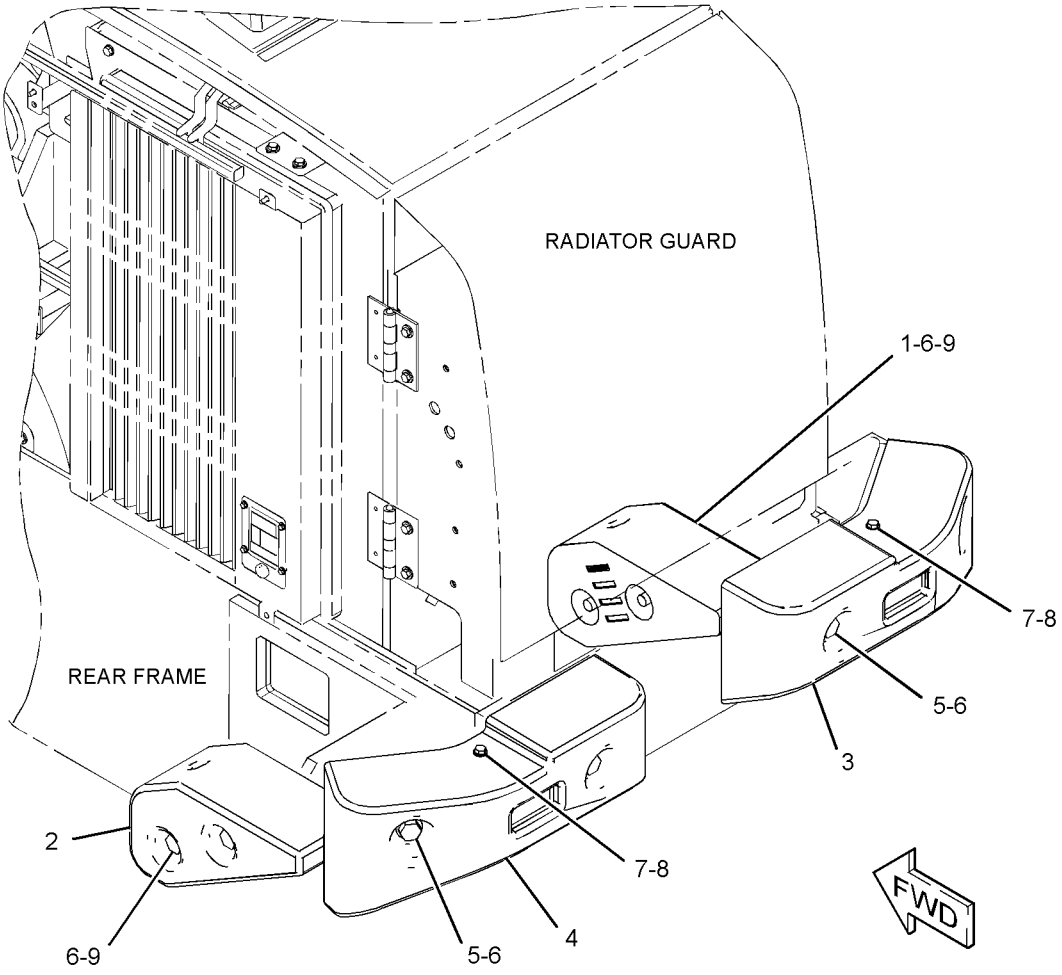

GRAPHIC #1 **<END>** g01407285

301-4353 COVER GP-ACCESS—CAB FLOOR

S/N: KLN1-UP

PART OF 289-8974 AXLE AR-FIXED

SMCS-726A **i03039661**

NOTE	REF NO	GRAPHIC REF	PART NUMBER	QTY	PART NAME 1 2 3 4 5 6 (PRODUCT LEVEL)	SEE PAGE
	1	1	**4H-3001**	1	PLUG-BUTTON	
	2	1	**301-4354**	1	PLATE	
	3	1	**301-4355**	1	TREAD	
	4	1	**9X-2038**	2	WASHER (7X19X2-MM THK)	
M	5	1	**9X-2045**	2	SCREW-TRUSS HEAD (M6X1X20-MM)	

M-METRIC PART

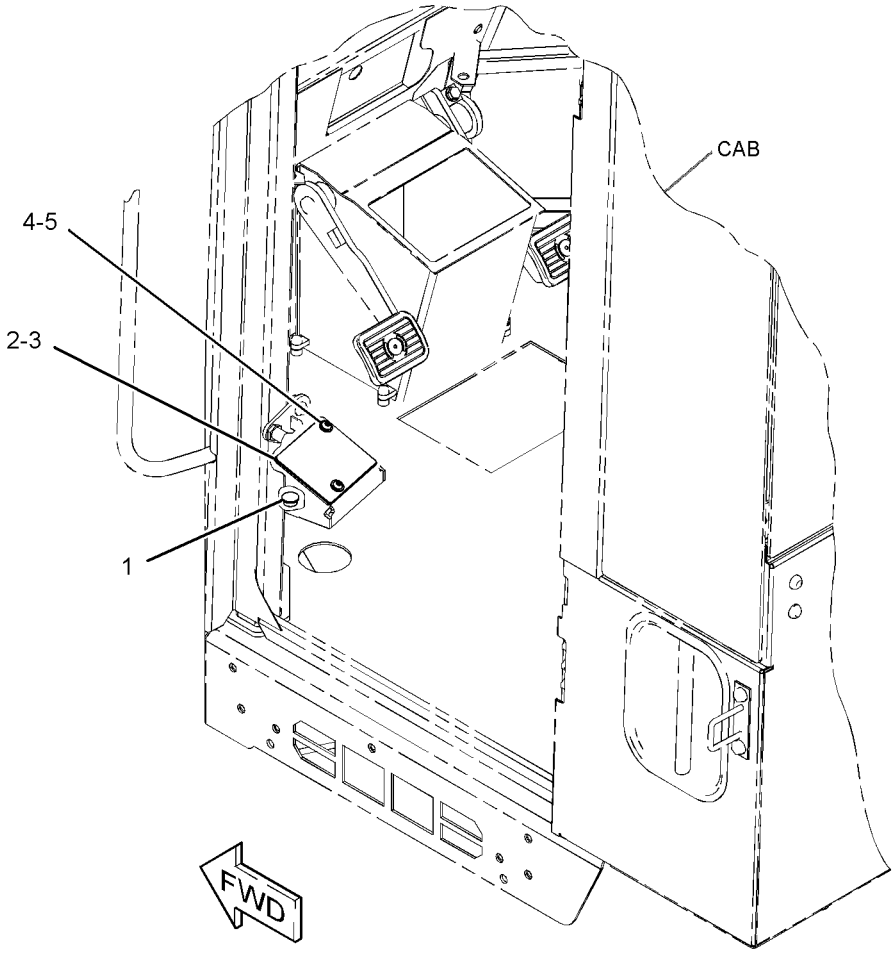

GRAPHIC #1 **<END>** g01391815

289-8960 DOOR GP-ACCESS—HOOD SIDE

S/N: KLN1-337

PART OF 289-8841 CHASSIS AR

SMCS-7273 **i03016174**

NOTE	REF NO	GRAPHIC REF	PART NUMBER	QTY	PART NAME 1 2 3 4 5 6 (PRODUCT LEVEL)	SEE PAGE
	1	1	**198-8945**	1	DOOR AS-HOOD (RH)	
	2	1	*289-8900*	1	DOOR AS-ACCESS	
	2A	1	**198-8946**	1	DOOR AS-HOOD (LH)	
	2B	1	**295-4221**	1	INSULATION	
	2C	1	**295-4222**	1	INSULATION	
	2D	1	**295-4223**	1	INSULATION	

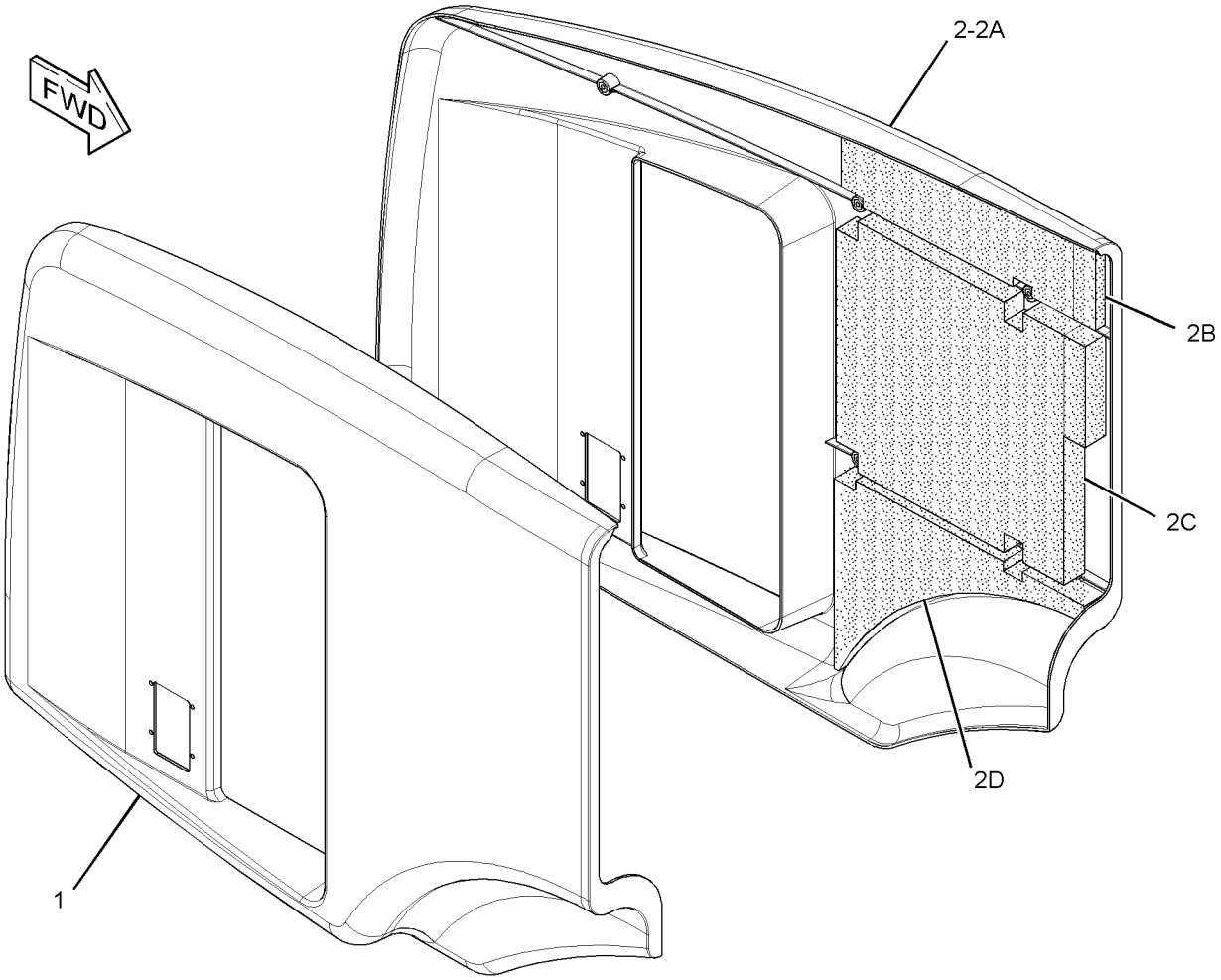

GRAPHIC #1 **<END>** g01403709

289-8960 DOOR GP-ACCESS—HOOD SIDE

S/N: KLN338-UP

PART OF 289-8841 CHASSIS AR

SMCS-7273 **i03409900**

NOTE	REF NO	GRAPHIC REF	PART NUMBER	QTY	PART NAME 1 2 3 4 5 6 (PRODUCT LEVEL)	SEE PAGE
	1	1	**198-8945**	1	DOOR AS-HOOD (RH)	
C	2	1	**198-8946**	1	DOOR AS-HOOD (LH)	
C	3	1	**315-5520**	1	INSULATION	

C-CHANGE FROM PREVIOUS TYPE

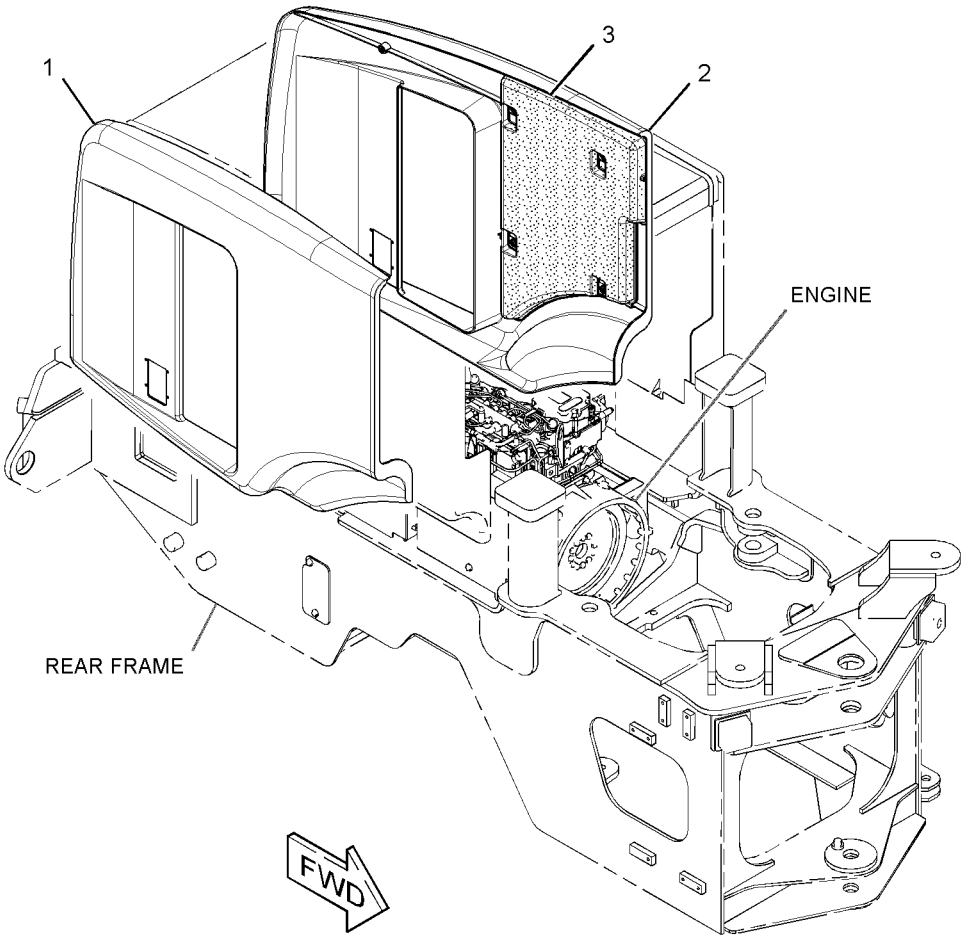

GRAPHIC #1 **<END>** g01792293

FRAME AND BODY

140-9295 FENDER GP-FRONT

S/N: KLN1-UP
AN ATTACHMENT

SMCS-7252 **i03036782**

NOTE	REF NO	GRAPHIC REF	PART NUMBER	QTY	PART NAME 1 2 3 4 5 6 (PRODUCT LEVEL)	SEE PAGE
	1	1	**214-9564**	8	PLATE	
	2	1	**140-9296**	2	BRACKET AS	
	3	1	**214-9563**	2	FENDER	
	4	1	**7X-7729**	8	WASHER (11X25X3-MM THK)	
	5	1	**204-0813**	8	BOLT (M6X1X40-MM)	
M	6	1	**8T-4136**	8	BOLT (M10X1.5X25-MM)	
	7	1	**8T-4205**	8	WASHER-HARD (7.2X14.5X2-MM THK)	

M-METRIC PART

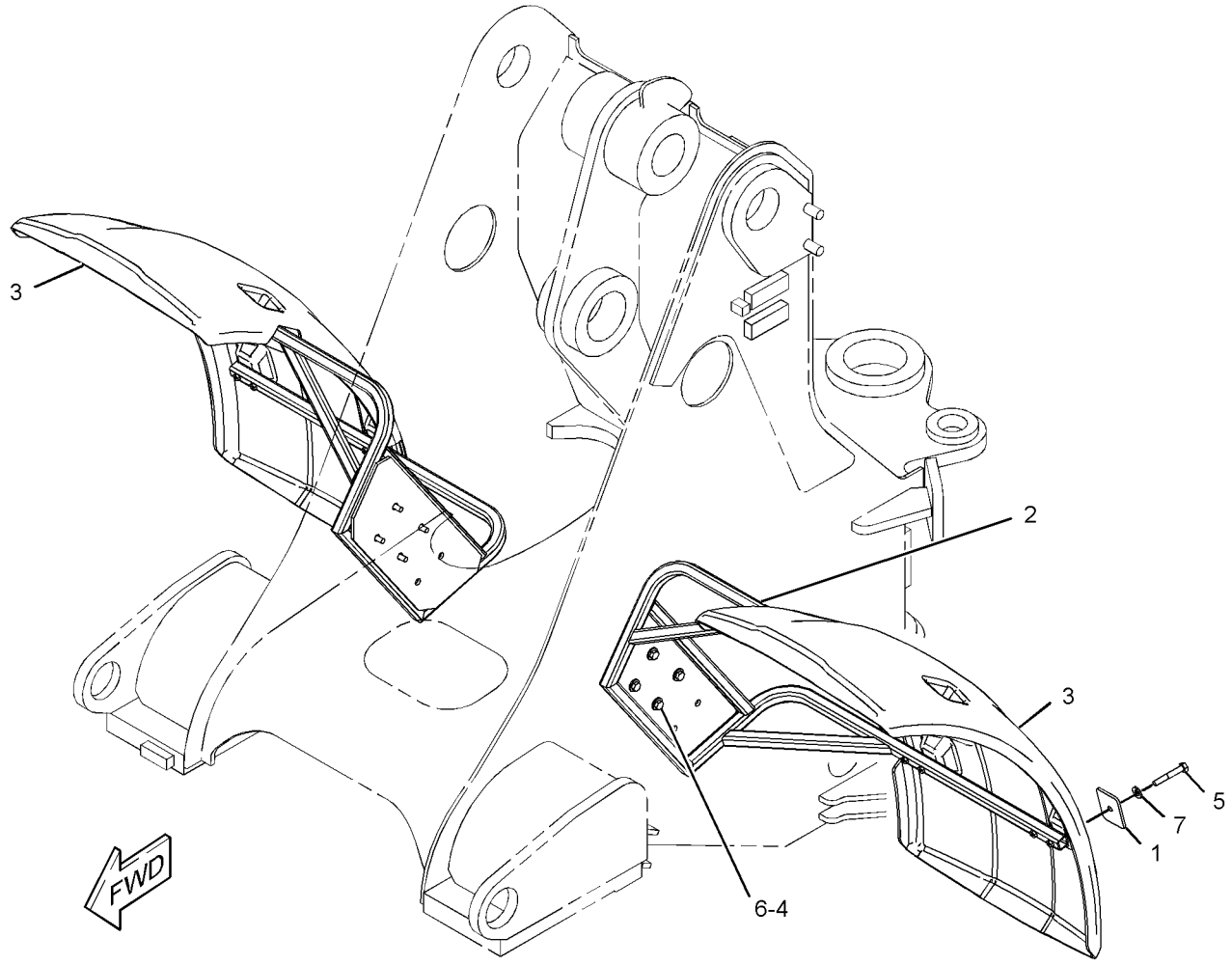

GRAPHIC #1 **<END>** g01545538

FRAME AND BODY

257-1641 FRAME AS-REAR

S/N: KLN1-UP

PART OF 257-1640 FRAME GP-REAR

SMCS-7051 **i03105926**

NOTE	REF NO	GRAPHIC REF	PART NUMBER	QTY	PART NAME 1 2 3 4 5 6 (PRODUCT LEVEL)	SEE PAGE
	1	1	**092-1136**	2	BOSS (M10X1.5-THD)	
	2	1	**128-7954**	2	BLOCK	
M	3	1	**110-2023**	4	STUD-WELD (M10X1.5X25-MM)	
	4	1	**7T-1099**	9	LINK	
M	5	1	**8T-3490**	4	NUT-WELD (M10X1.5-THD)	
M	6	1	**8Y-4489**	5	BOSS (M10X1.5-THD)	
	7	1	**8Y-7023**	3	BOSS (M12X1.75-THD)	
	8	1	**9C-6809**	21	BLOCK (M10X1.5-THD)	
	9	1	**9C-7862**	4	BOSS (M24X3-THD)	
M	10	1	**9R-2672**	20	BOSS (M10X1.5X20-MM)	
	11	1	**9R-9282**	1	BOSS (M10X1.5-THD)	
	12	1	**9T-3598**	9	BOSS (M10X1.5-THD)	

M-METRIC PART

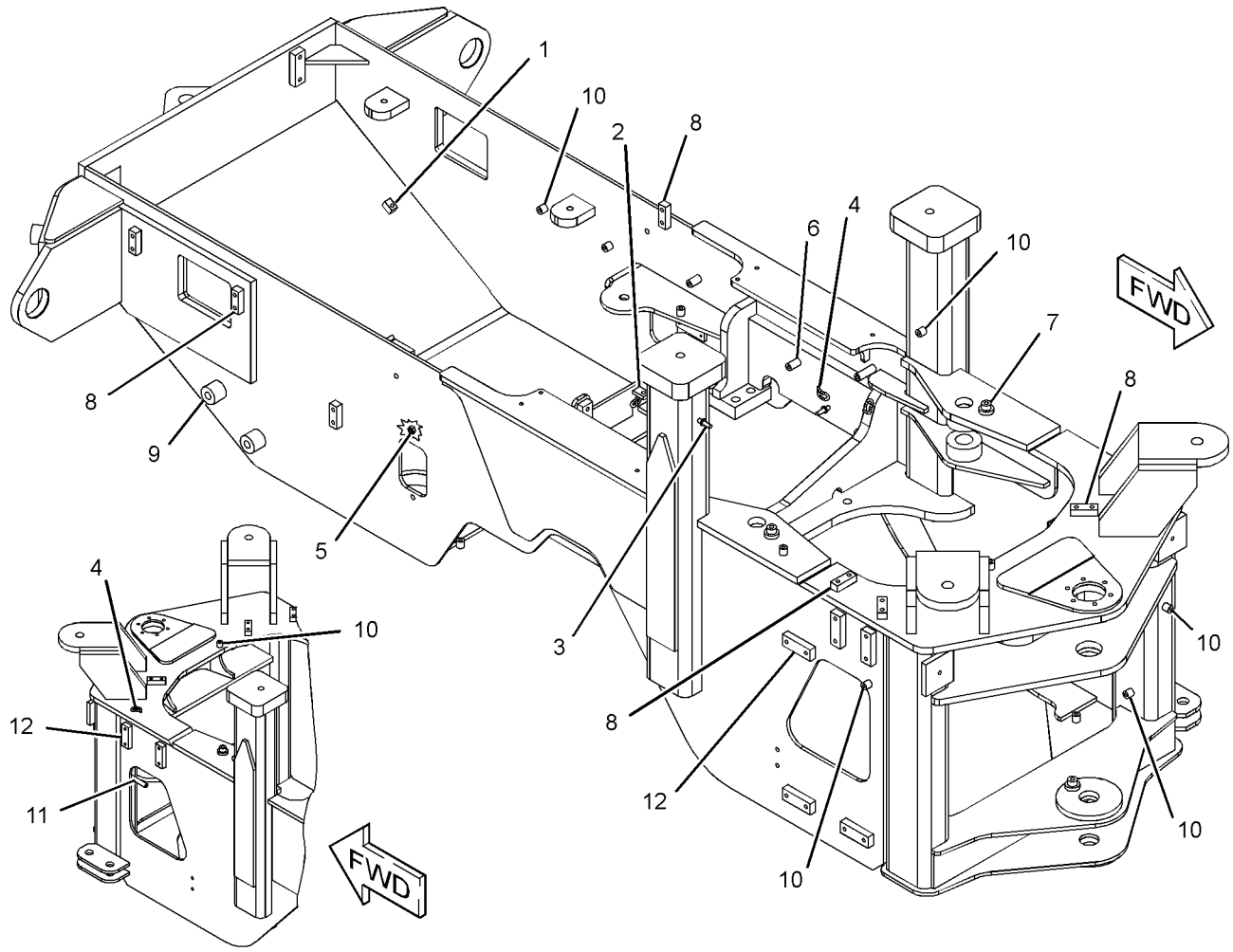

GRAPHIC #1 **<END>** g01392572

FRAME AND BODY

257-1650 FRAME GP-LOADER

S/N: KLN1-UP

PART OF 289-8841 CHASSIS AR

SMCS-7054 **i02989167**

NOTE	REF NO	GRAPHIC REF	PART NUMBER	QTY	PART NAME 1 2 3 4 5 6 (PRODUCT LEVEL)	SEE PAGE
Y	1	1	**257-1651**	1	FRAME GP-LOADER	281

Y-SEPARATE ILLUSTRATION

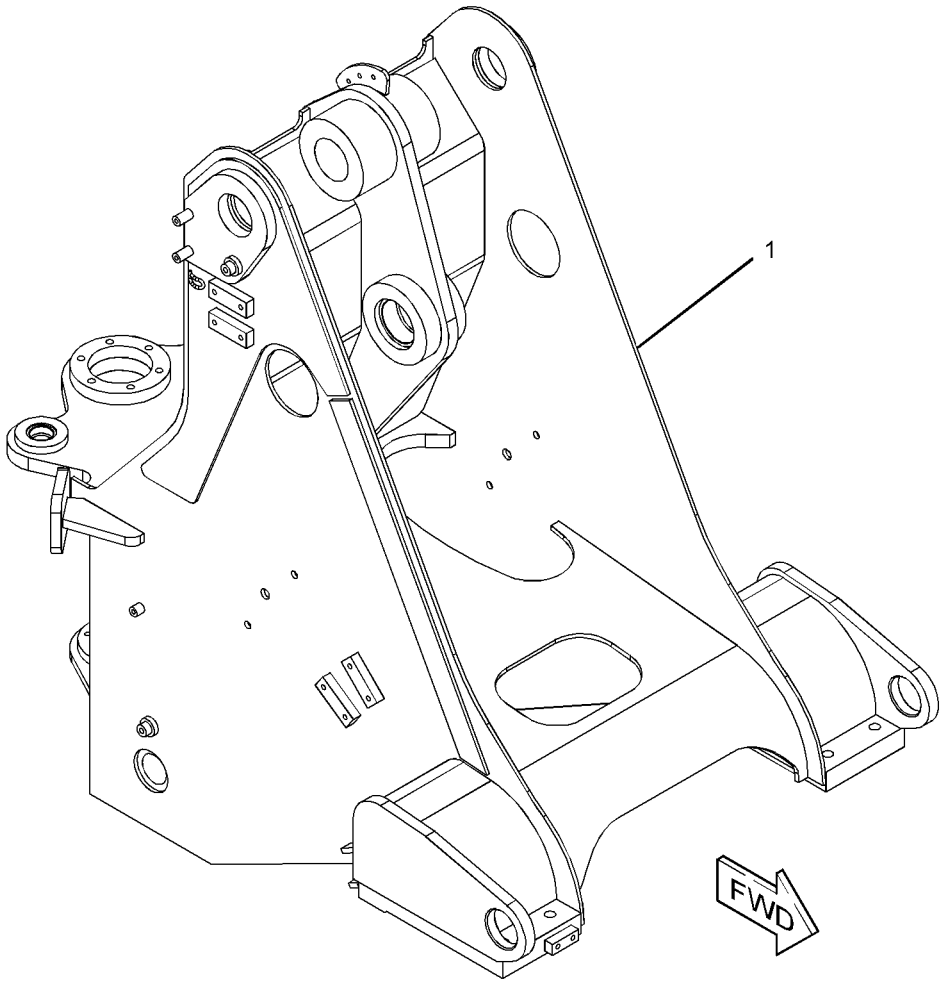

GRAPHIC #1 **<END>** g01395587

FRAME AND BODY

257-1651 FRAME GP-LOADER

S/N: KLN1-UP

PART OF 257-1650 FRAME GP-LOADER

SMCS-7054 **i02989288**

NOTE	REF NO	GRAPHIC REF	PART NUMBER	QTY	PART NAME 1 2 3 4 5 6 (PRODUCT LEVEL)	SEE PAGE
	1	1	**092-1136**	1	BOSS (M10X1.5-THD)	
Y	2	1	*257-1652*	1	FRAME GP-LOADER	282
	3	1	**7T-1099**	18	LINK	
M	4	1	**8Y-4489**	9	BOSS (M10X1.5-THD)	
	5	1	**8Y-7023**	3	BOSS (M12X1.75-THD)	
	6	1	**9C-6809**	7	BLOCK (M10X1.5-THD)	
M	7	1	**9R-2613**	1	BOSS-WELD (M10X1.5X25-MM)	
M	8	1	**9R-2672**	3	BOSS (M10X1.5X20-MM)	
	9	1	**9T-3598**	11	BOSS (M10X1.5-THD)	

M-METRIC PART
Y-SEPARATE ILLUSTRATION

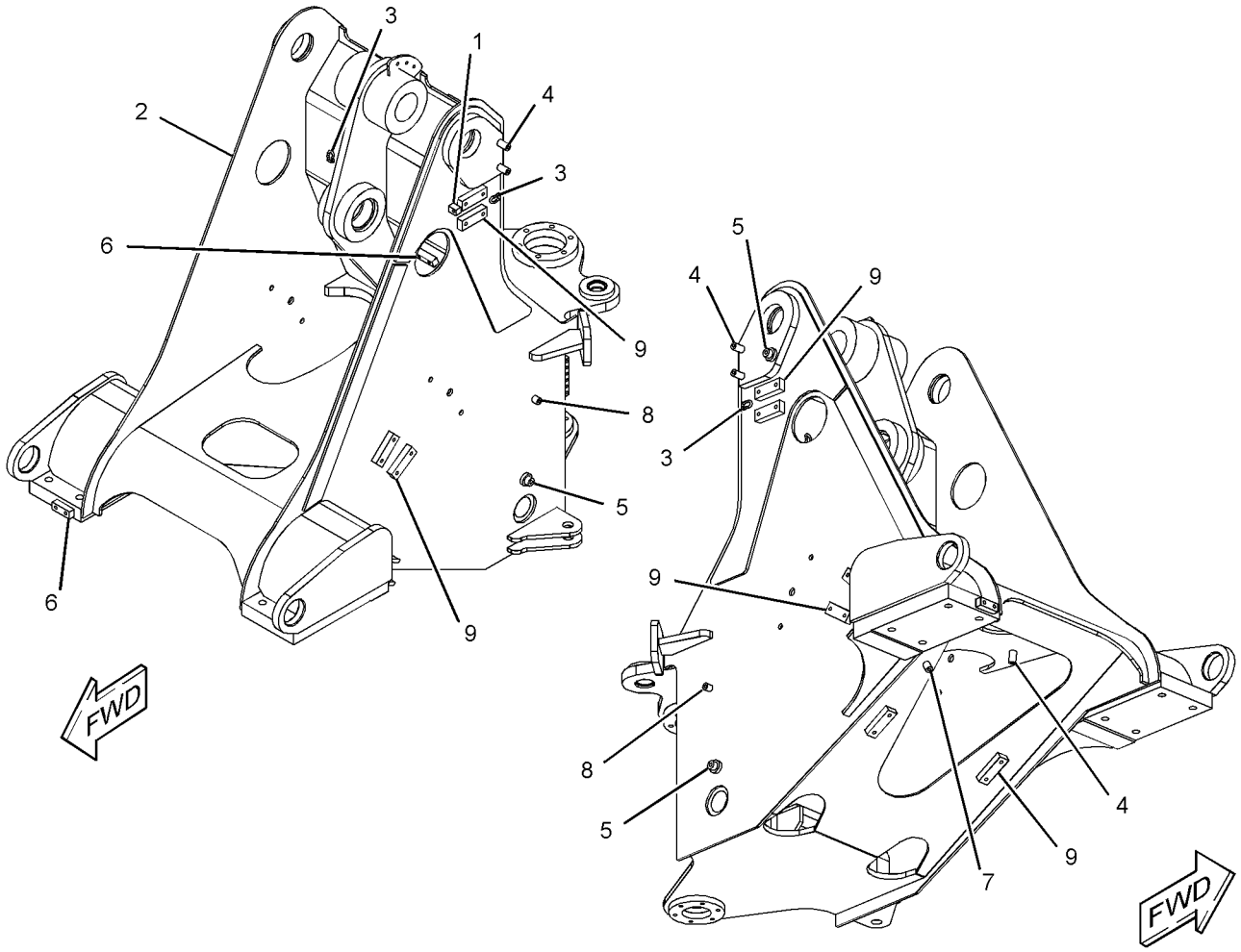

GRAPHIC #1 **<END>** g01397115

FRAME AND BODY

257-1652 FRAME GP-LOADER

S/N: KLN1-UP

PART OF 257-1651 FRAME GP-LOADER

SMCS-7054 **i02989306**

NOTE	REF NO	GRAPHIC REF	PART NUMBER	QTY	PART NAME 1 2 3 4 5 6 (PRODUCT LEVEL)	SEE PAGE
	1	1	**171-3667**	1	BEARING-SLEEVE	
	2	1	**4K-4709**	2	BEARING-SLEEVE	

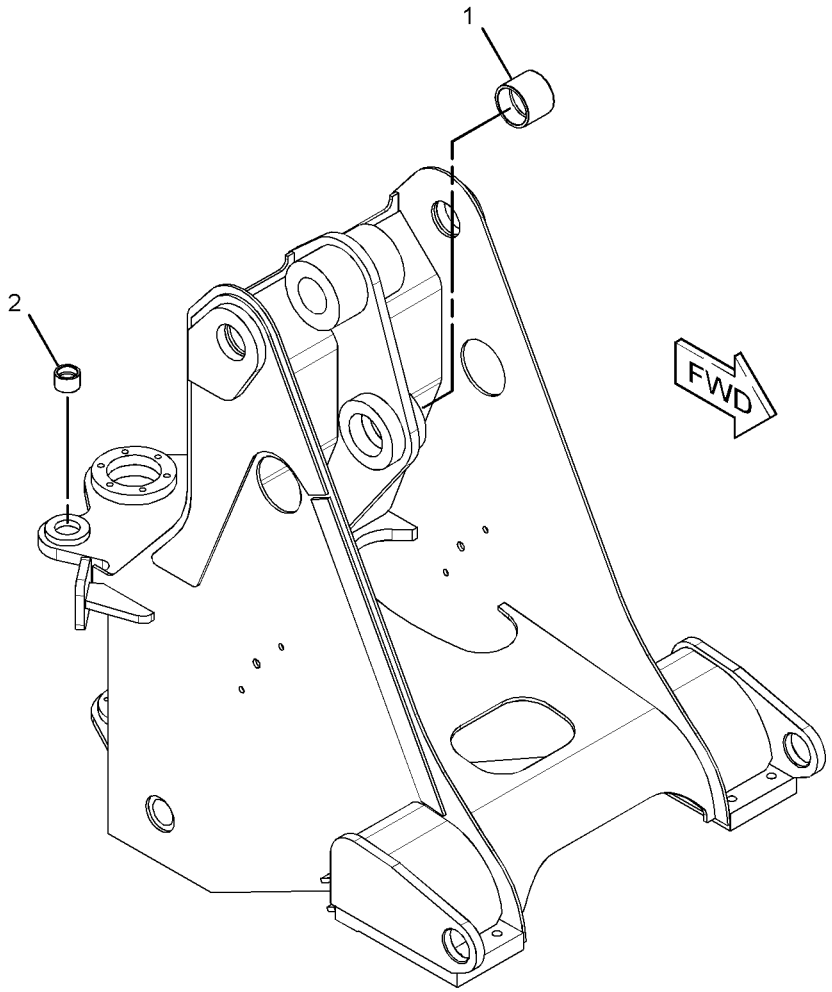

GRAPHIC #1 **<END>** g01398340

257-1640 FRAME GP-REAR

S/N: KLN1-UP

PART OF 289-8841 CHASSIS AR

SMCS-7051 **i02989165**

NOTE	REF NO	GRAPHIC REF	PART NUMBER	QTY	PART NAME 1 2 3 4 5 6 (PRODUCT LEVEL)	SEE PAGE
	1	1	**103-5796**	1	PIN-KEEPER	
	2	1	**112-0885**	2	PAD AS-RESILIENT	
	3	1	**132-2558**	1	PIN AS	
	4	1	**257-1615**	2	PLATE	
Y	5	1	**257-1641**	1	FRAME AS-REAR (ENGINE END)	279
	6	1	**7X-7729**	4	WASHER (11X25X3-MM THK)	
	7	1	**8T-4121**	2	WASHER-HARD (11X21X2.5-MM THK)	
M	8	1	**8T-4137**	2	BOLT (M10X1.5X20-MM)	
M	9	1	**8T-4196**	4	BOLT (M10X1.5X35-MM)	

M-METRIC PART
Y-SEPARATE ILLUSTRATION

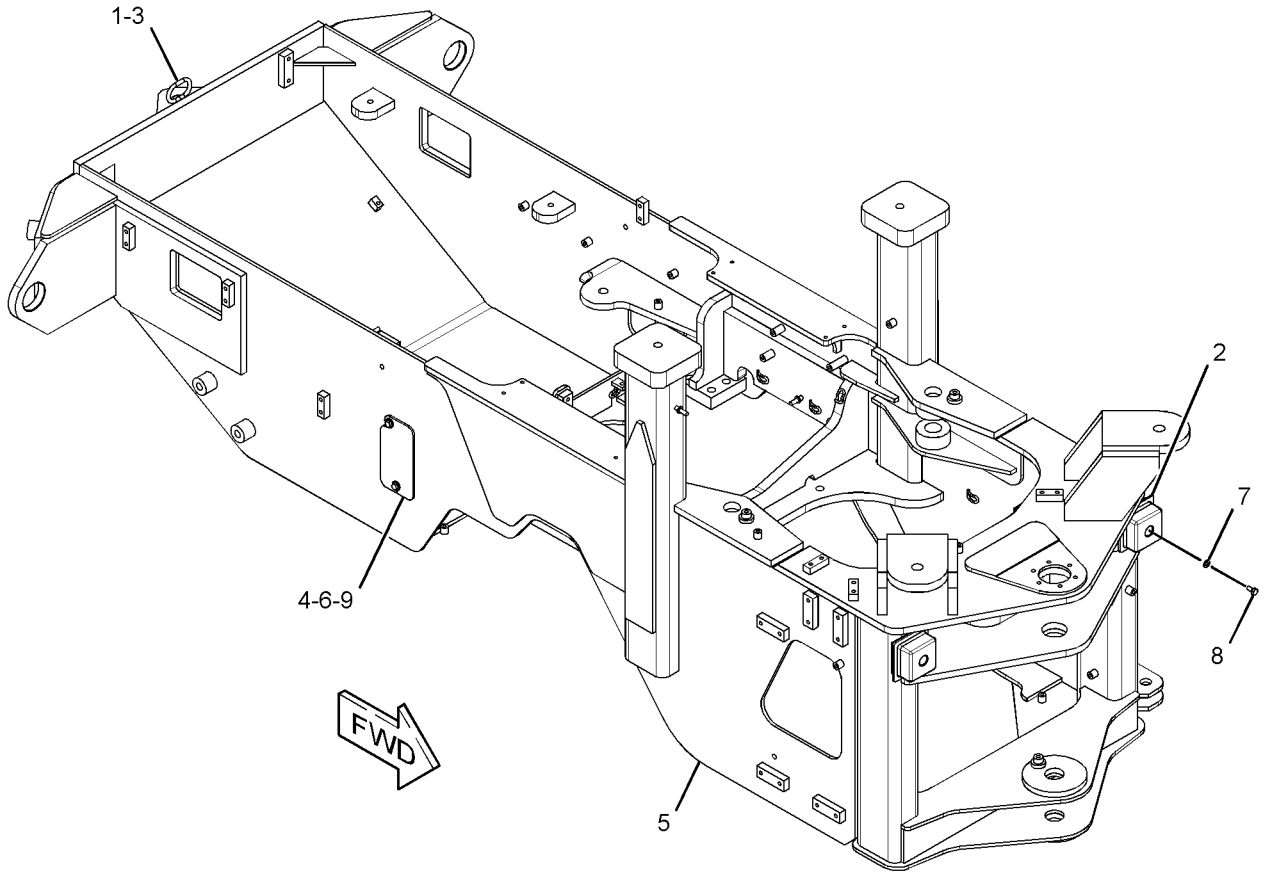

GRAPHIC #1 **<END>** g01392081

293-5221 GUARD GP-CRANKCASE

S/N: KLN1-UP

AN ATTACHMENT

SMCS-7151 **i03039637**

NOTE	REF NO	GRAPHIC REF	PART NUMBER	QTY	PART NAME 1 2 3 4 5 6 (PRODUCT LEVEL)	SEE PAGE
	1	1	**219-2418**	1	PLATE AS	
M		1	**8T-3490**	2	NUT-WELD (M10X1.5-THD)	
	2	1	**293-5222**	1	PLATE AS	
	3	1	**7X-7729**	4	WASHER (11X25X3-MM THK)	
M	4	1	**8T-4195**	4	BOLT (M10X1.5X30-MM)	

M-METRIC PART

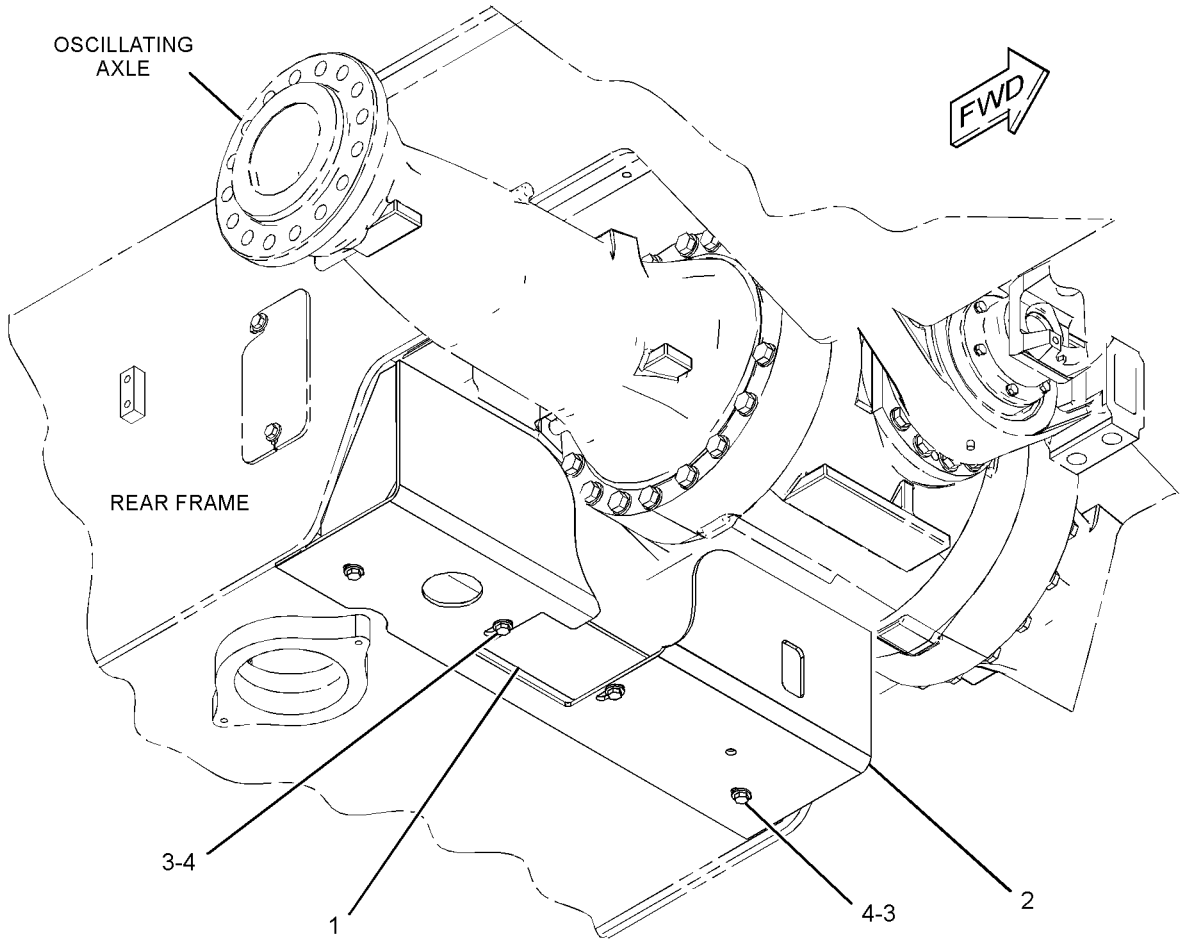

GRAPHIC #1 **<END>** g01444978

290-7213 GUARD GP-DRIVE SHAFT

S/N: KLN1-UP
AN ATTACHMENT

SMCS-7153 **i03018373**

NOTE	REF NO	GRAPHIC REF	PART NUMBER	QTY	PART NAME 1 2 3 4 5 6 (PRODUCT LEVEL)	SEE PAGE
	1	1	**295-0580**	1	GUARD AS	
	2	1	**7X-7729**	4	WASHER (11X25X3-MM THK)	
M	3	1	**8T-4136**	4	BOLT (M10X1.5X25-MM)	

M-METRIC PART

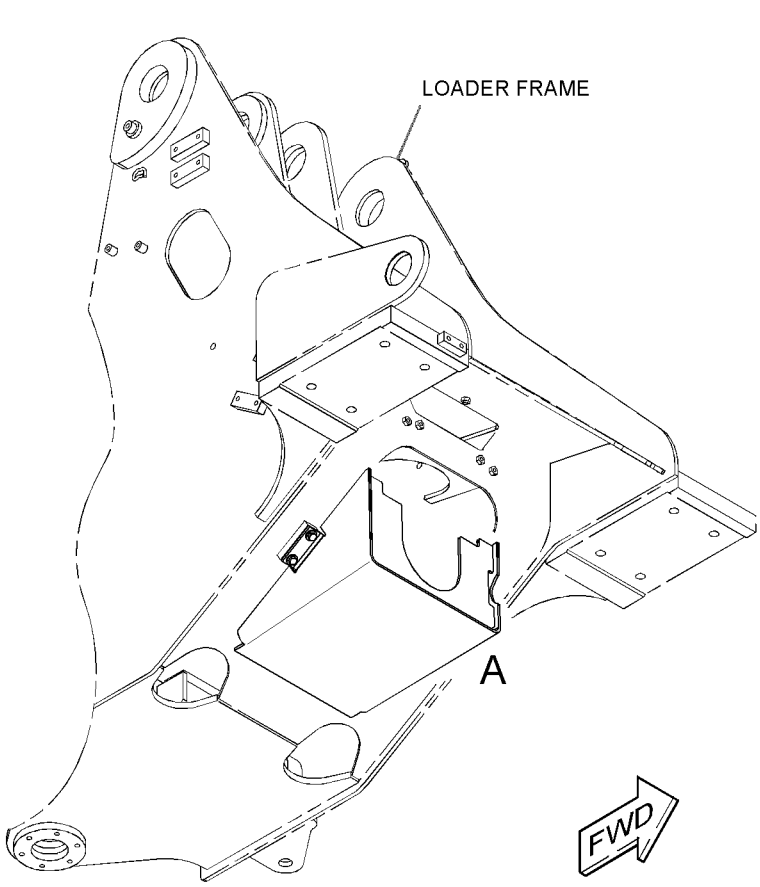

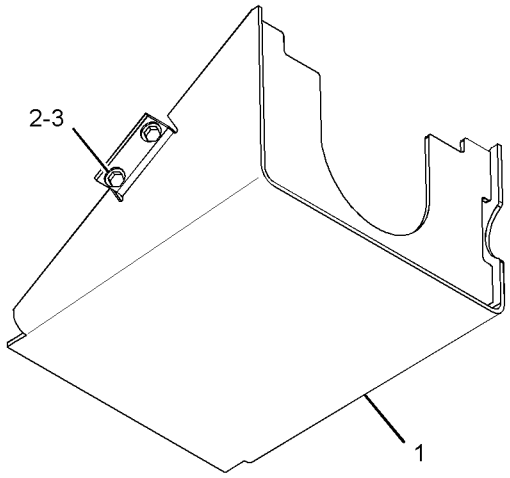

VIEW OF AREA A

GRAPHIC #1

<END>

g01529836

156-4556 GUARD GP-LINES

S/N: KLN1-UP
THREE VALVE
AN ATTACHMENT

SMCS-7167 **i01196406**

NOTE	REF NO	GRAPHIC REF	PART NUMBER	QTY	PART NAME 1 2 3 4 5 6 (PRODUCT LEVEL)	SEE PAGE
	1	1	**7K-1181**	8	STRAP-CABLE	
	2	1	**163-4356**	2	GUARD-HOSE	
	3	1	**5P-7468**	4	CLIP (SLOT)	
	4	1	**5P-7469**	4	CLIP (TAB)	
	5	1	**5P-8444**	4	GROMMET	

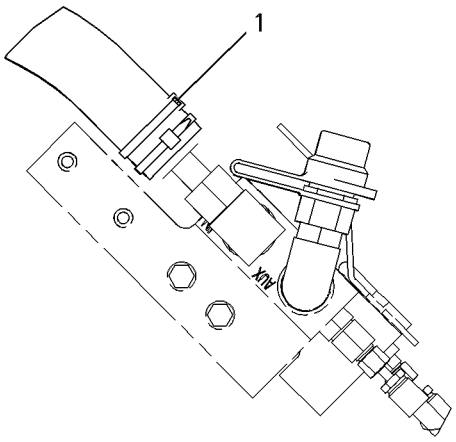

VIEW OF AREA A

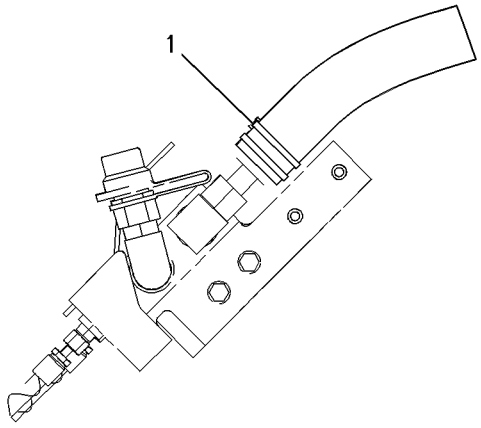

VIEW B-B

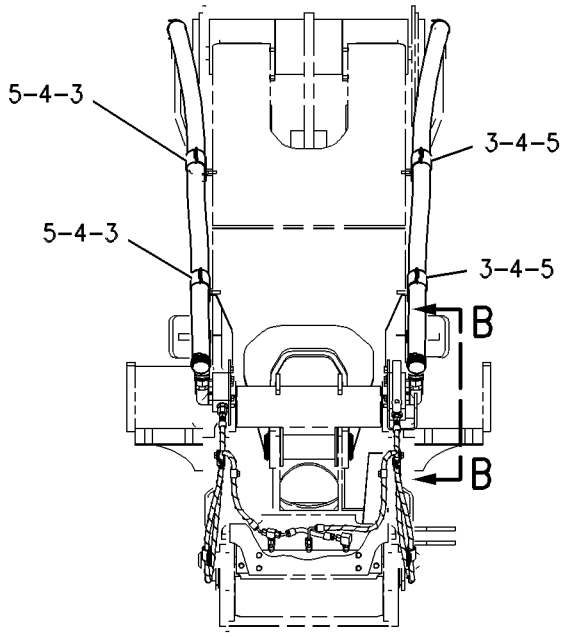

FRONT VIEW

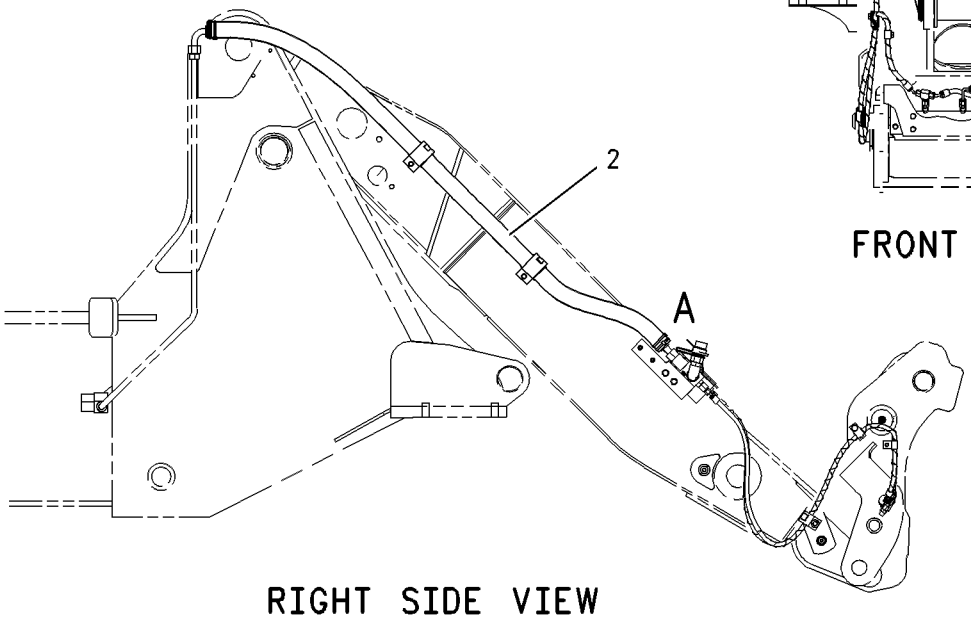

RIGHT SIDE VIEW

GRAPHIC #1 **<END>** g00632844

163-4384 GUARD GP-LINES–COUPLER

S/N: KLN1-UP

AN ATTACHMENT

SMCS-7167 **i03082418**

NOTE	REF NO	GRAPHIC REF	PART NUMBER	QTY	PART NAME 1 2 3 4 5 6 (PRODUCT LEVEL)	SEE PAGE
	1	1	**7K-1181**	8	STRAP - CABLE	
	2	1	**163-4386**	2	GUARD - HOSE	

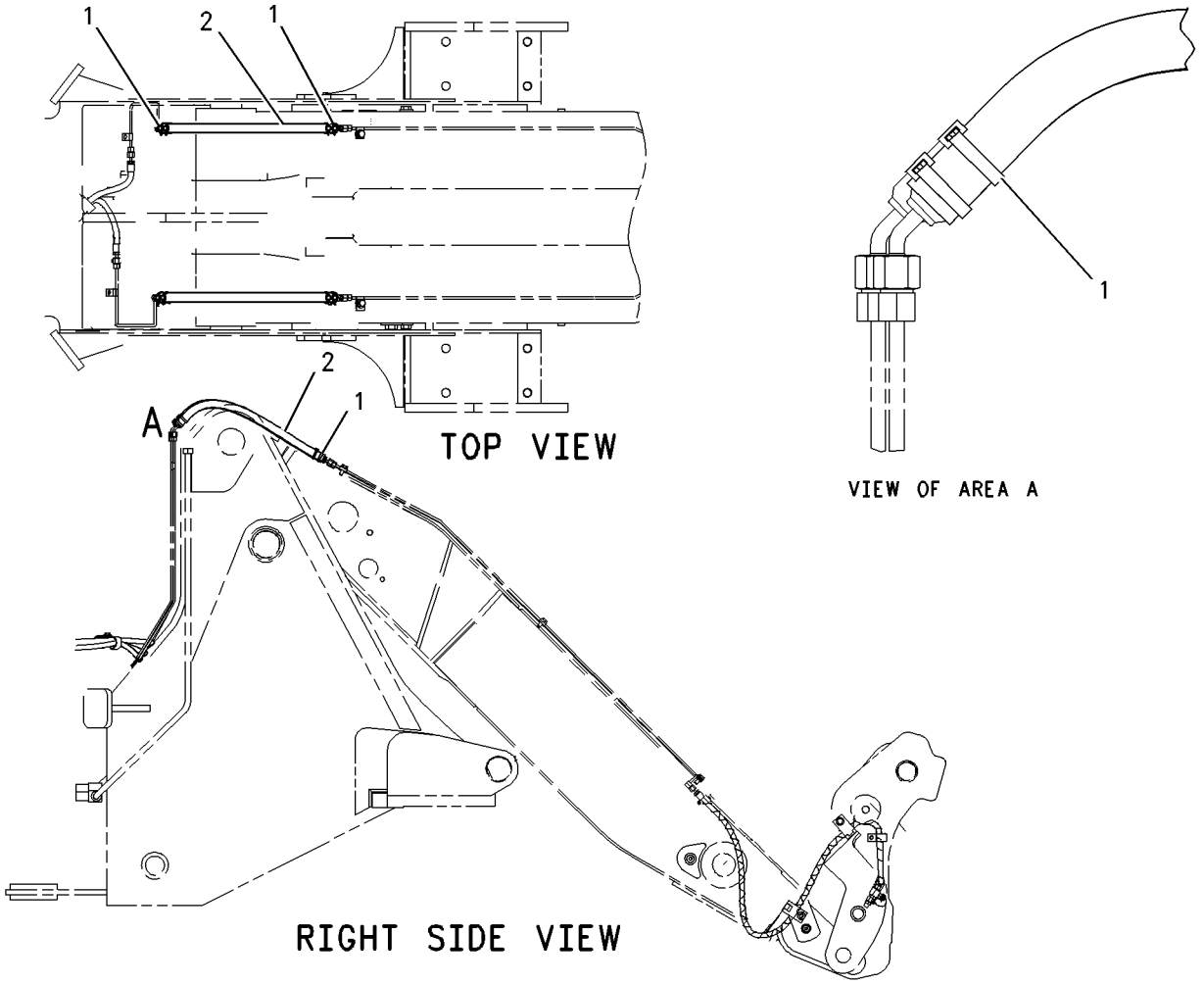

GRAPHIC #1 **<END>** g00812633

176-7585 GUARD GP-LINES

S/N: KLN1-UP
AN ATTACHMENT

SMCS-7167 **i02674374**

NOTE	REF NO	GRAPHIC REF	PART NUMBER	QTY	PART NAME 1 2 3 4 5 6 (PRODUCT LEVEL)	SEE PAGE
	1	1	**7K-1181**	8	STRAP-CABLE	
C	2	1	**278-5641**	1	GUARD-HOSE	
C	3	1	**278-5642**	1	GUARD-HOSE	
	4	1	**6V-0545**	1	GROMMET	

C-CHANGE FROM PREVIOUS TYPE

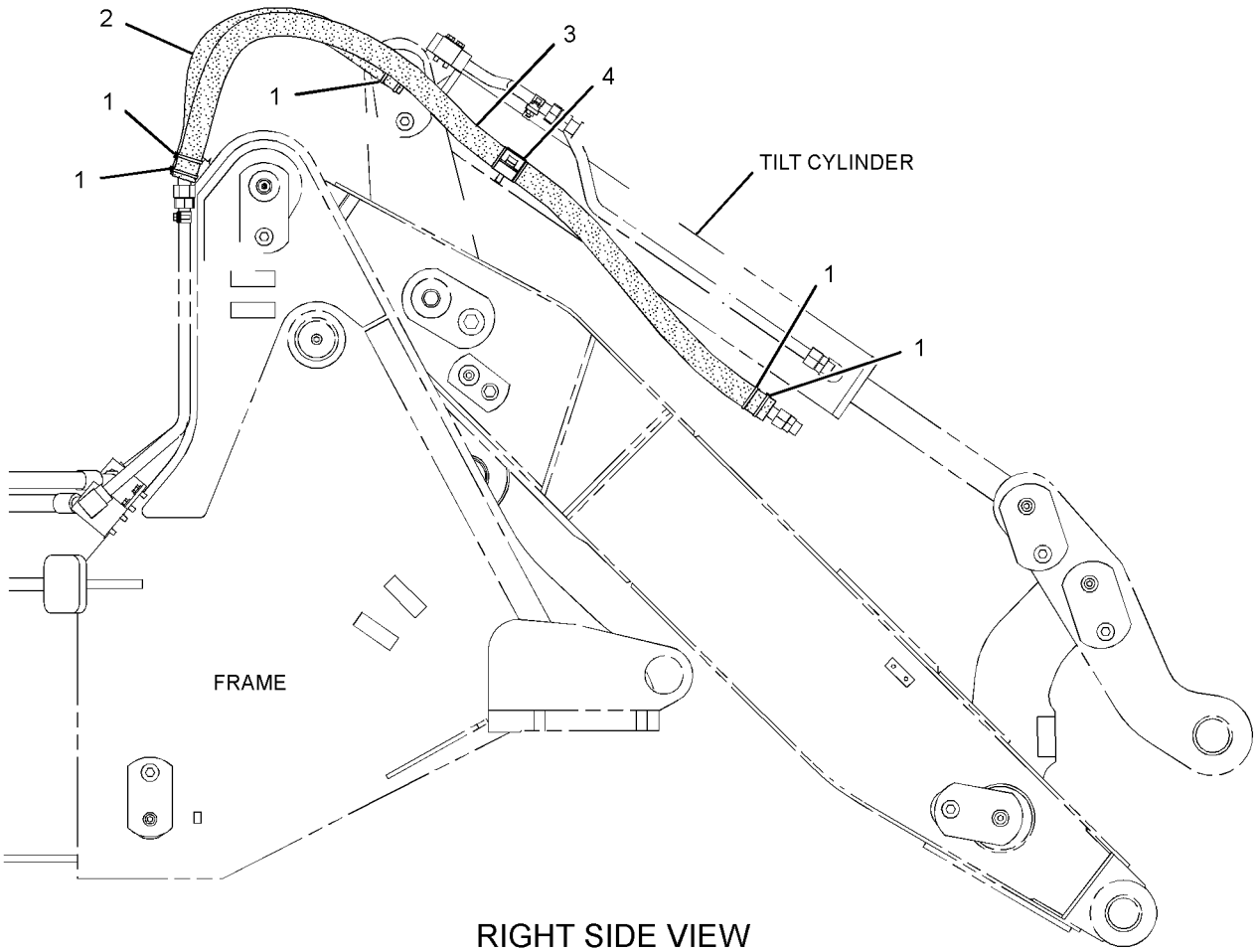

RIGHT SIDE VIEW

GRAPHIC #1 **<END>** g01336179

FRAME AND BODY

290-7207 GUARD GP-POWER TRAIN

S/N: KLN1-UP

AN ATTACHMENT

SMCS-7153 **i03038621**

NOTE	REF NO	GRAPHIC REF	PART NUMBER	QTY	PART NAME 1 2 3 4 5 6 (PRODUCT LEVEL)	SEE PAGE
	1	1	**7W-3447**	3	SPACER (10.2X19.05X10.2-MM THK)	
	2	1	**8R-8847**	1	RETAINER-SPRING	
	3	1	**218-2440**	1	PLATE	
	4	1	**294-0506**	1	PLATE AS	
	5	1	**1S-0994**	1	CLIP	
	6	1	**7X-0578**	3	WASHER-HARD (10.2X32X2.5-MM THK)	
	7	1	**8T-4121**	2	WASHER-HARD (11X21X2.5-MM THK)	
M	8	1	**8T-4133**	1	NUT (M10X1.5-THD)	
M	9	1	**8T-4186**	1	BOLT (M10X1.5X40-MM)	
M	10	1	**8T-4195**	2	BOLT (M10X1.5X30-MM)	
	11	1	**8T-4223**	2	WASHER-HARD (13.5X25.5X3-MM THK)	
M	12	1	**8T-4956**	2	BOLT (M12X1.75X35-MM)	

M-METRIC PART

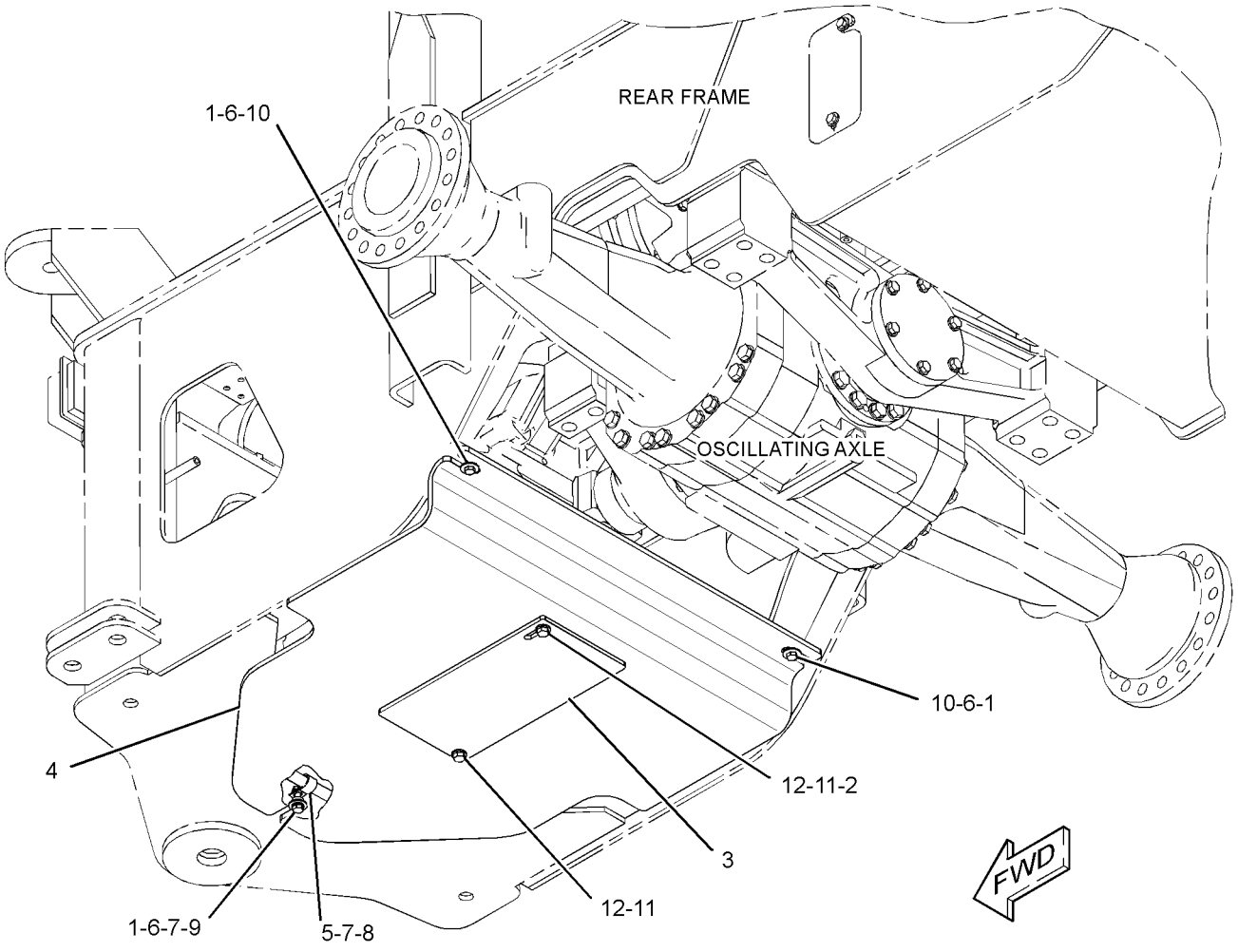

GRAPHIC #1 **<END>** g01395851

290-4074 GUARD GP-RADIATOR

S/N: KLN1-UP

PART OF 289-9075 RADIATOR & AFTERCOOLER GP

SMCS-7155 **i03085920**

NOTE	REF NO	GRAPHIC REF	PART NUMBER	QTY	PART NAME 1 2 3 4 5 6 (PRODUCT LEVEL)	SEE PAGE
	1	1	**092-1136**	2	BOSS (M10X1.5-THD)	
	2	1	**140-9312**	2	HINGE AS	
	3	1	*214-0620*	2	PLATE AS	
					(EACH INCLUDES)	
M		1	**3E-6908**	2	STUD-WELD (M8X1.25X20-MM)	
	4	1	*296-4322*	1	CHANNEL AS	
		1	**7T-1099**	1	LINK	
M		1	**8T-3490**	2	NUT-WELD (M10X1.5-THD)	
		1	**9C-6809**	3	BLOCK (M10X1.5-THD)	
M		1	**9R-2672**	1	BOSS (M10X1.5X20-MM)	
	5	1	*300-1724*	1	PLATE AS	
		1	**5P-1076**	4	WASHER-HARD (13.5X30X4-MM THK)	
		1	**7T-1099**	5	LINK	
M		1	**8T-3490**	1	NUT-WELD (M10X1.5-THD)	
M		1	**9R-2672**	1	BOSS (M10X1.5X20-MM)	
	6	1	**7T-1099**	7	LINK	
M	7	1	**8T-3490**	2	NUT-WELD (M10X1.5-THD)	
M	8	1	**8Y-4489**	1	BOSS (M10X1.5-THD)	
	9	1	**9C-6809**	5	BLOCK (M10X1.5-THD)	
M	10	1	**9R-2672**	3	BOSS (M10X1.5X20-MM)	

M-METRIC PART

290-4074 **GUARD GP-RADIATOR** *(contd.)* **i03085920**

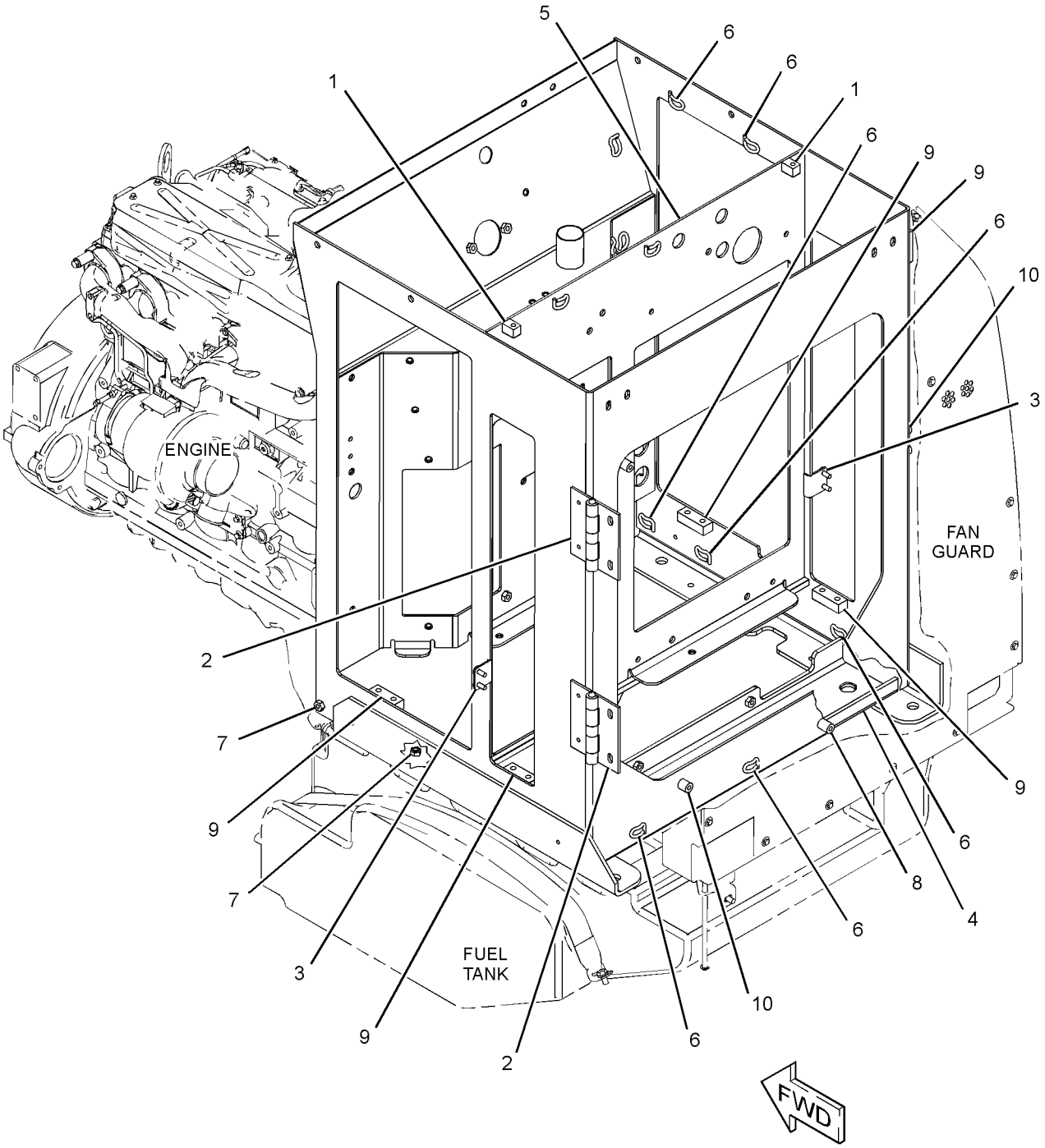

GRAPHIC #1 **<END>** g01406632

113-3790 HITCH GP-ARTICULATING

S/N: KLN1-UP

PART OF 289-8841 CHASSIS AR

SMCS-7057, 7100 **i01862457**

NOTE	REF NO	GRAPHIC REF	PART NUMBER	QTY	PART NAME 1 2 3 4 5 6 (PRODUCT LEVEL)	SEE PAGE
	1	1	**4K-7464**	1	SHIM PACK (INCLUDES 19-SHIMS)	
	2	1	**6I-8860**	2	CUP-BEARING	
	3	1	**6K-4185**	1	SPACER (1.44-IN THK)	
	4	1	**6K-4191**	1	CAP-UPPER	
	5	1	**6V-1194**	2	CUP-BEARING	
	6	1	**6V-8795**	2	CONE-BEARING	
	7	1	**6W-8246**	1	SHIM PACK (INCLUDES 27-SHIMS)	
	8	1	**6I-8849**	2	CONE-BEARING (TAPERED ROLLER)	
	9	1	**8R-7091**	1	CAP	
	10	1	**8R-7092**	1	CAP	
	11	1	**8Y-7047**	1	PIN AS	
	12	1	**9V-6343**	1	CAP	
	13	1	**110-7628**	1	SHIM	
	14	1	**113-3791**	1	PIN AS	
	15	1	**113-3793**	1	PLATE	
	16	1	**113-3794**	2	SHIM PACK (INCLUDES 19-SHIMS)	
	17	1	**3B-8489**	2	FITTING-GREASE	
	18	1	**6K-4186**	2	SEAL-LIP TYPE	
	19	1	**7X-0618**	1	WASHER-HARD (13.5X40X5-MM THK)	
	20	1	**8T-4121**	6	WASHER-HARD (11X21X2.5-MM THK)	
M	21	1	**8T-4192**	1	BOLT (M12X1.75X25-MM)	
M	22	1	**8T-4172**	6	BOLT (M10X1.5X80-MM)	
M	23	1	**8T-4194**	10	BOLT (M12X1.75X50-MM)	
	24	1	**8T-4223**	16	WASHER-HARD (13.5X25.5X3-MM THK)	
M	25	1	**8T-5041**	6	BOLT (M12X1.75X120-MM)	
	26	1	**9H-2258**	2	SEAL-LIP TYPE	

M-METRIC PART

113-3790 **HITCH GP-ARTICULATING** *(contd.)* **i01862457**

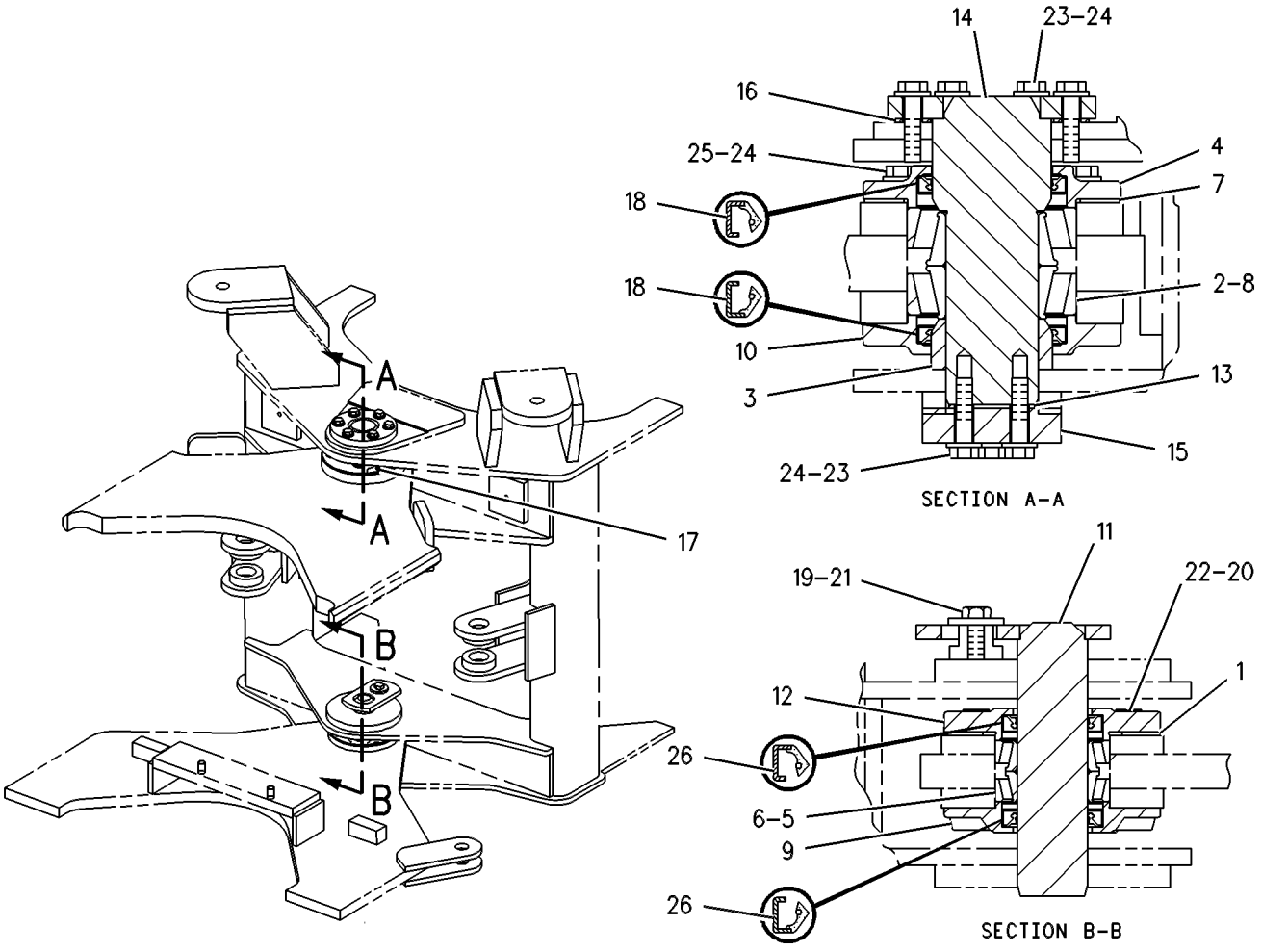

GRAPHIC #1 **<END>** g00131887

FRAME AND BODY

289-8912 HOOD & GUARD GP

S/N: KLN1-UP

PART OF 289-8841 CHASSIS AR

SMCS-7251 **i03537761**

NOTE	REF NO	GRAPHIC REF	PART NUMBER	QTY	PART NAME 1 2 3 4 5 6 (PRODUCT LEVEL)	SEE PAGE
D	1	1	**5P-5637**		SEAL (0.1-M)	
	2	1	*125-2086*	1	LOCK AS-CYLINDER	
		1	**226-0294**	1	LOCK AS	
		1	**226-0339**	1	CAM	
	3	1	**130-1916**	4	STUD-BALL	
	4	1	**172-8591**	2	NUT-SPRING	
	5	1	**198-8933**	4	HINGE	
	6	1	**198-8942**	2	BRACKET	
	7	1	**198-8943**	2	BRACKET	
	8	1	**198-8944**	2	PLATE	
	9	1	**198-8954**	1	PANEL AS-HOOD (RH)	
	10	1	**198-8955**	1	PANEL AS-HOOD (LH)	
	11	1	**198-8961**	2	PLATE	
J	12	1	**9X-2299**	2	LATCH AS (PADDLE)	
	13	1	**318-3319**	1	HINGE AS-HOOD (RH)	
	14	1	**318-3320**	1	HINGE AS-HOOD (LH)	
					(EACH HINGE AS INCLUDES)	
		1	**9Y-7215**	2	SLEEVE-ISOLATOR	
	15	1	**228-7696**	2	SPRING AS-GAS (HOOD)	
	16	1	**290-4068**	1	HOOD AS	
	17	1	**290-4073**	2	PLATE	
	18	1	**291-5008**	1	PLATE AS	
		1	**6C-1834**	5	RIVET	
		1	**6C-3681**	8	RIVET-POP	
		1	**301-5754**	2	HINGE AS	
		1	**302-4285**	1	LATCH	
	19	1	**292-1086**	1	PLATE AS	
		1	**6C-1834**	5	RIVET	
		1	**6C-3681**	8	RIVET-POP	
		1	**301-5754**	2	HINGE AS	
		1	**302-4285**	1	LATCH	
	20	1	**292-2559**	1	RING	
M	21	1	**131-3540**	4	LOCKNUT (M8X1.25-THD)	
M	22	1	**5C-2890**	8	NUT (M6X1-THD)	
M	23	1	**5C-7261**	12	NUT (M8X1.25-THD)	
	24	1	**5P-4115**	2	WASHER-HARD (7.2X19X2-MM THK)	
M	25	1	**7X-2534**	2	BOLT (M6X1X50-MM)	
M	26	1	**7X-2540**	4	BOLT (M8X1.25X120-MM)	
	27	1	**7X-7729**	39	WASHER (11X25X3-MM THK)	
M	28	1	**8T-4133**	4	NUT (M10X1.5-THD)	
M	29	1	**8T-4137**	12	BOLT (M10X1.5X20-MM)	
M	30	1	**8T-4138**	8	BOLT (M6X1X20-MM)	
M	31	1	**8T-4189**	4	BOLT (M8X1.25X20-MM)	
M	32	1	**8T-4195**	23	BOLT (M10X1.5X30-MM)	
	33	1	**8T-4205**	16	WASHER-HARD (7.2X14.5X2-MM THK)	
	34	1	**8T-4224**	32	WASHER-HARD (8.8X16X2-MM THK)	
M	35	1	**8T-4908**	4	BOLT (M8X1.25X25-MM)	
E	36	1	**9X-8699**		SEAL (307-CM EACH)	
E	36A	1	**9X-8699**		SEAL (91-CM EACH)	
H	37	1	**136-7728**		SEAL-COMPOSITE (18-DM EACH)	
	38	1	**295-1038**	1	INSULATION (LH)	
M	39	1	**8T-4200**	14	BOLT (M8X1.25X16-MM)	
	40	1	**5P-4116**	10	WASHER-HARD (8.8X20.5X2-MM THK)	

D-ORDER BY THE METER
E-ORDER BY THE CENTIMETER
H-ORDER BY THE DECIMETER
J-REQUIRES CORPORATE KEY
M-METRIC PART

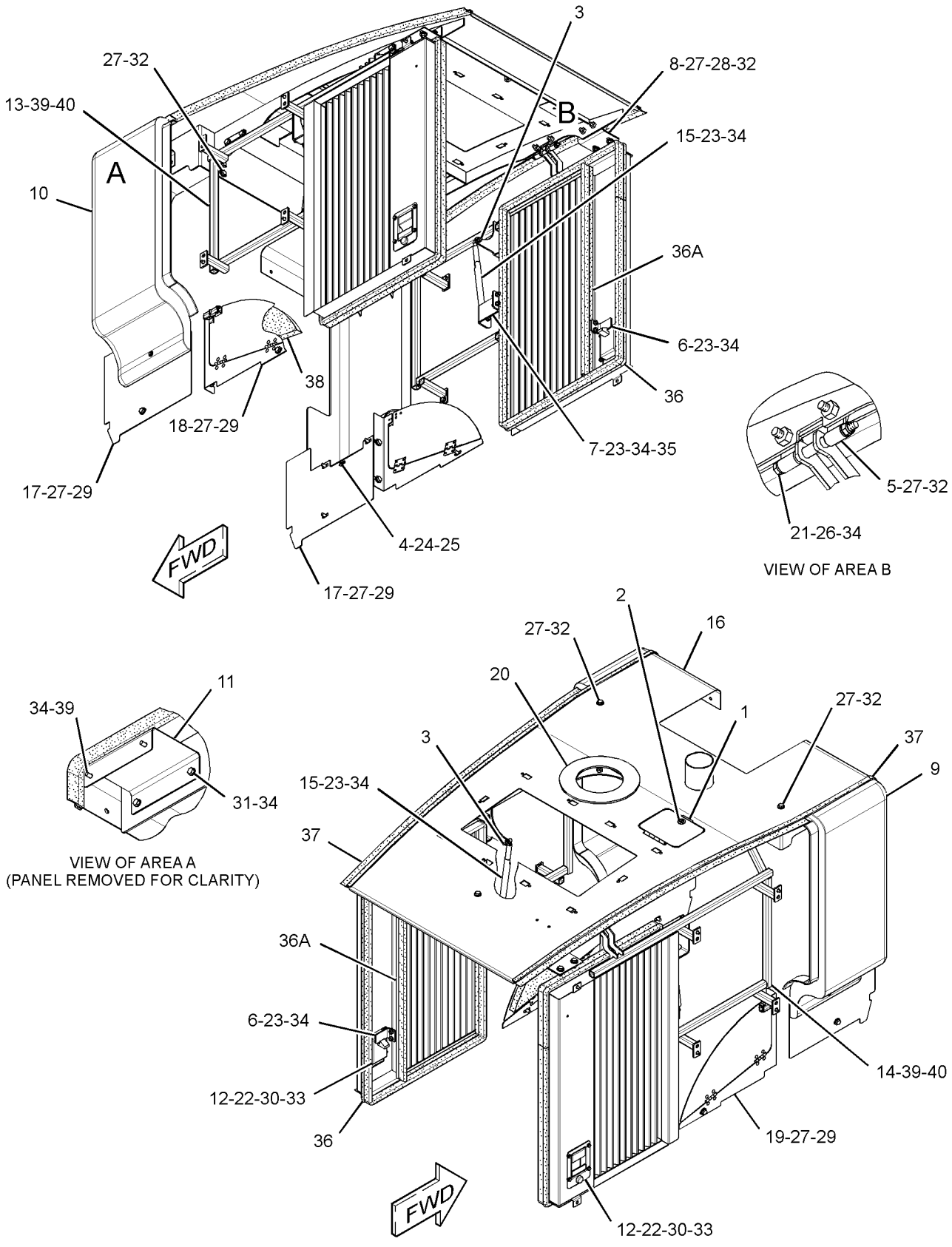

GRAPHIC #1 **<END>** g01536413

FRAME AND BODY

289-8913 LADDER GP

S/N: KLN1-UP

PART OF 289-8841 CHASSIS AR

SMCS-7254 **i03626109**

NOTE	REF NO	GRAPHIC REF	PART NUMBER	QTY	PART NAME 1 2 3 4 5 6 (PRODUCT LEVEL)	SEE PAGE
	1	2	**134-5214**	1	STEP AS (LH)	
M		2	**8T-3490**	2	NUT-WELD (M10X1.5-THD)	
	2	1	**134-5215**	1	STEP AS (RH)	
M		1	**8T-3490**	2	NUT-WELD (M10X1.5-THD)	
	3	1,2	**153-9706**	8	PLATE	
	4	1,2	**154-2302**	16	SPACER (11X20X15-MM THK)	
	5	1	**189-0942**	1	BRACKET AS	
M		1	**8T-3490**	4	NUT-WELD (M10X1.5-THD)	
	6	1	**202-0392**	1	PLATFORM AS (RH)	
M		1	**6V-9632**	2	NUT-WELD (M6X1-THD)	
M		1	**8T-3490**	2	NUT-WELD (M10X1.5-THD)	
	7	2	**202-0393**	1	PLATFORM AS (LH)	
M		2	**6V-9632**	2	NUT-WELD (M6X1-THD)	
M		2	**8T-3490**	2	NUT-WELD (M10X1.5-THD)	
	8	1,2	**283-8385**	4	SUPPORT-STEP (RUBBER)	
	9	1,2	**284-8491**	2	STEP AS	
					(EACH INCLUDES)	
M		1,2	**8T-3490**	4	NUT-WELD (M10X1.5-THD)	
	10	1,2	**284-8497**	2	LADDER AS	
	11	2	**284-8504**	1	BRACKET AS	
M		2	**8T-3490**	6	NUT-WELD (M10X1.5-THD)	
	12	1,2	**7X-7729**	52	WASHER (11X25X3-MM THK)	
M	13	1,2	**8T-4136**	22	BOLT (M10X1.5X25-MM)	
M	14	1,2	**8T-4186**	24	BOLT (M10X1.5X40-MM)	
M	15	1,2	**8T-4195**	8	BOLT (M10X1.5X30-MM)	
	16	1	**8T-4222**	2	WASHER-PLATED (11X32X2.5-MM THK)	

M-METRIC PART

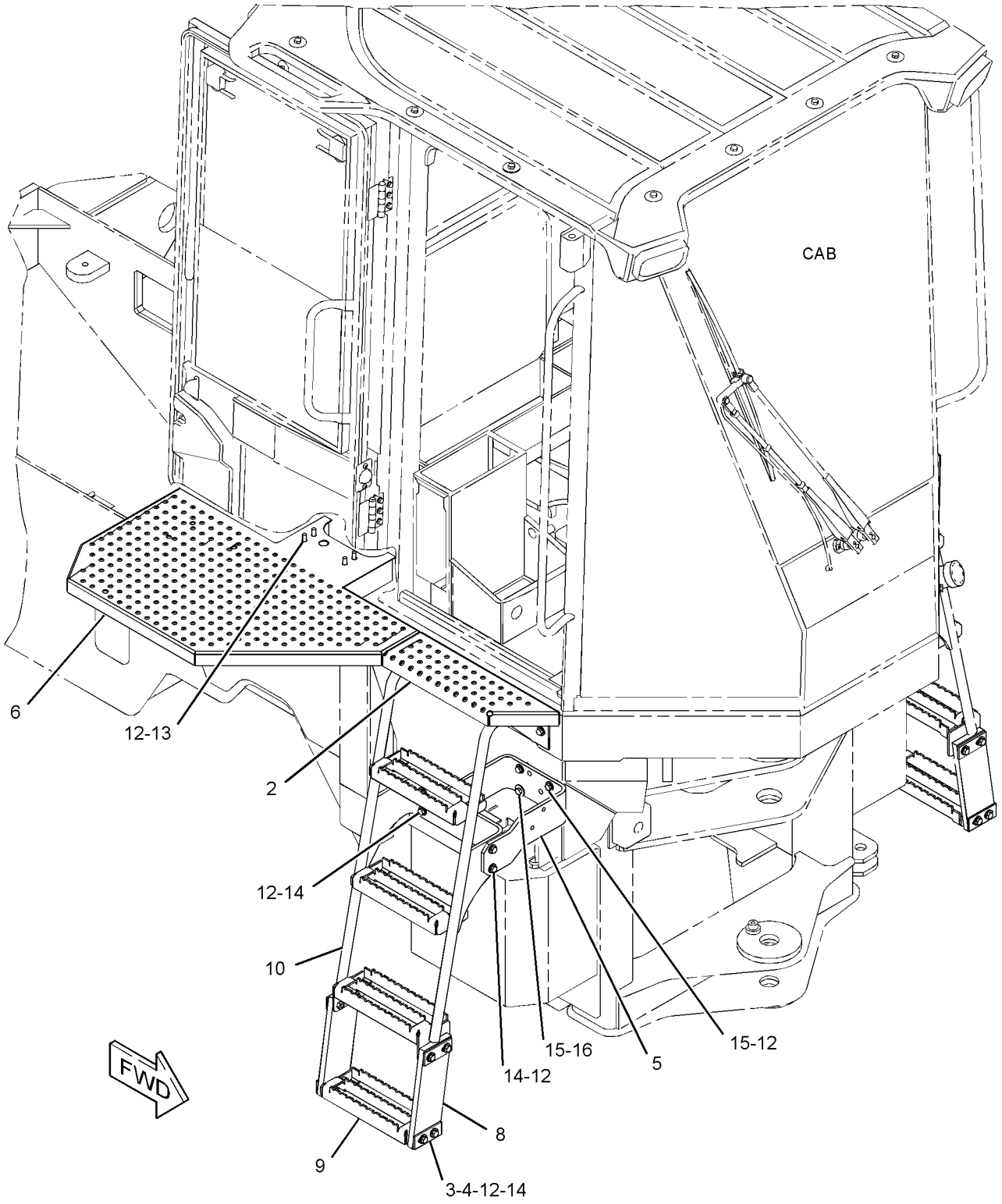

GRAPHIC #1 g01389406

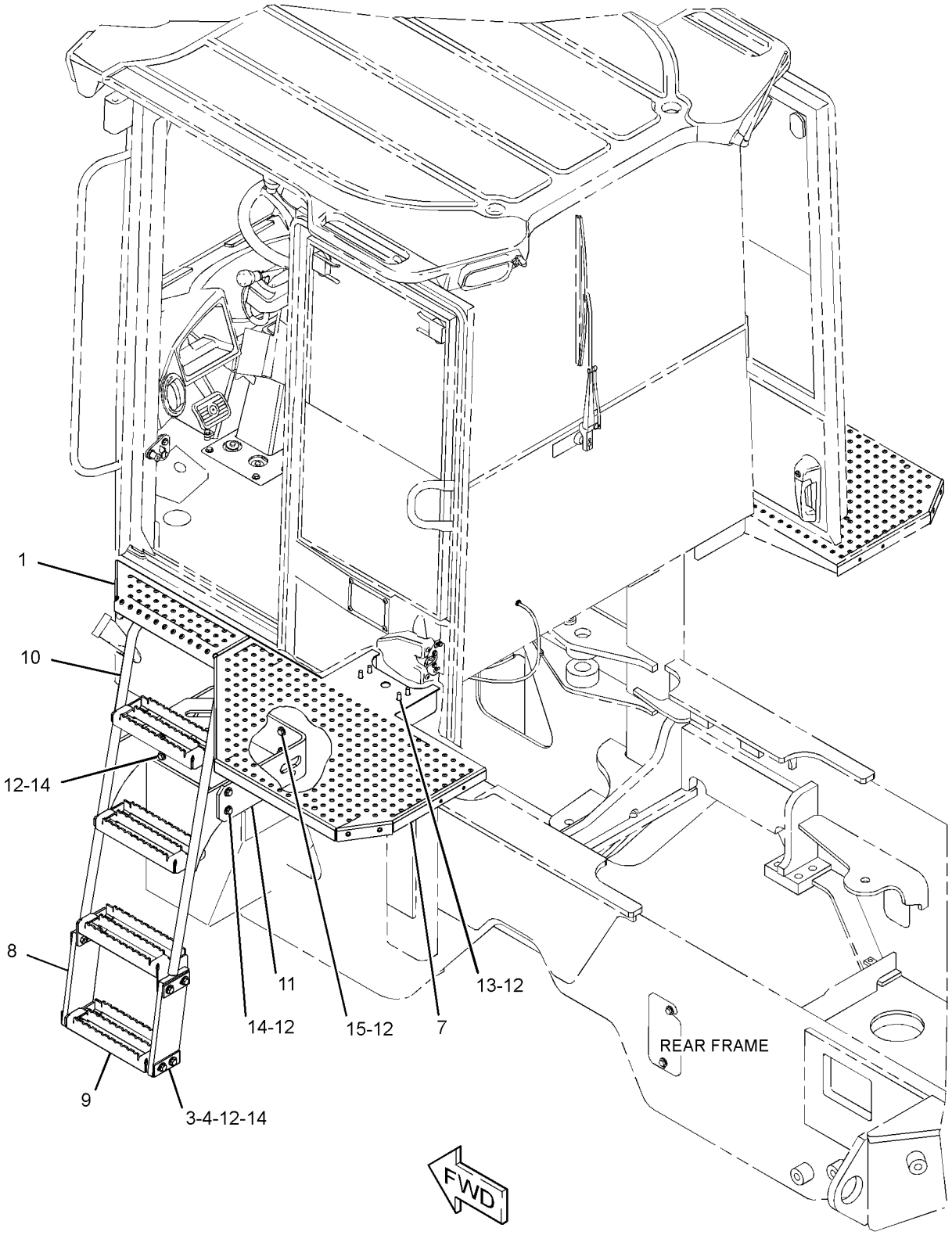

GRAPHIC #2 **<END>** g01389505

FRAME AND BODY

307-2578 LINES GP-GREASE

S/N: KLN1-UP

PART OF 289-8841 CHASSIS AR

SMCS-7510 **i03016265**

NOTE	REF NO	GRAPHIC REF	PART NUMBER	QTY	PART NAME 1 2 3 4 5 6 (PRODUCT LEVEL)	SEE PAGE
	1	1	**5T-9771**	1	HOSE AS	
	2	1	**7K-1181**	7	STRAP-CABLE	
	3	1	**8W-4342**	1	HOSE AS	
	4	1	**300-5443**	3	HOSE AS	
	5	1	**3B-6552**	5	ELBOW-PIPE (90-DEG)	
	6	1	**3B-8489**	7	FITTING-GREASE (HYDRAULIC)	

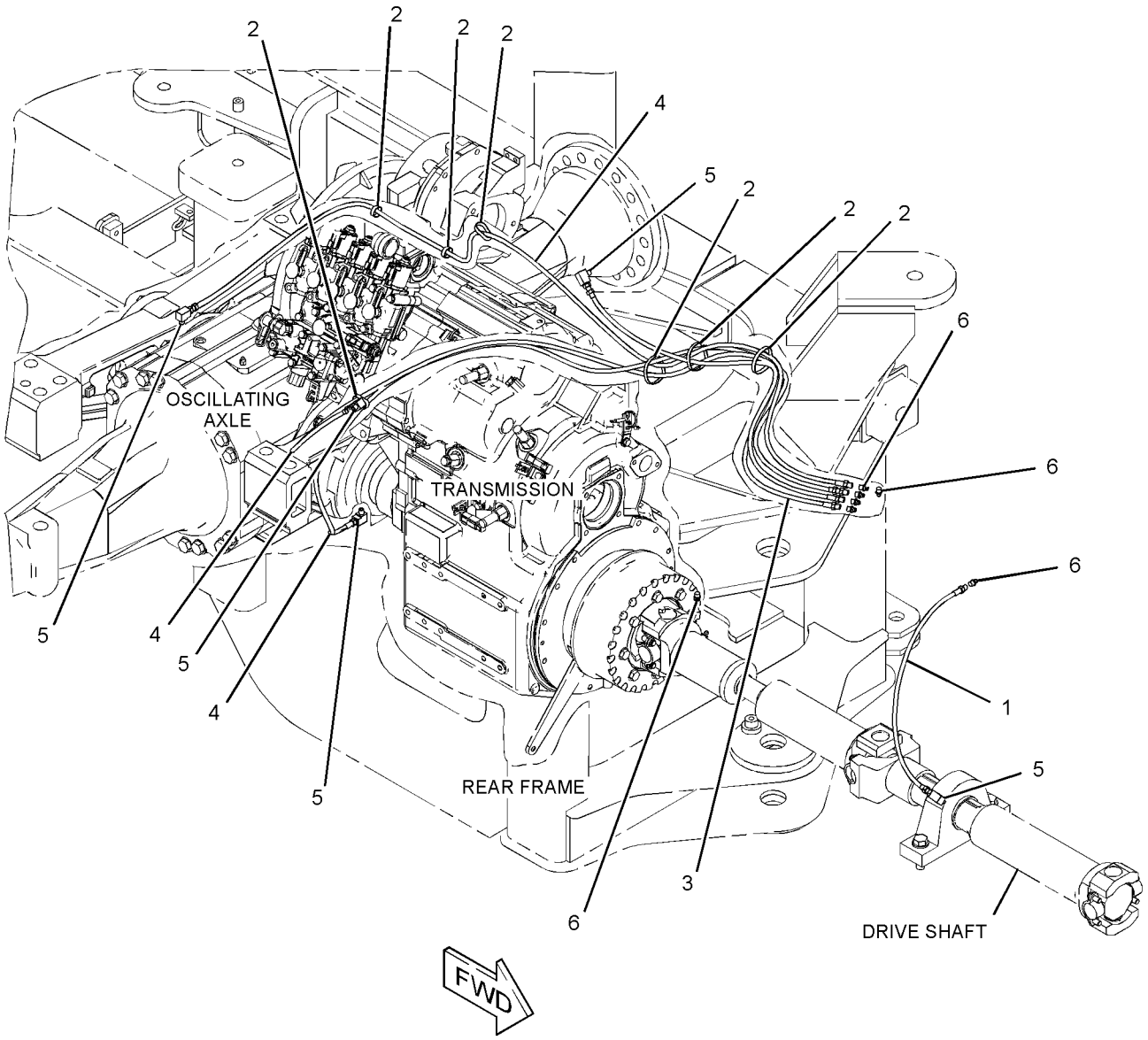

GRAPHIC #1 **<END>** g01398390

7V-2885 LINK GP-STEERING FRAME LOCK

S/N: KLN1-UP

PART OF 289-8841 CHASSIS AR

SMCS-7506 **i00634105**

NOTE	REF NO	GRAPHIC REF	PART NUMBER	QTY	PART NAME 1 2 3 4 5 6 (PRODUCT LEVEL)	SEE PAGE
	1	1	**5V-4998**	1	LINK	
	2	1	**5V-4999**	2	PIN	
	3	1	**5P-8837**	2	LOCKPIN	

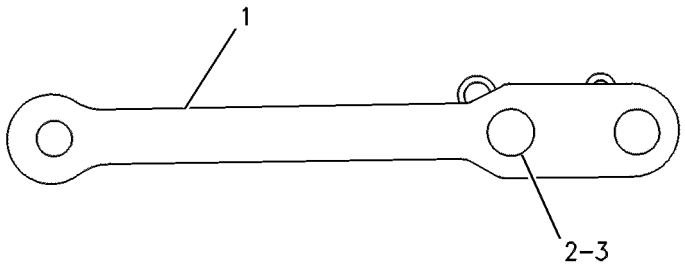

GRAPHIC #1 **<END>** g00120262

198-8964 PANEL GP-ACCESS–HOOD, CAB HEATER

S/N: KLN1-UP

PART OF 310-9954 OPERATOR AR, 290-8186 OPERATOR AR-OPEN ROPS AN ATTACHMENT

SMCS-7262, 726A **i01810904**

NOTE	REF NO	GRAPHIC REF	PART NUMBER	QTY	PART NAME 1 2 3 4 5 6 (PRODUCT LEVEL)	SEE PAGE
	1	1	**172-8591**	10	NUT-SPRING	
	2	1	**191-9188**	1	PLATE	
	3	1	**198-8957**	1	PLATE	
	4	1	**220-0691**	4	PLATE AS	
					(EACH INCLUDES)	
M		1	**8T-3490**	2	NUT-WELD (M10X1.5-THD)	
	5	1	**5P-9212**	1	PLUG	
	6	1	**8T-4121**	8	WASHER-HARD (11X21X2.5-MM THK)	
M	7	1	**8T-4137**	8	BOLT (M10X1.5X20-MM)	
M	8	1	**8T-4138**	10	BOLT (M6X1X20-MM)	
	9	1	**8T-4205**	10	WASHER-HARD (7.2X14.5X2-MM THK)	

M-METRIC PART

198-8964 **PANEL GP-ACCESS** *(contd.)* **i01810904**

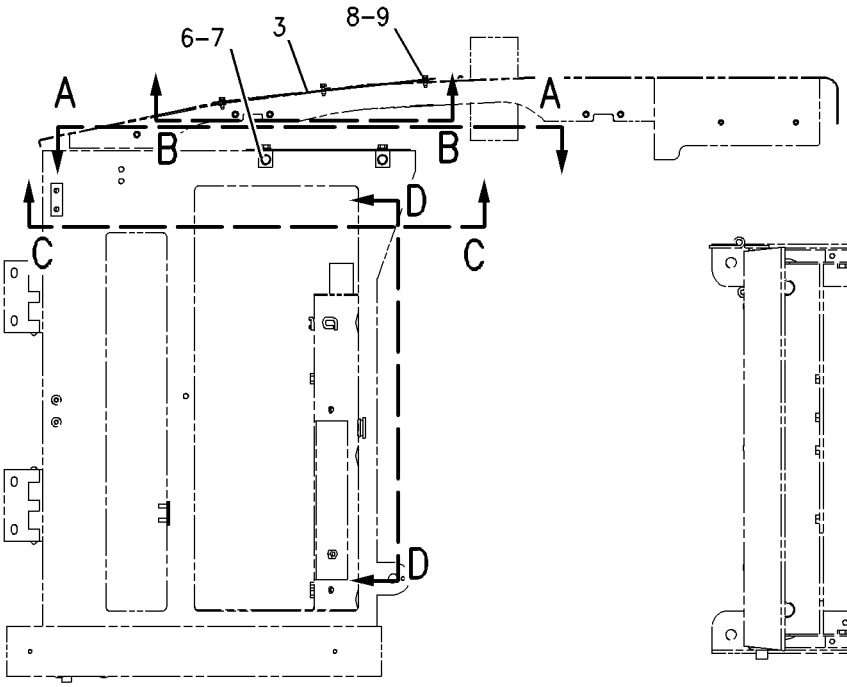

RIGHT SIDE VIEW

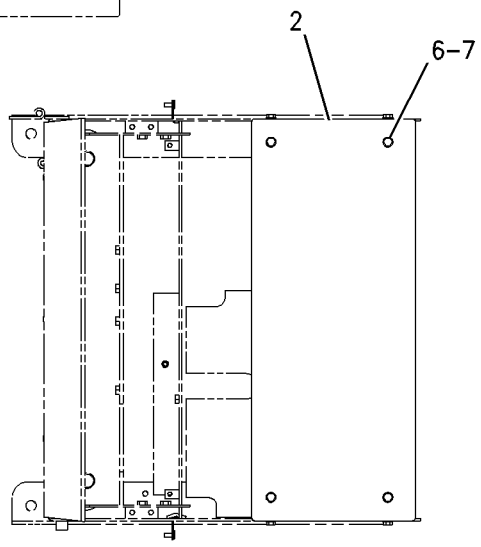

VIEW A-A

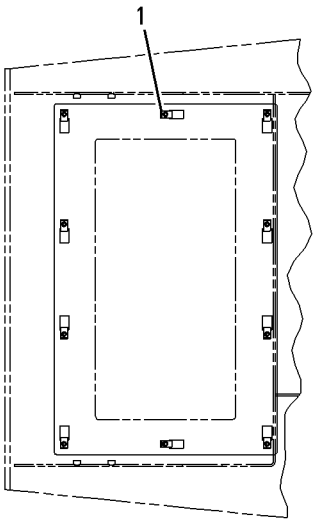

VIEW B-B

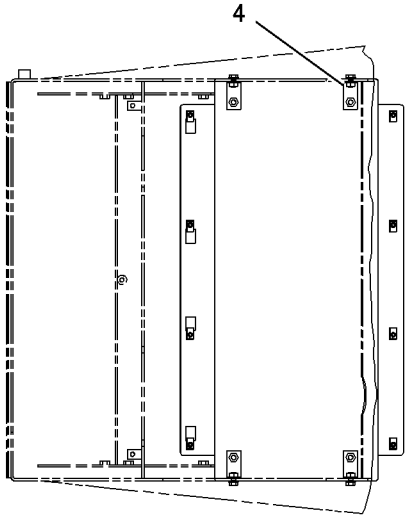

VIEW C-C

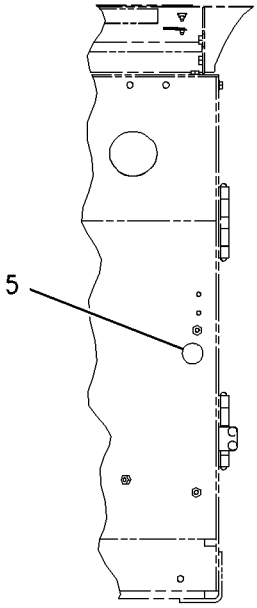

VIEW D-D

GRAPHIC #1 **<END>** g00917920

198-8965 PANEL GP-TOP—HOOD, AIR CONDITIONER

S/N: KLN1-UP
PART OF 294-9433 AIR CONDITIONER AR
AN ATTACHMENT

SMCS-7251 **i02751084**

NOTE	REF NO	GRAPHIC REF	PART NUMBER	QTY	PART NAME 1 2 3 4 5 6 (PRODUCT LEVEL)	SEE PAGE
	1	1	**172-8591**	10	NUT-SPRING	
C	2	1	**235-6947**	1	COVER AS	
C	3	1	**235-6948**	2	PLATE	
C	4	1	**186-0817**	2	WASHER-HARD (7X19X2-MM THK)	
M	5	1	**8T-4138**	10	BOLT (M6X1X20-MM)	
C	6	1	**8T-4205**	8	WASHER-HARD (7.2X14.5X2-MM THK)	

C-CHANGE FROM PREVIOUS TYPE
M-METRIC PART

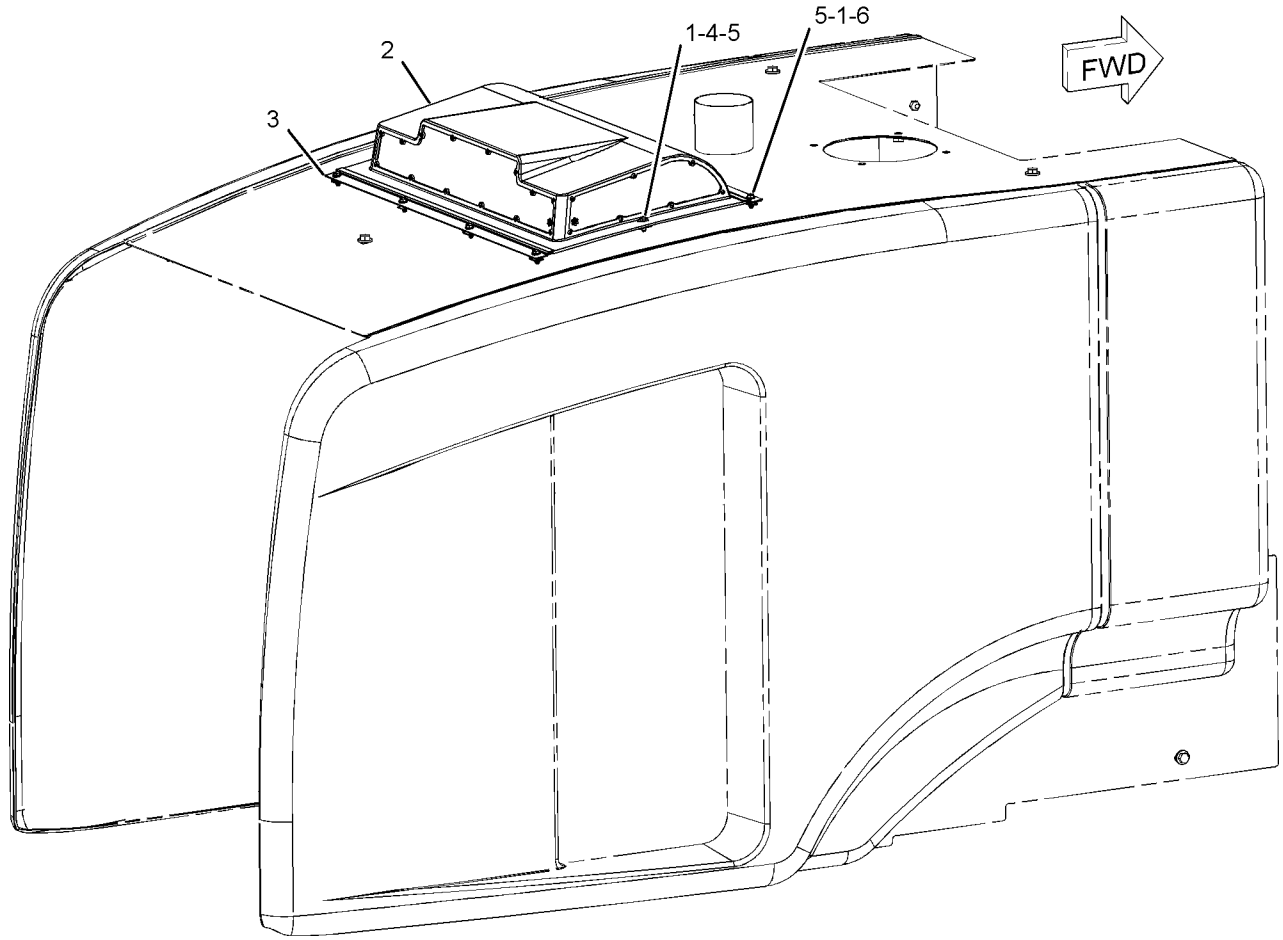

GRAPHIC #1 **<END>** g01091092

140-9251 ACCUMULATOR GP-BRAKE—CHARGED

S/N: KLN1-UP

PART OF 289-8925 LINES GP-SERVICE BRAKE

FIELD REPLACEMENT ORDER 149-5532—PAGE 308

SMCS-4263 **i03571157**

NOTE	REF NO	GRAPHIC REF	PART NUMBER	QTY	PART NAME 1 2 3 4 5 6 (PRODUCT LEVEL)	SEE PAGE
	1	1	**030-9613**	2	SCREW-FORMING (10-24XO.37-IN)	
	2	1	**1J-9671**	1	SEAL-O-RING	
	3	1	**069-2535**	1	VALVE-GAS	
	4	1	**069-2536**	1	PROTECTOR-GAS VALVE	
					AVAILABLE REPAIR KIT(S):	
			160-0496	1	KIT-SEAL (ACCUMULATOR)	

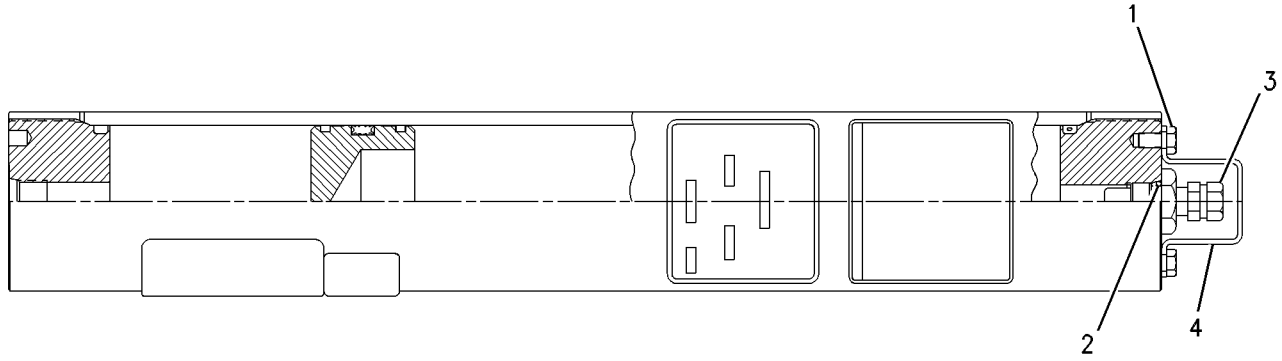

GRAPHIC #1 **<END>** g00649352

149-5532 ACCUMULATOR GP-HYDRAULIC—UNCHARGED

S/N: KLN1-UP

FIELD REPLACEMENT FOR 140-9251—PAGE 307

SMCS-4263 **i02844529**

NOTE	REF NO	GRAPHIC REF	PART NUMBER	QTY	PART NAME 1 2 3 4 5 6 (PRODUCT LEVEL)	SEE PAGE
	1	1	**030-9613**	2	SCREW-FORMING (10-24X0.37-IN)	
	2	1	**1J-9671**	1	SEAL-O-RING	
	3	1	**069-2535**	1	VALVE-GAS	
	4	1	**069-2536**	1	PROTECTOR-GAS VALVE	
					AVAILABLE REPAIR KIT(S):	
			160-0496	1	KIT-SEAL (ACCUMULATOR)	
					(INCLUDES SEALS)	

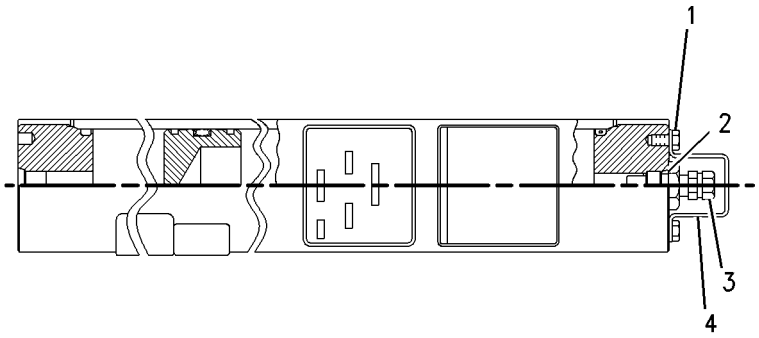

GRAPHIC #1 **<END>** g00683622

283-9971 BRAKE GP-PARKING

S/N: J2Y1-UP

PART OF 293-6017 GEAR GP-OUTPUT TRANSFER

SMCS-4267 **i03043582**

NOTE	REF NO	GRAPHIC REF	PART NUMBER	QTY	PART NAME 1 2 3 4 5 6 (PRODUCT LEVEL)	SEE PAGE
	1	1	**1V-2772**	1	SPRING-EXTENSION	
	2	1	**3K-7057**	1	SPRING-EXTENSION	
	3	1	**283-9972**	2	SHOE AS-LINED	
	4	1	**214-4768**	1	PLATE AS	
	5	1	**3K-7056**	1	SPRING-EXTENSION	

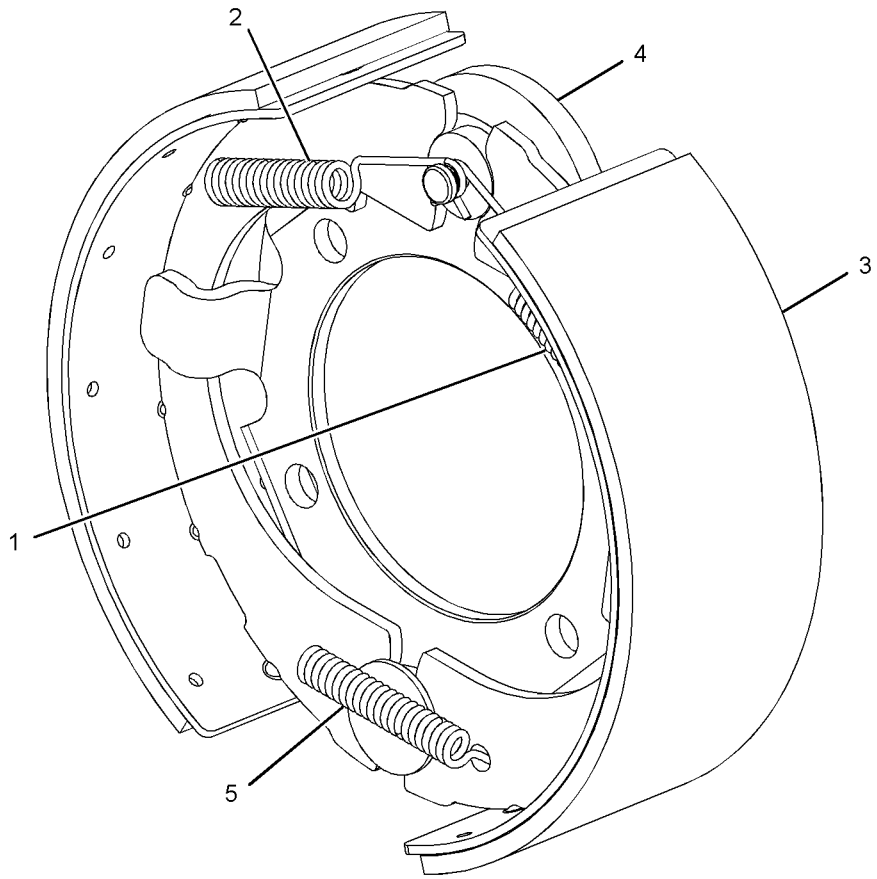

GRAPHIC #1 **<END>** g01291042

BRAKING SYSTEM

168-7000 CONTROL GP-PARKING BRAKE–HANDLE

S/N: KLN1-UP
PART OF 190-4405, 317-0770 OPERATOR AR
AN ATTACHMENT

SMCS-4282, 4284 **i01374826**

NOTE	REF NO	GRAPHIC REF	PART NUMBER	QTY	PART NAME 1 2 3 4 5 6 (PRODUCT LEVEL)	SEE PAGE
	1	1	**3H-8538**	1	PIN	
	2	1	**6G-4195**	1	SWITCH AS-LIMIT (PARKING BRAKE)	
		1	**3L-8187**	3	LOCKWASHER	
		1	**6V-8373**	3	SCREW-MACHINE (6-32X0.187-IN)	
	3	1	**6S-6646**	1	PIN-COTTER	
	4	1	**8K-1433**	1	GROMMET	
	5	1	**186-4415**	1	CLEVIS	
	6	1	**163-6408**	1	BRACKET AS	
		1	**7T-1099**	2	LINK	
M		1	**8T-3612**	3	NUT-WELD (M8X1.25-THD)	
	7	1	**163-6412**	1	LEVER AS	
		1	**9R-9110**	1	BUTTON	
		1	**9R-9111**	1	SPRING-COMPRESSION	
	8	1	**2N-3477**	2	SCREW-MACHINE (6-32X1.25-IN)	
	9	1	**4B-5324**	4	WASHER (3.9X9.6X1.2-MM THK)	
	10	1	**7D-6922**	2	LOCKNUT (6-32-THD)	
M	11	1	**8T-4189**	4	BOLT (M8X1.25X20-MM)	
	12	1	**8T-4224**	4	WASHER-HARD (8.8X16X2-MM THK)	

M-METRIC PART

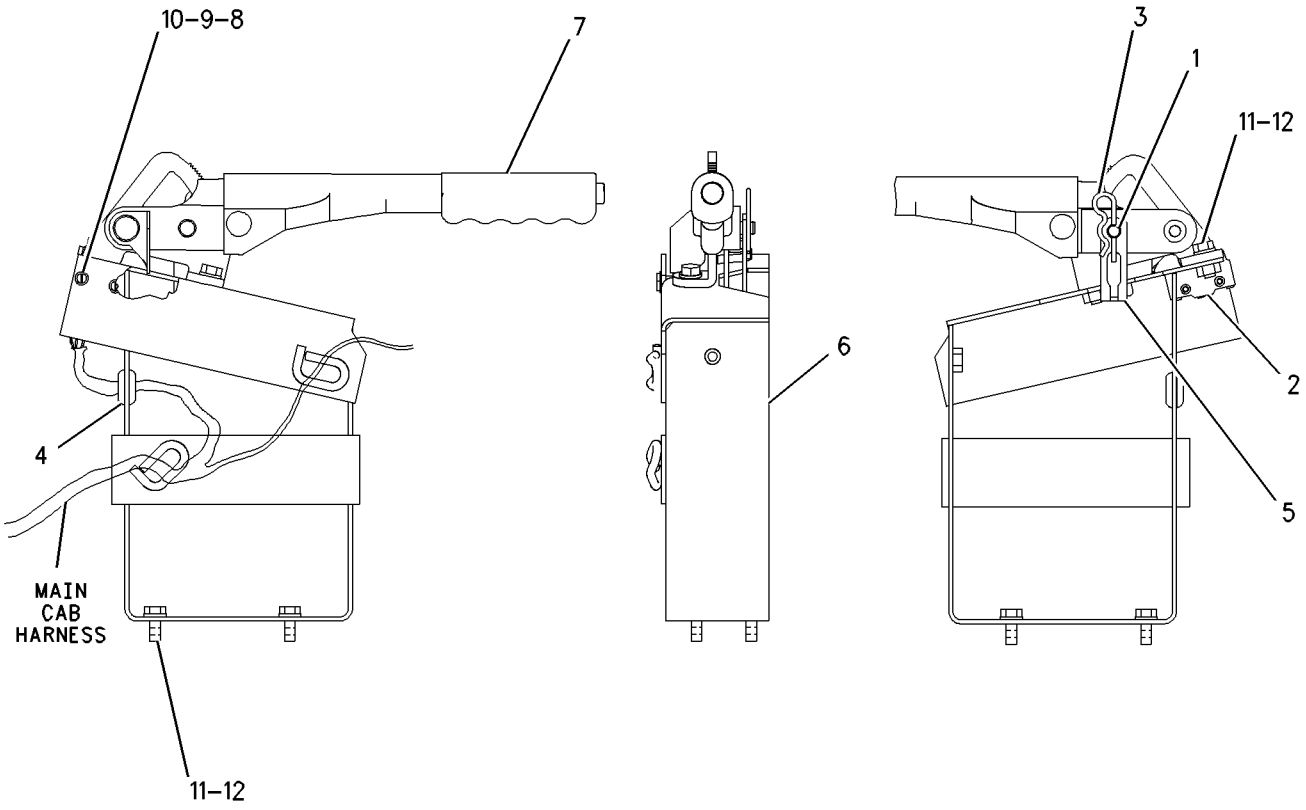

GRAPHIC #1 **<END>** g00729380

BRAKING SYSTEM

289-8930 CONTROL GP-PARKING BRAKE

S/N: KLN1-UP

PART OF 289-8841 CHASSIS AR

SMCS-4282, 4284 **i03016184**

NOTE	REF NO	GRAPHIC REF	PART NUMBER	QTY	PART NAME 1 2 3 4 5 6 (PRODUCT LEVEL)	SEE PAGE
	1	1	**8C-6160**	1	CLEVIS AS	
	2	1	**9U-0710**	2	CLIP	
	3	1	**143-3193**	1	CABLE AS-PARKING BRAKE CONTROL	
	4	1	**293-2840**	1	PLATE AS	
	5	1	**293-2841**	1	PLATE	
	6	1	**3B-4610**	1	PIN-COTTER	
M	7	1	**5C-7261**	1	NUT (M8X1.25-THD)	
	8	1	**5P-9297**	3	CLIP	
	9	1	**6V-8758**	1	PIN-CLEVIS	
	10	1	**8T-4121**	5	WASHER-HARD (11X21X2.5-MM THK)	
M	11	1	**8T-4136**	2	BOLT (M10X1.5X25-MM)	
M	12	1	**8T-4137**	3	BOLT (M10X1.5X20-MM)	
M	13	1	**8T-4192**	4	BOLT (M12X1.75X25-MM)	
	14	1	**8T-4223**	4	WASHER-HARD (13.5X25.5X3-MM THK)	

M-METRIC PART

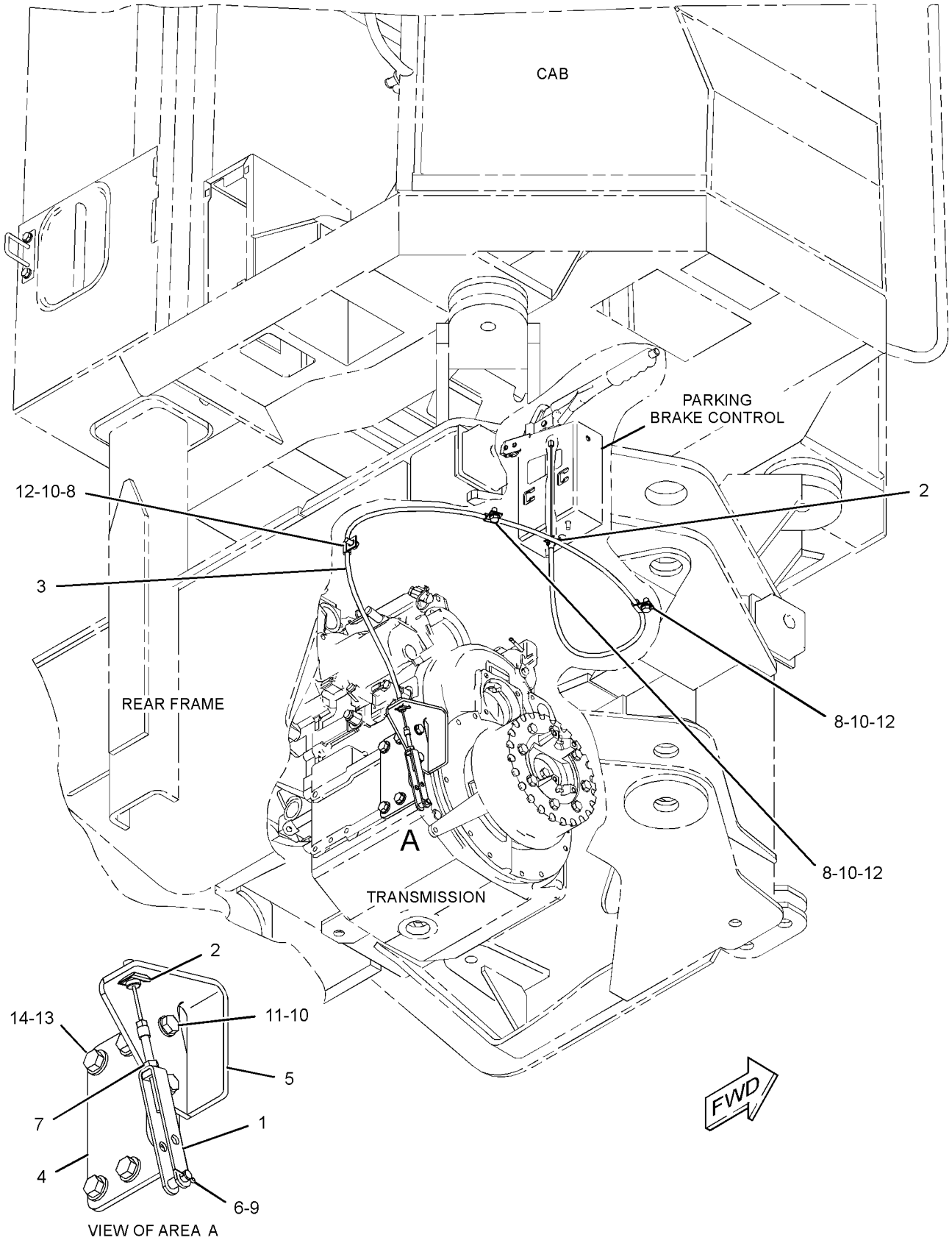

GRAPHIC #1 **<END>** g01390737

BRAKING SYSTEM

323-4078 CONTROL GP-PARKING BRAKE

S/N: KLN1-UP
PART OF 310-9953 CAB AR, 317-0771 OPERATOR GP
AN ATTACHMENT

SMCS-4282, 4284 **i03014091**

NOTE	REF NO	GRAPHIC REF	PART NUMBER	QTY	PART NAME 1 2 3 4 5 6 (PRODUCT LEVEL)	SEE PAGE
	1	1	**3H-8538**	1	PIN	
	2	1	**6G-4195**	1	SWITCH AS-LIMIT (PARKING BRAKE)	
		1	**3L-8187**	3	LOCKWASHER	
		1	**6V-8373**	3	SCREW-MACHINE (6-32X0.187-IN)	
	3	1	**6S-6646**	1	PIN-COTTER	
	4	1	**8K-1433**	1	GROMMET	
	5	1	**163-6408**	1	BRACKET AS	
	6	1	**186-4415**	1	CLEVIS	
	7	1	**323-4077**	1	LEVER AS	
		1	**9R-9110**	1	BUTTON	
		1	**9R-9111**	1	SPRING-COMPRESSION	
	8	1	**2N-3477**	2	SCREW-MACHINE (6-32X1.25-IN)	
	9	1	**4B-5324**	4	WASHER (3.9X9.6X1.2-MM THK)	
	10	1	**7D-6922**	2	LOCKNUT (6-32-THD)	
M	11	1	**8T-4189**	4	BOLT (M8X1.25X20-MM)	
	12	1	**8T-4224**	4	WASHER-HARD (8.8X16X2-MM THK)	

M-METRIC PART

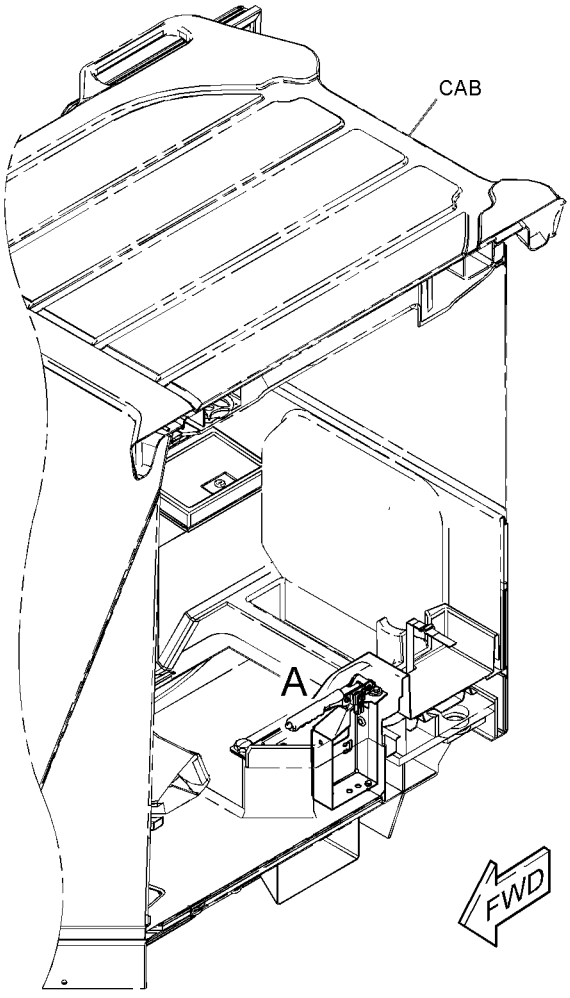

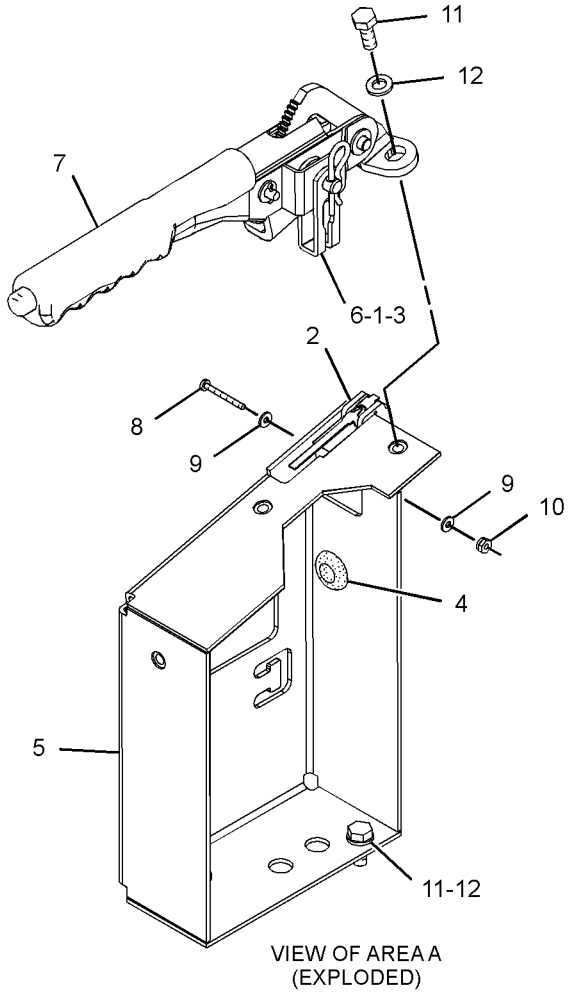

VIEW OF AREA A
(EXPLODED)

GRAPHIC #1 **<END>** g01546014

BRAKING SYSTEM

202-0430 CONTROL GP-SERVICE BRAKE

S/N: KLN1-UP

PART OF 289-8841 CHASSIS AR

SMCS-4257, 4258, 4263, 4265, 4269, 4280 **i03015303**

NOTE	REF NO	GRAPHIC REF	PART NUMBER	QTY	PART NAME 1 2 3 4 5 6 (PRODUCT LEVEL)	SEE PAGE
	1	1	**3B-4617**	2	PIN-COTTER	
	3	1	**6G-0233**	1	BOOT	
	4	1	**6V-0852**	1	CAP-DUST	
C	5	1	*164-5567*	1	COUPLER AS-QUICK DISCONNECT	
		1	**214-7568**	1	SEAL-O-RING	
		1	**6V-3965**	1	FITTING (QUICK DISCONNECT)	
	6	1	**7C-6467**	2	PLUG	
	7	1	**8E-8296**	2	DISC-THRUST	
	8	1	**8T-6431**	1	ROD END	
M	9	1	**9X-2065**	1	NUT (M10X1.5-THD, LH)	
	10	1	**128-0168**	1	ROD	
	11	1	**128-0169**	1	ROLLER	
	12	1	**132-0988**	1	BRACKET AS	
	13	1	**132-0994**	1	END-BEARING ROD	
	14	1	**294-2016**	1	PLATE	
	15	1	**133-7675**	1	SPRING	
M	16	1	**134-0673**	2	BOLT (M10X1.5X50-MM)	
	17	1	**144-8521**	1	VALVE GP-BRAKE CONTROL (SERVICE)	
		1	**117-7798**	1	BOOT	
		1	**117-7799**	1	KIT-SEAL (BRAKE VALVE)	
					(INCLUDES O-RINGS, QUAD RING, CUP & BOOT)	
	18	1	**294-2018**	1	LEVER AS	
	18A	1	**5V-4410**	2	BEARING-SLEEVE	
	20	1	**290-5825**	1	SENSOR GP-PRESSURE (BRAKE OIL)	
		1	**102-8803**	1	KIT-RECEPTACLE (3-PIN)	
					(INCLUDES RECEPTACLE AS & WEDGE)	
		1	**186-3735**	3	PIN-CONNECTOR (16-GA TO 18-GA)	
E		1	**9X-1813**		SLEEVE (34-CM)	
	21	1	*148-8336*	2	CONNECTOR AS	
					(EACH INCLUDES)	
		1	**6V-8636**	1	CONNECTOR	
		1	**3J-1907**	1	SEAL-O-RING	
		1	**6V-8397**	1	SEAL-O-RING	
	22	1	*148-8378*	1	ELBOW AS	
		1	**3J-1907**	1	SEAL-O-RING	
		1	**6V-8397**	1	SEAL-O-RING	
		1	**6V-8724**	1	ELBOW	
	23	1	*148-8443*	2	TEE AS	
					(EACH INCLUDES)	
		1	**3J-1907**	1	SEAL-O-RING	
		1	**6V-8397**	1	SEAL-O-RING	
		1	**7X-2459**	1	TEE-O-RING	
M	27	1	**8T-0389**	2	LOCKNUT (M10X1.5-THD)	
	28	1	**8T-4121**	13	WASHER-HARD (11X21X2.5-MM THK)	
M	29	1	**8T-4133**	1	NUT (M10X1.5-THD)	
M	30	1	**8T-4137**	5	BOLT (M10X1.5X20-MM)	
M	31	1	**8T-4196**	2	BOLT (M10X1.5X35-MM)	
	32	1	**9R-2807**	1	CLIP	
	33	1	**9R-3067**	1	PIN	
	34	1	**7K-1181**	1	STRAP-CABLE	
	35	1	**294-2017**	1	BEARING	
C	36	1	*173-7223*	1	ADAPTER AS	
		1	**3J-1907**	1	SEAL-O-RING	
		1	**3J-7354**	1	SEAL-O-RING	
		1	**9X-0261**	1	ADAPTER	
	37	1	**238-4743**	1	WASHER (10.5X21X1.25-MM THK)	

202-0430 **CONTROL GP-SERVICE BRAKE** *(contd.)* **i03015303**

C-CHANGE FROM PREVIOUS TYPE
E-ORDER BY THE CENTIMETER
M-METRIC PART

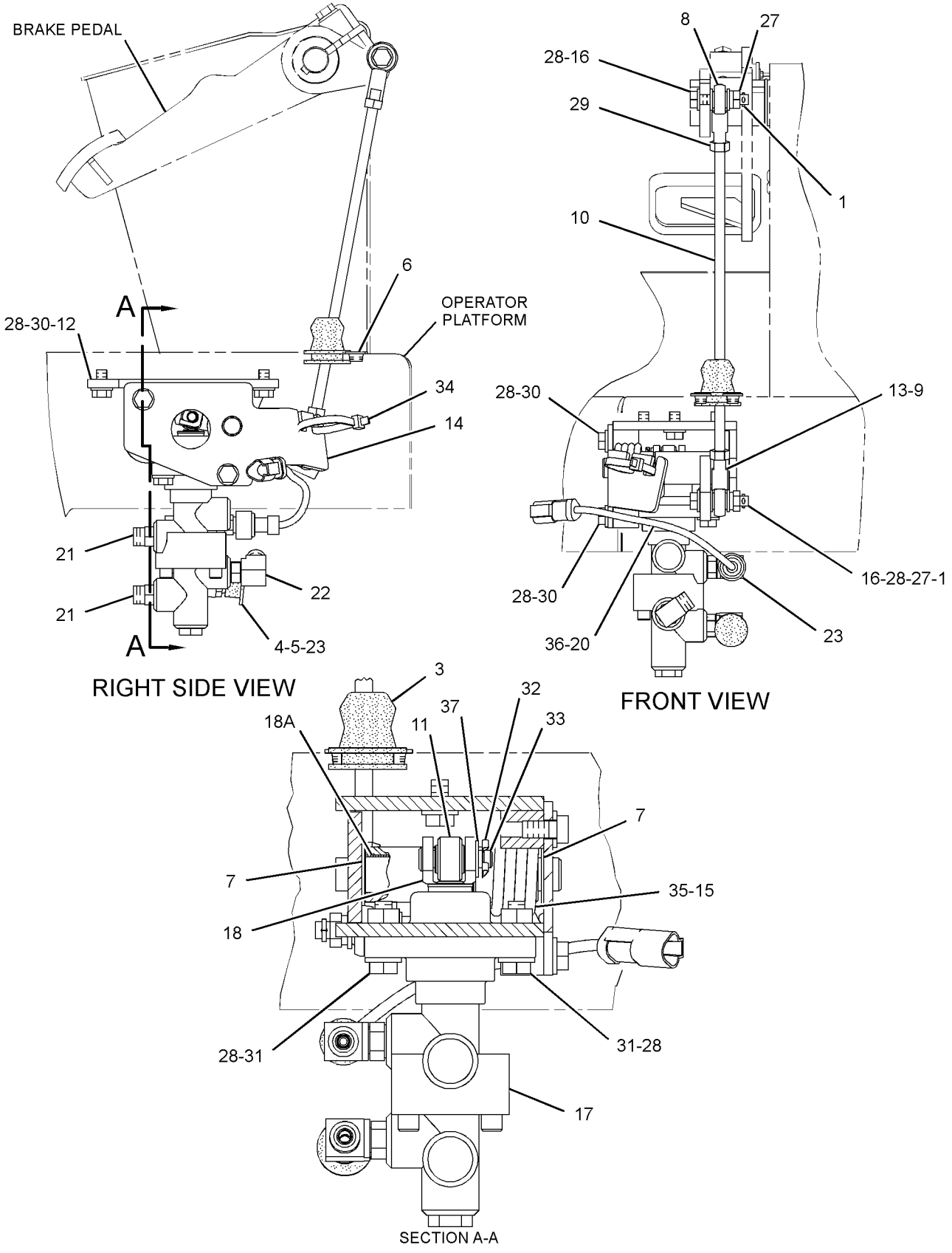

GRAPHIC #1 **<END>** g01723237

BRAKING SYSTEM

289-8925 LINES GP-SERVICE BRAKE

S/N: KLN1-UP

PART OF 289-8841 CHASSIS AR

SMCS-4257 **i03315473**

NOTE	REF NO	GRAPHIC REF	PART NUMBER	QTY	PART NAME 1 2 3 4 5 6 (PRODUCT LEVEL)	SEE PAGE
	1	1	**3S-2093**	4	STRAP-CABLE	
	2	1	**4E-7540**	1	ANGLE	
	3	1	**9L-1566**	1	SUPPORT	
I	4	1	**090-8516**	2	HOSE AS	
	5	1	**091-0081**	1	SPACER (10.5X20X10-MM THK)	
	6	1	**111-6940**	1	SPACER (13.1X15.9X36.5-MM THK)	
I	7	1	**8W-2522**	1	HOSE AS	
Y	8	1	*140-9251*	2	ACCUMULATOR GP-BRAKE (CHARGED)	307
I	9	1	**140-9273**	1	HOSE AS	
	10	1	**156-4130**	4	CLIP-TUBE	
	11	1	*156-4281*	1	TEE AS	
		1	**3J-7354**	1	SEAL-O-RING	
		1	**6V-8397**	2	SEAL-O-RING	
		1	**7X-0838**	1	TEE-O-RING	
M	12	1	**8T-4185**	1	BOLT (M10X1.5X50-MM)	
	13	1	**200-6345**	1	MOUNT (DUAL SWIVEL)	
	14	1	**204-2281**	3	STRAP-TIE	
	15	1	**205-5469**	1	GUARD-HOSE	
I	16	1	**214-8917**	2	HOSE AS	
I	17	1	**218-0001**	2	HOSE AS	
I	18	1	**239-6182**	1	HOSE AS	
	19	1	**300-9097**	1	BRACKET AS	
	20	1	**7K-1181**	4	STRAP-CABLE	
	21	1	*148-8336*	1	CONNECTOR AS	
		1	**6V-8397**	1	SEAL-O-RING	
		1	**3J-1907**	1	SEAL-O-RING	
		1	**6V-8636**	1	CONNECTOR	
	22	1	*148-8361*	2	ELBOW AS	
					(EACH INCLUDES)	
		1	**3J-7354**	1	SEAL-O-RING	
		1	**6V-8397**	1	SEAL-O-RING	
		1	**6V-9200**	1	ELBOW	
	23	1	*148-8367*	1	ELBOW AS	
		1	**6V-8397**	1	SEAL-O-RING	
		1	**6V-9850**	1	ELBOW	
	24	1	*148-8378*	1	ELBOW AS	
		1	**3J-1907**	1	SEAL-O-RING	
		1	**6V-8397**	1	SEAL-O-RING	
		1	**6V-8724**	1	ELBOW	
	25	1	*148-8435*	2	TEE AS	
					(EACH INCLUDES)	
		1	**3J-1907**	1	SEAL-O-RING	
		1	**6V-8397**	2	SEAL-O-RING	
		1	**6V-8781**	1	TEE-FACE SEAL	
	26	1	*173-7225*	1	TEE AS	
		1	**3J-7354**	1	SEAL-O-RING	
		1	**6V-8397**	2	SEAL-O-RING	
		1	**6V-9161**	1	TEE	
	27	1	**204-8000**	1	MOUNT (TIE WRAP)	
	28	1	**5P-4295**	1	CLIP	
M	29	1	**5C-7261**	1	NUT (M8X1.25-THD)	
	30	1	**5K-5338**	2	CLIP	
	31	1	**5P-4116**	3	WASHER-HARD (8.8X20.5X2-MM THK)	
	32	1	**7V-6571**	1	GROMMET	
	33	1	**7X-7729**	9	WASHER (11X25X3-MM THK)	
	34	1	**8D-9671**	1	CLIP	

289-8925 LINES GP-SERVICE BRAKE *(contd.)* i03315473

NOTE	REF NO	GRAPHIC REF	PART NUMBER	QTY	PART NAME 1 2 3 4 5 6 (PRODUCT LEVEL)	SEE PAGE
	35	1	**8M-2773**	2	CLIP	
	36	1	**8T-1895**	1	CLIP (SLOT)	
	37	1	**8T-1896**	1	CLIP (TAB)	
	38	1	**8T-4121**	7	WASHER-HARD (11X21X2.5-MM THK)	
M	39	1	**8T-4133**	2	NUT (M10X1.5-THD)	
M	40	1	**8T-4136**	2	BOLT (M10X1.5X25-MM)	
M	41	1	**8T-4195**	8	BOLT (M10X1.5X30-MM)	
M	42	1	**8T-4196**	2	BOLT (M10X1.5X35-MM)	
M	43	1	**8T-4908**	1	BOLT (M8X1.25X25-MM)	
M	44	1	**8T-6466**	1	BOLT (M10X1.5X60-MM)	

I-REFER TO HYDRAULIC INFORMATION SYSTEM
M-METRIC PART
Y-SEPARATE ILLUSTRATION

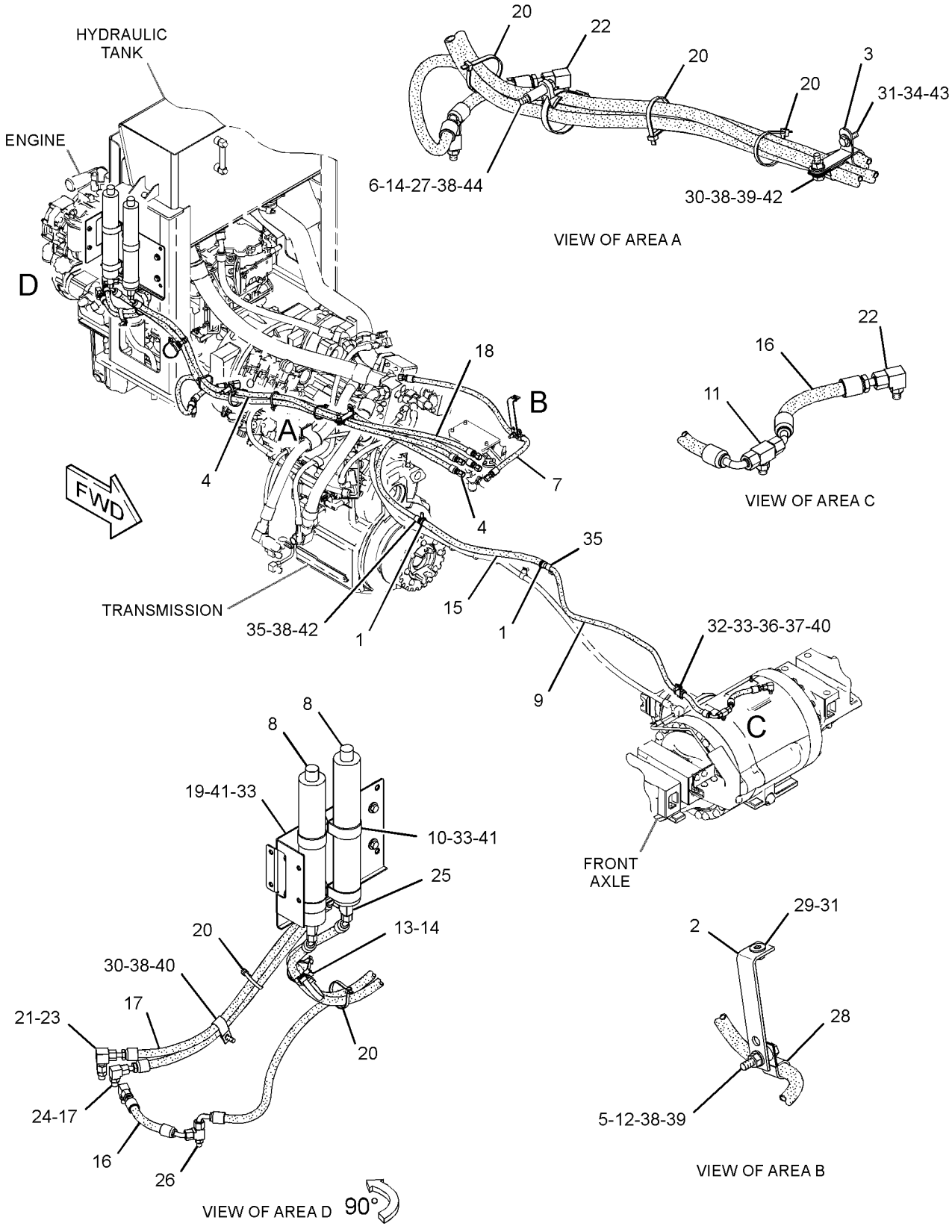

GRAPHIC #1 **<END>** g01845079

STEERING SYSTEM

132-2550 CYLINDER & MTG GP-STEERING

S/N: KLN1-UP

PART OF 289-8841 CHASSIS AR

SMCS-4303 **i01499448**

NOTE	REF NO	GRAPHIC REF	PART NUMBER	QTY	PART NAME 1 2 3 4 5 6 (PRODUCT LEVEL)	SEE PAGE
B	1	1	**9D-1535**	16	WASHER-THRUST (44.8X101.6X1.22-MM THK)	
	2	1	**132-2553**	2	PIN	
	3	1	**132-2554**	2	PIN AS	
Y	4	1	**142-6251**	2	CYLINDER GP-STEERING	323
	5	1	**6V-3213**	2	RING-RETAINING	
	6	1	**7X-0618**	2	WASHER-HARD (13.5X40X5-MM THK)	
M	7	1	**8T-4192**	2	BOLT (M12X1.75X25-MM)	

B-USE AS REQUIRED
M-METRIC PART
Y-SEPARATE ILLUSTRATION

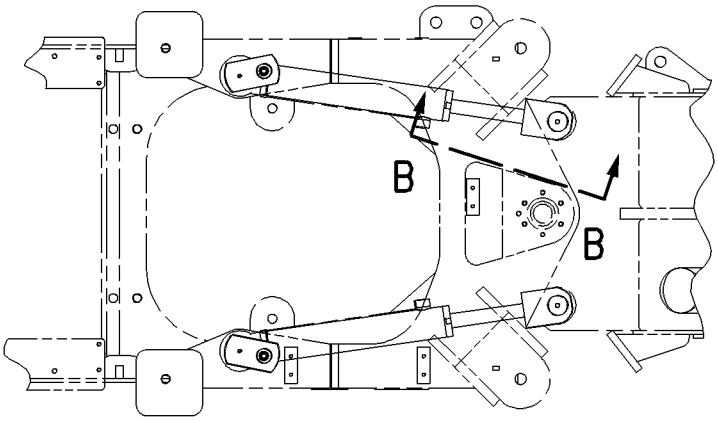

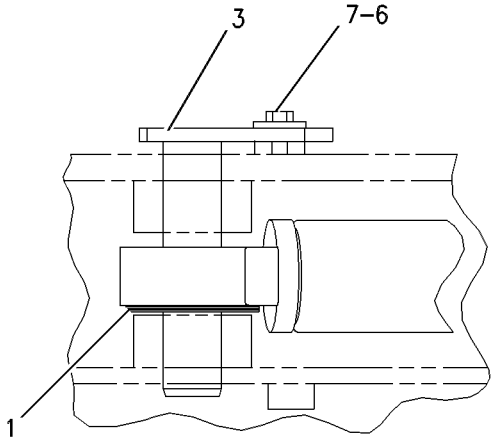

VIEW OF AREA A

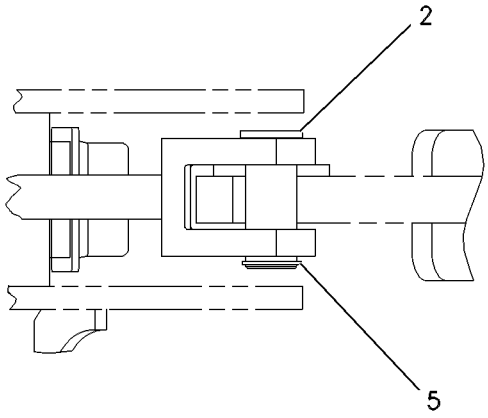

VIEW B-B

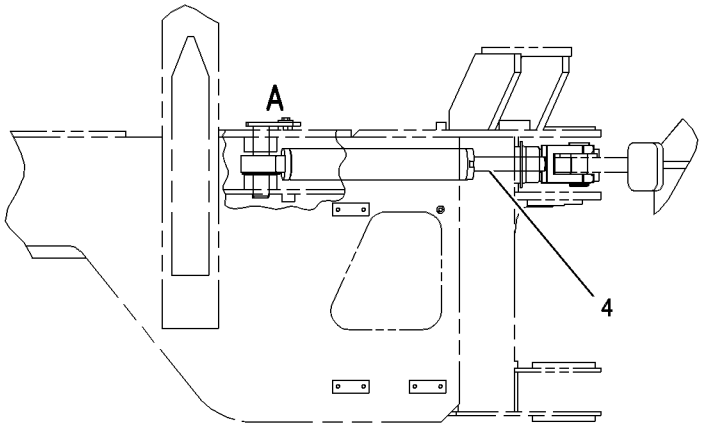

GRAPHIC #1 **<END>** g00623407

STEERING SYSTEM

180-6366 CYLINDER GP-HYDRAULIC

S/N: KLN1-UP
PART OF 179-3192 BUCKET AR-SIDE DUMP
AN ATTACHMENT

SMCS-4303 **i03082741**

NOTE	REF NO	GRAPHIC REF	PART NUMBER	QTY	PART NAME 1 2 3 4 5 6 (PRODUCT LEVEL)	SEE PAGE
J	1	1	**6J-2797**	1	RING-WEAR	
J	2	1	**5J-5402**	1	SEAL AS	
J	3	1	**5F-8000**	1	SEAL-O-RING	
J	4	1	**4T-5613**	1	RING-WEAR	
J	5	1	**167-2195**	1	SEAL AS-BUFFER	
J	6	1	**167-2304**	1	SEAL-U-CUP	
J	7	1	**229-9382**	1	SEAL-WIPER	
J	8	1	**2K-6830**	1	RING-BACKUP	
J	9	1	**1H-8128**	1	SEAL-O-RING	
J	10	1	**5J-7876**	2	BEARING-SLEEVE	
J	11	1	**9J-1318**	1	SEAL AS	
					AVAILABLE REPAIR KIT(S):	
J			**180-7208**	1	KIT-SEAL	
J-KIT MARKED J SERVICES PART(S) MARKED J						

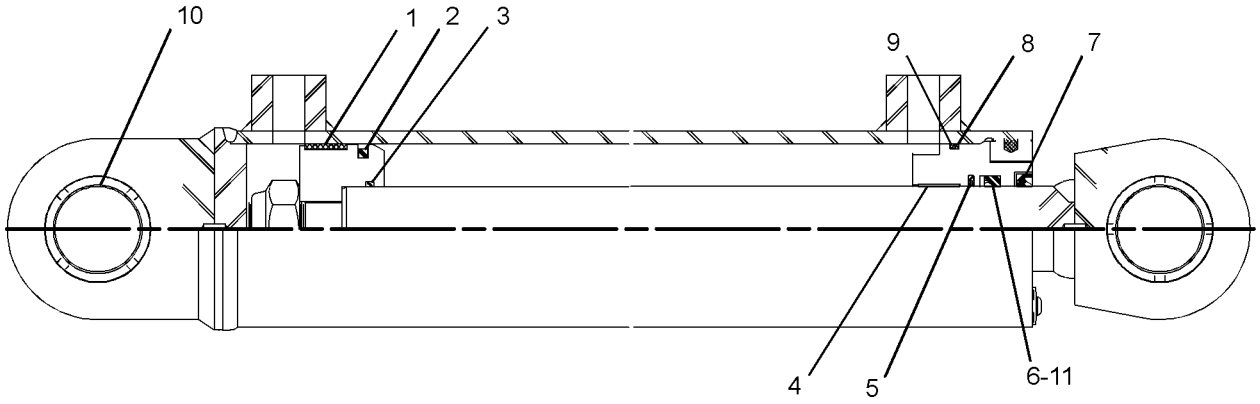

GRAPHIC #1 **<END>** g01010510

142-6251 CYLINDER GP-STEERING

S/N: KLN1-UP

69.85MM (2.75IN)BORE X 344.7MM (13.6IN) STROKE

PART OF 132-2550 CYLINDER & MTG GP-STEERING

SMCS-4303 **i02007067**

NOTE	REF NO	GRAPHIC REF	PART NUMBER	QTY	PART NAME 1 2 3 4 5 6 (PRODUCT LEVEL)	SEE PAGE
	1	1	**142-6252**	1	CYLINDER AS	
	1A	1	**4D-4431**	1	BEARING-ALIGNING	
M	2	1	**173-9779**	1	BOLT (M24X3.0X80MM)	
	3	1	**6V-8237**	1	WASHER (26X44X4MM THK)	
	4	1	**8J-0112**	1	RING-WEAR	
J	5	1	**5J-7010**	1	SEAL AS	
	6	1	**142-7568**	1	PISTON	
	7	1	**6E-4940**	1	HEAD	
	8	1	**142-6255**	1	ROD AS	
J	9	1	**4J-9225**	1	RING-BACKUP	
J	10	1	**175-7895**	1	SEAL-O-RING	
J	11	1	**4T-6780**	1	RING-WEAR	
J	12	1	**167-2186**	1	SEAL AS-BUFFER	
J	13	1	**167-2294**	1	SEAL-U-CUP	
CJ	14	1	**226-8202**	1	SEAL-WIPER	
					AVAILABLE REPAIR KIT(S):	
J			**233-9204**	1	KIT-SEAL	

C-CHANGE FROM PREVIOUS TYPE
J-KIT MARKED J INCLUDES PARTS MARKED J
M-METRIC PART

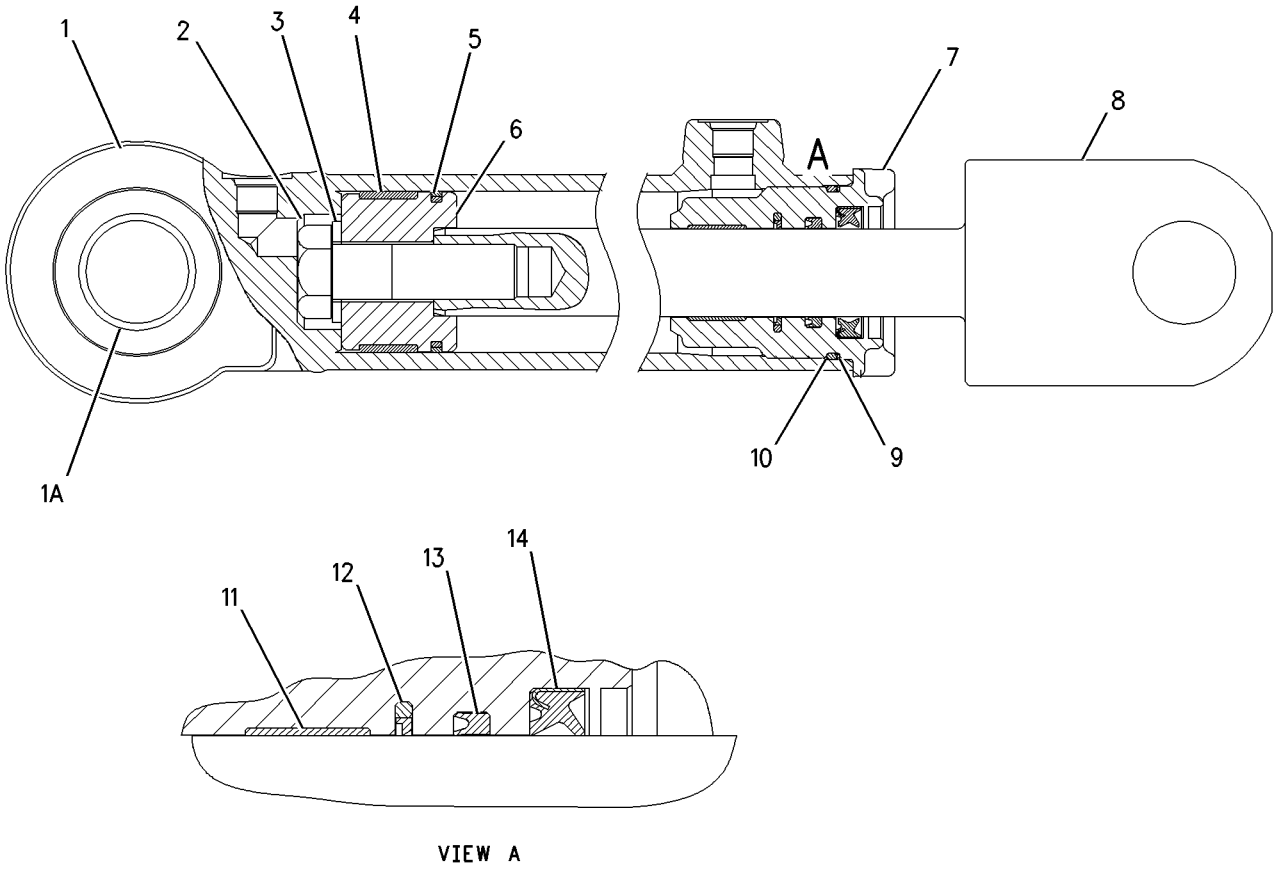

GRAPHIC #1 **<END>** g00943412

STEERING SYSTEM

214-5871 LINES GP-STEERING

S/N: KLN1-UP
PART OF 294-9439 STEERING AR-STANDARD
AN ATTACHMENT

SMCS-4304 **i03015310**

NOTE	REF NO	GRAPHIC REF	PART NUMBER	QTY	PART NAME 1 2 3 4 5 6 (PRODUCT LEVEL)	SEE PAGE
	1	2	**6V-0852**	1	CAP-DUST	
I	2	1	**146-7906**	1	HOSE AS	
I	3	1	**146-7907**	1	HOSE AS	
I	4	1	**146-7908**	1	HOSE AS	
	5	1	**214-4153**	1	PUMP GP-METERING (HMU)	
I	6	1	**169-2943**	1	HOSE AS	
	7	2	*169-4274*	1	TEE AS	
		2	**3J-7354**	1	SEAL-O-RING	
		2	**4J-5477**	1	SEAL-O-RING	
		2	**8T-3313**	1	TEE-O-RING	
I	8	1	**172-6456**	1	HOSE AS	
I	9	1	**214-7098**	1	HOSE AS	
I	10	1	**216-8396**	1	HOSE AS	
	11	1,2	*148-8340*	4	CONNECTOR AS	
					(EACH INCLUDES)	
		1,2	**3K-0360**	1	SEAL-O-RING	
		1,2	**6V-8398**	1	SEAL-O-RING	
		1,2	**6V-8639**	1	CONNECTOR	
	12	1,2	*148-8342*	2	CONNECTOR AS	
					(EACH INCLUDES)	
		1,2	**3K-0360**	1	SEAL-O-RING	
		1,2	**6V-8632**	1	CONNECTOR	
		1,2	**7J-9108**	1	SEAL-O-RING	
	13	2	*148-8364*	2	ELBOW AS	
					(EACH INCLUDES)	
		2	**3K-0360**	1	SEAL-O-RING	
		2	**6V-8398**	1	SEAL-O-RING	
		2	**6V-8625**	1	ELBOW	
	14	1	*148-8369*	1	ELBOW AS	
		1	**3J-7354**	1	SEAL-O-RING	
		1	**4J-5477**	1	SEAL-O-RING	
		1	**6V-8628**	1	ELBOW	
	15	2	*148-8428*	1	TEE AS	
		2	**3K-0360**	1	SEAL-O-RING	
		2	**6V-8398**	2	SEAL-O-RING	
		2	**6V-8782**	1	TEE	
	16	2	*148-8436*	1	TEE AS	
		2	**3K-0360**	1	SEAL-O-RING	
		2	**6V-8398**	2	SEAL-O-RING	
		2	**6V-8775**	1	TEE-FACE SEAL	
	17	1	*148-8408*	1	PLUG AS	
		1	**3D-2824**	1	SEAL-O-RING	
		1	**9S-4183**	1	PLUG-O-RING	
	18	2	*164-5567*	1	COUPLER AS-QUICK DISCONNECT	
		2	**3J-1907**	1	SEAL-O-RING	
		2	**6V-3965**	1	FITTING (QUICK DISCONNECT)	
	19	1	**164-4225**	1	CLIP	
	20	2	**8S-0948**	2	CLIP	
	21	2	**8T-4121**	2	WASHER-HARD (11X21X2.5-MM THK)	
M	22	2	**8T-4137**	2	BOLT (M10X1.5X20-MM)	

I-REFER TO HYDRAULIC INFORMATION SYSTEM
M-METRIC PART

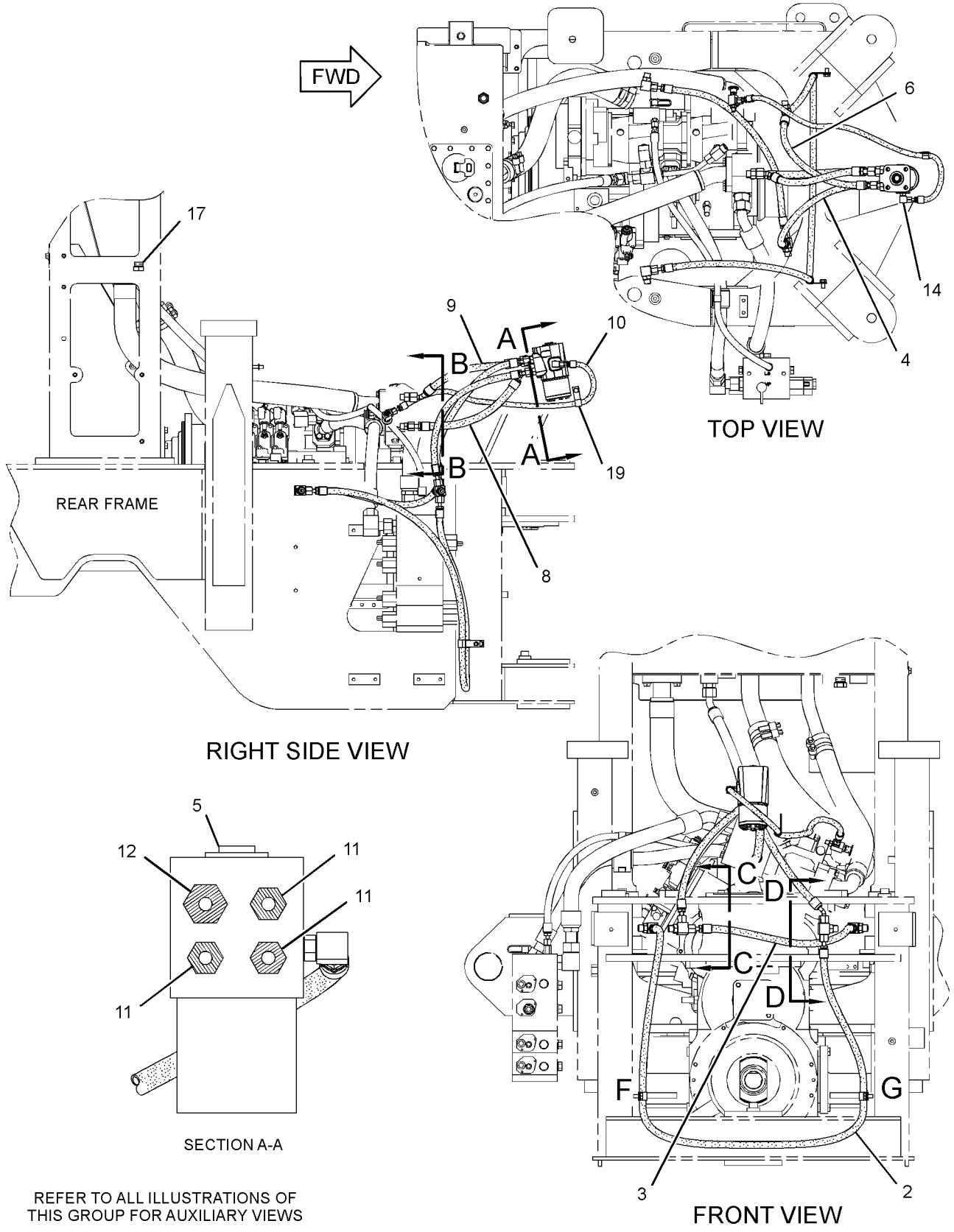

REFER TO ALL ILLUSTRATIONS OF
THIS GROUP FOR AUXILIARY VIEWS

GRAPHIC #1

g01620751

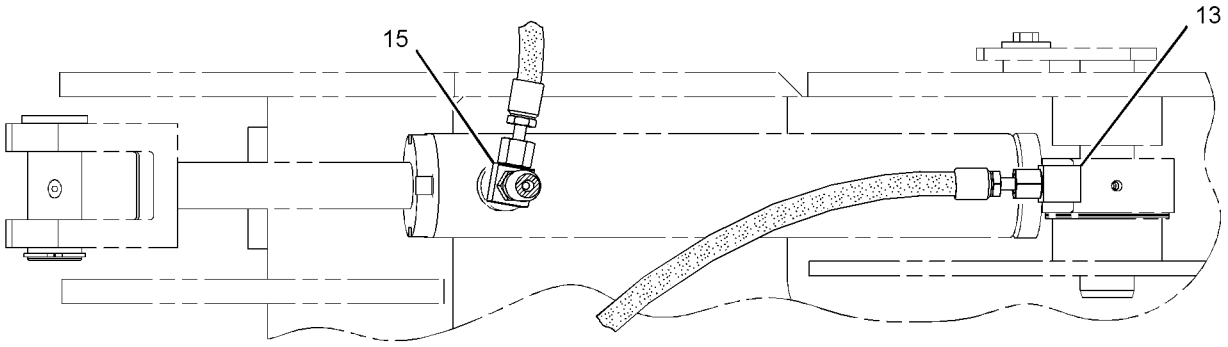

SECTION C-C

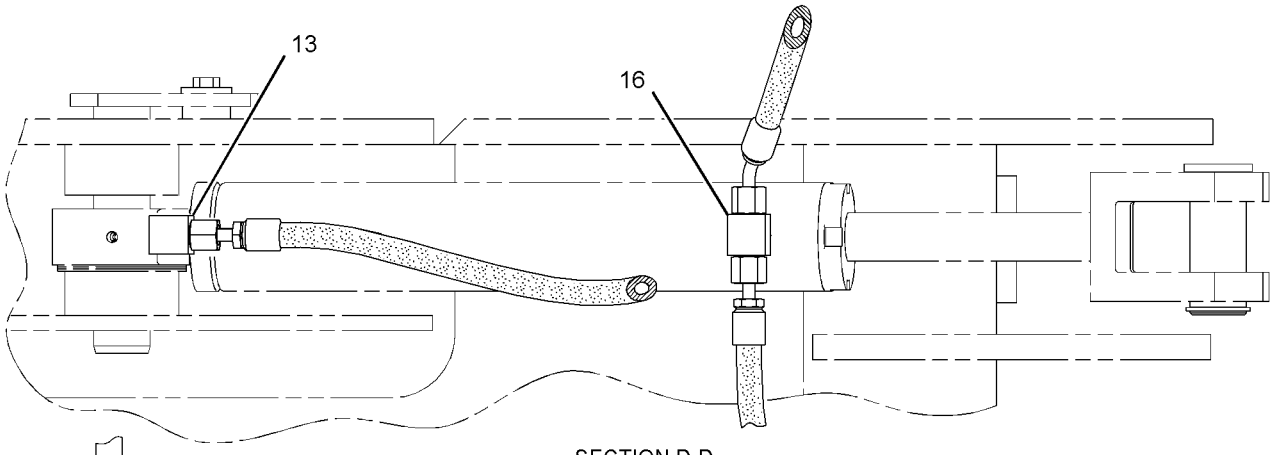

SECTION D-D

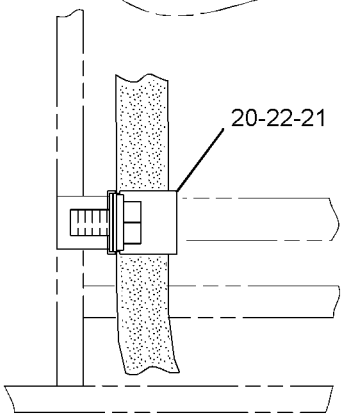

VIEW OF AREA F

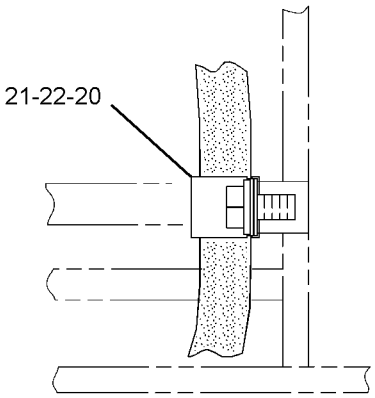

VIEW OF AREA G

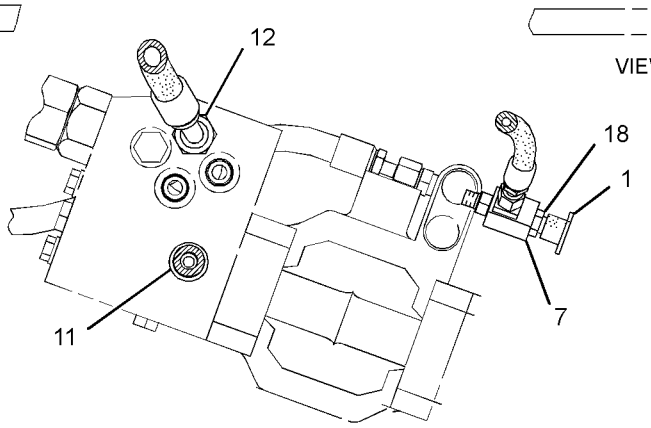

SECTION B-B

GRAPHIC #2 **<END>** g01620752

STEERING SYSTEM

294-9439 STEERING AR-STANDARD

S/N: KLN1-UP

AN ATTACHMENT

SMCS-4300, 4307 **i03511160**

NOTE	PART NUMBER	QTY	PART NAME 1 2 3 4 5 6 (PRODUCT LEVEL)	SEE PAGE
Y	*290-7203*	1	BATTERY & WIRING GP (STEERING)	124
Y	*214-5871*	1	LINES GP-STEERING	325

Y-SEPARATE ILLUSTRATION

<END>

STEERING SYSTEM

319-1625 STEERING COLUMN GP-ADJUSTABLE

S/N: KLN1-UP

PART OF 190-4635 CONTROL GP-STEERING

AN ATTACHMENT

SMCS-4338 **i03569837**

NOTE	REF NO	GRAPHIC REF	PART NUMBER	QTY	PART NAME 1 2 3 4 5 6 (PRODUCT LEVEL)	SEE PAGE
	1	1	**9G-3695**	1	PLUG	
	2	1	**102-8802**	1	KIT-RECEPTACLE (2-PIN)	
					(INCLUDES RECEPTACLE AS & WEDGE)	
	3	1	**186-3735**	1	PIN-CONNECTOR (16-GA TO 18-GA)	
	4	1	**149-0777**	1	KNOB (STEERING COLUMN TILT)	
	5	1	**319-9510**	1	SPRING AS-GAS (STEERING COLUMN)	
	6	1	**217-4155**	1	KIT-TILT LEVER (STEERING COLUMN)	
					(INCLUDES BOLTS, DOWEL, ROLL PIN, SPRING & TILT LEVER)	
	7	1	**332-6884**	1	KIT-CONTACT (HORN)	
					(INCLUDES HORN CONTACT AS & SCREWS)	
	8	1	**321-6951**	1	KIT-PIVOT (STEERING COLUMN TILT)	
					(INCLUDES PINS & BUSHINGS)	
	9	1	**311-8557**	1	COLUMN AS-STEERING	
M	10	1	**6V-8227**	1	NUT (M18X1.5-THD)	

M-METRIC PART

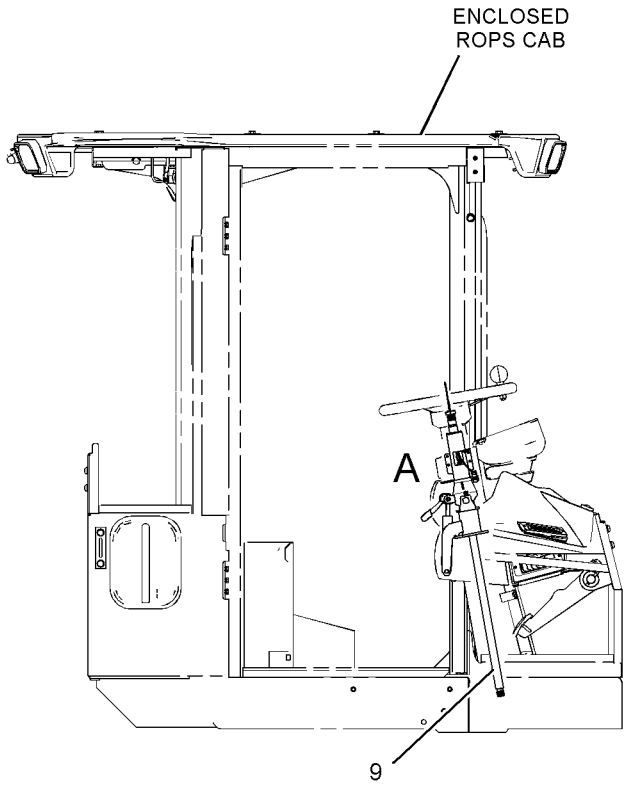

RIGHT SIDE VIEW

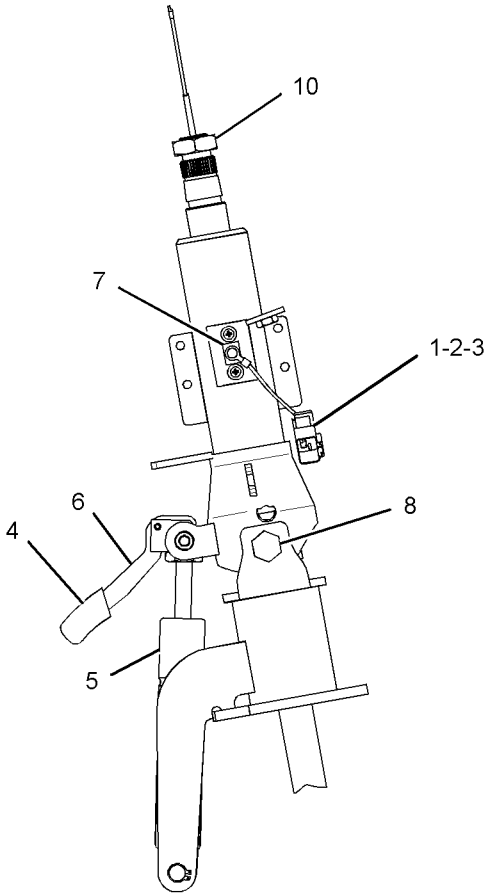

VIEW OF AREA A

GRAPHIC #1 **<END>** g01452575

243-4398 ACCUMULATOR GP-PILOT OIL—CHARGED

S/N: KLN1-UP
PART OF 289-8796 LINES GP-PILOT
FIELD REPLACEMENT ORDER 250-0393—PAGE 331

SMCS-5077 **i02777149**

NOTE	REF NO	GRAPHIC REF	PART NUMBER	QTY	PART NAME 1 2 3 4 5 6 (PRODUCT LEVEL)	SEE PAGE
	1	1	**224-5152**	1	VALVE-GAS	
	2	1	**224-5132**	1	CAP (GAS VALVE)	
	3	1	**3J-7354**	1	SEAL-O-RING	
	4	1	**1J-9671**	1	SEAL-O-RING	

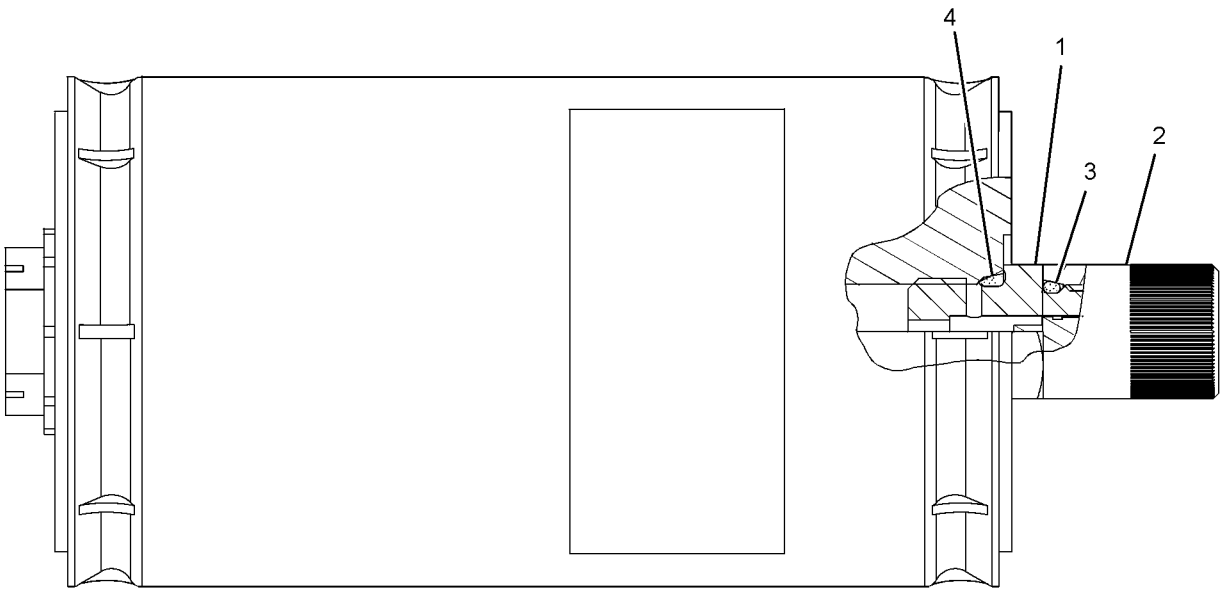

GRAPHIC #1 **<END>** g01396185

250-0393 ACCUMULATOR GP-PILOT OIL–UNCHARGED

S/N: KLN1-UP

FIELD REPLACEMENT FOR 243-4398–PAGE 330

SMCS-5077 **i02307418**

NOTE	REF NO	GRAPHIC REF	PART NUMBER	QTY	PART NAME 1 2 3 4 5 6 (PRODUCT LEVEL)	SEE PAGE
	1	1	**224-5152**	1	VALVE-GAS	

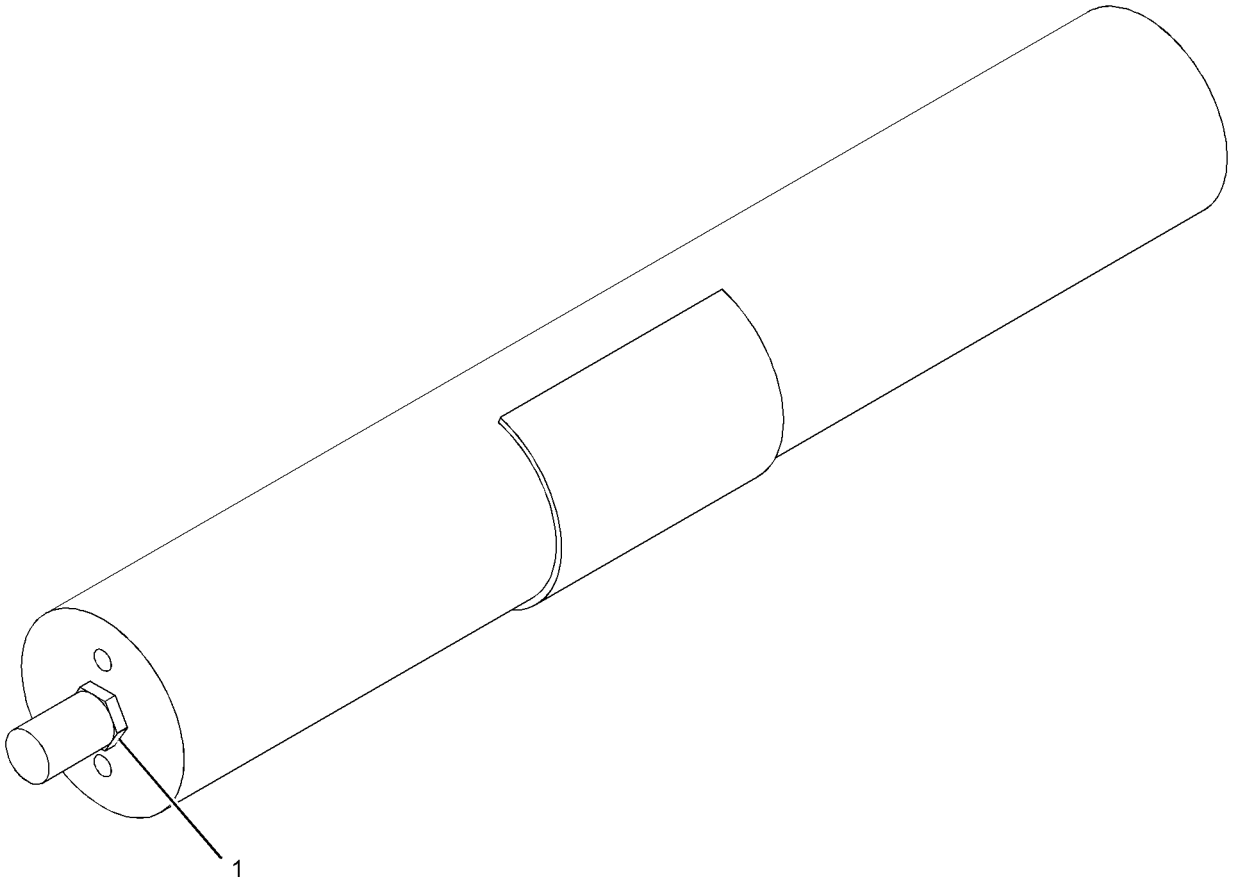

GRAPHIC #1 **<END>** g01107941

283-4418 ACCUMULATOR GP-RIDE CONTROL–CHARGED

S/N: KLN1-UP
PART OF 293-6472 CONTROL GP-RIDE
AN ATTACHMENT

SMCS-5004, 5077 **i03042701**

NOTE	REF NO	GRAPHIC REF	PART NUMBER	QTY	PART NAME 1 2 3 4 5 6 (PRODUCT LEVEL)	SEE PAGE
	1	1	**224-5132**	1	CAP (GAS VALVE)	
	2	1	**224-5152**	1	VALVE-GAS	
	3	1	**3J-7354**	1	SEAL-O-RING	
	4	1	**1J-9671**	1	SEAL-O-RING	
	5	1	**3D-2824**	1	SEAL-O-RING	
	6	1	**241-0037**	1	FILM-WARNING (HIGH PRESSURE, READ OMM)	
					AVAILABLE REPAIR KIT(S):	
			160-0496	1	KIT-SEAL (ACCUMULATOR)	
					(INCLUDES END CAP SEALS, PISTON SEALS & GAS VALVE SEAL)	

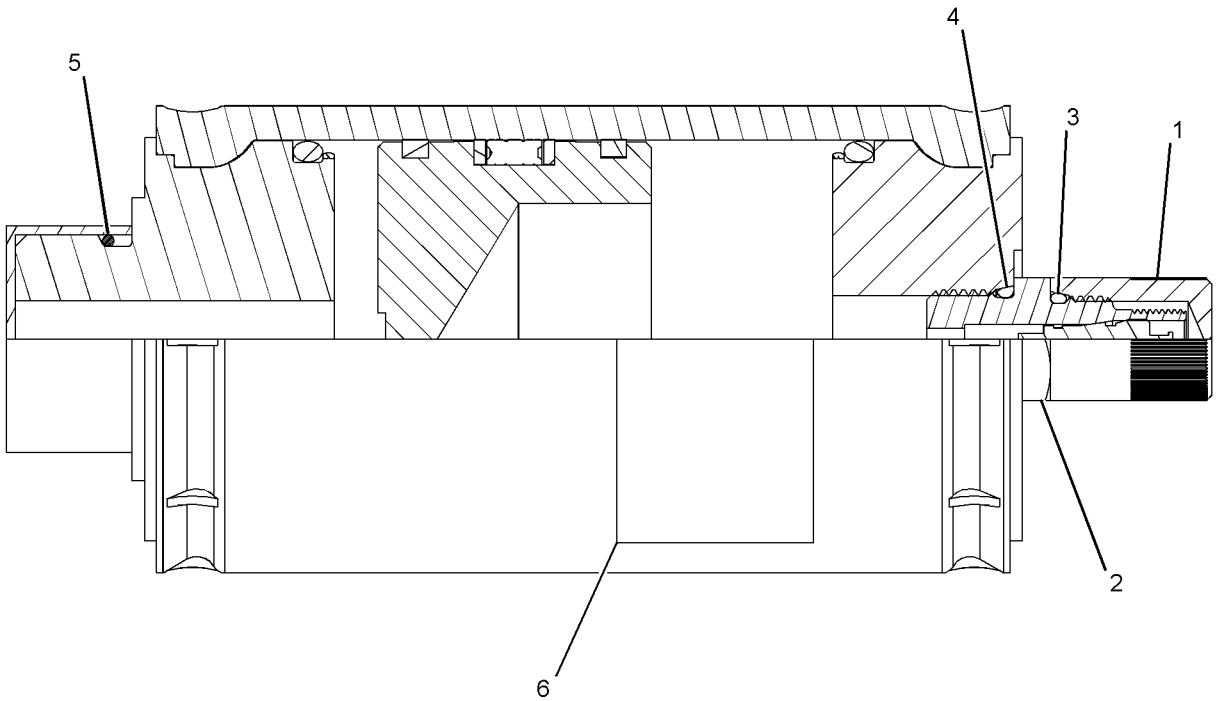

GRAPHIC #1 **<END>** g01393627

298-2412 ACCUMULATOR GP-RIDE CONTROL–CHARGED

S/N: KLN1-UP
PART OF 293-6472 CONTROL GP-RIDE
AN ATTACHMENT

SMCS-5004, 5077 **i03039483**

NOTE	REF NO	GRAPHIC REF	PART NUMBER	QTY	PART NAME 1 2 3 4 5 6 (PRODUCT LEVEL)	SEE PAGE
	1	1	**224-5132**	1	CAP (GAS VALVE)	
	2	1	**224-5152**	1	VALVE-GAS	
	3	1	**3J-7354**	1	SEAL-O-RING	
	4	1	**1J-9671**	1	SEAL-O-RING	
	5	1	**3D-2824**	1	SEAL-O-RING	
	6	1	**241-0037**	1	FILM-WARNING (HIGH PRESSURE, READ OMM)	

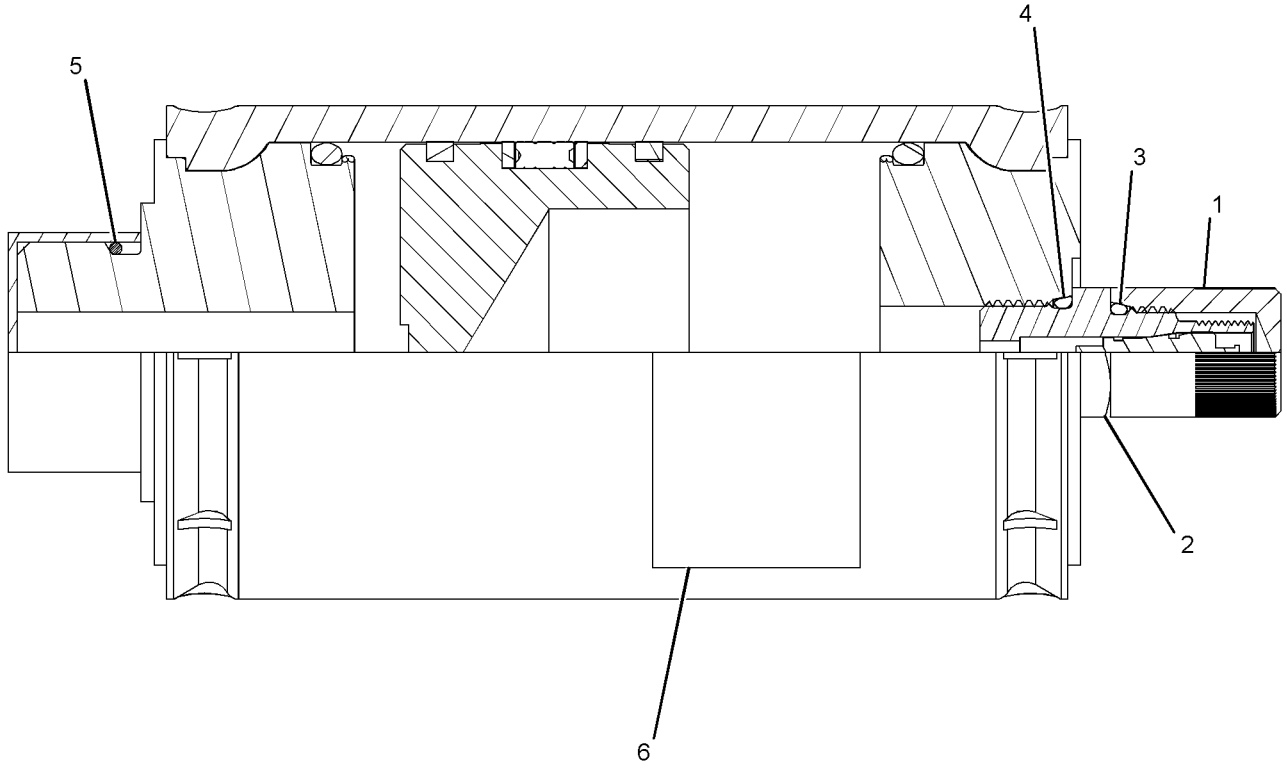

GRAPHIC #1 **<END>** g01395168

HYDRAULIC SYSTEM

289-8995 CONTROL AR-RIDE

S/N: KLN1-UP

AN ATTACHMENT

SMCS-5004 **i03043962**

NOTE	PART NUMBER	QTY	PART NAME 1 2 3 4 5 6 (PRODUCT LEVEL)	SEE PAGE
Y	*290-7184*	1	LINES GP-RIDE CONTROL	392
Y	*295-5544*	1	VALVE & MTG GP-RIDE CONTROL	426
Y	*290-7188*	1	WIRING GP-RIDE CONTROL	199

Y-SEPARATE ILLUSTRATION

<END>

293-6472 CONTROL GP-RIDE

S/N: KLN1-UP

PART OF 295-5544 VALVE & MTG GP-RIDE CONTROL

AN ATTACHMENT

SMCS-5004 **i03039415**

NOTE	REF NO	GRAPHIC REF	PART NUMBER	QTY	PART NAME 1 2 3 4 5 6 (PRODUCT LEVEL)	SEE PAGE
	1	1	**9T-1013**	1	VALVE AS-CHECK	
		1	**3K-0360**	1	SEAL-O-RING	
		1	**6V-8398**	1	SEAL-O-RING	
	2	1	*148-8307*	1	ADAPTER AS	
		1	**3J-1907**	1	SEAL-O-RING	
		1	**5P-8874**	1	ADAPTER	
	3	1	**280-9978**	1	VALVE GP-RIDE CONTROL	
		1	**252-0741**	1	VALVE GP-SOLENOID (RIDE CONTROL)	
		1	**156-5970**	1	NUT (1/2-20-THD)	
		1	**252-0745**	1	COIL AS	
Y	4	1	*283-4418*	2	ACCUMULATOR GP-RIDE CONTROL (CHARGED)	332
Y	5	1	*298-2412*	2	ACCUMULATOR GP-RIDE CONTROL (CHARGED)	333
	6	1	**3D-2824**	4	SEAL-O-RING	

Y-SEPARATE ILLUSTRATION

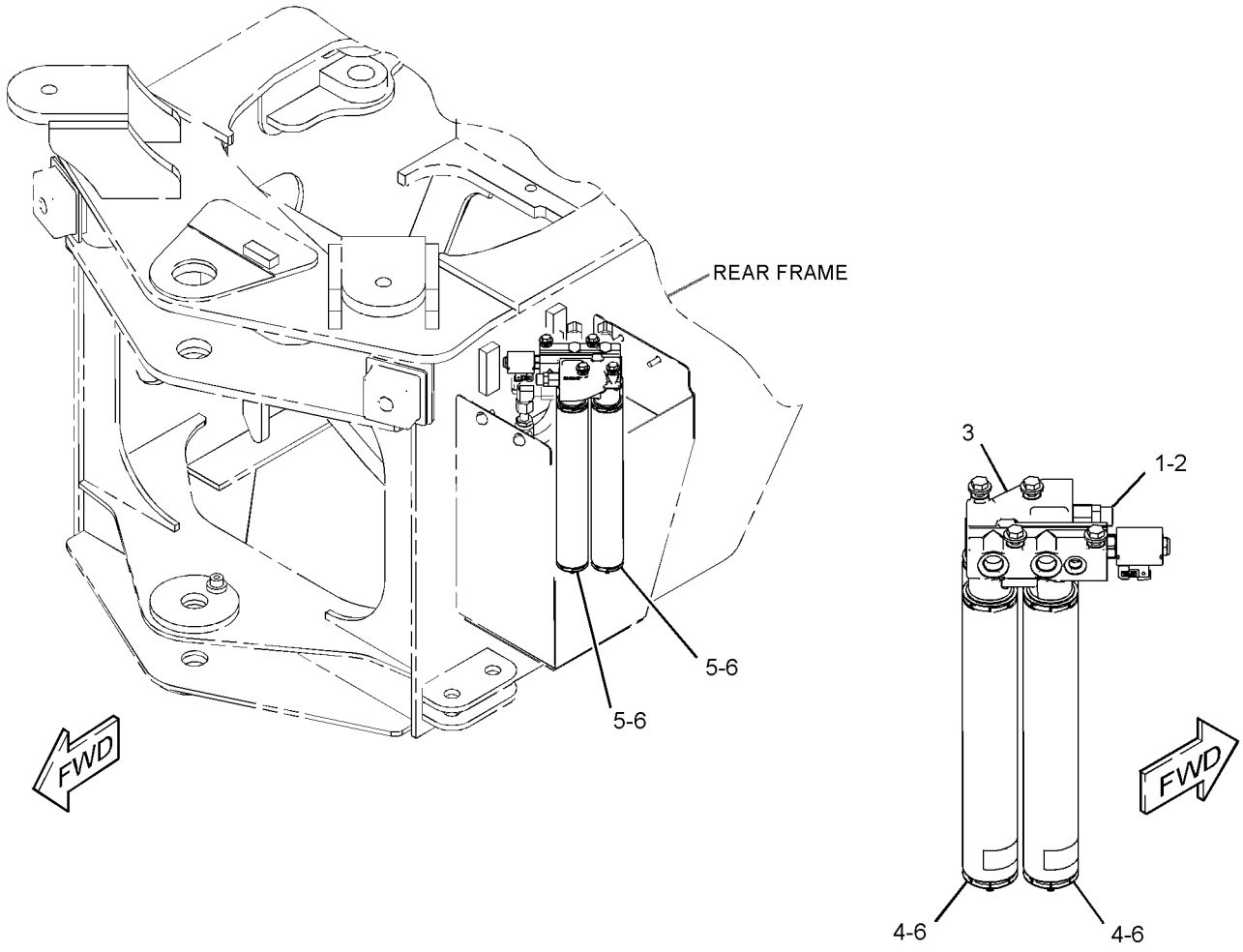

GRAPHIC #1 **<END>** g01393614

HYDRAULIC SYSTEM

293-2239 COOLER GP-HYD & TMSN OIL

S/N: KLN1-UP

PART OF 289-9075 RADIATOR & AFTERCOOLER GP

SMCS-1374, 1375 **i03016518**

NOTE	REF NO	GRAPHIC REF	PART NUMBER	QTY	PART NAME 1 2 3 4 5 6 (PRODUCT LEVEL)	SEE PAGE
	1	1	**123-4065**	32	RIVET-POP	
	2	1	**252-6841**	1	CORE AS-POWER TRAIN OIL COOLER	
Y	3	1	**293-2240**	1	COOLER GP-HYDRAULIC OIL	337

Y-SEPARATE ILLUSTRATION

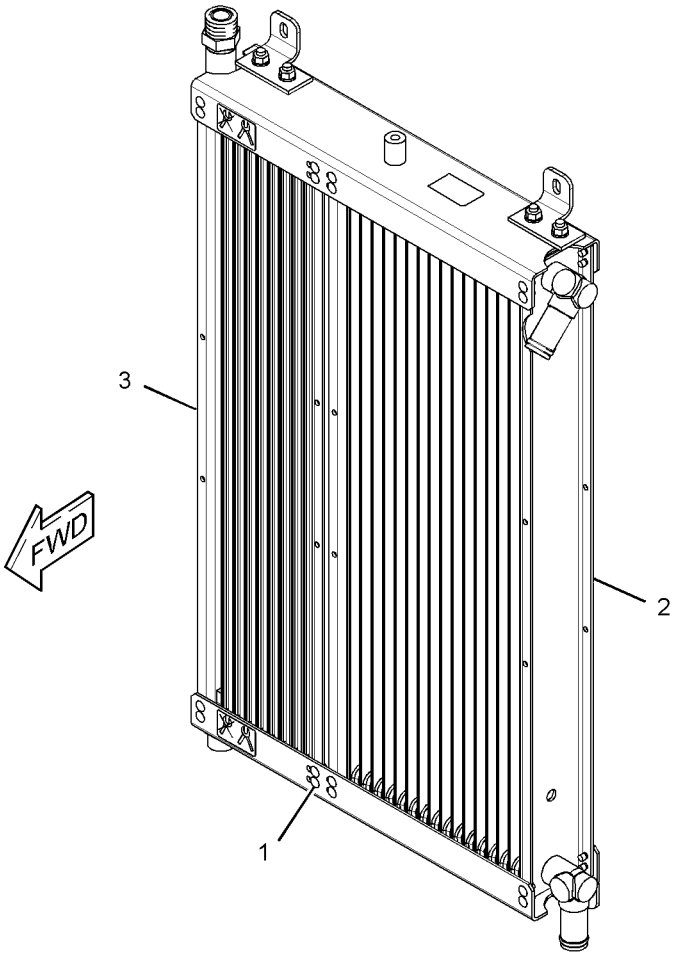

GRAPHIC #1 **<END>** g01391141

293-2240 COOLER GP-HYDRAULIC OIL

S/N: KLN1-UP

PART OF 293-2239 COOLER GP-HYD & XMSN OIL

SMCS-1374 **i03016517**

NOTE	REF NO	GRAPHIC REF	PART NUMBER	QTY	PART NAME 1 2 3 4 5 6 (PRODUCT LEVEL)	SEE PAGE
	1	1	**2M-9780**	2	SEAL-O-RING	
	2	1	**6V-8640**	1	CONNECTOR (SEAL)	
	3	1	**6V-8642**	1	CONNECTOR (SEAL)	
	4	1	**6V-9746**	1	SEAL-O-RING	
	5	1	**7J-9108**	1	SEAL-O-RING	

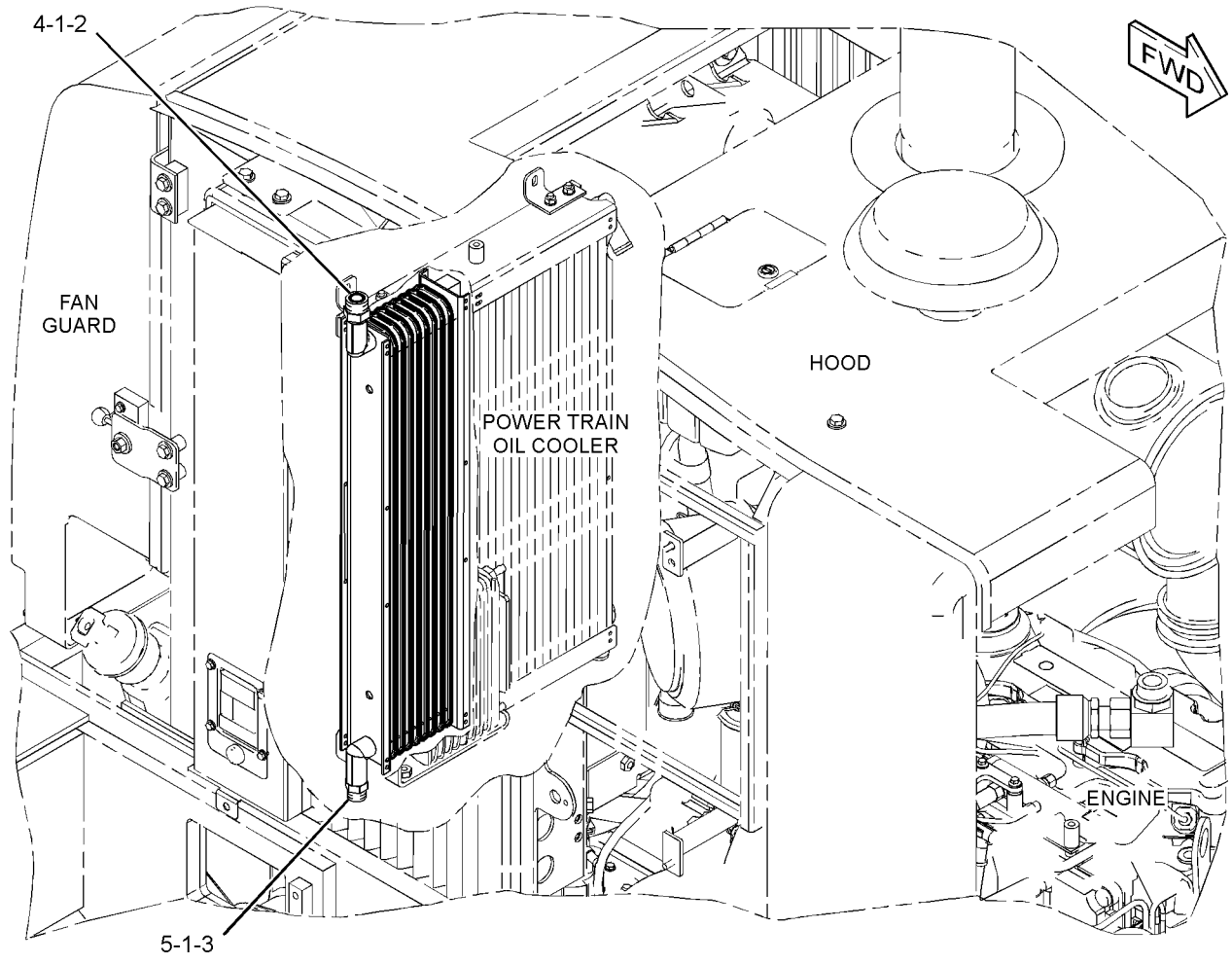

GRAPHIC #1 **<END>** g01391175

HYDRAULIC SYSTEM

328-7484 CORROSION AR-PROTECTION

S/N: KLN1-UP

AN ATTACHMENT

SMCS-0617 **i03088501**

NOTE	PART NUMBER	QTY	PART NAME 1 2 3 4 5 6 (PRODUCT LEVEL)	SEE PAGE
Y	*328-7485*	1	CAB AR-ENCLOSED ROPS	496
Y	*328-7486*	1	CONVERSION GP-CAB	524
Y	*328-7483*	1	SWITCH GP-DISCONNECT	168
	331-4908	1	LINES GP-PROTECTION	
	331-6364	1	PROTECTION GP-VANDALISM	
	127-3485	1	AIR CLEANER AS	

Y-SEPARATE ILLUSTRATION

<END>

148-7827 CYLINDER & MTG GP-COUPLER

S/N: KLN1-UP
PART OF 218-5113 COUPLER AR-QUICK
AN ATTACHMENT

SMCS-5133 **i03569109**

NOTE	REF NO	GRAPHIC REF	PART NUMBER	QTY	PART NAME 1 2 3 4 5 6 (PRODUCT LEVEL)	SEE PAGE
CY	1	1	**190-3085**	1	CYLINDER GP-COUPLER	341
F			**6W-5760**	2	DOWEL	
F			**6W-5761**	2	PIN	

C-CHANGE FROM PREVIOUS TYPE
F-NOT SHOWN
Y-SEPARATE ILLUSTRATION

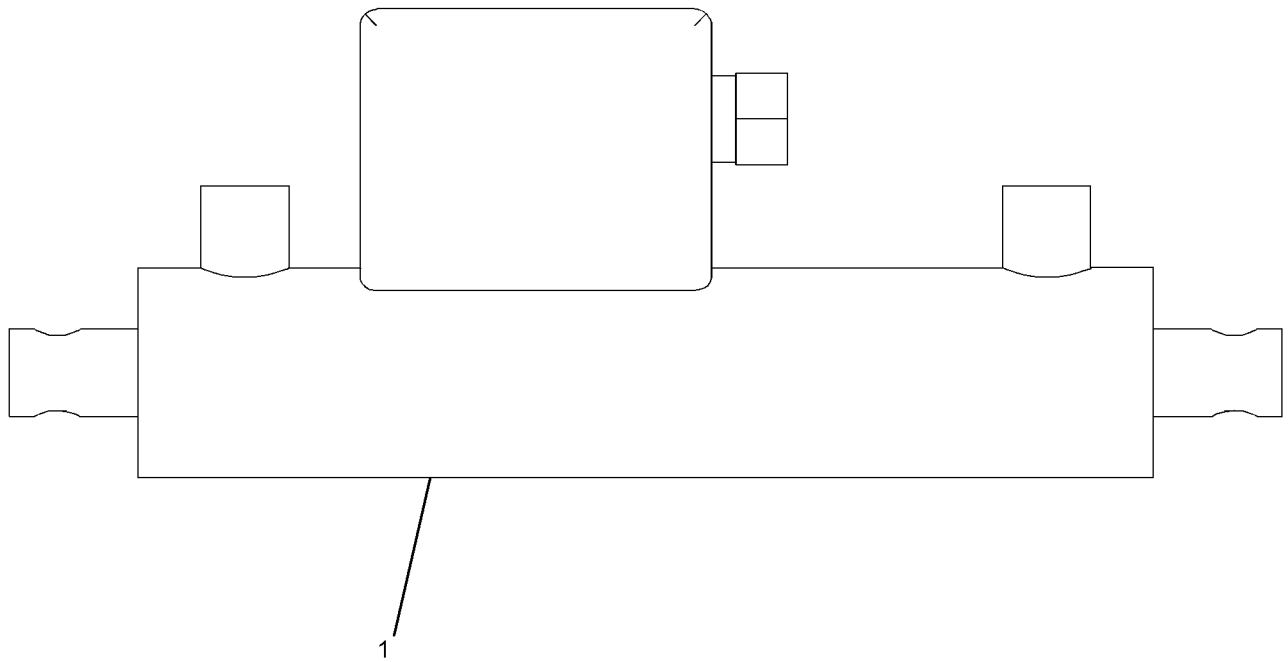

GRAPHIC #1 **<END>** g01896165

HYDRAULIC SYSTEM

180-9338 CYLINDER GP-BUCKET

S/N: KLN1-UP
101.6MM BORE X 257.2MM STROKE
PART OF 180-9335, 183-4735 BUCKET AR-MULTIPURPOSE
AN ATTACHMENT

SMCS-5457, 5498 **i03568305**

NOTE	REF NO	GRAPHIC REF	PART NUMBER	QTY	PART NAME 1 2 3 4 5 6 (PRODUCT LEVEL)	SEE PAGE
	1	1	**7K-0088**	1	BEARING-SLEEVE	
	2	1	**8J-5667**	1	BEARING-SLEEVE	
J	3	1	**4T-5613**	1	RING-WEAR	
J	4	1	**167-2195**	1	SEAL AS-BUFFER	
J	5	1	**1H-8128**	1	SEAL-O-RING	
J	6	1	**2K-6830**	1	RING-BACKUP	
J	7	1	**5J-5402**	1	SEAL AS	
J	8	1	**229-9382**	1	SEAL-WIPER	
	9	1	**9J-1318**	1	SEAL AS	
J	10	1	**167-2304**	1	SEAL-U-CUP	
J	11	1	**6J-2797**	1	RING-WEAR	
					AVAILABLE REPAIR KIT(S):	
J			**233-9205**	1	KIT-SEAL	
					(ALSO INCLUDES SEALS, BACKUP RING & SEAL-O-RING)	

J-KIT MARKED J INCLUDES PART(S) MARKED J

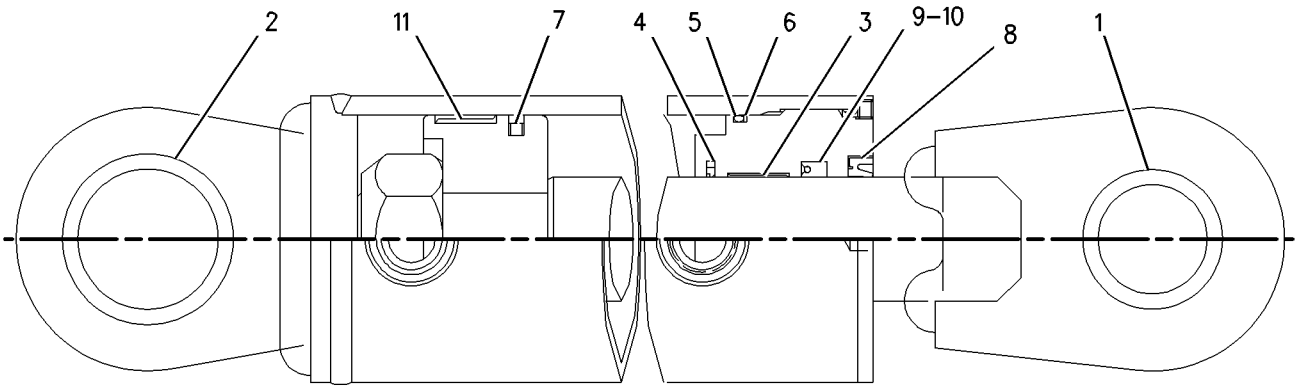

GRAPHIC #1 **<END>** g00709156

190-3085 CYLINDER GP-COUPLER

S/N: KLN1-UP
51-MM (2-IN) BORE X 158-MM (6.2-IN) STROKE
PART OF 148-7827 CYLINDER & MTG GP-COUPLER
AN ATTACHMENT

SMCS-5133 **i03569106**

NOTE	REF NO	GRAPHIC REF	PART NUMBER	QTY	PART NAME 1 2 3 4 5 6 (PRODUCT LEVEL)	SEE PAGE
	1	1	**178-3893**	2	ROD	
	2	1	**190-3611**	1	VALVE GP-CHECK (COUPLER CYLINDER)	
					AVAILABLE REPAIR KIT(S):	
			180-9872	1	KIT-SEAL (COUPLER CYLINDER)	
					(INCLUDES LOCKNUTS, SEALS, RINGS, & RETAINERS)	

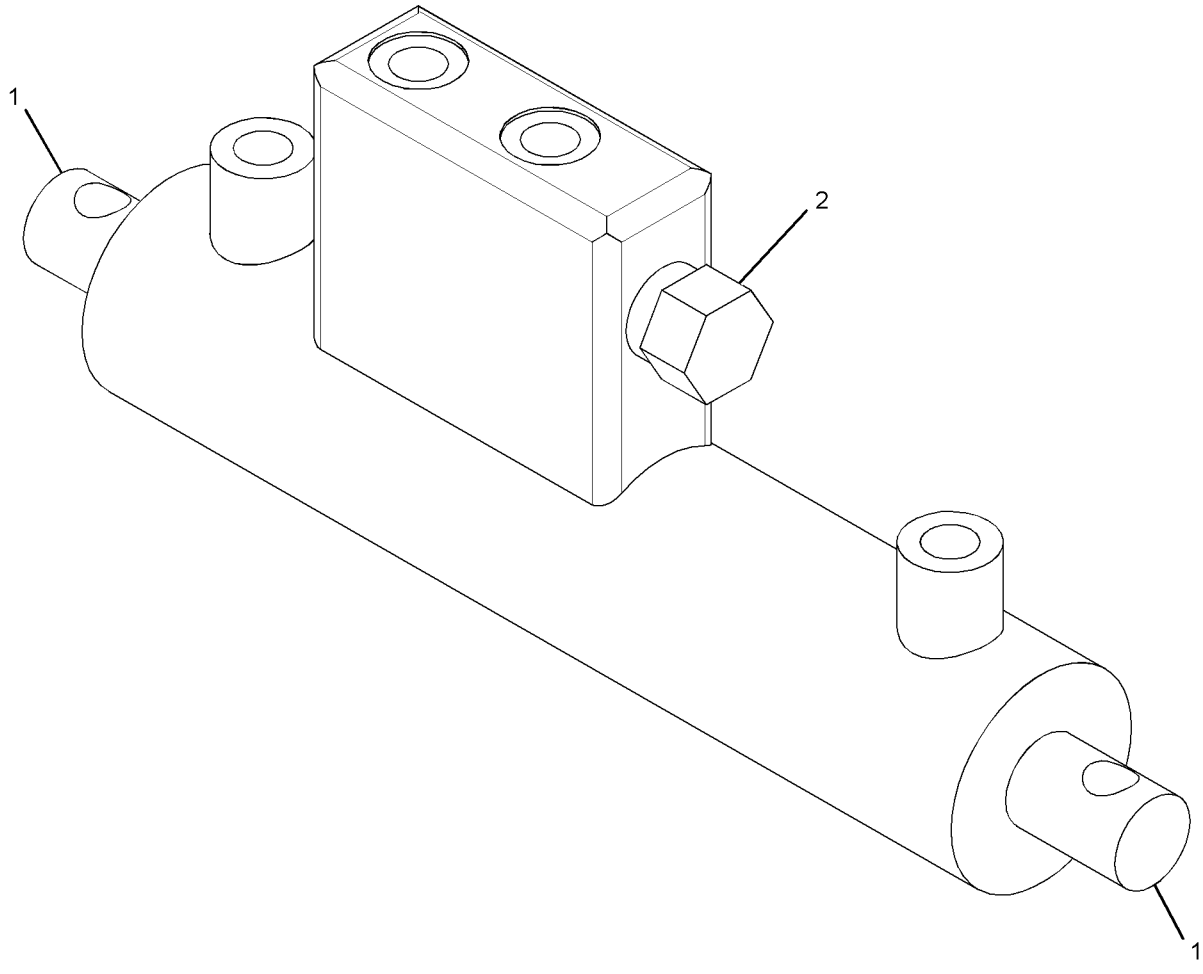

GRAPHIC #1 **<END>** g01896153

HYDRAULIC SYSTEM

141-7483 CYLINDER GP-LIFT

S/N: KLN1-UP
101.6MM (4.0IN)BORE X 807MM (31.77IN) STROKE
PART OF 289-8833 HYDRAULIC AR

SMCS-5102 **i02097730**

NOTE	REF NO	GRAPHIC REF	PART NUMBER	QTY	PART NAME 1 2 3 4 5 6 (PRODUCT LEVEL)	SEE PAGE
	1	1	**141-7486**	1	CYLINDER AS	
		1	**7P-3454**	1	BEARING-SLEEVE	
M	2	1	**173-9682**	1	BOLT (M36X4X100-MM)	
	3	1	**7D-5238**	1	WASHER (37.5X62X6-MM THK)	
	4	1	**6J-2797**	1	RING-WEAR	
	5	1	**5J-5402**	1	SEAL AS	
	6	1	**121-3397**	1	HEAD	
	7	1	**175-7537**	1	ROD AS	
		1	**118-1008**	1	BEARING	
	8	1	**2K-6830**	1	RING-BACKUP	
	9	1	**175-7900**	1	SEAL-O-RING	
	10	1	**142-5893**	1	PISTON	
	11	1	**8T-0785**	1	RING-WEAR	
	12	1	**167-2201**	1	SEAL AS-BUFFER	
	13	1	**167-2312**	1	SEAL-U-CUP	
	14	1	**225-3281**	1	SEAL-WIPER	

M-METRIC PART

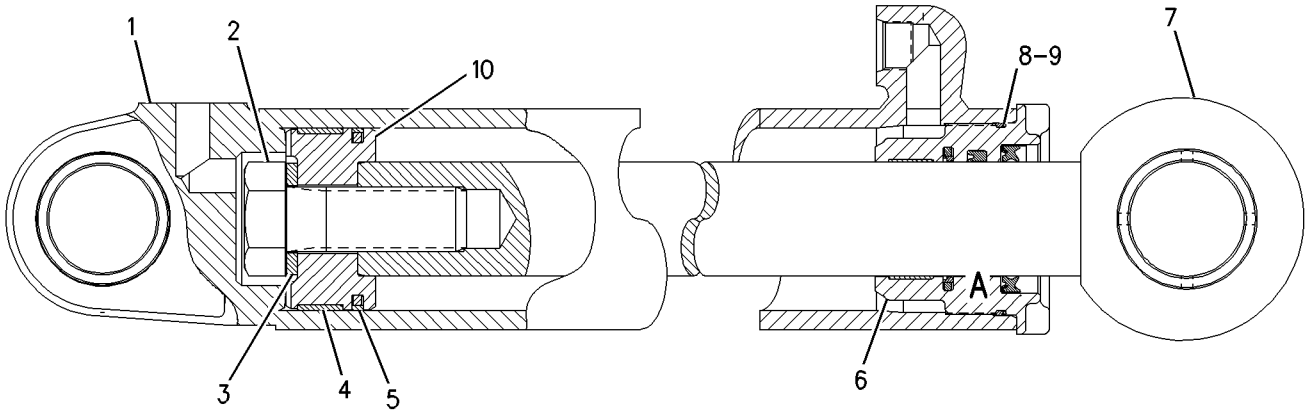

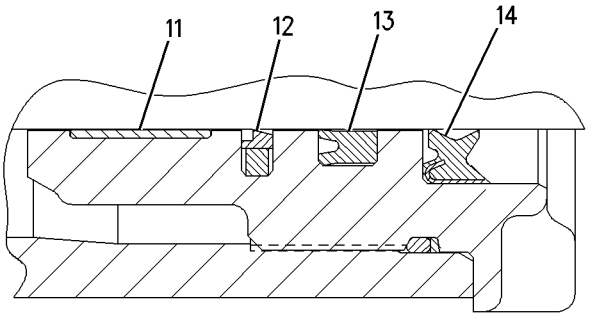

VIEW OF AREA A

GRAPHIC #1 **<END>** g00770206

HYDRAULIC SYSTEM

268-9437 CYLINDER GP-TILT

S/N: KLN1-UP
133.4-MM (5.3-IN) BORE X 945-MM (37.2-IN) STROKE
PART OF 289-8833 HYDRAULIC AR

SMCS-5104 **i02879978**

NOTE	REF NO	GRAPHIC REF	PART NUMBER	QTY	PART NAME 1 2 3 4 5 6 (PRODUCT LEVEL)	SEE PAGE
R	1	1	**141-7487**	1	ROD AS	
		1	**7P-8753**	1	BEARING	
C	2	1	**291-3835**	1	HEAD	
	3	1	**141-8185**	1	PISTON	
R	4	1	**268-9435**	1	CYLINDER AS	
J	5	1	**167-2201**	1	SEAL AS-BUFFER	
J	6	1	**167-2312**	1	SEAL-U-CUP	
J	7	1	**175-7905**	1	SEAL-O-RING	
J	8	1	**225-3281**	1	SEAL-WIPER	
J	9	1	**2D-0714**	1	RING-WEAR	
J	10	1	**2J-7767**	1	RING-BACKUP	
	11	1	**5J-7878**	1	NUT-SELF-LOCKING (1-7/8-12-THD)	
J	12	1	**8T-0763**	1	SEAL AS	
J	13	1	**8T-0785**	1	RING-WEAR	
					AVAILABLE REPAIR KIT(S):	
J			**234-1950**	1	KIT-SEAL	

C-CHANGE FROM PREVIOUS TYPE
J-KIT MARKED J SERVICE(S) PARTS MARKED J
R-REMFG PART MAY BE AVAILABLE

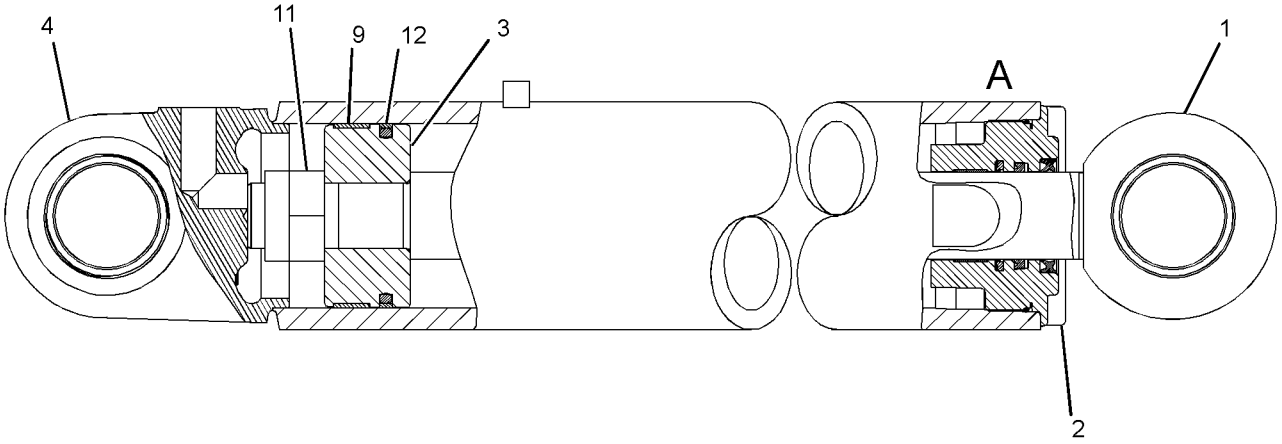

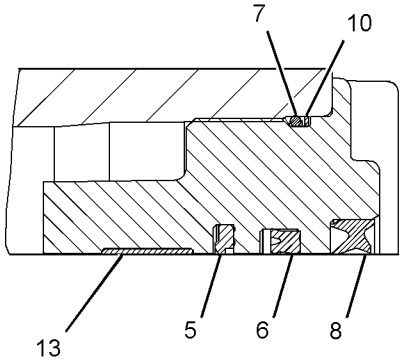

VIEW OF AREA A

GRAPHIC #1 **<END>** g01518114

HYDRAULIC SYSTEM

321-2543 FILTER & MTG GP-HYDRAULIC–OIL

S/N: KLN1-UP

PART OF 289-8833 HYDRAULIC AR

SMCS-5068 **i03105928**

NOTE	REF NO	GRAPHIC REF	PART NUMBER	QTY	PART NAME 1 2 3 4 5 6 (PRODUCT LEVEL)	SEE PAGE
Y	1	1	**209-3149**	1	FILTER GP-OIL (HYDRAULIC)	345
	2	1	**321-2542**	1	BRACKET	
	3	1	**322-5494**	1	MANIFOLD	
	4	1	**323-1650**	1	HOSE AS	
	5	1	*148-8347*	1	ELBOW AS	
		1	**3D-2824**	1	SEAL-O-RING	
		1	**6V-9007**	1	ELBOW	
		1	**6V-9746**	1	SEAL-O-RING	
	6	1	*148-8408*	2	PLUG AS	
					(EACH INCLUDES)	
		1	**3D-2824**	1	SEAL-O-RING	
		1	**9S-4183**	1	PLUG-O-RING	
	7	1	**269-4958**	1	ADAPTER	
	8	1	**7X-7729**	2	WASHER (11X25X3-MM THK)	
	9	1	**8T-4121**	6	WASHER-HARD (11X21X2.5-MM THK)	
M	10	1	**8T-4136**	2	BOLT (M10X1.5X25-MM)	
M	11	1	**8T-4137**	4	BOLT (M10X1.5X20-MM)	
M	12	1	**8T-4178**	2	BOLT (M10X1.5X90-MM)	

M-METRIC PART
Y-SEPARATE ILLUSTRATION

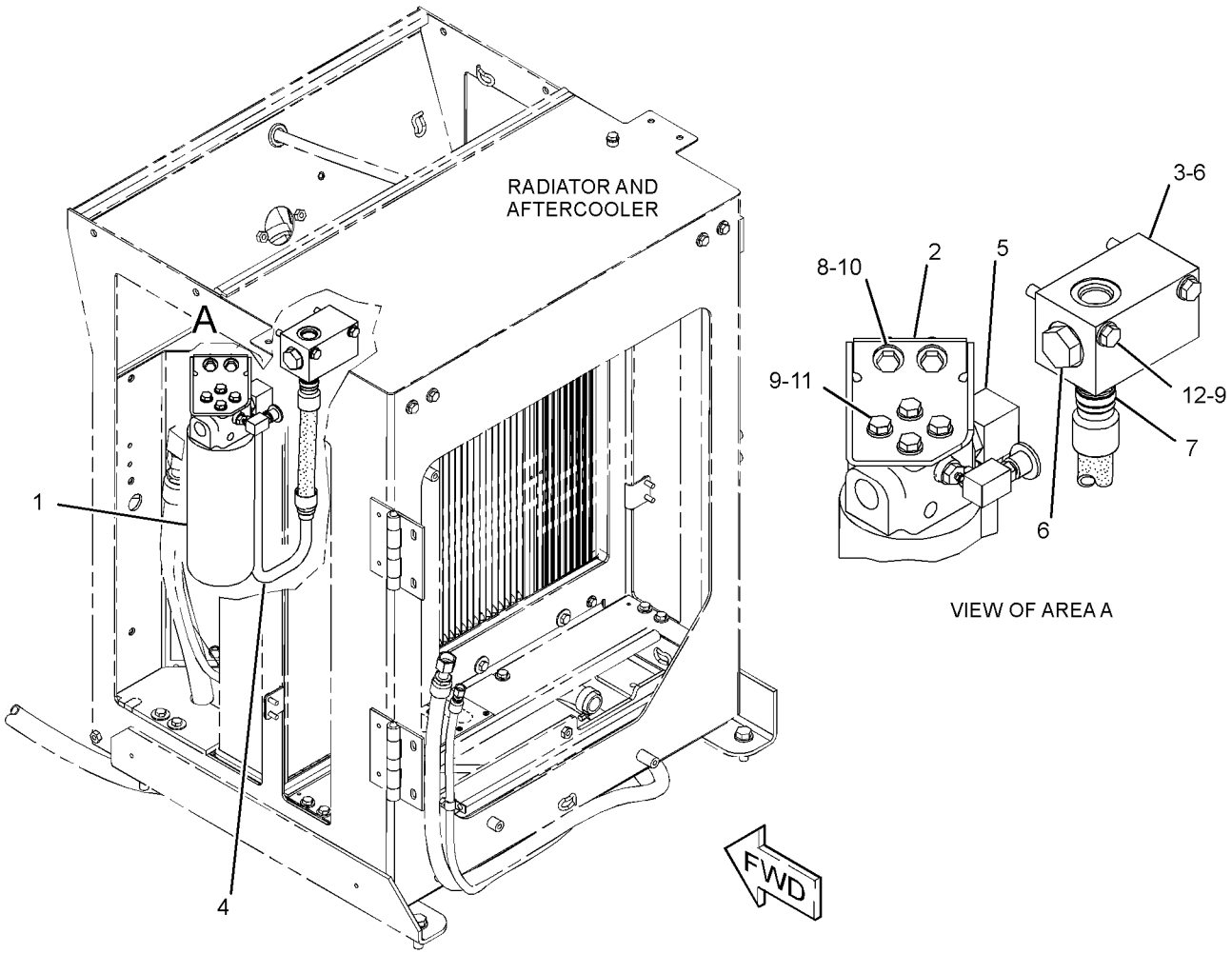

GRAPHIC #1 **<END>** g01827194

209-3149 FILTER GP-OIL–HYDRAULIC

S/N: KLN1-UP

PART OF 321-2543 FILTER & MTG GP-HYDRAULIC

SMCS-5068, 5091, 5092 **i01940376**

NOTE	REF NO	GRAPHIC REF	PART NUMBER	QTY	PART NAME 1 2 3 4 5 6 (PRODUCT LEVEL)	SEE PAGE
	1	1	**126-1818**	1	FILTER-OIL (ULTRA HIGH EFFICIENCY) (HYDRAULIC)	
	2	1	**3J-7354**	2	SEAL-O-RING	
	3	1	**7X-8549**	1	SWITCH AS-PRESSURE (HYDRAULIC OIL FILTER BYPASS)	
		1	**3J-1907**	1	SEAL-O-RING	
	4	1	**8C-3446**	1	VALVE-FLUID SAMPLING	
	5	1	**8C-3451**	1	CAP-DUST (FLUID SAMPLING VALVE)	
	6	1	**3J-1907**	1	SEAL-O-RING	
	7	1	**151-5145**	1	ELBOW	

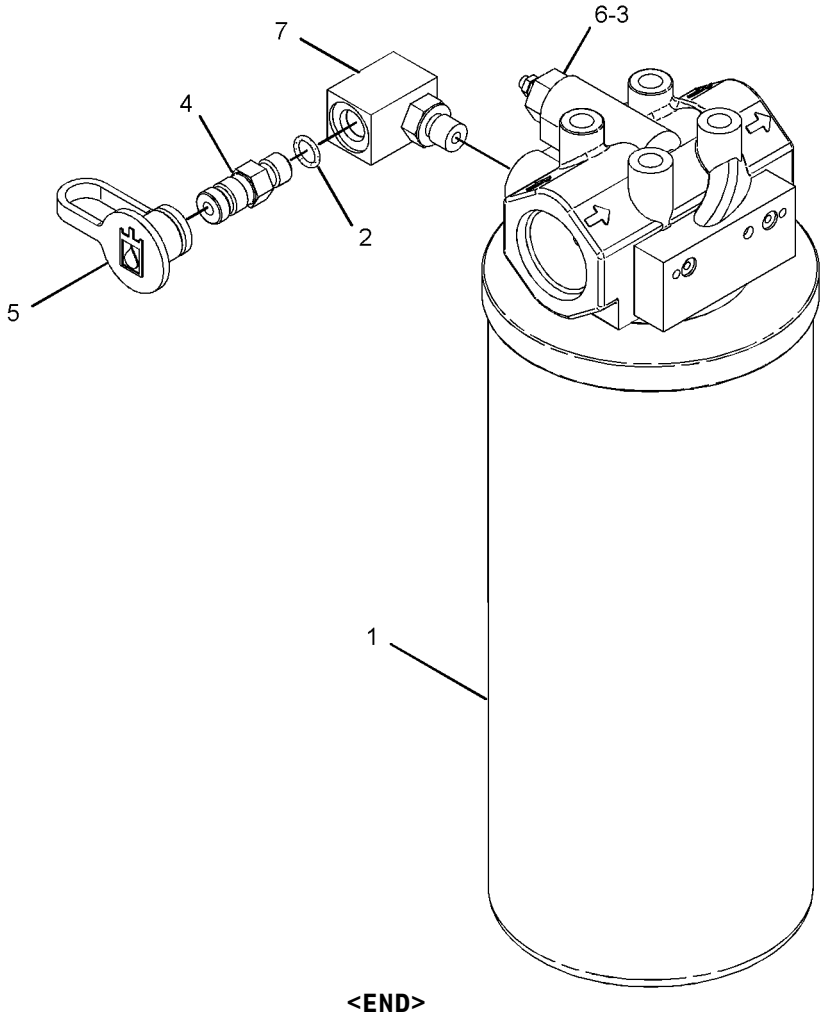

GRAPHIC #1 **<END>** g01013699

HYDRAULIC SYSTEM

289-8833 HYDRAULIC AR

S/N: KLN1-UP

PART OF 289-8840 COMMON AR

SMCS-5051 **i03016557**

NOTE	PART NUMBER	QTY	PART NAME 1 2 3 4 5 6 (PRODUCT LEVEL)	SEE PAGE
Y	**141-7483**	2	CYLINDER GP-LIFT	342
Y	**268-9437**	1	CYLINDER GP-TILT	343
Y	*321-2543*	1	FILTER & MTG GP-HYDRAULIC (OIL)	344
Y	*289-8934*	1	LINES GP-HYDRAULIC	373
Y	*290-6475*	1	LINES GP-LIFT CYLINDER	385
Y	*289-8796*	1	LINES GP-PILOT (SUPPLY)	389
Y	*289-8795*	1	LINES GP-TILT CYLINDER	395
Y	*289-8919*	1	PUMP & MTG GP-BRAKE & HYD FAN	412
Y	*132-2476*	1	PUMP & MTG GP-IMPL & STEERING	413
Y	*289-8901*	1	TANK & MTG GP-HYDRAULIC	424
Y-SEPARATE ILLUSTRATION				

<END>

203-3889 HYDRAULIC AR-2 VALVE—JOYSTICK CONTROL

S/N: KLN1-UP

AN ATTACHMENT

SMCS-5051 **i03200363**

NOTE	PART NUMBER	QTY	PART NAME 1 2 3 4 5 6 (PRODUCT LEVEL)	SEE PAGE
Y	*225-1059*	1	CONTROL GP-PILOT OPERATED HYD (JOYSTICK, 2-FUNCTION)	514
			S/N: KLN1-150	
Y	*235-6853*	1	CONTROL GP-PILOT OPERATED HYD (JOYSTICK, 2-FUNCTION)	517
			S/N: KLN151-UP	
Y	**209-0270**	1	VALVE GP-MAIN CONTROL (2-FUNCTION)	430
Y	*225-1057*	1	VALVE GP-SHUTOFF (HYDRAULIC LOCKOUT)	472
			S/N: KLN151-UP	
Y-SEPARATE ILLUSTRATION				

<END>

203-3891 HYDRAULIC AR-3 VALVE—JOYSTICK CONTROL

S/N: KLN1-UP

AN ATTACHMENT

SMCS-5051 **i03200420**

NOTE	PART NUMBER	QTY	PART NAME 1 2 3 4 5 6 (PRODUCT LEVEL)	SEE PAGE
Y	*225-1060*	1	CONTROL GP-PILOT OPERATED HYD (JOYSTICK, 3-FUNCTION)	515
			S/N: KLN1-230	
Y	*235-6856*	1	CONTROL GP-PILOT OPERATED HYD (JOYSTICK, 3-FUNCTION)	518
			S/N: KLN231-UP	
Y	*211-1063*	1	LINES GP-HYDRAULIC (3RD FUNCTION)	369
Y	**209-0271**	1	VALVE GP-MAIN CONTROL (3-FUNCTION)	434
Y	*225-1057*	1	VALVE GP-SHUTOFF (HYDRAULIC LOCKOUT)	472
			S/N: KLN231-UP	
Y-SEPARATE ILLUSTRATION				

<END>

203-3893 HYDRAULIC AR-4 VALVE—3-LEVER, WITH FNR

S/N: KLN1-UP
PART OF 303-2052 HYDRAULIC AR-4 VALVE
AN ATTACHMENT

SMCS-5051 **i03572217**

NOTE	PART NUMBER	QTY	PART NAME 1 2 3 4 5 6 (PRODUCT LEVEL)	SEE PAGE
Y	*225-1061*	1	CONTROL GP-PILOT OPERATED HYD (JOYSTICK, 4-FUNCTION)	516
			—OR—	
Y	*235-6860*	1	CONTROL GP-PILOT OPERATED HYD (JOYSTICK, 4-FUNCTION)	519
Y	*211-1063*	1	LINES GP-HYDRAULIC (3RD FUNCTION)	369
Y	*223-0521*	1	LINES GP-HYDRAULIC (4TH FUNCTION)	371
Y	**209-0272**	1	VALVE GP-MAIN CONTROL (4-FUNCTION)	438
Y	*225-1057*	1	VALVE GP-SHUTOFF (HYDRAULIC LOCKOUT)	472

Y-SEPARATE ILLUSTRATION

<END>

303-2052 HYDRAULIC AR-4 VALVE—
3-LEVER, WITH FNR, STANDARD LIFT MACHINES

S/N: KLN1-UP
AN ATTACHMENT

SMCS-5051 **i03202479**

NOTE	PART NUMBER	QTY	PART NAME 1 2 3 4 5 6 (PRODUCT LEVEL)	SEE PAGE
Y	*203-3893*	1	HYDRAULIC AR-4 VALVE (3-LEVER, WITH FNR)	347
Y	*223-0522*	1	LINES GP-CONNECTING	354
Y	*245-9020*	1	LINES GP-COUPLER (UPPER, STANDARD LIFT MACHINES)	357

Y-SEPARATE ILLUSTRATION

<END>

HYDRAULIC SYSTEM

218-9937 KICKOUT & POSITIONER GP

S/N: KLN1-UP

PART OF 289-8841 CHASSIS AR

SMCS-5109, 5112 **i02319598**

NOTE	REF NO	GRAPHIC REF	PART NUMBER	QTY	PART NAME 1 2 3 4 5 6 (PRODUCT LEVEL)	SEE PAGE
Y	1	1	**3E-7843**	2	CONTROL GP-POSITION	129
Y	2	1	**3E-7844**	1	CONTROL GP-LIFT KICKOUT	128
	3	1	**5G-7820**	1	MAGNET AS	
	4	1	**7K-1181**	3	STRAP-CABLE	
	5	1	**7V-5626**	4	CLAMP	
	6	1	**7V-5628**	1	PLATE	
	7	1	**132-2694**	1	HARNESS AS-CONTROL (KICKOUT, POSITIONER)	
		1	**102-8803**	1	KIT-RECEPTACLE (3-PIN)	
		1	**102-8805**	1	KIT-RECEPTACLE (6-PIN)	
					(EACH RECEPTACLE KIT INCLUDES RECEPTACLE AS & WEDGE)	
	8	1	**136-4794**	1	PLATE AS	
M		1	**6V-9632**	2	NUT-WELD (M6X1-THD)	
	9	1	**146-0066**	1	BRACKET	
	10	1	**146-0067**	1	BRACKET AS	
	11	1	**148-7860**	1	SHAFT AS	
	12	1	**195-0922**	1	SWITCH AS-ROCKER (BUCKET/FORK SELECTOR)	
		1	**111-7899**	1	GASKET	
	13	1	**240-5843**	1	TUBE AS	
	14	1	**4P-8134**	1	CLIP	
C	15	1	**264-7734**	1	SPACER	
	16	1	**5P-4115**	2	WASHER-HARD (7.2X19X2-MM THK)	
	17	1	**5P-4116**	4	WASHER-HARD (8.8X20.5X2-MM THK)	
M	18	1	**7X-2534**	4	BOLT (M6X1X50-MM)	
	19	1	**7X-7729**	2	WASHER (11X25X3-MM THK)	
CM	20	1	**8T-6870**	1	BOLT (M8X1.25X70-MM)	
	21	1	**8T-4121**	6	WASHER-HARD (11X21X2.5-MM THK)	
M	22	1	**8T-4136**	2	BOLT (M10X1.5X25-MM)	
M	23	1	**8T-4137**	6	BOLT (M10X1.5X20-MM)	
M	24	1	**8T-4189**	8	BOLT (M8X1.25X20-MM)	
C	25	1	**8T-4224**	5	WASHER-HARD (8.8X16X2-MM THK)	

C-CHANGE FROM PREVIOUS TYPE
M-METRIC PART
Y-SEPARATE ILLUSTRATION

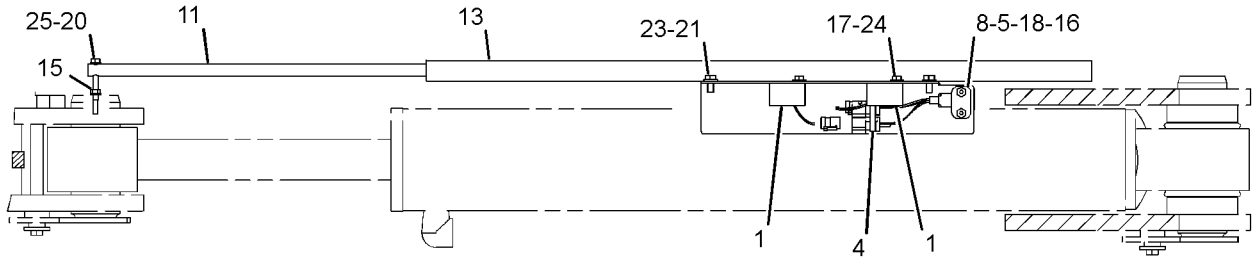

VIEW B-B

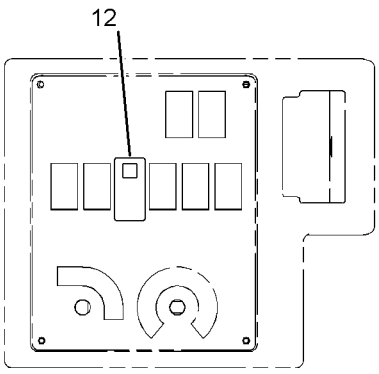

TOP VIEW FWD

(RIGHT SIDE CONSOLE)

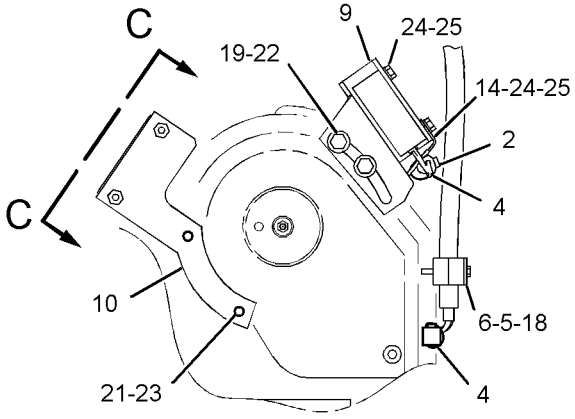

VIEW OF AREA A

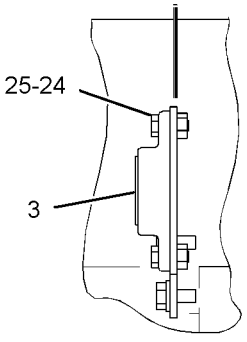

VIEW C-C

LEFT SIDE VIEW

GRAPHIC #1

<END>

g01163085

HYDRAULIC SYSTEM

180-9336 LINES GP-CONNECTING

S/N: KLN1-UP
PART OF 180-9335 BUCKET AR-MULTIPURPOSE
AN ATTACHMENT

SMCS-5057 **i03082861**

NOTE	REF NO	GRAPHIC REF	PART NUMBER	QTY	PART NAME 1 2 3 4 5 6 (PRODUCT LEVEL)	SEE PAGE
	1	1	**142-8948**	2	FITTING AS (QUICK DISCONNECT, MALE)	
I	2	1	**183-3020**	1	HOSE AS	
I	3	1	**183-3021**	1	HOSE AS	
I	4	1	*183-3022*	2	HOSE AS	
I	5	1	**183-3112**	1	HOSE AS	
I	6	1	**183-3113**	1	HOSE AS	
	7	1	**2P-1293**	2	LOCKNUT (1-3/16-12-THD)	
	8	1	**3D-2824**	6	SEAL-O-RING	
	9	1	**6V-9007**	6	ELBOW	
	10	1	**6V-9160**	2	TEE-FACE SEAL	
	11	1	**6V-9746**	12	SEAL-O-RING	
F		1	**187-5174**	2	CAP-DUST	

F-NOT SHOWN
I-REFER TO HYDRAULIC INFORMATION SYSTEM

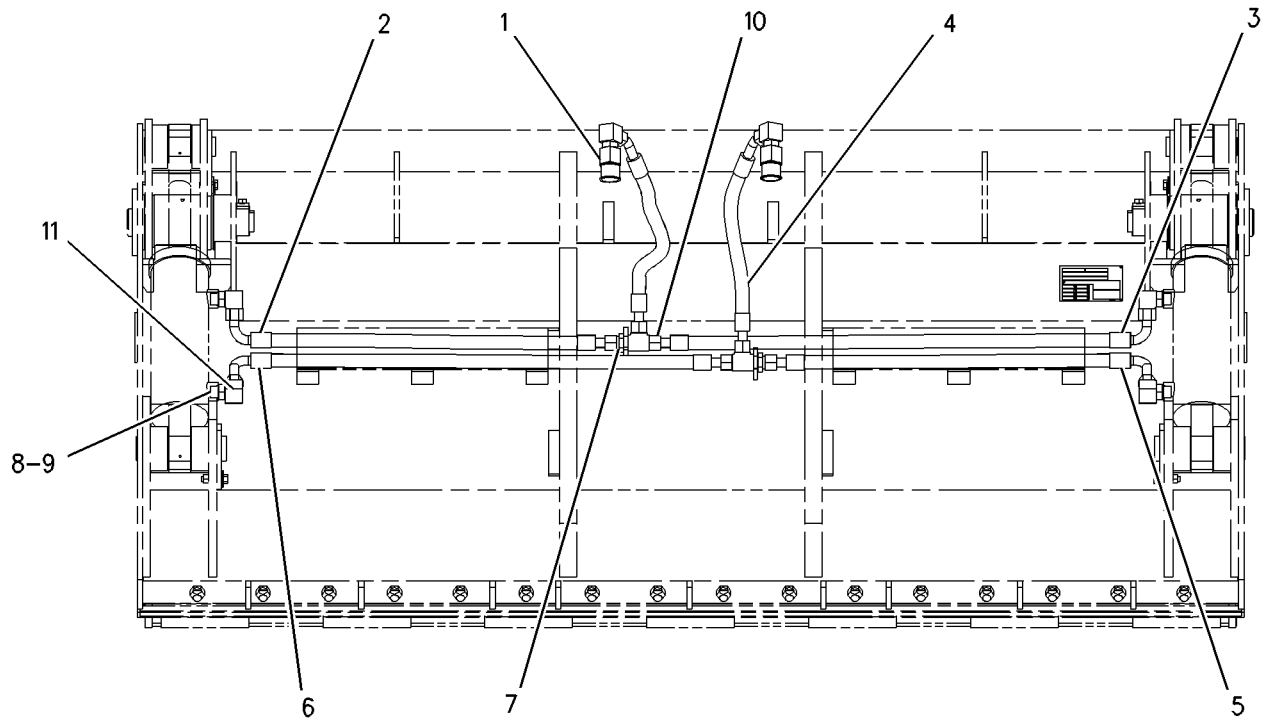

GRAPHIC #1 **<END>** g00665633

HYDRAULIC SYSTEM

180-9927 LINES GP-CONNECTING

S/N: KLN1-UP

PART OF 179-3192 BUCKET AR-SIDE DUMP

AN ATTACHMENT

SMCS-5057 **i03082720**

NOTE	REF NO	GRAPHIC REF	PART NUMBER	QTY	PART NAME 1 2 3 4 5 6 (PRODUCT LEVEL)	SEE PAGE
	1	1	**6V-0408**	2	SEAL-BONDED	
	2	1	**8T-7915**	2	ADAPTER	
	3	1	**169-9654**	1	BLOCK-PORT	
	4	1	**170-6709**	1	VALVE GP-COUNTERBALANCE	
		1	**175-7540**	1	VALVE AS	
		1	**077-7427**	1	KIT-SEAL (COUNTERBALANCE VALVE)	
		1	**175-7541**	1	BODY-VALVE	
I	5	1	**125-9488**	1	HOSE AS	
I	6	1	**183-2293**	1	HOSE AS	
I	7	1	**183-2294**	1	HOSE AS	
	8	1	**0S-1588**	2	BOLT (3/8-16X1.25-IN)	
	9	1	**0S-1619**	2	BOLT (3/8-16X3-IN)	
	10	1	**1P-4576**	4	FLANGE-HALF	
	11	1	**3D-2824**	2	SEAL-O-RING	
	12	1	**3J-1907**	3	SEAL-O-RING	
	13	1	**4J-5267**	4	SEAL-O-RING	
	14	1	**5M-2894**	10	WASHER-HARD (10.2X18.5X2.5-MM THK)	
	15	1	**6V-8397**	2	SEAL-O-RING	
	16	1	**6V-8636**	1	CONNECTOR	
	17	1	**6V-8724**	1	ELBOW	
	18	1	**6V-9007**	2	ELBOW	
	19	1	**6V-9746**	2	SEAL-O-RING	
	20	1	**7X-0290**	2	BOLT (3/8-16X3.5-IN)	
	21	1	**8T-9377**	4	BOLT (3/8-16X2.25-IN)	
	22	1	**9S-4191**	1	PLUG-O-RING	

I-REFER TO HYDRAULIC INFORMATION SYSTEM

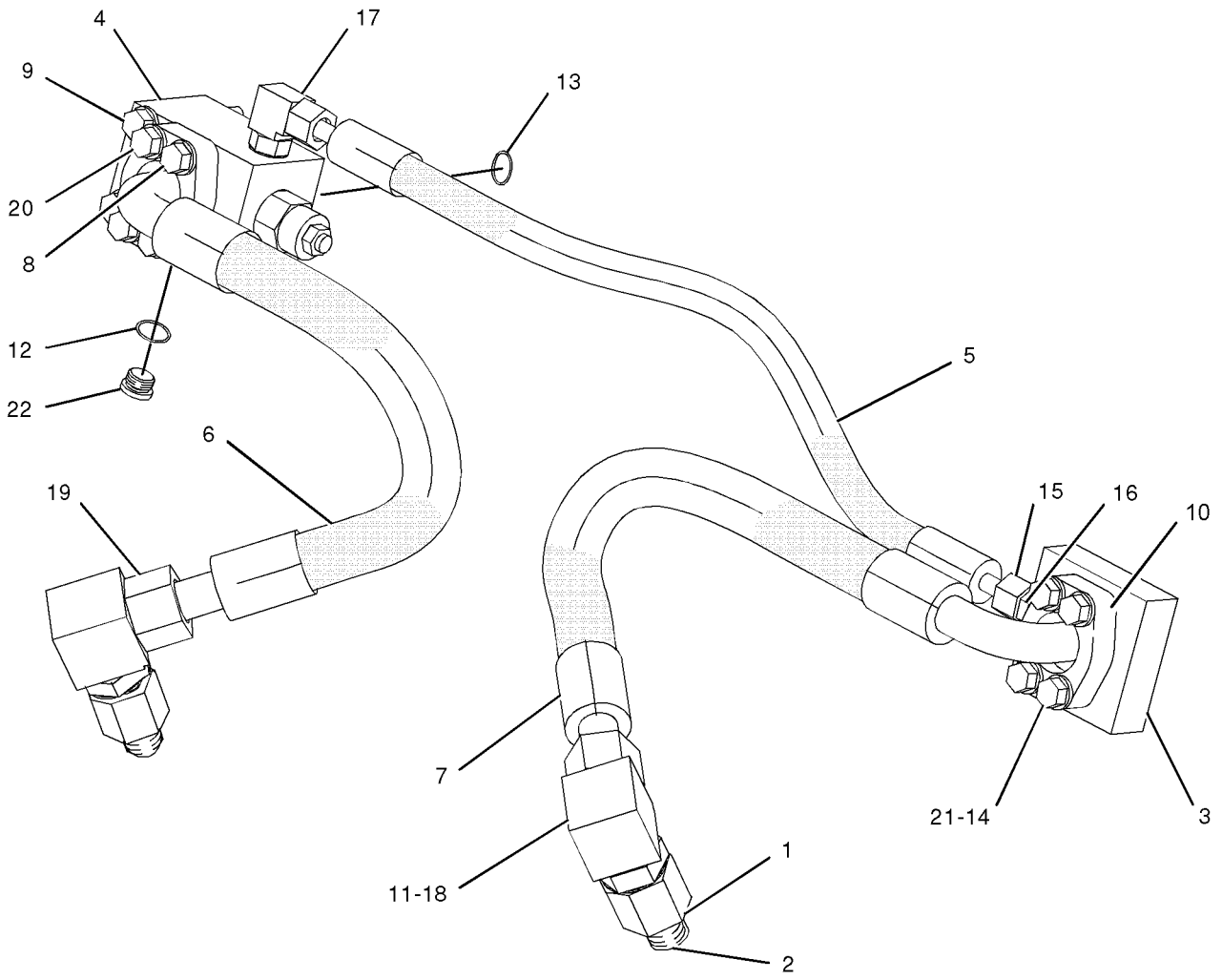

GRAPHIC #1 **<END>** g01018065

183-8702 LINES GP-CONNECTING

S/N: KLN1-UP
PART OF 183-4735 BUCKET AR-MULTIPURPOSE
AN ATTACHMENT

SMCS-5057 **i03082940**

NOTE	REF NO	GRAPHIC REF	PART NUMBER	QTY	PART NAME 1 2 3 4 5 6 (PRODUCT LEVEL)	SEE PAGE
I	1	1	**183-8704**	1	HOSE AS	
I	2	1	**183-8705**	1	HOSE AS	
I	3	1	**183-8706**	1	HOSE AS	
I	4	1	**8Y-8688**	1	HOSE AS	
I	5	1	**183-8708**	2	HOSE AS	
	6	1	**2P-1293**	2	LOCKNUT (1-3/16-12-THD)	
	7	1	**3D-2824**	6	SEAL-O-RING	
	8	1	**6V-9007**	6	ELBOW	
	9	1	**6V-9160**	2	TEE-FACE SEAL	
	10	1	**6V-9746**	12	SEAL-O-RING	
	11	1	**8T-7915**	2	ADAPTER	
	12	1	**6V-0408**	2	SEAL-BONDED	

I-REFER TO HYDRAULIC INFORMATION SYSTEM

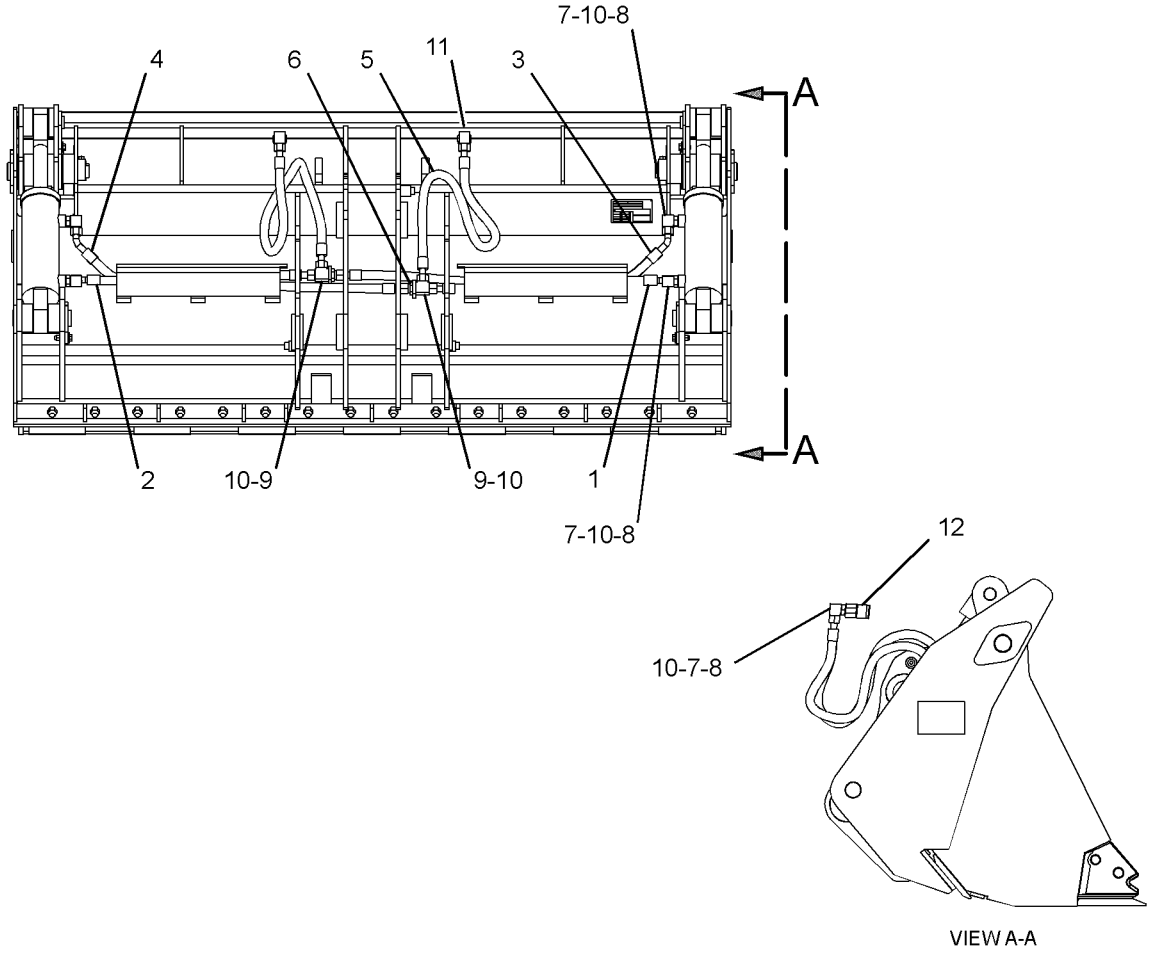

GRAPHIC #1 **<END>** g01178722

HYDRAULIC SYSTEM

223-0522 LINES GP-CONNECTING

S/N: KLN1-UP

PART OF 303-2052 HYDRAULIC AR-4 VALVE AN ATTACHMENT

SMCS-5057 **i02374928**

NOTE	REF NO	GRAPHIC REF	PART NUMBER	QTY	PART NAME 1 2 3 4 5 6 (PRODUCT LEVEL)	SEE PAGE
I	1	1	**146-0124**	2	HOSE AS	
	2	1	**152-5717**	1	CAP-DUST	
	3	1	**195-6525**	1	FITTING AS (QUICK DISCONNECT, FEMALE)	
	4	1	**195-6526**	1	FITTING AS (QUICK DISCONNECT, MALE)	
C	5	1	**152-5718**	1	CAP-DUST	
	6	1	*148-8418*	2	REDUCER AS	
					(EACH INCLUDES)	
		1	**6V-8398**	1	SEAL-O-RING	
		1	**6V-8942**	1	REDUCER-O-RING	
	7	1	*148-8455*	2	UNION AS	
					(EACH INCLUDES)	
		1	**6V-8997**	1	UNION	
		1	**6V-9746**	2	SEAL-O-RING	
	8	1	*171-6725*	2	ELBOW AS	
					(EACH INCLUDES)	
		1	**3D-2824**	1	SEAL-O-RING	
		1	**8T-6451**	1	ELBOW	
	9	1	**2P-1293**	2	LOCKNUT (1-3/16-12-THD)	
	10	1	**5P-7464**	4	CLIP (SLOT)	
	11	1	**5P-7465**	4	CLIP (TAB)	
	12	1	**6V-1249**	4	GROMMET	
	13	1	**9X-6580**	2	NUT (1-3/16-12-THD)	

C-CHANGE FROM PREVIOUS TYPE
I-REFER TO HYDRAULIC INFORMATION SYSTEM

223-0522 **LINES GP-CONNECTING** *(contd.)* **i02374928**

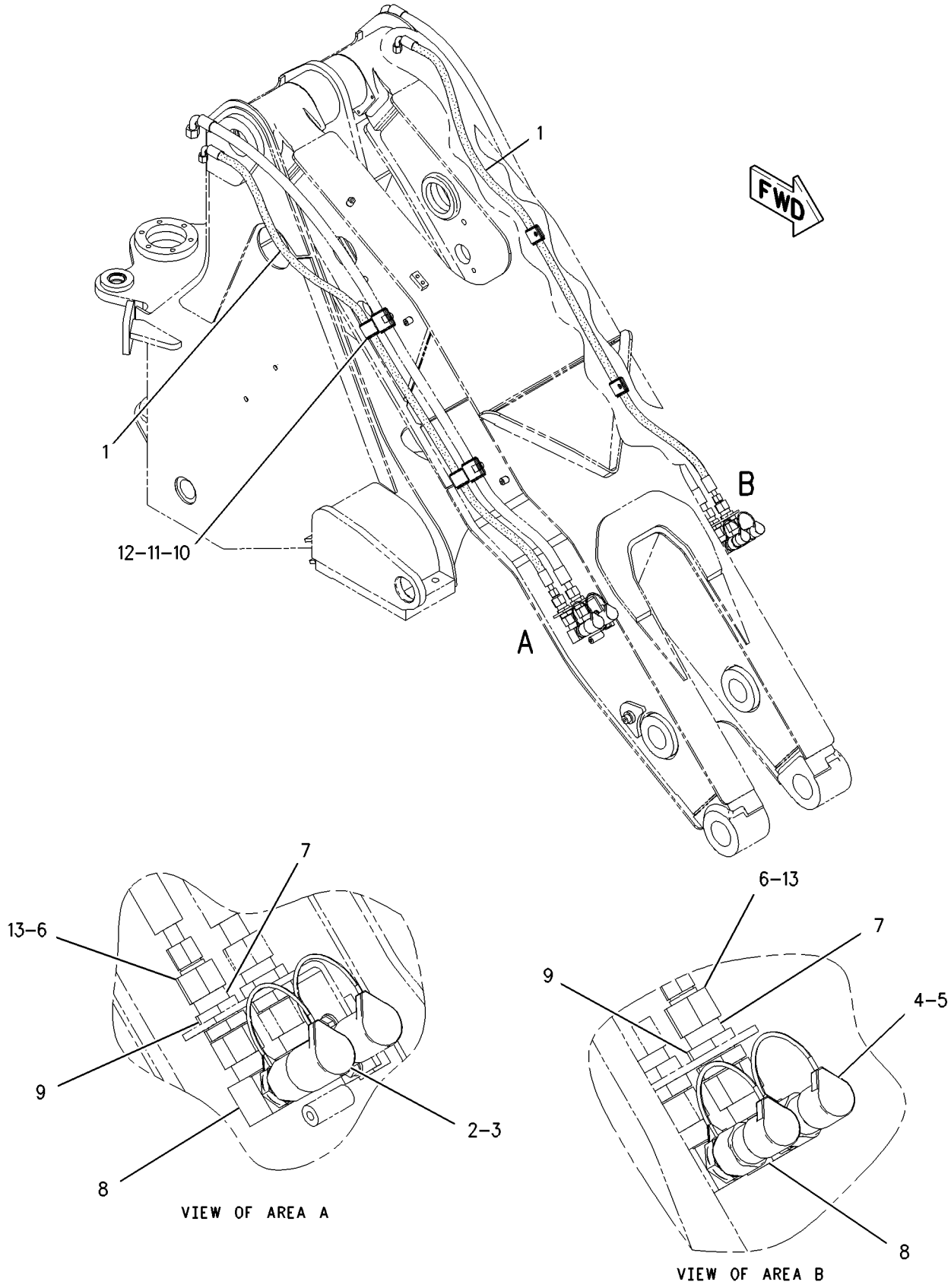

GRAPHIC #1 **<END>** g01006088

HYDRAULIC SYSTEM

335-3071 LINES GP-CONNECTING

S/N: KLN1-UP

PART OF 183-4735 BUCKET AR-MULTIPURPOSE

AN ATTACHMENT

SMCS-5057 **i03315040**

NOTE	REF NO	GRAPHIC REF	PART NUMBER	QTY	PART NAME 1 2 3 4 5 6 (PRODUCT LEVEL)	SEE PAGE
	1	1	**6V-0408**	2	SEAL-BONDED	
	2	1	**8T-7915**	2	ADAPTER	
I	3	1	**183-8708**	2	HOSE AS	
I	4	1	**335-3067**	1	HOSE AS	
I	5	1	**335-3068**	1	HOSE AS	
I	6	1	**335-3069**	1	HOSE AS	
I	7	1	**335-3070**	1	HOSE AS	
	8	1	**2P-1293**	2	LOCKNUT (1-3/16-12-THD)	
	9	1	**3D-2824**	6	SEAL-O-RING	
	10	1	**6V-9007**	6	ELBOW	
	11	1	**6V-9160**	2	TEE-FACE SEAL	
	12	1	**6V-9746**	12	SEAL-O-RING	

I-REFER TO HYDRAULIC INFORMATION SYSTEM

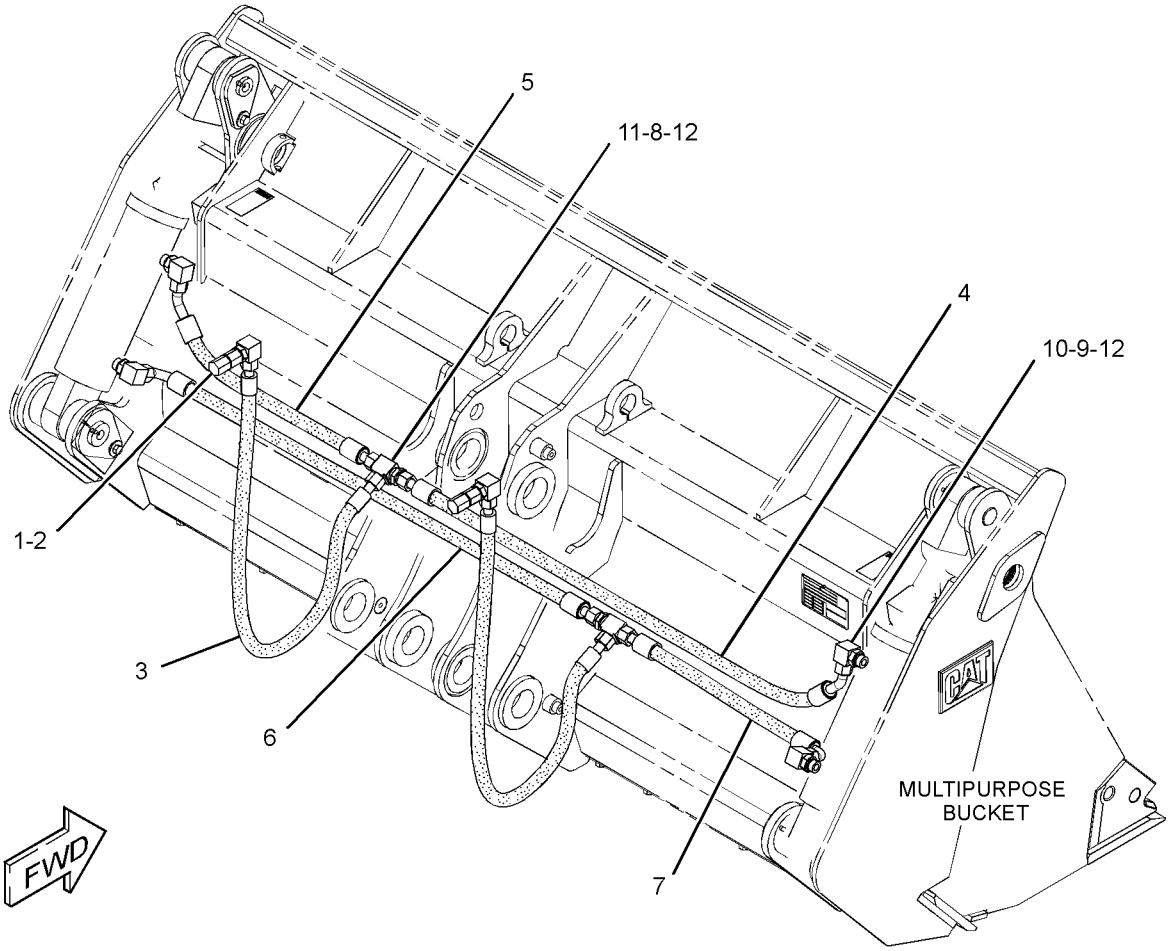

GRAPHIC #1 **<END>** g01897913

HYDRAULIC SYSTEM

245-9020 LINES GP-COUPLER

S/N: KLN1-UP

PART OF 303-2052 HYDRAULIC AR-4 VALVE, 270-7056 LINES GP-COUPLER AN ATTACHMENT

SMCS-5057, 5133 **i02863501**

NOTE	REF NO	GRAPHIC REF	PART NUMBER	QTY	PART NAME 1 2 3 4 5 6 (PRODUCT LEVEL)	SEE PAGE
	1	1	**213-5065**	2	BRACKET	
I	2	1	**216-6969**	2	HOSE AS	
	3	1	**2P-1293**	2	LOCKNUT (1-3/16-12-THD)	
	4	1	*268-1514*	2	UNION AS	
					(EACH INCLUDES)	
		1	**5K-9090**	1	SEAL-O-RING	
		1	**6V-9746**	1	SEAL-O-RING	
		1	**8C-8493**	1	UNION	
	5	1	**5P-7466**	4	CLIP (SLOT)	
	6	1	**5P-7467**	4	CLIP (TAB)	
	7	1	**5P-8112**	4	GROMMET	
M	8	1	**8T-4136**	4	BOLT (M10X1.5X25-MM)	
M	9	1	**8T-4196**	4	BOLT (M10X1.5X35-MM)	
	10	1	**8T-4121**	8	WASHER-HARD (11X21X2.5-MM THK)	
B	11	1	**6V-9833**	2	CAP AS	

B-USE AS REQUIRED
I-REFER TO HYDRAULIC INFORMATION SYSTEM
M-METRIC PART

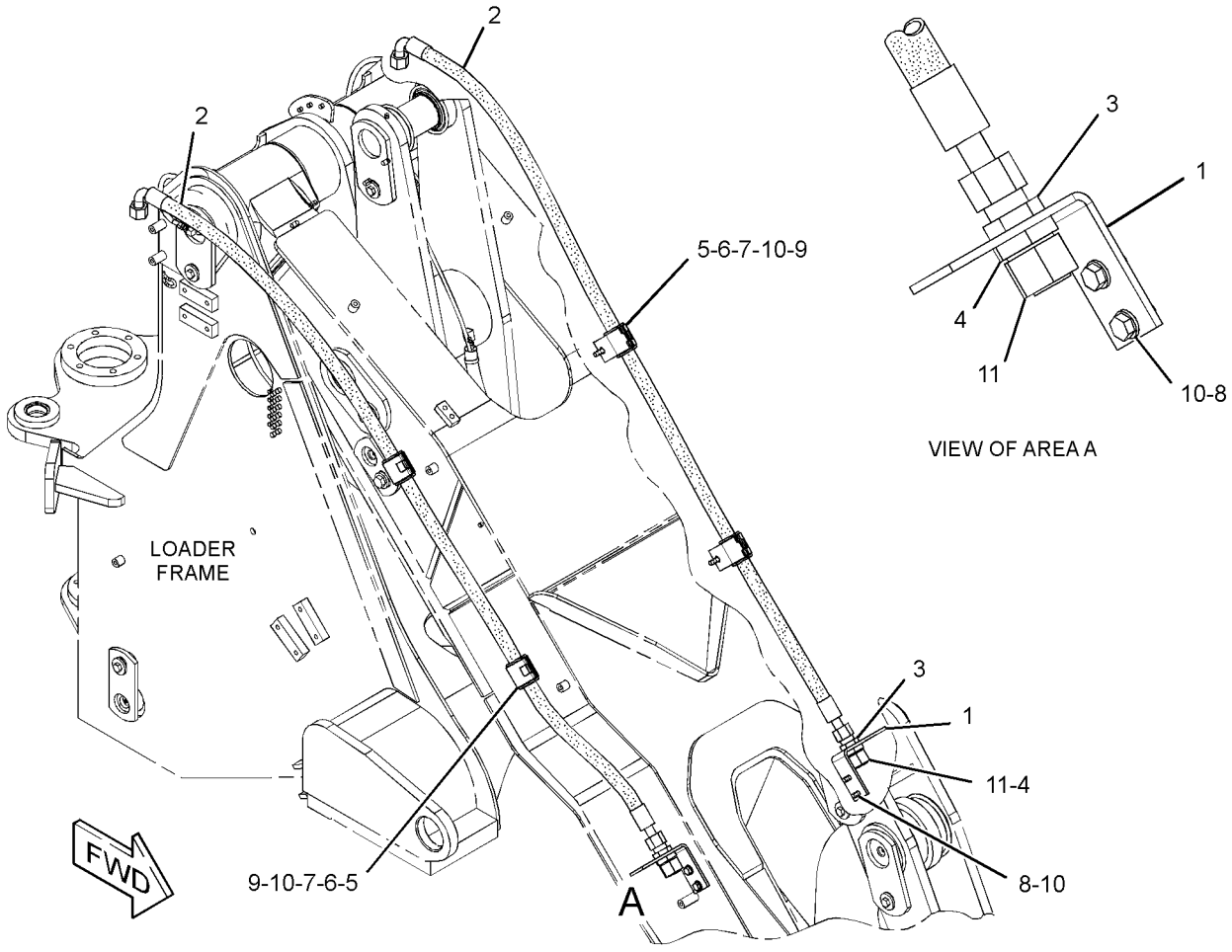

GRAPHIC #1 **<END>** g01405985

HYDRAULIC SYSTEM

248-5416 LINES GP-COUPLER

S/N: KLN1-UP
PART OF 270-7056 LINES GP-COUPLER
AN ATTACHMENT

SMCS-5057, 5133 **i02395197**

NOTE	REF NO	GRAPHIC REF	PART NUMBER	QTY	PART NAME 1 2 3 4 5 6 (PRODUCT LEVEL)	SEE PAGE
	1	1	**152-5717**	1	CAP-DUST	
	2	1	**152-5718**	1	CAP-DUST	
	3	1	**241-6189**	1	FITTING AS (QUICK DISCONNECT, MALE)	
	4	1	**241-6190**	1	FITTING AS (QUICK DISCONNECT, FEMALE)	
I	5	1	**261-7854**	2	HOSE AS	
	6	1	**261-7855**	2	TUBE AS	
M	7	1	**5C-2890**	2	NUT (M6X1-THD)	
M	8	1	**5C-9553**	2	BOLT (M6X1X16-MM)	
	9	1	**5K-9090**	4	SEAL-O-RING	
	10	1	**6V-9172**	2	NUT (1-7/16-12-THD)	
	11	1	**7X-7729**	2	WASHER (11X25X3-MM THK)	
	12	1	**8M-2771**	2	CLIP	
	13	1	**8T-1889**	2	CLIP (SLOT)	
	14	1	**8T-1890**	2	CLIP (TAB)	
M	15	1	**8T-4137**	2	BOLT (M10X1.5X20-MM)	
	16	1	**8T-4205**	4	WASHER-HARD (7.2X14.5X2-MM THK)	

I-REFER TO HYDRAULIC INFORMATION SYSTEM
M-METRIC PART

248-5416 **LINES GP-COUPLER** *(contd.)* **i02395197**

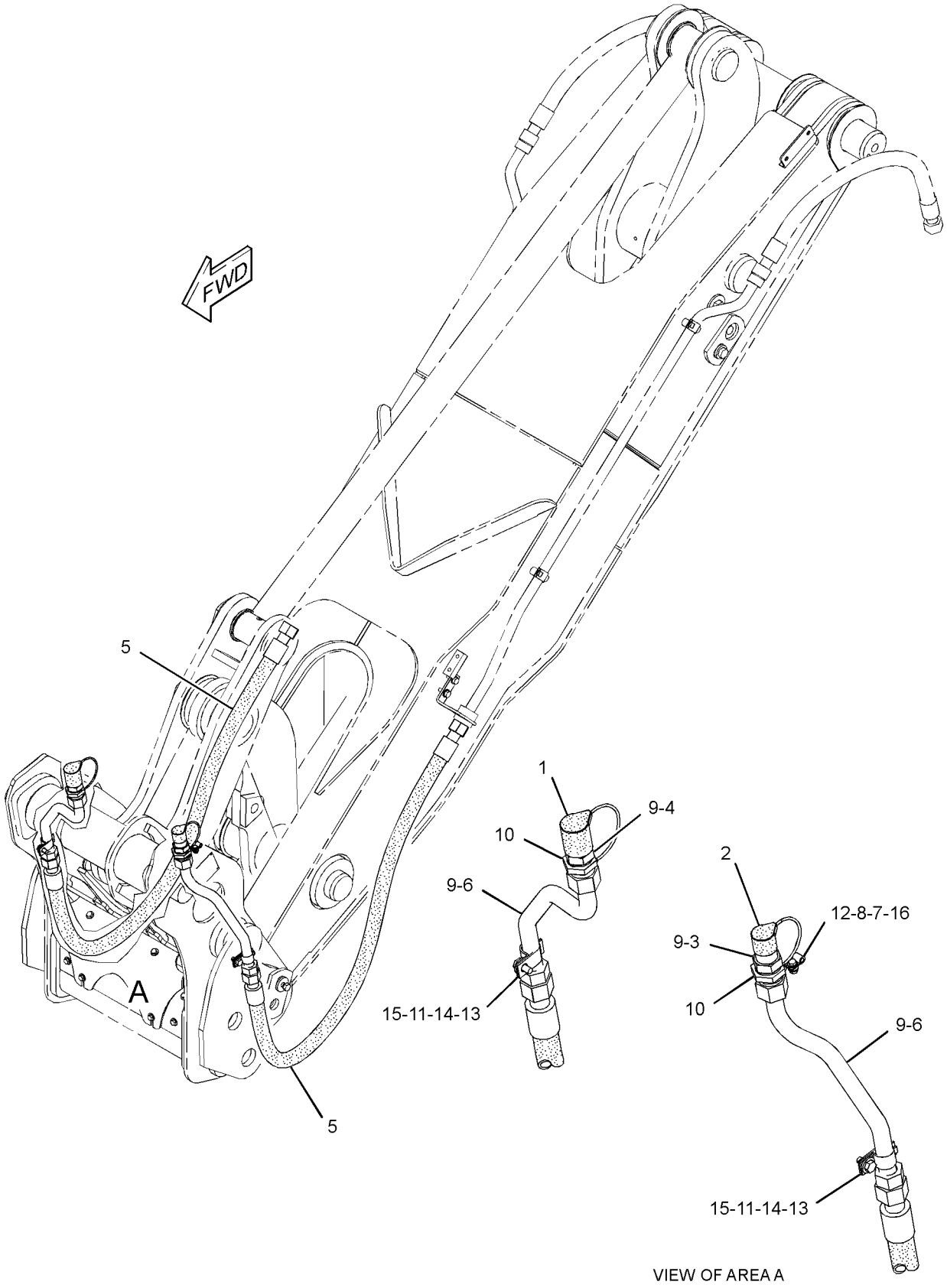

GRAPHIC #1 **<END>** g01285858

HYDRAULIC SYSTEM

270-7056 LINES GP-COUPLER

S/N: KLN1-UP
AN ATTACHMENT

SMCS-5057, 5133 **i02395181**

NOTE	REF NO	GRAPHIC REF	PART NUMBER	QTY	PART NAME 1 2 3 4 5 6 (PRODUCT LEVEL)	SEE PAGE
Y	1	1	*245-9020*	1	LINES GP-COUPLER (UPPER, STANDARD LIFT MACHINES)	357
Y	2	1	*248-5416*	1	LINES GP-COUPLER (THIRD FUNCTION, LOWER)	358

Y-SEPARATE ILLUSTRATION

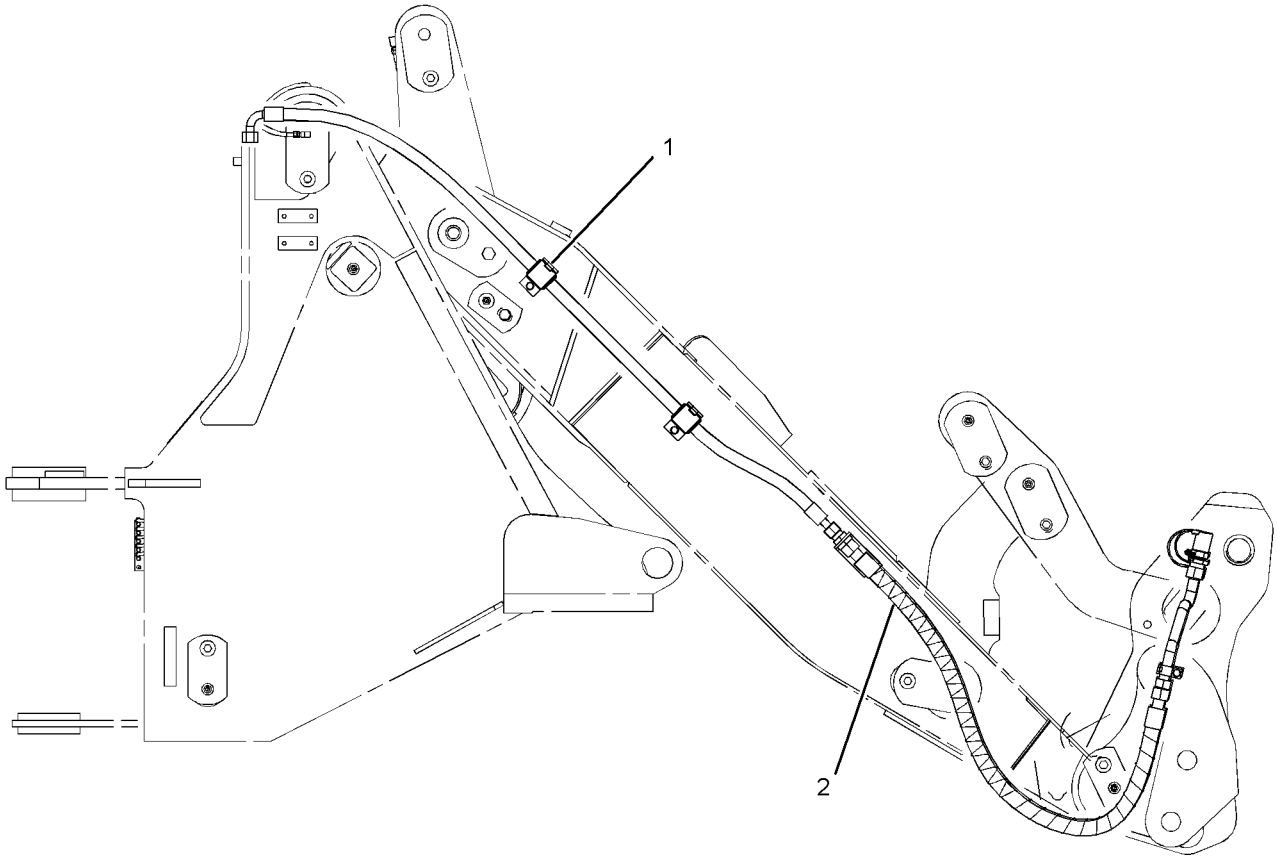

RIGHT SIDE VIEW

GRAPHIC #1 **<END>** g01185773

HYDRAULIC SYSTEM

296-6812 LINES GP-COUPLER—STANDARD LIFT MACHINES, WIDE

S/N: KLN1-230

PART OF 218-5113 COUPLER AR-QUICK

AN ATTACHMENT

SMCS-5057, 5133 **i03571163**

NOTE	REF NO	GRAPHIC REF	PART NUMBER	QTY	PART NAME 1 2 3 4 5 6 (PRODUCT LEVEL)	SEE PAGE
	1	1	**7K-1181**	1	STRAP-CABLE	
I	2	1	**169-9049**	1	HOSE AS	
I	3	1	**176-7558**	1	HOSE AS	
	4	1	**186-0357**	3	CLIP	
	5	1	**186-0359**	1	CLIP	
	6	1	**192-7625**	1	SWITCH AS-ROCKER (HYDRAULIC LOCKOUT)	
		1	**111-7899**	1	GASKET	
	7	1	**195-8673**	1	PLATE AS	
G	8	1	**160-2247**		SLEEVE-ABRASION (19.7-IN)	
I	9	1	**217-2768**	1	HOSE AS	
I	10	1	**217-2769**	2	HOSE AS	
	11	1	**223-8185**	1	TUBE AS	
	12	1	**223-8186**	1	TUBE AS	
Y	13	1	**233-2549**	1	MANIFOLD GP-CONTROL (QUICK COUPLER)	398
	14	1	**294-3046**	1	TUBE AS	
	15	1	**294-3047**	1	TUBE AS	
I	16	1	**294-8059**	2	HOSE AS	
	17	1	**295-4690**	1	BRACKET	
	18	1	**295-4691**	1	BRACKET	
	19	1	*148-8325*	4	CONNECTOR AS	
					(EACH INCLUDES)	
		1	**3J-1907**	1	SEAL-O-RING	
		1	**4J-5477**	1	SEAL-O-RING	
		1	**6V-8641**	1	CONNECTOR	
	20	1	*148-8368*	3	ELBOW AS	
					(EACH INCLUDES)	
		1	**3J-1907**	1	SEAL-O-RING	
		1	**4J-5477**	1	SEAL-O-RING	
		1	**6V-8627**	1	ELBOW	
	21	1	*148-8419*	1	REDUCER AS	
		1	**4J-5477**	1	SEAL-O-RING	
		1	**6V-8935**	1	REDUCER-O-RING	
	22	1	*149-5452*	2	UNION AS	
					(EACH INCLUDES)	
		1	**6V-8397**	2	SEAL-O-RING	
		1	**6V-8994**	1	UNION	
	23	1	**174-5907**	4	CLIP	
	24	1	**4J-5477**	4	SEAL-O-RING	
	25	1	**4P-8134**	1	CLIP	
	26	1	**5P-9297**	6	CLIP	
	27	1	**6V-8397**	2	SEAL-O-RING	
	28	1	**6V-9168**	2	NUT (11/16-16-THD)	
B	29	1	**6V-9829**	2	CAP AS	
	30	1	**7D-7233**	2	CLIP	
	31	1	**7X-7729**	10	WASHER (11X25X3-MM THK)	
	32	1	**8T-4121**	8	WASHER-HARD (11X21X2.5-MM THK)	
M	33	1	**8T-4133**	2	NUT (M10X1.5-THD)	
BM	34	1	**8T-4137**	12	BOLT (M10X1.5X20-MM)	
M	35	1	**8T-4139**	3	BOLT (M12X1.75X30-MM)	
M	36	1	**8T-4195**	2	BOLT (M10X1.5X30-MM)	
	37	1	**8T-4223**	3	WASHER-HARD (13.5X25.5X3-MM THK)	
BM	38	1	**8T-4244**	1	NUT (M12X1.75-THD)	
M	39	1	**8T-5436**	2	BOLT (M10X1.5X130-MM)	
	40	1	**9X-6582**	1	NUT (13/16-16-THD)	

B-USE AS REQUIRED
G-ORDER BY THE INCH
I-REFER TO HYDRAULIC INFORMATION SYSTEM
M-METRIC PART
Y-SEPARATE ILLUSTRATION

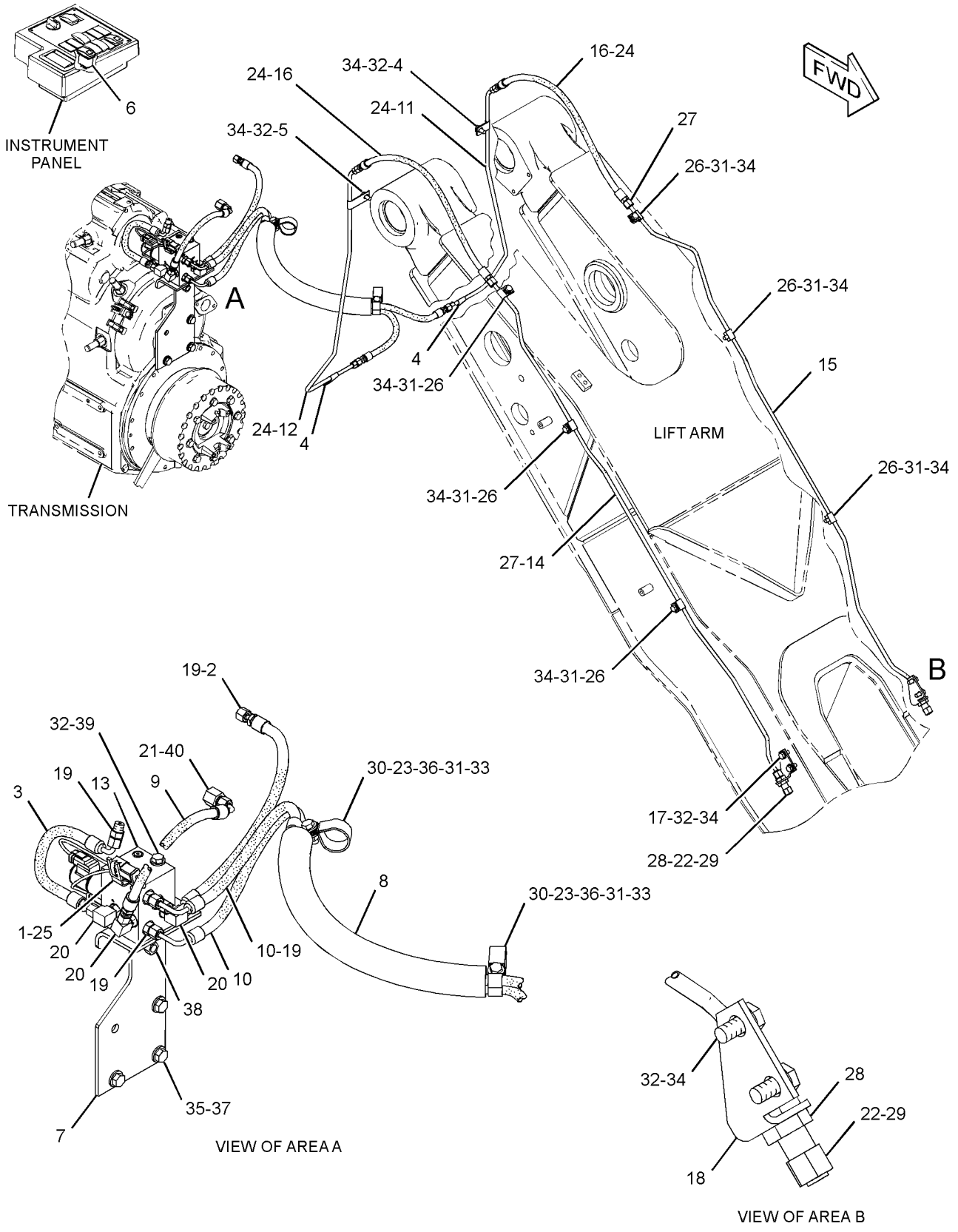

GRAPHIC #1 **<END>** g01396091

HYDRAULIC SYSTEM

296-6812 LINES GP-COUPLER—STANDARD LIFT MACHINES, WIDE

S/N: KLN231-UP
PART OF 218-5113 COUPLER AR-QUICK
AN ATTACHMENT

SMCS-5057, 5133 **i03576060**

NOTE	REF NO	GRAPHIC REF	PART NUMBER	QTY	PART NAME 1 2 3 4 5 6 (PRODUCT LEVEL)	SEE PAGE
	1	1	**7K-1181**	1	STRAP-CABLE	
CI	2	1	**317-7328**	1	HOSE AS	
I	3	1	**176-7558**	1	HOSE AS	
	4	1	**186-0357**	3	CLIP	
	5	1	**186-0359**	1	CLIP	
	6	1	**192-7625**	1	SWITCH AS-ROCKER (HYDRAULIC LOCKOUT)	
		1	**111-7899**	1	GASKET	
	7	1	**195-8673**	1	PLATE AS	
G	8	1	**160-2247**		SLEEVE-ABRASION (19.7-IN)	
I	9	1	**217-2768**	1	HOSE AS	
I	10	1	**217-2769**	2	HOSE AS	
	11	1	**223-8185**	1	TUBE AS	
	12	1	**223-8186**	1	TUBE AS	
Y	13	1	**233-2549**	1	MANIFOLD GP-CONTROL (QUICK COUPLER)	398
	14	1	**294-3046**	1	TUBE AS	
	15	1	**294-3047**	1	TUBE AS	
I	16	1	**294-8059**	2	HOSE AS	
	17	1	**295-4690**	1	BRACKET	
	18	1	**295-4691**	1	BRACKET	
C	19	1	*148-8325*	3	CONNECTOR AS	
					(EACH INCLUDES)	
		1	**3J-1907**	1	SEAL-O-RING	
		1	**4J-5477**	1	SEAL-O-RING	
		1	**6V-8641**	1	CONNECTOR	
	20	1	*148-8368*	3	ELBOW AS	
					(EACH INCLUDES)	
		1	**3J-1907**	1	SEAL-O-RING	
		1	**4J-5477**	1	SEAL-O-RING	
		1	**6V-8627**	1	ELBOW	
	21	1	*148-8419*	1	REDUCER AS	
		1	**4J-5477**	1	SEAL-O-RING	
		1	**6V-8935**	1	REDUCER-O-RING	
	22	1	*149-5452*	2	UNION AS	
					(EACH INCLUDES)	
		1	**6V-8397**	2	SEAL-O-RING	
		1	**6V-8994**	1	UNION	
	23	1	**174-5907**	4	CLIP	
	24	1	**4J-5477**	4	SEAL-O-RING	
	25	1	**4P-8134**	1	CLIP	
	26	1	**5P-9297**	6	CLIP	
	27	1	**6V-8397**	2	SEAL-O-RING	
	28	1	**6V-9168**	2	NUT (11/16-16-THD)	
B	29	1	**6V-9829**	2	CAP AS	
	30	1	**7D-7233**	2	CLIP	
	31	1	**7X-7729**	10	WASHER (11X25X3-MM THK)	
	32	1	**8T-4121**	8	WASHER-HARD (11X21X2.5-MM THK)	
M	33	1	**8T-4133**	2	NUT (M10X1.5-THD)	
BCM	34	1	**8T-4137**	12	BOLT (M10X1.5X20-MM)	
M	35	1	**8T-4139**	3	BOLT (M12X1.75X30-MM)	
M	36	1	**8T-4195**	2	BOLT (M10X1.5X30-MM)	
	37	1	**8T-4223**	3	WASHER-HARD (13.5X25.5X3-MM THK)	
M	39	1	**8T-5436**	2	BOLT (M10X1.5X130-MM)	
	40	1	**9X-6582**	1	NUT (13/16-16-THD)	
C	41	1	*164-9640*	1	CONNECTOR AS	
		1	**3J-1907**	1	SEAL-O-RING	

296-6812 **LINES GP-COUPLER** *(contd.)* **i03576060**

NOTE	REF NO	GRAPHIC REF	PART NUMBER	QTY	PART NAME 1 2 3 4 5 6 (PRODUCT LEVEL)	SEE PAGE
		1	**4J-5477**	1	SEAL-O-RING	
		1	**145-2237**	1	CONNECTOR	

B-USE AS REQUIRED
C-CHANGE FROM PREVIOUS TYPE
G-ORDER BY THE INCH
I-REFER TO HYDRAULIC INFORMATION SYSTEM
M-METRIC PART
Y-SEPARATE ILLUSTRATION

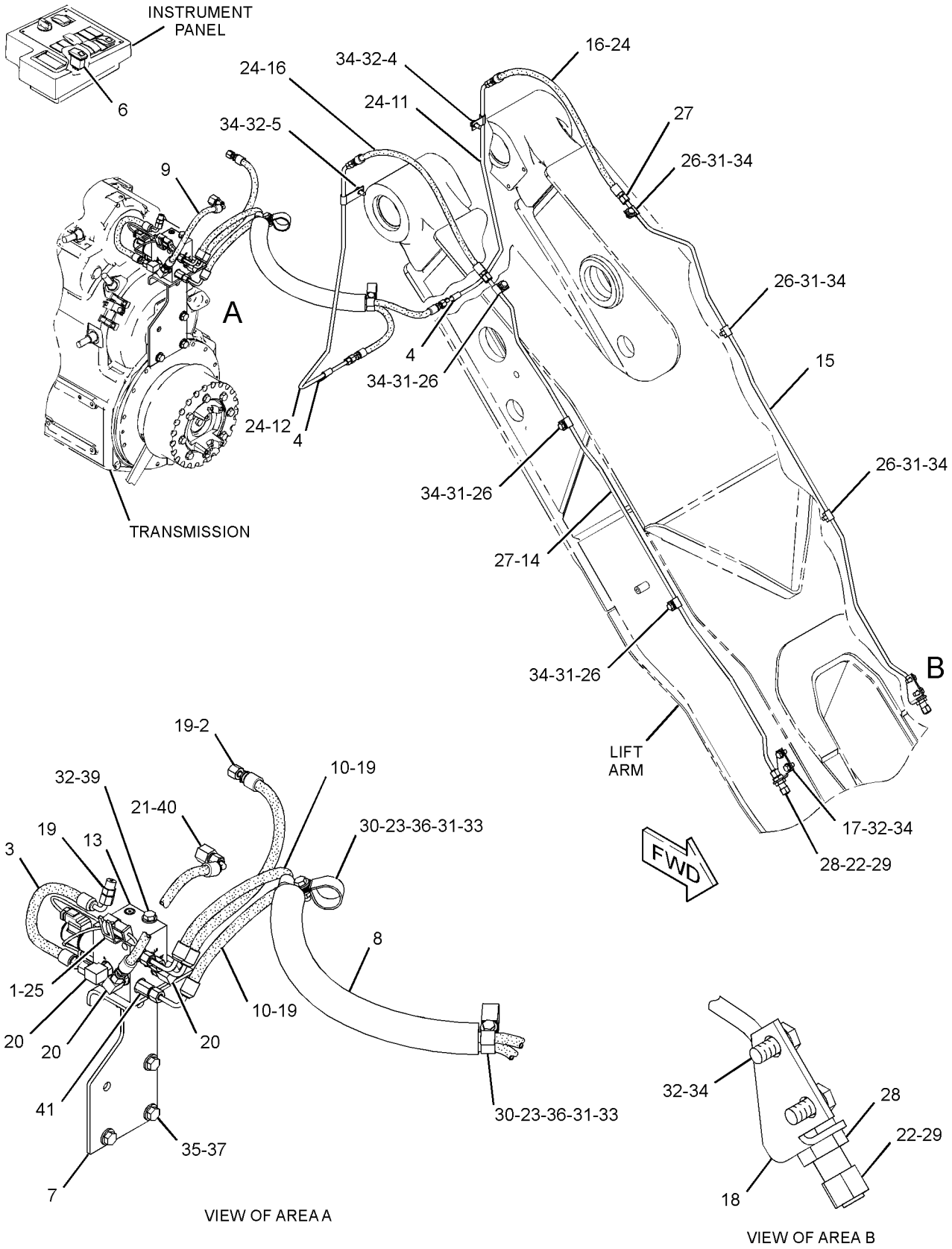

GRAPHIC #1 **<END>** g01909314

HYDRAULIC SYSTEM

297-2470 LINES GP-COUPLER—STANDARD LIFT MACHINES

S/N: KLN1-UP

PART OF 218-5113 COUPLER AR-QUICK

AN ATTACHMENT

SMCS-5057, 5133 **i03032331**

NOTE	REF NO	GRAPHIC REF	PART NUMBER	QTY	PART NAME 1 2 3 4 5 6 (PRODUCT LEVEL)	SEE PAGE
I	1	1	**214-5389**	1	HOSE AS	
I	2	1	**214-5390**	1	HOSE AS	
I	3	1	**297-2778**	1	HOSE AS	
I	4	1	**297-2779**	1	HOSE AS	
	5	1	*148-8325*	3	CONNECTOR AS	
					(EACH INCLUDES)	
		1	**3J-1907**	1	SEAL-O-RING	
		1	**4J-5477**	1	SEAL-O-RING	
		1	**6V-8641**	1	CONNECTOR	
	6	1	*148-8351*	1	ELBOW AS	
		1	**4J-5477**	1	SEAL-O-RING	
		1	**6V-9849**	1	ELBOW	
	7	1	*148-8368*	1	ELBOW AS	
		1	**3J-1907**	1	SEAL-O-RING	
		1	**4J-5477**	1	SEAL-O-RING	
		1	**6V-8627**	1	ELBOW	
	8	1	*150-5968*	2	TEE AS	
					(EACH INCLUDES)	
		1	**4J-5477**	2	SEAL-O-RING	
		1	**6V-9835**	1	TEE-SWIVEL	
	9	1	**5P-7462**	2	CLIP (SLOT)	
	10	1	**5P-7463**	2	CLIP (TAB)	
	11	1	**6V-0683**	2	GROMMET	
	12	1	**7X-7729**	4	WASHER (11X25X3-MM THK)	
	13	1	**8T-1893**	4	CLIP (SLOT)	
	14	1	**8T-1894**	4	CLIP (TAB)	
M	15	1	**8T-4137**	4	BOLT (M10X1.5X20-MM)	
	16	1	**8T-4223**	2	WASHER-HARD (13.5X25.5X3-MM THK)	

I-REFER TO HYDRAULIC INFORMATION SYSTEM
M-METRIC PART

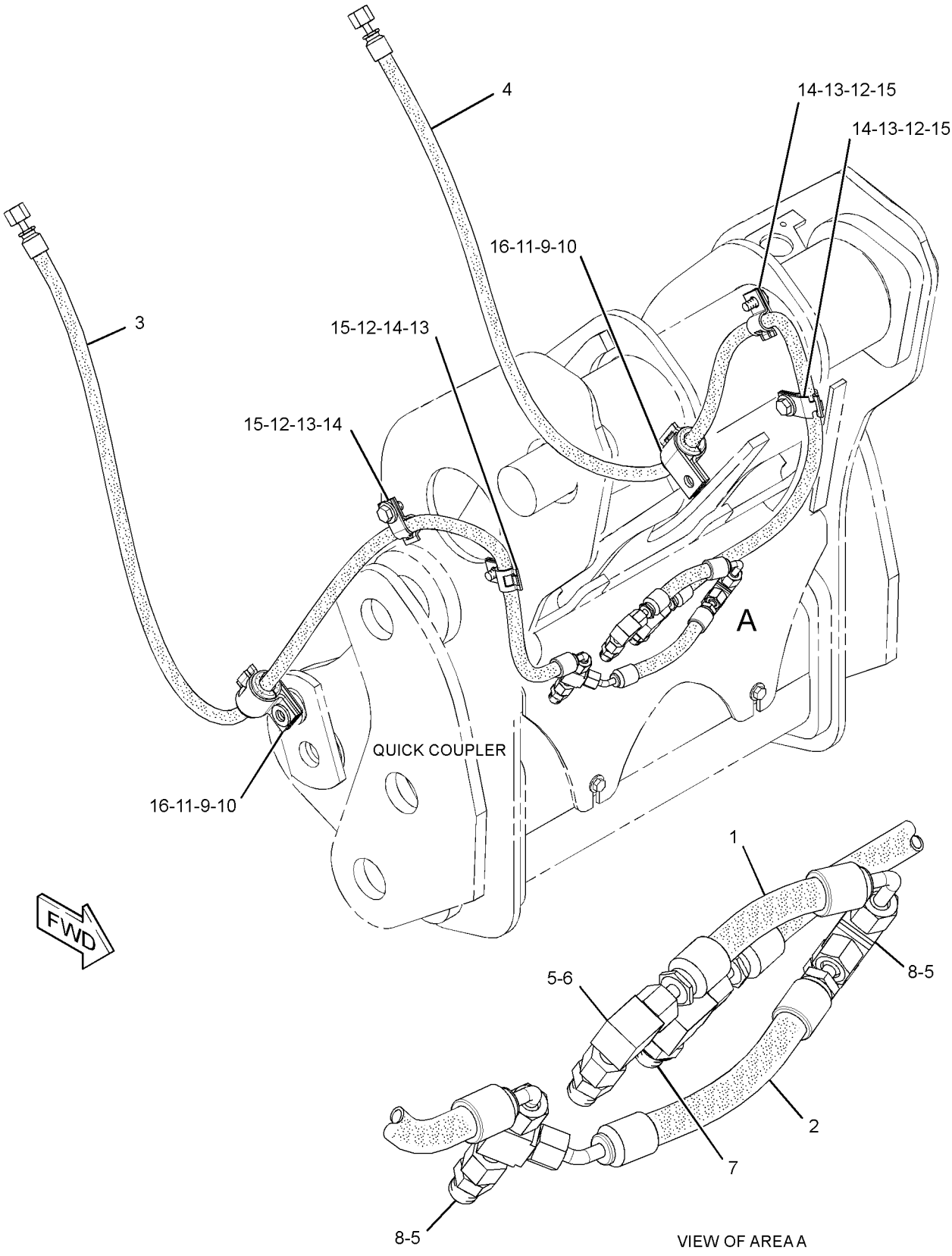

GRAPHIC #1 **<END>** g01371885

211-1063 LINES GP-HYDRAULIC—3RD FUNCTION

S/N: KLN1-UP

PART OF 203-3891 HYDRAULIC AR-3 VALVE, 203-3893 HYDRAULIC AR-4 VALVE AN ATTACHMENT

SMCS-5057 **i02817788**

NOTE	REF NO	GRAPHIC REF	PART NUMBER	QTY	PART NAME 1 2 3 4 5 6 (PRODUCT LEVEL)	SEE PAGE
M	1	1	**8T-4195**	2	BOLT (M10X1.5X30-MM)	
M	2	1	**8T-4136**	8	BOLT (M10X1.5X25-MM)	
I	3	1	**146-0112**	1	HOSE AS	
	4	1	**242-8807**	1	TUBE AS	
	5	1	**242-8808**	1	TUBE AS	
	6	1	**146-0117**	1	PLATE AS	
	7	1	**146-0118**	1	PLATE	
I	8	1	**214-0734**	1	HOSE AS	
I	9	1	**252-2382**	1	HOSE AS	
I	10	1	**192-7949**	1	HOSE AS	
	11	1	*148-8321*	2	CONNECTOR AS	
					(EACH INCLUDES)	
		1	**3J-1907**	1	SEAL-O-RING	
		1	**6V-8397**	1	SEAL-O-RING	
		1	**8C-0564**	1	CONNECTOR	
	12	1	*148-8336*	2	CONNECTOR AS	
					(EACH INCLUDES)	
		1	**3J-1907**	1	SEAL-O-RING	
		1	**6V-8397**	1	SEAL-O-RING	
		1	**6V-8636**	1	CONNECTOR	
	13	1	*148-8339*	2	CONNECTOR AS	
					(EACH INCLUDES)	
		1	**6V-8716**	1	CONNECTOR	
		1	**6V-9746**	1	SEAL-O-RING	
		1	**7M-8485**	1	SEAL-O-RING	
	14	1	*171-6723*	1	ELBOW AS	
		1	**6V-9746**	1	SEAL-O-RING	
		1	**8T-8899**	1	ELBOW	
	15	1	**2P-1293**	2	LOCKNUT (1-3/16-12-THD)	
	16	1	**5P-7466**	2	CLIP (SLOT)	
	17	1	**5P-7467**	2	CLIP (TAB)	
	18	1	**5P-8112**	2	GROMMET	
	19	1	**6V-9746**	2	SEAL-O-RING	
	20	1	**7X-7729**	4	WASHER (11X25X3-MM THK)	
	21	1	**8T-1887**	4	CLIP (SLOT)	
	22	1	**8T-1888**	4	CLIP (TAB)	
	23	1	**8T-4121**	6	WASHER-HARD (11X21X2.5-MM THK)	
	24	1	*148-8376*	2	ELBOW AS	
					(EACH INCLUDES)	
		1	**6V-8983**	1	ELBOW	
		1	**6V-9746**	2	SEAL-O-RING	
B	25	1	**217-0288**	2	CAP	
	26	1	**4V-9798**	2	TAG-IDENTIFICATION (LETTER, NUMBER C2)	
	27	1	**4V-9799**	2	TAG-IDENTIFICATION (LETTER, NUMBER C1)	

B-USE AS REQUIRED
I-REFER TO HYDRAULIC INFORMATION SYSTEM
M-METRIC PART

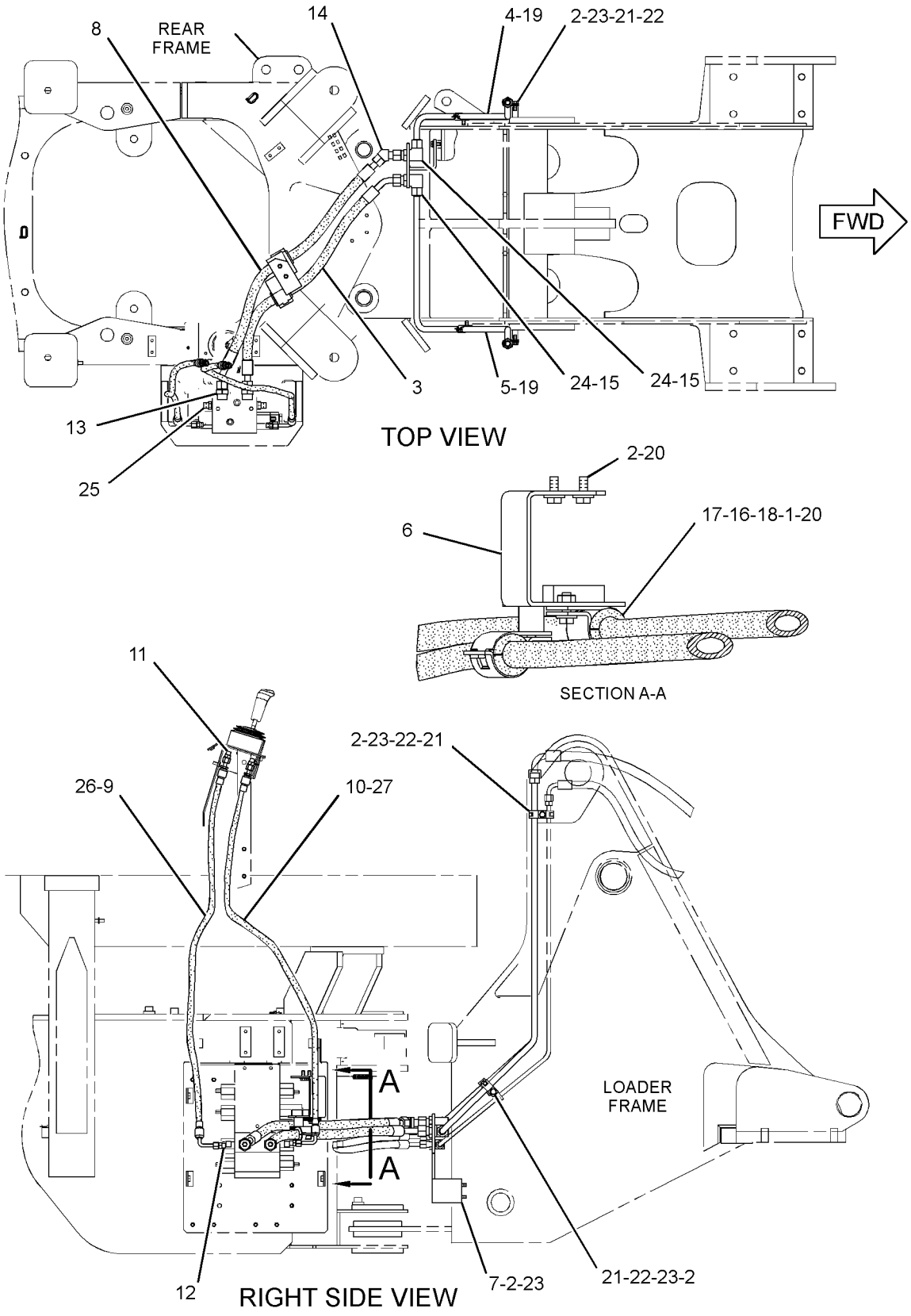

GRAPHIC #1

<END>

g01416377

223-0521 LINES GP-HYDRAULIC—4TH FUNCTION

S/N: KLN1-UP
PART OF 203-3893 HYDRAULIC AR-4 VALVE
AN ATTACHMENT

SMCS-5057 **i03568346**

NOTE	REF NO	GRAPHIC REF	PART NUMBER	QTY	PART NAME 1 2 3 4 5 6 (PRODUCT LEVEL)	SEE PAGE
M	1	1	**8T-4195**	2	BOLT (M10X1.5X30-MM)	
CM	2	1	**8T-4136**	4	BOLT (M10X1.5X25-MM)	
I	3	1	**146-0123**	1	HOSE AS	
C	4	1	**241-0941**	1	TUBE AS	
C	5	1	**241-0942**	1	TUBE AS	
	6	1	**146-7953**	1	PLATE AS	
	7	1	*153-6241*	1	ELBOW AS	
		1	**6V-8398**	1	SEAL-O-RING	
		1	**8C-8989**	1	ELBOW	
	8	1	*153-6252*	2	CONNECTOR AS	
					(EACH INCLUDES)	
		1	**6V-8398**	1	SEAL-O-RING	
		1	**7M-8485**	1	SEAL-O-RING	
		1	**9X-8408**	1	CONNECTOR	
I	9	1	**214-0737**	1	HOSE AS	
I	10	1	**252-2380**	1	HOSE AS	
I	11	1	**252-2381**	1	HOSE AS	
	12	1	*148-8321*	2	CONNECTOR AS	
					(EACH INCLUDES)	
		1	**3J-1907**	1	SEAL-O-RING	
		1	**6V-8397**	1	SEAL-O-RING	
		1	**8C-0564**	1	CONNECTOR	
	13	1	*148-8336*	2	CONNECTOR AS	
					(EACH INCLUDES)	
		1	**3J-1907**	1	SEAL-O-RING	
		1	**6V-8397**	1	SEAL-O-RING	
		1	**6V-8636**	1	CONNECTOR	
	14	1	*148-8375*	2	ELBOW AS	
					(EACH INCLUDES)	
		1	**6V-8398**	2	SEAL-O-RING	
		1	**6V-8981**	1	ELBOW	
	15	1	**5P-7464**	2	CLIP (SLOT)	
	16	1	**5P-7465**	2	CLIP (TAB)	
	17	1	**6V-1249**	2	GROMMET	
	18	1	**6V-8398**	2	SEAL-O-RING	
	19	1	**6V-9169**	2	NUT-BULKHEAD (13/16-16-THD)	
	20	1	**8T-1885**	4	CLIP (SLOT)	
	21	1	**8T-1886**	4	CLIP (TAB)	
C	22	1	**8T-4121**	6	WASHER-HARD (11X21X2.5-MM THK)	
C	23	1	**227-7474**	2	SPACER (13X20X7-MM THK)	
	24	1	**9F-6188**	2	TAG-IDENTIFICATION (A2)	
	25	1	**9F-6189**	2	TAG-IDENTIFICATION (A1)	

C-CHANGE FROM PREVIOUS TYPE
I-REFER TO HYDRAULIC INFORMATION SYSTEM
M-METRIC PART

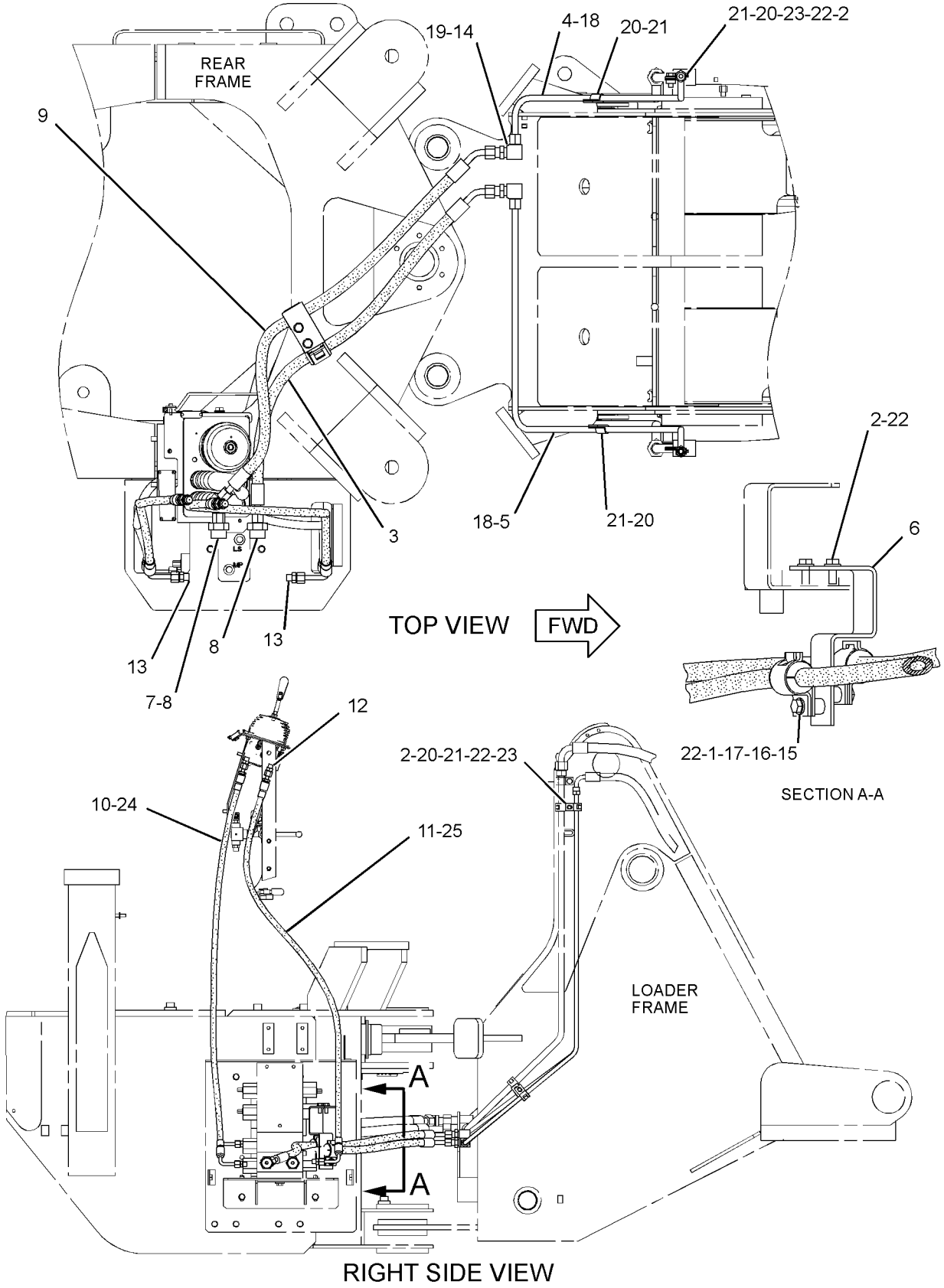

GRAPHIC #1

<END>

g01301198

HYDRAULIC SYSTEM

289-8934 LINES GP-HYDRAULIC

S/N: KLN1-UP

PART OF 289-8833 HYDRAULIC AR

SMCS-5057 **i03043302**

NOTE	REF NO	GRAPHIC REF	PART NUMBER	QTY	PART NAME 1 2 3 4 5 6 (PRODUCT LEVEL)	SEE PAGE
	1	2	**5D-1026**	2	CLAMP-HOSE	
	2	2	**6V-0852**	2	CAP-DUST	
	3	2	**8T-4983**	2	CLAMP-HOSE	
	4	2	**9U-6996**	2	ADAPTER-HOSE	
	5	1,2	**144-0367**	4	CLAMP-HOSE	
	6	1	**204-2281**	1	STRAP-TIE	
I	7	1	**205-7106**	1	HOSE AS	
	8	2	**209-0789**	1	MANIFOLD	
I	9	1	**211-4793**	1	HOSE AS	
	10	2	**212-7521**	1	VALVE GP-CHECK (RETURN RESTRICTOR)	
		2	**2S-4078**	1	SEAL-O-RING	
		2	**6V-8400**	1	SEAL-O-RING	
I	11	1	**214-2232**	1	HOSE AS	
	12	2	**217-4101**	1	TUBE AS	
	13	2	*250-1446*	1	TEE AS	
		2	**2M-9780**	1	SEAL-O-RING	
		2	**6V-9746**	1	SEAL-O-RING	
		2	**251-9303**	1	TEE	
	14	2	*250-1447*	1	TEE AS	
		2	**2M-9780**	1	SEAL-O-RING	
		2	**6V-8397**	1	SEAL-O-RING	
		2	**251-9304**	1	TEE	
	15	1	**262-5658**	1	HOSE	
	16	1	**262-5660**	1	HOSE AS	
I	17	1	**288-0746**	1	HOSE AS	
	18	2	**293-2455**	1	BLOCK	
	19	2	**293-2456**	1	BLOCK	
	20	1	**293-2457**	1	TUBE AS	
	21	2	**293-2465**	1	HOSE	
I	22	1	**293-2466**	1	HOSE AS	
	23	2	*148-8326*	1	CONNECTOR AS	
		2	**3J-7354**	1	SEAL-O-RING	
		2	**6V-8397**	1	SEAL-O-RING	
		2	**6V-9872**	1	CONNECTOR	
	24	2	*148-8335*	1	CONNECTOR AS	
		2	**5K-9090**	1	SEAL-O-RING	
		2	**6V-8635**	1	CONNECTOR	
		2	**7M-8485**	1	SEAL-O-RING	
	25	2	*148-8338*	1	CONNECTOR AS	
		2	**3J-1907**	1	SEAL-O-RING	
		2	**6V-8397**	1	SEAL-O-RING	
		2	**8T-0075**	1	CONNECTOR	
	26	2	*148-8352*	1	ELBOW AS	
		2	**5K-9090**	1	SEAL-O-RING	
		2	**6V-9854**	1	ELBOW	
	27	2	*148-8367*	1	ELBOW AS	
		2	**6V-8397**	1	SEAL-O-RING	
		2	**6V-9850**	1	ELBOW	
	28	2	*148-8373*	1	ELBOW AS	
		2	**6V-8400**	1	SEAL-O-RING	
		2	**7M-8485**	1	SEAL-O-RING	
		2	**8C-3364**	1	ELBOW	
	29	2	*148-8407*	1	PLUG AS	
		2	**3J-1907**	1	SEAL-O-RING	
		2	**9S-4191**	1	PLUG-O-RING	

HYDRAULIC SYSTEM

289-8934 **LINES GP-HYDRAULIC** *(contd.)* **i03043302**

NOTE	REF NO	GRAPHIC REF	PART NUMBER	QTY	PART NAME 1 2 3 4 5 6 (PRODUCT LEVEL)	SEE PAGE
	30	2	*148-8411*	2	PLUG AS	
					(EACH INCLUDES)	
		2	**3K-0360**	1	SEAL-O-RING	
		2	**9S-4185**	1	PLUG-O-RING	
	31	2	*148-8428*	1	TEE AS	
		2	**3K-0360**	1	SEAL-O-RING	
		2	**6V-8398**	2	SEAL-O-RING	
		2	**6V-8782**	1	TEE	
	32	2	*148-8433*	1	TEE AS	
		2	**6V-8397**	2	SEAL-O-RING	
		2	**6V-9836**	1	TEE-SWIVEL	
	33	2	*148-8444*	1	TEE AS-SWIVEL	
		2	**6V-8398**	2	SEAL-O-RING	
		2	**6V-9837**	1	TEE-SWIVEL	
	34	1	*153-6237*	1	ELBOW AS	
		1	**3D-2824**	1	SEAL-O-RING	
		1	**6V-9004**	1	ELBOW	
		1	**6V-9746**	1	SEAL-O-RING	
	35	2	*164-5567*	2	COUPLER AS-QUICK DISCONNECT	
					(EACH INCLUDES)	
		2	**3J-1907**	1	SEAL-O-RING	
		2	**6V-3965**	1	FITTING (QUICK DISCONNECT)	
	36	2	*171-6723*	1	ELBOW AS	
		2	**6V-9746**	1	SEAL-O-RING	
		2	**8T-8899**	1	ELBOW	
	37	2	*180-9933*	1	ADAPTER GP (90-DEG)	
		2	**3J-7354**	1	SEAL-O-RING	
		2	**135-9941**	1	ADAPTER	
	38	2	**1P-3703**	1	SEAL-RECTANGULAR	
	39	2	**1P-3708**	1	SEAL-RECTANGULAR	
	40	1	**1P-4582**	2	FLANGE-HALF	
	41	1,2	**1P-4584**	4	FLANGE-HALF	
	42	1	**204-8000**	1	MOUNT (TIE WRAP)	
	43	2	**4J-0520**	1	SEAL-O-RING	
	44	2	**4J-0524**	1	SEAL-O-RING	
	45	1	**4J-0527**	1	SEAL-O-RING	
	46	1	**5P-7468**	1	CLIP (SLOT)	
	47	1	**5P-7469**	1	CLIP (TAB)	
	48	1	**5P-8444**	1	GROMMET	
	49	1,2	**6J-2680**	2	SEAL-O-RING	
	50	1	**7S-1912**	1	CLIP	
M	51	2	**7X-2549**	8	BOLT (M12X1.75X100-MM)	
M	52	2	**8C-2926**	4	BOLT (M10X1.5X140-MM)	
	53	2	**8C-3206**	2	FLANGE-HALF	
	54	1,2	**8T-4121**	9	WASHER-HARD (11X21X2.5-MM THK)	
M	55	1	**8T-4136**	1	BOLT (M10X1.5X25-MM)	
M	56	1	**8T-4183**	4	BOLT (M12X1.75X40-MM)	
M	57	2	**8T-4184**	4	BOLT (M12X1.75X45-MM)	
M	58	1	**8T-4194**	4	BOLT (M12X1.75X50-MM)	
M	59	2	**8T-4196**	4	BOLT (M10X1.5X35-MM)	
	60	1,2	**8T-4223**	20	WASHER-HARD (13.5X25.5X3-MM THK)	
E	61	2	**5P-1505**		HOSE (21-CM)	
B	62	2	**6V-9830**	2	CAP AS	

B-USE AS REQUIRED
E-ORDER BY THE CENTIMETER
I-REFER TO HYDRAULIC INFORMATION SYSTEM
M-METRIC PART

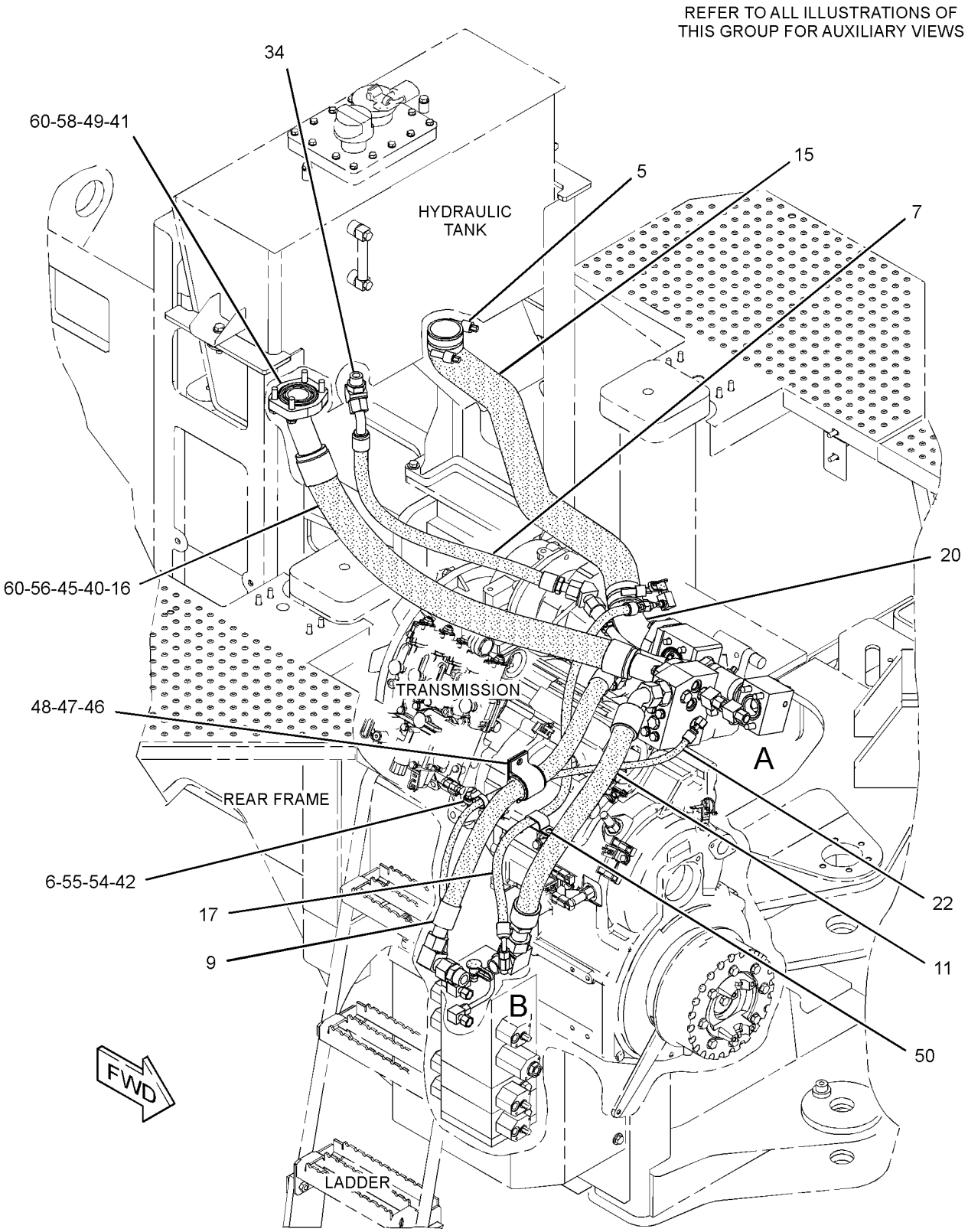

GRAPHIC #1 g01406080

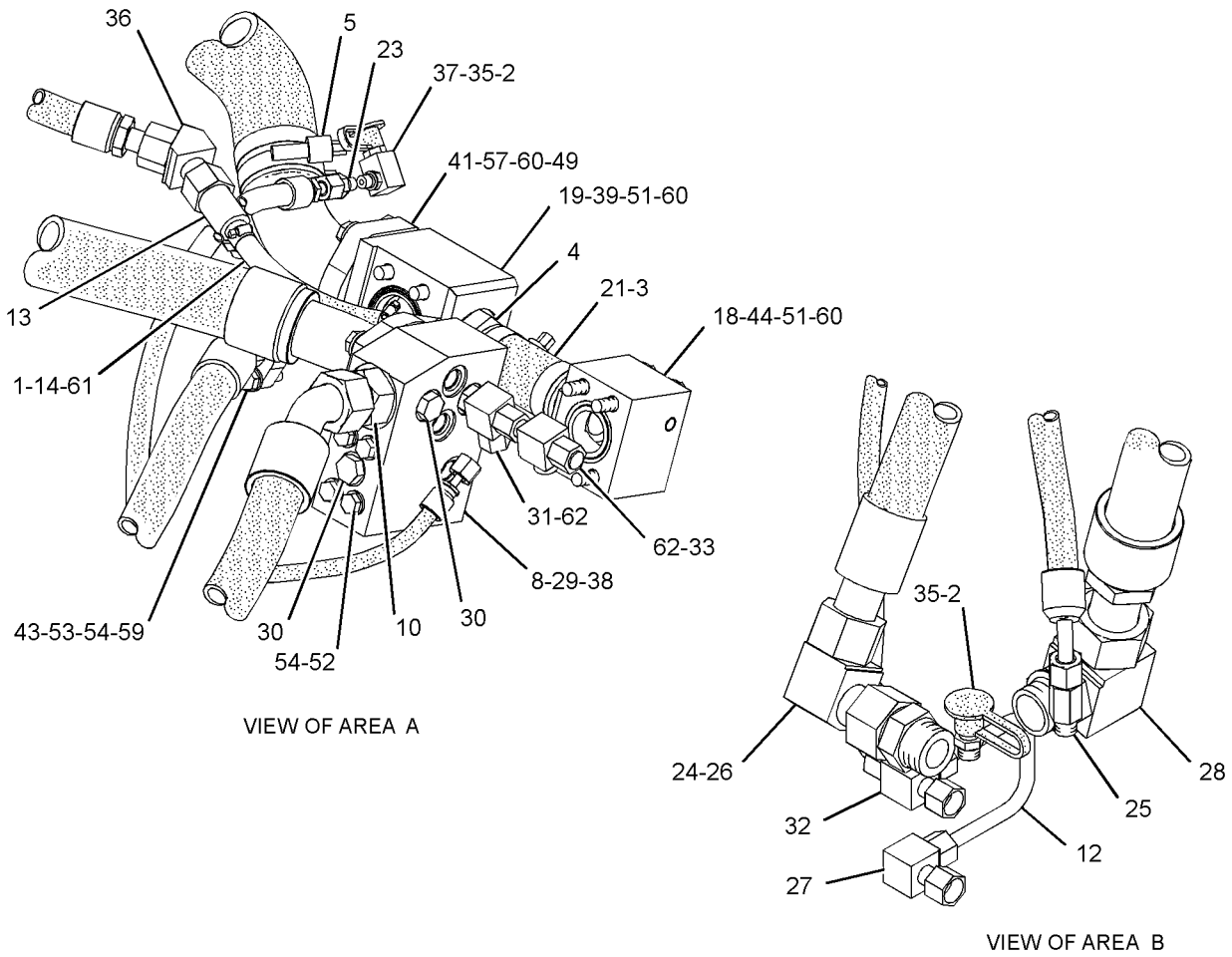

GRAPHIC #2 **<END>** g01406177

HYDRAULIC SYSTEM

290-7200 LINES GP-HYDRAULIC FAN—STANDARD

S/N: KLN1-UP

PART OF 289-8963 MOTOR AR-HYDRAULIC FAN

AN ATTACHMENT

SMCS-1386, 1387, 5057 **i03038632**

NOTE	REF NO	GRAPHIC REF	PART NUMBER	QTY	PART NAME 1 2 3 4 5 6 (PRODUCT LEVEL)	SEE PAGE
I	1	1	**109-5363**	1	HOSE AS	
	2	1	**130-9984**	2	CLIP	
	3	1	**200-6345**	2	MOUNT (DUAL SWIVEL)	
	4	1	**204-2281**	4	STRAP-TIE	
I	5	1	**293-2462**	1	HOSE AS	
I	6	1	**293-2463**	1	HOSE AS	
	7	1	*148-8316*	1	CONNECTOR AS	
		1	**3J-7354**	1	SEAL-O-RING	
		1	**4J-5477**	1	SEAL-O-RING	
		1	**6V-8647**	1	CONNECTOR	
	8	1	*148-8351*	1	ELBOW AS	
		1	**4J-5477**	1	SEAL-O-RING	
		1	**6V-9849**	1	ELBOW	
	9	1	*148-8382*	1	ELBOW AS	
		1	**3D-2824**	1	SEAL-O-RING	
		1	**7J-9108**	1	SEAL-O-RING	
		1	**8T-0404**	1	ELBOW	
	10	1	*148-8384*	1	ELBOW AS	
		1	**4J-5477**	2	SEAL-O-RING	
		1	**6V-8979**	1	ELBOW	
	11	1	*148-8390*	1	ELBOW AS	
		1	**2M-9780**	1	SEAL-O-RING	
		1	**6V-8626**	1	ELBOW	
		1	**7J-9108**	1	SEAL-O-RING	
	12	1	*169-7404*	2	ELBOW AS	
					(EACH INCLUDES)	
		1	**6V-8982**	1	ELBOW	
		1	**7J-9108**	2	SEAL-O-RING	
	13	1	**2P-1279**	1	LOCKNUT (9/16-18-THD)	
	14	1	**6V-9170**	2	NUT-BULKHEAD (1-14-THD)	
	15	1	**8T-4121**	2	WASHER-HARD (11X21X2.5-MM THK)	
M	16	1	**8T-4136**	2	BOLT (M10X1.5X25-MM)	

I-REFER TO HYDRAULIC INFORMATION SYSTEM
M-METRIC PART

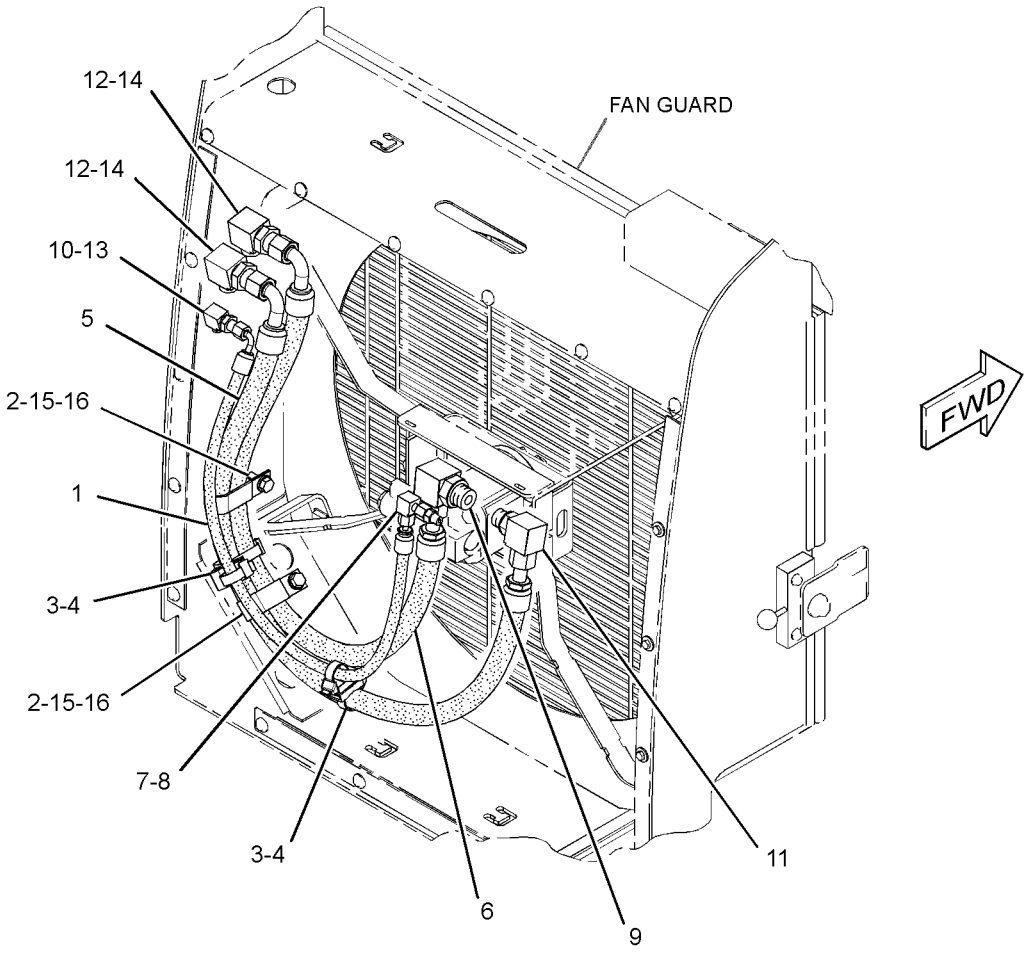

GRAPHIC #1 **<END>** g01548613

290-7201 LINES GP-HYDRAULIC FAN–REVERSING FAN

S/N: KLN1-UP

PART OF 289-8965 MOTOR AR-HYDRAULIC FAN

AN ATTACHMENT

SMCS-1386, 1387, 5057 **i03537766**

NOTE	REF NO	GRAPHIC REF	PART NUMBER	QTY	PART NAME 1 2 3 4 5 6 (PRODUCT LEVEL)	SEE PAGE
	1	1	**7K-1181**	1	STRAP-CABLE	
	2	1	**106-8704**	1	SUPPRESSOR AS-ARC	
	3	1	**158-5089**	1	RELAY AS (24-VOLT) (REVERSING FAN)	
I	4	1	**180-6567**	1	HOSE AS	
	5	1	**185-2765**	1	SWITCH AS-ROCKER (REVERSING FAN ON, OFF)	
		1	**111-7899**	1	GASKET	
I	6	1	**202-8928**	1	HOSE AS	
	7	1	**204-2281**	2	STRAP-TIE	
I	8	1	**293-2464**	1	HOSE AS	
	9	1	*148-8316*	1	CONNECTOR AS	
		1	**3J-7354**	1	SEAL-O-RING	
		1	**4J-5477**	1	SEAL-O-RING	
		1	**6V-8647**	1	CONNECTOR	
	10	1	*148-8341*	1	CONNECTOR AS	
		1	**3D-2824**	1	SEAL-O-RING	
		1	**6V-8713**	1	CONNECTOR	
		1	**7J-9108**	1	SEAL-O-RING	
	11	1	*148-8351*	1	ELBOW AS	
		1	**4J-5477**	1	SEAL-O-RING	
		1	**6V-9849**	1	ELBOW	
	12	1	*148-8384*	1	ELBOW AS	
		1	**4J-5477**	2	SEAL-O-RING	
		1	**6V-8979**	1	ELBOW	
	13	1	*148-8390*	1	ELBOW AS	
		1	**2M-9780**	1	SEAL-O-RING	
		1	**6V-8626**	1	ELBOW (FACE SEAL)	
		1	**7J-9108**	1	SEAL-O-RING	
	14	1	*148-8393*	1	ELBOW AS	
		1	**6V-9852**	1	ELBOW	
		1	**7J-9108**	1	SEAL-O-RING	
	15	1	*169-7404*	2	ELBOW AS	
					(EACH INCLUDES)	
		1	**6V-8982**	1	ELBOW (90-DEG)	
		1	**7J-9108**	2	SEAL-O-RING	
	16	1	**2P-1279**	1	LOCKNUT (9/16-18-THD)	
	17	1	**6V-9170**	2	NUT-BULKHEAD (1-14-THD)	

I-REFER TO HYDRAULIC INFORMATION SYSTEM

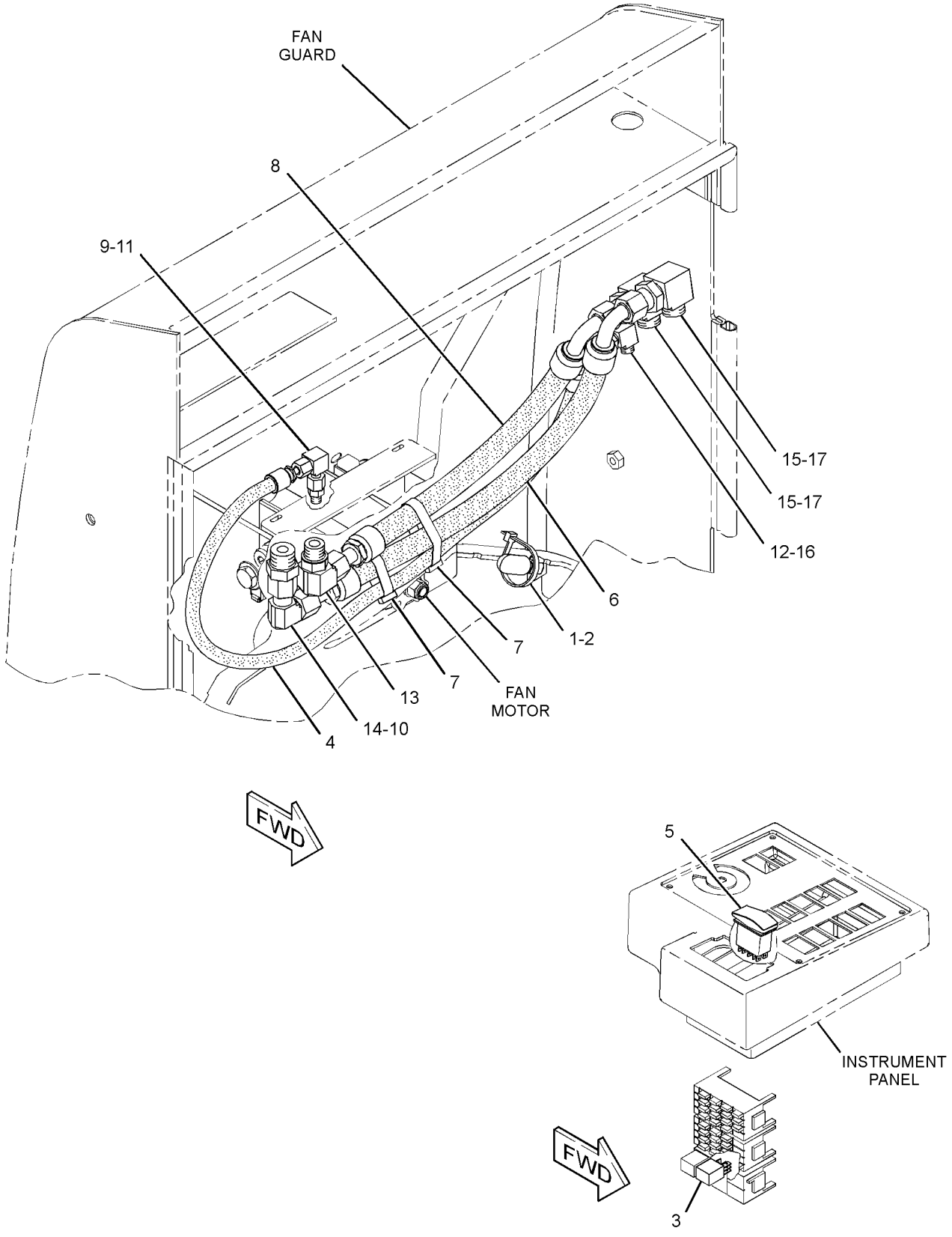

GRAPHIC #1 **<END>** g01397106

HYDRAULIC SYSTEM

323-1652 LINES GP-HYDRAULIC FAN–
WITHOUT AXLE OIL COOLER
S/N: KLN1-UP
PART OF 289-8991 AXLE AR-OSCILLATING
AN ATTACHMENT

SMCS-1386, 1387, 5057 **i03126425**

NOTE	REF NO	GRAPHIC REF	PART NUMBER	QTY	PART NAME 1 2 3 4 5 6 (PRODUCT LEVEL)	SEE PAGE
	1	2	**3S-2093**	2	STRAP-CABLE	
	2	1,2	**7K-1181**	5	STRAP-CABLE	
	3	1	**130-9984**	3	CLIP	
	4	2	**145-8983**	1	VALVE GP-CHECK (HYDRAULIC OIL COOLER BYPASS)	
		1	**6V-9746**	1	SEAL-O-RING	
		1	**3D-2824**	1	SEAL-O-RING	
	5	1	**200-6345**	1	MOUNT (DUAL SWIVEL)	
	6	1,2	**204-2281**	4	STRAP-TIE	
I	7	1	**262-5695**	1	HOSE AS	
	8	2	**290-5562**	1	MOUNT (DUAL SWIVEL)	
I	9	1	**292-9688**	1	HOSE AS	
I	10	1	**292-9698**	1	HOSE AS	
	11	2	**300-4148**	1	PLATE	
	12	2	**301-0361**	1	BRACKET AS	
I	13	1	**302-6378**	1	HOSE AS	
I	14	1	**323-1655**	1	HOSE AS	
I	15	2	**323-1656**	1	HOSE AS	
I	16	1	**323-1657**	1	HOSE AS	
I	17	2	**323-1658**	1	HOSE AS	
	18	1	*148-8352*	1	ELBOW AS	
		1	**5K-9090**	1	SEAL-O-RING	
		1	**6V-9854**	1	ELBOW	
	19	1	*148-8356*	1	ELBOW AS	
		1	**2S-4078**	1	SEAL-O-RING	
		1	**6V-8400**	1	SEAL-O-RING	
		1	**6V-9009**	1	ELBOW	
	20	2	*148-8362*	1	ELBOW AS	
		2	**3D-2824**	1	SEAL-O-RING	
		2	**5K-9090**	1	SEAL-O-RING	
		2	**8T-6684**	1	ELBOW	
	21	2	*148-8368*	1	ELBOW AS	
		2	**3J-1907**	1	SEAL-O-RING	
		2	**4J-5477**	1	SEAL-O-RING	
		2	**6V-8627**	1	ELBOW	
	22	1	*148-8373*	1	ELBOW AS	
		1	**6V-8400**	1	SEAL-O-RING	
		1	**7M-8485**	1	SEAL-O-RING	
		1	**8C-3364**	1	ELBOW	
	23	2	*148-8392*	1	ELBOW AS	
		2	**6V-9746**	1	SEAL-O-RING	
		2	**6V-9853**	1	ELBOW	
	24	2	*153-6237*	1	ELBOW AS	
		2	**3D-2824**	1	SEAL-O-RING	
		2	**6V-9004**	1	ELBOW	
		2	**6V-9746**	1	SEAL-O-RING	
	25	1	*155-3504*	1	ELBOW AS	
		1	**2M-9780**	1	SEAL-O-RING	
		1	**6V-9003**	1	ELBOW	
		1	**7J-9108**	1	SEAL-O-RING	
	26	1	*164-5641*	1	TEE AS	
		1	**3D-2824**	1	SEAL-O-RING	
		1	**5K-9090**	1	SEAL-O-RING	
		1	**6V-9746**	1	SEAL-O-RING	
		1	**128-7625**	1	TEE	

323-1652 **LINES GP-HYDRAULIC FAN** *(contd.)* **i03126425**

NOTE	REF NO	GRAPHIC REF	PART NUMBER	QTY	PART NAME 1 2 3 4 5 6 (PRODUCT LEVEL)	SEE PAGE
	27	2	*164-6860*	1	TEE AS	
		2	**6V-9350**	1	TEE-BULKHEAD	
		2	**7J-9108**	3	SEAL-O-RING	
	28	1,2	**4D-7388**	3	CLIP	
	29	2	**5P-7468**	1	CLIP (SLOT)	
	30	2	**5P-7469**	1	CLIP (TAB)	
	31	2	**5P-8444**	1	GROMMET	
	32	1	**6V-1889**	1	CLIP	
	33	2	**6V-9170**	1	NUT-BULKHEAD (1-14-THD)	
B	34	1	**6V-9832**	1	CAP AS	
	35	2	**7X-7729**	1	WASHER (11X25X3-MM THK)	
	36	2	**8C-3174**	1	GROMMET	
	37	1,2	**8M-2770**	2	CLIP	
	38	1,2	**8T-4121**	15	WASHER-HARD (11X21X2.5-MM THK)	
M	39	2	**8T-4136**	5	BOLT (M10X1.5X25-MM)	
M	40	1,2	**8T-4137**	6	BOLT (M10X1.5X20-MM)	
M	41	2	**8T-4186**	1	BOLT (M10X1.5X40-MM)	
M	42	1,2	**8T-4195**	2	BOLT (M10X1.5X30-MM)	
M	43	1	**8T-4196**	2	BOLT (M10X1.5X35-MM)	
	44	2	**9C-5344**	1	SPACER (10.5X20X18-MM THK)	
	45	1	**9M-4972**	1	CLIP	

B-USE AS REQUIRED
I-REFER TO HYDRAULIC INFORMATION SYSTEM
M-METRIC PART

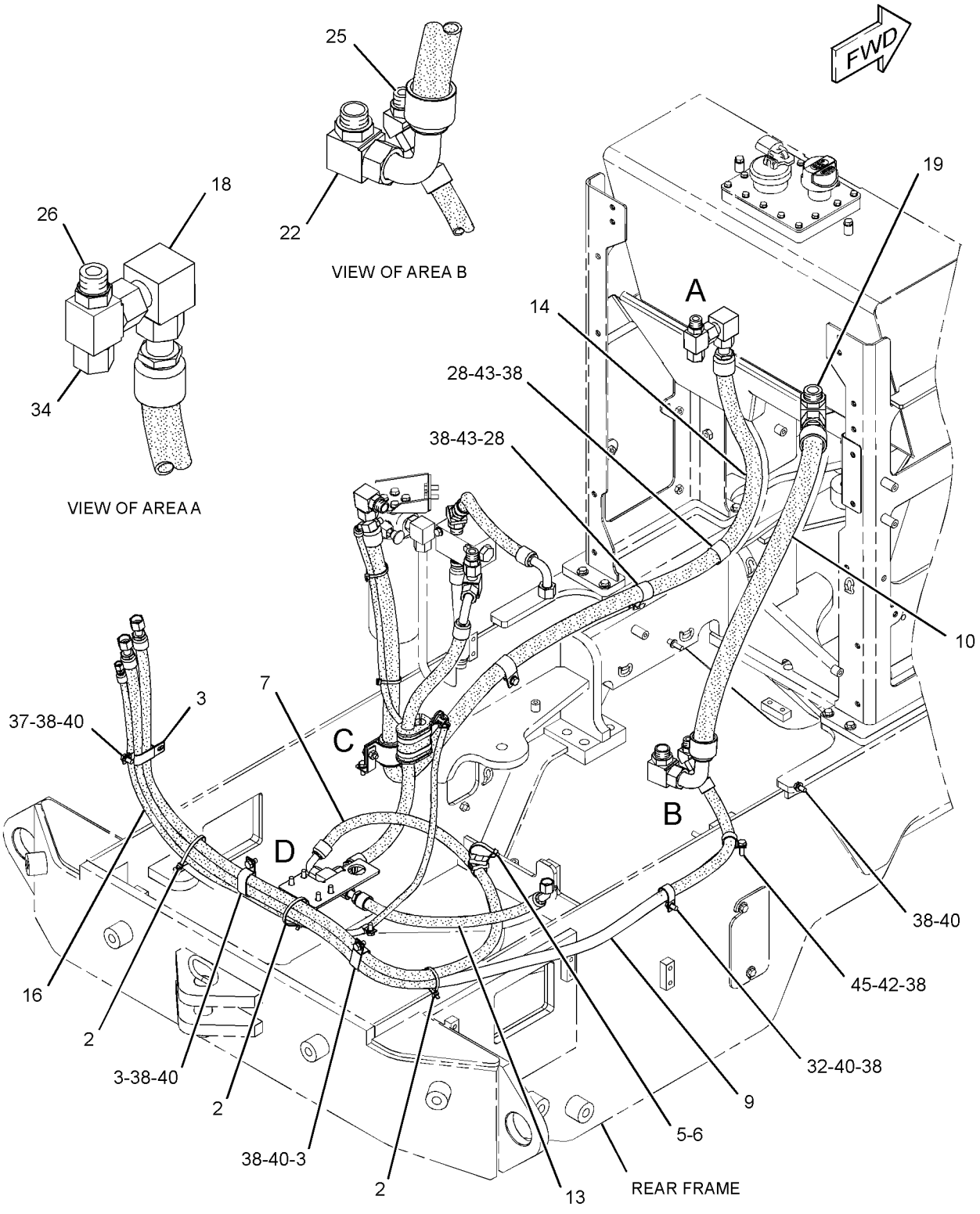

GRAPHIC #1

g01812135

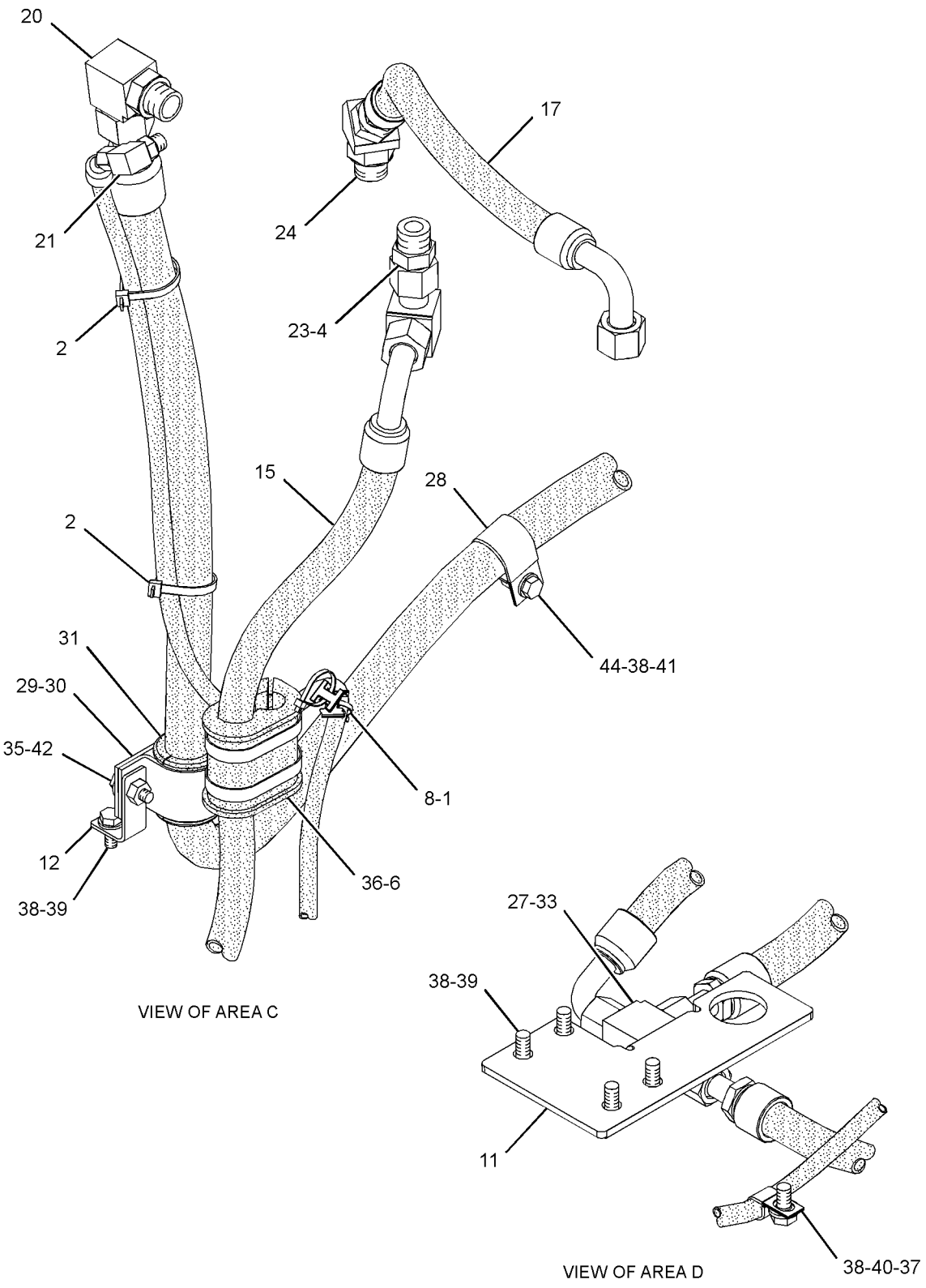

GRAPHIC #2 **<END>** g01812137

HYDRAULIC SYSTEM

290-6475 LINES GP-LIFT CYLINDER

S/N: KLN1-UP

PART OF 289-8833 HYDRAULIC AR

SMCS-5057, 5102 **i03043348**

NOTE	REF NO	GRAPHIC REF	PART NUMBER	QTY	PART NAME 1 2 3 4 5 6 (PRODUCT LEVEL)	SEE PAGE
	1	1	**5P-0599**	2	CLAMP-BAND	
	4	1	**9R-9572**	2	BLOCK	
	5	2	**091-0081**	2	SPACER (10.5X20X10-MM THK)	
Y	6	2	**112-1817**	1	VALVE GP-MANUAL (LOWERING CONTROL)	442
I	7	1	**132-2367**	2	HOSE AS	
I	8	1	**146-0111**	2	HOSE AS	
I	9	1	**148-7783**	1	HOSE AS	
I	10	1	**148-7784**	1	HOSE AS	
	11	2	*164-5545*	1	CONNECTOR AS	
		2	**3E-2335**	1	CONNECTOR	
		2	**3J-1907**	1	SEAL-O-RING	
		2	**6V-8397**	1	SEAL-O-RING	
	12	2	**185-3596**	1	BRACKET AS	
	13	1	**204-2281**	3	STRAP-TIE	
	14	1	**211-1058**	1	TUBE AS	
	15	1	**211-4230**	1	TUBE AS	
	16	2	**212-8136**	1	BRACKET	
	17	1	**213-8783**	1	BRACKET AS	
M		1	**8Y-4489**	2	BOSS (M10X1.5-THD)	
	18	2	**217-8112**	1	TUBE AS	
	19	2	**218-0255**	1	BRACKET AS	
M		2	**8T-3490**	1	NUT-WELD (M10X1.5-THD)	
	20	2	**218-0256**	1	BRACKET	
I	21	1	**219-8742**	1	HOSE AS	
	22	2	**221-0852**	1	TUBE AS	
I	23	1	**221-3234**	1	HOSE AS	
I	24	1	**252-2376**	1	HOSE AS	
M	25	2	**116-6952**	4	BOLT (M4X0.7X10-MM)	
	26	1	*148-8321*	2	CONNECTOR AS	
					(EACH INCLUDES)	
		1	**3J-1907**	1	SEAL-O-RING	
		1	**6V-8397**	1	SEAL-O-RING	
		1	**8C-0564**	1	CONNECTOR	
	27	1	*148-8327*	2	CONNECTOR AS	
					(EACH INCLUDES)	
		1	**3D-2824**	1	SEAL-O-RING	
		1	**6V-8637**	1	CONNECTOR	
		1	**6V-9746**	1	SEAL-O-RING	
	28	1	*148-8335*	2	CONNECTOR AS	
					(EACH INCLUDES)	
		1	**5K-9090**	1	SEAL-O-RING	
		1	**6V-8635**	1	CONNECTOR	
		1	**7M-8485**	1	SEAL-O-RING	
	29	1	*148-8336*	2	CONNECTOR AS	
					(EACH INCLUDES)	
		1	**3J-1907**	1	SEAL-O-RING	
		1	**6V-8397**	1	SEAL-O-RING	
		1	**6V-8636**	1	CONNECTOR	
	30	1	*148-8410*	2	PLUG AS	
					(EACH INCLUDES)	
		1	**2M-9780**	1	SEAL-O-RING	
		1	**9S-4190**	1	PLUG-O-RING	
	31	2	*150-4043*	1	CONNECTOR AS	
		2	**3J-1907**	1	SEAL-O-RING	
		2	**6V-8398**	1	SEAL-O-RING	
		2	**6V-9873**	1	CONNECTOR	

290-6475 **LINES GP-LIFT CYLINDER** *(contd.)* **i03043348**

NOTE	REF NO	GRAPHIC REF	PART NUMBER	QTY	PART NAME 1 2 3 4 5 6 (PRODUCT LEVEL)	SEE PAGE
I	32	1	**200-3044**	1	HOSE AS	
	33	2	**4B-4274**	4	WASHER (5.5X13X1.2-MM THK)	
	34	1,2	**4J-5267**	2	SEAL-O-RING	
	35	1	**5K-5338**	1	CLIP	
	36	1,2	**5K-9090**	4	SEAL-O-RING	
	37	2	**5P-7468**	2	CLIP (SLOT)	
	38	2	**5P-7469**	2	CLIP (TAB)	
	39	2	**5P-8444**	2	GROMMET	
	40	2	**6V-7359**	4	GROMMET	
	41	2	**6V-8398**	1	SEAL-O-RING	
	42	1	**6V-9172**	2	NUT (1-7/16-12-THD)	
	43	1	**6V-9746**	4	SEAL-O-RING	
	44	1,2	**7X-7729**	12	WASHER (11X25X3-MM THK)	
	45	1,2	**8C-3205**	4	FLANGE-HALF	
	46	2	**8T-1899**	4	CLIP (SLOT)	
	47	2	**8T-1900**	4	CLIP (TAB)	
	48	1,2	**8T-4121**	15	WASHER-HARD (11X21X2.5-MM THK)	
M	49	2	**8T-4133**	4	NUT (M10X1.5-THD)	
M	50	1,2	**8T-4136**	7	BOLT (M10X1.5X25-MM)	
M	51	2	**8T-4182**	2	BOLT (M10X1.5X45-MM)	
M	52	2	**8T-4195**	4	BOLT (M10X1.5X30-MM)	
M	53	1,2	**8T-4196**	10	BOLT (M10X1.5X35-MM)	

I-REFER TO HYDRAULIC INFORMATION SYSTEM
M-METRIC PART
Y-SEPARATE ILLUSTRATION

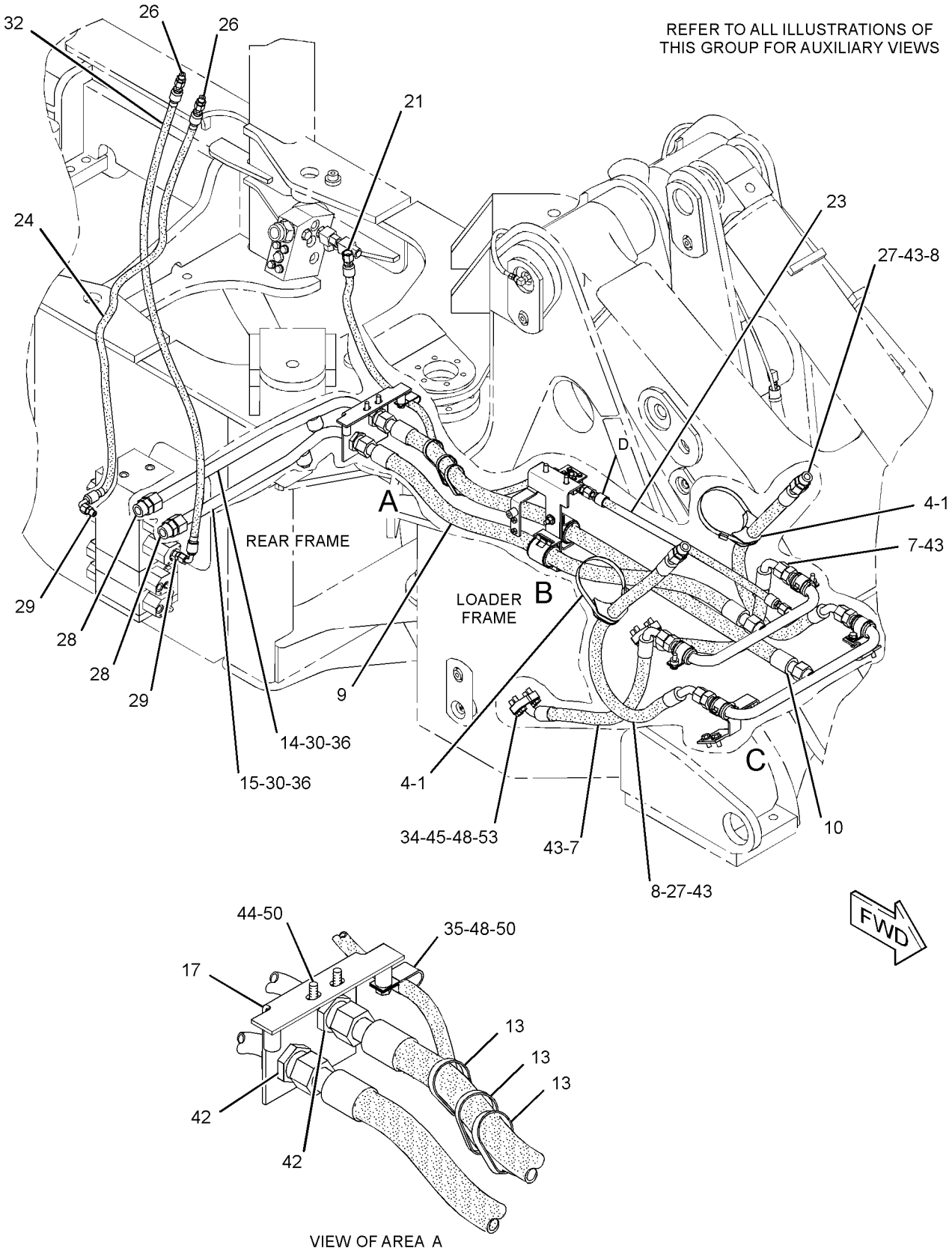

GRAPHIC #1 g01407640

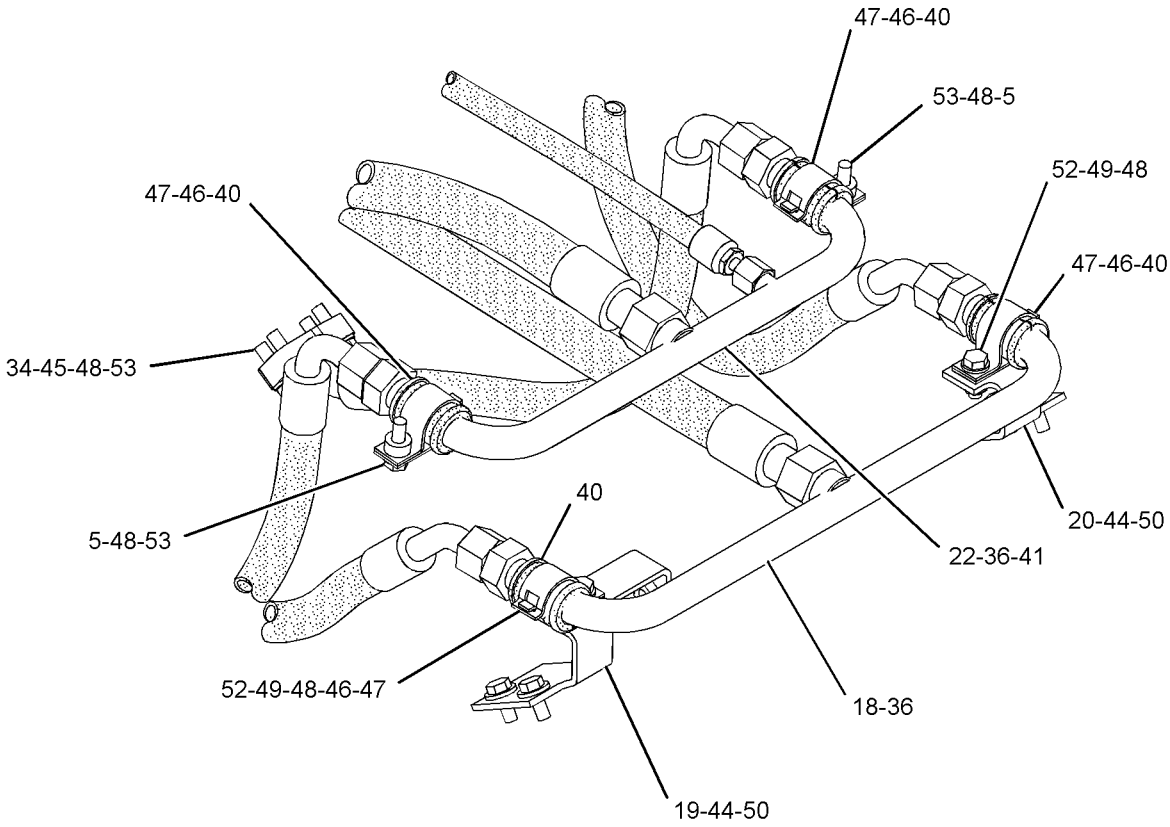

VIEW OF AREA C

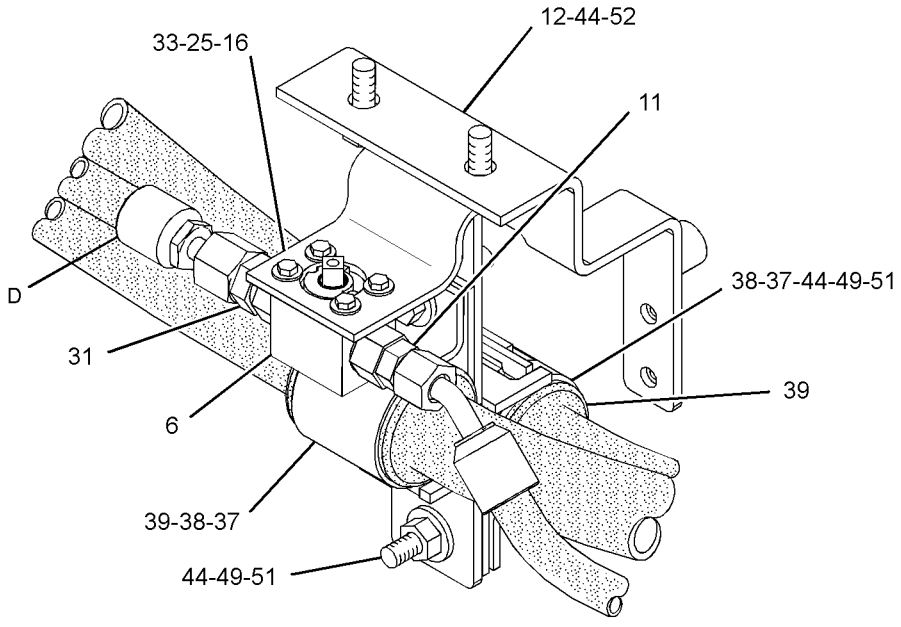

VIEW OF AREA B

GRAPHIC #2 **<END>** g01407723

HYDRAULIC SYSTEM

289-8796 LINES GP-PILOT

S/N: KLN1-UP

PART OF 289-8833 HYDRAULIC AR

SMCS-5057, 5059 **i03511200**

NOTE	REF NO	GRAPHIC REF	PART NUMBER	QTY	PART NAME 1 2 3 4 5 6 (PRODUCT LEVEL)	SEE PAGE
	1	2	**6V-0852**	2	CAP-DUST	
I	2	1	**128-2756**	1	HOSE AS	
	3	1	**156-4130**	2	CLIP-TUBE	
	4	2	*164-5586*	1	TEE AS	
		2	**6V-8398**	1	SEAL-O-RING	
		2	**7X-0871**	1	TEE	
	5	2	*165-2273*	1	VALVE GP-SHUTOFF (RETURN MANIFOLD)	
		2	**3K-0360**	1	SEAL-O-RING	
		2	**6V-7238**	1	VALVE-SHUTOFF	
Y	6	2	**185-5209**	1	VALVE GP-PRESSURE REDUCING (PILOT OIL)	465
I	7	1	**214-7094**	1	HOSE AS	
	8	2	**219-7845**	1	PLATE AS	
		2	**4H-4063**	1	PIN	
		2	**009-4499**	1	PIN-ALIGNMENT	
M		2	**6V-9632**	1	NUT-WELD (M6X1-THD)	
M		2	**8T-3490**	1	NUT-WELD (M10X1.5-THD)	
Y	9	1	*243-4398*	1	ACCUMULATOR GP-PILOT OIL (CHARGED)	330
I	10	1	**252-2374**	1	HOSE AS	
I	11	1	**252-2375**	1	HOSE AS	
I	12	1	**265-2167**	1	HOSE AS	
I	13	1	**303-1251**	1	HOSE AS	
I	14	1	**303-3126**	1	HOSE AS	
	15	2	*148-8307*	1	ADAPTER AS	
		2	**3J-1907**	1	SEAL-O-RING	
		2	**5P-8874**	1	ADAPTER	
	16	2	*148-8318*	1	CONNECTOR AS	
		2	**3K-0360**	1	SEAL-O-RING	
		2	**6V-8397**	1	SEAL-O-RING	
		2	**6V-8634**	1	CONNECTOR	
	17	1	*148-8336*	1	CONNECTOR AS	
		1	**3J-1907**	1	SEAL-O-RING	
		1	**6V-8397**	1	SEAL-O-RING	
		1	**6V-8636**	1	CONNECTOR	
	18	1	*148-8353*	1	ELBOW AS	
		1	**3J-1907**	1	SEAL-O-RING	
		1	**6V-8397**	1	SEAL-O-RING	
		1	**6V-9001**	1	ELBOW	
	19	1	*148-8363*	1	ELBOW AS	
		1	**3K-0360**	1	SEAL-O-RING	
		1	**6V-8397**	1	SEAL-O-RING	
		1	**6V-9876**	1	ELBOW	
	20	2	**148-8367**	1	ELBOW AS	
		2	**6V-8397**	1	SEAL-O-RING	
		2	**6V-9850**	1	ELBOW	
	21	2	*148-8378*	2	ELBOW AS	
					(EACH INCLUDES)	
		2	**3J-1907**	1	SEAL-O-RING	
		2	**6V-8397**	1	SEAL-O-RING	
		2	**6V-8724**	1	ELBOW	
	22	2	*148-8433*	3	TEE AS	
					(EACH INCLUDES)	
		2	**6V-8397**	2	SEAL-O-RING	
		2	**6V-9836**	1	TEE-SWIVEL	
	23	2	*148-8436*	1	TEE AS	
		2	**3K-0360**	1	SEAL-O-RING	
		2	**6V-8398**	2	SEAL-O-RING	

289-8796 **LINES GP-PILOT** *(contd.)* **i03511200**

NOTE	REF NO	GRAPHIC REF	PART NUMBER	QTY	PART NAME 1 2 3 4 5 6 (PRODUCT LEVEL)	SEE PAGE
		2	**6V-8775**	1	TEE-FACE SEAL	
	24	2	*148-8444*	1	TEE AS-SWIVEL	
		2	**6V-8398**	2	SEAL-O-RING	
		2	**6V-9837**	1	TEE-SWIVEL	
	25	1	*150-4043*	1	CONNECTOR AS	
		1	**3J-1907**	1	SEAL-O-RING	
		1	**6V-8398**	1	SEAL-O-RING	
		1	**6V-9873**	1	CONNECTOR	
	26	2	*164-5567*	2	COUPLER AS-QUICK DISCONNECT	
					(EACH INCLUDES)	
		2	**3J-1907**	1	SEAL-O-RING	
		2	**6V-3965**	1	FITTING (QUICK DISCONNECT)	
	27	1,2	**7X-7729**	3	WASHER (11X25X3-MM THK)	
	28	1,2	**8T-4121**	3	WASHER-HARD (11X21X2.5-MM THK)	
M	29	1	**8T-4133**	1	NUT (M10X1.5-THD)	
M	30	2	**8T-4136**	1	BOLT (M10X1.5X25-MM)	
M	31	2	**8T-4137**	1	BOLT (M10X1.5X20-MM)	
M	32	1	**8T-4172**	1	BOLT (M10X1.5X80-MM)	
M	33	1	**8T-4195**	2	BOLT (M10X1.5X30-MM)	
B	34	2	**6V-9829**	2	CAP AS	

B-USE AS REQUIRED
I-REFER TO HYDRAULIC INFORMATION SYSTEM
M-METRIC PART
Y-SEPARATE ILLUSTRATION

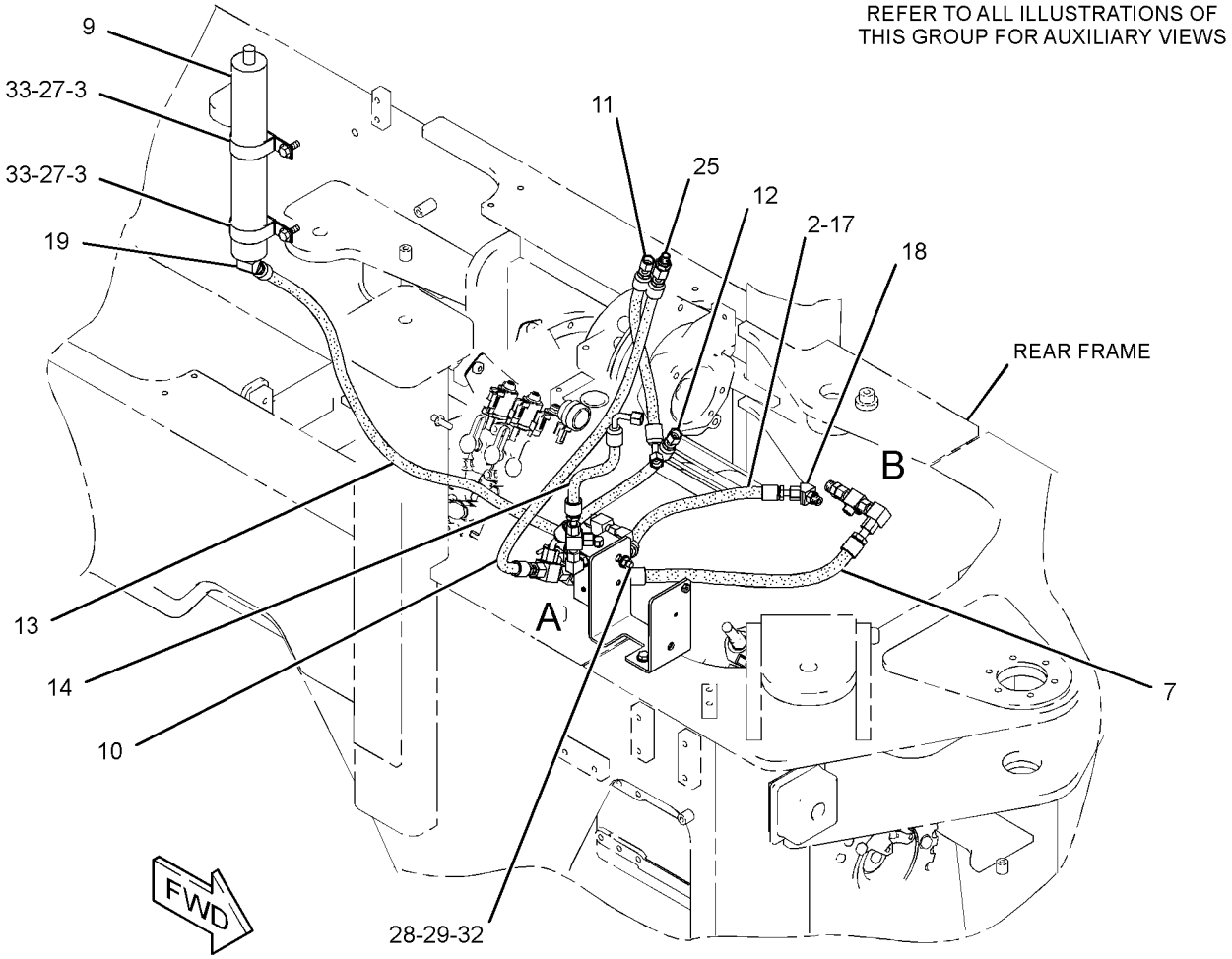

GRAPHIC #1 g01404188

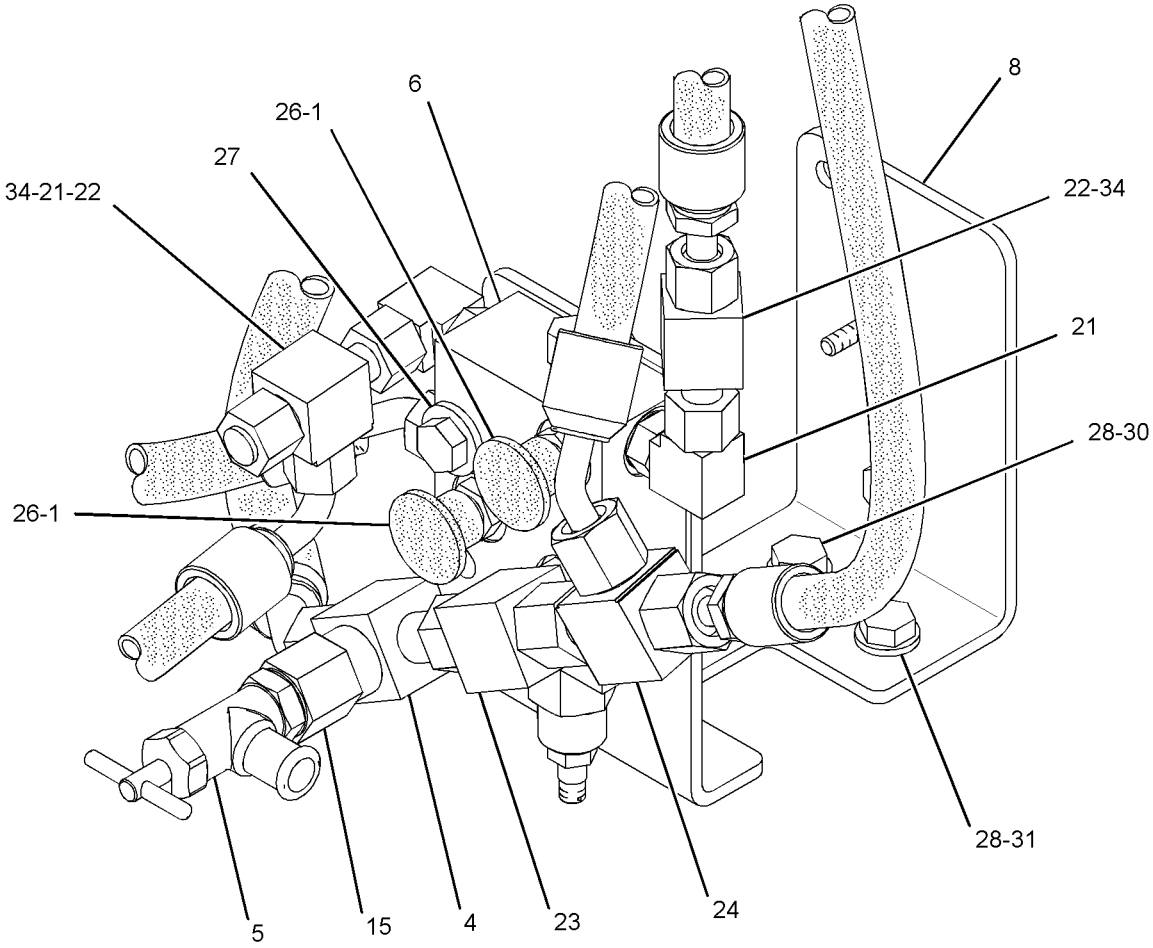

VIEW OF AREA A

90°

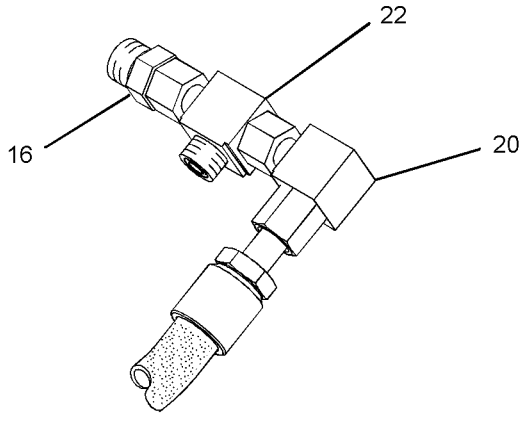

VIEW OF AREA B

GRAPHIC #2

<END>

g01404193

HYDRAULIC SYSTEM

290-7184 LINES GP-RIDE CONTROL

S/N: KLN1-UP
PART OF 289-8995 CONTROL AR-RIDE
AN ATTACHMENT

SMCS-5004, 5057, 5077 **i03440460**

NOTE	REF NO	GRAPHIC REF	PART NUMBER	QTY	PART NAME 1 2 3 4 5 6 (PRODUCT LEVEL)	SEE PAGE
M	1	1	**101-3129**	1	STUD (M10X1.5-THD)	
I	2	1	**103-1243**	2	HOSE AS	
	3	1	**328-2973**	1	SWITCH GP-PRESSURE (RIDE CONTROL DISABLE)	
		1	**186-3735**	2	PIN-CONNECTOR (16-GA TO 18-GA)	
		1	**102-8802**	1	KIT-RECEPTACLE (2-PIN)	
					(INCLUDES RECEPTACLE AS & WEDGE)	
	4	1	*148-8424*	1	TEE AS	
		1	**6V-8397**	1	SEAL-O-RING	
		1	**8T-8902**	1	TEE	
I	5	1	**149-0197**	1	HOSE AS	
	6	1	*165-6365*	1	FITTING AS	
		1	**3J-1907**	1	SEAL-O-RING	
		1	**7W-7381**	1	FITTING-OUTLET	
	7	1	*168-1968*	1	TEE AS	
		1	**3J-1907**	1	SEAL-O-RING	
		1	**6V-8397**	1	SEAL-O-RING	
		1	**126-6872**	1	TEE	
	8	1	**200-6345**	3	MOUNT (DUAL SWIVEL)	
	9	1	**204-2281**	8	STRAP-TIE	
	10	1	**224-7830**	1	FILM-WARNING (HIGH PRESSURE, READ OMM, U.S.)	
					—OR—	
			224-0672	1	FILM-WARNING (HIGH PRESSURE, READ OMM, INTL)	
I	11	1	**250-6792**	1	HOSE AS	
I	12	1	**293-2458**	1	HOSE AS	
	13	1	**294-2858**	1	PLATE AS	
	14	1	*309-5127*	1	ELBOW AS	
		1	**6V-8397**	1	SEAL-O-RING	
		1	**152-3411**	1	ELBOW	
	15	1	*148-8315*	3	CONNECTOR AS	
					(EACH INCLUDES)	
		1	**2M-9780**	1	SEAL-O-RING	
		1	**6V-8642**	1	CONNECTOR	
		1	**7J-9108**	1	SEAL-O-RING	
	16	1	*148-8336*	1	CONNECTOR AS	
		1	**3J-1907**	1	SEAL-O-RING	
		1	**6V-8397**	1	SEAL-O-RING	
		1	**6V-8636**	1	CONNECTOR	
	17	1	*148-8367*	2	ELBOW AS	
					(EACH INCLUDES)	
		1	**6V-8397**	1	SEAL-O-RING	
		1	**6V-9850**	1	ELBOW	
	18	1	*148-8390*	2	ELBOW AS	
					(EACH INCLUDES)	
		1	**2M-9780**	1	SEAL-O-RING	
		1	**6V-8626**	1	ELBOW	
		1	**7J-9108**	1	SEAL-O-RING	
	19	1	*148-8393*	3	ELBOW AS	
					(EACH INCLUDES)	
		1	**6V-9852**	1	ELBOW	
		1	**7J-9108**	1	SEAL-O-RING	
	20	1	*198-0143*	1	ELBOW AS	
		1	**7J-9108**	1	SEAL-O-RING	
		1	**157-2348**	1	ELBOW	
	22	1	**3J-1907**	1	SEAL-O-RING	
M	23	1	**8T-4133**	1	NUT (M10X1.5-THD)	

290-7184 **LINES GP-RIDE CONTROL** *(contd.)* **i03440460**

NOTE	REF NO	GRAPHIC REF	PART NUMBER	QTY	PART NAME 1 2 3 4 5 6 (PRODUCT LEVEL)	SEE PAGE
	24	1	**6V-1889**	2	CLIP	
	25	1	**7D-1649**	1	WASHER-HARD (13.5X32X5-MM THK)	
	26	1	**7S-1912**	1	CLIP	
	27	1	**7X-7729**	4	WASHER (11X25X3-MM THK)	
	28	1	**8T-4121**	2	WASHER-HARD (11X21X2.5-MM THK)	
M	29	1	**8T-4195**	4	BOLT (M10X1.5X30-MM)	

I-REFER TO HYDRAULIC INFORMATION SYSTEM
M-METRIC PART

290-7184 **LINES GP-RIDE CONTROL** *(contd.)* **i03440460**

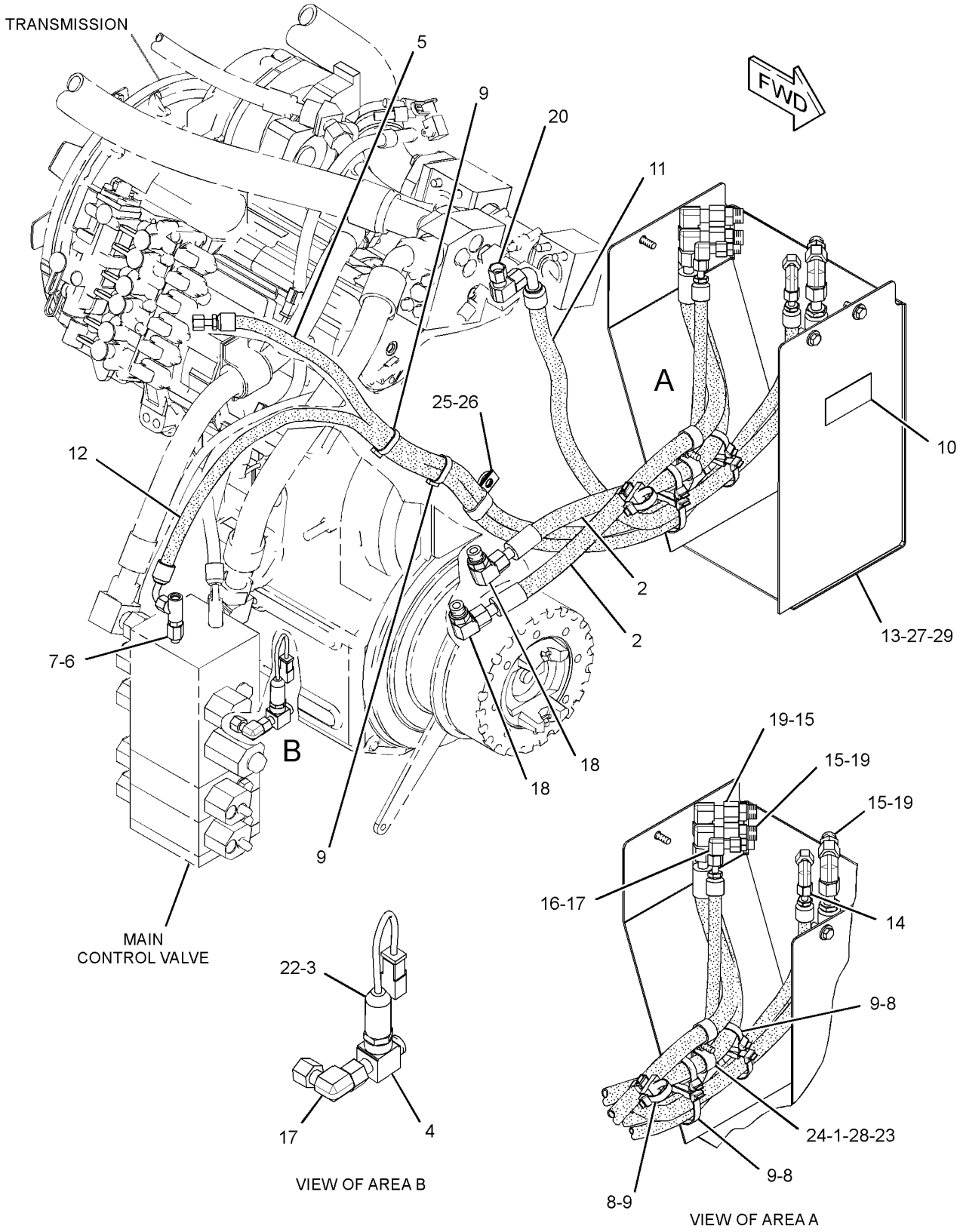

GRAPHIC #1 **<END>** g01443285

HYDRAULIC SYSTEM

289-8795 LINES GP-TILT CYLINDER

S/N: KLN1-UP

PART OF 289-8833 HYDRAULIC AR

SMCS-5057, 5104 **i03302146**

NOTE	REF NO	GRAPHIC REF	PART NUMBER	QTY	PART NAME 1 2 3 4 5 6 (PRODUCT LEVEL)	SEE PAGE
	1	1	**5P-5148**	1	STRAP-TIE	
	2	1	**6V-0852**	2	CAP-DUST	
M	3	1	**8T-5005**	2	BOLT (M10X1.5X70-MM)	
	4	1	**9X-8256**	1	WASHER (6.6X12X2-MM THK)	
	5	1	**8Y-8387**	2	BLOCK	
I	6	1	**086-3757**	1	HOSE AS	
	7	1	*164-5567*	2	COUPLER AS-QUICK DISCONNECT	
					(EACH INCLUDES)	
		1	**3J-1907**	1	SEAL-O-RING	
		1	**6V-3965**	1	FITTING (QUICK DISCONNECT)	
	8	1	**111-6940**	2	SPACER (13.1X15.9X36.5-MM THK)	
I	9	1	**141-9242**	1	HOSE AS	
	10	1	**132-2393**	1	BRACKET	
	11	1	**132-2398**	1	BRACKET	
I	12	1	**132-2399**	1	HOSE AS	
	13	1	**140-9289**	1	PLATE AS	
I	14	1	**153-8072**	1	HOSE AS	
	15	1	*150-3065*	2	ADAPTER AS	
					(EACH INCLUDES)	
		1	**3J-1907**	1	SEAL-O-RING	
		1	**6V-0484**	1	ADAPTER-O-RING	
Y	16	1	**173-4032**	1	VALVE GP-COMBINATION (TILT RELIEF)	428
	17	1	**184-6352**	1	BRACKET	
	18	1	**184-6353**	1	BRACKET	
G	19	1	**160-2248**		SLEEVE-ABRASION (19.1-IN)	
	20	1	**200-6345**	2	MOUNT (DUAL SWIVEL)	
	21	1	**204-2281**	4	STRAP-TIE	
	22	1	**210-5545**	1	TUBE AS	
I	23	1	**214-7096**	1	HOSE AS	
	24	1	**7K-3975**	2	TAG-IDENTIFICATION (LETTER, NUMBER T2)	
	25	1	**221-3206**	1	TUBE AS	
I	26	1	**252-2378**	1	HOSE AS	
I	27	1	**252-2379**	1	HOSE AS	
	28	1	**253-3524**	1	TUBE AS	
	29	1	**253-3526**	1	TUBE AS	
I	30	1	**253-3542**	1	HOSE AS	
I	31	1	**253-3549**	1	HOSE AS	
	32	1	**263-2908**	1	PLATE AS	
	33	1	*148-8316*	1	CONNECTOR AS	
		1	**3J-7354**	1	SEAL-O-RING	
		1	**4J-5477**	1	SEAL-O-RING	
		1	**6V-8647**	1	CONNECTOR	
	34	1	*148-8321*	2	CONNECTOR AS	
					(EACH INCLUDES)	
		1	**3J-1907**	1	SEAL-O-RING	
		1	**6V-8397**	1	SEAL-O-RING	
		1	**8C-0564**	1	CONNECTOR	
	35	1	*148-8329*	1	CONNECTOR AS	
		1	**4K-1388**	1	SEAL-O-RING	
		1	**5K-9090**	1	SEAL-O-RING	
		1	**8T-6453**	1	CONNECTOR	
	36	1	*148-8335*	2	CONNECTOR AS	
					(EACH INCLUDES)	
		1	**5K-9090**	1	SEAL-O-RING	
		1	**6V-8635**	1	CONNECTOR	
		1	**7M-8485**	1	SEAL-O-RING	

289-8795 **LINES GP-TILT CYLINDER** *(contd.)* **i03302146**

NOTE	REF NO	GRAPHIC REF	PART NUMBER	QTY	PART NAME 1 2 3 4 5 6 (PRODUCT LEVEL)	SEE PAGE
	37	1	*148-8336*	2	CONNECTOR AS	
					(EACH INCLUDES)	
		1	**3J-1907**	1	SEAL-O-RING	
		1	**6V-8397**	1	SEAL-O-RING	
		1	**6V-8636**	1	CONNECTOR	
	38	1	*148-8340*	2	CONNECTOR AS	
					(EACH INCLUDES)	
		1	**3K-0360**	1	SEAL-O-RING	
		1	**6V-8398**	1	SEAL-O-RING	
		1	**6V-8639**	1	CONNECTOR	
	39	1	*148-8345*	1	CONNECTOR AS	
		1	**2M-9780**	1	SEAL-O-RING	
		1	**6V-8398**	1	SEAL-O-RING	
		1	**6V-8638**	1	CONNECTOR	
	40	1	*148-8351*	1	ELBOW AS	
		1	**4J-5477**	1	SEAL-O-RING	
		1	**6V-9849**	1	ELBOW	
	41	1	*148-8428*	1	TEE AS	
		1	**3K-0360**	1	SEAL-O-RING	
		1	**6V-8398**	2	SEAL-O-RING	
		1	**6V-8782**	1	TEE	
	42	1	*164-5577*	2	ELBOW AS	
					(EACH INCLUDES)	
		1	**5K-9090**	2	SEAL-O-RING	
		1	**6V-8984**	1	ELBOW	
	43	1	*174-6118*	1	ELBOW AS	
		1	**1J-9671**	1	SEAL-O-RING	
		1	**4J-5477**	1	SEAL-O-RING	
		1	**100-7603**	1	ELBOW	
	44	1	**4J-0520**	1	SEAL-O-RING	
	45	1	**5K-9090**	4	SEAL-O-RING	
	46	1	**5P-7468**	1	CLIP (SLOT)	
	47	1	**5P-7469**	1	CLIP (TAB)	
	48	1	**5P-8444**	1	GROMMET	
	49	1	**6V-9172**	4	NUT (1-7/16-12-THD)	
	50	1	**6V-9830**	1	CAP AS	
M	51	1	**7X-2534**	1	BOLT (M6X1X50-MM)	
	52	1	**7X-7729**	10	WASHER (11X25X3-MM THK)	
	53	1	**8C-3206**	2	FLANGE-HALF	
	54	1	**8T-1889**	2	CLIP (SLOT)	
	55	1	**8T-1890**	2	CLIP (TAB)	
	56	1	**8T-4121**	10	WASHER-HARD (11X21X2.5-MM THK)	
M	57	1	**8T-4136**	9	BOLT (M10X1.5X25-MM)	
M	58	1	**8T-4186**	2	BOLT (M10X1.5X40-MM)	
M	59	1	**8T-4195**	5	BOLT (M10X1.5X30-MM)	
	60	1	**7K-3974**	2	TAG-IDENTIFICATION (LETTER, NUMBER T1)	

G-ORDER BY THE INCH
I-REFER TO HYDRAULIC INFORMATION SYSTEM
M-METRIC PART
Y-SEPARATE ILLUSTRATION

289-8795 **LINES GP-TILT CYLINDER** *(contd.)* **i03302146**

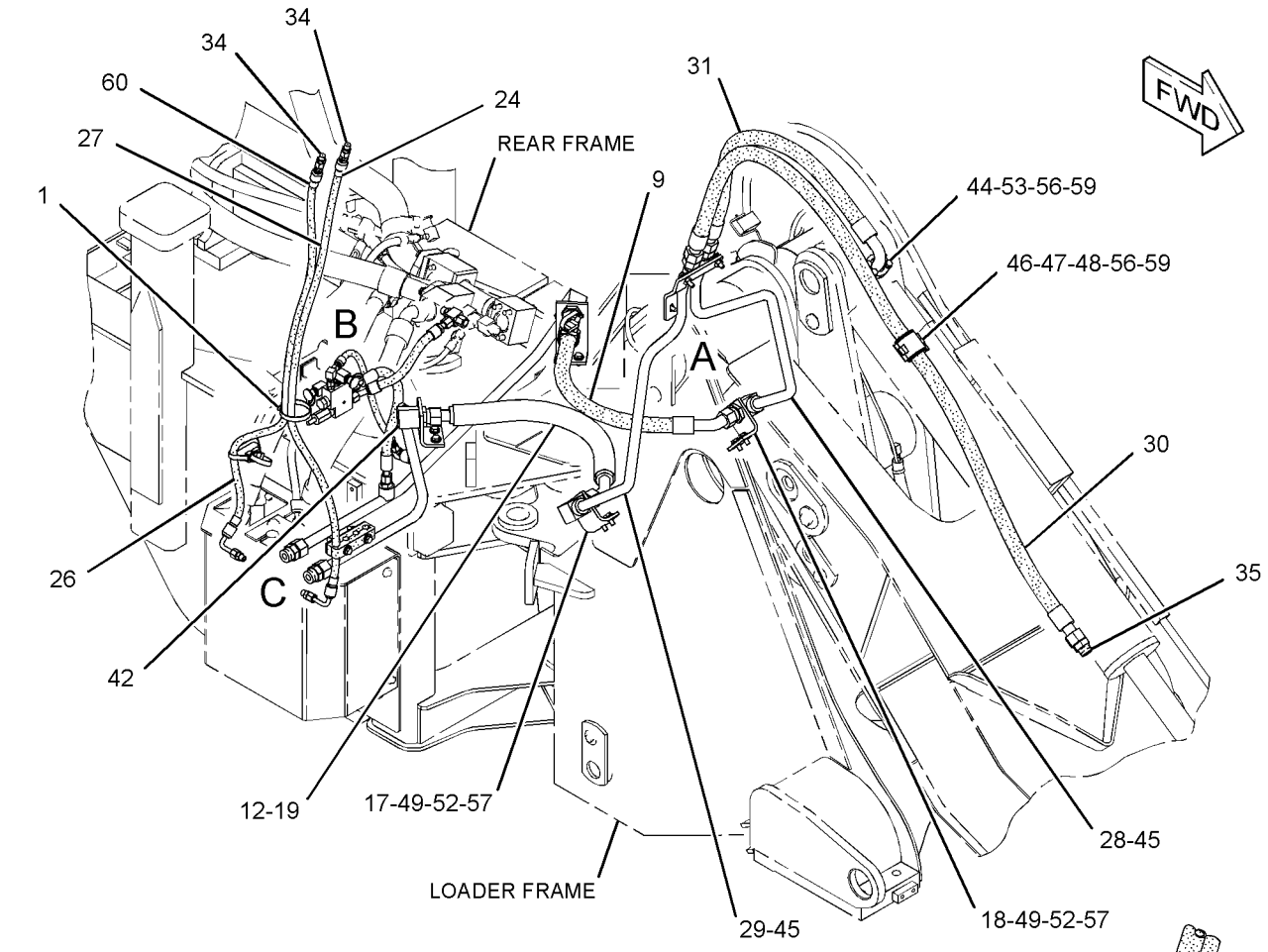

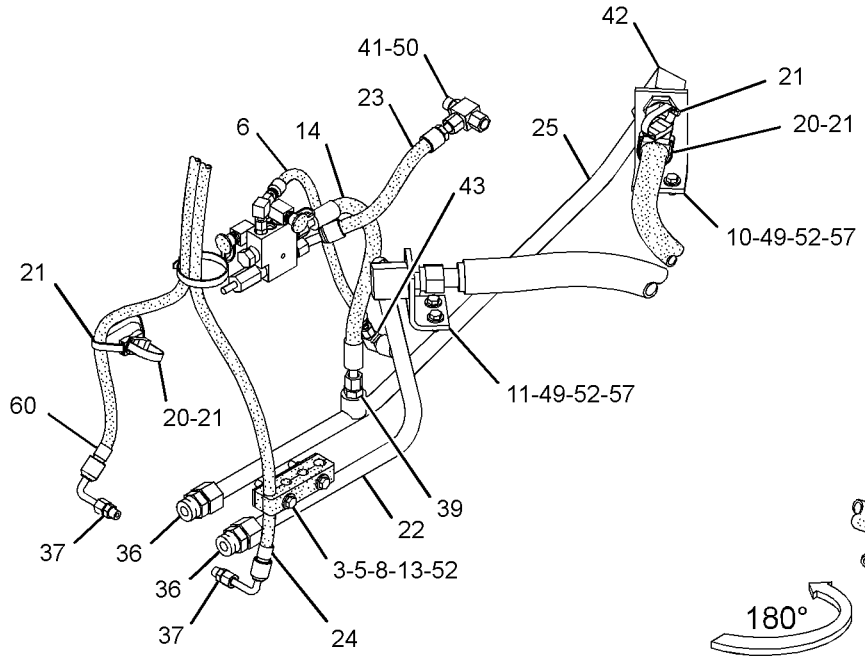

VIEW OF AREA C

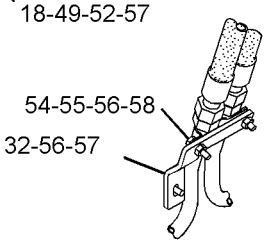

VIEW OF AREA A

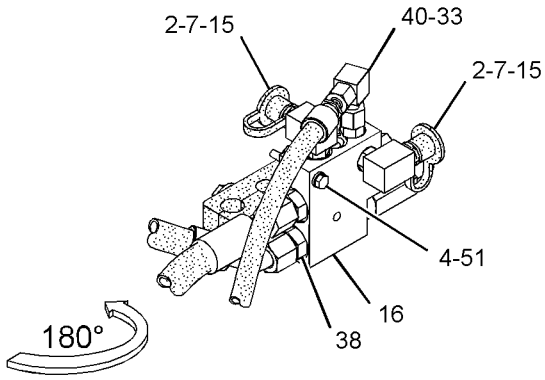

VIEW OF AREA B

GRAPHIC #1 **<END>** g01800779

HYDRAULIC SYSTEM

233-2549 MANIFOLD GP-CONTROL–QUICK COUPLER

S/N: KLN1-UP
24 VOLT
PART OF 296-6812 LINES GP-COUPLER
AN ATTACHMENT

SMCS-4264, 5072, 5264, 5467, 5479 **i03629300**

NOTE	REF NO	GRAPHIC REF	PART NUMBER	QTY	PART NAME 1 2 3 4 5 6 (PRODUCT LEVEL)	SEE PAGE
J	1	1	**249-7863**	1	VALVE GP-SOLENOID (24-VOLT) (QUICK COUPLER)	
		1	**250-6148**	2	COIL AS (24-VOLT)	
	2	1	**249-7859**	2	VALVE GP-SHUTTLE (QUICK COUPLER)	
	3	1	**261-7997**	1	WIRE AS	
					AVAILABLE REPAIR KIT(S):	
J			**106-3108**		KIT-SEAL	
J-KIT MARKED J SERVICES PART(S) MARKED J						

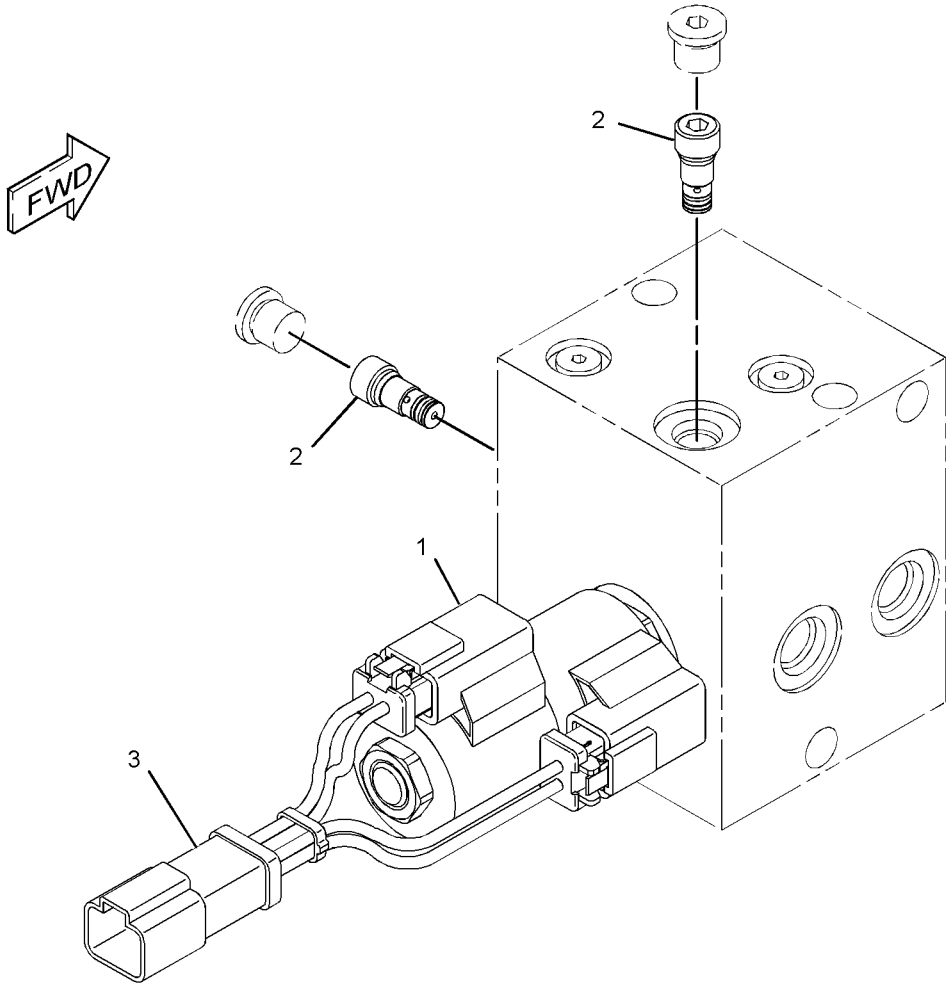

GRAPHIC #1 **<END>** g01190793

289-8964 MOTOR & MTG GP-HYDRAULIC FAN–REVERSING

S/N: KLN1-UP
PART OF 289-8965 MOTOR AR-HYDRAULIC FAN
AN ATTACHMENT

SMCS-1386 **i03038625**

NOTE	REF NO	GRAPHIC REF	PART NUMBER	QTY	PART NAME 1 2 3 4 5 6 (PRODUCT LEVEL)	SEE PAGE
Y	1	1	**289-6394**	1	MOTOR GP-GEAR (REVERSING FAN)	402
	2	1	**8T-4121**	4	WASHER-HARD (11X21X2.5-MM THK)	
M	3	1	**8T-4133**	2	NUT (M10X1.5-THD)	
M	4	1	**8T-4196**	2	BOLT (M10X1.5X35-MM)	

M-METRIC PART
Y-SEPARATE ILLUSTRATION

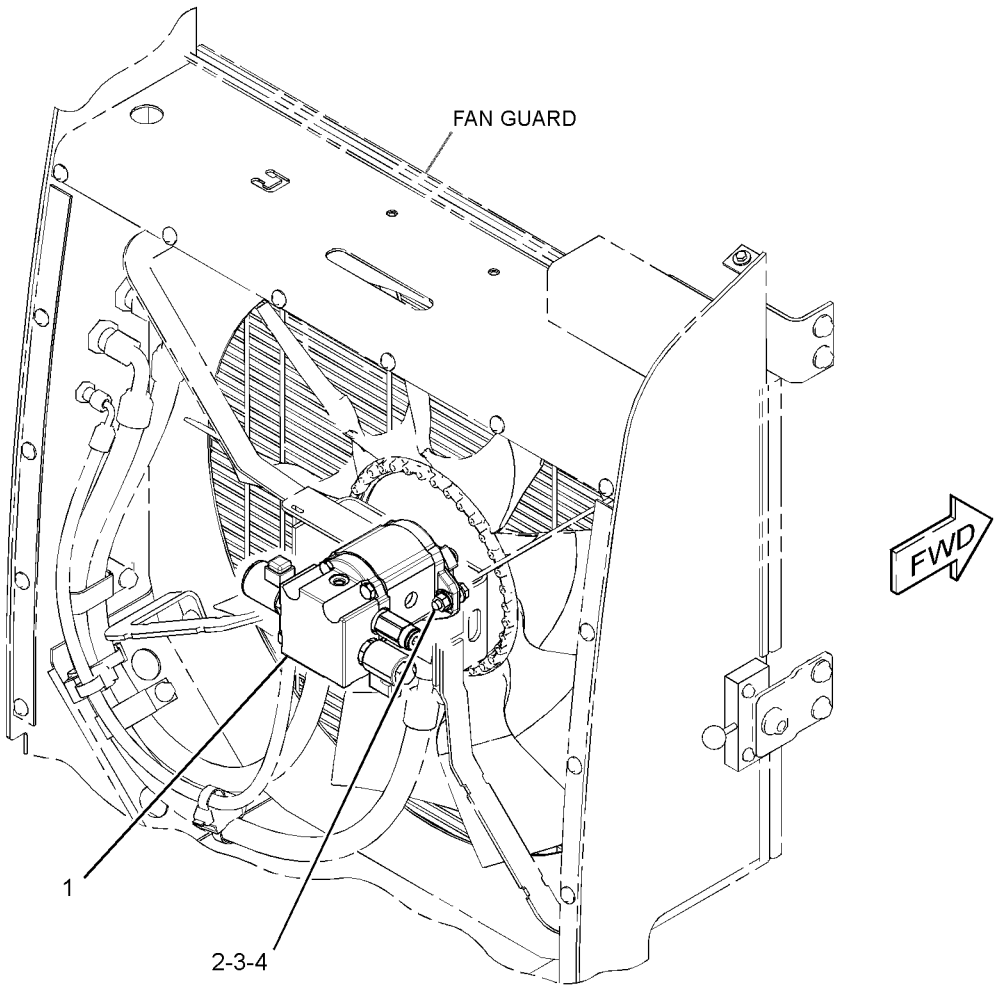

GRAPHIC #1 **<END>** g01543953

289-8963 MOTOR AR-HYDRAULIC FAN—STANDARD

S/N: KLN1-UP
AN ATTACHMENT

SMCS-1386 **i03038626**

NOTE	PART NUMBER	QTY	PART NAME 1 2 3 4 5 6 (PRODUCT LEVEL)	SEE PAGE
Y	*290-7200*	1	LINES GP-HYDRAULIC FAN (STANDARD)	377
Y	*289-8962*	1	MOTOR GP-GEAR (HYDRAULIC FAN)	403

Y-SEPARATE ILLUSTRATION

<END>

289-8965 MOTOR AR-HYDRAULIC FAN—REVERSING

S/N: KLN1-UP
AN ATTACHMENT

SMCS-1386 **i03038623**

NOTE	PART NUMBER	QTY	PART NAME 1 2 3 4 5 6 (PRODUCT LEVEL)	SEE PAGE
Y	*290-7201*	1	LINES GP-HYDRAULIC FAN (REVERSING)	379
Y	*289-8964*	1	MOTOR & MTG GP-HYDRAULIC FAN (REVERSING)	399

Y-SEPARATE ILLUSTRATION

<END>

289-6393 MOTOR GP-GEAR–HYDRAULIC FAN

S/N: KLN1-UP
PART OF 289-8962 MOTOR GP-GEAR
AN ATTACHMENT

SMCS-1386, 5061 **i03018466**

NOTE	REF NO	GRAPHIC REF	PART NUMBER	QTY	PART NAME 1 2 3 4 5 6 (PRODUCT LEVEL)	SEE PAGE
	1	1	**113-3632**	1	ADAPTER-FAN	
Y	2	1	**211-2092**	1	VALVE GP-SOLENOID (24-VOLT) (HYDRAULIC FAN)	475
	3	1	**087-0991**	1	VALVE AS-CHECK	
	4	1	**2M-2570**	1	LOCKNUT (1/2-20-THD)	
	5	1	**5P-8245**	1	WASHER-HARD (13.5X25.5X3-MM THK)	
Y	6	1	**299-3940**	1	MOTOR GP-GEAR (HYDRAULIC FAN)	405

Y-SEPARATE ILLUSTRATION

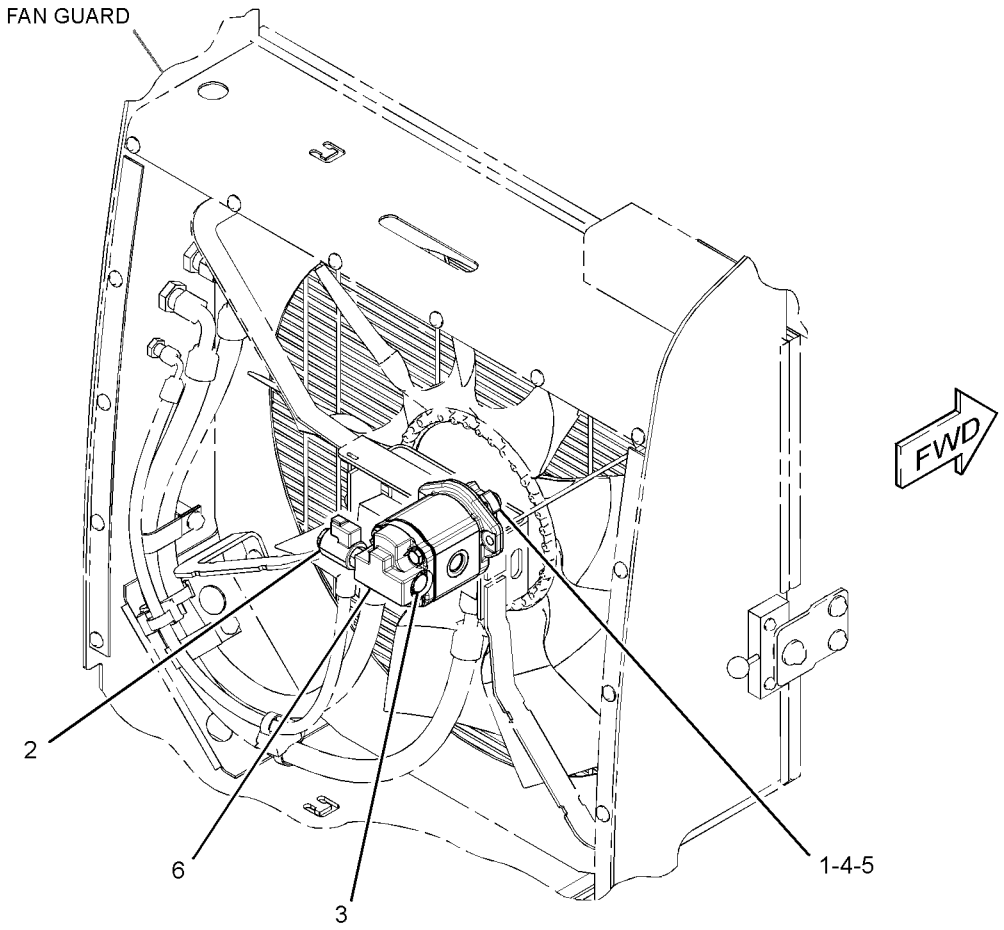

GRAPHIC #1 **<END>** g01548015

289-6394 MOTOR GP-GEAR–REVERSING FAN

S/N: KLN1-UP

PART OF 289-8964 MOTOR & MTG GP-HYDRAULIC FAN

AN ATTACHMENT

SMCS-1386, 5061 **i03038641**

NOTE	REF NO	GRAPHIC REF	PART NUMBER	QTY	PART NAME 1 2 3 4 5 6 (PRODUCT LEVEL)	SEE PAGE
	1	1	**113-3632**	1	ADAPTER-FAN	
Y	2	1	**211-2092**	1	VALVE GP-SOLENOID (24-VOLT) (HYDRAULIC FAN)	475
Y	3	1	**189-2100**	1	VALVE GP-SOLENOID (24-VOLT) (HYDRAULIC FAN)	474
J	4	1	**208-0886**	1	VALVE GP-RELIEF (HYDRAULIC FAN MOTOR)	
	5	1	**087-0991**	1	VALVE AS-CHECK	
	6	1	**2M-2570**	1	LOCKNUT (1/2-20-THD)	
	7	1	**5P-8245**	1	WASHER-HARD (13.5X25.5X3-MM THK)	
Y	8	1	**299-3939**	1	MOTOR GP-GEAR (REVERSING FAN) (BASIC)	404
					AVAILABLE REPAIR KIT(S):	
J			**264-5726**	1	KIT-SEAL	
					(INCLUDES SEAL-O-RINGS & BACK-UP RINGS)	

J-KIT MARKED J SERVICES PARTS MARKED J
Y-SEPARATE ILLUSTRATION

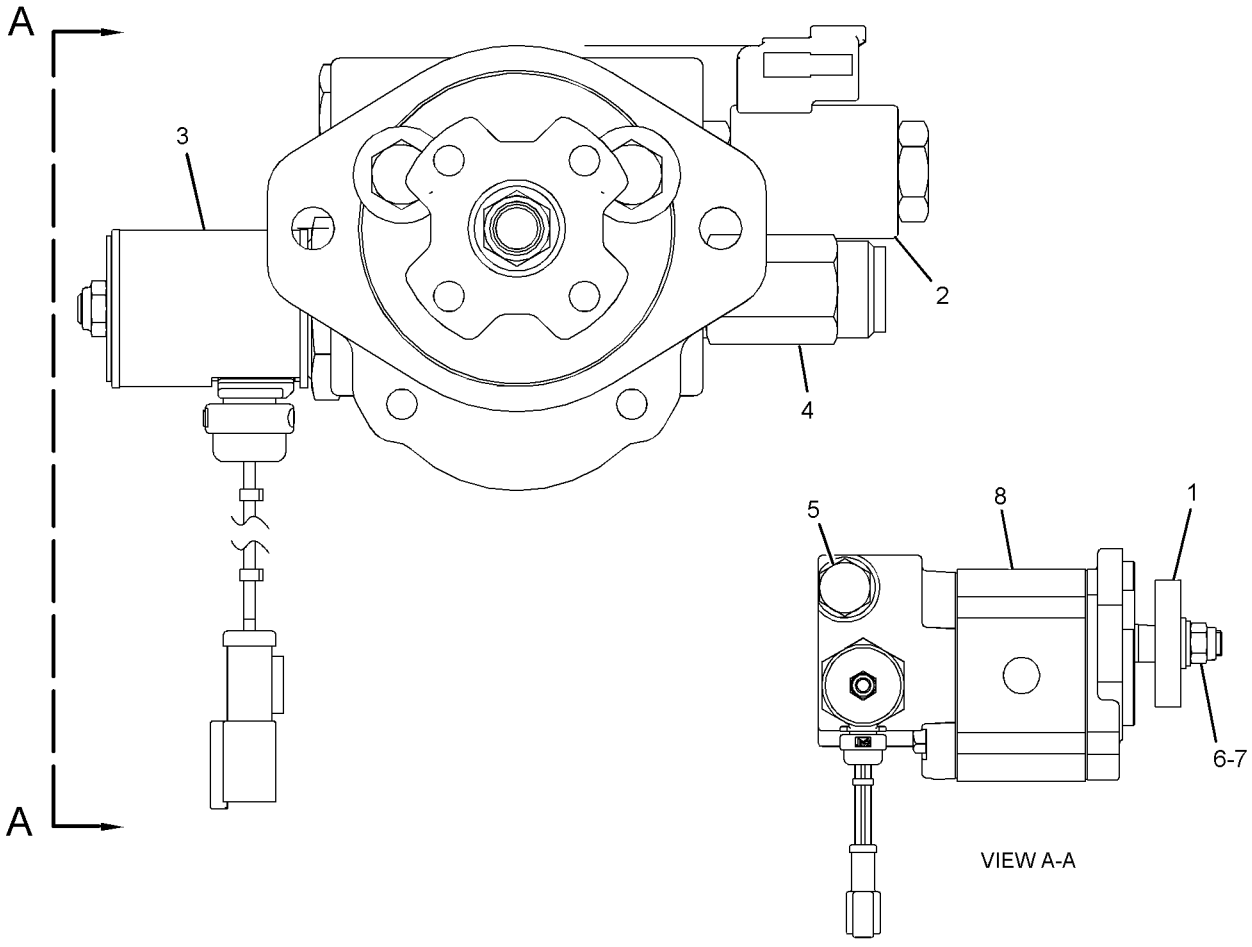

GRAPHIC #1 **<END>** g01410880

289-8962 MOTOR GP-GEAR–HYDRAULIC FAN

S/N: KLN1-UP
PART OF 289-8963 MOTOR AR-HYDRAULIC FAN
AN ATTACHMENT

SMCS-1386, 5061 **i03038627**

NOTE	REF NO	GRAPHIC REF	PART NUMBER	QTY	PART NAME 1 2 3 4 5 6 (PRODUCT LEVEL)	SEE PAGE
Y	1	1	**289-6393**	1	MOTOR GP-GEAR (HYDRAULIC FAN)	401
	2	1	**8T-4121**	4	WASHER-HARD (11X21X2.5-MM THK)	
M	3	1	**8T-4133**	2	NUT (M10X1.5-THD)	
M	4	1	**8T-4196**	2	BOLT (M10X1.5X35-MM)	

M-METRIC PART
Y-SEPARATE ILLUSTRATION

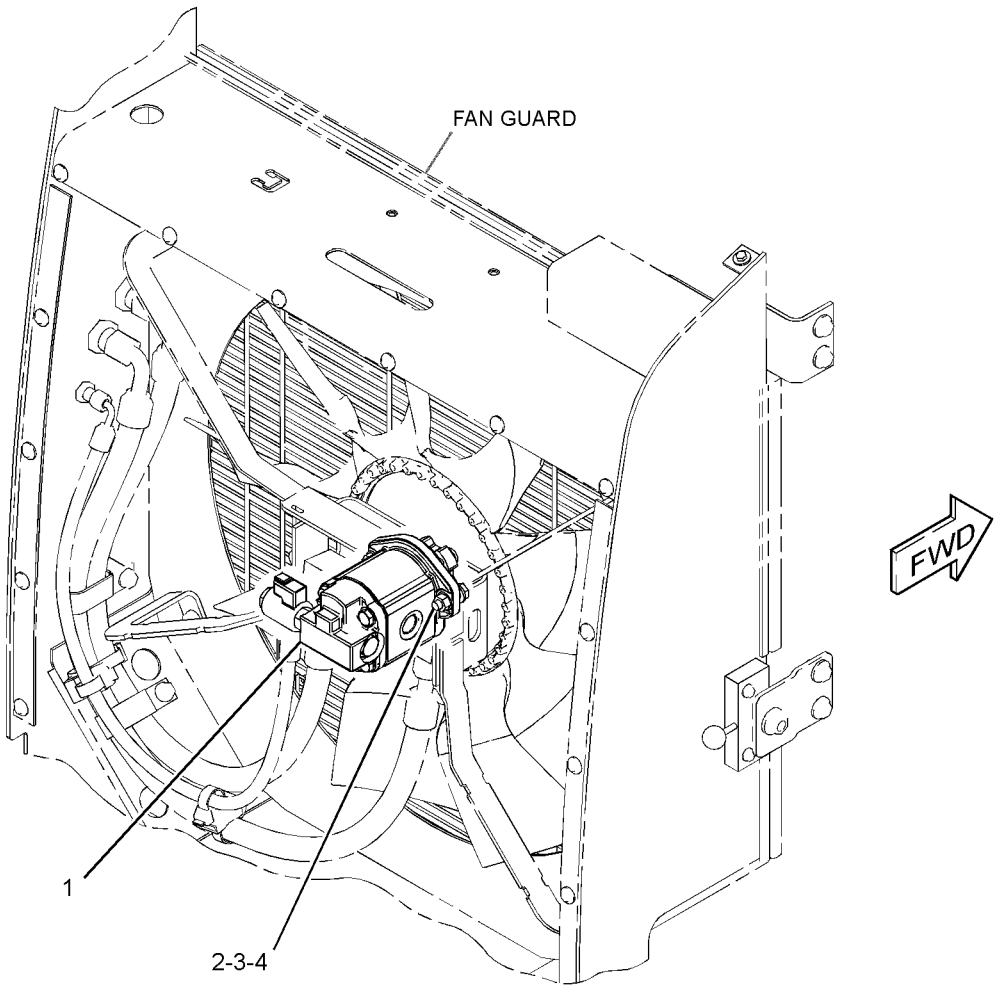

GRAPHIC #1 **<END>** g01543887

HYDRAULIC SYSTEM

299-3939 MOTOR GP-GEAR—REVERSING FAN

S/N: KLN1-UP
PART OF 289-6394 MOTOR GP-GEAR
AN ATTACHMENT

SMCS-1386, 5061 **i03039123**

NOTE	REF NO	GRAPHIC REF	PART NUMBER	QTY	PART NAME 1 2 3 4 5 6 (PRODUCT LEVEL)	SEE PAGE
	1	1	**208-2293**	4	BOLT (M10X1.5X97.8-MM)	
J	2	1	**296-6031**	1	SEAL-LIP TYPE	
J	3	1	**8J-6273**	1	RING-RETAINING	
	4	1	**135-5935**	1	SEAL-SHAFT	
	5	1	**208-0792**	1	FLANGE	
J	6	1	**4W-7356**	2	SEAL-O-RING	
	7	1	**099-3095**	4	DOWEL	
	8	1	**220-2680**	1	CAP-END	
					PARTS SHOWN IN GRAPHIC(S) WITHOUT A REFERENCE NUMBER ARE NOT SERVICED SEPARATELY	
					AVAILABLE REPAIR KIT(S):	
J			**293-5449**	1	KIT-SEAL	
					(ALSO INCLUDES SEAL-SHAFT)	

J-KIT MARKED J INCLUDES PARTS MARKED J

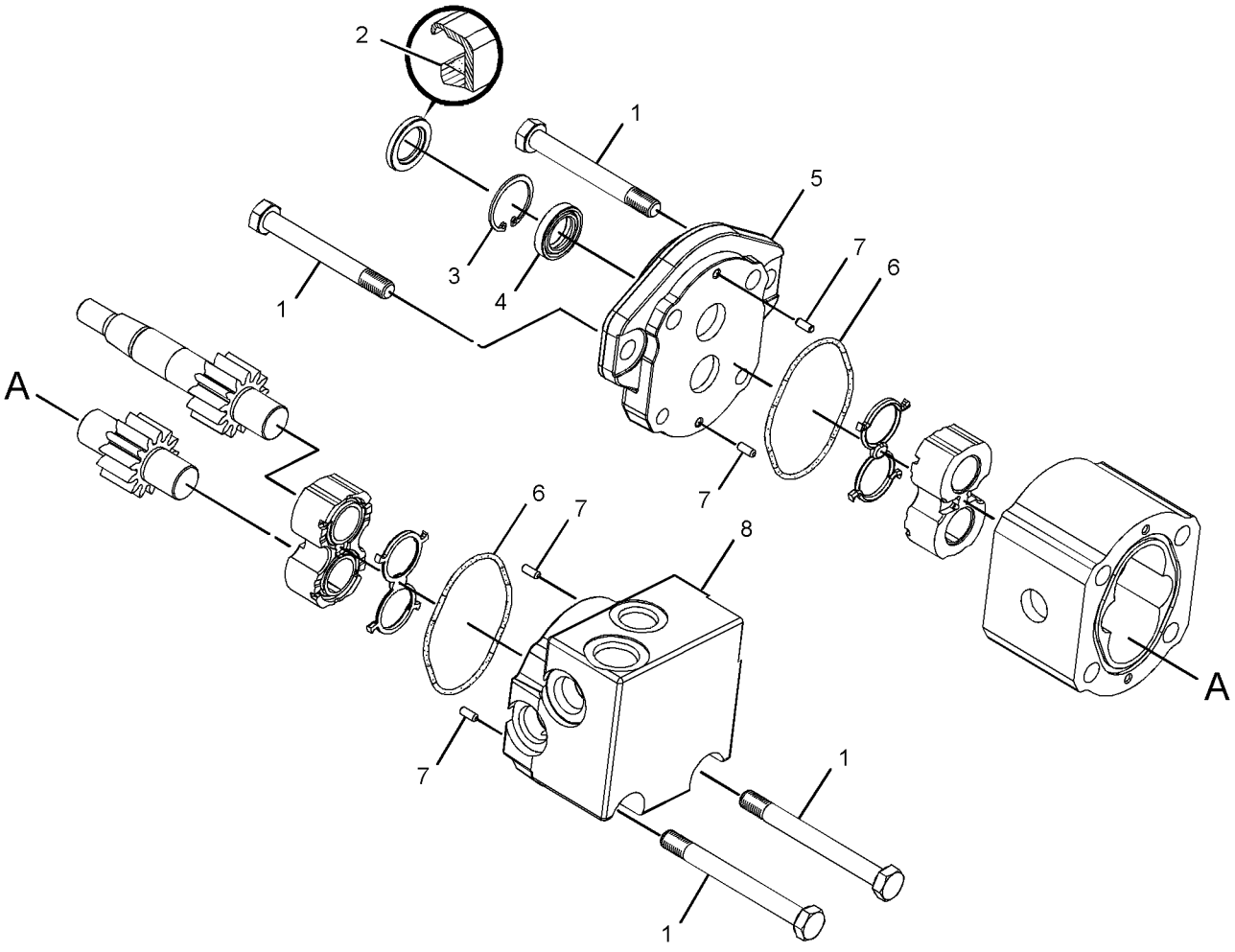

GRAPHIC #1 **<END>** g01405973

299-3940 MOTOR GP-GEAR–HYDRAULIC FAN

S/N: KLN1-UP
PART OF 289-6393 MOTOR GP-GEAR
AN ATTACHMENT

SMCS-1386, 5061 **i03039194**

NOTE	REF NO	GRAPHIC REF	PART NUMBER	QTY	PART NAME 1 2 3 4 5 6 (PRODUCT LEVEL)	SEE PAGE
	1	1	**176-0210**	1	FLANGE	
	2	1	**099-3095**	4	DOWEL	
	3	1	**220-2681**	1	CAP-END	
	4	1	**304-5866**	4	BOLT (M10X1.5X101.6-MM)	
J	5	1	**296-6031**	1	SEAL-LIP TYPE	
J	6	1	**8J-6273**	1	RING-RETAINING	
	7	1	**135-5935**	1	SEAL-SHAFT	
J	8	1	**4W-7356**	2	SEAL-O-RING	
					PARTS SHOWN IN GRAPHIC(S) WITHOUT A REFERENCE NUMBER ARE NOT SERVICED SEPARATELY	
					AVAILABLE REPAIR KIT(S):	
J			**293-5449**	1	KIT-SEAL	
					(ALSO INCLUDES SEAL-SHAFT)	

J-KIT MARKED J INCLUDES PARTS MARKED J

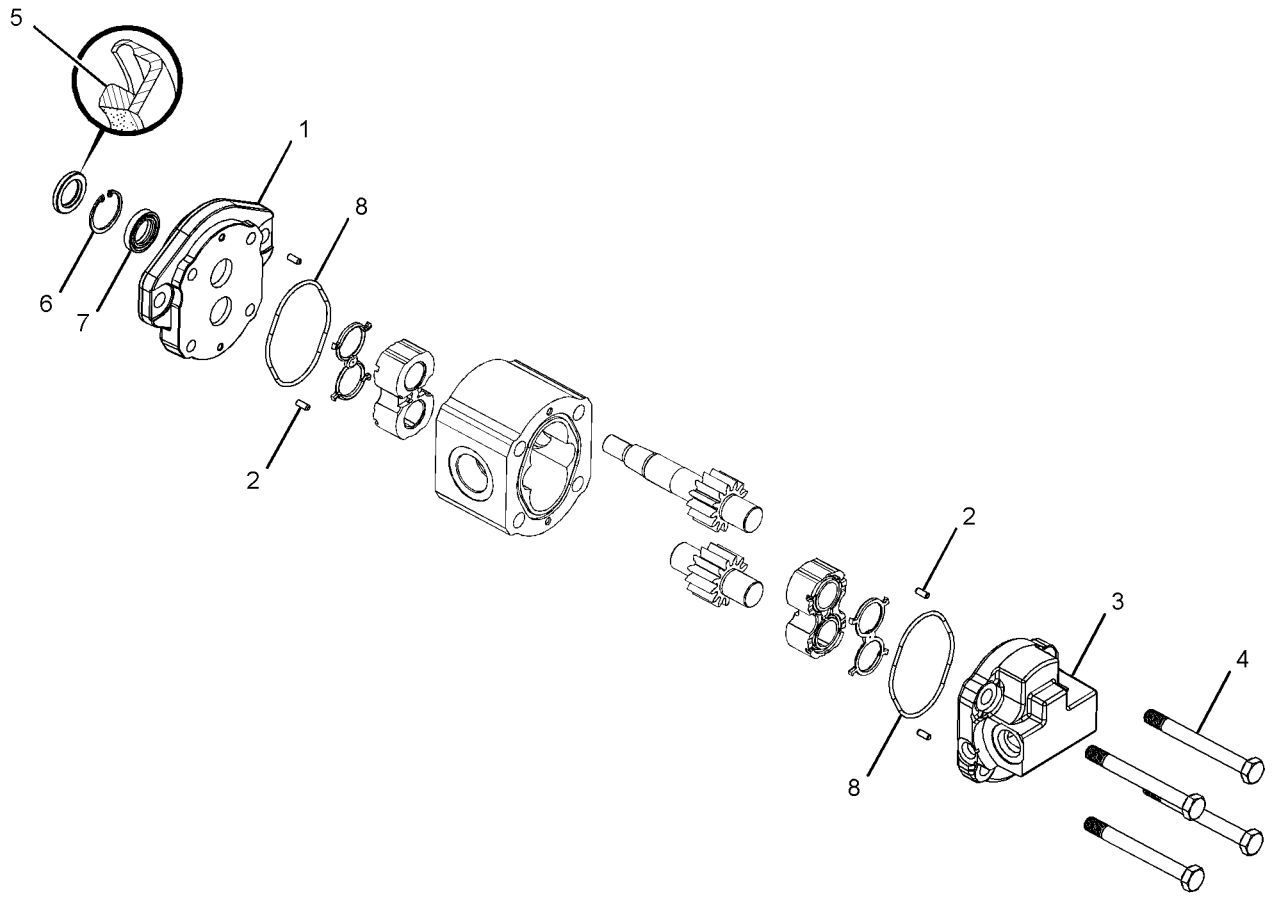

GRAPHIC #1 **<END>** g01391762

HYDRAULIC SYSTEM

211-4767 MOUNTING GP-CONTROL VALVE

S/N: KLN1-UP

PART OF 289-8841 CHASSIS AR

SMCS-5051 **i01754632**

NOTE	REF NO	GRAPHIC REF	PART NUMBER	QTY	PART NAME 1 2 3 4 5 6 (PRODUCT LEVEL)	SEE PAGE
	1	1	**140-9291**	1	COVER	
	2	1	**211-0608**	1	BRACKET AS	
	3	1	**211-0622**	1	BRACKET AS	
	4	1	**5P-1076**	3	WASHER-HARD (13.5X30X4-MM THK)	
	5	1	**7X-7729**	4	WASHER (11X25X3-MM THK)	
	6	1	**8T-4121**	9	WASHER-HARD (11X21X2.5-MM THK)	
M	7	1	**8T-4136**	7	BOLT (M10X1.5X25-MM)	
M	8	1	**8T-4137**	4	BOLT (M10X1.5X20-MM)	
M	9	1	**8T-4192**	1	BOLT (M12X1.75X25-MM)	
M	10	1	**8T-4195**	2	BOLT (M10X1.5X30-MM)	
M	11	1	**8T-4956**	2	BOLT (M12X1.75X35-MM)	

M-METRIC PART

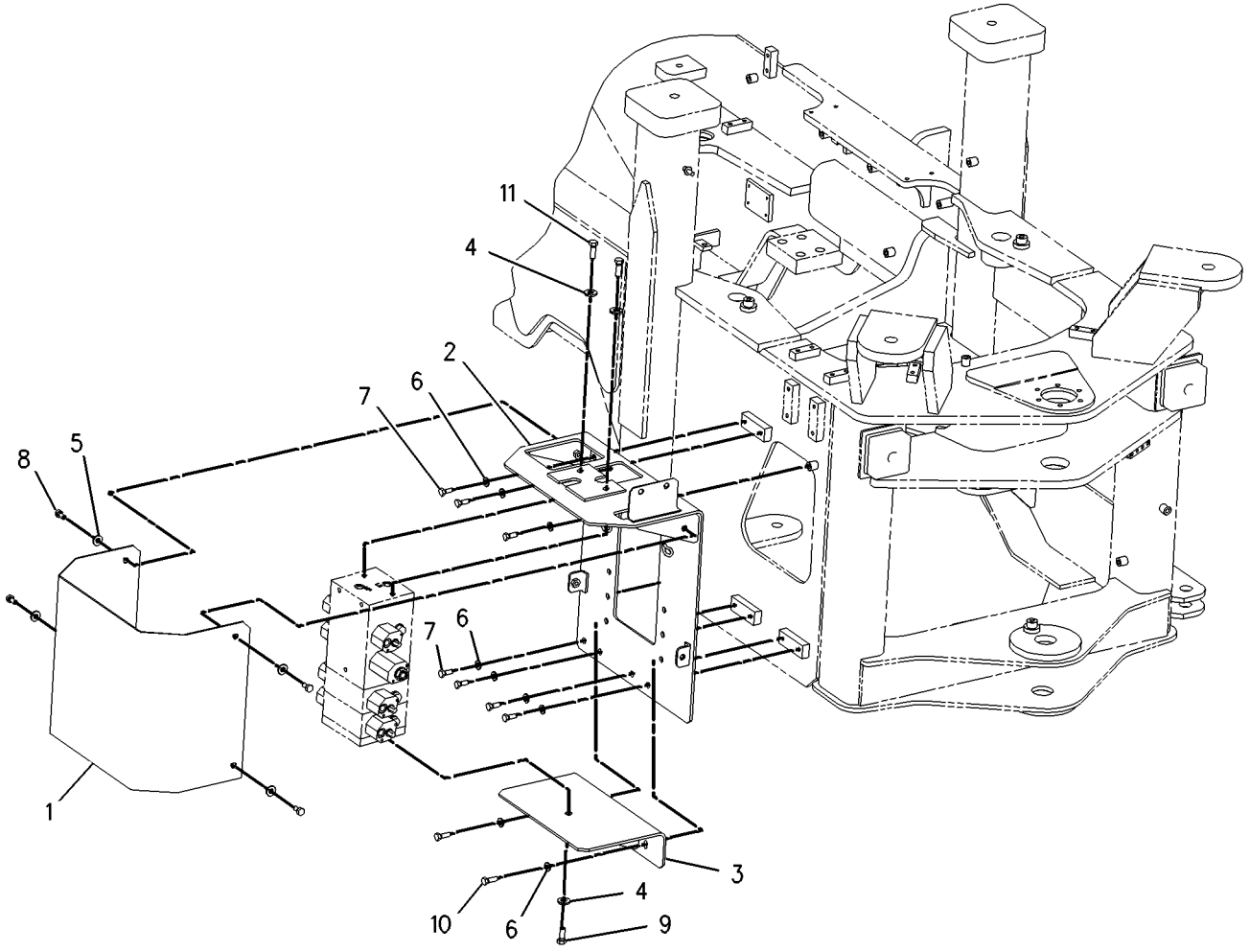

GRAPHIC #1 **<END>** g00857812

145-2322 PIVOT GP-PILOT VALVE–LIFT

S/N: KLN1-UP
PART OF 145-5256 VALVE GP-PILOT
AN ATTACHMENT

SMCS-5059 **i01738563**

NOTE	REF NO	GRAPHIC REF	PART NUMBER	QTY	PART NAME 1 2 3 4 5 6 (PRODUCT LEVEL)	SEE PAGE
	1	1	**139-4189**	1	PLATE	
	2	1	**141-7481**	1	SPACER	
	3	1	**146-3337**	2	PLUNGER AS	
					(EACH INCLUDES)	
		1	**8T-1138**	2	RING-RETAINING	
		1	**131-2639**	1	WASHER (3.2X9X0.5-MM THK)	
	4	1	**146-6315**	2	PIN-ADJUSTMENT	
	5	1	**146-8479**	1	SWIVEL	
	6	1	**153-8941**	1	WASHER	
	7	1	**153-8946**	2	SPRING	
	8	1	**146-6317**	1	RETAINER	
	9	1	**159-3781**	2	SPRING	
M	10	1	**5C-2890**	2	NUT (M6X1-THD)	

M-METRIC PART

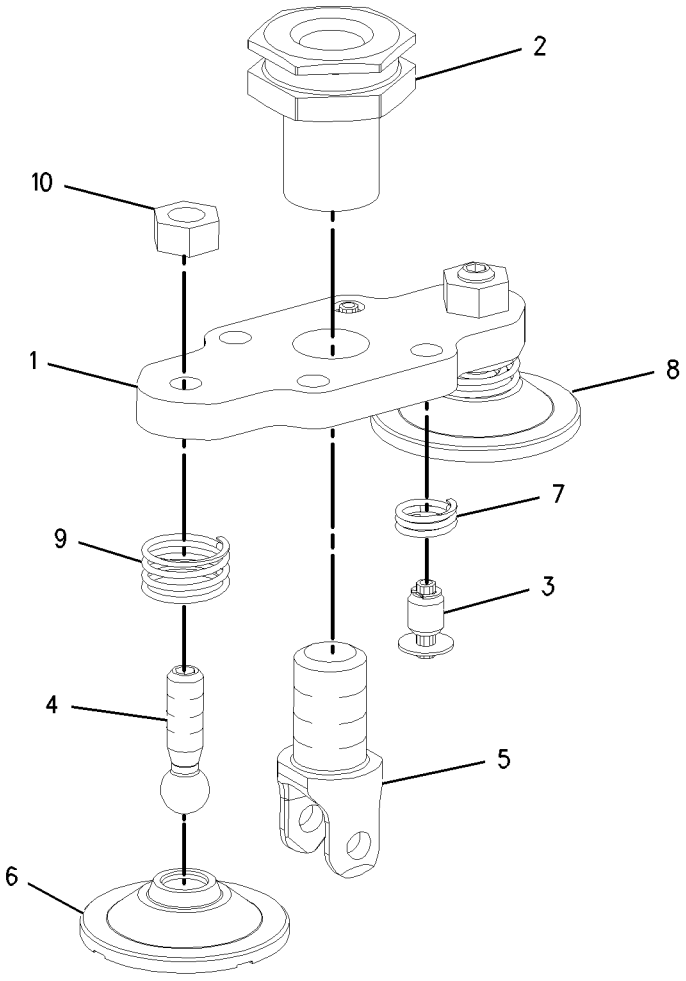

GRAPHIC #1 **<END>** g00890431

HYDRAULIC SYSTEM

147-2038 PIVOT GP-PILOT VALVE–TILT

S/N: KLN1-UP
PART OF 145-5256 VALVE GP-PILOT
AN ATTACHMENT

SMCS-5059 **i01727901**

NOTE	REF NO	GRAPHIC REF	PART NUMBER	QTY	PART NAME 1 2 3 4 5 6 (PRODUCT LEVEL)	SEE PAGE
	1	1	**139-4189**	1	PLATE	
	2	1	**141-7481**	1	SPACER	
	3	1	**146-6315**	2	PIN-ADJUSTMENT	
	4	1	**146-8479**	1	SWIVEL	
	5	1	**153-8941**	1	WASHER	
	6	1	**159-3781**	1	SPRING	
M	7	1	**5C-2890**	2	NUT (M6X1-THD)	

M-METRIC PART

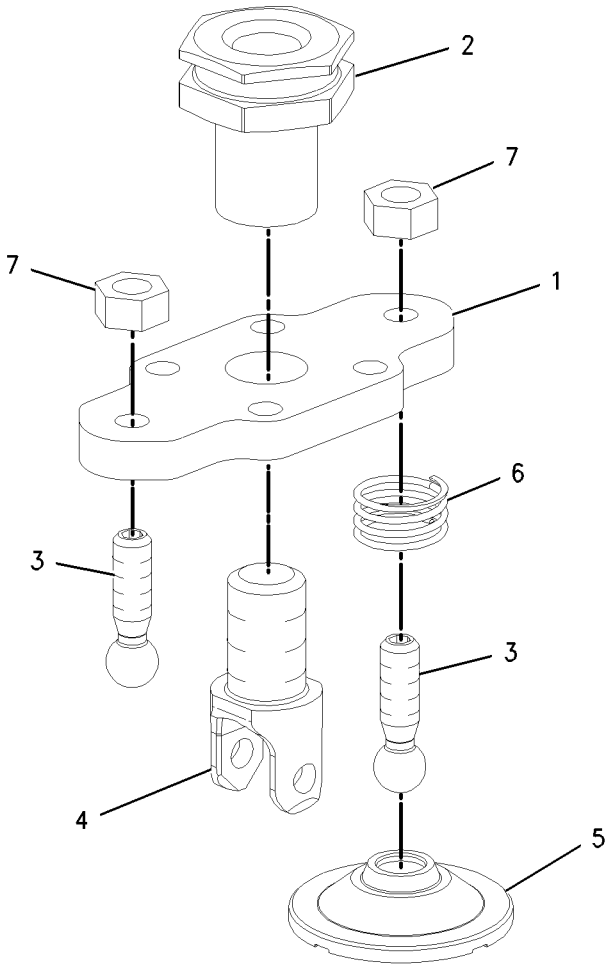

GRAPHIC #1 **<END>** g00890089

147-3114 PIVOT GP-PILOT VALVE–AUXILIARY

S/N: KLN1-UP
PART OF 212-1307 VALVE GP-PILOT
AN ATTACHMENT

SMCS-5059 **i01727871**

NOTE	REF NO	GRAPHIC REF	PART NUMBER	QTY	PART NAME 1 2 3 4 5 6 (PRODUCT LEVEL)	SEE PAGE
	1	1	**139-4189**	1	PLATE	
	2	1	**141-7481**	1	SPACER	
	3	1	**146-8479**	1	SWIVEL	
M	4	1	**178-7877**	2	SETSCREW (M6X1X25-MM)	
M	5	1	**5C-2890**	2	NUT (M6X1-THD)	

M-METRIC PART

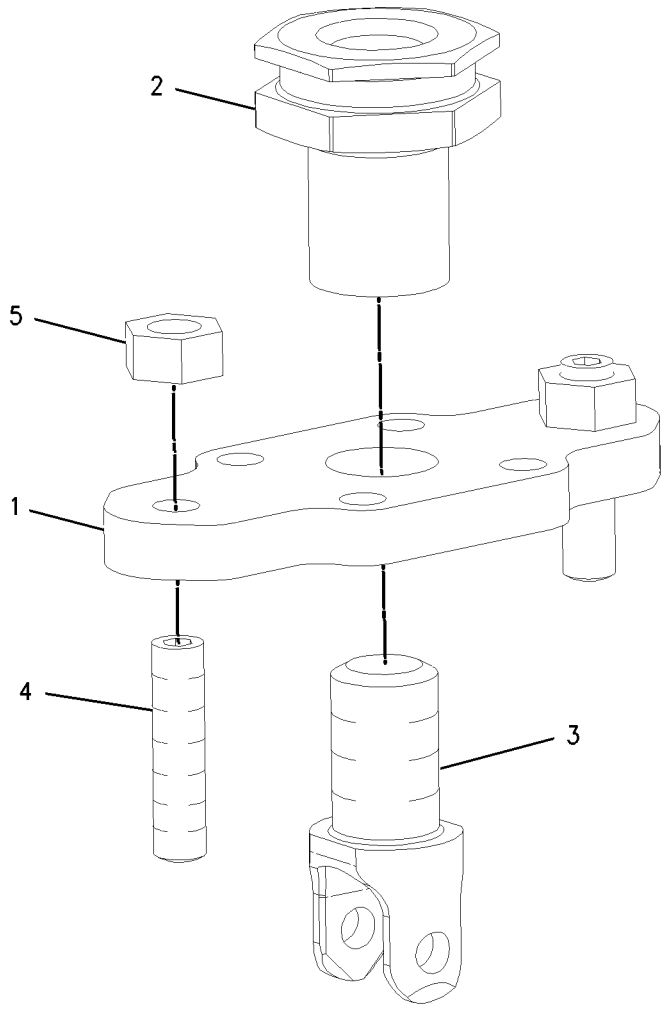

GRAPHIC #1 **<END>** g00890091

175-9443 PIVOT GP-PILOT VALVE–AUXILIARY

S/N: KLN1-UP
PART OF 212-1305, 212-1307 VALVE GP-PILOT
AN ATTACHMENT

SMCS-5059 **i03629310**

NOTE	REF NO	GRAPHIC REF	PART NUMBER	QTY	PART NAME 1 2 3 4 5 6 (PRODUCT LEVEL)	SEE PAGE
	1	1	**139-4189**	1	PLATE	
	2	1	**141-7481**	1	SPACER	
	3	1	**146-3337**	2	PLUNGER AS	
					(EACH INCLUDES)	
		1	**8T-1138**	2	RING-RETAINING	
		1	**131-2639**	2	WASHER (3.2X9X0.5-MM THK)	
	4	1	**146-6315**	1	PIN-ADJUSTMENT	
	5	1	**146-8479**	1	SWIVEL	
	6	1	**153-8946**	2	SPRING	
M	7	1	**178-7877**	1	SETSCREW (M6X1X25-MM)	
	8	1	**146-6317**	1	RETAINER	
	9	1	**159-3781**	1	SPRING	
M	10	1	**5C-2890**	2	NUT (M6X1-THD)	

M-METRIC PART

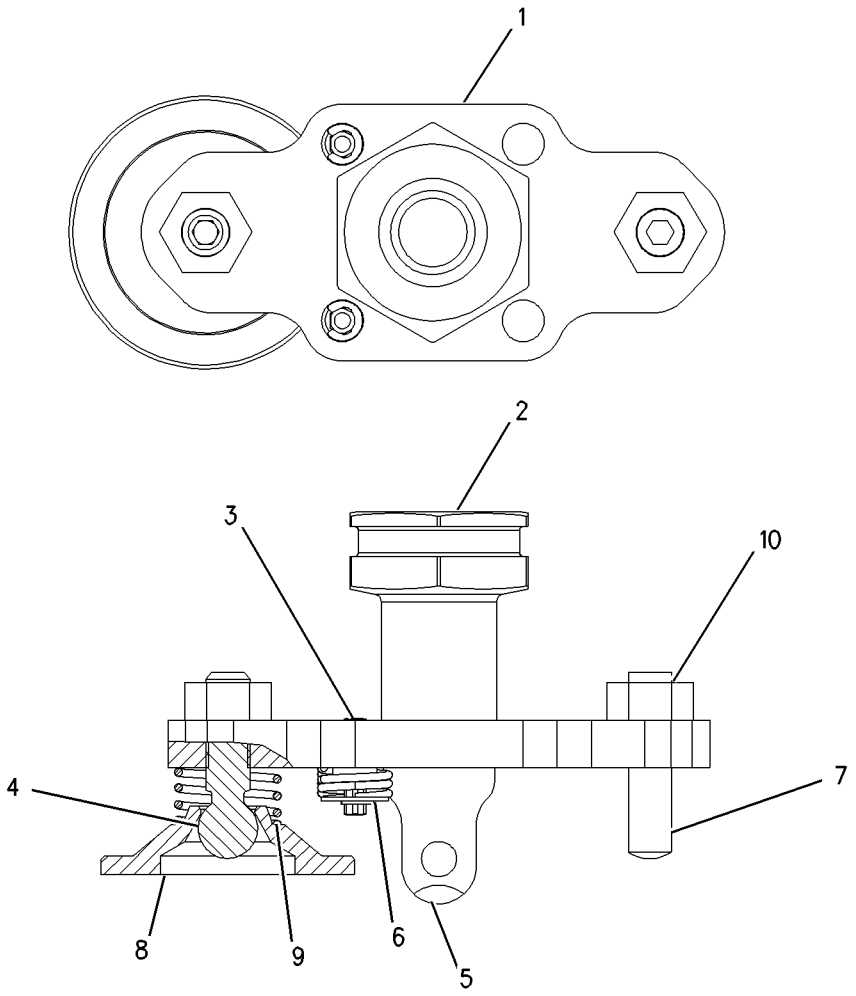

GRAPHIC #1 **<END>** g00683735

147-3322 PLATE GP-PILOT VALVE–JOYSTICK

S/N: KLN1-UP

PART OF 136-9289, 212-1302, 212-1305, 212-1307 VALVE GP-PILOT

AN ATTACHMENT

SMCS-5059 **i01832303**

NOTE	REF NO	GRAPHIC REF	PART NUMBER	QTY	PART NAME 1 2 3 4 5 6 (PRODUCT LEVEL)	SEE PAGE
M	1	1	**5C-2890**	4	NUT (M6X1-THD)	
	2	1	**146-6315**	3	PIN-ADJUSTMENT	
	3	1	**153-8945**	3	PLUNGER AS	
					(EACH INCLUDES)	
		1	**3H-7180**	1	SETSCREW (1/4-28X0.25-IN)	
		1	**6J-9996**	1	SPRING	
M	4	1	**178-7877**	1	SETSCREW (M6X1X25-MM)	
	5	1	**146-6317**	3	RETAINER	
	6	1	**159-3781**	3	SPRING	

M-METRIC PART

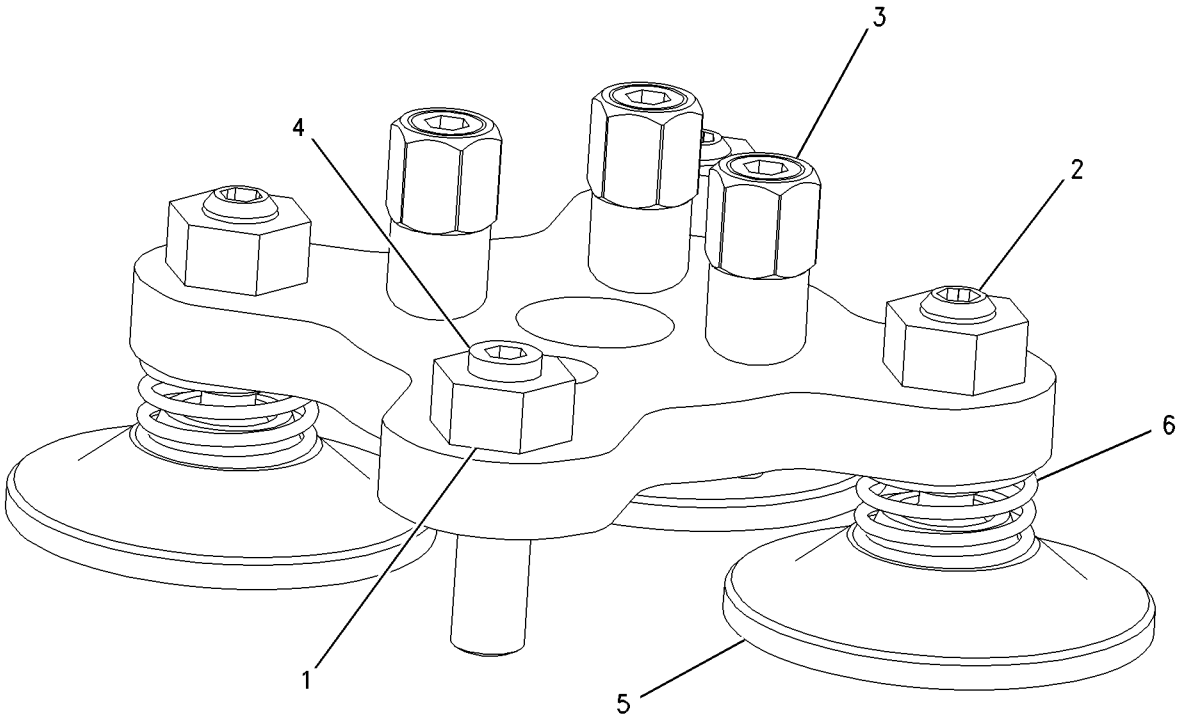

GRAPHIC #1 **<END>** g00810224

HYDRAULIC SYSTEM

289-8919 PUMP & MTG GP-BRAKE & HYD FAN

S/N: KLN1-UP

PART OF 289-8833 HYDRAULIC AR

SMCS-1387, 4268 **i03043301**

NOTE	REF NO	GRAPHIC REF	PART NUMBER	QTY	PART NAME 1 2 3 4 5 6 (PRODUCT LEVEL)	SEE PAGE
	1	1	**9Y-9380**	1	GASKET	
Y	2	1	**288-4162**	1	PUMP GP-GEAR (BRAKE, HYDRAULIC FAN)	414
M	3	1	**3E-8016**	4	BOLT-SELF-LOCKING (M8X1.25X25-MM)	
M	4	1	**5A-3604**	1	BOLT-SOCKET HEAD (M8X1.25X25-MM)	
	5	1	**8T-4224**	7	WASHER-HARD (8.8X16X2-MM THK)	
M	6	1	**8T-6870**	1	BOLT (M8X1.25X70-MM)	

M-METRIC PART
Y-SEPARATE ILLUSTRATION

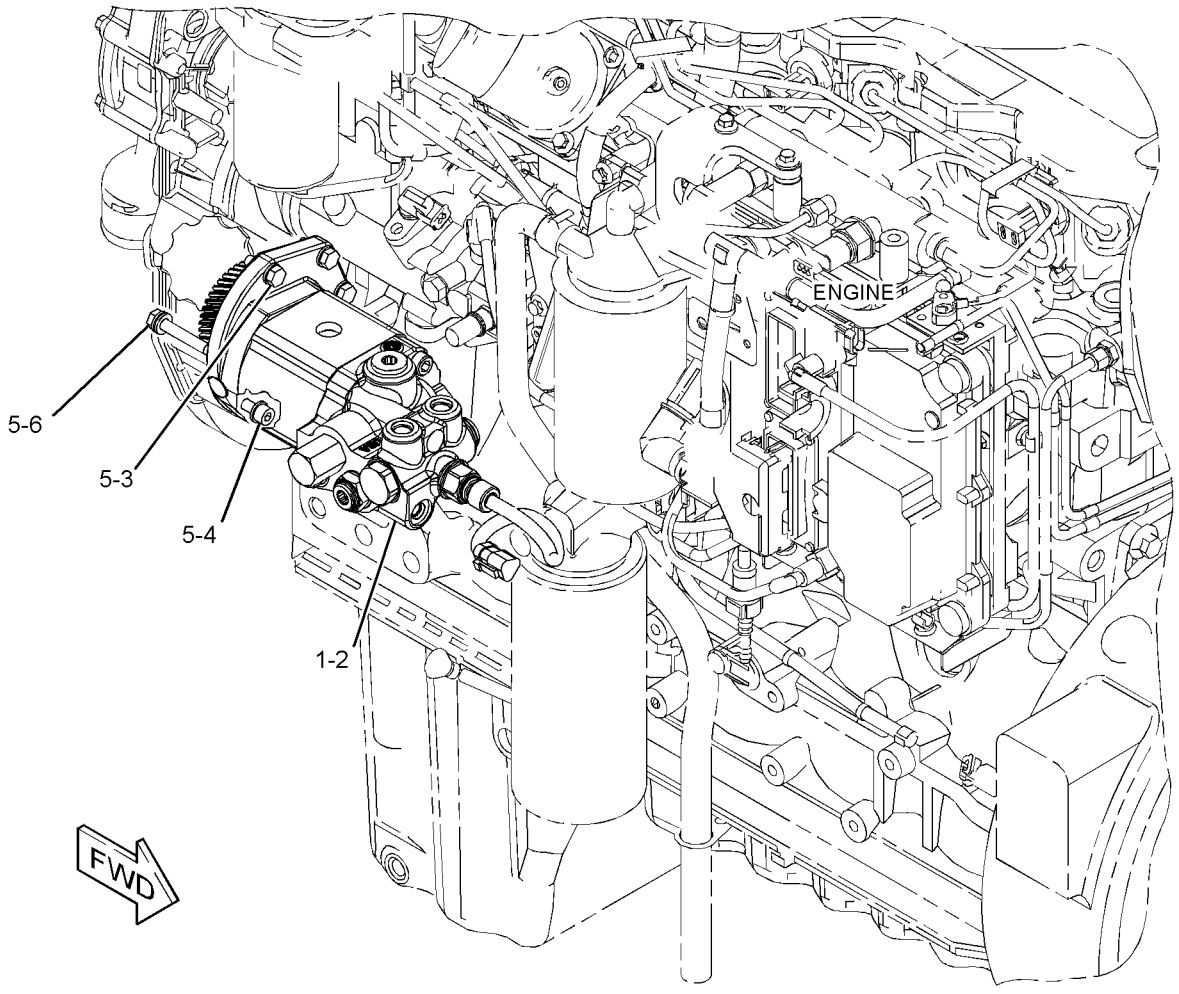

GRAPHIC #1 **<END>** g01399293

132-2476 PUMP & MTG GP-IMPL & STEERING–
IMPLEMENT,PILOT & STEERING
S/N: KLN1-UP
PART OF 289-8833 HYDRAULIC AR

SMCS-4306, 5055, 5070, 5084 **i01859602**

NOTE	REF NO	GRAPHIC REF	PART NUMBER	QTY	PART NAME 1 2 3 4 5 6 (PRODUCT LEVEL)	SEE PAGE
Y	1	1	**163-2428**	1	PUMP GP-PISTON (IMPLEMENT, STEERING, PILOT)	417
	2	1	**1H-6227**	1	SEAL-O-RING	
M	3	1	**6V-8200**	2	BOLT-SOCKET HEAD (M12X1.75X35-MM)	
	4	1	**8T-7971**	2	WASHER-HARD (13.5X25.5X5-MM THK)	

M-METRIC PART
Y-SEPARATE ILLUSTRATION

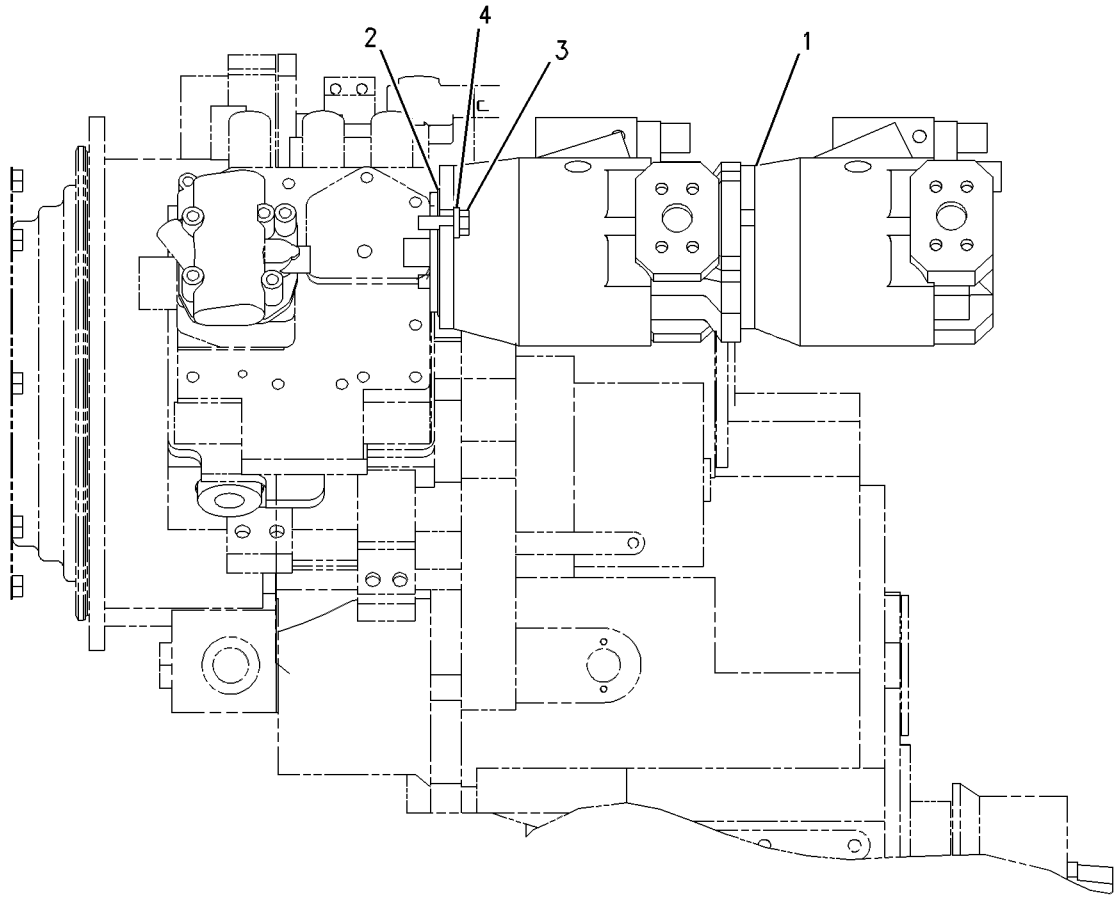

GRAPHIC #1 **<END>** g00605834

288-4162 PUMP GP-GEAR–BRAKE, HYDRAULIC FAN

S/N: KLN1-UP

PART OF 289-8919 PUMP & MTG GP-BRAKE & HYD FAN

SMCS-5073 **i03039404**

NOTE	REF NO	GRAPHIC REF	PART NUMBER	QTY	PART NAME 1 2 3 4 5 6 (PRODUCT LEVEL)	SEE PAGE
	1	1	**205-4587**	1	GEAR (33-TEETH)	
M	2	1	**160-8499**	1	NUT (M12X1.5-THD)	
	3	1	**5P-8244**	1	WASHER-HARD (12X22.5X2.5-MM THK)	
Y	4	1	**299-3941**	1	PUMP GP-GEAR (BRAKE, HYDRAULIC FAN)	415
	5	1	**1J-9671**	1	SEAL-O-RING	
Y	6	1	**224-4536**	1	SENSOR GP-PRESSURE (INJECTION ACTUATION)	159

M-METRIC PART
Y-SEPARATE ILLUSTRATION

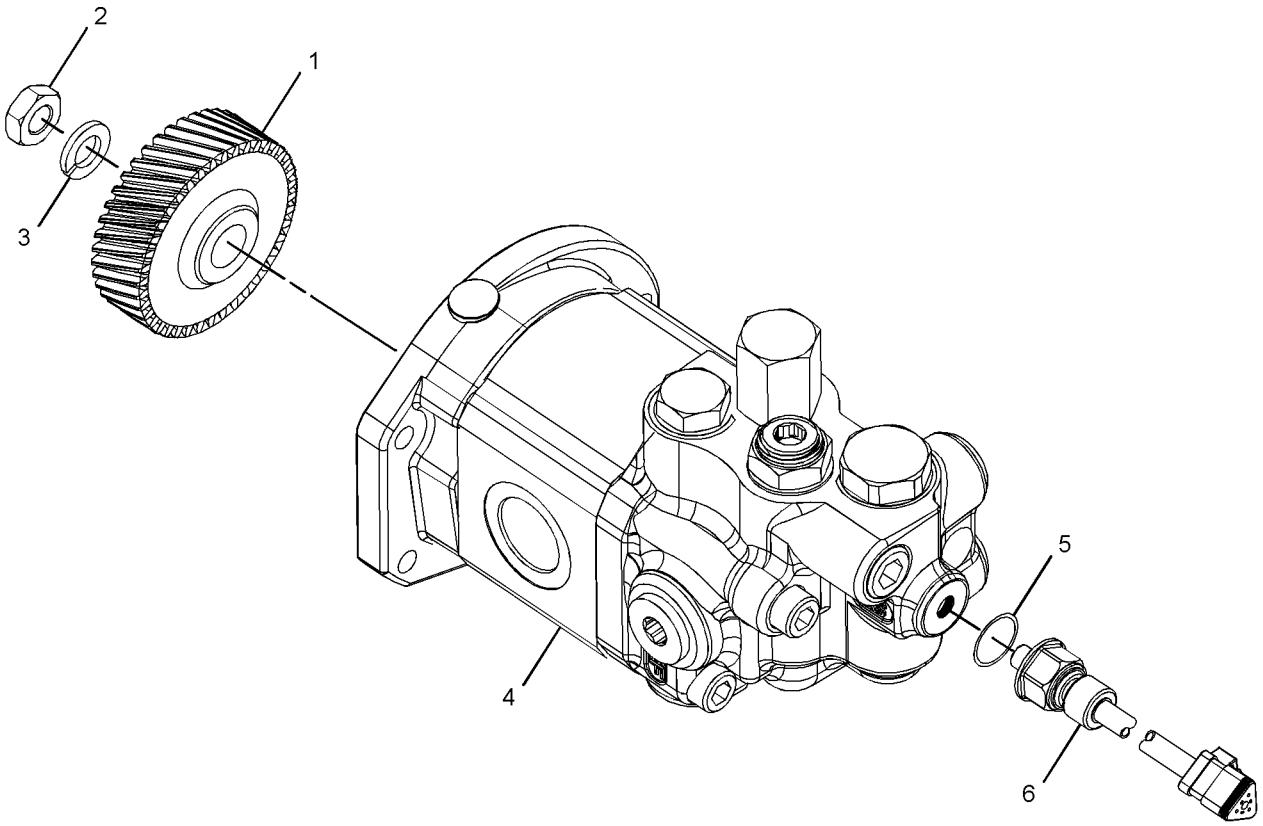

GRAPHIC #1 **<END>** g01398458

299-3941 PUMP GP-GEAR—BRAKE, HYDRAULIC FAN

S/N: KLN1-UP

PART OF 288-4162 PUMP GP-GEAR

SMCS-5073 **i03039580**

NOTE	REF NO	GRAPHIC REF	PART NUMBER	QTY	PART NAME 1 2 3 4 5 6 (PRODUCT LEVEL)	SEE PAGE
	1	1	**204-4148**	1	SEAL-SHAFT	
	2	1	**131-0715**	1	SEAL-SHAFT	
	3	1	**220-2657**	1	FLANGE	
	4	1	**099-3095**	3	DOWEL	
	5	1	**4W-7356**	2	SEAL-O-RING	
	6	1	**6E-2943**	1	PLUG (DRAIN)	
L	7	1	**270-2615**	1	VALVE GP-ACCUMULATOR CHARGING (BRAKE)	
	8	1	**199-3778**	2	BOLT-SOCKET HEAD (M10X1.5X170-MM)	
M	9	1	**8T-0272**	1	BOLT-SOCKET HEAD (M10X1.5X110-MM)	
M	10	1	**086-2369**	1	BOLT-SOCKET HEAD (M10X1.5X130-MM)	
					PARTS SHOWN IN GRAPHIC(S) WITHOUT A REFERENCE NUMBER ARE NOT SERVICED SEPARATELY	
					AVAILABLE REPAIR KIT(S):	
			201-5242	1	KIT-SEAL (GEAR PUMP)	
					(INCLUDES DUST SEAL, BACKUP RINGS, E-SEALS, SHAFT SEAL & RETAINING RING)	
L			**270-2616**	1	KIT-SEAL	
					(INCLUDES SEALS, POPPETS, PLUG & FILTER)	

L-KIT MARKED L SERVICES PART MARKED L
M-METRIC PART

299-3941 **PUMP GP-GEAR** *(contd.)* **i03039580**

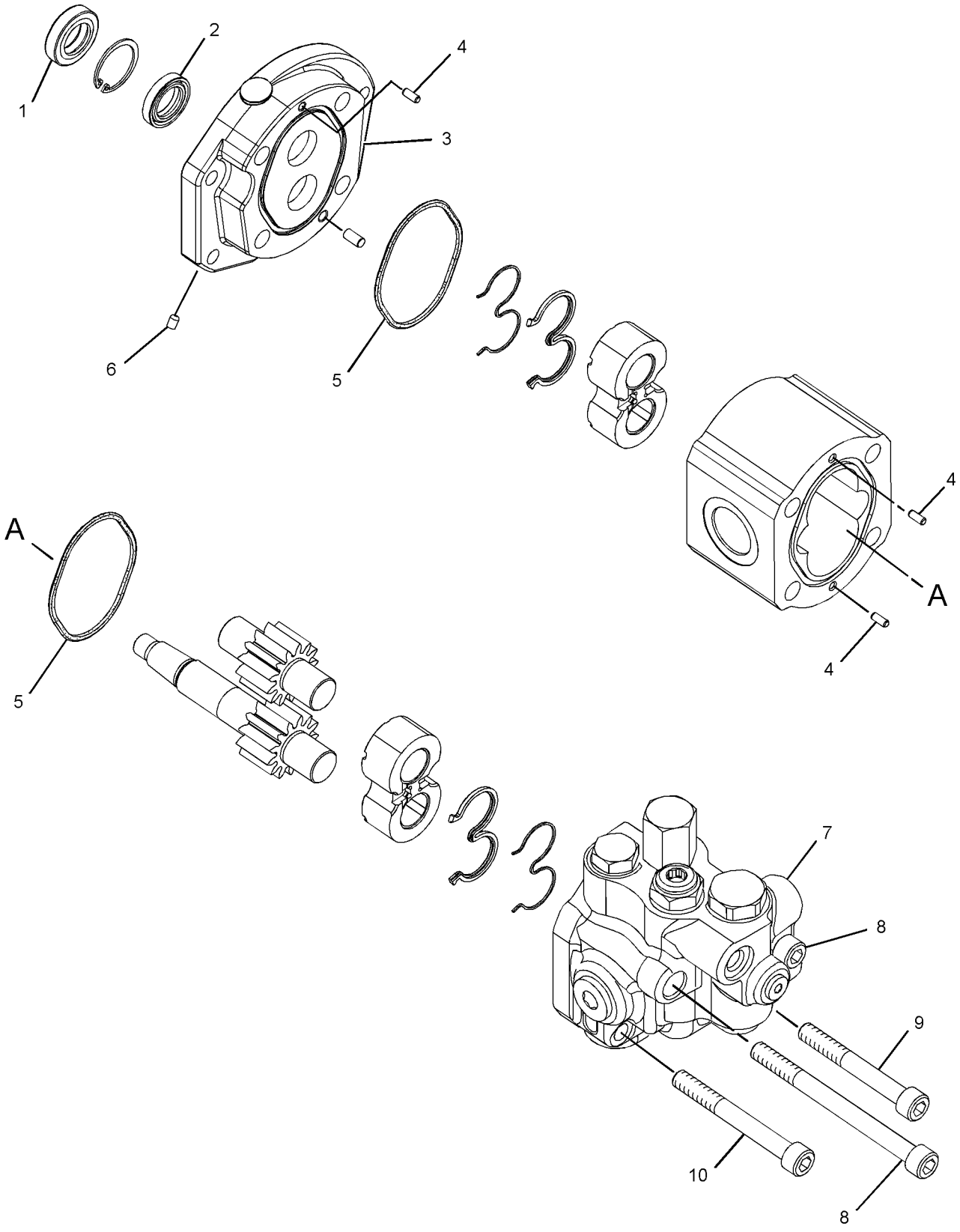

GRAPHIC #1 **<END>** g01398192

163-2428 PUMP GP-PISTON–IMPLEMENT,PILOT & STEERING

S/N: KLN1-UP

PART OF 132-2476 PUMP & MTG GP-IMPL & STEERING

SMCS-5070 **i03628851**

NOTE	PART NUMBER	QTY	PART NAME 1 2 3 4 5 6 (PRODUCT LEVEL)	SEE PAGE
YR	**168-9027**	1	PUMP GP-PISTON (FRONT) (IMPLEMENT, PILOT)	420
YR	**168-7873**	1	PUMP GP-PISTON (REAR) (STEERING, PILOT)	418

R-REMFG PART MAY BE AVAILABLE
Y-SEPARATE ILLUSTRATION

<END>

HYDRAULIC SYSTEM

168-7873 PUMP GP-PISTON–REAR*R

S/N: KLN1-UP

PART OF 163-2428 PUMP GP-PISTON

SMCS-5070 **i02573777**

NOTE	REF NO	GRAPHIC REF	PART NUMBER	QTY	PART NAME 1 2 3 4 5 6 (PRODUCT LEVEL)	SEE PAGE
	1	1	**168-7872**	1	SHAFT-PUMP	
	2	1	**8C-3110**	1	RING-RETAINING	
	3	1	**127-9471**	1	SEAL-PUMP SHAFT	
	4	1	**9S-8006**	1	PLUG-O-RING	
	5	1	**2M-9780**	1	SEAL-O-RING	
	6	1	**127-9490**	1	SPRING (BIAS)	
	7	1	**127-9472**	1	ROD	
	8	1	**168-7861**	1	PISTON-ACTUATOR	
	9	1	**168-7863**	1	PLUG-CONTROL	
	10	1	**8T-7525**	1	SEAL-O-RING	
	11	1	**083-4419**	1	PIN	
	12	1	**168-7864**	1	HEAD-PUMP	
	13	1	**168-3504**	1	SEAL	
	14	1	**136-8423**	1	PLUG-BREAK OFF	
M	15	1	**095-0670**	4	BOLT (M12X1.75X45-MM)	
	16	1	**105-3035**	1	CONE-BEARING	
C	17	1	**203-8609**	1	CUP-BEARING	
	18	1	**127-9485**	1	SEAL-O-RING	
CY	19	1	**224-3188**	1	VALVE GP-PUMP CONTROL (PRESSURE, FLOW COMPENSATOR)	468
	20	1	**127-9483**	1	SHIM (PRELOAD)	
Y	21	1	**168-7868**	1	ROTATING GP-PUMP	423
	22	1	**235-5677**	1	SWASHPLATE	
	23	1	**168-7869**	2	BEARING-CRADLE	
C	24	1	**203-9163**	1	CONE-BEARING	
	25	1	**6V-4636**	1	CUP-BEARING	
	26	1	**168-7871**	1	HOUSING-PUMP	
C	27	1	**9X-7680**	3	SEAL-O-RING	
CM	28	1	**8T-8442**	4	BOLT-SOCKET HEAD (M6X1X30-MM)	

C-CHANGE FROM PREVIOUS TYPE
M-METRIC PART
Y-SEPARATE ILLUSTRATION

168-7873 **PUMP GP-PISTON** *(contd.)* **i02573777**

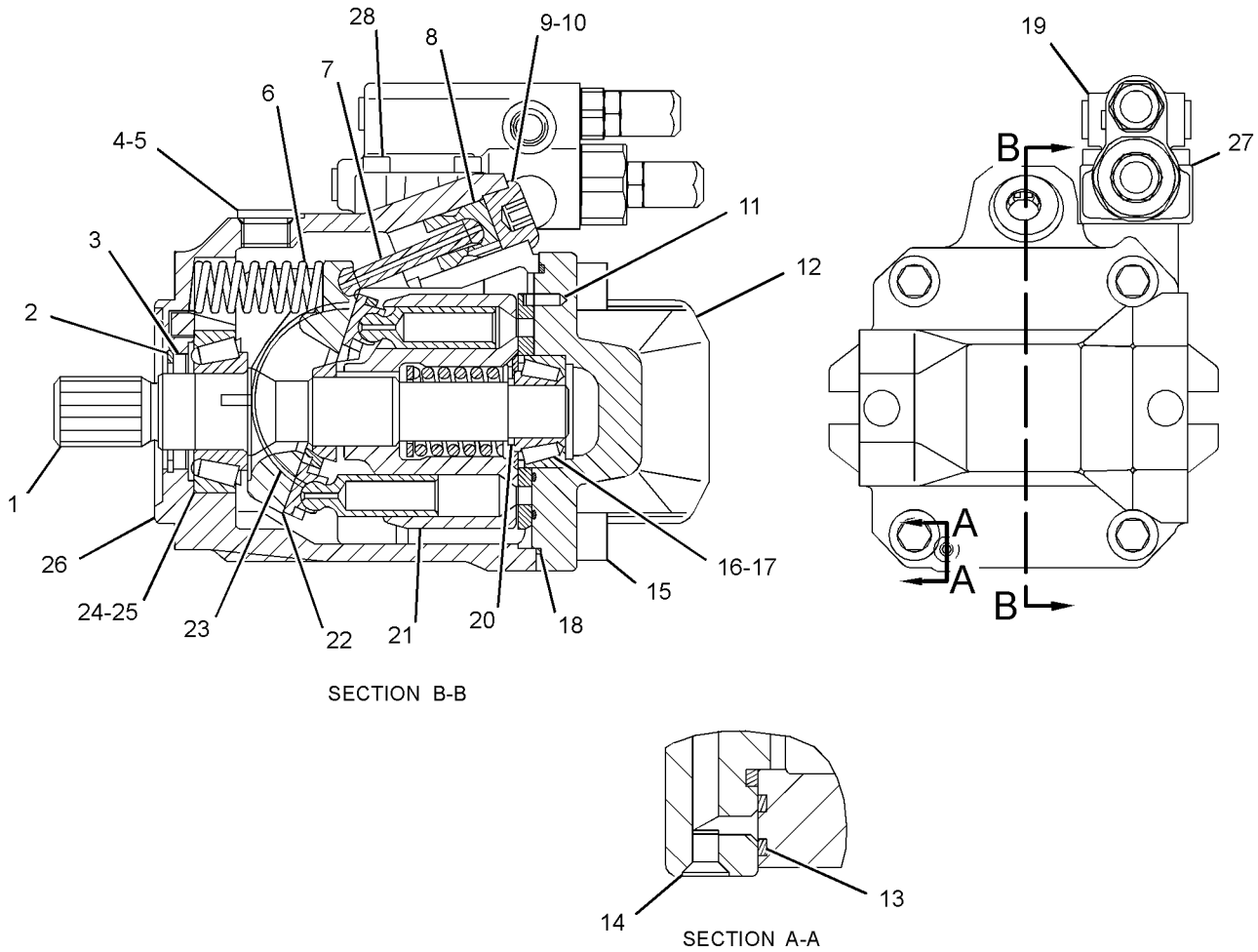

SECTION B-B

SECTION A-A

GRAPHIC #1 **<END>** g01289789

HYDRAULIC SYSTEM

168-9027 PUMP GP-PISTON—FRONT*R

S/N: KLN1-UP
IMPLEMENT, PILOT
PART OF 163-2428 PUMP GP-PISTON

SMCS-5070 **i03629301**

NOTE	REF NO	GRAPHIC REF	PART NUMBER	QTY	PART NAME 1 2 3 4 5 6 (PRODUCT LEVEL)	SEE PAGE
M	1	1	**6R-7943**	2	SCREW (M5X0.8X15-MM)	
	2	1	**7Y-5267**	1	RING-RETAINING	
	3	1	**168-7319**	1	SEAL-SHAFT	
	4	1	**9S-8006**	1	PLUG-O-RING	
	5	1	**2M-9780**	1	SEAL-O-RING	
	6	1	**168-2197**	1	SPRING	
	7	1	**168-2198**	1	LINK-CONTROL	
	8	1	**168-2199**	1	PISTON-CONTROL	
	9	1	**168-2200**	1	PLUG-CONTROL	
	10	1	**8T-7525**	1	SEAL-O-RING	
	11	1	**083-4419**	1	PIN	
	12	1	**168-7316**	1	HEAD-PUMP	
	13	1	**168-3504**	1	SEAL	
	14	1	**136-8423**	2	PLUG-BREAK OFF	
M	15	1	**104-8085**	4	BOLT-SOCKET HEAD	
	16	1	**9W-2109**	1	CONE	
	17	1	**9W-2110**	1	CUP-TAPERED ROLLER	
	18	1	**117-8801**	1	SEAL-O-RING	
	19	1	**168-7321**	1	PLATE-PORT	
	20	1	**168-2203**	1	SHIM-SHAFT	
Y	21	1	**168-2204**	1	ROTATING GP-PUMP (IMPLEMENT, PILOT)	422
	22	1	**168-7317**	1	SWASHPLATE-PUMP	
	23	1	**168-2206**	2	BEARING-CRADLE	
	24	1	**3P-1210**	1	CONE-BEARING	
	25	1	**8J-0412**	1	CUP-BEARING	
	26	1	**168-7315**	1	HOUSING-PUMP	
	27	1	**168-7318**	1	SHAFT-PUMP	
	28	1	**118-3122**	1	SEAL-O-RING	
	29	1	**168-7320**	1	COUPLING-SHAFT	
M	30	1	**8T-3957**	2	BOLT-SOCKET HEAD (M12X1.75X30-MM)	
	31	1	**8T-4223**	2	WASHER-HARD (13.5X25.5X3-MM THK)	
FY			**168-7323**	1	VALVE GP-PUMP CONTROL (PRESSURE, FLOW COMPENSATOR)	466

F-NOT SHOWN
M-METRIC PART
Y-SEPARATE ILLUSTRATION

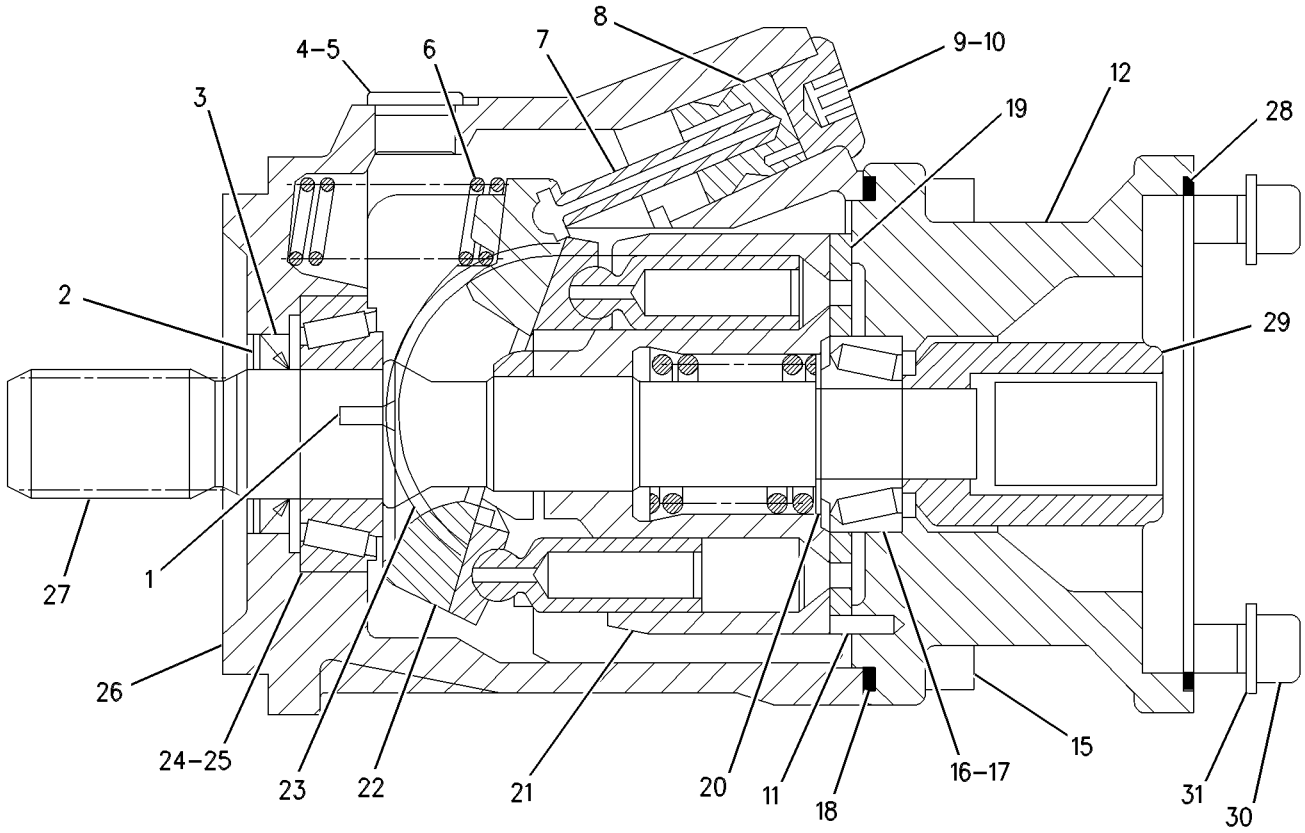

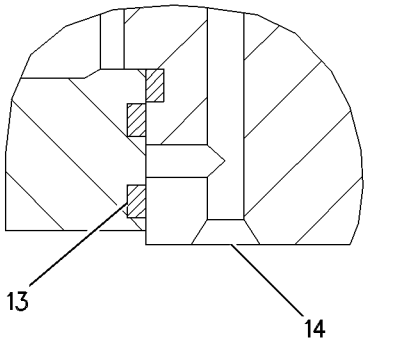

SECTION A–A

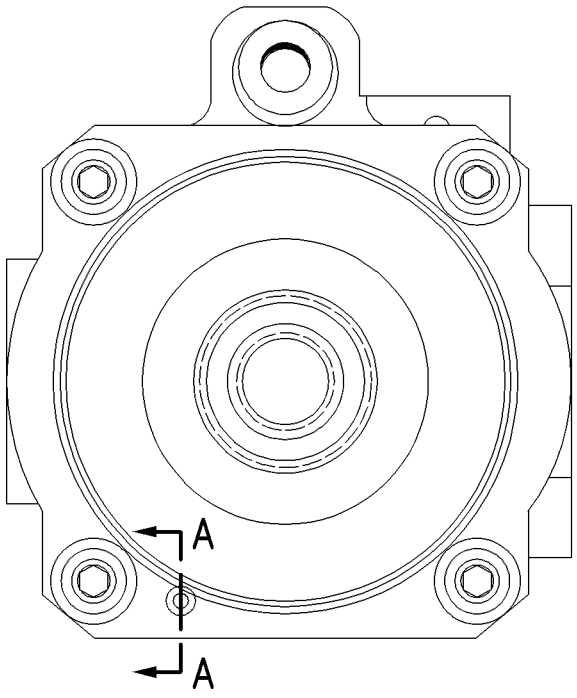

GRAPHIC #1 **<END>** g00618731

HYDRAULIC SYSTEM

168-2204 ROTATING GP-PUMP

S/N: KLN1-UP

PART OF 168-9027 PUMP GP-PISTON

SMCS-1387, 5070, 5084 **i01229673**

NOTE	REF NO	GRAPHIC REF	PART NUMBER	QTY	PART NAME 1 2 3 4 5 6 (PRODUCT LEVEL)	SEE PAGE
	1	1	**168-3378**	1	BEARING-SPHERICAL	
	2	1	**168-3379**	3	PIN	
	3	1	**6V-7723**	1	RING-RETAINING	
	4	1	**168-3380**	1	BARREL-CYLINDER	
	5	1	**168-3381**	1	SPRING	
	6	1	**168-3382**	1	WASHER (42-MM ODX2.7-MM THK)	
	7	1	**168-3384**	9	PISTON AS-PUMP	
	8	1	**168-3385**	1	PLATE-RETRACTION	

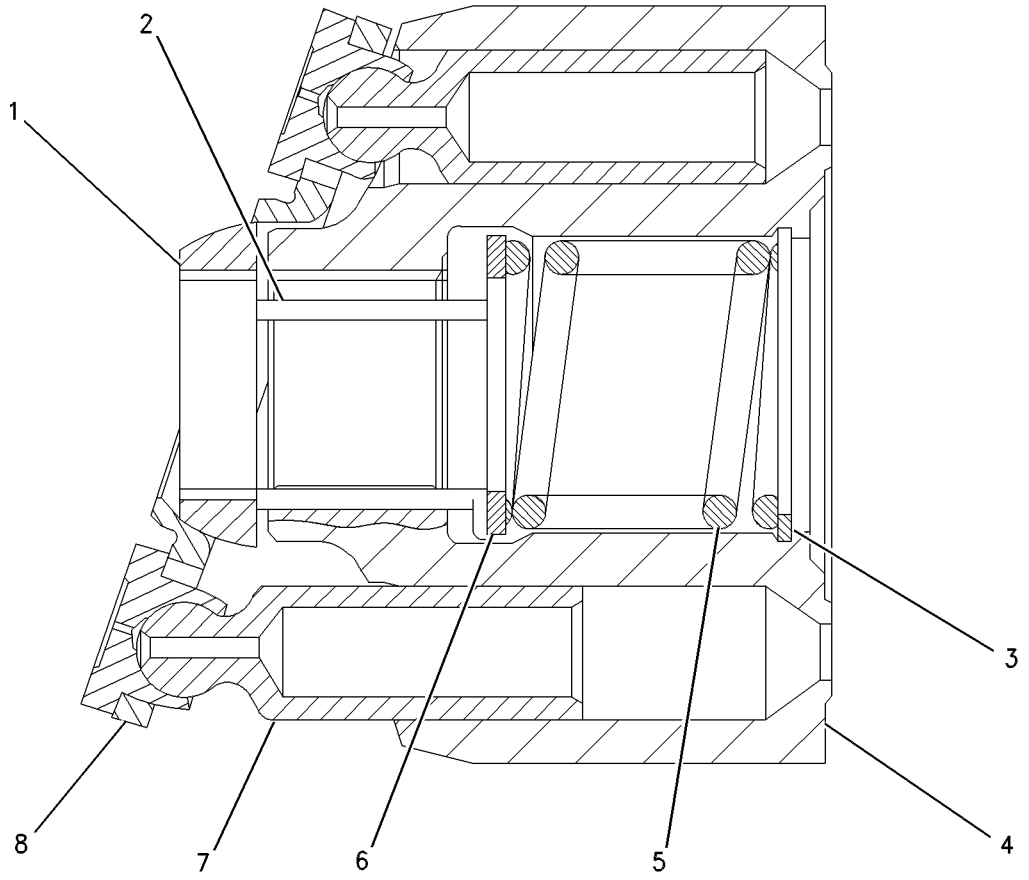

GRAPHIC #1 **<END>** g00538144

168-7868 ROTATING GP-PUMP

S/N: KLN1-UP

PART OF 168-7873 PUMP GP-PISTON

SMCS-1387, 5070, 5084 **i01229714**

NOTE	REF NO	GRAPHIC REF	PART NUMBER	QTY	PART NAME 1 2 3 4 5 6 (PRODUCT LEVEL)	SEE PAGE
	1	1	**138-8175**	1	BEARING-TAPERED ROLLER	
	2	1	**168-7940**	3	PIN	
	3	1	**096-0015**	1	RING-RETAINING	
	4	1	**128-7069**	1	BARREL	
	5	1	**168-7941**	1	SPRING	
	6	1	**168-7942**	1	WASHER (36.5-MM ODX2.0-MM THK)	
	7	1	**168-7943**	9	PISTON AS	
	8	1	**168-7944**	1	PLATE-RETRACTION	

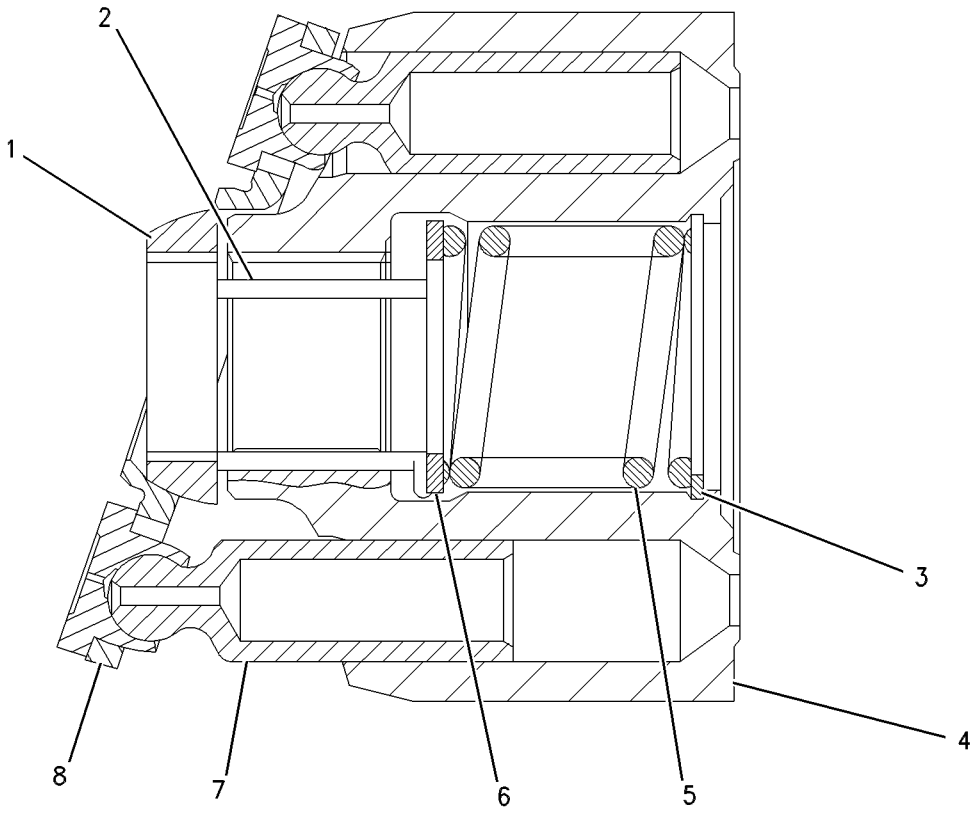

GRAPHIC #1 **<END>** g00616122

HYDRAULIC SYSTEM

289-8901 TANK & MTG GP-HYDRAULIC

S/N: KLN1-UP

PART OF 289-8833 HYDRAULIC AR

SMCS-5056 **i03628932**

NOTE	REF NO	GRAPHIC REF	PART NUMBER	QTY	PART NAME 1 2 3 4 5 6 (PRODUCT LEVEL)	SEE PAGE
	1	1	**246-2641**	1	PADLOCK GP	
		1	**5P-8500**	1	KEY	
	2	1	**7T-8332**	4	MOUNTING	
Y	3	1	*262-5654*	1	TANK GP-HYDRAULIC	425
	4	1	**289-9620**	1	PLATE AS	
	5	1	**289-9621**	1	PLATE AS	
	6	1	**320-0569**	1	PLATE	
	7	1	**7X-7729**	12	WASHER (11X25X3-MM THK)	
	8	1	**8F-6437**	4	WASHER (13.5X50.8X4.76-MM THK)	
	9	1	**8T-4121**	2	WASHER-HARD (11X21X2.5-MM THK)	
M	10	1	**8T-4136**	2	BOLT (M10X1.5X25-MM)	
M	11	1	**8T-4137**	2	BOLT (M10X1.5X20-MM)	
M	12	1	**8T-4186**	8	BOLT (M10X1.5X40-MM)	
	13	1	**8T-4223**	8	WASHER-HARD (13.5X25.5X3-MM THK)	
M	14	1	**8T-4244**	4	NUT (M12X1.75-THD)	
M	15	1	**8T-4910**	4	BOLT (M12X1.75X60-MM)	
M	16	1	**8T-4133**	2	NUT (M10X1.5-THD)	

M-METRIC PART
Y-SEPARATE ILLUSTRATION

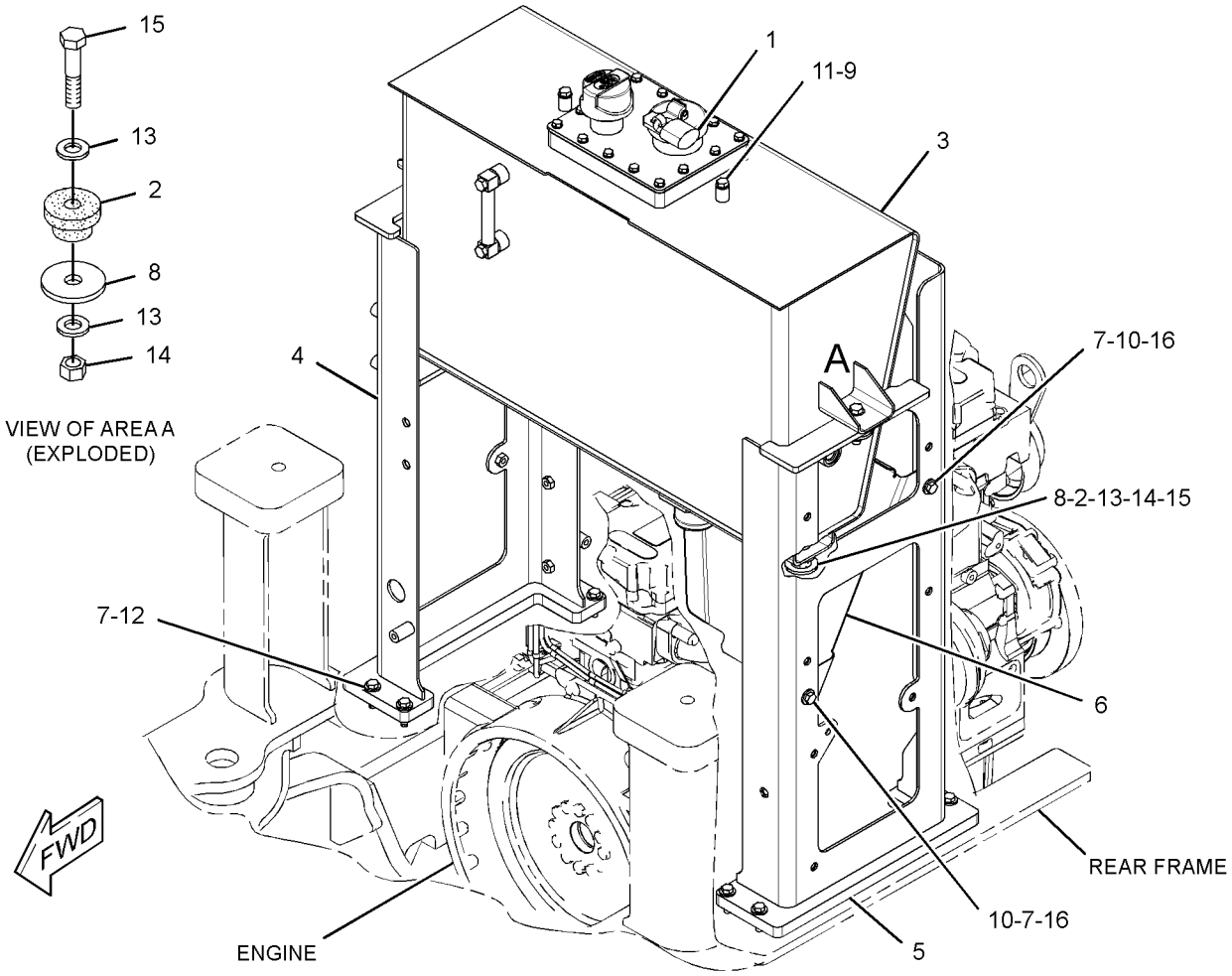

GRAPHIC #1 **<END>** g01589838

HYDRAULIC SYSTEM

262-5654 TANK GP-HYDRAULIC

S/N: KLN1-UP

PART OF 289-8901 TANK & MTG GP-HYDRAULIC

SMCS-5056 **i03629306**

NOTE	REF NO	GRAPHIC REF	PART NUMBER	QTY	PART NAME 1 2 3 4 5 6 (PRODUCT LEVEL)	SEE PAGE
	1	1	**142-8937**	1	CAP AS-FILLER (HYDRAULIC TANK)	
	2	1	**206-8818**	1	STRAINER (HYDRAULIC OIL)	
	3	1	**206-9546**	1	GASKET	
	4	1	**253-8295**	1	GAUGE-SIGHT (FLUID LEVEL)	
	5	1	**255-0759**	1	SCREEN-SUCTION (FILTER)	
		1	**030-4606**	1	SEAL-O-RING	
	6	1	**258-2829**	1	BREATHER (HYDRAULIC TANK)	
M	7	1	**8T-4908**	14	BOLT (M8X1.25X25-MM)	
	8	1	**262-5689**	1	STRAINER (HYDRAULIC TANK)	
	9	1	**300-1301**	1	COVER AS-HYDRAULIC TANK	
		1	**5P-4116**	1	WASHER-HARD (8.8X20.5X2-MM THK)	
M		1	**8T-6912**	1	BOLT (M8X1.25X50-MM)	
		1	**299-7996**	1	PLATE	
		1	**299-7997**	1	SCREEN (BREATHER)	
		1	**299-7998**	1	PLATE AS	
	10	1	**8T-4224**	14	WASHER-HARD (8.8X16X2-MM THK)	

M-METRIC PART

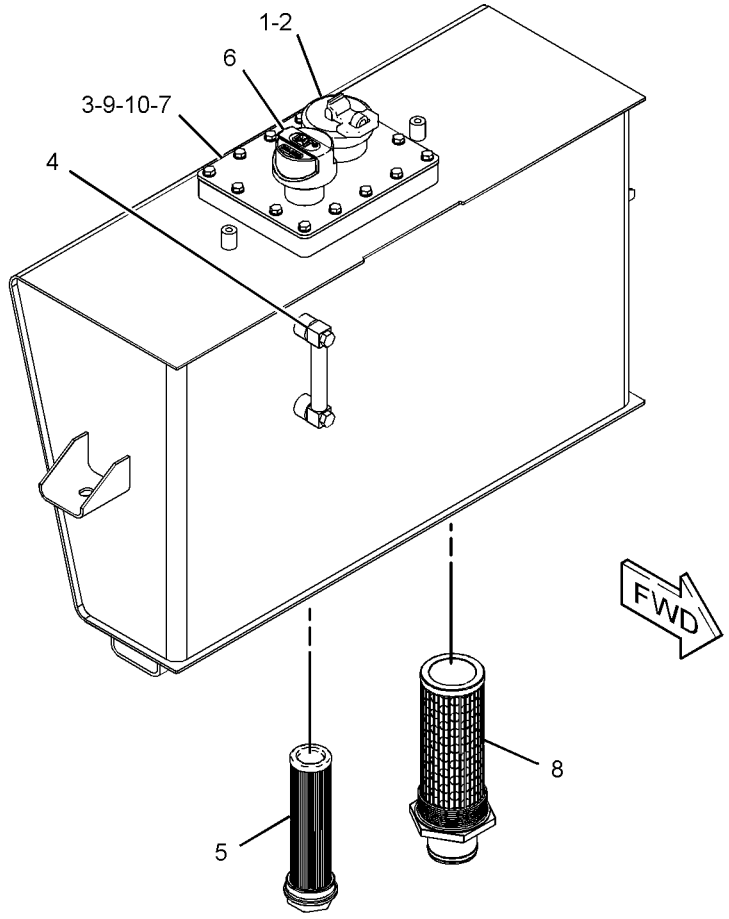

GRAPHIC #1 **<END>** g01946665

HYDRAULIC SYSTEM

295-5544 VALVE & MTG GP-RIDE CONTROL

S/N: KLN1-UP
PART OF 289-8995 CONTROL AR-RIDE
AN ATTACHMENT

SMCS-5054, 5066 **i03039602**

NOTE	REF NO	GRAPHIC REF	PART NUMBER	QTY	PART NAME 1 2 3 4 5 6 (PRODUCT LEVEL)	SEE PAGE
Y	1	1	*293-6472*	1	CONTROL GP-RIDE	335
	2	1	**7X-7729**	4	WASHER (11X25X3-MM THK)	
M	3	1	**8T-4195**	4	BOLT (M10X1.5X30-MM)	

M-METRIC PART
Y-SEPARATE ILLUSTRATION

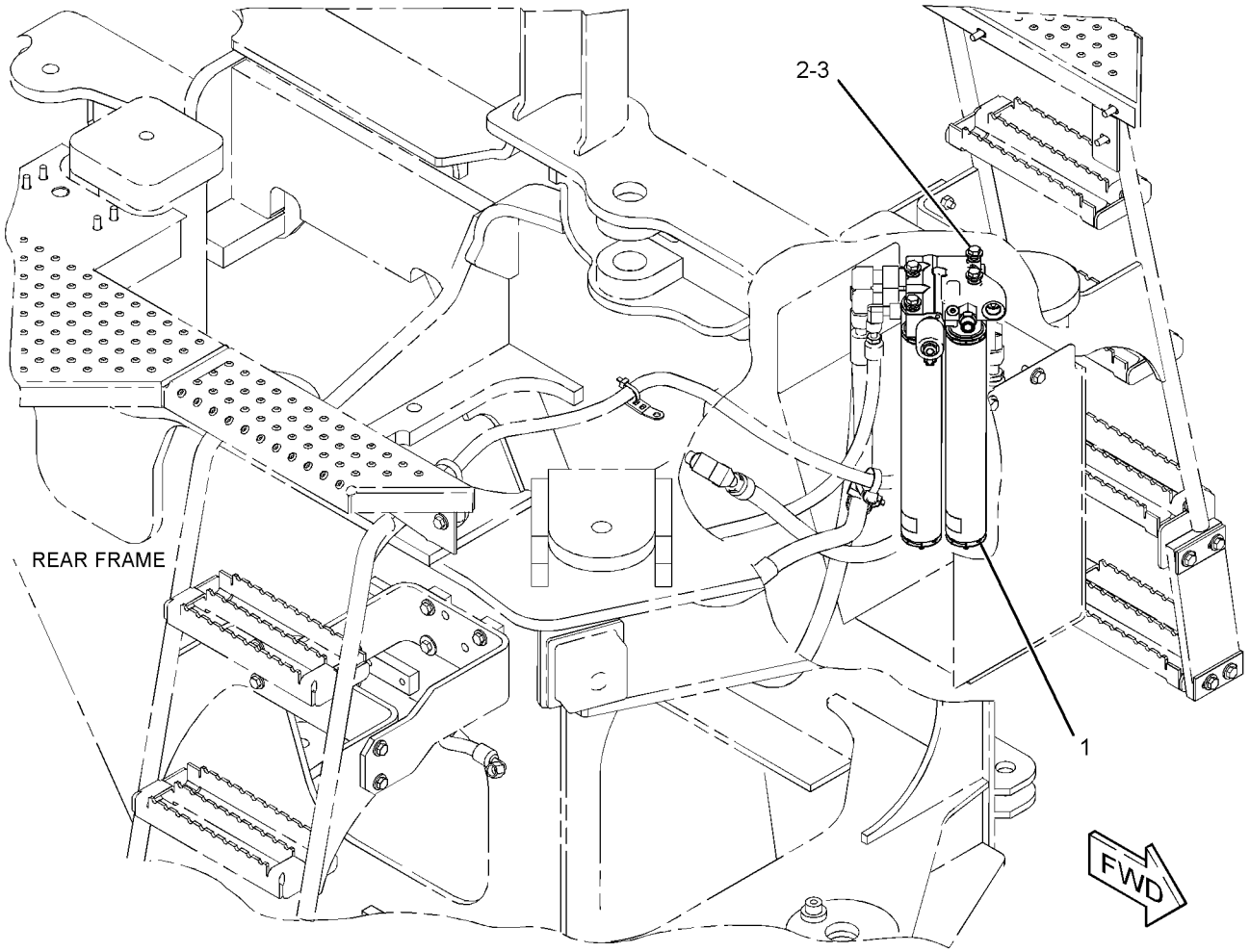

GRAPHIC #1 **<END>** g01389805

HYDRAULIC SYSTEM

233-7133 VALVE & MTG GP-SOLENOID

S/N: KLN1-UP
PART OF 225-1057 VALVE GP-SHUTOFF
AN ATTACHMENT

SMCS-4805, 5479 **i03583753**

NOTE	REF NO	GRAPHIC REF	PART NUMBER	QTY	PART NAME 1 2 3 4 5 6 (PRODUCT LEVEL)	SEE PAGE
J	1	1	**233-7126**	1	VALVE GP-SOLENOID (HYDRAULIC LOCKOUT)	
M	2	1	**096-5968**	2	BOLT-SOCKET HEAD (M5X0.8X8-MM)	
					AVAILABLE REPAIR KIT(S):	
J			**250-8330**	1	KIT-SEAL	
					(INCLUDES O-RINGS)	

J-KIT MARKED J AVAILABLE FOR PART MARKED J
M-METRIC PART

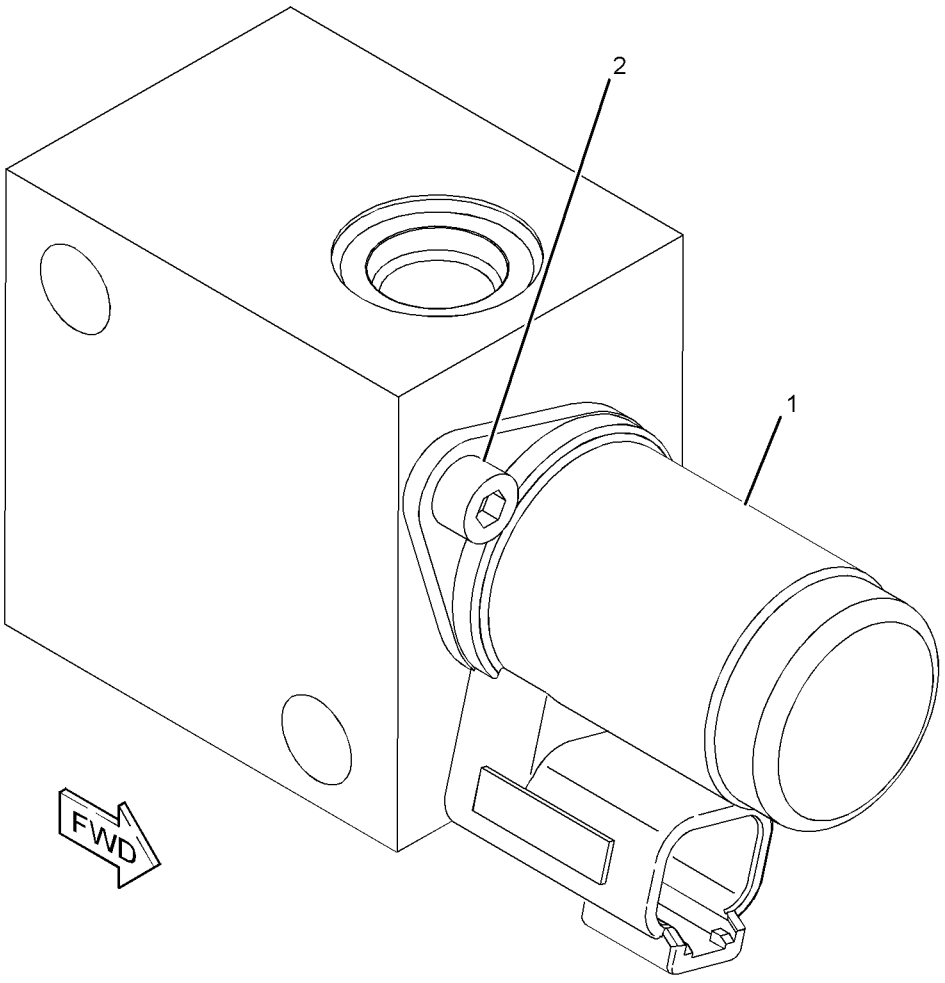

GRAPHIC #1 **<END>** g01183188

173-4032 VALVE GP-COMBINATION–TILT RELIEF

S/N: KLN1-UP

PART OF 289-8795 LINES GP-TILT CYLINDER

SMCS-5064 **i03629304**

NOTE	REF NO	GRAPHIC REF	PART NUMBER	QTY	PART NAME 1 2 3 4 5 6 (PRODUCT LEVEL)	SEE PAGE
	1	1	**173-7061**	1	VALVE GP-RELIEF (TILT)	
J		1	**2M-9780**	1	SEAL-O-RING	
J		1	**161-6149**	1	SEAL-O-RING	
J		1	**161-6161**	2	RING-BACKUP	
	2	1	**173-7062**	1	VALVE GP-DIVERTER (TILT)	
	3	1	**3J-7354**	1	SEAL-O-RING	
	4	1	**3K-0360**	2	SEAL-O-RING	
	5	1	**9S-8002**	1	PLUG-O-RING	
	6	1	**9S-8005**	2	PLUG-O-RING	
					AVAILABLE REPAIR KIT(S):	
J			**133-5545**	1	KIT-SEAL (RELIEF VALVE)	

J-KIT MARKED J SERVICES PART(S) MARKED J

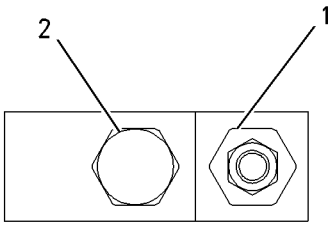

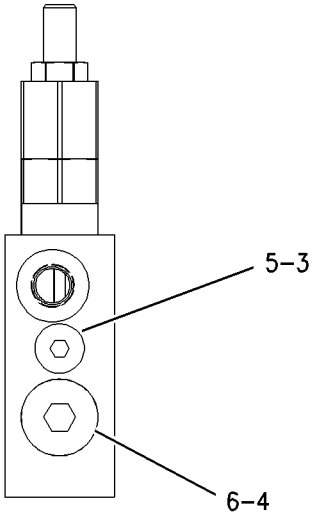

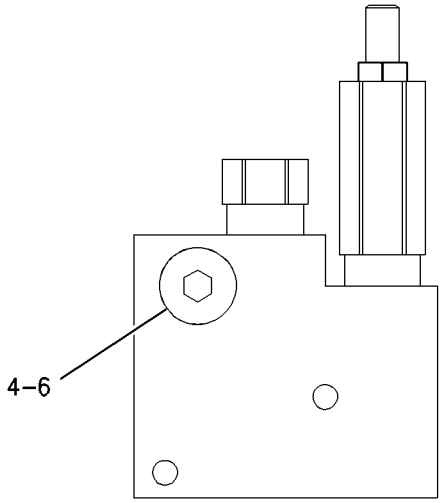

GRAPHIC #1 **<END>** g00640883

HYDRAULIC SYSTEM

216-7502 VALVE GP-CONTROL–AUXILIARY

S/N: KLN1-UP

PART OF 209-0271, 209-0272 VALVE GP-MAIN CONTROL

AN ATTACHMENT

SMCS-5051 **i03628894**

NOTE	REF NO	GRAPHIC REF	PART NUMBER	QTY	PART NAME 1 2 3 4 5 6 (PRODUCT LEVEL)	SEE PAGE
	1	1	**215-8137**	2	KIT-VALVE (CHECK VALVE)	
					(EACH KIT INCLUDES BLOCK, LOCKNUT, CAP & STUD)	
	2	1	**5P-3456**	2	SEAL-O-RING	
	3	1	**215-8131**	2	SPRING	
	4	1	**215-8129**	1	RETAINER	
	5	1	**211-5255**	4	BOLT-SOCKET HEAD (M5X0.8X55-MM)	
	6	1	**215-8128**	1	RETAINER	
	7	1	**215-8139**	1	VALVE GP-CHECK (LOAD)	
	8	1	**216-7523**	1	SPRING	
	9	1	**216-7525**	1	KIT-PLUG	
					(INCLUDES PLUG & SEAL)	
	10	1	**216-9729**	1	STEM	
	11	1	**8T-7524**	1	SEAL-O-RING	

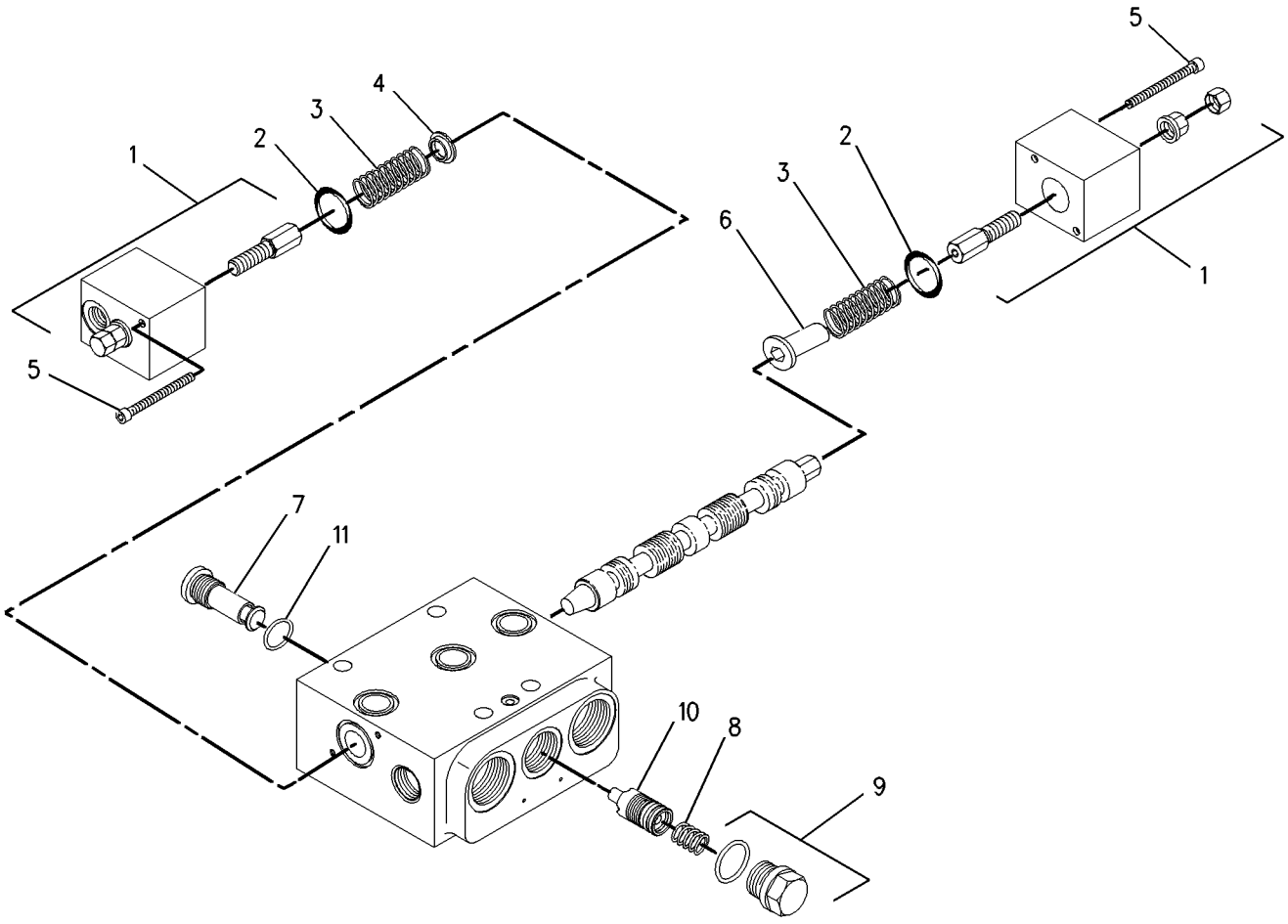

GRAPHIC #1 **<END>** g00927396

HYDRAULIC SYSTEM

209-0270 VALVE GP-MAIN CONTROL

S/N: KLN1-UP
2 FUNCTION
PART OF 203-3889 HYDRAULIC AR-2 VALVE
AN ATTACHMENT

SMCS-5051 **i03629307**

NOTE	REF NO	GRAPHIC REF	PART NUMBER	QTY	PART NAME 1 2 3 4 5 6 (PRODUCT LEVEL)	SEE PAGE
M	1	1	**5A-3604**	4	BOLT-SOCKET HEAD (M8X1.25X25-MM)	
	2	1	**216-9819**	1	PLATE	
	3	1	**6V-8397**	2	SEAL-O-RING	
	4	1	**229-9850**	1	VALVE GP-CHECK (MAKEUP OIL)	
		1	**033-6034**	1	SEAL-O-RING	
	5	1	**215-8115**	1	VALVE GP-FLOW CONTROL (SIGNAL DRAIN)	
		1	**033-5879**	1	SEAL-O-RING	
		1	**192-7111**	1	SEAL-O-RING	
	6	1	**6V-7970**	1	SEAL-O-RING	
	7	1	**8C-4424**	1	PLUG	
	8	1	**216-7913**	2	KIT-ORIFICE (CHECK VALVE)	
					(EACH KIT INCLUDES ORIFICE, SPRING & PLUG)	
	9	1	**215-8111**	1	KIT-VALVE (BOTTOM)	
					(KIT INCLUDES STEM, SPRING, PLUG & SEAL)	
	10	1	**215-8109**	1	KIT-VALVE (TOP)	
					(KIT INCLUDES STEM, SPRING, PLUG & SEAL)	
	11	1	**215-8116**	1	VALVE GP-RELIEF (SIGNAL LIMITER)	
		1	**033-5879**	1	SEAL-O-RING	
		1	**192-7111**	1	SEAL-O-RING	
	12	1	**217-3708**	2	VALVE GP-RELIEF (PILOT OPERATED)	
					(EACH INCLUDES)	
		1	**217-1994**	1	KIT-SEAL (RELIEF VALVE)	
					(KIT INCLUDES SEAL-O-RINGS)	
	13	1	**215-8138**	1	VALVE GP-CHECK	
	14	1	**3E-2331**	1	PLUG	
	15	1	**215-8139**	2	VALVE GP-CHECK (LOAD)	
	15A	1	**215-8139**	1	VALVE GP-CHECK (REGENERATION)	
	16	1	**8T-7524**	4	SEAL-O-RING	
	17	1	**215-8113**	1	VALVE GP-CHECK (BACKPRESSURE)	
		1	**6V-8352**	1	SEAL-O-RING	
	18	1	**5P-6718**	3	SEAL-O-RING	
	19	1	**061-7538**	1	SEAL-O-RING	
	20	1	**217-4598**	1	VALVE GP-RELIEF (MAKEUP)	
		1	**123-7531**	1	KIT-SEAL (RELIEF VALVE)	
					(KIT INCLUDES SEAL, THRUST RING & O-RINGS)	
M	21	1	**189-3014**	1	SCREW	
	22	1	**206-7655**	1	ORIFICE-SHUTTLE	
M	23	1	**206-7647**	1	PILOT	
	24	1	**6V-9507**	1	PLUG	
	25	1	**4J-5477**	1	SEAL-O-RING	
	26	2	**215-8135**	1	KIT-VALVE (CHECK VALVE)	
					(KIT INCLUDES BLOCK, STUD & LOCKNUT)	
	27	2	**215-8134**	1	KIT-VALVE (CHECK VALVE) (ORIFICE)	
					(KIT INCLUDES BLOCK, SEAL, ORIFICE, RETAINER, SPRING & CAP)	
	28	2	**215-8136**	1	KIT-VALVE (CHECK VALVE)	
					(KIT INCLUDES BLOCK, CAPS & STUD)	
	29	2	**215-8137**	1	KIT-VALVE (CHECK VALVE) (ORIFICE)	
					(KIT INCLUDES BLOCK, CAPS & STUD)	
	30	2	**215-8132**	1	KIT-VALVE (SHOCK REDUCING CHECK VALVE)	
					(KIT INCLUDES SPOOL & SEAL)	
M	31	2	**120-3956**	2	BOLT-SOCKET HEAD (M5X0.8X60-MM)	
M	32	2	**127-4832**	2	BOLT-SOCKET HEAD (M5X0.8X90-MM)	

209-0270 VALVE GP-MAIN CONTROL *(contd.)* i03629307

NOTE	REF NO	GRAPHIC REF	PART NUMBER	QTY	PART NAME 1 2 3 4 5 6 (PRODUCT LEVEL)	SEE PAGE
	33	2	**211-5255**	4	BOLT-SOCKET HEAD (M5X0.8X55-MM)	
	34	2	**5P-3456**	4	SEAL-O-RING	
	35	2	**215-8131**	4	SPRING	
	36	2	**215-8128**	2	RETAINER	
	37	2	**215-8133**	1	RING	
	38	2	**215-8129**	2	RETAINER	
	39	1	**217-4597**	1	VALVE GP-RELIEF (MAKEUP)	
		1	**123-7531**	1	KIT-SEAL (RELIEF VALVE)	
					(KIT INCLUDES SEAL, THRUST RING & O-RINGS)	

M-METRIC PART

209-0270 VALVE GP-MAIN CONTROL *(contd.)* i03629307

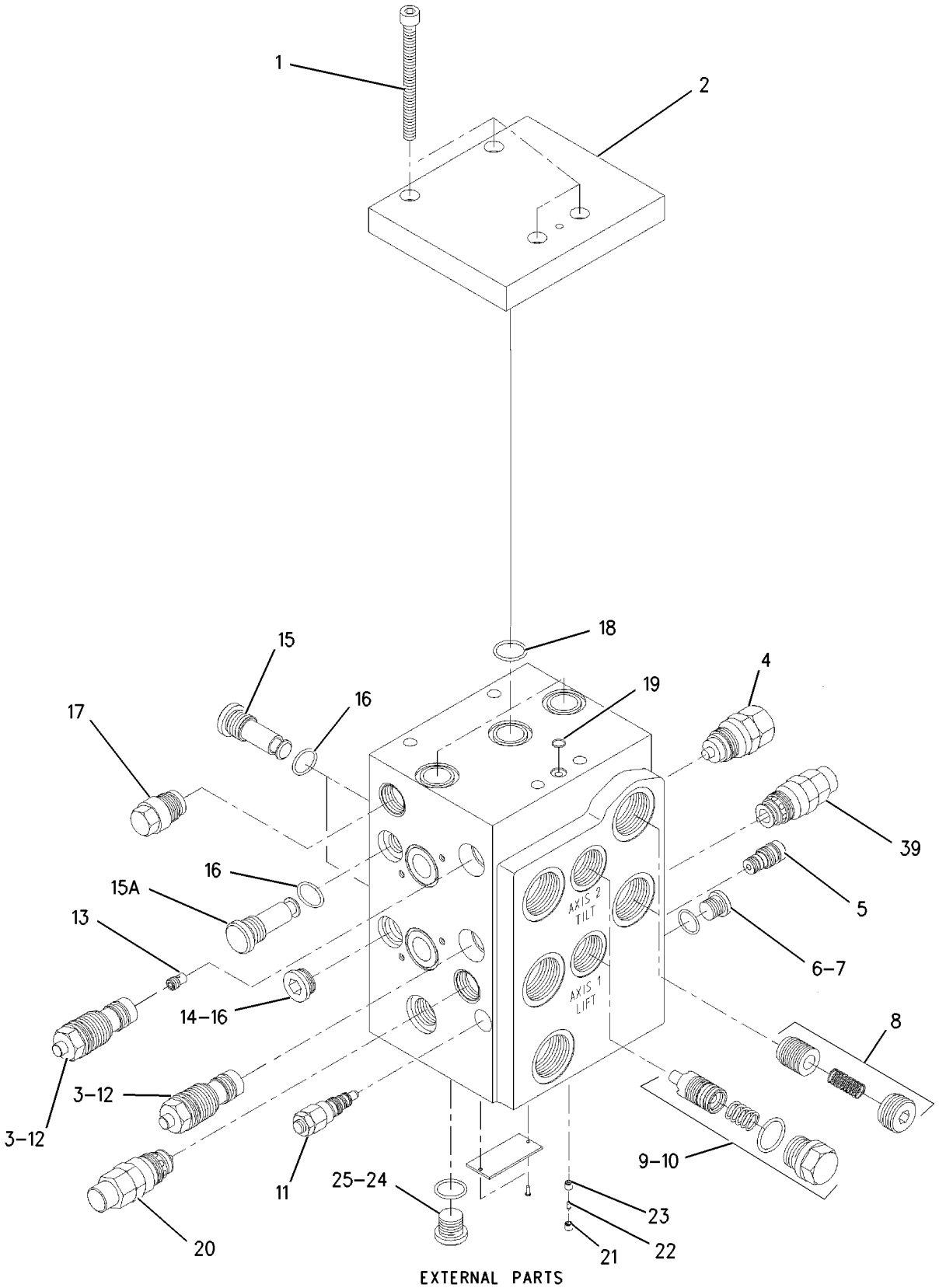

EXTERNAL PARTS

GRAPHIC #1 g00945088

209-0270 VALVE GP-MAIN CONTROL *(contd.)* i03629307

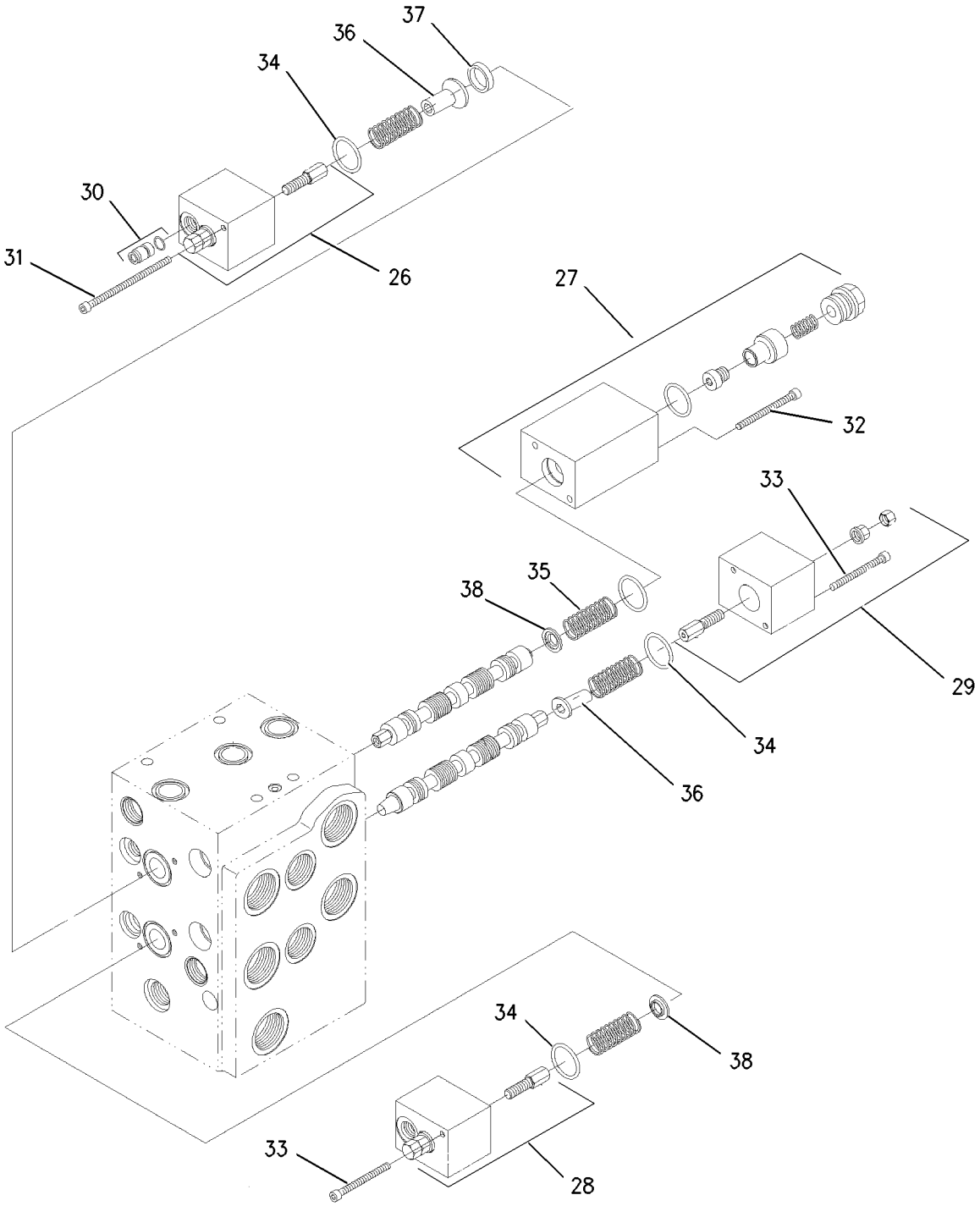

INTERNAL PARTS

GRAPHIC #2 **<END>** g00895485

HYDRAULIC SYSTEM

209-0271 VALVE GP-MAIN CONTROL

S/N: KLN1-UP
3 FUNCTION
PART OF 203-3891 HYDRAULIC AR-3 VALVE
AN ATTACHMENT

SMCS-5051 **i03571168**

NOTE	REF NO	GRAPHIC REF	PART NUMBER	QTY	PART NAME 1 2 3 4 5 6 (PRODUCT LEVEL)	SEE PAGE
M	1	1	**8T-2394**	4	BOLT-SOCKET HEAD (M8X1.25X90-MM)	
	2	1	**216-9819**	1	PLATE	
	3	1	**215-8119**	2	VALVE GP-RELIEF (PILOT OPERATED)	
					(EACH INCLUDES)	
		1	**123-7531**	1	KIT-SEAL (RELIEF VALVE)	
					(KIT INCLUDES SEAL, THRUST RING & O-RINGS)	
	4	1	**229-9850**	1	VALVE GP-CHECK	
	5	1	**215-8115**	1	VALVE GP-FLOW CONTROL (SIGNAL DRAIN)	
		1	**033-5879**	1	SEAL-O-RING	
		1	**192-7111**	1	SEAL-O-RING	
	6	1	**6V-7970**	1	SEAL-O-RING	
	7	1	**8C-4424**	1	PLUG	
	8	1	**216-7913**	2	KIT-ORIFICE (CHECK VALVE)	
					(EACH KIT INCLUDES ORIFICE, SPRING & PLUG)	
	9	1	**215-8111**	1	KIT-VALVE (BOTTOM)	
					(KIT INCLUDES STEM, SPRING, PLUG & SEAL)	
	10	1	**215-8109**	1	KIT-VALVE (TOP)	
					(KIT INCLUDES STEM, SPRING, PLUG & SEAL)	
	11	1	**215-8116**	1	VALVE GP-RELIEF (SIGNAL LIMITER)	
		1	**033-5879**	1	SEAL-O-RING	
		1	**192-7111**	1	SEAL-O-RING	
	12	1	**217-3708**	2	VALVE GP-RELIEF (PILOT OPERATED)	
					(EACH INCLUDES)	
		1	**217-1994**	1	KIT-SEAL	
					(KIT INCLUDES SEAL-O-RINGS)	
	13	1	**215-8138**	1	VALVE GP-CHECK	
	14	1	**3E-2331**	1	PLUG	
	15	1	**215-8139**	2	VALVE GP-CHECK (LOAD)	
	15A	1	**215-8139**	1	VALVE GP-CHECK (REGENERATION)	
	16	1	**8T-7524**	4	SEAL-O-RING	
	17	1	**215-8113**	1	VALVE GP-CHECK (BACKPRESSURE)	
		1	**6V-8352**	1	SEAL-O-RING	
	18	1	**5P-6718**	6	SEAL-O-RING	
	19	1	**061-7538**	2	SEAL-O-RING	
Y	20	1	**216-7502**	1	VALVE GP-CONTROL (AUXILIARY)	429
M	21	1	**189-3014**	1	SCREW	
	22	1	**206-7655**	1	ORIFICE-SHUTTLE	
M	23	1	**206-7647**	1	PILOT	
	24	1	**6V-9507**	1	PLUG	
	25	1	**4J-5477**	1	SEAL-O-RING	
	26	2	**215-8135**	1	KIT-VALVE (CHECK VALVE) (ORIFICE)	
					(KIT INCLUDES BLOCK, STUD & LOCKNUT)	
	27	2	**215-8134**	1	KIT-VALVE (CHECK VALVE) (ORIFICE)	
					(KIT INCLUDES BLOCK, SEAL, ORIFICE, RETAINER, SPRING & CAP)	
	28	2	**215-8136**	1	KIT-VALVE (CHECK VALVE) (ORIFICE)	
					(KIT INCLUDES BLOCK, CAPS & STUD)	
	29	2	**215-8137**	1	KIT-VALVE (CHECK VALVE) (ORIFICE)	
					(KIT INCLUDES BLOCK, CAPS & STUD)	
	30	2	**215-8132**	3	KIT-VALVE (SHOCK REDUCING CHECK VALVE)	
					(EACH KIT INCLUDES SPOOL & SEAL)	
M	31	2	**120-3956**	2	BOLT-SOCKET HEAD (M5X0.8X60-MM)	
M	32	2	**127-4832**	2	BOLT-SOCKET HEAD (M5X0.8X90-MM)	
	33	2	**211-5255**	4	BOLT-SOCKET HEAD (M5X0.8X55-MM)	

209-0271 VALVE GP-MAIN CONTROL *(contd.)* i03571168

NOTE	REF NO	GRAPHIC REF	PART NUMBER	QTY	PART NAME 1 2 3 4 5 6 (PRODUCT LEVEL)	SEE PAGE
	34	2	**5P-3456**	4	SEAL-O-RING	
	35	2	**215-8131**	4	SPRING	
	36	2	**215-8128**	2	RETAINER	
	37	2	**215-8133**	1	RING	
	38	2	**215-8129**	2	RETAINER	
	39	1	**217-4597**	1	VALVE GP-RELIEF (MAKEUP)	
		1	**123-7531**	1	KIT-SEAL (RELIEF VALVE)	
					(KIT INCLUDES SEAL, THRUST RING & O-RINGS)	
	40	1	**217-4598**	1	VALVE GP-RELIEF (MAKEUP)	
		1	**123-7531**	1	KIT-SEAL (RELIEF VALVE)	
					(KIT INCLUDES SEAL, THRUST RING & O-RINGS)	
	41	1	**6V-8397**	2	SEAL-O-RING	

M-METRIC PART
Y-SEPARATE ILLUSTRATION

209-0271 VALVE GP-MAIN CONTROL *(contd.)* i03571168

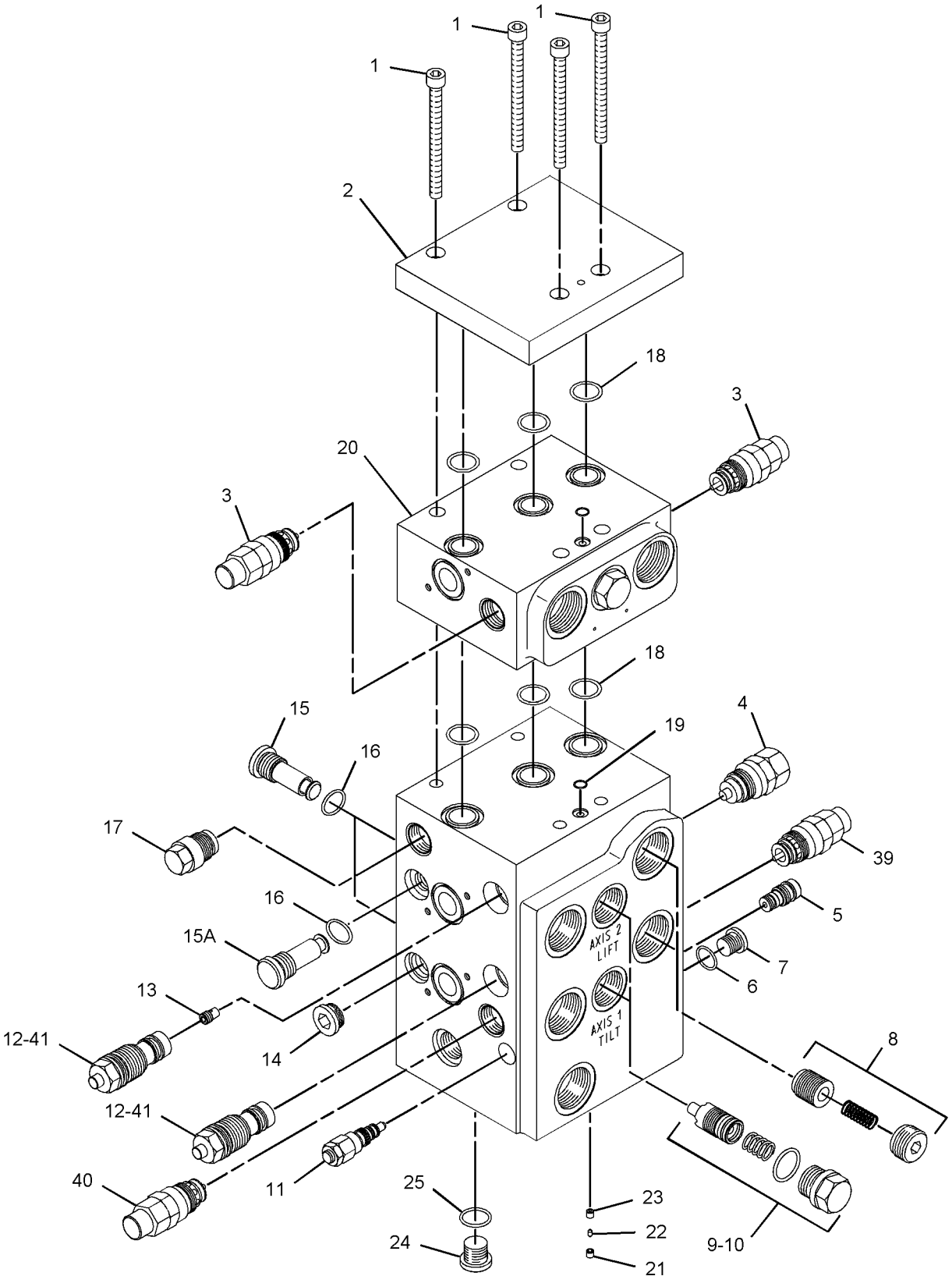

(EXTERNAL PARTS)

GRAPHIC #1 g01105723

209-0271 VALVE GP-MAIN CONTROL *(contd.)* **i03571168**

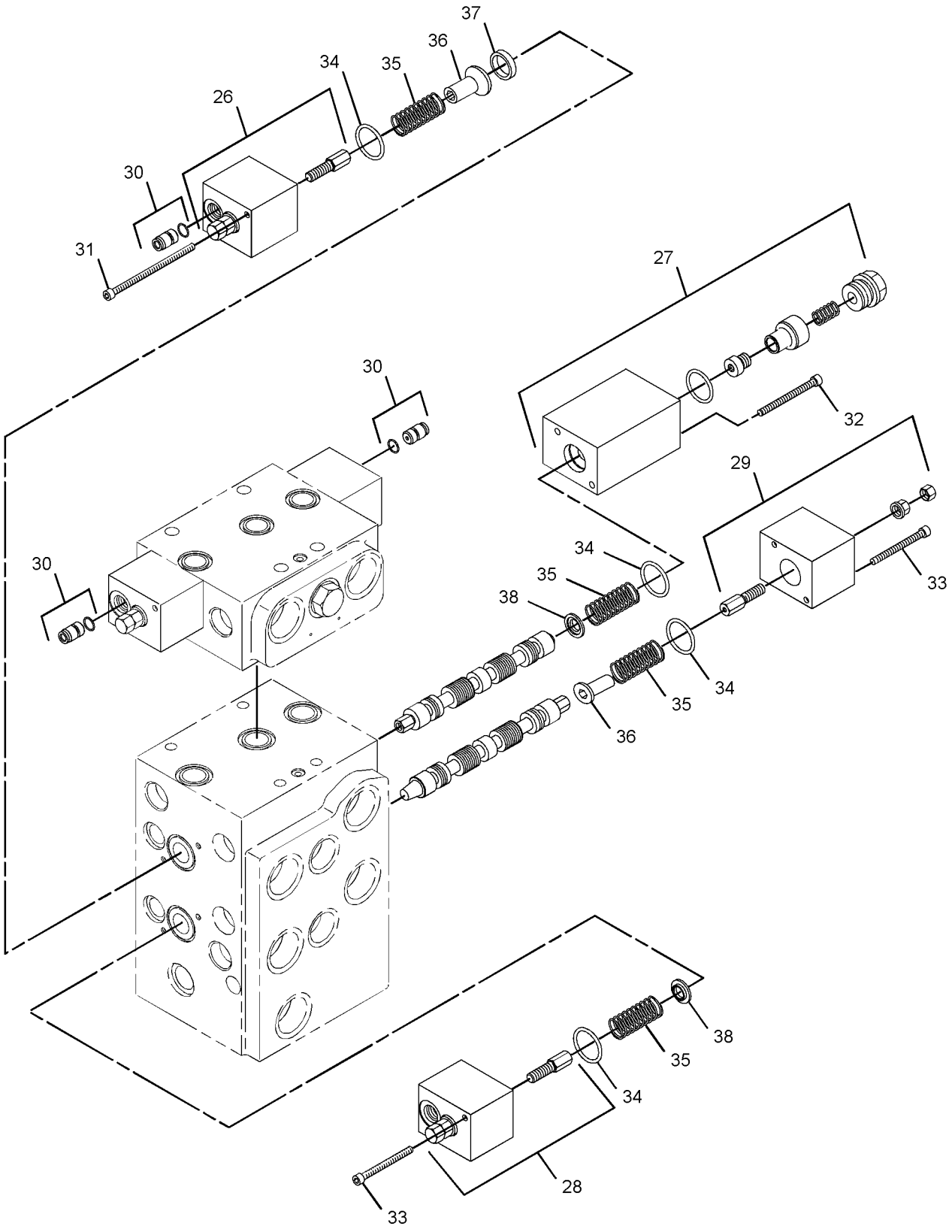

(INTERNAL PARTS)

GRAPHIC #2 **<END>** g01105724

HYDRAULIC SYSTEM

209-0272 VALVE GP-MAIN CONTROL–4-FUNCTION

S/N: KLN1-UP

PART OF 203-3893 HYDRAULIC AR-4 VALVE

AN ATTACHMENT

SMCS-5051 **i03571169**

NOTE	REF NO	GRAPHIC REF	PART NUMBER	QTY	PART NAME 1 2 3 4 5 6 (PRODUCT LEVEL)	SEE PAGE
	1	1	**217-3401**	4	BOLT	
	2	1	**216-9819**	1	PLATE	
	3	1	**215-8119**	2	VALVE GP-RELIEF (PILOT OPERATED)	
					(EACH INCLUDES)	
		1	**123-7531**	1	KIT-SEAL (RELIEF VALVE)	
					(KIT INCLUDES SEAL, THRUST RING & O-RINGS)	
	4	1	**229-9850**	1	VALVE GP-CHECK (MAKEUP OIL)	
	5	1	**215-8115**	1	VALVE GP-FLOW CONTROL (SIGNAL DRAIN)	
		1	**033-5879**	1	SEAL-O-RING	
		1	**192-7111**	1	SEAL-O-RING	
	6	1	**6V-7970**	1	SEAL-O-RING	
	7	1	**8C-4424**	1	PLUG	
	8	1	**216-7913**	2	KIT-ORIFICE (CHECK VALVE)	
					(EACH KIT INCLUDES ORIFICE, SPRING & PLUG)	
	9	1	**215-8111**	1	KIT-VALVE (BOTTOM)	
					(KIT INCLUDES STEM, SPRING, PLUG & SEAL)	
	10	1	**215-8109**	1	KIT-VALVE (TOP)	
					(KIT INCLUDES STEM, SPRING, PLUG & SEAL)	
	11	1	**215-8116**	1	VALVE GP-RELIEF (SIGNAL LIMITER)	
		1	**033-5879**	1	SEAL-O-RING	
		1	**192-7111**	1	SEAL-O-RING	
	12	1	**217-3708**	2	VALVE GP-RELIEF (PILOT OPERATED)	
					(EACH INCLUDES)	
		1	**217-1994**	1	KIT-SEAL (RELIEF VALVE)	
					(KIT INCLUDES SEAL-O-RINGS)	
	13	1	**215-8138**	1	VALVE GP-CHECK	
	14	1	**3E-2331**	1	PLUG	
	15	1	**215-8139**	2	VALVE GP-CHECK (LOAD)	
	15A	1	**215-8139**	1	VALVE GP-CHECK (REGENERATION)	
	16	1	**8T-7524**	4	SEAL-O-RING	
	17	1	**215-8113**	1	VALVE GP-CHECK (BACKPRESSURE)	
		1	**6V-8352**	1	SEAL-O-RING	
	18	1	**5P-6718**	6	SEAL-O-RING	
	19	1	**061-7538**	2	SEAL-O-RING	
Y	20	1	**216-7502**	1	VALVE GP-CONTROL (AUXILIARY)	429
M	21	1	**189-3014**	1	SCREW	
	22	1	**206-7655**	1	ORIFICE-SHUTTLE	
M	23	1	**206-7647**	1	PILOT	
	24	1	**6V-9507**	1	PLUG	
	25	1	**4J-5477**	1	SEAL-O-RING	
	26	2	**215-8135**	1	KIT-VALVE (CHECK VALVE) (ORIFICE)	
					(KIT INCLUDES BLOCK, STUD & LOCKNUT)	
	27	2	**215-8134**	1	KIT-VALVE (CHECK VALVE) (ORIFICE)	
					(KIT INCLUDES BLOCK, SEAL, ORIFICE, RETAINER, SPRING & CAP)	
	28	2	**215-8136**	1	KIT-VALVE (CHECK VALVE) (ORIFICE)	
					(KIT INCLUDES BLOCK, CAPS & STUD)	
	29	2	**215-8137**	1	KIT-VALVE (CHECK VALVE) (ORIFICE)	
					(KIT INCLUDES BLOCK, CAPS & STUD)	
	30	2	**215-8132**	3	KIT-VALVE (SHOCK REDUCING CHECK VALVE)	
					(EACH KIT INCLUDES SPOOL & SEAL)	
M	31	2	**120-3956**	2	BOLT-SOCKET HEAD (M5X0.8X60-MM)	
M	32	2	**127-4832**	2	BOLT-SOCKET HEAD (M5X0.8X90-MM)	
	33	2	**211-5255**	4	BOLT-SOCKET HEAD (M5X0.8X55-MM)	

209-0272 VALVE GP-MAIN CONTROL *(contd.)* i03571169

NOTE	REF NO	GRAPHIC REF	PART NUMBER	QTY	PART NAME 1 2 3 4 5 6 (PRODUCT LEVEL)	SEE PAGE
	34	2	**5P-3456**	4	SEAL-O-RING	
	35	2	**215-8131**	4	SPRING	
	36	2	**215-8128**	2	RETAINER	
	37	2	**215-8133**	1	RING	
	38	2	**215-8129**	2	RETAINER	
	39	1	**217-4597**	1	VALVE GP-RELIEF (MAKEUP)	
		1	**123-7531**	1	KIT-SEAL (RELIEF VALVE)	
					(KIT INCLUDES SEAL, THRUST RING & O-RINGS)	
	40	1	**217-4598**	1	VALVE GP-RELIEF (MAKEUP)	
		1	**123-7531**	1	KIT-SEAL (RELIEF VALVE)	
					(KIT INCLUDES SEAL, THRUST RING & O-RINGS)	
	41	1	**6V-8397**	2	SEAL-O-RING	

M-METRIC PART
Y-SEPARATE ILLUSTRATION

209-0272 VALVE GP-MAIN CONTROL *(contd.)* i03571169

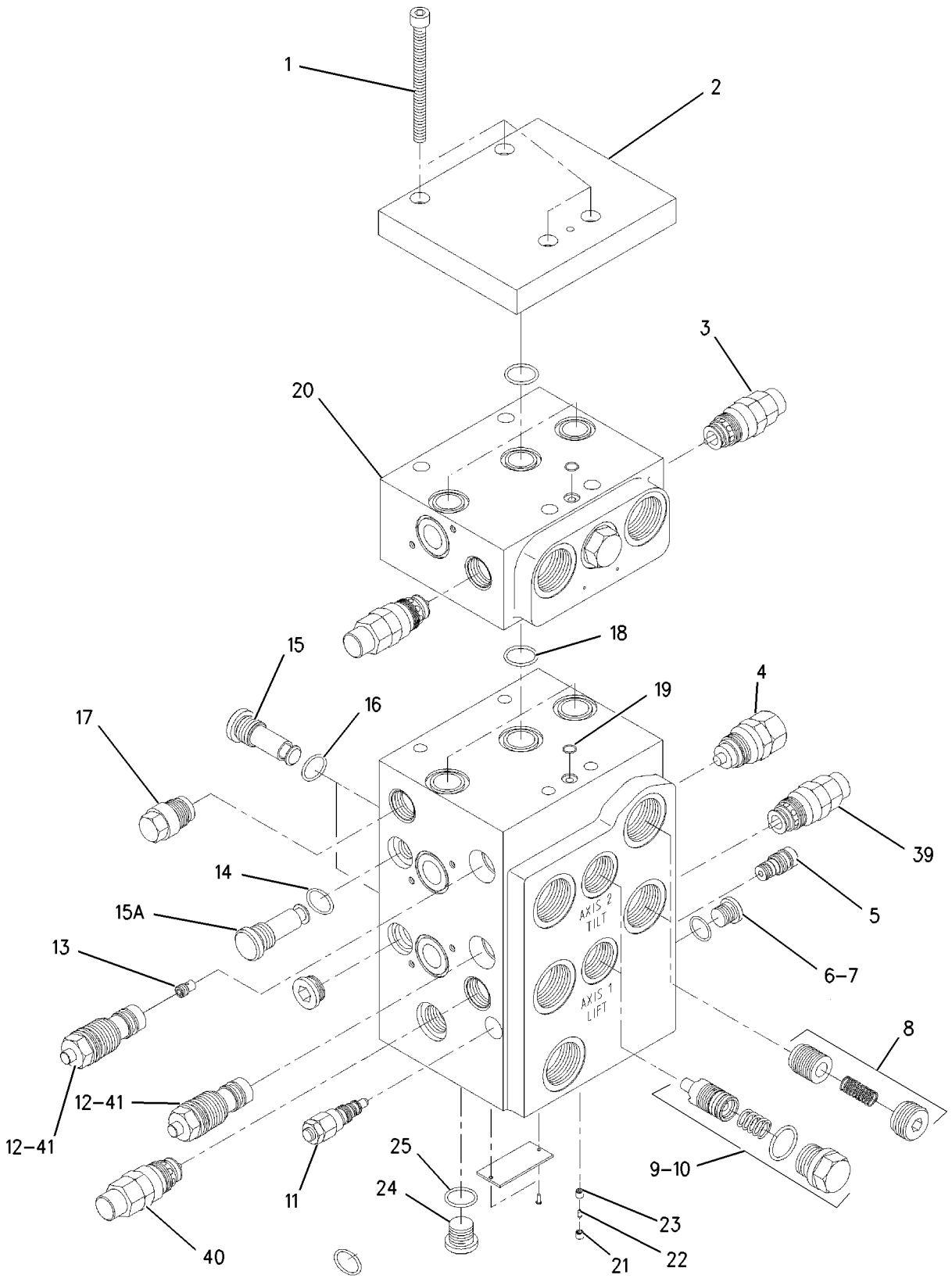

EXTERNAL PARTS

GRAPHIC #1 g00945157

209-0272 VALVE GP-MAIN CONTROL *(contd.)* **i03571169**

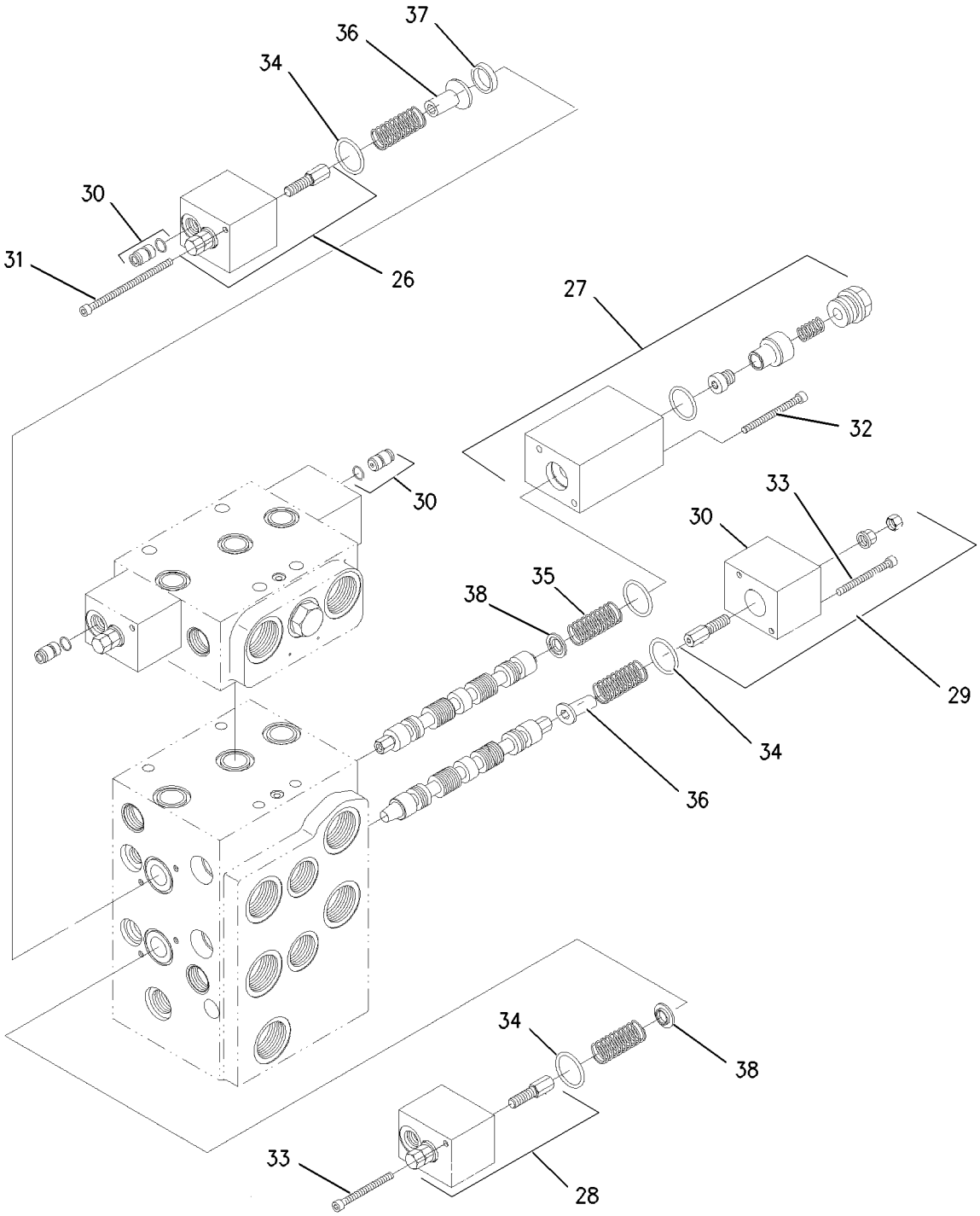

INTERNAL PARTS

GRAPHIC #2 **<END>** g00930522

HYDRAULIC SYSTEM

112-1817 VALVE GP-MANUAL

S/N: KLN1-UP

PART OF 290-6475 LINES GP-LIFT CYLINDER

SMCS-5001, 5130, 5147 **i01859603**

NOTE	PART NUMBER	QTY	PART NAME 1 2 3 4 5 6 (PRODUCT LEVEL)	SEE PAGE
J	*202-0671*	1	VALVE GP-MANUAL	
			—OR—	
J	*202-0673*	1	VALVE GP-MANUAL	
			—OR—	
J	*202-0674*	1	VALVE GP-MANUAL	
			AVAILABLE REPAIR KIT(S):	
J	**112-9861**	1	KIT-SEAL	
			(INCLUDES SEALS, CONNECTORS & THRUST RING)	

J-KIT MARKED J SERVICES PARTS MARKED J

<END>

136-9289 VALVE GP-PILOT–JOYSTICK, 2-FUNCTION

S/N: KLN1-UP
PART OF 212-1307 VALVE GP-PILOT
AN ATTACHMENT

SMCS-5059 **i03629313**

NOTE	REF NO	GRAPHIC REF	PART NUMBER	QTY	PART NAME 1 2 3 4 5 6 (PRODUCT LEVEL)	SEE PAGE
	1	1	**9S-8002**	8	PLUG-O-RING	
Y	2	1	**137-0266**	1	VALVE GP-PILOT CARTRIDGE (LIFT)	457
	3	1	**141-7481**	1	SPACER	
	4	1	**141-9236**	1	SCREEN AS (PILOT OIL)	
	5	1	**142-2651**	1	PLATE AS	
	6	1	**146-8478**	1	CUP	
	7	1	**153-8952**	1	ADAPTER	
	8	1	**163-5512**	5	GROMMET	
Y	9	1	**170-8513**	1	VALVE GP-PILOT CARTRIDGE (LOWER)	461
Y	10	1	**172-0223**	1	VALVE GP-PILOT CARTRIDGE (DUMP)	462
	11	1	**102-8806**	1	KIT-RECEPTACLE (8-PIN)	
					(INCLUDES RECEPTACLE AS & WEDGE)	
	12	1	**136-9297**	1	PLATE	
	13	1	**136-9298**	1	RETAINER	
	14	1	**141-4852**	1	BOOT	
	15	1	**145-8428**	3	COIL AS-DETENT	
					(EACH INCLUDES)	
		1	**8T-8729**	2	PIN-CONNECTOR (16-GA TO 18-GA)	
Y	16	1	**145-8711**	2	VALVE GP-PILOT CARTRIDGE (TILT BACK)	460
Y	17	1	**147-3322**	1	PLATE GP-PILOT VALVE (JOYSTICK)	411
	18	1	**8T-8737**	2	PLUG-SEAL	
	19	1	**149-5470**	1	PLATE	
	20	1	**153-8947**	1	SWIVEL AS	
	21	1	**3J-1907**	1	SEAL-O-RING	
	22	1	**3J-7354**	8	SEAL-O-RING	
M	23	1	**8T-0267**	4	BOLT-SOCKET HEAD (M6X1X12-MM)	
	24	1	**6V-8397**	1	SEAL-O-RING	
	25	1	**6V-8636**	1	CONNECTOR	
	26	1	**8L-2786**	1	SEAL-O-RING	

M-METRIC PART
Y-SEPARATE ILLUSTRATION

136-9289 VALVE GP-PILOT *(contd.)* i03629313

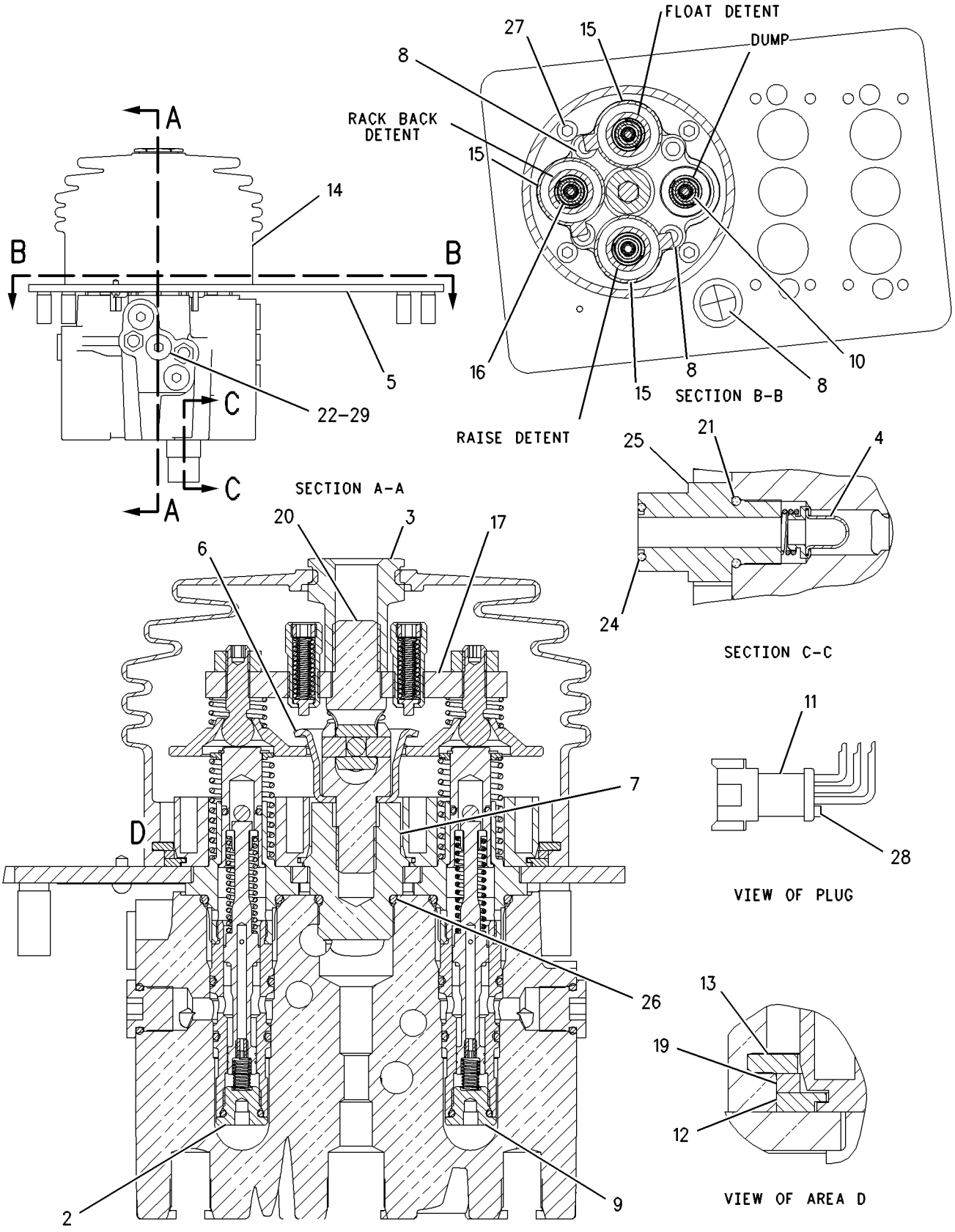

GRAPHIC #1 **<END>** g00645105

145-5256 VALVE GP-PILOT–2-FUNCTION

S/N: KLN1-UP
PART OF 212-1307 VALVE GP-PILOT
AN ATTACHMENT

SMCS-5059 **i03571171**

NOTE	REF NO	GRAPHIC REF	PART NUMBER	QTY	PART NAME 1 2 3 4 5 6 (PRODUCT LEVEL)	SEE PAGE
M	1	1	**5C-2890**	2	NUT (M6X1-THD)	
	2	1	**9S-8002**	12	PLUG-O-RING	
	3	2	**141-1556**	2	RETAINER	
	4	2	**141-2032**	2	PLATE	
	5	2	**144-7850**	1	PLATE AS	
	6	2	**148-7922**	2	PLATE	
Y	7	2	**145-2322**	1	PIVOT GP-PILOT VALVE (LIFT)	407
	8	2	**102-8805**	1	KIT-RECEPTACLE (6-PIN)	
					(KIT INCLUDES RECEPTACLE AS & WEDGE)	
	9	2	**146-8477**	2	BRACKET	
	10	1	**146-8981**	2	PIN	
	11	1	**033-9139**	4	RING-RETAINING	
M	12	2	**105-3481**	2	BOLT-SOCKET HEAD (M8X1.25X20-MM)	
	13	1	**136-9292**	2	BOOT	
	14	2	**137-9755**	3	COIL AS-DETENT (24-VDC)	
					(EACH INCLUDES)	
		2	**1S-9593**	2	STRAP-CABLE	
		2	**8T-8729**	2	PIN-CONNECTOR (16-GA TO 18-GA)	
M	15	1	**141-8546**	2	BOLT-SOCKET HEAD (M6X1X100-MM)	
	16	2	**145-2334**	2	ADAPTER	
	17	1	**145-7977**	2	ADAPTER	
Y	18	2	**145-8710**	2	VALVE GP-PILOT CARTRIDGE (LIFT)	459
Y	19	2	**145-8711**	2	VALVE GP-PILOT CARTRIDGE (TILT)	460
	20	2	**8L-2786**	2	SEAL-O-RING	
Y	21	2	**147-2038**	1	PIVOT GP-PILOT VALVE (TILT)	408
M	22	2	**147-4502**	8	BOLT-SOCKET HEAD (M6X1X10-MM)	
	23	1	**3J-7354**	16	SEAL-O-RING	
	24	2	**8T-8737**	2	PLUG-SEAL	

M-METRIC PART
Y-SEPARATE ILLUSTRATION

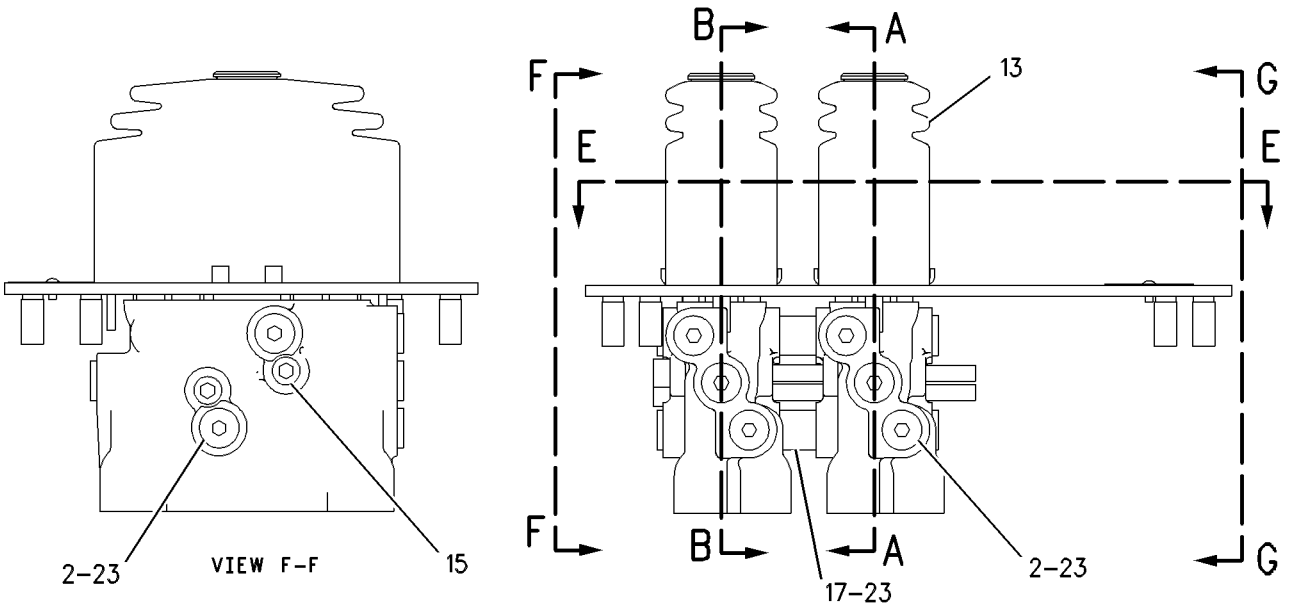

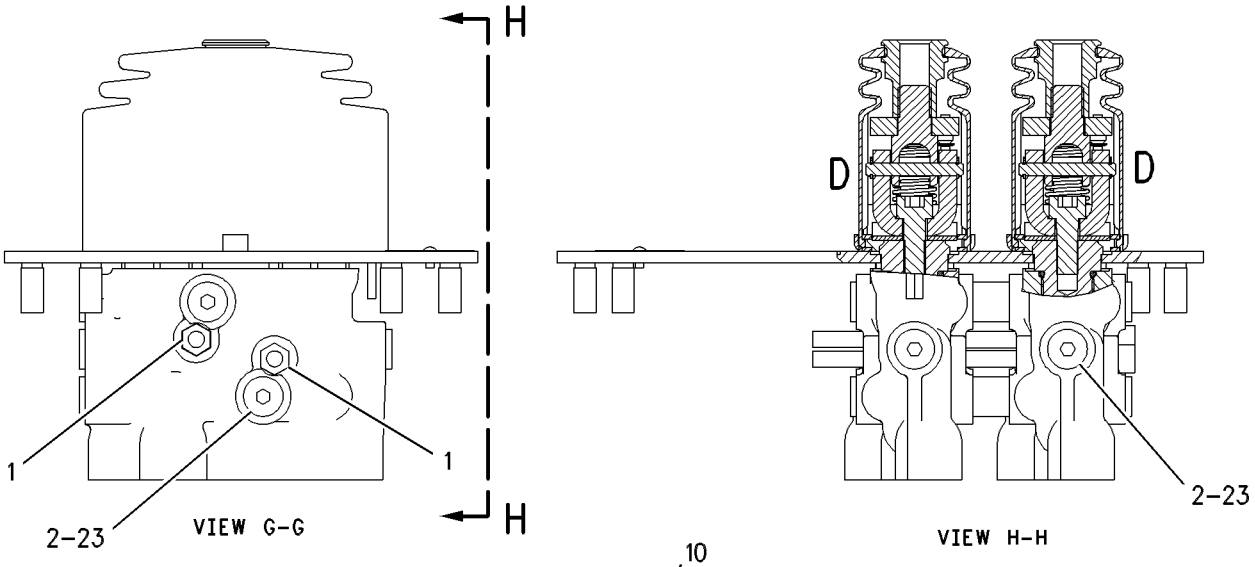

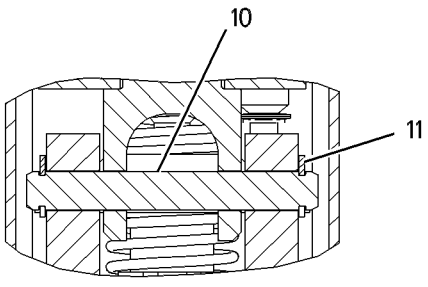

VIEW OF AREA D

REFER TO ALL ILLUSTRATIONS OF THIS GROUP FOR AUXILIARY VIEWS

GRAPHIC #1

g00281431

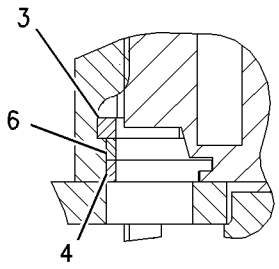

VIEW OF AREA C

REFER TO ALL ILLUSTRATIONS OF THIS GROUP FOR AUXILIARY VIEWS

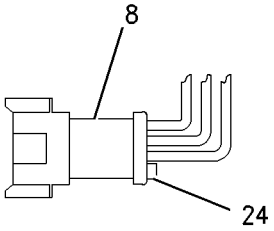

PLUG DETAIL

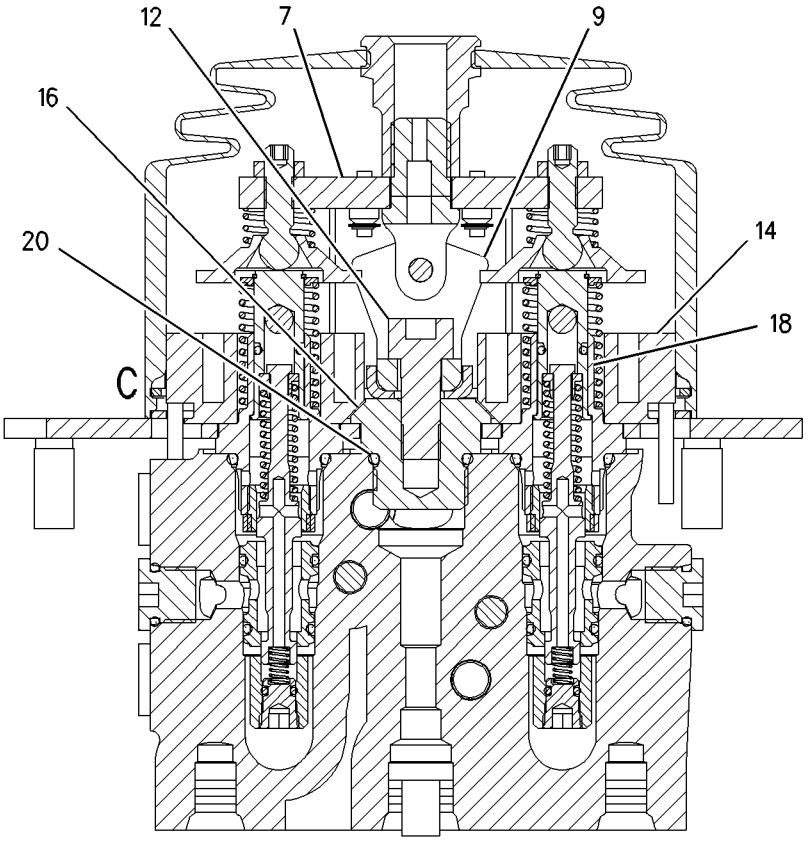

SECTION A-A

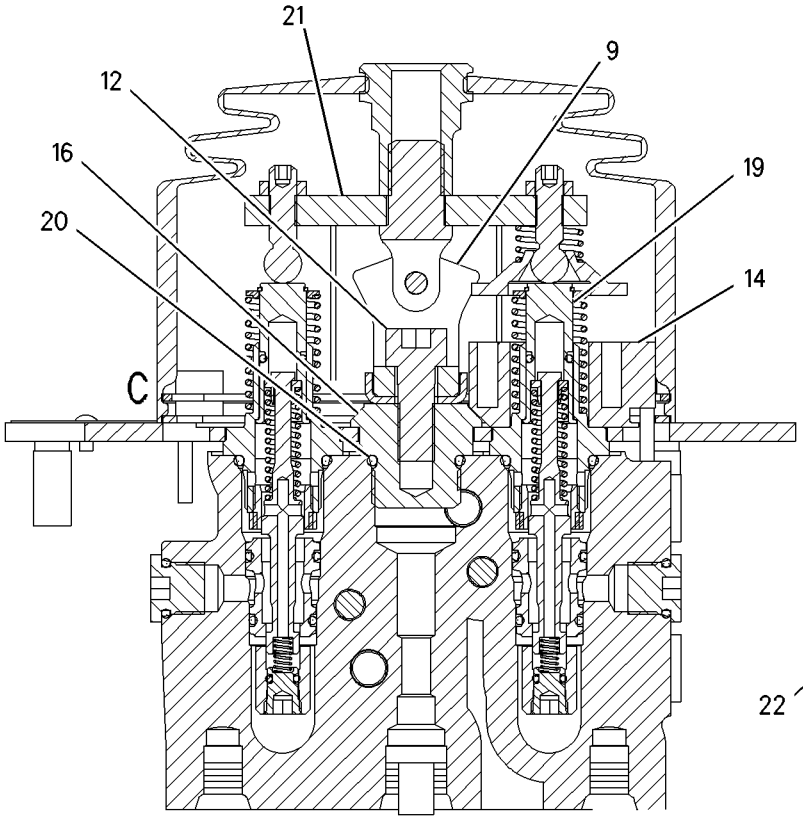

SECTION B-B

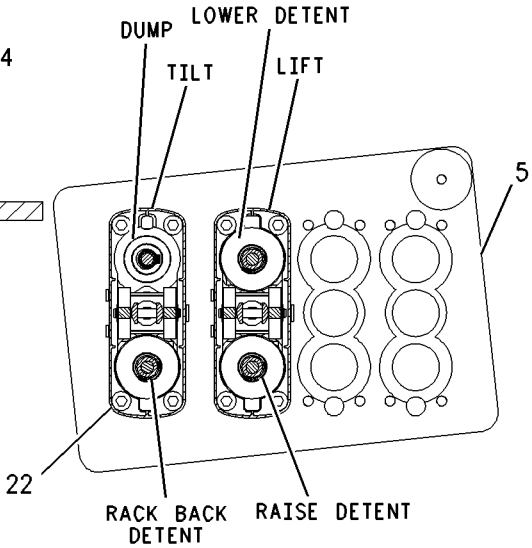

SECTION E-E

GRAPHIC #2 **<END>** g00888456

212-1302 VALVE GP-PILOT—JOYSTICK, 2-FUNCTION

S/N: KLN1-UP
PART OF 287-2058 VALVE GP-PILOT
AN ATTACHMENT

SMCS-5059 **i03537741**

NOTE	REF NO	GRAPHIC REF	PART NUMBER	QTY	PART NAME 1 2 3 4 5 6 (PRODUCT LEVEL)	SEE PAGE
	1	1	**141-4852**	1	BOOT	
	2	1	**141-7481**	1	SPACER	
	3	1	**141-9236**	1	SCREEN AS (PILOT OIL)	
	4	1	**142-2651**	1	PLATE AS	
	5	1	**146-8478**	1	CUP	
	6	1	**153-8947**	1	SWIVEL AS	
	7	1	**153-8952**	1	ADAPTER	
	8	1	**163-5512**	5	GROMMET	
	9	1	**102-8806**	1	KIT-RECEPTACLE (8-PIN)	
					(INCLUDES RECEPTACLE AS & WEDGE)	
	10	1	*136-9291*	1	BODY	
	11	1	**136-9297**	1	PLATE	
	12	1	**136-9298**	1	RETAINER	
	13	1	**145-8428**	3	COIL AS-DETENT	
					(EACH INCLUDES)	
		1	**8T-8729**	2	PIN-CONNECTOR (16-GA TO 18-GA)	
Y	14	1	**147-3322**	1	PLATE GP-PILOT VALVE (JOYSTICK)	411
	15	1	**149-5470**	1	PLATE	
M	16	1	**191-8920**	4	BOLT-SOCKET HEAD (M6X1X12-MM)	
Y	17	1	**212-4962**	2	VALVE GP-PILOT CARTRIDGE (LIFT, FLOAT, LOWER)	463
Y	18	1	**212-4963**	2	VALVE GP-PILOT CARTRIDGE (DUMP, TILT BACK)	464
	19	1	**9S-8002**	8	PLUG-O-RING	
	20	1	**3J-1907**	1	SEAL-O-RING	
	21	1	**3J-7354**	8	SEAL-O-RING	
	22	1	**8T-8737**	2	PLUG-SEAL	
	23	1	**6V-8397**	1	SEAL-O-RING	
	24	1	**6V-8636**	1	CONNECTOR	
	25	1	**8L-2786**	1	SEAL-O-RING	

M-METRIC PART
Y-SEPARATE ILLUSTRATION

212-1302 VALVE GP-PILOT *(contd.)* i03537741

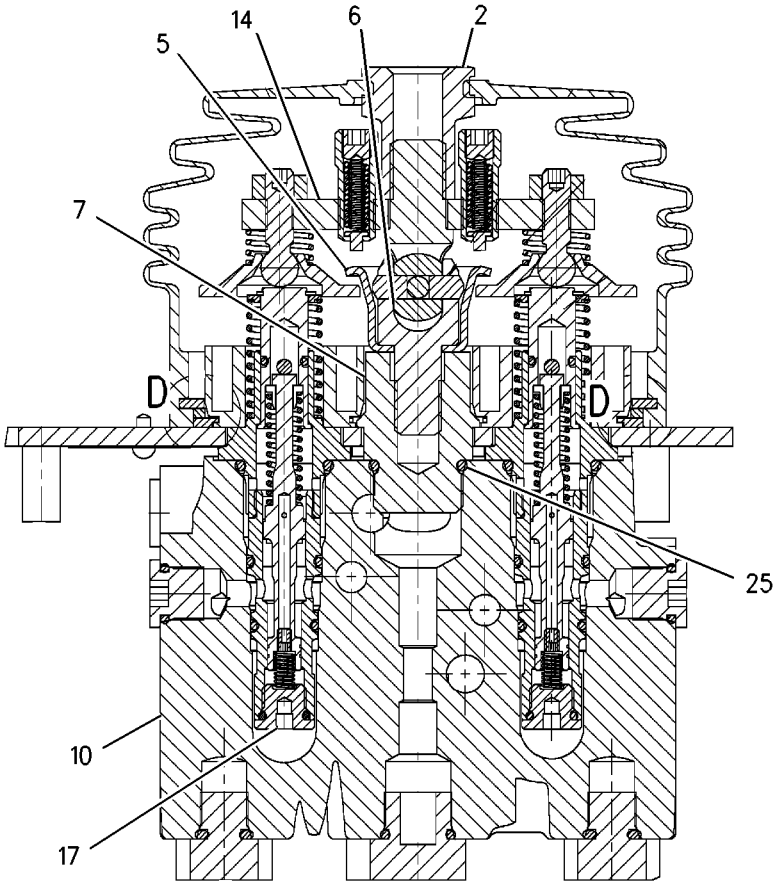

SECTION A-A

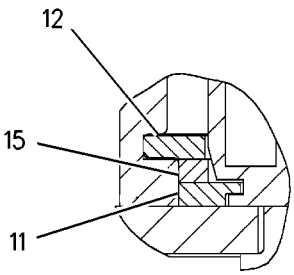

VIEW OF AREA D

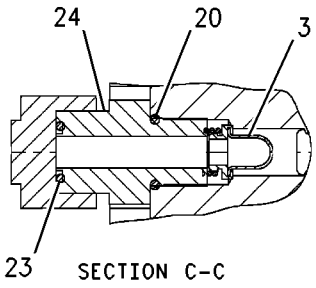

SECTION C-C

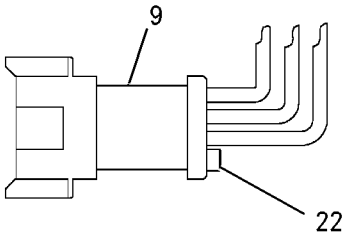

PLUG DETAIL

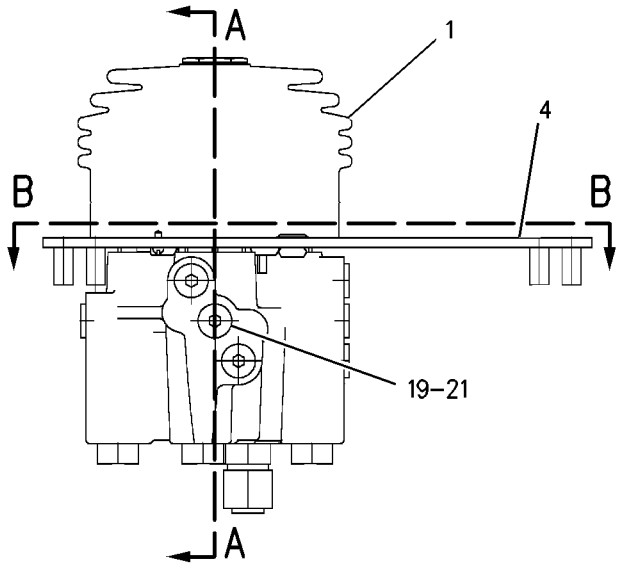

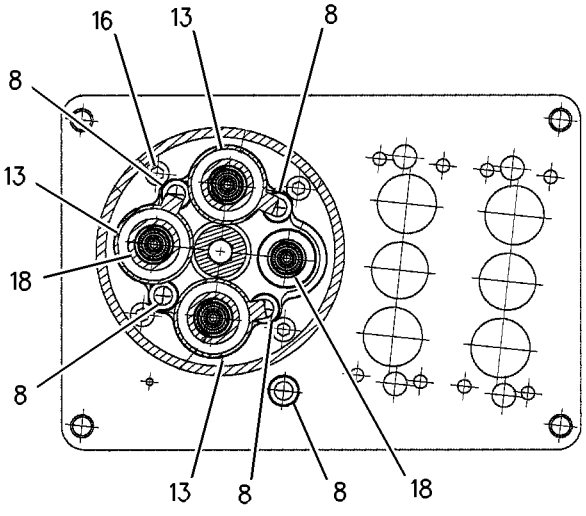

SECTION B-B

GRAPHIC #1 **<END>** g00886130

212-1305 VALVE GP-PILOT—JOYSTICK, 4-FUNCTION

S/N: KLN1-UP
PART OF 287-2060 CONTROL GP-JOYSTICK
AN ATTACHMENT

SMCS-5059 **i03626661**

NOTE	REF NO	GRAPHIC REF	PART NUMBER	QTY	PART NAME 1 2 3 4 5 6 (PRODUCT LEVEL)	SEE PAGE
	1	1	**6V-8636**	1	CONNECTOR	
	2	1	**8L-2786**	2	SEAL-O-RING	
	3	1	**141-1095**	2	ADAPTER	
	4	1	**141-1556**	1	RETAINER	
	5	1	**141-2032**	1	PLATE	
	6	1	**141-4852**	1	BOOT	
	7	1	**141-7481**	1	SPACER	
	8	1	**141-9236**	1	SCREEN AS (PILOT OIL)	
	9	1	**142-2651**	1	PLATE AS	
	10	1	**145-2334**	1	ADAPTER	
	11	1	**146-8477**	1	BRACKET	
	12	1	**146-8478**	1	CUP	
	13	1	**146-8981**	1	PIN	
	14	1	**148-7922**	1	PLATE	
	15	1	**153-8947**	1	SWIVEL AS	
	16	1	**153-8952**	1	ADAPTER	
	17	1	**163-5512**	7	GROMMET	
Y	18	1	**175-9443**	1	PIVOT GP-PILOT VALVE (AUXILIARY)	410
	19	1	**033-9139**	2	RING-RETAINING	
	20	1	**102-8806**	1	KIT-RECEPTACLE (8-PIN)	
					(INCLUDES RECEPTACLE AS & WEDGE)	
	21	1	**9S-8002**	12	PLUG-O-RING	
	22	1	**136-9292**	1	BOOT	
	23	1	**136-9297**	1	PLATE	
	24	1	**136-9298**	1	RETAINER	
M	25	1	**140-9926**	2	BOLT-SOCKET HEAD (M6X1X150-MM)	
	26	1	**145-8428**	4	COIL AS-DETENT	
					(EACH INCLUDES)	
D		1	**6V-2689**	1	TUBE-HEAT SHRINK (6.35-MM DIA) (0.8-M)	
		1	**186-3735**	2	PIN-CONNECTOR (16-GA TO 18-GA)	
Y	27	1	**147-3322**	1	PLATE GP-PILOT VALVE (JOYSTICK)	411
	28	1	**149-5470**	1	PLATE	
M	29	1	**191-8920**	8	BOLT-SOCKET HEAD (M6X1X12-MM)	
Y	30	1	**212-4962**	4	VALVE GP-PILOT CARTRIDGE (LIFT, FLOAT, LOWER)	463
Y	31	1	**212-4963**	2	VALVE GP-PILOT CARTRIDGE (DUMP, TILT BACK)	464
	32	1	**9S-4191**	2	PLUG-O-RING	
	33	1	**3J-1907**	3	SEAL-O-RING	
	34	1	**3J-7354**	16	SEAL-O-RING	
M	35	1	**5A-3604**	1	BOLT-SOCKET HEAD (M8X1.25X25-MM)	
M	36	1	**5C-2890**	2	NUT (M6X1-THD)	
	37	1	**6V-8397**	1	SEAL-O-RING	

D-ORDER BY THE METER
M-METRIC PART
Y-SEPARATE ILLUSTRATION

212-1305 VALVE GP-PILOT *(contd.)* **i03626661**

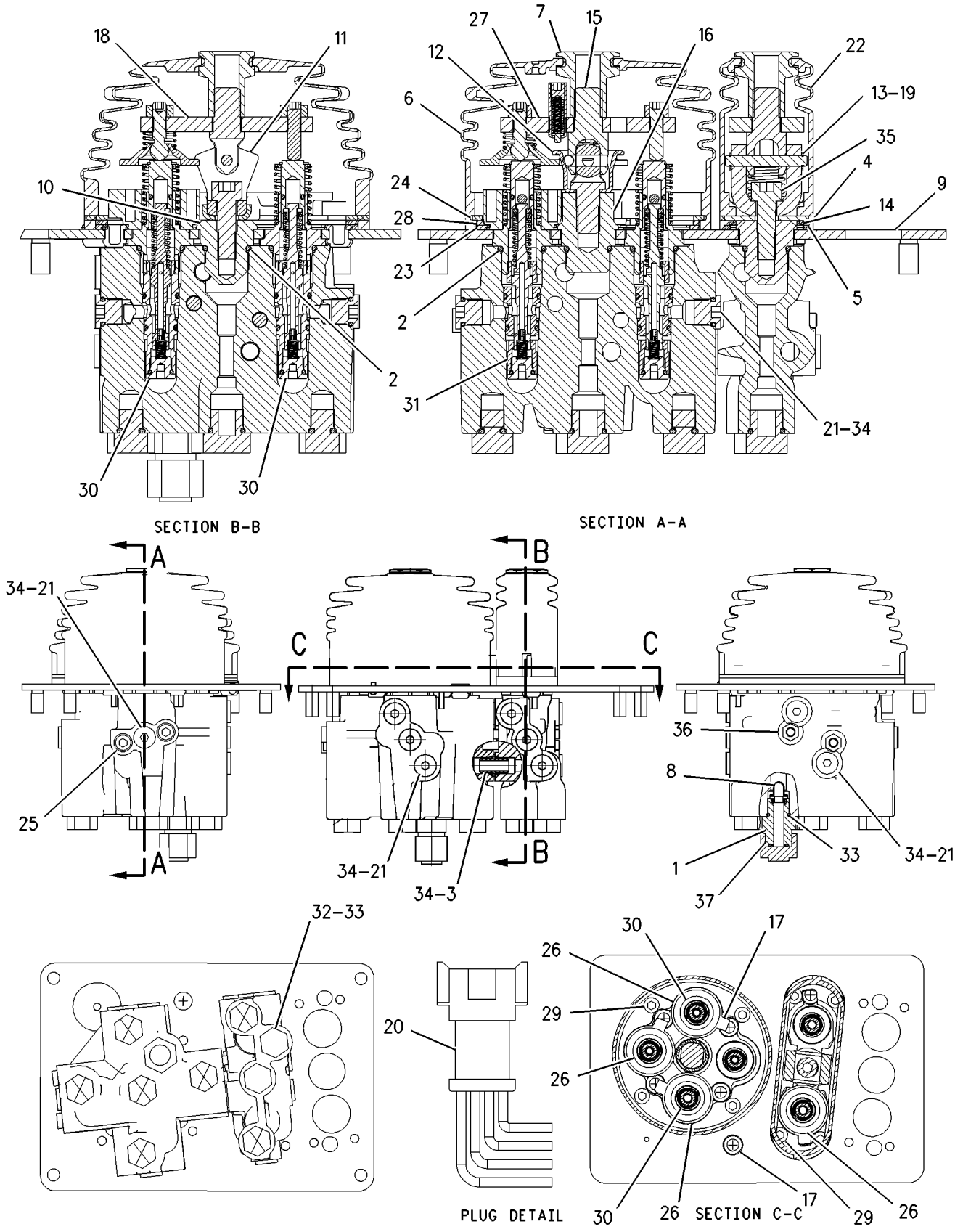

GRAPHIC #1 **<END>** g00875369

HYDRAULIC SYSTEM

212-1307 VALVE GP-PILOT

S/N: KLN1-UP
JOYSTICK,4 FUNCTION
PART OF 287-2064 VALVE GP-PILOT
AN ATTACHMENT

SMCS-5059 **i03626670**

NOTE	REF NO	GRAPHIC REF	PART NUMBER	QTY	PART NAME 1 2 3 4 5 6 (PRODUCT LEVEL)	SEE PAGE
Y	1	1	**145-5256**	2	VALVE GP-PILOT (2-FUNCTION)	445
	2	1	**141-1095**	2	ADAPTER	
	3	2	**141-1556**	2	RETAINER	
	4	2	**141-2032**	2	PLATE	
	5	1	**141-4852**	1	BOOT	
	6	2	**141-7481**	1	SPACER	
	7	1	**141-9236**	1	SCREEN AS (PILOT OIL)	
	8	2	**142-2651**	1	PLATE AS	
	9	2	**145-2334**	2	ADAPTER	
	10	2	**146-8477**	2	BRACKET	
	11	2	**146-8478**	1	CUP	
	12	2	**146-8981**	2	PIN	
Y	13	2	**147-3114**	1	PIVOT GP-PILOT VALVE (AUXILIARY)	409
	14	2	**148-7922**	2	PLATE	
	15	2	**153-8947**	1	SWIVEL AS	
	16	2	**153-8952**	1	ADAPTER	
	17	1	**163-5512**	9	GROMMET	
Y	18	2	**175-9443**	1	PIVOT GP-PILOT VALVE (TILT)	410
	19	2	**033-9139**	4	RING-RETAINING	
	20	2	**102-8806**	1	KIT-RECEPTACLE (8-PIN)	
Y	21	1	**136-9289**	1	VALVE GP-PILOT (JOYSTICK, 2-FUNCTION)	443
	22	1	**136-9292**	2	BOOT	
	23	2	**136-9297**	1	PLATE	
	24	2	**136-9298**	1	RETAINER	
	25	2	**145-8428**	4	COIL AS-DETENT	
					(EACH INCLUDES)	
D		2	**6V-2689**		TUBE-HEAT SHRINK (6.35-MM DIA) (0.8-M)	
		2	**186-3735**	2	PIN-CONNECTOR (16-GA TO 18-GA)	
Y	26	2	**147-3322**	1	PLATE GP-PILOT VALVE (JOYSTICK)	411
	27	2	**149-5470**	1	PLATE	
	28	1	**157-6144**	2	ADAPTER	
M	29	1	**157-6155**	2	BOLT-SOCKET HEAD	
M	30	1	**191-8920**	12	BOLT-SOCKET HEAD (M6X1X12-MM)	
Y	31	1,2	**212-4962**	6	VALVE GP-PILOT CARTRIDGE (LIFT, LOWER, AUXILIARY)	463
Y	32	1	**212-4963**	2	VALVE GP-PILOT CARTRIDGE (DUMP, TILT BACK)	464
	33	1,2	**9S-8002**	16	PLUG-O-RING	
	34	1	**3J-1907**	5	SEAL-O-RING	
	35	1,2	**3J-7354**	24	SEAL-O-RING	
	36	1	**9S-4191**	4	PLUG-O-RING	
M	37	2	**5A-3604**	2	BOLT-SOCKET HEAD (M8X1.25X25-MM)	
M	38	1	**5C-2890**	2	NUT (M6X1-THD)	
	39	1	**6V-8397**	1	SEAL-O-RING	
	40	1	**6V-8636**	1	CONNECTOR	
	41	2	**8L-2786**	3	SEAL-O-RING	

D-ORDER BY THE METER
M-METRIC PART
Y-SEPARATE ILLUSTRATION

212-1307 VALVE GP-PILOT *(contd.)* **i03626670**

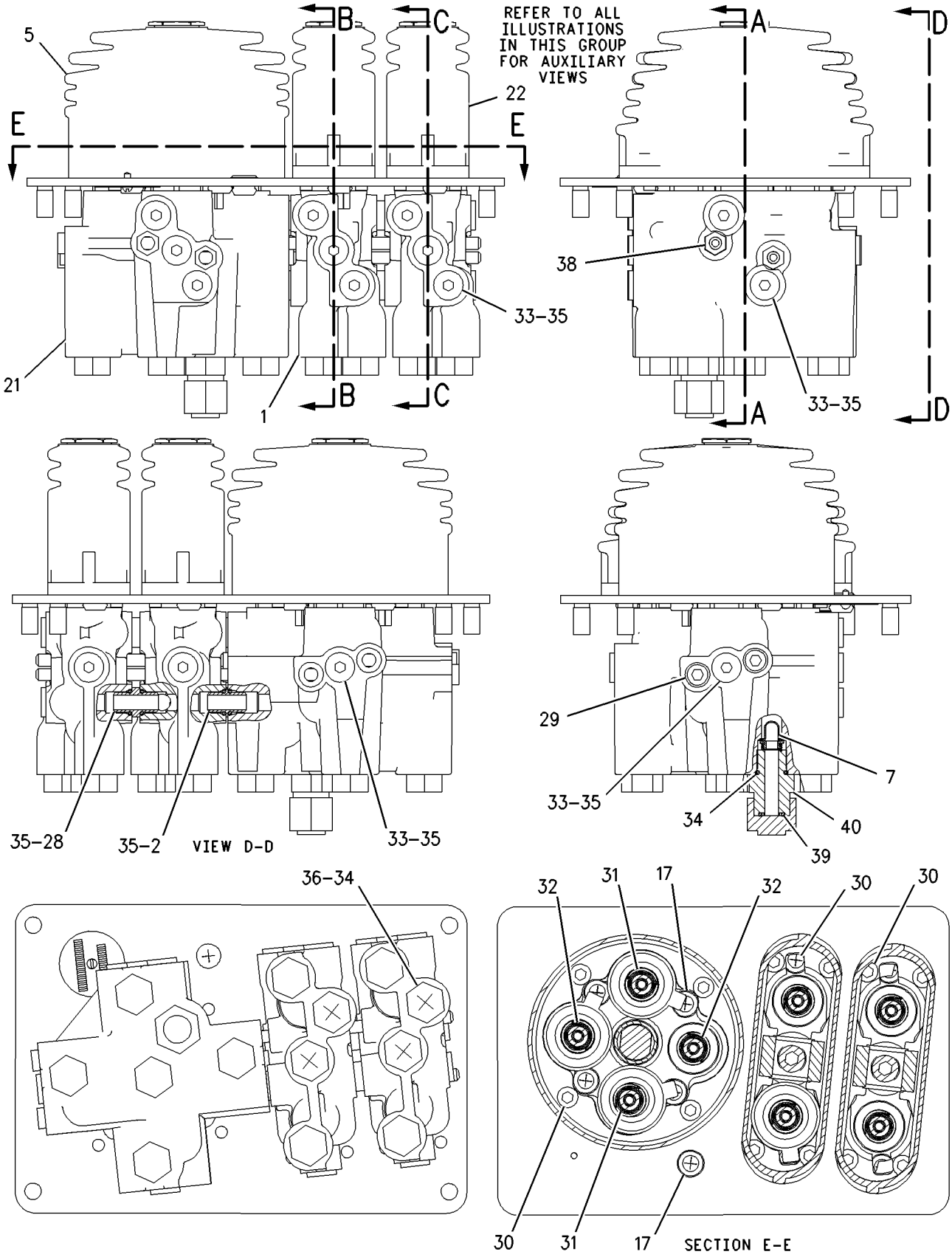

GRAPHIC #1 g00886161

212-1307 VALVE GP-PILOT *(contd.)* i03626670

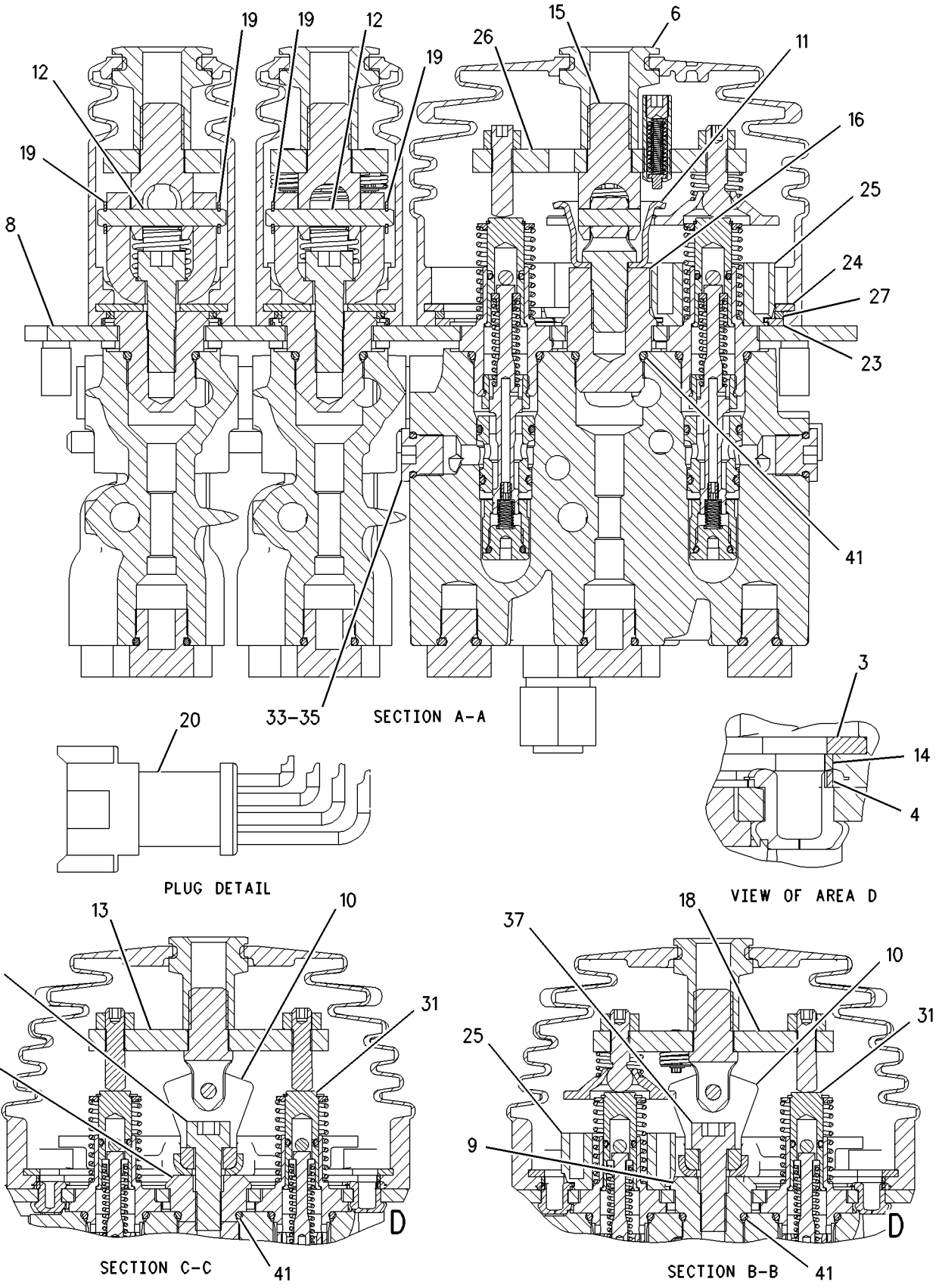

GRAPHIC #2 **<END>** g00886168

287-2058 VALVE GP-PILOT—JOYSTICK, 2-FUNCTION

S/N: KLN1-UP

PART OF 225-1059, 235-6853 CONTROL GP-PILOT OPERATED HYD AN ATTACHMENT

SMCS-5059 **i03031940**

NOTE	REF NO	GRAPHIC REF	PART NUMBER	QTY	PART NAME 1 2 3 4 5 6 (PRODUCT LEVEL)	SEE PAGE
	1	1	**149-4359**	1	ROD-CONTROL	
Y	2	1	**212-1302**	1	VALVE GP-PILOT (JOYSTICK, 2-FUNCTION)	448
	3	1	**287-0524**	1	CONTROL GP-HANDLE (DIRECTION, DOWNSHIFT SWITCHES)	
		1	**186-3735**	6	PIN-CONNECTOR (16-GA TO 18-GA)	
M	4	1	**150-1293**	2	SCREW-BUTTON HEAD (M4X0.7X12-MM)	
	5	1	**102-8805**	1	KIT-RECEPTACLE (6-PIN)	
					(INCLUDES RECEPTACLE AS & WEDGE)	
	7	1	**3S-2093**	2	STRAP-CABLE	
M	8	1	**8T-4244**	1	NUT (M12X1.75-THD)	

M-METRIC PART
Y-SEPARATE ILLUSTRATION

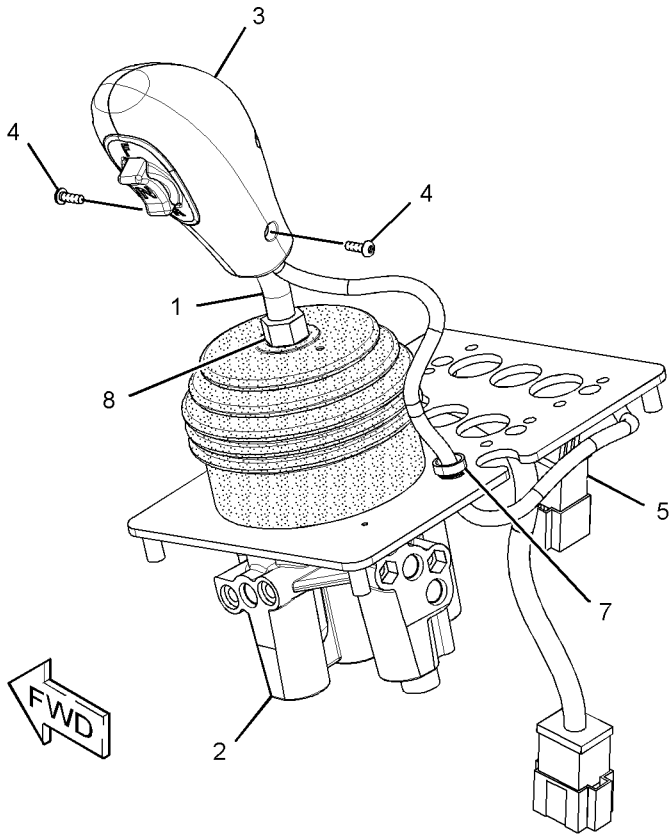

GRAPHIC #1 **<END>** g01539433

287-2064 VALVE GP-PILOT—JOYSTICK, 4-FUNCTION

S/N: KLN1-UP

PART OF 225-1061, 235-6860 CONTROL GP-PILOT OPERATED HYD AN ATTACHMENT

SMCS-5059 **i02818365**

NOTE	REF NO	GRAPHIC REF	PART NUMBER	QTY	PART NAME 1 2 3 4 5 6 (PRODUCT LEVEL)	SEE PAGE
	1	1	**114-3937**	1	ROD	
	2	1	**114-3940**	1	ROD	
	3	1	**124-4401**	2	KNOB	
	4	1	**149-4359**	1	ROD-CONTROL	
Y	5	1	**212-1307**	1	VALVE GP-PILOT (JOYSTICK, 4-FUNCTION)	452
	6	1	**259-1161**	1	PLATE	
	7	1	**270-7612**	1	SEAL	
	8	1	**287-0524**	1	CONTROL GP-HANDLE (DIRECTION, DOWNSHIFT SWITCHES)	
		1	**186-3735**	6	PIN-CONNECTOR (16-GA TO 18-GA)	
M	9	1	**150-1293**	2	SCREW-BUTTON HEAD (M4X0.7X12-MM)	
M	10	1	**8T-4244**	3	NUT (M12X1.75-THD)	

M-METRIC PART
Y-SEPARATE ILLUSTRATION

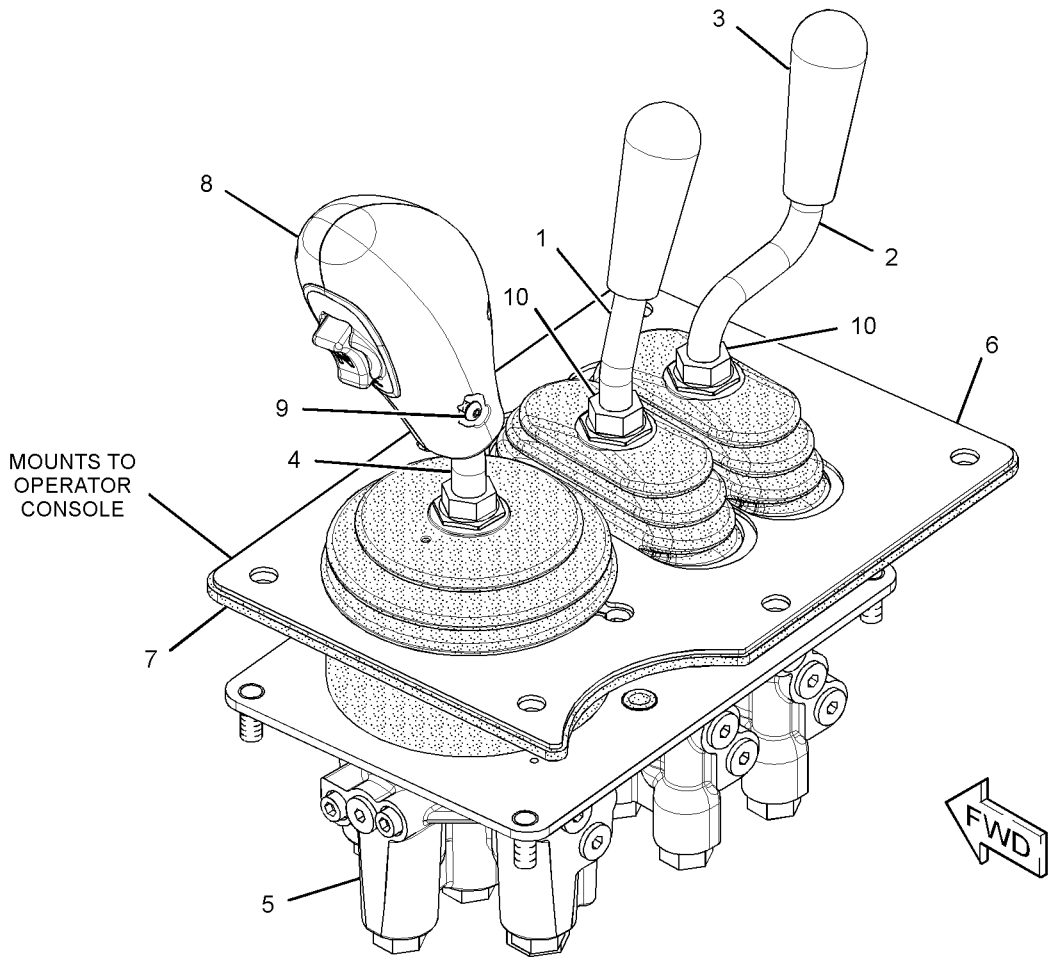

GRAPHIC #1 **<END>** g01394558

137-0266 VALVE GP-PILOT CARTRIDGE

S/N: KLN1-UP
PART OF 136-9289 VALVE GP-PILOT
AN ATTACHMENT

SMCS-5059 **i01859601**

NOTE	REF NO	GRAPHIC REF	PART NUMBER	QTY	PART NAME 1 2 3 4 5 6 (PRODUCT LEVEL)	SEE PAGE
	1	1	**136-9304**	1	ADAPTER	
	2	1	**145-8707**	1	SPRING	
	3	1	**146-6316**	2	RETAINER	
	4	1	**146-6319**	1	RETAINER	
	5	1	**153-8925**	1	STOP	
	6	1	**116-4527**	1	ORIFICE	
	7	1	**146-6318**	1	PLUNGER	
	8	1	**153-8924**	1	SPOOL	
	9	1	**153-8926**	1	SPRING	
	10	1	**153-8929**	1	CAGE	
	11	1	**157-2152**	1	SPRING	
	12	1	**1M-6718**	1	BALL	
	13	1	**2H-3429**	1	RING-RETAINING	
	14	1	**3K-0360**	1	SEAL-O-RING	
	15	1	**4K-2039**	1	SEAL-O-RING	
	16	1	**6M-5062**	1	SEAL-O-RING	
	17	1	**7I-6601**	1	SEAL-O-RING	
	18	1	**7J-0204**	1	SEAL-O-RING	

137-0266 VALVE GP-PILOT CARTRIDGE *(contd.)* i01859601

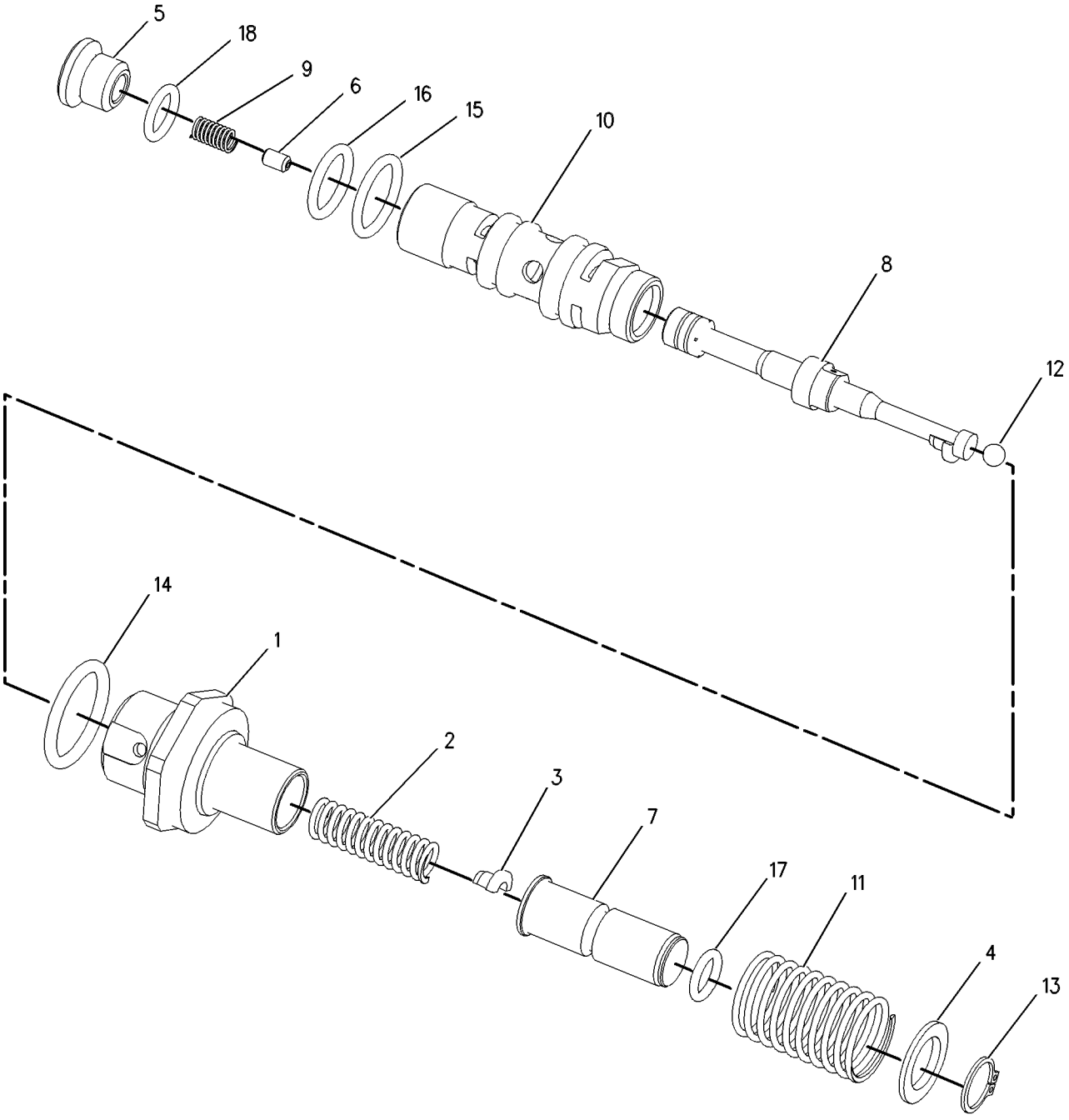

GRAPHIC #1 **<END>** g00484334

145-8710 VALVE GP-PILOT CARTRIDGE

S/N: KLN1-UP
PART OF 145-5256 VALVE GP-PILOT
AN ATTACHMENT

SMCS-5059 **i01098524**

NOTE	REF NO	GRAPHIC REF	PART NUMBER	QTY	PART NAME 1 2 3 4 5 6 (PRODUCT LEVEL)	SEE PAGE
	1	1	**136-9301**	1	SPRING	
	2	1	**136-9304**	1	ADAPTER	
	3	1	**141-5151**	1	SPRING	
	4	1	**146-6316**	2	RETAINER	
	5	1	**146-6319**	1	RETAINER	
	6	1	**153-8925**	1	STOP	
	7	1	**116-4527**	1	ORIFICE	
	8	1	**146-6318**	1	PLUNGER	
	9	1	**153-8924**	1	SPOOL	
	10	1	**153-8926**	1	SPRING	
	11	1	**153-8929**	1	CAGE	
	12	1	**1M-6718**	1	BALL	
	13	1	**2H-3429**	1	RING-RETAINING	
	14	1	**3K-0360**	1	SEAL-O-RING	
	15	1	**4K-2039**	1	SEAL-O-RING	
	16	1	**6M-5062**	1	SEAL-O-RING	
	17	1	**7I-6601**	1	SEAL-O-RING	
	18	1	**7J-0204**	1	SEAL-O-RING	

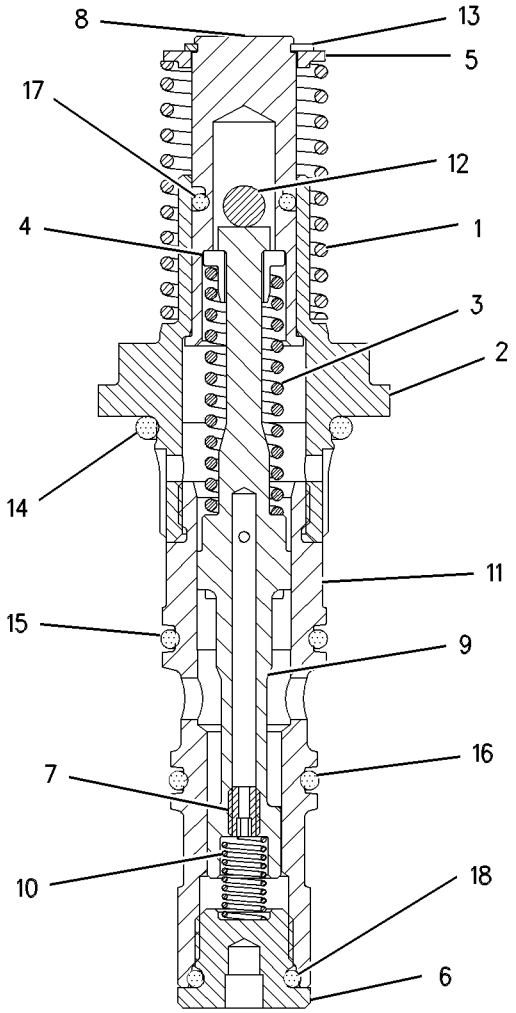

GRAPHIC #1 **<END>** g00577903

HYDRAULIC SYSTEM

145-8711 VALVE GP-PILOT CARTRIDGE

S/N: KLN1-UP
PART OF 136-9289, 145-5256 VALVE GP-PILOT
AN ATTACHMENT

SMCS-5059 **i01203961**

NOTE	REF NO	GRAPHIC REF	PART NUMBER	QTY	PART NAME 1 2 3 4 5 6 (PRODUCT LEVEL)	SEE PAGE
	1	1	**136-9304**	1	ADAPTER	
	2	1	**145-8707**	1	SPRING	
	3	1	**146-6316**	2	RETAINER	
	4	1	**146-6319**	1	RETAINER	
	5	1	**153-8925**	1	STOP	
	6	1	**116-4527**	1	ORIFICE	
	7	1	**146-6318**	1	PLUNGER	
	8	1	**153-8924**	1	SPOOL	
	9	1	**153-8926**	1	SPRING	
	10	1	**153-8929**	1	CAGE	
	11	1	**157-2153**	1	SPRING	
	12	1	**1M-6718**	1	BALL	
	13	1	**2H-3429**	1	RING-RETAINING	
	14	1	**3K-0360**	1	SEAL-O-RING	
	15	1	**4K-2039**	1	SEAL-O-RING	
	16	1	**6M-5062**	1	SEAL-O-RING	
	17	1	**7I-6601**	1	SEAL-O-RING	
	18	1	**7J-0204**	1	SEAL-O-RING	

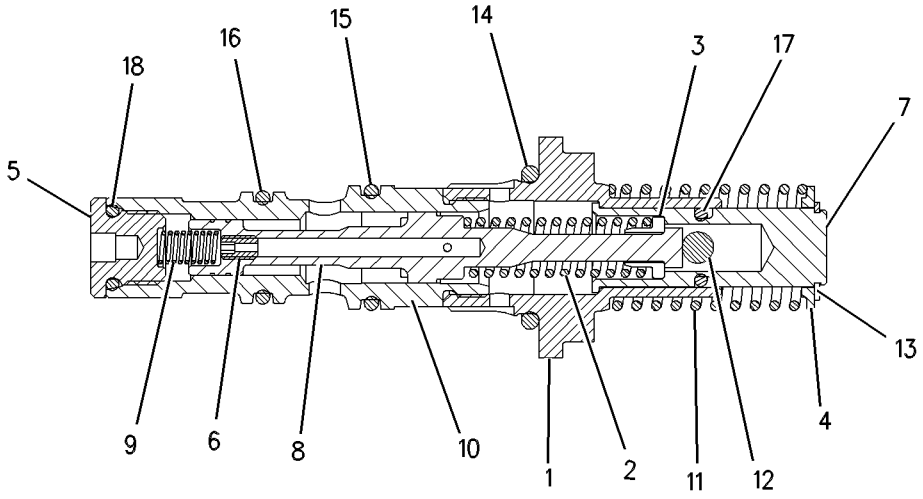

GRAPHIC #1 **<END>** g00605140

170-8513 VALVE GP-PILOT CARTRIDGE

S/N: KLN1-UP
PART OF 136-9289 VALVE GP-PILOT
AN ATTACHMENT

SMCS-5059 **i01206094**

NOTE	REF NO	GRAPHIC REF	PART NUMBER	QTY	PART NAME 1 2 3 4 5 6 (PRODUCT LEVEL)	SEE PAGE
	1	1	**136-9304**	1	ADAPTER	
	2	1	**141-5151**	1	SPRING	
	3	1	**146-6316**	2	RETAINER	
	4	1	**146-6319**	1	RETAINER	
	5	1	**153-8925**	1	STOP	
	6	1	**116-4527**	1	ORIFICE	
	7	1	**146-6318**	1	PLUNGER	
	8	1	**153-8924**	1	SPOOL	
	9	1	**153-8926**	1	SPRING	
	10	1	**153-8929**	1	CAGE	
	11	1	**157-2152**	1	SPRING	
	12	1	**1M-6718**	1	BALL	
	13	1	**2H-3429**	1	RING-RETAINING	
	14	1	**3K-0360**	1	SEAL-O-RING	
	15	1	**4K-2039**	1	SEAL-O-RING	
	16	1	**6M-5062**	1	SEAL-O-RING	
	17	1	**7I-6601**	1	SEAL-O-RING	
	18	1	**7J-0204**	1	SEAL-O-RING	

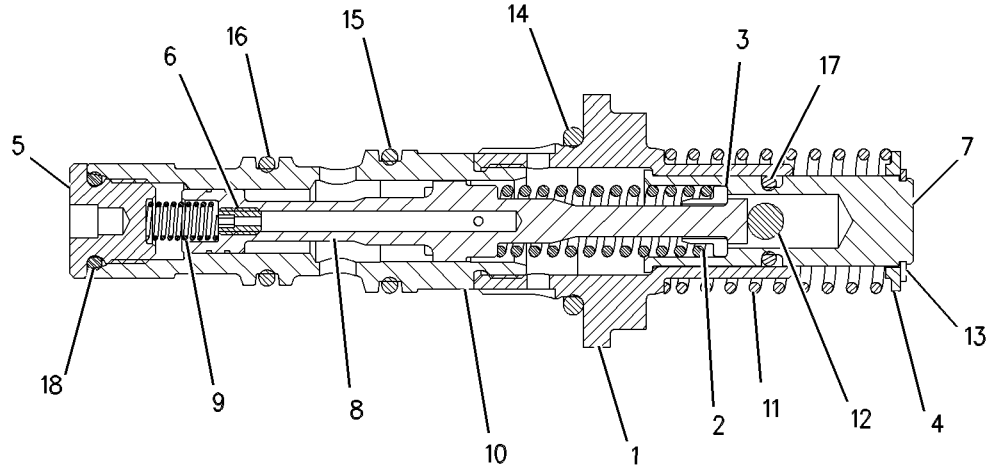

GRAPHIC #1 **<END>** g00597577

HYDRAULIC SYSTEM

172-0223 VALVE GP-PILOT CARTRIDGE

S/N: KLN1-UP
PART OF 136-9289 VALVE GP-PILOT
AN ATTACHMENT

SMCS-5059 **i01208675**

NOTE	REF NO	GRAPHIC REF	PART NUMBER	QTY	PART NAME 1 2 3 4 5 6 (PRODUCT LEVEL)	SEE PAGE
	1	1	**136-9304**	1	ADAPTER	
	2	1	**146-6316**	2	RETAINER	
	3	1	**146-6319**	1	RETAINER	
	4	1	**153-8925**	1	STOP	
	5	1	**171-4055**	1	SPRING	
	6	1	**116-4527**	1	ORIFICE	
	7	1	**146-6318**	1	PLUNGER	
	8	1	**153-8924**	1	SPOOL	
	9	1	**153-8926**	1	SPRING	
	10	1	**153-8929**	1	CAGE	
	11	1	**157-2153**	1	SPRING	
	12	1	**2H-3429**	1	RING-RETAINING	
	13	1	**3E-4354**	1	BALL	
	14	1	**3K-0360**	1	SEAL-O-RING	
	15	1	**4K-2039**	1	SEAL-O-RING	
	16	1	**6M-5062**	1	SEAL-O-RING	
	17	1	**7I-6601**	1	SEAL-O-RING	
	18	1	**7J-0204**	1	SEAL-O-RING	

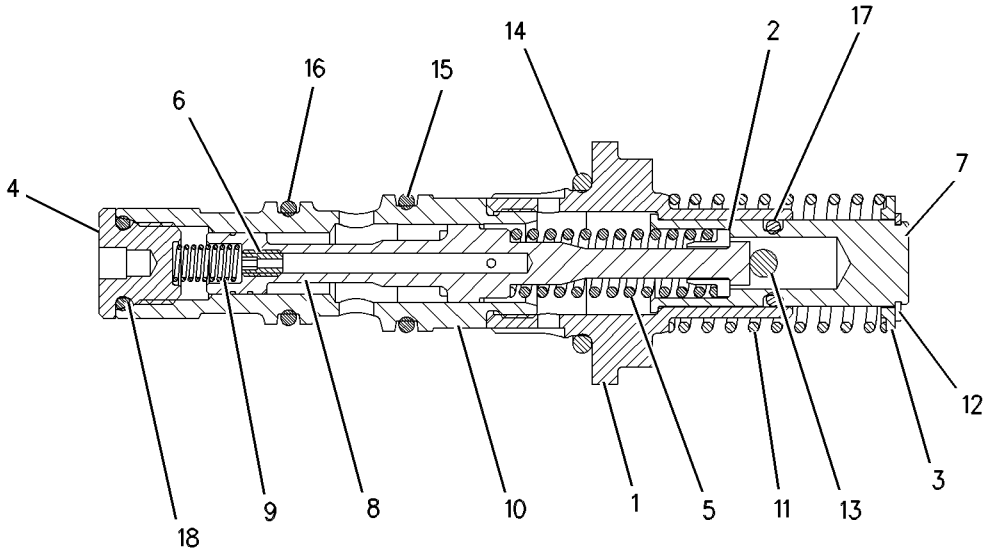

GRAPHIC #1 **<END>** g00598081

212-4962 VALVE GP-PILOT CARTRIDGE

S/N: KLN1-UP

PART OF 212-1302, 212-1305, 212-1307 VALVE GP-PILOT

AN ATTACHMENT

SMCS-5059 **i01822324**

NOTE	REF NO	GRAPHIC REF	PART NUMBER	QTY	PART NAME 1 2 3 4 5 6 (PRODUCT LEVEL)	SEE PAGE
	1	1	**116-4527**	1	ORIFICE	
	2	1	**6M-5062**	1	SEAL-O-RING	
	3	1	**146-6316**	2	RETAINER	
	4	1	**7I-6601**	1	SEAL-O-RING	
	5	1	**146-6319**	1	RETAINER	
	6	1	**153-8924**	1	SPOOL	
	7	1	**153-8925**	1	STOP	
	8	1	**153-8926**	1	SPRING	
	9	1	**153-8929**	1	CAGE	
	10	1	**7J-0204**	1	SEAL-O-RING	
	11	1	**157-2152**	1	SPRING	
	12	1	**2H-3429**	1	RING-RETAINING	
	13	1	**3E-4354**	1	BALL	
	14	1	**3K-0360**	1	SEAL-O-RING	
	15	1	**4K-2039**	1	SEAL-O-RING	

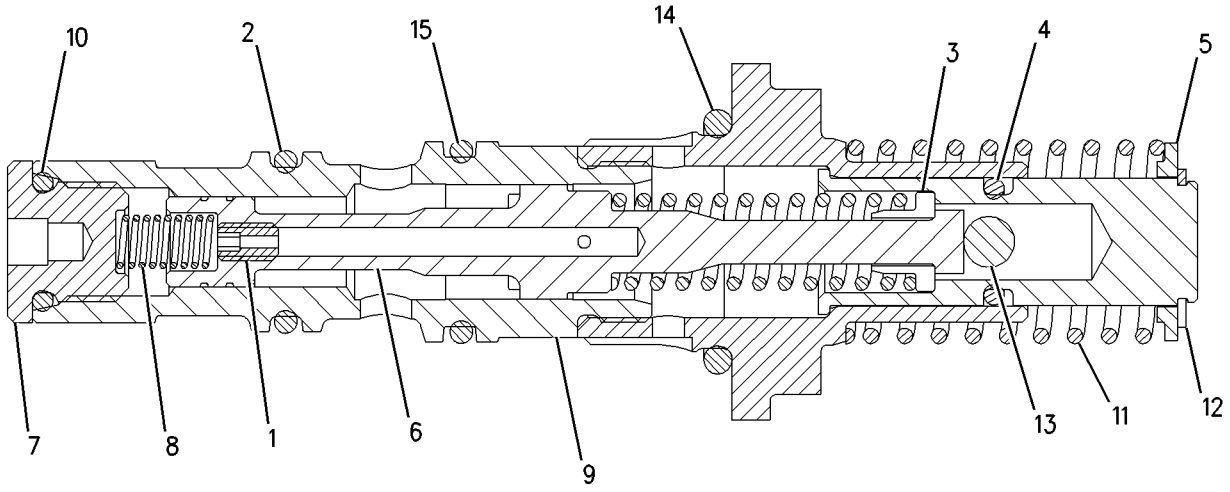

GRAPHIC #1 **<END>** g00930437

HYDRAULIC SYSTEM

212-4963 VALVE GP-PILOT CARTRIDGE

S/N: KLN1-UP

PART OF 212-1302, 212-1305, 212-1307 VALVE GP-PILOT

AN ATTACHMENT

SMCS-5059 **i01822407**

NOTE	REF NO	GRAPHIC REF	PART NUMBER	QTY	PART NAME 1 2 3 4 5 6 (PRODUCT LEVEL)	SEE PAGE
	1	1	**116-4527**	1	ORIFICE	
	2	1	**6M-5062**	1	SEAL-O-RING	
	3	1	**146-6316**	2	RETAINER	
	4	1	**7I-6601**	1	SEAL-O-RING	
	5	1	**146-6319**	1	RETAINER	
	6	1	**153-8924**	1	SPOOL	
	7	1	**153-8925**	1	STOP	
	8	1	**153-8926**	1	SPRING	
	9	1	**153-8929**	1	CAGE	
	10	1	**157-2153**	1	SPRING	
	11	1	**7J-0204**	1	SEAL-O-RING	
	12	1	**2H-3429**	1	RING-RETAINING	
	13	1	**3E-4354**	1	BALL	
	14	1	**3K-0360**	1	SEAL-O-RING	
	15	1	**4K-2039**	1	SEAL-O-RING	

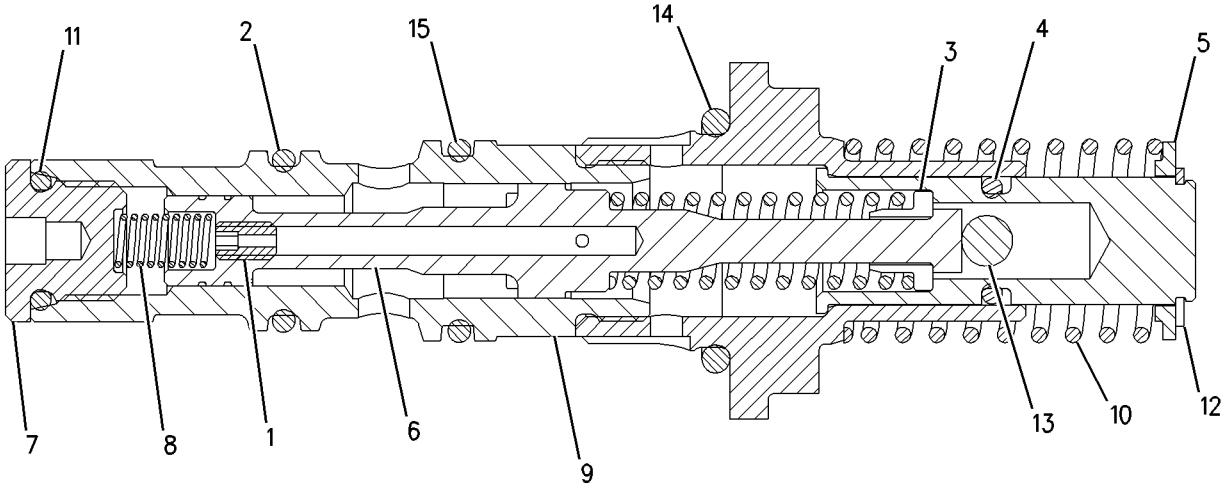

GRAPHIC #1 **<END>** g00930441

HYDRAULIC SYSTEM

185-5209 VALVE GP-PRESSURE REDUCING

S/N: KLN1-UP

PART OF 289-8796 LINES GP-PILOT

SMCS-5117 **i01862793**

NOTE	REF NO	GRAPHIC REF	PART NUMBER	QTY	PART NAME 1 2 3 4 5 6 (PRODUCT LEVEL)	SEE PAGE
	1	1	**119-8397**	1	VALVE GP-CHECK	
		1	**9N-1756**	1	SEAL-O-RING	
		1	**033-5853**	1	SEAL-O-RING	
		1	**126-5985**	1	RING-BACKUP	
	2	1	**184-9975**	1	VALVE GP-PRESSURE REDUCING	
		1	**6V-6924**	2	RING-BACKUP	
		1	**6V-5758**	1	SEAL-O-RING	
		1	**033-6027**	1	SEAL-O-RING	
		1	**033-6043**	1	SEAL-O-RING	
		1	**185-2327**	2	RING-BACKUP	

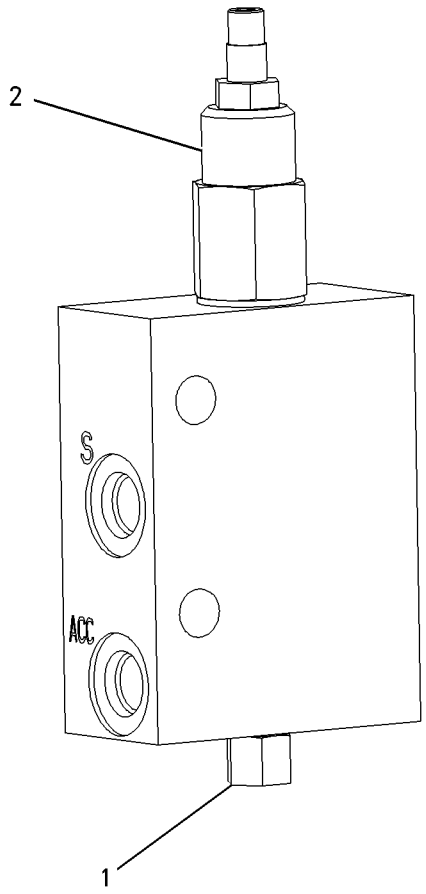

GRAPHIC #1 **<END>** g00685814

168-7323 VALVE GP-PUMP CONTROL–
PRESSURE, FLOW COMPENSATOR
S/N: KLN1-UP
PART OF 168-9027 PUMP GP-PISTON

SMCS-5455 **i01862748**

NOTE	REF NO	GRAPHIC REF	PART NUMBER	QTY	PART NAME 1 2 3 4 5 6 (PRODUCT LEVEL)	SEE PAGE
	1	1	**6E-6528**	6	SEAL	
	2	1	**6E-6527**	2	PLUG	
	3	1	**6E-3268**	1	RETAINER-SPRING	
	4	1	**6E-3275**	1	SPRING	
	5	1	**6E-3274**	1	SPRING	
	6	1	**033-6043**	1	SEAL-O-RING	
	7	1	**6E-3272**	1	SEAT	
	8	1	**6E-6540**	1	PLUG	
M	9	1	**6E-6538**	2	NUT-ADJUSTMENT (M8X1-THD)	
M	10	1	**6E-6537**	2	SCREW-ADJUSTMENT (M8X1X28-MM)	
M	11	1	**6E-6539**	2	NUT-CAP (M8X1-THD)	
	12	1	**6E-3273**	1	SEAT	
	13	1	**6E-6536**	1	PLUG	
	14	1	**6E-3269**	1	RETAINER-SPRING	
	15	1	**105-2145**	1	VALVE-ORIFICE	
	16	1	**5P-9262**	1	SEAL-O-RING	
	17	1	**9S-8002**	1	PLUG-O-RING	
	18	1	**3J-7354**	1	SEAL-O-RING	
	19	1	**6V-8352**	1	SEAL-O-RING	
M	20	1	**8T-8442**	4	BOLT-SOCKET HEAD (M6X1X30-MM)	
	21	1	**9X-7680**	3	SEAL-O-RING	
	22	1	**6E-3276**	1	SPRING	

M-METRIC PART

168-7323 VALVE GP-PUMP CONTROL *(contd.)* **i01862748**

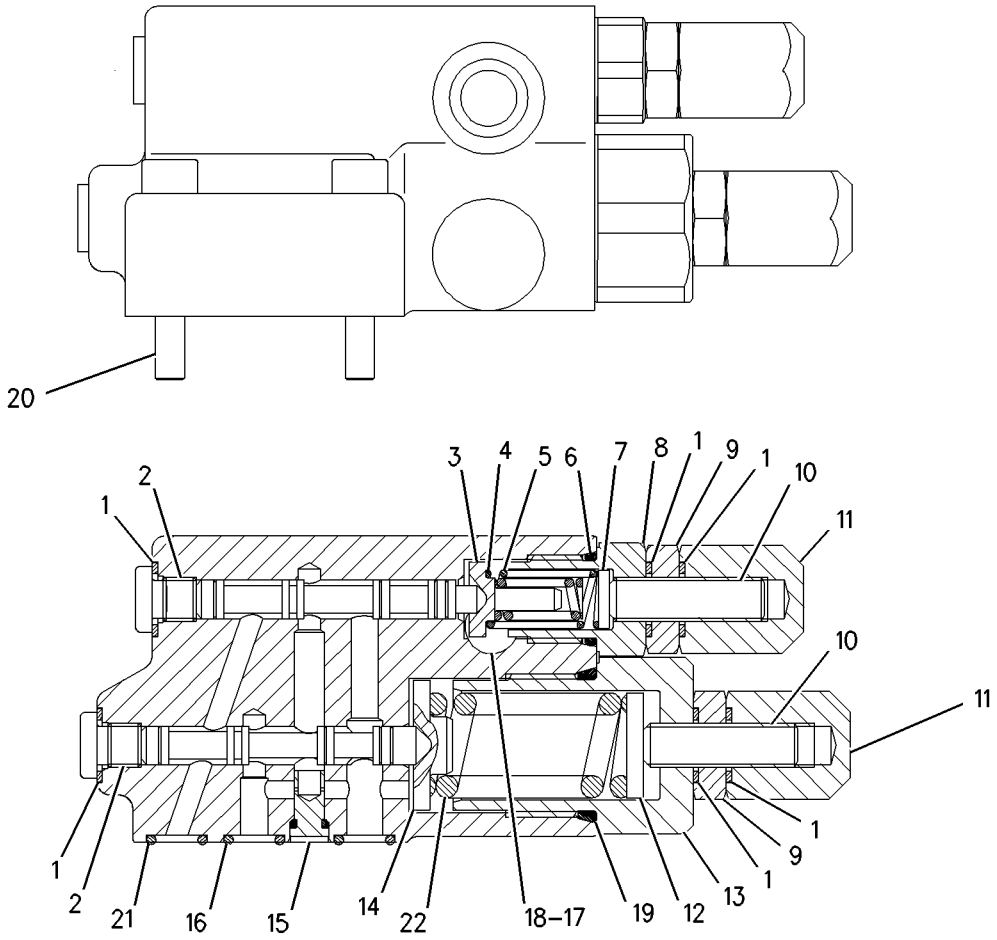

GRAPHIC #1 **<END>** g00831780

224-3188 VALVE GP-PUMP CONTROL–
PRESSURE, FLOW COMPENSATOR
S/N: KLN1-UP
PART OF 168-7873 PUMP GP-PISTON

SMCS-5455 **i02574373**

NOTE	REF NO	GRAPHIC REF	PART NUMBER	QTY	PART NAME 1 2 3 4 5 6 (PRODUCT LEVEL)	SEE PAGE
	1	1	**6E-3268**	1	RETAINER-SPRING	
	2	1	**6E-3269**	1	RETAINER-SPRING	
	3	1	**200-5359**	1	HOUSING	
	4	1	**200-5360**	1	HOUSING	
	5	1	**6E-3272**	1	SEAT	
	6	1	**6E-3273**	1	SEAT	
	7	1	**6E-3275**	1	SPRING	
	8	1	**6E-3276**	1	SPRING	
	9	1	**201-0780**	1	ORIFICE	
	10	1	**202-7503**	2	RETAINER	
	11	1	**6E-6527**	2	PLUG	
	12	1	**193-1036**	1	SPRING	
	13	1	**033-6043**	1	SEAL-O-RING	
	14	1	**6V-8352**	1	SEAL-O-RING	
	15	1	**6E-6528**	2	SEAL	
	16	1	**5P-9262**	1	SEAL-O-RING	
M	17	1	**200-5361**	2	NUT (M8X1-THD)	
	18	1	**200-5362**	2	SEAL-O-RING	
	19	1	**200-5363**	2	RING-THRUST	
	20	1	**200-5364**	2	CAP	

M-METRIC PART

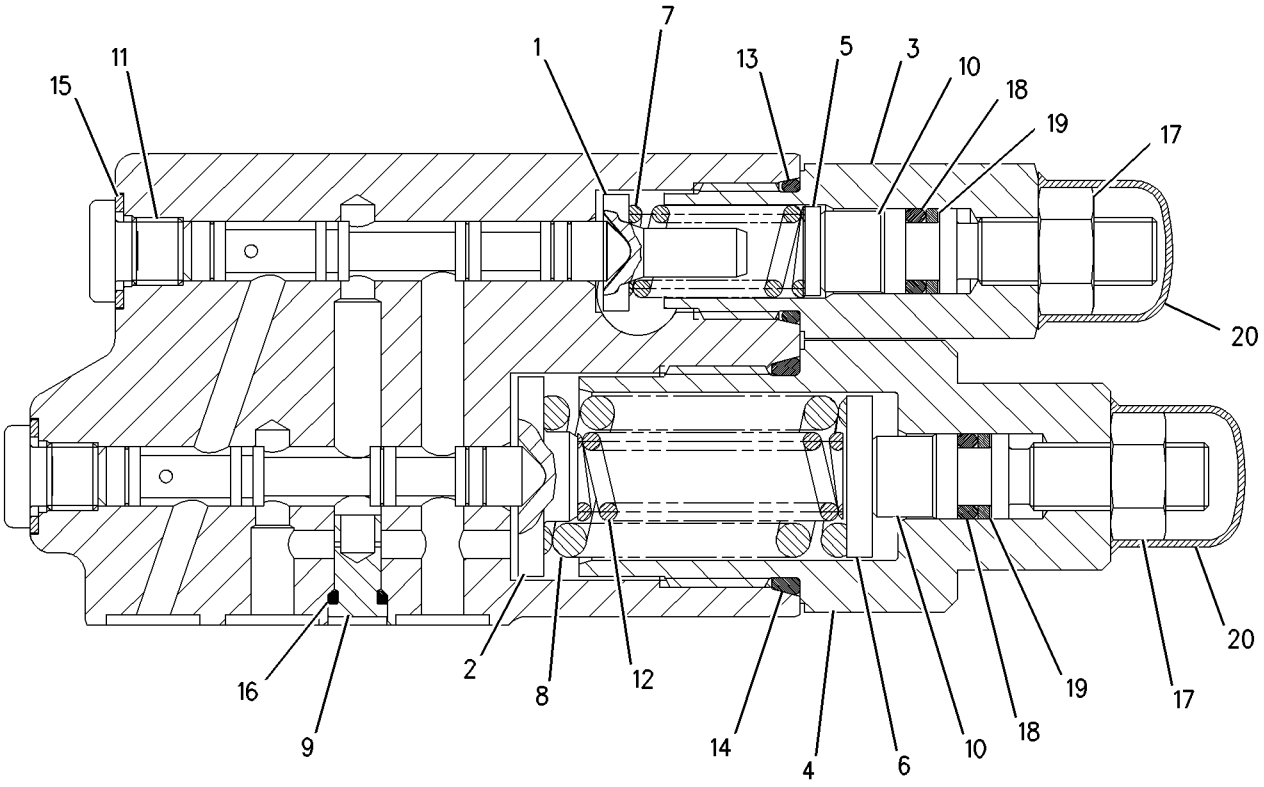

SECTION VIEW

GRAPHIC #1 **<END>** g00932169

177-0026 VALVE GP-RELIEF—TRANSMISSION HYDRAULIC CONTROL

S/N: J2Y1-UP

PART OF 200-2043 VALVE GP-TRANSMISSION CONTROL

SMCS-5069, 5117 **i02603930**

NOTE	REF NO	GRAPHIC REF	PART NUMBER	QTY	PART NAME 1 2 3 4 5 6 (PRODUCT LEVEL)	SEE PAGE
	1	1	**2S-4663**	1	SEAL-O-RING	
	2	1	**2S-5835**	1	PISTON-LOAD	
	3	1	**3J-1907**	3	SEAL-O-RING	
	4	1	**3K-0360**	1	SEAL-O-RING	
	5	1	**4M-5905**	1	SCREW-ADJUSTMENT (5/16-18X1-IN)	
	6	1	**6V-0852**	1	CAP-DUST	
	7	1	**6V-3965**	1	FITTING (QUICK DISCONNECT)	
	8	1	**7B-3028**	1	SCREW-DRIVE (NO 4X0.187-IN)	
	9	1	**8E-1143**	1	SLUG	
	10	1	**8M-5253**	1	SEAL-O-RING	
	11	1	**9M-2110**	1	COVER-ADJUSTMENT	
	12	1	**115-4550**	1	COVER	
	13	1	**172-7966**	1	BODY	
	14	1	**172-7968**	1	SPOOL AS	
		1	**3D-8317**	1	RING-RETAINING	
		1	**4B-9880**	1	BALL	
		1	**4M-2381**	1	SPRING	
		1	**9U-8669**	1	RETAINER	
	15	1	**174-7449**	1	SPRING	
	16	1	**241-6205**	1	PLUG	
	17	1	**6V-0484**	1	ADAPTER-O-RING	
M	18	1	**6V-3940**	2	BOLT (M8X1.25X25-MM)	
M	19	1	**6V-5218**	2	BOLT (M8X1.25X35-MM)	
	20	1	**9M-1974**	2	WASHER-HARD (8.8X16X2-MM THK)	
	21	1	**9S-8004**	1	PLUG-O-RING	

M-METRIC PART

177-0026 VALVE GP-RELIEF *(contd.)* **i02603930**

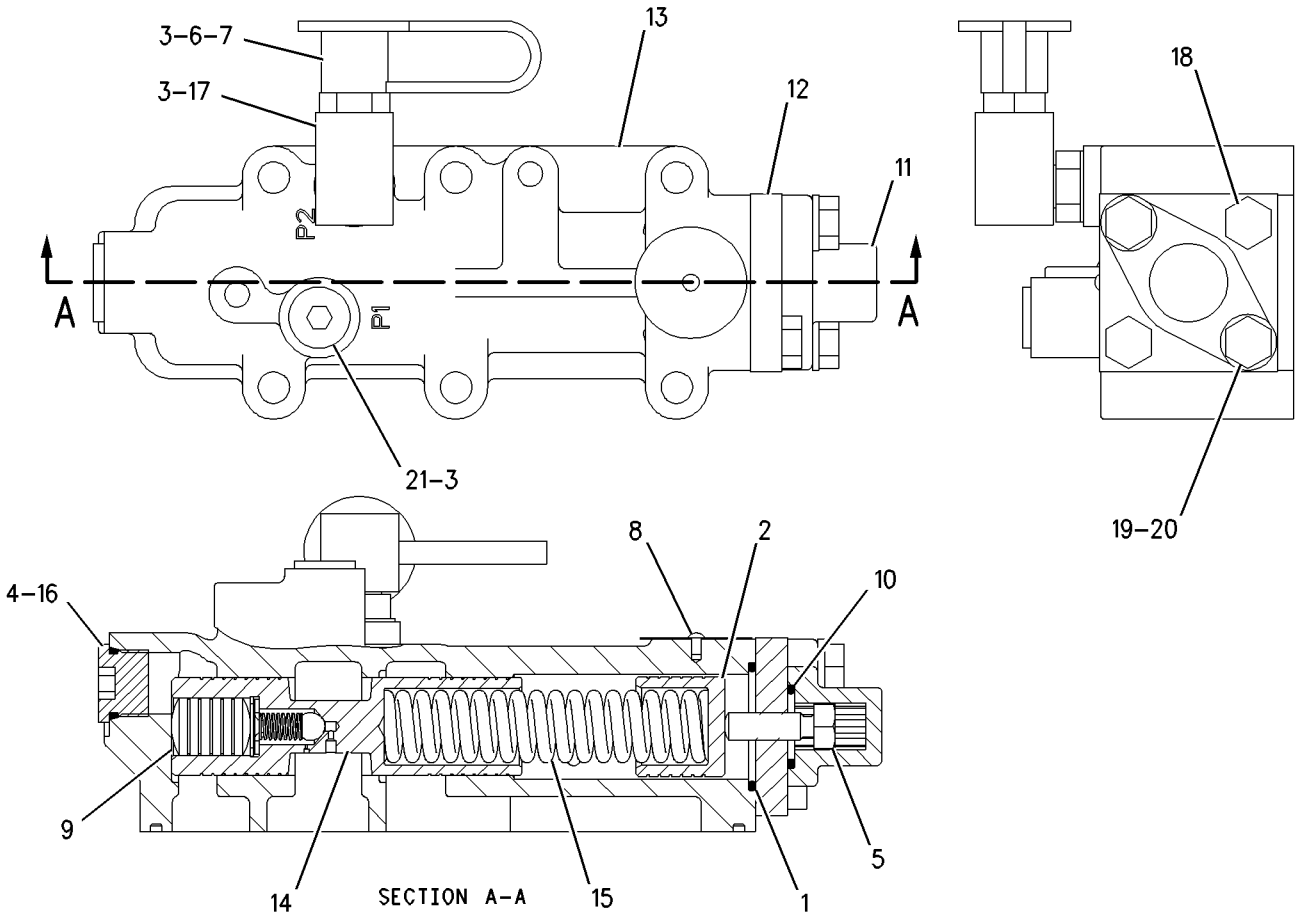

GRAPHIC #1 **<END>** g00989055

HYDRAULIC SYSTEM

225-1057 VALVE GP-SHUTOFF–HYDRAULIC LOCKOUT

S/N: KLN1-UP

PART OF 225-1059, 225-1060, 225-1061 CONTROL GP-PILOT OPERATED HYD, 203-3889 HYDRAULIC AR-2 VALVE, 203-3893 HYDRAULIC AR-4 VALVE AN ATTACHMENT

SMCS-5059, 5130 **i02818624**

NOTE	REF NO	GRAPHIC REF	PART NUMBER	QTY	PART NAME 1 2 3 4 5 6 (PRODUCT LEVEL)	SEE PAGE
	1	1	**6V-1178**	1	PLUG-BUTTON	
C	2	1	**091-0079**	1	PLUG	
	3	1	**226-2095**	1	FILM (BLACK)	
Y	4	1	**233-7133**	1	VALVE & MTG GP-SOLENOID (HYDRAULIC LOCKOUT)	427
C	5	1	**148-8378**	2	ELBOW AS	
					(EACH INCLUDES)	
		1	**3J-1907**	1	SEAL-O-RING	
		1	**6V-8397**	1	SEAL-O-RING	
		1	**6V-8724**	1	ELBOW	
C	6	1	**148-8435**	1	TEE AS	
		1	**3J-1907**	1	SEAL-O-RING	
		1	**6V-8397**	2	SEAL-O-RING	
		1	**6V-8781**	1	TEE-FACE SEAL	
C	7	1	**298-7736**	2	COLLAR	
M	8	1	**2Y-5829**	2	NUT (M10X1.5-THD)	
	9	1	**6V-5839**	4	WASHER (11X21X2.5-MM THK)	
C	10	1	**6V-9829**	1	CAP AS	
CM	11	1	**8T-0643**	2	BOLT (M10X1.5X80-MM)	

C-CHANGE FROM PREVIOUS TYPE
M-METRIC PART
Y-SEPARATE ILLUSTRATION

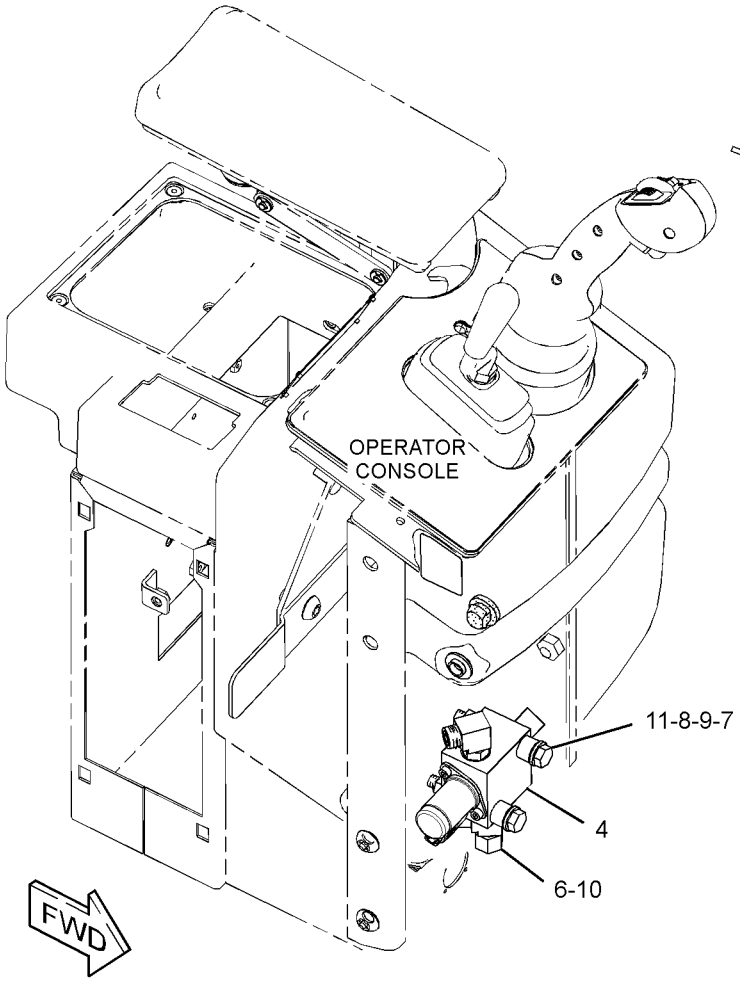

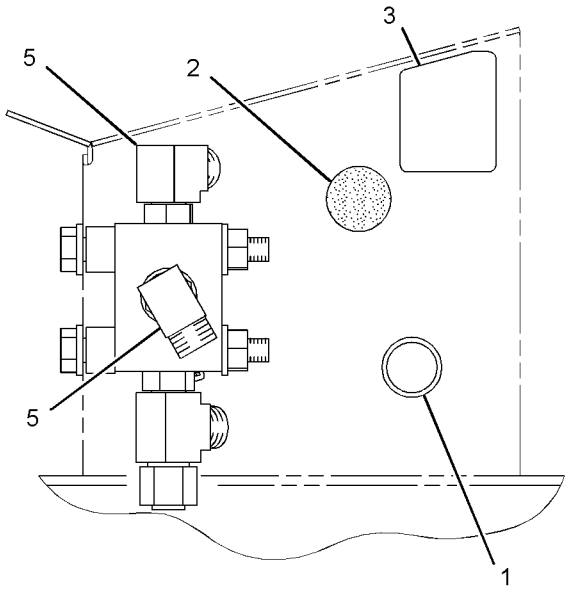

LEFT SIDE VIEW

GRAPHIC #1 **<END>** g01414777

HYDRAULIC SYSTEM

189-2100 VALVE GP-SOLENOID

S/N: KLN1-UP
24 VOLT
PART OF 289-6394 MOTOR GP-GEAR
AN ATTACHMENT

SMCS-5132, 5479 **i03537649**

NOTE	REF NO	GRAPHIC REF	PART NUMBER	QTY	PART NAME 1 2 3 4 5 6 (PRODUCT LEVEL)	SEE PAGE
	1	1	**8C-9987**	1	WASHER (8.3X28X2.5-MM THK)	
	2	1	**111-0343**	1	LOCKNUT (5/16-18-THD)	
	3	1	**189-0189**	1	COIL AS (24-VOLT)	
		1	**1S-9593**	2	STRAP-CABLE	
		1	**102-8802**	1	KIT-RECEPTACLE (2-PIN)	
					(INCLUDES RECEPTACLE AS & WEDGE)	
		1	**186-3735**	1	PIN-CONNECTOR (16-GA TO 18-GA)	
J	4	1	*189-2096*	1	CARTRIDGE AS-VALVE	
		1	**8C-9987**	1	WASHER (8.3X28X2.5-MM THK)	
		1	**111-0343**	1	LOCKNUT (5/16-18-THD)	
					AVAILABLE REPAIR KIT(S):	
J			**6T-7054**	1	KIT-SEAL (CARTRIDGE)	
					(INCLUDES SEALS & RINGS)	

J-KIT MARKED J SERVICES PART MARKED J

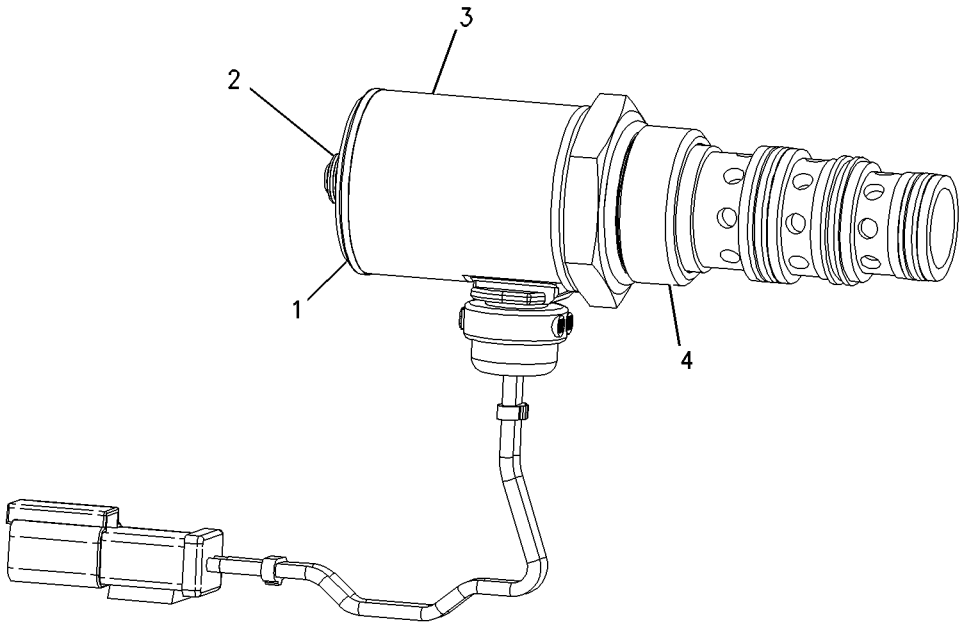

GRAPHIC #1 **<END>** g00891427

211-2092 VALVE GP-SOLENOID

S/N: KLN1-UP
24-VOLT
PART OF 289-6393, 289-6394 MOTOR GP-GEAR
AN ATTACHMENT

SMCS-5132, 5479 **i02348939**

NOTE	REF NO	GRAPHIC REF	PART NUMBER	QTY	PART NAME 1 2 3 4 5 6 (PRODUCT LEVEL)	SEE PAGE
	1	1	**123-3132**	1	RING-BACKUP	
	2	1	**8L-2779**	1	SEAL-O-RING	
	3	1	**230-0913**	1	COIL AS	
	4	1	**033-6028**	1	SEAL-O-RING	

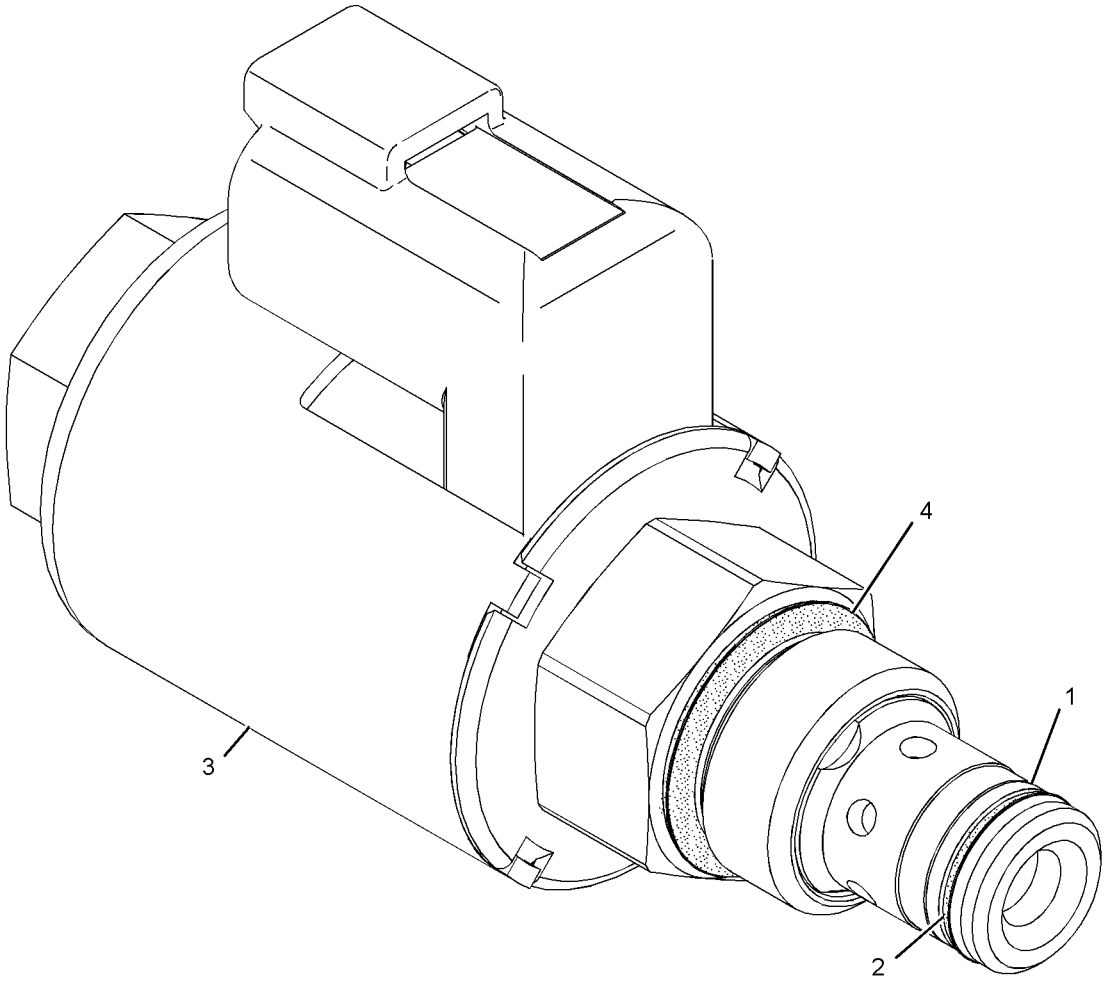

GRAPHIC #1 **<END>** g01181806

IMPLEMENTS

132-2350 CONTROL GP-WORK TOOL—STANDARD LIFT MACHINES

S/N: KLN1-UP

AN ATTACHMENT

SMCS-6116, 6117, 6119, 6700 **i03511084**

NOTE	REF NO	GRAPHIC REF	PART NUMBER	QTY	PART NAME 1 2 3 4 5 6 (PRODUCT LEVEL)	SEE PAGE
E	1	1	**121-0199**		WRAP-SPIRAL (3/8-IN OD) (29-CM EACH)	
E	1A	2	**121-0199**		WRAP-SPIRAL (3/8-IN OD) (17.5-CM)	
	2	1,2	**3G-0572**	2	HOSE AS	
	3	2	**5T-3821**	1	HOSE AS	
	4	2	**7K-1181**	7	STRAP-CABLE	
	5	1	**107-9976**	4	SEAL-O-RING	
	6	2	**118-2722**	2	SEAL-O-RING	
	7	1	**132-2300**	1	ARM & BEARING AS-LIFT	
		1	**7P-3466**	2	BEARING-SLEEVE	
		1	**4V-4453**	4	BEARING-SLEEVE	
	8	1	**143-4969**	1	LEVER & BEARING AS	
		1	**4V-2879**	2	BEARING-SLEEVE	
	9	1	**143-4979**	1	LINK & BEARING AS	
		1	**4V-4453**	2	BEARING-SLEEVE	
	10	2	**146-7990**	1	PIN AS	
	11	1	**146-7993**	2	PIN AS	
	12	2	**146-7996**	2	PIN AS	
	13	1	**146-8000**	1	PIN AS	
	14	2	**146-8009**	1	PIN AS	
	15	1	**146-8010**	1	PIN AS	
	16	1	**146-8013**	1	PIN AS	
	17	2	**146-8016**	1	PIN AS	
	18	2	**146-8019**	1	PIN AS	
G	19	2	**160-2243**		SLEEVE-ABRASION (40.95-IN)	
	20	1	**163-4361**	1	HOSE AS	
	21	2	**163-4362**	1	HOSE AS	
	22	2	**177-1452**	2	WASHER-HARD (22X60X6-MM THK)	
B	23	1	**194-7109**	4	SHIM (1-MM THK)	
B	24	1	**194-7110**	2	SHIM (0.5-MM THK)	
	25	1	**194-7111**	2	SHIM (4-MM THK)	
	26	1	**194-7112**	2	SHIM (2-MM THK)	
	27	1	**235-7350**	1	LEVER & BEARING AS (TILT, FRONT)	
		1	**4V-8639**	2	BEARING-SLEEVE	
	28	1	**235-7353**	1	LINK & BEARING AS (TILT, FRONT)	
		1	**4V-8639**	2	BEARING-SLEEVE	
		1	**4V-8674**	1	BEARING-SLEEVE	
	29	1	**235-7390**	1	PIN AS	
	30	1	**002-0639**	1	ADAPTER-PIPE	
	31	2	**1M-8652**	2	RING-RETAINING	
	32	1,2	**3B-6552**	4	ELBOW-PIPE	
	33	1	**3B-7734**	1	NIPPLE-PIPE	
	34	1,2	**3B-8489**	9	FITTING-GREASE	
	35	1,2	**3B-8491**	4	FITTING-GREASE	
	36	2	**3E-9411**	2	WASHER-HARD (17.5X38X6-MM THK)	
	37	2	**4D-8123**	1	CLIP	
	38	1,2	**7K-9205**	8	SEAL-LIP TYPE	
	39	1	**7K-9208**	4	SEAL-LIP TYPE	
	40	1,2	**7K-9209**	10	SEAL-LIP TYPE	
	41	1,2	**7K-9212**	8	SEAL-LIP TYPE	
	42	2	**7K-9216**	2	SEAL-LIP TYPE	
	43	1,2	**7X-0618**	7	WASHER-HARD (13.5X40X5-MM THK)	
	44	1	**8B-4884**	1	ELBOW	
	45	2	**8T-4121**	3	WASHER-HARD (11X21X2.5-MM THK)	
M	46	2	**8T-4137**	3	BOLT (M10X1.5X20-MM)	
M	47	1,2	**8T-4192**	7	BOLT (M12X1.75X25-MM)	
M	48	2	**8T-7338**	2	BOLT (M16X2X45-MM)	

132-2350 **CONTROL GP-WORK TOOL** *(contd.)* **i03511084**

NOTE	REF NO	GRAPHIC REF	PART NUMBER	QTY	PART NAME 1 2 3 4 5 6 (PRODUCT LEVEL)	SEE PAGE
M	49	2	**8T-6430**	2	BOLT (M20X2.5X50-MM)	
	50	2	**9C-7907**	3	SPACER (21.5X28X14-MM THK)	
	51	2	**9X-8582**	3	CLIP	

B-USE AS REQUIRED
E-ORDER BY THE CENTIMETER
G-ORDER BY THE INCH
M-METRIC PART

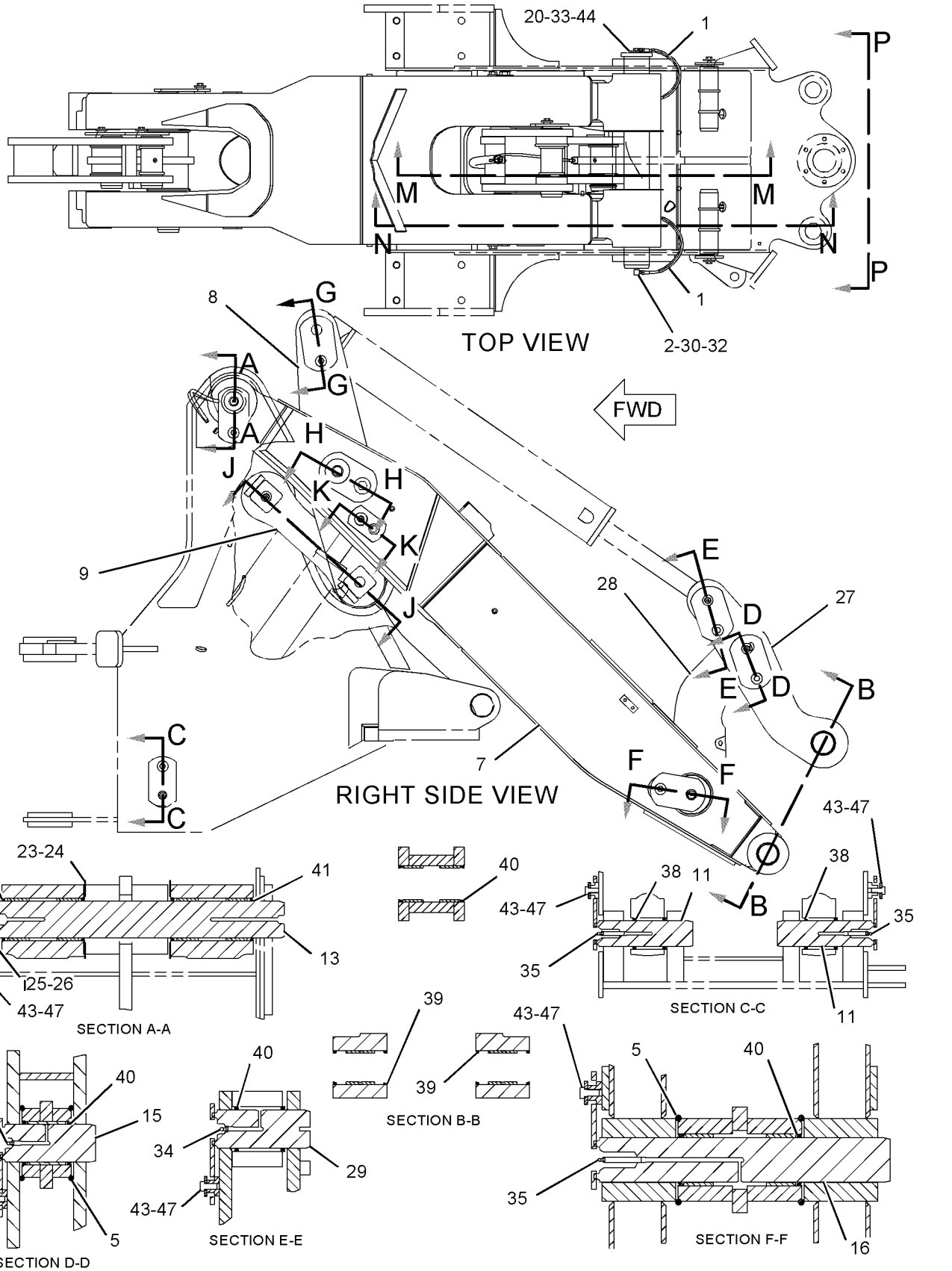

GRAPHIC #1

g01107184

132-2350 **CONTROL GP-WORK TOOL** *(contd.)* **i03511084**

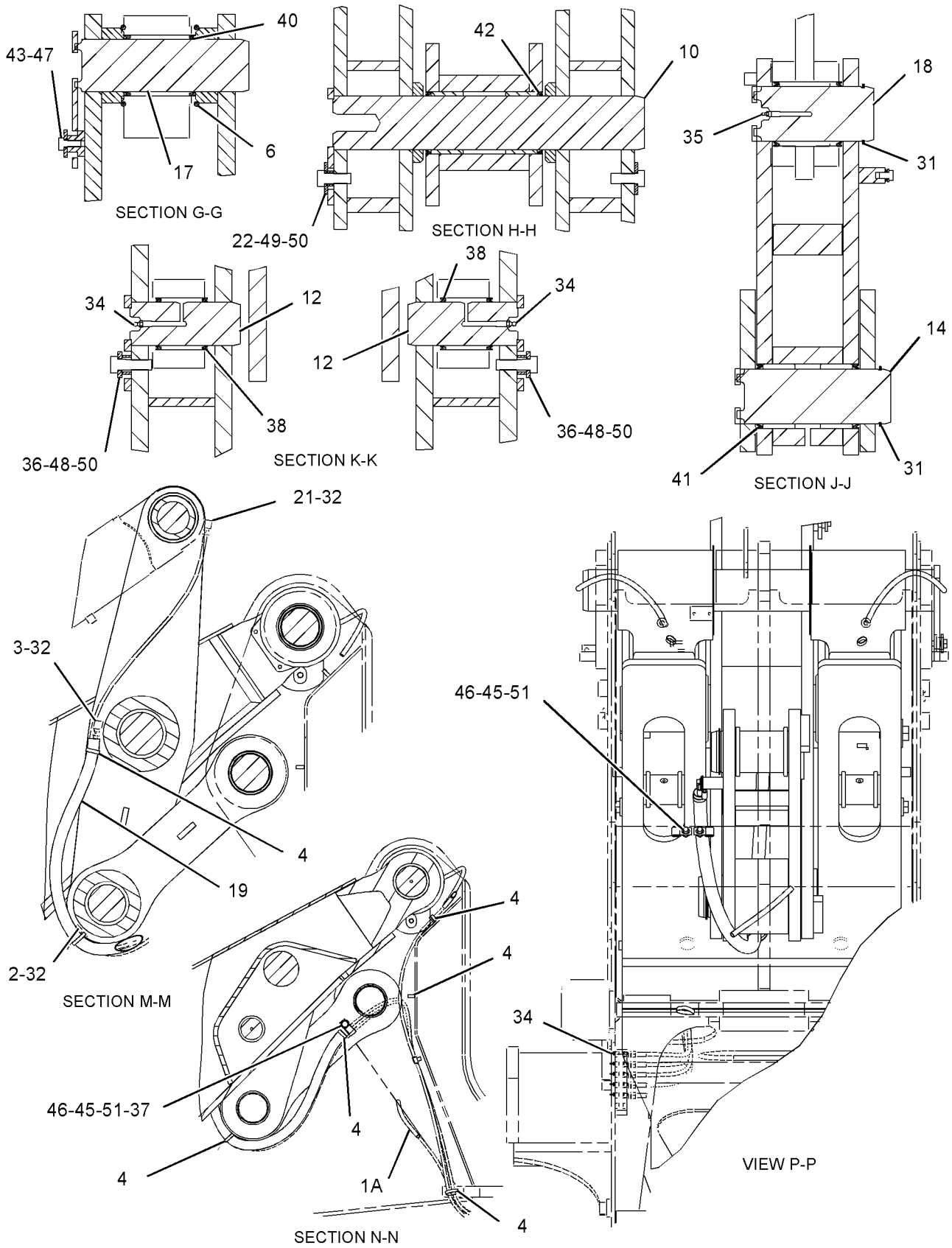

GRAPHIC #2 **<END>** g01848593

IMPLEMENTS

148-7680 CONTROL GP-WORK TOOL—HIGH LIFT MACHINES

S/N: KLN1-UP

AN ATTACHMENT

SMCS-6116, 6117, 6119, 6700 **i03524040**

NOTE	REF NO	GRAPHIC REF	PART NUMBER	QTY	PART NAME 1 2 3 4 5 6 (PRODUCT LEVEL)	SEE PAGE
E	1	2	**121-0199**		WRAP-SPIRAL (3/8-IN OD) (29-CM EACH)	
E	1A	2	**121-0199**		WRAP-SPIRAL (3/8-IN OD) (17.5-CM)	
	2	1,2	**3G-0572**	2	HOSE AS	
	3	1	**5T-3821**	1	HOSE AS	
	4	1,2	**7K-1181**	7	STRAP-CABLE	
	5	1	**107-9976**	4	SEAL-O-RING	
	6	1	**118-2722**	2	SEAL-O-RING	
	7	1	**143-4969**	1	LEVER & BEARING AS (TILT, REAR)	
	7A	1	**4V-2879**	2	BEARING-SLEEVE	
	8	2	**143-4979**	1	LINK & BEARING AS (TILT, REAR)	
	8A	2	**4V-4453**	2	BEARING-SLEEVE	
M	8B	2	**9R-9866**	1	BOSS (M10X1.5X45-MM)	
	9	1	**146-7990**	1	PIN AS	
	10	1	**146-7993**	2	PIN AS	
	11	1	**146-7996**	2	PIN AS	
	12	1	**146-8000**	1	PIN AS	
	13	2	**146-8009**	1	PIN AS	
	14	1	**146-8010**	1	PIN AS	
	15	1	**146-8013**	1	PIN AS	
	16	1	**146-8016**	1	PIN AS	
	17	2	**146-8019**	1	PIN AS	
	18	1	**148-7681**	1	LEVER & BEARING AS (TILT, FRONT)	
	18A	1	**4V-8639**	2	BEARING-SLEEVE	
	19	1	**148-7685**	1	ARM & BEARING AS-LIFT	
	19A	1	**156-8000**	4	BEARING-SLEEVE	
	19B	1	**7P-3466**	2	BEARING-SLEEVE	
M	19C	1	**8Y-4489**	4	BOSS (M10X1.5-THD)	
	19D	1	**9C-6809**	2	BLOCK (M10X1.5-THD)	
M	19E	1	**9R-2672**	8	BOSS (M10X1.5X20-MM)	
M	19F	1	**9R-9866**	2	BOSS (M10X1.5X45-MM)	
G	20	1	**160-2243**		SLEEVE-ABRASION (41-IN)	
	21	1	**163-4361**	1	HOSE AS	
	22	2	**163-4362**	1	HOSE AS	
	23	1	**174-3734**	2	FILM (HIGH LIFT)	
	24	1	**177-1452**	2	WASHER-HARD (22X60X6-MM THK)	
B	25	1	**194-7109**	4	SHIM (1-MM THK)	
B	26	1	**194-7110**	2	SHIM (0.5-MM THK)	
	27	1	**194-7111**	2	SHIM (4-MM THK)	
	28	1	**194-7112**	2	SHIM (2-MM THK)	
	29	1	**235-7353**	1	LINK & BEARING AS (TILT, FRONT)	
	29A	1	**4V-8639**	2	BEARING-SLEEVE	
	29B	1	**4V-8674**	1	BEARING-SLEEVE	
	30	1	**235-7390**	1	PIN AS	
	31	2	**002-0639**	1	ADAPTER-PIPE	
	32	2	**1M-8652**	2	RING-RETAINING	
	33	1,2	**3B-6552**	4	ELBOW-PIPE	
	34	1	**3B-7734**	1	NIPPLE-PIPE	
	35	1,2	**3B-8489**	9	FITTING-GREASE	
	36	1,2	**3B-8491**	4	FITTING-GREASE	
	37	1	**3E-9411**	2	WASHER-HARD (17.5X38X6-MM THK)	
	38	2	**4D-8123**	1	CLIP	
	39	1,2	**7K-9205**	8	SEAL-LIP TYPE	
	40	1	**7K-9208**	4	SEAL-LIP TYPE	
	41	1,2	**7K-9209**	10	SEAL-LIP TYPE	
	42	1,2	**7K-9212**	8	SEAL-LIP TYPE	
	43	1	**7K-9216**	2	SEAL-LIP TYPE	

148-7680 **CONTROL GP-WORK TOOL** *(contd.)* **i03524040**

NOTE	REF NO	GRAPHIC REF	PART NUMBER	QTY	PART NAME 1 2 3 4 5 6 (PRODUCT LEVEL)	SEE PAGE
	44	1	**7X-0618**	7	WASHER-HARD (13.5X40X5-MM THK)	
	45	1	**8B-4884**	1	ELBOW	
	46	2	**8T-4121**	3	WASHER-HARD (11X21X2.5-MM THK)	
M	47	2	**8T-4137**	3	BOLT (M10X1.5X20-MM)	
M	48	1	**8T-4192**	7	BOLT (M12X1.75X25-MM)	
M	49	1	**8T-7338**	2	BOLT (M16X2X45-MM)	
M	50	1	**8T-6430**	2	BOLT (M20X2.5X50-MM)	
	51	1	**9C-7907**	3	SPACER (21.5X28X14-MM THK)	
	52	2	**9X-8582**	3	CLIP	
	53	1	**9R-2404**	2	REFLECTOR-AMBER	

B-USE AS REQUIRED
E-ORDER BY THE CENTIMETER
G-ORDER BY THE INCH
M-METRIC PART

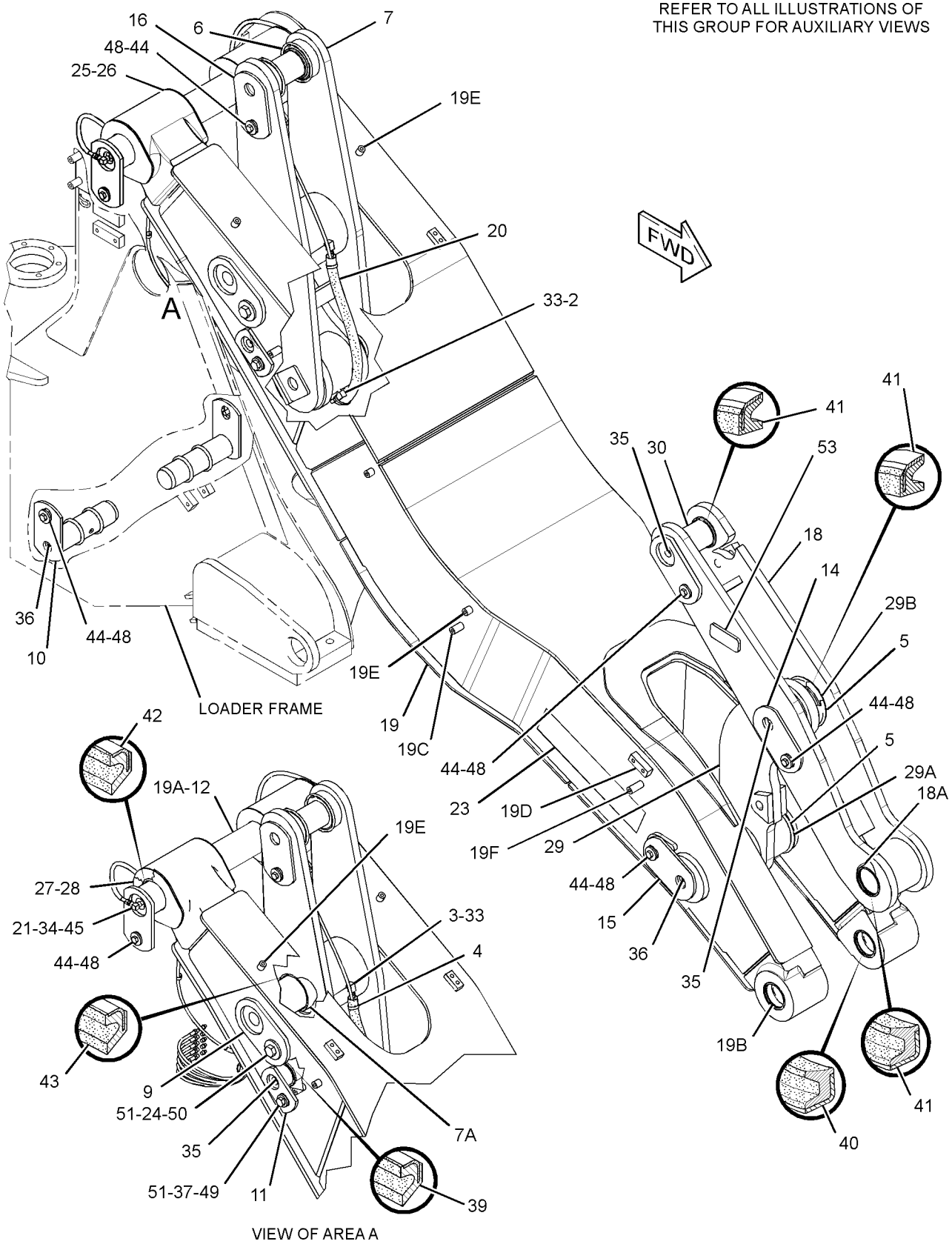

GRAPHIC #1 g01897973

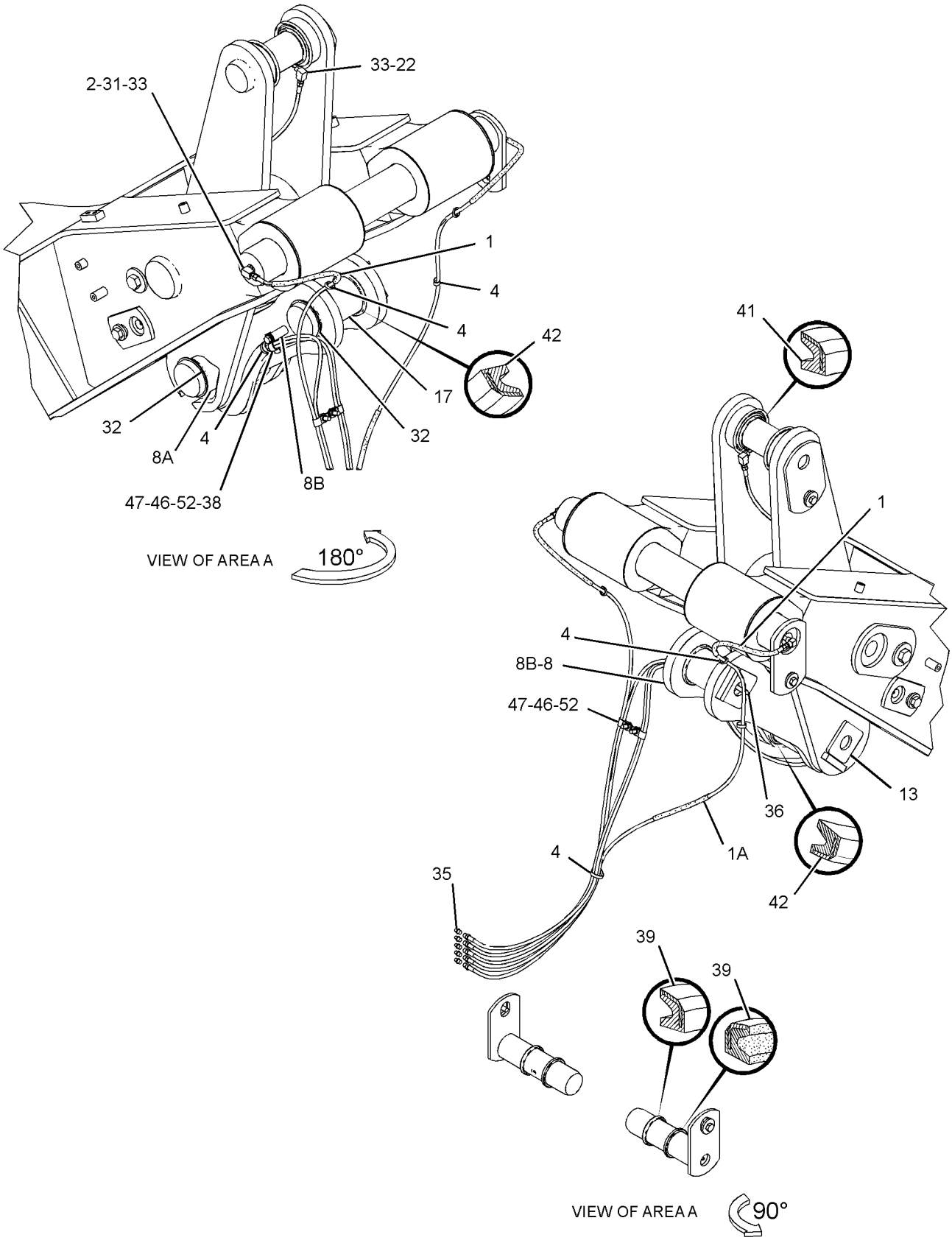

GRAPHIC #2 **<END>** g01897837

OPERATOR STATION

173-1028 ADJUSTER GP-SEAT

S/N: KLN1-UP
PART OF 178-0603 SEAT GP
AN ATTACHMENT

SMCS-7321 **i01437574**

NOTE	REF NO	GRAPHIC REF	PART NUMBER	QTY	PART NAME 1 2 3 4 5 6 (PRODUCT LEVEL)	SEE PAGE
	1	1	**4V-8256**	4	SPRING	
	2	1	**117-4486**	1	ANCHOR	
	3	1	**117-4492**	1	ROD	
	4	1	**132-0338**	2	WASHER-PLASTIC (13X31.7X0.8-MM THK)	
	5	1	**136-1544**	1	LATCH AS-LH	
	6	1	**143-1288**	1	LOCKNUT-FLANGE (3/8-16-THD)	
	7	1	**156-5545**	1	LATCH AS-RH	
	8	1	**164-4531**	1	ROD	
	9	1	**9M-1974**	1	WASHER-HARD (8.8X16X2-MM THK)	
	10	1	**170-1114**	1	HANDLE (SLIDE ADJUSTMENT)	
	11	1	**170-1115**	1	HANDLE (TILT ADJUSTMENT)	
	12	1	**172-4001**	1	BRACKET	
	13	1	**1D-4675**	1	BOLT-CARRIAGE (3/8-16X0.75-IN)	
	14	1	**2K-4973**	2	LOCKNUT (3/8-16-THD)	
	15	1	**7L-8170**	1	NUT-FULL (5/16-18-THD)	
	16	1	**7X-0608**	2	WASHER-HARD (10.2X16X2-MM THK)	
	17	1	**170-1112**	1	PLATE AS	

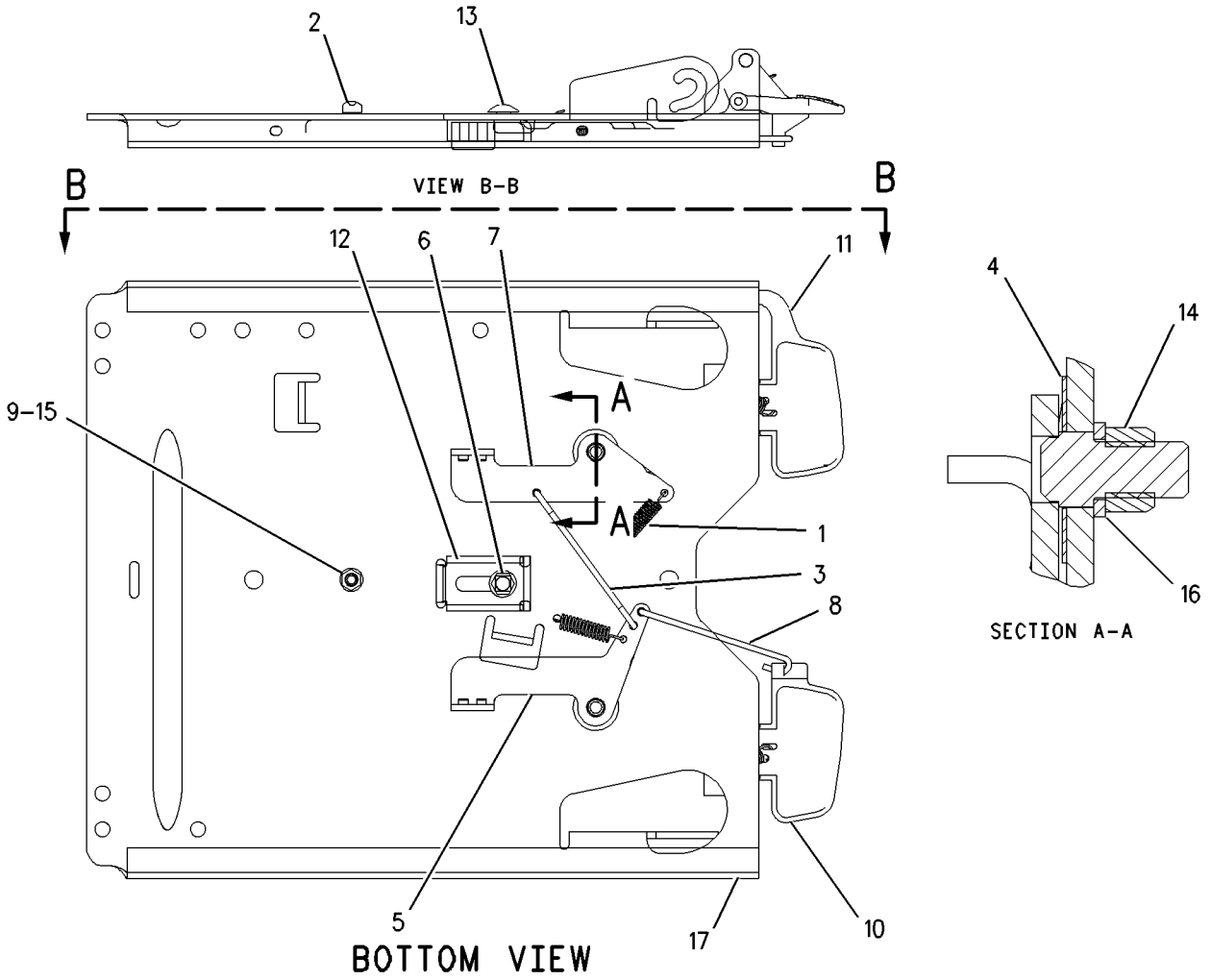

GRAPHIC #1 **<END>** g00686297

OPERATOR STATION

237-3970 AIR COMPRESSOR GP-SEAT

S/N: KLN1-UP

FOR OPTIONAL FIELD REPLACEMENT ORDER 214-0783 COMPRESSOR,211-5358 CONDUIT(100-CM) & 5P-6010 TUBE(1-M), PROVIDES HEAVY DUTY SEAT COMPRESSOR

PART OF 191-2933 SUSPENSION GP-SEAT

AN ATTACHMENT

SMCS-731S, 7324 **i02784170**

NOTE	REF NO	GRAPHIC REF	PART NUMBER	QTY	PART NAME 1 2 3 4 5 6 (PRODUCT LEVEL)	SEE PAGE
					(NO SERVICED PARTS)	

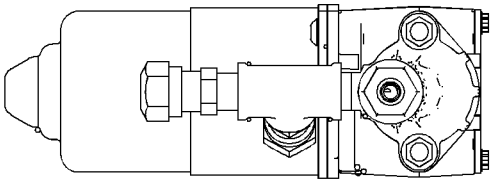

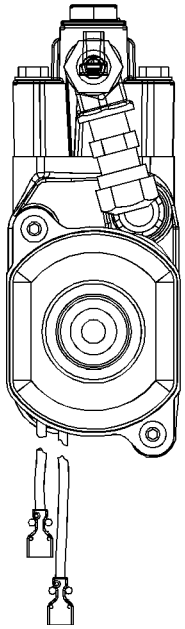

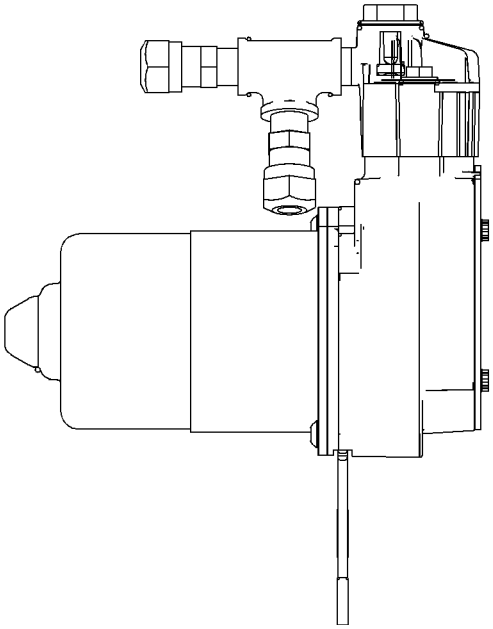

GRAPHIC #1 **<END>** g01040576

OPERATOR STATION

284-0506 AIR CONDITIONER & MOUNTING GP–

WITH CABLE CONTROL

S/N: KLN1-UP

PART OF 294-9433 AIR CONDITIONER AR

AN ATTACHMENT

SMCS-7320 **i03538566**

NOTE	REF NO	GRAPHIC REF	PART NUMBER	QTY	PART NAME 1 2 3 4 5 6 (PRODUCT LEVEL)	SEE PAGE
D	1	1	**5P-5643**		SEAL (0.7-M EACH)	
	2	1	**118-7259**	1	GASKET	
	3	1	**156-4449**	1	CABLE AS (HEATER TEMPERATURE CONTROL)	
		1	**2H-3920**	2	LOCKWASHER	
		1	**6V-8369**	1	NUT (7/16-28-THD)	
		1	**143-8874**	1	BOOT	
	4	1	**236-2295**	2	TUBE AS	
	5	1	**236-4233**	1	SWITCH AS-ROCKER (AIR CONDITIONER, HEATER CONT)	
		1	**111-7899**	1	GASKET	
	6	1	**280-2710**	1	CIRCUIT BREAKER AS (20-AMPERE) (AIR CONDITIONER)	
Y	7	1	**306-8142**	1	AIR CONDITIONER GP	488
	8	1	**7X-0579**	11	WASHER-HARD (8.8X25.5X2-MM THK)	
M	9	1	**8T-4908**	11	BOLT (M8X1.25X25-MM)	

D-ORDER BY THE METER
M-METRIC PART
Y-SEPARATE ILLUSTRATION

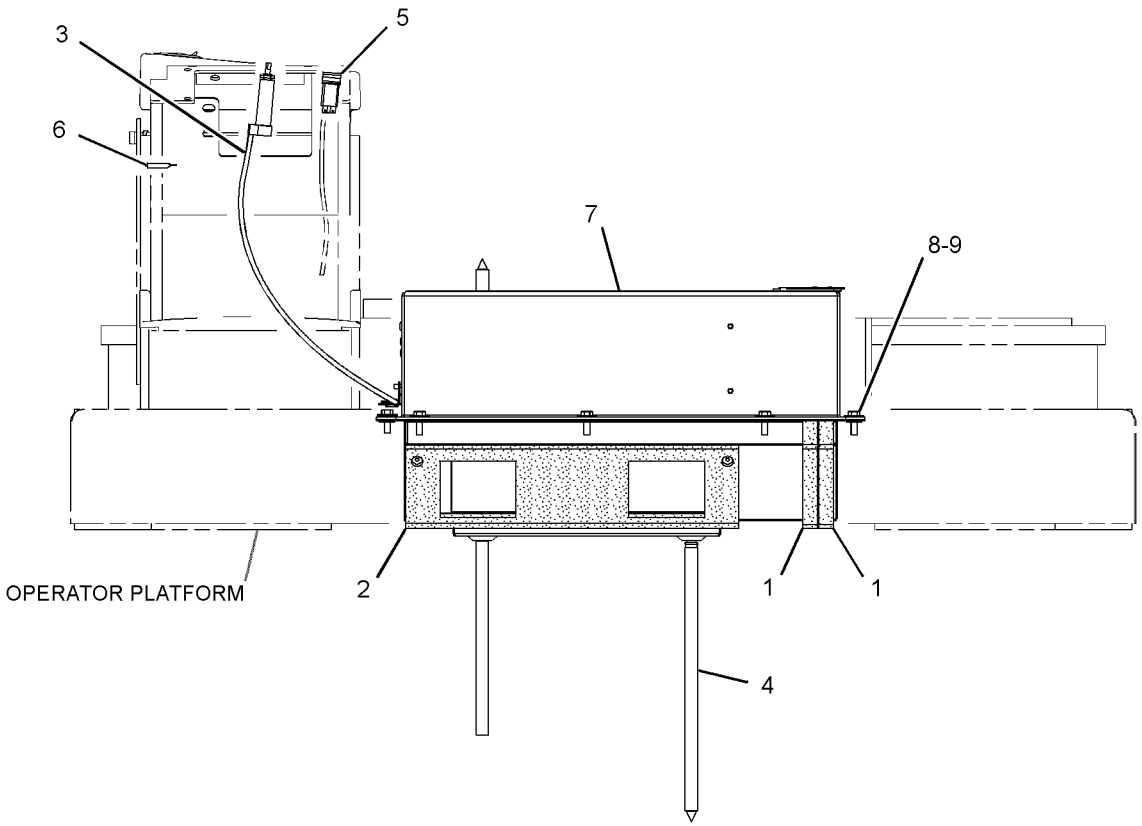

FRONT VIEW

GRAPHIC #1 **<END>** g01389726

OPERATOR STATION

294-9433 AIR CONDITIONER AR

S/N: KLN1-UP
PART OF 328-7485 CAB AR-ENCLOSED ROPS
AN ATTACHMENT

SMCS-7320 **i03038601**

NOTE	PART NUMBER	QTY	PART NAME 1 2 3 4 5 6 (PRODUCT LEVEL)	SEE PAGE
Y	*284-0506*	1	AIR CONDITIONER & MOUNTING GP (WITH CABLE CONTROL)	486
Y	*267-3770*	1	ALTERNATOR GP-CHARGING (24-VOLT, 95-AMPERE)	123
Y	*262-0858*	1	COMPRESSOR GP-REFRIGERANT	506
Y	*203-5937*	1	CONDENSER & MTG GP-REFRIGERANT	508
Y	*294-9432*	1	LINES GP-AIR CONDITIONER	558
Y	*290-8753*	1	LINES GP-CAB HEATER	560
Y	*198-8965*	1	PANEL GP-TOP (HOOD, AIR CONDITIONER)	306

Y-SEPARATE ILLUSTRATION

<END>

OPERATOR STATION

306-8142 AIR CONDITIONER GP

S/N: KLN1-UP
PART OF 284-0506 AIR CONDITIONER & MOUNTING GP
AN ATTACHMENT

SMCS-7320 **i03036784**

NOTE	REF NO	GRAPHIC REF	PART NUMBER	QTY	PART NAME 1 2 3 4 5 6 (PRODUCT LEVEL)	SEE PAGE
	1	1	**3E-1841**	1	LEVER	
	2	1	**6T-6708**	2	WASHER (7X28.6X4.1-MM THK)	
	3	1	**7F-2050**	1	LOCKNUT (3/4-16-THD)	
	4	1	**8Y-5737**	1	CLAMP	
	5	1	**9G-1950**	1	RESISTOR	
	6	1	**9X-2185**	4	SCREW (8-15X0.44-IN)	
	7	1	**9X-2488**	6	CLAMP-HOSE	
	8	1	**102-0341**	1	CLIP	
	9	1	**114-3140**	1	GROMMET	
	10	1	**118-5044**	1	HARNESS AS-HEATER & AIR COND	
	11	1	**124-8495**	1	VALVE AS-WATER	
	12	1	**151-0894**	1	COVER AS	
	13	1	**183-7528**	1	COIL AS-HEATER	
	14	1	**255-9138**	1	BRACKET AS	
M		1	**9X-2032**	8	NUT-WELD (M4X0.7-THD)	
	15	1	**275-6706**	1	MOTOR-BLOWER (24-VOLT, A/C, HEATER)	
	16	1	**283-2456**	1	COIL AS-EVAPORATOR	
	17	1	**309-8618**	1	CASE AS	
	18	1	**3S-2093**	3	STRAP-CABLE	
	19	1	**037-4426**	1	RETAINER	
	20	1	**124-8494**	2	GASKET	
M	21	1	**129-3178**	2	LOCKNUT (M6X1-THD)	
M	22	1	**141-9784**	1	BOLT (M6X1X190-MM)	
	23	1	**1P-6522**	1	GROMMET	
	24	1	**2H-3922**	1	LOCKWASHER	
	25	1	**2H-3923**	1	LOCKWASHER	
	26	1	**3B-4501**	2	LOCKWASHER	
	27	1	**3E-5464**	1	THERMOSTAT (HVAC)	
M	28	1	**5C-9553**	8	BOLT (M6X1X16-MM)	
	29	1	**6V-1668**	2	WASHER (6.5X29.1X3-MM THK)	
M	30	1	**6V-5210**	8	SCREW-MACHINE (M4X0.7X10-MM)	
	31	1	**7F-2060**	1	LOCKNUT (7/8-14-THD)	
M	32	1	**8C-8457**	1	SCREW-MACHINE (M5X0.8X14-MM)	
	33	1	**8T-4205**	11	WASHER-HARD (7.2X14.5X2-MM THK)	
	34	1	**8T-6631**	2	SCREW-MACHINE (8-32X0.5-IN)	
M	35	1	**9X-2044**	1	SCREW-TRUSS HEAD (M6X1X16-MM)	
E	36	1	**136-1953**		HOSE (17.8-CM)	
E	36A	1	**136-1953**		HOSE (15.2-CM)	
E	36B	1	**136-1953**		HOSE (22.9-CM)	
D	37	1	**5P-7070**		INSULATION-STRIP (0.4-M EACH)	
D	38	1	**5P-5643**		SEAL (0.4-M)	
D	39	1	**8T-5372**		SEAL (0.2-M EACH)	
D	40	1	**6V-1392**		SEAL (0.7-M EACH)	
D	40A	1	**6V-1392**		SEAL (0.2-M EACH)	
	41	1	**153-6932**	1	GASKET	

D-ORDER BY THE METER
E-ORDER BY THE CENTIMETER
M-METRIC PART

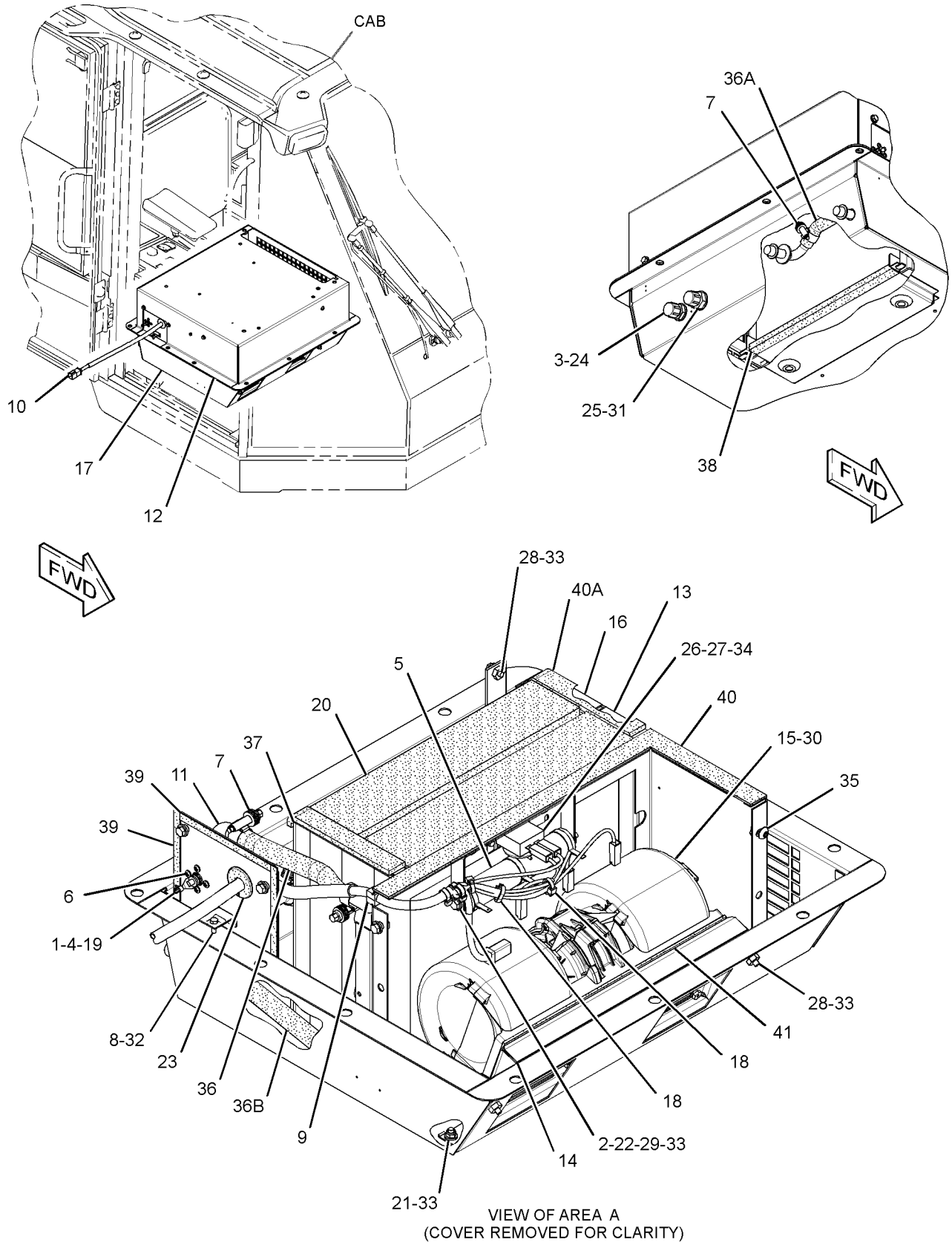

VIEW OF AREA A
(COVER REMOVED FOR CLARITY)

GRAPHIC #1 **<END>** g01571230

OPERATOR STATION

214-7636 ARM GP-WINDOW WIPER

S/N: KLN1-UP
FRONT
PART OF 107-4628, 146-6908 WIPER GP-WINDOW
AN ATTACHMENT

SMCS-7305 **i01877471**

NOTE	REF NO	GRAPHIC REF	PART NUMBER	QTY	PART NAME 1 2 3 4 5 6 (PRODUCT LEVEL)	SEE PAGE
M	1	1	**191-8921**	4	BOLT-SOCKET HEAD (M6X1X25-MM)	
	2	1	**227-7392**	4	WASHER (6.3X10.3X0.4-MM THK)	
M	3	1	**6V-8225**	4	NUT (M6X1-THD)	
	4	1	**136-3190**	1	NOZZLE AS-WASHER	
	5	1	**136-3188**	3	CLIP	

M-METRIC PART

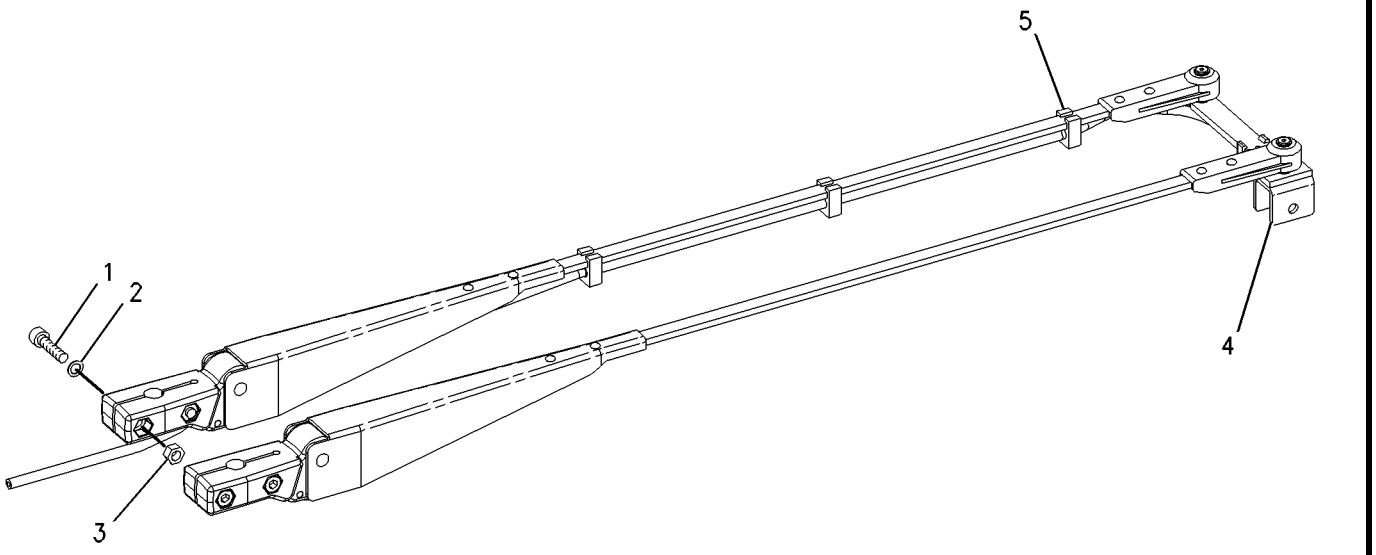

GRAPHIC #1 **<END>** g00958013

OPERATOR STATION

307-0205 ARM GP-WINDOW WIPER–REAR

S/N: KLN1-UP
PART OF 107-4628 WIPER GP-WINDOW
AN ATTACHMENT

SMCS-7305 **i02809008**

NOTE	REF NO	GRAPHIC REF	PART NUMBER	QTY	PART NAME 1 2 3 4 5 6 (PRODUCT LEVEL)	SEE PAGE
	1	1	**136-3188**	3	CLIP	
	2	1	**136-3195**	1	NOZZLE AS-WASHER	
M	3	1	**191-8921**	2	BOLT-SOCKET HEAD (M6X1X25-MM)	
	4	1	**227-7392**	2	WASHER (6.3X10.3X0.4-MM THK)	
M	5	1	**6V-8225**	2	NUT (M6X1-THD)	
E	6	1	**194-5171**		HOSE (75-CM)	

E-ORDER BY THE CENTIMETER
M-METRIC PART

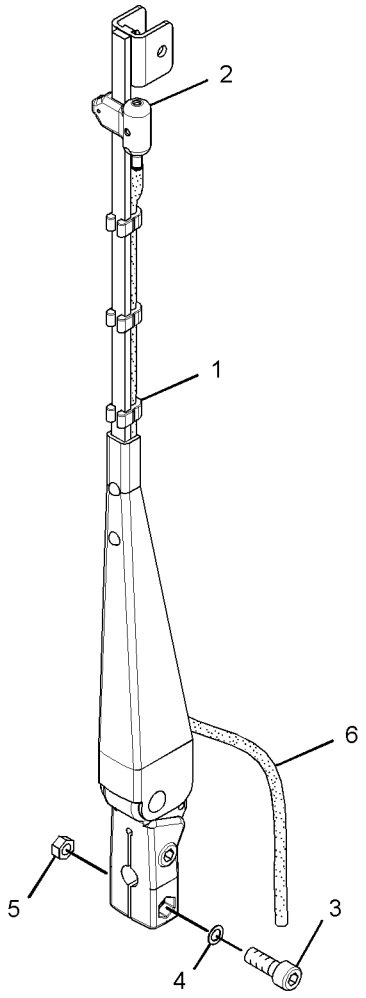

GRAPHIC #1

<END>

g01401957

OPERATOR STATION

8Y-5904 ARMREST GP

S/N: KLN1-UP
PART OF 162-8447, 162-8448 ARMREST GP
AN ATTACHMENT

SMCS-7307, 7312 **i01539068**

NOTE	REF NO	GRAPHIC REF	PART NUMBER	QTY	PART NAME 1 2 3 4 5 6 (PRODUCT LEVEL)	SEE PAGE
	1	1	**8Y-5906**	1	BASE-ARMREST	
L	2	1	**8S-7803**	1	RING-RETAINING	
J	3	1	**6V-2687**	4	SCREW-PAN HEAD (10-24X1-IN)	
L	4	1	**8T-8641**	1	WASHER (M9.8X16X0.8-MM THK)	
L	5	1	**3E-4312**	1	NUT-SQUARE (3/8-16-THD)	
	6	1	**8Y-5914**	1	SPRING	
					AVAILABLE REPAIR KIT(S):	
J			**8Y-5988**	1	KIT-CUSHION	
L			**8Y-6028**	1	KIT-ADJUSTER	

J-KIT MARKED J SERVICES PART MARKED J
L-KIT MARKED L SERVICES PARTS MARKED L

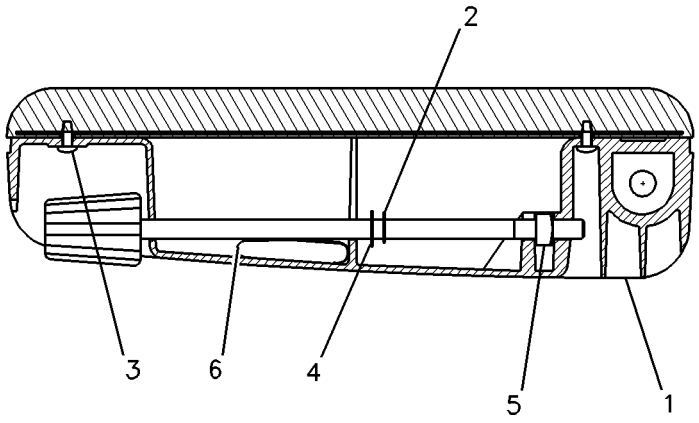

GRAPHIC #1 **<END>** g00799356

162-8447 ARMREST GP–LH

S/N: KLN1-UP
PART OF 178-7914 SEAT GP
AN ATTACHMENT

SMCS-7307, 7312 **i01729950**

NOTE	REF NO	GRAPHIC REF	PART NUMBER	QTY	PART NAME 1 2 3 4 5 6 (PRODUCT LEVEL)	SEE PAGE
Y	1	1	**8Y-5904**	1	ARMREST GP	492
	2	1	**156-5549**	1	BOLT	
	3	1	**163-1149**	1	BRACKET AS	
	4	1	**0L-1351**	1	BOLT (3/8-16X0.875-IN)	
	5	1	**1K-6872**	1	LOCKNUT (1/2-13-THD)	
	6	1	**4H-0094**	1	RING-RETAINING	
	7	1	**5P-8245**	1	WASHER-HARD (13.5X25.5X3-MM THK)	
	8	1	**7X-0521**	1	WASHER-HARD (20X36.5X5-MM THK)	
	9	1	**9X-8873**	1	BOLT (1/2-13X2.25-IN)	

Y-SEPARATE ILLUSTRATION

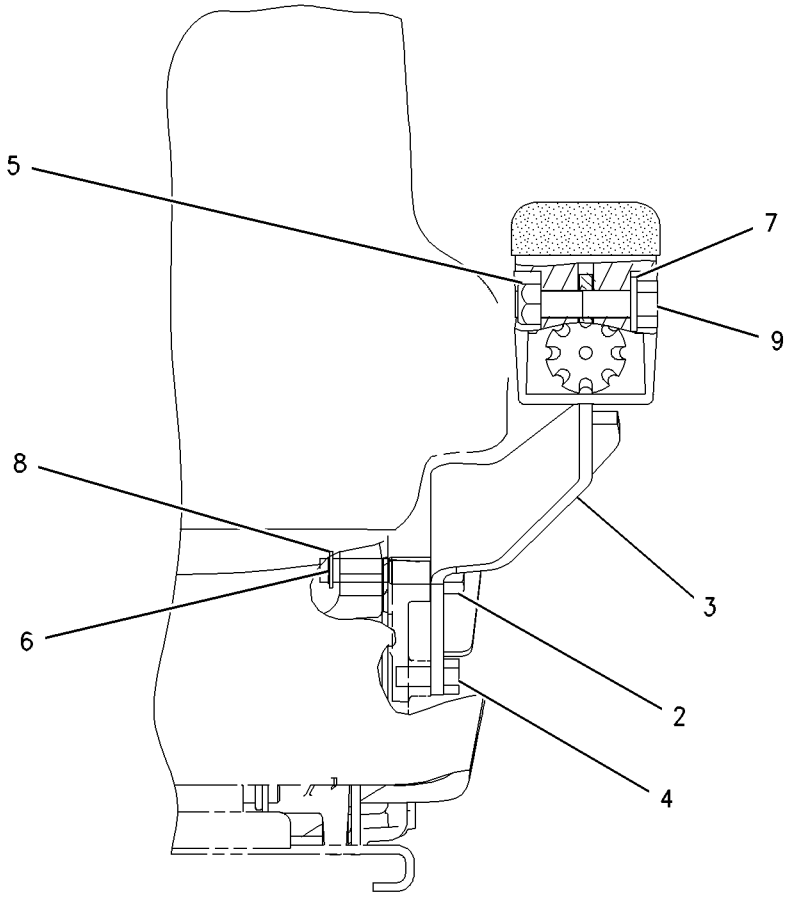

FRONT VIEW

GRAPHIC #1 **<END>** g00889154

OPERATOR STATION

162-8448 ARMREST GP–RH

S/N: KLN1-UP
PART OF 178-7914 SEAT GP
AN ATTACHMENT

SMCS-7307, 7312 **i01739191**

NOTE	REF NO	GRAPHIC REF	PART NUMBER	QTY	PART NAME 1 2 3 4 5 6 (PRODUCT LEVEL)	SEE PAGE
Y	1	1	**8Y-5904**	1	ARMREST GP	492
	2	1	**156-5549**	1	BOLT	
	3	1	**163-1148**	1	BRACKET AS (RH)	
	4	1	**0L-1351**	1	BOLT (3/8-16X0.875-IN)	
	5	1	**1K-6872**	1	LOCKNUT (1/2-13-THD)	
	6	1	**4H-0094**	1	RING-RETAINING	
	7	1	**5P-8245**	1	WASHER-HARD (13.5X25.5X3-MM THK)	
	8	1	**7X-0521**	1	WASHER-HARD (20X36.5X5-MM THK)	
	9	1	**9X-8873**	1	BOLT (1/2-13X2.25-IN)	

Y-SEPARATE ILLUSTRATION

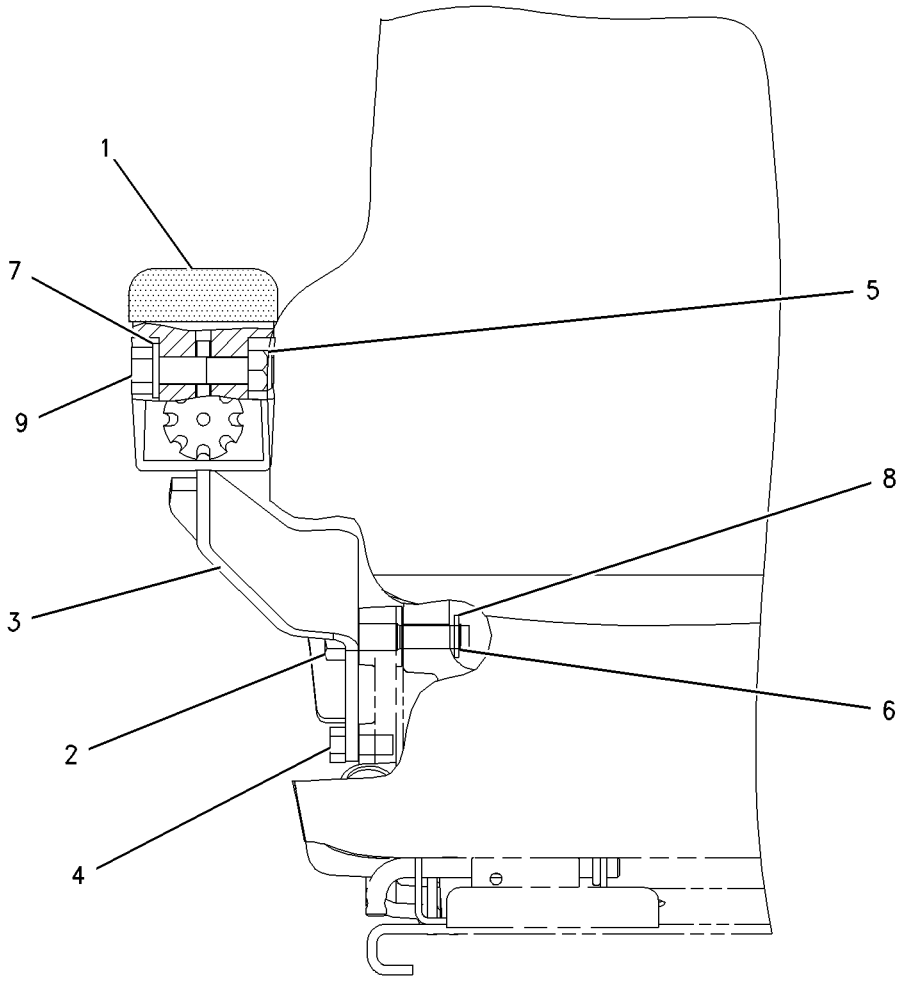

GRAPHIC #1 **<END>** g00890800

OPERATOR STATION

310-9953 CAB AR

S/N: KLN1-UP
PART OF 310-9954 OPERATOR AR
AN ATTACHMENT

SMCS-7301 **i03084767**

NOTE	PART NUMBER	QTY	PART NAME 1 2 3 4 5 6 (PRODUCT LEVEL)	SEE PAGE
Y	*323-4078*	1	CONTROL GP-PARKING BRAKE (HANDLE)	314
Y	*190-4635*	1	CONTROL GP-STEERING	520
Y	*190-4690*	1	CONTROL GP-TRANSMISSION	522
Y	*118-0809*	1	DASH GP	525
Y	*204-2004*	1	LIGHTING GP-REAR	154
Y	*172-5512*	1	LINER GP-CAB	553
Y	*317-0720*	1	PEDAL GP-GOVERNOR	591
Y	*172-5507*	1	SUPPORT GP-SEAT	614
Y	*184-2463*	1	SWITCH GP-WIPER	173
Y	*146-6908*	1	WIPER GP-WINDOW (FRONT)	624
Y	*310-9952*	1	CAB GP	497
Y	*311-8706*	1	LIGHTING GP-FLOOD	148
	118-0626	1	FILM-WINDOW (FRONT)	

Y-SEPARATE ILLUSTRATION

<END>

311-8698 CAB AR

S/N: KLN1-UP
PART OF 311-8699 CAB AR
AN ATTACHMENT

SMCS-7301 **i03084726**

NOTE	PART NUMBER	QTY	PART NAME 1 2 3 4 5 6 (PRODUCT LEVEL)	SEE PAGE
Y	*311-8697*	1	DOOR GP-CAB	541
Y	*290-8181*	1	LIGHTING GP-FLOOD (CAB FRONT, REAR)	146
Y	*311-8693*	1	ROPS GP-ENCLOSED	596

Y-SEPARATE ILLUSTRATION

<END>

311-8699 CAB AR

S/N: KLN1-UP
PART OF 311-8700 OPERATOR AR
AN ATTACHMENT

SMCS-7301 **i03084723**

NOTE	PART NUMBER	QTY	PART NAME 1 2 3 4 5 6 (PRODUCT LEVEL)	SEE PAGE
Y	*311-8698*	1	CAB AR	495
Y	*317-0770*	1	OPERATOR AR	569

Y-SEPARATE ILLUSTRATION

<END>

OPERATOR STATION

290-8513 CAB AR-ENCLOSED ROPS—SLIDING WINDOWS

S/N: KLN1-UP
AN ATTACHMENT

SMCS-7301 **i03043972**

NOTE	PART NUMBER	QTY	PART NAME 1 2 3 4 5 6 (PRODUCT LEVEL)	SEE PAGE
Y	*290-8525*	1	OPERATOR AR-ENCLOSED ROPS (SLIDING WINDOWS)	570
Y	*174-2215*	1	SKIRT GP-CAB	612
Y-SEPARATE ILLUSTRATION				

<END>

290-8522 CAB AR-ENCLOSED ROPS

S/N: KLN1-UP
PART OF 290-8525 OPERATOR AR-ENCLOSED ROPS
AN ATTACHMENT

SMCS-7301 **i03315421**

NOTE	PART NUMBER	QTY	PART NAME 1 2 3 4 5 6 (PRODUCT LEVEL)	SEE PAGE
Y	*190-4405*	1	OPERATOR AR	568
			—OR—	
Y	*317-0770*	1	OPERATOR AR	569
Y	*290-8520*	1	CAB GP-ENCLOSED ROPS (SLIDING WINDOWS)	504
Y-SEPARATE ILLUSTRATION				

<END>

310-9955 CAB AR-ENCLOSED ROPS

S/N: KLN1-UP
AN ATTACHMENT

SMCS-7301 **i03084720**

NOTE	PART NUMBER	QTY	PART NAME 1 2 3 4 5 6 (PRODUCT LEVEL)	SEE PAGE
Y	*311-8700*	1	OPERATOR AR	569
Y	*174-2215*	1	SKIRT GP-CAB	612
Y-SEPARATE ILLUSTRATION				

<END>

328-7485 CAB AR-ENCLOSED ROPS

S/N: KLN1-UP
PART OF 328-7484 CORROSION AR-PROTECTION
AN ATTACHMENT

SMCS-7301 **i03085122**

NOTE	PART NUMBER	QTY	PART NAME 1 2 3 4 5 6 (PRODUCT LEVEL)	SEE PAGE
Y	*294-9433*	1	AIR CONDITIONER AR	487
Y	*328-7486*	1	CONVERSION GP-CAB	524
Y-SEPARATE ILLUSTRATION				

<END>

OPERATOR STATION

310-9952 CAB GP

S/N: KLN1-UP
PART OF 310-9953 CAB AR
AN ATTACHMENT

SMCS-7301 **i03150320**

NOTE	REF NO	GRAPHIC REF	PART NUMBER	QTY	PART NAME 1 2 3 4 5 6 (PRODUCT LEVEL)	SEE PAGE
	1	1	**6K-8088**	4	BEARING-ROLLER	
	2	1	**8E-8300**	2	DISC-THRUST	
	3	1	**8R-6904**	2	TREAD-RUBBER	
	4	1	**107-6056**	1	PEDAL AS-LH	
	5	1	**107-6144**	1	GLASS-FRONT (LH)	
	6	1	**107-6145**	1	GLASS-FRONT (CENTER)	
	7	1	**110-7524**	21	BUTTON	
	8	1	**111-0132**	1	PEDAL AS-RH	
	9	1	**111-0177**	1	GLASS-FRONT (RH)	
	10	1	**166-8679**	1	PLATE	
	11	1	**169-9908**	1	GLASS-REAR	
	12	1	**169-9949**	1	SUPPORT AS	
		1	**169-9950**	1	PLATE AS	
M		1	**6V-9632**	6	NUT-WELD (M6X1-THD)	
M		1	**159-9540**	2	NUT-WELD (M8X1.25-THD)	
	13	1	**310-9951**	1	CAB AS	
	14	1	**1B-8723**	1	KEY-WOODRUFF	
M	15	1	**6V-3940**	4	BOLT (M8X1.25X25-MM)	
	16	1	**8T-4121**	1	WASHER-HARD (11X21X2.5-MM THK)	
M	17	1	**8T-4185**	1	BOLT (M10X1.5X50-MM)	
	18	1	**9M-1974**	4	WASHER-HARD (8.8X16X2-MM THK)	
M	19	1	**9X-2045**	4	SCREW-TRUSS HEAD (M6X1X20-MM)	

M-METRIC PART

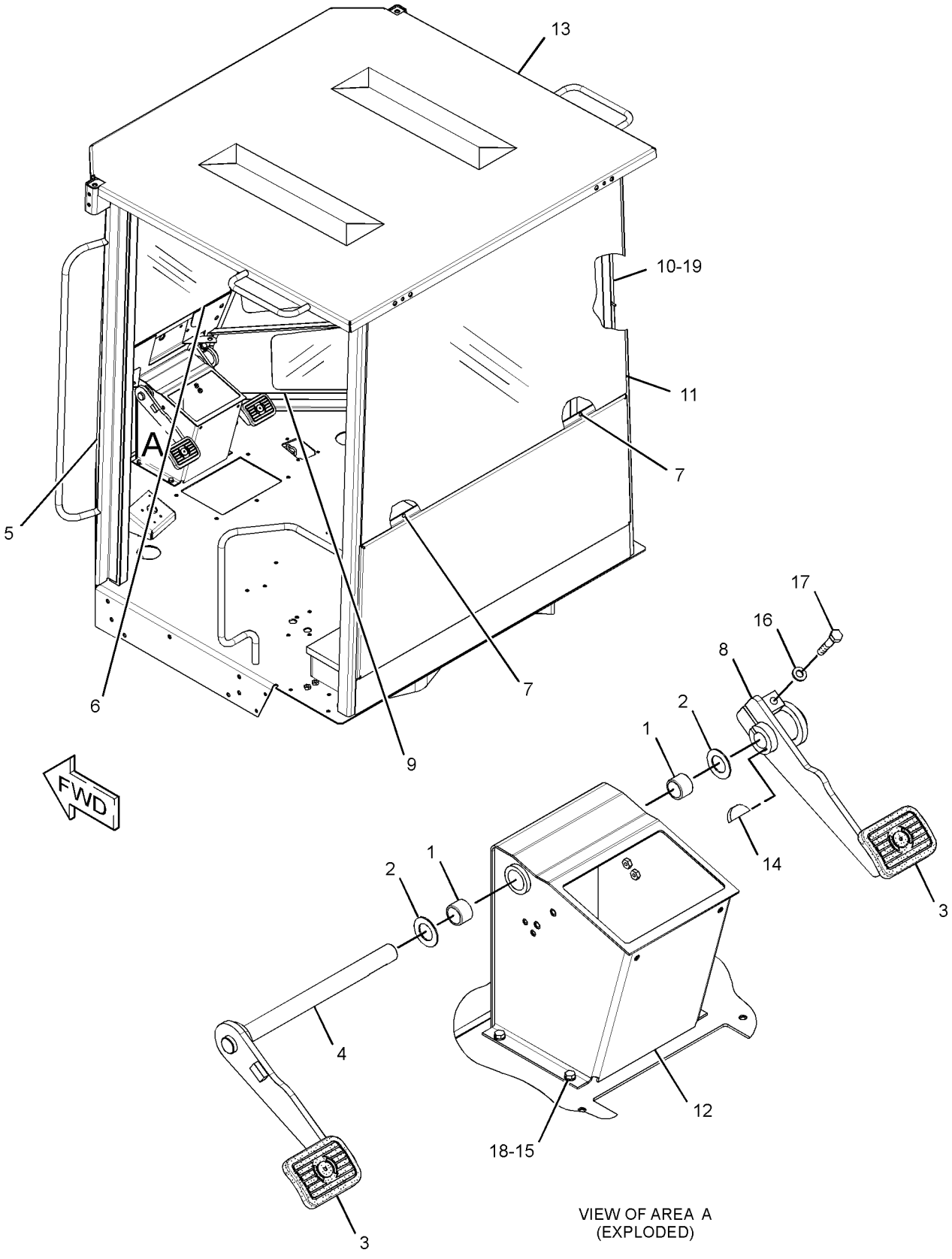

VIEW OF AREA A
(EXPLODED)

GRAPHIC #1 **<END>** g01621249

OPERATOR STATION

311-8691 CAB GP

S/N: KLN1-UP

PART OF 311-8693 ROPS GP-ENCLOSED

AN ATTACHMENT

SMCS-7301 **i03538567**

NOTE	REF NO	GRAPHIC REF	PART NUMBER	QTY	PART NAME 1 2 3 4 5 6 (PRODUCT LEVEL)	SEE PAGE
M	1	1	**8U-7051**	1	SCREW (M6X1X12-MM)	
	2	1	**8Y-6377**	1	STRIKER	
	3	1	**9R-8537**	1	SOCKET-LATCH	
	4	1	**107-6144**	1	GLASS-FRONT (LH)	
	5	1	**107-6145**	1	GLASS-FRONT (CENTER)	
	6	1	**107-6146**	1	GLASS-REAR (LH)	
	7	1	**108-4311**	1	SCREW-MACHINE (3/8-16X0.75-IN)	
	8	1	**111-0177**	1	GLASS-FRONT (RH)	
	9	1	**111-0178**	1	GLASS-REAR (RH)	
	10	1	**111-0204**	1	PLATE AS	
	11	1	**161-8042**	1	GLASS AS-REAR	
	12	1	**161-9645**	1	STRIKER AS	
	13	1	**198-3393**	4	INSERT	
	14	1	**263-2062**	1	BRACKET AS	
	15	1	**311-8689**	1	CAB AS	
		1	**5D-9629**	1	ROD	
		1	**7T-1099**	21	LINK	
M		1	**8T-3734**	12	BOSS-WELD (M10X1.5X40-MM)	
		1	**8R-6132**	2	HANDLE AS	
	16	1	**5P-4116**	2	WASHER-HARD (8.8X20.5X2-MM THK)	
	17	1	**8T-4121**	12	WASHER-HARD (11X21X2.5-MM THK)	
M	18	1	**8T-4137**	4	BOLT (M10X1.5X20-MM)	
M	19	1	**8T-4189**	14	BOLT (M8X1.25X20-MM)	
	20	1	**8T-4224**	12	WASHER-HARD (8.8X16X2-MM THK)	
M	21	1	**9X-2041**	8	SCREW-TRUSS HEAD (M10X1.5X20-MM)	

M-METRIC PART

311-8691 CAB GP *(contd.)* **i03538567**

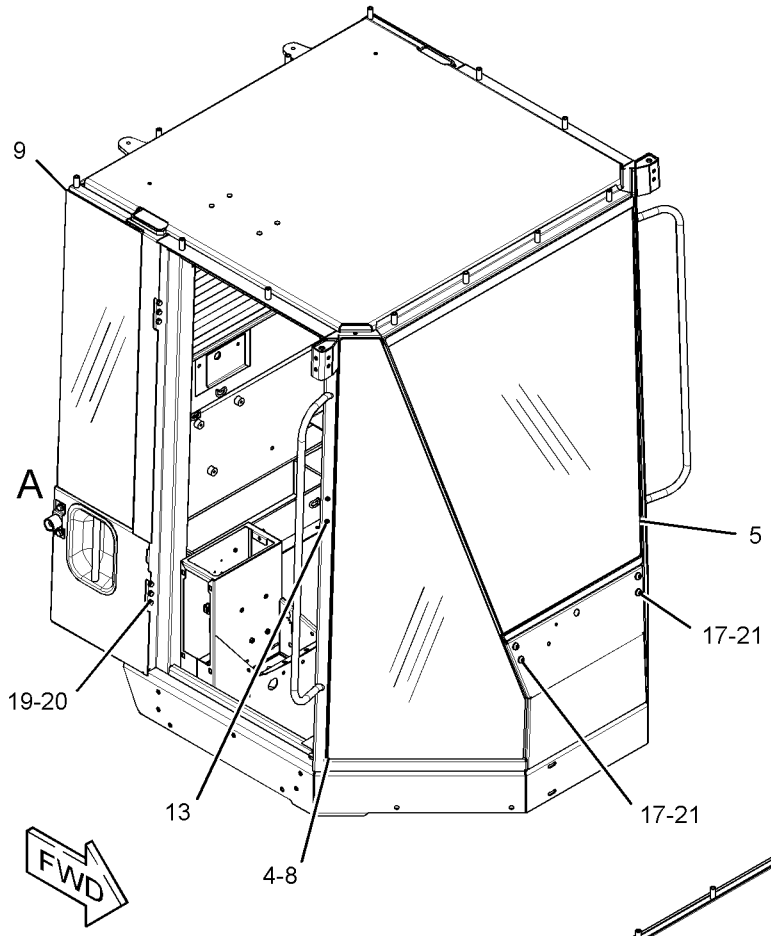

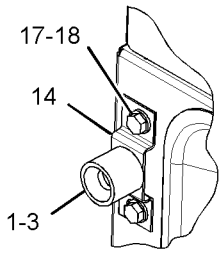

VIEW OF AREA A

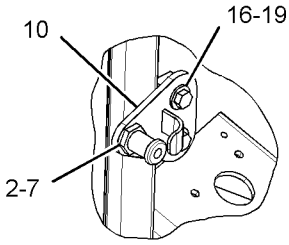

VIEW OF AREA B

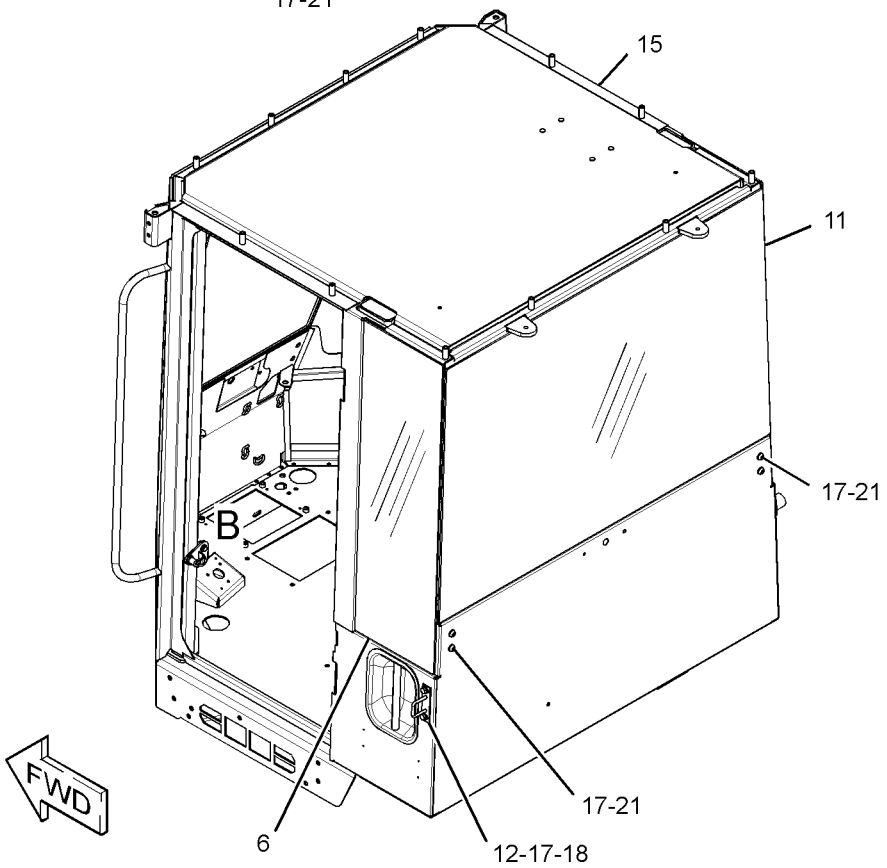

GRAPHIC #1 **<END>** g01887603

OPERATOR STATION

290-8497 CAB GP-ENCLOSED ROPS

S/N: KLN1-UP

PART OF 290-8499 CAB GP-ENCLOSED ROPS

AN ATTACHMENT

SMCS-7301 **i03590540**

NOTE	PART NUMBER	QTY	PART NAME 1 2 3 4 5 6 (PRODUCT LEVEL)	SEE PAGE
M	**8T-3734**	12	BOSS-WELD (M10X1.5X40-MM)	
	8R-6132	2	HANDLE AS	
	7T-1099	21	LINK	
M	**6V-9632**	1	NUT-WELD (M6X1-THD)	
	5D-9629	1	ROD	
D	**6V-0352**		SEAL (0.1-M)	

D-ORDER BY THE METER
M-METRIC PART

<END>

OPERATOR STATION

290-8499 CAB GP-ENCLOSED ROPS

S/N: KLN1-UP
PART OF 290-8501 ROPS GP-ENCLOSED
AN ATTACHMENT

SMCS-7301 **i03016513**

NOTE	REF NO	GRAPHIC REF	PART NUMBER	QTY	PART NAME 1 2 3 4 5 6 (PRODUCT LEVEL)	SEE PAGE
	1	1	**8Y-6377**	2	STRIKER	
	2	1	**107-6144**	1	GLASS-FRONT (LH)	
	3	1	**107-6145**	1	GLASS-FRONT (CENTER)	
	4	1	**107-6146**	1	GLASS-REAR (LH)	
	5	1	**108-4311**	2	SCREW-MACHINE (3/8-16X0.75-IN)	
	6	1	**111-0177**	1	GLASS-FRONT (RH)	
	7	1	**111-0178**	1	GLASS-REAR (RH)	
	8	1	**111-0204**	1	PLATE AS (LH)	
	9	1	**111-0209**	1	PLATE AS (RH)	
	10	1	**161-8042**	1	GLASS AS-REAR	
	11	1	**161-9645**	2	STRIKER AS	
	12	1	**198-3393**	4	INSERT	
Y	13	1	**290-8497**	1	CAB GP-ENCLOSED ROPS	501
	14	1	**5P-4116**	4	WASHER-HARD (8.8X20.5X2-MM THK)	
	15	1	**8T-4121**	12	WASHER-HARD (11X21X2.5-MM THK)	
M	16	1	**8T-4137**	4	BOLT (M10X1.5X20-MM)	
M	17	1	**8T-4189**	16	BOLT (M8X1.25X20-MM)	
	18	1	**8T-4224**	12	WASHER-HARD (8.8X16X2-MM THK)	
M	19	1	**9X-2041**	8	SCREW-TRUSS HEAD (M10X1.5X20-MM)	

M-METRIC PART
Y-SEPARATE ILLUSTRATION

290-8499 CAB GP-ENCLOSED ROPS *(contd.)* i03016513

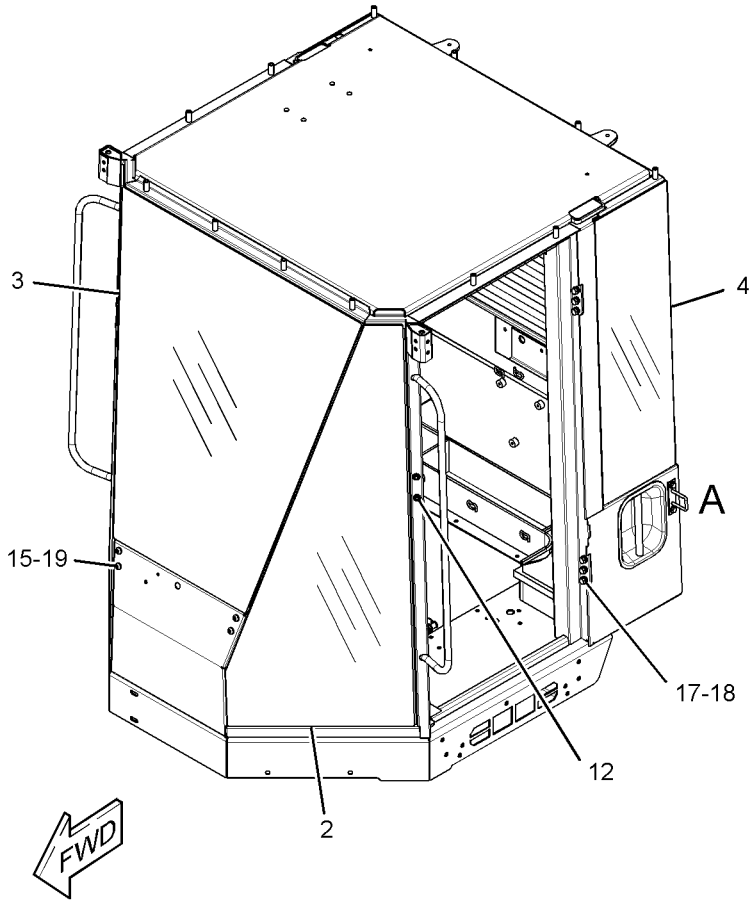

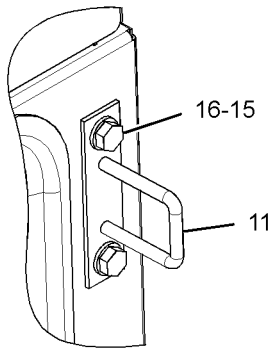

VIEW OF AREA A

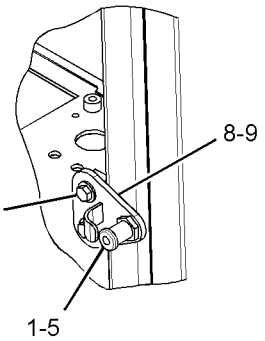

VIEW OF AREA B

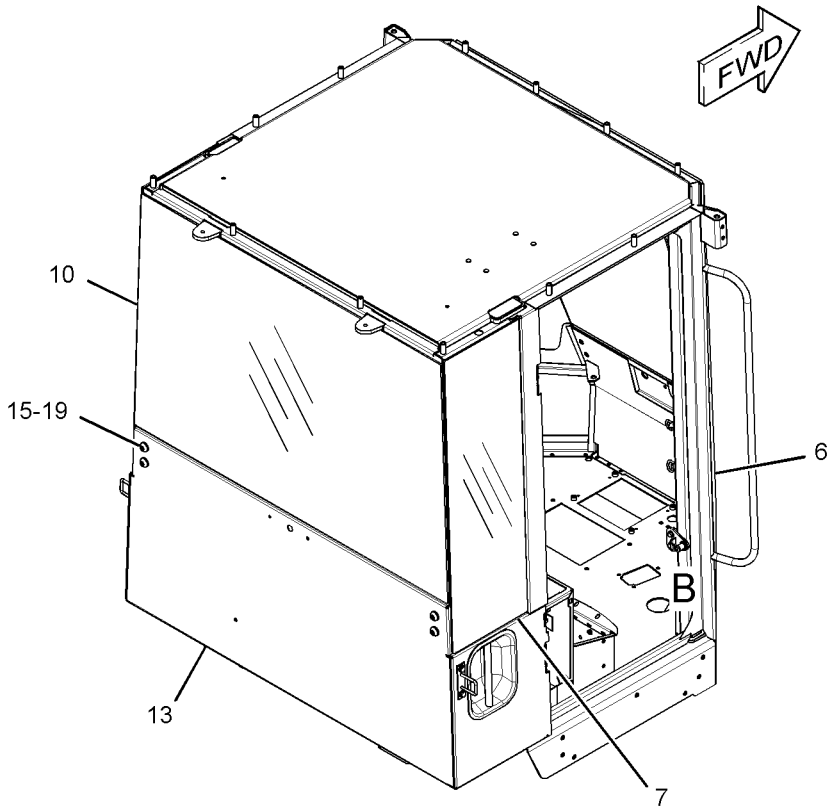

GRAPHIC #1 **<END>** g01407648

OPERATOR STATION

290-8520 CAB GP-ENCLOSED ROPS

S/N: KLN1-UP
PART OF 290-8522 CAB AR-ENCLOSED ROPS
AN ATTACHMENT

SMCS-7301 **i03016527**

NOTE	PART NUMBER	QTY	PART NAME 1 2 3 4 5 6 (PRODUCT LEVEL)	SEE PAGE
Y	*290-8494*	1	DOOR GP-CAB (SLIDING WINDOWS)	532
Y	*290-8181*	1	LIGHTING GP-FLOOD (CAB FRONT, REAR)	146
Y	*290-8501*	1	ROPS GP-ENCLOSED	595

Y-SEPARATE ILLUSTRATION

<END>

290-8182 CANOPY AR-OPEN ROPS

S/N: KLN1-UP
PART OF 290-8186 OPERATOR AR-OPEN ROPS
AN ATTACHMENT

SMCS-7302, 7323 **i03043780**

NOTE	PART NUMBER	QTY	PART NAME 1 2 3 4 5 6 (PRODUCT LEVEL)	SEE PAGE
Y	*290-8179*	1	CANOPY GP-OPEN ROPS	504
Y	*317-0771*	1	OPERATOR GP	570

Y-SEPARATE ILLUSTRATION

<END>

290-8189 CANOPY AR-OPEN ROPS

S/N: KLN1-UP
AN ATTACHMENT

SMCS-7302, 7323 **i03043760**

NOTE	PART NUMBER	QTY	PART NAME 1 2 3 4 5 6 (PRODUCT LEVEL)	SEE PAGE
Y	*259-4137*	1	ALTERNATOR GP-CHARGING (24-VOLT, 95-AMPERE)	122
Y	*290-8186*	1	OPERATOR AR-OPEN ROPS	570
Y	*174-2213*	1	SKIRT GP-CAB	611

Y-SEPARATE ILLUSTRATION

<END>

290-8179 CANOPY GP-OPEN ROPS

S/N: KLN1-UP
PART OF 290-8182 CANOPY AR-OPEN ROPS
AN ATTACHMENT

SMCS-7323 **i03043820**

NOTE	PART NUMBER	QTY	PART NAME 1 2 3 4 5 6 (PRODUCT LEVEL)	SEE PAGE
Y	*313-4572*	1	LIGHTING GP-FLOOD (CANOPY FRONT, REAR)	150
Y	*290-8177*	1	ROPS GP-OPEN	597

Y-SEPARATE ILLUSTRATION

<END>

OPERATOR STATION

183-5106 COMPRESSOR GP-REFRIGERANT

S/N: KLN1-UP

PART OF 262-0858 COMPRESSOR GP-REFRIGERANT

AN ATTACHMENT

SMCS-1802 **i03437060**

NOTE	REF NO	GRAPHIC REF	PART NUMBER	QTY	PART NAME 1 2 3 4 5 6 (PRODUCT LEVEL)	SEE PAGE
	1	1	**180-9339**	2	PIN-CONNECTOR (14-GA TO 18-GA)	
	2	1	**102-8802**	1	KIT-RECEPTACLE (2-PIN)	
					(INCLUDES RECEPTACLE AS & WEDGE)	
	3	1	**314-4018**	1	VALVE AS (REFRIGERANT COMPRESSOR)	
		1	**9X-7378**	1	SEAL-O-RING	
	4	1	**7T-4532**	1	PLUG AS	
	5	1	**9X-7385**	2	SEAL-O-RING	

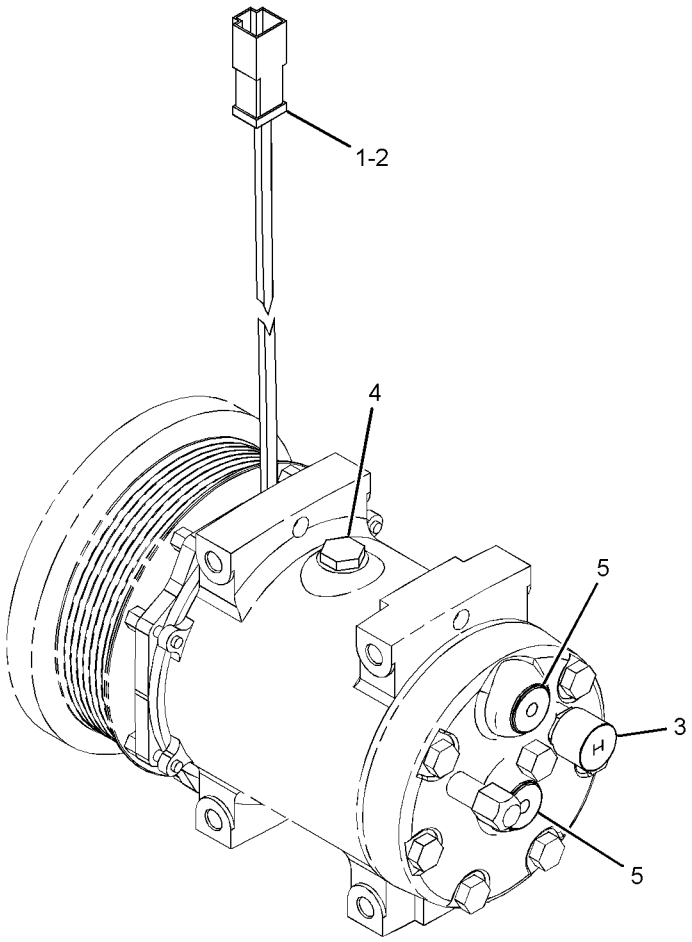

GRAPHIC #1 **<END>** g01419732

OPERATOR STATION

262-0858 COMPRESSOR GP-REFRIGERANT

S/N: KLN1-UP
PART OF 294-9433 AIR CONDITIONER AR
AN ATTACHMENT

SMCS-1802 **i03016507**

NOTE	REF NO	GRAPHIC REF	PART NUMBER	QTY	PART NAME 1 2 3 4 5 6 (PRODUCT LEVEL)	SEE PAGE
Y	1	1	**183-5106**	1	COMPRESSOR GP-REFRIGERANT	505
	2	1	**262-0849**	1	BRACKET	
	3	1	**3E-4356**	2	WASHER-HARD (17.5X30X6-MM THK)	
	4	1	**5P-4116**	4	WASHER-HARD (8.8X20.5X2-MM THK)	
M	5	1	**7X-2538**	4	BOLT (M8X1.25X100-MM)	
	6	1	**8T-4121**	1	WASHER-HARD (11X21X2.5-MM THK)	
M	7	1	**8T-4779**	2	BOLT (M16X2X35-MM)	
M	8	1	**8T-6466**	1	BOLT (M10X1.5X60-MM)	

M-METRIC PART
Y-SEPARATE ILLUSTRATION

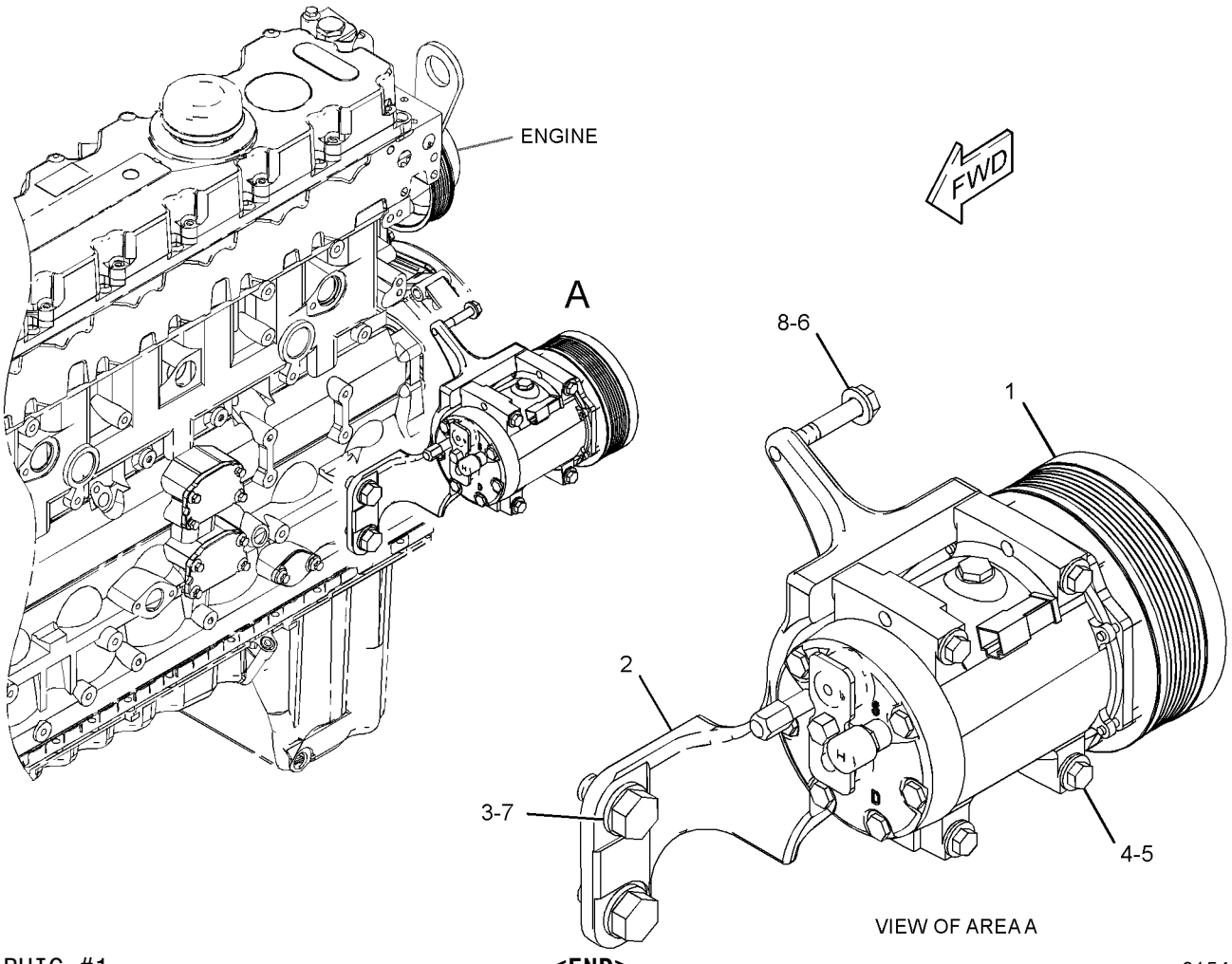

GRAPHIC #1 **<END>** g01541514

OPERATOR STATION

202-0363 CONDENSER & MTG GP-REFRIGERANT

S/N: KLN1-UP

PART OF 203-5937 CONDENSER & MTG GP-REFRIGERANT AN ATTACHMENT

SMCS-1805 **i01811425**

NOTE	REF NO	GRAPHIC REF	PART NUMBER	QTY	PART NAME 1 2 3 4 5 6 (PRODUCT LEVEL)	SEE PAGE
Y	1	1	**199-7041**	1	CONDENSER GP-REFRIGERANT	509
	2	1	**205-6025**	1	BRACKET	
	3	1	**205-6026**	1	BRACKET	
	4	1	**205-6027**	1	BRACKET	
	5	1	**205-6028**	1	BRACKET	
M	6	1	**8T-4189**	10	BOLT (M8X1.25X20MM)	
	7	1	**8T-4224**	10	WASHER-HARD (8.8X16X2MM THK)	

M-METRIC PART
Y-SEPARATE ILLUSTRATION

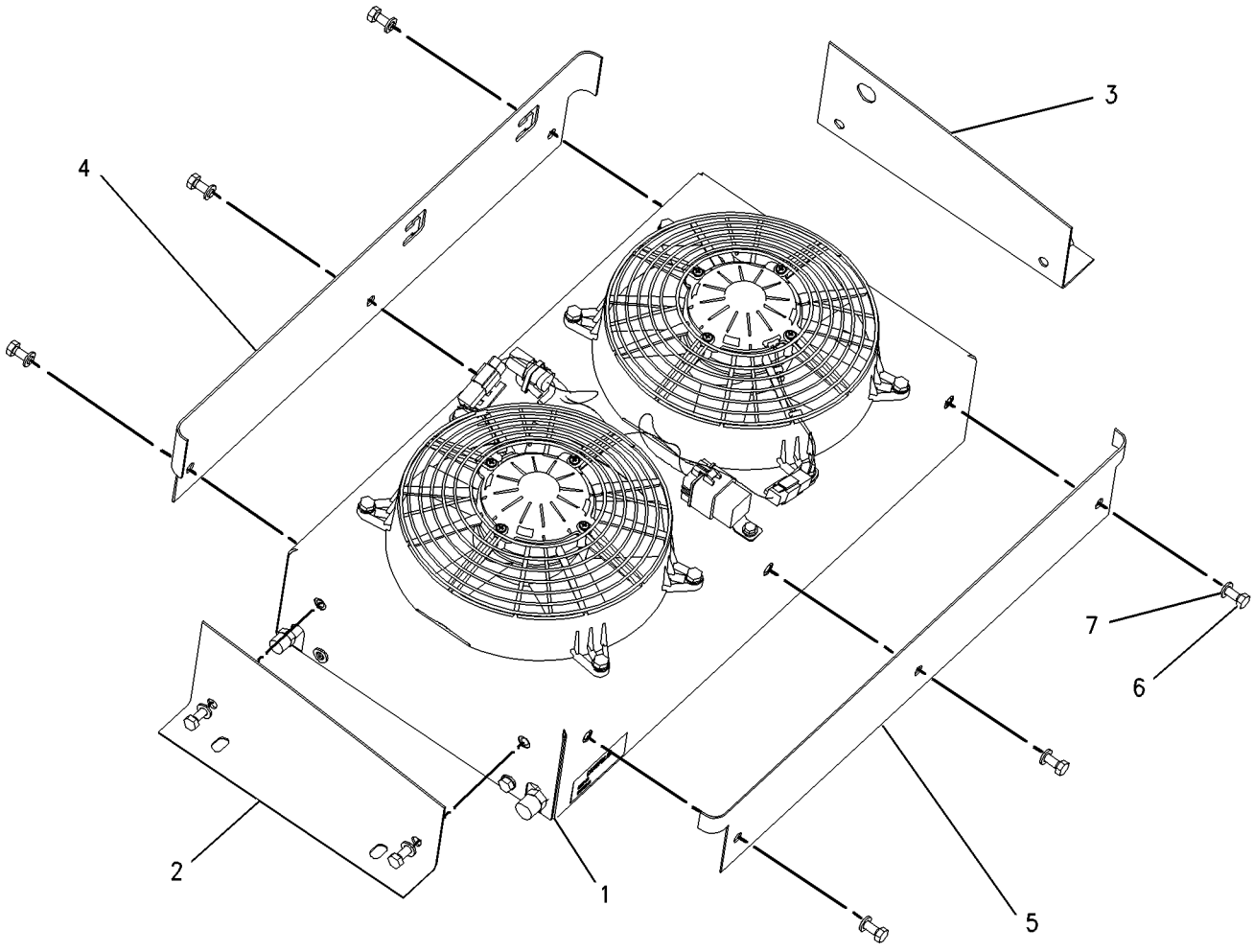

GRAPHIC #1 **<END>** g00895692

OPERATOR STATION

203-5937 CONDENSER & MTG GP-REFRIGERANT

S/N: KLN1-UP
PART OF 294-9433 AIR CONDITIONER AR
AN ATTACHMENT

SMCS-1805 **i03017517**

NOTE	REF NO	GRAPHIC REF	PART NUMBER	QTY	PART NAME 1 2 3 4 5 6 (PRODUCT LEVEL)	SEE PAGE
Y	1	1	*202-0363*	1	CONDENSER & MTG GP-REFRIGERANT	507
	2	1	**205-6024**	2	BRACKET AS	
					(EACH INCLUDES)	
M		1	**8T-3490**	4	NUT-WELD (M10X1.5-THD)	
	3	1	**8T-4121**	8	WASHER-HARD (11X21X2.5-MM THK)	
M	4	1	**8T-4195**	8	BOLT (M10X1.5X30-MM)	
CD	5	1	**5P-7211**		SEAL (0.2-M)	
	6	1	**280-2710**	1	CIRCUIT BREAKER AS (20-AMPERE)	

C-CHANGE FROM PREVIOUS TYPE
D-ORDER BY THE METER
M-METRIC PART
Y-SEPARATE ILLUSTRATION

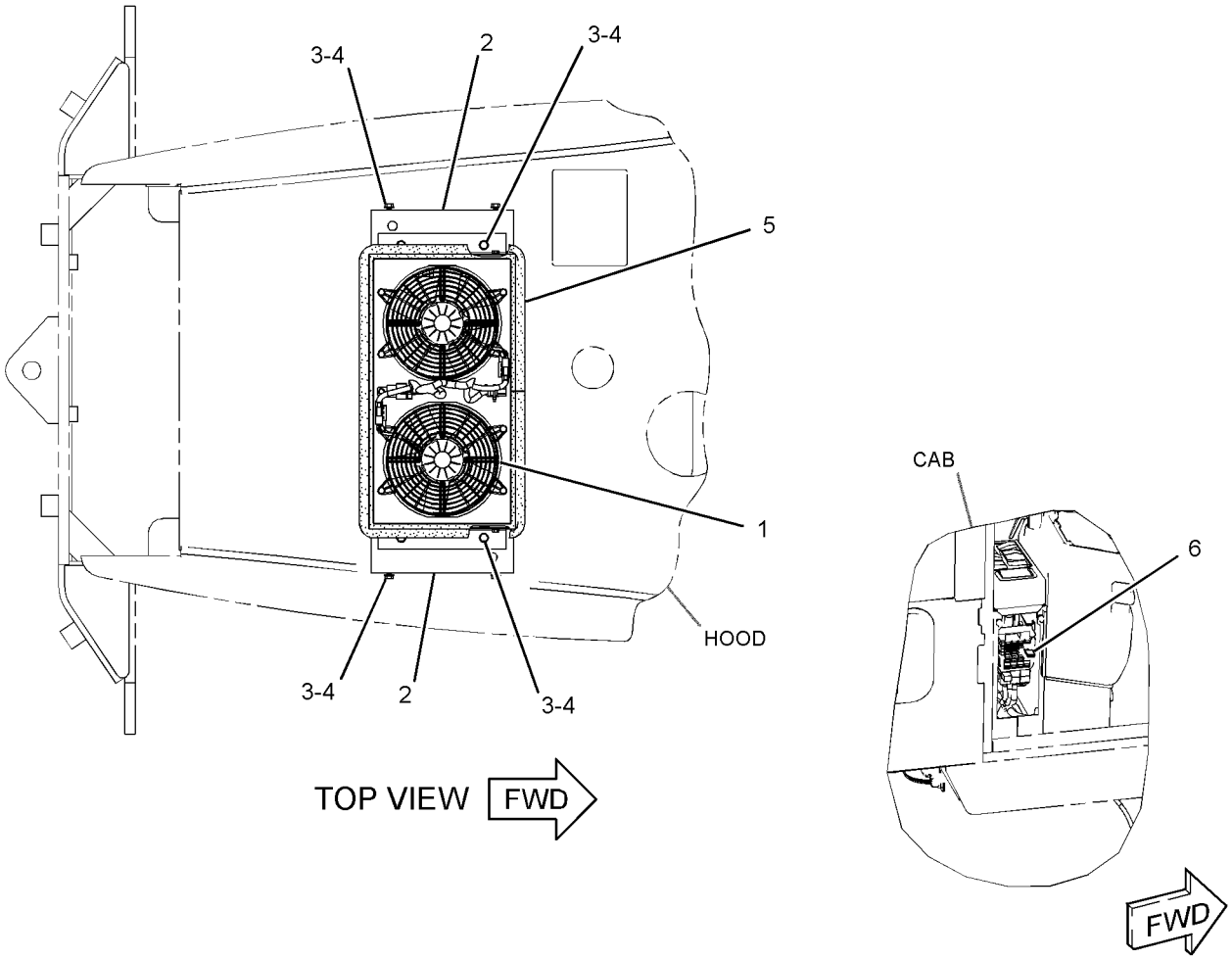

GRAPHIC #1 **<END>** g01535941

OPERATOR STATION

199-7041 CONDENSER GP-REFRIGERANT

S/N: KLN1-UP

PART OF 202-0363 CONDENSER & MTG GP-REFRIGERANT AN ATTACHMENT

SMCS-1805 **i03629303**

NOTE	REF NO	GRAPHIC REF	PART NUMBER	QTY	PART NAME 1 2 3 4 5 6 (PRODUCT LEVEL)	SEE PAGE
	1	1	**3E-5239**	1	RELAY AS (24-VOLT) (CONDENSER)	
	2	1	**3S-2093**	5	STRAP-CABLE	
	3	1	**8C-3756**	1	FILM-IDENTIFICATION (REFRIGERANT CONDENSER)	
	4	1	**304-3715**	2	FAN AS-CONDENSER (24-VOLT, 5-BLADE)	
	5	1	**169-7435**	1	HARNESS AS-HEATER & AIR COND (CONDENSER FANS)	
		1	**9W-0852**	3	PIN-CONNECTOR (14-GA)	
		1	**155-2270**	2	KIT-CONNECTING PLUG (2-PIN)	
					(EACH INCLUDES PLUG AS, WEDGE & INTERFACE SEAL)	
		1	**9X-1054**	1	PLUG AS-CONNECTOR (4-PIN)	
		1	**102-8803**	1	KIT-RECEPTACLE (3-PIN)	
					(INCLUDES RECEPTACLE AS & WEDGE)	
		1	**9W-0844**	4	SOCKET-CONNECTOR (14-GA)	
		1	**9X-1056**	4	TERMINAL-RECEPTACLE (14-GA TO 16-GA)	
	6	1	**199-7042**	1	CASE AS	
M		1	**6V-9632**	1	NUT-WELD (M6X1-THD)	
		1	**7T-1099**	1	LINK	
M		1	**8T-3612**	21	NUT-WELD (M8X1.25-THD)	
	7	1	**199-7043**	1	COIL AS-CONDENSER	
	8	1	**4P-7581**	2	CLIP (LADDER)	
M	9	1	**5C-9553**	1	BOLT (M6X1X16-MM)	
M	10	1	**8T-4200**	4	BOLT (M8X1.25X16-MM)	
	11	1	**8T-4205**	1	WASHER-HARD (7.2X14.5X2-MM THK)	
	12	1	**8T-4224**	12	WASHER-HARD (8.8X16X2-MM THK)	
M	13	1	**8T-5093**	8	BOLT-LOCKING (M8X1.25X25-MM)	

M-METRIC PART

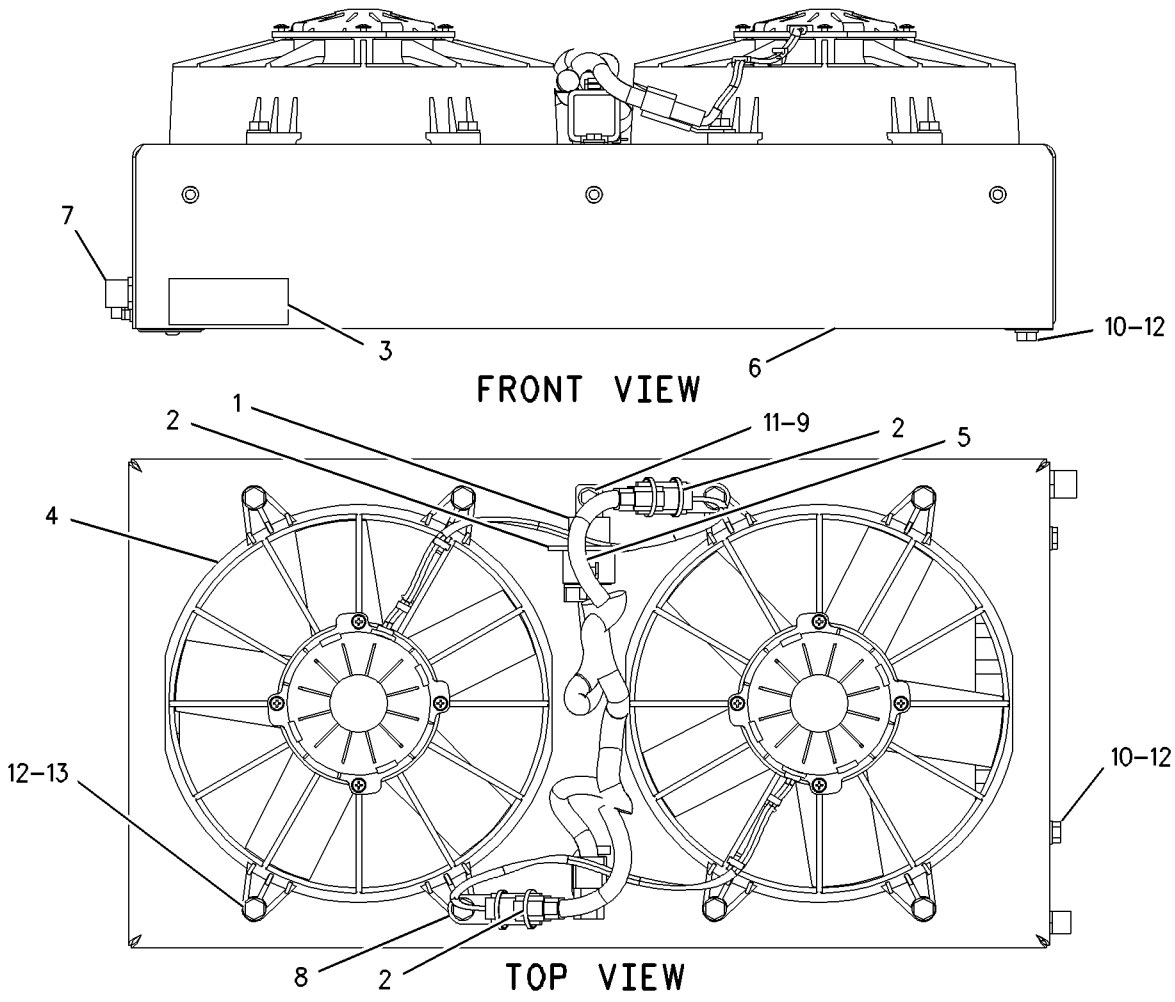

GRAPHIC #1 **<END>** g00946176

OPERATOR STATION

291-3750 CONSOLE GP-OPERATOR

S/N: KLN1-UP

PART OF 310-9954, 311-8700 OPERATOR AR, 290-8525 OPERATOR AR-ENCLOSED ROPS, 290-8186 OPERATOR AR-OPEN ROPS

AN ATTACHMENT

SMCS-5258 **i03016492**

NOTE	REF NO	GRAPHIC REF	PART NUMBER	QTY	PART NAME 1 2 3 4 5 6 (PRODUCT LEVEL)	SEE PAGE
E	1	1	**3E-3892**		SEAL (20.4-CM EACH)	
E	1A	1	**3E-3892**		SEAL (18-CM EACH)	
E	1B	1	**3E-3892**		SEAL (29.8-CM)	
	2	1	**4E-1062**	1	CUSHION AS-ARMREST	
	3	1	**187-2082**	1	LEVER-CONTROL	
	4	1	**259-1155**	1	COVER AS	
	5	1	**291-3748**	1	SUPPORT	
	6	1	**291-3749**	1	BRACKET AS	
	7	1	**103-2006**	4	SCREW-PAN HEAD (6-19X0.37-IN)	
M	8	1	**6V-7357**	3	BOLT (M6X1X25-MM)	
	9	1	**8T-4205**	3	WASHER-HARD (7.2X14.5X2-MM THK)	
M	10	1	**9X-2041**	2	SCREW-TRUSS HEAD (M10X1.5X20-MM)	
M	11	1	**9X-2043**	2	SCREW-TRUSS HEAD (M6X1X14-MM)	
M	12	1	**9X-2045**	8	SCREW-TRUSS HEAD (M6X1X20-MM)	
	13	1	**114-6658**	6	WASHER (6.5X17X1-MM THK)	
	14	1	**8T-4121**	2	WASHER-HARD (11X21X2.5-MM THK)	

E-ORDER BY THE CENTIMETER
M-METRIC PART

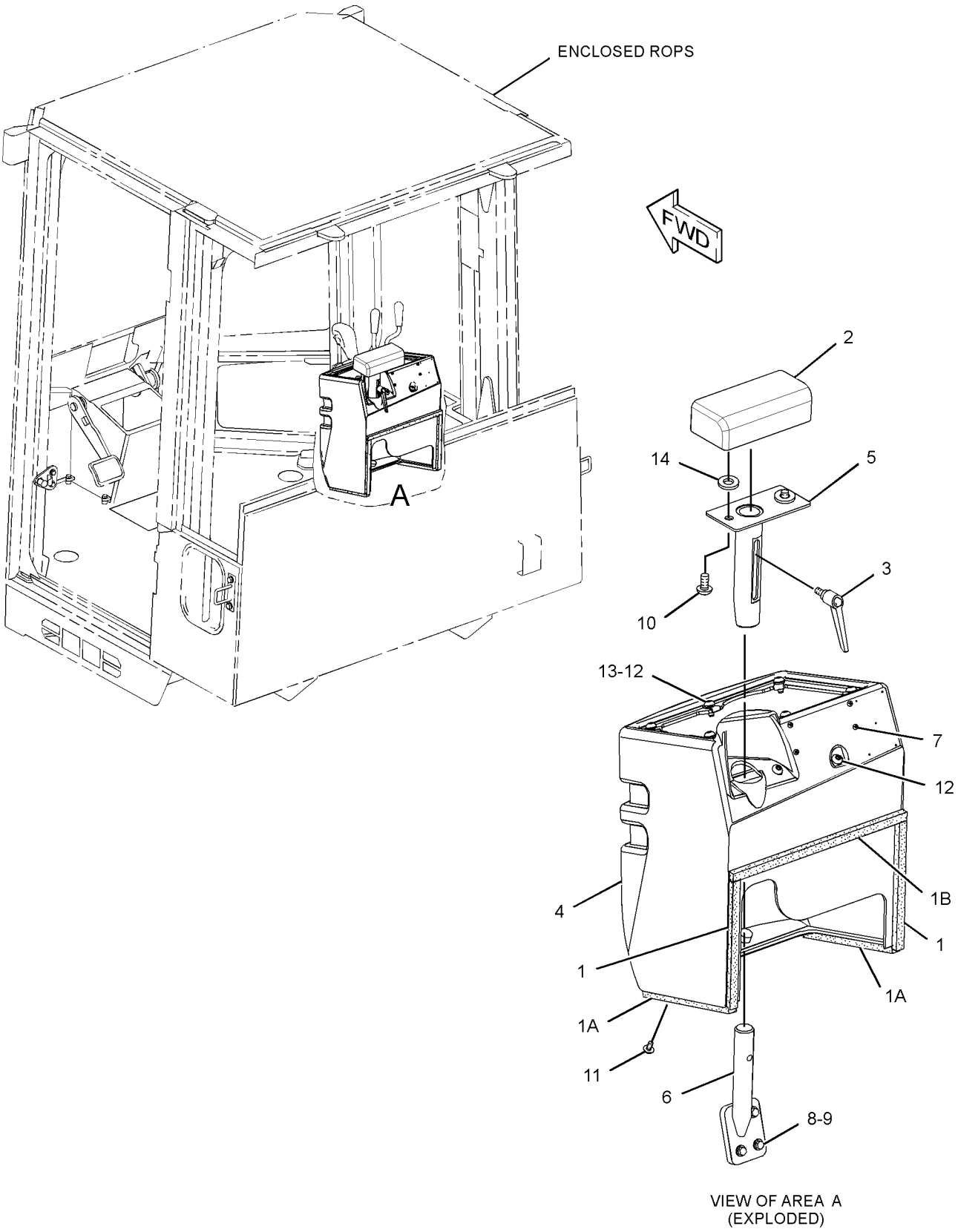

VIEW OF AREA A
(EXPLODED)

GRAPHIC #1 **<END>** g01406627

287-2060 CONTROL GP-JOYSTICK–JOYSTICK, 4-FUNCTION

S/N: KLN1-UP

PART OF 225-1060, 235-6856 CONTROL GP-PILOT OPERATED HYD

AN ATTACHMENT

SMCS-5063, 5705 **i03031742**

NOTE	REF NO	GRAPHIC REF	PART NUMBER	QTY	PART NAME 1 2 3 4 5 6 (PRODUCT LEVEL)	SEE PAGE
	1	1	**114-3937**	1	ROD	
	2	1	**124-4401**	1	KNOB	
	3	1	**149-4359**	1	ROD-CONTROL	
Y	4	1	**212-1305**	1	VALVE GP-PILOT (JOYSTICK, 4-FUNCTION)	450
	5	1	**287-0524**	1	CONTROL GP-HANDLE (DIRECTION, DOWNSHIFT SWITCHES)	
		1	**186-3735**	6	PIN-CONNECTOR (16-GA TO 18-GA)	
M	6	1	**150-1293**	2	SCREW-BUTTON HEAD (M4X0.7X12-MM)	
	7	1	**102-8805**	1	KIT-RECEPTACLE (6-PIN)	
					(INCLUDES RECEPACLE AS & WEDGE)	
	9	1	**3S-2093**	2	STRAP-CABLE	
M	10	1	**8T-4244**	2	NUT (M12X1.75-THD)	

M-METRIC PART
Y-SEPARATE ILLUSTRATION

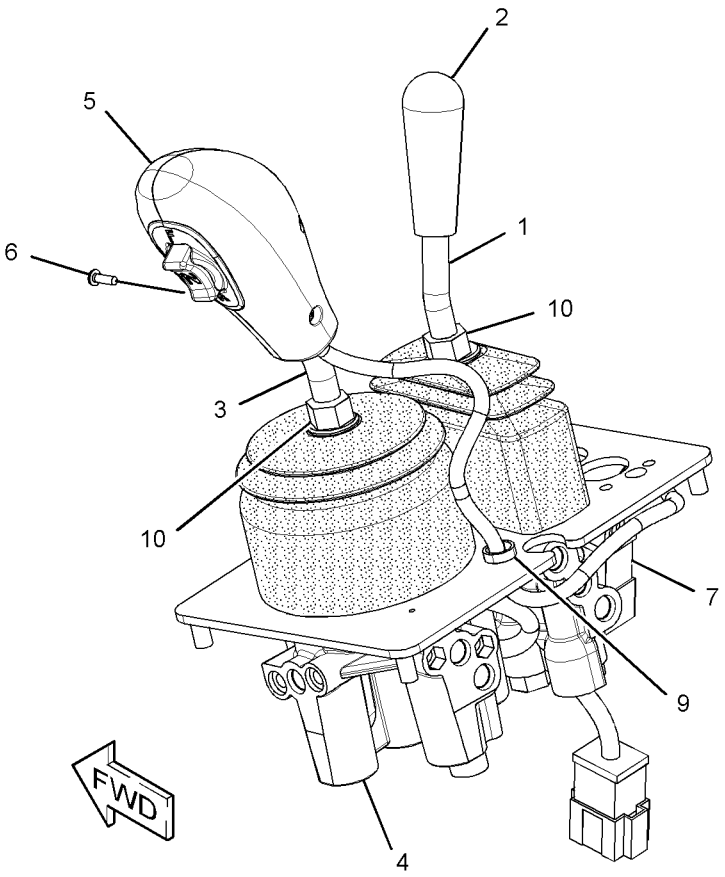

GRAPHIC #1 **<END>** g01539653

OPERATOR STATION

225-1059 CONTROL GP-PILOT OPERATED HYD–
JOYSTICK, 2-FUNCTION
S/N: KLN1-UP
PART OF 203-3889 HYDRAULIC AR-2 VALVE
AN ATTACHMENT

SMCS-5063 **i02874023**

NOTE	REF NO	GRAPHIC REF	PART NUMBER	QTY	PART NAME 1 2 3 4 5 6 (PRODUCT LEVEL)	SEE PAGE
	1	1	**179-6397**	1	PLATE-INSTRUCTION (IMPLEMENT WITH JOYSTICK)	
	2	1	**223-4717**	1	BRACKET	
Y	3	1	*225-1057*	1	VALVE GP-SHUTOFF (HYDRAULIC LOCKOUT)	472
	4	1	**262-1388**	1	SUPPORT AS (PILOT OPERATED HYDRAULIC)	
CY	5	1	*287-2058*	1	VALVE GP-PILOT (JOYSTICK, 2-FUNCTION)	455
C	6	1	**102-8805**	1	KIT-RECEPTACLE (6-PIN)	
					(INCLUDES RECEPTACLE AS & WEDGE)	
M	8	1	**5C-7261**	4	NUT (M8X1.25-THD)	
	9	1	**6V-5839**	2	WASHER (11X21X2.5-MM THK)	
	10	1	**8T-4121**	2	WASHER-HARD (11X21X2.5-MM THK)	
M	11	1	**8T-4137**	2	BOLT (M10X1.5X20-MM)	
	12	1	**8T-4224**	4	WASHER-HARD (8.8X16X2-MM THK)	
M	13	1	**9X-2040**	2	SCREW-TRUSS HEAD (M10X1.5X25-MM)	
M	14	1	**9X-2041**	2	SCREW-TRUSS HEAD (M10X1.5X20-MM)	

C-CHANGE FROM PREVIOUS TYPE
M-METRIC PART
Y-SEPARATE ILLUSTRATION

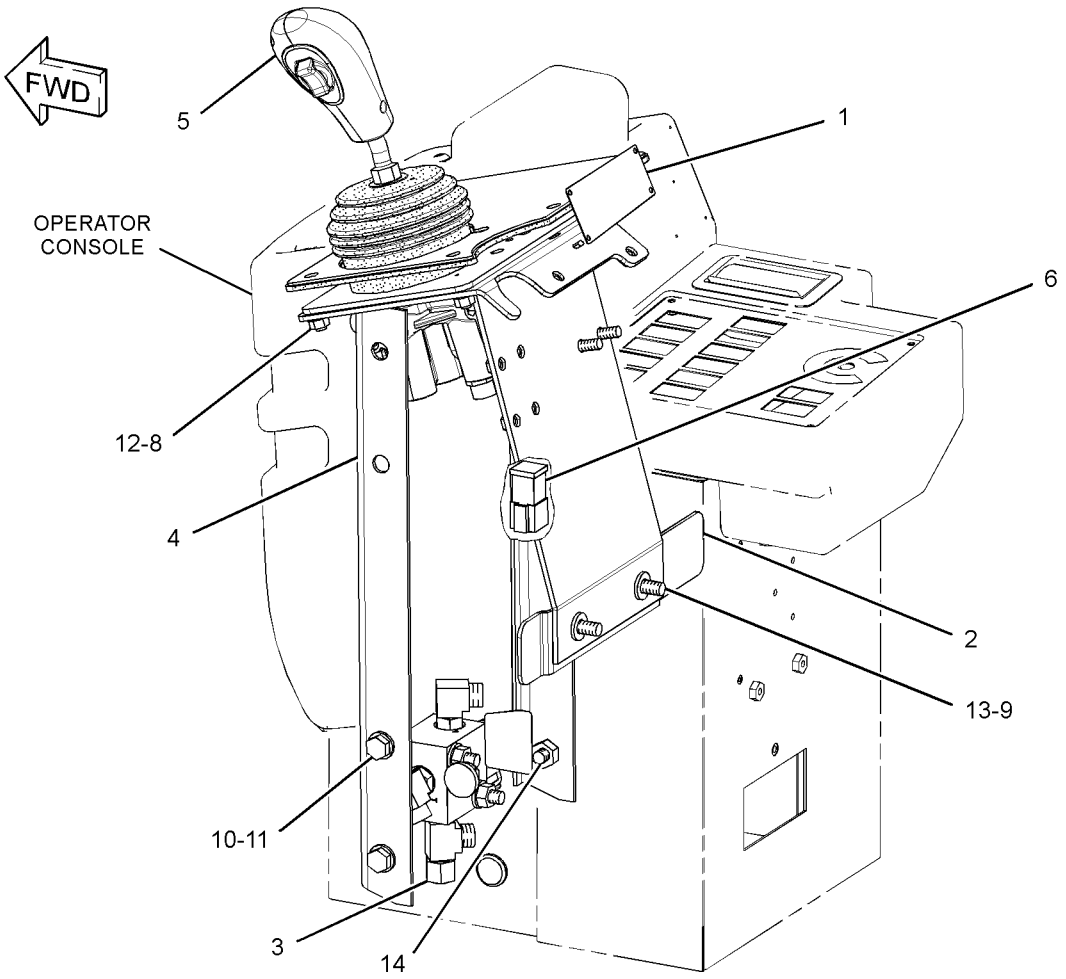

GRAPHIC #1 **<END>** g01371544

225-1060 CONTROL GP-PILOT OPERATED HYD–
JOYSTICK, 3-FUNCTION
S/N: KLN1-230
PART OF 203-3891 HYDRAULIC AR-3 VALVE
AN ATTACHMENT

SMCS-5063 **i02874177**

NOTE	REF NO	GRAPHIC REF	PART NUMBER	QTY	PART NAME 1 2 3 4 5 6 (PRODUCT LEVEL)	SEE PAGE
	1	1	**179-6397**	1	PLATE-INSTRUCTION (IMPLEMENT WITH JOYSTICK)	
	2	1	**223-4717**	1	BRACKET	
Y	3	1	*225-1057*	1	VALVE GP-SHUTOFF (HYDRAULIC LOCKOUT)	472
	4	1	**262-1388**	1	SUPPORT AS	
CY	5	1	*287-2060*	1	CONTROL GP-JOYSTICK (4-FUNCTION)	513
C	6	1	**102-8805**	1	KIT-RECEPTACLE (6-PIN)	
					(INCLUDES RECEPTACLE AS & WEDGE)	
M	8	1	**5C-7261**	4	NUT (M8X1.25-THD)	
	9	1	**6V-5839**	2	WASHER (11X21X2.5-MM THK)	
	10	1	**8T-4121**	2	WASHER-HARD (11X21X2.5-MM THK)	
M	11	1	**8T-4137**	2	BOLT (M10X1.5X20-MM)	
	12	1	**8T-4224**	4	WASHER-HARD (8.8X16X2-MM THK)	
M	13	1	**9X-2040**	2	SCREW-TRUSS HEAD (M10X1.5X25-MM)	
M	14	1	**9X-2041**	2	SCREW-TRUSS HEAD (M10X1.5X20-MM)	

C-CHANGE FROM PREVIOUS TYPE
M-METRIC PART
Y-SEPARATE ILLUSTRATION

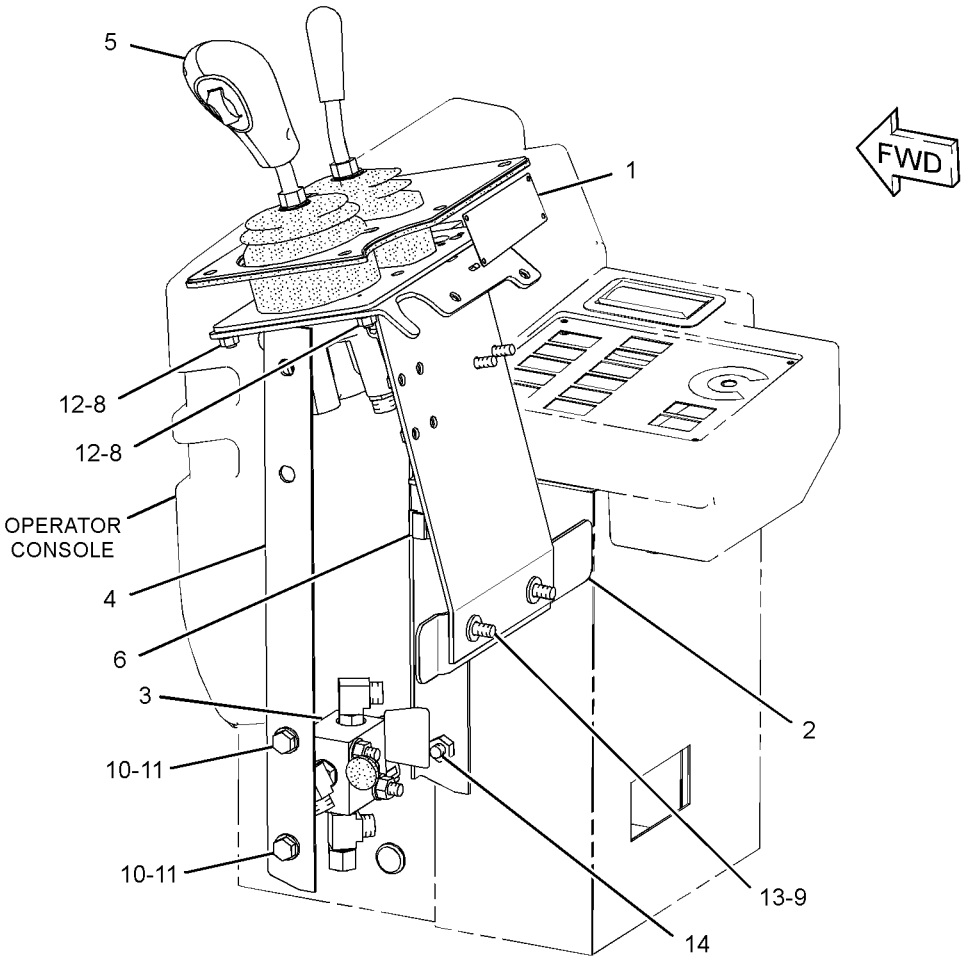

GRAPHIC #1 **<END>** g01367013

OPERATOR STATION

225-1061 CONTROL GP-PILOT OPERATED HYD–
JOYSTICK, 4-FUNCTION
S/N: KLN1-UP
PART OF 203-3893 HYDRAULIC AR-4 VALVE
AN ATTACHMENT

SMCS-5063 **i02819233**

NOTE	REF NO	GRAPHIC REF	PART NUMBER	QTY	PART NAME 1 2 3 4 5 6 (PRODUCT LEVEL)	SEE PAGE
	1	1	**179-6396**	1	PLATE-INSTRUCTION (IMPLEMENT WITH JOYSTICK)	
	2	1	**223-4717**	1	BRACKET	
Y	3	1	*225-1057*	1	VALVE GP-SHUTOFF (HYDRAULIC LOCKOUT)	472
	4	1	**262-1388**	1	SUPPORT AS	
CY	5	1	*287-2064*	1	VALVE GP-PILOT (JOYSTICK, 4-FUNCTION)	456
C	6	1	**102-8805**	1	KIT-RECEPTACLE (6-PIN)	
					(INCLUDES RECEPTACLE AS & WEDGE)	
M	8	1	**5C-7261**	4	NUT (M8X1.25-THD)	
	9	1	**6V-5839**	2	WASHER (11X21X2.5-MM THK)	
	10	1	**8T-4121**	2	WASHER-HARD (11X21X2.5-MM THK)	
M	11	1	**8T-4137**	2	BOLT (M10X1.5X20-MM)	
	12	1	**8T-4224**	4	WASHER-HARD (8.8X16X2-MM THK)	
M	13	1	**9X-2040**	2	SCREW-TRUSS HEAD (M10X1.5X25-MM)	
M	14	1	**9X-2041**	2	SCREW-TRUSS HEAD (M10X1.5X20-MM)	

C-CHANGE FROM PREVIOUS TYPE
M-METRIC PART
Y-SEPARATE ILLUSTRATION

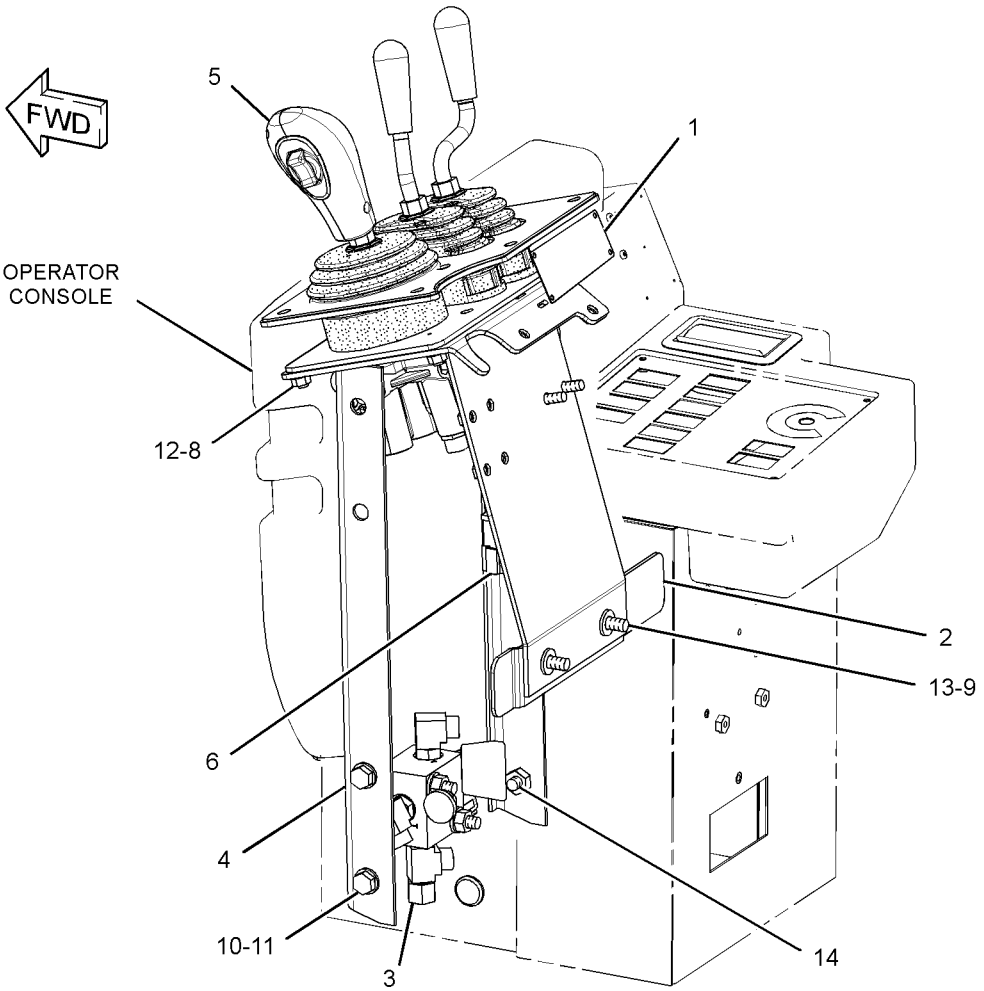

GRAPHIC #1 **<END>** g01366638

OPERATOR STATION

235-6853 CONTROL GP-PILOT OPERATED HYD–
JOYSTICK, 2-FUNCTION
S/N: KLN1-UP
PART OF 203-3889 HYDRAULIC AR-2 VALVE
AN ATTACHMENT

SMCS-5063 **i03031923**

NOTE	REF NO	GRAPHIC REF	PART NUMBER	QTY	PART NAME 1 2 3 4 5 6 (PRODUCT LEVEL)	SEE PAGE
	1	1	**179-6397**	1	PLATE-INSTRUCTION (IMPLEMENT WITH JOYSTICK)	
	2	1	**223-4717**	1	BRACKET	
	3	1	**262-1388**	1	SUPPORT AS	
Y	4	1	*287-2058*	1	VALVE GP-PILOT (JOYSTICK, 2-FUNCTION)	455
M	7	1	**5C-7261**	4	NUT (M8X1.25-THD)	
	9	1	**8T-4121**	2	WASHER-HARD (11X21X2.5-MM THK)	
M	10	1	**8T-4137**	2	BOLT (M10X1.5X20-MM)	
	11	1	**8T-4224**	4	WASHER-HARD (8.8X16X2-MM THK)	
M	12	1	**9X-2040**	2	SCREW-TRUSS HEAD (M10X1.5X25-MM)	
M	13	1	**9X-2041**	2	SCREW-TRUSS HEAD (M10X1.5X20-MM)	
	14	1	**259-1159**	1	PLATE	
	15	1	**270-7612**	1	SEAL	

M-METRIC PART
Y-SEPARATE ILLUSTRATION

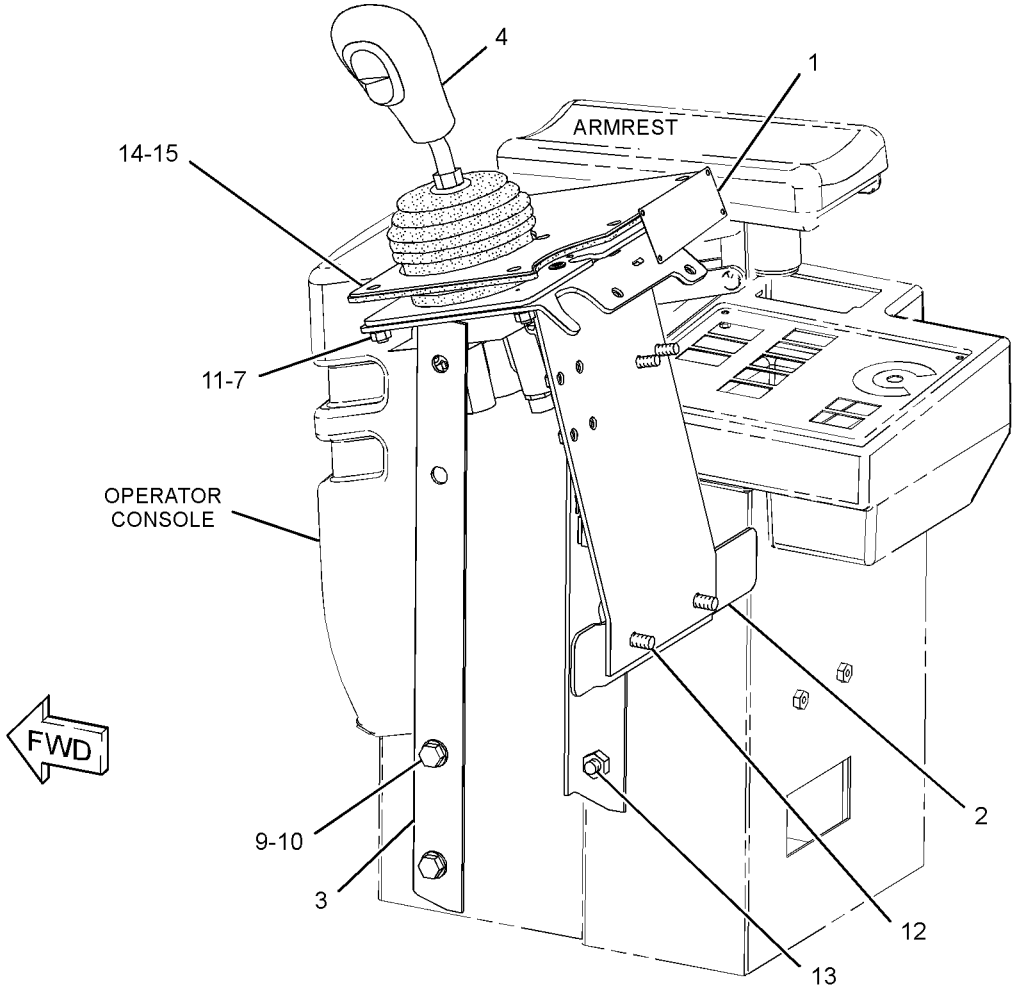

GRAPHIC #1 **<END>** g01490436

OPERATOR STATION

235-6856 CONTROL GP-PILOT OPERATED HYD–
JOYSTICK, 3-FUNCTION
S/N: KLN231-UP
PART OF 203-3891 HYDRAULIC AR-3 VALVE
AN ATTACHMENT

SMCS-5063 **i03032435**

NOTE	REF NO	GRAPHIC REF	PART NUMBER	QTY	PART NAME 1 2 3 4 5 6 (PRODUCT LEVEL)	SEE PAGE
	1	1	**179-6397**	1	PLATE-INSTRUCTION (IMPLEMENT WITH JOYSTICK)	
	2	1	**223-4717**	1	BRACKET	
	3	1	**259-1160**	1	PLATE	
	4	1	**262-1388**	1	SUPPORT AS (PILOT OPERATED HYDRAULIC)	
	5	1	**270-7612**	1	SEAL	
Y	6	1	*287-2060*	1	CONTROL GP-JOYSTICK (4-FUNCTION)	513
M	7	1	**5C-7261**	4	NUT (M8X1.25-THD)	
	8	1	**8T-4121**	2	WASHER-HARD (11X21X2.5-MM THK)	
M	9	1	**8T-4137**	2	BOLT (M10X1.5X20-MM)	
	10	1	**8T-4224**	4	WASHER-HARD (8.8X16X2-MM THK)	
M	11	1	**9X-2040**	2	SCREW-TRUSS HEAD (M10X1.5X25-MM)	
M	12	1	**9X-2041**	2	SCREW-TRUSS HEAD (M10X1.5X20-MM)	

M-METRIC PART
Y-SEPARATE ILLUSTRATION

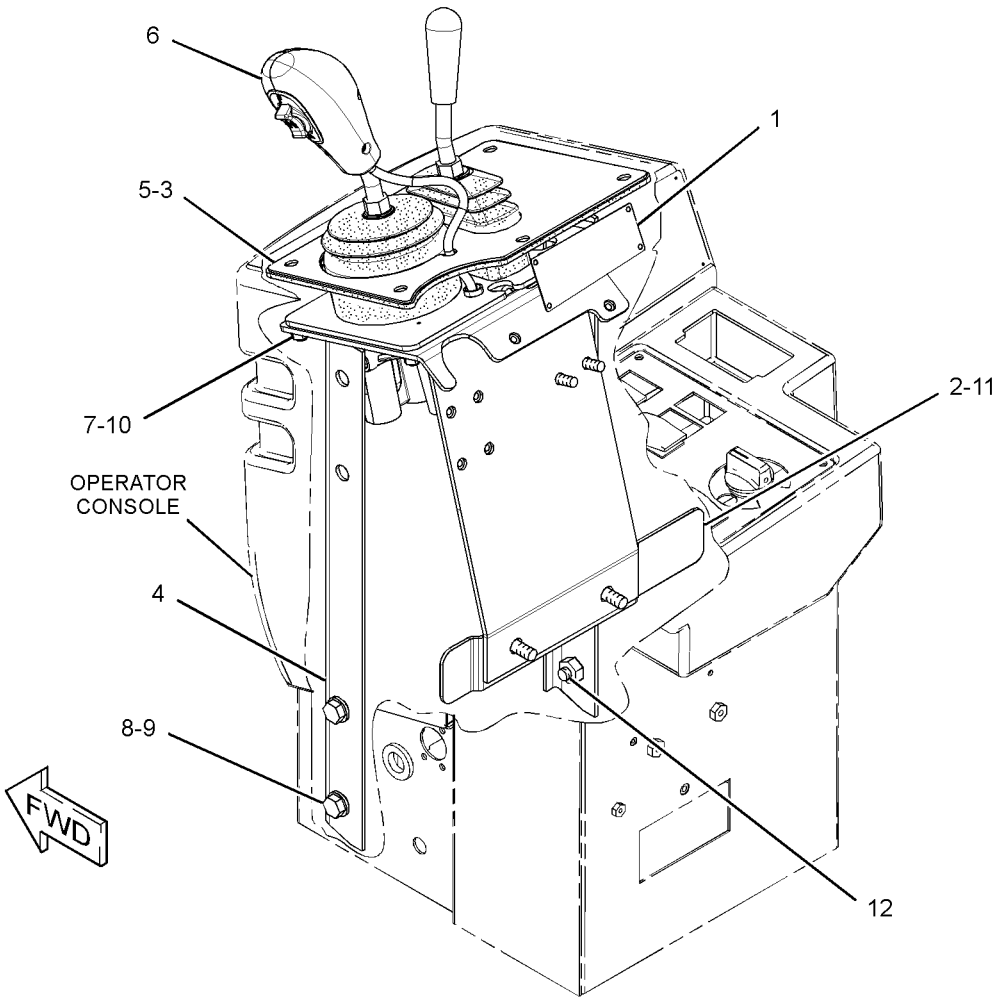

GRAPHIC #1 **<END>** g01508541

235-6860 CONTROL GP-PILOT OPERATED HYD

S/N: KLN1-UP

PART OF 203-3893 HYDRAULIC AR-4 VALVE AN ATTACHMENT

SMCS-5063 **i03572220**

NOTE	REF NO	GRAPHIC REF	PART NUMBER	QTY	PART NAME 1 2 3 4 5 6 (PRODUCT LEVEL)	SEE PAGE
	1	1	**179-6396**	1	PLATE-INSTRUCTION (IMPLEMENT WITH JOYSTICK)	
	2	1	**223-4717**	1	BRACKET	
	3	1	**259-1161**	1	PLATE	
	4	1	**262-1388**	1	SUPPORT AS	
	5	1	**270-7612**	1	SEAL	
Y	6	1	*287-2064*	1	VALVE GP-PILOT (JOYSTICK, 4-FUNCTION)	456
M	7	1	**5C-7261**	4	NUT (M8X1.25-THD)	
	8	1	**8T-4121**	2	WASHER-HARD (11X21X2.5-MM THK)	
M	9	1	**8T-4137**	2	BOLT (M10X1.5X20-MM)	
	10	1	**8T-4224**	4	WASHER-HARD (8.8X16X2-MM THK)	
M	11	1	**9X-2040**	2	SCREW-TRUSS HEAD (M10X1.5X25-MM)	
M	12	1	**9X-2041**	2	SCREW-TRUSS HEAD (M10X1.5X20-MM)	

M-METRIC PART
Y-SEPARATE ILLUSTRATION

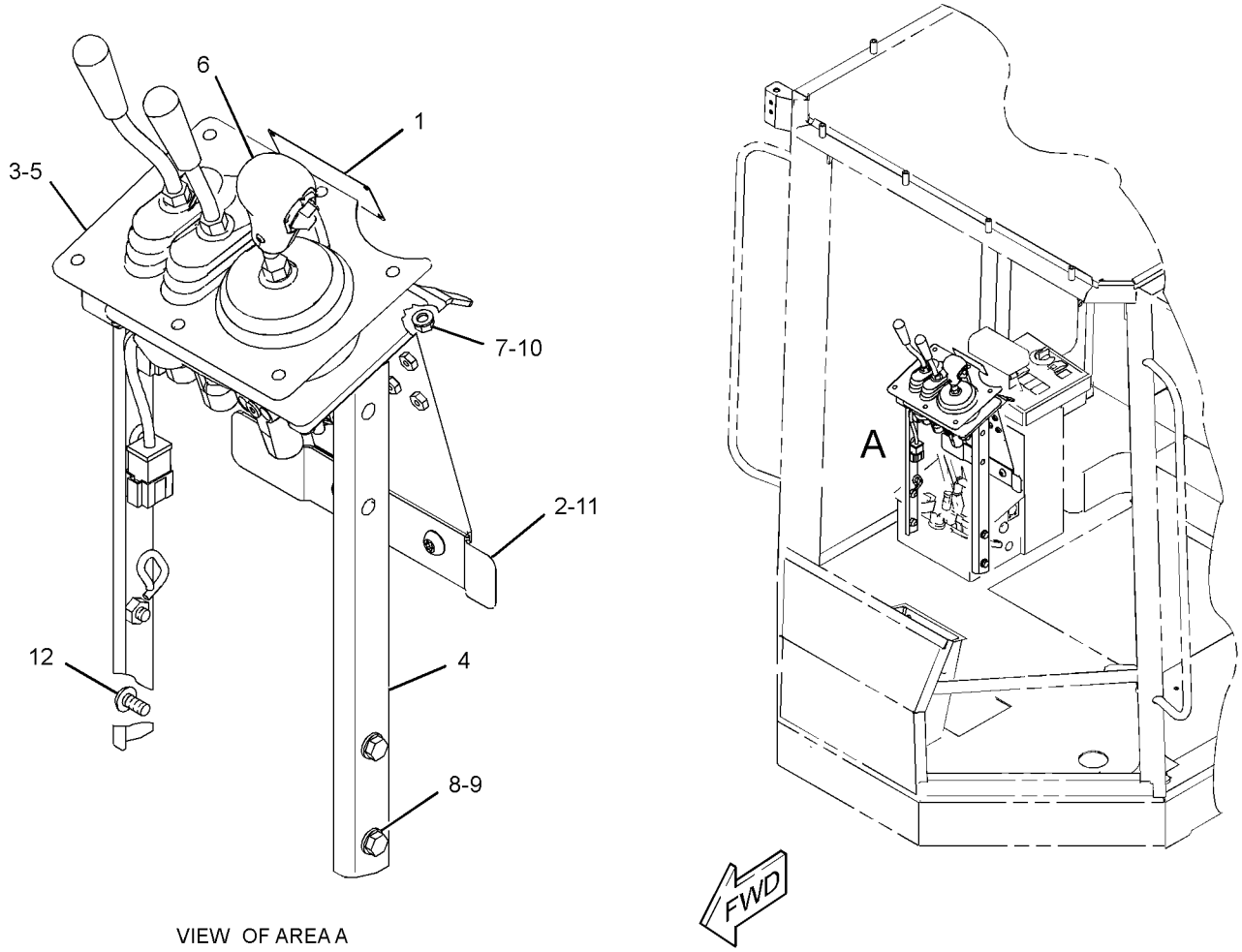

VIEW OF AREA A

GRAPHIC #1 **<END>** g01905554

OPERATOR STATION

190-4635 CONTROL GP-STEERING

S/N: KLN1-UP

PART OF 310-9953 CAB AR, 190-4405, 317-0770 OPERATOR AR, 317-0771 OPERATOR GP

AN ATTACHMENT

SMCS-4310, 4338, 4343 **i03031760**

NOTE	REF NO	GRAPHIC REF	PART NUMBER	QTY	PART NAME 1 2 3 4 5 6 (PRODUCT LEVEL)	SEE PAGE
M	1	1	**9X-2045**	2	SCREW-TRUSS HEAD (M6X1X20-MM)	
	2	1	**2T-3360**	1	BUTTON AS-HORN	
	3	1	**9D-7924**	4	MOUNTING	
	4	1	**107-6007**	1	SUPPORT AS	
	5	1	**107-6141**	1	COVER	
	6	1	**111-7874**	1	SEAL	
	7	1	**111-7878**	1	COVER	
	8	1	**134-4735**	1	PLATE AS	
M		1	**8T-3612**	4	NUT-WELD (M8X1.25-THD)	
	9	1	**129-3270**	1	STEERING WHEEL AS	
	10	1	**8R-2918**	1	KNOB AS (STEERING WHEEL)	
CY	11	1	**319-1625**	1	STEERING COLUMN GP-ADJUSTABLE	329
	12	1	**5P-4116**	5	WASHER-HARD (8.8X20.5X2-MM THK)	
	13	1	**7X-0603**	4	WASHER-HARD (9.9X35X2.5-MM THK)	
M	14	1	**8T-4189**	5	BOLT (M8X1.25X20-MM)	
M	15	1	**8T-4191**	4	BOLT (M10X1.5X16-MM)	
M	16	1	**8T-6869**	4	BOLT (M8X1.25X60-MM)	
M	17	1	**8T-8894**	4	BOLT-SOCKET HEAD (M10X1.5X20-MM)	
M	18	1	**9X-2042**	4	SCREW-TRUSS HEAD (M6X1X12-MM)	

C-CHANGE FROM PREVIOUS TYPE
M-METRIC PART
Y-SEPARATE ILLUSTRATION

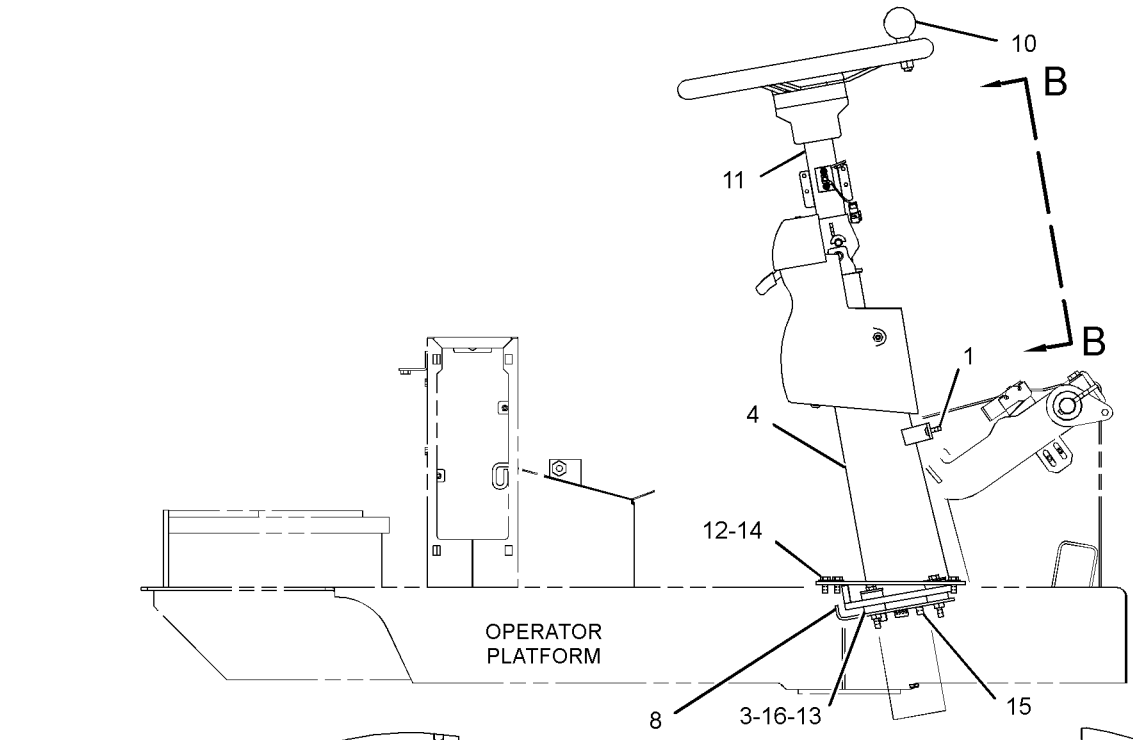

RIGHT SIDE VIEW

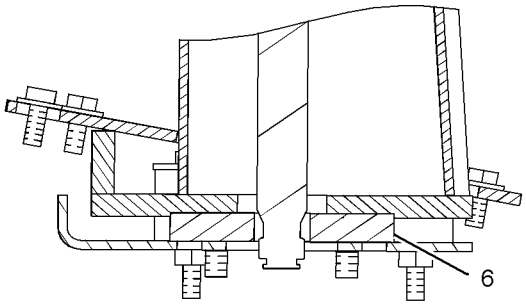

SECTION A-A

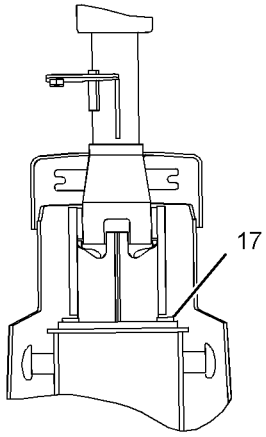

VIEW B-B

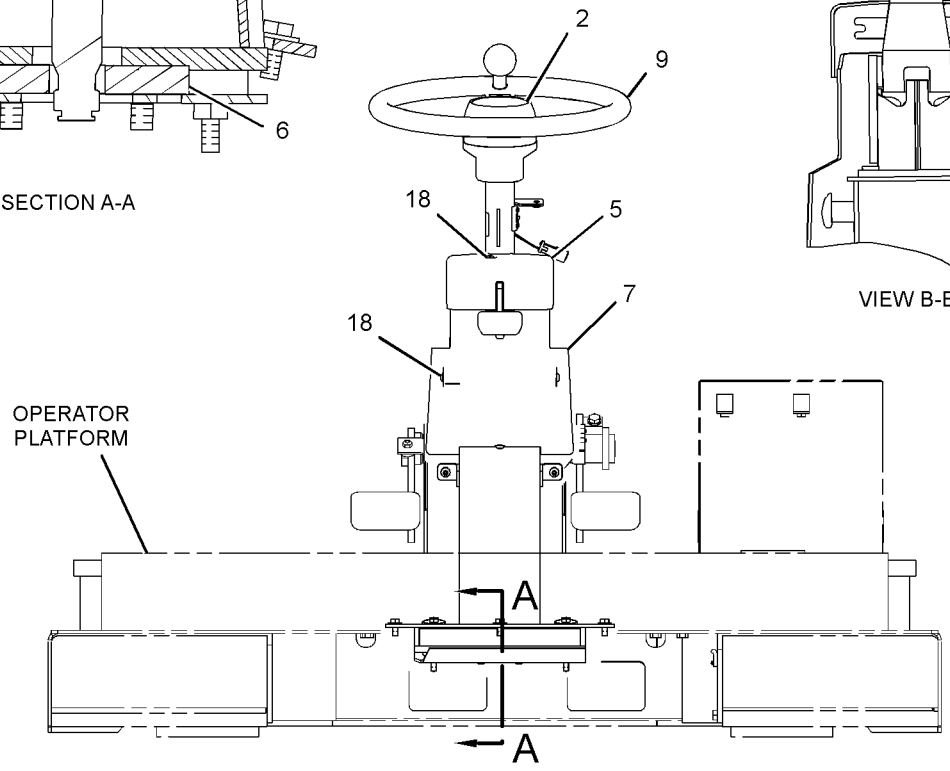

REAR VIEW

GRAPHIC #1 **<END>** g01431917

OPERATOR STATION

190-4690 CONTROL GP-TRANSMISSION

S/N: KLN1-UP

PART OF 310-9953 CAB AR, 190-4405, 317-0770 OPERATOR AR, 317-0771 OPERATOR GP

AN ATTACHMENT

SMCS-3065, 3168 **i03031701**

NOTE	REF NO	GRAPHIC REF	PART NUMBER	QTY	PART NAME 1 2 3 4 5 6 (PRODUCT LEVEL)	SEE PAGE
	1	1	**6I-1418**	4	SPACER (8.2X12.7X28.7-MM THK)	
	2	1	**8T-9655**	8	MOUNT-ISOLATION	
B	3	1	**101-9161**	1	WIRE AS	
M	4	1	**134-1374**	4	BOLT-SOCKET HEAD (M5X0.8X20-MM)	
CY	5	1	**299-5841**	1	CONTROL GP-TRANSMISSION	523
	6	1	**216-9069**	2	BRACKET AS	
					(EACH INCLUDES)	
M		1	**6V-9632**	1	NUT-WELD (M6X1-THD)	
	7	1	**217-0956**	1	COVER	
R	8	1	**304-5687**	1	CONTROL GP-UNPROGRAMMED (TRANSMISSION)	
M	9	1	**5C-9553**	2	BOLT (M6X1X16-MM)	
M	10	1	**7X-0818**	4	BOLT (M8X1.25X45-MM)	
	11	1	**9X-8256**	2	WASHER (6.6X12X2-MM THK)	

B-USE AS REQUIRED
C-CHANGE FROM PREVIOUS TYPE
M-METRIC PART
R-REMFG PART MAY BE AVAILABLE
Y-SEPARATE ILLUSTRATION

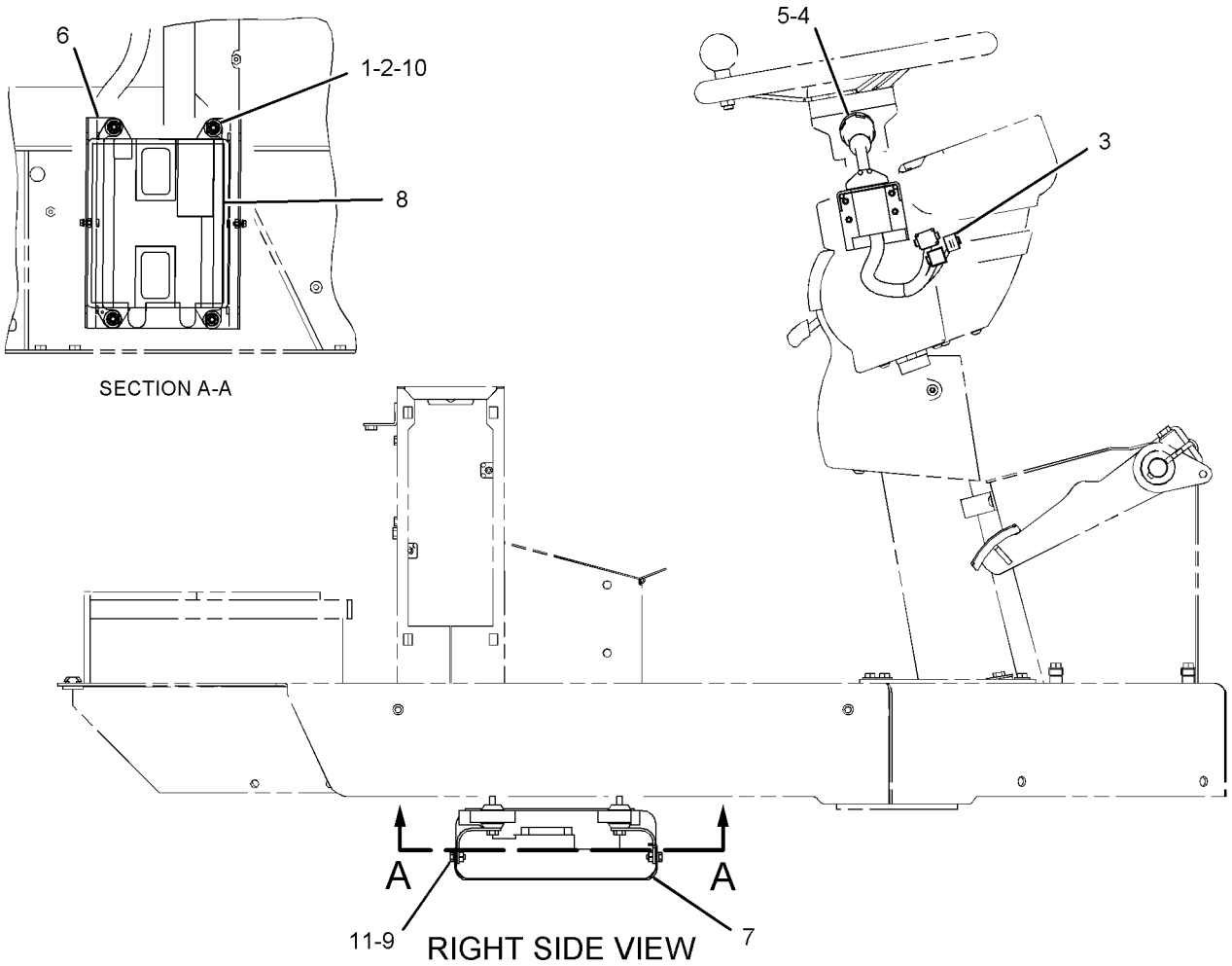

GRAPHIC #1 **<END>** g01143784

OPERATOR STATION

299-5841 CONTROL GP-TRANSMISSION

S/N: KLN1-UP

PART OF 190-4690 CONTROL GP-TRANSMISSION

AN ATTACHMENT

SMCS-3065, 3168 **i03165923**

NOTE	REF NO	GRAPHIC REF	PART NUMBER	QTY	PART NAME 1 2 3 4 5 6 (PRODUCT LEVEL)	SEE PAGE
	1	1	**102-8805**	1	KIT-RECEPTACLE (6-PIN)	
					(INCLUDES RECEPTACLE AS & WEDGE)	
	2	1	**155-2265**	1	KIT-CONNECTING PLUG (8-PIN)	
	3	1	**155-2271**	1	KIT-CONNECTING PLUG (4-PIN)	
					(EACH PLUG KIT INCLUDES PLUG AS, WEDGE & INTERFACE SEAL)	
	4	1	**186-3736**	12	SOCKET-CONNECTOR (16-GA TO 18-GA)	
	5	1	**9G-3695**	2	PLUG	
	6	1	**186-3735**	4	PIN-CONNECTOR (16-GA TO 18-GA)	

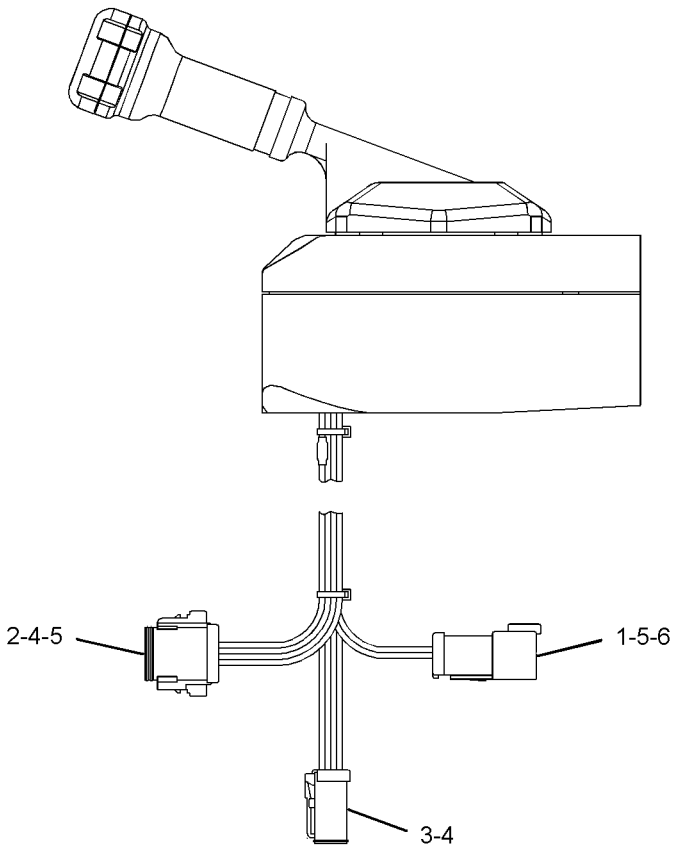

REAR VIEW

GRAPHIC #1 **<END>** g01400985

OPERATOR STATION

328-7486 CONVERSION GP-CAB

S/N: KLN1-UP

PART OF 328-7485 CAB AR-ENCLOSED ROPS, 328-7484 CORROSION AR-PROTECTION AN ATTACHMENT

SMCS-7301, 7310 **i03085123**

NOTE	PART NUMBER	QTY	PART NAME 1 2 3 4 5 6 (PRODUCT LEVEL)	SEE PAGE
	328-7487	1	CAB AS	
	328-7489	1	DOOR AS-CAB (LH)	
	328-7488	1	DOOR AS-CAB (RH)	
	330-5567	1	HINGE AS	
	330-5570	1	HINGE AS	
	232-0813	1	PEDAL AS (RH)	
	232-0811	1	PEDAL AS-LH	
	232-0809	1	SUPPORT AS	

<END>

OPERATOR STATION

118-0809 DASH GP

S/N: KLN1-UP

PART OF 310-9953 CAB AR, 317-0771 OPERATOR GP

AN ATTACHMENT

SMCS-7314 **i01374382**

NOTE	REF NO	GRAPHIC REF	PART NUMBER	QTY	PART NAME 1 2 3 4 5 6 (PRODUCT LEVEL)	SEE PAGE
C	1	1	**166-9287**	1	DASH AS	
	2	1	**5P-4116**	4	WASHER-HARD (8.8X20.5X2MM THK)	
M	3	1	**8T-4908**	4	BOLT (M8X1.25X25MM)	

C-CHANGE FROM PREVIOUS TYPE
M-METRIC PART

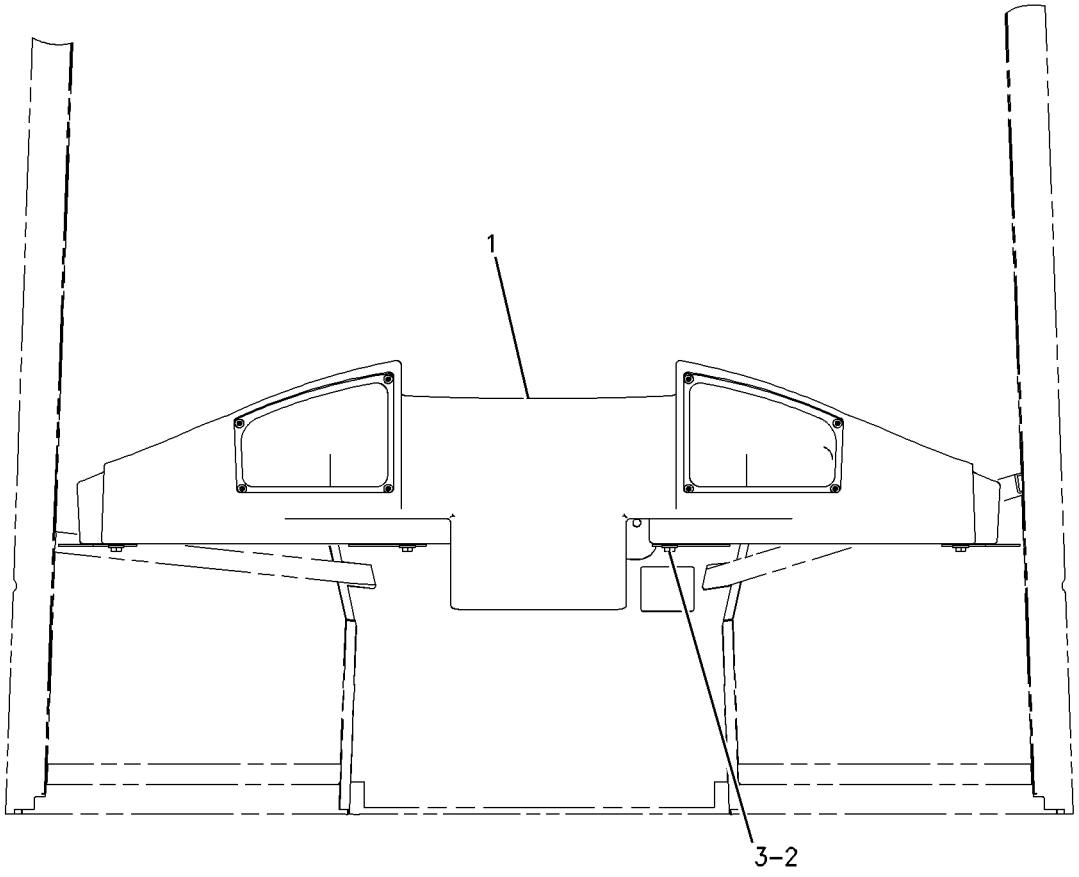

GRAPHIC #1 **<END>** g00729083

OPERATOR STATION

207-5948 DEFROSTER GP-CAB

S/N: KLN1-UP
PART OF 190-4405, 317-0770 OPERATOR AR
AN ATTACHMENT

SMCS-7304, 7316 **i01831651**

NOTE	REF NO	GRAPHIC REF	PART NUMBER	QTY	PART NAME 1 2 3 4 5 6 (PRODUCT LEVEL)	SEE PAGE
	1	1	**3E-5239**	1	RELAY AS (24-VOLT)	
	2	1	**204-8799**	1	SWITCH AS-ROCKER (DEFROSTER)	
		1	**111-7899**	1	GASKET	
	3	1	**8T-4205**	1	WASHER-HARD (7.2X14.5X2-MM THK)	
M	4	1	**9X-2042**	1	SCREW-TRUSS HEAD (M6X1X12-MM)	

M-METRIC PART

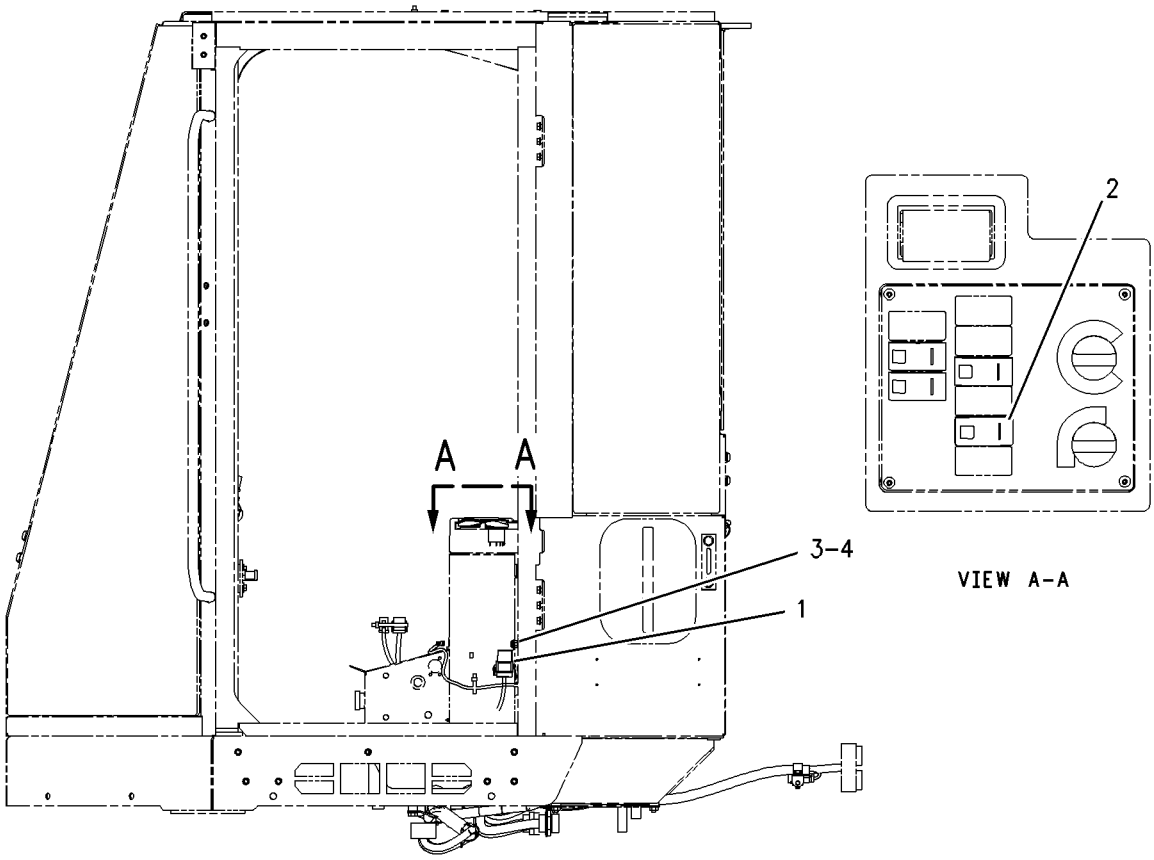

LEFT SIDE VIEW

GRAPHIC #1 **<END>** g00917880

OPERATOR STATION

290-8491 DOOR GP-CAB—FIXED WINDOW, LH

S/N: KLN1-UP
PART OF 311-8697 DOOR GP-CAB
AN ATTACHMENT

SMCS-7308 **i03038602**

NOTE	REF NO	GRAPHIC REF	PART NUMBER	QTY	PART NAME 1 2 3 4 5 6 (PRODUCT LEVEL)	SEE PAGE
E	1	1	**3E-3805**		SEAL (420-CM)	
	2	1	**3T-5201**	1	BEARING	
	3	1	**4E-1384**	1	BUMPER-CONICAL	
	4	1	**7W-2108**	1	SPRING-BYPASS VALVE	
	5	1	**8T-4742**	1	END-YOKE ROD	
	10	1	**141-8580**	1	RING-RETAINING	
	11	1	**161-9640**	1	COVER	
	12	1	**161-9641**	1	PLATE	
	13	1	**161-9642**	1	ROD AS	
	14	1	**161-9647**	1	PLATE	
	15	1	**162-2189**	1	GLASS-CAB (DOOR)	
	16	1	**168-2457**	1	LATCH AS-DOOR	
	17	1	**169-3995**	1	SEAL	
	18	1	**178-2593**	1	BUMPER	
J	19	1	**252-1862**	1	HANDLE AS (PULL)	
	20	1	**252-1863**	1	GASKET	
	21	1	**254-1127**	1	PLATE	
	22	1	**269-2890**	1	CLEVIS	
	23	1	**269-2892**	1	PIN	
	24	1	**269-2893**	1	CLIP	
Y	25	1	**290-8493**	1	DOOR GP-CAB (LH)	531
	26	1	**292-2869**	1	LATCH AS (LH)	
	27	1	**292-3254**	1	COVER (LH)	
M	28	1	**5C-2890**	1	NUT (M6X1-THD)	
M	29	1	**5C-7261**	2	NUT (M8X1.25-THD)	
	30	1	**5P-4116**	1	WASHER-HARD (8.8X20.5X2-MM THK)	
M	31	1	**8T-4138**	3	BOLT (M6X1X20-MM)	
M	32	1	**8T-4181**	3	BOLT (M6X1X20-MM)	
	33	1	**8T-4205**	5	WASHER-HARD (7.2X14.5X2-MM THK)	
M	34	1	**8T-4971**	4	BOLT (M6X1X30-MM)	
M	35	1	**9X-2042**	11	SCREW-TRUSS HEAD (M6X1X12-MM)	

E-ORDER BY THE CENTIMETER
J-REQUIRES COPORATE KEY
M-METRIC PART
Y-SEPARATE ILLUSTRATION

290-8491 DOOR GP-CAB *(contd.)* i03038602

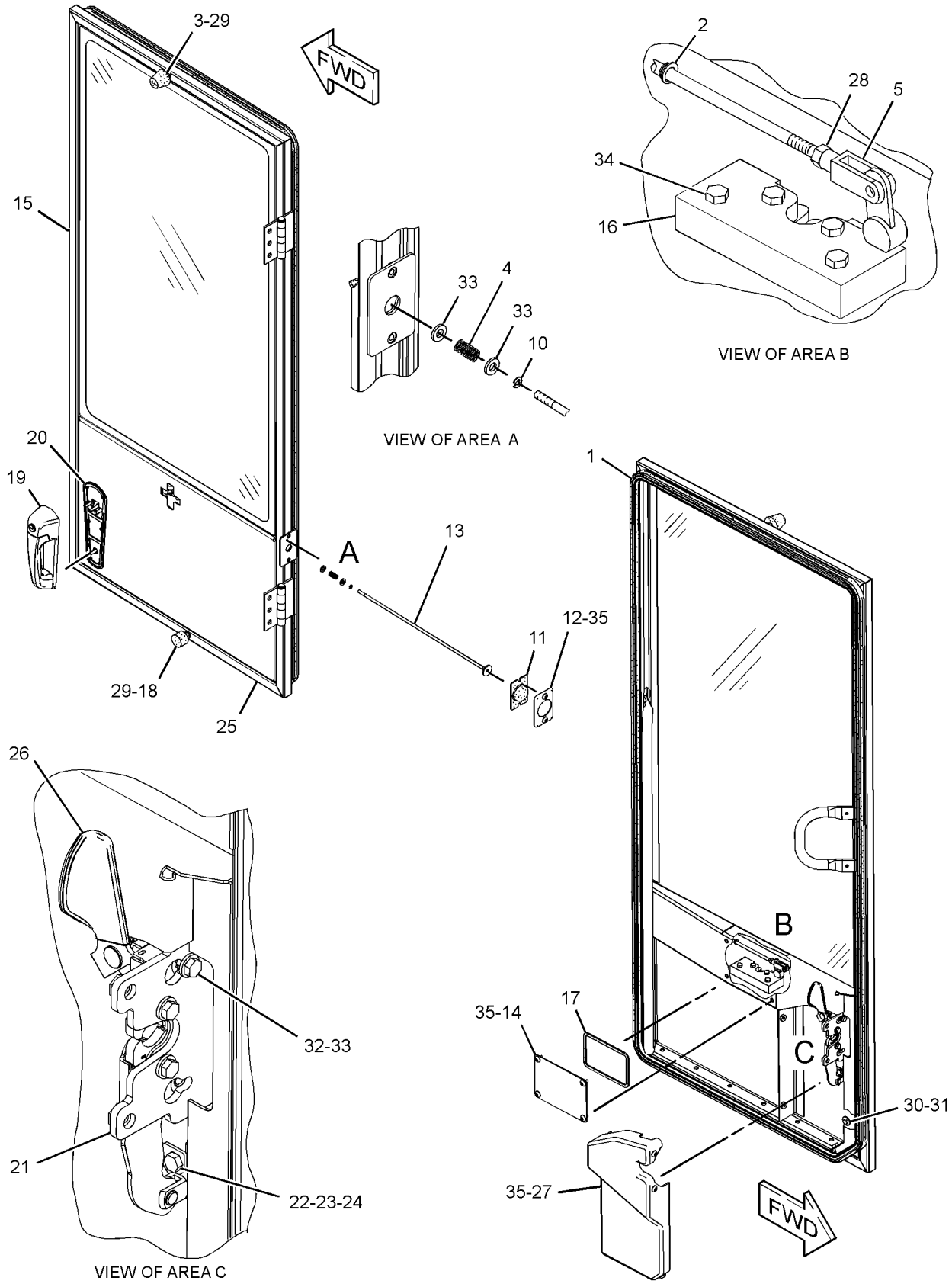

GRAPHIC #1 **<END>** g01406027

OPERATOR STATION

290-8492 DOOR GP-CAB–RH

S/N: KLN1-UP
PART OF 290-8495 DOOR GP-CAB
AN ATTACHMENT

SMCS-7308 **i03016548**

NOTE	REF NO	GRAPHIC REF	PART NUMBER	QTY	PART NAME 1 2 3 4 5 6 (PRODUCT LEVEL)	SEE PAGE
	1	1	*291-9251*	1	PLATE AS	
M		1	**159-9539**	2	NUT-WELD (M6X1-THD)	
	2	1	*107-6120*	1	PLATE AS	
M		1	**159-9539**	2	NUT-WELD (M6X1-THD)	
	7	1	**111-0201**	1	HANDHOLD	
	9	1	**115-1552**	1	HANDLE-PULL	
	10	1	*120-6125*	1	PLATE AS	
M		1	**159-9539**	1	NUT-WELD (M6X1-THD)	
	12	1	*161-9639*	1	PLATE AS	
M		1	**159-9539**	2	NUT-WELD (M6X1-THD)	
	14	1	*231-0299*	1	SHEET AS	
M		1	**159-9539**	4	NUT-WELD (M6X1-THD)	
	16	1	**286-9592**	2	HINGE AS	
					(EACH INCLUDES)	
		1	**096-2323**	1	RING-RETAINING (EXTERNAL)	
		1	**318-0827**	1	PIN	
BDF			**6V-0352**		SEAL (0.3-M)	

B-USE AS REQUIRED
D-ORDER BY THE METER
F-NOT SHOWN
M-METRIC PART

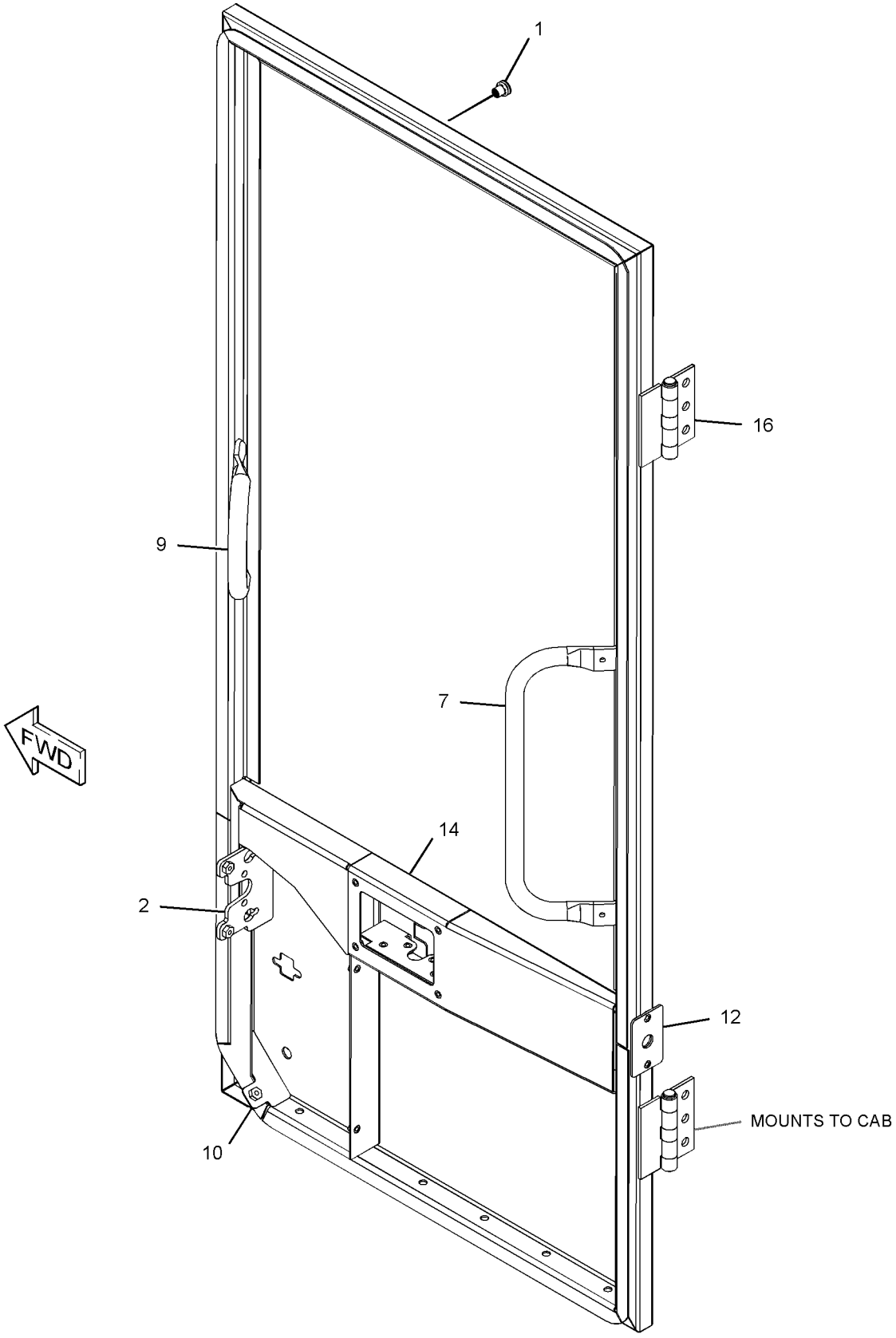

GRAPHIC #1 **<END>** g01542174

OPERATOR STATION

290-8493 DOOR GP-CAB–LH

S/N: KLN1-UP
PART OF 290-8491, 290-8496 DOOR GP-CAB
AN ATTACHMENT

SMCS-7308 **i02973987**

NOTE	REF NO	GRAPHIC REF	PART NUMBER	QTY	PART NAME 1 2 3 4 5 6 (PRODUCT LEVEL)	SEE PAGE
	1	1	*107-6120*	1	PLATE AS	
M		1	**159-9539**	2	NUT-WELD (M6X1-THD)	
	2	1	**111-0200**	1	HANDRAIL (GRAB)	
	3	1	**115-1552**	1	HANDLE-PULL	
	4	1	*233-8009*	1	SHEET AS	
M		1	**159-9539**	4	NUT-WELD (M6X1-THD)	
	5	1	**286-9593**	2	HINGE AS	
					(EACH INCLUDES)	
		1	**096-2323**	1	RING-RETAINING (EXTERNAL)	
	6	1	*291-9252*	1	PLATE AS (DOOR)	
M		1	**159-9539**	2	NUT-WELD (M6X1-THD)	

M-METRIC PART

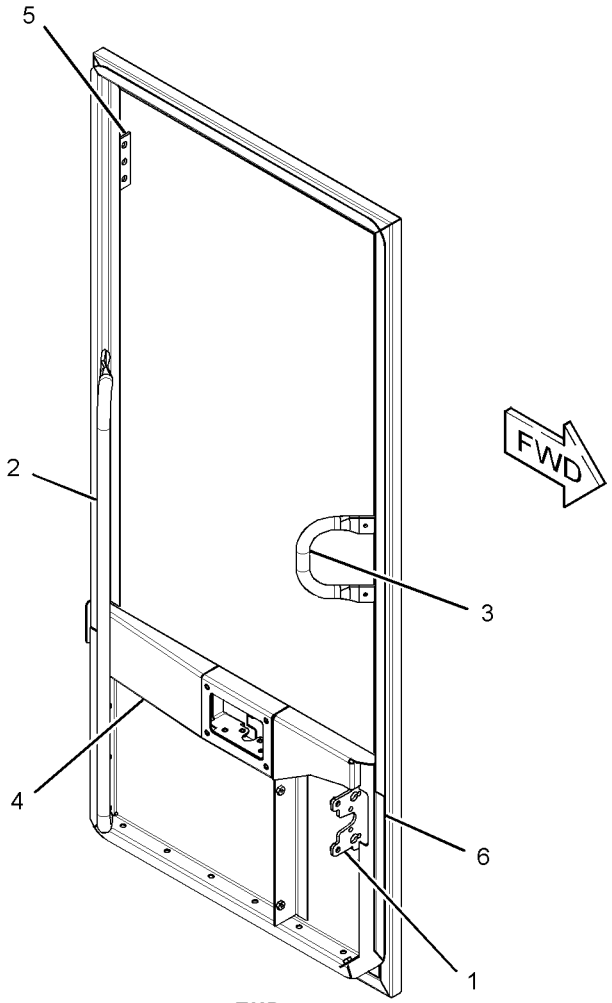

GRAPHIC #1 **<END>** g01400155

OPERATOR STATION

290-8494 DOOR GP-CAB

S/N: KLN1-UP
PART OF 290-8520 CAB GP-ENCLOSED ROPS
AN ATTACHMENT

SMCS-7308 **i03016531**

NOTE	PART NUMBER	QTY	PART NAME 1 2 3 4 5 6 (PRODUCT LEVEL)	SEE PAGE
Y	**290-8495**	1	DOOR GP-CAB (SLIDING WINDOW, RH)	533
Y	**290-8496**	1	DOOR GP-CAB (SLIDING WINDOW, LH)	536

Y-SEPARATE ILLUSTRATION

<END>

290-8495 DOOR GP-CAB—SLIDING WINDOW, RH

S/N: KLN1-UP
PART OF 290-8494 DOOR GP-CAB
AN ATTACHMENT

SMCS-7308 **i03016530**

NOTE	REF NO	GRAPHIC REF	PART NUMBER	QTY	PART NAME 1 2 3 4 5 6 (PRODUCT LEVEL)	SEE PAGE
E	1	2	**3E-3805**		SEAL (420-CM)	
	2	2	**3T-5201**	1	BEARING	
	3	1	**4E-1384**	1	BUMPER-CONICAL	
	4	1	**7W-2108**	1	SPRING-BYPASS VALVE	
	5	2	**8T-4742**	1	END-YOKE ROD	
	10	1	**141-8580**	1	RING-RETAINING	
	11	1	**161-9640**	1	COVER	
	12	1	**161-9641**	1	PLATE	
	13	1	**161-9642**	1	ROD AS	
	14	2	**161-9647**	1	PLATE	
	15	2	**168-2458**	1	LATCH AS-DOOR	
	16	2	**169-3995**	1	SEAL	
	17	1	**178-2593**	1	BUMPER	
Y	18	1	**180-2535**	1	WINDOW GP-DOOR (CAB)	621
J	19	1	**252-1862**	1	HANDLE AS (PULL)	
	20	1	**252-1863**	1	GASKET	
	21	2	**254-1127**	1	PLATE	
	22	2	**269-2890**	1	CLEVIS	
	23	2	**269-2892**	1	PIN	
	24	2	**269-2893**	1	CLIP	
Y	25	1	**290-8492**	1	DOOR GP-CAB (RH)	529
	26	2	**292-2870**	1	LATCH AS (RH) (RH)	
	27	2	**292-3255**	1	COVER (RH) (RH)	
M	28	2	**5C-2890**	1	NUT (M6X1-THD)	
M	29	1	**5C-7261**	2	NUT (M8X1.25-THD)	
	30	1	**5P-4116**	1	WASHER-HARD (8.8X20.5X2-MM THK)	
M	31	1	**8T-4138**	3	BOLT (M6X1X20-MM)	
M	32	2	**8T-4181**	3	BOLT (M6X1X20-MM)	
	33	1,2	**8T-4205**	5	WASHER-HARD (7.2X14.5X2-MM THK)	
M	34	2	**8T-4971**	4	BOLT (M6X1X30-MM)	
M	35	1,2	**9X-2042**	11	SCREW-TRUSS HEAD (M6X1X12-MM)	

E-ORDER BY THE CENTIMETER
J-REQUIRES CORPORATE KEY
M-METRIC PART
Y-SEPARATE ILLUSTRATION

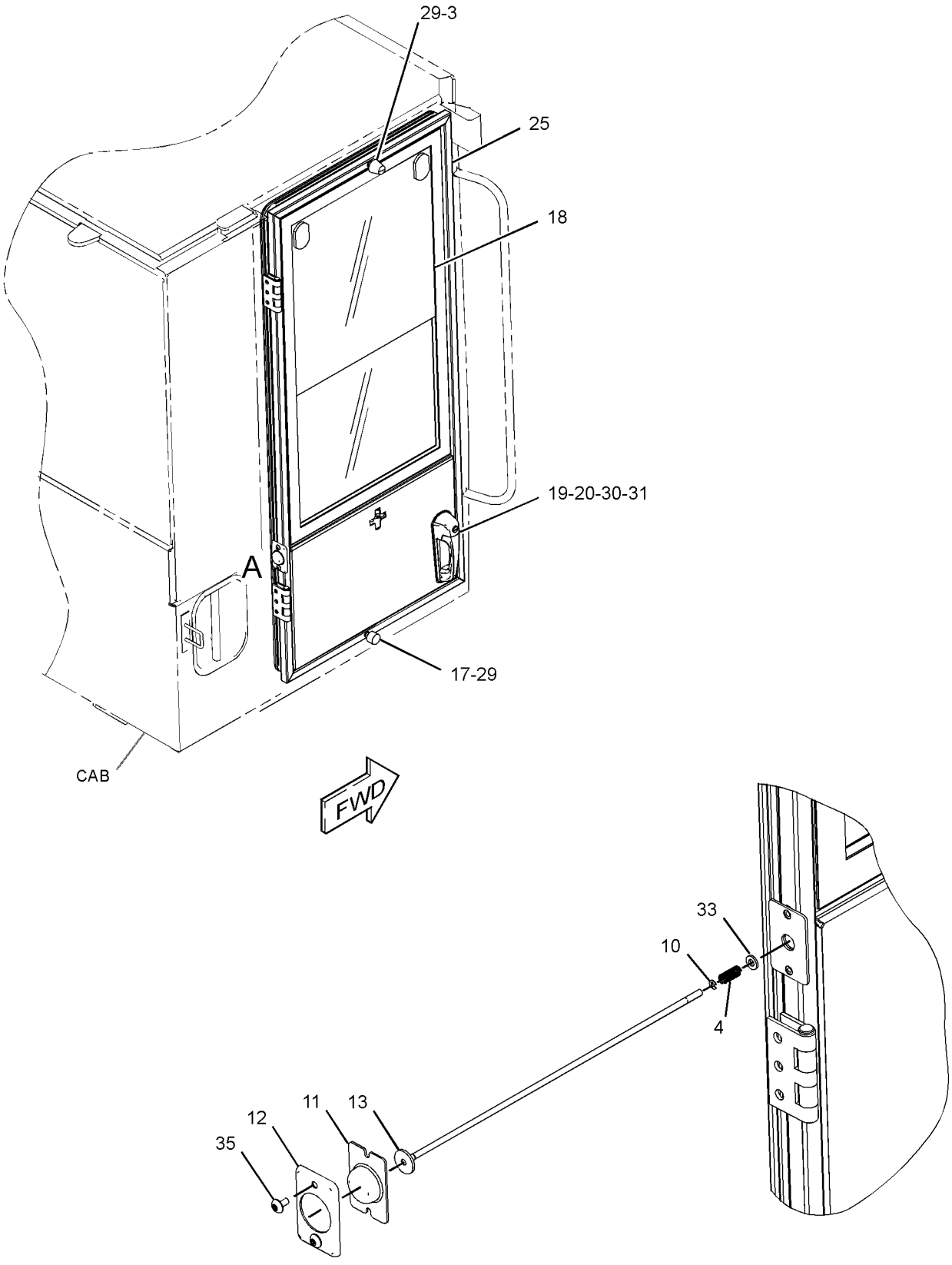

GRAPHIC #1

g01537015

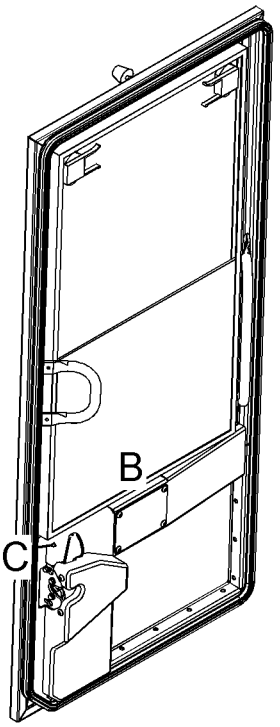

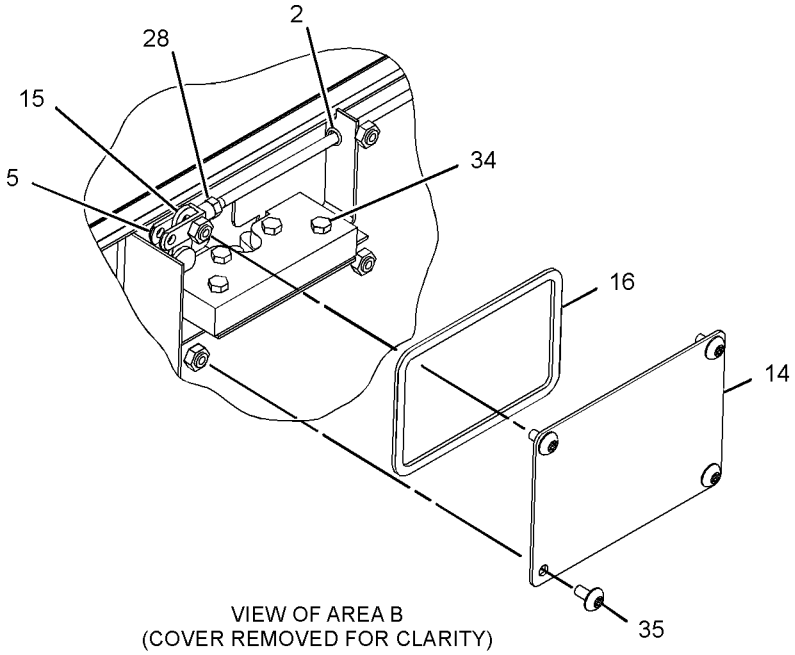

VIEW OF AREA B
(COVER REMOVED FOR CLARITY)

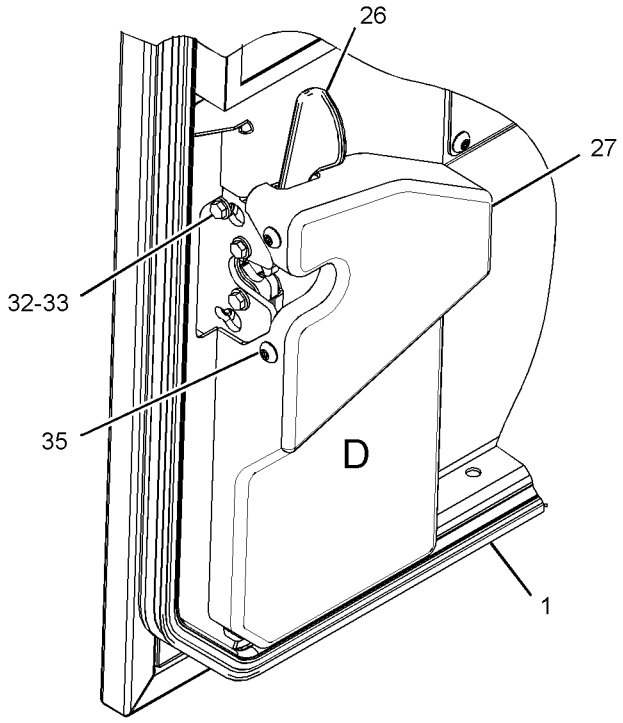

VIEW OF AREA C

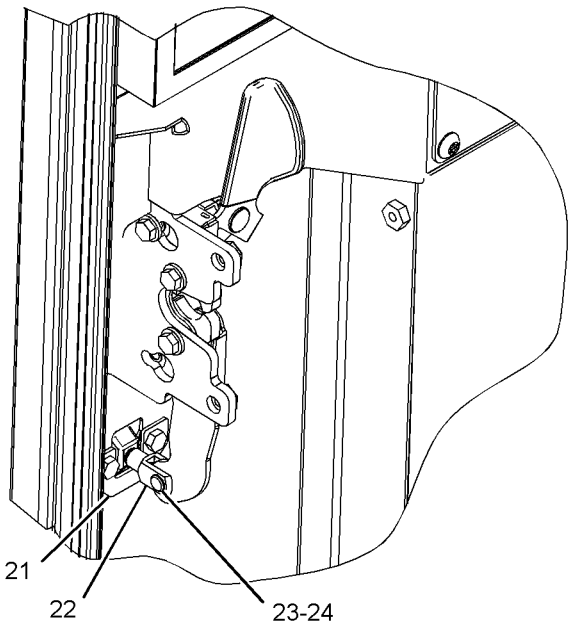

VIEW OF AREA D
(COVER REMOVED FOR CLARITY)

GRAPHIC #2 **<END>** g01537033

OPERATOR STATION

290-8496 DOOR GP-CAB—SLIDING WINDOW, LH

S/N: KLN1-UP
PART OF 290-8494 DOOR GP-CAB
AN ATTACHMENT

SMCS-7308 **i02973948**

NOTE	REF NO	GRAPHIC REF	PART NUMBER	QTY	PART NAME 1 2 3 4 5 6 (PRODUCT LEVEL)	SEE PAGE
E	1	1	**3E-3805**		SEAL (420-CM)	
	2	1	**3T-5201**	1	BEARING	
	3	1	**4E-1384**	1	BUMPER-CONICAL	
	4	1	**7W-2108**	1	SPRING-BYPASS VALVE	
	5	1	**8T-4742**	1	END-YOKE ROD	
	6	1	**141-8580**	1	RING-RETAINING	
	7	1	**161-9640**	1	COVER	
	8	1	**161-9641**	1	PLATE	
	9	1	**161-9642**	1	ROD AS	
	10	1	**161-9647**	1	PLATE	
	11	1	**168-2457**	1	LATCH AS-DOOR	
	12	1	**169-3995**	1	SEAL	
	13	2	**178-2593**	1	BUMPER	
Y	14	1	**180-2535**	1	WINDOW GP-DOOR (CAB)	621
J	15	2	**252-1862**	1	HANDLE AS (PULL)	
	16	2	**252-1863**	1	GASKET	
	17	2	**254-1127**	1	PLATE	
	18	2	**269-2890**	1	CLEVIS	
	19	2	**269-2892**	1	PIN	
	20	2	**269-2893**	1	CLIP	
Y	21	1	**290-8493**	1	DOOR GP-CAB (LH)	531
	22	1	**292-2869**	1	LATCH AS	
	23	1	**292-3254**	1	COVER	
M	24	1	**5C-2890**	1	NUT (M6X1-THD)	
M	25	1,2	**5C-7261**	2	NUT (M8X1.25-THD)	
	26	2	**5P-4116**	1	WASHER-HARD (8.8X20.5X2-MM THK)	
M	27	2	**8T-4138**	3	BOLT (M6X1X20-MM)	
M	28	1	**8T-4181**	3	BOLT (M6X1X20-MM)	
	29	1	**8T-4205**	5	WASHER-HARD (7.2X14.5X2-MM THK)	
M	30	1	**8T-4971**	4	BOLT (M6X1X30-MM)	
M	31	1	**9X-2042**	11	SCREW-TRUSS HEAD (M6X1X12-MM)	

E-ORDER BY THE CENTIMETER
J-REQUIRES CORPORATE KEY
M-METRIC PART
Y-SEPARATE ILLUSTRATION

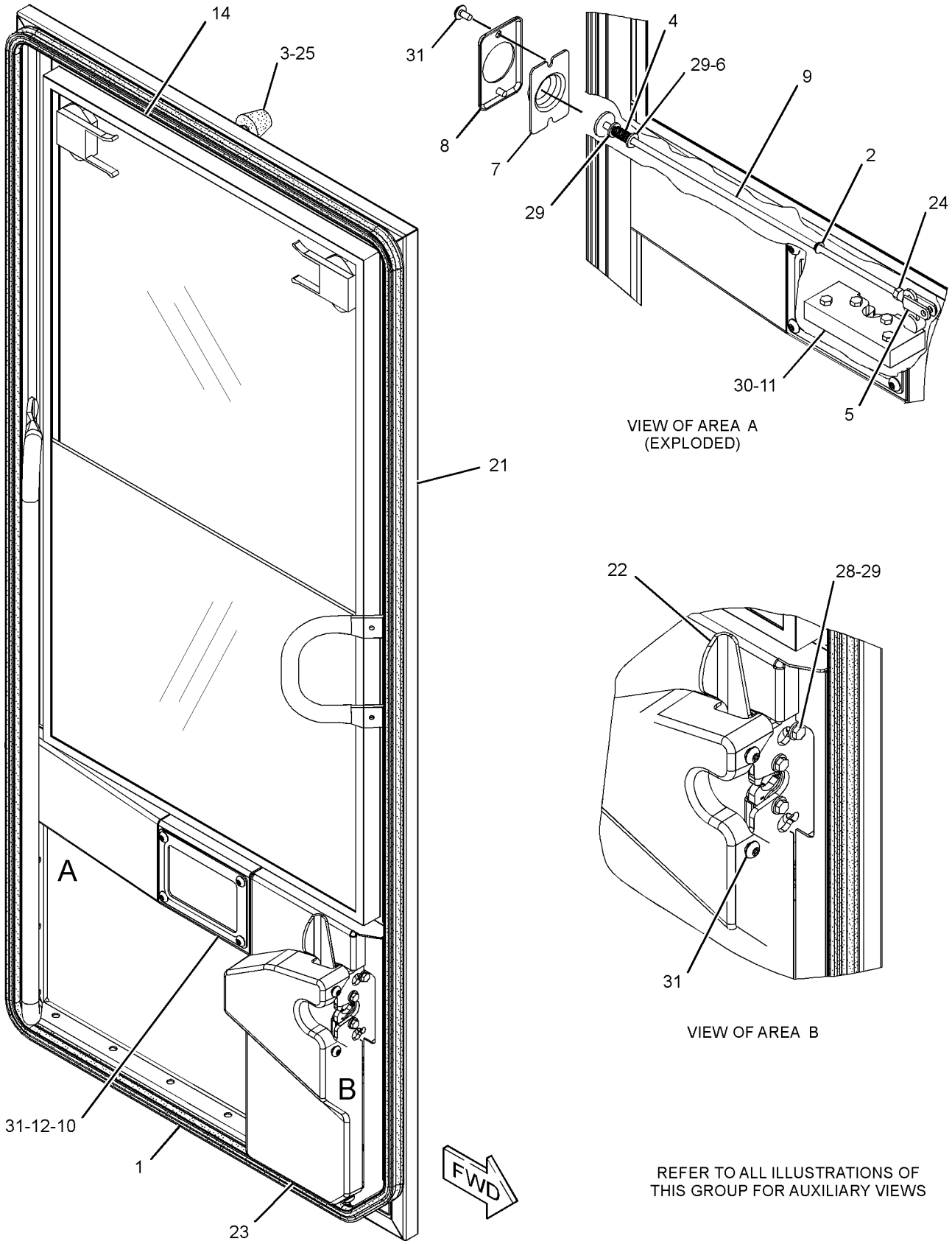

GRAPHIC #1 g01408830

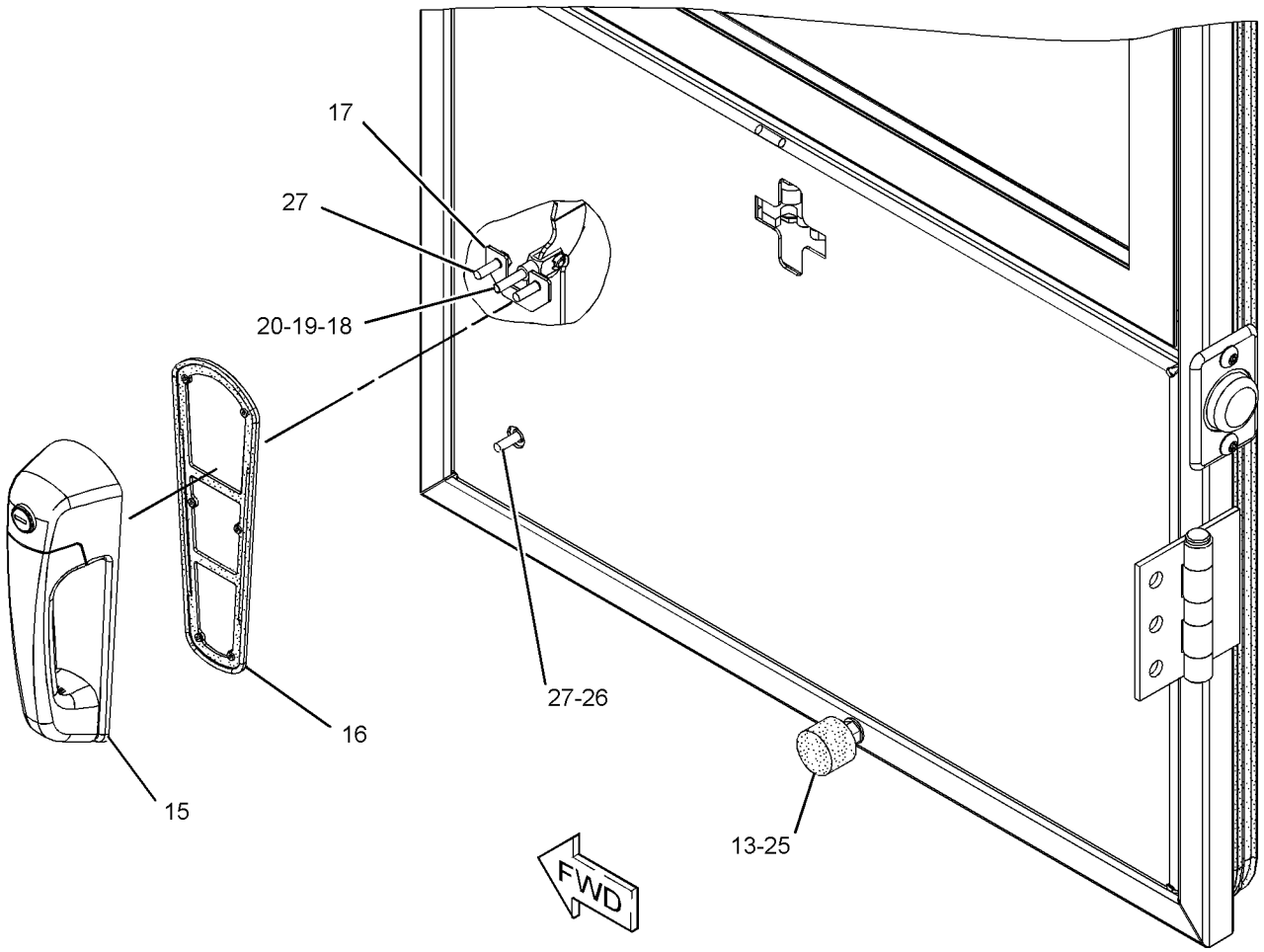

GRAPHIC #2 **<END>** g01408866

OPERATOR STATION

311-8695 DOOR GP-CAB–RH

S/N: KLN1-UP
PART OF 311-8696 DOOR GP-CAB
AN ATTACHMENT

SMCS-7308 **i03626672**

NOTE	REF NO	GRAPHIC REF	PART NUMBER	QTY	PART NAME 1 2 3 4 5 6 (PRODUCT LEVEL)	SEE PAGE
	1	1	**4E-1384**	1	BUMPER-CONICAL	
	2	1	**9R-8538**	1	PLUNGER (LATCH)	
	3	1	**162-2189**	1	GLASS-CAB (DOOR)	
	4	1	**178-2593**	1	BUMPER	
	5	1	**311-8694**	1	DOOR AS-CAB (RH)	
		1	**286-9592**	2	HINGE AS	
					(EACH INCLUDES)	
		1	**096-2323**	1	RING-RETAINING (EXTERNAL)	
		1	**318-0827**	1	PIN	
M	6	1	**5C-7261**	2	NUT (M8X1.25-THD)	
M	7	1	**6V-7743**	1	LOCKNUT (M6X1-THD)	
M	8	1	**8T-4971**	1	BOLT (M6X1X30-MM)	
	9	1	**9X-8256**	1	WASHER (6.6X12X2-MM THK)	
E	10	1	**3E-3805**		SEAL (420-CM)	

E-ORDER BY THE CENTIMETER
M-METRIC PART

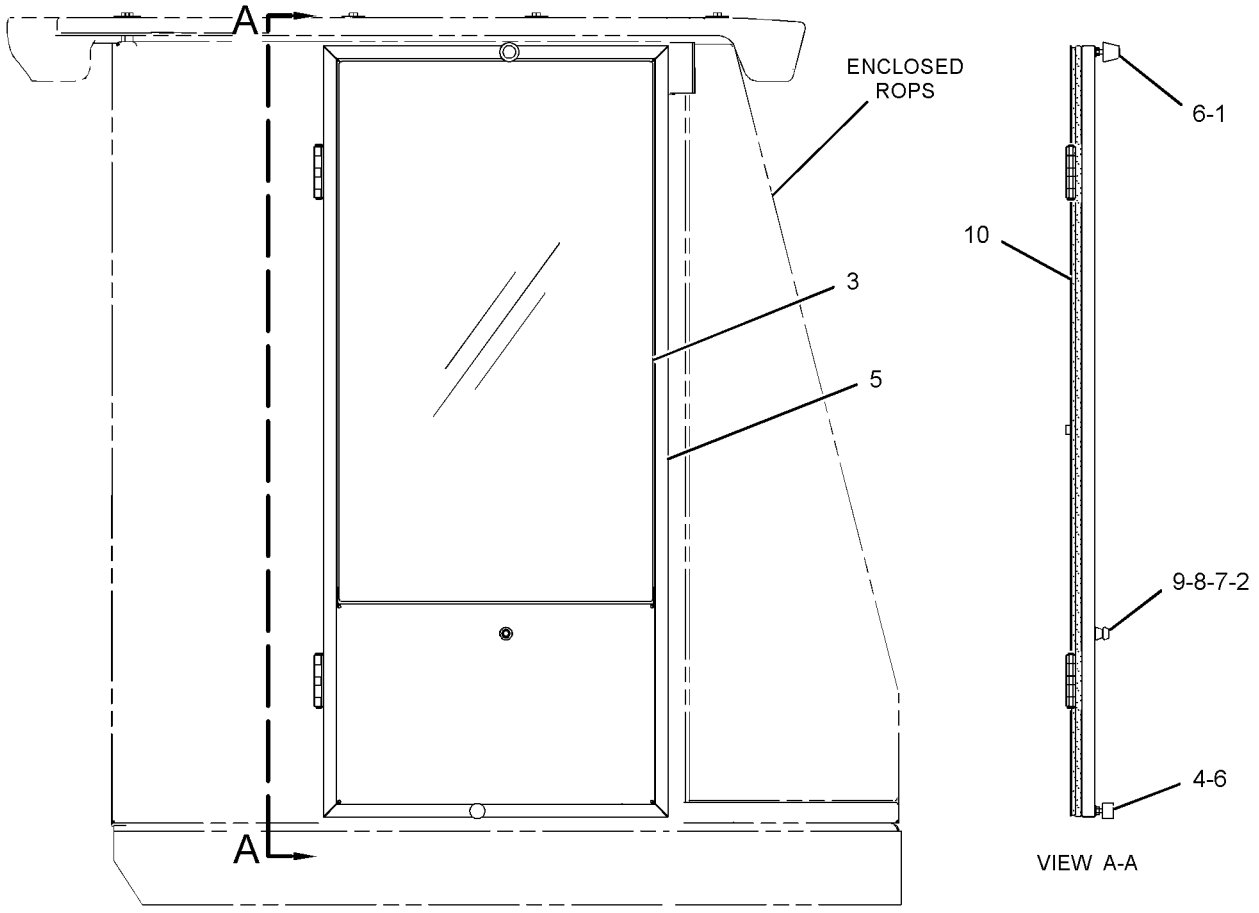

RIGHT SIDE VIEW

GRAPHIC #1 **<END>** g01646595

OPERATOR STATION

311-8696 DOOR GP-CAB

S/N: KLN1-UP
FIXED WINDOW, RH
PART OF 311-8697 DOOR GP-CAB
AN ATTACHMENT

SMCS-7308 **i03237767**

NOTE	REF NO	GRAPHIC REF	PART NUMBER	QTY	PART NAME 1 2 3 4 5 6 (PRODUCT LEVEL)	SEE PAGE
	1	1	**5P-7958**	1	SLEEVE-CABLE SPLICE	
	2	1	**8T-6842**	1	FILM-INSTRUCTION (PULL RING, ALTERNATE EXIT)	
	3	1	**126-1052**	1	PIN	
	4	1	**160-9925**	1	LANYARD	
	5	1	**209-5018**	1	LATCH AS	
Y	6	1	*311-8695*	1	DOOR GP-CAB (RH)	539
M	7	1	**9X-2044**	2	SCREW-TRUSS HEAD (M6X1X16-MM)	

M-METRIC PART
Y-SEPARATE ILLUSTRATION

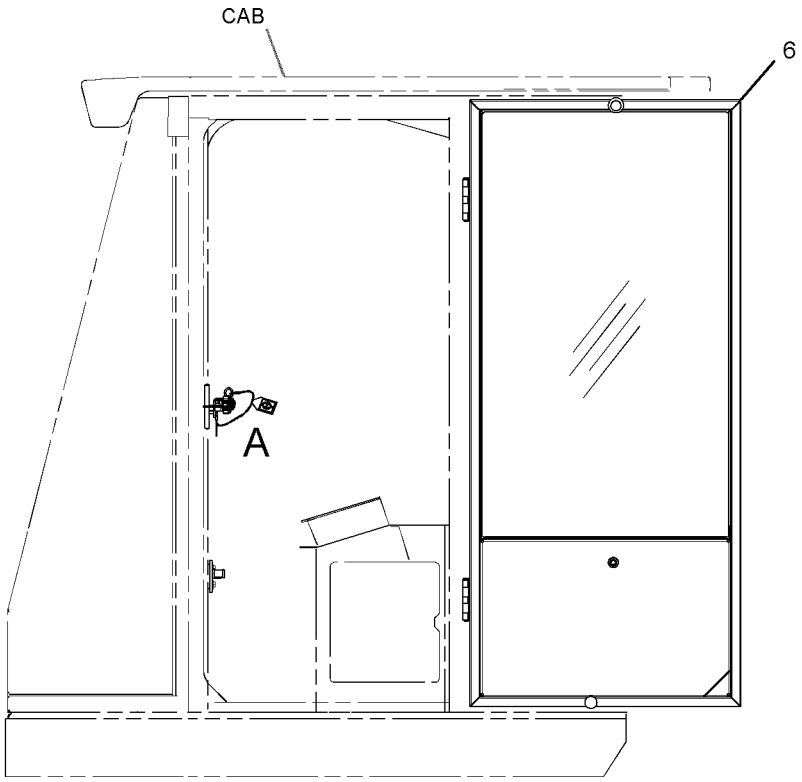

LEFT SIDE VIEW
(DOOR IN THE OPEN POSITION)

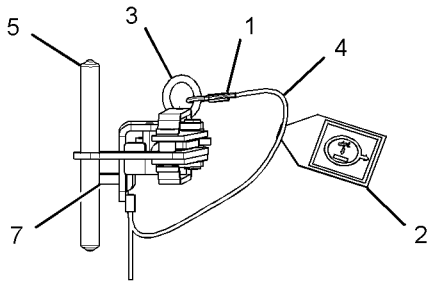

VIEW OF AREA A

GRAPHIC #1 **<END>** g01647716

OPERATOR STATION

311-8697 DOOR GP-CAB

S/N: KLN1-UP
PART OF 311-8698 CAB AR
AN ATTACHMENT

SMCS-7308 **i03084740**

NOTE	PART NUMBER	QTY	PART NAME 1 2 3 4 5 6 (PRODUCT LEVEL)	SEE PAGE
Y	**290-8491**	1	DOOR GP-CAB (FIXED WINDOW, LH)	527
Y	**311-8696**	1	DOOR GP-CAB (FIXED WINDOW, RH)	540

Y-SEPARATE ILLUSTRATION

<END>

OPERATOR STATION

107-4630 DUCT GP-CAB AIR

S/N: KLN1-UP
PART OF 190-4405, 317-0770 OPERATOR AR
AN ATTACHMENT

SMCS-734D **i03126354**

NOTE	REF NO	GRAPHIC REF	PART NUMBER	QTY	PART NAME 1 2 3 4 5 6 (PRODUCT LEVEL)	SEE PAGE
D	1	1	**5P-5927**		SEAL (0.7-M)	
D	1A	1	**5P-5927**		SEAL (0.9-M)	
D	1B	1	**5P-5927**		SEAL (1.2-M)	
C	2	1	**8Y-6388**	2	LOUVER AS-VENT	
C	3	1	**8Y-6391**	2	LOUVER AS-VENT	
	4	1	**104-2091**	12	SCREW-FLAT HEAD (NO 6X0.5-IN)	
	5	1	**107-6079**	1	DUCT	
	6	1	**148-3626**	8	SCREW-FLAT HEAD (NO 6X3/4-IN)	
C	7	1	**151-5715**	4	LOUVER AS-VENT	
	8	1	**161-7620**	12	SCREW-PAN HEAD	
C	9	1	**166-9286**	1	DUCT AS	
	10	1	**5P-4116**	4	WASHER-HARD (8.8X20.5X2-MM THK)	
M	11	1	**8T-4908**	4	BOLT (M8X1.25X25-MM)	

C-CHANGE FROM PREVIOUS TYPE
D-ORDER BY THE METER
M-METRIC PART

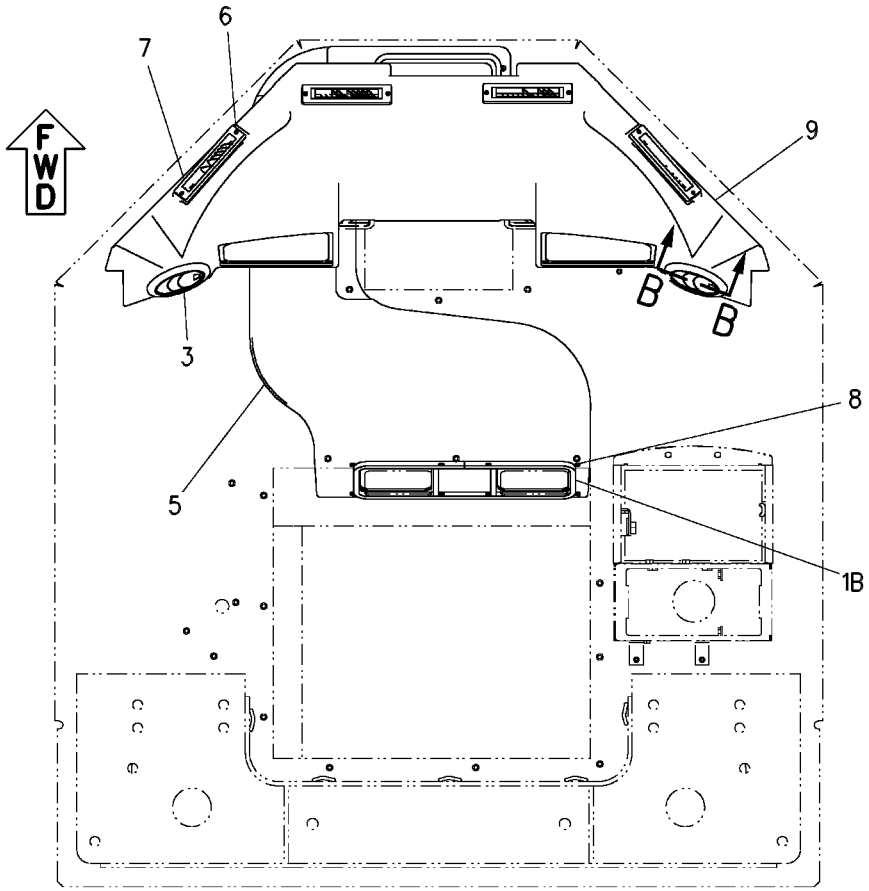

TOP VIEW

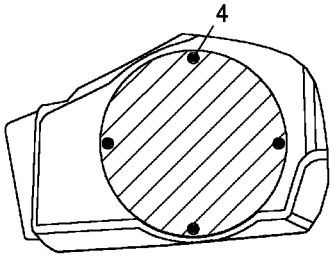

SECTION B-B

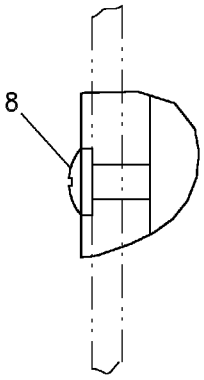

VIEW OF AREA A

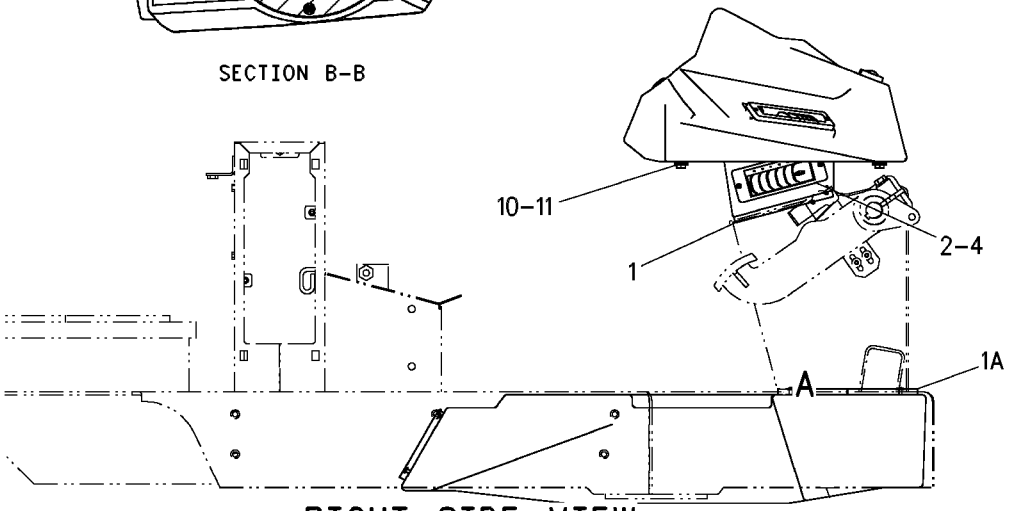

RIGHT SIDE VIEW

GRAPHIC #1 **<END>** g00627948

OPERATOR STATION

119-4769 FILTER GP-CAB AIR

S/N: KLN1-UP
PART OF 190-4405, 317-0770 OPERATOR AR
AN ATTACHMENT

SMCS-7342 **i03538601**

NOTE	REF NO	GRAPHIC REF	PART NUMBER	QTY	PART NAME 1 2 3 4 5 6 (PRODUCT LEVEL)	SEE PAGE
	1	1	**111-8738**	1	FILTER ELEMENT-CAB AIR (PRIMARY)	
	2	1	**180-7487**	1	FILTER ELEMENT-CAB AIR (OPTIONAL W/ ODOR REDUCTION)	
	3	1	**114-3944**	1	COVER	
	4	1	**116-7856**	4	KNOB	
	5	1	**127-8613**	1	GASKET	
	6	1	**180-7486**	1	COVER AS	

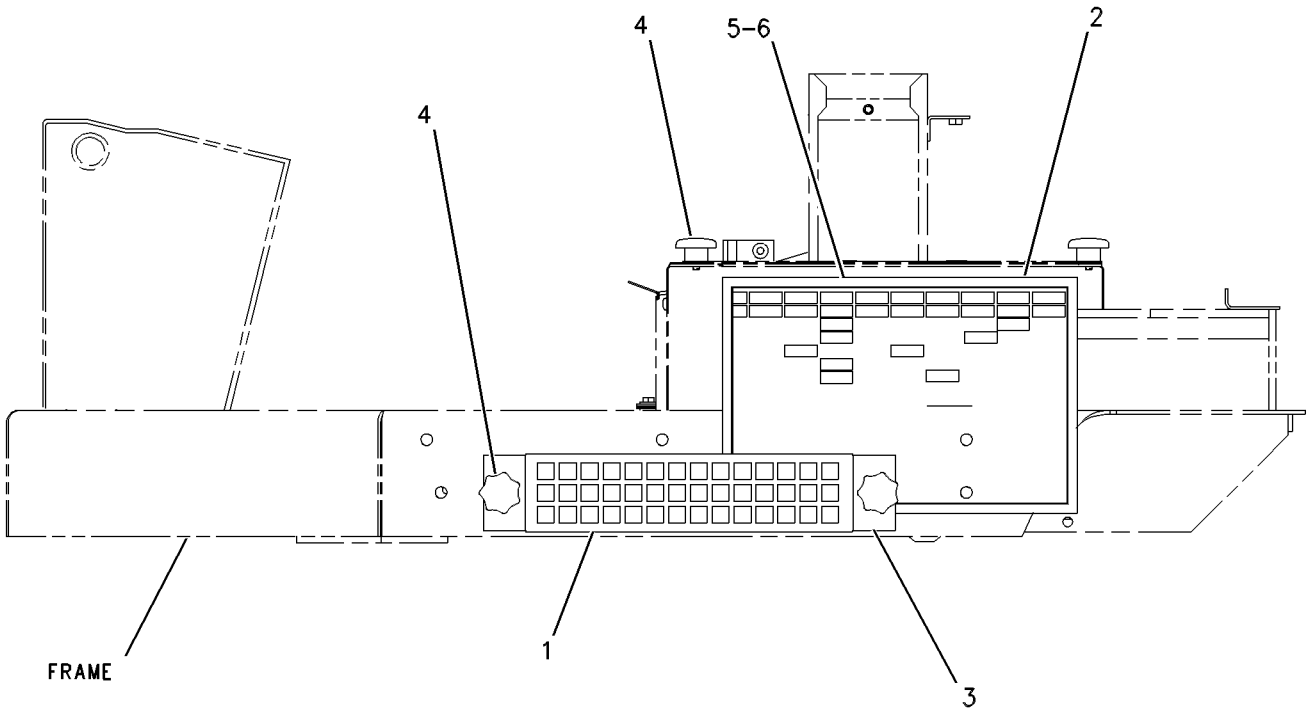

LEFT SIDE VIEW

GRAPHIC #1 **<END>** g00661567

OPERATOR STATION

290-8488 FLOOR MAT GP

S/N: KLN1-UP
PART OF 290-8525 OPERATOR AR-ENCLOSED ROPS
AN ATTACHMENT

SMCS-726M **i03016539**

NOTE	REF NO	GRAPHIC REF	PART NUMBER	QTY	PART NAME 1 2 3 4 5 6 (PRODUCT LEVEL)	SEE PAGE
	1	1	**4E-2161**	1	STRAP	
D	2	1	**5P-5637**		SEAL (0.8-M)	
	3	1	*8C-3426*	1	LOCK GP-CYLINDER	
		1	**226-0294**	1	LOCK AS	
		1	**226-0341**	1	CAM	
	4	1	**8N-9033**	2	PLUG	
	5	1	**8T-3995**	5	NUT (M6X1-THD)	
	6	1	**111-7881**	1	COVER AS	
	7	1	**115-1561**	1	COVER	
	8	1	**125-7043**	1	BOX AS	
	9	1	**125-7045**	1	COVER AS	
	10	1	**125-7046**	1	PLATE AS	
	11	1	**127-6510**	2	COVER	
	12	1	**136-2109**	1	COVER AS	
		1	**4S-8264**	3	RIVET-POP	
		1	**9R-2620**	1	PLUG	
		1	**120-0596**	1	BRACKET	
		1	**124-9015**	1	KIT-BRUSH SEAL	
		1	**128-0899**	4	RIVET	
	13	1	**291-4043**	1	FLOOR MAT	
	14	1	**291-4982**	1	INSULATION AS	
	15	1	**291-9962**	1	MAT-PROTECTIVE	
M	16	1	**5C-2890**	2	NUT (M6X1-THD)	
M	17	1	**8T-4189**	3	BOLT (M8X1.25X20-MM)	
M	18	1	**8T-4200**	2	BOLT (M8X1.25X16-MM)	
	19	1	**8T-4205**	2	WASHER-HARD (7.2X14.5X2-MM THK)	
	20	1	**8T-4224**	5	WASHER-HARD (8.8X16X2-MM THK)	
	21	1	**9X-2038**	1	WASHER (7X19X2-MM THK)	
M	22	1	**9X-2043**	2	SCREW-TRUSS HEAD (M6X1X14-MM)	
M	23	1	**9X-2045**	7	SCREW-TRUSS HEAD (M6X1X20-MM)	

D-ORDER BY THE METER
M-METRIC PART

290-8488 **FLOOR MAT GP** *(contd.)* **i03016539**

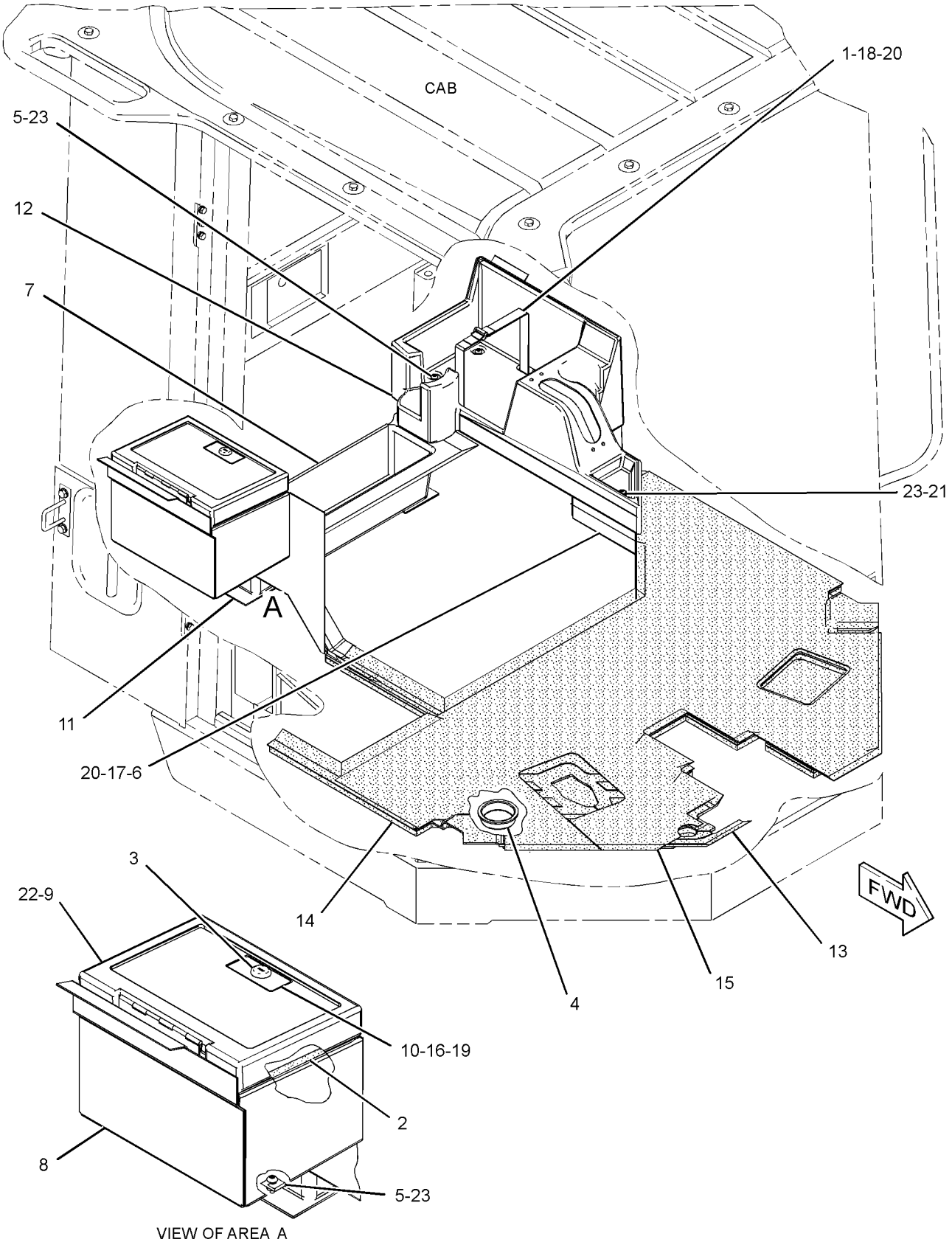

VIEW OF AREA A

GRAPHIC #1 **<END>** g01398697

OPERATOR STATION

317-0692 FLOOR MAT GP

S/N: KLN1-UP
PART OF 290-8186 OPERATOR AR-OPEN ROPS
AN ATTACHMENT

SMCS-726M **i03014096**

NOTE	REF NO	GRAPHIC REF	PART NUMBER	QTY	PART NAME 1 2 3 4 5 6 (PRODUCT LEVEL)	SEE PAGE
D	1	2	**5P-5637**		SEAL (0.8-M)	
	2	1	**4E-2161**	1	STRAP	
	3	2	*8C-3426*	1	LOCK GP-CYLINDER	
		2	**226-0294**	1	LOCK AS	
		2	**226-0341**	1	CAM	
	4	2	**8T-3995**	5	NUT (M6X1-THD)	
	5	1	**111-7881**	1	COVER AS	
	6	1	**125-7043**	1	BOX AS	
	7	1	**125-7045**	1	COVER AS	
	8	1	**125-7046**	1	PLATE AS	
	9	1	**126-1034**	1	LINER AS-CAB	
	10	1	**126-1035**	1	PLATE AS	
M		1	**6V-9632**	2	NUT-WELD (M6X1-THD)	
	11	1	**126-1036**	1	PLATE AS	
M		1	**6V-9632**	2	NUT-WELD (M6X1-THD)	
	12	1	**126-1367**	1	INSULATION	
	13	1	**127-7457**	1	INSULATION	
	14	1	**136-2109**	1	COVER AS	
		1	**4S-8264**	3	RIVET-POP	
		1	**9R-2620**	1	PLUG	
		1	**120-0596**	1	BRACKET	
		1	**124-9015**	1	KIT-BRUSH SEAL	
		1	**128-0899**	4	RIVET	
	15	1	**317-0694**	1	FLOOR MAT	
	16	2	**317-0695**	1	INSULATION AS	
M	17	2	**5C-2890**	2	NUT (M6X1-THD)	
M	18	1,2	**8T-4189**	3	BOLT (M8X1.25X20-MM)	
M	19	2	**8T-4200**	2	BOLT (M8X1.25X16-MM)	
	20	2	**8T-4205**	2	WASHER-HARD (7.2X14.5X2-MM THK)	
	21	1,2	**8T-4224**	5	WASHER-HARD (8.8X16X2-MM THK)	
	22	1	**9D-3769**	1	GROMMET	
	23	1	**9X-2038**	1	WASHER (7X19X2-MM THK)	
M	24	1,2	**9X-2043**	6	SCREW-TRUSS HEAD (M6X1X14-MM)	
M	25	1,2	**9X-2045**	9	SCREW-TRUSS HEAD (M6X1X20-MM)	

D-ORDER BY THE METER
M-METRIC PART

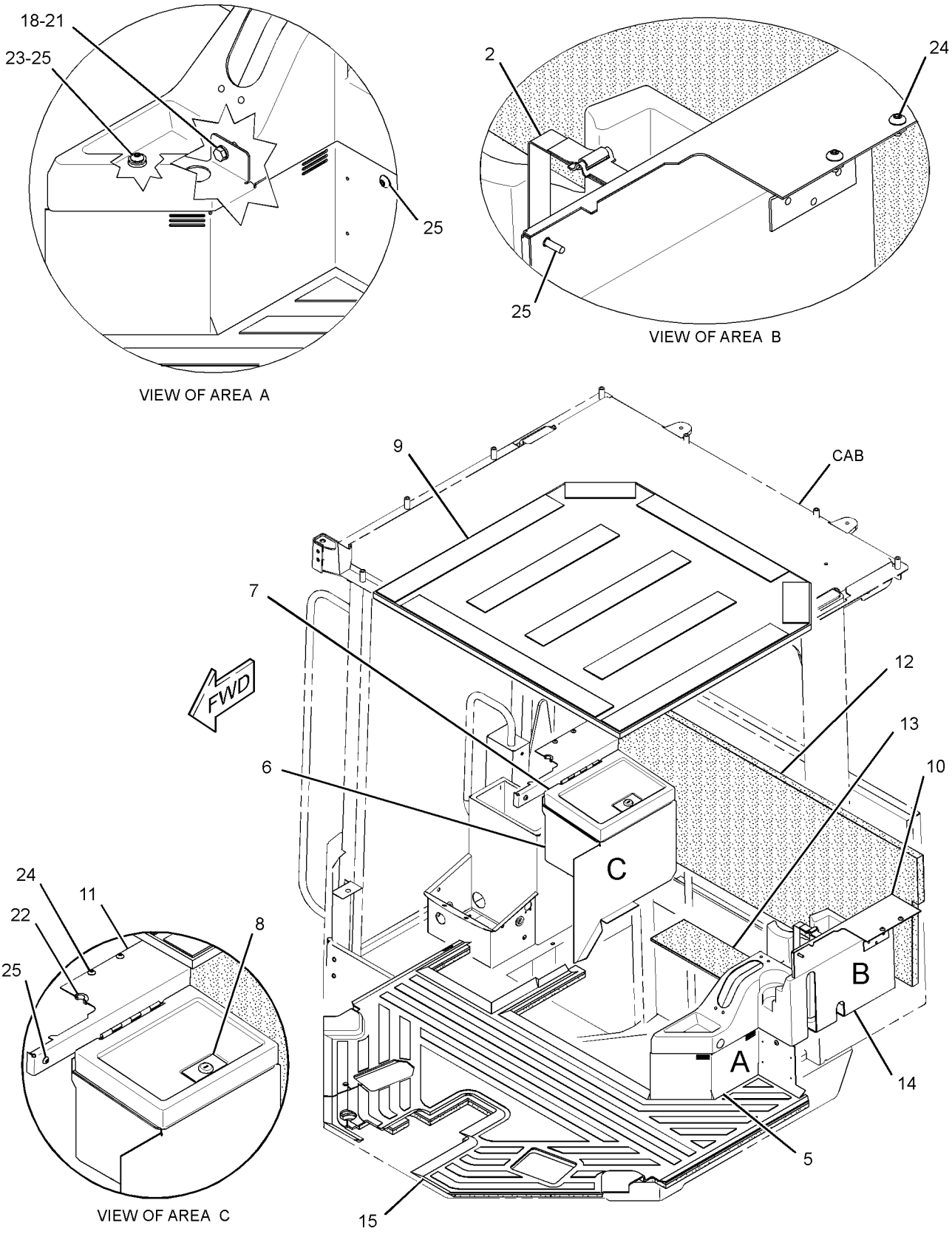

GRAPHIC #1

g01541534

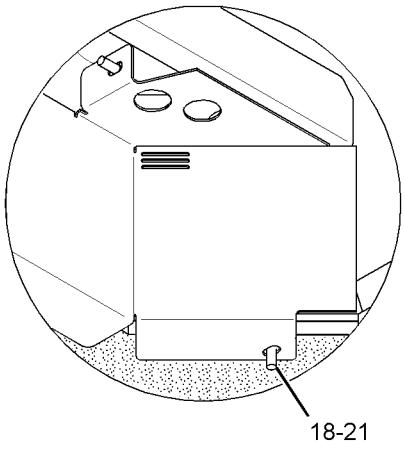

VIEW OF AREA F

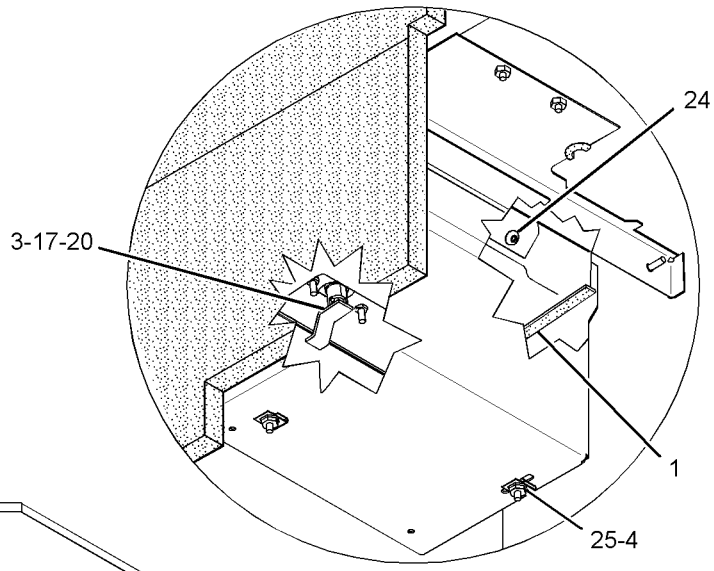

VIEW OF AREA D

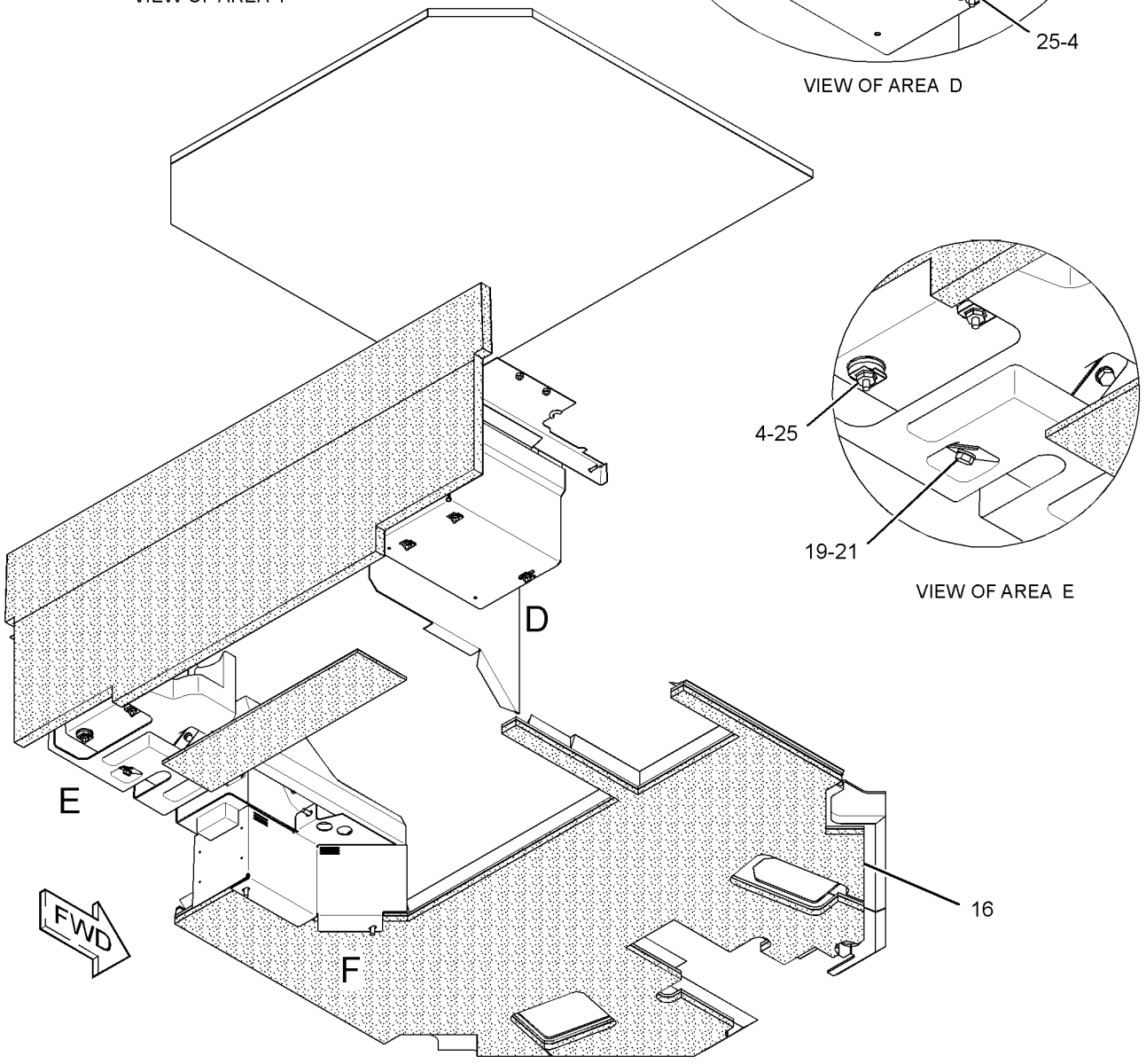

VIEW OF AREA E

GRAPHIC #2

<END>

g01541535

OPERATOR STATION

317-0769 FLOOR MAT GP

S/N: KLN1-UP

PART OF 311-8700 OPERATOR AR, 290-8525 OPERATOR AR-ENCLOSED ROPS AN ATTACHMENT

SMCS-726M **i03014094**

NOTE	REF NO	GRAPHIC REF	PART NUMBER	QTY	PART NAME 1 2 3 4 5 6 (PRODUCT LEVEL)	SEE PAGE
	1	1	**4E-2161**	1	STRAP	
D	2	2	**5P-5637**		SEAL (0.8-M)	
	3	2	*8C-3426*	1	LOCK GP-CYLINDER	
		2	**226-0294**	1	LOCK AS	
		2	**226-0341**	1	CAM	
	4	2	**8N-9033**	2	PLUG	
	5	2	**8T-3995**	5	NUT (M6X1-THD)	
	6	1	**111-7881**	1	COVER AS	
	7	1	**115-1561**	1	COVER	
	8	2	**125-7043**	1	BOX AS	
	9	2	**125-7045**	1	COVER AS	
	10	1	**125-7046**	1	PLATE AS	
	11	1	**127-6510**	2	COVER	
	12	1	**136-2109**	1	COVER AS	
		1	**4S-8264**	3	RIVET-POP	
		1	**9R-2620**	1	PLUG	
		1	**120-0596**	1	BRACKET	
		1	**124-9015**	1	KIT-BRUSH SEAL	
		1	**128-0899**	4	RIVET	
	13	1	**317-0694**	1	FLOOR MAT	
	14	2	**317-0695**	1	INSULATION AS	
	15	1	**317-0855**	1	MAT-PROTECTIVE	
M	16	2	**5C-2890**	2	NUT (M6X1-THD)	
M	17	2	**8T-4189**	3	BOLT (M8X1.25X20-MM)	
M	18	2	**8T-4200**	2	BOLT (M8X1.25X16-MM)	
	19	2	**8T-4205**	2	WASHER-HARD (7.2X14.5X2-MM THK)	
	20	2	**8T-4224**	5	WASHER-HARD (8.8X16X2-MM THK)	
	21	1	**9X-2038**	1	WASHER (7X19X2-MM THK)	
M	22	2	**9X-2043**	2	SCREW-TRUSS HEAD (M6X1X14-MM)	
M	23	1,2	**9X-2045**	7	SCREW-TRUSS HEAD (M6X1X20-MM)	

D-ORDER BY THE METER
M-METRIC PART

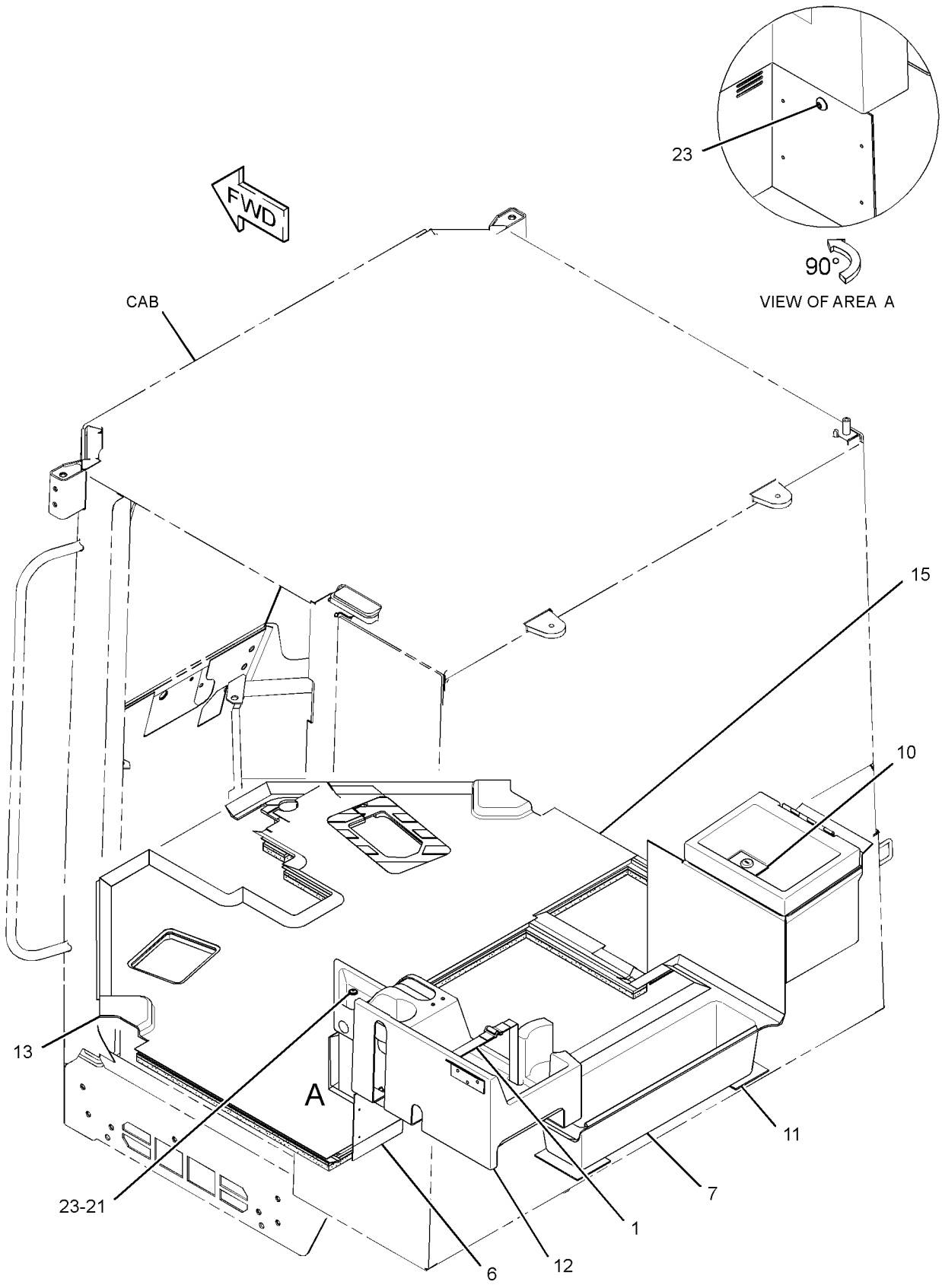

GRAPHIC #1 g01536434

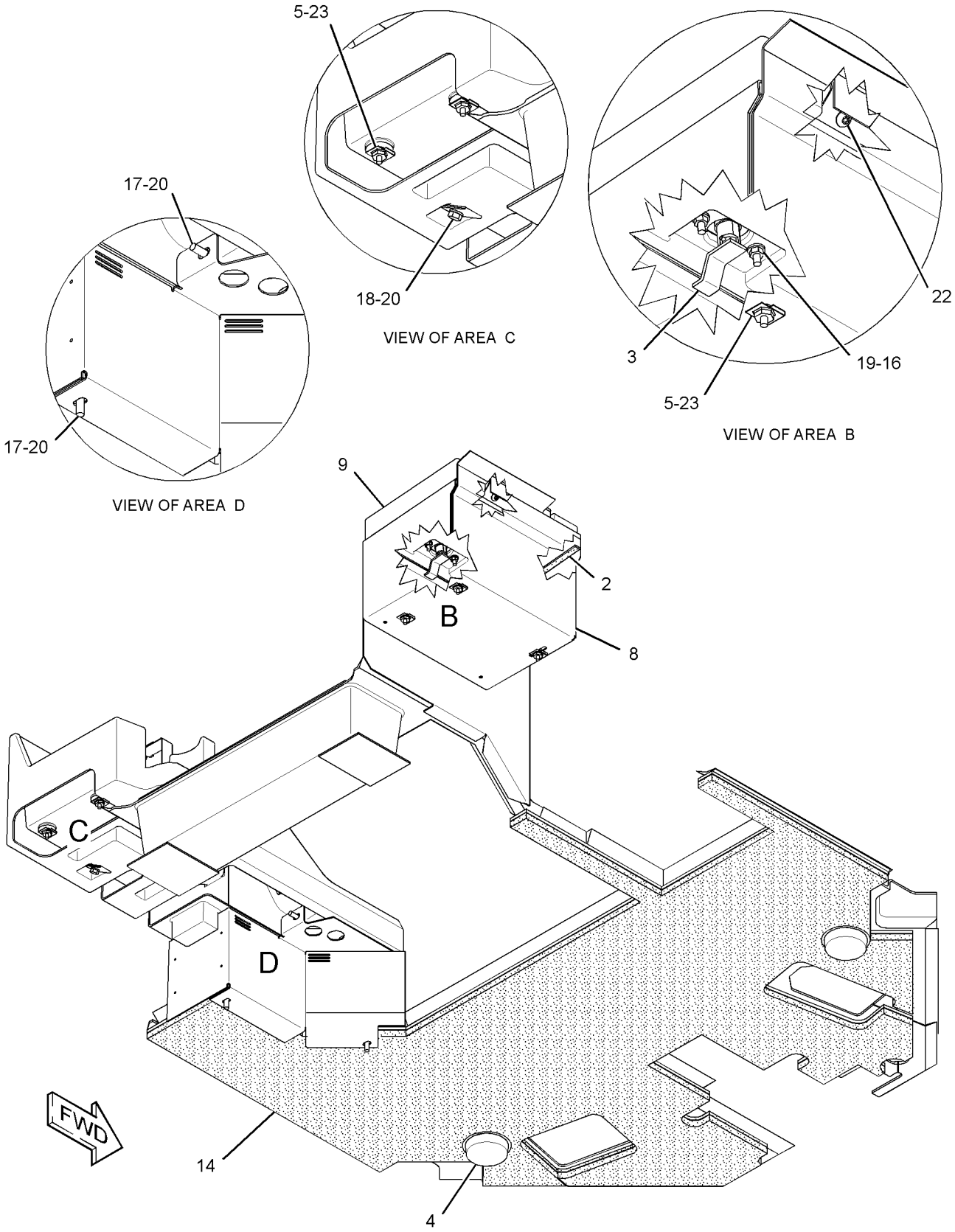

GRAPHIC #2 **<END>** g01536435

OPERATOR STATION

172-5512 LINER GP-CAB

S/N: KLN1-UP
PART OF 310-9953 CAB AR
AN ATTACHMENT

SMCS-7329 **i01212413**

NOTE	REF NO	GRAPHIC REF	PART NUMBER	QTY	PART NAME 1 2 3 4 5 6 (PRODUCT LEVEL)	SEE PAGE
	1	1	**9X-2038**	12	WASHER (7X19X2-MM THK)	
	2	1	**107-6032**	1	LAMP GP-DOME (24-VOLT)	
		1	**112-5219**	1	LAMP (24-VOLT, 10-WATT)	
	3	1	**174-0563**	1	LINER AS-CAB	
M	4	1	**9X-2045**	12	SCREW-TRUSS HEAD (M6X1X20-MM)	

M-METRIC PART

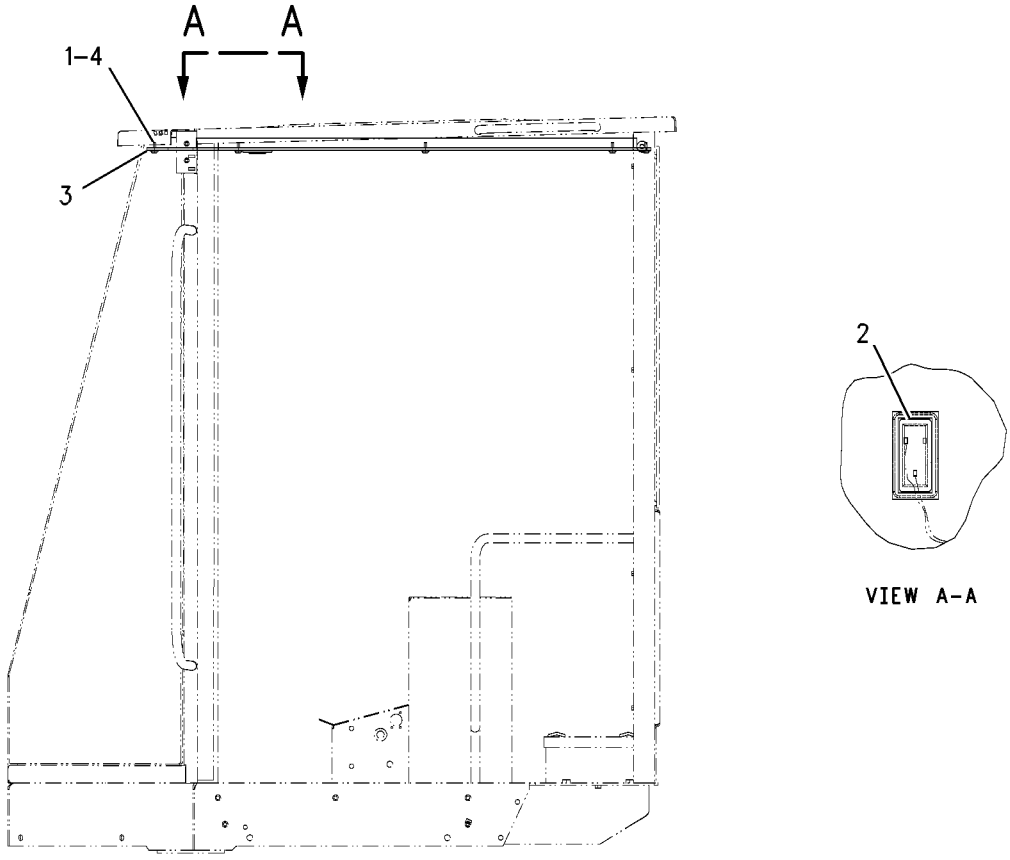

GRAPHIC #1 **<END>** g00661099

OPERATOR STATION

241-8564 LINER GP-CAB

S/N: KLN1-UP
PART OF 190-4405, 317-0770 OPERATOR AR
AN ATTACHMENT

SMCS-7329 **i03453900**

NOTE	REF NO	GRAPHIC REF	PART NUMBER	QTY	PART NAME 1 2 3 4 5 6 (PRODUCT LEVEL)	SEE PAGE
	1	1	**6V-8928**	1	HOOK-COAT	
	2	1	**107-6032**	1	LAMP GP-DOME (24-VOLT) (CAB)	
		1	**259-1286**		LAMP (24-VOLT, 10-WATT)	
	3	1	**145-5307**	1	PLATE	
	4	1	**180-5098**	1	INSULATION	
C	5	1	**261-6778**	1	HEADLINER	
	6	1	**240-2563**	1	COVER	
	7	1	**240-2564**	1	COVER AS (RH)	
	8	1	**240-2565**	1	COVER AS (LH)	
					(EACH COVER AS INCLUDES)	
E		1	**121-0192**		FASTENER-HOOK (60-CM)	
E		1	**129-1854**		FASTENER-LOOP (60-CM)	
M	9	1	**6V-8490**	4	BOLT (M6X1X25-MM)	
M	10	1	**9X-2045**	1	SCREW-TRUSS HEAD (M6X1X20-MM)	
	11	1	**270-7618**	1	COVER AS	
	12	1	**272-3190**	1	COVER AS	
	13	1	**9U-8263**	1	COVER	
	14	1	**114-3953**	1	BRACKET AS	
	15	1	**114-3954**	1	COVER	
M	16	1	**5C-2890**	4	NUT (M6X1-THD)	
	17	1	**5P-4115**	4	WASHER-HARD (7.2X19X2-MM THK)	
	18	1	**5P-8524**	4	GROMMET	
M	19	1	**9X-2042**	4	SCREW-TRUSS HEAD (M6X1X12-MM)	

C-CHANGE FROM PREVIOUS TYPE
E-ORDER BY THE CENTIMETER
M-METRIC PART

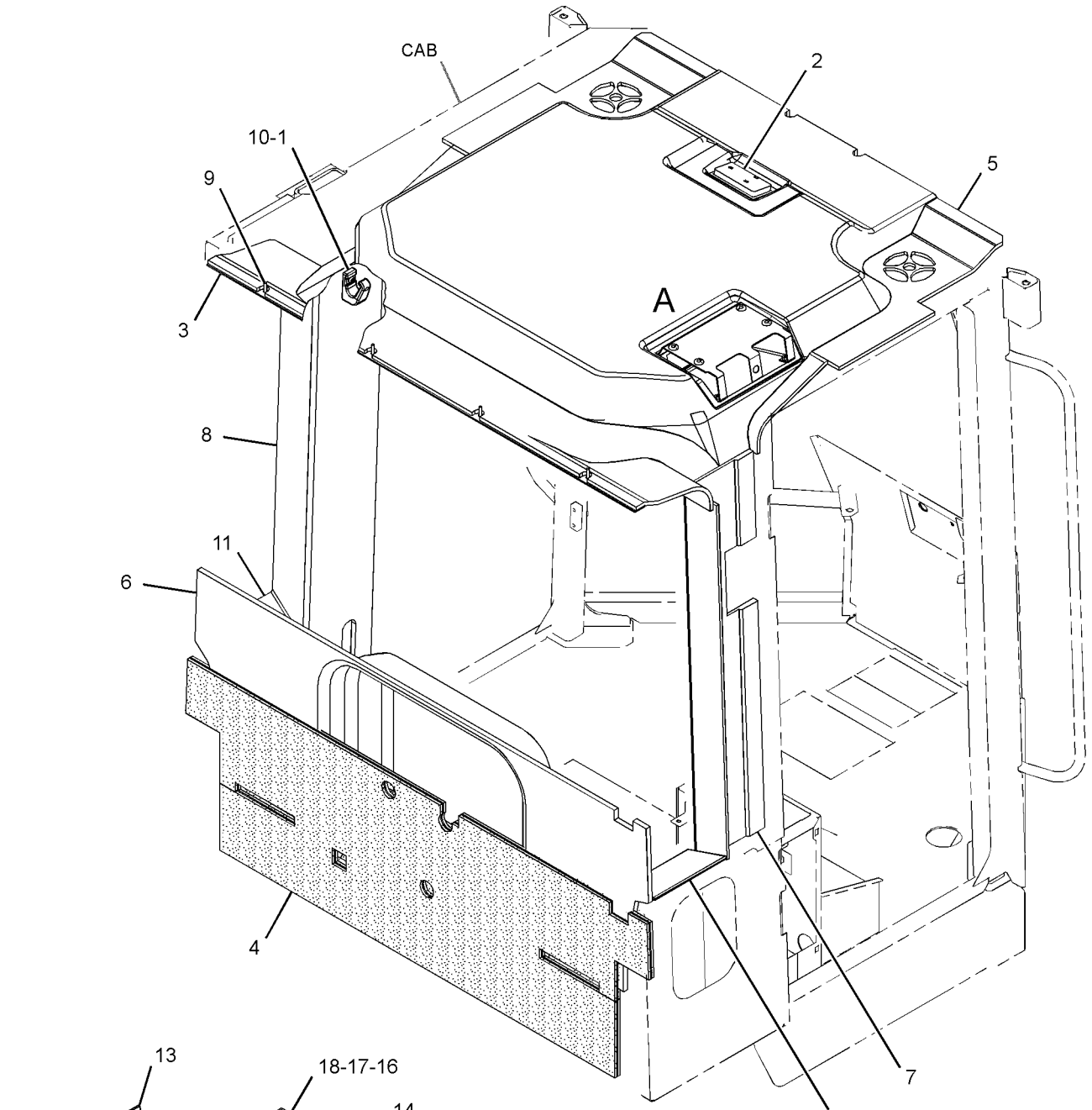

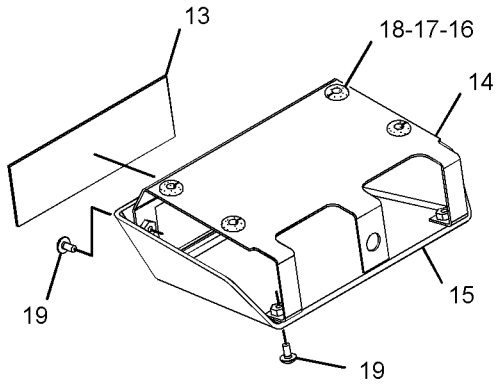

VIEW OF AREA A
(EXPLODED)

GRAPHIC #1 **<END>** g01863054

OPERATOR STATION

310-9947 LINER GP-CAB—LOWER

S/N: KLN1-UP
PART OF 310-9954 OPERATOR AR
AN ATTACHMENT

SMCS-7329 **i03150300**

NOTE	REF NO	GRAPHIC REF	PART NUMBER	QTY	PART NAME 1 2 3 4 5 6 (PRODUCT LEVEL)	SEE PAGE
	1	1	**8N-9033**	2	PLUG	
	2	1	**125-7045**	1	COVER AS	
	3	1	**125-7046**	1	PLATE AS	
	4	1	*172-5501*	1	COVER AS	
		1	**034-7044**	4	RIVET	
		1	**124-9015**	1	KIT-BRUSH SEAL	
		1	**172-5500**	1	PLATE AS	
	5	1	**172-5503**	1	BOX AS	
	6	1	**226-0294**	1	LOCK AS	
	7	1	**310-9945**	1	FLOOR MAT	
M	8	1	**5C-2890**	2	NUT (M6X1-THD)	
M	9	1	**8T-4189**	7	BOLT (M8X1.25X20-MM)	
	10	1	**8T-4205**	2	WASHER-HARD (7.2X14.5X2-MM THK)	
	11	1	**8T-4224**	7	WASHER-HARD (8.8X16X2-MM THK)	
M	12	1	**9X-2042**	2	SCREW-TRUSS HEAD (M6X1X12-MM)	
D	13	1	**5P-5637**		SEAL (0.8-M)	
E	14	1	**126-8472**		SEAL (45-CM)	

D-ORDER BY THE METER
E-ORDER BY THE CENTIMETER
M-METRIC PART

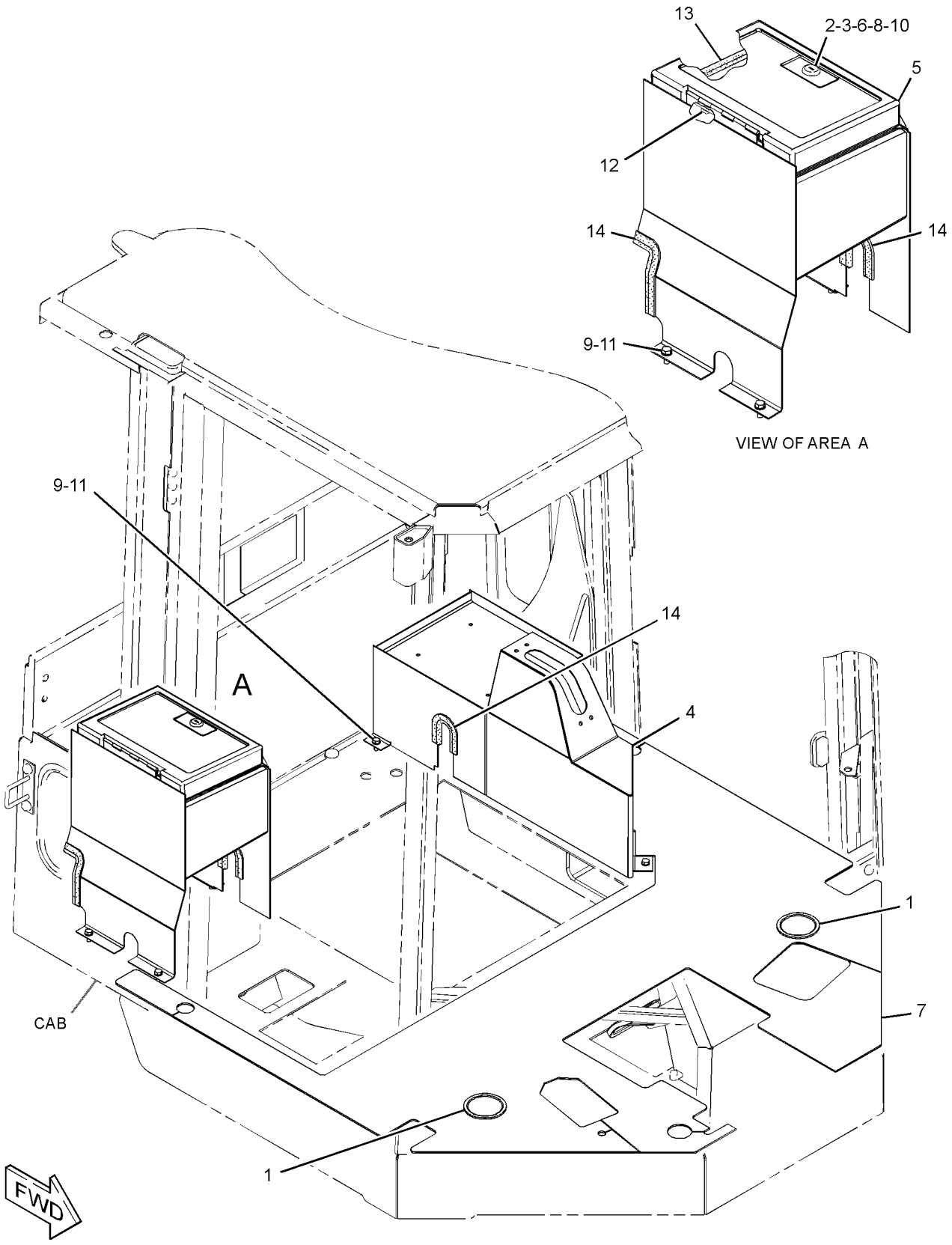

GRAPHIC #1 **<END>** g01697453

OPERATOR STATION

294-9432 LINES GP-AIR CONDITIONER

S/N: KLN1-UP
PART OF 294-9433 AIR CONDITIONER AR
AN ATTACHMENT

SMCS-1808 **i03504105**

NOTE	REF NO	GRAPHIC REF	PART NUMBER	QTY	PART NAME 1 2 3 4 5 6 (PRODUCT LEVEL)	SEE PAGE
	1	1	**3S-2093**	4	STRAP-CABLE	
M	2	1	**8T-4133**	2	NUT (M10X1.5-THD)	
	3	1	**315-7790**	1	PLATE	
	4	1	**189-3158**	1	SUPPRESSOR-ARC	
	5	1	**200-6345**	4	MOUNT (DUAL SWIVEL)	
	6	1	**217-7742**	1	GROMMET	
	7	1	**236-6923**	1	SWITCH AS-PRESSURE (REFRIGERANT)	
	8	1	**257-3227**	1	RECEIVER AS	
		1	**189-1707**	1	ORIFICE AS-AIR CONDITIONER	
	9	1	**274-5909**	1	ACCUMULATOR-REFRIGERANT	
	10	1	**284-8306**	1	BRACKET AS	
	11	1	**291-2576**	1	TUBE AS	
	12	1	**292-2522**	1	TUBE AS	
I	13	1	**292-3592**	1	HOSE AS	
I	14	1	**292-3593**	1	HOSE AS	
I	15	1	**294-0976**	1	HOSE AS	
I	16	1	**299-9123**	1	HOSE AS	
I	17	1	**303-5190**	1	HOSE AS	
M	18	1	**8T-4185**	1	BOLT (M10X1.5X50-MM)	
	19	1	**109-1633**	1	CLIP (SLOT)	
	20	1	**109-1634**	1	CLIP (TAB)	
M	21	1	**8T-4195**	1	BOLT (M10X1.5X30-MM)	
	22	1	**1M-4543**	1	GROMMET	
	24	1	**4S-1962**	2	CLIP	
	25	1	**5P-7648**	1	GROMMET	
	26	1	**7X-7729**	3	WASHER (11X25X3-MM THK)	
	27	1	**7X-7910**	1	CLIP (SLOT)	
	28	1	**7X-7911**	1	CLIP (TAB)	
	29	1	**8M-2773**	1	CLIP	
	30	1	**8T-4121**	7	WASHER-HARD (11X21X2.5-MM THK)	
M	31	1	**8T-4136**	6	BOLT (M10X1.5X25-MM)	
M	32	1	**8T-4137**	1	BOLT (M10X1.5X20-MM)	
	33	1	**8T-4223**	2	WASHER-HARD (13.5X25.5X3-MM THK)	
M	34	1	**8T-4956**	2	BOLT (M12X1.75X35-MM)	
	35	1	**9D-3768**	1	GROMMET	
	36	1	**9M-8406**	6	CLIP	
	37	1	**9X-7378**	1	SEAL-O-RING	
	38	1	**9X-7380**	2	SEAL-O-RING	
	39	1	**9X-7381**	4	SEAL-O-RING	
	40	1	**9X-7382**	2	SEAL-O-RING	
	41	1	**9X-7383**	2	SEAL-O-RING	
	42	1	**204-2281**	8	STRAP-TIE	
	43	1	**130-4677**	1	PLATE-INSTRUCTION (AIR CONDITIONER)	

I-REFER TO HYDRAULIC INFORMATION SYSTEM
M-METRIC PART

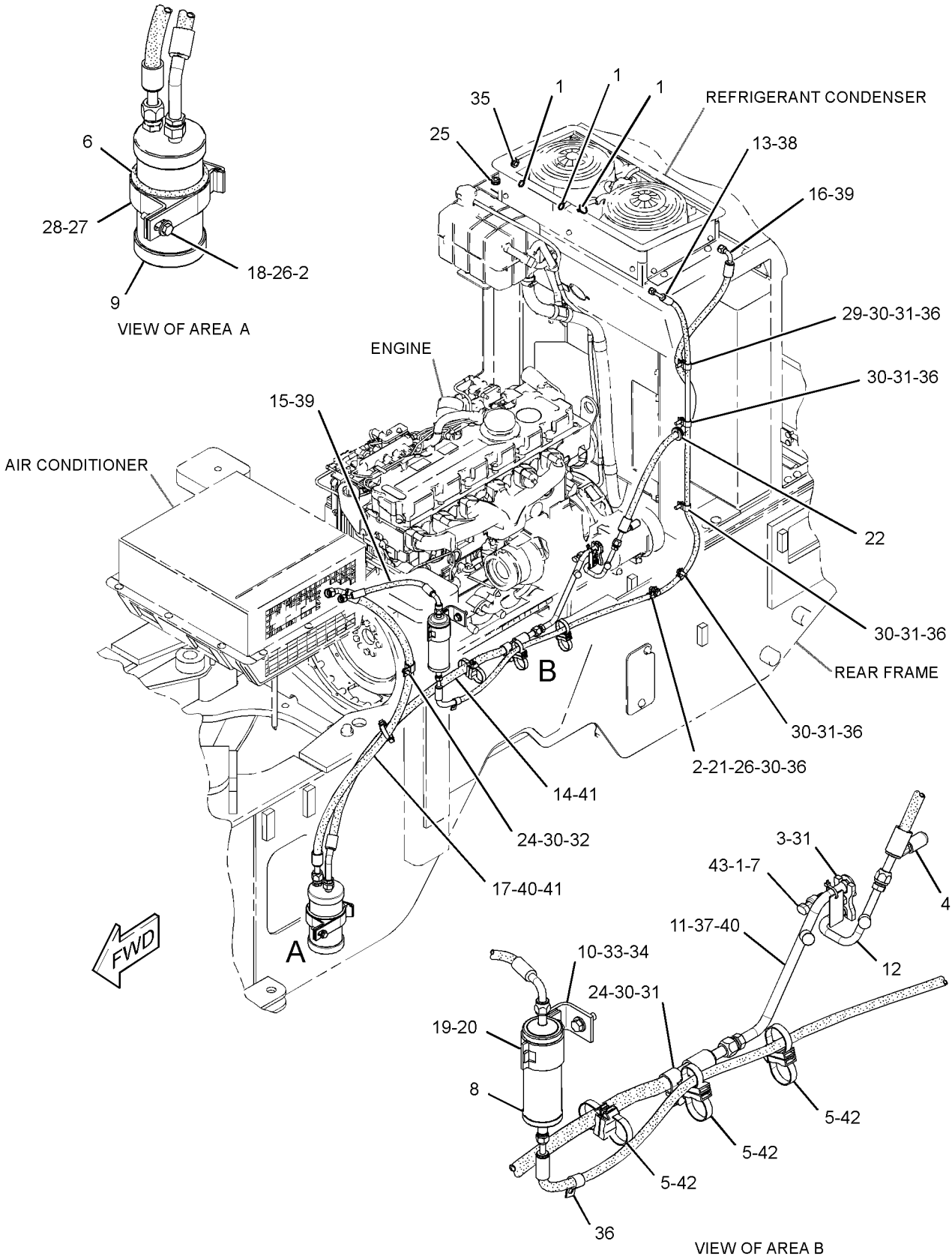

GRAPHIC #1 **<END>** g01841753

OPERATOR STATION

290-8753 LINES GP-CAB HEATER

S/N: KLN1-UP
PART OF 294-9433 AIR CONDITIONER AR
AN ATTACHMENT

SMCS-7304 **i03626681**

NOTE	REF NO	GRAPHIC REF	PART NUMBER	QTY	PART NAME 1 2 3 4 5 6 (PRODUCT LEVEL)	SEE PAGE
	1	1	**5D-1026**	4	CLAMP-HOSE	
E	2	1	**5P-0767**		HOSE (199-CM)	
E	2A	1	**5P-0767**		HOSE (223-CM)	
E	3	1	**7I-1024**		GUARD-HOSE (20-CM)	
	4	1	**7K-1181**	2	STRAP-CABLE	
	5	1	**9M-4814**	1	CONNECTOR-HOSE	
	6	1	**9X-3959**	1	ELBOW	
	7	1	**301-0361**	1	BRACKET AS	
M		1	**8T-3490**	1	NUT-WELD (M10X1.5-THD)	
	8	1	**205-8125**	1	CLIP	
	9	1	**6D-1641**	3	CLIP	
	10	1	**8T-4121**	2	WASHER-HARD (11X21X2.5-MM THK)	
M	11	1	**8T-4137**	2	BOLT (M10X1.5X20-MM)	
M	12	1	**8T-4139**	1	BOLT (M12X1.75X30-MM)	
	13	1	**8T-4223**	1	WASHER-HARD (13.5X25.5X3-MM THK)	

E-ORDER BY THE CENTIMETER
M-METRIC PART

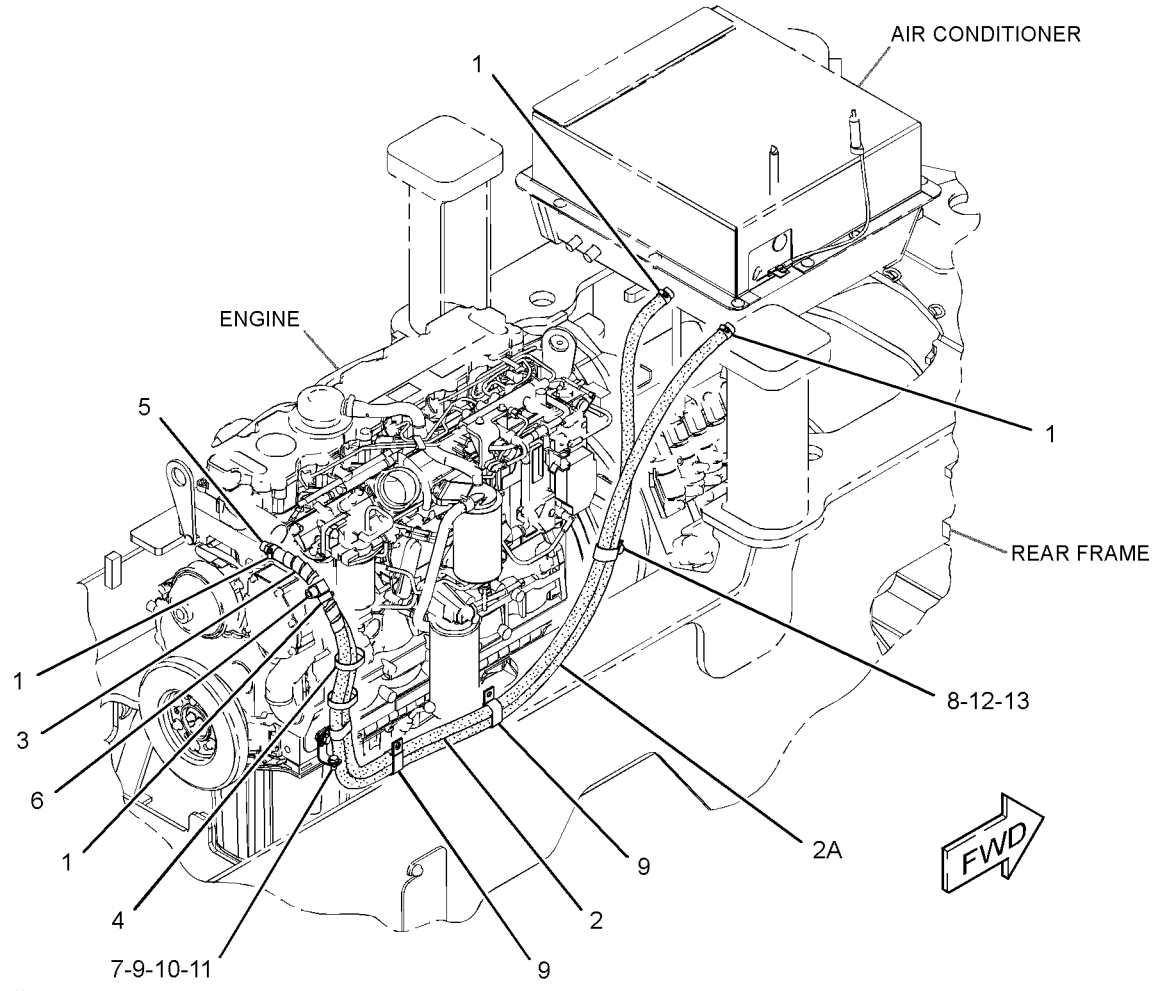

GRAPHIC #1 **<END>** g01398361

OPERATOR STATION

6V-1970 LITERATURE GP

S/N: KLN1-UP

PART OF 289-8841 CHASSIS AR

SMCS-7300, 7400 **i00607038**

NOTE	PART NUMBER	QTY	PART NAME 1 2 3 4 5 6 (PRODUCT LEVEL)	SEE PAGE
	5P-8500	2	KEY	
	2Y-3209	2	SEAL-WIRE	

<END>

OPERATOR STATION

290-7208 MIRROR GP

S/N: KLN1-UP
CANNOT BE USED WITH 107-4643—PAGE 564
AN ATTACHMENT

SMCS-7319 **i03569834**

NOTE	REF NO	GRAPHIC REF	PART NUMBER	QTY	PART NAME 1 2 3 4 5 6 (PRODUCT LEVEL)	SEE PAGE
	1	1	**5P-6872**	2	MIRROR AS	
					(EACH INCLUDES)	
	1A	1	**3K-6060**	1	LOCKNUT (3/8-16-THD)	
	2	1	**114-3956**	2	PLATE	
	3	1	**220-4049**	1	ARM AS	
	4	1	**220-4050**	1	MIRROR (EXTERIOR, REAR)	
M	5	1	**5C-9553**	6	BOLT (M6X1X16-MM)	
	6	1	**8T-4205**	8	WASHER-HARD (7.2X14.5X2-MM THK)	
	7	1	**235-4546**	2	NUT-JAM (3/8-16-THD)	

M-METRIC PART

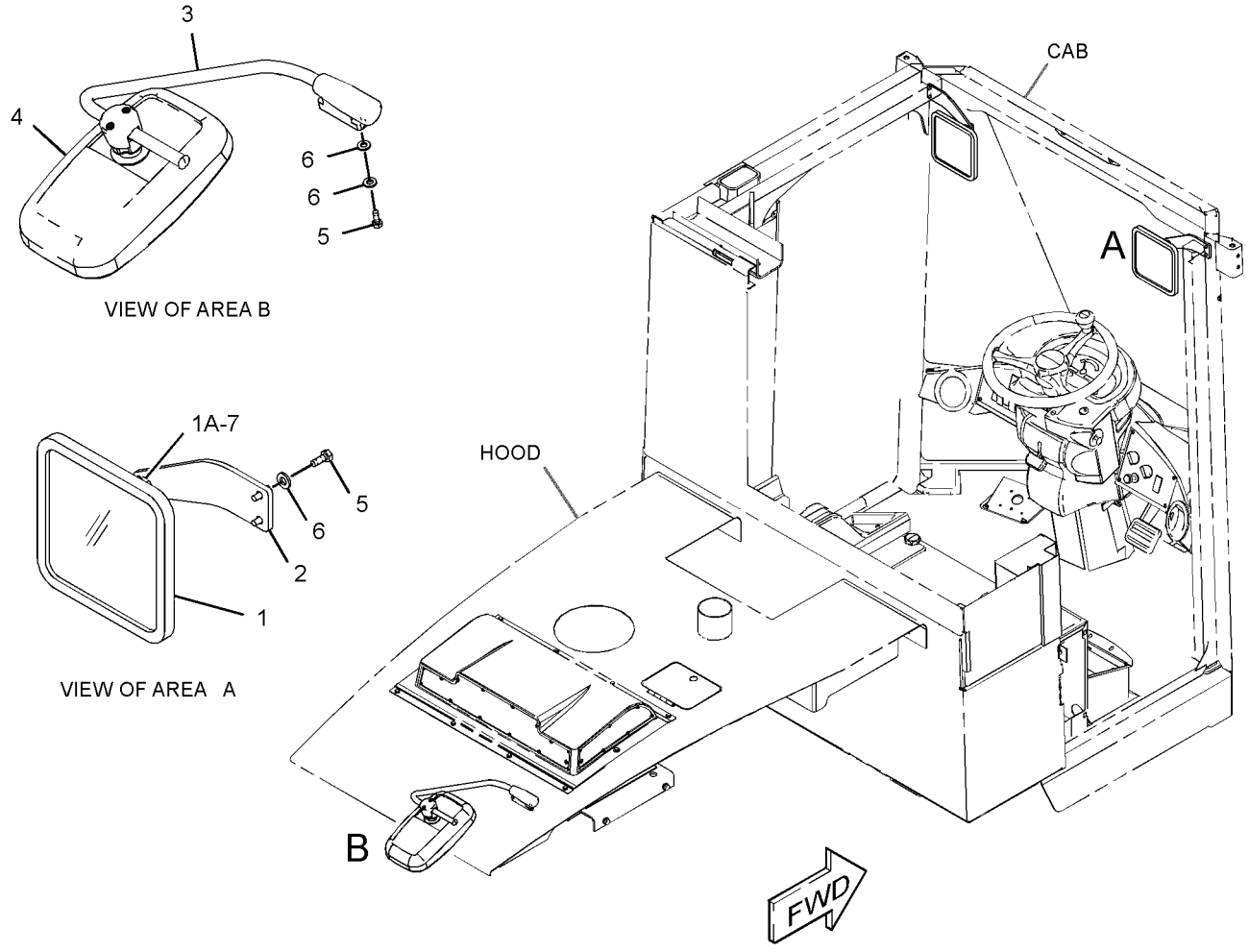

GRAPHIC #1 **<END>** g01896234

107-4642 MIRROR GP-REAR VIEW—EXTERIOR

S/N: KLN1-UP
AN ATTACHMENT

SMCS-7319 **i00710783**

NOTE	REF NO	GRAPHIC REF	PART NUMBER	QTY	PART NAME 1 2 3 4 5 6 (PRODUCT LEVEL)	SEE PAGE
	1	1	**150-6582**	2	MIRROR AS	
	2	1	**123-6621**	1	BRACKET AS (LH)	
	3	1	**123-6622**	1	BRACKET AS (RH)	
M	4	1	**8T-4189**	4	BOLT (M8X1.25X20-MM)	
	5	1	**8T-4224**	4	WASHER-HARD (8.8X16X2-MM THK)	

M-METRIC PART

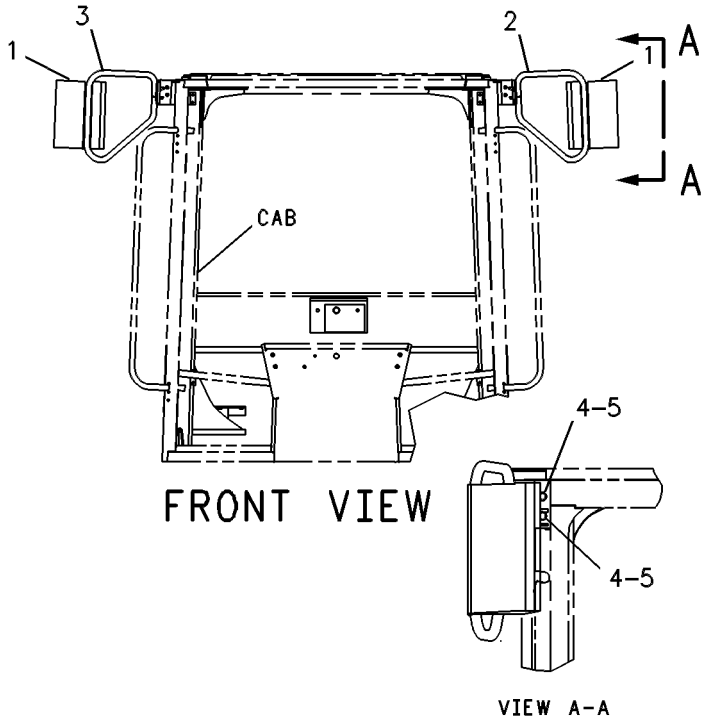

FRONT VIEW

VIEW A-A

GRAPHIC #1 **<END>** g00307313

OPERATOR STATION

107-4643 MIRROR GP-REAR VIEW—INTERIOR

S/N: KLN1-UP
PART OF 190-4405 OPERATOR AR
AN ATTACHMENT

SMCS-7319 **i02857416**

NOTE	REF NO	GRAPHIC REF	PART NUMBER	QTY	PART NAME 1 2 3 4 5 6 (PRODUCT LEVEL)	SEE PAGE
	1	1	**5P-6872**	2	MIRROR AS	
	2	1	**114-3956**	2	PLATE	
M	3	1	**5C-9553**	4	BOLT (M6X1X16-MM)	
	4	1	**8T-4205**	4	WASHER-HARD (7.2X14.5X2-MM THK)	
	5	1	**3K-6060**	2	LOCKNUT (3/8-16-THD)	
	6	1	**235-4546**	2	NUT-JAM (3/8-16-THD)	
F			**9X-8256**	4	WASHER (6.6X12X2-MM THK)	
FM			**5C-2890**	2	NUT (M6X1-THD)	
FM			**5C-9553**	2	BOLT (M6X1X16-MM)	

F-NOT SHOWN
M-METRIC PART

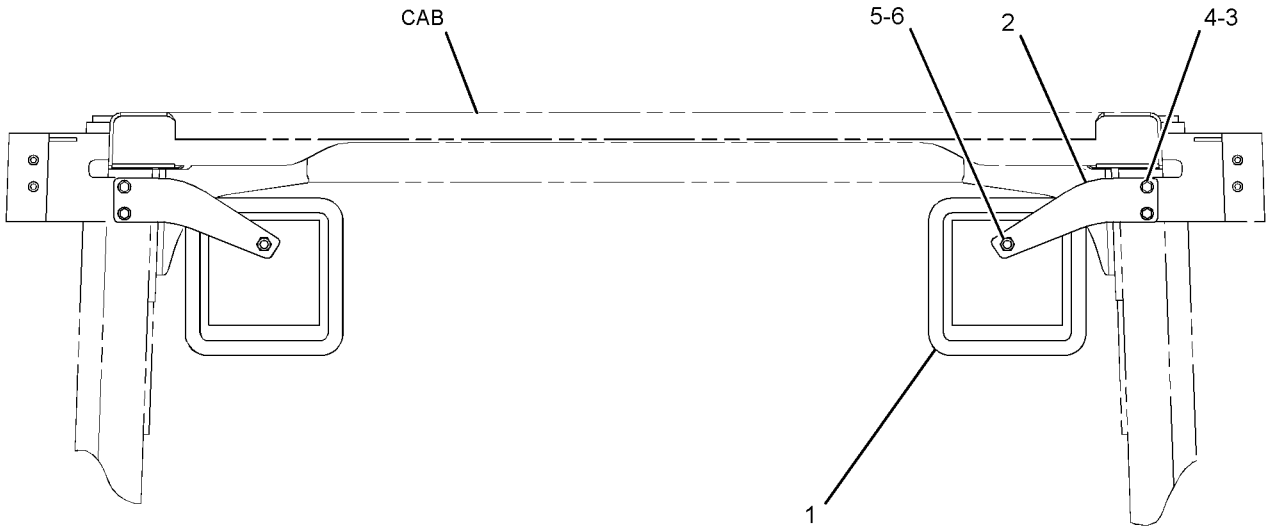

FRONT VIEW

GRAPHIC #1 **<END>** g01427257

155-5783 MOTOR GP-WINDOW WIPER–FRONT

S/N: KLN1-UP
24 VOLT
PART OF 107-4628, 146-6908 WIPER GP-WINDOW
AN ATTACHMENT

SMCS-7305 **i03590501**

NOTE	REF NO	GRAPHIC REF	PART NUMBER	QTY	PART NAME 1 2 3 4 5 6 (PRODUCT LEVEL)	SEE PAGE
	1	1	**135-0611**	1	MOTOR GP-WINDOW WIPER (24-VOLT, 2-SPEED)	
		1	**8T-8737**	1	PLUG-SEAL	
		1	**102-8805**	1	KIT-RECEPTACLE (6-PIN)	
					(KIT INCLUDES RECEPTACLE AS & WEDGE)	
		1	**186-3735**	5	PIN-CONNECTOR (16-GA TO 18-GA)	
	2	1	**206-5823**	1	CAP (MOTOR)	

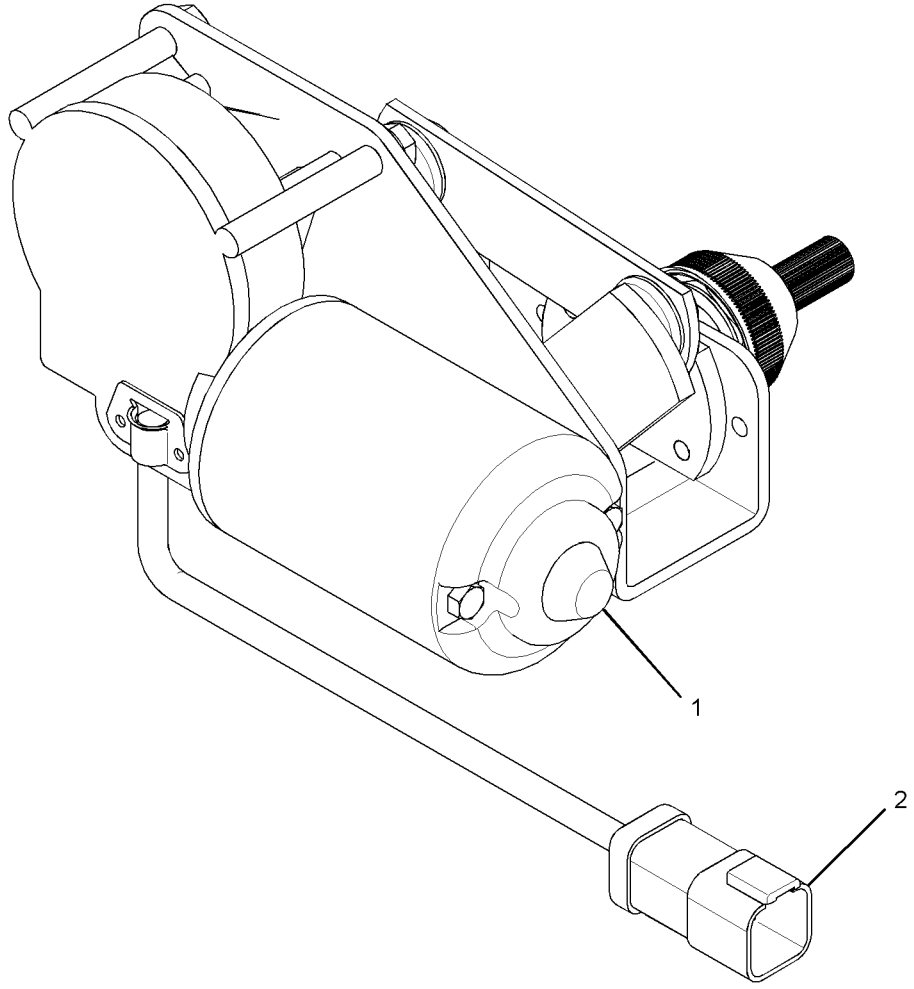

GRAPHIC #1 **<END>** g01908073

OPERATOR STATION

155-5784 MOTOR GP-WINDOW WIPER–REAR

S/N: KLN1-UP
24 VOLT
PART OF 107-4628 WIPER GP-WINDOW
AN ATTACHMENT

SMCS-7305 **i03009970**

NOTE	REF NO	GRAPHIC REF	PART NUMBER	QTY	PART NAME 1 2 3 4 5 6 (PRODUCT LEVEL)	SEE PAGE
C	1	1	**135-0611**	1	MOTOR GP-WINDOW WIPER (24-VOLT, 2-SPEED)	
		1	**102-8805**	1	KIT-RECEPTACLE (6-PIN)	
					(INCLUDES RECEPTACLE AS & WEDGE)	
		1	**8T-8737**	1	PLUG-SEAL	
		1	**186-3735**	5	PIN-CONNECTOR (16-GA TO 18-GA)	
C	2	1	**206-5823**	1	CAP	

C-CHANGE FROM PREVIOUS TYPE

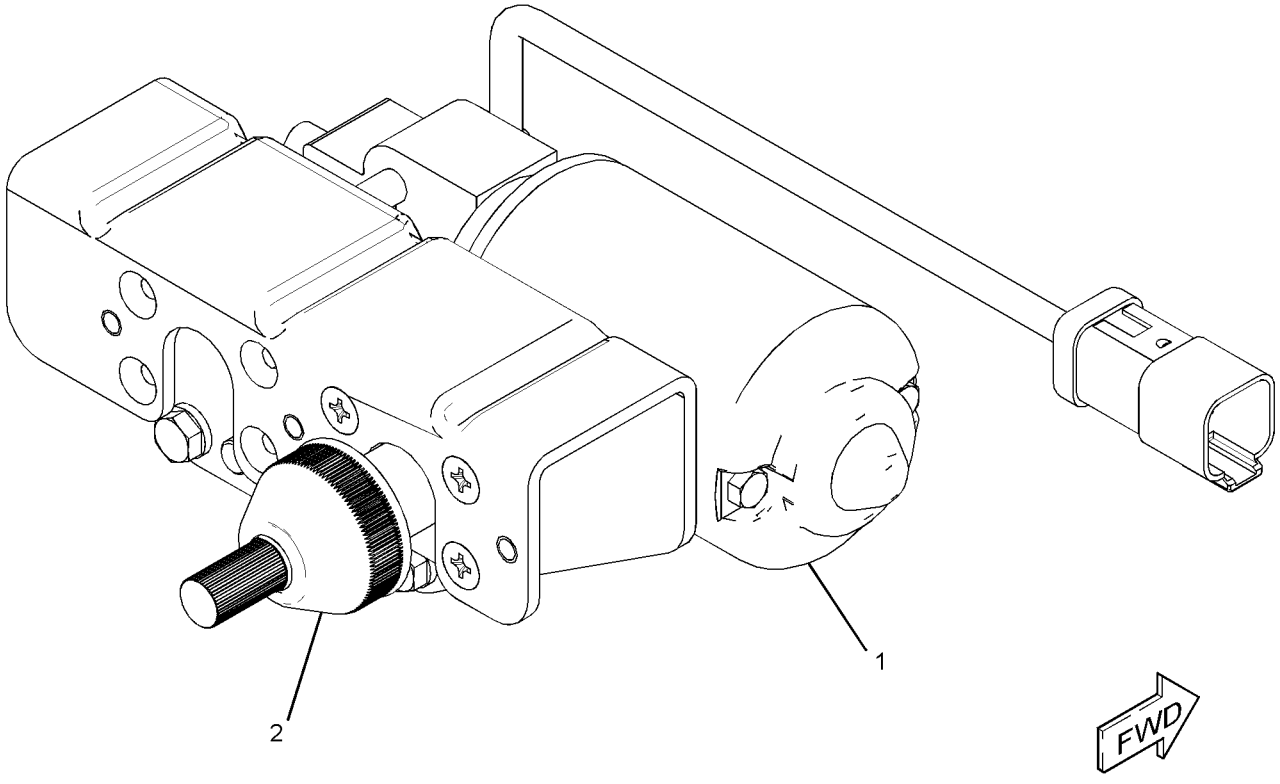

GRAPHIC #1 **<END>** g01423589

OPERATOR STATION

156-4271 MOUNTING GP-CAB

S/N: KLN1-UP

PART OF 310-9954, 311-8700 OPERATOR AR, 290-8525 OPERATOR AR-ENCLOSED ROPS, 290-8186 OPERATOR AR-OPEN ROPS

AN ATTACHMENT

SMCS-7301 **i01215188**

NOTE	REF NO	GRAPHIC REF	PART NUMBER	QTY	PART NAME 1 2 3 4 5 6 (PRODUCT LEVEL)	SEE PAGE
	1	1	**6Y-2525**	4	SLEEVE	
	2	1	**8Y-7119**	4	WASHER (26X144X12-MM THK)	
	3	1	**9W-9940**	4	MOUNT AS	
M	4	1	**7X-2567**	4	BOLT (M24X3X160-MM)	
M	5	1	**8T-4001**	2	NUT (M24X3-THD)	
	6	1	**8T-4167**	6	WASHER-HARD (26X44X4-MM THK)	

M-METRIC PART

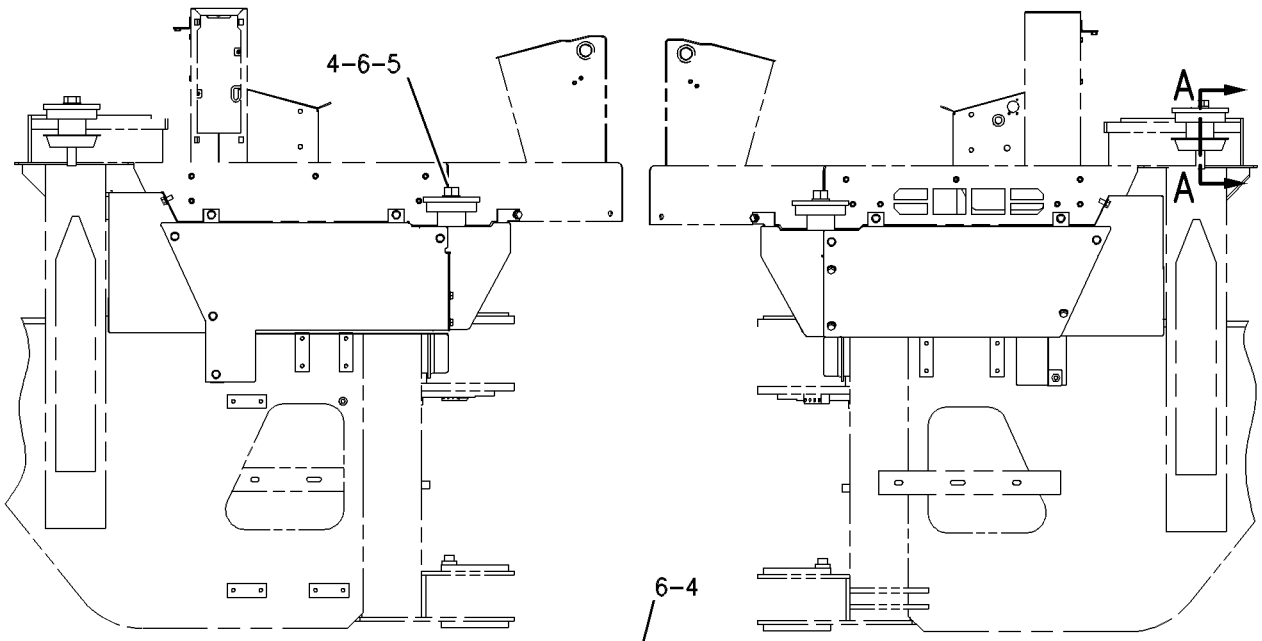

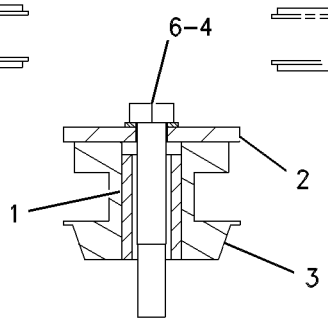

SECTION A-A

GRAPHIC #1 **<END>** g00648781

OPERATOR STATION

190-4405 OPERATOR AR

S/N: KLN1-UP
PART OF 290-8522 CAB AR-ENCLOSED ROPS
AN ATTACHMENT

SMCS-7301 **i02274786**

NOTE	PART NUMBER	QTY	PART NAME 1 2 3 4 5 6 (PRODUCT LEVEL)	SEE PAGE
Y	*168-7000*	1	CONTROL GP-PARKING BRAKE (HANDLE)	310
Y	*190-4635*	1	CONTROL GP-STEERING	520
Y	*190-4690*	1	CONTROL GP-TRANSMISSION	522
Y	*207-5948*	1	DEFROSTER GP-CAB	526
Y	*107-4630*	1	DUCT GP-CAB AIR	542
Y	*119-4769*	1	FILTER GP-CAB AIR	544
Y	*241-8564*	1	LINER GP-CAB (UPPER)	554
Y	*107-4643*	1	MIRROR GP-REAR VIEW (INTERIOR)	564
Y	*190-4700*	1	PEDAL GP-GOVERNOR	589
Y	*107-6133*	1	SWITCH GP-WIPER (INTERMITTENT)	172
Y	*107-4628*	1	WIPER GP-WINDOW	622
	118-0626	1	FILM-WINDOW (FRONT)	

Y-SEPARATE ILLUSTRATION

<END>

310-9954 OPERATOR AR

S/N: KLN1-UP
PART OF 315-4654 OPERATOR AR
AN ATTACHMENT

SMCS-7301 **i03084763**

NOTE	PART NUMBER	QTY	PART NAME 1 2 3 4 5 6 (PRODUCT LEVEL)	SEE PAGE
Y	*310-9953*	1	CAB AR	495
Y	*291-3750*	1	CONSOLE GP-OPERATOR	511
Y	*310-9947*	1	LINER GP-CAB	556
Y	*156-4271*	1	MOUNTING GP-CAB	567
Y	*198-8964*	1	PANEL GP-ACCESS (HOOD, CAB HEATER)	304
Y	*290-8169*	1	PANEL GP-INSTRUMENT (FRONT)	573
Y	*311-8502*	1	PANEL GP-INSTRUMENT	584
Y	*173-4311*	1	WASHER GP-WINDOW	620
Y	*311-8501*	1	WIRING GP-CAB	183

Y-SEPARATE ILLUSTRATION

<END>

OPERATOR STATION

311-8700 OPERATOR AR

S/N: KLN1-UP
PART OF 310-9955 CAB AR-ENCLOSED ROPS
AN ATTACHMENT

SMCS-7301 **i03084722**

NOTE	PART NUMBER	QTY	PART NAME 1 2 3 4 5 6 (PRODUCT LEVEL)	SEE PAGE
Y	*311-8699*	1	CAB AR	495
Y	*291-3750*	1	CONSOLE GP-OPERATOR	511
Y	*317-0769*	1	FLOOR MAT GP	550
Y	*156-4271*	1	MOUNTING GP-CAB	567
Y	*290-8169*	1	PANEL GP-INSTRUMENT (FRONT)	573
Y	*290-8171*	1	PANEL GP-INSTRUMENT (ENCLOSED ROPS)	575
Y	*131-1236*	1	WASHER GP-WINDOW	618
Y	*289-8903*	1	WIRING GP-CAB (ENCLOSED ROPS)	177
Y-SEPARATE ILLUSTRATION				

<END>

315-4654 OPERATOR AR

S/N: KLN1-UP
AN ATTACHMENT

SMCS-7301 **i03084762**

NOTE	PART NUMBER	QTY	PART NAME 1 2 3 4 5 6 (PRODUCT LEVEL)	SEE PAGE
Y	*259-4137*	1	ALTERNATOR GP-CHARGING (24-VOLT, 95-AMPERE)	122
Y	*310-9954*	1	OPERATOR AR	568
Y	*174-2215*	1	SKIRT GP-CAB	612
Y-SEPARATE ILLUSTRATION				

<END>

317-0770 OPERATOR AR

S/N: KLN1-UP
PART OF 311-8699 CAB AR, 290-8522 CAB AR-ENCLOSED ROPS
AN ATTACHMENT

SMCS-7301 **i03038580**

NOTE	PART NUMBER	QTY	PART NAME 1 2 3 4 5 6 (PRODUCT LEVEL)	SEE PAGE
Y	*168-7000*	1	CONTROL GP-PARKING BRAKE (HANDLE)	310
Y	*190-4635*	1	CONTROL GP-STEERING	520
Y	*190-4690*	1	CONTROL GP-TRANSMISSION	522
Y	*207-5948*	1	DEFROSTER GP-CAB	526
Y	*107-4630*	1	DUCT GP-CAB AIR	542
Y	*119-4769*	1	FILTER GP-CAB AIR	544
Y	*241-8564*	1	LINER GP-CAB (UPPER)	554
Y	*317-0720*	1	PEDAL GP-GOVERNOR	591
Y	*107-6133*	1	SWITCH GP-WIPER (INTERMITTENT)	172
Y	*107-4628*	1	WIPER GP-WINDOW	622
	118-0626	1	FILM-WINDOW (FRONT)	
Y-SEPARATE ILLUSTRATION				

<END>

OPERATOR STATION

290-8525 OPERATOR AR-ENCLOSED ROPS—SLIDING WINDOWS

S/N: KLN1-UP
PART OF 290-8513 CAB AR-ENCLOSED ROPS
AN ATTACHMENT

SMCS-7301 **i03315543**

NOTE	PART NUMBER	QTY	PART NAME 1 2 3 4 5 6 (PRODUCT LEVEL)	SEE PAGE
Y	*290-8522*	1	CAB AR-ENCLOSED ROPS (SLIDING WINDOWS)	496
Y	*291-3750*	1	CONSOLE GP-OPERATOR	511
Y	*290-8488*	1	FLOOR MAT GP	545
			-OR-	
Y	*317-0769*	1	FLOOR MAT GP	550
Y	*156-4271*	1	MOUNTING GP-CAB	567
Y	*290-8169*	1	PANEL GP-INSTRUMENT (FRONT)	573
Y	*290-8171*	1	PANEL GP-INSTRUMENT (ENCLOSED ROPS)	575
Y	*131-1236*	1	WASHER GP-WINDOW	618
Y	*289-8903*	1	WIRING GP-CAB (ENCLOSED ROPS)	177
Y-SEPARATE ILLUSTRATION				

<END>

290-8186 OPERATOR AR-OPEN ROPS

S/N: KLN1-UP
PART OF 290-8189 CANOPY AR-OPEN ROPS
AN ATTACHMENT

SMCS-7323 **i03043762**

NOTE	PART NUMBER	QTY	PART NAME 1 2 3 4 5 6 (PRODUCT LEVEL)	SEE PAGE
Y	*290-8182*	1	CANOPY AR-OPEN ROPS	504
Y	*291-3750*	1	CONSOLE GP-OPERATOR	511
Y	*317-0692*	1	FLOOR MAT GP	547
Y	*156-4271*	1	MOUNTING GP-CAB	567
Y	*198-8964*	1	PANEL GP-ACCESS (HOOD, CAB HEATER)	304
Y	*290-8169*	1	PANEL GP-INSTRUMENT (FRONT)	573
Y	*290-8174*	1	PANEL GP-INSTRUMENT (OPEN ROPS)	580
Y	*289-8904*	1	WIRING GP-CAB (OPEN ROPS)	180
Y-SEPARATE ILLUSTRATION				

<END>

317-0771 OPERATOR GP

S/N: KLN1-UP
PART OF 290-8182 CANOPY AR-OPEN ROPS
AN ATTACHMENT

SMCS-7300, 7301 **i03038542**

NOTE	PART NUMBER	QTY	PART NAME 1 2 3 4 5 6 (PRODUCT LEVEL)	SEE PAGE
Y	*323-4078*	1	CONTROL GP-PARKING BRAKE	314
Y	*190-4635*	1	CONTROL GP-STEERING	520
Y	*190-4690*	1	CONTROL GP-TRANSMISSION	522
Y	*118-0809*	1	DASH GP	525
Y	*317-0720*	1	PEDAL GP-GOVERNOR	591
Y	*118-0808*	1	SUPPORT GP-SEAT	613
Y-SEPARATE ILLUSTRATION				

<END>

OPERATOR STATION

292-6402 PAN GP-BACKREST—LUMBAR

S/N: KLN1-UP

PART OF 292-9237 PAN GP-BACKREST

AN ATTACHMENT

SMCS-7312 **i03095782**

NOTE	REF NO	GRAPHIC REF	PART NUMBER	QTY	PART NAME 1 2 3 4 5 6 (PRODUCT LEVEL)	SEE PAGE
	1	1	**5P-7957**	1	LANYARD	
	2	1	**136-1543**	1	PLATE AS-LUMBAR	
	3	1	**173-2052**	1	RETAINER	
	4	1	**178-7907**	1	HOLDER	
	5	1	**261-5694**	1	PAN AS-BACKREST	
	6	1	**322-3161**	1	SPRING	
	7	1	**4K-9429**	8	RIVET-POP	

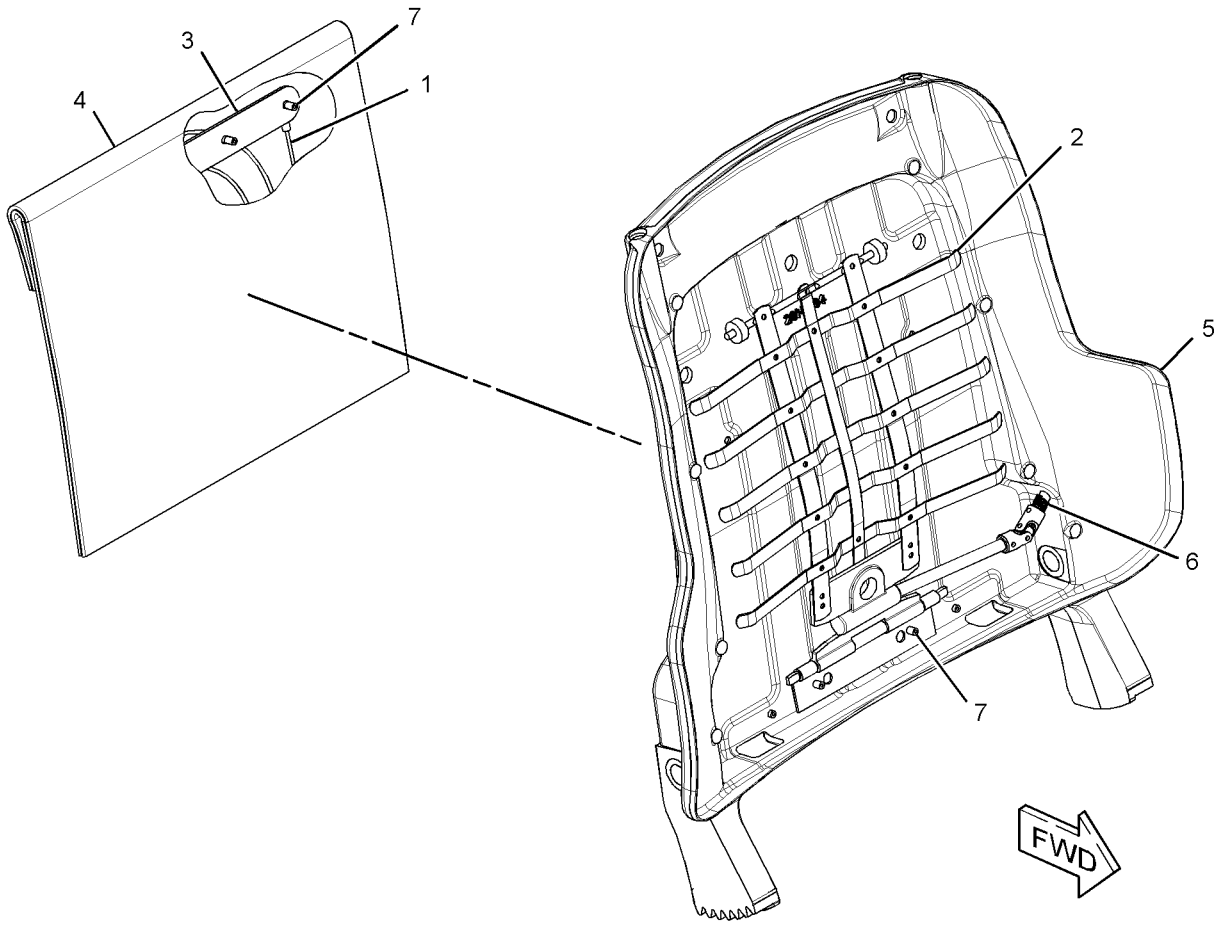

GRAPHIC #1 **<END>** g01577333

OPERATOR STATION

292-9237 PAN GP-BACKREST

S/N: KLN1-UP
PART OF 178-0603 SEAT GP
AN ATTACHMENT

SMCS-7312 **i03093580**

NOTE	REF NO	GRAPHIC REF	PART NUMBER	QTY	PART NAME 1 2 3 4 5 6 (PRODUCT LEVEL)	SEE PAGE
	1	1	**164-4883**	1	KNOB-LUMBAR	
	2	1	**250-4628**	3	PLUG	
	3	1	**292-6097**	1	CUSHION AS-BACK	
Y	4	1	**292-6402**	1	PAN GP-BACKREST (LUMBAR)	571
	5	1	**5P-0537**	2	WASHER-HARD (7.2X14.5X2-MM THK)	
	6	1	**6V-8969**	2	SCREW-BUTTON HEAD (1/4-20X0.5-IN)	
	7	1	**8T-7566**	1	PIN-SPRING	

Y-SEPARATE ILLUSTRATION

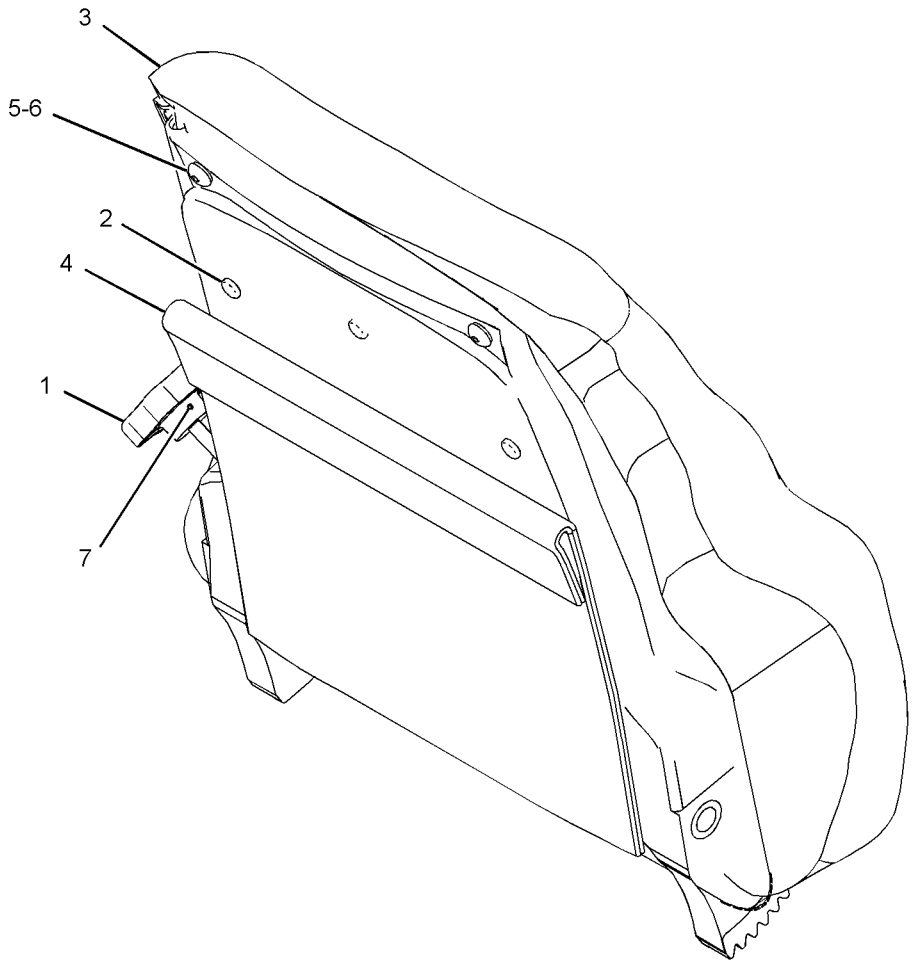

GRAPHIC #1 **<END>** g01336870

OPERATOR STATION

290-8169 PANEL GP-INSTRUMENT–FRONT

S/N: KLN1-UP
PART OF 310-9954, 311-8700 OPERATOR AR, 290-8525 OPERATOR AR-ENCLOSED ROPS, 290-8186 OPERATOR AR-OPEN ROPS
AN ATTACHMENT

SMCS-7451 **i03016535**

NOTE	REF NO	GRAPHIC REF	PART NUMBER	QTY	PART NAME 1 2 3 4 5 6 (PRODUCT LEVEL)	SEE PAGE
	1	1	**110-7887**	1	SWITCH AS-START (KEY) (ENGINE)	
		1	**7T-6799**	1	NUT-MOUNTING (1-32-THD)	
		1	**102-8804**	1	KIT-RECEPTACLE (4-PIN)	
					(INCLUDES RECEPTACLE AS & WEDGE)	
		1	**186-3735**	4	PIN-CONNECTOR (16-GA TO 18-GA)	
	2	1	**204-6101**	6	WASHER-HARD (5.3X10X1-MM THK)	
	3	1	**129-7184**	1	FILM-INSTRUCTION (ENGINE START)	
B	4	1	**184-5293**	1	PLUG	
	5	1	**185-5629**	1	PLATE AS	
	6	1	**190-4563**	1	PLATE AS	
M		1	**6V-9632**	2	NUT-WELD (M6X1-THD)	
	7	1	**222-0574**	1	FILM (INSTRUMENT PANEL COVER)	
	8	1	**270-9442**	1	SCREW-TRUSS HEAD (M6X1X20-MM)	
	9	1	**313-2157**	1	MODULE GP-DISPLAY (GAUGE CLUSTER)	
	10	1	**291-0639**	1	PLATE AS	
M		1	**9X-2032**	8	NUT-WELD (M4X0.7-THD)	
	11	1	**291-0640**	1	HOUSING AS-GAUGE	
M	12	1	**129-3178**	2	LOCKNUT (M6X1-THD)	
M	13	1	**5C-2890**	2	NUT (M6X1-THD)	
M	14	1	**5C-8312**	4	NUT (M4X0.7-THD)	
M	15	1	**6V-8490**	2	BOLT (M6X1X25-MM)	
	16	1	**8C-9987**	2	WASHER (8.3X28X2.5-MM THK)	
	17	1	**8T-4205**	4	WASHER-HARD (7.2X14.5X2-MM THK)	
M	18	1	**9X-1046**	6	SCREW (M4X0.7X18-MM)	
M	19	1	**9X-2045**	2	SCREW-TRUSS HEAD (M6X1X20-MM)	
	20	1	**9X-2038**	1	WASHER (7X19X2-MM THK)	
M	21	1	**213-7315**	12	SCREW-TRUSS HEAD (M4X0.7X25-MM)	

B-USE AS REQUIRED
M-METRIC PART

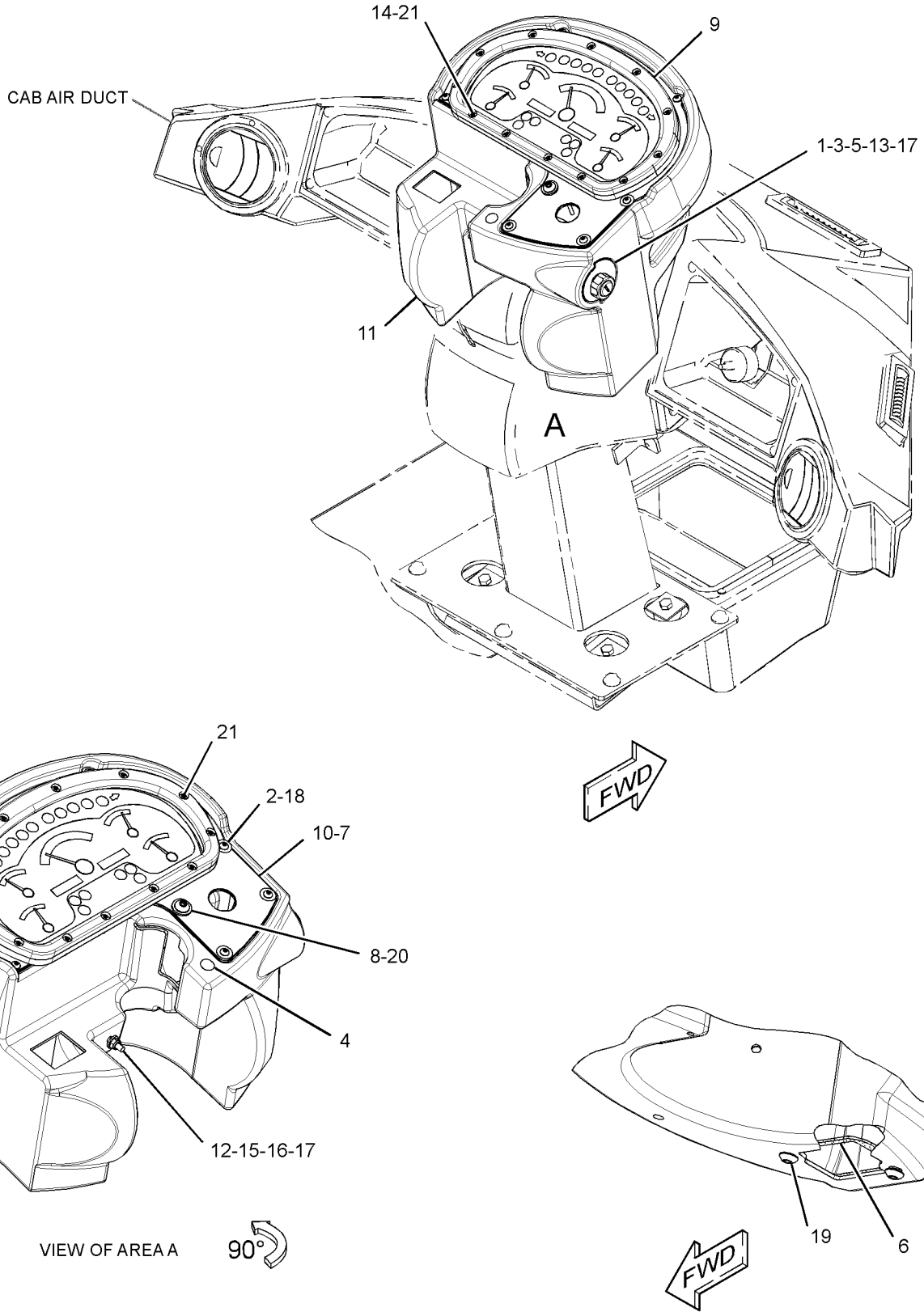

GRAPHIC #1 **<END>** g01406018

OPERATOR STATION

290-8171 PANEL GP-INSTRUMENT

S/N: KLN1-UP

PART OF 311-8700 OPERATOR AR, 290-8525 OPERATOR AR-ENCLOSED ROPS AN ATTACHMENT

SMCS-7451 **i03627159**

NOTE	REF NO	GRAPHIC REF	PART NUMBER	QTY	PART NAME 1 2 3 4 5 6 (PRODUCT LEVEL)	SEE PAGE
D	1	1	**8T-3425**		CHANNEL-TRIM (0.1-M)	
	2	2	**154-5629**	1	ASHTRAY AS	
B	3	2	**2G-5298**	1	WIRE AS	
	4	2	**3E-5239**	1	RELAY AS (24-VOLT) (FRONT FLOODLIGHTS)	
	5	2	**6Y-6584**	1	STRAP AS-GROUND	
	6	1	**7K-1181**	40	STRAP-CABLE	
	7	1	**105-8034**	1	SWITCH AS-LIMIT (BRAKE PEDAL)	
	8	2	**107-6013**	1	SEAL	
	9	2	**107-6021**	1	HOUSING AS	
	10	2	**110-6109**	1	KNOB-CONTROL (CONTROL PANEL SWITCHES)	
	11	2	**114-3951**	1	PLATE	
	12	2	**115-1748**	1	LAMP (24-VOLT, 3-WATT)	
	13	2	**116-7471**	1	PULLER-MINIFUSE	
	14	2	**117-3787**	4	KNOB (COVER FASTENERS)	
	15	2	**117-3788**	4	RECEPTACLE (CLIP)	
	16	2	**117-3789**	4	RETAINER (STUD)	
	17	1	**118-7362**	1	GROMMET-SPLIT	
	18	2	**148-5689**	1	GROMMET-SPLIT	
	19	2	**158-5089**	1	RELAY AS (24-VOLT) (ALARM)	
B	20	2	**165-0311**	7	PLUG	
	21	1	**180-9900**	1	CAP AS	
		1	**5P-7958**	1	SLEEVE-CABLE SPLICE	
		1	**8C-6354**	1	CAP-RECEPTACLE	
		1	**179-9392**	1	LANYARD	
	22	2	**195-0916**	1	SWITCH AS-ROCKER (THROTTLE LOCK SET, RESUME)	
		2	**111-7899**	1	GASKET	
	23	2	**195-0917**	1	SWITCH AS-ROCKER (THROTTLE LOCK ON/OFF)	
	24	2	**195-0921**	1	SWITCH AS-ROCKER (KICKOUT ON/OFF)	
		2	**111-7899**	1	GASKET	
	25	1	**203-9007**	1	NUT (1-1/2-18-THD)	
	26	1	**206-1345**	2	STRAP-CABLE	
	27	2	**236-4232**	1	PLATE AS	
	28	2	**236-4234**	1	SWITCH AS-ROCKER (BLOWER FAN SPEED)	
		1	**111-7899**	1	GASKET	
	29	1	**238-4864**	1	BRACKET AS	
M		1	**159-9539**	1	NUT-WELD (M6X1-THD)	
Y	30	2	**241-8368**	1	SWITCH GP-MAGNETIC (24-VOLT) (MAIN RELAY)	169
	31	1	**245-9088**	1	BUMPER	
	32	2	**252-4575**	1	FILM-CONTROL (CONSOLE, RH)	
	33	2	**266-7620**	1	SWITCH AS-ROCKER (HYDRAULIC LOCKOUT)	
		2	**111-7899**	1	GASKET	
	34	1	**270-2679**	1	LOCKWASHER	
	35	1	**289-9171**	1	HARNESS AS-CAB	
		1	**116-4159**	1	BASE	
		1	**112-9609**	1	BLOCK-MICRORELAY	
		1	**124-9636**	2	BLOCK-MINIFUSE	
		1	**123-7615**	1	CONNECTOR	
		1	**113-8490**	19	FUSE (10-AMPERE)	
		1	**113-8491**	6	FUSE (15-AMPERE)	
		1	**113-8492**	3	FUSE (20-AMPERE)	
		1	**113-8493**	2	FUSE (25-AMPERE)	
		1	**111-6795**	1	HOUSING-RELAY	
		1	**112-9610**	2	LOCK-MICRORELAY	
		1	**124-9637**	2	LOCK-MINIFUSE	
		1	**111-6816**	1	LOCK	

OPERATOR STATION

290-8171 **PANEL GP-INSTRUMENT** *(contd.)* **i03627159**

NOTE	REF NO	GRAPHIC REF	PART NUMBER	QTY	PART NAME 1 2 3 4 5 6 (PRODUCT LEVEL)	SEE PAGE
		1	**9W-0852**	3	PIN-CONNECTOR (14-GA)	
		1	**8N-1546**	1	PIN-CONNECTOR (6-GA)	
		1	**7X-6222**	1	PLUG AS-CONNECTOR (24-PIN)	
M		1	**3E-8558**	1	BOLT (M5X0.8X39.37-MM)	
		1	**3E-4367**	1	RING-RETAINING	
		1	**9X-3265**	2	SEAL-CONNECTOR (24-PIN)	
		1	**9X-1054**	2	PLUG AS-CONNECTOR (4-PIN)	
		1	**8T-8737**	157	PLUG-SEAL	
		1	**102-8802**	8	KIT-RECEPTACLE (2-PIN)	
		1	**102-8803**	4	KIT-RECEPTACLE (3-PIN)	
		1	**102-8804**	2	KIT-RECEPTACLE (4-PIN)	
			102-8806	2	KIT-RECEPTACLE (8-PIN)	
		1	**102-8801**	3	KIT-RECEPTACLE (12-PIN)	
		1	**102-8805**	2	KIT-RECEPTACLE (6-PIN)	
					(EACH RECEPTACLE KIT INCLUDES RECEPTACLE AS & WEDGE)	
		1	**127-5484**	1	RECEPTACLE AS-CONNECTOR (1-PIN)	
		1	**9X-3402**	97	SOCKET-CONNECTOR (16-GA TO 18-GA)	
		1	**9W-0844**	19	SOCKET-CONNECTOR (14-GA)	
		1	**113-5183**	1	SOCKET-LAMP	
		1	**3S-2093**	3	STRAP-CABLE	
		1	**8L-8413**	74	STRAP-CABLE	
		1	**189-3158**	3	SUPPRESSOR-ARC	
		1	**128-4168**	3	TERMINAL AS	
					(EACH INCLUDES)	
		1	**6H-3592**	1	TERMINAL (6-GA TO 8-GA)	
E		1	**6V-9023**		TUBE-HEAT SHRINK (12.7-MM DIA) (4-CM)	
		1	**2L-8069**	1	TERMINAL (2-GA TO 10-GA)	
		1	**2L-8079**	3	TERMINAL (14-GA TO 16-GA)	
		1	**6V-0491**	2	TERMINAL-BLADE (14-GA TO 18-GA)	
		1	**091-2436**	59	TERMINAL-BLADE (18-GA TO 22-GA)	
		1	**104-1995**	14	TERMINAL-BLADE (14-GA TO 18-GA)	
		1	**112-9611**	7	TERMINAL-BLADE	
		1	**112-9612**	10	TERMINAL-BLADE	
		1	**116-4160**	6	TERMINAL-BLADE (12-GA TO 14-GA)	
		1	**116-4161**	22	TERMINAL-BLADE (16-GA TO 18-GA)	
		1	**113-5100**	4	TERMINAL-BUS	
		1	**127-5460**	3	TERMINAL-BUS	
		1	**113-5184**	2	TERMINAL-RECEPTACLE (16-GA TO 18-GA) (POWER TRAIN)	
		1	**3E-9179**	3	TERMINAL-RECEPTACLE (14-GA TO 18-GA)	
		1	**9X-1056**	4	TERMINAL-RECEPTACLE (14-GA TO 16-GA)	
		1	**100-5041**	4	TERMINAL-RECEPTACLE (18-GA TO 20-GA)	
		1	**111-6793**	3	TERMINAL-RECEPTACLE	
E		1	**119-3662**		TUBE-HEAT SHRINK (10.85-MM DIA) (59-CM)	
E		1	**125-7874**		TUBE-HEAT SHRINK (5.72-MM DIA) (205-CM)	
E		1	**125-7875**		TUBE-HEAT SHRINK (7.44-MM DIA) (50-CM)	
	36	2	**293-6135**	1	COVER	
	37	2	**295-2665**	1	FILM-FUSE/RELAY (IDENTIFICATION)	
	38	1	**302-2182**	1	BRACKET	
	39	2	**170-9360**	1	GROMMET	
	40	2	**204-6101**	4	WASHER-HARD (5.3X10X1-MM THK)	
	41	1	**3S-2093**	9	STRAP-CABLE	
	42	2	**4B-4863**	1	WASHER (4.7X11X1.2-MM THK)	
	43	1	**4P-7581**	1	CLIP (LADDER)	
	44	1,2	**4P-8134**	4	CLIP (LADDER)	
M	45	1	**5C-2890**	1	NUT (M6X1-THD)	
M	46	1	**5C-9553**	1	BOLT (M6X1X16-MM)	
	47	2	**5P-4115**	4	WASHER-HARD (7.2X19X2-MM THK)	
	48	1	**5P-4116**	1	WASHER-HARD (8.8X20.5X2-MM THK)	

290-8171 **PANEL GP-INSTRUMENT** *(contd.)* **i03627159**

NOTE	REF NO	GRAPHIC REF	PART NUMBER	QTY	PART NAME 1 2 3 4 5 6 (PRODUCT LEVEL)	SEE PAGE
M	49	2	**6V-8837**	1	BOLT (M6X1X16-MM)	
	50	1,2	**8T-4121**	4	WASHER-HARD (11X21X2.5-MM THK)	
M	51	2	**8T-4133**	2	NUT (M10X1.5-THD)	
M	52	1	**8T-4137**	2	BOLT (M10X1.5X20-MM)	
M	53	1	**8T-4189**	3	BOLT (M8X1.25X20-MM)	
M	54	1	**8T-4199**	2	BOLT (M8X1.25X12-MM)	
	55	1,2	**8T-4205**	6	WASHER-HARD (7.2X14.5X2-MM THK)	
	56	1	**8T-4224**	4	WASHER-HARD (8.8X16X2-MM THK)	
M	57	2	**8T-9405**	1	BOLT-SOCKET HEAD (M4X0.7X16-MM)	
M	58	2	**9X-1046**	4	SCREW (M4X0.7X18-MM)	
M	59	2	**9X-2042**	5	SCREW-TRUSS HEAD (M6X1X12-MM)	
M	60	2	**9X-2044**	2	SCREW-TRUSS HEAD (M6X1X16-MM)	
M	61	2	**9X-2045**	2	SCREW-TRUSS HEAD (M6X1X20-MM)	
E	62	2	**103-2543**		SEAL (3-CM)	

B-USE AS REQUIRED
D-ORDER BY THE METER
E-ORDER BY THE CENTIMETER
M-METRIC PART
Y-SEPARATE ILLUSTRATION

290-8171 **PANEL GP-INSTRUMENT** *(contd.)* **i03627159**

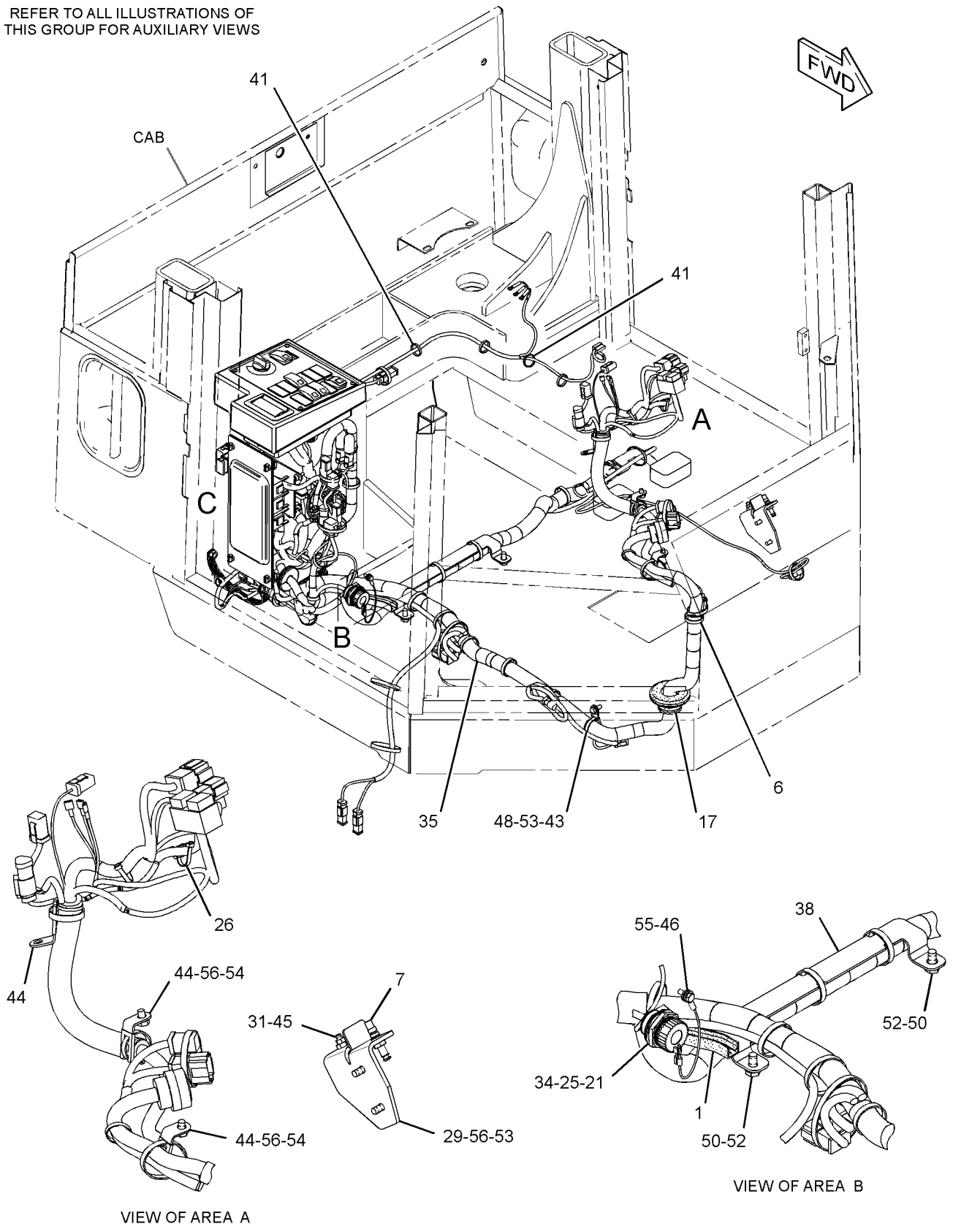

GRAPHIC #1 g01827313

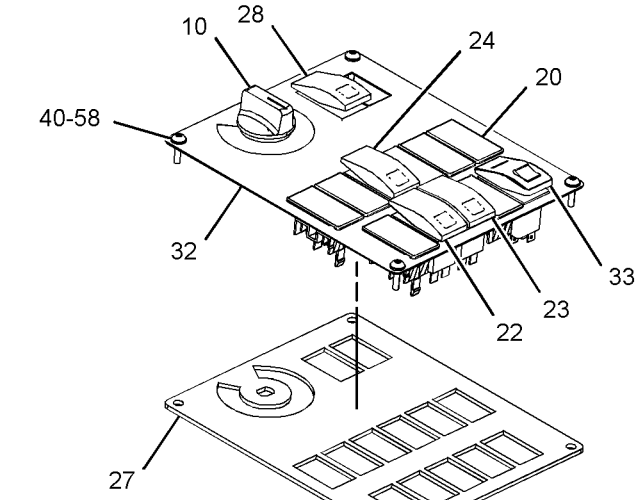

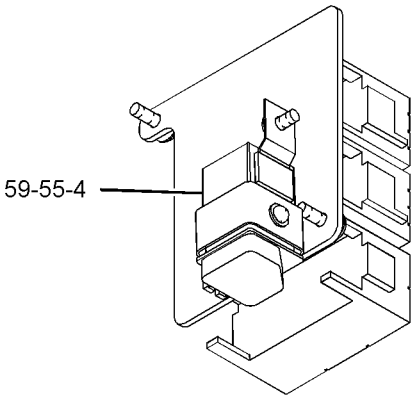

VIEW OF AREA D
(HARNESS REMOVED FOR CLARITY)

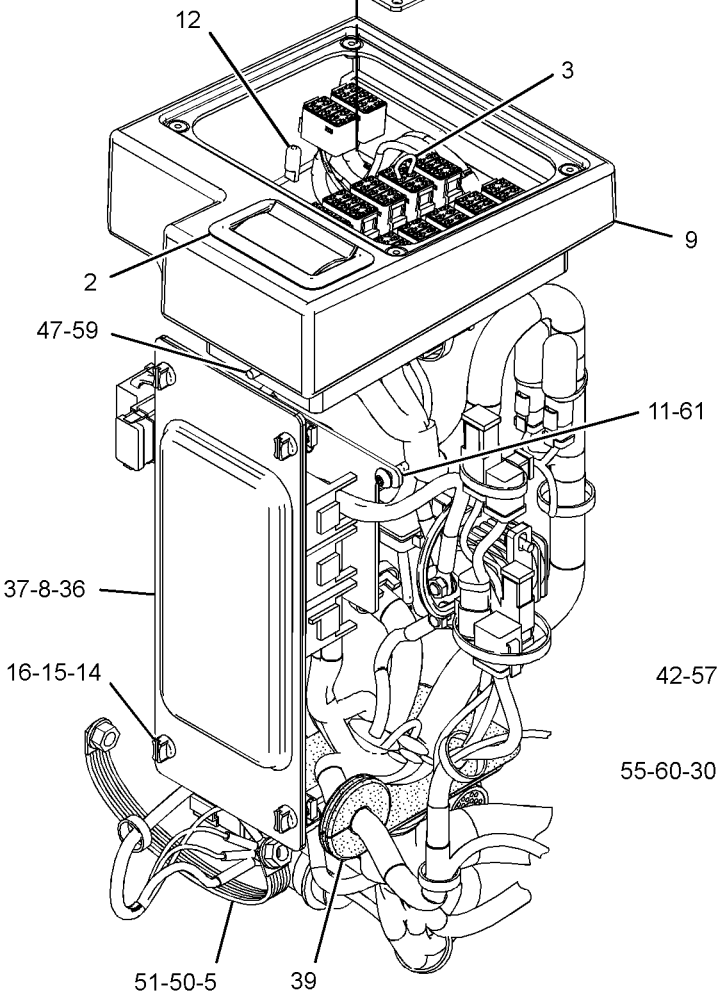

VIEW OF AREA C
(EXPLODED)

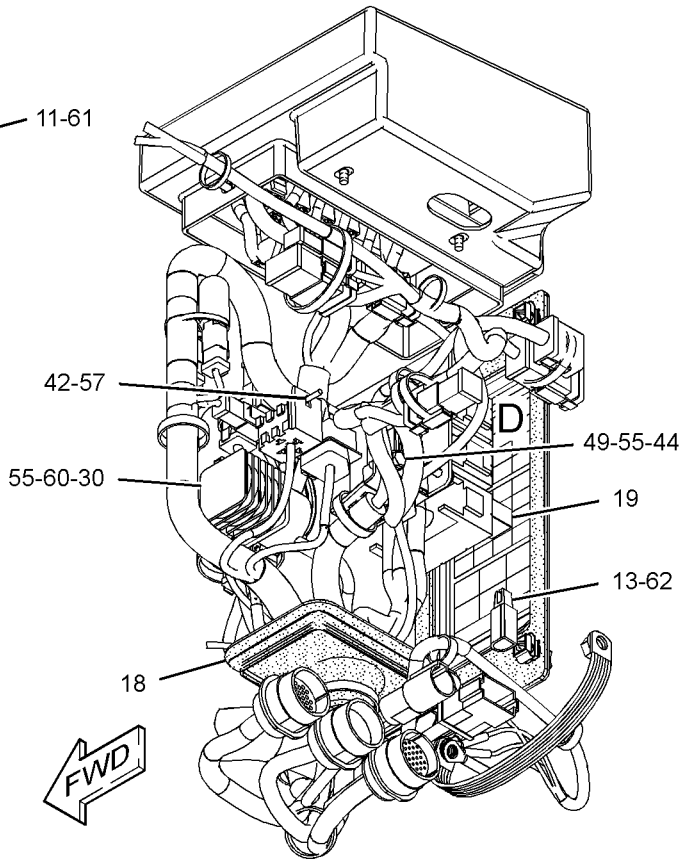

GRAPHIC #2 **<END>** g01827314

OPERATOR STATION

290-8174 PANEL GP-INSTRUMENT–OPEN ROPS

S/N: KLN1-UP
PART OF 290-8186 OPERATOR AR-OPEN ROPS
AN ATTACHMENT

SMCS-7451 **i03538525**

NOTE	REF NO	GRAPHIC REF	PART NUMBER	QTY	PART NAME 1 2 3 4 5 6 (PRODUCT LEVEL)	SEE PAGE
E	1	2	**126-8472**		SEAL (14-CM)	
D	2	2	**8T-3425**		CHANNEL-TRIM (10-M)	
	3	2	**154-5629**	1	ASHTRAY AS	
B	4	2	**2G-5298**	1	WIRE AS	
	5	2	**3E-5239**	1	RELAY AS (24-VOLT) (FRONT FLOODLIGHTS)	
	6	2	**6Y-6584**	1	STRAP AS-GROUND	
	7	1	**105-8034**	1	SWITCH AS-LIMIT (BRAKE PEDAL)	
	8	2	**107-6013**	1	SEAL	
	9	2	**107-6021**	1	HOUSING AS	
	10	2	**116-7471**	1	PULLER-MINIFUSE	
	11	2	**117-3787**	4	KNOB	
	12	2	**117-3788**	4	RECEPTACLE (CLIP)	
	13	2	**117-3789**	4	RETAINER (STUD)	
	14	1	**118-7362**	1	GROMMET-SPLIT	
	15	2	**135-2602**	1	FILM-CONTROLS (FUSE, RELAY PANEL)	
	16	2	**148-5689**	1	GROMMET-SPLIT	
	17	2	**158-5089**	1	RELAY AS (24-VOLT) (ALARM)	
	18	2	**160-6520**	1	PLATE	
B	19	2	**165-0311**	7	PLUG	
	20	1	**180-9900**	1	CAP AS	
		1	**5P-7958**	1	SLEEVE-CABLE SPLICE	
		1	**8C-6354**	1	CAP-RECEPTACLE	
		1	**179-9392**	1	LANYARD	
	21	2	**195-0916**	1	SWITCH AS-ROCKER (THROTTLE LOCK SET, RESUME)	
		1	**111-7899**	1	GASKET	
	22	2	**195-0917**	1	SWITCH AS-ROCKER (THROTTLE LOCK ON, OFF)	
	23	2	**195-0921**	1	SWITCH AS-ROCKER (KICKOUT ON, OFF)	
		1	**111-7899**	1	GASKET	
	25	1	**203-9007**	1	NUT (1-1/2-18-THD)	
	26	1	**206-1345**	2	STRAP-CABLE	
	30	2	**236-4232**	1	PLATE AS	
	31	1	**238-4864**	1	BRACKET AS	
M		1	**159-9539**	1	NUT-WELD (M6X1-THD)	
Y	32	2	**241-8368**	1	SWITCH GP-MAGNETIC (24-VOLT) (MAIN RELAY)	169
	33	1	**245-9088**	1	BUMPER	
	34	2	**266-7620**	1	SWITCH AS-ROCKER (HYDRAULIC LOCKOUT)	
		1	**111-7899**	1	GASKET	
	35	1	**270-2679**	1	LOCKWASHER	
	36	1	**289-9171**	1	HARNESS AS-CAB	
	37	2	**293-6135**	1	COVER	
	38	2	**295-2665**	1	FILM-FUSE/RELAY	
	39	2	**302-2182**	1	BRACKET	
	40	1	**7K-1181**	39	STRAP-CABLE	
	41	2	**170-9360**	1	GROMMET	
	42	2	**204-6101**	4	WASHER-HARD (5.3X10X1-MM THK)	
	43	2	**4B-4863**	1	WASHER (4.7X11X1.2-MM THK)	
	44	1	**4P-7581**	1	CLIP	
	45	1,2	**4P-8134**	4	CLIP	
M	46	1	**5C-2890**	1	NUT (M6X1-THD)	
M	47	1	**5C-9553**	1	BOLT (M6X1X16-MM)	
	48	2	**5P-4115**	4	WASHER-HARD (7.2X19X2-MM THK)	
	49	1	**5P-4116**	1	WASHER-HARD (8.8X20.5X2-MM THK)	
M	50	2	**6V-8837**	1	BOLT (M6X1X16-MM)	
	51	2	**8T-4121**	4	WASHER-HARD (11X21X2.5-MM THK)	
M	52	2	**8T-4133**	2	NUT (M10X1.5-THD)	

290-8174 **PANEL GP-INSTRUMENT** *(contd.)* **i03538525**

NOTE	REF NO	GRAPHIC REF	PART NUMBER	QTY	PART NAME 1 2 3 4 5 6 (PRODUCT LEVEL)	SEE PAGE
M	53	2	**8T-4137**	2	BOLT (M10X1.5X20-MM)	
M	54	1	**8T-4189**	3	BOLT (M8X1.25X20-MM)	
M	56	1	**8T-4199**	2	BOLT (M8X1.25X12-MM)	
	57	1,2	**8T-4205**	6	WASHER-HARD (7.2X14.5X2-MM THK)	
	58	1	**8T-4224**	4	WASHER-HARD (8.8X16X2-MM THK)	
M	59	2	**8T-9405**	1	BOLT-SOCKET HEAD (M4X0.7X16-MM)	
M	60	2	**9X-1046**	4	SCREW (M4X0.7X18-MM)	
M	61	2	**9X-2042**	5	SCREW-TRUSS HEAD (M6X1X12-MM)	
M	62	2	**9X-2044**	2	SCREW-TRUSS HEAD (M6X1X16-MM)	
M	63	2	**9X-2045**	2	SCREW-TRUSS HEAD (M6X1X20-MM)	
E	64	2	**103-2543**		SEAL (3-CM)	
	65	1	**3S-2093**	6	STRAP-CABLE	

B-USE AS REQUIRED
D-ORDER BY THE METER
E-ORDER BY THE CENTIMETER
M-METRIC PART
Y-SEPARATE ILLUSTRATION

REFER TO ALL ILLUSTRATIONS OF THIS GROUP FOR AUXILIARY VIEWS

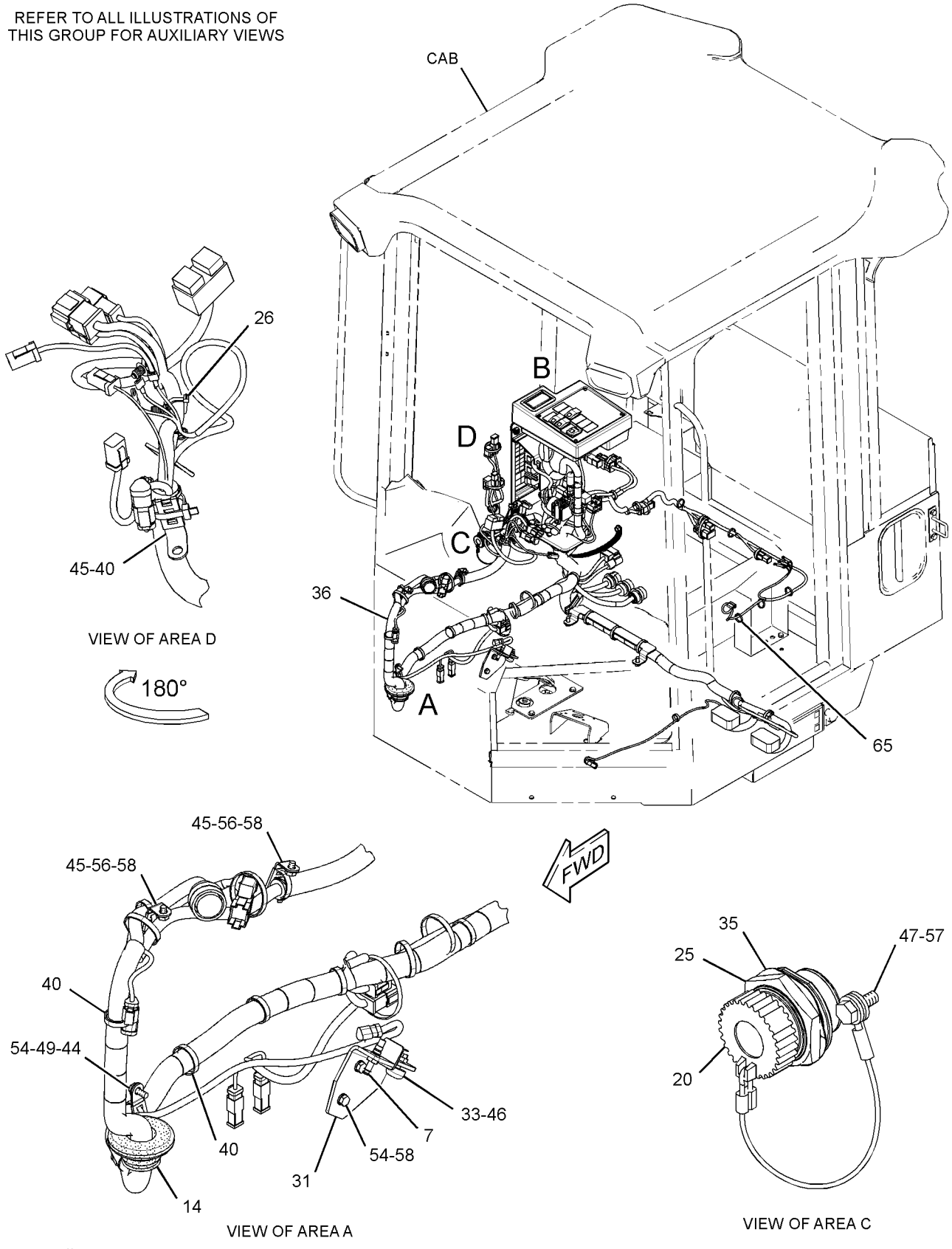

GRAPHIC #1

g01628853

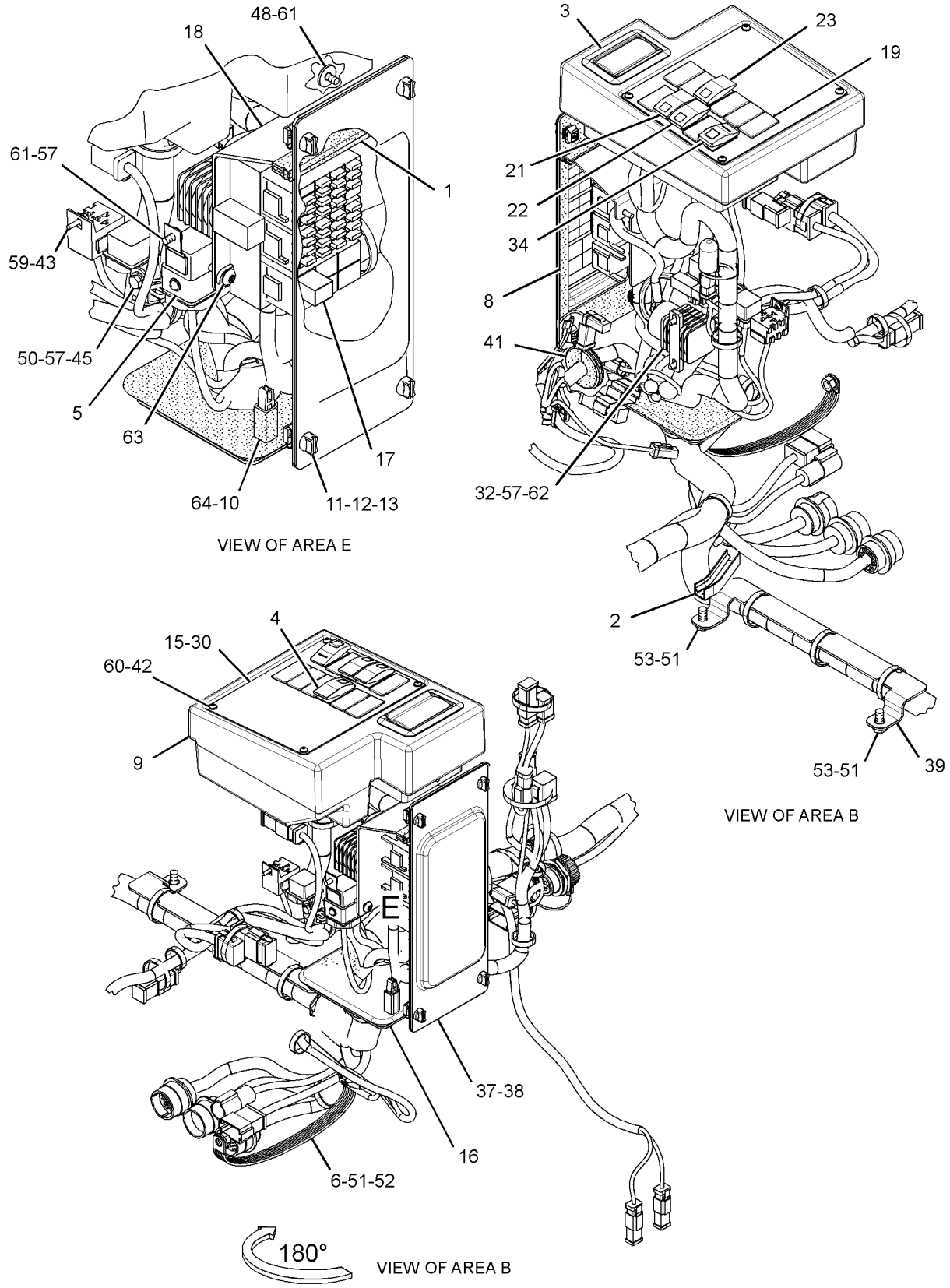

GRAPHIC #2 **<END>** g01628854

OPERATOR STATION

311-8502 PANEL GP-INSTRUMENT

S/N: KLN1-UP
PART OF 310-9954 OPERATOR AR
AN ATTACHMENT

SMCS-7451 **i03627193**

NOTE	REF NO	GRAPHIC REF	PART NUMBER	QTY	PART NAME 1 2 3 4 5 6 (PRODUCT LEVEL)	SEE PAGE
E	1	2	**126-8472**		SEAL (14-CM)	
D	2	2	**8T-3425**		CHANNEL-TRIM (0.1-M)	
B	3	2	**2G-5298**	1	WIRE AS	
	4	2	**3E-5239**	1	RELAY AS (24-VOLT) (FRONT FLOODLIGHTS)	
	5	1	**6Y-6584**	1	STRAP AS-GROUND	
B	6	2	**7K-1181**	48	STRAP-CABLE	
	7	2	**105-8034**	1	SWITCH AS-LIMIT (BRAKE PEDAL)	
	8	2	**107-6013**	1	SEAL	
	9	2	**116-7471**	1	PULLER-MINIFUSE	
	10	2	**117-3787**	4	KNOB	
	11	2	**117-3788**	4	RECEPTACLE	
	12	2	**117-3789**	4	RETAINER	
	13	1	**118-7362**	1	GROMMET-SPLIT	
	14	2	**135-2602**	1	FILM-CONTROLS (FUSE, RELAY PANEL)	
	15	2	**148-5689**	1	GROMMET-SPLIT	
	16	2	**158-5089**	1	RELAY AS (24-VOLT) (ALARM)	
	17	2	**160-6520**	1	PLATE	
B	18	2	**165-0311**	7	PLUG	
	19	1	**180-9900**	1	CAP AS	
		1	**5P-7958**	1	SLEEVE-CABLE SPLICE	
		1	**8C-6354**	1	CAP-RECEPTACLE	
		1	**179-9392**	1	LANYARD	
	20	2	**195-0916**	1	SWITCH AS-ROCKER (THROTTLE LOCK SET, RESUME)	
		1	**111-7899**	1	GASKET	
	21	2	**195-0917**	1	SWITCH AS-ROCKER (THROTTLE LOCK ON, OFF)	
	22	2	**195-0921**	1	SWITCH AS-ROCKER (KICKOUT ON, OFF)	
		1	**111-7899**	1	GASKET	
	23	1	**200-6345**	1	MOUNT (DUAL SWIVEL)	
	24	1	**203-9007**	1	NUT (1-1/2-18-THD)	
	25	1	**206-1345**	2	STRAP-CABLE	
	26	2	**211-0052**	3	NUT (11/16-18-THD)	
	27	1	**226-2951**	1	BRACKET AS	
	28	1	**226-3378**	1	PLATE AS	
	29	2	**236-4232**	1	PLATE AS	
	30	2	**238-4864**	1	BRACKET AS	
M		2	**159-9539**	1	NUT-WELD (M6X1-THD)	
Y	31	2	**241-8368**	1	SWITCH GP-MAGNETIC (24-VOLT) (MAIN RELAY)	169
	32	2	**245-9088**	1	BUMPER	
	33	2	**266-7620**	1	SWITCH AS-ROCKER (HYDRAULIC LOCKOUT)	
		1	**111-7899**	1	GASKET	
	34	1	**270-2679**	1	LOCKWASHER	
	35	1	**289-9171**	1	HARNESS AS-CAB	
		1	**116-4159**	1	BASE	
		1	**112-9609**	1	BLOCK-MICRORELAY	
		1	**124-9636**	2	BLOCK-MINIFUSE	
		1	**123-7615**	1	CONNECTOR	
		1	**113-8490**	19	FUSE (10-AMPERE)	
		1	**113-8491**	6	FUSE (15-AMPERE)	
		1	**113-8492**	3	FUSE (20-AMPERE)	
		1	**113-8493**	2	FUSE (25-AMPERE)	
		1	**111-6795**	1	HOUSING-RELAY	
		1	**112-9610**	2	LOCK-MICRORELAY	
		1	**124-9637**	2	LOCK-MINIFUSE	
		1	**111-6816**	1	LOCK	
		1	**9W-0852**	3	PIN-CONNECTOR (14-GA)	

NOTE	REF NO	GRAPHIC REF	PART NUMBER	QTY	PART NAME 1 2 3 4 5 6 (PRODUCT LEVEL)	SEE PAGE
		1	**8N-1546**	1	PIN-CONNECTOR (6-GA)	
		1	**7X-6222**	1	PLUG AS-CONNECTOR (24-PIN)	
M		1	**3E-8558**	1	BOLT (M5X0.8X39.37-MM)	
		1	**3E-4367**	1	RING-RETAINING	
		1	**9X-3265**	2	SEAL-CONNECTOR (24-PIN)	
		1	**9X-1054**	2	PLUG AS-CONNECTOR (4-PIN)	
		1	**8T-8737**	157	PLUG-SEAL	
		1	**102-8802**	8	KIT-RECEPTACLE (2-PIN)	
		1	**102-8803**	4	KIT-RECEPTACLE (3-PIN)	
		1	**102-8804**	2	KIT-RECEPTACLE (4-PIN)	
			102-8806	2	KIT-RECEPTACLE (8-PIN)	
		1	**102-8801**	3	KIT-RECEPTACLE (12-PIN)	
		1	**102-8805**	2	KIT-RECEPTACLE (6-PIN)	
					(EACH RECEPTACLE KIT INCLUDES RECEPTACLE AS & WEDGE)	
		1	**127-5484**	1	RECEPTACLE AS-CONNECTOR (1-PIN)	
		1	**9X-3402**	97	SOCKET-CONNECTOR (16-GA TO 18-GA)	
		1	**9W-0844**	19	SOCKET-CONNECTOR (14-GA)	
		1	**113-5183**	1	SOCKET-LAMP	
		1	**3S-2093**	3	STRAP-CABLE	
		1	**8L-8413**	74	STRAP-CABLE	
		1	**189-3158**	3	SUPPRESSOR-ARC	
		1	**128-4168**	3	TERMINAL AS	
					(EACH INCLUDES)	
		1	**6H-3592**	1	TERMINAL (6-GA TO 8-GA)	
E		1	**6V-9023**		TUBE-HEAT SHRINK (12.7-MM DIA) (4-CM)	
		1	**2L-8069**	1	TERMINAL (2-GA TO 10-GA)	
		1	**2L-8079**	3	TERMINAL (14-GA TO 16-GA)	
		1	**6V-0491**	2	TERMINAL-BLADE (14-GA TO 18-GA)	
		1	**091-2436**	59	TERMINAL-BLADE (18-GA TO 22-GA)	
		1	**104-1995**	14	TERMINAL-BLADE (14-GA TO 18-GA)	
		1	**112-9611**	7	TERMINAL-BLADE	
		1	**112-9612**	10	TERMINAL-BLADE	
		1	**116-4160**	6	TERMINAL-BLADE (12-GA TO 14-GA)	
		1	**116-4161**	22	TERMINAL-BLADE (16-GA TO 18-GA)	
		1	**113-5100**	4	TERMINAL-BUS	
		1	**127-5460**	3	TERMINAL-BUS	
		1	**113-5184**	2	TERMINAL-RECEPTACLE (16-GA TO 18-GA) (POWER TRAIN)	
		1	**3E-9179**	3	TERMINAL-RECEPTACLE (14-GA TO 18-GA)	
		1	**9X-1056**	4	TERMINAL-RECEPTACLE (14-GA TO 16-GA)	
		1	**100-5041**	4	TERMINAL-RECEPTACLE (18-GA TO 20-GA)	
		1	**111-6793**	3	TERMINAL-RECEPTACLE	
E		1	**119-3662**		TUBE-HEAT SHRINK (10.85-MM DIA) (59-CM)	
E		1	**125-7874**		TUBE-HEAT SHRINK (5.72-MM DIA) (205-CM)	
E		1	**125-7875**		TUBE-HEAT SHRINK (7.44-MM DIA) (50-CM)	
	36	2	**293-6135**	1	COVER	
	37	2	**295-2665**	1	FILM-FUSE/RELAY	
B	38	2	**302-2182**	1	BRACKET	
	39	2	**170-9360**	1	GROMMET	
	40	1,2	**204-6101**	4	WASHER-HARD (5.3X10X1-MM THK)	
	41	2	**4B-4863**	1	WASHER (4.7X11X1.2-MM THK)	
	42	1	**4P-7581**	1	CLIP	
	43	1,2	**4P-8134**	4	CLIP	
M	44	2	**5C-2890**	1	NUT (M6X1-THD)	
M	45	1	**5C-9553**	1	BOLT (M6X1X16-MM)	
	46	1	**5P-4116**	1	WASHER-HARD (8.8X20.5X2-MM THK)	
M	47	2	**6V-8837**	1	BOLT (M6X1X16-MM)	
	48	1,2	**8T-4121**	6	WASHER-HARD (11X21X2.5-MM THK)	
M	49	1	**8T-4133**	2	NUT (M10X1.5-THD)	

311-8502 **PANEL GP-INSTRUMENT** *(contd.)* **i03627193**

NOTE	REF NO	GRAPHIC REF	PART NUMBER	QTY	PART NAME 1 2 3 4 5 6 (PRODUCT LEVEL)	SEE PAGE
M	50	2	**8T-4137**	2	BOLT (M10X1.5X20-MM)	
M	51	1,2	**8T-4189**	3	BOLT (M8X1.25X20-MM)	
M	52	1	**8T-4195**	2	BOLT (M10X1.5X30-MM)	
M	53	1	**8T-4199**	2	BOLT (M8X1.25X12-MM)	
	54	1,2	**8T-4205**	6	WASHER-HARD (7.2X14.5X2-MM THK)	
	55	1,2	**8T-4224**	4	WASHER-HARD (8.8X16X2-MM THK)	
M	56	2	**8T-9405**	1	BOLT-SOCKET HEAD (M4X0.7X16-MM)	
M	57	2	**9X-1046**	4	SCREW (M4X0.7X18-MM)	
M	58	2	**9X-2042**	1	SCREW-TRUSS HEAD (M6X1X12-MM)	
M	59	2	**9X-2044**	2	SCREW-TRUSS HEAD (M6X1X16-MM)	
M	60	2	**9X-2045**	2	SCREW-TRUSS HEAD (M6X1X20-MM)	
E	61	2	**103-2543**		SEAL (3-CM)	

B-USE AS REQUIRED
D-ORDER BY THE METER
E-ORDER BY THE CENTIMETER
M-METRIC PART
Y-SEPARATE ILLUSTRATION

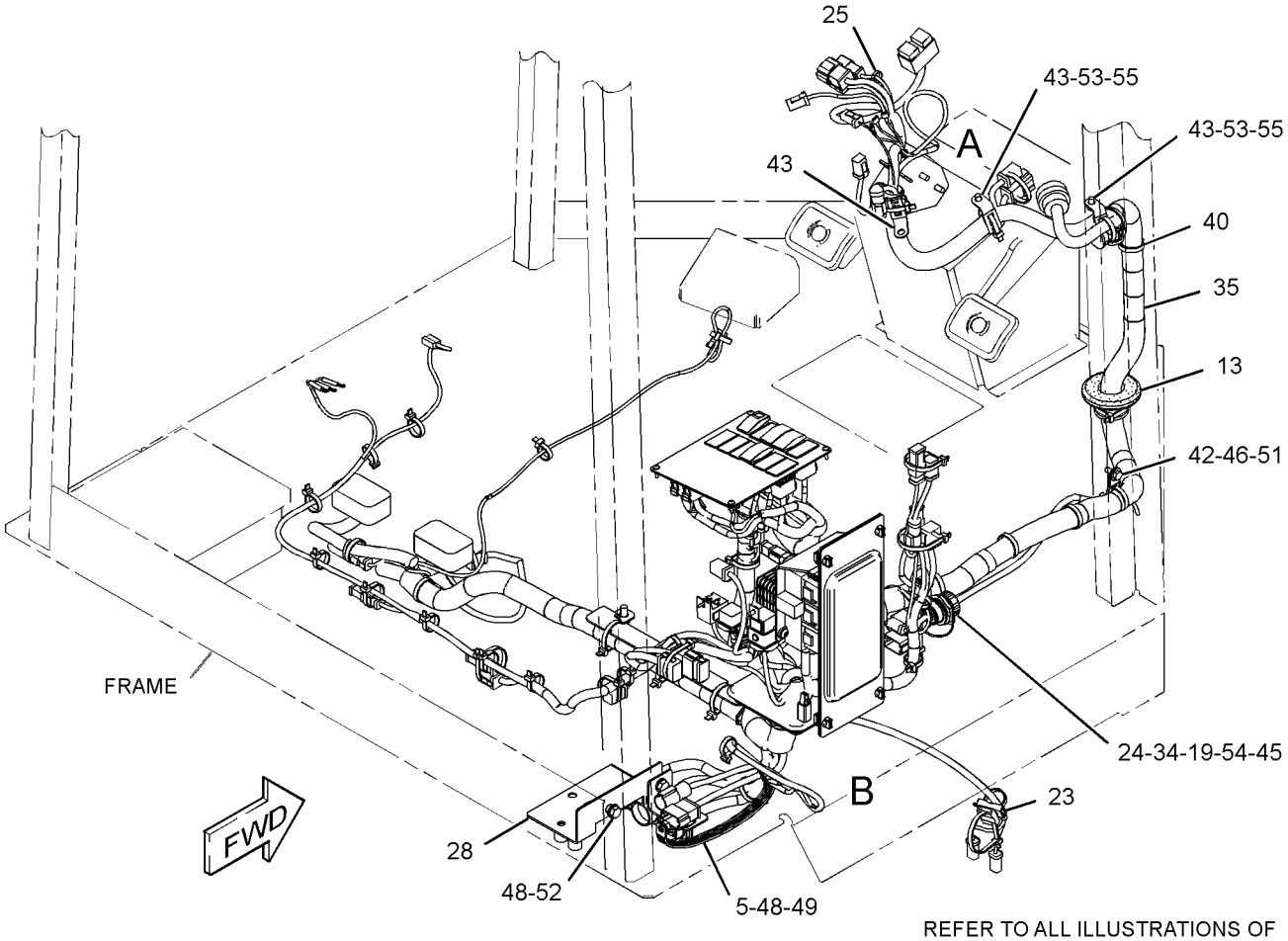

REFER TO ALL ILLUSTRATIONS OF THIS GROUP FOR AUXILIARY VIEWS

GRAPHIC #1

g01627527

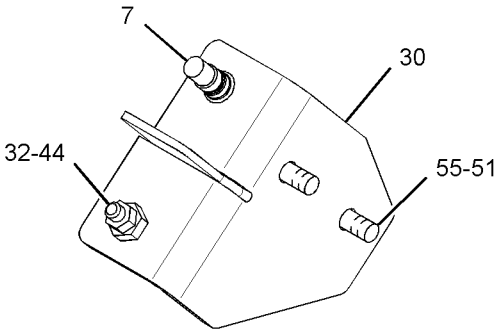

VIEW OF AREA A
(WIRING HARNESS
REMOVED FOR CLARITY)

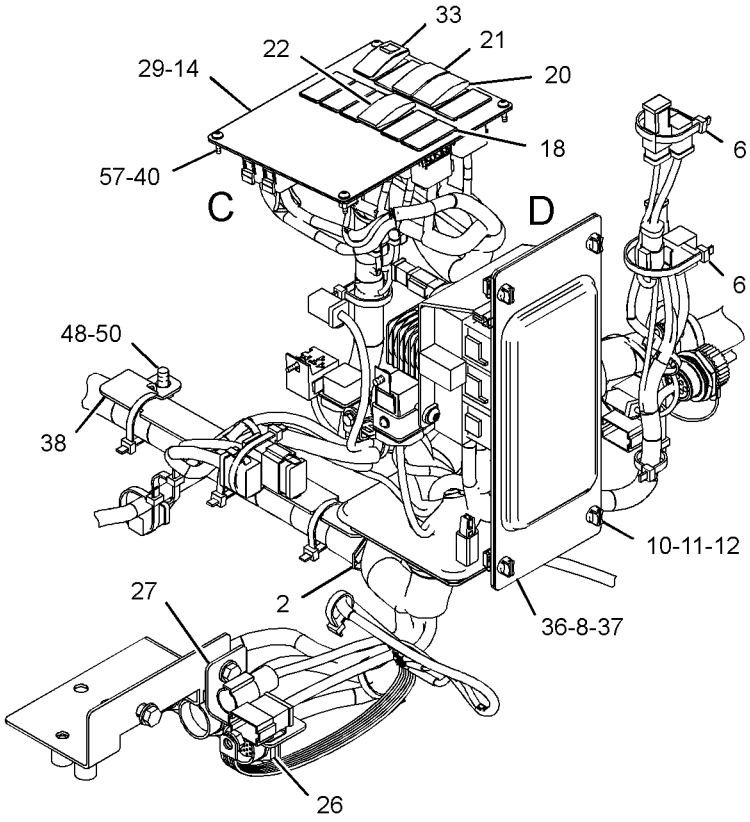

VIEW OF AREA B

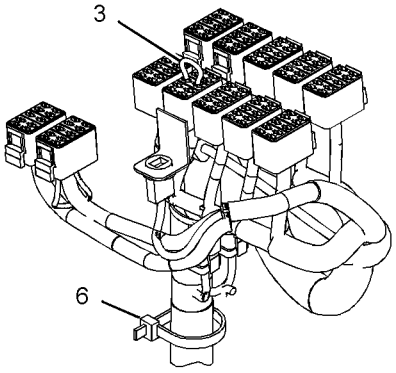

VIEW OF AREA C
(COVER REMOVED FOR CLARITY)

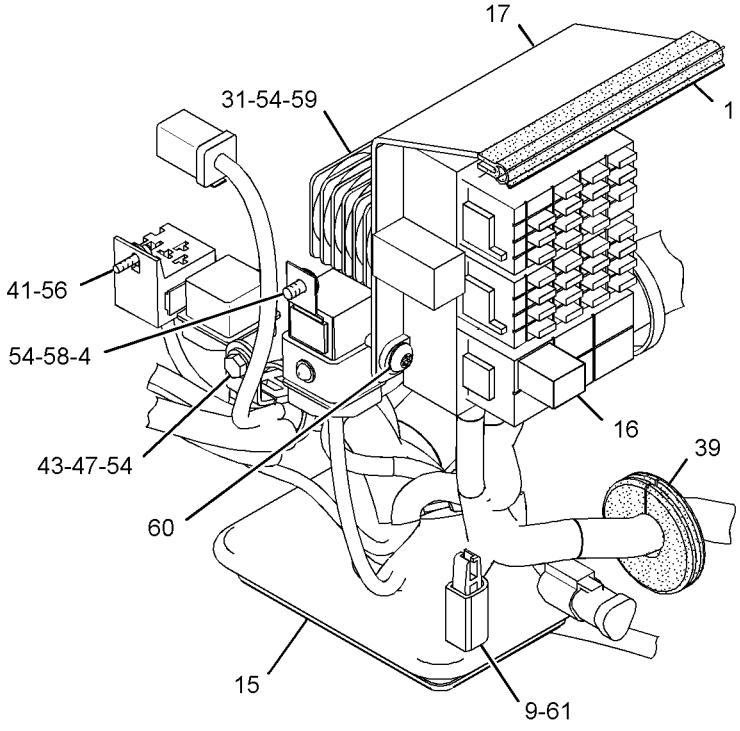

VIEW OF AREA D
(COVER REMOVED FOR CLARITY)

GRAPHIC #2 **<END>** g01627528

OPERATOR STATION

174-9730 PEDAL GP-BRAKE

S/N: KLN1-UP

PART OF 290-8501, 311-8693 ROPS GP-ENCLOSED, 290-8177 ROPS GP-OPEN

AN ATTACHMENT

SMCS-4269, 4290 **i01860062**

NOTE	REF NO	GRAPHIC REF	PART NUMBER	QTY	PART NAME 1 2 3 4 5 6 (PRODUCT LEVEL)	SEE PAGE
	1	1	**1B-8723**	1	KEY-WOODRUFF	
	2	1	**6K-8088**	4	BEARING-ROLLER	
	3	1	**8E-8300**	2	DISC-THRUST	
	4	1	**8R-6904**	2	TREAD-RUBBER	
	5	1	**107-6056**	1	PEDAL AS-LH	
	6	1	**111-0132**	1	PEDAL AS-RH	
	7	1	**174-9725**	1	SUPPORT AS	
M		1	**159-9539**	2	NUT-WELD (M6X1-THD)	
M		1	**159-9540**	2	NUT-WELD (M8X1.25-THD)	
	8	1	**8T-4121**	1	WASHER-HARD (11X21X2.5-MM THK)	
M	9	1	**8T-4185**	1	BOLT (M10X1.5X50-MM)	

M-METRIC PART

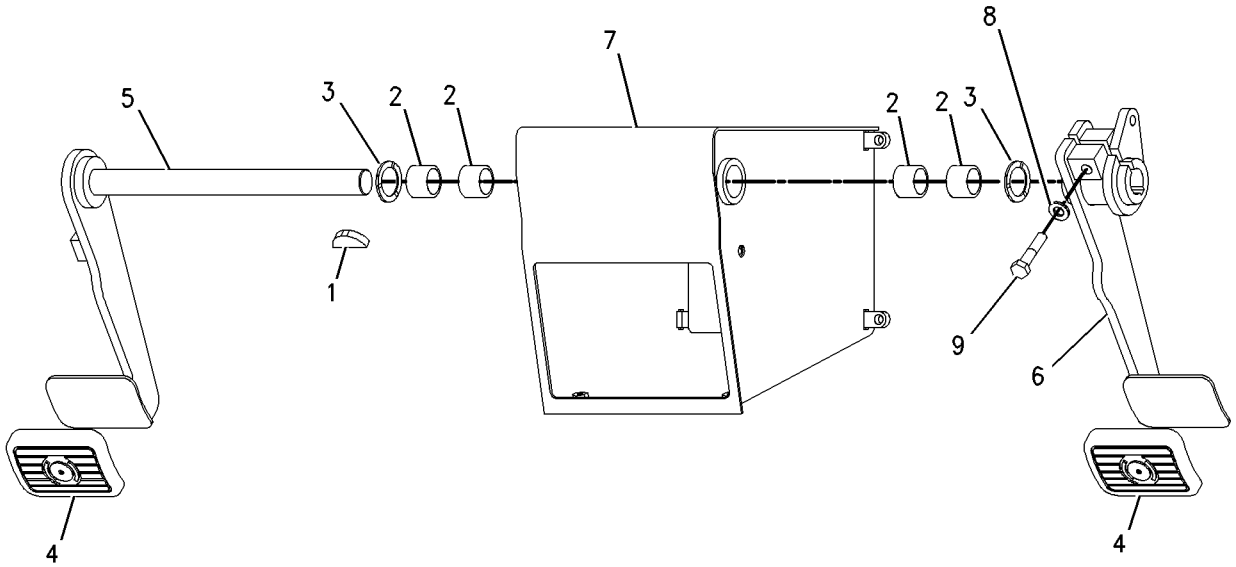

GRAPHIC #1 **<END>** g00748414

190-4700 PEDAL GP-GOVERNOR

S/N: KLN1-UP
PART OF 190-4405 OPERATOR AR
AN ATTACHMENT

SMCS-1276 **i02978726**

NOTE	REF NO	GRAPHIC REF	PART NUMBER	QTY	PART NAME 1 2 3 4 5 6 (PRODUCT LEVEL)	SEE PAGE
CY	1	1	**243-0061**	1	PEDAL GP-GOVERNOR	590
M	2	1	**9X-2045**	3	SCREW-TRUSS HEAD (M6X1X20-MM)	

C-CHANGE FROM PREVIOUS TYPE
M-METRIC PART
Y-SEPARATE ILLUSTRATION

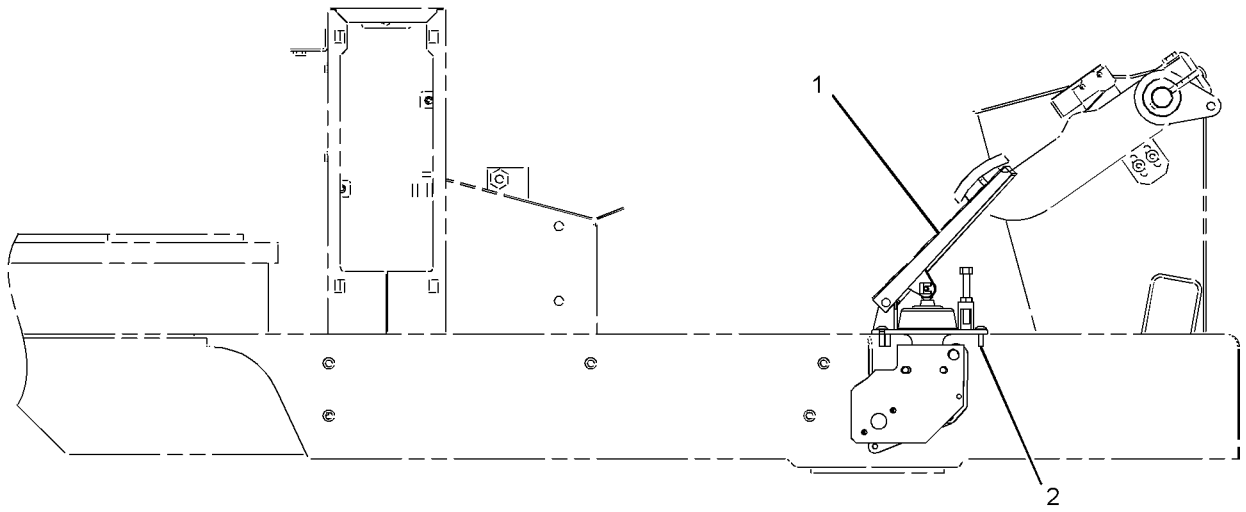

RIGHT SIDE VIEW

GRAPHIC #1 **<END>** g01177028

OPERATOR STATION

243-0061 PEDAL GP-GOVERNOR

S/N: KLN1-UP
PART OF 190-4700 PEDAL GP-GOVERNOR
AN ATTACHMENT

SMCS-1276 **i02102405**

NOTE	REF NO	GRAPHIC REF	PART NUMBER	QTY	PART NAME 1 2 3 4 5 6 (PRODUCT LEVEL)	SEE PAGE
M	1	1	**3C-4922**	1	SCREW-HEX HEAD	
	2	1	**243-0062**	1	KIT-REPAIR (GOVERNOR PEDAL)	
					(INCLUDES SHAFT, CLIPS & BEARINGS)	
Y	3	1	**160-2443**	1	SENSOR GP-POSITION (ROTARY)	158
	4	1	**243-0063**	1	BOOT	
	5	1	**254-7913**	1	SPRING	
	6	1	**254-7914**	1	SPRING-TORSION	
M	7	1	**3C-3364**	1	NUT-HALF (M8X1.25-THD)	
	8	1	**3F-9556**	2	LOCKWASHER	
	9	1	**3K-8106**	1	SCREW-MACHINE (8-32X1.0-IN)	
	10	1	**6V-8186**	2	NUT-FULL (5/16-24-THD)	
	11	1	**8C-7508**	1	LOCKWASHER	
	12	1	**8T-0086**	2	LOCKWASHER	
	13	1	**8T-0328**	2	WASHER-HARD (5.5X10X1-MM THK)	
M	14	1	**8T-0352**	2	BOLT (M5X0.8X45-MM)	
	15	1	**8T-6902**	5	CLIP	
	16	1	**153-4816**	1	WASHER-HARD	
M	17	1	**162-6555**	2	LOCKNUT	

M-METRIC PART
Y-SEPARATE ILLUSTRATION

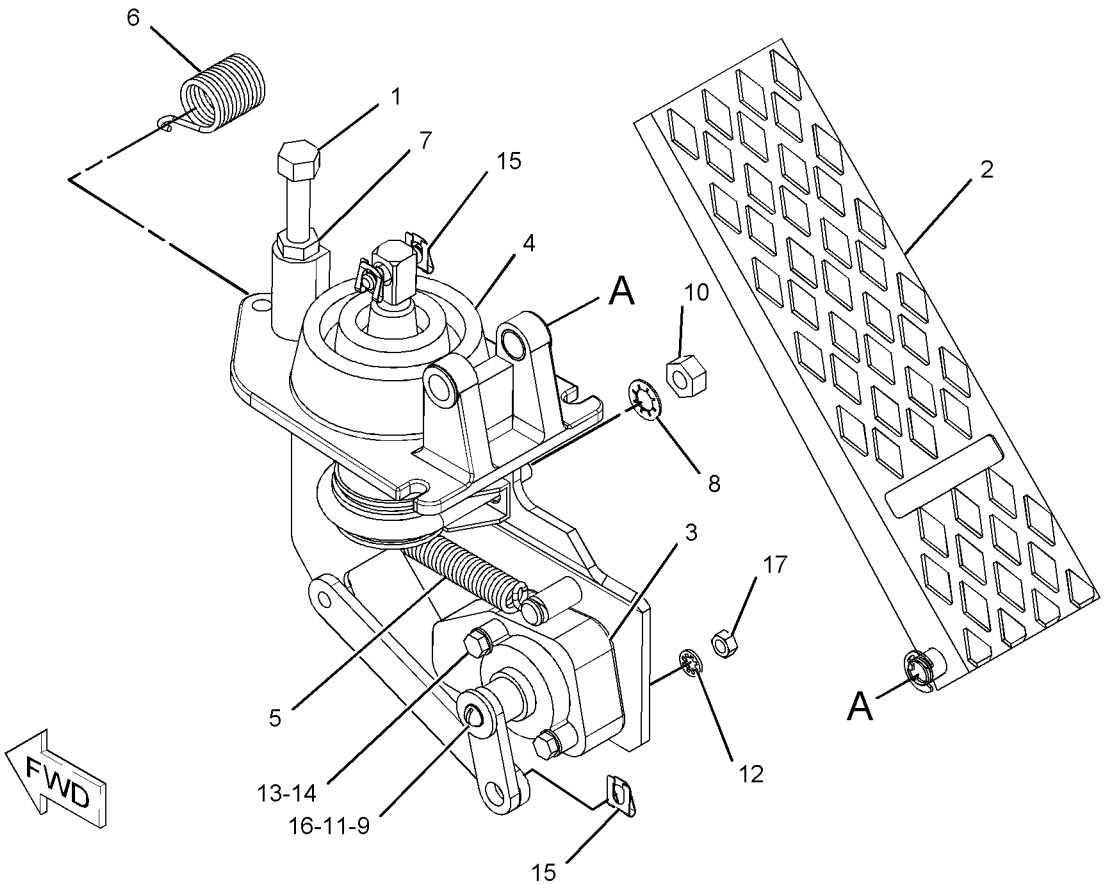

GRAPHIC #1 **<END>** g01089058

OPERATOR STATION

317-0720 PEDAL GP-GOVERNOR

S/N: KLN1-UP

PART OF 310-9953 CAB AR, 317-0770 OPERATOR AR, 317-0771 OPERATOR GP

AN ATTACHMENT

SMCS-1276 **i03627214**

NOTE	REF NO	GRAPHIC REF	PART NUMBER	QTY	PART NAME 1 2 3 4 5 6 (PRODUCT LEVEL)	SEE PAGE
	1	1	**7K-1181**	3	STRAP-CABLE	
	2	1	*262-5778*	1	PEDAL GP-GOVERNOR	
		1	**269-1983**	1	SENSOR GP-POSITION	
		1	**292-9802**	1	COVER	
	3	1	**311-7491**	1	SPACER	
		1	**290-7046**	4	INSERT	
	4	1	**317-4218**	1	HARNESS AS-SENSOR (GOVERNOR PEDAL)	
E		1	**232-0893**		CONDUIT-FLEXIBLE (6.2-MM ID) (51-CM)	
		1	**9X-3401**	3	PIN-CONNECTOR (16-GA TO 18-GA)	
					-OR-	
		1	**126-1767**	3	PIN-CONNECTOR (14-GA)	
		1	**230-4013**	1	PLUG AS-CONNECTOR (3-PIN)	
		1	**264-7030**	1	SEAL-CONNECTOR	
		1	**102-8803**	1	KIT-RECEPTACLE (3-PIN)	
					(INCLUDES RECEPTACLE AS & WEDGE)	
		1	**9X-3402**	3	SOCKET-CONNECTOR (16-GA TO 18-GA)	
E		1	**119-3662**		TUBE-HEAT SHRINK (10.85-MM DIA) (7-CM)	
M	5	1	**7Y-9099**	4	SCREW-TRUSS HEAD (M8X1.25X25-MM)	
	6	1	**9X-2038**	3	WASHER (7X19X2-MM THK)	
M	7	1	**9X-2045**	3	SCREW-TRUSS HEAD (M6X1X20-MM)	

E-ORDER BY THE CENTIMETER
M-METRIC PART

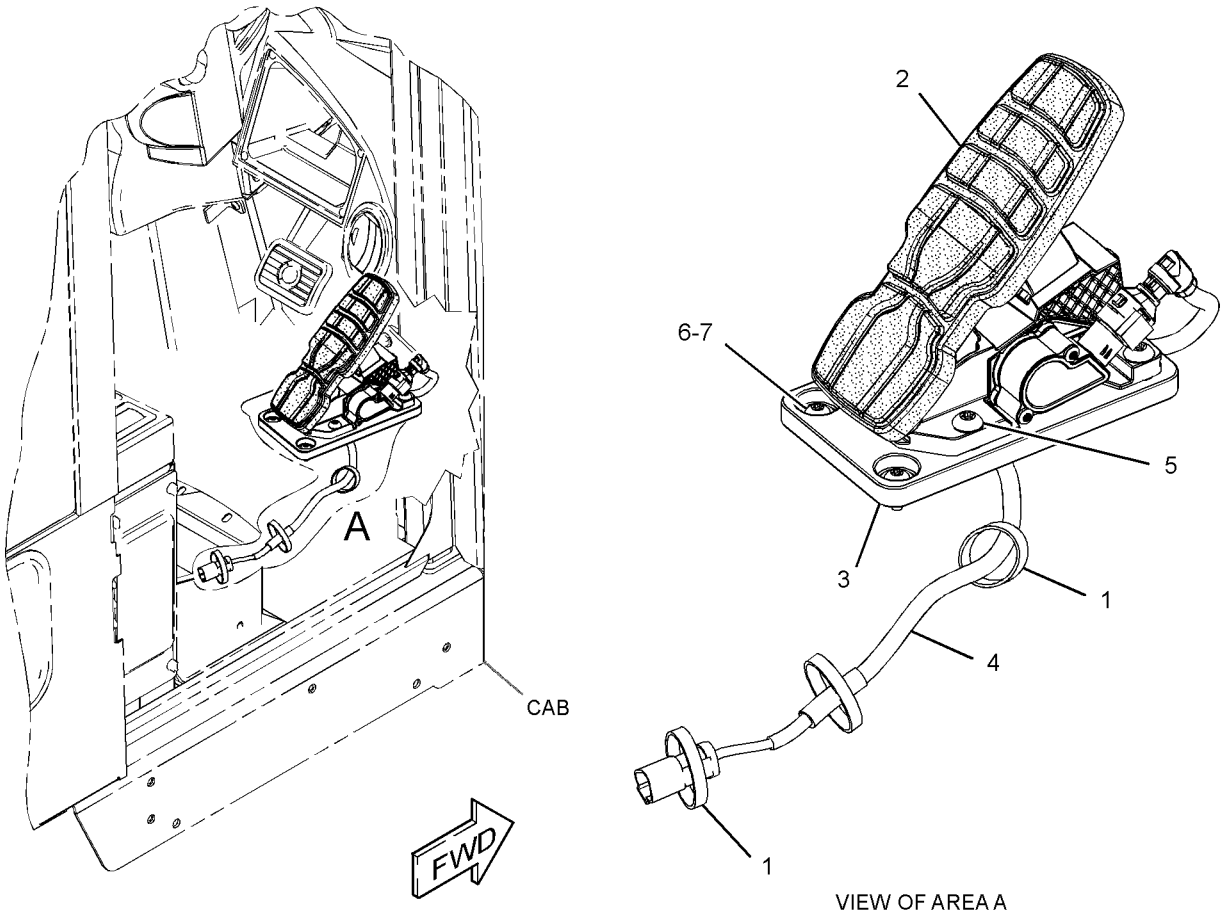

VIEW OF AREA A

GRAPHIC #1 **<END>** g01605653

OPERATOR STATION

263-9088 RADIO GP-COMMUNICATION–PRODUCT LINK 121SR

S/N: KLN1-UP

PART OF 320-2503 INSTALLATION GP-COMMUNICATION

AN ATTACHMENT

SMCS-733T **i03194501**

NOTE	PART NUMBER	QTY	PART NAME 1 2 3 4 5 6 (PRODUCT LEVEL)	SEE PAGE
	330-3408	1	SOFTWARE GP-COMMUNICATION (PRODUCT LINK 121SR)	

<END>

OPERATOR STATION

210-2270 RECLINER GP-SEAT

S/N: KLN1-UP
PART OF 178-0603 SEAT GP
AN ATTACHMENT

SMCS-7312 **i03626687**

NOTE	REF NO	GRAPHIC REF	PART NUMBER	QTY	PART NAME 1 2 3 4 5 6 (PRODUCT LEVEL)	SEE PAGE
	1	1	**177-1862**	1	BRACKET (SEAT BELT) (SEAT BELT)	
	2	1	**210-2262**	1	BRACKET AS (LH)	
	3	1	**210-2263**	1	BRACKET AS (RH)	
	4	1	**210-2266**	1	GEAR-LOCK (14-TEETH)	
	5	1	**293-2911**	1	SHAFT AS	
		1	**2L-5893**	2	PIN-SPRING	
		1	**170-8590**	1	SPRING	
	6	1	**217-7933**	1	LATCH	
	7	1	**236-5197**	1	SPRING	
	8	1	**031-0214**	1	BOLT-LOCKING (1/4-20X0.5-IN)	
	9	1	**101-2867**	1	WASHER-HARD (7.2X25X2-MM THK)	
	10	1	**4M-6425**	1	BOLT (5/16-18X1-IN)	
	11	1	**5M-2894**	1	WASHER-HARD (10.2X18.5X2.5-MM THK)	
	12	1	**5S-7383**	1	BOLT (3/8-16X1.75-IN)	
	13	1	**8T-4224**	1	WASHER-HARD (8.8X16X2-MM THK)	

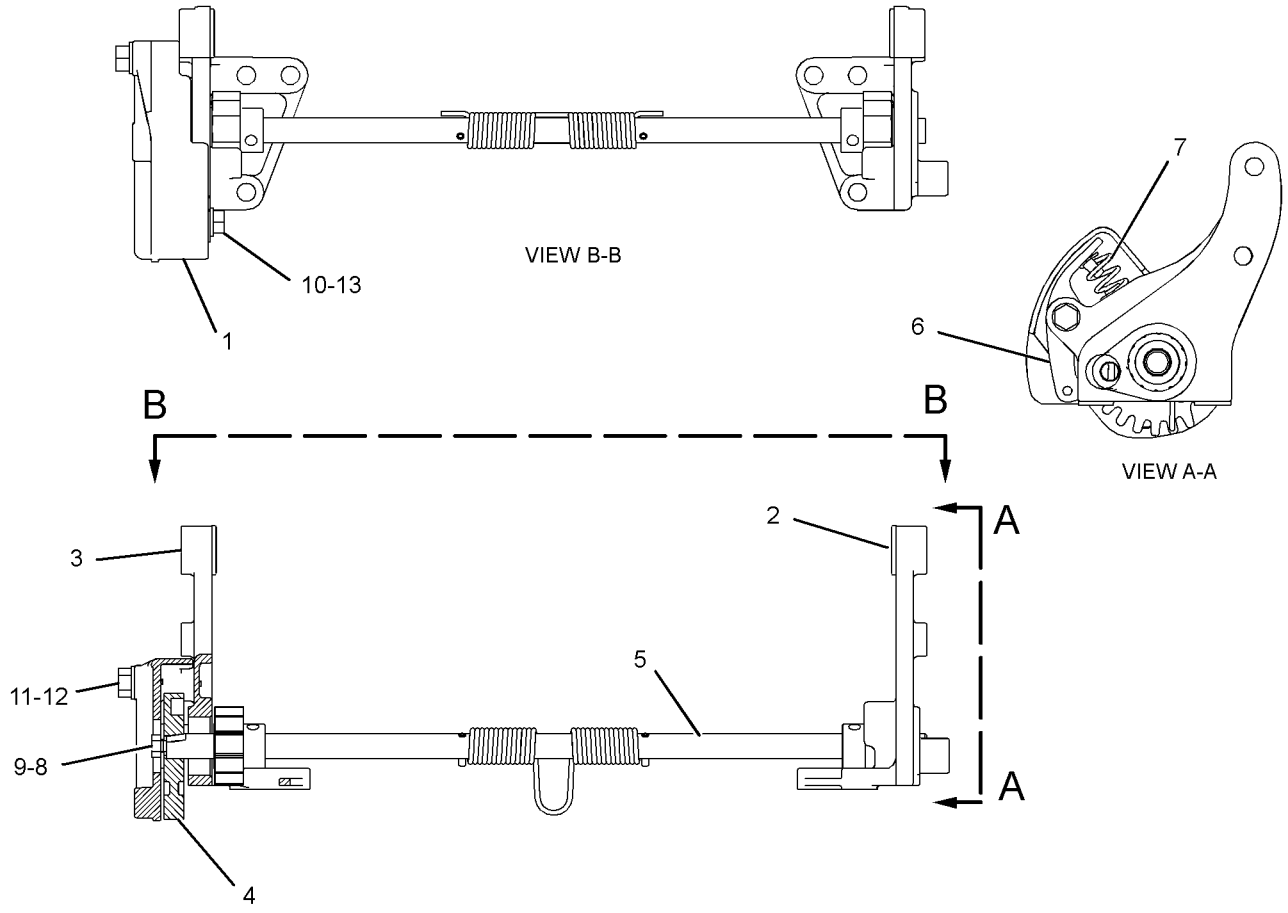

GRAPHIC #1 **<END>** g01296294

OPERATOR STATION

290-8501 ROPS GP-ENCLOSED

S/N: KLN1-UP
PART OF 290-8520 CAB GP-ENCLOSED ROPS
AN ATTACHMENT

SMCS-7301 **i03016529**

NOTE	REF NO	GRAPHIC REF	PART NUMBER	QTY	PART NAME 1 2 3 4 5 6 (PRODUCT LEVEL)	SEE PAGE
	1	1	**091-0079**	8	PLUG	
Y	2	1	*174-9730*	1	PEDAL GP-BRAKE	588
Y	3	1	**290-8499**	1	CAB GP-ENCLOSED ROPS	502
M	4	1	**8T-4189**	4	BOLT (M8X1.25X20-MM)	
	5	1	**8T-4224**	4	WASHER-HARD (8.8X16X2-MM THK)	

M-METRIC PART
Y-SEPARATE ILLUSTRATION

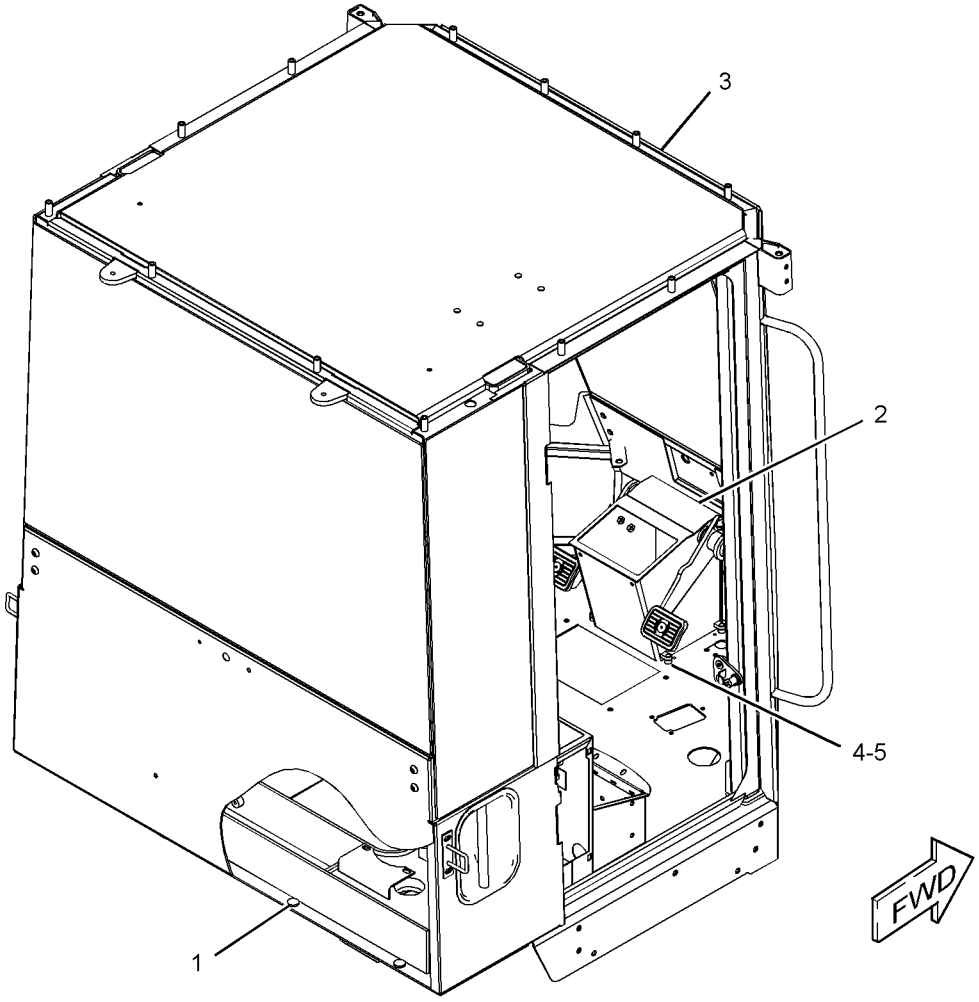

GRAPHIC #1 **<END>** g01529117

OPERATOR STATION

311-8693 ROPS GP-ENCLOSED

S/N: KLN1-UP
PART OF 311-8698 CAB AR
AN ATTACHMENT

SMCS-7301 **i03084881**

NOTE	PART NUMBER	QTY	PART NAME 1 2 3 4 5 6 (PRODUCT LEVEL)	SEE PAGE
Y	*174-9730*	1	PEDAL GP-BRAKE	588
Y	*311-8691*	1	CAB GP	499
M	**8T-4189**	4	BOLT (M8X1.25X20-MM)	
	091-0079	8	PLUG	
	8T-4224	4	WASHER-HARD (8.8X16X2-MM THK)	

M-METRIC PART
Y-SEPARATE ILLUSTRATION

<END>

OPERATOR STATION

290-8177 ROPS GP-OPEN

S/N: KLN1-UP
PART OF 290-8179 CANOPY GP-OPEN ROPS
AN ATTACHMENT

SMCS-7323 **i03043882**

NOTE	REF NO	GRAPHIC REF	PART NUMBER	QTY	PART NAME 1 2 3 4 5 6 (PRODUCT LEVEL)	SEE PAGE
	1	1	**118-7255**	1	COVER	
Y	2	1	*174-9730*	1	PEDAL GP-BRAKE	588
	3	1	**290-8175**	1	CANOPY AS	
	4	1	**8T-4121**	2	WASHER-HARD (11X21X2.5-MM THK)	
M	5	1	**8T-4137**	2	BOLT (M10X1.5X20-MM)	
M	6	1	**8T-4189**	4	BOLT (M8X1.25X20-MM)	
	7	1	**8T-4224**	4	WASHER-HARD (8.8X16X2-MM THK)	

M-METRIC PART
Y-SEPARATE ILLUSTRATION

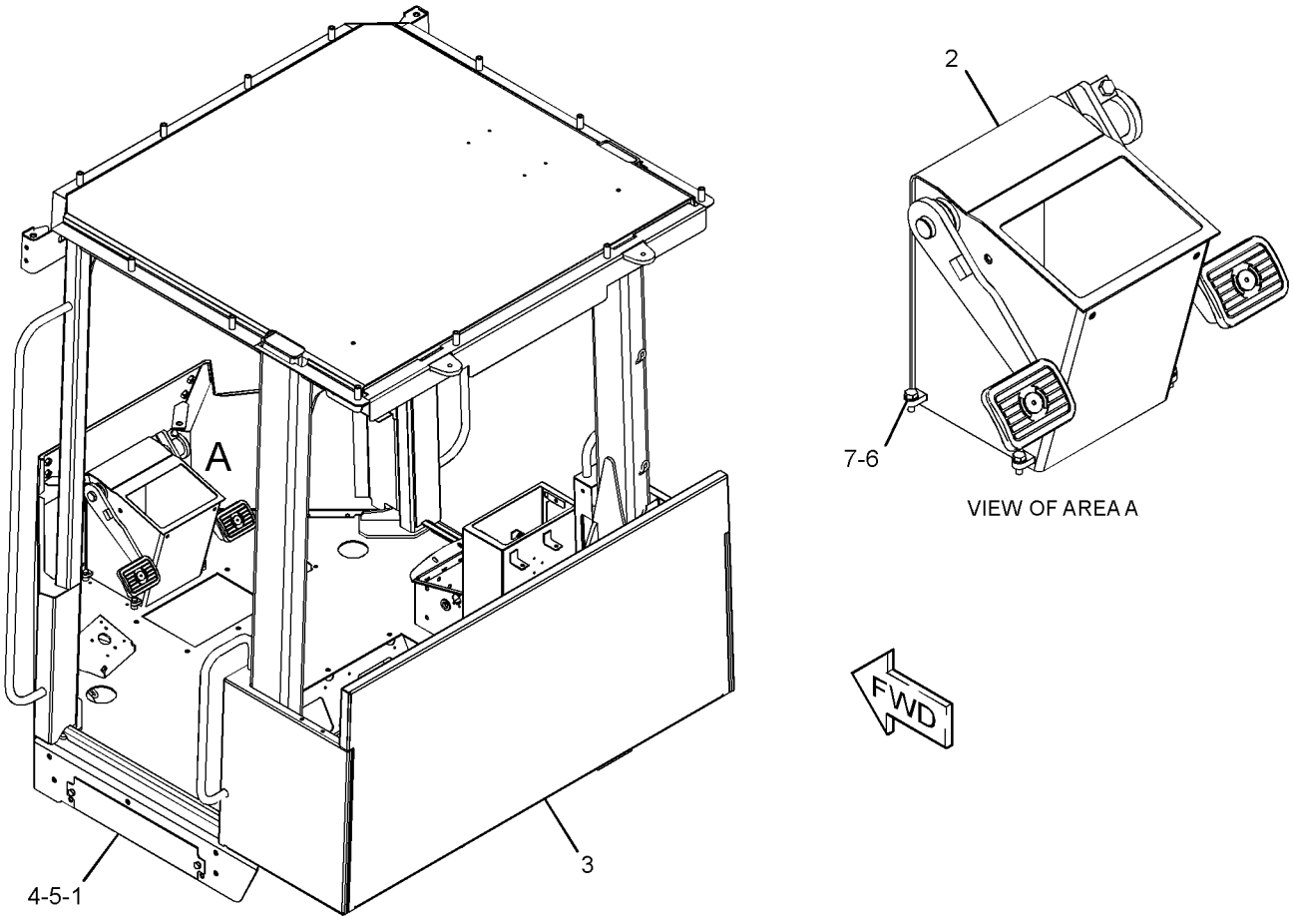

GRAPHIC #1 **<END>** g01561013

OPERATOR STATION

118-7250 SCREEN GP-SUN

S/N: KLN1-UP

AN ATTACHMENT

SMCS-7165 **i01850342**

NOTE	REF NO	GRAPHIC REF	PART NUMBER	QTY	PART NAME 1 2 3 4 5 6 (PRODUCT LEVEL)	SEE PAGE
	1	1	**119-2073**	2	HOOK-RETAINER	

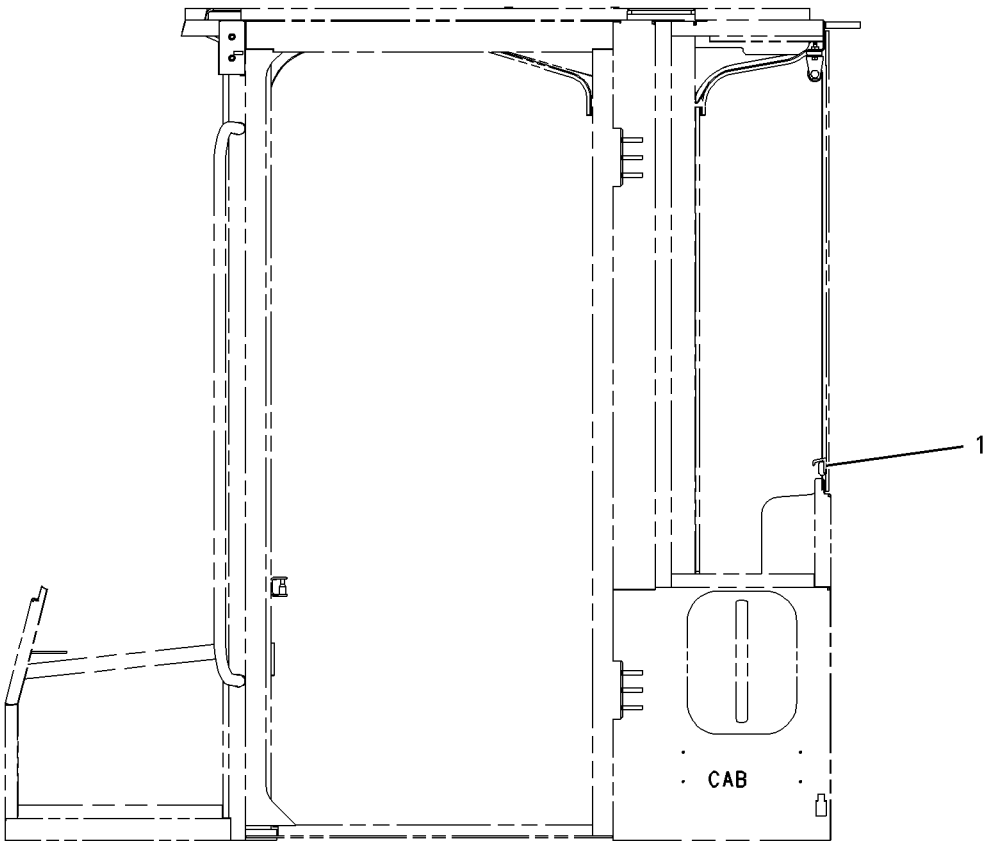

LEFT SIDE VIEW

GRAPHIC #1 **<END>** g00942564

OPERATOR STATION

239-5814 SEAT & MOUNTING GP

S/N: KLN1-UP
AN ATTACHMENT

SMCS-7312 **i03409834**

NOTE	REF NO	GRAPHIC REF	PART NUMBER	QTY	PART NAME 1 2 3 4 5 6 (PRODUCT LEVEL)	SEE PAGE
	1	1	**177-4937**	1	SPACER (11.7X19.8X20.3-MM THK)	
Y	2	1	**219-8096**	1	SEAT GP-SUSPENSION (AIR)	606
Y	3	1	**222-0345**	1	SEAT BELT GP (RETRACTABLE)	602
	4	1	**0T-0244**	1	BOLT (7/16-20X1.25-IN)	
M	5	1	**8T-5093**	2	BOLT-LOCKING (M8X1.25X25-MM)	
	6	1	**205-6388**	1	BOLT (7/16-20X1.75-IN)	
	7	1	**8T-4121**	4	WASHER-HARD (11X21X2.5-MM THK)	
M	8	1	**9X-2125**	4	BOLT-LOCKING (M10X1.5X25-MM)	

M-METRIC PART
Y-SEPARATE ILLUSTRATION

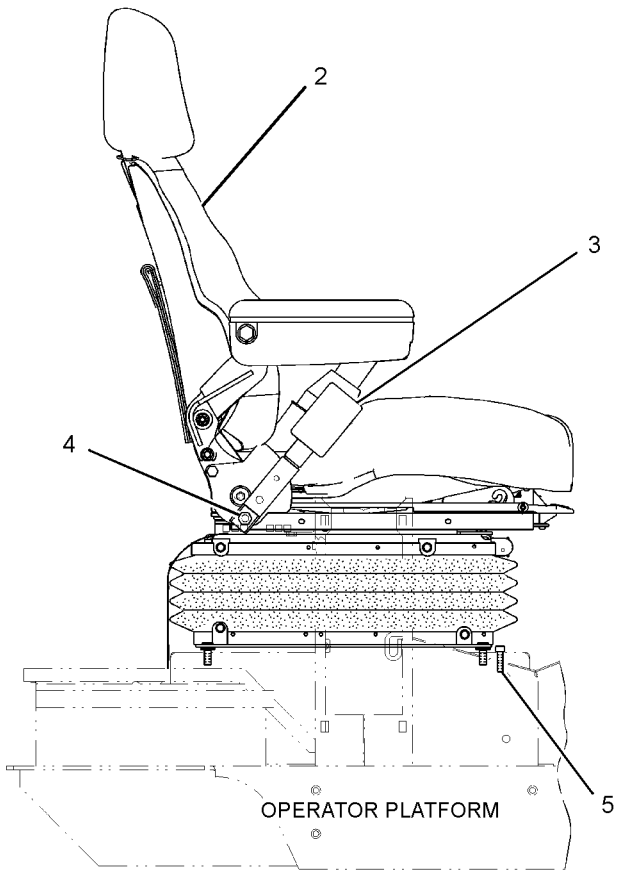

RIGHT SIDE VIEW

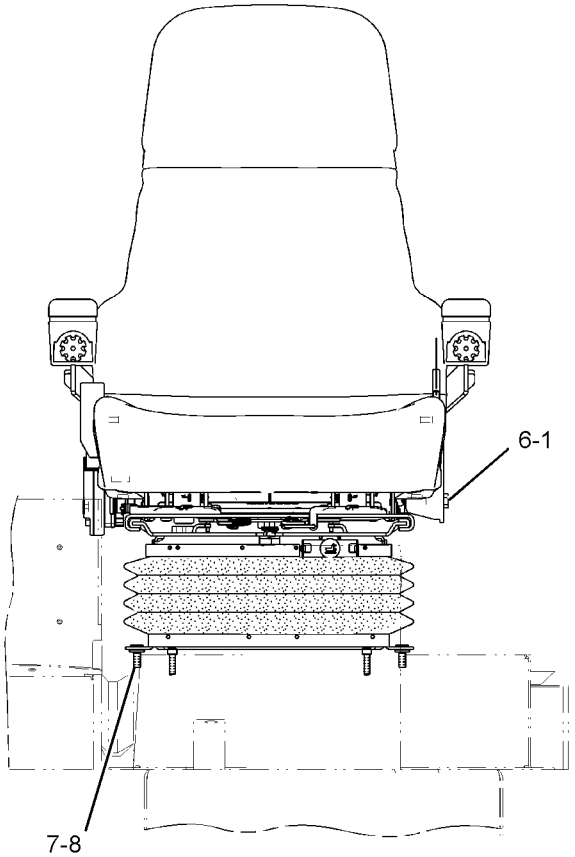

FRONT VIEW

GRAPHIC #1 **<END>** g01256905

OPERATOR STATION

257-5103 SEAT & MOUNTING GP

S/N: KLN1-UP
AN ATTACHMENT

SMCS-7312 **i03511185**

NOTE	REF NO	GRAPHIC REF	PART NUMBER	QTY	PART NAME 1 2 3 4 5 6 (PRODUCT LEVEL)	SEE PAGE
Y	1	1	**233-7388**	1	SEAT GP-SUSPENSION (CLOTH)	609
M	2	1	**8T-5093**	4	BOLT-LOCKING (M8X1.25X25-MM)	
	3	1	**118-7236**	1	PLATE	
M	4	1	**9X-2041**	4	SCREW-TRUSS HEAD (M10X1.5X20-MM)	
	5	1	**223-7937**	1	SEAT BELT GP (3-IN)	
		1	**8S-4726**	1	BOLT (7/16-20X3-IN)	
		1	**8T-5360**	2	WASHER (12X22.5X2.5-MM THK)	
		1	**8T-9381**	1	BOLT (7/16-20X1-IN)	
		1	**261-7651**	1	SPACER (12X20X4-MM THK)	
	6	1	**8T-4224**	4	WASHER-HARD (8.8X16X2-MM THK)	

M-METRIC PART
Y-SEPARATE ILLUSTRATION

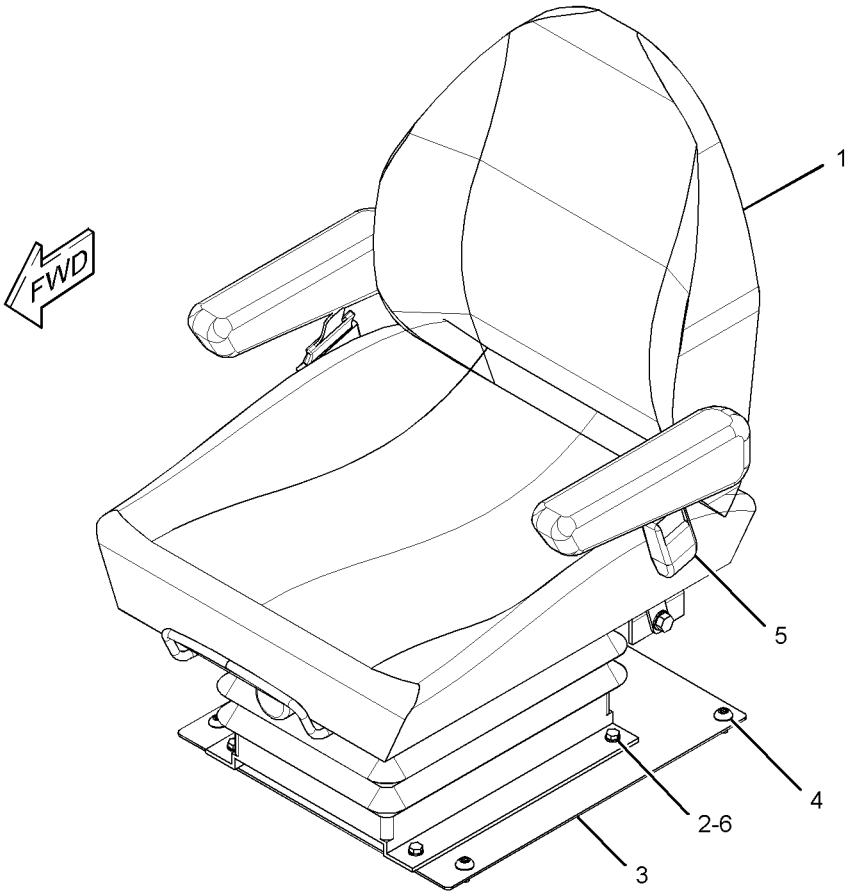

GRAPHIC #1 **<END>** g01819815

OPERATOR STATION

257-5104 SEAT & MOUNTING GP

S/N: KLN1-UP
AN ATTACHMENT

SMCS-7312 **i03451663**

NOTE	REF NO	GRAPHIC REF	PART NUMBER	QTY	PART NAME 1 2 3 4 5 6 (PRODUCT LEVEL)	SEE PAGE
	1	1	**223-7937**	1	SEAT BELT GP (3-IN)	
		1	**8S-4726**	1	BOLT (7/16-20X3-IN)	
		1	**8T-5360**	2	WASHER (12X22.5X2.5-MM THK)	
		1	**8T-9381**	1	BOLT (7/16-20X1-IN)	
		1	**261-7651**	1	SPACER (12X20X4-MM THK)	
Y	2	1	**233-7387**	1	SEAT GP-SUSPENSION (VINYL)	607
M	3	1	**8T-5093**	4	BOLT-LOCKING (M8X1.25X25-MM)	
	4	1	**118-7236**	1	PLATE	
M	5	1	**9X-2041**	4	SCREW-TRUSS HEAD (M10X1.5X20-MM)	
	6	1	**8T-4224**	4	WASHER-HARD (8.8X16X2-MM THK)	

M-METRIC PART
Y-SEPARATE ILLUSTRATION

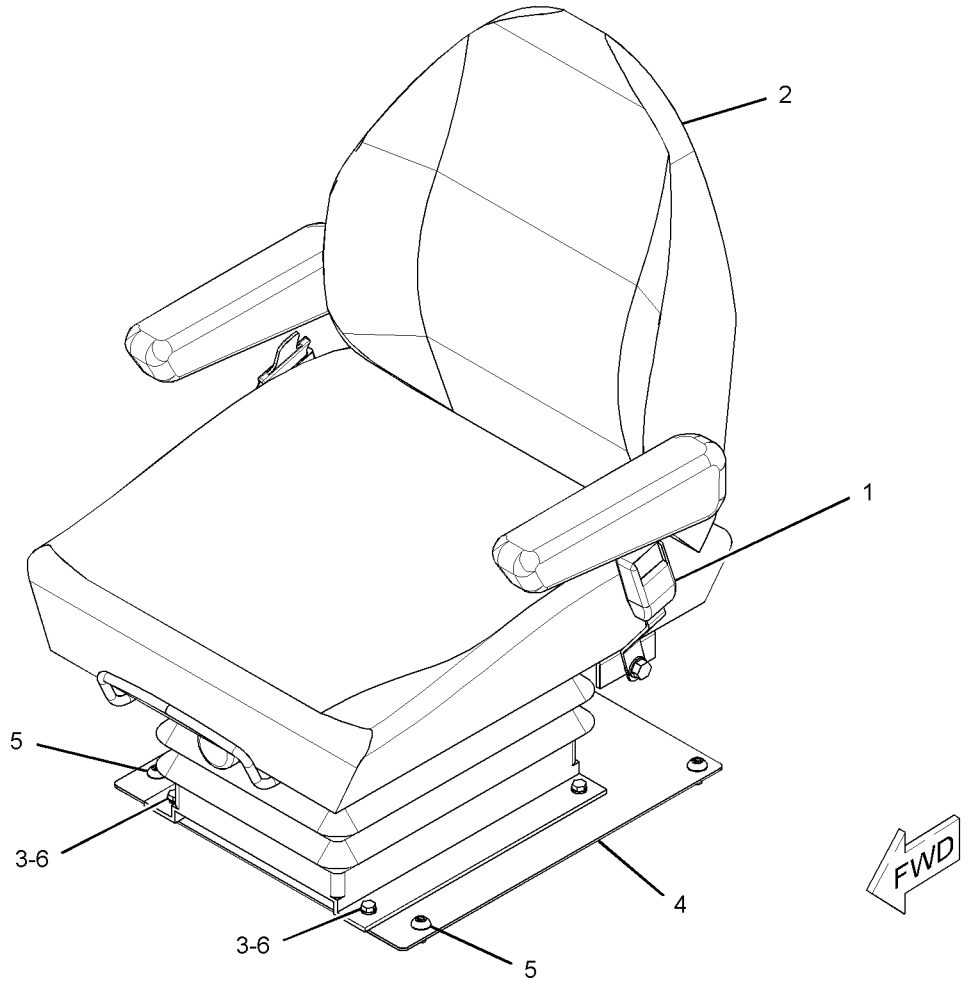

GRAPHIC #1 **<END>** g01843434

OPERATOR STATION

222-0345 SEAT BELT GP–RETRACTABLE

S/N: KLN1-UP
PART OF 239-5814 SEAT & MOUNTING GP
AN ATTACHMENT

SMCS-7327 **i02947636**

NOTE	REF NO	GRAPHIC REF	PART NUMBER	QTY	PART NAME 1 2 3 4 5 6 (PRODUCT LEVEL)	SEE PAGE
					(NO SERVICED PARTS)	

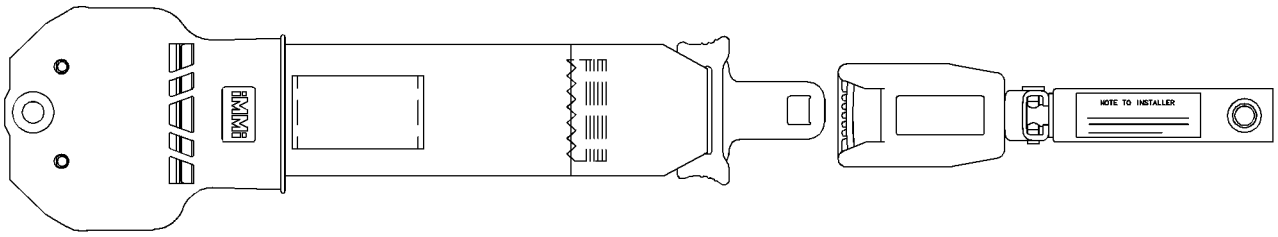

GRAPHIC #1 **<END>** g01196135

OPERATOR STATION

178-0603 SEAT GP–CLOTH

S/N: KLN1-UP
PART OF 178-7914 SEAT GP
AN ATTACHMENT

SMCS-7312 **i02679176**

NOTE	REF NO	GRAPHIC REF	PART NUMBER	QTY	PART NAME 1 2 3 4 5 6 (PRODUCT LEVEL)	SEE PAGE
	1	1	**218-0861**	1	PAN AS	
		1	**8T-9082**	5	RIVET-POP	
		1	**217-9049**	1	CUSHION AS	
	2	1	**143-1288**	8	LOCKNUT-FLANGE (3/8-16-THD)	
	3	1	**171-1230**	6	SCREW-BUTTON HEAD (3/8-16X1-IN)	
	4	1	**171-6682**	1	BAR	
	5	1	**172-2416**	2	PIN	
Y	6	1	*173-1028*	1	ADJUSTER GP-SEAT	484
	7	1	**177-1863**	2	BOLT-PIVOT (3/8-16X2.89-IN)	
Y	8	1	*210-2270*	1	RECLINER GP-SEAT	594
CY	9	1	*292-9237*	1	PAN GP-BACKREST	572
	10	1	**184-2298**	1	ROD	
	11	1	**184-2299**	4	WASHER (7X25.4X2.54-MM THK)	
	12	1	**095-0843**	2	PIN-COTTER	
	13	1	**5V-1496**	2	RETAINER	
	14	1	**6V-7646**	2	WASHER-HARD (7.2X25X2-MM THK)	
	15	1	**8T-0328**	1	WASHER-HARD (5.5X10X1-MM THK)	
	16	1	**8T-4205**	1	WASHER-HARD (7.2X14.5X2-MM THK)	
C	17	1	**294-5042**	2	SPACER (11.1X19.5X9.67-MM THK)	

C-CHANGE FROM PREVIOUS TYPE
Y-SEPARATE ILLUSTRATION

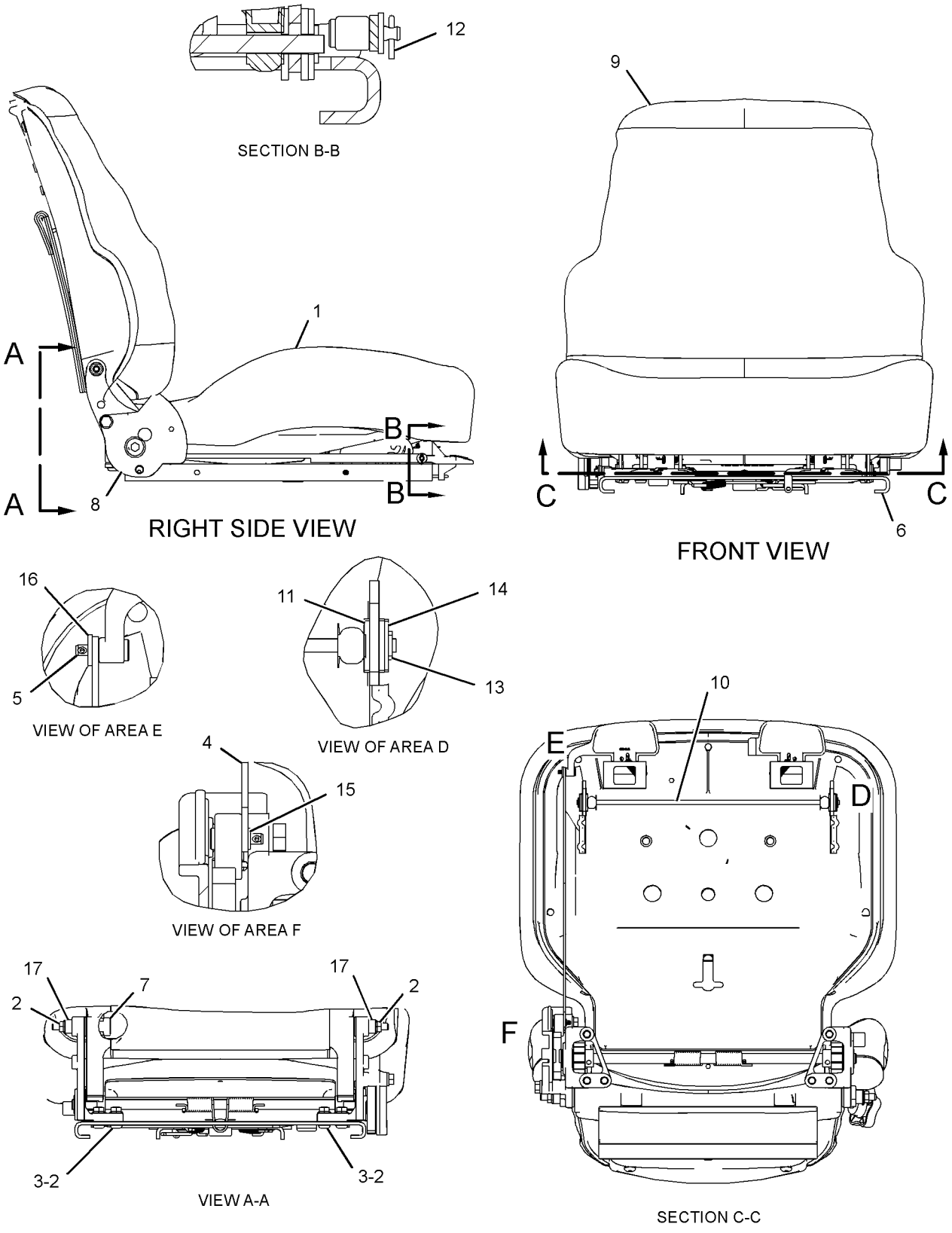

GRAPHIC #1 **<END>** g01336990

OPERATOR STATION

178-7914 SEAT GP

S/N: KLN1-UP
PART OF 219-8096 SEAT GP-SUSPENSION
AN ATTACHMENT

SMCS-7312 **i03626686**

NOTE	REF NO	GRAPHIC REF	PART NUMBER	QTY	PART NAME 1 2 3 4 5 6 (PRODUCT LEVEL)	SEE PAGE
	1	1	**173-3082**	1	EXTENSION GP-BACKREST (CLOTH)	
		1	**117-4491**	1	ROD	
Y	2	1	**162-8447**	1	ARMREST GP (LH)	493
Y	3	1	**162-8448**	1	ARMREST GP (RH)	494
	4	1	**177-4937**	1	SPACER (11.7X19.8X20.3-MM THK)	
	5	1	**180-5559**	1	SCREW-PAN HEAD (7/16-20X1.75-IN)	
	6	1	**180-5560**	1	SCREW-PAN HEAD (7/16-20X1.25-IN)	
	7	1	**183-3648**	1	SEAT BELT GP (RETRACTABLE)	
Y	8	1	**178-0603**	1	SEAT GP (CLOTH)	603

Y-SEPARATE ILLUSTRATION

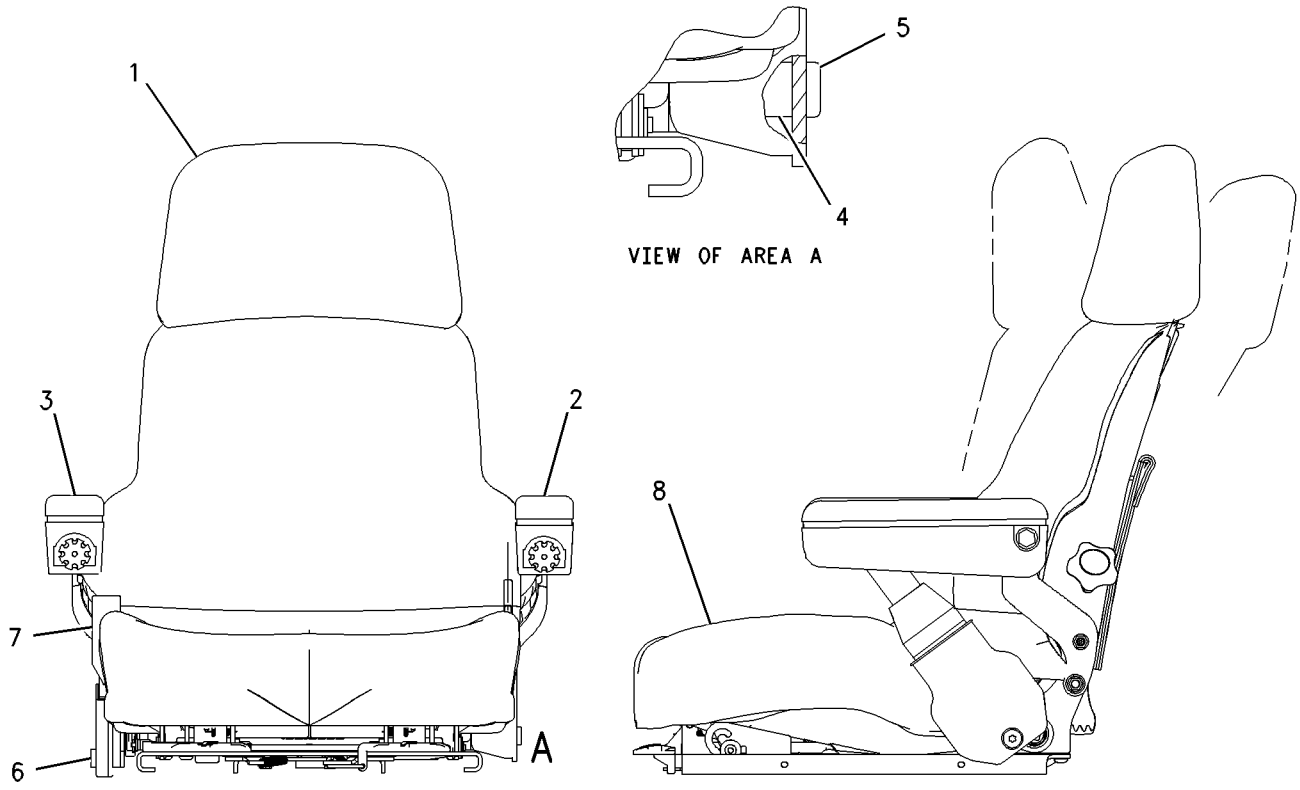

GRAPHIC #1 **<END>** g00685959

OPERATOR STATION

219-8096 SEAT GP-SUSPENSION–AIR

S/N: KLN1-UP
PART OF 239-5814 SEAT & MOUNTING GP
AN ATTACHMENT

SMCS-7324, 7336 **i03538541**

NOTE	REF NO	GRAPHIC REF	PART NUMBER	QTY	PART NAME 1 2 3 4 5 6 (PRODUCT LEVEL)	SEE PAGE
J	1	1	**161-9289**	4	BLOCK-SLIDER	
J	2	1	**173-5787**	4	SETSCREW (1/4-20-THD)	
Y	3	1	**178-7914**	1	SEAT GP (SUSPENSION)	605
Y	4	1	**191-2933**	1	SUSPENSION GP-SEAT (AIR)	615
J	5	1	**203-7703**	2	WASHER-HARD (10.2X22.22X2.38-MM THK)	
J	6	1	**4F-4879**	1	BOLT (3/8-16X0.5-IN)	
					AVAILABLE REPAIR KIT(S):	
J			**173-7035**	1	KIT-SLIDER BLOCK (SUSPENSION SEAT)	

J-KIT MARKED J SERVICED BY PARTS MARKED J
Y-SEPARATE ILLUSTRATION

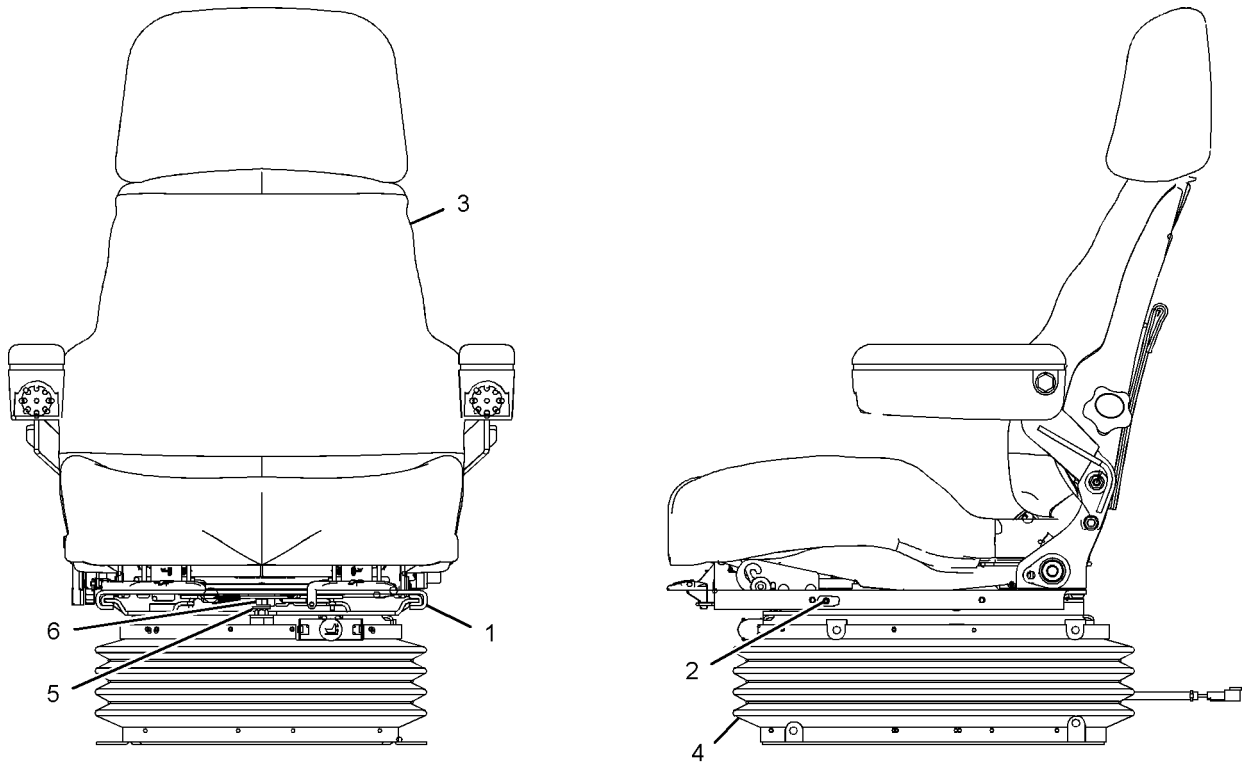

FRONT VIEW LEFT SIDE VIEW

GRAPHIC #1 **<END>** g01046935

OPERATOR STATION

233-7387 SEAT GP-SUSPENSION—VINYL

S/N: KLN1-UP

PART OF 257-5104 SEAT & MOUNTING GP

AN ATTACHMENT

SMCS-7324, 7336 **i02471593**

NOTE	REF NO	GRAPHIC REF	PART NUMBER	QTY	PART NAME 1 2 3 4 5 6 (PRODUCT LEVEL)	SEE PAGE
	1	1	**110-5056**	1	KIT-SEAT (BACK)	
	2	1	**110-5059**	1	KIT-SEAT (BOTTOM)	
	3	1	**155-4957**	1	KIT-COVER (BACK)	
					(INCLUDES TRIM BARS, HOG RINGS & BACK COVER)	
	4	1	**156-1685**	1	KIT-COVER (BOTTOM)	
					(INCLUDES WIRE, D-CLIPS & SEAT COVER)	
	5	1	**202-4732**	1	KIT-FRAME (SEAT)	
					(INCLUDES STOP CLIPS, HEADREST GUIDES, SCREWS & SEAT FRAME)	
	6	1	**202-4736**	1	KIT-DAMPER	
					(INCLUDES DAMPER, SPACERS, PINS, BUSHING, WASHERS & NUT)	
	7	1	**202-4738**	1	KIT-SUSPENSION	
					(INCLUDES SUSPENSION AS)	
	8	1	**202-4739**	1	KIT-STOP (SUSPENSION SEAT)	
					(INCLUDES UPSTOPS & BUMPSTOP)	
	9	1	**204-1126**	1	KIT-PLATE (SEAT)	
					(INCLUDES PLATE, SCREWS & WASHERS)	
	10	1	**213-4574**	1	KIT-BOOT (SUSPENSION SEAT)	
	11	1	**213-4576**	1	KIT-RIDE CONTROL (SUSPENSION SEAT)	
	12	1	**213-4579**	1	KIT-WEIGHT ADJUSTER (SUSPENSION SEAT)	
	13	1	**242-8764**	1	SUPPORT (RH)	
	14	1	**242-8765**	1	SUPPORT (LH)	
	15	1	**250-6011**	1	KIT-STRAP (SEAT)	
	16	1	**250-6012**	1	KIT-SLIDE RAIL (SEAT)	
	17	1	**250-6013**	1	KIT-LEVER (SEAT)	

233-7387 SEAT GP-SUSPENSION *(contd.)* **i02471593**

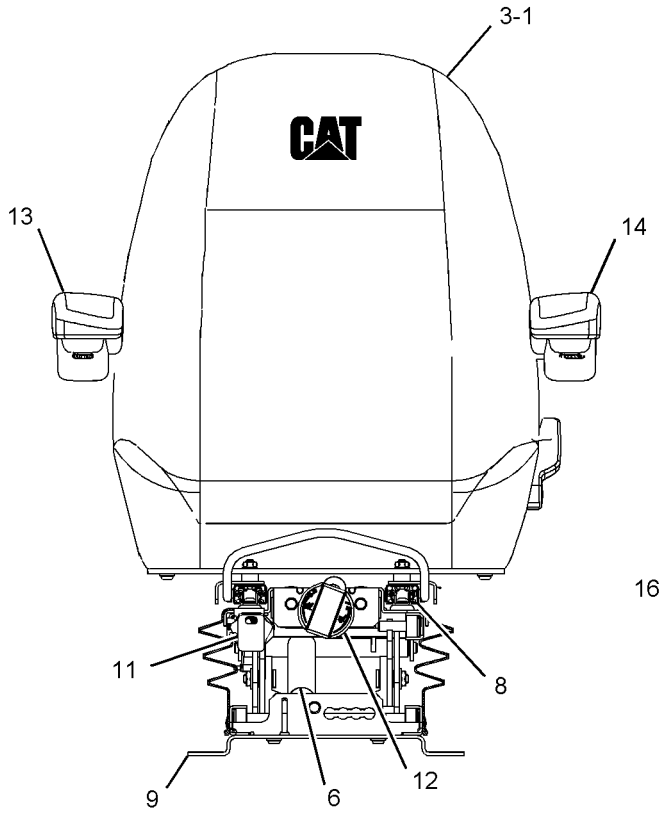

FRONT VIEW

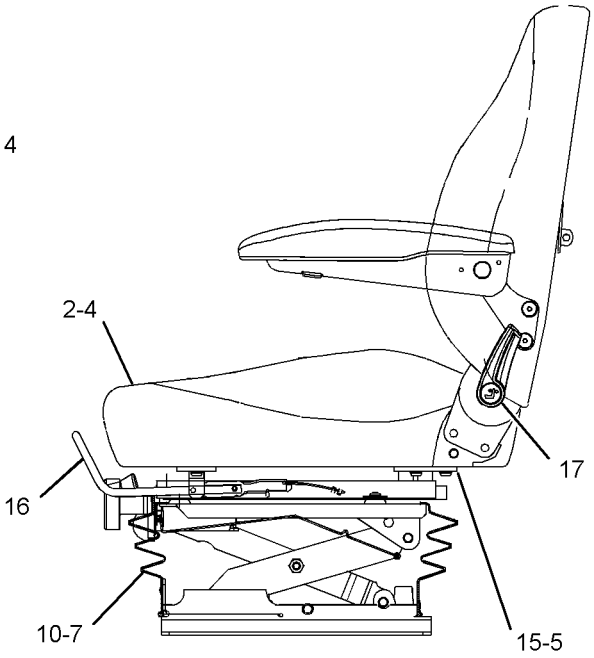

LEFT SIDE VIEW

GRAPHIC #1 **<END>** g01118776

OPERATOR STATION

233-7388 SEAT GP-SUSPENSION—CLOTH

S/N: KLN1-UP

PART OF 257-5103 SEAT & MOUNTING GP

AN ATTACHMENT

SMCS-7324, 7336 **i02471595**

NOTE	REF NO	GRAPHIC REF	PART NUMBER	QTY	PART NAME 1 2 3 4 5 6 (PRODUCT LEVEL)	SEE PAGE
	1	1	**110-5056**	1	KIT-SEAT (BACK)	
	2	1	**110-5059**	1	KIT-SEAT (BOTTOM)	
	3	1	**156-1686**	1	KIT-COVER (SEAT)	
					(INCLUDES WIRE, D-CLIPS & SEAT COVER)	
	4	1	**156-1687**	1	KIT-COVER (BACK)	
					(INCLUDES TRIM BARS, HOG RINGS & BACK COVER)	
	5	1	**202-4732**	1	KIT-FRAME (SEAT)	
					(INCLUDES STOP CLIPS, HEADREST GUIDES, SCREWS & SEAT FRAME)	
	6	1	**202-4736**	1	KIT-DAMPER	
					(INCLUDES DAMPER, SPACERS, PINS, WASHERS & NUT)	
	7	1	**202-4738**	1	KIT-SUSPENSION	
					(INCLUDES SUSPENSION AS)	
	8	1	**202-4739**	1	KIT-STOP (SUSPENSION SEAT)	
					(INCLUDES UPSTOPS AND BUMPSTOP)	
	9	1	**204-1126**	1	KIT-PLATE (SEAT)	
					(INCLUDES PLATE, SCREWS & WASHERS)	
	10	1	**213-4574**	1	KIT-BOOT (SUSPENSION SEAT)	
	11	1	**213-4576**	1	KIT-RIDE CONTROL (SUSPENSION SEAT)	
	12	1	**213-4579**	1	KIT-WEIGHT ADJUSTER (SUSPENSION SEAT)	
	13	1	**242-8764**	1	SUPPORT (RH)	
	14	1	**242-8765**	1	SUPPORT (LH)	
	15	1	**250-6011**	1	KIT-STRAP (SEAT)	
	16	1	**250-6012**	1	KIT-SLIDE RAIL (SEAT)	
	17	1	**250-6013**	1	KIT-LEVER (SEAT)	

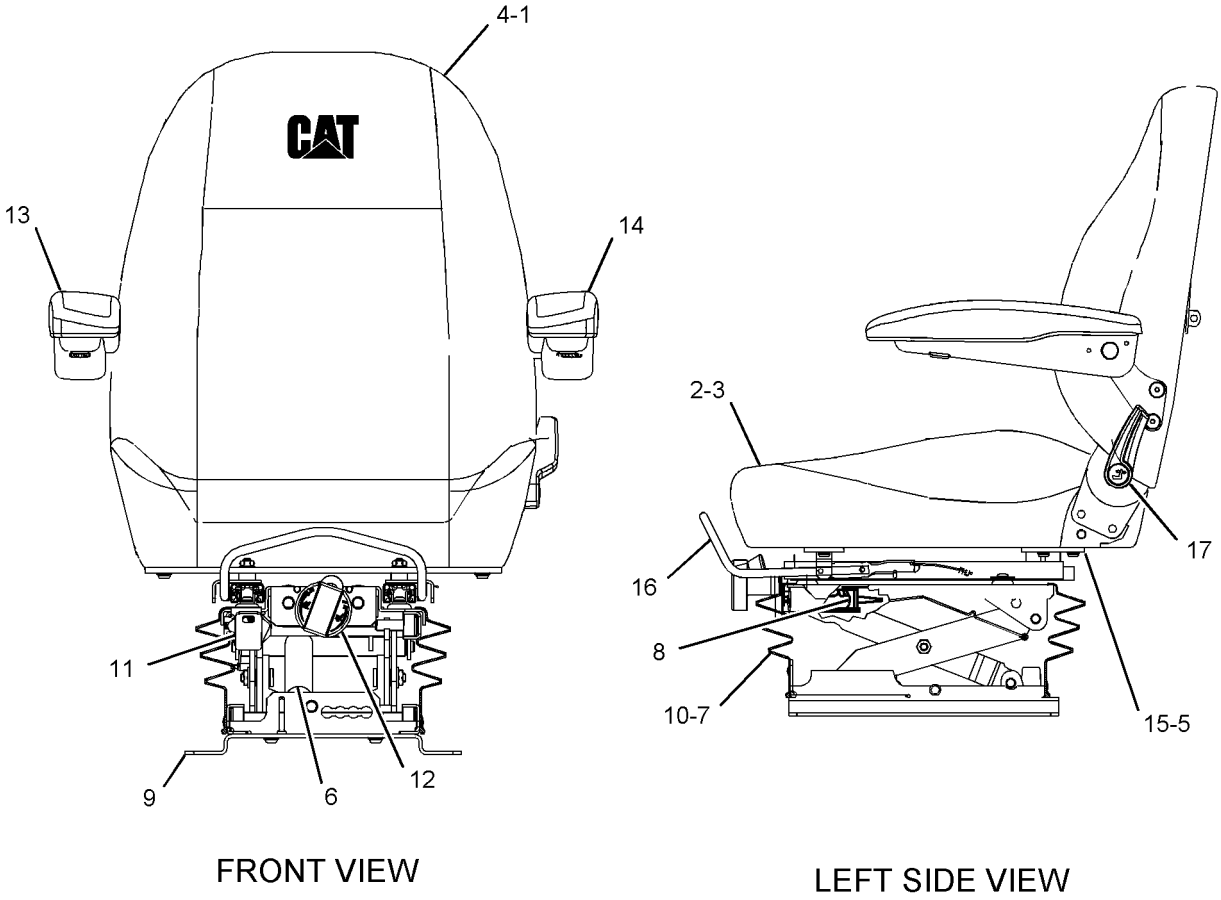

FRONT VIEW

LEFT SIDE VIEW

GRAPHIC #1 **<END>** g01097915

174-2213 SKIRT GP-CAB

S/N: KLN1-UP
VERSALINK
PART OF 290-8189 CANOPY AR-OPEN ROPS
AN ATTACHMENT

SMCS-7301 **i01219606**

NOTE	REF NO	GRAPHIC REF	PART NUMBER	QTY	PART NAME 1 2 3 4 5 6 (PRODUCT LEVEL)	SEE PAGE
	1	1	**128-0782**	1	SHEET AS	
	2	1	**132-3543**	1	STRAP AS	
	3	1	**162-1981**	1	SHEET AS	
	4	1	**162-1982**	1	SHEET AS	
	5	1	**162-1983**	1	SHEET AS	
	6	1	**162-1984**	1	SHEET AS	
	7	1	**174-2211**	1	SHEET AS	
	8	1	**8T-4121**	23	WASHER-HARD (11X21X2.5-MM THK)	
M	9	1	**8T-4137**	23	BOLT (M10X1.5X20-MM)	

M-METRIC PART

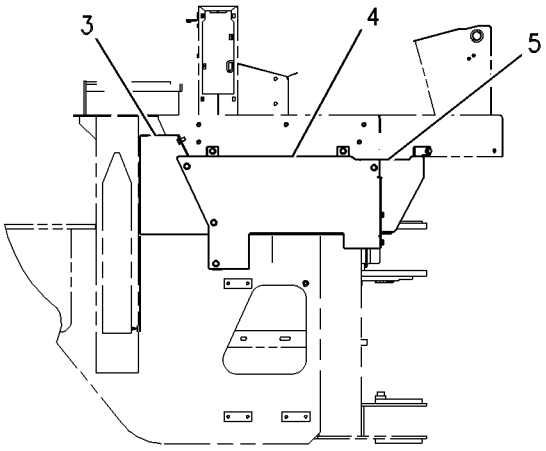

RIGHT SIDE VIEW

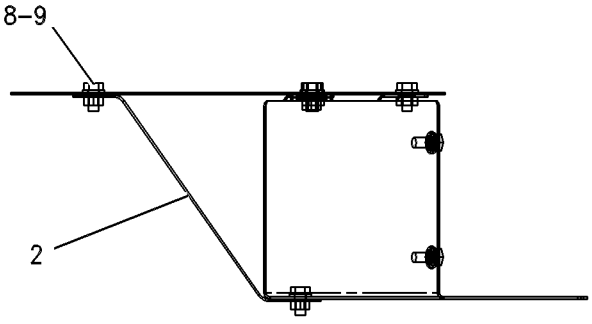

VIEW A-A

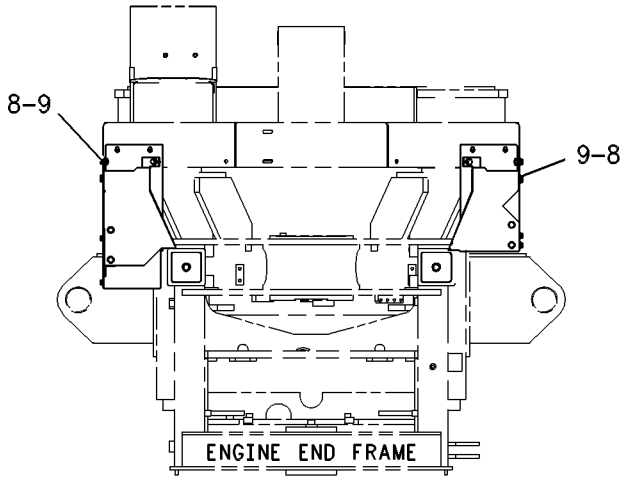

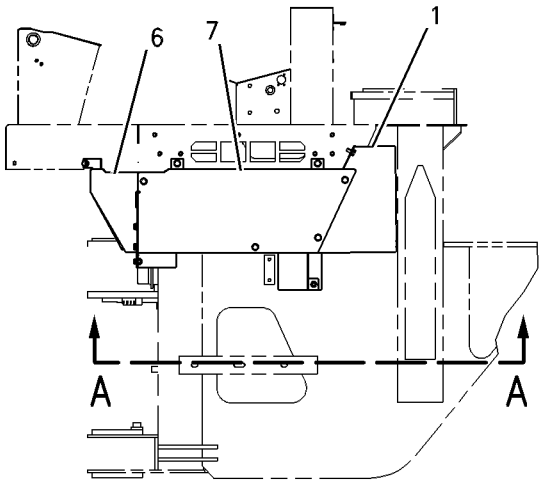

LEFT SIDE VIEW

GRAPHIC #1 **<END>** g00637750

OPERATOR STATION

174-2215 SKIRT GP-CAB

S/N: KLN1-UP
VERSALINK
PART OF 290-8513, 310-9955 CAB AR-ENCLOSED ROPS, 315-4654 OPERATOR AR
AN ATTACHMENT

SMCS-7301 **i01219617**

NOTE	REF NO	GRAPHIC REF	PART NUMBER	QTY	PART NAME 1 2 3 4 5 6 (PRODUCT LEVEL)	SEE PAGE
	1	1	**128-0782**	1	SHEET AS	
	2	1	**128-0784**	1	SHEET AS	
	3	1	**132-3543**	1	STRAP AS	
	4	1	**162-1981**	1	SHEET AS	
	5	1	**162-1982**	1	SHEET AS	
	6	1	**162-1983**	1	SHEET AS	
	7	1	**162-1984**	1	SHEET AS	
	8	1	**8T-4121**	23	WASHER-HARD (11X21X2.5-MM THK)	
M	9	1	**8T-4137**	23	BOLT (M10X1.5X20-MM)	

M-METRIC PART

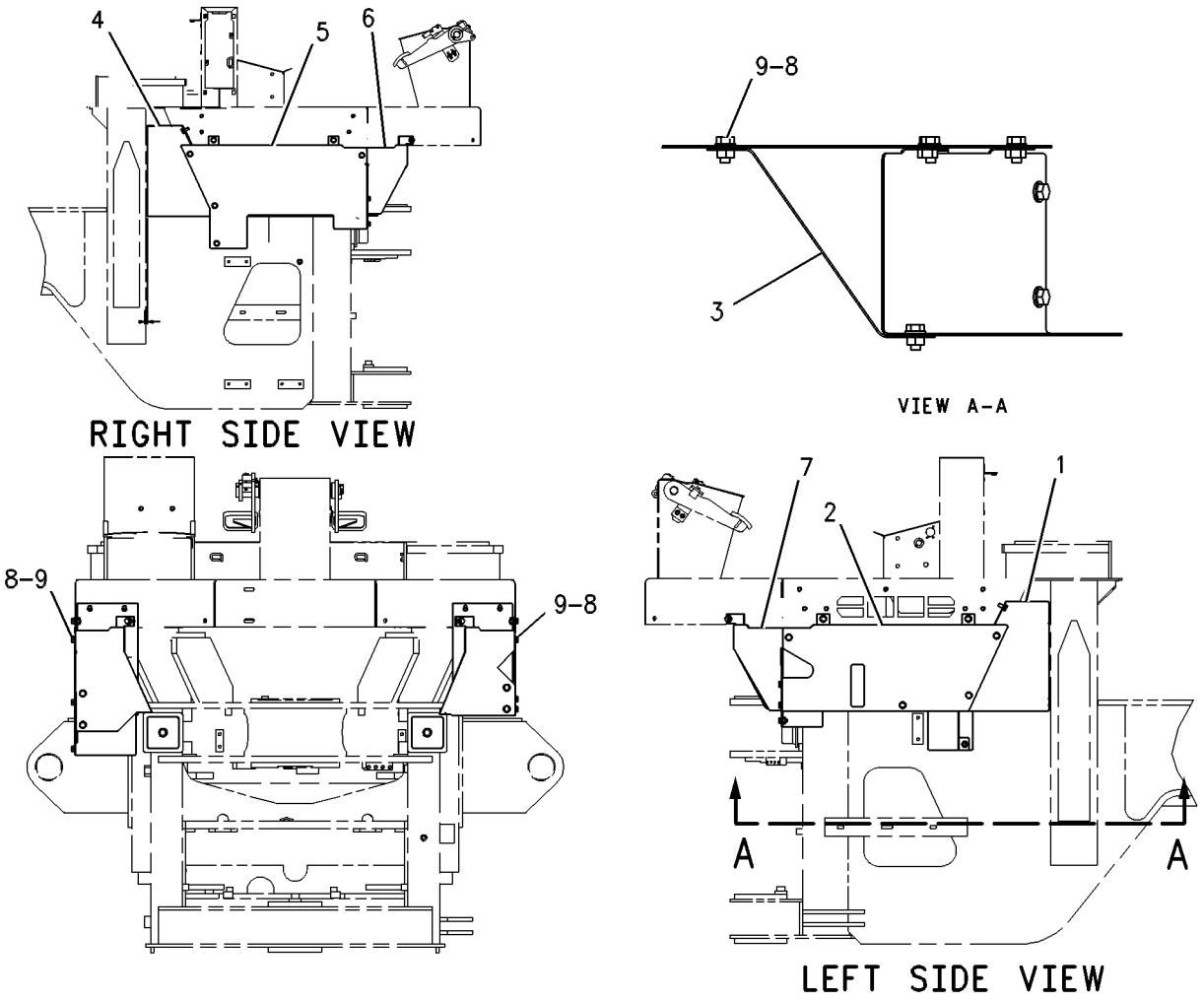

GRAPHIC #1 **<END>** g00634153

OPERATOR STATION

118-0808 SUPPORT GP-SEAT

S/N: KLN1-UP
PART OF 317-0771 OPERATOR GP
AN ATTACHMENT

SMCS-7321 **i00717796**

NOTE	REF NO	GRAPHIC REF	PART NUMBER	QTY	PART NAME 1 2 3 4 5 6 (PRODUCT LEVEL)	SEE PAGE
	1	1	**119-8310**	1	COVER AS	
M		1	**8T-3490**	2	NUT-WELD (M10X1.5-THD)	
M		1	**8T-3612**	2	NUT-WELD (M8X1.25-THD)	
	2	1	**7X-0579**	11	WASHER-HARD (8.8X25.5X2-MM THK)	
M	3	1	**8T-4908**	11	BOLT (M8X1.25X25-MM)	

M-METRIC PART

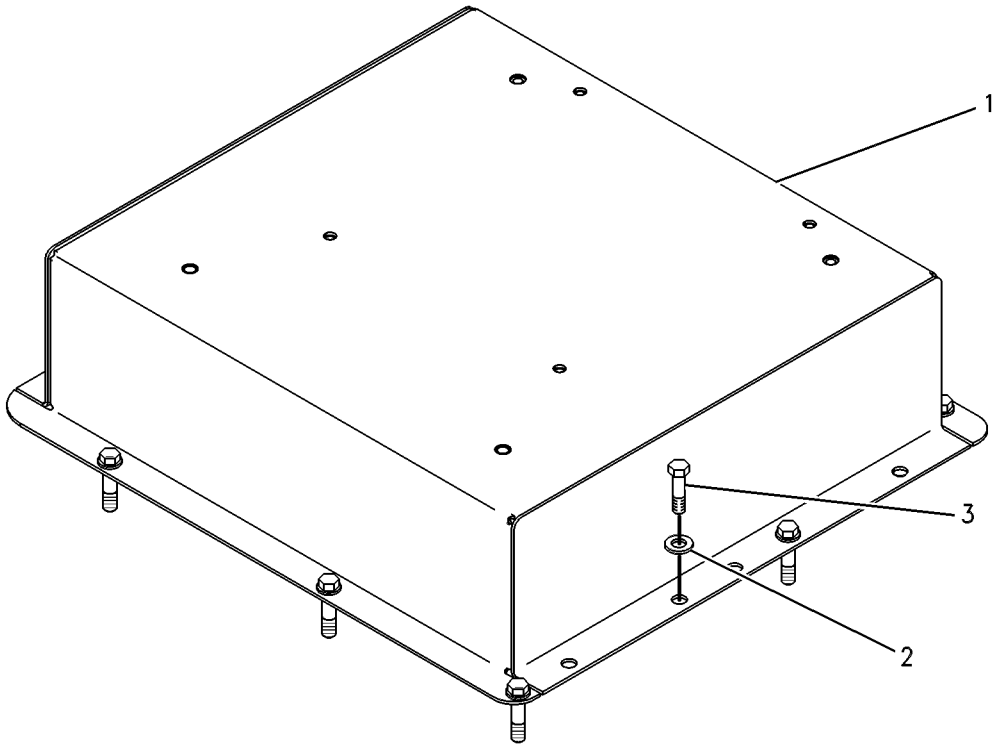

GRAPHIC #1 **<END>** g00131738

OPERATOR STATION

172-5507 SUPPORT GP-SEAT

S/N: KLN1-UP
PART OF 310-9953 CAB AR
AN ATTACHMENT

SMCS-7321 **i01282132**

NOTE	REF NO	GRAPHIC REF	PART NUMBER	QTY	PART NAME 1 2 3 4 5 6 (PRODUCT LEVEL)	SEE PAGE
	1	1	**119-8310**	1	COVER AS	
		1	**7T-1099**	3	LINK	
	2	1	**7X-0579**	11	WASHER-HARD (2.0MM THK)	
M	3	1	**8T-4908**	11	BOLT (M8X1.25X25MM)	

M-METRIC PART

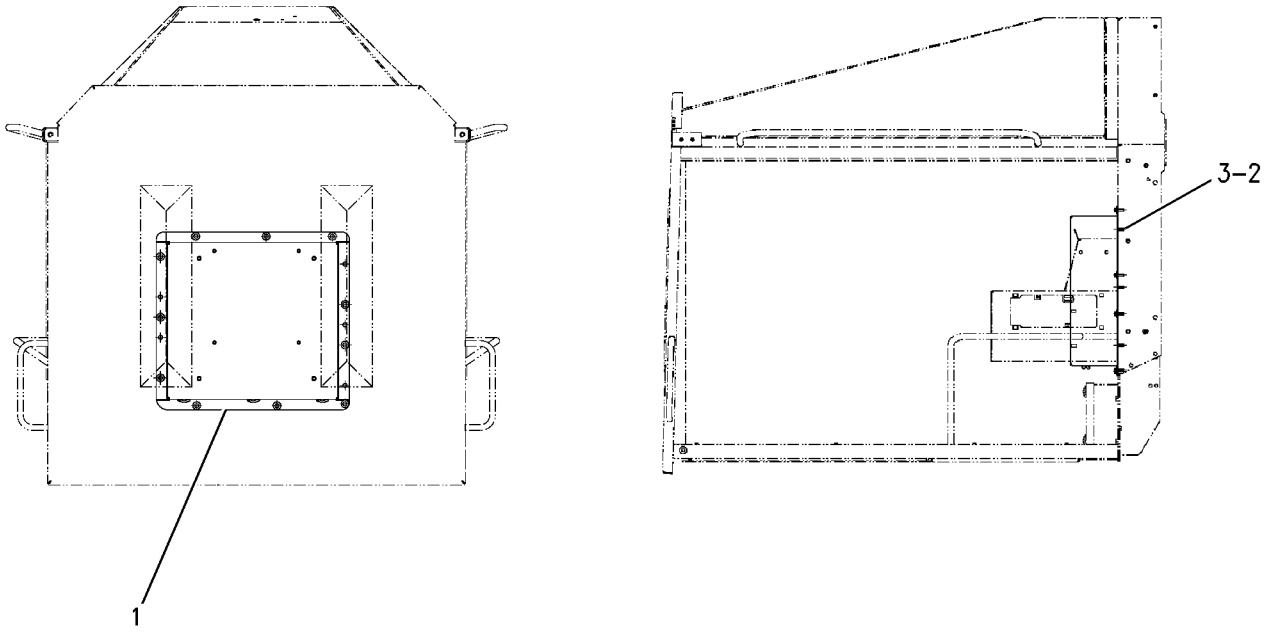

GRAPHIC #1 **<END>** g00680267

OPERATOR STATION

191-2933 SUSPENSION GP-SEAT—AIR

S/N: KLN1-UP
PART OF 219-8096 SEAT GP-SUSPENSION
AN ATTACHMENT

SMCS-7324 **i03176251**

NOTE	REF NO	GRAPHIC REF	PART NUMBER	QTY	PART NAME 1 2 3 4 5 6 (PRODUCT LEVEL)	SEE PAGE
	1	1	**3P-9900**	5	WASHER (10.5X30X3-MM THK)	
	2	1	**4B-4278**	2	WASHER (10.2X20.5X1.6-MM THK)	
	3	1	**4V-8577**	12	BEARING	
	4	1	**8L-8413**	1	STRAP-CABLE	
	5	1	**145-0326**	1	FILM-INSTRUCTION (SEAT ADJUSTMENT)	
	6	1	**164-1234**	1	PLATE	
	7	1	**101-0003**	33	FASTENER	
	8	1	**169-7380**	1	BOLT-SOCKET HEAD (3/8-16X0.375-IN)	
	9	1	**186-5107**	2	SCREW-DRIVE (NO 8X1.25-IN)	
	10	1	**192-7752**	4	SHAFT AS	
	11	1	**192-7755**	1	HOUSING AS (LOWER)	
	12	1	**192-7760**	1	SHAFT	
	13	1	**192-7767**	1	SCISSORS AS	
	14	1	**192-7783**	1	TOGGLE AS (WIDE)	
	15	1	**192-7787**	1	TOGGLE AS (NARROW)	
	16	1	**192-7790**	1	HOUSING AS (UPPER)	
	17	1	**192-7795**	1	BOOT	
	18	1	**192-7805**	1	HARNESS AS-VALVE (SEAT AIR COMPRESSOR)	
	19	1	**192-7810**	1	SPRING AS-AIR	
		1	**5P-4423**	1	ELBOW	
		1	**163-1135**	1	SPRING	
J	20	1	**192-7812**	1	BOLT-SHOULDER (3/8-16X2-IN)	
	21	1	**192-7820**	3	BUMPER	
	22	1	**192-7822**	1	SHAFT	
	23	1	**237-3943**	1	BRACKET	
Y	24	1	**237-3970**	1	AIR COMPRESSOR GP-SEAT	485
	25	1	**108-4311**	1	SCREW-MACHINE (3/8-16X0.75-IN)	
J	26	1	**2K-4973**	8	LOCKNUT (3/8-16-THD)	
J	27	1	**3J-4818**	1	LOCKWASHER	
M	28	1	**5C-2890**	3	NUT (M6X1-THD)	
	29	1	**8T-9371**	1	BOLT (3/8-16X0.5-IN)	
E	30	1	**211-5358**		CONDUIT-FLEXIBLE (36-CM)	
E	30A	1	**211-5358**		CONDUIT-FLEXIBLE (27-CM)	
D	31	1	**5P-6010**		TUBE (0.4-M)	
D	31A	1	**5P-6010**		TUBE (0.3-M)	
					AVAILABLE REPAIR KIT(S):	
			192-7799	1	KIT-AIR VALVE (SUSPENSION SEAT)	
					(INCLUDES KNOB AS, NUT, VALVE, LOCKWASHER & FITTING)	
J			**192-7848**	1	KIT-SHOCK ABSORBER (SUSPENSION SEAT)	
					(ALSO INCLUDES SHOCK ABSORBER, BEARINGS, WASHERS & BOLT)	
			211-9294	1	KIT-TETHER (SUSPENSION SEAT)	
					(INCLUDES TETHERS)	

D-ORDER BY THE METER
E-ORDER BY THE CENTIMETER
J-KIT MARKED J SERVICES PARTS MARKED J
M-METRIC PART
Y-SEPARATE ILLUSTRATION

191-2933 SUSPENSION GP-SEAT *(contd.)* i03176251

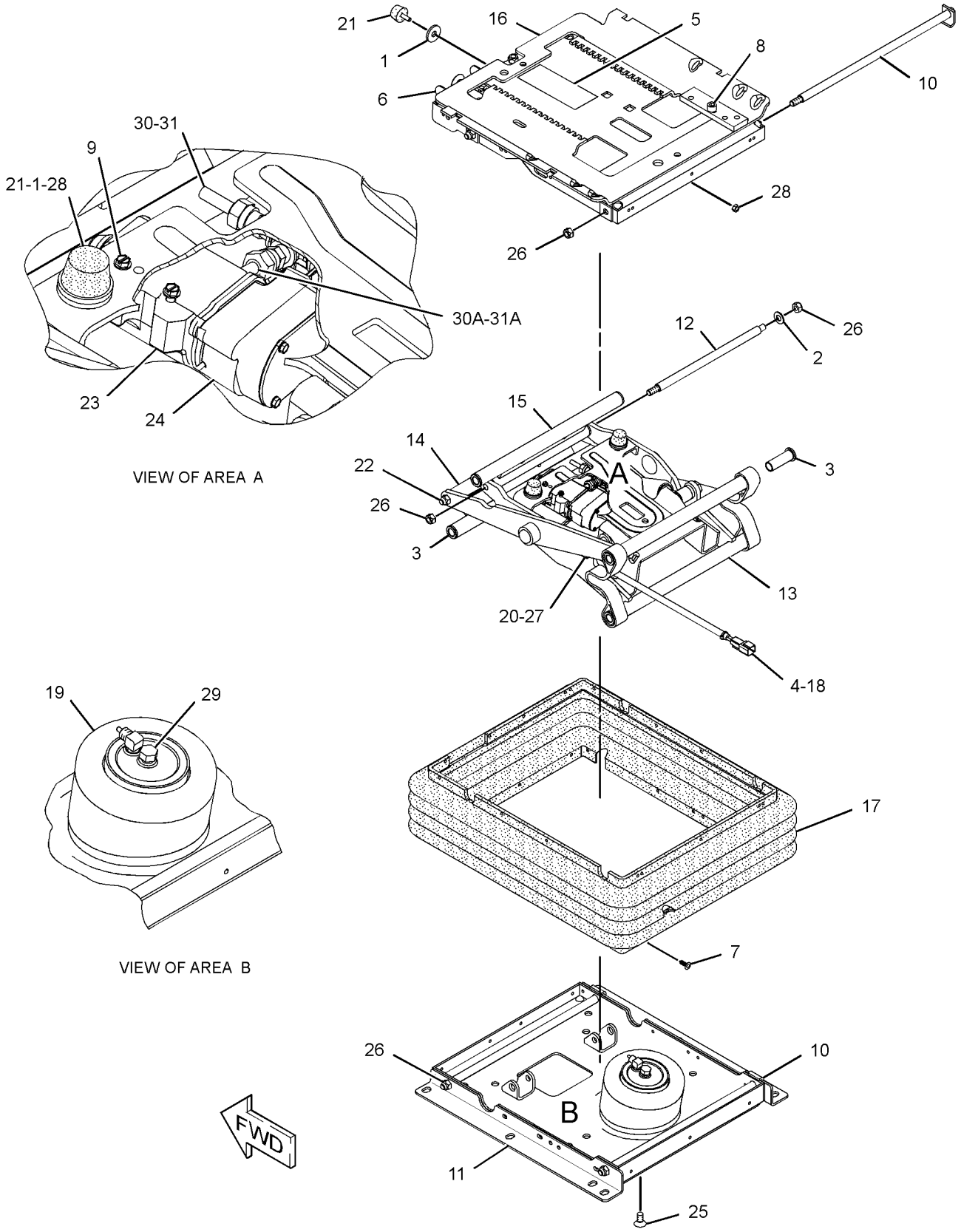

GRAPHIC #1 **<END>** g01598864

OPERATOR STATION

107-4641 VISOR GP-CAB

S/N: KLN1-UP
AN ATTACHMENT

SMCS-7301 **i01130547**

NOTE	REF NO	GRAPHIC REF	PART NUMBER	QTY	PART NAME 1 2 3 4 5 6 (PRODUCT LEVEL)	SEE PAGE
	1	1	**9R-3203**	2	PLATE	
	2	1	**9R-3204**	1	PLATE AS	
	3	1	**9R-3205**	1	VISOR AS	
M	4	1	**9X-2042**	2	SCREW-TRUSS HEAD (M6X1X12-MM)	
M	5	1	**9X-2045**	2	SCREW-TRUSS HEAD (M6X1X20-MM)	

M-METRIC PART

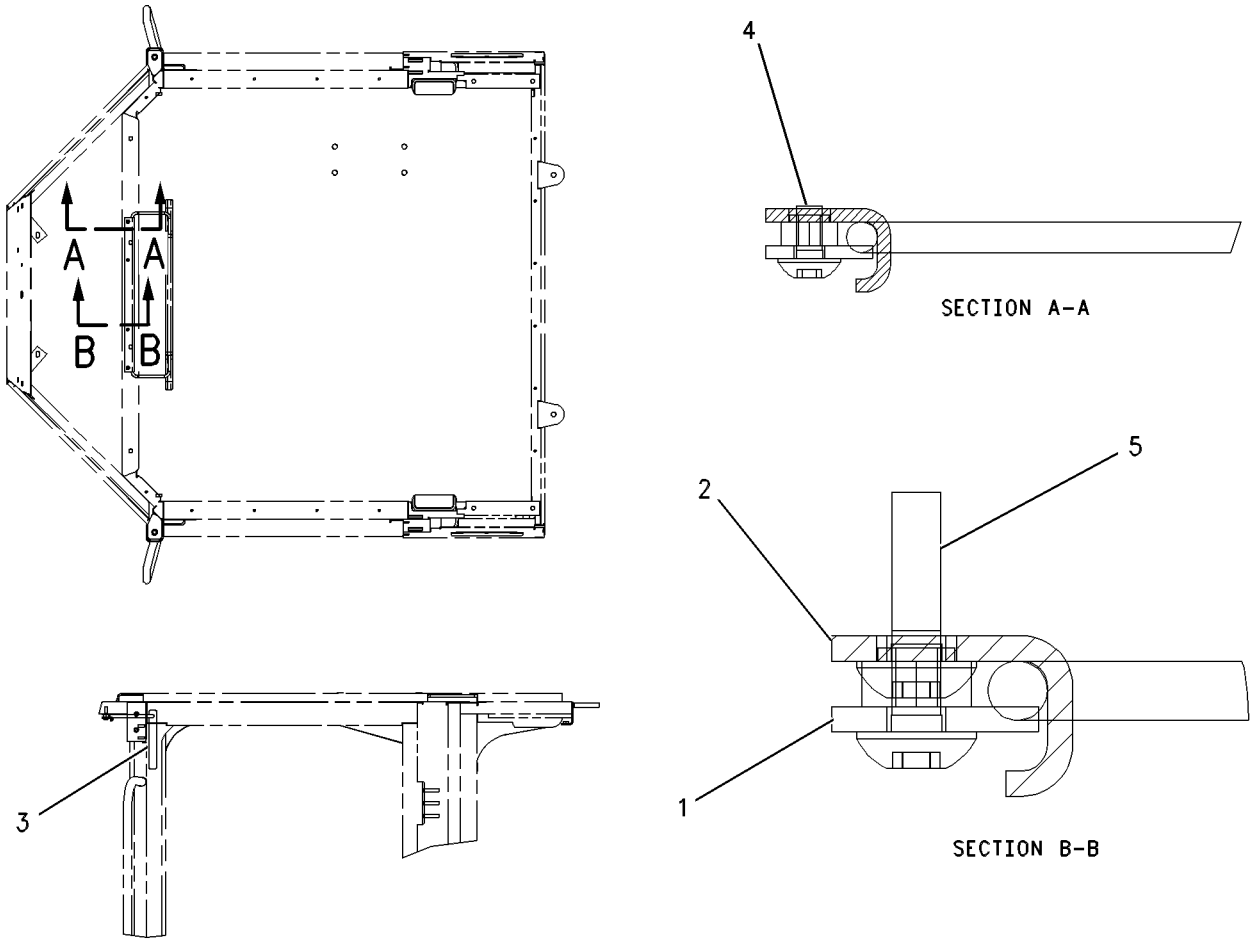

GRAPHIC #1 **<END>** g00599031

OPERATOR STATION

131-1236 WASHER GP-WINDOW

S/N: KLN1-UP
PART OF 311-8700 OPERATOR AR, 290-8525 OPERATOR AR-ENCLOSED ROPS AN ATTACHMENT

SMCS-7306 **i02945075**

NOTE	REF NO	GRAPHIC REF	PART NUMBER	QTY	PART NAME 1 2 3 4 5 6 (PRODUCT LEVEL)	SEE PAGE
E	1	1	**144-0195**		HOSE (152-CM)	
E	1A	1	**144-0195**		HOSE (137-CM)	
	2	1	**4E-7316**	1	STRAP AS	
M		1	**8T-3612**	2	NUT-WELD (M8X1.25-THD)	
	3	1	**131-1237**	1	BRACKET AS	
M		1	**8T-3490**	2	NUT-WELD (M10X1.5-THD)	
	4	1	**131-1238**	1	BRACKET AS	
Y	5	1	**152-2764**	1	WASHER GP-WINDOW	619
	6	1	**3S-2093**	2	STRAP-CABLE	
	7	1	**8T-4121**	4	WASHER-HARD (11X21X2.5-MM THK)	
M	8	1	**8T-4137**	4	BOLT (M10X1.5X20-MM)	
M	9	1	**8T-4189**	2	BOLT (M8X1.25X20-MM)	
	10	1	**8T-4224**	2	WASHER-HARD (8.8X16X2-MM THK)	

E-ORDER BY THE CENTIMETER
M-METRIC PART
Y-SEPARATE ILLUSTRATION

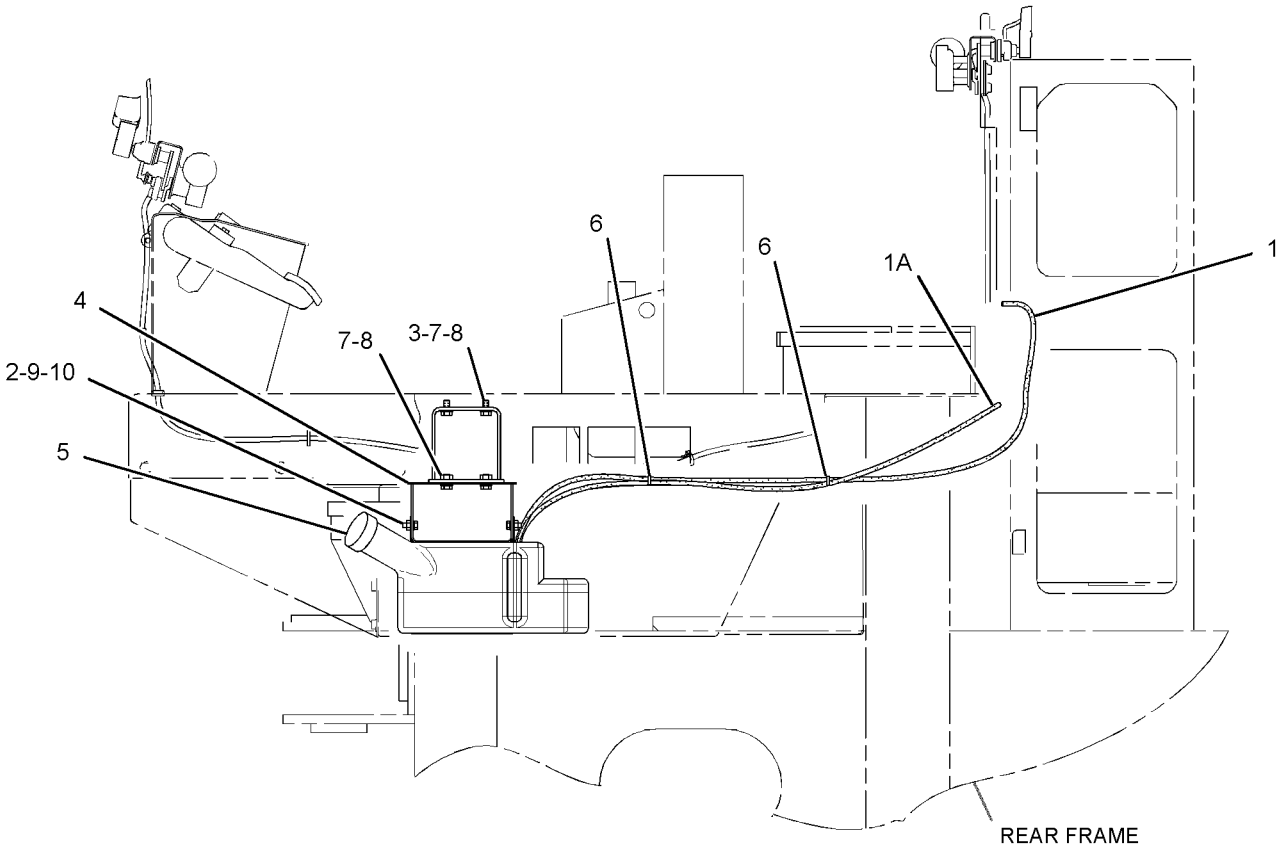

LEFT SIDE VIEW

GRAPHIC #1 **<END>** g01432363

152-2764 WASHER GP-WINDOW

S/N: KLN1-UP

PART OF 131-1236, 173-4311 WASHER GP-WINDOW

AN ATTACHMENT

SMCS-7306 **i01062076**

NOTE	REF NO	GRAPHIC REF	PART NUMBER	QTY	PART NAME 1 2 3 4 5 6 (PRODUCT LEVEL)	SEE PAGE
	1	1	**152-2763**	1	RESERVOIR	
	2	1	**8E-8292**	1	CAP-VENTED	
	3	1	**7T-8890**	2	PUMP AS-WASHER	
	4	1	**8T-5914**	2	GROMMET	
	5	1	**8T-5913**	2	SCREEN-FILTER	

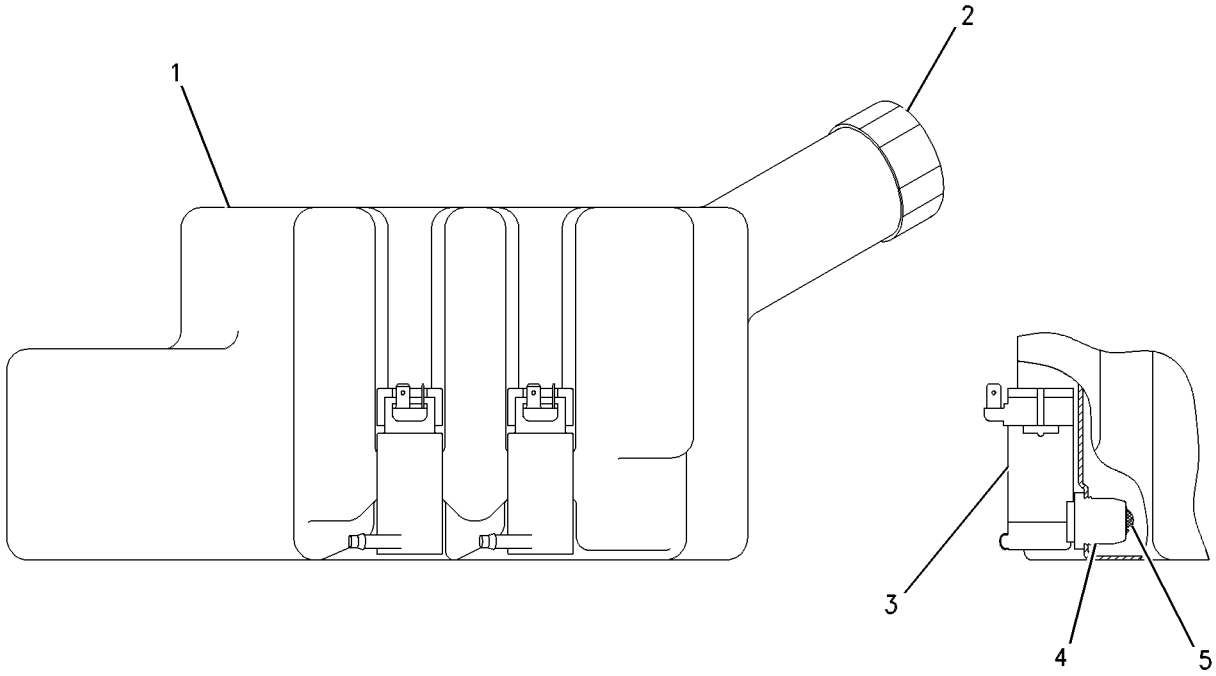

GRAPHIC #1 **<END>** g00325164

OPERATOR STATION

173-4311 WASHER GP-WINDOW

S/N: KLN1-UP
PART OF 310-9954 OPERATOR AR
AN ATTACHMENT

SMCS-7306 **i03626683**

NOTE	REF NO	GRAPHIC REF	PART NUMBER	QTY	PART NAME 1 2 3 4 5 6 (PRODUCT LEVEL)	SEE PAGE
	1	1	**4E-7316**	1	STRAP AS	
M		1	**8T-3612**	2	NUT-WELD (M8X1.25-THD)	
	2	1	**131-1237**	1	BRACKET AS	
M		1	**8T-3490**	2	NUT-WELD (M10X1.5-THD)	
	3	1	**131-1238**	1	BRACKET AS	
Y	4	1	**152-2764**	1	WASHER GP-WINDOW	619
	5	1	**8T-4121**	4	WASHER-HARD (11X21X2.5-MM THK)	
M	6	1	**8T-4137**	4	BOLT (M10X1.5X20-MM)	
M	7	1	**8T-4189**	2	BOLT (M8X1.25X20-MM)	
	8	1	**8T-4224**	2	WASHER-HARD (8.8X16X2-MM THK)	

M-METRIC PART
Y-SEPARATE ILLUSTRATION

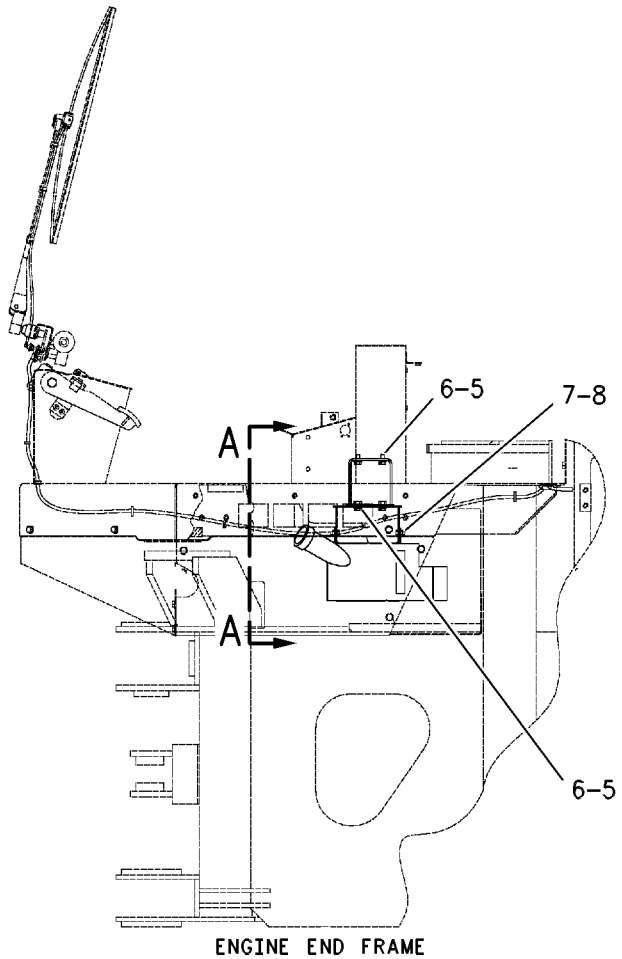

ENGINE END FRAME

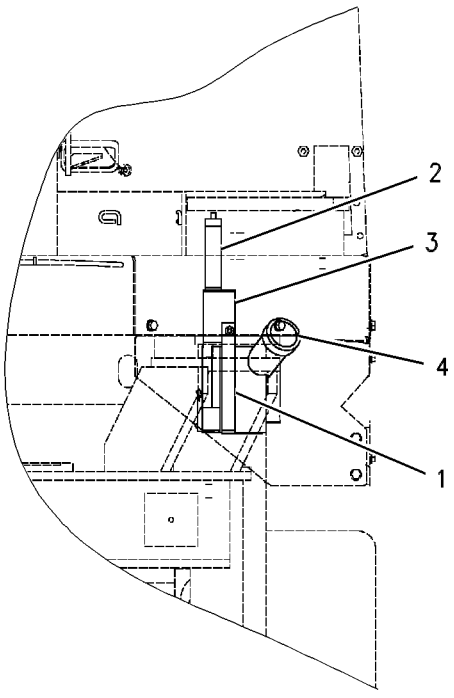

VIEW A-A

GRAPHIC #1 **<END>** g00661083

OPERATOR STATION

180-2535 WINDOW GP-DOOR

S/N: KLN1-UP
PART OF 290-8495, 290-8496 DOOR GP-CAB
AN ATTACHMENT

SMCS-7308, 7310 **i02320127**

NOTE	REF NO	GRAPHIC REF	PART NUMBER	QTY	PART NAME 1 2 3 4 5 6 (PRODUCT LEVEL)	SEE PAGE
	1	1	**144-1569**	1	STOP	
	2	1	**187-5122**	1	FRAME	
	3	1	**187-5123**	1	RAIL	
	4	1	**187-5124**	1	GLASS-SLIDING	
	5	1	**187-5125**	1	GLASS-FIXED	
	6	1	**187-5126**	1	RAIL AS	
	7	1	**187-5127**	1	CATCH AS	
		1	**150-8015**	1	GASKET	
	8	1	**187-5128**	1	CATCH AS	
		1	**150-8015**	1	GASKET	
M	9	1	**8T-0306**	6	SCREW-MACHINE (M5X0.8X10-MM)	
	10	1	**9X-2532**	1	SEAL	
E	11	1	**137-2170**		SEAL (250-CM)	

E-ORDER BY THE CENTIMETER
M-METRIC PART

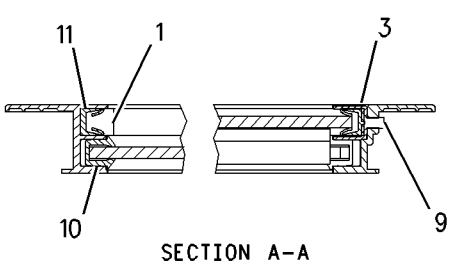

SECTION A-A

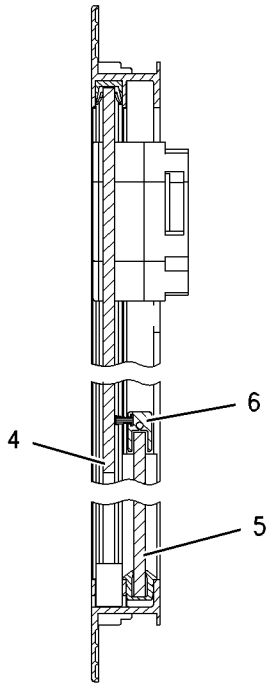

SECTION B-B

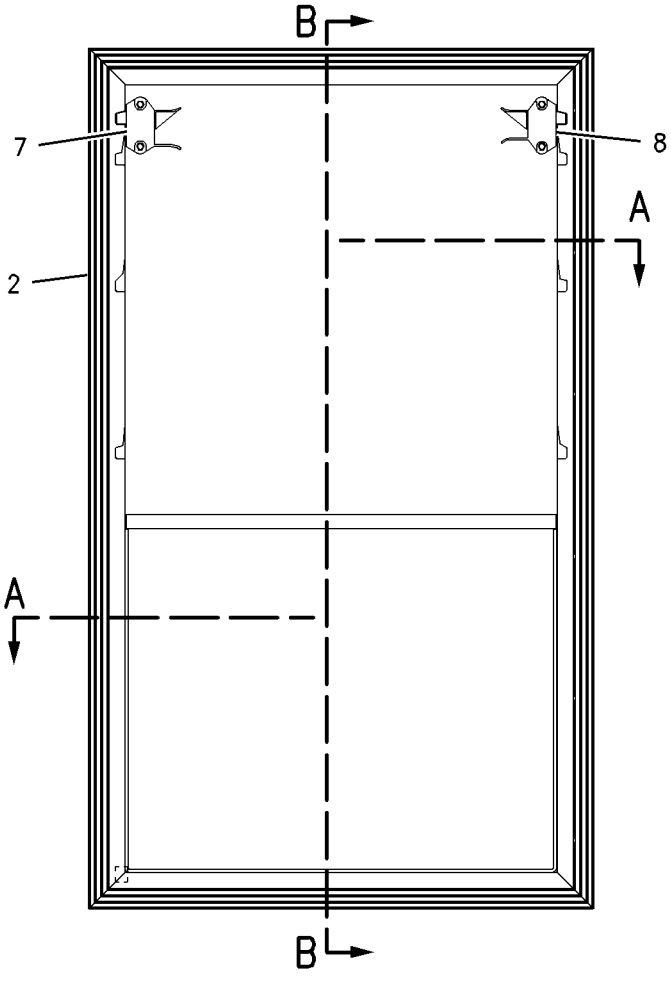

GRAPHIC #1 **<END>** g00762052

OPERATOR STATION

107-4628 WIPER GP-WINDOW

S/N: KLN1-UP
PART OF 190-4405, 317-0770 OPERATOR AR
AN ATTACHMENT

SMCS-7305 **i03412894**

NOTE	REF NO	GRAPHIC REF	PART NUMBER	QTY	PART NAME 1 2 3 4 5 6 (PRODUCT LEVEL)	SEE PAGE
	1	1	**6V-6543**	1	BLADE AS-WIPER (503-MM) (REAR)	
	2	1	**6V-6210**	1	GASKET-SHAFT	
	3	1	**6V-7419**	1	BLADE AS-WIPER (700-MM) (FRONT)	
	4	1	**8T-5400**	4	CONNECTOR AS	
	5	1	**9R-2596**	2	PLATE	
C	6	1	**155-5779**	1	WIPER PIVOT AS	
CY	7	1	**307-0205**	1	ARM GP-WINDOW WIPER (REAR)	491
CY	8	1	**214-7636**	1	ARM GP-WINDOW WIPER (FRONT)	490
CY	9	1	**155-5783**	1	MOTOR GP-WINDOW WIPER (24-VOLT) (FRONT)	565
CY	10	1	**155-5784**	1	MOTOR GP-WINDOW WIPER (24-VOLT) (REAR)	566
	11	1	**3S-2093**	7	STRAP-CABLE	
	12	1	**4M-7470**	1	GROMMET	
M	13	1	**3E-8020**	2	SCREW-TRUSS HEAD (M6X1X25-MM)	
E	14	1	**144-0195**		HOSE (267-CM)	
E	14A	1	**144-0195**		HOSE (70-CM)	

C-CHANGE FROM PREVIOUS TYPE
E-ORDER BY THE CENTIMETER
M-METRIC PART
Y-SEPARATE ILLUSTRATION

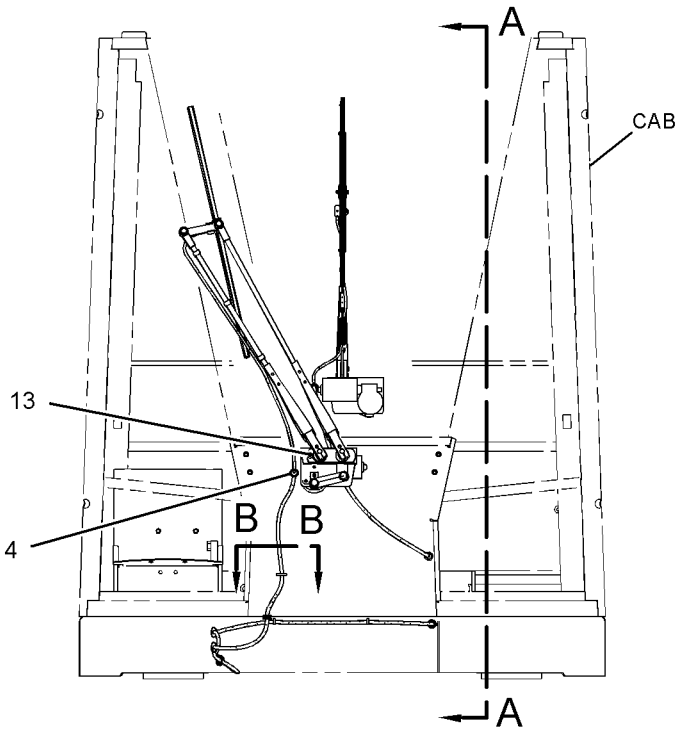

FRONT VIEW

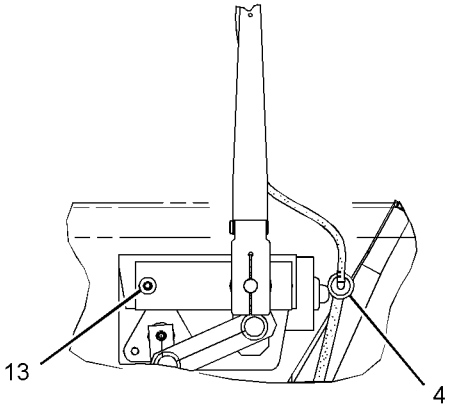

VIEW E-E

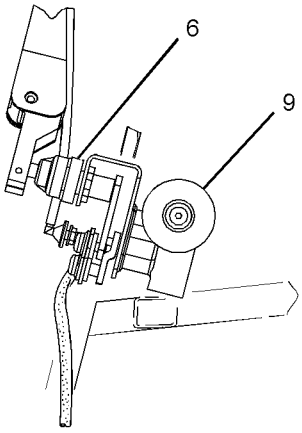

VIEW OF AREA C

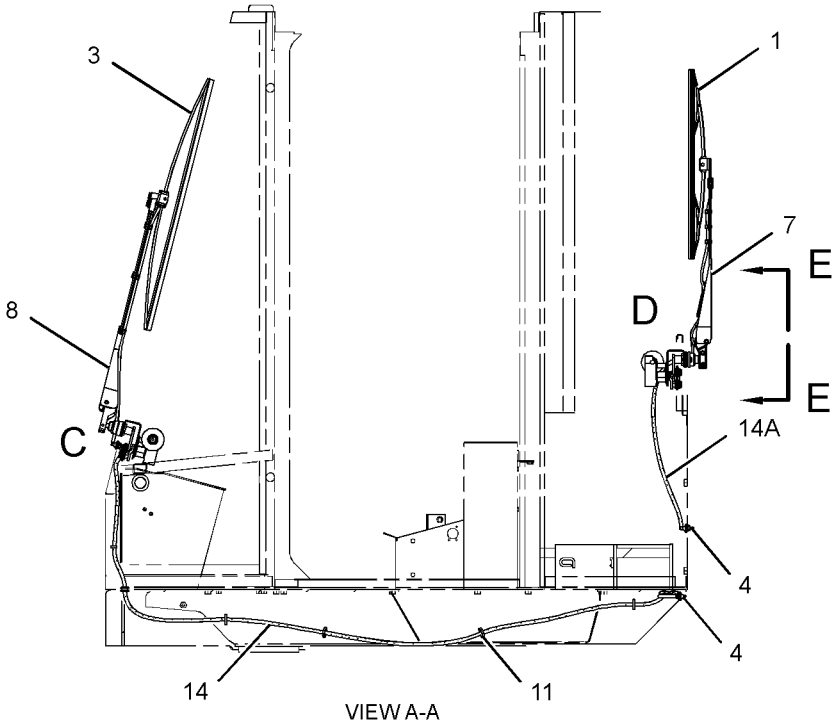

VIEW A-A

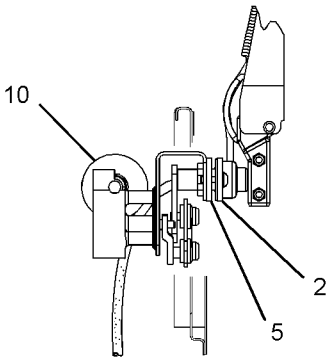

VIEW OF AREA D

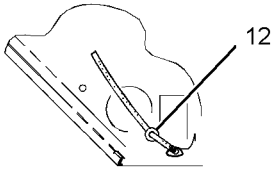

SECTION B-B

GRAPHIC #1 **<END>** g01411066

OPERATOR STATION

146-6908 WIPER GP-WINDOW–FRONT

S/N: KLN1-UP
PART OF 310-9953 CAB AR
AN ATTACHMENT

SMCS-7305 **i03626685**

NOTE	REF NO	GRAPHIC REF	PART NUMBER	QTY	PART NAME 1 2 3 4 5 6 (PRODUCT LEVEL)	SEE PAGE
	1	1	**6V-7419**	1	BLADE AS-WIPER (700-MM) (FRONT)	
C	2	1	**8T-5400**	1	CONNECTOR AS	
	3	1	**155-5779**	1	WIPER PIVOT AS	
Y	4	1	**214-7636**	1	ARM GP-WINDOW WIPER (FRONT)	490
Y	5	1	**155-5783**	1	MOTOR GP-WINDOW WIPER (24-VOLT) (FRONT)	565
	6	1	**3S-2093**	7	STRAP-CABLE	
	7	1	**4M-7470**	1	GROMMET	
M	8	1	**9X-2045**	1	SCREW-TRUSS HEAD (M6X1X20-MM)	
CE	9	1	**144-0195**		HOSE (311-CM)	
C	10	1	**6K-9632**	1	TEE	
C	11	1	**9R-3469**	1	DIAPHRAGM	

C-CHANGE FROM PREVIOUS TYPE
E-ORDER BY THE CENTIMETER
M-METRIC PART
Y-SEPARATE ILLUSTRATION

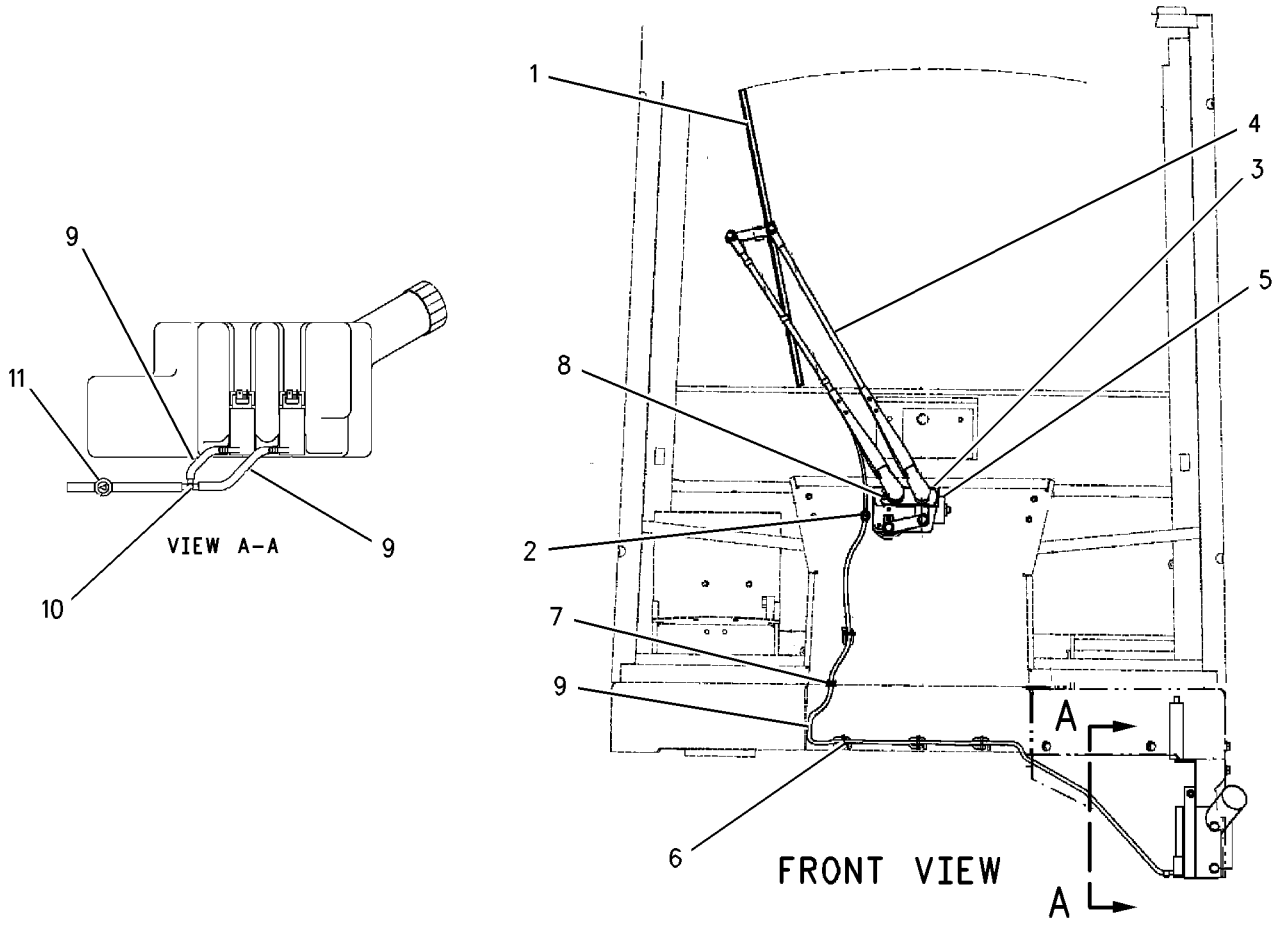

GRAPHIC #1 **<END>** g00929225

WORK TOOLS

116-9713 ADAPTER GP-TIP

S/N: KLN1-UP

AN ATTACHMENT

SMCS-6803 **i01862804**

NOTE	PART NUMBER	QTY	PART NAME 1 2 3 4 5 6 (PRODUCT LEVEL)	SEE PAGE
	6I-9250	1	ADAPTER-TIP	
	6I-9251	1	ADAPTER-TIP	
	1U-0257	6	ADAPTER-STRAP	
	8J-2928	12	BOLT-PLOW (1-8X3.75-IN)	
	4F-4042	2	BOLT-PLOW (1-8X3-IN)	
	4J-9058	2	BOLT-PLOW (1-8X3.25-IN)	
	8J-2933	12	NUT (1-8-THD)	
	2J-3507	4	NUT-FULL (1-8-THD)	

<END>

WORK TOOLS

229-9714 ARM GP-MATERIAL HANDLING

S/N: KLN1-UP

AN ATTACHMENT

SMCS-6542 **i03083164**

NOTE	REF NO	GRAPHIC REF	PART NUMBER	QTY	PART NAME 1 2 3 4 5 6 (PRODUCT LEVEL)	SEE PAGE
	1	1	**6W-5652**	1	EXTENSION AS (MIDDLE)	
	2	1	**6W-5656**	1	EXTENSION AS (OUTER)	
	3	1	**6W-5678**	1	RETAINER AS	
		1	**6W-5677**	1	ROD	
	4	1	**6W-5679**	1	RETAINER AS	
		1	**6W-5677**	1	ROD	
	5	1	**8D-3791**	2	PIN	
	6	1	**9V-2714**	1	HOOK	
	7	1	**9V-2715**	1	SHACKLE AS	
	8	1	**7X-0371**	1	BOLT (3/4-10X3.75-IN)	
	9	1	**8T-4896**	2	WASHER-HARD (10.2X18.5X2.5-MM THK)	
	10	1	**229-9715**	1	BASE AS	
	11	1	**233-2944**	2	FILM-RATING (LOAD)	
	12	1	**1K-6870**	1	LOCKNUT (3/4-10-THD)	
	13	1	**5G-2373**	2	PIN	
	14	1	**5M-3062**	2	BOLT (3/8-16X0.75-IN)	

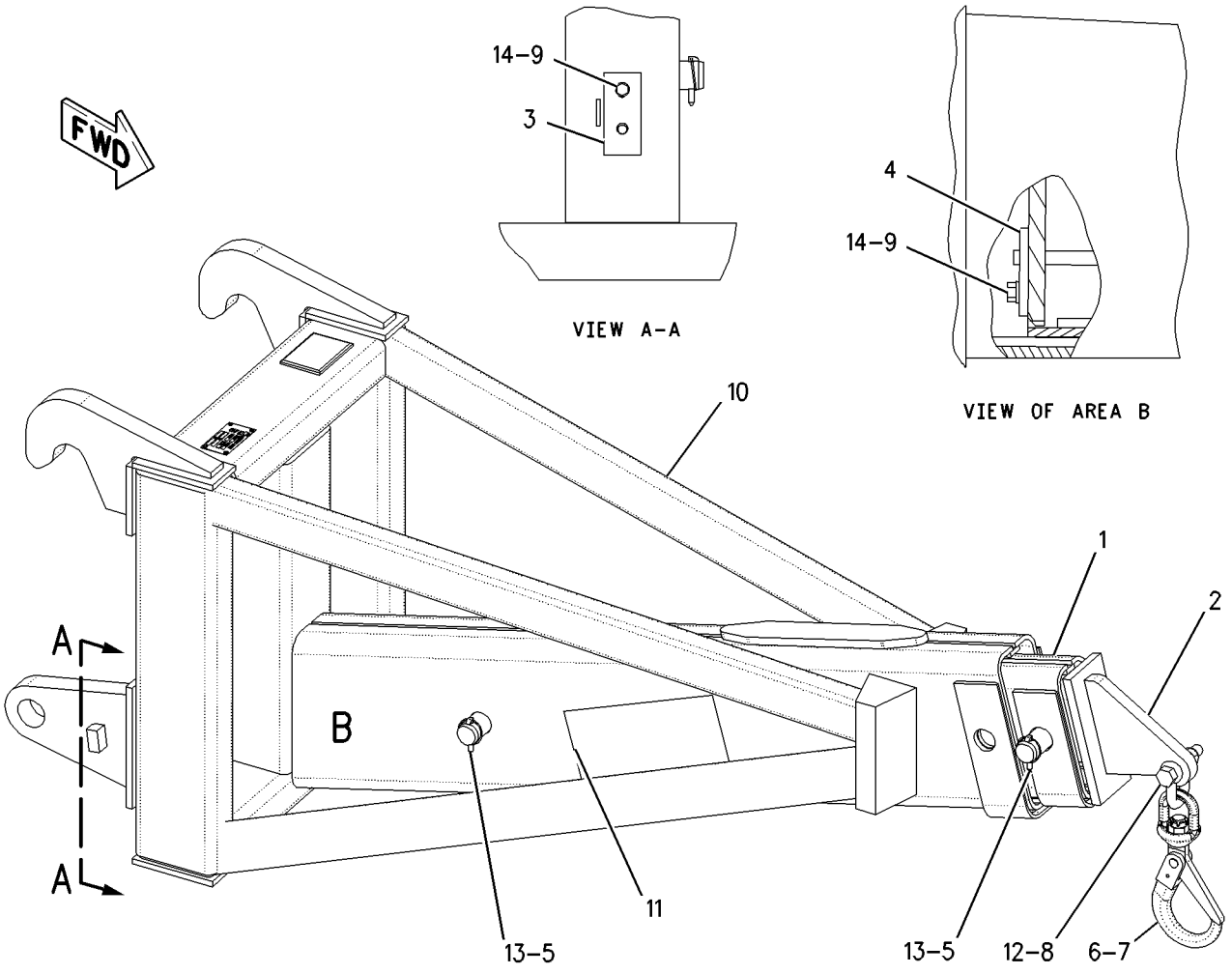

GRAPHIC #1 **<END>** g00977652

241-0935 BUCKET AR-GENERAL PURPOSE–QUICK COUPLER

S/N: KLN1-UP
AN ATTACHMENT

SMCS-6101 **i03001566**

NOTE	REF NO	GRAPHIC REF	PART NUMBER	QTY	PART NAME 1 2 3 4 5 6 (PRODUCT LEVEL)	SEE PAGE
	1	1	**208-1032**	1	PLATE AS	
Y	2	1	**241-0936**	1	BUCKET GP-GENERAL PURPOSE (QUICK COUPLER)	645
	3	1	**8T-4121**	6	WASHER-HARD (11X21X2.5-MM THK)	
M	4	1	**8T-4136**	6	BOLT (M10X1.5X25-MM)	

M-METRIC PART
Y-SEPARATE ILLUSTRATION

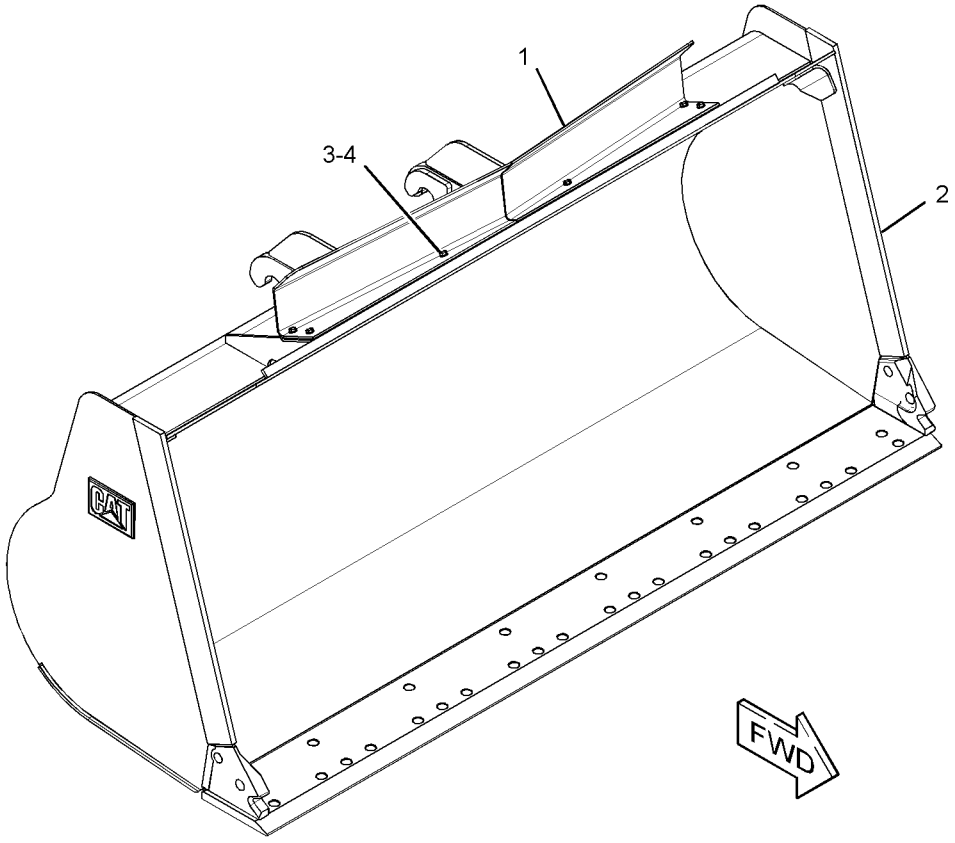

GRAPHIC #1 **<END>** g01547740

WORK TOOLS

252-6909 BUCKET AR-GENERAL PURPOSE

S/N: KLN1-UP

AN ATTACHMENT

SMCS-6101 **i03001574**

NOTE	REF NO	GRAPHIC REF	PART NUMBER	QTY	PART NAME 1 2 3 4 5 6 (PRODUCT LEVEL)	SEE PAGE
	1	1	**143-4973**	1	PLATE AS	
Y	2	1	*148-7900*	1	MOUNTING GP-BUCKET	660
Y	3	1	**252-6910**	1	BUCKET GP-GENERAL PURPOSE	646
	4	1	**8T-4121**	6	WASHER-HARD (11X21X2.5-MM THK)	
M	5	1	**8T-4136**	6	BOLT (M10X1.5X25-MM)	

M-METRIC PART
Y-SEPARATE ILLUSTRATION

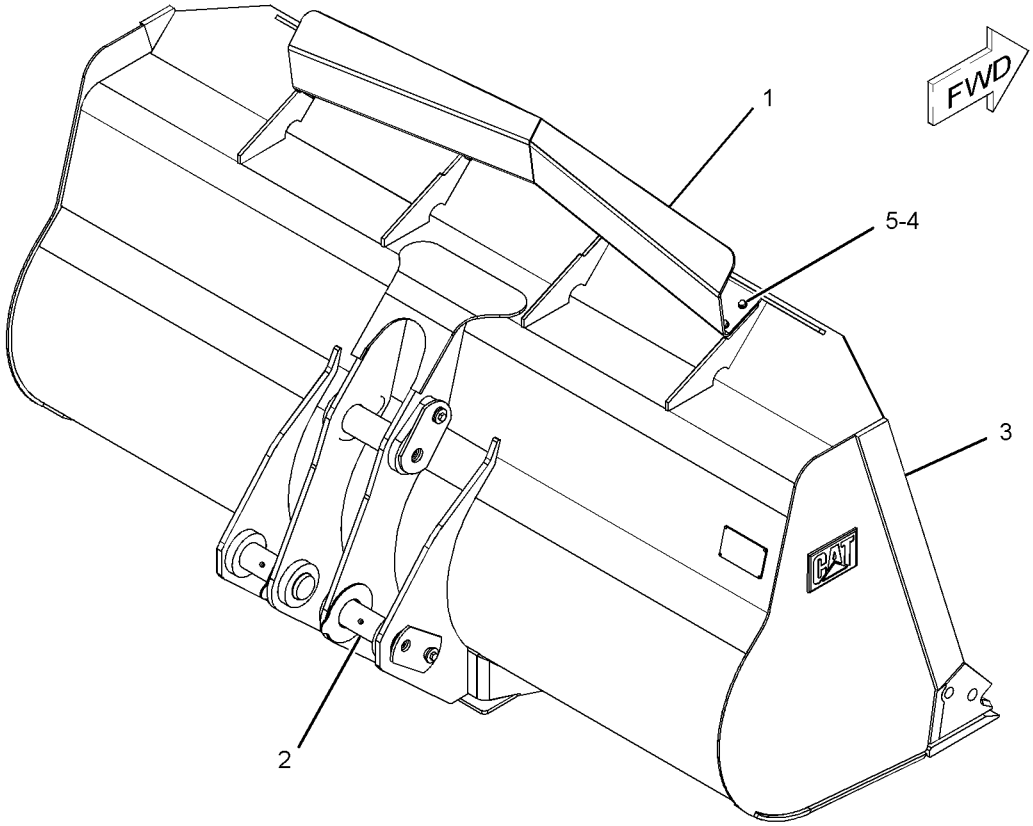

GRAPHIC #1 **<END>** g01119525

251-5412 BUCKET AR-LIGHT MATERIAL

S/N: KLN1-UP
AN ATTACHMENT

SMCS-6103 **i03001572**

NOTE	REF NO	GRAPHIC REF	PART NUMBER	QTY	PART NAME 1 2 3 4 5 6 (PRODUCT LEVEL)	SEE PAGE
	1	1	**208-1032**	1	PLATE AS	
Y	2	1	**251-5413**	1	BUCKET GP-LIGHT MATERIAL (QUICK COUPLER)	647
	3	1	**8T-4121**	6	WASHER-HARD (11X21X2.5-MM THK)	
M	4	1	**8T-4136**	6	BOLT (M10X1.5X25-MM)	

M-METRIC PART
Y-SEPARATE ILLUSTRATION

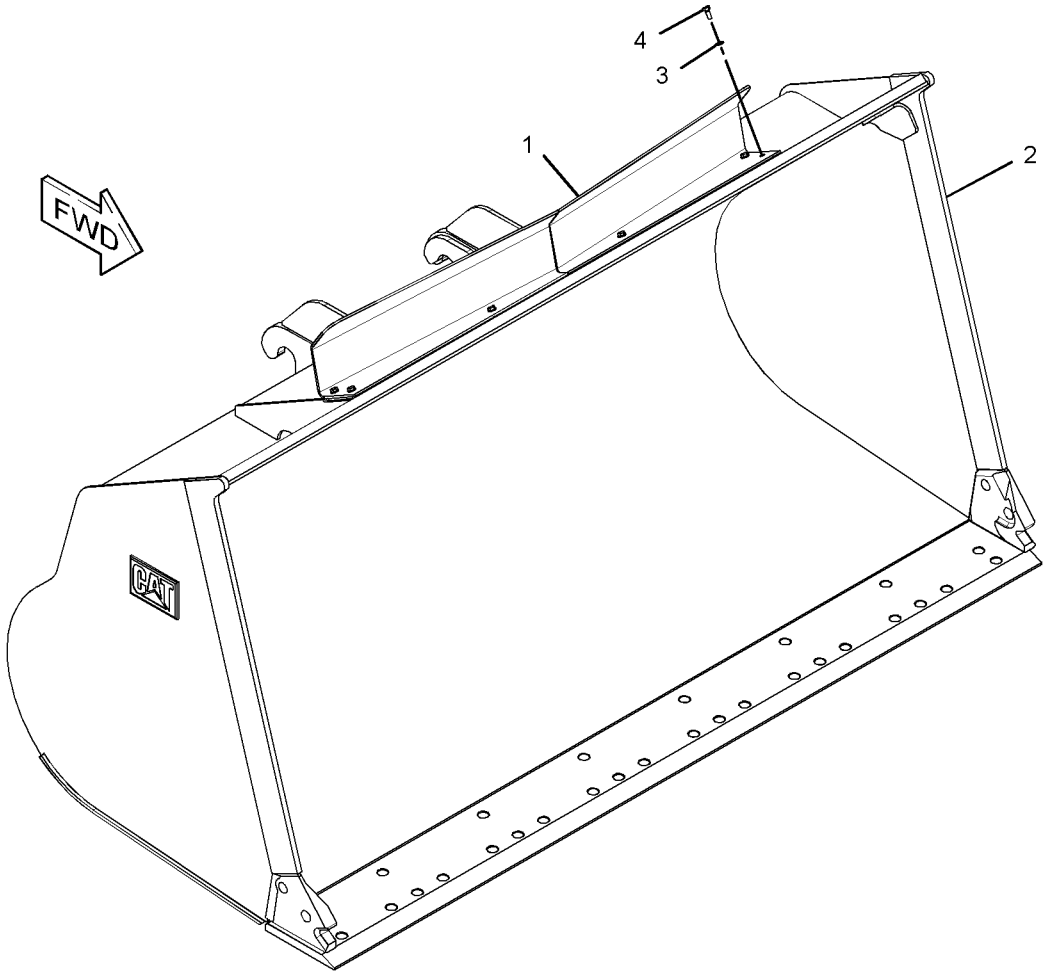

GRAPHIC #1 **<END>** g01535274

WORK TOOLS

252-6903 BUCKET AR-LIGHT MATERIAL

S/N: KLN1-UP
2.8-CU M (3.7-CU YD) CAPACITY
AN ATTACHMENT

SMCS-6103 **i03001575**

NOTE	REF NO	GRAPHIC REF	PART NUMBER	QTY	PART NAME 1 2 3 4 5 6 (PRODUCT LEVEL)	SEE PAGE
	1	1	**143-4973**	1	PLATE AS	
Y	2	1	*148-7900*	1	MOUNTING GP-BUCKET	660
Y	3	1	**252-6904**	1	BUCKET GP-LIGHT MATERIAL	648
	4	1	**8T-4121**	6	WASHER-HARD (11X21X2.5-MM THK)	
M	5	1	**8T-4136**	6	BOLT (M10X1.5X25-MM)	

M-METRIC PART
Y-SEPARATE ILLUSTRATION

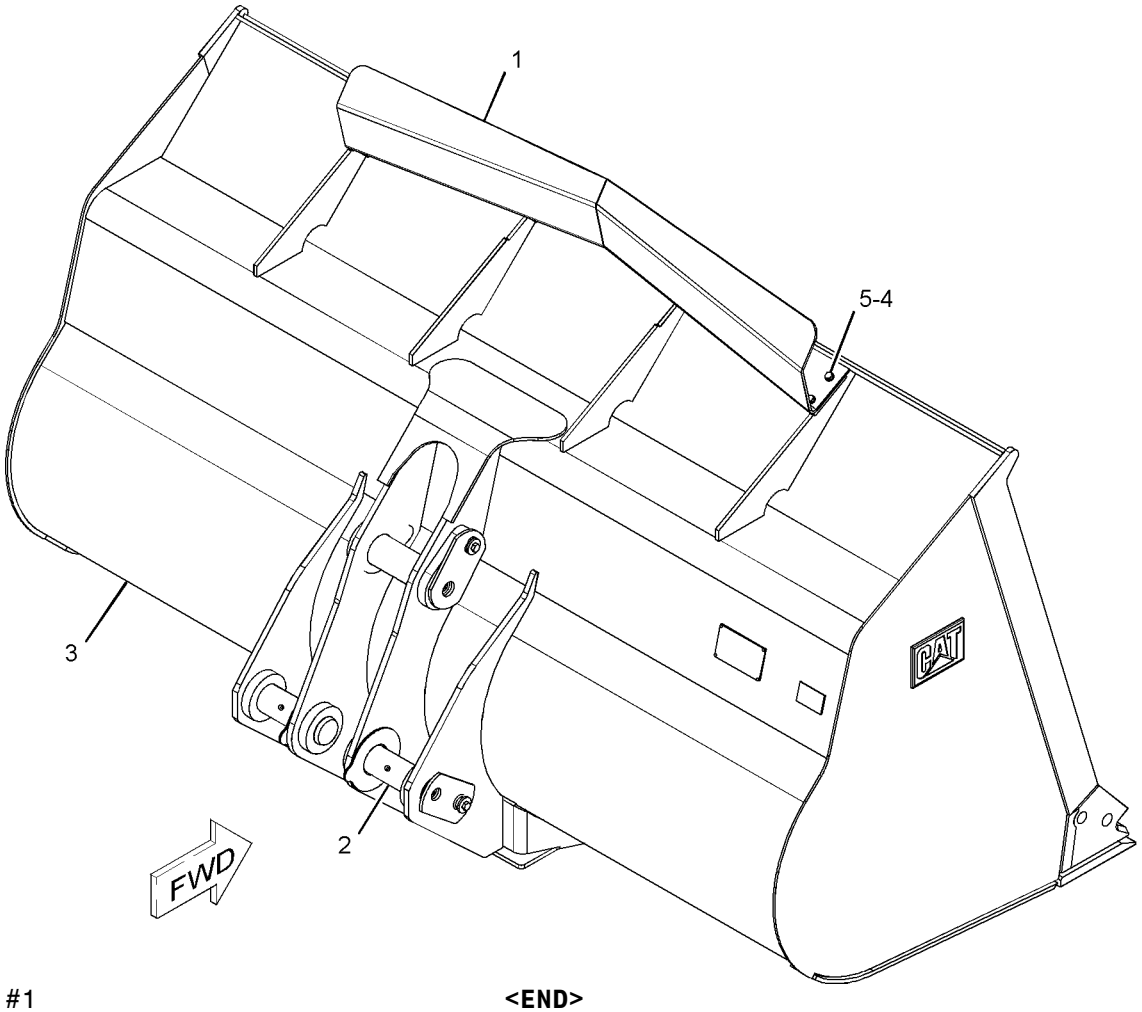

GRAPHIC #1 **<END>** g01092817

WORK TOOLS

180-9335 BUCKET AR-MULTIPURPOSE

S/N: KLN1-UP
2610-MM (102.7-IN) WIDE
AN ATTACHMENT

SMCS-6104 **i03362901**

NOTE	REF NO	GRAPHIC REF	PART NUMBER	QTY	PART NAME 1 2 3 4 5 6 (PRODUCT LEVEL)	SEE PAGE
	1	1	**3B-8488**	2	FITTING-GREASE	
	2	1	**8D-6234**	4	BUSHING-FLANGE	
	3	1	**8T-8917**	2	BOLT (1/2-13X1.25-IN)	
	4	1	**159-8038**	2	FILM-WARNING (CRUSH HAZARD, STAY BACK)	
Y	5	1	*180-9336*	1	LINES GP-CONNECTING	350
Y	6	1	*180-9337*	1	BUCKET GP-MULTIPURPOSE	649
Y	7	1	*180-9338*	2	CYLINDER GP-BUCKET	340
	8	1	**183-2160**	2	PIN AS	
	9	1	**183-2161**	2	PIN AS	
	10	1	**3B-8489**	4	FITTING-GREASE	
	11	1	**9X-0941**	2	LOCKNUT (1/2-13-THD)	
	12	1	**7K-9202**	4	SEAL-LIP TYPE	
	13	1	**7K-9204**	4	SEAL-LIP TYPE	
	14	1	**8T-4835**	2	BOLT (1/2-13X2-IN)	
	15	1	**312-5694**	1	SETSCREW (1/4-20X0.25-IN)	

Y-SEPARATE ILLUSTRATION

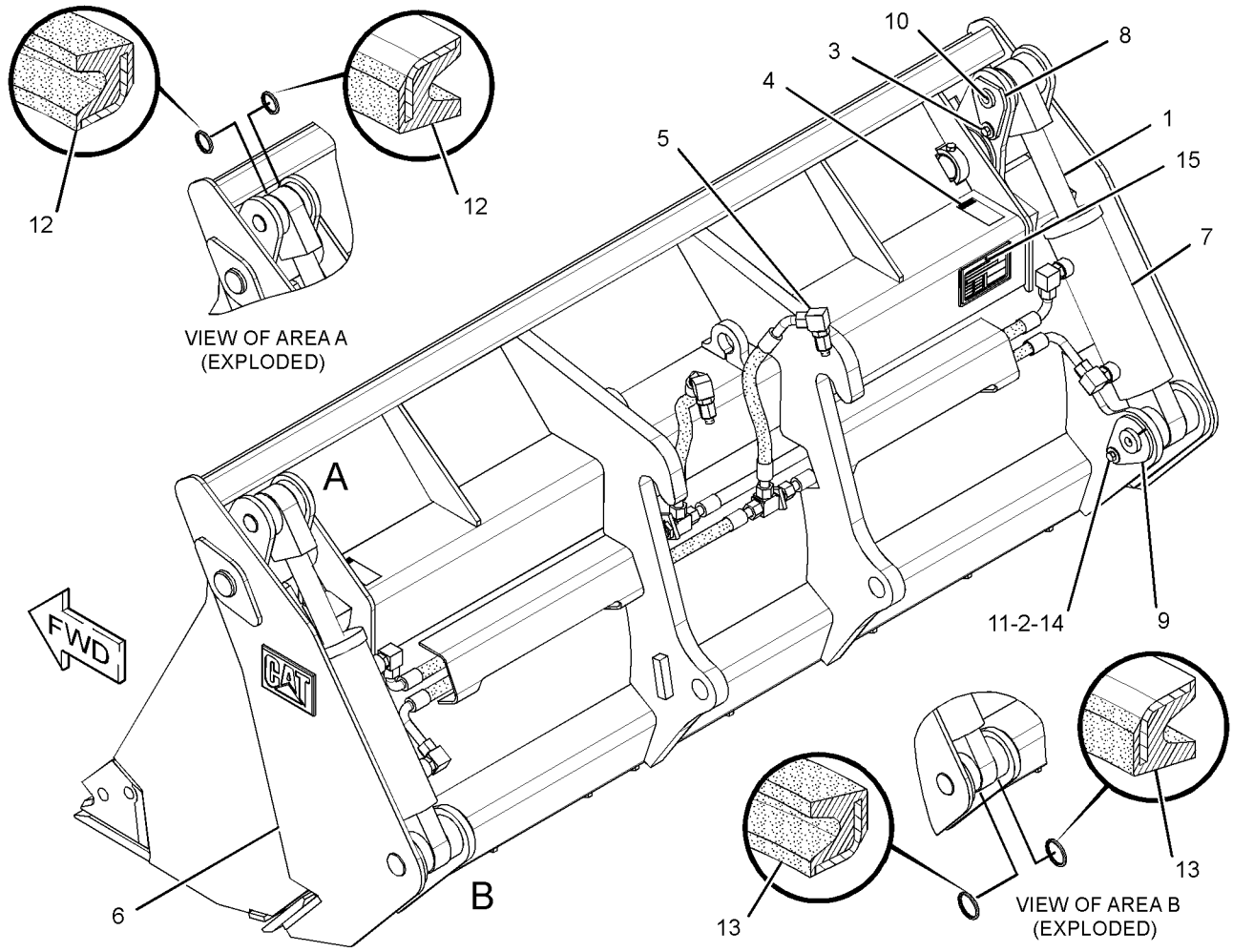

GRAPHIC #1 **<END>** g01818140

WORK TOOLS

183-4735 BUCKET AR-MULTIPURPOSE

S/N: KLN1-UP
AN ATTACHMENT
TYPE 1

SMCS-6104 **i03085727**

NOTE	REF NO	GRAPHIC REF	PART NUMBER	QTY	PART NAME 1 2 3 4 5 6 (PRODUCT LEVEL)	SEE PAGE
	1	1	**3B-8488**	2	FITTING-GREASE	
	2	1	**8D-6234**	4	BUSHING-FLANGE	
	3	1	**8T-8917**	2	BOLT (1/2-13X1.25-IN)	
	4	1	**159-8038**	2	FILM-WARNING (CRUSH HAZARD, STAY BACK)	
Y	5	1	**180-9338**	2	CYLINDER GP-BUCKET	340
	6	1	**183-2160**	2	PIN AS	
	7	1	**183-2161**	2	PIN AS	
Y	8	1	*183-5583*	1	BUCKET GP-MULTIPURPOSE	650
Y	9	1	*183-8702*	1	LINES GP-CONNECTING	353
	10	1	**3B-8489**	4	FITTING-GREASE	
	11	1	**6V-8188**	2	NUT (1/2-13-THD)	
	12	1	**7K-9202**	4	SEAL-LIP TYPE	
	13	1	**7K-9204**	4	SEAL-LIP TYPE	
	14	1	**8T-4835**	2	BOLT (1/2-13X2-IN)	

Y-SEPARATE ILLUSTRATION

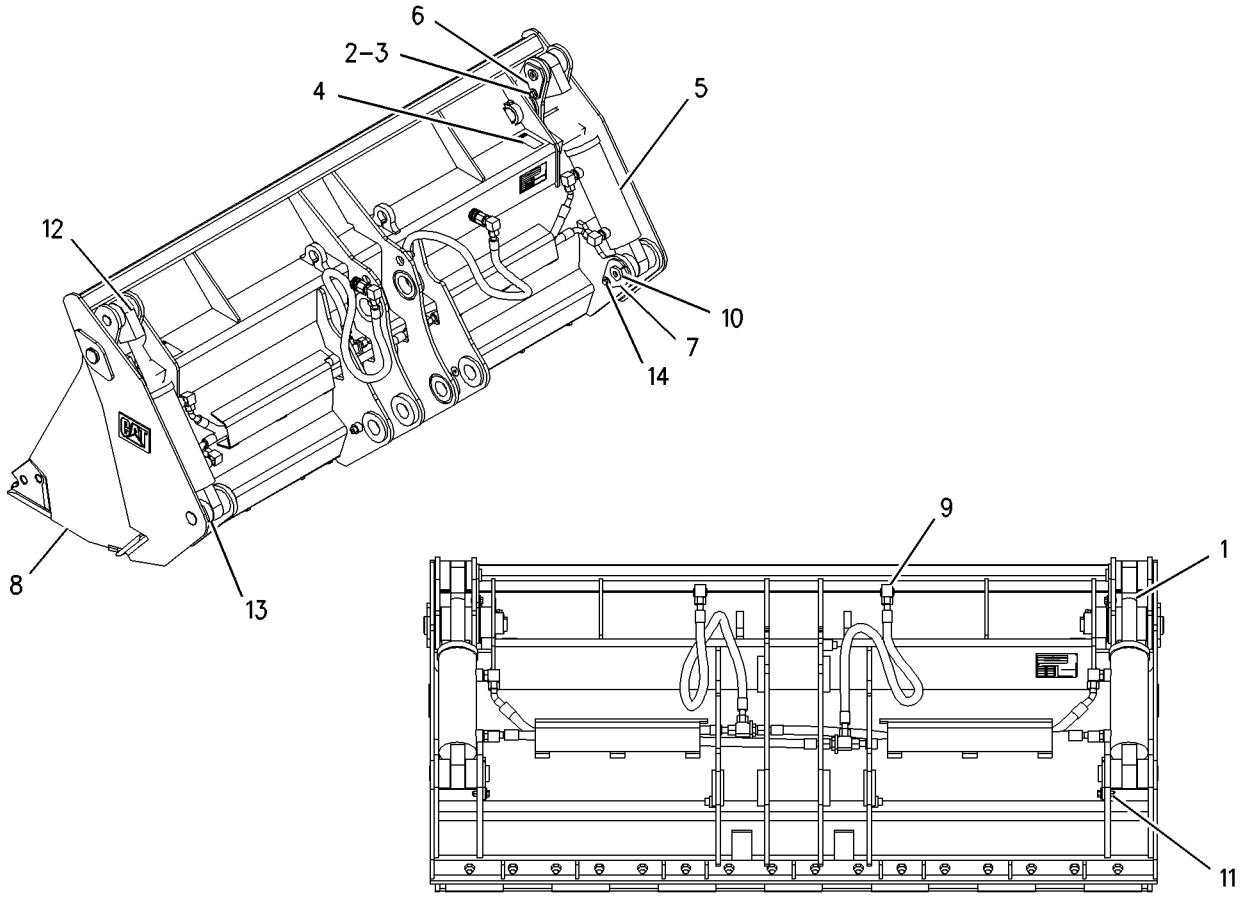

GRAPHIC #1 **<END>** g00652015

WORK TOOLS

183-4735 BUCKET AR-MULTIPURPOSE

S/N: KLN1-UP
AN ATTACHMENT
TYPE 2

SMCS-6104 **i03315044**

NOTE	REF NO	GRAPHIC REF	PART NUMBER	QTY	PART NAME 1 2 3 4 5 6 (PRODUCT LEVEL)	SEE PAGE
	1	1	**3B-8488**	2	FITTING-GREASE	
	2	1	**8D-6234**	4	BUSHING-FLANGE	
	3	1	**8T-8917**	2	BOLT (1/2-13X1.25-IN)	
	4	1	**159-8038**	2	FILM-WARNING (CRUSH HAZARD, STAY BACK)	
Y	5	1	**180-9338**	2	CYLINDER GP-BUCKET	340
	6	1	**183-2160**	2	PIN AS	
	7	1	**183-2161**	2	PIN AS	
Y	8	1	*183-5583*	1	BUCKET GP-MULTIPURPOSE	650
CY	9	1	*335-3071*	1	LINES GP-CONNECTING	356
	10	1	**3B-8489**	4	FITTING-GREASE	
	11	1	**6V-8188**	2	NUT (1/2-13-THD)	
	12	1	**7K-9202**	4	SEAL-LIP TYPE	
	13	1	**7K-9204**	4	SEAL-LIP TYPE	
	14	1	**8T-4835**	2	BOLT (1/2-13X2-IN)	
C	15	1	**312-5694**	1	SETSCREW (1/4-20X0.25-IN)	

C-CHANGE FROM PREVIOUS TYPE
Y-SEPARATE ILLUSTRATION

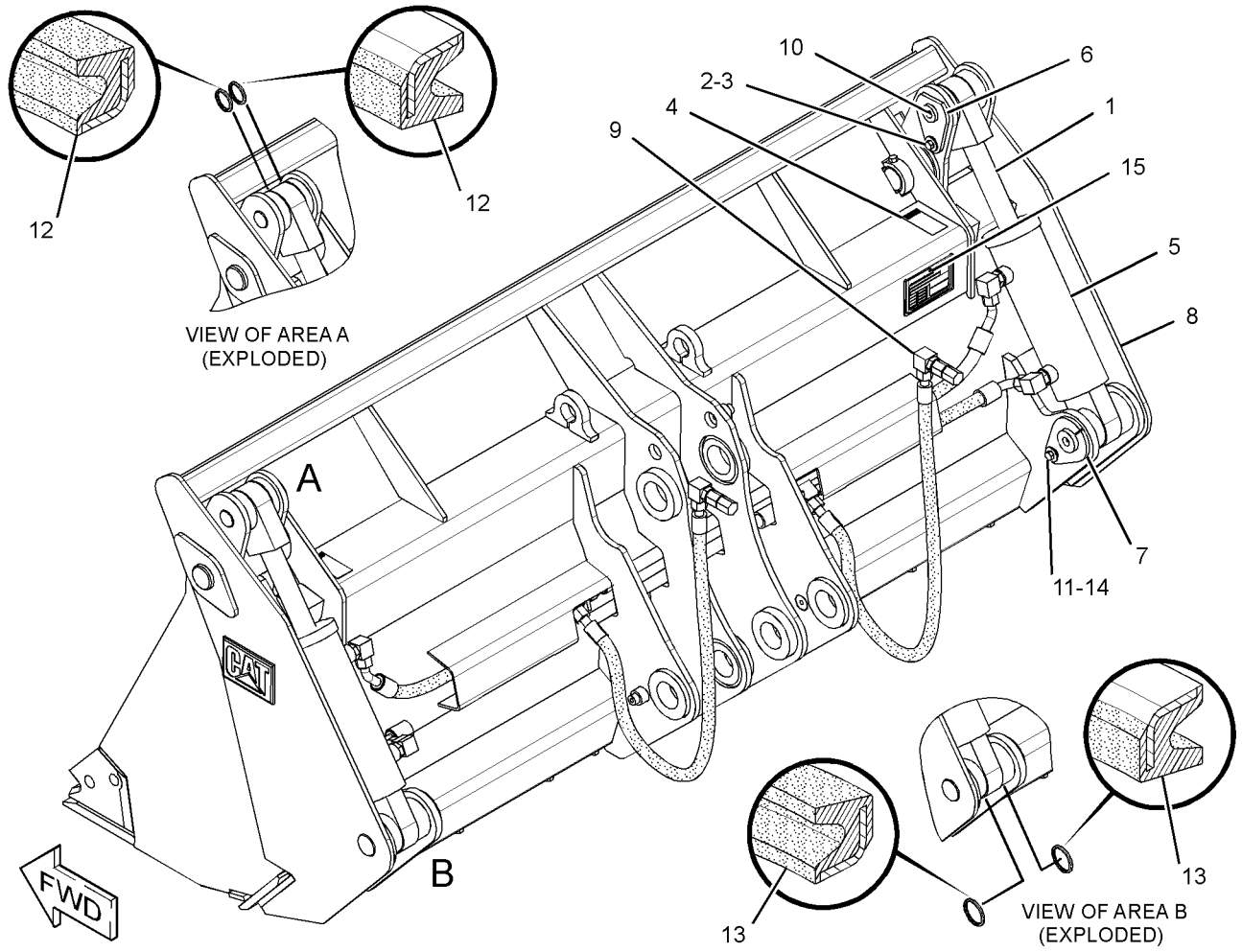

GRAPHIC #1 **<END>** g01816515

WORK TOOLS

179-3192 BUCKET AR-SIDE DUMP

S/N: KLN1-UP
AN ATTACHMENT

SMCS-6105 **i03085780**

NOTE	REF NO	GRAPHIC REF	PART NUMBER	QTY	PART NAME 1 2 3 4 5 6 (PRODUCT LEVEL)	SEE PAGE
M	1	1	**8T-6868**	2	BOLT (M12X1.75X80-MM)	
	2	1	**169-4868**	1	FILM-WARNING (NO CLEARANCE, STAY BACK)	
Y	3	1	*177-7775*	1	BUCKET GP-SIDE DUMP	652
Y	4	1	**180-6366**	1	CYLINDER GP-HYDRAULIC	322
Y	5	1	*180-9927*	1	LINES GP-CONNECTING	351
	6	1	**185-1134**	2	PIN	
	7	1	**3B-8489**	5	FITTING-GREASE	
M	8	1	**6V-7687**	2	LOCKNUT (M12X1.75-THD)	

M-METRIC PART
Y-SEPARATE ILLUSTRATION

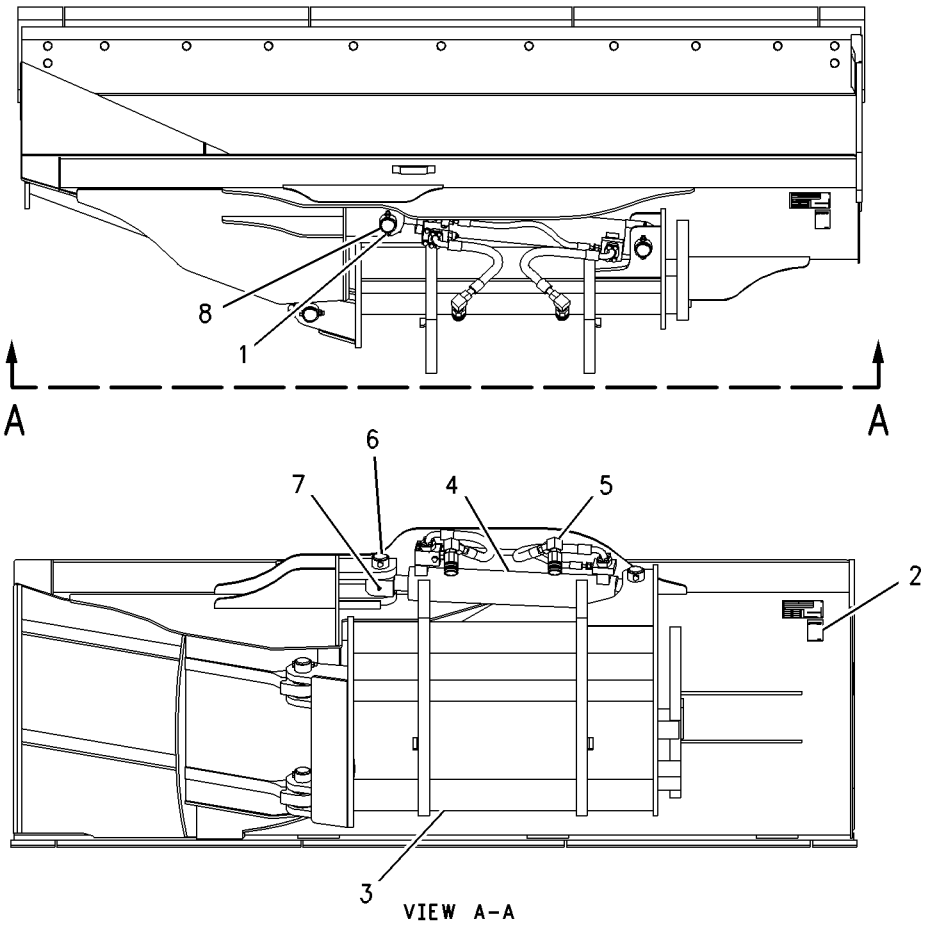

VIEW A-A

GRAPHIC #1 **<END>** g00707310

145-5163 BUCKET AS-GENERAL PURPOSE

S/N: KLN1-UP
2532-MM (99.7-IN) WIDE X 1.7-CU M (2.2-CU YD) CAPACITY
PART OF 172-8563 BUCKET AS-GENERAL PURPOSE
AN ATTACHMENT

SMCS-6101 **i01862852**

NOTE	REF NO	GRAPHIC REF	PART NUMBER	QTY	PART NAME 1 2 3 4 5 6 (PRODUCT LEVEL)	SEE PAGE
	1	1	**4E-0659**	1	EDGE-CUTTING	
	2	1	**162-7790**	4	PLATE	
	3	1	**162-1961**	2	PLATE	
	4	1	**9T-3598**	2	BOSS (M10X1.5-THD)	
	5	1	**9V-4484**	3	PLATE	
	6	1	**145-5202**	1	HINGE AS (TILT, LH) (LH INNER)	
	7	1	**111-9758**	1	PLATE	
	8	1	**145-5201**	1	HINGE AS (TILT, RH) (RH INNER)	

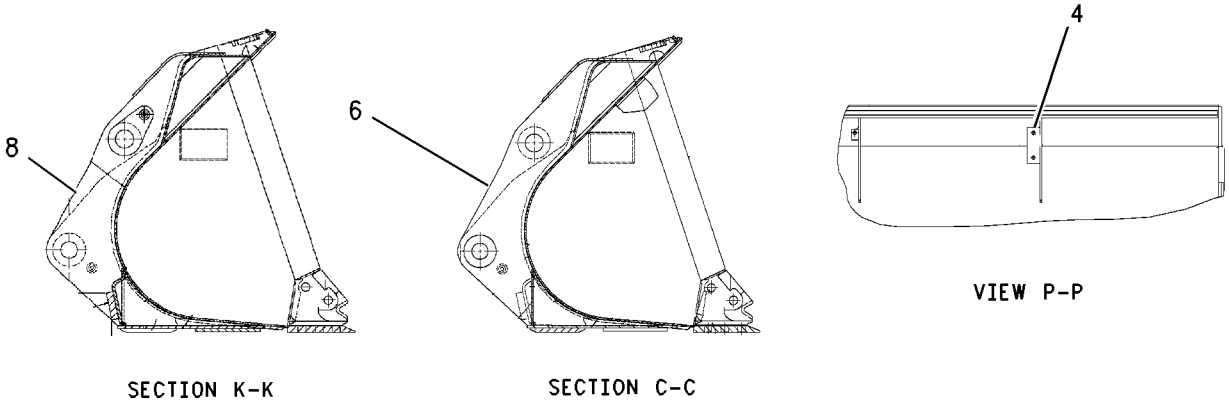

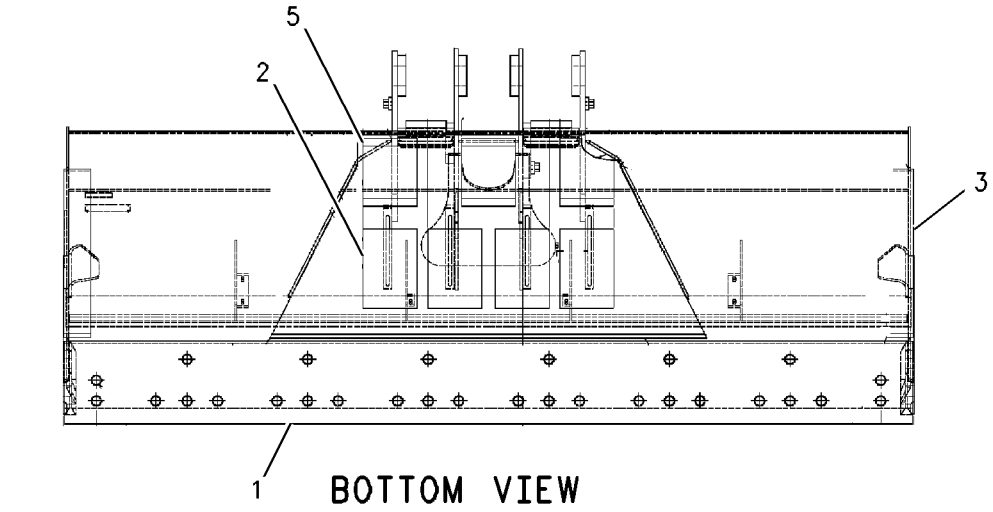

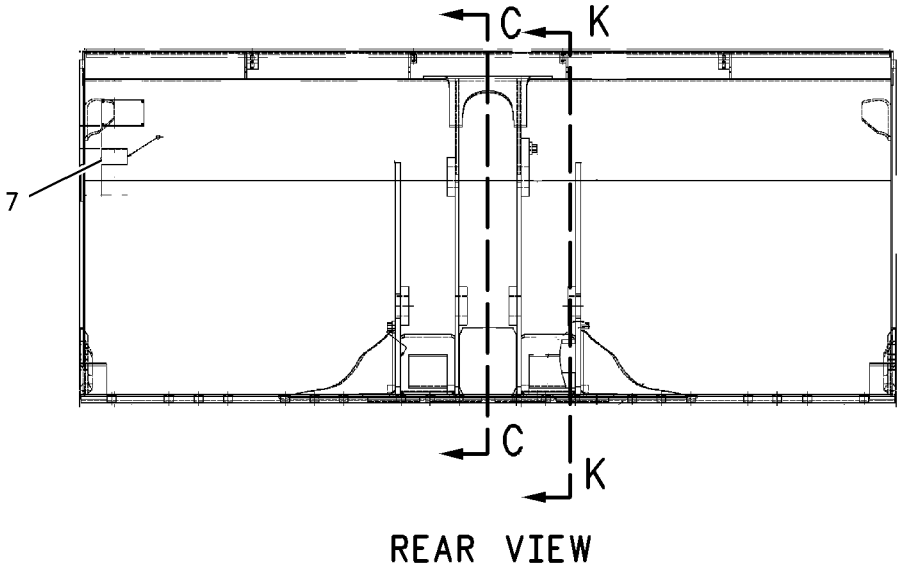

GRAPHIC #1 **<END>** g00654767

172-8563 BUCKET AS-GENERAL PURPOSE

S/N: KLN1-UP

PART OF 167-3963 BUCKET GP-GENERAL PURPOSE

AN ATTACHMENT

SMCS-6101 **i01505695**

NOTE	REF NO	GRAPHIC REF	PART NUMBER	QTY	PART NAME 1 2 3 4 5 6 (PRODUCT LEVEL)	SEE PAGE
Y	1	1	*145-5163*	1	BUCKET AS-GENERAL PURPOSE	635

Y-SEPARATE ILLUSTRATION

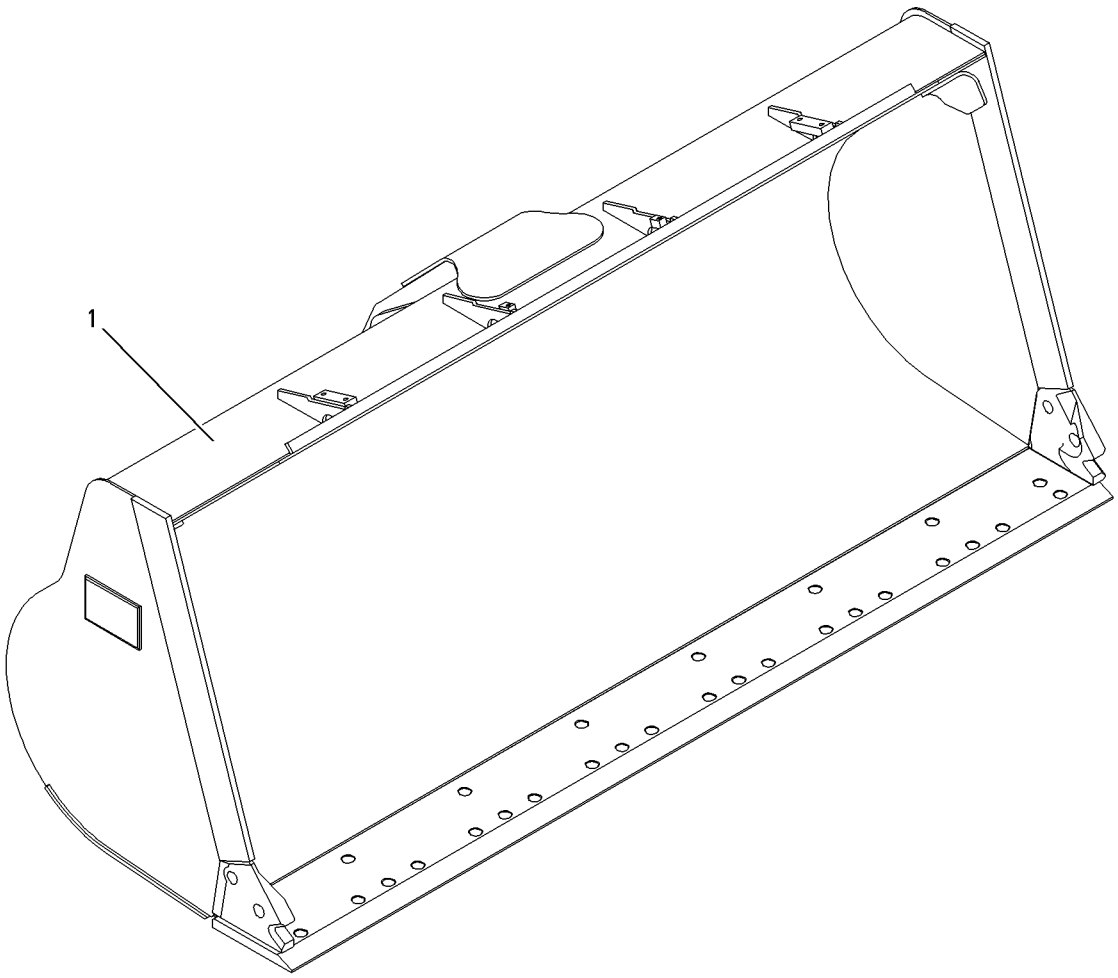

GRAPHIC #1 **<END>** g00782875

WORK TOOLS

241-0937 BUCKET AS-GENERAL PURPOSE—QUICK COUPLER

S/N: KLN1-UP
2524-MM (99.4-IN) WIDE X 2.1-CU M (2.8-CU YD) CAPACITY
PART OF 241-0936 BUCKET GP-GENERAL PURPOSE
AN ATTACHMENT

SMCS-6101 **i02973992**

NOTE	REF NO	GRAPHIC REF	PART NUMBER	QTY	PART NAME 1 2 3 4 5 6 (PRODUCT LEVEL)	SEE PAGE
	1	1	**4E-0659**	1	EDGE-CUTTING	
	2	1	**9V-9480**	2	PLATE	
	3	1	**092-1136**	2	BOSS (M10X1.5-THD)	
	4	1	*154-8410*	1	PLATE AS (RH)	
		1	**2C-9259**	1	PLATE-IDENTIFICATION (CAT)	
		1	**6I-8311**	1	CORNER (RH)	
		1	**154-8413**	1	BAR	
	5	1	*154-8411*	1	PLATE AS (LH)	
		1	**2C-9259**	1	PLATE-IDENTIFICATION (CAT)	
		1	**6I-8310**	1	CORNER (LH)	
		1	**154-8413**	1	BAR	
	6	1	**164-4021**	2	PLATE	
	7	1	**164-9316**	2	PLATE	
	8	1	**9T-3598**	2	BOSS (M10X1.5-THD)	

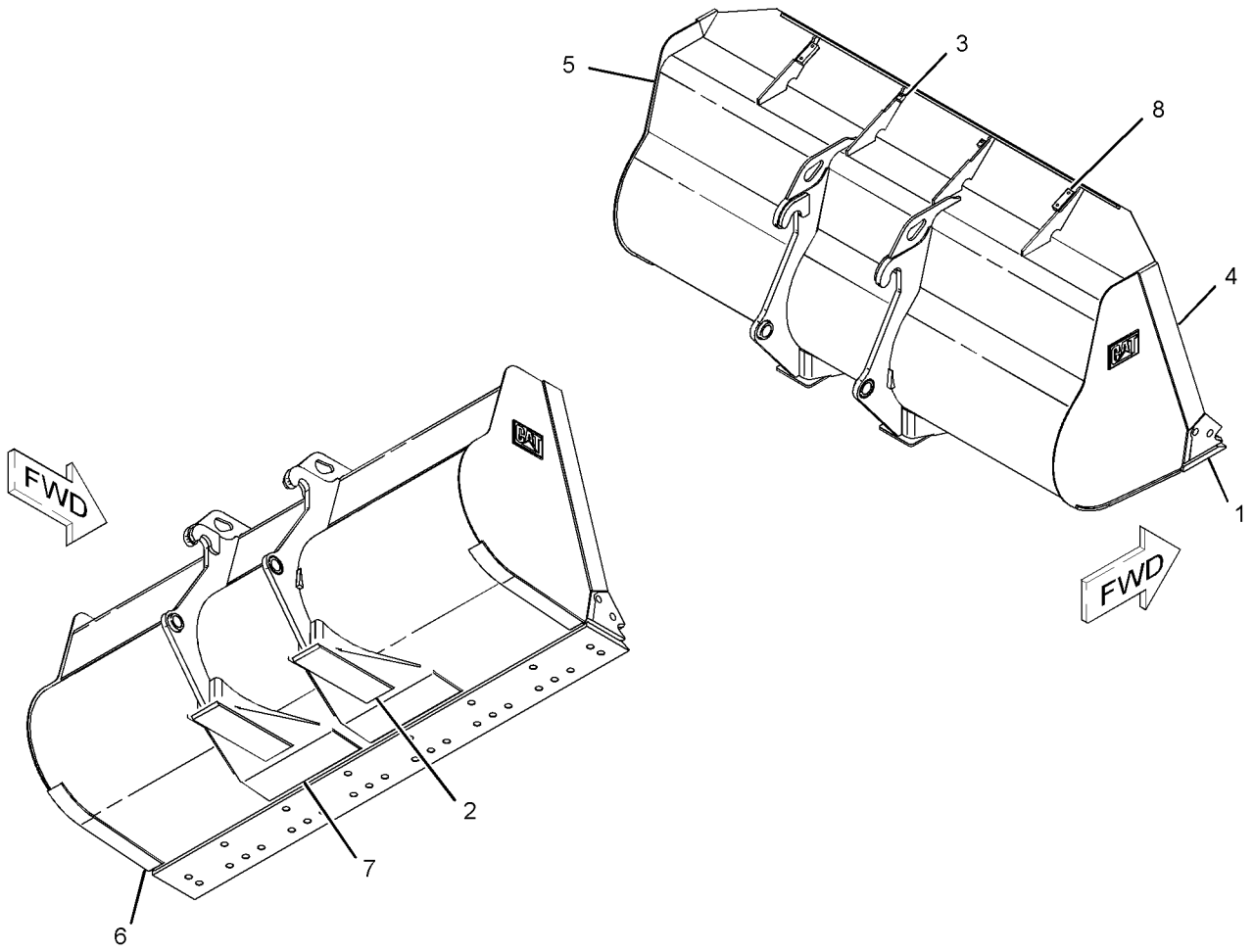

GRAPHIC #1 **<END>** g01116263

WORK TOOLS

252-6911 BUCKET AS-GENERAL PURPOSE

S/N: KLN1-UP
2524-MM (99.N-IN) WIDE X 2.1-CU M (2.8-CU YD) CAPACITY
PART OF 252-6910 BUCKET GP-GENERAL PURPOSE
AN ATTACHMENT

SMCS-6101 **i03066298**

NOTE	REF NO	GRAPHIC REF	PART NUMBER	QTY	PART NAME 1 2 3 4 5 6 (PRODUCT LEVEL)	SEE PAGE
	1	1	**4E-0659**	1	EDGE-CUTTING	
	2	1	**9V-9480**	2	PLATE	
	3	1	**092-1136**	2	BOSS (M10X1.5-THD)	
	4	1	**9T-3598**	2	BOSS (M10X1.5-THD)	
	5	1	**145-5201**	1	HINGE AS (TILT, RH)	
	6	1	**145-5202**	1	HINGE AS (TILT, LH)	
	7	1	*154-8410*	1	PLATE AS (RH)	
		1	**154-8413**	1	BAR	
		1	**2C-9259**	1	PLATE-IDENTIFICATION (CAT)	
		1	**6I-8311**		CORNER (RH)	
	8	1	*154-8411*	1	PLATE AS (LH)	
		1	**154-8413**	1	BAR	
		1	**2C-9259**	1	PLATE-IDENTIFICATION (CAT)	
		1	**6I-8310**	1	CORNER (LH)	
	9	1	**164-4021**	2	PLATE	
	10	1	**164-4022**	1	HINGE AS (LIFT, OUTER, RH)	
	11	1	**164-4024**	1	HINGE AS (LIFT, OUTER, LH)	
	12	1	**164-9316**	2	PLATE	

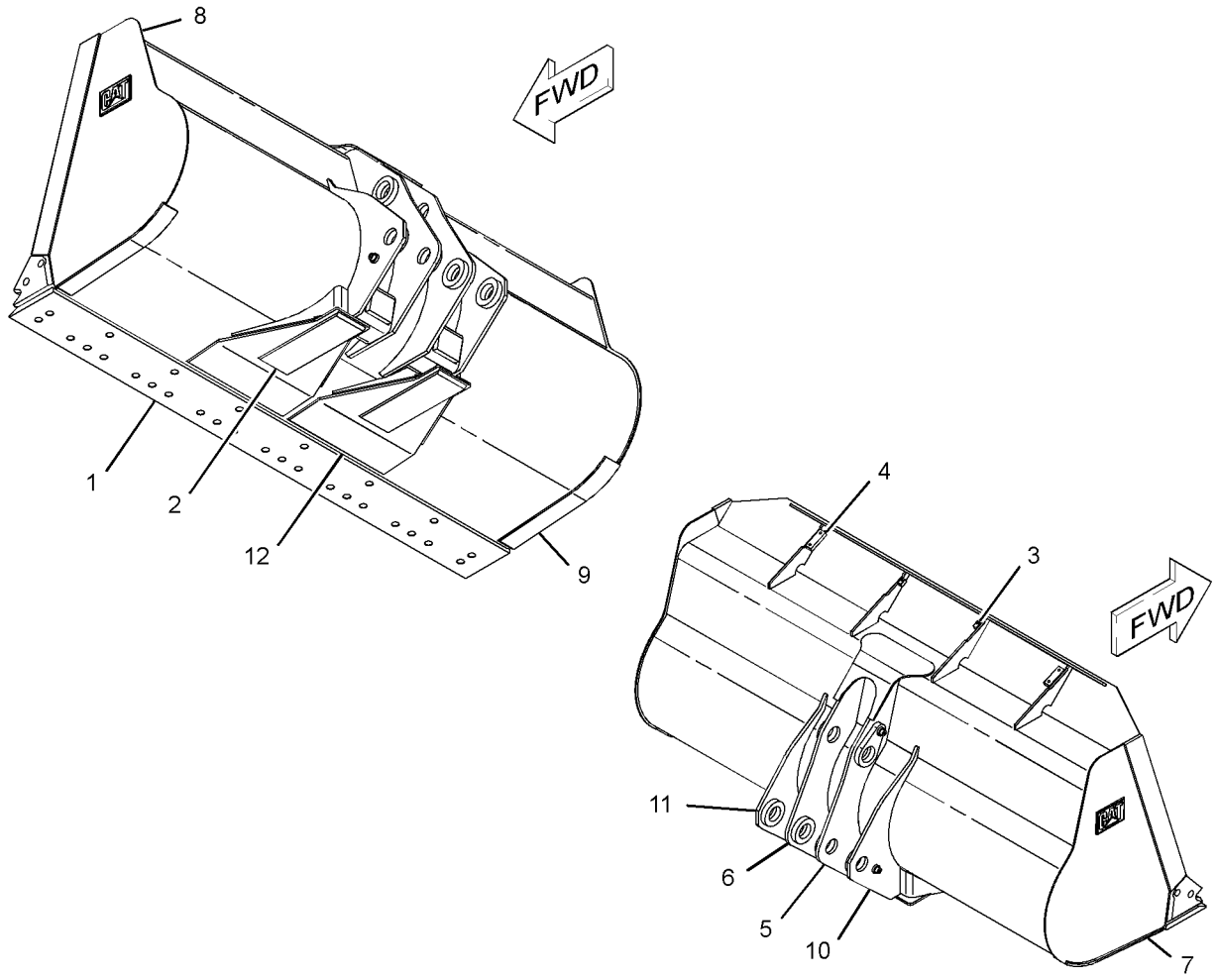

GRAPHIC #1 **<END>** g01557274

251-5414 BUCKET AS-LIGHT MATERIAL—QUICK COUPLER

S/N: KLN1-UP
2532-MM (99.7-IN) WIDE X 2.8-CU M (3.7-CU YD) CAPACITY
PART OF 251-5413 BUCKET GP-LIGHT MATERIAL
AN ATTACHMENT

SMCS-6103 **i03016471**

NOTE	REF NO	GRAPHIC REF	PART NUMBER	QTY	PART NAME 1 2 3 4 5 6 (PRODUCT LEVEL)	SEE PAGE
	1	1	**4E-0659**	1	EDGE-CUTTING	
	2	1	**9V-9480**	2	PLATE	
	3	1	**092-1136**	2	BOSS (M10X1.5-THD)	
	5	1	**164-9316**	2	PLATE	
	6	1	*174-4426*	1	PLATE AS (LH)	
	6A	1	**2C-9259**	1	PLATE-IDENTIFICATION (CAT)	
	6B	1	**6I-8310**	1	CORNER (LH)	
	7	1	*174-4427*	1	PLATE AS (RH)	
	7A	1	**2C-9259**	1	PLATE-IDENTIFICATION (CAT)	
	7B	1	**6I-8311**	1	CORNER (RH)	
	8	1	**174-4726**	2	PLATE	
	9	1	**9T-3598**	2	BOSS (M10X1.5-THD)	

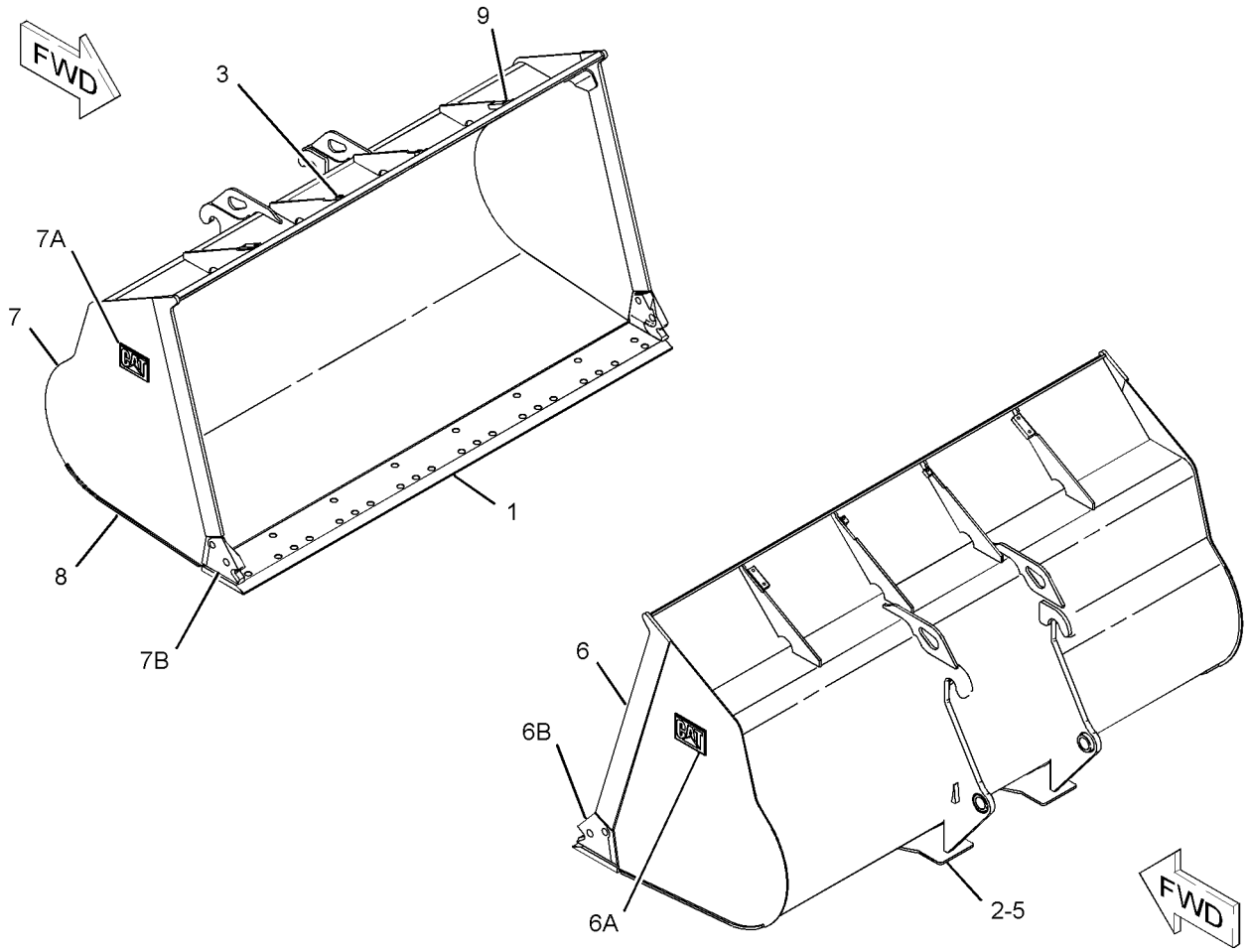

GRAPHIC #1 **<END>** g01119131

252-6905 BUCKET AS-LIGHT MATERIAL

S/N: KLN1-UP
2532-MM (99.6-IN) WIDE X 2.8-CU M (3.7-CU YD) CAPACITY
PART OF 252-6904 BUCKET GP-LIGHT MATERIAL
AN ATTACHMENT

SMCS-6103 **i03066291**

NOTE	REF NO	GRAPHIC REF	PART NUMBER	QTY	PART NAME 1 2 3 4 5 6 (PRODUCT LEVEL)	SEE PAGE
	1	1	**4E-0659**	1	EDGE-CUTTING	
	2	1	**9V-9480**	2	PLATE	
	3	1	**092-1136**	2	BOSS (M10X1.5-THD)	
	4	1	**145-5201**	1	HINGE AS (TILT, RH)	
	5	1	**145-5202**	1	HINGE AS (TILT, LH)	
	6	1	**162-7790**	4	PLATE	
	7	1	**164-4022**	1	HINGE AS (LIFT, OUTER, RH)	
	8	1	**164-4024**	1	HINGE AS (LIFT, OUTER, LH)	
	9	1	**164-9316**	2	PLATE	
	10	1	**174-4726**	2	PLATE	
	11	1	**9T-3598**	2	BOSS (M10X1.5-THD)	

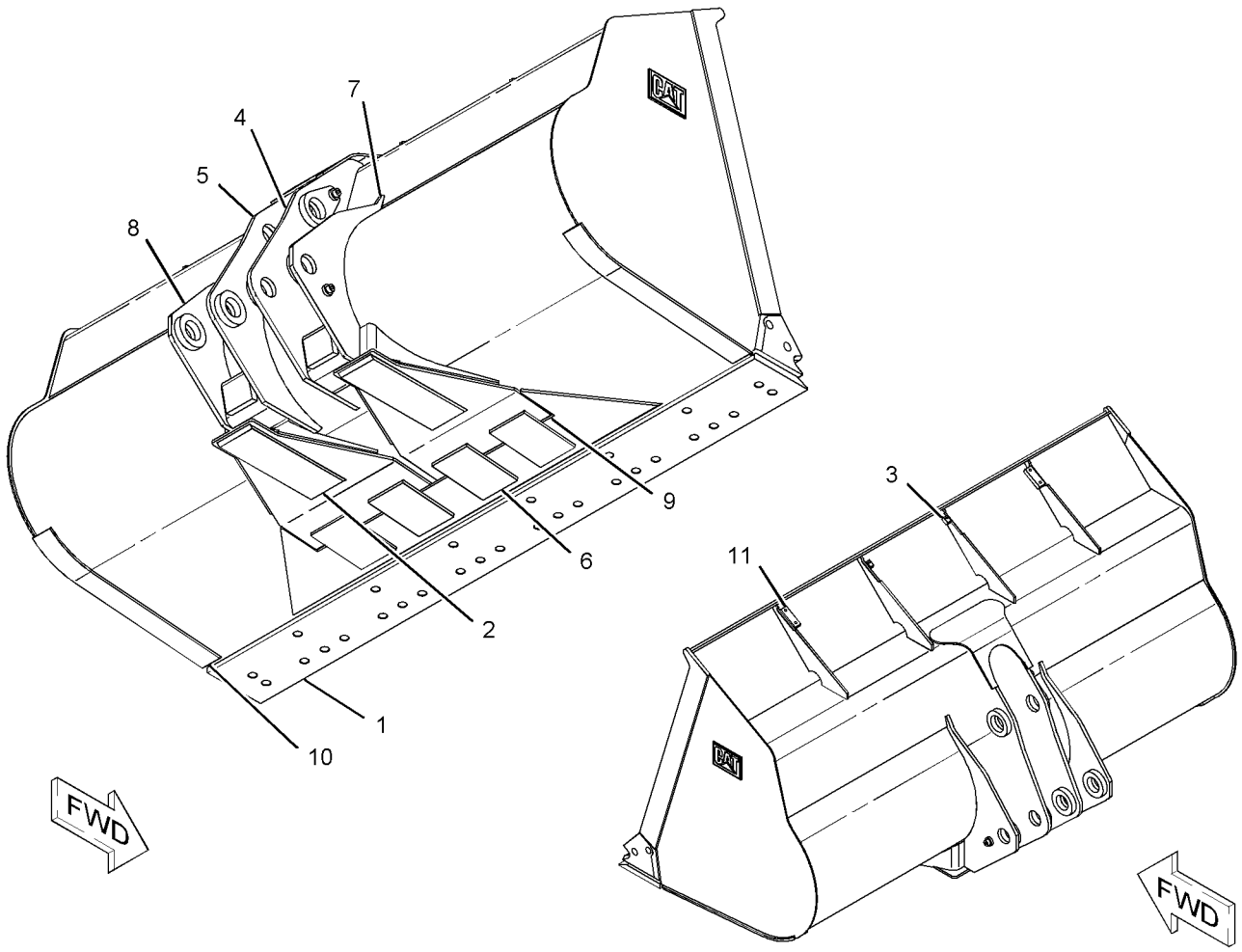

GRAPHIC #1 **<END>** g01141732

172-8556 BUCKET AS-PENETRATION

S/N: KLN1-UP
2594-MM (102.1-IN) WIDE X 1.7-CU M (2.2-CU YD) CAPACITY
PART OF 167-3964 BUCKET GP-PENETRATION
AN ATTACHMENT

SMCS-6131 **i01397950**

NOTE	REF NO	GRAPHIC REF	PART NUMBER	QTY	PART NAME 1 2 3 4 5 6 (PRODUCT LEVEL)	SEE PAGE
	1	1	**4E-2482**	1	EDGE AS-CUTTING	
		1	**1U-1254**	8	ADAPTER	
		1	**4E-2483**	1	EDGE-CUTTING	
	2	1	**145-5201**	1	HINGE AS (TILT, RH)	
	3	1	**145-5202**	1	HINGE AS (TILT, LH)	
	4	1	**145-5220**	1	PLATE-WEAR	
	5	1	**145-5221**	4	PLATE-WEAR	
	6	1	**164-4022**	1	HINGE AS (LIFT, OUTER, RH)	
	7	1	**164-4024**	1	HINGE AS (LIFT, OUTER, LH)	
	8	1	**9T-3598**	2	BOSS (M10X1.5-THD)	
	9	1	**4V-8285**	1	CORNER (RH)	
	10	1	**4V-8286**	1	CORNER (LH)	

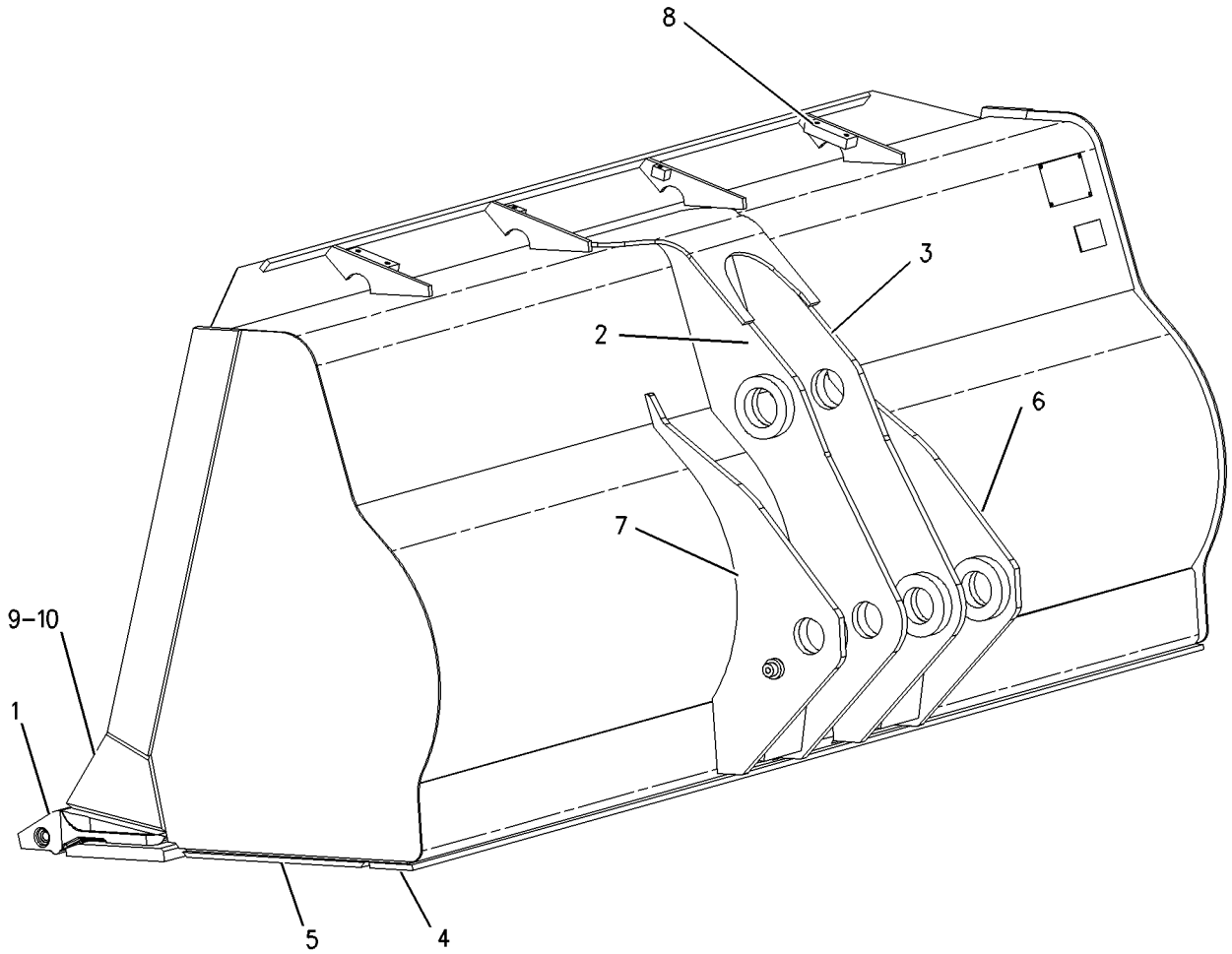

GRAPHIC #1 **<END>** g00736719

WORK TOOLS

167-3963 BUCKET GP-GENERAL PURPOSE

S/N: KLN1-UP
AN ATTACHMENT

SMCS-6101 **i01795692**

NOTE	REF NO	GRAPHIC REF	PART NUMBER	QTY	PART NAME 1 2 3 4 5 6 (PRODUCT LEVEL)	SEE PAGE
	1	1	**208-1032**	1	PLATE AS	
Y	2	1	*148-7900*	1	MOUNTING GP-BUCKET	660
Y	3	1	*172-8563*	1	BUCKET AS-GENERAL PURPOSE	637
	4	1	**8T-4121**	6	WASHER-HARD (11X21X2.5-MM THK)	
M	5	1	**8T-4136**	6	BOLT (M10X1.5X25-MM)	

M-METRIC PART
Y-SEPARATE ILLUSTRATION

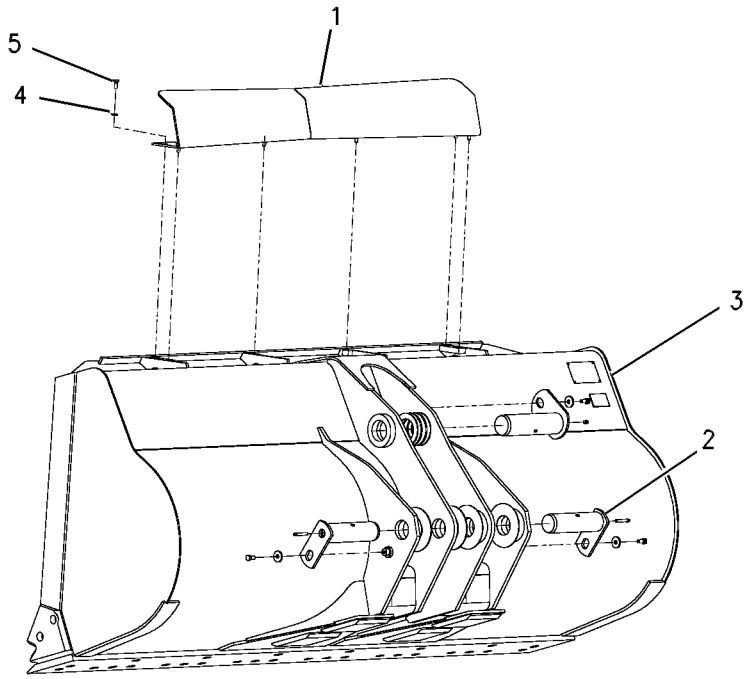

GRAPHIC #1 **<END>** g00605267

167-3966 BUCKET GP-GENERAL PURPOSE—QUICK COUPLER

S/N: KLN1-UP

2532-MM (99.6-IN) WIDE X 1.7-CU M (2.2-CU YD) CAPACITY

AN ATTACHMENT

SMCS-6101 **i01552719**

NOTE	REF NO	GRAPHIC REF	PART NUMBER	QTY	PART NAME 1 2 3 4 5 6 (PRODUCT LEVEL)	SEE PAGE
	1	1	**143-4973**	1	PLATE AS	
	2	1	**4E-0659**	1	EDGE-CUTTING	
	2A	1	**9T-3598**	2	BOSS (M10X1.5-THD)	
	2B	1	**9V-4484**	2	PLATE	
	2C	1	**111-9758**	1	PLATE	
	2D	1	**162-1960**	2	PLATE	
	2E	1	**162-1961**	2	PLATE	
	2F	1	**168-7551**	2	PLATE	
	3	1	**8T-4121**	6	WASHER-HARD (11X21X2.5-MM THK)	
M	4	1	**8T-4136**	6	BOLT (M10X1.5X25-MM)	

M-METRIC PART

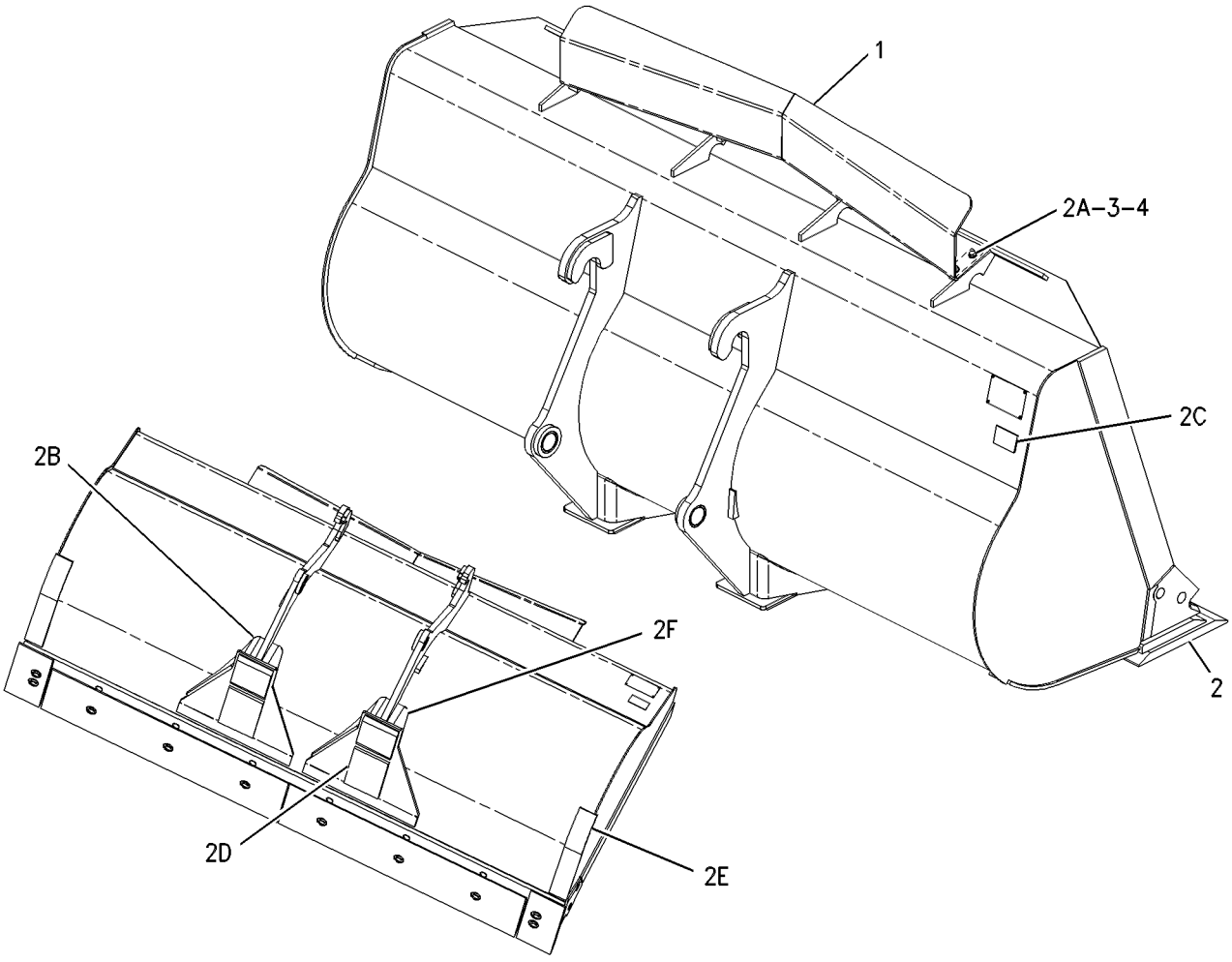

GRAPHIC #1 **<END>** g00605282

241-0936 BUCKET GP-GENERAL PURPOSE–QUICK COUPLER

S/N: KLN1-UP

PART OF 241-0935 BUCKET AR-GENERAL PURPOSE

AN ATTACHMENT

SMCS-6101 **i03016433**

NOTE	REF NO	GRAPHIC REF	PART NUMBER	QTY	PART NAME 1 2 3 4 5 6 (PRODUCT LEVEL)	SEE PAGE
	1	1	**137-4234**	1	PLATE-IDENTIFICATION (WORK TOOL)	
	2	1	**168-8389**	4	TACK-FASTENER	
Y	3	1	*241-0937*	1	BUCKET AS-GENERAL PURPOSE (QUICK COUPLER)	638

Y-SEPARATE ILLUSTRATION

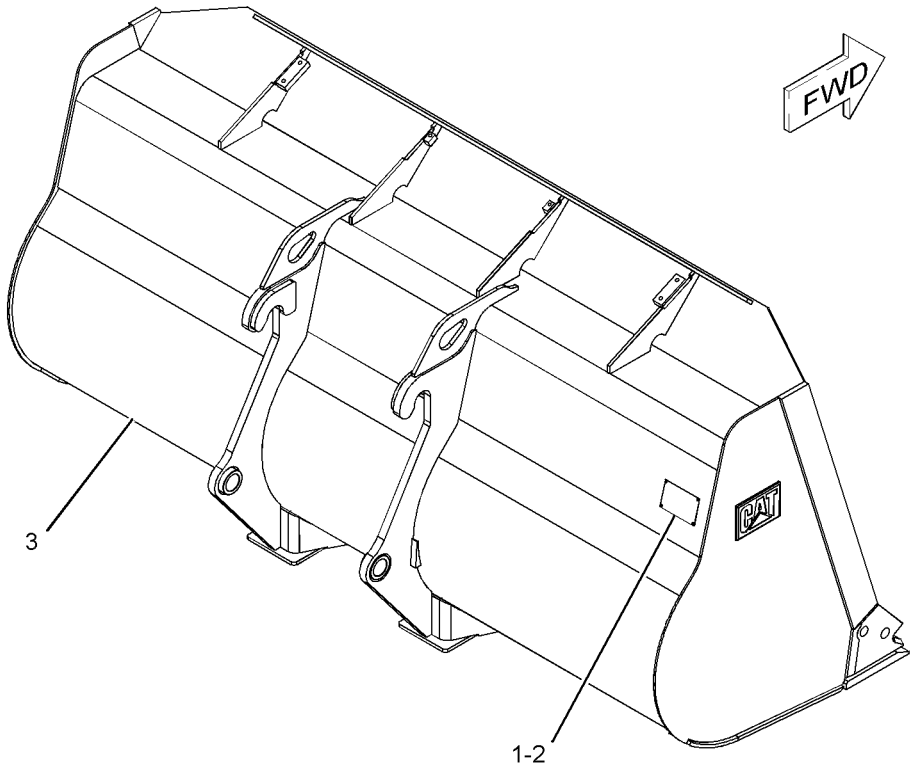

GRAPHIC #1 **<END>** g01116212

252-6910 BUCKET GP-GENERAL PURPOSE

S/N: KLN1-UP
PART OF 252-6909 BUCKET AR-GENERAL PURPOSE
AN ATTACHMENT

SMCS-6101 **i03066294**

NOTE	REF NO	GRAPHIC REF	PART NUMBER	QTY	PART NAME 1 2 3 4 5 6 (PRODUCT LEVEL)	SEE PAGE
	1	1	**137-4234**	1	PLATE-IDENTIFICATION (WORK TOOL)	
	2	1	**168-8389**	4	TACK-FASTENER	
Y	3	1	*252-6911*	1	BUCKET AS-GENERAL PURPOSE	639

Y-SEPARATE ILLUSTRATION

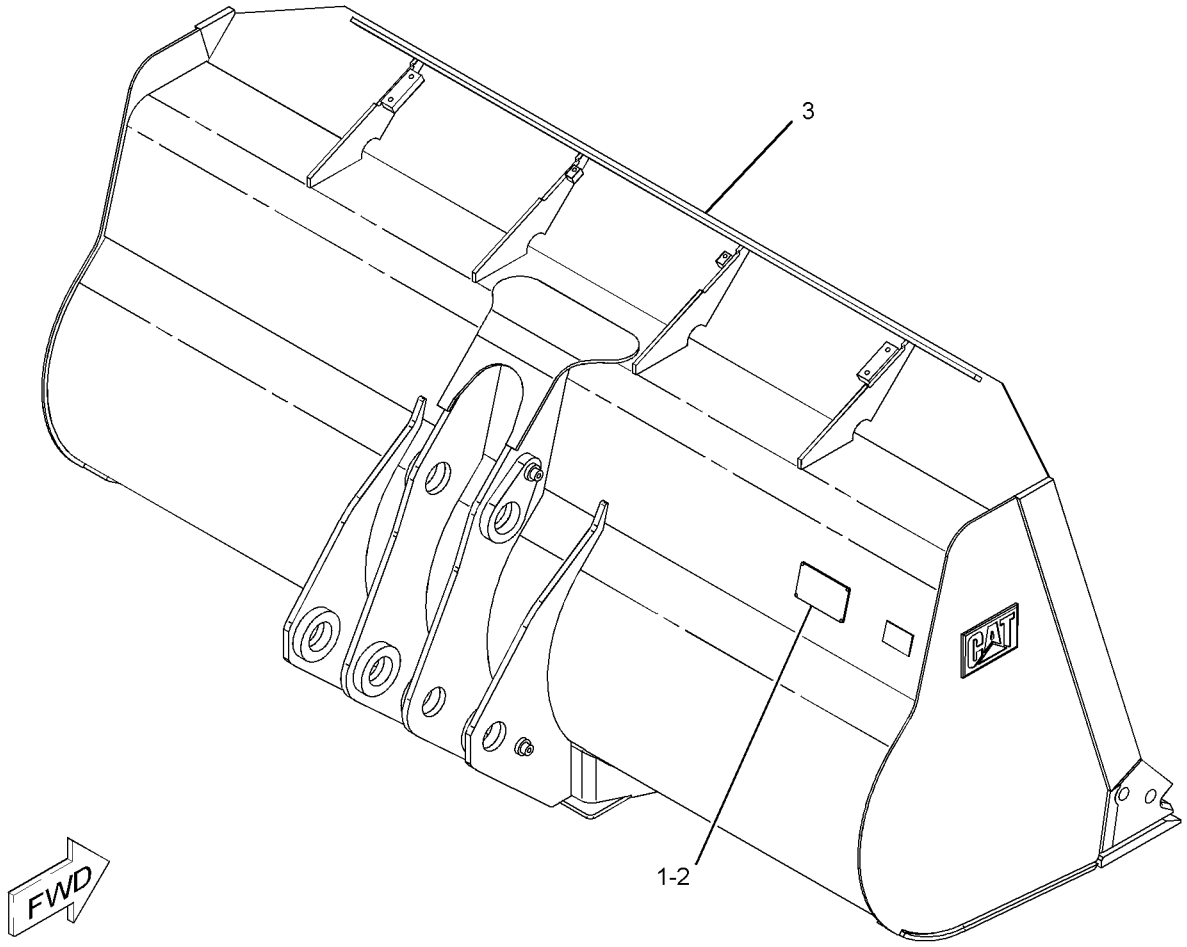

GRAPHIC #1 **<END>** g01119273

251-5413 BUCKET GP-LIGHT MATERIAL–QUICK COUPLER

S/N: KLN1-UP

PART OF 251-5412 BUCKET AR-LIGHT MATERIAL

AN ATTACHMENT

SMCS-6103 **i03016461**

NOTE	REF NO	GRAPHIC REF	PART NUMBER	QTY	PART NAME 1 2 3 4 5 6 (PRODUCT LEVEL)	SEE PAGE
	1	1	**137-4234**	1	PLATE-IDENTIFICATION (WORK TOOL)	
	2	1	**168-8389**	4	TACK-FASTENER	
Y	3	1	*251-5414*	1	BUCKET AS-LIGHT MATERIAL (QUICK COUPLER)	640

Y-SEPARATE ILLUSTRATION

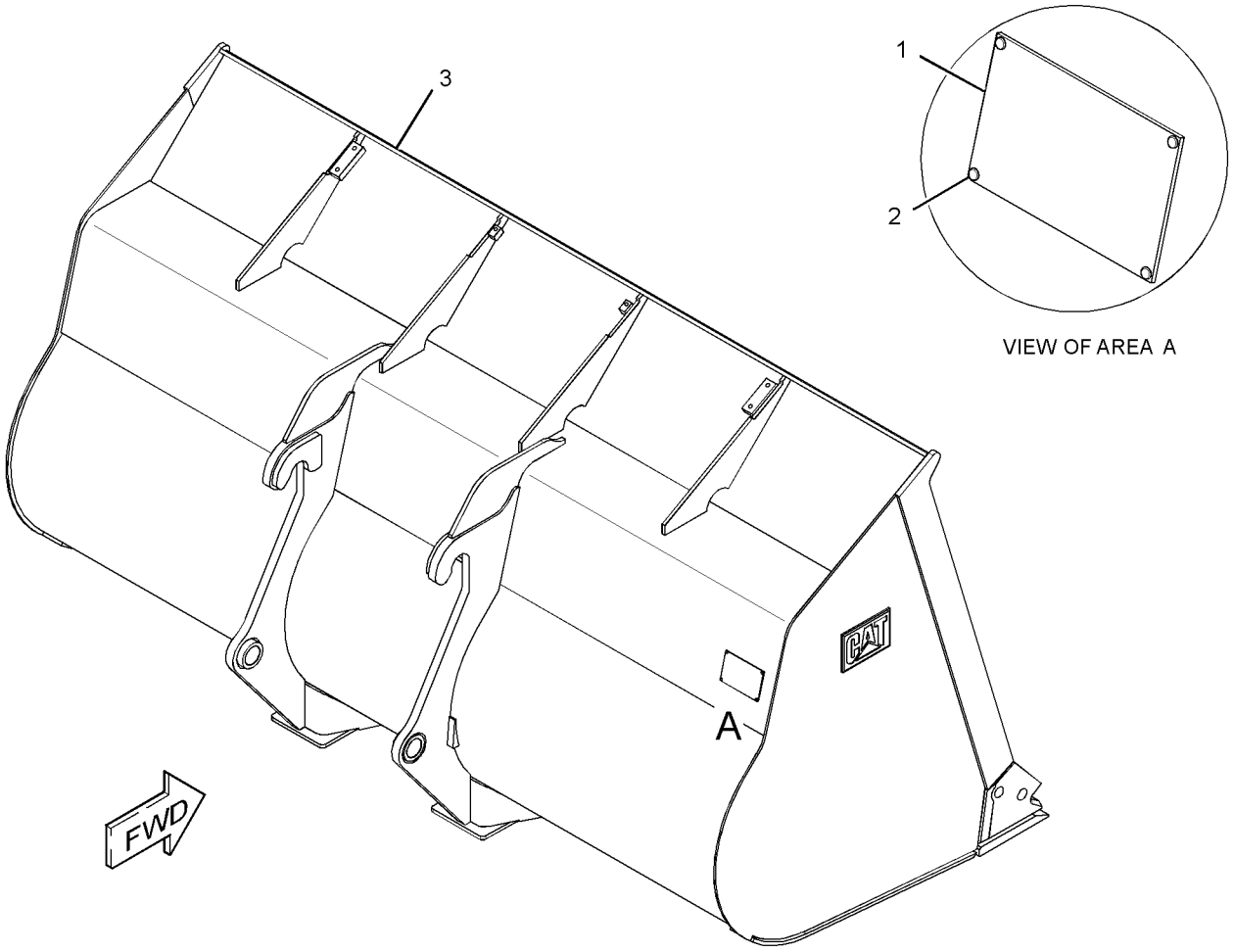

VIEW OF AREA A

GRAPHIC #1 **<END>** g01535873

WORK TOOLS

252-6904 BUCKET GP-LIGHT MATERIAL

S/N: KLN1-UP
2.8-CU M (3.7-CU YD) CAPACITY
PART OF 252-6903 BUCKET AR-LIGHT MATERIAL
AN ATTACHMENT

SMCS-6103 **i03066288**

NOTE	REF NO	GRAPHIC REF	PART NUMBER	QTY	PART NAME 1 2 3 4 5 6 (PRODUCT LEVEL)	SEE PAGE
	1	1	**137-4234**	1	PLATE-IDENTIFICATION (WORK TOOL)	
	2	1	**168-8389**	4	TACK-FASTENER	
Y	3	1	*252-6905*	1	BUCKET AS-LIGHT MATERIAL	641

Y-SEPARATE ILLUSTRATION

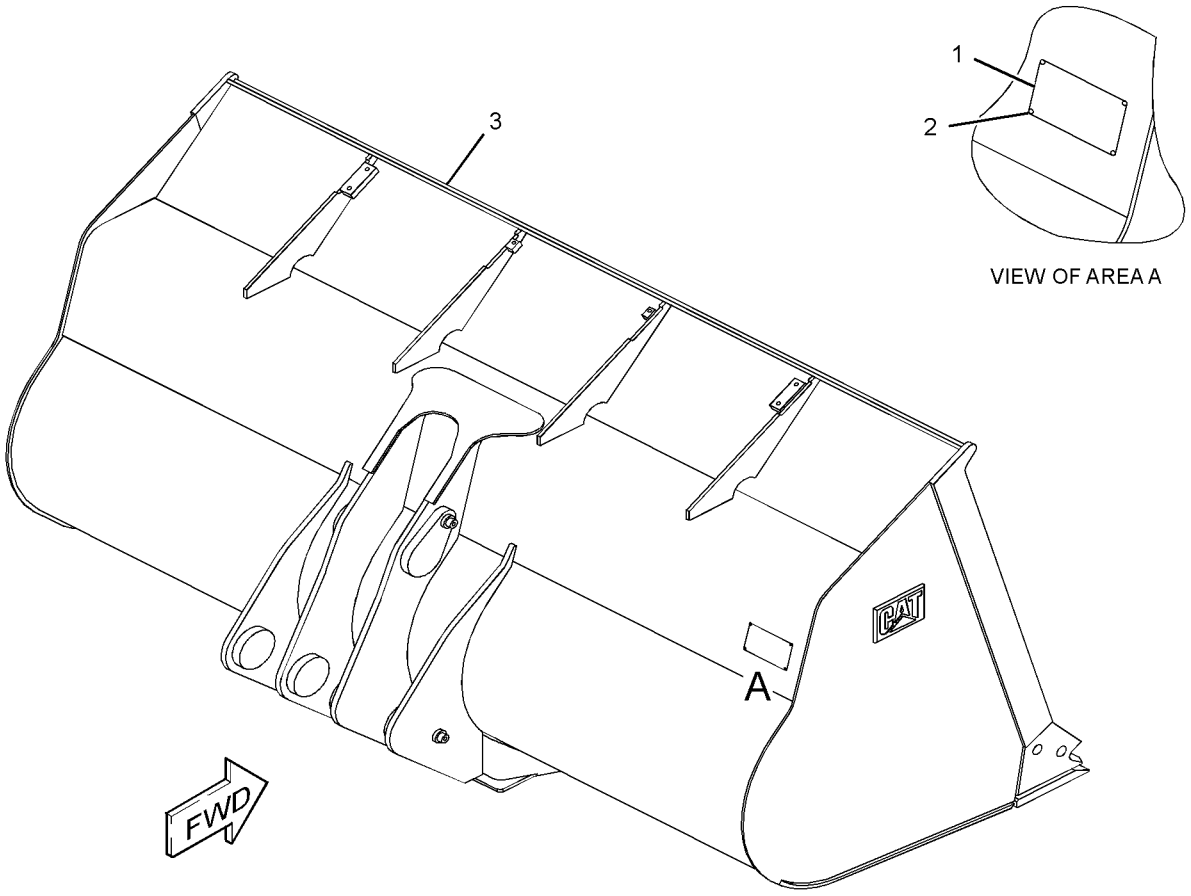

VIEW OF AREA A

GRAPHIC #1 **<END>** g01301966

180-9337 BUCKET GP-MULTIPURPOSE

S/N: KLN1-UP
2610-MM (102.8-IN) WIDE X 1.62-CU M (2.13-CU YD) CAPACITY
PART OF 180-9335 BUCKET AR-MULTIPURPOSE
AN ATTACHMENT

SMCS-6104 **i01550625**

NOTE	REF NO	GRAPHIC REF	PART NUMBER	QTY	PART NAME 1 2 3 4 5 6 (PRODUCT LEVEL)	SEE PAGE
	1	1	**4T-8374**	1	EDGE-CUTTING	
	2	1	**180-6391**	2	PIN	
	3	1	**180-6397**	2	TUBE	
	4	1	**2J-3506**	16	NUT-FULL (3/4-10 THD)	
	5	1	**5J-4773**	16	BOLT-PLOW (3/4-10X2.5 IN)	
	6	1	**7X-0331**	2	BOLT (1/2-13X4.25 IN)	
	7	1	**9X-0941**	2	NUT (1/2-13 THD)	

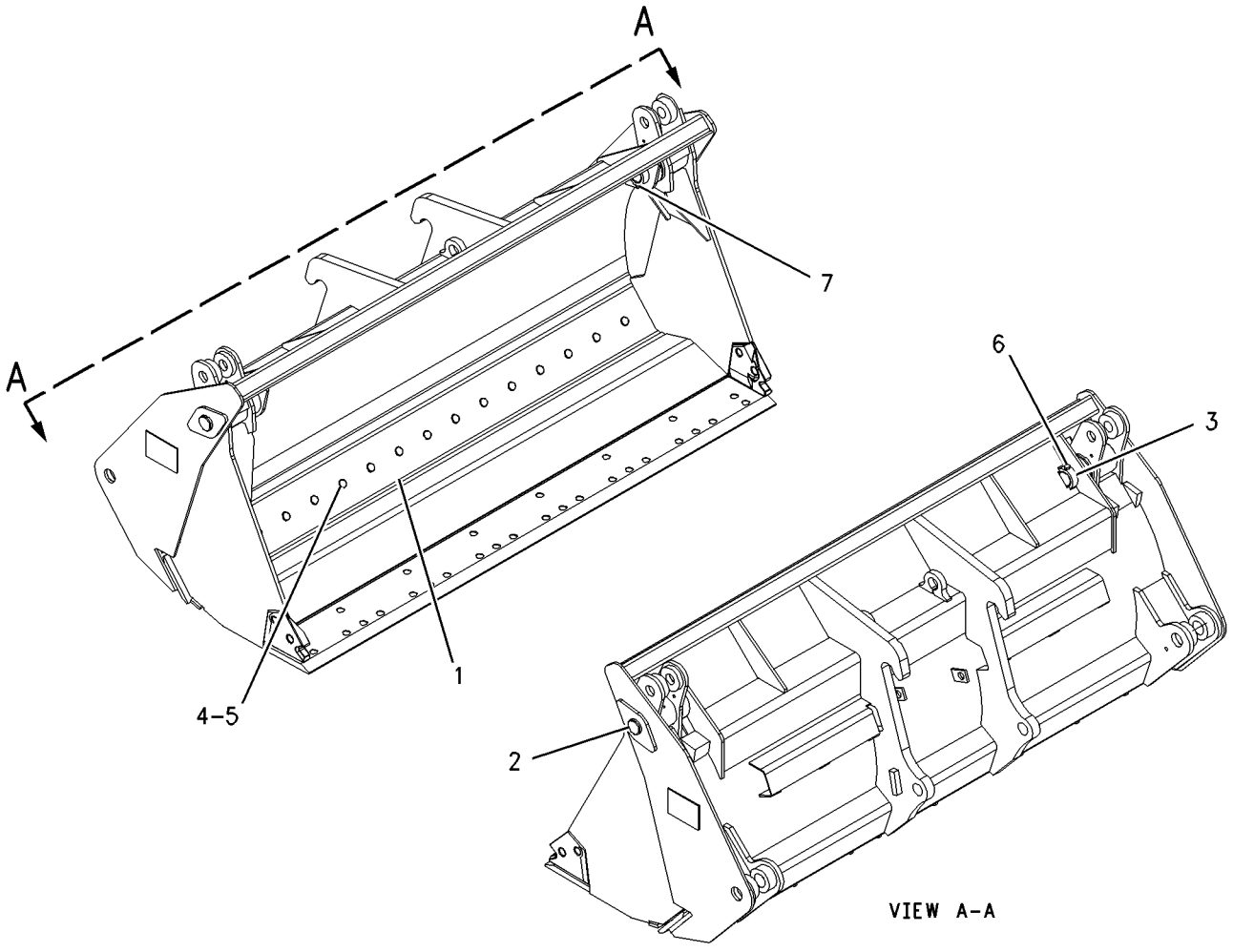

GRAPHIC #1 **<END>** g00653531

183-5583 BUCKET GP-MULTIPURPOSE

S/N: KLN1-UP
2610-MM (102.7-IN) WIDE X 1.53-CU M (2-CU YD) CAPACITY
PART OF 183-4735 BUCKET AR-MULTIPURPOSE
AN ATTACHMENT

SMCS-6104 **i03082920**

NOTE	REF NO	GRAPHIC REF	PART NUMBER	QTY	PART NAME 1 2 3 4 5 6 (PRODUCT LEVEL)	SEE PAGE
	1	1	**4T-8374**	1	EDGE-CUTTING (256-CM)	
	2	1	**180-6391**	2	PIN	
	3	1	**7K-9205**	4	SEAL-LIP TYPE	
	4	1	**7J-9344**	4	BEARING-SLEEVE	
	5	1	**180-6375**	7	PLATE	
	6	1	**180-6376**	1	PLATE	
	7	1	**4E-0659**	1	EDGE-CUTTING (243-CM)	
	8	1	**180-6397**	2	TUBE	
	9	1	**180-6418**	1	PLATE-EDGE	
	10	1	**2J-3506**	16	NUT-FULL (3/4-10-THD)	
	11	1	**5J-4773**	16	BOLT-PLOW (3/4-10X2.5-IN)	
	12	1	**7X-0331**	2	BOLT (1/2-13X4.25-IN)	
	13	1	**9X-0941**	2	LOCKNUT (1/2-13-THD)	

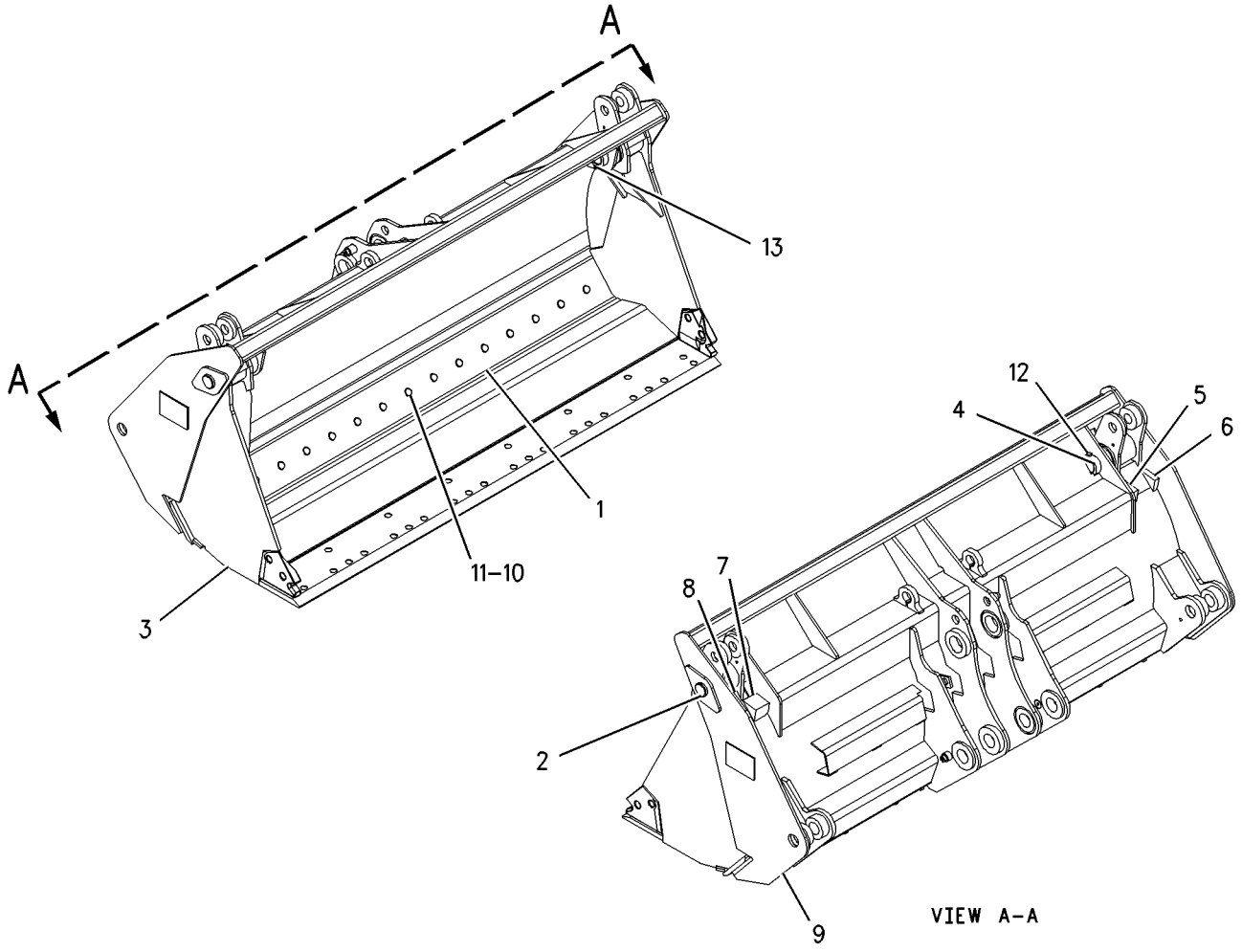

GRAPHIC #1 **<END>** g00651941

167-3964 BUCKET GP-PENETRATION

S/N: KLN1-UP
AN ATTACHMENT

SMCS-6131 **i01378934**

NOTE	REF NO	GRAPHIC REF	PART NUMBER	QTY	PART NAME 1 2 3 4 5 6 (PRODUCT LEVEL)	SEE PAGE
	1	1	**143-4973**	1	PLATE AS	
Y	2	1	*148-7900*	1	MOUNTING GP-BUCKET	660
Y	3	1	*172-8556*	1	BUCKET AS-PENETRATION	642
	4	1	**8T-4121**	6	WASHER-HARD (11X21X2.5-MM THK)	
M	5	1	**8T-4136**	6	BOLT (M10X1.5X25-MM)	

M-METRIC PART
Y-SEPARATE ILLUSTRATION

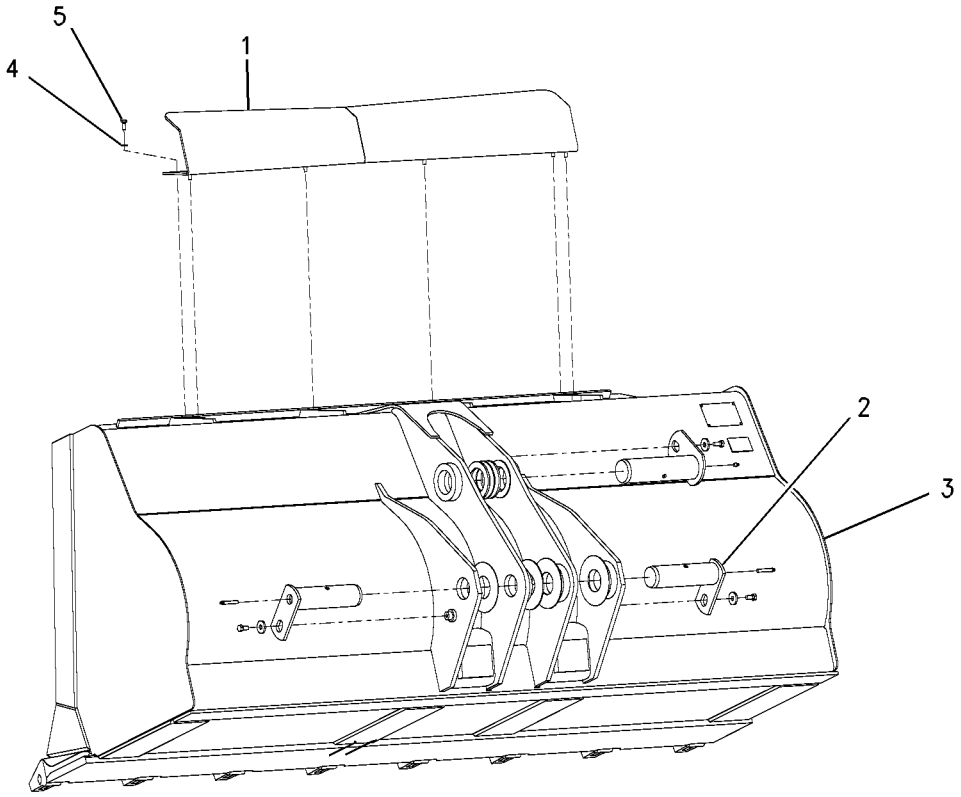

GRAPHIC #1 **<END>** g00636976

177-7775 BUCKET GP-SIDE DUMP

S/N: KLN1-UP
3047-MM (119.9-IN) WIDE X 1.72-CU M (2.24-CU YD) CAPACITY
PART OF 179-3192 BUCKET AR-SIDE DUMP
AN ATTACHMENT

SMCS-6105 **i03082682**

NOTE	REF NO	GRAPHIC REF	PART NUMBER	QTY	PART NAME 1 2 3 4 5 6 (PRODUCT LEVEL)	SEE PAGE
	1	1	**185-1134**	2	PIN	
M	2	1	**6V-7687**	2	LOCKNUT (M12X1.75-THD)	
M	3	1	**8T-6868**	2	BOLT (M12X1.75X80-MM)	

M-METRIC PART

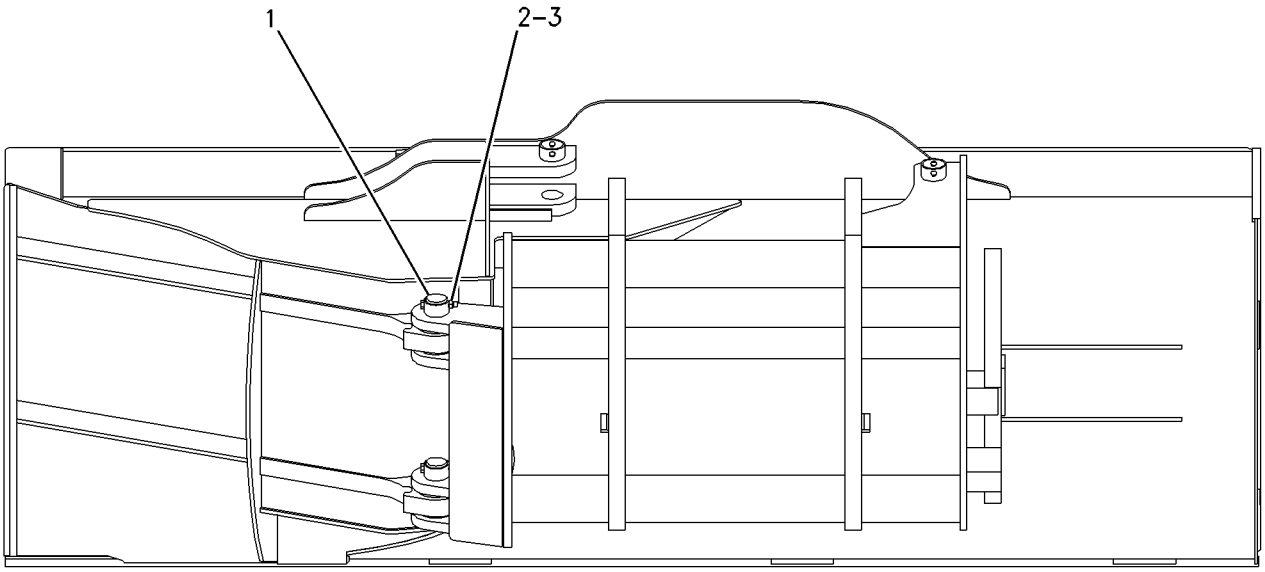

REAR VIEW

GRAPHIC #1 **<END>** g00652690

WORK TOOLS

132-2443 CARRIAGE AS-FORK

S/N: KLN1-UP
AN ATTACHMENT

SMCS-6402 **i01259162**

NOTE	PART NUMBER	QTY	PART NAME 1 2 3 4 5 6 (PRODUCT LEVEL)	SEE PAGE
			(NO SERVICED PARTS)	

<END>

218-5113 COUPLER AR-QUICK

S/N: KLN1-UP
STANDARD LIFT
FOR USE WITH 132-2350—PAGE 476. CANNOT BE USED WITH 148-7900—PAGE 660
AN ATTACHMENT

SMCS-6129 **i03031954**

NOTE	PART NUMBER	QTY	PART NAME 1 2 3 4 5 6 (PRODUCT LEVEL)	SEE PAGE
Y	*235-7400*	1	COUPLER GP-QUICK	654
Y	*148-7827*	1	CYLINDER & MTG GP-COUPLER	339
Y	*296-6812*	1	LINES GP-COUPLER (STANDARD LIFT MACHINES, WIDE)	361
Y	*297-2470*	1	LINES GP-COUPLER (STANDARD LIFT MACHINES)	367
Y-SEPARATE ILLUSTRATION				

<END>

WORK TOOLS

235-7400 COUPLER GP-QUICK

S/N: KLN1-UP

PART OF 218-5113 COUPLER AR-QUICK

AN ATTACHMENT

SMCS-6129 **i02585763**

NOTE	REF NO	GRAPHIC REF	PART NUMBER	QTY	PART NAME 1 2 3 4 5 6 (PRODUCT LEVEL)	SEE PAGE
	1	1	**132-2419**	2	PIN AS	
	2	1	**132-2427**	1	PIN AS	
	3	1	**132-2435**	1	PLATE	
	4	1	**132-2441**	1	PLATE AS	
	5	1	**146-7986**	2	SHIM (3.18-MM THK)	
	6	1	**146-7987**	2	SHIM (6.35-MM THK)	
	7	1	**176-0623**	2	WASHER (78X160X1.6-MM THK)	
	8	1	**176-0624**	2	WASHER (78X160X3-MM THK)	
	9	1	**235-7401**	1	COUPLER AS	
M		1	**9R-2672**	4	BOSS (M10X1.5X20-MM)	
	11	1	**3B-8489**	1	FITTING-GREASE	
	12	1	**3B-8491**	2	FITTING-GREASE	
	13	1	**5P-4116**	8	WASHER-HARD (8.8X20.5X2-MM THK)	
	14	1	**7X-0618**	2	WASHER-HARD (13.5X40X5-MM THK)	
M	15	1	**8T-4908**	8	BOLT (M8X1.25X25-MM)	
M	16	1	**8T-4956**	2	BOLT (M12X1.75X35-MM)	
	17	1	**9H-5604**	1	RING-RETAINING	

M-METRIC PART

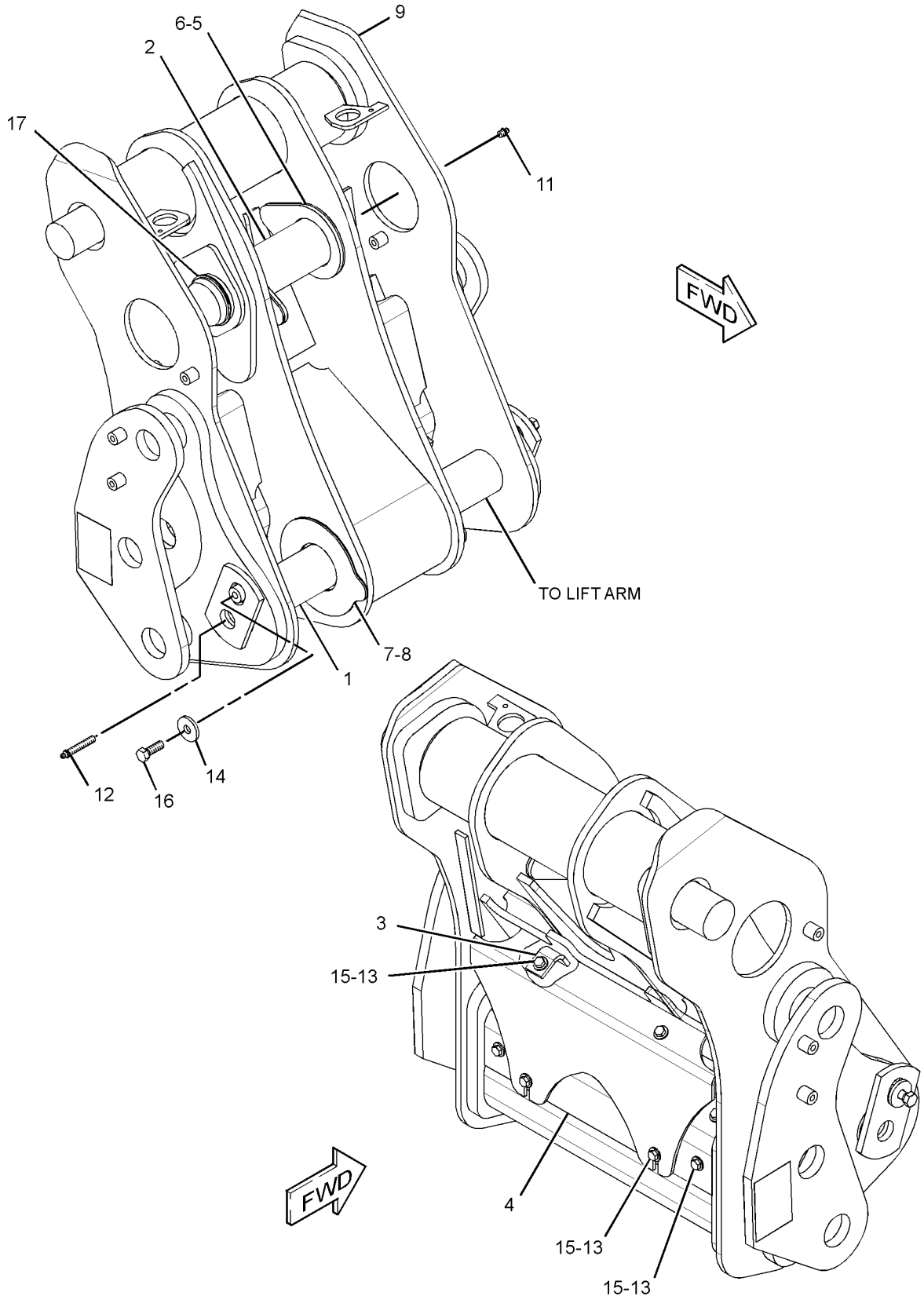

GRAPHIC #1 **<END>** g01323025

WORK TOOLS

8E-4566 EDGE GP-CUTTING

S/N: KLN1-UP

AN ATTACHMENT

SMCS-6801 **i01130561**

NOTE	PART NUMBER	QTY	PART NAME 1 2 3 4 5 6 (PRODUCT LEVEL)	SEE PAGE
	1J-5607	10	BOLT-PLOW	
	8E-4567	2	EDGE-CUTTING	
	4T-8091	2	EDGE-END	
	2J-3507	10	NUT-FULL (1-8 THD)	

<END>

183-3764 EDGE GP-CUTTING

S/N: KLN1-UP

AN ATTACHMENT

SMCS-6801 **i01543071**

NOTE	PART NUMBER	QTY	PART NAME 1 2 3 4 5 6 (PRODUCT LEVEL)	SEE PAGE
	1J-5607	13	BOLT-PLOW (1-8X2.75 IN)	
	1U-0293	1	EDGE-CUTTING	
	1U-0294	2	EDGE-CUTTING	
	4T-8091	2	EDGE-END	
	2J-3507	13	NUT-FULL (1-8 THD)	

<END>

8E-4568 EDGE GP-SEGMENT

S/N: KLN1-UP

AN ATTACHMENT

SMCS-6818 **i01130557**

NOTE	PART NUMBER	QTY	PART NAME 1 2 3 4 5 6 (PRODUCT LEVEL)	SEE PAGE
	1J-5607	14	BOLT-PLOW	
	8E-4569	7	EDGE-SEGMENT	
	2J-3507	14	NUT-FULL (1-8 THD)	

<END>

WORK TOOLS

195-6935 FORK GP-PALLET

S/N: KLN1-UP

AN ATTACHMENT

SMCS-6136 **i01738109**

NOTE	REF NO	GRAPHIC REF	PART NUMBER	QTY	PART NAME 1 2 3 4 5 6 (PRODUCT LEVEL)	SEE PAGE
	1	1	**221-3424**	1	POSITIONER GP-WORK TOOL	
	2	1	**195-6961**	1	INSERT	
	3	1	**195-6962**	1	PIN	

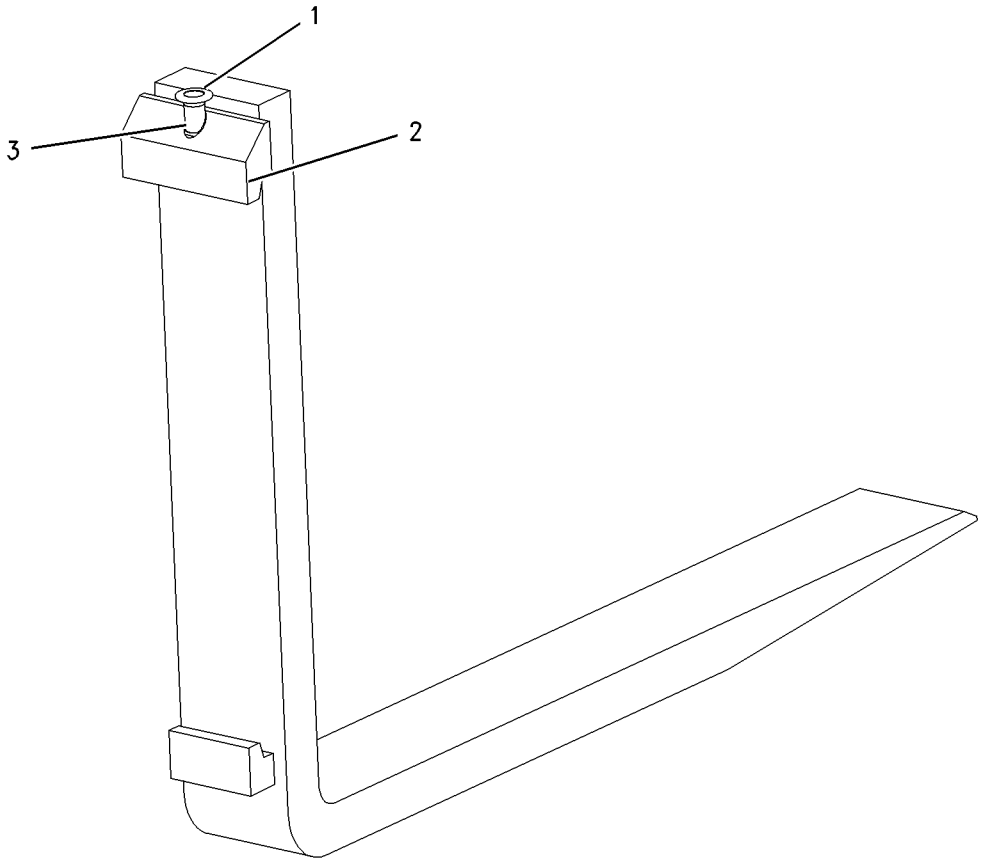

GRAPHIC #1 **<END>** g00811797

WORK TOOLS

195-6937 FORK GP-PALLET

S/N: KLN1-UP
PALLET
AN ATTACHMENT

SMCS-6136 **i01738133**

NOTE	REF NO	GRAPHIC REF	PART NUMBER	QTY	PART NAME 1 2 3 4 5 6 (PRODUCT LEVEL)	SEE PAGE
	1	1	**221-3424**	1	POSITIONER GP-WORK TOOL	
		1	**195-6961**	1	INSERT	
		1	**221-3428**	1	PIN	

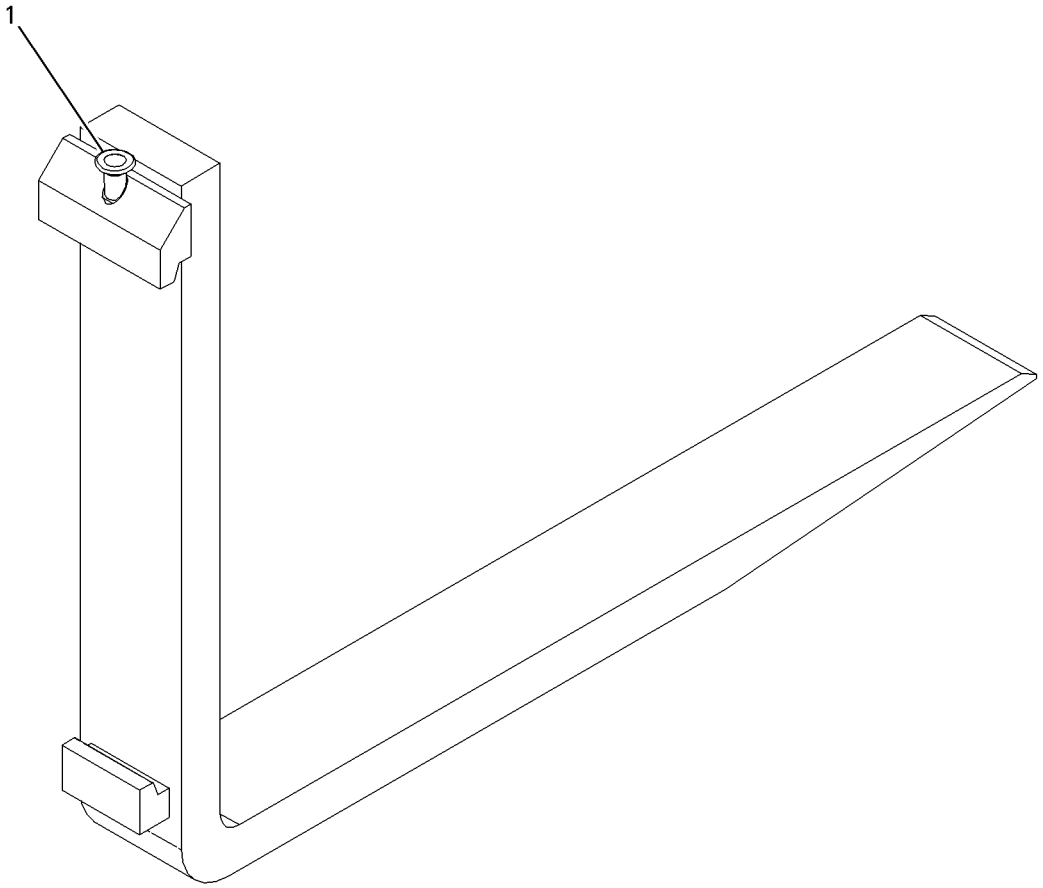

GRAPHIC #1 **<END>** g00798608

WORK TOOLS

195-6938 FORK GP-PALLET

S/N: KLN1-UP

AN ATTACHMENT

SMCS-6136 **i01738134**

NOTE	REF NO	GRAPHIC REF	PART NUMBER	QTY	PART NAME 1 2 3 4 5 6 (PRODUCT LEVEL)	SEE PAGE
	1	1	**221-3424**	1	POSITIONER GP-WORK TOOL	
		1	**195-6961**	1	INSERT	
		1	**221-3428**	1	PIN	

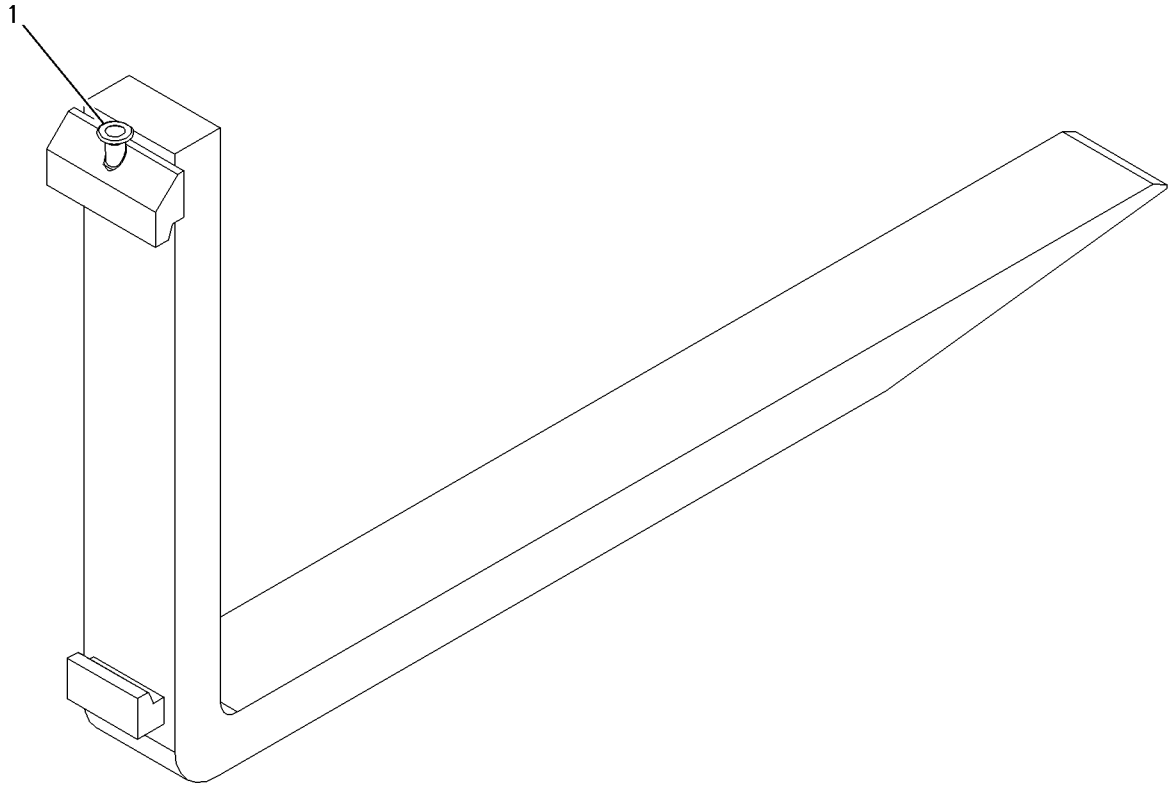

GRAPHIC #1 **<END>** g00797945

148-7900 MOUNTING GP-BUCKET

S/N: KLN1-UP

PART OF 252-6909 BUCKET AR-GENERAL PURPOSE, 252-6903 BUCKET AR-LIGHT MATERIAL, 167-3963 BUCKET GP-GENERAL PURPOSE, 167-3964 BUCKET GP-PENETRATION AN ATTACHMENT

SMCS-6101, 6102, 6103, 6131, 6523 **i02007074**

NOTE	REF NO	GRAPHIC REF	PART NUMBER	QTY	PART NAME 1 2 3 4 5 6 (PRODUCT LEVEL)	SEE PAGE
	1	1	**3B-8489**	1	FITTING-GREASE	
	2	1	**3B-8491**	2	FITTING-GREASE	
B	3	1	**176-0623**	2	WASHER (78X160X1.6-MM THK)	
B	4	1	**176-0624**	2	WASHER (78X160X3-MM THK)	
B	5	1	**146-7986**	2	SHIM (3.18-MM THK)	
B	6	1	**146-7987**	2	SHIM (6.35-MM THK)	
	7	1	**146-8003**	2	PIN AS	
	8	1	**146-8006**	1	PIN AS	
	9	1	**7X-0618**	3	WASHER-HARD (13.5X40X5-MM THK)	
M	10	1	**8T-4192**	3	BOLT (M12X1.75X25-MM)	

B-USE AS REQUIRED
M-METRIC PART

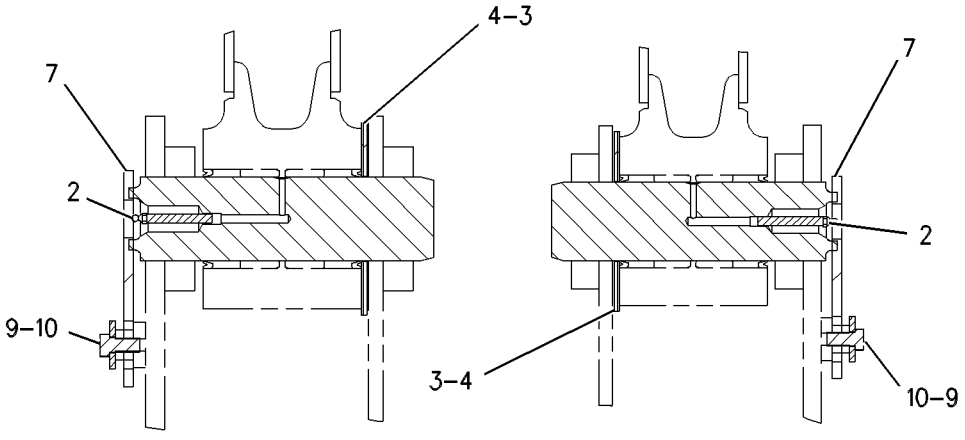

SECTION B-B

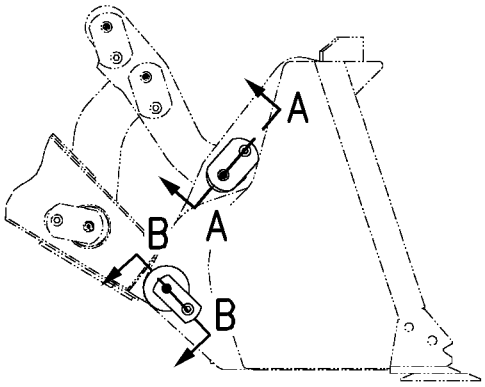

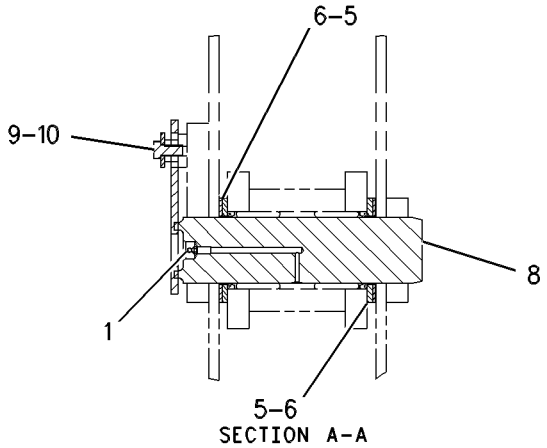

SECTION A-A

GRAPHIC #1 **<END>** g00605231

WORK TOOLS

9J-3169 TIP GP-LONG

S/N: KLN1-UP
PART OF 9W-8142 TIP GP-LONG
AN ATTACHMENT

SMCS-6805 **i03627194**

NOTE	REF NO	GRAPHIC REF	PART NUMBER	QTY	PART NAME 1 2 3 4 5 6 (PRODUCT LEVEL)	SEE PAGE
	1	1	**132-4763**	1	PIN	
	2	1	**149-5733**	1	RETAINER AS (G.E.T.)	
	3	1	**1U-3252**	1	TIP-LONG	

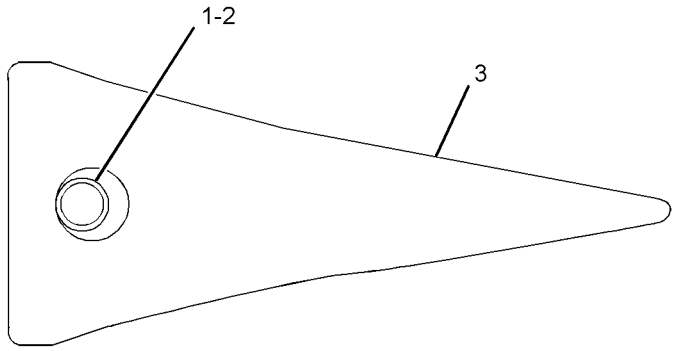

GRAPHIC #1 **<END>** g01946215

WORK TOOLS

9W-8142 TIP GP-LONG

S/N: KLN1-UP

FOR USE WITH 116-9713—PAGE 625

AN ATTACHMENT

SMCS-6805 **i00448280**

NOTE	PART NUMBER	QTY	PART NAME 1 2 3 4 5 6 (PRODUCT LEVEL)	SEE PAGE
Y	*9J-3169*	1	TIP GP-LONG	661

Y-SEPARATE ILLUSTRATION

<END>

WORK TOOLS

9J-3178 TIP GP-SHORT

S/N: KLN1-UP
PART OF 9W-8143 TIP GP-SHORT
AN ATTACHMENT

SMCS-6805 **i03627178**

NOTE	REF NO	GRAPHIC REF	PART NUMBER	QTY	PART NAME 1 2 3 4 5 6 (PRODUCT LEVEL)	SEE PAGE
	1	1	**132-4763**	1	PIN	
	2	1	**149-5733**	1	RETAINER AS (G.E.T.)	
C	3	1	**1U-3251**	1	TIP-SHORT	

C-CHANGE FROM PREVIOUS TYPE

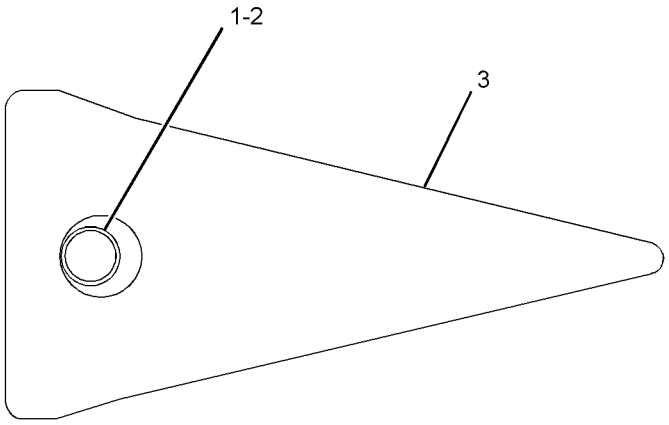

GRAPHIC #1 **<END>** g01946227

WORK TOOLS

9W-8143 TIP GP-SHORT

S/N: KLN1-UP

AN ATTACHMENT

SMCS-6805 **i00448272**

NOTE	PART NUMBER	QTY	PART NAME 1 2 3 4 5 6 (PRODUCT LEVEL)	SEE PAGE
Y	*9J-3178*	1	TIP GP-SHORT	663

Y-SEPARATE ILLUSTRATION

<END>

SERVICE EQUIPMENT AND SUPPLIES

290-6491 FILM GP—INTERNATIONAL

S/N: KLN1-UP

AN ATTACHMENT

SMCS-7405, 7557 **i03043973**

NOTE	PART NUMBER	QTY	PART NAME 1 2 3 4 5 6 (PRODUCT LEVEL)	SEE PAGE
	159-3590	1	FILM-IDENTIFICATION (WATER SEPARATOR)	
			(DIRECTLY TO THE RIGHT OF THE FUEL WATER SEPERATOR BOWL ON REAR COOLING STRUCTURE)	
	146-6747	2	FILM-INFORMATION (24-VOLT)	
			(INSIDE OF THE BATTERY BOX ON THE FRONT SIDE PLATE NEAR THE TOP)	
	224-9855	1	FILM-INSTRUCTION (START AID, READ OMM, INTL)	
			(BRACKET ON RH "B" POST INSIDE OF CAB)	
	276-2604	1	FILM-INSTRUCTION (BELT ROUTING)	
			(60MM INWARDS FROM THE LEFT SIDE OF THE REAR STRUCTURE & 290MM UP FROM THE NON-METALLIC MAT & PLACE ON SURFACE FACING	
			REAR OF MACHINE WITHIN RADIATOR STRUCTURE TO THE LEFT OF THE LEFT SIDE REMOVABLE ACCESS PANEL & BELOW HOSE GROMMET)	
	219-0302	1	FILM-WARNING (NO WELD, NO DRILL, READ OMM)	
			(LH B-POST INSIDE OF CAB, FLUSH WITH PARKING BRAKE CONSOLE)	
	224-8946	1	FILM-WARNING (NO ETHER SPRAY/AIR INTK, INTL)	
			(RH SIDE OF ENGINE COMPARTMENT HOOD NEAR PRE-AIRCLEANER.FILM SHOULD BE ORIENTED TO READ WHILE STANDING ON RH SIDE	
			PLATFORM)	
	225-0312	2	FILM-WARNING (JUMP START, READ OMM)	
			(INSIDE OF BATTERY BOX ON THE FRONT SIDE PLATE NEAR THE TOP)	
	225-4257	1	FILM-WARNING (HOT FLUID UNDER PRESS, INTL)	
			(UNDERSIDE OF SHUNT TANK ACCESS DOOR. ORIENT TO BE READ FROM RH SIDE OF MACHINE)	
	226-1240	2	FILM-WARNING (CRUSH HAZARD, STAY BACK, INTL)	
			(5MM ABOVE EDGE OF BLACK PLATE OF CAB & CENTER BETWEEN FRONT CAB SKIRT MOUNTING BOLTS)	
	305-4472	1	FILM-WARNING (CRUSH HAZARD, READ OMM, INTL)	
			(180MM UP FROM THE ARTICULATION LOCK PLATE & 40MM FROM THE FRONT END OF ENGINE END FRAME)	
	239-4234	1	FILM-WARNING (QUICK COUPLER, READ OMM, INTL)	
			(BRACKET ON RH "B" POST INSIDE OF CAB)	
	240-7957	1	FILM-WARNING (DO NOT OPERATE, READ OMM, INTL)	
			(BRACKET ON RH "B" POST INSIDE OF CAB)	
	302-4390	1	FILM-WARNING (CRUSH HAZARD, FASTEN SEAT BELT)	
			(RH A-POST INSIDE OF CAB, FLUSH WITH TOP OF STEERING WHEEL FACING OPERATOR)	
	305-4467	1	FILM-WARNING (HIGH PRESSURE, READ MANUAL)	
			(VERTICALLY ON AIR CLEANER BRACKET BETWEEN HARDWARE ON RH OF MACHINE ADJACENT TO THE BRAKE ACCUMULATORS)	

<END>

SERVICE EQUIPMENT AND SUPPLIES

293-4929 FILM GP

S/N: KLN1-UP

PART OF 312-4574 PLATE & FILM GP

SMCS-7405, 7557 **i03016494**

NOTE	REF NO	GRAPHIC REF	PART NUMBER	QTY	PART NAME 1 2 3 4 5 6 (PRODUCT LEVEL)	SEE PAGE
	1	1	**293-4922**	1	FILM-STRIPE (924H, CAT, RH)	
	2	1	**293-4919**	2	FILM-STRIPE (FILLER, HOOD)	
	3	1	**293-4921**	1	FILM-STRIPE (924H, CAT, LH)	
	5	1	**9X-2447**	1	FILM-INFORMATION (CATERPILLAR)	
	6	1	**253-0861**	2	FILM-INFORMATION (CAT POWER, ACERT TECHNOLOGY)	

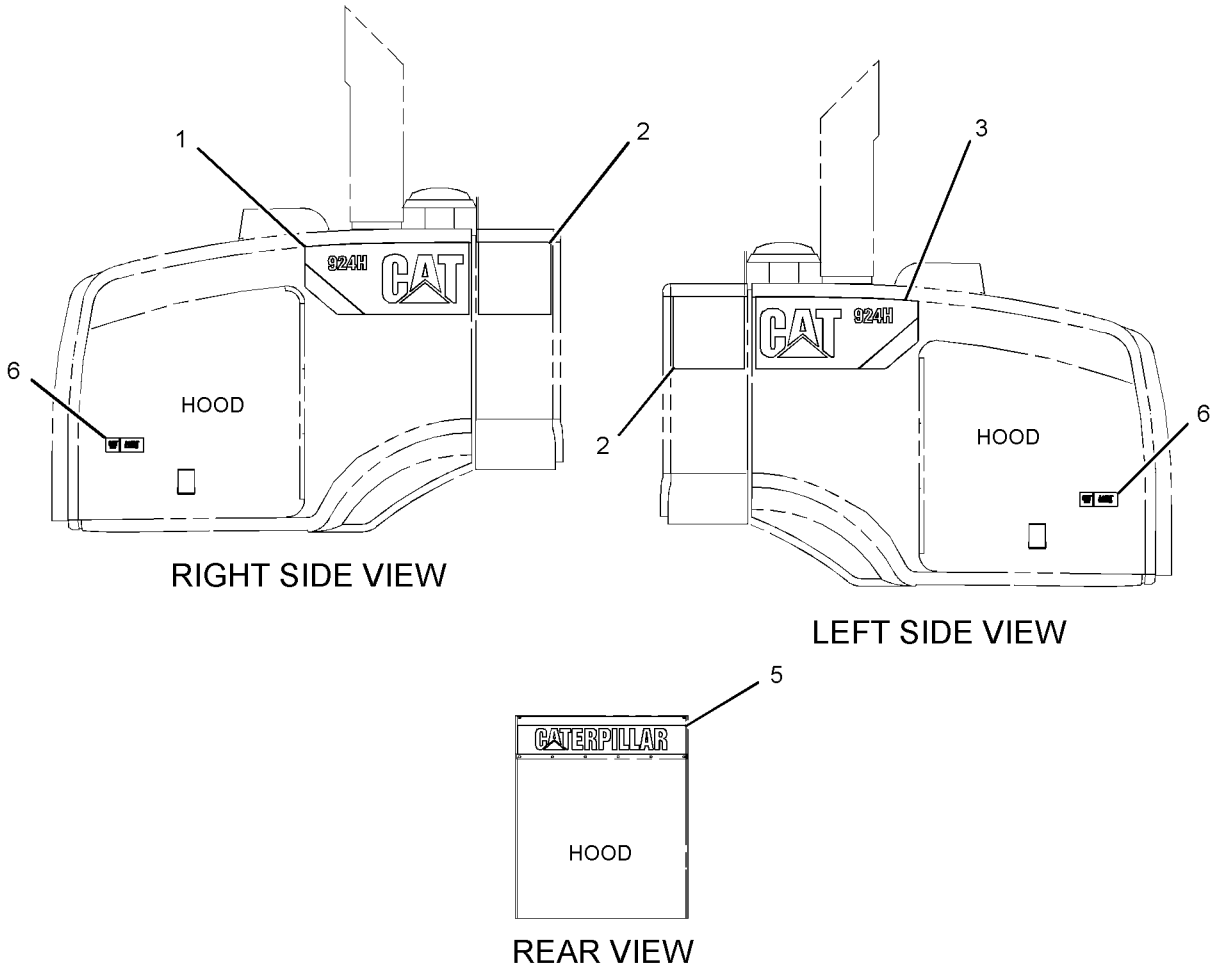

GRAPHIC #1

<END>

g01528255

SERVICE EQUIPMENT AND SUPPLIES

328-8319 FILM GP-INTERNATIONAL

S/N: KLN1-UP

AN ATTACHMENT

SMCS-7405, 7557 **i03038530**

NOTE	PART NUMBER	QTY	PART NAME 1 2 3 4 5 6 (PRODUCT LEVEL)	SEE PAGE
	159-3590	1	FILM-IDENTIFICATION (WATER SEPARATOR)	
			(TO THE RIGHT OF THE FUEL WATER SEPERATOR BOWL ON REAR COOLING STRUCTURE)	
	146-6747	2	FILM-INFORMATION (24-VOLT)	
			(ON THE INSIDE OF THE BATTEY BOX ON THE FRONT SIDE PLATE NEAR THE TOP)	
	276-2604	1	FILM-INSTRUCTION (BELT ROUTING)	
			(60-MM INWARDS FROM THE LEFT SIDE OF THE REAR STRUCTURE & 290-MM UP FROM THE NON-METALIC MAT & PLACE ON SURFACE FACING	
			REAR OF MACHINE WITHIN RADIATOR STRUCTURE TO THE LEFT OF THE LEFT SIDE REMOVABLE ACCESS PANEL & BELOW HOSE GORMMET)	
	327-0803	1	FILM-START AID	
			(ON RH-A POST INSIDE OF CAB & 5-MM ABOVE THE SEAT BELT FILM)	
	219-0302	1	FILM-WARNING (NO WELD, NO DRILL, READ OMM)	
			(ON LH B-POST INSIDE OF CAB, FLUSH WITH PARKING BRAKE CONSOLE)	
	224-8946	1	FILM-WARNING (NO ETHER SPRAY/AIR INTK, INTL)	
			(ON RH SIDE OF ENGINE COMPARTMENT HOOD NEAR PRE-AIRCLEANER. ORIENTED TO BE READ WHILE STANDING ON RH SIDE PLATFORM)	
	225-0312	2	FILM-WARNING (JUMP START, READ OMM)	
			(ON THE INSIDE OF THE BATTEY BOX ON THE FRONT SIDE PLATE NEAR THE TOP)	
	225-4257	1	FILM-WARNING (HOT FLUID UNDER PRESS, INTL)	
			(ON UNDERSIDE OF THE SHUNT TANK ACCESS DOOR. ORIENT TO BE READ FROM RH SIDE OF MACHINE)	
	226-1240	2	FILM-WARNING (CRUSH HAZARD, STAY BACK, INTL)	
			(5-MM ABOVE BOTTOM EDGE OF BLACK PLATE OF CAB & CENTER BETWEEN FRONT CAB SKIRT MOUNTING BOLTS)	
	305-4467	1	FILM-WARNING (HIGH PRESSURE, READ MANUAL)	
			(VERTICALLY ON AIR CLEANER BRACKET BETWEEN HARDWARE ON RH SIDE OF MACHINE ADJACENT TO THE BRAKE ACCUMULATORS)	
	305-4472	1	FILM-WARNING (CRUSH HAZARD, READ OMM, INTL)	
			(180-MM UP FROM THE ARTICULATION LOCK PLATE & 25-MM FROM FRONT EDGE OF ENGINE END FRAME)	
	327-0802	1	FILM-WARNING (CRUSH HAZARD, FASTEN SEAT BELT)	
			(ON RH-A POST INSIDE CAB, 950-MM UP FROM THE FLOORPLATE. AVOID PLACING DECAL OVER FILLET WELD FOR PROPER FITTING)	
	327-0804	1	FILM-WARNING (CRUSH HAZARD, READ OMM)	
			(ON RH-A POST INSIDE CAB & 5-MM ABOVE STARTING AID FILM)	
	327-0805	1	FILM-WARNING (DO NOT OPERATE, READ OMM)	
			(ON RH-A POST INSIDE OF THE CAB & 5-MM ABOVE QUICK COUPLER FILM. AVOID PLACING DECAL OVER FILLET WELD, FOR PROPER	
			FITTING)	

<END>

SERVICE EQUIPMENT AND SUPPLIES

312-4574 PLATE & FILM GP

S/N: KLN1-UP

PART OF 289-8841 CHASSIS AR

SMCS-7405, 7557 **i02989175**

NOTE	PART NUMBER	QTY	PART NAME 1 2 3 4 5 6 (PRODUCT LEVEL)	SEE PAGE
Y	*293-4929*	1	FILM GP	666
	239-6989	1	PLATE-SERIAL NUMBER (MACHINE)	
			(ON LH SIDE OF THE NON-ENGINE END FRAME & ABOVE THE BOTTOM EDGE OF THE OUTER PLATE FROM THE EDGE ADJACENT TO THE HITCH)	
	225-4150	1	PLATE-SERVICE INFORMATION (MACHINE)	
			(ON COMBO PIN PLATE)	
B	**193-5913**	8	PLUG	
B	**193-5914**	50	PLUG	
B	**193-5918**	4	PLUG	
	309-6899	1	FILM-INSTRUCTION (BATTERY)	
			(IN CENTER OF FRONT GLASS, VISIBLE FROM SEATED POSITION IN CAB. FOR OROPS CAB, ON LH B-POST, AT EYE LEVEL OF OPERATOR	
			FROM SEATED POSITION IN CAB)	
	202-9824	1	FILM-INFORMATION (BRAZIL)	
			(ON THE LH SIDE OF THE NON-ENGINE END FRAME (OUTSIDE) & BESIDE THE TOP-LEFT CORNER OF THE COMBO PIN PLATE)	
	312-7713	1	FILM-INSTRUCTION (DOOR, READ OMM)	
			(ON RH ENGINE ACCESS FOLD DOWN PANEL & ON INSIDE OF PANEL ALIGNED WITH HINGES. 100-MM FROM BOTTOM EDGE OF FOLD DOWN	
			PANEL & ALIGNED FORE/AFT WITH FRONT EDGE OF HINGE)	
	134-7258	1	FILM-INFORMATION (EXTENDED LIFE COOLANT,READ OMM)	
			(ON UNDERSIDE OF THE SHUNT TANK ACCESS DOOR. ORIENT TO READ FROM RH SIDE OF MACHINE)	
	300-9915	2	FILM-IDENTIFICATION (HYDRAULIC OIL)	
			(ONE FILM ON TOP OF HYDRAULIC TANK,CENTERED ON SIGHT GUAGE. ORIENT TO BE READ FROM RH SIDE OF MACHINE)	
			(ONE FILM ON RH SIDE OF CAB 255-MM UP FROM THE BOTTOM OF CAB & 16-MM FROM BACK EDGE OF CAB)	
	7X-3229	4	FILM-INSTRUCTION (LIFT EYE, TIE-DOWN LOCATION)	
			(ABOVE EACH TIE DOWN EYE. CENTERED ON THE HOLE ON THE ANGINE END FRAME, OR COUNTER WEIGHT (IF FITTED) & ADJACENT TO	
			EACH EYE TOWARD THE INSIDE OF THE NON-ENGINE END FRAME	
	220-5574	1	FILM-INSTRUCTION (RADIATOR DOORS)	
			(ON FAN GUARD BELOW THE LATCH. POSITION SO THAT IT IS COVER WHEN SERVICE DOOR IS CLOSED)	
	179-3609	1	FILM-INSTRUCTION (REMOTE GREASE POINTS)	
			(ON MACHINE LEFT SIDE SKIRT 70-MM FROM FRONT EDGE & 15-MM FROM TOP EDGE OF SKIRT)	
	179-3610	1	FILM-INSTRUCTION (REMOTE GREASE POINT LOCATIONS)	
			(ABOVE GREASE BLOCK ON ENGINE END FRAME)	
	179-3612	1	FILM-INSTRUCTION (REMOTE GREASE POINT LOCATIONS)	
			(BESIDE GREASE BLOCK ON NON-ENGINE END FRAME)	

312-4574 **PLATE & FILM GP** ***(contd.)*** **i02989175**

NOTE	PART NUMBER	QTY	PART NAME 1 2 3 4 5 6 (PRODUCT LEVEL)	SEE PAGE
	220-5573	1	FILM-INSTRUCTION (REMOTE GREASE POINTS)	
			(ON MACHINE LEFT SIDE SKIRT 10-MM FROM FRONT EDGE & 10-MM FROM TOP EDGE OF SKIRT)	
	236-7230	1	TAG-WARNING (STEERING FRAME LOCK)	
			(TO THE STEERING WHEEL)	

B-USE AS REQUIRED
Y-SEPARATE ILLUSTRATION

<END>

220-7925 PLATE GP-AXLE IDENTIFICATION

S/N: KLN1-UP
PART OF 267-7372 AXLE AR-OSCILLATING
AN ATTACHMENT

SMCS-7557 **i01914258**

NOTE	PART NUMBER	QTY	PART NAME 1 2 3 4 5 6 (PRODUCT LEVEL)	SEE PAGE
	220-3773	1	PLATE GP-AXLE IDENTIFICATION	
	109-8895	1	PLATE-IDENTIFICATION	
	220-3681	1	TAPE	
	220-7924	1	PLATE GP-AXLE IDENTIFICATION	
	082-2817	4	TACK	
	109-8895	1	PLATE-IDENTIFICATION	

<END>

MEMORANDA

PART NUMBER INDEX

Part	Page
0	
0L-1351	493
	494
0S-1588	351
0S-1619	351
0T-0244	599
1	
1B-3057	124
1B-3978	207
	231
1B-3980	231
1B-8723	497
	588
1B-8736	4
	11
	25
1D-4675	484
1G-8878	225
1H-3244	120
	143
	148
	156
	157
1H-4393	152
1H-6227	413
1H-8128	322
	340
1H-9696	252
1J-5607	656
1J-9671	307
	308
	330
	332
	333
	396
	414
1K-6853	261
1K-6870	626
1K-6872	493
	494
1K-8061	236
	239
1M-4543	197
	244
	558
1M-6718	457
	459
	460
	461
1M-7250	79
1M-8652	476
	480
1P-0810	124
	192
	197
1P-3703	374
1P-3708	374
1P-4576	223
	351
1P-4582	374
1P-4584	374
1P-6522	488
1R-0622	183
1S-0396	244
1S-0994	290
1S-7251	124
1S-9593	445
	474
1U-0257	625
1U-0293	656
1U-0294	656
1U-1254	642
1U-3251	663
1U-3252	661
1U-8846	207
	252
1V-2772	309
2	
2B-0858	13
	15
	33
2C-9259	638
	639
	640
2D-0598	207
2D-0714	343
2D-2507	255
2D-2508	255
2D-2509	255
2D-2628	254
	268
2D-2629	254
	268
2D-2630	254
	268
2D-2631	254
	268
2D-2633	254
	268
2G-5298	575
	580
	584
2G-6595	255
2G-8767	124
2H-3429	457
	459
	460
	461
2H-3920	172
	174
	486
2H-3922	167
	488
2H-3923	488
2J-3506	649
	650
2J-3507	625
	656
2J-7550	252
2J-7767	343
2K-4821	120
2K-4973	484
	615
2K-5957	230
2K-6830	322
	340
	342
2L-0043	221
2L-5893	594
2L-6726	267
2L-8066	188
	192
2L-8067	188
	192
2L-8068	188
	192
2L-8069	576
	585
2L-8076	197
	270
2L-8077	146
	150
	188
	192
2L-8078	146
	150
2L-8079	177
	180
	183
	197
	576
	585
2M-2570	401
	402
2M-3433	195
2M-9780	87
	118
	243
	337
	373
	377
	379
	381
	385
	392
	396
	418
	420
	428
2N-3477	310
	314
2N-7006	207
2N-7007	207
2P-1279	377
	379
2P-1293	350
	353
	354
	356
	357
	369
2P-1692	269
2P-4173	19
2P-8104	165
2Q-5979	253
	►254
2S-1382	267
2S-3440	7
	9
2S-4078	243
	373
	381
2S-4663	470
2S-5835	470
2T-3360	520
2W-1141	207
	209
	211
	213
2Y-3209	561
2Y-5829	472
3	
3B-0551	232
	234
	236
	239
3B-4501	488
3B-4610	312
3B-4617	315
3B-6552	301
	476
	480
3B-7734	476
	480
3B-8488	261
	631
	632
	633
3B-8489	259
	293
	301
	476
	480
	631
	632
	633
	634
	654
	660
3B-8491	476
	480
	654
	660
3C-3364	590
3C-4922	590
3D-2824	216
	223
	243
	244
	325
	332
	333
	335
	344
	350
	351
	353

► **PRIMARY REFERENCE**

PART NUMBER INDEX

Part	Page
	354
	356
	374
	377
	379
	381
	385
3D-8317	470
3E-1841	488
3E-2331	430
	434
	438
3E-2335	385
3E-2338	232
	236
3E-3365	160
3E-3367	129
3E-3368	129
3E-3371	128
	158
	171
3E-3389	172
3E-3805	527
	533
	536
	539
3E-3892	511
3E-4312	492
3E-4354	462
	463
	464
3E-4356	28
	506
3E-4367	576
	585
3E-5153	165
3E-5154	165
3E-5239	199
	509
	526
	575
	580
	584
3E-5464	488
3E-6328	▶119
	152
3E-6908	291
3E-7690	242
3E-7843	▶129
	348
3E-7844	▶128
	348
3E-8016	412
3E-8020	622
3E-8320	124
3E-8558	576
	585
3E-9179	576
	585
3E-9411	476
	480
3F-9556	120
	590
3G-0572	476
	480
3H-7180	411
3H-8538	310
	314
3J-1907	207
	223
	225
	243
	244
	247
	265
	269
	315
	317
	325
	335
	345
	351
	361
	364
	367
	369
	371
	373
	374
	381
	385
	389
	390
	392
	395
	396
	443
	448
	450
	452
	470
	472
3J-4818	615
3J-7354	19
	225
	242
	315
	317
	325
	330
	332
	333
	345
	373
	374
	377
	379
	395
	428
	443
	445
	448
	450
	452
	466
3K-0360	19
	188
	192
	236
	239
	242
	243
	270
	325
	335
	374
	389
	396
	428
	457
	459
	460
	461
	462
	463
	464
	470
3K-6060	562
	564
3K-7056	309
3K-7057	309
3K-8106	590
3K-9520	59
	63
3L-8187	310
	314
3P-1210	420
3P-9900	615
3S-2093	19
	59
	63
	87
	132
	133
	134
	154
	188
	192
	197
	242
	270
	317
	381
	455
	488
	509
	513
	558
	576
	581
	585
	618
	622
	624
3S-6049	124
3S-6050	124
3S-8665	188
	195
3T-2094	251
3T-4696	177
	183
3T-5201	527
	533
	536

4

Part	Page
4B-0418	59
	63
4B-2048	154
4B-3665	252
4B-4274	386
4B-4276	148
4B-4278	615
4B-4674	148
4B-4863	72
	576
	580
	585
4B-5324	310
	314
4B-8774	80
4B-9880	470
4D-4431	323
4D-7388	59
	63
	244
	247
	382
4D-8123	476
	480
4D-9986	132
	133
4E-0659	635
	638
	639
	640
	641
	644
	650
4E-1062	511
4E-1384	527
	533
	536
	539
4E-2161	545
	547
	550
4E-2482	642
4E-2483	642
4E-5984	260
4E-5985	260
4E-7316	618
	620
4E-7540	317
4F-2294	169
4F-4042	625
4F-4879	606
4F-7389	228
4F-8824	231
4H-0094	493
	494
4H-3001	275
4H-4063	389
4J-0520	374
	396
4J-0523	222
4J-0524	374
4J-0527	374
4J-5267	223

▶ **PRIMARY REFERENCE**

PART NUMBER INDEX

Part	Page	Part	Page	Part	Page	Part	Page
	351		181		295		560
	386		184		358	5D-9629	499
4J-5477	242		188		407		501
	243		192		408	5F-8000	322
	325		195		409	5G-2373	626
	361		199		410	5G-7820	348
	364		244		411	5H-1039	236
	365		348		445		239
	367		361		450	5H-3252	251
	377		364		452	5H-3701	232
	379		576		527		234
	381		580		533		236
	395		585		536		239
	396	4S-1962	558		545	5H-6005	207
	430	4S-5879	207		547	5J-2974	226
	434	4S-8264	545		550	5J-4773	649
	438		547		554		650
4J-9058	625		550		556	5J-5402	322
4J-9225	323	4T-5613	322		564		340
4K-0173	232		340		573		342
	234	4T-6780	323		576	5J-7010	323
	236	4T-8091	656		580	5J-7876	322
	239	4T-8374	649		585	5J-7878	343
4K-1388	395		650		615	5K-4778	87
4K-2039	457	4V-2879	476	5C-7261	59	5K-5338	87
	459		480		63		317
	460	4V-4164	154		146		386
	461	4V-4453	476		150	5K-8451	87
	462		480		156	5K-9090	242
	463	4V-8256	484		157		243
	464	4V-8285	642		163		244
4K-4709	282	4V-8286	642		187		247
4K-4879	254	4V-8577	615		188		357
	256	4V-8639	476		191		358
4K-4881	257		480		192		373
4K-7464	293	4V-8674	476		295		381
4K-7502	23		480		312		385
4K-9429	571	4V-9798	369		317		386
4L-7249	227	4V-9799	369		514		395
	228	4W-3753	223		515		396
	229	4W-7356	404		516	5L-4753	221
4M-1677	203		405		517	5L-7200	152
	205		415		518	5M-2894	351
	206				519		594
4M-2381	470				527	5M-3062	626
4M-5905	470	**5**			533	5M-4987	251
4M-6425	594				536	5M-6213	118
4M-7470	154	5A-3604	98		539	5M-6214	236
	622		99	5C-8312	152		239
	624		115		573	5P-0537	572
4P-7581	178		412	5C-9553	117	5P-0599	385
	181		430		358	5P-0713	207
	184		450		488	5P-0743	19
	188		452		509	5P-0747	124
	192	5C-2890	131		522	5P-0761	124
	195		143		562	5P-0765	195
	197		145		564	5P-0767	560
	199		146		576	5P-1076	53
	270		148		580		291
	509		150		585		406
	576		152	5D-1026	9	5P-1442	87
	580		156		19	5P-1505	19
	585		157		59		87
4P-8134	176		188		63		374
	178		192		373	5P-1506	60

► **PRIMARY REFERENCE**

PART NUMBER INDEX

Part	Page
	64
5P-1717	72
5P-2304	207
5P-2861	231
5P-3454	188
	192
5P-3456	429
	431
	435
	439
5P-3723	232
	234
	236
	239
5P-3863	207
5P-4115	295
	348
	554
	576
	580
5P-4116	59
	63
	72
	124
	162
	188
	192
	195
	295
	317
	348
	425
	499
	502
	506
	520
	525
	527
	533
	536
	542
	576
	580
	585
	654
5P-4295	317
5P-4362	247
5P-4423	615
5P-4484	232
	234
	236
	239
5P-4571	146
	150
	177
	178
	180
	183
	184
5P-5148	395
5P-5291	236
	239
5P-5623	176
5P-5630	163
5P-5637	295
	545
	547
	550
	556
5P-5639	146
	150
5P-5643	486
	488
5P-5677	137
5P-5755	60
	64
5P-5774	150
5P-5927	542
5P-6010	615
5P-6038	178
	181
	184
5P-6264	197
5P-6271	177
	180
	183
5P-6718	19
	430
	434
	438
5P-6872	562
	564
5P-6887	59
	63
5P-7070	488
5P-7211	53
	60
	64
	508
5P-7462	367
5P-7463	367
5P-7464	354
	371
5P-7465	354
	371
5P-7466	357
	369
5P-7467	357
	369
5P-7468	222
	244
	286
	374
	382
	386
	396
5P-7469	222
	244
	286
	374
	382
	386
	396
5P-7648	558
5P-7684	207
5P-7814	19
5P-7957	571
5P-7958	540
	575
	580
	584
5P-8112	357
	369
5P-8244	414
5P-8245	23
	231
	232
	234
	236
	239
	401
	402
	493
	494
5P-8247	120
	232
	234
	236
	239
5P-8347	269
5P-8444	244
	286
	374
	382
	386
	396
5P-8500	222
	424
	561
5P-8524	554
5P-8525	148
5P-8837	303
5P-8874	335
	389
5P-9212	304
5P-9262	466
	468
5P-9297	312
	361
	364
5S-7349	120
5S-7383	594
5T-3821	476
	480
5T-9771	301
5V-1496	603
5V-4410	315
5V-4998	303
5V-4999	303
5V-5498	261
5V-8780	53
6	
6A-5591	207
6C-1834	295
6C-3681	295
6C-8648	232
	234
	236
	239
6D-0337	254
	256
	▶268
6D-0443	254
	268
6D-1641	560
6D-3479	87
	124
6D-4244	178
	181
	184
6D-6146	154
6D-7690	232
	234
	236
	239
6D-7889	98
	99
6E-2943	415
6E-3268	466
	468
6E-3269	466
	468
6E-3272	466
	468
6E-3273	466
	468
6E-3274	466
6E-3275	466
	468
6E-3276	466
	468
6E-4940	323
6E-6527	466
	468
6E-6528	466
	468
6E-6536	466
6E-6537	466
6E-6538	466
6E-6539	466
6E-6540	466
6F-2956	232
	234
	236
	239
6F-3930	255
6F-7045	167
6G-0233	315
6G-2256	124
6G-2263	124
6G-4195	310
	314
6H-3592	576
	585
6I-0217	7
	25
	41
	49
	50
	57
	80
	100
	105
	110
6I-0254	41
	57
	100

▶ **PRIMARY REFERENCE**

PART NUMBER INDEX

Part	Page	Part	Page	Part	Page	Part	Page
	105		342		325		270
	110	6J-9996	411		373		472
6I-0260	30	6K-4185	293		389		514
	47	6K-4186	293		395		515
	89	6K-4191	293		470		516
	92	6K-5614	218	6V-1178	472	6V-5842	207
	95	6K-6075	236	6V-1194	293		251
	100		239	6V-1249	354	6V-6210	622
	105	6K-6307	207		371	6V-6317	207
	110	6K-8088	497	6V-1363	72		252
6I-0423	24		588	6V-1392	488	6V-6543	622
6I-0455	49	6K-8987	249	6V-1668	488	6V-6924	465
	50	6K-9632	624	6V-1720	207	6V-7238	19
6I-0456	100	6M-5062	457	6V-1820	207		389
	105		459		252	6V-7357	146
	110		460	6V-1889	244		150
6I-0563	80		461		382		511
6I-0593	89		462		393	6V-7359	386
	92		463	6V-1970	1	6V-7419	622
	95		464		▶561		624
6I-0631	24	6N-1604	132	6V-2394	209	6V-7527	227
6I-0645	25		133	6V-2687	492		228
	76	6N-6984	59	6V-2689	177		229
	77		63		183	6V-7646	603
6I-0650	25	6R-7943	420		450	6V-7687	634
6I-0654	27	6S-6646	310		452		652
	89		314	6V-3213	320	6V-7723	422
	92	6S-8620	60	6V-3668	231	6V-7728	188
	95		87	6V-3821	270		192
6I-0817	80	6T-3631	171	6V-3822	270	6V-7732	232
6I-0847	24	6T-3632	171	6V-3940	470		234
6I-1090	44	6T-3633	171		497		236
6I-1418	522	6T-5598	187	6V-3965	207		239
6I-1497	30		188		223	6V-7743	539
6I-4374	41		192		243	6V-7970	430
	100	6T-6708	488		247		434
	105	6T-6969	87		266		438
	110	6T-7054	474		269	6V-7981	251
6I-4681	30	6V-0347	232		315	6V-8186	590
6I-4793	47		234		325	6V-8188	632
	49		236		374		633
	50		239		390	6V-8189	120
	100	6V-0352	501		395	6V-8197	229
	105		529		470		236
	110	6V-0408	351	6V-4249	28		239
6I-8310	638		353		252	6V-8200	413
	639		356	6V-4429	236	6V-8210	227
	640	6V-0484	247		239		228
6I-8311	638		269	6V-4636	418		229
	639		395	6V-5210	488	6V-8212	220
	640		470	6V-5215	270	6V-8218	265
6I-8390	209	6V-0491	146	6V-5217	207	6V-8225	490
	211		150		270		491
6I-8531	259		195	6V-5218	270	6V-8227	329
6I-8849	293		576		470	6V-8237	323
6I-8860	293		585	6V-5223	270	6V-8352	430
6I-9250	625	6V-0545	222	6V-5230	207		434
6I-9251	625		289	6V-5653	87		438
6I-9804	267	6V-0683	367	6V-5683	221		466
6I-9805	267	6V-0852	207	6V-5696	228		468
6I-9806	207		223		231	6V-8369	172
	▶267		242	6V-5758	465		174
6J-2680	374		247	6V-5839	28		486
6J-2797	322		269		207	6V-8373	310
	340		315		220		314

▶ **PRIMARY REFERENCE**

PART NUMBER INDEX

Part	Page	Part	Page	Part	Page	Part	Page
6V-8397	243		389	6V-9003	243		385
	315		392		381		386
	317		396	6V-9004	243	6V-9829	361
	351		443		374		364
	361		448		381		390
	364		450	6V-9007	223		472
	369		452		344	6V-9830	374
	371	6V-8637	223		350		396
	373		385		351	6V-9832	244
	374	6V-8638	396		353		382
	385	6V-8639	325		356	6V-9833	244
	389		396	6V-9009	243		357
	392	6V-8640	337		381	6V-9835	367
	395	6V-8641	361	6V-9023	576	6V-9836	374
	396		364		585		389
	430		367	6V-9160	350	6V-9837	243
	435	6V-8642	337		353		374
	439		392		356		390
	443	6V-8647	242	6V-9161	317	6V-9840	243
	448		377	6V-9168	361	6V-9842	243
	450		379		364	6V-9849	367
	452		395	6V-9169	371		377
	472	6V-8675	231	6V-9170	244		379
6V-8398	242		232		377		396
	243		234		379	6V-9850	317
	325		236		382		373
	335		239	6V-9172	244		389
	354	6V-8713	379		247		392
	371	6V-8716	369		358	6V-9852	379
	374	6V-8724	315		386		392
	385		317		396	6V-9853	243
	386		351	6V-9189	140		381
	389		389	6V-9200	317	6V-9854	242
	390		472	6V-9350	244		247
	396	6V-8758	312		382		373
6V-8400	243	6V-8775	325	6V-9507	430		381
	373		390		434	6V-9872	373
	381	6V-8781	317		438	6V-9873	385
6V-8490	554		472	6V-9632	188		390
	573	6V-8782	325		195	6V-9876	389
6V-8625	243		374		298	6W-5652	626
	325		396		348	6W-5656	626
6V-8626	243	6V-8795	293		389	6W-5677	626
	377	6V-8837	577		497	6W-5678	626
	379		580		501	6W-5679	626
	392		585		509	6W-5760	28
6V-8627	243	6V-8928	554		522		339
	361	6V-8935	361		547	6W-5761	339
	364		364		573	6W-6807	262
	367	6V-8942	354	6V-9746	223	6W-8246	293
	381	6V-8969	572		242	6Y-0584	207
6V-8628	325	6V-8979	377		243	6Y-0869	216
6V-8632	325		379		244	6Y-0928	211
6V-8634	389	6V-8981	371		337	6Y-1300	211
6V-8635	242	6V-8982	377		344		213
	247		379		350	6Y-2525	567
	373	6V-8983	369		351	6Y-4464	251
	385	6V-8984	244		353	6Y-4465	251
	395		396		354	6Y-4618	252
6V-8636	315	6V-8991	247		356	6Y-4890	211
	317	6V-8994	361		357	6Y-4997	251
	351		364		369	6Y-5010	251
	369	6V-8997	354		373	6Y-5027	209
	371	6V-8998	247		374	6Y-5631	209
	385	6V-9001	389		381		211

PART NUMBER INDEX

Part	Page
	213
6Y-6584	575
	580
	584
6Y-6712	▶251
	252
6Y-7818	209
	211
	213
6Y-7922	209
6Y-7968	209
	211
	213
6Y-8069	230
6Y-8157	209
	211
	213
6Y-8265	209
6Y-8512	209
6Y-8514	209
6Y-9016	207
6Y-9017	207

7

Part	Page
7B-3028	470
7C-0351	20
	30
7C-1224	30
7C-1281	7
	9
7C-4616	25
7C-6467	315
7D-1649	393
7D-5238	342
7D-5252	255
7D-6922	310
	314
7D-7233	361
	364
7D-8636	227
	228
	229
7D-8637	227
	228
	229
7F-2050	488
7F-2060	488
7F-8268	207
7G-3228	195
7G-5220	228
	231
7I-1024	87
	560
7I-3003	228
7I-6601	457
	459
	460
	461
	462
	463
	464
7J-0204	457
	459
	460
	461
	462
	463
	464
7J-9108	243
	244
	325
	337
	377
	379
	381
	382
	392
7J-9344	650
7K-0088	340
7K-1181	19
	59
	63
	124
	134
	148
	152
	176
	178
	181
	183
	187
	191
	195
	197
	199
	242
	247
	286
	288
	289
	301
	315
	317
	348
	361
	364
	379
	381
	476
	480
	560
	575
	580
	584
	591
7K-3974	396
7K-3975	395
7K-9202	631
	632
	633
7K-9204	631
	632
	633
7K-9205	476
	480
	650
7K-9208	476
	480
7K-9209	476
	480
7K-9212	476
	480
7K-9216	476
	480
	484
7L-8170	484
7M-8485	207
	232
	234
	236
	239
	242
	243
	247
	369
	371
	373
	381
	385
	395
7N-0718	124
	▶167
7N-5274	124
7N-9801	175
7P-3454	342
7P-3466	476
	480
7P-8753	343
7S-1912	374
	393
7T-1099	279
	281
	291
	310
	499
	501
	509
	614
7T-2703	207
7T-4532	505
7T-5554	242
7T-6087	165
7T-6090	165
7T-6496	216
7T-6799	573
7T-8332	59
	63
	424
7T-8890	619
7V-2885	1
	▶303
7V-5626	348
7V-5628	195
	348
7V-6089	195
7V-6571	317
7V-8317	218
7W-2108	527
	533
	536
7W-2632	100
	105
	110
7W-3447	290
7W-4540	164
7W-7381	392
7X-0290	351
7X-0331	649
	650
7X-0371	626
7X-0474	207
7X-0515	244
7X-0521	493
	494
7X-0578	290
7X-0579	486
	613
	614
7X-0603	520
7X-0606	247
7X-0608	187
	191
	484
7X-0618	293
	320
	476
	481
	654
	660
7X-0818	522
7X-0838	317
7X-0871	389
7X-2436	232
	234
	236
	239
7X-2459	315
7X-2464	247
7X-2465	249
7X-2495	209
	211
	213
7X-2533	53
	134
7X-2534	195
	295
	348
	396
7X-2538	506
7X-2540	295
7X-2549	374
7X-2552	168
7X-2554	28
7X-2556	244
7X-2567	567
7X-3229	668
7X-3350	227
	228
7X-3393	67
7X-6222	576
	585
7X-6315	130
7X-7729	3
	53
	59
	63
	72
	74
	78

▶ **PRIMARY REFERENCE**

PART NUMBER INDEX

Part	Page
	122
	123
	154
	222
	244
	272
	278
	283
	284
	285
	295
	298
	317
	344
	348
	358
	361
	364
	367
	369
	382
	386
	390
	393
	396
	406
	424
	426
	558
7X-7910	558
7X-7911	558
7X-7958	59
	63
	247
7X-8549	345
7Y-5227	244
7Y-5267	420
7Y-9099	591
8	
8B-4884	476
	481
8C-0564	369
	371
	385
	395
8C-2926	374
8C-3110	418
8C-3174	244
	382
8C-3205	386
8C-3206	374
	396
8C-3364	243
	373
	381
8C-3398	188
	192
8C-3426	545
	547
	550
8C-3445	45
	170
8C-3446	19
	225
	345
8C-3447	223
8C-3451	345
8C-3681	60
	64
	87
8C-3756	509
8C-3979	209
	211
	213
8C-3982	209
	211
	213
8C-4400	213
8C-4424	430
	434
	438
8C-4436	122
	123
8C-4982	72
8C-5224	19
8C-5225	19
8C-5607	134
8C-5608	134
8C-6160	312
8C-6354	575
	580
	584
8C-6440	155
8C-7508	590
8C-8457	488
8C-8478	28
8C-8493	357
8C-8989	371
8C-9778	165
8C-9987	474
	573
8D-2707	254
	268
8D-3791	626
8D-6234	631
	632
	633
8D-9671	195
	317
8D-9947	223
8E-1118	146
8E-1143	470
8E-3416	209
8E-4566	▶656
8E-4567	656
8E-4568	▶656
8E-4569	656
8E-5556	211
	213
8E-5707	209
	211
	213
8E-5726	211
	213
8E-5727	211
	213
8E-5728	211
	213
8E-5831	211
	213
8E-6117	209
8E-6120	209
8E-6558	209
8E-7841	270
8E-8292	619
8E-8296	315
8E-8300	497
	588
8E-8313	209
	211
	213
8E-8317	209
8E-8425	221
8E-9968	251
8F-1434	165
8F-6437	59
	63
	424
8F-8733	232
	234
	236
	239
8H-5303	167
8H-5306	167
8H-7521	207
8J-0112	323
8J-0412	420
8J-0426	207
8J-2928	625
8J-2933	625
8J-4455	165
8J-5667	340
8J-6273	404
	405
8K-1433	310
	314
8L-2779	98
	115
	475
8L-2786	443
	445
	448
	450
	452
8L-4070	165
8L-8413	137
	146
	150
	177
	178
	180
	183
	184
	187
	192
	195
	197
	576
	585
	615
8M-2770	244
	382
8M-2771	358
8M-2773	244
	318
	558
8M-5251	270
8M-5253	470
8N-0869	124
8N-1546	576
	585
8N-1549	187
	192
8N-1725	124
8N-9033	545
	550
	556
8R-0248	203
	205
	206
8R-0249	203
	205
	206
8R-0512	232
	234
	236
	239
8R-0768	124
8R-1703	218
8R-1705	218
8R-2211	218
8R-2212	218
8R-2236	227
	229
8R-2526	232
	234
	236
	239
8R-2532	232
	234
	236
	239
8R-2537	203
	205
	206
8R-2538	218
8R-2584	236
	239
8R-2918	520
8R-5825	255
8R-6132	499
	501
8R-6904	497
	588
8R-7091	293
8R-7092	293
8R-8847	290
8S-0768	269
8S-0948	87
	244
	325
8S-4726	600
	601
8S-7803	492
8S-9129	207
8S-9130	207
8T-0075	373

▶ **PRIMARY REFERENCE**

PART NUMBER INDEX

Part	Page	Part	Page	Part	Page	Part	Page
8T-0086	590		291		369		290
8T-0267	443		298		371		295
8T-0272	415		304		374		315
8T-0306	621		385		377		318
8T-0328	59		389		382		361
	63		508		386		364
	590		560		390		386
	603		613		393		390
8T-0336	232		618		396		392
	234		620		399		399
	236	8T-3612	72		403		403
	239		215		406		424
8T-0352	590		310		424		558
8T-0363	273		509		476		577
	274		520		481		580
8T-0372	259		613		497		585
8T-0389	139		618		499	8T-4136	53
	141		620		502		59
	142	8T-3734	499		506		63
	315		501		508		75
8T-0404	377	8T-3957	420		511		78
8T-0643	472	8T-3995	545		514		87
8T-0763	343		547		515		122
8T-0785	342		550		516		123
	343	8T-4001	567		517		124
8T-1138	407	8T-4121	28		518		152
	410		53		519		154
8T-1482	273		59		558		188
	274		63		560		192
8T-1686	242		75		577		222
8T-1742	211		78		580		244
8T-1885	371		87		585		247
8T-1886	371		117		588		272
8T-1887	369		124		597		278
8T-1888	369		139		599		285
8T-1889	358		148		611		298
	396		152		612		312
8T-1890	358		154		618		318
	396		164		620		344
8T-1893	367		165		627		348
8T-1894	367		178		628		357
8T-1895	318		181		629		369
8T-1896	318		184		630		371
8T-1899	386		188		643		374
8T-1900	386		192		644		377
8T-2394	434		195		651		382
8T-2925	203		197	8T-4122	59		386
	205		199		63		390
	206		222		260		396
8T-3293	231		223	8T-4131	28		406
8T-3313	325		244	8T-4133	59		424
8T-3425	575		247		63		558
	580		283		78		627
	584		290		117		628
8T-3490	59		293		124		629
	63		304		148		630
	87		312		154		643
	124		315		165		644
	187		318		178		651
	191		325		181	8T-4137	53
	242		344		184		59
	247		348		188		63
	272		357		192		117
	279		361		199		124
	284		364		244		146

► **PRIMARY REFERENCE**

PART NUMBER INDEX

Part	Page
	150
	188
	192
	195
	197
	199
	223
	244
	283
	295
	304
	312
	315
	325
	344
	348
	358
	361
	364
	367
	382
	390
	406
	424
	476
	481
	499
	502
	514
	515
	516
	517
	518
	519
	558
	560
	577
	581
	586
	597
	611
	612
	618
	620
8T-4138	134
	148
	188
	192
	199
	295
	304
	306
	527
	533
	536
8T-4139	361
	364
	560
8T-4140	260
8T-4157	53
8T-4158	53
8T-4167	249
	250
	567
8T-4170	28
8T-4171	188
	192
8T-4172	122
	123
	293
	390
8T-4177	269
8T-4178	247
	344
8T-4179	273
	274
8T-4181	527
	533
	536
8T-4182	59
	63
	386
8T-4183	28
	374
8T-4184	122
	123
	374
8T-4185	78
	164
	317
	497
	558
	588
8T-4186	28
	59
	63
	244
	290
	298
	382
	396
	424
8T-4189	52
	59
	63
	67
	145
	148
	188
	192
	215
	295
	310
	314
	348
	499
	502
	507
	520
	545
	547
	550
	556
	563
	577
	581
	586
	595
	596
	597
	618
	620
8T-4191	197
	520
8T-4192	188
	192
	293
	312
	320
	406
	476
	481
	660
8T-4193	59
	63
8T-4194	59
	63
	134
	293
	374
8T-4195	3
	53
	59
	63
	72
	74
	87
	122
	123
	124
	140
	195
	199
	244
	284
	290
	295
	298
	318
	361
	364
	369
	371
	382
	386
	390
	393
	396
	406
	426
	508
	558
	586
8T-4196	59
	63
	78
	122
	123
	188
	192
	222
	223
	244
	283
	315
	318
	357
	374
	382
	386
	399
	403
8T-4199	178
	181
	184
	577
	581
	586
8T-4200	59
	63
	67
	98
	99
	115
	132
	133
	163
	176
	295
	509
	545
	547
	550
8T-4205	53
	117
	120
	146
	150
	152
	156
	157
	188
	192
	278
	295
	304
	306
	358
	488
	509
	511
	526
	527
	533
	536
	545
	547
	550
	556
	562
	564
	573
	577
	581
	586
	603
8T-4222	60
	64
	78
	298

► PRIMARY REFERENCE

PART NUMBER INDEX

Part	Page	Part	Page	Part	Page	Part	Page
8T-4223	28		556	8T-4986	55	8T-7876	170
	60		563		75	8T-7915	351
	64		577	8T-5005	395		353
	122		581	8T-5041	293		356
	123		586	8T-5093	509	8T-7963	124
	134		594		599	8T-7971	413
	188		595		600	8T-8442	418
	192		596		601		466
	223		597	8T-5353	216	8T-8641	492
	244		600		251	8T-8729	128
	262		601	8T-5360	600		158
	273		618		601		161
	274		620	8T-5372	488		443
	290	8T-4226	60	8T-5379	250		445
	293		64	8T-5400	622		448
	312		146		624	8T-8730	129
	361		150	8T-5436	361	8T-8737	134
	364	8T-4244	53		364		141
	367		361	8T-5439	28		142
	374		424	8T-5452	207		148
	420		455	8T-5913	619		152
	424		456	8T-5914	619		172
	558		513	8T-6430	477		174
	560	8T-4649	274		481		177
8T-4224	52	8T-4742	527	8T-6431	315		178
	60		533	8T-6451	354		180
	64		536	8T-6453	395		183
	67	8T-4779	506	8T-6466	60		184
	120	8T-4835	631		64		187
	132		632		124		188
	133		633		318		191
	145	8T-4896	626		506		195
	146	8T-4908	146	8T-6631	488		197
	148		150	8T-6663	243		270
	150		162	8T-6684	243		443
	156		178		381		445
	157		181	8T-6703	55		448
	163		184		56		565
	176		195		222		566
	178		215	8T-6842	540		576
	181		295	8T-6868	223		585
	184		318		634	8T-8799	187
	188		425		652		191
	192		486	8T-6869	87	8T-8827	188
	195		525		520		192
	215		542	8T-6870	348	8T-8894	520
	295		613		412	8T-8899	369
	310		614	8T-6902	590		374
	314		654	8T-6912	425	8T-8902	243
	348	8T-4910	424	8T-7329	140		392
	412	8T-4956	244	8T-7338	28	8T-8917	631
	425		262		476		632
	499		290		481		633
	502		406	8T-7352	87	8T-9082	603
	507		558	8T-7524	429	8T-9085	207
	509		654		430	8T-9357	19
	514	8T-4970	148		434	8T-9371	615
	515	8T-4971	527		438	8T-9377	351
	516		533	8T-7525	418	8T-9381	600
	517		536		420		601
	518		539	8T-7547	60	8T-9386	243
	519	8T-4983	373		64	8T-9405	577
	545	8T-4984	55		188		581
	547		56		195		586
	550	8T-4985	75	8T-7566	572	8T-9655	87

► **PRIMARY REFERENCE**

PART NUMBER INDEX

Part	Page
	522
8U-7051	499
8V-7315	259
	260
	261
8V-7623	231
8W-2522	317
8W-4342	301
8X-0674	28
8Y-0711	223
8Y-4489	279
	281
	291
	385
	480
8Y-5737	488
8Y-5904	▶492
	493
	494
8Y-5906	492
8Y-5914	492
8Y-5988	492
8Y-6028	492
8Y-6377	499
	502
8Y-6388	542
8Y-6391	542
8Y-7023	279
	281
8Y-7047	293
8Y-7119	567
8Y-8387	395
8Y-8688	353

9

Part	Page
9B-7233	152
9C-5040	218
9C-5048	236
	239
9C-5049	236
	239
9C-5206	227
	229
9C-5344	244
	382
9C-6020	203
	205
	206
9C-6809	279
	281
	291
	480
9C-7292	227
	228
	229
9C-7862	279
9C-7907	477
	481
9D-1535	320
9D-3768	558
9D-3769	547
9D-7924	520
9F-2247	76
9F-5644	156
	157
	167
	187
	188
	191
	192
9F-6188	371
9F-6189	371
9F-8125	154
9G-1950	488
9G-3695	329
	523
9G-5127	207
9G-5311	232
	234
	236
	239
9G-8909	124
9H-1129	236
	239
9H-2258	293
9H-5604	654
9J-1318	322
	340
9J-3169	▶661
	662
9J-3178	▶663
	664
9K-7951	255
9L-1566	317
9L-6770	120
9L-7712	259
9L-9068	269
	270
9M-1974	269
	270
	470
	484
	497
9M-2110	470
9M-4814	560
9M-4972	244
	382
9M-8406	558
9M-9439	79
9N-0869	87
9N-1756	465
9R-1499	152
9R-2404	152
	481
9R-2596	622
9R-2613	281
9R-2620	545
	547
	550
9R-2672	279
	281
	291
	480
	654
9R-2807	315
9R-3067	315
9R-3203	617
9R-3204	617
9R-3205	617
9R-3469	624
9R-4750	134
9R-5878	28
	250
9R-7941	146
	150
9R-7942	144
9R-7980	146
	150
9R-8537	499
9R-8538	539
9R-9110	310
	314
9R-9111	310
	314
9R-9282	279
9R-9572	385
9R-9866	480
9S-4181	207
9S-4183	325
	344
9S-4185	374
9S-4190	385
9S-4191	207
	265
	351
	373
	450
	452
9S-7949	227
	228
	229
9S-7950	227
	228
	229
9S-8002	428
	443
	445
	448
	450
	452
	466
9S-8004	470
9S-8005	236
	239
	428
9S-8006	87
	418
	420
9S-8008	216
9S-9334	234
	239
9T-1013	335
9T-3598	279
	281
	635
	638
	639
	640
	641
9U-0710	312
9U-3668	259
9U-6996	373
9U-8263	554
9U-8669	470
9U-8875	209
	213
9U-9551	231
9U-9797	209
9V-1203	236
	239
9V-2412	259
9V-2714	626
9V-2715	626
9V-4484	635
	644
9V-6343	293
9V-9480	638
	639
	640
	641
9W-0335	178
	181
	184
9W-0844	177
	180
	183
	187
	192
	195
	197
	509
	576
	585
9W-0852	146
	148
	150
	177
	180
	183
	184
	187
	191
	195
	197
	509
	576
	584
9W-1454	207
9W-2109	420
9W-2110	420
9W-6068	216
9W-6466	209
9W-6582	28
9W-6584	28
9W-6904	209
	211
	213
9W-6912	211
9W-6922	209
9W-6927	209
9W-7159	207
9W-7759	230
9W-7761	211
	213
9W-7763	211
9W-7764	211

▶ PRIMARY REFERENCE

PART NUMBER INDEX

Part	Page
9W-7765	209
9W-7770	209
9W-7771	231
9W-8142	▶662
9W-8143	▶664
9W-9371	209
	211
	213
9W-9372	209
	211
	213
9W-9399	209
9W-9436	209
9W-9662	211
9W-9718	209
	211
	213
9W-9930	28
9W-9940	567
9X-0261	315
9X-0941	631
	649
	650
9X-1046	573
	577
	581
	586
9X-1054	199
	509
	576
	585
9X-1056	509
	576
	585
9X-1275	165
9X-1278	165
9X-1279	165
9X-1280	165
9X-1282	165
9X-1283	165
9X-1284	165
9X-1285	165
9X-1813	159
	160
	176
	270
	315
9X-2027	232
	234
	236
	239
9X-2032	72
	488
	573
9X-2038	275
	545
	547
	550
	553
	573
	591
9X-2040	514
	515
	516
	517
	518
	519
9X-2041	499
	502
	511
	514
	515
	516
	517
	518
	519
	520
	526
	527
	533
	536
	554
	556
	577
	581
	586
	617
9X-2043	511
	545
	547
	550
9X-2044	488
	540
	577
	581
	586
9X-2045	152
	275
	497
	511
	520
	545
	547
	550
	553
	554
	573
	577
	581
	586
	589
	591
	617
	624
9X-2065	315
9X-2125	599
9X-2185	488
9X-2201	75
9X-2299	295
9X-2447	666
9X-2488	488
9X-2532	621
9X-3265	576
	585
9X-3401	146
	150
	152
	177
	180
	183
	184
	187
	191
	195
	197
	591
9X-3402	199
	576
	585
	591
9X-3404	127
9X-3463	139
	140
	141
	142
	146
	150
9X-3959	560
9X-3965	59
	63
9X-4244	139
9X-4492	143
9X-4493	143
9X-4609	207
9X-4997	192
9X-4998	187
9X-5617	128
	129
9X-6165	134
	199
9X-6493	232
	234
	236
	239
9X-6580	354
9X-6582	361
	364
9X-6772	132
	133
	134
9X-7378	505
	558
9X-7380	558
9X-7381	558
9X-7382	558
9X-7383	558
9X-7385	505
9X-7680	418
	466
9X-7725	269
9X-8256	134
	395
	522
	539
	564
9X-8257	168
9X-8408	371
9X-8482	69
	70
9X-8582	477
	481
9X-8699	295
9X-8873	493
9X-9365	154
9Y-7215	295
9Y-8315	78
9Y-9380	412
9Y-9381	80
0	
002-0639	476
005-0469	207
005-0471	230
006-2884	177
	183
009-3101	53
009-4499	389
022-3108	259
030-4606	425
030-9613	307
	308
031-0214	594
032-8047	80
033-5853	465
033-5879	430
	434
	438
033-6027	465
033-6028	475
033-6034	430
033-6043	465
	466
	468
033-7687	23
033-9139	445
	450
	452
034-7044	556
035-8014	80
037-4426	488
039-8557	28
053-0189	59
	63
061-6712	232
	234
	236
	239
061-7538	430
	434
	438
067-6043	13
067-6179	25
069-2535	307
	308
069-2536	307
	308
077-7427	351
082-2817	669
083-4419	418
	420
085-7356	223
086-2369	415
086-3757	395
087-0991	401

▶ **PRIMARY REFERENCE**

PART NUMBER INDEX

Part	Page
	402
090-8516	317
091-0079	472
	595
	596
091-0081	59
	63
	317
	385
091-2436	178
	181
	184
	576
	585
092-1136	279
	281
	291
	638
	639
	640
	641
095-0670	418
095-0843	603
096-0015	423
096-2323	529
	531
	539
096-2617	165
096-5968	427
098-8968	154
099-3095	404
	405
	415
099-3649	72
1	
100-3253	141
	142
100-3254	141
	142
100-3255	141
	142
100-3685	165
100-3751	25
100-4830	5
	6
	25
	80
100-4838	131
100-4841	7
	9
	13
100-5041	576
	585
100-6674	187
	192
	197
100-7603	396
101-0003	615
101-2867	594
101-3129	392
101-3895	7
	9
	25
	101
	106
	111
101-9161	522
102-0341	488
102-1957	24
102-4176	124
102-7540	▶209
	264
102-7548	▶211
	264
102-8801	134
	177
	180
	183
	195
	576
	585
102-8802	119
	134
	137
	143
	160
	175
	176
	177
	181
	183
	187
	188
	191
	192
	195
	197
	199
	242
	270
	329
	392
	474
	505
	576
	585
102-8803	128
	137
	143
	158
	161
	171
	187
	191
	195
	197
	199
	270
	315
	348
	509
	576
	585
102-8804	591
	137
	178
	180
	184
	195
	573
	576
	585
102-8805	141
	142
	146
	148
	150
	152
	178
	180
	184
	197
	348
	445
	455
	513
	514
	515
	516
	523
	565
	566
	576
	585
102-8806	172
	174
	184
	443
	448
	450
	452
	576
	585
102-9690	30
103-1243	392
103-2006	511
103-2543	577
	581
	586
103-5687	46
103-5796	283
104-1995	178
	181
	184
	576
	585
104-2091	542
104-6747	219
104-6749	219
104-6750	219
104-6751	219
104-6754	219
104-6755	219
104-6757	219
104-8085	420
105-2145	466
105-3035	418
105-3481	445
105-4775	231
105-4776	231
105-8034	575
	580
	584
106-3108	398
106-7799	221
106-8704	379
106-8916	89
	92
	95
107-2348	80
107-3114	270
107-4628	568
	569
	▶622
107-4630	▶542
	568
	569
107-4641	▶617
107-4642	▶563
107-4643	▶564
	568
107-6007	520
107-6013	575
	580
	584
107-6021	575
	580
107-6032	553
	554
107-6056	497
	588
107-6079	542
107-6120	529
	531
107-6133	▶172
	568
	569
107-6141	520
107-6144	497
	499
	502
107-6145	497
	499
	502
107-6146	499
	502
107-9976	476
	480
108-1304	195
108-4311	499
	502
	615
109-1633	558
109-1634	558
109-4727	211
	213
109-4728	209
	211
109-5351	75
109-5363	377
109-5502	227
	228
	229
109-7041	146
	150
109-8895	669
109-8981	146

▶ **PRIMARY REFERENCE**

PART NUMBER INDEX

Part	Page	Part	Page	Part	Page	Part	Page
110-0203	177		▶442	115-1559	145		▶613
	180	112-4550	161		148	118-0809	495
	183	112-5219	553	115-1561	545		▶525
110-2023	279	112-5345	53		550		570
110-5056	607	112-6174	172	115-1748	177	118-1008	342
	609	112-7167	1		180	118-2722	476
110-5059	607		▶127		183		480
	609	112-9609	575		575	118-3122	420
110-6109	177		584	115-4550	470	118-5044	488
	183	112-9610	575	115-5327	203	118-7236	600
	575		584		205		601
110-7524	497	112-9611	576		206	118-7250	▶598
110-7628	293		585	116-4159	575	118-7255	597
110-7887	573	112-9612	576		584	118-7259	486
111-0132	497		585	116-4160	576	118-7362	575
	588	112-9861	442		585		580
111-0177	497	113-1504	41	116-4161	576		584
	499	113-3632	401		585	119-0013	263
	502		402	116-4527	457	119-2073	598
111-0178	499	113-3790	1		459	119-3662	146
	502		▶293		460		148
111-0200	531	113-3791	293		461		150
111-0201	529	113-3793	293		462		177
111-0204	499	113-3794	293		463		178
	502	113-5100	576		464		181
111-0209	502		585	116-4858	231		183
111-0343	474	113-5183	178	116-6161	188		184
111-0859	21		180		191		195
111-6793	576		184	116-6952	385		197
	585		576	116-7471	575		576
111-6795	575		585		580		585
	584	113-5184	178		584		591
111-6816	575		181	116-7856	544	119-4769	▶544
	584		184	116-9713	▶625		568
111-6940	317		576	117-1385	98		569
	395		585		99	119-8310	613
111-7874	520	113-7543	23		115		614
111-7878	520	113-8129	57	117-3787	575	119-8397	465
111-7881	545	113-8490	575		580	120-0596	545
	547		584		584		547
	550	113-8491	575	117-3788	575		550
111-7899	155		584		580	120-3956	430
	177	113-8492	575		584		434
	178		584	117-3789	575		438
	180	113-8493	575		580	120-4483	252
	181		584		584	120-6125	529
	183	114-1071	209	117-4486	484	121-0192	554
	184	114-3140	488	117-4491	605	121-0199	476
	199	114-3937	456	117-4492	484		480
	348		513	117-7798	315	121-0883	24
	361	114-3940	456	117-7799	315	121-3397	342
	364	114-3944	544	117-7836	▶253	121-7746	72
	379	114-3951	575		262		▶79
	486	114-3953	554	117-7837	▶253	121-8917	▶252
	526	114-3954	554		262		264
	575	114-3956	562		263	122-6246	53
	580		564	117-7839	253	122-6316	195
	584	114-6604	146		▶255	122-8353	226
111-8222	5		150	117-7840	253	123-2899	46
	6	114-6658	511		▶256	123-3132	475
111-8738	544	114-8843	148	117-8801	420	123-4065	59
111-9758	635		270	118-0626	495		63
	644	115-1552	529		568		336
112-0885	283		531		569	123-6621	563
112-1817	385	115-1558	▶145	118-0808	570	123-6622	563

▶ **PRIMARY REFERENCE**

PART NUMBER INDEX

Part	Page
123-7531	430
	431
	434
	435
	438
	439
123-7615	146
	150
	195
	575
	584
123-9056	231
124-3536	32
124-3815	25
	89
	92
	95
	100
	105
	110
124-4401	456
	513
124-5640	187
	192
124-8335	265
124-8494	488
124-8495	488
124-9015	545
	547
	550
	556
124-9636	575
	584
124-9637	575
	584
125-2086	295
125-7043	545
	547
	550
125-7045	545
	547
	550
	556
125-7046	545
	547
	550
	556
125-7874	134
	137
	146
	150
	177
	178
	181
	183
	184
	188
	192
	195
	197
	199
	270
	576
	585
125-7875	146
	148
	150
	192
	197
	199
	576
	585
125-7876	124
125-9488	351
126-0747	247
	▶265
126-0748	265
126-1034	547
126-1035	547
126-1036	547
126-1052	540
126-1367	547
126-1767	146
	150
	152
	177
	180
	183
	184
	187
	191
	195
	197
	591
126-1774	134
126-1818	345
126-5985	465
126-6872	392
126-7574	130
126-8472	556
	580
	584
127-3485	338
127-4832	430
	434
	438
127-5460	576
	585
127-5483	187
	191
127-5484	576
	585
127-6510	545
	550
127-7457	547
127-8613	544
127-9471	418
127-9472	418
127-9483	418
127-9485	418
127-9490	418
128-0168	315
128-0169	315
128-0219	236
	239
128-0782	611
	612
128-0784	612
128-0899	545
	547
128-2756	389
128-4168	576
	585
128-5167	263
128-5441	▶262
128-5450	263
128-5451	262
128-7069	423
128-7625	244
	381
128-7954	279
129-0336	155
129-1854	554
129-3178	488
	573
129-3270	520
129-5096	122
	123
129-7184	573
129-8087	187
	191
130-1916	295
130-3515	141
	142
130-4677	558
130-5300	270
130-9888	41
130-9984	242
	377
	381
131-0715	415
131-1236	569
	570
	▶618
131-1237	618
	620
131-1238	618
	620
131-2639	407
	410
131-3540	295
131-6143	79
132-0338	484
132-0988	315
132-0994	315
132-2300	476
132-2350	▶476
132-2367	385
132-2393	395
132-2398	395
132-2399	395
132-2419	654
132-2427	654
132-2435	654
132-2441	654
132-2443	▶653
132-2471	1
	▶249
132-2476	346
	▶413
132-2550	1
	▶320
132-2553	320
132-2554	320
	550
132-2558	283
132-2694	348
132-3543	611
	612
132-4763	661
	663
132-5789	197
	270
132-7551	187
	192
132-9623	209
133-1011	25
133-3235	152
133-3260	59
	63
133-4294	232
	234
	236
	239
133-5545	428
133-7675	315
133-9469	80
134-0404	225
134-0673	315
134-1374	522
134-2252	▶161
	269
134-2540	187
	192
134-4126	130
134-4735	520
134-5214	298
134-5215	298
134-7258	668
134-9569	152
135-0611	565
	566
135-2602	580
	584
135-3327	187
	191
135-5935	404
	405
135-9941	374
136-1543	571
136-1544	484
136-1953	488
136-2109	545
	547
	550
136-3188	490
	491
136-3190	490
136-3195	491
136-4593	220
136-4595	220
136-4794	348
136-7728	295
136-8423	418
	420
136-9289	▶443
	452
136-9291	448
136-9292	445
	450

▶ **PRIMARY REFERENCE**

PART NUMBER INDEX

Part	Page	Part	Page	Part	Page	Part	Page
	452	140-9251	▶307	142-2651	443	145-5307	554
136-9297	443		317		448	145-6929	▶143
	448	140-9273	317		450		152
	450	140-9289	395		452	145-7977	445
	452	140-9291	406	142-5789	140	145-8428	443
136-9298	443	140-9295	▶278		146		448
	448	140-9296	278		150		450
	450	140-9312	291	142-5893	342		452
	452	140-9926	450	142-6182	262	145-8707	457
136-9301	459	141-1095	450	142-6251	320		460
136-9304	457		452		▶323	145-8710	445
	459	141-1556	445	142-6252	323		▶459
	460		450	142-6255	323	145-8711	443
	461		452	142-7568	323		445
	462	141-2032	445	142-8937	425		▶460
137-0266	443		450	142-8948	350	145-8983	381
	▶457		452	143-1288	484	146-0058	274
137-2170	621	141-4852	443		603	146-0066	348
137-4234	645		448	143-3193	312	146-0067	348
	646		450	143-4916	203	146-0111	385
	647		452		205	146-0112	369
	648	141-4892	236		206	146-0117	369
137-6645	270		239	143-4918	203	146-0118	369
137-6727	222	141-5151	459		205	146-0123	371
137-9755	445		461		206	146-0124	354
138-1611	201	141-6821	221	143-4969	476	146-3337	407
	▶227	141-6822	230		480		410
138-1612	201	141-7481	407	143-4973	628	146-6274	▶221
	▶218		408		630		264
138-1614	201		409		644	146-6275	221
	▶203		410		651	146-6277	221
138-1615	201		443	143-4979	476	146-6280	207
138-1616	201		448		480	146-6282	▶230
	▶232		450	143-7899	222		264
	▶234		452	143-8874	486	146-6283	▶213
138-1617	201	141-7483	▶342	144-0195	618		264
	▶228		346		622	146-6315	407
138-1635	232	141-7486	342		624		408
	234	141-7487	343	144-0367	75		410
	236	141-8061	134		373		411
	239		177	144-1569	621	146-6316	457
138-1639	232		178	144-1636	199		459
	234		180	144-7850	445		460
138-1640	227		183	144-8521	315		461
138-1643	228		184	145-0326	615		462
138-1645	203		187	145-2237	365		463
	205		192	145-2322	▶407		464
	206		195		445	146-6317	407
138-1687	232	141-8185	343	145-2334	445		410
	234	141-8546	445		450		411
138-1736	228	141-8580	527		452	146-6318	457
138-2777	202		533	145-5163	▶635		459
	▶229		536		637		460
138-8175	423	141-8589	80	145-5201	635		461
139-3584	203	141-8615	▶220		639		462
	205		264		641	146-6319	457
	206	141-8619	230		642		459
139-4189	407	141-9236	443	145-5202	635		460
	408		448		639		461
	409		450		641		462
	410		452		642		463
140-3668	▶144	141-9242	395	145-5220	642		464
	155	141-9784	488	145-5221	642	146-6685	253
140-6140	236	141-9917	213	145-5256	▶445	146-6747	665
	239	142-0038	247		452		667

▶ **PRIMARY REFERENCE**

PART NUMBER INDEX

Part	Page
146-6783	▶253
	263
146-6908	495
	▶624
146-7453	247
146-7906	325
146-7907	325
146-7908	325
146-7953	371
146-7986	654
	660
146-7987	654
	660
146-7990	476
	480
146-7993	476
	480
146-7996	476
	480
146-8000	476
	480
146-8003	660
146-8006	660
146-8009	476
	480
146-8010	476
	480
146-8013	476
	480
146-8016	476
	480
146-8019	476
	480
146-8477	445
	450
	452
146-8478	443
	448
	450
	452
146-8479	407
	408
	409
	410
146-8981	445
	450
	452
147-1656	213
147-1657	211
147-1666	209
147-2038	▶408
	445
147-3114	▶409
	452
147-3322	▶411
	443
	448
	450
	452
147-3624	229
147-4502	445
147-5071	▶250
	253
147-5553	80
147-5576	▶262
	263
147-5577	262
148-1928	207
148-3626	542
148-5689	575
	580
	584
148-7680	▶480
148-7681	480
148-7685	480
148-7783	385
148-7784	385
148-7819	274
148-7827	▶339
	653
148-7841	203
	205
	206
148-7860	348
148-7900	628
	630
	643
	651
	▶660
148-7922	445
	450
	452
148-8307	335
	389
148-8315	392
148-8316	242
	377
	379
	395
148-8318	389
148-8321	369
	371
	385
	395
148-8325	361
	364
	367
148-8326	373
148-8327	223
	385
148-8329	395
148-8335	242
	247
	373
	385
	395
148-8336	315
	317
	369
	371
	385
	389
	392
	396
148-8338	373
148-8339	369
148-8340	325
	396
148-8341	379
148-8342	325
148-8345	396
148-8346	242
148-8347	223
	344
148-8351	367
	377
	379
	396
148-8352	242
	247
	373
	381
148-8353	389
148-8356	242
	381
148-8361	317
148-8362	243
	381
148-8363	389
148-8364	243
	325
148-8367	317
	373
	389
	392
148-8368	243
	361
	364
	367
	381
148-8369	325
148-8373	243
	373
	381
148-8375	371
148-8376	369
148-8378	315
	317
	389
	472
148-8382	377
148-8384	377
	379
148-8390	243
	377
	379
	392
148-8392	243
	381
148-8393	379
	392
148-8406	234
	239
148-8407	265
	373
148-8408	325
	344
148-8410	385
148-8411	374
148-8418	354
148-8419	361
	364
148-8424	243
	392
148-8428	325
	374
	396
148-8429	243
148-8433	374
	389
148-8435	317
	472
148-8436	325
	389
148-8443	315
148-8444	243
	374
	390
148-8448	243
148-8455	354
149-0197	392
149-0777	329
149-4359	455
	456
	513
149-5452	361
	364
149-5470	443
	448
	450
	452
149-5532	▶308
149-5733	661
	663
150-1293	455
	456
	513
150-3065	247
	395
150-4043	385
	390
150-5968	367
150-6582	563
150-8015	621
151-0894	488
151-4841	124
151-5145	345
151-5715	542
152-2763	619
152-2764	618
	▶619
	620
152-3411	392
152-5717	354
	358
152-5718	354
	358
153-0702	227
	228
	229
153-3013	232
	234
153-4816	590
153-6230	243
153-6237	243
	374
	381
153-6241	371
153-6248	243
153-6252	371

▶ **PRIMARY REFERENCE**

PART NUMBER INDEX

Part	Page	Part	Page	Part	Page	Part	Page
153-6932	488		187	156-8000	480	161-9640	527
153-8072	395		191	157-0670	19		533
153-8924	457		195	157-2152	457		536
	459		197		461	161-9641	527
	460		270		463		533
	461	155-2265	137	157-2153	460		536
	462		178		462	161-9642	527
	463		180		464		533
	464		184	157-2348	392		536
153-8925	457		523	157-6144	452	161-9645	499
	459	155-2270	134	157-6155	452		502
	460		137	158-3049	243	161-9647	527
	461		169	158-5089	199		533
	462		177		379		536
	463		183		575	162-1960	644
	464		187		580	162-1961	635
153-8926	457		191		584		644
	459		195	159-2829	75	162-1981	611
	460		197	159-3589	203		612
	461		199		205	162-1982	611
	462		270		206		612
	463		509	159-3590	665	162-1983	611
	464	155-2271	137		667		612
153-8929	457		178	159-3781	407	162-1984	611
	459		180		408		612
	460		184		410	162-2189	527
	461		195		411		539
	462		523	159-5255	19	162-6555	590
	463	155-2274	152	159-8038	631	162-7790	635
	464		177		632		641
153-8941	407		178		633	162-8447	▶493
	408		180	159-8049	124		605
153-8945	411		183	159-8050	124	162-8448	▶494
153-8946	407		184	159-9322	134		605
	410		187	159-9539	529	163-1135	615
153-8947	443		191		531	163-1148	494
	448		195		575	163-1149	493
	450	155-2276	159		580	163-1201	195
	452	155-3504	243		584	163-2428	413
153-8952	443		381		588		▶417
	448	155-4957	607	159-9540	497	163-4356	286
	450	155-5779	622		588	163-4361	476
	452		624	160-0162	110		480
153-9706	298	155-5783	▶565	160-0496	307	163-4362	476
154-2302	298		622		308		480
154-5629	575		624		332	163-4384	▶288
	580	155-5784	▶566	160-2243	476	163-4386	288
154-8410	638		622		480	163-5512	443
	639	155-6344	247	160-2247	361		448
154-8411	638	156-1685	607		364		450
	639	156-1686	609	160-2248	395		452
154-8413	638	156-1687	609	160-2443	▶158	163-6408	310
	639	156-4130	317		590		314
155-0576	100		389	160-6520	580	163-6412	310
	105	156-4271	▶567		584	164-1234	615
	110		568	160-7690	134	164-2108	266
155-2026	247		569	160-8499	414	164-4021	638
155-2255	134		570	160-9925	540		639
	187	156-4281	317	161-6149	428	164-4022	639
	191	156-4449	486	161-6161	428		641
	195	156-4556	▶286	161-7620	542		642
155-2260	137	156-5545	484	161-8042	499	164-4024	639
	159	156-5549	493		502		641
	177		494	161-9289	606		642
	183	156-5970	335	161-9639	529	164-4225	325

▶ **PRIMARY REFERENCE**

PART NUMBER INDEX

Part	Page	Part	Page	Part	Page	Part	Page
164-4531	484	167-3964	▶651		379	173-7061	428
164-4883	572	167-3966	▶644	169-7435	509	173-7062	428
164-5509	146	168-1968	392	169-8352	207	173-7223	315
164-5545	385	168-2197	420	169-9049	361	173-7225	317
164-5567	223	168-2198	420	169-9654	351	173-9682	342
	243	168-2199	420	169-9908	497	173-9779	323
	247	168-2200	420	169-9949	497	174-0563	553
	315	168-2203	420	169-9950	497	174-2211	611
	325	168-2204	420	170-1112	484	174-2213	504
	374		▶422	170-1114	484		▶611
	390	168-2206	420	170-1115	484	174-2215	496
	395	168-2457	527	170-4697	203		569
164-5577	244		536		205		▶612
	396	168-2458	533	170-6709	351	174-3734	480
164-5586	389	168-3378	422	170-8513	443	174-4246	53
164-5619	87	168-3379	422		▶461	174-4426	640
164-5641	244	168-3380	422	170-8590	594	174-4427	640
	381	168-3381	422	170-9360	576	174-4726	640
164-6860	244	168-3382	422		580		641
	382	168-3384	422		585	174-5907	361
164-6874	223	168-3385	422	171-1230	603		364
164-7556	139	168-3504	418	171-3667	282	174-6118	396
164-9316	638		420	171-4055	462	174-7449	470
	639	168-7000	▶310	171-5349	160	174-9570	▶84
	640		568		270		116
	641		569	171-6029	199	174-9725	588
164-9640	364	168-7315	420	171-6682	603	174-9730	▶588
165-0311	177	168-7316	420	171-6723	369		595
	180	168-7317	420		374		596
	183	168-7318	420	171-6725	354		597
	575	168-7319	420	171-7198	257	175-7537	342
	580	168-7320	420	171-7199	257	175-7540	351
	584	168-7321	420	171-8689	257	175-7541	351
165-0312	177	168-7323	420	172-0223	443	175-7895	323
	180		▶466		▶462	175-7900	342
	183	168-7551	644	172-2416	603	175-7905	343
165-2273	389	168-7861	418	172-4001	484	175-9443	▶410
165-4929	234	168-7863	418	172-5500	556		450
	239	168-7864	418	172-5501	556		452
165-5970	87	168-7868	418	172-5503	556	176-0118	257
	▶171		▶423	172-5507	495	176-0210	405
165-6365	392	168-7869	418		▶614	176-0623	654
165-6692	203	168-7871	418	172-5512	495		660
	205	168-7872	418		▶553	176-0624	654
	206	168-7873	417	172-6456	325		660
165-7097	177		▶418	172-7966	470	176-1705	257
	183	168-7940	423	172-7968	470	176-1706	▶257
166-8679	497	168-7941	423	172-8556	▶642		258
166-9286	542	168-7942	423		651	176-2435	272
166-9287	525	168-7943	423	172-8563	▶637	176-3141	17
167-2186	323	168-7944	423		643	176-7558	361
167-2195	322	168-8389	645	172-8591	295		364
	340		646		304	176-7585	▶289
167-2201	342		647		306	177-0019	207
	343		648	173-0064	247		▶216
167-2294	323	168-9027	417	173-1028	▶484	177-0026	269
167-2304	322		▶420		603		▶470
	340	169-2943	325	173-2052	571	177-1061	247
167-2312	342	169-3995	527	173-3082	605	177-1452	476
	343		533	173-4032	395		480
167-3692	178		536		▶428	177-1862	594
	180	169-4274	325	173-4311	568	177-1863	603
	184	169-4868	634		▶620	177-4937	599
167-3693	270	169-7380	615	173-5787	606		605
167-3963	▶643	169-7404	377	173-7035	606	177-7775	634

▶ **PRIMARY REFERENCE**

PART NUMBER INDEX

Part	Page
	▶652
178-0603	▶603
	605
178-2593	527
	533
	536
	539
178-3893	341
178-7877	409
	410
	411
178-7907	571
178-7914	▶605
	606
179-3192	▶634
179-3609	668
179-3610	668
179-3612	668
179-6396	516
	519
179-6397	514
	515
	517
	518
179-7071	22
179-9392	575
	580
	584
180-2535	533
	536
	▶621
180-3730	118
180-4686	117
180-5098	554
180-5559	605
180-5560	605
180-6366	▶322
	634
180-6375	650
180-6376	650
180-6391	649
	650
180-6397	649
	650
180-6418	650
180-6567	379
180-7208	322
180-7486	544
180-7487	544
180-8807	1
	▶176
180-8871	124
180-8874	124
180-8984	▶273
180-8996	273
	274
180-8997	273
	274
180-9335	▶631
180-9336	▶350
	631
180-9337	631
	▶649
180-9338	▶340
	631
	632
	633
180-9339	199
	505
180-9340	134
	152
	177
	178
	180
	183
	184
	187
	192
	195
	197
	199
	270
180-9872	341
180-9900	575
	580
	584
180-9927	▶351
	634
180-9933	374
183-2160	631
	632
	633
183-2161	631
	632
	633
183-2293	351
183-2294	351
183-3020	350
183-3021	350
183-3022	350
183-3112	350
183-3113	350
183-3648	605
183-3764	▶656
183-4735	▶632
	▶633
183-5106	▶505
	506
183-5583	632
	633
	▶650
183-7528	488
183-8597	▶160
	270
183-8702	▶353
	632
183-8704	353
183-8705	353
183-8706	353
183-8708	353
	356
184-2298	603
184-2299	603
184-2463	▶173
	495
184-5293	573
184-6352	395
184-6353	395
184-9975	465
185-0884	13
185-1016	▶67
	68
	69
185-1017	59
	63
185-1023	55
	56
185-1027	67
185-1028	▶215
	242
185-1030	55
185-1036	59
	63
185-1039	215
185-1045	3
	▶52
185-1046	52
185-1047	87
185-1134	634
	652
185-2327	465
185-2638	120
185-2639	120
185-2644	120
185-2645	120
185-2647	120
185-2648	120
185-2650	120
185-2651	120
185-2653	120
185-2654	120
185-2655	120
185-2658	120
185-2765	379
185-2766	177
	180
	183
185-3596	385
185-5209	389
	▶465
185-5629	573
186-0357	361
	364
186-0359	361
	364
186-0815	53
186-0817	53
	306
186-3735	119
	134
	137
	141
	142
	143
	148
	160
	171
	172
	174
	175
	176
	242
	270
	315
	329
	392
	450
	452
	455
	456
	474
	513
	523
	565
	566
	573
186-3736	134
	169
	523
186-4415	310
	314
186-4942	256
	▶257
186-4943	254
	▶258
186-5107	615
187-0789	168
187-2082	511
187-2868	72
187-5122	621
187-5123	621
187-5124	621
187-5125	621
187-5126	621
187-5127	621
187-5128	621
187-5174	350
189-0189	474
189-0942	298
189-1707	558
189-2096	474
189-2100	402
	▶474
189-3014	430
	434
	438
189-3158	195
	199
	558
	576
	585
190-0642	122
190-0643	123
190-3085	339
	▶341
190-3611	341
190-4405	496
	▶568
190-4559	177
	180
	183
190-4563	573
190-4635	495
	▶520
	568
	569
	570
190-4690	495
	▶522
	568

▶ **PRIMARY REFERENCE**

PART NUMBER INDEX

Part	Page
	569
	570
190-4700	568
	▶589
191-1782	87
191-2063	168
191-2226	260
191-2933	606
	▶615
191-8920	448
	450
	452
191-8921	490
	491
191-9182	59
	63
191-9184	59
	63
191-9188	304
192-7111	430
	434
	438
192-7625	361
	364
192-7752	615
192-7755	615
192-7760	615
192-7767	615
192-7783	615
192-7787	615
192-7790	615
192-7795	615
192-7799	615
192-7805	615
192-7810	615
192-7812	615
192-7820	615
192-7822	615
192-7848	615
192-7949	369
193-1036	468
193-4640	259
	261
193-5913	668
193-5914	668
193-5918	668
193-9056	177
	180
	183
194-5171	491
194-5226	159
194-5227	159
194-7109	476
	480
194-7110	476
	480
194-7111	476
	480
194-7112	476
	480
195-0916	575
	580
	584
195-0917	575
	580
	584
195-0921	575
	580
	584
195-0922	348
195-0925	155
195-6525	354
195-6526	354
195-6935	▶657
195-6937	▶658
195-6938	▶659
195-6961	657
	658
	659
195-6962	657
195-8673	361
	364
196-1185	270
197-6666	259
197-7261	187
	191
197-7995	259
197-8820	▶120
	122
	123
197-8896	206
197-8898	206
198-0143	392
198-3393	499
	502
198-5389	137
198-8933	295
198-8942	295
198-8943	295
198-8944	295
198-8945	276
	277
198-8946	276
	277
198-8954	295
198-8955	295
198-8957	304
198-8961	295
198-8964	▶304
	568
	570
198-8965	▶306
	487
199-3108	24
199-3109	24
199-3778	415
199-7041	507
	▶509
199-7042	509
199-7043	509
199-7891	120
199-8436	120
199-9252	50
	100
	105
	110
199-9267	45
	100
	105
	110
199-9751	15
	170
	▶269
	270
200-2044	269
200-2045	216
200-3044	386
200-5359	468
200-5360	468
200-5361	468
200-5362	468
200-5363	468
200-5364	468
200-6345	59
	63
	187
	195
	242
	317
	377
	381
	392
	395
	558
	584
201-0780	468
201-1024	177
	180
	183
201-3316	269
201-5242	415
201-5555	152
201-9517	260
	▶261
202-0358	117
202-0360	117
202-0363	▶507
	508
202-0392	298
202-0393	298
202-0420	1
	▶272
202-0430	1
	▶315
202-0671	442
202-0673	442
202-0674	442
202-1129	177
	180
	183
202-4732	607
	609
202-4736	607
	609
202-4738	607
	609
202-4739	607
	609
202-6614	139
202-7503	468
202-7857	53
202-8928	379
202-9824	668
203-2774	201
	202
	▶236
	▶239
203-2775	236
	239
203-2776	232
	234
	236
	239
203-2777	236
	239
203-3889	▶346
203-3891	▶346
203-3893	▶347
203-5937	487
	▶508
203-7703	606
203-8609	418
203-9007	575
	580
	584
203-9163	418
204-0302	7
204-0358	177
	183
204-0359	180
204-0813	278
204-1126	607
	609
204-1370	117
204-2004	▶154
	495
204-2281	124
	187
	191
	195
	242
	317
	373
	377
	379
	381
	385
	392
	395
	558
204-4148	415
204-6101	178
	181
	184
	573
	576
	580
	585
204-8000	188
	192
	195
	317
	374
204-8799	526
205-0626	120
205-0826	137

▶ **PRIMARY REFERENCE**

PART NUMBER INDEX

Part	Page	Part	Page	Part	Page	Part	Page
205-1627	72	211-0052	177	214-5871	▶325		438
205-2214	53		180		328	215-8139	429
205-3652	215		183	214-7094	389		430
205-4587	414		195	214-7096	395		434
205-5469	317		584	214-7098	325		438
205-6024	508	211-0608	406	214-7568	223	215-9509	89
205-6025	507	211-0622	406		266		92
205-6026	507	211-1058	385		315		95
205-6027	507	211-1063	346	214-7636	▶490	216-0102	232
205-6028	507		347		622		234
205-6388	599		▶369		624		236
205-7106	373	211-2092	401	214-8917	317		239
205-8125	560		402	214-9563	278	216-4983	75
205-8257	137		▶475	214-9564	278	216-6969	357
206-1345	197	211-4230	385	215-4012	75	216-7502	▶429
	575	211-4767	1	215-8109	430		434
	580		▶406		434		438
	584	211-4793	373		438	216-7523	429
206-2423	19	211-5255	429	215-8111	430	216-7525	429
206-4441	118		431		434	216-7790	124
206-5162	137		434		438	216-7913	430
206-5208	137		438	215-8113	430		434
206-5823	565	211-5358	615		434		438
	566	211-9294	615		438	216-8396	325
206-7647	430	212-1302	▶448	215-8115	430	216-8581	34
	434		455		434	216-8634	25
	438	212-1305	▶450		438	216-9069	522
206-7655	430		513	215-8116	430	216-9633	45
	434	212-1307	▶452		434		170
	438		456		438	216-9729	429
206-8818	425	212-3657	87	215-8119	434	216-9752	89
206-9546	425		▶116		438		92
206-9670	202	212-3863	59	215-8128	429	216-9819	430
	▶219		63		431		434
206-9672	219	212-4962	448		435		438
206-9673	219		450		439	217-0099	100
207-5948	▶526		452	215-8129	429		105
	568		▶463		431		110
	569	212-4963	448		435	217-0288	369
208-0792	404		450		439	217-0956	522
208-0886	402		452	215-8131	429	217-1994	430
208-1032	627		▶464		431		434
	629	212-7521	373		435		438
	643	212-8136	385		439	217-2768	361
208-2293	404	213-0139	187	215-8132	430		364
209-0270	346		191		434	217-2769	361
	▶430	213-4574	607		438		364
209-0271	346		609	215-8133	431	217-3401	438
	▶434	213-4576	607		435	217-3680	218
209-0272	347		609		439	217-3708	430
	▶438	213-4579	607	215-8134	430		434
209-0789	373		609		434		438
209-3149	344	213-5065	357		438	217-4101	373
	▶345	213-7315	573	215-8135	430	217-4155	329
209-4578	75	213-8783	385		434	217-4597	431
209-5018	540	213-9100	176		438		435
209-5502	5	214-0095	247	215-8136	430		439
209-5503	5	214-0620	291		434	217-4598	430
209-9219	12	214-0734	369		438		435
210-2262	594	214-0737	371	215-8137	429		439
210-2263	594	214-2232	373		430	217-6729	199
210-2266	594	214-4153	325		434	217-7742	558
210-2270	▶594	214-4768	309		438	217-7933	594
	603	214-5389	367	215-8138	430	217-8112	385
210-5545	395	214-5390	367		434	217-8339	116

▶ **PRIMARY REFERENCE**

PART NUMBER INDEX

Part	Page
217-9039	100
	105
	110
	186
217-9049	603
218-0001	317
218-0255	385
218-0256	385
218-0404	137
218-0861	603
218-2373	266
218-2440	290
218-2792	72
218-5113	▶653
218-9937	1
	▶348
219-0302	665
	667
219-0669	87
219-2418	284
219-6314	137
219-7845	389
219-8096	599
	▶606
219-8742	385
220-0691	304
220-1241	28
220-2657	415
220-2680	404
220-2681	405
220-3681	669
220-3773	669
220-4049	562
220-4050	562
220-5573	669
220-5574	668
220-7924	669
220-7925	202
	▶669
220-8678	84
221-0852	385
221-3206	395
221-3234	385
221-3424	657
	658
	659
221-3428	658
	659
221-7117	227
	229
222-0345	599
	▶602
222-0574	573
223-0521	347
	▶371
223-0522	347
	▶354
223-4717	514
	515
	516
	517
	518
	519
223-7937	600
	601
223-8185	361
	364
223-8186	361
	364
224-0672	392
224-2263	73
224-3188	418
	▶468
224-4536	▶159
	414
224-5132	330
	332
	333
224-5152	330
	331
	332
	333
224-6792	259
224-6793	▶259
	260
224-7830	392
224-8946	665
	667
224-9855	665
225-0312	665
	667
225-1057	346
	347
	▶472
	514
	515
	516
225-1059	346
	▶514
225-1060	346
	▶515
225-1061	347
	▶516
225-3281	342
	343
225-3854	197
225-4150	668
225-4257	665
	667
225-4287	67
225-5439	32
225-7738	57
225-7941	170
225-7944	49
	50
225-8019	57
225-8524	100
	105
	110
225-8839	11
225-8858	13
226-0294	295
	545
	547
	550
	556
226-0339	295
226-0341	545
	547
	550
226-0443	122
226-1240	665
	667
226-2095	472
226-2869	223
	▶225
226-2951	195
	584
226-3378	195
	584
226-8202	323
226-8766	25
226-8767	25
227-7392	490
	491
227-7474	371
228-0172	98
	115
228-5856	177
	180
	183
228-6052	141
	142
228-6054	141
	142
228-6056	141
	142
228-7100	98
	99
	115
228-7102	110
228-7696	295
229-2458	168
229-2940	247
229-4962	▶262
229-4970	▶262
229-9382	322
	340
229-9714	▶626
229-9715	626
229-9850	430
	434
	438
230-0913	475
230-4013	591
230-6177	168
230-8989	100
	105
	110
230-9667	▶263
230-9670	▶263
231-0299	529
231-7670	▶68
	70
232-0809	524
232-0811	524
232-0813	524
232-0893	591
232-1115	89
	92
	95
	187
	191
232-1322	13
	15
232-1374	87
232-1376	87
232-3149	100
	105
	110
232-3666	25
232-3751	49
	50
232-3861	45
	170
232-5170	205
232-7596	13
232-7597	13
232-7599	13
233-2549	361
	364
	▶398
233-2944	626
233-7126	427
233-7133	▶427
	472
233-7387	601
	▶607
233-7388	600
	▶609
233-8009	531
233-9204	323
233-9205	340
234-1950	343
234-2667	3
	▶164
234-3030	76
234-3063	89
	92
	95
234-4325	▶139
	145
234-7730	139
234-7731	139
235-1845	187
	191
235-4546	562
	564
235-5677	418
235-5762	145
235-6853	346
	▶517
235-6856	346
	▶518
235-6860	347
	▶519
235-6947	306
235-6948	306
235-7350	476
235-7353	476
	480
235-7390	476
	480
235-7400	653
	▶654
235-7401	654
236-2295	486
236-4232	575
	580
	584

▶ **PRIMARY REFERENCE**

PART NUMBER INDEX

Part	Page	Part	Page	Part	Page	Part	Page
236-4233	486		148	250-6148	398	256-7271	53
236-4234	575		154	250-6792	392	256-7902	73
236-4545	163	242-5441	165	250-8115	177	256-7903	73
236-5197	594	242-5442	165		180	256-7904	73
236-6923	558	242-5443	165		183	257-1615	283
236-7230	669	242-5444	165	250-8330	427	257-1625	▶274
236-8013	163	242-5445	165	251-3227	71	257-1640	1
237-0120	272	242-8159	117	251-4336	25		▶283
237-3943	615	242-8764	607	251-5412	▶629	257-1641	▶279
237-3970	▶485		609	251-5413	629		283
	615	242-8765	607		▶647	257-1650	1
238-0120	98		609	251-5414	▶640		▶280
	99	242-8807	369		647	257-1651	280
	115	242-8808	369	251-8336	30		▶281
238-4743	315	243-0061	589	251-9303	373	257-1652	281
238-4864	575		▶590	251-9304	373		▶282
	580	243-0062	590	252-0741	335	257-3227	558
	584	243-0063	590	252-0745	335	257-5103	▶600
238-5014	137	243-0516	▶137	252-1862	527	257-5104	▶601
238-5081	87	243-0517	137		533	257-6549	3
238-8288	77	243-0686	247		536		▶19
238-8292	80	243-4398	▶330	252-1863	527	258-2829	425
239-1134	163		389		533	259-0374	34
	▶175	244-3114	▶266		536	259-0558	242
239-3322	53		269	252-2374	389	259-1155	511
239-4234	665	245-1042	187	252-2375	389	259-1159	517
239-5814	▶599		191	252-2376	385	259-1160	518
239-6182	317	245-1044	187	252-2378	395	259-1161	456
239-6989	668		191	252-2379	395		519
239-7396	▶69	245-1045	187	252-2380	371	259-1286	554
240-0182	242		191	252-2381	371	259-1456	236
240-0183	242	245-1047	192	252-2382	369		239
240-2563	554	245-1048	187	252-4575	575	259-4137	▶122
240-2564	554		191	252-6841	336		504
240-2565	554	245-9020	347	252-6903	▶630		569
240-5843	348		▶357	252-6904	630	260-1555	132
240-7957	665		360		▶648	260-1556	133
241-0037	332	245-9088	575	252-6905	▶641	260-1566	132
	333		580		648	260-1569	133
241-0935	▶627		584	252-6909	▶628	260-3939	100
241-0936	627	246-2641	222	252-6910	628		105
	▶645		424		▶646		110
241-0937	▶638	247-6019	98	252-6911	▶639	260-5542	186
	645		99		646	261-5694	571
241-0941	371		115	253-0861	666	261-6778	554
241-0942	371	248-1066	98	253-1691	257	261-7651	600
241-4291	100		99	253-3524	395		601
	105		115	253-3526	395	261-7854	358
	110	248-5416	▶358	253-3542	395	261-7855	358
241-6172	247		360	253-3549	395	261-7997	398
241-6189	358	249-2895	152	253-8295	425	262-0849	506
241-6190	358	249-7859	398	253-8920	203	262-0858	487
241-6205	470	249-7863	398		205		▶506
241-8368	▶169	249-9076	134		206	262-1388	514
	187	250-0393	▶331	254-1127	527		515
	191	250-1446	373		533		516
	575	250-1447	373		536		517
	580	250-1844	203	254-7913	590		518
	584	250-4628	572	254-7914	590		519
241-8564	▶554	250-6011	607	255-0759	425	262-1421	▶130
	568		609	255-4692	72		134
	569	250-6012	607	255-9138	488	262-5654	424
242-0588	141		609	256-5049	▶263		▶425
	142	250-6013	607	256-6803	134	262-5658	373
242-3519	▶140		609	256-6804	134	262-5660	373

▶ **PRIMARY REFERENCE**

PART NUMBER INDEX

Part	Page	Part	Page	Part	Page	Part	Page
262-5661	247		536	276-5436	163		▶131
262-5663	247	269-2892	527	276-5600	13	277-4694	2
262-5666	242		533	276-5601	13		▶45
262-5689	425		536	276-5602	13	277-5007	2
262-5695	242	269-2893	527	276-5603	13		▶33
	381		533	276-5604	13	277-5031	7
262-5778	591		536	276-5605	13		9
262-7562	122	269-3311	187	276-6596	163	277-5064	7
	123		191	276-6597	163		9
263-2062	499	269-4750	206	276-7387	11	277-5065	7
263-2908	395	269-4958	344	276-7388	11		9
263-7701	▶70	269-8325	43	276-7389	11	277-5067	7
263-9088	134	270-2615	415	276-7390	11		9
	▶593	270-2616	415	276-7391	11	277-5094	7
264-4297	187	270-2679	575	276-7393	11	277-5096	7
	191		580	276-7394	11	277-5307	36
	270		584	276-7475	32	277-6165	89
264-5726	402	270-5320	84	276-7476	32		92
264-7030	591	270-7056	▶360	276-7478	32		95
264-7734	348	270-7612	456	276-7479	32	277-6990	2
265-2167	389		517	276-7481	32	277-9602	80
266-7620	575		518	276-7483	32	277-9603	80
	580		519	276-8116	15	277-9938	80
	584	270-7618	554	276-8117	15	277-9939	80
267-2680	156	270-8670	211	276-8123	15	277-9940	80
	187	270-9442	573	276-8132	15	277-9941	80
	191	272-3190	554	276-8133	15	278-0015	80
267-2744	187	273-4061	134	276-8134	17	278-0016	80
	191	273-5711	40	276-8398	▶99	278-0017	80
267-2746	187	274-1639	85		100	278-0310	80
	191		86	276-9200	36	278-0311	80
267-2809	143		100	276-9201	36	278-0314	89
267-3770	▶123		105	276-9206	36		92
	487		110	276-9207	36		95
267-4734	213	274-1929	2	276-9230	36	278-0315	89
267-5211	157		▶35	277-0118	24		92
267-5213	157	274-1930	35	277-1973	2		95
267-7207	187	274-1931	35		▶41	278-4138	89
	191	274-1932	35	277-1974	41		92
267-7208	187	274-1933	35	277-1975	41		95
	191	274-1934	35	277-2500	47		101
267-7283	122	274-1935	35	277-2537	49		106
	123	274-4284	134		50		111
267-7368	▶201	274-4990	187	277-2538	49	278-5111	36
	202		191		50	278-5112	36
267-7372	202	274-5909	558	277-2912	2	278-5113	36
267-7413	201	274-9872	156		▶43	278-5125	4
	▶205		187	277-2923	57	278-5126	4
267-7414	202		191	277-2925	57	278-5128	76
	▶206	275-0553	191	277-2939	2		77
267-9572	187	275-2428	131		▶57	278-5168	100
268-1514	357	275-6706	488	277-3012	25		105
268-6677	100	275-7741	172	277-3013	25		110
	105		173	277-3014	2	278-5170	100
	110		▶174		▶25		105
268-6678	100	275-9883	20	277-4223	5		110
	105		30	277-4224	2	278-5180	100
	110	275-9884	30		▶5		105
268-9435	343	275-9888	30	277-4262	2		110
268-9437	▶343	275-9889	30		▶44	278-5201	100
	346	275-9891	30	277-4302	76		105
269-1977	73	276-0142	30		77		110
269-1983	591	276-2604	665	277-4408	131	278-5202	100
269-2890	527		667	277-4409	131		105
	533	276-3810	163	277-4410	2		110

▶ **PRIMARY REFERENCE**

PART NUMBER INDEX

Part	Page
278-5203	100
	105
	110
278-5209	186
278-5210	186
278-5225	100
	105
	110
278-5226	100
	105
	110
278-5272	100
	105
	110
278-5273	100
	105
	110
278-5307	100
	105
	110
278-5641	289
278-5642	289
278-6377	157
	191
279-8762	2
	▶11
279-8780	2
	▶32
279-8821	2
	▶17
279-8825	2
	▶38
279-8837	2
	▶4
279-9361	80
279-9651	27
279-9652	27
279-9653	2
	▶27
280-1291	76
280-1394	2
	▶83
280-1889	100
	105
280-1890	100
	105
280-1891	100
	105
280-1911	▶36
	38
280-1912	36
280-1913	36
280-1914	36
280-2023	7
	9
280-2050	2
	▶40
280-2424	78
280-2710	486
	508
280-9978	335
281-6331	24
281-6332	2
	▶24
281-7039	47
281-7040	47
281-8744	46
281-8745	46
281-8746	46
281-8747	46
281-8748	2
	▶46
281-9106	89
281-9115	89
283-2456	488
283-3305	264
283-4418	▶332
	335
283-4558	2
	▶49
283-4559	49
283-8385	298
283-9971	231
	▶309
283-9972	309
284-0506	▶486
	487
284-1026	21
284-8306	558
284-8491	298
284-8497	298
284-8504	298
285-0620	3
285-0824	75
285-1975	7
	9
285-3197	80
286-0014	7
	9
286-0015	7
	9
286-2890	95
286-3594	177
	180
	183
286-3683	100
	105
286-7834	2
	▶23
286-7847	30
286-7851	80
286-8274	242
286-8817	30
286-9592	529
	539
286-9593	531
287-0524	455
	456
	513
287-2058	▶455
	514
	517
287-2060	▶513
	515
	518
287-2064	▶456
	516
	519
287-6838	100
	105
	110
287-6839	100
	105
	110
287-6849	89
287-6853	89
	92
	95
287-7637	85
	86
287-8597	24
288-0476	168
288-0746	373
288-4162	412
	▶414
288-4166	242
288-4641	123
288-7985	2
	▶76
	▶77
289-3232	3
	▶78
289-3233	78
289-3234	78
289-3235	78
289-3261	30
289-3268	2
	▶30
289-3322	3
	▶72
289-3533	3
	▶75
289-3534	75
289-3536	75
289-3537	75
289-6393	▶401
	403
289-6394	399
	▶402
289-8336	21
289-8794	53
289-8795	346
	▶395
289-8796	346
	▶389
289-8802	1
	▶130
289-8815	1
	▶250
289-8833	1
	▶346
289-8840	▶1
289-8841	1
289-8894	1
	▶3
289-8900	276
289-8901	346
	▶424
289-8902	1
	▶187
	▶191
289-8903	▶177
	569
	570
289-8904	▶180
	570
289-8906	▶155
289-8911	1
	▶117
289-8912	1
	▶295
289-8913	1
	▶298
289-8919	346
	▶412
289-8923	1
	▶247
289-8925	1
	▶317
289-8930	1
	▶312
289-8934	346
	▶373
289-8938	3
	▶87
289-8956	1
	▶195
289-8959	1
	▶197
289-8960	1
	▶276
	▶277
289-8962	400
	▶403
289-8963	▶400
289-8964	▶399
	400
289-8965	▶400
289-8974	▶201
	250
289-8985	▶202
289-8991	▶202
289-8995	▶334
289-9075	3
	▶59
	▶63
289-9166	187
289-9167	146
	150
289-9168	177
	183
289-9169	197
289-9171	575
	580
	584
289-9172	180
289-9430	30
289-9620	424
289-9621	424
290-0637	3
	▶28
290-0643	28
290-0644	28
290-0658	195
290-0659	177
	180
	183
290-1256	250
	▶260
290-1257	250

▶ **PRIMARY REFERENCE**

PART NUMBER INDEX

Part	Page
	▶264
290-3910	100
	105
290-3911	100
	105
290-3912	100
	105
290-3913	100
	105
290-3914	100
	105
290-3915	100
	105
290-3916	100
	105
290-3931	117
	▶118
290-4068	295
290-4073	295
290-4074	59
	63
	▶291
290-4432	▶162
290-5562	242
	381
290-5735	89
	92
	95
290-5825	315
290-6403	55
	56
290-6404	56
290-6405	55
290-6406	▶55
	202
290-6407	▶56
	202
290-6475	346
	▶385
290-6483	3
290-6491	▶665
290-7046	591
290-7184	334
	▶392
290-7186	▶223
	250
290-7188	▶199
	334
290-7198	1
	▶53
290-7199	53
290-7200	▶377
	400
290-7201	▶379
	400
290-7203	▶124
	328
290-7207	▶290
290-7208	▶562
290-7213	▶285
290-7223	1
	▶152
290-7895	28
290-7896	28
290-8169	568
290-8171	569
	570
	▶573
	▶575
290-8174	570
	▶580
290-8175	597
290-8177	504
	▶597
290-8179	▶504
290-8181	▶146
	495
	504
290-8182	▶504
	570
290-8186	504
	▶570
290-8189	▶504
290-8488	▶545
	570
290-8491	▶527
	541
290-8492	▶529
	533
290-8493	527
	▶531
	536
290-8494	504
	▶532
290-8495	532
	▶533
290-8496	532
	▶536
290-8497	▶501
	502
290-8499	▶502
	595
290-8501	504
	▶595
290-8513	▶496
290-8520	496
	▶504
290-8522	▶496
	570
290-8525	496
	▶570
290-8753	487
	▶560
290-8781	162
	▶163
291-0638	178
	181
	184
291-0639	573
291-0640	573
291-2513	2
	▶20
291-2515	2
	▶21
291-2576	558
291-3748	511
291-3749	511
291-3750	▶511
291-3835	343
291-4043	545
291-4982	545
291-5008	295
291-5919	▶98
	105
291-6008	178
	181
	184
291-6621	59
	63
	▶71
291-6629	59
	63
291-9121	178
	181
	184
291-9251	529
291-9252	531
291-9943	87
291-9962	545
292-0239	59
	63
292-0240	59
	63
292-0241	59
	63
292-0509	146
	150
292-0886	12
292-1086	295
292-2358	188
292-2522	558
292-2559	295
292-2869	527
	536
292-2870	533
292-3254	527
	536
292-3255	533
292-3462	77
292-3592	558
292-3593	558
292-5306	1
	▶2
292-5606	199
292-5856	2
	▶12
292-6097	572
292-6402	▶571
	572
292-8113	59
	63
292-9237	▶572
	603
292-9687	242
292-9688	242
	381
292-9698	242
	381
292-9802	591
292-9881	131
293-0249	98
	99
	115
293-1880	186
293-2239	59
	63
	▶336
293-2240	336
	▶337
293-2455	373
293-2456	373
293-2457	373
293-2458	392
293-2462	377
293-2463	377
293-2464	379
293-2465	373
293-2466	373
293-2467	223
293-2837	▶222
	250
293-2838	222
293-2839	222
293-2840	312
293-2841	312
293-2911	594
293-3032	59
	63
293-4050	▶132
293-4052	▶133
293-4919	666
293-4921	666
293-4922	666
293-4929	▶666
	668
293-5221	▶284
293-5222	284
293-5283	124
293-5284	124
293-5449	404
	405
293-5532	124
293-5828	247
293-6015	207
293-6017	▶231
	264
293-6018	▶207
	264
293-6135	576
	580
	585
293-6472	▶335
	426
293-6603	242
293-8068	89
	92
	95
293-8069	89
293-9795	87
293-9901	101
	106
	111
294-0506	290
294-0565	59
	63

▶ **PRIMARY REFERENCE**

PART NUMBER INDEX

Part	Page
294-0976	558
294-2016	315
294-2017	315
294-2018	315
294-2858	392
294-3031	98
294-3032	98
294-3046	361
	364
294-3047	361
	364
294-5042	603
294-8059	361
	364
294-9432	487
	▶558
294-9433	▶487
	496
294-9439	▶328
295-0189	98
295-0580	285
295-0912	76
	77
295-1038	295
295-1466	242
295-1467	242
295-1468	242
295-1711	25
295-1813	188
295-2665	576
	580
	585
295-4221	276
295-4222	276
295-4223	276
295-4323	242
295-4670	89
	92
	95
295-4690	361
	364
295-4691	361
	364
295-4801	98
	115
295-5544	334
	▶426
295-6661	15
296-3542	98
	115
296-4322	291
296-6031	404
	405
296-6706	244
296-6812	▶361
	▶364
	653
297-2470	▶367
	653
297-2778	367
297-2779	367
297-5184	2
	▶22
297-8966	188
	191
298-2412	▶333
	335
298-4547	7
298-4550	7
	9
298-6160	152
298-7736	472
299-3939	402
	▶404
299-3940	401
	▶405
299-3941	414
	▶415
299-3949	2
	▶34
299-3953	2
	▶186
299-5499	242
299-5511	15
299-5841	522
	▶523
299-7996	425
299-7997	425
299-7998	425
299-8229	83
299-9123	558
299-9124	124
	3
300-1271	188
	191
300-1301	425
300-1576	59
	63
300-1631	59
	63
300-1724	291
300-2940	101
	106
	111
300-3174	59
	63
300-4148	242
	381
300-4459	242
300-5443	301
300-6520	80
300-6868	164
	▶165
300-8840	242
300-8841	87
300-9097	317
300-9915	668
301-0361	242
	381
	560
301-0589	134
301-4353	201
	▶275
301-4354	275
301-4355	275
301-4852	87
301-5754	295
302-0406	▶141
	152
302-0408	▶142
	152
302-2182	576
	580
	585
302-4285	295
302-4390	665
302-5195	74
302-6378	381
303-1251	389
303-2052	▶347
303-2116	80
303-2930	2
	▶100
	▶105
	▶110
303-3126	389
303-5190	558
304-3715	509
304-3885	118
304-5687	522
304-5866	405
304-9464	▶226
	250
305-0632	270
305-0635	264
	▶270
305-2215	207
	231
305-4467	665
	667
305-4472	665
	667
305-5291	110
305-6157	89
305-6471	92
306-2337	41
306-5424	227
	228
	229
306-5432	89
	92
	95
306-6845	12
	▶13
306-8142	486
	▶488
306-9380	▶85
	100
	105
307-0205	▶491
	622
307-2578	1
	▶301
308-3458	117
308-5075	188
	191
308-7480	83
308-9075	2
	▶89
	▶92
	▶95
308-9076	89
308-9077	89
308-9078	89
308-9079	89
	92
	95
309-0857	92
	95
309-1620	▶156
	188
	191
309-5127	392
309-6663	▶15
	17
309-6664	7
	9
309-6678	15
309-6899	668
309-8006	100
	105
	110
309-8618	488
310-2393	134
310-7918	100
	105
	110
310-9945	556
310-9947	▶556
	568
310-9951	497
310-9952	495
	▶497
310-9953	▶495
	568
310-9954	▶568
	569
310-9955	▶496
311-1159	92
	95
311-1180	92
311-1666	92
	95
311-1684	92
	95
311-1723	59
	63
311-1952	92
	95
311-2232	95
311-2236	3
	▶74
311-2237	74
311-2239	74
311-2241	95
311-2262	92
	95
311-2825	7
	9
311-3204	134
311-3205	134
311-3858	100
	105
	110
311-6184	192
311-6185	188
311-6342	100

▶ **PRIMARY REFERENCE**

PART NUMBER INDEX

Part	Page
	105
	110
311-6632	100
	105
	110
311-7491	591
311-8501	▶183
	568
311-8502	568
	▶584
311-8557	329
311-8689	499
311-8691	▶499
	596
311-8693	495
	▶596
311-8694	539
311-8695	▶539
	540
311-8696	▶540
	541
311-8697	495
	▶541
311-8698	495
311-8699	▶495
	569
311-8700	496
	▶569
311-8706	▶148
	495
311-8707	148
312-4545	44
312-4574	1
	▶668
312-5694	631
	633
312-6390	260
312-7713	668
312-8743	75
313-2157	573
313-2507	72
313-2508	75
313-2509	75
313-2510	72
313-4553	118
313-4572	▶150
	504
314-4018	505
314-6480	72
	▶73
314-7513	124
314-7670	247
315-0180	124
315-4654	▶569
315-5520	277
315-7790	558
315-9810	80
316-9073	131
317-0692	▶547
	570
317-0694	547
	550
317-0695	547
	550
317-0720	495
	569
	570
	▶591
317-0769	▶550
	569
	570
317-0770	495
	496
	▶569
317-0771	504
	▶570
317-0855	550
317-2284	152
317-2684	77
317-2717	7
	9
317-3064	7
	9
317-4218	591
317-7328	364
317-8021	110
	▶115
318-0827	529
	539
318-1726	7
318-3319	295
318-3320	295
318-8038	7
	9
319-1625	▶329
	520
319-7412	250
319-7603	141
	142
319-8209	141
	142
319-9510	329
320-0569	424
320-2391	100
	105
320-2503	▶134
320-6551	7
	9
320-6564	2
	▶7
	▶9
320-9910	7
	9
321-1270	100
	105
	111
321-2383	41
321-2542	344
321-2543	▶344
	346
321-3600	▶86
	111
321-6951	329
322-3161	571
322-5494	344
322-6839	191
322-6840	191
322-6841	188
	192
322-6842	▶130
322-9662	57
323-1650	344
323-1652	202
	▶381
323-1653	202
	▶242
323-1655	242
	381
323-1656	242
	381
323-1657	242
	381
323-1658	242
	381
323-4077	314
323-4078	▶314
	495
	570
323-9531	266
324-0444	25
324-9712	▶157
	192
325-1277	60
	64
326-1644	84
326-5063	25
326-7288	7
326-7289	7
326-7401	▶47
	49
	50
327-0802	667
327-0803	667
327-0804	667
327-0805	667
328-2973	392
328-7483	▶168
	338
328-7484	▶338
328-7485	338
	▶496
328-7486	338
	496
	▶524
328-7487	524
328-7488	524
328-7489	524
328-8319	▶667
329-7854	6
329-7856	6
330-3408	593
330-3409	130
330-3410	130
330-3685	110
330-3687	110
330-4724	2
	▶50
330-4725	50
330-4726	50
330-4727	50
330-4728	50
330-4729	50
330-5467	110
330-5567	524
330-5570	524
330-6501	2
	▶6
330-6502	2
	▶170
331-3187	95
331-4400	30
331-4908	338
331-6364	338
331-7539	110
331-8917	80
331-8936	2
	▶80
332-6884	329
334-2932	115
335-3067	356
335-3068	356
335-3069	356
335-3070	356
335-3071	▶356
	633
335-9214	55
	56
336-8174	110
336-8175	110
336-8176	110
336-8177	110
336-8178	110
336-8179	110
336-8180	110
339-3397	38
339-9637	15
340-3641	130
340-3642	130
347-1132	4

▶ **PRIMARY REFERENCE**



© 2009 CATERPILLAR
ALL RIGHTS
RESERVED

CAT, CATERPILLAR, THEIR RESPECTIVE LOGOS, “CATERPILLAR YELLOW” AND THE POWER EDGE TRADE DRESS, AS WELL AS CORPORATE AND PRODUCT IDENTITY USED HEREIN, ARE TRADEMARKS OF CATERPILLAR AND MAY NOT BE USED WITHOUT PERMISSION.

PRINTED IN
U.S.A.