CATERPILLAR®

SEBP3520
November 2002

RUTHZIL TRATOR COMERCIAL DE PEÇAS LTDA 11 97083-6812 ROLANDO

Parts Manual



See "General Information" for New Parts Manual Features.

928G Wheel Loader and IT28G Integrated Toolcarrier

DBT1-Up (Machine)
DJD1-Up (Machine)
CPT1-Up (Engine)

Powered By 3056E Engine
This Parts Manual is also Available in .PDF Format on Compact Disc (CD-ROM)- Caterpillar Form No. SERP3520

Product and Dealer Information

Note: For product identification plate locations, see the section “Product Identification Information” in the Operation and Maintenance Manual.

Delivery Date: _____

Product Information

Model: _____

Product Identification Number: _____

Engine Serial Number: _____

Transmission Serial Number: _____

Generator Serial Number: _____

Attachment Serial Numbers: _____

Attachment Information: _____

Customer Equipment Number: _____

Dealer Equipment Number: _____

Dealer Information

Name: _____ Branch: _____

Address: _____

_____

_____

	Dealer Contact	Phone Number	Hours
Sales:	_____	_____	_____
Parts:	_____	_____	_____
Service:	_____	_____	_____

Informations produit et concessionnaire

Nota: Voir l'emplacement de la plaque signalétique du produit au chapitre "Informations produit" du guide d'utilisation et d'entretien.

Date de livraison: _____

Informations produit

Modèle: _____

Numéro d'identification produit: _____

Numéro de série du moteur: _____

Numéro de série de la boîte de vitesses: _____

Numéro de série de l'alternateur: _____

Numéros de série d'équipement: _____

Informations sur l'équipement: _____

Numéro matériel client: _____

Numéro matériel concessionnaire: _____

Informations concessionnaire

Nom: _____ Agence: _____

Adresse: _____

_____

_____

	Contact concessionnaire	Numéro de téléphone	Heures
Ventes:			
Pièces:			
Service:			

Información del Producto/Distribuidor

Nota: Para saber la ubicación de las placas de identificación del producto, ver la sección “Información sobre identificación del producto” en el Manual de Operación y Mantenimiento.

Fecha de entrega: _____

Información del producto

Modelo: _____

Número de identificación del producto: _____

Número de serie del motor: _____

Número de serie de la transmisión: _____

Número de serie del generador: _____

Números de serie de los accesorios: _____

Información sobre los accesorios: _____

Número del equipo del cliente: _____

Número del equipo del distribuidor: _____

Información del distribuidor

Nombre: _____ Sucursal: _____

Dirección: _____

_____

_____

	Comunicación con el distribuidor	Número de teléfono	Horas
Ventas:	_____	_____	_____
Piezas:	_____	_____	_____
Servicio:	_____	_____	_____

Informações Sobre Produto e Revendedor

Nota: Para localizações da placa de identificação do produto, consulte a seção, “Informações Sobre Identificação do Produto” no Manual de Operação e Manutenção.

Data de Entrega: _____

Informações Sobre o Produto

Modelo: _____

Número de Identificação do Produto: _____

Número de Série do Motor: _____

Número de Série da Transmissão: _____

Número de Série do Gerador: _____

Números de Série de Acessórios: _____

Informações Sobre Acessórios: _____

Número do Equipamento do Cliente: _____

Número do Equipamento do Revendedor: _____

Informações Sobre o Revendedor

Nome: _____ Filial: _____

Endereço: _____

_____

_____

	Contato do Revendedor	Telefone	Horas
Vendas:	_____	_____	_____
Peças:	_____	_____	_____
Serviço:	_____	_____	_____

TABLE OF CONTENTS

Name	Page
GENERAL INFORMATION	A18
REPAIR ALTERNATIVES	A33
SUPPLEMENTAL COOLANT ADDITIVES	A37
MAINTENANCE PARTS	A41
INDEX	A59
MACHINE ARRANGEMENT	1
CHASSIS AR	1
COMMON AR	2
WASTE HANDLING AR	3
ENGINE ARRANGEMENT	5
ENGINE AR-PRIMARY	5
INSTALLATION AR-ENGINE	6
BASIC ENGINE	7
CAMSHAFT GP	7
COVER GP-ENGINE	8
COVER GP-VALVE MECHANISM	10
CRANKSHAFT GP	12
CYLINDER BLOCK GP	13
CYLINDER HEAD GP	16
DRAIN GP-ENGINE OIL	18
FASTENER GP-CYLINDER HEAD	19
FLYWHEEL GP	20
GEAR GP-FRONT	21
HOUSING GP-FLYWHEEL	22
HOUSING GP-FRONT	24
LIFTING GP-ENGINE	26
MOUNTING GP-ALTERNATOR	27
MOUNTING GP-ENGINE	28
MOUNTING GP-ENGINE & TMSN	30
MOUNTING GP-FAN DRIVE	32
PAN GP-OIL	34
PISTON & ROD GP	36
PLUG GP-CYLINDER BLOCK	37
PLUG GP-ENGINE	39
PULLEY GP-CRANKSHAFT	40
ROCKER ARM GP	42
VALVE MECHANISM GP	44
LUBRICATION SYSTEM	45
FILTER GP-ENGINE OIL	45
GAUGE GP-OIL LEVEL (DIPSTICK)	46
PUMP GP-ENGINE OIL	48
VALVE GP-FLUID SAMPLING	50
COOLING SYSTEM	51
CONNECTION GP-WATER	51
COOLER GP-FLTR BASE & ENG OIL	52
FAN GP-SUCTION	54
GUARD GP-FAN	56
LINES GP-WATER	58
PUMP GP-WATER	60
RADIATOR GP	62
AIR INLET AND EXHAUST SYSTEM	67
AIR CLEANER GP	67
ELBOW GP-AIR INLET	71
EXTENSION GP-EXHAUST	72
LINES GP-AIR	73
MUFFLER GP	74
PRECLEANER GP	75
TURBOCHARGER GP	76
FUEL SYSTEM	78
FILTER GP-FUEL	78
LINES GP-FUEL	80
LINES GP-FUEL FILTER	84
PUMP GP-FUEL INJECTION	86
PUMP GP-FUEL TRANSFER	90
SEPARATOR GP-WATER	93
TANK & MTG GP-FUEL	94
ELECTRICAL AND STARTING SYSTEM	95
ALARM GP	95
ALTERNATOR GP-CHARGING	96
BATTERY GP	103
CONTROL GP-ENGINE ELECTRONIC	104
CONTROL GP-LIFT KICKOUT	105
CONTROL GP-POSITION	106
CONTROL GP-UNPROGRAMMED	107
CONVERTER GP-ELECTRICAL	108
ELECTRONICS GP-MACHINE	110
HEATER GP-JACKET WATER	111
LAMP GP-FLOOD	113
LAMP GP-STOP & TAIL	114
LAMP GP-WARNING BEACON	115
LIGHTING GP-AUXILIARY	116
LIGHTING GP-FLOOD	118
LIGHTING GP-FLOOD & SIGNAL	122
LIGHTING GP-WARNING	124
LINES GP-STARTING AID	126
SENSOR GP-POSITION	127
SENSOR GP-PRESSURE	128
STARTING AID GP	129
STARTING MOTOR GP-ELECTRIC	130
SWITCH GP-DISCONNECT	134
SWITCH GP-MAGNETIC	135
SWITCH GP-WIPER	137
WARNING GP-BACKUP	138
WIRING GP-BATTERY	140
WIRING GP-CAB	142
WIRING GP-COMMUNICATION	150
WIRING GP-ELECTRONIC CONTROL	154

TABLE OF CONTENTS

Name	Page
WIRING GP-ENGINE	156
WIRING GP-FRONT	162
WIRING GP-MACHINE	166
WIRING GP-REAR	170
WIRING GP-RIDE CONTROL	172
WIRING GP-SECONDARY STEERING	174
POWER TRAIN	176
AXLE AR-FIXED	176
AXLE AR-OSCILLATING	176
BRAKE & PLANETARY GP	180
CASE & PARTS GP-PLANETARY	184
CLUTCH GP	188
CONTROL GP-TRANSMISSION	194
COVER GP-TRANSMISSION	196
DIFFERENTIAL GP	198
DIFFERENTIAL GP-LIMITED SLIP	199
DIFFERENTIAL GP-NOSPIN	200
DRIVE GP-FLEXIBLE COUPLING	202
DRIVE GP-PUMP	203
FILLER GP-POWER TRAIN OIL	204
FILTER & LINES GP-TRANSMISSION	206
FILTER GP-OIL	208
GAUGE GP-SIGHT	209
GEAR GP-BEVEL	210
GEAR GP-OUTPUT TRANSFER	214
HOUSING GP-FIXED AXLE	216
HOUSING GP-OSCILLATING AXLE	218
INPUT GP-TRANSMISSION	224
LINES GP-AXLE OIL COOLER	226
LINES GP-TORQUE CONV COOLER	232
MOUNTING GP-AXLE	234
MOUNTING GP-RIM	235
POWER TRAIN AR	235
PUMP GP-GEAR	236
RIM AR	238
RIM GP-DEMOUNTABLE	240
SHAFT GP-DRIVE	246
SLIP JOINT GP	248
STOP GP-AXLE OSCILLATION	250
TIRE & RIM AR	250
TRANSMISSION AR	258
VALVE GP-BYPASS	259
VALVE GP-RELIEF	260
VALVE GP-TIRE	261
VALVE GP-TRANSMISSION CONTROL	262
FRAME AND BODY	264
BOX GP-BATTERY	264
COUNTERWEIGHT GP	265
FENDER GP-FRONT	268
FENDER GP-REAR	270
FRAME GP-FRONT	275
FRAME GP-LOADER	276
FRAME GP-REAR	277
GUARD GP-CRANKCASE	278
GUARD GP-LIGHTING	280
GUARD GP-LINES	283
GUARD GP-POWER TRAIN	287
HITCH GP-ARTICULATING	288
HOOD & GUARD GP	290
LADDER GP	292
LINES GP-GREASE	294
LINK GP-STEERING FRAME LOCK	296
PANEL GP-TOP	298
BRAKING SYSTEM	301
ACCUMULATOR GP-BRAKE	301
CONTROL GP-PARKING BRAKE	302
CONTROL GP-SERVICE BRAKE	304
LINES GP-SERVICE BRAKE	306
PUMP & MTG GP-BRAKE & HYD FAN	310
PUMP GP-GEAR	312
STEERING SYSTEM	316
CONTROL GP-STEERING	316
CYLINDER & MTG GP-STEERING	320
CYLINDER GP-HYDRAULIC	322
CYLINDER GP-STEERING	324
LINES GP-SECONDARY STEERING	326
LINES GP-STEERING	330
LOCK GP-STEERING CYLINDER	334
STEERING AR	335
STEERING AR-SECONDARY	335
STEERING COLUMN GP	337
HYDRAULIC SYSTEM	338
CARTRIDGE GP-VANE PUMP	338
CONTROL AR-RIDE	339
CONTROL GP-HANDLE	340
CONTROL GP-PILOT OPERATED HYD	342
COOLER GP-HYD & TMSN OIL	364
COOLER GP-HYDRAULIC OIL	366
CYLINDER & MTG GP-COUPLER	367
CYLINDER GP-COUPLER	368
CYLINDER GP-LIFT	370
CYLINDER GP-TILT	372
FILTER GP-OIL	378
HYDRAULIC AR	380
HYDRAULIC AR-2 VALVE	383
HYDRAULIC AR-3 VALVE	384
HYDRAULIC AR-4 VALVE	386
KICKOUT & POSITIONER GP	388
LINES GP-COUPLER	392
LINES GP-FRONT	400
LINES GP-HYDRAULIC	406
LINES GP-HYDRAULIC FAN	408
LINES GP-LIFT CYLINDER	416

TABLE OF CONTENTS

Name	Page
LINES GP-PILOT	428
LINES GP-RIDE CONTROL	440
LINES GP-TILT CYLINDER	448
LOCK GP-HYDRAULIC HAND CONTROL	455
MOTOR & MTG GP-HYDRAULIC FAN	456
MOTOR AR-HYDRAULIC FAN	458
MOTOR GP-GEAR	459
PIVOT GP-PILOT VALVE	466
PLATE GP-PILOT VALVE	471
PUMP & MTG GP-IMPL & STEERING	476
PUMP GP-PISTON	478
PUMP GP-PISTON & VANE	480
ROTATING GP-PUMP	481
TANK & MTG GP-HYDRAULIC	482
VALVE & MTG GP-MAIN CONTROL	484
VALVE & MTG GP-SOLENOID	489
VALVE GP-BALL	490
VALVE GP-CHECK	491
VALVE GP-CONTROL	492
VALVE GP-LOAD CONTROL	496
VALVE GP-MAIN CONTROL	498
VALVE GP-PILOT	508
VALVE GP-PILOT CARTRIDGE	534
VALVE GP-PRESS & FLOW CMPNSTR	542
VALVE GP-PRESSURE REDUCING	544
VALVE GP-QUICK COUPLER	546
VALVE GP-RELIEF	547
VALVE GP-RIDE CONTROL	556
VALVE GP-SHUTOFF	558
VALVE GP-SOLENOID	561
IMPLEMENTS	566
ARM AS-LIFT	566
BRACKET GP-TRANSPORT	567
CONTROL GP-BUCKET	568
CONTROL GP-WORK TOOL	570
WORK TOOLS	573
ADAPTER GP-TIP	573
ARM GP-MATERIAL HANDLING	574
BUCKET AS-GENERAL PURPOSE	575
BUCKET AS-LIGHT MATERIAL	580
BUCKET GP-GENERAL PURPOSE	581
CORNER-LH	583
CORNER-RH	583
COUPLER AR-QUICK	583
COUPLER GP-QUICK	586
EDGE GP-CUTTING	588
EDGE GP-SEGMENT	588
FORK GP	589
FORK GP-PALLET	590
GUARD GP-BUCKET	593
KIT-QUICK COUPLER	594
TIP GP-LONG	595
TIP GP-SHORT	596
TOOTH GP-LONG	598
TOOTH GP-UNI	599
OPERATOR STATION	600
AIR CONDITIONER & MOUNTING GP	600
AIR CONDITIONER AR	601
AIR CONDITIONER GP	604
ARMREST GP	607
CAB AR	610
CAB AR-ENCLOSED ROPS	611
CAB GP	612
CANOPY AR-OPEN ROPS	614
CANOPY GP-OPEN ROPS	614
COMPRESSOR GP-REFRIGERANT	616
CONDENSER & MTG GP-REFRIGERANT	618
CONDENSER GP-REFRIGERANT	620
CONTROL GP-MONITOR	621
COVER GP-CONSOLE	623
DASH GP	624
DEFROSTER GP-CAB	625
DOOR GP-CAB	626
DUCT GP-AIR	636
EXTENSION GP-BACKREST	638
FILTER GP-CAB AIR	639
GUARD GP-WINDOW	640
HEATER & MTG GP-CAB	642
HEATER AR-CAB	643
HEATER GP-CAB	644
HOUSING GP-SEAT SUSPENSION	646
INSTALLATION GP-RADIO	649
LINER GP-CAB	651
LINES GP-AIR CONDITIONER	656
LINES GP-HEATER	660
MIRROR GP-REAR VIEW	662
MOUNTING GP-CAB	664
OPERATOR AR	665
PAN GP-BACKREST	667
PAN GP-SEAT	668
PANEL GP-INSTRUMENT	670
PEDAL GP-BRAKE	680
PEDAL GP-GOVERNOR	681
PLATFORM AR	682
PLATFORM GP-OPERATOR	683
ROPS GP-ENCLOSED	684
ROPS GP-OPEN	686
SCREEN GP-SUN	688
SEAT & MOUNTING GP	689
SEAT BELT GP	693
SEAT GP	696
SEAT GP-SUSPENSION	699
SKIRT GP-CAB	704
SUPPORT GP-SEAT	706
SUSPENSION GP-SEAT	708

TABLE OF CONTENTS

Name	Page	Name	Page
VISOR GP-CAB	712		
WASHER GP-WINDOW	713		
WINDOW GP-DOOR	715		
WIPER GP-WINDOW	716		
SERVICE EQUIPMENT AND SUPPLIES	718		
BOX GP-TOOL	718		
FILM GP	719		
PLATE & FILM GP	721		
PART NUMBER INDEX	B1		

TABLE DES MATIÈRES

Désignation	Page
GÉNÉRALITÉS	A21
OPTIONS DE RÉPARATION	A34
ADDITIFS POUR LIQUIDE DE REFROIDISSEMENT	A38
PIÈCES DE RECHANGE	A45
INDEX	A69
VERSION DE MACHINE	1
VERSION DE CHASSIS	1
VERSION NORMALE	2
ÉLIMINATION DES DÉCHETS (VERSION)	3
MOTEUR (VERSION)	5
MOTEUR (VERSION PRINCIPALE)	5
MONTAGE DE MOTEUR (VERSION)	6
MOTEUR STANDARD	7
ARBRE A CAMES (ASS)	7
MOTEUR - COUVERCLE (ASS)	8
CACHE-SOUPAPES (ASS)	10
VILEBREQUIN (ASS)	12
BLOC-CYLINDRES (ASS)	13
CULASSE (ASS)	16
VIDANGE-HUILE DE MOTEUR (ASS)	18
BOULONNERIE DE LA CULASSE (ASS)	19
VOLANT MOTEUR (ASS)	20
PIGNONNERIE AV (ASS)	21
CARTER DE VOLANT (ASS)	22
CARTER AV (ASS)	24
OEILLETONS DE LEVAGE MOTEUR (ASS)	26
MONTAGE D'ALTERNATEUR (ASS)	27
MONTAGE DE MOTEUR (ASS)	28
MONTAGE DE MOTEUR ET BOÎTE (ASS)	30
MONTAGE D'ENTRAÎNEMENT DE VENTILATEUR (ASS)	32
HUILE MOTEUR - CARTER (ASS)	34
PISTON ET BIELLE (ASS)	36
BOUCHON - BLOC-CYLINDRES	37
BOUCHON DE MOTEUR (ASS)	39
VILEBREQUIN - POULIE (ASS)	40
AXE DE CULBUTEUR (ASS)	42
CULBUTERIE (ASS)	44
CIRCUIT DE GRAISSAGE	45
FILTRE À HUILE MOTEUR (ASS)	45
JAUGE D'HUILE MOTEUR (BAIONNETTE) (ASS)	46
POMPE A HUILE MOTEUR (ASS)	48
ROBINET-PRÉLÈVEMENT D'ÉCHANTILLON DE LIQUIDE (ASS)	50
CIRCUIT DE REFROIDISSEMENT	51
RACCORD D'EAU (ASS)	51
SUPPORT DE FILTRE ET REFROIDISSEUR D'HUILE MOTEUR	52
VENTILATEUR ASPIRANT (ASS)	54
PROTECTION DE VENTILATEUR (ASS)	56
CANALISATIONS D'EAU (ASS)	58
POMPE A EAU (ASS)	60
RADIATEUR (ASS)	62
CIRCUIT D'ADMISSION D'AIR ET D'ÉCHAPPEMENT	67
FILTRE A AIR (ASS)	67
COUDE D'ADMISSION D'AIR (ASS)	71
RALLONGE D'ÉCHAPPEMENT (ASS)	72
CANALISATIONS D'AIR (ASS)	73
SILENCIEUX (ASS)	74
PREFILTRE (ASS)	75
TURBOCOMPRESSEUR (ASS)	76
CIRCUIT DE CARBURANT	78
FILTRE A CARBURANT (ASS)	78
CANALISATIONS DE CARBURANT (ASS)	80
CANALISATIONS DU FILTRE A CARBURANT (ASS)	84
POMPE D'INJECTION DE CARBURANT (ASS)	86
POMPE D'ALIMENTATION EN CARBURANT (ASS)	90
SÉPARATEUR D'EAU (ASS)	93
RÉSERVOIR DE CARBURANT ET MONTAGE (ASS)	94
CIRCUIT ELECTRIQUE ET DE DEMARRAGE	95
AVERTISSEUR (ASS)	95
ALTERNATEUR DE CHARGE (ASS)	96
BATTERIE (ASS)	103
COMMANDE ELECTRONIQUE DE MOTEUR (ASS)	104
COMMANDE ELECTRONIQUE DE LIMITEUR DE LEVAGE (ASS)	105
COMMANDE DE POSITION (ASS)	106
COMMANDE NON PROGRAMMEE (ASS)	107
TRANSFORMATION ELECTRIQUE (ASS)	108
ÉLECTRONIQUE - MACHINE (ENS)	110

TABLE DES MATIÈRES

Désignation	Page
EAU DES CHEMISES - RECHAUFFEUR (ASS)	111
LAMPE - PHARE (ASS)	113
FEUX ARRIÈRE ET FEUX D'ARRÊT	114
LAMPE - GYROPHARE (ASS)	115
ÉCLAIRAGE - AUXILIAIRE (ASS)	116
ÉCLAIRAGE - PROJECTEURS (ASS)	118
ÉCLAIRAGE - PROJECTEURS ET CLIGNOTANTS (ASS)	122
ÉCLAIRAGE - AVERTISSEUR (ASS)	124
CANALISATIONS D'ÉTHER - MOTEUR (ASS)	126
SONDE - CIRCUIT DE CARBURANT	127
CAPTEUR DE PRESSION (ASS)	128
AUXILIAIRE DE DÉMARRAGE (ASS)	129
DÉMARREUR ÉLECTRIQUE (ASS)	130
ROBINET DE BATTERIE (ASS)	134
CONTACTEUR MAGNETIQUE (ASS)	135
INTERRUPTEUR D'ESSUIE-GLACE (ASS)	137
AVERTISSEUR DE RECUL (ASS)	138
CABLAGE DE BATTERIE (ASS)	140
CABLAGE DE CABINE (ASS)	142
CÂBLAGE DE COMMUNICATION (ASS)	150
COMMANDE ÉLECTRONIQUE - CABLAGE	154
CABLAGE DE MOTEUR (ASS)	156
CABLAGE AV (ASS)	162
CABLAGE DE LA MACHINE (ASS)	166
CABLAGE AR (ASS)	170
CÂBLAGE DE COMMANDE DE TRANSLATION (ASS)	172
CABLAGE DE DIRECTION AUXILIAIRE (ASS)	174
TRANSMISSION	176
ESSIEU FIXE (VERSION)	176
ESSIEU OSCILLANT (VERSION)	176
FREIN ET TRAINS PLANÉTAIRES (ASS)	180
TRAINS PLANÉTAIRES - CARTER ET PIÈCES	184
EMBRAYAGE (ASS)	188
COMMANDE DE BOITE DE VITESSES (ASS)	194
COUVERCLE DE BOITE DE VITESSES (ASS)	196
DIFFERENTIEL (ASS)	198
DIFFÉRENTIEL - GLISSEMENT LIMITÉ (ASS)	199
DIFFÉRENTIEL NOSPIN (ASS)	200
ENTRAÎNEMENT D'ACCOUPLEMENT FLEXIBLE (ASS)	202
ENTRAÎNEMENT DE POMPE (ASS)	203
GOULOTTE DE REMPLISSAGE D'HUILE DE TRANSMISSION	204
FILTRE ET CANALISATIONS - BOÎTE DE VITESSE (ASS)	206
FILTRE A HUILE (ASS)	208
REGARD DE NIVEAU (ASS)	209
COURONNE CONIQUE (ASS)	210
ENGRENAGE DE TRANSFERT DE RENDEMENT (ASS)	214
CARTER D'ESSIEU FIXE	216
CARTER D'ESSIEU OSCILLANT	218
ENTRÉE - BOÎTE POWERSHIFT (ASS)	224
CANALISATIONS DE REFROIDISSEUR D'HUILE D'ESSIEU (ASS)	226
CANALIS. DE REFROIDISSEMENT DU CONV. DE COUPLE	232
MONTAGE D'ESSIEU (ASS)	234
MONTAGE DE JANTE (ASS)	235
TRANSMISSION (VERSION)	235
POMPE A ENGRENAGES (ASS)	236
JANTE (VERSION)	238
JANTE DÉMONTABLE (ASS)	240
ARBRE D'ENTRAÎNEMENT (ASS)	246
CARDAN COULISSANT (ASS)	248
ARRÊT-OSCILLATION D'ESSIEU (ASS)	250
PNEU ET JANTE (VERSION)	250
BOÎTE DE VITESSES (VERSION)	258
SOUPAPE DE DÉRIVATION (ASS)	259
CLAPET DE DECHARGE (ASS)	260
PNEU - GROUPE DE VALVE	261
DISTRIBUTEUR DE BOITE (ASS)	262
CHÂSSIS ET BENNE	264
COMPARTIMENT DE BATTERIE (ASS)	264
CONTREPOIDS (ASS)	265
GARDE-BOUE AV (ASS)	268
GARDE-BOUE AR (ASS)	270
CHÂSSIS AV (ASS)	275
BATI - CHARGEUSE (ASS)	276
BÂTI AR (ASS)	277
CARTER - BLINDAGE (ASS)	278
PROTECTION - ÉCLAIRAGE (ASS)	280
PROTECTEUR DES CANALISATIONS (ASS)	283
BLINDAGE DE TRANSMISSION (ASS)	287
ATTELAGE D'ARTICULATION (ASS)	288
CAPOT ET PROTECTION (ASS)	290
ECHELLE (ASS)	292
CANALISATIONS DE GRAISSAGE (ASS)	294
LIAISON - VERROUILLAGE DE CHÂSSIS DE DIRECTION (ASS)	296
PANNEAU SUPERIEUR (ASS)	298

TABLE DES MATIÈRES

Désignation	Page
CIRCUIT DE FREINS	301
ACCUMULATEUR - FREIN	301
COMMANDE DE FREIN DE STATIONNEMENT (ASS)	302
FREIN DE MANOEUVRE - COMMANDE (ASS)	304
CANALISATIONS DU FREIN DE MANOEUVRE (ASS)	306
POMPE DE VENTILATEUR HYDRAULIQUE ET DE FREIN ET MONTAGE (ASS)	310
POMPE A ENGRENAGES (ASS)	312
CIRCUIT DE DIRECTION	316
COMMANDE DE DIRECTION (ASS)	316
VERIN DE DIRECTION ET MONTAGE (ASS)	320
VÉRIN HYDRAULIQUE (ASS)	322
VERIN DE DIRECTION (ASS)	324
CANALISATION DE DIRECTION AUXILIAIRE	326
CANALISATIONS DE DIRECTION (ASS)	330
VERROUILLAGE DE VÉRIN DE DIRECTION (ASS)	334
DIRECTION (ENS)	335
DIRECTION AUXILIAIRE (VERSION)	335
COLONNE DE DIRECTION (ASS)	337
CIRCUIT HYDRAULIQUE	338
POMPE À AILETTES - CARTOUCHE	338
COMMANDE DE TRANSLATION (VERSION)	339
COMMANDE DE POIGNÉE (ASS)	340
COMMANDE HYDRAULIQUE PILOTE (ASS)	342
REFROIDISSEUR D'HUILE HYDRAULIQUE ET DE BOÎTE (ASS)	364
REFROIDISSEUR D'HUILE HYDRAULIQUE (ASS)	366
VERIN ET MONTAGE - COUPLEUR (ASS)	367
VÉRIN DE COUPLEUR (ASS)	368
VÉRIN DE LEVAGE (ASS)	370
VÉRIN D'INCLINAISON (ASS)	372
FILTRE A HUILE (ASS)	378
VERSION HYDRAULIQUE	380
DISTRIBUTEUR - 2 VOIES (VERSION)	383
DISTRIBUTEUR - 3 VOIES (VERSION)	384
DISTRIBUTEUR QUADRUPLE CORPS (VERSION)	386
LIMITEUR DE LEVAGE ET RETOUR À L'ANGLE DE CAVAGE	388
CANALISATIONS DE COUPLEUR (ASS)	392
CANALISATIONS AV	400
CANALISATIONS HYDRAULIQUES (ASS)	406
CANALISATIONS HYDRAULIQUES DE VENTILATEUR (ASS)	408
CANALISATIONS DE VÉRIN DE LEVAGE (ASS)	416
CANALISATIONS A COMMANDE PILOTE (ASS)	428
CANALISATIONS DE COMMANDE DE MARCHE	440
CANALISATIONS DU VÉRIN D'INCLINAISON (ASS)	448
VERROUILLAGE DE COMMANDE MANUELLE HYDRAUL. (ASS)	455
MOTEUR ET MONTAGE DE VENTILATEUR HYDRAULIQUE (ASS)	456
VERSION DE MOTEUR DE VENTILATEUR HYDRAULIQUE	458
MOTEUR À ENGRENAGES (ASS)	459
ARTICULATION DE SOUPAPE PILOTE (ASS)	466
PLAQUE DE SOUPAPE PILOTE (ASS)	471
POMPE ET MONTAGE - ÉQUIPEMENT ET DIRECTION (ASS)	476
POMPE A PISTONS (ASS)	478
POMPE À PISTONS ET PALETTES (ASS)	480
GROUPE DE ROTATION DE POMPE	481
RÉSERVOIR HYDRAULIQUE ET MONTAGE (ASS)	482
COMMANDE PRINCIPALE DE SOUPAPE ET MONTAGE (ASS)	484
SOUPAPE ET MONTAGE - SOLÉNOÏDE	489
SOUPAPE SPHÉRIQUE (ASS)	490
CLAPET DE RETENUE (ENS)	491
DISTRIBUTEUR (ASS)	492
DISTRIBUTEUR DE CHARGE (ASS)	496
SOUPAPE DE COMMANDE PRINCIPALE (ASS)	498
SOUPAPE PILOTE (ASS)	508
SOUPAPE - CARTOUCHE PILOTE (ASS)	534
SOUPAPE RÉGULATRICE DE PRESSION ET DÉBIT	542
SOUPAPE RÉDUCTRICE DE PRESSION (ASS)	544
SOUPAPE DE COUPLEUR EXPRESS (ASS)	546
CLAPET DE DECHARGE (ASS)	547
DISTRIBUTEUR DE COMMANDE ANTI-TANGAGE	556
SOUPAPE D'ARRÊT (ASS)	558
SOUPAPE - SOLÉNOÏDE (ASS)	561

TABLE DES MATIÈRES

Désignation	Page
ÉQUIPEMENTS	566
BRAS DE LEVAGE (ENS)	566
SUPPORT D'EXPÉDITION (ASS)	567
COMMANDE DE GODET (ASS)	568
COMMANDE - OUTIL DE TRAVAIL (ASS)	570
OUTILS DE TRAVAIL	573
PORTE-POINTE (ASS)	573
BRAS DE MANUTENTION (ASS)	574
GODET NORMAL (ENS)	575
GODET POUR MATERIAUX MEUBLES (ENS)	580
GODET NORMAL (ASS)	581
COIN GAUCHE	583
COIN DROIT	583
COUPLEUR EXPRESS (VERSION)	583
COUPLEUR EXPRESS (ASS)	586
LAME DE COUPE (ASS)	588
SEGMENT DE LAME DE COUPE (ASS)	588
FOURCHE (ASS)	589
FOURCHE PALLETTE (ASS)	590
PROTECTION DE GODET (ASS)	593
KIT DE COUPLEUR EXPRESS	594
POINTE LONGUE (ASS)	595
POINTE COURTE (ASS)	596
DENT LONGUE (ASS)	598
DENT MONOBLOC (ASS)	599
POSTE DE CONDUITE	600
CLIMATISEUR ET MONTAGE (ASS)	600
CLIMATISEUR (VERSION)	601
CLIMATISEUR (ASS)	604
ACCOUDOIR (ASS)	607
CABINE (VERSION)	610
CABINE ROPS FERMÉE (VERSION)	611
CABINE (ASS)	612
VERSION DE TOIT - ROPS OUVERT	614
TOIT-ROPS OUVERT (ASS)	614
COMPRESSEUR DE REFRIGERANT (ASS)	616
CONDENSATEUR ET MONTAGE (RÉFRIGÉRANT)	618
CONDENSEUR DE RÉFRIGÉRANT	620
GROUPE DE CONTROLE	621
COUVERCLE DE LA CONSOLE (ASS)	623
TABLEAU DE BORD (ASS)	624
DEGIVREUR (ASS)	625
PORTIÈRE DE CABINE (ASS)	626
GAINE D'AIR (ASS)	636
RALLONGE DU DOSSIER DE SIEGE	638
FILTRE À AIR DE CABINE (ASS)	639
PROTECTION DE GLACE (ASS)	640
CHAUFFAGE ET MONTAGE - CABINE (ASS)	642
CHAUFFAGE DE CABINE (VERSION)	643
CHAUFFAGE DE CABINE (ASS)	644
SUSPENSION DE SIEGE - CARTER (ASS)	646
MONTAGE DE RADIO (ASS)	649
CABINE - REVÊTEMENT (ASS)	651
CANALISATIONS DE CLIMATISEUR (ASS)	656
CANALISATIONS DE CHAUFFAGE (ASS)	660
RÉTROVISEUR (ASS)	662
MONTAGE DE CABINE (ASS)	664
POSTE DE CONDUITE (VERSION)	665
COUVERCLE INFÉRIEUR-DOSSIER (ASS)	667
SIEGE - COUVERCLE INFERIEUR (ASS)	668
TABLEAU DE BORD (ASS)	670
PEDALE DE FREIN (ASS)	680
RÉGULATEUR - PÉDALE (ASS)	681
PLATE-FORME (VERSION)	682
PLATE-FORME DE CABINE	683
CABINE ROPS FERMÉE (ASS)	684
TOIT ROPS - OUVERT (ASS)	686
PARE-SOLEIL (ASS)	688
SIÈGE ET MONTAGE (ASS)	689
CEINTURE DE SECURITE (ASS)	693
SIÈGE (ASS)	696
SIÈGE AVEC SUSPENSION (ASS)	699
JUPE DE PROTECTION DE CABINE (ASS)	704
SUPPORT DE SIÈGE (ASS)	706
SIÈGE AVEC SUSPENSION (ASS)	708
RETROVISEUR - CABINE (ASS)	712
LAVE-GLACE - VITRE (ASS)	713
GLACE DE PORTIÈRE (ASS)	715
ESSUIE-GLACE (ASS)	716
MATÉRIEL ET FOURNITURES D'ENTRETIEN	718
COFFRE A OUTILS (ASS)	718
PLAQUE SIGNALÉTIQUE (ASS)	719
PLAQUES SIGNALETIQUES ET AUTOCOLLANTS (ASS)	721
INDEX DE NUMÉROS DE PIÈCES	B1

CONTENIDO

Nombre	Página
INFORMACIÓN GENERAL	A25
ALTERNATIVAS DE REPARACIÓN	A35
ADITIVOS DE REFRIGERANTE SUPLEMENTARIOS	A39
PIEZAS DE MANTENIMIENTO	A49
INDICE	A79
CONFIGURACIÓN DE MÁQUINAS	1
CHASIS (CONFIG)	1
CONFIGURACIÓN COMÚN	2
CONFIGURACIÓN DE ELIMINACIÓN DE BASURAS	3
CONFIGURACION DE MOTOR	5
MOTOR PRIMARIO (CONFIG)	5
CONFIGURACIÓN DE INSTALACIÓN DEL MOTOR	6
MOTOR BÁSICO	7
ÁRBOL DE LEVAS (GR)	7
TAPA DEL MOTOR (GR)	8
TAPA DEL MECANISMO DE VÁLVULAS (GR)	10
CIGÜEÑAL (GR)	12
BLOQUE MOTOR (GR)	13
CULATA DE CILINDROS (GR)	16
DRENAJE DEL ACEITE DE MOTOR	18
CULATA DE CILINDROS - TORNILLERÍA DE LA (GR)	19
VOLANTE (GR)	20
ENGRANAJE DELANTERO (GR)	21
VOLANTE - CAJA DE (GR)	22
CAJA DELANTERA (GR)	24
CÁNCAMOS DE LEVANTAMIENTO DEL MOTOR (GR)	26
MONTAJE DEL ALTERNADOR (GR)	27
MONTAJE DEL MOTOR (GR)	28
MONTAJE DEL MOTOR Y LA TRANSMISIÓN (GR)	30
MONTAJE DEL MANDO DE VENTILADOR (GR)	32
CÁRTER - COLECTOR DEL (GR)	34
PISTÓN Y BIELA (GR)	36
TAPÓN DEL BLOQUE MOTOR (GR)	37
TAPÓN DEL MOTOR (GR)	39
CIGÜEÑAL - POLEA DE (GR)	40
BALANCÍN (GR)	42
MECANISMO DE VÁLVULAS (GR)	44
SISTEMA DE LUBRICACIÓN	45
FILTRO DE ACEITE DEL MOTOR (GR)	45
INDICADOR DEL NIVEL DE ACEITE (VARILLA) (GR)	46
BOMBA DE ACEITE DEL MOTOR (GR)	48
VÁLVULA DE MUESTREO (GR)	50
SISTEMA DE ENFRIAMIENTO	51
AGUA - CONEXIÓN DE (GR)	51
ENFRIADOR DE ACEITE DEL MOTOR Y BASE DEL FILTRO	52
SUCCIÓN - VENTILADOR DE (GR)	54
PROTECTOR DEL VENTILADOR (GR)	56
TUBERÍAS DEL AGUA (GR)	58
BOMBA DE AGUA (GR)	60
RADIADOR (GR)	62
SISTEMA DE AIRE DE ADMISIÓN Y ESCAPE	67
FILTRO DE AIRE (GR)	67
CODO DE ADMISIÓN DE AIRE (GR)	71
EXTENSIÓN DEL ESCAPE (GR)	72
AIRE - TUBERÍAS DE (GR)	73
SILENCIADOR (GR)	74
ANTEFILTRO (GR)	75
TURBOCOMPRESOR (GR)	76
SISTEMA DE COMBUSTIBLE	78
FILTRO DE COMBUSTIBLE (GR)	78
TUBERÍAS DE COMBUSTIBLE (GR)	80
TUBERÍAS DEL FILTRO DE COMBUSTIBLE	84
BOMBA DE INYECCIÓN DE COMBUSTIBLE (GR)	86
BOMBA DE TRANSFERENCIA DE COMBUSTIBLE (GR)	90
SEPARADOR DE AGUA (GR)	93
TANQUE DE COMBUSTIBLE Y GRUPO DE MONTAJE	94
SISTEMA ELECTRICO Y DE ARRANQUE	95
ALARMA (GR)	95
CARGA - ALTERNADOR DE (GR)	96
BATERÍA (GR)	103
CONTROL ELECTRÓNICO DEL MOTOR (GR)	104
CONTROL DE DESCONEXIÓN DE LEVANTAMIENTO (GR)	105
CONTROL DE POSICION (GR)	106
CONTROL NO PROGRAMADO (GR)	107
CONVERTIDOR ELÉCTRICO (GR)	108
ELECTRONICA DE LA MAQUINA (GR)	110
AGUA DE LAS CAMISAS - CALENTADOR DEL (GR)	111
REFLECTOR (GR)	113
LUCES DE PARADA Y COLA (GR)	114

CONTENIDO

Nombre	Página
LÁMPARA DE BALIZA DE ADVERTENCIA (GR)	115
LUCES AUXILIARES (GR)	116
LUCES DE REFLECTOR (GR)	118
LUCES DE REFLECTOR Y CAMBIO DE DIRECCION (GR)	122
LUCES DE ADVERTENCIA (GR)	124
TUBERÍAS DEL AUXILIAR DE ARRANQUE CON ÉTER EN EL MOTOR (GR)	126
DETECTOR DE POSICIÓN (SISTEMA DE COMBUST.) (GR)	127
SENSOR DE PRESIÓN (GR)	128
AUXILIAR DE ARRANQUE (GR)	129
MOTOR DE ARRANQUE ELÉCTRICO (GR)	130
DISYUNTOR (GR)	134
INTERRUPTOR MAGNÉTICO (GR)	135
INTERRUPTOR DEL LIMPIADOR (GR)	137
RETROCESO - ALARMA DE (GR)	138
CABLES DE LA BATERÍA	140
CABLES DE LA CABINA (GR)	142
ALAMBRADO DE COMUNICACION (GR)	150
CABLES DEL CONTROL ELECTRÓNICO (GR)	154
CABLES DEL MOTOR (GR)	156
CABLES DELANTEROS (GR)	162
CABLES DE LA MÁQUINA (GR)	166
CABLES POSTERIORES (GR)	170
CABLES DE CONTROL DE AMORTIGUACIÓN (GR)	172
CABLES DE LA DIRECCIÓN SECUNDARIA	174
TREN DE FUERZA	176
EJE FIJO (CONFIG)	176
EJE OSCILANTE (CONFIG)	176
FRENO Y PLANETARIOS (GR)	180
CAJA Y PIEZAS DE LOS PLANETARIOS	184
EMBRAGUE (GR)	188
CONTROL DE LA TRANSMISIÓN (GR)	194
TAPA DE TRANSMISION (GR)	196
DIFERENCIAL (GR)	198
DIFERENCIAL DE DESLIZAMIENTO LIMITADO (GR)	199
DIFERENCIAL NOSPIN (GR)	200
ACOPLAMIENTO FLEXIBLE - MANDO DE (GR)	202
MANDO DE BOMBA (GR)	203
TUBO DE LLENADO DE ACEITE DE LA TRANSMISIÓN (GR)	204
TUBERÍAS DEL FILTRO Y LA TRANSMISIÓN (GR)	206
FILTRO DE ACEITE (GR)	208
MIRILLA DE MEDIDOR (GR)	209
CORONA (GR)	210
ENGRANAJE DE TRANSFERENCIA DE SALIDA	214
CAJA DEL EJE OSCILANTE (GR)	216
CAJA DE EJE OSCILANTE (GR)	218
ENTRADA - SERVOTRANSMISIÓN (GR)	224
TUBERÍAS DEL ENFRIADOR DE ACEITE DEL EJE (GR)	226
TUBERIAS DEL ENFRIADOR DEL CONVERTIDOR DE PAR	232
EJE - GRUPO DE MONTAJE	234
MONTAJE DE ARO	235
TREN DE FUERZA (CONFIG)	235
BOMBA DE ENGRANAJES (GR)	236
LLANTA (CONFIG)	238
ARO DESMONTABLE (GR)	240
EJE DE MANDO (GR)	246
JUNTA DESLIZANTE (GR)	248
TOPE DE OSCILACIÓN DEL EJE	250
ARO Y RUEDA	250
TRANSMISION (CONFIG)	258
DERIVACIÓN - VÁLVULA DE (GR)	259
VÁLVULA DE ALIVIO (GR)	260
VÁLVULA DEL NEUMÁTICO (GR)	261
VÁLVULA DE CONTROL DE LA TRANSMISIÓN (GR)	262
BASTIDOR Y CAJA	264
CAJA DE BATERÍA	264
CONTRAPESO (GR)	265
GUARDABARROS DELANTERO (GR)	268
GUARDABARROS TRASERO (GR)	270
BASTIDOR DELANTERO (GR)	275
BASTIDOR DEL CARGADOR (GR)	276
BASTIDOR TRASERO (GR)	277
CÁRTER - PROTECTOR DEL (GR)	278
PROTECTOR DE LAS LUCES (GR)	280
PROTECTOR DE LAS TUBERÍAS (GR)	283
PROTECTOR DEL TREN DE FUERZA (GR)	287
ENGANCHE ARTICULADO (GR)	288
CAPO Y PROTECTOR (GR)	290
ESCALERILLA (GR)	292
TUBERÍAS DE ENGRASE (GR)	294
TIRANTE DE TRABA DEL BASTIDOR DE DIRECCIÓN (GR)	296
PANEL SUPERIOR (GR)	298
SISTEMA DE FRENOS	301
ACUMULADOR DEL FRENO (GR)	301
CONTROL DEL FRENO DE ESTACIONAMIENTO	302

CONTENIDO

Nombre	Página
FRENO DE SERVICIO - CONTROL (GR)	304
TUBERÍAS DEL FRENO DE SERVICIO (GR)	306
GRUPO DE BOMBA Y MONTAJE, FRENOS Y VENTILADOR HIDRÁULICO	310
BOMBA DE ENGRANAJES (GR)	312
SISTEMA DE DIRECCIÓN	316
CONTROL DE DIRECCIÓN (GR)	316
CILINDRO DE DIRECCIÓN Y MONTAJE (GR)	320
CILINDRO HIDRÁULICO (GRUPO)	322
CILINDRO DE DIRECCIÓN (GR)	324
TUBERÍAS DE LA DIRECCIÓN SECUNDARIA (GR)	326
TUBERÍAS DE DIRECCIÓN (GR)	330
TRABA DE CILINDRO DE DIRECCIÓN (GR)	334
DIRECCIÓN (CONFIG)	335
DIRECCIÓN SECUNDARIA (CONFIG)	335
COLUMNA DE DIRECCIÓN (GR)	337
SISTEMA HIDRÁULICO	338
BOMBA DE PALETAS-CARTUCHO (GR)	338
CONTROL DE AMORTIGUACIÓN (CONFIG)	339
CONTROL DE MANIJA (GR)	340
CONTROL HIDRÁULICO DE OPERACIÓN PILOTO (GR)	342
GRUPO DE REFRIGERANTE, HIDRÁULICO Y ACEITE DE TRANSMISIÓN	364
ENFRIADOR DEL ACEITE HIDRAULICO (GR)	366
CILINDRO DE ACOPLAMINETO Y MONTAJE (GR)	367
CILINDRO DEL ACOPLADOR (GR)	368
CILINDRO DE LEVANTAMIENTO (GR)	370
INCLINACIÓN HORIZONTAL - CILINDRO DE (GR)	372
FILTRO DE ACEITE (GR)	378
HIDRÁULICA (CONFIG)	380
CONFIGURACIÓN HIDRÁULICA DE 2 VÁLVULAS	383
VÁLVULA HIDRÁULICA DE 3 VÍAS (CONFIG)	384
VÁLVULA HIDRÁULICA DE 4 VÍAS (CONFIG)	386
POSICIONADOR DEL CUCHARÓN Y DESCONEXIÓN (GR)	388
ACOPLADOR - TUBERÍAS DE (GR)	392
TUBERÍAS DELANTERAS (GR)	400
TUBERÍAS HIDRÁULICAS (GR)	406
TUBERÍAS HIDRÁULICAS DEL VENTILADOR (GR)	408
CILINDRO DE LEVANTAMIENTO - TUBERÍAS DEL (GR)	416
TUBERÍAS CON SERVOMANDO (GR)	428
TUBERIAS DE CONTROL DE LA SUSPENSIÓN (GR)	440
TUBERÍAS DEL CILINDRO DE INCLINACIÓN (GR)	448
TRABA DE CONTROL HIDRÁULICO MANUAL (GR)	455
MOTOR Y MONTAJE DE VENTILADOR HIDRAULICO (GR)	456
MOTOR (CONFIG), VENTILADOR HIDRÁULICO	458
MOTOR DE ENGRANAJES (GR)	459
GRUPO DE PIVOTE, VÁLVULA PILOTO	466
GRUPO DE PLANCHA, VÁLVULA PILOTO	471
BOMBA DE DIRECCIÓN E IMPLEMENTOS Y MONTAJE (GR)	476
BOMBA DE PISTONES (GR)	478
BOMBA DE PISTONES Y PALETAS (GR)	480
GRUPO GIRATORIO DE BOMBA	481
TANQUE HIDRÁULICO Y MONTAJE (GR)	482
MONTAJE Y VALVULA DEL CONTROL PRINCIPAL (GR)	484
VALVULA DE SOLENOIDE Y MONTAJE (GR	489
BOLA DE VÁLVULA (GR)	490
VÁLVULA DE RETENCIÓN (GR)	491
VÁLVULA DE CONTROL (GR)	492
VÁLVULA DE CONTROL DE CARGA (GR)	496
VÁLVULA DEL CONTROL PRINCIPAL (GR)	498
VÁLVULA PILOTO (GR)	508
VALVULA PILOTO DE CARTUCHO (GR)	534
VÁLVULA COMPENSADORA DE FLUJO Y PRESIÓN (GR)	542
VÁLVULA REDUCTORA DE PRESIÓN (GR)	544
VÁLVULA DE ACOPLAMIENTO RÁPIDO (GR)	546
VÁLVULA DE ALIVIO (GR)	547
VÁLVULA DE CONTROL DE LA AMORTIGUACIÓN (GR)	556
VÁLVULA DE CORTE (GR)	558
VÁLVULA DE SOLENOIDE (GR)	561

CONTENIDO

Nombre	Página
IMPLEMENTOS	566
BRAZO DE LEVANTAMIENTO (CONJ)	566
SOPORTE DE TRANSPORTE (GR)	567
CONTROL DEL CUCHARÓN (GR)	568
CONTROL DE LA HERRAMIENTA DE TRABAJO (GR)	570
HERRAMIENTAS	573
GRUPO DE PUNTA Y ADAPTADOR	573
AGUILÓN TELESCÓPICO (GR)	574
CUCHARÓN DE USO GENERAL (CONJ)	575
CUCHARÓN PARA MATERIALES LIVIANOS	580
CUCHARÓN DE USO GENERAL (GR)	581
ESQUINA-COSTADO IZQUIERDO	583
ESQUINA DERECHA	583
ACOPLADOR RÁPIDO (CONFIG)	583
ACOPLADOR RÁPIDO (GR)	586
CUCHILLA (GR)	588
SEGMENTO DE CUCHILLA (GR)	588
HORQUILLA (GR)	589
HORQUILLA PARA TARIMAS (GR)	590
GRUPO DE PROTECTOR DEL CUCHARON	593
JUEGO DE ACOPLADOR RAPIDO	594
PUNTA LARGA (GR)	595
PUNTA CORTA (GR)	596
DIENTE LARGO (GR)	598
DIENTE DE UNA PIEZA (UNI-TOOTH) (GR)	599
PUESTO DEL OPERADOR	600
ACONDICIONADOR DE AIRE Y MONTAJE (GR)	600
ACONDICIONADOR DE AIRE (CONFIG)	601
ACONDICIONADOR DE AIRE (GR)	604
POSABRAZOS (GR)	607
CABINA (CONFIG)	610
SISTEMA ROPS DE CABINA CERRADA (CONFIG)	611
CABINA (GR)	612
TECHO ROPS ABIERTO (CONFIG)	614
TECHO ROPS ABIERTO (GR)	614
COMPRESOR DE REFRIGERANTE (GR)	616
CONDENSADOR DEL REFRIGERANTE Y MONTAJE (GR)	618
CONDENSADOR DE REFRIGERANTE (GR)	620
CONTROL DE MONITOR (GR)	621
TAPA DE LA CONSOLA (GR)	623
CONSOLA (GR)	624
DESCONGELADOR DE LA CABINA (GR)	625
PUERTA DE CABINA	626
CONDUCTO DE AIRE (GR)	636
EXTENSIÓN DEL RESPALDO (GR)	638
FILTRO DE AIRE DE LA CABINA (GR)	639
PROTECTOR DE LA VENTANA	640
CALEFACCIÓN Y MONTAJE DE LA CABINA (GR)	642
CALEFACCIÓN DE LA CABINA (CONFIG)	643
CALEFACCIÓN DE LA CABINA (GR)	644
CAJA DE LA SUSPENSIÓN DEL ASIENTO (GR)	646
INSTALACIÓN DE RADIO (GR)	649
REVESTIMIENTO DE LA CABINA (GR)	651
TUBERÍAS DE ACONDICIONADOR DE AIRE (GR)	656
TUBERÍAS DE LA CALEFACCIÓN (GR)	660
RETROVISOR (GR)	662
GRUPO DE MONTAJE DE LA CABINA	664
COMPARTIMIENTO DEL OPERADOR (CONFIG)	665
SOPORTE DEL RESPALDO (GR)	667
CUBIERTA INFERIOR DEL ASIENTO DEL OPERADOR (GR)	668
TABLERO DE INSTRUMENTOS (GR)	670
PEDAL DE FRENO (GR)	680
REGULADOR - PEDAL DEL (GR)	681
PLATAFORMA (CONFIG)	682
PLATAFORMA DE LA CABINA	683
CABINA ROPS CERRADA (GR)	684
ESTRUCTURA ROPS ABIERTA (GR)	686
PERSIANA PARA EL SOL (GR)	688
ASIENTO Y MONTAJE (GR)	689
CINTURÓN DE SEGURIDAD (GR)	693
ASIENTO (GR)	696
SUSPENSIÓN - ASIENTO CON (GR)	699
FALDON DE CABINA (GR)	704
SOPORTE DEL ASIENTO (GR)	706
ASIENTO CON SUSPENSIÓN (GR)	708
VISERA (GR)	712
LAVAPARABRISAS DE LA VENTANA (GR)	713
VENTANA DE LA PUERTA (GR)	715
LIMPIAPARABRISAS DE LA VENTANA (GR)	716
EQUIPO DE SERVICIO Y SUMINISTROS	718
CAJA DE HERRAMIENTAS (GR)	718
ETIQUETA DE ADVERTENCIA (GR)	719
CALCOMANÍAS Y PLACAS DE IDENTIFICACIÓN (GR)	721

CONTENIDO

Nombre	Página	Nombre	Página
INDICE DE NUMEROS DE PIEZA	B1		

ÍNDICE

Designação	Página
INFORMAÇÃO GERAL	A29
ALTERNATIVAS DE REPARO	A36
ADITIVOS SUPLEMENTARES DO LÍQUIDO ARREFECEDOR	A40
PEÇAS DE MANUTENÇÃO	A54
ÍNDICE	A90
MÁQUINA - ARRANJO	1
CHASSI	1
ARRANJO BÁSICO	2
ATERRO SANITÁRIO	3
MOTOR - ARRANJO	5
MOTOR PRIMÁRIO	5
GRUPO DE INSTALAÇÃO - MOTOR	6
MOTOR BÁSICO	7
EIXO-COMANDO DE VÁLVULA	7
TAMPA - MOTOR	8
TAMPA - MECANISMO DAS VÁLVULAS	10
VIRABREQUIM	12
BLOCO DO MOTOR	13
CABEÇOTE DO MOTOR	16
DRENO - ÓLEO DO MOTOR	18
FIXADORES - CABEÇOTE DO MOTOR	19
VOLANTE DO MOTOR	20
ENGRENAGENS DE DISTRIBUIÇÃO	21
CAIXA DO VOLANTE DO MOTOR	22
CAIXA DIANTEIRA	24
LEVANTAMENTO DO MOTOR	26
MONTAGEM - ALTERNADOR	27
MONTAGEM - MOTOR	28
MONTAGEM - MOTOR E TRANSMISSÃO	30
MONTAGEM - COMANDO DO VENTILADOR	32
CÁRTER DO ÓLEO DO MOTOR	34
PISTÃO E BIELA	36
BUJÃO DO BLOCO DO CILINDRO	37
BUJÃO DO MOTOR	39
POLIA DO VIRABREQUIM	40
BALANCIM	42
MECANISMO DAS VÁLVULAS	44
SISTEMA DE LUBRIFICAÇÃO	45
FILTRO - ÓLEO DO MOTOR	45
INDICADOR - NÍVEL DO ÓLEO (VARETA)	46
BOMBA DE ÓLEO - MOTOR	48
VÁLVULA PARA TIRAR AMOSTRAS DE FLUIDOS	50
SISTEMA DE ARREFECIMENTO	51
CONEXÃO - TUBO D'ÁGUA	51
ARREFECEDOR DE ÓLEO DO MOTOR E BASE DO FILTRO	52
VENTILADOR DE SUCÇÃO	54
PROTETOR DO VENTILADOR	56
TUBOS - ÁGUA	58
BOMBA DE ÁGUA	60
RADIADOR	62
SISTEMA DA ADMISSÃO DE AR E DE ESCAPE	67
PURIFICADOR DE AR	67
COTOVELO DE ADMISSÃO DE AR	71
EXTENSÃO DO TUBO DE ESCAPE	72
TUBOS - AR	73
SILENCIADOR	74
PRÉ-PURIFICADOR	75
TURBOALIMENTADOR	76
SISTEMA DE COMBUSTÍVEL	78
FILTRO - COMBUSTÍVEL	78
TUBOS - COMBUSTÍVEL	80
TUBOS - FILTRO DO COMBUSTÍVEL	84
BOMBA DE INJEÇÃO DO COMBUSTÍVEL	86
BOMBA DE TRANSFERÊNCIA DO COMBUSTÍVEL	90
SEPARADOR DE ÁGUA	93
TANQUE DE COMBUSTÍVEL E MONTAGEM	94
SISTEMA ELÉTRICO E DE PARTIDA	95
ALARME	95
ALTERNADOR DE CORRENTE	96
BATERIA	103
CONTROLE ELETRÔNICO - MOTOR	104
CONTROLE - DESENGATE AUTOMÁTICO DE LEVANTAMENTO	105
CONTROLE - POSIÇÃO	106
CONTROLE - NÃO PROGRAMADO	107
CONVERSOR ELÉTRICO	108
SISTEMA ELETRÔNICO - MÁQUINA	110
AQUECEDOR DA ÁGUA DO MOTOR	111
LÂMPADA - FAROL	113
LUZ TRASEIRA E DE FREIO	114
LUZ GIRATÓRIA DE ALARME	115
ILUMINAÇÃO - AUXILIAR	116
SISTEMA DE ILUMINAÇÃO - FARÓIS	118
SISTEMA DE ILUMINAÇÃO - FARÓIS E SINAL	122

ÍNDICE

Designação	Página
SISTEMA DE ILUMINAÇÃO - ADVERTÊNCIA	124
TUBOS - AUXILIAR DE PARTIDA A ÉTER - MOTOR	126
EMISSOR - POSIÇÃO	127
SENSOR - PRESSÃO	128
AUXILIAR DE PARTIDA	129
MOTOR ELÉTRICO DE PARTIDA	130
CHAVE GERAL	134
INTERRUPTOR - MAGNÉTICO	135
INTERRUPTOR - LIMPADOR DO PÁRA-BRISA	137
ALARME DE MARCHA À RÉ	138
CABOS/FIOS ELÉTRICOS - BATERIA	140
CABOS/FIOS ELÉTRICOS - CABINE	142
CABO/FIOS ELÉTRICOS-COMUNICAÇÃO	150
CABOS/FIOS ELÉTRICOS - CONTROLE ELETRÔNICO	154
CABOS/FIOS ELÉTRICOS - MOTOR	156
CABOS/FIOS ELÉTRICOS - DIANTEIROS	162
CABOS/FIOS ELÉTRICOS - MÁQUINA	166
CABOS/FIOS ELÉTRICOS - TRASEIROS	170
CABOS/FIOS ELÉTRICOS - ABSORÇÃO DE IMPACTOS	172
CABOS/FIOS ELÉTRICOS - DIREÇÃO SECUNDÁRIA	174
TREM DE FORÇA	176
EIXO FIXO	176
EIXO OSCILANTE	176
FREIOS E ENGRENAGENS PLANETARIAS	180
CARCAÇA DAS ENGRENAGENS PLANETÁRIAS E COMPONENTES	184
EMBREAGEM	188
CONTROLE DA TRANSMISSÃO	194
TAMPA - TRANSMISSÃO	196
DIFERENCIAL	198
DIFERENCIAL - DESLIZAMENTO LIMITADO	199
DIFERENCIAL - NOSPIN	200
COMANDO - ACOPLAMENTO FLEXÍVEL	202
COMANDO DA BOMBA	203
BOCAL DE ENCHIMENTO DE ÓLEO DO TREM DE FORÇA	204
FILTRO E TUBOS - TRANSMISSÃO	206
FILTRO - ÓLEO	208
VISOR DE NÍVEL	209
ENGRENAGEM - COROA	210
ENGRENAGENS DE SAÍDA DE TRANSFERÊNCIA	214
CAIXA - EIXO FIXO	216
CAIXA - EIXO OSCILANTE	218
ENTRADA - TRANSMISSÃO	224
TUBOS - ARREFECEDOR DE ÓLEO DO EIXO	226
TUBOS - ARREFECEDOR DO CONVERSOR DE TORQUE	232
MONTAGEM DO EIXO	234
MONTAGEM - ARO	235
TREM DE FORÇA	235
BOMBA DE ENGRENAGENS	236
ARO	238
ARO DESMONTÁVEL	240
EIXO DE TRANSMISSÃO	246
JUNTA CORREDIÇA	248
BATENTE DE OSCILAÇÃO DO EIXO	250
PNEU E ARO	250
TRANSMISSÃO	258
VÁLVULA DE DERIVAÇÃO	259
VÁLVULA DE ALÍVIO	260
VÁLVULA DE PNEU	261
VÁLVULA DE CONTROLE - TRANSMISSÃO	262
CHASSI E CARROCERIA	264
CAIXA - BATERIA	264
CONTRAPESO	265
PÁRA-LAMA DIANTEIRO	268
PÁRA-LAMA TRASEIRO	270
CHASSI DIANTEIRO	275
CHASSI TRASEIRO	277
PROTETOR - CÁRTER DO ÓLEO DO MOTOR	278
PROTETOR - ILUMINAÇÃO	280
PROTETOR - TUBOS	283
PROTETOR - TREM DE FORÇA	287
ENGATE - ARTICULAÇÃO	288
CAPÔ E PROTETOR	290
ESCADA	292
TUBOS - GRAXA	294
ELO - TRAVA DA ARMAÇÃO DA DIREÇÃO	296
PAINEL - SUPERIOR	298
SISTEMA DE FREIO	301
ACUMULADOR - FREIO	301
CONTROLE DO FREIO DE ESTACIONAMENTO	302
CONTROLE DO FREIO DE SERVIÇO	304
TUBOS - FREIO DE SERVIÇO	306
BOMBA E MONTAGEM - FREIO E VENTILADOR HIDRÁULICO	310
BOMBA DE ENGRENAGENS	312

ÍNDICE

Designação	Página
SISTEMA DE DIREÇÃO	316
CONTROLE DE DIREÇÃO	316
CILINDRO DE DIREÇÃO E MONTAGEM	320
CILINDRO HIDRÁULICO	322
CILINDRO DA DIREÇÃO	324
TUBOS - DIREÇÃO SECUNDÁRIA	326
TUBOS - DIREÇÃO	330
TRAVA - CILINDRO DA DIREÇÃO	334
DIREÇÃO	335
DIREÇÃO SECUNDÁRIA	335
COLUNA DA DIREÇÃO	337
SISTEMA HIDRÁULICO	338
CARTUCHO - BOMBA DE PALHETAS	338
SISTEMA DE ABSORÇÃO DE IMPACTOS	339
CONTROLE-CABO	340
CONTROLE HIDRÁULICO DE OPERAÇÃO PILOTO	342
ARREFECEDOR - ÓLEO HIDRÁULICO E DA TRANSMISSÃO	364
ARREFECEDOR DO ÓLEO HIDRÁULICO	366
CILINDRO DO ACOPLADOR E MONTAGEM	367
CILINDRO - ACOPLADOR	368
CILINDRO DE LEVANTAMENTO	370
CILINDRO DE INCLINAÇÃO	372
FILTRO - ÓLEO	378
COMANDO HIDRÁULICO	380
ARRANJO HIDRÁULICO - 2 VÁLVULAS	383
ARRANJO HIDRÁULICO - 3 VÁLVULAS	384
ARRANJO HIDRÁULICO - 4 VÁLVULAS	386
DESENGATE E POSICIONADOR DA CAÇAMBA	388
TUBOS - ACOPLADOR	392
TUBOS - DIANTEIROS	400
TUBOS - ÓLEO HIDRÁULICO	406
TUBOS - VENTILADOR HIDRÁULICOS	408
TUBOS - CILINDRO DE LEVANTAMENTO	416
TUBOS - CIRCUITO PILOTO	428
TUBOS - ABSORÇÃO DE IMPACTOS	440
TUBOS - CILINDRO DE INCLINAÇÃO	448
TRAVA - CONTROLE MANUAL HIDRÁULICO	455
MOTOR E MONTAGEM - VENTILADOR HIDRÁULICO	456
MOTOR - VENTILADOR HIDRÁULICO	458
MOTOR - ENGRENAGENS	459
ARTICULAÇÃO DA VÁLVULA PILOTO	466
PLACA DA VÁLVULA PILOTO	471
BOMBA DE DIREÇÃO E ACESSÓRIO E MONTAGEM	476
BOMBA DE PISTÃO	478
BOMBA DE PISTÃO E PALHETA	480
GRUPO ROTATIVO DA BOMBA	481
TANQUE DE ÓLEO HIDRÁULICO E MONTAGEM	482
VÁLVULA DO CONTROLE PRINCIPAL E MONTAGEM	484
VALVULA DO SOLENOIDE E MONTAGEM	489
VÁLVULA ESFÉRICA	490
VÁLVULA DE RETENÇÃO	491
VÁLVULA DE CONTROLE	492
VÁLVULA - CONTROLE DE CARGA	496
VÁLVULA - CONTROLE PRINCIPAL	498
VÁLVULA DE CONTROLE PILOTO	508
VÁLVULA DO CARTUCHO PILOTO	534
VÁLVULA DE CONTROLE - PRESSÃO E COMPENSAÇÃO DE FLUXO	542
VÁLVULA DE REDUÇÃO DE PRESSÃO	544
VÁLVULA DE ACOPLAMENTO RÁPIDO	546
VÁLVULA DE ALÍVIO	547
VÁLVULA DE CONTROLE DE ABSORÇÃO DE IMPACTOS	556
VÁLVULA DE PARADA	558
VÁLVULA SOLENÓIDE	561
ACESSÓRIOS	566
BRAÇO DE LEVANTAMENTO	566
SUPORTE PARA TRANSPORTE	567
CONTROLE DA CAÇAMBA	568
CONTROLE DA FERRAMENTA DE TRABALHO	570
FERRAMENTAS DE TRABALHO	573
ADAPTADOR DA PONTA	573
BRAÇO - MANIPULADOR DE MATERIAIS	574
CAÇAMBA PARA APLICAÇÃO GERAL	575
CACAMBA PARA MATERIAL LEVE	580
CAÇAMBA PARA APLICAÇÃO GERAL	581
CANTO - LADO ESQUERDO	583
CANTO - LADO DIREITO	583
ACOPLADOR RÁPIDO	583
BORDA CORTANTE	588
BORDA SEGMENTADA DA CAÇAMBA	588
GARFO	589
GARFO DE PALETAS	590
PROTETOR - CAÇAMBA	593
JOGO DE ACOPLAMENTO RÁPIDO	594

ÍNDICE

Designação	Página
PONTA LONGA	595
PONTA CURTA	596
DENTE LONGO	598
UNI-DENTE	599
ESTAÇÃO DO OPERADOR	600
CONDICIONADOR DE AR E MONTAGEM	600
CONDICIONADOR DE AR	601
BRAÇO DO ASSENTO	607
CABINE	610
CABINE - ESTRUTURA ROPS COBERTA	611
CABINE	612
TOLDO - ROPS ABERTA	614
TOLDO - ESTRUTURA ROPS ABERTA	614
COMPRESSOR DE REFRIGERANTE	616
CONDENSADOR DO REFRIGERANTE E MONTAGEM	618
CONDENSADOR DE REFRIGERANTE	620
CONTROLE DO PAINEL MONITOR	621
TAMPA - CONSOLO	623
PAINEL DE INSTRUMENTOS	624
DESEMBAÇADOR DA CABINE	625
PORTA DA CABINE	626
DUCTO DE AR	636
EXTENSÃO - ENCOSTO	638
FILTRO - AR DA CABINE	639
PROTETOR - JANELA	640
AQUECEDOR DA CABINE E MONTAGEM	642
AQUECEDOR DA CABINE	643
CAIXA - SUSPENSÃO DO ASSENTO	646
INSTALAÇÃO DO RÁDIO	649
REVESTIMENTO DA CABINE	651
TUBOS - AR CONDICIONADO	656
TUBOS - AQUECEDOR	660
ESPELHO RETROVISOR	662
MONTAGEM - CABINE	664
CABINE	665
FUNDO - ENCOSTO	667
ASSENTO - FUNDO	668
PAINEL DE INSTRUMENTOS	670
PEDAL DO FREIO	680
PEDAL DO GOVERNADOR	681
PISO	682
PLATAFORMA DO OPERADOR	683
ROPS FECHADA	684
ROPS ABERTA	686
TELA PÁRA-SOL	688
ASSENTO E MONTAGEM	689
CINTO DE SEGURANÇA	693
ASSENTO	696
ASSENTO COM SUSPENSÃO	699
PAINEL PROTETOR - CABINE	704
SUPORTE - ASSENTO	706
SUSPENSÃO - ASSENTO	708
PÁRA-SOL DA CABINE	712
LAVADOR DO VIDRO	713
VIDRO DA PORTA	715
LIMPADOR DO VIDRO	716
EQUIPAMENTOS DE SERVIÇO E SUPRIMENTOS	718
CAIXA DE FERRAMENTAS	718
DECALQUE	719
PLACA E DECALQUE	721
ÍNDICE DE NÚMERO DE PEÇA	B1

GENERAL INFORMATION

1. MACHINE IDENTIFICATION

Caterpillar machines are identified by Product Identification Numbers (PIN). Some components included in a machine may be identified by Serial Numbers (S/N). Typical components that will be serialized include engines, transmissions, bulldozers, and rippers. The machine and engine are further identified by arrangement numbers and in some cases modification numbers. These numbers are shown on the product identification plate(s) and on the master plate in the operator's compartment.

Caterpillar dealers need all of these numbers to determine accurate parts identification.

SIS ***New Feature***

Effective First Quarter 2001 the Caterpillar Product Identification Number (PIN) will change from 8 to 17 characters. In an effort to provide uniform equipment identification, Caterpillar and other construction equipment manufacturers are moving to comply with the latest version of the product identification numbering standard. Non-road machine PINs are defined by ISO 10261. The new PIN format will apply to all Caterpillar machines and generator sets. The PIN plates and frame marking will display the 17 character PIN. The new format will look like the following:

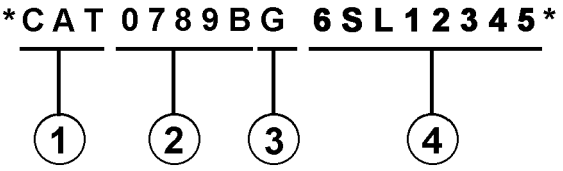

Where:

1. Caterpillar's World Manufacturing Code (characters 1-3)

2. Machine Descriptor (characters 4-8)

3. Check Character (character 9)

4. Machine Indicator Section (MIS) or Product Sequence Number (characters 10-17). These were previously referred to as the Serial Number.

Machines and generator sets produced before First Quarter 2001 will maintain their 8 character PIN format.

Components such as engines, transmissions, axles, etc. and work tools will continue to use an 8 character Serial Number (S/N).

2. ORDERING PARTS

⚠ WARNING

When replacement parts are required for this product Caterpillar recommends using Caterpillar replacement parts or parts with equivalent specifications including, but not limited to, physical dimensions, type, strength and material.

Failure to heed this warning can lead to premature failures, product damage, personal injury or death.

Quality Caterpillar replacement parts are available from Caterpillar dealers throughout the world. Their parts inventories are up to date and include all parts normally required to protect your investment in Caterpillar machines. Dealers may offer repair kits or remanufactured parts to allow selection of the most effective repair alternative for a particular situation. When ordering parts, your order should specify the quantity, part number, part name, and the serial number/product identification number of the machine for which the parts are needed.

3. PARTS MANUAL ORGANIZATION

Product information in this manual is presented as "information elements" that represent all of the components for the specific model. Engine Arrangement and Seat Group are examples of information elements. The information elements are organized alphabetically by part name and secondarily by part number within each major section of the manual.

4. TABLE OF CONTENTS

SIS ***New Feature***

A table of contents (TOC) is found at the beginning of the manual. The TOC lists each section of the manual with a complete list of all information elements organized as they appear in the manual. Page numbers are provided for quick reference to detailed parts identification illustrations and serviceable consist lists.

5. MAINTENANCE PARTS INDEX

The Maintenance Parts Index, located near the beginning of the manual, references most frequently used maintenance part numbers, providing description, quantity, usage and page number. This information is organized alphabetically by part description.

6. INDEX

The index located near the front of the manual is an alphabetical listing of all information elements included in the manual. Page numbers are provided for quick reference to detailed parts identification illustrations and serviceable consist lists.

7. PART NUMBER INDEX

A numerical index listing all part numbers and the corresponding page number(s) appears at the back of the manual.

8. CAPTIONS

Captions located at the top of each page of an information element identify the part number and part name along with additional descriptive information. PIN and S/N information found in each caption should be used to select correct information for a specific machine. Field replacement options, identification of optional attachment components, and where used ("part of") information is also provided.

SIS ***New Feature***

The first line of a caption is shown in larger type font to indicate the beginning of an information element. Captions for additional pages that may be required to illustrate an information element will be shown in standard type font and will include the term *(contd.)* .

9. NON-SERVICED PARTS

SIS ***New Feature***

In some instances it is necessary to display non-serviced parts that are a link to a lower level serviceable consist lists. These non-serviced part numbers are shown in *italic* type indicating that they are not available.

10. PARTS LIST REFERENCE NUMBERS

SIS ***New Feature***

Numbers shown in the Ref No column correspond to numbers used in the associated graphic(s). An alphabetic suffix may be added to a reference number to identify lower level consist items. Numbers shown in the Graphic Ref column refer to the graphic number identifier displayed in the lower left corner of each illustration. The Graphic Ref number may be used in combination with the item Ref No to determine the correct part number. There may be intentional omission of a Ref No in a consist list as information is updated to reflect the latest serviceable part numbers.

11. INDENTED PART NAMES

When a part name is indented in a parts list, it is part of (included in) the group or assembly under which it is indented.

12. ILLUSTRATION REFERENCE LETTERS

When necessary, illustrations contain reference letters (A, B, C etc.) that are intended to track lines and harnesses from one point to another. They are also used to show where to reconnect illustrations that have been separated.

13. ABBREVIATIONS AND SYMBOLS

O.D. – Outside Diameter
I.D. – Inside Diameter
A – Not Part Of This Group
B – Use As Required
C – Change From Previous Type
D – Order By The Meter
E – Order By The Centimeter
F – Not Shown
G – Order By The Inch
I – See Hose Fabrication Guide
M – Metric Part
R – Remfg Part May Be Available
Y – Separate Illustration
Z – Not Serviced Separately

NOTE:

Continuing improvement and advancement of product design may cause changes to your machine which may not be included in this publication. Whenever a question arises regarding your Caterpillar product or this publication, please consult your Caterpillar dealer for the latest available information.

GENERAL INFORMATION

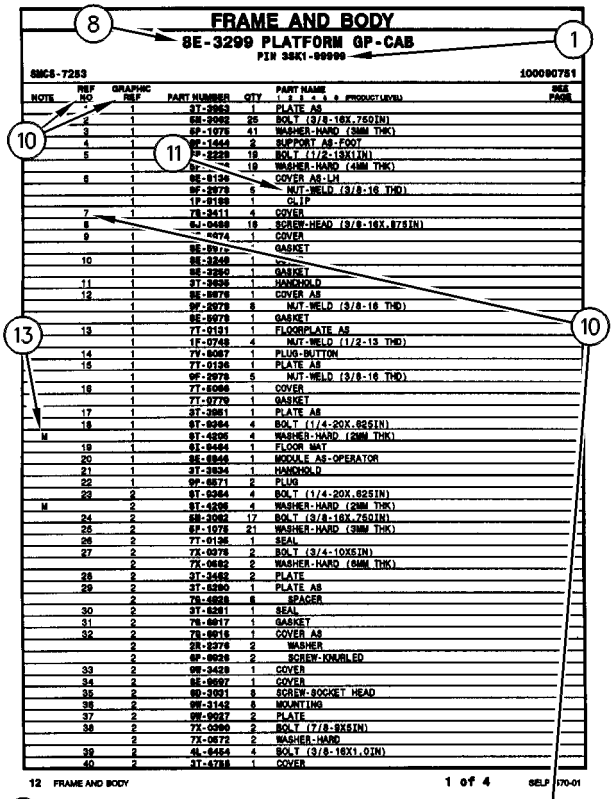

FRAME AND BODY

8E-3299 PLATFORM GP-CAB

PIN 38K1-99999

SMCS-7283 100090751

NOTE	REF NO	GRAPHIC REF	PART NUMBER	QTY	PART NAME 1 2 3 4 5 6 (PRODUCT LEVEL)	SEE PAGE
	1	1	3T-3953	1	PLATE AS	
	2	1	6B-3062	25	BOLT (3/8-16X.750IN)	
	3	1	6P-1075	41	WASHER-HARD (9MM THK)	
	4	1	9F-1444	2	SUPPORT AS-FOOT	
	5	1	7P-2229	19	BOLT (1/2-13X1IN)	
		1	6P-[illegible]	19	WASHER-HARD (4MM THK)	
	6	1	8E-8134	1	COVER AS-LH	
		1	9F-2979	5	NUT-WELD (3/8-16 THD)	
		1	1P-8188	1	CLIP	
	7	1	7S-2411	4	COVER	
	8		6J-0468	19	SCREW-HEAD (3/8-16X.875IN)	
	9	1	[illegible]-4674	1	COVER	
		1	8E-8972	[illegible]	GASKET	
	10	1	8E-3248	1	[illegible]	
		1	8E-3250	1	GASKET	
	11	1	3T-3939	1	HANDHOLD	
	12	1	8E-8978	1	COVER AS	
		1	9F-2978	8	NUT-WELD (3/8-16 THD)	
		1	8E-8978	1	GASKET	
	13	1	7T-0131	1	FLOORPLATE AS	
		1	1F-0748	4	NUT-WELD (1/2-13 THD)	
	14	1	7V-8087	1	PLUG-BUTTON	
	15	1	7T-0136	1	PLATE AS	
		1	9F-2979	5	NUT-WELD (3/8-16 THD)	
	16	1	7T-8098	1	COVER	
		1	7T-0779	1	GASKET	
	17	1	3T-3951	1	PLATE AS	
	18	1	6T-8364	4	BOLT (1/4-20X.625IN)	
M		1	6T-4205	4	WASHER-HARD (2MM THK)	
	19	1	6J-8464	1	FLOOR MAT	
	20	1	8E-8946	1	MODULE AS-OPERATOR	
	21	1	3T-3934	1	HANDHOLD	
	22	1	9P-8871	2	PLUG	
	23	2	6T-8364	4	BOLT (1/4-20X.625IN)	
M		2	6T-4205	4	WASHER-HARD (2MM THK)	
	24	2	6B-3062	17	BOLT (3/8-16X.750IN)	
	26	2	6P-1075	21	WASHER-HARD (9MM THK)	
	26	2	7T-0136	1	SEAL	
	27	2	7X-0378	2	BOLT (3/4-10X5IN)	
		2	7X-0682	2	WASHER-HARD (6MM THK)	
	28	2	3T-3482	2	PLATE	
	29	2	3T-8290	1	PLATE AS	
		2	7S-4838	6	SPACER	
	30	2	3T-8281	1	SEAL	
	31	2	7S-8817	1	GASKET	
	32	2	7S-8916	1	COVER AS	
		2	2R-2376	2	WASHER	
		2	6P-8826	2	SCREW-KNURLED	
	33	2	9W-3429	1	COVER	
	34	2	8E-8937	1	COVER	
	35	2	9D-3931	8	SCREW-SOCKET HEAD	
	36	2	9W-3142	8	MOUNTING	
	37	2	9W-9027	2	PLATE	
	38	2	7X-0360	2	BOLT (7/8-9X6IN)	
		2	7X-0672	2	WASHER-HARD	
	39	2	6L-4454	4	BOLT (3/8-16X1.0IN)	
	40	2	3T-4788	1	COVER	

12 FRAME AND BODY 1 of 4 SELP4570-01

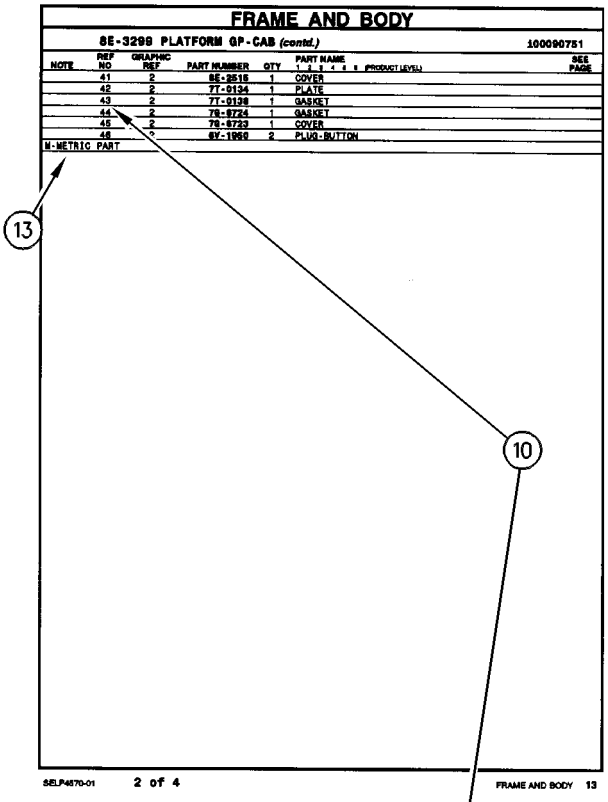

FRAME AND BODY

8E-3299 PLATFORM GP-CAB (contd.) 100090751

NOTE	REF NO	GRAPHIC REF	PART NUMBER	QTY	PART NAME 1 2 3 4 5 6 (PRODUCT LEVEL)	SEE PAGE
	41	2	8E-2515	1	COVER	
	42	2	7T-0134	1	PLATE	
	43	2	7T-0138	1	GASKET	
	44	2	7S-8724	1	GASKET	
	45	2	7S-8723	1	COVER	
	46	[illegible]	6V-1958	2	PLUG-BUTTON	
M-METRIC PART						

SELP4570-01 2 of 4 FRAME AND BODY 13

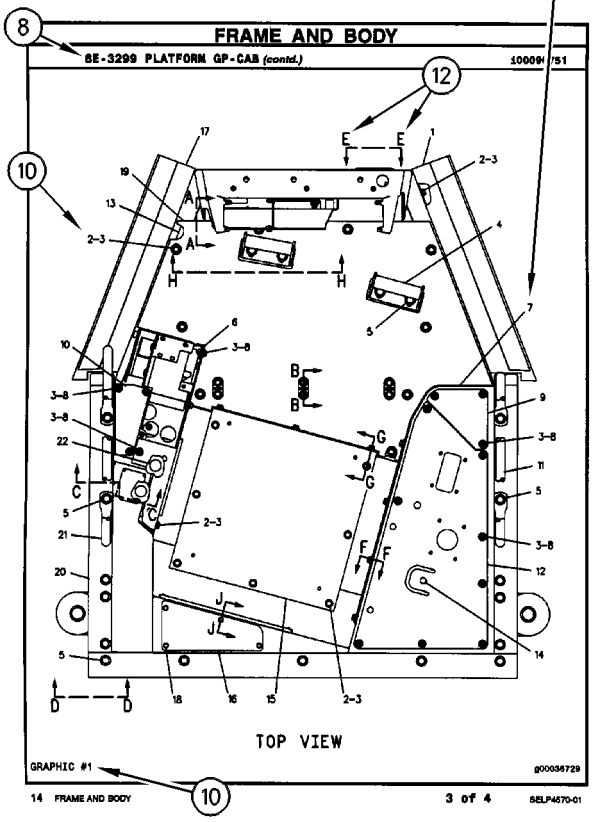

FRAME AND BODY

8E-3299 PLATFORM GP-CAB (contd.) 100090751

TOP VIEW

GRAPHIC #1 g00036729

14 FRAME AND BODY 3 of 4 SELP4570-01

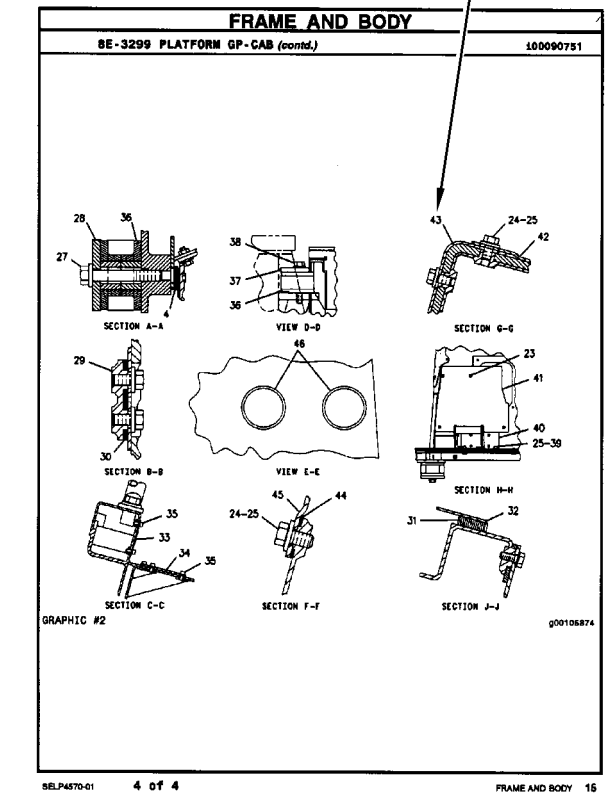

FRAME AND BODY

8E-3299 PLATFORM GP-CAB (contd.) 100090751

SECTION A-A VIEW D-D SECTION G-G

SECTION B-B VIEW E-E SECTION H-H

SECTION C-C SECTION F-F SECTION J-J

GRAPHIC #2 g00105874

SELP4570-01 4 of 4 FRAME AND BODY 16

1. IDENTIFICATION DE LA MACHINE

Toutes les machines Caterpillar portent un numéro d'identification (PIN). Certains composants des machines peuvent porter des numéros de série (S/N). En général, parmi les composants qui portent des numéros de série il y a les moteurs, les transmissions, les bulldozers et les rippers. En plus, la machine et le moteur peuvent recevoir des numéros de version, et dans certains cas, de modification. Ces numéros figurent sur les plaques de numéro de série et sur la plaque signalétique principale qui se trouve dans le poste de conduite.

Les concessionnaires Caterpillar doivent connaître tous ces numéros pour identifier correctement les pièces.

SIS *Nouvelle Caractéristique*

À partir du premier trimestre 2001, le numéro d'identification produit (PIN) Caterpillar passe de 8 à 17 caractères. Afin de permettre une identification uniforme des matériels, Caterpillar et d'autres constructeurs de machines de travaux publics s'efforcent de se conformer à la norme la plus récente portant sur les numéros d'identification des produits. Les numéros d'identification (PIN) de machines de chantier sont définis par la norme ISO 10261. Le nouveau format du numéro d'identification est valable pour toutes les machines et tous les groupes électrogènes Caterpillar. Le numéro d'identification produit (PIN) figurant sur la plaque et sur le châssis se composera de 17 caractères. Le nouveau format ressemblera à ceci:

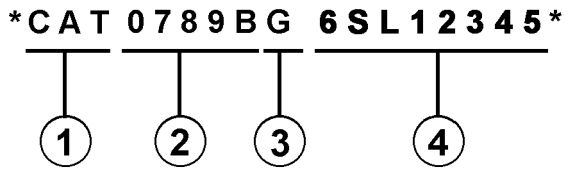

Il se décomposera de la façon suivante:

1. Code international de fabrication de Caterpillar (caractères 1 à 3)

2. Descriptif de la machine (caractères 4 à 8)

3. Contrôle (caractère 9)

4. Indicateur machine (MIS) ou numéro de séquence produit (caractères 10 à 17). Ceux-ci étaient auparavant désignés sous le terme de numéro de série.

Les machines et les groupes électrogènes construits avant le premier trimestre 2001 garderont le format à 8 caractères du numéro d'identification produit (PIN).

Les organes tels que les moteurs, les boîtes de vitesses, les essieux, etc., continueront d'être désignés par un numéro de série (S/N) à 8 caractères.

2. COMMANDE DE PIÈCES

⚠ DANGER

Lorsqu'il faut remplacer des pièces de rechange pour ce produit Caterpillar recommande d'utiliser les pièces de rechange Caterpillar ou les pièces qui ont des spécifications équivalentes dont les dimensions physiques, le type, la force et le matériau. Ces équivalences ne se limitent pas à l'énoncé précédent.

L'inobservation de cette mise en garde peut entraîner des défaillances prématurées, des dommages au produit, des blessures ou même la mort.

Les concessionnaires Caterpillar fournissent dans le monde entier des pièces de rechange de qualité Caterpillar. Leurs stocks de pièces sont constamment réapprovisionnés et comptent toutes les pièces nécessaires pour assurer la bonne marche de vos machines Caterpillar. Certains concessionnaires proposent également des kits de réparation ou des pièces rénovées, ce qui permet de choisir la solution la plus économique dans une situation donnée. Lors des commandes de pièces, mentionner la quantité, le numéro et la désignation des pièces ainsi que le numéro de série ou le numéro d'identification (PIN) de la machine pour laquelle ces pièces sont requises.

3. ORGANISATION DU CATALOGUE DE PIÈCES

Les renseignements sur les produits sont présentés sous forme de "Information element" (élément d'information) représentant tous les composants d'un modèle donné. "Engine Arrangement" (version de moteur) et "Seat Group" (assemblage de siège)" sont des exemples d'éléments d'information. Les éléments d'information sont classés par ordre alphabétique par la désignation standard des pièces et par numéros de pièces dans chaque partie importante du manuel.

4. TABLE DES MATIÈRES

Nouvelle Caractéristique

La table des matières se trouve au début du manuel. La table des matières fournit la liste de tous les chapitres du manuel avec une liste complète de tous les éléments d'information classés par ordre d'apparition dans le manuel. Les numéros de page sont fournis afin que l'utilisateur puisse trouver rapidement les illustrations détaillées concernant l'identification des pièces et les listes des pièces d'entretien.

5. INDEX DES PIÈCES D'ENTRETIEN

La rubrique "Index des pièces d'entretien" qui se trouve au début du manuel renvoie aux pièces d'entretien les plus fréquemment utilisées en précisant la désignation, la quantité, là où la pièce est utilisée et le numéro de page. Ces pièces sont classés par ordre alphabétique.

6. INDEX

L'index qui se trouve vers le début du manuel est une liste alphabétique de tous les éléments d'information du manuel. Les numéros de page sont fournis afin que l'utilisateur puisse trouver rapidement les illustrations détaillées concernant l'identification des pièces et les listes des pièces d'entretien.

7. INDEX DES NUMÉROS DE PIÈCES

Une liste numérique de tous les numéros de pièces et des pages correspondantes se trouve à la fin du manuel.

8. LÉGENDES

Les légendes qui se trouvent en haut de chaque page de chaque élément d'information fournissent le numéro de pièce, la désignation ainsi que des renseignements supplémentaires sur les pièces. Les renseignements concernant les numéros de série (S/N) qui se trouvent dans chaque légende doivent être utilisés pour sélectionner les informations correctes pour un moteur donné. Les informations concernant les options de remplacement sur le chantier, l'identification des composants des équipements offerts en option et les lieux d'application sont aussi fournies.

Nouvelle Caractéristique

Les lettres de la première ligne d'une légende sont présentées en police plus grande afin d'indiquer le début d'une unité d'information. Les légendes qui pourraient être requises pour des pages supplémentaires afin d'illustrer une unité d'information seront présentées en police standard et comprendront le terme (à suivre).

9. PIÈCES NON FOURNIES

Nouvelle Caractéristique

Dans certains cas, il est nécessaire d'indiquer les pièces non fournies qui sont en aval de la liste des pièces d'entretien. Les numéros des pièces non fournies dans la liste des pièces et les légendes seront en italique pour signaler qu'ils ne sont pas disponibles.

10. NUMÉROS DE RÉFÉRENCE DE LA LISTE DES PIÈCES

Nouvelle Caractéristique

Les numéros indiqués dans la colonne des numéros de références correspondent aux numéros utilisés dans les illustrations auxquelles ils sont associés. Un suffixe alphabétique peut être ajouté à un numéro de référence pour identifier la liste des articles en aval. Les numéros indiqués dans la colonne de référence de l'illustration renvoient à l'identification du numéro affiché dans le coin inférieur gauche de chaque illustration. Le numéro de référence de l'illustration pourrait être utilisé avec le numéro de référence de l'article pour déterminer le numéro de pièce correct. Il peut y avoir une omission intentionnelle d'un numéro de référence dans une liste de pièces suite à la mise à jour des informations en vue de refléter les numéros de pièces les plus récentes.

11. DÉSIGNATIONS DE PIÈCES EN RETRAIT

Lorsqu'une désignation de pièce est en retrait, cela veut dire que l'article en regard fait partie de l'ensemble sous lequel il figure.

12. LETTRES DE RÉFÉRENCE DES ILLUSTRATIONS

Quand cela est nécessaire, les illustrations comportent des lettres de référence (A, B, C, etc.) pour montrer le trajet des canalisations et faisceaux de câbles d'un point à l'autre. Elles sont utilisées également pour indiquer où relier les illustrations séparées auparavant.

13. ABRÉVIATIONS ET SYMBOLES

O.D. – Diamètre extérieur
I.D. – Diamètre intérieur
A – Ne fait pas partie de ce groupe
B – Utiliser selon besoin
C – Modification
D – Commander par mètre
E – Commander par centimètre
F – Non représenté
G – Commander par pouce
I – Voir "Hose Fabrication Guide"
M – Pièce métrique
R – Pièce rénovée éventuellement disponible
Y – Illustration séparée
Z – Non fourni séparément

NOTA:

En raison du progrès technique et des améliorations continuelles apportées au matériel, votre machine comporte peut-être des modifications qui n'apparaissent pas dans la présente publication. En cas de doute sur un détail de votre machine Caterpillar ou sur le texte de la présente publication, adressez-vous à votre concessionnaire Caterpillar.

FRAME AND BODY

8E-3299 PLATFORM GP-CAB

PIN 38K1-99999

SMCS-7283 — 100090751

NOTE	REF NO	GRAPHIC REF	PART NUMBER	QTY	PART NAME (1 2 3 4 5 6 PRODUCT LEVEL)	SEE PAGE
	1	1	3T-3953	1	PLATE AS	
	2	1	6B-3062	25	BOLT (3/8-16X.750IN)	
	3	1	6P-1075	41	WASHER-HARD (9MM THK)	
	4	1	9F-1444	2	SUPPORT AS-FOOT	
	5	1	7P-2229	19	BOLT (1/2-13X1IN)	
		1	6P-[illegible]	19	WASHER-HARD (4MM THK)	
	6	1	8E-8194	1	COVER AS-LH	
		1	9F-2979	5	NUT-WELD (3/8-16 THD)	
		1	1P-8199	1	CLIP	
	7	1	7S-3411	4	COVER	
	8		6J-0468	19	SCREW-HEAD (3/8-16X.875IN)	
	9	1	[illegible]-4674	1	COVER	
		1	8E-8972	1	GASKET	
	10	1	8E-3248	1	[illegible]	
		1	8E-3250	1	GASKET	
	11	1	3T-3939	1	HANDHOLD	
	12	1	8E-8978	1	COVER AS	
		1	9F-2978	8	NUT-WELD (3/8-16 THD)	
		1	8E-8979	1	GASKET	
	13	1	7T-0131	1	FLOORPLATE AS	
		1	1F-0748	4	NUT-WELD (1/2-13 THD)	
	14	1	7Y-8087	1	PLUG-BUTTON	
	15	1	7T-0136	1	PLATE AS	
		1	9F-2979	5	NUT-WELD (3/8-16 THD)	
	16	1	7T-8098	1	COVER	
		1	7T-0779	1	GASKET	
	17	1	3T-3951	1	PLATE AS	
	18	1	6T-8364	4	BOLT (1/4-20X.625IN)	
M		1	9T-4205	4	WASHER-HARD (2MM THK)	
	19	1	8S-8464	1	FLOOR MAT	
	20	1	8E-8946	1	MODULE AS-OPERATOR	
	21	1	3T-3934	1	HANDHOLD	
	22	1	9P-8871	2	PLUG	
	23	2	6T-8364	4	BOLT (1/4-20X.625IN)	
M		2	9T-4205	4	WASHER-HARD (2MM THK)	
	24	2	6B-3062	17	BOLT (3/8-16X.750IN)	
	25	2	6P-1075	21	WASHER-HARD (9MM THK)	
	26	2	7T-0136	1	SEAL	
	27	2	7X-0378	2	BOLT (3/4-10X5IN)	
		2	7X-0682	2	WASHER-HARD (6MM THK)	
	28	2	3T-3482	2	PLATE	
	29	2	3T-8290	1	PLATE AS	
		2	7S-4888	6	SPACER	
	30	2	3T-8291	1	SEAL	
	31	2	7S-8817	1	GASKET	
	32	2	7S-8916	1	COVER AS	
		2	2R-2376	2	WASHER	
		2	6P-8826	2	SCREW-KNURLED	
	33	2	9W-3429	1	COVER	
	34	2	8E-8897	1	COVER	
	35	2	9D-3931	8	SCREW-SOCKET HEAD	
	36	2	9W-3142	8	MOUNTING	
	37	2	9W-9027	2	PLATE	
	38	2	7X-0390	2	BOLT (7/8-9X6IN)	
		2	7X-0672	2	WASHER-HARD	
	39	2	6L-4454	4	BOLT (3/8-16X1.0IN)	
	40	2	3T-4788	1	COVER	

12 FRAME AND BODY — 1 of 4 — SELP4570-01

FRAME AND BODY

8E-3299 PLATFORM GP-CAB (contd.)

100090751

NOTE	REF NO	GRAPHIC REF	PART NUMBER	QTY	PART NAME (1 2 3 4 5 6 PRODUCT LEVEL)	SEE PAGE
	41	2	8E-2515	1	COVER	
	42	2	7T-0134	1	PLATE	
	43	2	7T-0138	1	GASKET	
	44	2	7S-8724	1	GASKET	
	45	2	7S-8723	1	COVER	
	46	[illegible]	6V-1958	2	PLUG-BUTTON	
M-METRIC PART						

SELP4570-01 — 2 of 4 — FRAME AND BODY 13

FRAME AND BODY

8E-3299 PLATFORM GP-CAB (contd.)

100090751

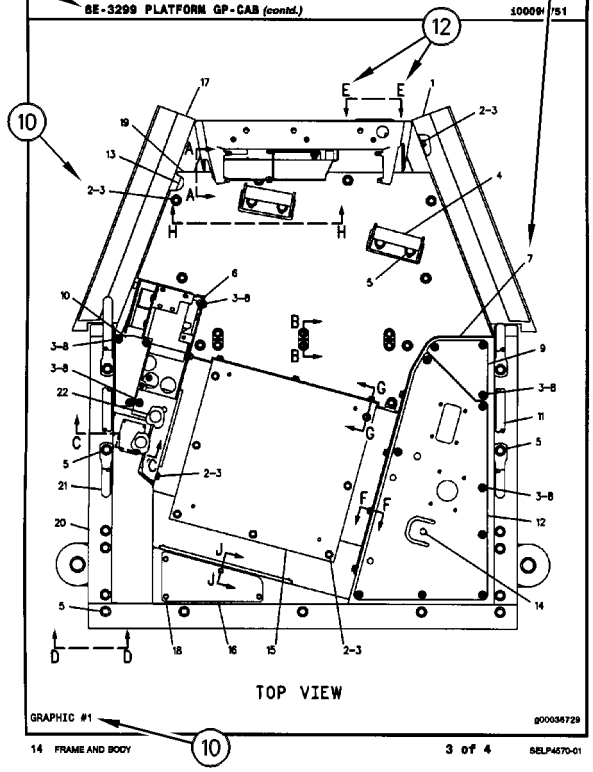

GRAPHIC #1 — g00036729

14 FRAME AND BODY — 3 of 4 — SELP4570-01

FRAME AND BODY

8E-3299 PLATFORM GP-CAB (contd.)

100090751

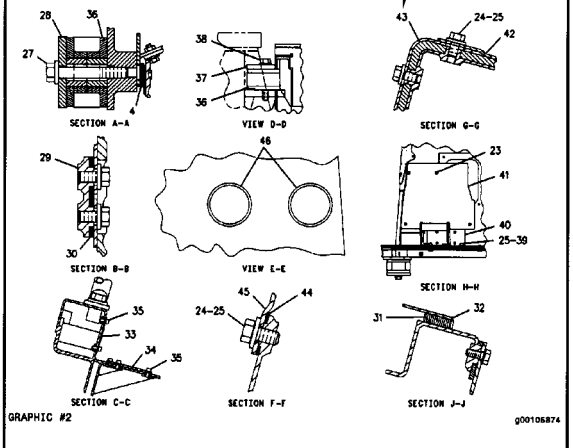

GRAPHIC #2 — g00105874

SELP4570-01 — 4 of 4 — FRAME AND BODY 16

1. MÁQUINAS

Las máquinas Caterpillar se identifican con Números de Identificación del Producto (PIN). Algunos componentes incluídos en la máquina pueden estar identificados con Números de Serie (N/S). Los componentes que tienen típicamente esta identificación incluyen motores, transmisiones, hojas topadoras y desgarradores. La máquina y el motor se identifican además con Números de Configuración y en algunos casos, Números de Modificación. Estos números están en las placas de identificación del producto o en la placa principal en la cabina del operador.

Los distribuidores Caterpillar necesitan estos números para identificar con exactitud los números de piezas de repuesto.

SIS *Nueva Característica*

A partir del primer trimestre del 2001, el Número de Identificación de Producto (PIN) de Caterpillar cambiará de 8 a 17 caracteres. Para hacer más uniforme el método de identificación de equipos, Caterpillar y otros fabricantes de equipo de construcción han tomado medidas para cumplir con la versión más reciente de la norma de numeración de identificación de productos. Los Números de Identificación de Producto para máquinas que no se operan en carreteras son definidos por la norma ISO 10261. El nuevo formato PIN corresponderá a todas las máquinas y grupos electrógenos Caterpillar. Las placas y los caracteres PIN estampados en el bastidor mostrarán el PIN de 17 caracteres. El nuevo formato tendrá la apariencia siguiente:

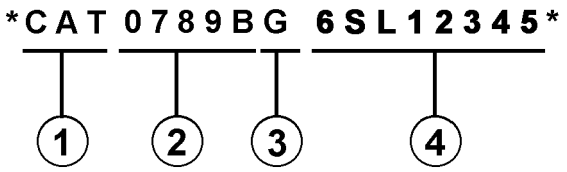

Significado de los caracteres:

1. Código de Fabricación Mundial de Caterpillar (caracteres 1-3)

2. Sección Descriptor de la Máquina (caracteres 4-8)

3. Carácter de Verificación (carácter 9)

4. Sección Indicador de la Máquina (MIS) o Número de Secuencia de Producto (caracteres 10-17). Anteriormente, estos caracteres constituían el Número de Serie.

Las máquinas y grupos electrógenos producidos antes del primer semestre del 2001 mantendrán su formato PIN de 8 caracteres.

Los componentes como motores, transmisiones, ejes, herramientas de trabajo, etc., continuarán usando un Número de Serie (S/N) de 8 caracteres.

2. COMO PEDIR REPUESTOS

⚠ ADVERTENCIA

Cuando se necesiten piezas de repuesto para este producto, Caterpillar recomienda usar piezas de repuesto Caterpillar o piezas que tengan especificaciones equivalentes incluyendo, pero sin estar limitadas a, dimensiones físicas, tipo, fortaleza y material.

El no hacer caso de esta advertencia puede llevar a fallas prematuras, daños al producto y lesiones graves o mortales.

Las piezas de repuesto Caterpillar de calidad están a la disposición de los distribuidores Caterpillar en todo el mundo. Sus existencias actualizadas incluyen todas las piezas normalmente requeridas para proteger su inversión en máquinas Caterpillar. Los distribuidores pueden tener juegos de reparación o piezas remanufacturadas para permitir la selección de la mejor alternativa de reparación en un caso en particular. Al pedir piezas de repuesto, especifique en su pedido la cantidad, el número de pieza, el nombre de la pieza y el número de serie/número de identificación del producto, de la máquina para la cual se necesitan estas piezas.

3. ORGANIZACION DEL MANUAL DE PIEZAS

La información sobre el producto, se presenta en este manual, como "elementos de información" que representan todos los componentes de un modelo específico. Las configuraciones de motores y los grupos de asientos son ejemplos de elementos de información. Los elementos de información están organizados primeramente por nombres de piezas en orden alfabético y en segundo lugar, por el número de pieza dentro de cada sección principal del manual.

4. CONTENIDO

Nueva Característica

La página de Contenido se encuentra al principio del manual. El Contenido indica cada sección del manual con una lista completa de todos los elementos de información organizados en el orden que aparecen en el manual. Los números de página proporcionan una referencia rápida a las ilustraciones detalladas de identificación de piezas y a las listas de componentes de repuesto de dichas piezas.

5. ÍNDICE DE PIEZAS DE MANTENIMIENTO

Al principio de este catálogo se encuentra un índice de los números de piezas utilizadas más frecuentemente para el mantenimiento, que incluye descripción, cantidad necesaria, lugar de utilización y número de página. Esta información está organizada alfabéticamente, por descripción de la pieza.

6. ÍNDICE

El Índice, ubicado cerca del principio del manual, es una lista en orden alfabético de todos los elementos de información incluídos en el manual. Los números de página proporcionan una referencia rápida a las ilustraciones detalladas de identificación de piezas y a las listas de componentes de repuesto de dichas piezas.

7. INDICE NUMÉRICO DE PIEZAS

Un índice numérico de piezas con el correspondiente número de página aparece al final de este catálogo.

8. TÍTULOS

Los títulos ubicados en la parte superior de cada página de elementos de información identifican el número y el nombre de la pieza junto con información descriptiva adicional para ayudar al usuario a determinar las piezas necesarias para una máquina en particular. También se suministra información sobre las opciones de reparación en el campo, la identificación de componentes de accesorios optativos y el lugar de ubicación de la pieza ("es parte de").

Nueva Característica

La primera línea del título se muestra con un tipo de letra más grande para indicar el comienzo de un elemento de información. Si se requieren páginas adicionales para ilustrar un elemento de información, los títulos se muestran con un tipo de letra normal y la continuación se indica entre paréntesis.

9. PIEZAS QUE NO SE SUMINISTRAN COMO REPUESTO

Nueva Característica

En algunos casos es necesario indicar piezas que no se suministran como repuesto pero que pueden estar conectadas a listas de componentes de otras piezas de repuesto. En tal caso, dichas piezas se muestran en cursiva para indicar que no son piezas disponibles.

10. NÚMEROS DE REFERENCIA

Nueva Característica

Los números en la columna de No. de Referencia corresponden a los números indicados en la ilustración que pertenece a ese número de pieza. Los números que tienen un sufijo alfabético identifican artículos de las listas de componentes de piezas. Los números en la columna de Referencia de la ilustración se identifican en la esquina inferior izquierda de cada ilustración. Para determinar el número de pieza correcto se puede utilizar tanto el No. de Referencia de la ilustración como el No. de Referencia del artículo. A medida que se actualiza la información para indicar los más recientes números de piezas de repuesto, puede omitirse intencionalmente un No. de Referencia en una lista de componentes de piezas.

11. NOMBRES DE PIEZA SANGRADOS

Cuando el nombre de una pieza está sangrado en una lista, significa que esta pieza forma parte del grupo o conjunto del renglón inmediatamente superior.

12. LETRAS DE REFERENCIA DE ILUSTRACIONES

Las ilustraciones contienen algunas veces letras de referencia (A, B, C etc.) cuyo propósito es seguir el trayecto de líneas y mazos de cables de un punto a otro. También se utilizan para mostrar dónde volver a unir ilustraciones que se habían separado.

13. ABREVIATURAS Y SIMBOLOS

O.D. – Diámetro exterior
I.D. – Diámetro interior
A – No es pieza de este grupo
B – Utilizado según la demanda
C – Indica cambio
D – Se pide por metro
E – Se pide por centímetro
F – No se muestra
G – Se pide por pulgada
I – Ver "Hose Fabrication Guide"
M – Pieza métrica
R – Puede estar disponible como pieza remanufacturada
Y – Ilustración separada
Z – No se suministra por separado

NOTA:

Las contínuas mejoras y adelantos en diseño podrían originar cambios a su máquina que no se incluyen en esta publicación. Cuando tenga alguna pregunta acerca de su producto Caterpillar o de esta publicación, consulte al distribuidor Caterpillar para obtener la información más reciente.

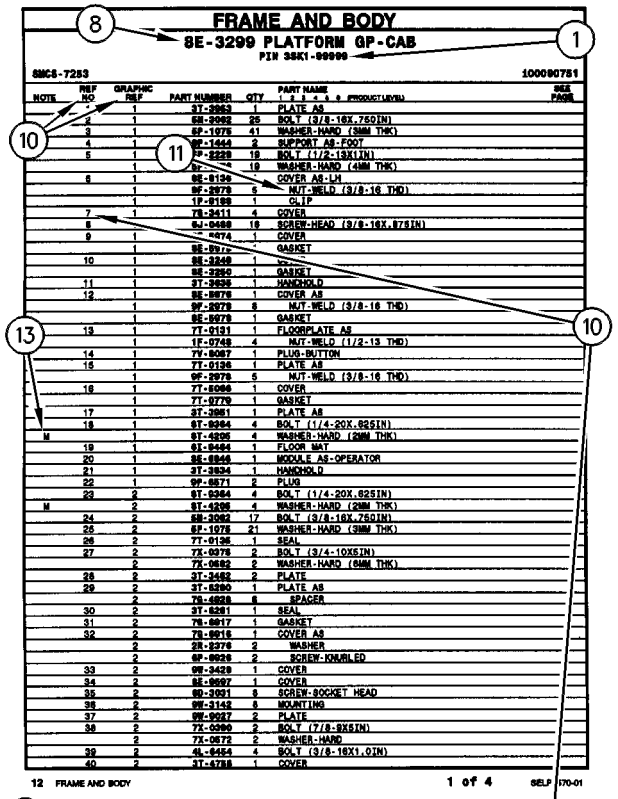

FRAME AND BODY

8E-3299 PLATFORM GP-CAB

PIN 38K1-99999

SMCS-7283 100090751

NOTE	REF NO	GRAPHIC REF	PART NUMBER	QTY	PART NAME 1 2 3 4 5 6 (PRODUCT LEVEL)	SEE PAGE
	1	1	3T-3953	1	PLATE AS	
	2	1	5B-3062	25	BOLT (3/8-16X.750IN)	
	3	1	6P-1075	41	WASHER-HARD (9MM THK)	
	4	1	9F-1444	2	SUPPORT AS-FOOT	
	5	1	7P-2229	19	BOLT (1/2-13X1IN)	
		1	6P-[illegible]	19	WASHER-HARD (4MM THK)	
	6	1	8E-8134	1	COVER AS-LH	
		1	9F-2979	5	NUT-WELD (3/8-16 THD)	
		1	1P-8199	1	CLIP	
	7	1	7S-3411	4	COVER	
	8		5J-0468	19	SCREW-HEAD (3/8-16X.875IN)	
	9	1	[illegible]-4674	1	COVER	
		1	8E-8972	1	GASKET	
	10	1	8E-3248	1	[illegible]	
		1	8E-3250	1	GASKET	
	11	1	3T-3939	1	HANDHOLD	
	12	1	8E-8978	1	COVER AS	
		1	9F-2978	8	NUT-WELD (3/8-16 THD)	
		1	8E-8978	1	GASKET	
	13	1	7T-0131	1	FLOORPLATE AS	
		1	1F-0748	4	NUT-WELD (1/2-13 THD)	
	14	1	7Y-8087	1	PLUG-BUTTON	
	15	1	7T-0136	1	PLATE AS	
		1	9F-2979	5	NUT-WELD (3/8-16 THD)	
	16	1	7T-8098	1	COVER	
		1	7T-0779	1	GASKET	
	17	1	3T-3951	1	PLATE AS	
	18	1	9T-9364	4	BOLT (1/4-20X.625IN)	
M		1	9T-4205	4	WASHER-HARD (2MM THK)	
	19	1	9I-9464	1	FLOOR MAT	
	20	1	8E-8946	1	MODULE AS-OPERATOR	
	21	1	3T-3934	1	HANDHOLD	
	22	1	9P-8871	2	PLUG	
	23	2	9T-9364	4	BOLT (1/4-20X.625IN)	
M		2	9T-4205	4	WASHER-HARD (2MM THK)	
	24	2	5B-3062	17	BOLT (3/8-16X.750IN)	
	26	2	6P-1075	21	WASHER-HARD (9MM THK)	
	26	2	7T-0126	1	SEAL	
	27	2	7X-0378	2	BOLT (3/4-10X5IN)	
		2	7X-0682	2	WASHER-HARD (6MM THK)	
	28	2	3T-3482	2	PLATE	
	29	2	3T-8290	1	PLATE AS	
		2	7S-4888	6	SPACER	
	30	2	3T-8281	1	SEAL	
	31	2	7S-8817	1	GASKET	
	32	2	7S-8916	1	COVER AS	
		2	2R-2376	2	WASHER	
		2	6P-8826	2	SCREW-KNURLED	
	33	2	9M-3429	1	COVER	
	34	2	8E-8937	1	COVER	
	35	2	9D-3931	8	SCREW-SOCKET HEAD	
	36	2	9M-3142	8	MOUNTING	
	37	2	9M-9027	2	PLATE	
	38	2	7X-0360	2	BOLT (7/8-9X5IN)	
		2	7X-0672	2	WASHER-HARD	
	39	2	9L-4454	4	BOLT (3/8-16X1.0IN)	
	40	2	3T-4788	1	COVER	

12 FRAME AND BODY 1 of 4 SELP4570-01

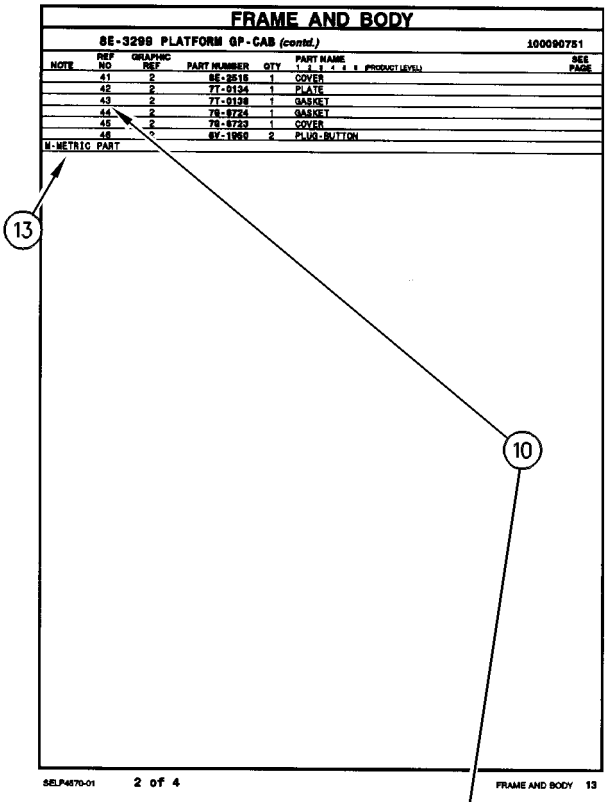

FRAME AND BODY

8E-3299 PLATFORM GP-CAB (contd.) 100090751

NOTE	REF NO	GRAPHIC REF	PART NUMBER	QTY	PART NAME 1 2 3 4 5 6 (PRODUCT LEVEL)	SEE PAGE
	41	2	8E-2515	1	COVER	
	42	2	7T-0134	1	PLATE	
	43	2	7T-0138	1	GASKET	
	44	2	7S-8724	1	GASKET	
	45	2	7S-8723	1	COVER	
	46	[illegible]	6V-1958	2	PLUG-BUTTON	
M-METRIC PART						

SELP4570-01 2 of 4 FRAME AND BODY 13

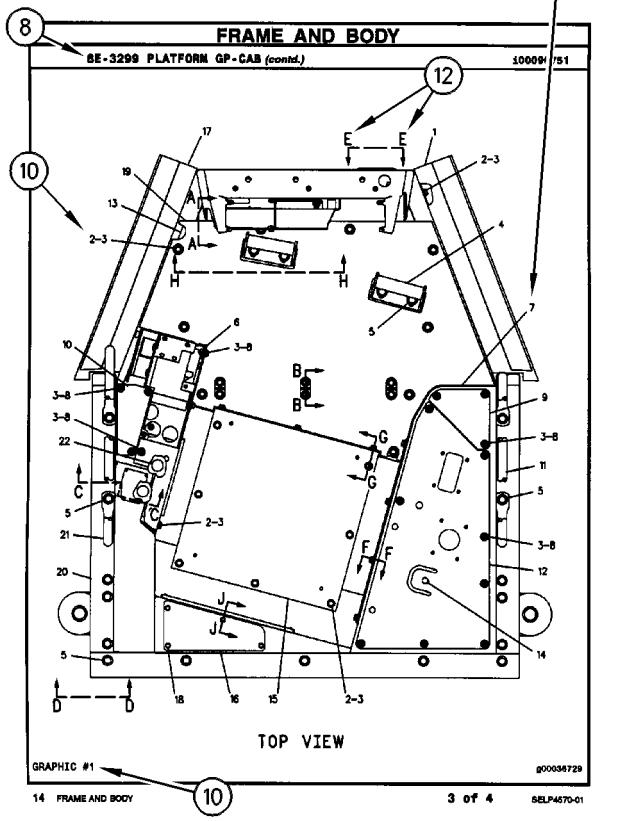

FRAME AND BODY

8E-3299 PLATFORM GP-CAB (contd.) 100090751

TOP VIEW

GRAPHIC #1 g00036729

14 FRAME AND BODY 3 of 4 SELP4570-01

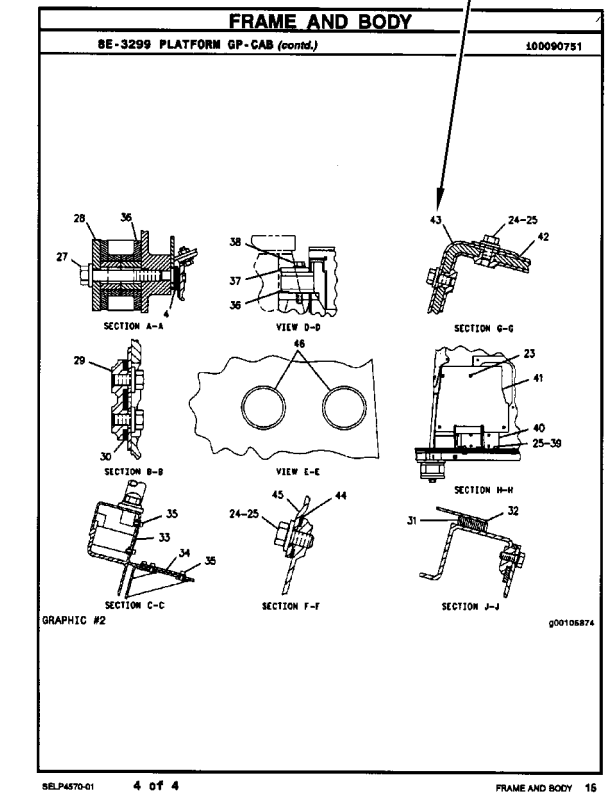

FRAME AND BODY

8E-3299 PLATFORM GP-CAB (contd.) 100090751

SECTION A-A VIEW D-D SECTION G-G

SECTION B-B VIEW E-E SECTION H-H

SECTION C-C SECTION F-F SECTION J-J

GRAPHIC #2 g00105874

SELP4570-01 4 of 4 FRAME AND BODY 16

INFORMAÇÃO GERAL

1. IDENTIFICAÇÃO DA MÁQUINA

As máquinas Caterpillar são identificadas pelos Números de Informação do Produto (PIN). Alguns componentes incluídos numa máquina podem ser identificados por Números de Série (S/N). Componentes típicos que serão enumerados com números de série incluem motores, transmissões, lâminas e ríperes. Além do número de série, a máquina e o motor são ainda identificados por números de arranjo e, em alguns casos, números de modificações. Tais números encontram-se na(s) placa(s) de identificação do produto e na placa mestre no compartimento do operador.

Novidades

A partir do primeiro trimestre de 2001 o Número de Identificação de Produto da Caterpillar (PIN) vai mudar de 8 para 17 caracteres. Esforçando-se para fornecer uma identificação uniforme de equipamentos, a Caterpillar e outros fabricantes de equipamento de construção estão mudando para atender a versão mais atualizada do padrão de identificação de produtos. Os números de PIN para produtos de aplicações não rodoviárias são definidos pela ISO 10261. O novo formato de número PIN será adotado em todas as máquinas e grupos geradores Caterpillar. As placas e as marcações do chassi mostrarão os 17 dígitos de PIN. O novo formato terá a seguinte disposição:

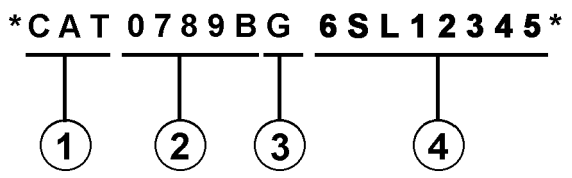

Onde:

1. Código de Fabricação Mundial da Caterpillar (dígitos 1-3)

2. Descrição da Máquina (dígitos 4-8)

3. Dígito de Verificação (dígito 9)

4. Seção de Indicador da Máquina (MIS) ou Número de Seqüência de Produto (dígitos 10-17). Estes eram anteriormente chamados de Número de Série.

Máquinas e grupos geradores produzidos antes do primeiro trimestre de 2001 manterão o formato de 8 caracteres de PIN.

Componentes como motores, transmissões, eixos, ferramentas de trabalho, etc. continuarão a usar Número de Série (S/N) com oito caracteres.

2. COMO OBTER PEÇAS

⚠ CUIDADO

Quando peças de substituição são exigidas para este produto, a Caterpillar recomenda a utilização de peças de substituição Caterpillar ou peças com as especificações equivalentes incluindo, mas não limitadas, à dimensões físicas, tipos, resistência e materiais.

A inobservância desta advertência poderá resultar em falhas prematuras, danos ao produto, ferimentos ou morte.

As Peças de Reposição de Qualidade Caterpillar encontram-se disponíveis nos revendedores Caterpillar no mundo inteiro. Seus estoques de peças são atualizados e incluem todas as peças normalmente necessárias para proteger seu investimento em máquinas Caterpillar. Alguns revendedores podem oferecer jogos de reparo ou peças de troca/remanufaturadas disponíveis como uma opção da alternativa de reparo mais eficaz para uma situação específica. Ao encomendar peças, seu pedido deve especificar a quantidade, o número e o nome da peça e o número de série/número de identificação do produto referentes à máquina para a qual as peças se destinam.

3. ORGANIZAÇÃO DO MANUAL DE PEÇAS

A informação do produto neste manual é apresentada em forma de "elementos de informação" que representam todos os componentes para o modelo específico. Arranjo de Motor e Grupo de Assento são exemplos de elementos de informação. Os elementos de informação são organizados em ordem alfabética por nome de peça ou secundariamente, por número de peça incluído em cada seção principal do manual.

4. LISTA DE CONTEÚDOS

Novidades

A Lista de Conteúdos (TOC) se encontra no princípio do manual. A Lista de Conteúdos (TOC) relaciona em cada seção do manual uma lista completa com todos os elementos de informação organizados conforme aparecem no manual. Números de página são fornecidos para que se tenha referência rápida de ilustrações de peças detalhadas e listas de conteúdos que podem receber serviço de manutenção.

5. ÍNDICE DE PEÇAS DE MANUTENÇÃO

O Índice de Peças de Manutenção, localizado perto do princípio do manual, faz referência aos números de peça de manutenção usados com maior frequência, fornecendo uma descrição, a quantidade, o uso e o número de página. Esta informação é organizada com a descrição da peça em ordem alfabética.

6. ÍNDICE

O Índice localizado perto do princípio do manual, consiste de uma lista em ordem alfabética de todos os elementos de informação incluídos no manual. Números de página são fornecidos para que se tenha referência rápida de ilustrações de peças detalhadas e listas de conteúdos que podem receber serviço de manutenção.

7. ÍNDICE DE NÚMERO DE PEÇA

Um índice numérico relacionando todos os números de peça e a(s) página(s) correspondentes, aparece no final do manual.

8. LEGENDAS

As legendas localizadas na parte de cima de cada página de um elemento de informação identifica o número de peça e o nome da peça, juntamente com informação descritiva adicional. Informações sobre o Número de Informação do Produto (PIN) e o Número de Série (S/N) encontradas em cada legenda devem ser usadas para selecionar a informação correta sobre uma máquina específica. Opções de substituição no campo, identificação de componentes de acessórios opcionais e informações sobre onde são utilizados ("parte de") são também fornecidas.

SIS ***Novidades***

A primeira linha de uma legenda é indicada em tipo maior para indicar o princípio de um elemento de informação. Legendas para páginas adicionais que podem ser necessárias para ilustrar um elemento de informação serão apresentadas em tipo padrão e incluirão o termo *(continua)* .

9. NÃO DISPONÍVEL SEPARADAMENTE

SIS ***Novidades***

Em alguns casos, é necessário mostrar peças não disponíveis separadamente que têm uma ligação com listas de conteúdos de nível inferior que podem receber serviço de manutenção. Os números de peça destes componentes não disponíveis aparecerão em *itálico* , a fim de indicar que não estão disponíveis.

10. NÙMEROS DE REFERÊNCIA À LISTA DE PEÇAS

SIS ***Novidades***

Os números indicados na coluna Ref No (No. de Referência) correspondem-se aos números usados no(s) gráfico(s) correspondente(s). Um sufixo com letras pode ser acrescentado a um número de referência para identificar itens de conteúdo de nível inferior. Os números indicados na coluna Graphic Ref (Referência de Gráfico) referem-se ao identificador de número de gráfico presente no canto esquerdo inferior de cada ilustração. O número de Referência de Gráfico pode ser usado em combinação com o item Ref No para determinar-se o número de peça correto. Poderá haver omissão intencional de um número de referência (Ref No) de uma lista de conteúdos uma vez que as informações são atualizadas para refletir os números de peça mais recentes que podem receber serviço de manutenção.

11. NOMES DE PEÇAS DESALINHADOS

Quando um nome de peça encontra-se desalinhado numa lista de peças, significa que tal item faz parte do (está incluído no) grupo ou conjunto sob o qual está relacionado.

12. LETRAS DE REFERÊNCIA NAS ILUSTRAÇÕES

Quando necessário, as ilustrações contêm letras de referência (A, B, C, etc.) que são utilizadas para seguir tubulações e cabos elétricos de um ponto a outro. Também foram utilizadas para indicar onde se pode reconectar as ilustrações que foram separadas.

13. ABREVIAÇÕES E SÍMBOLOS

O.D. – "Outside Diameter" (Diâmetro Externo)
I.D. – "Inside Diameter" (Diâmetro Interno)
A – Não faz parte deste grupo
B – Use conforme necessário
C – Indica modificação
D – Vendido por metro
E – Vendido por centímetro
F – Não ilustrado
G – Vendido por polegada
I – Consulte o seu revendedor quanto a mangueira
M – Peça métrica
R – Peça remanufaturada pode estar disponível; consulte o seu revendedor Cat
Y – Ilustração separada
Z – Não disponível separadamente

NOTA:

Os contínuos aperfeiçoamentos e avanços no projeto do produto podem ocasionar modificações em sua máquina que talvez ainda não estejam incluídas nesta publicação. Sempre que surgirem dúvidas quanto a um produto Caterpillar ou quanto à presente publicação, consulte o seu revendedor Caterpillar para obter as informações mais recentes disponíveis.

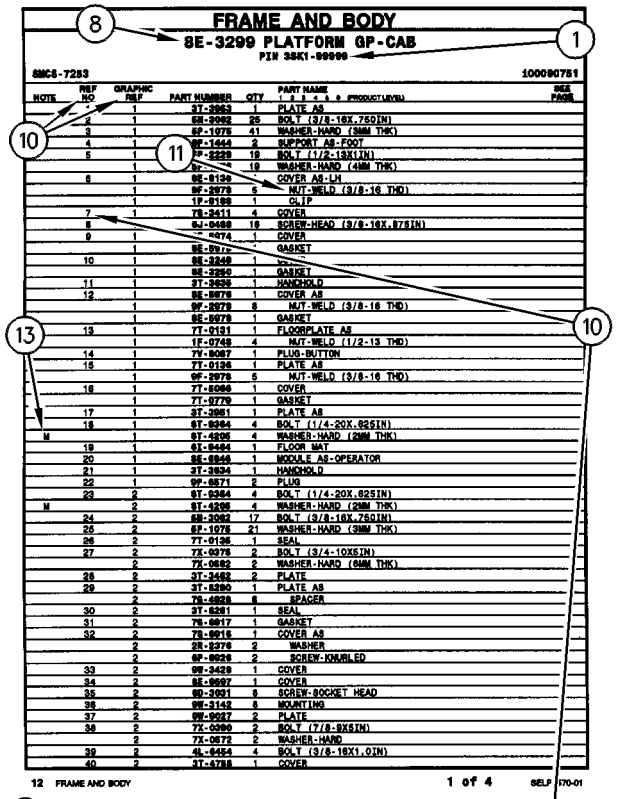

FRAME AND BODY

8E-3299 PLATFORM GP-CAB

PIN 38K1-99999

SMCS-7283 100090751

NOTE	REF NO	GRAPHIC REF	PART NUMBER	QTY	PART NAME 1 2 3 4 5 6 (PRODUCT LEVEL)	SEE PAGE
	1	1	3T-3953	1	PLATE AS	
	2	1	6B-3062	25	BOLT (3/8-16X.750IN)	
	3	1	6P-1075	41	WASHER-HARD (9MM THK)	
	4	1	9F-1444	2	SUPPORT AS-FOOT	
	5	1	7P-2229	19	BOLT (1/2-13X1IN)	
		1	6P-1	19	WASHER-HARD (4MM THK)	
	6	1	8E-8134	1	COVER AS-LH	
		1	9F-2979	5	NUT-WELD (3/8-16 THD)	
		1	1P-8188	1	CLIP	
	7	1	7S-3411	4	COVER	
	8		6J-0468	19	SCREW-HEAD (3/8-16X.875IN)	
	9	1	[illegible]474	1	COVER	
		1	8E-8972	1	GASKET	
	10	1	8E-3248	1	[illegible]	
		1	8E-3250	1	GASKET	
	11	1	3T-3939	1	HANDHOLD	
	12	1	8E-8978	1	COVER AS	
		1	9F-2978	8	NUT-WELD (3/8-16 THD)	
		1	8E-8978	1	GASKET	
	13	1	7T-0131	1	FLOORPLATE AS	
		1	1F-0748	4	NUT-WELD (1/2-13 THD)	
	14	1	7Y-8087	1	PLUG-BUTTON	
	15	1	7T-0136	1	PLATE AS	
		1	9F-2979	5	NUT-WELD (3/8-16 THD)	
	16	1	7T-8098	1	COVER	
		1	7T-0779	1	GASKET	
	17	1	3T-3951	1	PLATE AS	
	18	1	6T-8364	4	BOLT (1/4-20X.625IN)	
M		1	9T-4205	4	WASHER-HARD (2MM THK)	
	19	1	8S-8464	1	FLOOR MAT	
	20	1	8E-8946	1	MODULE AS-OPERATOR	
	21	1	3T-3934	1	HANDHOLD	
	22	1	9P-8871	2	PLUG	
	23	2	6T-8364	4	BOLT (1/4-20X.625IN)	
M		2	9T-4205	4	WASHER-HARD (2MM THK)	
	24	2	6B-3062	17	BOLT (3/8-16X.750IN)	
	25	2	6P-1075	21	WASHER-HARD (9MM THK)	
	26	2	7T-0136	1	SEAL	
	27	2	7X-0378	2	BOLT (3/4-10X5IN)	
		2	7X-0682	2	WASHER-HARD (6MM THK)	
	28	2	3T-3482	2	PLATE	
	29	2	3T-8290	1	PLATE AS	
		2	7S-4838	6	SPACER	
	30	2	3T-8291	1	SEAL	
	31	2	7S-8817	1	GASKET	
	32	2	7S-8916	1	COVER AS	
		2	2R-2376	2	WASHER	
		2	6P-8826	2	SCREW-KNURLED	
	33	2	9W-3429	1	COVER	
	34	2	8E-8937	1	COVER	
	35	2	9D-3931	8	SCREW-SOCKET HEAD	
	36	2	9W-3142	8	MOUNTING	
	37	2	9W-9027	2	PLATE	
	38	2	7X-0390	2	BOLT (7/8-9X6IN)	
		2	7X-0672	2	WASHER-HARD	
	39	2	6L-4454	4	BOLT (3/8-16X1.0IN)	
	40	2	3T-4788	1	COVER	

12 FRAME AND BODY 1 of 4 SELP4570-01

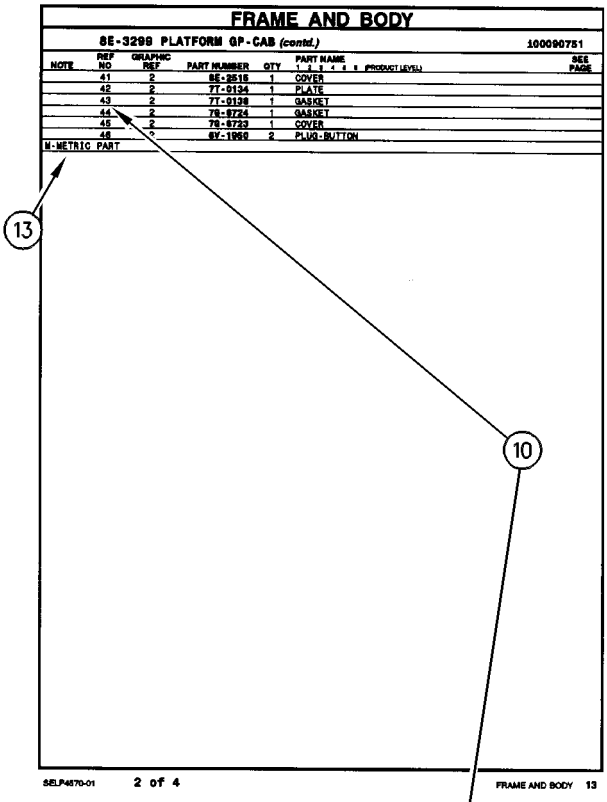

FRAME AND BODY

8E-3299 PLATFORM GP-CAB (contd.) 100090751

NOTE	REF NO	GRAPHIC REF	PART NUMBER	QTY	PART NAME 1 2 3 4 5 6 (PRODUCT LEVEL)	SEE PAGE
	41	2	8E-2515	1	COVER	
	42	2	7T-0134	1	PLATE	
	43	2	7T-0138	1	GASKET	
	44	2	7S-8724	1	GASKET	
	45	2	7S-8723	1	COVER	
	46	[illegible]	6V-1958	2	PLUG-BUTTON	
M-METRIC PART						

SELP4570-01 2 of 4 FRAME AND BODY 13

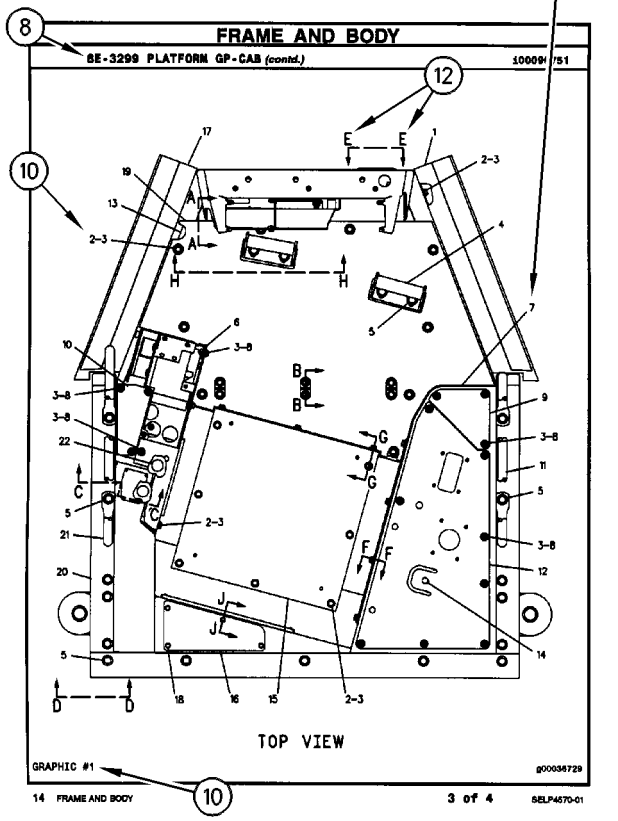

FRAME AND BODY

8E-3299 PLATFORM GP-CAB (contd.) 100090751

TOP VIEW

GRAPHIC #1 g00036729

14 FRAME AND BODY 3 of 4 SELP4570-01

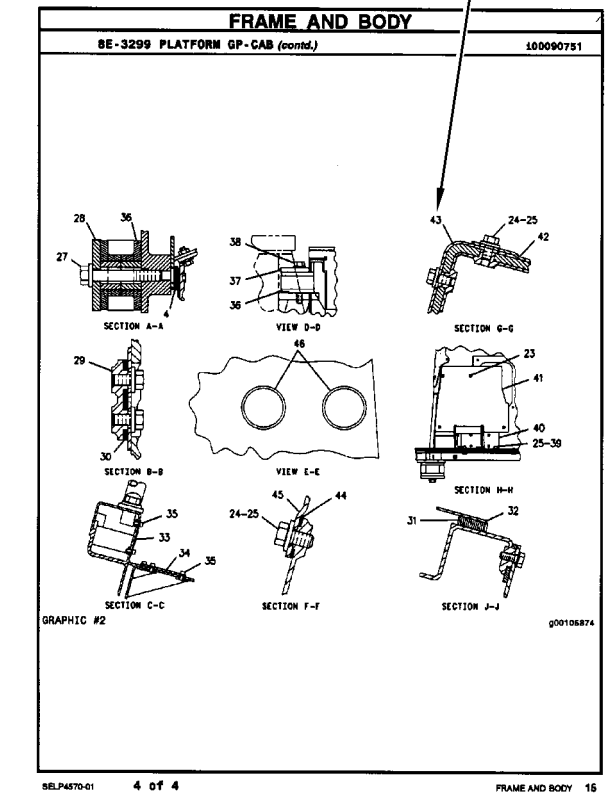

FRAME AND BODY

8E-3299 PLATFORM GP-CAB (contd.) 100090751

SECTION A-A VIEW D-D SECTION G-G

SECTION B-B VIEW E-E SECTION H-H

SECTION C-C SECTION F-F SECTION J-J

GRAPHIC #2 g00105874

SELP4570-01 4 of 4 FRAME AND BODY 16

REMANUFACTURED COMPONENTS

As an option when making repairs consider Caterpillar Remanufactured Components. Components that are available through the Caterpillar Remanufactured Program are identified three ways in the parts book:

- with the letter R in the note field of the parts list
- with an R* at the beginning of the first line of the caption
- with an *R at the end of the first line of the caption

Typical components included in the Remanufacturing Program include:

ALTERNATORS
CONNECTING RODS
CRANKSHAFTS - UNDERSIZE
CRANKSHAFTS - UPGRADE TO NEW
CYLINDER HEADS
ELECTRONIC CONTROL MODULES (ECM)
ELECTRONIC SENSORS
FUEL INJECTORS
FUEL NOZZLES
FUEL PUMPS
GOVERNORS
OIL PUMPS
PISTONS
SHORT BLOCKS
STARTERS
TURBOCHARGERS - COMPLETE
TURBOCHARGER CARTRIDGES
WATER PUMPS

Caterpillar Remanufactured engines for many engine arrangements are also available.

OPTIONS DE RÉPARATION

COMPOSANTS RÉNOVÉS

Comme option de réparation, considérer les composants rénovés Caterpillar. Les composants disponibles dans le cadre du programme Caterpillar de composants rénovés sont identifiés de trois façons dans le catalogue de pièces:

- avec la lettre "R" dans l'espace note de la liste des pièces
- avec R* au début de la première ligne des légendes
- avec *R à la fin de la première ligne des légendes

Les composants suivants figurent parmi les composants typiques du programme de rénovation:

ALTERNATEURS
BIELLES
VILEBREQUINS - SOUS-DIMENSIONNÉS
VILEBREQUINS - REMIS À NEUF
CULASSES
MODULES DE COMMANDE ÉLECTRONIQUE (ECM)
CAPTEURS ÉLECTRONIQUES
INJECTEURS
TÊTES D'INJECTEURS
POMPES À CARBURANT
RÉGULATEURS
POMPES À HUILE
PISTONS
BLOCS EMBIELLÉS
DÉMARREURS
TURBOCOMPRESSEURS - COMPLETS
CARTOUCHES DE TURBOCOMPRESSEUR
POMPES À EAU

Des moteurs rénovés sont aussi disponibles pour plusieurs versions de moteur.

COMPONENTES REMANUFACTURADOS

Al hacer reparaciones, tenga en cuenta la opción de Componentes Remanufacturados Caterpillar. Los componentes que están disponibles por medio del programa de Productos Remanufacturados Caterpillar se identifican de tres maneras en el manual de piezas:

- con la letra R en el espacio de Nota de la lista de piezas
- con una R* al comienzo de la primera línea de la leyenda
- con una *R al final de la primera línea de la leyenda

Los componentes que se incluyen típicamente en el Programa de Productos Remanufacturados son:

ALTERNADORES
BIELAS
CIGÜEÑALES - BAJOMEDIDA
CIGÜEÑALES - REMANUFACTURADOS A NUEVO
CULATAS
MÓDULOS DE CONTROL ELECTRÓNICO (ECM)
SENSORES ELECTRONICOS
INYECTORES
BOQUILLAS
BOMBAS DE COMBUSTIBLE
REGULADORES
BOMBAS DE ACEITE
PISTONES
MONOBLOQUES
MOTORES DE ARRANQUE
TURBOCOMPRESORES - COMPLETOS
NÚCLEOS DE TURBOCOMPRESOR
BOMBAS DE AGUA

También hay disponibles motores Remanufacturados Caterpillar para muchas de las configuraciones de motores.

COMPONENTES REMANUFATURADOS

Considere o uso de Componentes Remanufaturados Caterpillar ao efetuar reparos. Os componentes disponíveis através do Programa de Remanufatura Caterpillar são identificados de três formas no manual de peças:

- com um R na área da nota da lista de peças
- com um R* no princípio da primeira linha da legenda
- com um *R no final da primeira linha da legenda

Os componentes típicos que constam no Programa de Remanufatura incluem:

ALTERNADORES
BIELAS
VIRABREQUINS - SUBMEDIDAS
VIRABREQUINS - ATUALIZAÇÃO
CABEÇOTES
MÓDULOS DE CONTROLE ELETRÔNICO (ECM)
SENSORES ELETRÔNICOS
INJETORES DE COMBUSTÍVEL
BICOS DE ABASTECIMENTO DE COMBUSTÍVEL
BOMBAS DE COMBUSTÍVEL
GOVERNADORES
BOMBAS DE ÓLEO
PISTÕES
BLOCOS BÁSICOS DO MOTOR
MOTORES DE PARTIDA
TURBOALIMENTADORES - COMPLETOS
CARTUCHOS DE TURBOALIMENTADORES
BOMBAS D'ÁGUA

Motores Remanufaturados Caterpillar também encontram-se disponíveis para diversos arranjos de motor.

SUPPLEMENTAL COOLANT ADDITIVES

CUSTOMER BENEFITS:

Protects against cavitation, foam, erosion, corrosion, and scale buildup in cooling systems.

- Provides measured coolant conditioner.

DESCRIPTION:

Additives deplete from the coolant with normal operation. For this reason, Supplemental Coolant Additives (SCA) must be added to all heavy duty coolants at regular intervals. In addition, when not using a fully formulated, pre-charged antifreeze, like Caterpillar's DEAC, an initial charge of SCA must be added to the cooling system. The amount of SCA added to the system is dependent on the capacity of the system.

The SCA for initial fill is provided as a liquid. SCA's for maintenance intervals are available in liquid form and as a spin-on element. (No Spin-on available for 3600 Family of Engines)

NOTE:

The amount of SCA added at initial fill is not the same as the amount added at maintenance intervals.

The coolant additive elements can be used with any ethylene or propylene glycol type antifreeze which meets ASTM D4985 or ASTM D5345 Specifications.

NOTE:

For use with standard heavy duty coolant only, not for use with Extended Life Coolant.

PARTS NEEDED:

Cooling System Capacity		Liquid SCA at Initial Fill	Liquid SCA at Maintenance*	Spin-on SCA Maintenance Element*
Liters	Gallons			
22-30	(6-8)	3P-2044 (1)	6V-3542 (1)	111-2370 (1)
30-38	(8-10)	3P-2044 (1) 6V-3542 (1)	111-2372 (1)	111-2369 (1)
38-49	(10-13)	3P-2044 (1) 8T-1589 (1)	111-2372 (1)	111-2369 (1)
49-64	(13-17)	3P-2044 (2)	8T-1589 (1)	9N-3368 (1)
64-83	(17-22)	3P-2044 (2) 8T-1589 (1)	111-2372 (1) 6V-3542 (1)	111-2371 (1)
83-114	(22-30)	3P-2044 (3) 8T-1589 (1)	3P-2044 (1)	9N-3718 (1)
114-163	(30-43)	3P-2044 (5)	3P-2044 (1) 6V-3542 (1)	111-2371 (2)
163-242	(43-64)	3P-2044 (8)	3P-2044 (2)	9N-3718 (2)

** Normal maintenance period is 250 hrs. See your Operation and Maintenance Manual for complete coolant maintenance instructions.*

( ) Indicates quantity required.

ADDITIFS POUR LIQUIDE DE REFROIDISSEMENT

AVANTAGES POUR LE CLIENT

L'additif protège contre la cavitation, la mousse, l'érosion, la corrosion et l'accumulation de dépôts dans le circuit de refroidissement.

- L'additif complémentaire fournit une quantité mesurée d'additif.

DESCRIPTION:

Les additifs s'épuisent pendant l'utilisation du moteur. C'est pourquoi l'on doit ajouter de l'additif au liquide de refroidissement/antigel pour moteurs diesel à intervalles réguliers. En plus, si l'on n'utilise pas de l'antigel entièrement formulé et pré-chargé comme le liquide de refroidissement/antigel Caterpillar pour moteurs diesel, une quantité initiale d'additif doit être ajoutée au circuit de refroidissement. La quantité d'additif à ajouter au circuit dépend de la contenance du circuit.

L'additif pour le remplissage initial est fourni sous forme liquide. L'additif pour l'entretien ultérieur est disponible sous forme liquide et sous forme d'élément à visser. (Il n'y a pas d'élément à visser pour les moteurs de la famille 3600).

NOTA:

La quantité d'additif à ajouter au remplissage initial diffère de la quantité à ajouter aux intervalles d'entretien.

Les éléments d'additif peuvent être utilisés avec tout antigel de type éthylène ou propylène-glycol conforme à la norme ASTM D4985 ou ASTM D5345.

NOTA:

A utiliser uniquement avec du liquide de refroidissement pour moteurs diesel et non avec le liquide de refroidissement longue durée.

PIÈCES NÉCESSAIRES:

Contenance du circuit de refroidissement		Additif liquide au remplissage initial	Additif liquide aux intervalles d'entretien*	Elément d'additif à visser aux intervalles d'entretien*
Litres	Gallons U.S.			
22-30	(6-8)	3P-2044 (1)	6V-3542 (1)	111-2370 (1)
30-38	(8-10)	3P-2044 (1) 6V-3542 (1)	111-2372 (1)	111-2369 (1)
38-49	(10-13)	3P-2044 (1) 8T-1589 (1)	111-2372 (1)	111-2369 (1)
49-64	(13-17)	3P-2044 (2)	8T-1589 (1)	9N-3368 (1)
64-83	(17-22)	3P-2044 (2) 8T-1589 (1)	111-2372 (1) 6V-3542 (1)	111-2371 (1)
83-114	(22-30)	3P-2044 (3) 8T-1589 (1)	3P-2044 (1)	9N-3718 (1)
114-163	(30-43)	3P-2044 (5)	3P-2044 (1) 6V-3542 (1)	111-2371 (2)
163-242	(43-64)	3P-2044 (8)	3P-2044 (2)	9N-3718 (2)

** L'intervalle d'entretien normal est de 250 heures-service. Voir le Guide d'utilisation et d'entretien pour de plus amples renseignements concernant l'entretien du circuit de refroidissement.*

( ) Indique la quantité exigée.

ADITIVOS DE REFRIGERANTE SUPLEMENTARIOS

VENTAJAS PARA EL USUARIO:

Protegen contra la cavitación, la formación de espuma, la corrosión y la acumulación de escamas en los sistemas de enfriamiento.

- Suministra un acondicionador dosificado de refrigerante.

DESCRIPCIÓN:

Los aditivos en el refrigerante se agotan con la operación normal. Por esta razón, se debe agregar Aditivo de refrigerante suplementario (SCA) a todos los refrigerantes para servicio pesado, a intervalos regulares. Además, cuando no se usa un anticongelante de precarga completo, tal como el DEAC de Caterpillar, es necesario agregar una cantidad de aditivo de refrigerante suplementario inicial al sistema de enfriamiento. La cantidad de aditivo que se debe agregar depende de la capacidad del sistema.

El SCA de llenado inicial es líquido. El que se usa para el mantenimiento está disponible tanto en líquido como en un elemento enroscable. (No hay elemento enroscable disponible para la Familia de Motores 3600).

NOTA:

La cantidad de aditivo de llenado inicial no es la misma que se agrega en los intervalos de mantenimiento.

Los elementos de aditivo de refrigerante se pueden usar con cualquier anticongelante de tipo glicol etilénico o propílico que esté de acuerdo con las especificaciones de las normas ASTM D4985 o ASTM D5345.

NOTA:

Se debe utilizar únicamente con refrigerante estándar para servicio pesado; no se debe usar con Refrigerante de Larga Duración.

PIEZAS NECESARIAS:

Capacidad del Sistema de Enfriamiento		SCA líquido de llenado inicial	SCA líquido de mantenimiento*	Elemento de mantenimiento enroscable*
litros	gal EE.UU.			
22-30	6-8	3P-2044 (1)	6V-3542 (1)	111-2370 (1)
30-38	8-10	3P-2044 (1) 6V-3542 (1)	111-2372 (1)	111-2369 (1)
38-49	10-13	3P-2044 (1) 8T-1589 (1)	111-2372 (1)	111-2369 (1)
49-64	13-17	3P-2044 (2)	8T-1589 (1)	9N-3368 (1)
64-83	17-22	3P-2044 (2) 8T-1589 (1)	111-2372 (1) 6V-3542 (1)	111-2371 (1)
83-114	22-30	3P-2044 (3) 8T-1589 (1)	3P-2044 (1)	9N-3718 (1)
114-163	30-43	3P-2044 (5)	3P-2044 (1) 6V-3542 (1)	111-2371 (2)
163-242	43-64	3P-2044 (8)	3P-2044 (2)	9N-3718 (2)

** El período normal de mantenimiento es de 250 horas. Para ver las instrucciones completas sobre el mantenimiento del refrigerante, consulte el Manual de Operación y Mantenimiento.*

( ) Indica la cantidad necesaria.

ADITIVOS SUPLEMENTARES DO LÍQUIDO ARREFECEDOR

BENEFÍCIOS PARA O CLIENTE:

Protege contra cavitação, espuma, erosão, corrosão e acúmulo de crostas nos sistemas de arrefecimento.

- Fornece uma quantidade pré-determinada de condicionador de arrefecimento.

DESCRIÇÃO:

Com a operação normal, os aditivos se esgotam do líquido arrefecedor. Por isso, Aditivos Suplementares do Líquido Arrefecedor (SCA) devem ser acrescentados a todos os líquidos arrefecedores para serviço pesado em intervalos regulares. Além disso, quando um anticongelante pré-carregado, totalmente formulado não for usado, como o DEAC Caterpillar, uma carga inicial de SCA deve ser acrescentada ao sistema de arrefecimento. A quantidade de SCA acrescentada ao sistema depende da capacidade do sistema.

O SCA para abastecimento inicial é fornecido em forma de líquido. Os aditivos suplementares (SCA) para intervalos de manutenção estão à disposição em forma líquida e como um elemento com roscas. (Exceto os Motores da Família 3600)

NOTA:

A quantidade de SCA adicionada no abastecimento inicial não é a mesma que a acrescentada nos intervalos de manutenção.

Os elementos do aditivo do líquido arrefecedor podem ser usados com qualquer tipo de anticongelante etileno ou propileno que satisfaz as Especificações ASTM D4985 ou ASTM D5345.

NOTA:

Para uso apenas com líquido arrefecedor para serviço pesado padrão, não deve ser usado com Líquido Arrefecedor de Vida Longa.

PEÇAS NECESSÁRIAS:

Capacidade do Sistema de Arrefecimento		Líquido SCA Durante Abastecimento Inicial	Líquido SCA Durante Manutenção*	Elemento de Manutenção de SCA com Roscas*
Litros	Galões			
22-30	6-8	3P-2044 (1)	6V-3542 (1)	111-2370 (1)
30-38	8-10	3P-2044 (1) 6V-3542 (1)	111-2372 (1)	111-2369 (1)
38-49	10-13	3P-2044 (1) 8T-1589 (1)	111-2372 (1)	111-2369 (1)
49-64	13-17	3P-2044 (2)	8T-1589 (1)	9N-3368 (1)
64-83	17-22	3P-2044 (2) 8T-1589 (1)	111-2372 (1) 6V-3542 (1)	111-2371 (1)
83-114	22-30	3P-2044 (3) 8T-1589 (1)	3P-2044 (1)	9N-3718 (1)
114-163	30-43	3P-2044 (5)	3P-2044 (1) 6V-3542 (1)	111-2371 (2)
163-242	43-64	3P-2044 (8)	3P-2044 (2)	9N-3718 (2)

** O período normal de manutenção é de 250 horas. Consulte o Manual de Operação e Manutenção para obter instruções completas quanto à manutenção do líquido arrefecedor.*

( ) Indica a quantidade exigida.

MAINTENANCE PARTS

DESCRIPTION	PART NUMBER	QTY	WHERE USED	PAGE
AIR INLET AND EXHAUST SYSTEM				
CAP-RAIN (AIR CLEANER)	166-2087	1	AIR CLEANER GP	68
FILTER ELEMENT AS-AIR (PRIMARY)	152-7217	1	AIR CLEANER GP	67
		1	AIR CLEANER GP	69
FILTER ELEMENT AS-AIR (SECONDARY)	152-7219	1	AIR CLEANER GP	67
		1	AIR CLEANER GP	69
INDICATOR AS	187-2868	1	AIR CLEANER GP	70
INDICATOR AS (FILTER CHANGE)	187-2868	1	AIR CLEANER GP	68
BASIC ENGINE				
CAP AS (OIL FILLER)	130-9888	1	COVER GP-VALVE MECHANISM	10
COCK-DRAIN (CYLINDER BLOCK OIL DRAIN)	2P-4173	1	DRAIN GP-ENGINE OIL	18
GASKET (VALVE COVER)	216-9604	1	COVER GP-VALVE MECHANISM	10
HOSE-DISPOSAL (FUMES)	191-5049	1	COVER GP-VALVE MECHANISM	10
PLUG-SEAL (OIL DRAIN)	8C-5225	1	DRAIN GP-ENGINE OIL	18
PLUG-SUMP DRAIN	7C-0351	2	PAN GP-OIL	34
SEAL-O-RING (OIL DRAIN PLUG)	5P-6718	2	PAN GP-OIL	34
SPRING (BREATHER HOSE)	162-1565	1	COVER GP-VALVE MECHANISM	10
BRAKING SYSTEM				
CAP-DUST	6V-0852	1	CONTROL GP-SERVICE BRAKE	304
COOLING SYSTEM				
CAP AS-RADIATOR	185-1043	1	RADIATOR GP	62
REGULATOR-WATER TEMPERATURE	216-9737	1	CONNECTION GP-WATER	51
SEAL-O-RING (REGULATOR)	140-7515	1	CONNECTION GP-WATER	51
SEAL (REGULATOR HOUSING)	141-6188	1	CONNECTION GP-WATER	51
VALVE GP-RADIATOR DRAIN	225-4287	1	RADIATOR GP	62

MAINTENANCE PARTS

DESCRIPTION	PART NUMBER	QTY	WHERE USED	PAGE
ELECTRICAL AND STARTING SYSTEM				
BATTERY (12V)(950CCA)	115-2422	2	BATTERY GP	103
BELT-DRIVE (WARNING BEACON)	9X-8139	1	LAMP GP-WARNING BEACON	115
CIRCUIT BREAKER AS (15 AMP)	3T-2662	1	WIRING GP-ENGINE	156
CIRCUIT BREAKER AS (30 AMP)	147-1773	1	WIRING GP-ENGINE	156
CIRCUIT BREAKER AS (90 AMP)	171-2211	1	WIRING GP-ENGINE	156
CIRCUIT BREAKER GP (60 AMP)	171-2208	1	WIRING GP-ENGINE	156
KEY (BATTERY DISCONNECT)	8H-5306	1	SWITCH GP-DISCONNECT	134
LAMP	9X-3463	1	LAMP GP-FLOOD	113
LAMP AS-LH	5C-9029	1	LIGHTING GP-FLOOD & SIGNAL	122
LAMP AS-RH	5C-8964	1	LIGHTING GP-FLOOD & SIGNAL	122
LAMP AS (12 VOLT)	165-5655	1	WIRING GP-MACHINE	166
LAMP (DOUBLE FILAMENT)	9X-4492	1	LAMP GP-STOP & TAIL	114
LAMP-HEAD (24 VOLT)	9X-3463	1	LIGHTING GP-FLOOD & SIGNAL	122
LAMP (SINGLE FILAMENT)	9X-4493	1	LAMP GP-STOP & TAIL	114
LAMP (24 VOLT)	9X-3463	1	LIGHTING GP-FLOOD	118
		1	LIGHTING GP-FLOOD	120
	9X-4493	2	LIGHTING GP-FLOOD & SIGNAL	122
	115-1748	2	WIRING GP-CAB	142
		4	WIRING GP-CAB	146
LAMP (24 VOLT)(70 WATT)	9X-7849	1	LAMP GP-WARNING BEACON	115
LENS	146-2438	1	LAMP GP-STOP & TAIL	114
LENS (AMBER)	9X-8121	1	LAMP GP-WARNING BEACON	115
REFLECTOR	9R-1499	2	LIGHTING GP-FLOOD & SIGNAL	122
REFLECTOR-AMBER	9R-2404	6	LIGHTING GP-FLOOD & SIGNAL	122
V-BELT SET	130-3216	1	ALTERNATOR GP-CHARGING	100
		1	ALTERNATOR GP-CHARGING	102
FRAME AND BODY				
FITTING-GREASE	3B-8489	2	HITCH GP-ARTICULATING	288
FITTING-GREASE (1/8-27 THD)	3B-8489	7	LINES GP-GREASE	294
		6	LINES GP-GREASE	295
FUEL SYSTEM				
CAP AS-FUEL	142-8828	1	TANK & MTG GP-FUEL	94
FILTER ELEMENT-FUEL	145-4501	1	FILTER GP-FUEL	78
FILTER ELEMENT-WATER (SEPARATOR)	131-1812	1	SEPARATOR GP-WATER	93
KIT-BOWL SEAL (WATER SEPERATOR)	128-8614	1	SEPARATOR GP-WATER	93

MAINTENANCE PARTS

DESCRIPTION	PART NUMBER	QTY	WHERE USED	PAGE
HYDRAULIC SYSTEM				
BREATHER	130-4634	1	TANK & MTG GP-HYDRAULIC	482
CAP AS	174-3222	1	CYLINDER GP-TILT	376
CAP AS-HYDRAULIC	142-8937	1	TANK & MTG GP-HYDRAULIC	482
CAP-DUST	6V-0852	1	LINES GP-HYDRAULIC	406
		2	LINES GP-PILOT	428
		2	LINES GP-PILOT	432
		2	LINES GP-PILOT	436
	8C-3451	1	FILTER GP-OIL	379
FILTER AS-OIL	126-1818	1	FILTER GP-OIL	379
KEY	5P-8500	1	TANK & MTG GP-HYDRAULIC	482
KIT-SEAL	107-7491	1	VALVE GP-CHECK	491
PADLOCK GP	5P-8502	1	TANK & MTG GP-HYDRAULIC	482
SCREEN AS	141-9236	1	VALVE GP-PILOT	508
		1	VALVE GP-PILOT	512
		1	VALVE GP-PILOT	514
		1	VALVE GP-PILOT	516
		1	VALVE GP-PILOT	518
		1	VALVE GP-PILOT	520
		1	VALVE GP-PILOT	524
		1	VALVE GP-PILOT	526
		1	VALVE GP-PILOT	528
		1	VALVE GP-PILOT	532
SEAL-O-RING	3D-2824	1	MOTOR GP-GEAR	464
SLEEVE	8Y-6364	1	TANK & MTG GP-HYDRAULIC	482
IMPLEMENTS				
FITTING-GREASE	3B-8489	8	CONTROL GP-BUCKET	568
		12	CONTROL GP-WORK TOOL	570
FITTING-STRAIGHT	3B-8491	4	CONTROL GP-BUCKET	568
LUBRICATION SYSTEM				
CAP-DUST (OIL SAMPLING VALVE)	8C-3445	1	VALVE GP-FLUID SAMPLING	50
FILTER AS-ENGINE OIL	1R-0739	1	FILTER GP-ENGINE OIL	45
OPERATOR STATION				
BATTERY	101-1785	1	CONTROL GP-MONITOR	621
BLADE AS-WIPER (FRONT)	6V-7419	1	WIPER GP-WINDOW	716
BLADE AS-WIPER (REAR)	5C-8811	1	WIPER GP-WINDOW	716
CAP AS (AIR CONDITIONER)	3E-4051	1	LINES GP-AIR CONDITIONER	656
	3E-4052	1	LINES GP-AIR CONDITIONER	656
CIRCUIT BREAKER AS (15 AMP) (AIR SEAT)	3T-2662	1	SEAT & MOUNTING GP	692
FILTER	111-8738	1	FILTER GP-CAB AIR	639
FILTER-SCREEN	8T-5913	2	WASHER GP-WINDOW	714
LAMP	112-5219	1	LINER GP-CAB	651
LAMP (24 VOLT)	115-1748	1	CONTROL GP-MONITOR	621
		2	PANEL GP-INSTRUMENT	676
V-BELT	1W-2934	1	COMPRESSOR GP-REFRIGERANT	617

MAINTENANCE PARTS

DESCRIPTION	PART NUMBER	QTY	WHERE USED	PAGE
POWER TRAIN				
BREATHER	9G-5127	1	CASE & PARTS GP-PLANETARY	184
CAP	2D-2633	1	VALVE GP-TIRE	261
CAP-DUST	6V-0852	2	CASE & PARTS GP-PLANETARY	184
		1	FILTER GP-OIL	208
		1	LINES GP-AXLE OIL COOLER	226
		1	LINES GP-TORQUE CONV COOLER	232
	8C-3451	1	FILTER GP-OIL	208
CAP-FILL	137-6727	1	FILLER GP-POWER TRAIN OIL	204
FILTER AS-OIL (HYDRAULIC)	1G-8878	1	FILTER GP-OIL	208
FILTER-MAGNETIC	8S-9129	1	CASE & PARTS GP-PLANETARY	184
FITTING-GREASE	3B-8489	1	SHAFT GP-DRIVE	247
		1	SLIP JOINT GP	249
PADLOCK GP	5P-8502	1	FILLER GP-POWER TRAIN OIL	204
PLUG-DRAIN	7T-2703	1	CASE & PARTS GP-PLANETARY	184
PLUG-MAGNETIC	5P-4484	1	HOUSING GP-FIXED AXLE	216
		1	HOUSING GP-OSCILLATING AXLE	218
		1	HOUSING GP-OSCILLATING AXLE	222
SCREEN-SUCTION	8S-9130	1	CASE & PARTS GP-PLANETARY	184
WORK TOOLS				
FITTING-STRAIGHT (1/8-27 THD)	3B-8491	4	COUPLER GP-QUICK	586

PIÈCES DE RECHANGE

DESCRIPTION	NUMÉRO DE PIECÈS	QTÉ	DOMAINE D'APPLICATION	PAGE
CHÂSSIS ET BENNE				
GRAISSEUR	3B-8489	2	ATTELAGE D'ARTICULATION (ASS)	288
GRAISSEUR (FILET 1/8-27)	3B-8489	7	CANALISATIONS DE GRAISSAGE (ASS)	294
		6	CANALISATIONS DE GRAISSAGE (ASS)	295
CIRCUIT D'ADMISSION D'AIR ET D'ÉCHAPPEMENT				
BOUCHON CONTRE LA PLUIE (FILTRE À AIR)	166-2087	1	FILTRE A AIR (ASS)	68
ÉLÉMENT DE FILTRE À AIR (ENS) (PRINCIPAL)	152-7217	1	FILTRE A AIR (ASS)	67
		1	FILTRE A AIR (ASS)	69
ÉLÉMENT DE FILTRE À AIR (ENS) (SECONDAIRE)	152-7219	1	FILTRE A AIR (ASS)	67
		1	FILTRE A AIR (ASS)	69
INDICATEUR (ENS)	187-2868	1	FILTRE A AIR (ASS)	70
INDICATEUR (ENS) (REMPLACEMENT DE FILTRE)	187-2868	1	FILTRE A AIR (ASS)	68
CIRCUIT DE CARBURANT				
BOUCHON DE CARBURANT (ENS)	142-8828	1	RÉSERVOIR DE CARBURANT ET MONTAGE (ASS)	94
ÉLÉMENT DE FILTRE À CARBURANT	145-4501	1	FILTRE A CARBURANT (ASS)	78
ÉLÉMENT DE FILTRE À EAU (SÉPARATEUR)	131-1812	1	SÉPARATEUR D'EAU (ASS)	93
KIT DE JOINT DE FILTRE (SÉPARATEUR D'EAU)	128-8614	1	SÉPARATEUR D'EAU (ASS)	93
CIRCUIT DE FREINS				
PARE-POUSSIERE	6V-0852	1	FREIN DE MANOEUVRE - COMMANDE (ASS)	304
CIRCUIT DE GRAISSAGE				
FILTRE A HUILE MOTEUR (ENS)	1R-0739	1	FILTRE À HUILE MOTEUR (ASS)	45
PARE-POUSSIERE (ROBINET DE PRÉLÈVEMENT D'HUILE)	8C-3445	1	ROBINET-PRÉLÈVEMENT D'ÉCHANTILLON DE LIQUIDE (ASS)	50
CIRCUIT DE REFROIDISSEMENT				
BOUCHON DE RADIATEUR (ENS)	185-1043	1	RADIATEUR (ASS)	62
BOURRELET D'ÉTANCHÉITÉ (CARTER DE RÉGULATEUR)	141-6188	1	RACCORD D'EAU (ASS)	51
JOINT TORIQUE (RÉGULATEUR)	140-7515	1	RACCORD D'EAU (ASS)	51
ROBINET DE VIDANGE DE RADIATEUR (ASS)	225-4287	1	RADIATEUR (ASS)	62
THERMOSTAT-TEMPÉRATURE D'EAU	216-9737	1	RACCORD D'EAU (ASS)	51

PIÈCES DE RECHANGE

DESCRIPTION	NUMÉRO DE PIECÈS	QTÉ	DOMAINE D'APPLICATION	PAGE
CIRCUIT ELECTRIQUE ET DE DEMARRAGE				
AMPOULE	9X-3463	1	LAMPE - PHARE (ASS)	113
AMPOULE (FILAMENT DOUBLE)	9X-4492	1	FEUX ARRIÈRE ET FEUX D'ARRÊT	114
AMPOULE (FILAMENT SIMPLE)	9X-4493	1	FEUX ARRIÈRE ET FEUX D'ARRÊT	114
AMPOULE (24 VOLTS)	9X-3463	1	ÉCLAIRAGE - PROJECTEURS (ASS)	118
		1	ÉCLAIRAGE - PROJECTEURS (ASS)	120
	115-1748	2	CABLAGE DE CABINE (ASS)	142
		4	CABLAGE DE CABINE (ASS)	146
	9X-4493	2	ÉCLAIRAGE - PROJECTEURS ET CLIGNOTANTS (ASS)	122
AMPOULE (24 VOLTS)(70 WATTS)	9X-7849	1	LAMPE - GYROPHARE (ASS)	115
BATTERIE (12V)(950CCA)	115-2422	2	BATTERIE (ASS)	103
CLÉ (COUPE-BATTERIE)	8H-5306	1	ROBINET DE BATTERIE (ASS)	134
DISJONCTEUR (ASS) (60A)	171-2208	1	CABLAGE DE MOTEUR (ASS)	156
DISJONCTEUR (ENS) (15A)	3T-2662	1	CABLAGE DE MOTEUR (ASS)	156
DISJONCTEUR (ENS) (30A)	147-1773	1	CABLAGE DE MOTEUR (ASS)	156
DISJONCTEUR (ENS) (90A)	171-2211	1	CABLAGE DE MOTEUR (ASS)	156
ENTRAÎNEMENT POUR COURROIE (GYROPHARE)	9X-8139	1	LAMPE - GYROPHARE (ASS)	115
JEU DE COURROIES TRAPEZOIDALES	130-3216	1	ALTERNATEUR DE CHARGE (ASS)	100
		1	ALTERNATEUR DE CHARGE (ASS)	102
LAMPE - FEUX AV (24 VOLTS)	9X-3463	1	ÉCLAIRAGE - PROJECTEURS ET CLIGNOTANTS (ASS)	122
LAMPE-CÔTÉ DROIT (ENS)	5C-8964	1	ÉCLAIRAGE - PROJECTEURS ET CLIGNOTANTS (ASS)	122
LAMPE-CÔTÉ GAUCHE (ENS)	5C-9029	1	ÉCLAIRAGE - PROJECTEURS ET CLIGNOTANTS (ASS)	122
LAMPE (ENS) (12 VOLTS)	165-5655	1	CABLAGE DE LA MACHINE (ASS)	166
LENTILLE	146-2438	1	FEUX ARRIÈRE ET FEUX D'ARRÊT	114
LENTILLE (JAUNE)	9X-8121	1	LAMPE - GYROPHARE (ASS)	115
RÉFLECTEUR	9R-1499	2	ÉCLAIRAGE - PROJECTEURS ET CLIGNOTANTS (ASS)	122
RÉFLECTEUR JAUNE	9R-2404	6	ÉCLAIRAGE - PROJECTEURS ET CLIGNOTANTS (ASS)	122

PIÈCES DE RECHANGE

DESCRIPTION	NUMÉRO DE PIECÈS	QTÉ	DOMAINE D'APPLICATION	PAGE
CIRCUIT HYDRAULIQUE				
BOUCHON HYDRAULIQUE (ENS)	142-8937	1	RÉSERVOIR HYDRAULIQUE ET MONTAGE (ASS)	482
CADENAS (ASS)	5P-8502	1	RÉSERVOIR HYDRAULIQUE ET MONTAGE (ASS)	482
CHAPEAU (ENS)	174-3222	1	VÉRIN D'INCLINAISON (ASS)	376
CLÉ	5P-8500	1	RÉSERVOIR HYDRAULIQUE ET MONTAGE (ASS)	482
ÉCRAN (ENS)	141-9236	1	SOUPAPE PILOTE (ASS)	508
		1	SOUPAPE PILOTE (ASS)	512
		1	SOUPAPE PILOTE (ASS)	514
		1	SOUPAPE PILOTE (ASS)	516
		1	SOUPAPE PILOTE (ASS)	518
		1	SOUPAPE PILOTE (ASS)	520
		1	SOUPAPE PILOTE (ASS)	524
		1	SOUPAPE PILOTE (ASS)	526
		1	SOUPAPE PILOTE (ASS)	528
		1	SOUPAPE PILOTE (ASS)	532
FILTRE À HUILE (ENS)	126-1818	1	FILTRE A HUILE (ASS)	379
JOINT TORIQUE	3D-2824	1	MOTEUR À ENGRENAGES (ASS)	464
KIT DE JOINTS	107-7491	1	CLAPET DE RETENUE (ENS)	491
MANCHON	8Y-6364	1	RÉSERVOIR HYDRAULIQUE ET MONTAGE (ASS)	482
PARE-POUSSIERE	6V-0852	2	CANALISATIONS A COMMANDE PILOTE (ASS)	428
		2	CANALISATIONS A COMMANDE PILOTE (ASS)	432
		2	CANALISATIONS A COMMANDE PILOTE (ASS)	436
		1	CANALISATIONS HYDRAULIQUES (ASS)	406
	8C-3451	1	FILTRE A HUILE (ASS)	379
RENIFLARD	130-4634	1	RÉSERVOIR HYDRAULIQUE ET MONTAGE (ASS)	482
ÉQUIPEMENTS				
GRAISSEUR	3B-8489	12	COMMANDE - OUTIL DE TRAVAIL (ASS)	570
		8	COMMANDE DE GODET (ASS)	568
RACCORD DROIT	3B-8491	4	COMMANDE DE GODET (ASS)	568
MOTEUR STANDARD				
BOUCHON-JOINT (VIDANGE D'HUILE)	8C-5225	1	VIDANGE-HUILE DE MOTEUR (ASS)	18
BOUCHON-VIDANGE DU CARTER	7C-0351	2	HUILE MOTEUR - CARTER (ASS)	34
CHAPEAU (ENS) (REMPLISSAGE D'HUILE)	130-9888	1	CACHE-SOUPAPES (ASS)	10
JOINT PLAT (CACHE-SOUPAPES)	216-9604	1	CACHE-SOUPAPES (ASS)	10
JOINT TORIQUE (BOUCHON DE VIDANGE D'HUILE)	5P-6718	2	HUILE MOTEUR - CARTER (ASS)	34
RESSORT (FLEXIBLE DE RENIFLARD)	162-1565	1	CACHE-SOUPAPES (ASS)	10
ROBINET DE VIDANGE (VIDANGE D'HUILE DE BLOC-CYLINDRE)	2P-4173	1	VIDANGE-HUILE DE MOTEUR (ASS)	18
TUYAU D'ÉCHAPPEMENT (VAPEURS)	191-5049	1	CACHE-SOUPAPES (ASS)	10

PIÈCES DE RECHANGE

DESCRIPTION	NUMÉRO DE PIECÈS	QTÉ	DOMAINE D'APPLICATION	PAGE
OUTILS DE TRAVAIL				
RACCORD DROIT (FILET 1/8-27)	3B-8491	4	COUPLEUR EXPRESS (ASS)	586
POSTE DE CONDUITE				
AMPOULE	112-5219	1	CABINE - REVÊTEMENT (ASS)	651
AMPOULE (24 VOLTS)	115-1748	1	GROUPE DE CONTROLE	621
		2	TABLEAU DE BORD (ASS)	676
BALAI D'ESSUIE-GLACE (ENS) (ARRIÈRE)	5C-8811	1	ESSUIE-GLACE (ASS)	716
BALAI D'ESSUIE-GLACE (ENS) (AVANT)	6V-7419	1	ESSUIE-GLACE (ASS)	716
BATTERIE	101-1785	1	GROUPE DE CONTROLE	621
CHAPEAU (ENS) (CLIMATISEUR)	3E-4051	1	CANALISATIONS DE CLIMATISEUR (ASS)	656
	3E-4052	1	CANALISATIONS DE CLIMATISEUR (ASS)	656
COURROIE TRAPEZOIDALE	1W-2934	1	COMPRESSEUR DE REFRIGERANT (ASS)	617
DISJONCTEUR (ENS) (15A) (SIÈGE PNEUMATIQUE)	3T-2662	1	SIÈGE ET MONTAGE (ASS)	692
FILTRE	111-8738	1	FILTRE À AIR DE CABINE (ASS)	639
TAMIS DE FILTRE	8T-5913	2	LAVE-GLACE - VITRE (ASS)	714
TRANSMISSION				
BOUCHON AIMANTÉ	5P-4484	1	CARTER D'ESSIEU FIXE	216
		1	CARTER D'ESSIEU OSCILLANT	218
		1	CARTER D'ESSIEU OSCILLANT	222
BOUCHON DE REMPLISSAGE	137-6727	1	GOULOTTE DE REMPLISSAGE D'HUILE DE TRANSMISSION	204
BOUCHON DE VIDANGE	7T-2703	1	TRAINS PLANÉTAIRES - CARTER ET PIÈCES	184
CADENAS (ASS)	5P-8502	1	GOULOTTE DE REMPLISSAGE D'HUILE DE TRANSMISSION	204
CHAPEAU	2D-2633	1	PNEU - GROUPE DE VALVE	261
ÉCRAN MAGNÉTIQUE	8S-9129	1	TRAINS PLANÉTAIRES - CARTER ET PIÈCES	184
FILTRE À HUILE (ENS) (HYDRAULIQUE)	1G-8878	1	FILTRE A HUILE (ASS)	208
GRAISSEUR	3B-8489	1	ARBRE D'ENTRAÎNEMENT (ASS)	247
		1	CARDAN COULISSANT (ASS)	249
PARE-POUSSIERE	6V-0852	1	CANALIS. DE REFROIDISSEMENT DU CONV. DE COUPLE	232
		1	CANALISATIONS DE REFROIDISSEUR D'HUILE D'ESSIEU (ASS)	226
		1	FILTRE A HUILE (ASS)	208
		2	TRAINS PLANÉTAIRES - CARTER ET PIÈCES	184
	8C-3451	1	FILTRE A HUILE (ASS)	208
RENIFLARD	9G-5127	1	TRAINS PLANÉTAIRES - CARTER ET PIÈCES	184
TAMIS D'ASPIRATION	8S-9130	1	TRAINS PLANÉTAIRES - CARTER ET PIÈCES	184

PIEZAS DE MANTENIMIENTO

DESCRIPCION	NUMERO DE PIEZA	CANT	SE UTILIZA EN	PAGINA
BASTIDOR Y CAJA				
CONEXIÓN DE ENGRASE	3B-8489	2	ENGANCHE ARTICULADO (GR)	288
CONEXIÓN DE ENGRASE (ROSCA DE 1/8-27)	3B-8489	7	TUBERÍAS DE ENGRASE (GR)	294
		6	TUBERÍAS DE ENGRASE (GR)	295
HERRAMIENTAS				
CONEXION-RECTA (ROSCA DE 1/8-27)	3B-8491	4	ACOPLADOR RÁPIDO (GR)	586
IMPLEMENTOS				
CONEXIÓN DE ENGRASE	3B-8489	12	CONTROL DE LA HERRAMIENTA DE TRABAJO (GR)	570
		8	CONTROL DEL CUCHARÓN (GR)	568
CONEXION-RECTA	3B-8491	4	CONTROL DEL CUCHARÓN (GR)	568
MOTOR BÁSICO				
EMPAQUETADURA (TAPA DE VÁLVULA)	216-9604	1	TAPA DEL MECANISMO DE VÁLVULAS (GR)	10
GRIFO DE DRENAJE (DRENAJE DEL ACEITE DEL BLOQUE DEL CILINDRO)	2P-4173	1	DRENAJE DEL ACEITE DE MOTOR	18
RESORTE (RESPIRADERO DE MANGUERA)	162-1565	1	TAPA DEL MECANISMO DE VÁLVULAS (GR)	10
SELLO ANULAR (TAPÓN PARA DRENAJE DE ACEITE)	5P-6718	2	CÁRTER - COLECTOR DEL (GR)	34
TAPÓN (CONJ) (FILTRO DE ACEITE)	130-9888	1	TAPA DEL MECANISMO DE VÁLVULAS (GR)	10
TAPON DE DRENAJE DE SUMIDERO	7C-0351	2	CÁRTER - COLECTOR DEL (GR)	34
TAPON DE SELLO (DRENAJE DE ACEITE)	8C-5225	1	DRENAJE DEL ACEITE DE MOTOR	18
TUBO DE ESCAPE (VAPORES)	191-5049	1	TAPA DEL MECANISMO DE VÁLVULAS (GR)	10
PUESTO DEL OPERADOR				
BATERÍA	101-1785	1	CONTROL DE MONITOR (GR)	621
CORREA TRAPEZOIDAL	1W-2934	1	COMPRESOR DE REFRIGERANTE (GR)	617
DISYUNTOR (CONJ) (15 A) (ASIENTO DE AIRE)	3T-2662	1	ASIENTO Y MONTAJE (GR)	692
FILTRO	111-8738	1	FILTRO DE AIRE DE LA CABINA (GR)	639
HOJA DE LIMPIAPARABRISAS (CONJ) (DELANTERO)	6V-7419	1	LIMPIAPARABRISAS DE LA VENTANA (GR)	716
HOJA DE LIMPIAPARABRISAS (CONJ) (TRASERO/A)	5C-8811	1	LIMPIAPARABRISAS DE LA VENTANA (GR)	716
LÁMPARA	112-5219	1	REVESTIMIENTO DE LA CABINA (GR)	651
LÁMPARA (24 VOLTIOS)	115-1748	1	CONTROL DE MONITOR (GR)	621
		2	TABLERO DE INSTRUMENTOS (GR)	676
REJILLA DE FILTRO	8T-5913	2	LAVAPARABRISAS DE LA VENTANA (GR)	714
TAPÓN (CONJ) (ACONDICIONADOR DE AIRE)	3E-4051	1	TUBERÍAS DE ACONDICIONADOR DE AIRE (GR)	656
	3E-4052	1	TUBERÍAS DE ACONDICIONADOR DE AIRE (GR)	656

PIEZAS DE MANTENIMIENTO

DESCRIPCION	NUMERO DE PIEZA	CANT	SE UTILIZA EN	PAGINA
SISTEMA DE AIRE DE ADMISIÓN Y ESCAPE				
ELEMENTO DEL FILTRO DE AIRE (CONJ) (PRIMARIO)	152-7217	1	FILTRO DE AIRE (GR)	67
		1	FILTRO DE AIRE (GR)	69
ELEMENTO DEL FILTRO DE AIRE (CONJ) (SECUNDARIO)	152-7219	1	FILTRO DE AIRE (GR)	67
		1	FILTRO DE AIRE (GR)	69
INDICADOR (CONJ)	187-2868	1	FILTRO DE AIRE (GR)	70
INDICADOR (CONJ) (CAMBIO DE FILTRO)	187-2868	1	FILTRO DE AIRE (GR)	68
TAPA PARA LLUVIA (FILTRO DE AIRE)	166-2087	1	FILTRO DE AIRE (GR)	68
SISTEMA DE COMBUSTIBLE				
ELEMENTO DE FILTRO DE AGUA (SEPARADOR)	131-1812	1	SEPARADOR DE AGUA (GR)	93
ELEMENTO DE FILTRO DE COMBUSTIBLE	145-4501	1	FILTRO DE COMBUSTIBLE (GR)	78
JUEGO DE SELLO DE TAZA (SEPARADOR DE AGUA)	128-8614	1	SEPARADOR DE AGUA (GR)	93
TAPA DEL COMBUSTIBLE(CONJ)	142-8828	1	TANQUE DE COMBUSTIBLE Y GRUPO DE MONTAJE	94
SISTEMA DE ENFRIAMIENTO				
REGULADOR DE TEMPERATURA DEL AGUA	216-9737	1	AGUA - CONEXIÓN DE (GR)	51
SELLO ANULAR (REGULADOR)	140-7515	1	AGUA - CONEXIÓN DE (GR)	51
SELLO (CAJA DE REGULADOR)	141-6188	1	AGUA - CONEXIÓN DE (GR)	51
TAPA DE RADIADOR (CONJ)	185-1043	1	RADIADOR (GR)	62
VÁLVULA DE DRENAJE DEL RADIADOR (GR)	225-4287	1	RADIADOR (GR)	62
SISTEMA DE FRENOS				
TAPA CONTRA EL POLVO	6V-0852	1	FRENO DE SERVICIO - CONTROL (GR)	304
SISTEMA DE LUBRICACIÓN				
FILTRO DE ACEITE DEL MOTOR (CONJ)	1R-0739	1	FILTRO DE ACEITE DEL MOTOR (GR)	45
TAPA CONTRA EL POLVO (VÁLVULA DE MUESTREO DE ACEITE)	8C-3445	1	VÁLVULA DE MUESTREO (GR)	50

PIEZAS DE MANTENIMIENTO

DESCRIPCION	NUMERO DE PIEZA	CANT	SE UTILIZA EN	PAGINA
SISTEMA ELECTRICO Y DE ARRANQUE				
BATERÍA (12 VOLTIOS, 950 AMPERIOS DE CORRIENTE EN FRIO)	115-2422	2	BATERÍA (GR)	103
CRISTAL	146-2438	1	LUCES DE PARADA Y COLA (GR)	114
CRISTAL (AMBAR)	9X-8121	1	LÁMPARA DE BALIZA DE ADVERTENCIA (GR)	115
DISYUNTOR (CONJ) (15 A)	3T-2662	1	CABLES DEL MOTOR (GR)	156
DISYUNTOR (CONJ) (30 A)	147-1773	1	CABLES DEL MOTOR (GR)	156
DISYUNTOR (CONJ) (90 AMP)	171-2211	1	CABLES DEL MOTOR (GR)	156
DISYUNTOR DE CIRCUITO (GR) (60 AMP)	171-2208	1	CABLES DEL MOTOR (GR)	156
JUEGO DE CORREAS TRAPEZOIDALES	130-3216	1	CARGA - ALTERNADOR DE (GR)	100
		1	CARGA - ALTERNADOR DE (GR)	102
LÁMPARA	9X-3463	1	REFLECTOR (GR)	113
LÁMPARA (CONJ) (12 VOLTIOS)	165-5655	1	CABLES DE LA MÁQUINA (GR)	166
LÁMPARA DE FARO DELANTERO (24 VOLTIOS)	9X-3463	1	LUCES DE REFLECTOR Y CAMBIO DE DIRECCION (GR)	122
LAMPARA DERECHA (CONJ)	5C-8964	1	LUCES DE REFLECTOR Y CAMBIO DE DIRECCION (GR)	122
LÁMPARA (FILAMENTO DOBLE)	9X-4492	1	LUCES DE PARADA Y COLA (GR)	114
LÁMPARA (FILAMENTO SENCILLO)	9X-4493	1	LUCES DE PARADA Y COLA (GR)	114
LAMPARA IZQUIERDA (CONJ)	5C-9029	1	LUCES DE REFLECTOR Y CAMBIO DE DIRECCION (GR)	122
LÁMPARA (24 VOLTIOS)	9X-3463	1	LUCES DE REFLECTOR (GR)	118
		1	LUCES DE REFLECTOR (GR)	120
	9X-4493	2	LUCES DE REFLECTOR Y CAMBIO DE DIRECCION (GR)	122
	115-1748	2	CABLES DE LA CABINA (GR)	142
		4	CABLES DE LA CABINA (GR)	146
LÁMPARA (24 VOLTIOS, 70 VATIOS)	9X-7849	1	LÁMPARA DE BALIZA DE ADVERTENCIA (GR)	115
LLAVE (DESCONECTAR BATERIA)	8H-5306	1	DISYUNTOR (GR)	134
MANDO DE CORREA (BALIZA GIRATORIA DE ADVERTENCIA)	9X-8139	1	LÁMPARA DE BALIZA DE ADVERTENCIA (GR)	115
REFLECTOR	9R-1499	2	LUCES DE REFLECTOR Y CAMBIO DE DIRECCION (GR)	122
REFLECTOR-AMBAR	9R-2404	6	LUCES DE REFLECTOR Y CAMBIO DE DIRECCION (GR)	122

PIEZAS DE MANTENIMIENTO

DESCRIPCION	NUMERO DE PIEZA	CANT	SE UTILIZA EN	PAGINA
SISTEMA HIDRÁULICO				
CANDADO (GR)	5P-8502	1	TANQUE HIDRÁULICO Y MONTAJE (GR)	482
FILTRO DE ACEITE (CONJ)	126-1818	1	FILTRO DE ACEITE (GR)	379
JUEGO DE SELLOS	107-7491	1	VÁLVULA DE RETENCIÓN (GR)	491
LLAVE	5P-8500	1	TANQUE HIDRÁULICO Y MONTAJE (GR)	482
MANGUITO	8Y-6364	1	TANQUE HIDRÁULICO Y MONTAJE (GR)	482
PANTALLA (CONJ)	141-9236	1	VÁLVULA PILOTO (GR)	508
		1	VÁLVULA PILOTO (GR)	512
		1	VÁLVULA PILOTO (GR)	514
		1	VÁLVULA PILOTO (GR)	516
		1	VÁLVULA PILOTO (GR)	518
		1	VÁLVULA PILOTO (GR)	520
		1	VÁLVULA PILOTO (GR)	524
		1	VÁLVULA PILOTO (GR)	526
		1	VÁLVULA PILOTO (GR)	528
		1	VÁLVULA PILOTO (GR)	532
RESPIRADERO	130-4634	1	TANQUE HIDRÁULICO Y MONTAJE (GR)	482
SELLO ANULAR	3D-2824	1	MOTOR DE ENGRANAJES (GR)	464
TAPA CONTRA EL POLVO	6V-0852	2	TUBERÍAS CON SERVOMANDO (GR)	428
		2	TUBERÍAS CON SERVOMANDO (GR)	432
		2	TUBERÍAS CON SERVOMANDO (GR)	436
		1	TUBERÍAS HIDRÁULICAS (GR)	406
	8C-3451	1	FILTRO DE ACEITE (GR)	379
TAPA HIDRAULICA (CONJ)	142-8937	1	TANQUE HIDRÁULICO Y MONTAJE (GR)	482
TAPÓN (CONJ)	174-3222	1	INCLINACIÓN HORIZONTAL - CILINDRO DE (GR)	376

PIEZAS DE MANTENIMIENTO

DESCRIPCION	NUMERO DE PIEZA	CANT	SE UTILIZA EN	PAGINA
TREN DE FUERZA				
CANDADO (GR)	5P-8502	1	TUBO DE LLENADO DE ACEITE DE LA TRANSMISIÓN (GR)	204
CONEXIÓN DE ENGRASE	3B-8489	1	EJE DE MANDO (GR)	247
		1	JUNTA DESLIZANTE (GR)	249
FILTRO DE ACEITE (CONJ) (HIDRAULICO)	1G-8878	1	FILTRO DE ACEITE (GR)	208
FILTRO MAGNÉTICO	8S-9129	1	CAJA Y PIEZAS DE LOS PLANETARIOS	184
REJILLA DE SUCCIÓN	8S-9130	1	CAJA Y PIEZAS DE LOS PLANETARIOS	184
RESPIRADERO	9G-5127	1	CAJA Y PIEZAS DE LOS PLANETARIOS	184
TAPA	2D-2633	1	VÁLVULA DEL NEUMÁTICO (GR)	261
TAPA CONTRA EL POLVO	6V-0852	2	CAJA Y PIEZAS DE LOS PLANETARIOS	184
		1	FILTRO DE ACEITE (GR)	208
		1	TUBERÍAS DEL ENFRIADOR DE ACEITE DEL EJE (GR)	226
		1	TUBERIAS DEL ENFRIADOR DEL CONVERTIDOR DE PAR	232
	8C-3451	1	FILTRO DE ACEITE (GR)	208
TAPA, LLENADO	137-6727	1	TUBO DE LLENADO DE ACEITE DE LA TRANSMISIÓN (GR)	204
TAPÓN DE DRENAJE	7T-2703	1	CAJA Y PIEZAS DE LOS PLANETARIOS	184
TAPÓN MAGNÉTICO	5P-4484	1	CAJA DE EJE OSCILANTE (GR)	218
		1	CAJA DE EJE OSCILANTE (GR)	222
		1	CAJA DEL EJE OSCILANTE (GR)	216

PEÇAS DE MANUTENÇÃO

DESCRIÇÃO	NÚMERO DE PEÇA	QUANT	UTILIZADA EM	PÁGINA
ACESSÓRIOS				
CONEXÃO - RETA	3B-8491	4	CONTROLE DA CAÇAMBA	568
GRAXEIRA	3B-8489	8	CONTROLE DA CAÇAMBA	568
		12	CONTROLE DA FERRAMENTA DE TRABALHO	570
CHASSI E CARROCERIA				
GRAXEIRA	3B-8489	2	ENGATE - ARTICULAÇÃO	288
GRAXEIRA (ROSCA 1/8-27 POL)	3B-8489	7	TUBOS - GRAXA	294
		6	TUBOS - GRAXA	295
ESTAÇÃO DO OPERADOR				
BATERIA	101-1785	1	CONTROLE DO PAINEL MONITOR	621
CORREIA EM V	1W-2934	1	COMPRESSOR DE REFRIGERANTE	617
DISJUNTOR AUTOMÁTICO DE CIRCUITO (15 A) (AR - ASSENTO)	3T-2662	1	ASSENTO E MONTAGEM	692
FILTRO	111-8738	1	FILTRO - AR DA CABINE	639
FILTRO - TELA	8T-5913	2	LAVADOR DO VIDRO	714
LÂMINA DO LIMPADOR DE PÁRA-BRISA (DIANTEIRO)	6V-7419	1	LIMPADOR DO VIDRO	716
LÂMINA DO LIMPADOR DE PÁRA-BRISA (PARTE TRASEIRA)	5C-8811	1	LIMPADOR DO VIDRO	716
LÂMPADA	112-5219	1	REVESTIMENTO DA CABINE	651
LÂMPADA (24 V)	115-1748	1	CONTROLE DO PAINEL MONITOR	621
		2	PAINEL DE INSTRUMENTOS	676
TAMPA (CONDICIONADOR DE AR)	3E-4051	1	TUBOS - AR CONDICIONADO	656
	3E-4052	1	TUBOS - AR CONDICIONADO	656
FERRAMENTAS DE TRABALHO				
CONEXÃO - RETA (ROSCA 1/8-27 POL)	3B-8491	4	ACOPLADOR RÁPIDO	586
MOTOR BÁSICO				
BUJÃO - DRENAGEM DO RESERVATÓRIO	7C-0351	2	CÁRTER DO ÓLEO DO MOTOR	34
BUJÃO-RETENTOR (DRENO DO ÓLEO)	8C-5225	1	DRENO - ÓLEO DO MOTOR	18
JUNTA (TAMPA DA VÁLVULA)	216-9604	1	TAMPA - MECANISMO DAS VÁLVULAS	10
MANGUEIRA - DESCARTE (VAPORES)	191-5049	1	TAMPA - MECANISMO DAS VÁLVULAS	10
MOLA (MANGUEIRA DO RESPIRO)	162-1565	1	TAMPA - MECANISMO DAS VÁLVULAS	10
RETENTOR DE ANEL-O (BUJÃO DE DRENAGEM DE ÓLEO)	5P-6718	2	CÁRTER DO ÓLEO DO MOTOR	34
TAMPA (BOCAL DE ENCHIMENTO DE ÓLEO)	130-9888	1	TAMPA - MECANISMO DAS VÁLVULAS	10
TORNEIRA-DRENAGEM (DRENO DO ÓLEO DO BLOCO DO CILINDRO)	2P-4173	1	DRENO - ÓLEO DO MOTOR	18

PEÇAS DE MANUTENÇÃO

DESCRIÇÃO	NÚMERO DE PEÇA	QUANT	UTILIZADA EM	PÁGINA
SISTEMA DA ADMISSÃO DE AR E DE ESCAPE				
ELEMENTO DO FILTRO DE AR (PRIMÁRIO)	152-7217	1	PURIFICADOR DE AR	69
		1	PURIFICADOR DE AR	67
ELEMENTO DO FILTRO DE AR (SECUNDÁRIO)	152-7219	1	PURIFICADOR DE AR	67
		1	PURIFICADOR DE AR	69
INDICADOR	187-2868	1	PURIFICADOR DE AR	70
INDICADOR (TROCA DO FILTRO)	187-2868	1	PURIFICADOR DE AR	68
TAMPA - CHUVA (PURIFICADOR DE AR)	166-2087	1	PURIFICADOR DE AR	68
SISTEMA DE ARREFECIMENTO				
REGULADOR DE TEMPERATURA DA ÁGUA	216-9737	1	CONEXÃO - TUBO D'ÁGUA	51
RETENTOR (ALOJAMENTO DO REGULADOR)	141-6188	1	CONEXÃO - TUBO D'ÁGUA	51
RETENTOR DE ANEL-O (REGULADOR)	140-7515	1	CONEXÃO - TUBO D'ÁGUA	51
TAMPA - RADIADOR	185-1043	1	RADIADOR	62
VÁLVULA DE DRENAGEM DO RADIADOR	225-4287	1	RADIADOR	62
SISTEMA DE COMBUSTÍVEL				
ELEMENTO DO FILTRO DE COMBUSTÍVEL	145-4501	1	FILTRO - COMBUSTÍVEL	78
ELEMENTO FILTRANTE-ÁGUA (SEPARADOR)	131-1812	1	SEPARADOR DE ÁGUA	93
JOGO DE VEDADOR DA CAÇAMBA (SEPARADOR DE ÁGUA)	128-8614	1	SEPARADOR DE ÁGUA	93
TAMPA - TANQUE DE COMBUSTÍVEL	142-8828	1	TANQUE DE COMBUSTÍVEL E MONTAGEM	94
SISTEMA DE FREIO				
TAMPA CONTRA POEIRA	6V-0852	1	CONTROLE DO FREIO DE SERVIÇO	304
SISTEMA DE LUBRIFICAÇÃO				
FILTRO - ÓLEO DO MOTOR	1R-0739	1	FILTRO - ÓLEO DO MOTOR	45
TAMPA CONTRA POEIRA (VÁLVULA DE AMOSTRAGEM DE ÓLEO)	8C-3445	1	VÁLVULA PARA TIRAR AMOSTRAS DE FLUIDOS	50

PEÇAS DE MANUTENÇÃO

DESCRIÇÃO	NÚMERO DE PEÇA	QUANT	UTILIZADA EM	PÁGINA
SISTEMA ELÉTRICO E DE PARTIDA				
BATERIA (12V)(950CCA)	115-2422	2	BATERIA	103
CHAVE (DESCONECTAR A BATERIA)	8H-5306	1	CHAVE GERAL	134
CORREIA DE COMANDO (PISCA-PISCA DE ADVERTÊNCIA)	9X-8139	1	LUZ GIRATÓRIA DE ALARME	115
DISJUNTOR AUTOMÁTICO DE CIRCUITO (15 A)	3T-2662	1	CABOS/FIOS ELÉTRICOS - MOTOR	156
DISJUNTOR AUTOMÁTICO DE CIRCUITO (30 A)	147-1773	1	CABOS/FIOS ELÉTRICOS - MOTOR	156
DISJUNTOR AUTOMÁTICO DE CIRCUITO (90 AMP)	171-2211	1	CABOS/FIOS ELÉTRICOS - MOTOR	156
FAROL DIANTEIRO (24 V)	9X-3463	1	SISTEMA DE ILUMINAÇÃO - FARÓIS E SINAL	122
INTERRUPTOR - CIRCUITO (60 A)	171-2208	1	CABOS/FIOS ELÉTRICOS - MOTOR	156
JOGO DE CORREIAS EM V	130-3216	1	ALTERNADOR DE CORRENTE	100
		1	ALTERNADOR DE CORRENTE	102
LÂMPADA	9X-3463	1	LÂMPADA - FAROL	113
LÂMPADA - LADO DIREITO	5C-8964	1	SISTEMA DE ILUMINAÇÃO - FARÓIS E SINAL	122
LÂMPADA - LADO ESQUERDO	5C-9029	1	SISTEMA DE ILUMINAÇÃO - FARÓIS E SINAL	122
LÂMPADA (FILAMENTO DUPLO)	9X-4492	1	LUZ TRASEIRA E DE FREIO	114
LÂMPADA (FILAMENTO SIMPLES)	9X-4493	1	LUZ TRASEIRA E DE FREIO	114
LÂMPADA (12 V)	165-5655	1	CABOS/FIOS ELÉTRICOS - MÁQUINA	166
LÂMPADA (24 V)	9X-3463	1	SISTEMA DE ILUMINAÇÃO - FARÓIS	118
		1	SISTEMA DE ILUMINAÇÃO - FARÓIS	120
	9X-4493	2	SISTEMA DE ILUMINAÇÃO - FARÓIS E SINAL	122
	115-1748	2	CABOS/FIOS ELÉTRICOS - CABINE	142
		4	CABOS/FIOS ELÉTRICOS - CABINE	146
LÂMPADA (24 VOLTS)(70 WATTS)	9X-7849	1	LUZ GIRATÓRIA DE ALARME	115
LENTE	146-2438	1	LUZ TRASEIRA E DE FREIO	114
LENTE (ÂMBER)	9X-8121	1	LUZ GIRATÓRIA DE ALARME	115
REFLETOR	9R-1499	2	SISTEMA DE ILUMINAÇÃO - FARÓIS E SINAL	122
REFLETOR - ÂMBAR	9R-2404	6	SISTEMA DE ILUMINAÇÃO - FARÓIS E SINAL	122

PEÇAS DE MANUTENÇÃO

DESCRIÇÃO	NÚMERO DE PEÇA	QUANT	UTILIZADA EM	PÁGINA
SISTEMA HIDRÁULICO				
CADEADO	5P-8502	1	TANQUE DE ÓLEO HIDRÁULICO E MONTAGEM	482
CHAVE	5P-8500	1	TANQUE DE ÓLEO HIDRÁULICO E MONTAGEM	482
FILTRO - ÓLEO	126-1818	1	FILTRO - ÓLEO	379
JOGO DE RETENTOR	107-7491	1	VÁLVULA DE RETENÇÃO	491
LUVA	8Y-6364	1	TANQUE DE ÓLEO HIDRÁULICO E MONTAGEM	482
RESPIRO	130-4634	1	TANQUE DE ÓLEO HIDRÁULICO E MONTAGEM	482
RETENTOR DE ANEL-O	3D-2824	1	MOTOR - ENGRENAGENS	464
TAMPA	174-3222	1	CILINDRO DE INCLINAÇÃO	376
TAMPA - HIDRÁULICO	142-8937	1	TANQUE DE ÓLEO HIDRÁULICO E MONTAGEM	482
TAMPA CONTRA POEIRA	6V-0852	2	TUBOS - CIRCUITO PILOTO	428
		2	TUBOS - CIRCUITO PILOTO	432
		2	TUBOS - CIRCUITO PILOTO	436
		1	TUBOS - ÓLEO HIDRÁULICO	406
	8C-3451	1	FILTRO - ÓLEO	379
TELA FILTRANTE	141-9236	1	VÁLVULA DE CONTROLE PILOTO	508
		1	VÁLVULA DE CONTROLE PILOTO	512
		1	VÁLVULA DE CONTROLE PILOTO	514
		1	VÁLVULA DE CONTROLE PILOTO	516
		1	VÁLVULA DE CONTROLE PILOTO	518
		1	VÁLVULA DE CONTROLE PILOTO	520
		1	VÁLVULA DE CONTROLE PILOTO	524
		1	VÁLVULA DE CONTROLE PILOTO	526
		1	VÁLVULA DE CONTROLE PILOTO	528
		1	VÁLVULA DE CONTROLE PILOTO	532

PEÇAS DE MANUTENÇÃO

DESCRIÇÃO	NÚMERO DE PEÇA	QUANT	UTILIZADA EM	PÁGINA
TREM DE FORÇA				
BUJÃO DO DRENO	7T-2703	1	CARCAÇA DAS ENGRENAGENS PLANETÁRIAS E COMPONENTES	184
BUJÃO MAGNÉTICO	5P-4484	1	CAIXA - EIXO FIXO	216
		1	CAIXA - EIXO OSCILANTE	218
		1	CAIXA - EIXO OSCILANTE	222
CADEADO	5P-8502	1	BOCAL DE ENCHIMENTO DE ÓLEO DO TREM DE FORÇA	204
FILTRO - MAGNÉTICO	8S-9129	1	CARCAÇA DAS ENGRENAGENS PLANETÁRIAS E COMPONENTES	184
FILTRO - ÓLEO (HIDRÁULICO)	1G-8878	1	FILTRO - ÓLEO	208
GRAXEIRA	3B-8489	1	EIXO DE TRANSMISSÃO	247
		1	JUNTA CORREDIÇA	249
RESPIRO	9G-5127	1	CARCAÇA DAS ENGRENAGENS PLANETÁRIAS E COMPONENTES	184
TAMPA	2D-2633	1	VÁLVULA DE PNEU	261
TAMPA - ENCHIMENTO	137-6727	1	BOCAL DE ENCHIMENTO DE ÓLEO DO TREM DE FORÇA	204
TAMPA CONTRA POEIRA	6V-0852	2	CARCAÇA DAS ENGRENAGENS PLANETÁRIAS E COMPONENTES	184
		1	FILTRO - ÓLEO	208
		1	TUBOS - ARREFECEDOR DE ÓLEO DO EIXO	226
		1	TUBOS - ARREFECEDOR DO CONVERSOR DE TORQUE	232
	8C-3451	1	FILTRO - ÓLEO	208
TELA DE SUCÇÃO	8S-9130	1	CARCAÇA DAS ENGRENAGENS PLANETÁRIAS E COMPONENTES	184

INDEX

Name	Page
A	
ACCUMULATOR GP-BRAKE	301
ADAPTER GP	226
ADAPTER GP-TIP	573
AIR CLEANER GP	67
	68
	69
	70
AIR CONDITIONER & MOUNTING GP	600
AIR CONDITIONER AR	601
	602
AIR CONDITIONER GP	604
ALARM GP–ACTION	95
ALTERNATOR GP-CHARGING	96
	98
	100
	102
ARM AS-LIFT	566
ARM GP-MATERIAL HANDLING	574
ARMREST GP	608
ARMREST GP–LH	609
ARMREST GP–RH	607
AXLE AR-FIXED	176
AXLE AR-OSCILLATING	176
	177
	178
	179
B	
BATTERY	621
BATTERY GP	103
BATTERY (12V)(950CCA)	103
BELT-DRIVE (WARNING BEACON)	115
BLADE AS-WIPER (FRONT)	716
BLADE AS-WIPER (REAR)	716
BOWL AS-WATER COLLECTION	93
BOX GP-BATTERY	264
BOX GP-TOOL	718
BRACKET GP-TRANSPORT	567
BRAKE & PLANETARY GP	180
	182
BREATHER	184
	482
BUCKET AS-GENERAL PURPOSE	575
	576
	577
	578
	579
BUCKET AS-LIGHT MATERIAL	580
BUCKET GP-GENERAL PURPOSE	581
	582

Name	Page
C	
CAB AR	610
	611
CAB AR-ENCLOSED ROPS	611
CAB GP	612
CABLE AS	600
CAMSHAFT GP	7
CANOPY AR-OPEN ROPS	614
CANOPY GP-OPEN ROPS	614
	615
CAP	261
CAP AS	376
CAP AS (AIR CONDITIONER)	656
CAP AS-FUEL	94
CAP AS-HYDRAULIC	482
CAP AS (OIL FILLER)	10
CAP AS-RADIATOR	62
CAP-DUST	184
	208
	226
	232
	304
	379
	406
	428
	432
	436
CAP-DUST (OIL SAMPLING VALVE)	50
CAP-FILL	204
CAP-RAIN (AIR CLEANER)	68
CARTRIDGE GP-VANE PUMP–IMPLEMENT	338
CASE & PARTS GP-PLANETARY	184
CHASSIS AR	1
	2
CIRCUIT BREAKER AS (15 AMP)	156
CIRCUIT BREAKER AS (15 AMP) (AIR SEAT)	692
CIRCUIT BREAKER AS (30 AMP)	156
CIRCUIT BREAKER AS (90 AMP)	156
CIRCUIT BREAKER GP (60 AMP)	156
CLUTCH GP	188
	190
	192
COCK-DRAIN (CYLINDER BLOCK OIL DRAIN)	18
COMMON AR	2
	3
COMPRESSOR GP-REFRIGERANT	616
	617
CONDENSER & MTG GP-REFRIGERANT	618
	619
CONDENSER GP-REFRIGERANT	620
CONNECTION GP-WATER	51
CONTROL AR-RIDE	339
CONTROL GP-BUCKET	568

INDEX

Name	Page
CONTROL GP-COMMUNICATION (PRODUCT LINK)	150
CONTROL GP-ENGINE ELECTRONIC	104
CONTROL GP-HANDLE	340
CONTROL GP-LIFT KICKOUT	105
	388
CONTROL GP-LIFT KICKOUT (LIFT)	390
CONTROL GP-MONITOR–KIT	621
CONTROL GP-PARKING BRAKE	302
	303
CONTROL GP-PILOT OPERATED HYD	342
	344
	346
	348
	350
	352
	354
	356
	358
	360
	362
CONTROL GP-POSITION	388
	390
CONTROL GP-POSITION–BUCKET	106
CONTROL GP-SERVICE BRAKE	304
CONTROL GP-STEERING	316
	318
CONTROL GP-TRANSMISSION	194
	195
CONTROL GP-UNPROGRAMMED–SECURITY	107
CONTROL GP-VOLTAGE (24 VOLT) (LOAD PROTECTION)	86
CONTROL GP-WORK TOOL	570
CONVERTER GP-ELECTRICAL	108
	109
	110
COOLER GP-FLTR BASE & ENG OIL	52
COOLER GP-HYD & TMSN OIL	364
	365
COOLER GP-HYDRAULIC OIL	366
CORNER-LH	583
CORNER-RH	583
COUNTERWEIGHT GP	265
	266
	267
COUPLER AR-QUICK	583
	584
COUPLER GP-QUICK	586
COVER GP-CONSOLE	623
COVER GP-ENGINE	8
COVER GP-TRANSMISSION	196
COVER GP-VALVE MECHANISM	10
CRANKSHAFT GP	12
CYLINDER & MTG GP-COUPLER	367
CYLINDER & MTG GP-STEERING	320
CYLINDER BLOCK GP	13
	14
CYLINDER GP-COUPLER	368
CYLINDER GP-HYDRAULIC–RH	322
CYLINDER GP-LIFT	370
CYLINDER GP-STEERING–LH	324
CYLINDER GP-TILT	372
	374
	376
CYLINDER HEAD GP	16
	17

D

DASH GP	624
DEFROSTER GP-CAB	625
DIFFERENTIAL GP	198
DIFFERENTIAL GP-LIMITED SLIP	199
DIFFERENTIAL GP-NOSPIN	200
	201
DOOR GP-CAB	626
DOOR GP-CAB–LH	628
	632
DOOR GP-CAB–RH	630
	634
DRAIN GP-ENGINE OIL	18
DRIVE GP-FLEXIBLE COUPLING	202
DRIVE GP-PUMP	203
DUCT GP-AIR	636

E

EDGE GP-CUTTING	588
EDGE GP-SEGMENT	588
ELBOW GP	558
ELBOW GP-AIR INLET	71
ELECTRONICS GP-MACHINE	110
ELECTRONICS GP-MACHINE–SECURITY	110
ENGINE AR-PRIMARY	5
EXTENSION GP-BACKREST	638
EXTENSION GP-EXHAUST	72

F

FAN GP-SUCTION	54
FASTENER GP-CYLINDER HEAD	19
FENDER GP-FRONT	268
FENDER GP-REAR	270
	272
	274
FILLER GP-POWER TRAIN OIL	204
FILM	105
	106
	428

INDEX

Name	Page
	432
	436
FILM-CIRCUIT BREAKER	156
FILM (CONTROLS)	672
FILM GP	719
	720
FILM (HYDRAULIC OIL)	721
FILM-IDENTIFICATION (CIRCUIT BREAKER)	156
FILM-IDENTIFICATION (GROUP & SEQUENCE NO.)	620
FILM-INSTRUCTION (ENGINE RUN, ON/OFF)	670
FILM-INSTRUCTION (SEAT ADJUSTMENT)	708
	710
FILM-INSTRUMENT (IMPLEMENT LOCKOUT)	342
FILM (MACHINE SECURITY SYSTEM)	166
FILM-WARNING (NO ETHER/AIR INTAKE)	721
	722
FILM (WASTE HANDLER)	3
FILM (WASTE HANDLER) (WASTE HANDLER)	4
FILM (12 VOLT)	109
FILM (12VOLT)	108
FILTER	639
FILTER & LINES GP-TRANSMISSION	206
FILTER AS-ENGINE OIL	45
FILTER AS-OIL	379
FILTER AS-OIL (HYDRAULIC)	208
FILTER BASE & ENG OIL COOLER	52
FILTER ELEMENT AS-AIR (PRIMARY)	67
	69
FILTER ELEMENT AS-AIR (SECONDARY)	67
	69
FILTER ELEMENT-FUEL	78
FILTER ELEMENT-WATER (SEPARATOR)	93
FILTER GP-CAB AIR	639
FILTER GP-ENGINE OIL	45
FILTER GP-FUEL	78
FILTER GP-OIL	208
	378
	379
FILTER-MAGNETIC	184
FILTER-SCREEN	714
FITTING AS	406
FITTING-GREASE	247
	249
	288
	568
	570
FITTING-GREASE (1/8-27 THD)	294
	295
FITTING-STRAIGHT	568
FITTING-STRAIGHT (1/8-27 THD)	586
FLASHER AS (12/24 VOLT)	122
FLYWHEEL GP	20
FORK GP	589
FORK GP-PALLET	590
	591
	592
FRAME GP-FRONT	275
FRAME GP-LOADER	276
FRAME GP-REAR	277

G

GASKET (VALVE COVER)	10
GAUGE AS-OIL LEVEL (DIPSTICK)	216
	218
	222
GAUGE GP-OIL LEVEL (DIPSTICK)	46
GAUGE GP-SIGHT	209
GEAR GP-BEVEL	210
	212
GEAR GP-FRONT	21
GEAR GP-OUTPUT TRANSFER	214
GUARD GP-BUCKET–TOOTH TIP	593
GUARD GP-CRANKCASE	278
GUARD GP-FAN	56
GUARD GP-LIGHTING	280
	282
GUARD GP-LINES	284
	285
	286
GUARD GP-LINES–TILT	283
GUARD GP-POWER TRAIN	287
GUARD GP-WINDOW	640
	641

H

HARNESS AS-AIR CONDITIONER (CONDENSER FANS)	620
HEATER & MTG GP-CAB	642
HEATER AR-CAB	643
HEATER GP-CAB	644
HEATER GP-JACKET WATER	111
	112
HITCH GP-ARTICULATING	288
HOOD & GUARD GP	290
HORN AS (24 VOLT)(LOW TONE)	162
HOSE-DISPOSAL (FUMES)	10
HOUSING GP-FIXED AXLE	216
HOUSING GP-FLYWHEEL	22
HOUSING GP-FRONT	24
HOUSING GP-OSCILLATING AXLE	218
	222
HOUSING GP-SEAT SUSPENSION	646
HYDRAULIC AR	380
	381

INDEX

Name	Page
	382
	383
HYDRAULIC AR-2 VALVE	383
	384
HYDRAULIC AR-3 VALVE	384
	385
HYDRAULIC AR-4 VALVE	386

I

INDICATOR AS	70
INDICATOR AS (FILTER CHANGE)	68
INPUT GP-TRANSMISSION	224
INSTALLATION AR-ENGINE	6
INSTALLATION GP-RADIO	649
	650

K

KEY	482
KEY AS-ELECTRONIC (SECURITY)	166
KEY (BATTERY DISCONNECT)	134
KICKOUT & POSITIONER GP	388
	390
KIT-ADJUSTER	700
	702
KIT-ADJUSTER (ARMREST)	608
KIT-ADJUSTER (SEAT PAN)	668
KIT-AIR COMPRESSOR	710
KIT-ARMREST-LH	700
	702
KIT-ARMREST-RH	700
	702
KIT-BACK TILT (SEAT PAN)	668
KIT-BEARING	647
KIT-BEARING (ALTERNATOR)	98
KIT-BELT TETHER	708
KIT-BOWL SEAL (WATER SEPERATOR)	93
KIT-BUMPER	646
KIT-BUMPSTOP	700
KIT-CABLE ADJUSTER	700
	702
KIT-CONNECTING PLUG (12 PIN)	672
	676
KIT-CONNECTING PLUG (12 PIN)	156
	621
KIT-CONNECTING PLUG (2 PIN)	136
	156
	162
	166
	170
	172
	173
	262
	388
	390
	424
	604
	620
	621
	672
	677
KIT-CONNECTING PLUG (2 PIN)	146
KIT-CONNECTING PLUG (3 PIN)	106
	156
	166
	170
	262
	314
	390
	621
	672
	677
KIT-CONNECTING PLUG (3 PIN)	146
KIT-CONNECTING PLUG (4 PIN)	162
	195
	672
	677
KIT-CONNECTING PLUG (4 PIN)	142
	146
KIT-CONNECTING PLUG (6 PIN)	108
	162
	166
	672
	677
KIT-CONNECTING PLUG (6 PIN)	142
	146
KIT-CONNECTING PLUG (8 PIN)	150
	162
	195
	649
	672
	676
KIT-CONNECTING PLUG (8 PIN)	152
KIT-CONNECTING PLUG (8 PIN)	142
	146
KIT-CONTACT (STARTING MOTOR)	132
KIT-COVER	700
KIT-CUSHION (ARMREST)	608
KIT-CUSHION (CLOTH BACKREST)	638
KIT-DAMPER	700
KIT-FASTENER (SEAT SUSPENSION)	710
KIT-FOAM	700
KIT-FOLLOWER	646
	647
KIT-FRAME AS	700
KIT-GEAR (STARTING MOTOR)	132
KIT-HANDLE	700
KIT-HARDWARE (ALTERNATOR)	98
KIT-HARDWARE (SOLENOID VALVE)	562

INDEX

Name	Page
KIT-HEIGHT RISER	700
KIT-HOSE (WATER) (REGULATOR HOUSING)	60
KIT-INDICATOR	647
KIT-LEVER AS	700
KIT-PISTON	481
KIT-QUICK COUPLER	594
KIT-RECEPTACLE (12 PIN)	122
	621
	677
KIT-RECEPTACLE (12 PIN)	162
	672
KIT-RECEPTACLE (12 PIN)	142
	146
	676
KIT-RECEPTACLE (2 PIN)	114
	138
	156
	162
	166
	170
	172
	173
	226
	262
	388
	414
	424
	440
	558
	562
	563
	564
	604
	621
	644
	656
	672
	710
KIT-RECEPTACLE (2 PIN)	95
KIT-RECEPTACLE (2 PIN)	146
	676
KIT-RECEPTACLE (3 PIN)	105
	114
	127
	128
	156
	166
	170
	174
	262
	326
	336
	388
	390
	620
	649
	672
KIT-RECEPTACLE (3 PIN)	146
	621
	676
KIT-RECEPTACLE (4 PIN)	86
	162
	561
	672
KIT-RECEPTACLE (4 PIN)	670
KIT-RECEPTACLE (4 PIN)	118
	120
	676
KIT-RECEPTACLE (6 PIN)	108
	122
	142
	146
	150
	152
	166
	195
	340
	350
	352
	354
	356
	360
	604
	644
	672
	676
KIT-RECEPTACLE (6 PIN)	716
KIT-RECEPTACLE (6 PIN)	676
KIT-RECEPTACLE (8 PIN)	137
	142
	146
	150
	152
	388
	390
	474
	475
	508
	512
	514
	518
	524
	528
	672
KIT-RECEPTACLE (8 PIN)	676
KIT-ROLLER	710
KIT-SCISSORS	710
KIT-SEAL	416
	420

INDEX

Name	Page
	462
	490
	491
	558
KIT-SEAT CUSHION (CLOTH)	696
KIT-SEAT KNOB	696
KIT-SEAT TILT (SEAT PAN)	668
KIT-SLIDE RAIL	700
KIT-SLIDER BLOCK	696
	699
KIT-SPACER	478
KIT-SPRING	646
	700
KIT-SUSPENSION BEARING	700
KIT-SUSPENSION BOOT	708
KIT-SUSPENSION COVER	700
KIT-SUSPENSION KNOB	646
KIT-SUSPENSION ROLLER	708
KIT-TERMINAL (ALTERNATOR)	98
KIT-TETHER	700
	702
	710
KIT-TILT PAN	696
KIT-UPPER AS	700
KIT-WATER BASE (WATER SEPARATOR)	93
KIT-WATER PUMP	60
KNOB-CONTROL	146

L

Name	Page
LADDER GP	292
LAMP	113
	651
LAMP AS-LH	122
LAMP AS-RH	122
LAMP AS (12 VOLT)	166
LAMP (DOUBLE FILAMENT)	114
LAMP GP-FLOOD	113
	118
	120
	122
LAMP GP-STOP & TAIL	114
LAMP GP-WARNING BEACON	115
LAMP-HEAD (24 VOLT)	122
LAMP (SINGLE FILAMENT)	114
LAMP (24 VOLT)	118
	120
	122
	142
	146
	621
	676
LAMP (24 VOLT)(70 WATT)	115
LENS	114
LENS (AMBER)	115
LIFTING GP-ENGINE	26
LIGHTING GP-AUXILIARY	116
LIGHTING GP-FLOOD	118
	120
LIGHTING GP-FLOOD & SIGNAL	122
LIGHTING GP-WARNING	124
	125
LINER GP-CAB	651
	652
	654
LINES GP-AIR	73
LINES GP-AIR CONDITIONER	656
LINES GP-AXLE OIL COOLER	226
LINES GP-COUPLER	392
	396
LINES GP-FRONT	400
	402
	404
LINES GP-FUEL	80
LINES GP-FUEL FILTER	84
LINES GP-GREASE	294
	295
LINES GP-HEATER	660
LINES GP-HYDRAULIC	406
LINES GP-HYDRAULIC FAN	408
	412
	414
LINES GP-LIFT CYLINDER	416
	420
	424
LINES GP-PILOT	428
	432
	436
LINES GP-RIDE CONTROL	440
	444
LINES GP-SECONDARY STEERING	326
LINES GP-SERVICE BRAKE	306
LINES GP-STARTING AID	126
LINES GP-STEERING	330
LINES GP-TILT CYLINDER	448
	450
	452
LINES GP-TORQUE CONV COOLER	232
LINES GP-WATER	58
LINK GP-STEERING FRAME LOCK	296
LOCK GP-HYDRAULIC HAND CONTROL	455
LOCK GP-STEERING CYLINDER	334

M

Name	Page
MIRROR GP-REAR VIEW–CAB	662
	663
MOTOR & MTG GP-HYDRAULIC FAN	456
	457
MOTOR AR-HYDRAULIC FAN	458

INDEX

Name	Page
MOTOR GP-GEAR– REVERSING HYDRAULIC FAN	460, 462
MOTOR GP-GEAR– STANDARD HYDRAULIC FAN	459, 464
MOUNTING GP-ALTERNATOR	27
MOUNTING GP-AXLE	234
MOUNTING GP-CAB	664
MOUNTING GP-ENGINE	28
MOUNTING GP-ENGINE & TMSN	30
MOUNTING GP-FAN DRIVE	32
MOUNTING GP-RIM	235
MUFFLER GP	74
O	
OPERATOR AR	665, 666
P	
PADLOCK GP	204, 482
PAN GP-BACKREST	667
PAN GP-OIL	34
PAN GP-SEAT	668
PANEL GP-INSTRUMENT	670, 672, 676
PANEL GP-TOP	298, 300
PEDAL GP-BRAKE	680
PEDAL GP-GOVERNOR	681
PISTON & ROD GP	36
PIVOT GP-PILOT VALVE	466, 467, 468, 469, 470
PLATE & FILM GP	721, 722, 723
PLATE & FILM GP–ARABIC	727
PLATE & FILM GP–DANISH	726
PLATE & FILM GP–DUTCH	727
PLATE & FILM GP–FINNISH	729
PLATE & FILM GP–FRENCH	723
PLATE & FILM GP–GERMAN	725
PLATE & FILM GP–GREEK	726
PLATE & FILM GP–ITALIAN	725
PLATE & FILM GP–JAPANESE	730
PLATE & FILM GP–NORWEGIAN	729
PLATE & FILM GP–PORTUGUESE	724
PLATE & FILM GP–RUSSIAN	728
PLATE & FILM GP–SPANISH	724
PLATE & FILM GP–SWEDISH	728
PLATE GP-PILOT VALVE	471, 472, 473, 474, 475
PLATE-INSTRUCTION	656
PLATE-INSTRUCTION (BATTERY)	140
PLATE-WARNING (NO CLEARANCE)	723, 726
PLATFORM AR	682
PLATFORM GP-OPERATOR	683
PLUG-DRAIN	184
PLUG GP-CYLINDER BLOCK	37, 38
PLUG GP-ENGINE	39
PLUG-MAGNETIC	216, 218, 222
PLUG-SEAL (OIL DRAIN)	18
PLUG-SUMP DRAIN	34
POWER TRAIN AR	235
PRECLEANER GP	75
PULLER-MINIFUSE	672, 676
PULLEY GP-CRANKSHAFT	40
PUMP & MTG GP-BRAKE & HYD FAN	310
PUMP & MTG GP-IMPL & STEERING	476
PUMP GP-ENGINE OIL	48
PUMP GP-FUEL INJECTION	86
PUMP GP-FUEL TRANSFER	90
PUMP GP-GEAR	236, 237
PUMP GP-GEAR– BRAKING & HYDRAULIC FAN	312, 314
PUMP GP-PISTON–STEERING & PILOT	478
PUMP GP-PISTON & VANE	480
PUMP GP-WATER	60
R	
RADIATOR GP	62
REFLECTOR	122
REFLECTOR-AMBER	122
REGULATOR-WATER TEMPERATURE	51
RIM AR	238, 239
RIM GP-DEMOUNTABLE	240, 241, 242, 243, 244, 245

INDEX

Name	Page
ROCKER ARM GP	42
ROPS GP-ENCLOSED	684
ROPS GP-OPEN	686
ROTATING GP-PUMP	481

S

SCREEN AS	508 512 514 516 518 520 524 526 528 532
SCREEN GP-SUN	688
SCREEN-SUCTION	184
SEAL-O-RING	464
SEAL-O-RING (OIL DRAIN PLUG)	34
SEAL-O-RING (REGULATOR)	51
SEAL (REGULATOR HOUSING)	51
SEAT & MOUNTING GP	689 690 691 692
SEAT BELT GP	693 698
SEAT BELT GP–RETRACTABLE	694
SEAT GP	696
SEAT GP–CLOTH	698
SEAT GP-SUSPENSION	699 702
SEAT GP-SUSPENSION–VINYL	700
SENSOR GP-POSITION	127 622
SENSOR GP-PRESSURE	128 304
SENSOR GP-PRESSURE (BOOST)	86
SENSOR GP-PRESSURE (ENGINE OIL)	86
SENSOR GP-SPEED (TIMING)	86
SENSOR GP-TEMPERATURE (AIR INLET)	86
SENSOR GP-TEMPERATURE (ENGINE COOLANT)	86
SENSOR GP-TEMPERATURE (TORQUE CONVERTER OIL)	156 262
SEPARATOR GP-WATER	93
SERVICE GP-FORK POSITIONER	590
SHAFT GP-DRIVE	246
SHAFT GP-DRIVE–FRONT	247
SHIM PACK	478
SKIRT GP-CAB	704 705
SLEEVE	482
SLIP JOINT GP–CENTER	248
SLIP JOINT GP–REAR	249
SOFTWARE GP-COMMUNICATION (PRODUCT LINK)	152
SOFTWARE GP-MACHINE	110
SOFTWARE GP-MONITOR	110
SPRING (BREATHER HOSE)	10
STARTING AID GP	129
STARTING MOTOR GP-ELECTRIC	130 132
STEERING AR	335
STEERING AR-SECONDARY	335
STEERING COLUMN GP	337
STOP GP-AXLE OSCILLATION	250
SUN VISOR	712
SUPPORT GP-SEAT	706
SUSPENSION GP-SEAT	708
SUSPENSION GP-SEAT–AIR	710
SWITCH AS-BALL	558
SWITCH AS-KICKOUT	342
SWITCH AS-LIMIT	672
SWITCH AS-LIMIT (BRAKE PEDAL)	676
SWITCH AS-LIMIT (PARKING BRAKE)	302
SWITCH AS-PRESSURE	226
SWITCH AS-PRESSURE (HYDRAULIC OIL FILTER BYPASS)	379
SWITCH AS-PRESSURE (REFRIGERANT)	656
SWITCH AS-PRESSURE (SECONDARY STEERING)	336
SWITCH AS-PRESSURE (SECONDARY STEERING OIL)	326
SWITCH AS-ROTARY	146
SWITCH AS-ROTARY (FAN BLOWER SPEED)	676
SWITCH AS-ROTARY (RUNNING/FLOOD/PANEL/TAIL LIGHT)	142
SWITCH AS (STARTER)	132
SWITCH AS-THERMOSTAT	604
SWITCH AS-TURN SIG & WARNING	122
SWITCH AS-WIPER (INTERMITTENT)	137
SWITCH GP-DISCONNECT–BATTERY	134
SWITCH GP-MAGNETIC	136
SWITCH GP-MAGNETIC–SECONDARY STEERING RELAY	135
SWITCH GP-MAGNETIC (24V) (STARTING AID RELAY)	156
SWITCH GP-START (KEY)	670
SWITCH GP-WIPER	137

T

TANK & MTG GP-FUEL	94
TANK & MTG GP-HYDRAULIC	482
TIP GP-LONG	595

INDEX

Name	Page
TIP GP-SHORT	596, 597
TIRE & RIM AR	250, 251, 252, 253, 254, 255, 256, 257
TOOTH GP-LONG	598
TOOTH GP-UNI	599
TRANSMISSION AR	258
TURBOCHARGER GP	76

V

Name	Page
V-BELT	617
V-BELT SET	100, 102
VALVE	494, 498, 500, 502, 504, 506
VALVE & MTG GP-MAIN CONTROL	484, 485, 486, 487, 488
VALVE & MTG GP-SOLENOID–PILOT ON/OFF	489
VALVE AS (AIR CONDITIONER)	656
VALVE AS-CONTROL	259
VALVE-GAS	301
VALVE GP-BALL	416, 490
VALVE GP-BALL (RESOLVER)	420
VALVE GP-BALL (RESOLVER) (DEAD ENGINE LIFT ARM LOWER)	424
VALVE GP-BYPASS	232, 259
VALVE GP-CHECK	491
VALVE GP-CONTROL–AUXILIARY	492, 494
VALVE GP-FLUID SAMPLING	50, 379
VALVE GP-FLUID SAMPLING (ENGINE OIL)	50
VALVE GP-LOAD CONTROL	496, 497
VALVE GP-MAIN CONTROL	498, 500, 502, 504
VALVE GP-PILOT	506, 512, 514, 518, 520, 524, 526, 528, 532
VALVE GP-PILOT–FOUR LEVER	508
VALVE GP-PILOT–TWO LEVER	516
VALVE GP-PILOT CARTRIDGE	534, 536, 538, 540
VALVE GP-PRESS & FLOW CMPNSTR	542
VALVE GP-PRESSURE REDUCING	544, 545
VALVE GP-QUICK COUPLER	546
VALVE GP-RADIATOR DRAIN	62
VALVE GP-RELIEF	260, 547, 548, 549, 550, 551, 552, 553, 554, 555
VALVE GP-RIDE CONTROL	556
VALVE GP-SHUTOFF	558, 560
VALVE GP-SOLENOID	561
VALVE GP-SOLENOID–DEAD ENGINE, BUCKET LOWER	562
VALVE GP-SOLENOID–DEMAND FAN	565
VALVE GP-SOLENOID–REVERSING FAN	563
VALVE GP-SOLENOID–RIDE CONTROL	564
VALVE GP-TIRE	261
VALVE GP-TRANSMISSION CONTROL	262
VALVE (LOAD CHECK)	492
VALVE MECHANISM GP	44
VALVE-RELIEF	184
VALVE-SHUTOFF	406
VALVE-SHUTOFF (OIL DRAIN)	18
VISOR GP-CAB	712

W

Name	Page
WARNING GP-BACKUP	138
WASHER GP-WINDOW	713, 714
WASTE HANDLING AR	3, 4

INDEX

Name	Page	Name	Page
WINDOW GP-DOOR	715		
WIPER GP-WINDOW	716		
WIRING GP-BATTERY	140		
WIRING GP-CAB	142		
	146		
WIRING GP-COMMUNICATION	150		
	152		
WIRING GP-ELECTRONIC CONTROL	154		
WIRING GP-ENGINE	156		
WIRING GP-FRONT	162		
WIRING GP-MACHINE	166		
WIRING GP-REAR	170		
WIRING GP-RIDE CONTROL	172		
	173		
WIRING GP-SECONDARY STEERING	174		

INDEX

Désignation	Page
A	
ACCOUDOIR (ASS)	607, 608
ACCOUDOIR (ASS)	609
ACCUMULATEUR - FREIN	301
ADAPTATEUR (ASS)	226
ALTERNATEUR DE CHARGE (ASS)	100, 102
ALTERNATEUR DE CHARGE (ASS)	96, 98
AMPOULE	113, 651
AMPOULE (FILAMENT DOUBLE)	114
AMPOULE (FILAMENT SIMPLE)	114
AMPOULE (24 VOLTS)	118, 120, 142, 146, 621, 676
AMPOULE (24 VOLTS)	122
AMPOULE (24 VOLTS)(70 WATTS)	115
ARBRE A CAMES (ASS)	7
ARBRE D'ENTRAÎNEMENT (ASS)	246, 247
ARRÊT-OSCILLATION D'ESSIEU (ASS)	250
ARTICULATION DE SOUPAPE PILOTE (ASS)	466, 467, 468, 469, 470
ATTELAGE D'ARTICULATION (ASS)	288
AUTOCOLLANT	105, 106, 428, 432, 436
AUTOCOLLANT (COMMANDES)	672
AUTOCOLLANT DE DISJONCTEUR	156
AUTOCOLLANT DE MISE EN GARDE (PAS D'ÉTHER/ADMISSION D'AIR)	721, 722
AUTOCOLLANT D'IDENTIFICATION (ASSEMBLAGE ET NO DE SÉQUENCE)	620
AUTOCOLLANT D'IDENTIFICATION (DISJONCTEUR)	156
AUTOCOLLANT (HUILE HYDRAULIQUE)	721
AUTOCOLLANT INSTRUMENTS (VERROUILLAGE D'ÉQUIPEMENT)	342
AUTOCOLLANT (MANUTENTION DES DÉCHETS)	3
AUTOCOLLANT (MANUTENTION DES DÉCHETS) (MANUTENTION DES DÉCHETS)	4
AUTOCOLLANT (SYSTÈME DE SÉCURITÉ DE LA MACHINE)	166
AUTOCOLLANT (12 VOLTS)	108, 109
AUXILIAIRE DE DÉMARRAGE (ASS)	129
AVERTISSEUR (ASS)	95
AVERTISSEUR DE RECUL (ASS)	138
AXE DE CULBUTEUR (ASS)	42
B	
BALAI D'ESSUIE-GLACE (ENS) (ARRIÈRE)	716
BALAI D'ESSUIE-GLACE (ENS) (AVANT)	716
BATI - CHARGEUSE (ASS)	276
BÂTI AR (ASS)	277
BATTERIE	621
BATTERIE (ASS)	103
BATTERIE (12V)(950CCA)	103
BLINDAGE DE TRANSMISSION (ASS)	287
BLOC-CYLINDRES (ASS)	13, 14
BOÎTE DE VITESSES (VERSION)	258
BOUCHON - BLOC-CYLINDRES	37, 38
BOUCHON AIMANTÉ	216, 218, 222
BOUCHON CONTRE LA PLUIE (FILTRE À AIR)	68
BOUCHON DE CARBURANT (ENS)	94
BOUCHON DE MOTEUR (ASS)	39
BOUCHON DE RADIATEUR (ENS)	62
BOUCHON DE REMPLISSAGE	204
BOUCHON DE VIDANGE	184
BOUCHON HYDRAULIQUE (ENS)	482
BOUCHON-JOINT (VIDANGE D'HUILE)	18
BOUCHON-VIDANGE DU CARTER	34
BOULONNERIE DE LA CULASSE (ASS)	19
BOURRELET D'ÉTANCHÉITÉ (CARTER DE RÉGULATEUR)	51
BOUTON DE COMMANDE	146
BRAS DE LEVAGE (ENS)	566
BRAS DE MANUTENTION (ASS)	574
C	
CABINE - REVÊTEMENT (ASS)	651, 652, 654
CABINE (ASS)	612
CABINE ROPS FERMÉE (ASS)	684
CABINE ROPS FERMÉE (VERSION)	611
CABINE (VERSION)	610, 611
CABLAGE AR (ASS)	170

INDEX

Désignation	Page
CABLAGE AV (ASS)	162
CABLAGE DE BATTERIE (ASS)	140
CABLAGE DE CABINE (ASS)	142
	146
CÂBLAGE DE COMMANDE DE TRANSLATION (ASS)	172
	173
CÂBLAGE DE COMMUNICATION (ASS)	150
	152
CABLAGE DE DIRECTION AUXILIAIRE (ASS)	174
CABLAGE DE LA MACHINE (ASS)	166
CABLAGE DE MOTEUR (ASS)	156
CABLE (ENS)	600
CACHE-SOUPAPES (ASS)	10
CADENAS (ASS)	204
	482
CANALIS. DE REFROIDISSEMENT DU CONV. DE COUPLE	232
CANALISATION DE DIRECTION AUXILIAIRE	326
CANALISATIONS A COMMANDE PILOTE (ASS)	428
	432
	436
CANALISATIONS AV	400
	402
	404
CANALISATIONS D'AIR (ASS)	73
CANALISATIONS DE CARBURANT (ASS)	80
CANALISATIONS DE CHAUFFAGE (ASS)	660
CANALISATIONS DE CLIMATISEUR (ASS)	656
CANALISATIONS DE COMMANDE DE MARCHE	440
	444
CANALISATIONS DE COUPLEUR (ASS)	392
	396
CANALISATIONS DE DIRECTION (ASS)	330
CANALISATIONS DE GRAISSAGE (ASS)	294
	295
CANALISATIONS DE REFROIDISSEUR D'HUILE D'ESSIEU (ASS)	226
CANALISATIONS DE VÉRIN DE LEVAGE (ASS)	424
CANALISATIONS DE VÉRIN DE LEVAGE (ASS)	416
	420
CANALISATIONS D'EAU (ASS)	58
CANALISATIONS D'ÉTHER - MOTEUR (ASS)	126
CANALISATIONS DU FILTRE A CARBURANT (ASS)	84
CANALISATIONS DU FREIN DE MANOEUVRE (ASS)	306
CANALISATIONS DU VÉRIN D'INCLINAISON (ASS)	448
	450
	452
CANALISATIONS HYDRAULIQUES (ASS)	406
CANALISATIONS HYDRAULIQUES DE VENTILATEUR (ASS)	408
	412
	414
CAPOT ET PROTECTION (ASS)	290
CAPTEUR DE PRESSION (ASS)	128
	304
CAPTEUR DE PRESSION (ASS) (HUILE MOTEUR)	86
CAPTEUR DE PRESSION (ASS) (SURALIMENTATION)	86
CAPTEUR DE TEMPERATURE (ASS) (ADMISSION D'AIR)	86
CAPTEUR DE TEMPERATURE (ASS) (HUILE DU CONV. DE COUPLE)	262
CAPTEUR DE TEMPERATURE (ASS) (HUILE DU CONV. DE COUPLE)	156
CAPTEUR DE TEMPERATURE (ASS) (LIQUIDE DE REFROIDISSEMENT DU MOTEUR)	86
CAPTEUR DE VITESSE (ASS) (CALAGE)	86
CARDAN COULISSANT (ASS)	248
	249
CARTER - BLINDAGE (ASS)	278
CARTER AV (ASS)	24
CARTER DE VOLANT (ASS)	22
CARTER D'ESSIEU FIXE	216
CARTER D'ESSIEU OSCILLANT	218
CARTER D'ESSIEU OSCILLANT	222
CEINTURE DE SECURITE (ASS)	698
CEINTURE DE SECURITE (ASS)	693
	694
CHAPEAU	261
CHAPEAU (ENS)	376
CHAPEAU (ENS) (CLIMATISEUR)	656
CHAPEAU (ENS) (CLIMATISEUR)	656
CHAPEAU (ENS) (REMPLISSAGE D'HUILE)	10
CHÂSSIS AV (ASS)	275
CHAUFFAGE DE CABINE (ASS)	644
CHAUFFAGE DE CABINE (VERSION)	643
CHAUFFAGE ET MONTAGE - CABINE (ASS)	642
CLAPET	494
	498
	500
	502
	504
	506
CLAPET (CONTRÔLE DE CHARGE)	492
CLAPET DE DECHARGE	184
CLAPET DE DECHARGE (ASS)	260
	547
	548
	549
	550
	551

INDEX

Désignation	Page
	552
	553
	554
	555
CLAPET DE RETENUE (ENS)	491
CLAPET (ENS) (CLIMATISEUR)	656
CLÉ	482
CLÉ (COUPE-BATTERIE)	134
CLÉ ÉLECTRONIQUE (ENS) (SÉCURITÉ)	166
CLIGNOTANT (ENS) (12/24 VOLTS)	122
CLIMATISEUR (ASS)	604
CLIMATISEUR ET MONTAGE (ASS)	600
CLIMATISEUR (VERSION)	601
	602
COFFRE A OUTILS (ASS)	718
COIN DROIT	583
COIN GAUCHE	583
COLONNE DE DIRECTION (ASS)	337
COMMANDE - OUTIL DE TRAVAIL (ASS)	570
COMMANDE DE BOITE DE VITESSES (ASS)	194
	195
COMMANDE DE COMMUNICATION (ASS) (LIAISON DE PRODUIT)	150
COMMANDE DE DIRECTION (ASS)	316
	318
COMMANDE DE FREIN DE STATIONNEMENT (ASS)	302
	303
COMMANDE DE GODET (ASS)	568
COMMANDE DE LA TENSION (ASS) (24 VOLTS) (PROTECTION DE CHARGE)	86
COMMANDE DE POIGNÉE (ASS)	340
COMMANDE DE POSITION (ASS)	106
	388
	390
COMMANDE DE TRANSLATION (VERSION)	339
COMMANDE ÉLECTRONIQUE - CABLAGE	154
COMMANDE ELECTRONIQUE DE LIMITEUR DE LEVAGE (ASS)	388
COMMANDE ELECTRONIQUE DE LIMITEUR DE LEVAGE (ASS)	105
COMMANDE ELECTRONIQUE DE LIMITEUR DE LEVAGE (ASS) (LEVAGE)	390
COMMANDE ELECTRONIQUE DE MOTEUR (ASS)	104
COMMANDE HYDRAULIQUE PILOTE (ASS)	344
	346
	348
	350
COMMANDE HYDRAULIQUE PILOTE (ASS)	342
	352
	354
	356
	358
	360
	362
COMMANDE NON PROGRAMMEE (ASS)	107
COMMANDE PRINCIPALE DE SOUPAPE ET MONTAGE (ASS)	484
	485
	486
	487
	488
COMPARTIMENT DE BATTERIE (ASS)	264
COMPRESSEUR DE REFRIGERANT (ASS)	616
	617
CONDENSATEUR ET MONTAGE (RÉFRIGÉRANT)	618
	619
CONDENSEUR DE RÉFRIGÉRANT	620
CONTACTEUR DE CLIGNOTANT DE DIRECTION ET AVERTISS.	122
CONTACTEUR (ENS) (DÉMARREUR)	132
CONTACTEUR MAGNETIQUE (ASS)	135
	136
CONTACTEUR MAGNETIQUE (ASS) (24 V) (RELAIS D'AIDE AU DÉMARRAGE)	156
CONTREPOIDS (ASS)	265
	266
	267
COUDE (ASS)	558
COUDE D'ADMISSION D'AIR (ASS)	71
COUPLEUR EXPRESS (ASS)	586
COUPLEUR EXPRESS (VERSION)	583
	584
COURONNE CONIQUE (ASS)	210
	212
COURROIE TRAPEZOIDALE	617
COUVERCLE DE BOITE DE VITESSES (ASS)	196
COUVERCLE DE LA CONSOLE (ASS)	623
COUVERCLE INFÉRIEUR-DOSSIER (ASS)	667
CULASSE (ASS)	16
	17
CULBUTERIE (ASS)	44
CUVETTE-ACCUMULATION D'EAU (ENS)	93

D

DEGIVREUR (ASS)	625
DÉMARREUR ÉLECTRIQUE (ASS)	130
	132
DENT LONGUE (ASS)	598
DENT MONOBLOC (ASS)	599
DIFFÉRENTIEL - GLISSEMENT LIMITÉ (ASS)	199
DIFFERENTIEL (ASS)	198
DIFFÉRENTIEL NOSPIN (ASS)	200
	201
DIRECTION AUXILIAIRE (VERSION)	335

INDEX

Désignation	Page
DIRECTION (ENS)	335
DISJONCTEUR (ASS) (60A)	156
DISJONCTEUR DE SECURITE (ENS)	672
DISJONCTEUR DE SECURITE (ENS) (FREIN DE STATIONNEMENT)	302
DISJONCTEUR DE SECURITE (ENS) (PÉDALE DE FREIN)	676
DISJONCTEUR (ENS) (15A)	156
DISJONCTEUR (ENS) (15A) (SIÈGE PNEUMATIQUE)	692
DISJONCTEUR (ENS) (30A)	156
DISJONCTEUR (ENS) (90A)	156
DISTRIBUTEUR - 2 VOIES (VERSION)	383 384
DISTRIBUTEUR - 3 VOIES (VERSION)	384 385
DISTRIBUTEUR (ASS)	492 494
DISTRIBUTEUR DE BOITE (ASS)	262
DISTRIBUTEUR DE CHARGE (ASS)	496 497
DISTRIBUTEUR DE COMMANDE ANTI-TANGAGE	556
DISTRIBUTEUR DE FREIN (ENS)	259
DISTRIBUTEUR QUADRUPLE CORPS (VERSION)	386

E

Désignation	Page
EAU DES CHEMISES - RECHAUFFEUR (ASS)	111 112
ECHELLE (ASS)	292
ÉCLAIRAGE - AUXILIAIRE (ASS)	116
ÉCLAIRAGE - AVERTISSEUR (ASS)	124 125
ÉCLAIRAGE - PROJECTEURS (ASS)	120
ÉCLAIRAGE - PROJECTEURS (ASS)	118
ÉCLAIRAGE - PROJECTEURS ET CLIGNOTANTS (ASS)	122
ÉCRAN (ENS)	508 512 514 516 518 520 524 526 528 532
ÉCRAN MAGNÉTIQUE	184
ÉLECTRONIQUE - MACHINE (ENS)	110
ÉLÉMENT DE FILTRE À AIR (ENS) (PRINCIPAL)	67 69
ÉLÉMENT DE FILTRE À AIR (ENS) (SECONDAIRE)	67 69
ÉLÉMENT DE FILTRE À CARBURANT	78
ÉLÉMENT DE FILTRE À EAU (SÉPARATEUR)	93
ÉLIMINATION DES DÉCHETS (VERSION)	3 4
EMBRAYAGE (ASS)	188 190 192
ENGRENAGE DE TRANSFERT DE RENDEMENT (ASS)	214
ENTRAÎNEMENT D'ACCOUPLEMENT FLEXIBLE (ASS)	202
ENTRAÎNEMENT DE POMPE (ASS)	203
ENTRAÎNEMENT POUR COURROIE (GYROPHARE)	115
ENTRÉE - BOÎTE POWERSHIFT (ASS)	224
ENTRETIEN - POSITIONNEUR DE FOURCHE (ASS)	590
ESSIEU FIXE (VERSION)	176
ESSIEU OSCILLANT (VERSION)	176 177 178 179
ESSUIE-GLACE (ASS)	716
EXTRACTEUR DE MINI-FUSIBLE	672 676

F

Désignation	Page
FAISCEAU DE CABLES DU CLIMATISEUR (ENS) (VENTILATEURS DE CONDENSEUR)	620
FEUX ARRIÈRE ET FEUX D'ARRÊT	114
FILTRE	639
FILTRE A AIR (ASS)	67 68 69 70
FILTRE À AIR DE CABINE (ASS)	639
FILTRE A CARBURANT (ASS)	78
FILTRE A HUILE (ASS)	208 378 379
FILTRE À HUILE (ENS)	379
FILTRE À HUILE (ENS) (HYDRAULIQUE)	208
FILTRE À HUILE MOTEUR (ASS)	45
FILTRE A HUILE MOTEUR (ENS)	45
FILTRE ET CANALISATIONS - BOÎTE DE VITESSE (ASS)	206
FOURCHE (ASS)	589
FOURCHE PALLETTE (ASS)	590 591 592

INDEX

Désignation	Page
FREIN DE MANOEUVRE - COMMANDE (ASS)	304
FREIN ET TRAINS PLANÉTAIRES (ASS)	180 182

G

GAINE D'AIR (ASS)	636
GARDE-BOUE AR (ASS)	270 272 274
GARDE-BOUE AV (ASS)	268
GLACE DE PORTIÈRE (ASS)	715
GODET NORMAL (ASS)	581 582
GODET NORMAL (ENS)	575 576 577 578 579
GODET POUR MATERIAUX MEUBLES (ENS)	580
GOULOTTE DE REMPLISSAGE D'HUILE DE TRANSMISSION	204
GRAISSEUR	247 249 288 568 570
GRAISSEUR (ENS)	406
GRAISSEUR (FILET 1/8-27)	294 295
GROUPE DE CONTROLE	621
GROUPE DE ROTATION DE POMPE	481

H

HUILE MOTEUR - CARTER (ASS)	34

I

INDICATEUR (ENS)	70
INDICATEUR (ENS) (REMPLACEMENT DE FILTRE)	68
INTERRUPTEUR - RAPPEL (ENS)	342
INTERRUPTEUR DE DÉMARRAGE (ASS) (CLAVETTE)	670
INTERRUPTEUR DE THERMOSTAT (ENS)	604
INTERRUPTEUR D'ESSUIE-GLACE (ASS)	137
INTERRUPTEUR D'ESSUIE-GLACE (INTERMITTENT)	137
INTERRUPTEUR ROTATIF (ENS)	146
INTERRUPTEUR ROTATIF (ENS) (FEU DE MARCHE/PROJECTEUR/TÉMOIN DU PANNEAU/FEU ARRIÈRE)	142
INTERRUPTEUR ROTATIF (ENS) (VITESSE DU VENTILATEUR SOUFFLANT)	676
INTERRUPTEUR SPHÉRIQUE (ENS)	558

J

JANTE DÉMONTABLE (ASS)	240 241 242 243 244 245
JANTE (VERSION)	238 239
JAUGE D'HUILE MOTEUR (BAIONNETTE) (ASS)	46
JAUGE D'HUILE MOTEUR (BAÏONNETTE) (ENS)	216 218 222
JEU DE COURROIES TRAPEZOIDALES	100 102
JOINT PLAT (CACHE-SOUPAPES)	10
JOINT TORIQUE	464
JOINT TORIQUE (BOUCHON DE VIDANGE D'HUILE)	34
JOINT TORIQUE (RÉGULATEUR)	51
JUPE DE PROTECTION DE CABINE (ASS)	704 705

K

KIT - COUSSIN (ACCOUDOIR)	608
KIT - COUSSIN (DOSSIER EN TOILE)	638
KIT - SUPÉRIEUR (ENS)	700
KIT D'ACCOUDOIR - DROITE	700 702
KIT D'ACCOUDOIR GAUCHE	700 702
KIT D'AMORTISSEUR DE VIBRATIONS	700
KIT D'ATTACHE	700 702 710
KIT D'ATTACHE DE CEINTURE DE SECURITE	708
KIT DE BLOC COULISSANT	696 699
KIT DE BORNE (ALTERNATEUR)	98
KIT DE BOUGIE (12 BROCHES)	156 621 672 676
KIT DE BOUGIE (2 BROCHES)	136 146 156

INDEX

Désignation	Page
	162
	166
	170
	172
	173
	262
	388
	390
	424
	604
	620
	621
	672
	677
KIT DE BOUGIE (3 BROCHES)	106
	146
	156
	166
	170
	262
	390
	621
	672
	677
KIT DE BOUGIE (3 BROCHES)	314
KIT DE BOUGIE (4 BROCHES)	142
	146
	162
	195
	672
	677
KIT DE BOUGIE (6 BROCHES)	108
	142
	146
	162
	166
	672
	677
KIT DE BOUGIE (8 BROCHES)	142
	146
	150
	152
	162
	195
	649
	672
	676
KIT DE BOULONNERIE (ALTERNATEUR)	98
KIT DE BOULONNERIE (ÉLECTROVANNE)	562
KIT DE BOULONNERIE (SUSPENSION DU SIÈGE)	710
KIT DE BOUTON	646
KIT DE BOUTON DE SIEGE	696
KIT DE BUTÉE (SIÈGE)	700
KIT DE CALES D'ÉPAISSEUR	478
KIT DE CHÂSSIS (ENS)	700
KIT DE CISEAUX	710
KIT DE COMPRESSEUR D'AIR	710
KIT DE CONTACTEUR (DÉMARREUR)	132
KIT DE COUPLEUR EXPRESS	594
KIT DE COUSSIN DE SIEGE (TOILE)	696
KIT DE COUSSINET	647
KIT DE COUSSINET (ALTERNATEUR)	98
KIT DE COUSSINET DE SUSPENSION	700
KIT DE COUVERCLE DE SUSPENSION	700
KIT DE COUVERCLES	700
KIT DE FLEXIBLE (EAU) (CARTER DE RÉGULATEUR)	60
KIT DE GAINE	708
KIT DE HAUTEUR	700
KIT DE JOINT DE FILTRE (SÉPARATEUR D'EAU)	93
KIT DE JOINTS	416
	420
	462
	490
	491
	558
KIT DE LEVIER (ENS)	700
KIT DE MOUSSE	700
KIT DE PANNEAU DU DOSSIER DU SIEGE	696
KIT DE PARE-CHOCS	646
KIT DE PISTON	481
KIT DE POIGNÉE	700
KIT DE POMPE À EAU	60
KIT DE POUSSOIR	646
	647
KIT DE PRISE FEMELLE (12 BROCHES)	122
KIT DE PRISE FEMELLE (12 BROCHES)	142
	146
	162
	621
	672
	676
	677
KIT DE PRISE FEMELLE (2 BROCHES)	95
	138
	146
	162
	166
	170
	172
	173
	388
	414
	424
	440
	558
	562
	604

INDEX

Désignation	Page
	621
	656
	672
	676
	710
KIT DE PRISE FEMELLE (2 BROCHES)	114
	262
KIT DE PRISE FEMELLE (2 BROCHES)	226
KIT DE PRISE FEMELLE (2 BROCHES)	156
	563
	564
	644
	656
KIT DE PRISE FEMELLE (3 BROCHES)	105
	127
	146
	166
	170
	174
	388
	390
	620
	621
	649
	672
	676
KIT DE PRISE FEMELLE (3 BROCHES)	114
	262
KIT DE PRISE FEMELLE (3 BROCHES)	128
	156
	326
	336
KIT DE PRISE FEMELLE (4 BROCHES)	118
	120
	162
	672
	676
KIT DE PRISE FEMELLE (4 BROCHES)	86
KIT DE PRISE FEMELLE (4 BROCHES)	670
KIT DE PRISE FEMELLE (4 BROCHES)	561
KIT DE PRISE FEMELLE (6 BROCHES)	122
	142
	146
	166
	195
	350
	352
	354
	356
	360
	604
	672
	676
	716
KIT DE PRISE FEMELLE (6 BROCHES)	108
	150
	152
KIT DE PRISE FEMELLE (6 BROCHES)	340
	644
KIT DE PRISE FEMELLE (8 BROCHES)	137
	142
	146
	388
	390
	672
	676
KIT DE PRISE FEMELLE (8 BROCHES)	474
	475
KIT DE PRISE FEMELLE (8 BROCHES)	150
	152
KIT DE PRISE FEMELLE (8 BROCHES)	508
	512
	514
	518
	524
	528
KIT DE RAIL DE SIEGE COULISSANT	700
KIT DE REDRESSEMENT (CUVETTE DE SIÈGE)	668
KIT DE REGLAGE	700
	702
KIT DE REGLAGE (ACCOUDOIR)	608
KIT DE REGLAGE (CUVETTE DE SIÈGE)	668
KIT DE RÉGLAGE DE CABLE	700
	702
KIT DE REGLAGE DE SIEGE - INCLINAISON (CUVETTE DE SIÈGE)	668
KIT DE RESSORTS	646
	700
KIT DE RONDELLE D'ÉPAISSEUR	478
KIT DE ROULEAU	708
	710
KIT D'ENGRENAGE (DÉMARREUR)	132
KIT D'INDICATEUR	647
KLAXON (ENS) (24 VOLTS)(TON FAIBLE)	162

L

LAME DE COUPE (ASS)	588
LAMPE - FEUX AV (24 VOLTS)	122
LAMPE - GYROPHARE (ASS)	115
LAMPE - PHARE (ASS)	113
	118
	120
LAMPE - PHARE (ASS)	122
LAMPE-CÔTÉ DROIT (ENS)	122
LAMPE-CÔTÉ GAUCHE (ENS)	122
LAMPE (ENS) (12 VOLTS)	166
LAVE-GLACE - VITRE (ASS)	713
	714

INDEX

Désignation	Page
LENTILLE	114
LENTILLE (JAUNE)	115
LIAISON - VERROUILLAGE DE CHÂSSIS DE DIRECTION (ASS)	296
LIMITEUR DE LEVAGE ET RETOUR À L'ANGLE DE CAVAGE	388
	390
LOGICIEL DE COMMUNICATION (ASS) (LIAISON DE PRODUIT)	152
LOGICIEL-MACHINE (ASS)	110
LOGICIEL-MONITEUR (ASS)	110

M

MANCHON	482
MANOCONTACT (ENS)	226
MANOCONTACT (ENS) (DÉRIVATION DE FILTRE À HUILE HYDRAULIQUE)	379
MANOCONTACT (ENS) (DIRECTION AUXILIAIRE)	336
MANOCONTACT (ENS) (HUILE DE DIRECTION AUXILIAIRE)	326
MANOCONTACT (ENS) (RÉFRIGÉRANT)	656
MONTAGE D'ALTERNATEUR (ASS)	27
MONTAGE DE CABINE (ASS)	664
MONTAGE DE JANTE (ASS)	235
MONTAGE DE MOTEUR (ASS)	28
MONTAGE DE MOTEUR ET BOÎTE (ASS)	30
MONTAGE DE MOTEUR (VERSION)	6
MONTAGE DE RADIO (ASS)	649
	650
MONTAGE D'ENTRAÎNEMENT DE VENTILATEUR (ASS)	32
MONTAGE D'ESSIEU (ASS)	234
MOTEUR - COUVERCLE (ASS)	8
MOTEUR À ENGRENAGES (ASS)	459
	460
	462
	464
MOTEUR ET MONTAGE DE VENTILATEUR HYDRAULIQUE (ASS)	456
	457
MOTEUR (VERSION PRINCIPALE)	5

O

OEILLETONS DE LEVAGE MOTEUR (ASS)	26

P

PANNEAU SUPERIEUR (ASS)	298
	300
PARE-POUSSIERE	184
	208
	226
	232
	304
	379
	406
	428
	432
	436
PARE-POUSSIERE (ROBINET DE PRÉLÈVEMENT D'HUILE)	50
PARE-SOLEIL	712
PARE-SOLEIL (ASS)	688
PEDALE DE FREIN (ASS)	680
PIGNONNERIE AV (ASS)	21
PISTON ET BIELLE (ASS)	36
PLAQUE - AVERTISSEMENT (PAS DE DÉGAGEMENT)	723
	726
PLAQUE DE SOUPAPE PILOTE (ASS)	471
	472
	473
	474
	475
PLAQUE D'INSTRUCTIONS	656
PLAQUE D'INSTRUCTIONS (BATTERIE)	140
PLAQUE SIGNALÉTIQUE (ASS)	719
	720
PLAQUES SIGNALETIQUES ET AUTOCOLLANTS (ASS)	722
	723
PLAQUES SIGNALETIQUES ET AUTOCOLLANTS (ASS)	723
	724
	725
	726
	727
	728
	729
	730
PLAQUES SIGNALETIQUES ET AUTOCOLLANTS (ASS)	721
PLATE-FORME DE CABINE	683
PLATE-FORME (VERSION)	682
PNEU - GROUPE DE VALVE	261
PNEU ET JANTE (VERSION)	250
	251
	252
	253
	254
	255
	256
	257
POINTE COURTE (ASS)	596
	597
POINTE LONGUE (ASS)	595
POMPE À AILETTES - CARTOUCHE	338

INDEX

Désignation	Page
POMPE A EAU (ASS)	60
POMPE A ENGRENAGES (ASS)	312, 314
POMPE A ENGRENAGES (ASS)	236, 237
POMPE A HUILE MOTEUR (ASS)	48
POMPE A PISTONS (ASS)	478
POMPE À PISTONS ET PALETTES (ASS)	480
POMPE D'ALIMENTATION EN CARBURANT (ASS)	90
POMPE DE VENTILATEUR HYDRAULIQUE ET DE FREIN ET MONTAGE (ASS)	310
POMPE D'INJECTION DE CARBURANT (ASS)	86
POMPE ET MONTAGE - ÉQUIPEMENT ET DIRECTION (ASS)	476
PORTE-POINTE (ASS)	573
PORTIÈRE DE CABINE (ASS)	626, 628, 630, 632, 634
POSTE DE CONDUITE (VERSION)	665, 666
PREFILTRE (ASS)	75
PROTECTEUR DES CANALISATIONS (ASS)	283, 284, 285, 286
PROTECTION - ÉCLAIRAGE (ASS)	280, 282
PROTECTION DE GLACE (ASS)	640, 641
PROTECTION DE GODET (ASS)	593
PROTECTION DE VENTILATEUR (ASS)	56

R

Désignation	Page
RACCORD D'EAU (ASS)	51
RACCORD DROIT	568
RACCORD DROIT (FILET 1/8-27)	586
RADIATEUR (ASS)	62
RALLONGE D'ÉCHAPPEMENT (ASS)	72
RALLONGE DU DOSSIER DE SIEGE	638
RÉFLECTEUR	122
RÉFLECTEUR JAUNE	122
REFROIDISSEUR D'HUILE HYDRAULIQUE (ASS)	366
REFROIDISSEUR D'HUILE HYDRAULIQUE ET DE BOÎTE (ASS)	364, 365
REFROIDISSEUR HUILE MOTEUR ET SUPPORT DE FILTRE	52
REGARD DE NIVEAU (ASS)	209
RÉGULATEUR - PÉDALE (ASS)	681
RENIFLARD	184, 482
RÉSERVOIR DE CARBURANT ET MONTAGE (ASS)	94
RÉSERVOIR HYDRAULIQUE ET MONTAGE (ASS)	482
RESSORT (FLEXIBLE DE RENIFLARD)	10
RETROVISEUR - CABINE (ASS)	712
RÉTROVISEUR (ASS)	662, 663
ROBINET DE BATTERIE (ASS)	134
ROBINET DE VIDANGE DE RADIATEUR (ASS)	62
ROBINET DE VIDANGE (VIDANGE D'HUILE DE BLOC-CYLINDRE)	18
ROBINET-PRÉLÈVEMENT D'ÉCHANTILLON DE LIQUIDE (ASS)	50
ROBINET-PRÉLÈVEMENT D'ÉCHANTILLON DE LIQUIDE (ASS)	379
ROBINET-PRÉLÈVEMENT D'ÉCHANTILLON DE LIQUIDE (ASS) (HUILE MOTEUR)	50
ROTATION DE LA ROUE DU VENTILATEUR SOUFFLANT (POSITION DE MARCHE DU MOTEUR MARCHE/ARRÊT)	670
ROTATION DE LA ROUE DU VENTILATEUR SOUFFLANT (RÉGLAGE DU SIÈGE)	708, 710

S

Désignation	Page
SEGMENT DE LAME DE COUPE (ASS)	588
SÉPARATEUR D'EAU (ASS)	93
SIEGE - COUVERCLE INFERIEUR (ASS)	668
SIÈGE (ASS)	696, 698
SIÈGE AVEC SUSPENSION (ASS)	708, 710
SIÈGE AVEC SUSPENSION (ASS)	699, 700
SIÈGE AVEC SUSPENSION (ASS)	702
SIÈGE ET MONTAGE (ASS)	689, 690, 691, 692
SILENCIEUX (ASS)	74
SONDE - CIRCUIT DE CARBURANT	127, 622
SOUPAPE - CARTOUCHE PILOTE (ASS)	534, 536, 538, 540
SOUPAPE - GAZ (CIRCUIT DE FREINAGE)	301
SOUPAPE - SOLÉNOÏDE (ASS)	561, 562, 563

INDEX

Désignation	Page
	564
	565
SOUPAPE D'ARRÊT	406
SOUPAPE D'ARRÊT (ASS)	558
SOUPAPE D'ARRÊT (ASS)	560
SOUPAPE D'ARRÊT (VIDANGE D'HUILE)	18
SOUPAPE DE COMMANDE PRINCIPALE (ASS)	498
	500
	502
	504
	506
SOUPAPE DE COUPLEUR EXPRESS (ASS)	546
SOUPAPE DE DÉRIVATION (ASS)	232
	259
SOUPAPE ET MONTAGE - SOLÉNOÏDE	489
SOUPAPE PILOTE (ASS)	508
	512
	514
	516
	518
	520
	524
	526
	528
	532
SOUPAPE RÉDUCTRICE DE PRESSION (ASS)	544
	545
SOUPAPE RÉGULATRICE DE PRESSION ET DÉBIT	542
SOUPAPE SPHÉRIQUE (ASS)	416
	490
SOUPAPE SPHÉRIQUE (ASS) (RÉPARTITEUR)	420
SOUPAPE SPHÉRIQUE (ASS) (RÉPARTITEUR) (ABAISSEMENT DU BRAS DE LEVAGE MOTEUR À L'ARRÊT)	424
SUPPORT DE FILTRE ET REFROIDISSEUR D'HUILE MOTEUR	52
SUPPORT DE SÉPARATEUR D'EAU (SÉPARATEUR D'EAU)	93
SUPPORT DE SIÈGE (ASS)	706
SUPPORT D'EXPÉDITION (ASS)	567
SUSPENSION DE SIEGE - CARTER (ASS)	646

T

TABLEAU DE BORD (ASS)	624
	672
	676
TABLEAU DE BORD (ASS)	670
TAMIS D'ASPIRATION	184
TAMIS DE FILTRE	714
THERMOSTAT-TEMPÉRATURE D'EAU	51
TOIT ROPS - OUVERT (ASS)	686
TOIT-ROPS OUVERT (ASS)	614
	615
TRAINS PLANÉTAIRES - CARTER ET PIÈCES	184
TRANSFORMATION ELECTRIQUE (ASS)	108
TRANSFORMATION ELECTRIQUE (ASS)	109
	110
TRANSMISSION (VERSION)	235
TURBOCOMPRESSEUR (ASS)	76
TUYAU D'ÉCHAPPEMENT (VAPEURS)	10

V

VENTILATEUR ASPIRANT (ASS)	54
VÉRIN DE COUPLEUR (ASS)	368
VERIN DE DIRECTION (ASS)	324
VERIN DE DIRECTION ET MONTAGE (ASS)	320
VÉRIN DE LEVAGE (ASS)	370
VÉRIN D'INCLINAISON (ASS)	372
	374
	376
VERIN ET MONTAGE - COUPLEUR (ASS)	367
VÉRIN HYDRAULIQUE (ASS)	322
VERROUILLAGE DE COMMANDE MANUELLE HYDRAUL. (ASS)	455
VERROUILLAGE DE VÉRIN DE DIRECTION (ASS)	334
VERSION DE CHASSIS	1
	2
VERSION DE MOTEUR DE VENTILATEUR HYDRAULIQUE	458
VERSION DE TOIT - ROPS OUVERT	614
VERSION HYDRAULIQUE	380
	381
	382
	383
VERSION NORMALE	2
	3
VIDANGE-HUILE DE MOTEUR (ASS)	18
VILEBREQUIN - POULIE (ASS)	40
VILEBREQUIN (ASS)	12
VOLANT MOTEUR (ASS)	20

INDICE

Nombre	Página

A

ACONDICIONADOR DE AIRE (CONFIG) 601, 602
ACONDICIONADOR DE AIRE (GR) 604
ACONDICIONADOR DE AIRE Y MONTAJE (GR) 600
ACOPLADOR - TUBERÍAS DE (GR) 392, 396
ACOPLADOR RÁPIDO (CONFIG) 583, 584
ACOPLADOR RÁPIDO (GR) 586
ACOPLAMIENTO FLEXIBLE - MANDO DE (GR) 202
ACUMULADOR DEL FRENO (GR) 301
ADAPTADOR (GR) 226
AGUA - CONEXIÓN DE (GR) 51
AGUA DE LAS CAMISAS - CALENTADOR DEL (GR) 111, 112
AGUILÓN TELESCÓPICO (GR) 574
AIRE - TUBERÍAS DE (GR) 73
ALAMBRADO DE COMUNICACION (GR) 150, 152
ALARMA (GR) 95
ANTEFILTRO (GR) 75
ÁRBOL DE LEVAS (GR) 7
ARO DESMONTABLE (GR) 240, 241, 242, 243, 244, 245
ARO Y RUEDA 250, 251, 252, 253, 254, 255, 256, 257
ARRANQUE - INTERRUPTOR DE (GR) (LLAVE) 670
ASIENTO CON SUSPENSIÓN (GR) 708, 710
ASIENTO (GR) 696, 698
ASIENTO Y MONTAJE (GR) 689, 690, 691, 692
AUXILIAR DE ARRANQUE (GR) 129

B

BALANCÍN (GR) 42
BASE DEL FILTRO Y ACEITE REFRIGERANTE DE MOTOR 52
BASTIDOR DEL CARGADOR (GR) 276
BASTIDOR DELANTERO (GR) 275
BASTIDOR TRASERO (GR) 277
BATERÍA 621
BATERÍA (GR) 103
BATERÍA (12 VOLTIOS, 950 AMPERIOS DE CORRIENTE EN FRIO) 103
BLOQUE DESLIZANTE-JUEGO 696, 699
BLOQUE MOTOR (GR) 13, 14
BOCINA (CONJ) (24 VOLTIOS)(TONO BAJO) . . . 162
BOLA DE VÁLVULA (GR) 416, 490
BOLA DE VÁLVULA (GR) (RESOLVEDOR) 420
BOLA DE VÁLVULA (GR) (RESOLVEDOR) (BAJADA DEL BRAZO DE LEVANTAMIENTO CON EL MOTOR PARADO) 424
BOMBA DE ACEITE DEL MOTOR (GR) 48
BOMBA DE AGUA (GR) 60
BOMBA DE DIRECCIÓN E IMPLEMENTOS Y MONTAJE (GR) 476
BOMBA DE ENGRANAJES (GR) 312, 314
BOMBA DE ENGRANAJES (GR) 236, 237
BOMBA DE INYECCIÓN DE COMBUSTIBLE (GR) 86
BOMBA DE PALETAS-CARTUCHO (GR) 338
BOMBA DE PISTONES (GR) 478
BOMBA DE PISTONES Y PALETAS (GR) 480
BOMBA DE TRANSFERENCIA DE COMBUSTIBLE (GR) 90
BRAZO DE LEVANTAMIENTO (CONJ) 566

C

CABINA (CONFIG) 610, 611
CABINA (GR) 612
CABINA ROPS CERRADA (GR) 684
CABLE (CONJ) 600
CABLES DE CONTROL DE AMORTIGUACIÓN (GR) 172, 173
CABLES DE LA BATERÍA 140
CABLES DE LA CABINA (GR) 146
CABLES DE LA CABINA (GR) 142
CABLES DE LA DIRECCIÓN SECUNDARIA 174
CABLES DE LA MÁQUINA (GR) 166

INDICE

Nombre	Página
CABLES DEL CONTROL ELECTRÓNICO (GR)	154
CABLES DEL MOTOR (GR)	156
CABLES DELANTEROS (GR)	162
CABLES POSTERIORES (GR)	170
CAJA DE BATERÍA	264
CAJA DE EJE OSCILANTE (GR)	218
	222
CAJA DE HERRAMIENTAS (GR)	718
CAJA DE LA SUSPENSIÓN DEL ASIENTO (GR)	646
CAJA DEL EJE OSCILANTE (GR)	216
CAJA DELANTERA (GR)	24
CAJA Y PIEZAS DE LOS PLANETARIOS	184
CALCOMANÍA	105
	106
	428
	432
	436
CALCOMANÍA (ACEITE HIDRAULICO)	721
CALCOMANÍA (CONTROLES)	672
CALCOMANÍA DE ADVERTENCIA (ASIENTO AJUSTABLE)	708
	710
CALCOMANÍA DE ADVERTENCIA (FUNCIONAMIENTO DEL MOTOR, ENCENDIDO/APAGADO)	670
CALCOMANÍA DE ADVERTENCIA (NO ETER/ENTRADA DE AIRE)	721
	722
CALCOMANÍA DE IDENTIFICACIÓN (DISYUNTOR)	156
CALCOMANÍA DE IDENTIFICACIÓN (NUMERO DE GRUPO Y SECUENCIA)	620
CALCOMANIA, DISYUNTOR	156
CALCOMANÍA-INSTRUMENTO (DESCONEXIÓNN DE IMPLEMENTO)	342
CALCOMANÍA (MANIPULADOR DE DESPERDICIOS)	3
CALCOMANÍA (MANIPULADOR DE DESPERDICIOS) (MANIPULADOR DE DESPERDICIOS)	4
CALCOMANÍA (SISTEMA DE SEGURIDAD DE LA MÁQUINA)	166
CALCOMANÍA (12 V)	109
CALCOMANÍA (12 VOLTIOS)	108
CALCOMANÍAS Y PLACAS DE IDENTIFICACIÓN (GR)	721
	722
	723
	724
	725
	726
	727
	728
	729
	730
CALEFACCIÓN DE LA CABINA (CONFIG)	643
CALEFACCIÓN DE LA CABINA (GR)	644
CALEFACCIÓN Y MONTAJE DE LA CABINA (GR)	642
CÁNCAMOS DE LEVANTAMIENTO DEL MOTOR (GR)	26
CANDADO (GR)	204
	482
CAPO Y PROTECTOR (GR)	290
CARGA - ALTERNADOR DE (GR)	102
CARGA - ALTERNADOR DE (GR)	96
	98
	100
CÁRTER - COLECTOR DEL (GR)	34
CÁRTER - PROTECTOR DEL (GR)	278
CHASIS (CONFIG)	1
	2
CIGÜEÑAL - POLEA DE (GR)	40
CIGÜEÑAL (GR)	12
CILINDRO DE ACOPLAMINETO Y MONTAJE (GR)	367
CILINDRO DE DIRECCIÓN (GR)	324
CILINDRO DE DIRECCIÓN Y MONTAJE (GR)	320
CILINDRO DE LEVANTAMIENTO - TUBERÍAS DEL (GR)	416
	420
	424
CILINDRO DE LEVANTAMIENTO (GR)	370
CILINDRO DEL ACOPLADOR (GR)	368
CILINDRO HIDRÁULICO (GRUPO)	322
CINTURÓN DE SEGURIDAD (GR)	698
CINTURÓN DE SEGURIDAD (GR)	693
	694
CODO DE ADMISIÓN DE AIRE (GR)	71
COLUMNA DE DIRECCIÓN (GR)	337
COMPARTIMIENTO DEL OPERADOR (CONFIG)	665
	666
COMPRESOR DE REFRIGERANTE (GR)	616
	617
CONDENSADOR DE REFRIGERANTE (GR)	620
CONDENSADOR DEL REFRIGERANTE Y MONTAJE (GR)	618
	619
CONDUCTO DE AIRE (GR)	636
CONEXION (CONJ)	406
CONEXIÓN DE ENGRASE	247
	249
	288
	568
	570
CONEXIÓN DE ENGRASE (ROSCA DE 1/8-27)	294

INDICE

Nombre	Página
	295
CONEXION-RECTA	568
CONEXION-RECTA (ROSCA DE 1/8-27)	586
CONFIGURACIÓN COMÚN	2
	3
CONFIGURACIÓN DE ELIMINACIÓN DE BASURAS	3
	4
CONFIGURACIÓN DE INSTALACIÓN DEL MOTOR	6
CONFIGURACIÓN HIDRÁULICA DE 2 VÁLVULAS	383
	384
CONJUNTO DE CABLES, ACONDICIONADOR DE AIRE (VENTILADORES DEL CONDENSADOR)	620
CONJUNTO DE DESTELLADOR (12/24 VOLTIOS)	122
CONJUNTO DE JUEGO SUPERIOR	700
CONJUNTO DE LLAVE, ELECTRONICA (SEGURIDAD)	166
CONSOLA (GR)	624
CONTRAPESO (GR)	265
	266
	267
CONTROL DE AMORTIGUACIÓN (CONFIG)	339
CONTROL DE COMUNICACION (GR) (ESLABON DE PRODUCTO)	150
CONTROL DE DESCONEXIÓN DE LEVANTAMIENTO (GR)	105
	388
CONTROL DE DESCONEXIÓN DE LEVANTAMIENTO (GR) (LEVANTAMIENTO)	390
CONTROL DE DIRECCIÓN (GR)	316
	318
CONTROL DE LA HERRAMIENTA DE TRABAJO (GR)	570
CONTROL DE LA PERILLA	146
CONTROL DE LA TRANSMISIÓN (GR)	194
	195
CONTROL DE MANIJA (GR)	340
CONTROL DE MONITOR (GR)	621
CONTROL DE POSICION (GR)	106
	388
	390
CONTROL DE VOLTAJE (GR) (24 VOLTIOS) (PROTECCIÓN DE CARGA)	86
CONTROL DEL CUCHARÓN (GR)	568
CONTROL DEL FRENO DE ESTACIONAMIENTO	302
	303
CONTROL ELECTRÓNICO DEL MOTOR (GR)	104
CONTROL HIDRÁULICO DE OPERACIÓN PILOTO (GR)	342
	344
	346
	348
	350
	352
	354
	356
	358
	360
	362
CONTROL NO PROGRAMADO (GR)	107
CONVERTIDOR ELÉCTRICO (GR)	108
	109
	110
CORONA (GR)	210
	212
CORREA TRAPEZOIDAL	617
CRISTAL	114
CRISTAL (AMBAR)	115
CUBIERTA INFERIOR DEL ASIENTO DEL OPERADOR (GR)	668
CUCHARÓN DE USO GENERAL (CONJ)	575
	576
	577
	578
	579
CUCHARÓN DE USO GENERAL (GR)	581
	582
CUCHARÓN PARA MATERIALES LIVIANOS	580
CUCHILLA (GR)	588
CULATA DE CILINDROS - TORNILLERÍA DE LA (GR)	19
CULATA DE CILINDROS (GR)	16
	17

D

DERIVACIÓN - VÁLVULA DE (GR)	232
	259
DESCONGELADOR DE LA CABINA (GR)	625
DETECTOR DE POSICIÓN (SISTEMA DE COMBUST.) (GR)	127
DETECTOR DE POSICIÓN (SISTEMA DE COMBUST.) (GR)	622
DIENTE DE UNA PIEZA (UNI-TOOTH) (GR)	599
DIENTE LARGO (GR)	598
DIFERENCIAL DE DESLIZAMIENTO LIMITADO (GR)	199
DIFERENCIAL (GR)	198
DIFERENCIAL NOSPIN (GR)	200
	201
DIRECCIÓN (CONFIG)	335
DIRECCIÓN SECUNDARIA (CONFIG)	335

INDICE

Nombre	Página
DISYUNTOR (CONJ) (15 A)	156
DISYUNTOR (CONJ) (15 A) (ASIENTO DE AIRE)	692
DISYUNTOR (CONJ) (30 A)	156
DISYUNTOR (CONJ) (90 AMP)	156
DISYUNTOR DE CIRCUITO (GR) (60 AMP)	156
DISYUNTOR (GR)	134
DRENAJE DEL ACEITE DE MOTOR	18
E	
EJE - GRUPO DE MONTAJE	234
EJE DE MANDO (GR)	246
	247
EJE FIJO (CONFIG)	176
EJE OSCILANTE (CONFIG)	176
	177
	178
	179
ELECTRONICA DE LA MAQUINA (GR)	110
ELEMENTO DE FILTRO DE AGUA (SEPARADOR)	93
ELEMENTO DE FILTRO DE COMBUSTIBLE	78
ELEMENTO DEL FILTRO DE AIRE (CONJ) (PRIMARIO)	69
ELEMENTO DEL FILTRO DE AIRE (CONJ) (PRIMARIO)	67
ELEMENTO DEL FILTRO DE AIRE (CONJ) (SECUNDARIO)	67
	69
EMBRAGUE (GR)	188
	190
	192
EMPAQUETADURA (TAPA DE VÁLVULA)	10
ENFRIADOR DE ACEITE DEL MOTOR Y BASE DEL FILTRO	52
ENFRIADOR DEL ACEITE HIDRAULICO (GR)	366
ENGANCHE ARTICULADO (GR)	288
ENGRANAJE DE TRANSFERENCIA DE SALIDA	214
ENGRANAJE DELANTERO (GR)	21
ENTRADA - SERVOTRANSMISIÓN (GR)	224
ESCALERILLA (GR)	292
ESQUINA-COSTADO IZQUIERDO	583
ESQUINA DERECHA	583
ESTRUCTURA ROPS ABIERTA (GR)	686
ETIQUETA DE ADVERTENCIA (GR)	719
	720
EXTENSIÓN DEL ESCAPE (GR)	72
EXTENSIÓN DEL RESPALDO (GR)	638
EXTRACTOR DE MINIFUSIBLES	672
	676

Nombre	Página
F	
FALDON DE CABINA (GR)	704
	705
FILTRO	639
FILTRO DE ACEITE (CONJ)	379
FILTRO DE ACEITE (CONJ) (HIDRAULICO)	208
FILTRO DE ACEITE DEL MOTOR (CONJ)	45
FILTRO DE ACEITE DEL MOTOR (GR)	45
FILTRO DE ACEITE (GR)	208
	378
	379
FILTRO DE AIRE DE LA CABINA (GR)	639
FILTRO DE AIRE (GR)	67
	68
	69
	70
FILTRO DE COMBUSTIBLE (GR)	78
FILTRO MAGNÉTICO	184
FRENO DE SERVICIO - CONTROL (GR)	304
FRENO Y PLANETARIOS (GR)	180
	182
G	
GRIFO DE DRENAJE (DRENAJE DEL ACEITE DEL BLOQUE DEL CILINDRO)	18
GRUPO DE BOMBA Y MONTAJE, FRENOS Y VENTILADOR HIDRÁULICO	310
GRUPO DE CODO	558
GRUPO DE MONTAJE DE LA CABINA	664
GRUPO DE PIVOTE, VÁLVULA PILOTO	466
	467
	468
	469
	470
GRUPO DE PLANCHA, VÁLVULA PILOTO	475
GRUPO DE PLANCHA, VÁLVULA PILOTO	471
	472
	473
	474
GRUPO DE PROTECTOR DEL CUCHARON	593
GRUPO DE PUNTA Y ADAPTADOR	573
GRUPO DE REFRIGERANTE, HIDRÁULICO Y ACEITE DE TRANSMISIÓN	364
	365
GRUPO DE SOFTWARE, COMUNICACIÓN (ESLABON DE PRODUCTO)	152
GRUPO GIRATORIO DE BOMBA	481
GUARDABARROS DELANTERO (GR)	268
GUARDABARROS TRASERO (GR)	270
	272
	274

INDICE

Nombre	Página
H	
HIDRÁULICA (CONFIG)	380, 381, 382, 383
HOJA DE LIMPIAPARABRISAS (CONJ) (DELANTERO)	716
HOJA DE LIMPIAPARABRISAS (CONJ) (TRASERO/A)	716
HORQUILLA (GR)	589
HORQUILLA PARA TARIMAS (GR)	590, 591, 592
I	
INCLINACIÓN HORIZONTAL - CILINDRO DE (GR)	372, 374, 376
INDICADOR (CONJ)	70
INDICADOR (CONJ) (CAMBIO DE FILTRO)	68
INDICADOR DEL NIVEL DE ACEITE (VARILLA) (GR)	46
INDICADOR DEL NIVEL DEL ACEITE (VARILLA) (CONJ)	216, 218, 222
INSTALACIÓN DE RADIO (GR)	649, 650
INTERRUPTOR (CONJ) (ARRANQUE)	132
INTERRUPTOR DE BOLA (CONJ)	558
INTERRUPTOR DE DESCONEXIÓN (CONJ)	342
INTERRUPTOR DE LÍMITE (CONJ)	672
INTERRUPTOR DE LÍMITE (CONJ) (FRENO DE ESTACIONAMIENTO)	302
INTERRUPTOR DE LÍMITE (CONJ) (PEDAL DE FRENO)	676
INTERRUPTOR DE PRESIÓN (CONJ)	226
INTERRUPTOR DE PRESIÓN (CONJ) (ACEITE DE LA DIRECCION SECUNDARIA)	326
INTERRUPTOR DE PRESIÓN (CONJ) (DERIVACION DEL FILTRO DEL ACEITE HIDRAULICO)	379
INTERRUPTOR DE PRESIÓN (CONJ) (DIRECCIÓN SECUNDARIA)	336
INTERRUPTOR DE PRESIÓN (CONJ) (REFRIGERANTE)	656
INTERRUPTOR DE SEÑAL DE GIRO Y ADVERTENCIA (CONJ)	122
INTERRUPTOR DEL LIMPIADOR (GR)	137
INTERRUPTOR DEL LIMPIAPARABRISAS (CONJ) (INTERMITENTE)	137
INTERRUPTOR DEL TERMOSTATO (CONJ)	604
INTERRUPTOR MAGNÉTICO (GR)	135, 136
INTERRUPTOR MAGNÉTICO (GR) (24V) (RELÉ DE ARRANQUE ASISTIDO)	156
INTERRUPTOR ROTATIVO (CONJ)	146
INTERRUPTOR ROTATIVO (CONJ) (DE DESPLAZAMIENTO/REFLECTOR/DE TABLERO/LUZ DE COLA)	142
INTERRUPTOR ROTATIVO (CONJ) (VELOCIDAD DEL VENTILADOR SOPLADOR)	676
J	
JUEGO ACOJINADO DE GOMA	700
JUEGO AJUSTADOR DE CABLE	700, 702
JUEGO DE ACOPLADOR RAPIDO	594
JUEGO DE AJUSTE DEL ASIENTO	700, 702
JUEGO DE AJUSTE DEL ASIENTO (POSABRAZO)	608
JUEGO DE AJUSTE DEL ASIENTO (SOPORTE INFERIOR DEL ASIENTO)	668
JUEGO DE AMORTIGUADOR	700
JUEGO DE AMORTIGUADOR (POSABRAZO)	608
JUEGO DE AMORTIGUADOR (RESPALDO DE TELA)	638
JUEGO DE ATADURA	700, 702, 710
JUEGO DE BASE DEL SEPARADOR DE AGUA (SEPARADOR DE AGUA)	93
JUEGO DE BASTIDOR (CONJ)	700
JUEGO DE BOMBA DE AGUA	60
JUEGO DE BOTÓN	646
JUEGO DE BOTÓN DEL ASIENTO	696
JUEGO DE CALCES	478
JUEGO DE COJÍN DEL ASIENTO (DE TELA)	696
JUEGO DE COJINETE DE SUSPENSIÓN	700
JUEGO DE COJINETES	647
JUEGO DE COJINETES (ALTERNADOR)	98
JUEGO DE CONTACTOR (MOTOR DE ARRANQUE)	132
JUEGO DE CORREAS TRAPEZOIDALES	100, 102
JUEGO DE ELEVADOR DE ALTURA	700
JUEGO DE ENCHUFE (12 CLAVIJAS)	156, 621, 672, 676
JUEGO DE ENCHUFE (2 CLAVIJAS)	136, 146, 156, 162, 166

INDICE

Nombre	Página
	170
	172
	173
	262
	388
	390
	604
	620
	621
	672
	677
JUEGO DE ENCHUFE (2 CLAVIJAS)	424
JUEGO DE ENCHUFE (3 CLAVIJAS)	106
	146
	156
	166
	170
	262
	314
	390
	621
	672
	677
JUEGO DE ENCHUFE (4 CLAVIJAS)	142
	146
	162
	195
	672
	677
JUEGO DE ENCHUFE (6 CLAVIJAS)	108
	142
	146
	162
	166
	672
	677
JUEGO DE ENCHUFE (8 CLAVIJAS)	142
	146
	150
	152
	162
	195
	649
	672
	676
JUEGO DE ENGRANAJES (MOTOR DE ARRANQUE)	132
JUEGO DE ESPACIADOR	478
JUEGO DE FUNDA DE LA SUSPENSIÓN DEL ASIENTO	708
JUEGO DE INCLINACIÓN DE ASIENTO (SOPORTE INFERIOR DEL ASIENTO)	668
JUEGO DE INCLINACIÓN TRASERA (SOPORTE INFERIOR DEL ASIENTO)	668
JUEGO DE INDICADOR	647
JUEGO DE MANGUERA (AGUA) (CAJA DE REGULADOR)	60
JUEGO DE MANIJA	700
JUEGO DE PALANCA (CONJ)	700
JUEGO DE PANEL DEL RESPALDO DEL ASIENTO	696
JUEGO DE PARAGOLPES	646
	700
JUEGO DE PISTÓN	481
JUEGO DE POSABRAZOS DERECHO	700
	702
JUEGO DE RECEPTÁCULO (12 CLAVIJAS)	122
JUEGO DE RECEPTÁCULO (12 CLAVIJAS)	162
	621
	672
	676
	677
JUEGO DE RECEPTÁCULO (12 CLAVIJAS)	142
	146
JUEGO DE RECEPTÁCULO (2 CLAVIJAS)	114
	138
	156
	162
	172
	173
	226
	262
	388
	414
	424
	440
	604
	621
	644
	656
	672
	676
	710
JUEGO DE RECEPTÁCULO (2 CLAVIJAS)	166
	170
	656
JUEGO DE RECEPTÁCULO (2 CLAVIJAS)	95
	558
	562
	563
	564
JUEGO DE RECEPTÁCULO (2 CLAVIJAS)	146
JUEGO DE RECEPTÁCULO (3 CLAVIJAS)	105
	114
	127
	128
	156
	174
	262
	388

INDICE

Nombre	Página
	390
	620
	649
	672
	676
JUEGO DE RECEPTÁCULO (3 CLAVIJAS)	166
	170
	326
	336
JUEGO DE RECEPTÁCULO (3 CLAVIJAS)	146
	621
JUEGO DE RECEPTÁCULO (4 CLAVIJAS)	86
	162
	670
	672
	676
JUEGO DE RECEPTÁCULO (4 CLAVIJAS)	561
JUEGO DE RECEPTÁCULO (4 CLAVIJAS)	118
	120
JUEGO DE RECEPTÁCULO (6 CLAVIJAS)	108
	122
	142
	146
	150
	152
	195
	350
	352
	354
	356
	360
	604
	644
	672
	676
	716
JUEGO DE RECEPTÁCULO (6 CLAVIJAS)	166
	340
JUEGO DE RECEPTÁCULO (8 CLAVIJAS)	137
	150
	152
	388
	474
	475
	508
	512
	514
	518
	524
	528
	672
	676
JUEGO DE RECEPTÁCULO (8 CLAVIJAS)	142
	146
	390
JUEGO DE RESORTES	646
	700
JUEGO DE RESTRICCIÓN DEL CINTURÓN	708
JUEGO DE RIEL DE DESLIZAMIENTO DEL ASIENTO	700
JUEGO DE RODILLO	708
	710
JUEGO DE SEGUIDOR	646
	647
JUEGO DE SELLO DE TAZA (SEPARADOR DE AGUA)	93
JUEGO DE SELLOS	416
	420
	462
	490
	491
	558
JUEGO DE TAPA	700
JUEGO DE TAPA DE SUSPENSIÓN	700
JUEGO DE TERMINAL (ALTERNADOR)	98
JUEGO DE TIJERAS	710
JUEGO DE TORNILLERÍA (ALTERNADOR)	98
JUEGO DE TORNILLERÍA (SUSPENSION DE ASIENTO)	710
JUEGO DE TORNILLERÍA (VALVULA DE SOLENOIDE)	562
JUEGO DEL COMPRESOR DE AIRE	710
JUEGO-POSABRAZOS-LADO IZQUIERDO	700
	702
JUNTA DESLIZANTE (GR)	248
	249

L

LÁMPARA	113
	651
LÁMPARA (CONJ) (12 VOLTIOS)	166
LÁMPARA DE BALIZA DE ADVERTENCIA (GR)	115
LÁMPARA DE FARO DELANTERO (24 VOLTIOS)	122
LAMPARA DERECHA (CONJ)	122
LÁMPARA (FILAMENTO DOBLE)	114
LÁMPARA (FILAMENTO SENCILLO)	114
LAMPARA IZQUIERDA (CONJ)	122
LÁMPARA (24 VOLTIOS)	122
	142
	146
	621
	676
LÁMPARA (24 VOLTIOS)	118
	120
LÁMPARA (24 VOLTIOS, 70 VATIOS)	115
LAVAPARABRISAS DE LA VENTANA (GR)	713
	714

INDICE

Nombre	Página
LIMPIAPARABRISAS DE LA VENTANA (GR)	716
LLANTA (CONFIG)	238
	239
LLAVE	482
LLAVE (DESCONECTAR BATERIA)	134
LUCES AUXILIARES (GR)	116
LUCES DE ADVERTENCIA (GR)	124
	125
LUCES DE PARADA Y COLA (GR)	114
LUCES DE REFLECTOR (GR)	118
	120
LUCES DE REFLECTOR Y CAMBIO DE DIRECCION (GR)	122

M

MANDO DE BOMBA (GR)	203
MANDO DE CORREA (BALIZA GIRATORIA DE ADVERTENCIA)	115
MANGUITO	482
MECANISMO DE VÁLVULAS (GR)	44
MIRILLA DE MEDIDOR (GR)	209
MONTAJE DE ARO	235
MONTAJE DEL ALTERNADOR (GR)	27
MONTAJE DEL MANDO DE VENTILADOR (GR)	32
MONTAJE DEL MOTOR (GR)	28
MONTAJE DEL MOTOR Y LA TRANSMISIÓN (GR)	30
MONTAJE Y VALVULA DEL CONTROL PRINCIPAL (GR)	484
	485
	486
	487
	488
MOTOR (CONFIG), VENTILADOR HIDRÁULICO	458
MOTOR DE ARRANQUE ELÉCTRICO (GR)	130
	132
MOTOR DE ENGRANAJES (GR)	459
	460
	462
	464
MOTOR PRIMARIO (CONFIG)	5
MOTOR Y MONTAJE DE VENTILADOR HIDRAULICO (GR)	456
	457

P

PANEL SUPERIOR (GR)	298
	300
PANTALLA (CONJ)	508
	512
	514
	516
	518
	520
	524
	526
	528
	532
PEDAL DE FRENO (GR)	680
PERSIANA PARA EL SOL (GR)	688
PISTÓN Y BIELA (GR)	36
PLACA DE ADVERTENCIA (NO ESPACIO LIBRE)	723
	726
PLACA DE INSTRUCCIONES	656
PLACA DE INSTRUCCIONES (BATERÍA)	140
PLATAFORMA (CONFIG)	682
PLATAFORMA DE LA CABINA	683
POSABRAZOS (GR)	607
	608
	609
POSICIONADOR DEL CUCHARÓN Y DESCONEXIÓN (GR)	388
	390
PROTECTOR DE LA VENTANA	640
	641
PROTECTOR DE LAS LUCES (GR)	280
	282
PROTECTOR DE LAS TUBERÍAS (GR)	283
	284
	285
	286
PROTECTOR DEL TREN DE FUERZA (GR)	287
PROTECTOR DEL VENTILADOR (GR)	56
PUERTA DE CABINA	626
	628
	630
	632
	634
PUNTA CORTA (GR)	596
	597
PUNTA LARGA (GR)	595

R

RADIADOR (GR)	62
RECIPIENTE DE RECOLECCION DE AGUA (CONJ)	93
REFLECTOR	122
REFLECTOR-AMBAR	122
REFLECTOR (GR)	113
	118
	120
	122
REGULADOR - PEDAL DEL (GR)	681

INDICE

Nombre	Página
REGULADOR DE TEMPERATURA DEL AGUA	51
REJILLA DE FILTRO	714
REJILLA DE SUCCIÓN	184
RESORTE (RESPIRADERO DE MANGUERA)	10
RESPIRADERO	184
	482
RETROCESO - ALARMA DE (GR)	138
RETROVISOR (GR)	662
	663
REVESTIMIENTO DE LA CABINA (GR)	651
	652
	654

S

SEGMENTO DE CUCHILLA (GR)	588
SELLO ANULAR	464
SELLO ANULAR (REGULADOR)	51
SELLO ANULAR (TAPÓN PARA DRENAJE DE ACEITE)	34
SELLO (CAJA DE REGULADOR)	51
SENSOR DE PRESIÓN (GR)	304
SENSOR DE PRESIÓN (GR)	128
SENSOR DE PRESIÓN (GR) (ACEITE DEL MOTOR)	86
SENSOR DE PRESIÓN (GR) (REFUERZO)	86
SENSOR DE TEMPERATURA (GR) (ACEITE DE CONVERTIDOR DE PAR)	262
SENSOR DE TEMPERATURA (GR) (ACEITE DE CONVERTIDOR DE PAR)	156
SENSOR DE TEMPERATURA (GR) (ADMISIÓN DE AIRE)	86
SENSOR DE TEMPERATURA (GR) (REFRIGERANTE DEL MOTOR)	86
SENSOR DE VELOCIDAD (GR) (SINCRONIZACIÓN)	86
SEPARADOR DE AGUA (GR)	93
SERVICIO DE POSICIONADOR DE HORQUILLA (GR)	590
SILENCIADOR (GR)	74
SISTEMA ROPS DE CABINA CERRADA (CONFIG)	611
SOFTWARE DE LA MAQUINA (GR)	110
SOFTWARE DE MONITOR (GR)	110
SOPORTE DE TRANSPORTE (GR)	567
SOPORTE DEL ASIENTO (GR)	706
SOPORTE DEL RESPALDO (GR)	667
SUCCIÓN - VENTILADOR DE (GR)	54
SUSPENSIÓN - ASIENTO CON (GR)	699
	700
	702

T

TABLERO DE INSTRUMENTOS (GR)	670
	672
	676
TANQUE DE COMBUSTIBLE Y GRUPO DE MONTAJE	94
TANQUE HIDRÁULICO Y MONTAJE (GR)	482
TAPA	261
TAPA CONTRA EL POLVO	184
	208
	226
	232
	304
	379
	406
	428
	432
	436
TAPA CONTRA EL POLVO (VÁLVULA DE MUESTREO DE ACEITE)	50
TAPA DE LA CONSOLA (GR)	623
TAPA DE RADIADOR (CONJ)	62
TAPA DE TRANSMISION (GR)	196
TAPA DEL COMBUSTIBLE(CONJ)	94
TAPA DEL MECANISMO DE VÁLVULAS (GR)	10
TAPA DEL MOTOR (GR)	8
TAPA HIDRAULICA (CONJ)	482
TAPA, LLENADO	204
TAPA PARA LLUVIA (FILTRO DE AIRE)	68
TAPÓN (CONJ)	376
TAPÓN (CONJ) (ACONDICIONADOR DE AIRE)	656
TAPÓN (CONJ) (FILTRO DE ACEITE)	10
TAPÓN DE DRENAJE	184
TAPON DE DRENAJE DE SUMIDERO	34
TAPON DE SELLO (DRENAJE DE ACEITE)	18
TAPÓN DEL BLOQUE MOTOR (GR)	37
	38
TAPÓN DEL MOTOR (GR)	39
TAPÓN MAGNÉTICO	216
	218
	222
TECHO ROPS ABIERTO (CONFIG)	614
TECHO ROPS ABIERTO (GR)	614
	615
TIRANTE DE TRABA DEL BASTIDOR DE DIRECCIÓN (GR)	296
TOPE DE OSCILACIÓN DEL EJE	250
TRABA DE CILINDRO DE DIRECCIÓN (GR)	334
TRABA DE CONTROL HIDRÁULICO MANUAL (GR)	455
TRANSMISION (CONFIG)	258
TREN DE FUERZA (CONFIG)	235
TUBERÍAS CON SERVOMANDO (GR)	428

INDICE

Nombre	Página
	432
	436
TUBERÍAS DE ACONDICIONADOR DE AIRE (GR)	656
TUBERÍAS DE COMBUSTIBLE (GR)	80
TUBERIAS DE CONTROL DE LA SUSPENSIÓN (GR)	440
	444
TUBERÍAS DE DIRECCIÓN (GR)	330
TUBERÍAS DE ENGRASE (GR)	294
	295
TUBERÍAS DE LA CALEFACCIÓN (GR)	660
TUBERÍAS DE LA DIRECCIÓN SECUNDARIA (GR)	326
TUBERÍAS DEL AGUA (GR)	58
TUBERÍAS DEL AUXILIAR DE ARRANQUE CON ÉTER EN EL MOTOR (GR)	126
TUBERÍAS DEL CILINDRO DE INCLINACIÓN (GR)	448
	450
	452
TUBERÍAS DEL ENFRIADOR DE ACEITE DEL EJE (GR)	226
TUBERIAS DEL ENFRIADOR DEL CONVERTIDOR DE PAR	232
TUBERÍAS DEL FILTRO DE COMBUSTIBLE	84
TUBERÍAS DEL FILTRO Y LA TRANSMISIÓN (GR)	206
TUBERÍAS DEL FRENO DE SERVICIO (GR)	306
TUBERÍAS DELANTERAS (GR)	400
	402
	404
TUBERÍAS HIDRÁULICAS DEL VENTILADOR (GR)	408
	412
	414
TUBERÍAS HIDRÁULICAS (GR)	406
TUBO DE ESCAPE (VAPORES)	10
TUBO DE LLENADO DE ACEITE DE LA TRANSMISIÓN (GR)	204
TURBOCOMPRESOR (GR)	76

V

VÁLVULA	494
	498
	500
	502
	504
	506
VÁLVULA COMPENSADORA DE FLUJO Y PRESIÓN (GR)	542
VÁLVULA (COMPROBACIÓN DE LA CARGA)	492
VÁLVULA (CONJ) (ACONDICIONADOR DE AIRE)	656
VÁLVULA DE ACOPLAMIENTO RÁPIDO (GR)	546
VALVULA DE ALIVIO	184
VÁLVULA DE ALIVIO (GR)	260
	547
	548
	549
	550
	551
	552
	553
	554
	555
VÁLVULA DE CONTROL (CONJ)	259
VÁLVULA DE CONTROL DE CARGA (GR)	496
	497
VÁLVULA DE CONTROL DE LA AMORTIGUACIÓN (GR)	556
VÁLVULA DE CONTROL DE LA TRANSMISIÓN (GR)	262
VÁLVULA DE CONTROL (GR)	492
	494
VÁLVULA DE CORTE	406
VÁLVULA DE CORTE (DRENAJE DE ACEITE)	18
VÁLVULA DE CORTE (GR)	558
VÁLVULA DE CORTE (GR)	560
VÁLVULA DE DRENAJE DEL RADIADOR (GR)	62
VÁLVULA DE GAS	301
VÁLVULA DE MUESTREO (GR)	50
VÁLVULA DE MUESTREO (GR)	379
VÁLVULA DE MUESTREO (GR) (ACEITE DEL MOTOR)	50
VÁLVULA DE RETENCIÓN (GR)	491
VÁLVULA DE SOLENOIDE (GR)	561
	562
	563
	564
	565
VALVULA DE SOLENOIDE Y MONTAJE (GR	489
VÁLVULA DEL CONTROL PRINCIPAL (GR)	498
	500
	502
	504
	506
VÁLVULA DEL NEUMÁTICO (GR)	261
VÁLVULA HIDRÁULICA DE 3 VÍAS (CONFIG)	384
	385
VÁLVULA HIDRÁULICA DE 4 VÍAS (CONFIG)	386
VALVULA PILOTO DE CARTUCHO (GR)	534
	536
	538
	540
VÁLVULA PILOTO (GR)	508
	512
	514

INDICE

Nombre	Página	Nombre	Página
	516		
	518		
	520		
	524		
	526		
	528		
	532		
VÁLVULA REDUCTORA DE PRESIÓN (GR)	544		
	545		
VENTANA DE LA PUERTA (GR)	715		
VISERA	712		
VISERA (GR)	712		
VOLANTE - CAJA DE (GR)	22		
VOLANTE (GR)	20		

ÍNDICE

Designação	Página

A

ACOPLADOR RÁPIDO	583 584 586
ACUMULADOR - FREIO	301
ADAPTADOR	226
ADAPTADOR DA PONTA	573
ALARME	95
ALARME DE MARCHA À RÉ	138
ALTERNADOR DE CORRENTE	96 98 100 102
AQUECEDOR DA ÁGUA DO MOTOR	111 112
AQUECEDOR DA CABINE	643 644
AQUECEDOR DA CABINE E MONTAGEM	642
ARO	238 239
ARO DESMONTÁVEL	240 241 242 243 244 245
ARRANJO BÁSICO	2 3
ARRANJO HIDRÁULICO - 2 VÁLVULAS	383 384
ARRANJO HIDRÁULICO - 3 VÁLVULAS	384 385
ARRANJO HIDRÁULICO - 4 VÁLVULAS	386
ARREFECEDOR - ÓLEO HIDRÁULICO E DA TRANSMISSÃO	364 365
ARREFECEDOR DE ÓLEO DO MOTOR E BASE DO FILTRO	52
ARREFECEDOR DO ÓLEO HIDRÁULICO	366
ARTICULAÇÃO DA VÁLVULA PILOTO	466 467 468 469 470
ASSENTO	696 698
ASSENTO - FUNDO	668
ASSENTO COM SUSPENSÃO	699 700 702
ASSENTO E MONTAGEM	689 690 691 692
ATERRO SANITÁRIO	3 4
AUXILIAR DE PARTIDA	129

B

BALANCIM	42
BATENTE DE OSCILAÇÃO DO EIXO	250
BATERIA	103 621
BATERIA (12V)(950CCA)	103
BLOCO DO MOTOR	13 14
BOCAL DE ENCHIMENTO DE ÓLEO DO TREM DE FORÇA	204
BOMBA DE ÁGUA	60
BOMBA DE DIREÇÃO E ACESSÓRIO E MONTAGEM	476
BOMBA DE ENGRENAGENS	236 237 312 314
BOMBA DE INJEÇÃO DO COMBUSTÍVEL	86
BOMBA DE ÓLEO - MOTOR	48
BOMBA DE PISTÃO	478
BOMBA DE PISTÃO E PALHETA	480
BOMBA DE TRANSFERÊNCIA DO COMBUSTÍVEL	90
BOMBA E MONTAGEM - FREIO E VENTILADOR HIDRÁULICO	310
BORDA CORTANTE	588
BORDA SEGMENTADA DA CAÇAMBA	588
BRAÇO - MANIPULADOR DE MATERIAIS	574
BRAÇO DE LEVANTAMENTO	566
BRAÇO DO ASSENTO	607 608 609
BUJÃO - DRENAGEM DO RESERVATÓRIO	34
BUJÃO DO BLOCO DO CILINDRO	37 38
BUJÃO DO DRENO	184
BUJÃO DO MOTOR	39
BUJÃO MAGNÉTICO	216 218 222
BUJÃO-RETENTOR (DRENO DO ÓLEO)	18
BUZINA (24 VOLTS)(TONALIDADE BAIXA)	162

C

CABEÇOTE DO MOTOR	16 17
CABINE	610 611 612

ÍNDICE

Designação	Página
	665
	666
CABINE - ESTRUTURA ROPS COBERTA	611
CABO	600
CABO - CONTROLE	146
CABO/FIOS ELÉTRICOS-COMUNICAÇÃO	150
	152
CABOS/FIOS ELÉTRICOS - ABSORÇÃO DE IMPACTOS	172
	173
CABOS/FIOS ELÉTRICOS - BATERIA	140
CABOS/FIOS ELÉTRICOS - CABINE	142
	146
CABOS/FIOS ELÉTRICOS - CONTROLE ELETRÔNICO	154
CABOS/FIOS ELÉTRICOS - DIANTEIROS	162
CABOS/FIOS ELÉTRICOS - DIREÇÃO SECUNDÁRIA	174
CABOS/FIOS ELÉTRICOS - MÁQUINA	166
CABOS/FIOS ELÉTRICOS - MOTOR	156
CABOS/FIOS ELÉTRICOS - TRASEIROS	170
CAÇAMBA PARA APLICAÇÃO GERAL	575
	576
	577
	578
	579
	581
	582
CACAMBA PARA MATERIAL LEVE	580
CADEADO	204
	482
CAIXA - BATERIA	264
CAIXA - EIXO FIXO	216
CAIXA - EIXO OSCILANTE	218
	222
CAIXA - SUSPENSÃO DO ASSENTO	646
CAIXA DE FERRAMENTAS	718
CAIXA DIANTEIRA	24
CAIXA DO VOLANTE DO MOTOR	22
CANTO - LADO DIREITO	583
CANTO - LADO ESQUERDO	583
CAPÔ E PROTETOR	290
CARCAÇA DAS ENGRENAGENS PLANETÁRIAS E COMPONENTES	184
CÁRTER DO ÓLEO DO MOTOR	34
CARTUCHO - BOMBA DE PALHETAS	338
CHASSI	1
	2
CHASSI DIANTEIRO	275
	276
CHASSI TRASEIRO	277
CHAVE	482
CHAVE - ELETRÔNICO (SEGURANÇA)	166
CHAVE (DESCONECTAR A BATERIA)	134
CHAVE GERAL	134
CHICOTE - CONDICIONADOR DE AR DA CABINE (VENTILADORES DO CONDENSADOR)	620
CILINDRO - ACOPLADOR	368
CILINDRO DA DIREÇÃO	324
CILINDRO DE DIREÇÃO E MONTAGEM	320
CILINDRO DE INCLINAÇÃO	372
	374
	376
CILINDRO DE LEVANTAMENTO	370
CILINDRO DO ACOPLADOR E MONTAGEM	367
CILINDRO HIDRÁULICO	322
CINTO DE SEGURANÇA	693
	694
	698
COLUNA DA DIREÇÃO	337
COMANDO - ACOPLAMENTO FLEXÍVEL	202
COMANDO DA BOMBA	203
COMANDO HIDRÁULICO	380
	381
	382
	383
COMPRESSOR DE REFRIGERANTE	616
	617
CONDENSADOR DE REFRIGERANTE	620
CONDENSADOR DO REFRIGERANTE E MONTAGEM	618
	619
CONDICIONADOR DE AR	601
	602
	604
CONDICIONADOR DE AR E MONTAGEM	600
CONEXÃO	406
CONEXÃO - RETA	568
CONEXÃO - RETA (ROSCA 1/8-27 POL)	586
CONEXÃO - TUBO D'ÁGUA	51
CONTRAPESO	265
	266
	267
CONTROLE - DESENGATE AUTOMÁTICO DE LEVANTAMENTO	105
	388
CONTROLE - DESENGATE AUTOMÁTICO DE LEVANTAMENTO (LEVANTAMENTO)	390
CONTROLE - NÃO PROGRAMADO	107
CONTROLE - POSIÇÃO	106
	388
	390
CONTROLE-CABO	340
CONTROLE-COMUNICAÇÃO (PRODUCT LINK)	150
CONTROLE DA CAÇAMBA	568
CONTROLE DA FERRAMENTA DE TRABALHO	570
CONTROLE DA TRANSMISSÃO	194

ÍNDICE

Designação	Página
	195
CONTROLE DE DIREÇÃO	316
	318
CONTROLE DE VOLTAGEM (24 V) (PROTEÇÃO DA CARGA)	86
CONTROLE DO FREIO DE ESTACIONAMENTO	302
	303
CONTROLE DO FREIO DE SERVIÇO	304
CONTROLE DO PAINEL MONITOR	621
CONTROLE ELETRÔNICO - MOTOR	104
CONTROLE HIDRÁULICO DE OPERAÇÃO PILOTO	342
	344
	346
	348
	350
	352
	354
	356
	358
	360
	362
CONVERSOR ELÉTRICO	108
	109
	110
CORREIA DE COMANDO (PISCA-PISCA DE ADVERTÊNCIA)	115
CORREIA EM V	617
COTOVELO	558
COTOVELO DE ADMISSÃO DE AR	71

D

DECALQUE	105
	106
	428
	432
	436
	719
	720
DECALQUE - ADVERTÊNCIA (SEM ÉTER - ADMISSÃO DE AR)	721
	722
DECALQUE - IDENTIFICAÇÃO (DISJUNTOR)	156
DECALQUE - IDENTIFICAÇÃO (NO. DE SEQÜÊNCIA E GRUPO)	620
DECALQUE - INSTRUÇÃO (AJUSTE DO ASSENTO)	708
	710
DECALQUE - INSTRUÇÃO (FUNCIONAMENTO DO MOTOR - LIGAR-DESLIGAR)	670
DECALQUE - INSTRUMENTO (CONTRAPORCA DO IMPLEMENTO)	342
DECALQUE (CONTROLES)	672
DECALQUE (MANIPULADOR DE RESÍDUOS)	3
DECALQUE (MANIPULADOR DE RESÍDUOS) (MANIPULADOR DE RESÍDUOS)	4
DECALQUE (ÓLEO HIDRÁULICO)	721
DECALQUE (SISTEMA DE SEGURANÇA DA MÁQUINA)	166
DECALQUE (12 V)	109
DECALQUE (12VOLT)	108
DENTE LONGO	598
DESEMBAÇADOR DA CABINE	625
DESENGATE E POSICIONADOR DA CAÇAMBA	388
	390
DIFERENCIAL	198
DIFERENCIAL - DESLIZAMENTO LIMITADO	199
DIFERENCIAL - NOSPIN	200
	201
DIREÇÃO	335
DIREÇÃO SECUNDÁRIA	335
DISJUNTOR AUTOMÁTICO DE CIRCUITO (15 A)	156
DISJUNTOR AUTOMÁTICO DE CIRCUITO (15 A) (AR - ASSENTO)	692
DISJUNTOR AUTOMÁTICO DE CIRCUITO (30 A)	156
DISJUNTOR AUTOMÁTICO DE CIRCUITO (90 AMP)	156
DRENO - ÓLEO DO MOTOR	18
DUCTO DE AR	636

E

EIXO-COMANDO DE VÁLVULA	7
EIXO DE TRANSMISSÃO	246
	247
EIXO FIXO	176
EIXO OSCILANTE	176
	177
	178
	179
ELEMENTO DO FILTRO DE AR (PRIMÁRIO)	67
	69
ELEMENTO DO FILTRO DE AR (SECUNDÁRIO)	67
	69
ELEMENTO DO FILTRO DE COMBUSTÍVEL	78
ELEMENTO FILTRANTE-ÁGUA (SEPARADOR)	93
ELO - TRAVA DA ARMAÇÃO DA DIREÇÃO	296
EMBREAGEM	188
	190
	192
EMISSOR - POSIÇÃO	127
	622

ÍNDICE

Designação	Página
ENGATE - ARTICULAÇÃO	288
ENGRENAGEM - COROA	210 212
ENGRENAGENS DE DISTRIBUIÇÃO	21
ENGRENAGENS DE SAÍDA DE TRANSFERÊNCIA	214
ENTRADA - TRANSMISSÃO	224
ESCADA	292
ESPELHO RETROVISOR	662 663
EXTENSÃO - ENCOSTO	638
EXTENSÃO DO TUBO DE ESCAPE	72

F

FAROL DIANTEIRO (24 V)	122
FILTRO	639
FILTRO - AR DA CABINE	639
FILTRO - COMBUSTÍVEL	78
FILTRO - MAGNÉTICO	184
FILTRO - ÓLEO	208 378 379
FILTRO - ÓLEO DO MOTOR	45
FILTRO - ÓLEO (HIDRÁULICO)	208
FILTRO - TELA	714
FILTRO E TUBOS - TRANSMISSÃO	206
FIXADORES - CABEÇOTE DO MOTOR	19
FREIOS E ENGRENAGENS PLANETARIAS	180 182
FUNDO - ENCOSTO	667

G

GARFO	589
GARFO DE PALETAS	590 591 592
GR. DE SERVIÇO - POSICIONADOR DO GARFO	590
GRAXEIRA	247 249 288 568 570
GRAXEIRA (ROSCA 1/8-27 POL)	294 295
GRUPO DE INSTALAÇÃO - MOTOR	6
GRUPO ROTATIVO DA BOMBA	481

I

ILUMINAÇÃO - AUXILIAR	116
INDICADOR	70
INDICADOR - NÍVEL DO ÓLEO (VARETA)	46
INDICADOR - VARETA DO NÍVEL DE ÓLEO	216 218 222
INDICADOR (TROCA DO FILTRO)	68
INSTALAÇÃO DO RÁDIO	649 650
INTERRUPTOR - CIRCUITO (60 A)	156
INTERRUPTOR - DESENGATE AUTOMÁTICO	342
INTERRUPTOR - ESFERA	558
INTERRUPTOR - LIMITADOR	672
INTERRUPTOR - LIMITADOR (FREIO DE ESTACIONAMENTO)	302
INTERRUPTOR - LIMITADOR (PEDAL DO FREIO)	676
INTERRUPTOR - LIMPADOR DO PÁRA-BRISA	137
INTERRUPTOR - LIMPADOR (INTERMITENTE)	137
INTERRUPTOR - MAGNÉTICO	135 136
INTERRUPTOR - MAGNÉTICO (24 V) (RELÉ DO AUXILIAR DE PARTIDA)	156
INTERRUPTOR - PARTIDA (CHAVE)	670
INTERRUPTOR - PRESSÃO	226
INTERRUPTOR - PRESSÃO (DIREÇÃO SECUNDÁRIA)	336
INTERRUPTOR - PRESSÃO (FILTRO DE DERIVAÇÃO DO ÓLEO HIDRÁULICO)	379
INTERRUPTOR - PRESSÃO (ÓLEO DA DIREÇÃO SECUNDÁRIA)	326
INTERRUPTOR - PRESSÃO (REFRIGERANTE)	656
INTERRUPTOR - ROTATIVO	146
INTERRUPTOR - ROTATIVO (FAROL E LUZES - TRASEIRA, DO PAINEL, DE OPERAÇÃO)	142
INTERRUPTOR - ROTATIVO (VELOCIDADE DO VENTILADOR)	676
INTERRUPTOR - SINALIZAÇÃO DE DIREÇÃO / LUZ DE ALERTA	122
INTERRUPTOR - TERMOSTATO	604
INTERRUPTOR (MOTOR DE PARTIDA)	132

J

JOGO - SUPERIOR	700
JOGO DE ACOPLAMENTO RÁPIDO	594
JOGO DE AJUSTADOR	700 702
JOGO DE AJUSTADOR DE CABO	700 702
JOGO DE AJUSTADOR (ENCOSTO DO BRAÇO)	608
JOGO DE AJUSTADOR (FUNDO DO ASSENTO)	668

ÍNDICE

Designação	Página
JOGO DE AJUSTE DA ALTURA	700
JOGO DE ALAVANCA	700
JOGO DE ALMOFADA DO ASSENTO (TECIDO)	696
JOGO DE ALMOFADA (ENCOSTO DE TECIDO)	638
JOGO DE ALMOFADA (ENCOSTO DO BRAÇO)	608
JOGO DE AMORTECEDOR	700
JOGO DE ARMAÇÃO	700
JOGO DE BASE DO SEPARADOR DE ÁGUA (SEPARADOR DE ÁGUA)	93
JOGO DE BATENTE DO ASSENTO	700
JOGO DE BLOCO DESLIZADOR	696
	699
JOGO DE BOMBA D'ÁGUA	60
JOGO DE BOTÃO DE SUSPENSÃO	646
JOGO DE BRAÇO DO ASSENTO - LADO ESQUERDO	700
	702
JOGO DE BRAÇO DO ASSENTO DO OPERADOR - LADO DIREITO	700
	702
JOGO DE CALÇOS	478
JOGO DE CÁRTER DE INCLINAÇÃO	696
JOGO DE COIFA DE SUSPENSÃO	708
JOGO DE COMPRESSOR DE AR	710
JOGO DE CONTATO (MOTOR DE PARTIDA)	132
JOGO DE CORDÃO	700
	702
	710
JOGO DE CORREIAS EM V	100
	102
JOGO DE ENGRENAGEM (MOTOR DE PARTIDA)	132
JOGO DE ESPAÇADORES	478
JOGO DE ESPUMA	700
JOGO DE FIXADOR DE CORREIA	708
JOGO DE FIXADORES (ALTERNADOR)	98
JOGO DE FIXADORES (SUSPENSÃO DO ASSENTO)	710
JOGO DE FIXADORES (VÁLVULA SOLENÓIDE)	562
JOGO DE INCLINAÇÃO DO ASSENTO (FUNDO DO ASSENTO)	668
JOGO DE INCLINAÇÃO TRASEIRA (FUNDO DO ASSENTO)	668
JOGO DE INDICADOR	647
JOGO DE MAÇANETA DO ASSENTO	696
JOGO DE MANCAL	647
JOGO DE MANCAL (ALTERNADOR)	98
JOGO DE MANCAL DA SUSPENSÃO	700
JOGO DE MANGUEIRA (ÁGUA) (ALOJAMENTO DO REGULADOR)	60
JOGO DE MOLA	646
	700
JOGO DE PÁRA-CHOQUE	646
JOGO DE PISTÃO	481
JOGO DE RECEPTÁCULO (12 PINOS)	122
	621
	677
JOGO DE RECEPTÁCULO (12 PINOS)	142
	146
	672
	676
JOGO DE RECEPTÁCULO (12 PINOS)	162
JOGO DE RECEPTÁCULO (2 PINOS)	95
	114
	138
	146
	156
	170
	172
	173
	226
	262
	388
	414
	424
	440
	558
	562
	563
	564
	604
	621
	644
	656
	672
	676
	710
JOGO DE RECEPTÁCULO (2 PINOS)	162
	166
JOGO DE RECEPTÁCULO (3 PINOS)	105
	114
	127
	128
	146
	156
	166
	170
	174
	262
	326
	336
	388
	390
	620
	621
	649

ÍNDICE

Designação	Página
	672
	676
JOGO DE RECEPTÁCULO (4 PINOS)	86
	118
	120
	162
	561
	670
	672
	676
JOGO DE RECEPTÁCULO (6 PINOS)	108
	122
	142
	146
	150
	152
	195
	340
	350
	352
	354
	356
	360
	604
	644
	672
	676
	716
JOGO DE RECEPTÁCULO (6 PINOS)	166
JOGO DE RECEPTÁCULO (8 PINOS)	137
	142
	146
	150
	152
	388
	390
	474
	475
	508
	512
	514
	518
	524
	528
	672
	676
JOGO DE RETENTOR	416
	420
	462
	490
	491
	558
JOGO DE ROLETE DE SUSPENSÃO	708
JOGO DE ROLO	710
JOGO DE SEGUIDOR	646
	647
JOGO DE TAMPA	700
JOGO DE TAMPA DA SUSPENSÃO	700
JOGO DE TERMINAL (ALTERNADOR)	98
JOGO DE TESOURAS	710
JOGO DE TOMADA DE CONEXÃO (12 PINOS)	156
	672
	676
JOGO DE TOMADA DE CONEXÃO (12 PINOS)	621
JOGO DE TOMADA DE CONEXÃO (2 PINOS)	146
	156
	162
	166
	170
	172
	173
	262
	388
	390
	424
	604
	620
	621
	672
	677
JOGO DE TOMADA DE CONEXÃO (2 PINOS)	136
JOGO DE TOMADA DE CONEXÃO (3 PINOS)	106
	146
	156
	166
	170
	262
	314
	390
	621
	672
	677
JOGO DE TOMADA DE CONEXÃO (4 PINOS)	142
	146
	162
	195
	672
	677
JOGO DE TOMADA DE CONEXÃO (6 PINOS)	108
	142
	146
	162
	166
	672
	677
JOGO DE TOMADA DE CONEXÃO (8 PINOS)	142
	146
	150

ÍNDICE

Designação	Página
	152
	162
	195
	649
	672
	676
JOGO DE TRILHO DESLIZANTE	700
JOGO DE VEDADOR DA CAÇAMBA (SEPARADOR DE ÁGUA)	93
JUNTA CORREDIÇA	248
	249
JUNTA (TAMPA DA VÁLVULA)	10

L

LÂMINA DO LIMPADOR DE PÁRA-BRISA (DIANTEIRO)	716
LÂMINA DO LIMPADOR DE PÁRA-BRISA (PARTE TRASEIRA)	716
LÂMPADA	113
	651
LÂMPADA - FAROL	113
	118
	120
	122
LÂMPADA - LADO DIREITO	122
LÂMPADA - LADO ESQUERDO	122
LÂMPADA (FILAMENTO DUPLO)	114
LÂMPADA (FILAMENTO SIMPLES)	114
LÂMPADA (12 V)	166
LÂMPADA (24 V)	118
	120
	122
	142
	146
	621
	676
LÂMPADA (24 VOLTS)(70 WATTS)	115
LAVADOR DO VIDRO	713
	714
LENTE	114
LENTE (ÂMBER)	115
LEVANTAMENTO DO MOTOR	26
LIMPADOR DO VIDRO	716
LUVA	482
LUZ GIRATÓRIA DE ALARME	115
LUZ INTERMITENTE (12-24 VOLTS)	122
LUZ TRASEIRA E DE FREIO	114

M

MANGUEIRA - DESCARTE (VAPORES)	10
MECANISMO DAS VÁLVULAS	44
MOLA (MANGUEIRA DO RESPIRO)	10
MONITOR - SOFTWARE	110
MONTAGEM - ALTERNADOR	27
MONTAGEM - ARO	235
MONTAGEM - CABINE	664
MONTAGEM - COMANDO DO VENTILADOR	32
MONTAGEM - MOTOR	28
MONTAGEM - MOTOR E TRANSMISSÃO	30
MONTAGEM DO EIXO	234
MOTOR - ENGRENAGENS	459
	460
	462
	464
MOTOR - VENTILADOR HIDRÁULICO	458
MOTOR E MONTAGEM - VENTILADOR HIDRÁULICO	456
	457
MOTOR ELÉTRICO DE PARTIDA	130
	132
MOTOR PRIMÁRIO	5

P

PAINEL - SUPERIOR	298
	300
PAINEL DE INSTRUMENTOS	624
	670
	672
	676
PAINEL PROTETOR - CABINE	704
	705
PÁRA-LAMA DIANTEIRO	268
PÁRA-LAMA TRASEIRO	270
	272
	274
PÁRA-SOL	712
PÁRA-SOL DA CABINE	712
PEDAL DO FREIO	680
PEDAL DO GOVERNADOR	681
PELÍCULA - DISJUNTOR	156
PISO	682
PISTÃO E BIELA	36
PLACA DA VÁLVULA PILOTO	471
	472
	473
	474
	475
PLACA DE ADVERTÊNCIA (SEM ESPAÇO LIVRE)	723
	726
PLACA DE INSTRUÇÃO	656
PLACA DE INSTRUÇÃO (BATERIA)	140
PLACA E DECALQUE	721
	722
	723
	724
	725

ÍNDICE

Designação	Página
	726
	727
	728
	729
	730
PLATAFORMA DO OPERADOR	683
PNEU E ARO	250
	251
	252
	253
	254
	255
	256
	257
POLIA DO VIRABREQUIM	40
PONTA CURTA	596
	597
PONTA LONGA	595
PORTA DA CABINE	626
	628
	630
	632
	634
PRÉ-PURIFICADOR	75
PROTETOR - CAÇAMBA	593
PROTETOR - CÁRTER DO ÓLEO DO MOTOR	278
PROTETOR - ILUMINAÇÃO	280
	282
PROTETOR - JANELA	640
	641
PROTETOR - TREM DE FORÇA	287
PROTETOR - TUBOS	283
	284
	285
	286
PROTETOR DO VENTILADOR	56
PURIFICADOR DE AR	67
	68
	69
	70

R

RADIADOR	62
REFLETOR	122
REFLETOR - ÂMBAR	122
REGULADOR DE TEMPERATURA DA ÁGUA	51
RESERVATÓRIO - ARMAZENAGEM DE ÁGUA	93
RESPIRO	184
	482
RETENTOR (ALOJAMENTO DO REGULADOR)	51
RETENTOR DE ANEL-O	464
RETENTOR DE ANEL-O (BUJÃO DE DRENAGEM DE ÓLEO)	34
RETENTOR DE ANEL-O (REGULADOR)	51
REVESTIMENTO DA CABINE	651
	652
	654
ROPS ABERTA	686
ROPS FECHADA	684

S

SACADOR - MINIFUSÍVEL	672
	676
SENSOR - PRESSÃO	128
	304
SENSOR - PRESSÃO (ÓLEO DO MOTOR)	86
SENSOR - PRESSÃO (REFORÇAR)	86
SENSOR - TEMPERATURA (ADMISSÃO DE AR)	86
SENSOR - TEMPERATURA (LÍQUIDO ARREFECEDOR DO MOTOR)	86
SENSOR - TEMPERATURA (ÓLEO DO CONVERSOR DE TORQUE)	156
	262
SENSOR DE VELOCIDADE (REGULAGEM DE INJEÇÃO OU IGNIÇÃO)	86
SEPARADOR DE ÁGUA	93
SILENCIADOR	74
SISTEMA DE ABSORÇÃO DE IMPACTOS	339
SISTEMA DE ILUMINAÇÃO - ADVERTÊNCIA	124
	125
SISTEMA DE ILUMINAÇÃO - FARÓIS	118
	120
SISTEMA DE ILUMINAÇÃO - FARÓIS E SINAL	122
SISTEMA ELETRÔNICO - MÁQUINA	110
SOFTWARE - COMUNICAÇÃO (PRODUCT LINK)	152
SOFTWARE - MÁQUINA	110
SUPORTE - ASSENTO	706
SUPORTE PARA TRANSPORTE	567
SUSPENSÃO - ASSENTO	708
	710

T

TAMPA	261
	376
TAMPA - CHUVA (PURIFICADOR DE AR)	68
TAMPA - CONSOLO	623
TAMPA - ENCHIMENTO	204
TAMPA - HIDRÁULICO	482
TAMPA - MECANISMO DAS VÁLVULAS	10
TAMPA - MOTOR	8
TAMPA - RADIADOR	62

ÍNDICE

Designação	Página
TAMPA - TANQUE DE COMBUSTÍVEL	94
TAMPA - TRANSMISSÃO	196
TAMPA (BOCAL DE ENCHIMENTO DE ÓLEO)	10
TAMPA (CONDICIONADOR DE AR)	656
TAMPA CONTRA POEIRA	184
	208
	226
	232
	304
	379
	406
	428
	432
	436
TAMPA CONTRA POEIRA (VÁLVULA DE AMOSTRAGEM DE ÓLEO)	50
TANQUE DE COMBUSTÍVEL E MONTAGEM	94
TANQUE DE ÓLEO HIDRÁULICO E MONTAGEM	482
TELA DE SUCÇÃO	184
TELA FILTRANTE	508
	512
	514
	516
	518
	520
	524
	526
	528
	532
TELA PÁRA-SOL	688
TOLDO - ESTRUTURA ROPS ABERTA	614
	615
TOLDO - ROPS ABERTA	614
TORNEIRA-DRENAGEM (DRENO DO ÓLEO DO BLOCO DO CILINDRO)	18
TRANSMISSÃO	258
TRAVA - CILINDRO DA DIREÇÃO	334
TRAVA - CONTROLE MANUAL HIDRÁULICO	455
TREM DE FORÇA	235
TUBOS - ABSORÇÃO DE IMPACTOS	440
	444
TUBOS - ACOPLADOR	392
	396
TUBOS - ÁGUA	58
TUBOS - AQUECEDOR	660
TUBOS - AR	73
TUBOS - AR CONDICIONADO	656
TUBOS - ARREFECEDOR DE ÓLEO DO EIXO	226
TUBOS - ARREFECEDOR DO CONVERSOR DE TORQUE	232
TUBOS - AUXILIAR DE PARTIDA A ÉTER - MOTOR	126
TUBOS - CILINDRO DE INCLINAÇÃO	448
	450
	452
TUBOS - CILINDRO DE LEVANTAMENTO	416
	420
	424
TUBOS - CIRCUITO PILOTO	428
	432
	436
TUBOS - COMBUSTÍVEL	80
TUBOS - DIANTEIROS	400
	402
	404
TUBOS - DIREÇÃO	330
TUBOS - DIREÇÃO SECUNDÁRIA	326
TUBOS - FILTRO DO COMBUSTÍVEL	84
TUBOS - FREIO DE SERVIÇO	306
TUBOS - GRAXA	294
	295
TUBOS - ÓLEO HIDRÁULICO	406
TUBOS - VENTILADOR HIDRÁULICOS	408
	412
	414
TURBOALIMENTADOR	76

U

UNI-DENTE	599

V

VÁLVULA	494
	498
	500
	502
	504
	506
VÁLVULA - CONTROLE DE CARGA	496
	497
VÁLVULA - CONTROLE PRINCIPAL	498
	500
	502
	504
	506
VÁLVULA (CONDICIONADOR DE AR)	656
VÁLVULA DE ACOPLAMENTO RÁPIDO	546
VÁLVULA DE ALÍVIO	184
	260
	547
	548
	549
	550
	551
	552
	553
	554

ÍNDICE

Designação	Página
	555
VÁLVULA DE CONTROLE	259
	492
	494
VÁLVULA DE CONTROLE - PRESSÃO E COMPENSAÇÃO DE FLUXO	542
VÁLVULA DE CONTROLE - TRANSMISSÃO	262
VÁLVULA DE CONTROLE DE ABSORÇÃO DE IMPACTOS	556
VÁLVULA DE CONTROLE PILOTO	508
	512
	514
	516
	518
	520
	524
	526
	528
	532
VÁLVULA DE DERIVAÇÃO	232
	259
VÁLVULA DE DRENAGEM DO RADIADOR	62
VÁLVULA DE GÁS	301
VÁLVULA DE PARADA	406
	558
	560
VÁLVULA DE PARADA (DRENO DO ÓLEO)	18
VÁLVULA DE PNEU	261
VÁLVULA DE REDUÇÃO DE PRESSÃO	544
	545
VÁLVULA DE RETENÇÃO	491
VÁLVULA DO CARTUCHO PILOTO	534
	536
	538
	540
VÁLVULA DO CONTROLE PRINCIPAL E MONTAGEM	484
	485
	486
	487
	488
VALVULA DO SOLENOIDE E MONTAGEM	489
VÁLVULA ESFÉRICA	416
	490
VÁLVULA ESFÉRICA (RESOLVEDOR)	420
VÁLVULA ESFÉRICA (RESOLVEDOR) (ABAIXAMENTO DO BRAÇO DE LEVANTAMENTO COM MOTOR DESLIGADO)	424
VÁLVULA PARA TIRAR AMOSTRAS DE FLUIDOS	50
	379
VÁLVULA PARA TIRAR AMOSTRAS DE FLUIDOS (ÓLEO DO MOTOR)	50
VÁLVULA (RETENÇÃO DE CARGA)	492
VÁLVULA SOLENÓIDE	561
	562
	563
	564
	565
VENTILADOR DE SUCÇÃO	54
VIDRO DA PORTA	715
VIRABREQUIM	12
VISOR DE NÍVEL	209
VOLANTE DO MOTOR	20

MEMORANDA

MACHINE ARRANGEMENT

176-5221 CHASSIS AR

S/N: DBT1-UP

PART OF 176-5220 COMMON AR

SMCS-7000 **i01820217**

NOTE	PART NUMBER	QTY	PART NAME 1 2 3 4 5 6 (PRODUCT LEVEL)	SEE PAGE
Y	*113-3724*	1	CONTROL GP-WORK TOOL	570
Y	*113-3783*	1	LINK GP-STEERING FRAME LOCK	296
Y	*113-3790*	1	HITCH GP-ARTICULATING	288
Y	*113-3795*	1	FRAME GP-LOADER	276
Y	*118-0880*	1	MOUNTING GP-AXLE	234
Y	*118-0899*	1	CYLINDER & MTG GP-STEERING	320
Y	*123-7333*	1	WIRING GP-FRONT	162
Y	*132-2685*	1	BATTERY GP	103
Y	*180-8801*	1	WIRING GP-ENGINE	156
Y	*180-8804*	1	WIRING GP-REAR	170
Y	*180-8805*	1	WIRING GP-BATTERY	140
Y	*180-8807*	1	WARNING GP-BACKUP	138
Y	*180-8983*	1	COUNTERWEIGHT GP	265
Y	*180-9740*	1	EXTENSION GP-EXHAUST	72
Y	*184-1333*	1	LINES GP-FUEL	80
Y	*197-7122*	1	CONTROL GP-PARKING BRAKE	303
Y	*198-8970*	1	HOOD & GUARD GP	290
Y	*202-0354*	1	TANK & MTG GP-FUEL	94
Y	*202-0420*	1	BOX GP-BATTERY	264
Y	*202-0428*	1	BOX GP-TOOL	718
Y	*202-0429*	1	PLATE & FILM GP	722
Y	*202-0430*	1	CONTROL GP-SERVICE BRAKE	304
Y	*202-7215*	1	GUARD GP-FAN	56
Y	*203-3895*	1	LINES GP-SERVICE BRAKE	306
Y	*203-3872*	1	LINES GP-TORQUE CONV COOLER	232
Y	*203-8600*	1	FRAME GP-REAR	277
Y	*204-5865*	1	LINES GP-GREASE	295
Y	*208-4985*	1	FENDER GP-FRONT	268
Y	*208-6246*	1	LADDER GP	292

Y-SEPARATE ILLUSTRATION

<END>

MACHINE ARRANGEMENT

204-4349 CHASSIS AR

S/N: DJD1-UP

PART OF 204-4350 COMMON AR

SMCS-7000 **i01822610**

NOTE	PART NUMBER	QTY	PART NAME 1 2 3 4 5 6 (PRODUCT LEVEL)	SEE PAGE
Y	*113-3706*	1	CONTROL GP-BUCKET	568
Y	*113-3783*	1	LINK GP-STEERING FRAME LOCK	296
Y	*113-3785*	1	FRAME GP-FRONT	275
Y	*113-3790*	1	HITCH GP-ARTICULATING	288
Y	*118-0880*	1	MOUNTING GP-AXLE	234
Y	*118-0899*	1	CYLINDER & MTG GP-STEERING	320
Y	*123-7333*	1	WIRING GP-FRONT	162
Y	*132-2685*	1	BATTERY GP	103
Y	*180-8801*	1	WIRING GP-ENGINE	156
Y	*180-8804*	1	WIRING GP-REAR	170
Y	*180-8805*	1	WIRING GP-BATTERY	140
Y	*180-8807*	1	WARNING GP-BACKUP	138
Y	*180-8984*	1	COUNTERWEIGHT GP	266
Y	*180-9740*	1	EXTENSION GP-EXHAUST	72
Y	*180-9744*	1	PLATE & FILM GP	721
Y	*184-1333*	1	LINES GP-FUEL	80
Y	*197-7122*	1	CONTROL GP-PARKING BRAKE	303
Y	*198-8970*	1	HOOD & GUARD GP	290
Y	*202-0354*	1	TANK & MTG GP-FUEL	94
Y	*202-0420*	1	BOX GP-BATTERY	264
Y	*202-0428*	1	BOX GP-TOOL	718
Y	*202-0430*	1	CONTROL GP-SERVICE BRAKE	304
Y	*202-7215*	1	GUARD GP-FAN	56
Y	*203-3895*	1	LINES GP-SERVICE BRAKE	306
Y	*203-3872*	1	LINES GP-TORQUE CONV COOLER	232
Y	*203-8600*	1	FRAME GP-REAR	277
Y	*204-5107*	1	LINES GP-GREASE	294
Y	*208-4985*	1	FENDER GP-FRONT	268
Y	*208-6246*	1	LADDER GP	292

Y-SEPARATE ILLUSTRATION

<END>

176-5220 COMMON AR

S/N: DBT1-UP

SMCS-7000 **i01794389**

NOTE	PART NUMBER	QTY	PART NAME 1 2 3 4 5 6 (PRODUCT LEVEL)	SEE PAGE
Y	*176-5187*	1	POWER TRAIN AR	235
Y	*176-5221*	1	CHASSIS AR	1
Y	*176-5222*	1	HYDRAULIC AR	380
Y	*176-5223*	1	INSTALLATION AR-ENGINE	6
Y	**179-1797**	1	ENGINE AR-PRIMARY	5
Y	*204-9417*	1	LIGHTING GP-FLOOD & SIGNAL	122
Y	*222-4879*	1	ELECTRONICS GP-MACHINE	110

Y-SEPARATE ILLUSTRATION

<END>

MACHINE ARRANGEMENT

204-4350 COMMON AR

S/N: DJD1-UP

SMCS-7000 **i01794402**

NOTE	PART NUMBER	QTY	PART NAME 1 2 3 4 5 6 (PRODUCT LEVEL)	SEE PAGE
Y	*176-5187*	1	POWER TRAIN AR	235
Y	*176-5223*	1	INSTALLATION AR-ENGINE	6
Y	*176-5242*	1	HYDRAULIC AR	380
Y	**179-1797**	1	ENGINE AR-PRIMARY	5
Y	*204-4349*	1	CHASSIS AR	2
Y	*204-9417*	1	LIGHTING GP-FLOOD & SIGNAL	122
Y	*222-4879*	1	ELECTRONICS GP-MACHINE	110

Y-SEPARATE ILLUSTRATION

<END>

213-7244 WASTE HANDLING AR

S/N: DJD1-UP; DBT1-UP
NACD
AN ATTACHMENT

SMCS-7000 **i01837393**

NOTE	PART NUMBER	QTY	PART NAME 1 2 3 4 5 6 (PRODUCT LEVEL)	SEE PAGE
	213-7253	1	FILM GP (WASTE HANDLER)	
	221-8455	2	FILM (WASTE HANDLER)	
	214-5561	1	GUARD GP-LIGHTING	
M	**8T-4189**	8	BOLT (M8X1.25X20MM)	
	8T-4224	14	WASHER-HARD (8.8X16X2MM THK)	
M	**8T-6870**	6	BOLT (M8X1.25X70MM)	
	197-5023	2	SCREEN AS	
	197-5024	2	BRACKET AS	
Y	*204-4338*	1	GUARD GP-POWER TRAIN	287
	209-8712	1	GUARD GP-RADIATOR	
	8T-4121	4	WASHER-HARD (11X21X2.5MM THK)	
M	**8T-4195**	4	BOLT (M10X1.5X30MM)	
	209-8713	1	GUARD AS	
Y	*175-6760*	1	GUARD GP-WINDOW	641

M-METRIC PART
Y-SEPARATE ILLUSTRATION

<END>

MACHINE ARRANGEMENT

213-7245 WASTE HANDLING AR

S/N: DJD1-UP; DBT1-UP
COSA
AN ATTACHMENT

SMCS-7000 **i01837396**

NOTE	PART NUMBER	QTY	PART NAME 1 2 3 4 5 6 (PRODUCT LEVEL)	SEE PAGE
Y	*175-6760*	1	GUARD GP-WINDOW	641
Y	*192-0735*	1	GUARD GP-LIGHTING	280
Y	*204-4338*	1	GUARD GP-POWER TRAIN	287
	209-8712	1	GUARD GP-RADIATOR	
	8T-4121	4	WASHER-HARD (11X21X2.5MM THK)	
M	**8T-4195**	4	BOLT (M10X1.5X30MM)	
	209-8713	1	GUARD AS	
	213-7253	1	FILM GP (WASTE HANDLER) (WASTE HANDLER)	
	221-8455	2	FILM (WASTE HANDLER) (WASTE HANDLER)	

M-METRIC PART
Y-SEPARATE ILLUSTRATION

<END>

ENGINE ARRANGEMENT

179-1797 ENGINE AR-PRIMARY

S/N: CPT1-UP
110 BRAKE KW (148 BHP) AT 2300
PART OF 176-5220, 204-4350 COMMON AR

SMCS-1000 **i01818303**

NOTE	PART NUMBER	QTY	PART NAME 1 2 3 4 5 6 (PRODUCT LEVEL)	SEE PAGE
Y	*216-8620*	1	CAMSHAFT GP	7
Y	*216-9740*	1	CONNECTION GP-WATER	51
Y	*221-5285*	1	COOLER GP-FLTR BASE & ENG OIL	52
Y	*221-6858*	1	COVER GP-ENGINE	8
Y	*221-1241*	1	COVER GP-VALVE MECHANISM	10
Y	*216-8316*	1	CRANKSHAFT GP	12
Y	*216-8231*	1	CYLINDER BLOCK GP	13
Y	*216-8343*	1	CYLINDER HEAD GP	17
Y	*217-0594*	1	ELBOW GP-AIR INLET	71
Y	*171-1423*	1	FASTENER GP-CYLINDER HEAD	19
Y	*221-5290*	1	FILTER GP-ENGINE OIL	45
Y	*217-0640*	1	FILTER GP-FUEL	78
Y	*170-2464*	1	FLYWHEEL GP	20
Y	*217-1499*	1	GEAR GP-FRONT	21
Y	*219-1854*	1	STARTING AID GP	129
Y	*187-0534*	1	HOUSING GP-FLYWHEEL	22
Y	*221-6835*	1	HOUSING GP-FRONT	24
Y	*221-6875*	1	LIFTING GP-ENGINE	26
Y	*171-1419*	1	LINES GP-FUEL FILTER	84
Y	*219-1855*	1	LINES GP-STARTING AID	126
Y	*171-1090*	1	MOUNTING GP-ALTERNATOR	27
Y	*171-1410*	1	MOUNTING GP-ENGINE	28
Y	*170-3711*	1	MOUNTING GP-FAN DRIVE	32
Y	*221-2959*	1	PAN GP-OIL	34
Y	*216-8324*	1	PISTON & ROD GP	36
Y	*147-5524*	1	PLUG GP-CYLINDER BLOCK	37
Y	*147-5532*	1	PLUG GP-CYLINDER BLOCK	38
Y	*163-0264*	1	PLUG GP-ENGINE	39
Y	*184-5483*	1	PULLEY GP-CRANKSHAFT	40
Y	*220-6148*	1	PUMP GP-ENGINE OIL	48
Y	*217-0109*	1	PUMP GP-FUEL INJECTION	86
Y	*219-2455*	1	PUMP GP-FUEL TRANSFER	90
Y	*221-5369*	1	PUMP GP-WATER	60
Y	*221-6866*	1	TURBOCHARGER GP	76
Y	*216-8619*	1	VALVE MECHANISM GP	44
Y	*219-2462*	1	WIRING GP-ELECTRONIC CONTROL	154
			AVAILABLE GASKET KIT(S):	
	216-9612	1	KIT-GASKET (TOP)	
	216-9616	1	KIT-GASKET (BOTTOM)	

Y-SEPARATE ILLUSTRATION

ENGINE ARRANGEMENT

176-5223 INSTALLATION AR-ENGINE

S/N: DJD1-UP; DBT1-UP

PART OF 176-5220, 204-4350 COMMON AR

SMCS-1000 **i01804744**

NOTE	PART NUMBER	QTY	PART NAME 1 2 3 4 5 6 (PRODUCT LEVEL)	SEE PAGE
Y	*186-2337*	1	DRAIN GP-ENGINE OIL	18
Y	*185-1045*	1	FAN GP-SUCTION	54
Y	*204-4343*	1	GAUGE GP-OIL LEVEL (DIPSTICK)	46
Y	*192-4339*	1	LINES GP-AIR	73
Y	*186-2345*	1	MOUNTING GP-ENGINE & TMSN	30
Y	*186-2344*	1	MUFFLER GP	74
Y	*185-1015*	1	RADIATOR GP	62
Y	*1G-9963*	1	STARTING MOTOR GP-ELECTRIC	130
Y	*140-8911*	1	VALVE GP-FLUID SAMPLING	50

Y-SEPARATE ILLUSTRATION

BASIC ENGINE

216-8620 CAMSHAFT GP

S/N: CPT1-UP

PART OF 179-1797 ENGINE AR-PRIMARY

SMCS-1210, 1211, 1212 **i01801877**

NOTE	REF NO	GRAPHIC REF	PART NUMBER	QTY	PART NAME 1 2 3 4 5 6 (PRODUCT LEVEL)	SEE PAGE
	1	1	**154-8056**	1	CAMSHAFT	

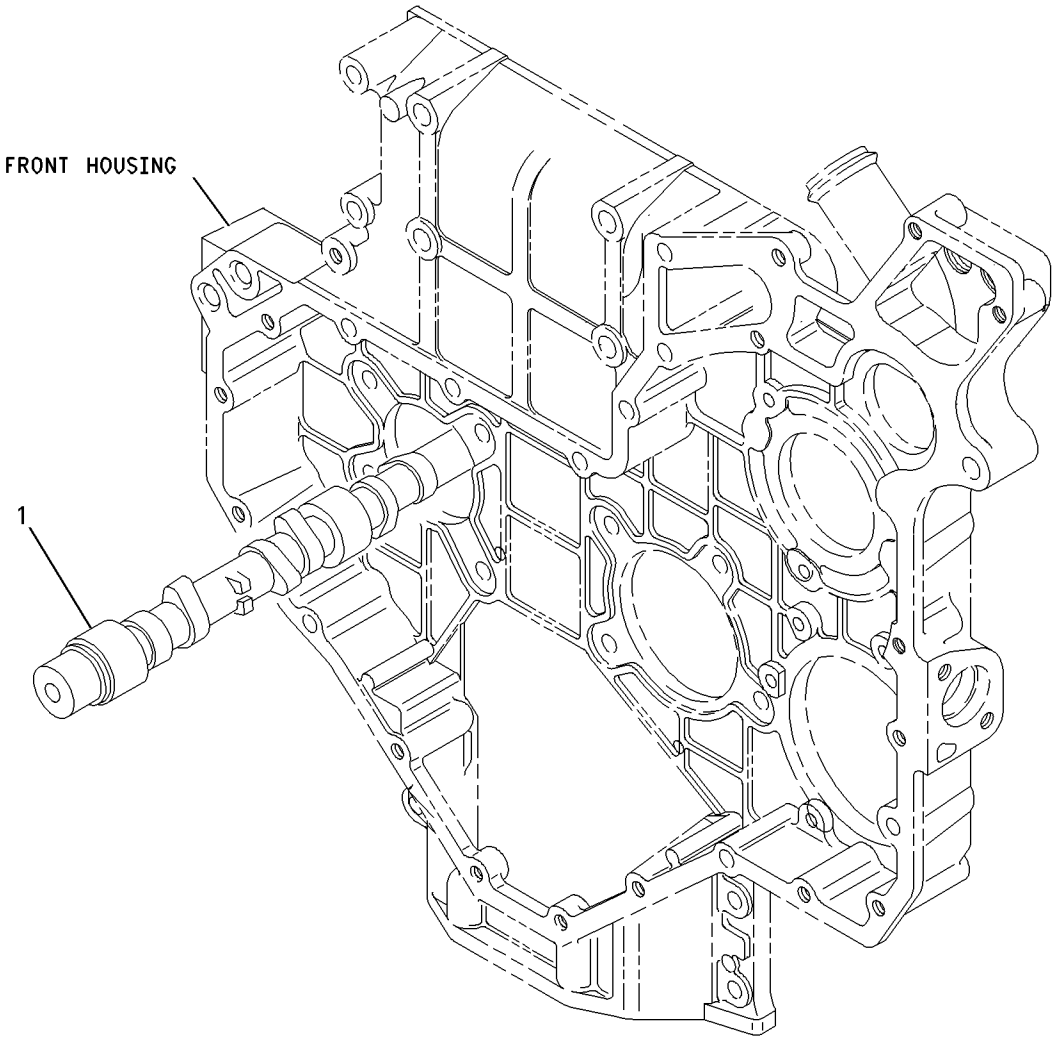

GRAPHIC #1 g00922202

BASIC ENGINE

221-6858 COVER GP-ENGINE

S/N: CPT1-UP
PTO
PART OF 179-1797 ENGINE AR-PRIMARY

SMCS-1000 **i01770747**

NOTE	REF NO	GRAPHIC REF	PART NUMBER	QTY	PART NAME 1 2 3 4 5 6 (PRODUCT LEVEL)	SEE PAGE
	1	1	**2B-0858**	1	PLUG-PIPE	
	2	1	**6I-0593**	1	BOLT (M10X1.5X30MM)	
	3	1	**6I-0646**	1	BOLT (M10X1.5X14MM)	
	5	1	**100-4830**	1	BOLT (M10X1.5X20MM)	
	6	1	**111-8222**	5	BOLT	
	7	1	**209-5502**	1	COVER AS (TIMING GEAR)	
	8	1	**209-5503**	1	SEAL-COVER	
	9	1	**214-3203**	1	WASHER	

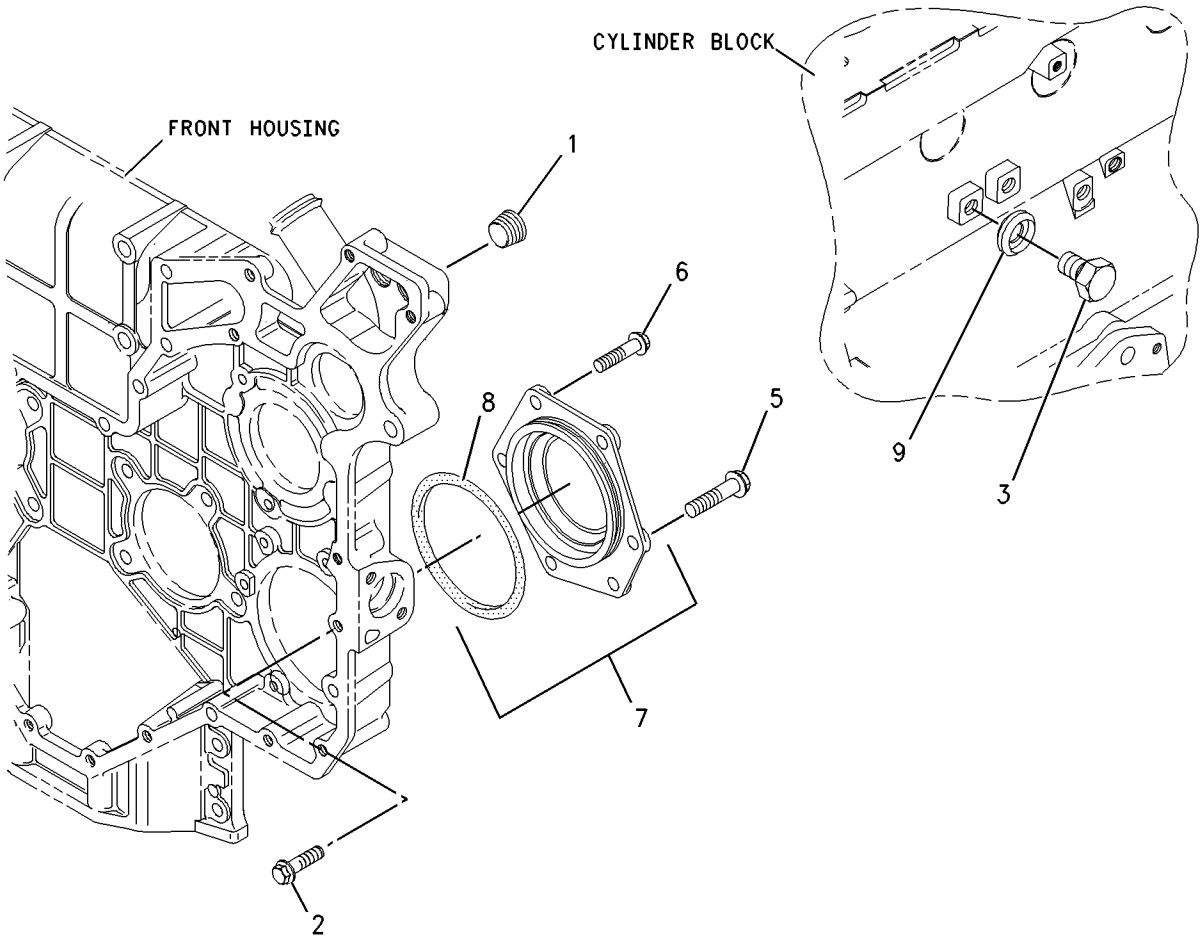

GRAPHIC #1 g00905241

MEMORANDA

BASIC ENGINE

221-1241 COVER GP-VALVE MECHANISM

S/N: CPT1-UP

PART OF 179-1797 ENGINE AR-PRIMARY

SMCS-1107 **i01834981**

NOTE	REF NO	GRAPHIC REF	PART NUMBER	QTY	PART NAME 1 2 3 4 5 6 (PRODUCT LEVEL)	SEE PAGE
	1	1	**6I-0217**	2	BOLT (M8X1.25X20MM)	
	2	1	**6I-0456**	1	BOLT (M8X1.25X45MM)	
	3	1	**6I-4374**	1	BOLT	
	4	1	**7C-1281**	1	BRACKET	
	5	1	**100-4104**	1	GASKET	
	6	1	**160-6988**	1	FILLER AS-OIL	
	7	1	**113-1505**	1	SEAL-O-RING	
	8	1	**130-9888**	1	CAP AS (OIL FILLER)	
	9	1	**113-1504**	1	SEAL-O-RING	
	10	1	**162-1565**	1	SPRING (BREATHER HOSE)	
	11	1	**191-5049**	1	HOSE-DISPOSAL (FUMES)	
	12	1	**216-9606**	1	COVER AS (VALVE)	
	13	1	**203-9203**	1	SCREW	
	14	1	**216-9600**	8	BOLT	
	15	1	**216-9602**	1	BREATHER AS (CRANKCASE)	
	16	1	**216-9604**	1	GASKET (VALVE COVER)	
	17	1	**219-1803**	1	TUBE	
	18	1	**7M-7410**	1	PLUG	

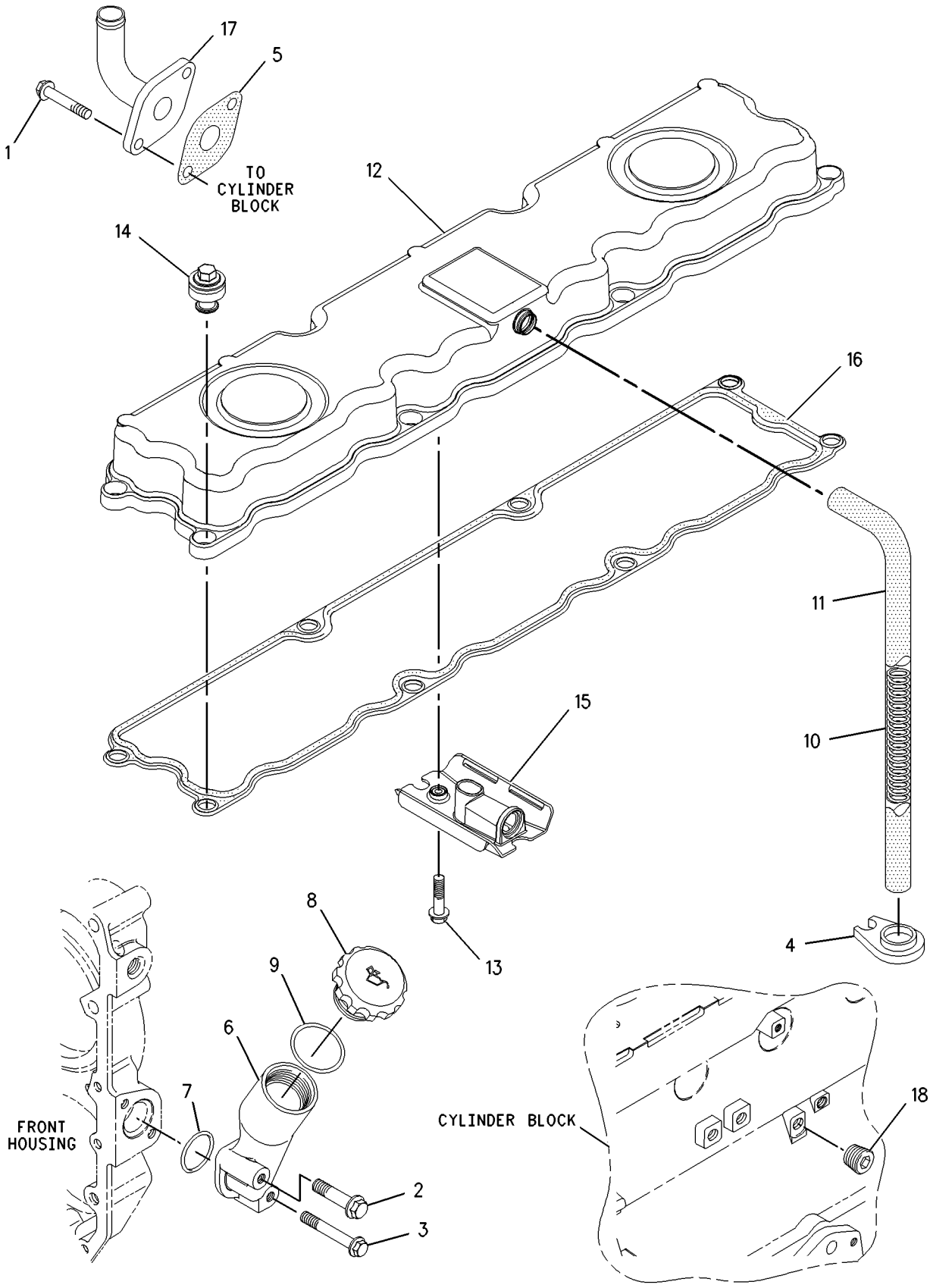

GRAPHIC #1 g00900183

BASIC ENGINE

216-8316 CRANKSHAFT GP

S/N: CPT1-UP

PART OF 179-1797 ENGINE AR-PRIMARY

SMCS-1202 **i01777306**

NOTE	REF NO	GRAPHIC REF	PART NUMBER	QTY	PART NAME 1 2 3 4 5 6 (PRODUCT LEVEL)	SEE PAGE
	1	1	**1B-8736**	1	KEY-WOODRUFF	
	2	1	**216-8314**	1	GEAR-CRANKSHAFT (34 TEETH)	
	3	1	**216-8315**	1	CRANKSHAFT GP	
B	4	1	**7W-4589**	1	BEARING SET-MAIN (.18MM O.S.)	
B		1	**7W-4590**	1	SET-BEARING (0.25 US ID)	
B		1	**7W-4591**	1	SET-BEARING (0.51 US ID)	
B	5	1	**7W-4592**	1	SET-BEARING (0.76 US ID) (STANDARD)	
B		1	**7W-4816**	1	BEARING SET-ROD	
B		1	**7W-4817**	1	SET-BEARING (0.25 US ID)	
B		1	**7W-4818**	1	SET-BEARING (0.51 US ID)	
B		1	**7W-4819**	1	SET-BEARING (0.76 US ID)	
B	6	1	**032-9090**	2	WASHER-THRUST (STANDARD-UPPER)	
B		1	**067-6873**	2	WASHER-THRUST (.18MM OS)	
B	7	1	**032-9091**	2	WASHER-THRUST (STANDARD-LOWER)	
B		1	**067-6874**	2	WASHER-THRUST (.18MM OS)	

B-USE AS REQUIRED

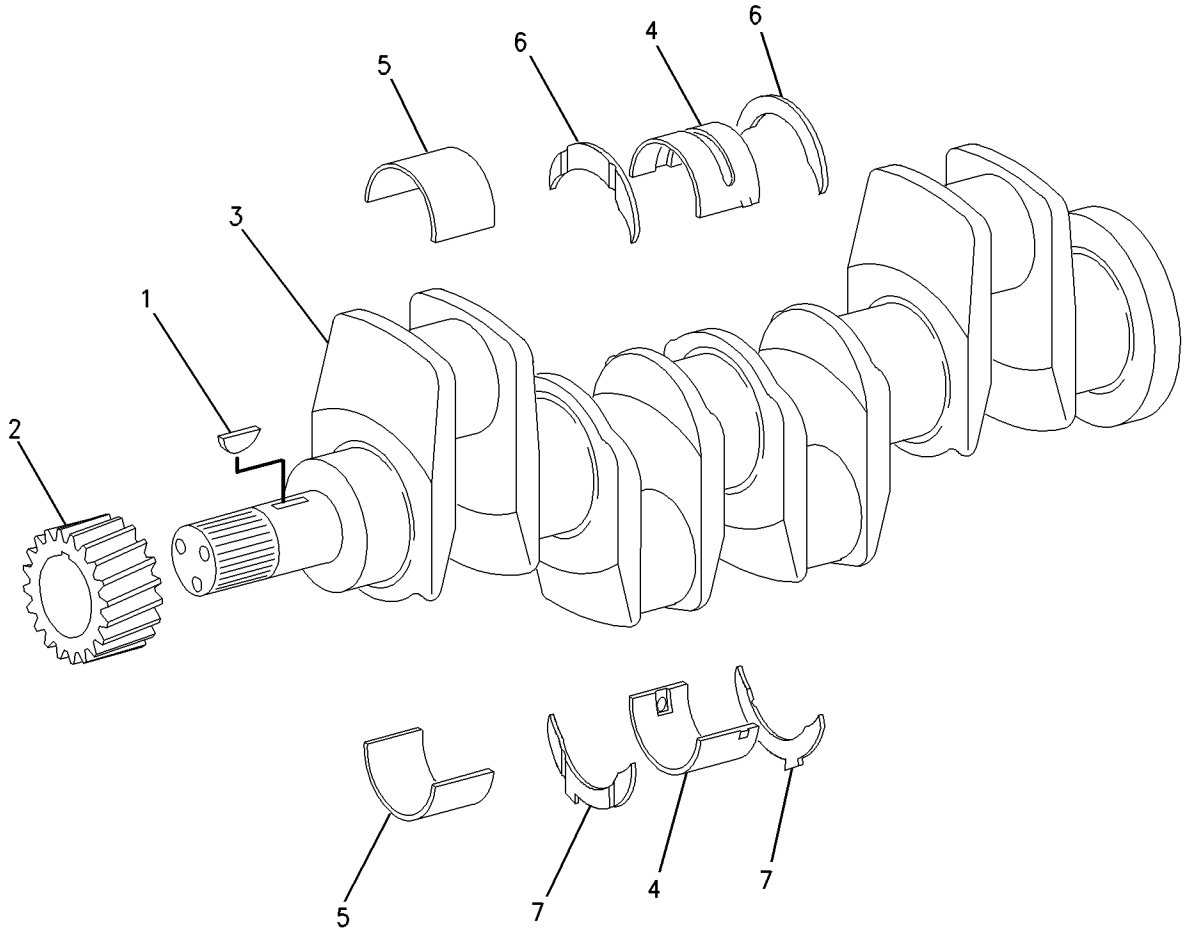

GRAPHIC #1 g00887896

BASIC ENGINE

216-8231 CYLINDER BLOCK GP

S/N: CPT1-UP

PART OF 179-1797 ENGINE AR-PRIMARY

SMCS-1201 **i01777340**

NOTE	REF NO	GRAPHIC REF	PART NUMBER	QTY	PART NAME 1 2 3 4 5 6 (PRODUCT LEVEL)	SEE PAGE
Y	1	1	**216-8235**	1	CYLINDER BLOCK GP	14
	2	1	**209-9219**	10	BOLT (M8X1.25X16MM)	
	3	1	**209-9218**	1	HOUSING AS	
	3A	1	**219-2512**	1	SLEEVE	

Y-SEPARATE ILLUSTRATION

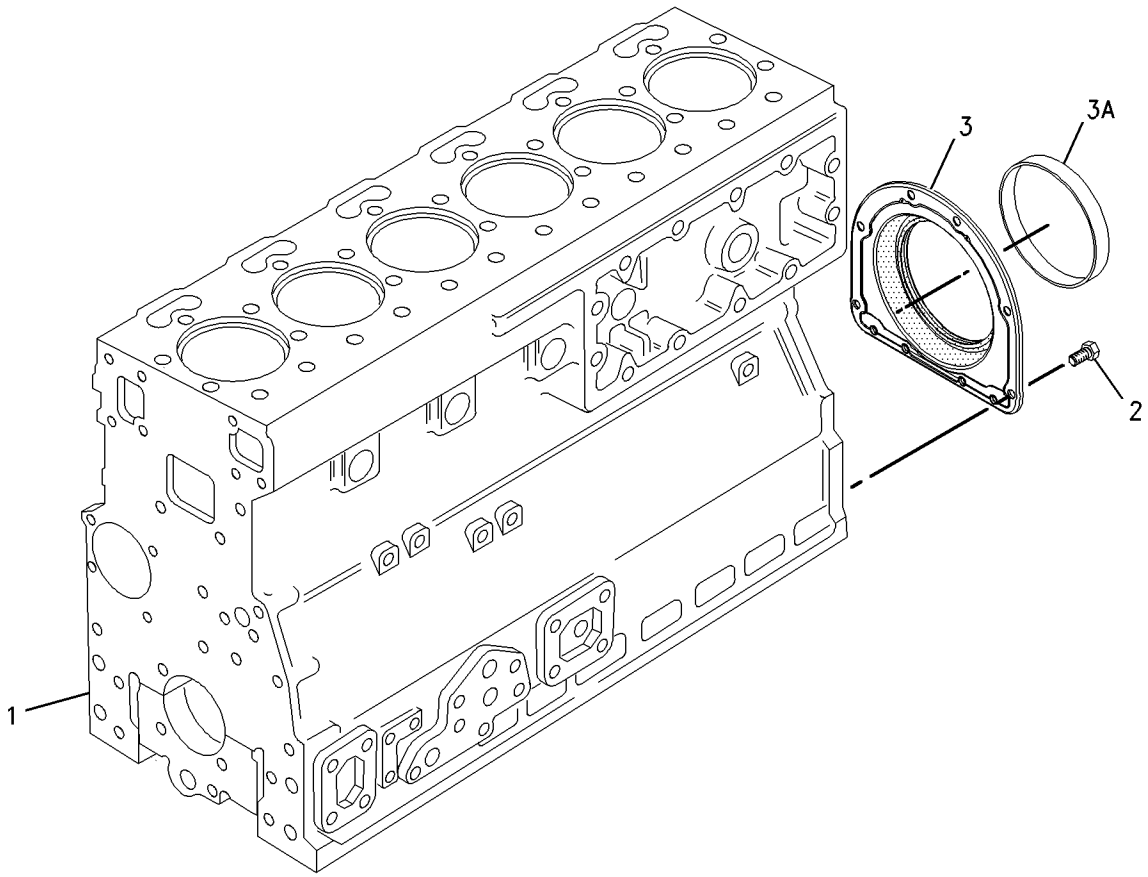

GRAPHIC #1 g00830579

216-8235 CYLINDER BLOCK GP

S/N: CPT1-UP

PART OF 216-8231 CYLINDER BLOCK GP

SMCS-1201 **i01775681**

NOTE	REF NO	GRAPHIC REF	PART NUMBER	QTY	PART NAME 1 2 3 4 5 6 (PRODUCT LEVEL)	SEE PAGE
	1	1	**1N-3762**	12	PLUG-CUP	
	2	1	**6I-1074**	6	VALVE AS (OIL JET)	
					(EACH INCLUDES)	
	3	1	**6I-0686**	1	SPRING	
	4	1	**6I-1075**	1	BALL	
	5	1	**6I-1076**	1	RETAINER	
	6	1	**6I-4354**	1	DOWEL	
	7	1	**7W-2501**	1	PLUG	
	8	1	**9Y-5015**	1	PLUG-FREEZE	
	9	1	**035-8068**	14	BOLT	
	10	1	**036-5802**	1	BEARING	
	11	1	**067-6002**	14	DOWEL	
	12	1	**067-6805**	1	PLUG	
	13	1	**067-6808**	1	PLUG	
	14	1	**111-1815**	6	LINER	
	15	1	**127-3294**	1	SHAFT	
	16	1	**148-3026**	6	JET AS-PISTON COOLING	
	17	1	**214-1668**	1	WASHER-SPECIAL	
	18	1	**215-2103**	6	PLUG	

216-8235 **CYLINDER BLOCK GP** *(contd.)* **i01775681**

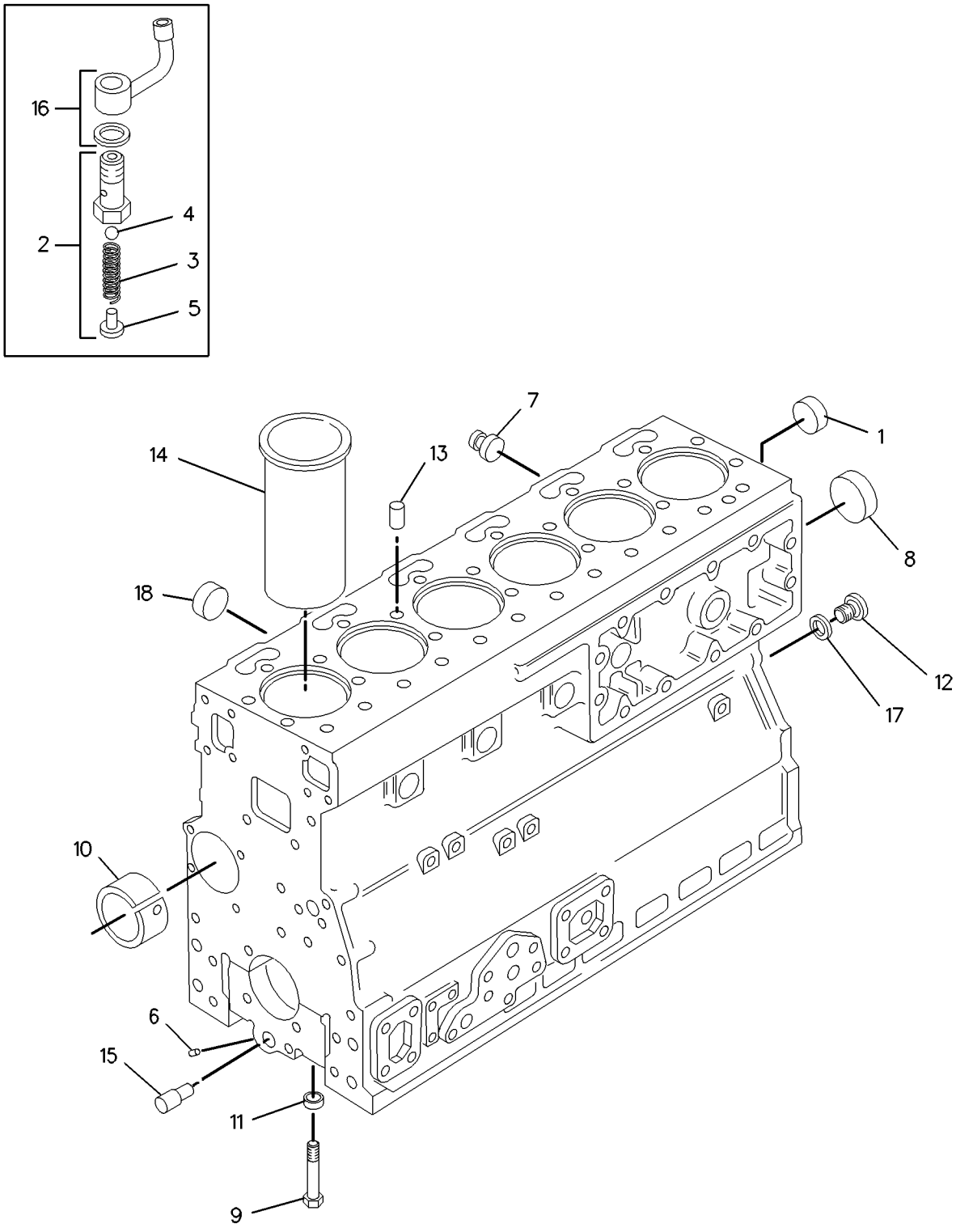

GRAPHIC #1 g00863044

BASIC ENGINE

216-8335 CYLINDER HEAD GP

S/N: CPT1-UP

PART OF 216-8343 CYLINDER HEAD GP

SMCS-1100 **i01834988**

NOTE	REF NO	GRAPHIC REF	PART NUMBER	QTY	PART NAME 1 2 3 4 5 6 (PRODUCT LEVEL)	SEE PAGE
	1	1	**1N-3762**	1	PLUG-CUP	
	2	1	**7M-7410**	6	PLUG	
	3	1	**067-6043**	3	PLUG-SIDE	
	4	1	**138-2050**	6	VALVE-EXHAUST	
	5	1	**138-2060**	12	CAP	
	6	1	**145-6855**	6	VALVE-INLET	
	7	1	**145-6856**	6	SEAL (INLET)	
	8	1	**145-6858**	6	SEAL (EXHAUST)	
	9	1	**147-1979**	24	RETAINER	
	10	1	**163-9256**	6	GUIDE-VALVE (EXHAUST)	
	11	1	**185-0882**	6	GUIDE-VALVE (INTAKE)	
	12	1	**206-4127**	12	SPRING-VALVE	
	13	1	**216-8332**	6	INSERT-VALVE (INLET)	
	14	1	**216-8333**	6	INSERT-VALVE (EXHAUST)	

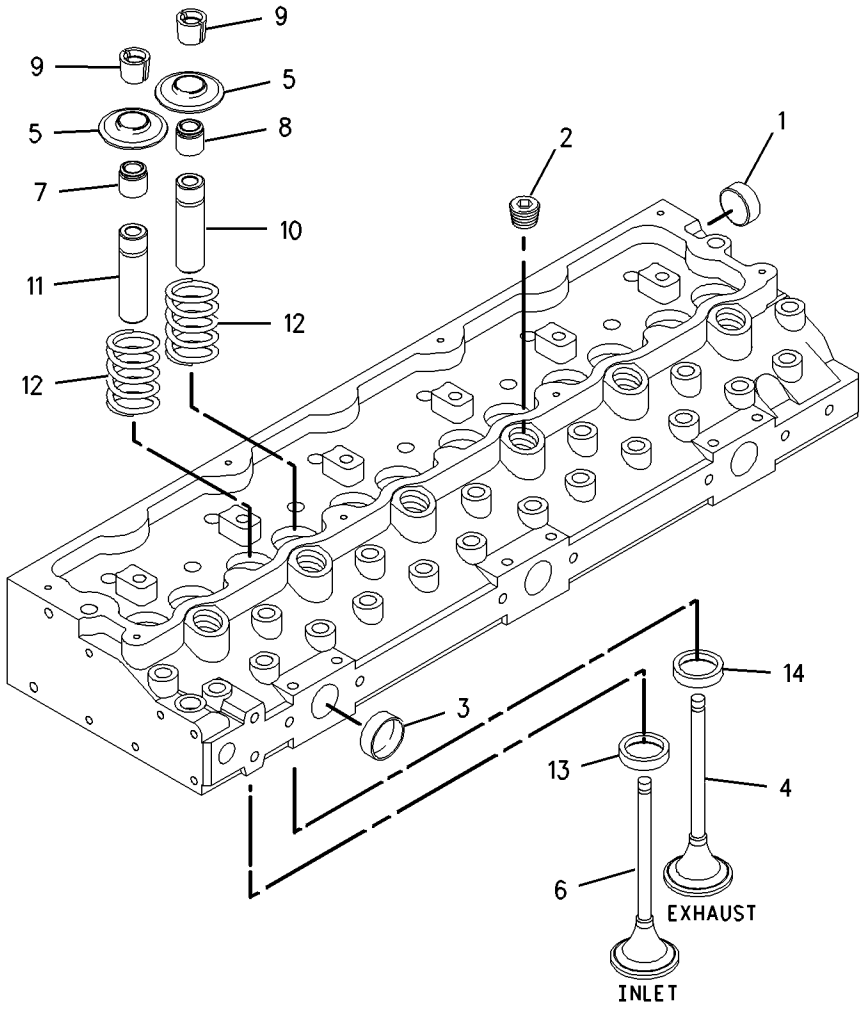

GRAPHIC #1 g00860247

BASIC ENGINE

216-8343 CYLINDER HEAD GP

S/N: CPT1-UP

PART OF 179-1797 ENGINE AR-PRIMARY

SMCS-1100 **i01777355**

NOTE	REF NO	GRAPHIC REF	PART NUMBER	QTY	PART NAME 1 2 3 4 5 6 (PRODUCT LEVEL)	SEE PAGE
	1	1	**7W-2518**	12	BOLT (1/2-20X3.63IN)	
	2	1	**7W-2519**	18	BOLT (1/2-20X4.25IN)	
	3	1	**7W-2520**	2	BOLT (1/2-20X5.09IN)	
	4	1	**156-4173**	1	GASKET-CYLINDER HEAD	
	5	1	**161-9820**	2	PIN	
Y	6	1	**216-8335**	1	CYLINDER HEAD GP	16

Y-SEPARATE ILLUSTRATION

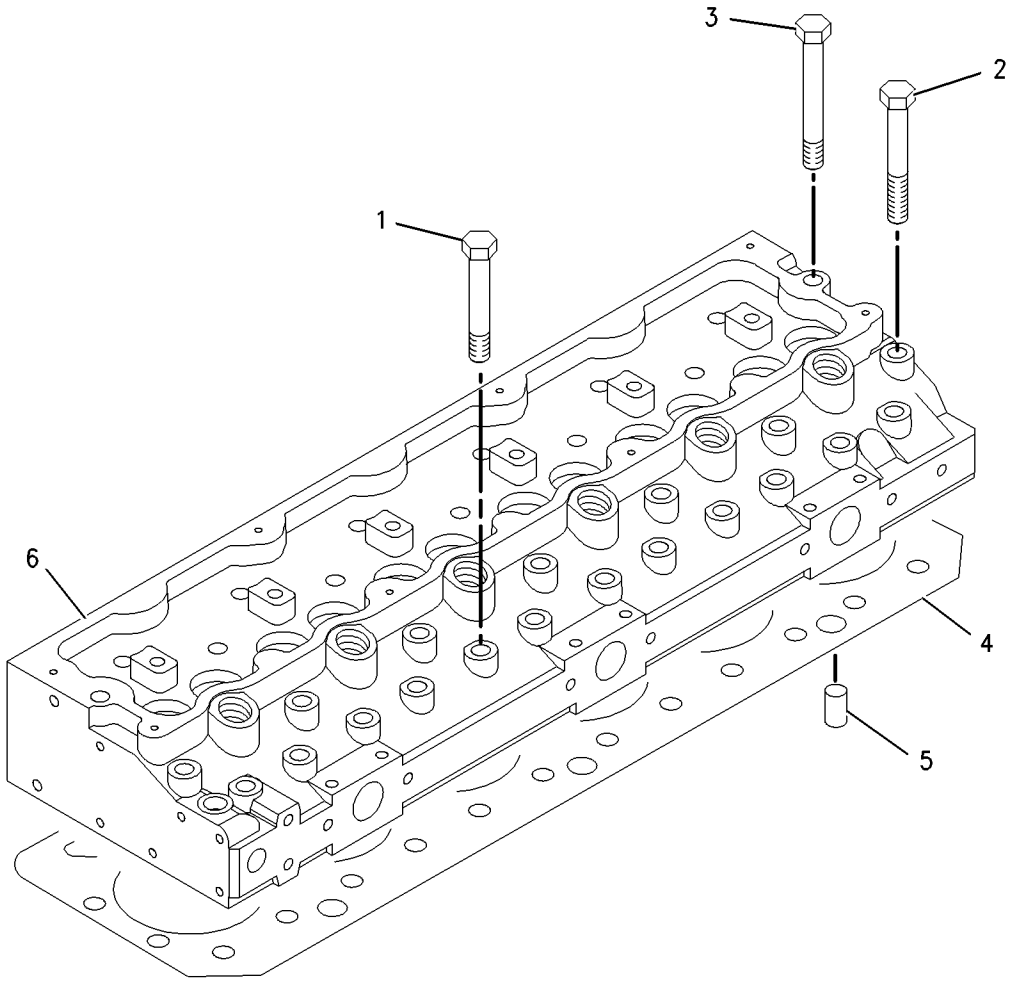

GRAPHIC #1 g00889681

BASIC ENGINE

186-2337 DRAIN GP-ENGINE OIL

S/N: DJD1-UP; DBT1-UP

PART OF 176-5223 INSTALLATION AR-ENGINE

SMCS-1302 **i01818360**

NOTE	REF NO	GRAPHIC REF	PART NUMBER	QTY	PART NAME 1 2 3 4 5 6 (PRODUCT LEVEL)	SEE PAGE
	1	1	**2P-4173**	1	COCK-DRAIN (CYLINDER BLOCK OIL DRAIN)	
	2	1	**5D-1026**	1	CLAMP-HOSE	
	3	1	**6V-7238**	1	VALVE-SHUTOFF (OIL DRAIN)	
	4	1	**8C-5225**	1	PLUG-SEAL (OIL DRAIN)	
	5	1	**159-5255**	1	ADAPTER	
	6	1	**3K-0360**	1	SEAL-O-RING	
	7	1	**5P-9186**	1	SEAL-O-RING	
E	8	1	**5P-0743**		HOSE (51CM)	

E-ORDER BY THE CENTIMETER

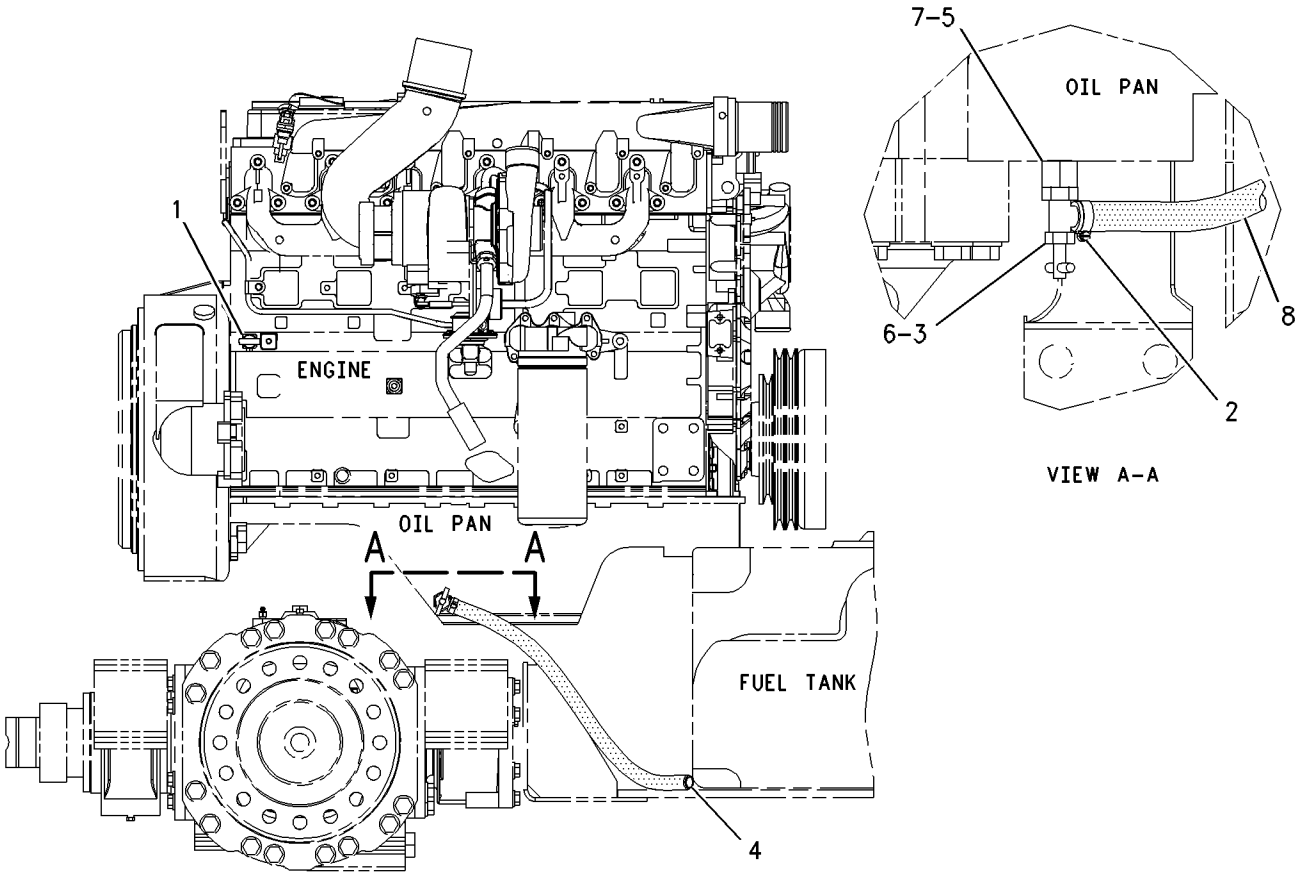

LEFT SIDE VIEW

GRAPHIC #1 g00922918

BASIC ENGINE

171-1423 FASTENER GP-CYLINDER HEAD

S/N: CPT1-UP

PART OF 179-1797 ENGINE AR-PRIMARY

SMCS-1100 **i01145269**

NOTE	REF NO	GRAPHIC REF	PART NUMBER	QTY	PART NAME 1 2 3 4 5 6 (PRODUCT LEVEL)	SEE PAGE
	1	1	**124-3815**	3	BOLT	

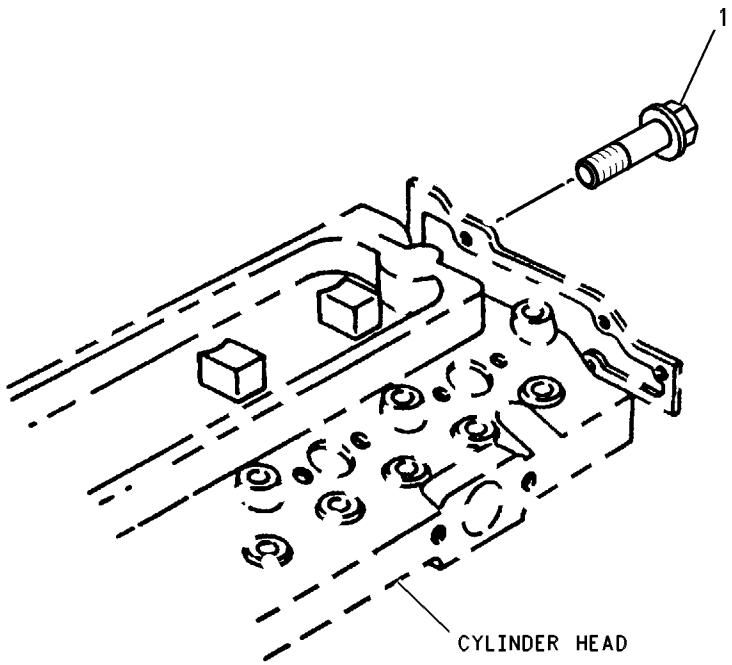

GRAPHIC #1 g00611206

170-2464 FLYWHEEL GP

S/N: CPT1-UP

PART OF 179-1797 ENGINE AR-PRIMARY

SMCS-1156 **i01398798**

NOTE	REF NO	GRAPHIC REF	PART NUMBER	QTY	PART NAME 1 2 3 4 5 6 (PRODUCT LEVEL)	SEE PAGE
	1	1	**4K-7502**	12	BOLT (1/2-20X1.375IN)	
	2	1	**113-7543**	1	FLYWHEEL AS	
	2A	1	**033-7687**	1	RING-STARTING MOTOR (126 TEETH)	
	3	1	**145-4911**	12	WASHER	

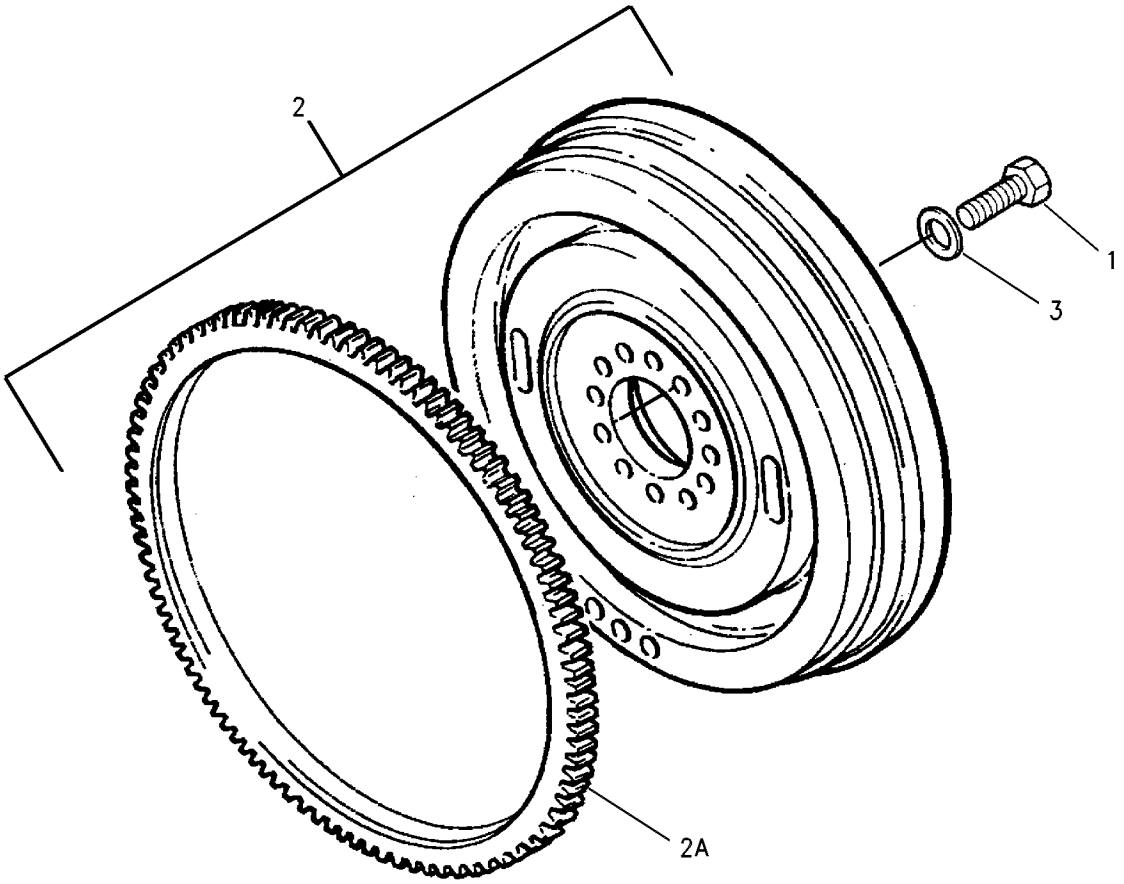

GRAPHIC #1 g00607792

BASIC ENGINE

217-1499 GEAR GP-FRONT

S/N: CPT1-UP

PART OF 179-1797 ENGINE AR-PRIMARY

SMCS-1206 **i01819089**

NOTE	REF NO	GRAPHIC REF	PART NUMBER	QTY	PART NAME 1 2 3 4 5 6 (PRODUCT LEVEL)	SEE PAGE
	1	1	**6I-0256**	1	WASHER	
	2	1	**067-6928**	1	CLIP	
	3	1	**216-8348**	1	GEAR AS-IDLER (31 TEETH)	
	4	1	**067-6927**	1	BUSHING-TERMINAL	

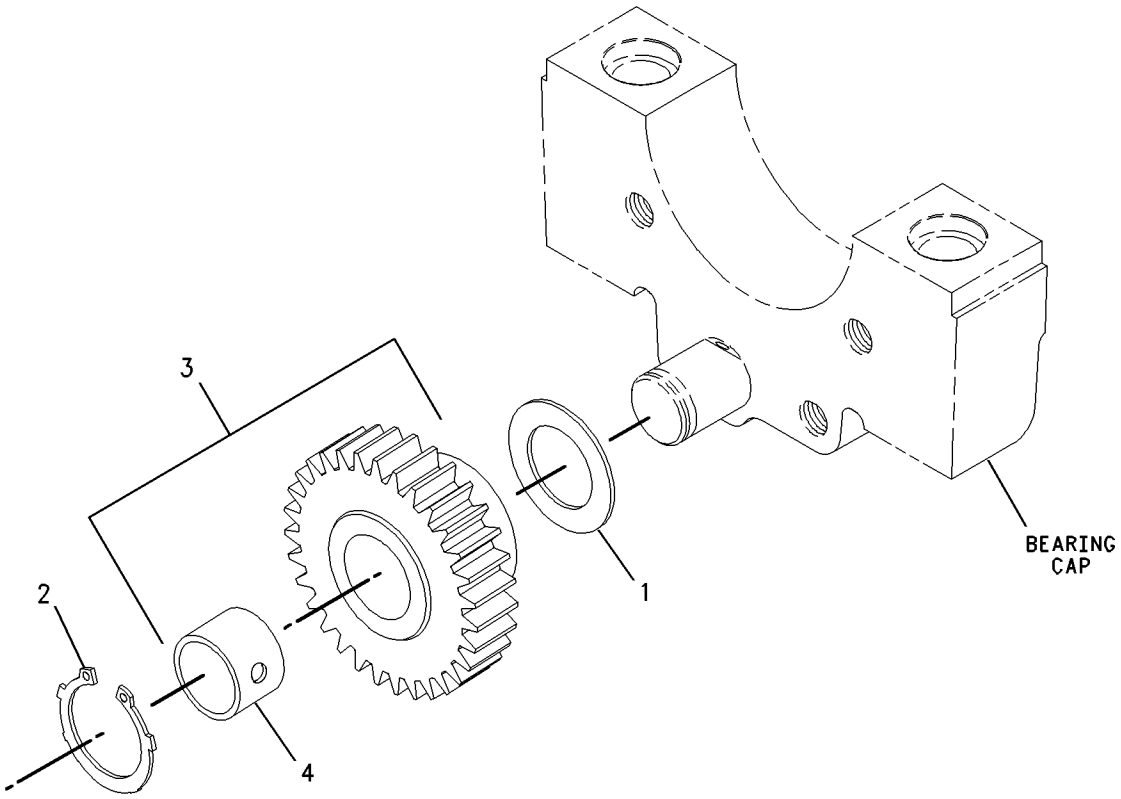

GRAPHIC #1 g00860185

BASIC ENGINE

187-0534 HOUSING GP-FLYWHEEL

S/N: CPT1-UP

PART OF 179-1797 ENGINE AR-PRIMARY

SMCS-1157 **i01396762**

NOTE	REF NO	GRAPHIC REF	PART NUMBER	QTY	PART NAME 1 2 3 4 5 6 (PRODUCT LEVEL)	SEE PAGE
	1	1	**6I-0423**	2	BOLT (M12X1.75X30MM)	
	2	1	**6I-0631**	2	BOLT (M6X1.0X12MM)	
	3	1	**6I-0847**	1	PLUG	
	4	1	**6I-4200**	3	BOLT (M10X1.5X16MM)	
	5	1	**7W-4642**	1	SHIELD-DUST	
	6	1	**067-6123**	2	DOWEL	
	7	1	**102-1957**	1	PLATE	
	8	1	**121-0883**	6	BOLT (M10X1.5X30MM)	
	9	1	**132-0154**	1	PLUG	
	10	1	**149-9176**	1	HOUSING-FLYWHEEL	
	11	1	**166-6176**	1	PLUG	

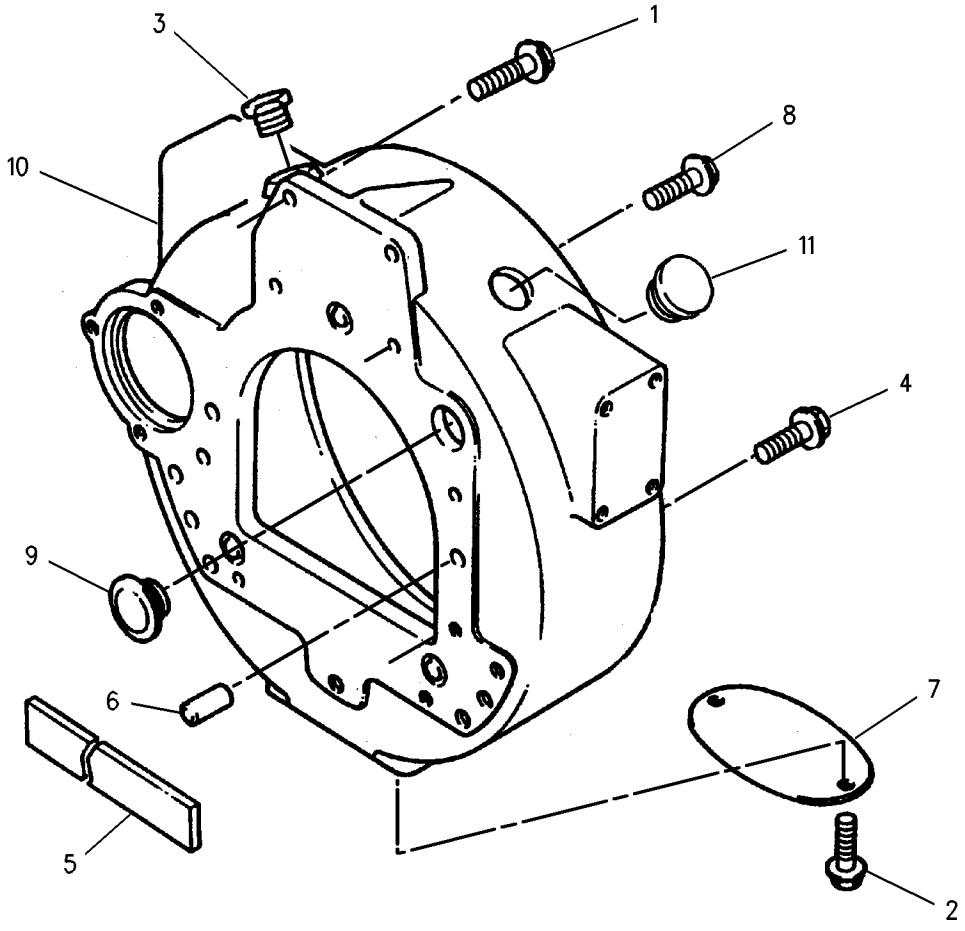

GRAPHIC #1 g00724813

MEMORANDA

BASIC ENGINE

221-6835 HOUSING GP-FRONT

S/N: CPT1-UP

PART OF 179-1797 ENGINE AR-PRIMARY

SMCS-1151, 1162 **i01725128**

NOTE	REF NO	GRAPHIC REF	PART NUMBER	QTY	PART NAME 1 2 3 4 5 6 (PRODUCT LEVEL)	SEE PAGE
	1	1	**1B-8736**	1	KEY-WOODRUFF	
	2	1	**6I-0217**	1	BOLT (M8X1.25X20MM)	
	3	1	**6I-0254**	6	BOLT (M8X1.25X30MM)	
	4	1	**6I-0260**	1	BOLT (M8X1.25X25MM)	
	5	1	**6I-0645**	3	BOLT (M8X1.25X25MM)	
	6	1	**6I-0789**	3	BOLT (M10X1.5X60MM)	
	7	1	**6I-0839**	6	BOLT (M8X1.25X70MM)	
	8	1	**6I-0846**	2	BOLT (M6X1.0X14MM)	
	9	1	**7C-4616**	1	BOLT (M12X1.75X45MM)	
	10	1	**067-6178**	1	WASHER	
	11	1	**067-6179**	1	DOWEL	
	12	1	**067-6897**	1	HUB-IDLER GEAR	
	13	1	**067-6900**	1	PLATE-RETAINING	
	14	1	**133-1011**	1	WASHER	
	15	1	**140-7443**	1	GASKET-COVER	
	16	1	**140-7444**	1	SHIELD	
	17	1	**140-7445**	1	DAMPER	
	18	1	**160-3510**	1	GASKET	
	19	1	**183-6317**	1	COVER AS-FRONT	
	20	1	**4W-5359**	1	SEAL-CRANKSHAFT	
	21	1	**167-2153**	1	SLEEVE-CRANKSHAFT	
	22	1	**216-8632**	1	HOUSING-FRONT	
	23	1	**216-8633**	1	GEAR AS-IDLER (73 TEETH)	
	24	1	**067-6899**	2	BUSHING-IDLER GEAR	
	25	1	**216-8634**	1	GEAR-CAMSHAFT (68 TEETH)	

221-6835 **HOUSING GP-FRONT** *(contd.)* **i01725128**

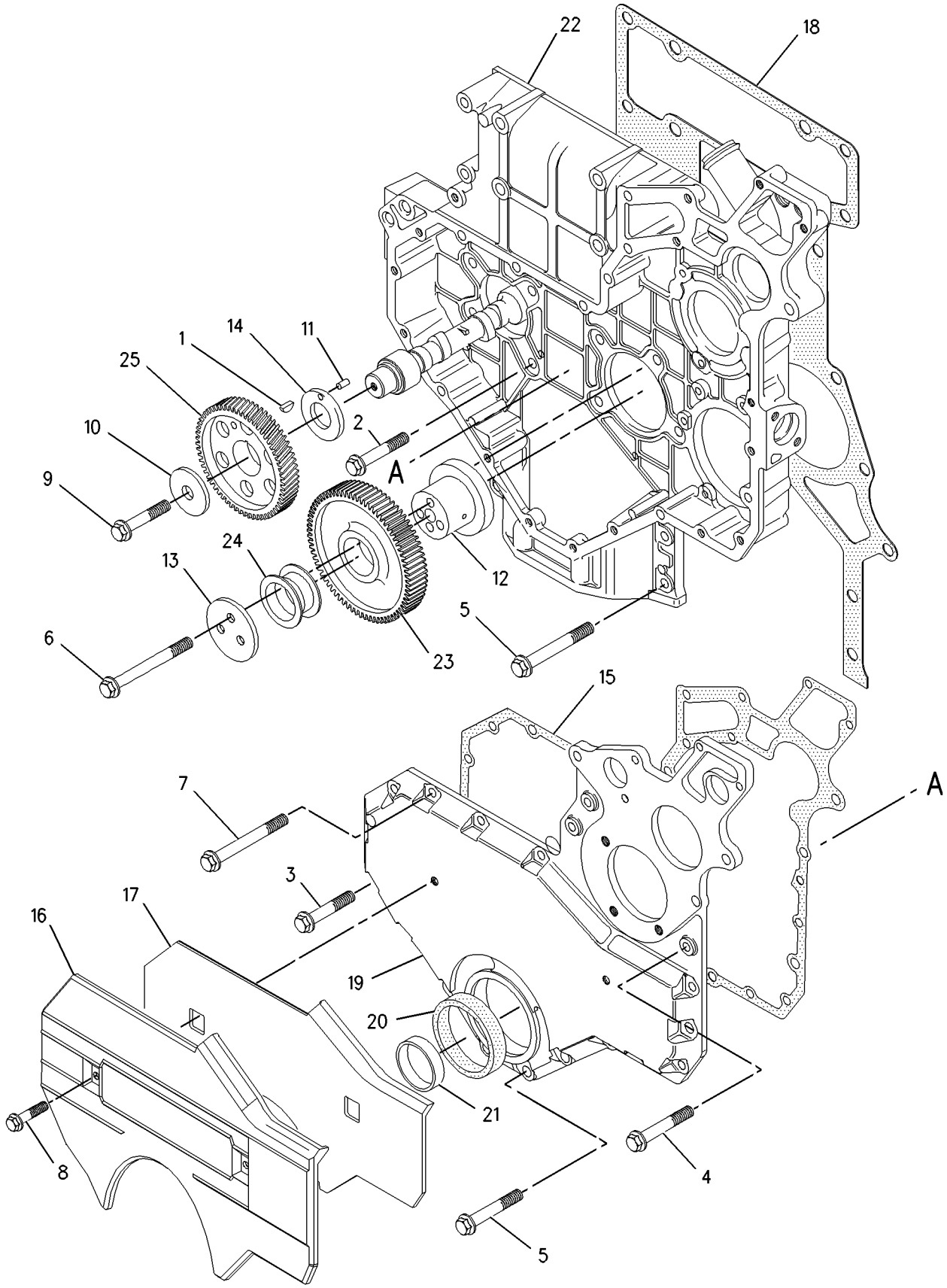

GRAPHIC #1 g00862294

BASIC ENGINE

221-6875 LIFTING GP-ENGINE

S/N: CPT1-UP

PART OF 179-1797 ENGINE AR-PRIMARY

SMCS-1122 **i01725113**

NOTE	REF NO	GRAPHIC REF	PART NUMBER	QTY	PART NAME 1 2 3 4 5 6 (PRODUCT LEVEL)	SEE PAGE
	1	1	**6I-0654**	4	BOLT (M10X1.5X25MM)	
	2	1	**221-6872**	2	PLATE	

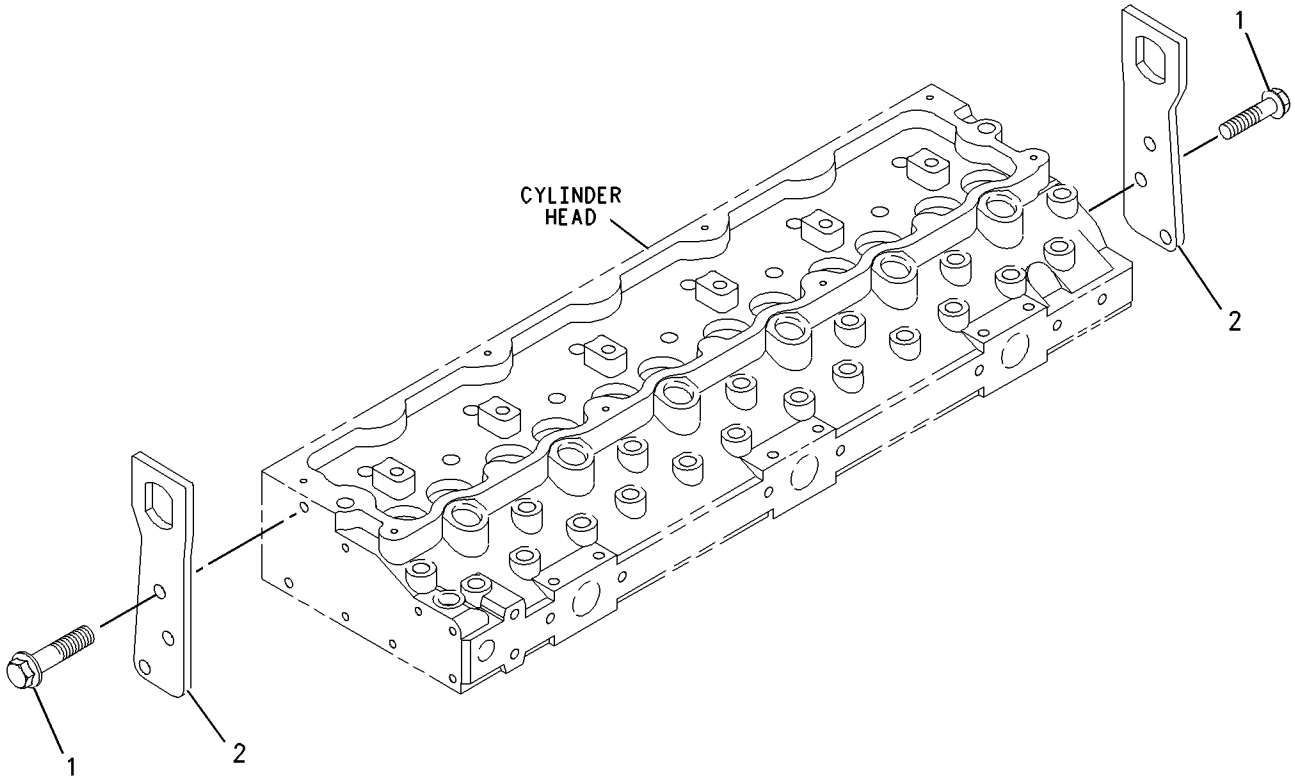

GRAPHIC #1 g00889453

BASIC ENGINE

171-1090 MOUNTING GP-ALTERNATOR

S/N: CPT1-UP

PART OF 179-1797 ENGINE AR-PRIMARY

SMCS-1405 **i01139020**

NOTE	REF NO	GRAPHIC REF	PART NUMBER	QTY	PART NAME 1 2 3 4 5 6 (PRODUCT LEVEL)	SEE PAGE
	1	1	**6I-0254**	2	BOLT	
	2	1	**6I-0839**	1	BOLT	
	3	1	**6I-4374**	2	BOLT	

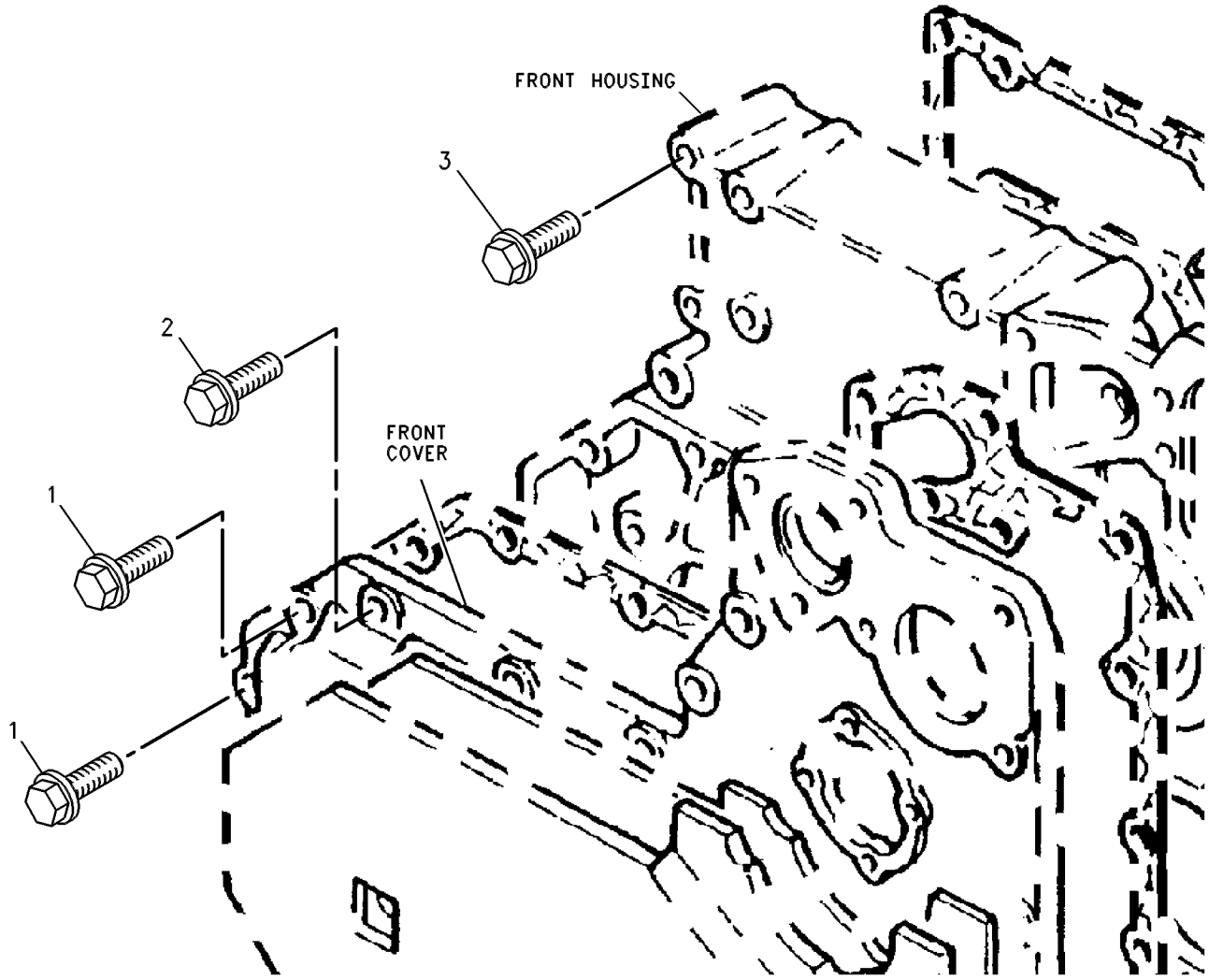

GRAPHIC #1 g00612614

171-1410 MOUNTING GP-ENGINE

S/N: CPT1-UP

PART OF 179-1797 ENGINE AR-PRIMARY

SMCS-1152 **i01139019**

NOTE	REF NO	GRAPHIC REF	PART NUMBER	QTY	PART NAME 1 2 3 4 5 6 (PRODUCT LEVEL)	SEE PAGE
	1	1	**102-9460**	1	PLUG	
	2	1	**113-7913**	3	STUD	
	3	1	**171-1411**	4	STUD	

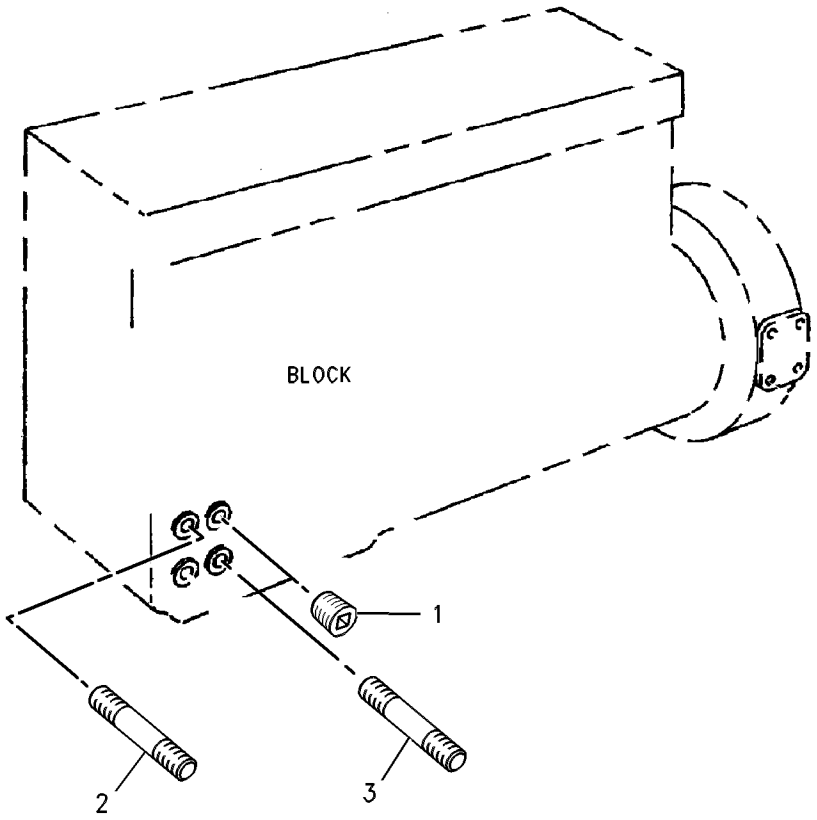

GRAPHIC #1 g00610570

MEMORANDA

186-2345 MOUNTING GP-ENGINE & TMSN

S/N: DJD1-UP; DBT1-UP

PART OF 176-5223 INSTALLATION AR-ENGINE

SMCS-1152, 1154, 3082 **i01818376**

NOTE	REF NO	GRAPHIC REF	PART NUMBER	QTY	PART NAME 1 2 3 4 5 6 (PRODUCT LEVEL)	SEE PAGE
	1	1	**7X-2622**	2	WASHER (10MM THK)	
M	2	1	**8T-4170**	2	BOLT (M20X2.5X150MM)	
	3	1	**9W-9915**	2	MOUNT AS	
	4	1	**103-0280**	10	SPACER (7MM THK)	
	5	1	**199-4152**	2	SUPPORT-ENGINE	
	6	1	**200-1922**	1	SUPPORT AS	
	7	1	**200-1923**	1	SUPPORT AS	
	8	1	**200-2739**	2	SLEEVE	
	9	1	**220-1241**	2	MOUNT AS	
M	10	1	**6V-4249**	8	BOLT (M10X1.5X50 MM)	
	11	1	**6V-5839**	8	WASHER (11X21X2.5MM THK)	
	12	1	**7M-1201**	2	DOWEL	
	13	1	**7Y-1734**	2	WASHER	
M	14	1	**8C-8478**	2	BOLT (M20X2.5X140MM)	
	15	1	**8T-4121**	12	WASHER-HARD (11X21X2.5MM THK)	
	16	1	**8T-4122**	7	WASHER-HARD (17X32X3.5MM THK)	
M	17	1	**8T-4131**	4	NUT (M20X2.5 THD)	
M	18	1	**8T-4132**	7	NUT (M16X2 THD)	
M	19	1	**8T-4183**	10	BOLT (M12X1.75X40MM)	
M	20	1	**8T-4186**	12	BOLT (M10X1.5X40MM)	
	21	1	**8T-4223**	10	WASHER-HARD (13.5X25.5X3MM THK)	
	22	1	**8T-5439**	8	WASHER (21.5X45X6MM THK)	
	23	1	**9R-5878**	4	WASHER	

M-METRIC PART

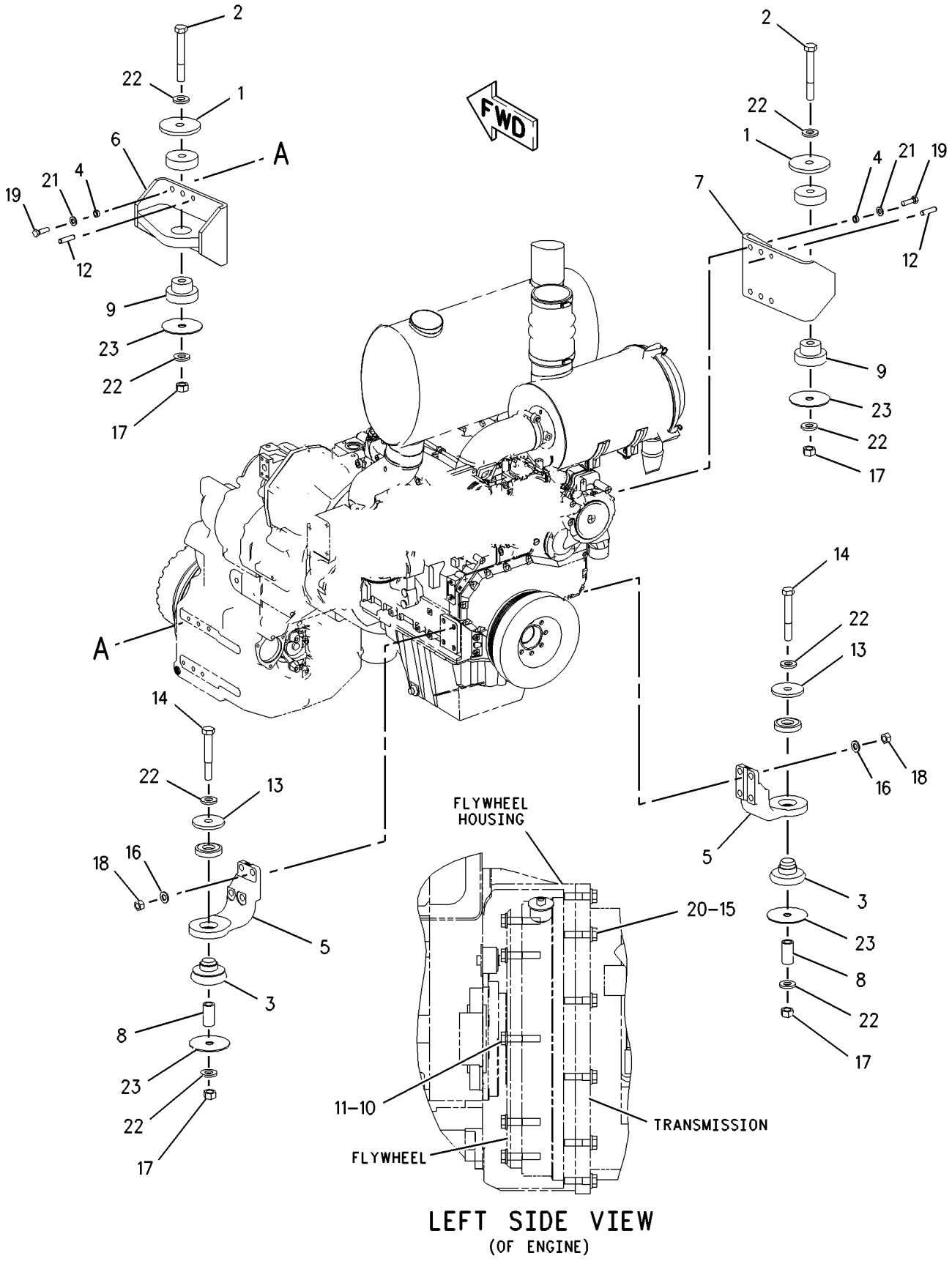

LEFT SIDE VIEW
(OF ENGINE)

GRAPHIC #1

g00924116

BASIC ENGINE

170-3711 MOUNTING GP-FAN DRIVE

S/N: CPT1-UP

PART OF 179-1797 ENGINE AR-PRIMARY

SMCS-1359 **i01139025**

NOTE	REF NO	GRAPHIC REF	PART NUMBER	QTY	PART NAME 1 2 3 4 5 6 (PRODUCT LEVEL)	SEE PAGE
	1	1	**6I-0650**	4	BOLT	

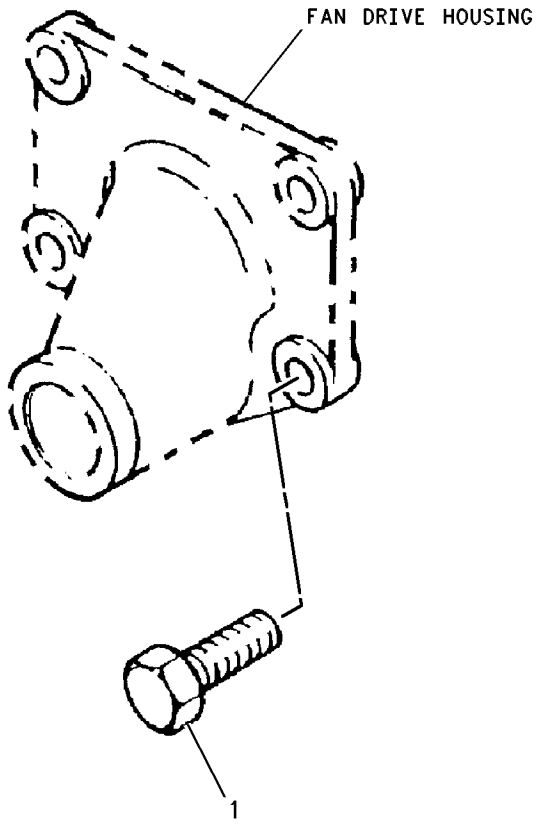

GRAPHIC #1 g00607880

MEMORANDA

221-2959 PAN GP-OIL

S/N: CPT1-UP

PART OF 179-1797 ENGINE AR-PRIMARY

SMCS-1302 **i01843782**

NOTE	REF NO	GRAPHIC REF	PART NUMBER	QTY	PART NAME 1 2 3 4 5 6 (PRODUCT LEVEL)	SEE PAGE
	1	1	**113-5280**	1	PAN AS-OIL	
	2	1	**7C-1224**	1	INSERT	
	3	1	**195-3761**	1	SPACER	
	4	1	**7C-0351**	2	PLUG-SUMP DRAIN	
	5	1	**5P-6718**	2	SEAL-O-RING (OIL DRAIN PLUG)	
	6	1	**6I-4709**	6	BOLT (M8X1.25X100MM)	
	7	1	**6I-0217**	22	BOLT (M8X1.25X20MM)	
	8	1	**211-0067**	1	BRIDGE	
	9	1	**6I-0363**	2	BOLT (M6X1.0X20MM)	
	10	1	**6I-4710**	1	GASKET	
	11	1	**113-5281**	1	TUBE AS	
	12	1	**6I-4681**	1	GASKET	
	13	1	**6I-0260**	2	BOLT (M8X1.25X25MM)	
	14	1	**6I-0289**	1	PLUG	
	15	1	**6I-0572**	2	BOLT (M8X1.25.20MM)	
	16	1	**113-5282**	1	BRACKET	
	17	1	**113-8130**	1	CLIP	
	19	1	**6I-0291**	2	NUT (M8X1.25)	
	20	1	**124-3815**	1	BOLT (M8X16X1.25MM)	
	21	1	**113-8231**	1	SUPPORT	

221-2959 **PAN GP-OIL** *(contd.)* **i01843782**

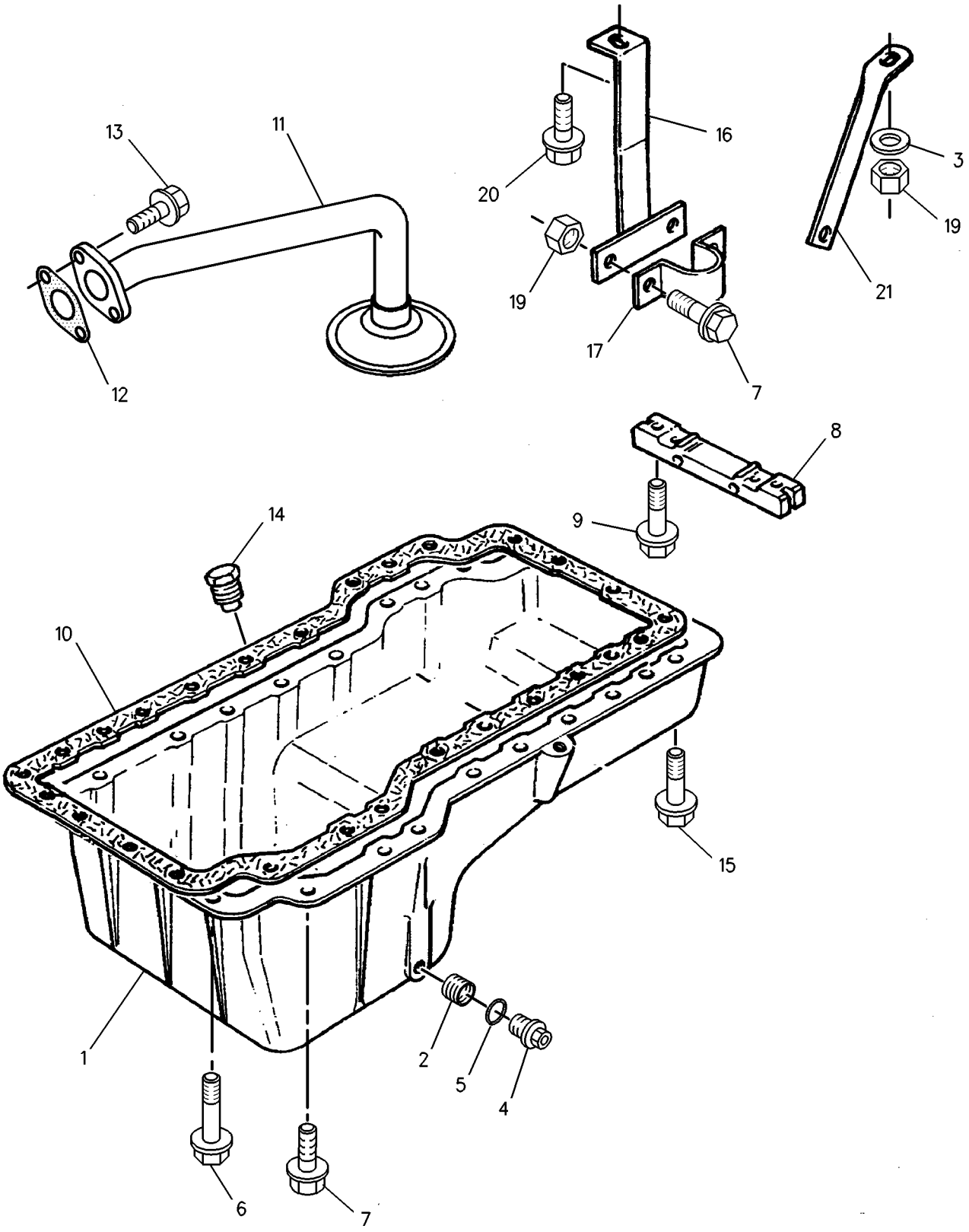

GRAPHIC #1 g00886975

216-8324 PISTON & ROD GP

S/N: CPT1-UP

PART OF 179-1797 ENGINE AR-PRIMARY

SMCS-1225 **i01812010**

NOTE	REF NO	GRAPHIC REF	PART NUMBER	QTY	PART NAME 1 2 3 4 5 6 (PRODUCT LEVEL)	SEE PAGE
	1	1	**216-8323**	6	PISTON AS	
					(EACH INCLUDES)	
		1	**124-3536**	1	RING-RETAINING	
	2	1	**217-1573**	1	KIT-PISTON RING	
J	3	1	**160-6493**	6	ROD AS (H)	
					—OR—	
J		1	**160-6494**	6	ROD AS (J)	
					—OR—	
J		1	**160-6495**	6	ROD AS (K)	
					—OR—	
J		1	**160-6496**	6	ROD AS (L)	
					(EACH ROD AS INCLUDES)	
	4	1	**7W-2505**	2	NUT-CONNECTING ROD	
	5	1	**067-6883**	2	BOLT-ROD CAP	
	6	1	**138-2048**	1	BUSHING	
	7	1	**194-2466**	2	DOWEL	

J-ENSURE THAT THE CORRECT ROD LENGTH IS FITTED.

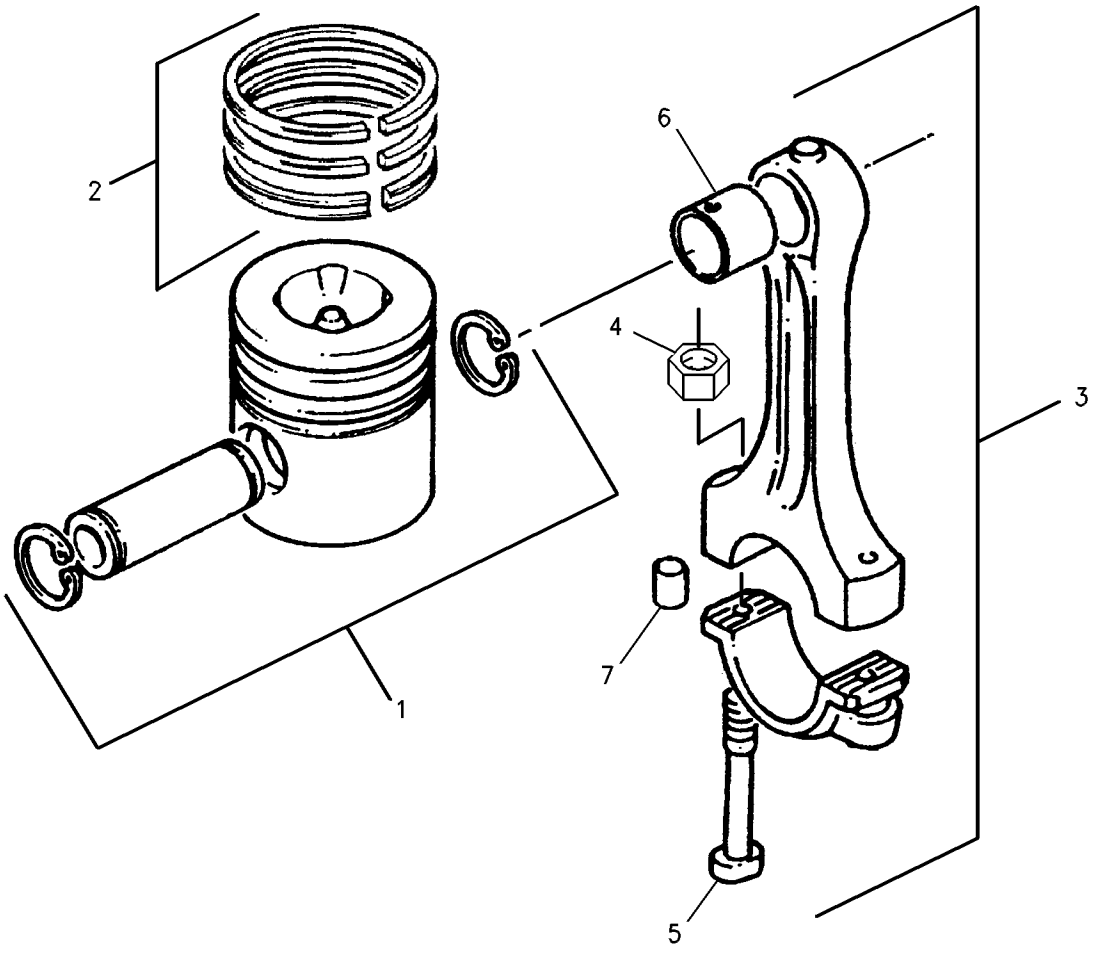

GRAPHIC #1 g00716867

147-5524 PLUG GP-CYLINDER BLOCK

S/N: CPT1-UP

PART OF 179-1797 ENGINE AR-PRIMARY

SMCS-1201 **i01834989**

NOTE	REF NO	GRAPHIC REF	PART NUMBER	QTY	PART NAME 1 2 3 4 5 6 (PRODUCT LEVEL)	SEE PAGE
	1	1	**069-1124**	2	PLUG	

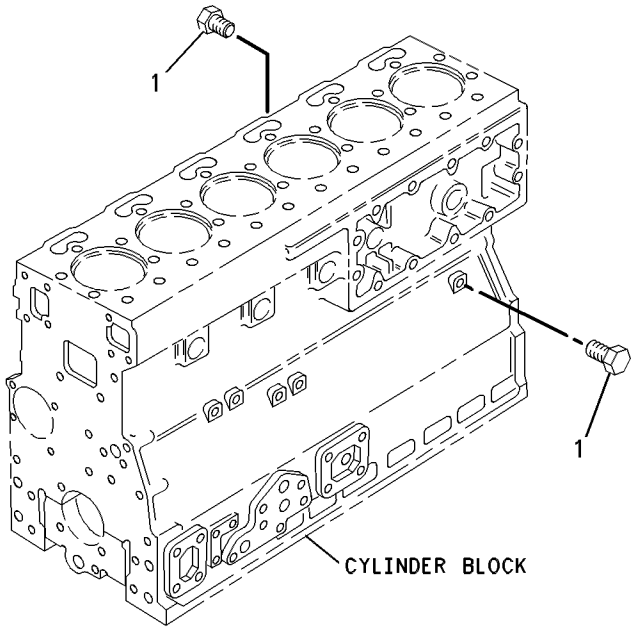

GRAPHIC #1 g00282502

BASIC ENGINE

147-5532 PLUG GP-CYLINDER BLOCK

S/N: CPT1-UP

PART OF 179-1797 ENGINE AR-PRIMARY

SMCS-1201 **i00950314**

NOTE	REF NO	GRAPHIC REF	PART NUMBER	QTY	PART NAME 1 2 3 4 5 6 (PRODUCT LEVEL)	SEE PAGE
	1	1	**035-8063**	2	PLUG	

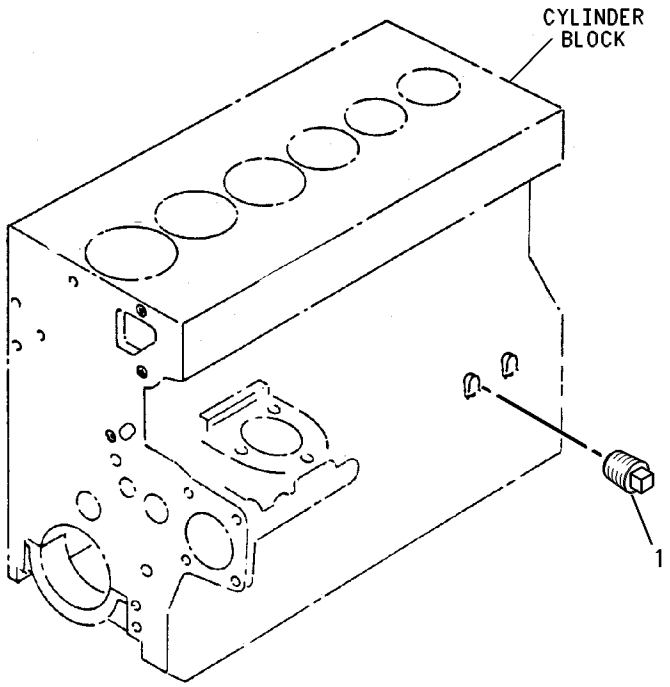

GRAPHIC #1 g00282503

163-0264 PLUG GP-ENGINE

S/N: CPT1-UP

PART OF 179-1797 ENGINE AR-PRIMARY

SMCS-1000 **i01104654**

NOTE	REF NO	GRAPHIC REF	PART NUMBER	QTY	PART NAME 1 2 3 4 5 6 (PRODUCT LEVEL)	SEE PAGE
	1	1	**2B-0858**	2	PLUG-PIPE (1/2-14 NPTF)	

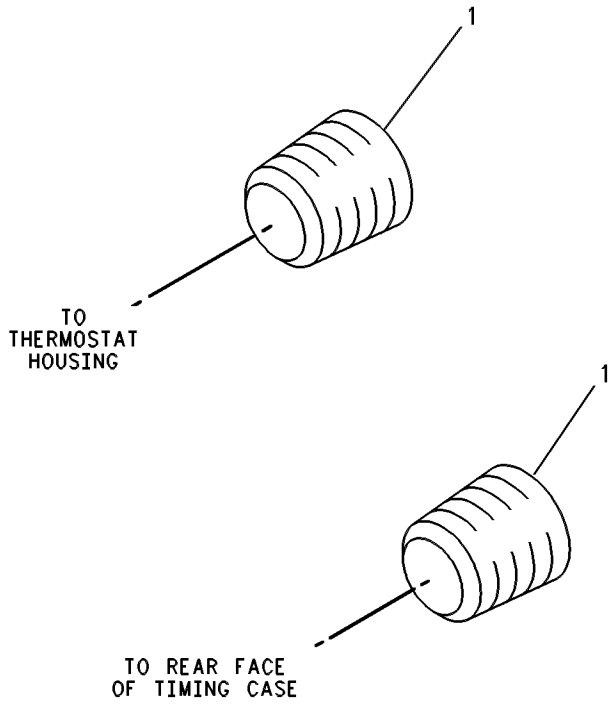

GRAPHIC #1 g00585450

BASIC ENGINE

184-5483 PULLEY GP-CRANKSHAFT

S/N: CPT1-UP

PART OF 179-1797 ENGINE AR-PRIMARY

SMCS-1205 **i01203429**

NOTE	REF NO	GRAPHIC REF	PART NUMBER	QTY	PART NAME 1 2 3 4 5 6 (PRODUCT LEVEL)	SEE PAGE
	1	1	**6I-4714**	1	SPACER	
	2	1	**6I-4716**	1	KEY	
	3	1	**7D-8048**	1	SEAL-O-RING	
	4	1	**7W-4632**	1	LOCK-SPLIT	
	5	1	**7W-4634**	3	BOLT	
	6	1	**7W-4635**	1	BLOCK-THRUST	
	7	1	**102-9941**	8	BOLT	
	8	1	**148-0199**	1	DAMPER	
	9	1	**184-5484**	1	PULLEY	

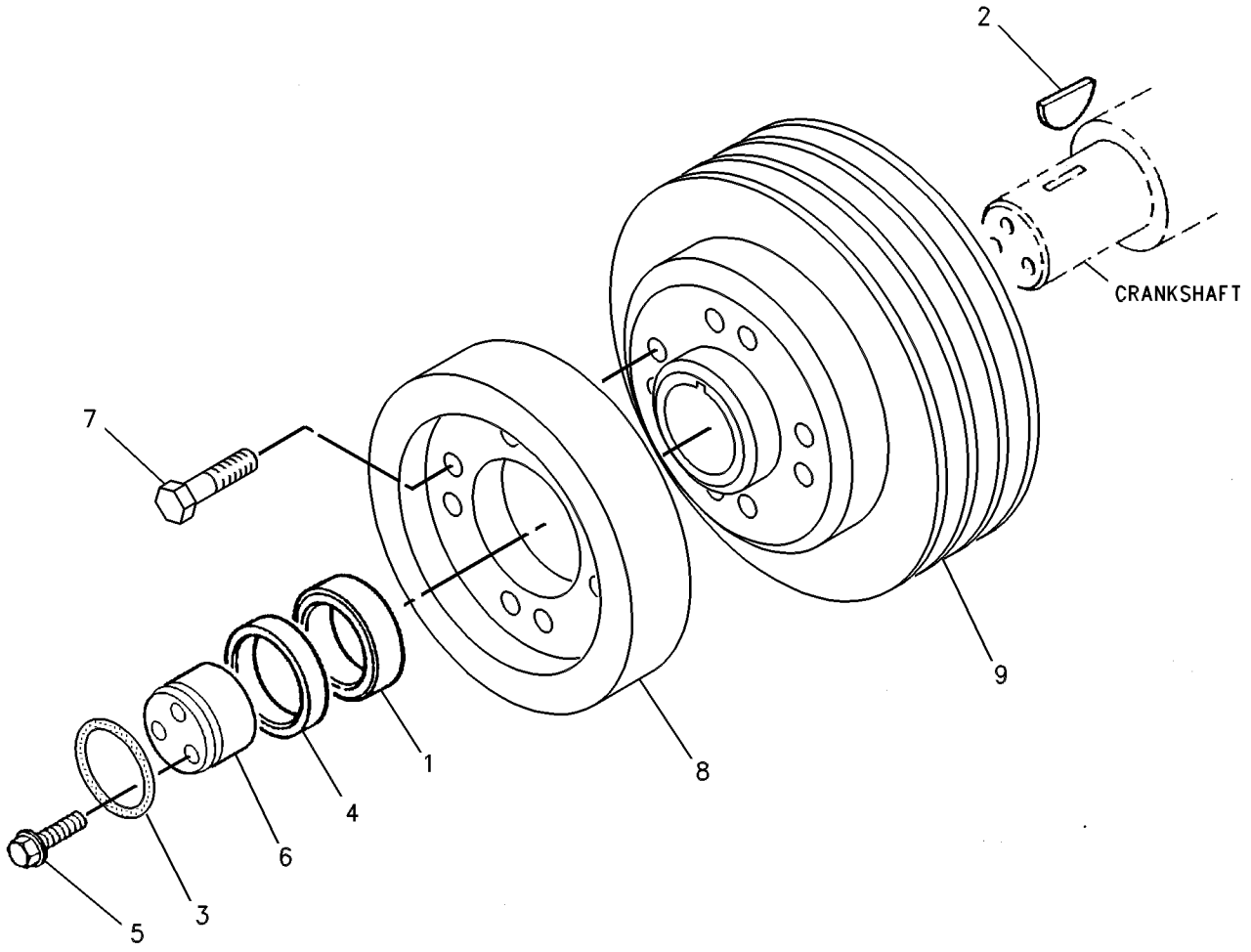

GRAPHIC #1 g00646018

MEMORANDA

BASIC ENGINE

146-8956 ROCKER ARM GP

S/N: CPT1-UP

PART OF 216-8619 VALVE MECHANISM GP

SMCS-1123 **i01548267**

NOTE	REF NO	GRAPHIC REF	PART NUMBER	QTY	PART NAME 1 2 3 4 5 6 (PRODUCT LEVEL)	SEE PAGE
	1	1	**6I-1206**	6	BRACKET-SHAFT	
	2	1	**6I-3717**	1	BOLT (NO.10X12.7MM)	
	3	1	**6I-3718**	1	CONNECTION-FEED	
	4	1	**6V-8183**	12	NUT-FULL (3/8-24 THD)	
B	5	1	**195-7004**	2	SHIM	
	6	1	**006-8606**	2	RING-RETAINING	
	7	1	**067-6087**	4	SPRING-SHAFT	
	8	1	**067-6088**	2	SPRING-SHAFT	
	9	1	**185-1546**	8	SCREW	
	10	1	**138-2054**	2	WASHER	
	11	1	**209-0091**	6	LEVER AS (LH)	
					(EACH INCLUDES)	
	12	1	**139-5514**	1	BUSHING-LEVER	
	13	1	**209-0092**	6	LEVER AS (RH)	
					(EACH INCLUDES)	
	14	1	**139-5514**	1	BUSHING-LEVER	
	15	1	**146-8957**	1	SHAFT AS	
	16	1	**067-6083**	2	PLUG-SHAFT END	
	17	1	**129-3493**	1	FERRULE	

B-USE AS REQUIRED

146-8956 ROCKER ARM GP *(contd.)* **i01548267**

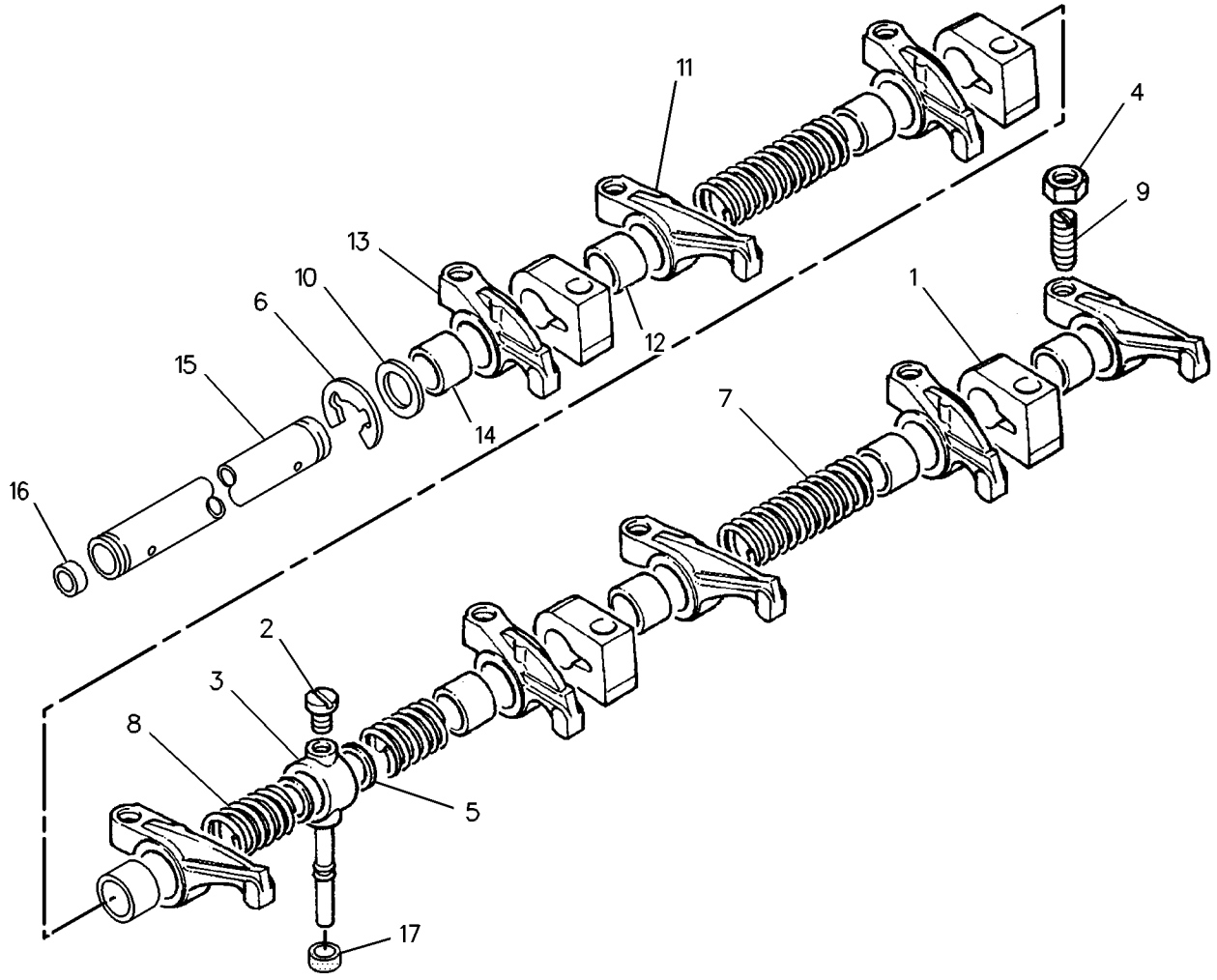

GRAPHIC #1 g00735390

216-8619 VALVE MECHANISM GP

S/N: CPT1-UP

PART OF 179-1797 ENGINE AR-PRIMARY

SMCS-1102, 1121, 1123 **i01725018**

NOTE	REF NO	GRAPHIC REF	PART NUMBER	QTY	PART NAME 1 2 3 4 5 6 (PRODUCT LEVEL)	SEE PAGE
	1	1	**6I-0235**	6	BOLT (M12X1.75X50MM)	
	2	1	**067-6095**	12	ROD	
	3	1	**138-2053**	12	TAPPET	
Y	4	1	**146-8956**	1	ROCKER ARM GP	42

Y-SEPARATE ILLUSTRATION

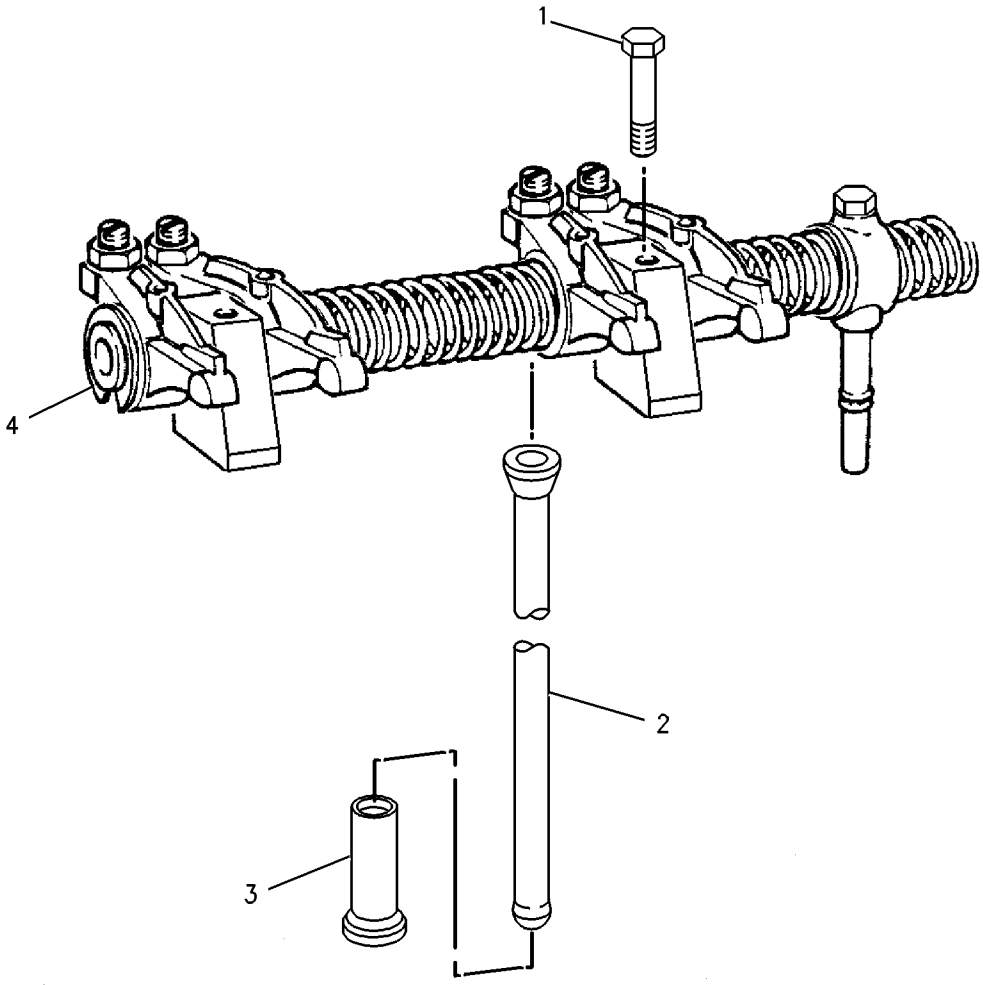

GRAPHIC #1 g00887556

221-5290 FILTER GP-ENGINE OIL

S/N: CPT1-UP

PART OF 179-1797 ENGINE AR-PRIMARY

SMCS-1306, 1308 **i01725106**

NOTE	REF NO	GRAPHIC REF	PART NUMBER	QTY	PART NAME 1 2 3 4 5 6 (PRODUCT LEVEL)	SEE PAGE
	1	1	**1R-0739**	1	FILTER AS-ENGINE OIL	

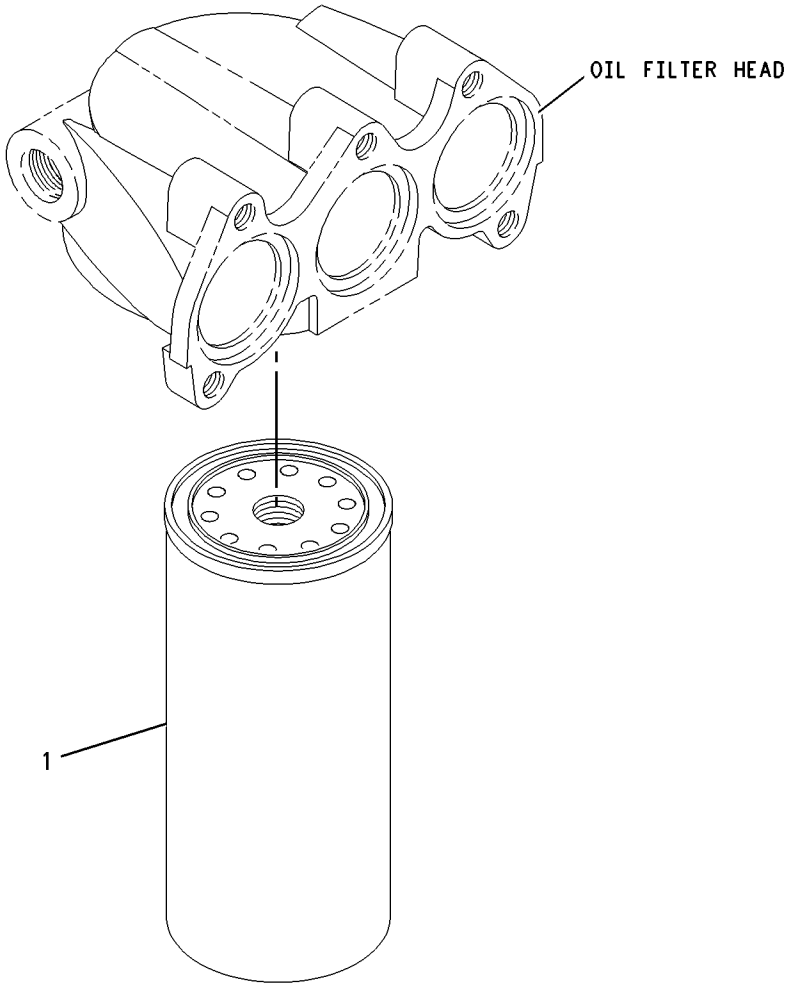

GRAPHIC #1 g00887435

204-4343 GAUGE GP-OIL LEVEL (DIPSTICK)

S/N: DJD1-UP; DBT1-UP

PART OF 176-5223 INSTALLATION AR-ENGINE

SMCS-1326 **i01804749**

NOTE	REF NO	GRAPHIC REF	PART NUMBER	QTY	PART NAME 1 2 3 4 5 6 (PRODUCT LEVEL)	SEE PAGE
	1	1	**6I-1497**	1	SEAL	
	2	1	**166-3988**	1	GAUGE-OIL LEVEL (DIPSTICK)	
	3	1	**166-3990**	1	FILM-INFORMATION	
	4	1	*204-4344*	1	TUBE AS	
	4A	1	**6I-4079**	1	NUT	

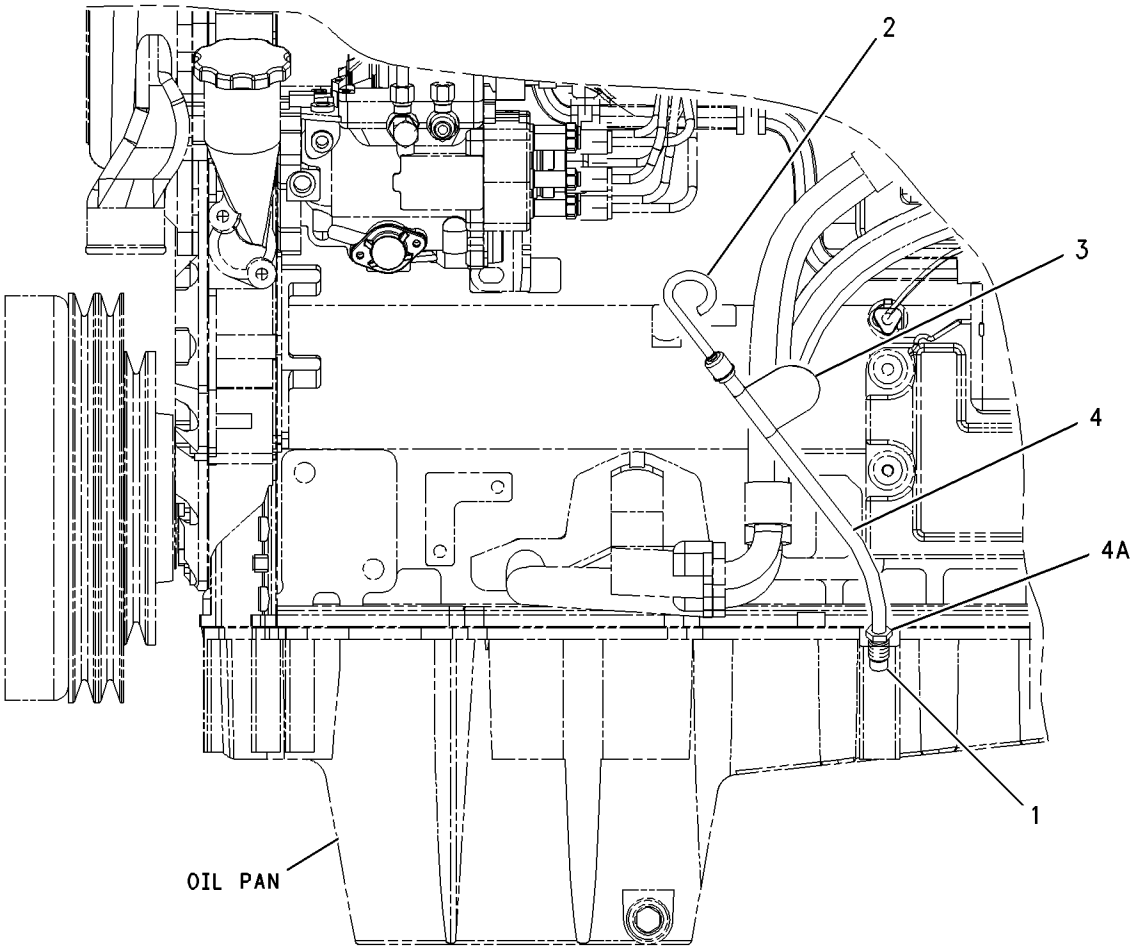

LEFT SIDE VIEW

GRAPHIC #1 g00924573

MEMORANDA

LUBRICATION SYSTEM

220-6148 PUMP GP-ENGINE OIL

S/N: CPT1-UP

PART OF 179-1797 ENGINE AR-PRIMARY

SMCS-1304, 1315 **i01725167**

NOTE	REF NO	GRAPHIC REF	PART NUMBER	QTY	PART NAME 1 2 3 4 5 6 (PRODUCT LEVEL)	SEE PAGE
	1	1	**5C-1796**	1	GASKET	
	2	1	**6I-0260**	6	BOLT (M8X1.25X25MM)	
	3	1	**6I-0291**	1	NUT (M8X1.25)	
	4	1	**6I-4374**	1	BOLT	
	5	1	**067-6933**	1	GASKET	
	6	1	**106-8916**	2	BOLT (M6X16MM)	
	7	1	**112-2370**	1	STUD	
	8	1	**112-7702**	1	HOUSING AS	
	9	1	**6I-0787**	1	RING-RETAINING	
	10	1	**7W-4648**	1	SEAT-SPRING	
	11	1	**7W-4650**	1	SPRING	
	12	1	**7W-4782**	1	PLUNGER	
	13	1	**112-7704**	2	BOLT	
	14	1	**124-3815**	1	BOLT (M8X16X1.25MM)	
	15	1	**183-6318**	1	TUBE AS	
	16	1	**189-5601**	1	SEAL-O-RING	
	17	1	**216-8625**	1	PUMP AS-ENGINE OIL	
	18	1	**220-6151**	1	TUBE-OIL	

220-6148 **PUMP GP-ENGINE OIL** ***(contd.)*** **i01725167**

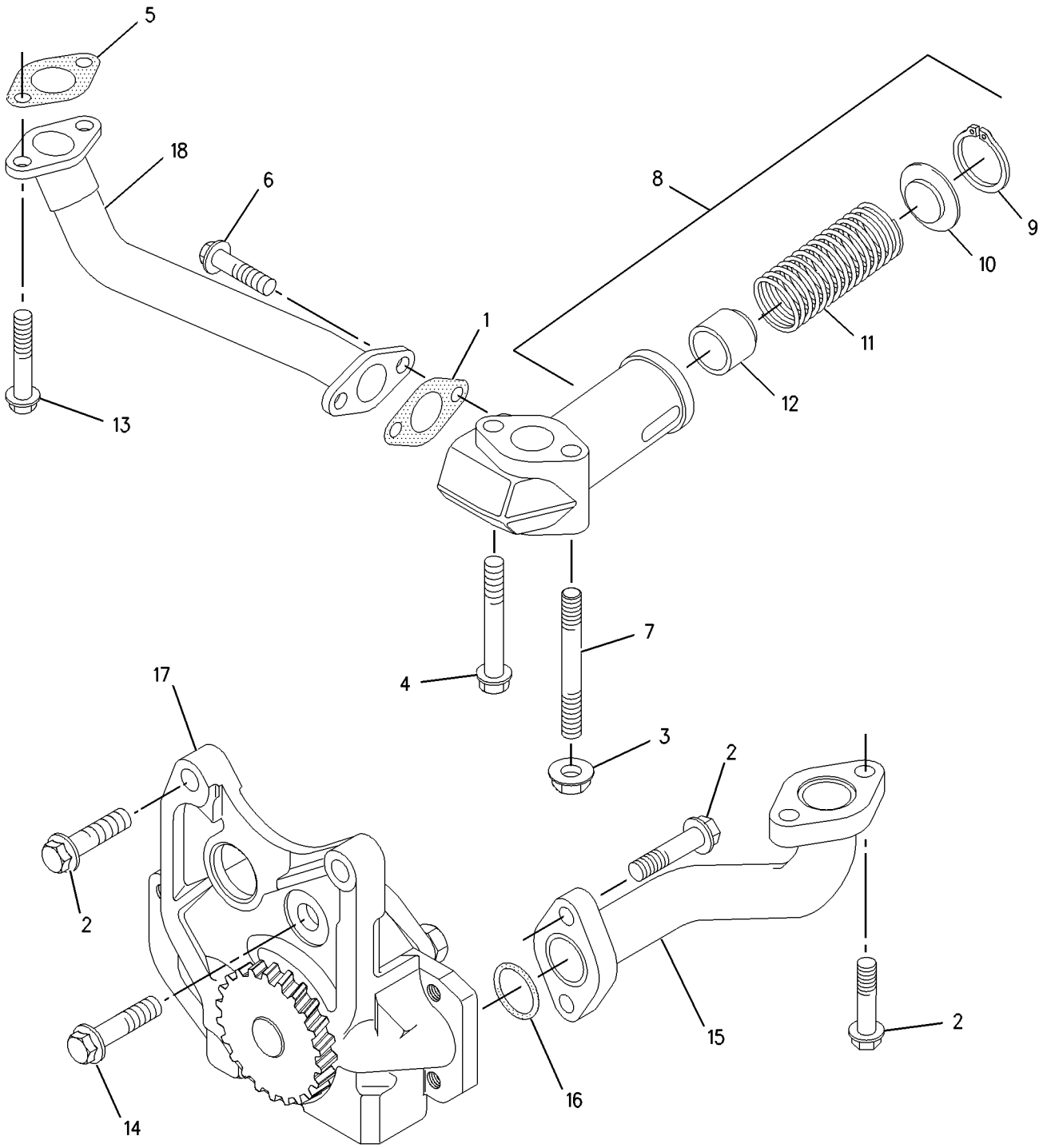

GRAPHIC #1 g00889139

140-8911 VALVE GP-FLUID SAMPLING

S/N: DJD1-UP; DBT1-UP

PART OF 176-5223 INSTALLATION AR-ENGINE

SMCS-7542 **i01834990**

NOTE	REF NO	GRAPHIC REF	PART NUMBER	QTY	PART NAME 1 2 3 4 5 6 (PRODUCT LEVEL)	SEE PAGE
	1	1	**6V-7529**	1	ADAPTER	
	2	1	**8C-3445**	1	CAP-DUST (OIL SAMPLING VALVE)	
	3	1	**8C-3446**	1	VALVE GP-FLUID SAMPLING (ENGINE OIL)	
	4	1	**3J-7354**	1	SEAL-O-RING	

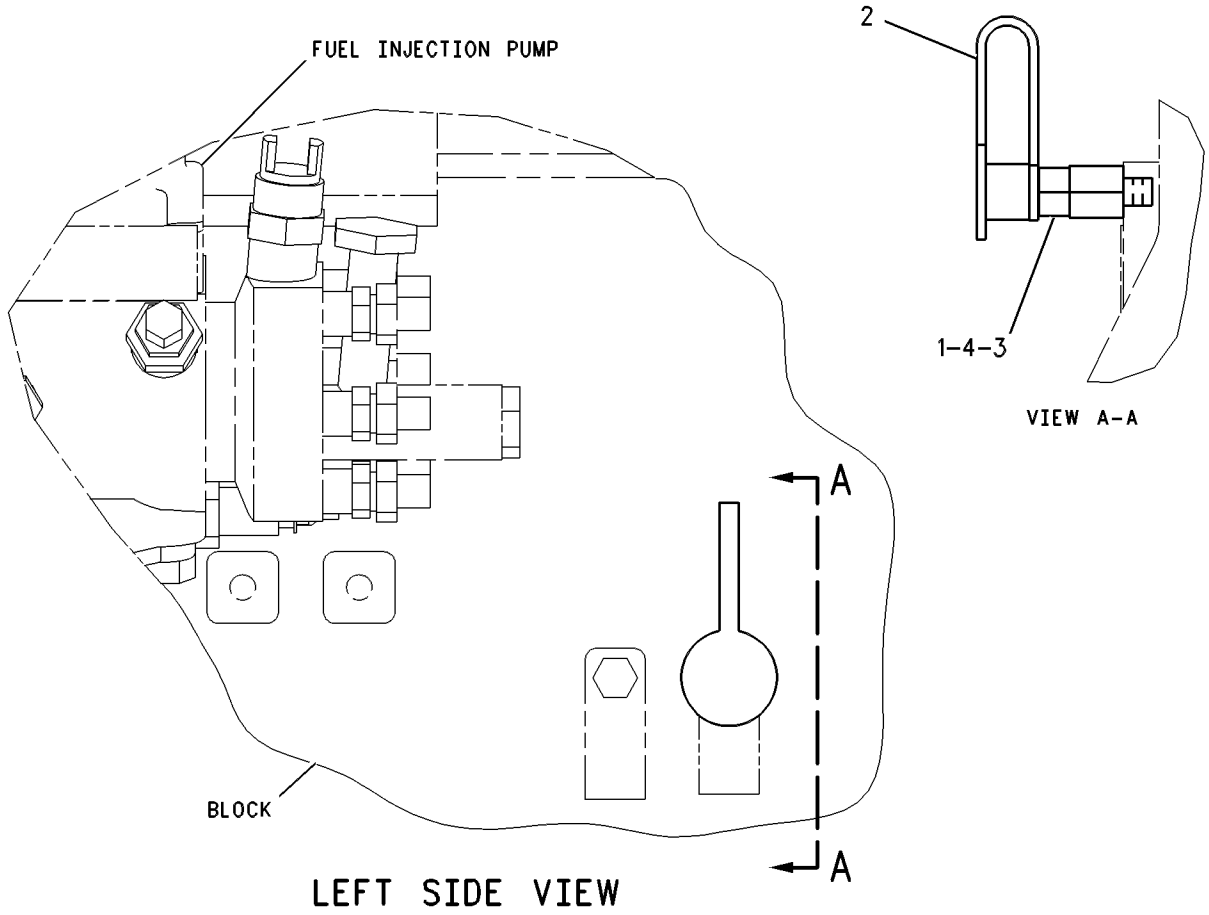

GRAPHIC #1 g00616533

COOLING SYSTEM

216-9740 CONNECTION GP-WATER

S/N: CPT1-UP

PART OF 179-1797 ENGINE AR-PRIMARY

SMCS-1380 **i01843776**

NOTE	REF NO	GRAPHIC REF	PART NUMBER	QTY	PART NAME 1 2 3 4 5 6 (PRODUCT LEVEL)	SEE PAGE
	1	1	**6I-0260**	1	BOLT (M8X1.25X25MM)	
	2	1	**6I-4374**	1	BOLT	
	3	1	**216-9743**	1	CONNECTION AS	
	4	1	**140-7515**	1	SEAL-O-RING (REGULATOR)	
	5	1	**141-6188**	1	SEAL (REGULATOR HOUSING)	
	6	1	**162-0236**	1	RING	
	7	1	**162-0237**	1	PLUG (M8X25MM)	
	8	1	**216-9737**	1	REGULATOR-WATER TEMPERATURE	
	9	1	**171-1078**	1	SPACER	

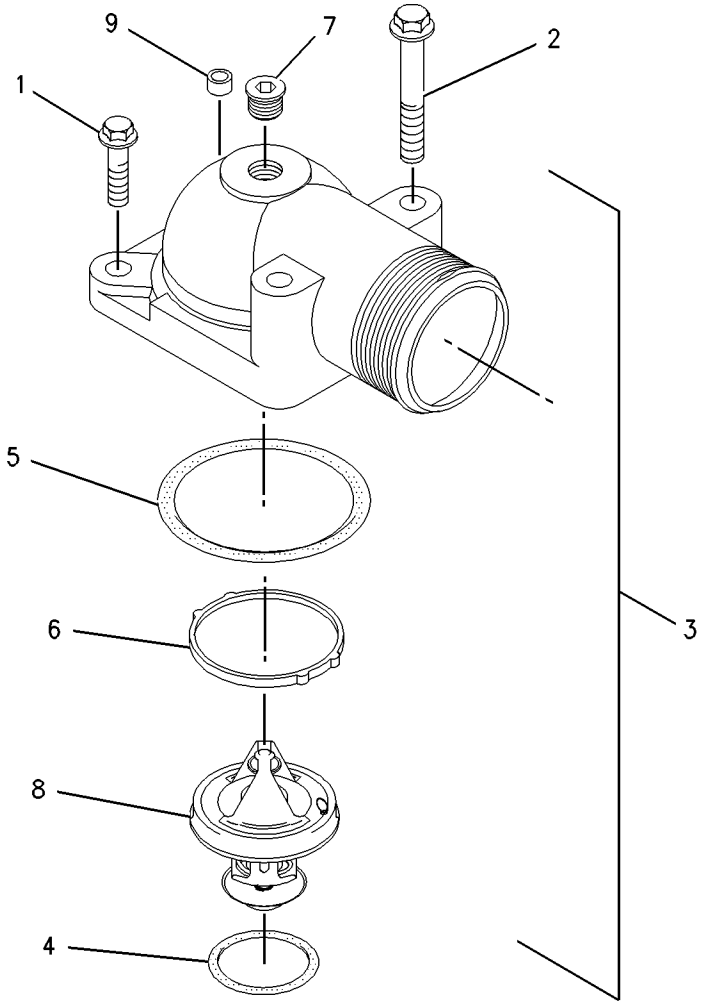

GRAPHIC #1 g00861524

221-5285 COOLER GP-FLTR BASE & ENG OIL

S/N: CPT1-UP

PART OF 179-1797 ENGINE AR-PRIMARY

SMCS-1306, 1378 **i01812069**

NOTE	REF NO	GRAPHIC REF	PART NUMBER	QTY	PART NAME 1 2 3 4 5 6 (PRODUCT LEVEL)	SEE PAGE
	1	1	**2M-9780**	1	SEAL-O-RING	
	2	1	**5F-9657**	3	SEAL-O-RING	
M	3	1	**5P-8196**	1	PLUG	
	4	1	**6I-0260**	6	BOLT (M8X1.25X25MM)	
	5	1	**6I-0291**	4	NUT (M8X1.25)	
	6	1	**6I-4786**	1	GASKET	
	7	1	**7C-1493**	1	VALVE AS-BYPASS (OIL FILTER)	
	8	1	**7W-9028**	1	BASE AS-OIL FILTER	
	8A	1	**2P-2537**	1	STUD-HOLLOW	
	9	1	**9L-9188**	1	SPRING-VALVE	
	10	1	**100-4461**	6	BOLT (M10X50MM)	
M	11	1	**101-3895**	3	BOLT (M8X1.25X35MM)	
	12	1	**124-3815**	14	BOLT (M8X16X1.25MM)	
	13	1	**140-8783**	4	BOLT (M10X45MM)	
	14	1	**162-0757**	2	SEAL	
	15	1	**162-0761**	4	FLANGE	
	16	1	**162-9754**	2	SEAL	
	17	1	**175-3915**	1	COOLER-OIL	
	18	1	**216-9637**	1	HOUSING	
	19	1	**216-9638**	1	GASKET	
	20	1	**216-9641**	1	TUBE	
	21	1	**216-9643**	2	GASKET	
	22	1	**216-9645**	1	TUBE	
	23	1	**220-7171**	1	ADAPTER-HOUSING	
	24	1	**221-5278**	1	HEAD AS	
	25	1	**219-1818**	1	CONNECTION	
	26	1	**221-4520**	1	GASKET	
					AVAILABLE REPAIR KIT(S):	
			219-2172	1	KIT-REPAIR	

M-METRIC PART

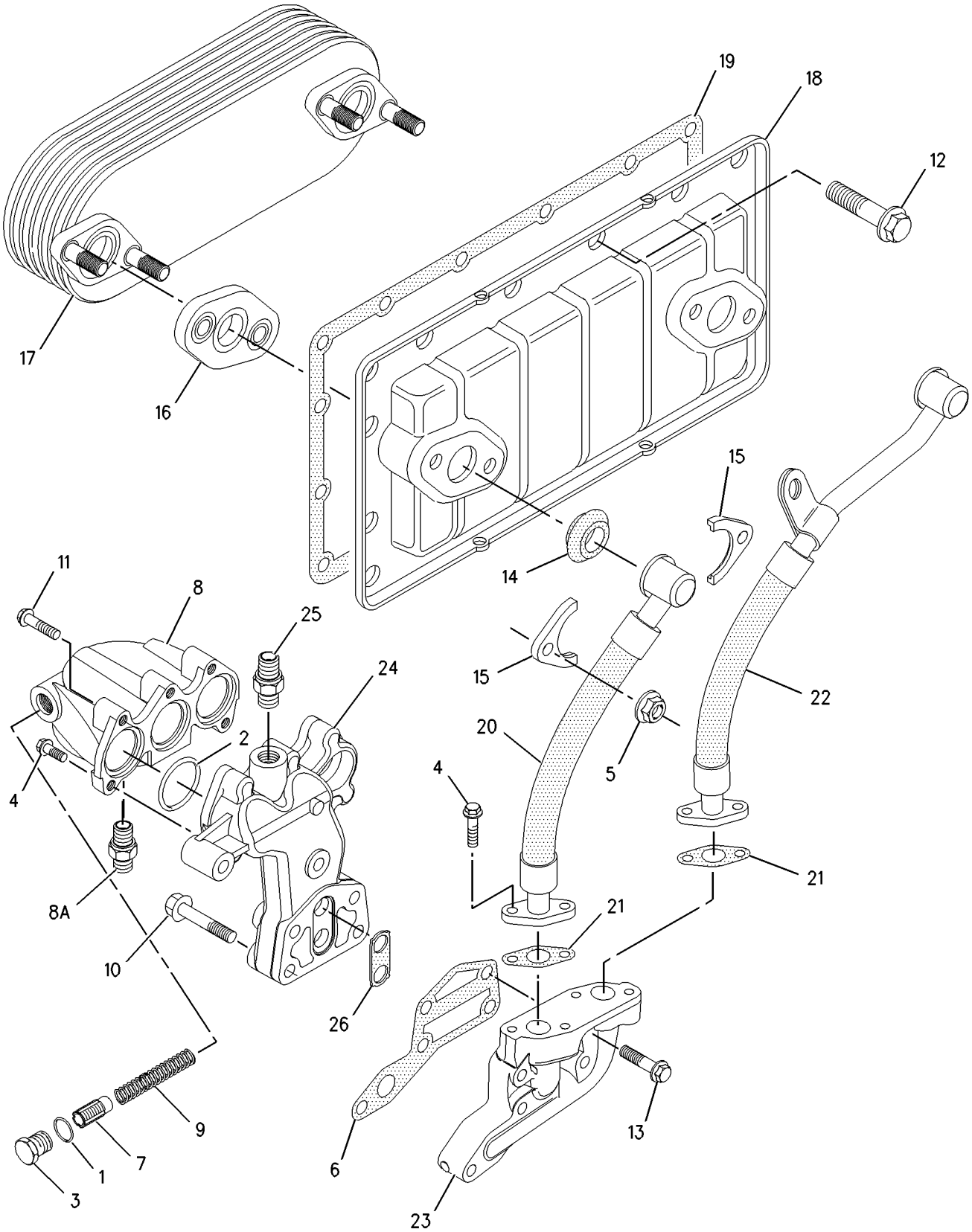

GRAPHIC #1 g00887831

COOLING SYSTEM

185-1045 FAN GP-SUCTION

S/N: DJD1-UP; DBT1-UP

PART OF 176-5223 INSTALLATION AR-ENGINE

SMCS-1356 **i01804747**

NOTE	REF NO	GRAPHIC REF	PART NUMBER	QTY	PART NAME 1 2 3 4 5 6 (PRODUCT LEVEL)	SEE PAGE
	1	1	**185-1046**	1	SPIDER AS-FAN	
M	2	1	**8T-4189**	4	BOLT (M8X1.25X20MM)	
	3	1	**8T-4224**	4	WASHER-HARD (8.8X16X2MM THK)	

M-METRIC PART

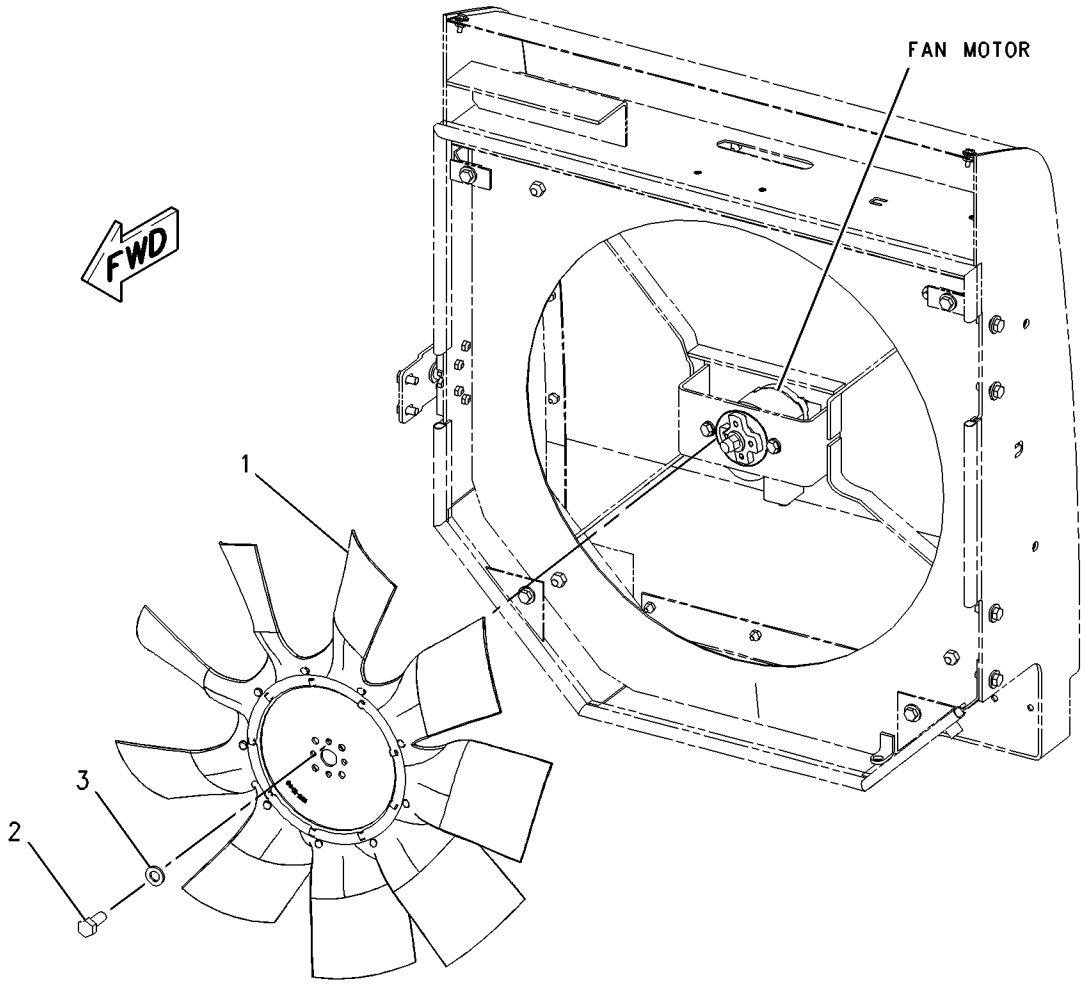

GRAPHIC #1 g00923981

MEMORANDA

COOLING SYSTEM

202-7215 GUARD GP-FAN

S/N: DJD1-UP; DBT1-UP
PART OF 176-5221, 204-4349 CHASSIS AR

SMCS-1360 **i01776412**

NOTE	REF NO	GRAPHIC REF	PART NUMBER	QTY	PART NAME 1 2 3 4 5 6 (PRODUCT LEVEL)	SEE PAGE
	1	1	**5V-8780**	1	KNOB	
	2	1	**8T-4157**	1	STRIKER AS	
		1	**8T-4158**	1	WASHER	
	3	1	**112-5345**	1	LATCH AS-DOOR	
	4	1	**122-6246**	1	PLATE	
	5	1	**174-4246**	1	BRACKET	
	6	1	**202-7216**	1	GUARD AS	
M		1	**6V-9632**	10	NUT-WELD (M6X1 THD)	
		1	**9R-2672**	1	BOSS (M10X20MM)	
	7	1	**202-7857**	1	MOUNT AS	
		1	**5D-9629**	2	ROD	
	8	1	**205-2214**	1	GRILL AS	
M	9	1	**186-0815**	20	BOLT-HEX HEAD (M6X1X20MM)	
	10	1	**186-0817**	20	WASHER-HARD (7X19X2MM THK)	
	11	1	**225-8383**	1	PLATE	
	12	1	**5P-1076**	1	WASHER-HARD (13.5X30X4MM THK)	
M	13	1	**7X-2533**	4	BOLT (M6X1X35MM)	
	14	1	**7X-7729**	12	WASHER (11X25X3MM THK)	
	15	1	**8T-4121**	4	WASHER-HARD (11X21X2.5MM THK)	
M	16	1	**8T-4136**	4	BOLT (M10X1.5X25MM)	
M	17	1	**8T-4137**	8	BOLT (M10X1.5X20MM)	
M	18	1	**8T-4195**	4	BOLT (M10X1.5X30MM)	
	19	1	**8T-4205**	4	WASHER-HARD (7.2X14.5X2MM THK)	
M	20	1	**8T-4244**	1	NUT (M12X1.75 THD)	
D	21	1	**5P-7211**		SEAL (2.7M)	

D-ORDER BY THE METER
M-METRIC PART

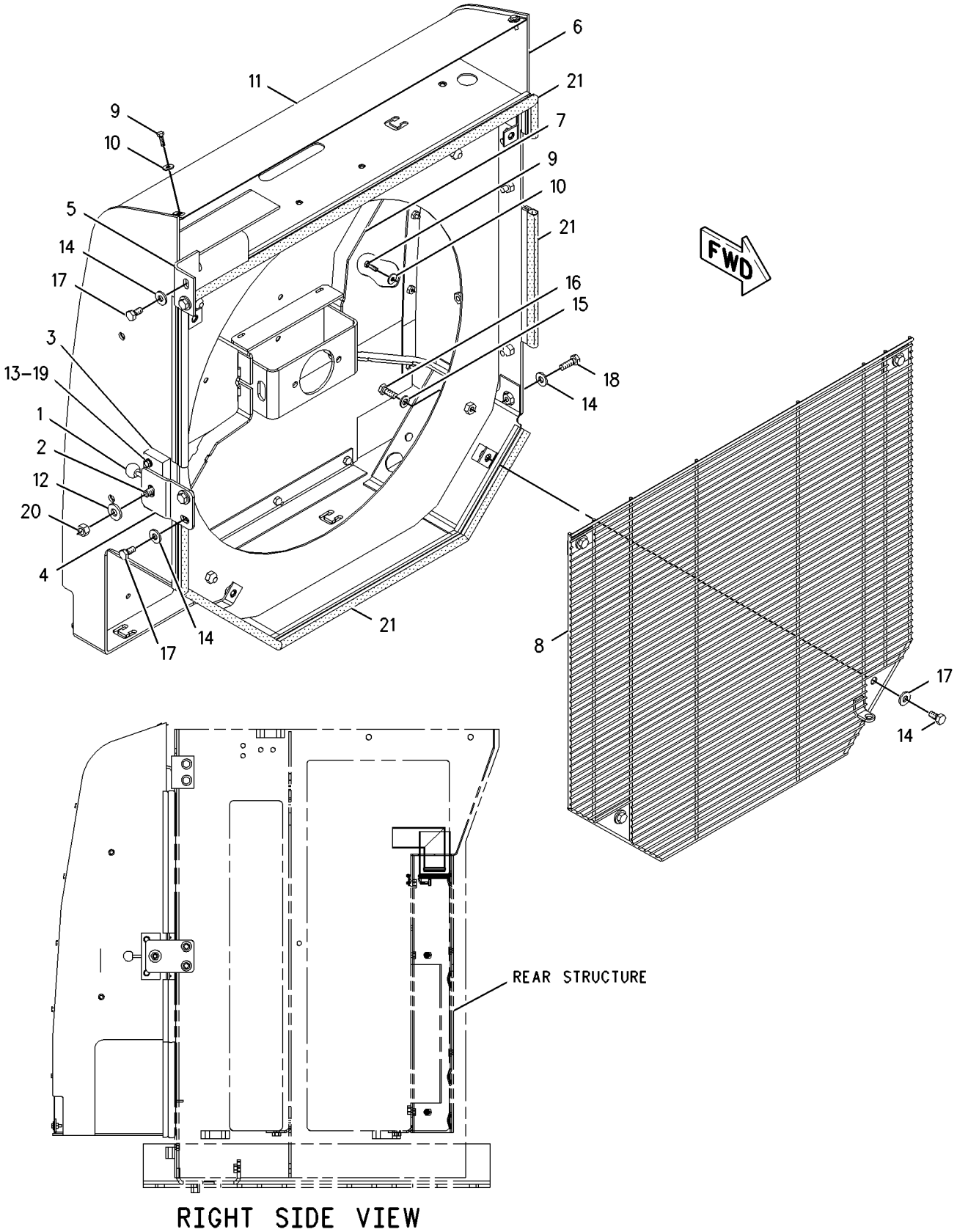

RIGHT SIDE VIEW

GRAPHIC #1 g00916964

COOLING SYSTEM

192-4360 LINES GP-WATER

S/N: DJD1-UP; DBT1-UP
PART OF 203-5949, 203-5950 AXLE AR-OSCILLATING
AN ATTACHMENT

SMCS-1380 **i01781747**

NOTE	REF NO	GRAPHIC REF	PART NUMBER	QTY	PART NAME 1 2 3 4 5 6 (PRODUCT LEVEL)	SEE PAGE
	1	1	**185-1023**	1	HOSE	
	2	1	**185-1024**	1	HOSE	
	3	1	**185-1030**	1	HOSE	
	4	1	**185-1031**	1	HOSE	
	5	1	**214-7458**	1	CLAMP-T'BOLT	
	6	1	**215-4011**	3	CLAMP	
	7	1	**216-6944**	2	CLAMP	
	8	1	**216-6946**	2	CLAMP	

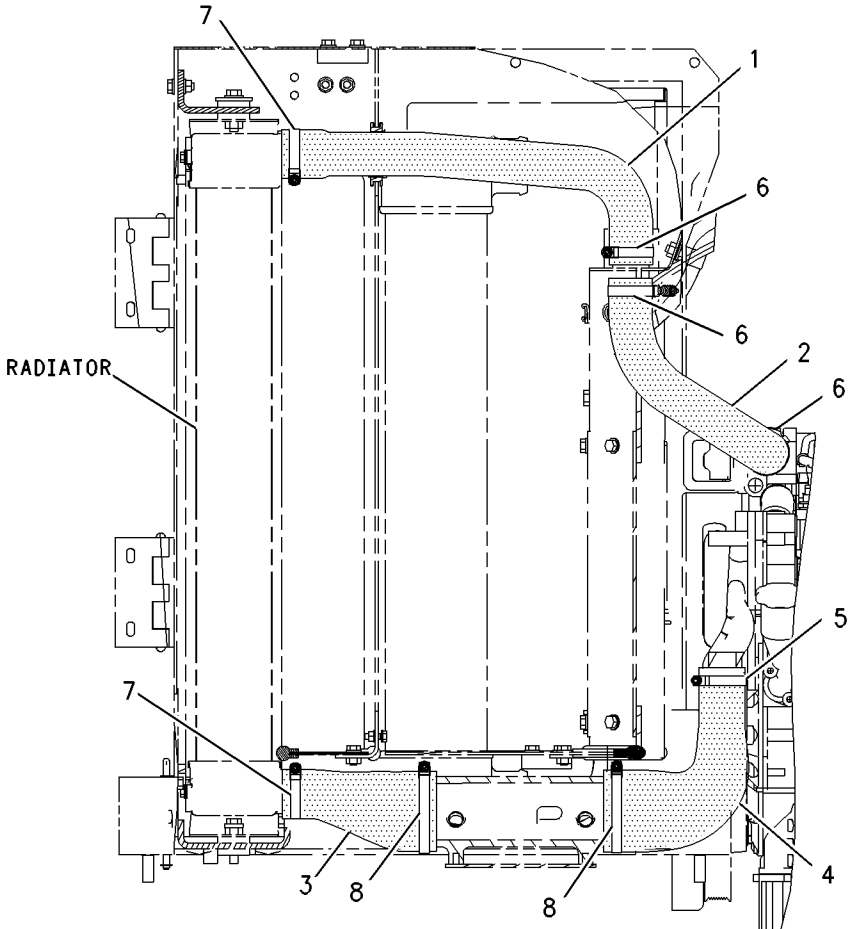

RIGHT SIDE VIEW

GRAPHIC #1 g00914698

MEMORANDA

COOLING SYSTEM

221-5369 PUMP GP-WATER

S/N: CPT1-UP

PART OF 179-1797 ENGINE AR-PRIMARY

SMCS-1361 **i01843790**

NOTE	REF NO	GRAPHIC REF	PART NUMBER	QTY	PART NAME 1 2 3 4 5 6 (PRODUCT LEVEL)	SEE PAGE
	1	1	**6I-0456**	3	BOLT (M8X1.25X45MM)	
	2	1	**6I-0645**	3	BOLT (M8X1.25X25MM)	
	3	1	**6I-4374**	3	BOLT	
	4	1	**6I-4793**	1	BOLT	
	5	1	**100-3751**	2	BOLT (M8X1.25X65MM)	
	6	1	**101-3771**	1	BOLT	
	7	1	**101-3805**	3	BOLT (M8X1.25X90MM)	
	8	1	**201-8745**	1	GASKET (WATER PUMP)	
	9	1	**140-7505**	1	COVER	
	10	1	**140-7506**	1	GASKET-COVER	
	11	1	**140-7512**	1	KIT-HOSE (WATER) (REGULATOR HOUSING)	
	12	1	**127-8286**	2	CLAMP-HOSE	
	13	1	**171-1076**	1	HOUSING AS (REGULATOR)	
	14	1	**172-4844**	1	SEAL-O-RING	
	15	1	**216-9734**	1	PUMP GP-WATER	
					AVAILABLE REPAIR KIT(S):	
			177-8782	1	KIT-WATER PUMP	

221-5369 **PUMP GP-WATER** ***(contd.)*** **i01843790**

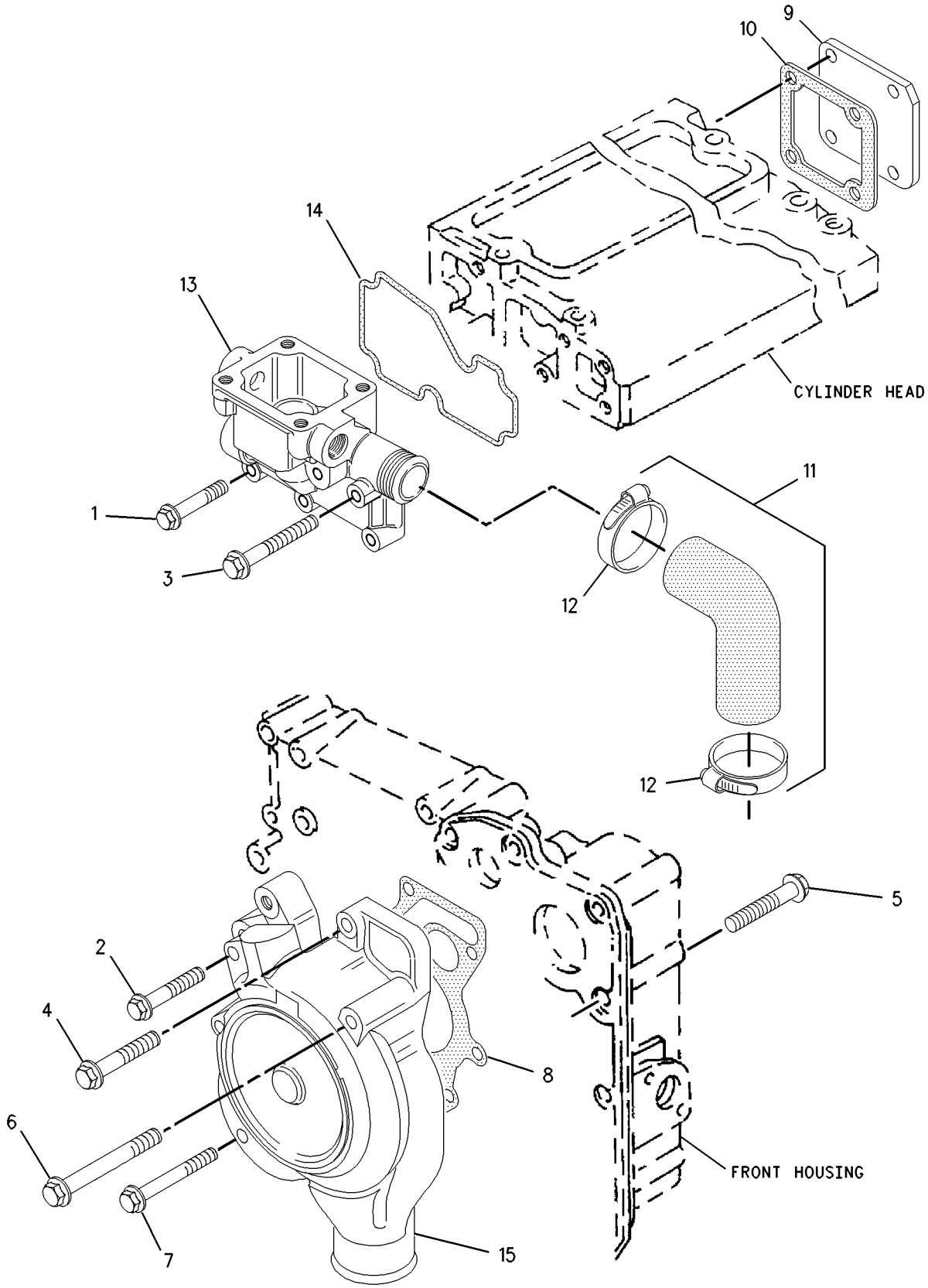

GRAPHIC #1 g00887152

COOLING SYSTEM

185-1015 RADIATOR GP

S/N: DJD1-UP; DBT1-UP

PART OF 176-5223 INSTALLATION AR-ENGINE

SMCS-1353 **i01834991**

NOTE	REF NO	GRAPHIC REF	PART NUMBER	QTY	PART NAME 1 2 3 4 5 6 (PRODUCT LEVEL)	SEE PAGE
E	1	1	**8C-3681**		HOSE (108CM)	
E	1A	3	**8C-3681**		HOSE (178CM)	
E	2	3	**8I-1362**		HOSE (160CM)	
E	3	3	**9X-2133**		HOSE (107CM)	
D	4	1	**5P-5755**		SEAL (.9M)	
D	4A	3	**5P-5755**		SEAL (2.4M)	
D	4B	3	**5P-5755**		SEAL (2.3M)	
D	4C	3	**5P-5755**		SEAL (3.1M)	
D	5	3	**5P-7211**		SEAL (.9M)	
D	5A	3	**5P-7211**		SEAL (.4M)	
D	5B	3	**5P-7211**		SEAL (.3M)	
D	5C	3	**5P-7211**		SEAL (.8M)	
D	5D	3	**5P-7211**		SEAL (.4M)	
D	5E	3	**5P-7211**		SEAL (.4M)	
D	6	3	**5P-7483**		SEAL (.4M)	
	7	3	**5D-1026**	2	CLAMP-HOSE	
	8	2	**6N-6984**	4	MOUNT	
	9	1	**7K-1181**	1	STRAP-CABLE	
	10	2	**7T-8332**	4	MOUNTING	
	11	2	**9M-7958**	2	CLAMP-HOSE	
	12	1	**009-3101**	1	RING-RETAINING	
	13	2	*185-1016*	1	RADIATOR GP	
	13A	2	**185-1027**	4	BRACKET AS	
	13B	2	**225-4287**	1	VALVE GP-RADIATOR DRAIN	
	13C	2	**7X-3393**	8	WASHER-HARD	
M	13D	2	**8T-4189**	8	BOLT (M8X1.25X20MM)	
M	13E	2	**8T-4200**	12	BOLT (M8X1.25X16MM)	
	13F	2	**8T-4224**	12	WASHER-HARD (8.8X16X2MM THK)	
	14	1	**185-1017**	1	AFTERCOOLER AS	
	15	3	*185-1018*	1	TANK GP-COOLANT	
	15A	3	**119-5155**	1	SEAL-O-RING	
	15B	3	**185-1019**	1	TANK-COOLANT	
	15C	3	**185-1043**	1	CAP AS-RADIATOR	
	15D	3	**185-1044**	1	ADAPTER	
	15E	3	**185-1047**	1	ADAPTER	
	15F	3	**219-0669**	1	SEAL-O-RING	
	16	2	**185-1036**	1	BRACKET	
	17	2	**185-1049**	1	PLATE	
	18	1	**191-9177**	1	GUARD AS	
	18A	1	**7W-0815**	1	SPACER	
		1	**092-1136**	2	BAR	
	18B	2	**140-9312**	2	HINGE AS	
	18C	1	**7T-1099**	6	LINK	
M	18D	2	**8T-3612**	1	NUT-WELD (M8X1.25 THD)	
	18E	1	**9C-6809**	5	BLOCK	
	18F	1	**9R-2672**	2	BOSS (M10X20MM)	
	19	2	**191-9182**	1	PLATE	
	20	3	**191-9184**	1	PLATE	
	21	3	**191-9191**	1	PLATE	
	22	3	**191-9192**	1	PLATE	
	23	3	**208-0372**	2	STRAP AS	
	24	1	**215-8978**	1	ROD	
	25	3	**053-0189**	1	GROMMET	
	26	3	**1B-3057**	2	CLIP	
	27	2	**3K-9520**	1	GROMMET	
	28	3	**4D-7388**	2	CLIP	

185-1015 **RADIATOR GP** ***(contd.)*** **i01834991**

NOTE	REF NO	GRAPHIC REF	PART NUMBER	QTY	PART NAME 1 2 3 4 5 6 (PRODUCT LEVEL)	SEE PAGE
M	29	3	**5C-7261**	8	NUT (M8X1.25 THD)	
	30	3	**5P-4116**	8	WASHER-HARD (8.8X20.5X2MM THK)	
	31	3	**5P-6887**	1	GROMMET	
	32	2	**8F-6437**	2	WASHER (13.5X50.8X4.76MM THK)	
	33	1,2,3	**8T-4121**	29	WASHER-HARD (11X21X2.5MM THK)	
	34	1	**8T-4122**	4	WASHER-HARD (17X32X3.5MM THK)	
M	35	1,2	**8T-4133**	10	NUT (M10X1.5 THD)	
M	36	2,3	**8T-4137**	19	BOLT (M10X1.5X20MM)	
M	37	2	**8T-4182**	4	BOLT (M10X1.5X45MM)	
M	38	3	**8T-4189**	4	BOLT (M8X1.25X20MM)	
M	39	1	**8T-4193**	4	BOLT (M16X2X50MM)	
M	40	2	**8T-4194**	2	BOLT (M12X1.75X50MM)	
M	41	1,2	**8T-4195**	6	BOLT (M10X1.5X30MM)	
M	42	1	**8T-4200**	1	BOLT (M8X1.25X16MM)	
	43	2	**8T-4222**	10	WASHER-PLATED (11X32X2.5MM THK)	
	44	2	**8T-4223**	2	WASHER-HARD (13.5X25.5X3MM THK)	
	45	1,3	**8T-4224**	9	WASHER-HARD (8.8X16X2MM THK)	
	46	2	**8T-4226**	4	WASHER-PLATED (10.5X45X3MM THK)	
M	47	3	**8T-4908**	4	BOLT (M8X1.25X25MM)	
	48	1	**9M-8406**	1	CLIP	
M	49	1	**9X-8482**	2	SETSCREW-SOCKET (M12X1.75X70MM)	

D-ORDER BY THE METER
E-ORDER BY THE CENTIMETER
M-METRIC PART

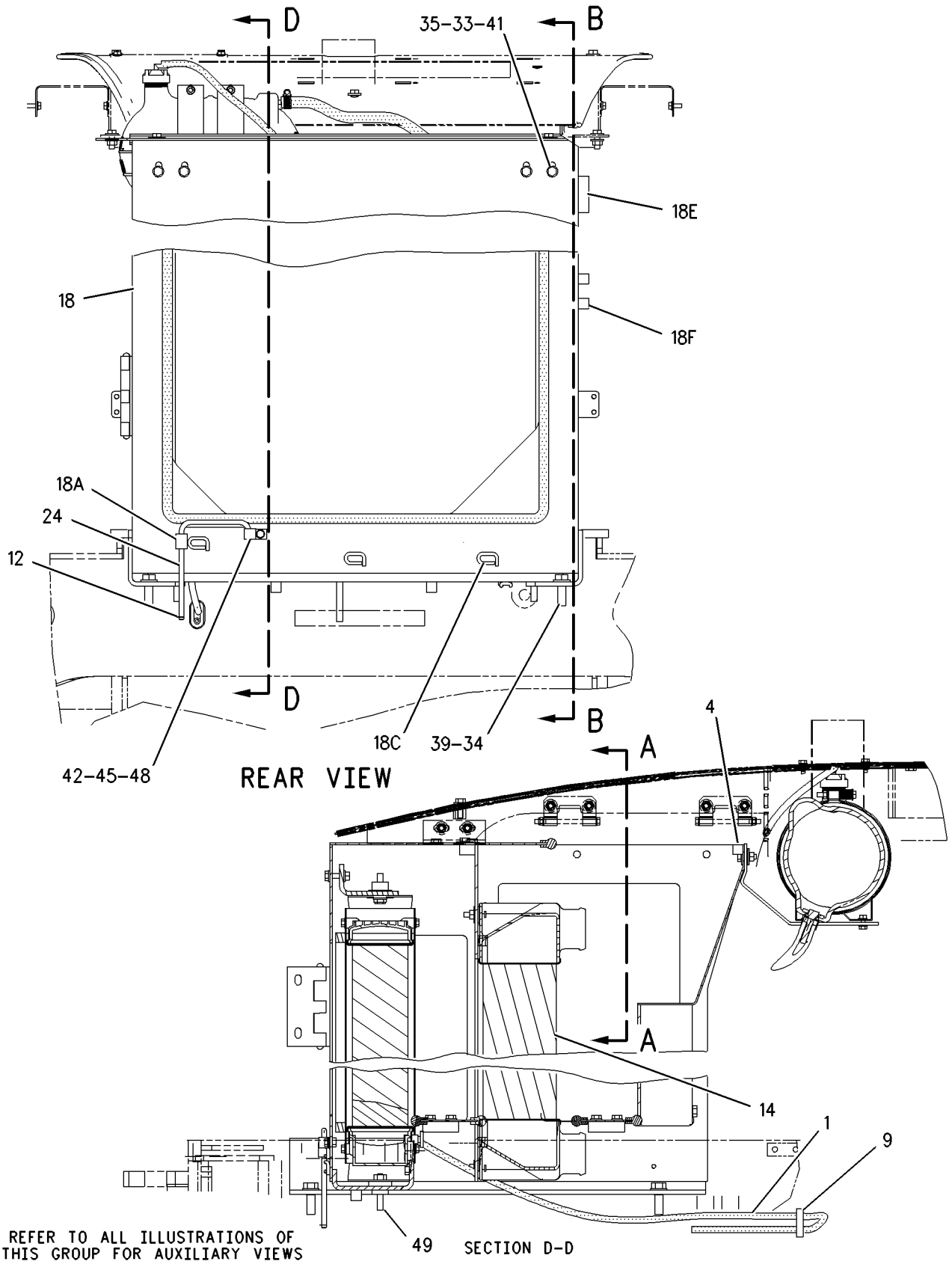

GRAPHIC #1 g00931130

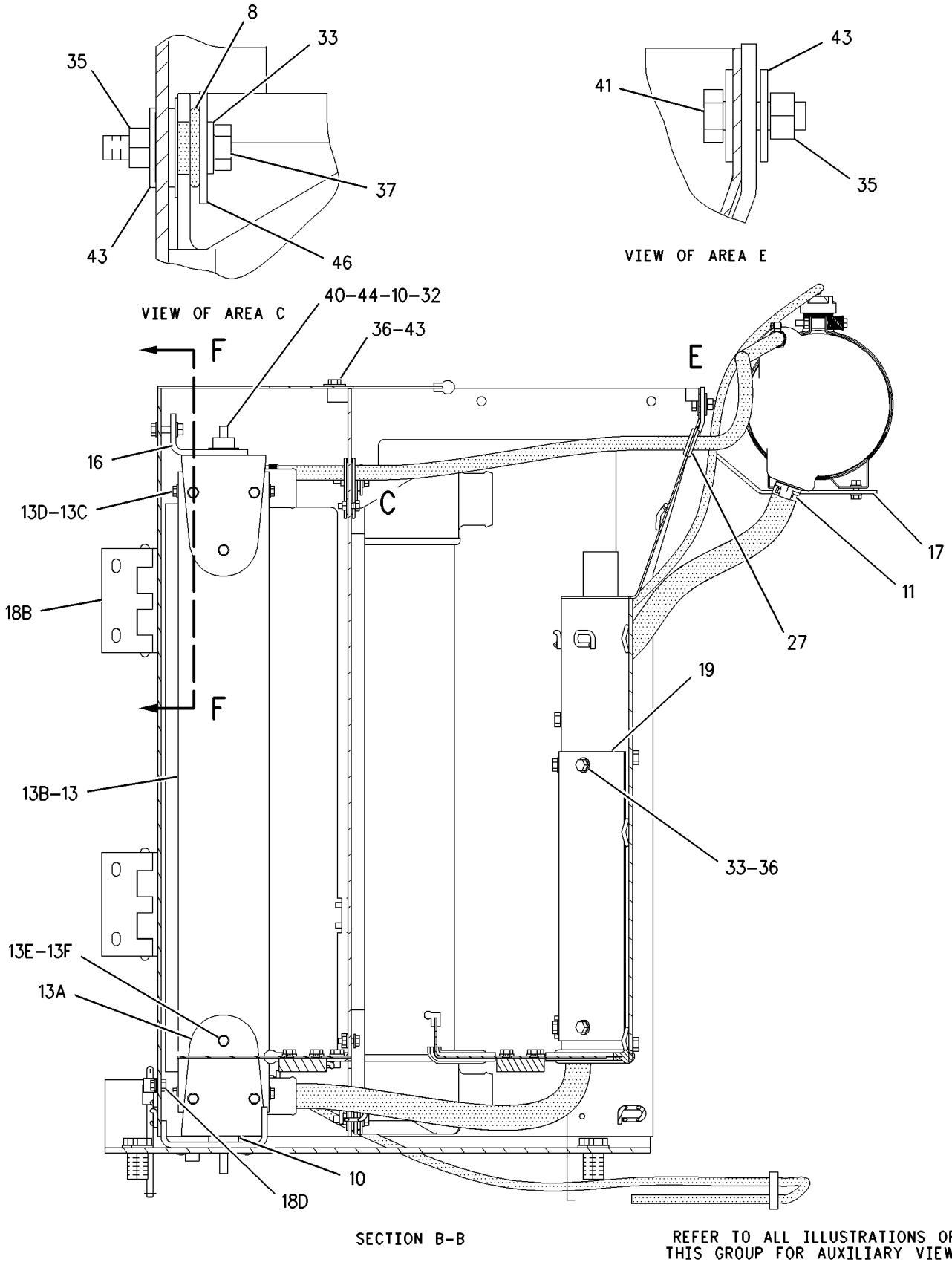

GRAPHIC #2

g00931131

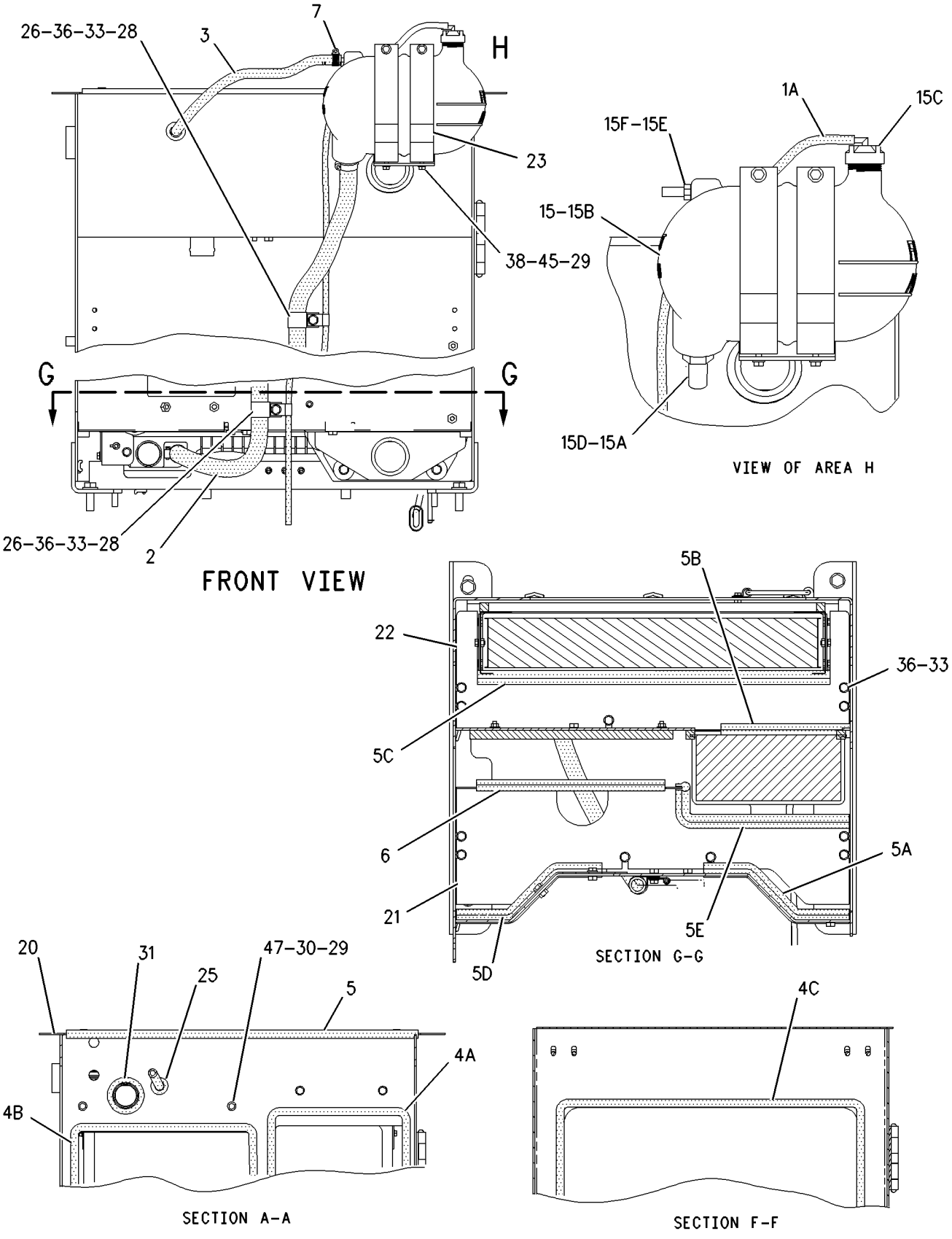

GRAPHIC #3 g00931132

AIR INLET AND EXHAUST SYSTEM

159-3260 AIR CLEANER GP

S/N: DJD1-UP; DBT1-UP
PART OF 204-4329 AIR CLEANER GP
AN ATTACHMENT

SMCS-1051, 1054 **i01820720**

NOTE	REF NO	GRAPHIC REF	PART NUMBER	QTY	PART NAME 1 2 3 4 5 6 (PRODUCT LEVEL)	SEE PAGE
	1	1	**159-6003**	1	COVER AS	
	2	1	**152-7217**	1	FILTER ELEMENT AS-AIR (PRIMARY)	
	3	1	**152-7219**	1	FILTER ELEMENT AS-AIR (SECONDARY)	

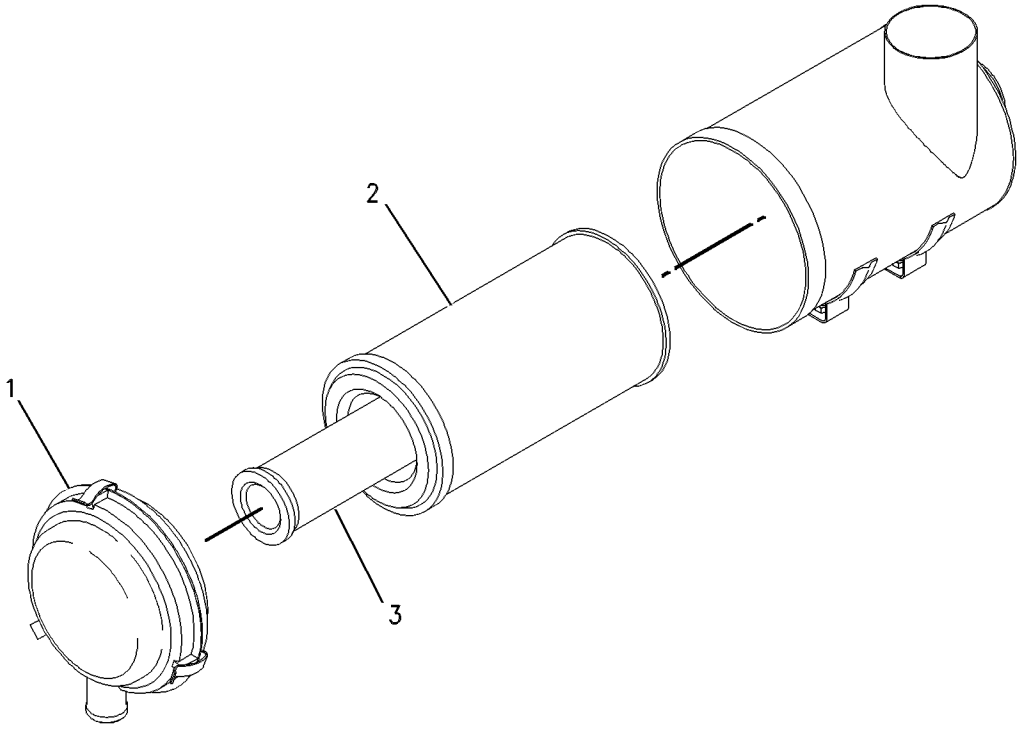

GRAPHIC #1 g00616885

AIR INLET AND EXHAUST SYSTEM

186-2341 AIR CLEANER GP

S/N: DJD1-UP; DBT1-UP
AN ATTACHMENT

SMCS-1051, 1054 **i01818383**

NOTE	REF NO	GRAPHIC REF	PART NUMBER	QTY	PART NAME 1 2 3 4 5 6 (PRODUCT LEVEL)	SEE PAGE
D	1	1	*6V-1363*		HOSE (.9M)	
	2	1	**166-2087**	1	CAP-RAIN (AIR CLEANER)	
	3	1	**4B-4863**	4	WASHER (4.7X11X1.2MM THK)	
M	4	1	**8C-4982**	2	BOLT-SOCKET HEAD (M4X0.7X20 MM)	
	5	1	**123-0275**	1	FITTING	
	6	1	**159-3261**	1	HOSE	
Y	7	1	*199-8124*	1	AIR CLEANER GP	69
	8	1	*218-2792*	1	INDICATOR GP-FILTER CHANGE	
		1	**187-2868**	1	INDICATOR AS (FILTER CHANGE)	
		1	**205-1627**	1	BRACKET	
M	9	1	**5C-8312**	2	NUT (M4X0.7 THD)	
	10	1	**5P-0599**	2	CLAMP	
	11	1	**7D-1728**	2	CLIP	
	12	1	**7X-7729**	4	WASHER (11X25X3MM THK)	
M	13	1	**8T-4136**	4	BOLT (M10X1.5X25MM)	

D-ORDER BY THE METER
M-METRIC PART
Y-SEPARATE ILLUSTRATION

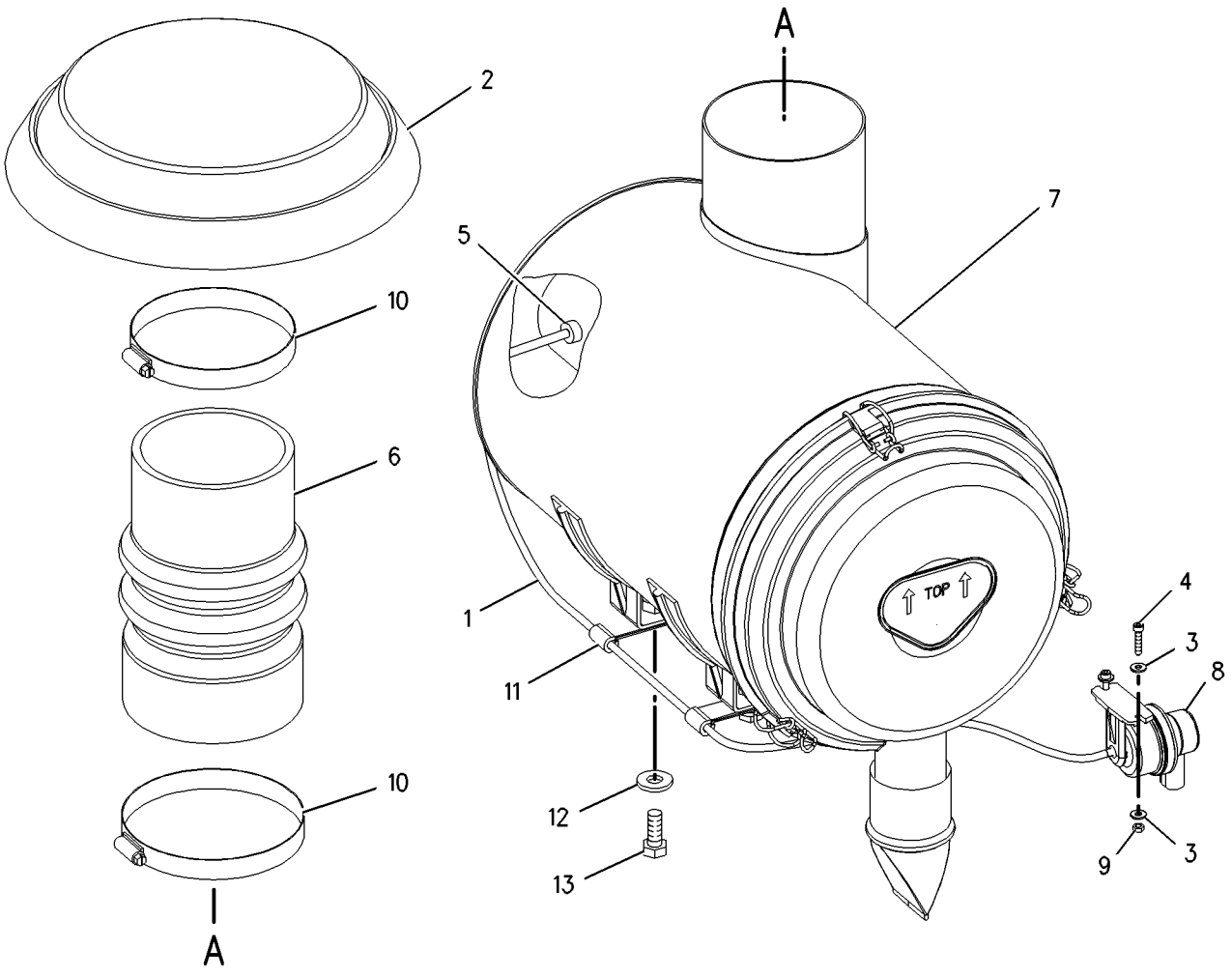

GRAPHIC #1 g00922141

AIR INLET AND EXHAUST SYSTEM

199-8124 AIR CLEANER GP

S/N: DJD1-UP; DBT1-UP
PART OF 186-2341 AIR CLEANER GP
AN ATTACHMENT

SMCS-1051, 1054 **i01741459**

NOTE	REF NO	GRAPHIC REF	PART NUMBER	QTY	PART NAME 1 2 3 4 5 6 (PRODUCT LEVEL)	SEE PAGE
	1	1	**131-8829**	1	VALVE-VACUATOR	
	2	1	**152-7217**	1	FILTER ELEMENT AS-AIR (PRIMARY)	
	3	1	**152-7219**	1	FILTER ELEMENT AS-AIR (SECONDARY)	
	4	1	**152-7224**	1	COVER AS	

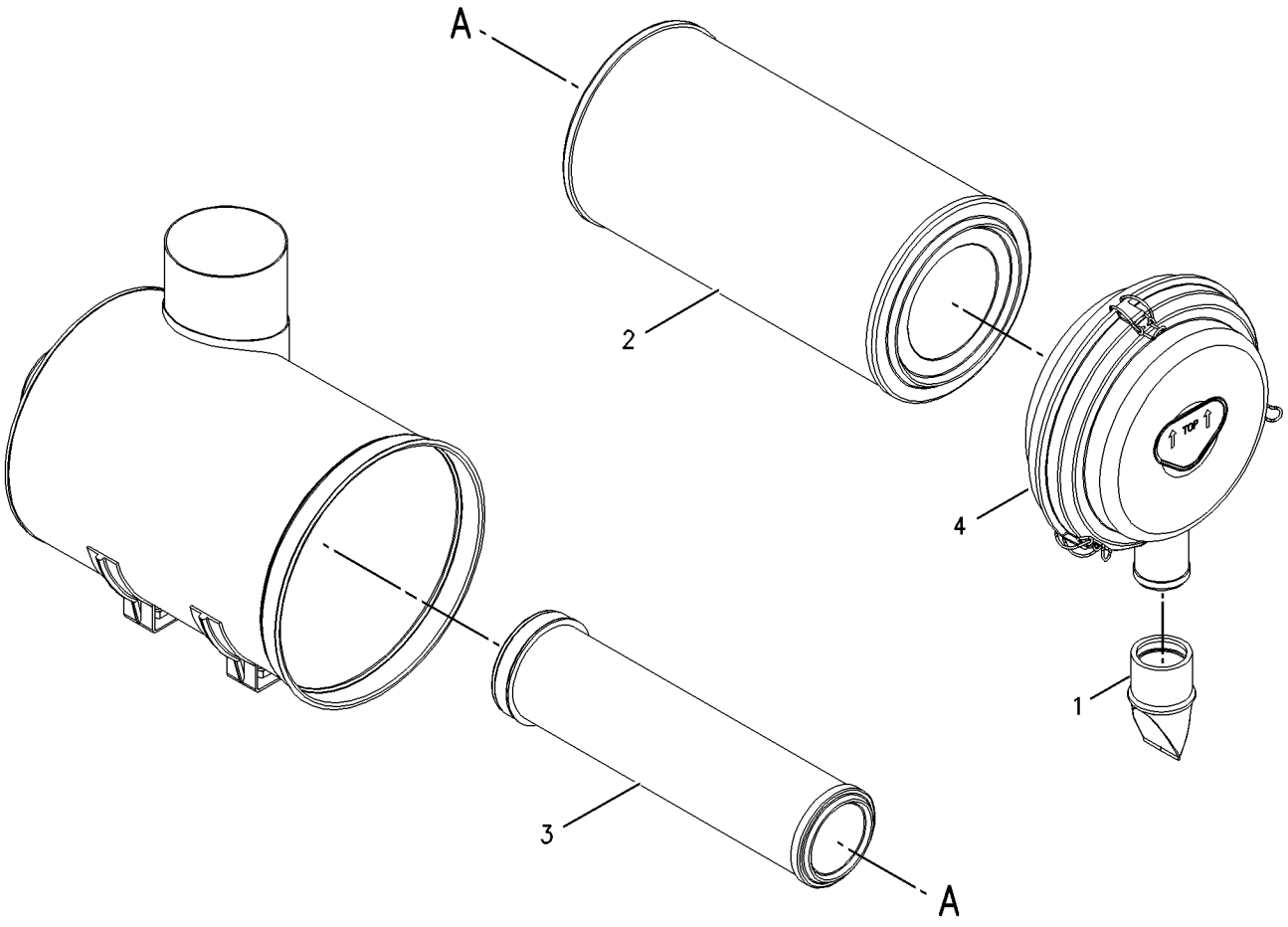

GRAPHIC #1 g00898261

AIR INLET AND EXHAUST SYSTEM

204-4329 AIR CLEANER GP

S/N: DJD1-UP; DBT1-UP
AN ATTACHMENT

SMCS-1051, 1054 **i01798323**

NOTE	REF NO	GRAPHIC REF	PART NUMBER	QTY	PART NAME 1 2 3 4 5 6 (PRODUCT LEVEL)	SEE PAGE
BD	1	1	**6V-1363**		HOSE (1M)	
	2	1	**4B-4863**	4	WASHER (4.7X11X1.2MM THK)	
M	3	1	**8C-4982**	2	BOLT-SOCKET HEAD (M4X0.7X20 MM)	
Y	4	1	**121-7746**	1	PRECLEANER GP	75
	5	1	**123-0275**	1	FITTING	
Y	6	1	**159-3260**	1	AIR CLEANER GP	67
	7	1	**159-3261**	1	HOSE	
	8	1	*218-2792*	1	INDICATOR GP-FILTER CHANGE	
		1	**187-2868**	1	INDICATOR AS	
		1	**205-1627**	1	BRACKET	
M	9	1	**5C-8312**	2	NUT (M4X0.7 THD)	
	10	1	**5P-0599**	2	CLAMP	
	11	1	**7D-1728**	2	CLIP	
	12	1	**7X-7729**	4	WASHER (11X25X3MM THK)	
M	13	1	**8T-4136**	4	BOLT (M10X1.5X25MM)	

B-USE AS REQUIRED
D-ORDER BY THE METER
M-METRIC PART
Y-SEPARATE ILLUSTRATION

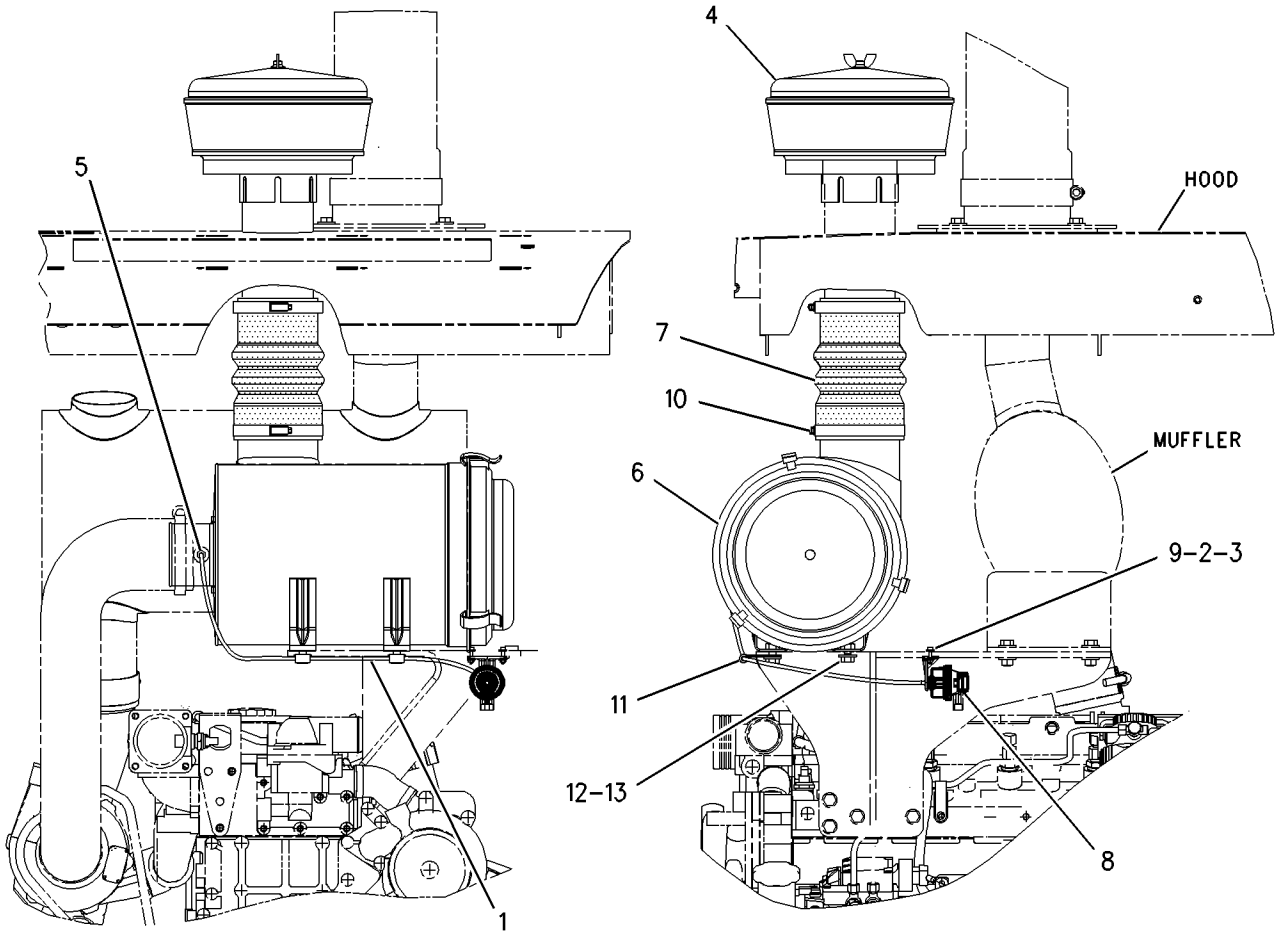

GRAPHIC #1 g00926791

AIR INLET AND EXHAUST SYSTEM

217-0594 ELBOW GP-AIR INLET

S/N: CPT1-UP

PART OF 179-1797 ENGINE AR-PRIMARY

SMCS-1087 **i01725034**

NOTE	REF NO	GRAPHIC REF	PART NUMBER	QTY	PART NAME 1 2 3 4 5 6 (PRODUCT LEVEL)	SEE PAGE
	1	1	**6I-0260**	4	BOLT (M8X1.25X25MM)	
	2	1	**217-0595**	1	CONNECTOR	
	3	1	**217-0596**	1	GASKET	

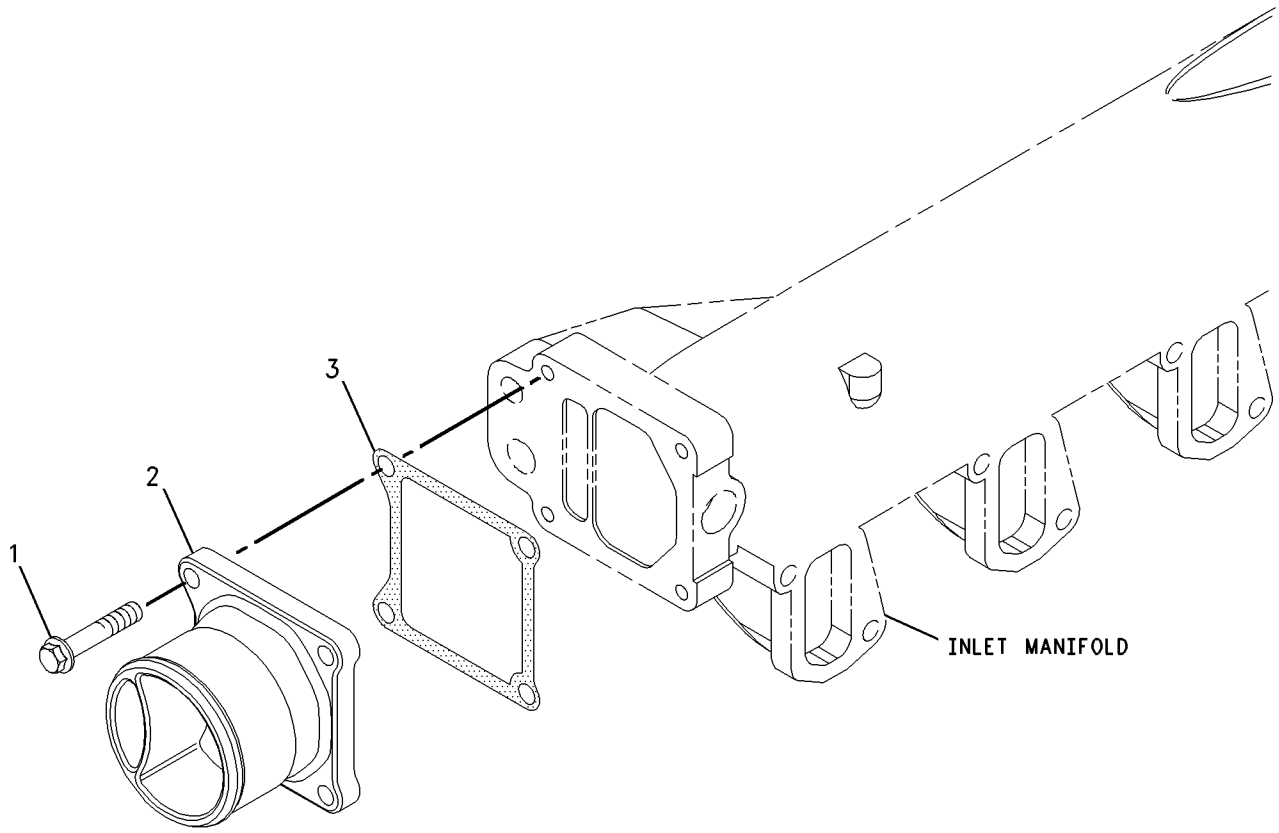

GRAPHIC #1 g00859961

AIR INLET AND EXHAUST SYSTEM

180-9740 EXTENSION GP-EXHAUST

S/N: DJD1-UP; DBT1-UP

PART OF 176-5221, 204-4349 CHASSIS AR

SMCS-1061 **i01773331**

NOTE	REF NO	GRAPHIC REF	PART NUMBER	QTY	PART NAME 1 2 3 4 5 6 (PRODUCT LEVEL)	SEE PAGE
	1	1	**199-4284**	1	SUPPORT AS	
	2	1	**199-4297**	1	PLATE	
	3	1	**199-5117**	1	PIPE AS	
		1	**7E-1397**	1	CLAMP-BENT BOLT	
	4	1	**7X-7729**	4	WASHER (11X25X3MM THK)	
M	5	1	**8T-4195**	4	BOLT (M10X1.5X30MM)	

M-METRIC PART

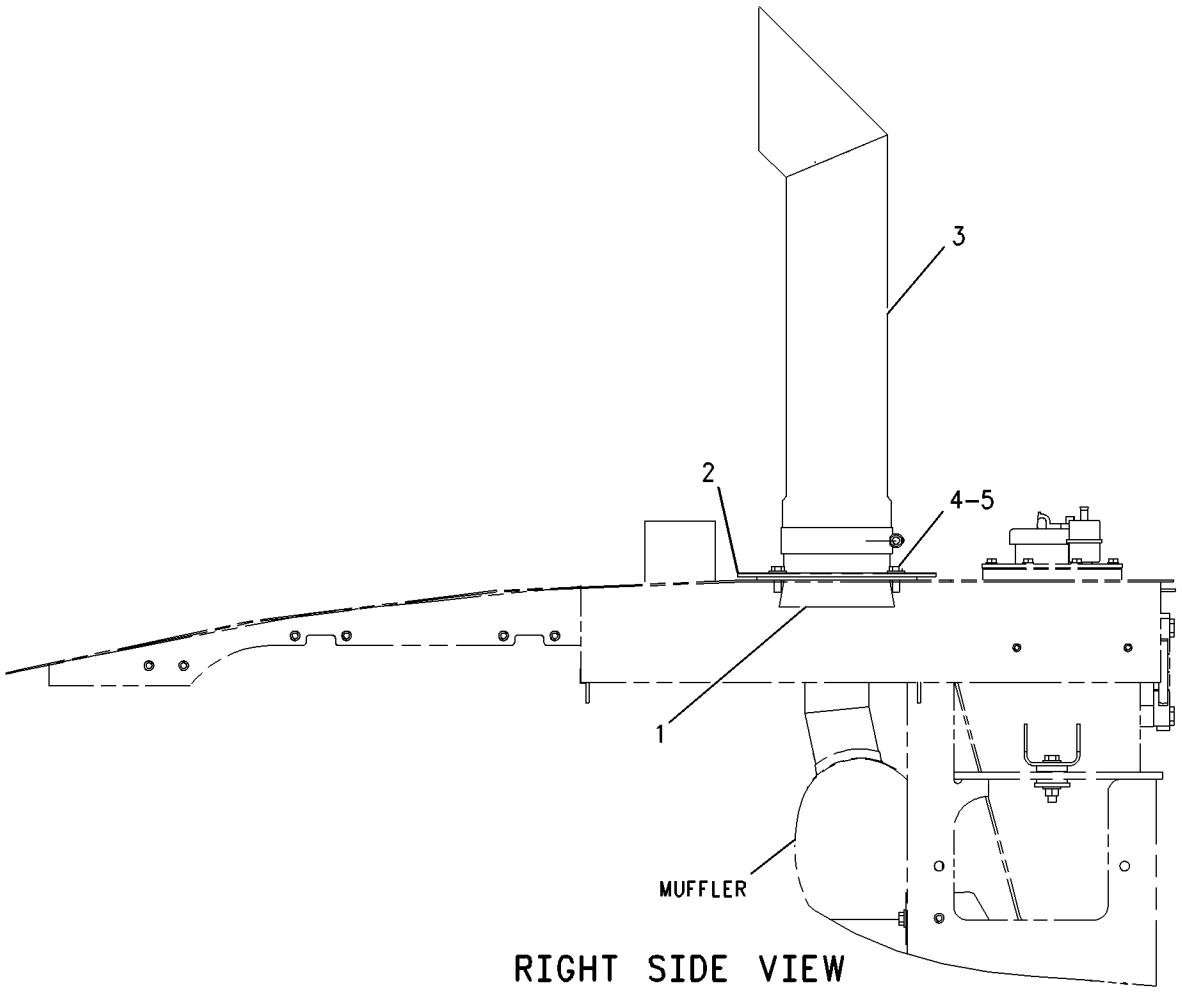

RIGHT SIDE VIEW

GRAPHIC #1 g00915196

AIR INLET AND EXHAUST SYSTEM

192-4339 LINES GP-AIR

S/N: DJD1-UP; DBT1-UP

PART OF 176-5223 INSTALLATION AR-ENGINE

SMCS-1071 **i01804795**

NOTE	REF NO	GRAPHIC REF	PART NUMBER	QTY	PART NAME 1 2 3 4 5 6 (PRODUCT LEVEL)	SEE PAGE
	1	1	**192-4352**	1	HOSE	
	2	1	**196-9442**	1	HOSE-AIR	
	3	1	**208-6055**	1	CLAMP	
	4	1	**215-3112**	1	LINES GP-AIR	
	4A	1	**109-5351**	1	HOSE-HUMP	
	4B	1	**159-2829**	1	HOSE	
	4C	1	**209-4578**	1	CLAMP	
	4D	1	**214-5514**	1	GROMMET	
	4E	1	**214-5515**	1	TUBE	
	4F	1	**215-4012**	1	CLAMP	
	4G	1	**216-4983**	2	CLAMP	
	5	1	**209-4589**	1	CLAMP	
	6	1	**209-4579**	2	CLAMP	

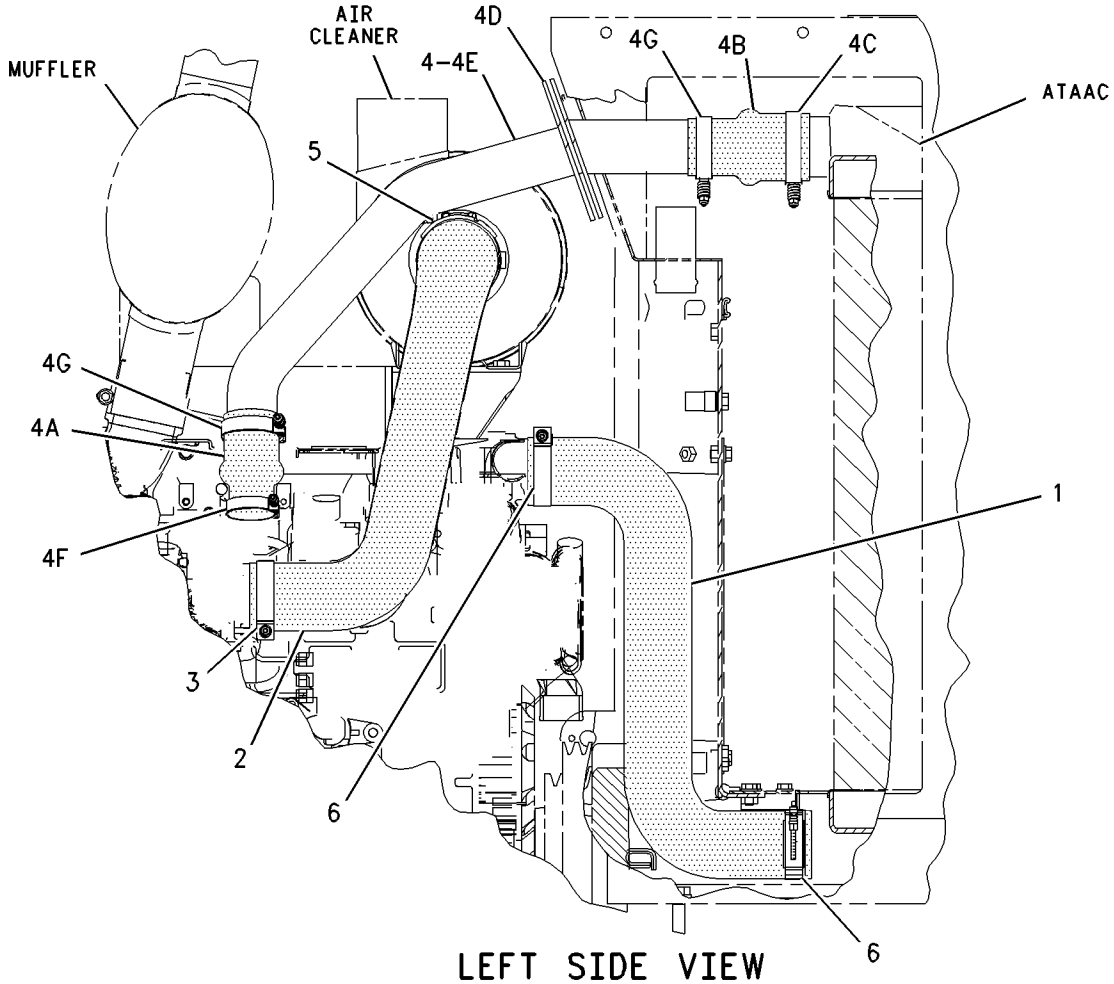

LEFT SIDE VIEW

GRAPHIC #1 g00923481

AIR INLET AND EXHAUST SYSTEM

186-2344 MUFFLER GP

S/N: DJD1-UP; DBT1-UP

PART OF 176-5223 INSTALLATION AR-ENGINE

SMCS-1062 **i01804753**

NOTE	REF NO	GRAPHIC REF	PART NUMBER	QTY	PART NAME 1 2 3 4 5 6 (PRODUCT LEVEL)	SEE PAGE
	1	1	**124-2528**	4	SPACER (10MM THK)	
	2	1	**196-9441**	1	SUPPORT AS	
	2A	1	**9R-2672**	1	BOSS (M10X20MM)	
	3	1	**199-5067**	1	MUFFLER AS	
	3A	1	**9Y-8315**	1	CLAMP-BENT BOLT	
	4	1	**7X-7729**	4	WASHER (11X25X3MM THK)	
	5	1	**8T-4121**	4	WASHER-HARD (11X21X2.5MM THK)	
M	6	1	**8T-4133**	2	NUT (M10X1.5 THD)	
M	7	1	**8T-4195**	2	BOLT (M10X1.5X30MM)	
M	8	1	**8T-4196**	4	BOLT (M10X1.5X35MM)	

M-METRIC PART

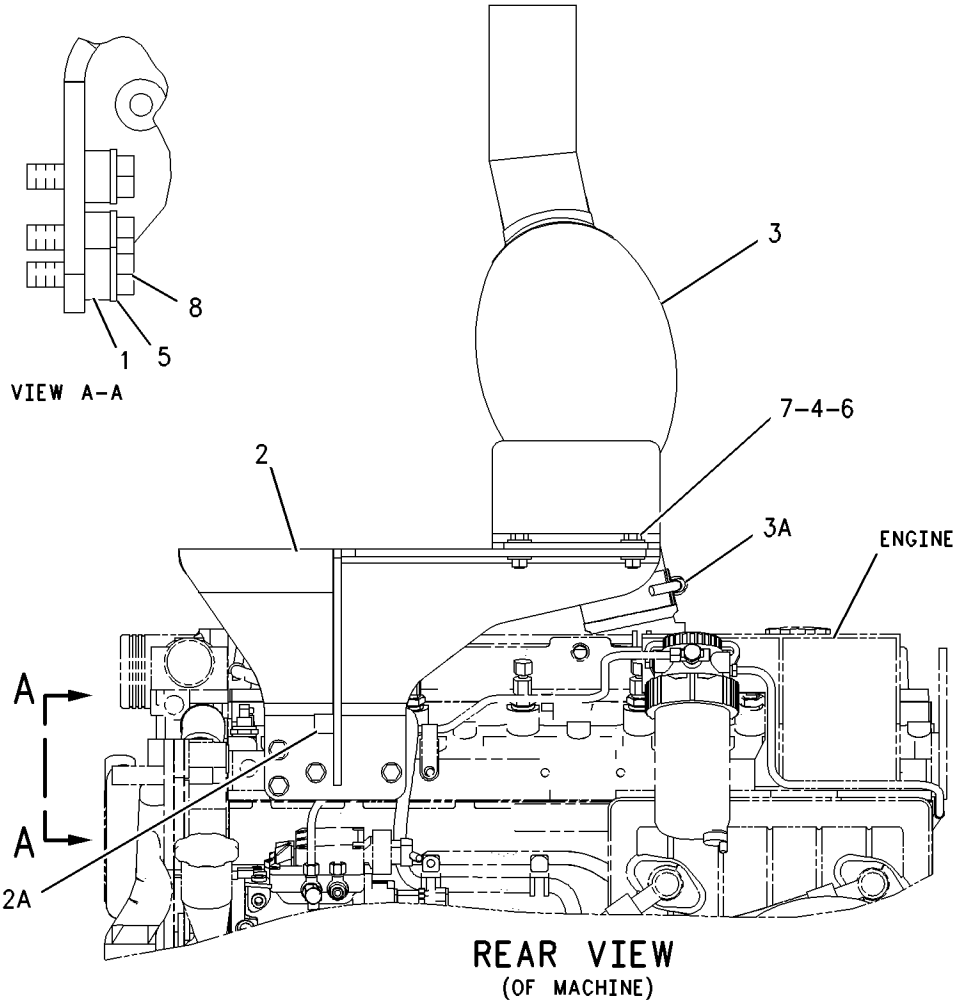

GRAPHIC #1 g00924466

AIR INLET AND EXHAUST SYSTEM

121-7746 PRECLEANER GP

S/N: DJD1-UP; DBT1-UP

PART OF 204-4329 AIR CLEANER GP

FOR USE WITH AIR CLEANERS WITH 101.6 MM DIAMETER INLET. CANNOT BE USED WITH AIR CLEANER RAIN CAP

AN ATTACHMENT

SMCS-1055 **i01728182**

NOTE	REF NO	GRAPHIC REF	PART NUMBER	QTY	PART NAME 1 2 3 4 5 6 (PRODUCT LEVEL)	SEE PAGE
	1	1	**1M-7250**	1	BOWL	
	2	1	**9M-9439**	1	COVER AS	

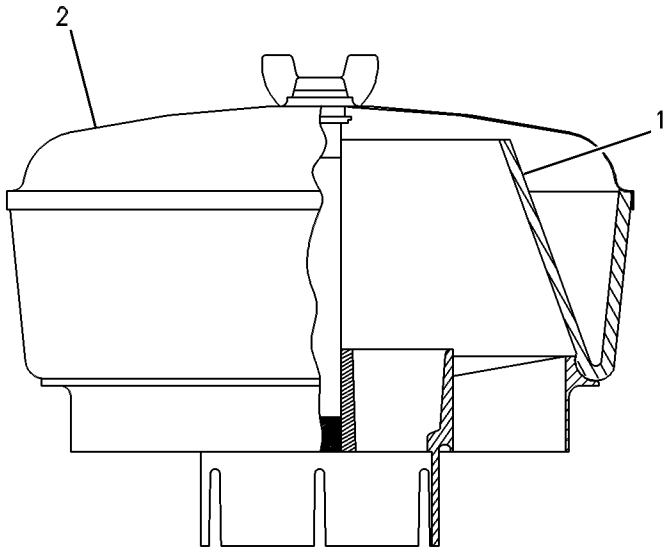

GRAPHIC #1 g00130024

AIR INLET AND EXHAUST SYSTEM

221-6866 TURBOCHARGER GP

S/N: CPT1-UP

PART OF 179-1797 ENGINE AR-PRIMARY

SMCS-1052, 1053 **i01725172**

NOTE	REF NO	GRAPHIC REF	PART NUMBER	QTY	PART NAME 1 2 3 4 5 6 (PRODUCT LEVEL)	SEE PAGE
	1	1	**5D-1026**	2	CLAMP-HOSE	
	2	1	**6I-0217**	2	BOLT (M8X1.25X20MM)	
	3	1	**6I-1132**	1	GASKET	
	4	1	**7W-2628**	1	NUT	
	5	1	**7W-2634**	1	UNION	
	6	1	**032-8048**	1	FITTING-BRASS	
	7	1	**100-4453**	2	STUD	
	8	1	**100-4454**	6	NUT	
	9	1	**100-4466**	1	GASKET	
	10	1	**124-3815**	3	BOLT (M8X16X1.25MM)	
	11	1	**138-2042**	4	NUT	
	12	1	**141-8589**	1	GASKET-TURBOCHARGER	
	13	1	**141-8597**	1	GASKET	
	14	1	**141-8599**	4	STUD	
	15	1	**141-9777**	1	HEAT SHIELD	
	16	1	**146-1841**	18	BOLT	
	17	1	**147-5553**	4	STUD	
	18	1	**160-0149**	1	HOSE	
	19	1	**162-1504**	6	BOLT	
	20	1	**216-2892**	1	BOLT-SOCKET HEAD	
	21	1	**216-8685**	1	TURBOCHARGER GP	
	22	1	**216-8690**	1	TUBE AS	
	23	1	**216-8699**	1	MANIFOLD-INLET	
	24	1	**216-8703**	2	GASKET-MANIFOLD	
	25	1	**216-8705**	6	BOLT	
	26	1	**216-8708**	1	MANIFOLD-EXHAUST	
	27	1	**216-8709**	1	MANIFOLD-EXHAUST	
	28	1	**216-8710**	1	MANIFOLD-EXHAUST	
	29	1	**216-8712**	2	GASKET-MANIFOLD	
	30	1	**221-6863**	1	TUBE AS	
	31	1	**221-6864**	1	ELBOW	

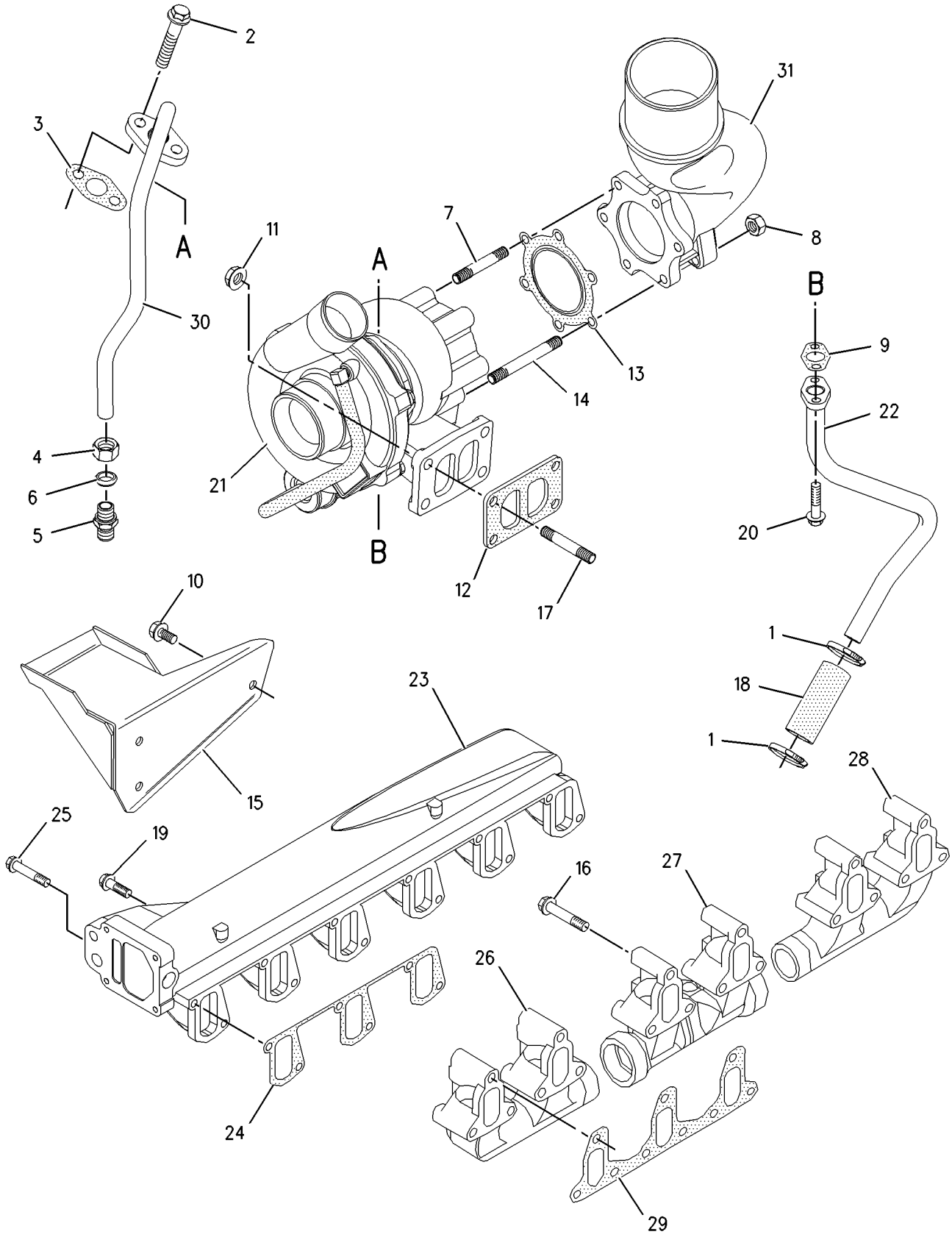

GRAPHIC #1 g00888802

FUEL SYSTEM

217-0640 FILTER GP-FUEL

S/N: CPT1-UP

PART OF 179-1797 ENGINE AR-PRIMARY

SMCS-1261 **i01725043**

NOTE	REF NO	GRAPHIC REF	PART NUMBER	QTY	PART NAME 1 2 3 4 5 6 (PRODUCT LEVEL)	SEE PAGE
	1	1	**6I-0593**	2	BOLT (M10X1.5X30MM)	
	2	1	**141-7844**	1	FILTER ELEMENT AS-FUEL	
	3	1	**145-4501**	1	FILTER ELEMENT-FUEL	

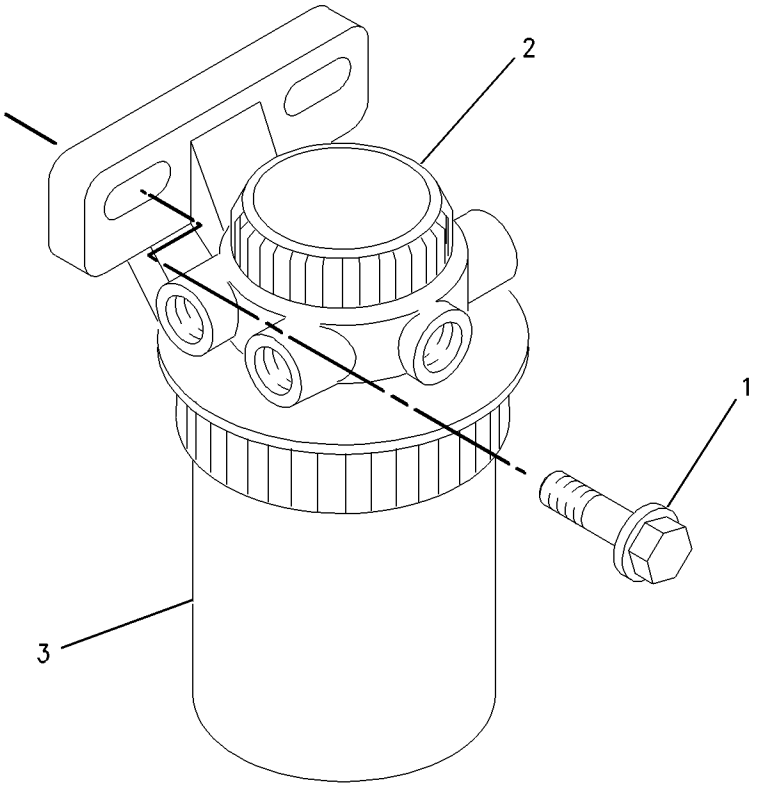

GRAPHIC #1 g00889605

MEMORANDA

FUEL SYSTEM

184-1333 LINES GP-FUEL

S/N: DJD1-UP; DBT1-UP

PART OF 176-5221, 204-4349 CHASSIS AR

SMCS-1274 **i01832333**

NOTE	REF NO	GRAPHIC REF	PART NUMBER	QTY	PART NAME 1 2 3 4 5 6 (PRODUCT LEVEL)	SEE PAGE
	1	1,3	**1P-4278**	6	CLAMP-HOSE	
	3	2	**6G-2263**	1	SPACER (10.5X19X28.5MM THK)	
	4	2	**032-8100**	2	WASHER (.064MM THK)	
	5	2	**033-7849**	2	PLUG	
	7	2	**122-4873**	1	BRACKET AS	
M		2	**8T-3490**	1	NUT-WELD (M10X1.5 THD)	
	9	2	**220-1865**	1	BRACKET AS	
M		2	**8T-3490**	1	NUT-WELD (M10X1.5 THD)	
Y	10	1	**220-5557**	1	SEPARATOR GP-WATER	93
	11	2	**226-9424**	2	GROMMET	
	12	2	**4D-6466**	2	CLIP	
	13	3	**4K-8302**	1	CLIP	
M	14	2	**5C-7261**	1	NUT (M8X1.25 THD)	
	15	2	**5P-9085**	2	CLIP	
	16	2,3	**6D-3479**	2	CLIP	
	17	2	**7X-7729**	3	WASHER (11X25X3MM THK)	
	18	2,3	**8T-4121**	4	WASHER-HARD (11X21X2.5MM THK)	
M	19	2	**8T-4136**	2	BOLT (M10X1.5X25MM)	
M	20	3	**8T-4137**	1	BOLT (M10X1.5X20MM)	
M	21	2	**8T-4189**	1	BOLT (M8X1.25X20MM)	
M	22	2	**8T-4196**	3	BOLT (M10X1.5X35MM)	
	23	2	**8T-4224**	2	WASHER-HARD (8.8X16X2MM THK)	
M	24	2	**8T-6466**	1	BOLT (M10X1.50X60MM)	
E	25	1	**8C-3681**		HOSE (80CM)	
E	26	1	**5P-1420**		HOSE (182CM)	
E	27	1	**5P-1420**		HOSE (165CM)	
E	28	3	**5P-1420**		HOSE (158CM)	
	29	2	*152-0983*	2	TUBE AS	
	30	2	**122-0473**	2	SPACER (6.5MM THK)	

E-ORDER BY THE CENTIMETER
M-METRIC PART
Y-SEPARATE ILLUSTRATION

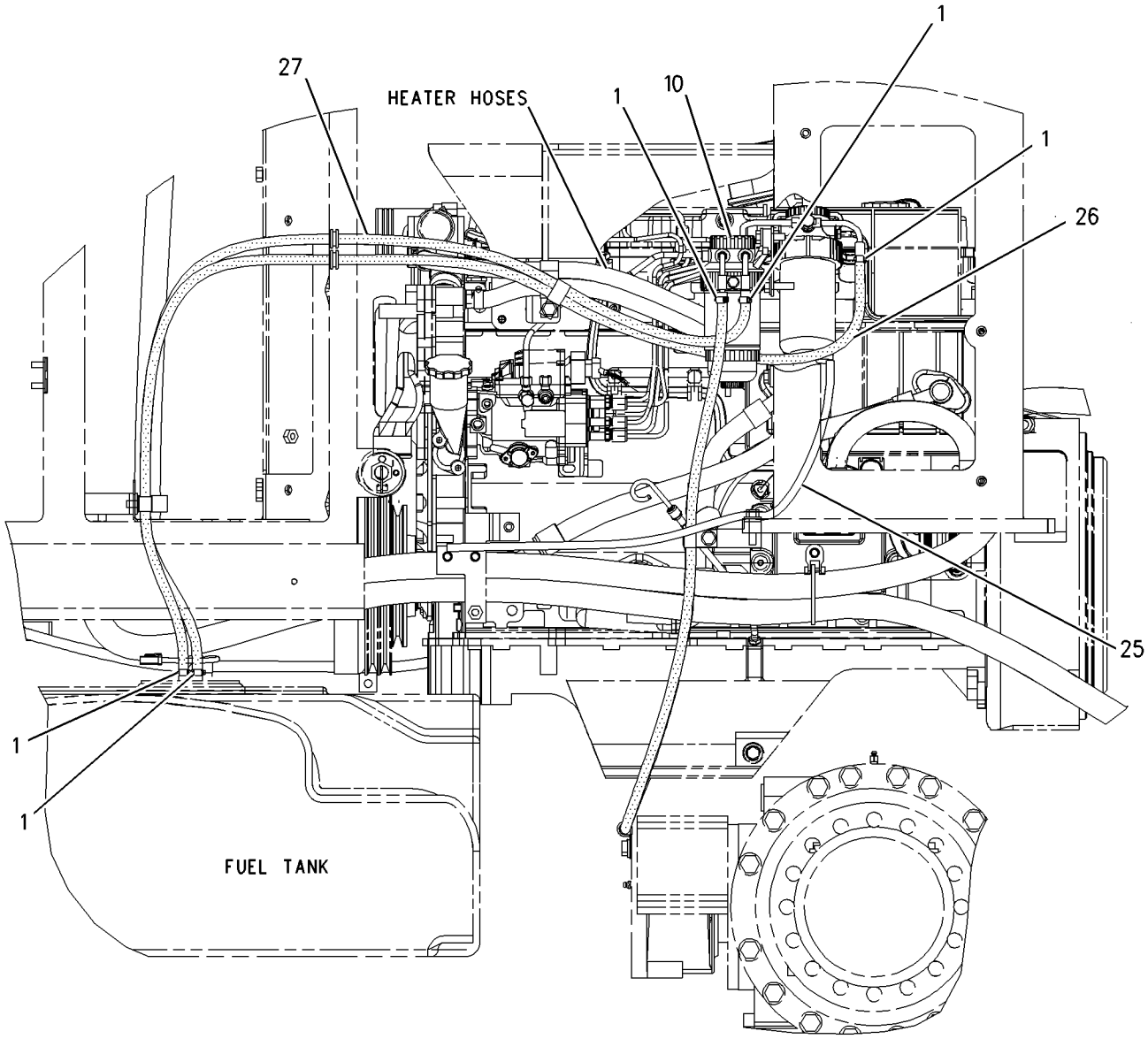

RIGHT SIDE VIEW

GRAPHIC #1 g00920714

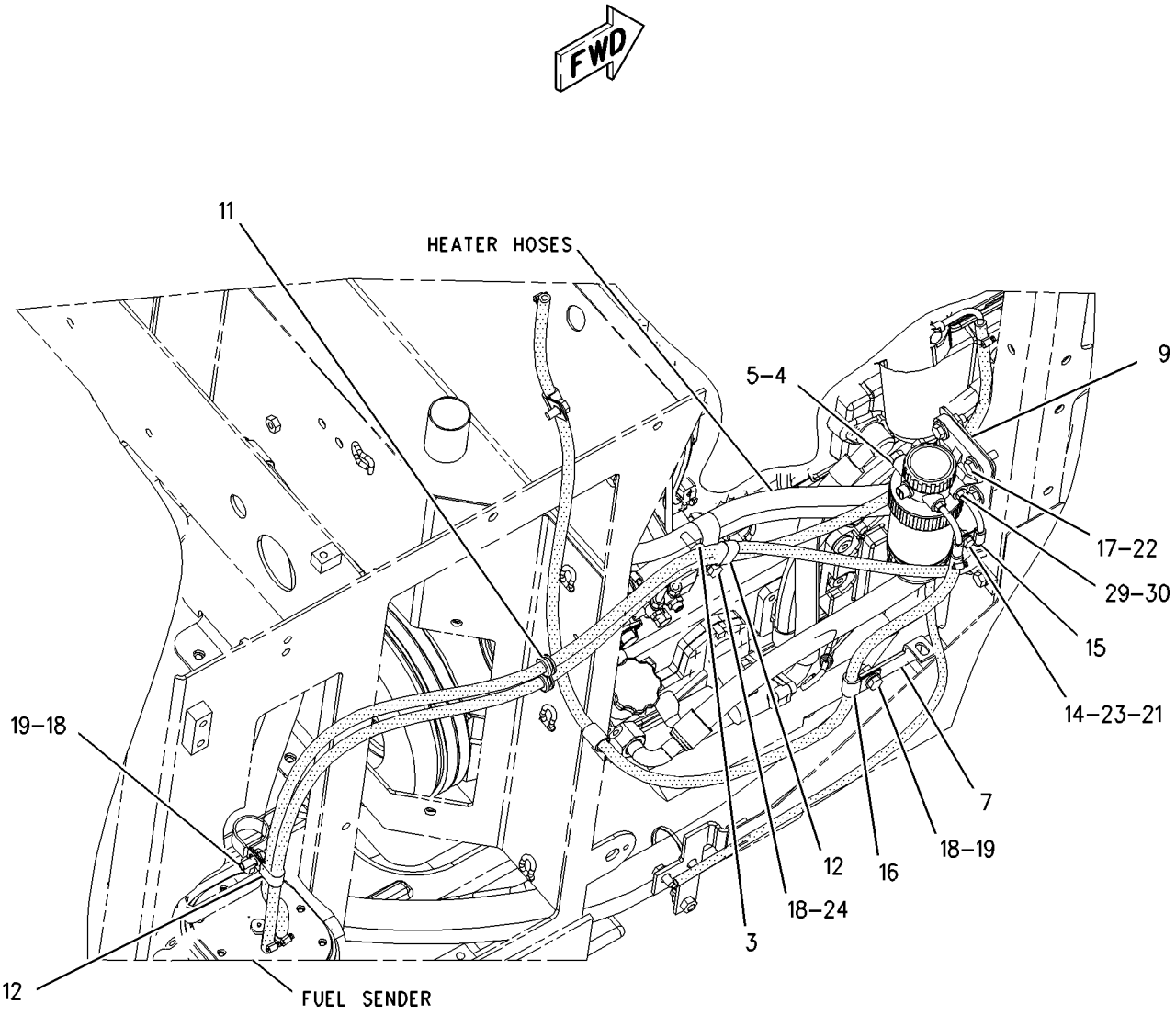

GRAPHIC #2 g00935935

184-1333 **LINES GP-FUEL** ***(contd.)*** **i01832333**

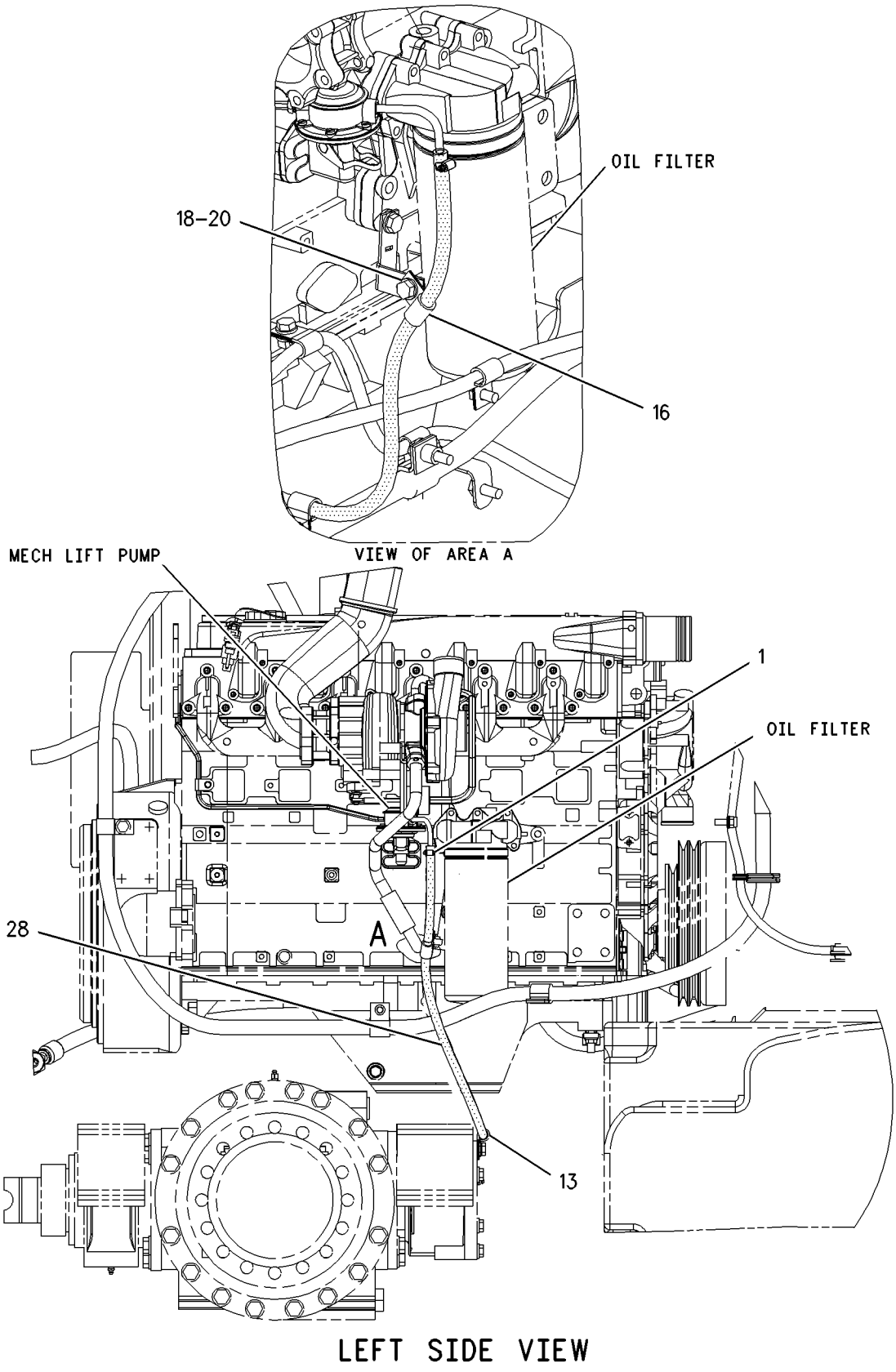

GRAPHIC #3 g00921089

FUEL SYSTEM

171-1419 LINES GP-FUEL FILTER

S/N: CPT1-UP

PART OF 179-1797 ENGINE AR-PRIMARY

SMCS-1261, 1274 **i01452508**

NOTE	REF NO	GRAPHIC REF	PART NUMBER	QTY	PART NAME 1 2 3 4 5 6 (PRODUCT LEVEL)	SEE PAGE
	1	1	**067-6268**	1	NUT-FUEL LINE	
	2	1	**067-6269**	1	FITTING	

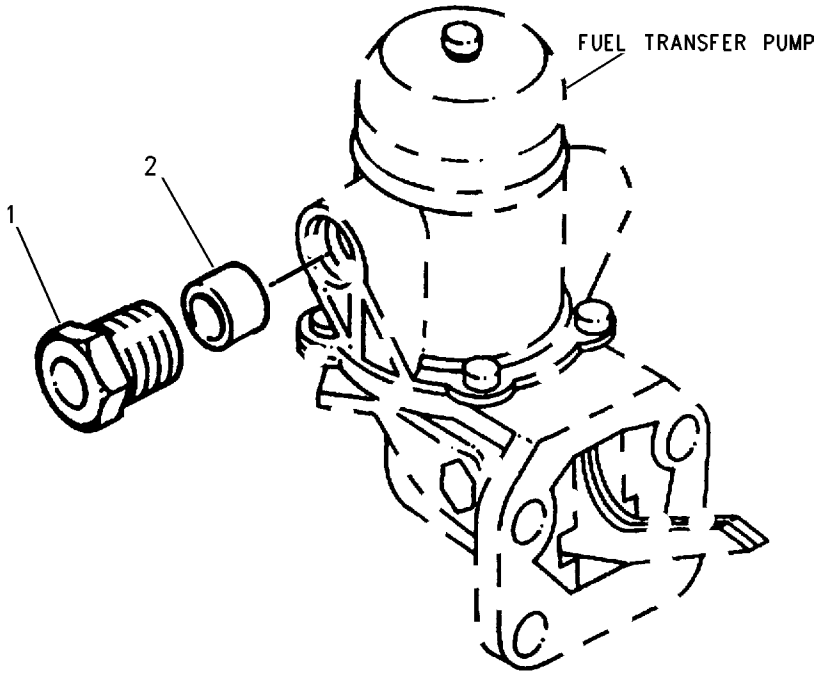

GRAPHIC #1 g00759895

MEMORANDA

FUEL SYSTEM

217-0109 PUMP GP-FUEL INJECTION

S/N: CPT1-UP

PART OF 179-1797 ENGINE AR-PRIMARY

SMCS-1251 **i01839438**

NOTE	REF NO	GRAPHIC REF	PART NUMBER	QTY	PART NAME 1 2 3 4 5 6 (PRODUCT LEVEL)	SEE PAGE
	1	1	**4B-4277**	1	WASHER (8.8X17.5X1.6MM THK)	
	2	1	**6I-0217**	1	BOLT (M8X1.25X20MM)	
	3	1	**6I-0291**	8	NUT (M8X1.25)	
	4	1	**133-7668**	1	STUD	
	5	1	**228-8960**	1	CLIP	
	6	1	**228-8963**	2	STUD	
	7	2	**7M-7410**	1	PLUG	
	8	1	**100-4830**	1	BOLT (M10X1.5X20MM)	
	9	1	**124-3708**	3	CLIP	
	10	1	**228-8943**	1	BRACKET	
	11	1	**228-8956**	1	BRACKET	
	12	1	**145-8327**	1	SEAL-O-RING	
	13	2	**149-2091**	1	SEAL-O-RING	
	14	1	**101-3877**	3	STUD	
	15	1	**162-9992**	3	CLIP	
	16	1	**164-3207**	6	WASHER	
	17	1	**221-1018**	1	CONTROL GP-ENGINE ELECTRONIC	
M	18	1	**6V-5217**	4	BOLT (M8X1.25X20MM)	
	19	1	**141-8599**	1	STUD	
	20	1,2	**114-4363**	3	BOLT (M8X1.25X12MM)	
	22	2	**216-3448**	1	SENSOR GP-PRESSURE (ENGINE OIL)	
	23	2	**216-3436**	1	SENSOR GP-TEMPERATURE (ENGINE COOLANT)	
	24	2	**216-3436**	1	SENSOR GP-TEMPERATURE (AIR INLET)	
	25	2	**216-3446**	1	SENSOR GP-SPEED (TIMING)	
	27	2	**199-9252**	1	SEAL-O-RING	
	28	2	**199-9267**	1	SEAL-O-RING	
	29	2	**199-9751**	2	SEAL-O-RING	
	30	2	**216-3450**	1	SENSOR GP-PRESSURE (BOOST)	
	33	1	**216-9786**	6	INJECTOR AS-FUEL	
	35	1	**216-9790**	1	GEAR (FUEL PUMP)	
	37	1	**216-9824**	1	PUMP GP-FUEL INJECTION	
	38	1	**216-9826**	1	TUBE AS (CYL NO.1)	
	39	1	**216-9828**	1	TUBE AS (CYL NO.2)	
	40	1	**216-9830**	1	TUBE AS (CYL NO.3)	
	41	1	**216-9831**	1	TUBE AS (CYL NO.4)	
	42	1	**216-9834**	1	TUBE AS (CYL NO.5)	
	43	1	**216-9835**	1	TUBE AS (CYL NO.6)	
	44	1	**155-0576**	8	MOUNT-ISOLATION	
	45	1	**217-0099**	7	SPACER	
	46	1	**217-0100**	4	SPACER	
	50	1	**215-9430**	4	CONTROL GP-VOLTAGE (24 VOLT) (LOAD PROTECTION)	
		1	**1S-9593**	2	STRAP-CABLE	
		1	**7T-0093**	4	PIN-CONNECTOR	
		1	**177-9653**	1	KIT-RECEPTACLE (4 PIN)	

M-METRIC PART

217-0109 **PUMP GP-FUEL INJECTION** *(contd.)* **i01839438**

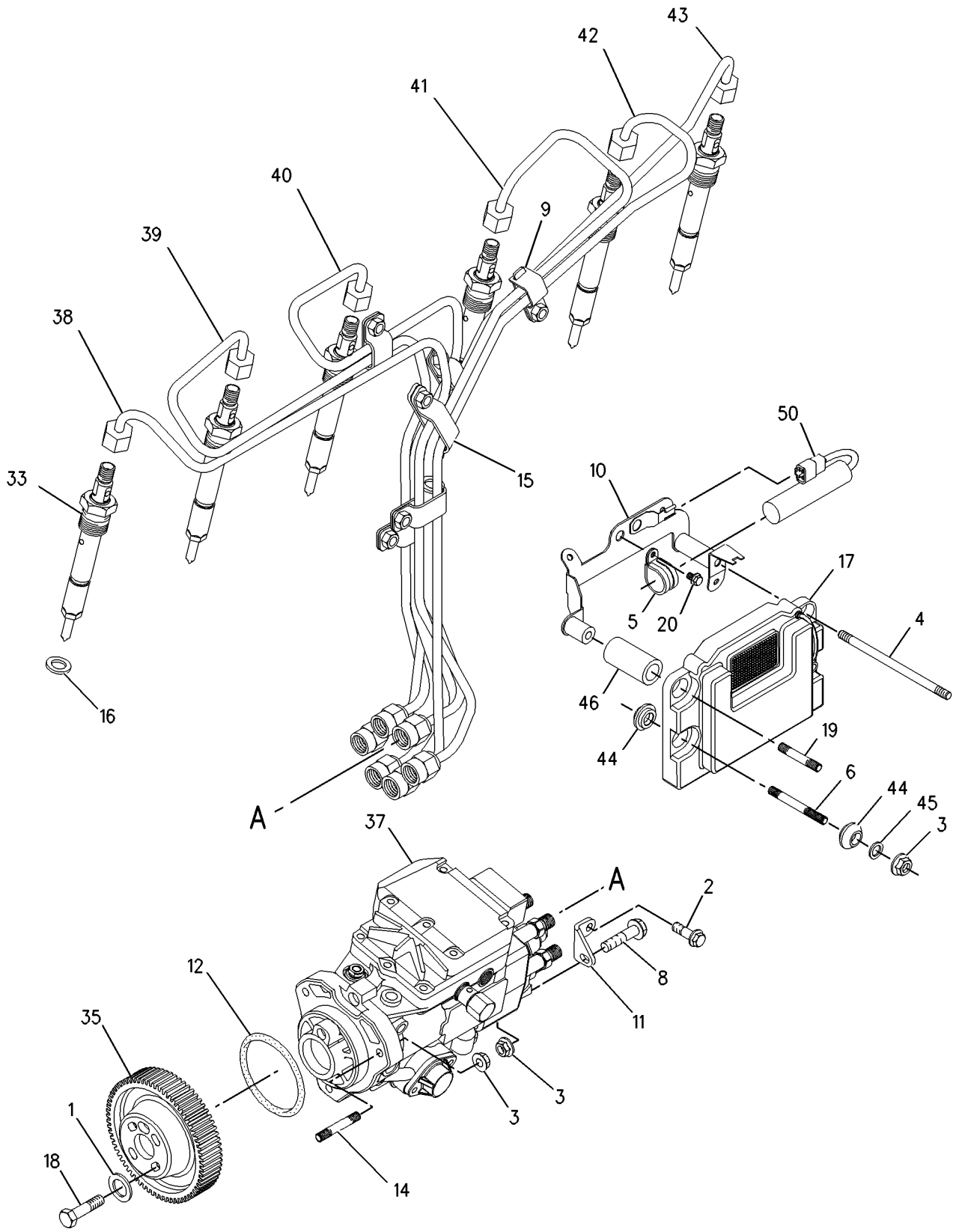

GRAPHIC #1 g00936420

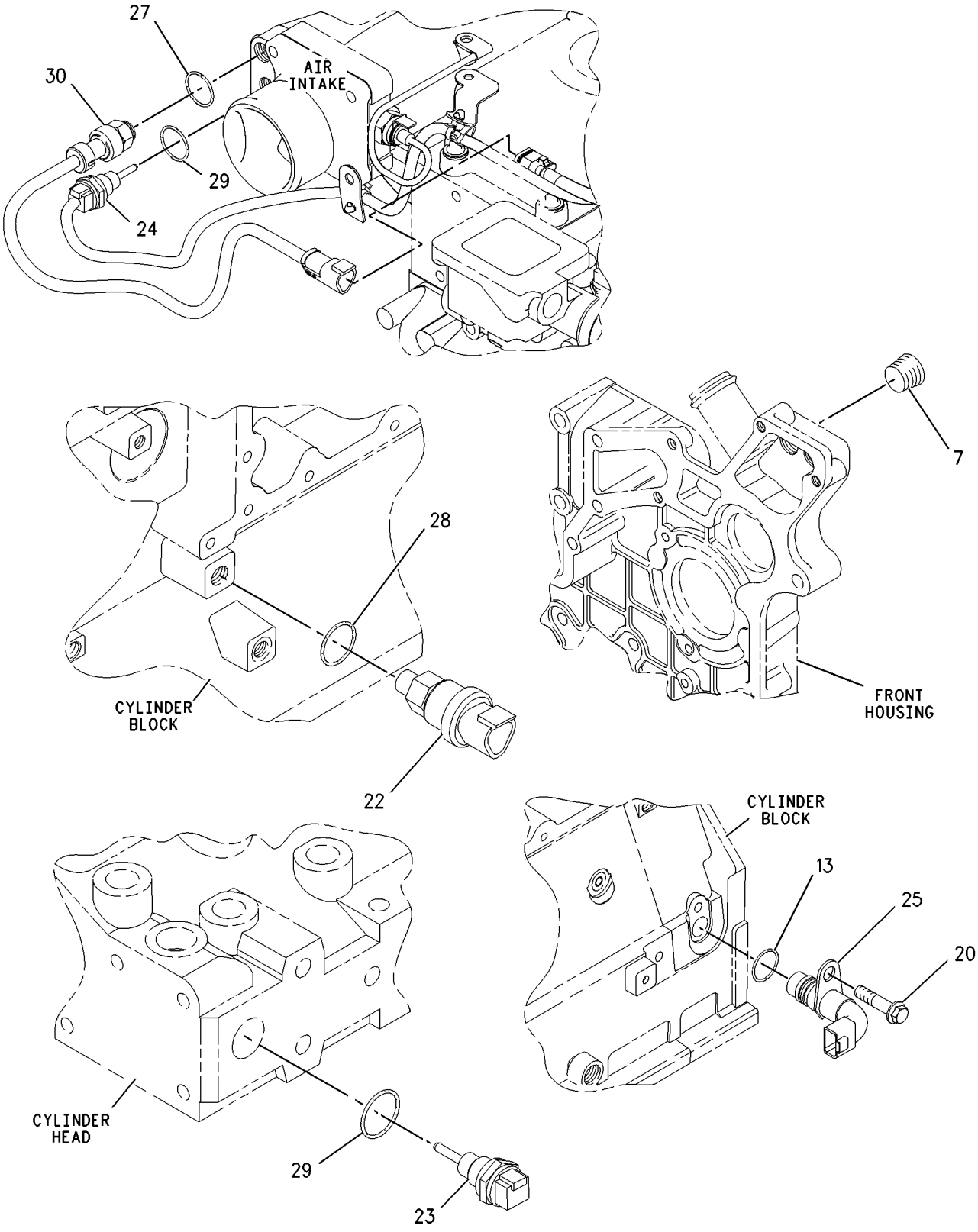

GRAPHIC #2

g00936421

MEMORANDA

FUEL SYSTEM

219-2455 PUMP GP-FUEL TRANSFER

S/N: CPT1-UP

PART OF 179-1797 ENGINE AR-PRIMARY

SMCS-1256 **i01773938**

NOTE	REF NO	GRAPHIC REF	PART NUMBER	QTY	PART NAME 1 2 3 4 5 6 (PRODUCT LEVEL)	SEE PAGE
	1	1	**5C-1777**	5	NUT	
	2	2	**6I-0217**	1	BOLT (M8X1.25X20MM)	
	3	2	**6I-0254**	4	BOLT (M8X1.25X30MM)	
	4	1	**6I-1090**	1	BOLT (M8X1.25X40MM)	
	5	2	**033-7849**	1	PLUG	
	6	1	**067-6269**	4	FITTING (5/16IN)	
	7	2	**100-4830**	3	BOLT (M10X1.5X20MM)	
	8	2	**101-3906**	1	BOLT	
	9	2	**101-3907**	2	WASHER	
	10	1	**101-7178**	1	BOLT (M10X55MM)	
	11	2	**102-9988**	1	SPACER	
	12	1	**127-8162**	1	CLIP	
	13	2	**162-2000**	1	WASHER	
	14	2	**216-9043**	1	PUMP AS-FUEL PRIMING	
	15	2	**7W-4553**	1	GASKET-FUEL PUMP	
	16	2	**216-9053**	1	CONNECTOR	
	17	1	**216-9086**	1	SPACER	
	18	1	**216-9092**	1	CONNECTOR	
	19	1	**216-9752**	4	WASHER	
	20	1	**217-0721**	1	BOLT	
	21	2	**219-2442**	1	TUBE AS	
	22	2	**102-9986**	1	CLIP	
	23	2	**102-9987**	1	CLIP	
	24	1	**219-2443**	1	TUBE AS	
	25	1	**102-9986**	1	CLIP	
	26	2	**219-2450**	1	BRACKET	
	27	1	**219-2451**	1	CONNECTION	
	28	1	**219-2452**	1	BALL	
	29	1	**219-2453**	1	TUBE AS	
	30	1	**149-6117**	1	CLIP	

219-2455 **PUMP GP-FUEL TRANSFER** *(contd.)* **i01773938**

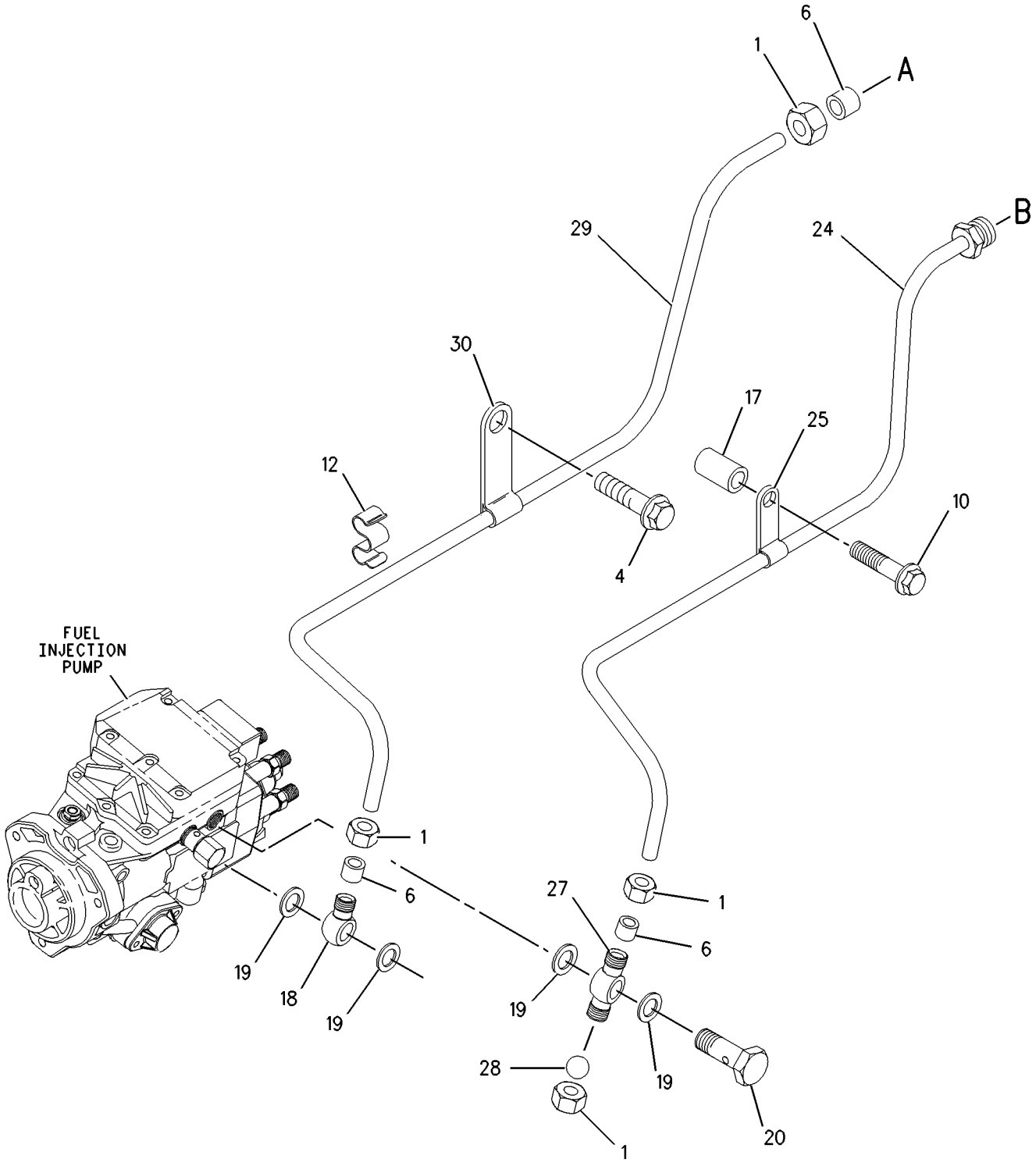

GRAPHIC #1 g00891374

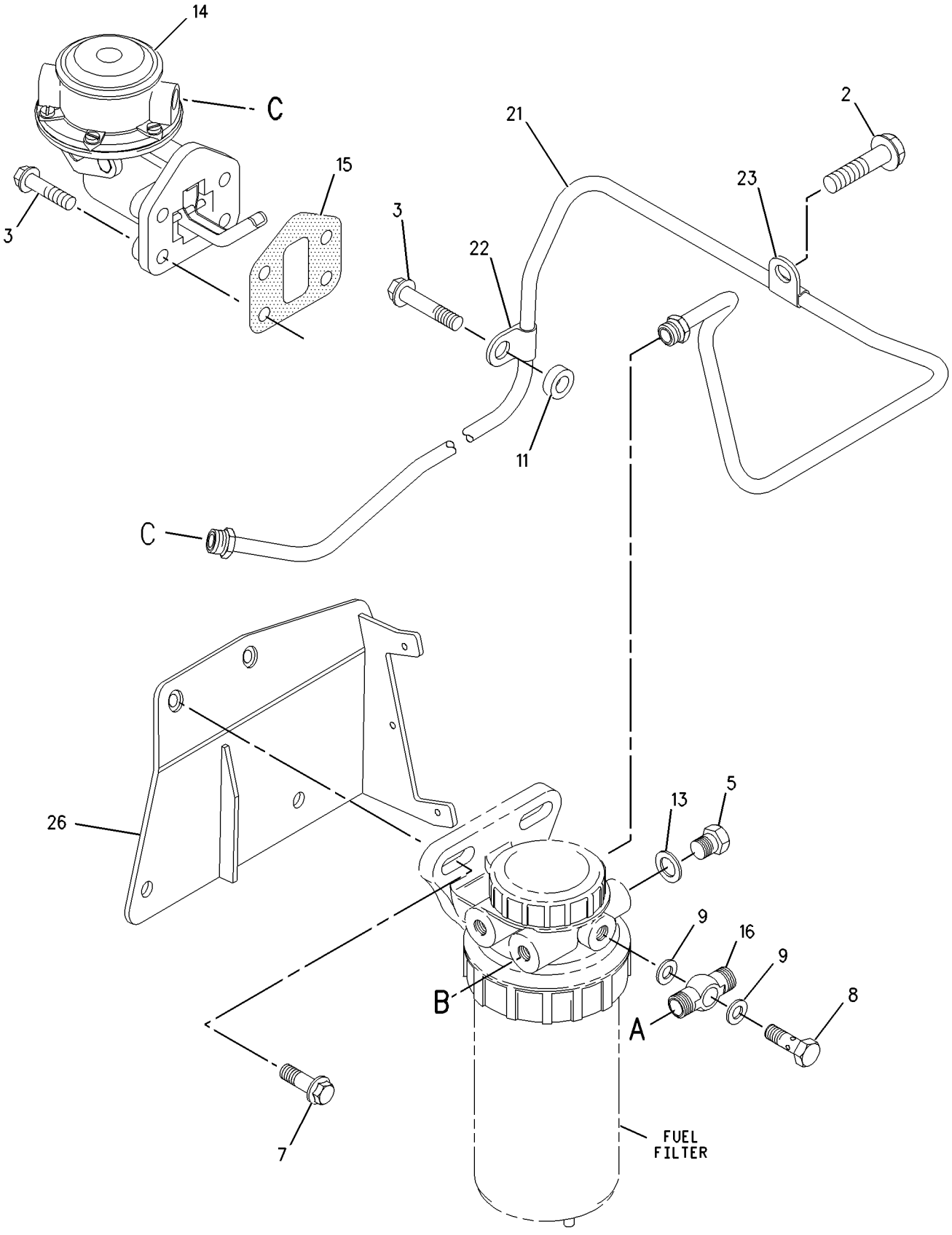

GRAPHIC #2

g00891375

FUEL SYSTEM

220-5557 SEPARATOR GP-WATER

S/N: DJD1-UP; DBT1-UP
W/BOWL
PART OF 184-1333 LINES GP-FUEL

SMCS-1263 **i01818393**

NOTE	REF NO	GRAPHIC REF	PART NUMBER	QTY	PART NAME 1 2 3 4 5 6 (PRODUCT LEVEL)	SEE PAGE
	1	1	**112-9401**	1	BOWL AS-WATER COLLECTION	
		1	**128-8614**	1	KIT-BOWL SEAL (WATER SEPERATOR)	
	2	1	**118-8118**	1	RING-RETAINING	
	3	1	**118-8119**	1	NUT	
	4	1	**121-4480**	1	KIT-WATER BASE (WATER SEPARATOR)	
					(INCLUDES NUT-CAP, CAP-HEADER, SEAL-CAP, PLUG-VOLUME, SEAL-O-RING, PLUG-VENT, SEAL-DUST & RING RETAINER)	
	5	1	**131-1812**	1	FILTER ELEMENT-WATER (SEPARATOR)	

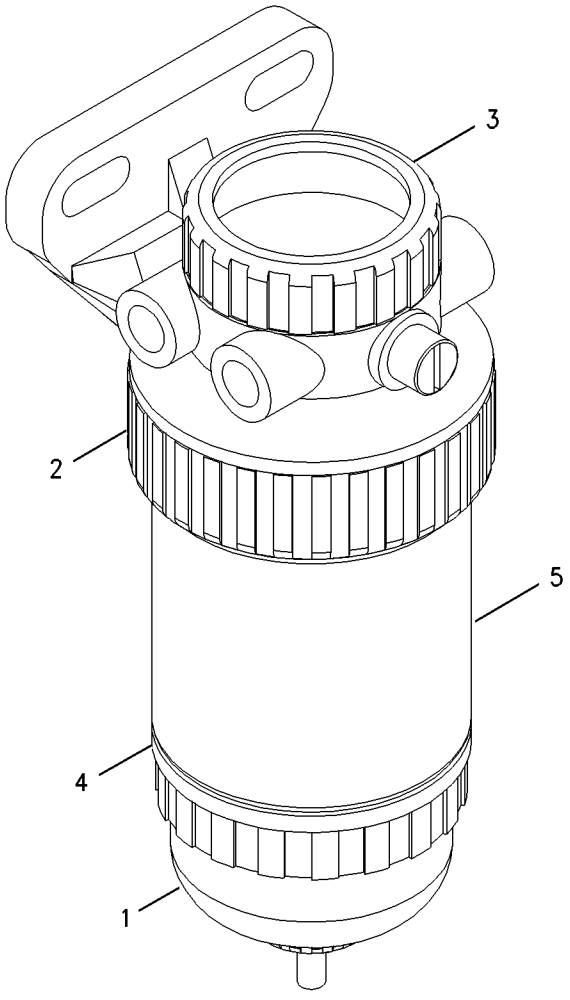

GRAPHIC #1 g00916889

FUEL SYSTEM

202-0354 TANK & MTG GP-FUEL

S/N: DJD1-UP; DBT1-UP

PART OF 176-5221, 204-4349 CHASSIS AR

SMCS-1273 **i01802329**

NOTE	REF NO	GRAPHIC REF	PART NUMBER	QTY	PART NAME 1 2 3 4 5 6 (PRODUCT LEVEL)	SEE PAGE
	1	1	**202-0355**	1	TANK AS-FUEL	
		1	**142-8828**	1	CAP AS-FUEL	
		1	**180-3730**	1	FILTER AS-FUEL	
		1	**206-4441**	1	ADAPTER	
	2	1	**202-0360**	2	STRAP AS	
					(EACH INCLUDES)	
		1	**202-0358**	1	STRAP	
M	3	1	**180-4686**	2	BOLT-HEX HEAD	
	4	1	**8T-4121**	6	WASHER-HARD (11X21X2.5MM THK)	
M	5	1	**8T-4133**	2	NUT (M10X1.5 THD)	
M	6	1	**8T-4137**	2	BOLT (M10X1.5X20MM)	

M-METRIC PART

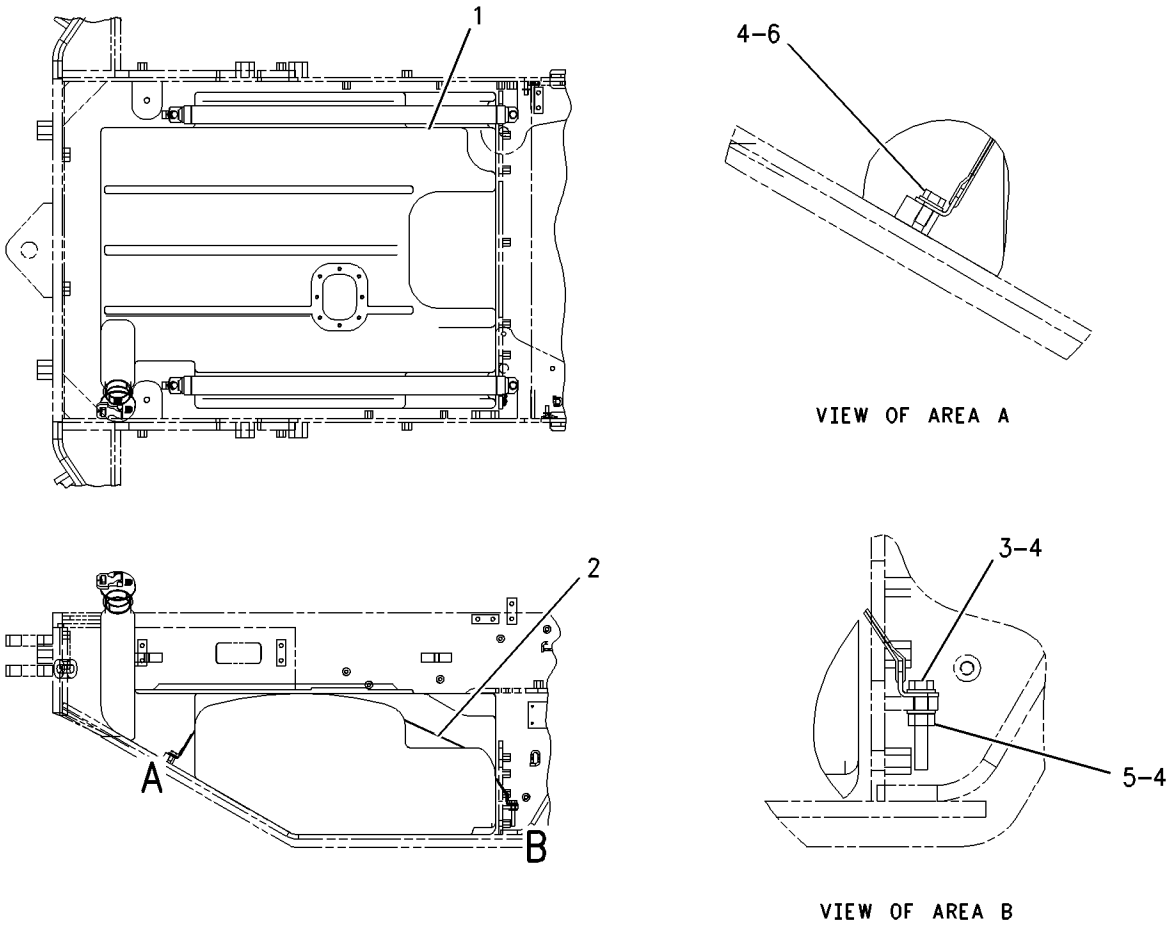

GRAPHIC #1 g00915489

3E-6328 ALARM GP–ACTION

S/N: DJD1-UP; DBT1-UP
24 VOLT
PART OF 204-9417 LIGHTING GP-FLOOD & SIGNAL

SMCS-7406, 7407 **i01741309**

NOTE	REF NO	GRAPHIC REF	PART NUMBER	QTY	PART NAME 1 2 3 4 5 6 (PRODUCT LEVEL)	SEE PAGE
J	1	1	**102-8802**	1	KIT-RECEPTACLE (2 PIN)	
					(INCLUDES RECEPTACLE AS & PART MARKED J)	
	2	1	**186-3735**	2	PIN-CONNECTOR	
J	3	1	**3E-3365**	1	WEDGE-RECEPTACLE LOCK (2 PIN)	

J-KIT MARKED J INCLUDES PART MARKED J

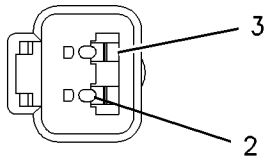

VIEW A–A

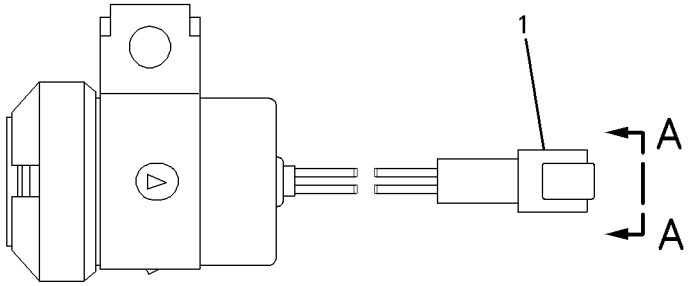

GRAPHIC #1 g00826023

177-9953 ALTERNATOR GP-CHARGING

S/N: DJD1-UP; DBT1-UP
24 VOLT, 80 AMP
PART OF 210-1672 ALTERNATOR GP-CHARGING
AN ATTACHMENT

SMCS-1405 **i01531014**

NOTE	REF NO	GRAPHIC REF	PART NUMBER	QTY	PART NAME 1 2 3 4 5 6 (PRODUCT LEVEL)	SEE PAGE
	1	1	**185-2653**	1	FRAME	
	2	1	**5S-7349**	1	BOLT (1/4-20X0.5 IN)	
	3	1	**185-2639**	1	FAN AS	
	4	1	**1H-3244**	1	LOCKWASHER	
	5	1	**185-2645**	1	FRAME	
	6	1	**2K-4821**	1	LOCKNUT	
	7	1	**5P-8247**	1	WASHER-HARD (17X32X3.5MM THK)	
	8	1	**185-2651**	1	COVER	
	9	1	**8T-4205**	1	WASHER-HARD (7.2X14.5X2MM THK)	
	10	1	**185-2647**	1	GROMMET	
	11	1	**9L-6770**	1	CAP	
	12	1	**185-2643**	1	STATOR AS	
	13	1	**185-2638**	2	COLLAR	
	14	1	**185-2654**	1	PLATE	
	15	1	**185-2650**	1	ROTOR AS	
	16	1	**185-2644**	1	COIL AS	
	17	1	**185-2648**	1	REGULATOR AS	
J	18	1	**6V-8189**	1	NUT (5/16-18 THD)	
J	19	1	**8T-4224**	1	WASHER-HARD (8.8X16X2MM THK)	
J	20	1	**3F-9556**	1	LOCKWASHER	
					AVAILABLE REPAIR KIT(S):	
J			**199-7891**		KIT-TERMINAL	
					(INCLUDES INSULATORS, WASHERS, NUT, STEP NUT)	
			185-2655		KIT-BEARING	
					(INCLUDES 3 BEARINGS)	
			199-8436		KIT-TERMINAL	
					(INCLUDES HOLDER AS, PLATE, INSULATOR, PIN, BOLT, GROMMET, NUT)	
			185-2658		KIT-HARDWARE	
					(INCLUDES BOLTS)	

J-KIT MARKED J AVAILABLE FOR PARTS MARKED J

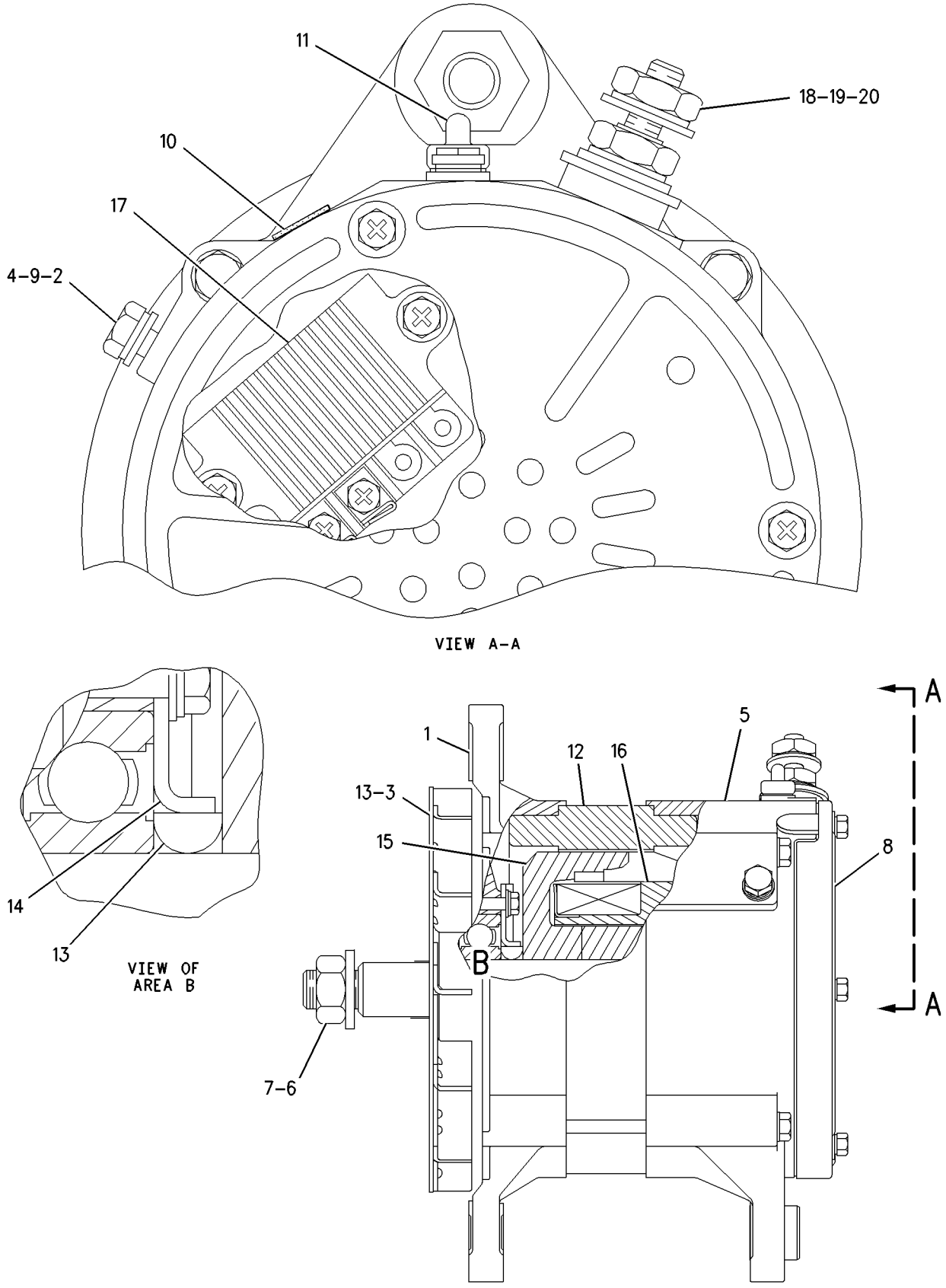

GRAPHIC #1

g00795850

197-8820 ALTERNATOR GP-CHARGING*R

S/N: DJD1-UP; DBT1-UP
24 VOLT,95 AMP
PART OF 210-1675 ALTERNATOR GP-CHARGING
AN ATTACHMENT

SMCS-1405 **i01812123**

NOTE	REF NO	GRAPHIC REF	PART NUMBER	QTY	PART NAME 1 2 3 4 5 6 (PRODUCT LEVEL)	SEE PAGE
	1	1	**185-2653**	1	FRAME	
	2	1	**5S-7349**	1	BOLT (1/4-20X0.5 IN)	
	3	1	**185-2639**	1	FAN AS	
	4	1	**1H-3244**	1	LOCKWASHER	
	5	1	**185-2645**	1	FRAME	
	6	1	**2K-4821**	1	LOCKNUT (5/8-18 THD)	
	7	1	**5P-8247**	1	WASHER-HARD (17X32X3.5MM THK)	
	8	1	**185-2651**	1	COVER	
	9	1	**8T-4205**	1	WASHER-HARD (7.2X14.5X2MM THK)	
	10	1	**185-2647**	1	GROMMET	
	11	1	**9L-6770**	1	CAP (ALTERNATOR AC TAP)	
	12	1	**205-0626**	1	STATOR AS-ALTERNATOR	
	13	1	**185-2638**	2	COLLAR	
	14	1	**185-2654**	1	PLATE	
	15	1	**185-2650**	1	ROTOR AS	
	16	1	**185-2644**	1	COIL AS	
	17	1	**185-2648**	1	REGULATOR AS	
	18	1	**6V-8189**	1	NUT (5/16-18 THD)	
	19	1	**8T-4224**	1	WASHER-HARD (8.8X16X2MM THK)	
	20	1	**3F-9556**	1	LOCKWASHER	
					AVAILABLE REPAIR KIT(S):	
			185-2655		KIT-BEARING (ALTERNATOR)	
					(INCLUDES 2 BEARINGS)	
			185-2656		KIT-TERMINAL (ALTERNATOR)	
					(INCLUDES HOLDER AS, PLATE, INSULATOR, PIN, BOLTS, GROMMET, AND NUT	
			185-2657		KIT-TERMINAL (ALTERNATOR)	
					(INCLUDES INSULATORS, WASHERS, AND NUTS)	
			185-2658		KIT-HARDWARE (ALTERNATOR)	
					(INCLUDES BOLTS)	

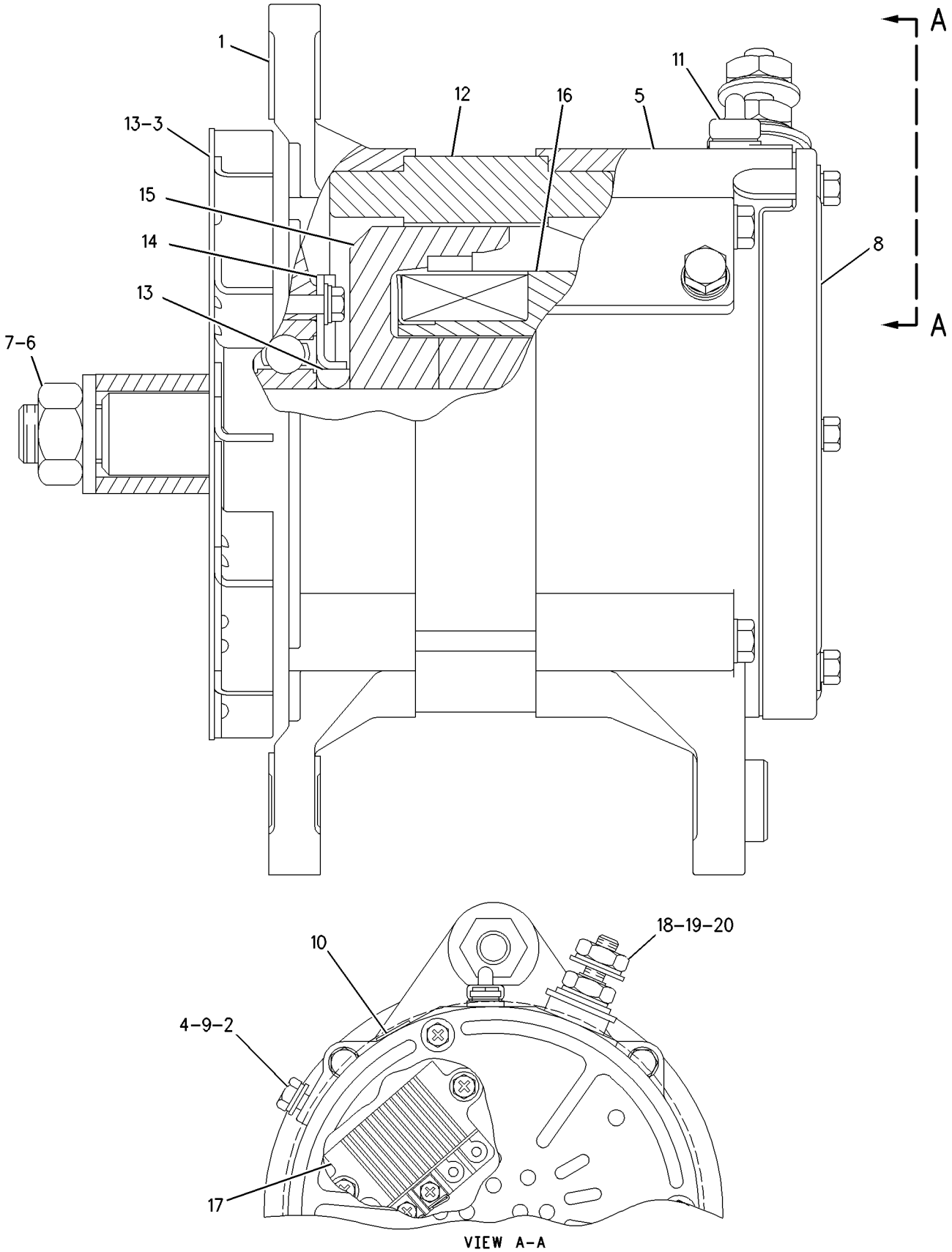

GRAPHIC #1

g00873198

ELECTRICAL AND STARTING SYSTEM

210-1672 ALTERNATOR GP-CHARGING

S/N: DJD1-UP; DBT1-UP
24 VOLT,80 AMP
AN ATTACHMENT

SMCS-1405 **i01782199**

NOTE	REF NO	GRAPHIC REF	PART NUMBER	QTY	PART NAME 1 2 3 4 5 6 (PRODUCT LEVEL)	SEE PAGE
	1	1	**9L-6246**	1	PULLEY-ALTERNATOR	
	2	1	**9S-1240**	1	NUT AS	
	3	1	**130-3216**	1	V-BELT SET	
					(INCLUDES 2 BELTS)	
	4	1	**157-2393**	1	BRACKET AS	
	5	1	**158-2829**	1	STRAP	
	6	1	**212-8743**	1	BRACKET-ALTERNATOR	
YR	7	1	**177-9953**	1	ALTERNATOR GP-CHARGING	96
	8	1	**5P-1076**	1	WASHER-HARD (13.5X30X4MM THK)	
	9	1	**7X-0338**	1	BOLT (1/2-13X6 IN)	
	10	1	**7X-7729**	1	WASHER (11X25X3MM THK)	
	11	1	**8C-4436**	1	BOLT (1/2-13X1.375 IN)	
M	12	1	**8T-4136**	1	BOLT (M10X1.5X25MM)	
M	13	1	**8T-4183**	1	BOLT (M12X1.75X40MM)	
	14	1	**8T-4223**	2	WASHER-HARD (13.5X25.5X3MM THK)	
	15	1	**8T-4224**	2	WASHER-HARD (8.8X16X2MM THK)	
M	16	1	**8T-6870**	2	BOLT (M8X1.25X70MM)	

M-METRIC PART
R-REMFG PART MAY BE AVAILABLE
Y-SEPARATE ILLUSTRATION

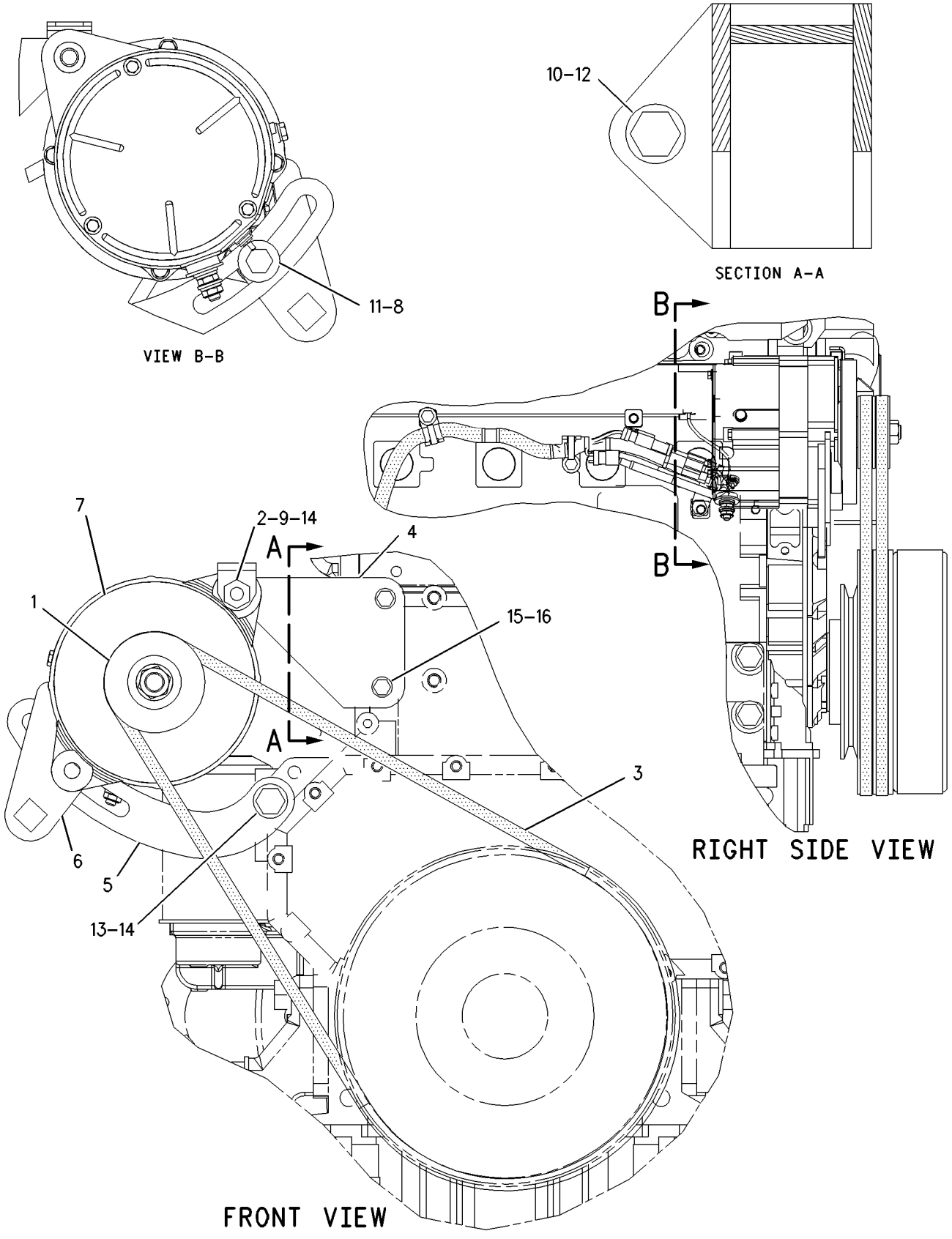

GRAPHIC #1 g00913314

ELECTRICAL AND STARTING SYSTEM

210-1675 ALTERNATOR GP-CHARGING

S/N: DJD1-UP; DBT1-UP
24 VOLT,95 AMP
AN ATTACHMENT

SMCS-1405 **i01746937**

NOTE	REF NO	GRAPHIC REF	PART NUMBER	QTY	PART NAME 1 2 3 4 5 6 (PRODUCT LEVEL)	SEE PAGE
	1	1	**9L-6246**	1	PULLEY-ALTERNATOR	
	2	1	**9S-1240**	1	NUT AS	
	3	1	**130-3216**	1	V-BELT SET	
	4	1	**157-2393**	1	BRACKET AS	
	5	1	**158-2829**	1	STRAP	
Y	6	1	**197-8820**	1	ALTERNATOR GP-CHARGING	98
	7	1	**212-8743**	1	BRACKET-ALTERNATOR	
	8	1	**5P-1076**	1	WASHER-HARD (13.5X30X4MM THK)	
	9	1	**7X-0338**	1	BOLT (1/2-13X6 IN)	
	10	1	**7X-7729**	1	WASHER (11X25X3MM THK)	
	11	1	**8C-4436**	1	BOLT (1/2-13X1.375 IN)	
M	12	1	**8T-4136**	1	BOLT (M10X1.5X25MM)	
M	13	1	**8T-4183**	1	BOLT (M12X1.75X40MM)	
	14	1	**8T-4223**	2	WASHER-HARD (13.5X25.5X3MM THK)	
	15	1	**8T-4224**	2	WASHER-HARD (8.8X16X2MM THK)	
M	16	1	**8T-6870**	2	BOLT (M8X1.25X70MM)	

M-METRIC PART
Y-SEPARATE ILLUSTRATION

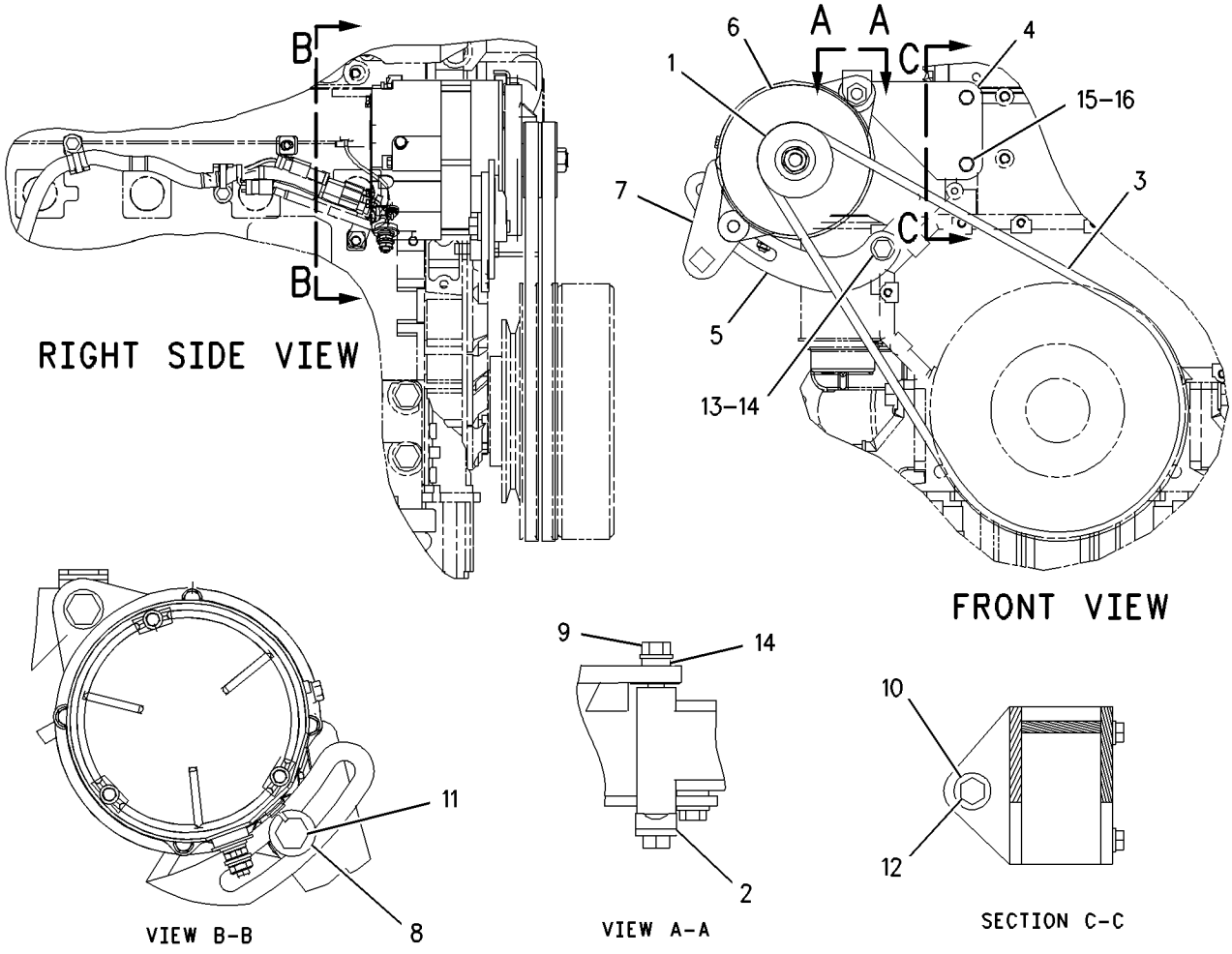

GRAPHIC #1 g00897654

132-2685 BATTERY GP

S/N: DJD1-UP; DBT1-UP

PART OF 176-5221, 204-4349 CHASSIS AR

SMCS-1401 **i01252976**

NOTE	PART NUMBER	QTY	PART NAME 1 2 3 4 5 6 (PRODUCT LEVEL)	SEE PAGE
	115-2422	2	BATTERY (12V)(950CCA)	

<END>

ELECTRICAL AND STARTING SYSTEM

210-6776 CONTROL GP-ENGINE ELECTRONIC

S/N: DJD1-UP
AN ATTACHMENT

SMCS-1901 **i01770515**

NOTE	REF NO	GRAPHIC REF	PART NUMBER	QTY	PART NAME 1 2 3 4 5 6 (PRODUCT LEVEL)	SEE PAGE
	1	1	**201-9041**	1	CONTROL GP-ENGINE ELECTRONIC	
	1A	1	**7X-6315**	1	STRAP AS-GROUND	
	1B	1	**134-4126**	1	WASHER (4.52X8.28X.76MM THK)	

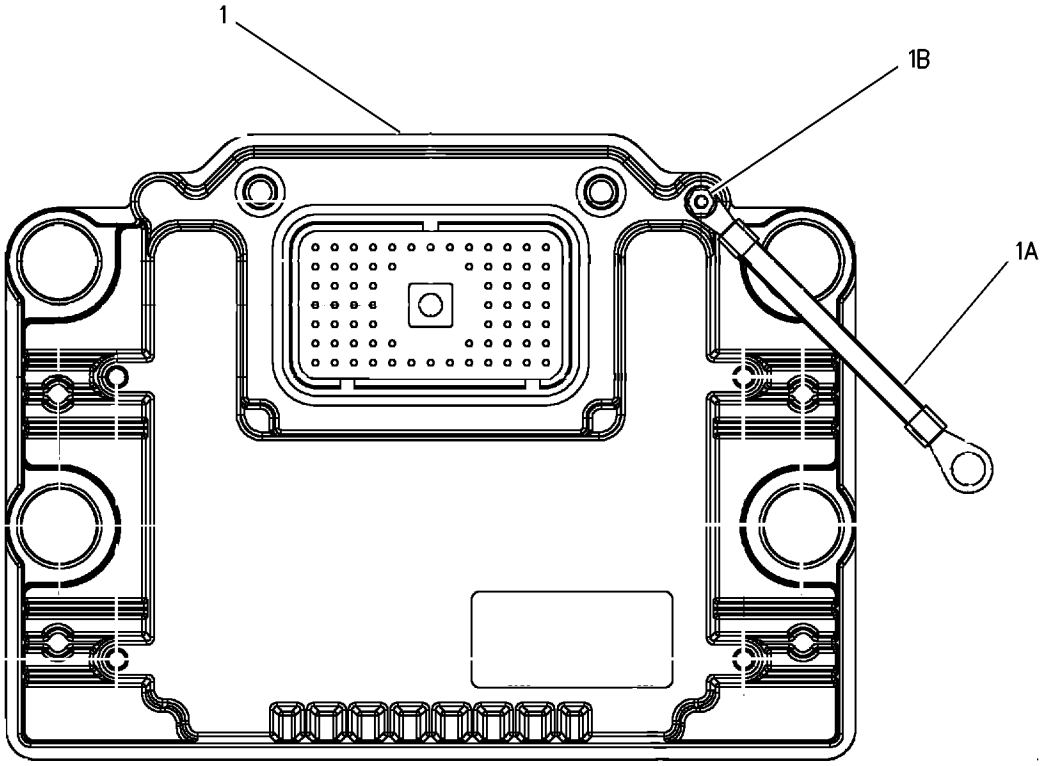

GRAPHIC #1 g00892577

3E-7844 CONTROL GP-LIFT KICKOUT

S/N: DJD1-UP; DBT1-UP

PART OF 113-3652, 122-6490 KICKOUT & POSITIONER GP

SMCS-5109 **i01303520**

NOTE	REF NO	GRAPHIC REF	PART NUMBER	QTY	PART NAME 1 2 3 4 5 6 (PRODUCT LEVEL)	SEE PAGE
	1	1	**9X-5617**	1	FILM	
	2	1	**102-8803**	1	KIT-RECEPTACLE (3 PIN)	
					(INCLUDES RECEPTACLE AS AND WEDGE)	
	3	1	**8T-8729**	3	PIN-CONNECTOR	
	4	1	**3E-3371**	1	WEDGE-RECEPTACLE LOCK	

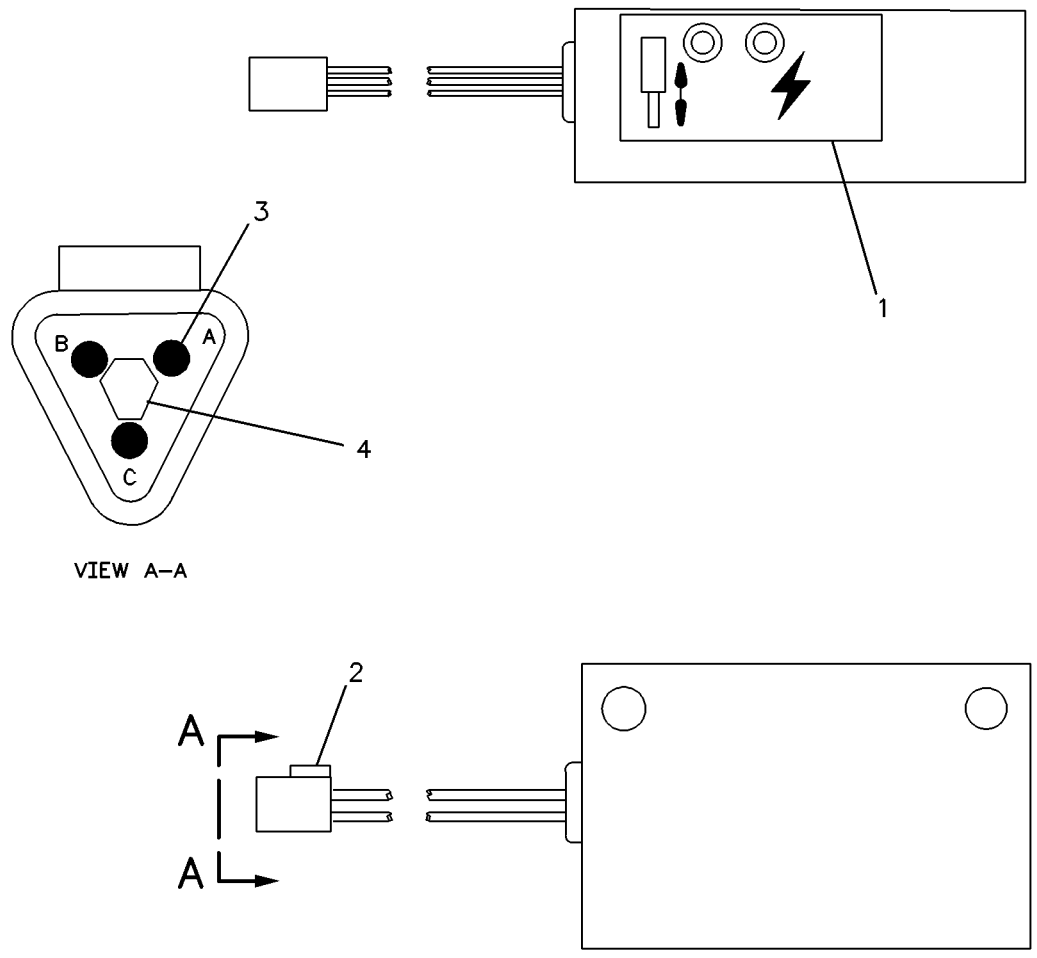

GRAPHIC #1 g00119271

3E-7843 CONTROL GP-POSITION–BUCKET

S/N: DJD1-UP; DBT1-UP

PART OF 113-3652, 122-6490 KICKOUT & POSITIONER GP

SMCS-5112 **i01303509**

NOTE	REF NO	GRAPHIC REF	PART NUMBER	QTY	PART NAME 1 2 3 4 5 6 (PRODUCT LEVEL)	SEE PAGE
	1	1	**9X-5617**	1	FILM	
	2	1	**8T-8730**	3	SOCKET-CONNECTOR	
	3	1	**3E-3368**	1	WEDGE-PLUG LOCK	
	4	1	**155-2260**	1	KIT-CONNECTING PLUG (3 PIN)	
					(INCLUDES PLUG AS AND WEDGE)	

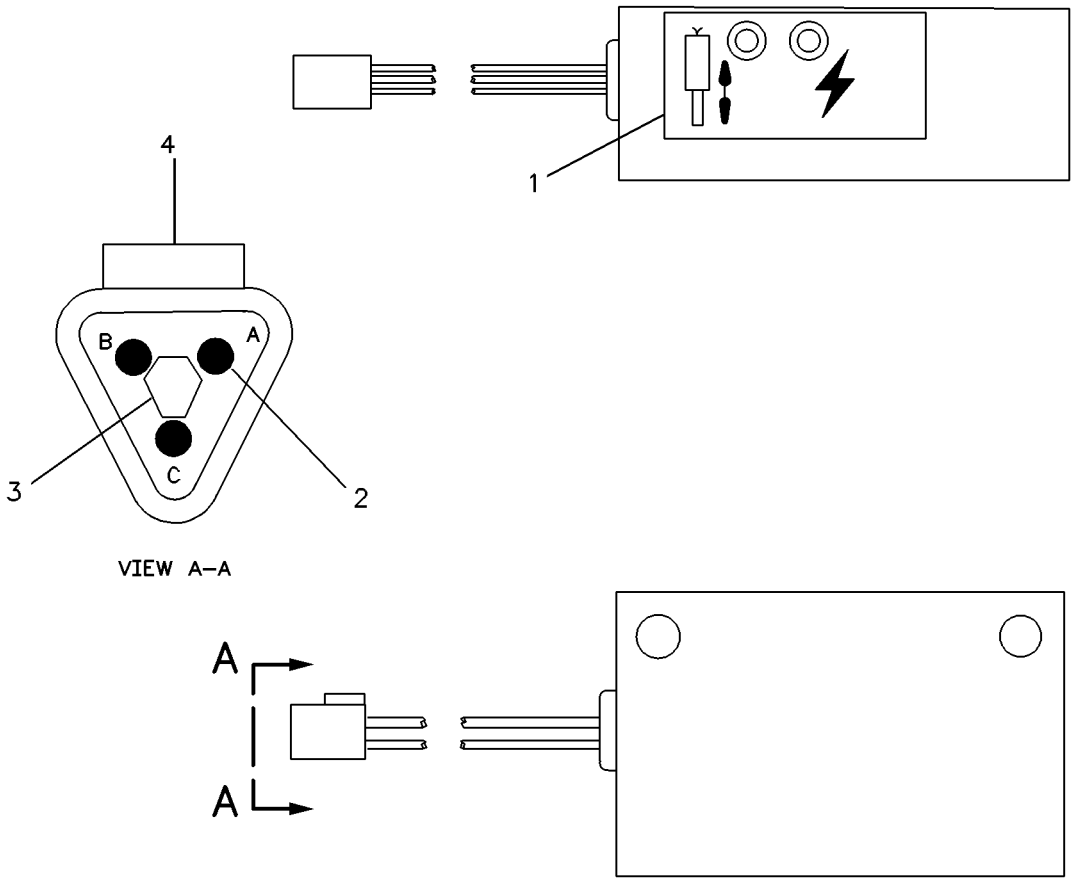

GRAPHIC #1 g00119265

193-8550 CONTROL GP-UNPROGRAMMED–SECURITY

S/N: DJD1-UP; DBT1-UP
PART OF 190-2446 ELECTRONICS GP-MACHINE
AN ATTACHMENT

SMCS-7610 **i01379391**

NOTE	REF NO	GRAPHIC REF	PART NUMBER	QTY	PART NAME 1 2 3 4 5 6 (PRODUCT LEVEL)	SEE PAGE
	1	1	**193-8549**	1	CONTROL AS-ELECTRONIC	
	2	1	**7X-6315**	1	STRAP-GROUNDING	
	3	1	**184-2472**	1	SCREW-PAN HEAD	
	4	1	**134-4126**	1	WASHER (.76MM THK)	

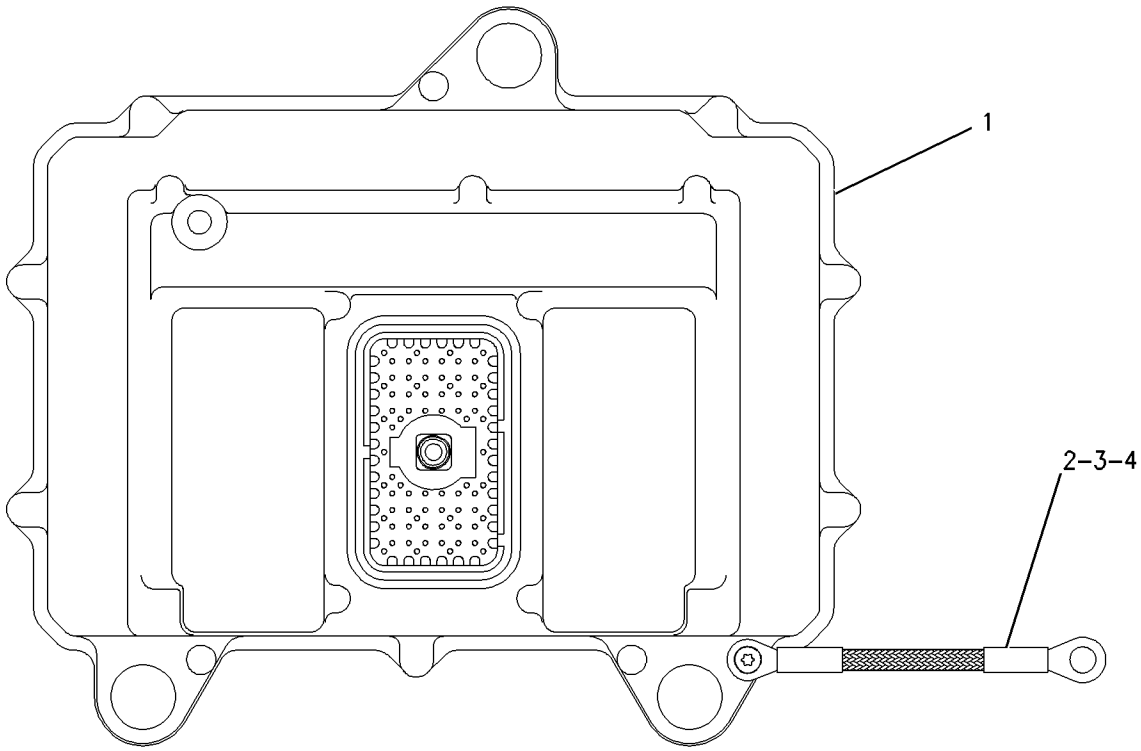

GRAPHIC #1 g00728621

115-1317 CONVERTER GP-ELECTRICAL

S/N: DJD1-UP; DBT1-UP

PART OF 225-3773 CONVERTER GP-ELECTRICAL

SMCS-1421 **i01806288**

NOTE	REF NO	GRAPHIC REF	PART NUMBER	QTY	PART NAME 1 2 3 4 5 6 (PRODUCT LEVEL)	SEE PAGE
	1	1	**7K-1181**	1	STRAP-CABLE	
	2	1	**117-2311**	1	RECEPTACLE AS-POWER (12 VOLT)	
	3	1	**124-5638**	1	FILM (12VOLT)	
	4	1	**205-4285**	1	CONVERTER GP-ELECTRICAL (24 VOLT TO 12 VOLT)	
	5	1	**222-1259**	1	HARNESS AS	
		1	**102-8805**	1	KIT-RECEPTACLE (6 PIN)	
		1	**155-2274**	1	KIT-CONNECTING PLUG (6 PIN)	
	6	1	**3V-4791**	1	GROMMET	
M	7	1	**9X-1046**	2	SCREW (M4X0.7X18MM)	

M-METRIC PART

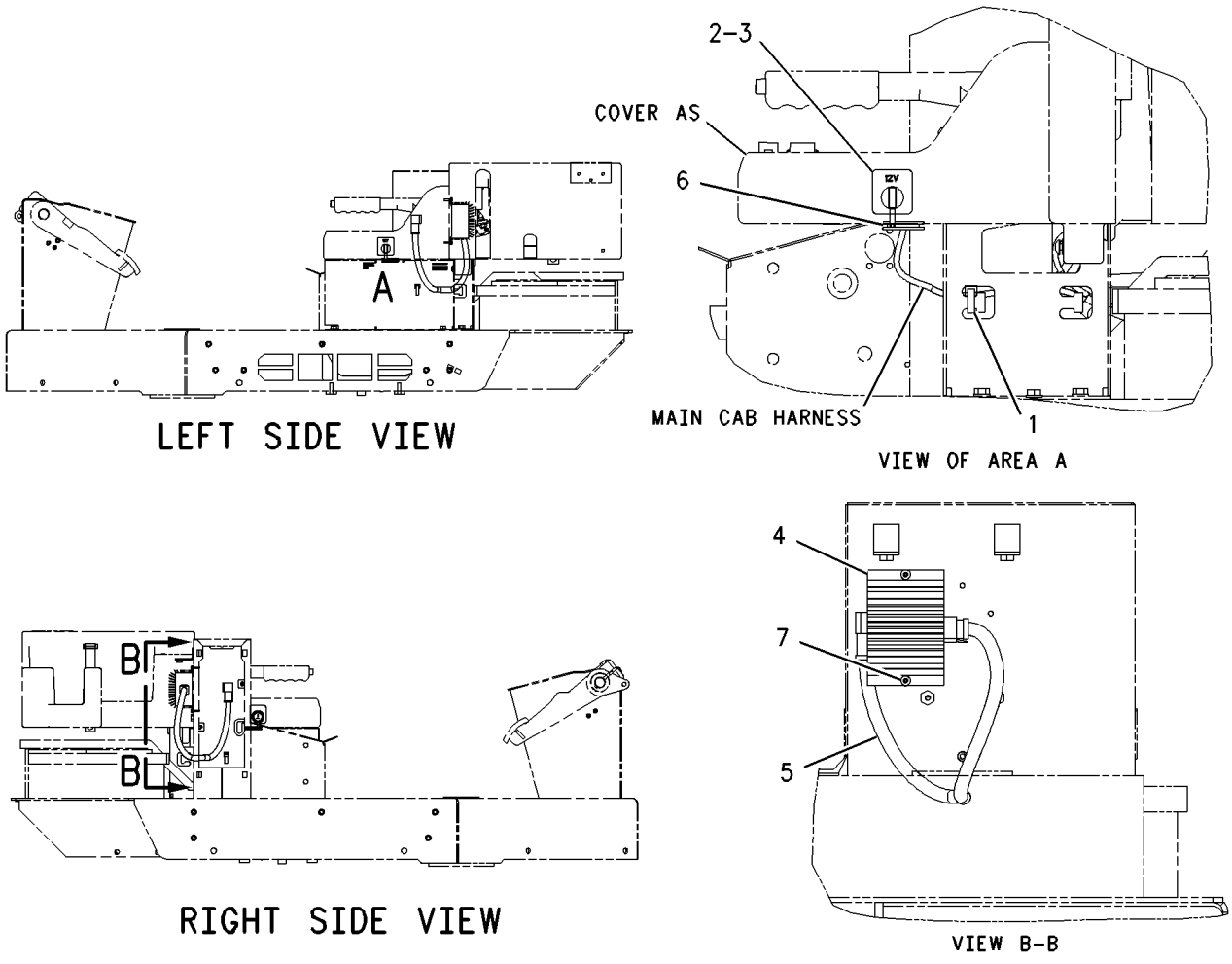

GRAPHIC #1 g00927533

207-5947 CONVERTER GP-ELECTRICAL

S/N: DJD1-UP; DBT1-UP
24 VOLT TO 12 VOLT
PART OF 225-4329 INSTALLATION GP-RADIO
CANNOT BE USED WITH 225-4329—PAGE 650
AN ATTACHMENT

SMCS-1421 **i01819411**

NOTE	REF NO	GRAPHIC REF	PART NUMBER	QTY	PART NAME 1 2 3 4 5 6 (PRODUCT LEVEL)	SEE PAGE
	1	1	**117-2311**	1	RECEPTACLE AS-POWER (12 VOLT)	
	2	1	**124-5638**	1	FILM (12 VOLT)	
	3	1	**205-4285**	1	CONVERTER GP-ELECTRICAL (24 VOLT TO 12 VOLT)	
	4	1	**3V-4791**	1	GROMMET	
M	5	1	**9X-1046**	2	SCREW (M4X0.7X18MM)	
	6	1	**9X-8256**	2	WASHER (6.6X12X2MM THK)	

M-METRIC PART

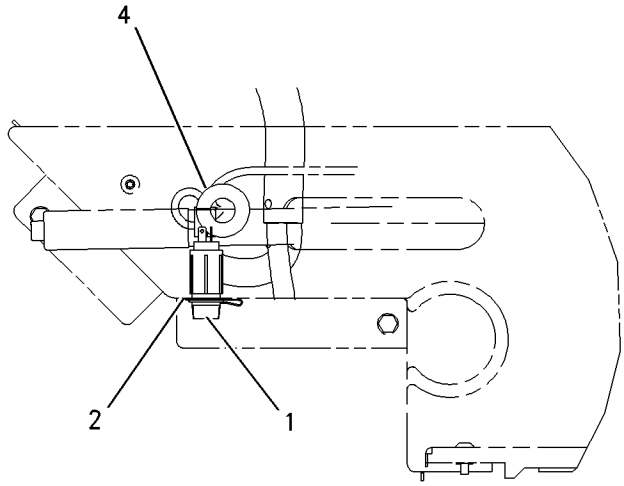

LEFT SIDE VIEW
(PARK BRAKE & COVER AS.)

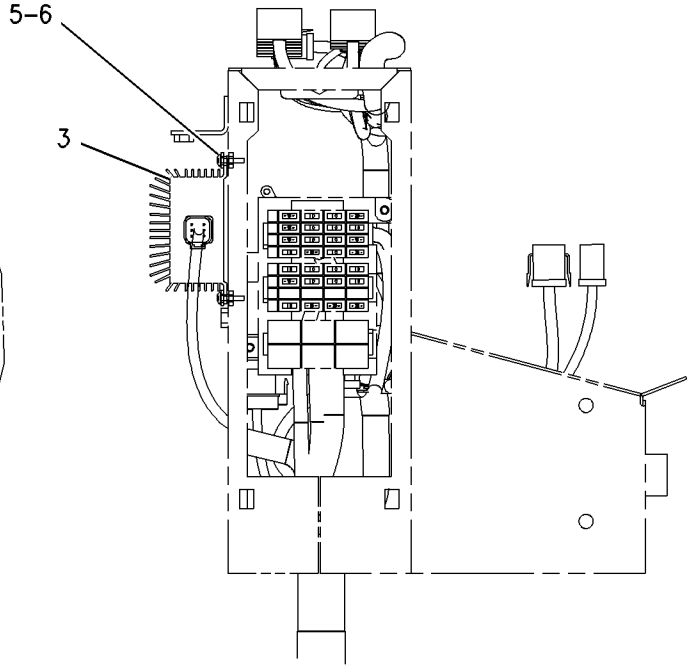

RIGHT SIDE VIEW
(FUSE BOX)

GRAPHIC #1 g00895503

ELECTRICAL AND STARTING SYSTEM

225-3773 CONVERTER GP-ELECTRICAL

S/N: DJD1-UP; DBT1-UP
FIELD INSTALLATION

SMCS-1421 **i01827678**

NOTE	PART NUMBER	QTY	PART NAME 1 2 3 4 5 6 (PRODUCT LEVEL)	SEE PAGE
Y	*115-1317*	1	CONVERTER GP-ELECTRICAL (12 VOLT)	108
Y-SEPARATE ILLUSTRATION				

<END>

190-2446 ELECTRONICS GP-MACHINE–SECURITY

S/N: DJD1-UP; DBT1-UP
PART OF 189-4871 WIRING GP-MACHINE
AN ATTACHMENT

SMCS-7610, 7620 **i01684135**

NOTE	PART NUMBER	QTY	PART NAME 1 2 3 4 5 6 (PRODUCT LEVEL)	SEE PAGE
Y	**193-8550**	1	CONTROL GP-UNPROGRAMMED (SECURITY)	107
	7X-6315	1	STRAP AS	
	134-4126	1	WASHER (4.52X8.28X.76MM THK)	
	184-2472	1	SCREW-PAN HEAD (LUBRICATED)	
	207-5268	1	SOFTWARE GP-MACHINE (SECURITY)	
Y-SEPARATE ILLUSTRATION				

<END>

215-2884 ELECTRONICS GP-MACHINE

S/N: DJD1-UP; DBT1-UP
PART OF 222-4879 ELECTRONICS GP-MACHINE

SMCS-7610, 7620 **i01773119**

NOTE	PART NUMBER	QTY	PART NAME 1 2 3 4 5 6 (PRODUCT LEVEL)	SEE PAGE
	221-3242	1	SOFTWARE GP-MACHINE	
			-OR-	
			(OPTIONAL SERVICE REPLACEMENT)	
	221-3243	1	SERVICE GP-MACHINE	
	221-3242	1	SOFTWARE GP-MACHINE	
	215-6512	1	CONTROL GP-ENGINE ELECTRONIC	

<END>

222-4879 ELECTRONICS GP-MACHINE

S/N: DJD1-UP; DBT1-UP
PART OF 176-5220, 204-4350 COMMON AR

SMCS-7610, 7620 **i01816109**

NOTE	PART NUMBER	QTY	PART NAME 1 2 3 4 5 6 (PRODUCT LEVEL)	SEE PAGE
Y	**215-2884**	1	ELECTRONICS GP-MACHINE	110
Y-SEPARATE ILLUSTRATION				

<END>

107-1852 HEATER GP-JACKET WATER

S/N: DJD1-UP; DBT1-UP
120 VOLT/1000 WATT
AN ATTACHMENT

SMCS-1383 **i00990336**

NOTE	REF NO	GRAPHIC REF	PART NUMBER	QTY	PART NAME 1 2 3 4 5 6 (PRODUCT LEVEL)	SEE PAGE
	1	1	**8M-5254**	1	SEAL-O-RING (31.34MM ID)	
	2	1	**159-6108**	1	CORD AS-HEATER	

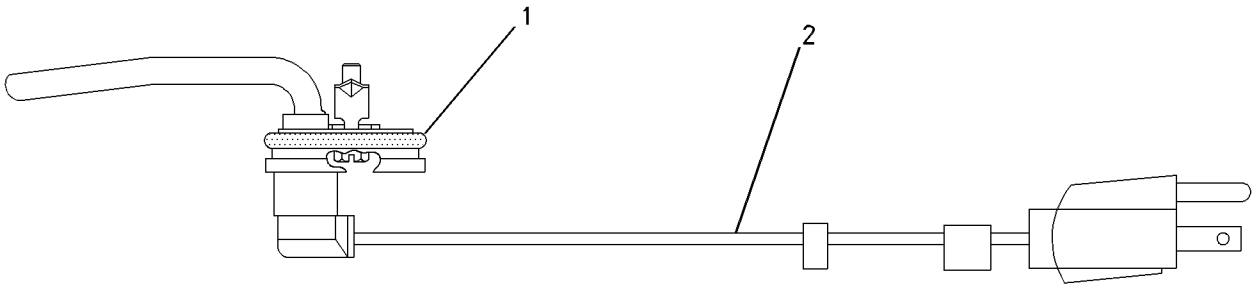

GRAPHIC #1 g00508425

159-4995 HEATER GP-JACKET WATER

S/N: DJD1-UP; DBT1-UP
AN ATTACHMENT

SMCS-1383 **i01231147**

NOTE	REF NO	GRAPHIC REF	PART NUMBER	QTY	PART NAME 1 2 3 4 5 6 (PRODUCT LEVEL)	SEE PAGE
	1	1	**8M-5254**	1	SEAL-O-RING (31.34MM ID)	
	2	1	**159-4996**	1	CORD AS-HEATER	

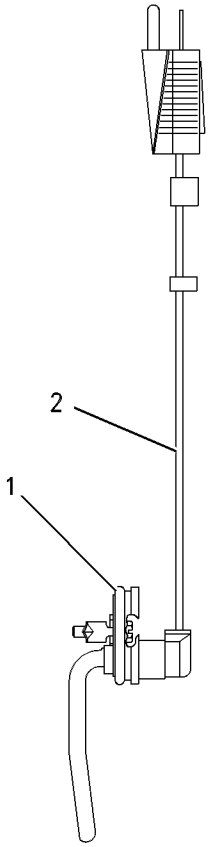

GRAPHIC #1 g00656196

117-3468 LAMP GP-FLOOD

S/N: DJD1-UP; DBT1-UP
24 VOLT
PART OF 115-1558 LIGHTING GP-AUXILIARY
AN ATTACHMENT

SMCS-1434 **i01017730**

NOTE	REF NO	GRAPHIC REF	PART NUMBER	QTY	PART NAME 1 2 3 4 5 6 (PRODUCT LEVEL)	SEE PAGE
	1	1	**9X-3463**	1	LAMP	
	2	1	**144-5282**	2	SCREW	
	3	1	**144-5283**	1	SEAL	
	4	1	**144-5284**	1	LENS AS	
	5	1	**164-7556**	1	CLIP	

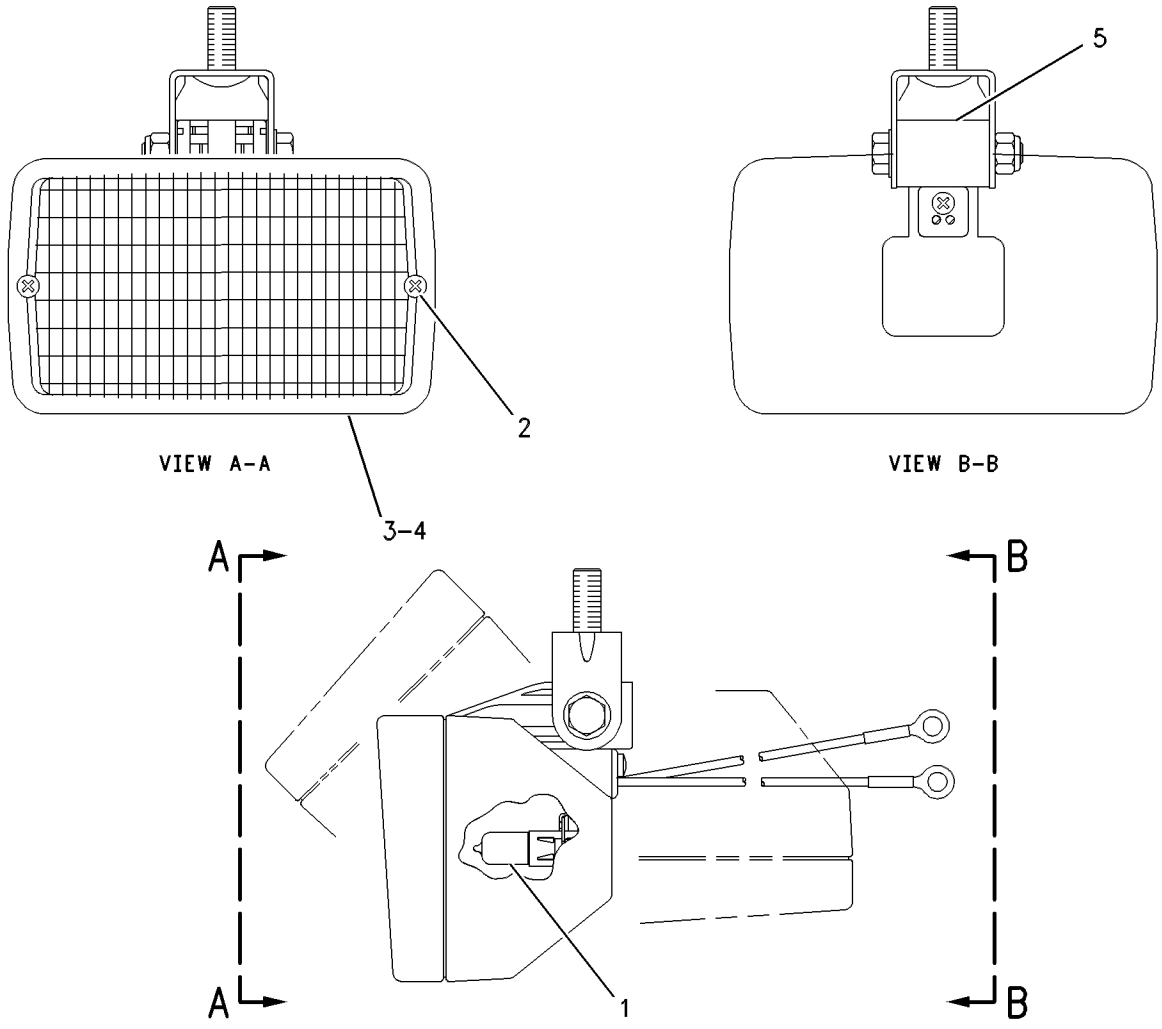

GRAPHIC #1 g00523187

145-6929 LAMP GP-STOP & TAIL

S/N: DJD1-UP; DBT1-UP

PART OF 204-9417 LIGHTING GP-FLOOD & SIGNAL

SMCS-1432 **i01676625**

NOTE	REF NO	GRAPHIC REF	PART NUMBER	QTY	PART NAME 1 2 3 4 5 6 (PRODUCT LEVEL)	SEE PAGE
	1	1	**3E-3365**	1	WEDGE-RECEPTACLE LOCK (2 PIN)	
	2	1	**3E-3371**	1	WEDGE-RECEPTACLE LOCK (3 PIN)	
	3	1	**8T-8729**	5	PIN-CONNECTOR	
	4	1	**9X-4492**	1	LAMP (DOUBLE FILAMENT)	
	5	1	**9X-4493**	1	LAMP (SINGLE FILAMENT)	
	6	1	**102-8802**	1	KIT-RECEPTACLE (2 PIN)	
					(KIT INCLUDES RECEPTACLE AS AND WEDGE)	
	7	1	**102-8803**	1	KIT-RECEPTACLE (3 PIN)	
					(KIT INCLUDES RECEPTACLE AS AND WEDGE)	
	8	1	**146-2438**	1	LENS	

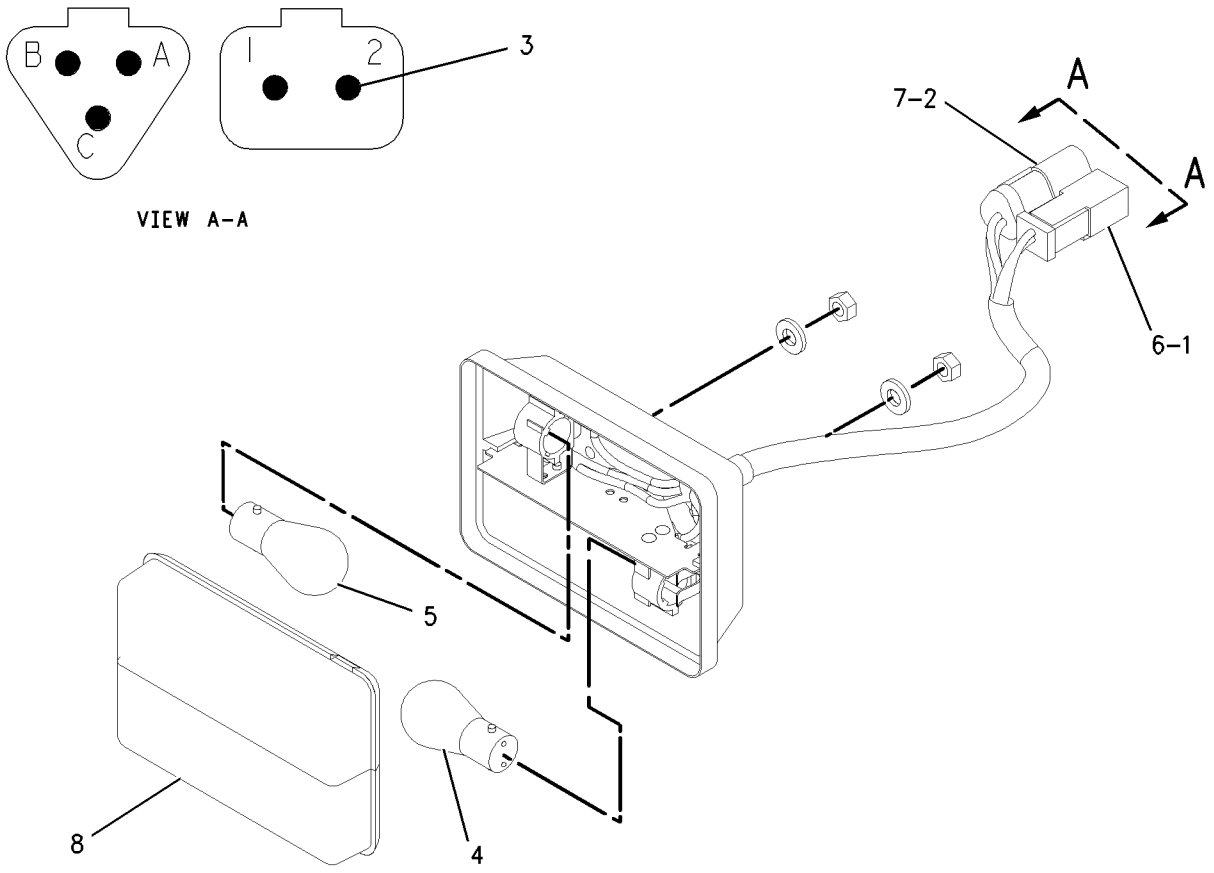

GRAPHIC #1 g00728005

108-1029 LAMP GP-WARNING BEACON

S/N: DJD1-UP; DBT1-UP
24 VOLT. AMBER
PART OF 218-8836, 218-8837 LIGHTING GP-WARNING
AN ATTACHMENT

SMCS-1431 **i01833556**

NOTE	REF NO	GRAPHIC REF	PART NUMBER	QTY	PART NAME 1 2 3 4 5 6 (PRODUCT LEVEL)	SEE PAGE
	1	1	**9X-8121**	1	LENS (AMBER)	
	2	1	**9X-7849**	1	LAMP (24 VOLT)(70 WATT)	
	3	1	**9X-8139**	1	BELT-DRIVE (WARNING BEACON)	
	4	1	**9R-7958**	1	CORD AS	
	5	1	**9R-7942**	1	PLUG AS	

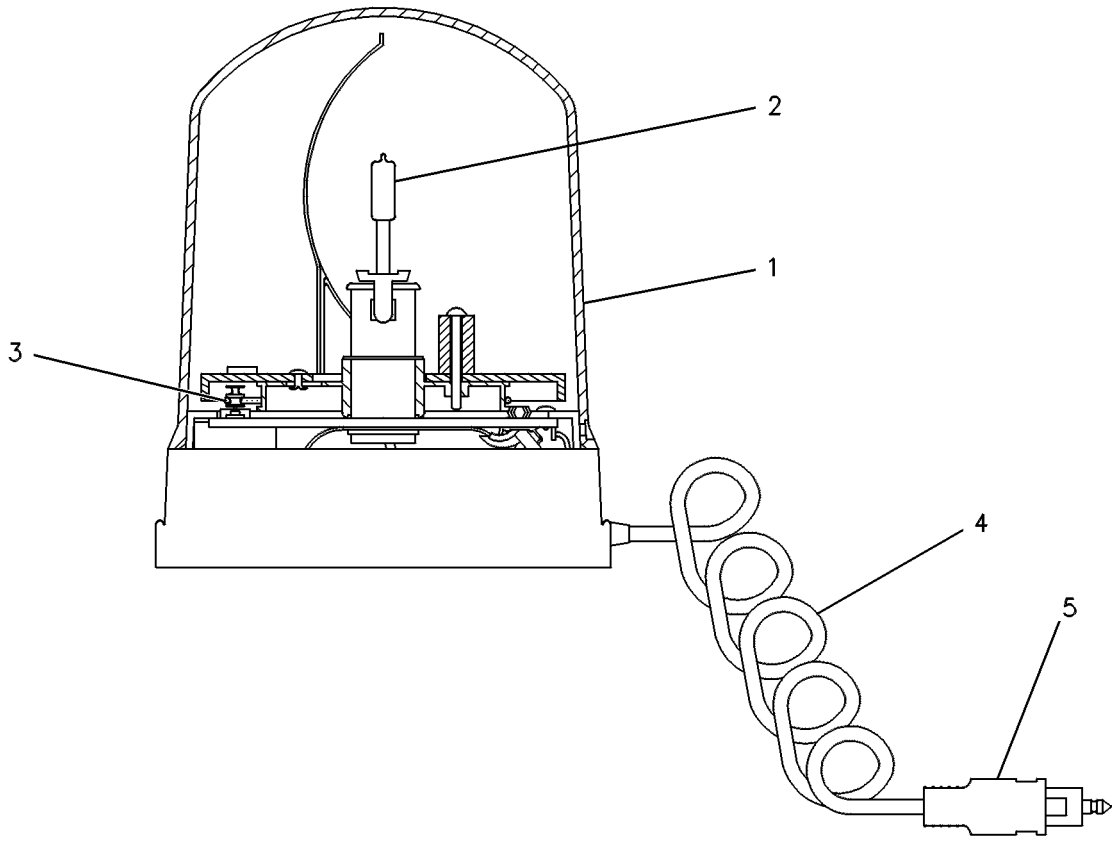

GRAPHIC #1 g00131297

115-1558 LIGHTING GP-AUXILIARY

S/N: DJD1-UP; DBT1-UP
AN ATTACHMENT

SMCS-1429 **i01232020**

NOTE	REF NO	GRAPHIC REF	PART NUMBER	QTY	PART NAME 1 2 3 4 5 6 (PRODUCT LEVEL)	SEE PAGE
	1	1	**115-1559**	2	PLATE	
Y	2	1	**117-3468**	2	LAMP GP-FLOOD	113
M	3	1	**5C-2890**	4	NUT (M6X1.00 THD)	
	4	1	**8T-4121**	2	WASHER-HARD (2.5MM THK)	
M	5	1	**8T-4133**	2	NUT (M10X1.50 THD)	
	6	1	**8T-4224**	4	WASHER-HARD (8.8X16X2MM THK)	
M	7	1	**8T-4189**	4	BOLT (M8X1.25X20MM)	
BD	8	1	**5P-6039**		WRAP-SPIRAL	

B-USE AS REQUIRED
D-ORDER BY THE METER
M-METRIC PART
Y-SEPARATE ILLUSTRATION

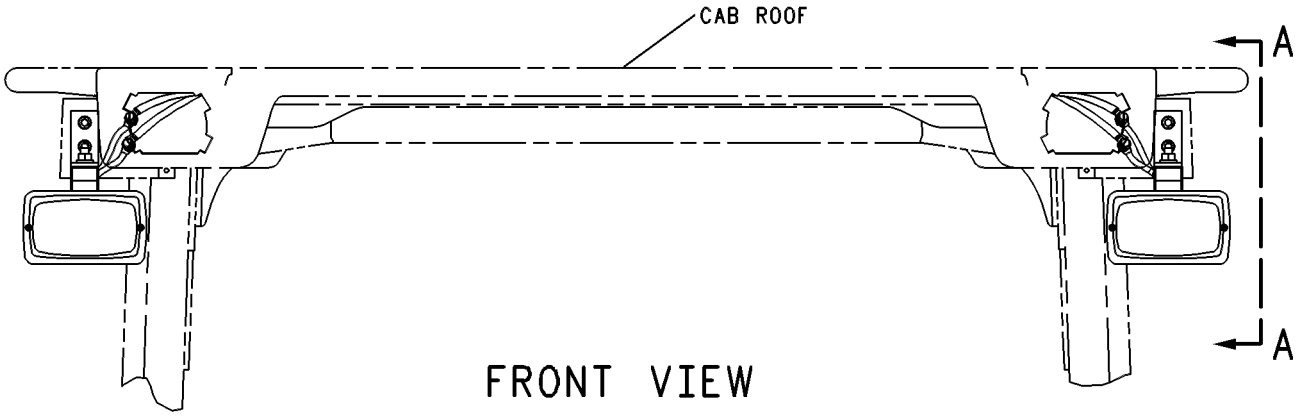

FRONT VIEW

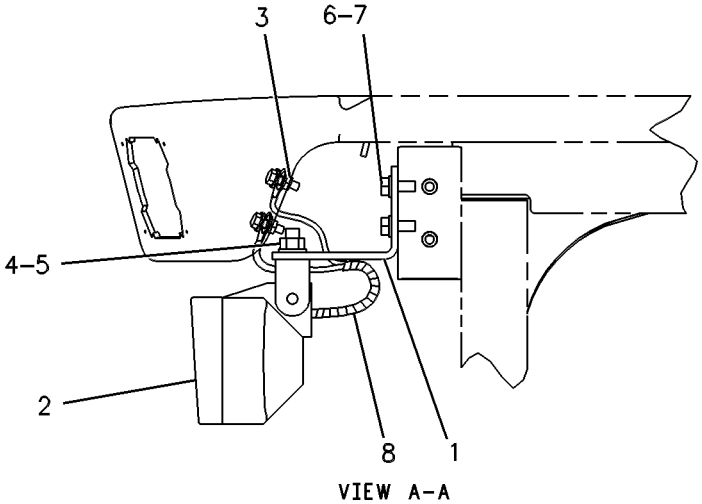

VIEW A–A

GRAPHIC #1 g00132023

MEMORANDA

117-9622 LIGHTING GP-FLOOD

S/N: DJD1-UP; DBT1-UP
4 LAMP
PART OF 205-0522 CAB AR, 205-0524 CAB AR-ENCLOSED ROPS
AN ATTACHMENT

SMCS-1434 **i01640673**

NOTE	REF NO	GRAPHIC REF	PART NUMBER	QTY	PART NAME 1 2 3 4 5 6 (PRODUCT LEVEL)	SEE PAGE
	1	1	**8E-1118**	1	ANTENNA AS	
D	2	1	**5P-5639**	2	SEAL (0.32M EACH)	
	3	1	**109-7041**	4	LAMP GP-FLOOD	
					(EACH INCLUDES)	
		1	**9X-3463**	1	LAMP (24 VOLT)	
		1	**142-5789**	4	SCREW	
	4	1	**109-8981**	1	CABLE AS-COAXIAL	
	5	1	**111-0157**	1	HARNESS AS-LIGHTING (FLOOD)	
		1	**102-8804**	1	KIT-RECEPTACLE (4 PIN)	
					(INCLUDES RECEPTACLE AS & WEDGE)	
	6	1	**114-6604**	16	NUT-SPEED	
	7	1	**119-0781**		ADHESIVE	
C	8	1	**164-5509**	1	BLOCK	
C	9	1	**180-5100**	1	ROOF	
	9A	1	**9R-7941**	1	RECEPTACLE AS-POWER (24 VOLTS)	
		1	**178-7539**	1	RECEPTACLE AS (POWER PORT)	
		1	**9R-7980**	1	COVER	
		1	**5P-5774**	1	PLUG	
M	10	1	**5C-2890**	4	NUT (M6X1 THD)	
M	11	1	**6V-7357**	4	BOLT (M6X1.0X25MM)	
CM	12	1	**8T-4137**	12	BOLT (M10X1.5X20MM)	
	13	1	**8T-4205**	8	WASHER-HARD (7.2X14.5X2MM THK)	
C	14	1	**8T-4226**	12	WASHER-PLATED (10.5X45X3MM THK)	
D	15	1	**5P-5639**		SEAL (0.51M)	
D	16	1	**5P-5639**		SEAL (0.27M)	

C-CHANGE FROM PREVIOUS TYPE
D-ORDER BY THE METER
M-METRIC PART

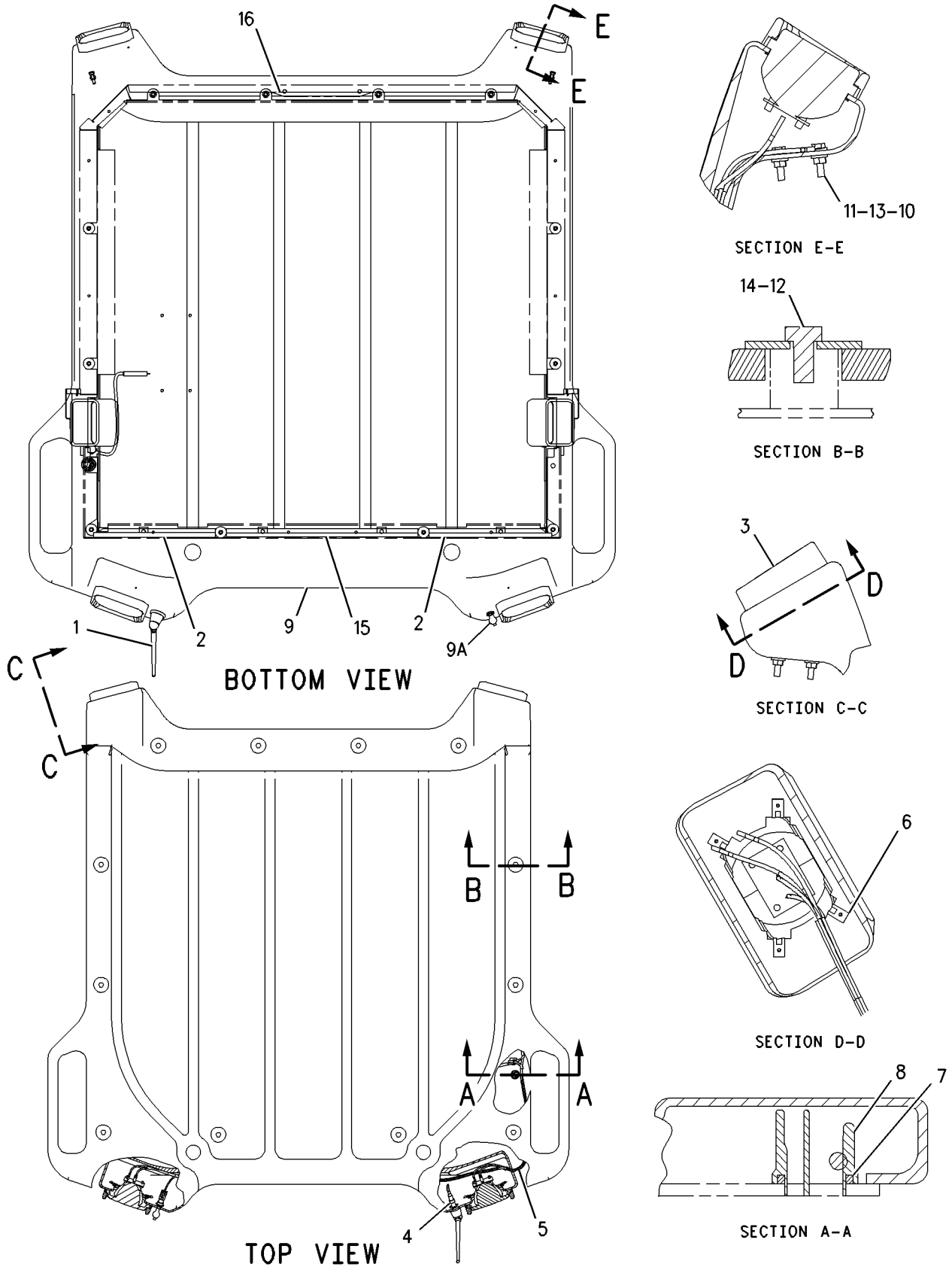

GRAPHIC #1

g00786496

120-6668 LIGHTING GP-FLOOD

S/N: DJD1-UP; DBT1-UP
4 LAMP
PART OF 205-0520 CANOPY GP-OPEN ROPS
AN ATTACHMENT

SMCS-1434 **i01620341**

NOTE	REF NO	GRAPHIC REF	PART NUMBER	QTY	PART NAME 1 2 3 4 5 6 (PRODUCT LEVEL)	SEE PAGE
	1	1	**5P-5774**	1	PLUG	
	2	1	**9R-7941**	1	RECEPTACLE AS-POWER (24 VOLTS)	
		1	**9R-7980**	1	COVER	
	3	1	**109-7041**	4	LAMP GP-FLOOD	
					(EACH INCLUDES)	
		1	**9X-3463**	1	LAMP (24 VOLT)	
		1	**142-5789**	4	SCREW	
	4	1	**111-0157**	1	HARNESS AS-LIGHTING (FLOOD)	
		1	**102-8804**	1	KIT-RECEPTACLE (4 PIN)	
					(INCLUDES RECEPTACALE AS & WEDGE)	
	5	1	**114-6604**	16	NUT-SPEED	
	6	1	**180-5100**	1	ROOF	
M	7	1	**5C-2890**	4	NUT (M6X1 THD)	
M	8	1	**6V-7357**	4	BOLT (M6X1.0X25MM)	
M	9	1	**8T-4137**	12	BOLT (M10X1.5X20MM)	
	10	1	**8T-4205**	8	WASHER-HARD (7.2X14.5X2MM THK)	
	11	1	**8T-4226**	12	WASHER-PLATED (10.5X45X3MM THK)	
D	12	1	**5P-5639**		SEAL (0.51M)	
D	13	1	**5P-5639**	2	SEAL (0.32M)	
D	14	1	**5P-5639**	3	SEAL (0.27M)	

D-ORDER BY THE METER
M-METRIC PART

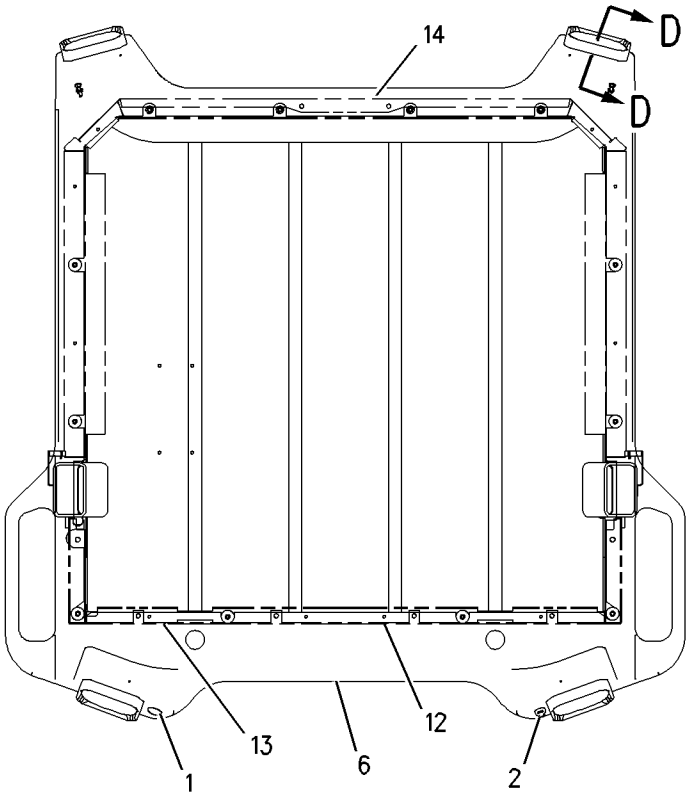

BOTTOM VIEW

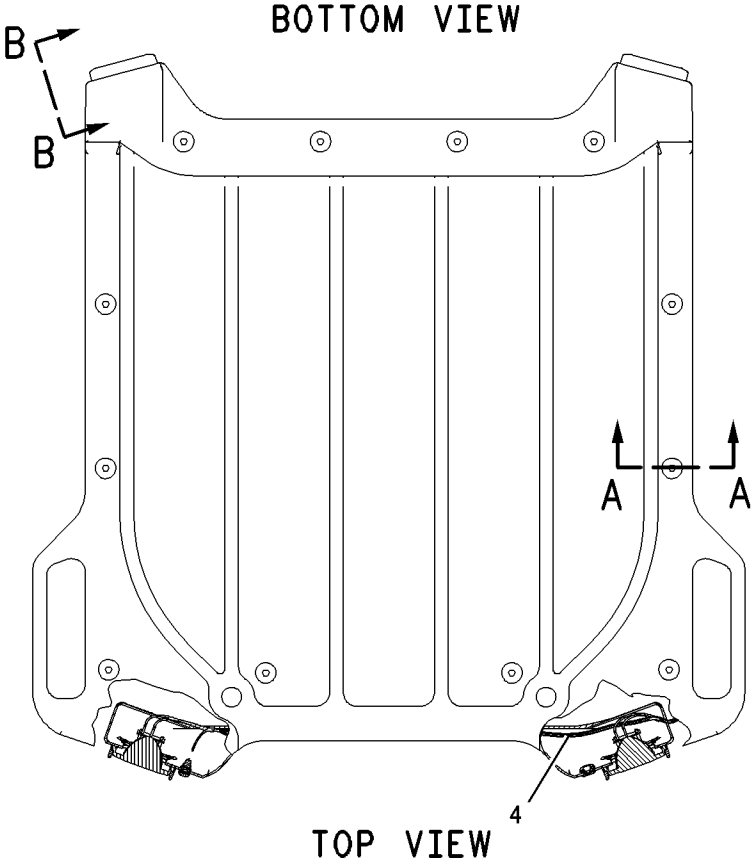

TOP VIEW

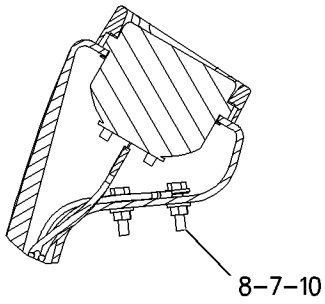

SECTION D-D

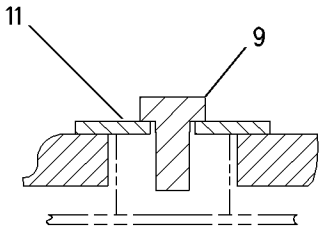

SECTION A-A

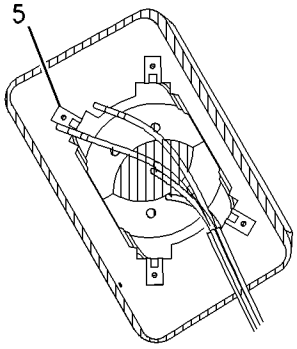

SECTION C-C

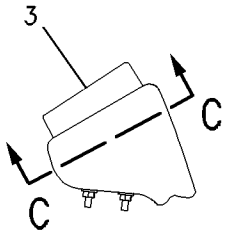

SECTION B-B

GRAPHIC #1

g00838641

ELECTRICAL AND STARTING SYSTEM

204-9417 LIGHTING GP-FLOOD & SIGNAL

S/N: DJD1-UP; DBT1-UP

PART OF 176-5220, 204-4350 COMMON AR

SMCS-1430, 1434 **i01794474**

NOTE	REF NO	GRAPHIC REF	PART NUMBER	QTY	PART NAME 1 2 3 4 5 6 (PRODUCT LEVEL)	SEE PAGE
Y	1	1	**3E-6328**	1	ALARM GP (24V)	95
	2	1	**5C-8964**	1	LAMP AS-RH	
	3	1	**5C-9029**	1	LAMP AS-LH	
	4	1	**5V-2998**	1	PLATE	
	5	1	**6K-0806**	2	STRAP-CABLE	
	6	1	**9R-1499**	2	REFLECTOR	
	7	1	**9R-2404**	6	REFLECTOR-AMBER	
	8	1	**9X-4493**	2	LAMP (24 VOLT)	
M	9	1	**9X-6615**	4	BOLT (M5X.8X30MM)	
	10	1	**108-0358**	1	FLASHER AS (12/24 VOLT)	
	11	1	**109-7041**	2	LAMP GP-FLOOD	
					(EACH INCLUDES)	
		1	**9X-3463**	1	LAMP-HEAD (24 VOLT)	
		1	**142-5789**	4	SCREW	
	12	1	**111-5042**	4	FASTENER	
	13	1	**112-7292**	2	HARNESS AS-LIGHTING (FRONT)	
					(EACH INCLUDES)	
		1	**102-8805**	1	KIT-RECEPTACLE (6 PIN)	
	14	1	**114-6604**	8	NUT-SPEED	
	15	1	**117-0811**	2	BRACKET AS	
	16	1	**128-0280**	2	HOUSING-LAMP	
	17	1	**131-7866**	2	PLATE AS	
M		1	**8T-3612**	3	NUT-WELD (M8X1.25 THD)	
	18	1	**131-7874**	4	PAD-RESILIENT	
Y	19	1	**145-6929**	2	LAMP GP-STOP & TAIL	114
	20	1	**173-3064**	1	SWITCH AS-TURN SIG & WARNING	
		1	**5L-7200**	1	SCREW (8-32X0.375 IN)	
		1	**9B-7233**	1	LOCKWASHER	
	21	1	**202-7479**	1	HARNESS AS-LIGHTING (TURN SIGNALS)	
		1	**102-8801**	1	KIT-RECEPTACLE (12 PIN)	
	22	1	**119-5026**	2	SCREW-PAN HEAD (10-16X0.63 IN)	
	23	1	**133-3235**	1	LEVER	
	24	1	**1H-4393**	3	LOCKWASHER	
	25	1	**3B-4503**	4	LOCKWASHER	
	26	1	**4B-4274**	6	WASHER (5.5X13X1.2MM THK)	
M	27	1	**5C-2874**	4	NUT (M5X.8 THD)	
M	28	1	**5C-2890**	1	NUT (M6X1 THD)	
M	29	1	**5C-8312**	1	NUT (M4X0.7 THD)	
	30	1	**8T-4205**	4	WASHER-HARD (7.2X14.5X2MM THK)	
	31	1	**8T-4224**	6	WASHER-HARD (8.8X16X2MM THK)	
M	32	1	**8T-6912**	6	BOLT (M8X1.25X50MM)	
M	33	1	**9X-2045**	1	SCREW-TRUSS HEAD (M6X1X20MM)	
	34	1	**9X-8256**	1	WASHER (6.6X12X2MM THK)	

M-METRIC PART
Y-SEPARATE ILLUSTRATION

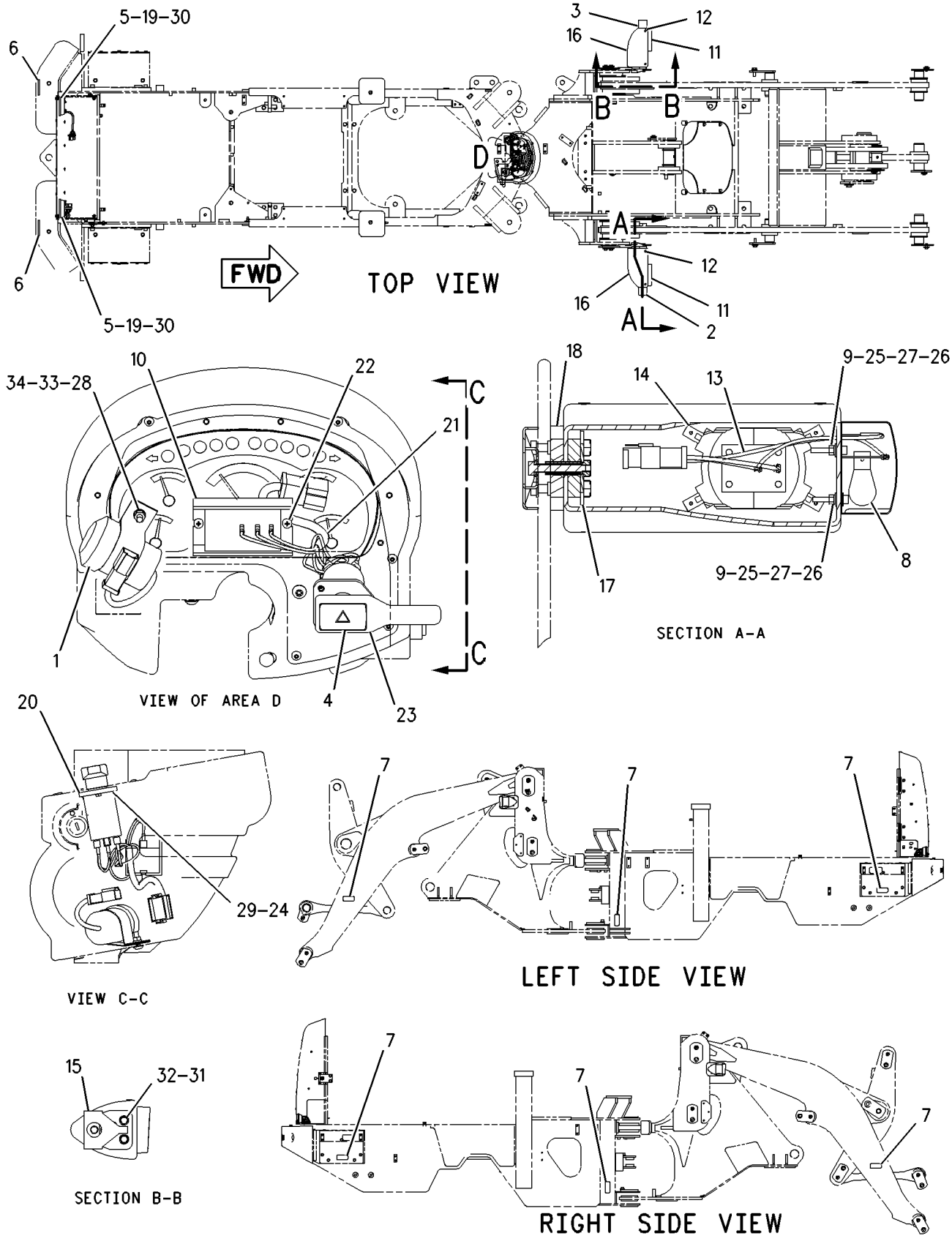

GRAPHIC #1 g00919737

218-8836 LIGHTING GP-WARNING

S/N: DJD1-UP; DBT1-UP
AN ATTACHMENT

SMCS-1431 **i01819415**

NOTE	REF NO	GRAPHIC REF	PART NUMBER	QTY	PART NAME 1 2 3 4 5 6 (PRODUCT LEVEL)	SEE PAGE
Y	1	1	**108-1029**	1	LAMP GP-WARNING BEACON (24 VOLT)	115
	2	1	**129-0336**	1	PLATE	
	3	1	**195-0925**	1	SWITCH AS-ROCKER (WARNING BEACON)	
		1	**111-7899**	1	GASKET	
	4	1	**6V-6635**	4	SCREW-PAN HEAD	

Y-SEPARATE ILLUSTRATION

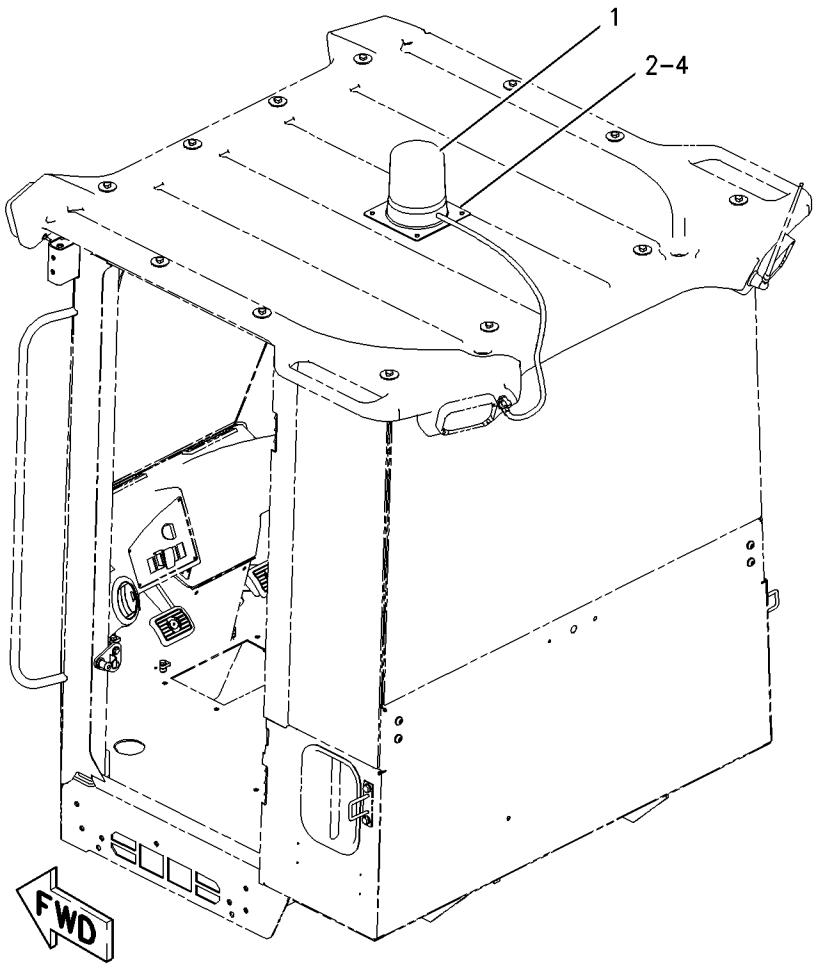

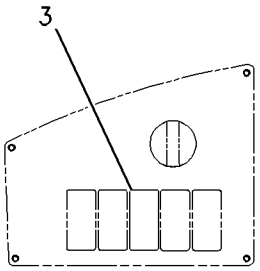

LH SWITCH PANEL
(924, 928, IT28G)

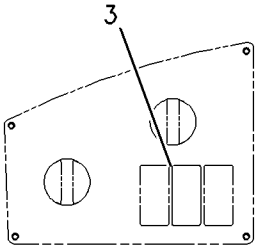

LH SWITCH PANEL
(938, IT38G11)

GRAPHIC #1 g00905707

218-8837 LIGHTING GP-WARNING

S/N: DJD1-UP; DBT1-UP
AN ATTACHMENT

SMCS-1431 **i01819416**

NOTE	REF NO	GRAPHIC REF	PART NUMBER	QTY	PART NAME 1 2 3 4 5 6 (PRODUCT LEVEL)	SEE PAGE
Y	1	1	**108-1029**	1	LAMP GP-WARNING BEACON (24 VOLT)	115
	2	1	**129-0337**	1	PLATE AS	
	3	1	**195-0925**	1	SWITCH AS-ROCKER (WARNING BEACON)	
		1	**111-7899**	1	GASKET	
	4	1	**6V-6635**	4	SCREW-PAN HEAD	

Y-SEPARATE ILLUSTRATION

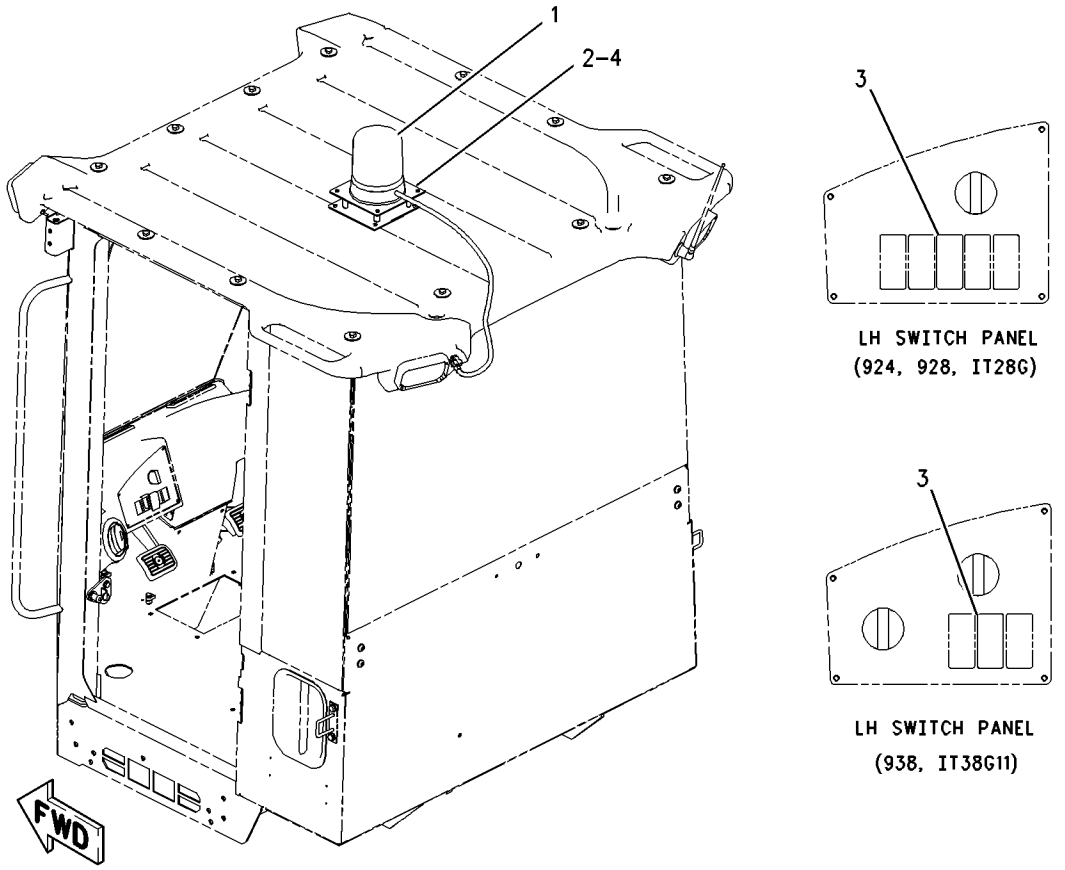

GRAPHIC #1 g00906061

219-1855 LINES GP-STARTING AID

S/N: CPT1-UP

PART OF 179-1797 ENGINE AR-PRIMARY

SMCS-1090, 1296 **i01725062**

NOTE	REF NO	GRAPHIC REF	PART NUMBER	QTY	PART NAME 1 2 3 4 5 6 (PRODUCT LEVEL)	SEE PAGE
	1	1	**067-6998**	1	NUT	
	2	1	**067-6999**	1	FERRULE	
	3	1	**114-4363**	2	BOLT (M8X1.25X12MM)	
	4	1	**219-1856**	1	LINE AS-FUEL	
	5	1	**101-3927**	3	CLIP	
	6	1	**101-3983**	1	NUT (3/16)	
	7	1	**101-3984**	1	FERRULE	

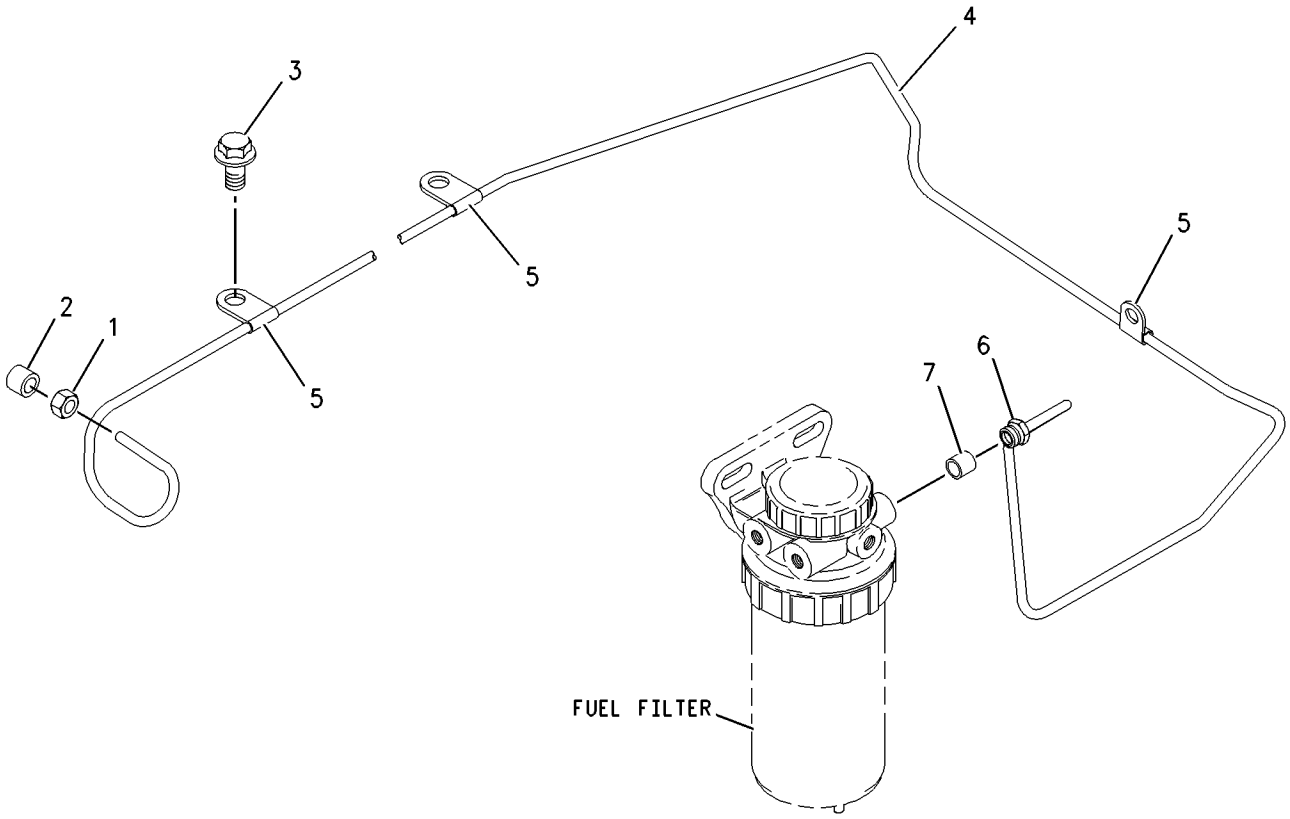

GRAPHIC #1 g00888975

160-2443 SENSOR GP-POSITION

S/N: DJD1-UP; DBT1-UP
ROTARY
PART OF 190-4700 PEDAL GP-GOVERNOR, 190-4652 PLATFORM AR
AN ATTACHMENT

SMCS-4269, 5702, 5736, 5737, 7494 **i01834566**

NOTE	REF NO	GRAPHIC REF	PART NUMBER	QTY	PART NAME 1 2 3 4 5 6 (PRODUCT LEVEL)	SEE PAGE
J	1	1	**102-8803**	1	KIT-RECEPTACLE (3 PIN)	
	2	1	**8T-8729**	3	PIN-CONNECTOR	
J	3	1	**3E-3371**	1	WEDGE-RECEPTACLE LOCK (3 PIN)	

J-PART MARKED J INCLUDED IN KIT MARKED J

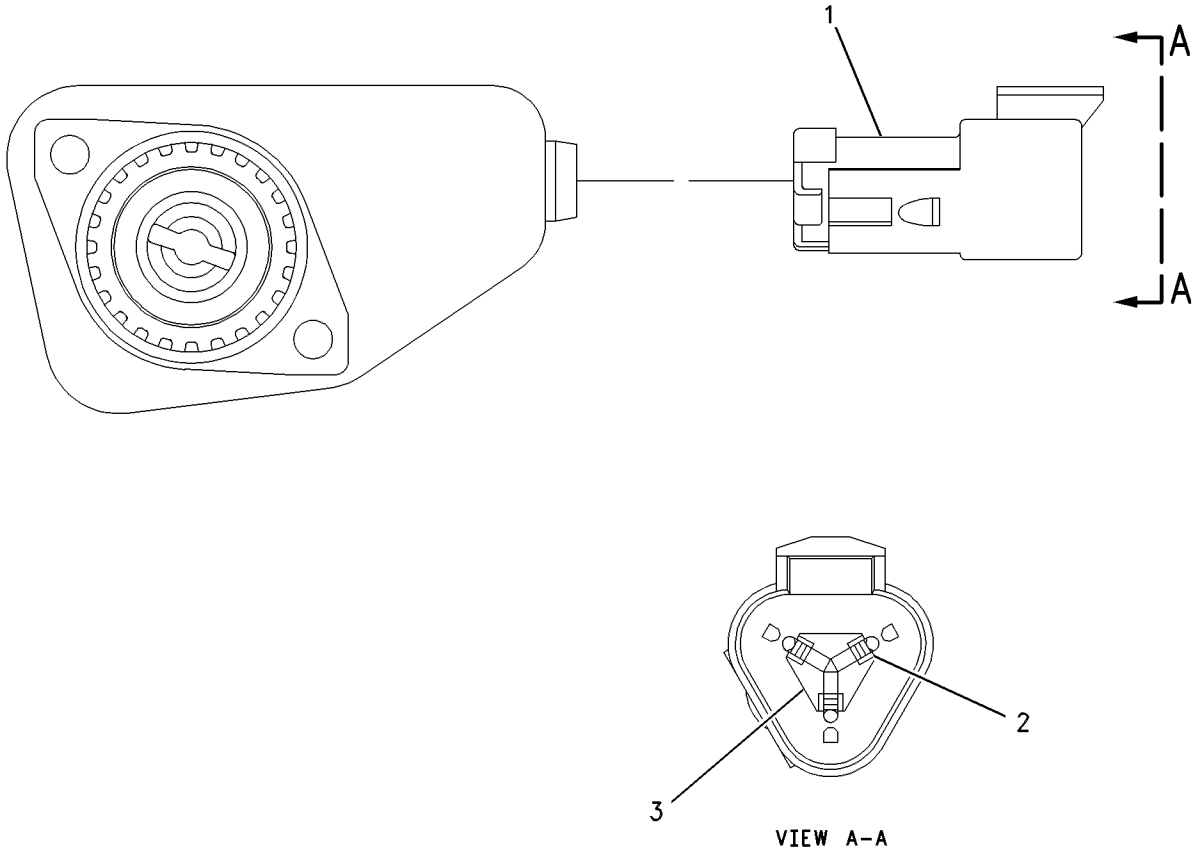

GRAPHIC #1 g00637818

124-4672 SENSOR GP-PRESSURE

S/N: DJD1-UP

PART OF 202-6496 CONTROL GP-MONITOR

SMCS-1408, 7494 **i01834758**

NOTE	REF NO	GRAPHIC REF	PART NUMBER	QTY	PART NAME 1 2 3 4 5 6 (PRODUCT LEVEL)	SEE PAGE
	1	1	**7T-7370**	1	SEAL-SECURITY	
E	2	1	**9X-1813**		SLEEVE (16CM)	
J	3	1	**102-8803**	1	KIT-RECEPTACLE (3 PIN)	
	4	1	**8T-8729**	3	PIN-CONNECTOR	
J	5	1	**3E-3371**	1	WEDGE-RECEPTACLE LOCK (3 PIN)	

E-ORDER BY THE CENTIMETER
J-KIT MARKED J INCLUDES PART MARKED J

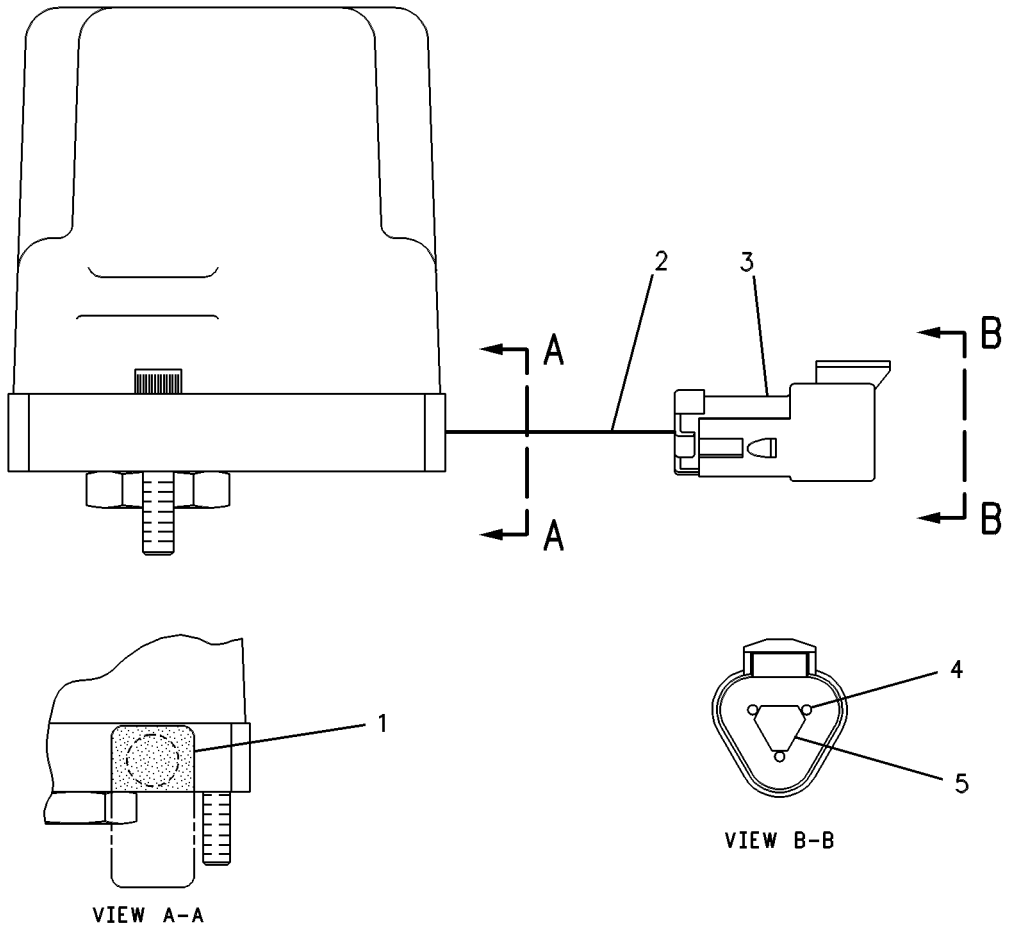

GRAPHIC #1 g00109035

219-1854 STARTING AID GP

S/N: CPT1-UP

PART OF 179-1797 ENGINE AR-PRIMARY

SMCS-1090 **i01725056**

NOTE	REF NO	GRAPHIC REF	PART NUMBER	QTY	PART NAME 1 2 3 4 5 6 (PRODUCT LEVEL)	SEE PAGE
	1	1	**127-2956**	1	WASHER	
	2	1	**186-4272**	1	HEATER (AIR INLET)	

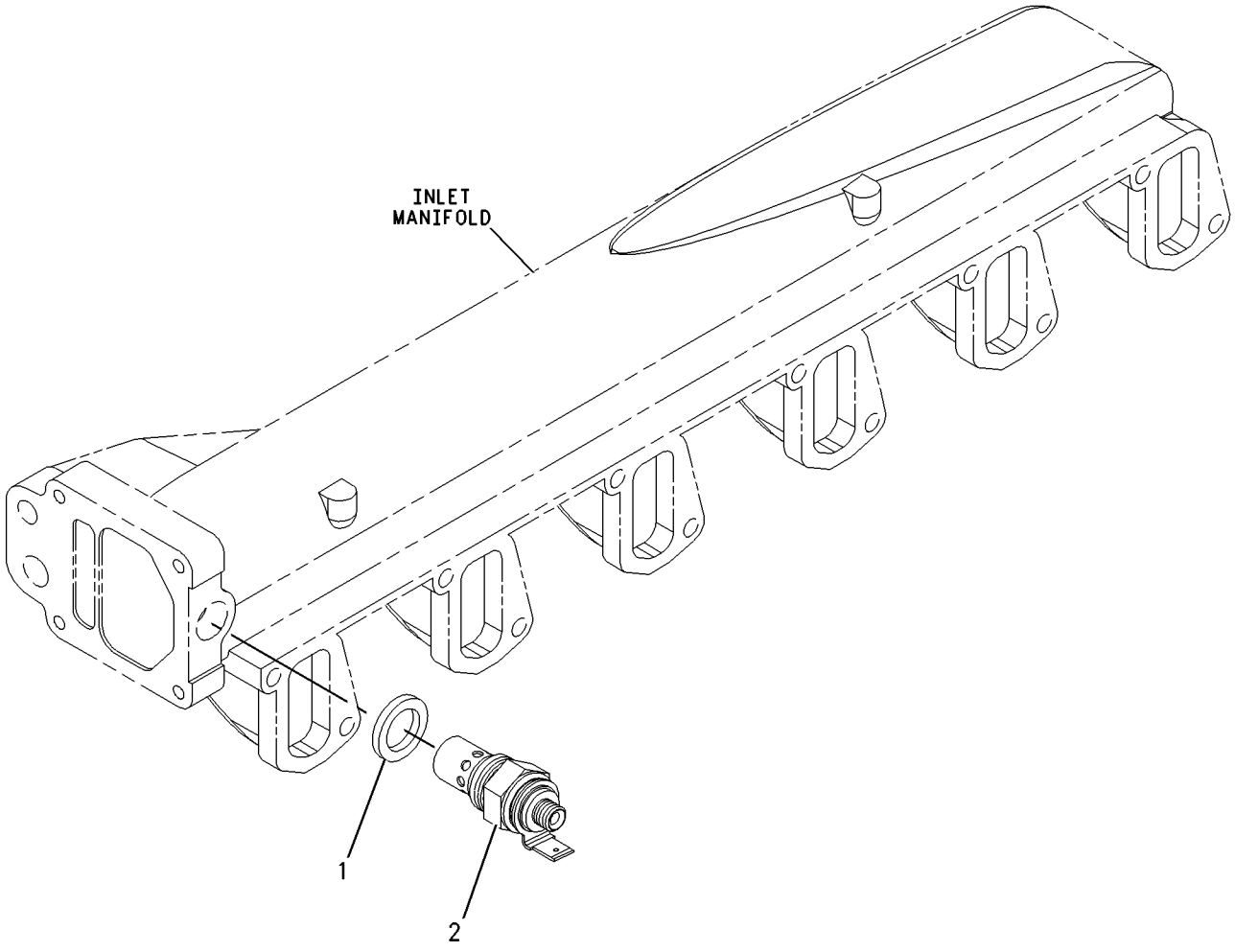

GRAPHIC #1 g00888883

1G-9963 STARTING MOTOR GP-ELECTRIC

S/N: DJD1-UP; DBT1-UP

PART OF 176-5223 INSTALLATION AR-ENGINE

SMCS-1453 **i00733846**

NOTE	REF NO	GRAPHIC REF	PART NUMBER	QTY	PART NAME 1 2 3 4 5 6 (PRODUCT LEVEL)	SEE PAGE
YC	1	1	**143-0541**	1	STARTING MOTOR GP-ELECTRIC	132
M	2	1	**8T-4195**	3	BOLT (M10X1.50X30MM)	
	3	1	**8T-4121**	3	WASHER (2.5MM THK)	

C-CHANGE FROM PREVIOUS TYPE
M-METRIC PART
Y-SEPARATE ILLUSTRATION

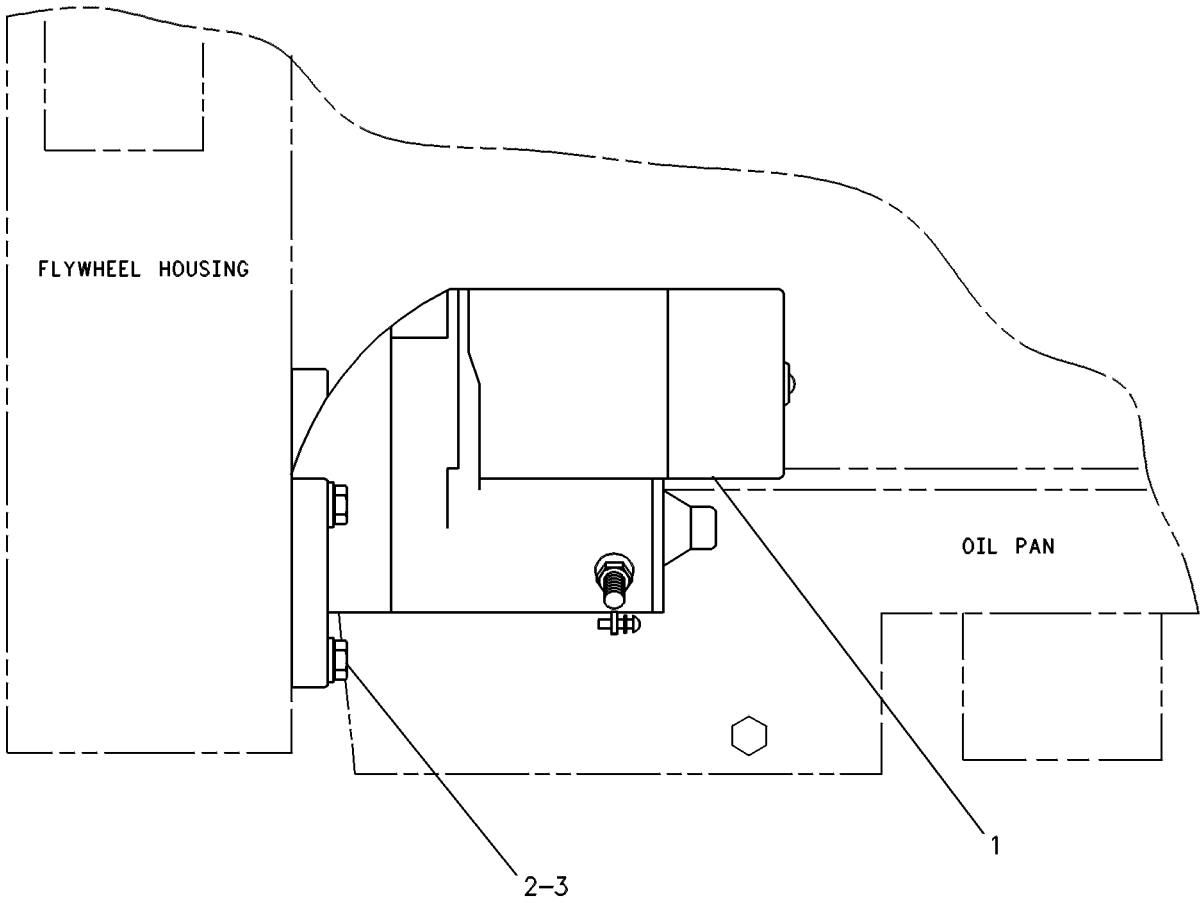

GRAPHIC #1 g00238636

MEMORANDA

ELECTRICAL AND STARTING SYSTEM

143-0541 STARTING MOTOR GP-ELECTRIC*R

S/N: DJD1-UP; DBT1-UP

PART OF 1G-9963 STARTING MOTOR GP-ELECTRIC

SMCS-1453 **i01812113**

NOTE	REF NO	GRAPHIC REF	PART NUMBER	QTY	PART NAME 1 2 3 4 5 6 (PRODUCT LEVEL)	SEE PAGE
	1	1	**8C-9778**	1	PLUNGER AS	
	2	1	**8C-9783**	1	GASKET	
	3	1	**2P-8104**	1	BEARING	
	4	1	**7T-6092**	1	HOLDER AS-BRUSH	
M	5	1	**8T-4133**	2	NUT (M10X1.5 THD)	
	6	1	**7T-6088**	1	BEARING AS	
	7	1	**7T-6087**	1	WASHER	
	8	1	**7T-6093**	1	CLUTCH AS	
	9	1	**8J-4455**	1	BALL	
	10	1	**7T-6090**	1	SPRING	
	11	1	**8T-4121**	2	WASHER-HARD (11X21X2.5MM THK)	
	12	1	**3E-5153**	1	COVER-STARTING MOTOR	
M	13	1	**9X-2036**	1	SCREW-PAN HEAD	
	14	1	**8F-1434**	1	LOCKWASHER	
	15	1	**100-6659**	1	SWITCH AS (STARTER)	
	16	1	**3E-6238**	1	ARMATURE AS	
	17	1	**3E-6237**	1	CASE AS-STARTING MOTOR	
	18	1	**100-4115**	1	HOUSING-STARTING MOTOR	
	19	1	**143-1344**	1	FRAME-STARTER	
	20	1	**100-3685**	1	CAP	
	21	1	**3E-5154**	1	BUSHING-STARTING MOTOR	
					AVAILABLE REPAIR KIT(S):	
			7T-6099	1	KIT-GEAR (STARTING MOTOR)	
					(INCLUDES RETAINER, PINION & ROLLERS)	
			8C-5457	1	KIT-CONTACT (STARTING MOTOR)	
					(INCLUDES NUT, WASHER, PLATE BUSHING & BOLT)	
			100-4112	1	KIT-CONTACT (STARTING MOTOR)	
					(INCLUDES NUT, WASHER, SEAL BUSHING, PLATE & BOLT)	
			146-6729	1	KIT-HARDWARE (STARTING MOTOR)	

M-METRIC PART

143-0541 STARTING MOTOR GP-ELECTRIC *(contd.)* **i01812113**

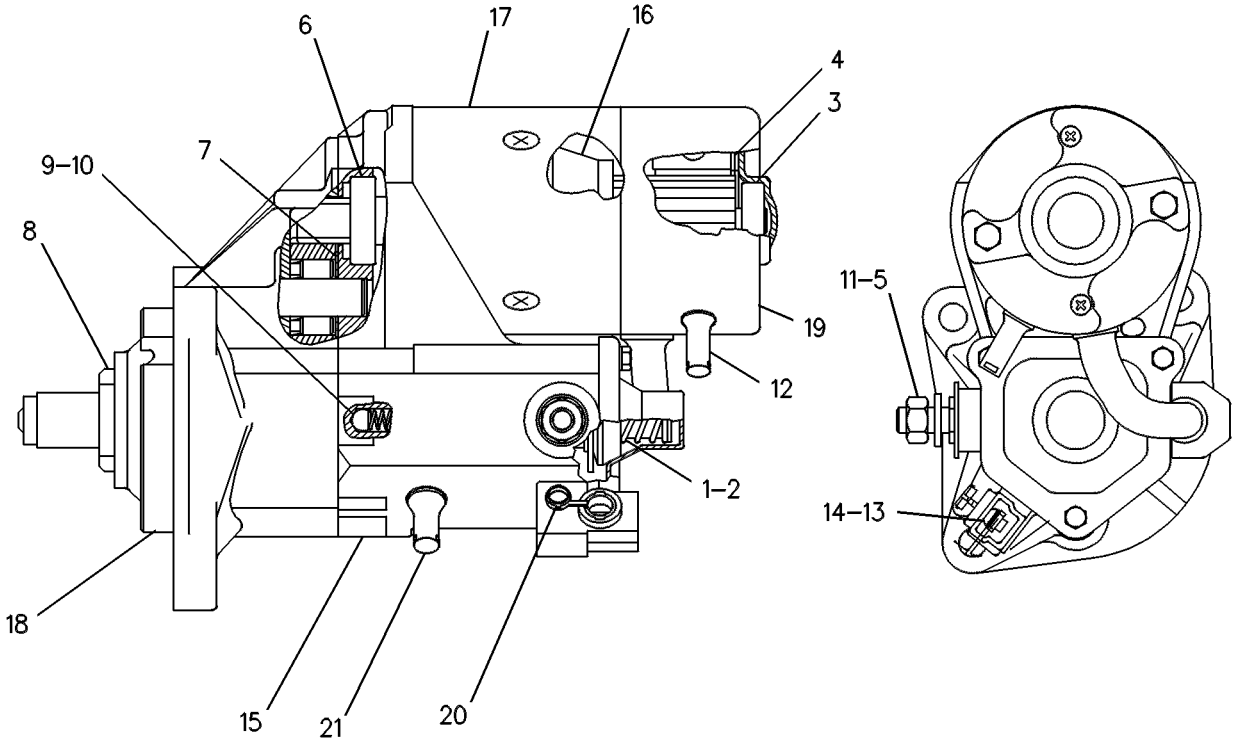

GRAPHIC #1 g00131126

7N-0718 SWITCH GP-DISCONNECT–BATTERY

S/N: DJD1-UP; DBT1-UP

PART OF 180-8805 WIRING GP-BATTERY

SMCS-1411 **i01727188**

NOTE	REF NO	GRAPHIC REF	PART NUMBER	QTY	PART NAME 1 2 3 4 5 6 (PRODUCT LEVEL)	SEE PAGE
	1	1	**8H-5306**	1	KEY (BATTERY DISCONNECT)	
	2	1	**8H-5303**	1	NUT (3/4-16 THD)	
	3	1	**2H-3922**	2	LOCKWASHER	
	4	1	**9F-5644**	2	LOCKWASHER	
	5	1	**6F-7045**	2	NUT-FULL (3/8X24 THD)	

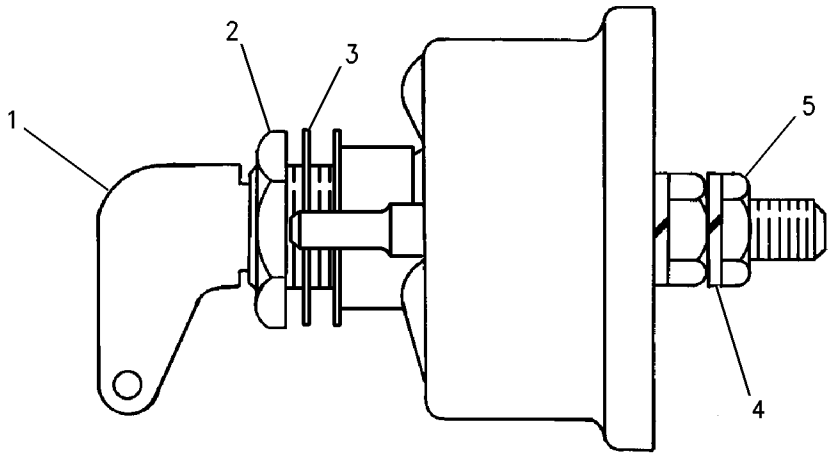

GRAPHIC #1 g00715584

3E-0154 SWITCH GP-MAGNETIC—SECONDARY STEERING RELAY

S/N: DJD1-UP; DBT1-UP
24-32 VOLT
PART OF 180-8810 WIRING GP-SECONDARY STEERING
AN ATTACHMENT

SMCS-7499 **i01819975**

NOTE	REF NO	GRAPHIC REF	PART NUMBER	QTY	PART NAME 1 2 3 4 5 6 (PRODUCT LEVEL)	SEE PAGE
	1	1	**7X-0620**	2	WASHER-HARD (5.5X13X1.6MM THK)	
	2	1	**8F-1434**	2	LOCKWASHER	
	3	1	**6V-8378**	2	NUT (10-32 THD)	
C	4	1	**6V-8801**	2	NUT (3/8-16 THD)	
C	5	1	**7X-0608**	2	WASHER-HARD (10.2X16X2.0MM THK)	
	6	1	**4D-1326**	2	LOCKWASHER	

C-CHANGE FROM PREVIOUS TYPE

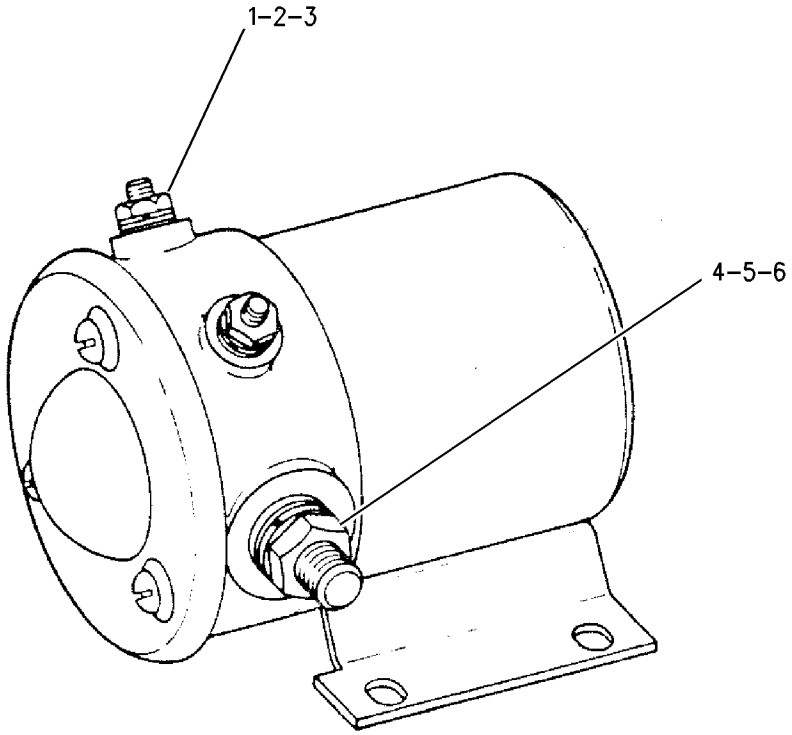

GRAPHIC #1 g00726410

167-0138 SWITCH GP-MAGNETIC

S/N: DJD1-UP; DBT1-UP
24 VOLT
PART OF 190-4310, 190-4320 PANEL GP-INSTRUMENT
AN ATTACHMENT

SMCS-7499 **i01700656**

NOTE	REF NO	GRAPHIC REF	PART NUMBER	QTY	PART NAME 1 2 3 4 5 6 (PRODUCT LEVEL)	SEE PAGE
	1	1	**4F-2294**	2	NUT-JAM (5/16-24 THD)	
	2	1	**6V-8186**	2	NUT-FULL (5/16-24 THD)	
	3	1	**155-2270**	1	KIT-CONNECTING PLUG (2 PIN)	
					(INCLUDES PLUG AS & WEDGE)	
	4	1	**186-3736**	2	SOCKET-CONNECTOR	
	5	1	**155-2261**	1	WEDGE-PLUG LOCK (2 PIN)	

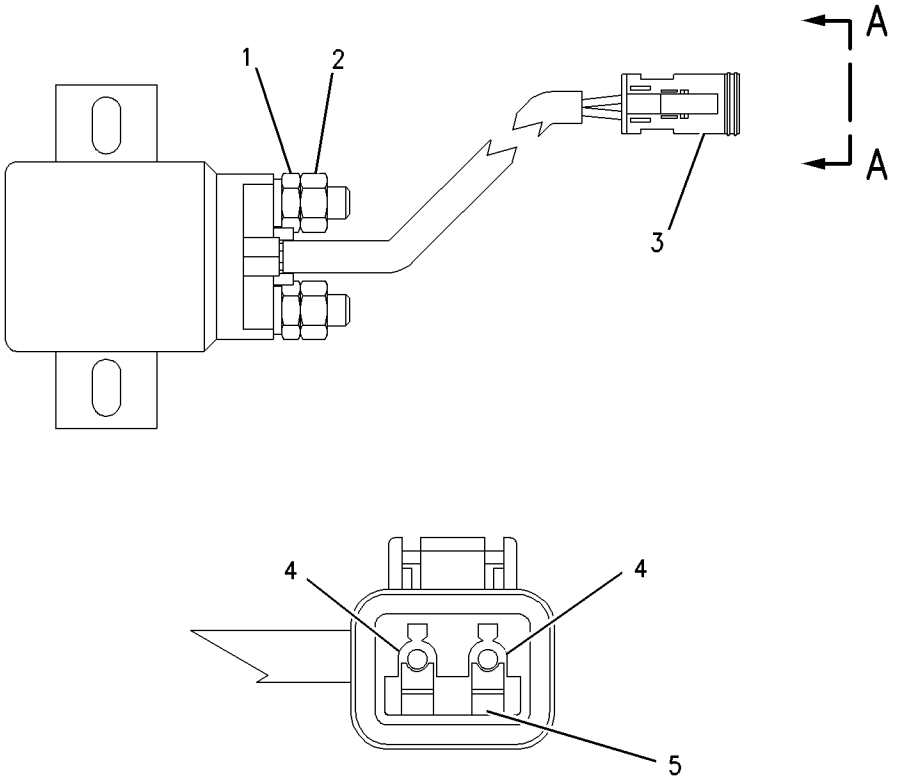

VIEW A-A

GRAPHIC #1 g00831588

107-6133 SWITCH GP-WIPER

S/N: DJD1-UP; DBT1-UP
PART OF 190-4405 CAB AR
AN ATTACHMENT

SMCS-7332 **i01232028**

NOTE	REF NO	GRAPHIC REF	PART NUMBER	QTY	PART NAME 1 2 3 4 5 6 (PRODUCT LEVEL)	SEE PAGE
J	1	1	**110-7886**	1	SWITCH AS-WIPER (INTERMITTENT)	
JL	2	1	**102-8806**	1	KIT-RECEPTACLE (8 PIN)	
J	3	1	**9W-0852**	4	PIN-CONNECTOR	
J	4	1	**6V-8369**	1	NUT (7/16-28 THD)	
J	5	1	**2H-3920**	1	LOCKWASHER (11.38MM ID)	
J	6	1	**8T-8737**	1	PLUG-SEAL	
J	7	1	**8T-8729**	3	PIN-CONNECTOR	
JL	8	1	**3E-3389**	1	WEDGE-RECEPTACLE LOCK	

J-QUANTITIES SHOWN ARE FOR BOTH FRONT AND REAR WIPER SWITCHES
L-PART MARKED L INCLUDED IN KIT MARKED L

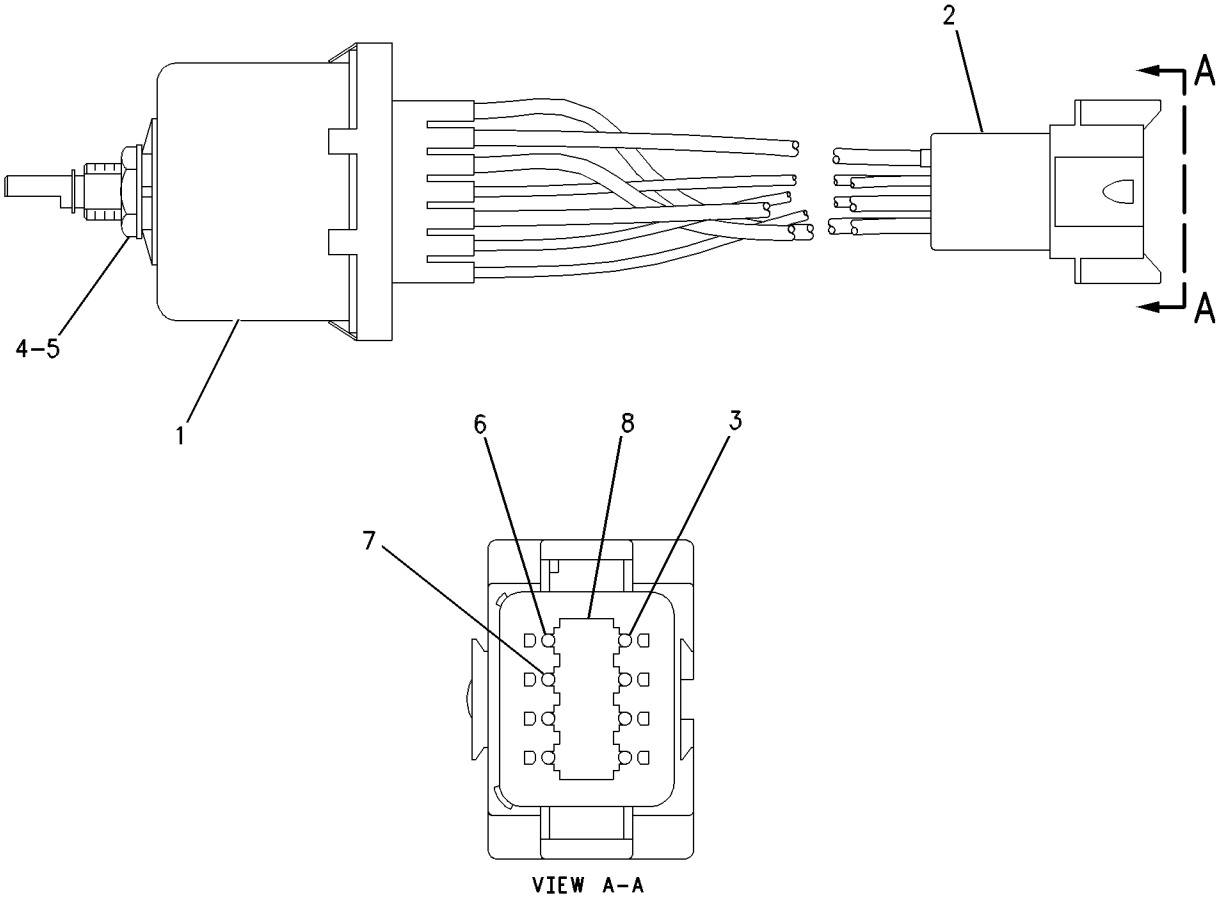

GRAPHIC #1 g00599711

180-8807 WARNING GP-BACKUP

S/N: DJD1-UP; DBT1-UP

PART OF 176-5221, 204-4349 CHASSIS AR

SMCS-7406 **i01774643**

NOTE	REF NO	GRAPHIC REF	PART NUMBER	QTY	PART NAME 1 2 3 4 5 6 (PRODUCT LEVEL)	SEE PAGE
	1	1	**7K-1181**	1	STRAP-CABLE	
	2	1	**213-9100**	1	ALARM-BACKUP	
		1	**102-8802**	1	KIT-RECEPTACLE (2 PIN)	
M	3	1	**8T-4200**	2	BOLT (M8X1.25X16MM)	
	4	1	**8T-4224**	2	WASHER-HARD (8.8X16X2MM THK)	

M-METRIC PART

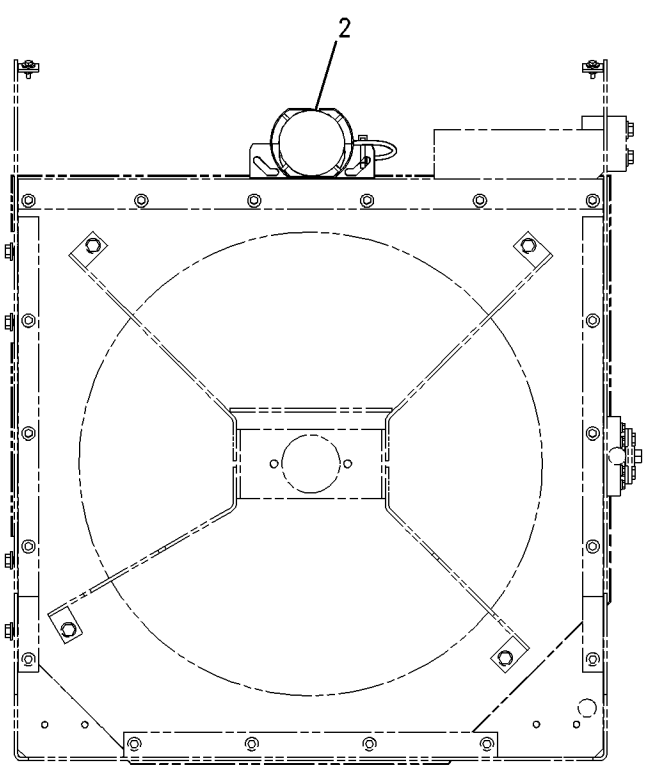

REAR VIEW

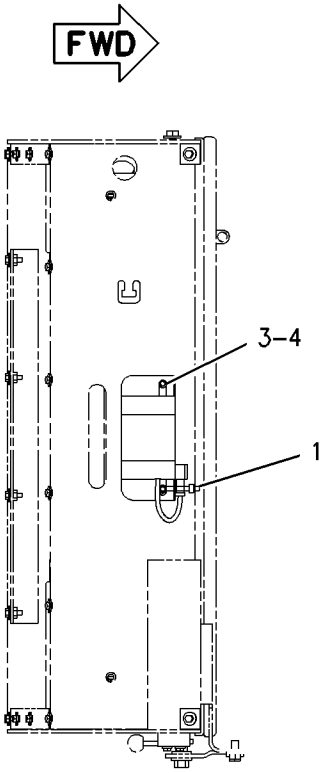

TOP VIEW

GRAPHIC #1 g00915611

MEMORANDA

180-8805 WIRING GP-BATTERY

S/N: DJD1-UP; DBT1-UP
PART OF 176-5221, 204-4349 CHASSIS AR

SMCS-1402 **i01774696**

NOTE	REF NO	GRAPHIC REF	PART NUMBER	QTY	PART NAME 1 2 3 4 5 6 (PRODUCT LEVEL)	SEE PAGE
	1	1	**2G-8767**	2	WASHER (10.5X60X3MM THK)	
	2	1	**3E-8320**	1	PLATE-INSTRUCTION (BATTERY)	
	3	1	**3W-6188**	1	BRACKET	
	4	1	**6G-2256**	2	CLAMP	
	5	1	**6G-2263**	2	SPACER (10.5X19X28.5MM THK)	
Y	6	1	**7N-0718**	1	SWITCH GP-DISCONNECT (BATTERY)	134
	7	1	**8R-0768**	4	ROD-RETAINING	
	8	1	**091-0081**	1	SPACER (10.5X20X10.0MM THK)	
	9	1	**102-4176**	2	HOLD-DOWN	
	10	1	**111-6940**	1	SPACER	
	11	1	**180-8871**	1	CABLE AS	
		1	**5P-0761**		CABLE (00GA)(RED) (146CM)	
		1	**7N-5274**	1	COVER-TERMINAL (BLACK)	
		1	**8N-1725**	1	COVER-TERMINAL (RED)	
		1	**3S-6050**	1	TERMINAL AS-BATTERY (NEGATIVE)	
		1	**3S-6049**	1	TERMINAL AS-BATTERY (POSITIVE)	
	12	1	**180-8872**	1	CABLE AS	
		1	**1S-7252**	1	TERMINAL-RING (FOR 3/8 IN BOLT)	
		1	**5P-0747**		CABLE (00GA)(BLACK) (115CM)	
		1	**9G-0002**	1	COVER-TERMINAL	
		1	**9G-8909**	1	COVER-TERMINAL (BLACK)	
		1	**8T-9757**	1	TERMINAL AS-BATTERY (NEGATIVE)	
	13	1	**180-8873**	1	CABLE AS	
		1	**1S-7252**	1	TERMINAL-RING (FOR 3/8 IN BOLT)	
		1	**5P-0747**		CABLE (00GA)(BLACK) (17CM)	
		1	**8S-3020**	1	TERMINAL-CABLE	
	14	1	**180-8874**	1	CABLE AS	
		1	**1S-7251**	1	TERMINAL-RING (FOR 1/2 IN BOLT)	
		1	**5P-0747**		CABLE (00GA)(BLACK) (30CM)	
		1	**8S-3020**	1	TERMINAL-CABLE	
		1	**9G-8909**	1	COVER-TERMINAL (BLACK)	
	15	1	**226-6059**	1	CABLE AS	
		1	**1S-7252**	1	TERMINAL-RING (FOR 3/8 IN BOLT)	
		1	**5P-0761**		CABLE (00GA)(RED) (183CM)	
		1	**8N-0869**	1	COVER-TERMINAL (RED)	
		1	**9G-0004**	1	COVER-TERMINAL (RED)	
		1	**8C-5917**	1	TERMINAL AS-BATTERY (POSITIVE)	
	16	1	**5P-4116**	5	WASHER-HARD (8.8X20.5X2MM THK)	
	17	1	**6D-3479**	9	CLIP	
	18	1	**8T-4121**	14	WASHER-HARD (11X21X2.5MM THK)	
M	19	1	**8T-4133**	5	NUT (M10X1.5 THD)	
M	20	1	**8T-4136**	3	BOLT (M10X1.5X25MM)	
M	21	1	**8T-4137**	5	BOLT (M10X1.5X20MM)	
M	22	1	**8T-6466**	3	BOLT (M10X1.50X60MM)	
M	23	1	**8T-7547**	1	BOLT (M8X1.25X30MM)	
M	24	1	**8T-7963**	4	LOCKNUT	

M-METRIC PART
Y-SEPARATE ILLUSTRATION

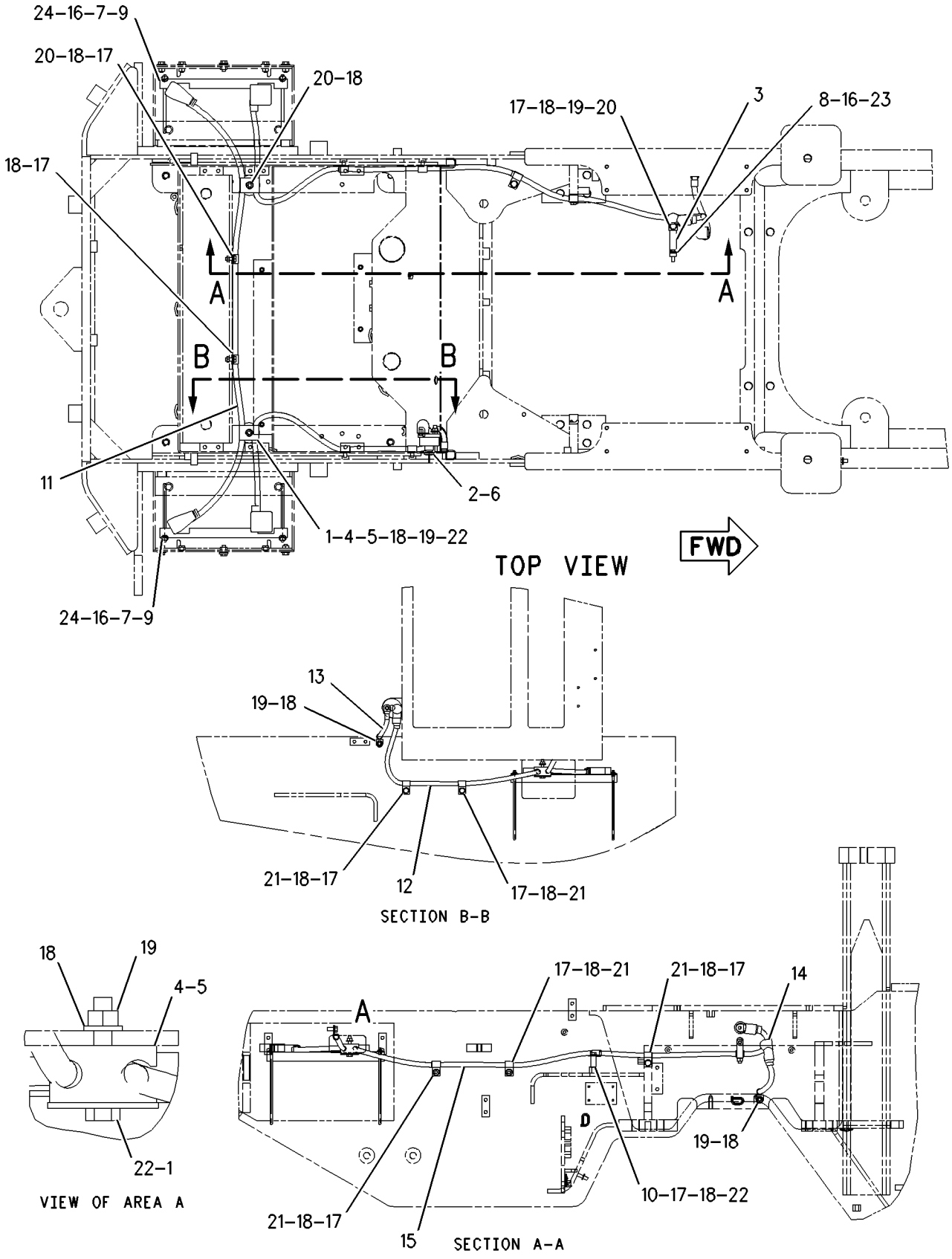

GRAPHIC #1 g00919168

190-4330 WIRING GP-CAB

S/N: DJD1-UP; DBT1-UP
PART OF 190-4406 CANOPY GP-OPEN ROPS
AN ATTACHMENT

SMCS-1408, 7301 **i01824255**

NOTE	REF NO	GRAPHIC REF	PART NUMBER	QTY	PART NAME 1 2 3 4 5 6 (PRODUCT LEVEL)	SEE PAGE
	1	2	**2G-5298**	1	WIRE AS	
B	2	1,2	**7K-1181**	12	STRAP-CABLE	
	3	1	**108-3320**	1	SWITCH AS-ROTARY (RUNNING/FLOOD/PANEL/TAIL LIGHT)	
		1	**3E-3389**	1	WEDGE-RECEPTACLE LOCK	
		1	**9W-0852**	8	PIN-CONNECTOR	
		1	**102-8806**	1	KIT-RECEPTACLE (8 PIN)	
	4	1	**110-6109**	1	KNOB-CONTROL	
B	5	1	**111-7899**	4	GASKET	
	6	2	**115-1748**	2	LAMP (24 VOLT)	
B	7	1	**165-0311**	4	PLUG	
	8	1	**172-2309**	1	HARNESS AS-CAB (LOWER ROPS TO ROOF)	
		1	**102-8801**	1	KIT-RECEPTACLE (12 PIN)	
		1	**155-2271**	1	KIT-CONNECTING PLUG (4 PIN)	
	9	1	**185-2766**	1	SWITCH AS-ROCKER (AUTOSHIFT ON/OFF)	
		1	**111-7899**	1	GASKET	
	10	1	**185-2769**	1	SWITCH AS-ROCKER (TRANSMISSION NEUTRALIZER ON/OFF)	
		1	**111-7899**	1	GASKET	
	11	2	**189-6140**	1	HARNESS AS-INSTRUMENT PANEL	
		2	**102-8805**	1	KIT-RECEPTACLE (6 PIN)	
		2	**155-2265**	3	KIT-CONNECTING PLUG (8 PIN)	
		2	**155-2271**	1	KIT-CONNECTING PLUG (4 PIN)	
		2	**155-2274**	1	KIT-CONNECTING PLUG (6 PIN)	
	12	1	**190-4558**	1	PLATE AS	
	13	1	**190-4559**	1	PLATE AS	
	14	1	**201-1024**	1	BRACKET	
	15	1	**202-1129**	8	SCREW-TRUSS HEAD	
	16	1	**204-0357**	1	FILM (PANEL-LH)	
	17	1	**204-0359**	1	FILM (PANEL-RH)	
	18	1	**211-0052**	1	NUT	
	19	1	**4P-7581**	1	CLIP	
	20	2	**4P-8134**	1	CLIP	
	21	1	**6D-4244**	1	CLIP	
	22	1	**8T-4121**	1	WASHER-HARD (11X21X2.5MM THK)	
M	23	1	**8T-4133**	1	NUT (M10X1.5 THD)	
M	24	1	**8T-4189**	1	BOLT (M8X1.25X20MM)	
M	25	1,2	**8T-4199**	2	BOLT (M8X1.25X12MM)	
	26	1,2	**8T-4224**	3	WASHER-HARD (8.8X16X2MM THK)	
	27	1	**9W-0335**	1	LIGHTER AS (CIGAR)(24 VOLT)	

B-USE AS REQUIRED
M-METRIC PART

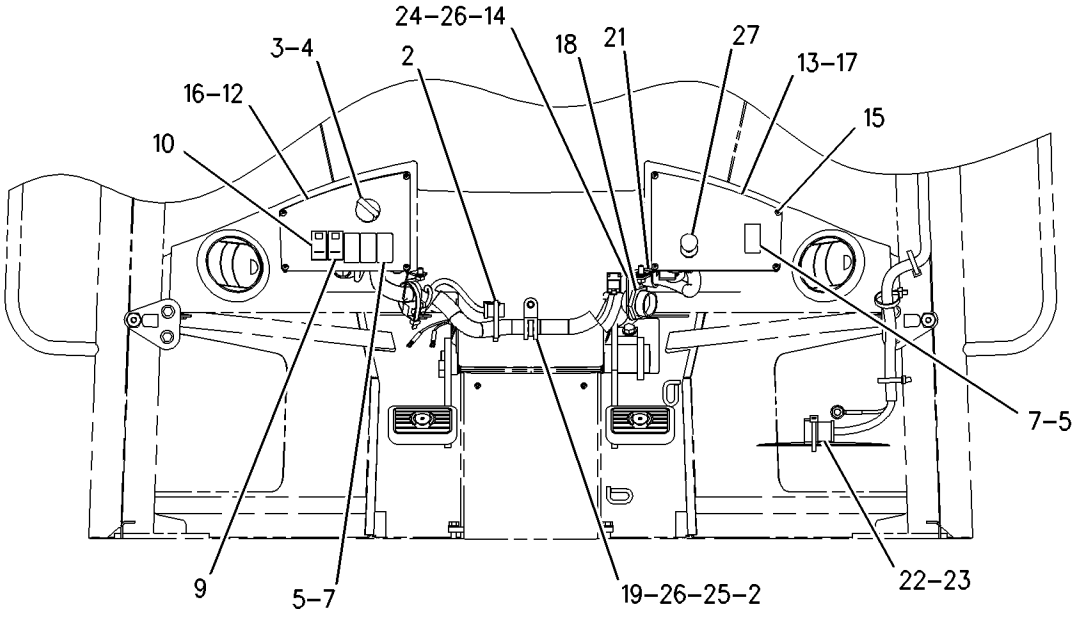

REAR VIEW

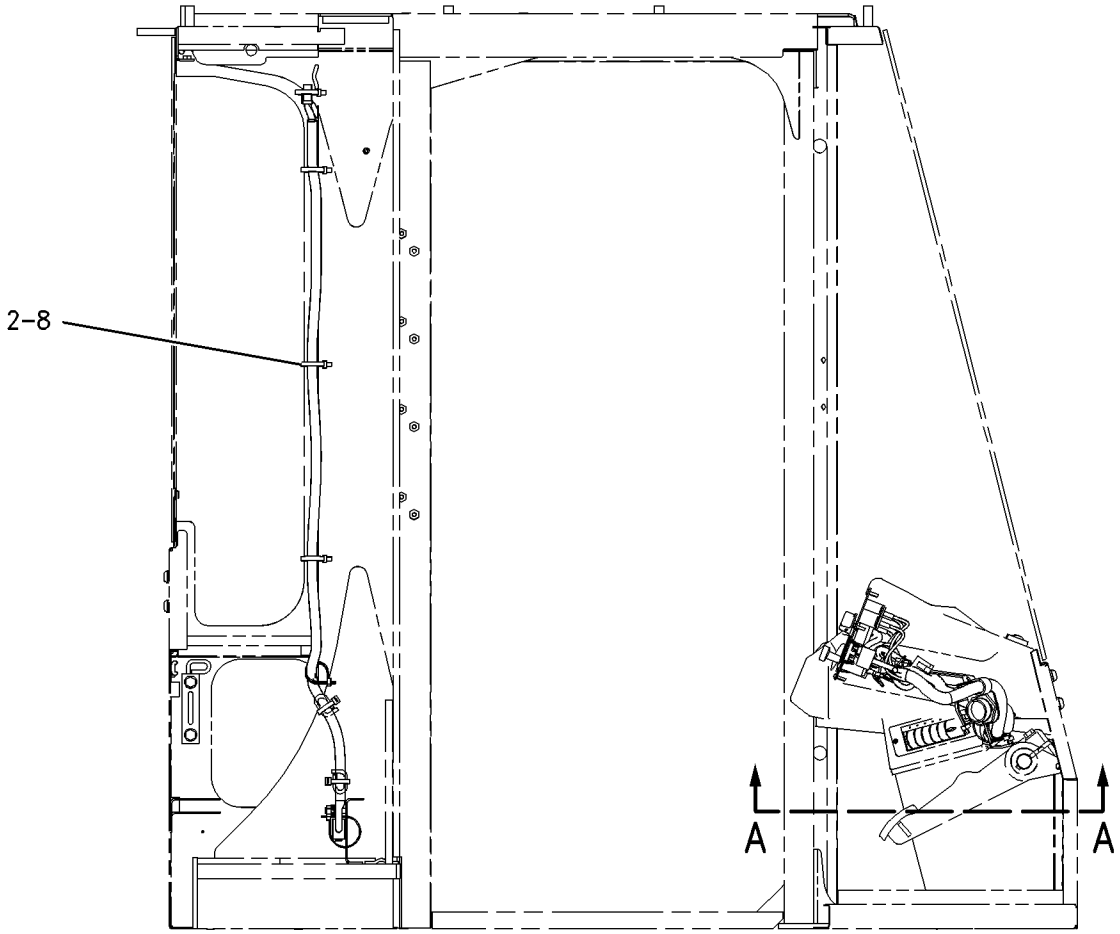

REFER TO ALL ILLUSTRATIONS OF THIS GROUP FOR AUXILIARY VIEWS

RIGHT SIDE VIEW

GRAPHIC #1 g00923106

190-4330 **WIRING GP-CAB** ***(contd.)*** **i01824255**

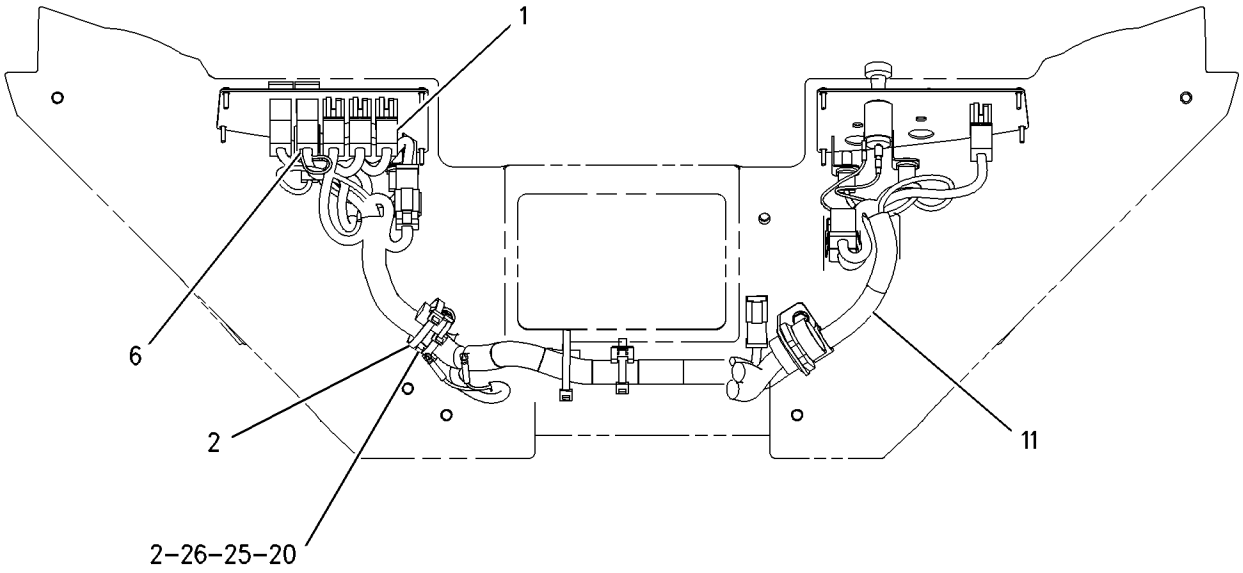

SECTION A-A

GRAPHIC #2 g00923107

MEMORANDA

190-4340 WIRING GP-CAB

S/N: DJD1-UP; DBT1-UP
ENCLOSED
PART OF 190-4405 CAB AR, 190-4652 PLATFORM AR
AN ATTACHMENT

SMCS-1408, 7301 **i01801058**

NOTE	REF NO	GRAPHIC REF	PART NUMBER	QTY	PART NAME 1 2 3 4 5 6 (PRODUCT LEVEL)	SEE PAGE
	1	2	**2G-5298**	1	WIRE AS	
B	2	1,2	**7K-1181**	19	STRAP-CABLE	
	3	1	**108-3320**	1	SWITCH AS-ROTARY	
					(RUNNING/FLOOD/PANEL/TAIL LIGHTS)	
		1	**3E-3389**	1	WEDGE-RECEPTACLE LOCK	
		1	**9W-0852**	8	PIN-CONNECTOR	
		1	**102-8806**	1	KIT-RECEPTACLE (8 PIN)	
	4	1	**110-6109**	3	KNOB-CONTROL	
B	5	1	**111-7899**	4	GASKET	
	6	2	**115-1748**	4	LAMP (24 VOLT)	
B	7	1	**165-0311**	4	PLUG	
	8	1	**172-2307**	1	HARNESS AS-CAB (SHELL)	
		1	**102-8801**	1	KIT-RECEPTACLE (12 PIN)	
		1	**102-8802**	1	KIT-RECEPTACLE (2 PIN)	
		1	**102-8803**	1	KIT-RECEPTACLE (3 PIN)	
		1	**155-2260**	1	KIT-CONNECTING PLUG (3 PIN)	
		1	**155-2270**	1	KIT-CONNECTING PLUG (2 PIN)	
		1	**155-2271**	1	KIT-CONNECTING PLUG (4 PIN)	
		1	**155-2274**	1	KIT-CONNECTING PLUG (6 PIN)	
	9	1	**185-2766**	1	SWITCH AS-ROCKER (AUTOSHIFT ON/OFF)	
		1	**111-7899**	1	GASKET	
	10	1	**185-2769**	1	SWITCH AS-ROCKER	
					(TRANSMISSION NEUTRALIZER ON/OFF)	
		1	**111-7899**	1	GASKET	
	11	2	**189-6140**	1	HARNESS AS-INSTRUMENT PANEL	
		2	**102-8805**	1	KIT-RECEPTACLE (6 PIN)	
		2	**155-2265**	3	KIT-CONNECTING PLUG (8 PIN)	
		2	**155-2271**	1	KIT-CONNECTING PLUG (4 PIN)	
		2	**155-2274**	1	KIT-CONNECTING PLUG (6 PIN)	
	12	1	**190-4558**	1	PLATE AS	
	13	1	**190-4559**	1	PLATE AS	
	14	1	**201-1024**	1	BRACKET	
	15	1	**202-1129**	8	SCREW-TRUSS HEAD	
	16	1	**204-0357**	1	FILM (PANEL-LH)	
	17	1	**204-0358**	1	FILM (PANEL-RH)	
	18	1	**211-0052**	1	NUT	
	19	1	**4P-7581**	1	CLIP	
	20	2	**4P-8134**	1	CLIP	
	21	1	**6D-4244**	1	CLIP	
	22	1	**8T-4121**	1	WASHER-HARD (11X21X2.5MM THK)	
M	23	1	**8T-4133**	1	NUT (M10X1.5 THD)	
M	24	1	**8T-4189**	1	BOLT (M8X1.25X20MM)	
M	25	1,2	**8T-4199**	2	BOLT (M8X1.25X12MM)	
	26	1,2	**8T-4224**	3	WASHER-HARD (8.8X16X2MM THK)	
	27	1	**9W-0335**	1	LIGHTER AS (CIGAR)(24 VOLT)	

B-USE AS REQUIRED
M-METRIC PART

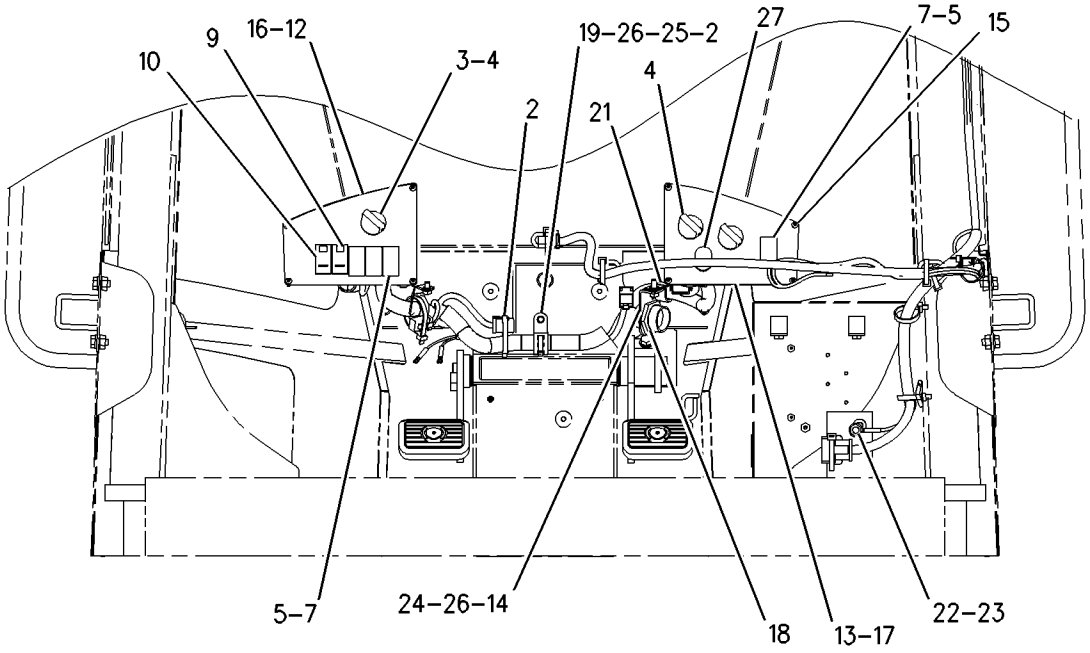

REAR VIEW

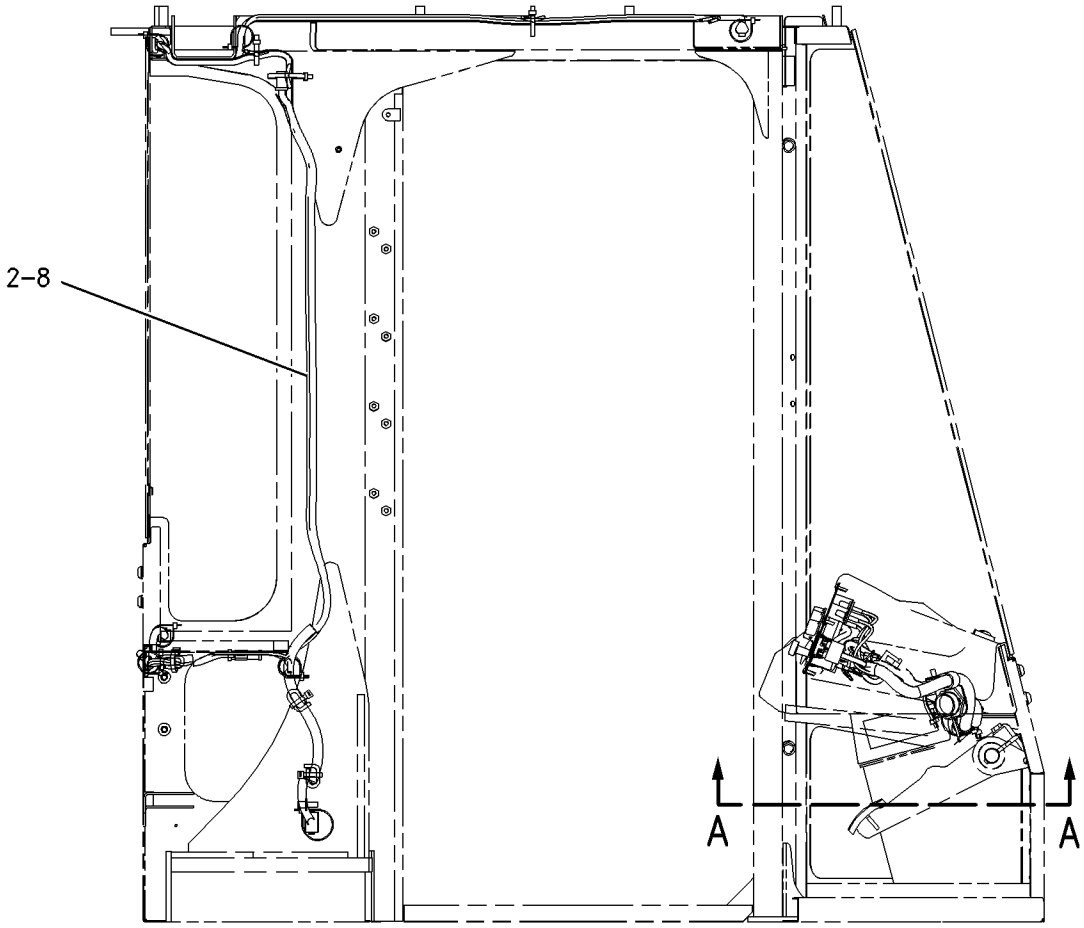

REFER TO ALL ILLUSTRATIONS OF THIS GROUP FOR AUXILIARY VIEWS

RIGHT SIDE VIEW

GRAPHIC #1

g00923098

190-4340 **WIRING GP-CAB** ***(contd.)*** **i01801058**

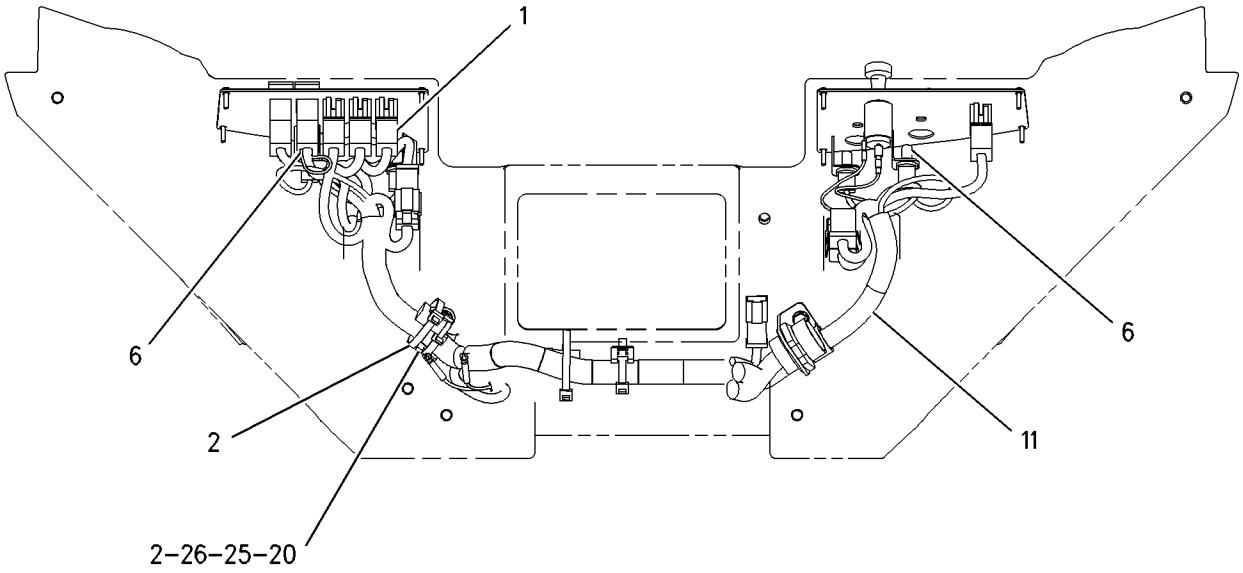

SECTION A–A

GRAPHIC #2 g00923099

MEMORANDA

189-4870 WIRING GP-COMMUNICATION

S/N: DJD1-UP; DBT1-UP
PRODUCT LINK
AN ATTACHMENT

SMCS-1408, 7602 **i01832953**

NOTE	REF NO	GRAPHIC REF	PART NUMBER	QTY	PART NAME 1 2 3 4 5 6 (PRODUCT LEVEL)	SEE PAGE
	1	1	**7K-1181**	7	STRAP-CABLE	
	2	1	**9X-8256**	7	WASHER (6.6X12X2MM THK)	
B	3	1	**031-5644**	6	CLIP	
	4	1	**9R-4750**	1	BOSS	
	5	1	**190-4564**	1	PLATE AS	
		1	**2M-7077**	4	SPACER (.406IN X .62IN X .37IN THK)	
M		1	**6V-9632**	3	NUT-WELD (M6X1 THD)	
	6	1	**226-3681**	1	PLATE	
	7	1	**207-6796**	1	ANTENNA AS	
		1	**172-6755**	1	ANTENNA	
	8	1	**209-6417**	1	CONTROL GP-COMMUNICATION (PRODUCT LINK)	
	9	1	**218-2439**	1	HARNESS AS-CONTROL (PRODUCT LINK)	
		1	**102-8805**	1	KIT-RECEPTACLE (6 PIN)	
		1	**102-8806**	1	KIT-RECEPTACLE (8 PIN)	
		1	**155-2265**	1	KIT-CONNECTING PLUG (8 PIN)	
M	10	1	**8T-4138**	3	BOLT (M6X1X20MM)	
M	11	1	**8T-4194**	1	BOLT (M12X1.75X50MM)	
	12	1	**8T-4223**	1	WASHER-HARD (13.5X25.5X3MM THK)	
M	13	1	**8T-4971**	4	BOLT (M6X1X30MM)	

B-USE AS REQUIRED
M-METRIC PART

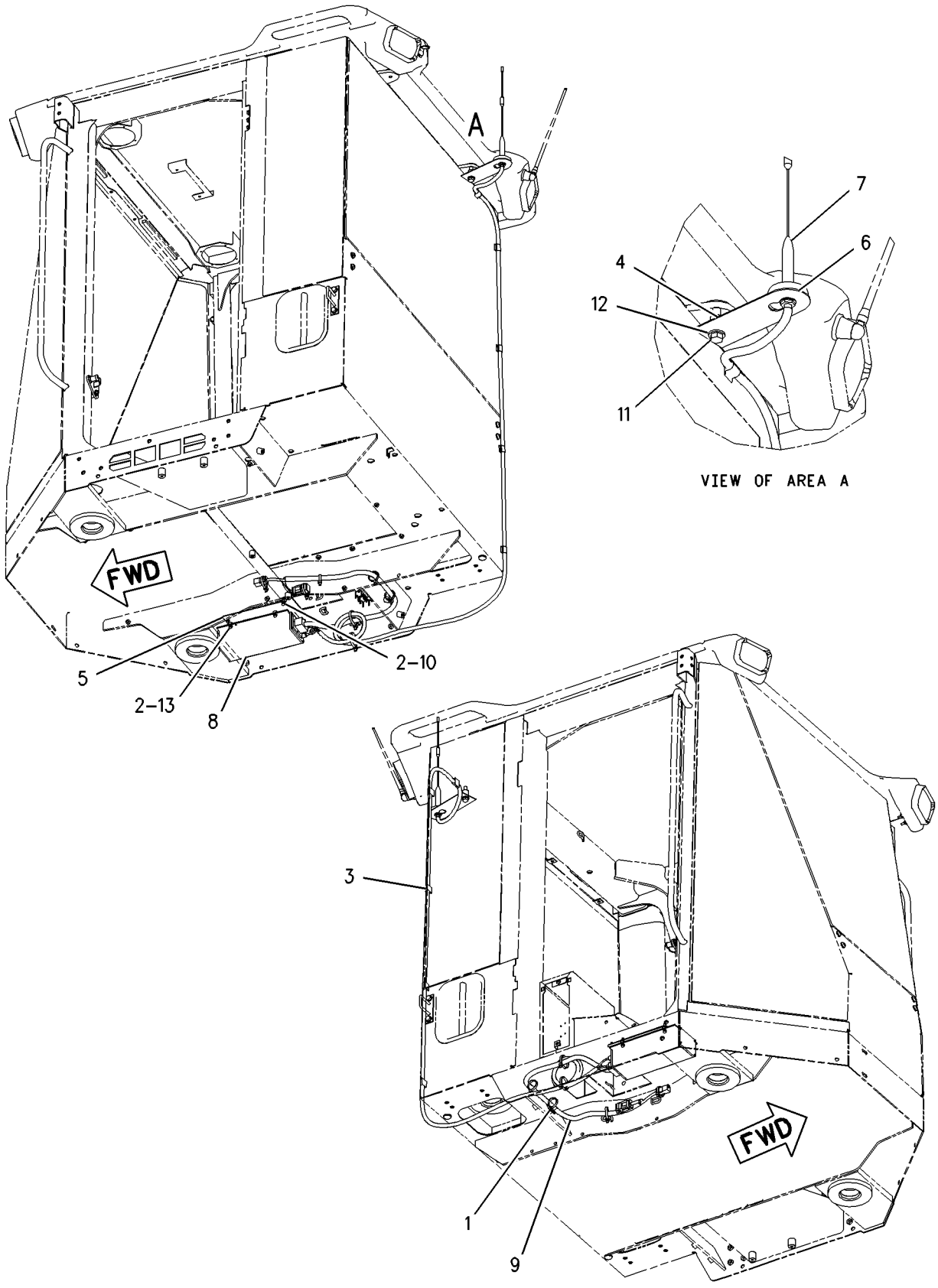

GRAPHIC #1 g00937243

215-2886 WIRING GP-COMMUNICATION

S/N: DJD1-UP; DBT1-UP
PRODUCT LINK
AN ATTACHMENT

SMCS-1408, 7602 **i01832899**

NOTE	REF NO	GRAPHIC REF	PART NUMBER	QTY	PART NAME 1 2 3 4 5 6 (PRODUCT LEVEL)	SEE PAGE
	1	1	**7K-1181**	7	STRAP-CABLE	
	2	1	**9X-8256**	7	WASHER (6.6X12X2MM THK)	
	3	1	**031-5644**	6	CLIP	
	4	1	**9R-4750**	1	BOSS	
	5	1	**190-4564**	1	PLATE AS	
		1	**2M-7077**	4	SPACER (.406IN X .62IN X .37IN THK)	
M		1	**6V-9632**	3	NUT-WELD (M6X1 THD)	
	6	1	**207-6796**	1	ANTENNA AS	
	7	1	**209-6416**	1	CONTROL GP-COMMUNICATION (PRODUCT LINK)	
		1	**224-6310**	1	SOFTWARE GP-COMMUNICATION (PRODUCT LINK)	
	8	1	**218-2439**	1	HARNESS AS-CONTROL (PRODUCT LINK)	
		1	**102-8805**	1	KIT-RECEPTACLE (6 PIN)	
		1	**102-8806**	1	KIT-RECEPTACLE (8 PIN)	
		1	**155-2265**	1	KIT-CONNECTING PLUG (8 PIN)	
	9	1	**226-3681**	1	PLATE	
M	10	1	**8T-4138**	3	BOLT (M6X1X20MM)	
M	11	1	**8T-4194**	1	BOLT (M12X1.75X50MM)	
	12	1	**8T-4223**	1	WASHER-HARD (13.5X25.5X3MM THK)	
M	13	1	**8T-4971**	4	BOLT (M6X1X30MM)	

M-METRIC PART

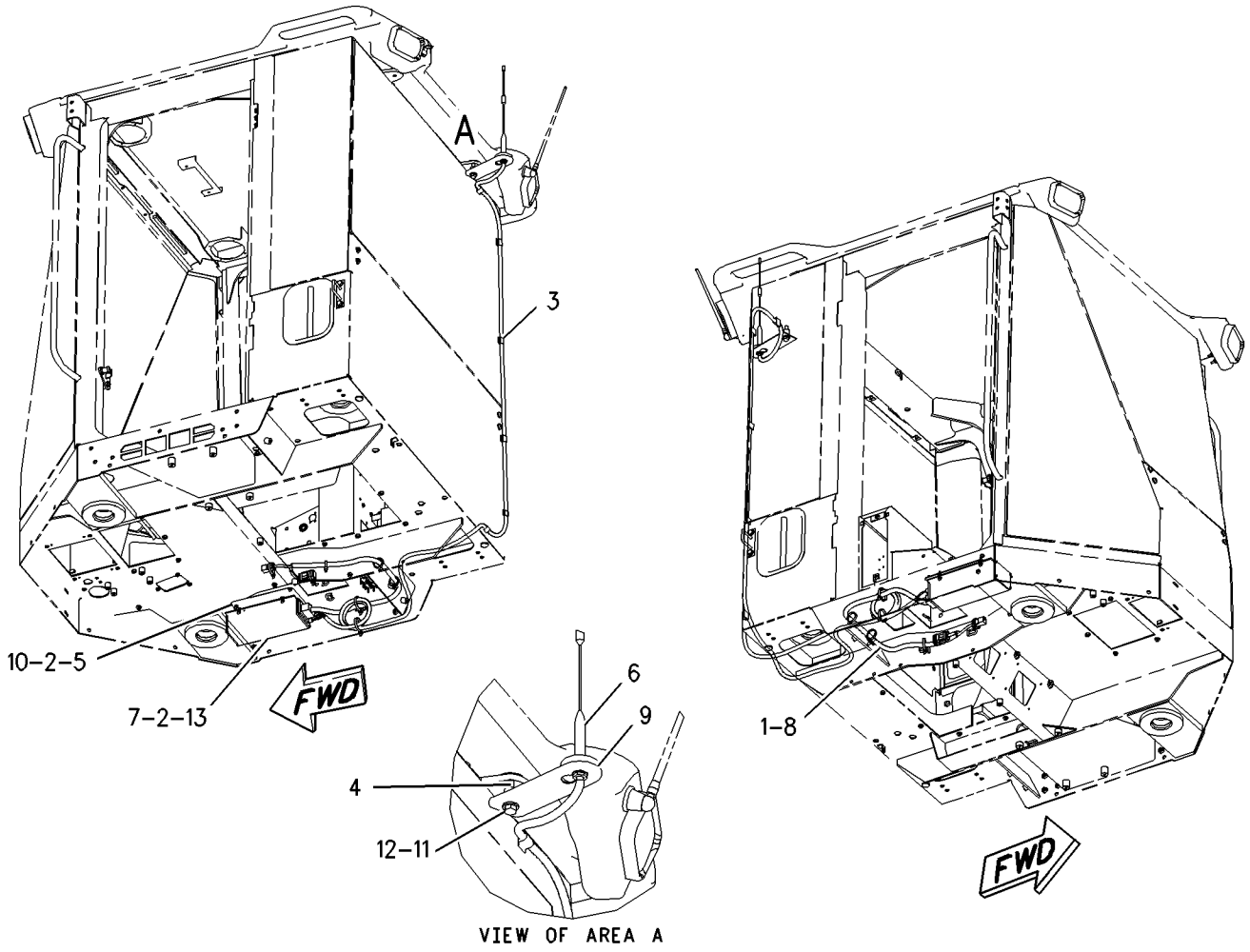

GRAPHIC #1 g00937293

219-2462 WIRING GP-ELECTRONIC CONTROL

S/N: CPT1-UP

PART OF 179-1797 ENGINE AR-PRIMARY

SMCS-1408 **i01725083**

NOTE	REF NO	GRAPHIC REF	PART NUMBER	QTY	PART NAME 1 2 3 4 5 6 (PRODUCT LEVEL)	SEE PAGE
	1	1	**100-4458**	3	BOLT (M8X1.25X14MM)	
	2	1	**100-4830**	1	BOLT (M10X1.5X20MM)	
	3	1	**140-8783**	1	BOLT (M10X45MM)	
	4	1	**217-8413**	1	HARNESS AS-ENGINE	
	5	1	**217-8477**	5	CLIP	
	6	1	**217-8478**	2	CLIP	
	7	1	**217-9038**	1	BOLT	
	8	1	**217-9059**	2	SPACER	

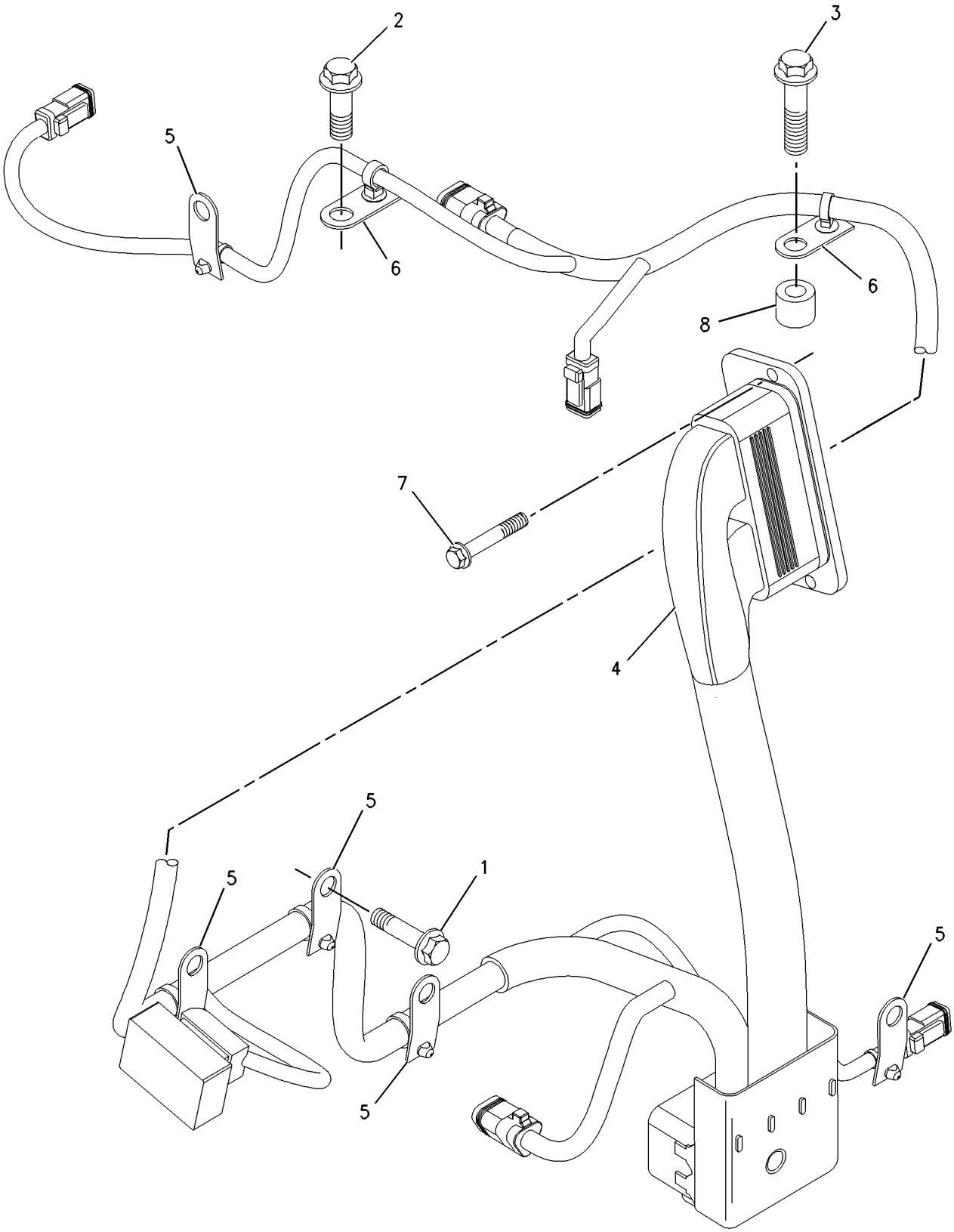

GRAPHIC #1 g00889026

ELECTRICAL AND STARTING SYSTEM

180-8801 WIRING GP-ENGINE

S/N: DJD1-UP; DBT1-UP

PART OF 176-5221, 204-4349 CHASSIS AR

SMCS-1403, 1408 **i01833043**

NOTE	REF NO	GRAPHIC REF	PART NUMBER	QTY	PART NAME 1 2 3 4 5 6 (PRODUCT LEVEL)	SEE PAGE
	1	1	**3E-5239**	2	RELAY AS (24 VOLT)	
	2	3	**3S-2093**	5	STRAP-CABLE	
	3	1	**3T-2662**	1	CIRCUIT BREAKER AS (15 AMP)	
		1	**6V-8376**	2	SCREW-MACHINE (8-32X0.25 IN)	
		1	**9B-7233**	2	LOCKWASHER	
	4	1,2,3	**7K-1181**	21	STRAP-CABLE	
	5	1	**7W-1251**	1	RESISTOR	
	6	1,2	**8T-8827**	5	BOOT	
	7	1	**091-0081**	1	SPACER (10.5X20X10.0MM THK)	
	8	1	**111-6940**	1	SPACER (13.1X15.9X36.5MM THK)	
	9	1	**118-3534**	1	SWITCH GP-MAGNETIC (24V) (STARTING AID RELAY)	
	10	1	**130-9811**	1	SENSOR GP-TEMPERATURE (TORQUE CONVERTER OIL)	
	11	1	**131-3201**	4	BOOT	
	12	3	**134-2540**	1	RECEPTACLE AS (3 PIN)	
	13	1,3	**135-3327**	2	PLATE AS	
M		1,3	**8T-3490**	1	NUT-WELD (M10X1.5 THD)	
	14	1	**143-9542**	1	FILM-CIRCUIT BREAKER	
	15	1	**147-1773**	1	CIRCUIT BREAKER AS (30 AMP)	
		1	**6V-8378**	2	NUT (10-32 THD)	
		1	**8F-1434**	2	LOCKWASHER	
		1	**8T-0328**	2	WASHER-HARD (5.5X10X1MM THK)	
	16	1	**148-5318**	1	FILM-IDENTIFICATION (CIRCUIT BREAKER)	
	17	2	**148-8298**	1	WIRE AS	
	18	1	**171-2208**	1	CIRCUIT BREAKER GP (60 AMP)	
		1	**1H-3244**	2	LOCKWASHER	
		1	**6V-8187**	2	NUT (1/4-28 THD)	
		1	**8T-4205**	2	WASHER-HARD (7.2X14.5X2MM THK)	
	19	1	**171-2211**	1	CIRCUIT BREAKER AS (90 AMP)	
		1	**1H-3244**	2	LOCKWASHER	
		1	**6V-8187**	2	NUT (1/4-28 THD)	
		1	**8T-4205**	2	WASHER-HARD (7.2X14.5X2MM THK)	
	20	1	**224-9610**	1	HARNESS AS-ENGINE	
		1	**102-8802**	1	KIT-RECEPTACLE (2 PIN)	
		1	**102-8803**	1	KIT-RECEPTACLE (3 PIN)	
		1	**155-2255**	1	KIT-CONNECTING PLUG (12 PIN)	
		1	**155-2270**	6	KIT-CONNECTING PLUG (2 PIN)	
		1	**174-0503**	1	KIT-CONNECTING PLUG (3 PIN)	
	21	1	**225-0066**	1	PLATE AS	
M		1	**6V-9632**	4	NUT-WELD (M6X1 THD)	
		1	**7T-1099**	1	LINK	
		1	**8G-0816**	4	BUSHING-TERMINAL	
	22	1	**225-5224**	1	CABLE AS	
E		1	**8C-3056**		CABLE (2 GA) (20CM)	
		1	**030-1712**	2	RING-TERMINAL	
	23	3	**226-5923**	1	BRACKET	
	24	1	**230-4927**	2	CLAMP-HALF	
	25	1	**096-6166**	2	WASHER-HARD (4.5X9X1MM THK)	
	26	1	**3K-0360**	1	SEAL-O-RING	
	27	1	**3K-8106**	2	SCREW-MACHINE (8-32 X 1 IN)	
	28	2,3	**3S-8665**	2	CLIP	
	29	1	**4B-4274**	4	WASHER (5.5X13X1.2MM THK)	
	30	1	**4B-4863**	4	WASHER (4.7X11X1.2MM THK)	
	31	1,2,3	**4P-7581**	10	CLIP	
	32	1,2,3	**4P-8134**	5	CLIP	
	33	1	**5P-4965**	4	SCREW-MACHINE (10-32 THD)	
	34	1	**6V-1889**	2	CLIP	

180-8801 **WIRING GP-ENGINE** ***(contd.)*** **i01833043**

NOTE	REF NO	GRAPHIC REF	PART NUMBER	QTY	PART NAME 1 2 3 4 5 6 (PRODUCT LEVEL)	SEE PAGE
	35	1	**6V-7345**	2	SCREW-MACHINE (8-32X.875 IN)	
M	36	1	**8C-6965**	2	BOLT-SOCKET HEAD (M6X1X45MM)	
	37	1,2,3	**8T-4121**	11	WASHER-HARD (11X21X2.5MM THK)	
M	38	1	**8T-4133**	1	NUT (M10X1.5 THD)	
M	39	1	**8T-4137**	1	BOLT (M10X1.5X20MM)	
M	40	1	**8T-4138**	4	BOLT (M6X1X20MM)	
M	41	1	**8T-4186**	5	BOLT (M10X1.5X40MM)	
M	42	3	**8T-4189**	1	BOLT (M8X1.25X20MM)	
M	43	2,3	**8T-4191**	3	BOLT (M10X1.5X16MM)	
M	44	1,3	**8T-4192**	2	BOLT (M12X1.75X25MM)	
M	45	3	**8T-4195**	1	BOLT (M10X1.5X30MM)	
M	46	1	**8T-4197**	1	BOLT (M8X1.25X40MM)	
M	47	1,2	**8T-4200**	4	BOLT (M8X1.25X16MM)	
	48	1,3	**8T-4223**	2	WASHER-HARD (13.5X25.5X3MM THK)	
	49	1,2,3	**8T-4224**	7	WASHER-HARD (8.8X16X2MM THK)	
M	50	1	**8T-6912**	1	BOLT (M8X1.25X50MM)	
M	51	1	**8T-7852**	2	BOLT (M4X.7X10MM)	
	52	2,3	**9M-4972**	2	CLIP	
	53	1	**9X-8256**	6	WASHER (6.6X12X2MM THK)	

E-ORDER BY THE CENTIMETER
M-METRIC PART

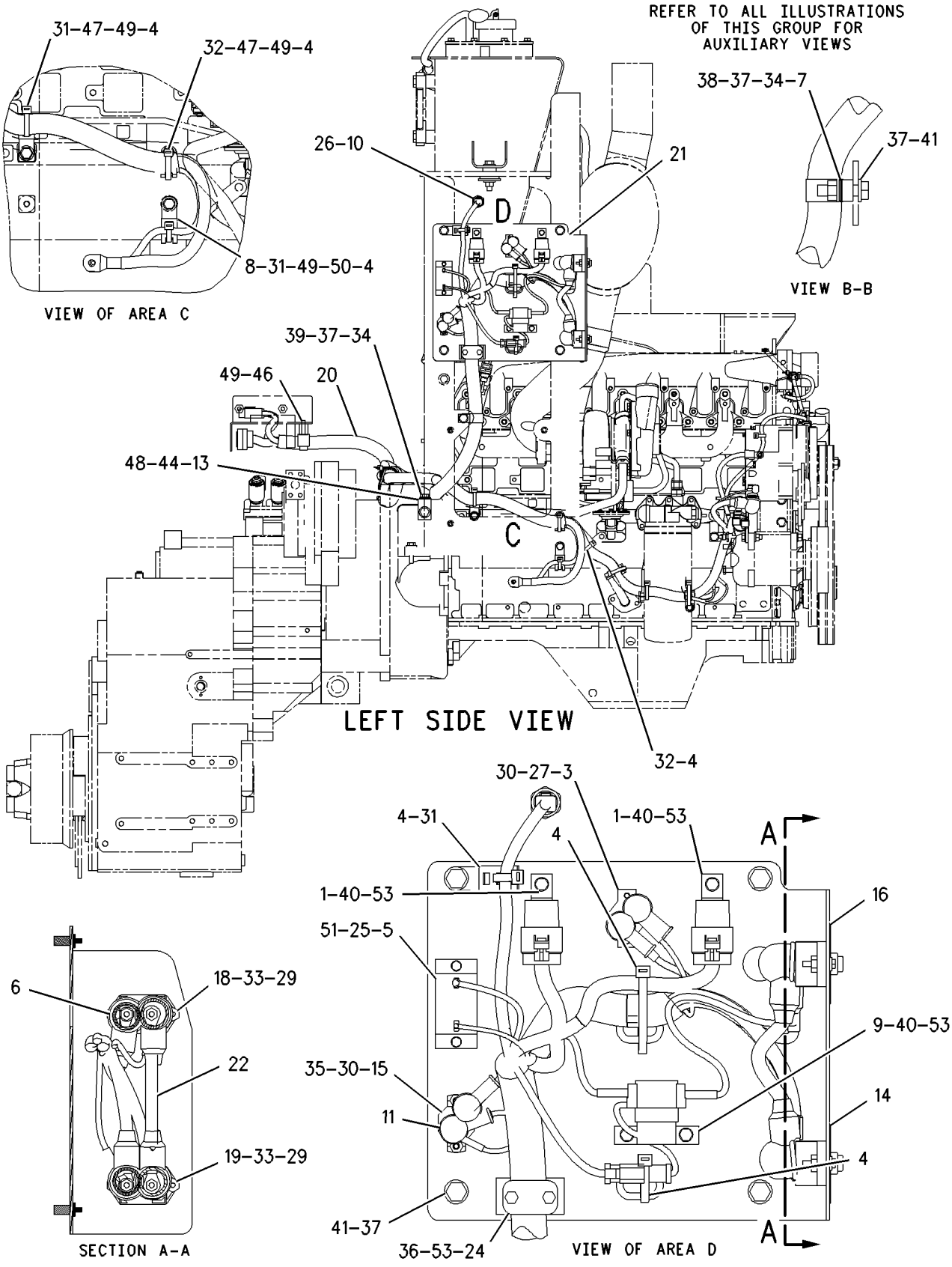

GRAPHIC #1

g00936930

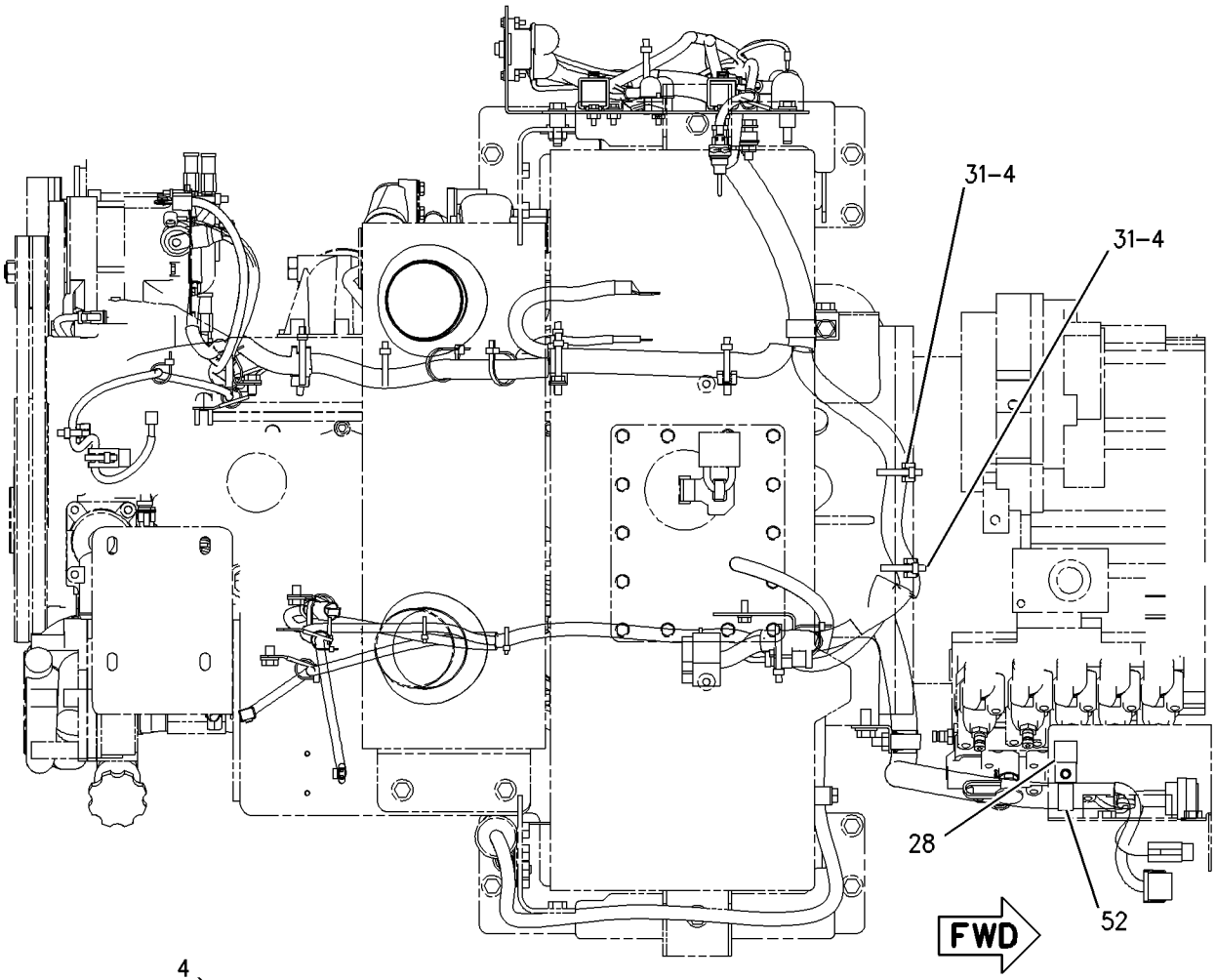

TOP VIEW

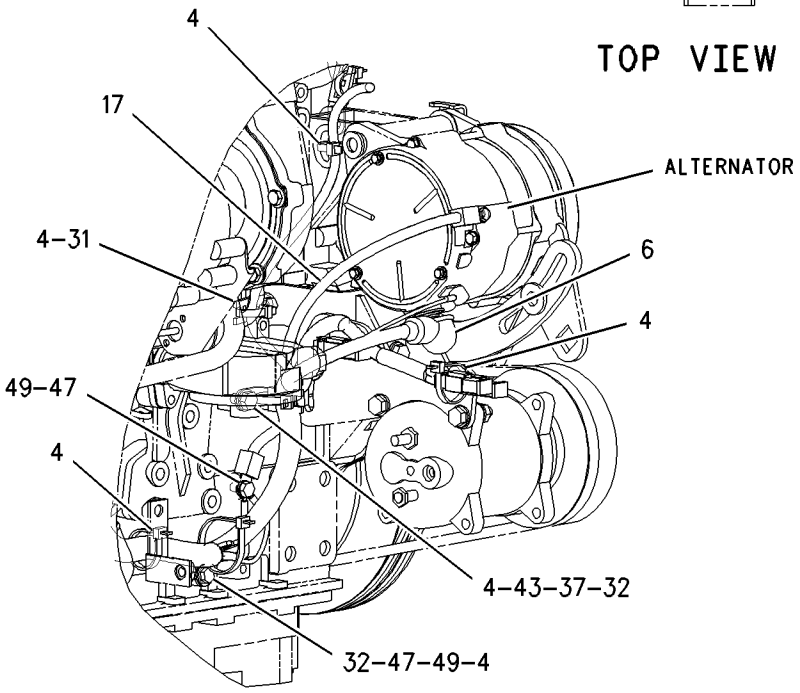

GRAPHIC #2 g00936939

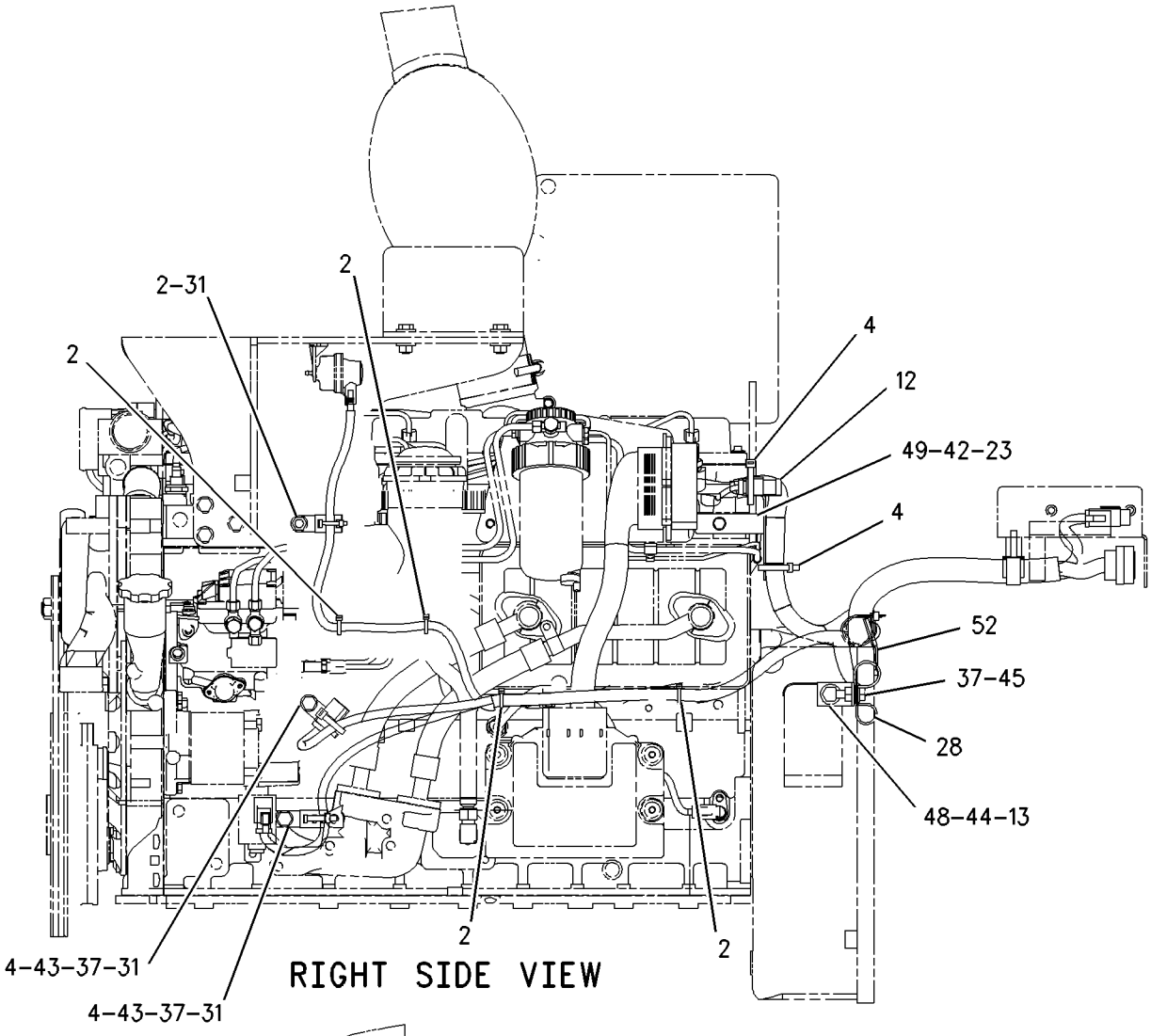

RIGHT SIDE VIEW

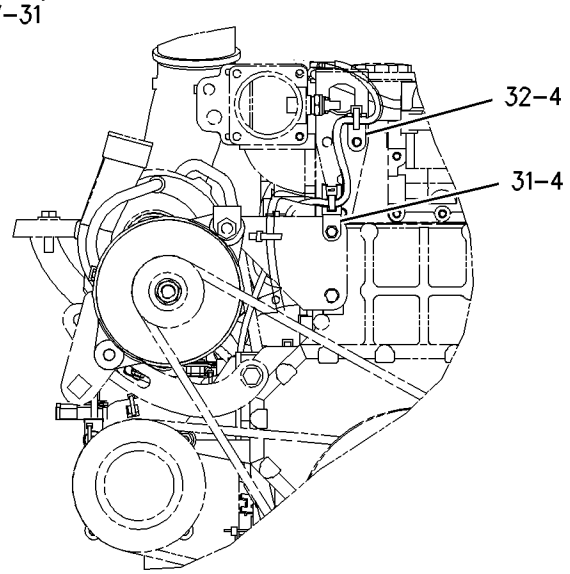

REAR VIEW

GRAPHIC #3

g00936945

MEMORANDA

123-7333 WIRING GP-FRONT

S/N: DJD1-UP; DBT1-UP
PART OF 176-5221, 204-4349 CHASSIS AR

SMCS-5734 **i01834767**

NOTE	REF NO	GRAPHIC REF	PART NUMBER	QTY	PART NAME 1 2 3 4 5 6 (PRODUCT LEVEL)	SEE PAGE
	1	1,2	**7K-1181**	21	STRAP-CABLE	
	2	1	**8T-8737**	8	PLUG-SEAL	
C	3	2	**163-1201**	1	HORN AS (24 VOLT)(LOW TONE)	
	4	1	**176-0302**	1	HARNESS AS (FRONT CHASSIS)	
		1	**102-8802**	3	KIT-RECEPTACLE (2 PIN)	
		1	**102-8801**	1	KIT-RECEPTACLE (12 PIN)	
		1	**155-2265**	2	KIT-CONNECTING PLUG (8 PIN)	
		1	**155-2270**	2	KIT-CONNECTING PLUG (2 PIN)	
		1	**155-2271**	2	KIT-CONNECTING PLUG (4 PIN)	
		1	**155-2274**	2	KIT-CONNECTING PLUG (6 PIN)	
	5	2	**194-4121**	4	SPACER	
	6	1	**194-8111**	1	PLATE AS	
	7	1	**194-8112**	1	PLATE AS	
	8	2	**194-8113**	2	PLATE	
	9	2	**194-8114**	2	BLOCK	
	10	2	**194-8115**	2	BLOCK	
	11	2	**194-8116**	2	BLOCK	
	12	1	**2H-9524**	2	GROMMET	
	13	1	**102-8804**	2	KIT-RECEPTACLE (4 PIN)	
	14	1	**4P-8134**	1	CLIP	
	15	1	**7B-1251**	2	GROMMET	
	16	1,2	**8T-4121**	8	WASHER-HARD (11X21X2.5MM THK)	
M	17	1,2	**8T-4137**	4	BOLT (M10X1.5X20MM)	
M	18	2	**8T-4198**	4	BOLT (M10X1.5X100MM)	

C-CHANGE FROM PREVIOUS TYPE
M-METRIC PART

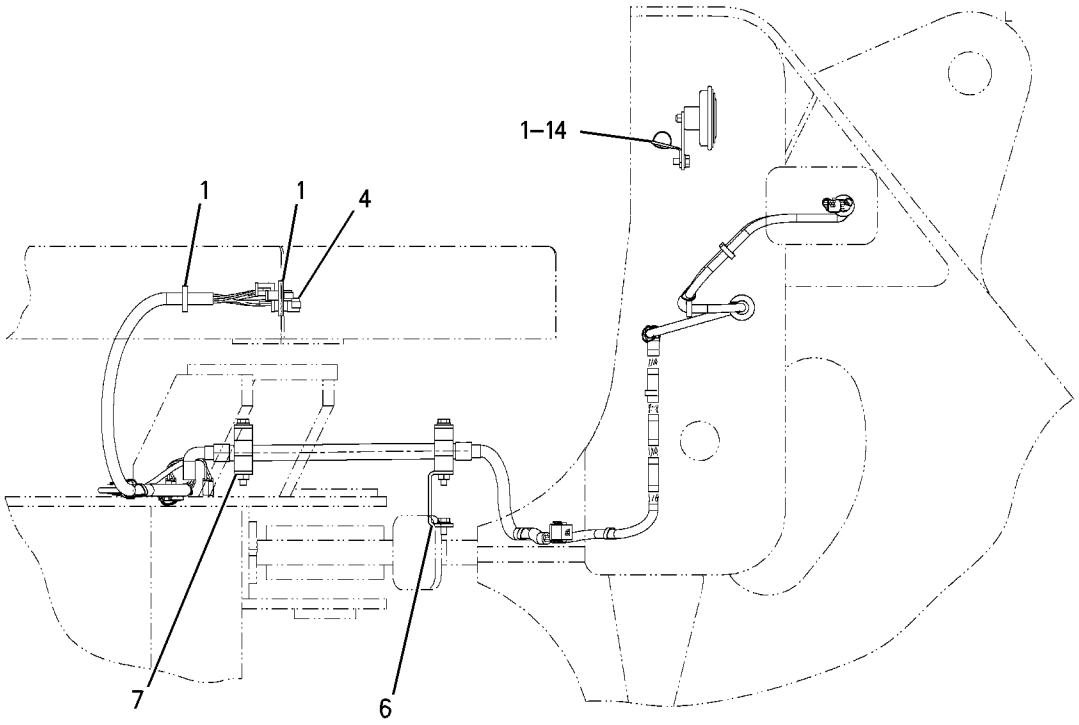

RIGHT SIDE VIEW

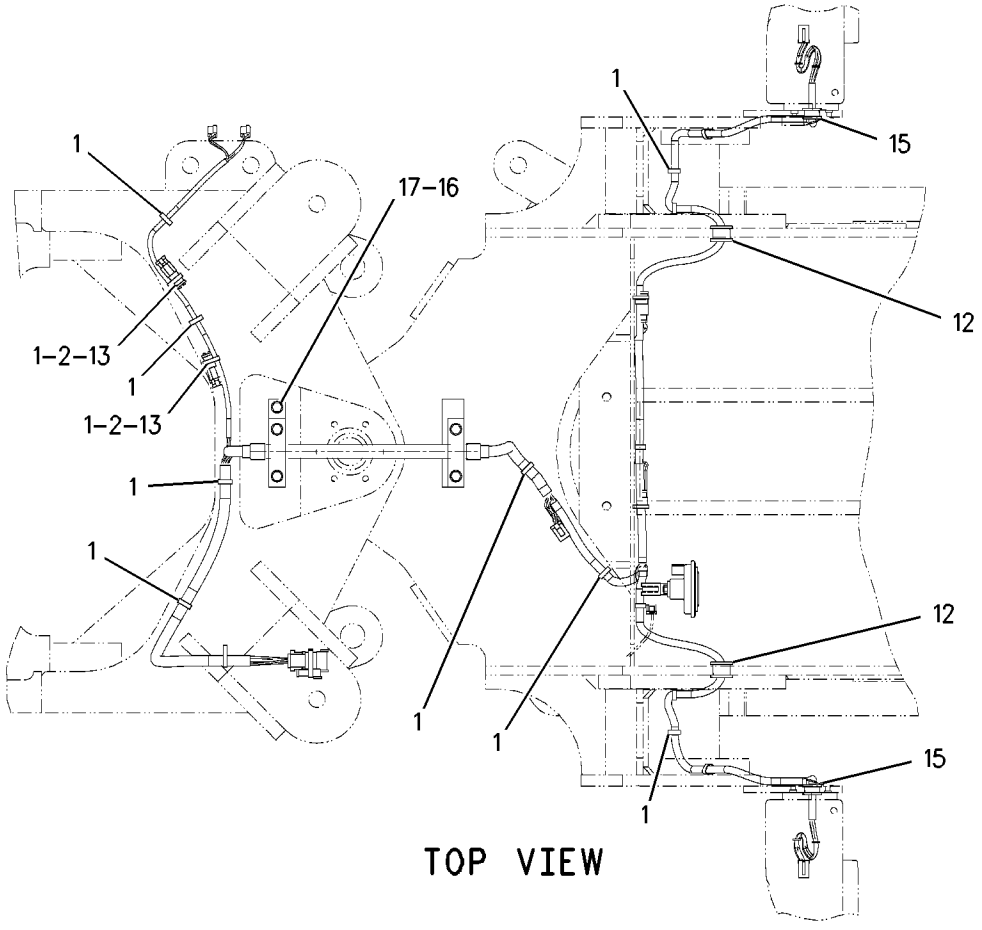

TOP VIEW

GRAPHIC #1

g00851789

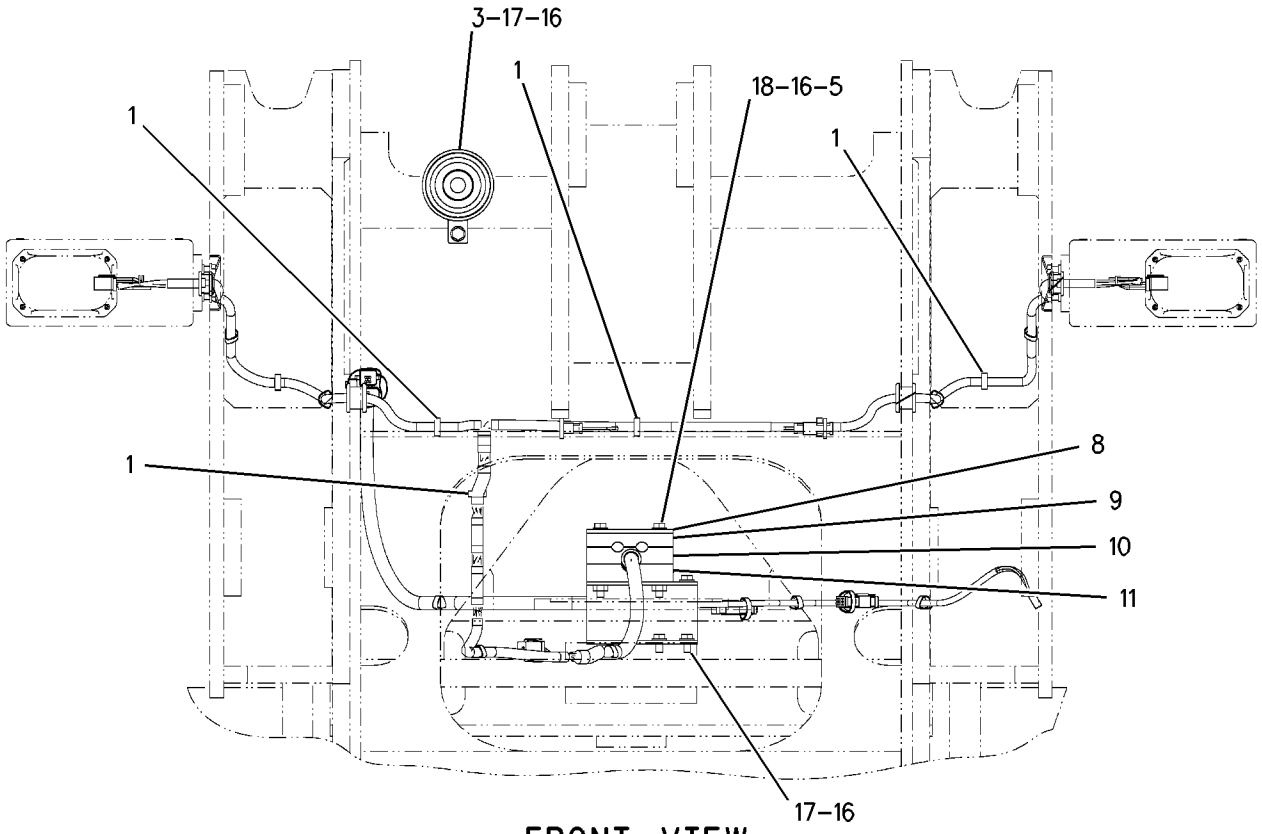

FRONT VIEW

GRAPHIC #2 g00851790

MEMORANDA

189-4871 WIRING GP-MACHINE

S/N: DJD1-UP; DBT1-UP
AN ATTACHMENT

SMCS-1408 **i01823376**

NOTE	REF NO	GRAPHIC REF	PART NUMBER	QTY	PART NAME 1 2 3 4 5 6 (PRODUCT LEVEL)	SEE PAGE
	1	2	**3E-3371**	1	WEDGE-RECEPTACLE LOCK (3 PIN)	
	2	1	**6I-1418**	3	SPACER (8.2X12.7X28.7MM THK)	
	3	1	**155-0576**	6	MOUNT-ISOLATION	
	4	1	**205-0826**	1	FILM (MACHINE SECURITY SYSTEM)	
	5	1	**206-5162**	2	KEY AS-ELECTRONIC (SECURITY)	
	6	1	**206-5208**	1	COIL AS	
		1	**102-8802**	1	KIT-RECEPTACLE (2 PIN)	
	7	2	**222-3870**	1	COIL AS	
		2	**102-8802**	1	KIT-RECEPTACLE (2 PIN)	
	8	1	**224-9611**	1	HARNESS AS-CONTROL (SECURITY)	
		1	**102-8805**	1	KIT-RECEPTACLE (6 PIN)	
		1	**150-6766**	1	PLUG AS-CONNECTOR	
		1	**159-9322**	1	SEAL-O-RING	
		1	**155-2260**	1	KIT-CONNECTING PLUG (3 PIN)	
		1	**155-2270**	1	KIT-CONNECTING PLUG (2 PIN)	
		1	**155-2274**	1	KIT-CONNECTING PLUG (6 PIN)	
M	9	1	**099-3649**	3	BOLT (M8X1.25X40MM)	
	10	1	**165-5655**	1	LAMP AS (12 VOLT)	
Y	11	1	*190-2446*	1	ELECTRONICS GP-MACHINE (SECURITY)	110
	12	2	**102-8803**	1	KIT-RECEPTACLE (3 PIN)	
	13	2	**7K-1181**	24	STRAP-CABLE	
	14	1	**9N-0869**	3	WASHER-HARD (8.8X25.5X2MM THK)	
	15	1	**224-3385**	1	FILM (START)	

M-METRIC PART
Y-SEPARATE ILLUSTRATION

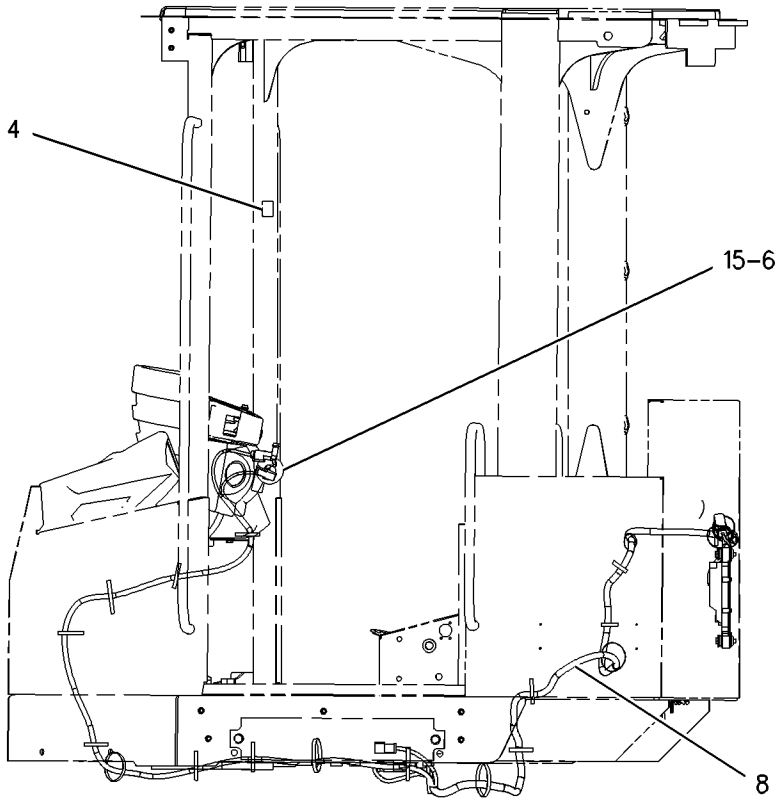

LEFT SIDE VIEW

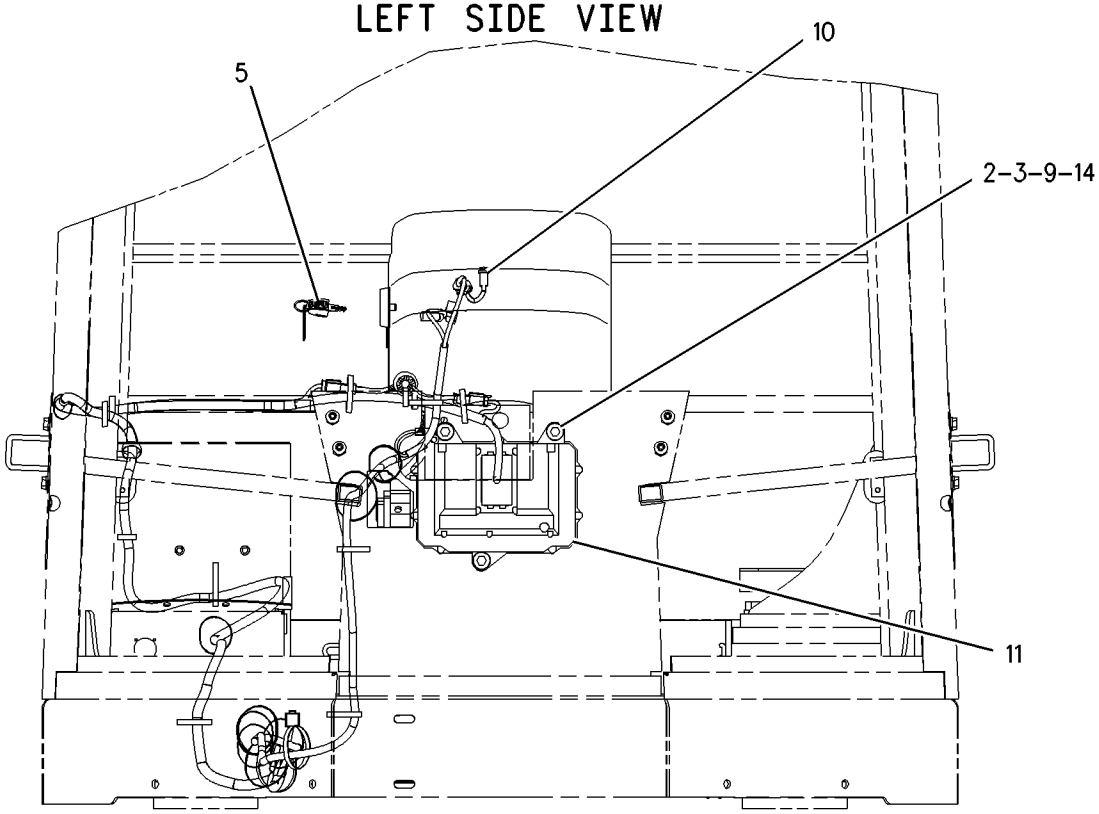

FRONT VIEW

GRAPHIC #1 g00920606

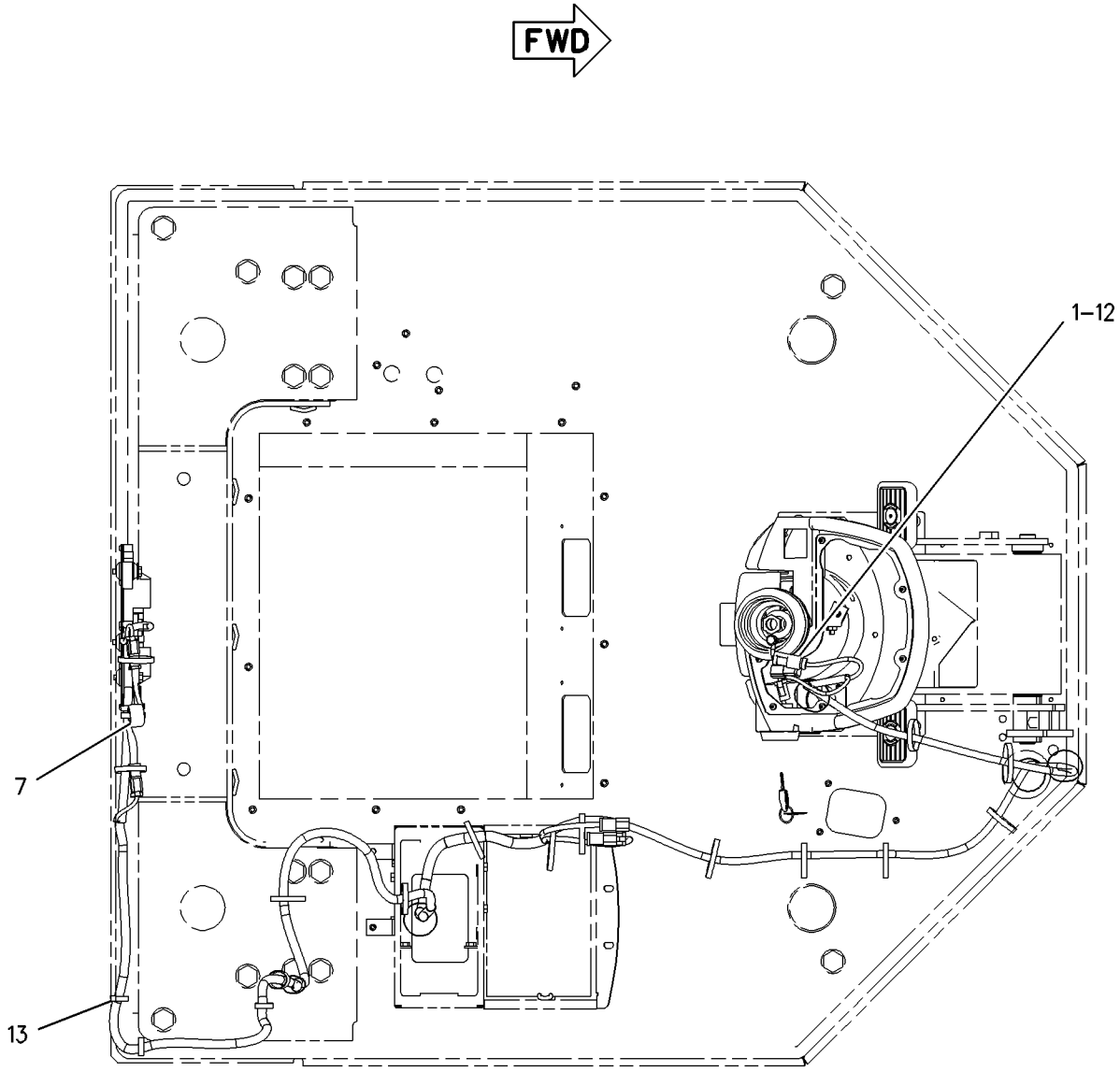

TOP VIEW

GRAPHIC #2 g00920607

MEMORANDA

180-8804 WIRING GP-REAR

S/N: DJD1-UP; DBT1-UP

PART OF 176-5221, 204-4349 CHASSIS AR

SMCS-1408 **i01835099**

NOTE	REF NO	GRAPHIC REF	PART NUMBER	QTY	PART NAME 1 2 3 4 5 6 (PRODUCT LEVEL)	SEE PAGE
	1	1	**7K-1181**	34	STRAP-CABLE	
	2	1	**204-1370**	1	GASKET	
	3	1	**224-9612**	1	HARNESS AS-REAR CHASSIS	
		1	**102-8802**	1	KIT-RECEPTACLE (2 PIN)	
		1	**102-8803**	1	KIT-RECEPTACLE (3 PIN)	
		1	**155-2260**	4	KIT-CONNECTING PLUG (3 PIN)	
		1	**155-2270**	11	KIT-CONNECTING PLUG (2 PIN)	
	4	1	**132-5789**	1	CLIP	
	5	1	**194-7265**	1	SENDER AS-FUEL LEVEL	
		1	**3E-3365**	1	WEDGE-RECEPTACLE LOCK (2 PIN)	
		1	**102-8802**	1	KIT-RECEPTACLE (2 PIN)	
		1	**186-3735**	2	PIN-CONNECTOR	
	6	1	**4P-7581**	4	CLIP	
	7	1	**4P-8134**	3	CLIP	
M	8	1	**5C-9553**	8	BOLT (M6X1X16MM)	
	9	1	**5P-6264**	4	GROMMET	
	10	1	**8D-9671**	1	CLIP	
	11	1	**8T-4121**	6	WASHER-HARD (11X21X2.5MM THK)	
M	12	1	**8T-4137**	5	BOLT (M10X1.5X20MM)	
M	13	1	**8T-4186**	1	BOLT (M10X1.5X40MM)	
	14	1	**8T-4205**	8	WASHER-HARD (7.2X14.5X2MM THK)	

M-METRIC PART

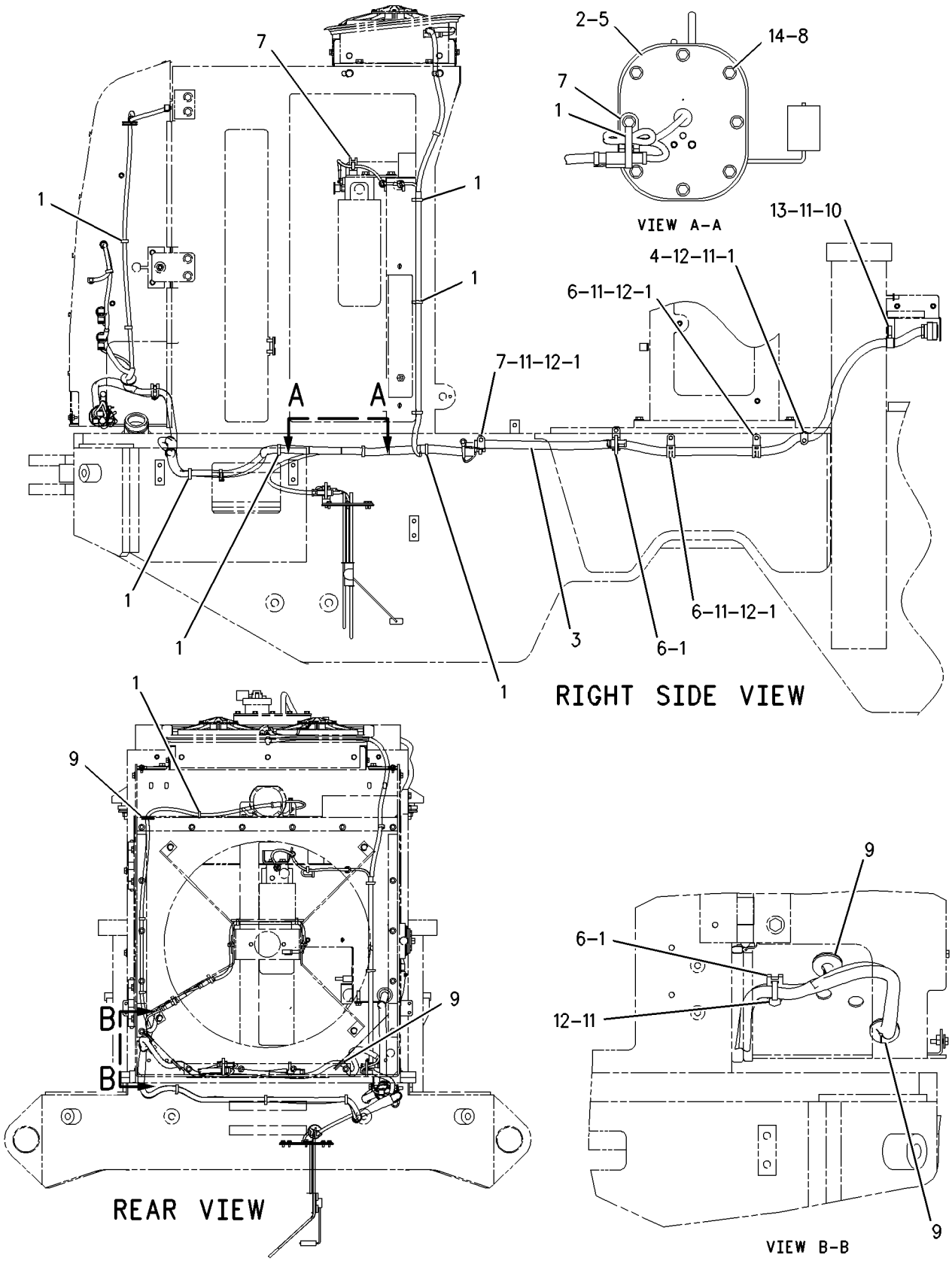

GRAPHIC #1 g00938229

215-2889 WIRING GP-RIDE CONTROL

S/N: DBT1-UP
PART OF 203-8560 CONTROL AR-RIDE
AN ATTACHMENT

SMCS-5004, 5734 **i01829911**

NOTE	REF NO	GRAPHIC REF	PART NUMBER	QTY	PART NAME 1 2 3 4 5 6 (PRODUCT LEVEL)	SEE PAGE
	1	1	**3E-5239**	1	RELAY AS (24 VOLT)	
	2	1	**7K-1181**	6	STRAP-CABLE	
	3	1	**106-8704**	1	SUPPRESSOR AS-ARC	
		1	**102-8802**	1	KIT-RECEPTACLE (2 PIN)	
					(KIT SERVICES RECEPTACLE AS AND WEDGE)	
	4	1	**128-0208**	1	HARNESS AS-RIDE CONTROL	
		1	**155-2270**	1	KIT-CONNECTING PLUG (2 PIN)	
					(KIT SERVICES PLUG AS AND WEDGE)	
	5	1	**158-5089**	1	RELAY AS (RIDE CONTROL)	
	6	1	**185-2767**	1	SWITCH AS-ROCKER (RIDE CONTROL)	
		1	**111-7899**	1	GASKET	
M	7	1	**8T-4138**	1	BOLT (M6X1X20MM)	
	8	1	**9X-8256**	1	WASHER (6.6X12X2MM THK)	

M-METRIC PART

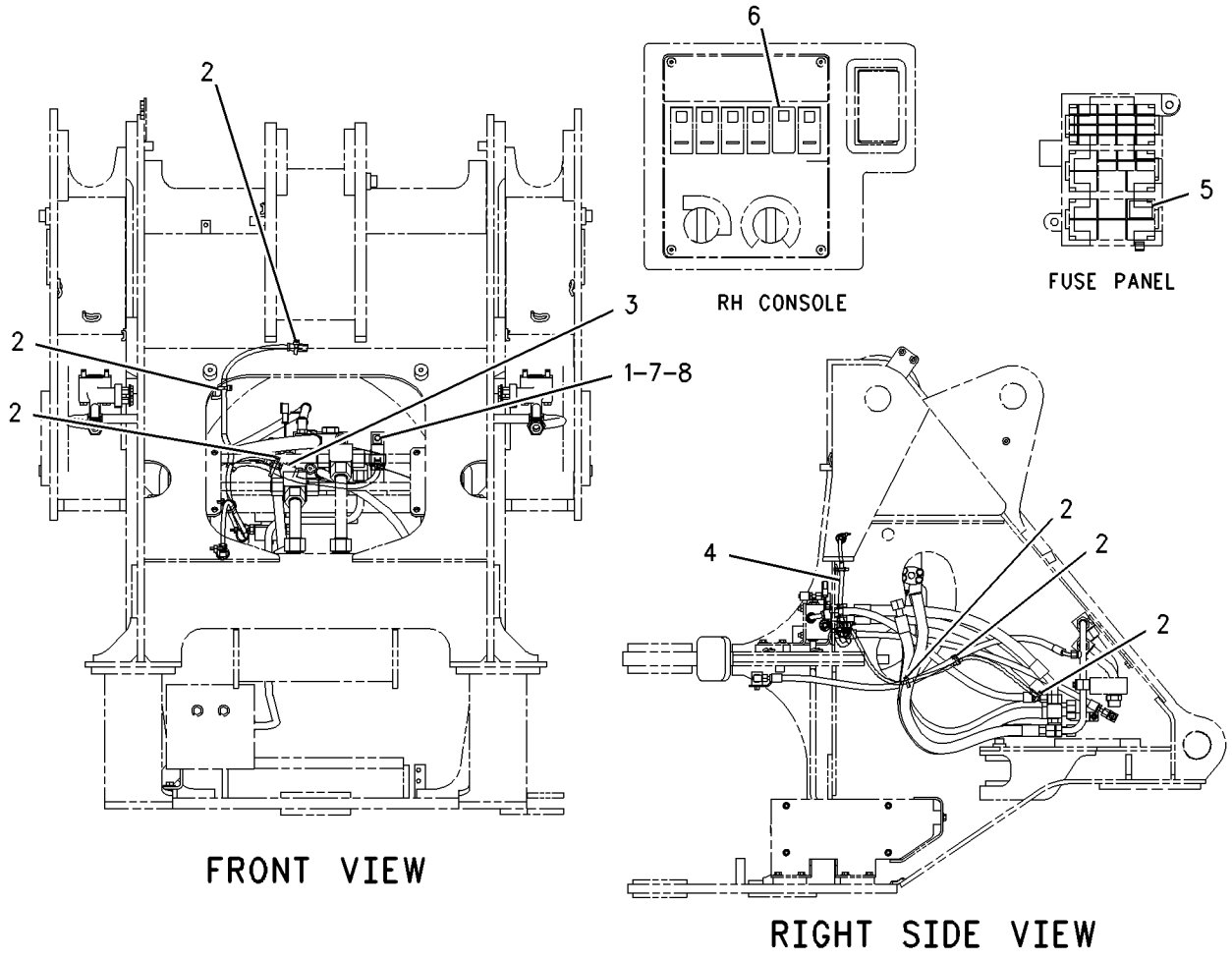

GRAPHIC #1 g00892078

215-2890 WIRING GP-RIDE CONTROL

S/N: DJD1-UP
PART OF 203-8558 CONTROL AR-RIDE
AN ATTACHMENT

SMCS-5004, 5734 **i01829912**

NOTE	REF NO	GRAPHIC REF	PART NUMBER	QTY	PART NAME 1 2 3 4 5 6 (PRODUCT LEVEL)	SEE PAGE
	1	1	**7K-1181**	2	STRAP-CABLE	
	2	1	**106-8704**	1	SUPPRESSOR AS-ARC	
		1	**102-8802**	1	KIT-RECEPTACLE (2 PIN)	
		1	**3E-3365**	1	WEDGE-RECEPTACLE LOCK (2 PIN)	
		1	**186-3735**	1	PIN-CONNECTOR	
	3	1	**125-8232**	1	HARNESS AS-RIDE CONTROL (RIDE CONTROL)	
		1	**102-8802**	1	KIT-RECEPTACLE (2 PIN)	
		1	**155-2270**	1	KIT-CONNECTING PLUG (2 PIN)	
	4	1	**158-5089**	1	RELAY AS (RIDE CONTROL)	
	5	1	**185-2767**	1	SWITCH AS-ROCKER (RIDE CONTROL)	
		1	**111-7899**	1	GASKET	
	6	1	**4P-7581**	1	CLIP	

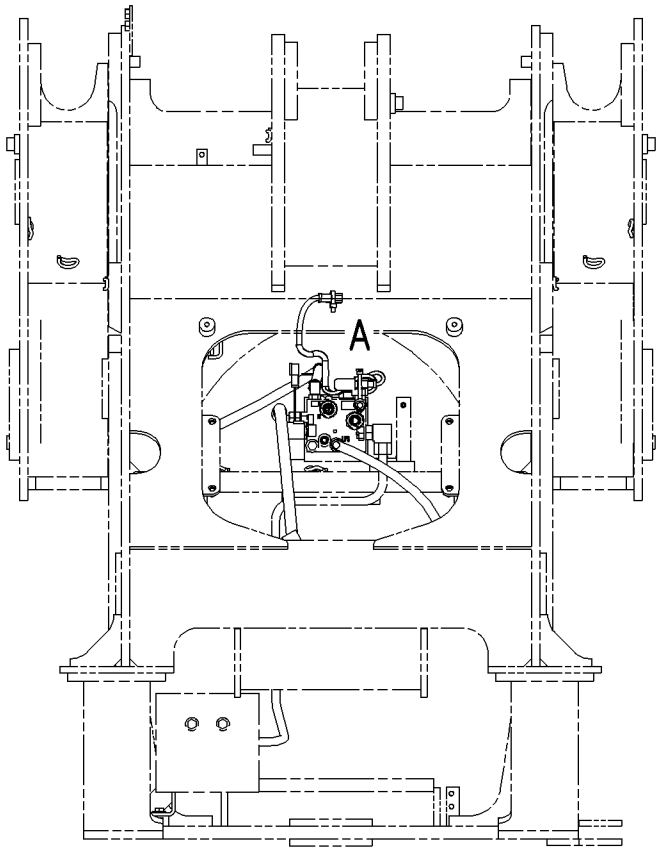

FRONT VIEW

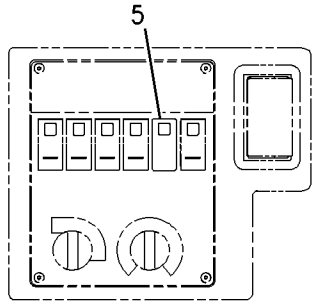

RH CONSOLE

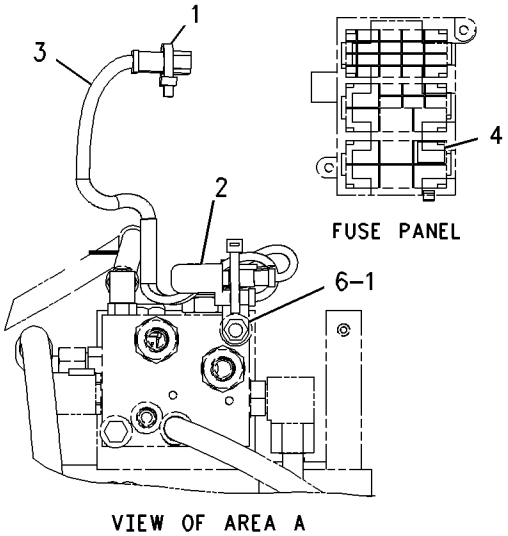

FUSE PANEL

VIEW OF AREA A

GRAPHIC #1 g00892019

180-8810 WIRING GP-SECONDARY STEERING

S/N: DJD1-UP; DBT1-UP
SECONDARY STEERING
PART OF 203-4659 STEERING AR, 223-9074 STEERING AR-SECONDARY
AN ATTACHMENT

SMCS-1408, 4334 **i01824510**

NOTE	REF NO	GRAPHIC REF	PART NUMBER	QTY	PART NAME 1 2 3 4 5 6 (PRODUCT LEVEL)	SEE PAGE
Y	1	1	**3E-0154**	1	SWITCH GP-MAGNETIC	135
	2	1	**7K-1181**	6	STRAP-CABLE	
	3	1	**8X-9618**	1	STRAP AS-GROUND	
	4	1	**9L-1566**	1	SUPPORT-TUBE	
	5	1	**118-5597**	1	DIODE AS	
		1	**2L-8076**	1	TERMINAL-CRIMP (14-16 GA)	
		1	**6V-2689**	1	TUBE-HEAT SHRINK	
	6	1	**158-5089**	1	RELAY AS (SECONDARY STEERING)	
	7	1	**180-8860**	1	HARNESS AS-STEERING (SECONDARY)	
		1	**102-8803**	1	KIT-RECEPTACLE (3 PIN)	
	8	1	**185-2768**	1	SWITCH AS-ROCKER (SECONDARY STEERING)	
		1	**111-7899**	1	GASKET	
	9	1	**208-9645**	1	CABLE AS	
	10	1	**208-9646**	1	CABLE AS	
	11	1	**4P-8134**	1	CLIP	
	12	1	**5P-9299**	3	CLIP	
	13	1	**8T-4121**	7	WASHER-HARD (11X21X2.5MM THK)	
M	14	1	**8T-4133**	3	NUT (M10X1.5 THD)	
M	15	1	**8T-4136**	3	BOLT (M10X1.5X25MM)	
M	16	1	**8T-4171**	4	BOLT (M6X1X12MM)	
	17	1	**8T-4205**	4	WASHER-HARD (7.2X14.5X2MM THK)	
M	18	1	**8T-4195**	1	BOLT (M10X1.5X30MM)	
M	19	1	**8T-4189**	1	BOLT (M8X1.25X20MM)	
	20	1	**5P-4116**	1	WASHER-HARD (8.8X20.5X2MM THK)	
	21	1	**3W-6188**	1	BRACKET	

M-METRIC PART
Y-SEPARATE ILLUSTRATION

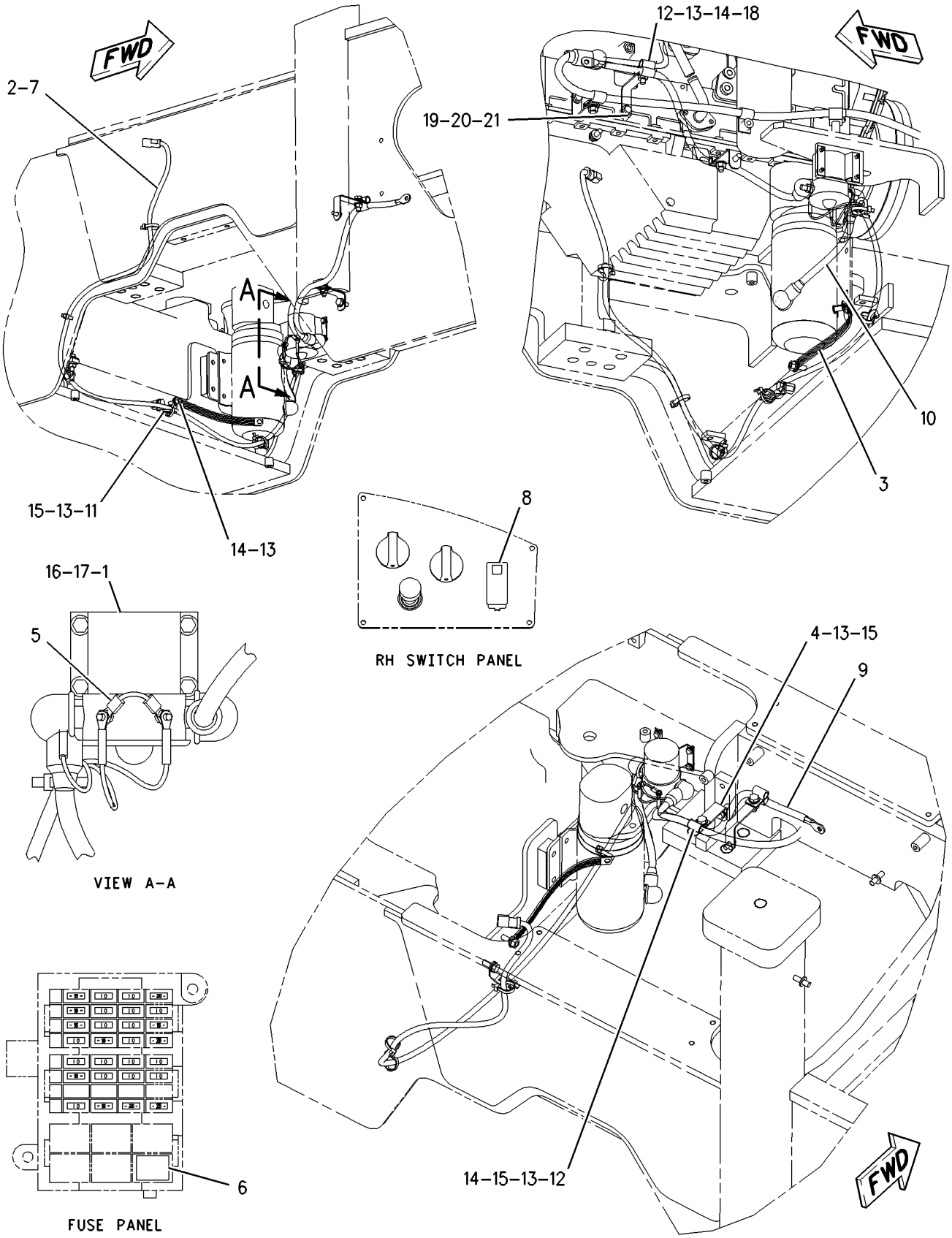

GRAPHIC #1

g00922817

203-2761 AXLE AR-FIXED

S/N: DJD1-UP; DBT1-UP
STANDARD DIFFERENTIAL, SINGLE DISC BRAKE
AN ATTACHMENT

SMCS-3013, 3278 **i01739941**

NOTE	PART NUMBER	QTY	PART NAME 1 2 3 4 5 6 (PRODUCT LEVEL)	SEE PAGE
Y	*163-5775*	2	BRAKE & PLANETARY GP	180
Y	**151-6142**	1	DIFFERENTIAL GP	198
Y	*203-2762*	1	GEAR GP-BEVEL	212
Y	**203-2763**	1	HOUSING GP-FIXED AXLE	216
	220-7925	1	PLATE	

Y-SEPARATE ILLUSTRATION

<END>

203-2770 AXLE AR-FIXED

S/N: DJD1-UP; DBT1-UP
LIMITED SLIP DIFFERENTIAL, SINGLE DISC BRAKE
AN ATTACHMENT

SMCS-3013, 3278 **i01735658**

NOTE	PART NUMBER	QTY	PART NAME 1 2 3 4 5 6 (PRODUCT LEVEL)	SEE PAGE
Y	*163-5775*	2	BRAKE & PLANETARY GP	180
Y	**159-7446**	1	DIFFERENTIAL GP-LIMITED SLIP	199
Y	*203-2762*	1	GEAR GP-BEVEL	212
Y	*203-2763*	1	HOUSING GP-FIXED AXLE	216
	220-7925	1	PLATE	

Y-SEPARATE ILLUSTRATION

<END>

203-2752 AXLE AR-OSCILLATING

S/N: DJD1-UP; DBT1-UP
STANDARD DIFFERENTIAL, SINGLE DISC BRAKE
PART OF 203-5947 AXLE AR-OSCILLATING
AN ATTACHMENT

SMCS-3013, 3278 **i01742857**

NOTE	PART NUMBER	QTY	PART NAME 1 2 3 4 5 6 (PRODUCT LEVEL)	SEE PAGE
Y	*163-5775*	2	BRAKE & PLANETARY GP	180
Y	**151-6142**	1	DIFFERENTIAL GP	198
Y	*203-2753*	1	GEAR GP-BEVEL	210
Y	*203-2754*	1	HOUSING GP-OSCILLATING AXLE	218
	220-7925	1	PLATE	

Y-SEPARATE ILLUSTRATION

<END>

203-2766 AXLE AR-OSCILLATING

S/N: DJD1-UP; DBT1-UP
REAR, STANDARD DIFFERENTIAL
PART OF 203-5949 AXLE AR-OSCILLATING
AN ATTACHMENT

SMCS-3013, 3278 **i01745882**

NOTE	PART NUMBER	QTY	PART NAME 1 2 3 4 5 6 (PRODUCT LEVEL)	SEE PAGE
Y	*203-2768*	2	BRAKE & PLANETARY GP	182
Y	**151-6142**	1	DIFFERENTIAL GP	198
Y	*203-2753*	1	GEAR GP-BEVEL	210
Y	*203-2767*	1	HOUSING GP-OSCILLATING AXLE (OSCILLATING)	222
	220-7925	1	PLATE	

Y-SEPARATE ILLUSTRATION

<END>

203-2769 AXLE AR-OSCILLATING

S/N: DJD1-UP; DBT1-UP
LIMITED SLIP DIFFERENTIAL, SINGLE DISC BRAKE
PART OF 203-5948 AXLE AR-OSCILLATING
AN ATTACHMENT

SMCS-3013, 3278 **i01735656**

NOTE	PART NUMBER	QTY	PART NAME 1 2 3 4 5 6 (PRODUCT LEVEL)	SEE PAGE
Y	*163-5775*	2	BRAKE & PLANETARY GP	180
Y	**159-7446**	1	DIFFERENTIAL GP-LIMITED SLIP	199
Y	*203-2753*	1	GEAR GP-BEVEL	210
Y	*203-2754*	1	HOUSING GP-OSCILLATING AXLE	218
	220-7925	1	PLATE	

Y-SEPARATE ILLUSTRATION

<END>

203-2771 AXLE AR-OSCILLATING

S/N: DJD1-UP; DBT1-UP
REAR, LIMITED SLIP DIFFERENTIAL
PART OF 203-5950 AXLE AR-OSCILLATING
AN ATTACHMENT

SMCS-3013, 3278 **i01746225**

NOTE	PART NUMBER	QTY	PART NAME 1 2 3 4 5 6 (PRODUCT LEVEL)	SEE PAGE
Y	*203-2768*	2	BRAKE & PLANETARY GP	182
Y	**159-7446**	1	DIFFERENTIAL GP-LIMITED SLIP	199
Y	*203-2753*	1	GEAR GP-BEVEL	210
Y	*203-2767*	1	HOUSING GP-OSCILLATING AXLE (OSCILLATING)	222
	220-7925	1	PLATE	

Y-SEPARATE ILLUSTRATION

<END>

203-2772 AXLE AR-OSCILLATING

S/N: DJD1-UP; DBT1-UP
NO SPIN DIFFERENTIAL, SINGLE DISC BRAKE
PART OF 203-8553 AXLE AR-OSCILLATING
AN ATTACHMENT

SMCS-3013, 3278 **i01735653**

NOTE	PART NUMBER	QTY	PART NAME 1 2 3 4 5 6 (PRODUCT LEVEL)	SEE PAGE
Y	*163-5775*	2	BRAKE & PLANETARY GP	180
Y	*117-8258*	1	DIFFERENTIAL GP-NOSPIN	201
Y	*203-2753*	1	GEAR GP-BEVEL	210
Y	*203-2754*	1	HOUSING GP-OSCILLATING AXLE	218
	220-7925	1	PLATE	

Y-SEPARATE ILLUSTRATION

<END>

203-5947 AXLE AR-OSCILLATING

S/N: DJD1-UP; DBT1-UP
STANDARD DIFFERENTIAL
AN ATTACHMENT

SMCS-3013, 3278 **i01745894**

NOTE	PART NUMBER	QTY	PART NAME 1 2 3 4 5 6 (PRODUCT LEVEL)	SEE PAGE
Y	*203-2752*	1	AXLE AR-OSCILLATING	176
Y	*203-3881*	1	LINES GP-HYDRAULIC FAN	408
	192-4367	1	LINES GP-WATER	
	185-1023	1	HOSE-COOLANT	
	185-1024	1	HOSE-COOLANT	
	185-1021	1	HOSE-COOLANT	
	215-4011	4	CLAMP	
	216-6944	2	CLAMP	

Y-SEPARATE ILLUSTRATION

<END>

203-5948 AXLE AR-OSCILLATING

S/N: DJD1-UP; DBT1-UP
LIMITED SLIP
AN ATTACHMENT

SMCS-3013, 3278 **i01745896**

NOTE	PART NUMBER	QTY	PART NAME 1 2 3 4 5 6 (PRODUCT LEVEL)	SEE PAGE
Y	*203-2769*	1	AXLE AR-OSCILLATING	177
Y	*203-3881*	1	LINES GP-HYDRAULIC FAN	408
	192-4367	1	LINES GP-WATER	
	185-1021	1	HOSE-COOLANT	
	185-1023	1	HOSE-COOLANT	
	185-1024	1	HOSE-COOLANT	
	216-6944	2	CLAMP	
	215-4011	4	CLAMP	

Y-SEPARATE ILLUSTRATION

<END>

203-5949 AXLE AR-OSCILLATING

S/N: DJD1-UP; DBT1-UP
REAR, STANDARD DIFFERENTIAL
AN ATTACHMENT

SMCS-3013, 3278 **i01798380**

NOTE	PART NUMBER	QTY	PART NAME 1 2 3 4 5 6 (PRODUCT LEVEL)	SEE PAGE
Y	*192-4360*	1	LINES GP-WATER (AXLE OIL COOLER)	58
Y	*203-2766*	1	AXLE AR-OSCILLATING	177
Y	*219-3313*	1	LINES GP-AXLE OIL COOLER	226

Y-SEPARATE ILLUSTRATION

<END>

203-5950 AXLE AR-OSCILLATING

S/N: DJD1-UP; DBT1-UP
REAR, LIMITED SLIP
AN ATTACHMENT

SMCS-3013, 3278 **i01798357**

NOTE	PART NUMBER	QTY	PART NAME 1 2 3 4 5 6 (PRODUCT LEVEL)	SEE PAGE
Y	*192-4360*	1	LINES GP-WATER (AXLE OIL COOLER)	58
Y	*203-2771*	1	AXLE AR-OSCILLATING	177
Y	*219-3313*	1	LINES GP-AXLE OIL COOLER	226

Y-SEPARATE ILLUSTRATION

<END>

203-8553 AXLE AR-OSCILLATING

S/N: DJD1-UP; DBT1-UP
NOSPIN DIFFERENTIAL
AN ATTACHMENT

SMCS-3013, 3278 **i01746231**

NOTE	PART NUMBER	QTY	PART NAME 1 2 3 4 5 6 (PRODUCT LEVEL)	SEE PAGE
Y	*203-2772*	1	AXLE AR-OSCILLATING	178
Y	*203-3881*	1	LINES GP-HYDRAULIC FAN	408
	192-4367	1	LINES GP-WATER	
	185-1021	1	HOSE-COOLANT	
	185-1023	1	HOSE-COOLANT	
	185-1024	1	HOSE-COOLANT	
	215-4011	4	CLAMP	
	216-6944	2	CLAMP	

Y-SEPARATE ILLUSTRATION

<END>

163-5775 BRAKE & PLANETARY GP

S/N: DJD1-UP; DBT1-UP

PART OF 203-2761, 203-2770 AXLE AR-FIXED, 203-2752, 203-2769, 203-2772 AXLE AR-OSCILLATING

AN ATTACHMENT

SMCS-4011, 4255 **i01105446**

NOTE	REF NO	GRAPHIC REF	PART NUMBER	QTY	PART NAME 1 2 3 4 5 6 (PRODUCT LEVEL)	SEE PAGE
	1	1	**116-7711**	1	GEAR-SUN (18 TEETH)	
	2	1	**163-5776**	1	PISTON	
	3	1	**163-7233**	1	SEAL-D-RING	
	4	1	**163-7234**	1	SEAL-D-RING	
	5	1	**170-0048**	1	DISC-FRICTION	
	6	1	**170-4698**	1	PLATE-REACTION	
	7	1	**115-5327**	3	DOWEL	
	8	1	**116-7713**	1	GEAR-RING (87 TEETH)	
	9	1	**8R-2198**	1	CARRIER-PLANETARY	
	10	1	**8R-2200**	3	SHAFT-PLANETARY	
	11	1	**8T-2925**	3	PIN-SPRING	
	12	1	**8R-2202**	6	WASHER-THRUST	
	13	1	**8R-2201**	3	BEARING-SLEEVE	
	14	1	**116-7712**	3	GEAR-PLANET (33 TEETH)	
	15	1	**170-0108**	3	SPRING	
	16	1	**9M-4335**	3	DOWEL-REACTION	
	17	1	**138-1645**	3	PIN-SPRING	

163-5775 **BRAKE & PLANETARY GP** ***(contd.)*** **i01105446**

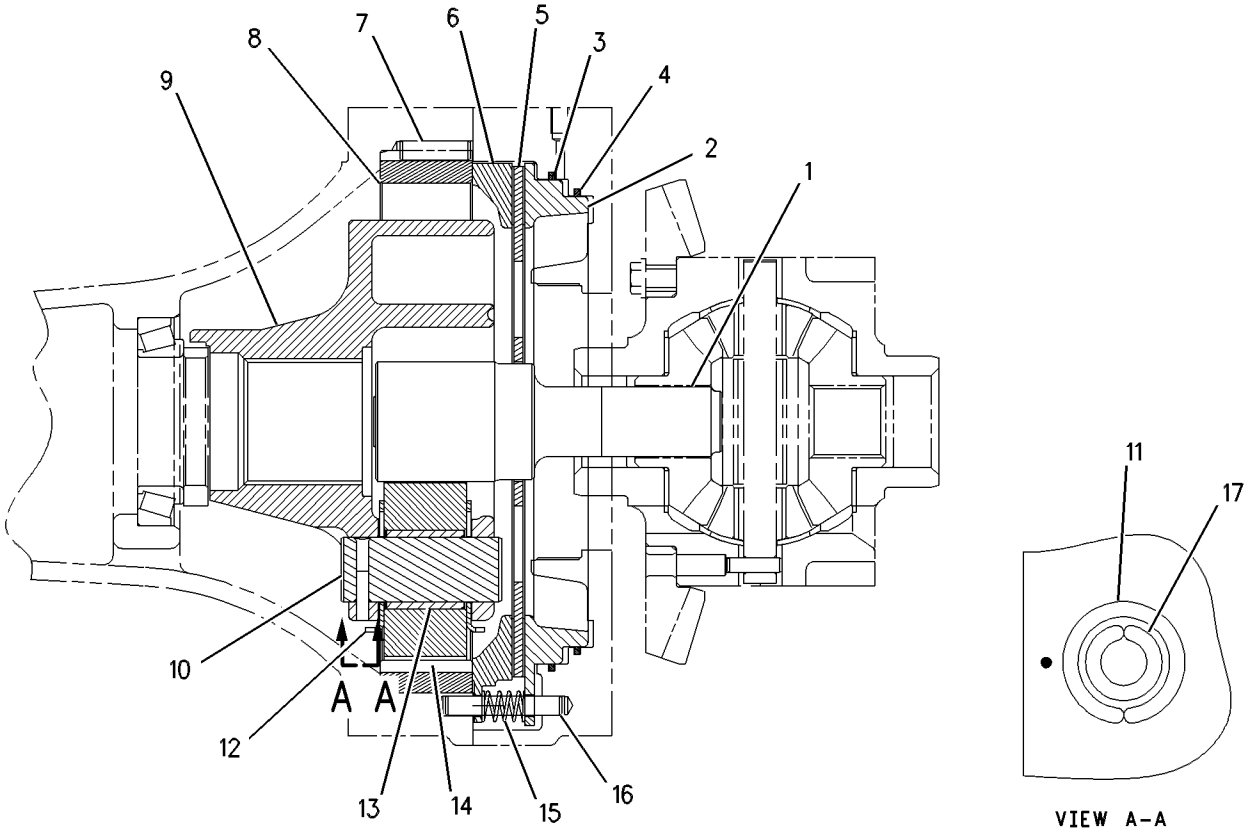

GRAPHIC #1 g00570353

203-2768 BRAKE & PLANETARY GP

S/N: DJD1-UP; DBT1-UP
PART OF 203-2766, 203-2771 AXLE AR-OSCILLATING
AN ATTACHMENT

SMCS-4011, 4255 **i01745890**

NOTE	REF NO	GRAPHIC REF	PART NUMBER	QTY	PART NAME 1 2 3 4 5 6 (PRODUCT LEVEL)	SEE PAGE
	1	1	**8R-2198**	1	CARRIER-PLANETARY	
	2	1	**8R-2200**	3	SHAFT-PLANETARY	
	3	1	**8R-2201**	3	BEARING-SLEEVE	
	4	1	**8R-2202**	6	WASHER-THRUST	
	5	1	**116-7712**	3	GEAR-PLANET (33 TEETH)	
	6	1	**116-7713**	1	GEAR-RING (87 TEETH)	
	7	1	**163-5776**	1	PISTON	
	8	1	**163-7233**	1	SEAL-D-RING	
	9	1	**163-7234**	1	SEAL-D-RING	
	10	1	**170-0048**	2	DISC-FRICTION	
	11	1	**170-0108**	3	SPRING	
	12	1	**170-4698**	1	PLATE-REACTION	
	13	1	**175-7376**	1	GEAR-SUN	
	14	1	**203-5852**	1	PLATE	
	15	1	**203-5853**	3	SLEEVE	
	16	1	**115-5327**	3	DOWEL	
	17	1	**138-1645**	3	PIN-SPRING	
	18	1	**4M-1677**	3	DOWEL-REACTION	
	19	1	**8T-2925**	3	PIN-SPRING	

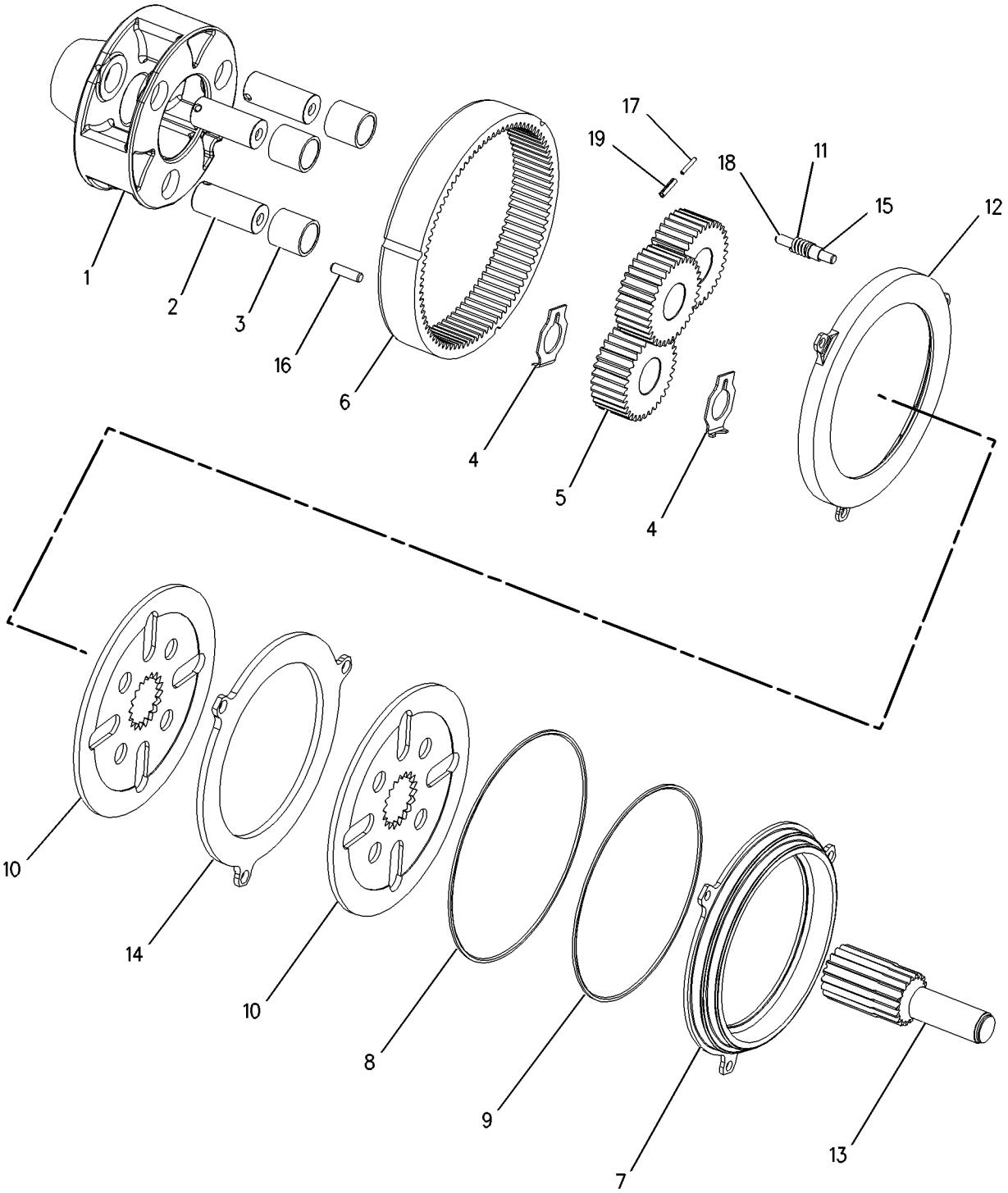

GRAPHIC #1 g00897263

POWER TRAIN

177-0018 CASE & PARTS GP-PLANETARY

S/N: DJD1-UP; DBT1-UP

PART OF 177-0017 TRANSMISSION AR

SMCS-3064 **i01798974**

NOTE	REF NO	GRAPHIC REF	PART NUMBER	QTY	PART NAME 1 2 3 4 5 6 (PRODUCT LEVEL)	SEE PAGE
M	1	2	**6V-1820**	14	BOLT (M10X1.50X30MM)	
	2	1,2	**6V-5839**	16	WASHER (11X21X2.5MM THK)	
Y	3	1	**177-0019**	1	COVER GP-TRANSMISSION	196
	4	1	**1U-8846**	1	SEALANT-GASKET	
	5	1	**180-7502**	1	HOUSING	
	6	1	**9S-4181**	2	PLUG	
	7	2	**9G-5127**	1	BREATHER	
M	8	2	**7X-0474**	2	BOLT (M10X1.5X220MM)	
M	9	2	**6V-6317**	3	BOLT (M10X1.5X20MM)	
	10	1,2	**3J-1907**	4	SEAL-O-RING	
	11	2	**169-8352**	1	SHIELD AS	
M	12	2	**6A-5591**	4	BOLT (M12X1.75X25MM)	
	13	2	**2N-7006**	1	COVER	
	14	2	**2N-7007**	1	GASKET	
M	15	1,2	**6V-5230**	13	BOLT (M10X1.5X60MM)	
	16	1	**8J-0426**	1	PLUG	
	17	1	**133-4297**	1	SEAL-LIP TYPE	
	18	2	**6Y-0584**	1	RACE-ROLLER BEARING	
	19	2	**2W-1141**	4	BEARING-ROLLER	
	20	2	**5P-2304**	1	RACE & ROLLER AS	
	21	2	**005-0469**	2	CUP-BEARING	
	22	2	**5P-0713**	1	SEAL-LIP	
	23	2	**6Y-9017**	1	CAGE-BEARING	
	24	2	**8H-7521**	1	SEAL-O-RING	
	25	1	**2D-0598**	1	SEAL-O-RING	
	26	1	**9W-1454**	1	COVER	
	27	1	**5P-3863**	1	SEAL-O-RING	
M	28	1	**6V-5217**	3	BOLT (M8X1.25X20MM)	
	29	1	**8S-9130**	1	SCREEN-SUCTION	
	30	1	**8S-9129**	1	FILTER-MAGNETIC	
M	31	1	**6V-5842**	8	BOLT (M10X1.50X40MM)	
	32	1	**7T-2703**	1	PLUG-DRAIN	
	33	1	**7M-8485**	3	SEAL-O-RING	
M	34	1	**8T-9085**	1	BOLT (M10X1.50X150MM)	
	35	1	**148-1928**	1	VALVE-RELIEF	
	36	1	**9X-4609**	1	SEAL-O-RING	
	38	1	**5H-6005**	4	SEAL-O-RING	
	39	2	**6Y-9016**	1	SHIM PACK (INCLUDES 12 SHIMS)	
	40	1	**1B-3978**	1	CUP-BEARING	
	41	1	**9W-7159**	2	SHIM PACK (INCLUDES 12 SHIMS)	
	42	2	**9S-4191**	2	PLUG	
	43	1	**7F-8268**	1	SEAL-O-RING	
	44	1,2	**6V-3965**	2	FITTING AS	
	45	1,2	**6V-0852**	2	CAP-DUST	
Y	46	1	**6I-9806**	1	VALVE GP-RELIEF	260
	47	1	**8T-5452**	2	SEAL-O-RING	
	48	2	**146-6280**	1	COVER	
	49	2	**4S-5879**	1	SEAL-O-RING	
	50	2	**5P-7684**	1	PLUG	
	51	2	**6K-6307**	1	SEAL-O-RING	

M-METRIC PART
Y-SEPARATE ILLUSTRATION

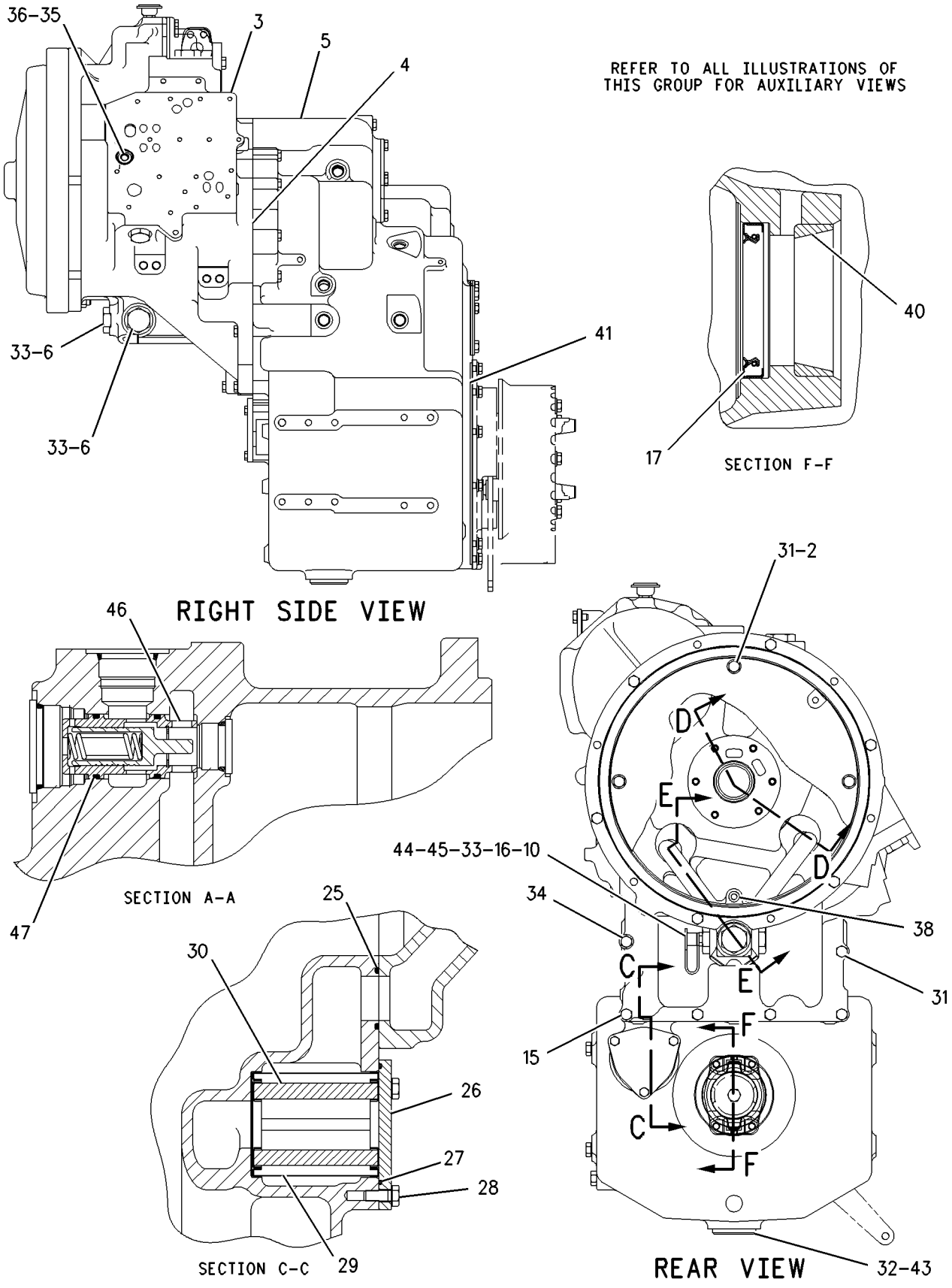

GRAPHIC #1

g00921843

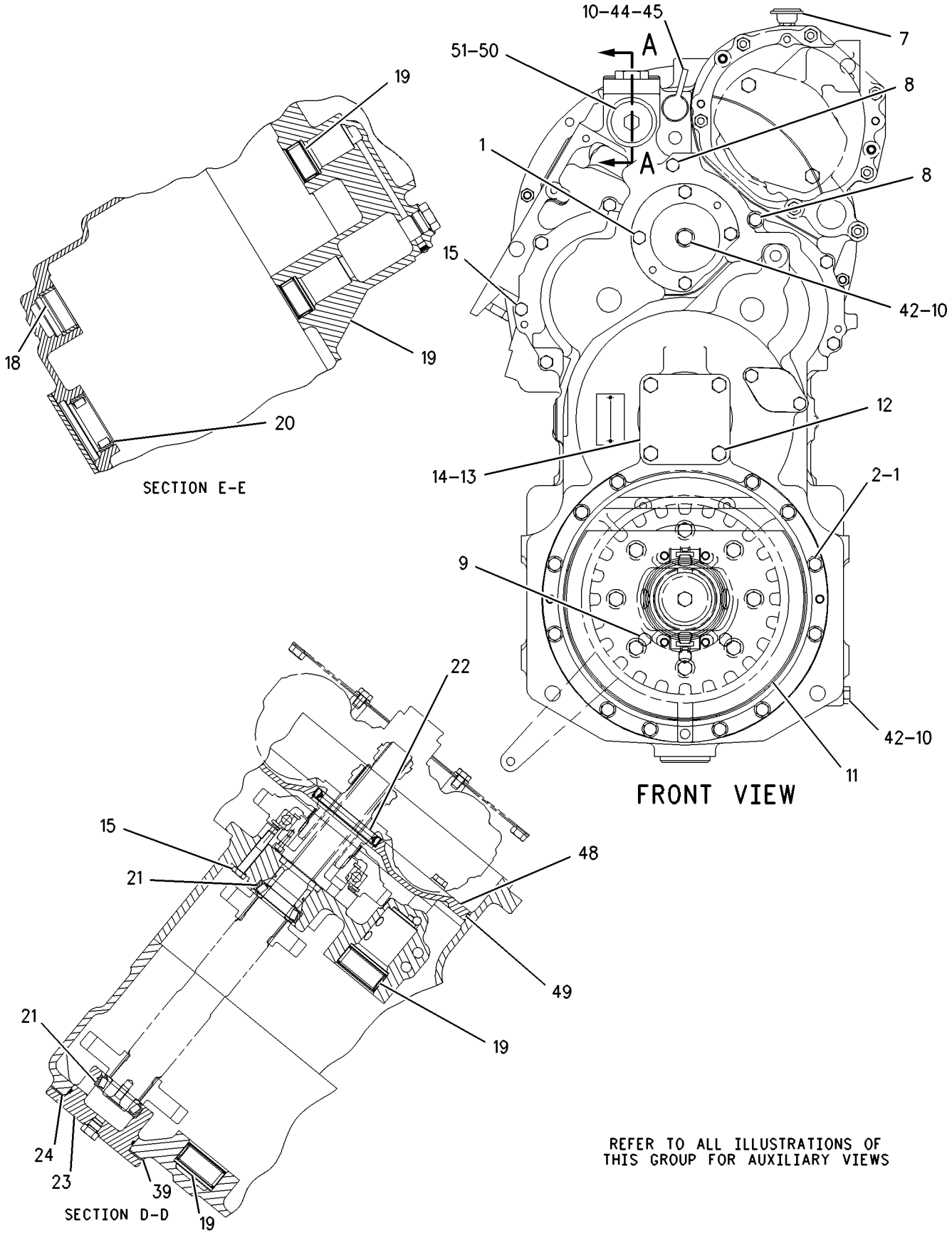

GRAPHIC #2

g00921845

MEMORANDA

118-4918 CLUTCH GP

S/N: DJD1-UP; DBT1-UP
SECOND & REVERSE
PART OF 177-0017 TRANSMISSION AR

SMCS-3155 **i00722980**

NOTE	REF NO	GRAPHIC REF	PART NUMBER	QTY	PART NAME 1 2 3 4 5 6 (PRODUCT LEVEL)	SEE PAGE
	1	1	**6I-8390**	3	RING-SEAL	
	2	1	**142-5914**	1	SHAFT AS	
		1	**9W-0718**	2	PLUG	
	3	1	**8C-3979**	2	RING-RETAINING	
	4	1	**120-4482**	1	GEAR (50 TEETH)	
	5	1	**8C-4400**	1	RING-RETAINING	
	6	1	**8E-5726**	1	PLATE-END	
	7	1	**6Y-1300**	6	DISC-FRICTION	
	8	1	**8E-5556**	6	PLATE-CLUTCH	
	9	1	**9W-9372**	2	RING-SEAL	
	10	1	**9W-9371**	2	RING-SEAL	
	11	1	**6Y-5631**	6	PLATE-CLUTCH	
	12	1	**6Y-7968**	6	DISC-FRICTION	
	13	1	**9U-8875**	1	RING-RETAINING	
	14	1	**116-4885**	1	GEAR (50 TEETH)	
	15	1	**9W-6912**	1	SPACER	
	16	1	**9W-7764**	1	GEAR (33 TEETH)	
	17	1	**6Y-0928**	1	SPACER	
	18	1	**6Y-4890**	1	BEARING	
	19	1	**9W-9662**	1	WASHER-THRUST	
	20	1	**109-4728**	1	HUB AS	
		1	**2W-1141**	1	BEARING-ROLLER	
		1	**7X-2495**	1	RING-RETAINING	
		1	**9W-8013**	1	HUB AS	
	21	1	**8E-5707**	1	PLATE-END	
	22	1	**9W-6904**	2	RING-RETAINER	
	23	1	**9W-9718**	1	RETAINER-SPRING	
	24	1	**6Y-7818**	2	SPRING	
	25	1	**6Y-8157**	1	PISTON	
	26	1	**116-4870**	1	PISTON	
	27	1	**8E-5727**	1	RETAINER-SPRING	
	28	1	**109-4727**	1	HUB AS	
		1	**2W-1141**	1	BEARING-ROLLER	
		1	**6Y-6952**	1	HUB AS	
		1	**7X-2495**	1	RING-RETAINING	
	29	1	**8E-8313**	4	DISC-THRUST	
	30	1	**8C-3982**	1	RING-RETAINING	
	31	1	**9N-4354**	2	BODY-VALVE	
	32	1	**3D-2891**	2	BALL	
	33	1	**129-8732**	2	SPRING	
	34	1	**8L-2746**	1	SEAL-O-RING (15.6MM ID)	
	35	1	**9N-4365**	2	RETAINER-SPRING	
	36	1	**3D-8358**	2	RING-RETAINING	

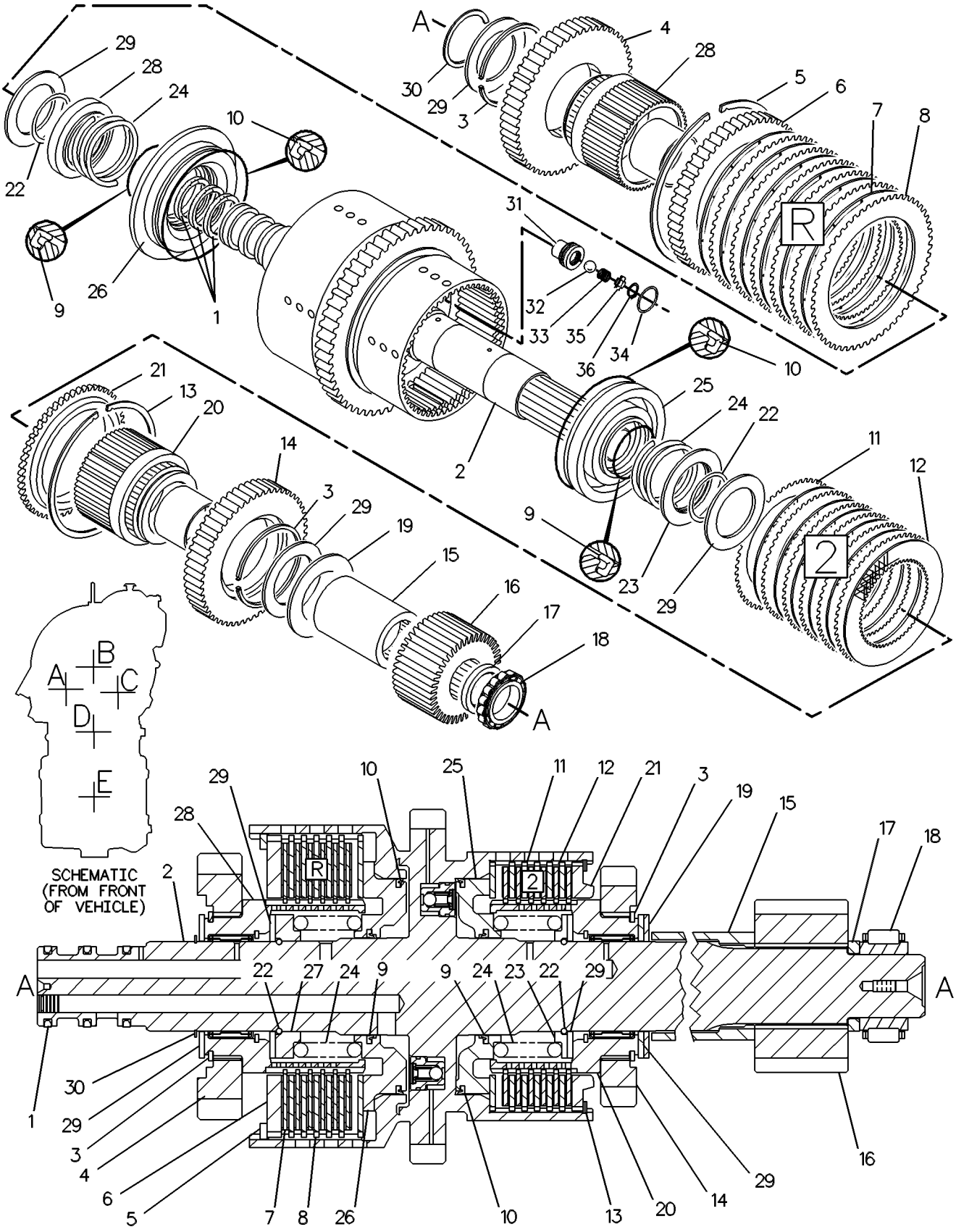

GRAPHIC #1 g00131719

118-4921 CLUTCH GP

S/N: DJD1-UP; DBT1-UP
FORWARD HIGH & FORWARD LOW
PART OF 177-0017 TRANSMISSION AR

SMCS-3155 **i00722990**

NOTE	REF NO	GRAPHIC REF	PART NUMBER	QTY	PART NAME 1 2 3 4 5 6 (PRODUCT LEVEL)	SEE PAGE
	1	1	**6I-8390**	3	RING-SEAL	
	2	1	**142-5862**	1	SHAFT AS	
		1	**9W-0718**	2	PLUG	
	3	1	**8C-3982**	2	RING-RETAINING	
	4	1	**120-4482**	1	GEAR	
	5	1	**8C-4400**	1	RING-RETAINING	
	6	1	**8E-5726**	1	PLATE-END	
	7	1	**6Y-1300**	6	DISC-FRICTION	
	8	1	**8E-5556**	6	PLATE-CLUTCH	
	9	1	**9W-9372**	2	RING-SEAL	
	10	1	**9W-9371**	2	RING-SEAL	
	11	1	**6Y-5631**	4	PLATE-CLUTCH	
	12	1	**6Y-7968**	4	DISC-FRICTION	
	13	1	**9U-8875**	1	RING-RETAINING	
	14	1	**8E-5707**	1	PLATE-END	
	15	1	**8E-8313**	4	DISC-THRUST	
	16	1	**8C-3979**	2	RING-RETAINING	
	17	1	**116-4884**	1	GEAR	
	18	1	**109-4730**	1	HUB AS	
		1	**2W-1141**	1	BEARING-ROLLER	
		1	**7X-2495**	1	RING-RETAINING	
	19	1	**9W-6904**	2	RING-RETAINER	
	20	1	**9W-9718**	1	RETAINER-SPRING	
	21	1	**6Y-7818**	2	SPRING	
	22	1	**6Y-8157**	1	PISTON	
	23	1	**116-4870**	1	PISTON	
	24	1	**8E-5727**	1	RETAINER-SPRING	
	25	1	**109-4727**	1	HUB AS	
		1	**2W-1141**	1	BEARING-ROLLER	
		1	**7X-2495**	1	RING-RETAINING	
	26	1	**9N-4354**	2	BODY-VALVE	
	27	1	**3D-2891**	2	BALL	
	28	1	**129-8732**	2	SPRING	
	29	1	**8L-2746**	2	SEAL-O-RING (15.6MM ID)	
	30	1	**9N-4365**	2	RETAINER-SPRING	
	31	1	**3D-8358**	2	RING-RETAINING	

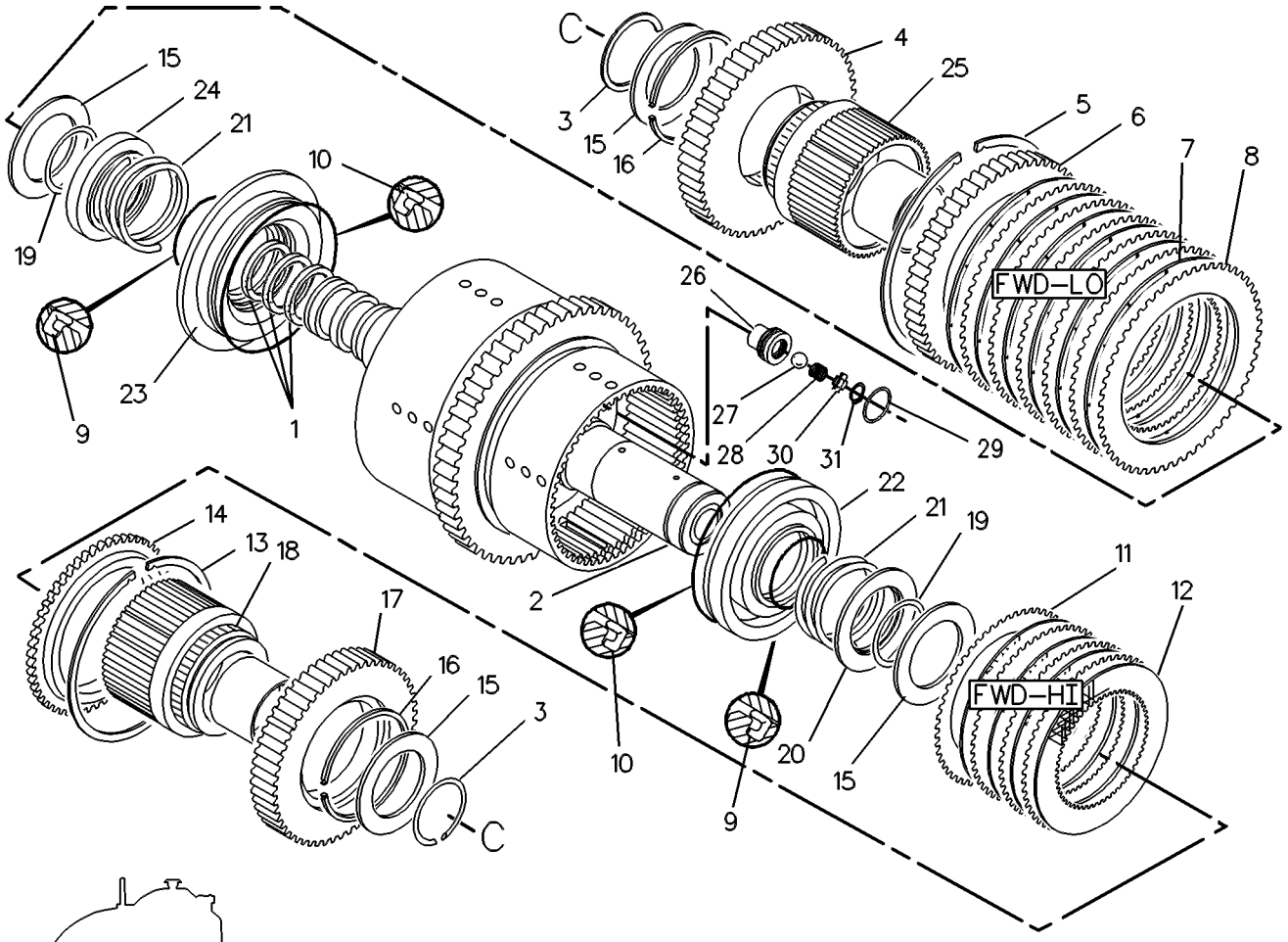

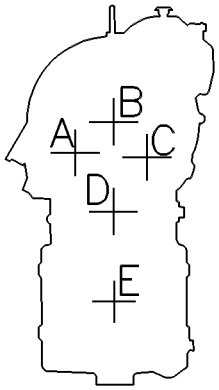

SCHEMATIC
(FROM FRONT
OF VEHICLE)

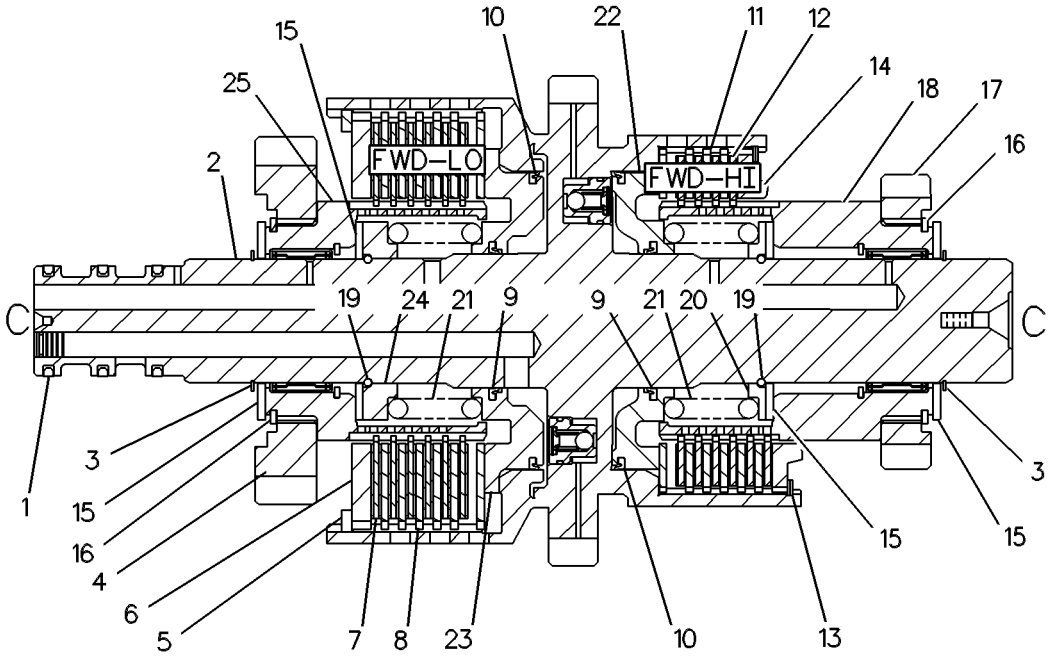

GRAPHIC #1

g00131720

190-2914 CLUTCH GP

S/N: DJD1-UP; DBT1-UP
FIRST & THIRD
PART OF 177-0017 TRANSMISSION AR

SMCS-3155 **i01703527**

NOTE	REF NO	GRAPHIC REF	PART NUMBER	QTY	PART NAME 1 2 3 4 5 6 (PRODUCT LEVEL)	SEE PAGE
	1	1	**6T-6593**	3	RING-SEAL	
	2	1	**8C-3982**	2	RING-RETAINING	
	3	1	**8C-3979**	1	RING-RETAINING	
	4	1	**9W-7765**	1	GEAR (40 TEETH)	
	5	1	**109-4728**	1	HUB AS	
		1	**2W-1141**	1	BEARING-ROLLER	
	6	1	**9W-9718**	1	RETAINER-SPRING	
	7	1	**6Y-7818**	1	SPRING	
	8	1	**9W-9372**	1	RING-SEAL	
	9	1	**6Y-8157**	1	PISTON	
	10	1	**9W-9371**	1	RING-SEAL	
	11	1	**6Y-8265**	1	SEAL AS-BALANCE	
	12	1	**6Y-5027**	1	RING-RETAINING	
	13	1	**9W-6922**	1	WASHER-THRUST (7.2MM THK)	
	14	1	**8E-6117**	1	GEAR (93 TEETH)	
	15	1	**204-2593**	1	GEAR	
	16	1	**9W-6466**	1	WASHER-THRUST (3.16MM THK)	
	17	1	**8E-6558**	1	RACE-ROLLER BEARING	
	18	1	**142-5925**	1	SHAFT AS	
		1	**9W-0718**	2	PLUG	
	19	1	**8E-8317**	2	DISC-THRUST	
	20	1	**6V-2394**	1	RING-RETAINING	
	21	1	**8E-6120**	1	HUB AS	
		1	**8E-3416**	1	BEARING-SLEEVE	
	22	1	**6Y-8514**	1	PLATE-END	
	23	1	**9U-9797**	1	RING-RETAINING	
	24	1	**9W-6927**	2	RING-RETAINING	
	25	1	**6Y-7922**	9	DISC-FRICTION	
	26	1	**8E-6115**	9	PLATE-CLUTCH	
	27	1	**114-1071**	1	PISTON	
	28	1	**132-9623**	1	SPRING-WAVE	
	29	1	**6Y-5631**	5	PLATE-CLUTCH	
	30	1	**6Y-7968**	5	DISC-FRICTION	
	31	1	**9U-8875**	1	RING-RETAINING	
	32	1	**8E-5707**	1	PLATE-END	
	33	1	**9W-6904**	1	RING-RETAINING	
	34	1	**8E-8313**	2	DISC-THRUST	
	35	1	**9W-9436**	1	RING-SEAL	
	36	1	**9W-9399**	1	RING-SEAL	
	37	1	**9N-4354**	1	BODY-VALVE	
	38	1	**3D-2891**	1	BALL	
	39	1	**129-8732**	1	SPRING	
	40	1	**8L-2746**	1	SEAL-O-RING	
	41	1	**9N-4365**	1	RETAINER-SPRING	
	42	1	**3D-8358**	1	RING-RETAINING	

190-2914 **CLUTCH GP** ***(contd.)*** **i01703527**

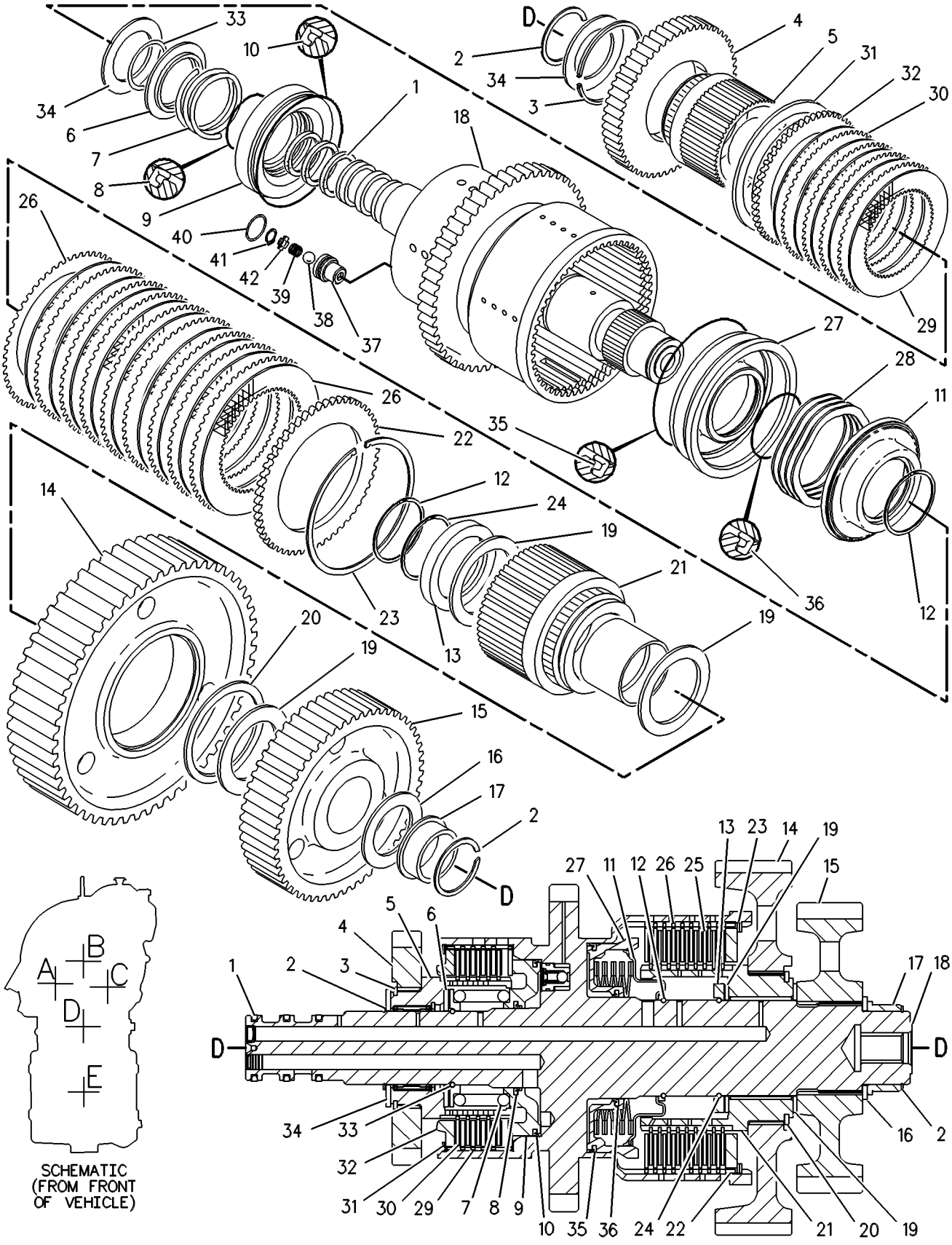

GRAPHIC #1 g00131628

190-4690 CONTROL GP-TRANSMISSION

S/N: DJD1-UP; DBT1-UP

PART OF 190-4405 CAB AR, 190-4406 CANOPY GP-OPEN ROPS, 190-4652 PLATFORM AR AN ATTACHMENT

SMCS-3065, 3168 **i01807713**

NOTE	REF NO	GRAPHIC REF	PART NUMBER	QTY	PART NAME 1 2 3 4 5 6 (PRODUCT LEVEL)	SEE PAGE
	1	1	**6I-1418**	4	SPACER (8.2X12.7X28.7MM THK)	
	2	1	**8T-9655**	8	MOUNT (ISOLATION)	
M	3	1	**134-1374**	4	BOLT-SOCKET HEAD (M5X.8X20MM)	
Y	4	1	**201-0211**	1	CONTROL GP-TRANSMISSION	195
	5	1	**216-9069**	2	BRACKET AS	
					(EACH INCLUDES)	
M		1	**6V-9632**	1	NUT-WELD (M6X1 THD)	
	6	1	**217-0956**	1	COVER	
	7	1	**228-0382**	1	SERVICE GP-MACHINE	
M	8	1	**5C-9553**	2	BOLT (M6X1X16MM)	
M	9	1	**7X-0818**	4	BOLT (M8X1.25X45MM)	
	10	1	**9X-8256**	2	WASHER (6.6X12X2MM THK)	

M-METRIC PART
Y-SEPARATE ILLUSTRATION

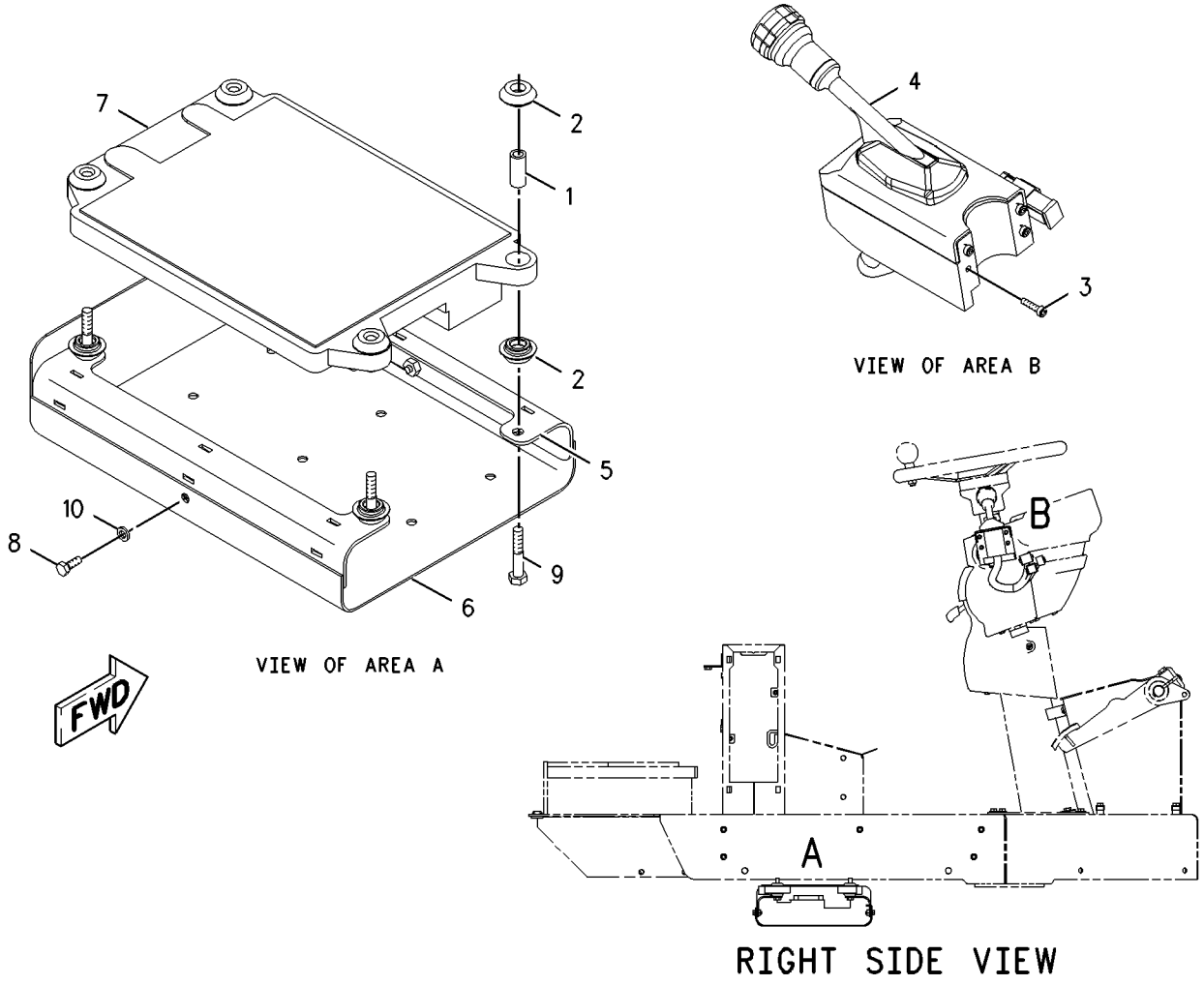

GRAPHIC #1 g00913504

201-0211 CONTROL GP-TRANSMISSION

S/N: DJD1-UP; DBT1-UP
PART OF 190-4690 CONTROL GP-TRANSMISSION
AN ATTACHMENT

SMCS-3065, 3168 **i01480277**

NOTE	REF NO	GRAPHIC REF	PART NUMBER	QTY	PART NAME 1 2 3 4 5 6 (PRODUCT LEVEL)	SEE PAGE
	1	1	**102-8805**	1	KIT-RECEPTACLE (6 PIN)	
					(INCLUDES RECEPTACLE AS AND WEDGE)	
	2	1	**155-2265**	1	KIT-CONNECTING PLUG (8 PIN)	
					(INLUDES PLUG AS AND WEDGE)	
	3	1	**155-2259**	1	WEDGE-PLUG LOCK	
	4	1	**3E-3383**	1	WEDGE-RECEPTACLE LOCK	
	5	1	**186-3736**	12	SOCKET-CONNECTOR	
	6	1	**186-3735**	4	PIN-CONNECTOR	
	7	1	**101-9161**	1	WIRE AS	
	8	1	**155-2271**	1	KIT-CONNECTING PLUG (4 PIN)	
					(INCLUDES PLUG AS AND WEDGE)	
	9	1	**155-2262**	1	WEDGE-PLUG LOCK	
	10	1	**9G-3695**	2	PLUG (GROMMET SEALING)	

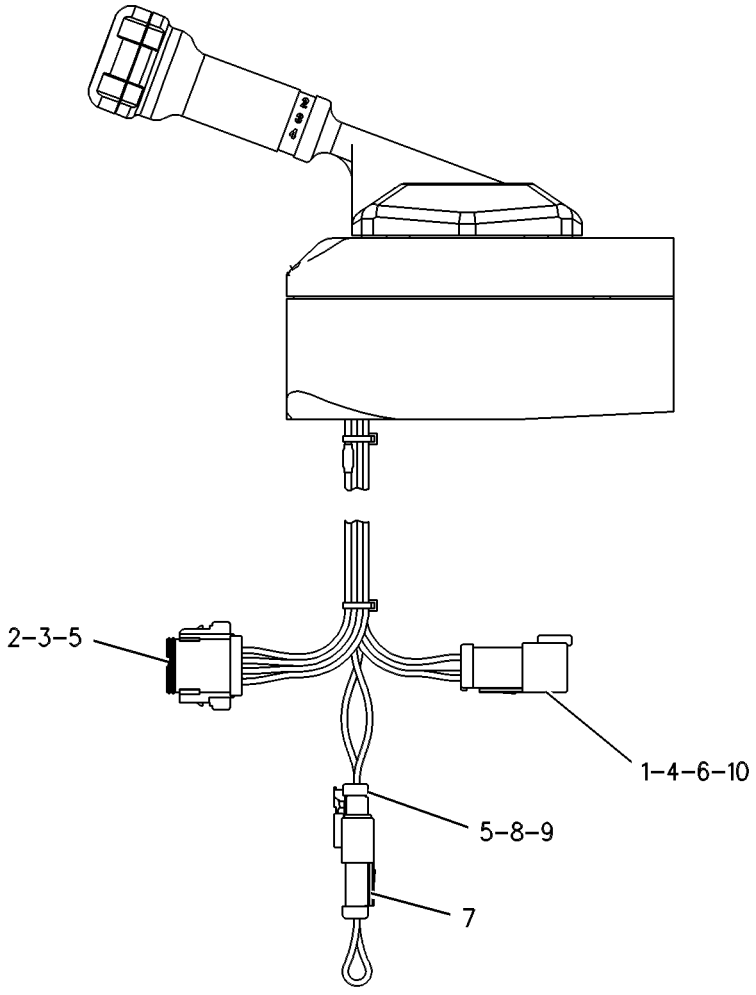

GRAPHIC #1 g00438763

177-0019 COVER GP-TRANSMISSION

S/N: DJD1-UP; DBT1-UP

PART OF 177-0018 CASE & PARTS GP-PLANETARY

SMCS-3030 **i01799132**

NOTE	REF NO	GRAPHIC REF	PART NUMBER	QTY	PART NAME 1 2 3 4 5 6 (PRODUCT LEVEL)	SEE PAGE
	1	1	**200-2045**	1	COVER	
	2	1	**7T-6496**	2	PLUG (11.9 MM DIA)	
	3	1	**6Y-0869**	4	PLUG (13.9MM DIA)	
	4	1	**8T-5353**	2	DOWEL	
	5	1	**9S-8008**	4	PLUG	
	6	1	**3D-2824**	4	SEAL-O-RING	
	7	1	**9W-6068**	1	PLUG (10.0MM DIA)	

177-0019 **COVER GP-TRANSMISSION** *(contd.)* **i01799132**

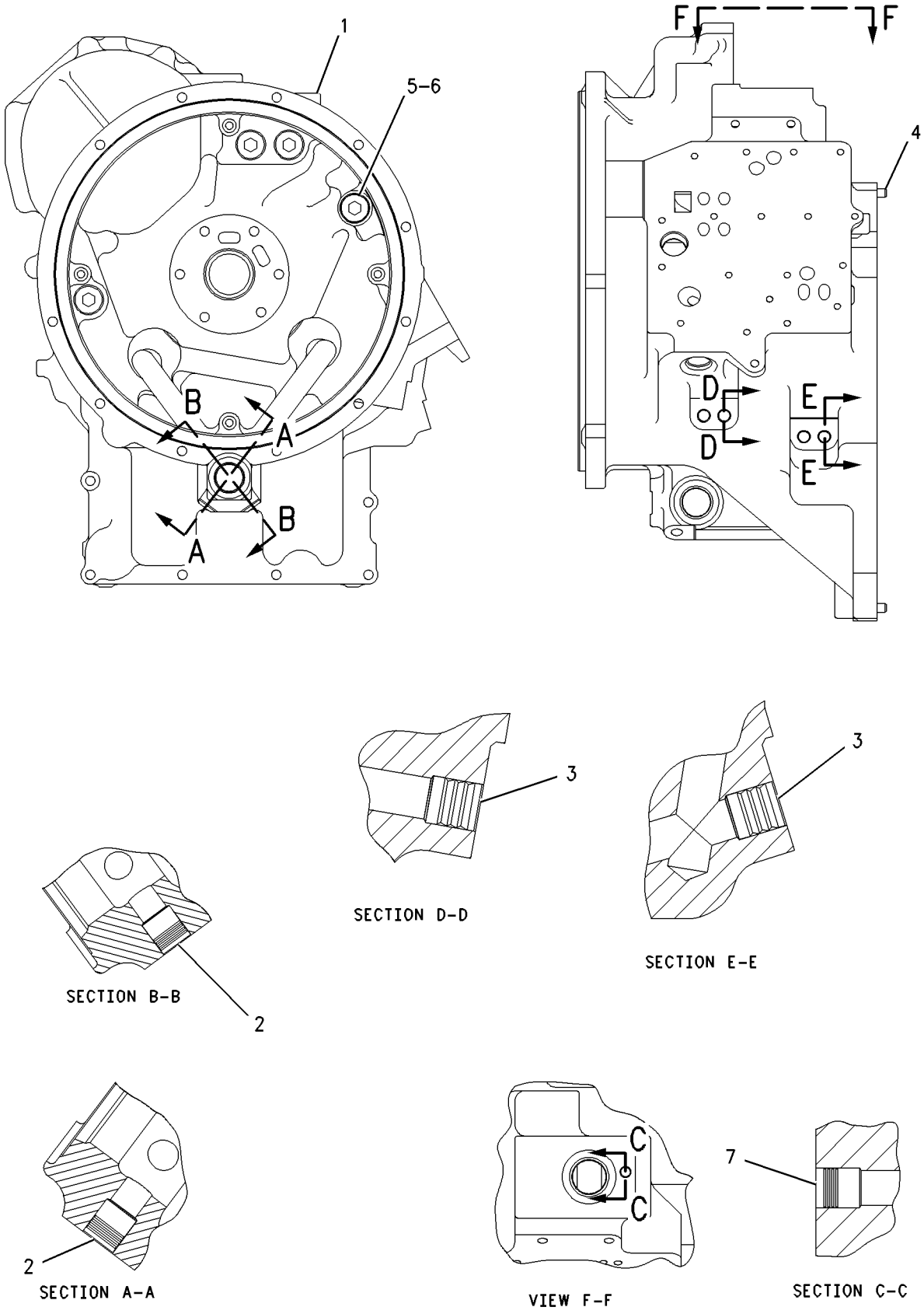

GRAPHIC #1 g00921862

151-6142 DIFFERENTIAL GP

S/N: DJD1-UP; DBT1-UP

PART OF 203-2761 AXLE AR-FIXED, 203-2752, 203-2766 AXLE AR-OSCILLATING AN ATTACHMENT

SMCS-3258 **i00861708**

NOTE	REF NO	GRAPHIC REF	PART NUMBER	QTY	PART NAME 1 2 3 4 5 6 (PRODUCT LEVEL)	SEE PAGE
	1	1	**8R-7834**	1	CASE AS-DIFFERENTIAL	
		1	**5P-8245**	4	WASHER (3MM THK)	
M		1	**8T-0106**	4	BOLT (M12X1.75X100MM)	
	2	1	**8R-1705**	2	GEAR-DIFFERENTIAL BEVEL (16 TEETH)	
	3	1	**8R-7833**	1	SHAFT-GOVERNOR CONTROL	
	4	1	**9C-5040**	2	WASHER-THRUST (1.5MM THK)	
	5	1	**133-8305**	2	WASHER	
	6	1	**8T-0099**	1	DOWEL	
	7	1	**8R-2211**	2	BEARING-SLEEVE	
	8	1	**8R-1703**	2	PINION-DIFFERENTIAL BEVEL (10 TEETH)	
	9	1	**8R-2212**	1	SPACER (82.0MM THK)	

M-METRIC PART

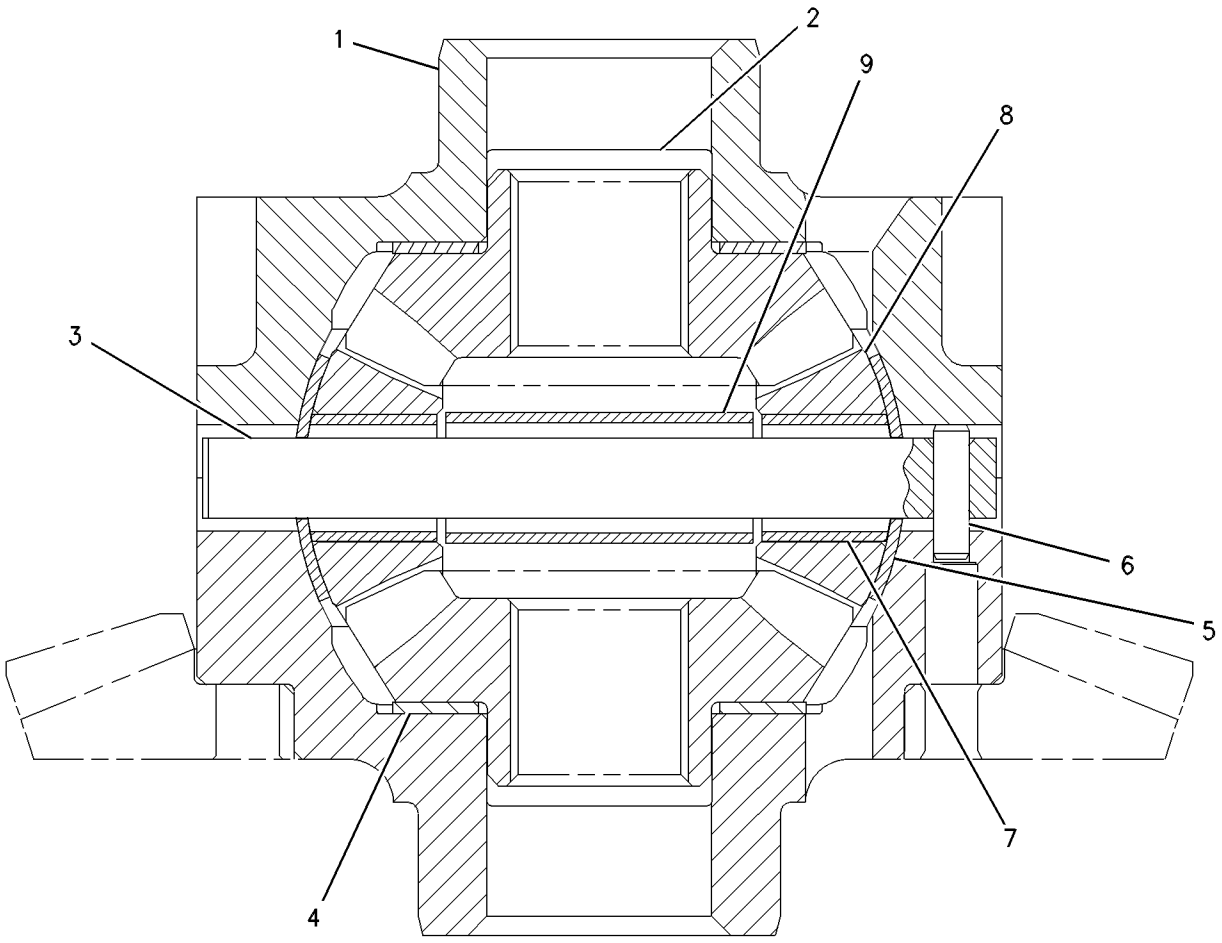

GRAPHIC #1 g00368833

159-7446 DIFFERENTIAL GP-LIMITED SLIP

S/N: DJD1-UP; DBT1-UP

PART OF 203-2770 AXLE AR-FIXED, 203-2769, 203-2771 AXLE AR-OSCILLATING AN ATTACHMENT

SMCS-3263 **i01083623**

NOTE	REF NO	GRAPHIC REF	PART NUMBER	QTY	PART NAME 1 2 3 4 5 6 (PRODUCT LEVEL)	SEE PAGE
	1	1	**104-6754**	2	WASHER-THRUST (3.9MM THK)	
	2	1	**104-6740**	4	PINION (9 TEETH)	
	3	1	**104-6741**	2	SHAFT-PINION	
	4	1	**104-6739**	2	GEAR-DIFFERENTIAL BEVEL (14 TEETH)	
	5	1	**104-6746**	1	CASE AS	
M	5A	1	**6V-8337**	2	BOLT-SOCKET HEAD (M8X1.25X35MM)	
	6	1	**159-7457**	2	KIT-THIN DISC	
	7	1	**159-7458**	2	KIT-THICK DISC	
	8	1	**104-6742**	2	HOUSING-ACTUATOR	

M-METRIC PART

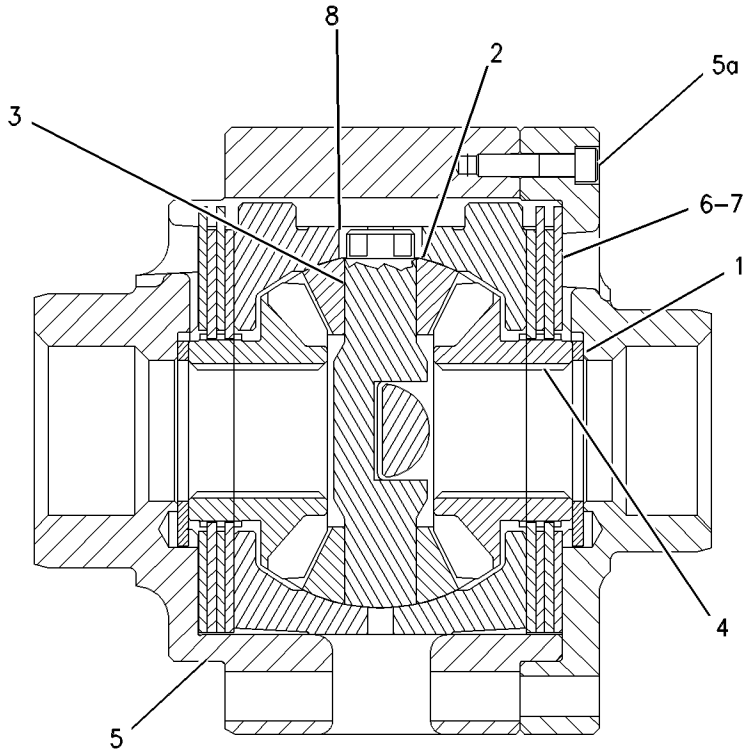

CUTAWAY OF DIFFERENTIAL

GRAPHIC #1 g00569947

4E-6103 DIFFERENTIAL GP-NOSPIN

S/N: DJD1-UP; DBT1-UP
PART OF 117-8258 DIFFERENTIAL GP-NOSPIN
AN ATTACHMENT

SMCS-3265 **i01097538**

NOTE	REF NO	GRAPHIC REF	PART NUMBER	QTY	PART NAME 1 2 3 4 5 6 (PRODUCT LEVEL)	SEE PAGE
	1	1	**8R-9831**	1	CAM AS-SPIDER	
	2	1	**3V-0908**	2	CLUTCH & RING AS	
	3	1	**3V-0905**	2	SPRING-CONICAL	
	4	1	**3V-0906**	2	RETAINER	
	5	1	**4E-6102**	2	GEAR-SIDE (28 TEETH)	
	6	1	**4E-2367**	1	SPACER (34MM THK)	

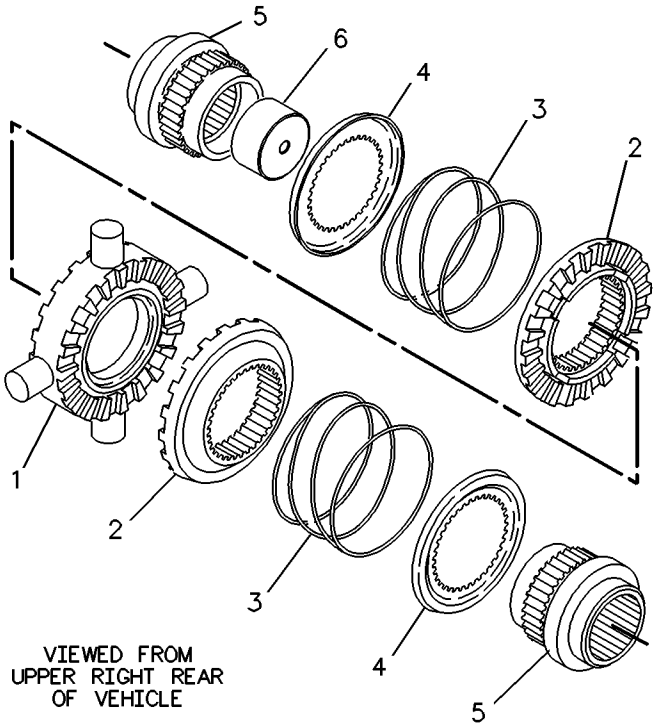

GRAPHIC #1 g00127871

117-8258 DIFFERENTIAL GP-NOSPIN

S/N: DJD1-UP; DBT1-UP
PART OF 203-2772 AXLE AR-OSCILLATING
AN ATTACHMENT

SMCS-3265 **i00350878**

NOTE	PART NUMBER	QTY	PART NAME 1 2 3 4 5 6 (PRODUCT LEVEL)	SEE PAGE
	4E-6104	1	CASE AS-DIFFERENTIAL	
Y	**4E-6103**	1	DIFFERENTIAL GP-NOSPIN	200

Y-SEPARATE ILLUSTRATION

<END>

141-8615 DRIVE GP-FLEXIBLE COUPLING

S/N: DJD1-UP; DBT1-UP

PART OF 177-0017 TRANSMISSION AR

SMCS-3252 **i01084976**

NOTE	REF NO	GRAPHIC REF	PART NUMBER	QTY	PART NAME 1 2 3 4 5 6 (PRODUCT LEVEL)	SEE PAGE
	1	1	**136-4595**	1	PLATE AS	
M	2	1	**6V-8212**	6	BOLT (M10X1.50X16MM)	
	3	1	**6V-5839**	6	WASHER (2.5MM THK)	
	4	1	**136-4593**	1	PLATE	

M-METRIC PART

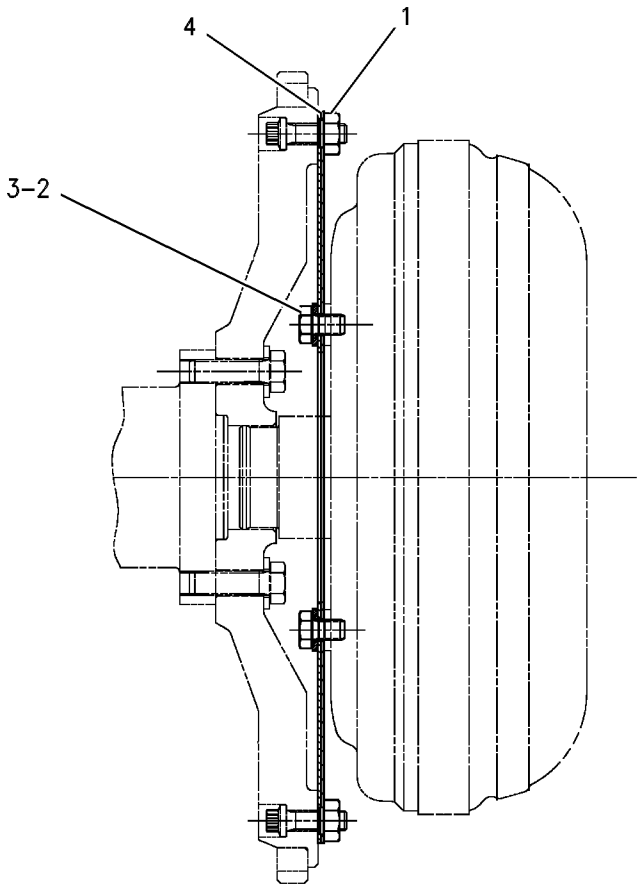

GRAPHIC #1 g00572184

146-6274 DRIVE GP-PUMP

S/N: DJD1-UP; DBT1-UP

PART OF 177-0017 TRANSMISSION AR

SMCS-3108 **i01157828**

NOTE	REF NO	GRAPHIC REF	PART NUMBER	QTY	PART NAME 1 2 3 4 5 6 (PRODUCT LEVEL)	SEE PAGE
M	1	1	**6V-5683**	4	BOLT (M6X1X16MM)	
	2	1	**2L-0043**	1	RING-RETAINING	
	3	1	**146-6275**	1	SUPPORT AS-BEARING	
		1	**8E-8425**	1	BEARING-SLEEVE	
	4	1	**141-6821**	1	GEAR-DRIVE	
	5	1	**146-6277**	1	SUPPORT-STATOR	
	6	1	**5L-4753**	1	RING-RETAINING	
	7	1	**106-7799**	1	BALL BEARING	

M-METRIC PART

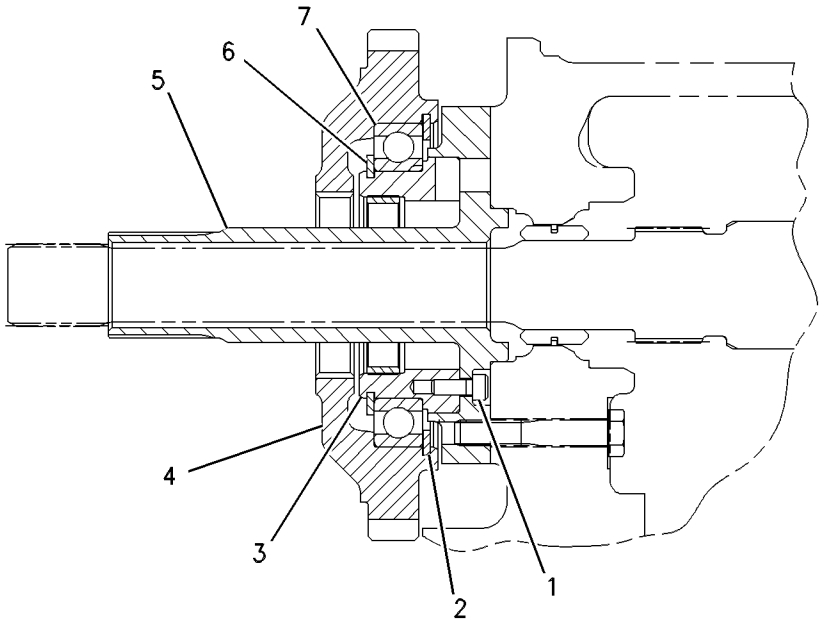

GRAPHIC #1 g00620914

118-0849 FILLER GP-POWER TRAIN OIL

S/N: DJD1-UP; DBT1-UP
PART OF 176-5187 POWER TRAIN AR

SMCS-3005, 3081 **i01819453**

NOTE	REF NO	GRAPHIC REF	PART NUMBER	QTY	PART NAME 1 2 3 4 5 6 (PRODUCT LEVEL)	SEE PAGE
	1	1	**5P-8502**	1	PADLOCK GP	
A		1	**5P-8500**	1	KEY	
A		1	**8Y-6364**	1	SLEEVE	
	2	1	**8T-6703**	2	CLAMP-HOSE	
B	3	1	**143-7899**	1	HOSE	
	4	1	**118-0850**	1	TUBE AS	
	5	1	**122-6453**	1	TUBE AS	
	6	1	**122-6455**	1	BRACKET AS	
M		1	**8T-3490**	1	NUT-WELD (M10X1.5 THD)	
	7	1	**137-6727**	1	CAP-FILL	
	8	1	**5P-7468**	1	CLIP (SLOT)	
	9	1	**5P-7469**	1	CLIP (TAB)	
	10	1	**4J-0523**	1	SEAL-O-RING	
	11	1	**8T-4121**	4	WASHER-HARD (11X21X2.5MM THK)	
M	12	1	**8T-4136**	3	BOLT (M10X1.5X25MM)	
M	13	1	**8T-4196**	2	BOLT (M10X1.5X35MM)	
	14	1	**7X-7729**	1	WASHER (11X25X3MM THK)	
	15	1	**6V-0545**	1	GROMMET	

A-NOT PART OF THIS GROUP
B-USE AS REQUIRED
M-METRIC PART

118-0849 **FILLER GP-POWER TRAIN OIL** ***(contd.)*** **i01819453**

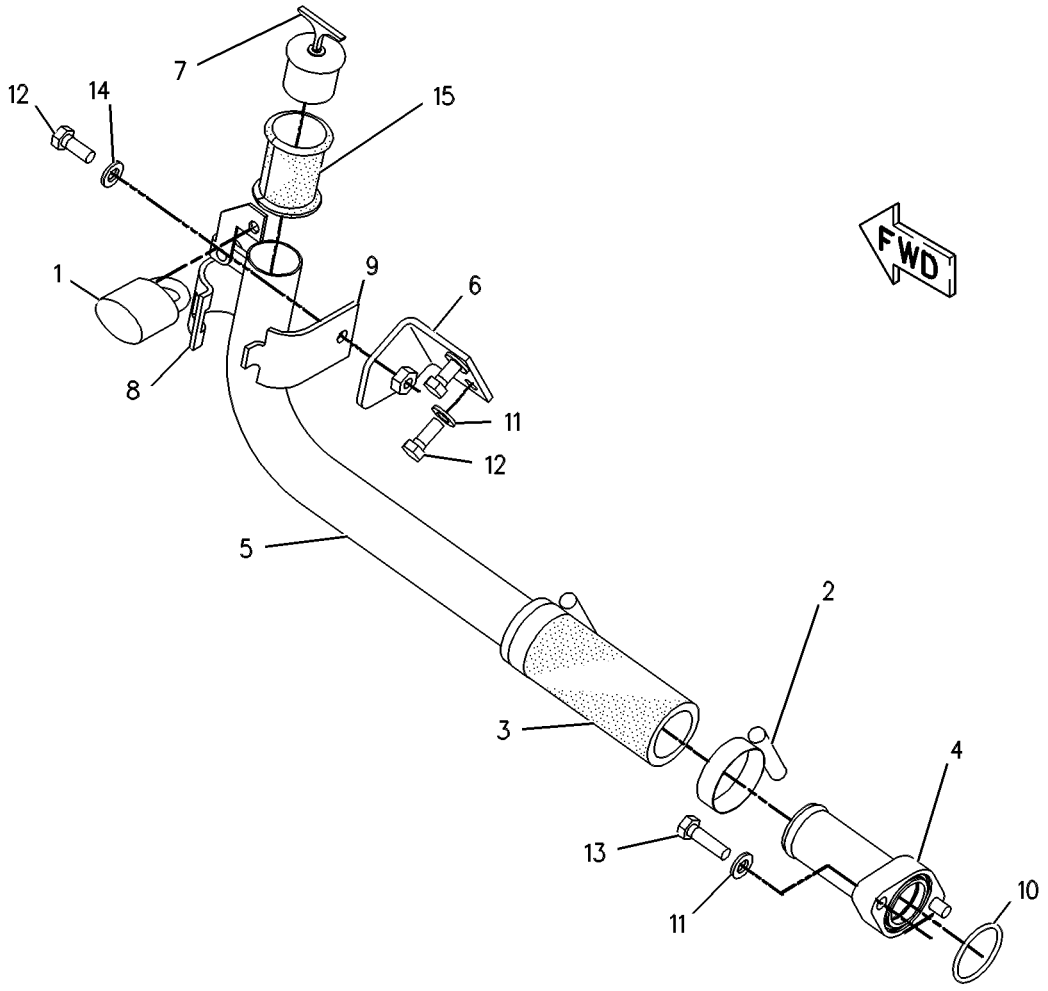

GRAPHIC #1 g00131930

203-3894 FILTER & LINES GP-TRANSMISSION

S/N: DJD1-UP; DBT1-UP
PART OF 176-5187 POWER TRAIN AR

SMCS-3067, 3154 **i01801047**

NOTE	REF NO	GRAPHIC REF	PART NUMBER	QTY	PART NAME 1 2 3 4 5 6 (PRODUCT LEVEL)	SEE PAGE
I	1	1	**8Y-0711**	1	HOSE AS	
	2	1	**9C-9458**	1	BRACKET AS	
Y	3	1	**226-2869**	1	FILTER GP-OIL	208
I	4	1	**212-4652**	1	HOSE AS	
C	5	1	*148-8327*	1	CONNECTOR AS	
		1	**3D-2824**	1	SEAL-O-RING	
		1	**6V-8637**	1	CONNECTOR-SEAL	
		1	**6V-9746**	1	SEAL-O-RING	
	6	1	*148-8347*	2	ELBOW GP	
					(EACH INCLUDES)	
		1	**3D-2824**	1	SEAL-O-RING	
		1	**6V-9007**	1	ELBOW	
		1	**6V-9746**	1	SEAL-O-RING	
	7	1	**1P-4576**	2	FLANGE-HALF	
	8	1	**4J-5267**	1	SEAL-O-RING	
	9	1	**8T-4121**	10	WASHER-HARD (11X21X2.5MM THK)	
M	10	1	**8T-4137**	5	BOLT (M10X1.5X20MM)	
M	11	1	**8T-4195**	1	BOLT (M10X1.5X30MM)	
M	12	1	**8T-4196**	4	BOLT (M10X1.5X35MM)	
	13	1	**8T-7529**	1	CLIP	

C-CHANGE FROM PREVIOUS TYPE
I-SEE HOSE FABRICATION GUIDE
M-METRIC PART
Y-SEPARATE ILLUSTRATION

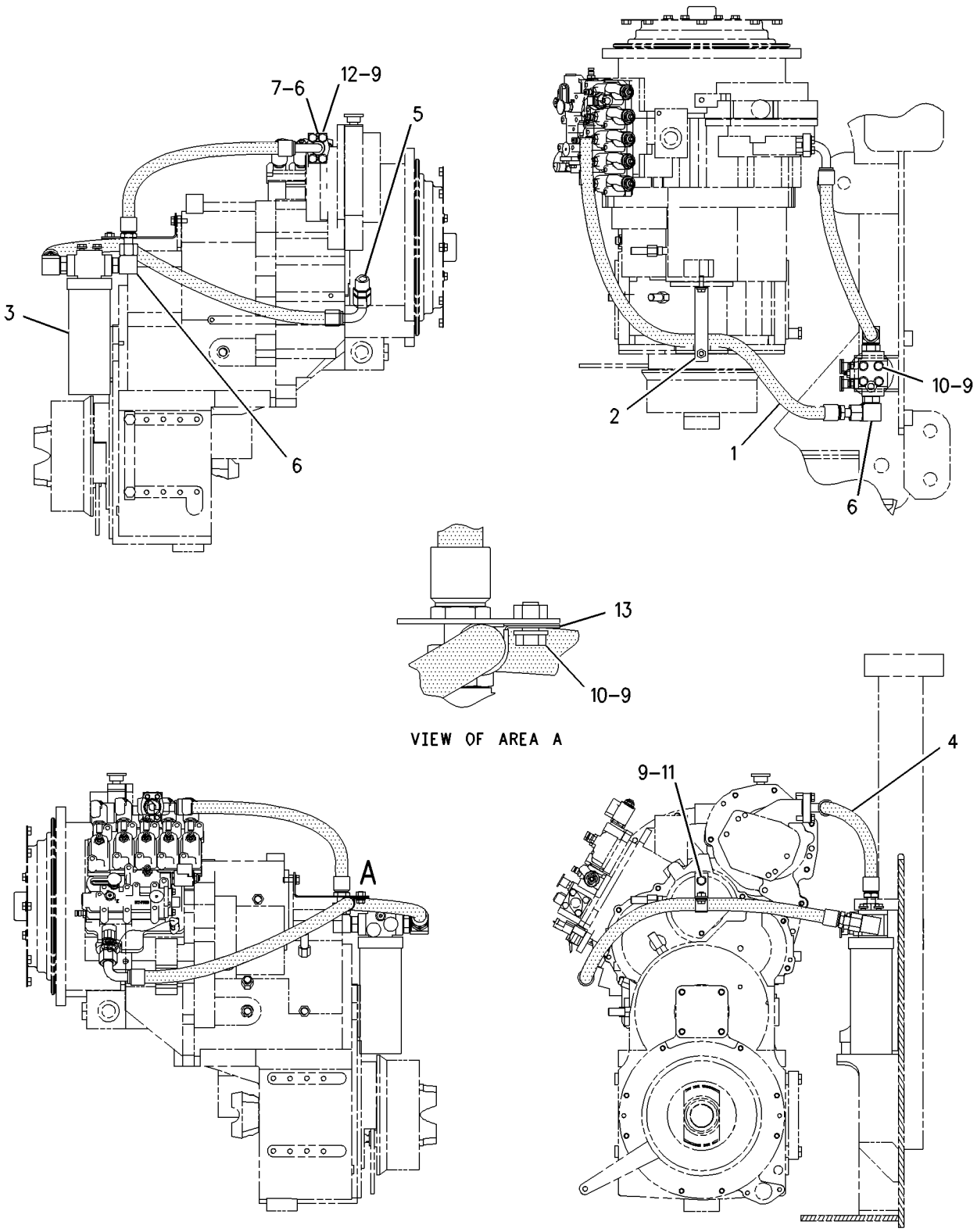

GRAPHIC #1 g00918948

226-2869 FILTER GP-OIL

S/N: DJD1-UP; DBT1-UP
POWERTRAIN
PART OF 203-3894 FILTER & LINES GP-TRANSMISSION

SMCS-3004, 3067 **i01794922**

NOTE	REF NO	GRAPHIC REF	PART NUMBER	QTY	PART NAME 1 2 3 4 5 6 (PRODUCT LEVEL)	SEE PAGE
	1	1	**1G-8878**	1	FILTER AS-OIL (HYDRAULIC)	
	2	1	**6V-0852**	1	CAP-DUST	
	3	1	**8C-3451**	1	CAP-DUST	
	4	1	**134-0404**	1	INDICATOR AS	
	5	1	*164-5567*	1	FITTING GP	
		1	**3J-1907**	1	SEAL-O-RING	
		1	**6V-3965**	1	FITTING AS	
	6	1	**3J-1907**	1	SEAL-O-RING	
	7	1	**3J-7354**	1	SEAL-O-RING	
	8	1	**8C-3446**	1	VALVE GP-FLUID SAMPLING	

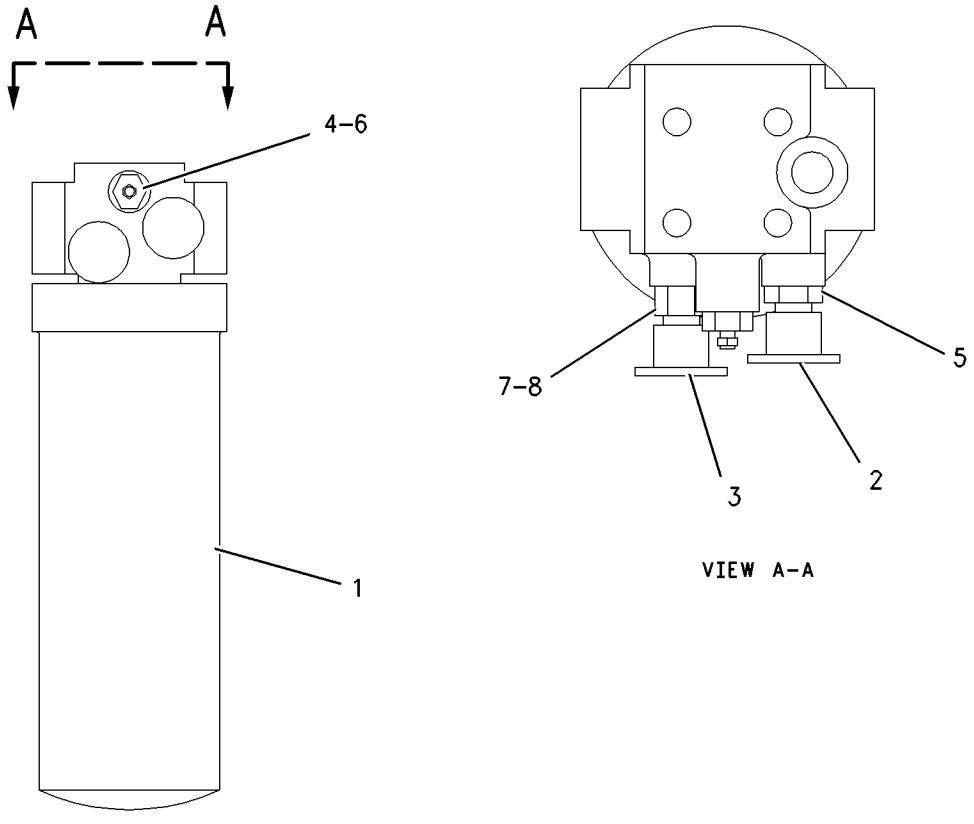

GRAPHIC #1 g00920536

129-8734 GAUGE GP-SIGHT

S/N: DJD1-UP; DBT1-UP
PART OF 176-5187 POWER TRAIN AR

SMCS-7479 **i01834635**

NOTE	REF NO	GRAPHIC REF	PART NUMBER	QTY	PART NAME 1 2 3 4 5 6 (PRODUCT LEVEL)	SEE PAGE
	1	1	**122-8353**	2	BOLT (M12X46.5MM)	
	2	1	**122-8352**	4	SEAL-O-RING	

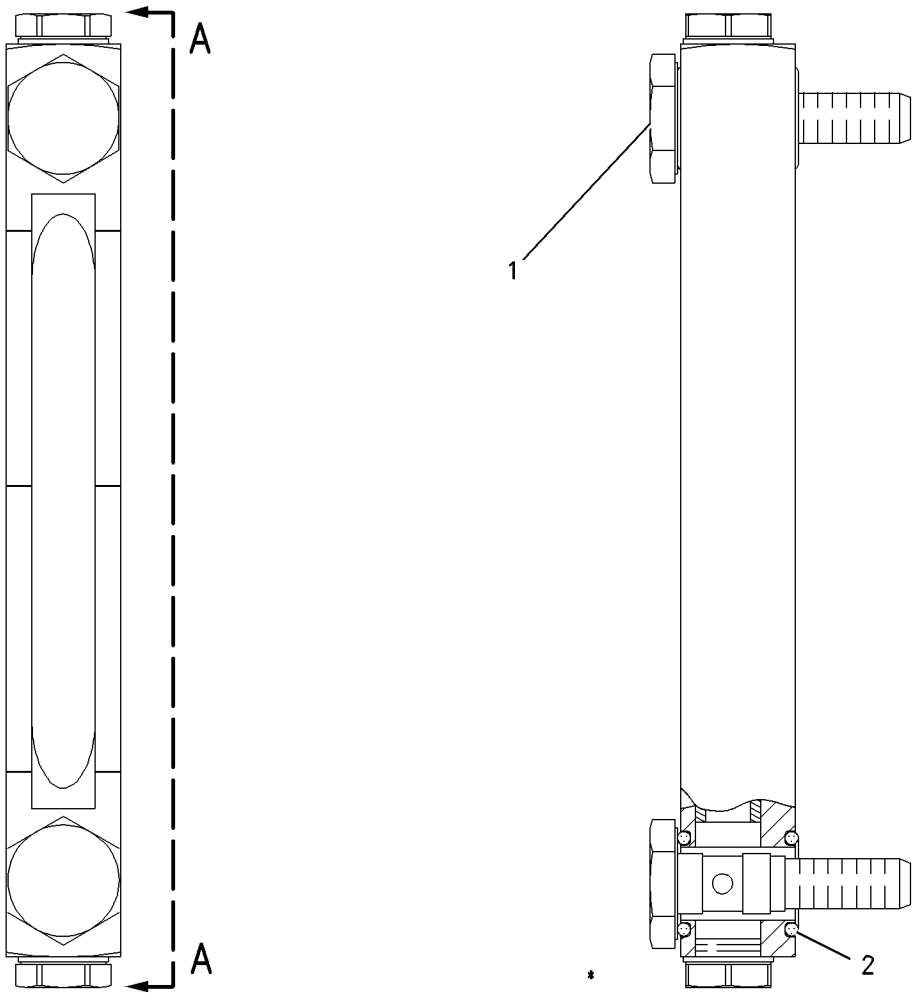

GRAPHIC #1 g00937226

203-2753 GEAR GP-BEVEL

S/N: DJD1-UP; DBT1-UP

PART OF 203-2752, 203-2766, 203-2769, 203-2771, 203-2772 AXLE AR-OSCILLATING AN ATTACHMENT

SMCS-3256 **i01728657**

NOTE	REF NO	GRAPHIC REF	PART NUMBER	QTY	PART NAME 1 2 3 4 5 6 (PRODUCT LEVEL)	SEE PAGE
	1	1	**1K-7990**	1	CONE-BEARING	
	2	1	**1K-7991**	1	CUP-BEARING	
	3	1	**2J-6232**	1	CUP-BEARING	
	4	1	**2J-6233**	1	CONE-BEARING	
	5	1	**2K-9295**	1	CONE-BEARING	
	6	1	**6V-0347**	1	CONE-BEARING	
	7	1	**4E-3644**	1	NUT-ADJUSTMENT	
M	8	1	**4E-3896**	2	BOLT (M6X1X14MM)	
	9	1	**4E-3897**	2	LOCK	
	10	1	**4E-4305**	1	NUT-ADJUSTMENT	
	11	1	**9U-2743**	1	SLEEVE AS	
		1	**3B-4124**	1	CUP-BEARING	
	12	1	**9U-2744**	1	SLEEVE AS	
		1	**4E-4307**	1	SLEEVE	
B	13	1	**9U-3409**	1	SHIM PACK	
	14	1	**9V-2412**	1	RETAINER	
	15	1	**203-2756**	1	SET-BEVEL GEAR	
		1	**8R-8121**	1	GEAR-BEVEL (42 TEETH)	
		1	**203-2757**	1	SHAFT-PINION	
	16	1	**203-2758**	1	SPACER	
	17	1	**203-2759**	1	YOKE AS	
		1	**215-8125**	1	GUARD	
	18	1	**2H-3927**	1	SEAL-O-RING	
	19	1	**4E-4031**	2	PIN	
M	20	1	**8T-0372**	1	BOLT (M12X1.75X90MM)	
	21	1	**9X-2621**	4	PIN-SPRING	
	22	1	**9X-2622**	4	PIN-SPRING	
M	23	1	**9X-6491**	16	BOLT (MJ16X2X150 MM)	

B-USE AS REQUIRED
M-METRIC PART

203-2753 **GEAR GP-BEVEL** ***(contd.)*** **i01728657**

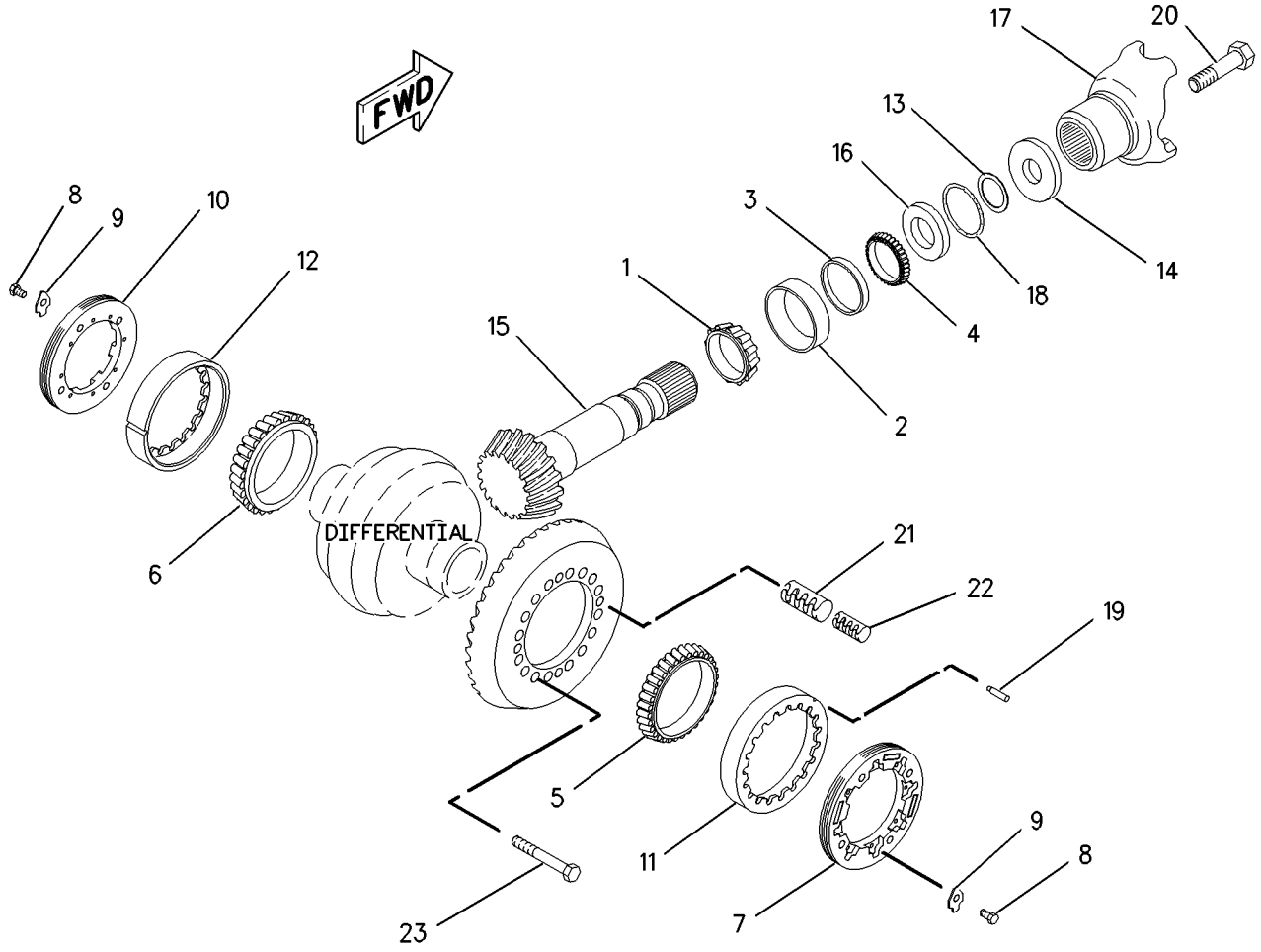

GRAPHIC #1 g00888571

203-2762 GEAR GP-BEVEL

S/N: DJD1-UP; DBT1-UP
PART OF 203-2761, 203-2770 AXLE AR-FIXED
AN ATTACHMENT

SMCS-3256 **i01728697**

NOTE	REF NO	GRAPHIC REF	PART NUMBER	QTY	PART NAME 1 2 3 4 5 6 (PRODUCT LEVEL)	SEE PAGE
	1	1	**1K-7990**	1	CONE-BEARING	
	2	1	**1K-7991**	1	CUP-BEARING	
	3	1	**2J-6232**	1	CUP-BEARING	
	4	1	**2J-6233**	1	CONE-BEARING	
	5	1	**2K-9295**	1	CONE-BEARING	
	6	1	**6V-0347**	1	CONE-BEARING	
	7	1	**4E-3644**	1	NUT-ADJUSTMENT	
M	8	1	**4E-3896**	2	BOLT (M6X1X14MM)	
	9	1	**4E-3897**	2	LOCK	
	10	1	**4E-4305**	1	NUT-ADJUSTMENT	
	11	1	**9U-2743**	1	SLEEVE AS	
		1	**3B-4124**	1	CUP-BEARING	
	12	1	**9U-2744**	1	SLEEVE AS	
		1	**6F-2956**	1	CUP-BEARING	
B	13	1	**9U-3409**	1	SHIM PACK	
	14	1	**9V-2412**	1	RETAINER	
	15	1	**203-2756**	1	SET-BEVEL GEAR	
		1	**8R-8121**	1	GEAR-BEVEL (42 TEETH)	
		1	**203-2757**	1	SHAFT-PINION	
	16	1	**203-2758**	1	SPACER	
	17	1	**203-2764**	1	YOKE AS	
		1	**215-8125**	1	GUARD	
	18	1	**2H-3927**	1	SEAL-O-RING	
	19	1	**4E-4031**	2	PIN	
M	20	1	**8T-0372**	1	BOLT (M12X1.75X90MM)	
	21	1	**9X-2621**	4	PIN-SPRING	
	22	1	**9X-2622**	4	PIN-SPRING	
M	23	1	**9X-6491**	16	BOLT (MJ16X2X150 MM)	

B-USE AS REQUIRED
M-METRIC PART

203-2762 **GEAR GP-BEVEL** ***(contd.)*** **i01728697**

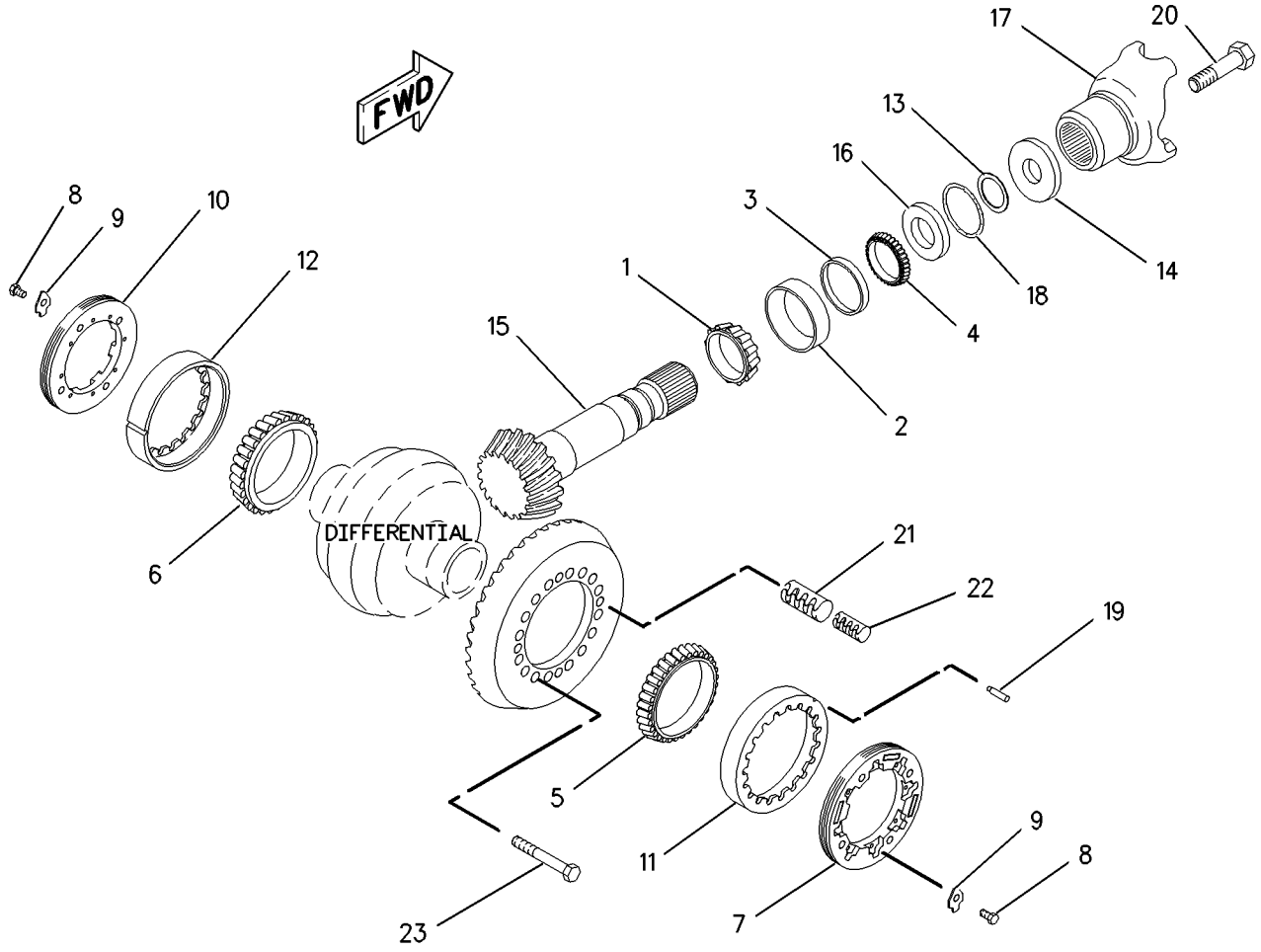

GRAPHIC #1 g00888571

190-2915 GEAR GP-OUTPUT TRANSFER

S/N: DJD1-UP; DBT1-UP

PART OF 177-0017 TRANSMISSION AR

SMCS-3075, 3159 **i01753934**

NOTE	REF NO	GRAPHIC REF	PART NUMBER	QTY	PART NAME 1 2 3 4 5 6 (PRODUCT LEVEL)	SEE PAGE
	1	1	**4F-8824**	2	SEAL-O-RING	
M	2	1	**6V-5696**	2	BOLT (M12X1.75X80MM)	
	3	1	**7G-5220**	2	RETAINER	
	4	1	**1B-3978**	1	CUP-BEARING	
	5	1	**1B-3980**	2	CONE-BEARING	
	6	1	**204-2594**	1	GEAR	
	7	1	**8T-3293**	1	RING-RETAINING	
	8	1	**5P-2861**	1	SEAL-O-RING	
	9	1	**9U-9551**	1	CAGE-BEARING	
	10	1	**8V-7623**	1	DRUM-BRAKE	
	11	1	*214-4769*	1	BRAKE GP-PARKING	
		1	**214-4768**	1	PLATE AS	
		1	**1V-2772**	1	SPRING-EXTENSION	
		1	**3K-7056**	1	SPRING-EXTENSION	
		1	**3K-7057**	1	SPRING-EXTENSION	
		1	**111-9050**	2	SHOE AS-LINED	
M	12	1	**6V-8675**	4	BOLT (M12X1.75X35MM)	
	13	1	**105-4776**	1	YOKE-BRAKE FLANGE	
M	14	1	**6V-3668**	8	BOLT (M12X1.75X30MM)	
	15	1	**5P-8245**	12	WASHER-HARD (13.5X25.5X3MM THK)	
	16	1	**133-4297**	1	SEAL-LIP TYPE	
	17	1	**123-9056**	1	LEVER AS	
	18	1	**116-4858**	1	SHAFT	
	19	1	**105-4775**	1	YOKE-OUTPUT	

M-METRIC PART

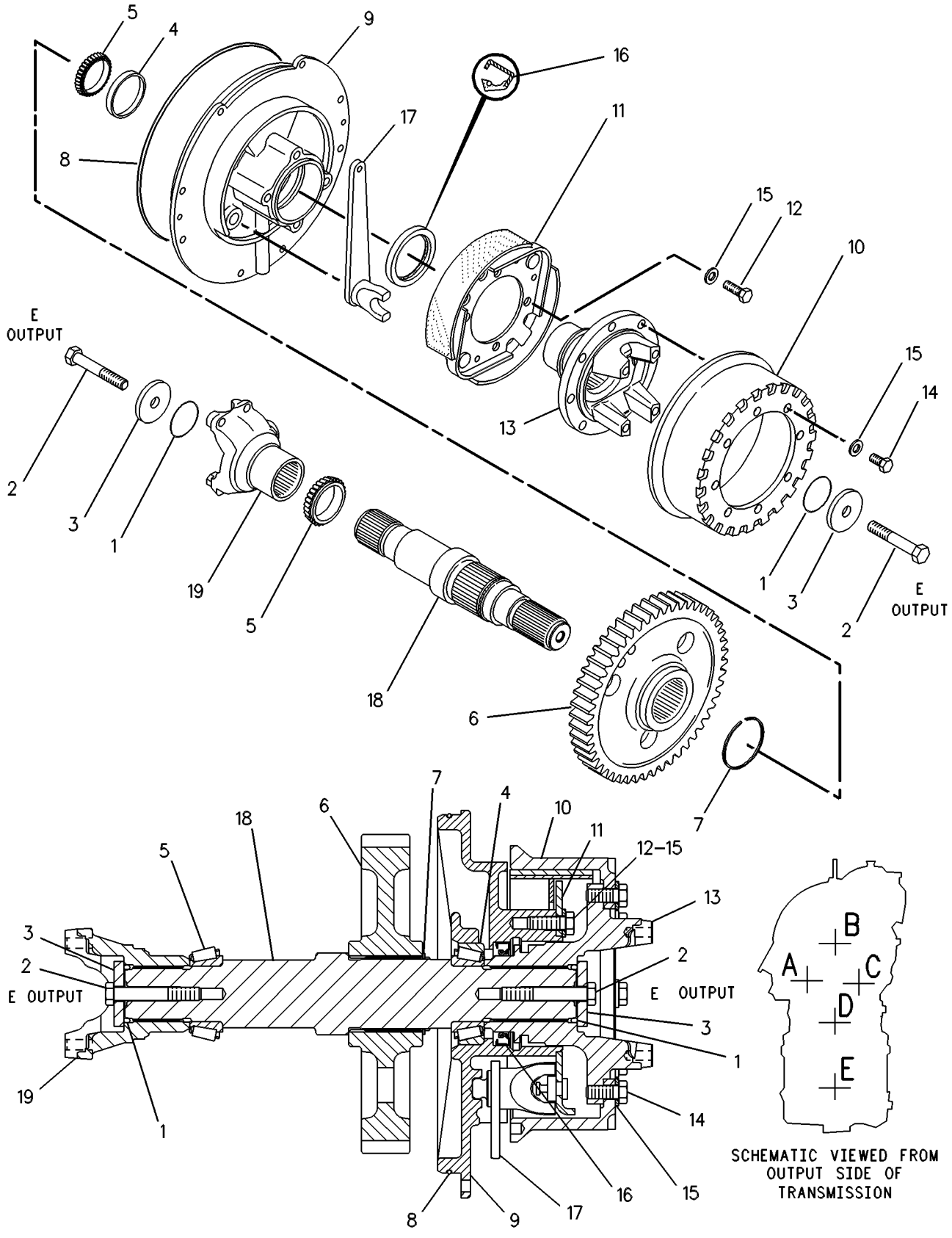

GRAPHIC #1 g00131629

203-2763 HOUSING GP-FIXED AXLE

S/N: DJD1-UP; DBT1-UP
FIXED
PART OF 203-2761, 203-2770 AXLE AR-FIXED
AN ATTACHMENT

SMCS-3260 **i01728793**

NOTE	REF NO	GRAPHIC REF	PART NUMBER	QTY	PART NAME 1 2 3 4 5 6 (PRODUCT LEVEL)	SEE PAGE
	1	1	**117-3319**	2	HOUSING	
	2	1	**215-8058**	1	RETAINER-SEAL	
M	3	1	**8T-0375**	8	BOLT (M16X2X45MM)	
	4	1	**5P-8247**	40	WASHER-HARD (17X32X3.5MM THK)	
	5	1	**9G-5311**	2	SEAL GP-DUO-CONE	
					(EACH INCLUDES)	
		1	**4K-0173**	2	RING-SEALING	
	6	1	**5P-3723**	2	CONE-BEARING	
	7	1	**6D-7690**	2	CUP-BEARING	
	8	1	**5H-3701**	2	SCREW-PURGE	
	9	1	**8T-0336**	1	FITTING-RELIEF	
	10	1	**205-3211**	1	HOUSING AS	
M		1	**095-0673**	3	BOLT-SOCKET HEAD (M12X1.75X60MM)	
	11	1	**3B-0551**	1	PLUG-PIPE	
	12	1	**8R-0512**	1	GAUGE AS-OIL LEVEL (DIPSTICK)	
	13	1	**4E-1639**	2	SHAFT-AXLE	
M	14	1	**6C-5304**	16	BOLT (M16X2X110 MM)	
	15	1	**5P-4484**	1	PLUG-MAGNETIC	
M	16	1	**9X-6493**	16	BOLT (M16X2X180MM)	
	17	1	**9C-6041**	3	DOWEL	
	18	1	**061-6712**	2	RING-RETAINING	
	19	1	**8R-2532**	2	NUT-BEARING	
	20	1	**6F-2956**	2	CUP-BEARING	
	21	1	**6V-0347**	2	CONE-BEARING	
	22	1	**193-2200**	1	SEAL-LIP TYPE	
M	23	1	**8T-5093**	6	BOLT-LOCKING (M8X1.25X25MM)	
	24	1	**8T-4224**	6	WASHER-HARD (8.8X16X2MM THK)	
	25	1	**8R-2189**	1	HOUSING-PINION	
B	26	1	**8R-3809**	1	SHIM PACK (INCLUDES 8 SHIMS)	
	27	1	**8F-9516**	1	SEAL-O-RING	
	28	1	**3E-2338**	2	PLUG-PIPE	
	29	1	**7M-8485**	3	SEAL-O-RING	

B-USE AS REQUIRED
M-METRIC PART

203-2763 **HOUSING GP-FIXED AXLE** ***(contd.)*** **i01728793**

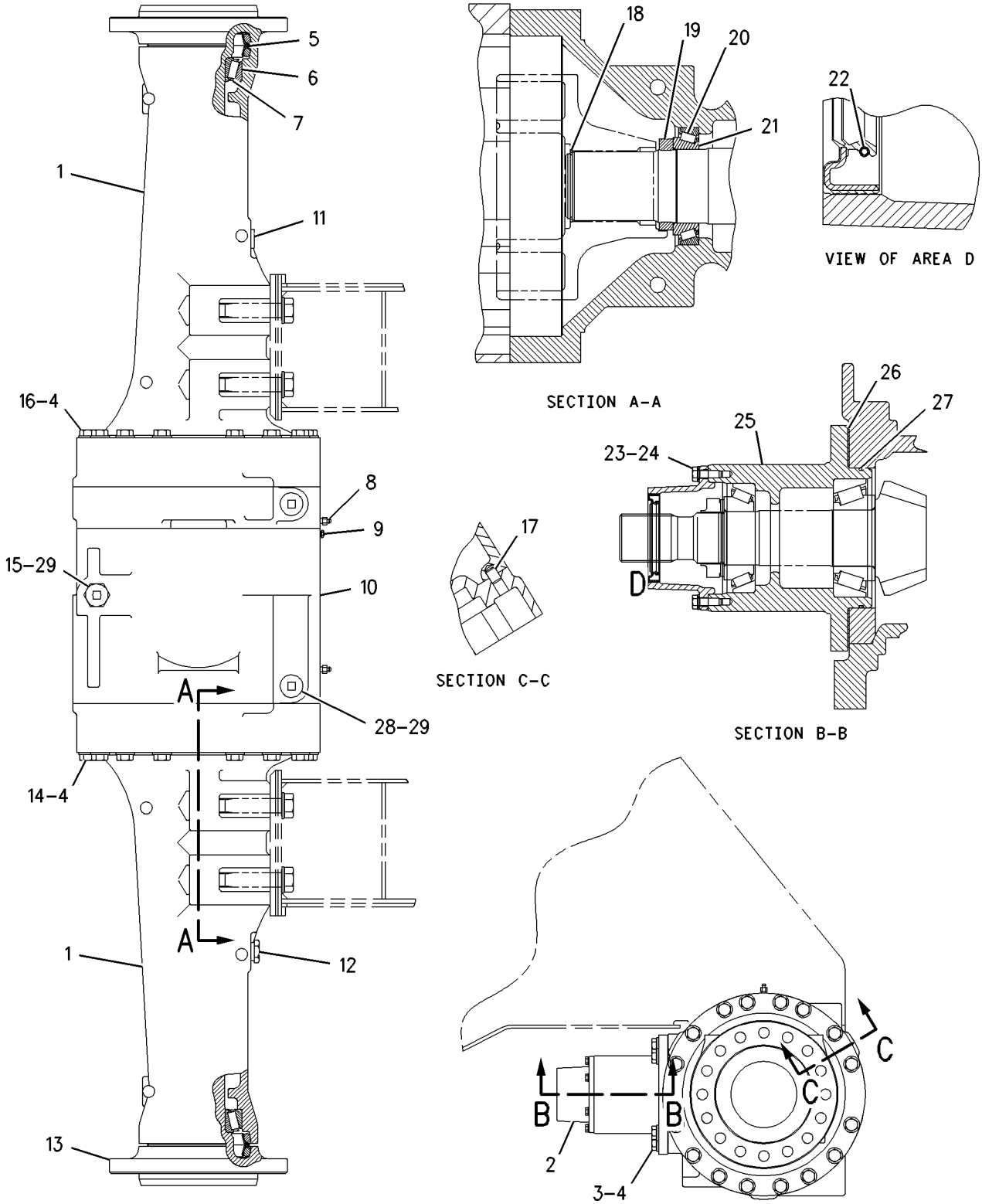

GRAPHIC #1 g00888645

203-2754 HOUSING GP-OSCILLATING AXLE

S/N: DJD1-UP; DBT1-UP

PART OF 203-2752, 203-2769, 203-2772 AXLE AR-OSCILLATING

AN ATTACHMENT

SMCS-3260, 3268 **i01719204**

NOTE	REF NO	GRAPHIC REF	PART NUMBER	QTY	PART NAME 1 2 3 4 5 6 (PRODUCT LEVEL)	SEE PAGE
	1	2	**3B-0551**	1	PLUG-PIPE	
	2	1	**5H-3701**	2	SCREW-PURGE	
	3	1	**8T-0336**	2	FITTING-RELIEF	
	4	1	**9C-6041**	3	DOWEL	
	5	1	**128-0219**	1	SUPPORT-TRUNNION	
	6	1	**8T-4224**	6	WASHER-HARD (8.8X16X2MM THK)	
M	7	1	**8T-5093**	6	BOLT-LOCKING (M8X1.25X25MM)	
	8	1	**3E-2338**	2	PLUG-PIPE	
	9	1	**7M-8485**	3	SEAL-O-RING	
	10	1	**141-4892**	1	SUPPORT-TRUNNION	
	11	1	**5M-6214**	2	PLUG-PIPE	
	12	1	**5P-4484**	1	PLUG-MAGNETIC	
	13	2	**8R-0512**	1	GAUGE AS-OIL LEVEL (DIPSTICK)	
	14	2	**5P-8247**	48	WASHER-HARD (17X32X3.5MM THK)	
M	15	2	**9X-6493**	16	BOLT (M16X2X180MM)	
	16	2	**8R-3809**	1	SHIM PACK (INCLUDES 8 SHIMS)	
M	17	2	**8T-0375**	8	BOLT (M16X2X45MM)	
	18	2	**9H-1129**	2	SEAL-LIP	
	19	2	**5P-5291**	1	RING-RETAINING	
	20	2	**9C-5048**	1	BEARING-SLEEVE	
	21	2	**8F-9516**	1	SEAL-O-RING	
	22	2	**8R-2189**	1	HOUSING-PINION	
M	23	2	**6C-5304**	16	BOLT (M16X2X110 MM)	
	24	2	**6D-7690**	2	CUP-BEARING	
	25	2	**5P-3723**	2	CONE-BEARING	
	26	2	**9G-5311**	2	SEAL GP-DUO-CONE	
	27	2	**203-2234**	2	SHAFT-AXLE	
	28	2	**6F-2956**	2	CUP-BEARING	
	29	2	**6V-0347**	2	CONE-BEARING	
	30	2	**8R-2532**	2	NUT-BEARING	
	31	2	**061-6712**	2	RING-RETAINING	
	32	2	**8R-2584**	1	TRUNNION	
M	33	2	**6V-4429**	8	BOLT (M16X2X40MM)	
	34	2	**6K-6075**	1	COVER	
	35	2	**5P-8245**	12	WASHER-HARD (13.5X25.5X3MM THK)	
M	36	2	**7X-3350**	6	BOLT-LOCKING (M12X1.75X35 MM)	
M	37	2	**6V-8197**	6	BOLT (M12X1.75X40MM)	
	38	2	**205-3210**	1	HOUSING AS	
M		2	**095-0673**	3	BOLT-SOCKET HEAD (M12X1.75X60MM)	
	39	2	**133-4293**	1	SEAL-LIP TYPE	
	40	2	**5H-1039**	1	SEAL-O-RING	
	41	2	**9C-5049**	1	BEARING-SLEEVE	
	42	2	**9V-1203**	1	PLATE-THRUST	
	43	2	**1K-8061**	2	WASHER-THRUST	

M-METRIC PART

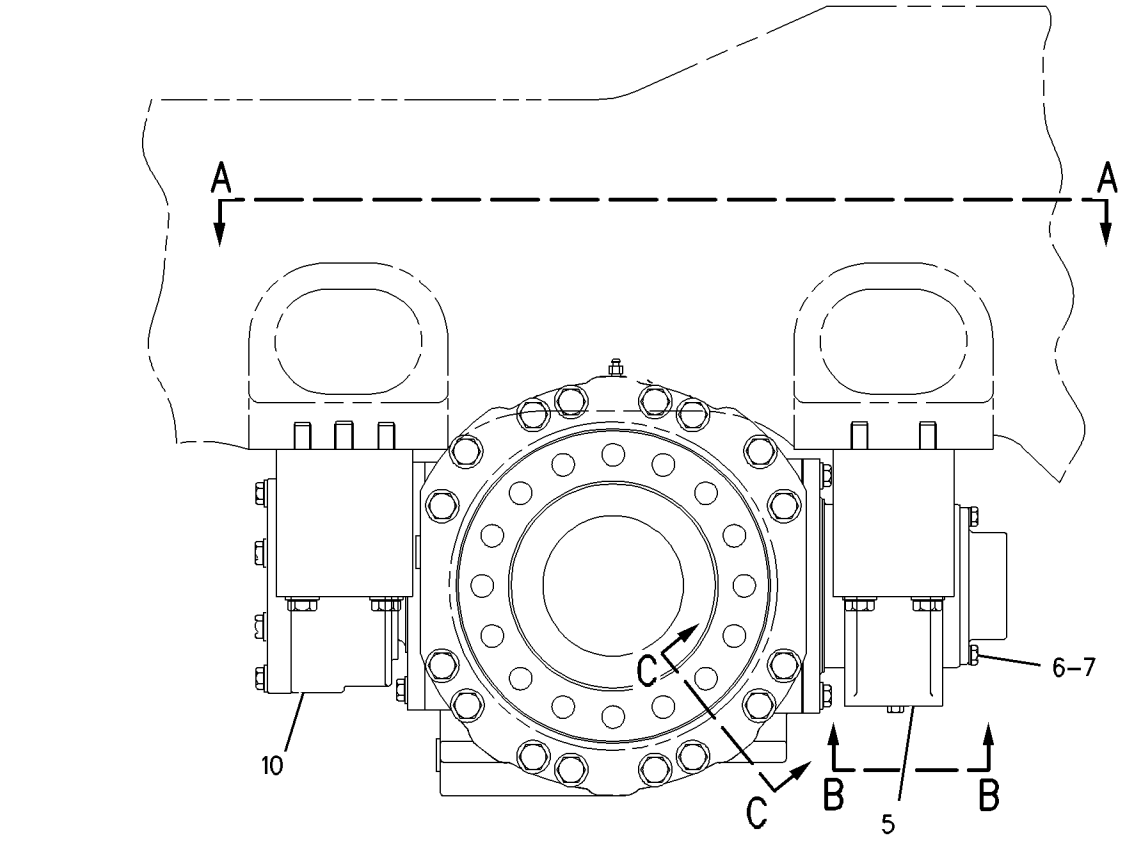

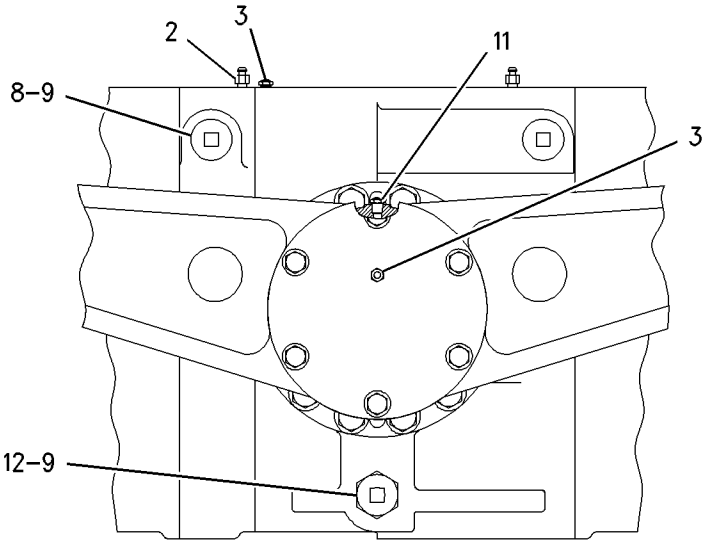

REFER TO ALL ILLUSTRATIONS IN THIS GROUP FOR AUXILIARY VIEWS

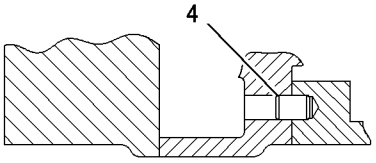

SECTION C-C

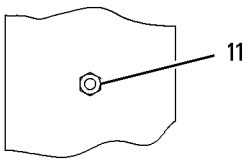

VIEW B-B

GRAPHIC #1 g00883906

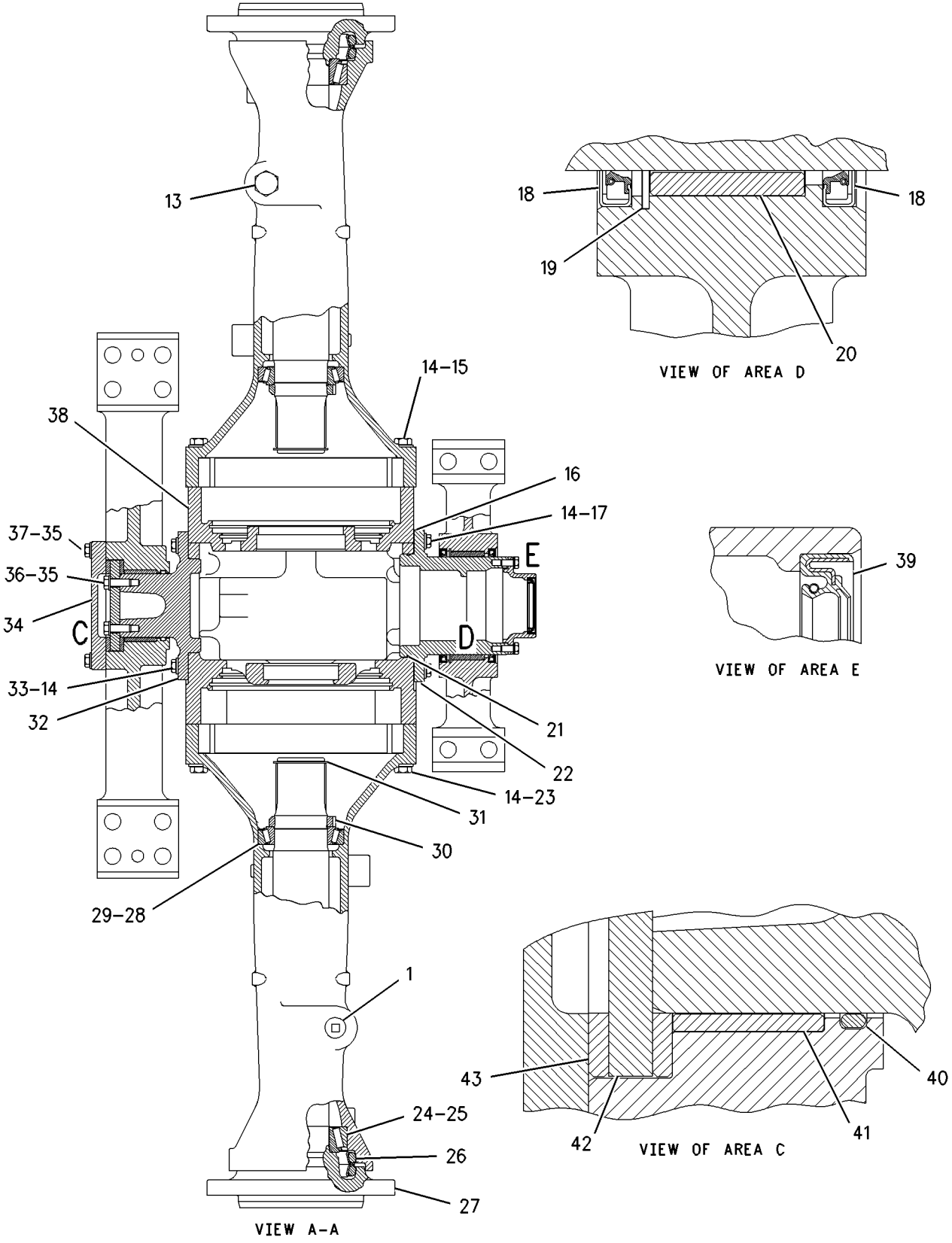

GRAPHIC #2

g00883904

MEMORANDA

203-2767 HOUSING GP-OSCILLATING AXLE

S/N: DJD1-UP; DBT1-UP
PART OF 203-2766, 203-2771 AXLE AR-OSCILLATING
AN ATTACHMENT

SMCS-3260, 3268 **i01729047**

NOTE	REF NO	GRAPHIC REF	PART NUMBER	QTY	PART NAME 1 2 3 4 5 6 (PRODUCT LEVEL)	SEE PAGE
	1	1	**3B-0551**	1	PLUG-PIPE	
	2	1	**5H-3701**	2	SCREW-PURGE	
	3	1	**8T-0336**	2	FITTING-RELIEF	
	4	1	**215-8058**	1	RETAINER-SEAL	
	5	1	**9C-6041**	3	DOWEL	
	6	1	**128-0219**	1	SUPPORT-TRUNNION	
	7	1	**8T-4224**	6	WASHER-HARD (8.8X16X2MM THK)	
M	8	1	**8T-5093**	6	BOLT-LOCKING (M8X1.25X25MM)	
	9	1	**175-7310**	2	SPACER	
M	10	1	**6C-5303**	16	BOLT	
	11	1	**141-4892**	1	SUPPORT-TRUNNION	
	12	1	**5M-6214**	2	PLUG-PIPE	
	13	1	**5P-4484**	1	PLUG-MAGNETIC	
	14	1	**8R-0512**	1	GAUGE AS-OIL LEVEL (DIPSTICK)	
	15	1	**5P-8247**	48	WASHER-HARD (17X32X3.5MM THK)	
M	16	1	**6C-3522**	16	BOLT	
B	17	1	**8R-3809**	1	SHIM PACK (INCLUDES 8 SHIMS)	
M	18	1	**8T-0375**	8	BOLT (M16X2X45MM)	
	19	1	**9H-1129**	2	SEAL-LIP	
	20	1	**5P-5291**	1	RING-RETAINING	
	21	1	**9C-5048**	1	BEARING-SLEEVE	
	22	1	**8F-9516**	1	SEAL-O-RING	
	23	1	**8R-2189**	1	HOUSING-PINION	
	24	1	**4E-1639**	2	SHAFT-AXLE	
	25	1	**6D-7690**	2	CUP-BEARING	
	26	1	**5P-3723**	2	CONE-BEARING	
	27	1	**9G-5311**	2	SEAL GP-DUO-CONE	
					(EACH INCLUDES)	
		1	**4K-0173**	2	RING-SEALING	
	28	1	**117-3320**	2	HOUSING	
	29	1	**6F-2956**	2	CUP-BEARING	
	30	1	**6V-0347**	2	CONE-BEARING	
	31	1	**8R-2532**	2	NUT-BEARING	
	32	1	**061-6712**	2	RING-RETAINING	
	33	1	**8R-2584**	1	TRUNNION	
M	34	1	**6V-4429**	8	BOLT (M16X2X40MM)	
	35	1	**6K-6075**	1	COVER	
	36	1	**5P-8245**	12	WASHER-HARD (13.5X25.5X3MM THK)	
M	37	1	**7X-3350**	6	BOLT-LOCKING (M12X1.75X35 MM)	
M	38	1	**6V-8197**	6	BOLT (M12X1.75X40MM)	
	39	1	**205-3210**	1	HOUSING AS	
M		1	**095-0673**	3	BOLT-SOCKET HEAD (M12X1.75X60MM)	
	40	1	**193-2200**	1	SEAL-LIP TYPE	
	41	1	**5H-1039**	1	SEAL-O-RING	
	42	1	**9C-5049**	1	BEARING-SLEEVE	
	43	1	**9V-1203**	1	PLATE-THRUST	
	44	1	**1K-8061**	2	WASHER-THRUST	
	45	1	**3E-2338**	2	PLUG-PIPE	
	46	1	**7M-8485**	3	SEAL-O-RING	

B-USE AS REQUIRED
M-METRIC PART

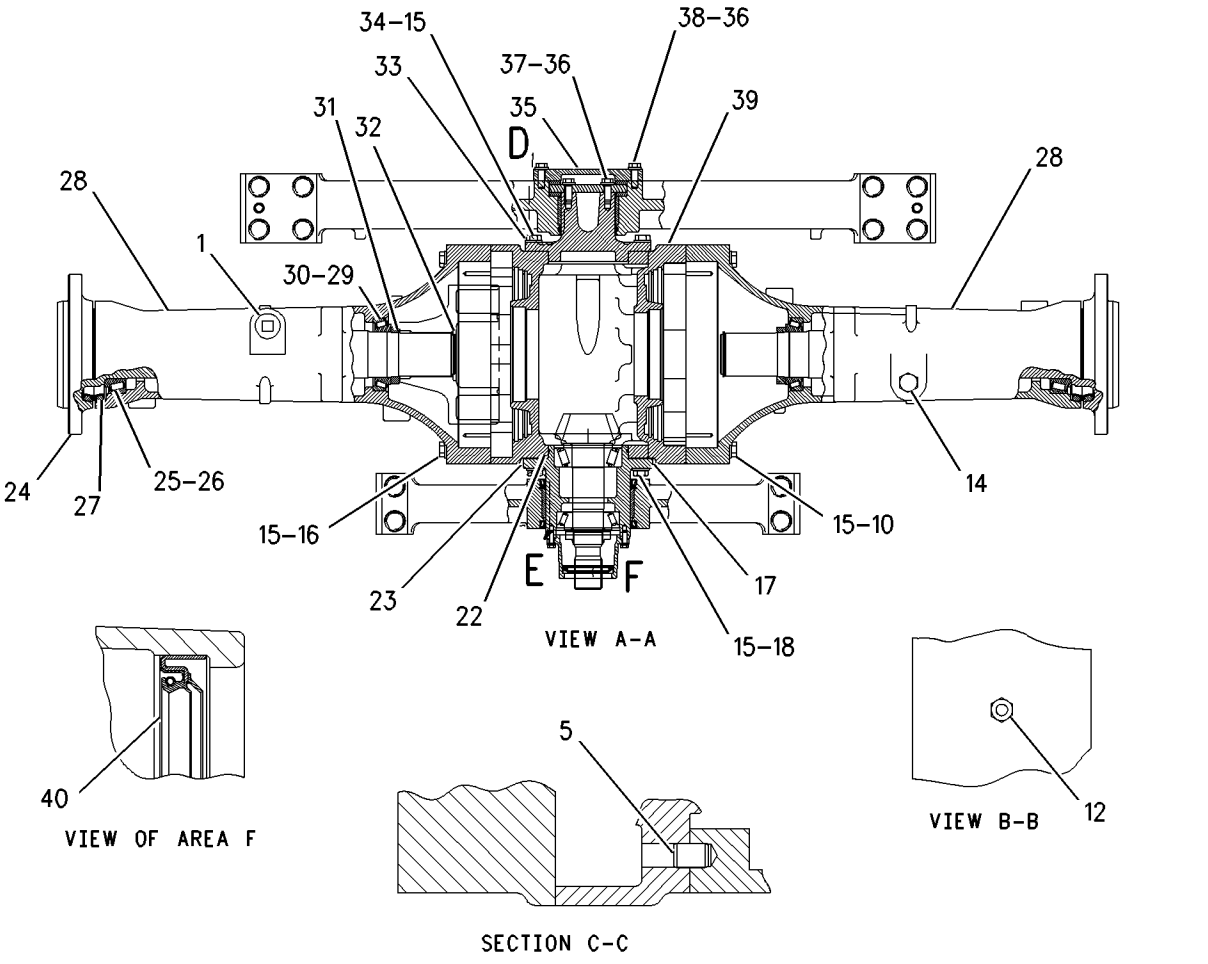

GRAPHIC #1 g00888636

190-2888 INPUT GP-TRANSMISSION

S/N: DJD1-UP; DBT1-UP

PART OF 177-0017 TRANSMISSION AR

SMCS-3002, 3063, 3159 **i01576933**

NOTE	REF NO	GRAPHIC REF	PART NUMBER	QTY	PART NAME 1 2 3 4 5 6 (PRODUCT LEVEL)	SEE PAGE
	1	1	**190-2911**	1	SHAFT-INPUT	
	2	1	**6Y-8069**	1	CARRIER-SEAL	
	3	1	**2K-5957**	1	RING-SEALING	
	4	1	**120-4481**	1	GEAR	
	5	1	**116-4883**	1	GEAR	
	6	1	**005-0471**	2	CONE-BEARING	

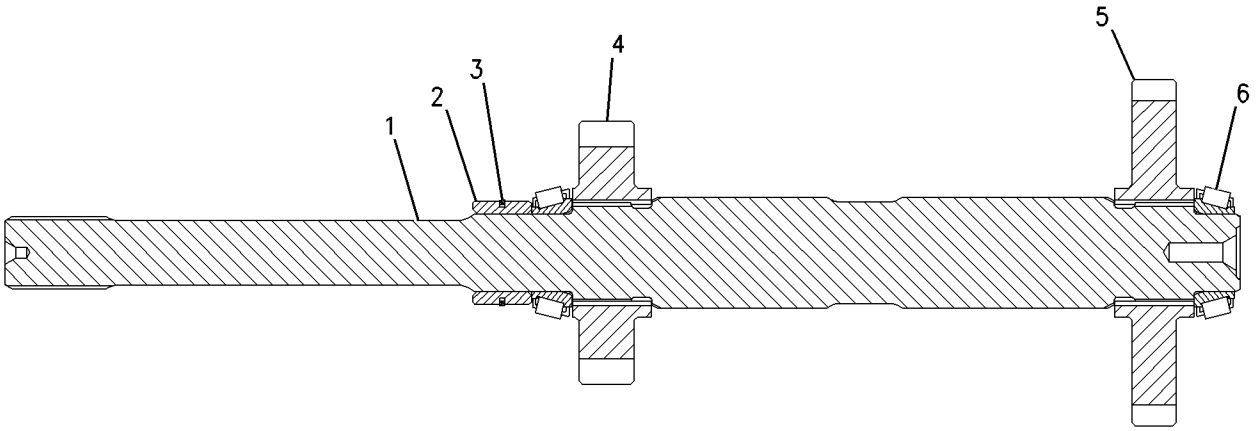

GRAPHIC #1 g00819860

MEMORANDA

219-3313 LINES GP-AXLE OIL COOLER

S/N: DJD1-UP; DBT1-UP
PART OF 203-5949, 203-5950 AXLE AR-OSCILLATING
AN ATTACHMENT

SMCS-3016 **i01836447**

NOTE	REF NO	GRAPHIC REF	PART NUMBER	QTY	PART NAME 1 2 3 4 5 6 (PRODUCT LEVEL)	SEE PAGE
G	1	1	**160-2245**		SLEEVE-ABRASION (59.1 IN)	
G	2	1	**160-2243**		SLEEVE-ABRASION (32.68 IN)	
	3	3	**3E-7692**	1	SWITCH AS-PRESSURE	
		3	**102-8802**	1	KIT-RECEPTACLE (2 PIN)	
		3	**186-3735**	2	PIN-CONNECTOR	
	4	1,3	**3S-2093**	6	STRAP-CABLE	
	5	1	**6E-2833**	1	SCREEN AS (AXLE OIL COOLER)	
	6	3	**6V-0852**	1	CAP-DUST	
	7	1,3	**7K-1181**	3	STRAP-CABLE	
	8	2	**091-0081**	1	SPACER (10.5X20X10.0MM THK)	
	9	1	*101-1790*	1	ADAPTER AS	
		1	**6V-9746**	1	SEAL-O-RING	
		1	**9X-6643**	1	ADAPTER	
	10	3	**125-7484**	1	SPACER	
	11	3	**129-8087**	1	SPACER (14MM THK)	
	12	3	*153-6248*	1	ADAPTER GP	
		3	**6V-8397**	1	SEAL-O-RING	
		3	**8T-6663**	1	ADAPTER-PORT	
	13	1	**172-4622**	1	UNION GP	
		1	**7M-8485**	2	SEAL-O-RING	
		1	**8C-9029**	1	UNION	
	14	3	*185-1028*	1	COOLER GP-AXLE OIL	
M		3	**8T-4189**	2	BOLT (M8X1.25X20MM)	
		3	**8T-4224**	4	WASHER-HARD (8.8X16X2MM THK)	
M		3	**8T-4908**	2	BOLT (M8X1.25X25MM)	
		3	**185-1039**	1	BRACKET AS	
M		3	**8T-3612**	2	NUT-WELD (M8X1.25 THD)	
		3	**205-3652**	1	CORE AS-AXLE OIL COOLER	
	15	2	*187-2120*	1	ELBOW AS	
		2	**4J-5477**	1	SEAL-O-RING	
		2	**8C-8408**	1	ELBOW	
	16	1	**192-7637**	1	PLATE AS	
		1	**9R-2672**	1	BOSS (M10X20MM)	
	17	2	**205-5268**	1	PUMP & MOTOR GP-AXLE OIL CLR	
I	18	1	**212-5085**	1	HOSE AS	
I	19	3	**212-5940**	1	HOSE AS	
I	20	2	**212-5942**	1	HOSE AS	
I	21	1	**212-6056**	1	HOSE AS	
	22	1	**214-1042**	1	PLATE AS	
M		1	**8T-3490**	2	NUT-WELD (M10X1.5 THD)	
I	23	1	**215-3810**	1	HOSE AS	
I	24	3	**215-3811**	1	HOSE AS	
I	25	2	**215-5645**	1	HOSE AS	
I	26	3	**215-5646**	1	HOSE AS	
	27	2	**216-3041**	1	BRACKET AS	
M		2	**8T-3490**	2	NUT-WELD (M10X1.5 THD)	
		2	**092-2467**	2	BAR	
I	28	1	**216-3937**	1	HOSE AS	
I	29	3	**216-3938**	1	HOSE AS	
I	30	3	**219-3311**	1	HOSE AS	
I	31	3	**219-3314**	1	HOSE AS	
I	32	1	**223-8276**	1	HOSE AS	
	33	3	**226-1354**	1	VALVE GP-CHECK	
		3	**6V-9746**	2	SEAL-O-RING	
	34	3	**227-4306**	1	TUBE AS	

219-3313 LINES GP-AXLE OIL COOLER *(contd.)* i01836447

NOTE	REF NO	GRAPHIC REF	PART NUMBER	QTY	PART NAME 1 2 3 4 5 6 (PRODUCT LEVEL)	SEE PAGE
I	35	1	**229-5115**	1	HOSE AS	
I	36	2	**230-6142**	1	HOSE AS	
	37	3	*148-8306*	2	ADAPTER AS	
					(EACH INCLUDES)	
		3	**5P-5777**	1	ADAPTER-O-RING	
		3	**7M-8485**	1	SEAL-O-RING	
	38	2	*148-8325*	1	CONNECTOR GP	
		2	**3J-1907**	1	SEAL-O-RING	
		2	**4J-5477**	1	SEAL-O-RING	
		2	**6V-8641**	1	CONNECTOR	
	39	2	*148-8327*	2	CONNECTOR AS	
					(EACH INCLUDES)	
		2	**3D-2824**	1	SEAL-O-RING	
		2	**6V-8637**	1	CONNECTOR-SEAL	
		2	**6V-9746**	1	SEAL-O-RING	
	40	1	*148-8358*	1	ELBOW AS	
		1	**2M-9780**	1	SEAL-O-RING	
		1	**6V-8398**	1	SEAL-O-RING	
		1	**6V-8624**	1	ELBOW	
	41	2,3	*148-8364*	4	ELBOW GP	
					(EACH INCLUDES)	
		2,3	**3K-0360**	1	SEAL-O-RING	
		2,3	**6V-8398**	1	SEAL-O-RING	
		2,3	**6V-8625**	1	ELBOW	
	42	2	*148-8372*	2	ELBOW GP	
					(EACH INCLUDES)	
		2	**2M-9780**	1	SEAL-O-RING	
		2	**6V-8398**	1	SEAL-O-RING	
		2	**6V-8721**	1	ELBOW	
	43	2	*148-8385*	1	ELBOW GP	
		2	**3J-7354**	1	SEAL-O-RING	
		2	**4J-5477**	1	SEAL-O-RING	
		2	**6V-9000**	1	ELBOW	
	44	2	*148-8388*	1	ELBOW GP	
		2	**2M-9780**	1	SEAL-O-RING	
		2	**6V-8629**	1	ELBOW	
		2	**6V-9746**	1	SEAL-O-RING	
	45	3	**148-8418**	1	REDUCER GP	
		3	**6V-8398**	1	SEAL-O-RING	
		3	**6V-8942**	1	REDUCER-O-RING (FACE)	
	46	3	*148-8424*	1	TEE GP	
		3	**6V-8397**	1	SEAL-O-RING	
		3	**8T-8902**	1	TEE	
	47	3	*148-8436*	1	TEE AS	
		3	**3K-0360**	1	SEAL-O-RING	
		3	**6V-8398**	2	SEAL-O-RING	
		3	**6V-8775**	1	TEE-FACE SEAL	
	48	2	*148-8444*	1	TEE GP	
		2	**6V-8397**	2	SEAL-O-RING	
		2	**6V-9837**	1	TEE-SWIVEL	
	49	2	*148-8448*	1	FITTING GP	
		2	**4J-5477**	2	SEAL-O-RING	
		2	**6V-9842**	1	TEE-SWIVEL	
	50	3	**150-4037**	1	TEE GP	
		3	**6V-8398**	2	SEAL-O-RING	
		3	**6V-9844**	1	TEE-SWIVEL	
	51	1	*150-4049*	1	ELBOW GP	
		1	**8T-4149**	1	ELBOW	
		1	**6V-9746**	1	SEAL-O-RING	

219-3313 LINES GP-AXLE OIL COOLER *(contd.)* i01836447

NOTE	REF NO	GRAPHIC REF	PART NUMBER	QTY	PART NAME 1 2 3 4 5 6 (PRODUCT LEVEL)	SEE PAGE
		1	**7M-8485**	1	SEAL-O-RING	
	52	1	*153-6237*	1	ELBOW GP	
		1	**3D-2824**	1	SEAL-O-RING	
		1	**6V-9004**	1	ELBOW	
		1	**6V-9746**	1	SEAL-O-RING	
	53	3	*164-5567*	1	FITTING GP	
		3	**3J-1907**	1	SEAL-O-RING	
		3	**6V-3965**	1	FITTING AS	
	54	2	**164-6862**	1	TEE GP	
		2	**6V-9160**	1	TEE-FACE SEAL	
		2	**6V-9746**	3	SEAL-O-RING	
	55	1,3	**204-8000**	3	MOUNT	
	56	2	**2P-1293**	1	LOCKNUT-BULKHEAD (1 3/16-12 THD)	
	57	3	**3J-1907**	1	SEAL-O-RING	
	58	2	**3P-2404**	1	CLIP	
	59	3	**4D-7388**	1	CLIP	
	60	2	**4D-9517**	2	CLIP	
	61	2	**6D-3479**	1	CLIP	
	62	1,2,3	**6V-1889**	5	CLIP	
	63	3	**6V-8556**	1	NUT (1 3/16-12 THD)	
	64	1	**7M-8485**	1	SEAL-O-RING	
	65	3	**7X-0515**	6	WASHER-HARD (17X35X5MM THK)	
M	66	2	**7X-2543**	2	BOLT (M10X1.5X120MM)	
M	67	3	**7X-2557**	3	BOLT (M16X2X140MM)	
	68	2	**7X-7729**	4	WASHER (11X25X3MM THK)	
M	69	3	**7Y-3557**	3	BOLT (M16X2X210MM)	
	70	2	**8M-2770**	1	CLIP	
	71	3	**8M-2773**	2	CLIP	
	72	2	**8S-5107**	1	SPACER (2.0 IN THK)	
	73	1,2,3	**8T-4121**	13	WASHER-HARD (11X21X2.5MM THK)	
M	74	2	**8T-4133**	1	NUT (M10X1.5 THD)	
M	75	1,2,3	**8T-4136**	5	BOLT (M10X1.5X25MM)	
M	76	1	**8T-4137**	3	BOLT (M10X1.5X20MM)	
M	77	3	**8T-4186**	1	BOLT (M10X1.5X40MM)	
M	78	2	**8T-4195**	3	BOLT (M10X1.5X30MM)	
	79	2	**8T-4223**	1	WASHER-HARD (13.5X25.5X3MM THK)	
M	80	2	**8T-4648**	1	BOLT (M12X1.75X70MM)	
M	81	2	**8T-5005**	2	BOLT (M10X1.50X70MM)	

G-ORDER BY THE INCH
I-SEE HOSE FABRICATION GUIDE
M-METRIC PART

219-3313 LINES GP-AXLE OIL COOLER *(contd.)* i01836447

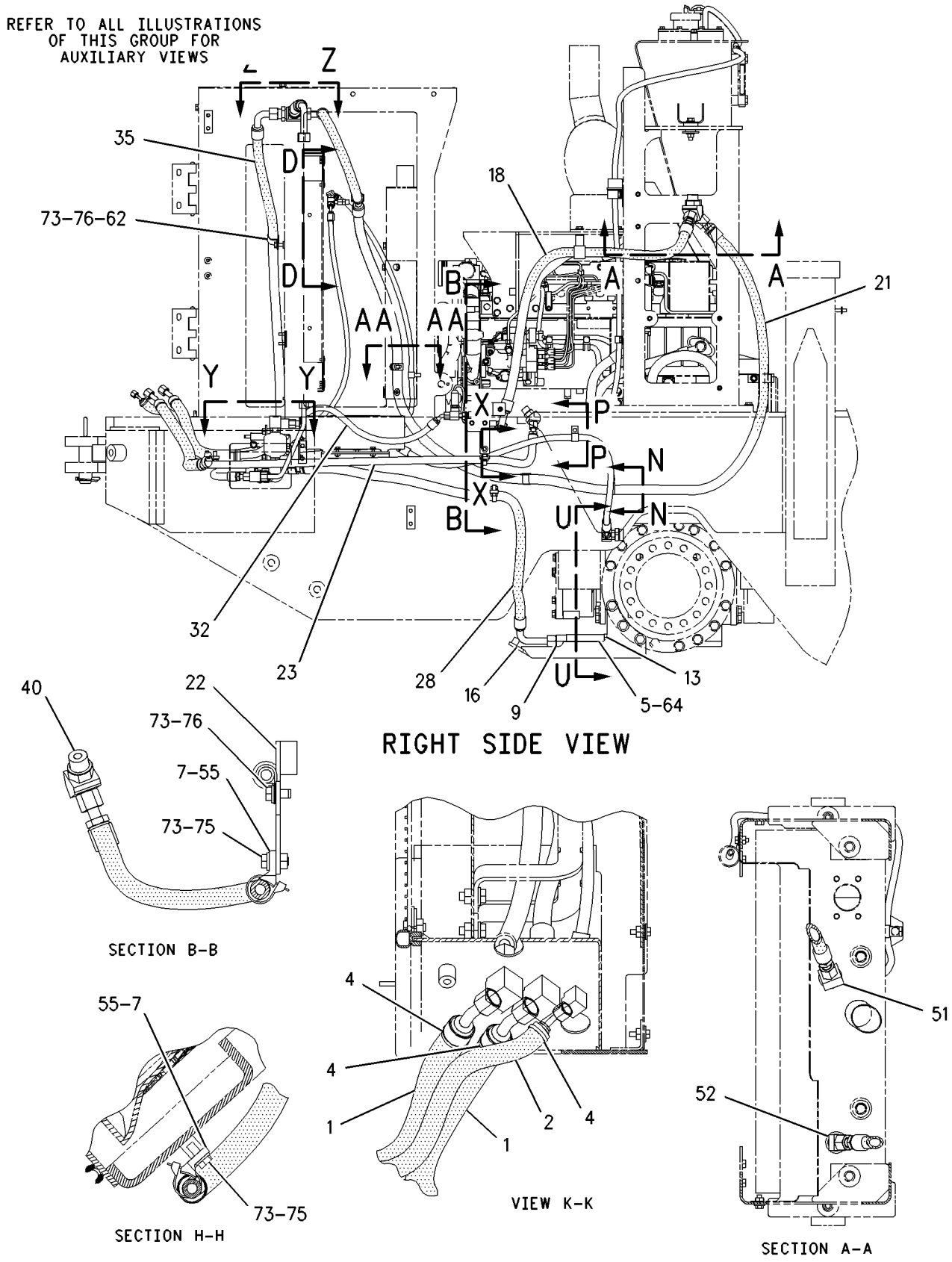

GRAPHIC #1 g00938783

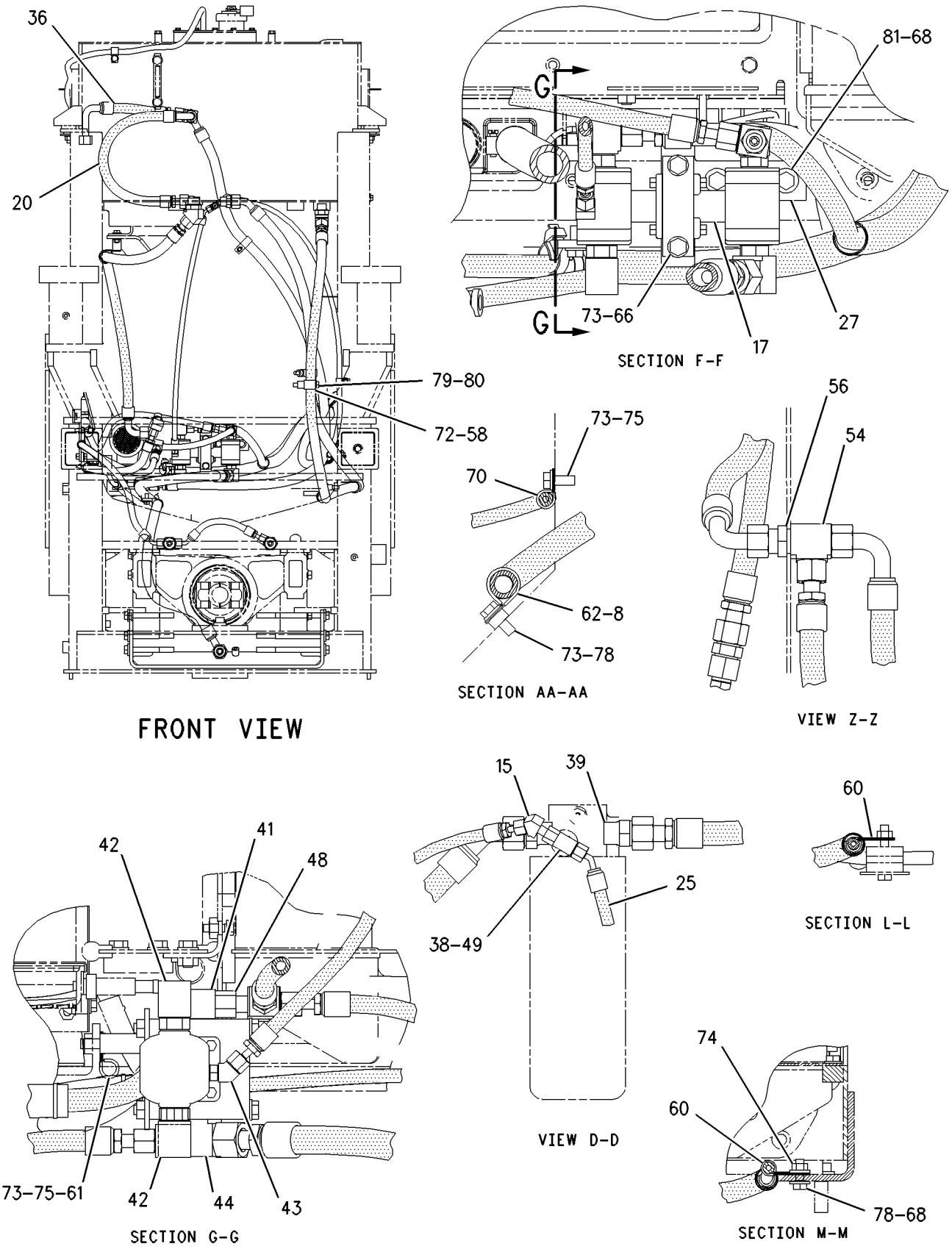

GRAPHIC #2

g00938784

219-3313 **LINES GP-AXLE OIL COOLER** *(contd.)* **i01836447**

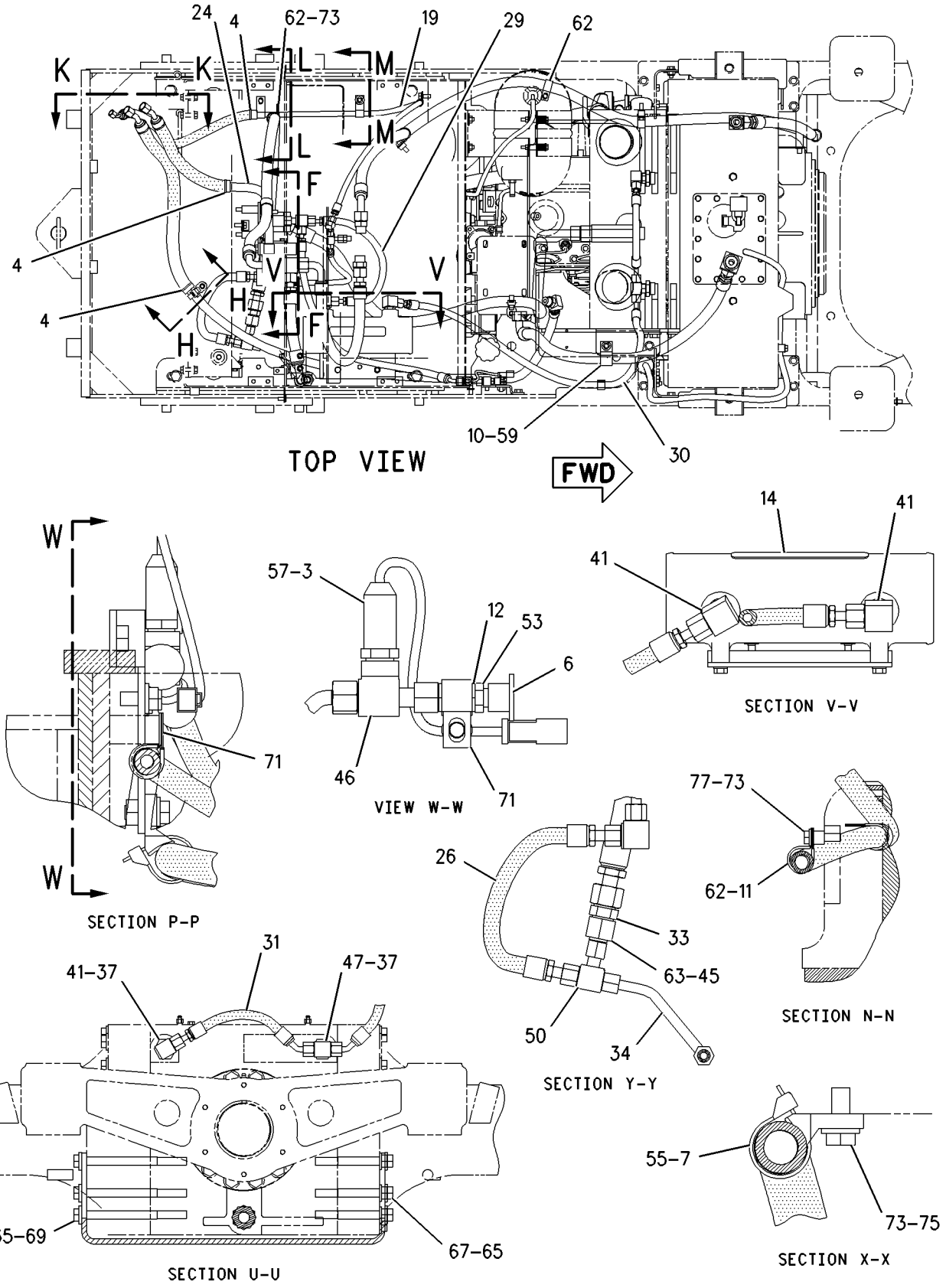

GRAPHIC #3 g00938785

203-3872 LINES GP-TORQUE CONV COOLER

S/N: DJD1-UP; DBT1-UP

PART OF 176-5221, 204-4349 CHASSIS AR

SMCS-1375, 3016 **i01831924**

NOTE	REF NO	GRAPHIC REF	PART NUMBER	QTY	PART NAME 1 2 3 4 5 6 (PRODUCT LEVEL)	SEE PAGE
	1	1	**6V-0852**	1	CAP-DUST	
Y	2	1	**126-0747**	1	VALVE GP-BYPASS	259
I	3	1	**208-2300**	1	HOSE AS	
I	4	1	**208-2301**	1	HOSE AS	
	5	1	**229-2935**	2	TUBE AS	
	6	1	**229-2938**	1	HOSE AS	
	7	1	**229-2940**	1	PLATE AS	
M		1	**8T-3490**	3	NUT-WELD (M10X1.5 THD)	
	8	1	**229-2941**	1	PLATE AS	
M		1	**8T-3490**	2	NUT-WELD (M10X1.5 THD)	
	9	1	**230-7287**	1	HOSE AS	
	10	1	*148-8335*	4	CONNECTOR AS	
					(EACH INCLUDES)	
		1	**5K-9090**	1	SEAL-O-RING	
		1	**6V-8635**	1	CONNECTOR	
		1	**7M-8485**	1	SEAL-O-RING	
	11	1	*148-8357*	2	ELBOW GP	
					(EACH INCLUDES)	
		1	**5K-9090**	1	SEAL-O-RING	
		1	**6V-9008**	1	ELBOW	
		1	**7M-8485**	1	SEAL-O-RING	
	12	1	*150-3065*	1	ADAPTER GP	
		1	**3J-1907**	1	SEAL-O-RING	
		1	**6V-0484**	1	ADAPTER-O-RING (90 DEGREE)	
	13	1	*164-5567*	1	FITTING GP	
		1	**3J-1907**	1	SEAL-O-RING	
		1	**6V-3965**	1	FITTING AS	
	14	1	**5K-9090**	2	SEAL-O-RING	
	15	1	**6V-9172**	2	NUT (1 7/16-12 THD)	
	16	1	**7D-7233**	2	CLIP	
	17	1	**8T-4121**	9	WASHER-HARD (11X21X2.5MM THK)	
M	18	1	**8T-4136**	6	BOLT (M10X1.5X25MM)	
M	19	1	**8T-4178**	3	BOLT (M10X1.5X90MM)	

I-SEE HOSE FABRICATION GUIDE
M-METRIC PART
Y-SEPARATE ILLUSTRATION

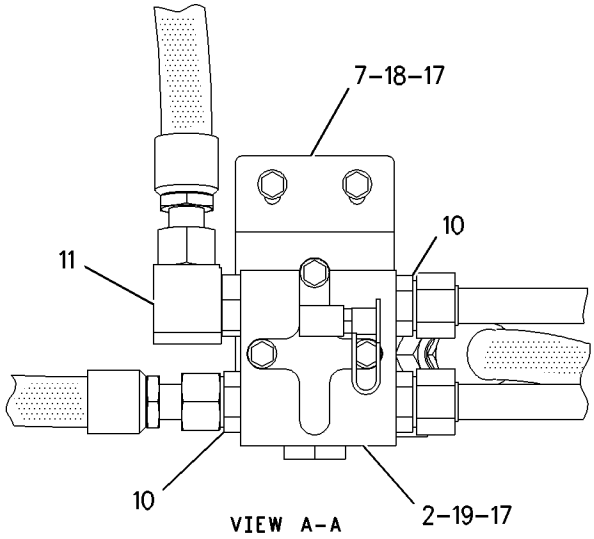

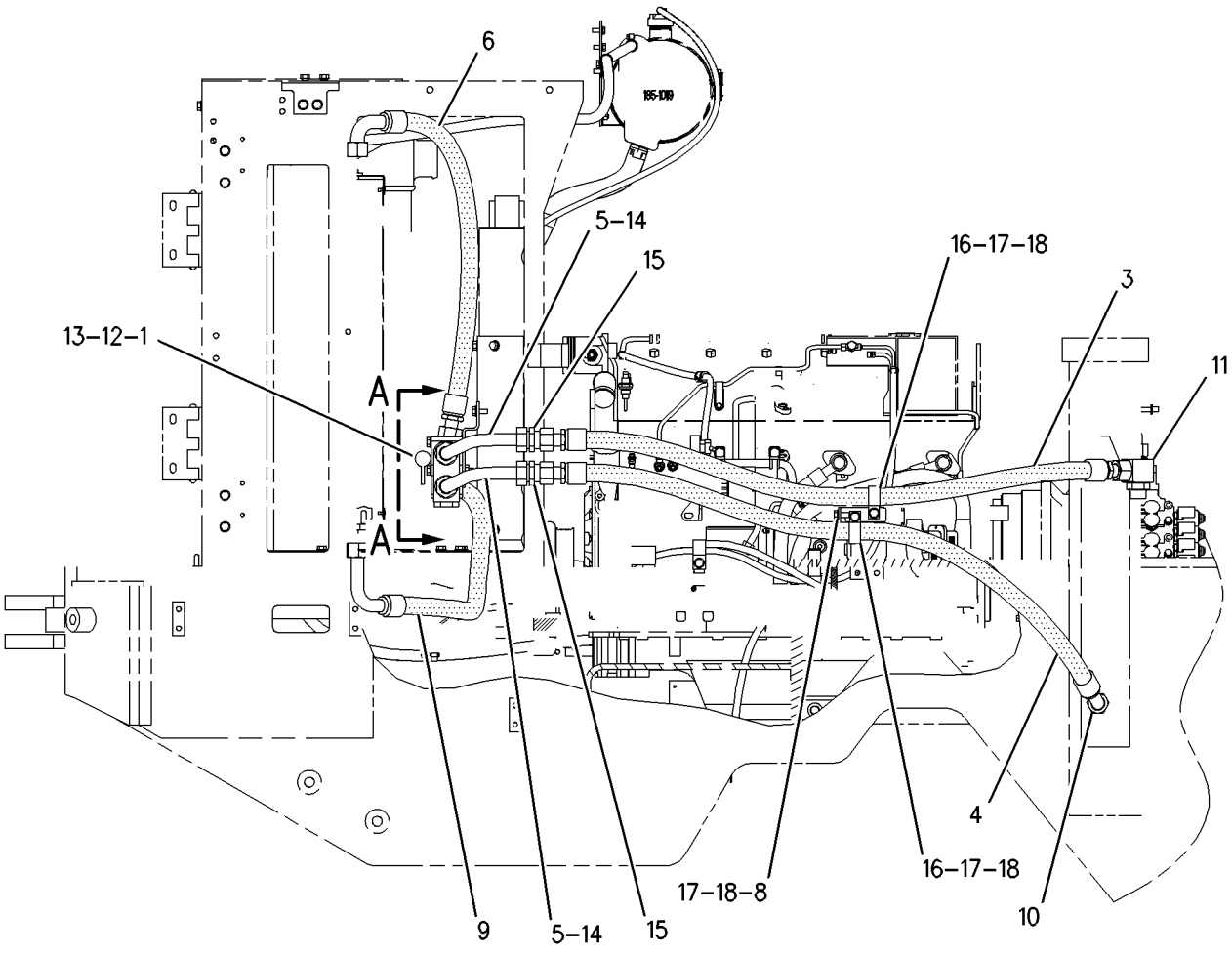

GRAPHIC #1 g00937372

118-0880 MOUNTING GP-AXLE

S/N: DJD1-UP; DBT1-UP

PART OF 176-5221, 204-4349 CHASSIS AR

SMCS-3268, 3278 **i00722797**

NOTE	REF NO	GRAPHIC REF	PART NUMBER	QTY	PART NAME 1 2 3 4 5 6 (PRODUCT LEVEL)	SEE PAGE
	1	1	**6K-8987**	2	DOWEL	
M	2	1	**7X-2465**	12	BOLT (M24X3.0X180MM)	
M	3	1	**7X-2567**	8	BOLT (M24X3X160 MM)	
	4	1	**8T-4167**	20	WASHER (4.0MM THK)	

M-METRIC PART

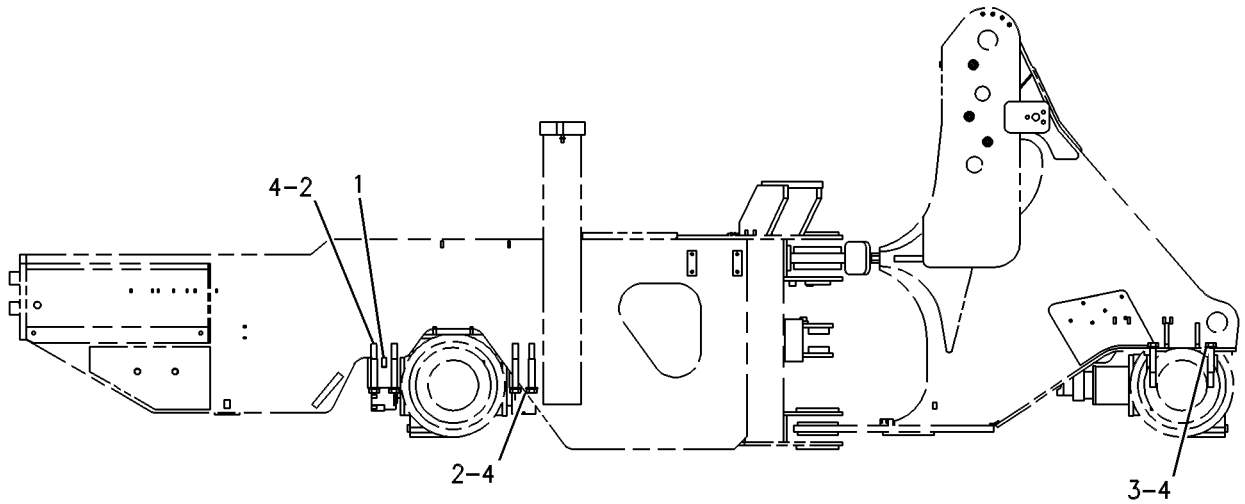

RIGHT SIDE VIEW

GRAPHIC #1 g00131636

147-5071 MOUNTING GP-RIM

S/N: DJD1-UP; DBT1-UP
PART OF 117-7836, 117-7837, 146-6783, 154-5508 RIM AR
AN ATTACHMENT

SMCS-4202, 4209 **i01200801**

NOTE	PART NUMBER	QTY	PART NAME 1 2 3 4 5 6 (PRODUCT LEVEL)	SEE PAGE
JM	**8T-5379**	16	BOLT (M24X3.0X50MM)	
J	**8T-4167**	16	WASHER (4.0MM THK)	

J-QUANTITIES SHOWN ARE PER RIM
M-METRIC PART

<END>

176-5187 POWER TRAIN AR

S/N: DJD1-UP; DBT1-UP
PART OF 176-5220, 204-4350 COMMON AR

SMCS-3000 **i01794449**

NOTE	PART NUMBER	QTY	PART NAME 1 2 3 4 5 6 (PRODUCT LEVEL)	SEE PAGE
Y	*118-0849*	1	FILLER GP-POWER TRAIN OIL	204
Y	**129-8734**	1	GAUGE GP-SIGHT	209
Y	*177-0017*	1	TRANSMISSION AR	258
Y	*202-4338*	1	SHAFT GP-DRIVE	246
Y	*203-3894*	1	FILTER & LINES GP-TRANSMISSION	206

Y-SEPARATE ILLUSTRATION

<END>

6Y-6712 PUMP GP-GEAR

S/N: DJD1-UP; DBT1-UP
1 SECTION
PART OF 121-8917 PUMP GP-GEAR

SMCS-3066, 5073 **i01514600**

NOTE	REF NO	GRAPHIC REF	PART NUMBER	QTY	PART NAME 1 2 3 4 5 6 (PRODUCT LEVEL)	SEE PAGE
M	1	1	**6V-5842**	1	BOLT (M10X1.50X40MM)	
M	2	1	**6V-7981**	5	BOLT (M10X1.50X70MM)	
		1	**6Y-5010**	1	WASHER (10.16X19X.84MM THK)	
	3	1	**8E-9968**	1	BODY AS	
	4	1	**3T-2094**	2	BEARING-SLEEVE	
	5	1	**5M-4987**	2	DOWEL	
	6	1	**8T-5353**	2	DOWEL (9.4MM DIA X 19.5MM OAL)	
	7	1	**6Y-4464**	1	GEAR AS-OIL PUMP (17 TEETH)	
		1	**2B-9373**	1	KEY-WOODRUFF (NOT SERVICED SEPARATELY)	
	8	1	**5H-3252**	1	SEAL-O-RING	
	9	1	**6Y-4997**	1	COVER AS	
	10	1	**3T-2094**	2	BEARING-SLEEVE	
	11	1	**6Y-4465**	1	GEAR-OIL PUMP (15 TEETH)	

M-METRIC PART

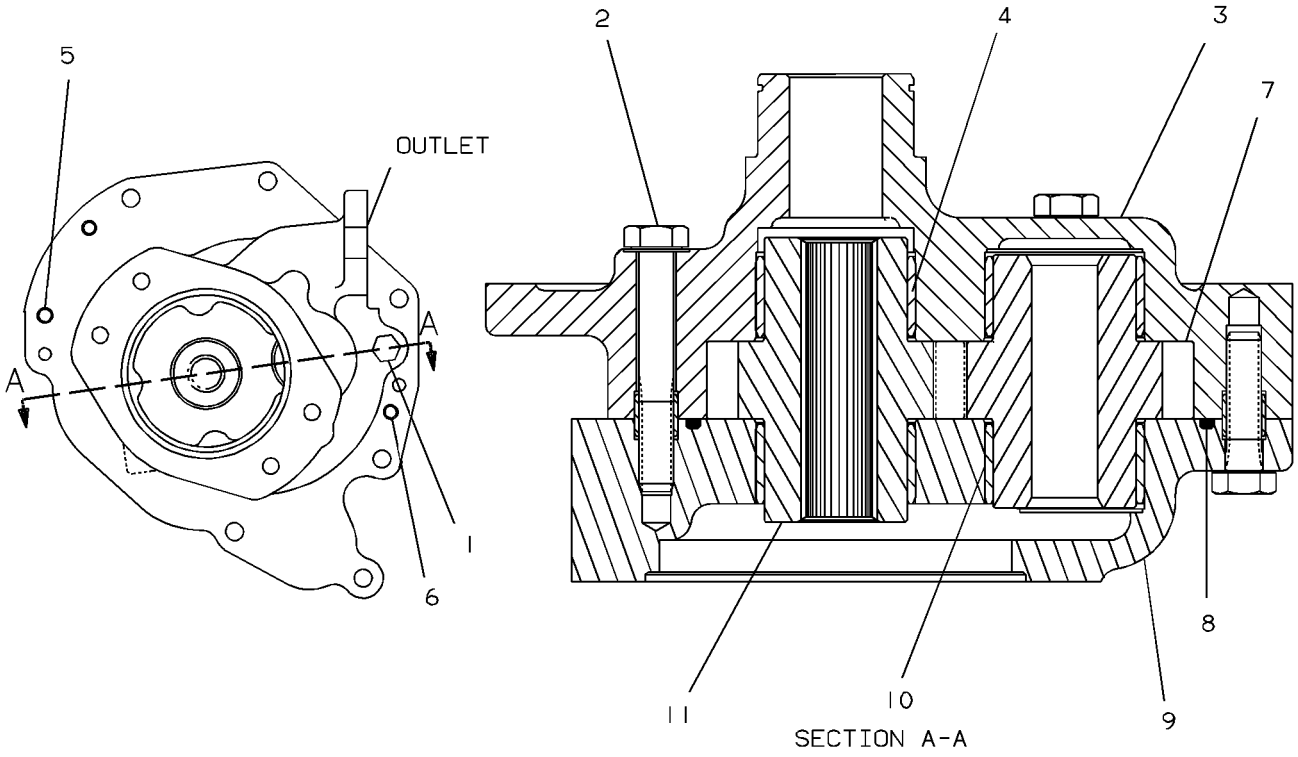

GRAPHIC #1 g00126574

121-8917 PUMP GP-GEAR

S/N: DJD1-UP; DBT1-UP
PART OF 177-0017 TRANSMISSION AR

SMCS-3066, 5073 **i01232034**

NOTE	REF NO	GRAPHIC REF	PART NUMBER	QTY	PART NAME 1 2 3 4 5 6 (PRODUCT LEVEL)	SEE PAGE
Y	1	1	**6Y-6712**	1	PUMP GP-GEAR	236
	2	1	**120-4483**	1	GEAR-DRIVE	
M	3	1	**6V-6317**	6	BOLT (M10X20MM)	
	4	1	**2J-7550**	1	RING-RETAINING	
	5	1	**6Y-4618**	1	SHAFT-GOVERNOR CONTROL	
	6	1	**4B-3665**	1	BALL BEARING	
	7	1	**1H-9696**	1	SEAL-O-RING (44.0MM ID)	
M	8	1	**6V-4249**	2	BOLT (M10X1.5X50 MM)	
M	9	1	**6V-1820**	5	BOLT (M10X1.50X30MM)	

M-METRIC PART
Y-SEPARATE ILLUSTRATION

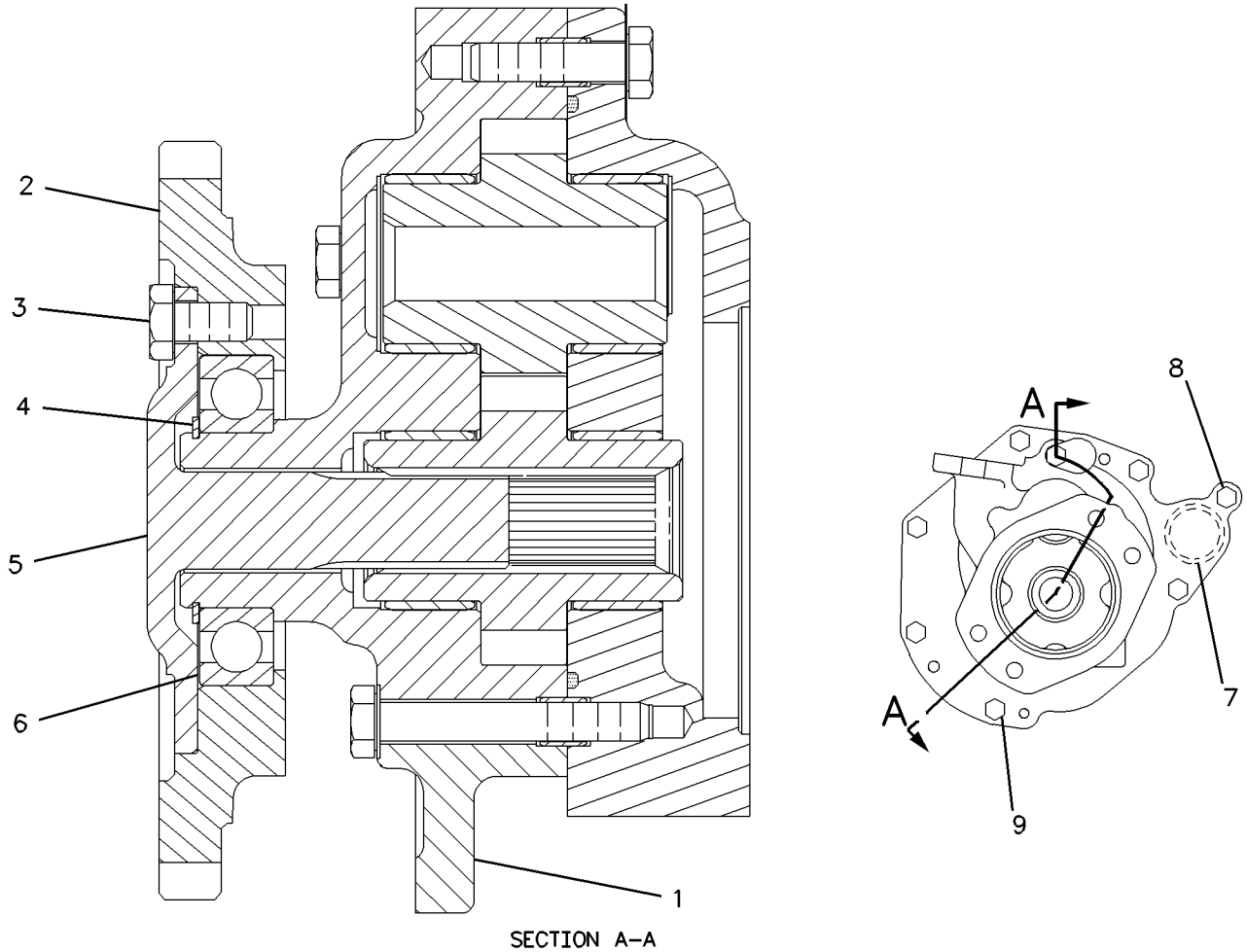

GRAPHIC #1 g00658643

117-7836 RIM AR

S/N: DJD1-UP; DBT1-UP
15.5-25 OR 17.5-25 TUBELESS TIRES. 1 PIECE
PART OF 117-7848, 117-7849, 117-7851, 128-5438, 128-5439, 229-4953, 229-4954, 229-4955, 229-4962 TIRE & RIM AR
AN ATTACHMENT

SMCS-4209 **i01232035**

NOTE	PART NUMBER	QTY	PART NAME 1 2 3 4 5 6 (PRODUCT LEVEL)	SEE PAGE
Y	*147-5071*	1	MOUNTING GP-RIM	235
Y	**117-7839**	4	RIM GP-DEMOUNTABLE	241

Y-SEPARATE ILLUSTRATION

<END>

117-7837 RIM AR

S/N: DJD1-UP; DBT1-UP
17.5-25 TUBELESS TIRES. 3 PIECE
PART OF 117-7860, 117-7861, 117-7862, 128-5440, 128-5441, 229-4956, 229-4957, 229-4958, 229-4970 TIRE & RIM AR
AN ATTACHMENT

SMCS-4209 **i01065376**

NOTE	PART NUMBER	QTY	PART NAME 1 2 3 4 5 6 (PRODUCT LEVEL)	SEE PAGE
Y	*147-5071*	1	MOUNTING GP-RIM	235
Y	*117-7840*	4	RIM GP-DEMOUNTABLE	242

Y-SEPARATE ILLUSTRATION

<END>

146-6783 RIM AR

S/N: DJD1-UP; DBT1-UP
(17.00X25, 3 PIECE)
PART OF 149-8058, 190-9002, 230-9671, 230-9679 TIRE & RIM AR
AN ATTACHMENT

SMCS-4209 **i01063933**

NOTE	PART NUMBER	QTY	PART NAME 1 2 3 4 5 6 (PRODUCT LEVEL)	SEE PAGE
Y	*147-5071*	1	MOUNTING GP-RIM	235
Y	*2Q-5979*	4	RIM GP-DEMOUNTABLE	240

Y-SEPARATE ILLUSTRATION

<END>

154-5508 RIM AR

S/N: DJD1-UP; DBT1-UP
17.00X25 3-PIECE. CENTER MOUNT
PART OF 190-8987, 230-9672, 230-9673, 230-9674, 230-9675, 230-9676, 230-9677, 230-9678, 230-9681 TIRE & RIM AR
CANNOT BE USED WITH COSA ROADING ARRANGEMENTS
AN ATTACHMENT

SMCS-4209 **i01087011**

NOTE	PART NUMBER	QTY	PART NAME 1 2 3 4 5 6 (PRODUCT LEVEL)	SEE PAGE
Y	*147-5071*	1	MOUNTING GP-RIM	235
Y	*2Q-5979*	1	RIM GP-DEMOUNTABLE	240
Y	*147-5484*	1	STOP GP-AXLE	250

Y-SEPARATE ILLUSTRATION

<END>

2Q-5979 RIM GP-DEMOUNTABLE

S/N: DJD1-UP; DBT1-UP
17.00 X 25 3-PIECE
PART OF 146-6783, 154-5508 RIM AR
AN ATTACHMENT

SMCS-4209 **i01327057**

NOTE	REF NO	GRAPHIC REF	PART NUMBER	QTY	PART NAME 1 2 3 4 5 6 (PRODUCT LEVEL)	SEE PAGE
CY	1	1	**186-4943**	1	RIM GP-DEMOUNTABLE	245
Y	2	1	**6D-0337**	1	VALVE GP-TIRE	261
	3	1	**4K-4879**	1	SEAL-O-RING	

C-CHANGE FROM PREVIOUS TYPE
Y-SEPARATE ILLUSTRATION

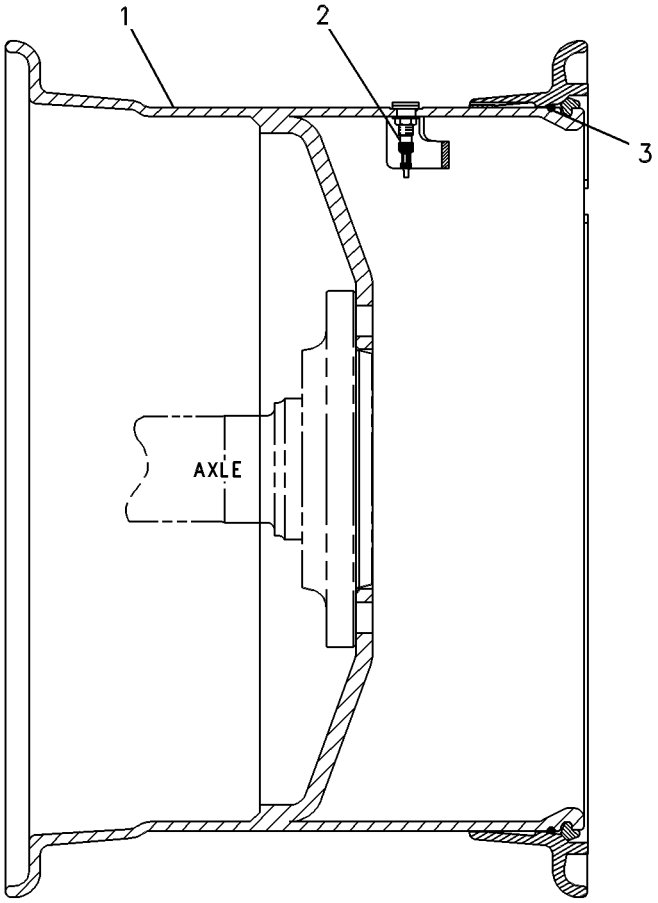

GRAPHIC #1 g00278075

117-7839 RIM GP-DEMOUNTABLE

S/N: DJD1-UP; DBT1-UP
13.00 X 25 1 PIECE
PART OF 117-7836 RIM AR
AN ATTACHMENT

SMCS-4209 **i00350533**

NOTE	REF NO	GRAPHIC REF	PART NUMBER	QTY	PART NAME 1 2 3 4 5 6 (PRODUCT LEVEL)	SEE PAGE
	1	1	**8R-5825**	1	RIM AS	
	2	1	**2G-6595**	1	VALVE GP-TIRE	
		1	**6F-3930**	1	CORE-VALVE	
		1	**9K-7951**	1	CAP-VALVE	
		1	**7D-5252**	1	SPUD AS	
		1	**2D-2507**	1	SPUD	
		1	**2D-2508**	1	GROMMET	
		1	**2D-2509**	1	LOCKNUT	

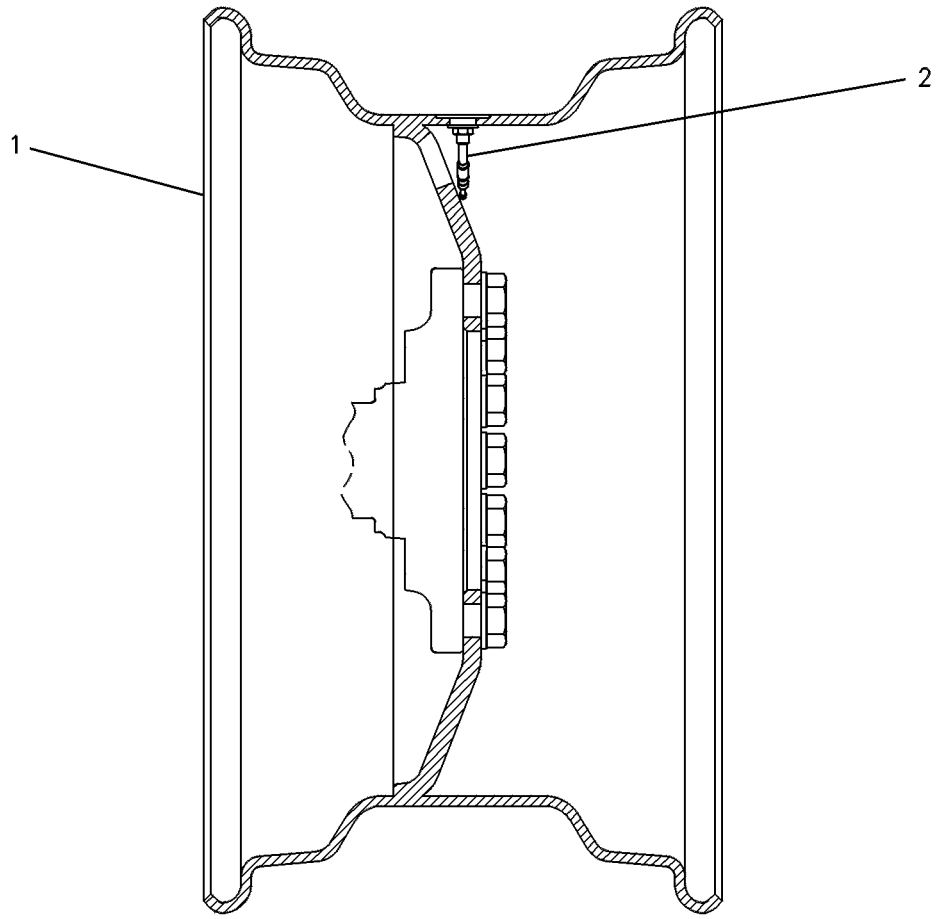

GRAPHIC #1 g00129196

117-7840 RIM GP-DEMOUNTABLE

S/N: DJD1-UP; DBT1-UP
14.00 X 25, 3 PIECE
PART OF 117-7837 RIM AR
AN ATTACHMENT

SMCS-4209 **i01327028**

NOTE	REF NO	GRAPHIC REF	PART NUMBER	QTY	PART NAME 1 2 3 4 5 6 (PRODUCT LEVEL)	SEE PAGE
Y	1	1	**186-4942**	1	RIM GP-DEMOUNTABLE	244
	2	1	**4K-4879**	1	SEAL-O-RING	
Y	3	1	**6D-0337**	1	VALVE GP-TIRE	261

Y-SEPARATE ILLUSTRATION

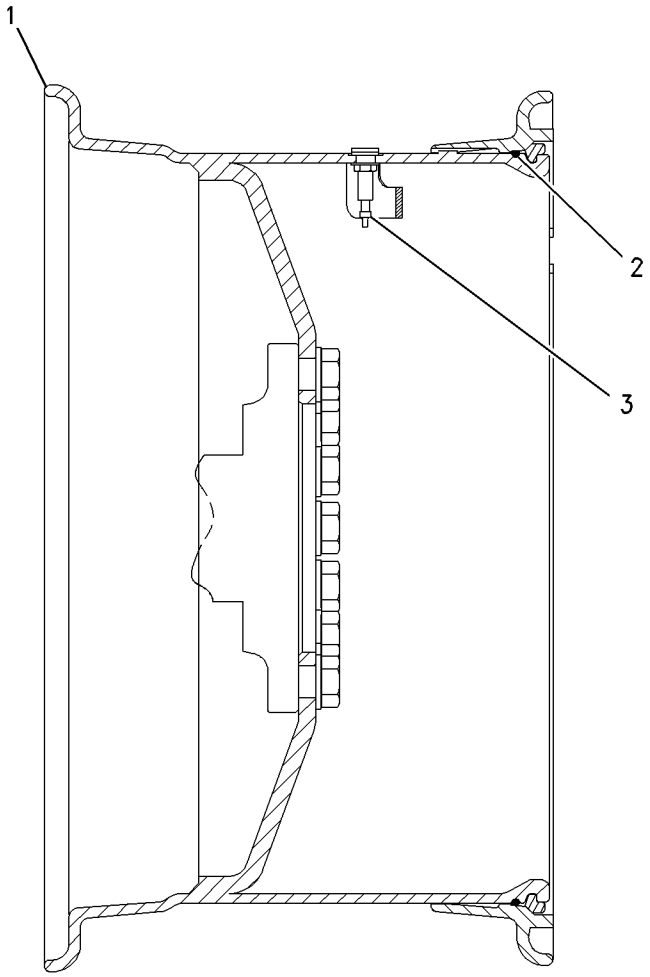

GRAPHIC #1 g00702233

128-5436 RIM GP-DEMOUNTABLE

S/N: DJD1-UP; DBT1-UP
14.00 X 25. 3 PIECE
PART OF 186-4942 RIM GP-DEMOUNTABLE
AN ATTACHMENT

SMCS-4209 **i01326198**

NOTE	REF NO	GRAPHIC REF	PART NUMBER	QTY	PART NAME 1 2 3 4 5 6 (PRODUCT LEVEL)	SEE PAGE
	1	1	**102-2131**	1	RIM AS	
	2	1	**8X-9925**	1	FLANGE	
	3	1	**4K-4881**	1	LOCKRING	

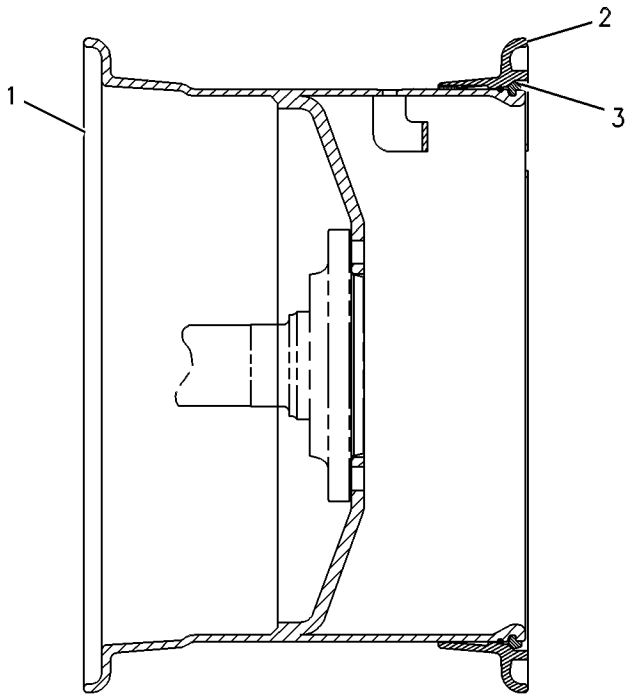

GRAPHIC #1 g00276538

176-1705 RIM GP-DEMOUNTABLE

S/N: DJD1-UP; DBT1-UP
14.00 X 25. 3 PIECE
PART OF 186-4942 RIM GP-DEMOUNTABLE
AN ATTACHMENT

SMCS-4209 **i01389191**

NOTE	PART NUMBER	QTY	PART NAME 1 2 3 4 5 6 (PRODUCT LEVEL)	SEE PAGE
	176-0118	1	DRIVER	
	171-7198	1	FLANGE AS	
	4K-4881	1	LOCK RING	
	171-7199	1	RIM AS	

<END>

176-1706 RIM GP-DEMOUNTABLE

S/N: DJD1-UP; DBT1-UP
17.00 X 25. THREE PIECE
PART OF 186-4943 RIM GP-DEMOUNTABLE
AN ATTACHMENT

SMCS-4209 **i01326391**

NOTE	PART NUMBER	QTY	PART NAME 1 2 3 4 5 6 (PRODUCT LEVEL)	SEE PAGE
	176-0118	1	DRIVER	
	171-8689	1	FLANGE AS	
	4K-4881	1	LOCKRING	
	176-1707	1	RIM AS	

<END>

186-4942 RIM GP-DEMOUNTABLE

S/N: DJD1-UP; DBT1-UP
14.00X25 3 PIECE
PART OF 117-7840 RIM GP-DEMOUNTABLE
AN ATTACHMENT

SMCS-4209 **i01819506**

NOTE	PART NUMBER	QTY	PART NAME 1 2 3 4 5 6 (PRODUCT LEVEL)	SEE PAGE
Y	**128-5436**	1	RIM GP-DEMOUNTABLE	243
			—OR—	
Y	*176-1705*	1	RIM GP-DEMOUNTABLE	244

Y-SEPARATE ILLUSTRATION

<END>

186-4943 RIM GP-DEMOUNTABLE

S/N: DJD1-UP; DBT1-UP
17.00 X 25. THREE PIECE
PART OF 2Q-5979 RIM GP-DEMOUNTABLE
AN ATTACHMENT

SMCS-4209 **i01819508**

NOTE	PART NUMBER	QTY	PART NAME 1 2 3 4 5 6 (PRODUCT LEVEL)	SEE PAGE
Y	*176-1706*	1	RIM GP-DEMOUNTABLE	244

Y-SEPARATE ILLUSTRATION

<END>

202-4338 SHAFT GP-DRIVE

S/N: DJD1-UP; DBT1-UP
PART OF 176-5187 POWER TRAIN AR

SMCS-3253 **i01823464**

NOTE	REF NO	GRAPHIC REF	PART NUMBER	QTY	PART NAME 1 2 3 4 5 6 (PRODUCT LEVEL)	SEE PAGE
	1	1	**4E-5984**	10	STRAP	
Y	2	1	**201-9517**	1	SLIP JOINT GP (CENTER)	248
Y	3	1	*202-4340*	1	SHAFT GP-DRIVE (REAR)	247
Y	4	1	**204-3540**	1	SLIP JOINT GP (FRONT)	249
M	5	1	**4E-5985**	20	BOLT-12 POINT HEAD (M10X1.25X20MM)	
	6	1	**8T-4122**	2	WASHER-HARD (17X32X3.5MM THK)	
M	7	1	**8T-4140**	2	BOLT (M16X2X60MM)	

M-METRIC PART
Y-SEPARATE ILLUSTRATION

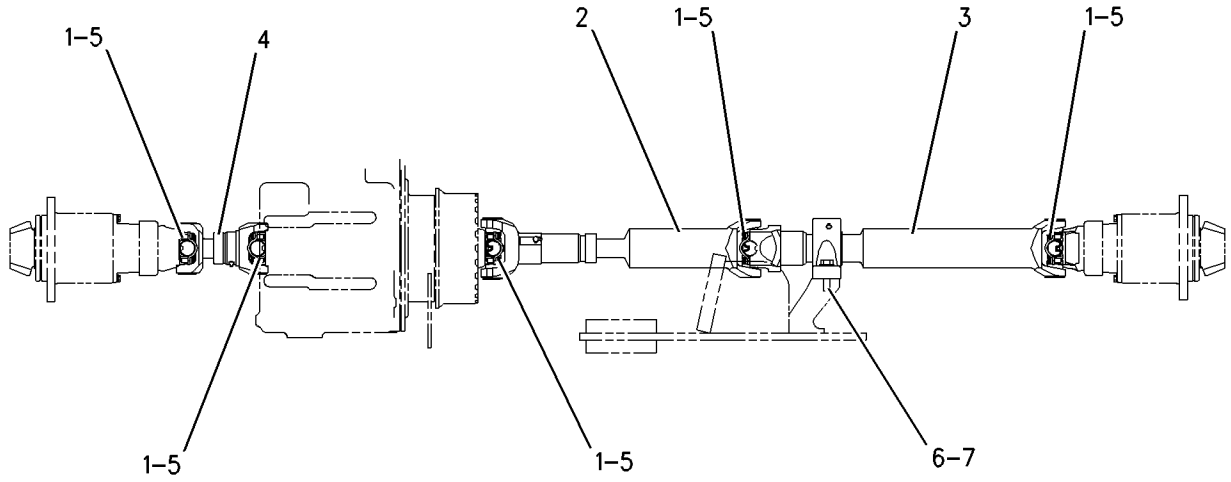

GRAPHIC #1 g00920552

202-4340 SHAFT GP-DRIVE—FRONT

S/N: DJD1-UP; DBT1-UP

PART OF 202-4338 SHAFT GP-DRIVE

SMCS-3253 **i01794945**

NOTE	REF NO	GRAPHIC REF	PART NUMBER	QTY	PART NAME 1 2 3 4 5 6 (PRODUCT LEVEL)	SEE PAGE
	1	1	**6I-8531**	1	BEARING GP-PILLOW BLOCK	
		1	**3B-8489**	1	FITTING-GREASE	
		1	**197-7995**	1	KIT-SETSCREW	
					(INCLUDES SETSCREWS AND NUT)	
	2	1	**9U-3668**	1	YOKE	
	3	1	**202-4339**	1	UNIVERSAL JOINT GP	
		1	**193-4640**	1	KIT-DIFFERENTIAL BEARING	
					(INCLUDES RING)	
M	4	1	**8T-0372**	1	BOLT (M12X1.75X90MM)	
	5	1	**9V-2412**	1	RETAINER	

M-METRIC PART

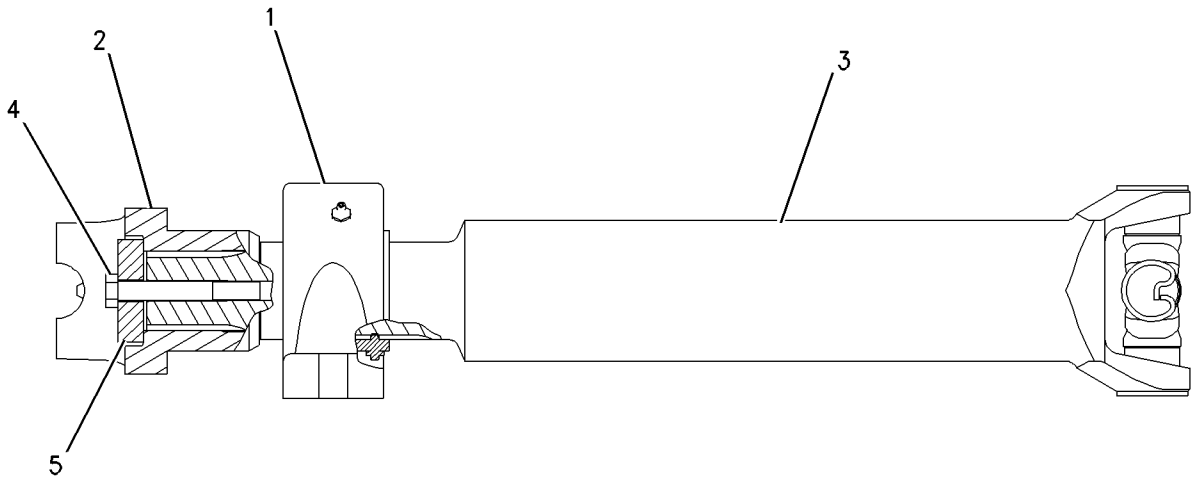

GRAPHIC #1 g00920523

201-9517 SLIP JOINT GP–CENTER

S/N: DJD1-UP; DBT1-UP

PART OF 202-4338 SHAFT GP-DRIVE

SMCS-3251 **i01834786**

NOTE	REF NO	GRAPHIC REF	PART NUMBER	QTY	PART NAME 1 2 3 4 5 6 (PRODUCT LEVEL)	SEE PAGE
	1	1	**1K-6853**	1	FITTING	
	2	1	**3B-8488**	1	FITTING-GREASE	
	3	1	**8R-2022**	1	SEAL	
	4	1	**193-4640**	2	SPIDER & BEARING GP	
					(EACH INCLUDES)	
		1	**8V-7315**	4	RING	

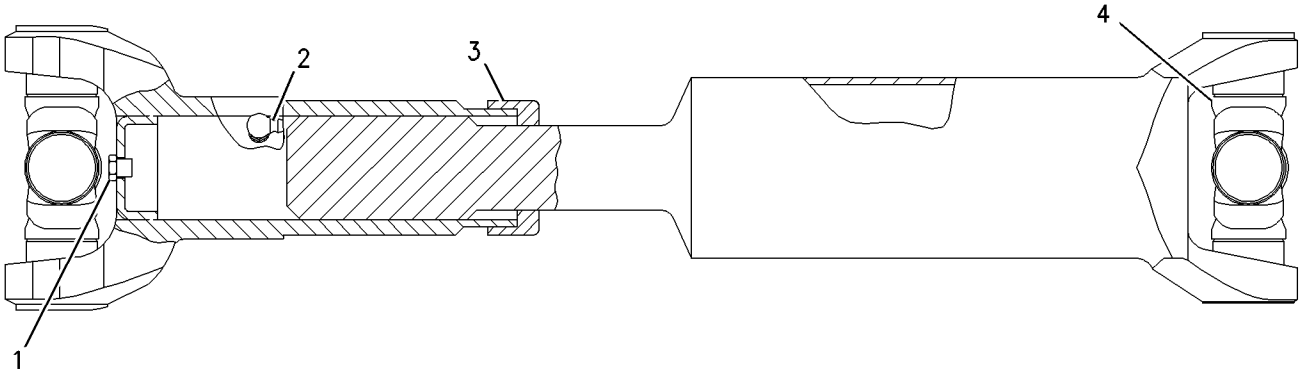

GRAPHIC #1 g00914281

204-3540 SLIP JOINT GP–REAR

S/N: DJD1-UP; DBT1-UP

PART OF 202-4338 SHAFT GP-DRIVE

SMCS-3251 **i01794930**

NOTE	REF NO	GRAPHIC REF	PART NUMBER	QTY	PART NAME 1 2 3 4 5 6 (PRODUCT LEVEL)	SEE PAGE
	1	1	**3B-8489**	1	FITTING-GREASE	
	2	1	**8V-1412**	1	RETAINER	
	3	1	**191-2226**	2	SPIDER & BEARING GP	
		1	**8V-7315**	4	RING	

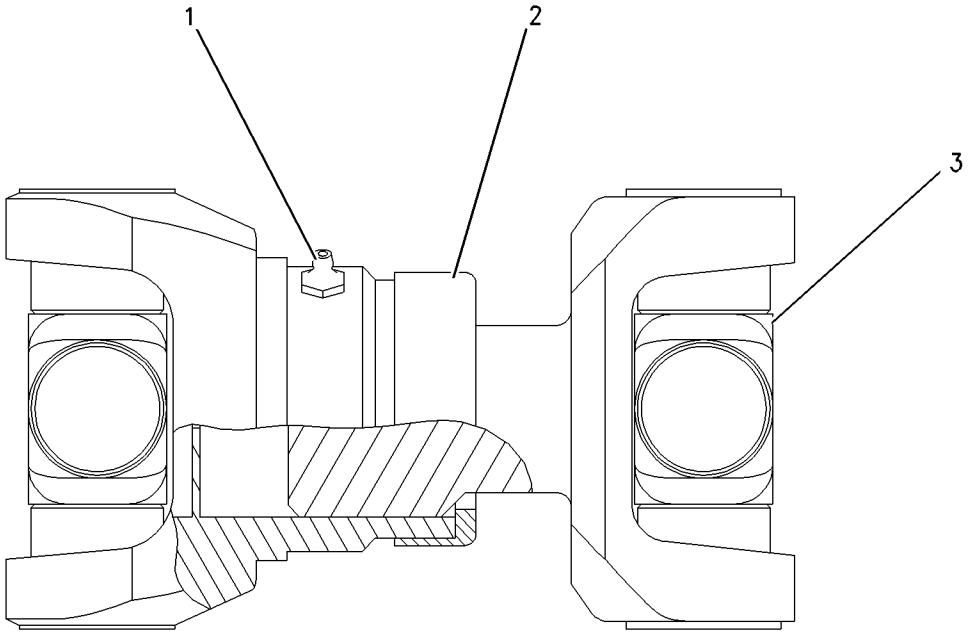

GRAPHIC #1 g00920541

147-5484 STOP GP-AXLE OSCILLATION

S/N: DJD1-UP; DBT1-UP
PART OF 154-5508 RIM AR
AN ATTACHMENT

SMCS-3259 **i01093369**

NOTE	PART NUMBER	QTY	PART NAME 1 2 3 4 5 6 (PRODUCT LEVEL)	SEE PAGE
	4E-1357	2	BLOCK	
M	**8T-4956**	4	BOLT (M12X1.75X35MM)	
	8T-4223	4	WASHER-HARD (3MM THK)	

M-METRIC PART

<END>

117-7848 TIRE & RIM AR

S/N: DJD1-UP; DBT1-UP
AN ATTACHMENT

SMCS-4202 **i01069703**

NOTE	PART NUMBER	QTY	PART NAME 1 2 3 4 5 6 (PRODUCT LEVEL)	SEE PAGE
Y	*117-7836*	1	RIM AR	238
J	*106-4835*	4	TIRE (17.5 R25*L-2)	

J-PROCURE LOCALLY
Y-SEPARATE ILLUSTRATION

<END>

117-7849 TIRE & RIM AR

S/N: DJD1-UP; DBT1-UP
AN ATTACHMENT

SMCS-4202 **i01069696**

NOTE	PART NUMBER	QTY	PART NAME 1 2 3 4 5 6 (PRODUCT LEVEL)	SEE PAGE
Y	*117-7836*	1	RIM AR	238
J	*6C-3246*	4	TIRE (17.5 R25*L-3)	

J-PROCURE LOCALLY
Y-SEPARATE ILLUSTRATION

<END>

117-7851 TIRE & RIM AR

S/N: DJD1-UP; DBT1-UP
AN ATTACHMENT

SMCS-4202 **i01120937**

NOTE	PART NUMBER	QTY	PART NAME 1 2 3 4 5 6 (PRODUCT LEVEL)	SEE PAGE
Y	*117-7836*	1	RIM AR	238
J	*6C-7366*	4	TIRE (17.5 R25*L-2)	

J-PROCURE LOCALLY
Y-SEPARATE ILLUSTRATION

<END>

117-7860 TIRE & RIM AR

S/N: DJD1-UP; DBT1-UP
AN ATTACHMENT

SMCS-4202 **i01069705**

NOTE	PART NUMBER	QTY	PART NAME 1 2 3 4 5 6 (PRODUCT LEVEL)	SEE PAGE
Y	*117-7837*	1	RIM AR	238
J	*106-4835*	4	TIRE (17.5 R25*L-2)	

J-PROCURE LOCALLY
Y-SEPARATE ILLUSTRATION

<END>

117-7861 TIRE & RIM AR

S/N: DJD1-UP; DBT1-UP
AN ATTACHMENT

SMCS-4202 **i01069706**

NOTE	PART NUMBER	QTY	PART NAME 1 2 3 4 5 6 (PRODUCT LEVEL)	SEE PAGE
Y	*117-7837*	1	RIM AR	238
J	*6C-3246*	4	TIRE (17.5 R25*L-3)	

J-PROCURE LOCALLY
Y-SEPARATE ILLUSTRATION

<END>

117-7862 TIRE & RIM AR

S/N: DJD1-UP; DBT1-UP
AN ATTACHMENT

SMCS-4202 **i01120948**

NOTE	PART NUMBER	QTY	PART NAME 1 2 3 4 5 6 (PRODUCT LEVEL)	SEE PAGE
Y	*117-7837*	1	RIM AR	238
J	*6C-7366*	4	TIRE (17.5 R25*L-2)	

J-PROCURE LOCALLY
Y-SEPARATE ILLUSTRATION

<END>

128-5438 TIRE & RIM AR

S/N: DJD1-UP; DBT1-UP
AN ATTACHMENT

SMCS-4202 **i01069739**

NOTE	PART NUMBER	QTY	PART NAME 1 2 3 4 5 6 (PRODUCT LEVEL)	SEE PAGE
Y	*117-7836*	1	RIM AR	238
J	*128-5450*	4	TIRE (17.5X25 12PR L-2)	

J-PROCURE LOCALLY
Y-SEPARATE ILLUSTRATION

<END>

128-5439 TIRE & RIM AR

S/N: DJD1-UP; DBT1-UP
AN ATTACHMENT

SMCS-4202 **i01069747**

NOTE	PART NUMBER	QTY	PART NAME 1 2 3 4 5 6 (PRODUCT LEVEL)	SEE PAGE
Y	*117-7836*	1	RIM AR	238
J	*128-5451*	4	TIRE (17.5X25 12PR L-3)	

J-PROCURE LOCALLY
Y-SEPARATE ILLUSTRATION

<END>

128-5440 TIRE & RIM AR

S/N: DJD1-UP; DBT1-UP
AN ATTACHMENT

SMCS-4202 **i01069749**

NOTE	PART NUMBER	QTY	PART NAME 1 2 3 4 5 6 (PRODUCT LEVEL)	SEE PAGE
Y	*117-7837*	1	RIM AR	238
J	*128-5450*	4	TIRE (17.5X25 12PR L-2)	

J-PROCURE LOCALLY
Y-SEPARATE ILLUSTRATION

<END>

128-5441 TIRE & RIM AR

S/N: DJD1-UP; DBT1-UP
AN ATTACHMENT

SMCS-4202 **i01069751**

NOTE	PART NUMBER	QTY	PART NAME 1 2 3 4 5 6 (PRODUCT LEVEL)	SEE PAGE
Y	*117-7837*	1	RIM AR	238
J	*128-5451*	4	TIRE (17.5X25 12PR L-3)	

J-PROCURE LOCALLY
Y-SEPARATE ILLUSTRATION

<END>

149-8058 TIRE & RIM AR

S/N: DJD1-UP; DBT1-UP
AN ATTACHMENT

SMCS-4202 **i01630505**

NOTE	PART NUMBER	QTY	PART NAME 1 2 3 4 5 6 (PRODUCT LEVEL)	SEE PAGE
Y	*146-6783*	1	RIM AR	238
J	*205-5409*	4	TIRE	

J-PROCURE LOCALLY
Y-SEPARATE ILLUSTRATION

<END>

190-8987 TIRE & RIM AR

S/N: DJD1-UP; DBT1-UP
20.5R25
AN ATTACHMENT

SMCS-4202 **i01834779**

NOTE	PART NUMBER	QTY	PART NAME 1 2 3 4 5 6 (PRODUCT LEVEL)	SEE PAGE
Y	*154-5508*	1	RIM AR	239
J	*190-8985*	4	TIRE (20.5XR25 DG2 L-2)	

J-PROCURE LOCALLY
Y-SEPARATE ILLUSTRATION

<END>

190-9002 TIRE & RIM AR

S/N: DJD1-UP; DBT1-UP
AN ATTACHMENT

SMCS-4202 **i01796084**

NOTE	PART NUMBER	QTY	PART NAME 1 2 3 4 5 6 (PRODUCT LEVEL)	SEE PAGE
	188-7675	4	TIRE (550/65R25*L-2)	
Y	*146-6783*	1	RIM AR	238

Y-SEPARATE ILLUSTRATION

<END>

229-4953 TIRE & RIM AR

S/N: DJD1-UP; DBT1-UP
AN ATTACHMENT

SMCS-4202 **i01820726**

NOTE	PART NUMBER	QTY	PART NAME 1 2 3 4 5 6 (PRODUCT LEVEL)	SEE PAGE
	106-4835	4	TIRE (17.5 R25*L-2)	
Y	*117-7836*	1	RIM AR	238

Y-SEPARATE ILLUSTRATION

<END>

229-4954 TIRE & RIM AR

S/N: DJD1-UP; DBT1-UP
AN ATTACHMENT

SMCS-4202 **i01819028**

NOTE	PART NUMBER	QTY	PART NAME 1 2 3 4 5 6 (PRODUCT LEVEL)	SEE PAGE
Y	*117-7836*	1	RIM AR	238
J	*6C-3246*	4	TIRE (17.5 R25*L-3)	

J-PROCURE LOCALLY
Y-SEPARATE ILLUSTRATION

<END>

229-4955 TIRE & RIM AR

S/N: DJD1-UP; DBT1-UP
AN ATTACHMENT

SMCS-4202 **i01820186**

NOTE	PART NUMBER	QTY	PART NAME 1 2 3 4 5 6 (PRODUCT LEVEL)	SEE PAGE
Y	*117-7836*	1	RIM AR	238
J	*6C-7366*	4	TIRE (17.5 R25 * GP2B6S)	

J-PROCURE LOCALLY
Y-SEPARATE ILLUSTRATION

<END>

229-4956 TIRE & RIM AR

S/N: DJD1-UP; DBT1-UP
AN ATTACHMENT

SMCS-4202 **i01819090**

NOTE	PART NUMBER	QTY	PART NAME 1 2 3 4 5 6 (PRODUCT LEVEL)	SEE PAGE
Y	*117-7837*	1	RIM AR	238
J	*106-4835*	4	TIRE (17.5 R25*L-2)	

J-PROCURE LOCALLY
Y-SEPARATE ILLUSTRATION

<END>

229-4957 TIRE & RIM AR

S/N: DJD1-UP; DBT1-UP
AN ATTACHMENT

SMCS-4202 **i01819106**

NOTE	PART NUMBER	QTY	PART NAME 1 2 3 4 5 6 (PRODUCT LEVEL)	SEE PAGE
Y	*117-7837*	1	RIM AR	238
J	*6C-3246*	4	TIRE (17.5 R25*L-3)	

J-PROCURE LOCALLY
Y-SEPARATE ILLUSTRATION

<END>

229-4958 TIRE & RIM AR

S/N: DJD1-UP; DBT1-UP
AN ATTACHMENT

SMCS-4202 **i01819109**

NOTE	PART NUMBER	QTY	PART NAME 1 2 3 4 5 6 (PRODUCT LEVEL)	SEE PAGE
Y	*117-7837*	1	RIM AR	238
J	*6C-7366*	4	TIRE (17.5 R25 * GP2B6S)	

J-PROCURE LOCALLY
Y-SEPARATE ILLUSTRATION

<END>

229-4962 TIRE & RIM AR

S/N: DJD1-UP; DBT1-UP
AN ATTACHMENT

SMCS-4202 **i01819113**

NOTE	PART NUMBER	QTY	PART NAME 1 2 3 4 5 6 (PRODUCT LEVEL)	SEE PAGE
Y	*117-7836*	1	RIM AR	238
J	*128-5450*	4	TIRE (17.5X25 12PR L-2)	

J-PROCURE LOCALLY
Y-SEPARATE ILLUSTRATION

<END>

229-4970 TIRE & RIM AR

S/N: DJD1-UP; DBT1-UP
AN ATTACHMENT

SMCS-4202 **i01838213**

NOTE	PART NUMBER	QTY	PART NAME 1 2 3 4 5 6 (PRODUCT LEVEL)	SEE PAGE
Y	*117-7837*	1	RIM AR	238
	174-6899	4	TIRE (17.5-25 16PR G-3)	

Y-SEPARATE ILLUSTRATION

<END>

230-9671 TIRE & RIM AR

S/N: DJD1-UP; DBT1-UP
AN ATTACHMENT

SMCS-4202 **i01837352**

NOTE	PART NUMBER	QTY	PART NAME 1 2 3 4 5 6 (PRODUCT LEVEL)	SEE PAGE
Y	*146-6783*	1	RIM AR	238
	205-5409	4	TIRE (550/65-R25*L3)	

Y-SEPARATE ILLUSTRATION

<END>

230-9672 TIRE & RIM AR

S/N: DJD1-UP; DBT1-UP
AN ATTACHMENT

SMCS-4202 **i01837365**

NOTE	PART NUMBER	QTY	PART NAME 1 2 3 4 5 6 (PRODUCT LEVEL)	SEE PAGE
Y	*154-5508*	1	RIM AR	239
	106-4837	4	TIRE (20.5 R25*L-2)	

Y-SEPARATE ILLUSTRATION

<END>

230-9673 TIRE & RIM AR

S/N: DJD1-UP; DBT1-UP
AN ATTACHMENT

SMCS-4202 **i01837373**

NOTE	PART NUMBER	QTY	PART NAME 1 2 3 4 5 6 (PRODUCT LEVEL)	SEE PAGE
Y	*154-5508*	1	RIM AR	239
	6C-3247	4	TIRE (20.5 R25*L-3)	

Y-SEPARATE ILLUSTRATION

<END>

230-9674 TIRE & RIM AR

S/N: DJD1-UP; DBT1-UP
AN ATTACHMENT

SMCS-4202 **i01837399**

NOTE	PART NUMBER	QTY	PART NAME 1 2 3 4 5 6 (PRODUCT LEVEL)	SEE PAGE
Y	*154-5508*	1	RIM AR	239
	128-5164	4	TIRE (20.5X25 12PR L-2)	

Y-SEPARATE ILLUSTRATION

<END>

230-9675 TIRE & RIM AR

S/N: DJD1-UP; DBT1-UP
AN ATTACHMENT

SMCS-4202 **i01837401**

NOTE	PART NUMBER	QTY	PART NAME 1 2 3 4 5 6 (PRODUCT LEVEL)	SEE PAGE
Y	*154-5508*	1	RIM AR	239
	128-5167	4	TIRE (20.5X25 12PR L-3)	

Y-SEPARATE ILLUSTRATION

<END>

230-9676 TIRE & RIM AR

S/N: DJD1-UP; DBT1-UP
AN ATTACHMENT

SMCS-4202 **i01837541**

NOTE	PART NUMBER	QTY	PART NAME 1 2 3 4 5 6 (PRODUCT LEVEL)	SEE PAGE
Y	*154-5508*	1	RIM AR	239
	128-5162	4	TIRE (20.5X25 12PR L-2)	

Y-SEPARATE ILLUSTRATION

<END>

230-9677 TIRE & RIM AR

S/N: DJD1-UP; DBT1-UP
AN ATTACHMENT

SMCS-4202 **i01837546**

NOTE	PART NUMBER	QTY	PART NAME 1 2 3 4 5 6 (PRODUCT LEVEL)	SEE PAGE
Y	*154-5508*	1	RIM AR	239
	128-5165	4	TIRE (20.5X25 12PR L-3)	
Y-SEPARATE ILLUSTRATION				

<END>

230-9678 TIRE & RIM AR

S/N: DJD1-UP; DBT1-UP
AN ATTACHMENT

SMCS-4202 **i01837549**

NOTE	PART NUMBER	QTY	PART NAME 1 2 3 4 5 6 (PRODUCT LEVEL)	SEE PAGE
Y	*154-5508*	1	RIM AR	239
	6C-7367	4	TIRE (20.5XR25 * GP-2B)	
Y-SEPARATE ILLUSTRATION				

<END>

230-9679 TIRE & RIM AR

S/N: DJD1-UP; DBT1-UP
AN ATTACHMENT

SMCS-4202 **i01837552**

NOTE	PART NUMBER	QTY	PART NAME 1 2 3 4 5 6 (PRODUCT LEVEL)	SEE PAGE
Y	*146-6783*	1	RIM AR	238
	190-8992	4	TIRE (550/65R25 GP-3D)	
Y-SEPARATE ILLUSTRATION				

<END>

230-9681 TIRE & RIM AR

S/N: DJD1-UP; DBT1-UP
AN ATTACHMENT

SMCS-4202 **i01837556**

NOTE	PART NUMBER	QTY	PART NAME 1 2 3 4 5 6 (PRODUCT LEVEL)	SEE PAGE
Y	*154-5508*	1	RIM AR	239
	229-5039	4	TIRE	
Y-SEPARATE ILLUSTRATION				

<END>

177-0017 TRANSMISSION AR

S/N: DJD1-UP; DBT1-UP

PART OF 176-5187 POWER TRAIN AR

SMCS-3030 **i01834780**

NOTE	REF NO	GRAPHIC REF	PART NUMBER	QTY	PART NAME 1 2 3 4 5 6 (PRODUCT LEVEL)	SEE PAGE
Y	1	1	*141-8615*	1	DRIVE GP-FLEXIBLE COUPLING	202
	2	1	**206-5142**	1	CONVERTER AS	
Y	3	1	*146-6274*	1	DRIVE GP-PUMP	203
Y	4	1	*177-0018*	1	CASE & PARTS GP-PLANETARY	184
Y	5	1	*190-2888*	1	INPUT GP-TRANSMISSION	224
Y	6	1	*118-4921*	1	CLUTCH GP (FOWARD HIGH & FORWARD LOW)	190
Y	7	1	*118-4918*	1	CLUTCH GP (SECOND & REVERSE)	188
Y	8	1	*190-2914*	1	CLUTCH GP (FIRST & THIRD)	192
Y	9	1	*190-2915*	1	GEAR GP-OUTPUT TRANSFER	214
Y	10	1	**200-2042**	1	VALVE GP-TRANSMISSION CONTROL	262
Y	11	1	*121-8917*	1	PUMP GP-GEAR	237

Y-SEPARATE ILLUSTRATION

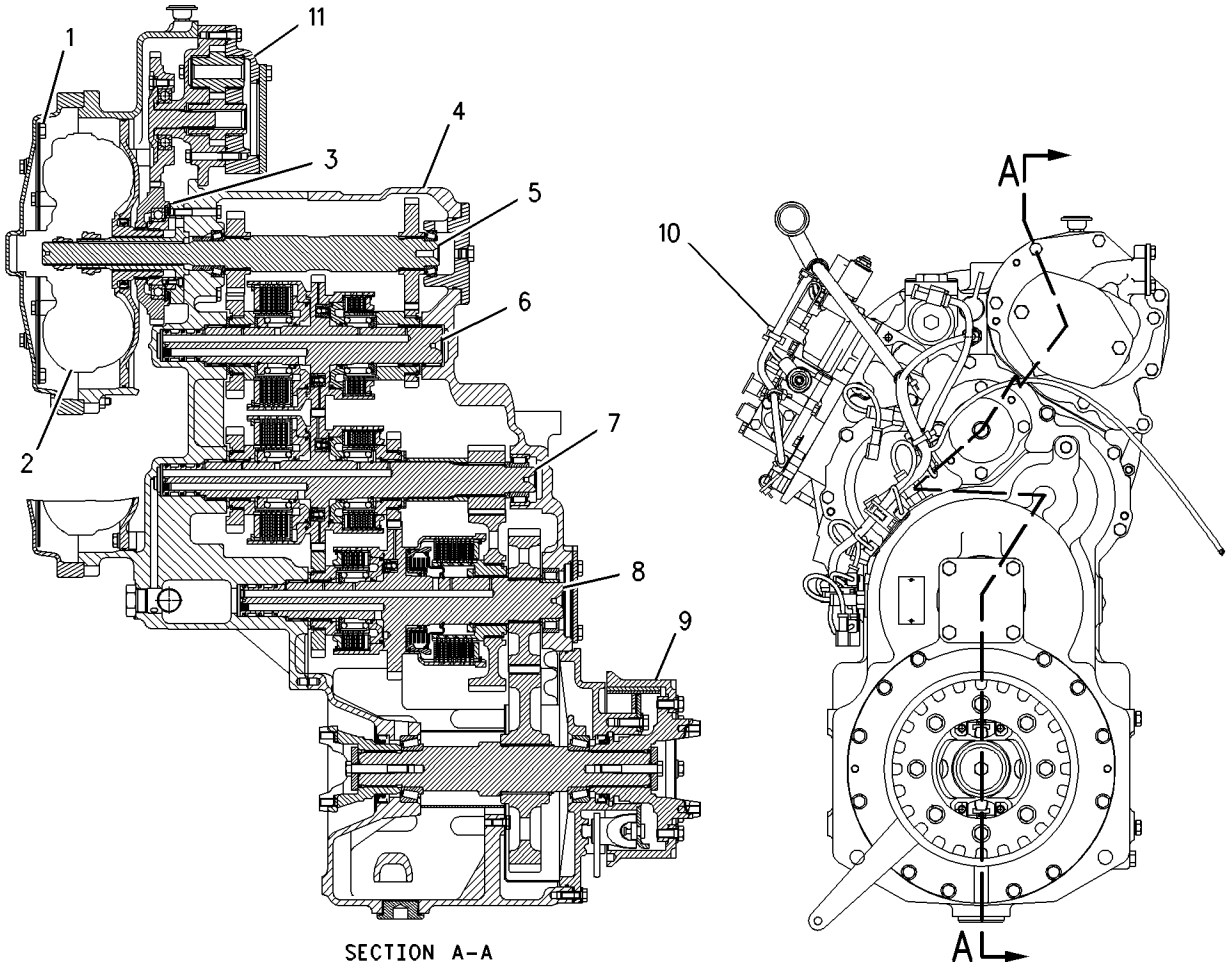

GRAPHIC #1 g00919871

126-0747 VALVE GP-BYPASS

S/N: DJD1-UP; DBT1-UP

PART OF 203-3872 LINES GP-TORQUE CONV COOLER

SMCS-5093 **i01707324**

NOTE	REF NO	GRAPHIC REF	PART NUMBER	QTY	PART NAME 1 2 3 4 5 6 (PRODUCT LEVEL)	SEE PAGE
	1	1	**9S-4191**	1	PLUG	
	2	1	**126-0748**	1	BODY	
	3	1	**3J-1907**	1	SEAL-O-RING	
	4	1	**6V-8218**	1	SEAL-O-RING	
	5	1	**124-8335**	1	VALVE AS-CONTROL	

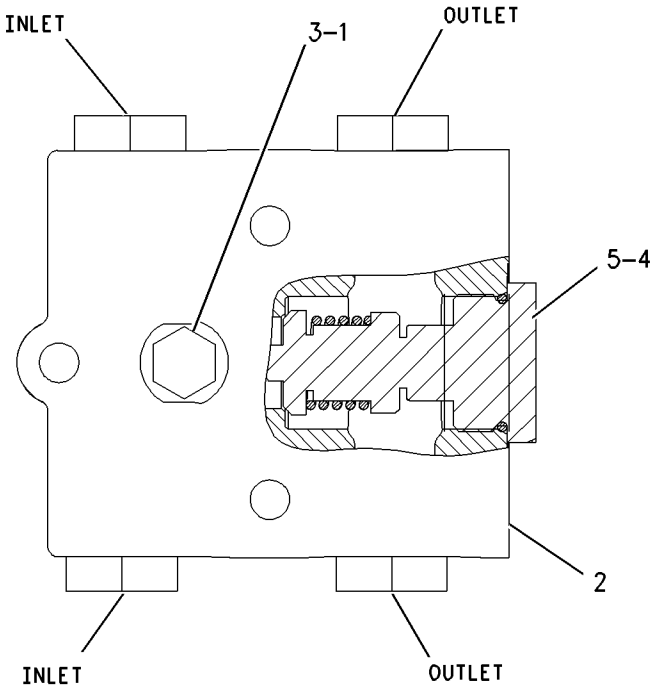

GRAPHIC #1 g00878814

6I-9806 VALVE GP-RELIEF

S/N: DJD1-UP; DBT1-UP

PART OF 177-0018 CASE & PARTS GP-PLANETARY

SMCS-3133, 3182, 3210, 3213 **i00349502**

NOTE	REF NO	GRAPHIC REF	PART NUMBER	QTY	PART NAME 1 2 3 4 5 6 (PRODUCT LEVEL)	SEE PAGE
	1	1	**6I-9805**	1	BODY	
	2	1	**2S-1382**	1	SPRING	
	3	1	**6I-9804**	1	SPOOL	
	4	1	**2L-6726**	1	RING-RETAINING	

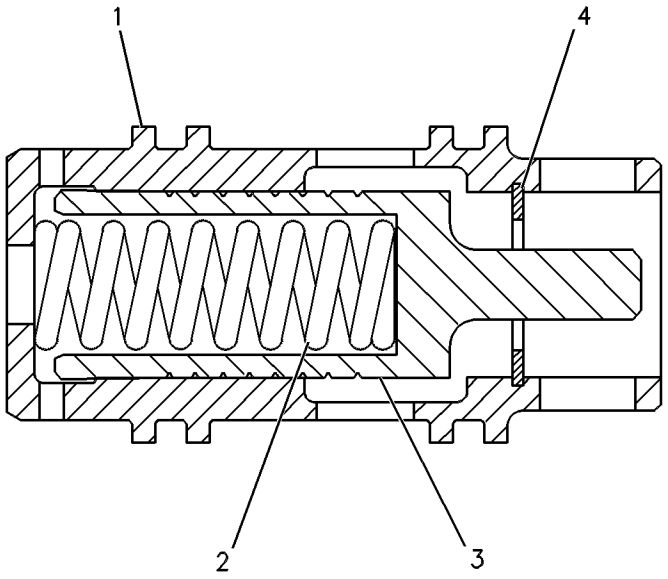

GRAPHIC #1 g00128535

6D-0337 VALVE GP-TIRE

S/N: DJD1-UP; DBT1-UP
PART OF 117-7840, 2Q-5979 RIM GP-DEMOUNTABLE
AN ATTACHMENT

SMCS-4203 **i01720866**

NOTE	REF NO	GRAPHIC REF	PART NUMBER	QTY	PART NAME 1 2 3 4 5 6 (PRODUCT LEVEL)	SEE PAGE
	1	1	**6D-0443**	1	HOUSING AS-CORE	
	2	1	**2D-2628**	1	CORE-VALVE	
	3	1	**2D-2633**	1	CAP	
	4	1	**8D-2707**	1	SPUD AS	
	5	1	**2D-2629**	1	GROMMET	
	6	1	**2D-2630**	1	WASHER	
	7	1	**2D-2631**	1	NUT (.482-26 THD)	

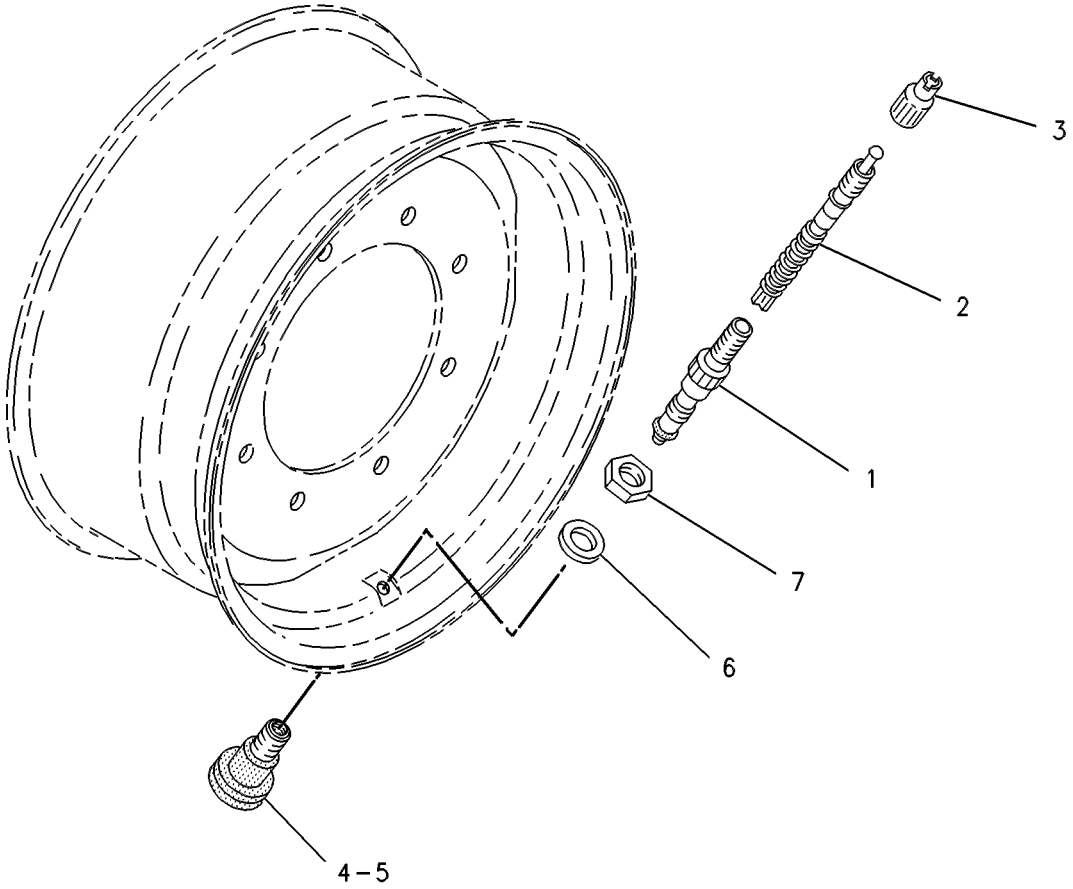

GRAPHIC #1 g00121904

200-2042 VALVE GP-TRANSMISSION CONTROL

S/N: DJD1-UP; DBT1-UP

PART OF 177-0017 TRANSMISSION AR

SMCS-3073, 3167 **i01799127**

NOTE	REF NO	GRAPHIC REF	PART NUMBER	QTY	PART NAME 1 2 3 4 5 6 (PRODUCT LEVEL)	SEE PAGE
	1	1	**7K-1181**	10	STRAP-CABLE	
	2	1	**8E-7841**	2	CLIP AS-CONNECTING	
	3	1	**9L-9068**	2	DOWEL	
	4	1	**130-9811**	1	SENSOR GP-TEMPERATURE (TORQUE CONVERTER OIL)	
	5	1	**180-8852**	1	HARNESS AS-VALVE (TRANSMISSION CONTROL)	
		1	**102-8803**	1	KIT-RECEPTACLE (3 PIN)	
		1	**155-2260**	2	KIT-CONNECTING PLUG (3 PIN)	
		1	**155-2270**	12	KIT-CONNECTING PLUG (2 PIN)	
	6	1	**200-2043**	1	VALVE GP-TRANSMISSION CONTROL	
	7	1	**107-3114**	1	SEAL-O-RING	
	8	1	**130-5300**	2	CLIP	
	9	1	**132-5789**	8	CLIP	
	10	1	**183-8597**	2	SENSOR GP-SPEED (TRANSMISSION INTERMEDIATE)	
					(EACH INCLUDES)	
		1	**102-8802**	1	KIT-RECEPTACLE (2 PIN)	
		1	**3E-3365**	1	WEDGE-RECEPTACLE LOCK (2 PIN)	
		1	**186-3735**	2	PIN-CONNECTOR	
		1	**9X-1813**		SLEEVE (14CM)	
		1	**171-5349**	1	STRAP-MARKER	
	11	1	**196-1185**	2	SENSOR GP-SPEED (TRANSMISSION OUTPUT)	
					(EACH INCLUDES)	
		1	**102-8802**	1	KIT-RECEPTACLE (2 PIN)	
		1	**3E-3365**	1	WEDGE-RECEPTACLE LOCK (2 PIN)	
		1	**186-3735**	2	PIN-CONNECTOR	
		1	**9X-1813**		SLEEVE (14CM)	
		1	**171-5349**	1	STRAP-MARKER	
	12	1	**3K-0360**	6	SEAL-O-RING	
	13	1	**4P-7581**	2	CLIP	
M	14	1	**6V-2317**	1	BOLT (M8X1.25X30MM)	
M	15	1	**6V-3821**	4	BOLT (M8X1.25X110MM)	
M	16	1	**6V-3822**	1	BOLT (M10X1.5X35MM)	
M	17	1	**6V-5217**	2	BOLT (M8X1.25X20MM)	
M	18	1	**6V-5218**	3	BOLT (M8X1.25X35MM)	
M	19	1	**6V-5223**	9	BOLT (M8X1.25X100MM)	
	20	1	**6V-5839**	1	WASHER (11X21X2.5MM THK)	
	21	1	**8M-5251**	5	SEAL-O-RING	
	22	1	**9M-1974**	19	WASHER-HARD (8.8X16X2MM THK)	
	23	1	**183-8597**	1	SENSOR GP-SPEED (TORQUE CONVERTER OUTPUT)	
		1	**102-8802**	1	KIT-RECEPTACLE (2 PIN)	
		1	**3E-3365**	1	WEDGE-RECEPTACLE LOCK (2 PIN)	
		1	**186-3735**	2	PIN-CONNECTOR	
		1	**9X-1813**		SLEEVE (14CM)	
		1	**171-5349**	1	STRAP-MARKER	

M-METRIC PART

200-2042 VALVE GP-TRANSMISSION CONTROL *(contd.)* i01799127

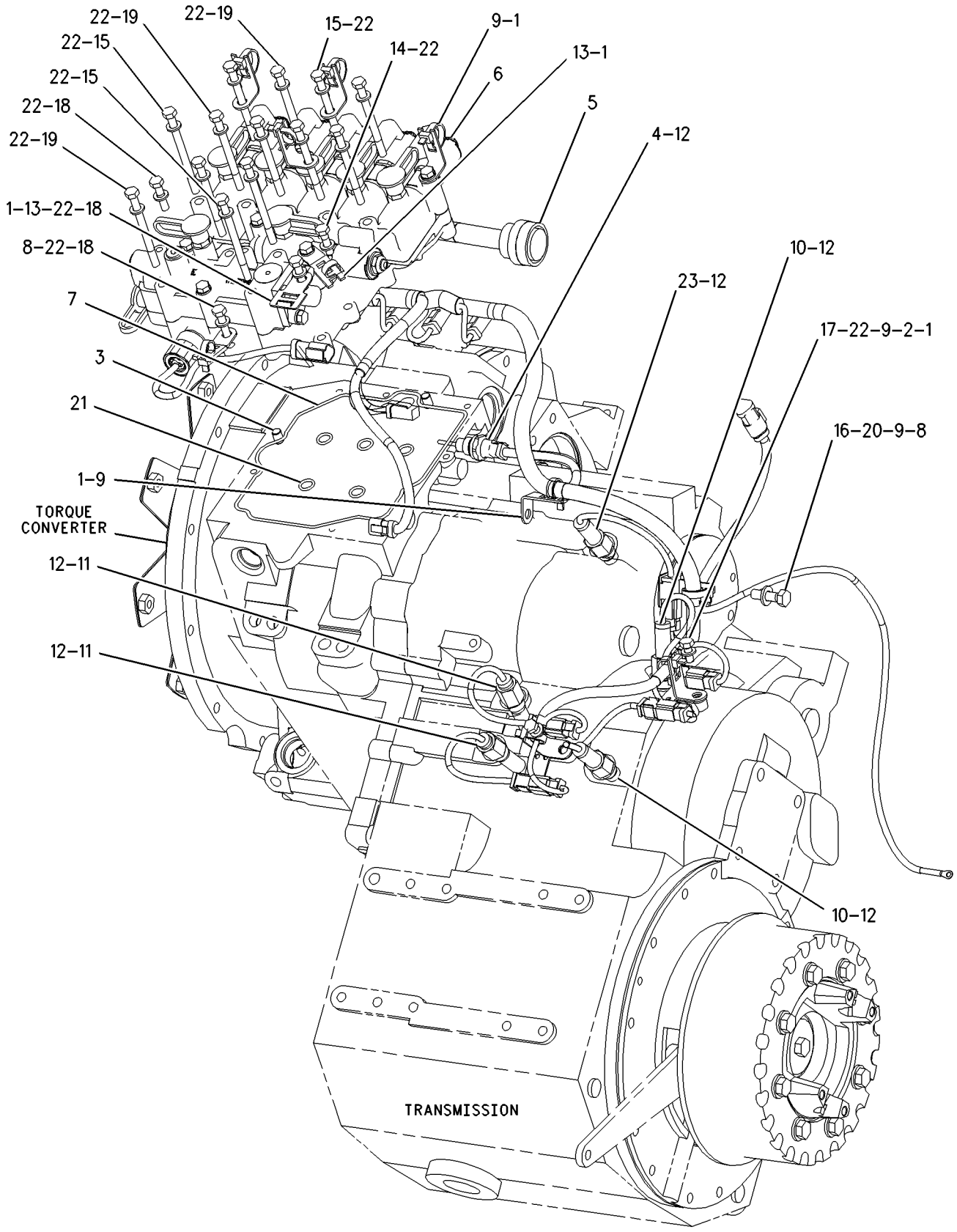

GRAPHIC #1 g00922072

FRAME AND BODY

202-0420 BOX GP-BATTERY

S/N: DJD1-UP; DBT1-UP

PART OF 176-5221, 204-4349 CHASSIS AR

SMCS-7257 **i01694689**

NOTE	REF NO	GRAPHIC REF	PART NUMBER	QTY	PART NAME 1 2 3 4 5 6 (PRODUCT LEVEL)	SEE PAGE
	1	1	**146-7980**	2	PLATE AS	
	2	1	**176-2435**	2	BOX AS	
	3	1	**176-2437**	2	COVER (RH)	
	4	1	**7X-7729**	22	WASHER (11X25X3MM THK)	
M	5	1	**8T-4136**	22	BOLT (M10X1.5X25MM)	

M-METRIC PART

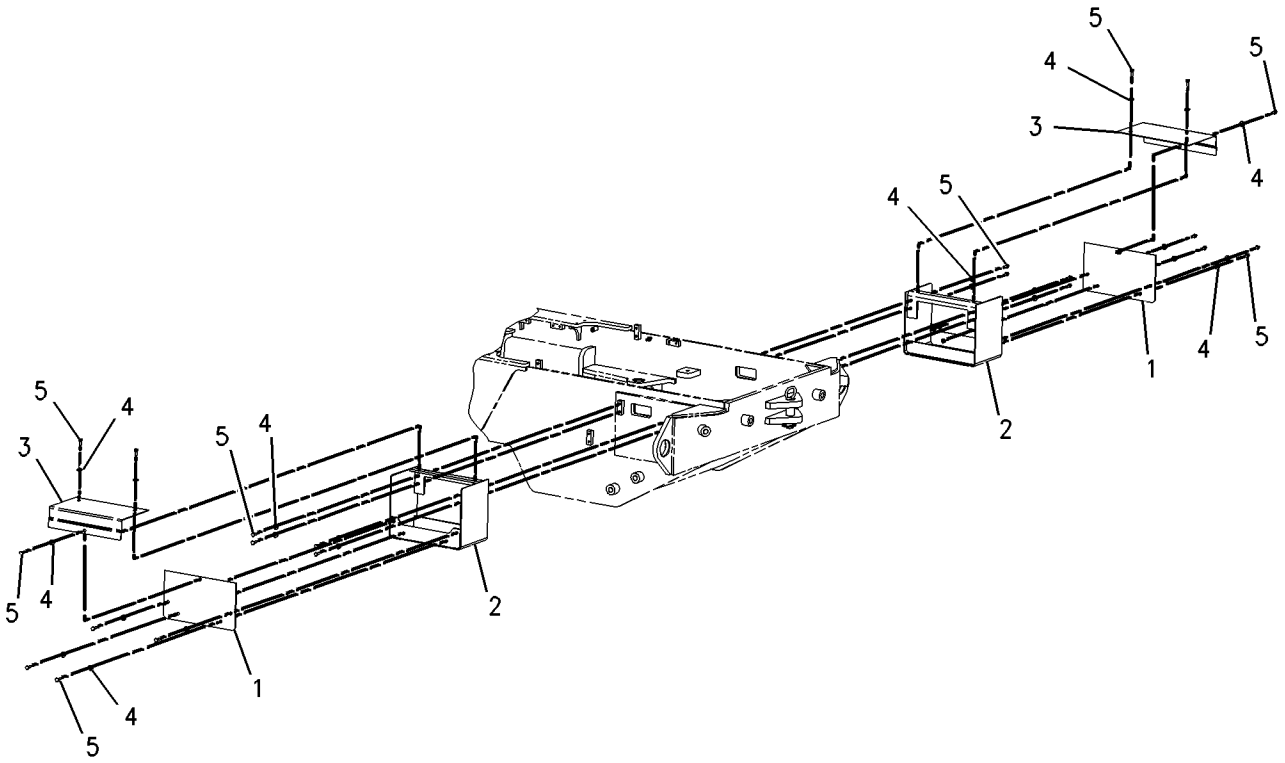

GRAPHIC #1 g00877769

FRAME AND BODY

180-8983 COUNTERWEIGHT GP

S/N: DBT1-UP

PART OF 176-5221 CHASSIS AR

SMCS-7056 **i01794847**

NOTE	REF NO	GRAPHIC REF	PART NUMBER	QTY	PART NAME 1 2 3 4 5 6 (PRODUCT LEVEL)	SEE PAGE
	1	1	**180-8992**	1	COUNTERWEIGHT AS	
	2	1	**180-8993**	1	COUNTERWEIGHT AS	
M	3	1	**7X-2465**	4	BOLT (M24X3.0X180MM)	
	4	1	**8T-1482**	4	WASHER-HARD (26X50X8MM THK)	
M	5	1	**8T-4179**	2	BOLT (M12X1.75X20MM)	
	6	1	**8T-4223**	2	WASHER-HARD (13.5X25.5X3MM THK)	

M-METRIC PART

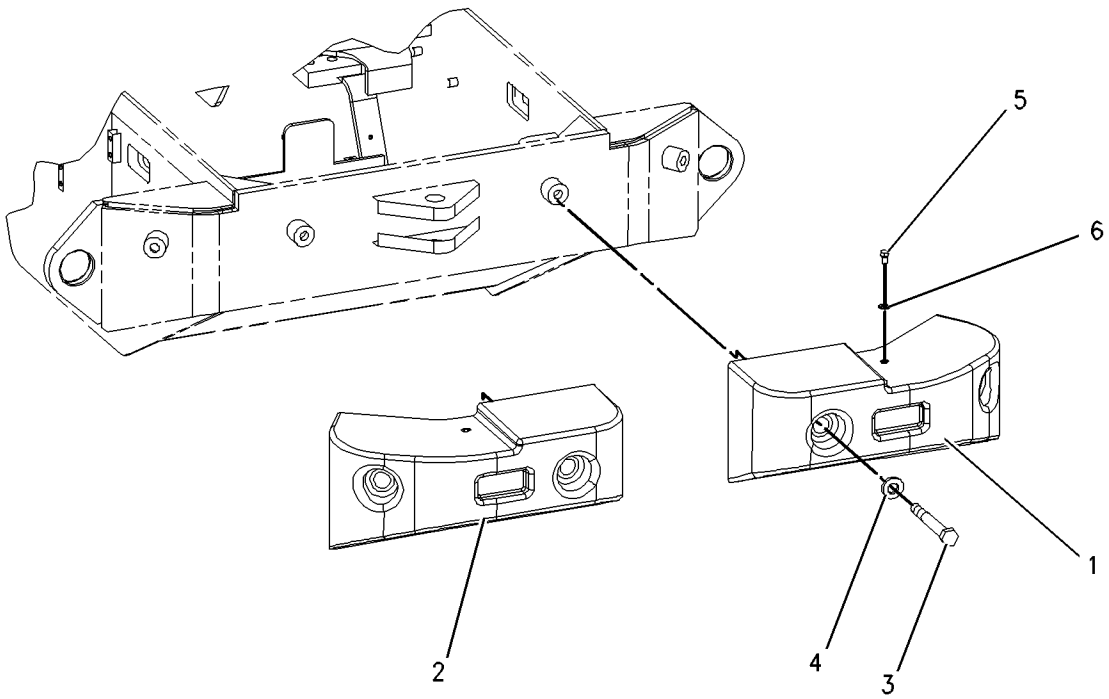

GRAPHIC #1 g00920546

180-8984 COUNTERWEIGHT GP

S/N: DJD1-UP

PART OF 204-4349 CHASSIS AR

SMCS-7056 **i01834794**

NOTE	REF NO	GRAPHIC REF	PART NUMBER	QTY	PART NAME 1 2 3 4 5 6 (PRODUCT LEVEL)	SEE PAGE
	1	1	**180-8996**	1	COUNTERWEIGHT AS (RH)	
	2	1	**180-8997**	1	COUNTERWEIGHT AS (LH)	
M	3	1	**8T-0363**	4	BOLT (M24X3X120MM)	
	4	1	**8T-1482**	4	WASHER-HARD (26X50X8MM THK)	
M	5	1	**8T-4179**	2	BOLT (M12X1.75X20MM)	
	6	1	**8T-4223**	2	WASHER-HARD (13.5X25.5X3MM THK)	

M-METRIC PART

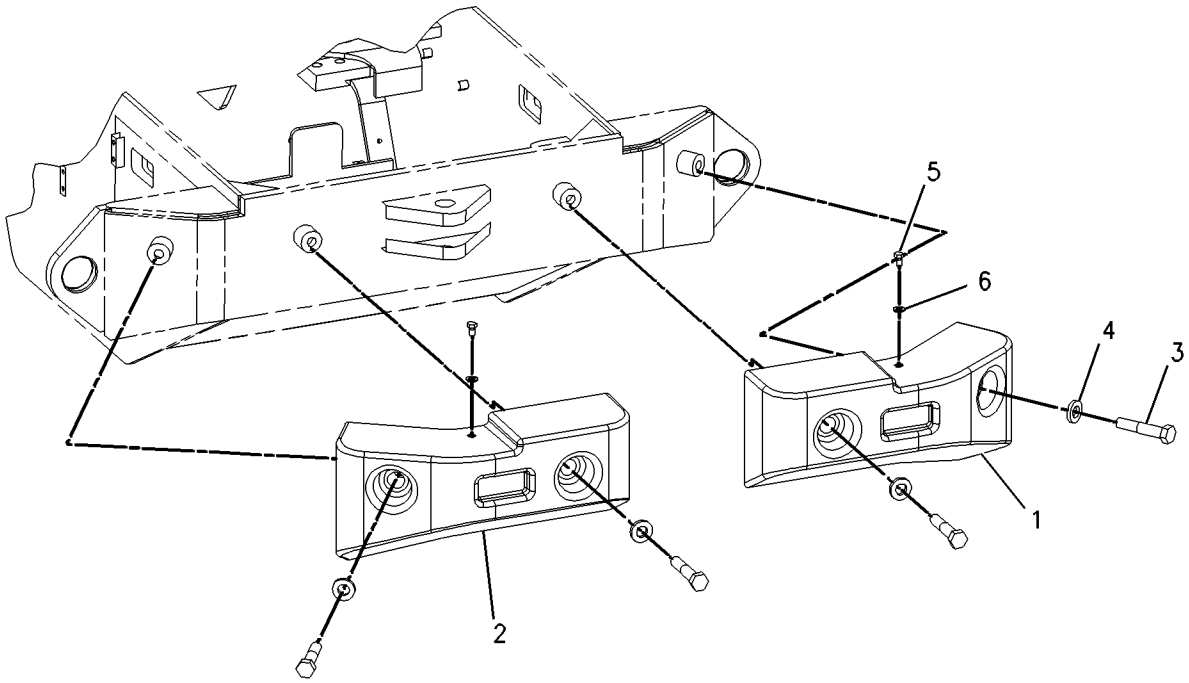

GRAPHIC #1 g00894434

FRAME AND BODY

180-8986 COUNTERWEIGHT GP

S/N: DJD1-UP; DBT1-UP
AN ATTACHMENT

SMCS-7056 **i01797722**

NOTE	REF NO	GRAPHIC REF	PART NUMBER	QTY	PART NAME 1 2 3 4 5 6 (PRODUCT LEVEL)	SEE PAGE
	1	1	**180-8994**	1	COUNTERWEIGHT (RH)	
	2	1	**204-4332**	1	COUNTERWEIGHT (LH)	
M	3	1	**7X-2465**	4	BOLT (M24X3.0X180MM)	
	4	1	**8T-1482**	4	WASHER-HARD (26X50X8MM THK)	

M-METRIC PART

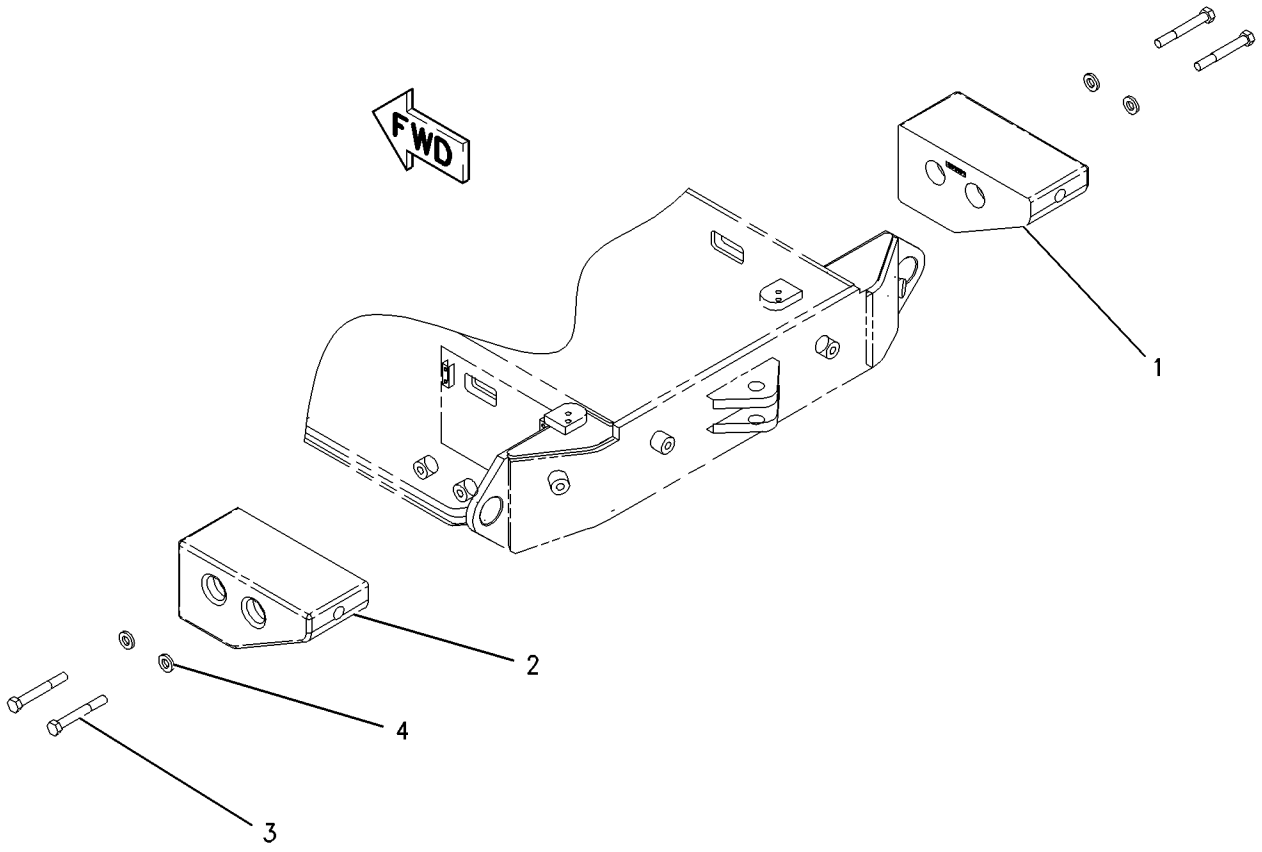

GRAPHIC #1 g00921361

208-4985 FENDER GP-FRONT

S/N: DJD1-UP; DBT1-UP
PART OF 176-5221, 204-4349 CHASSIS AR

SMCS-7252 **i01739067**

NOTE	REF NO	GRAPHIC REF	PART NUMBER	QTY	PART NAME 1 2 3 4 5 6 (PRODUCT LEVEL)	SEE PAGE
	1	1	**8I-6603**	4	INSERT-SQUARE	
	2	1	**138-8484**	1	BRACKET AS (LH)	
	3	1	**138-8485**	1	BRACKET AS (RH)	
	4	1	**214-9563**	2	FENDER	
	5	1	**214-9564**	8	PLATE	
	6	1	**204-0813**	8	BOLT	
	7	1	**7X-7729**	6	WASHER (11X25X3MM THK)	
M	8	1	**8T-4186**	6	BOLT (M10X1.5X40MM)	

M-METRIC PART

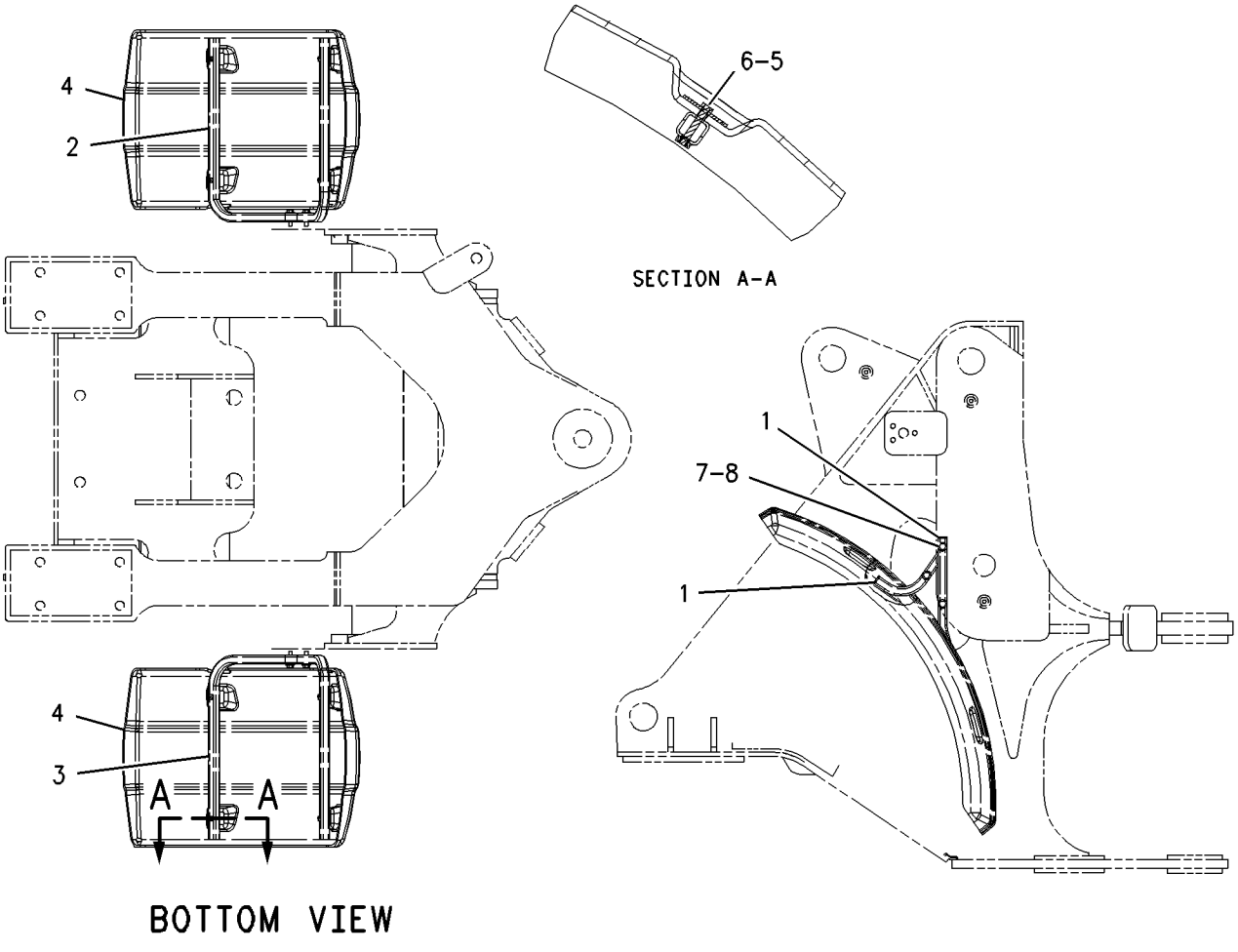

GRAPHIC #1 g00892007

MEMORANDA

208-4983 FENDER GP-REAR

S/N: DJD1-UP; DBT1-UP
AN ATTACHMENT

SMCS-7252 **i01840710**

NOTE	REF NO	GRAPHIC REF	PART NUMBER	QTY	PART NAME 1 2 3 4 5 6 (PRODUCT LEVEL)	SEE PAGE
	1	1	**146-0085**	2	PIVOT AS	
	2	1	**163-4347**	2	GUIDE	
	3	1	**163-4348**	2	COVER	
M	4	1	**179-4324**	8	LOCKNUT (M5X0.8 THD)	
	5	1	**231-2997**	2	ROD	
	6	1	**231-2996**	1	PLATE (LH)	
	7	1	**207-8808**	2	PLATE	
	8	1	**208-0011**	2	LATCH AS	
	9	1	**231-2995**	1	PLATE (RH)	
Y	10	1	**215-2645**	1	FENDER GP-REAR (LH)	272
Y	11	1	**215-2646**	1	FENDER GP-REAR (RH)	274
	12	1	**4B-4274**	16	WASHER (5.5X13X1.2MM THK)	
	13	1	**5P-4115**	2	WASHER-HARD (7.2X19X2MM THK)	
M	14	1	**6V-7357**	4	BOLT (M6X1.0X25MM)	
	15	1	**6V-7644**	2	RING-RETAINING	
	16	1	**7X-7729**	8	WASHER (11X25X3MM THK)	
M	17	1	**8C-3210**	2	BOLT (M6X1X16MM)	
M	18	1	**8T-4127**	8	SCREW-MACHINE (M5X0.8X20MM)	
M	19	1	**8T-4137**	4	BOLT (M10X1.5X20MM)	
M	20	1	**8T-4195**	4	BOLT (M10X1.5X30MM)	
	21	1	**8T-4205**	4	WASHER-HARD (7.2X14.5X2MM THK)	

M-METRIC PART
Y-SEPARATE ILLUSTRATION

208-4983 **FENDER GP-REAR** *(contd.)* **i01840710**

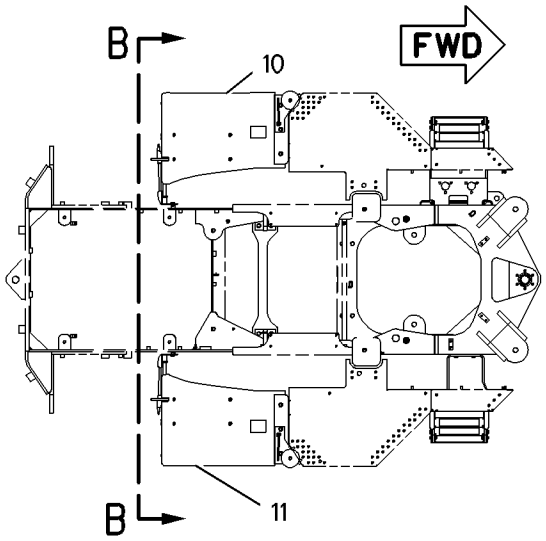

TOP VIEW

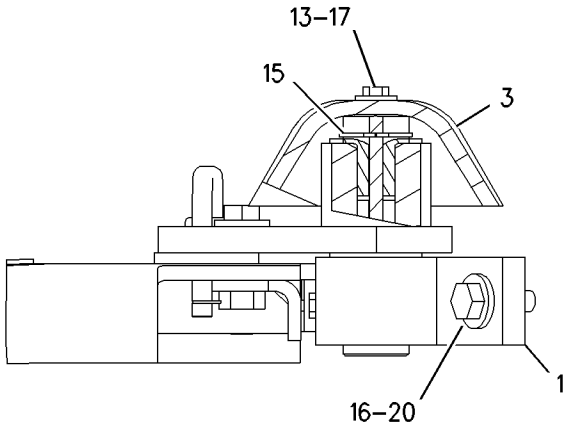

VIEW OF AREA A

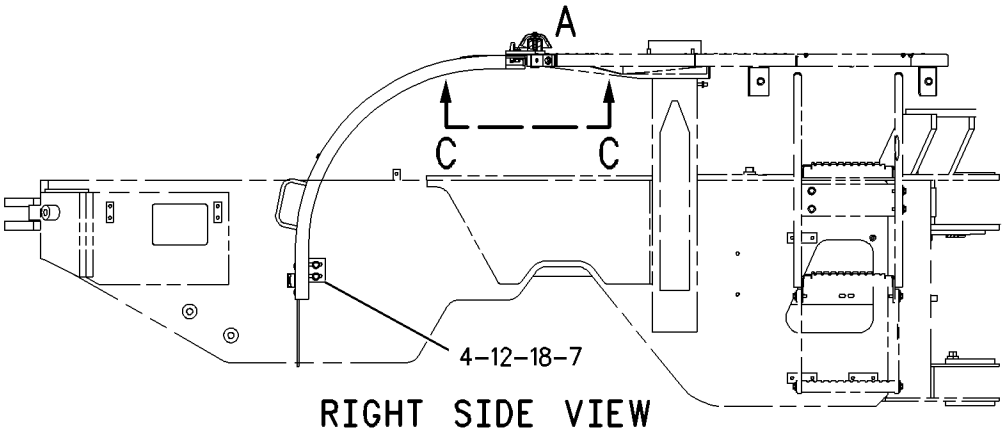

RIGHT SIDE VIEW

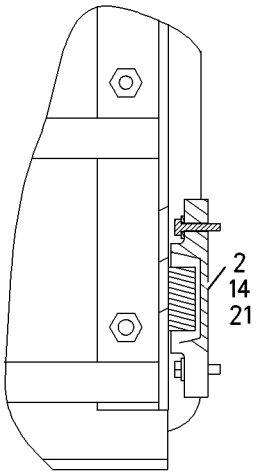

VIEW C-C

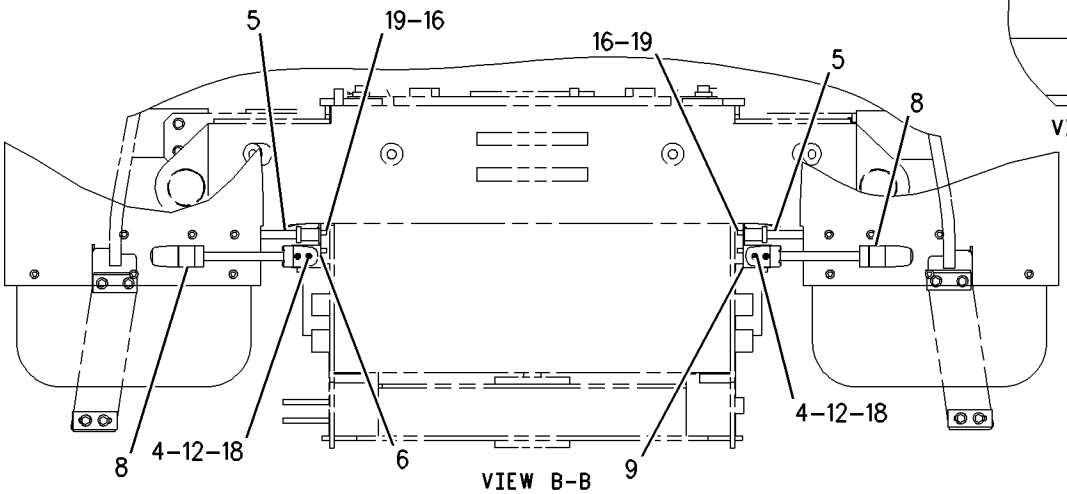

VIEW B-B

GRAPHIC #1 g00913414

215-2645 FENDER GP-REAR

S/N: DJD1-UP; DBT1-UP
LH
PART OF 208-4983 FENDER GP-REAR
AN ATTACHMENT

SMCS-7252 **i01782567**

NOTE	REF NO	GRAPHIC REF	PART NUMBER	QTY	PART NAME 1 2 3 4 5 6 (PRODUCT LEVEL)	SEE PAGE
	1	1	**009-3101**	1	RING-RETAINING	
	2	1	**124-2456**	1	FILM-INSTRUCTION (NO STEP)	
	3	1	**146-0083**	1	PLATE	
	4	1	**146-0084**	1	ROD	
	5	1	**146-0090**	1	PIVOT AS-LH	
	6	1	**146-0098**	2	BUSHING	
	7	1	**163-4345**	1	MUD FLAP	
	8	1	**215-2643**	1	BRACKET AS	
M		1	**6V-9632**	7	NUT-WELD (M6X1 THD)	
	9	1	**9L-6074**	1	GROMMET	
M	10	1	**129-3178**	3	LOCKNUT (M6X1 THD)	
	11	1	**5P-4115**	13	WASHER-HARD (7.2X19X2MM THK)	
M	12	1	**6V-7357**	3	BOLT (M6X1.0X25MM)	
	13	1	**7X-7729**	3	WASHER (11X25X3MM THK)	
M	14	1	**8C-8451**	7	BOLT (M6X1X40MM)	
M	15	1	**8T-4186**	3	BOLT (M10X1.5X40MM)	

M-METRIC PART

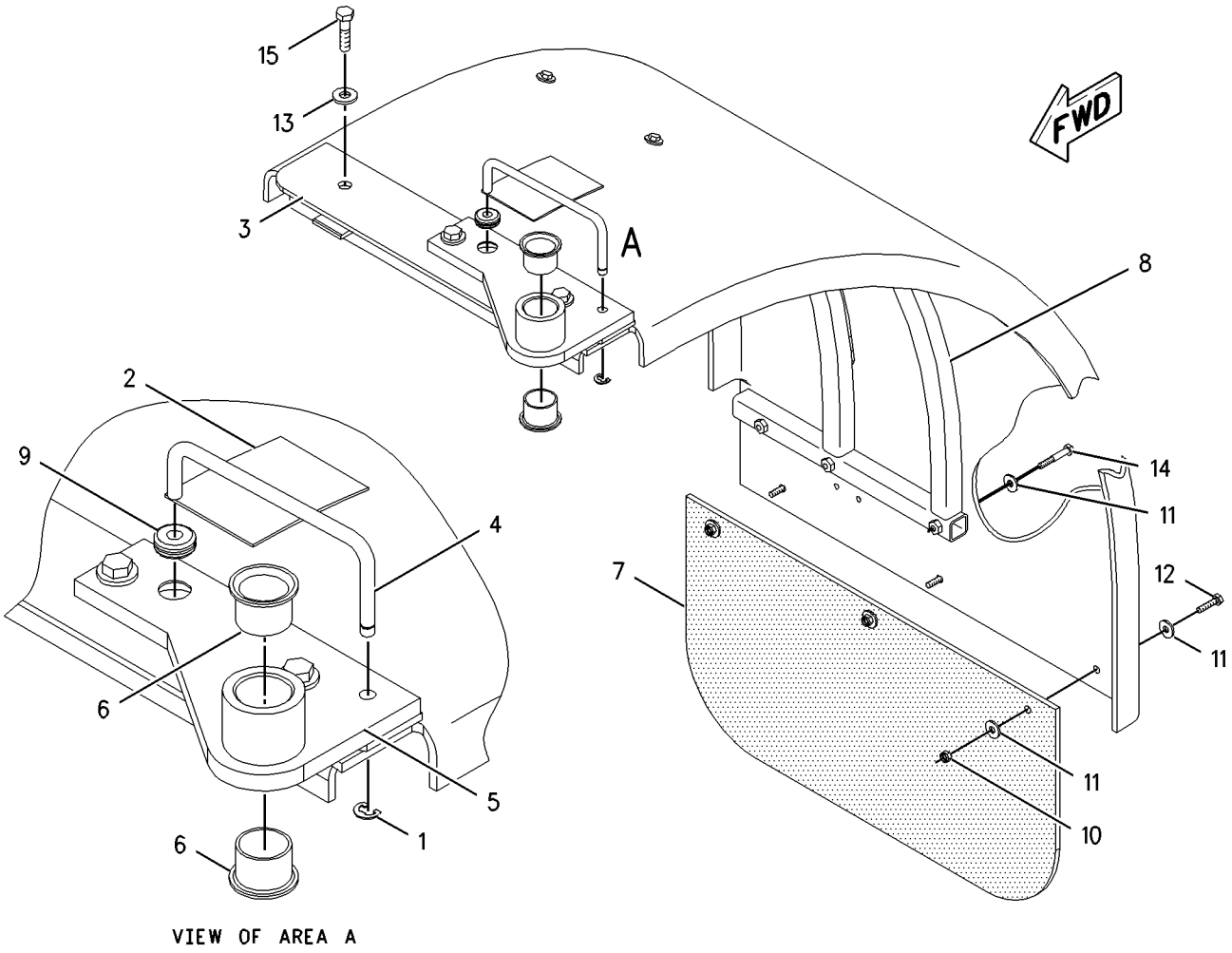

GRAPHIC #1 g00913409

215-2646 FENDER GP-REAR

S/N: DJD1-UP; DBT1-UP
RH
PART OF 208-4983 FENDER GP-REAR
AN ATTACHMENT

SMCS-7252 **i01754124**

NOTE	REF NO	GRAPHIC REF	PART NUMBER	QTY	PART NAME 1 2 3 4 5 6 (PRODUCT LEVEL)	SEE PAGE
	1	1	**009-3101**	1	RING-RETAINING	
	2	1	**124-2456**	1	FILM-INSTRUCTION (NO STEP)	
	3	1	**146-0083**	1	PLATE	
	4	1	**146-0084**	1	ROD	
	5	1	**146-0089**	1	PIVOT AS-RH	
	6	1	**146-0098**	2	BUSHING	
	7	1	**9L-6074**	1	GROMMET	
	8	1	**215-2644**	1	BRACKET AS	
	9	1	**219-6910**	1	FENDER	
M	10	1	**129-3178**	3	LOCKNUT (M6X1 THD)	
	11	1	**5P-4115**	13	WASHER-HARD (7.2X19X2MM THK)	
M	12	1	**6V-7357**	3	BOLT (M6X1.0X25MM)	
	13	1	**7X-7729**	3	WASHER (11X25X3MM THK)	
M	14	1	**8C-8451**	7	BOLT (M6X1X40MM)	
M	15	1	**8T-4186**	3	BOLT (M10X1.5X40MM)	

M-METRIC PART

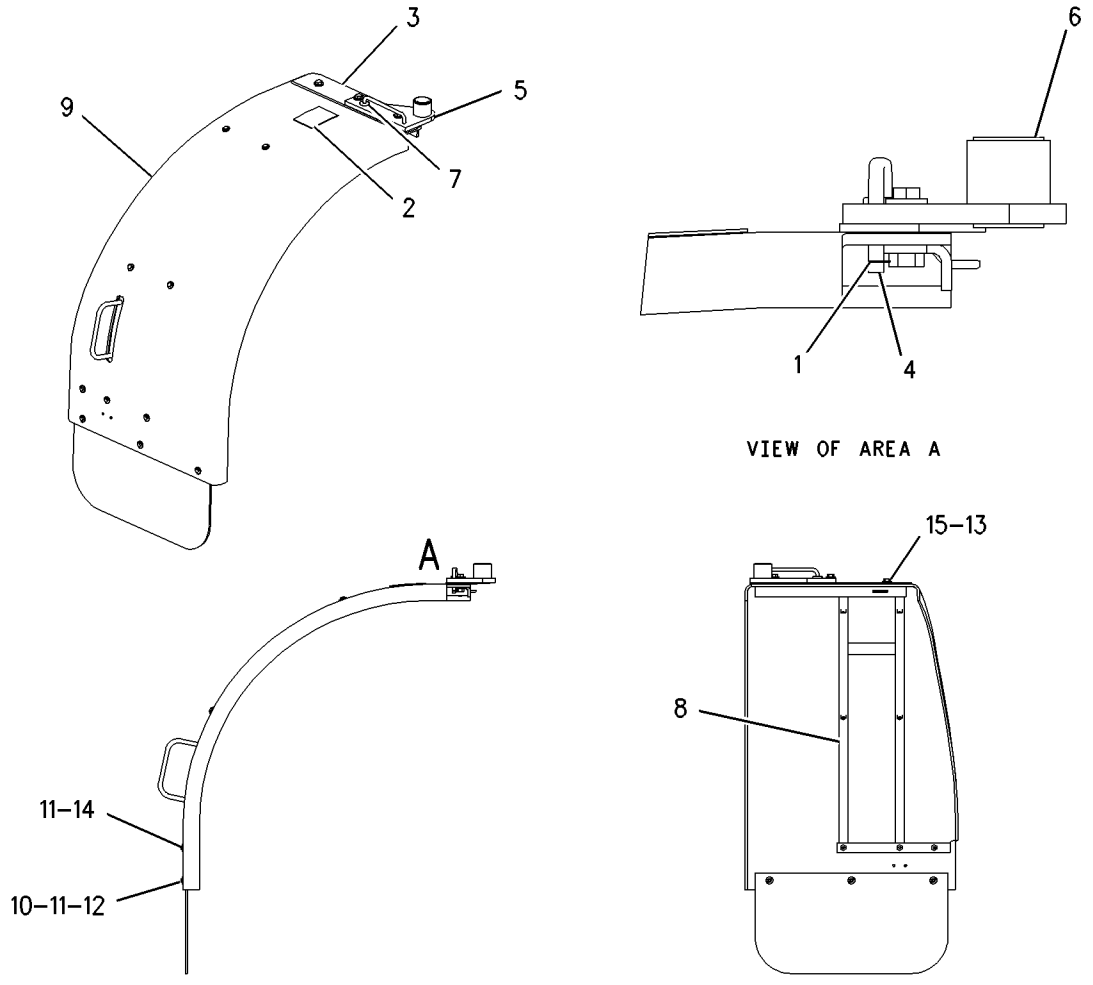

GRAPHIC #1 g00897462

FRAME AND BODY

113-3785 FRAME GP-FRONT

S/N: DJD1-UP

PART OF 204-4349 CHASSIS AR

SMCS-7051 **i01819553**

NOTE	REF NO	GRAPHIC REF	PART NUMBER	QTY	PART NAME 1 2 3 4 5 6 (PRODUCT LEVEL)	SEE PAGE
M	1	1	**8T-4195**	4	BOLT (M10X1.5X30MM)	
	2	1	**118-0955**	1	PLATE	
	3	1	**8T-4121**	4	WASHER-HARD (11X21X2.5MM THK)	
	4	1	**113-3900**	1	FRAME AS-FRONT	
	5	1	**7T-1099**	17	LINK	
	6	1	**9R-2672**	2	BOSS (M10X20MM)	
	7	1	**9C-6809**	3	BLOCK	
M	8	1	**8T-3490**	4	NUT-WELD (M10X1.5 THD)	
	9	1	**9T-3598**	1	LUG	

M-METRIC PART

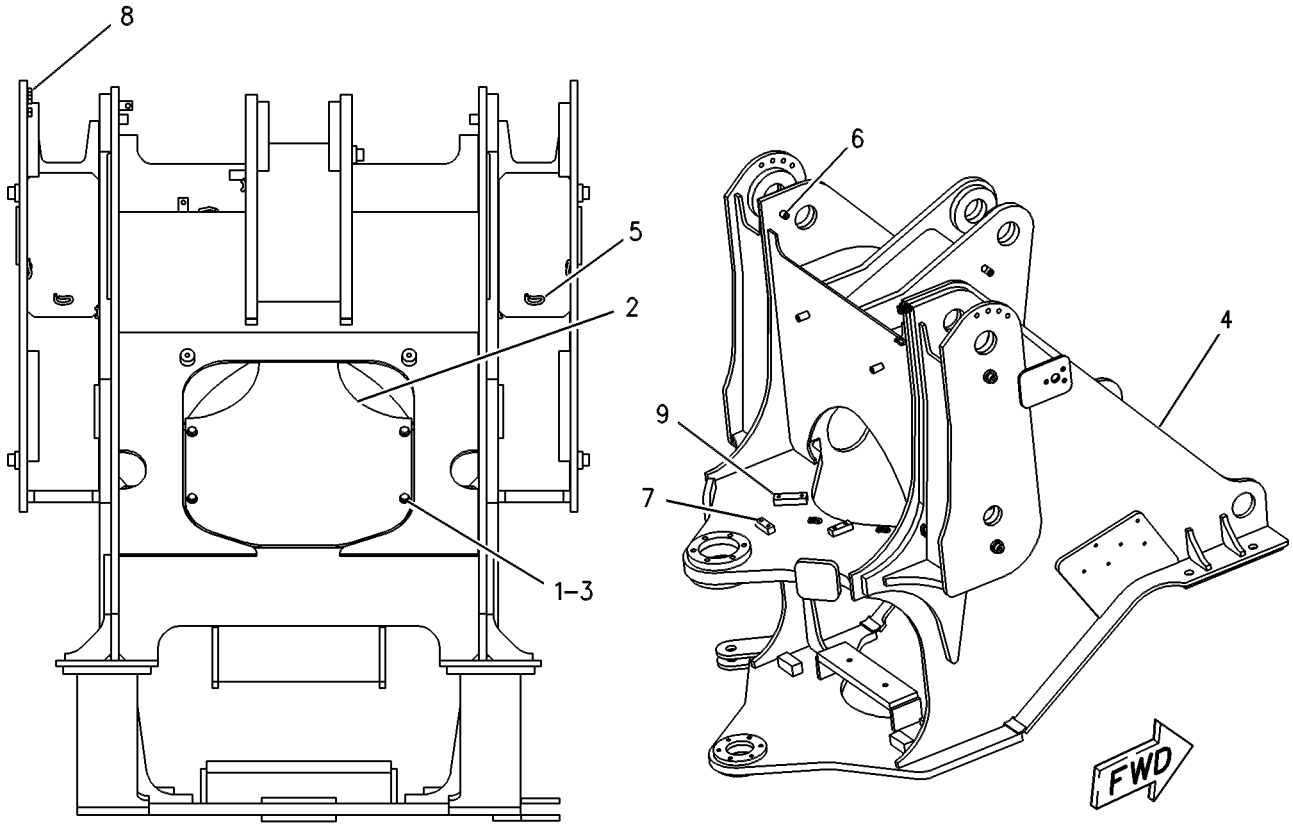

FRONT VIEW OF MACHINE

GRAPHIC #1 g00131710

FRAME AND BODY

113-3795 FRAME GP-LOADER

S/N: DBT1-UP

PART OF 176-5221 CHASSIS AR

SMCS-7054 **i00534646**

NOTE	REF NO	GRAPHIC REF	PART NUMBER	QTY	PART NAME 1 2 3 4 5 6 (PRODUCT LEVEL)	SEE PAGE
M	1	1	**8T-4195**	4	BOLT (M10X1.50X30MM)	
	2	1	**118-0955**	1	PLATE	
	3	1	**8T-4121**	4	WASHER (2.5MM THK)	
	4	1	**113-3850**	1	FRAME AS	
	5	1	**7T-1099**	17	LINK	
	6	1	**9R-2672**	3	BOSS (20MM DIA)	
	7	1	**9T-3598**	4	LUG	
M	8	1	**8T-3490**	4	NUT-WELD (M10X1.5 THD)	
	9	1	**9C-6809**	3	BLOCK	

M-METRIC PART

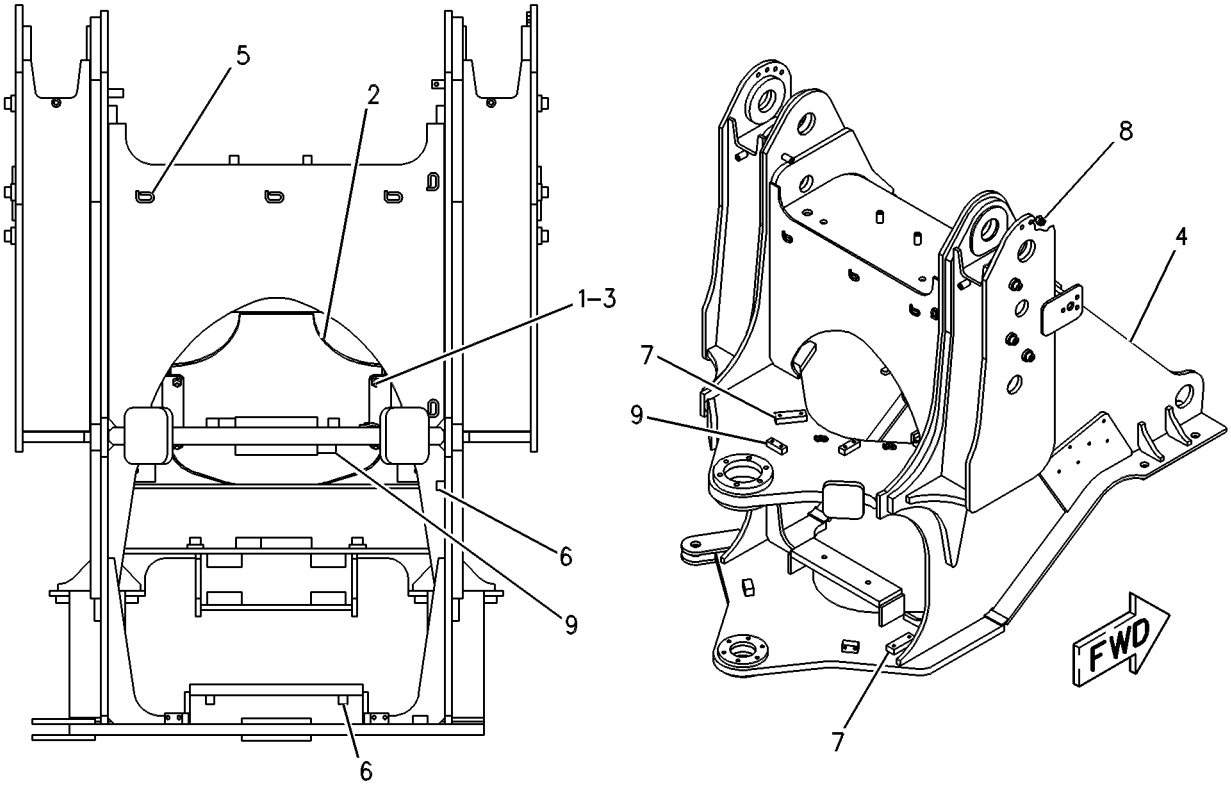

REAR VIEW OF MACHINE

GRAPHIC #1 g00260459

FRAME AND BODY

203-8600 FRAME GP-REAR

S/N: DJD1-UP; DBT1-UP

PART OF 176-5221, 204-4349 CHASSIS AR

SMCS-7051 **i01740319**

NOTE	REF NO	GRAPHIC REF	PART NUMBER	QTY	PART NAME 1 2 3 4 5 6 (PRODUCT LEVEL)	SEE PAGE
	1	1	**103-5796**	1	PIN-KEEPER	
	2	1	**112-0885**	2	PAD AS-RESILIENT	
	3	1	**132-2558**	1	PIN AS	
	4	1	**203-8599**	1	FRAME AS-REAR	
	5	1	**8T-4121**	2	WASHER-HARD (11X21X2.5MM THK)	
M	6	1	**8T-4137**	2	BOLT (M10X1.5X20MM)	

M-METRIC PART

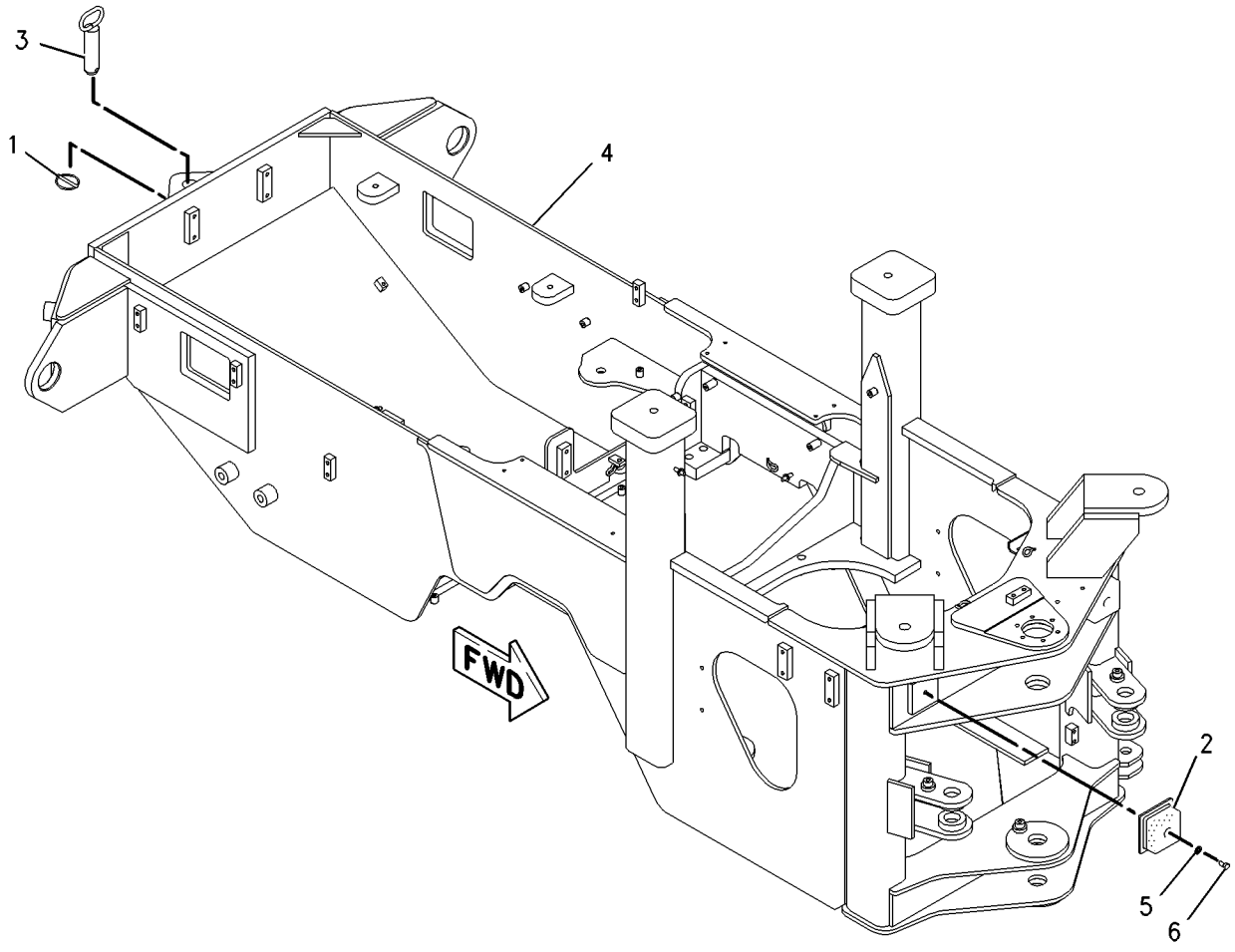

GRAPHIC #1 g00891472

FRAME AND BODY

213-9036 GUARD GP-CRANKCASE

S/N: DJD1-UP; DBT1-UP
AN ATTACHMENT

SMCS-7151 **i01846360**

NOTE	REF NO	GRAPHIC REF	PART NUMBER	QTY	PART NAME 1 2 3 4 5 6 (PRODUCT LEVEL)	SEE PAGE
	1	1	**218-2833**	1	PLATE AS	
	2	1	**219-2418**	1	PLATE AS	
	3	1	**7X-7729**	4	WASHER (11X25X3MM THK)	
M	4	1	**8T-4195**	4	BOLT (M10X1.5X30MM)	

M-METRIC PART

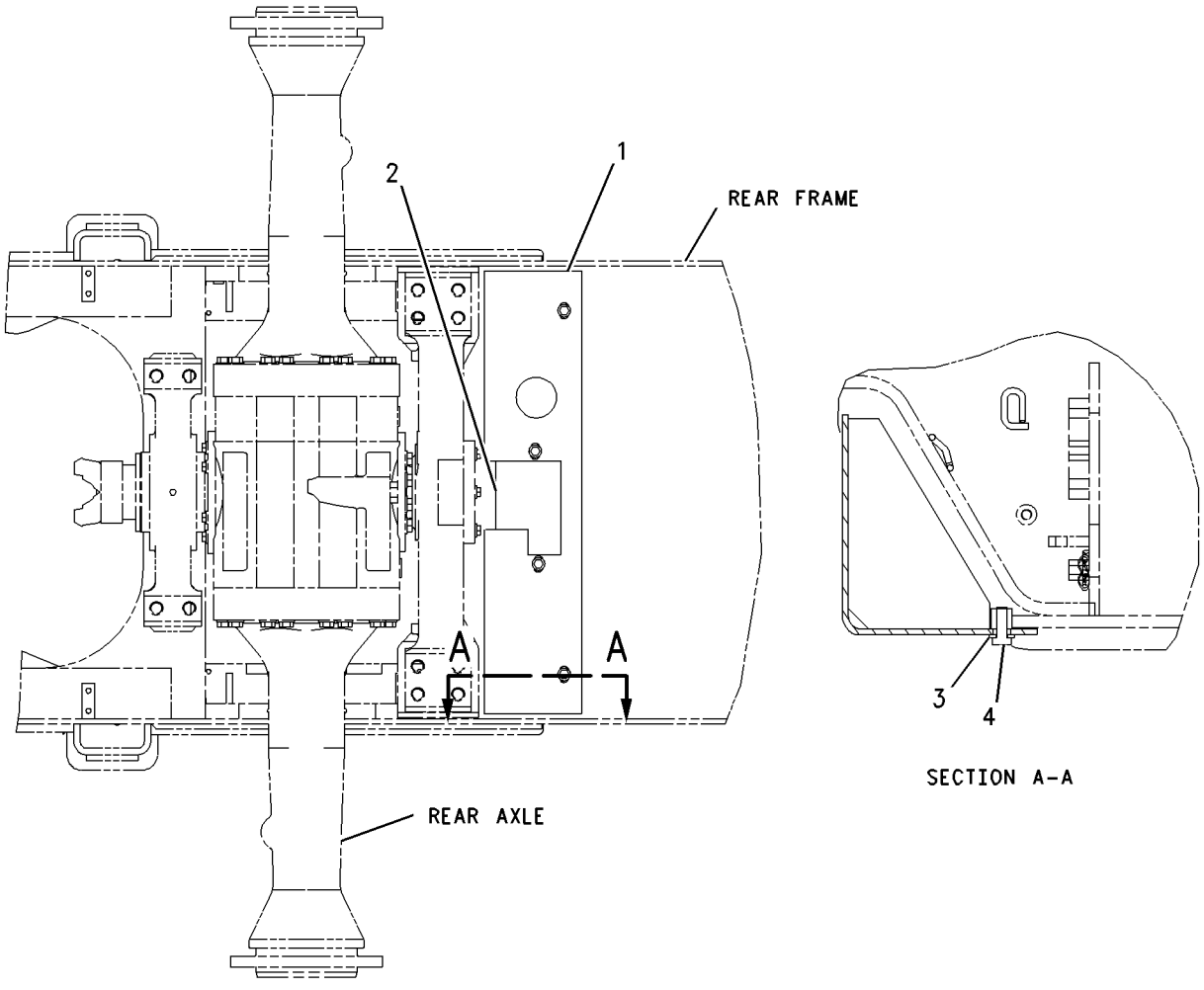

GRAPHIC #1 g00940429

MEMORANDA

192-0735 GUARD GP-LIGHTING

S/N: DJD1-UP; DBT1-UP
FRONT LIGHT
PART OF 213-7245 WASTE HANDLING AR
AN ATTACHMENT

SMCS-7150 **i01758683**

NOTE	REF NO	GRAPHIC REF	PART NUMBER	QTY	PART NAME 1 2 3 4 5 6 (PRODUCT LEVEL)	SEE PAGE
	1	1	**157-3645**	1	SUPPORT AS	
	2	1	**157-3646**	1	SUPPORT AS	
	3	1	**192-0732**	1	GUARD AS	
	4	1	**192-0734**	1	GUARD AS	
	5	1	**197-1597**	2	GUARD AS	
M	6	1	**8T-4189**	6	BOLT (M8X1.25X20MM)	
M	7	1	**8T-4200**	8	BOLT (M8X1.25X16MM)	
	8	1	**8T-4224**	14	WASHER-HARD (8.8X16X2MM THK)	

M-METRIC PART

192-0735 **GUARD GP-LIGHTING** *(contd.)* **i01758683**

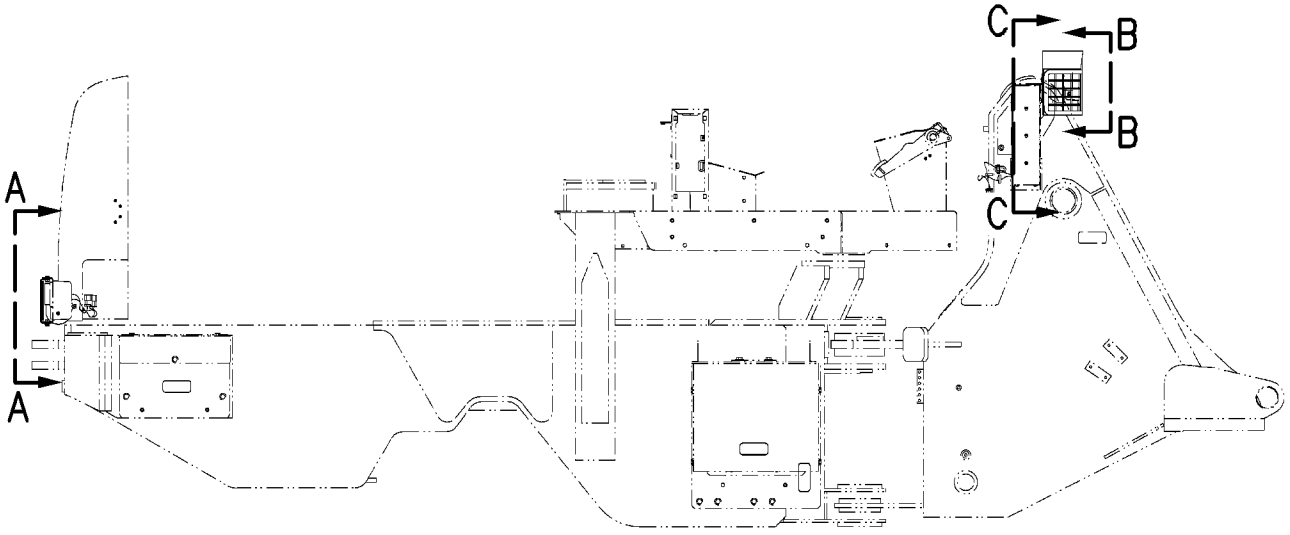

RIGHT SIDE VIEW

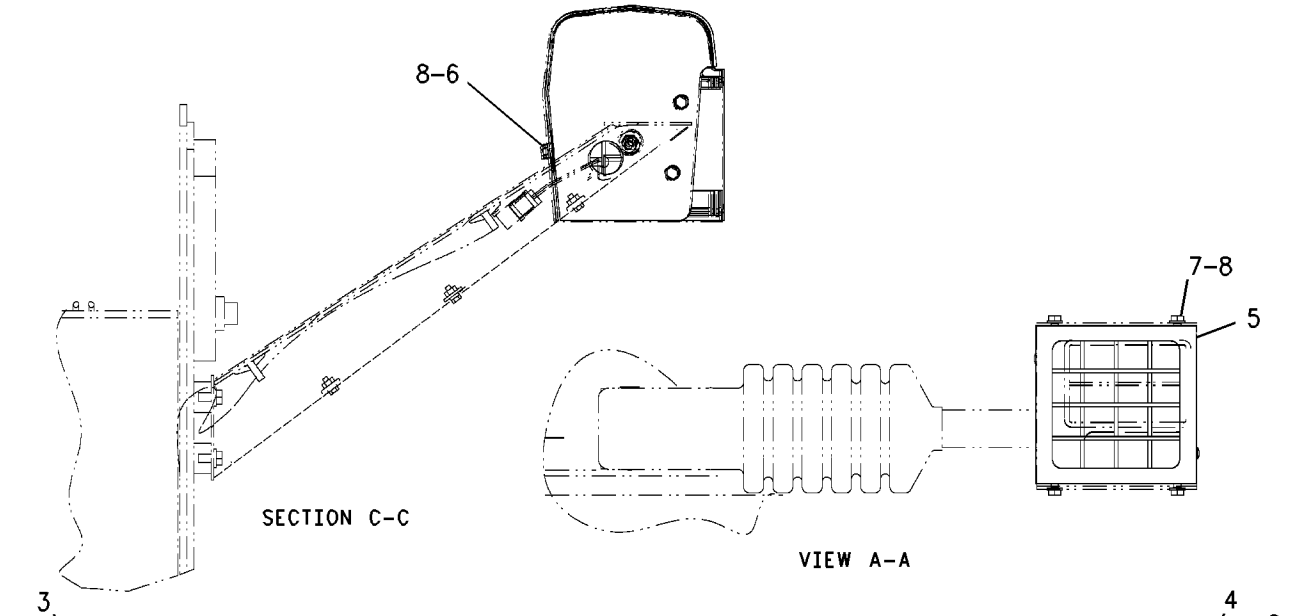

SECTION C-C

VIEW A-A

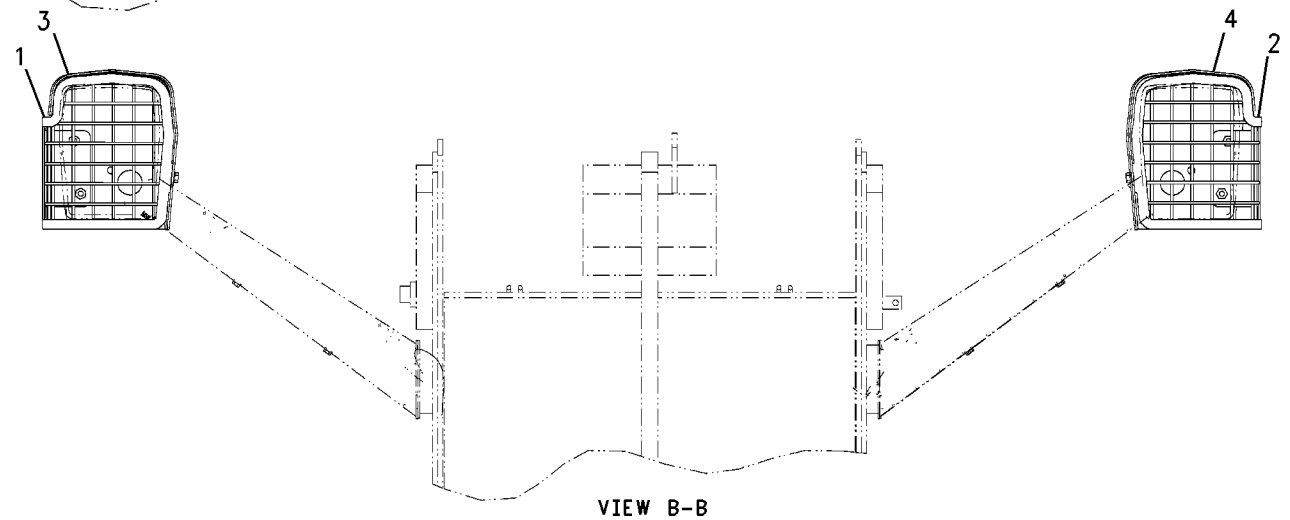

VIEW B-B

GRAPHIC #1 g00849272

FRAME AND BODY

214-5561 GUARD GP-LIGHTING

S/N: DJD1-UP; DBT1-UP
AN ATTACHMENT

SMCS-7150 **i01797717**

NOTE	REF NO	GRAPHIC REF	PART NUMBER	QTY	PART NAME 1 2 3 4 5 6 (PRODUCT LEVEL)	SEE PAGE
	1	1	**197-5023**	2	SCREEN AS	
	2	1	**197-5024**	2	BRACKET AS	
					(EACH INCLUDES)	
M		1	**8T-3612**	4	NUT-WELD (M8X1.25 THD)	
M	3	1	**8T-4189**	8	BOLT (M8X1.25X20MM)	
	4	1	**8T-4224**	14	WASHER-HARD (8.8X16X2MM THK)	
M	5	1	**8T-6870**	6	BOLT (M8X1.25X70MM)	

M-METRIC PART

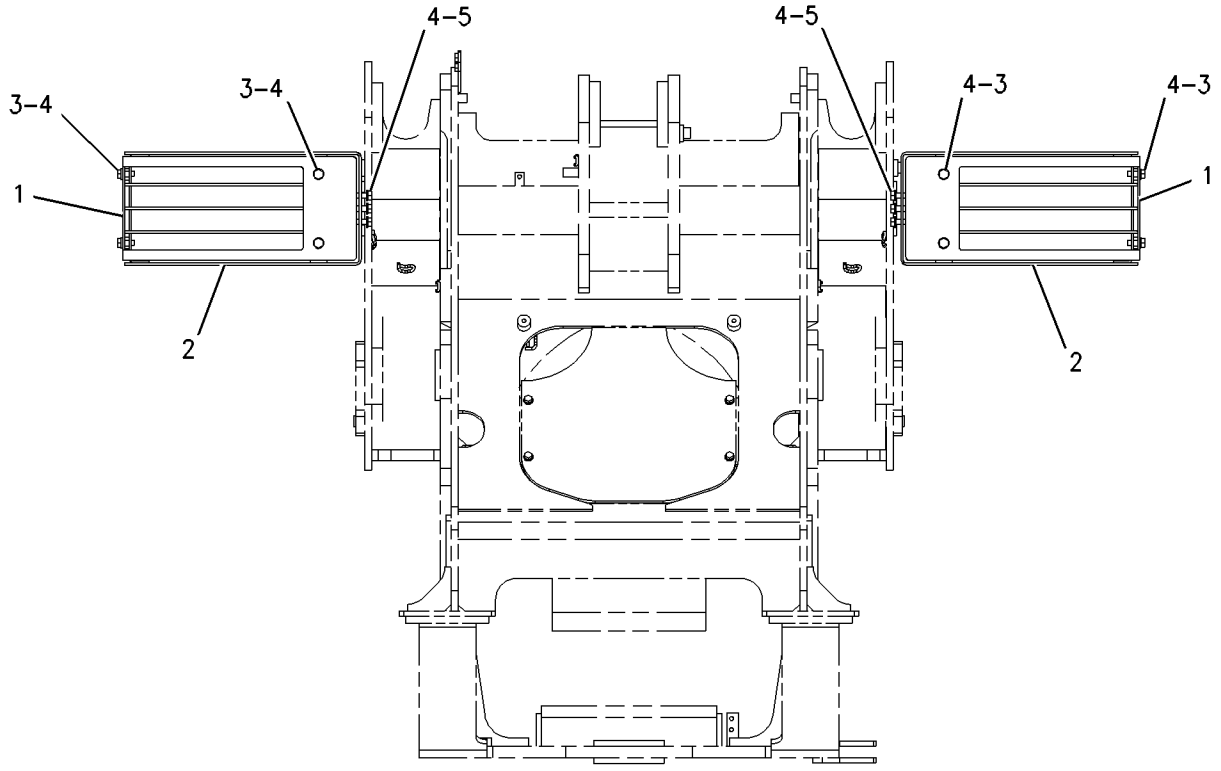

FRONT VIEW

GRAPHIC #1 g00922136

118-1121 GUARD GP-LINES–TILT

S/N: DJD1-UP
AN ATTACHMENT

SMCS-7167 **i00729468**

NOTE	REF NO	GRAPHIC REF	PART NUMBER	QTY	PART NAME 1 2 3 4 5 6 (PRODUCT LEVEL)	SEE PAGE
	1	1	**7K-1181**	8	STRAP-CABLE (4.00IN DIA)	
	2	1	**122-6268**	2	GUARD-HOSE	
B	3	1	**6V-0545**	2	GROMMET	

B-USE AS REQUIRED

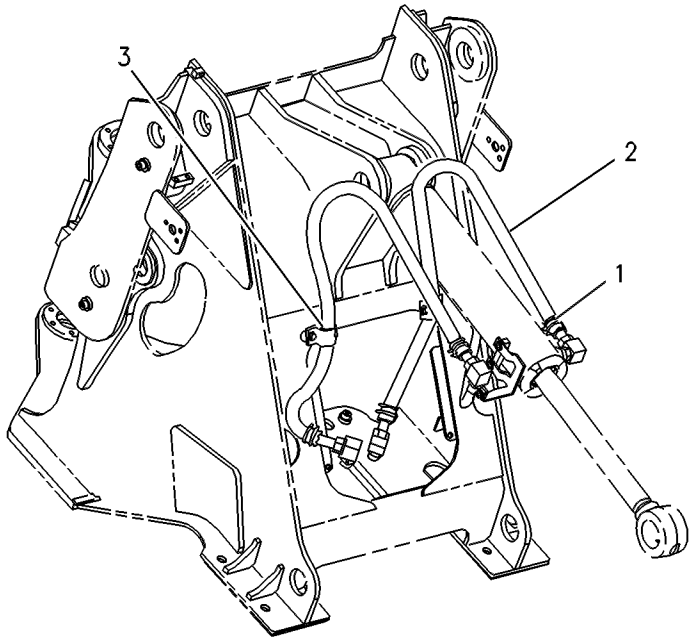

GRAPHIC #1 g00279413

FRAME AND BODY

122-6342 GUARD GP-LINES

S/N: DBT1-UP
3 VALVE,HI FLO
AN ATTACHMENT

SMCS-7167 **i01698511**

NOTE	REF NO	GRAPHIC REF	PART NUMBER	QTY	PART NAME 1 2 3 4 5 6 (PRODUCT LEVEL)	SEE PAGE
	1	1	**3S-2093**	32	STRAP-CABLE	
	2	1	**6R-2050**	4	SLEEVE	
B	3	1	**8T-2525**	2	GROMMET	
B	4	1	**160-2245**	4	SLEEVE-ABRASION	
B	5	1	**5P-8444**	2	GROMMET	
B	6	1	**5P-7468**	2	CLIP (SLOT)	
B	7	1	**5P-7469**	2	CLIP (TAB)	

B-USE AS REQUIRED

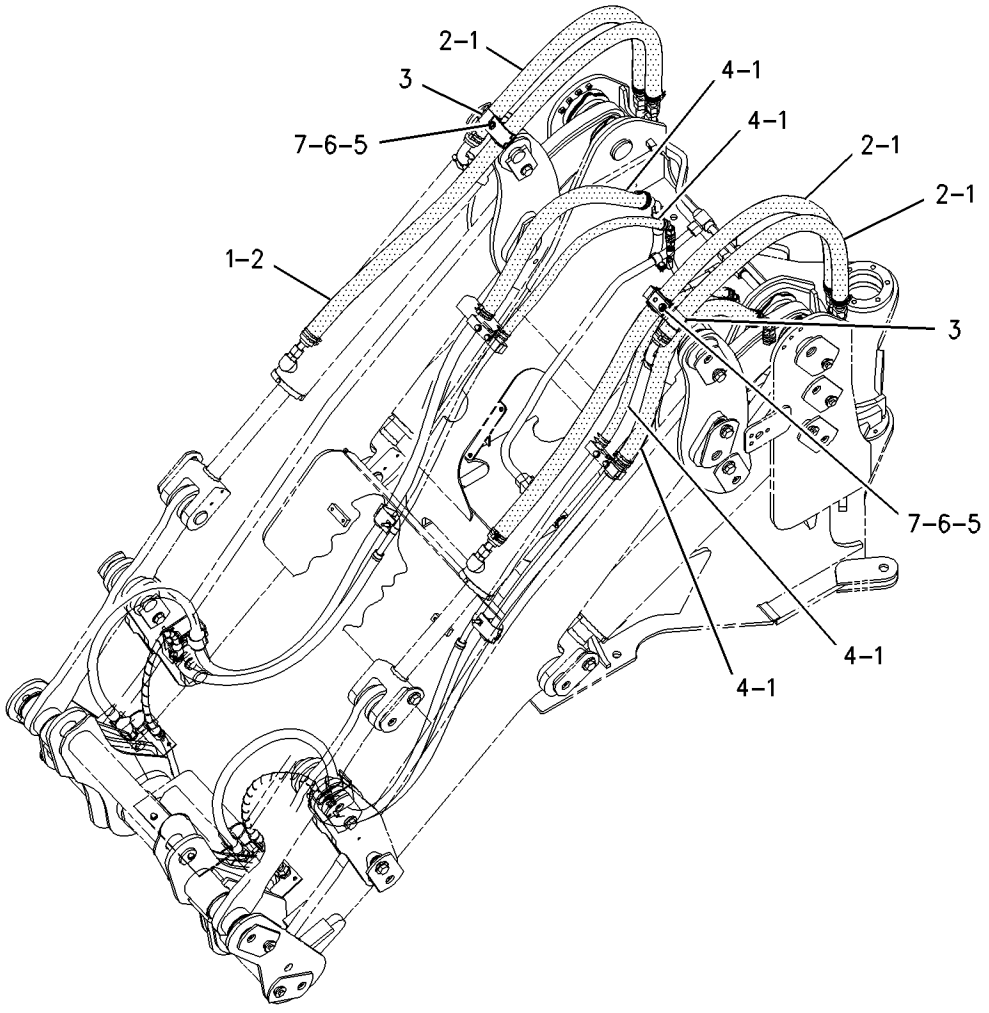

GRAPHIC #1 g00874556

FRAME AND BODY

128-0298 GUARD GP-LINES

S/N: DJD1-UP
3 VALVE
AN ATTACHMENT

SMCS-7167 **i00730046**

NOTE	REF NO	GRAPHIC REF	PART NUMBER	QTY	PART NAME 1 2 3 4 5 6 (PRODUCT LEVEL)	SEE PAGE
	1	1	**7K-1181**	16	STRAP-CABLE (4.00IN DIA)	
	2	1	**122-6268**	2	GUARD-HOSE	
	3	1	**134-6077**	2	GUARD-HOSE	
B	4	1	**5P-7468**	2	CLIP (SLOT)	
B	5	1	**5P-7469**	2	CLIP (TAB)	
B	6	1	**5P-8444**	2	GROMMET	
B	7	1	**6V-0545**	2	GROMMET	

B-USE AS REQUIRED

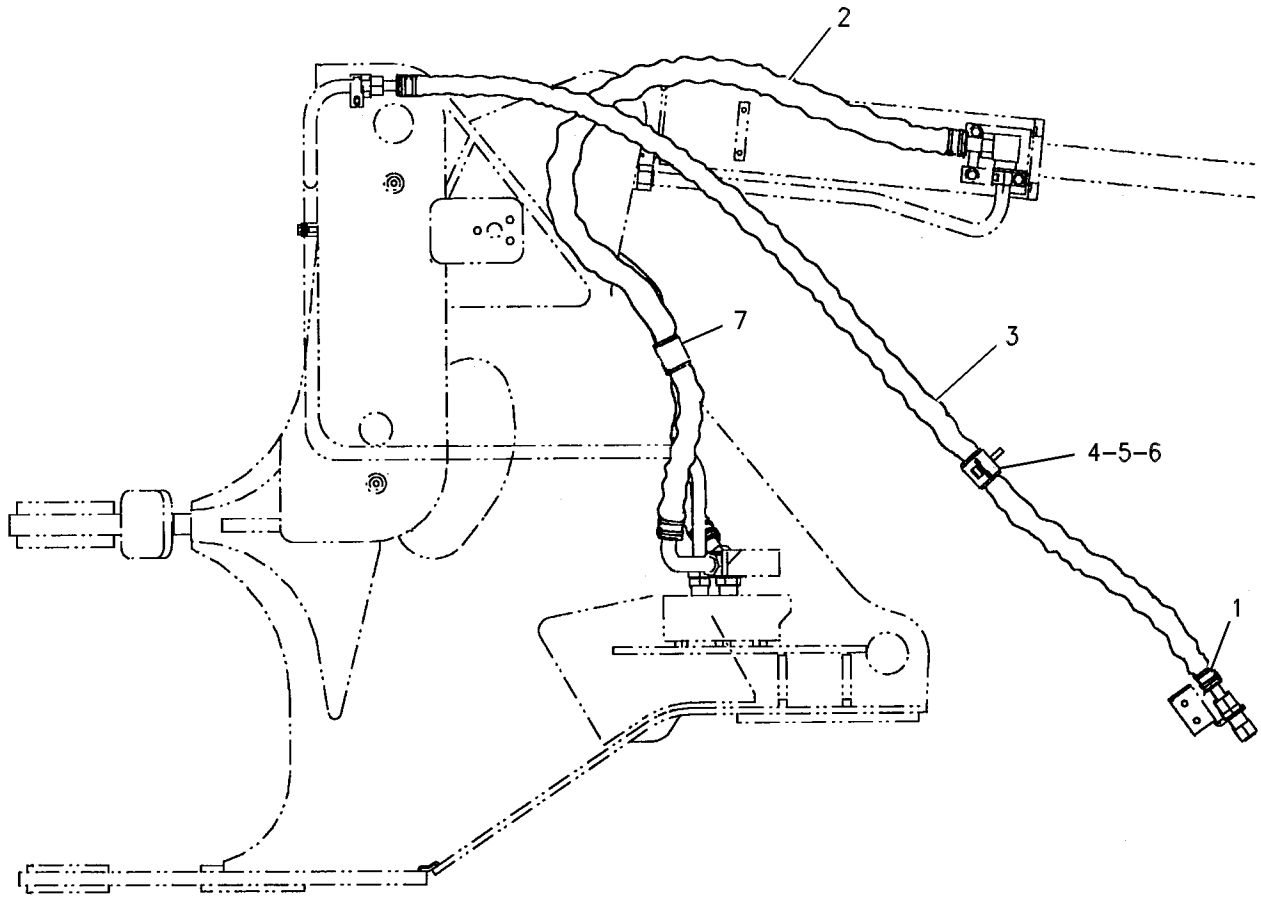

GRAPHIC #1 g00281283

128-0299 GUARD GP-LINES

S/N: DBT1-UP
AN ATTACHMENT

SMCS-7167 **i01698537**

NOTE	REF NO	GRAPHIC REF	PART NUMBER	QTY	PART NAME 1 2 3 4 5 6 (PRODUCT LEVEL)	SEE PAGE
	1	1	**3S-2093**	40	STRAP-CABLE	
	2	1	**6R-2050**	4	SLEEVE	
B	3	1	**8T-2525**	2	GROMMET	
	4	1	**160-2245**	6	SLEEVE-ABRASION	
B	5	1	**5P-8444**	2	GROMMET	
B	6	1	**5P-7468**	2	CLIP (SLOT)	
B	7	1	**5P-7469**	2	CLIP (TAB)	

B-USE AS REQUIRED

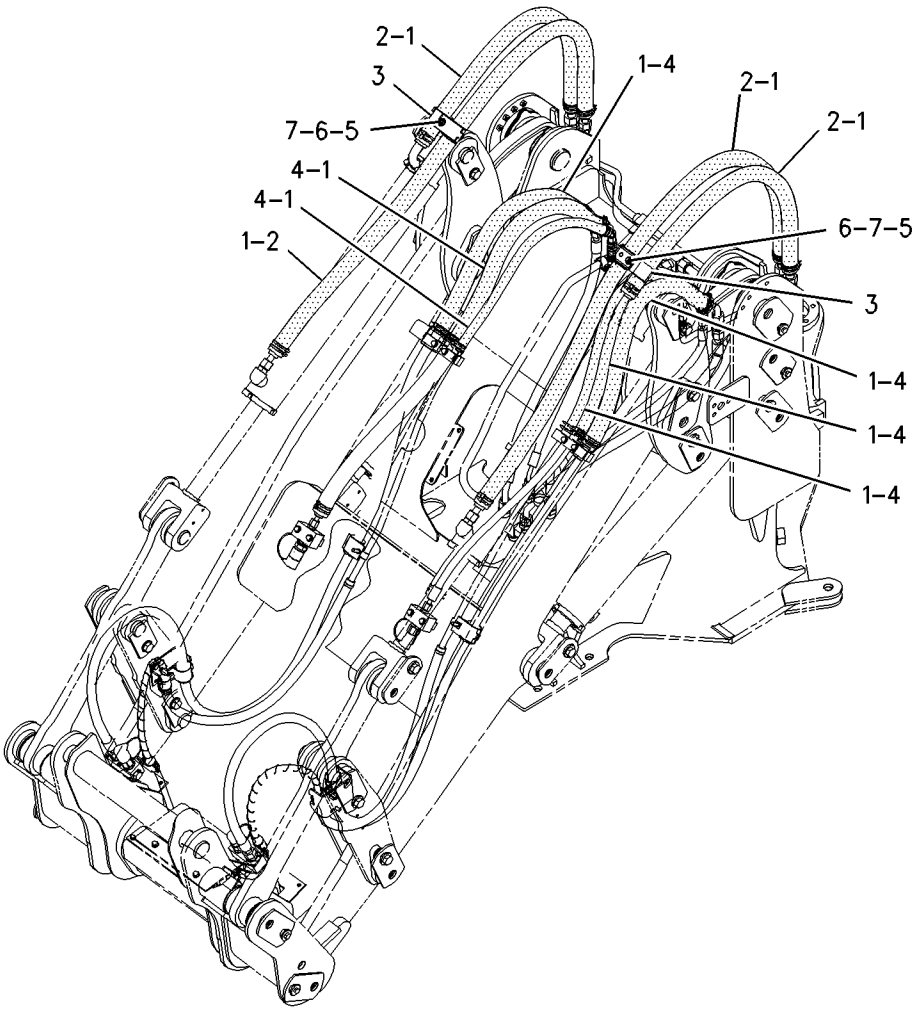

GRAPHIC #1 g00874548

204-4338 GUARD GP-POWER TRAIN

S/N: DJD1-UP; DBT1-UP
PART OF 213-7244, 213-7245 WASTE HANDLING AR
AN ATTACHMENT

SMCS-7153 **i01758666**

NOTE	REF NO	GRAPHIC REF	PART NUMBER	QTY	PART NAME 1 2 3 4 5 6 (PRODUCT LEVEL)	SEE PAGE
	1	1	**7W-3447**	3	SPACER (10.2X19.05X10.2MM THK)	
	2	1	**204-4339**	1	PLATE AS	
	3	1	**218-2440**	1	PLATE	
	4	1	**7X-0578**	3	WASHER-HARD (10.2X32X2.5MM THK)	
	5	1	**8R-8847**	1	RETAINER-SPRING	
M	6	1	**8T-4195**	3	BOLT (M10X1.5X30MM)	
	7	1	**8T-4223**	2	WASHER-HARD (13.5X25.5X3MM THK)	
M	8	1	**8T-4956**	2	BOLT (M12X1.75X35MM)	

M-METRIC PART

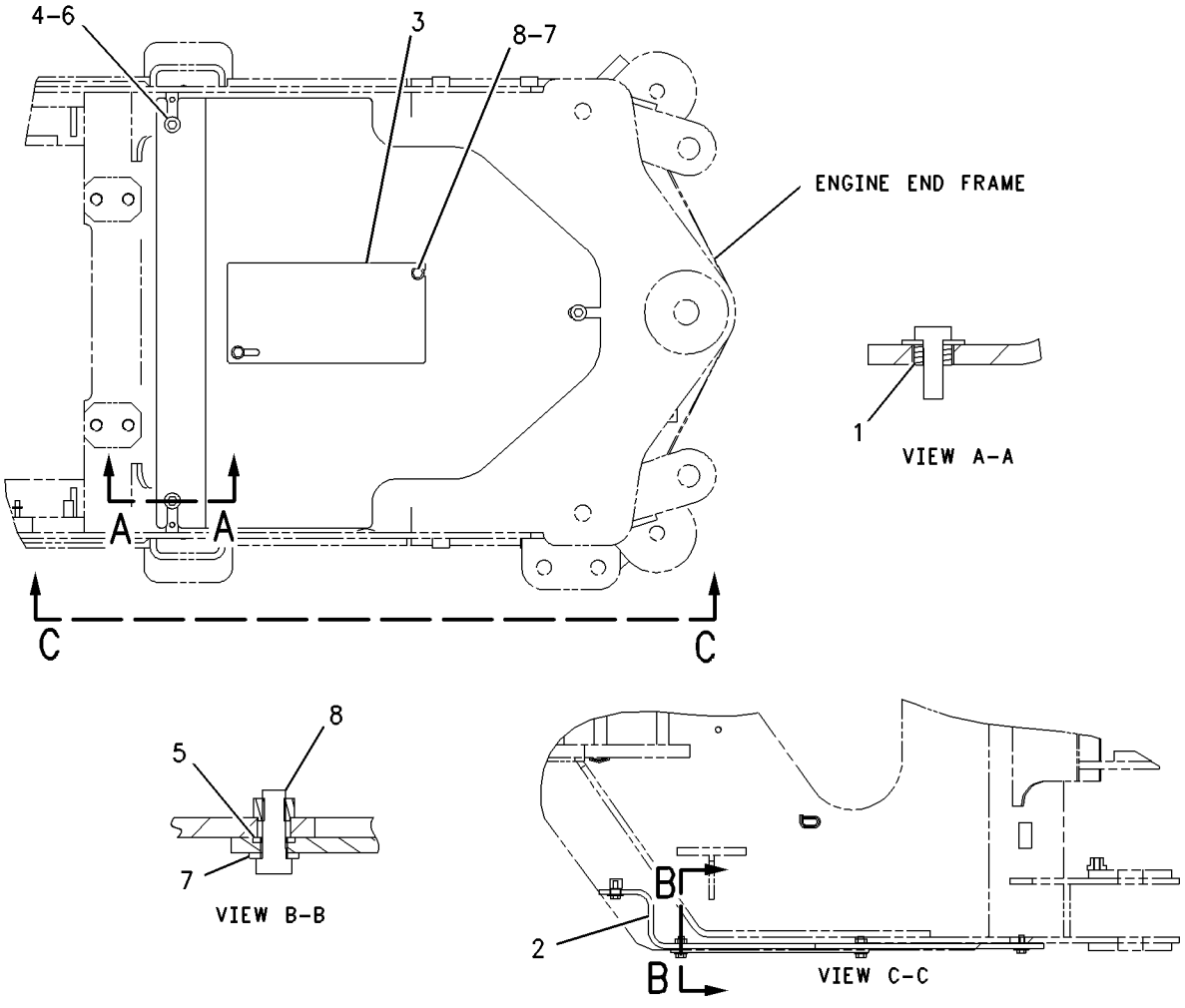

GRAPHIC #1 g00900090

113-3790 HITCH GP-ARTICULATING

S/N: DJD1-UP; DBT1-UP

PART OF 176-5221, 204-4349 CHASSIS AR

SMCS-7057, 7100 **i01506215**

NOTE	REF NO	GRAPHIC REF	PART NUMBER	QTY	PART NAME 1 2 3 4 5 6 (PRODUCT LEVEL)	SEE PAGE
B	1	1	**4K-7464**	1	SHIM PACK (INCLUDES 19 SHIMS)	
	2	1	**6I-8860**	2	CUP-ROLLER BEARING	
	3	1	**6K-4185**	1	SPACER (1.44 IN THK)	
	4	1	**6K-4191**	1	CAP-UPPER	
	5	1	**6V-1194**	2	CUP-ROLLER BEARING	
	6	1	**6V-8795**	2	CONE-ROLLER BEARING	
B	7	1	**6W-8246**	1	SHIM PACK (INCLUDES 27 SHIMS)	
	8	1	**6I-8849**	2	CONE-ROLLER BEARING	
	9	1	**8R-7091**	1	CAP	
	10	1	**8R-7092**	1	CAP	
	11	1	**8Y-7047**	1	PIN AS	
	12	1	**9V-6343**	1	CAP	
	13	1	**110-7628**	1	SHIM	
	14	1	**113-3791**	1	PIN AS	
	15	1	**113-3793**	1	PLATE	
B	16	1	**113-3794**	2	SHIM PACK (INCLUDES 19 SHIMS)	
	17	1	**3B-8489**	2	FITTING-GREASE	
	18	1	**6K-4186**	2	SEAL-LIP	
	19	1	**7X-0618**	1	WASHER-HARD (13.5X40X5MM THK)	
	20	1	**8T-4121**	6	WASHER-HARD (11X21X2.5MM THK)	
M	21	1	**8T-4192**	1	BOLT (M12X1.75X25MM)	
M	22	1	**8T-4172**	6	BOLT (M10X1.50X80MM)	
M	23	1	**8T-4194**	10	BOLT (M12X1.75X50MM)	
	24	1	**8T-4223**	16	WASHER-HARD (13.5X25.5X3MM THK)	
M	25	1	**8T-5041**	6	BOLT (M12X1.75X120MM)	
	26	1	**9H-2258**	2	SEAL-LIP (50.80MM ID)	

B-USE AS REQUIRED
M-METRIC PART

113-3790 **HITCH GP-ARTICULATING** *(contd.)* **i01506215**

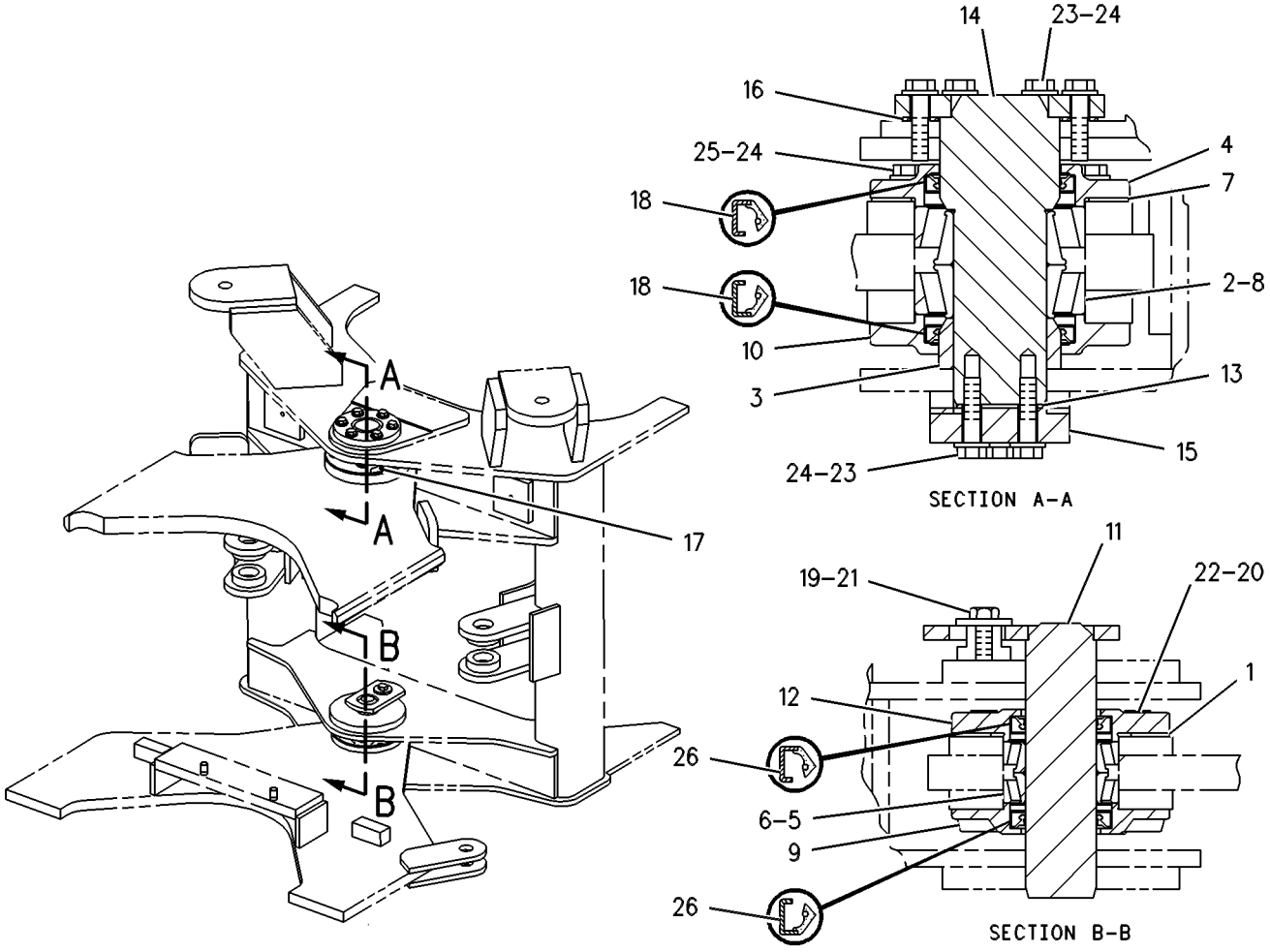

GRAPHIC #1 g00131887

FRAME AND BODY

198-8970 HOOD & GUARD GP

S/N: DJD1-UP; DBT1-UP

PART OF 176-5221, 204-4349 CHASSIS AR

SMCS-7251 **i01838143**

NOTE	REF NO	GRAPHIC REF	PART NUMBER	QTY	PART NAME 1 2 3 4 5 6 (PRODUCT LEVEL)	SEE PAGE
D	1	1	**5P-5637**		SEAL (1M)	
	2	1	**125-2086**	1	LOCK AS-CYLINDER	
		1	**7F-9223**	1	LOCKWASHER	
		1	**8T-5004**	1	SCREW-MACHINE (1/4-28X0.375 IN)	
	3	1	**130-1916**	4	STUD-BALL	
	4	1	**228-7696**	2	SPRING AS-GAS	
	5	1	**172-8591**	2	NUT-SPRING	
	6	1	**198-8933**	4	HINGE	
	7	1	**198-8942**	2	BRACKET	
	8	1	**198-8943**	2	BRACKET	
	9	1	**198-8944**	2	PLATE	
	10	1	**198-8945**	1	DOOR AS (RH)	
	11	1	**198-8946**	1	DOOR AS (LH)	
	12	1	**198-8954**	1	PANEL AS (RH)	
	13	1	**198-8955**	1	PANEL AS (LH)	
	14	1	**198-8959**	2	PLATE	
	15	1	**198-8961**	2	PLATE	
	16	1	**202-0370**	1	HOOD AS	
	17	1	**224-8930**	2	LATCH AS	
	18	1	**225-3800**	1	HINGE AS (RH)	
	19	1	**225-3801**	1	HINGE AS (LH)	
M	20	1	**131-3540**	4	LOCKNUT (M8X1.25 THD)	
M	21	1	**5C-2890**	8	NUT (M6X1 THD)	
M	22	1	**5C-7261**	12	NUT (M8X1.25 THD)	
	23	1	**5P-4115**	2	WASHER-HARD (7.2X19X2MM THK)	
M	24	1	**7X-2535**	2	BOLT (M6X1X60MM)	
M	25	1	**7X-2540**	4	BOLT (M8X1.25X120MM)	
	26	1	**7X-7729**	35	WASHER (11X25X3MM THK)	
M	27	1	**8T-4133**	4	NUT (M10X1.5 THD)	
M	28	1	**8T-4138**	8	BOLT (M6X1X20MM)	
M	29	1	**8T-4189**	18	BOLT (M8X1.25X20MM)	
M	30	1	**8T-4195**	31	BOLT (M10X1.5X30MM)	
	31	1	**8T-4205**	16	WASHER-HARD (7.2X14.5X2MM THK)	
	32	1	**8T-4224**	42	WASHER-HARD (8.8X16X2MM THK)	
M	33	1	**8T-4908**	4	BOLT (M8X1.25X25MM)	
E	34	1	**207-0536**	1	SEAL (181CM)	
E	35	1	**207-0536**	1	SEAL (181CM)	
E	36	1	**9X-8699**	2	SEAL (91CM EACH)	
E	37	1	**9X-8699**	2	SEAL (306CM EACH)	

D-ORDER BY THE METER
E-ORDER BY THE CENTIMETER
M-METRIC PART

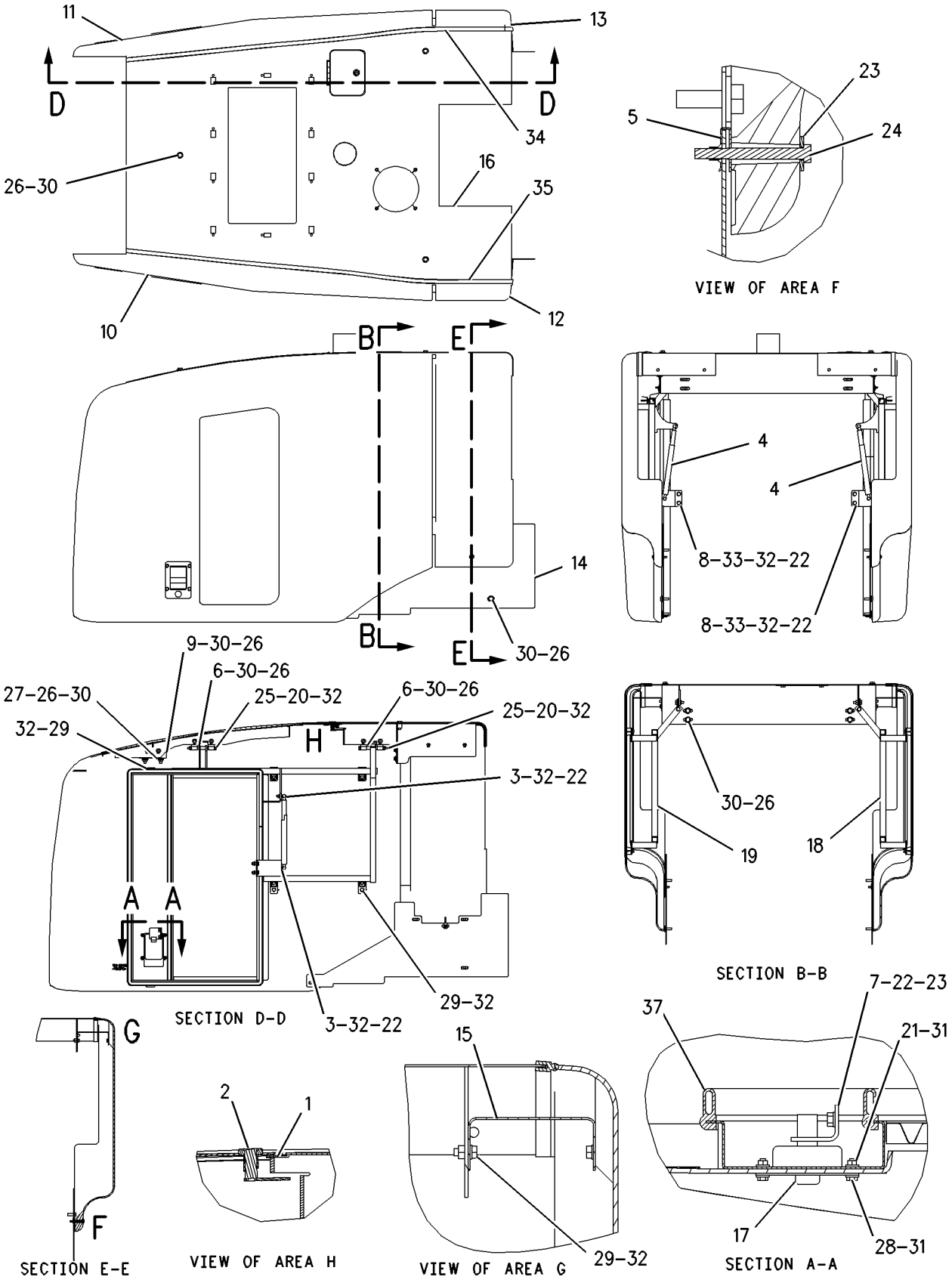

GRAPHIC #1 g00918009

208-6246 LADDER GP

S/N: DJD1-UP; DBT1-UP

PART OF 176-5221, 204-4349 CHASSIS AR

SMCS-7254 **i01755861**

NOTE	REF NO	GRAPHIC REF	PART NUMBER	QTY	PART NAME 1 2 3 4 5 6 (PRODUCT LEVEL)	SEE PAGE
	1	1	**127-5447**	16	SPACER	
	2	1	**132-2339**	2	LADDER AS	
	3	1	**134-5214**	1	STEP AS	
M		1	**8T-3490**	2	NUT-WELD (M10X1.5 THD)	
	4	1	**134-5215**	1	STEP AS	
M		1	**8T-3490**	2	NUT-WELD (M10X1.5 THD)	
	5	1	**153-4856**	4	BELT	
	6	1	**153-9706**	8	PLATE	
	7	1	**202-0392**	1	PLATFORM AS	
M		1	**6V-9632**	2	NUT-WELD (M6X1 THD)	
M		1	**8T-3490**	2	NUT-WELD (M10X1.5 THD)	
	8	1	**202-0393**	1	PLATFORM AS	
M		1	**6V-9632**	2	NUT-WELD (M6X1 THD)	
M		1	**8T-3490**	2	NUT-WELD (M10X1.5 THD)	
	9	1	**215-3886**	2	STEP	
	10	1	**7X-7729**	46	WASHER (11X25X3MM THK)	
M	11	1	**8T-4133**	16	NUT (M10X1.5 THD)	
M	12	1	**8T-4136**	22	BOLT (M10X1.5X25MM)	
M	13	1	**8T-4186**	16	BOLT (M10X1.5X40MM)	
M	14	1	**8T-4195**	8	BOLT (M10X1.5X30MM)	

M-METRIC PART

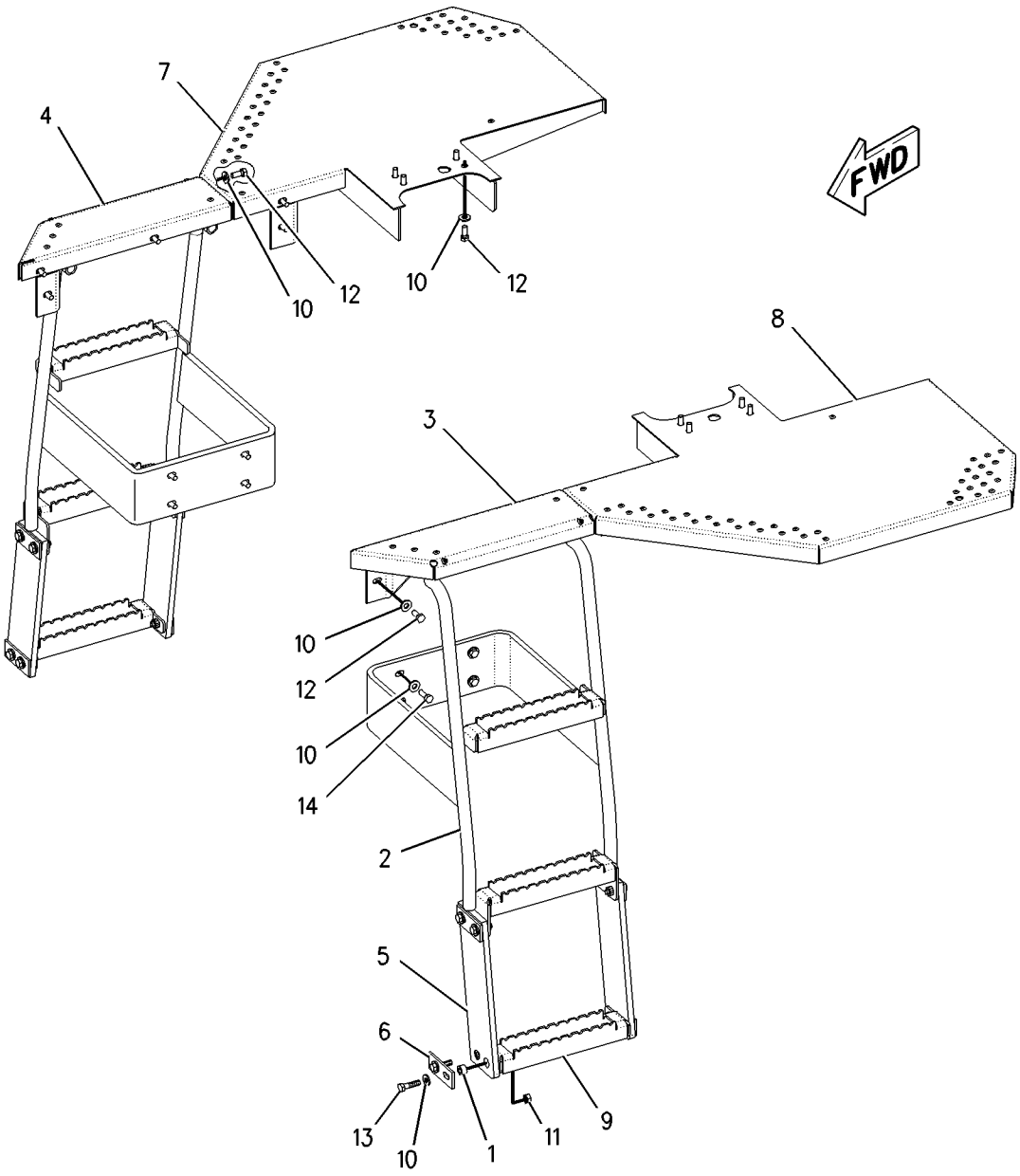

GRAPHIC #1 g00924149

FRAME AND BODY

204-5107 LINES GP-GREASE

S/N: DJD1-UP

PART OF 204-4349 CHASSIS AR

SMCS-7510 **i01692974**

NOTE	REF NO	GRAPHIC REF	PART NUMBER	QTY	PART NAME 1 2 3 4 5 6 (PRODUCT LEVEL)	SEE PAGE
	1	1	**3B-6552**	3	ELBOW	
	2	1	**3B-7734**	1	NIPPLE-PIPE	
	3	1	**3F-6166**	2	EXTENSION	
I	4	1	**3G-6659**	1	HOSE AS	
	5	1	**3G-6660**	1	HOSE AS	
	6	1	**5T-9772**	1	HOSE AS	
	7	1	**6G-9933**	1	HOSE AS	
	8	1	**7K-1181**	5	STRAP-CABLE	
	9	1	**8B-4884**	1	ELBOW	
	10	1	**8W-4342**	1	HOSE AS	
	11	1	**3B-8489**	7	FITTING-GREASE (1/8-27 THD)	
	12	1	**4D-8123**	1	CLIP	
	13	1	**6V-2383**	1	CLIP	

I-SEE HOSE FABRICATION GUIDE

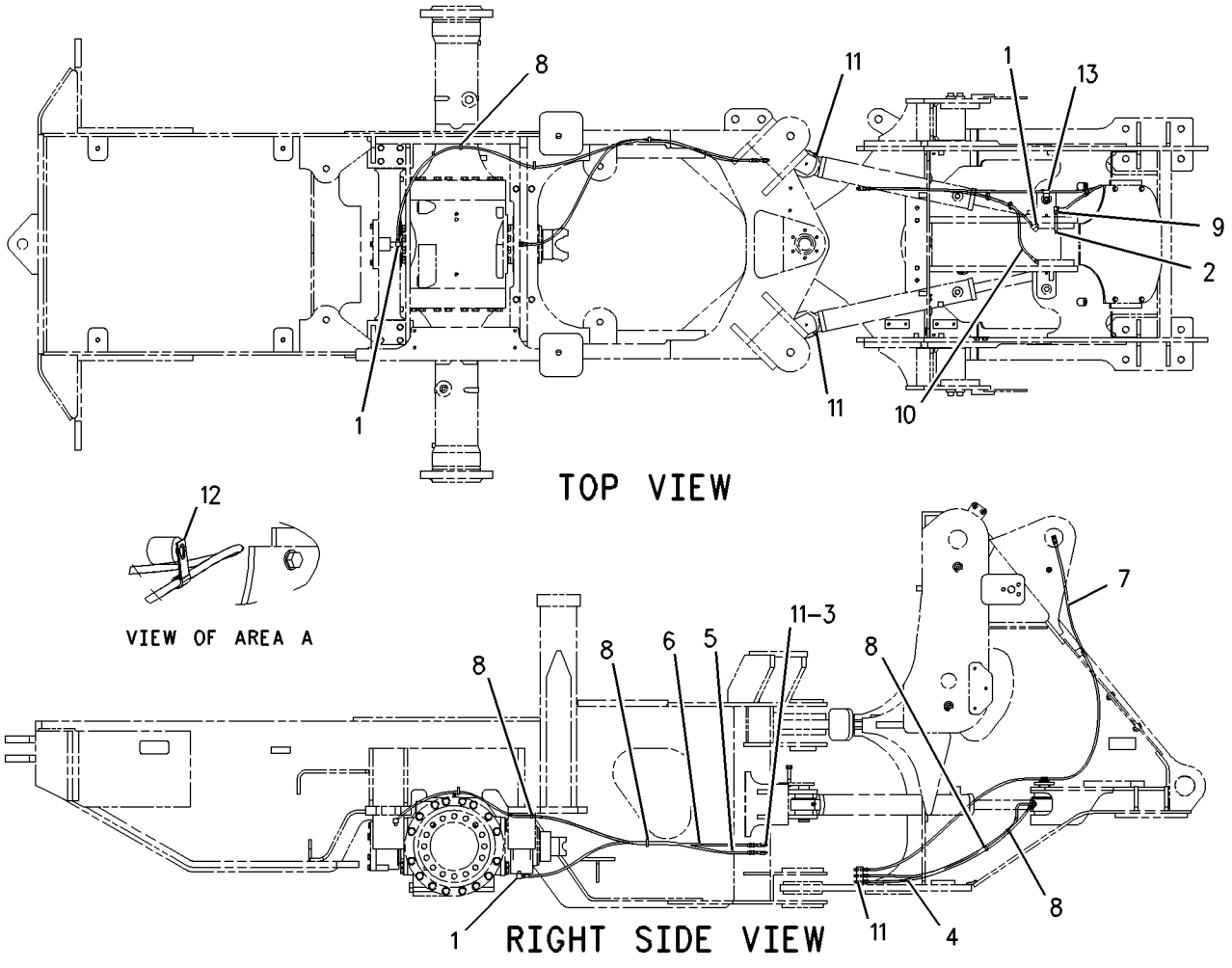

GRAPHIC #1 g00877025

FRAME AND BODY

204-5865 LINES GP-GREASE

S/N: DBT1-UP

PART OF 176-5221 CHASSIS AR

SMCS-7510 **i01739065**

NOTE	REF NO	GRAPHIC REF	PART NUMBER	QTY	PART NAME 1 2 3 4 5 6 (PRODUCT LEVEL)	SEE PAGE
	1	1	**3B-6552**	3	ELBOW	
	2	1	**3F-6166**	2	EXTENSION	
I	3	1	**3G-6659**	1	HOSE AS	
	4	1	**3G-6660**	1	HOSE AS	
	5	1	**5T-9772**	1	HOSE AS	
	6	1	**7K-1181**	5	STRAP-CABLE	
	7	1	**8W-4342**	1	HOSE AS	
	8	1	**3B-8489**	6	FITTING-GREASE (1/8-27 THD)	

I-SEE HOSE FABRICATION GUIDE

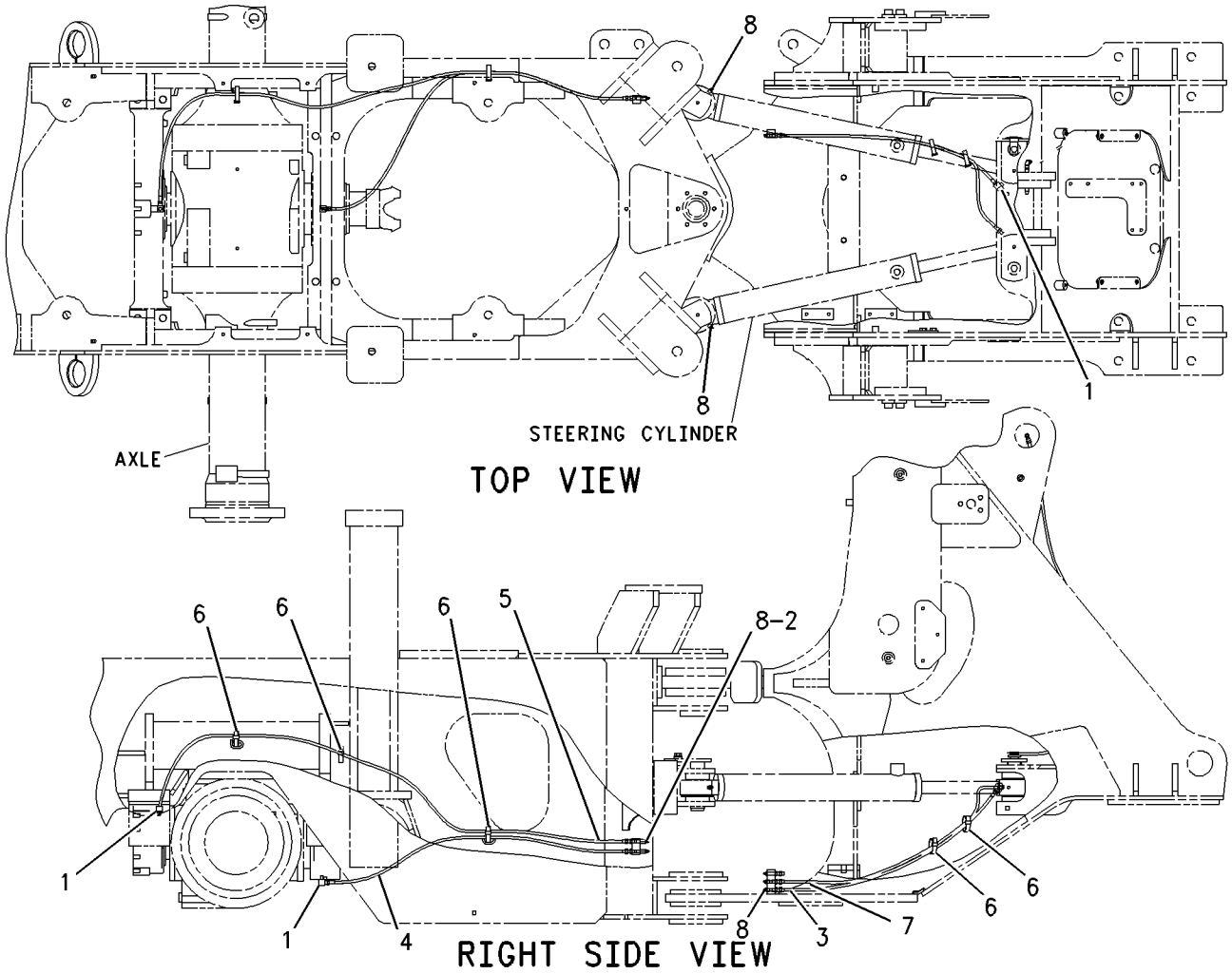

GRAPHIC #1 g00890824

113-3783 LINK GP-STEERING FRAME LOCK

S/N: DJD1-UP; DBT1-UP

PART OF 176-5221, 204-4349 CHASSIS AR

SMCS-7506 **i00972680**

NOTE	REF NO	GRAPHIC REF	PART NUMBER	QTY	PART NAME 1 2 3 4 5 6 (PRODUCT LEVEL)	SEE PAGE
	1	1	**5P-8837**	2	LOCKPIN	
	2	1	**5V-4999**	2	PIN	
	3	1	**113-3784**	1	LINK	

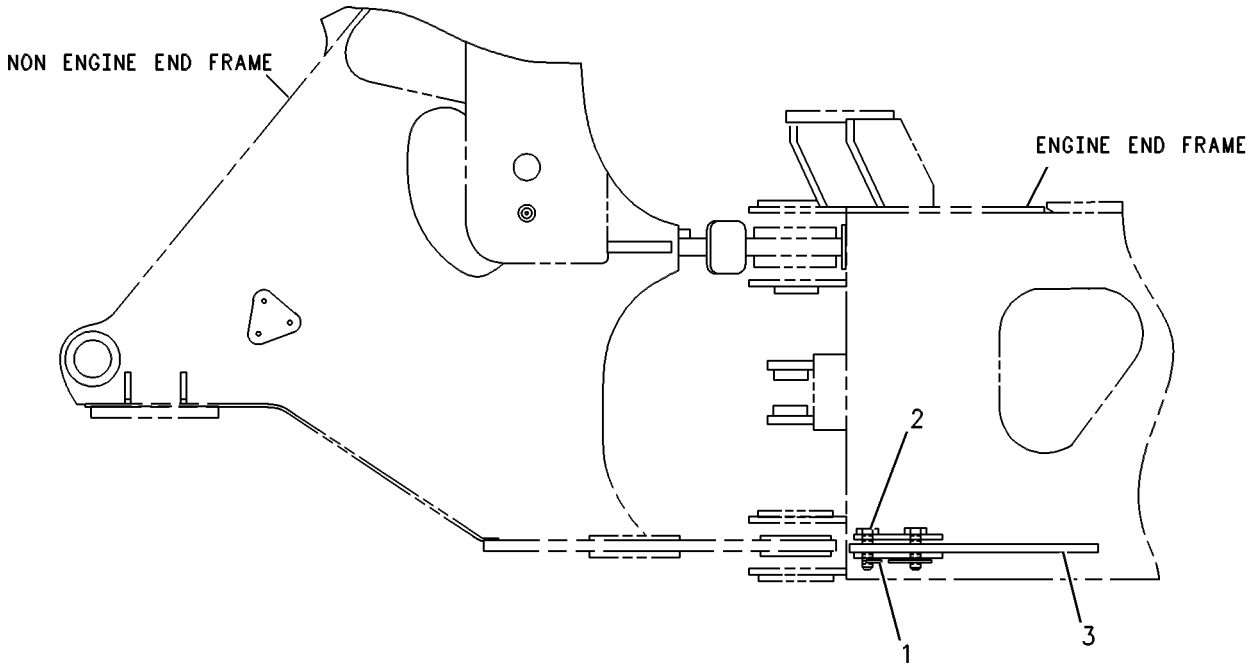

LEFT SIDE VIEW

GRAPHIC #1 g00131599

MEMORANDA

198-8964 PANEL GP-TOP

S/N: DJD1-UP; DBT1-UP
PART OF 190-4401 HEATER AR-CAB, 190-4654 OPERATOR AR
AN ATTACHMENT

SMCS-7251 **i01787960**

NOTE	REF NO	GRAPHIC REF	PART NUMBER	QTY	PART NAME 1 2 3 4 5 6 (PRODUCT LEVEL)	SEE PAGE
	1	1	**172-8591**	10	NUT-SPRING	
	2	1	**191-9188**	1	PLATE	
	3	1	**198-8957**	1	PLATE	
	4	1	**220-0691**	4	PLATE AS	
					(EACH INCLUDES)	
M		1	**8T-3490**	2	NUT-WELD (M10X1.5 THD)	
	5	1	**5P-9212**	1	PLUG	
	6	1	**8T-4121**	8	WASHER-HARD (11X21X2.5MM THK)	
M	7	1	**8T-4137**	8	BOLT (M10X1.5X20MM)	
M	8	1	**8T-4138**	10	BOLT (M6X1X20MM)	
	9	1	**8T-4205**	10	WASHER-HARD (7.2X14.5X2MM THK)	

M-METRIC PART

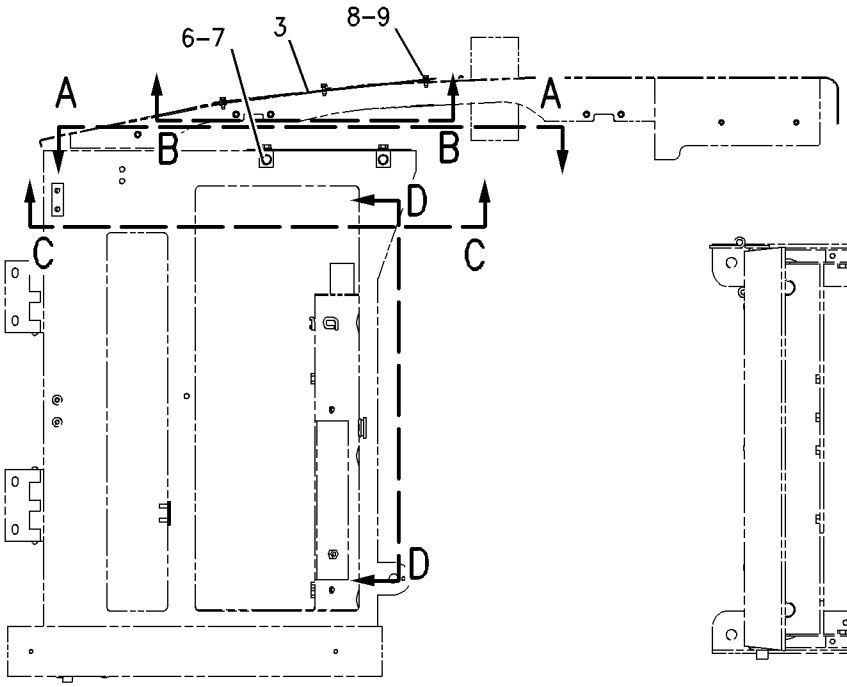

RIGHT SIDE VIEW

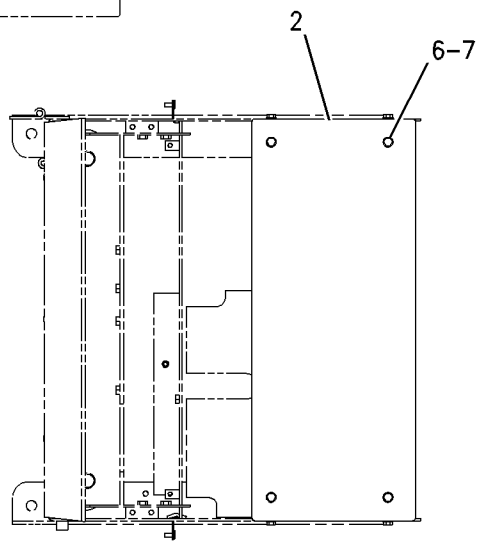

VIEW A-A

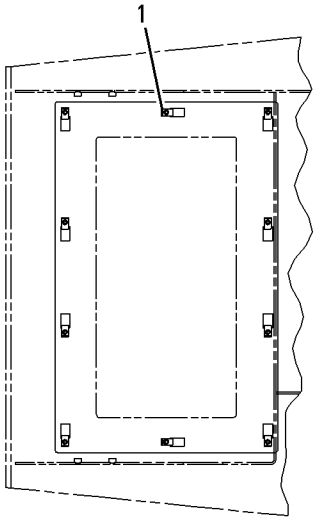

VIEW B-B

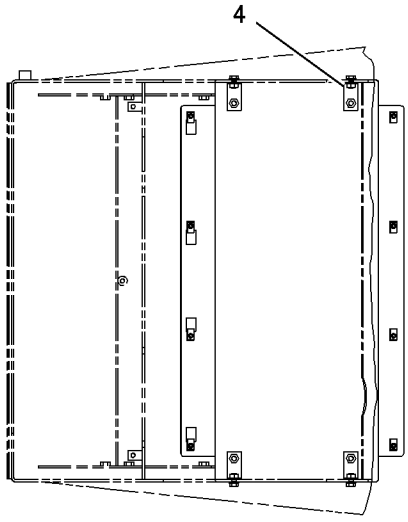

VIEW C-C

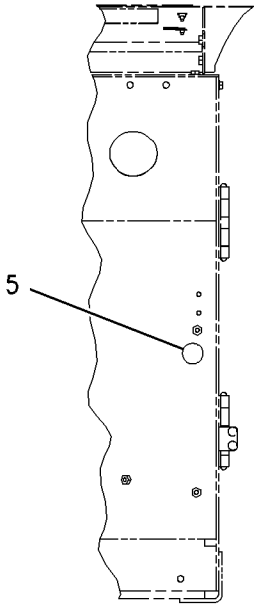

VIEW D-D

GRAPHIC #1 g00917920

198-8965 PANEL GP-TOP

S/N: DJD1-UP; DBT1-UP
AIR CONDITIONER
PART OF 190-4402, 227-5317 AIR CONDITIONER AR
AN ATTACHMENT

SMCS-7251 **i01787991**

NOTE	REF NO	GRAPHIC REF	PART NUMBER	QTY	PART NAME 1 2 3 4 5 6 (PRODUCT LEVEL)	SEE PAGE
	1	1	**172-8591**	10	NUT-SPRING	
	2	1	**198-8956**	1	COVER AS	
	3	1	**186-0817**	10	WASHER-HARD (7X19X2MM THK)	
M	4	1	**8T-4138**	10	BOLT (M6X1X20MM)	

M-METRIC PART

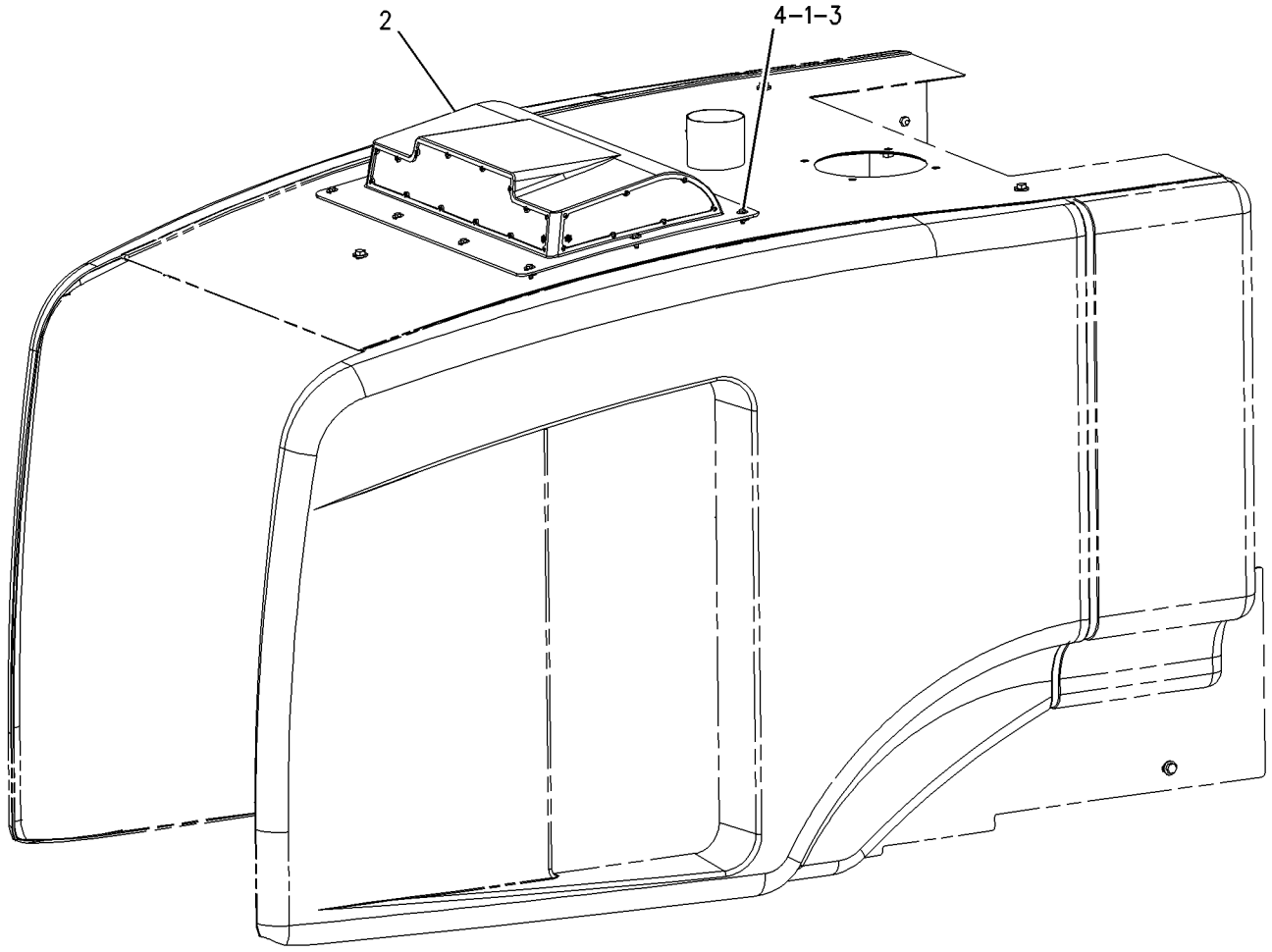

GRAPHIC #1 g00917899

140-9251 ACCUMULATOR GP-BRAKE

S/N: DJD1-UP; DBT1-UP

PART OF 203-3895 LINES GP-SERVICE BRAKE

SMCS-4263 **i01135312**

NOTE	REF NO	GRAPHIC REF	PART NUMBER	QTY	PART NAME 1 2 3 4 5 6 (PRODUCT LEVEL)	SEE PAGE
	1	1	**030-9613**	2	SCREW-FORMING	
	2	1	**1J-9671**	1	SEAL-O-RING (10.52MM ID)	
	3	1	**069-2535**	1	VALVE-GAS	
	4	1	**069-2536**	1	PROTECTOR-GAS VALVE	
F		1	**160-0496**	1	KIT-ACCUMULATOR SERVICE	

F-NOT SHOWN

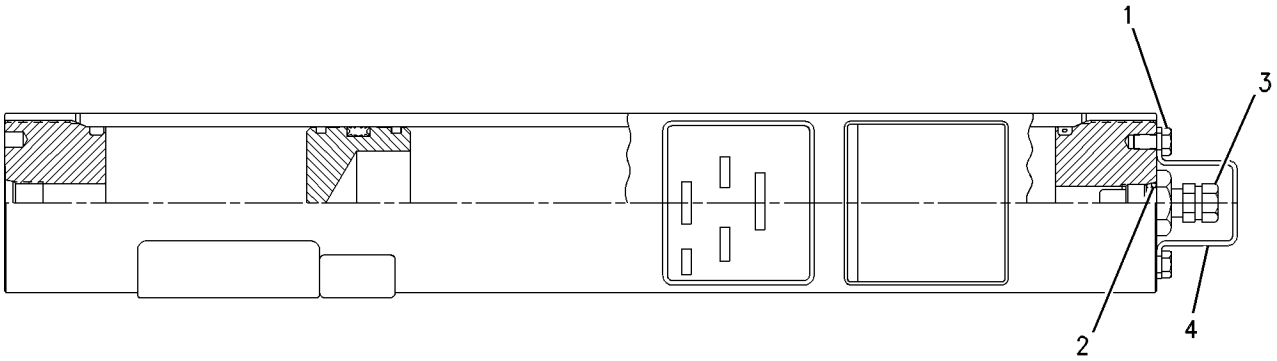

GRAPHIC #1 g00649352

BRAKING SYSTEM

168-7000 CONTROL GP-PARKING BRAKE

S/N: DJD1-UP; DBT1-UP

PART OF 190-4405 CAB AR, 190-4406 CANOPY GP-OPEN ROPS, 190-4652 PLATFORM AR

AN ATTACHMENT

SMCS-4282, 4284 **i01472589**

NOTE	REF NO	GRAPHIC REF	PART NUMBER	QTY	PART NAME 1 2 3 4 5 6 (PRODUCT LEVEL)	SEE PAGE
	1	1	**3H-8538**	1	PIN	
	2	1	**6G-4195**	1	SWITCH AS-LIMIT (PARKING BRAKE)	
		1	**3L-8187**	3	LOCKWASHER	
		1	**6V-8373**	3	SCREW-MACHINE (6-32X0.187 IN)	
	3	1	**6S-6646**	1	PIN	
	4	1	**8K-1433**	1	GROMMET	
	5	1	**186-4415**	1	CLEVIS	
	6	1	**163-6408**	1	BRACKET AS	
	7	1	**163-6412**	1	LEVER AS	
		1	**9R-9110**	1	BUTTON	
		1	**9R-9111**	1	SPRING-COMPRESSION	
	8	1	**2N-3477**	2	SCREW-MACHINE (6-32X1.25 IN)	
	9	1	**4B-5324**	4	WASHER (3.9X9.6X1.2MM THK)	
	10	1	**7D-6922**	2	LOCKNUT	
M	11	1	**8T-4189**	4	BOLT (M8X1.25X20MM)	
	12	1	**8T-4224**	4	WASHER-HARD (8.8X16X2MM THK)	

M-METRIC PART

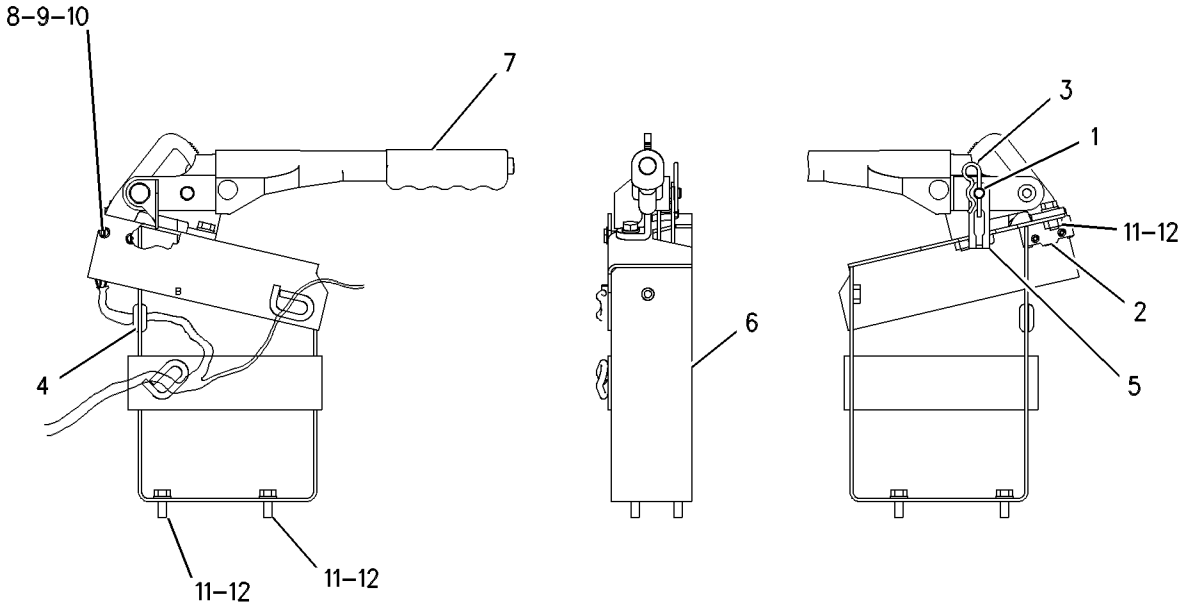

GRAPHIC #1 g00578109

BRAKING SYSTEM

197-7122 CONTROL GP-PARKING BRAKE

S/N: DJD1-UP; DBT1-UP

PART OF 176-5221, 204-4349 CHASSIS AR

SMCS-4282, 4284 **i01749010**

NOTE	REF NO	GRAPHIC REF	PART NUMBER	QTY	PART NAME 1 2 3 4 5 6 (PRODUCT LEVEL)	SEE PAGE
	1	1	**8C-6160**	1	CLEVIS AS	
	2	1	**9U-0710**	2	CLIP	
	3	1	**143-3193**	1	CABLE AS	
	4	1	**208-0840**	1	PLATE AS	
	5	1	**3B-4610**	1	PIN-COTTER	
M	6	1	**5C-7261**	1	NUT (M8X1.25 THD)	
	7	1	**5P-9297**	2	CLIP	
	8	1	**6V-8758**	1	PIN-CLEVIS	
	9	1	**8T-4121**	2	WASHER-HARD (11X21X2.5MM THK)	
M	10	1	**8T-4137**	2	BOLT (M10X1.5X20MM)	
	11	1	**8T-4223**	4	WASHER-HARD (13.5X25.5X3MM THK)	
M	12	1	**8T-4956**	4	BOLT (M12X1.75X35MM)	

M-METRIC PART

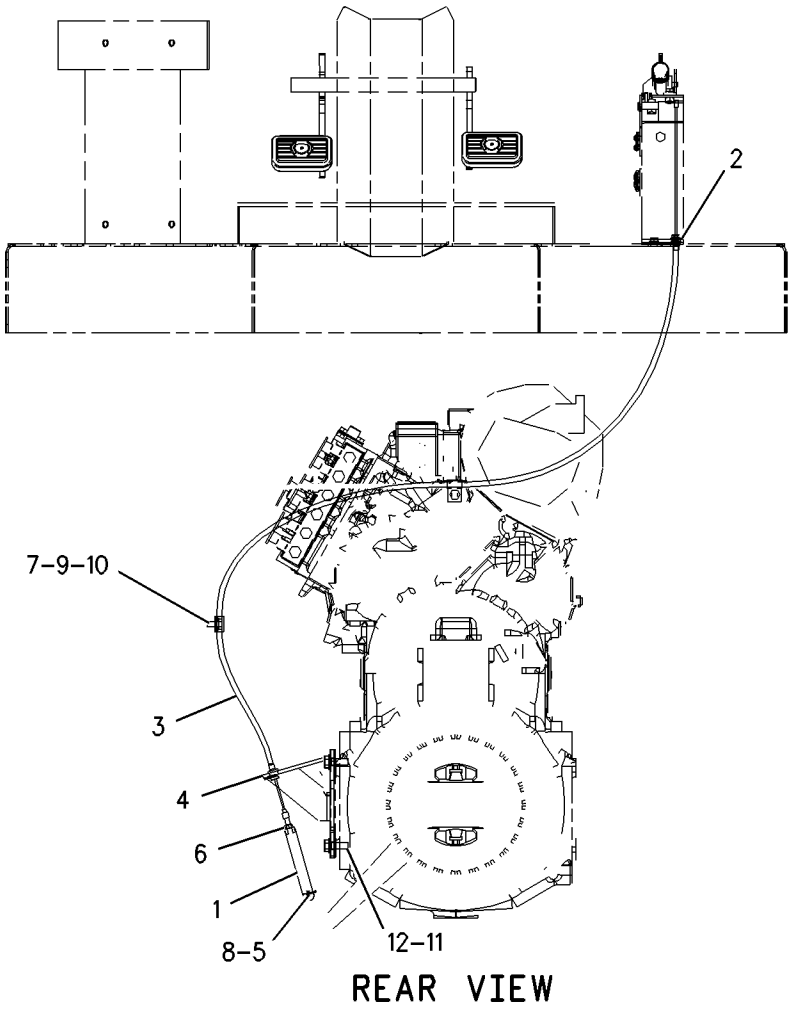

GRAPHIC #1 g00899718

BRAKING SYSTEM

202-0430 CONTROL GP-SERVICE BRAKE

S/N: DJD1-UP; DBT1-UP

PART OF 176-5221, 204-4349 CHASSIS AR

SMCS-4257, 4258, 4265, 4269, 4280 **i01824604**

NOTE	REF NO	GRAPHIC REF	PART NUMBER	QTY	PART NAME 1 2 3 4 5 6 (PRODUCT LEVEL)	SEE PAGE
	1	1	**3B-4617**	2	PIN-COTTER	
	2	1	**3E-2332**	1	ELBOW	
	3	1	**6G-0233**	1	BOOT	
	4	1	**6V-0852**	1	CAP-DUST	
	5	1	**6V-3965**	1	FITTING AS	
	6	1	**7C-6467**	2	PLUG	
	7	1	**8E-8296**	2	DISC-THRUST	
	8	1	**8T-6431**	1	ROD END	
M	9	1	**9X-2065**	1	NUT	
	10	1	**128-0168**	1	ROD	
	11	1	**128-0169**	1	ROLLER	
	12	1	**132-0988**	1	BRACKET AS	
		1	**5G-6973**	2	LUG	
	13	1	**132-0994**	1	END-BEARING ROD	
	14	1	**132-3789**	1	PLATE	
	15	1	**133-7675**	1	SPRING	
M	16	1	**134-0673**	2	BOLT	
	17	1	**144-8521**	1	VALVE GP-BRAKE CONTROL (SERVICE)	
		1	**117-7798**	1	BOOT	
		1	**117-7799**	1	KIT-SEAL	
					(INCLUDES 4 O-RINGS, 1 QUAD RING, CUP AND BOOT)	
	18	1	**146-6822**	1	LEVER AS	
	19	1	**165-6365**	1	FITTING AS	
		1	**3J-1907**	1	SEAL-O-RING	
		1	**7W-7381**	1	FITTING-OUTLET	
	20	1	**188-3823**	1	SENSOR GP-PRESSURE	
	21	1	*148-8336*	2	CONNECTOR AS	
					(EACH INCLUDES)	
		1	**3J-1907**	1	SEAL-O-RING	
		1	**6V-8397**	1	SEAL-O-RING	
		1	**6V-8636**	1	CONNECTOR (SEAL)	
	22	1	*148-8378*	1	ELBOW AS	
		1	**3J-1907**	1	SEAL-O-RING	
		1	**6V-8397**	1	SEAL-O-RING	
		1	**6V-8724**	1	ELBOW	
	23	1	*148-8443*	2	TEE GP	
					(EACH INCLUDES)	
		1	**3J-1907**	1	SEAL-O-RING	
		1	**6V-8397**	1	SEAL-O-RING	
		1	**7X-2459**	1	TEE-O-RING	
	24	1	**3J-1907**	2	SEAL-O-RING	
	25	1	**3J-7354**	1	SEAL-O-RING	
	26	1	**5V-4410**	2	BEARING-SLEEVE	
M	27	1	**8T-0389**	2	LOCKNUT (M10X1.5 THD)	
	28	1	**8T-4121**	15	WASHER-HARD (11X21X2.5MM THK)	
M	29	1	**8T-4133**	1	NUT (M10X1.5 THD)	
M	30	1	**8T-4137**	6	BOLT (M10X1.5X20MM)	
M	31	1	**8T-4196**	2	BOLT (M10X1.5X35MM)	
	32	1	**9R-2807**	1	CLIP	
	33	1	**9R-3067**	1	PIN	

M-METRIC PART

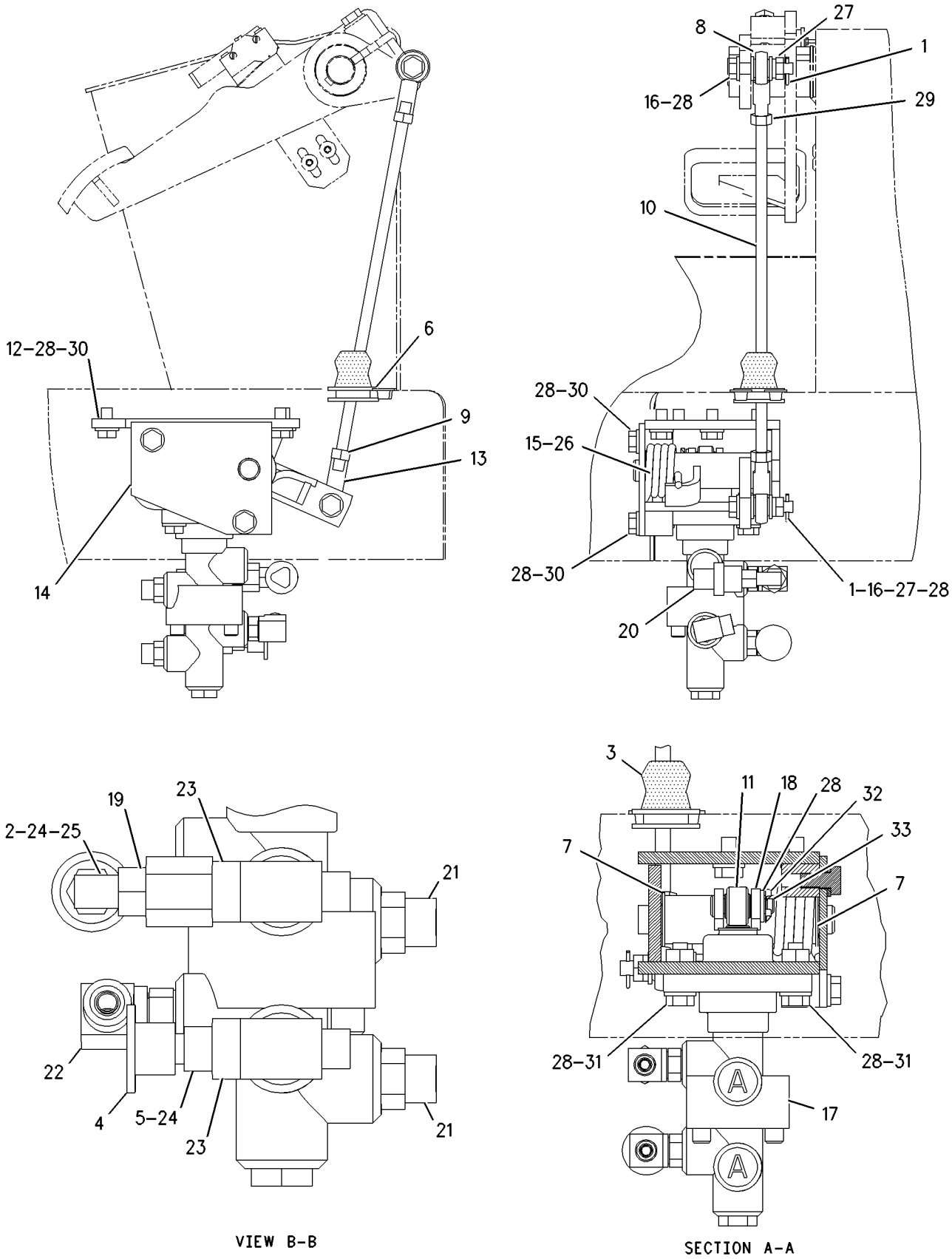

GRAPHIC #1

g00917008

BRAKING SYSTEM

203-3895 LINES GP-SERVICE BRAKE

S/N: DJD1-UP; DBT1-UP

PART OF 176-5221, 204-4349 CHASSIS AR

SMCS-4257 **i01831117**

NOTE	REF NO	GRAPHIC REF	PART NUMBER	QTY	PART NAME 1 2 3 4 5 6 (PRODUCT LEVEL)	SEE PAGE
	1	2	**4E-7540**	1	ANGLE	
	2	2	**8Y-8387**	4	BLOCK	
	3	2	**8Y-8898**	2	TUBE AS	
	4	1	**9X-6581**	1	NUT	
I	5	2	**104-8621**	1	HOSE AS	
	6	2	**111-6940**	4	SPACER (13.1X15.9X36.5MM THK)	
I	7	1	**128-0164**	1	HOSE AS	
	8	2	**132-2397**	1	BRACKET AS	
Y	9	2	*140-9251*	2	ACCUMULATOR GP-BRAKE	301
	10	2	**140-9289**	1	PLATE AS	
	11	2	**156-4130**	4	CLIP	
	12	2	**200-6345**	1	MOUNT-SWIVEL	
	13	2	**204-2281**	2	TIE	
	14	2	**205-3961**	1	PLATE	
I	15	2	**213-7435**	2	HOSE AS	
I	16	1	**213-7436**	2	HOSE AS	
I	17	2	**213-7437**	1	HOSE AS	
	18	2	**229-5152**	1	PLATE	
	19	1	*148-8353*	2	ELBOW GP	
					(EACH INCLUDES)	
		1	**3J-1907**	1	SEAL-O-RING	
		1	**6V-8397**	1	SEAL-O-RING	
		1	**6V-9001**	1	ELBOW	
	20	2	*148-8361*	4	ELBOW GP	
					(EACH INCLUDES)	
		2	**3J-7354**	1	SEAL-O-RING	
		2	**6V-8397**	1	SEAL-O-RING	
		2	**6V-9200**	1	ELBOW	
	21	1	*148-8416*	1	REDUCER AS	
		1	**6V-8398**	1	SEAL-O-RING	
		1	**6V-8939**	1	REDUCER	
	22	2	*148-8433*	1	TEE GP	
		2	**6V-8397**	2	SEAL-O-RING	
		2	**6V-9836**	1	TEE-SWIVEL	
	23	2	*148-8434*	1	TEE AS	
		2	**6V-8397**	2	SEAL-O-RING	
		2	**6V-9843**	1	TEE-SWIVEL	
	24	2	*148-8435*	2	TEE GP	
					(EACH INCLUDES)	
		2	**3J-1907**	1	SEAL-O-RING	
		2	**6V-8397**	2	SEAL-O-RING	
		2	**6V-8781**	1	TEE-FACE SEAL	
	25	2	**4D-7735**	1	CLIP	
M	26	2	**5C-7261**	1	NUT (M8X1.25 THD)	
	27	1	**5K-5338**	1	CLIP	
	28	2	**5P-4116**	2	WASHER-HARD (8.8X20.5X2MM THK)	
	29	1,2	**8M-2773**	4	CLIP	
	30	1,2	**8T-4121**	14	WASHER-HARD (11X21X2.5MM THK)	
M	31	2	**8T-4133**	3	NUT (M10X1.5 THD)	
M	32	2	**8T-4136**	2	BOLT (M10X1.5X25MM)	
M	33	1	**8T-4137**	1	BOLT (M10X1.5X20MM)	
M	34	2	**8T-4139**	1	BOLT (M12X1.75X30MM)	
M	35	2	**8T-4195**	4	BOLT (M10X1.5X30MM)	
	36	2	**8T-4223**	1	WASHER-HARD (13.5X25.5X3MM THK)	
	37	2	**8T-4224**	1	WASHER-HARD (8.8X16X2MM THK)	
M	38	2	**8T-4908**	1	BOLT (M8X1.25X25MM)	

203-3895 **LINES GP-SERVICE BRAKE** *(contd.)* **i01831117**

NOTE	REF NO	GRAPHIC REF	PART NUMBER	QTY	PART NAME 1 2 3 4 5 6 (PRODUCT LEVEL)	SEE PAGE
M	39	2	**8T-5005**	4	BOLT (M10X1.50X70MM)	
	40	2	**8Y-8388**	1	PLATE	

I-SEE HOSE FABRICATION GUIDE
M-METRIC PART
Y-SEPARATE ILLUSTRATION

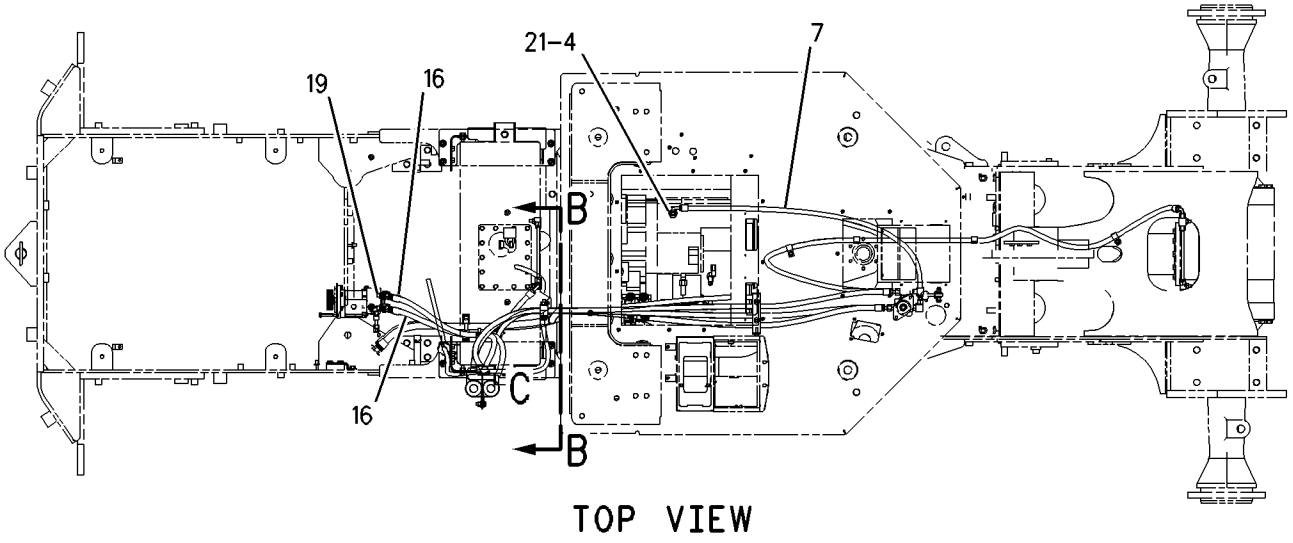

TOP VIEW

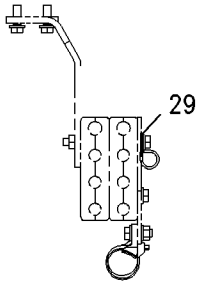

SECTION H-H

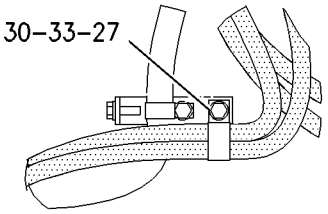

VIEW OF AREA J

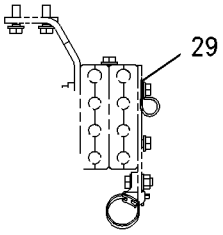

SECTION Q-Q

REFER TO ALL ILLUSTRATIONS IN THIS GROUP FOR AUXILIARY VIEWS

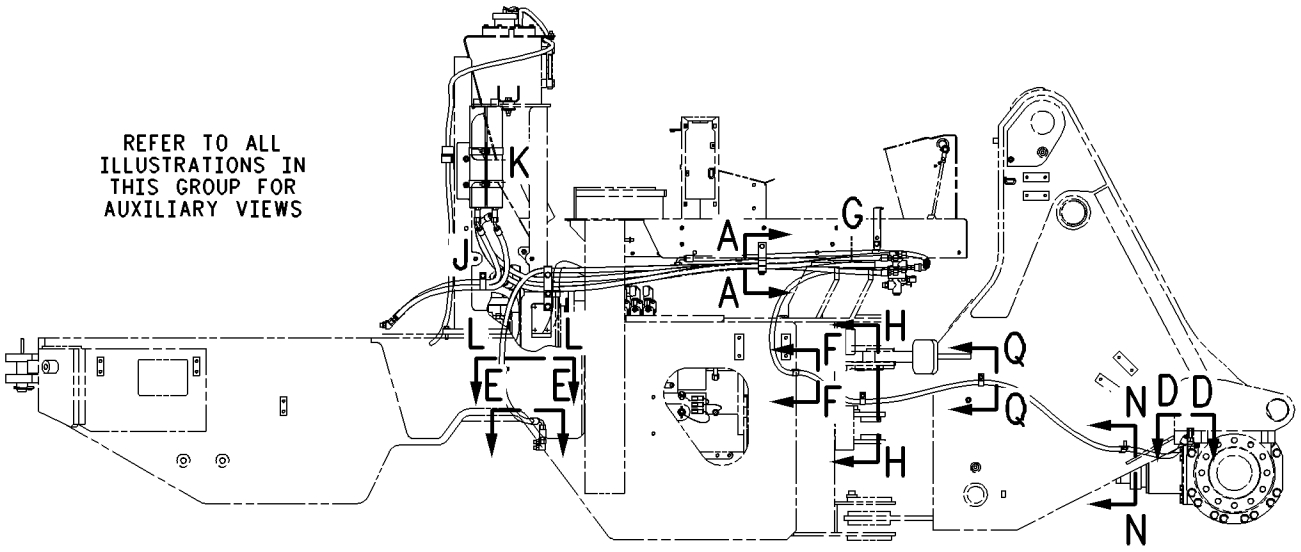

RIGHT SIDE VIEW

GRAPHIC #1 g00935537

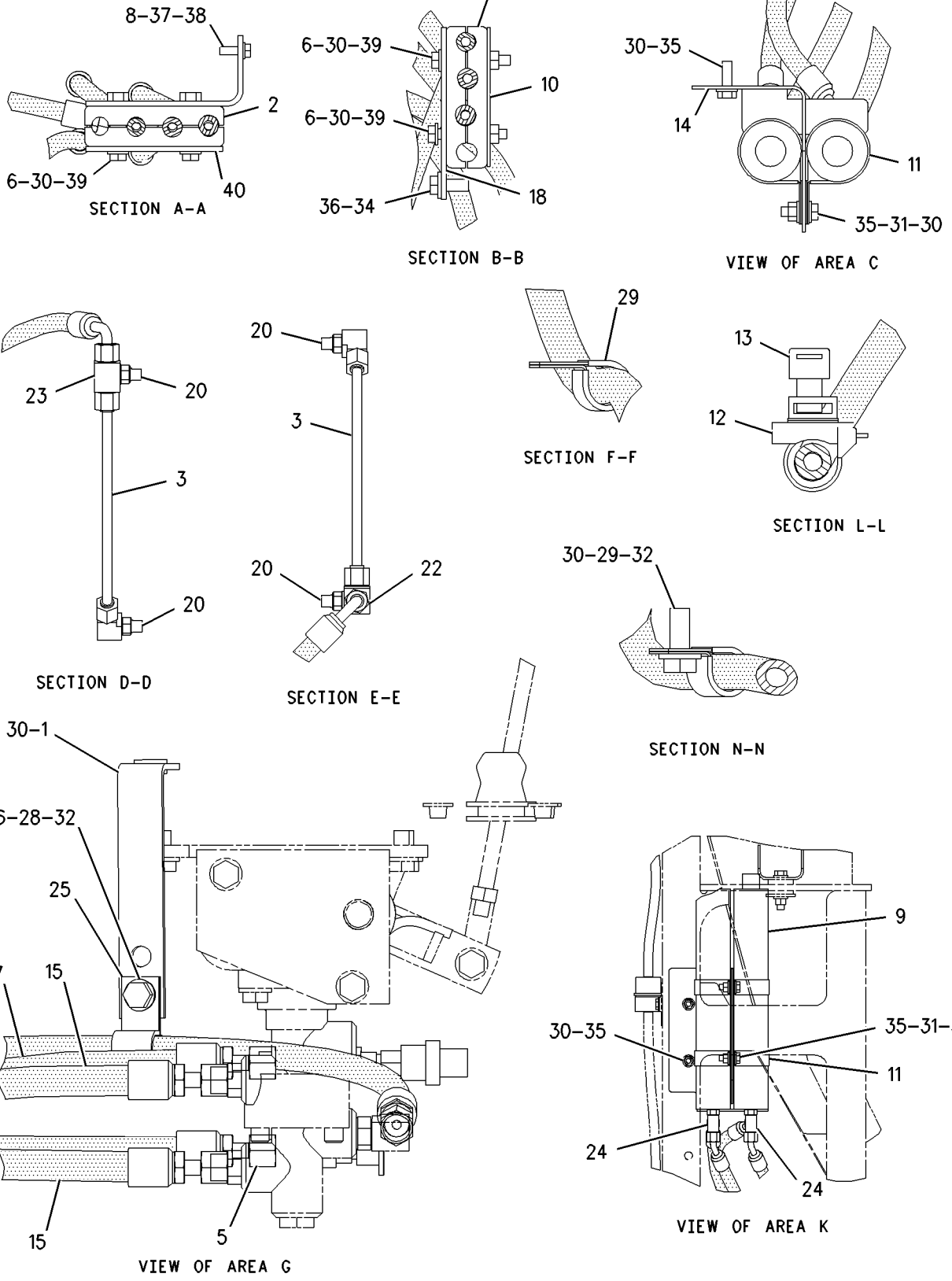

GRAPHIC #2

g00935536

203-3898 PUMP & MTG GP-BRAKE & HYD FAN

S/N: DJD1-UP; DBT1-UP

PART OF 176-5222, 176-5242 HYDRAULIC AR

SMCS-1387, 4268 **i01775198**

NOTE	REF NO	GRAPHIC REF	PART NUMBER	QTY	PART NAME 1 2 3 4 5 6 (PRODUCT LEVEL)	SEE PAGE
	1	1	**9Y-9380**	1	GASKET	
Y	2	1	**205-3665**	1	PUMP GP-GEAR (BRAKING & HYDRAULIC FAN)	314
M	3	1	**3E-8016**	5	BOLT-LOCKING (M8X1.25X25MM)	
	4	1	**8T-4224**	6	WASHER-HARD (8.8X16X2MM THK)	
M	5	1	**8T-6870**	1	BOLT (M8X1.25X70MM)	

M-METRIC PART
Y-SEPARATE ILLUSTRATION

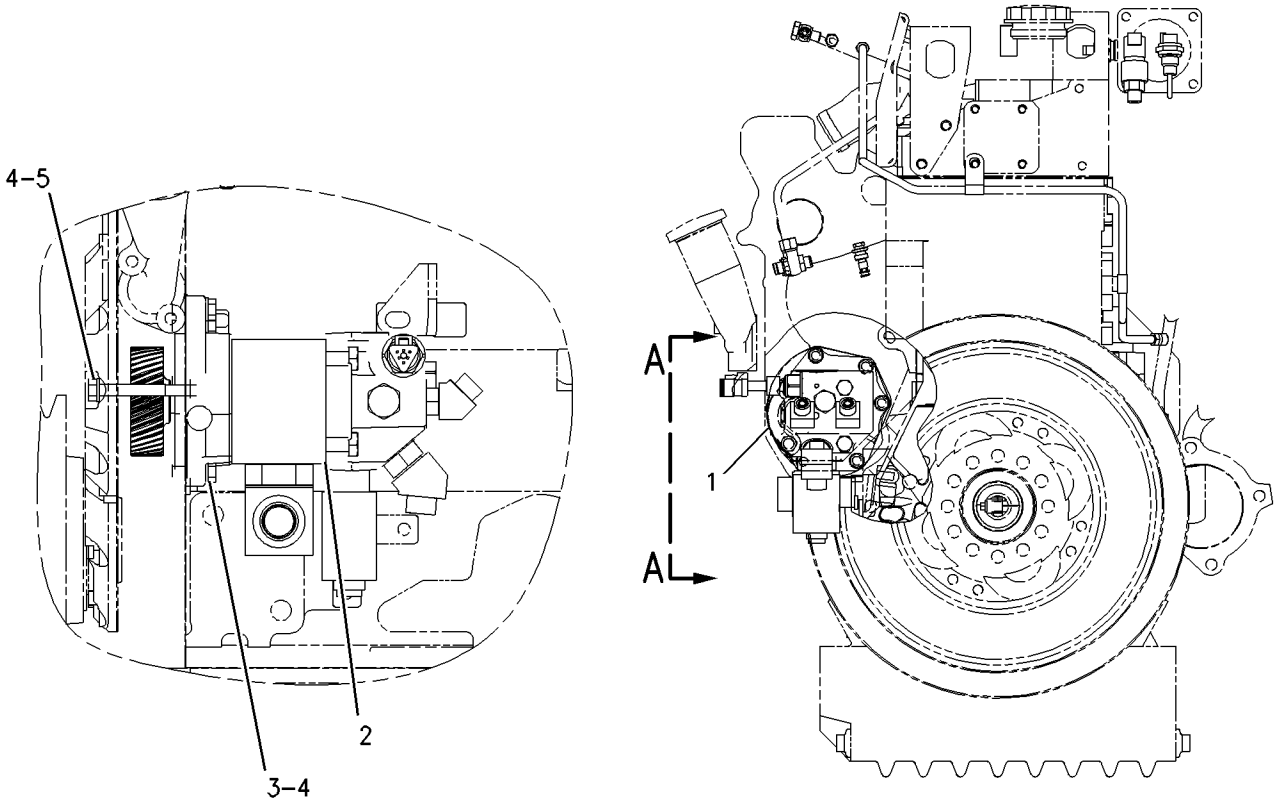

GRAPHIC #1 g00916565

MEMORANDA

199-5683 PUMP GP-GEAR–BRAKING & HYDRAULIC FAN

S/N: DJD1-UP; DBT1-UP

PART OF 205-3665 PUMP GP-GEAR

SMCS-4268, 4306, 5073 **i01775630**

NOTE	REF NO	GRAPHIC REF	PART NUMBER	QTY	PART NAME 1 2 3 4 5 6 (PRODUCT LEVEL)	SEE PAGE
J	1	1	**131-0715**	1	SEAL-SHAFT	
J	2	1	**187-1267**	1	RING-RETAINING	
J	3	1	**204-4148**	1	SEAL-SHAFT	
	4	1	**220-2657**	1	FLANGE	
	5	1	**6E-2943**	1	PLUG	
J	6	1	**4W-7356**	2	SEAL	
	7	1	**099-3095**	3	DOWEL	
	8	1	**1V-8787**	1	PIN	
	9	1	**220-2658**	1	COVER-END	
	10	1	**208-2293**	4	BOLT	
					AVAILABLE REPAIR KIT(S):	
J			**201-5242**	1	KIT-SEAL	

J-KIT MARKED J SERVICES PARTS MARKED J

199-5683 PUMP GP-GEAR ***(contd.)*** **i01775630**

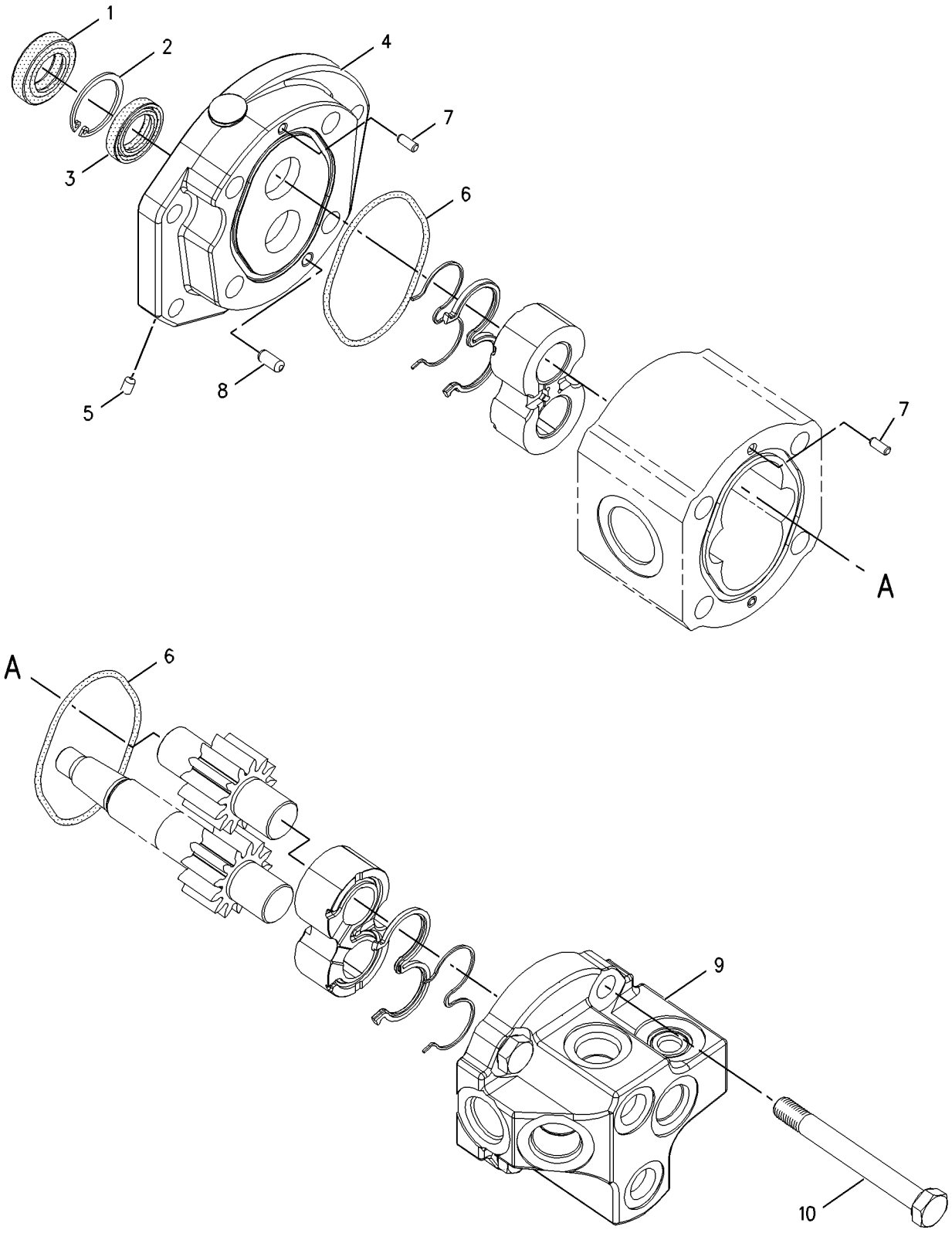

GRAPHIC #1 g00918500

205-3665 PUMP GP-GEAR–BRAKING & HYDRAULIC FAN

S/N: DJD1-UP; DBT1-UP

PART OF 203-3898 PUMP & MTG GP-BRAKE & HYD FAN

SMCS-4268, 4306, 5073 **i01844026**

NOTE	REF NO	GRAPHIC REF	PART NUMBER	QTY	PART NAME 1 2 3 4 5 6 (PRODUCT LEVEL)	SEE PAGE
	1	1	**205-4587**	1	GEAR (40 TOOTH)	
M	2	1	**160-8499**	1	NUT	
	3	1	**5P-8244**	1	WASHER (12X22.5X2.5MM THK)	
	4	1	**203-6590**	1	VALVE GP-SOLENOID	
	4A	1	**146-3728**	1	WASHER-SPRING	
	4B	1	**148-2350**	1	COIL AS	
Z	4C	1		1	CARTRIDGE AS	
Z	4D	1		1	ADAPTER AS	
Y	5	1	**199-5683**	1	PUMP GP-GEAR (BRAKING AND HYDRAULIC FAN)	312
	6	1	*148-8347*	1	ELBOW GP	
		1	**3D-2824**	1	SEAL-O-RING	
		1	**6V-9007**	1	ELBOW	
		1	**6V-9746**	1	SEAL-O-RING	
	7	1	**213-4555**	1	VALVE GP-CONTROL	
		1	**3K-0360**	1	SEAL-O-RING	
		1	**095-1750**	1	SEAL-O-RING	
		1	**161-6149**	1	SEAL-O-RING	
		1	**161-6161**	1	RING-BACKUP	
		1	**187-0541**	1	RING-BACKUP	
	8	1	**215-6671**	1	SENSOR GP-PRESSURE	
E		1	**9X-1813**		SLEEVE (35CM)	
		1	**155-2260**	1	KIT-CONNECTING PLUG (3 PIN)	
		1	**155-2276**	1	WEDGE-PLUG LOCK (3 PIN)	
	9	1	**3E-4296**	1	SEAL-O-RING	
	10	1	**220-0186**	1	ORIFICE	
	11	1	**087-0991**	1	VALVE AS-CHECK	
	12	1	*148-8358*	1	ELBOW AS	
		1	**2M-9780**	1	SEAL-O-RING	
		1	**6V-8398**	1	SEAL-O-RING	
		1	**6V-8624**	1	ELBOW	
	13	1	*148-8353*	2	ELBOW GP	
					(EACH INCLUDES)	
		1	**3J-1907**	1	SEAL-O-RING	
		1	**6V-8397**	1	SEAL-O-RING	
		1	**6V-9001**	1	ELBOW	

E-ORDER BY THE CENTIMETER
M-METRIC PART
Y-SEPARATE ILLUSTRATION
Z-NOT SERVICED SEPARATELY

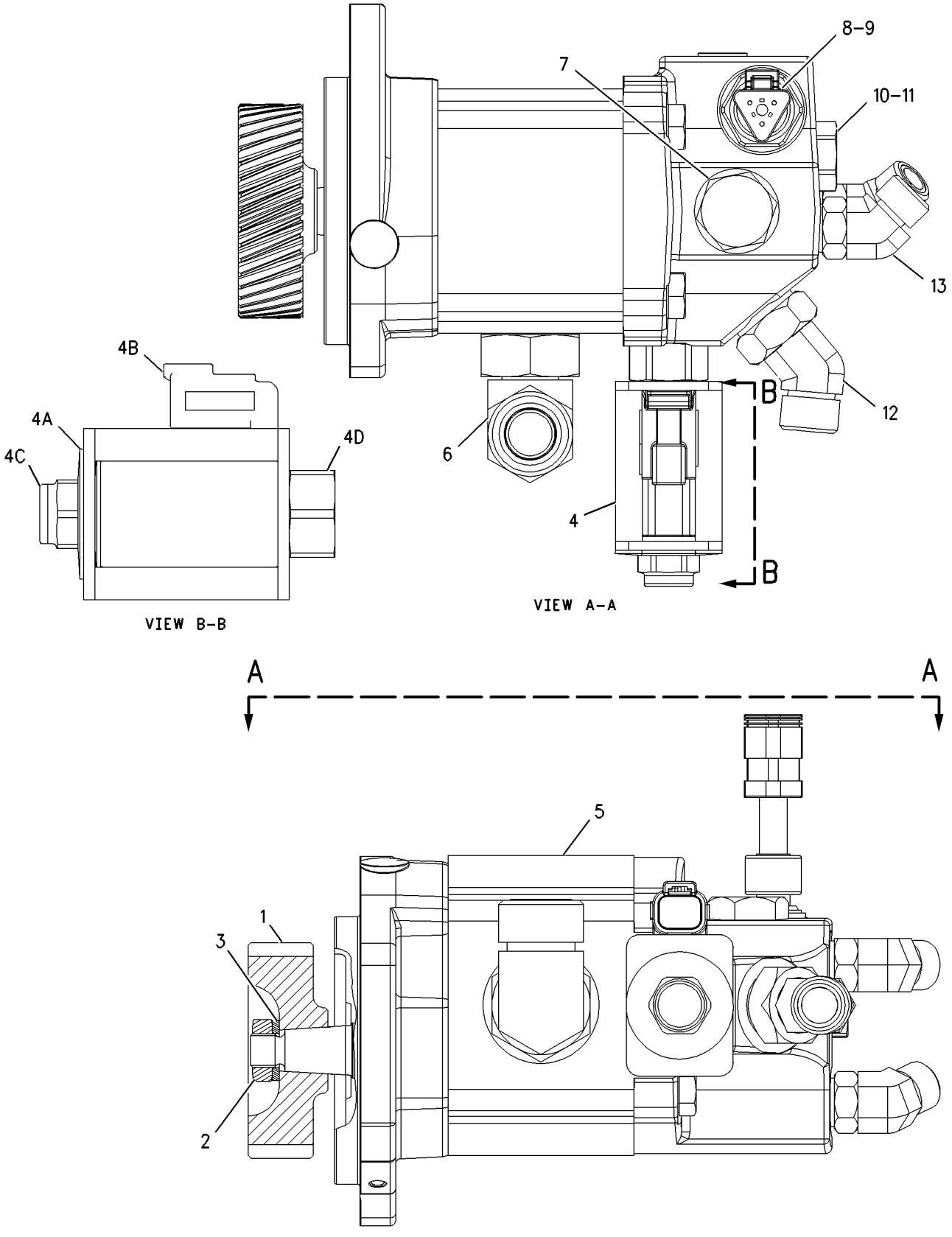

GRAPHIC #1

g00918970

190-4635 CONTROL GP-STEERING

S/N: DJD1-UP; DBT1-UP
PART OF 190-4405 CAB AR, 190-4652 PLATFORM AR
AN ATTACHMENT

SMCS-4304, 4309, 4310, 4338 **i01779779**

NOTE	REF NO	GRAPHIC REF	PART NUMBER	QTY	PART NAME 1 2 3 4 5 6 (PRODUCT LEVEL)	SEE PAGE
	1	1	**2T-3360**	1	BUTTON AS-HORN	
	2	1	**8R-2918**	1	KNOB AS	
	3	1	**9D-7924**	4	MOUNTING	
	4	1	**107-6007**	1	SUPPORT AS	
	5	1	**107-6141**	1	COVER	
	6	1	**111-7874**	1	SEAL	
	7	1	**111-7878**	1	COVER	
	8	1	**129-3270**	1	WHEEL AS-STEERING	
	9	1	**134-4735**	1	PLATE AS	
M		1	**8T-3612**	4	NUT-WELD (M8X1.25 THD)	
Y	10	1	**201-4825**	1	STEERING COLUMN GP (TILT)	337
	11	1	**5P-4116**	5	WASHER-HARD (8.8X20.5X2MM THK)	
	12	1	**7X-0603**	4	WASHER-HARD (9.9X35X2.5MM THK)	
M	13	1	**8T-4189**	5	BOLT (M8X1.25X20MM)	
M	14	1	**8T-4191**	4	BOLT (M10X1.5X16MM)	
M	15	1	**8T-6869**	4	BOLT (M8X1.25X60MM)	
M	16	1	**8T-8894**	4	BOLT-SOCKET HEAD (M10X1.5X20MM)	
M	17	1	**9X-2042**	4	SCREW-TRUSS HEAD (M6X1X12MM)	
M	18	1	**9X-2045**	2	SCREW-TRUSS HEAD (M6X1X20MM)	

M-METRIC PART
Y-SEPARATE ILLUSTRATION

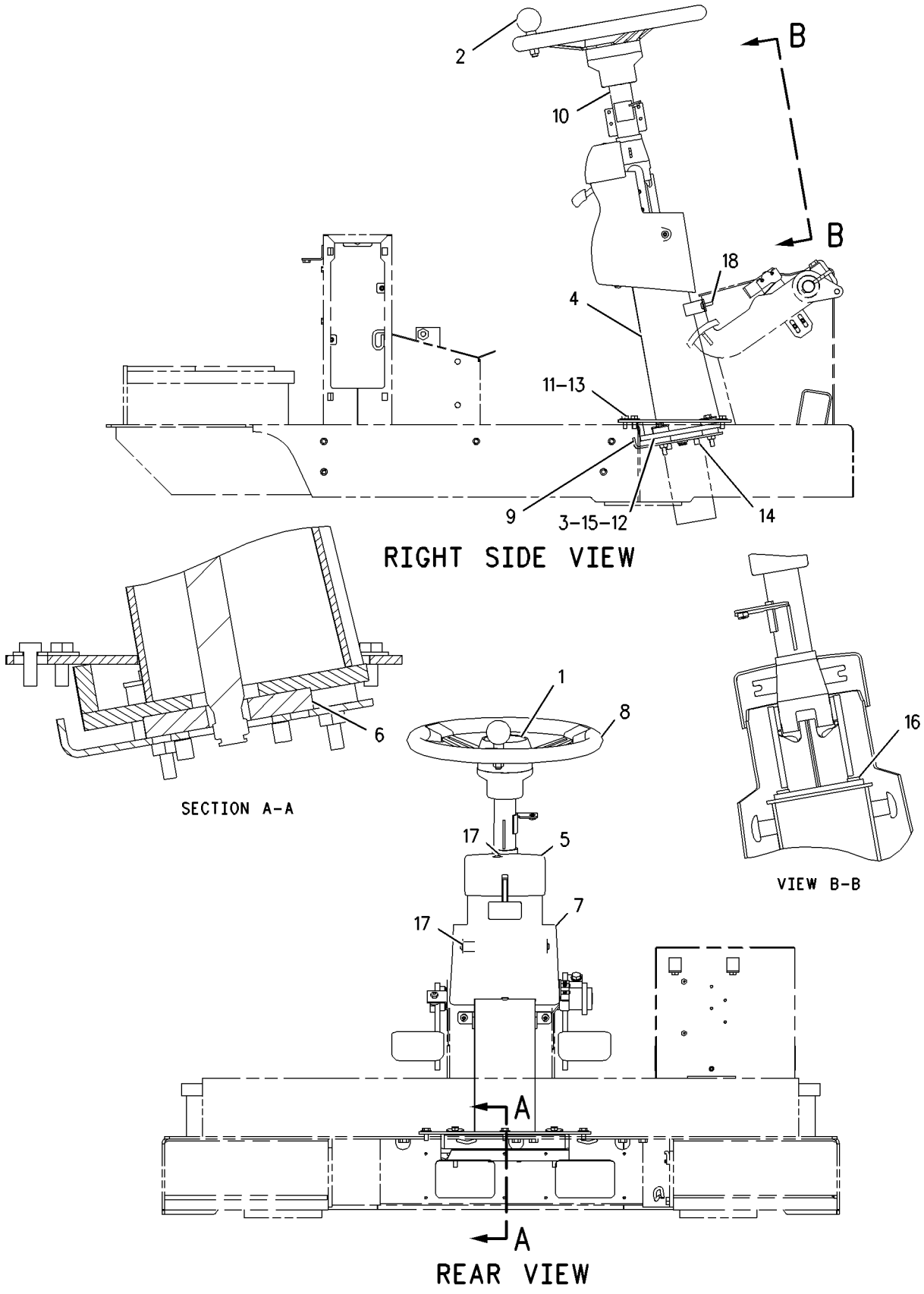

GRAPHIC #1

g00913540

STEERING SYSTEM

190-4643 CONTROL GP-STEERING

S/N: DJD1-UP; DBT1-UP
PART OF 190-4406 CANOPY GP-OPEN ROPS
AN ATTACHMENT

SMCS-4304, 4309, 4310, 4338 **i01780313**

NOTE	REF NO	GRAPHIC REF	PART NUMBER	QTY	PART NAME 1 2 3 4 5 6 (PRODUCT LEVEL)	SEE PAGE
	1	1	**2T-3360**	1	BUTTON AS-HORN	
	2	1	**8R-2918**	1	KNOB AS	
	3	1	**9D-7924**	4	MOUNTING	
	4	1	**107-6007**	1	SUPPORT AS	
	5	1	**107-6141**	1	COVER	
	6	1	**111-7878**	1	COVER	
	7	1	**129-3270**	1	WHEEL AS-STEERING	
	8	1	**134-4735**	1	PLATE AS	
M		1	**8T-3612**	4	NUT-WELD (M8X1.25 THD)	
Y	9	1	**201-4825**	1	STEERING COLUMN GP (TILT)	337
	10	1	**5P-4116**	5	WASHER-HARD (8.8X20.5X2MM THK)	
	11	1	**7X-0603**	4	WASHER-HARD (9.9X35X2.5MM THK)	
M	12	1	**8T-4189**	5	BOLT (M8X1.25X20MM)	
M	13	1	**8T-4191**	4	BOLT (M10X1.5X16MM)	
M	14	1	**8T-6869**	4	BOLT (M8X1.25X60MM)	
M	15	1	**8T-8894**	4	BOLT-SOCKET HEAD (M10X1.5X20MM)	
M	16	1	**9X-2042**	4	SCREW-TRUSS HEAD (M6X1X12MM)	
M	17	1	**9X-2045**	2	SCREW-TRUSS HEAD (M6X1X20MM)	

M-METRIC PART
Y-SEPARATE ILLUSTRATION

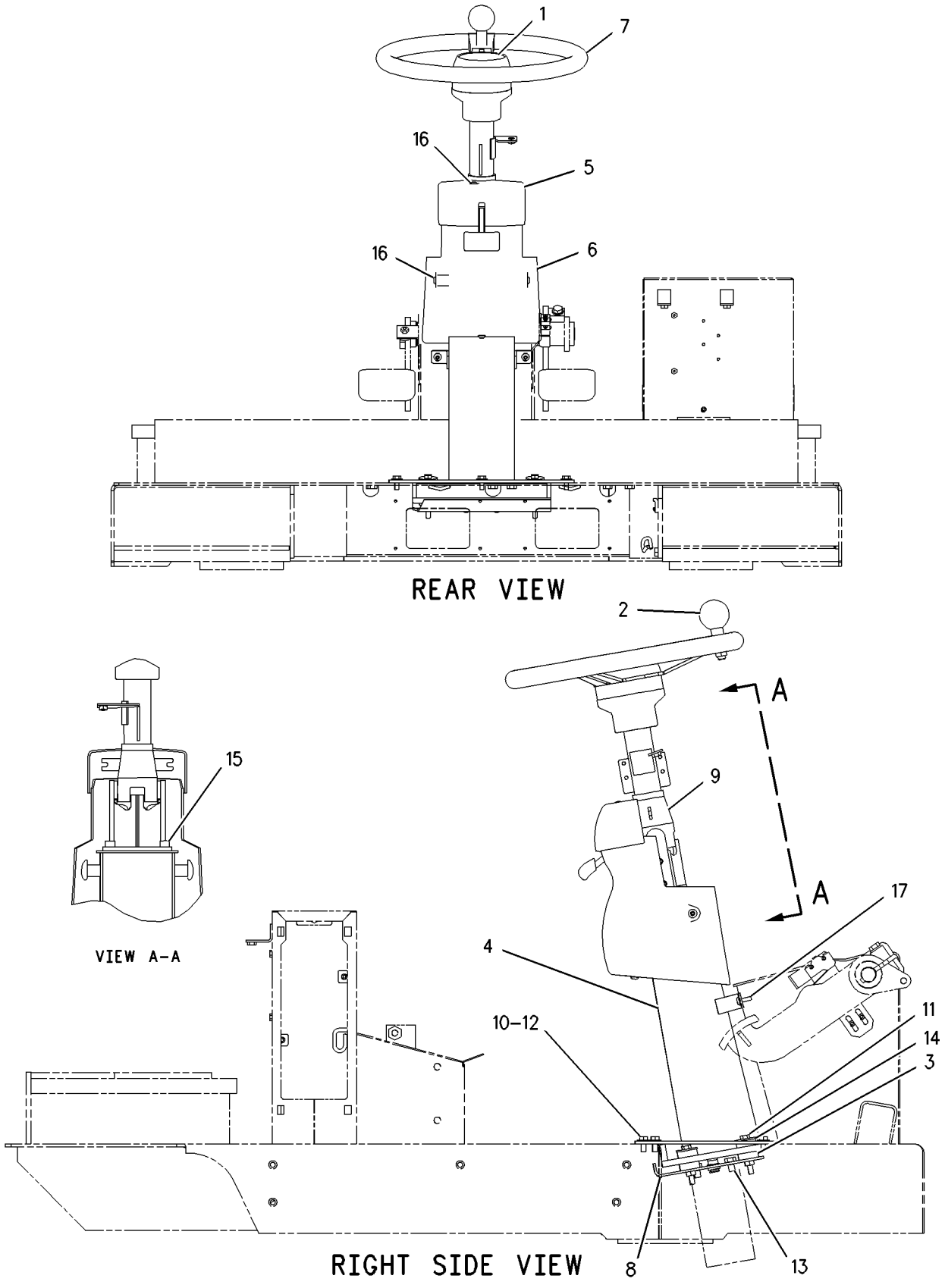

GRAPHIC #1 g00913405

STEERING SYSTEM

118-0899 CYLINDER & MTG GP-STEERING

S/N: DJD1-UP; DBT1-UP

PART OF 176-5221, 204-4349 CHASSIS AR

SMCS-4303 **i01216070**

NOTE	REF NO	GRAPHIC REF	PART NUMBER	QTY	PART NAME 1 2 3 4 5 6 (PRODUCT LEVEL)	SEE PAGE
	1	1	**4E-4524**	4	PIN AS	
B	2	1	**9D-1535**	12	WASHER-THRUST (1.22MM THK)	
Y	3	1	**125-0373**	1	CYLINDER GP-HYDRAULIC (RH)	322
Y	4	1	**125-0374**	1	CYLINDER GP-STEERING (LH)	324
	5	1	**7X-0618**	2	WASHER-HARD (5MM THK)	
M	6	1	**8T-4192**	2	BOLT (M12X1.75X25MM)	
	7	1	**8T-4223**	4	WASHER-HARD (3MM THK)	
M	8	1	**8T-6868**	2	BOLT (M12X1.75X80MM)	

B-USE AS REQUIRED
M-METRIC PART
Y-SEPARATE ILLUSTRATION

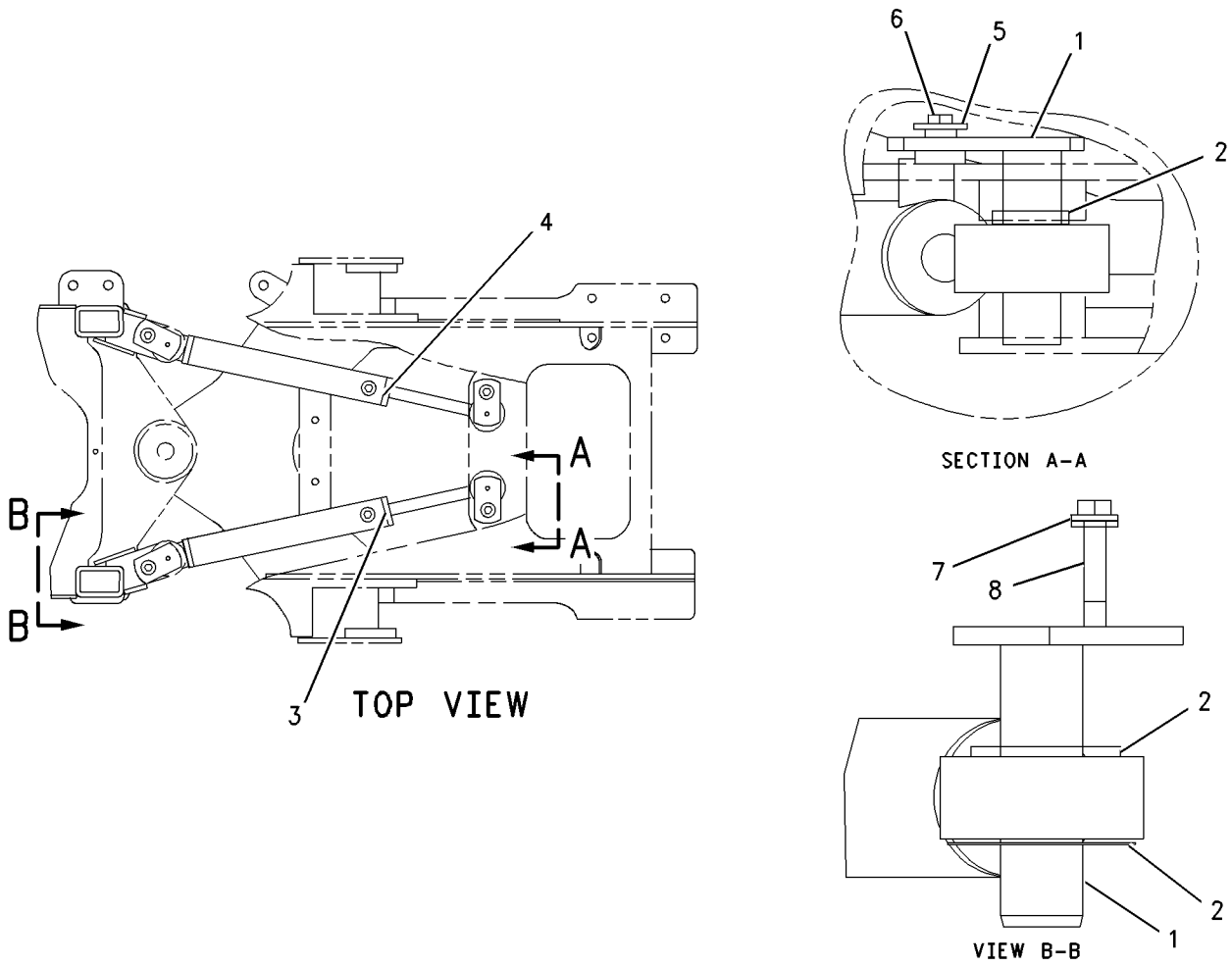

GRAPHIC #1 g00651374

MEMORANDA

125-0373 CYLINDER GP-HYDRAULIC—RH

S/N: DJD1-UP; DBT1-UP
69.9 MM (2.75 IN) BORE X 472 MM (18.6 IN) STROKE
PART OF 118-0899 CYLINDER & MTG GP-STEERING

SMCS-4303 **i00523696**

NOTE	REF NO	GRAPHIC REF	PART NUMBER	QTY	PART NAME 1 2 3 4 5 6 (PRODUCT LEVEL)	SEE PAGE
	1	1	**125-0375**	1	CYLINDER AS-RH	
		1	**130-9901**	1	CAP	
	2	1	**4D-4431**	1	BEARING-ALIGNING	
	3	1	**8T-3282**	1	WASHER-HARD (3.5MM THK)	
	4	1	**5J-7010**	1	SEAL AS	
	5	1	**8J-0112**	1	RING-WEAR	
	6	1	**9T-2457**	1	PISTON	
	7	1	**5H-8848**	1	SEAL-O-RING (69.44MM ID)	
	8	1	**4J-9225**	1	RING-BACKUP	
	9	1	**6E-4940**	1	HEAD	
	10	1	**9T-6672**	1	ROD AS	
	11	1	**4D-4431**	1	BEARING-ALIGNING	
	12	1	**8C-9122**	1	SEAL AS	
	13	1	**5J-8150**	1	SEAL-U-CUP	
	14	1	**8C-9131**	1	SEAL-LIP	
	15	1	**006-8663**	1	RING	
M	16	1	**6V-5845**	1	BOLT (M20X2.5X70MM)	
	17	1	**4T-6780**	1	RING-WEAR	

M-METRIC PART

125-0373 CYLINDER GP-HYDRAULIC *(contd.)* i00523696

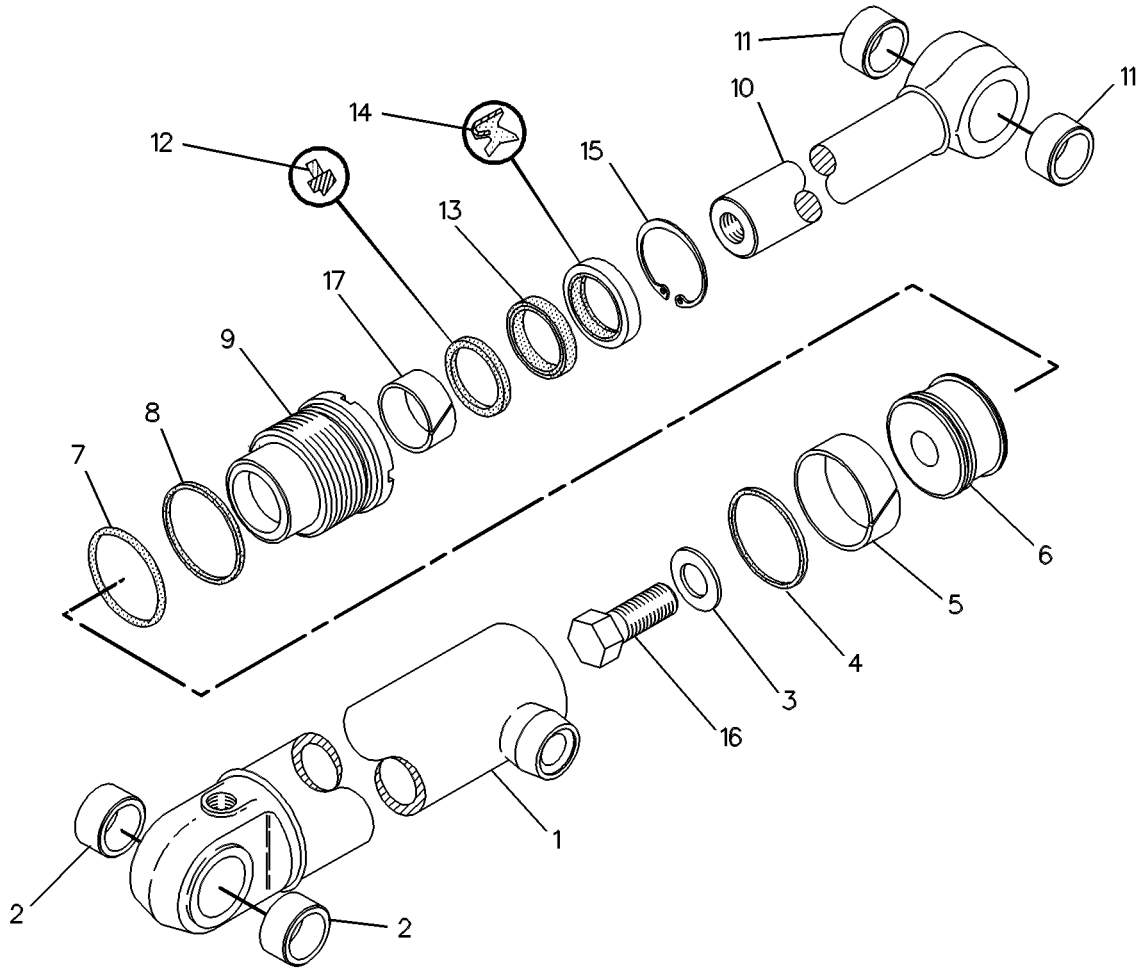

GRAPHIC #1 g00131642

125-0374 CYLINDER GP-STEERING—LH

S/N: DJD1-UP; DBT1-UP
69.9 MM (2.75 IN) BORE X 472 MM (18.6 IN) STROKE
PART OF 118-0899 CYLINDER & MTG GP-STEERING

SMCS-4303 **i00523710**

NOTE	REF NO	GRAPHIC REF	PART NUMBER	QTY	PART NAME 1 2 3 4 5 6 (PRODUCT LEVEL)	SEE PAGE
	1	1	**125-0376**	1	CYLINDER AS-LH	
		1	**130-9901**	1	CAP	
	2	1	**4D-4431**	1	BEARING-ALIGNING	
	3	1	**8T-3282**	1	WASHER-HARD (3.5MM THK)	
	4	1	**5J-7010**	1	SEAL AS	
	5	1	**8J-0112**	1	RING-WEAR	
	6	1	**9T-2457**	1	PISTON	
	7	1	**5H-8848**	1	SEAL-O-RING (69.44MM ID)	
	8	1	**4J-9225**	1	RING-BACKUP	
	9	1	**6E-4940**	1	HEAD	
	10	1	**9T-6672**	1	ROD AS	
	11	1	**4D-4431**	1	BEARING-ALIGNING	
	12	1	**8C-9122**	1	SEAL AS	
	13	1	**5J-8150**	1	SEAL-U-CUP	
	14	1	**8C-9131**	1	SEAL-LIP	
	15	1	**006-8663**	1	RING	
M	16	1	**6V-5845**	1	BOLT (M20X2.5X70MM)	
	17	1	**4T-6780**	1	RING-WEAR	

M-METRIC PART

125-0374 CYLINDER GP-STEERING *(contd.)* i00523710

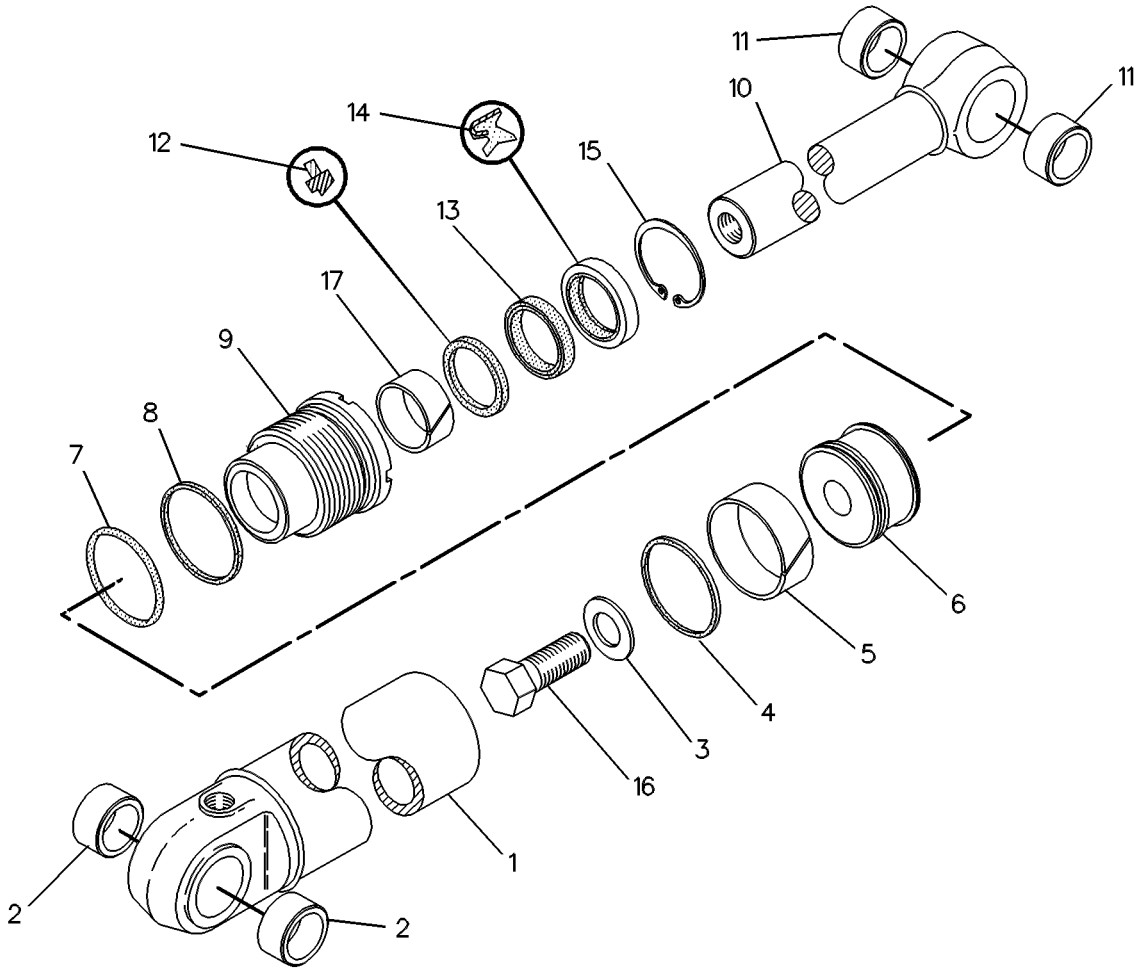

GRAPHIC #1 g00131641

STEERING SYSTEM

212-9977 LINES GP-SECONDARY STEERING

S/N: DJD1-UP; DBT1-UP
TO ASSIST IN STEERING WHEN ENGINE STOPS RUNNING
PART OF 203-4659 STEERING AR
AN ATTACHMENT

SMCS-4304 **i01834801**

NOTE	REF NO	GRAPHIC REF	PART NUMBER	QTY	PART NAME 1 2 3 4 5 6 (PRODUCT LEVEL)	SEE PAGE
	1	2	**3E-6450**	1	SWITCH AS-PRESSURE (SECONDARY STEERING OIL)	
		2	**102-8803**	1	KIT-RECEPTACLE (3 PIN)	
		2	**8T-8729**	3	PIN-CONNECTOR	
	2	2	**3S-9703**	2	TUBE-RETAINER	
	3	2	**5T-6374**	1	SPACER (10.5X20X40MM THK)	
	4	1	**7K-1181**	1	STRAP-CABLE	
I	5	1	**9R-4688**	1	HOSE AS	
	6	2	**9T-1013**	2	VALVE AS-CHECK	
					(EACH INCLUDES)	
		2	**3K-0360**	1	SEAL-O-RING (16.36MM ID)	
		2	**6V-8398**	1	SEAL-O-RING	
	7	2	**9T-8071**	1	VALVE GP-RELIEF (SECONDARY STEERING)	
I	8	1	**133-4826**	2	HOSE AS	
	9	2	**154-8150**	1	TEE-SWIVEL	
	10	1,2	**200-6345**	2	MOUNT-SWIVEL	
	11	1,2	**204-2281**	5	TIE	
	12	2	**205-5266**	1	PUMP & MOTOR GP-SEC STEERING	
		2	**1A-2209**	2	BOLT (3/8-24X1.25 IN)	
		2	**117-3915**	1	MOTOR GP-ELECTRIC	
		2	**6V-8801**	2	NUT (3/8-16 THD)	
		2	**7X-0608**	2	WASHER-HARD (10.2X16X2.0MM THK)	
		2	**123-8914**	1	PUMP	
	13	2	**211-6643**	1	PLATE AS	
I	14	2	**212-4648**	1	HOSE AS	
I	15	1	**212-4650**	2	HOSE AS	
I	16	2	**213-7438**	1	HOSE AS	
I	17	2	**214-1542**	1	HOSE AS	
I	18	1	**214-1543**	1	HOSE AS	
I	19	1	**214-1544**	1	HOSE AS	
I	20	1	**214-2282**	1	HOSE AS	
	21	1	**223-2223**	1	PUMP GP-METERING	
	22	2	*148-8316*	1	CONNECTOR GP	
		2	**3J-7354**	1	SEAL-O-RING (8.92MM ID)	
		2	**4J-5477**	1	SEAL-O-RING	
		2	**6V-8647**	1	CONNECTOR	
	23	2	*148-8340*	4	CONNECTOR GP	
					(EACH INCLUDES)	
		2	**3K-0360**	1	SEAL-O-RING (16.36MM ID)	
		2	**6V-8398**	1	SEAL-O-RING	
		2	**6V-8639**	1	CONNECTOR	
	24	2	*148-8342*	1	CONNECTOR GP	
		2	**3K-0360**	1	SEAL-O-RING (16.36MM ID)	
		2	**6V-8632**	1	CONNECTOR	
		2	**7J-9108**	1	SEAL-O-RING	
	25	1,2	*148-8345*	2	CONNECTOR GP	
					(EACH INCLUDES)	
		1,2	**2M-9780**	1	SEAL-O-RING	
		1,2	**6V-8398**	1	SEAL-O-RING	
		1,2	**6V-8638**	1	CONNECTOR-SEAL	
	26	2	*148-8347*	1	ELBOW GP	
		2	**3D-2824**	1	SEAL-O-RING	
		2	**6V-9007**	1	ELBOW	
		2	**6V-9746**	1	SEAL-O-RING	

212-9977 LINES GP-SECONDARY STEERING *(contd.)* i01834801

NOTE	REF NO	GRAPHIC REF	PART NUMBER	QTY	PART NAME 1 2 3 4 5 6 (PRODUCT LEVEL)	SEE PAGE
	27	2	*148-8358*	2	ELBOW AS	
					(EACH INCLUDES)	
		2	**2M-9780**	1	SEAL-O-RING	
		2	**6V-8398**	1	SEAL-O-RING	
		2	**6V-8624**	1	ELBOW	
	28	1	*148-8369*	1	ELBOW GP	
		1	**3J-7354**	1	SEAL-O-RING (8.92MM ID)	
		1	**4J-5477**	1	SEAL-O-RING	
		1	**6V-8628**	1	ELBOW	
	29	2	*148-8418*	1	REDUCER GP	
		2	**6V-8398**	1	SEAL-O-RING	
		2	**6V-8942**	1	REDUCER-O-RING (FACE)	
	30	2	*148-8421*	1	TEE AS	
		2	**3D-2824**	1	SEAL-O-RING	
		2	**6V-8397**	1	SEAL-O-RING	
		2	**6V-9746**	1	SEAL-O-RING	
		2	**8T-2883**	1	TEE	
	31	2	*148-8436*	1	TEE AS	
		2	**3K-0360**	1	SEAL-O-RING (16.36MM ID)	
		2	**6V-8398**	2	SEAL-O-RING	
		2	**6V-8775**	1	TEE-FACE SEAL	
	32	2	*148-8444*	2	TEE GP	
					(EACH INCLUDES)	
		2	**6V-8398**	2	SEAL-O-RING	
		2	**6V-9837**	1	TEE-SWIVEL	
	33	2	*150-4033*	1	TEE GP	
		2	**6V-9746**	2	SEAL-O-RING	
		2	**6V-9846**	1	TEE-SWIVEL	
	34	2	*150-4036*	1	TEE AS	
		2	**3K-0360**	1	SEAL-O-RING (16.36MM ID)	
		2	**118-0911**	1	TEE-O-RING PORT	
	35	1	*155-6258*	1	ELBOW AS	
		1	**3D-2824**	1	SEAL-O-RING	
		1	**6V-8398**	1	SEAL-O-RING	
		1	**127-1647**	1	ELBOW	
	36	2	**204-8000**	1	MOUNT	
	37	2	**3K-0360**	1	SEAL-O-RING (16.36MM ID)	
	38	2	**5P-7464**	6	CLIP (SLOT)	
	39	2	**5P-7465**	6	CLIP (TAB)	
	40	1	**6D-4244**	1	CLIP	
	41	2	**6V-1249**	6	GROMMET	
	42	2	**6V-8398**	1	SEAL-O-RING	
	43	2	**6V-8556**	1	NUT (1 3/16-12 THD)	
	44	2	**7X-7729**	2	WASHER (11X25X3MM THK)	
	45	2	**8T-4121**	2	WASHER-HARD (11X21X2.5MM THK)	
M	46	2	**8T-4136**	2	BOLT (M10X1.5X25MM)	
M	47	2	**8T-4172**	1	BOLT (M10X1.50X80MM)	
M	48	2	**8T-4186**	1	BOLT (M10X1.5X40MM)	
	49	2	**8T-4224**	4	WASHER-HARD (8.8X16X2MM THK)	
M	50	2	**8T-7547**	4	BOLT (M8X1.25X30MM)	

I-SEE HOSE FABRICATION GUIDE
M-METRIC PART

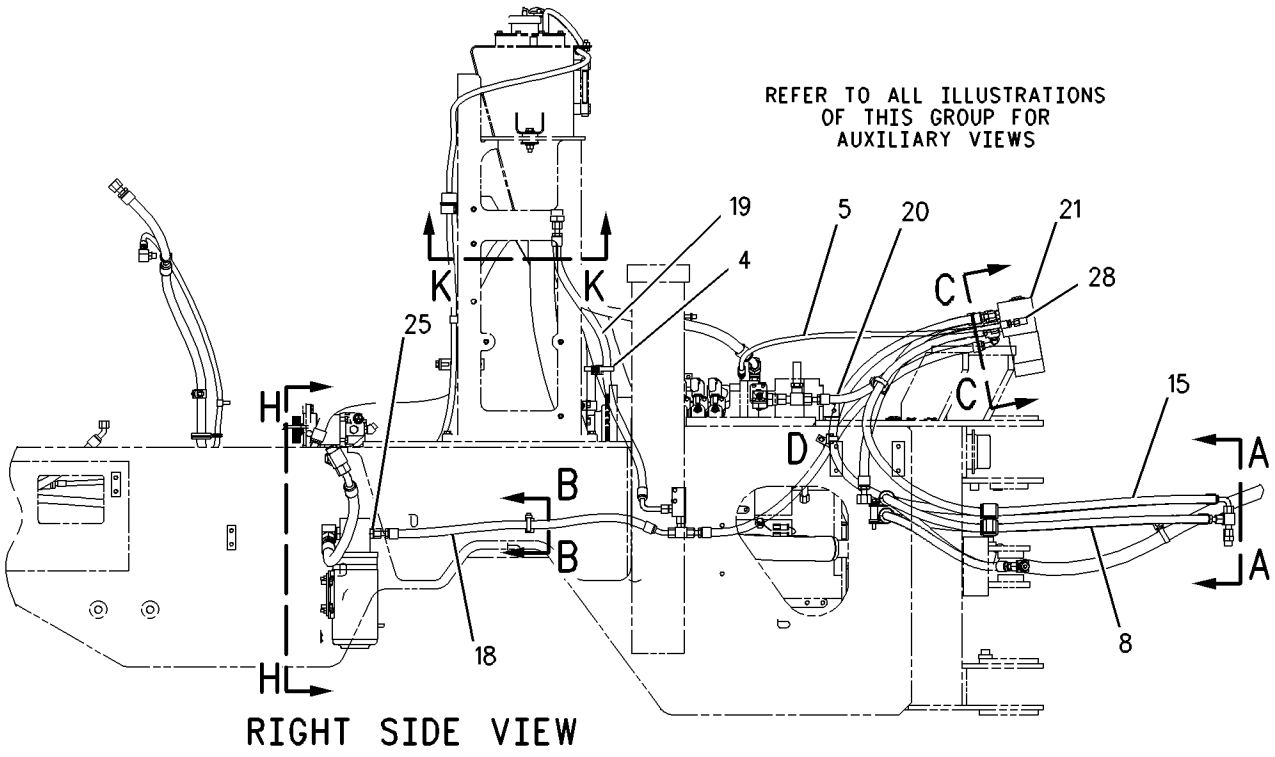

RIGHT SIDE VIEW

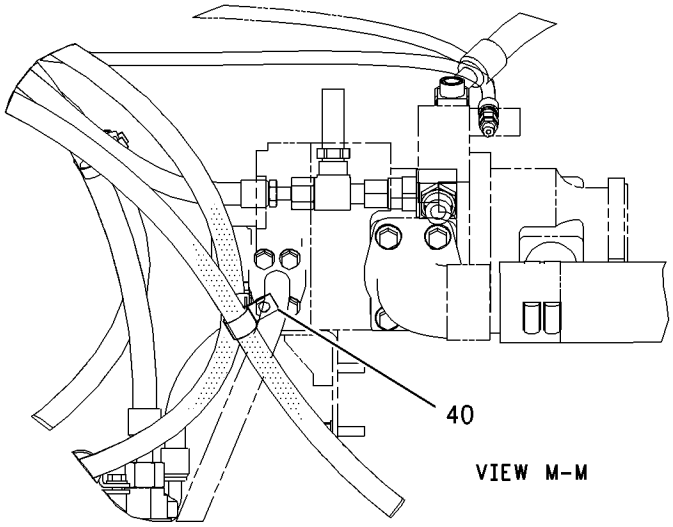

VIEW M-M

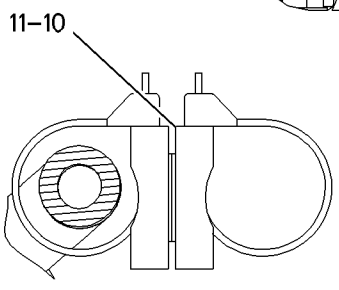

SECTION B-B

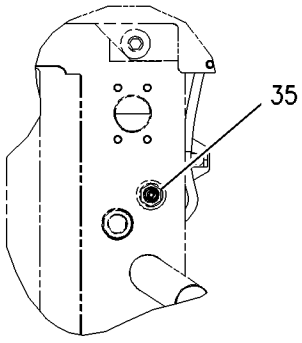

SECTION K-K

GRAPHIC #1 g00924970

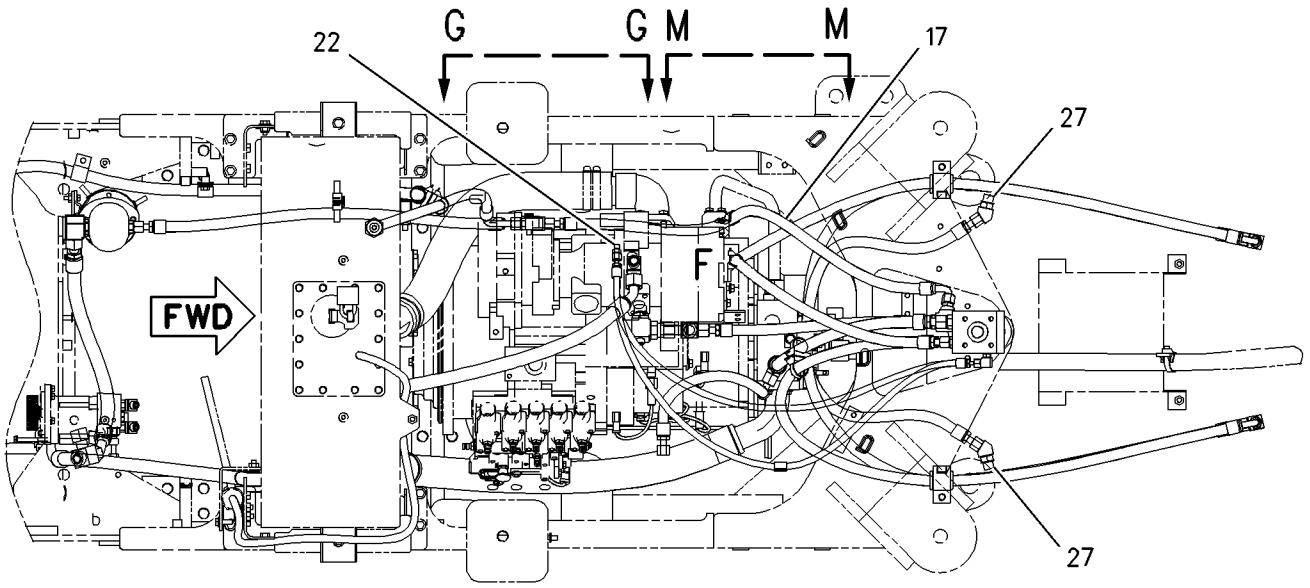

TOP VIEW

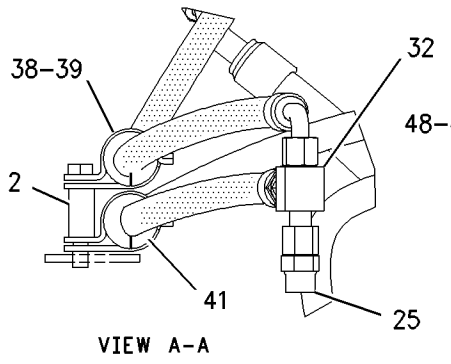

VIEW A-A

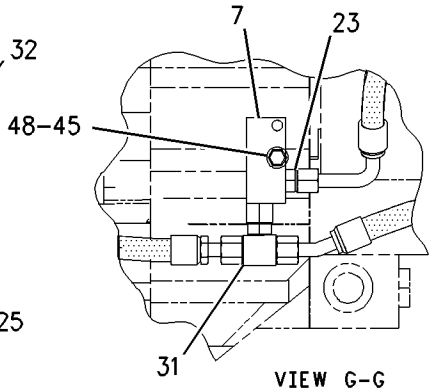

VIEW G-G

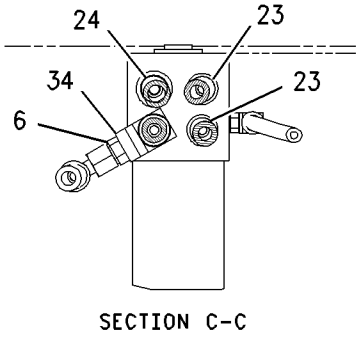

SECTION C-C

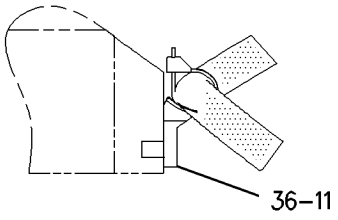

VIEW OF AREA F

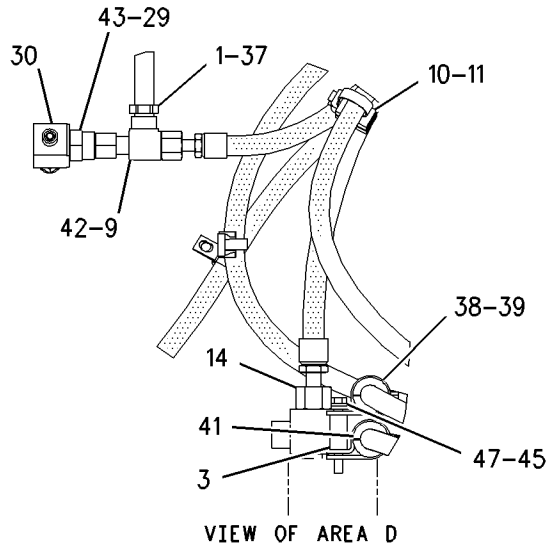

VIEW OF AREA D

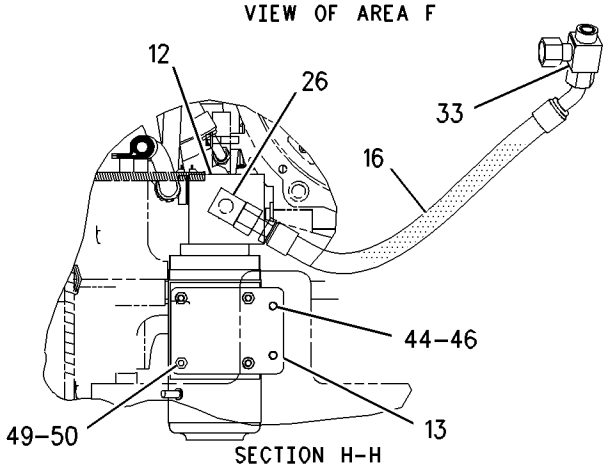

SECTION H-H

GRAPHIC #2 g00925437

STEERING SYSTEM

212-4656 LINES GP-STEERING

S/N: DJD1-UP; DBT1-UP
PART OF 203-3900 STEERING AR
AN ATTACHMENT

SMCS-4304 **i01804706**

NOTE	REF NO	GRAPHIC REF	PART NUMBER	QTY	PART NAME 1 2 3 4 5 6 (PRODUCT LEVEL)	SEE PAGE
	1	2	**3S-9703**	2	TUBE-RETAINER	
	2	2	**5T-6374**	1	SPACER (10.5X20X40MM THK)	
I	3	1	**9R-4688**	1	HOSE AS	
	4	1	**223-2223**	1	PUMP GP-METERING	
	5	1	**200-6345**	1	MOUNT-SWIVEL	
	6	1,2	**204-2281**	3	TIE	
I	7	1	**212-4648**	1	HOSE AS	
I	8	1	**212-4649**	1	HOSE AS	
I	9	1	**212-4650**	2	HOSE AS	
I	10	1	**133-4826**	2	HOSE AS	
	11	1	*148-8316*	1	CONNECTOR GP	
		1	**3J-7354**	1	SEAL-O-RING	
		1	**4J-5477**	1	SEAL-O-RING	
		1	**6V-8647**	1	CONNECTOR	
	12	2	*148-8340*	3	CONNECTOR GP	
					(EACH INCLUDES)	
		2	**3K-0360**	1	SEAL-O-RING	
		2	**6V-8398**	1	SEAL-O-RING	
		2	**6V-8639**	1	CONNECTOR	
	13	2	*148-8342*	1	CONNECTOR GP	
		2	**3K-0360**	1	SEAL-O-RING	
		2	**6V-8632**	1	CONNECTOR	
		2	**7J-9108**	1	SEAL-O-RING	
	14	1	*148-8345*	2	CONNECTOR GP	
					(EACH INCLUDES)	
		1	**2M-9780**	1	SEAL-O-RING	
		1	**6V-8398**	1	SEAL-O-RING	
		1	**6V-8638**	1	CONNECTOR-SEAL	
	15	1	*148-8358*	2	ELBOW AS	
					(EACH INCLUDES)	
		1	**2M-9780**	1	SEAL-O-RING	
		1	**6V-8398**	1	SEAL-O-RING	
		1	**6V-8624**	1	ELBOW	
	16	1	*148-8369*	1	ELBOW GP	
		1	**3J-7354**	1	SEAL-O-RING	
		1	**4J-5477**	1	SEAL-O-RING	
		1	**6V-8628**	1	ELBOW	
	17	2	*148-8418*	1	REDUCER GP	
		2	**6V-8398**	1	SEAL-O-RING	
		2	**6V-8942**	1	REDUCER-O-RING (FACE)	
	18	2	*148-8421*	1	TEE AS-ORFS	
		2	**3D-2824**	1	SEAL-O-RING	
		2	**6V-8397**	1	SEAL-O-RING	
		2	**6V-9746**	1	SEAL-O-RING	
		2	**8T-2883**	1	TEE	
	19	1	*148-8444*	2	TEE GP	
					(EACH INCLUDES)	
		1	**6V-8398**	2	SEAL-O-RING	
		1	**6V-9837**	1	TEE-SWIVEL	
	20	1	*148-8408*	1	PLUG AS	
		1	**3D-2824**	1	SEAL-O-RING	
		1	**9S-4183**	1	PLUG	
	21	2	**204-8000**	1	MOUNT	
	22	2	**5P-7464**	6	CLIP (SLOT)	
	23	2	**5P-7465**	6	CLIP (TAB)	

212-4656 **LINES GP-STEERING** ***(contd.)*** **i01804706**

NOTE	REF NO	GRAPHIC REF	PART NUMBER	QTY	PART NAME 1 2 3 4 5 6 (PRODUCT LEVEL)	SEE PAGE
M	24	2	**8T-4172**	1	BOLT (M10X1.50X80MM)	
	25	2	**6V-1249**	6	GROMMET	
	26	2	**8T-4121**	1	WASHER-HARD (11X21X2.5MM THK)	
	27	2	**6V-8556**	1	NUT (1 3/16-12 THD)	

I-SEE HOSE FABRICATION GUIDE
M-METRIC PART

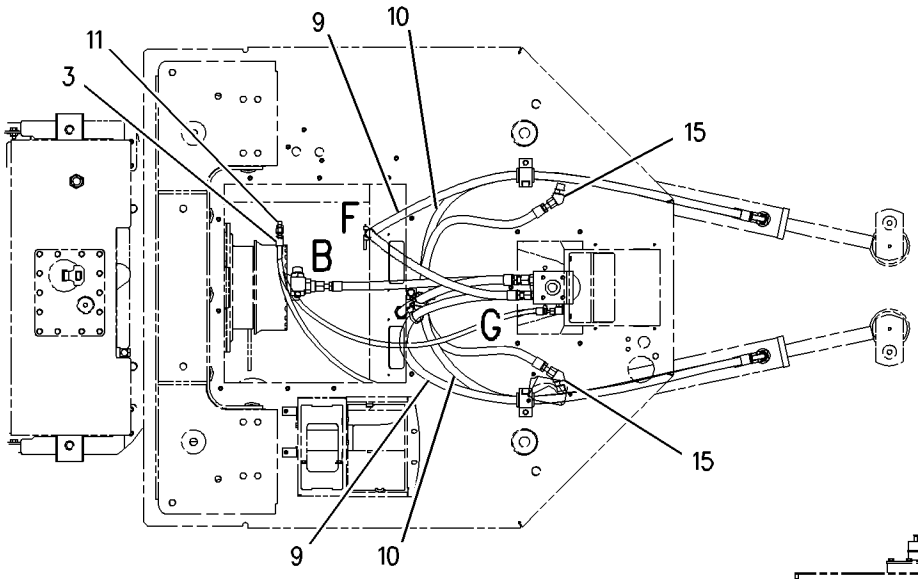

TOP VIEW

REFER TO ALL ILLUSTRATIONS IN THIS GROUP FOR AUXILIARY VIEWS

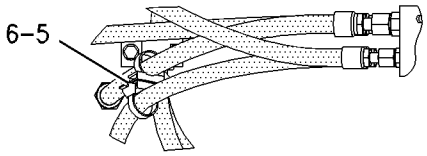

VIEW OF AREA G

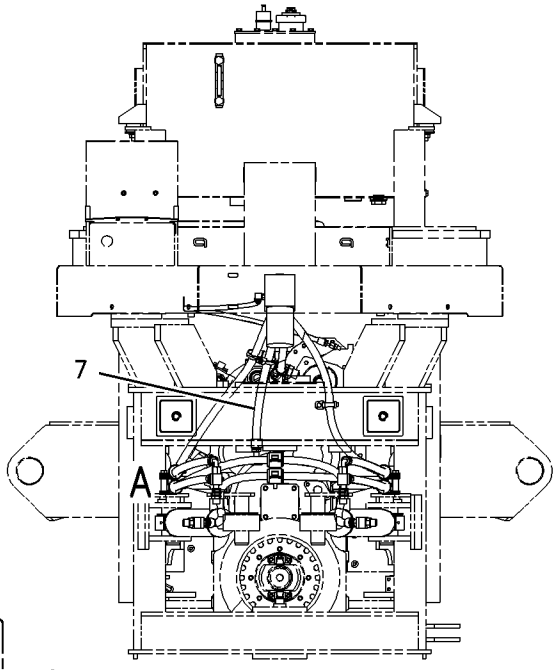

FRONT VIEW

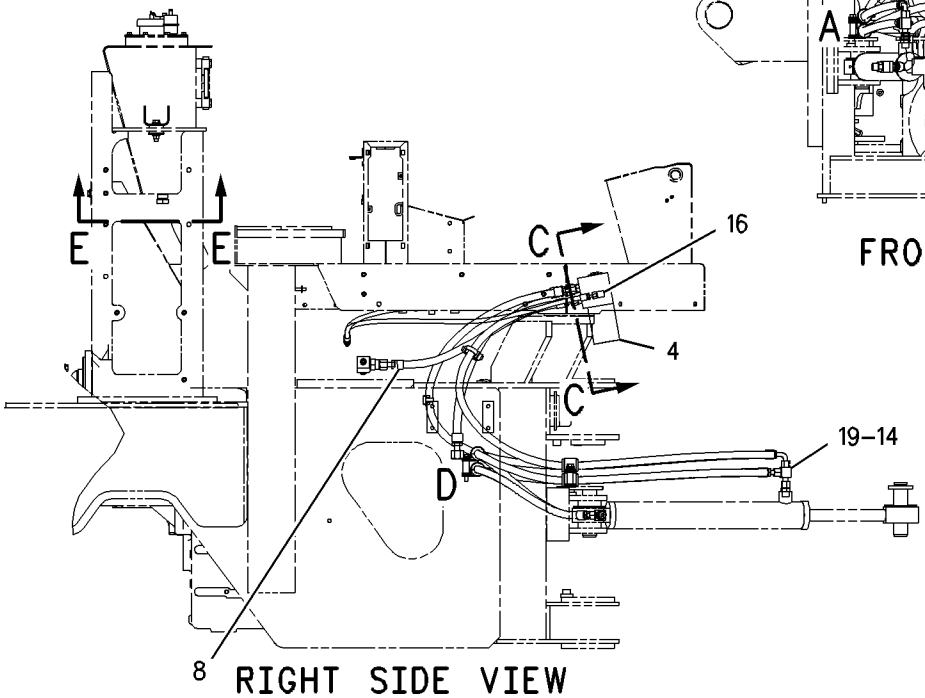

RIGHT SIDE VIEW

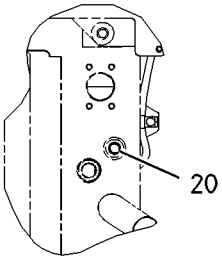

SECTION E-E

GRAPHIC #1

g00908764

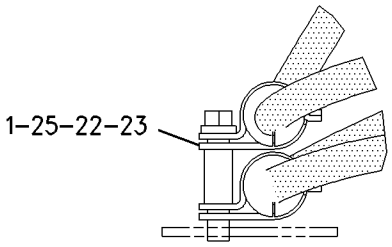

VIEW OF AREA A

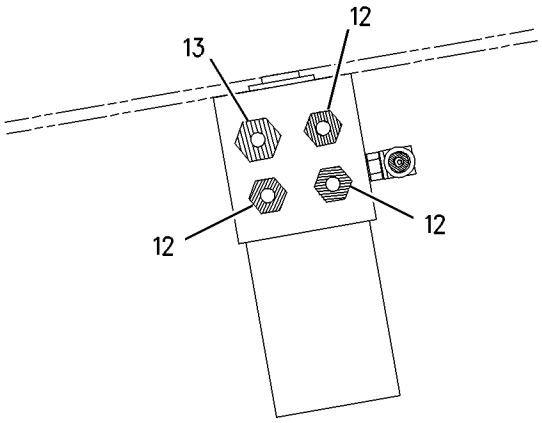

SECTION C–C

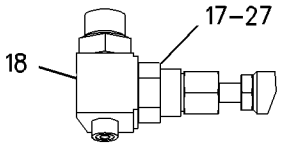

VIEW OF AREA B

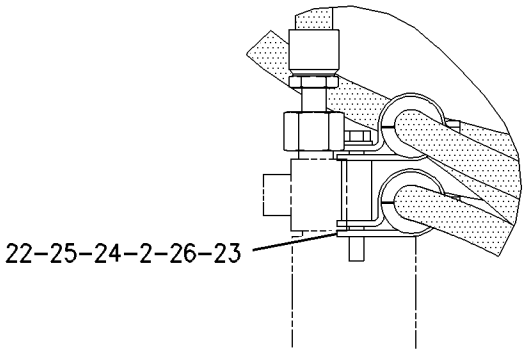

VIEW OF AREA D

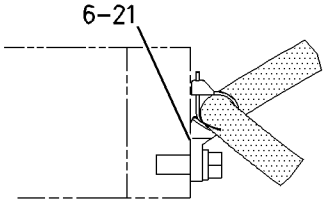

VIEW OF AREA F

GRAPHIC #2

g00924043

STEERING SYSTEM

149-4113 LOCK GP-STEERING CYLINDER

S/N: DJD1-UP; DBT1-UP

AN ATTACHMENT

SMCS-7430 **i01824788**

NOTE	REF NO	GRAPHIC REF	PART NUMBER	QTY	PART NAME 1 2 3 4 5 6 (PRODUCT LEVEL)	SEE PAGE
					(NO SERVICED PARTS)	

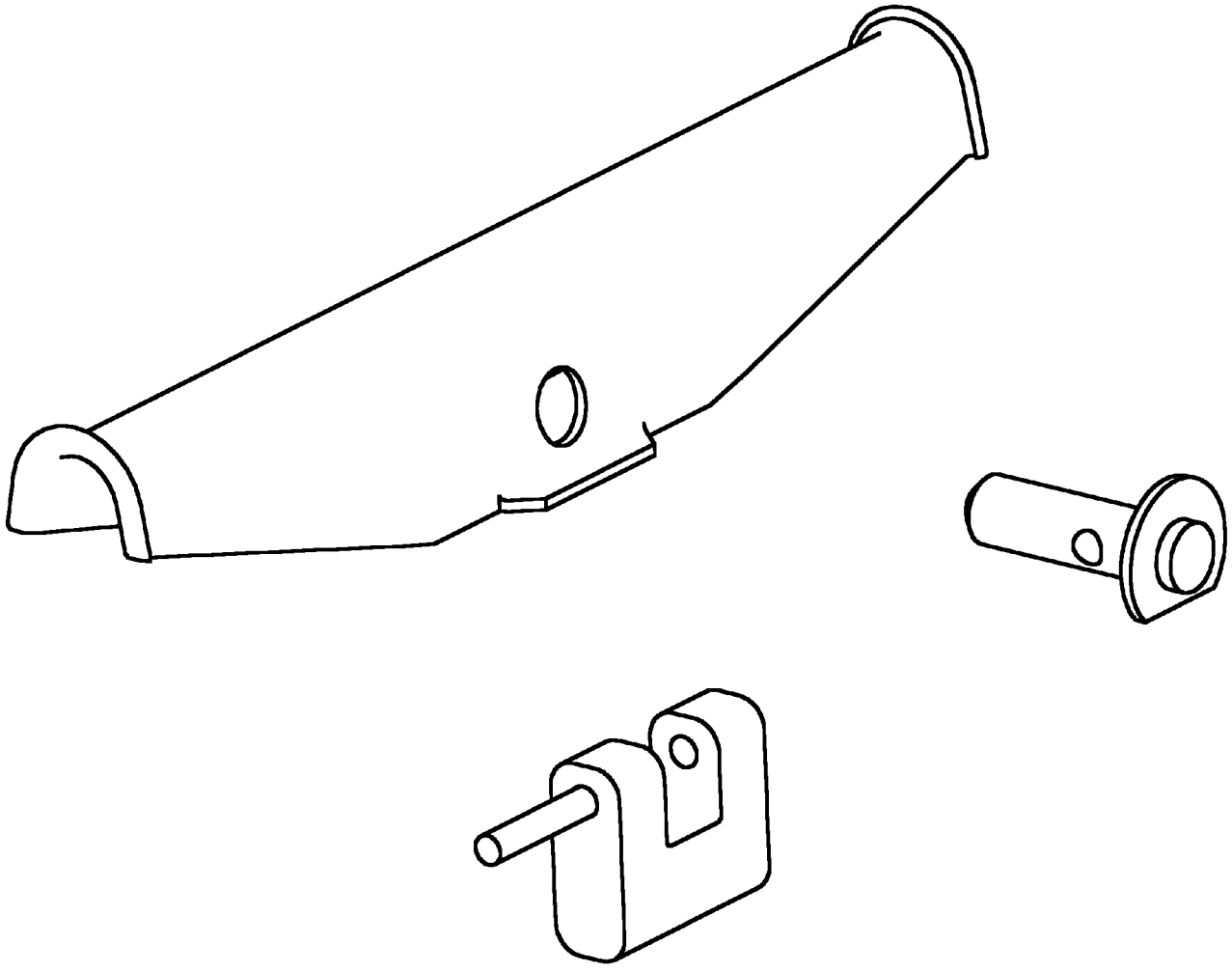

GRAPHIC #1 g00678823

STEERING SYSTEM

203-3900 STEERING AR

S/N: DJD1-UP; DBT1-UP
CANNOT BE USED WITH 203-4659—PAGE 335
AN ATTACHMENT

SMCS-4300 **i01738417**

NOTE	PART NUMBER	QTY	PART NAME 1 2 3 4 5 6 (PRODUCT LEVEL)	SEE PAGE
Y	*212-4656*	1	LINES GP-STEERING	330
Y-SEPARATE ILLUSTRATION				

<END>

203-4659 STEERING AR

S/N: DJD1-UP; DBT1-UP
CANNOT BE USED WITH 203-3900—PAGE 335
AN ATTACHMENT

SMCS-4300 **i01741180**

NOTE	PART NUMBER	QTY	PART NAME 1 2 3 4 5 6 (PRODUCT LEVEL)	SEE PAGE
Y	*212-9977*	1	LINES GP-SECONDARY STEERING	326
Y	*180-8810*	1	WIRING GP-SECONDARY STEERING	174
Y-SEPARATE ILLUSTRATION				

<END>

223-9074 STEERING AR-SECONDARY

S/N: DJD1-UP; DBT1-UP
FIELD INSTALLATION

SMCS-4300 **i01827910**

NOTE	PART NUMBER	QTY	PART NAME 1 2 3 4 5 6 (PRODUCT LEVEL)	SEE PAGE
M	**8T-4136**	2	BOLT (M10X1.5X25MM)	
M	**8T-4186**	1	BOLT (M10X1.5X40MM)	
M	**8T-7547**	4	BOLT (M8X1.25X30MM)	
	6D-4244	1	CLIP	
	148-8340	1	CONNECTOR GP	
	3K-0360	1	SEAL-O-RING	
	6V-8398	1	SEAL-O-RING	
	6V-8639	1	CONNECTOR	
	148-8345	1	CONNECTOR GP	
	2M-9780	1	SEAL-O-RING	
	6V-8398	1	SEAL-O-RING	
	6V-8638	1	CONNECTOR-SEAL	
	155-6258	1	ELBOW AS	
	3D-2824	1	SEAL-O-RING	
	6V-8398	1	SEAL-O-RING	
	127-1647	1	ELBOW	
	148-8347	1	ELBOW GP	
	3D-2824	1	SEAL-O-RING	
	6V-9007	1	ELBOW	
	6V-9746	1	SEAL-O-RING	
I	**213-7438**	1	HOSE AS	
I	**214-1542**	1	HOSE AS	
I	**214-1543**	1	HOSE AS	
I	**214-1544**	1	HOSE AS	
I	**214-2282**	1	HOSE AS	
	200-6345	2	MOUNT-SWIVEL	
	211-6643	1	PLATE AS	
M	**8T-3612**	4	NUT-WELD (M8X1.25 THD)	

223-9074 **STEERING AR-SECONDARY** *(contd.)* **i01827910**

NOTE	PART NUMBER	QTY	PART NAME 1 2 3 4 5 6 (PRODUCT LEVEL)	SEE PAGE
	205-5266	1	PUMP & MOTOR GP-SEC STEERING	
	1A-2209	2	BOLT (3/8-24X1.25 IN)	
	117-3915	1	MOTOR GP-ELECTRIC	
	6V-8801	2	NUT (3/8-16 THD)	
	7X-0608	2	WASHER-HARD (10.2X16X2.0MM THK)	
	123-8914	1	PUMP	
	3K-0360	1	SEAL-O-RING	
	6V-8398	1	SEAL-O-RING	
	7K-1181	1	STRAP-CABLE	
	3E-6450	1	SWITCH AS-PRESSURE (SECONDARY STEERING)	
	102-8803	1	KIT-RECEPTACLE (3 PIN)	
	3E-3371	1	WEDGE-RECEPTACLE LOCK (3 PIN)	
	186-3735	3	PIN-CONNECTOR	
	148-8436	1	TEE AS	
	3K-0360	1	SEAL-O-RING	
	6V-8398	2	SEAL-O-RING	
	6V-8775	1	TEE-FACE SEAL	
	150-4036	1	TEE AS	
	3K-0360	1	SEAL-O-RING	
	118-0911	1	TEE-O-RING PORT	
	150-4033	1	TEE GP	
	6V-9746	2	SEAL-O-RING	
	6V-9846	1	TEE-SWIVEL	
	154-8150	1	TEE-SWIVEL	
	204-2281	4	TIE	
	9T-1013	2	VALVE AS-CHECK	
			(EACH INCLUDES)	
	3K-0360	1	SEAL-O-RING	
	6V-8398	1	SEAL-O-RING	
	9T-8071	1	VALVE GP-RELIEF	
	7X-7729	2	WASHER (11X25X3MM THK)	
	8T-4121	1	WASHER-HARD (11X21X2.5MM THK)	
	8T-4224	4	WASHER-HARD (8.8X16X2MM THK)	
Y	*180-8810*	1	WIRING GP-SECONDARY STEERING	174

I-SEE HOSE FABRICATION GUIDE
M-METRIC PART
Y-SEPARATE ILLUSTRATION

<END>

201-4825 STEERING COLUMN GP

S/N: DJD1-UP; DBT1-UP
TILT
PART OF 190-4635, 190-4643 CONTROL GP-STEERING
AN ATTACHMENT

SMCS-4310 **i01790355**

NOTE	REF NO	GRAPHIC REF	PART NUMBER	QTY	PART NAME 1 2 3 4 5 6 (PRODUCT LEVEL)	SEE PAGE
	1	1	**149-0777**	1	KIT-KNOB	
	2	1	**222-1241**	1	KIT-HORN	
M	3	1	**169-3261**	1	NUT (M18X1.5 THD)	
	4	1	**217-4154**	1	SPRING AS-GAS	
	5	1	**217-4155**	1	KIT-TILT LEVER	
	6	1	**196-3699**	2	PIN-PIVOT	
	7	1	**196-3698**	2	BUSHING-PIVOT	

M-METRIC PART

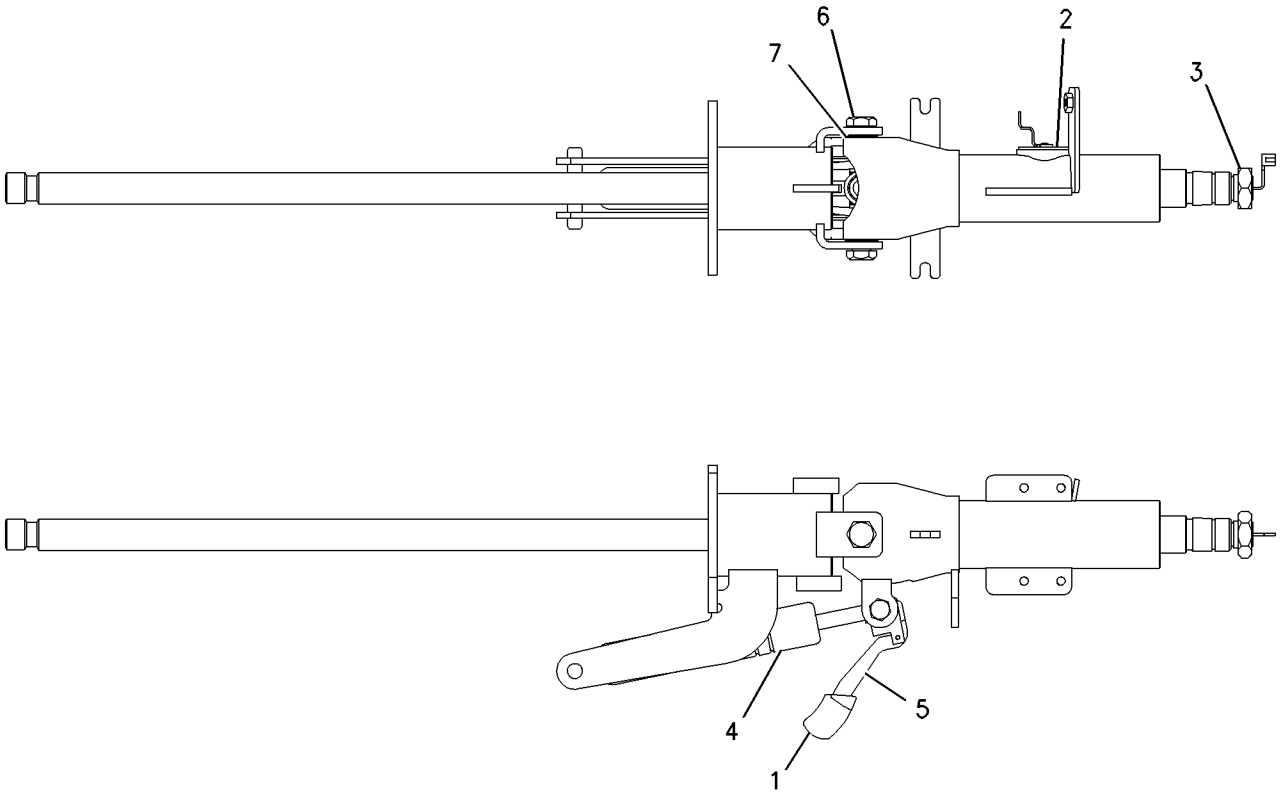

GRAPHIC #1 g00917591

6E-6477 CARTRIDGE GP-VANE PUMP–IMPLEMENT

S/N: DJD1-UP; DBT1-UP

PART OF 119-7698 PUMP GP-PISTON & VANE

SMCS-5055 **i00178288**

NOTE	REF NO	GRAPHIC REF	PART NUMBER	QTY	PART NAME 1 2 3 4 5 6 (PRODUCT LEVEL)	SEE PAGE
	1	1	**8C-3079**	4	SEAL-O-RING	
	2	1	**117-1911**	4	SEAL & RETAINER AS	
	3	1	**9T-5042**	2	DOWEL	
	4	1	**6E-6494**	1	PLATE AS-INLET	
	5	1	**6E-1979**	1	KIT-VANE	
		1	**6E-6492**	1	ROTOR	
	6	1	**6E-6493**	1	RING-CAM	
	7	1	**3F-5792**	1	SEAL-O-RING (129.77MM ID)	
	8	1	**061-9457**	1	SEAL-O-RING	
	9	1	**9T-5087**	1	RING	
	10	1	**6E-6488**	1	PLATE-OUTLET	
	11	1	**3G-1820**	1	RING-SEAL	
	12	1	**6E-6490**	1	PLATE-FLEX (LH)	
	13	1	**6E-6491**	1	PLATE-FLEX (RH)	
	14	1	**9T-5112**	2	SCREW	

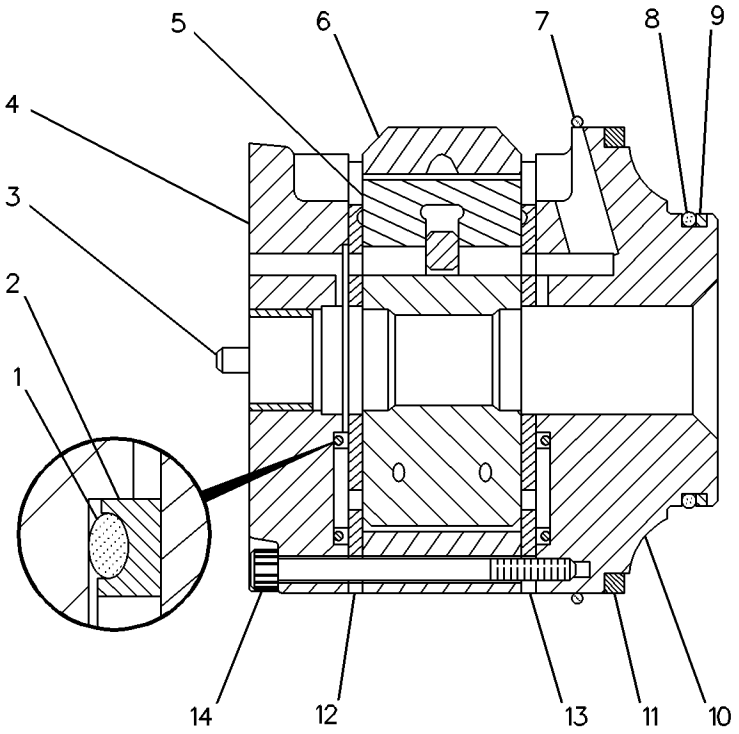

GRAPHIC #1 g00119390

HYDRAULIC SYSTEM

203-8558 CONTROL AR-RIDE

S/N: DJD1-UP
AN ATTACHMENT

SMCS-5004 **i01797776**

NOTE	PART NUMBER	QTY	PART NAME 1 2 3 4 5 6 (PRODUCT LEVEL)	SEE PAGE
Y	*215-2890*	1	WIRING GP-RIDE CONTROL	173
Y	*218-3673*	1	LINES GP-RIDE CONTROL	444

Y-SEPARATE ILLUSTRATION

<END>

203-8560 CONTROL AR-RIDE

S/N: DBT1-UP
PART OF 223-9072 CONTROL AR-RIDE
AN ATTACHMENT

SMCS-5004 **i01797777**

NOTE	PART NUMBER	QTY	PART NAME 1 2 3 4 5 6 (PRODUCT LEVEL)	SEE PAGE
Y	*213-6217*	1	LINES GP-RIDE CONTROL	440
Y	*215-2889*	1	WIRING GP-RIDE CONTROL	172

Y-SEPARATE ILLUSTRATION

<END>

223-9072 CONTROL AR-RIDE

S/N: DBT1-UP
FIELD INSTALLATION

SMCS-5004 **i01831041**

NOTE	PART NUMBER	QTY	PART NAME 1 2 3 4 5 6 (PRODUCT LEVEL)	SEE PAGE
Y	*203-8560*	1	CONTROL AR-RIDE	339

Y-SEPARATE ILLUSTRATION

<END>

HYDRAULIC SYSTEM

184-5296 CONTROL GP-HANDLE

S/N: DJD1-UP; DBT1-UP

PART OF 202-0426, 202-0427, 203-5936 HYDRAULIC AR, 202-0421, 202-0422 HYDRAULIC AR-2 VALVE, 202-0423, 202-0424 HYDRAULIC AR-3 VALVE, 202-0425 HYDRAULIC AR-4 VALVE

AN ATTACHMENT

SMCS-3065, 5063, 5705 **i01735714**

NOTE	REF NO	GRAPHIC REF	PART NUMBER	QTY	PART NAME 1 2 3 4 5 6 (PRODUCT LEVEL)	SEE PAGE
M	1	1	**150-1293**	2	SCREW-BUTTON HEAD (M4X0.7X12MM)	
	2	1	**208-6097**	1	HANDLE GP-CONTROL	
		1	**186-3735**	6	PIN-CONNECTOR	
	3	1	**149-4359**	1	ROD-CONTROL	
	4	1	**102-8805**	1	KIT-RECEPTACLE (6 PIN)	
					(INCLUDES RECEPTACLE AS & WEDGE)	
	5	1	**3E-3383**	1	WEDGE-RECEPTACLE LOCK	
M	6	1	**8T-4244**	1	NUT (M12X1.75 THD)	

M-METRIC PART

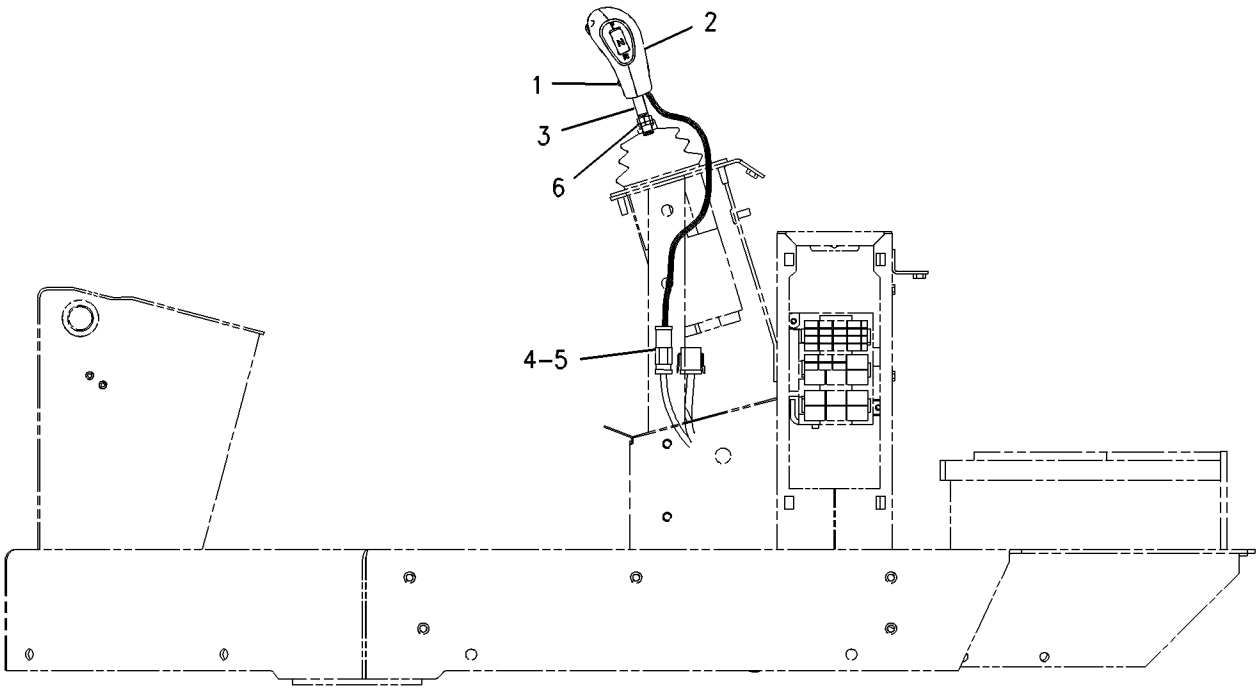

RIGHT SIDE VIEW

GRAPHIC #1 g00885736

MEMORANDA

HYDRAULIC SYSTEM

122-6332 CONTROL GP-PILOT OPERATED HYD

S/N: DBT1-UP
PART OF 202-0425 HYDRAULIC AR-4 VALVE
AN ATTACHMENT

SMCS-5063 **i01659504**

NOTE	REF NO	GRAPHIC REF	PART NUMBER	QTY	PART NAME 1 2 3 4 5 6 (PRODUCT LEVEL)	SEE PAGE
	1	1	**9R-1948**	2	RIVET	
	2	1	**103-2006**	4	SCREW-PAN HEAD	
	3	1	**107-6037**	1	SWITCH AS-KICKOUT	
		1	**111-7899**	1	GASKET	
	4	1	**107-6050**	1	SUPPORT AS	
	5	1	**114-3937**	1	ROD	
	6	1	**114-3940**	1	ROD	
	7	1	**124-4401**	2	KNOB	
	8	1	**141-9188**	1	FILM-INSTRUMENT (IMPLEMENT LOCKOUT)	
	9	1	**141-9193**	1	PLATE-INSTRUMENT	
Y	10	1	**172-3206**	1	VALVE GP-PILOT	512
CY	11	1	**208-9665**	1	VALVE GP-SHUTOFF	558
M	12	1	**5C-7261**	4	NUT (M8X1.25 THD)	
	13	1	**8T-4121**	4	WASHER-HARD (11X21X2.5MM THK)	
M	14	1	**8T-4137**	4	BOLT (M10X1.5X20MM)	
	15	1	**8T-4224**	4	WASHER-HARD (8.8X16X2MM THK)	
M	16	1	**8T-4244**	2	NUT (M12X1.75 THD)	
M	17	1	**9X-2041**	2	SCREW-TRUSS HEAD (M10X1.5X20MM)	

C-CHANGE FROM PREVIOUS TYPE
M-METRIC PART
Y-SEPARATE ILLUSTRATION

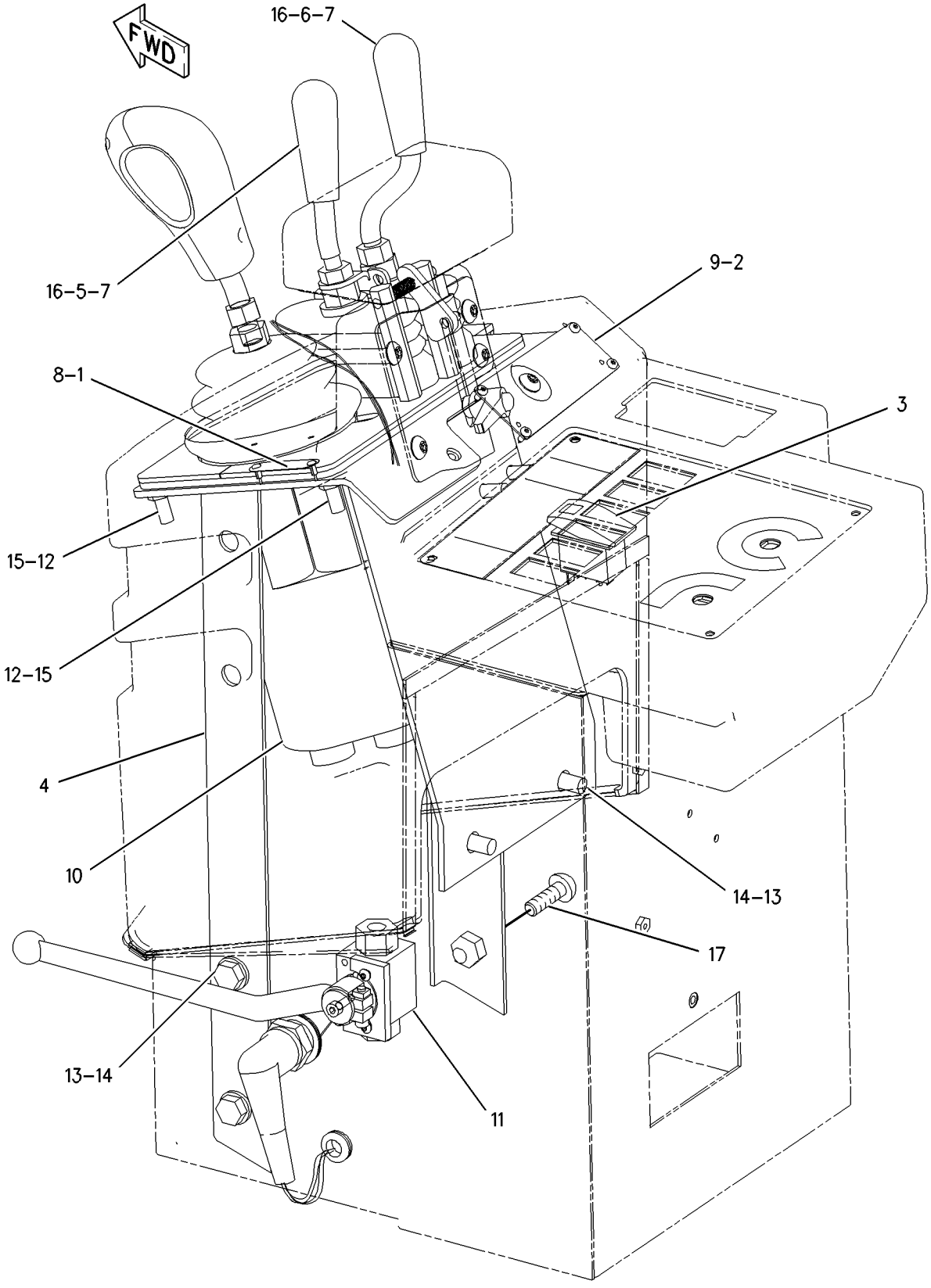

GRAPHIC #1 g00856361

HYDRAULIC SYSTEM

219-4785 CONTROL GP-PILOT OPERATED HYD

S/N: DBT1-UP
JOYSTICK, TWO FUNCTION
PART OF 203-5936 HYDRAULIC AR, 202-0422 HYDRAULIC AR-2 VALVE
AN ATTACHMENT

SMCS-5063 **i01797362**

NOTE	REF NO	GRAPHIC REF	PART NUMBER	QTY	PART NAME 1 2 3 4 5 6 (PRODUCT LEVEL)	SEE PAGE
	1	1	**103-2006**	4	SCREW-PAN HEAD	
	2	1	**107-6050**	1	SUPPORT AS	
		1	**7T-1099**	2	LINK	
M		1	**159-9539**	2	NUT-WELD (M6X1 THD)	
M		1	**159-9541**	4	NUT-WELD (M10X1.5 THD)	
	3	1	**141-9193**	1	PLATE-INSTRUMENT	
	4	1	**146-3765**	1	COVER	
Y	5	1	**175-9446**	1	VALVE GP-PILOT (JOYSTICK, 2 FUNCTION)	514
	6	1	**195-0922**	1	SWITCH AS-ROCKER (SELECTOR)	
		1	**111-7899**	1	GASKET	
	7	1	**223-4717**	1	BRACKET	
Y	8	1	**225-1057**	1	VALVE GP-SHUTOFF	560
M	9	1	**5C-7261**	4	NUT (M8X1.25 THD)	
	10	1	**8T-4121**	2	WASHER-HARD (11X21X2.5MM THK)	
M	11	1	**8T-4137**	2	BOLT (M10X1.5X20MM)	
	12	1	**8T-4224**	4	WASHER-HARD (8.8X16X2MM THK)	
M	13	1	**9X-2040**	2	SCREW-TRUSS HEAD (M10X1.5X25MM)	
M	14	1	**9X-2041**	2	SCREW-TRUSS HEAD (M10X1.5X20MM)	

M-METRIC PART
Y-SEPARATE ILLUSTRATION

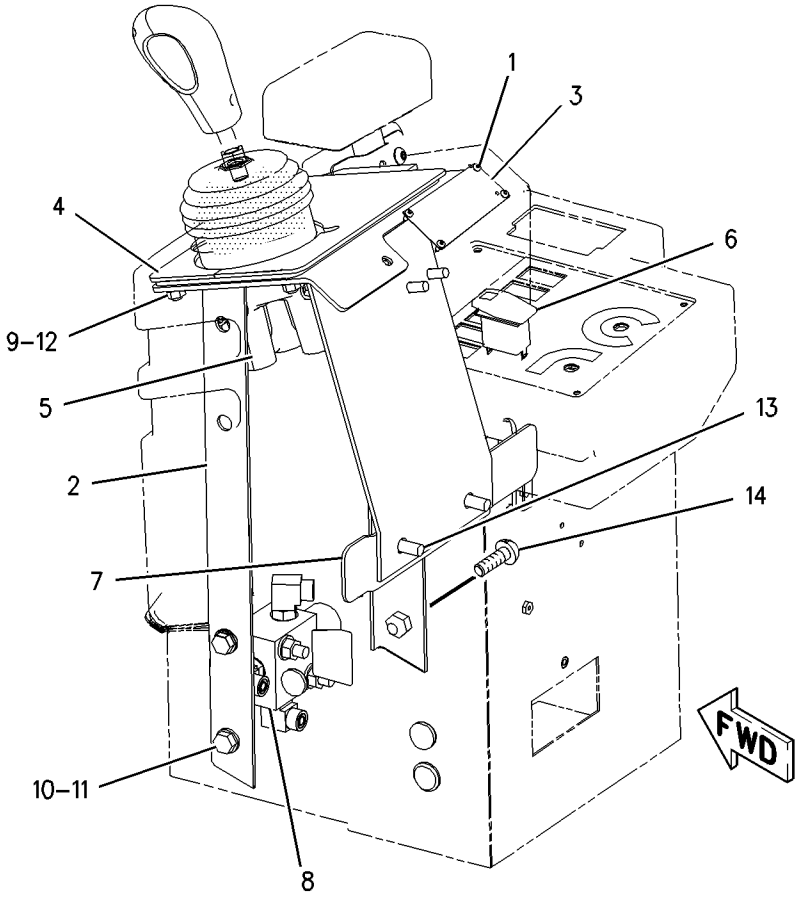

GRAPHIC #1 g00920344

HYDRAULIC SYSTEM

219-4786 CONTROL GP-PILOT OPERATED HYD

S/N: DBT1-UP
JOYSTICK, THREE FUNCTION
PART OF 202-0426 HYDRAULIC AR, 202-0424 HYDRAULIC AR-3 VALVE
AN ATTACHMENT

SMCS-5063 **i01797576**

NOTE	REF NO	GRAPHIC REF	PART NUMBER	QTY	PART NAME 1 2 3 4 5 6 (PRODUCT LEVEL)	SEE PAGE
	1	1	**103-2006**	4	SCREW-PAN HEAD	
	2	1	**107-6050**	1	SUPPORT AS	
		1	**7T-1099**	2	LINK	
M		1	**159-9539**	2	NUT-WELD (M6X1 THD)	
M		1	**159-9541**	4	NUT-WELD (M10X1.5 THD)	
	3	1	**114-3937**	1	ROD	
	4	1	**124-4401**	1	KNOB	
	5	1	**141-9193**	1	PLATE-INSTRUMENT	
	6	1	**164-4111**	1	COVER	
Y	7	1	**175-9448**	1	VALVE GP-PILOT (JOYSTICK , 3 FUNCTION)	518
	8	1	**195-0922**	1	SWITCH AS-ROCKER (SELECTOR)	
		1	**111-7899**	1	GASKET	
	9	1	**223-4717**	1	BRACKET	
Y	10	1	**225-1057**	1	VALVE GP-SHUTOFF	560
M	11	1	**5C-7261**	4	NUT (M8X1.25 THD)	
	12	1	**8T-4121**	2	WASHER-HARD (11X21X2.5MM THK)	
M	13	1	**8T-4137**	2	BOLT (M10X1.5X20MM)	
	14	1	**8T-4224**	4	WASHER-HARD (8.8X16X2MM THK)	
M	15	1	**8T-4244**	1	NUT (M12X1.75 THD)	
M	16	1	**9X-2040**	2	SCREW-TRUSS HEAD (M10X1.5X25MM)	
M	17	1	**9X-2041**	2	SCREW-TRUSS HEAD (M10X1.5X20MM)	

M-METRIC PART
Y-SEPARATE ILLUSTRATION

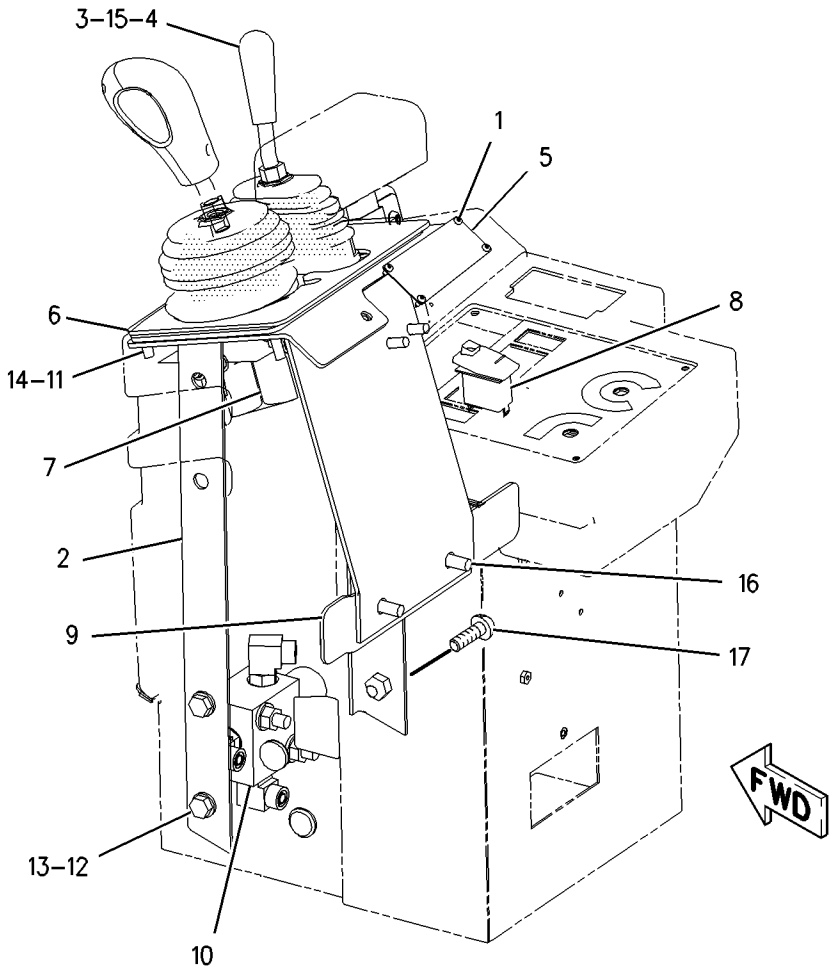

GRAPHIC #1 g00920907

HYDRAULIC SYSTEM

219-4787 CONTROL GP-PILOT OPERATED HYD

S/N: DBT1-UP
PART OF 202-0427 HYDRAULIC AR
AN ATTACHMENT

SMCS-5063 **i01797580**

NOTE	REF NO	GRAPHIC REF	PART NUMBER	QTY	PART NAME 1 2 3 4 5 6 (PRODUCT LEVEL)	SEE PAGE
	1	1	**103-2006**	4	SCREW-PAN HEAD	
	2	1	**107-6050**	1	SUPPORT AS	
		1	**7T-1099**	2	LINK	
M		1	**159-9539**	2	NUT-WELD (M6X1 THD)	
M		1	**159-9541**	4	NUT-WELD (M10X1.5 THD)	
	3	1	**114-3937**	1	ROD	
	4	1	**114-3940**	1	ROD	
	5	1	**124-4401**	2	KNOB	
	6	1	**141-9193**	1	PLATE-INSTRUMENT	
Y	7	1	**172-3206**	1	VALVE GP-PILOT (JOYSTICK, 4 FUNCTION)	512
	8	1	**195-0922**	1	SWITCH AS-ROCKER (SELECTOR)	
		1	**111-7899**	1	GASKET	
	9	1	**223-4717**	1	BRACKET	
Y	10	1	**225-1057**	1	VALVE GP-SHUTOFF	560
M	11	1	**5C-7261**	4	NUT (M8X1.25 THD)	
	12	1	**8T-4121**	2	WASHER-HARD (11X21X2.5MM THK)	
M	13	1	**8T-4137**	2	BOLT (M10X1.5X20MM)	
	14	1	**8T-4224**	4	WASHER-HARD (8.8X16X2MM THK)	
M	15	1	**8T-4244**	2	NUT (M12X1.75 THD)	
M	16	1	**9X-2040**	2	SCREW-TRUSS HEAD (M10X1.5X25MM)	
M	17	1	**9X-2041**	2	SCREW-TRUSS HEAD (M10X1.5X20MM)	

M-METRIC PART
Y-SEPARATE ILLUSTRATION

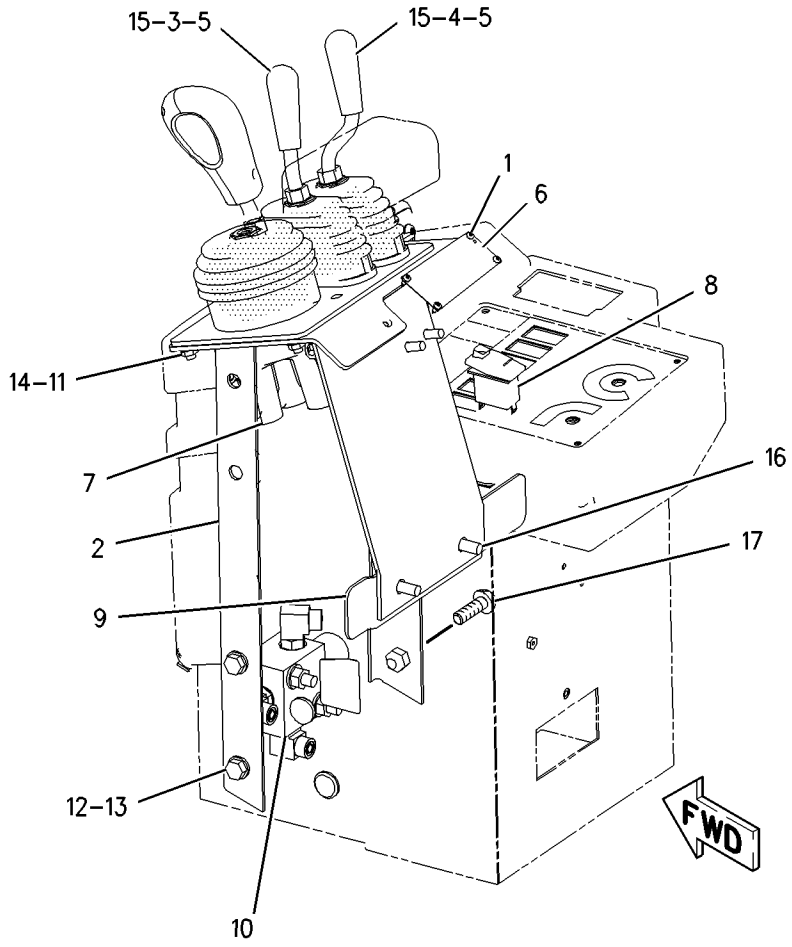

GRAPHIC #1 g00920896

HYDRAULIC SYSTEM

219-4788 CONTROL GP-PILOT OPERATED HYD

S/N: DBT1-UP

PART OF 203-5935 HYDRAULIC AR, 203-5929 HYDRAULIC AR-4 VALVE AN ATTACHMENT

SMCS-5063 **i01797601**

NOTE	REF NO	GRAPHIC REF	PART NUMBER	QTY	PART NAME 1 2 3 4 5 6 (PRODUCT LEVEL)	SEE PAGE
	1	1	**8T-8737**	4	PLUG-SEAL	
	2	1	**103-2006**	4	SCREW-PAN HEAD	
	3	1	**107-6050**	1	SUPPORT AS	
		1	**7T-1099**	2	LINK	
M		1	**159-9539**	2	NUT-WELD (M6X1 THD)	
M		1	**159-9541**	4	NUT-WELD (M10X1.5 THD)	
	4	1	**114-3937**	1	ROD	
	5	1	**114-3940**	2	ROD	
	6	1	**124-4401**	3	KNOB	
	7	1	**124-6913**	1	ROD	
	8	1	**133-8597**	1	HANDLE AS	
		1	**5I-3762**	1	KNOB	
		1	**186-3735**	2	PIN-CONNECTOR	
	9	1	**141-9191**	1	PLATE	
Y	10	1	**172-3205**	1	VALVE GP-PILOT (4 FUNCTION)	508
	11	1	**195-0922**	1	SWITCH AS-ROCKER (SELECTOR)	
		1	**111-7899**	1	GASKET	
	12	1	**223-4717**	1	BRACKET	
Y	13	1	**225-1057**	1	VALVE GP-SHUTOFF	560
M	14	1	**150-1293**	1	SCREW-BUTTON HEAD (M4X0.7X12MM)	
	15	1	**1H-4393**	1	LOCKWASHER	
	16	1	**102-8805**	1	KIT-RECEPTACLE (6 PIN)	
	17	1	**3E-3383**	1	WEDGE-RECEPTACLE LOCK	
M	18	1	**5C-7261**	4	NUT (M8X1.25 THD)	
	19	1	**8T-4121**	2	WASHER-HARD (11X21X2.5MM THK)	
M	20	1	**8T-4137**	2	BOLT (M10X1.5X20MM)	
	21	1	**8T-4224**	4	WASHER-HARD (8.8X16X2MM THK)	
M	22	1	**8T-4244**	4	NUT (M12X1.75 THD)	
M	23	1	**9X-2040**	2	SCREW-TRUSS HEAD (M10X1.5X25MM)	
M	24	1	**9X-2041**	2	SCREW-TRUSS HEAD (M10X1.5X20MM)	

M-METRIC PART
Y-SEPARATE ILLUSTRATION

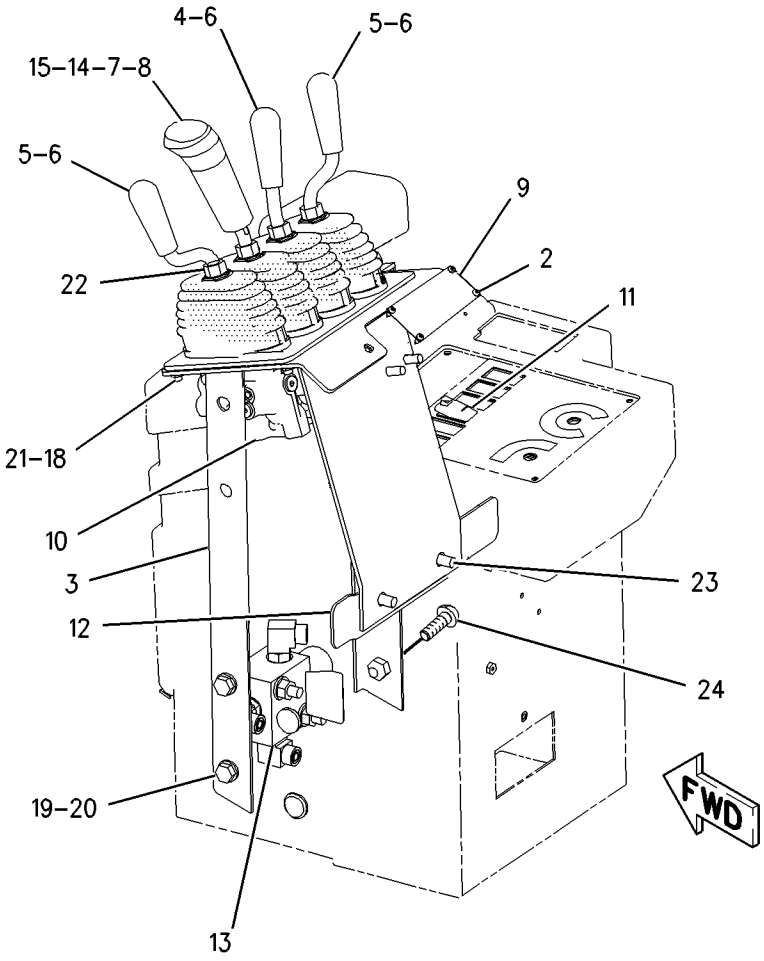

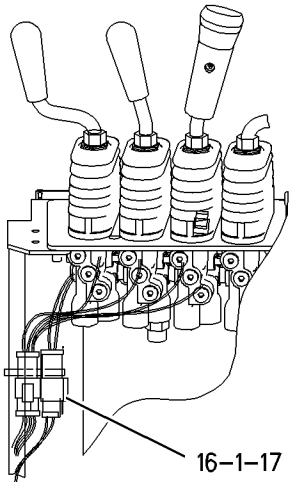

FRONT VIEW

GRAPHIC #1

g00920887

HYDRAULIC SYSTEM

219-4789 CONTROL GP-PILOT OPERATED HYD

S/N: DBT1-UP
THREE FUNCTION
PART OF 203-5934 HYDRAULIC AR, 218-2457 HYDRAULIC AR-3 VALVE
AN ATTACHMENT

SMCS-5063 **i01797632**

NOTE	REF NO	GRAPHIC REF	PART NUMBER	QTY	PART NAME 1 2 3 4 5 6 (PRODUCT LEVEL)	SEE PAGE
	1	1	**8T-8737**	4	PLUG-SEAL	
	2	1	**103-2006**	4	SCREW-PAN HEAD	
	3	1	**107-6050**	1	SUPPORT AS	
		1	**7T-1099**	2	LINK	
M		1	**159-9539**	2	NUT-WELD (M6X1 THD)	
M		1	**159-9541**	4	NUT-WELD (M10X1.5 THD)	
	4	1	**114-3937**	1	ROD	
	5	1	**114-3940**	1	ROD	
	6	1	**124-4401**	2	KNOB	
	7	1	**124-6913**	1	ROD	
	8	1	**133-8597**	1	HANDLE AS	
		1	**5I-3762**	1	KNOB	
		1	**186-3735**	2	PIN-CONNECTOR	
	9	1	**141-9191**	1	PLATE	
	10	1	**163-1870**	1	COVER	
Y	11	1	**175-9449**	1	VALVE GP-PILOT (3 FUNCTION)	520
	12	1	**195-0922**	1	SWITCH AS-ROCKER (SELECTOR)	
		1	**111-7899**	1	GASKET	
	13	1	**223-4717**	1	BRACKET	
Y	14	1	**225-1057**	1	VALVE GP-SHUTOFF	560
M	15	1	**150-1293**	1	SCREW-BUTTON HEAD (M4X0.7X12MM)	
	16	1	**1H-4393**	1	LOCKWASHER	
J	17	1	**102-8805**	1	KIT-RECEPTACLE (6 PIN)	
J	18	1	**3E-3383**	1	WEDGE-RECEPTACLE LOCK	
M	19	1	**5C-7261**	4	NUT (M8X1.25 THD)	
	20	1	**8T-4121**	2	WASHER-HARD (11X21X2.5MM THK)	
M	21	1	**8T-4137**	2	BOLT (M10X1.5X20MM)	
	22	1	**8T-4224**	4	WASHER-HARD (8.8X16X2MM THK)	
M	23	1	**8T-4244**	3	NUT (M12X1.75 THD)	
M	24	1	**9X-2040**	2	SCREW-TRUSS HEAD (M10X1.5X25MM)	
M	25	1	**9X-2041**	2	SCREW-TRUSS HEAD (M10X1.5X20MM)	

J-KIT MARKED J INCLUDES PART MARKED J
M-METRIC PART
Y-SEPARATE ILLUSTRATION

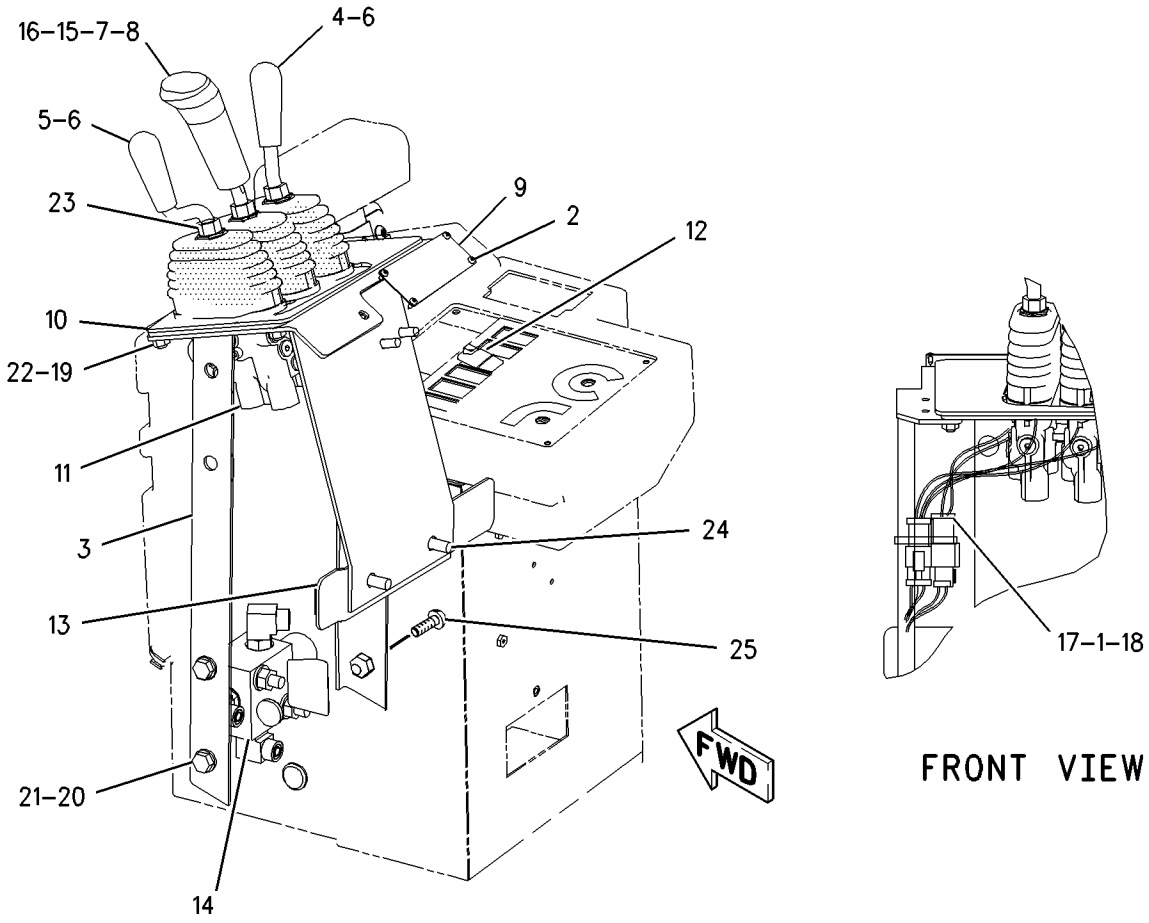

GRAPHIC #1 g00920875

HYDRAULIC SYSTEM

219-4790 CONTROL GP-PILOT OPERATED HYD

S/N: DBT1-UP

PART OF 203-5933 HYDRAULIC AR, 218-2456 HYDRAULIC AR-2 VALVE AN ATTACHMENT

SMCS-5063 **i01797652**

NOTE	REF NO	GRAPHIC REF	PART NUMBER	QTY	PART NAME 1 2 3 4 5 6 (PRODUCT LEVEL)	SEE PAGE
	1	1	**8T-8737**	4	PLUG-SEAL	
	2	1	**103-2006**	4	SCREW-PAN HEAD	
	3	1	**107-6050**	1	SUPPORT AS	
		1	**7T-1099**	2	LINK	
M		1	**159-9539**	2	NUT-WELD (M6X1 THD)	
M		1	**159-9541**	4	NUT-WELD (M10X1.5 THD)	
	4	1	**114-3940**	1	ROD	
	5	1	**124-4401**	1	KNOB	
	6	1	**124-6913**	1	ROD	
	7	1	**133-8597**	1	HANDLE AS	
		1	**5I-3762**	1	KNOB	
		1	**186-3735**	2	PIN-CONNECTOR	
	8	1	**141-9191**	1	PLATE	
	9	1	**163-1869**	1	COVER	
	10	1	**195-0922**	1	SWITCH AS-ROCKER (SELECTOR) (BUCKET/FORK)	
		1	**111-7899**	1	GASKET	
	11	1	**223-4717**	1	BRACKET	
Y	12	1	**225-1057**	1	VALVE GP-SHUTOFF	560
M	13	1	**150-1293**	1	SCREW-BUTTON HEAD (M4X0.7X12MM)	
Y	14	1	**175-9447**	1	VALVE GP-PILOT (2 FUNCTION)	516
	15	1	**1H-4393**	1	LOCKWASHER	
J	16	1	**102-8805**	1	KIT-RECEPTACLE (6 PIN)	
J	17	1	**3E-3383**	1	WEDGE-RECEPTACLE LOCK	
M	18	1	**5C-7261**	4	NUT (M8X1.25 THD)	
	19	1	**8T-4121**	2	WASHER-HARD (11X21X2.5MM THK)	
M	20	1	**8T-4137**	2	BOLT (M10X1.5X20MM)	
	21	1	**8T-4224**	4	WASHER-HARD (8.8X16X2MM THK)	
M	22	1	**8T-4244**	2	NUT (M12X1.75 THD)	
M	23	1	**9X-2040**	2	SCREW-TRUSS HEAD (M10X1.5X25MM)	
M	24	1	**9X-2041**	2	SCREW-TRUSS HEAD (M10X1.5X20MM)	

J-KIT MARKED J INCLUDES PART MARKED J
M-METRIC PART
Y-SEPARATE ILLUSTRATION

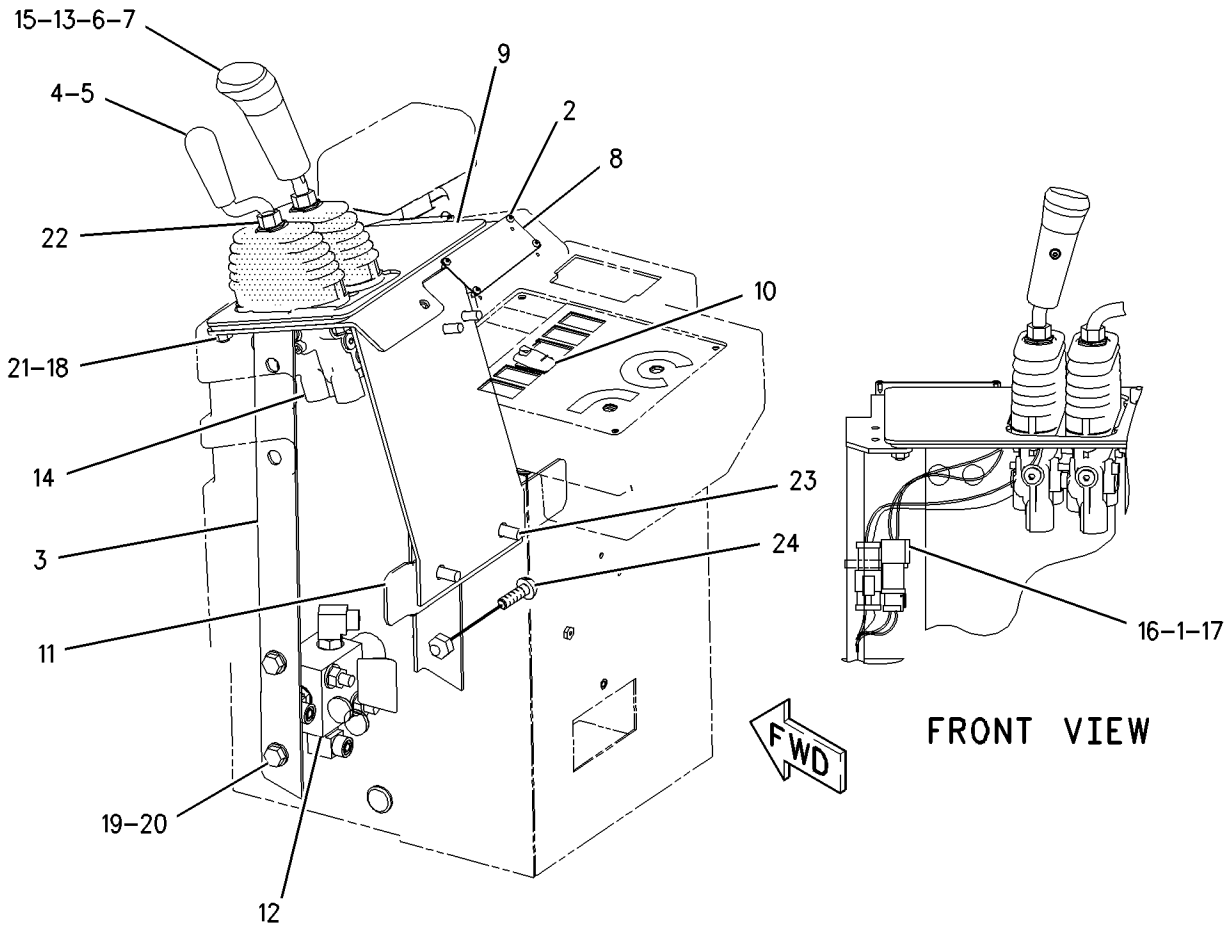

GRAPHIC #1 g00920800

HYDRAULIC SYSTEM

220-1505 CONTROL GP-PILOT OPERATED HYD

S/N: DJD1-UP
PART OF 203-5927 HYDRAULIC AR-2 VALVE
AN ATTACHMENT

SMCS-5063 **i01797660**

NOTE	REF NO	GRAPHIC REF	PART NUMBER	QTY	PART NAME 1 2 3 4 5 6 (PRODUCT LEVEL)	SEE PAGE
	1	1	**8T-8737**	4	PLUG-SEAL	
	2	1	**103-2006**	4	SCREW-PAN HEAD	
	3	1	**107-6050**	1	SUPPORT AS	
		1	**7T-1099**	2	LINK	
M		1	**159-9539**	2	NUT-WELD (M6X1 THD)	
M		1	**159-9541**	4	NUT-WELD (M10X1.5 THD)	
	4	1	**114-3940**	1	ROD	
	5	1	**124-4401**	1	KNOB	
	6	1	**124-6913**	1	ROD	
	7	1	**133-8597**	1	HANDLE AS	
		1	**5I-3762**	1	KNOB	
		1	**8T-8729**	2	PIN-CONNECTOR	
	8	1	**141-9191**	1	PLATE	
	9	1	**163-1869**	1	COVER	
Y	10	1	**201-3360**	1	VALVE GP-PILOT (2 LEVER)	526
	11	1	**223-4717**	1	BRACKET	
Y	12	1	**225-1057**	1	VALVE GP-SHUTOFF	560
M	13	1	**150-1293**	1	SCREW-BUTTON HEAD (M4X0.7X12MM)	
	14	1	**1H-4393**	1	LOCKWASHER	
J	15	1	**102-8805**	1	KIT-RECEPTACLE (6 PIN)	
J	16	1	**3E-3383**	1	WEDGE-RECEPTACLE LOCK	
M	17	1	**5C-7261**	4	NUT (M8X1.25 THD)	
	18	1	**8T-4121**	2	WASHER-HARD (11X21X2.5MM THK)	
M	19	1	**8T-4137**	2	BOLT (M10X1.5X20MM)	
	20	1	**8T-4224**	4	WASHER-HARD (8.8X16X2MM THK)	
M	21	1	**8T-4244**	2	NUT (M12X1.75 THD)	
M	22	1	**9X-2040**	2	SCREW-TRUSS HEAD (M10X1.5X25MM)	
M	23	1	**9X-2041**	2	SCREW-TRUSS HEAD (M10X1.5X20MM)	

J-KIT MARKED J INCLUDES PART MARKED J
M-METRIC PART
Y-SEPARATE ILLUSTRATION

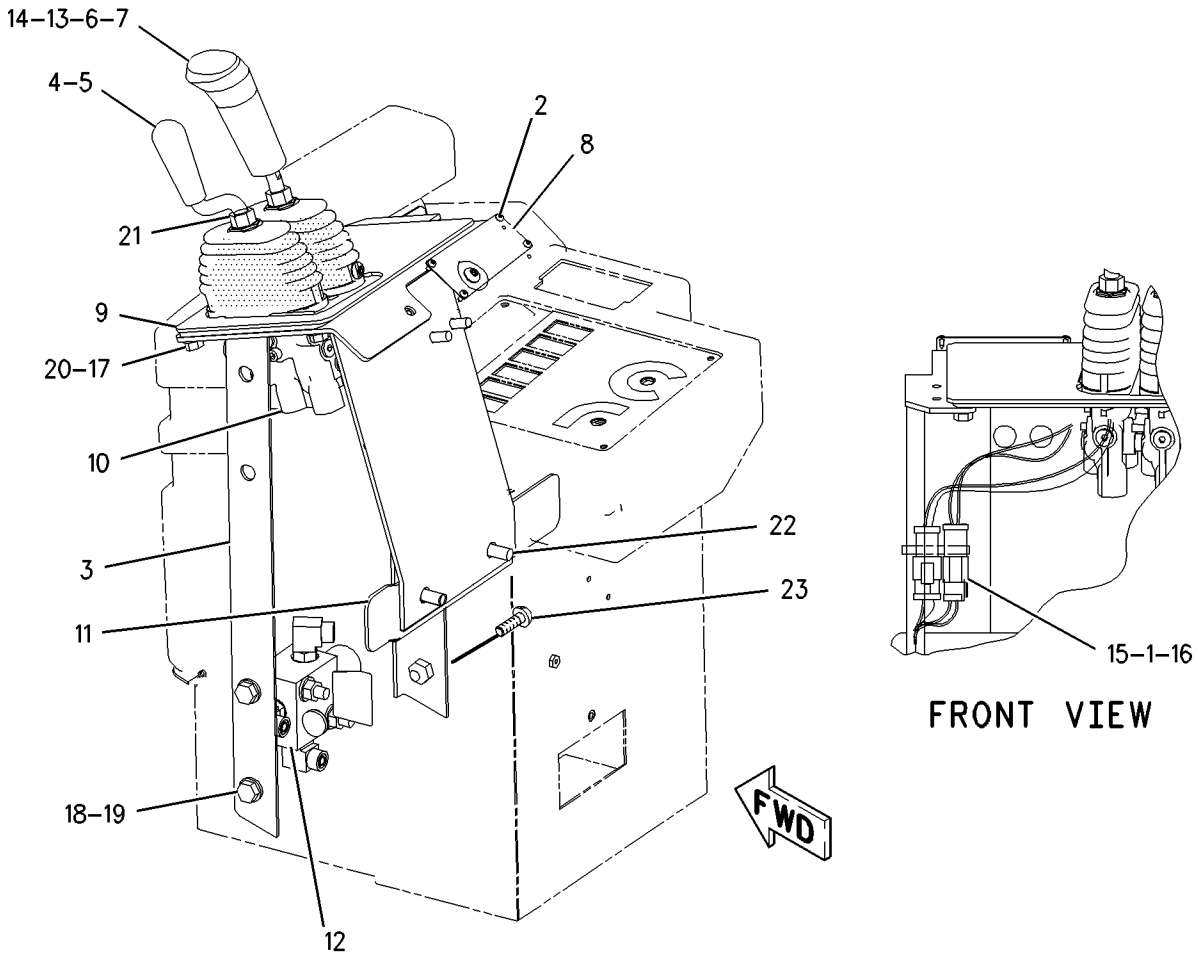

GRAPHIC #1 g00920683

HYDRAULIC SYSTEM

220-1506 CONTROL GP-PILOT OPERATED HYD

S/N: DJD1-UP
PART OF 202-0421 HYDRAULIC AR-2 VALVE
AN ATTACHMENT

SMCS-5063 **i01797681**

NOTE	REF NO	GRAPHIC REF	PART NUMBER	QTY	PART NAME 1 2 3 4 5 6 (PRODUCT LEVEL)	SEE PAGE
	1	1	**103-2006**	4	SCREW-PAN HEAD	
	2	1	**107-6050**	1	SUPPORT AS	
		1	**7T-1099**	2	LINK	
M		1	**159-9539**	2	NUT-WELD (M6X1 THD)	
M		1	**159-9541**	4	NUT-WELD (M10X1.5 THD)	
	3	1	**141-9193**	1	PLATE-INSTRUMENT	
	4	1	**146-3765**	1	COVER	
Y	5	1	**201-3359**	1	VALVE GP-PILOT (JOYSTICK, 2 FUNCTION)	524
	6	1	**223-4717**	1	BRACKET	
Y	7	1	**225-1057**	1	VALVE GP-SHUTOFF	560
M	8	1	**5C-7261**	4	NUT (M8X1.25 THD)	
	9	1	**8T-4121**	2	WASHER-HARD (11X21X2.5MM THK)	
M	10	1	**8T-4137**	2	BOLT (M10X1.5X20MM)	
	11	1	**8T-4224**	4	WASHER-HARD (8.8X16X2MM THK)	
M	12	1	**9X-2040**	2	SCREW-TRUSS HEAD (M10X1.5X25MM)	
M	13	1	**9X-2041**	2	SCREW-TRUSS HEAD (M10X1.5X20MM)	

M-METRIC PART
Y-SEPARATE ILLUSTRATION

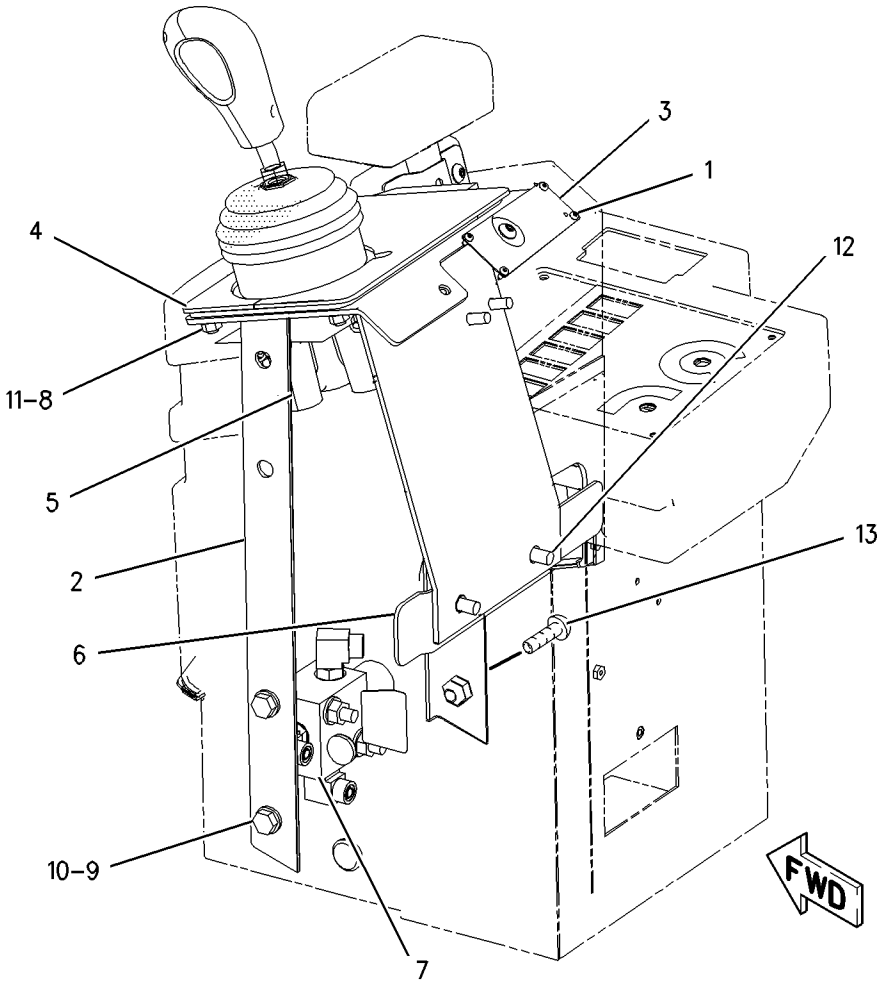

GRAPHIC #1 g00920668

MEMORANDA

HYDRAULIC SYSTEM

220-1507 CONTROL GP-PILOT OPERATED HYD

S/N: DJD1-UP
PART OF 203-5928 HYDRAULIC AR-3 VALVE
AN ATTACHMENT

SMCS-5063 **i01797696**

NOTE	REF NO	GRAPHIC REF	PART NUMBER	QTY	PART NAME 1 2 3 4 5 6 (PRODUCT LEVEL)	SEE PAGE
	1	1	**8T-8737**	4	PLUG-SEAL	
	2	1	**103-2006**	4	SCREW-PAN HEAD	
	3	1	**107-6050**	1	SUPPORT AS	
		1	**7T-1099**	2	LINK	
M		1	**159-9539**	2	NUT-WELD (M6X1 THD)	
M		1	**159-9541**	4	NUT-WELD (M10X1.5 THD)	
	4	1	**114-3937**	1	ROD	
	5	1	**114-3940**	1	ROD	
	6	1	**124-4401**	2	KNOB	
	7	1	**124-6913**	1	ROD	
	8	1	**133-8597**	1	HANDLE AS	
		1	**5I-3762**	1	KNOB	
		1	**8T-8729**	2	PIN-CONNECTOR	
	9	1	**141-9191**	1	PLATE	
	10	1	**163-1870**	1	COVER	
Y	11	1	**201-3362**	1	VALVE GP-PILOT (3 LEVER)	532
	12	1	**223-4717**	1	BRACKET	
Y	13	1	**225-1057**	1	VALVE GP-SHUTOFF	560
M	14	1	**150-1293**	1	SCREW-BUTTON HEAD (M4X0.7X12MM)	
	15	1	**1H-4393**	1	LOCKWASHER	
J	16	1	**102-8805**	1	KIT-RECEPTACLE (6 PIN)	
J	17	1	**3E-3383**	1	WEDGE-RECEPTACLE LOCK	
M	18	1	**5C-7261**	4	NUT (M8X1.25 THD)	
	19	1	**8T-4121**	2	WASHER-HARD (11X21X2.5MM THK)	
M	20	1	**8T-4137**	2	BOLT (M10X1.5X20MM)	
	21	1	**8T-4224**	4	WASHER-HARD (8.8X16X2MM THK)	
M	22	1	**8T-4244**	3	NUT (M12X1.75 THD)	
M	23	1	**9X-2040**	2	SCREW-TRUSS HEAD (M10X1.5X25MM)	
M	24	1	**9X-2041**	2	SCREW-TRUSS HEAD (M10X1.5X20MM)	

J-KIT MARKED J INCLUDES PART MARKED J
M-METRIC PART
Y-SEPARATE ILLUSTRATION

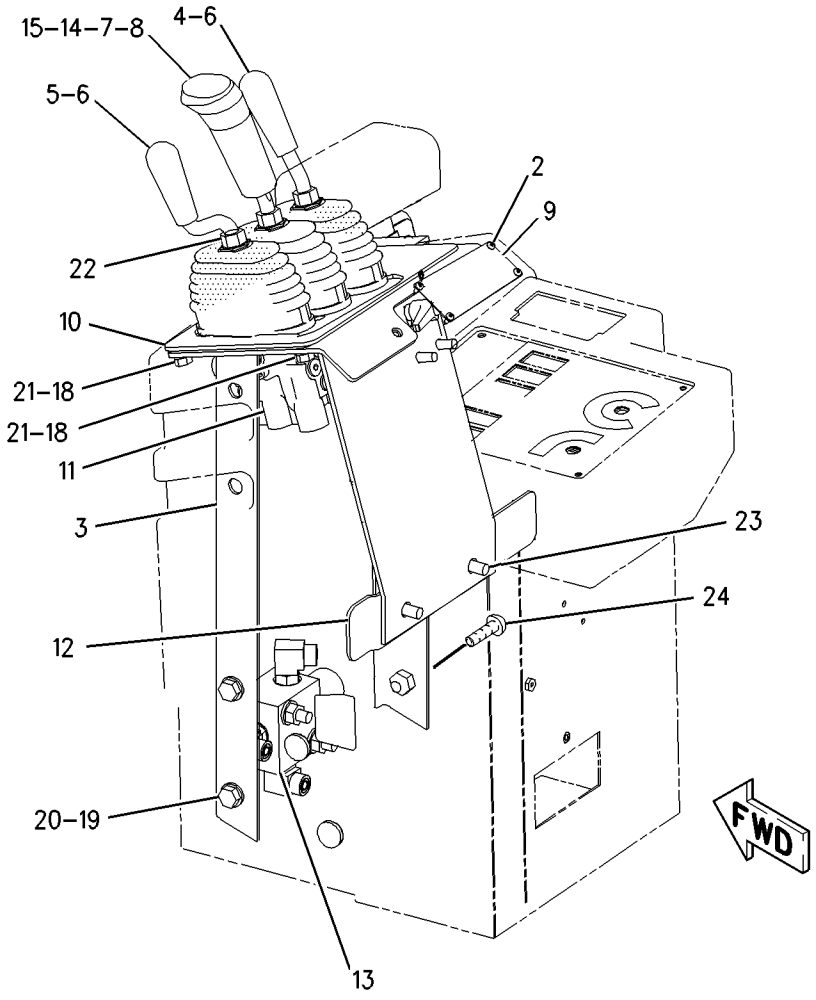

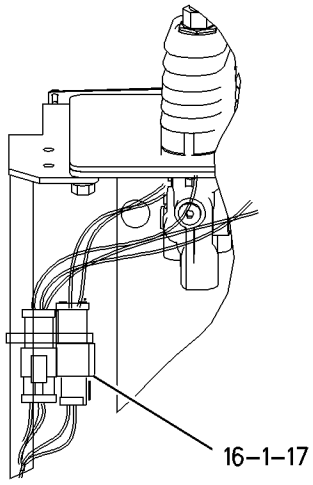

FRONT VIEW

GRAPHIC #1

g00920640

HYDRAULIC SYSTEM

220-1509 CONTROL GP-PILOT OPERATED HYD

S/N: DJD1-UP
PART OF 202-0423 HYDRAULIC AR-3 VALVE
AN ATTACHMENT

SMCS-5063 **i01798325**

NOTE	REF NO	GRAPHIC REF	PART NUMBER	QTY	PART NAME 1 2 3 4 5 6 (PRODUCT LEVEL)	SEE PAGE
	1	1	**103-2006**	4	SCREW-PAN HEAD	
	2	1	**107-6050**	1	SUPPORT AS	
		1	**7T-1099**	2	LINK	
M		1	**159-9539**	2	NUT-WELD (M6X1 THD)	
M		1	**159-9541**	4	NUT-WELD (M10X1.5 THD)	
	3	1	**114-3937**	1	ROD	
	4	1	**124-4401**	1	KNOB	
	5	1	**141-9193**	1	PLATE-INSTRUMENT	
	6	1	**164-4111**	1	COVER	
Y	7	1	**201-3361**	1	VALVE GP-PILOT (JOYSTICK, 3 FUNCTION)	528
	8	1	**223-4717**	1	BRACKET	
Y	9	1	**225-1057**	1	VALVE GP-SHUTOFF	560
M	10	1	**5C-7261**	4	NUT (M8X1.25 THD)	
	11	1	**8T-4121**	2	WASHER-HARD (11X21X2.5MM THK)	
M	12	1	**8T-4137**	2	BOLT (M10X1.5X20MM)	
	13	1	**8T-4224**	4	WASHER-HARD (8.8X16X2MM THK)	
M	14	1	**8T-4244**	1	NUT (M12X1.75 THD)	
M	15	1	**9X-2040**	2	SCREW-TRUSS HEAD (M10X1.5X25MM)	
M	16	1	**9X-2041**	2	SCREW-TRUSS HEAD (M10X1.5X20MM)	

M-METRIC PART
Y-SEPARATE ILLUSTRATION

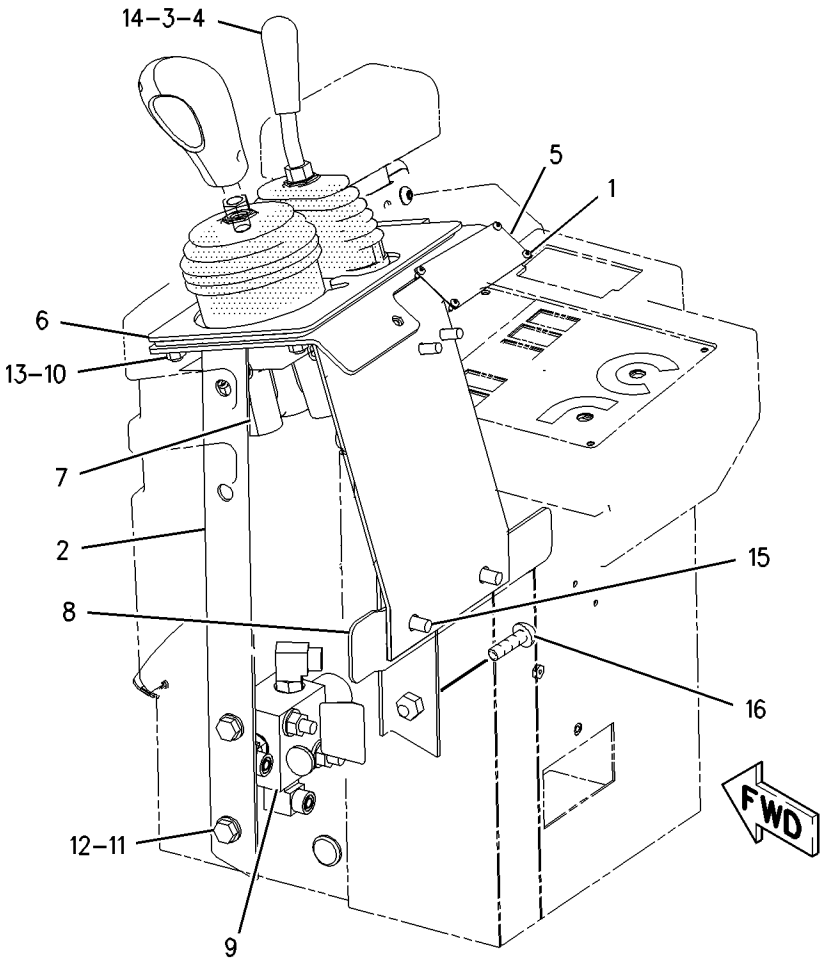

GRAPHIC #1 g00920923

HYDRAULIC SYSTEM

215-6741 COOLER GP-HYD & TMSN OIL

S/N: DJD1-UP; DBT1-UP
AN ATTACHMENT

SMCS-1374, 1375 **i01823483**

NOTE	REF NO	GRAPHIC REF	PART NUMBER	QTY	PART NAME 1 2 3 4 5 6 (PRODUCT LEVEL)	SEE PAGE
	1	1	**8T-9386**	1	CONNECTOR	
	2	1	**8C-4000**	1	CONNECTOR	
	3	1	**7J-9108**	1	SEAL-O-RING	
	4	1	**123-4065**	40	RIVET-POP	
	5	1	**185-1032**	1	CORE AS-HYDRAULIC OIL COOLER	
	6	1	**215-6737**	1	CORE AS-POWER TRAIN OIL COOLER	
	7	1	**104-9054**	1	CONNECTOR-ORFS	
	8	1	**2M-9780**	4	SEAL-O-RING	
	9	1	**5K-9090**	2	SEAL-O-RING	
	10	1	**6V-8398**	1	SEAL-O-RING	
	11	1	**6V-8642**	1	CONNECTOR	

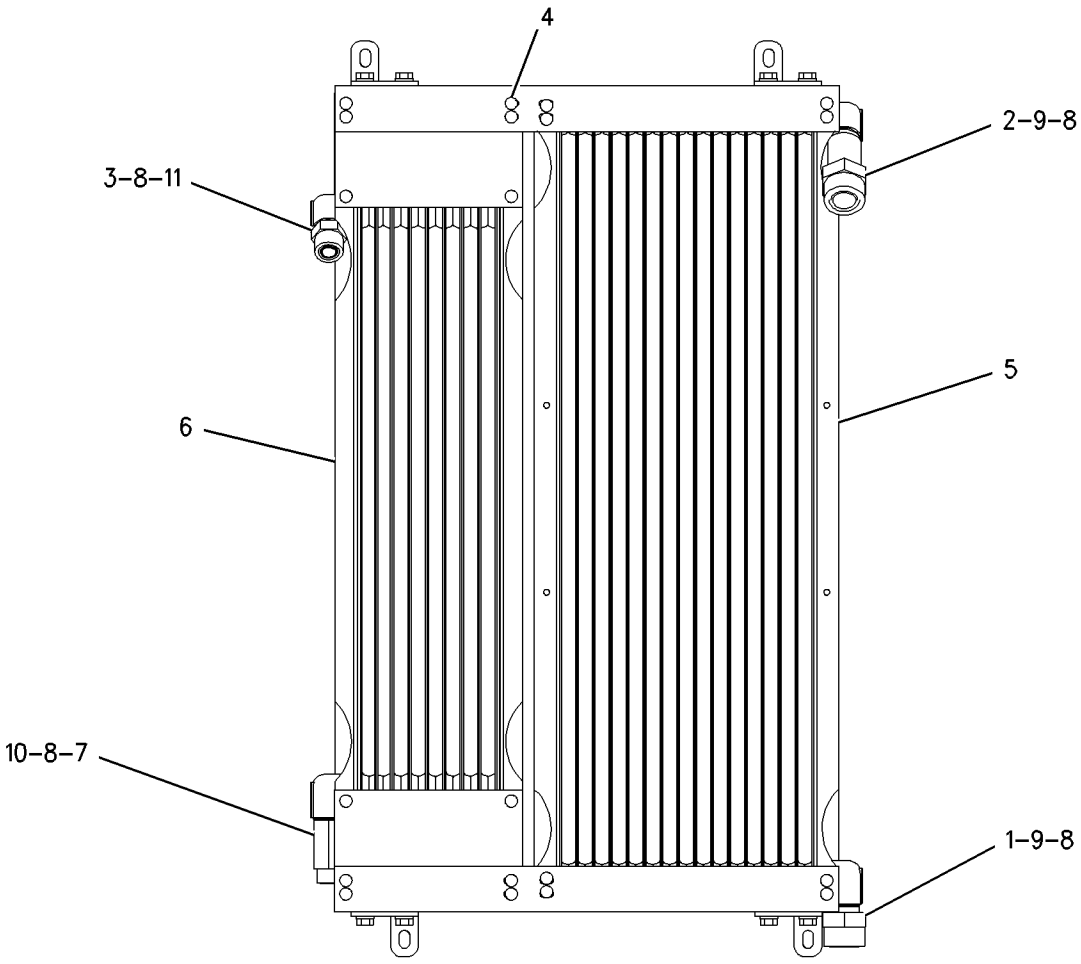

GRAPHIC #1 g00920020

HYDRAULIC SYSTEM

215-6743 COOLER GP-HYD & TMSN OIL

S/N: DJD1-UP; DBT1-UP
HEAVY DUTY
PART OF 227-9400 COOLER GP-HYDRAULIC OIL
AN ATTACHMENT

SMCS-1374, 1375 **i01823486**

NOTE	REF NO	GRAPHIC REF	PART NUMBER	QTY	PART NAME 1 2 3 4 5 6 (PRODUCT LEVEL)	SEE PAGE
	1	1	**8T-9386**	2	CONNECTOR	
	2	1	**7J-9108**	1	SEAL-O-RING	
	3	1	**123-4065**	32	RIVET-POP	
	4	1	**185-1032**	1	CORE AS-HYDRAULIC OIL COOLER	
	5	1	**215-6740**	1	CORE AS-POWER TRAIN OIL COOLER (HEAVY DUTY)	
	6	1	**2M-9780**	4	SEAL-O-RING	
	7	1	**5K-9090**	2	SEAL-O-RING	
	8	1	**6V-8398**	1	SEAL-O-RING	
	9	1	**6V-8638**	1	CONNECTOR-SEAL	
	10	1	**6V-8642**	1	CONNECTOR	

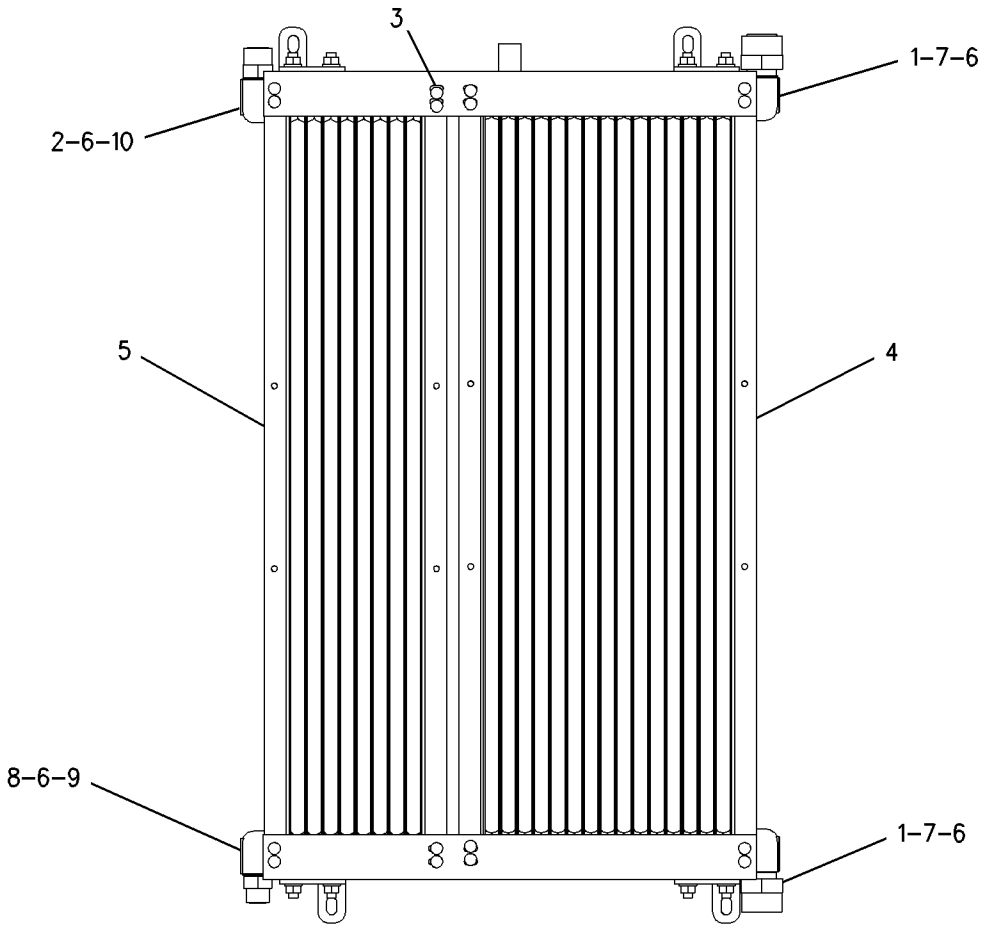

GRAPHIC #1 g00928825

HYDRAULIC SYSTEM

227-9400 COOLER GP-HYDRAULIC OIL

S/N: DJD1-UP; DBT1-UP
AN ATTACHMENT

SMCS-1374 **i01818990**

NOTE	REF NO	GRAPHIC REF	PART NUMBER	QTY	PART NAME 1 2 3 4 5 6 (PRODUCT LEVEL)	SEE PAGE
Y	1	1	**215-6743**	1	COOLER GP-HYD & TMSN OIL (HEAVY DUTY)	365

Y-SEPARATE ILLUSTRATION

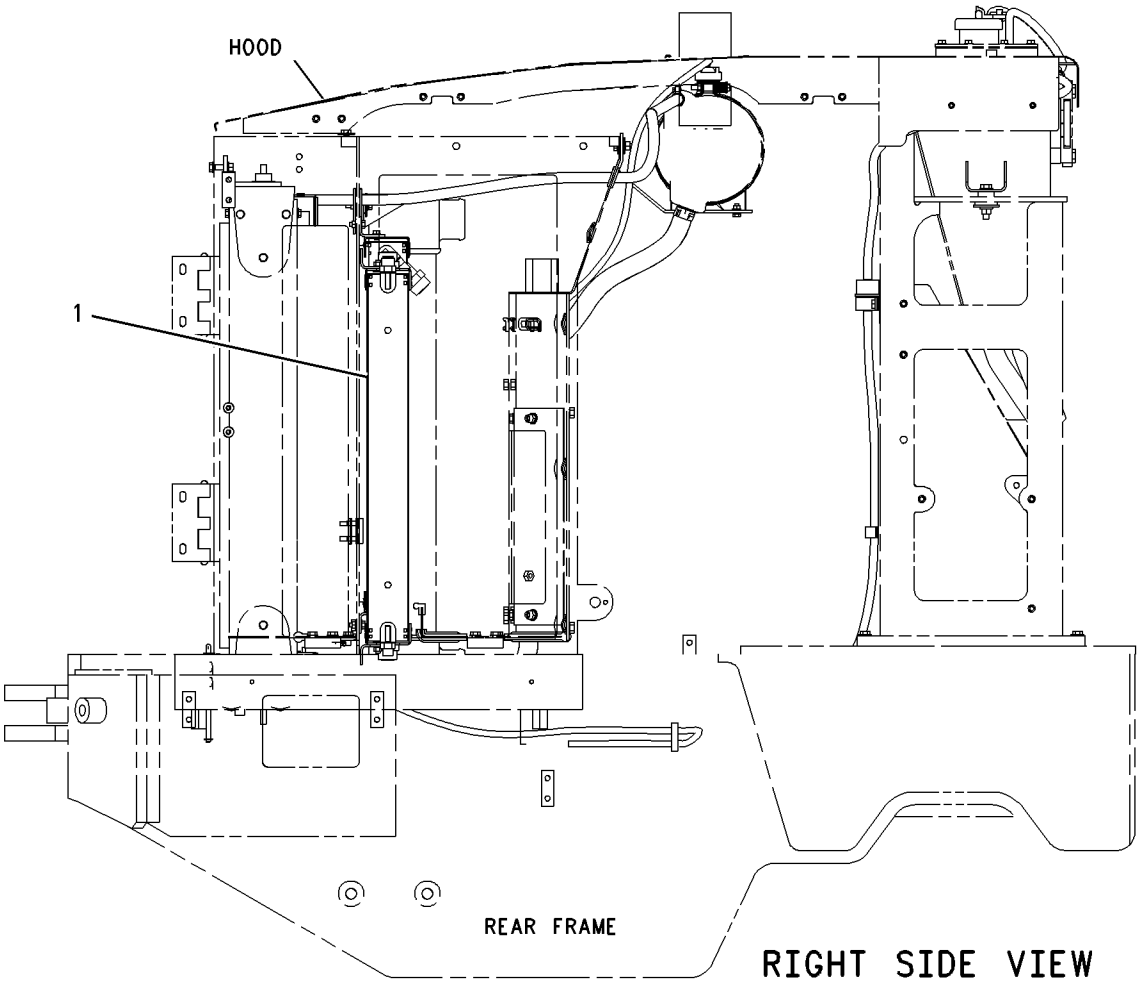

GRAPHIC #1 g00928792

HYDRAULIC SYSTEM

196-1979 CYLINDER & MTG GP-COUPLER

S/N: DJD1-UP; DBT1-UP
PART OF 122-6466, 223-3378 COUPLER AR-QUICK
AN ATTACHMENT

SMCS-5133 **i01760120**

NOTE	REF NO	GRAPHIC REF	PART NUMBER	QTY	PART NAME 1 2 3 4 5 6 (PRODUCT LEVEL)	SEE PAGE
	1	1	**6W-5760**	2	DOWEL	
	2	1	**6W-5761**	2	PIN	
Y	3	1	**190-3085**	1	CYLINDER GP-COUPLER	368

Y-SEPARATE ILLUSTRATION

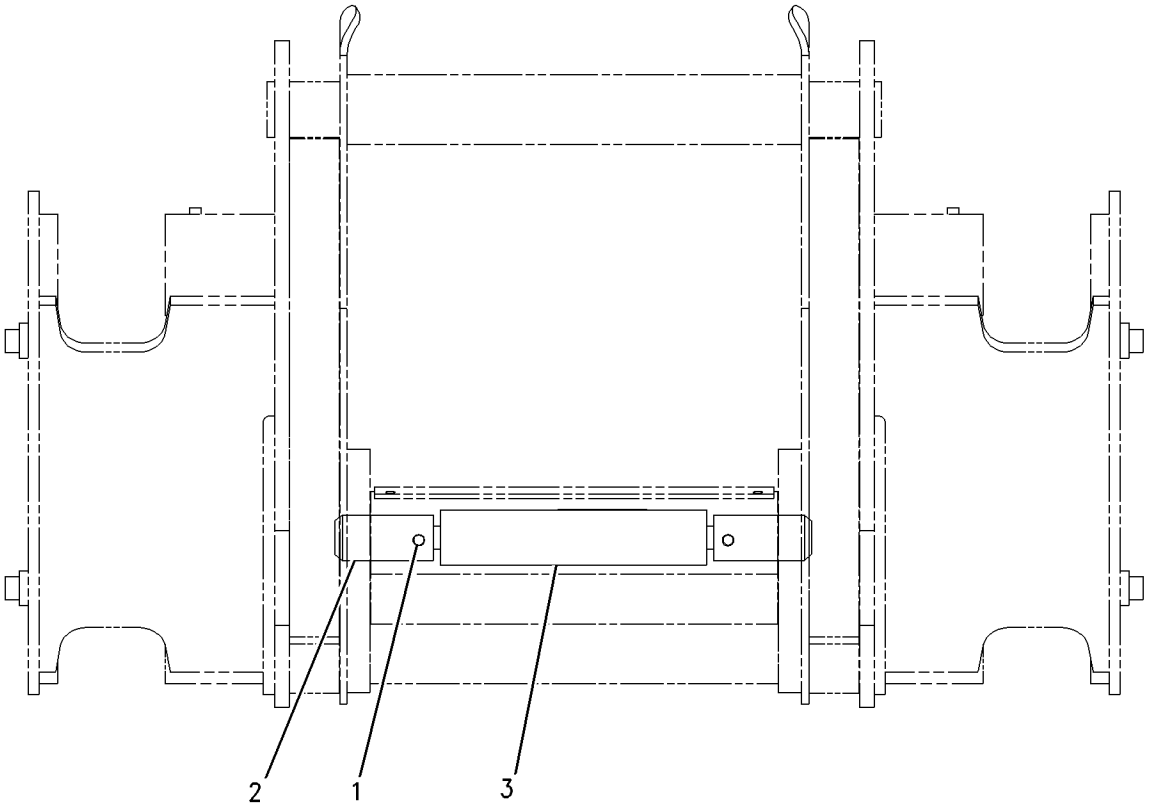

GRAPHIC #1 g00897220

190-3085 CYLINDER GP-COUPLER

S/N: DJD1-UP; DBT1-UP
PART OF 196-1979 CYLINDER & MTG GP-COUPLER
AN ATTACHMENT

SMCS-5133 **i01762694**

NOTE	PART NUMBER	QTY	PART NAME 1 2 3 4 5 6 (PRODUCT LEVEL)	SEE PAGE
	178-3893	2	ROD AS	
	190-3611	1	VALVE GP-CHECK	
			AVAILABLE REPAIR KIT(S):	
	180-9872	1	KIT-SEAL	
			(INCLUDES LOCKNUTS, SEALS, RINGS, AND RETAINERS)	

<END>

MEMORANDA

HYDRAULIC SYSTEM

119-1060 CYLINDER GP-LIFT

S/N: DJD1-UP; DBT1-UP
120.65MM BORE X 685MM STROKE
PART OF 176-5222, 176-5242 HYDRAULIC AR

SMCS-5102 **i01834806**

NOTE	REF NO	GRAPHIC REF	PART NUMBER	QTY	PART NAME 1 2 3 4 5 6 (PRODUCT LEVEL)	SEE PAGE
R	1	1	**119-1062**	1	CYLINDER AS	
		1	*176-9644*	1	CAP AS	
		1	**4V-8629**	1	BEARING-SLEEVE	
M	2	1	**173-9685**	1	BOLT-HEX HEAD (M20X2.5X70MM)	
	3	1	**106-1017**	1	WASHER (36.7X77X6MM THK)	
	4	1	**4T-8588**	1	SEAL AS	
	5	1	**8T-8390**	1	RING-WEAR	
	6	1	**133-8773**	1	PISTON	
J	7	1	**175-7903**	1	SEAL-O-RING	
	8	1	**2J-3961**	1	RING-BACKUP	
	9	1	**8T-0785**	1	RING-WEAR	
R	10	1	**119-1063**	1	ROD AS	
	11	1	**120-6679**	1	HEAD	
J	12	1	**167-2201**	1	SEAL AS-BUFFER	
J	13	1	**167-2312**	1	SEAL-U-CUP	
J	14	1	**167-2463**	1	SEAL-WIPER	
					AVAILABLE REPAIR KIT(S):	
J			**186-4382**	1	KIT-SEAL	

J-KIT MARKED J INCLUDES PARTS MARKED J
M-METRIC PART
R-REMFG PART MAY BE AVAILABLE

119-1060 CYLINDER GP-LIFT *(contd.)* i01834806

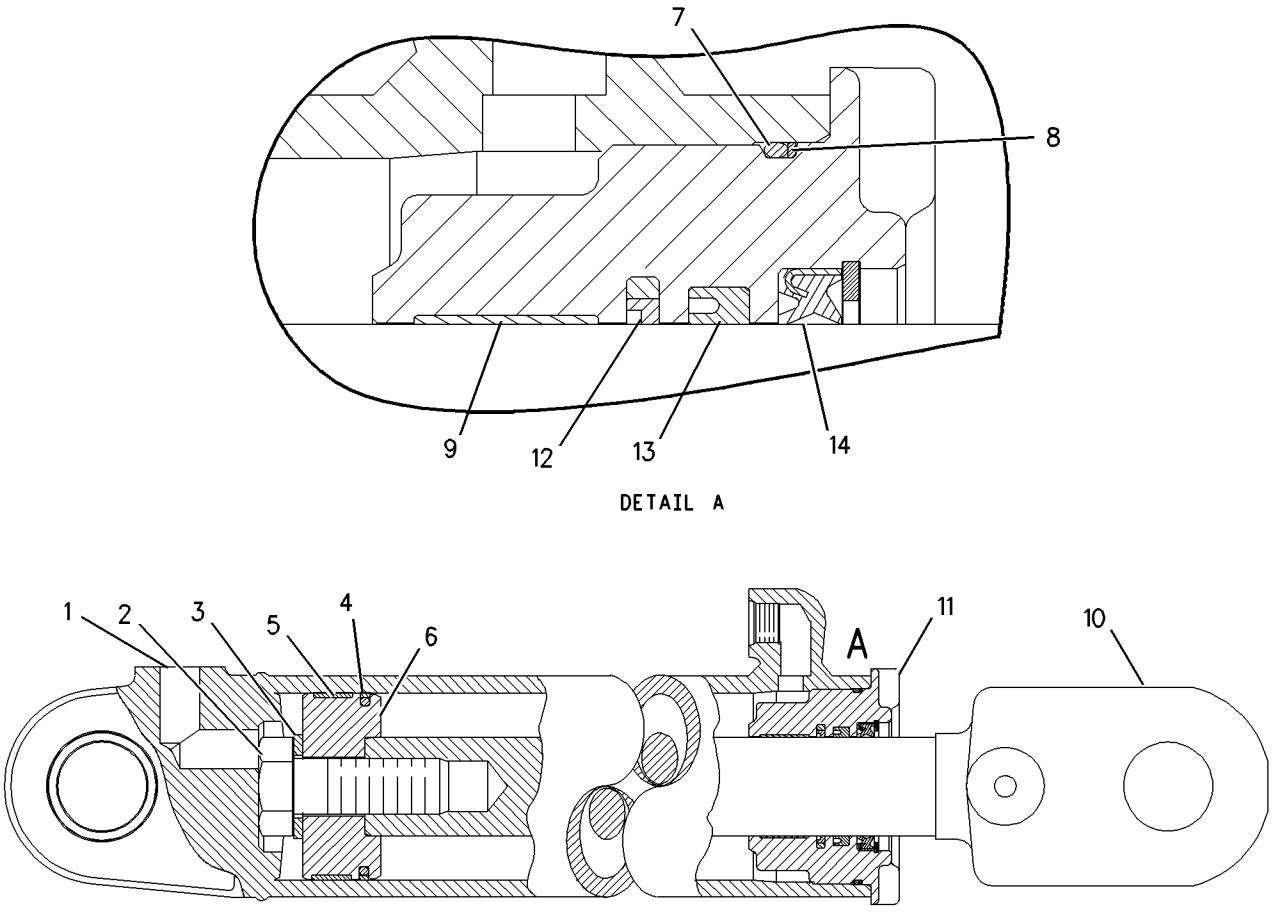

GRAPHIC #1 g00732920

HYDRAULIC SYSTEM

118-8105 CYLINDER GP-TILT

S/N: DJD1-UP
127MM BORE X 550MM STROKE
PART OF 176-5242 HYDRAULIC AR

SMCS-5104 **i01469437**

NOTE	REF NO	GRAPHIC REF	PART NUMBER	QTY	PART NAME 1 2 3 4 5 6 (PRODUCT LEVEL)	SEE PAGE
	1	1	**118-8106**	1	CYLINDER AS	
		1	**1V-9148**	1	BEARING-SLEEVE (76.481MM ID)	
		1	**110-7849**	2	LUG	
	2	1	**5J-5731**	1	LOCKNUT (1-3/4-12 THD)	
	3	1	**4J-4630**	1	RING-WEAR	
	4	1	**9X-7264**	1	SEAL AS	
	5	1	**6E-2314**	1	PISTON	
	6	1	**5F-3999**	1	SEAL-O-RING	
	7	1	**4J-9221**	1	RING-BACKUP	
		1	**3D-2824**	2	SEAL-O-RING	
	8	1	**121-3395**	1	HEAD	
	9	1	**118-8110**	1	ROD AS	
		1	**3G-5285**	1	BEARING-SLEEVE	
	10	1	**167-2463**	1	SEAL-WIPER	
	11	1	**167-2312**	1	SEAL-U-CUP	
	12	1	**167-2201**	1	SEAL AS-BUFFER	
	13	1	**8T-0785**	1	RING-WEAR	

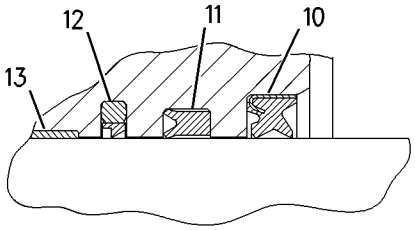

VIEW OF AREA A

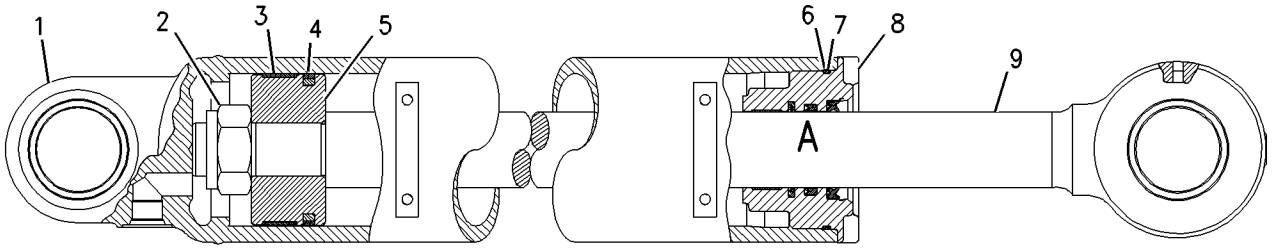

GRAPHIC #1 g00766803

MEMORANDA

119-1852 CYLINDER GP-TILT

S/N: DBT1-UP
101.6 MM (3.99 IN) BORE X 755 MM (29.7 IN) STROKE
PART OF 176-5222 HYDRAULIC AR

SMCS-5104 **i01834984**

NOTE	REF NO	GRAPHIC REF	PART NUMBER	QTY	PART NAME 1 2 3 4 5 6 (PRODUCT LEVEL)	SEE PAGE
	1	1	**119-1853**	1	CYLINDER AS	
		1	**7J-9682**	1	BEARING-SLEEVE	
M	2	1	**173-9683**	1	BOLT-HEX HEAD (M30X3.5X90MM)	
	3	1	**9X-8399**	1	WASHER (33X56X6MM THK)	
	4	1	**5J-5402**	1	SEAL AS	
	5	1	**6J-2797**	1	RING-WEAR	
	6	1	**133-8780**	1	PISTON	
	7	1	**175-7900**	1	SEAL-O-RING	
	8	1	**2K-6830**	1	RING-BACKUP	
	9	1	**6E-0775**	1	HEAD	
	10	1	**133-8778**	1	ROD AS	
JL	11	1	**167-2457**	1	SEAL-WIPER	
JL	12	1	**167-2304**	1	SEAL-U-CUP	
JL	13	1	**167-2195**	1	SEAL AS-BUFFER	
JL	14	1	**4T-5613**	1	RING-WEAR	
					AVAILABLE REPAIR KIT(S):	
J			**185-7690**	1	KIT-SEAL	
L			**185-7691**	1	KIT-SEAL	

J-KIT MARKED J INCLUDES PARTS MARKED J
L-KIT MARKED L INCLUDES PARTS MARKED L
M-METRIC PART

119-1852 CYLINDER GP-TILT *(contd.)*

i01834984

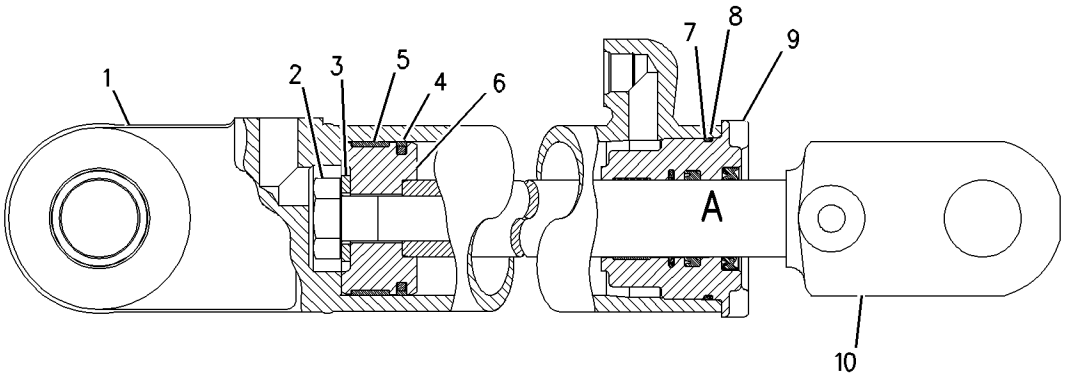

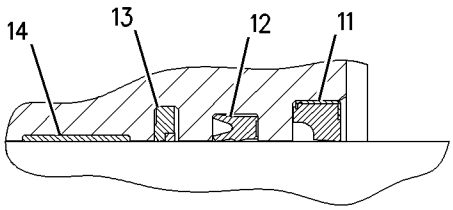

VIEW OF AREA A

GRAPHIC #1

g00774889

HYDRAULIC SYSTEM

127-3020 CYLINDER GP-TILT

S/N: DBT1-UP
101.6 MM (3.99 IN) BORE X 755 MM (29.7 IN) STROKE
PART OF 176-5222 HYDRAULIC AR

SMCS-5104 **i01834993**

NOTE	REF NO	GRAPHIC REF	PART NUMBER	QTY	PART NAME 1 2 3 4 5 6 (PRODUCT LEVEL)	SEE PAGE
R	1	1	**127-3021**	1	CYLINDER AS	
		1	**174-3222**	1	CAP AS	
		1	**7J-9682**	1	BEARING-SLEEVE	
		1	**110-7849**	2	LUG	
M	2	1	**173-9683**	1	BOLT-HEX HEAD (M30X3.5X90MM)	
	3	1	**9X-8399**	1	WASHER (33X56X6MM THK)	
J	4	1	**5J-5402**	1	SEAL AS	
J	5	1	**6J-2797**	1	RING-WEAR	
	6	1	**133-8780**	1	PISTON	
J	7	1	**175-7900**	1	SEAL-O-RING	
J	8	1	**2K-6830**	1	RING-BACKUP	
	9	1	**6E-0775**	1	HEAD	
	10	1	**133-8778**	1	ROD AS	
JL	11	1	**167-2457**	1	SEAL-WIPER	
JL	12	1	**167-2304**	1	SEAL-U-CUP	
JL	13	1	**167-2195**	1	SEAL AS-BUFFER	
JL	14	1	**4T-5613**	1	RING-WEAR	
					AVAILABLE REPAIR KIT(S):	
J			**185-7688**	1	KIT-SEAL	
L			**185-7691**	1	KIT-SEAL	

J-KIT MARKED J INCLUDES PARTS MARKED J
L-KIT MARKED L INCLUDES PARTS MARKED L
M-METRIC PART
R-REMFG PART MAY BE AVAILABLE

127-3020 CYLINDER GP-TILT *(contd.)* i01834993

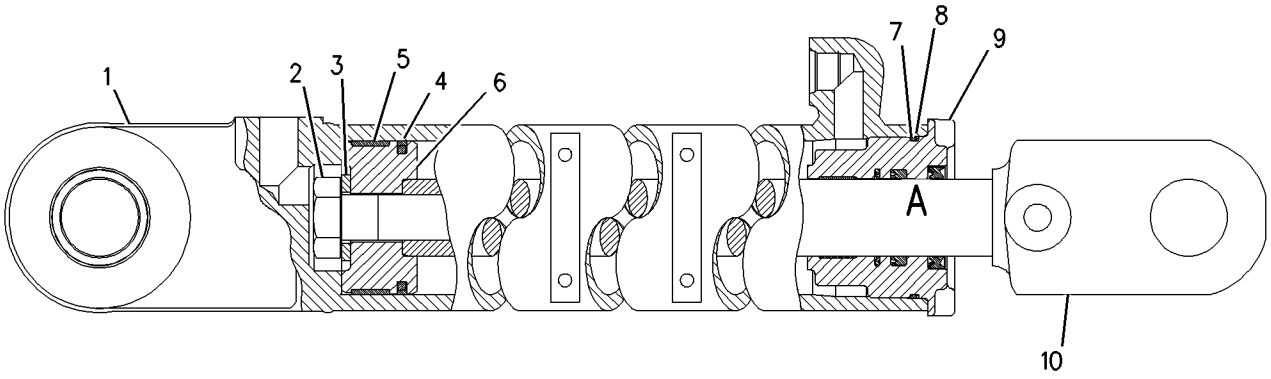

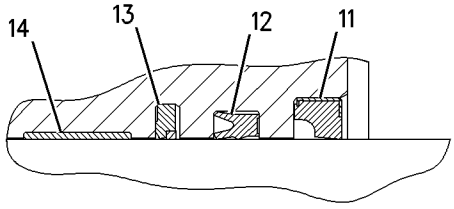

VIEW OF AREA A

GRAPHIC #1 g00774882

HYDRAULIC SYSTEM

203-3877 FILTER GP-OIL

S/N: DJD1-UP; DBT1-UP

PART OF 176-5222, 176-5242 HYDRAULIC AR

SMCS-5068, 5092 **i01835405**

NOTE	REF NO	GRAPHIC REF	PART NUMBER	QTY	PART NAME 1 2 3 4 5 6 (PRODUCT LEVEL)	SEE PAGE
	1	1	**229-2939**	1	BRACKET	
Y	2	1	**209-3149**	1	FILTER GP-OIL (HYDRAULIC)	379
	3	1	**7X-7729**	2	WASHER (11X25X3MM THK)	
	4	1	**8T-4121**	4	WASHER-HARD (11X21X2.5MM THK)	
M	5	1	**8T-4136**	2	BOLT (M10X1.5X25MM)	
M	6	1	**8T-4137**	4	BOLT (M10X1.5X20MM)	

M-METRIC PART
Y-SEPARATE ILLUSTRATION

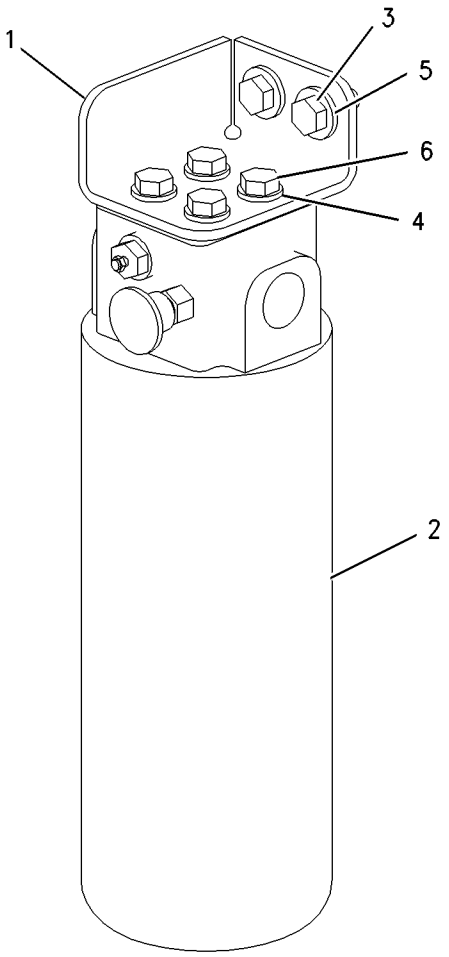

GRAPHIC #1 g00916670

209-3149 FILTER GP-OIL

S/N: DJD1-UP; DBT1-UP
BASIC
PART OF 203-3877 FILTER GP-OIL

SMCS-5068, 5092 **i01834999**

NOTE	REF NO	GRAPHIC REF	PART NUMBER	QTY	PART NAME 1 2 3 4 5 6 (PRODUCT LEVEL)	SEE PAGE
	1	1	**126-1818**	1	FILTER AS-OIL	
	2	1	**3J-7354**	1	SEAL-O-RING	
	3	1	**7X-8549**	1	SWITCH AS-PRESSURE (HYDRAULIC OIL FILTER BYPASS)	
		1	**3J-1907**	1	SEAL-O-RING	
	4	1	**8C-3446**	1	VALVE GP-FLUID SAMPLING	
	5	1	**8C-3451**	1	CAP-DUST	
	6	1	**3J-1907**	1	SEAL-O-RING	

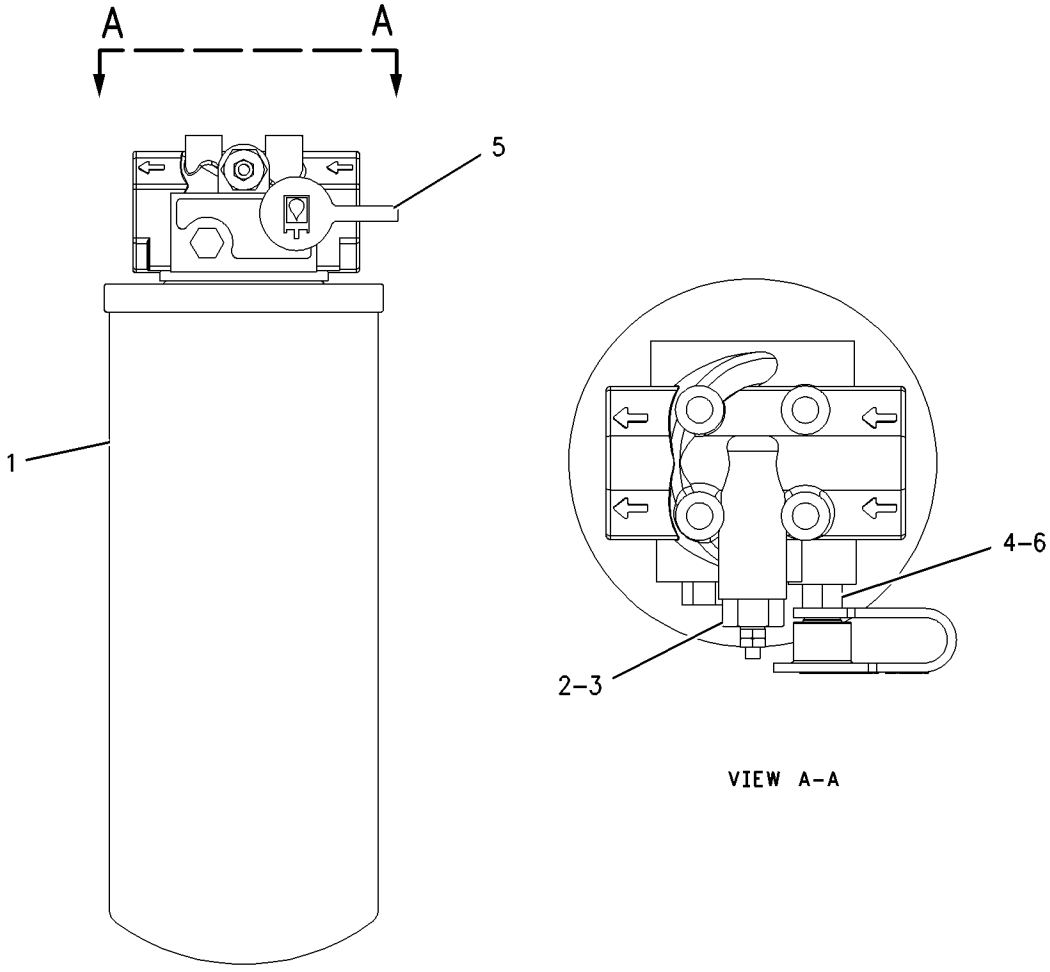

VIEW A-A

GRAPHIC #1 g00920953

HYDRAULIC SYSTEM

176-5222 HYDRAULIC AR

S/N: DBT1-UP

PART OF 176-5220 COMMON AR

SMCS-5051 **i01835002**

NOTE	PART NUMBER	QTY	PART NAME 1 2 3 4 5 6 (PRODUCT LEVEL)	SEE PAGE
Y	**119-1060**	2	CYLINDER GP-LIFT	370
Y	**119-1852**	1	CYLINDER GP-TILT	374
Y	**127-3020**	1	CYLINDER GP-TILT	376
Y	*203-3877*	1	FILTER GP-OIL (HYDRAULIC)	378
Y	*122-6490*	1	KICKOUT & POSITIONER GP	390
Y	*203-3897*	1	LINES GP-HYDRAULIC	406
Y	*203-3898*	1	PUMP & MTG GP-BRAKE & HYD FAN	310
Y	*118-1083*	1	PUMP & MTG GP-IMPL & STEERING	476
Y	*205-5408*	1	TANK & MTG GP-HYDRAULIC	482

Y-SEPARATE ILLUSTRATION

<END>

176-5242 HYDRAULIC AR

S/N: DJD1-UP

PART OF 204-4350 COMMON AR

SMCS-5051 **i01835003**

NOTE	PART NUMBER	QTY	PART NAME 1 2 3 4 5 6 (PRODUCT LEVEL)	SEE PAGE
Y	**119-1060**	2	CYLINDER GP-LIFT	370
Y	**118-8105**	1	CYLINDER GP-TILT	372
Y	*203-3877*	1	FILTER GP-OIL (HYDRAULIC)	378
Y	*113-3652*	1	KICKOUT & POSITIONER GP	388
Y	*203-3897*	1	LINES GP-HYDRAULIC	406
Y	*118-0861*	1	LINES GP-LIFT CYLINDER	416
Y	*118-0862*	1	LINES GP-TILT CYLINDER	448
Y	*203-3898*	1	PUMP & MTG GP-BRAKE & HYD FAN	310
Y	*118-1083*	1	PUMP & MTG GP-IMPL & STEERING	476
Y	*205-5408*	1	TANK & MTG GP-HYDRAULIC	482

Y-SEPARATE ILLUSTRATION

<END>

HYDRAULIC SYSTEM

202-0426 HYDRAULIC AR

S/N: DBT1-UP
THREE VALVE, THREE LEVER
AN ATTACHMENT

SMCS-5051 **i01838101**

NOTE	PART NUMBER	QTY	PART NAME 1 2 3 4 5 6 (PRODUCT LEVEL)	SEE PAGE
Y	*122-6329*	1	VALVE & MTG GP-MAIN CONTROL (3 FUNCTION)	486
Y	*219-4786*	1	CONTROL GP-PILOT OPERATED HYD (JOYSTICK, 3 FUNCTION)	346
Y	*122-6359*	1	LINES GP-TILT CYLINDER	452
Y	*149-4612*	1	COVER GP-CONSOLE	623
Y	*184-5296*	1	CONTROL GP-HANDLE (TMSN F-N-R & DOWNSHIFT CONTROL)	340
Y	*188-2865*	1	LINES GP-FRONT	404
Y	*203-5925*	1	LINES GP-PILOT	432
Y	*218-5129*	1	LINES GP-LIFT CYLINDER	424

Y-SEPARATE ILLUSTRATION

<END>

202-0427 HYDRAULIC AR

S/N: DBT1-UP
THREE VALVE, THREE LEVER
AN ATTACHMENT

SMCS-5051 **i01838117**

NOTE	PART NUMBER	QTY	PART NAME 1 2 3 4 5 6 (PRODUCT LEVEL)	SEE PAGE
Y	*122-6330*	1	VALVE & MTG GP-MAIN CONTROL (4 FUNCTION)	487
Y	*219-4787*	1	CONTROL GP-PILOT OPERATED HYD (JOYSTICK, 4 FUNCTION)	348
Y	*122-6337*	1	LINES GP-FRONT	402
Y	*122-6359*	1	LINES GP-TILT CYLINDER	452
Y	*149-4612*	1	COVER GP-CONSOLE	623
Y	*184-5296*	1	CONTROL GP-HANDLE (TMSN F-N-R & DOWNSHIFT CONTROL)	340
Y	*188-2865*	1	LINES GP-FRONT	404
Y	*203-5926*	1	LINES GP-PILOT	436
Y	*218-5129*	1	LINES GP-LIFT CYLINDER	424

Y-SEPARATE ILLUSTRATION

<END>

HYDRAULIC SYSTEM

203-5933 HYDRAULIC AR

S/N: DBT1-UP
TWO LEVER, THREE VALVE
AN ATTACHMENT

SMCS-5051 **i01839573**

NOTE	PART NUMBER	QTY	PART NAME 1 2 3 4 5 6 (PRODUCT LEVEL)	SEE PAGE
Y	*219-4790*	1	CONTROL GP-PILOT OPERATED HYD (2 FUNCTION)	354
Y	*149-4612*	1	COVER GP-CONSOLE	623
Y	*218-5129*	1	LINES GP-LIFT CYLINDER	424
Y	*203-5924*	1	LINES GP-PILOT	428
Y	*122-6359*	1	LINES GP-TILT CYLINDER	452
Y	**201-1068**	1	VALVE & MTG GP-MAIN CONTROL (2 FUNCTION)	488

Y-SEPARATE ILLUSTRATION

<END>

203-5934 HYDRAULIC AR

S/N: DBT1-UP
THREE VALVE, THREE LEVER
AN ATTACHMENT

SMCS-5051 **i01839610**

NOTE	PART NUMBER	QTY	PART NAME 1 2 3 4 5 6 (PRODUCT LEVEL)	SEE PAGE
Y	*219-4789*	1	CONTROL GP-PILOT OPERATED HYD (3 FUNCTION)	352
Y	*149-4612*	1	COVER GP-CONSOLE	623
Y	*188-2865*	1	LINES GP-FRONT	404
Y	*218-5129*	1	LINES GP-LIFT CYLINDER	424
Y	*203-5925*	1	LINES GP-PILOT	432
Y	*122-6359*	1	LINES GP-TILT CYLINDER	452
Y	*122-6329*	1	VALVE & MTG GP-MAIN CONTROL (3 FUNCTION)	486

Y-SEPARATE ILLUSTRATION

<END>

203-5935 HYDRAULIC AR

S/N: DBT1-UP
THREE VALVE, THREE LEVER
AN ATTACHMENT

SMCS-5051 **i01839565**

NOTE	PART NUMBER	QTY	PART NAME 1 2 3 4 5 6 (PRODUCT LEVEL)	SEE PAGE
Y	*219-4788*	1	CONTROL GP-PILOT OPERATED HYD (4 FUNCTION)	350
Y	*149-4612*	1	COVER GP-CONSOLE	623
Y	*122-6337*	1	LINES GP-FRONT	402
Y	*188-2865*	1	LINES GP-FRONT	404
Y	*218-5129*	1	LINES GP-LIFT CYLINDER	424
Y	*203-5926*	1	LINES GP-PILOT	436
Y	*122-6359*	1	LINES GP-TILT CYLINDER	452
Y	*122-6330*	1	VALVE & MTG GP-MAIN CONTROL (4 FUNCTION)	487

Y-SEPARATE ILLUSTRATION

<END>

HYDRAULIC SYSTEM

203-5936 HYDRAULIC AR

S/N: DBT1-UP
ONE LEVER,TWO VALVE, FORWARD, NEUTRAL, REVERSE
AN ATTACHMENT

SMCS-5051 **i01839621**

NOTE	PART NUMBER	QTY	PART NAME 1 2 3 4 5 6 (PRODUCT LEVEL)	SEE PAGE
Y	*184-5296*	1	CONTROL GP-HANDLE (TMSN F-N-R & DOWNSHIFT CONTROL)	340
Y	*219-4785*	1	CONTROL GP-PILOT OPERATED HYD (JOYSTICK, 2 FUNCTION)	344
Y	*149-4612*	1	COVER GP-CONSOLE	623
Y	*218-5129*	1	LINES GP-LIFT CYLINDER	424
Y	*203-5924*	1	LINES GP-PILOT	428
Y	*122-6359*	1	LINES GP-TILT CYLINDER	452
Y	**201-1068**	1	VALVE & MTG GP-MAIN CONTROL (2 FUNCTION)	488
Y-SEPARATE ILLUSTRATION				

<END>

202-0421 HYDRAULIC AR-2 VALVE

S/N: DJD1-UP
ONE LEVER, FORWARD, NEUTRAL, REVERSE
AN ATTACHMENT

SMCS-5051 **i01748399**

NOTE	PART NUMBER	QTY	PART NAME 1 2 3 4 5 6 (PRODUCT LEVEL)	SEE PAGE
Y	*184-5296*	1	CONTROL GP-HANDLE	340
Y	*220-1506*	1	CONTROL GP-PILOT OPERATED HYD	358
Y	*149-4612*	1	COVER GP-CONSOLE	623
Y	*203-5924*	1	LINES GP-PILOT	428
Y	*118-1087*	1	VALVE & MTG GP-MAIN CONTROL	484
Y-SEPARATE ILLUSTRATION				

<END>

202-0422 HYDRAULIC AR-2 VALVE

S/N: DBT1-UP
ONE LEVER, WITH FORWARD, NEUTRAL, REVERSE
AN ATTACHMENT

SMCS-5051 **i01761504**

NOTE	PART NUMBER	QTY	PART NAME 1 2 3 4 5 6 (PRODUCT LEVEL)	SEE PAGE
Y	*184-5296*	1	CONTROL GP-HANDLE (TMSN F-N-R & DOWNSHIFT CONTROL)	340
Y	*219-4785*	1	CONTROL GP-PILOT OPERATED HYD (JOYSTICK, 2 FUNCTION)	344
Y	*149-4612*	1	COVER GP-CONSOLE	623
Y	*122-6338*	1	LINES GP-LIFT CYLINDER	420
Y	*203-5924*	1	LINES GP-PILOT	428
Y	*122-6322*	1	LINES GP-TILT CYLINDER	450
Y	**201-1068**	1	VALVE & MTG GP-MAIN CONTROL (2 FUNCTION)	488
Y-SEPARATE ILLUSTRATION				

<END>

HYDRAULIC SYSTEM

203-5927 HYDRAULIC AR-2 VALVE

S/N: DJD1-UP
TWO LEVER
AN ATTACHMENT

SMCS-5051 **i01738815**

NOTE	PART NUMBER	QTY	PART NAME 1 2 3 4 5 6 (PRODUCT LEVEL)	SEE PAGE
Y	*220-1505*	1	CONTROL GP-PILOT OPERATED HYD	356
Y	*149-4612*	1	COVER GP-CONSOLE	623
Y	*203-5924*	1	LINES GP-PILOT	428
Y	*118-1087*	1	VALVE & MTG GP-MAIN CONTROL	484

Y-SEPARATE ILLUSTRATION

<END>

218-2456 HYDRAULIC AR-2 VALVE

S/N: DBT1-UP
TWO LEVER
AN ATTACHMENT

SMCS-5051 **i01761586**

NOTE	PART NUMBER	QTY	PART NAME 1 2 3 4 5 6 (PRODUCT LEVEL)	SEE PAGE
Y	*219-4790*	1	CONTROL GP-PILOT OPERATED HYD (2 FUNCTION)	354
Y	*149-4612*	1	COVER GP-CONSOLE	623
Y	*122-6338*	1	LINES GP-LIFT CYLINDER	420
Y	*203-5924*	1	LINES GP-PILOT	428
Y	*122-6322*	1	LINES GP-TILT CYLINDER	450
Y	**201-1068**	1	VALVE & MTG GP-MAIN CONTROL (2 FUNCTION)	488

Y-SEPARATE ILLUSTRATION

<END>

202-0423 HYDRAULIC AR-3 VALVE

S/N: DJD1-UP
TWO LEVER, WITH FORWARD, NEUTRAL, REVERSE
AN ATTACHMENT

SMCS-5051 **i01739709**

NOTE	PART NUMBER	QTY	PART NAME 1 2 3 4 5 6 (PRODUCT LEVEL)	SEE PAGE
Y	*184-5296*	1	CONTROL GP-HANDLE	340
Y	*220-1509*	1	CONTROL GP-PILOT OPERATED HYD	362
Y	*149-4612*	1	COVER GP-CONSOLE	623
Y	*118-1094*	1	LINES GP-FRONT	400
Y	*203-5925*	1	LINES GP-PILOT	432
Y	*118-1095*	1	VALVE & MTG GP-MAIN CONTROL	485

Y-SEPARATE ILLUSTRATION

<END>

HYDRAULIC SYSTEM

202-0424 HYDRAULIC AR-3 VALVE

S/N: DBT1-UP
TWO LEVER, FNR
AN ATTACHMENT

SMCS-5051 **i01796639**

NOTE	PART NUMBER	QTY	PART NAME 1 2 3 4 5 6 (PRODUCT LEVEL)	SEE PAGE
Y	*184-5296*	1	CONTROL GP-HANDLE (TMSN F-N-R & DOWNSHIFT CONTROL)	340
Y	*219-4786*	1	CONTROL GP-PILOT OPERATED HYD (JOYSTICK, 3 FUNCTION)	346
Y	*149-4612*	1	COVER GP-CONSOLE	623
Y	*188-2865*	1	LINES GP-FRONT	404
Y	*122-6338*	1	LINES GP-LIFT CYLINDER	420
Y	*203-5925*	1	LINES GP-PILOT	432
Y	*122-6322*	1	LINES GP-TILT CYLINDER	450
Y	*122-6329*	1	VALVE & MTG GP-MAIN CONTROL (3 FUNCTION)	486

Y-SEPARATE ILLUSTRATION

<END>

203-5928 HYDRAULIC AR-3 VALVE

S/N: DJD1-UP
THREE LEVER
AN ATTACHMENT

SMCS-5051 **i01738904**

NOTE	PART NUMBER	QTY	PART NAME 1 2 3 4 5 6 (PRODUCT LEVEL)	SEE PAGE
Y	*220-1507*	1	CONTROL GP-PILOT OPERATED HYD	360
Y	*149-4612*	1	COVER GP-CONSOLE	623
Y	*118-1094*	1	LINES GP-FRONT	400
Y	*203-5925*	1	LINES GP-PILOT	432
Y	*118-1095*	1	VALVE & MTG GP-MAIN CONTROL	485

Y-SEPARATE ILLUSTRATION

<END>

218-2457 HYDRAULIC AR-3 VALVE

S/N: DBT1-UP
THREE LEVER
AN ATTACHMENT

SMCS-5051 **i01797102**

NOTE	PART NUMBER	QTY	PART NAME 1 2 3 4 5 6 (PRODUCT LEVEL)	SEE PAGE
Y	*122-6322*	1	LINES GP-TILT CYLINDER	450
Y	*122-6329*	1	VALVE & MTG GP-MAIN CONTROL (3 FUNCTION)	486
Y	*122-6338*	1	LINES GP-LIFT CYLINDER	420
Y	*149-4612*	1	COVER GP-CONSOLE	623
Y	*188-2865*	1	LINES GP-FRONT	404
Y	*203-5925*	1	LINES GP-PILOT	432
Y	*219-4789*	1	CONTROL GP-PILOT OPERATED HYD (3 FUNCTION)	352

Y-SEPARATE ILLUSTRATION

<END>

HYDRAULIC SYSTEM

202-0425 HYDRAULIC AR-4 VALVE

S/N: DBT1-UP
THREE LEVER, FNR
AN ATTACHMENT

SMCS-5051 **i01798538**

NOTE	PART NUMBER	QTY	PART NAME 1 2 3 4 5 6 (PRODUCT LEVEL)	SEE PAGE
Y	*184-5296*	1	CONTROL GP-HANDLE (TMSN F-N-R & DOWNSHIFT CONTROL)	340
Y	*122-6332*	1	CONTROL GP-PILOT OPERATED HYD (JOYSTICK, 4 FUNCTION)	342
Y	*149-4612*	1	COVER GP-CONSOLE	623
Y	*122-6337*	1	LINES GP-FRONT	402
Y	*188-2865*	1	LINES GP-FRONT	404
Y	*122-6338*	1	LINES GP-LIFT CYLINDER	420
Y	*203-5926*	1	LINES GP-PILOT	436
Y	*122-6322*	1	LINES GP-TILT CYLINDER	450
Y	*122-6330*	1	VALVE & MTG GP-MAIN CONTROL (4 FUNCTION)	487

Y-SEPARATE ILLUSTRATION

<END>

203-5929 HYDRAULIC AR-4 VALVE

S/N: DBT1-UP
FOUR LEVER
AN ATTACHMENT

SMCS-5051 **i01739061**

NOTE	PART NUMBER	QTY	PART NAME 1 2 3 4 5 6 (PRODUCT LEVEL)	SEE PAGE
Y	*219-4788*	1	CONTROL GP-PILOT OPERATED HYD	350
Y	*149-4612*	1	COVER GP-CONSOLE	623
Y	*122-6337*	1	LINES GP-FRONT	402
Y	*188-2865*	1	LINES GP-FRONT	404
Y	*122-6338*	1	LINES GP-LIFT CYLINDER	420
Y	*203-5926*	1	LINES GP-PILOT	436
Y	*122-6322*	1	LINES GP-TILT CYLINDER	450
Y	*122-6330*	1	VALVE & MTG GP-MAIN CONTROL	487

Y-SEPARATE ILLUSTRATION

<END>

MEMORANDA

HYDRAULIC SYSTEM

113-3652 KICKOUT & POSITIONER GP

S/N: DJD1-UP

PART OF 176-5242 HYDRAULIC AR

SMCS-5109, 5112 **i01819667**

NOTE	REF NO	GRAPHIC REF	PART NUMBER	QTY	PART NAME 1 2 3 4 5 6 (PRODUCT LEVEL)	SEE PAGE
Y	1	1	**3E-7843**	1	CONTROL GP-POSITION	106
Y	2	1	**3E-7844**	1	CONTROL GP-LIFT KICKOUT	105
	3	1	**5G-7820**	1	MAGNET AS	
	4	1	**7K-1181**	8	STRAP-CABLE	
	5	1	**7V-5626**	4	CLAMP	
	6	1	**7V-5628**	1	PLATE	
	7	1	**106-6394**	2	CLAMP	
	8	1	**109-1297**	2	CLAMP	
	9	1	**118-0885**	1	SHAFT AS	
	10	1	**118-0887**	1	CLAMP AS	
	11	1	**118-0888**	1	TUBE	
	12	1	**122-6493**	1	PLATE AS	
	13	1	**122-6495**	1	GUARD AS	
		1	**7T-1099**	1	LINK	
	14	1	**136-4794**	1	PLATE AS	
	15	1	**138-6791**	1	PLATE	
	16	1	**164-5362**	1	HARNESS AS (POSITIONER)	
		1	**155-2270**	1	KIT-CONNECTING PLUG (2 PIN)	
		1	**102-8802**	1	KIT-RECEPTACLE (2 PIN)	
		1	**102-8803**	1	KIT-RECEPTACLE (3 PIN)	
		1	**102-8806**	1	KIT-RECEPTACLE (8 PIN)	
	17	1	**187-3662**	1	CLIP	
M	18	1	**8T-6869**	1	BOLT (M8X1.25X60MM)	
	19	1	**4P-7581**	2	CLIP	
	20	1	**5G-7822**	1	PLATE	
	21	1	**5P-4115**	2	WASHER-HARD (7.2X19X2MM THK)	
M	22	1	**6V-7744**	1	LOCKNUT (M10X1.5 THD)	
M	23	1	**6V-9189**	1	LOCKNUT (M8X1.25 THD)	
M	24	1	**7X-2534**	4	BOLT (M6X1X50MM)	
	25	1	**8T-4121**	8	WASHER-HARD (11X21X2.5MM THK)	
M	26	1	**8T-4136**	2	BOLT (M10X1.5X25MM)	
M	27	1	**8T-4137**	2	BOLT (M10X1.5X20MM)	
M	28	1	**8T-4186**	1	BOLT (M10X1.5X40MM)	
M	29	1	**8T-4189**	9	BOLT (M8X1.25X20MM)	
M	30	1	**8T-4196**	2	BOLT (M10X1.5X35MM)	
M	31	1	**8T-4200**	2	BOLT (M8X1.25X16MM)	
	32	1	**8T-4224**	13	WASHER-HARD (8.8X16X2MM THK)	

M-METRIC PART
Y-SEPARATE ILLUSTRATION

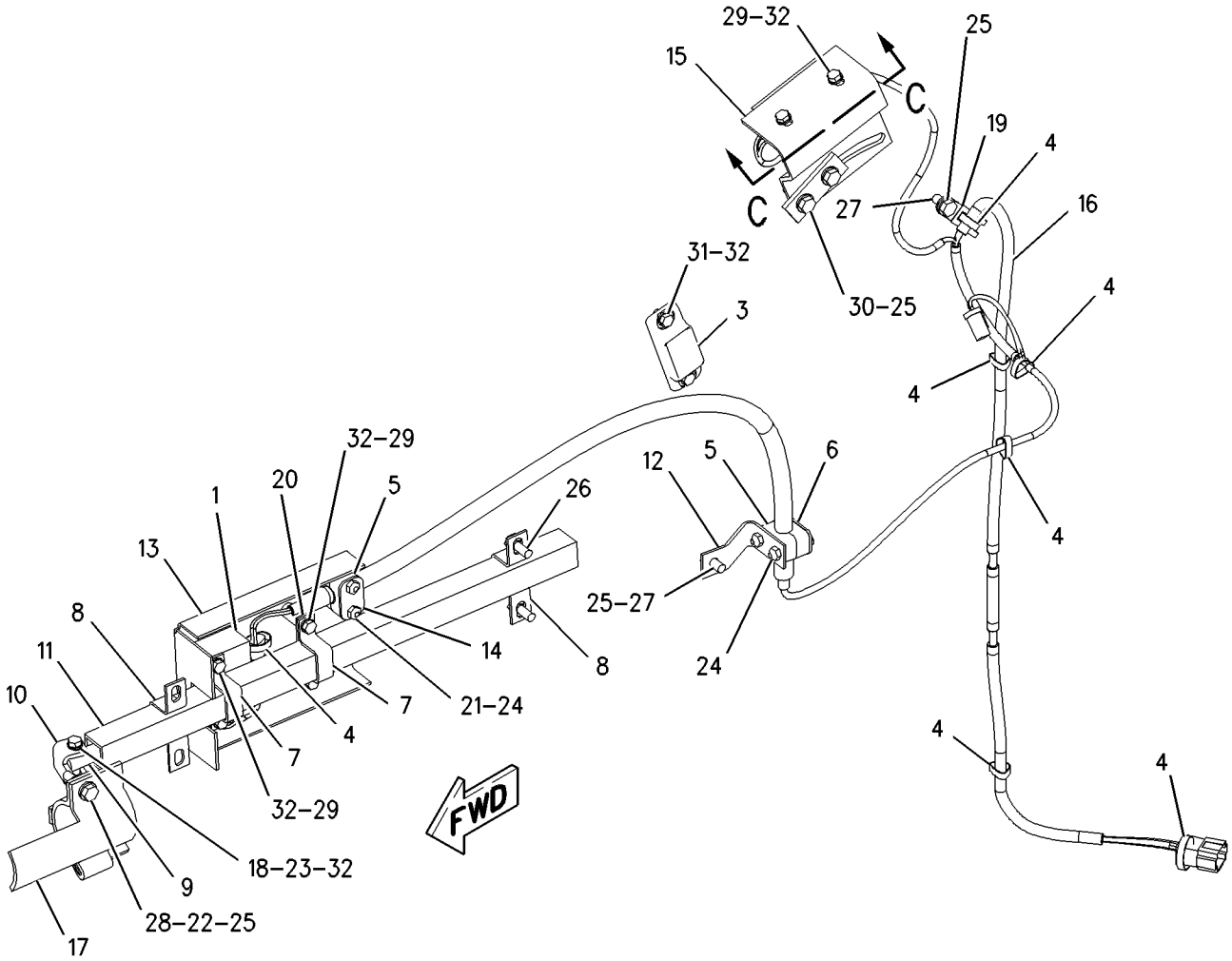

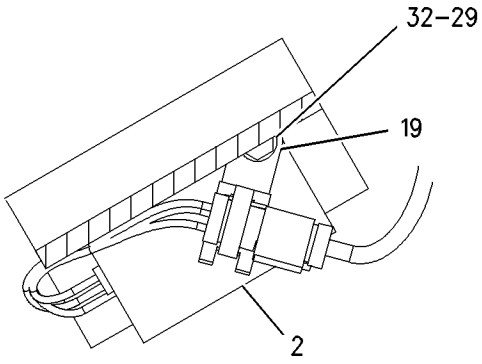

SECTION C–C

GRAPHIC #1 g00845237

HYDRAULIC SYSTEM

122-6490 KICKOUT & POSITIONER GP

S/N: DBT1-UP

PART OF 176-5222 HYDRAULIC AR

SMCS-5109, 5112 **i01819671**

NOTE	REF NO	GRAPHIC REF	PART NUMBER	QTY	PART NAME 1 2 3 4 5 6 (PRODUCT LEVEL)	SEE PAGE
Y	1	1	**3E-7844**	1	CONTROL GP-LIFT KICKOUT (LIFT)	105
	2	1	**9X-2132**	1	RETAINER	
	3	1	**5G-7820**	1	MAGNET AS	
	4	1	**7K-1181**	10	STRAP-CABLE	
	5	1	**7V-5626**	6	CLAMP	
	6	1	**7V-5628**	2	PLATE	
	7	1	**8T-4224**	9	WASHER-HARD (8.8X16X2MM THK)	
CY	8	1	**3E-7843**	2	CONTROL GP-POSITION	106
	9	1	**161-5922**	1	PLATE AS	
	10	1	**121-7981**	1	SHAFT AS	
	11	1	**121-7983**	1	TUBE	
	12	1	**122-6493**	1	PLATE AS	
M		1	**6V-9632**	2	NUT-WELD (M6X1 THD)	
	13	1	**134-4630**	2	CLAMP	
	14	1	**109-1297**	2	CLAMP	
	15	1	**136-4794**	1	PLATE AS	
M		1	**6V-9632**	2	NUT-WELD (M6X1 THD)	
	16	1	**137-2135**	1	PLATE AS	
		1	**7T-1099**	2	LINK	
	17	1	**138-6792**	1	PLATE	
	18	1	**164-4927**	1	HARNESS AS (POSITIONER)	
		1	**102-8806**	1	KIT-RECEPTACLE (8 PIN)	
		1	**155-2270**	1	KIT-CONNECTING PLUG (2 PIN)	
		1	**102-8808**	1	KIT-CONNECTING PLUG (3 PIN)	
		1	**102-8803**	2	KIT-RECEPTACLE (3 PIN)	
	19	1	**4P-8134**	1	CLIP	
	20	1	**5P-4115**	2	WASHER-HARD (7.2X19X2MM THK)	
M	21	1	**7X-2534**	6	BOLT (M6X1X50MM)	
	22	1	**7X-7729**	6	WASHER (11X25X3MM THK)	
	23	1	**8T-4121**	3	WASHER-HARD (11X21X2.5MM THK)	
M	24	1	**8T-4137**	7	BOLT (M10X1.5X20MM)	
M	25	1	**8T-4189**	7	BOLT (M8X1.25X20MM)	
M	26	1	**8T-4195**	2	BOLT (M10X1.5X30MM)	
M	27	1	**8T-4200**	2	BOLT (M8X1.25X16MM)	
	28	1	**153-9706**	1	PLATE	

C-CHANGE FROM PREVIOUS TYPE
M-METRIC PART
Y-SEPARATE ILLUSTRATION

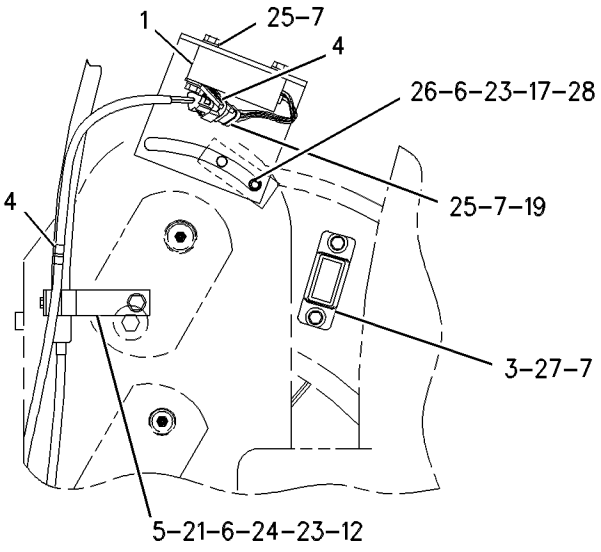

VIEW OF AREA A

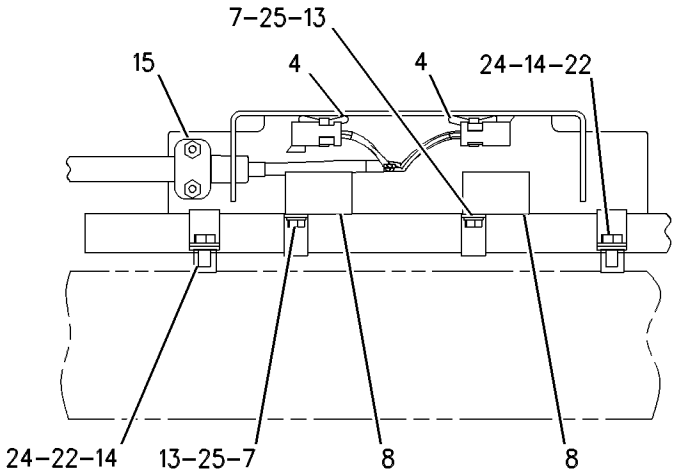

VIEW B-B

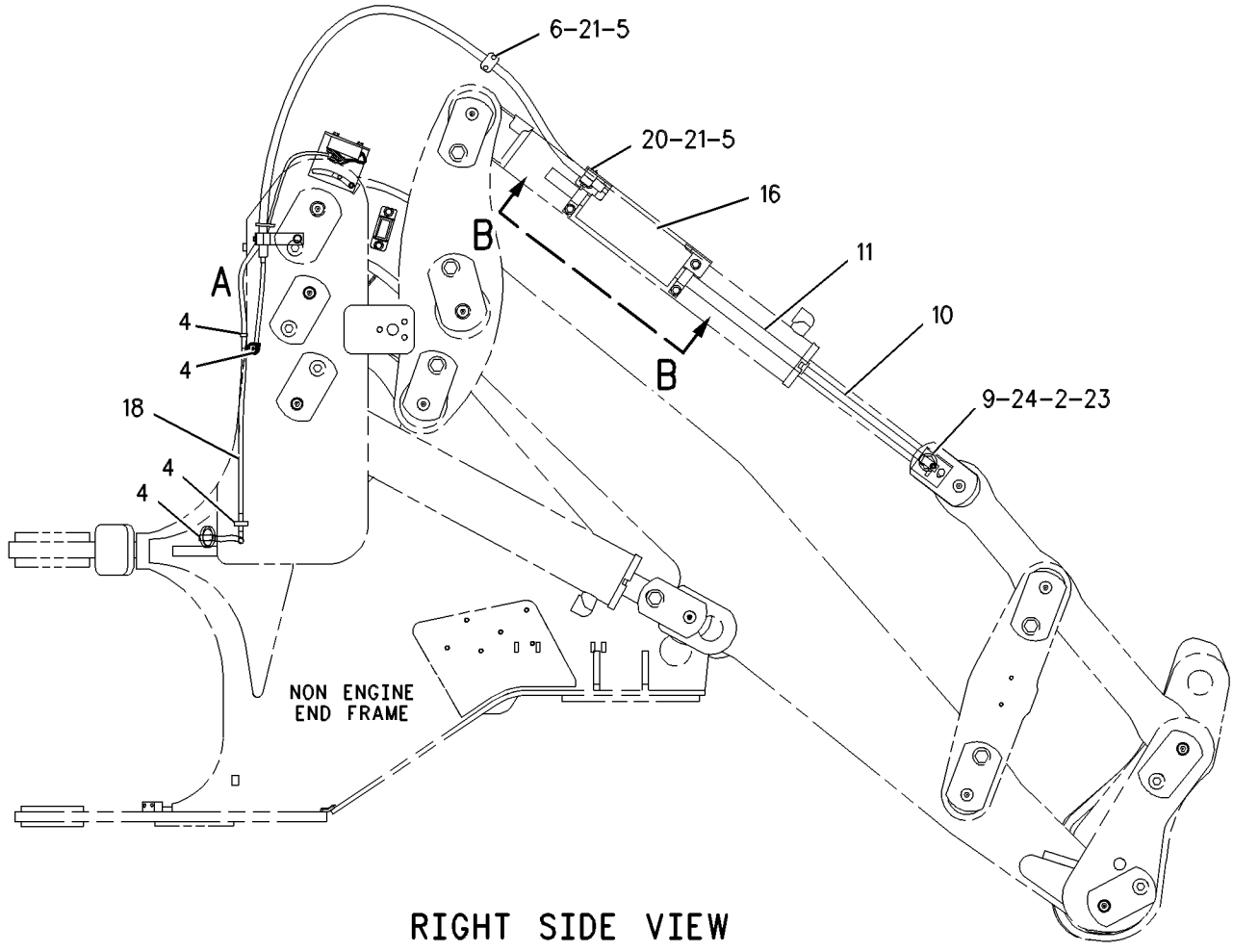

RIGHT SIDE VIEW

GRAPHIC #1

g00592924

HYDRAULIC SYSTEM

188-2860 LINES GP-COUPLER

S/N: DBT1-UP
PART OF 122-6466 COUPLER AR-QUICK
AN ATTACHMENT

SMCS-5057, 5133 **i01835004**

NOTE	REF NO	GRAPHIC REF	PART NUMBER	QTY	PART NAME 1 2 3 4 5 6 (PRODUCT LEVEL)	SEE PAGE
	1	1	**3S-2093**	4	STRAP-CABLE	
	2	1	**7K-1181**	2	STRAP-CABLE	
I	3	1	**177-1629**	1	HOSE AS	
I	4	1	**188-0938**	1	HOSE AS	
I	5	1	**188-0939**	1	HOSE AS	
I	6	1	**188-0940**	1	HOSE AS	
I	7	1	**188-0943**	2	HOSE AS	
I	8	1	**188-0945**	1	HOSE AS	
I	9	1	**188-0946**	1	HOSE AS	
	10	1	**188-2484**	4	BLOCK	
	11	1	**188-2485**	2	PLATE	
	12	1	**188-2856**	2	PLATE AS	
					(EACH INCLUDES)	
		1	**8Y-4489**	1	BOSS	
I	13	1	**188-2869**	1	HOSE AS	
	14	1	**192-7625**	1	SWITCH AS (QUICK COUPLER)	
		1	**111-7899**	1	GASKET	
Y	15	1	**193-4750**	1	VALVE GP-QUICK COUPLER	546
	16	1	**194-1851**	1	PLATE	
	17	1	**194-4120**	4	SPACER	
	18	1	**200-1898**	1	SUPRESSOR-ARC	
	19	1	**211-0542**	2	GUARD-HOSE	
	20	1	*148-8325*	2	CONNECTOR GP	
					(EACH INCLUDES)	
		1	**3J-1907**	1	SEAL-O-RING	
		1	**4J-5477**	1	SEAL-O-RING	
		1	**6V-8641**	1	CONNECTOR	
	21	1	*148-8336*	4	CONNECTOR AS	
					(EACH INCLUDES)	
		1	**3J-1907**	1	SEAL-O-RING	
		1	**6V-8397**	1	SEAL-O-RING	
		1	**6V-8636**	1	CONNECTOR	
	22	1	*148-8367*	2	ELBOW GP	
					(EACH INCLUDES)	
		1	**6V-8397**	1	SEAL-O-RING	
		1	**6V-9850**	1	ELBOW-SWIVEL	
	23	1	*148-8378*	1	ELBOW AS	
		1	**3J-1907**	1	SEAL-O-RING	
		1	**6V-8397**	1	SEAL-O-RING	
		1	**6V-8724**	1	ELBOW	
	24	1	*148-8433*	1	TEE GP	
		1	**6V-8397**	2	SEAL-O-RING	
		1	**6V-9836**	1	TEE-SWIVEL	
	25	1	*148-8435*	2	TEE GP	
					(EACH INCLUDES)	
		1	**3J-1907**	1	SEAL-O-RING	
		1	**6V-8397**	2	SEAL-O-RING	
		1	**6V-8781**	1	TEE-FACE SEAL	
	26	1	*148-8444*	1	TEE GP	
		1	**6V-8398**	2	SEAL-O-RING	
		1	**6V-9837**	1	TEE-SWIVEL	
	27	1	*148-8457*	2	UNION GP	
					(EACH INCLUDES)	
		1	**6V-8398**	2	SEAL-O-RING	
		1	**6V-8995**	1	UNION-BULKHEAD	

188-2860 **LINES GP-COUPLER** ***(contd.)*** **i01835004**

NOTE	REF NO	GRAPHIC REF	PART NUMBER	QTY	PART NAME 1 2 3 4 5 6 (PRODUCT LEVEL)	SEE PAGE
	28	1	*150-3036*	1	ELBOW GP	
		1	**3J-1907**	1	SEAL-O-RING	
		1	**6V-8397**	1	SEAL-O-RING	
		1	**8T-1905**	1	ELBOW	
	29	1	**4P-7581**	1	CLIP	
	30	1	**5P-7462**	4	CLIP (SLOT)	
	31	1	**5P-7463**	4	CLIP (TAB)	
	32	1	**6D-4246**	3	CLIP	
	33	1	**6V-0683**	4	GROMMET	
	34	1	**6V-9169**	2	NUT-BULKHEAD (13/16-16 THD)	
M	35	1	**7X-2543**	2	BOLT (M10X1.5X120MM)	
	36	1	**8T-4121**	26	WASHER-HARD (11X21X2.5MM THK)	
M	37	1	**8T-4133**	7	NUT (M10X1.5 THD)	
M	38	1	**8T-4136**	6	BOLT (M10X1.5X25MM)	
M	39	1	**8T-4172**	4	BOLT (M10X1.50X80MM)	
M	40	1	**8T-4195**	3	BOLT (M10X1.5X30MM)	
M	41	1	**8T-4196**	4	BOLT (M10X1.5X35MM)	

I-SEE HOSE FABRICATION GUIDE
M-METRIC PART
Y-SEPARATE ILLUSTRATION

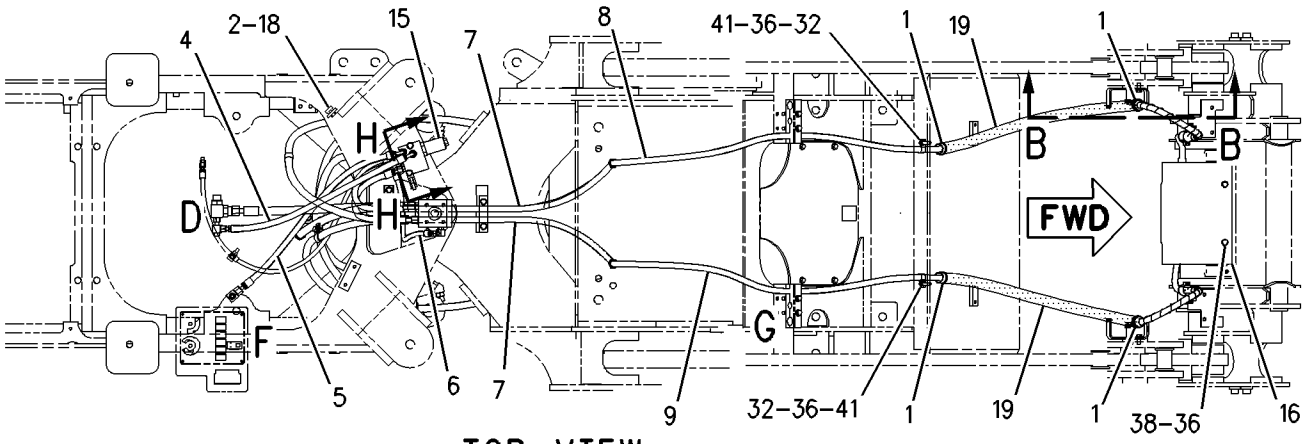

TOP VIEW

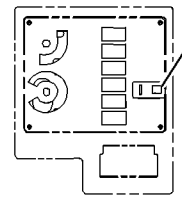

VIEW OF AREA F

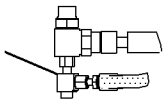

VIEW OF AREA D

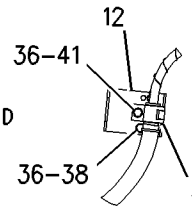

SECTION B-B

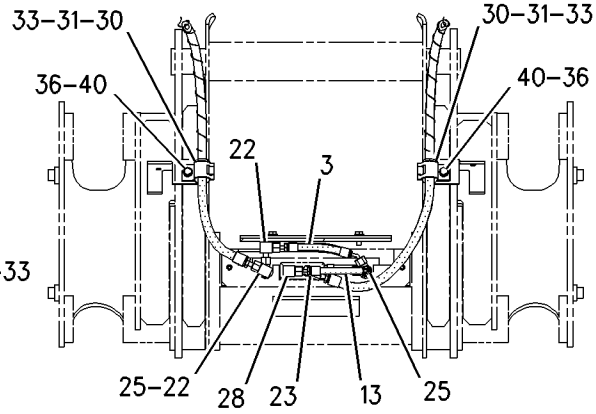

SECTION A-A

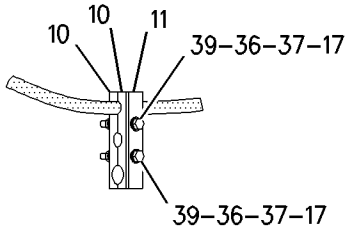

VIEW OF AREA G

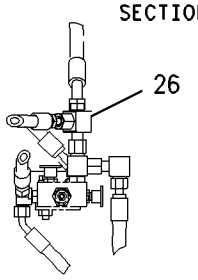

SECTION E-E

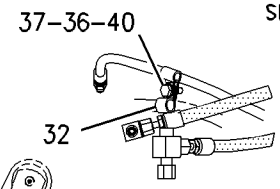

VIEW OF AREA C

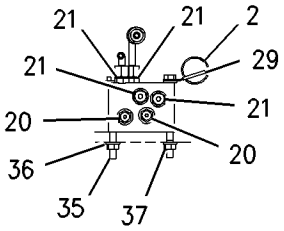

SECTION H-H

RIGHT SIDE VIEW

GRAPHIC #1

g00852581

MEMORANDA

HYDRAULIC SYSTEM

221-1707 LINES GP-COUPLER

S/N: DJD1-UP
PART OF 223-3378 COUPLER AR-QUICK
AN ATTACHMENT

SMCS-5057, 5133 **i01838372**

NOTE	REF NO	GRAPHIC REF	PART NUMBER	QTY	PART NAME 1 2 3 4 5 6 (PRODUCT LEVEL)	SEE PAGE
	1	1	**7K-1181**	2	STRAP-CABLE	
	2	1	**8R-0721**	2	SPACER	
I	3	1	**188-0938**	1	HOSE AS	
I	4	1	**188-0939**	1	HOSE AS	
I	5	1	**188-0940**	1	HOSE AS	
	6	1	**192-7625**	1	SWITCH AS (QUICK COUPLER)	
		1	**111-7899**	1	GASKET	
Y	7	1	**193-4750**	1	VALVE GP-QUICK COUPLER	546
	8	1	**194-4120**	4	SPACER	
	9	1	**200-1898**	1	SUPRESSOR-ARC	
I	10	1	**214-5389**	1	HOSE AS	
I	11	1	**214-5390**	1	HOSE AS	
	12	1	**226-5951**	1	TUBE AS	
	13	1	**226-5952**	1	TUBE AS	
	14	1	**226-6471**	2	HOSE AS	
	15	1	**226-7264**	2	BRACKET	
	16	1	**226-7265**	2	BRACKET AS	
	17	1	**226-7282**	2	HOSE AS	
	18	1	**226-7657**	1	HOSE AS	
	19	1	**226-7658**	1	HOSE AS	
	20	1	**227-0067**	4	BLOCK	
	21	1	**227-0113**	4	BLOCK	
	22	1	**227-0179**	4	PLATE	
	23	1	**230-0902**	1	BRACKET AS	
	24	1	**230-1233**	1	BRACKET AS	
	25	1	*148-8325*	7	CONNECTOR GP	
					(EACH INCLUDES)	
		1	**3J-1907**	1	SEAL-O-RING	
		1	**4J-5477**	1	SEAL-O-RING	
		1	**6V-8641**	1	CONNECTOR	
	26	1	*148-8336*	2	CONNECTOR AS	
					(EACH INCLUDES)	
		1	**3J-1907**	1	SEAL-O-RING	
		1	**6V-8397**	1	SEAL-O-RING	
		1	**6V-8636**	1	CONNECTOR	
	27	1	*148-8351*	2	ELBOW GP	
					(EACH INCLUDES)	
		1	**4J-5477**	1	SEAL-O-RING	
		1	**6V-9849**	1	ELBOW-SWIVEL	
	28	1	*148-8368*	1	ELBOW GP	
		1	**3J-1907**	1	SEAL-O-RING	
		1	**4J-5477**	1	SEAL-O-RING	
		1	**6V-8627**	1	ELBOW	
	29	1	*148-8433*	1	TEE GP	
		1	**6V-8397**	2	SEAL-O-RING	
		1	**6V-9836**	1	TEE-SWIVEL	
	30	1	*148-8444*	1	TEE GP	
		1	**6V-8398**	2	SEAL-O-RING	
		1	**6V-9837**	1	TEE-SWIVEL	
	31	1	*150-4052*	2	UNION AS	
					(EACH INCLUDES)	
		1	**4J-5477**	2	SEAL-O-RING	
		1	**6V-8993**	1	UNION	
	32	1	*150-5968*	2	TEE GP	
					(EACH INCLUDES)	

221-1707 **LINES GP-COUPLER** ***(contd.)*** **i01838372**

NOTE	REF NO	GRAPHIC REF	PART NUMBER	QTY	PART NAME 1 2 3 4 5 6 (PRODUCT LEVEL)	SEE PAGE
		1	**4J-5477**	2	SEAL-O-RING	
		1	**6V-9835**	1	TEE	
	33	1	**2P-1279**	2	LOCKNUT (9/16-18 THD)	
	34	1	**3P-5903**	2	CLIP (TAB)	
	35	1	**3P-5904**	2	CLIP (SLOT)	
	36	1	**4J-5477**	4	SEAL-O-RING	
	37	1	**4P-7581**	1	CLIP	
	38	1	**6D-3479**	2	CLIP	
	39	1	**6D-4246**	1	CLIP	
	40	1	**6V-3265**	4	CLIP	
M	41	1	**7X-2543**	2	BOLT (M10X1.5X120MM)	
	42	1	**7X-7729**	2	WASHER (11X25X3MM THK)	
	43	1	**8T-4121**	28	WASHER-HARD (11X21X2.5MM THK)	
M	44	1	**8T-4133**	5	NUT (M10X1.5 THD)	
M	45	1	**8T-4136**	12	BOLT (M10X1.5X25MM)	
M	46	1	**8T-4186**	2	BOLT (M10X1.5X40MM)	
M	47	1	**8T-4195**	3	BOLT (M10X1.5X30MM)	
M	48	1	**8T-5005**	6	BOLT (M10X1.50X70MM)	

I-SEE HOSE FABRICATION GUIDE
M-METRIC PART
Y-SEPARATE ILLUSTRATION

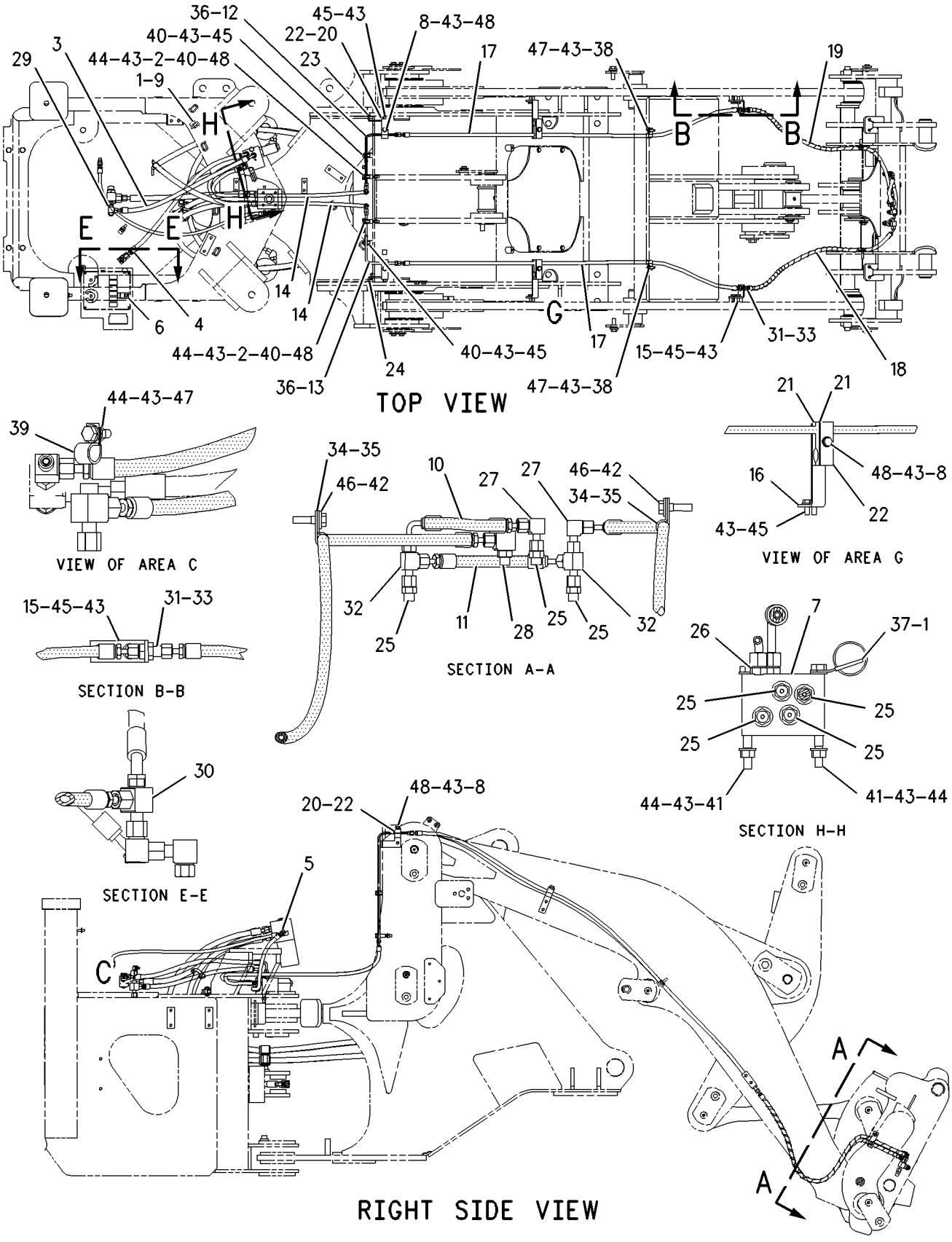

GRAPHIC #1 g00939113

MEMORANDA

HYDRAULIC SYSTEM

118-1094 LINES GP-FRONT

S/N: DJD1-UP

PART OF 202-0423, 203-5928 HYDRAULIC AR-3 VALVE AN ATTACHMENT

SMCS-5057 **i00525431**

NOTE	REF NO	GRAPHIC REF	PART NUMBER	QTY	PART NAME 1 2 3 4 5 6 (PRODUCT LEVEL)	SEE PAGE
	1	1	**6V-9832**	2	CAP AS	
	2	1	**118-0992**	1	TUBE AS	
	3	1	**118-0993**	1	TUBE AS	
I	4	1	**134-4531**	2	HOSE AS	
	5	1	**118-0996**	1	BRACKET	
	6	1	**118-0997**	1	BRACKET	
	7	1	**2P-1293**	2	LOCKNUT-BULKHEAD (1 3/16-12 THD)	
	8	1	**5K-9090**	2	SEAL-O-RING (23.52MM ID)	
	9	1	**5P-7466**	2	CLIP (SLOT)	
	10	1	**5P-7467**	2	CLIP (TAB)	
	11	1	**5P-8112**	2	GROMMET	
	12	1	**6V-8635**	2	CONNECTOR-SEAL	
	13	1	**6V-8997**	2	UNION	
	14	1	**6V-9746**	6	SEAL-O-RING (18.94MM ID)	
	15	1	**7M-8485**	2	SEAL-O-RING (29.74MM ID)	
	16	1	**7X-7729**	2	WASHER (3MM THK)	
	17	1	**8T-1889**	4	CLIP (SLOT)	
	18	1	**8T-1890**	4	CLIP (TAB)	
	19	1	**8T-4121**	8	WASHER (2.5MM THK)	
M	20	1	**8T-4136**	8	BOLT (M10X1.50X25MM)	
M	21	1	**8T-4186**	2	BOLT (M10X1.50X40MM)	

I-SEE HOSE FABRICATION GUIDE
M-METRIC PART

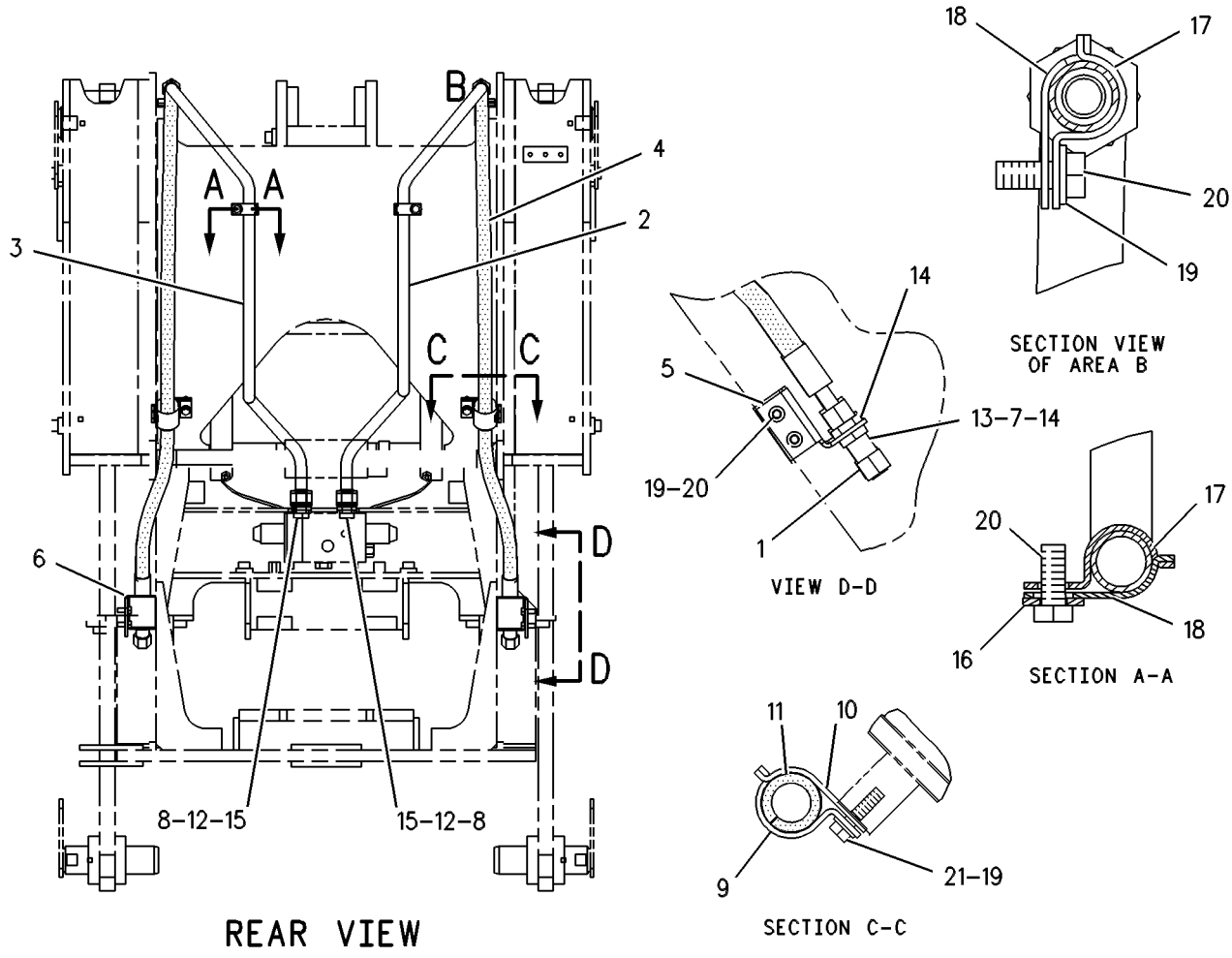

GRAPHIC #1

g00131934

HYDRAULIC SYSTEM

122-6337 LINES GP-FRONT

S/N: DBT1-UP

PART OF 202-0427, 203-5935 HYDRAULIC AR, 202-0425, 203-5929 HYDRAULIC AR-4 VALVE AN ATTACHMENT

SMCS-5057 **i01835119**

NOTE	REF NO	GRAPHIC REF	PART NUMBER	QTY	PART NAME 1 2 3 4 5 6 (PRODUCT LEVEL)	SEE PAGE
	1	1	**9X-6580**	2	NUT-O-RING SEAL	
I	2	1	**122-6352**	2	HOSE AS	
I	3	1	**133-4820**	2	HOSE AS	
	4	1	**187-9086**	2	CONNECTOR GP	
		1	**3K-0360**	1	SEAL-O-RING	
		1	**6V-8398**	1	SEAL-O-RING	
	5	1	**195-6525**	1	COUPLING	
	6	1	**195-6526**	1	COUPLING	
	7	1	**195-9877**	1	CAP-DUST	
	8	1	**195-9878**	1	CAP-DUST	
	9	1	**213-4267**	2	BRACKET	
	10	1	**117-0473**	2	ADAPTER	
	11	1	*148-8339*	2	CONNECTOR GP	
					(EACH INCLUDES)	
		1	**6V-8716**	1	CONNECTOR	
		1	**6V-9746**	1	SEAL-O-RING	
		1	**7M-8485**	1	SEAL-O-RING	
	12	1	*148-8418*	2	REDUCER GP	
					(EACH INCLUDES)	
		1	**6V-8398**	1	SEAL-O-RING	
		1	**6V-8942**	1	REDUCER-O-RING (FACE)	
	13	1	*148-8457*	2	UNION GP	
					(EACH INCLUDES)	
		1	**6V-8398**	2	SEAL-O-RING	
		1	**6V-8995**	1	UNION-BULKHEAD	
	14	1	**3D-2824**	2	SEAL-O-RING	
	15	1	**6V-9169**	4	NUT-BULKHEAD (13/16-16 THD)	
	16	1	**8T-4121**	4	WASHER-HARD (11X21X2.5MM THK)	
M	17	1	**8T-4191**	4	BOLT (M10X1.5X16MM)	

I-SEE HOSE FABRICATION GUIDE
M-METRIC PART

122-6337 **LINES GP-FRONT** ***(contd.)*** **i01835119**

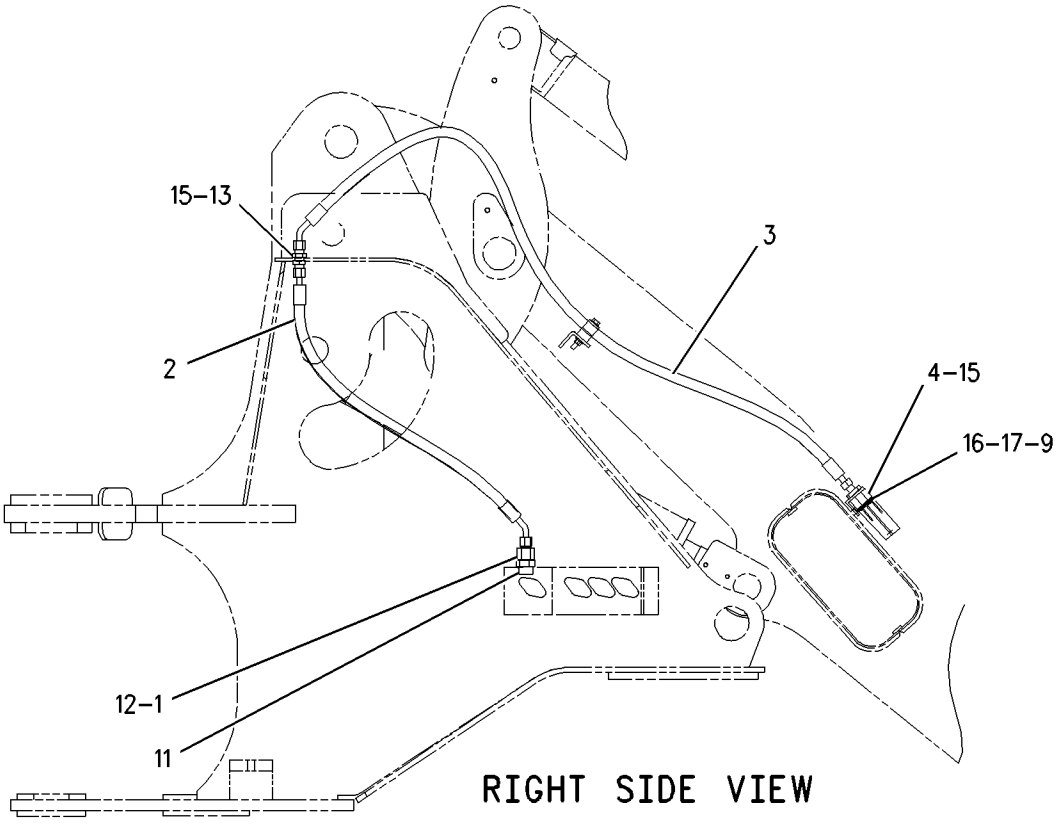

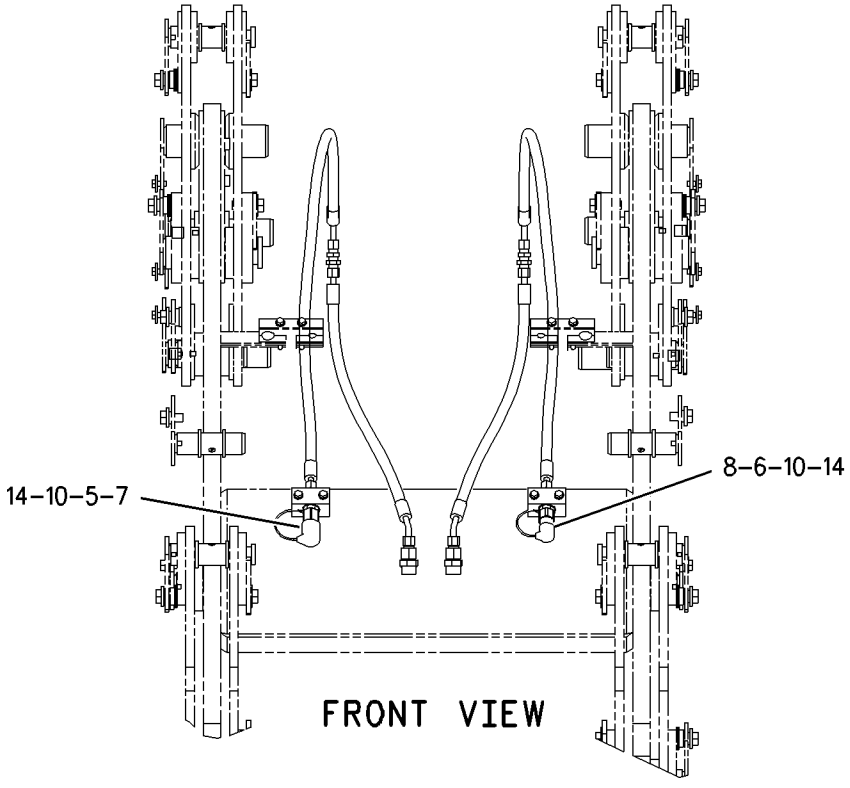

GRAPHIC #1 g00926381

HYDRAULIC SYSTEM

188-2865 LINES GP-FRONT

S/N: DBT1-UP

PART OF 202-0426, 202-0427, 203-5934, 203-5935 HYDRAULIC AR, 202-0424, 218-2457 HYDRAULIC AR-3 VALVE, 202-0425, 203-5929 HYDRAULIC AR-4 VALVE AN ATTACHMENT

SMCS-5057 **i01534226**

NOTE	REF NO	GRAPHIC REF	PART NUMBER	QTY	PART NAME 1 2 3 4 5 6 (PRODUCT LEVEL)	SEE PAGE
I	1	1	**122-6351**	2	HOSE AS	
	2	1	**122-7272**	2	BLOCK	
I	3	1	**128-0274**	2	HOSE AS	
	4	1	*172-4620*	2	CONNECTOR GP	
					(EACH INCLUDES)	
		1	**3D-2824**	2	SEAL-O-RING	
		1	**6Y-2349**	1	CONNECTOR	
	5	1	**195-6525**	1	COUPLING	
	6	1	**195-6526**	1	COUPLING	
	7	1	**195-9877**	1	CAP-DUST	
	8	1	**195-9878**	1	CAP-DUST	
	9	1	*148-8327*	2	CONNECTOR GP	
					(EACH INCLUDES)	
		1	**3D-2824**	1	SEAL-O-RING	
		1	**6V-8637**	1	CONNECTOR-SEAL	
		1	**6V-9746**	1	SEAL-O-RING	
	10	1	*148-8339*	2	CONNECTOR GP	
					(EACH INCLUDES)	
		1	**6V-8716**	1	CONNECTOR	
		1	**6V-9746**	1	SEAL-O-RING	
		1	**7M-8485**	1	SEAL-O-RING	
	11	1	*148-8410*	2	PLUG AS	
					(EACH INCLUDES)	
		1	**2M-9780**	1	SEAL-O-RING	
		1	**9S-4190**	1	PLUG-O-RING	
	12	1	*148-8455*	2	UNION GP	
					(EACH INCLUDES)	
		1	**6V-8997**	1	UNION	
		1	**6V-9746**	2	SEAL-O-RING	
	13	1	**2P-1293**	2	LOCKNUT-BULKHEAD (1 3/16-12 THD)	
	14	1	**5P-7466**	4	CLIP (SLOT)	
	15	1	**5P-7467**	4	CLIP (TAB)	
	16	1	**5P-8112**	4	GROMMET	
	17	1	**8T-4121**	4	WASHER-HARD (11X21X2.5MM THK)	
M	18	1	**8T-4136**	4	BOLT (M10X1.5X25MM)	

I-SEE HOSE FABRICATION GUIDE
M-METRIC PART

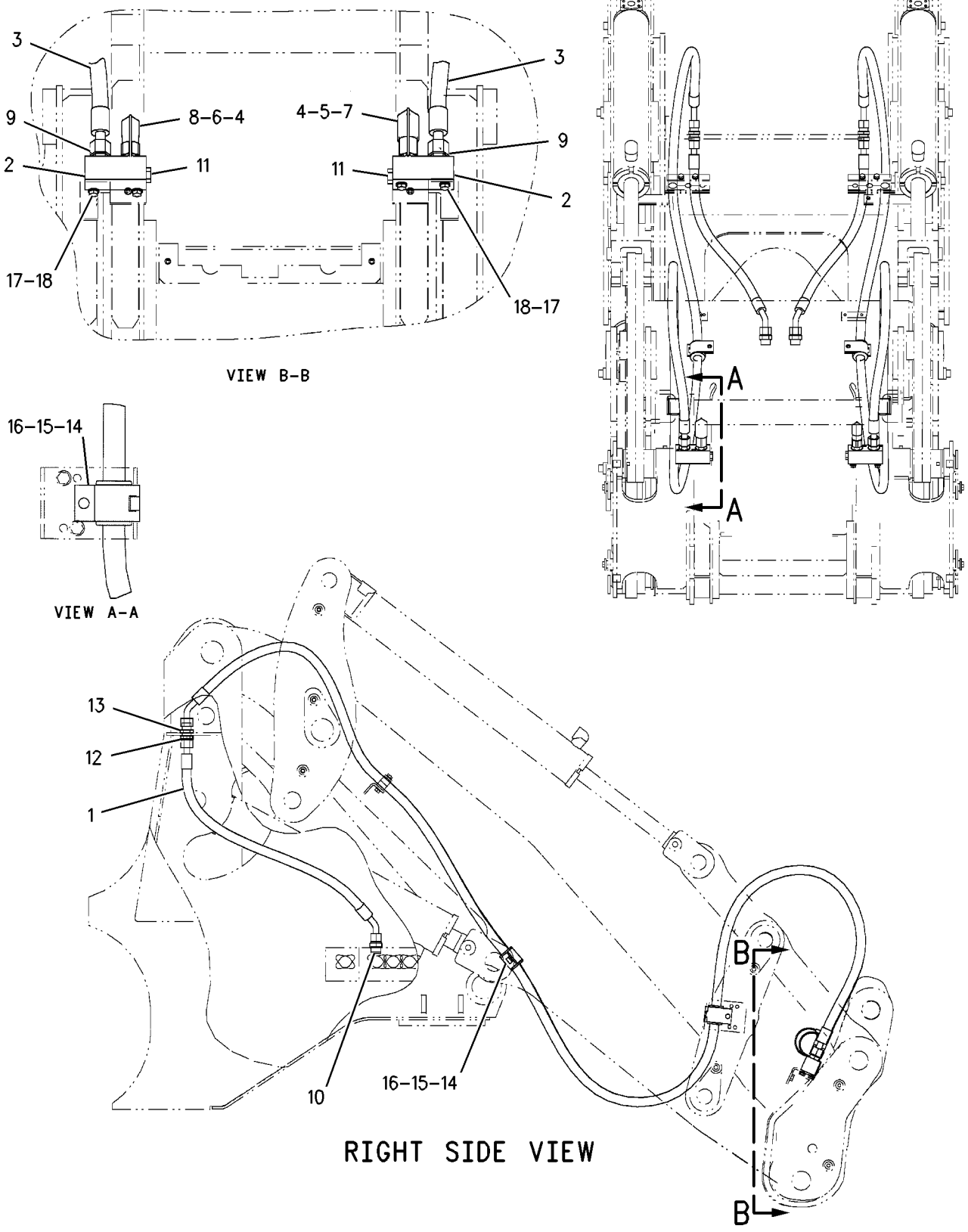

GRAPHIC #1 g00807381

HYDRAULIC SYSTEM

203-3897 LINES GP-HYDRAULIC

S/N: DJD1-UP; DBT1-UP

PART OF 176-5222, 176-5242 HYDRAULIC AR

SMCS-5057 **i01831289**

NOTE	REF NO	GRAPHIC REF	PART NUMBER	QTY	PART NAME 1 2 3 4 5 6 (PRODUCT LEVEL)	SEE PAGE
	1	1	**6V-0852**	1	CAP-DUST	
	2	1	**6V-7238**	1	VALVE-SHUTOFF	
	3	1	**118-0973**	1	TUBE AS	
	4	1	**144-0367**	4	CLAMP-HOSE	
	5	1	**151-9826**	1	PLATE AS	
	6	1	*164-5567*	1	FITTING GP	
		1	**3J-1907**	1	SEAL-O-RING	
		1	**6V-3965**	1	FITTING AS	
	7	1	**204-2281**	1	TIE	
I	8	1	**205-7102**	1	HOSE AS	
I	9	1	**205-7103**	1	HOSE AS	
	10	1	**209-0787**	1	MANIFOLD	
I	11	1	**212-4653**	1	HOSE AS	
	12	1	**212-7770**	1	TUBE AS	
I	13	1	**214-3279**	1	HOSE AS	
	14	1	**227-8233**	1	HOSE	
	15	1	*148-8323*	4	CONNECTOR GP	
					(EACH INCLUDES)	
		1	**2S-4078**	1	SEAL-O-RING	
		1	**5K-9090**	1	SEAL-O-RING	
		1	**6V-9875**	1	CONNECTOR	
	16	1	*148-8327*	1	CONNECTOR AS	
		1	**3D-2824**	1	SEAL-O-RING (23.47MM ID)	
		1	**6V-8637**	1	CONNECTOR-SEAL	
		1	**6V-9746**	1	SEAL-O-RING	
	17	1	*148-8441*	1	TEE AS	
		1	**2M-9780**	1	SEAL-O-RING	
		1	**6V-9032**	1	TEE-O-RING	
		1	**6V-9746**	1	SEAL-O-RING	
		1	**7J-9108**	1	SEAL-O-RING	
	18	1	*164-5578*	1	TEE AS	
		1	**3D-2824**	1	SEAL-O-RING (23.47MM ID)	
		1	**6V-9175**	1	TEE (FACE SEAL)	
		1	**6V-9746**	1	SEAL-O-RING	
		1	**7J-9108**	1	SEAL-O-RING	
	19	1	**1P-3703**	1	SEAL-RECTANGULAR	
	20	1	**1P-4582**	2	FLANGE-HALF	
	21	1	**1P-4584**	2	FLANGE-HALF	
	22	1	**204-8000**	1	MOUNT	
	23	1	**3K-0360**	1	SEAL-O-RING	
	24	1	**4D-7388**	2	CLIP	
	25	1	**4J-0527**	1	SEAL-O-RING	
	26	1	**5P-1935**	1	SEAL	
	27	1	**6J-2680**	1	SEAL-O-RING	
	28	1	**7X-7729**	6	WASHER (11X25X3MM THK)	
	29	1	**8T-4121**	5	WASHER-HARD (11X21X2.5MM THK)	
M	30	1	**8T-4136**	1	BOLT (M10X1.5X25MM)	
M	31	1	**8T-4139**	4	BOLT (M12X1.75X30MM)	
M	32	1	**8T-4182**	2	BOLT (M10X1.5X45MM)	
M	33	1	**8T-4185**	4	BOLT (M10X1.5X50MM)	
M	34	1	**8T-4194**	4	BOLT (M12X1.75X50MM)	
M	35	1	**8T-4196**	4	BOLT (M10X1.5X35MM)	
	36	1	**8T-4223**	12	WASHER-HARD (13.5X25.5X3MM THK)	
M	37	1	**8T-5041**	4	BOLT (M12X1.75X120MM)	

I-SEE HOSE FABRICATION GUIDE
M-METRIC PART

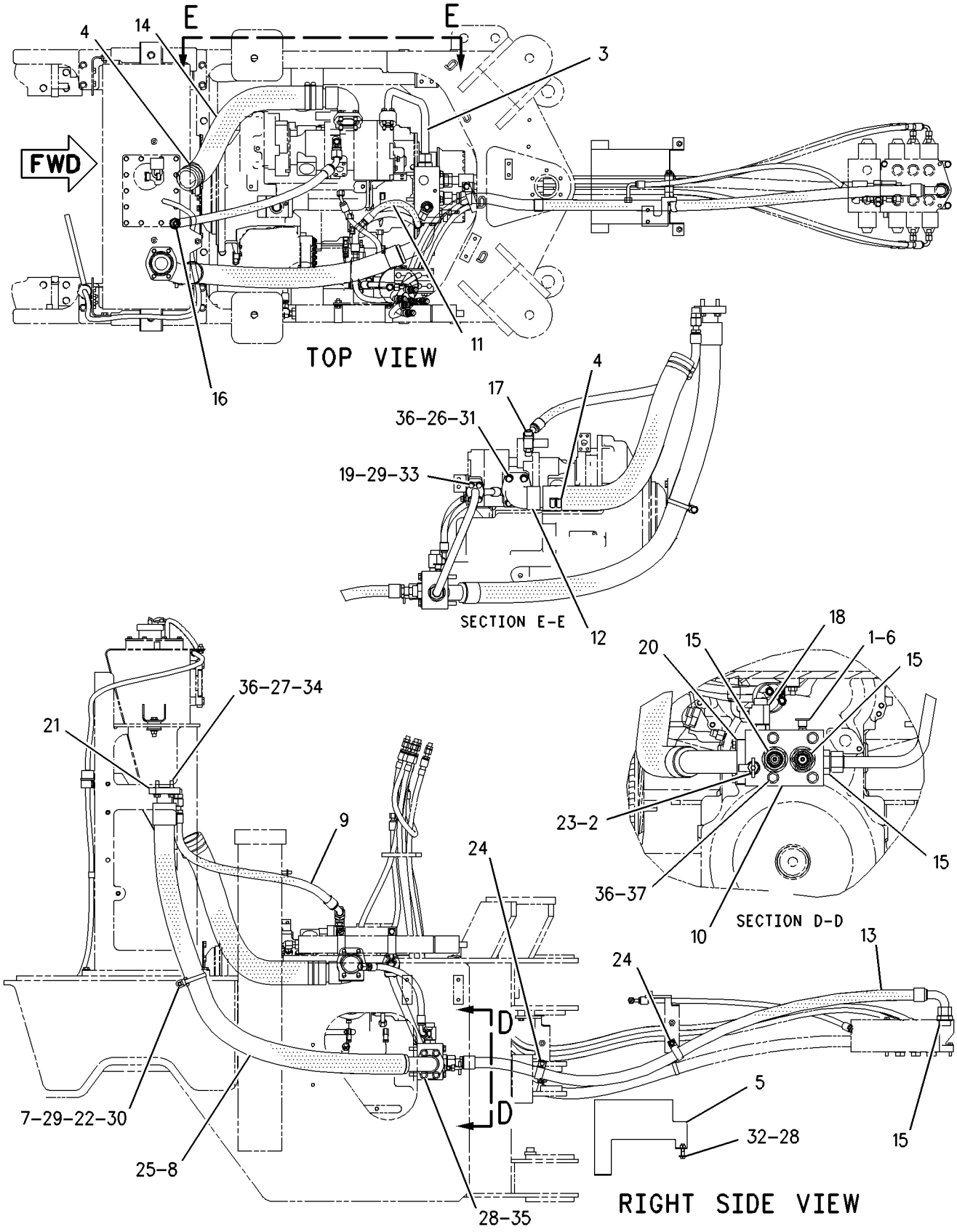

GRAPHIC #1 g00935242

HYDRAULIC SYSTEM

203-3881 LINES GP-HYDRAULIC FAN

S/N: DJD1-UP; DBT1-UP
PART OF 203-5947, 203-5948, 203-8553 AXLE AR-OSCILLATING
AN ATTACHMENT

SMCS-1386, 1387, 5057 **i01836456**

NOTE	REF NO	GRAPHIC REF	PART NUMBER	QTY	PART NAME 1 2 3 4 5 6 (PRODUCT LEVEL)	SEE PAGE
G	1	2	**160-2245**		SLEEVE-ABRASION (67IN)	
G	2	2	**160-2243**		SLEEVE-ABRASION (33IN)	
	3	1,2	**3S-2093**	6	STRAP-CABLE	
	4	2	**7K-1181**	2	STRAP-CABLE	
	5	2	**091-0081**	1	SPACER (10.5X20X10.0MM THK)	
	6	1	**125-7484**	1	SPACER	
	7	2	**129-8087**	1	SPACER (14MM THK)	
	8	1	**163-4295**	1	PLATE AS	
M		1	**8T-3490**	2	NUT-WELD (M10X1.5 THD)	
I	9	1	**209-7801**	1	HOSE AS	
I	10	1	**212-5085**	1	HOSE AS	
I	11	1	**212-5940**	1	HOSE AS	
I	12	2	**212-5942**	1	HOSE AS	
I	13	1	**212-6056**	1	HOSE AS	
	14	2	**214-1042**	1	PLATE AS	
M		2	**8T-3490**	2	NUT-WELD (M10X1.5 THD)	
I	15	1	**215-3810**	1	HOSE AS	
	16	2	**226-1354**	1	VALVE GP-CHECK	
		2	**6V-9746**	2	SEAL-O-RING	
	17	2	**227-4306**	1	TUBE AS	
I	18	1	**229-5115**	1	HOSE AS	
I	19	2	**230-6142**	1	HOSE AS	
	20	1	*148-8327*	2	CONNECTOR AS	
					(EACH INCLUDES)	
		1	**3D-2824**	1	SEAL-O-RING	
		1	**6V-8637**	1	CONNECTOR-SEAL	
		1	**6V-9746**	1	SEAL-O-RING	
	21	2	*148-8358*	1	ELBOW AS	
		2	**2M-9780**	1	SEAL-O-RING	
		2	**6V-8398**	1	SEAL-O-RING	
		2	**6V-8624**	1	ELBOW	
	22	1	*148-8368*	1	ELBOW GP	
		1	**3J-1907**	1	SEAL-O-RING	
		1	**4J-5477**	1	SEAL-O-RING	
		1	**6V-8627**	1	ELBOW	
	23	2	**148-8418**	1	REDUCER GP	
		2	**6V-8398**	1	SEAL-O-RING	
		2	**6V-8942**	1	REDUCER-O-RING (FACE)	
	24	2	**150-4037**	1	TEE GP	
		2	**6V-8398**	2	SEAL-O-RING	
		2	**6V-9844**	1	TEE-SWIVEL	
	25	1	*150-4049*	1	ELBOW GP	
		1	**8T-4149**	1	ELBOW	
		1	**6V-9746**	1	SEAL-O-RING	
		1	**7M-8485**	1	SEAL-O-RING	
	26	1	*153-6237*	1	ELBOW GP	
		1	**3D-2824**	1	SEAL-O-RING	
		1	**6V-9004**	1	ELBOW	
		1	**6V-9746**	1	SEAL-O-RING	
	27	2	**153-6241**	1	ELBOW GP	
		2	**6V-8398**	1	SEAL-O-RING	
		2	**8C-8989**	1	ELBOW	
	28	2	**164-6862**	1	TEE GP	
		2	**6V-9160**	1	TEE-FACE SEAL	
		2	**6V-9746**	3	SEAL-O-RING	

203-3881 LINES GP-HYDRAULIC FAN *(contd.)* i01836456

NOTE	REF NO	GRAPHIC REF	PART NUMBER	QTY	PART NAME 1 2 3 4 5 6 (PRODUCT LEVEL)	SEE PAGE
	29	2	**204-8000**	2	MOUNT	
	30	2	**2P-1293**	1	LOCKNUT-BULKHEAD (1 3/16-12 THD)	
	31	1	**3P-2404**	1	CLIP	
	32	1	**4D-7388**	1	CLIP	
	33	2	**4D-9517**	2	CLIP	
	34	1,2	**6V-1889**	5	CLIP	
	35	2	**6V-8556**	1	NUT (1 3/16-12 THD)	
	36	2	**7X-7729**	2	WASHER (11X25X3MM THK)	
	37	2	**8M-2770**	1	CLIP	
	38	1	**8S-5107**	1	SPACER (2.0 IN THK)	
	39	1,2	**8T-4121**	10	WASHER-HARD (11X21X2.5MM THK)	
M	40	2	**8T-4133**	1	NUT (M10X1.5 THD)	
M	41	2	**8T-4136**	2	BOLT (M10X1.5X25MM)	
M	42	1,2	**8T-4137**	3	BOLT (M10X1.5X20MM)	
M	43	2	**8T-4186**	1	BOLT (M10X1.5X40MM)	
M	44	1,2	**8T-4195**	4	BOLT (M10X1.5X30MM)	
	45	1	**8T-4223**	1	WASHER-HARD (13.5X25.5X3MM THK)	
M	46	1	**8T-4648**	1	BOLT (M12X1.75X70MM)	

G-ORDER BY THE INCH
I-SEE HOSE FABRICATION GUIDE
M-METRIC PART

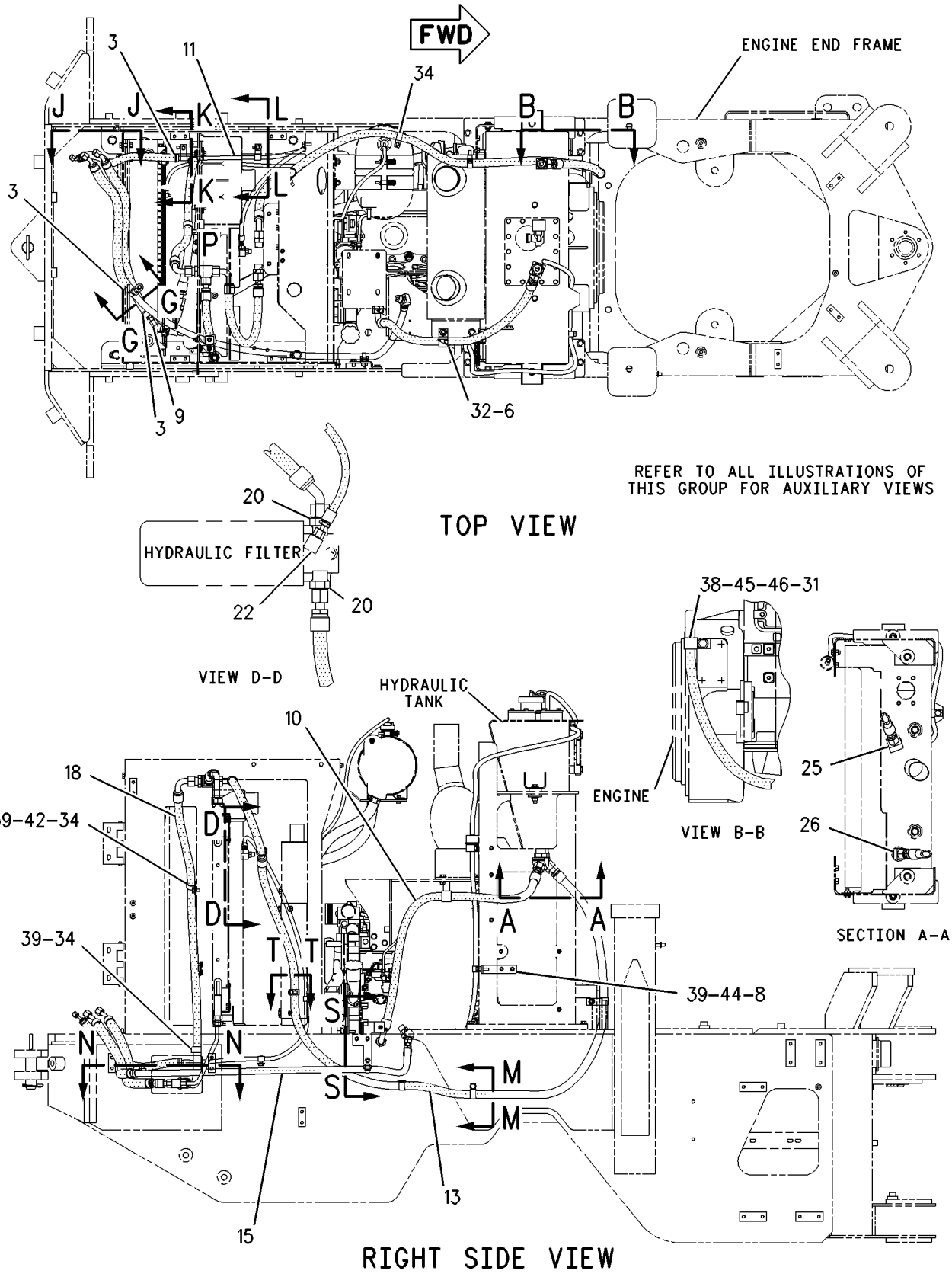

GRAPHIC #1 g00938861

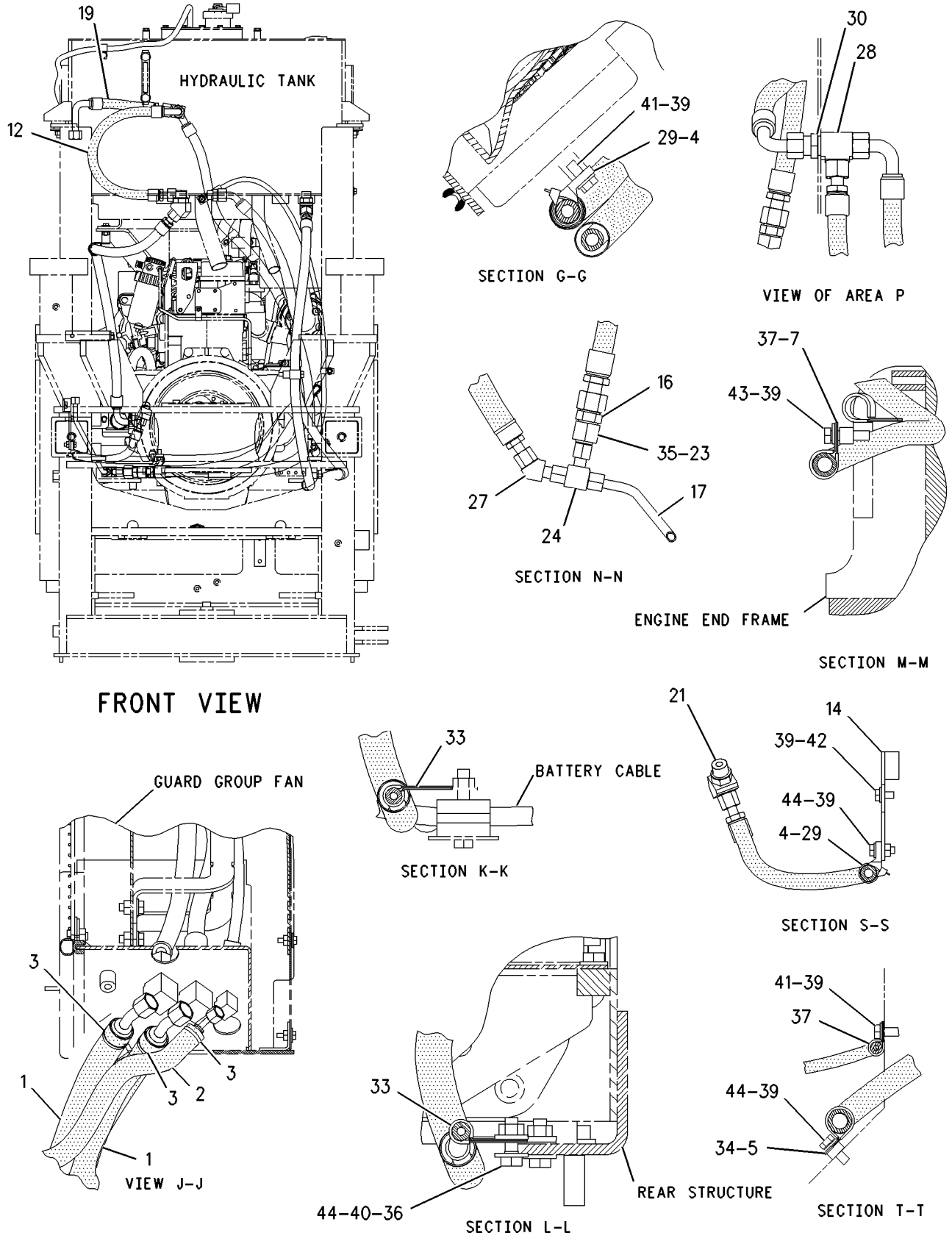

GRAPHIC #2 g00938880

HYDRAULIC SYSTEM

212-6282 LINES GP-HYDRAULIC FAN

S/N: DJD1-UP; DBT1-UP
WITH FAN
PART OF 203-5920, 203-5922 MOTOR AR-HYDRAULIC FAN
AN ATTACHMENT

SMCS-1386, 1387, 5057 **i01791161**

NOTE	REF NO	GRAPHIC REF	PART NUMBER	QTY	PART NAME 1 2 3 4 5 6 (PRODUCT LEVEL)	SEE PAGE
I	1	1	**164-1908**	1	HOSE AS	
I	2	1	**214-7091**	1	HOSE AS	
I	3	1	**214-7092**	1	HOSE AS	
	4	1	*148-8316*	1	CONNECTOR GP	
		1	**3J-7354**	1	SEAL-O-RING	
		1	**4J-5477**	1	SEAL-O-RING	
		1	**6V-8647**	1	CONNECTOR	
	5	1	*148-8372*	1	ELBOW GP	
		1	**2M-9780**	1	SEAL-O-RING	
		1	**6V-8398**	1	SEAL-O-RING	
		1	**6V-8721**	1	ELBOW	
	6	1	*148-8375*	2	ELBOW GP	
					(EACH INCLUDES)	
		1	**6V-8398**	2	SEAL-O-RING	
		1	**6V-8981**	1	ELBOW	
	7	1	*148-8381*	1	ELBOW GP	
		1	**3D-2824**	1	SEAL-O-RING	
		1	**6V-8398**	1	SEAL-O-RING	
		1	**8T-5429**	1	ELBOW	
	8	1	*148-8384*	1	ELBOW AS	
		1	**4J-5477**	2	SEAL-O-RING	
		1	**6V-8979**	1	ELBOW	
	9	1	**2P-1279**	1	LOCKNUT (9/16-18 THD)	
	10	1	**6V-9169**	2	NUT-BULKHEAD (13/16-16 THD)	

I-SEE HOSE FABRICATION GUIDE

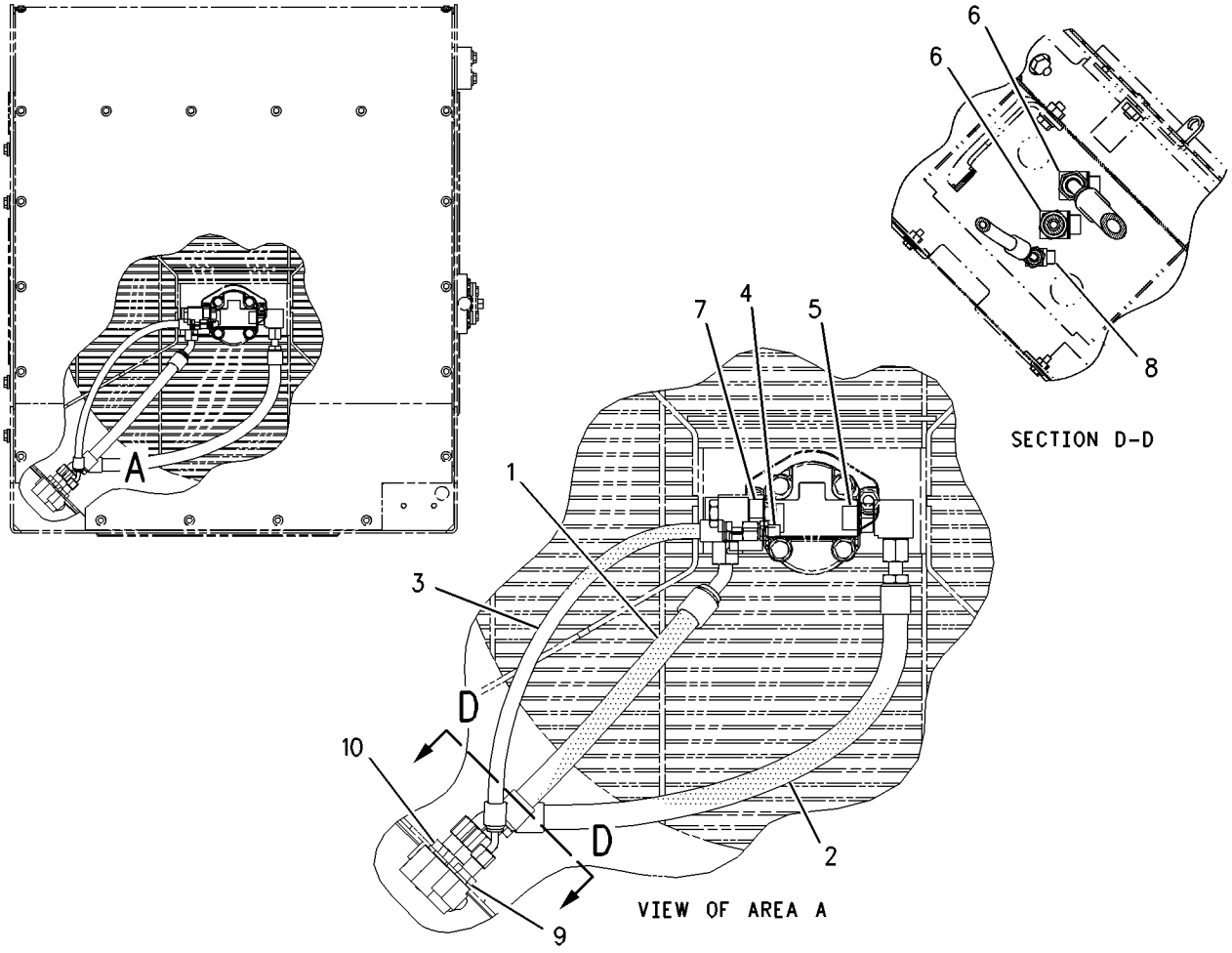

GRAPHIC #1 g00896302

HYDRAULIC SYSTEM

212-6283 LINES GP-HYDRAULIC FAN

S/N: DJD1-UP; DBT1-UP
WITH FAN
PART OF 203-5921, 203-5923 MOTOR AR-HYDRAULIC FAN
AN ATTACHMENT

SMCS-1386, 1387, 5057 **i01825730**

NOTE	REF NO	GRAPHIC REF	PART NUMBER	QTY	PART NAME 1 2 3 4 5 6 (PRODUCT LEVEL)	SEE PAGE
	1	1	**7K-1181**	1	STRAP-CABLE	
	2	1	**106-8704**	1	SUPPRESSOR AS-ARC	
		1	**102-8802**	1	KIT-RECEPTACLE (2 PIN)	
					(KIT SERVICES RECEPTACLE AS AND WEDGE)	
		1	**3E-3365**	1	WEDGE-RECEPTACLE LOCK (2 PIN)	
		1	**186-3735**	2	PIN-CONNECTOR	
	3	1	**158-5089**	1	RELAY AS	
	4	1	**185-2765**	1	SWITCH AS-ROCKER (REVERSING FAN ON/OFF)	
		1	**111-7899**	1	GASKET	
I	5	1	**214-7091**	1	HOSE AS	
I	6	1	**215-3813**	1	HOSE AS	
I	7	1	**215-5644**	1	HOSE AS	
	8	1	*148-8316*	1	CONNECTOR GP	
		1	**3J-7354**	1	SEAL-O-RING	
		1	**4J-5477**	1	SEAL-O-RING	
		1	**6V-8647**	1	CONNECTOR	
	9	1	*148-8340*	1	CONNECTOR GP	
		1	**3K-0360**	1	SEAL-O-RING	
		1	**6V-8398**	1	SEAL-O-RING	
		1	**6V-8639**	1	CONNECTOR	
	10	1	*148-8372*	1	ELBOW GP	
		1	**2M-9780**	1	SEAL-O-RING	
		1	**6V-8398**	1	SEAL-O-RING	
		1	**6V-8721**	1	ELBOW	
	11	1	*148-8375*	2	ELBOW GP	
					(EACH INCLUDES)	
		1	**6V-8398**	2	SEAL-O-RING	
		1	**6V-8981**	1	ELBOW	
	12	1	*148-8384*	1	ELBOW AS	
		1	**4J-5477**	2	SEAL-O-RING	
		1	**6V-8979**	1	ELBOW	
	13	1	**2P-1279**	1	LOCKNUT (9/16-18 THD)	
	14	1	**6V-9169**	2	NUT-BULKHEAD (13/16-16 THD)	

I-SEE HOSE FABRICATION GUIDE

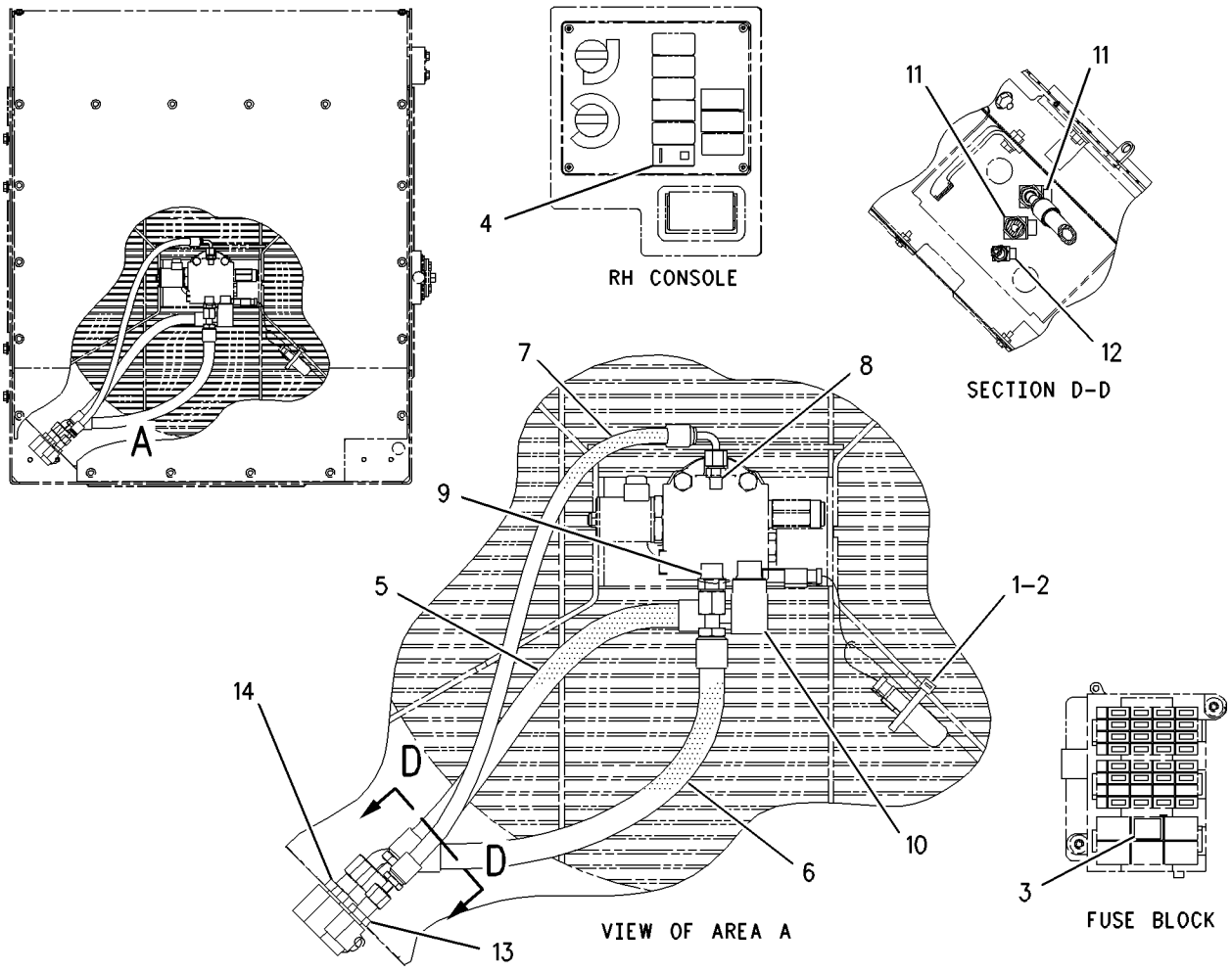

GRAPHIC #1

g00897162

HYDRAULIC SYSTEM

118-0861 LINES GP-LIFT CYLINDER

S/N: DJD1-UP

PART OF 176-5242 HYDRAULIC AR

SMCS-5057, 5102 **i01684819**

NOTE	REF NO	GRAPHIC REF	PART NUMBER	QTY	PART NAME 1 2 3 4 5 6 (PRODUCT LEVEL)	SEE PAGE
	1	1	**1P-3703**	2	SEAL-RECTANGULAR	
	2	1	**4V-0611**	4	CLAMP	
	3	1	**4V-0612**	2	PLATE	
	4	1	**6V-9832**	1	CAP AS	
	5	1	**9C-6460**	1	ELBOW	
	6	1	**9C-6461**	1	ELBOW	
I	7	1	**9C-6783**	2	HOSE AS	
	8	1	**112-1817**	1	VALVE GP-BALL	
		1	**112-9861**	1	KIT-SEAL	
	9	1	**122-6177**	1	PLATE	
	10	1	**122-6210**	1	TUBE AS	
	11	1	**122-6211**	1	TUBE AS	
	12	1	**122-6213**	1	TUBE AS	
	13	1	**122-6214**	1	TUBE AS	
	14	1	**122-6215**	1	TUBE AS	
	15	1	**122-6216**	1	TUBE AS	
	16	1	**122-6218**	1	TUBE AS	
I	17	1	**122-6220**	2	HOSE AS	
I	18	1	**129-5839**	1	HOSE AS	
	19	1	**149-4569**	1	TUBE AS	
	20	1	*148-8327*	2	CONNECTOR GP	
					(EACH INCLUDES)	
		1	**3D-2824**	1	SEAL-O-RING	
		1	**6V-8637**	1	CONNECTOR-SEAL	
		1	**6V-9746**	1	SEAL-O-RING	
	21	1	*148-8335*	2	CONNECTOR GP	
					(EACH INCLUDES)	
		1	**5K-9090**	1	SEAL-O-RING	
		1	**6V-8635**	1	CONNECTOR	
		1	**7M-8485**	1	SEAL-O-RING	
	22	1	*148-8336*	1	CONNECTOR GP	
		1	**3J-1907**	1	SEAL-O-RING	
		1	**6V-8397**	1	SEAL-O-RING	
		1	**6V-8636**	1	CONNECTOR	
	23	1	*148-8378*	1	ELBOW GP	
		1	**3J-1907**	1	SEAL-O-RING	
		1	**6V-8397**	1	SEAL-O-RING	
		1	**6V-8724**	1	ELBOW	
	24	1	*148-8437*	2	TEE AS-ORFS	
					(EACH INCLUDES)	
		1	**5K-9090**	1	SEAL-O-RING	
		1	**6V-9746**	2	SEAL-O-RING	
		1	**8T-1012**	1	TEE-FACE SEAL	
	25	1	*148-8449*	1	TEE GP-SWIVEL	
		1	**6V-9746**	2	SEAL-O-RING	
		1	**6V-9839**	1	TEE-SWIVEL	
	26	1	**4B-4274**	4	WASHER (5.5X13X1.2MM THK)	
	27	1	**4J-5267**	4	SEAL-O-RING	
	28	1	**5R-0939**	2	CLIP (TAB)	
	29	1	**5R-0940**	2	CLIP (SLOT)	
	30	1	**6V-8397**	1	SEAL-O-RING	
M	31	1	**6V-9189**	2	LOCKNUT (M8X1.25 THD)	
	32	1	**6V-9746**	4	SEAL-O-RING	
	33	1	**7X-7729**	2	WASHER (11X25X3MM THK)	
M	34	1	**7Y-3173**	4	SCREW-BUTTON HEAD (M4X0.7X12MM)	
	35	1	**8C-3205**	8	FLANGE-HALF	

118-0861 LINES GP-LIFT CYLINDER *(contd.)* i01684819

NOTE	REF NO	GRAPHIC REF	PART NUMBER	QTY	PART NAME 1 2 3 4 5 6 (PRODUCT LEVEL)	SEE PAGE
	36	1	**8T-4121**	16	WASHER-HARD (11X21X2.5MM THK)	
M	37	1	**8T-4137**	2	BOLT (M10X1.5X20MM)	
M	38	1	**8T-4182**	4	BOLT (M10X1.5X45MM)	
M	39	1	**8T-4196**	16	BOLT (M10X1.5X35MM)	
	40	1	**8T-4224**	4	WASHER-HARD (8.8X16X2MM THK)	
M	41	1	**8T-5005**	4	BOLT (M10X1.50X70MM)	
M	42	1	**8T-6869**	2	BOLT (M8X1.25X60MM)	

I-SEE HOSE FABRICATION GUIDE
M-METRIC PART

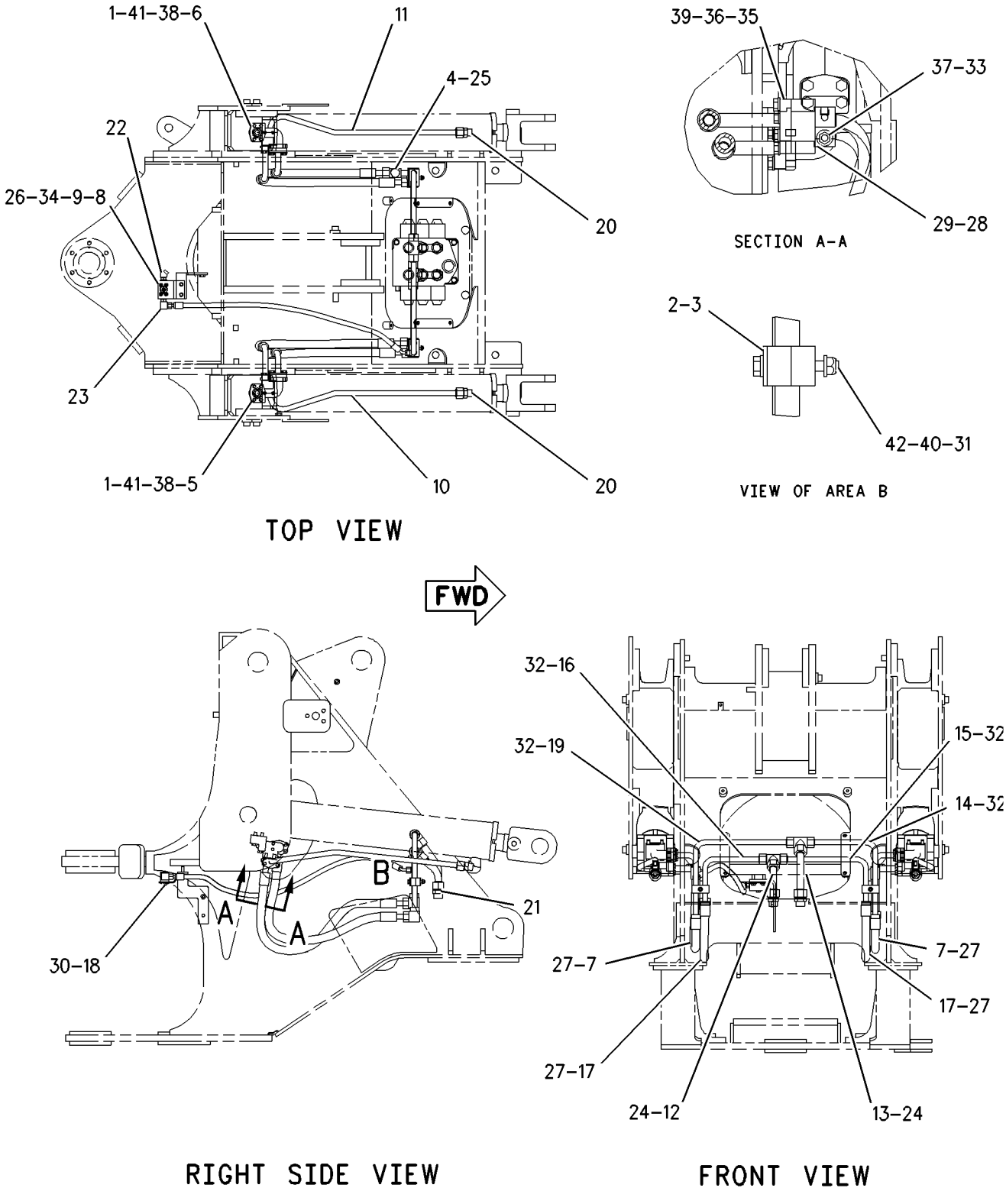

GRAPHIC #1 g00868939

MEMORANDA

HYDRAULIC SYSTEM

122-6338 LINES GP-LIFT CYLINDER

S/N: DBT1-UP

PART OF 202-0422, 218-2456 HYDRAULIC AR-2 VALVE, 202-0424, 218-2457 HYDRAULIC AR-3 VALVE, 202-0425, 203-5929 HYDRAULIC AR-4 VALVE AN ATTACHMENT

SMCS-5057, 5102 **i01828917**

NOTE	REF NO	GRAPHIC REF	PART NUMBER	QTY	PART NAME 1 2 3 4 5 6 (PRODUCT LEVEL)	SEE PAGE
	1	1	**1P-3703**	2	SEAL-RECTANGULAR	
	2	1	**4V-0611**	4	CLAMP	
	3	1	**4V-0612**	2	PLATE	
I	4	1	**9C-1999**	2	HOSE AS	
	5	1	**9C-6460**	1	ELBOW	
	6	1	**9C-6461**	1	ELBOW	
I	7	1	**111-8529**	2	HOSE AS	
	8	1	**112-1817**	1	VALVE GP-BALL (RESOLVER)	
		1	**112-9861**	1	KIT-SEAL	
	9	1	**122-6177**	1	PLATE	
	10	1	**122-6213**	1	TUBE AS	
	11	1	**122-6214**	1	TUBE AS	
	12	1	**122-6215**	1	TUBE AS	
	13	1	**122-6216**	1	TUBE AS	
	14	1	**122-6218**	1	TUBE AS	
	15	1	**122-6481**	2	PLATE	
	16	1	**128-0175**	1	TUBE AS	
	17	1	**128-0176**	1	TUBE AS	
I	18	1	**221-9774**	1	HOSE AS	
	19	1	**149-4569**	1	TUBE AS	
	20	1	*148-8327*	2	CONNECTOR AS	
					(EACH INCLUDES)	
		1	**3D-2824**	1	SEAL-O-RING	
		1	**6V-8637**	1	CONNECTOR-SEAL	
		1	**6V-9746**	1	SEAL-O-RING	
	21	1	*148-8335*	2	CONNECTOR AS	
					(EACH INCLUDES)	
		1	**5K-9090**	1	SEAL-O-RING	
		1	**6V-8635**	1	CONNECTOR	
		1	**7M-8485**	1	SEAL-O-RING	
	22	1	**148-8336**	1	CONNECTOR AS	
		1	**3J-1907**	1	SEAL-O-RING	
		1	**6V-8397**	1	SEAL-O-RING	
		1	**6V-8636**	1	CONNECTOR (SEAL)	
	23	1	*148-8378*	1	ELBOW AS	
		1	**3J-1907**	1	SEAL-O-RING	
		1	**6V-8397**	1	SEAL-O-RING	
		1	**6V-8724**	1	ELBOW	
	24	1	*148-8437*	2	TEE AS	
					(EACH INCLUDES)	
		1	**5K-9090**	1	SEAL-O-RING	
		1	**6V-9746**	2	SEAL-O-RING	
		1	**8T-1012**	1	TEE-FACE SEAL	
	25	1	*148-8449*	1	TEE GP-SWIVEL	
		1	**6V-9746**	2	SEAL-O-RING	
		1	**6V-9839**	1	TEE-SWIVEL	
	26	1	**4B-4274**	4	WASHER (5.5X13X1.2MM THK)	
	27	1	**4J-5267**	2	SEAL-O-RING	
	28	1	**5P-7460**	2	CLIP (SLOT)	
	29	1	**5P-7461**	2	CLIP (TAB)	
	30	1	**5R-0939**	4	CLIP (TAB)	
	31	1	**5R-0940**	4	CLIP (SLOT)	
	32	1	**6V-8397**	1	SEAL-O-RING	
M	33	1	**6V-9189**	2	LOCKNUT (M8X1.25 THD)	

122-6338 LINES GP-LIFT CYLINDER *(contd.)* i01828917

NOTE	REF NO	GRAPHIC REF	PART NUMBER	QTY	PART NAME 1 2 3 4 5 6 (PRODUCT LEVEL)	SEE PAGE
	34	1	**6V-9746**	6	SEAL-O-RING	
	35	1	**6V-9832**	1	CAP AS	
	36	1	**7X-7729**	10	WASHER (11X25X3MM THK)	
M	37	1	**7Y-3173**	4	SCREW-BUTTON HEAD (M4X0.7X12MM)	
	38	1	**8C-3205**	4	FLANGE-HALF	
	39	1	**8T-4121**	8	WASHER-HARD (11X21X2.5MM THK)	
M	40	1	**8T-4133**	4	NUT (M10X1.5 THD)	
M	41	1	**8T-4137**	2	BOLT (M10X1.5X20MM)	
M	42	1	**8T-4182**	4	BOLT (M10X1.5X45MM)	
M	43	1	**8T-4195**	4	BOLT (M10X1.5X30MM)	
M	44	1	**8T-4196**	8	BOLT (M10X1.5X35MM)	
	45	1	**8T-4224**	4	WASHER-HARD (8.8X16X2MM THK)	
M	46	1	**8T-5005**	4	BOLT (M10X1.50X70MM)	
M	47	1	**8T-6869**	2	BOLT (M8X1.25X60MM)	

I-SEE HOSE FABRICATION GUIDE
M-METRIC PART

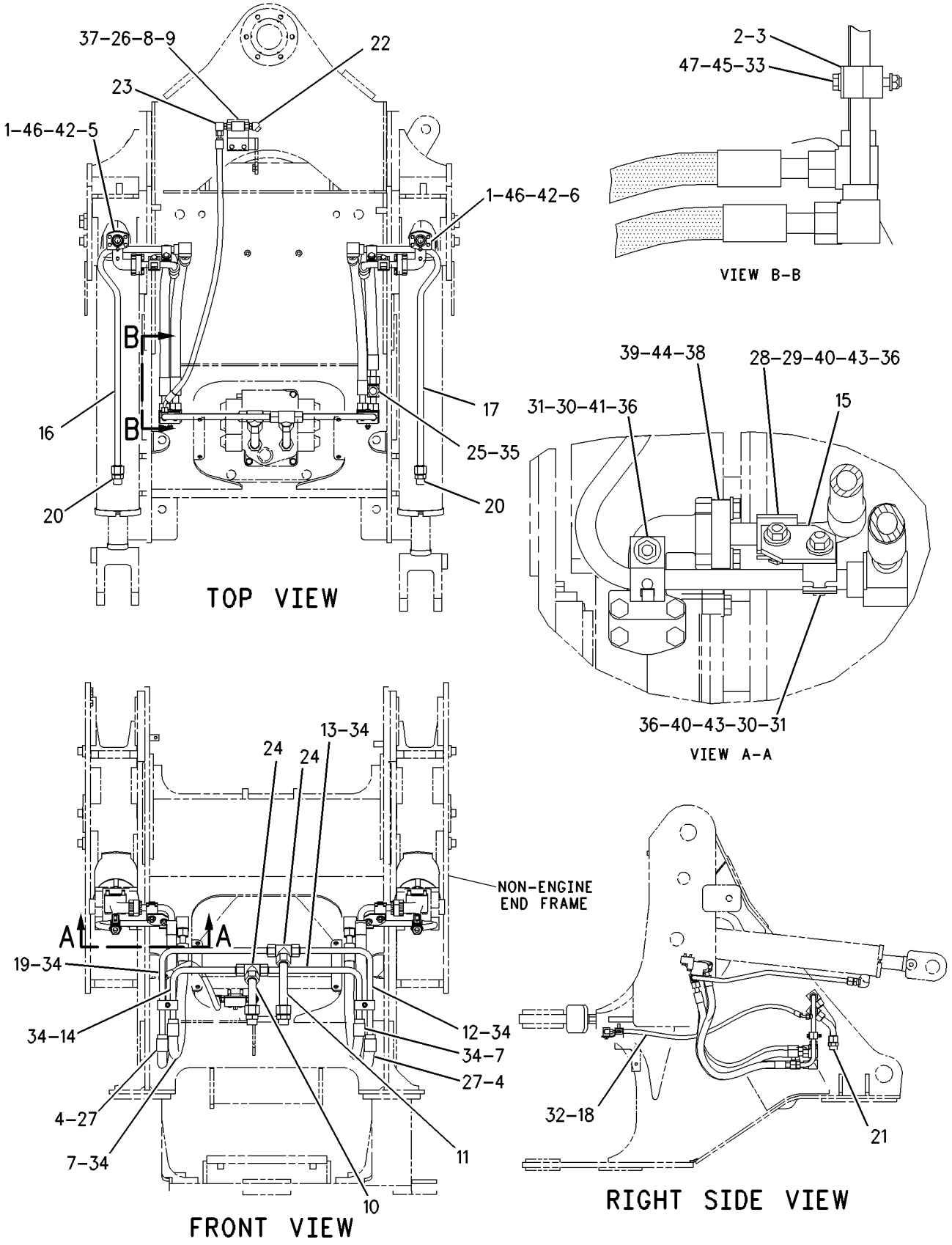

GRAPHIC #1

g00845035

MEMORANDA

HYDRAULIC SYSTEM

218-5129 LINES GP-LIFT CYLINDER

S/N: DBT1-UP

PART OF 202-0426, 202-0427, 203-5933, 203-5934, 203-5935, 203-5936 HYDRAULIC AR AN ATTACHMENT

SMCS-5057, 5102 **i01835159**

NOTE	REF NO	GRAPHIC REF	PART NUMBER	QTY	PART NAME 1 2 3 4 5 6 (PRODUCT LEVEL)	SEE PAGE
	1	2	**1P-3703**	4	SEAL-RECTANGULAR	
	2	1	**4V-0611**	4	CLAMP	
	3	1	**4V-0612**	2	PLATE	
	4	1,2	**7K-1181**	9	STRAP-CABLE	
I	5	2	**8I-5932**	2	HOSE AS	
I	6	2	**9C-1999**	2	HOSE AS	
	7	2	**106-8704**	1	SUPPRESSOR AS-ARC	
		2	**102-8802**	1	KIT-RECEPTACLE (2 PIN)	
		2	**186-3735**	2	PIN-CONNECTOR	
I	8	2	**111-8529**	2	HOSE AS	
Y	9	1	**112-1817**	1	VALVE GP-BALL (RESOLVER) (DEAD ENGINE LIFT ARM LOWER)	490
I	10	1	**112-4851**	2	HOSE AS	
I	11	1	**112-4854**	1	HOSE AS	
	12	1	**118-1048**	1	PLATE	
	13	1	**122-6177**	1	PLATE	
	14	2	**122-6213**	1	TUBE AS	
	15	2	**122-6214**	1	TUBE AS	
	16	2	**122-6215**	1	TUBE AS	
	17	2	**122-6216**	1	TUBE AS	
	18	2	**122-6217**	1	TUBE AS	
	19	2	**122-6218**	1	TUBE AS	
	20	2	**122-6481**	2	PLATE	
	21	1	**128-0175**	1	TUBE AS	
	22	1	**128-0176**	1	TUBE AS	
I	23	1	**129-5839**	1	HOSE AS	
	24	1	**132-1333**	1	HARNESS AS-SOLENOID (DEAD ENGINE, LIFT ARM LOWER)	
		1	**155-2270**	1	KIT-CONNECTING PLUG (2 PIN)	
		1	**102-8802**	1	KIT-RECEPTACLE (2 PIN)	
Y	25	2	**133-4848**	2	VALVE GP-LOAD CONTROL	496
	26	1	**155-5399**	2	WASHER (3.5MM THK)	
	27	2	**158-5089**	1	RELAY AS (DEAD ENGINE,LIFT ARM LOWER)	
	28	2	**195-0914**	1	SWITCH AS-ROCKER (DEAD ENGINE,LIFT ARM LOWER)	
	29	1	*148-8327*	2	CONNECTOR AS	
					(EACH INCLUDES)	
		1	**3D-2824**	1	SEAL-O-RING	
		1	**6V-8637**	1	CONNECTOR-SEAL	
		1	**6V-9746**	1	SEAL-O-RING	
	30	2	*148-8335*	2	CONNECTOR AS	
					(EACH INCLUDES)	
		2	**5K-9090**	1	SEAL-O-RING	
		2	**6V-8635**	1	CONNECTOR	
		2	**7M-8485**	1	SEAL-O-RING	
	31	1,2	*148-8336*	3	CONNECTOR AS	
					(EACH INCLUDES)	
		1,2	**3J-1907**	1	SEAL-O-RING	
		1,2	**6V-8397**	1	SEAL-O-RING	
		1,2	**6V-8636**	1	CONNECTOR	
	32	2	*148-8353*	2	ELBOW GP	
					(EACH INCLUDES)	
		2	**3J-1907**	1	SEAL-O-RING	
		2	**6V-8397**	1	SEAL-O-RING	
		2	**6V-9001**	1	ELBOW	
	33	2	*148-8371*	4	ELBOW AS	
					(EACH INCLUDES)	

218-5129 LINES GP-LIFT CYLINDER *(contd.)* i01835159

NOTE	REF NO	GRAPHIC REF	PART NUMBER	QTY	PART NAME 1 2 3 4 5 6 (PRODUCT LEVEL)	SEE PAGE
		2	**6V-8397**	1	SEAL-O-RING	
		2	**8C-8988**	1	ELBOW	
	34	1	*148-8378*	1	ELBOW AS	
		1	**3J-1907**	1	SEAL-O-RING	
		1	**6V-8397**	1	SEAL-O-RING	
		1	**6V-8724**	1	ELBOW	
	35	2	*148-8407*	2	PLUG GP	
					(EACH INCLUDES)	
		2	**3J-1907**	1	SEAL-O-RING	
		2	**9S-4191**	1	PLUG (9/16-18 THD)	
	36	1	*148-8433*	1	TEE GP	
		1	**6V-8397**	2	SEAL-O-RING	
		1	**6V-9836**	1	TEE-SWIVEL	
	37	2	*148-8437*	2	TEE AS	
					(EACH INCLUDES)	
		2	**5K-9090**	1	SEAL-O-RING	
		2	**6V-9746**	2	SEAL-O-RING	
		2	**8T-1012**	1	TEE-FACE SEAL	
	38	1	*148-8449*	2	TEE GP-SWIVEL	
					(EACH INCLUDES)	
		1	**6V-9746**	2	SEAL-O-RING	
		1	**6V-9839**	1	TEE-SWIVEL	
	39	2	*150-4034*	2	TEE GP	
					(EACH INCLUDES)	
		2	**6V-8397**	3	SEAL-O-RING	
		2	**8T-0379**	1	TEE-BULKHEAD	
	40	1	**4B-4274**	4	WASHER (5.5X13X1.2MM THK)	
	41	2	**4J-5267**	2	SEAL-O-RING	
	42	2	**4P-7581**	2	CLIP	
	43	2	**5P-7460**	2	CLIP (SLOT)	
	44	2	**5P-7461**	2	CLIP (TAB)	
	45	2	**5R-0939**	4	CLIP (TAB)	
	46	2	**5R-0940**	4	CLIP (SLOT)	
	47	1	**6V-8397**	1	SEAL-O-RING	
	48	2	**6V-9168**	2	NUT (11/16-16 THD)	
M	49	1	**6V-9189**	2	LOCKNUT (M8X1.25 THD)	
	50	1,2	**6V-9746**	6	SEAL-O-RING	
	51	2	**6V-9829**	1	CAP AS	
	52	1	**6V-9832**	2	CAP AS	
	53	2	**7X-7729**	10	WASHER (11X25X3MM THK)	
M	54	1	**7Y-3173**	4	SCREW-BUTTON HEAD (M4X0.7X12MM)	
	55	2	**8C-3205**	4	FLANGE-HALF	
	56	2	**8M-2773**	2	CLIP	
	57	1,2	**8T-4121**	26	WASHER-HARD (11X21X2.5MM THK)	
	58	2	**8T-4123**	4	WASHER-PLATED (22X35X3.5MM THK)	
M	59	2	**8T-4133**	4	NUT (M10X1.5 THD)	
M	60	2	**8T-4136**	2	BOLT (M10X1.5X25MM)	
M	61	1,2	**8T-4137**	10	BOLT (M10X1.5X20MM)	
M	62	2	**8T-4178**	8	BOLT (M10X1.5X90MM)	
M	63	2	**8T-4195**	4	BOLT (M10X1.5X30MM)	
M	64	2	**8T-4196**	8	BOLT (M10X1.5X35MM)	
	65	1	**8T-4224**	4	WASHER-HARD (8.8X16X2MM THK)	
M	66	1	**8T-6869**	2	BOLT (M8X1.25X60MM)	
	67	2	**9C-2260**	2	COVER	

I-SEE HOSE FABRICATION GUIDE
M-METRIC PART
Y-SEPARATE ILLUSTRATION

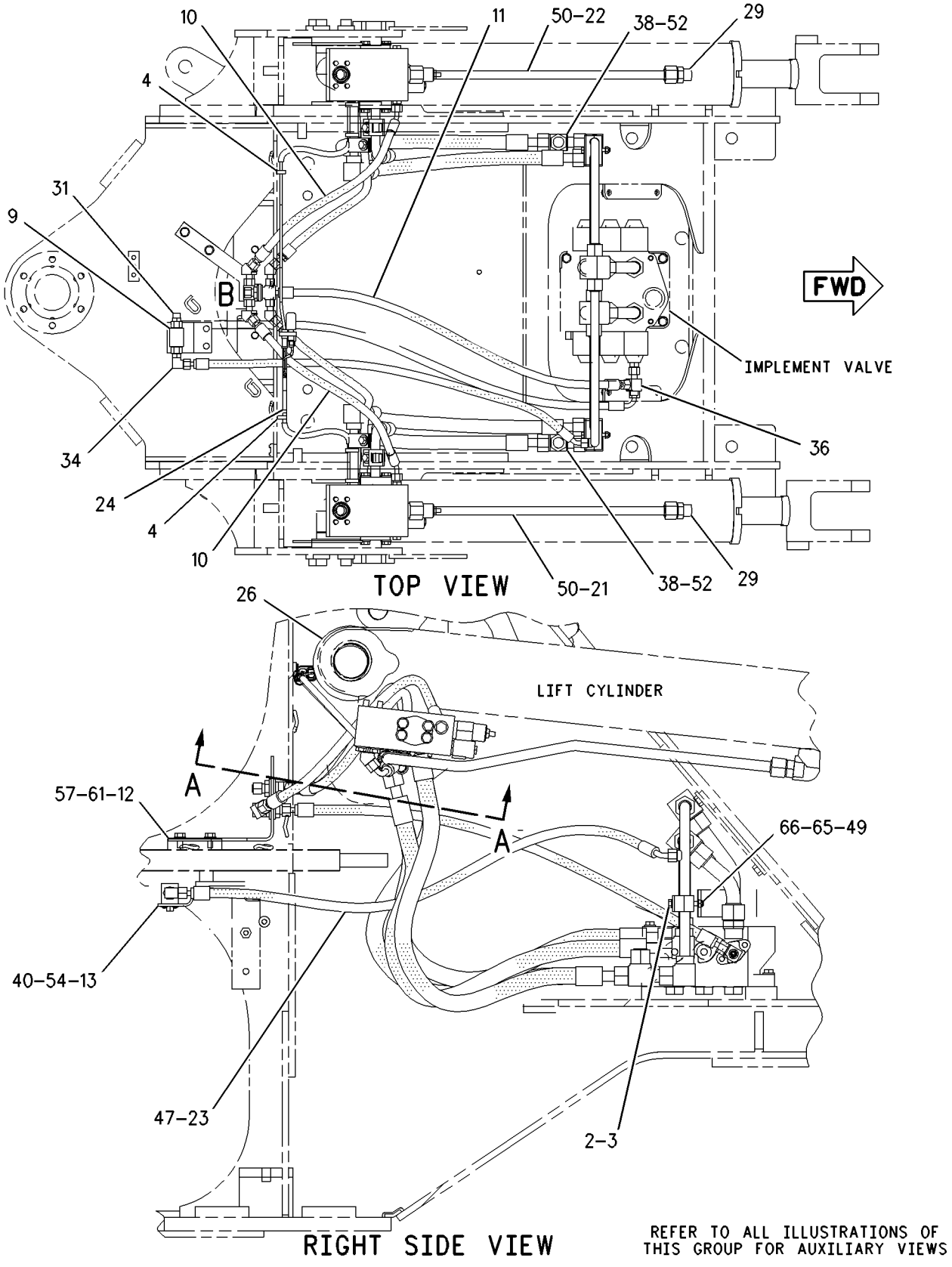

GRAPHIC #1 g00933207

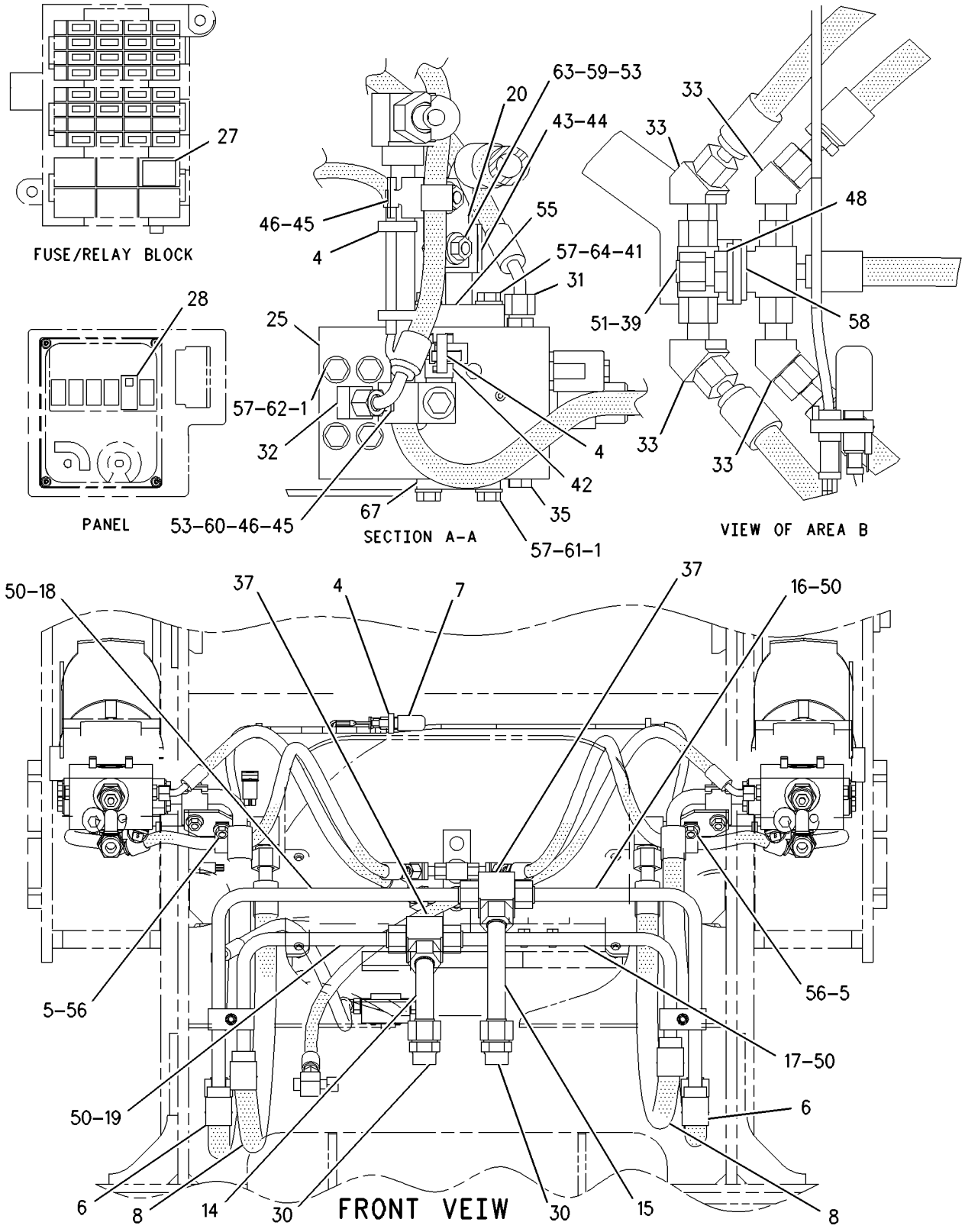

GRAPHIC #2

g00933208

HYDRAULIC SYSTEM

203-5924 LINES GP-PILOT

S/N: DJD1-UP; DBT1-UP
PART OF 203-5933, 203-5936 HYDRAULIC AR, 202-0421, 202-0422, 203-5927, 218-2456
HYDRAULIC AR-2 VALVE
AN ATTACHMENT

SMCS-5057, 5059 **i01836231**

NOTE	REF NO	GRAPHIC REF	PART NUMBER	QTY	PART NAME 1 2 3 4 5 6 (PRODUCT LEVEL)	SEE PAGE
	1	2	**4E-7540**	1	ANGLE	
	2	2	**5P-5148**	1	STRAP-TIE	
	3	2	**6V-0852**	2	CAP-DUST	
	4	2	**6V-3965**	2	FITTING AS	
	5	2	**7K-1181**	1	STRAP-CABLE	
	10	1,2	**8X-1147**	6	SPACER (10.3X15.9X74.7MM THK)	
	11	2	**8Y-8387**	12	BLOCK	
	12	1	**157-5544**	1	ACCUMULATOR GP-PILOT OIL	
		1	**158-2336**	1	VALVE-GAS	
		1	**160-0496**	1	KIT-ACCUMULATOR SERVICE	
		1	**170-0503**	1	FILM	
		1	**183-7600**	1	PISTON	
	13	2	**113-3682**	1	PLATE AS	
		2	**4H-4063**	1	PIN	
	14	1	**118-0939**	1	PLATE AS	
	15	2	**118-0970**	2	PLATE AS	
I	16	1	**118-1030**	1	HOSE AS	
I	17	1	**118-1032**	1	HOSE AS	
Y	18	2	**185-5209**	1	VALVE GP-PRESSURE REDUCING	545
I	19	1,2	**198-8211**	4	HOSE AS	
I	20	2	**212-4654**	1	HOSE AS	
I	21	1	**213-1794**	1	HOSE AS	
I	22	2	**226-3865**	1	HOSE AS	
I	23	2	**226-3866**	1	HOSE AS	
I	24	1	**226-5554**	1	HOSE AS	
	25	2	**104-3173**	2	CLIP	
	26	1	*148-8309*	1	ADAPTER GP	
		1	**2P-8421**	1	ADAPTER-O-RING	
		1	**3D-2824**	1	SEAL-O-RING	
	27	1	*148-8321*	4	CONNECTOR AS	
					(EACH INCLUDES)	
		1	**3J-1907**	1	SEAL-O-RING	
		1	**6V-8397**	1	SEAL-O-RING	
		1	**8C-0564**	1	CONNECTOR	
	28	2	*148-8323*	1	CONNECTOR GP	
		2	**2S-4078**	1	SEAL-O-RING	
		2	**5K-9090**	1	SEAL-O-RING	
		2	**6V-9875**	1	CONNECTOR	
	29	2	*148-8330*	1	CONNECTOR AS	
		2	**5K-9090**	1	SEAL-O-RING	
		2	**7M-8485**	1	SEAL-O-RING	
		2	**8T-0198**	1	CONNECTOR	
	30	1	*148-8336*	5	CONNECTOR AS	
					(EACH INCLUDES)	
		1	**3J-1907**	1	SEAL-O-RING	
		1	**6V-8397**	1	SEAL-O-RING	
		1	**6V-8636**	1	CONNECTOR	
	31	2	*148-8345*	1	CONNECTOR GP	
		2	**2M-9780**	1	SEAL-O-RING	
		2	**6V-8398**	1	SEAL-O-RING	
		2	**6V-8638**	1	CONNECTOR-SEAL	
	32	2	*148-8353*	1	ELBOW GP	
		2	**3J-1907**	1	SEAL-O-RING	
		2	**6V-8397**	1	SEAL-O-RING	

203-5924 **LINES GP-PILOT** ***(contd.)*** **i01836231**

NOTE	REF NO	GRAPHIC REF	PART NUMBER	QTY	PART NAME 1 2 3 4 5 6 (PRODUCT LEVEL)	SEE PAGE
		2	**6V-9001**	1	ELBOW	
	33	2	*148-8371*	1	ELBOW AS	
		2	**6V-8397**	1	SEAL-O-RING	
		2	**8C-8988**	1	ELBOW	
	34	1,2	*148-8378*	3	ELBOW AS	
					(EACH INCLUDES)	
		1,2	**3J-1907**	1	SEAL-O-RING	
		1,2	**6V-8397**	1	SEAL-O-RING	
		1,2	**6V-8724**	1	ELBOW	
	35	2	*148-8415*	1	REDUCER GP	
		2	**6V-8397**	1	SEAL-O-RING	
		2	**6V-8936**	1	REDUCER	
	36	2	*148-8428*	1	TEE GP	
		2	**3K-0360**	1	SEAL-O-RING	
		2	**6V-8398**	2	SEAL-O-RING	
		2	**6V-8782**	1	TEE-FACE SEAL	
	37	2	*148-8444*	2	TEE GP	
					(EACH INCLUDES)	
		2	**6V-8398**	2	SEAL-O-RING	
		2	**6V-9837**	1	TEE-SWIVEL	
	38	2	*153-6241*	2	ELBOW GP	
					(EACH INCLUDES)	
		2	**6V-8398**	1	SEAL-O-RING	
		2	**8C-8989**	1	ELBOW	
I	39	2	**198-8214**	1	HOSE AS	
	40	2	**3J-1907**	2	SEAL-O-RING	
	41	2	**3P-9847**	1	CLIP	
	42	2	**5P-7468**	1	CLIP (SLOT)	
	43	2	**5P-7469**	1	CLIP (TAB)	
	44	2	**5P-8444**	1	GROMMET	
M	45	2	**6V-7744**	2	LOCKNUT (M10X1.5 THD)	
	46	2	**6V-9830**	1	CAP AS	
M	47	2	**7X-2544**	1	BOLT (M10X1.5X104MM)	
	48	1,2	**8T-4121**	19	WASHER-HARD (11X21X2.5MM THK)	
M	49	2	**8T-4133**	1	NUT (M10X1.5 THD)	
M	50	2	**8T-4136**	4	BOLT (M10X1.5X25MM)	
M	51	2	**8T-4195**	5	BOLT (M10X1.5X30MM)	
M	52	2	**8T-6466**	1	BOLT (M10X1.50X60MM)	
M	53	1,2	**8T-6685**	5	BOLT (M10X1.50X110MM)	
	54	1,2	**8Y-8388**	3	PLATE	

I-SEE HOSE FABRICATION GUIDE
M-METRIC PART
Y-SEPARATE ILLUSTRATION

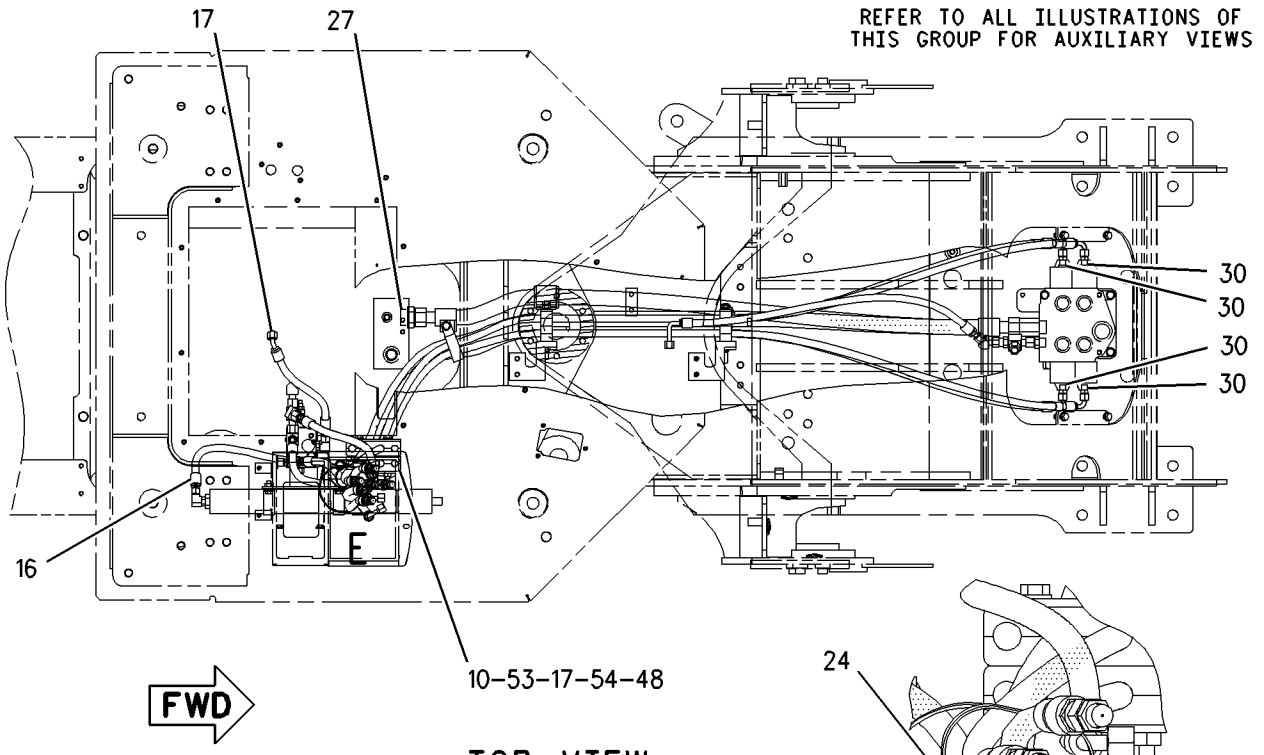

TOP VIEW

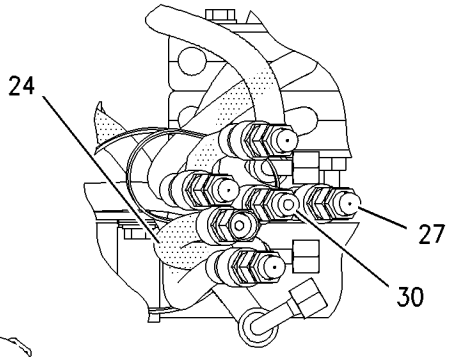

VIEW OF AREA E

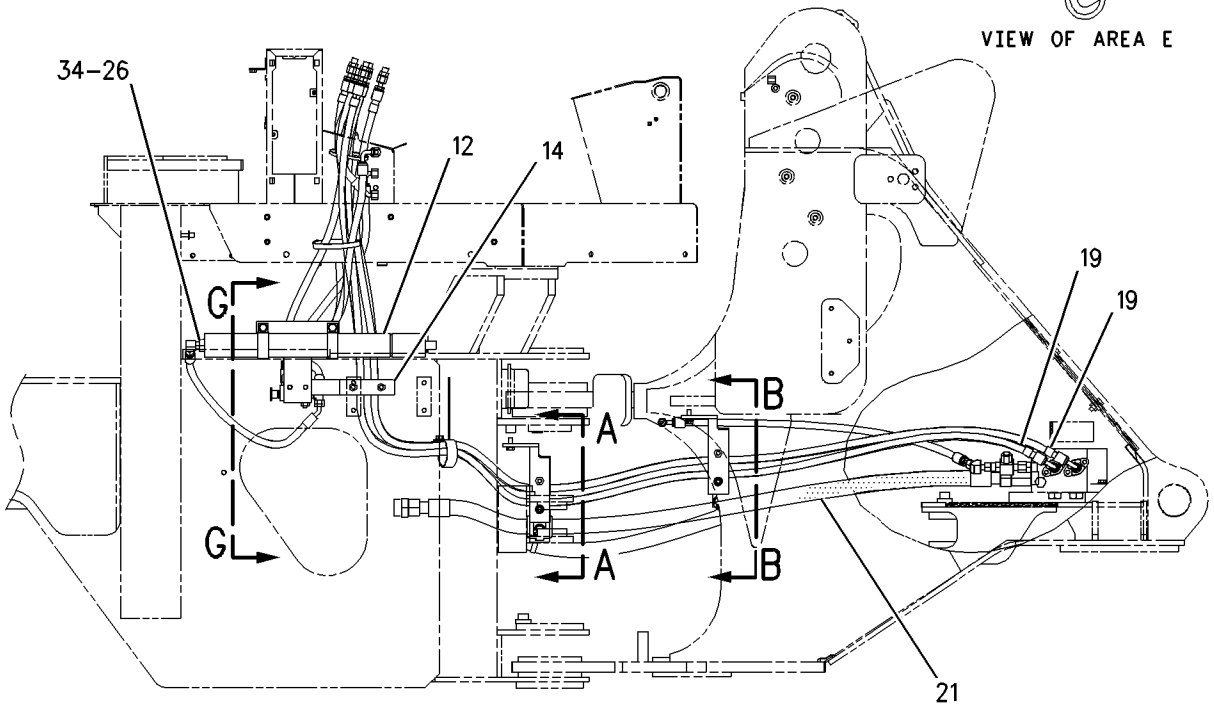

RIGHT SIDE VIEW

GRAPHIC #1 g00930342

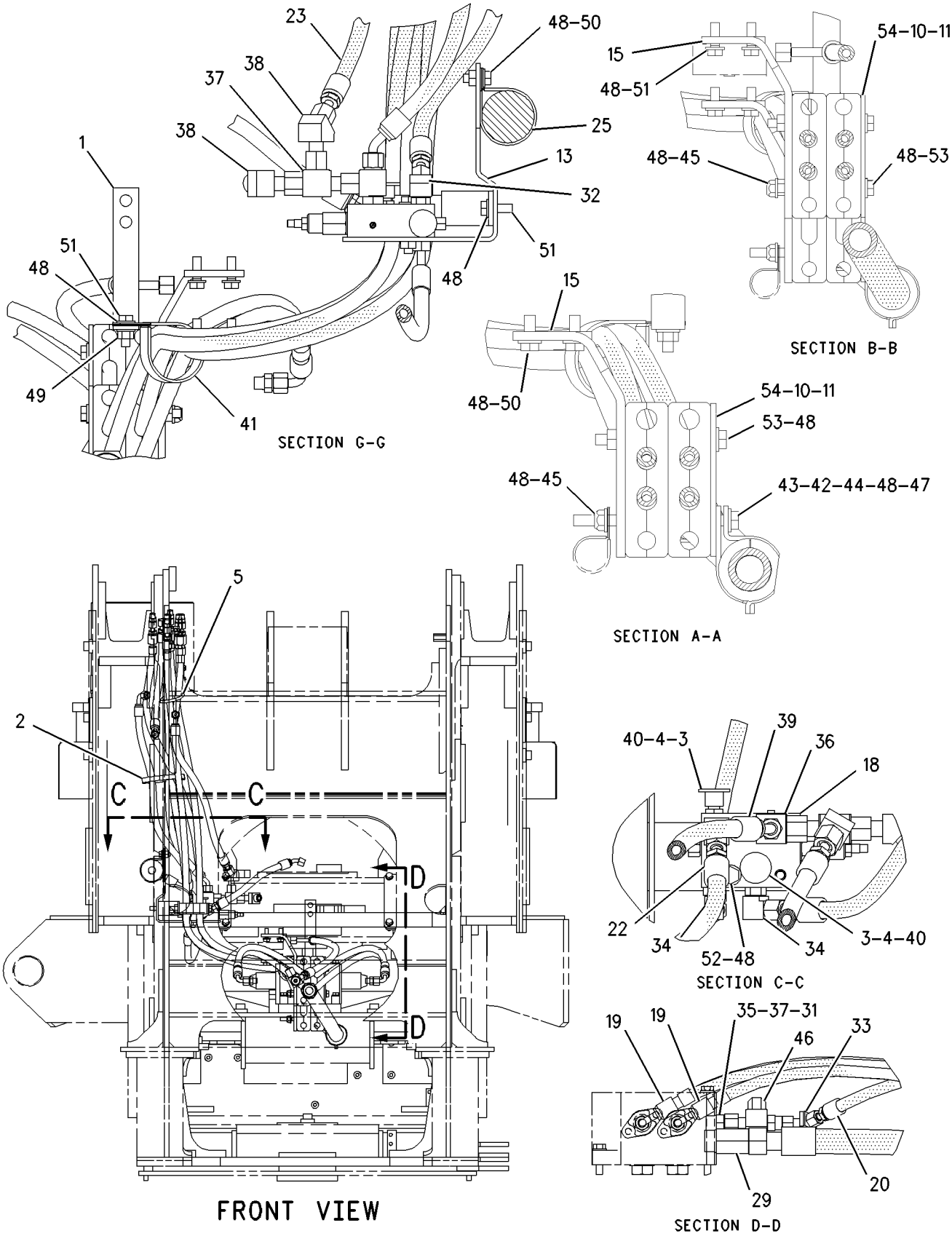

GRAPHIC #2

g00930344

HYDRAULIC SYSTEM

203-5925 LINES GP-PILOT

S/N: DJD1-UP; DBT1-UP
PART OF 202-0426, 203-5934 HYDRAULIC AR, 202-0423, 202-0424, 203-5928, 218-2457
HYDRAULIC AR-3 VALVE
AN ATTACHMENT

SMCS-5057, 5059 **i01836213**

NOTE	REF NO	GRAPHIC REF	PART NUMBER	QTY	PART NAME 1 2 3 4 5 6 (PRODUCT LEVEL)	SEE PAGE
	1	2	**4E-7540**	1	ANGLE	
	4	2	**5P-5148**	1	STRAP-TIE	
	5	2	**6V-0852**	2	CAP-DUST	
	6	2	**6V-3965**	2	FITTING AS	
	7	1	**7K-1181**	1	STRAP-CABLE	
	12	1,2	**8X-1147**	6	SPACER (10.3X15.9X74.7MM THK)	
	13	1,2	**8Y-8387**	12	BLOCK	
	14	1	**157-5544**	1	ACCUMULATOR GP-PILOT OIL	
		1	**158-2336**	1	VALVE-GAS	
		1	**160-0496**	1	KIT-ACCUMULATOR SERVICE	
		1	**170-0503**	1	FILM	
		1	**183-7600**	1	PISTON	
	15	2	**113-3682**	1	PLATE AS	
		2	**4H-4063**	1	PIN	
	16	1	**118-0939**	1	PLATE AS	
	17	2	**118-0970**	2	PLATE AS	
I	18	1	**118-1030**	1	HOSE AS	
I	19	1	**118-1032**	1	HOSE AS	
Y	20	2	**185-5209**	1	VALVE GP-PRESSURE REDUCING	545
I	21	1	**212-4654**	1	HOSE AS	
I	22	1	**213-1793**	1	HOSE AS	
I	23	2	**226-3865**	1	HOSE AS	
I	24	2	**226-3866**	1	HOSE AS	
I	25	2	**226-5554**	1	HOSE AS	
	26	1	**104-3173**	2	CLIP	
	27	1	*148-8309*	1	ADAPTER GP	
		1	**2P-8421**	1	ADAPTER-O-RING	
		1	**3D-2824**	1	SEAL-O-RING	
	28	1	*148-8321*	6	CONNECTOR AS	
					(EACH INCLUDES)	
		1	**3J-1907**	1	SEAL-O-RING	
		1	**6V-8397**	1	SEAL-O-RING	
		1	**8C-0564**	1	CONNECTOR	
	29	1	*148-8323*	1	CONNECTOR GP	
		1	**2S-4078**	1	SEAL-O-RING	
		1	**5K-9090**	1	SEAL-O-RING	
		1	**6V-9875**	1	CONNECTOR	
	30	2	*148-8330*	1	CONNECTOR AS	
		2	**5K-9090**	1	SEAL-O-RING	
		2	**7M-8485**	1	SEAL-O-RING	
		2	**8T-0198**	1	CONNECTOR	
	31	1	*148-8336*	7	CONNECTOR AS	
					(EACH INCLUDES)	
		1	**3J-1907**	1	SEAL-O-RING	
		1	**6V-8397**	1	SEAL-O-RING	
		1	**6V-8636**	1	CONNECTOR	
	32	2	*148-8345*	1	CONNECTOR GP	
		2	**2M-9780**	1	SEAL-O-RING	
		2	**6V-8398**	1	SEAL-O-RING	
		2	**6V-8638**	1	CONNECTOR-SEAL	
	33	2	*148-8353*	1	ELBOW GP	
		2	**3J-1907**	1	SEAL-O-RING	
		2	**6V-8397**	1	SEAL-O-RING	
		2	**6V-9001**	1	ELBOW	

203-5925 **LINES GP-PILOT** ***(contd.)*** **i01836213**

NOTE	REF NO	GRAPHIC REF	PART NUMBER	QTY	PART NAME 1 2 3 4 5 6 (PRODUCT LEVEL)	SEE PAGE
	34	2	*148-8371*	1	ELBOW AS	
		2	**6V-8397**	1	SEAL-O-RING	
		2	**8C-8988**	1	ELBOW	
	35	1,2	*148-8378*	3	ELBOW AS	
					(EACH INCLUDES)	
		1,2	**3J-1907**	1	SEAL-O-RING	
		1,2	**6V-8397**	1	SEAL-O-RING	
		1,2	**6V-8724**	1	ELBOW	
	36	2	*148-8415*	1	REDUCER GP	
		2	**6V-8397**	1	SEAL-O-RING	
		2	**6V-8936**	1	REDUCER	
	37	2	*148-8428*	1	TEE GP	
		2	**3K-0360**	1	SEAL-O-RING	
		2	**6V-8398**	2	SEAL-O-RING	
		2	**6V-8782**	1	TEE-FACE SEAL	
	38	2	*148-8444*	2	TEE GP	
					(EACH INCLUDES)	
		2	**6V-8398**	2	SEAL-O-RING	
		2	**6V-9837**	1	TEE-SWIVEL	
	39	2	*153-6241*	2	ELBOW GP	
					(EACH INCLUDES)	
		2	**6V-8398**	1	SEAL-O-RING	
		2	**8C-8989**	1	ELBOW	
I	40	1,2	**198-8211**	6	HOSE AS	
I	41	2	**198-8214**	1	HOSE AS	
	42	2	**3J-1907**	2	SEAL-O-RING	
	43	2	**3P-9847**	1	CLIP	
	44	2	**5P-7468**	1	CLIP (SLOT)	
	45	2	**5P-7469**	1	CLIP (TAB)	
	46	2	**5P-8444**	1	GROMMET	
M	47	2	**6V-7744**	2	LOCKNUT (M10X1.5 THD)	
	48	2	**6V-9830**	1	CAP AS	
M	49	2	**7X-2544**	1	BOLT (M10X1.5X104MM)	
	50	1,2	**8T-4121**	19	WASHER-HARD (11X21X2.5MM THK)	
M	51	2	**8T-4133**	1	NUT (M10X1.5 THD)	
M	52	1,2	**8T-4136**	4	BOLT (M10X1.5X25MM)	
M	53	2	**8T-4195**	5	BOLT (M10X1.5X30MM)	
M	54	2	**8T-6466**	1	BOLT (M10X1.50X60MM)	
M	55	1,2	**8T-6685**	5	BOLT (M10X1.50X110MM)	
	56	1,2	**8Y-8388**	3	PLATE	

I-SEE HOSE FABRICATION GUIDE
M-METRIC PART
Y-SEPARATE ILLUSTRATION

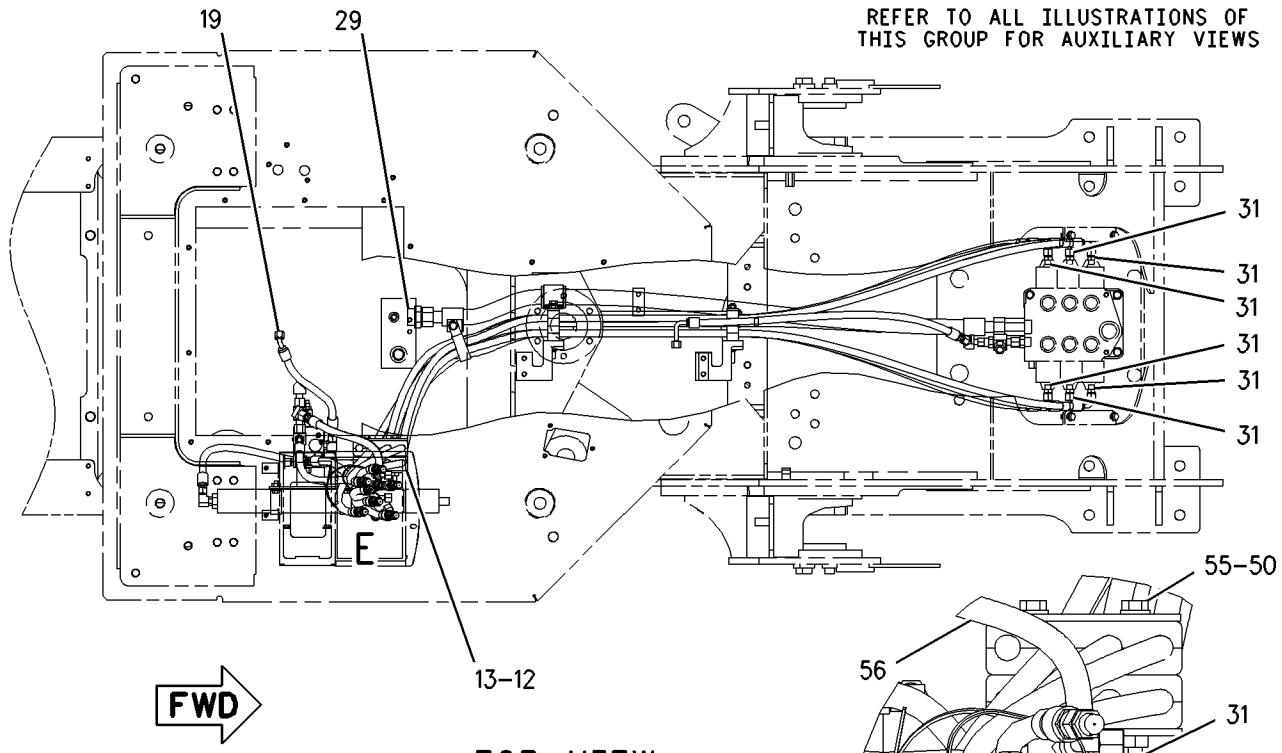

TOP VIEW

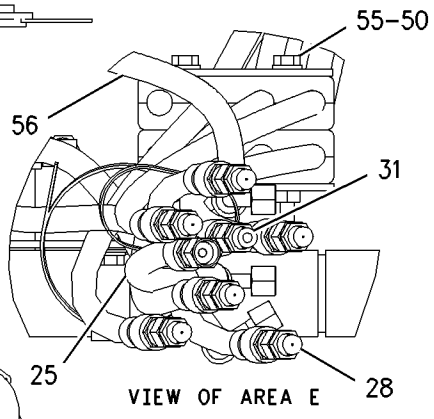

VIEW OF AREA E

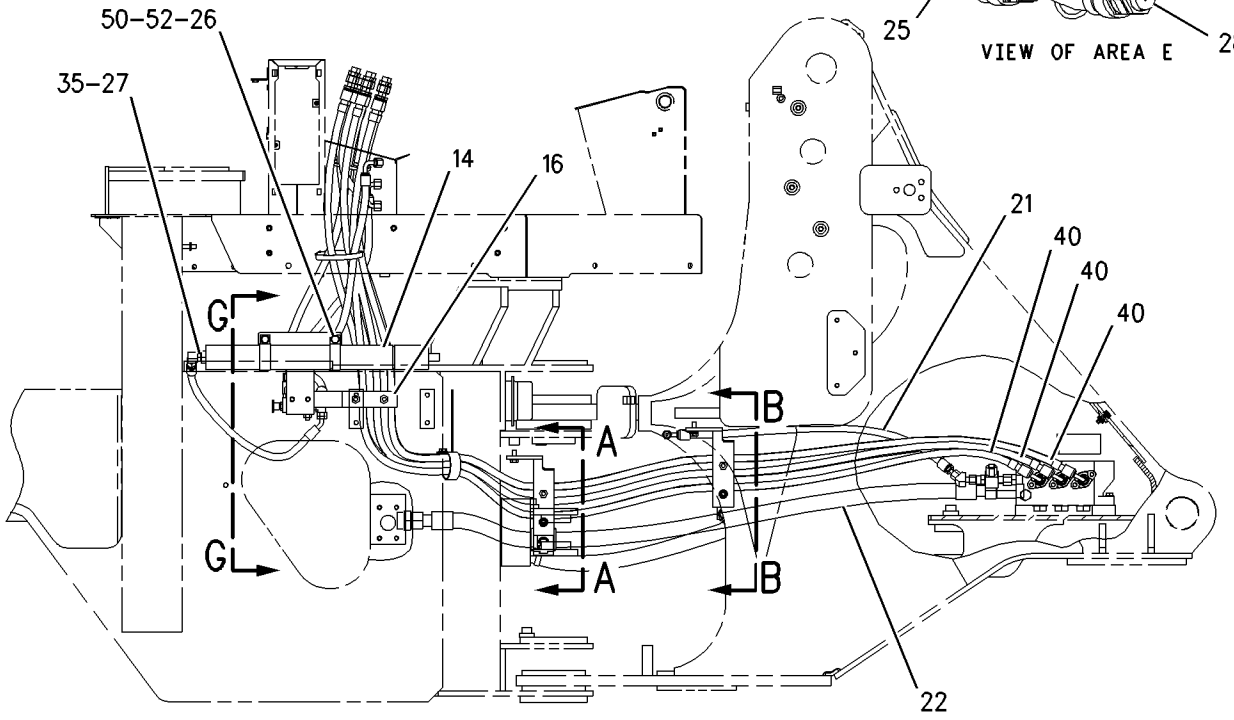

RIGHT SIDE VIEW

GRAPHIC #1 g00930532

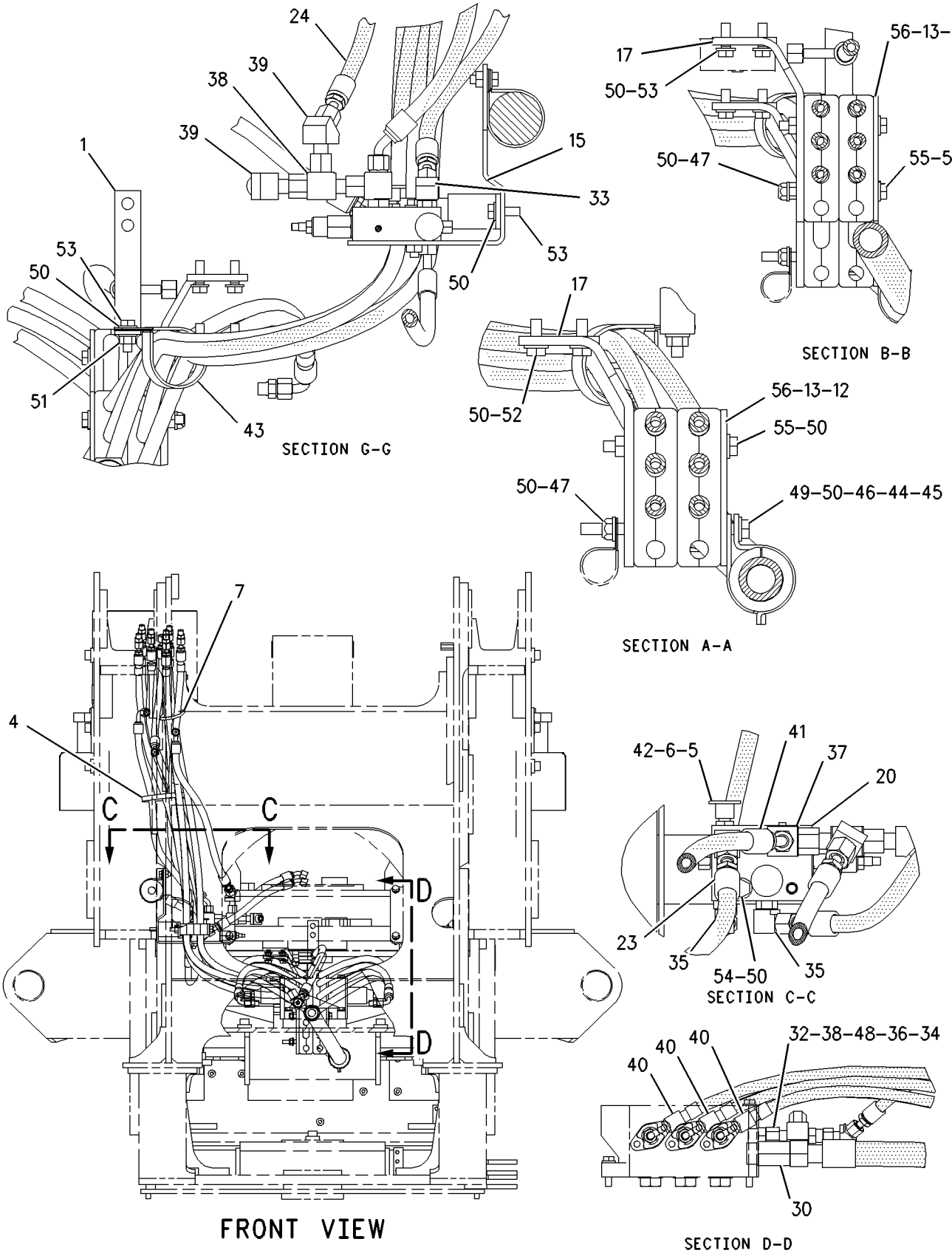

GRAPHIC #2

g00930534

HYDRAULIC SYSTEM

203-5926 LINES GP-PILOT

S/N: DBT1-UP

PART OF 202-0427, 203-5935 HYDRAULIC AR, 202-0425, 203-5929 HYDRAULIC AR-4 VALVE AN ATTACHMENT

SMCS-5057, 5059 **i01836204**

NOTE	REF NO	GRAPHIC REF	PART NUMBER	QTY	PART NAME 1 2 3 4 5 6 (PRODUCT LEVEL)	SEE PAGE
	1	2	**4E-7540**	1	ANGLE	
	4	2	**5P-5148**	1	STRAP-TIE	
	5	2	**6V-0852**	2	CAP-DUST	
	6	2	**6V-3965**	2	FITTING AS	
	7	1	**7K-1181**	1	STRAP-CABLE	
	12	1,2	**8X-1147**	6	SPACER (10.3X15.9X74.7MM THK)	
	13	1,2	**8Y-8387**	12	BLOCK	
	16	1	**157-5544**	1	ACCUMULATOR GP-PILOT OIL	
		1	**158-2336**	1	VALVE-GAS	
		1	**160-0496**	1	KIT-ACCUMULATOR SERVICE	
		1	**170-0503**	1	FILM	
		1	**183-7600**	1	PISTON	
	17	2	**113-3682**	1	PLATE AS	
	18	1	**118-0939**	1	PLATE AS	
	19	2	**118-0970**	2	PLATE AS	
I	20	1	**118-1030**	1	HOSE AS	
I	21	1	**118-1032**	1	HOSE AS	
Y	22	2	**185-5209**	1	VALVE GP-PRESSURE REDUCING	545
I	23	1	**213-1791**	1	HOSE AS	
I	24	1	**213-1792**	1	HOSE AS	
I	25	2	**226-3865**	1	HOSE AS	
I	26	2	**226-3866**	1	HOSE AS	
I	27	1	**226-5554**	1	HOSE AS	
	28	1	**104-3173**	2	CLIP	
	29	1	*148-8309*	1	ADAPTER GP	
		1	**2P-8421**	1	ADAPTER-O-RING	
		1	**3D-2824**	1	SEAL-O-RING	
	30	1	*148-8321*	8	CONNECTOR AS	
					(EACH INCLUDES)	
		1	**3J-1907**	1	SEAL-O-RING	
		1	**6V-8397**	1	SEAL-O-RING	
		1	**8C-0564**	1	CONNECTOR	
	31	1	*148-8323*	1	CONNECTOR GP	
		1	**2S-4078**	1	SEAL-O-RING	
		1	**5K-9090**	1	SEAL-O-RING	
		1	**6V-9875**	1	CONNECTOR	
	32	2	*148-8330*	1	CONNECTOR AS	
		2	**5K-9090**	1	SEAL-O-RING	
		2	**7M-8485**	1	SEAL-O-RING	
		2	**8T-0198**	1	CONNECTOR	
	33	1	*148-8336*	9	CONNECTOR AS	
					(EACH INCLUDES)	
		1	**3J-1907**	1	SEAL-O-RING	
		1	**6V-8397**	1	SEAL-O-RING	
		1	**6V-8636**	1	CONNECTOR	
	34	2	*148-8345*	1	CONNECTOR GP	
		2	**2M-9780**	1	SEAL-O-RING	
		2	**6V-8398**	1	SEAL-O-RING	
		2	**6V-8638**	1	CONNECTOR-SEAL	
	35	2	*148-8353*	1	ELBOW GP	
		2	**3J-1907**	1	SEAL-O-RING	
		2	**6V-8397**	1	SEAL-O-RING	
		2	**6V-9001**	1	ELBOW	
	36	2	*148-8371*	1	ELBOW AS	
		2	**6V-8397**	1	SEAL-O-RING	

203-5926 **LINES GP-PILOT** ***(contd.)*** **i01836204**

NOTE	REF NO	GRAPHIC REF	PART NUMBER	QTY	PART NAME 1 2 3 4 5 6 (PRODUCT LEVEL)	SEE PAGE
		2	**8C-8988**	1	ELBOW	
	37	1,2	*148-8378*	3	ELBOW AS	
					(EACH INCLUDES)	
		1,2	**3J-1907**	1	SEAL-O-RING	
		1,2	**6V-8397**	1	SEAL-O-RING	
		1,2	**6V-8724**	1	ELBOW	
	38	2	*148-8415*	1	REDUCER GP	
		2	**6V-8397**	1	SEAL-O-RING	
		2	**6V-8936**	1	REDUCER	
	39	2	*148-8428*	1	TEE GP	
		2	**3K-0360**	1	SEAL-O-RING	
		2	**6V-8398**	2	SEAL-O-RING	
		2	**6V-8782**	1	TEE-FACE SEAL	
	40	2	*148-8444*	2	TEE GP	
					(EACH INCLUDES)	
		2	**6V-8398**	2	SEAL-O-RING	
		2	**6V-9837**	1	TEE-SWIVEL	
	41	2	*153-6241*	2	ELBOW GP	
					(EACH INCLUDES)	
		1	**6V-8398**	1	SEAL-O-RING	
		1	**8C-8989**	1	ELBOW	
I	42	1,2	**198-8211**	8	HOSE AS	
I	43	2	**198-8214**	1	HOSE AS	
	44	2	**3J-1907**	2	SEAL-O-RING	
	45	2	**3P-9847**	1	CLIP	
	46	2	**5P-7468**	1	CLIP (SLOT)	
	47	2	**5P-7469**	1	CLIP (TAB)	
	48	2	**5P-8444**	1	GROMMET	
M	49	2	**6V-7744**	2	LOCKNUT (M10X1.5 THD)	
	50	2	**6V-9830**	1	CAP AS	
M	51	2	**7X-2544**	1	BOLT (M10X1.5X104MM)	
	52	1,2	**8T-4121**	19	WASHER-HARD (11X21X2.5MM THK)	
M	53	2	**8T-4133**	1	NUT (M10X1.5 THD)	
M	54	1,2	**8T-4136**	4	BOLT (M10X1.5X25MM)	
M	55	2	**8T-4195**	5	BOLT (M10X1.5X30MM)	
M	56	2	**8T-6466**	1	BOLT (M10X1.50X60MM)	
M	57	1,2	**8T-6685**	5	BOLT (M10X1.50X110MM)	
	58	1	**8Y-8388**	3	PLATE	

I-SEE HOSE FABRICATION GUIDE
M-METRIC PART
Y-SEPARATE ILLUSTRATION

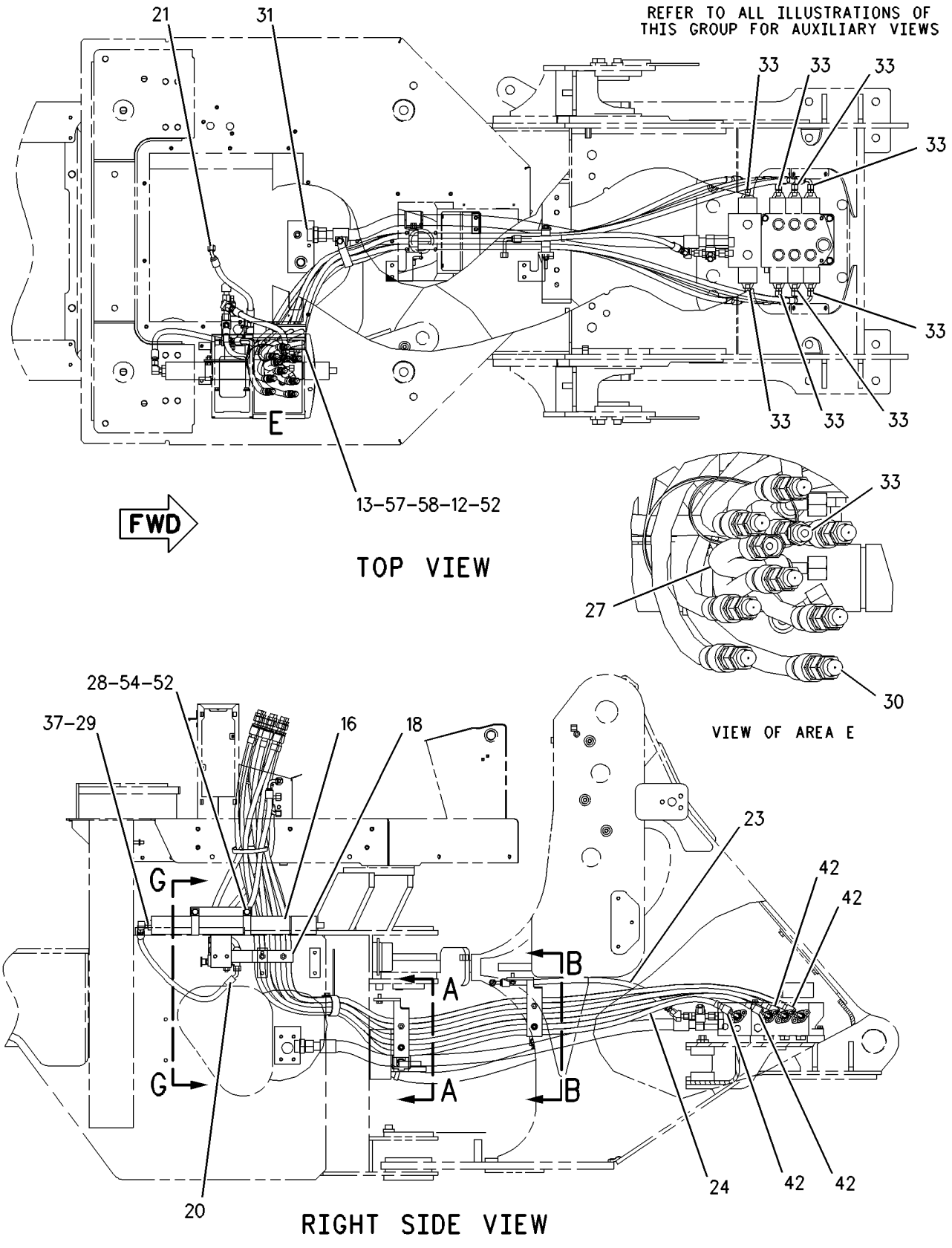

GRAPHIC #1 g00930770

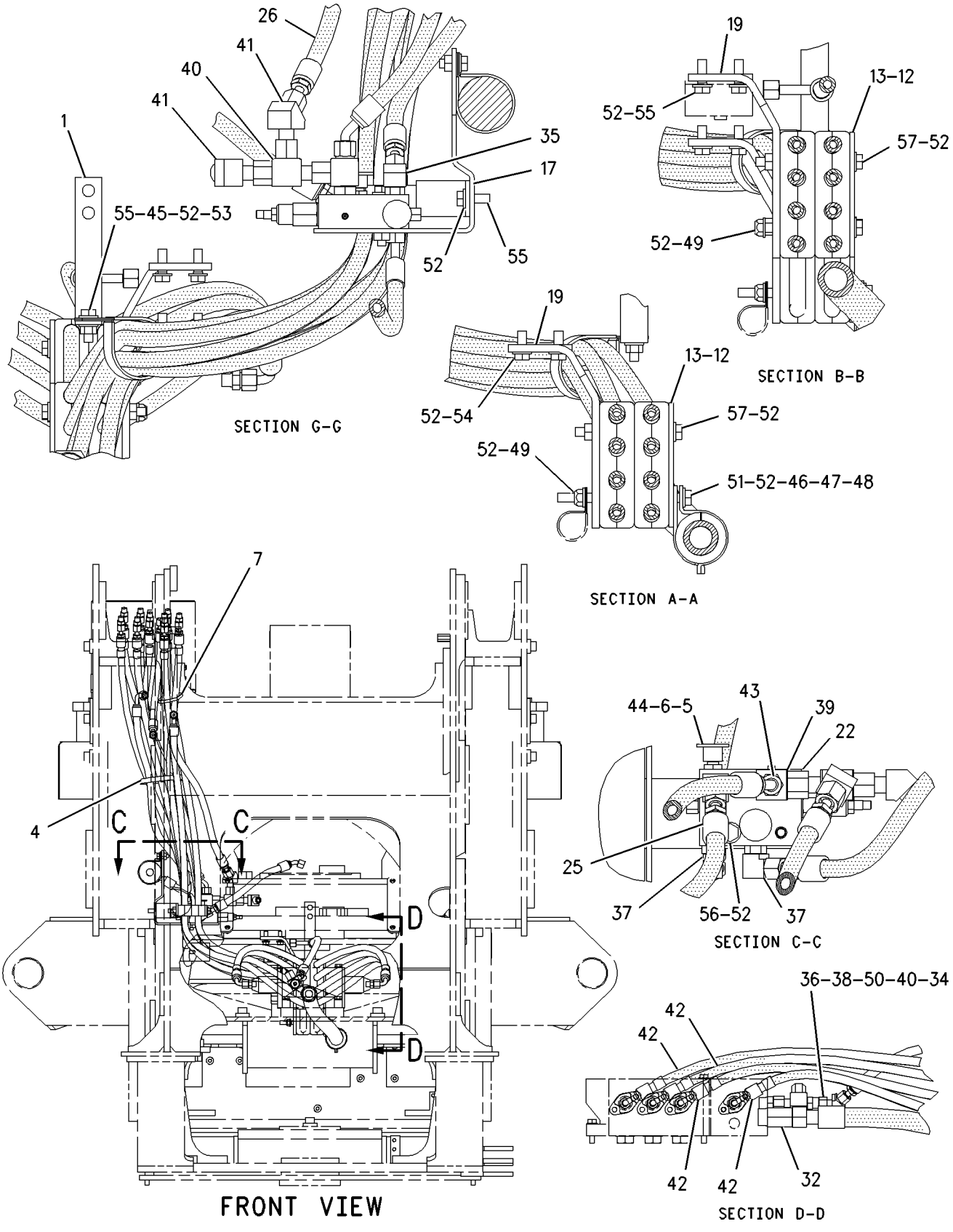

GRAPHIC #2

g00930769

HYDRAULIC SYSTEM

213-6217 LINES GP-RIDE CONTROL

S/N: DBT1-UP
PART OF 203-8560 CONTROL AR-RIDE
AN ATTACHMENT

SMCS-5057, 5077 **i01835179**

NOTE	REF NO	GRAPHIC REF	PART NUMBER	QTY	PART NAME 1 2 3 4 5 6 (PRODUCT LEVEL)	SEE PAGE
	1	1	**6U-5219**	2	U-CLAMP AS	
					(EACH INCLUDES)	
		1	**5P-1075**	2	WASHER-HARD (10.2X22.5X3MM THK)	
		1	**6V-8801**	2	NUT (3/8-16 THD)	
	2	1	**126-6916**	1	SWITCH AS-PRESSURE (RIDE CONTROL DISABLE)	
		1	**102-8802**	1	KIT-RECEPTACLE (2 PIN)	
		1	**3E-3365**	1	WEDGE-RECEPTACLE LOCK (2 PIN)	
		1	**186-3735**	2	PIN-CONNECTOR	
	3	1	**158-8777**	1	ACCUMULATOR GP-RIDE CONTROL	
		1	**5P-3779**	1	TAG-CYLINDER	
Y	4	1	**192-0086**	1	VALVE GP-RIDE CONTROL	556
	5	1	**206-7384**	1	BRACKET AS	
	6	1	**206-7385**	1	BRACKET AS	
	7	1	**206-7386**	1	PLATE	
	8	1	**213-5330**	1	TUBE AS	
I	9	1	**213-6218**	1	HOSE AS	
I	10	1	**213-6219**	2	HOSE AS	
I	11	1	**213-6220**	1	HOSE AS	
I	12	1	**213-6221**	1	HOSE AS	
	13	1	*148-8322*	2	CONNECTOR GP	
					(EACH INCLUDES)	
		1	**2M-9780**	1	SEAL-O-RING	
		1	**6V-8640**	1	CONNECTOR-SEAL	
		1	**6V-9746**	1	SEAL-O-RING	
	14	1	*148-8336*	1	CONNECTOR AS	
		1	**3J-1907**	1	SEAL-O-RING	
		1	**6V-8397**	1	SEAL-O-RING	
		1	**6V-8636**	1	CONNECTOR	
	15	1	*148-8345*	1	CONNECTOR GP	
		1	**2M-9780**	1	SEAL-O-RING	
		1	**6V-8398**	1	SEAL-O-RING	
		1	**6V-8638**	1	CONNECTOR-SEAL	
	16	1	*148-8370*	1	ELBOW GP	
		1	**6V-8398**	1	SEAL-O-RING	
		1	**6V-9851**	1	ELBOW	
	17	1	*148-8378*	1	ELBOW AS	
		1	**3J-1907**	1	SEAL-O-RING	
		1	**6V-8397**	1	SEAL-O-RING	
		1	**6V-8724**	1	ELBOW	
	18	1	*148-8390*	1	ELBOW GP	
		1	**2M-9780**	1	SEAL-O-RING	
		1	**6V-8626**	1	ELBOW	
		1	**7J-9108**	1	SEAL-O-RING	
	19	1	*148-8424*	1	TEE GP	
		1	**6V-8397**	1	SEAL-O-RING	
		1	**8T-8902**	1	TEE	
	20	1	*148-8433*	2	TEE GP	
					(EACH INCLUDES)	
		1	**6V-8397**	2	SEAL-O-RING	
		1	**6V-9836**	1	TEE-SWIVEL	
	21	1	*148-8449*	1	TEE GP-SWIVEL	
		1	**6V-9746**	2	SEAL-O-RING	
		1	**6V-9839**	1	TEE-SWIVEL	
	22	1	*150-4048*	1	ELBOW GP	
		1	**3K-0360**	1	SEAL-O-RING	

213-6217 LINES GP-RIDE CONTROL *(contd.)*

i01835179

NOTE	REF NO	GRAPHIC REF	PART NUMBER	QTY	PART NAME 1 2 3 4 5 6 (PRODUCT LEVEL)	SEE PAGE
		1	**6V-8722**	1	ELBOW	
		1	**7J-9108**	1	SEAL-O-RING	
	23	1	**3J-1907**	1	SEAL-O-RING	
	24	1	**7X-7729**	10	WASHER (11X25X3MM THK)	
	25	1	**8M-2773**	2	CLIP	
M	26	1	**8T-4136**	8	BOLT (M10X1.5X25MM)	
M	27	1	**8T-4198**	2	BOLT (M10X1.5X100MM)	

I-SEE HOSE FABRICATION GUIDE
M-METRIC PART
Y-SEPARATE ILLUSTRATION

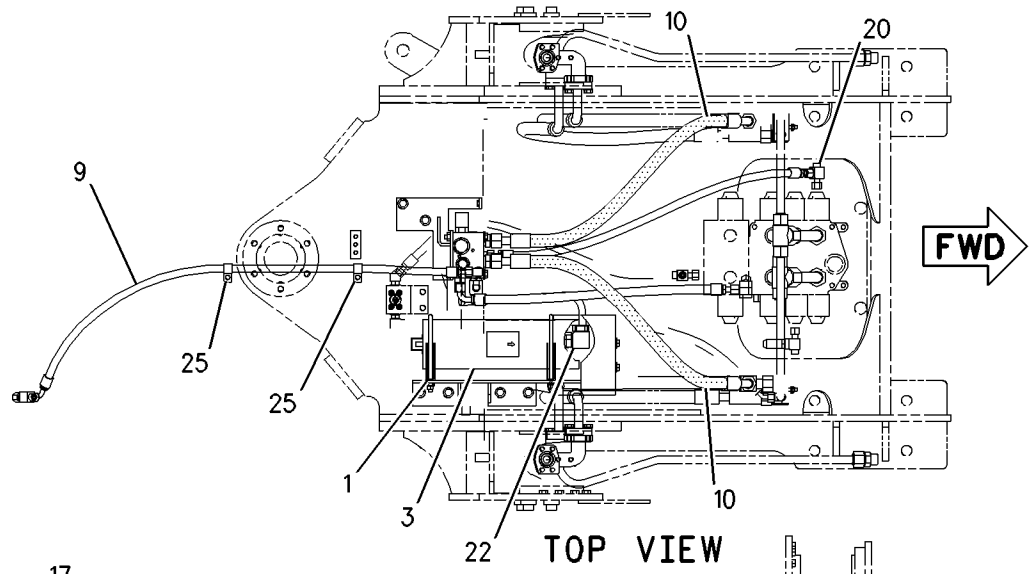

TOP VIEW

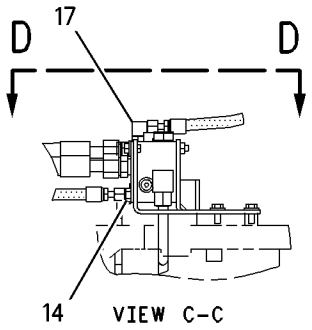

VIEW C-C

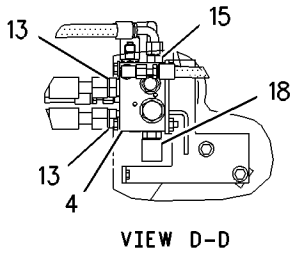

VIEW D-D

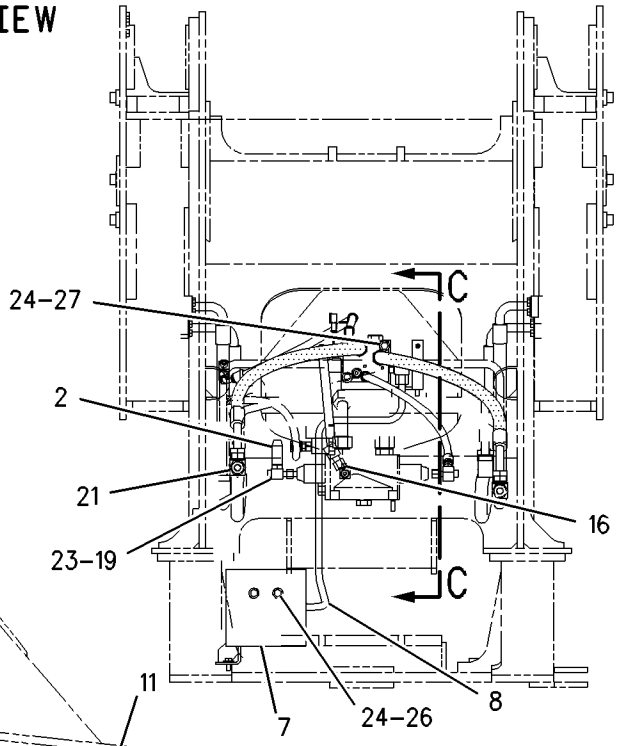

FRONT VIEW

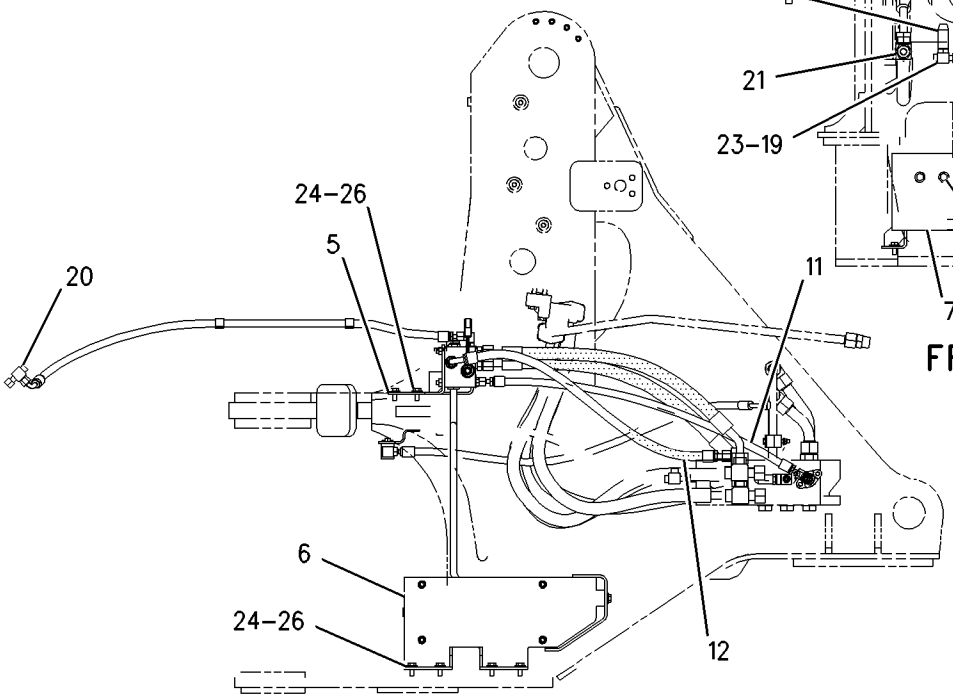

RIGHT SIDE VIEW

GRAPHIC #1 g00899363

MEMORANDA

HYDRAULIC SYSTEM

218-3673 LINES GP-RIDE CONTROL

S/N: DJD1-UP
PART OF 203-8558 CONTROL AR-RIDE
AN ATTACHMENT

SMCS-5057, 5077 **i01831206**

NOTE	REF NO	GRAPHIC REF	PART NUMBER	QTY	PART NAME 1 2 3 4 5 6 (PRODUCT LEVEL)	SEE PAGE
	1	1	**6U-5219**	2	U-CLAMP AS	
					(EACH INCLUDES)	
		1	**5P-1075**	2	WASHER-HARD (10.2X22.5X3MM THK)	
		1	**6V-8801**	2	NUT (3/8-16 THD)	
	2	1	**223-9699**	1	ACCUMULATOR GP-RIDE CONTROL	
Y	3	1	**192-0086**	1	VALVE GP-RIDE CONTROL	556
	4	1	**206-7384**	1	BRACKET AS	
	5	1	**206-7385**	1	BRACKET AS	
	6	1	**206-7386**	1	PLATE	
	7	1	**226-0347**	1	TUBE AS	
I	8	1	**213-6218**	1	HOSE AS	
I	9	1	**213-6219**	2	HOSE AS	
I	10	1	**213-6220**	1	HOSE AS	
I	11	1	**213-6221**	1	HOSE AS	
	12	1	*148-8322*	2	CONNECTOR GP	
					(EACH INCLUDES)	
		1	**2M-9780**	1	SEAL-O-RING	
		1	**6V-8640**	1	CONNECTOR-SEAL	
		1	**6V-9746**	1	SEAL-O-RING	
	13	1	**148-8336**	1	CONNECTOR AS	
		1	**3J-1907**	1	SEAL-O-RING	
		1	**6V-8397**	1	SEAL-O-RING	
		1	**6V-8636**	1	CONNECTOR	
	14	1	*148-8345*	1	CONNECTOR GP	
		1	**2M-9780**	1	SEAL-O-RING	
		1	**6V-8398**	1	SEAL-O-RING	
		1	**6V-8638**	1	CONNECTOR-SEAL	
	15	1	*148-8370*	1	ELBOW GP	
		1	**6V-8398**	1	SEAL-O-RING	
		1	**6V-9851**	1	ELBOW	
	16	1	*148-8378*	1	ELBOW AS	
		1	**3J-1907**	1	SEAL-O-RING	
		1	**6V-8397**	1	SEAL-O-RING	
		1	**6V-8724**	1	ELBOW	
	17	1	*148-8390*	1	ELBOW GP	
		1	**2M-9780**	1	SEAL-O-RING	
		1	**6V-8626**	1	ELBOW	
		1	**7J-9108**	1	SEAL-O-RING	
	18	1	*148-8433*	2	TEE GP	
					(EACH INCLUDES)	
		1	**6V-8397**	2	SEAL-O-RING	
		1	**6V-9836**	1	TEE-SWIVEL	
	19	1	*148-8449*	1	TEE GP-SWIVEL	
		1	**6V-9746**	2	SEAL-O-RING	
		1	**6V-9839**	1	TEE-SWIVEL	
	20	1	*150-4048*	1	ELBOW GP	
		1	**3K-0360**	1	SEAL-O-RING	
		1	**6V-8722**	1	ELBOW	
		1	**7J-9108**	1	SEAL-O-RING	
	21	1	**7X-7729**	10	WASHER (11X25X3MM THK)	
	22	1	**8M-2773**	2	CLIP	
M	23	1	**8T-4136**	8	BOLT (M10X1.5X25MM)	
M	24	1	**8T-4198**	2	BOLT (M10X1.5X100MM)	

I-SEE HOSE FABRICATION GUIDE
M-METRIC PART
Y-SEPARATE ILLUSTRATION

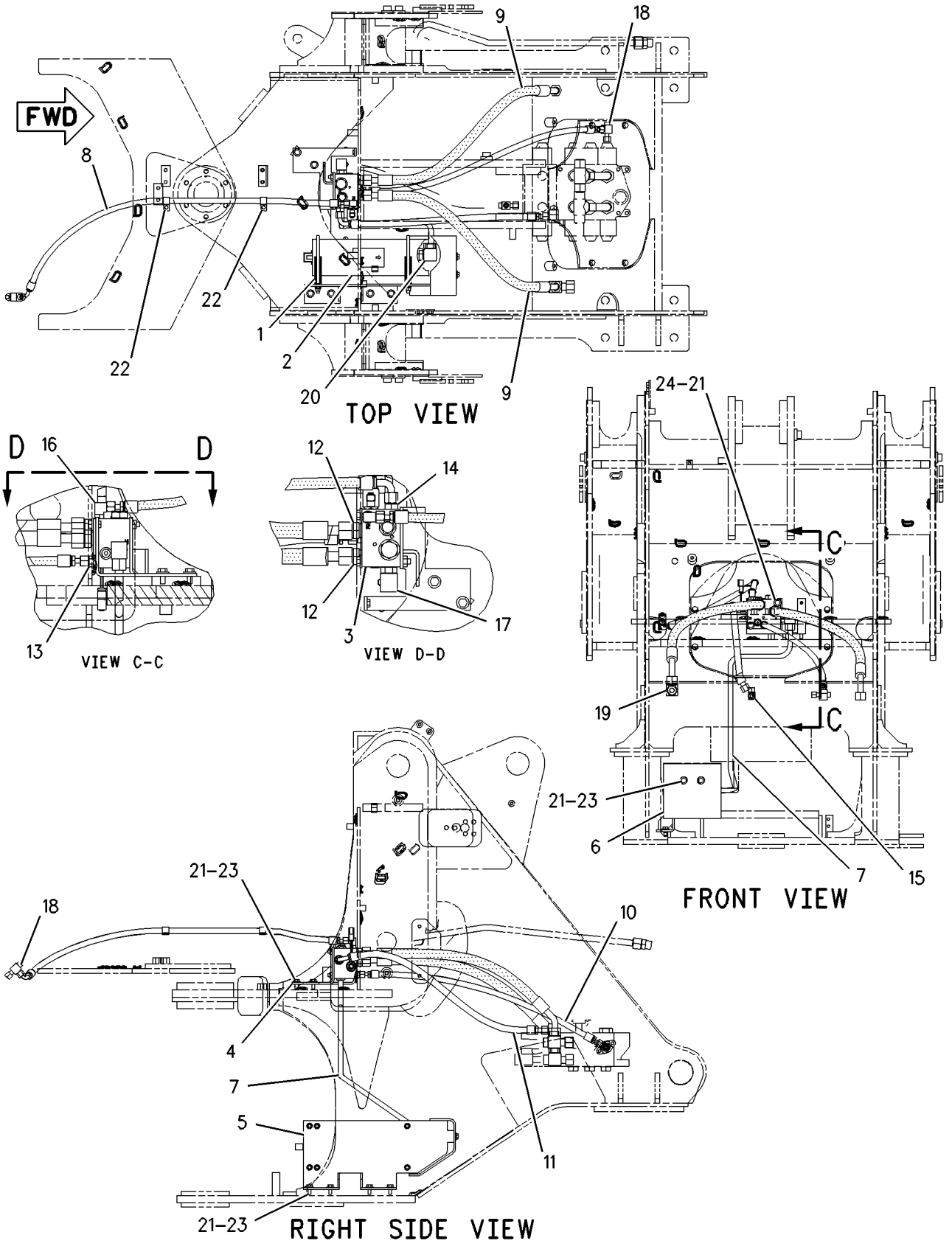

GRAPHIC #1 g00935150

MEMORANDA

HYDRAULIC SYSTEM

118-0862 LINES GP-TILT CYLINDER

S/N: DJD1-UP

PART OF 176-5242 HYDRAULIC AR

SMCS-5057, 5104 **i01103604**

NOTE	REF NO	GRAPHIC REF	PART NUMBER	QTY	PART NAME 1 2 3 4 5 6 (PRODUCT LEVEL)	SEE PAGE
	1	1	**118-0982**	1	TUBE AS	
	2	1	**118-0985**	1	BRACKET AS	
	3	1	**5K-9090**	2	SEAL-O-RING (23.52MM ID)	
I	4	1	**122-6511**	2	HOSE AS	
	5	1	**3D-2824**	2	SEAL-O-RING (23.47MM ID)	
	6	1	**5K-9090**	1	SEAL-O-RING (23.52MM ID)	
	7	1	**5P-7468**	2	CLIP (SLOT)	
	8	1	**5P-7469**	2	CLIP (TAB)	
	9	1	**5P-8444**	2	GROMMET	
	10	1	**5K-9090**	2	SEAL-O-RING (23.52MM ID)	
	11	1	**6V-9008**	2	ELBOW-90 DEGREE (1 5/16-12 THD)	
	12	1	**7M-8485**	2	SEAL-O-RING (29.74MM ID)	
	13	1	**7X-7729**	2	WASHER (3MM THK)	
	14	1	**8T-1889**	1	CLIP (SLOT)	
	15	1	**8T-1890**	1	CLIP (TAB)	
	16	1	**8T-4121**	3	WASHER (2.5MM THK)	
M	17	1	**8T-4195**	5	BOLT (M10X1.50X30MM)	
	18	1	**8T-6684**	2	ELBOW-90 DEGREE (1 1/16-12 THD)	

I-SEE HOSE FABRICATION GUIDE
M-METRIC PART

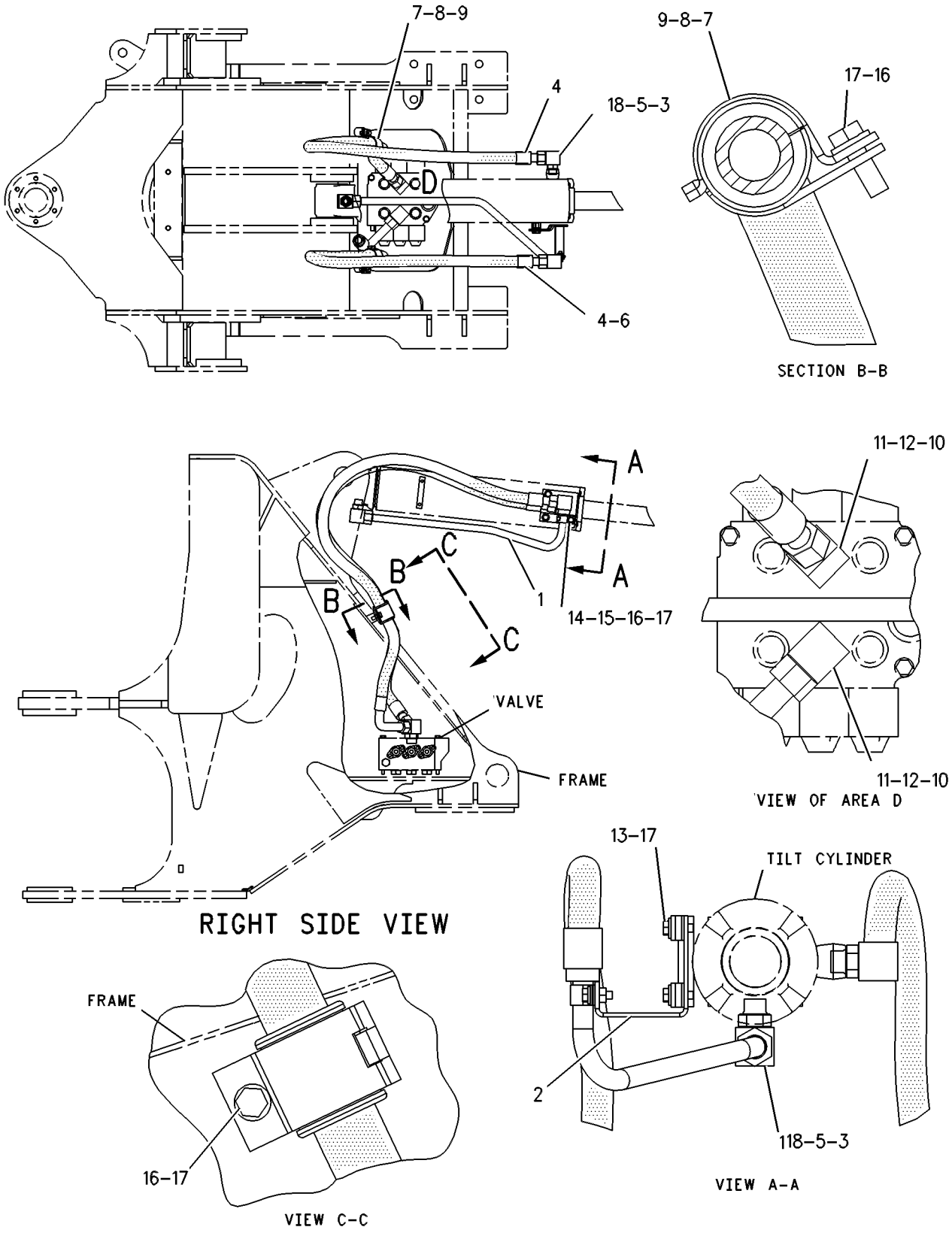

GRAPHIC #1

g00576416

HYDRAULIC SYSTEM

122-6322 LINES GP-TILT CYLINDER

S/N: DBT1-UP

PART OF 202-0422, 218-2456 HYDRAULIC AR-2 VALVE, 202-0424, 218-2457 HYDRAULIC AR-3 VALVE, 202-0425, 203-5929 HYDRAULIC AR-4 VALVE AN ATTACHMENT

SMCS-5057, 5104 **i00723044**

NOTE	REF NO	GRAPHIC REF	PART NUMBER	QTY	PART NAME 1 2 3 4 5 6 (PRODUCT LEVEL)	SEE PAGE
	1	1	**4E-1526**	1	BRACKET AS	
M		1	**6V-9632**	2	NUT-WELD (M6X1 THD)	
I	2	1	**4E-2649**	2	HOSE AS	
I	3	1	**4E-4691**	2	HOSE AS	
	4	1	**128-0170**	1	TUBE AS	
C	5	1	**138-7793**	1	TUBE AS	
C	6	1	**102-2204**	1	TUBE AS	
C	7	1	**102-2203**	1	TUBE AS	
	8	1	**128-0174**	1	TUBE AS	
	9	1	**3D-2824**	2	SEAL-O-RING (23.47MM ID)	
	10	1	**4J-0520**	2	SEAL-O-RING (32.92MM ID)	
	11	1	**5K-9090**	7	SEAL-O-RING (23.52MM ID)	
	12	1	**5P-7466**	2	CLIP (SLOT)	
	13	1	**5P-7467**	2	CLIP (TAB)	
	14	1	**5P-7468**	2	CLIP (SLOT)	
	15	1	**5P-7469**	2	CLIP (TAB)	
	16	1	**5P-8112**	2	GROMMET	
	17	1	**5P-8444**	2	GROMMET	
	18	1	**6V-8400**	1	SEAL-O-RING (29.9MM ID)	
	19	1	**6V-8637**	2	CONNECTOR-SEAL	
	20	1	**6V-9008**	1	ELBOW-90 DEGREE	
	21	1	**6V-9746**	4	SEAL-O-RING (18.94MM ID)	
	22	1	**6V-9847**	1	TEE-SWIVEL	
	23	1	**7M-8485**	2	SEAL-O-RING (29.74MM ID)	
	24	1	**7S-3916**	2	CLIP (TAB)	
	25	1	**7S-3919**	2	CLIP (SLOT)	
	26	1	**7X-7729**	6	WASHER (3MM THK)	
	27	1	**8C-3206**	4	FLANGE-HALF	
	28	1	**8C-3364**	1	ELBOW-90 DEGREE (1 11/16-12 THD)	
	29	1	**8T-4121**	8	WASHER (2.5MM THK)	
M	30	1	**8T-4133**	2	NUT (M10X1.50 THD)	
	31	1	**8T-1887**	2	CLIP (SLOT)	
	32	1	**8T-1888**	2	CLIP (TAB)	
M	33	1	**8T-4186**	2	BOLT (M10X1.50X40MM)	
M	34	1	**8T-4196**	10	BOLT (M10X1.50X35MM)	

C-CHANGE FROM PREVIOUS TYPE
I-SEE HOSE FABRICATION GUIDE
M-METRIC PART

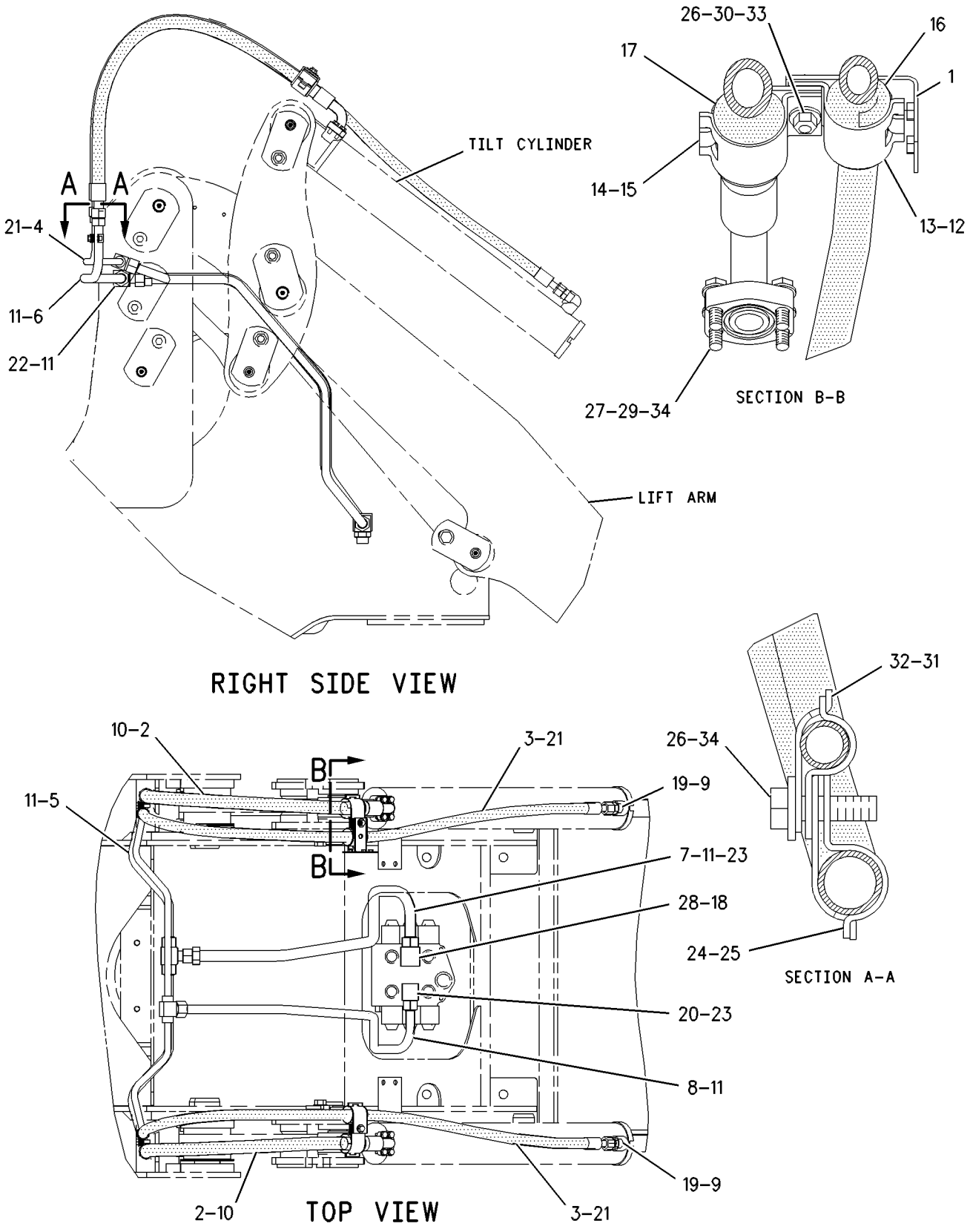

GRAPHIC #1

g00294816

HYDRAULIC SYSTEM

122-6359 LINES GP-TILT CYLINDER

S/N: DBT1-UP

PART OF 202-0426, 202-0427, 203-5933, 203-5934, 203-5935, 203-5936 HYDRAULIC AR AN ATTACHMENT

SMCS-5057, 5104 **i01469868**

NOTE	REF NO	GRAPHIC REF	PART NUMBER	QTY	PART NAME 1 2 3 4 5 6 (PRODUCT LEVEL)	SEE PAGE
	1	1	**1P-3703**	6	SEAL-RECTANGULAR	
	2	1	**3J-9069**	2	COVER	
	3	1	**3P-1967**	2	FLANGE-ONE PIECE	
	4	1	**4E-1526**	1	BRACKET AS	
	5	1	**7S-2013**	2	PLATE	
	6	1	**102-2203**	1	TUBE AS	
	7	1	**102-2204**	1	TUBE AS	
I	8	1	**112-4854**	1	HOSE AS	
I	9	1	**118-1049**	2	HOSE AS	
I	10	1	**122-6233**	2	HOSE AS	
I	11	1	**122-6234**	2	HOSE AS	
	12	1	**122-6235**	2	TUBE AS	
	13	1	**128-0170**	1	TUBE AS	
	14	1	**128-0174**	1	TUBE AS	
Y	15	1	**133-4861**	2	VALVE GP-LOAD CONTROL	497
	16	1	**138-7793**	1	TUBE AS	
	17	1	*148-8327*	4	CONNECTOR GP	
					(EACH INCLUDES)	
		1	**3D-2824**	1	SEAL-O-RING	
		1	**6V-8637**	1	CONNECTOR-SEAL	
		1	**6V-9746**	1	SEAL-O-RING	
	18	1	*148-8357*	1	ELBOW GP	
		1	**5K-9090**	1	SEAL-O-RING	
		1	**6V-9008**	1	ELBOW	
		1	**7M-8485**	1	SEAL-O-RING	
	19	1	*148-8373*	1	ELBOW AS	
		1	**6V-8400**	1	SEAL-O-RING	
		1	**7M-8485**	1	SEAL-O-RING	
		1	**8C-3364**	1	ELBOW	
	20	1	*148-8378*	2	ELBOW GP	
					(EACH INCLUDES)	
		1	**3J-1907**	1	SEAL-O-RING	
		1	**6V-8397**	1	SEAL-O-RING	
		1	**6V-8724**	1	ELBOW	
	21	1	*148-8433*	1	TEE GP	
		1	**6V-8397**	2	SEAL-O-RING	
		1	**6V-9836**	1	TEE-SWIVEL	
	22	1	*148-8445*	1	FITTING GP	
		1	**5K-9090**	2	SEAL-O-RING	
		1	**6V-9847**	1	TEE-SWIVEL	
	23	1	*148-8449*	1	TEE GP-SWIVEL	
		1	**6V-9746**	2	SEAL-O-RING	
		1	**6V-9839**	1	TEE-SWIVEL	
	24	1	*150-4034*	1	TEE GP	
		1	**6V-8397**	3	SEAL-O-RING	
		1	**8T-0379**	1	TEE-BULKHEAD	
	25	1	**4J-0520**	4	SEAL-O-RING	
	26	1	**5K-9090**	4	SEAL-O-RING	
	27	1	**5P-7466**	2	CLIP (SLOT)	
	28	1	**5P-7467**	2	CLIP (TAB)	
	29	1	**5P-8112**	2	GROMMET	
	30	1	**6D-4246**	1	CLIP	
	31	1	**6V-9168**	1	NUT (11/16-16 THD)	
	32	1	**6V-9746**	2	SEAL-O-RING	
	33	1	**6V-9832**	1	CAP AS	

122-6359 **LINES GP-TILT CYLINDER** ***(contd.)*** **i01469868**

NOTE	REF NO	GRAPHIC REF	PART NUMBER	QTY	PART NAME 1 2 3 4 5 6 (PRODUCT LEVEL)	SEE PAGE
	34	1	**7S-3916**	2	CLIP (TAB)	
	35	1	**7S-3919**	2	CLIP (SLOT)	
	36	1	**7X-7729**	6	WASHER (11X25X3MM THK)	
	37	1	**8C-3206**	12	FLANGE-HALF	
	38	1	**8M-2773**	4	CLIP	
	39	1	**8T-1887**	2	CLIP (SLOT)	
	40	1	**8T-1888**	2	CLIP (TAB)	
	41	1	**8T-4121**	28	WASHER-HARD (11X21X2.5MM THK)	
	42	1	**8T-4123**	2	WASHER-PLATED (22X35X3.5MM THK)	
M	43	1	**8T-4133**	4	NUT (M10X1.5 THD)	
M	44	1	**8T-4195**	2	BOLT (M10X1.5X30MM)	
M	45	1	**8T-4196**	20	BOLT (M10X1.5X35MM)	
M	46	1	**8T-5436**	8	BOLT (M10X1.50X130MM)	

I-SEE HOSE FABRICATION GUIDE
M-METRIC PART
Y-SEPARATE ILLUSTRATION

122-6359 **LINES GP-TILT CYLINDER** ***(contd.)*** **i01469868**

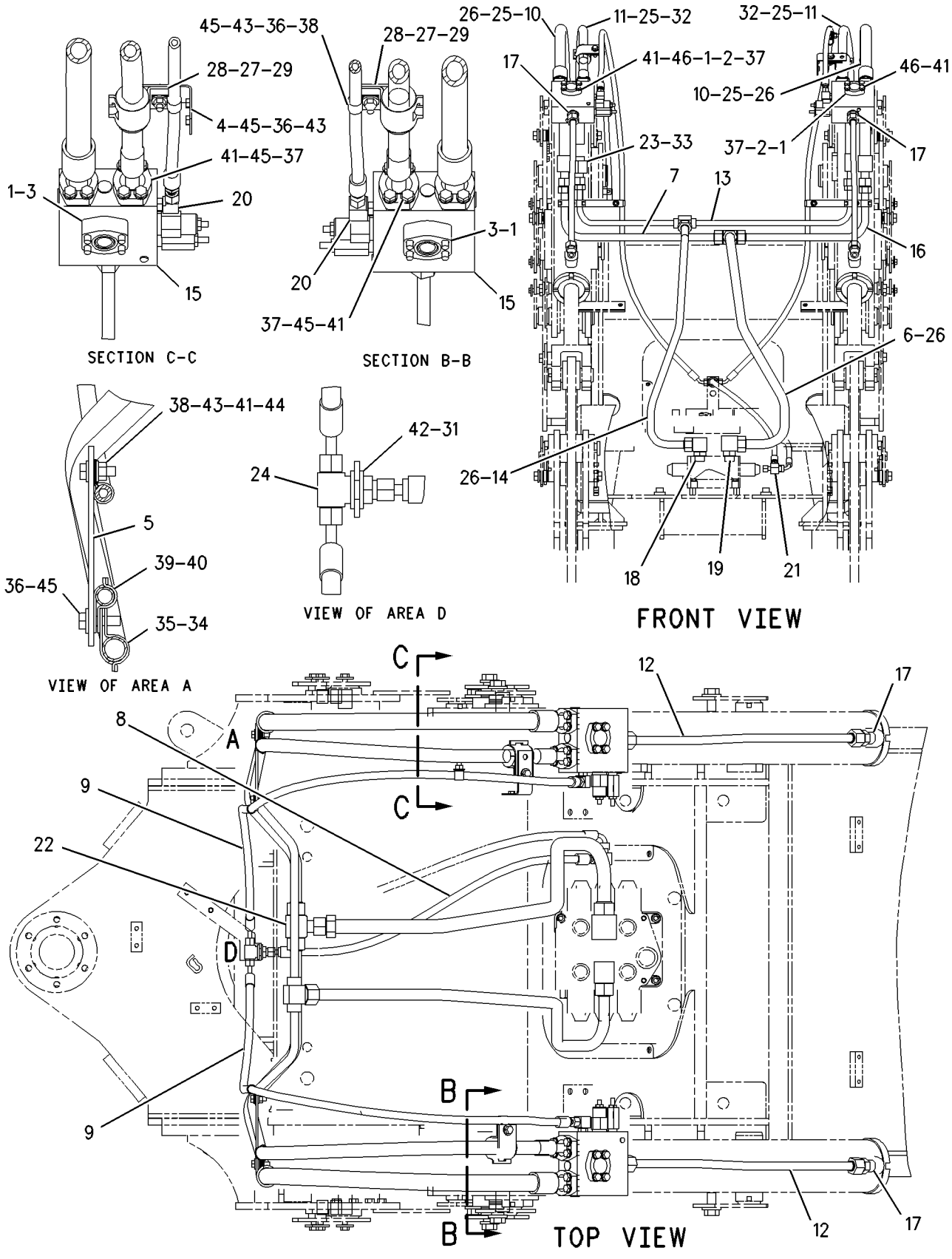

GRAPHIC #1

g00783658

HYDRAULIC SYSTEM

209-7763 LOCK GP-HYDRAULIC HAND CONTROL

S/N: DJD1-UP
AN ATTACHMENT

SMCS-5001 **i01676160**

NOTE	REF NO	GRAPHIC REF	PART NUMBER	QTY	PART NAME 1 2 3 4 5 6 (PRODUCT LEVEL)	SEE PAGE
	1	1	**4M-2381**	1	SPRING	
	2	1	**114-3949**	1	LOCK AS	
	3	1	**143-9069**	2	ROD	
	4	1	**209-7295**	1	PLATE	
	5	1	**209-7296**	1	TAB	
M	6	1	**6V-5683**	2	BOLT (M6X1X16MM)	
M	7	1	**9X-2042**	4	SCREW-TRUSS HEAD (M6X1X12MM)	
	8	1	**9X-8256**	2	WASHER (6.6X12X2MM THK)	

M-METRIC PART

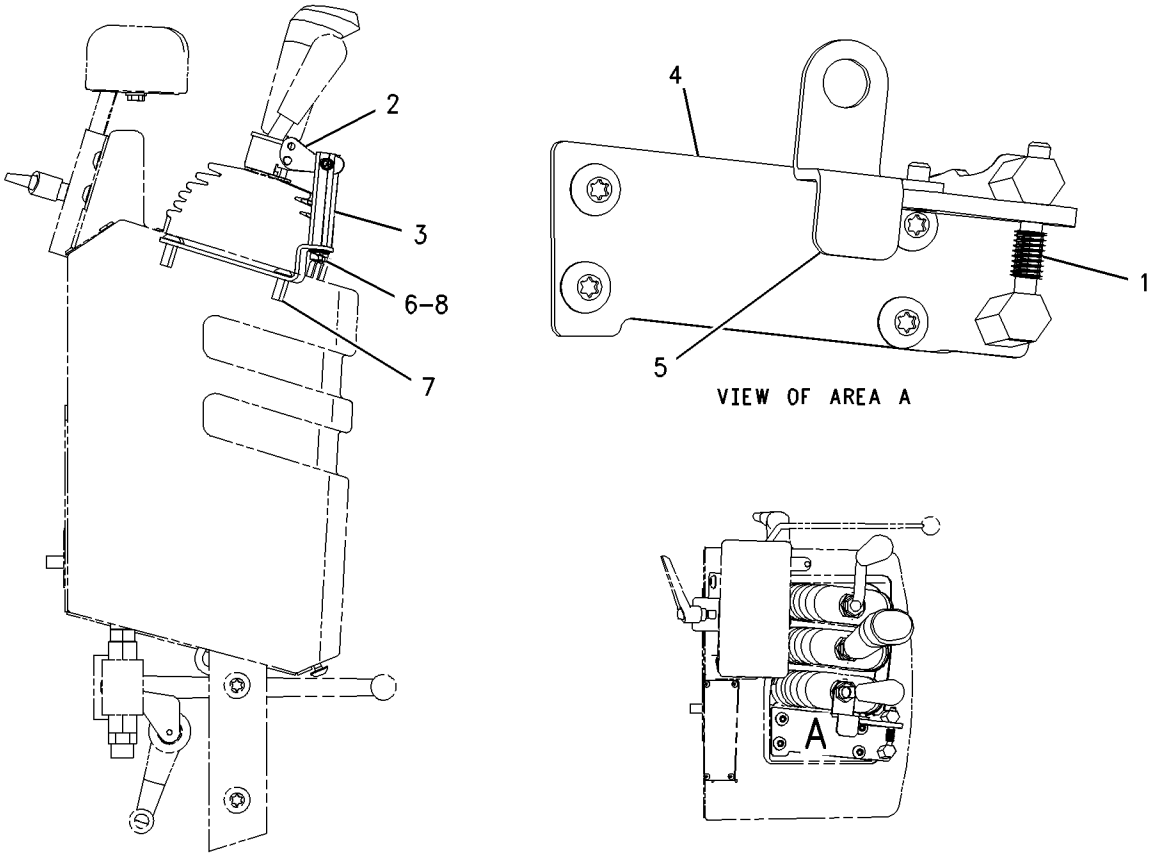

GRAPHIC #1 g00867000

212-6301 MOTOR & MTG GP-HYDRAULIC FAN

S/N: DJD1-UP; DBT1-UP
STANDARD
PART OF 203-5920, 203-5922 MOTOR AR-HYDRAULIC FAN
AN ATTACHMENT

SMCS-1386 **i01844082**

NOTE	REF NO	GRAPHIC REF	PART NUMBER	QTY	PART NAME 1 2 3 4 5 6 (PRODUCT LEVEL)	SEE PAGE
Y	1	1	**205-3669**	1	MOTOR GP-GEAR (HYDRAULIC FAN-STANDARD)	464
	2	1	**8T-4121**	4	WASHER-HARD (11X21X2.5MM THK)	
M	3	1	**8T-4133**	2	NUT (M10X1.5 THD)	
M	4	1	**8T-4196**	2	BOLT (M10X1.5X35MM)	

M-METRIC PART
Y-SEPARATE ILLUSTRATION

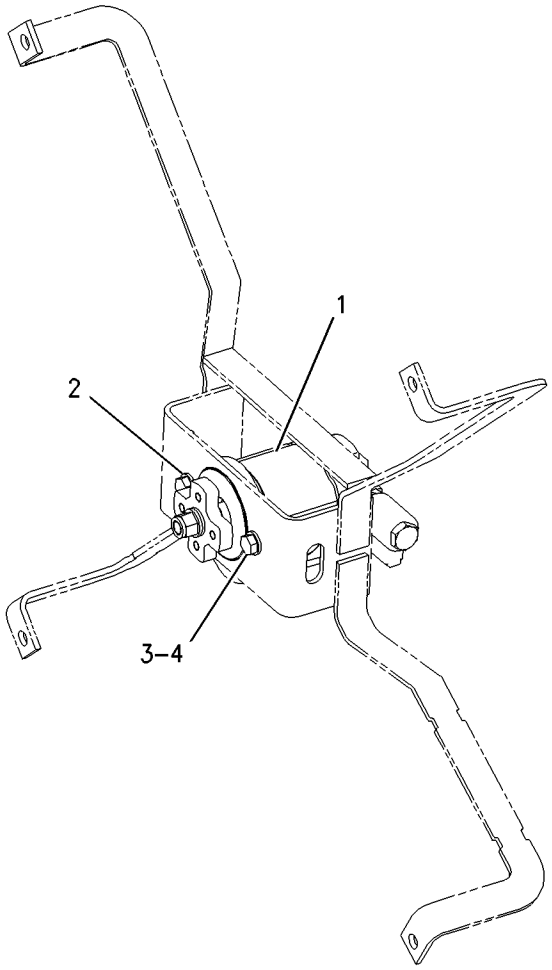

GRAPHIC #1 g00897163

212-6304 MOTOR & MTG GP-HYDRAULIC FAN

S/N: DJD1-UP; DBT1-UP
(REVERSING)
PART OF 203-5921, 203-5923 MOTOR AR-HYDRAULIC FAN
AN ATTACHMENT

SMCS-1386 **i01823494**

NOTE	REF NO	GRAPHIC REF	PART NUMBER	QTY	PART NAME 1 2 3 4 5 6 (PRODUCT LEVEL)	SEE PAGE
Y	1	1	*205-3668*	1	MOTOR GP-GEAR (HYDRAULIC FAN-REVERSING)	462
	2	1	**8T-4121**	4	WASHER-HARD (11X21X2.5MM THK)	
M	3	1	**8T-4133**	2	NUT (M10X1.5 THD)	
M	4	1	**8T-4196**	2	BOLT (M10X1.5X35MM)	

M-METRIC PART
Y-SEPARATE ILLUSTRATION

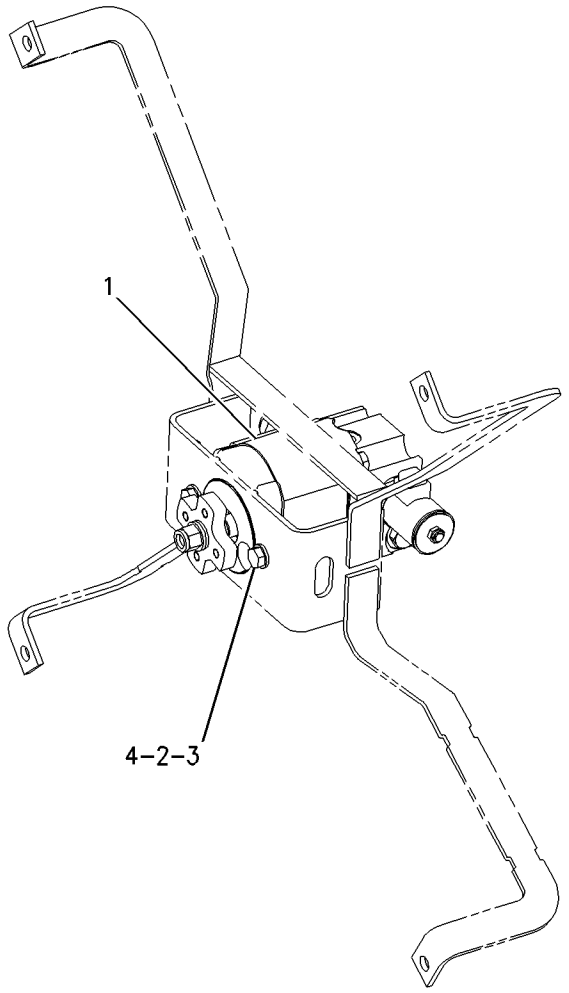

GRAPHIC #1 g00896396

HYDRAULIC SYSTEM

203-5920 MOTOR AR-HYDRAULIC FAN

S/N: DJD1-UP; DBT1-UP
STANDARD
AN ATTACHMENT

SMCS-1386, 1387, 5057 **i01739872**

NOTE	PART NUMBER	QTY	PART NAME 1 2 3 4 5 6 (PRODUCT LEVEL)	SEE PAGE
Y	*212-6282*	1	LINES GP-HYDRAULIC FAN	412
Y	*212-6301*	1	MOTOR & MTG GP-HYDRAULIC FAN	456

Y-SEPARATE ILLUSTRATION

<END>

203-5921 MOTOR AR-HYDRAULIC FAN

S/N: DJD1-UP; DBT1-UP
REVERSING
AN ATTACHMENT

SMCS-1386, 1387, 5057 **i01739891**

NOTE	PART NUMBER	QTY	PART NAME 1 2 3 4 5 6 (PRODUCT LEVEL)	SEE PAGE
Y	*212-6283*	1	LINES GP-HYDRAULIC FAN	414
Y	*212-6304*	1	MOTOR & MTG GP-HYDRAULIC FAN	457

Y-SEPARATE ILLUSTRATION

<END>

203-5922 MOTOR AR-HYDRAULIC FAN

S/N: DJD1-UP; DBT1-UP
LOW SPEED
AN ATTACHMENT

SMCS-1386, 1387, 5057 **i01739895**

NOTE	PART NUMBER	QTY	PART NAME 1 2 3 4 5 6 (PRODUCT LEVEL)	SEE PAGE
Y	*212-6282*	1	LINES GP-HYDRAULIC FAN	412
Y	*212-6301*	1	MOTOR & MTG GP-HYDRAULIC FAN	456

Y-SEPARATE ILLUSTRATION

<END>

203-5923 MOTOR AR-HYDRAULIC FAN

S/N: DJD1-UP; DBT1-UP
REVERSING AND LOW SPEED
AN ATTACHMENT

SMCS-1386, 1387, 5057 **i01739903**

NOTE	PART NUMBER	QTY	PART NAME 1 2 3 4 5 6 (PRODUCT LEVEL)	SEE PAGE
Y	*212-6283*	1	LINES GP-HYDRAULIC FAN	414
Y	*212-6304*	1	MOTOR & MTG GP-HYDRAULIC FAN	457

Y-SEPARATE ILLUSTRATION

<END>

HYDRAULIC SYSTEM

199-5681 MOTOR GP-GEAR–STANDARD HYDRAULIC FAN

S/N: DJD1-UP; DBT1-UP
PART OF 205-3669 MOTOR GP-GEAR
AN ATTACHMENT

SMCS-1386, 5061 **i01746807**

NOTE	REF NO	GRAPHIC REF	PART NUMBER	QTY	PART NAME 1 2 3 4 5 6 (PRODUCT LEVEL)	SEE PAGE
	1	1	**176-0210**	1	FLANGE	
	2	1	**099-3095**	4	DOWEL	
	3	1	**220-2681**	1	CAP-END	
M	4	1	**176-0798**	4	BOLT (M10X1.50X94MM)	
J	5	1	**176-0209**	1	SEAL-LIP TYPE	
J	6	1	**187-1267**	1	RING-RETAINING	
J	7	1	**135-5935**	1	SEAL-SHAFT	
J	8	1	**4W-7356**	2	SEAL	
					AVAILABLE REPAIR KIT(S):	
J			**209-6427**	1	KIT-SEAL	

J-KIT MARKED J INCLUDES PARTS MARKED J
M-METRIC PART

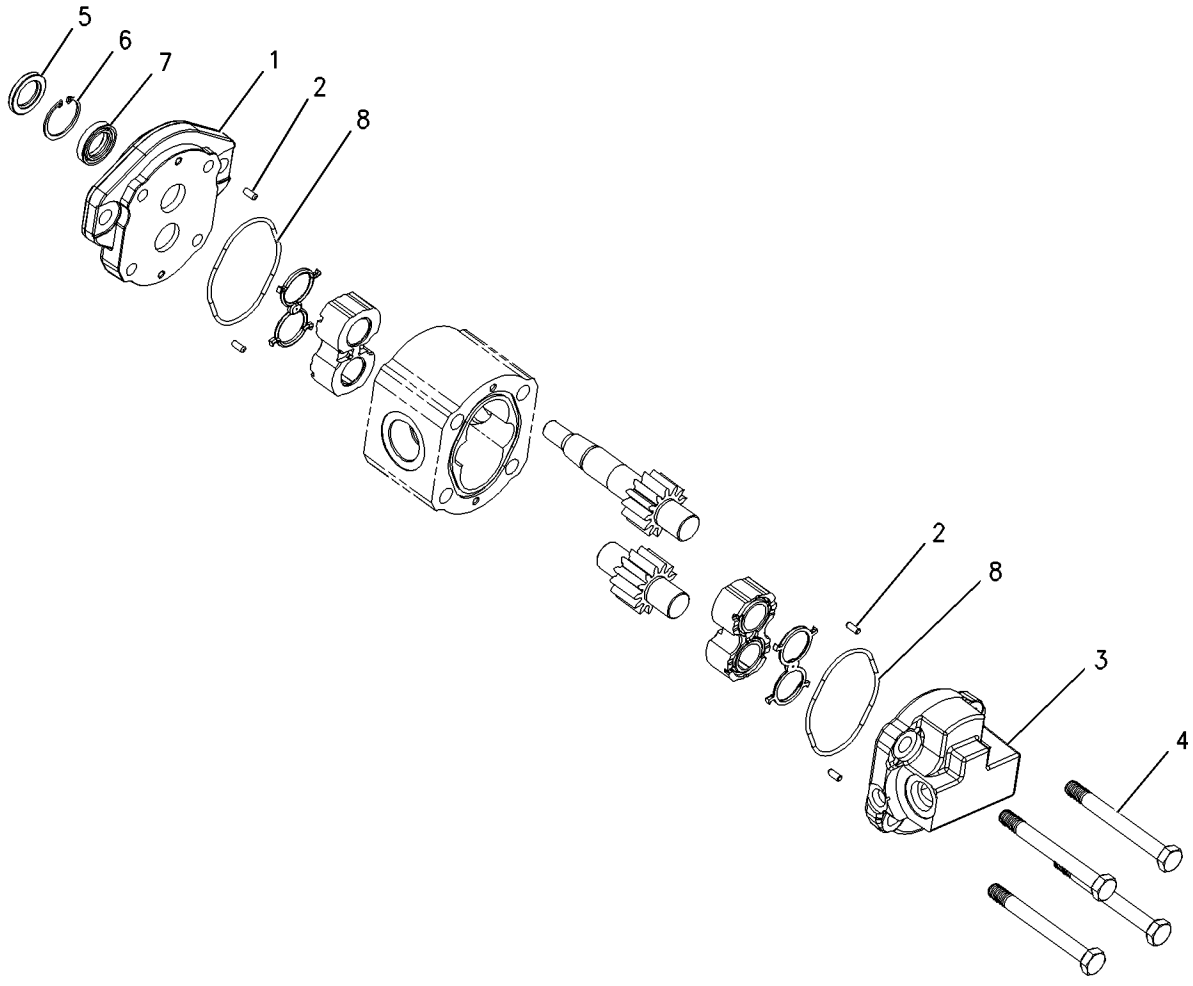

GRAPHIC #1 g00897085

199-5682 MOTOR GP-GEAR—REVERSING HYDRAULIC FAN

S/N: DJD1-UP; DBT1-UP
PART OF 205-3668 MOTOR GP-GEAR
AN ATTACHMENT

SMCS-1386, 5061 **i01746832**

NOTE	REF NO	GRAPHIC REF	PART NUMBER	QTY	PART NAME 1 2 3 4 5 6 (PRODUCT LEVEL)	SEE PAGE
	1	1	**208-2292**	2	BOLT (M10X1.50X87MM)	
J	2	1	**176-0209**	1	SEAL-LIP TYPE	
J	3	1	**187-1267**	1	RING-RETAINING	
J	4	1	**135-5935**	1	SEAL-SHAFT	
	5	1	**208-0792**	1	FLANGE	
J	6	1	**4W-7356**	2	SEAL	
	7	1	**099-3095**	4	DOWEL	
	8	1	**220-2680**	1	CAP-END	
M	9	1	**176-0798**	2	BOLT (M10X1.50X94MM)	
					AVAILABLE REPAIR KIT(S):	
J			**209-6427**	1	KIT-SEAL	

J-KIT MARKED J SERVICES PARTS MARKED J
M-METRIC PART

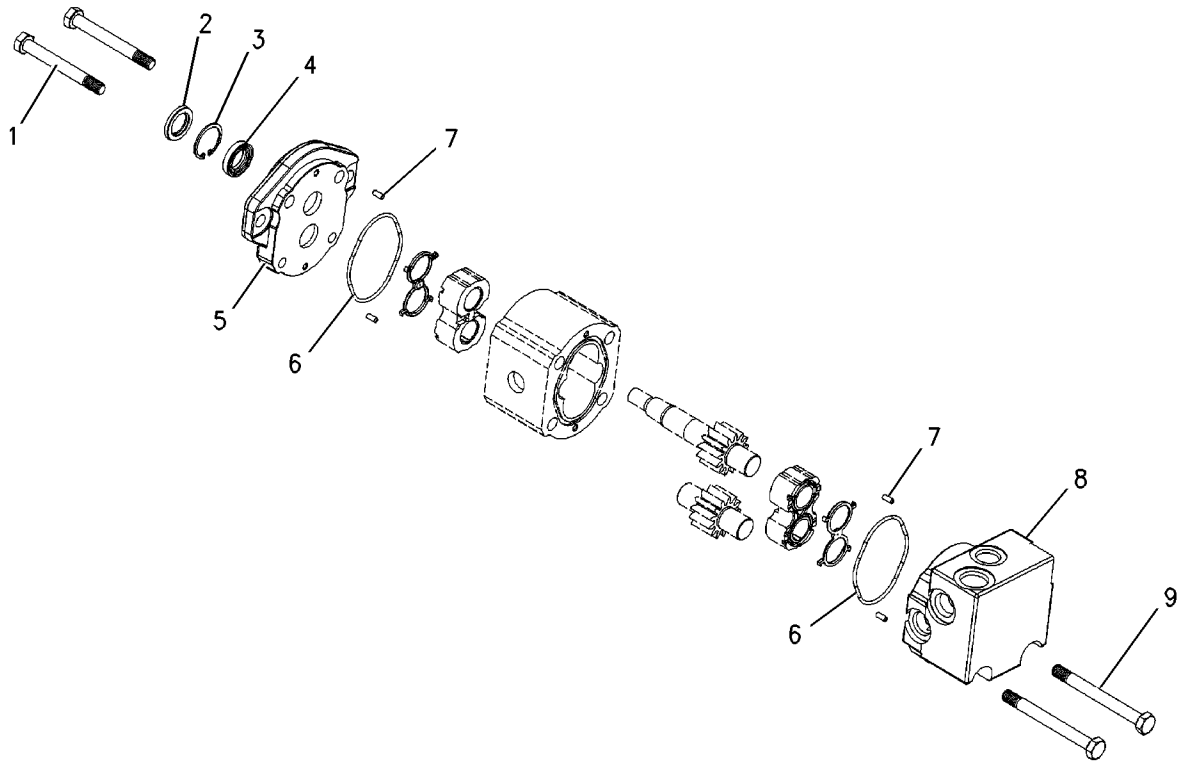

GRAPHIC #1 g00896487

MEMORANDA

205-3668 MOTOR GP-GEAR—REVERSING HYDRAULIC FAN

S/N: DJD1-UP; DBT1-UP
PART OF 212-6304 MOTOR & MTG GP-HYDRAULIC FAN
AN ATTACHMENT

SMCS-1386, 5061 **i01808125**

NOTE	REF NO	GRAPHIC REF	PART NUMBER	QTY	PART NAME 1 2 3 4 5 6 (PRODUCT LEVEL)	SEE PAGE
	1	1	**113-3632**	1	ADAPTER-FAN	
Y	2	1	**211-2092**	1	VALVE GP-SOLENOID (DEMAND FAN)	565
Y	3	1	**189-2100**	1	VALVE GP-SOLENOID (REVERSING FAN)	563
J	4	1	**208-0886**	1	VALVE GP-RELIEF (MAKE-UP)	
Y	5	1	**199-5682**	1	MOTOR GP-GEAR (HYDRAULIC FAN - REVERSING)	460
	6	1	**2M-2570**	1	LOCKNUT	
	7	1	**5P-8245**	1	WASHER-HARD (13.5X25.5X3MM THK)	
	8	1	*148-8316*	1	CONNECTOR GP	
		1	**3J-7354**	1	SEAL-O-RING	
		1	**4J-5477**	1	SEAL-O-RING	
		1	**6V-8647**	1	CONNECTOR	
	9	1	**087-0991**	1	VALVE AS-CHECK	
	10	1	*148-8340*	1	CONNECTOR GP	
		1	**3K-0360**	1	SEAL-O-RING	
		1	**6V-8398**	1	SEAL-O-RING	
		1	**6V-8639**	1	CONNECTOR	
	11	1	*148-8372*	1	ELBOW GP	
		1	**2M-9780**	1	SEAL-O-RING	
		1	**6V-8398**	1	SEAL-O-RING	
		1	**6V-8721**	1	ELBOW	
					AVAILABLE REPAIR KIT(S):	
J			**120-9051**	1	KIT-SEAL	

J-KIT MARKED J SERVICES PARTS MARKED J
Y-SEPARATE ILLUSTRATION

205-3668 **MOTOR GP-GEAR** ***(contd.)*** **i01808125**

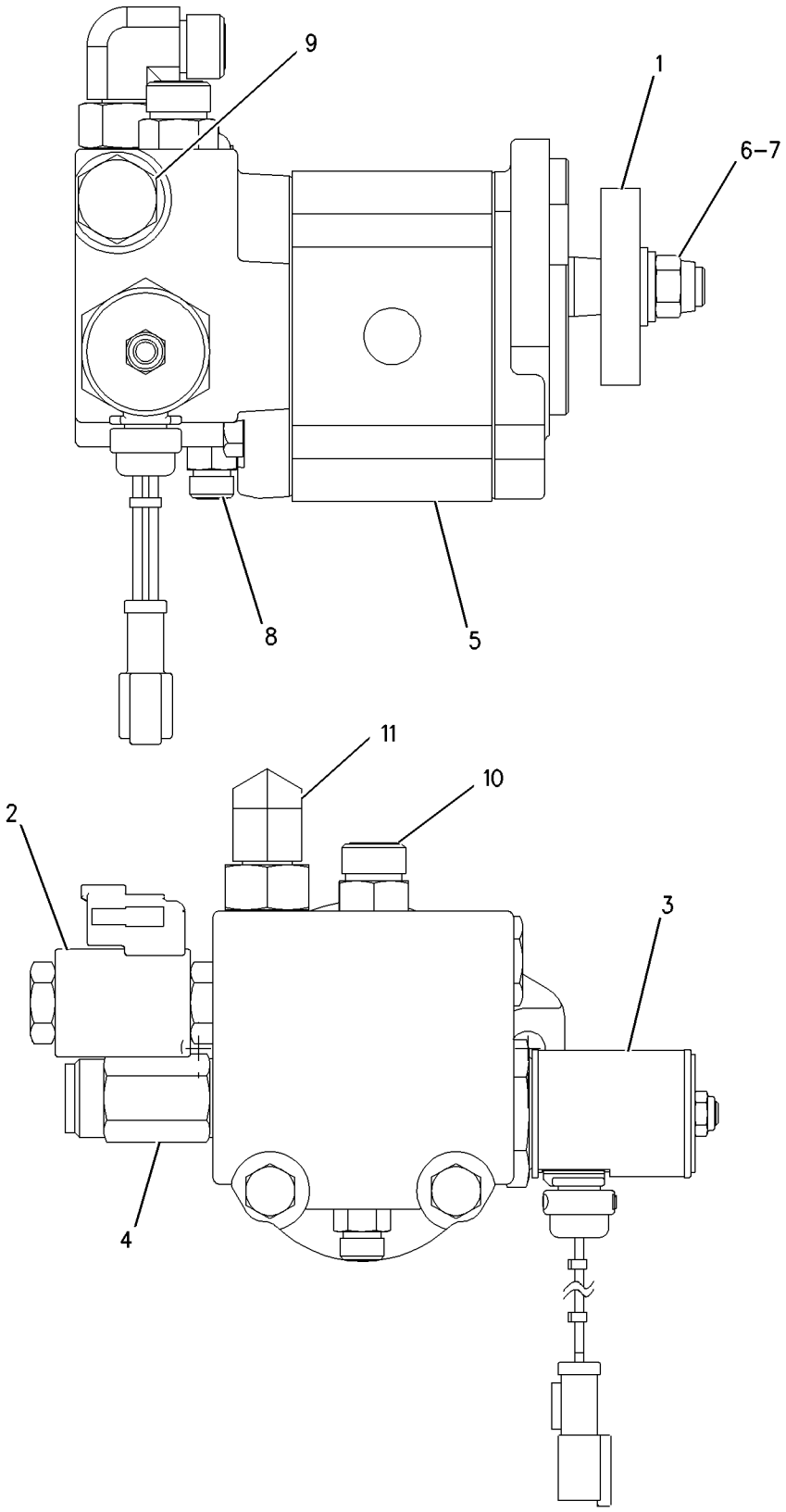

GRAPHIC #1 g00896497

205-3669 MOTOR GP-GEAR–STANDARD HYDRAULIC FAN

S/N: DJD1-UP; DBT1-UP

PART OF 212-6301 MOTOR & MTG GP-HYDRAULIC FAN

AN ATTACHMENT

SMCS-1386, 5061 **i01808189**

NOTE	REF NO	GRAPHIC REF	PART NUMBER	QTY	PART NAME 1 2 3 4 5 6 (PRODUCT LEVEL)	SEE PAGE
	1	1	**113-3632**	1	ADAPTER-FAN	
Y	2	1	**211-2092**	1	VALVE GP-SOLENOID (DEMAND FAN)	565
Y	3	1	**199-5681**	1	MOTOR GP-GEAR (HYDRAULIC FAN-STANDARD)	459
	4	1	**2M-2570**	1	LOCKNUT	
	5	1	**5P-8245**	1	WASHER-HARD (13.5X25.5X3MM THK)	
	6	1	*148-8372*	1	ELBOW GP	
		1	**2M-9780**	1	SEAL-O-RING	
		1	**6V-8398**	1	SEAL-O-RING	
		1	**6V-8721**	1	ELBOW	
	7	1	*148-8381*	1	ELBOW GP	
		1	**3D-2824**	1	SEAL-O-RING	
		1	**6V-8398**	1	SEAL-O-RING	
		1	**8T-5429**	1	ELBOW	
	8	1	*148-8316*	1	CONNECTOR GP	
		1	**3J-7354**	1	SEAL-O-RING	
		1	**4J-5477**	1	SEAL-O-RING	
		1	**6V-8647**	1	CONNECTOR	
	9	1	**087-0991**	1	VALVE AS-CHECK	

Y-SEPARATE ILLUSTRATION

205-3669 MOTOR GP-GEAR *(contd.)* **i01808189**

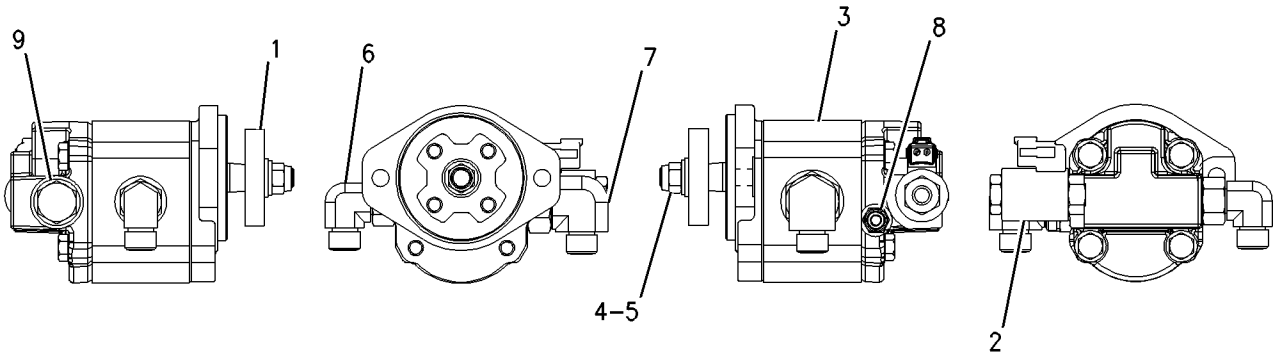

GRAPHIC #1 g00897100

175-9443 PIVOT GP-PILOT VALVE

S/N: DJD1-UP
PART OF 201-3360, 201-3362 VALVE GP-PILOT
AN ATTACHMENT

SMCS-5059 **i01832898**

NOTE	REF NO	GRAPHIC REF	PART NUMBER	QTY	PART NAME 1 2 3 4 5 6 (PRODUCT LEVEL)	SEE PAGE
	1	1	**139-4189**	1	PLATE	
	2	1	**141-7481**	1	SPACER	
	3	1	**146-3337**	2	PLUNGER AS	
					(EACH INCLUDES)	
		1	**8T-1138**	2	RING-RETAINING	
		1	**131-2639**	2	WASHER (3.2X9.0X0.5MM THK)	
	4	1	**146-6315**	1	PIN-ADJUSTMENT	
	5	1	**146-8479**	1	SWIVEL	
	6	1	**153-8946**	2	SPRING	
	8	1	**146-6317**	1	RETAINER	
	9	1	**159-3781**	1	SPRING	
M	10	1	**5C-2890**	2	NUT (M6X1 THD)	
FM		1	**178-7877**	1	SETSCREW	

F-NOT SHOWN
M-METRIC PART

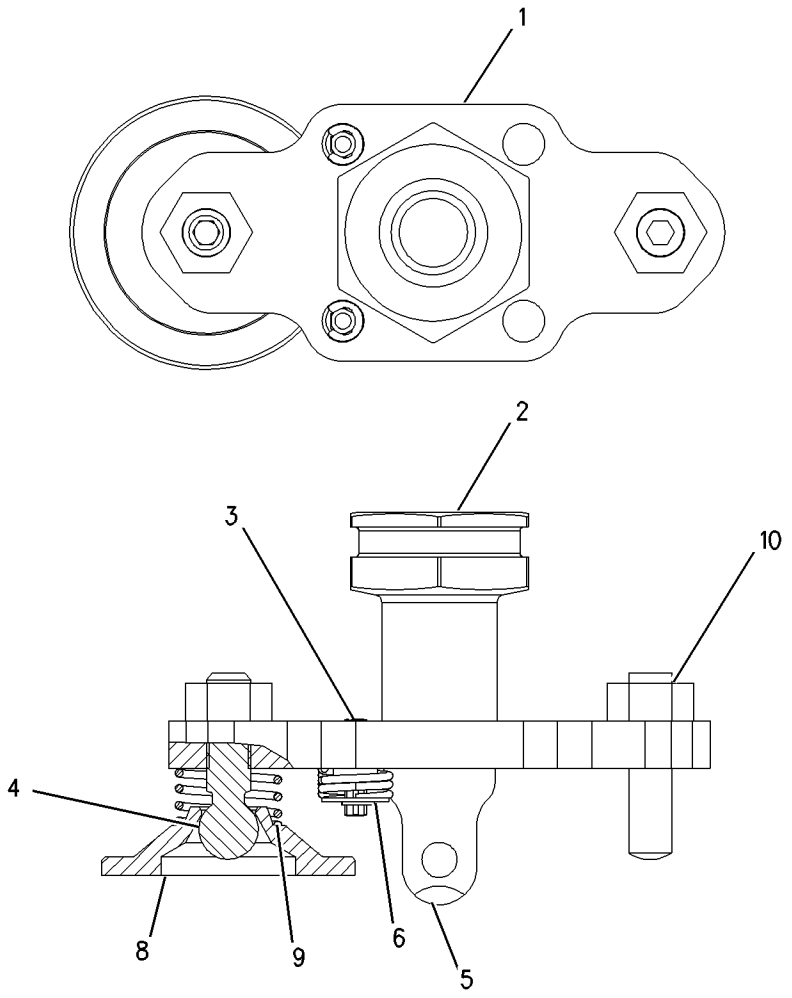

GRAPHIC #1 g00636565

175-9444 PIVOT GP-PILOT VALVE

S/N: DJD1-UP; DBT1-UP

PART OF 172-3205, 175-9447, 175-9449, 201-3360, 201-3362 VALVE GP-PILOT

AN ATTACHMENT

SMCS-5059 **i01539208**

NOTE	REF NO	GRAPHIC REF	PART NUMBER	QTY	PART NAME 1 2 3 4 5 6 (PRODUCT LEVEL)	SEE PAGE
	1	1	**139-4189**	1	PLATE	
	2	1	**141-7481**	1	SPACER	
	3	1	**146-3337**	4	PLUNGER AS	
					(EACH INCLUDES)	
		1	**8T-1138**	2	RING-RETAINING	
		1	**131-2639**	1	WASHER	
	4	1	**146-6315**	2	PIN	
	5	1	**146-6317**	2	WASHER	
	6	1	**146-8479**	1	SWIVEL	
	7	1	**153-8946**	4	SPRING	
	8	1	**159-3781**	2	SPRING	
M	9	1	**5C-2890**	2	NUT (M6X1 THD)	

M-METRIC PART

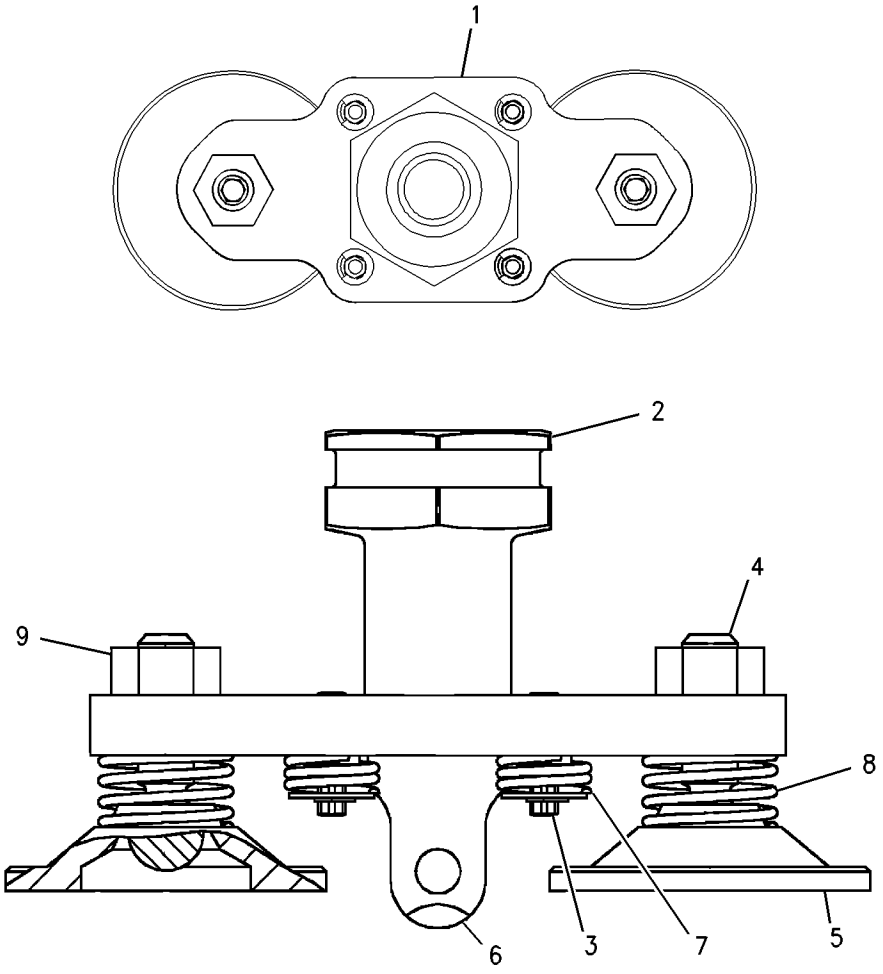

GRAPHIC #1 g00807285

HYDRAULIC SYSTEM

202-2564 PIVOT GP-PILOT VALVE

S/N: DJD1-UP; DBT1-UP

PART OF 172-3205, 172-3206, 175-9448, 175-9449, 201-3361, 201-3362 VALVE GP-PILOT

AN ATTACHMENT

SMCS-5059 **i01541554**

NOTE	REF NO	GRAPHIC REF	PART NUMBER	QTY	PART NAME 1 2 3 4 5 6 (PRODUCT LEVEL)	SEE PAGE
	1	1	**139-4189**	1	PLATE	
	2	1	**141-7481**	1	SPACER	
	3	1	**146-6315**	1	PIN	
	4	1	**146-6317**	1	WASHER	
	5	1	**146-8479**	1	SWIVEL	
	6	1	**159-3781**	1	SPRING	
M	7	1	**178-7877**	1	SETSCREW	
M	8	1	**5C-2890**	2	NUT (M6X1 THD)	

M-METRIC PART

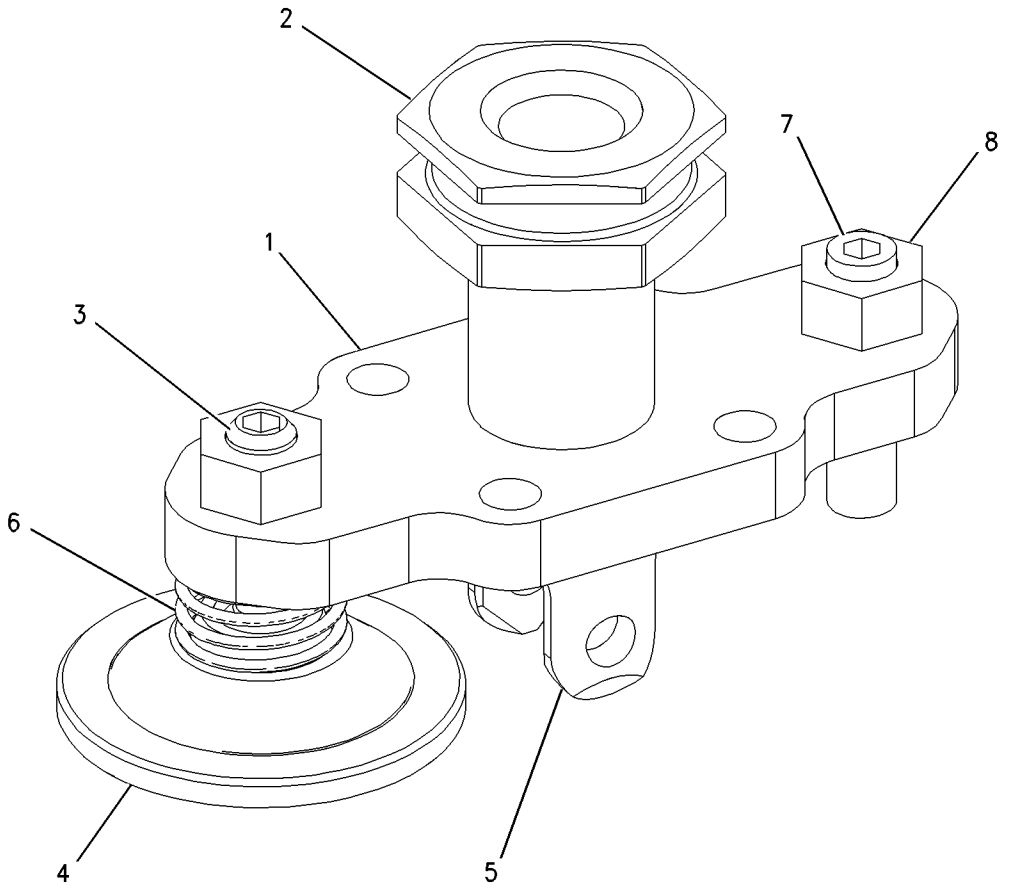

GRAPHIC #1 g00803469

HYDRAULIC SYSTEM

202-2567 PIVOT GP-PILOT VALVE

S/N: DBT1-UP
PART OF 172-3205, 175-9447, 175-9449 VALVE GP-PILOT
AN ATTACHMENT

SMCS-5059 **i01541530**

NOTE	REF NO	GRAPHIC REF	PART NUMBER	QTY	PART NAME 1 2 3 4 5 6 (PRODUCT LEVEL)	SEE PAGE
	1	1	**139-4189**	1	PLATE	
	2	1	**141-7481**	1	SPACER	
	3	1	**146-3337**	4	PLUNGER AS	
					(EACH INCLUDES)	
		1	**8T-1138**	2	RING-RETAINING	
		1	**131-2639**	1	WASHER	
	4	1	**146-6315**	1	PIN	
	5	1	**146-6317**	1	WASHER	
	6	1	**146-8479**	1	SWIVEL	
	7	1	**153-8946**	4	SPRING	
	8	1	**159-3781**	1	SPRING	
M	9	1	**178-7877**	1	SETSCREW	
M	10	1	**5C-2890**	2	NUT (M6X1 THD)	

M-METRIC PART

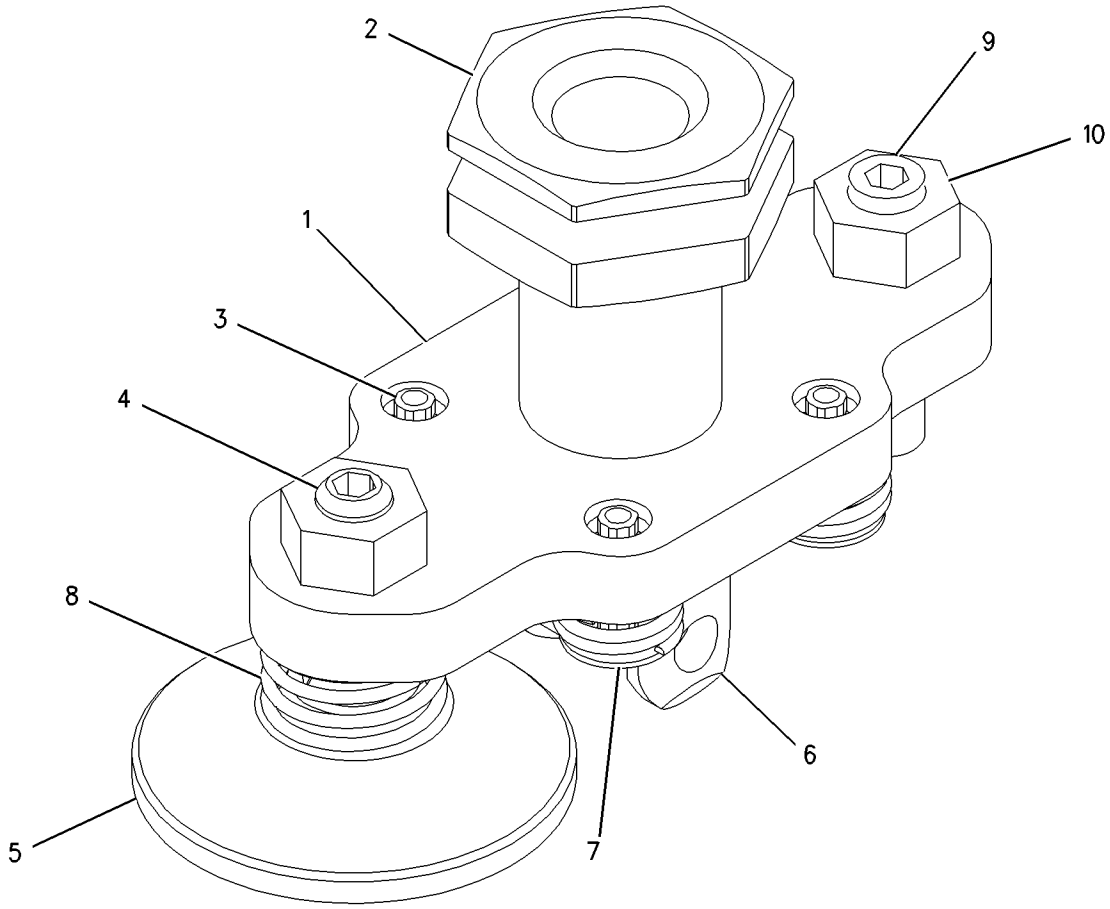

GRAPHIC #1 g00803500

HYDRAULIC SYSTEM

202-2568 PIVOT GP-PILOT VALVE

S/N: DBT1-UP

PART OF 172-3206, 175-9446, 175-9448 VALVE GP-PILOT

AN ATTACHMENT

SMCS-5059 **i01543800**

NOTE	REF NO	GRAPHIC REF	PART NUMBER	QTY	PART NAME 1 2 3 4 5 6 (PRODUCT LEVEL)	SEE PAGE
	1	1	**146-6315**	3	PIN	
	2	1	**146-6317**	3	WASHER	
	3	1	**153-8945**	4	PLUNGER AS	
					(EACH INCLUDES)	
		1	**3H-7180**	1	SETSCREW (1/4-28X.25IN)	
		1	**6J-9996**	1	SPRING	
	4	1	**159-3781**	3	SPRING	
M	5	1	**178-7877**	1	SETSCREW	
M	6	1	**5C-2890**	4	NUT (M6X1 THD)	

M-METRIC PART

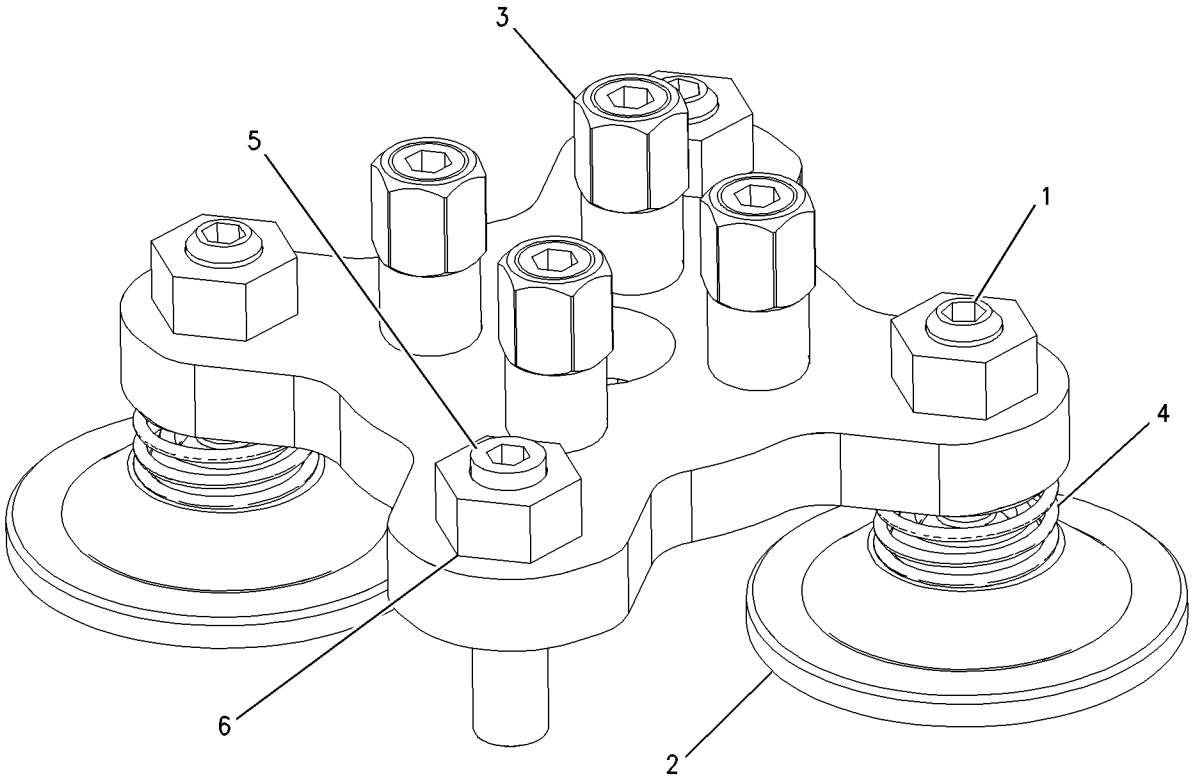

GRAPHIC #1 g00803699

163-4635 PLATE GP-PILOT VALVE

S/N: DBT1-UP
PART OF 172-3206 VALVE GP-PILOT
AN ATTACHMENT

SMCS-5059 **i01785363**

NOTE	REF NO	GRAPHIC REF	PART NUMBER	QTY	PART NAME 1 2 3 4 5 6 (PRODUCT LEVEL)	SEE PAGE
	1	1	**136-9297**	1	PLATE	
	2	1	**136-9298**	1	RETAINER	
	3	1	**141-1556**	2	RETAINER	
	4	1	**141-2032**	2	PLATE	
	5	1	**142-2651**	1	PLATE AS	
	6	1	**145-2334**	2	ADAPTER	
	7	1	**148-7922**	2	PLATE	
	8	1	**149-5470**	1	PLATE	
	9	1	**153-8952**	1	ADAPTER	
	10	1	**163-5512**	9	GROMMET	
	11	1	**145-8428**	4	COIL AS	
					(EACH INCLUDES)	
		1	**186-3735**	1	PIN-CONNECTOR	
M	12	1	**191-8920**	12	BOLT-SOCKET HEAD (M6X1X12MM)	
	13	1	**3K-0360**	3	SEAL-O-RING	

M-METRIC PART

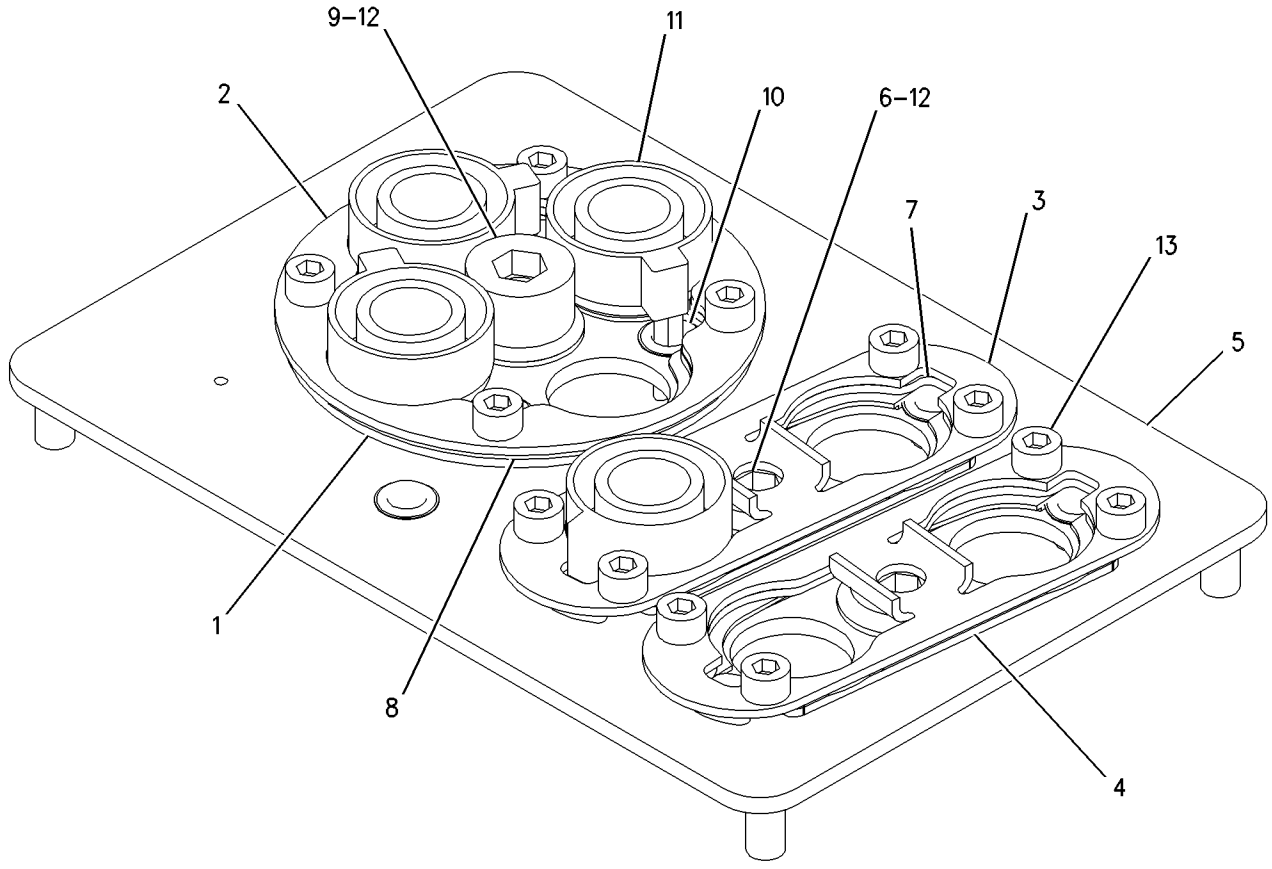

GRAPHIC #1 g00918318

HYDRAULIC SYSTEM

163-4636 PLATE GP-PILOT VALVE

S/N: DJD1-UP; DBT1-UP
PART OF 175-9448, 201-3361 VALVE GP-PILOT
AN ATTACHMENT

SMCS-5059 **i01488219**

NOTE	REF NO	GRAPHIC REF	PART NUMBER	QTY	PART NAME 1 2 3 4 5 6 (PRODUCT LEVEL)	SEE PAGE
	1	1	**136-9297**	1	PLATE	
	2	1	**136-9298**	1	RETAINER	
	3	1	**141-1556**	1	RETAINER	
	4	1	**141-2032**	1	PLATE	
	5	1	**142-2651**	1	PLATE AS	
	6	1	**148-7922**	1	PLATE	
	7	1	**149-5470**	1	PLATE	
	8	1	**153-8952**	1	ADAPTER	
	9	1	**163-5512**	6	GROMMET	
	10	1	**145-2334**	1	ADAPTER	
	11	1	**145-8428**	4	COIL AS	
		1	**186-3735**	2	PIN-CONNECTOR	
	12	1	**3K-0360**	2	SEAL-O-RING	
M	13	1	**8T-0267**	8	BOLT-SOCKET HEAD (M6X1X12MM)	

M-METRIC PART

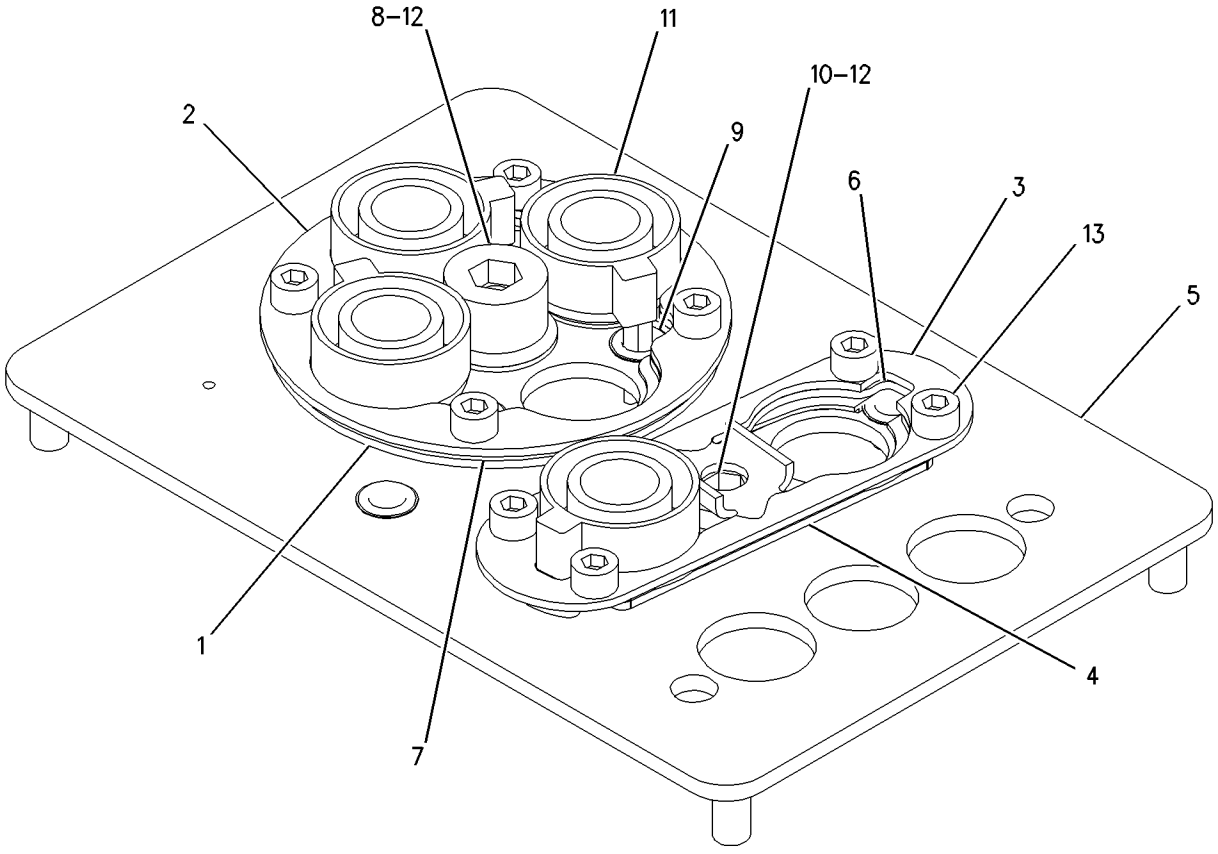

GRAPHIC #1 g00784163

HYDRAULIC SYSTEM

163-4637 PLATE GP-PILOT VALVE

S/N: DJD1-UP; DBT1-UP
PART OF 175-9446, 201-3359 VALVE GP-PILOT
AN ATTACHMENT

SMCS-5059 **i01544037**

NOTE	REF NO	GRAPHIC REF	PART NUMBER	QTY	PART NAME 1 2 3 4 5 6 (PRODUCT LEVEL)	SEE PAGE
	1	1	**136-9297**	1	PLATE	
	2	1	**136-9298**	1	RETAINER	
	3	1	**142-2651**	1	PLATE AS	
	4	1	**149-5470**	1	PLATE	
	5	1	**153-8952**	1	ADAPTER	
	6	1	**163-5512**	5	GROMMET	
	7	1	**145-8428**	3	COIL AS	
					(EACH INCLUDES)	
		1	**8T-8729**	2	PIN-CONNECTOR	
	8	1	**3K-0360**	1	SEAL-O-RING	
M	9	1	**8T-0267**	4	BOLT-SOCKET HEAD (M6X1X12MM)	

M-METRIC PART

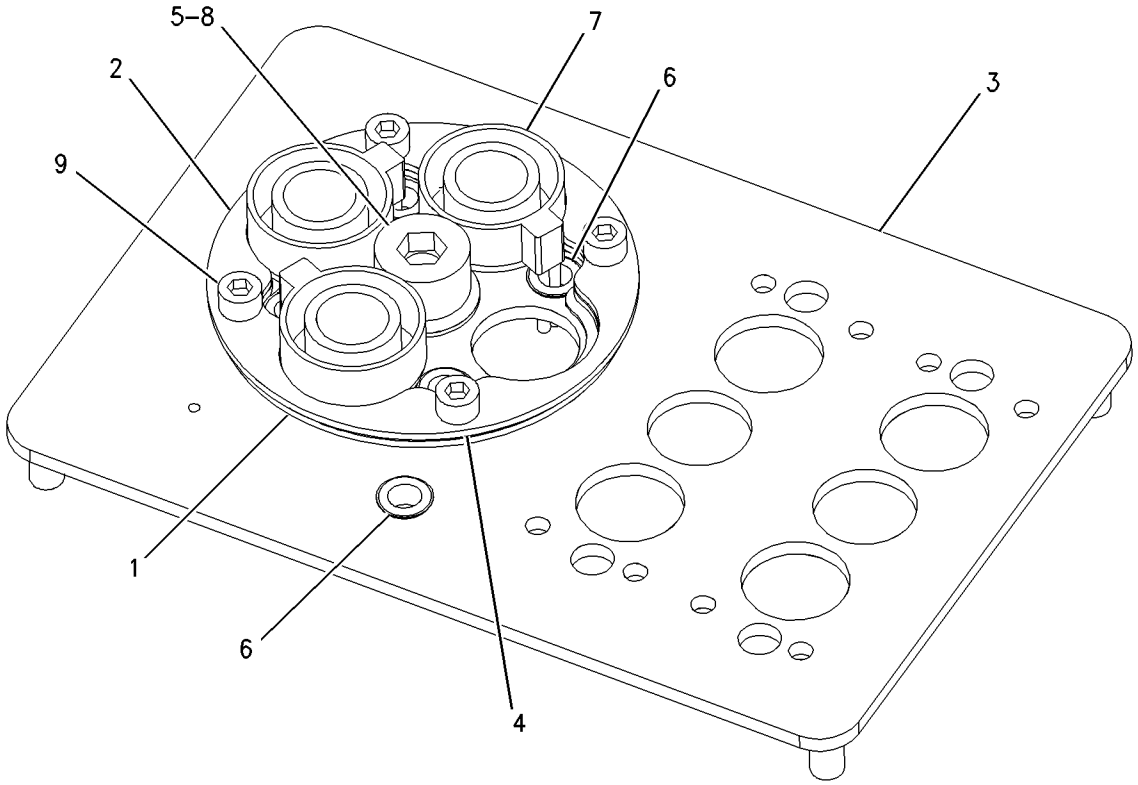

GRAPHIC #1 g00802455

HYDRAULIC SYSTEM

175-9436 PLATE GP-PILOT VALVE

S/N: DJD1-UP; DBT1-UP
PART OF 175-9447, 201-3360 VALVE GP-PILOT
AN ATTACHMENT

SMCS-5059 **i01627723**

NOTE	REF NO	GRAPHIC REF	PART NUMBER	QTY	PART NAME 1 2 3 4 5 6 (PRODUCT LEVEL)	SEE PAGE
	1	1	**141-1556**	2	RETAINER	
	2	1	**141-2032**	2	PLATE	
	3	1	**148-7922**	2	PLATE	
	4	1	**163-5512**	5	GROMMET	
	5	1	**145-2334**	2	ADAPTER	
	6	1	**145-8428**	3	COIL AS	
					(EACH INCLUDES)	
		1	**186-3735**	2	PIN-CONNECTOR	
	7	1	**160-6298**	1	PLATE AS	
	8	1	**102-8806**	1	KIT-RECEPTACLE (8 PIN)	
	9	1	**3E-3389**	1	WEDGE-RECEPTACLE LOCK	
	10	1	**8L-2786**	2	SEAL-O-RING	
M	11	1	**8T-0267**	8	BOLT-SOCKET HEAD (M6X1X12MM)	
	12	1	**8T-8737**	2	PLUG-SEAL	

M-METRIC PART

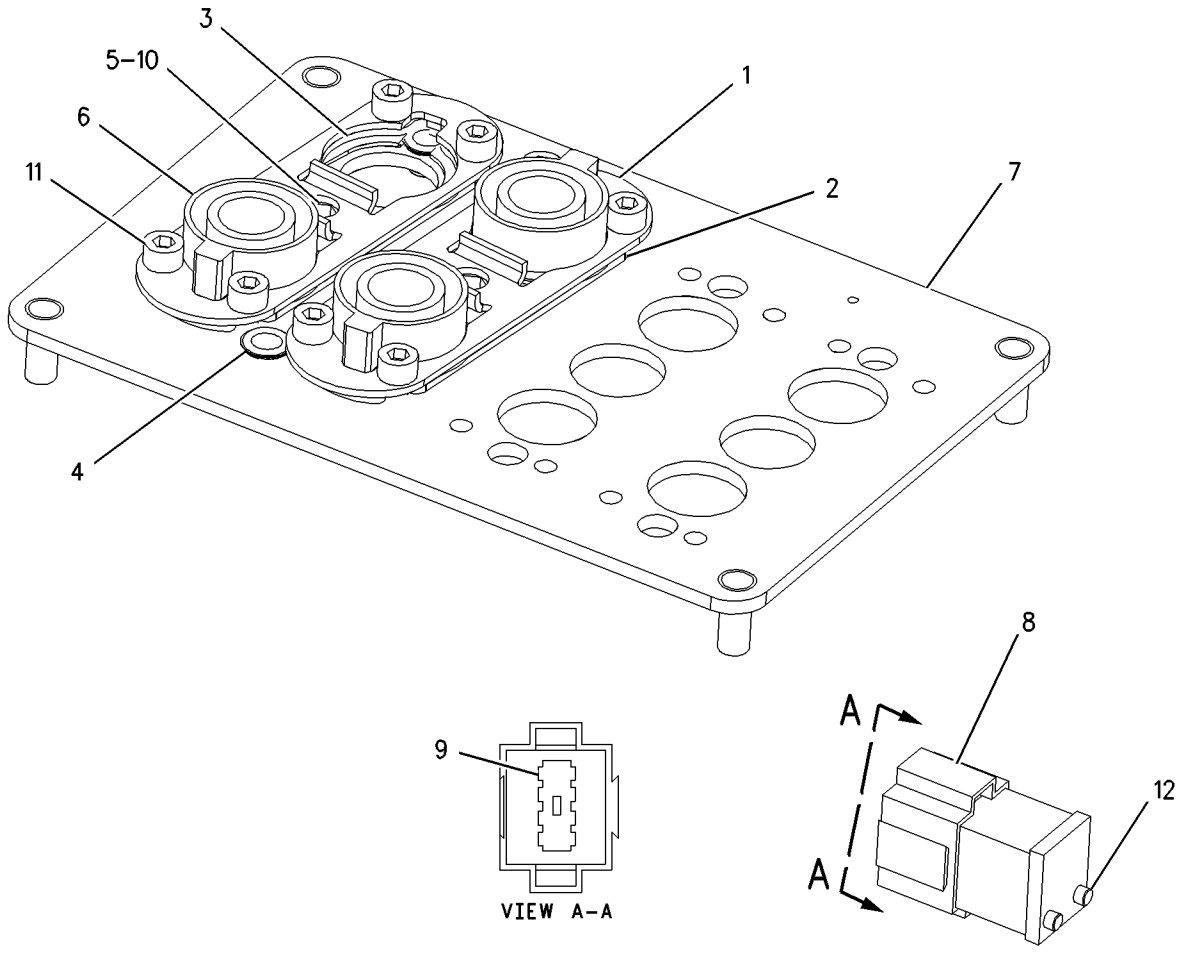

GRAPHIC #1 g00836591

HYDRAULIC SYSTEM

175-9437 PLATE GP-PILOT VALVE

S/N: DJD1-UP
PART OF 201-3362 VALVE GP-PILOT
AN ATTACHMENT

SMCS-5059 **i01627766**

NOTE	REF NO	GRAPHIC REF	PART NUMBER	QTY	PART NAME 1 2 3 4 5 6 (PRODUCT LEVEL)	SEE PAGE
	1	1	**141-1556**	3	RETAINER	
	2	1	**141-2032**	3	PLATE	
	3	1	**148-7922**	3	PLATE	
	4	1	**163-5512**	7	GROMMET	
	5	1	**145-2334**	3	ADAPTER	
	6	1	**145-8428**	4	COIL AS	
	7	1	**160-6298**	1	PLATE AS	
	8	1	**102-8806**	1	KIT-RECEPTACLE (8 PIN)	
					(KIT SERVICES RECEPTACLE AS AND WEDGE)	
	9	1	**3E-3389**	1	WEDGE-RECEPTACLE LOCK	
	10	1	**8L-2786**	3	SEAL-O-RING	
M	11	1	**8T-0267**	12	BOLT-SOCKET HEAD (M6X1X12MM)	

M-METRIC PART

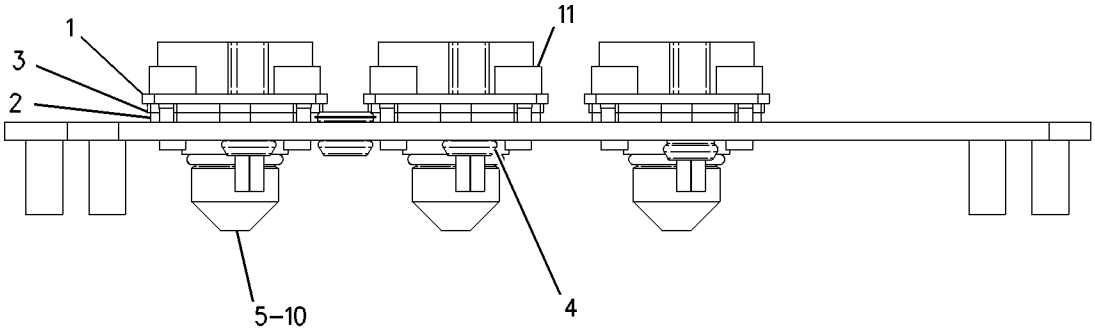

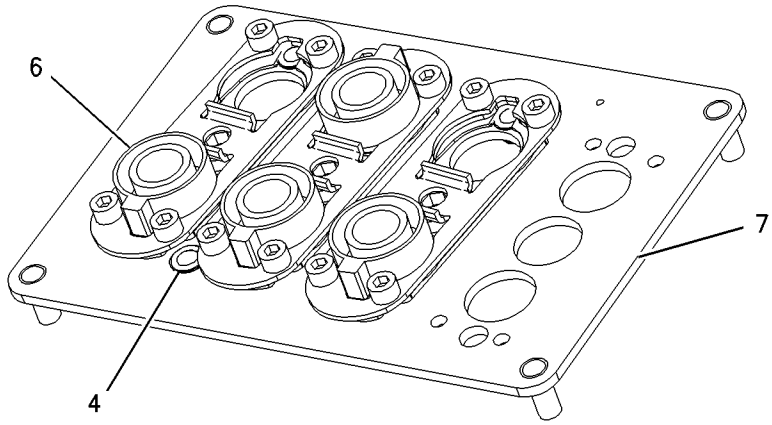

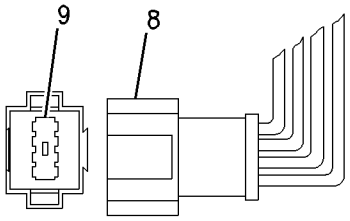

PLUG DETAIL

GRAPHIC #1 g00849306

HYDRAULIC SYSTEM

118-1083 PUMP & MTG GP-IMPL & STEERING

S/N: DJD1-UP; DBT1-UP

PART OF 176-5222, 176-5242 HYDRAULIC AR

SMCS-4306, 5055, 5070, 5084 **i01835204**

NOTE	REF NO	GRAPHIC REF	PART NUMBER	QTY	PART NAME 1 2 3 4 5 6 (PRODUCT LEVEL)	SEE PAGE
	1	1	**4E-2673**	1	BRACKET AS	
	2	1	**8T-7971**	2	WASHER-HARD (13.5X25.5X5MM THK)	
Y	3	1	**119-7698**	1	PUMP GP-PISTON & VANE (IMPLEMENT,PILOT,STEERING)	480
	4	1	**1H-6227**	1	SEAL-O-RING	
	5	1	**8T-4121**	4	WASHER-HARD (11X21X2.5MM THK)	
M	6	1	**8T-4137**	2	BOLT (M10X1.5X20MM)	
M	7	1	**8T-4196**	2	BOLT (M10X1.5X35MM)	
M	8	1	**8T-4956**	2	BOLT (M12X1.75X35MM)	

M-METRIC PART
Y-SEPARATE ILLUSTRATION

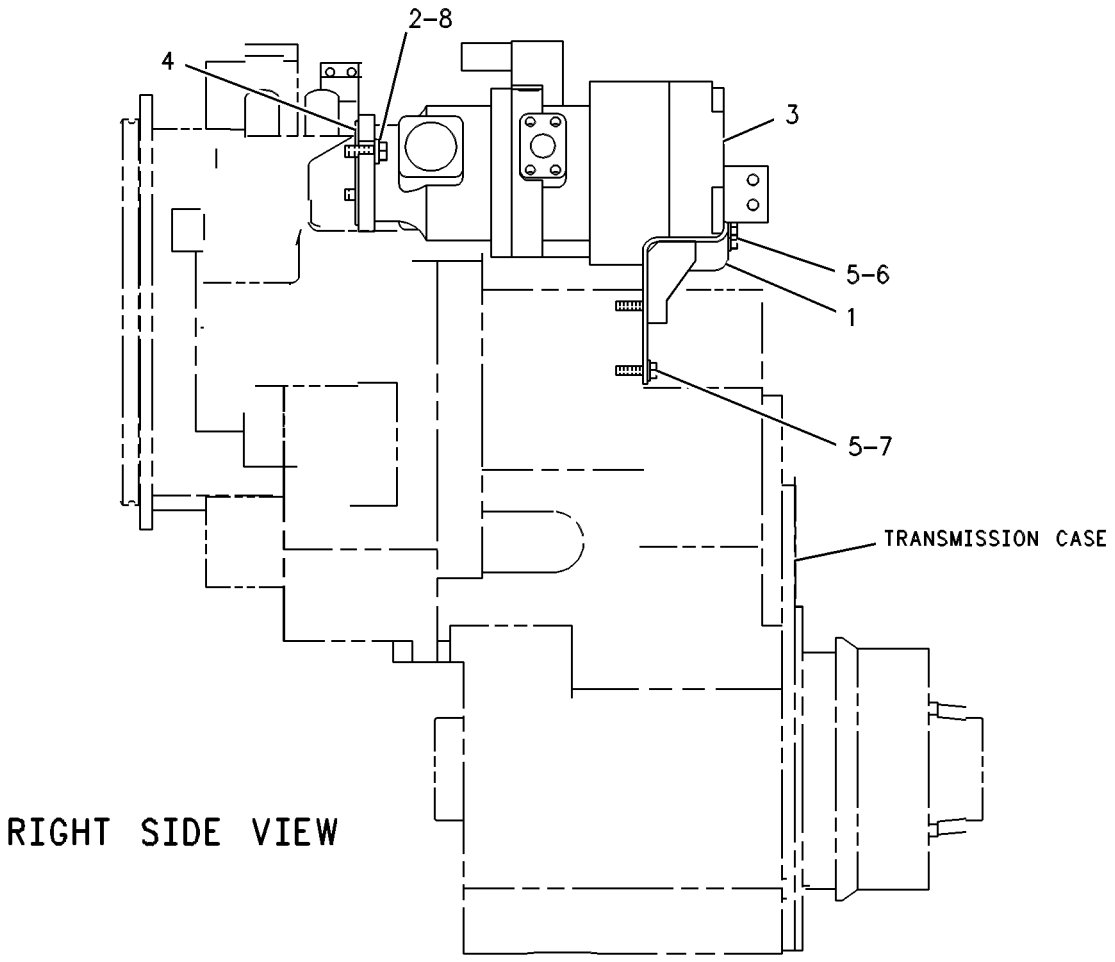

GRAPHIC #1 g00131708

MEMORANDA

HYDRAULIC SYSTEM

120-0140 PUMP GP-PISTON—STEERING & PILOT

S/N: DJD1-UP; DBT1-UP

PART OF 119-7698 PUMP GP-PISTON & VANE

SMCS-5070 **i00526962**

NOTE	REF NO	GRAPHIC REF	PART NUMBER	QTY	PART NAME 1 2 3 4 5 6 (PRODUCT LEVEL)	SEE PAGE
	1	1	**105-2151**	1	HEAD-PUMP	
	2	1	**9F-2247**	1	PLUG-PIPE	
	3	1	**9T-3867**	1	SPRING	
	4	1	**9T-1710**	1	POPPET	
	5	1	**9T-1636**	1	SEAT	
	6	1	**9T-2017**	2	SPACER	
	7	1	**005-8593**	2	SEAL-O-RING (52.07MM ID)	
	8	1	**9T-2011**	1	SHIM PACK	
	9	1	**3P-8680**	2	CUP-ROLLER BEARING	
	10	1	**7T-9831**	2	CONE-ROLLER BEARING	
	11	1	**9T-2015**	1	HOUSING	
	12	1	**9T-2014**	2	COVER	
	13	1	**5P-0076**	6	BOLT-12 POINT HEAD (3/8-16X1.50IN)	
	14	1	**9T-1752**	1	GASKET	
	15	1	**9S-4190**	1	PLUG-O-RING (7/16-20 THD)	
	16	1	**2M-9780**	1	SEAL-O-RING (19.18MM ID)	
	17	1	**8T-5089**	2	PIN-SPRING	
	18	1	**7L-0688**	4	BOLT-SOCKET HEAD (10-24X1.2IN)	
Y	19	1	**130-6235**	1	VALVE GP-PRESS & FLOW CMPNSTR	542
Y	20	1	**9T-2031**	1	ROTATING GP-PUMP	481
	21	1	**9T-2231**	1	SWASHPLATE	
	22	1	**6E-6481**	1	SHAFT-GOVERNOR CONTROL	
	23	1	**002-3455**	1	RING-RETAINING	
	24	1	**3E-6748**	1	SEAL-LIP (25.4MM ID)	
	25	1	**7T-9755**	1	CUP-ROLLER BEARING	
	26	1	**7T-9754**	1	CONE-ROLLER BEARING	
	27	1	**9T-2000**	1	KIT-SPACER	
	28	1	**9T-2232**	1	PLATE-WAFER	
	29	1	**9T-2001**	1	PIN	
	30	1	**7T-9753**	1	CUP-ROLLER BEARING	
	31	1	**7T-9752**	1	CONE-ROLLER BEARING	
	32	1	**9T-2173**	1	SEAT	
	33	1	**8J-8308**	1	PIN-ROLL	
	34	1	**9T-2168**	1	SPRING	
	35	1	**9T-2171**	1	SEAT	
	36	1	**9T-2172**	1	PISTON	
	37	1	**033-6028**	1	SEAL-O-RING (16.36MM ID)	
	38	1	**100-4230**	1	ROD-CONTROL	
	39	1	**100-4231**	1	CONNECTOR	
	40	1	**8F-9206**	2	SEAL-O-RING (12.37MM ID)	
	41	1	**9T-2002**	1	GASKET	
	42	1	**5F-9144**	1	SEAL-O-RING (7.65MM ID)	
	43	1	**9T-2003**	1	RING	
	44	1	**9S-2011**	8	SCREW-MACHINE	

Y-SEPARATE ILLUSTRATION

120-0140 **PUMP GP-PISTON** ***(contd.)*** **i00526962**

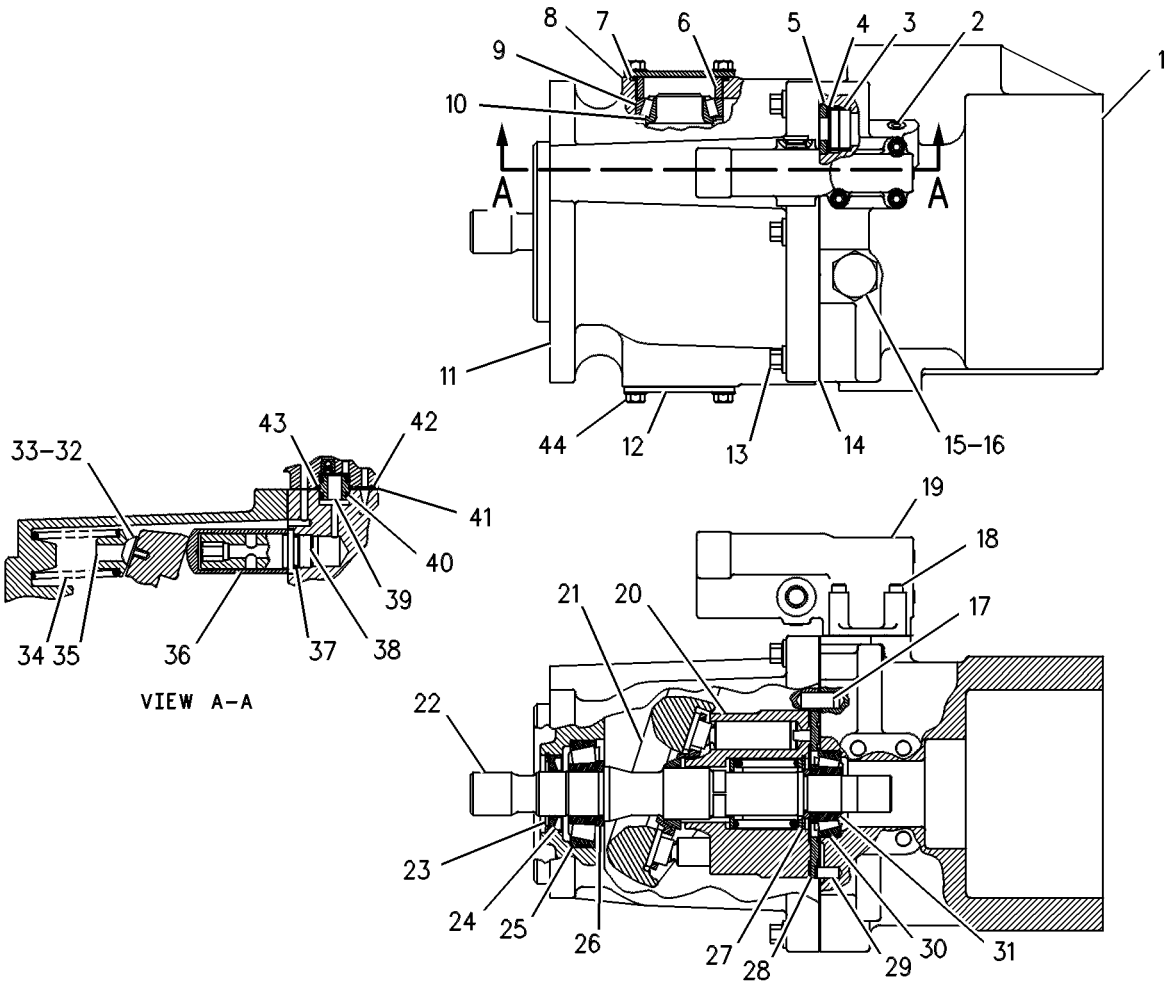

GRAPHIC #1 g00131202

HYDRAULIC SYSTEM

119-7698 PUMP GP-PISTON & VANE

S/N: DJD1-UP; DBT1-UP

PART OF 118-1083 PUMP & MTG GP-IMPL & STEERING

SMCS-5055, 5070 **i01835212**

NOTE	REF NO	GRAPHIC REF	PART NUMBER	QTY	PART NAME 1 2 3 4 5 6 (PRODUCT LEVEL)	SEE PAGE
YR	1	1	**120-0140**	1	PUMP GP-PISTON (STEERING & PILOT)	478
	2	1	**2M-8191**	2	RING-SNAP	
YR	3	1	**6E-6477**	1	CARTRIDGE GP-VANE PUMP (IMPLEMENT)	338
	4	1	**120-0145**	1	SHAFT-PUMP	
	5	1	**120-0146**	1	COVER-PUMP	
	6	1	**2H-1142**	1	RING-RETAINING	
	7	1	**6E-6480**	1	BEARING	
	8	1	**6J-7854**	2	RING-SNAP	
	9	1	**6E-6473**	1	COUPLING	
	10	1	**9X-8887**	4	BOLT (3/4-10X3 IN)	

R-REMFG PART MAY BE AVAILABLE
Y-SEPARATE ILLUSTRATION

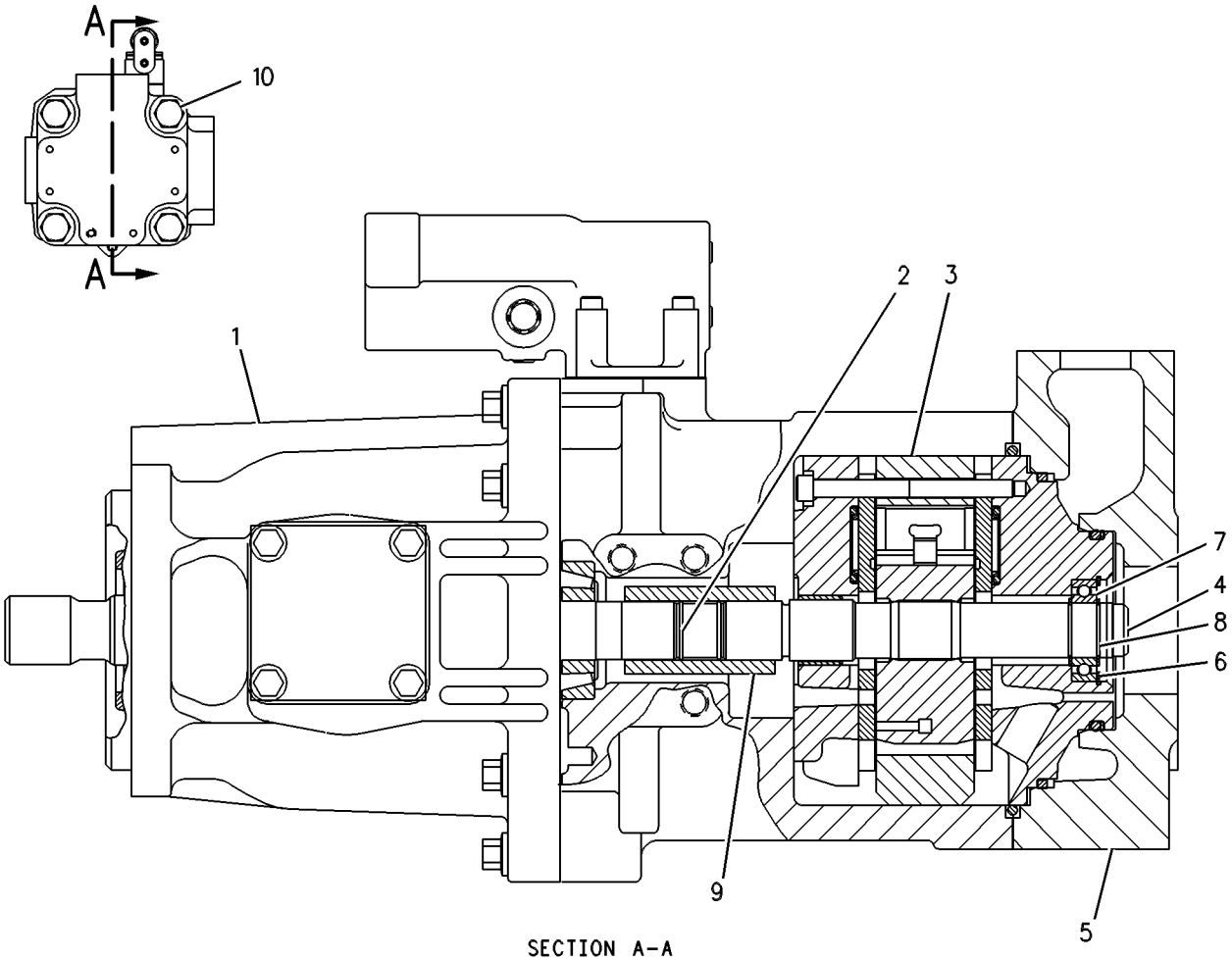

SECTION A-A

GRAPHIC #1 g00131711

HYDRAULIC SYSTEM

9T-2031 ROTATING GP-PUMP

S/N: DJD1-UP; DBT1-UP

PART OF 120-0140 PUMP GP-PISTON

SMCS-1387, 5070, 5084 **i00177309**

NOTE	REF NO	GRAPHIC REF	PART NUMBER	QTY	PART NAME 1 2 3 4 5 6 (PRODUCT LEVEL)	SEE PAGE
	1	1	**9T-3868**	1	KIT-PISTON	
	2	1	**9T-3860**	1	PLATE	
	3	1	**9T-3859**	1	WASHER-SPHERICAL	
	4	1	**9T-3862**	1	RETAINER	
	5	1	**9T-3857**	3	PIN	
	6	1	**9T-3863**	1	BARREL	
	7	1	**9T-3861**	1	WASHER	
	8	1	**9T-3858**	1	SPRING	
	9	1	**9T-3864**	1	WASHER	
	10	1	**004-1683**	1	RING-SNAP	

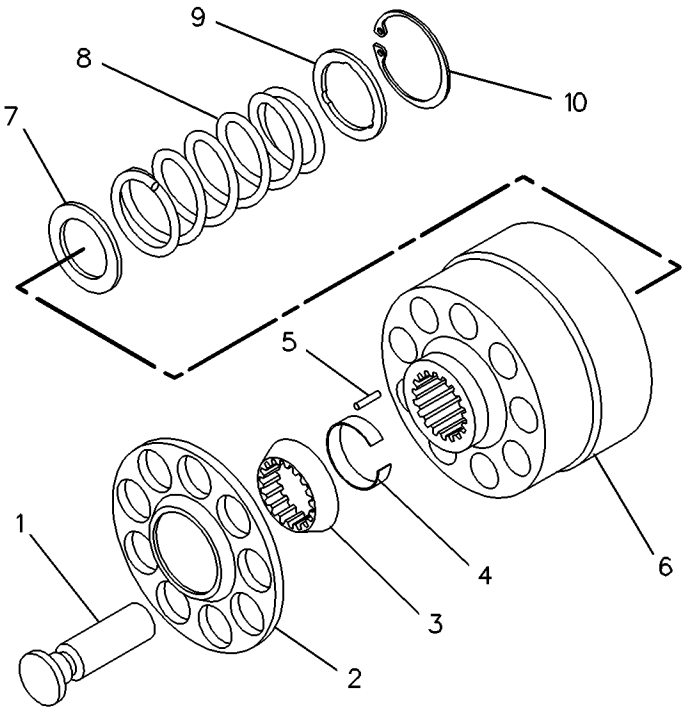

GRAPHIC #1 g00119400

HYDRAULIC SYSTEM

205-5408 TANK & MTG GP-HYDRAULIC

S/N: DJD1-UP; DBT1-UP

PART OF 176-5222, 176-5242 HYDRAULIC AR

SMCS-5056, 5068 **i01808471**

NOTE	REF NO	GRAPHIC REF	PART NUMBER	QTY	PART NAME 1 2 3 4 5 6 (PRODUCT LEVEL)	SEE PAGE
	1	1	**5P-8502**	1	PADLOCK GP	
		1	**5P-8500**	1	KEY	
		1	**8Y-6364**	1	SLEEVE	
	2	1	**7T-8332**	4	MOUNTING	
	3	1	**130-4634**	1	BREATHER	
	4	1	**202-9801**	1	PLATE AS	
	5	1	**202-9802**	1	PLATE AS	
	6	1	**205-5407**	1	TANK AS-HYDRAULIC	
	6A	1	**8T-4224**	14	WASHER-HARD (8.8X16X2MM THK)	
M	6B	1	**8T-4908**	14	BOLT (M8X1.25X25MM)	
	6C	1	**142-8937**	1	CAP AS-HYDRAULIC	
	6D	1	**153-2985**	1	GAUGE GP-SIGHT	
	6E	1	**122-8353**	2	BOLT (M12X46.5MM)	
	6F	1	**122-8352**	4	SEAL-O-RING	
	6G	1	**206-9546**	1	GASKET	
	7	1	**205-8439**	1	PLATE AS	
	8	1	**1S-0833**	1	CLIP	
	9	1	**7X-7729**	11	WASHER (11X25X3MM THK)	
	10	1	**8F-6437**	4	WASHER (13.5X50.8X4.76MM THK)	
	11	1	**8M-2773**	2	CLIP	
	12	1	**8T-4121**	1	WASHER-HARD (11X21X2.5MM THK)	
M	13	1	**8T-4136**	4	BOLT (M10X1.5X25MM)	
M	14	1	**8T-4186**	8	BOLT (M10X1.5X40MM)	
	15	1	**8T-4223**	8	WASHER-HARD (13.5X25.5X3MM THK)	
M	16	1	**8T-4244**	4	NUT (M12X1.75 THD)	
M	17	1	**8T-4910**	4	BOLT (M12X1.75X60MM)	
E	18	1	**5P-1442**		HOSE (124CM)	
E	19	1	**5P-1442**		HOSE (88CM)	

E-ORDER BY THE CENTIMETER
M-METRIC PART

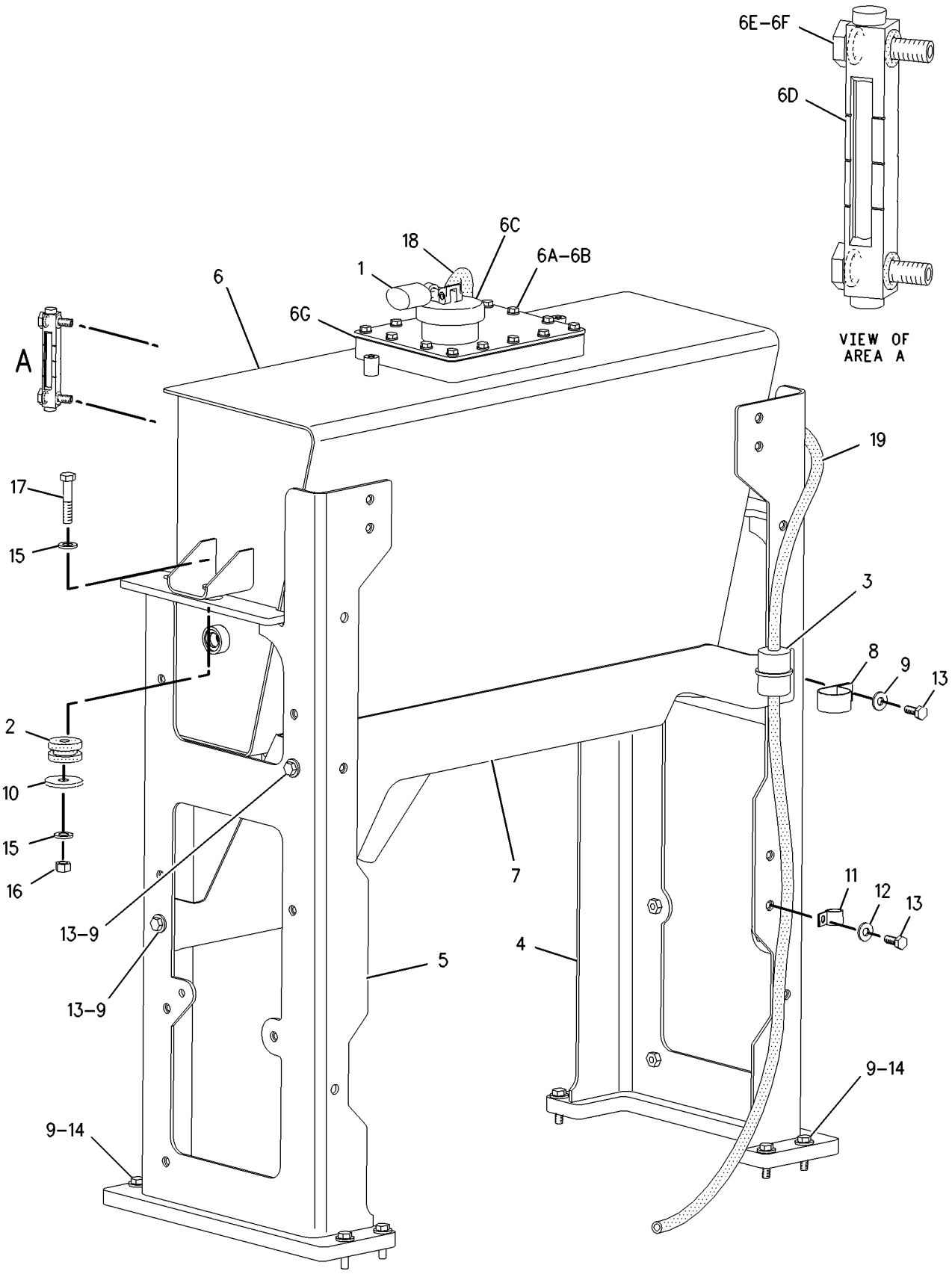

GRAPHIC #1

g00925698

HYDRAULIC SYSTEM

118-1087 VALVE & MTG GP-MAIN CONTROL

S/N: DJD1-UP
PART OF 202-0421, 203-5927 HYDRAULIC AR-2 VALVE
AN ATTACHMENT

SMCS-5051 **i00524559**

NOTE	REF NO	GRAPHIC REF	PART NUMBER	QTY	PART NAME 1 2 3 4 5 6 (PRODUCT LEVEL)	SEE PAGE
Y	1	1	**133-4234**	1	VALVE GP-MAIN CONTROL	498
	2	1	**8T-4121**	3	WASHER (2.5MM THK)	
M	3	1	**8T-4186**	2	BOLT (M10X1.50X40MM)	
M	4	1	**8T-5436**	1	BOLT (M10X1.50X130MM)	

M-METRIC PART
Y-SEPARATE ILLUSTRATION

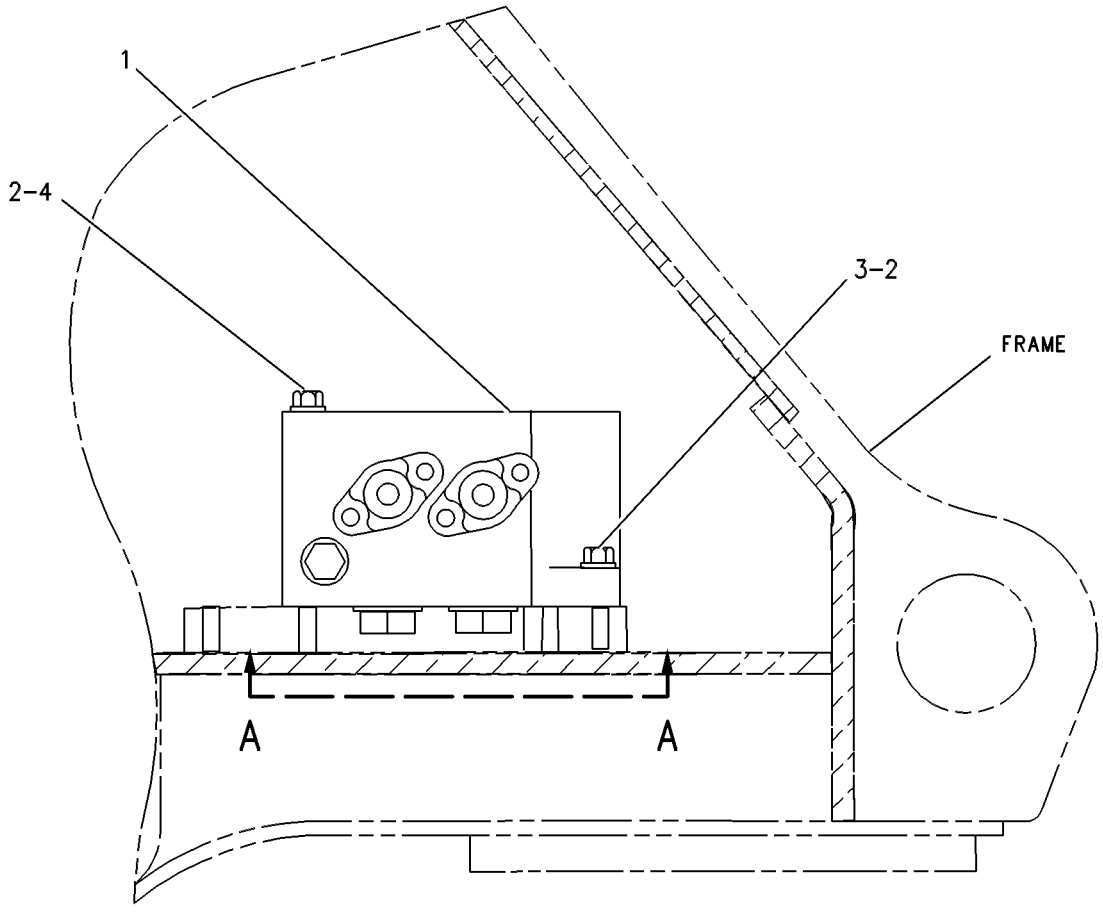

RIGHT SIDE VIEW

GRAPHIC #1 g00131730

118-1095 VALVE & MTG GP-MAIN CONTROL

S/N: DJD1-UP
3 FUNCTION
PART OF 202-0423, 203-5928 HYDRAULIC AR-3 VALVE
AN ATTACHMENT

SMCS-5051 **i00525543**

NOTE	REF NO	GRAPHIC REF	PART NUMBER	QTY	PART NAME 1 2 3 4 5 6 (PRODUCT LEVEL)	SEE PAGE
Y	1	1	**133-4235**	1	VALVE GP-MAIN CONTROL	500
	2	1	**8T-4121**	3	WASHER (2.5MM THK)	
M	3	1	**8T-4186**	2	BOLT (M10X1.50X40MM)	
M	4	1	**8T-5436**	1	BOLT (M10X1.50X130MM)	

M-METRIC PART
Y-SEPARATE ILLUSTRATION

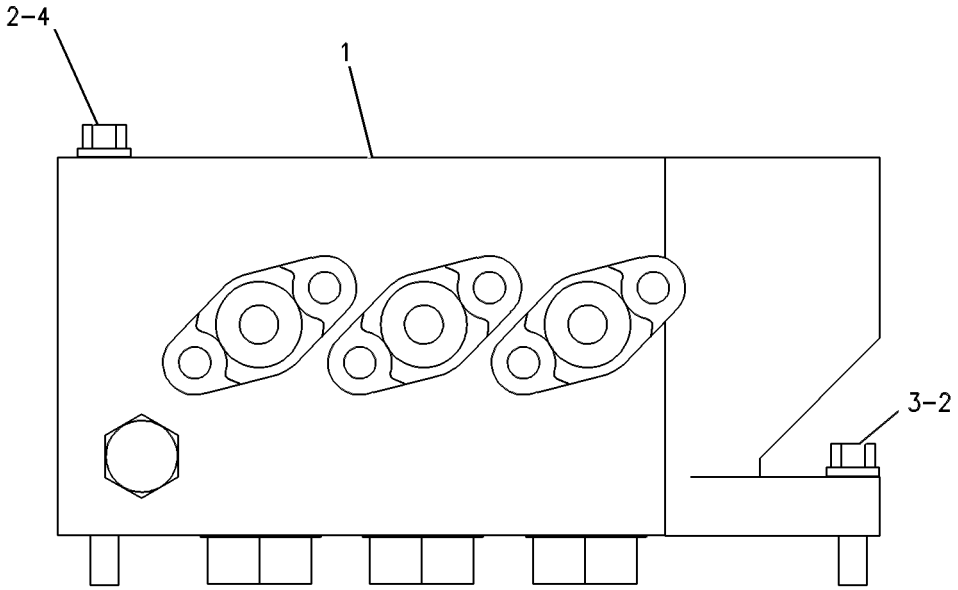

GRAPHIC #1 g00131724

122-6329 VALVE & MTG GP-MAIN CONTROL

S/N: DBT1-UP
MAIN
PART OF 202-0426, 203-5934 HYDRAULIC AR, 202-0424, 218-2457 HYDRAULIC AR-3 VALVE
AN ATTACHMENT

SMCS-5051 **i00534478**

NOTE	REF NO	GRAPHIC REF	PART NUMBER	QTY	PART NAME 1 2 3 4 5 6 (PRODUCT LEVEL)	SEE PAGE
Y	1	1	**133-4236**	1	VALVE GP-MAIN CONTROL	502
	2	1	**8T-4121**	3	WASHER (2.5MM THK)	
M	3	1	**8T-4186**	2	BOLT (M10X1.50X40MM)	
M	4	1	**8T-5436**	1	BOLT (M10X1.50X130MM)	

M-METRIC PART
Y-SEPARATE ILLUSTRATION

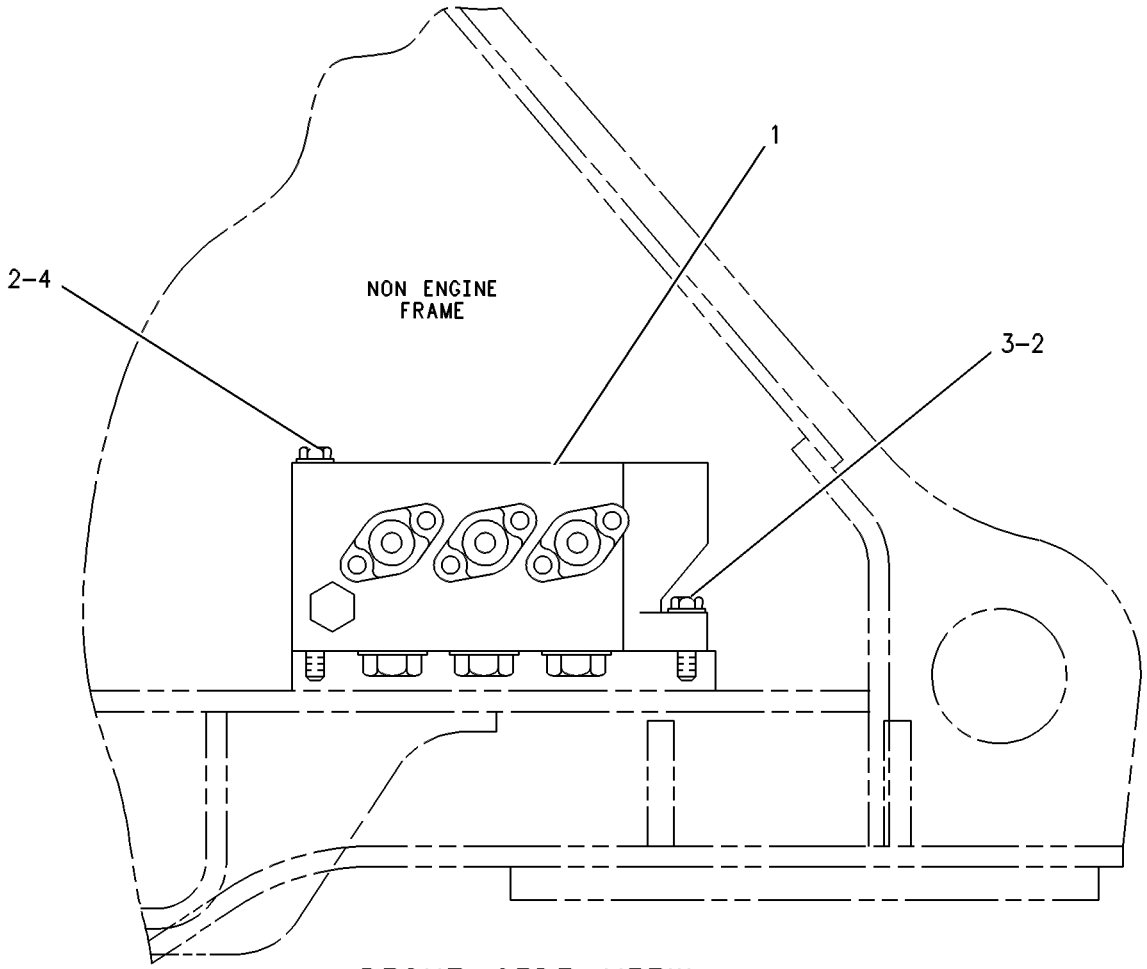

RIGHT SIDE VIEW

GRAPHIC #1 g00261143

122-6330 VALVE & MTG GP-MAIN CONTROL

S/N: DBT1-UP

MAIN

PART OF 202-0427, 203-5935 HYDRAULIC AR, 202-0425, 203-5929 HYDRAULIC AR-4 VALVE AN ATTACHMENT

SMCS-5051 **i00534492**

NOTE	REF NO	GRAPHIC REF	PART NUMBER	QTY	PART NAME 1 2 3 4 5 6 (PRODUCT LEVEL)	SEE PAGE
Y	1	1	**133-4237**	1	VALVE GP-MAIN CONTROL	504
	2	1	**8T-4121**	3	WASHER (2.5MM THK)	
M	3	1	**8T-4186**	2	BOLT (M10X1.50X40MM)	
M	4	1	**8T-5436**	1	BOLT (M10X1.50X130MM)	

M-METRIC PART
Y-SEPARATE ILLUSTRATION

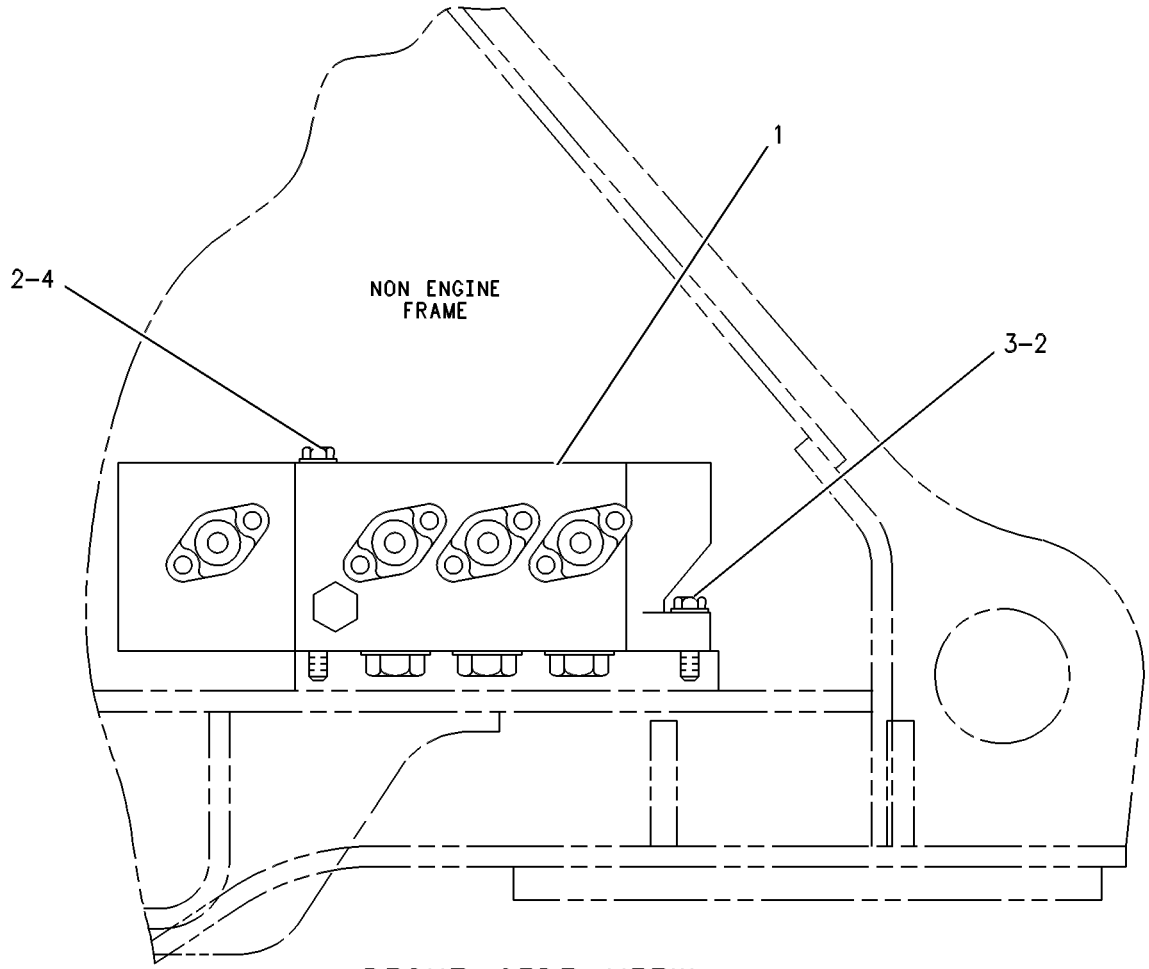

RIGHT SIDE VIEW

GRAPHIC #1 g00261209

HYDRAULIC SYSTEM

201-1068 VALVE & MTG GP-MAIN CONTROL

S/N: DBT1-UP
2 FUNCTION
PART OF 203-5933, 203-5936 HYDRAULIC AR, 202-0422, 218-2456 HYDRAULIC AR-2 VALVE AN ATTACHMENT

SMCS-5051 **i01761648**

NOTE	REF NO	GRAPHIC REF	PART NUMBER	QTY	PART NAME 1 2 3 4 5 6 (PRODUCT LEVEL)	SEE PAGE
Y	1	1	**179-8152**	1	VALVE GP-MAIN CONTROL	506
	2	1	**8T-4121**	3	WASHER-HARD (11X21X2.5MM THK)	
M	3	1	**8T-4186**	2	BOLT (M10X1.5X40MM)	
M	4	1	**8T-5436**	1	BOLT (M10X1.50X130MM)	

M-METRIC PART
Y-SEPARATE ILLUSTRATION

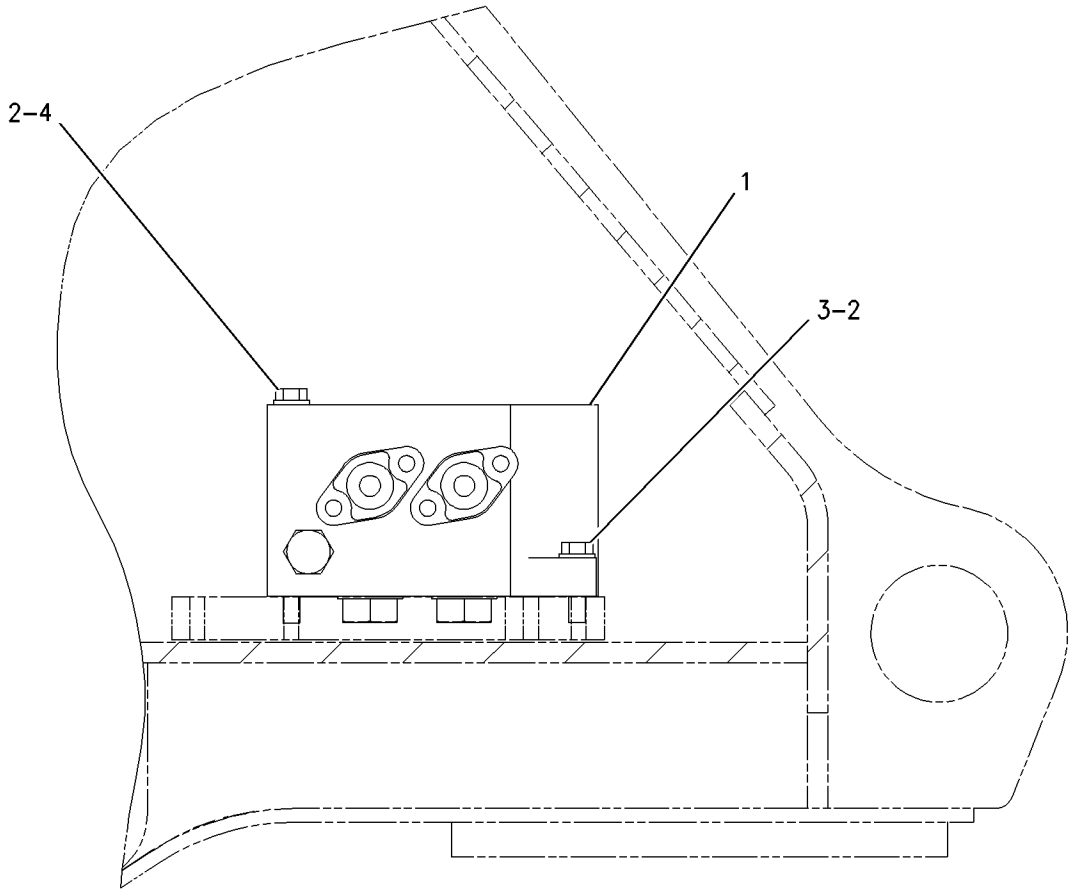

RIGHT SIDE VIEW

GRAPHIC #1 g00901815

222-3138 VALVE & MTG GP-SOLENOID–PILOT ON/OFF

S/N: DJD1-UP; DBT1-UP
PART OF 225-1057 VALVE GP-SHUTOFF
AN ATTACHMENT

SMCS-4805, 5479 **i01826003**

NOTE	REF NO	GRAPHIC REF	PART NUMBER	QTY	PART NAME 1 2 3 4 5 6 (PRODUCT LEVEL)	SEE PAGE
M	1	1	**8T-1158**	1	BOLT-SOCKET HEAD (M8X1.25X20MM)	
	2	1	**208-2978**	1	MANIFOLD	
J	3	1	**225-0300**	1	VALVE GP-SOLENOID (PILOT ON/OFF)	
	3A	1	**212-0061**	1	FLANGE	
					AVAILABLE REPAIR KIT(S):	
J			**200-2371**	1	KIT-SEAL	
					(INCLUDES 4 SEAL RINGS)	

J-KIT MARKED J AVAILABLE FOR PART(S) MARKED J
M-METRIC PART

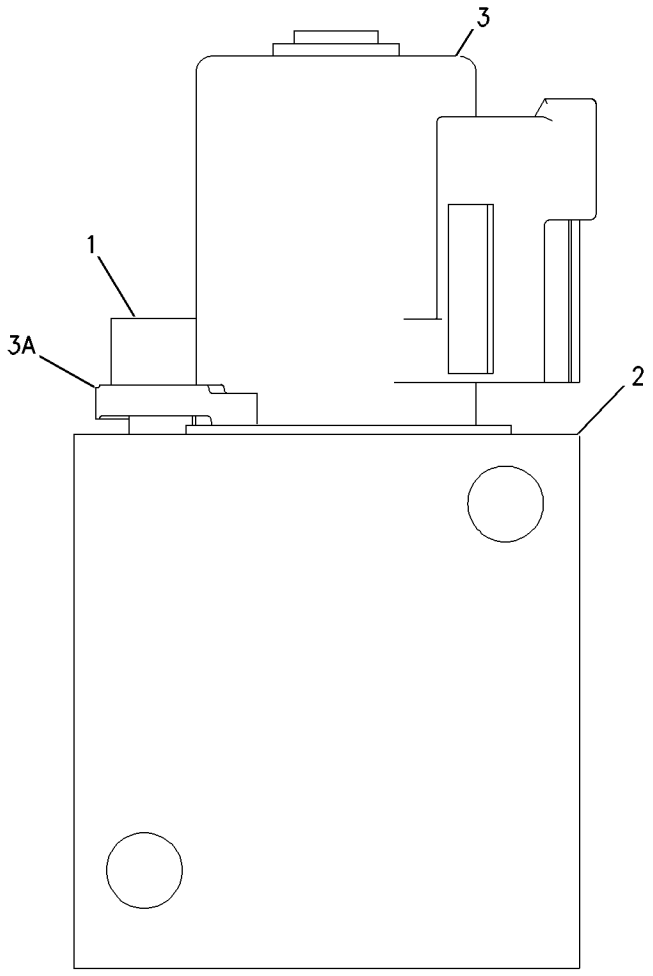

GRAPHIC #1 g00926077

112-1817 VALVE GP-BALL

S/N: DBT1-UP
RESOLVER
PART OF 218-5129 LINES GP-LIFT CYLINDER
AN ATTACHMENT

SMCS-5001, 5130, 5147 **i01796898**

NOTE	PART NUMBER	QTY	PART NAME 1 2 3 4 5 6 (PRODUCT LEVEL)	SEE PAGE
J	*202-0671*	1	VALVE GP-BALL	
			—OR—	
J	*202-0673*	1	VALVE GP-BALL	
			—OR—	
J	*202-0674*	1	VALVE GP-BALL	
			AVAILABLE REPAIR KIT(S):	
J	**112-9861**	1	KIT-SEAL	
			(INCLUDES SEALS, CONNECTORS & THRUST RING)	

J-KIT MARKED J SERVICES PARTS MARKED J

<END>

HYDRAULIC SYSTEM

9T-7634 VALVE GP-CHECK

S/N: DJD1-UP; DBT1-UP

PART OF 133-4234, 133-4235, 133-4236, 133-4237, 179-8152 VALVE GP-MAIN CONTROL AN ATTACHMENT

SMCS-5067 **i01505970**

NOTE	REF NO	GRAPHIC REF	PART NUMBER	QTY	PART NAME 1 2 3 4 5 6 (PRODUCT LEVEL)	SEE PAGE
J	1	1	**033-6027**	1	SEAL-O-RING	
					AVAILABLE REPAIR KIT(S):	
J			**107-7491**	1	KIT-SEAL	
J-KIT MARKED J INCLUDES PART MARKED J						

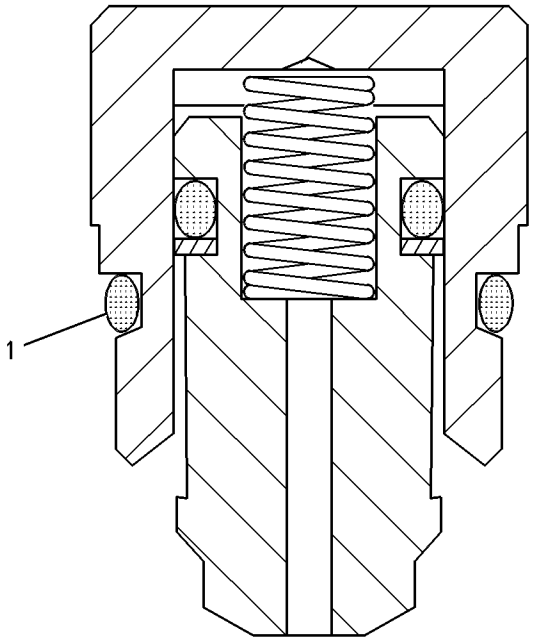

GRAPHIC #1 g00120239

6E-5958 VALVE GP-CONTROL—AUXILIARY

S/N: DBT1-UP
PILOT OPERATED
PART OF 138-7841 VALVE GP-CONTROL
AN ATTACHMENT

SMCS-5051 **i01370135**

NOTE	REF NO	GRAPHIC REF	PART NUMBER	QTY	PART NAME 1 2 3 4 5 6 (PRODUCT LEVEL)	SEE PAGE
	1	1	**6E-5434**	2	HOUSING-PILOT	
M	2	1	**8T-6870**	4	BOLT (M8X1.25X70MM)	
		1	**8T-4224**	4	WASHER-HARD (8.8X16X2MM THK)	
	3	1	**6E-6129**	1	PLUG-MAIN RELIEF	
		1	**3K-0360**	1	SEAL-O-RING (16.36MM ID)	
		1	**7J-9933**	1	SEAL-O-RING (21.89MM ID)	
	4	1	**9S-4190**	1	PLUG-O-RING (7/16-20 THD)	
		1	**2M-9780**	1	SEAL-O-RING (19.18MM ID)	
M	5	1	**8T-5436**	5	BOLT (M10X1.50X130MM)	
	6	1	**6E-5457**	1	PLUG (1 1/16-12 THD)	
		1	**6E-5643**	1	VALVE (LOAD CHECK)	
		1	**4T-3148**	1	SPRING	
		1	**3D-2824**	1	SEAL-O-RING (23.47MM ID)	
	7	1	**9X-2027**	5	WASHER (2MM THK)	
	8	1	**6E-5439**	2	SPRING	
	9	1	**6E-5440**	2	SPRING	
	10	1	**6E-5436**	2	RETAINER-SPRING	
	11	1	**8F-0212**	2	SEAL-O-RING (31.47MM ID)	
B	12	1	**6E-5431**	4	SHIM (0.50MM THK)	
CY	13	1	**186-0908**	1	VALVE GP-RELIEF (LINE,AUX CYL HEAD END PORT)	554
CY	13A	1	**186-0908**	1	VALVE GP-RELIEF (LINE,AUX CYL ROD END PORT)	554
	14	1	**061-7540**	1	SEAL-O-RING (37.69MM ID)	
	15	1	**5P-8118**	1	SEAL-O-RING (26.57MM ID)	

B-USE AS REQUIRED
C-CHANGE FROM PREVIOUS TYPE
M-METRIC PART
Y-SEPARATE ILLUSTRATION

6E-5958 VALVE GP-CONTROL ***(contd.)*** **i01370135**

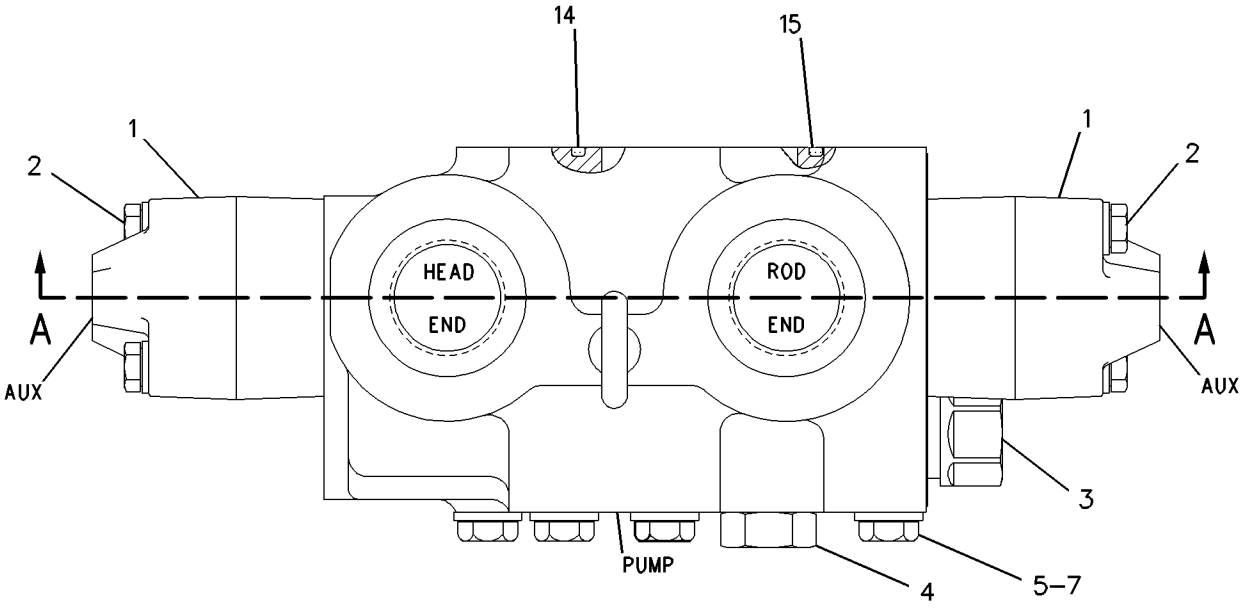

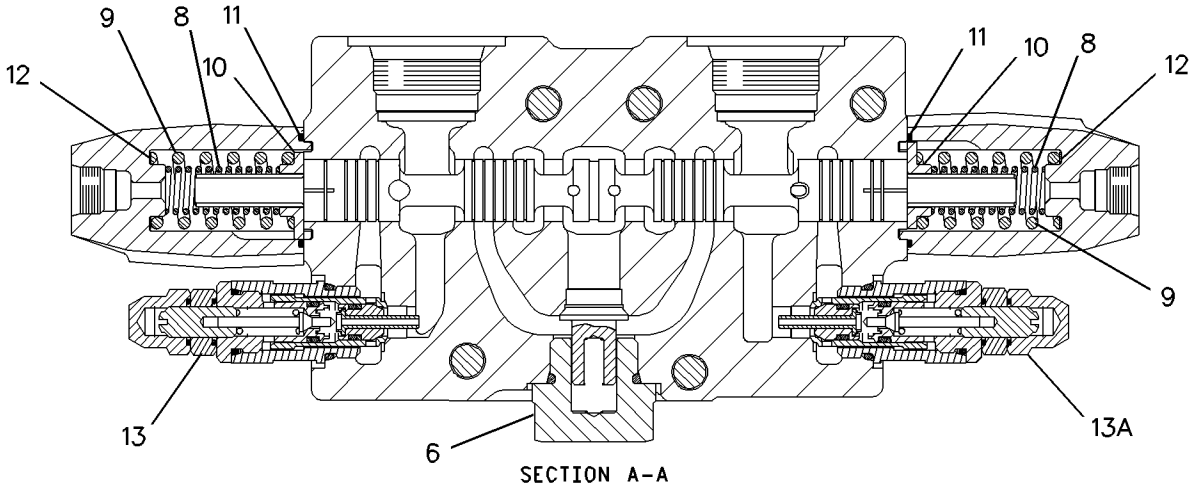

SECTION A-A

GRAPHIC #1 g00722784

HYDRAULIC SYSTEM

138-7841 VALVE GP-CONTROL—AUXILIARY

S/N: DBT1-UP
PILOT OPERATED
PART OF 133-4237 VALVE GP-MAIN CONTROL
AN ATTACHMENT

SMCS-5051 **i01359323**

NOTE	REF NO	GRAPHIC REF	PART NUMBER	QTY	PART NAME 1 2 3 4 5 6 (PRODUCT LEVEL)	SEE PAGE
Y	1	1	**6E-5958**	1	VALVE GP-CONTROL	492
	2	1	**6E-5434**	2	HOUSING-PILOT	
M	3	1	**8T-6870**	4	BOLT (M8X1.25X70MM)	
	4	1	**8T-4224**	4	WASHER-HARD (8.8X16X2MM THK)	
	5	1	**6E-6129**	1	PLUG-MAIN RELIEF	
	6	1	**9S-4190**	1	PLUG-O-RING (7/16-20 THD)	
	7	1	**2M-9780**	1	SEAL-O-RING (19.18MM ID)	
	8	1	**9X-2027**	5	WASHER (2MM THK)	
	9	1	**6E-5457**	1	PLUG (1 1/16-12 THD)	
	10	1	**6E-5643**	1	VALVE	
	11	1	**4T-3148**	1	SPRING	
	12	1	**3D-2824**	1	SEAL-O-RING (23.47MM ID)	
CY	13	1	**186-0905**	2	VALVE GP-RELIEF	553
	14	1	**6E-5439**	2	SPRING	
	15	1	**6E-5440**	2	SPRING	
	16	1	**6E-5436**	2	RETAINER-SPRING	
	17	1	**8F-0212**	2	SEAL-O-RING (31.47MM ID)	
B	18	1	**6E-5431**	4	SHIM (0.50MM THK)	
	19	1	**061-7540**	1	SEAL-O-RING (37.69MM ID)	
	20	1	**3K-0360**	1	SEAL-O-RING (16.36MM ID)	
	21	1	**7J-9933**	1	SEAL-O-RING (21.89MM ID)	
	22	1	**5P-8118**	1	SEAL-O-RING (26.57MM ID)	
M	23	1	**8T-5436**	5	BOLT (M10X1.50X130MM)	

B-USE AS REQUIRED
C-CHANGE FROM PREVIOUS TYPE
M-METRIC PART
Y-SEPARATE ILLUSTRATION

138-7841 VALVE GP-CONTROL ***(contd.)*** **i01359323**

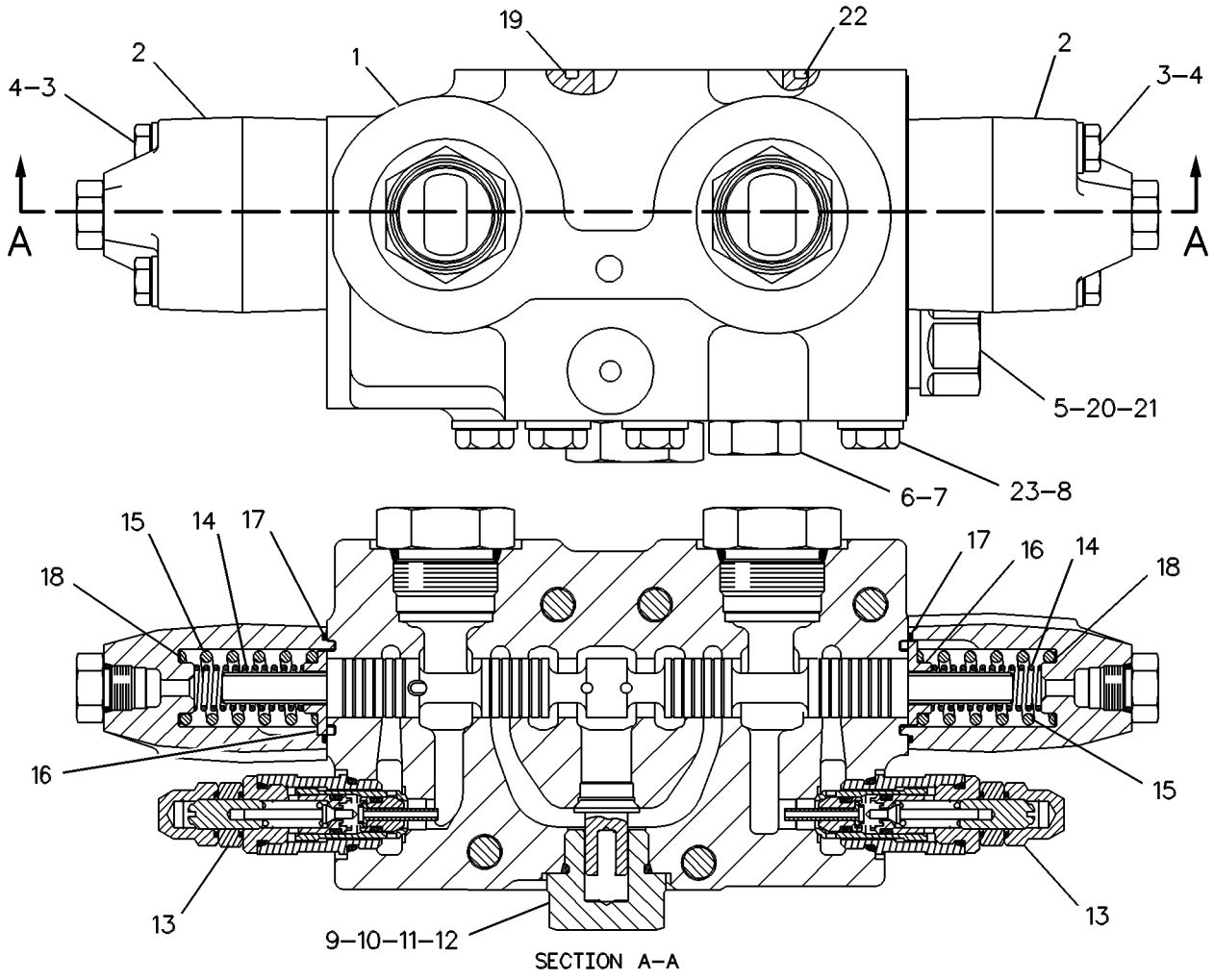

GRAPHIC #1 g00267292

HYDRAULIC SYSTEM

133-4848 VALVE GP-LOAD CONTROL

S/N: DBT1-UP
PART OF 218-5129 LINES GP-LIFT CYLINDER
AN ATTACHMENT

SMCS-5811 **i01829261**

NOTE	REF NO	GRAPHIC REF	PART NUMBER	QTY	PART NAME 1 2 3 4 5 6 (PRODUCT LEVEL)	SEE PAGE
	1	1	**9F-2167**	1	SCREW-PURGE	
	2	1	**106-9421**	1	PLUG-ORIFICE	
Y	3	1	**122-1134**	1	VALVE GP-SOLENOID (RIDE CONTROL)	562
	4	1	**123-0227**	1	PLUG-ORIFICE	
C	5	1	**192-8662**	1	VALVE GP-CHECK (RIDE CONTROL)	
	6	1	**4J-7533**	3	SEAL-O-RING	
	7	1	**9S-8001**	3	PLUG	

C-CHANGE FROM PREVIOUS TYPE
Y-SEPARATE ILLUSTRATION

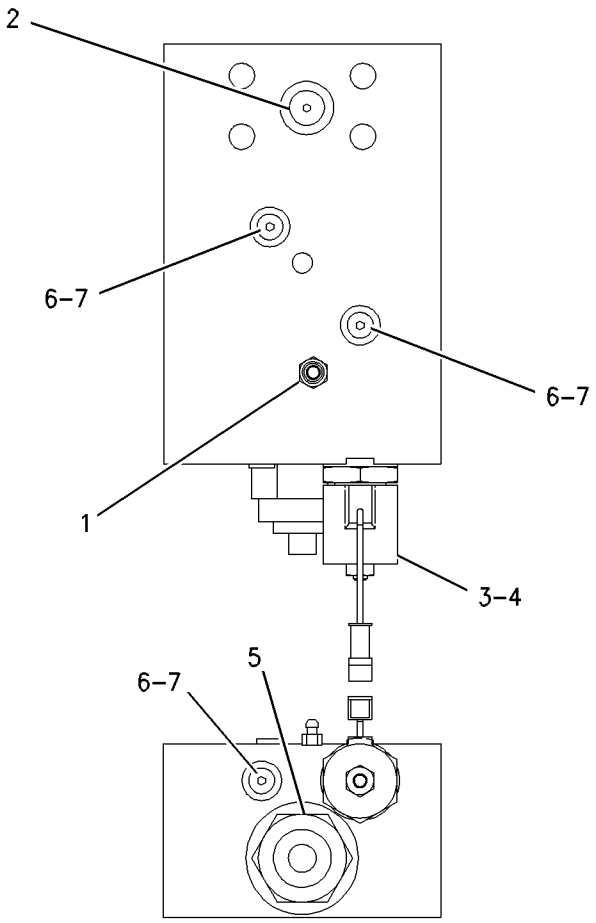

GRAPHIC #1 g00762313

133-4861 VALVE GP-LOAD CONTROL

S/N: DBT1-UP
PART OF 122-6359 LINES GP-TILT CYLINDER
AN ATTACHMENT

SMCS-5811 **i01453413**

NOTE	REF NO	GRAPHIC REF	PART NUMBER	QTY	PART NAME 1 2 3 4 5 6 (PRODUCT LEVEL)	SEE PAGE
	1	1	**9F-2167**	1	SCREW-PURGE	
C	2	1	**192-8662**	1	VALVE GP-CHECK	
	3	1	**3K-0360**	2	SEAL-O-RING	
	4	1	**7J-0204**	4	SEAL-O-RING	
	5	1	**9S-8005**	2	PLUG	
	6	1	**9S-8007**	4	PLUG-O-RING	
Y	7	1	**133-5330**	1	VALVE GP-RELIEF	549

C-CHANGE FROM PREVIOUS TYPE
Y-SEPARATE ILLUSTRATION

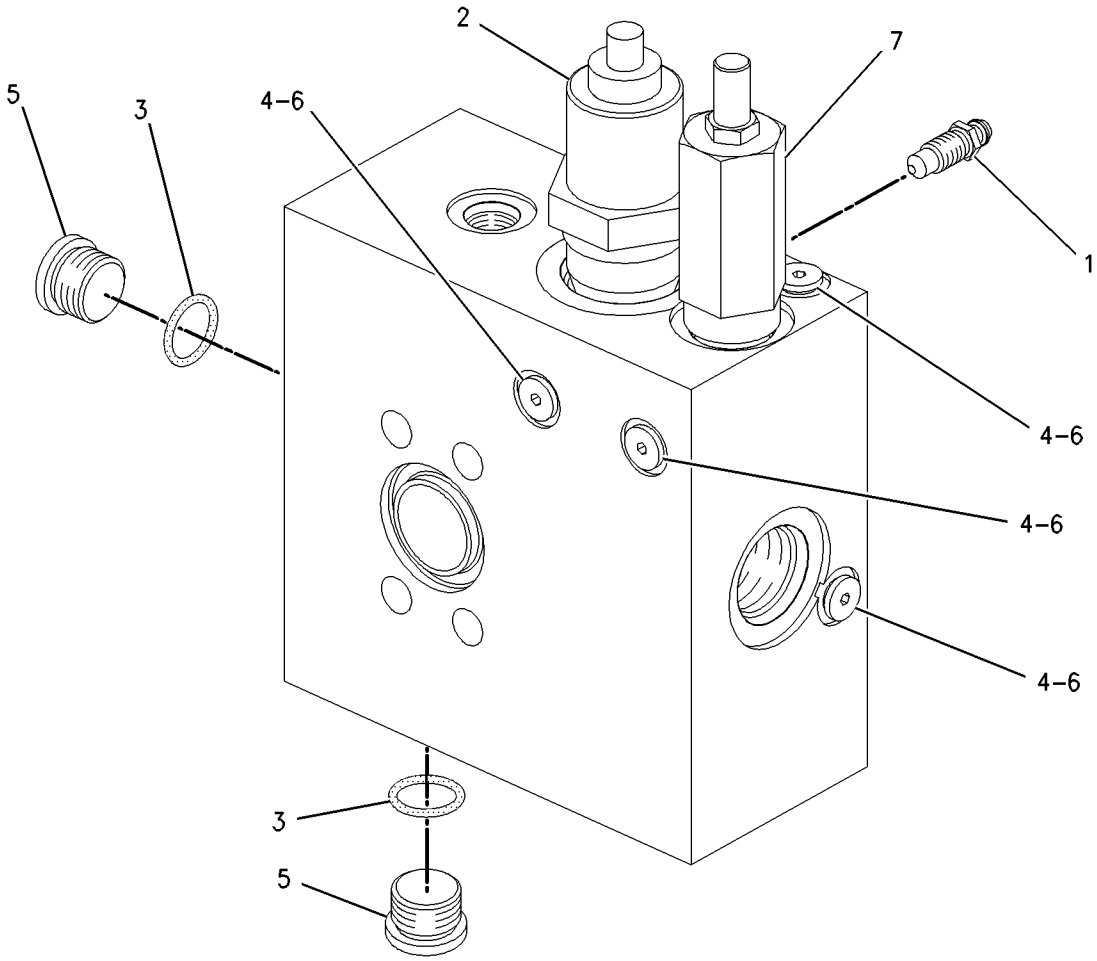

GRAPHIC #1 g00761467

HYDRAULIC SYSTEM

133-4234 VALVE GP-MAIN CONTROL

S/N: DJD1-UP
PART OF 118-1087 VALVE & MTG GP-MAIN CONTROL
AN ATTACHMENT

SMCS-5051 **i01563694**

NOTE	REF NO	GRAPHIC REF	PART NUMBER	QTY	PART NAME 1 2 3 4 5 6 (PRODUCT LEVEL)	SEE PAGE
	1	1	**8F-0212**	4	SEAL-O-RING	
	2	1	**6E-5434**	4	HOUSING-PILOT	
M	3	1	**8T-6870**	8	BOLT (M8X1.25X70MM)	
	4	1	**8T-4224**	8	WASHER-HARD (8.8X16X2MM THK)	
Y	5	1	**108-6428**	1	VALVE GP-RELIEF	547
	6	1	**9S-4190**	1	PLUG-O-RING	
	7	1	**2M-9780**	1	SEAL-O-RING	
Y	8	1	**9T-7634**	1	VALVE GP-CHECK	491
B	9	1	**6E-5431**	10	SHIM (0.50MM THK)	
	10	1	**6E-5457**	2	PLUG (1 1/16-12 THD)	
	11	1	**6E-5643**	2	VALVE	
	12	1	**4T-3148**	2	SPRING	
	13	1	**3D-2824**	2	SEAL-O-RING	
CY	14	1	**186-0913**	2	VALVE GP-RELIEF	555
	15	1	**6E-5437**	2	SPRING	
	16	1	**6E-5438**	2	SPRING	
	17	1	**6E-5439**	2	SPRING	
	18	1	**6E-5440**	2	SPRING	
	19	1	**6E-5436**	4	RETAINER-SPRING	
	20	1	**185-7708**	1	VALVE GP-RELIEF	
		1	**6E-3008**	1	SPRING	
		1	**8L-2779**	1	SEAL-O-RING	
		1	**9T-7266**	1	NUT (3/4-16 THD)	
		1	**033-6028**	1	SEAL-O-RING	
		1	**130-1676**	1	SEAL-O-RING	

B-USE AS REQUIRED
C-CHANGE FROM PREVIOUS TYPE
M-METRIC PART
Y-SEPARATE ILLUSTRATION

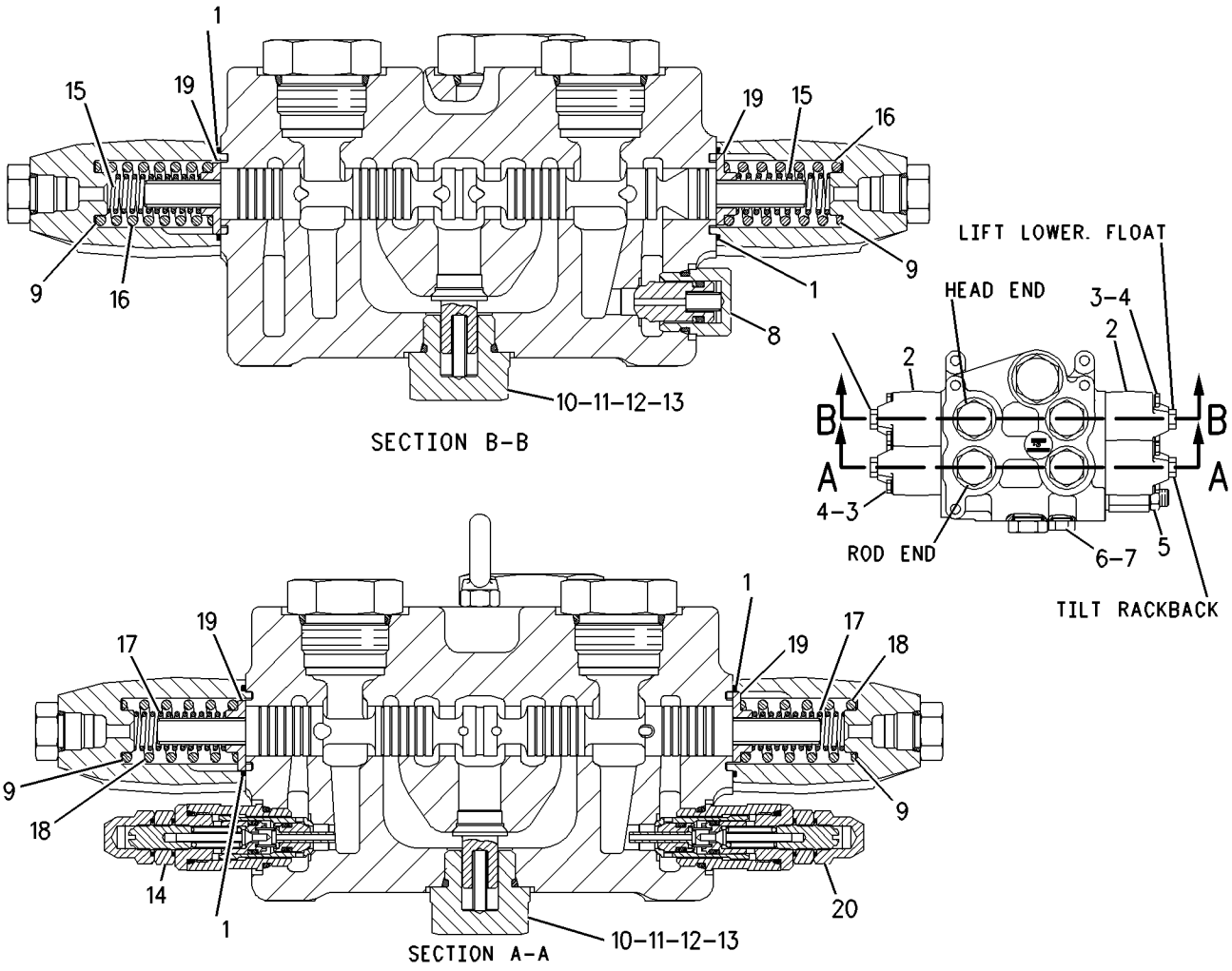

GRAPHIC #1 g00812243

HYDRAULIC SYSTEM

133-4235 VALVE GP-MAIN CONTROL

S/N: DJD1-UP

PART OF 118-1095 VALVE & MTG GP-MAIN CONTROL

AN ATTACHMENT

SMCS-5051 **i01520215**

NOTE	REF NO	GRAPHIC REF	PART NUMBER	QTY	PART NAME 1 2 3 4 5 6 (PRODUCT LEVEL)	SEE PAGE
Y	1	1	**9T-7634**	1	VALVE GP-CHECK	491
	2	1	**6E-5434**	6	HOUSING-PILOT	
M	3	1	**8T-6870**	12	BOLT (M8X1.25X70MM)	
	4	1	**8T-4224**	12	WASHER-HARD (8.8X16X2MM THK)	
Y	5	1	**108-6428**	1	VALVE GP-RELIEF	547
	6	1	**9S-4190**	1	PLUG-O-RING	
	7	1	**2M-9780**	1	SEAL-O-RING	
CY	8	1	**186-0913**	1	VALVE GP-RELIEF	555
B	9	1	**6E-5431**	14	SHIM (0.50MM THK)	
	10	1	**6E-5457**	3	PLUG (1 1/16-12 THD)	
	11	1	**6E-5643**	3	VALVE	
	12	1	**4T-3148**	3	SPRING	
	13	1	**3D-2824**	3	SEAL-O-RING	
Y	14	1	**186-0905**	2	VALVE GP-RELIEF	553
	15	1	**6E-5437**	2	SPRING	
	16	1	**6E-5438**	2	SPRING	
	17	1	**6E-5439**	4	SPRING	
	18	1	**6E-5440**	4	SPRING	
	19	1	**6E-5436**	6	RETAINER-SPRING	
	20	1	**8F-0212**	6	SEAL-O-RING	
CY	21	1	**185-7708**	1	VALVE GP-RELIEF	550

B-USE AS REQUIRED
C-CHANGE FROM PREVIOUS TYPE
M-METRIC PART
Y-SEPARATE ILLUSTRATION

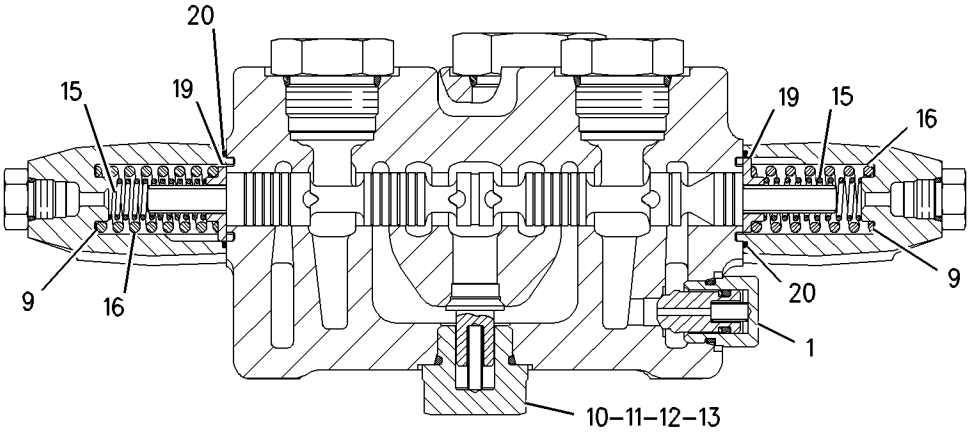

SECTION C-C

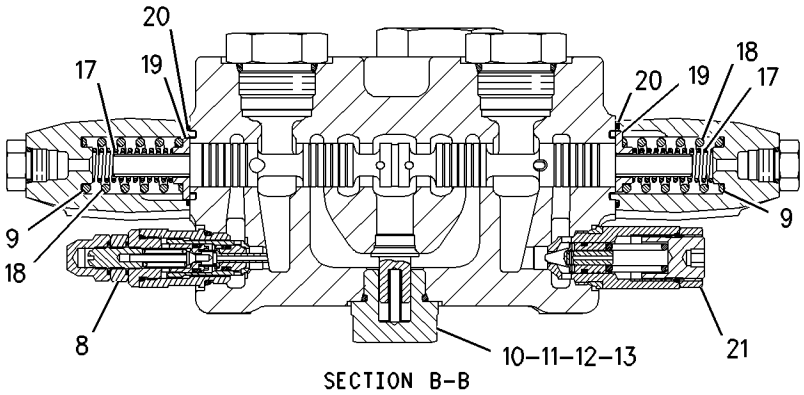

SECTION B-B

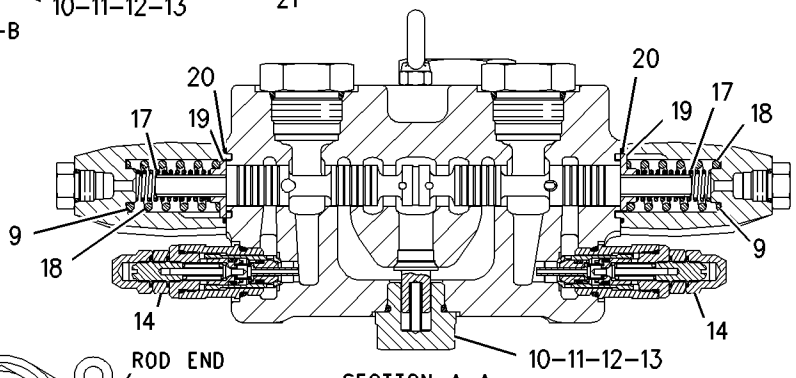

SECTION A-A

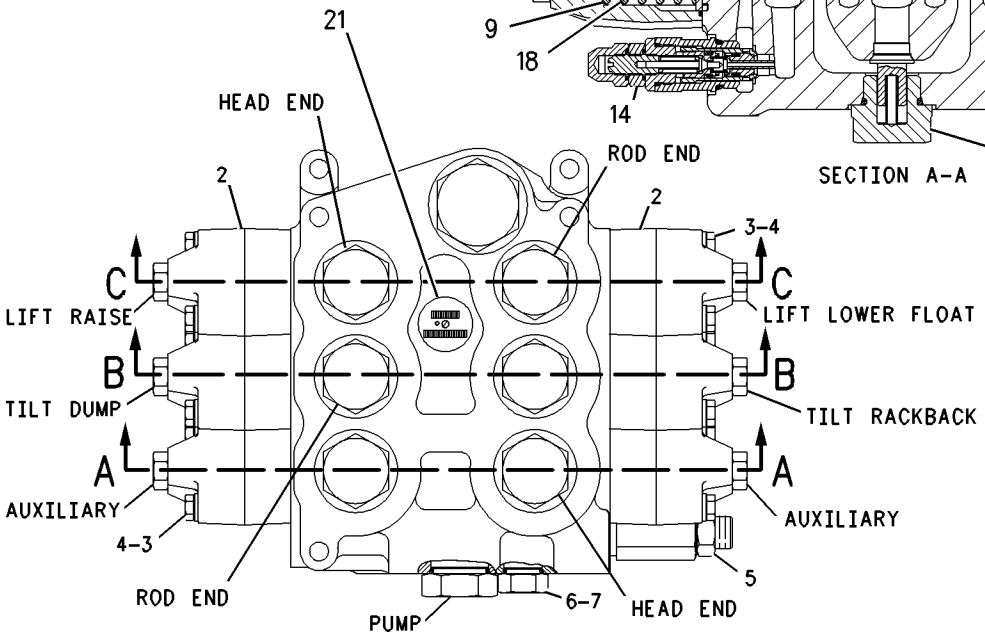

GRAPHIC #1

g00789641

133-4236 VALVE GP-MAIN CONTROL

S/N: DBT1-UP
PILOT OPERATED
PART OF 122-6329 VALVE & MTG GP-MAIN CONTROL
AN ATTACHMENT

SMCS-5051 **i01520314**

NOTE	REF NO	GRAPHIC REF	PART NUMBER	QTY	PART NAME 1 2 3 4 5 6 (PRODUCT LEVEL)	SEE PAGE
C	1	1	**185-7709**	1	VALVE GP-RELIEF	
		1	**6E-3008**	1	SPRING	
		1	**8L-2779**	1	SEAL-O-RING	
		1	**9T-7266**	1	NUT (3/4-16 THD)	
		1	**033-6028**	1	SEAL-O-RING	
		1	**130-1676**	1	SEAL-O-RING	
	2	1	**6E-5434**	6	HOUSING-PILOT	
M	3	1	**8T-6870**	12	BOLT (M8X1.25X70MM) (M8X1.50X50MM)	
	4	1	**8T-4224**	12	WASHER-HARD (8.8X16X2MM THK)	
Y	5	1	**122-3595**	1	VALVE GP-RELIEF	548
	6	1	**9S-4190**	1	PLUG-O-RING	
	7	1	**2M-9780**	1	SEAL-O-RING	
B	8	1	**6E-5431**	15	SHIM (0.50MM THK)	
Y	9	1	**186-0903**	1	VALVE GP-RELIEF	552
	10	1	**6E-5457**	3	PLUG (1 1/16-12 THD)	
	11	1	**6E-5643**	3	VALVE	
	12	1	**4T-3148**	3	SPRING	
	13	1	**3D-2824**	3	SEAL-O-RING	
Y	14	1	**186-0905**	2	VALVE GP-RELIEF	553
	15	1	**6E-5437**	3	SPRING	
	16	1	**6E-5438**	3	SPRING	
	17	1	**6E-5439**	3	SPRING	
	18	1	**6E-5440**	3	SPRING	
	19	1	**6E-5436**	6	RETAINER-SPRING	
	20	1	**8F-0212**	6	SEAL-O-RING	
Y	21	1	**9T-7634**	1	VALVE GP-CHECK	491

B-USE AS REQUIRED
C-CHANGE FROM PREVIOUS TYPE
M-METRIC PART
Y-SEPARATE ILLUSTRATION

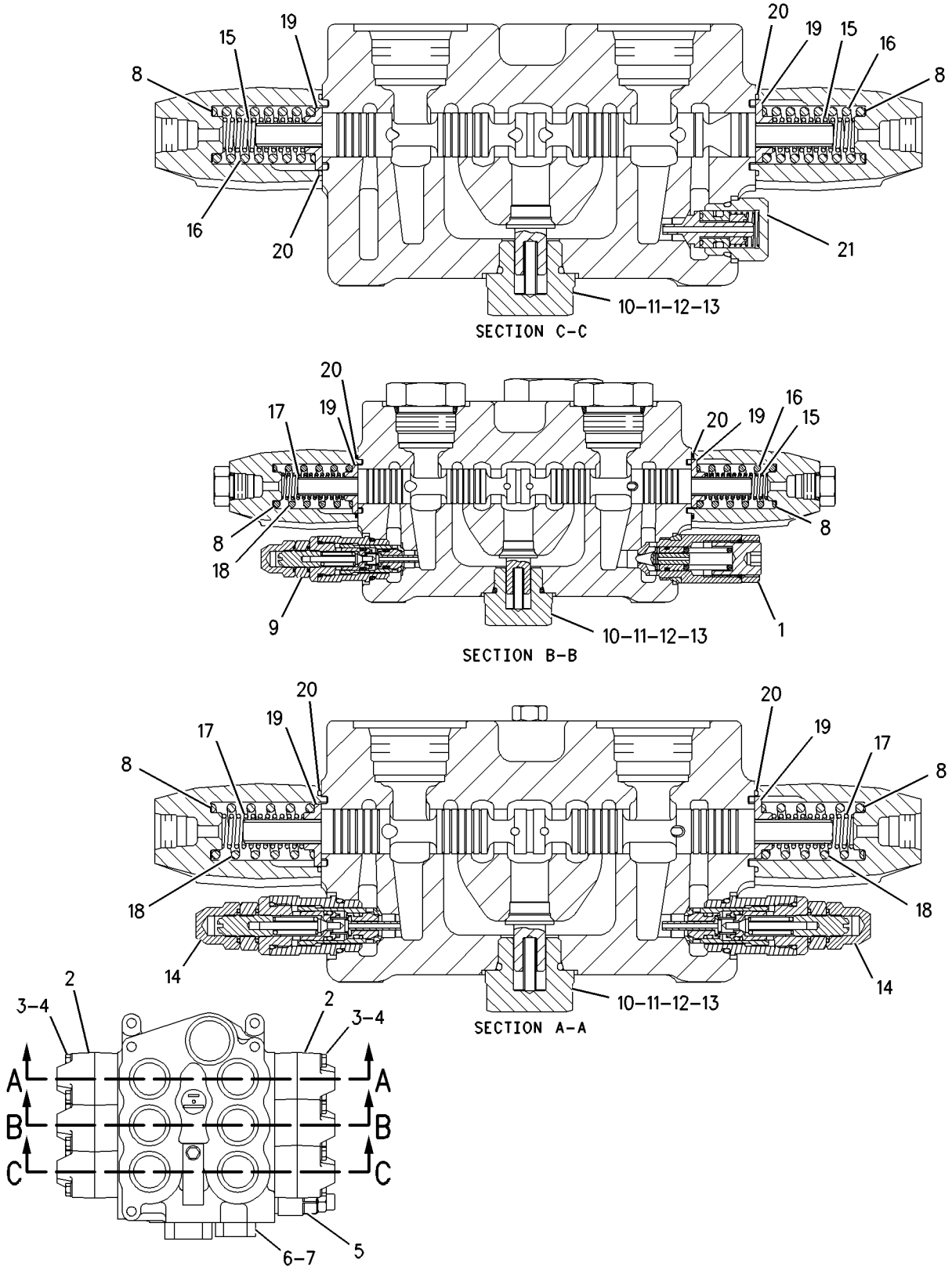

GRAPHIC #1 g00790870

133-4237 VALVE GP-MAIN CONTROL

S/N: DBT1-UP
PILOT OPERATED
PART OF 122-6330 VALVE & MTG GP-MAIN CONTROL
AN ATTACHMENT

SMCS-5051 **i01570112**

NOTE	REF NO	GRAPHIC REF	PART NUMBER	QTY	PART NAME 1 2 3 4 5 6 (PRODUCT LEVEL)	SEE PAGE
B	1	1	**6E-5431**	15	SHIM (0.50MM THK)	
Y	2	1	**138-7841**	1	VALVE GP-CONTROL	494
Y	3	1	**122-3595**	1	VALVE GP-RELIEF	548
CY	4	1	**186-0903**	1	VALVE GP-RELIEF	552
	5	1	**6E-5434**	8	HOUSING-PILOT	
M	6	1	**8T-6870**	12	BOLT (M8X1.25X70MM)	
	7	1	**8T-4224**	12	WASHER-HARD (8.8X16X2MM THK)	
	8	1	**146-3142**	1	STEM-LIFT	
	9	1	**146-3143**	1	STEM-TILT	
	10	1	**6E-5457**	3	PLUG (1 1/16-12 THD)	
	11	1	**6E-5643**	3	VALVE	
	12	1	**4T-3148**	3	SPRING	
	13	1	**3D-2824**	3	SEAL-O-RING	
CY	14	1	**186-0905**	2	VALVE GP-RELIEF	553
	15	1	**6E-5437**	3	SPRING	
	16	1	**6E-5438**	3	SPRING	
	17	1	**6E-5439**	3	SPRING	
	18	1	**6E-5440**	3	SPRING	
	19	1	**6E-5436**	6	RETAINER-SPRING	
	20	1	**8F-0212**	6	SEAL-O-RING	
Y	21	1	**9T-7634**	1	VALVE GP-CHECK	491
	22	1	**146-7824**	1	STEM-TILT	
CY	23	1	**185-7709**	1	VALVE GP-RELIEF	551

B-USE AS REQUIRED
C-CHANGE FROM PREVIOUS TYPE
M-METRIC PART
Y-SEPARATE ILLUSTRATION

133-4237 VALVE GP-MAIN CONTROL *(contd.)* i01570112

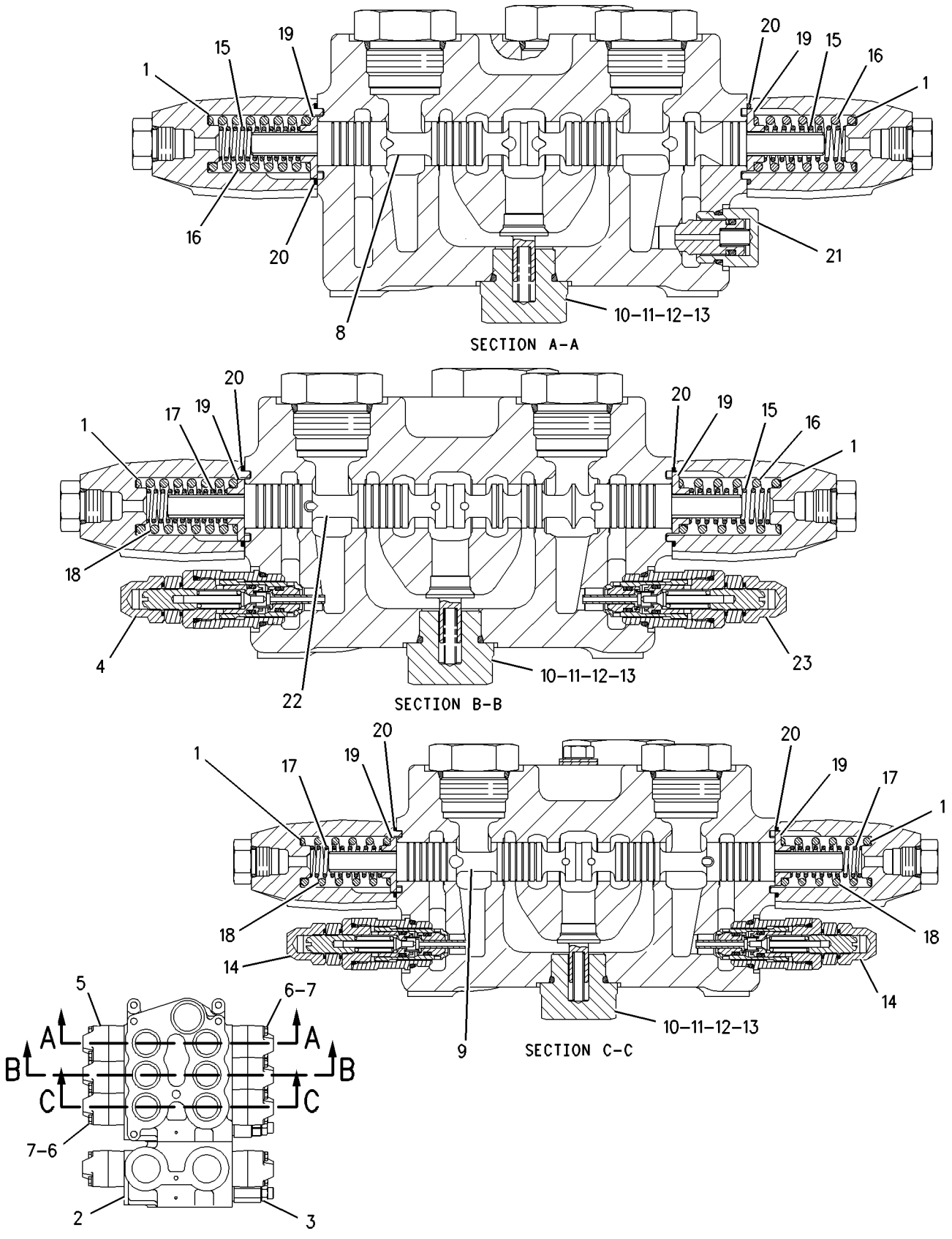

GRAPHIC #1 g00815340

HYDRAULIC SYSTEM

179-8152 VALVE GP-MAIN CONTROL

S/N: DBT1-UP
PART OF 201-1068 VALVE & MTG GP-MAIN CONTROL
AN ATTACHMENT

SMCS-5051 **i01569564**

NOTE	REF NO	GRAPHIC REF	PART NUMBER	QTY	PART NAME 1 2 3 4 5 6 (PRODUCT LEVEL)	SEE PAGE
	1	1	**146-7824**	1	STEM-TILT	
	2	1	**6E-5434**	4	HOUSING-PILOT	
M	3	1	**8T-6870**	8	BOLT (M8X1.25X70MM)	
	4	1	**8T-4224**	8	WASHER-HARD (8.8X16X2MM THK)	
Y	5	1	**122-3595**	1	VALVE GP-RELIEF	548
	6	1	**9S-4190**	1	PLUG-O-RING	
	7	1	**2M-9780**	1	SEAL-O-RING	
	8	1	**146-3142**	1	STEM-LIFT	
	9	1	**185-7709**	1	VALVE GP-RELIEF	
		1	**6E-3008**	1	SPRING	
		1	**8L-2779**	1	SEAL-O-RING	
		1	**9T-7266**	1	NUT (3/4-16 THD)	
		1	**033-6028**	1	SEAL-O-RING	
		1	**130-1676**	1	SEAL-O-RING	
	10	1	**6E-5457**	2	PLUG (1 1/16-12 THD)	
	11	1	**6E-5643**	2	VALVE	
	12	1	**4T-3148**	2	SPRING	
	13	1	**3D-2824**	2	SEAL-O-RING	
Y	14	1	**186-0903**	1	VALVE GP-RELIEF	552
	15	1	**6E-5437**	3	SPRING	
	16	1	**6E-5438**	3	SPRING	
	17	1	**6E-5439**	1	SPRING	
	18	1	**6E-5440**	1	SPRING	
	19	1	**6E-5436**	4	RETAINER-SPRING	
	20	1	**8F-0212**	4	SEAL-O-RING	
B	21	1	**6E-5431**	10	SHIM (0.50MM THK)	
Y	22	1	**9T-7634**	1	VALVE GP-CHECK	491

B-USE AS REQUIRED
M-METRIC PART
Y-SEPARATE ILLUSTRATION

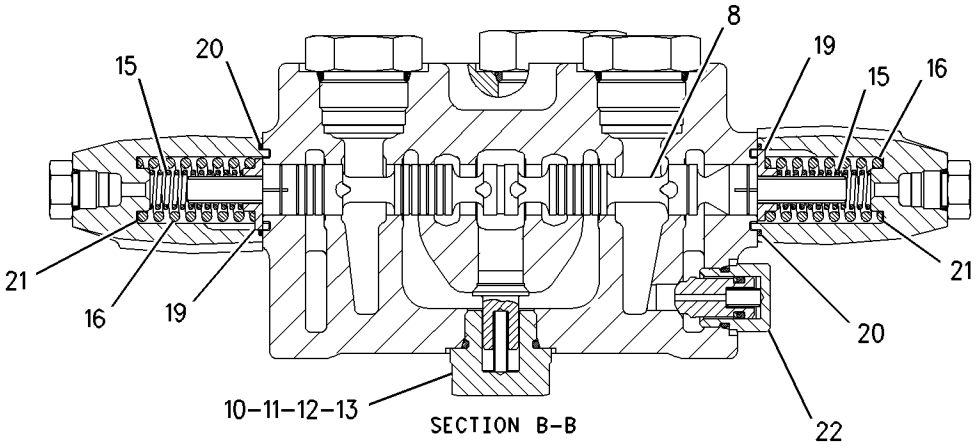

SECTION B–B

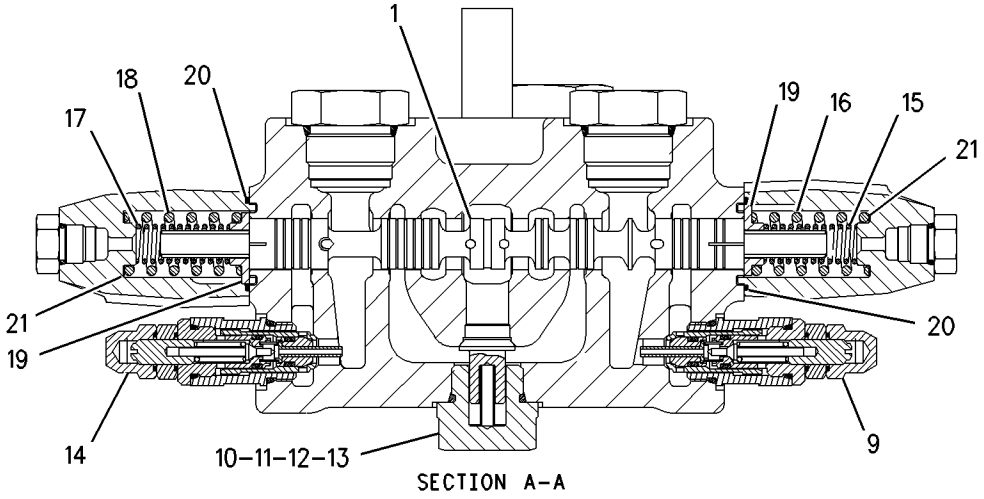

SECTION A–A

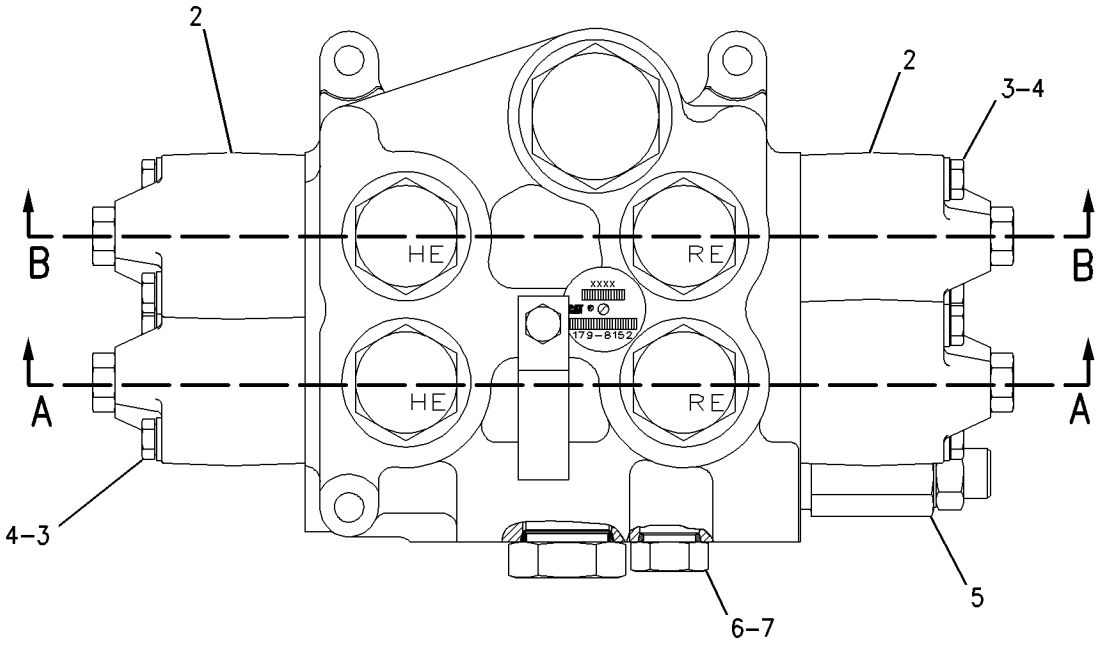

GRAPHIC #1 g00815034

HYDRAULIC SYSTEM

172-3205 VALVE GP-PILOT—FOUR LEVER

S/N: DBT1-UP

PART OF 219-4788 CONTROL GP-PILOT OPERATED HYD

AN ATTACHMENT

SMCS-5059 **i01539144**

NOTE	REF NO	GRAPHIC REF	PART NUMBER	QTY	PART NAME 1 2 3 4 5 6 (PRODUCT LEVEL)	SEE PAGE
	1	2	**7B-3028**	1	SCREW-DRIVE (NO 4X3/16 IN)	
	2	1	**141-9236**	1	SCREEN AS	
	3	1,2	**146-8477**	4	BRACKET	
	4	2	**146-8981**	4	PIN	
	5	1	**147-3114**	1	LEVER AS (AUX)	
M		1	**5C-2890**	2	NUT (M6X1 THD)	
		1	**139-4189**	1	PLATE	
		1	**141-7481**	1	SPACER	
		1	**146-8479**	1	SWIVEL	
M		1	**178-7877**	2	SETSCREW	
Y	6	1	**168-6504**	1	VALVE GP-PILOT CARTRIDGE	536
	7	2	**175-9429**	1	PLATE-IDENTIFICATION	
	8	1	**175-9435**	1	PLATE AS	
		1	**102-8806**	1	KIT-RECEPTACLE (8 PIN)	
		1	**3E-3389**	1	WEDGE-RECEPTACLE LOCK	
		1	**8L-2786**	4	SEAL-O-RING	
M		1	**8T-0267**	16	BOLT-SOCKET HEAD (M6X1X12MM)	
		1	**141-1556**	4	RETAINER	
		1	**141-2032**	4	PLATE	
	9	2	**175-9439**	1	BODY AS	
		2	**3J-1907**	12	SEAL-O-RING	
		2	**3J-7354**	32	SEAL-O-RING	
M		2	**5C-2890**	2	NUT (M6X1 THD)	
		2	**9S-8002**	20	PLUG-O-RING	
		2	**160-0750**	6	ADAPTER	
M		2	**168-4521**	2	BOLT-SOCKET HEAD	
Y	10	1	**175-9444**	1	PIVOT GP-PILOT VALVE	467
Y	11	1,2	**202-1233**	3	VALVE GP-PILOT CARTRIDGE	538
Y	12	1	**202-2558**	4	VALVE GP-PILOT CARTRIDGE	540
Y	13	1	**202-2564**	1	PIVOT GP-PILOT VALVE	468
Y	14	2	**202-2567**	1	PIVOT GP-PILOT VALVE	469
	15	2	**033-9139**	8	RING-RETAINING	
	16	2	**136-9292**	4	BOOT	
	17	1,2	**3J-1907**	7	SEAL-O-RING	
M	18	1,2	**5A-3604**	4	BOLT-SOCKET HEAD (M8X1.25X25MM)	
	19	1	**6V-8397**	1	SEAL-O-RING	
	20	1	**6V-8636**	1	CONNECTOR	
	21	2	**9S-4191**	6	PLUG-STRAIGHT THREAD (9/16-18 THD)	

M-METRIC PART
Y-SEPARATE ILLUSTRATION

172-3205 VALVE GP-PILOT *(contd.)* i01539144

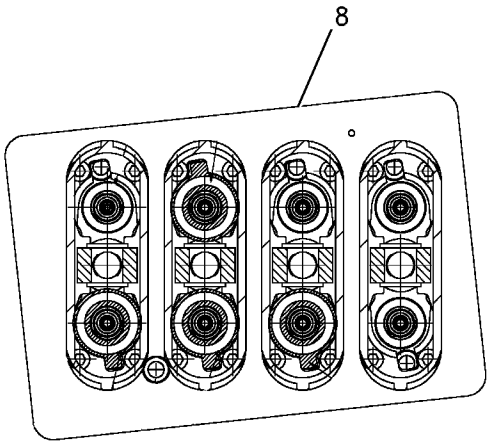

SECTION E-E

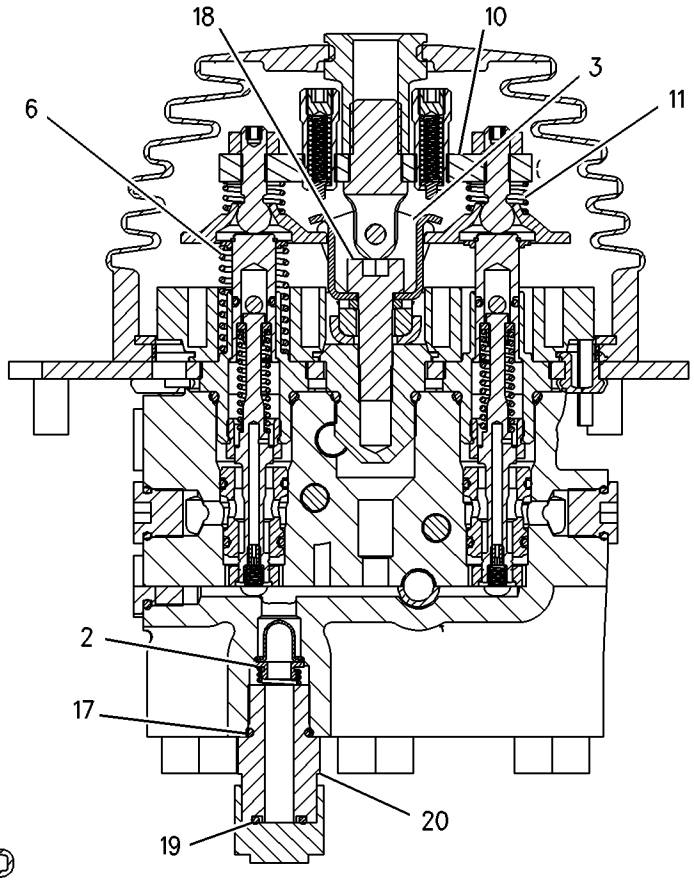

SECTION B-B

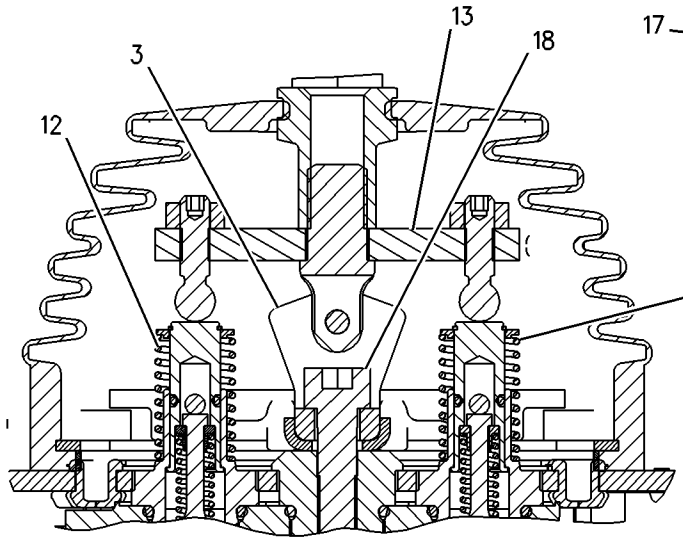

SECTION D-D

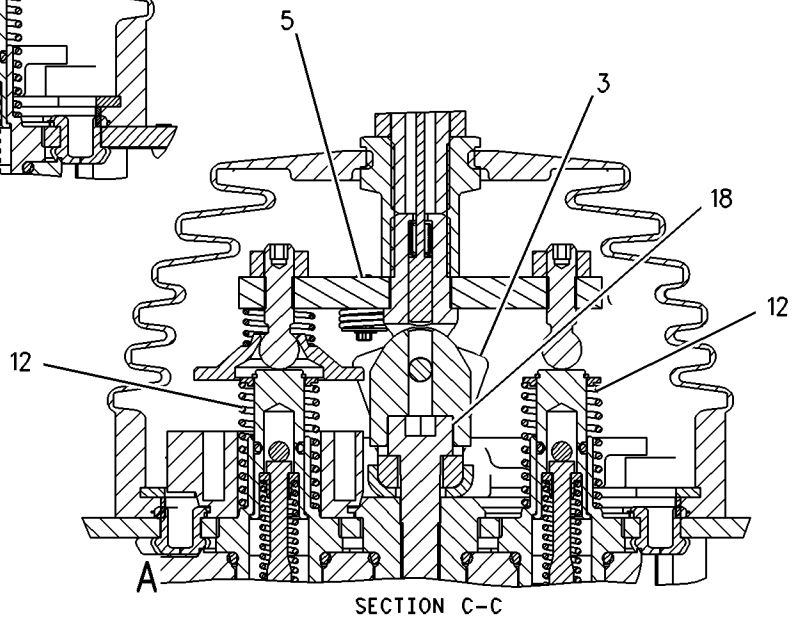

SECTION C-C

GRAPHIC #1 g00799463

172-3205 VALVE GP-PILOT *(contd.)* i01539144

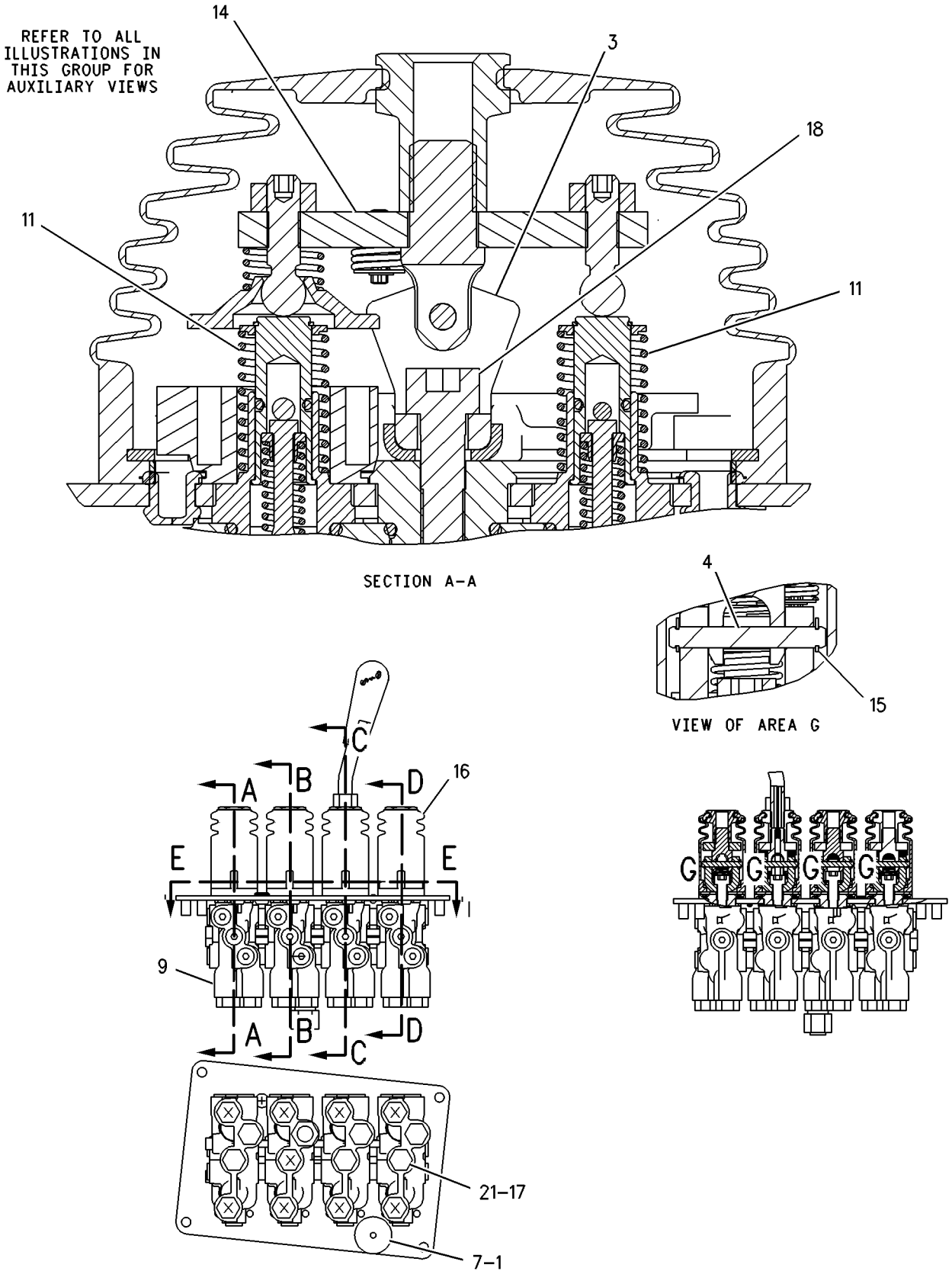

GRAPHIC #2 g00799469

MEMORANDA

HYDRAULIC SYSTEM

172-3206 VALVE GP-PILOT

S/N: DBT1-UP
PART OF 122-6332, 219-4787 CONTROL GP-PILOT OPERATED HYD
AN ATTACHMENT

SMCS-5059 **i01629786**

NOTE	REF NO	GRAPHIC REF	PART NUMBER	QTY	PART NAME 1 2 3 4 5 6 (PRODUCT LEVEL)	SEE PAGE
	1	1	**6V-8636**	1	CONNECTOR	
	2	1	**141-4852**	1	BOOT	
	3	1	**141-7481**	1	SPACER	
	4	1	**141-9236**	1	SCREEN AS	
	5	1	**146-8477**	2	BRACKET	
	6	1	**146-8478**	1	CUP	
	7	1	**146-8981**	2	PIN	
	8	1	**147-3114**	1	LEVER AS (AUX)	
M		1	**5C-2890**	2	NUT (M6X1 THD)	
		1	**139-4189**	1	PLATE	
		1	**141-7481**	1	SPACER	
		1	**146-8479**	1	SWIVEL	
M		1	**178-7877**	2	SETSCREW	
Y	9	1	**163-4635**	1	PLATE GP-PILOT VALVE	471
Y	10	1	**168-6503**	2	VALVE GP-PILOT CARTRIDGE	534
Y	11	1	**168-6504**	1	VALVE GP-PILOT CARTRIDGE	536
	12	1	**9S-4191**	4	PLUG-STRAIGHT THREAD	
	13	1	**175-9438**	1	BODY AS	
M		1	**157-6155**	2	BOLT-SOCKET HEAD	
		1	**3J-7354**	24	SEAL-O-RING	
M		1	**5C-2890**	2	NUT (M6X1 THD)	
		1	**9S-8002**	16	PLUG-O-RING	
		1	**141-1095**	2	ADAPTER	
		1	**157-6144**	2	ADAPTER	
Y	14	1	**202-1233**	1	VALVE GP-PILOT CARTRIDGE	538
Y	15	1	**202-2558**	4	VALVE GP-PILOT CARTRIDGE	540
Y	16	1	**202-2564**	1	PIVOT GP-PILOT VALVE	468
Y	17	1	**202-2568**	1	PIVOT GP-PILOT VALVE	470
	18	1	**033-9139**	4	RING-RETAINING	
	19	1	**102-8806**	1	KIT-RECEPTACLE (8 PIN)	
					(KIT SERVICES RECEPTACLE AS AND WEDGE)	
	20	1	**136-9292**	2	BOOT	
	21	1	**153-8947**	1	SWIVEL AS	
	22	1	**3J-1907**	5	SEAL-O-RING	
M	23	1	**5A-3604**	2	BOLT-SOCKET HEAD (M8X1.25X25MM)	
	24	1	**6V-8397**	1	SEAL-O-RING	

M-METRIC PART
Y-SEPARATE ILLUSTRATION

172-3206 VALVE GP-PILOT *(contd.)*

i01629786

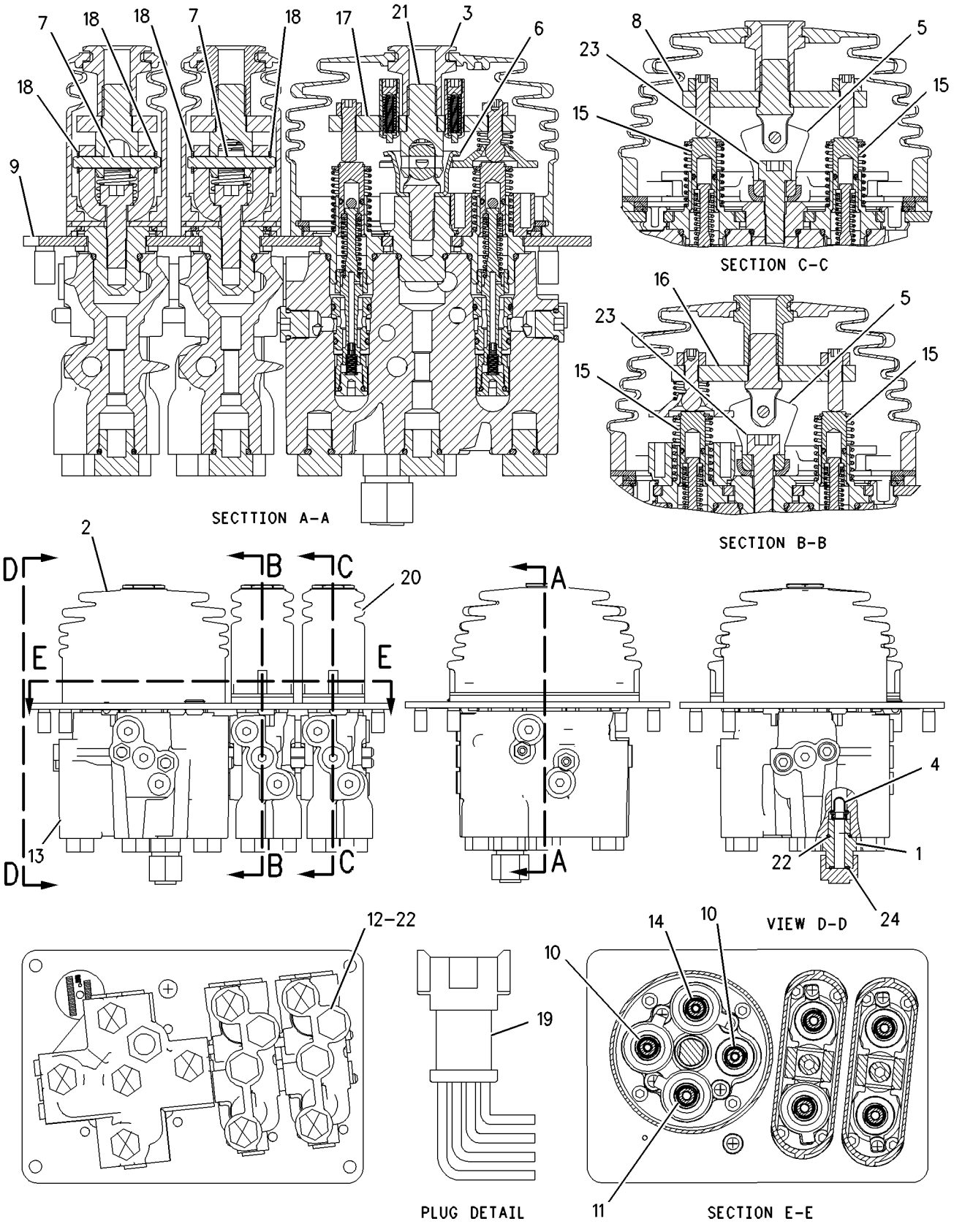

GRAPHIC #1

g00804835

HYDRAULIC SYSTEM

175-9446 VALVE GP-PILOT

S/N: DBT1-UP

PART OF 219-4785 CONTROL GP-PILOT OPERATED HYD

AN ATTACHMENT

SMCS-5059 **i01762177**

NOTE	REF NO	GRAPHIC REF	PART NUMBER	QTY	PART NAME 1 2 3 4 5 6 (PRODUCT LEVEL)	SEE PAGE
	1	1	**141-4852**	1	BOOT	
	2	1	**141-7481**	1	SPACER	
	3	1	**141-9236**	1	SCREEN AS	
	4	1	**146-8478**	1	CUP	
Y	5	1	**163-4637**	1	PLATE GP-PILOT VALVE	473
	6	1	**168-1877**	1	BODY AS	
		1	**3J-7354**	8	SEAL-O-RING	
		1	**9S-8002**	8	PLUG	
Y	7	1	**168-6503**	2	VALVE GP-PILOT CARTRIDGE	534
Y	8	1	**168-6504**	1	VALVE GP-PILOT CARTRIDGE	536
Y	9	1	**202-1233**	1	VALVE GP-PILOT CARTRIDGE	538
Y	10	1	**202-2568**	1	PIVOT GP-PILOT VALVE	470
	11	1	**102-8806**	1	KIT-RECEPTACLE (8 PIN)	
	12	1	**153-8947**	1	SWIVEL AS	
	13	1	**3J-1907**	1	SEAL-O-RING	
	14	1	**6V-8397**	1	SEAL-O-RING	
	15	1	**6V-8636**	1	CONNECTOR	
	16	1	**8T-8737**	2	PLUG-SEAL	

Y-SEPARATE ILLUSTRATION

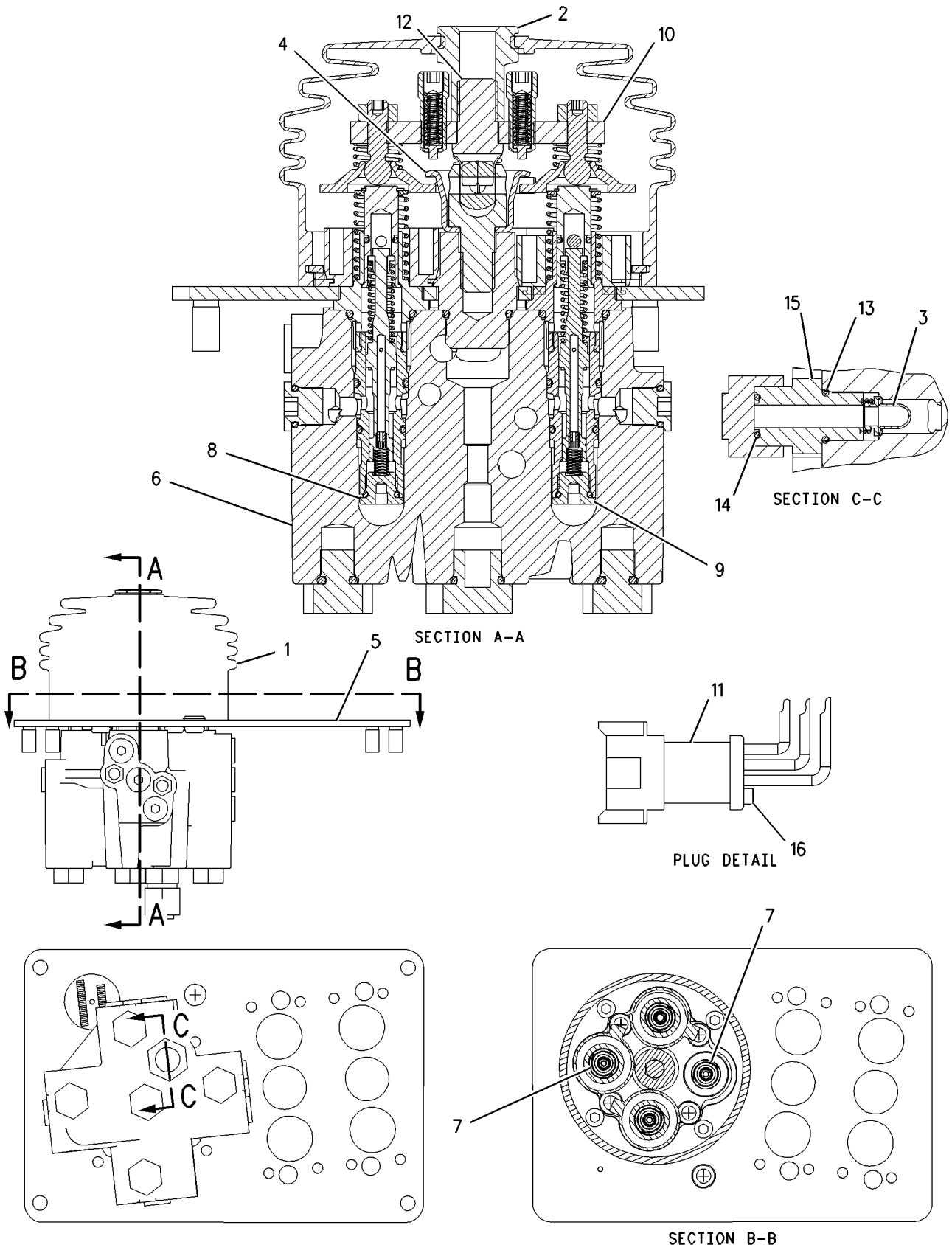

GRAPHIC #1

g00801973

HYDRAULIC SYSTEM

175-9447 VALVE GP-PILOT—TWO LEVER

S/N: DBT1-UP
PART OF 219-4790 CONTROL GP-PILOT OPERATED HYD
AN ATTACHMENT

SMCS-5059 **i01760198**

NOTE	REF NO	GRAPHIC REF	PART NUMBER	QTY	PART NAME 1 2 3 4 5 6 (PRODUCT LEVEL)	SEE PAGE
	1	1	**9S-4191**	2	PLUG	
	2	1	**141-9236**	1	SCREEN AS	
	3	1	**146-8477**	2	BRACKET	
	4	1	**146-8981**	2	PIN	
Y	5	1	**168-6504**	1	VALVE GP-PILOT CARTRIDGE	536
	6	1	**6V-8636**	1	CONNECTOR	
Y	7	1	**175-9436**	1	PLATE GP-PILOT VALVE	474
	8	1	**175-9440**	1	BODY AS	
		1	**3J-7354**	16	SEAL-O-RING	
M		1	**5C-2890**	2	NUT (M6X1 THD)	
M		1	**8T-2397**	2	BOLT (M6X1X90MM)	
		1	**9S-8002**	12	PLUG	
		1	**160-0750**	2	ADAPTER	
Y	9	1	**175-9444**	1	PIVOT GP-PILOT VALVE	467
Y	10	1	**202-1233**	3	VALVE GP-PILOT CARTRIDGE	538
Y	11	1	**202-2567**	1	PIVOT GP-PILOT VALVE	469
	12	1	**033-9139**	4	RING-RETAINING	
	13	1	**136-9292**	2	BOOT	
	14	1	**3J-1907**	3	SEAL-O-RING	
M	15	1	**5A-3604**	2	BOLT-SOCKET HEAD (M8X1.25X25MM)	
	16	1	**6V-8397**	1	SEAL-O-RING	

M-METRIC PART
Y-SEPARATE ILLUSTRATION

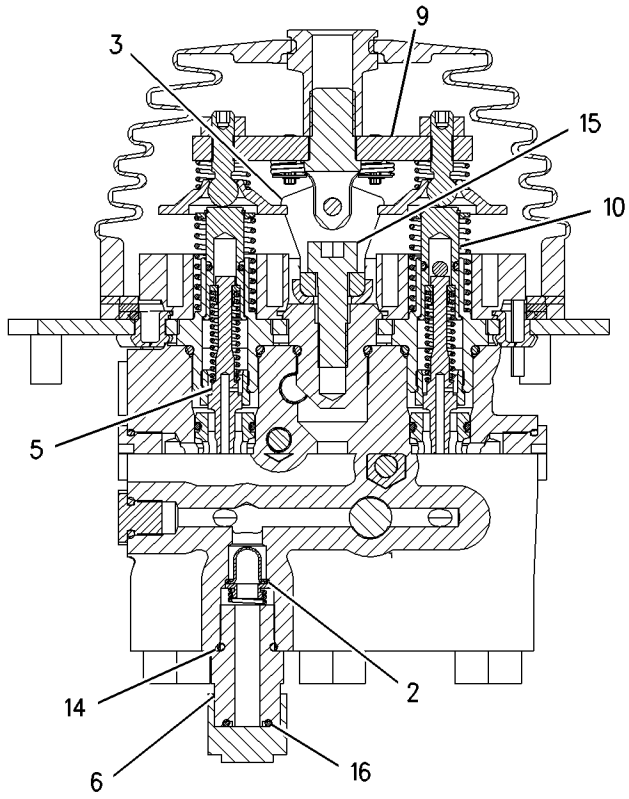

SECTION B-B

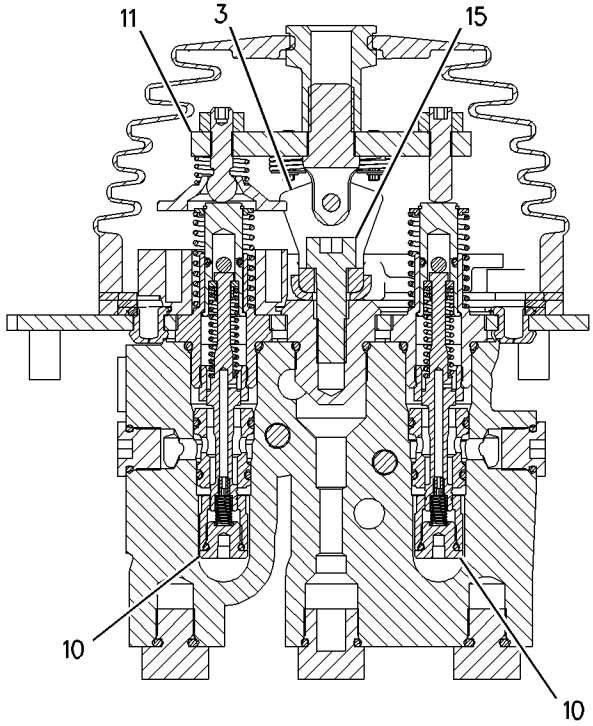

SECTION A-A

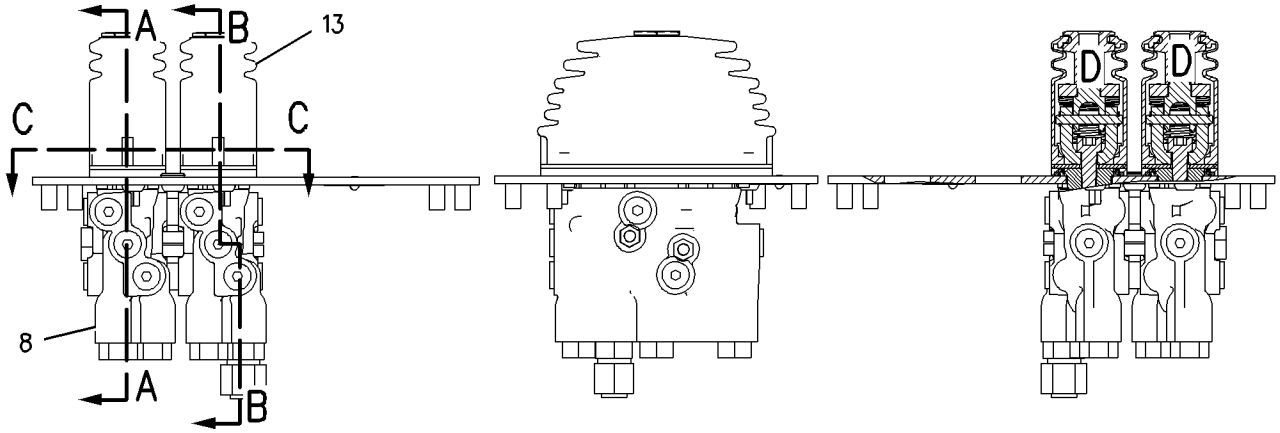

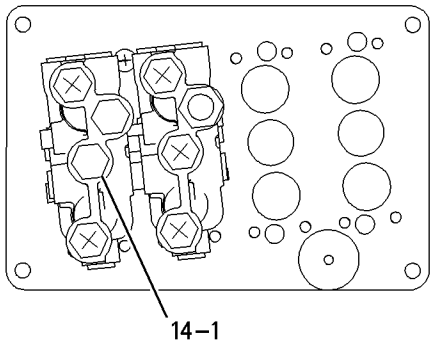

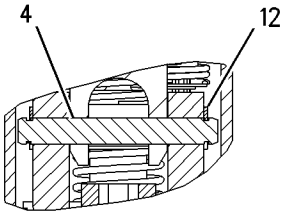

VIEW OF AREA D

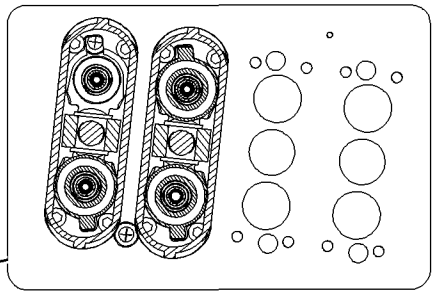

SECTION C-C

GRAPHIC #1 g00907443

175-9448 VALVE GP-PILOT

S/N: DBT1-UP
PART OF 219-4786 CONTROL GP-PILOT OPERATED HYD
AN ATTACHMENT

SMCS-5059 **i01541240**

NOTE	REF NO	GRAPHIC REF	PART NUMBER	QTY	PART NAME 1 2 3 4 5 6 (PRODUCT LEVEL)	SEE PAGE
	1	1	**7B-3028**	1	SCREW-DRIVE (NO 4X3/16 IN)	
	2	1	**141-4852**	1	BOOT	
	3	1	**141-7481**	1	SPACER	
	4	1	**141-9236**	1	SCREEN AS	
	5	1	**146-8477**	1	BRACKET	
	6	1	**146-8478**	1	CUP	
	7	1	**146-8981**	1	PIN	
Y	8	1	**163-4636**	1	PLATE GP-PILOT VALVE	472
	9	1	**168-1878**	1	BODY AS	
		1	**3J-1907**	7	SEAL-O-RING	
		1	**3J-7354**	16	SEAL-O-RING	
M		1	**5C-2890**	2	NUT (M6X1 THD)	
		1	**9S-8002**	12	PLUG-O-RING	
M		1	**140-9926**	2	BOLT-SOCKET HEAD	
		1	**141-1095**	2	ADAPTER	
Y	10	1	**168-6503**	2	VALVE GP-PILOT CARTRIDGE	534
Y	11	1	**168-6504**	1	VALVE GP-PILOT CARTRIDGE	536
	12	1	**175-9433**	1	PLATE-IDENTIFICATION	
Y	13	1	**202-1233**	1	VALVE GP-PILOT CARTRIDGE	538
Y	14	1	**202-2558**	2	VALVE GP-PILOT CARTRIDGE	540
Y	15	1	**202-2564**	1	PIVOT GP-PILOT VALVE	468
Y	16	1	**202-2568**	1	PIVOT GP-PILOT VALVE	470
	17	1	**033-9139**	2	RING-RETAINING	
	18	1	**102-8806**	1	KIT-RECEPTACLE (8 PIN)	
	19	1	**136-9292**	1	BOOT	
	20	1	**153-8947**	1	SWIVEL AS	
	21	1	**3J-1907**	3	SEAL-O-RING	
M	22	1	**5A-3604**	1	BOLT-SOCKET HEAD (M8X1.25X25MM)	
	23	1	**6V-8397**	1	SEAL-O-RING	
	24	1	**6V-8636**	1	CONNECTOR	
	25	1	**9S-4191**	2	PLUG-STRAIGHT THREAD	

M-METRIC PART
Y-SEPARATE ILLUSTRATION

175-9448 VALVE GP-PILOT *(contd.)* i01541240

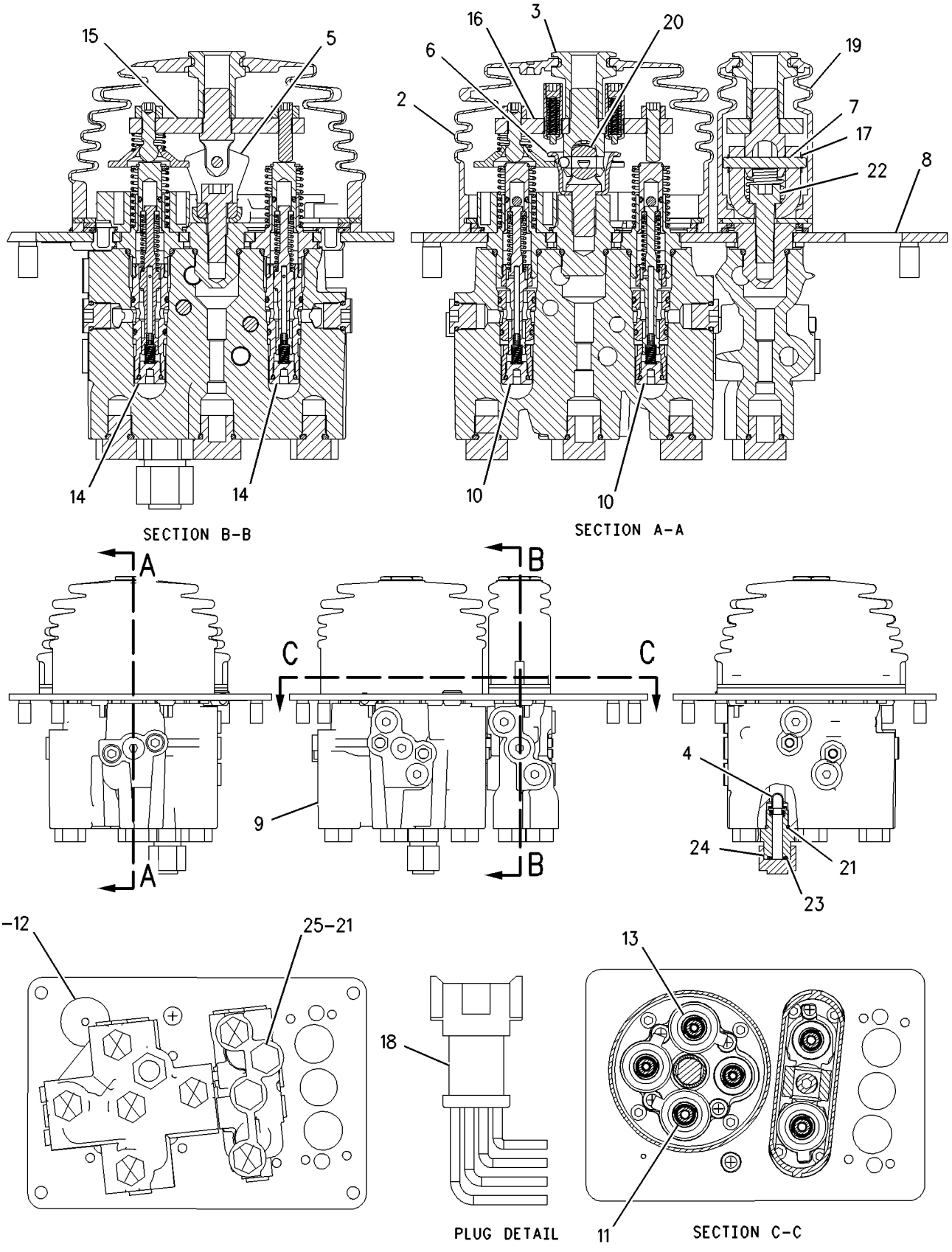

GRAPHIC #1 g00807529

HYDRAULIC SYSTEM

175-9449 VALVE GP-PILOT

S/N: DBT1-UP
PART OF 219-4789 CONTROL GP-PILOT OPERATED HYD
AN ATTACHMENT

SMCS-5059 **i01541229**

NOTE	REF NO	GRAPHIC REF	PART NUMBER	QTY	PART NAME 1 2 3 4 5 6 (PRODUCT LEVEL)	SEE PAGE
	1	2	**7B-3028**	1	SCREW-DRIVE (NO 4X3/16 IN)	
	2	3	**141-9236**	1	SCREEN AS	
	3	1,3	**146-8477**	3	BRACKET	
	4	3	**146-8981**	3	PIN	
Y	5	3	**168-6504**	1	VALVE GP-PILOT CARTRIDGE	536
	6	2	**175-9437**	1	PLATE AS	
	7	2	**175-9442**	1	BODY AS	
		2	**3J-1907**	12	SEAL-O-RING	
		2	**3J-7354**	24	SEAL-O-RING	
M		2	**5C-2890**	2	NUT (M6X1 THD)	
		2	**9S-8002**	16	PLUG-O-RING	
		2	**160-0750**	4	ADAPTER	
M		2	**168-4520**	2	BOLT-SOCKET HEAD	
Y	8	3	**175-9444**	1	PIVOT GP-PILOT VALVE	467
Y	9	1,3	**202-1233**	3	VALVE GP-PILOT CARTRIDGE	538
Y	10	3	**202-2558**	2	VALVE GP-PILOT CARTRIDGE	540
Y	11	3	**202-2564**	1	PIVOT GP-PILOT VALVE	468
Y	12	1	**202-2567**	1	PIVOT GP-PILOT VALVE	469
	13	3	**033-9139**	6	RING-RETAINING	
	14	2	**136-9292**	3	BOOT	
	15	2	**175-9434**	1	PLATE-IDENTIFICATION	
	16	2,3	**3J-1907**	5	SEAL-O-RING	
M	17	1,3	**5A-3604**	3	BOLT-SOCKET HEAD (M8X1.25X25MM)	
	18	3	**6V-8397**	1	SEAL-O-RING	
	19	3	**6V-8636**	1	CONNECTOR	
	20	2	**9S-4191**	4	PLUG-STRAIGHT THREAD (9/16-18 THD)	

M-METRIC PART
Y-SEPARATE ILLUSTRATION

175-9449 VALVE GP-PILOT *(contd.)* **i01541229**

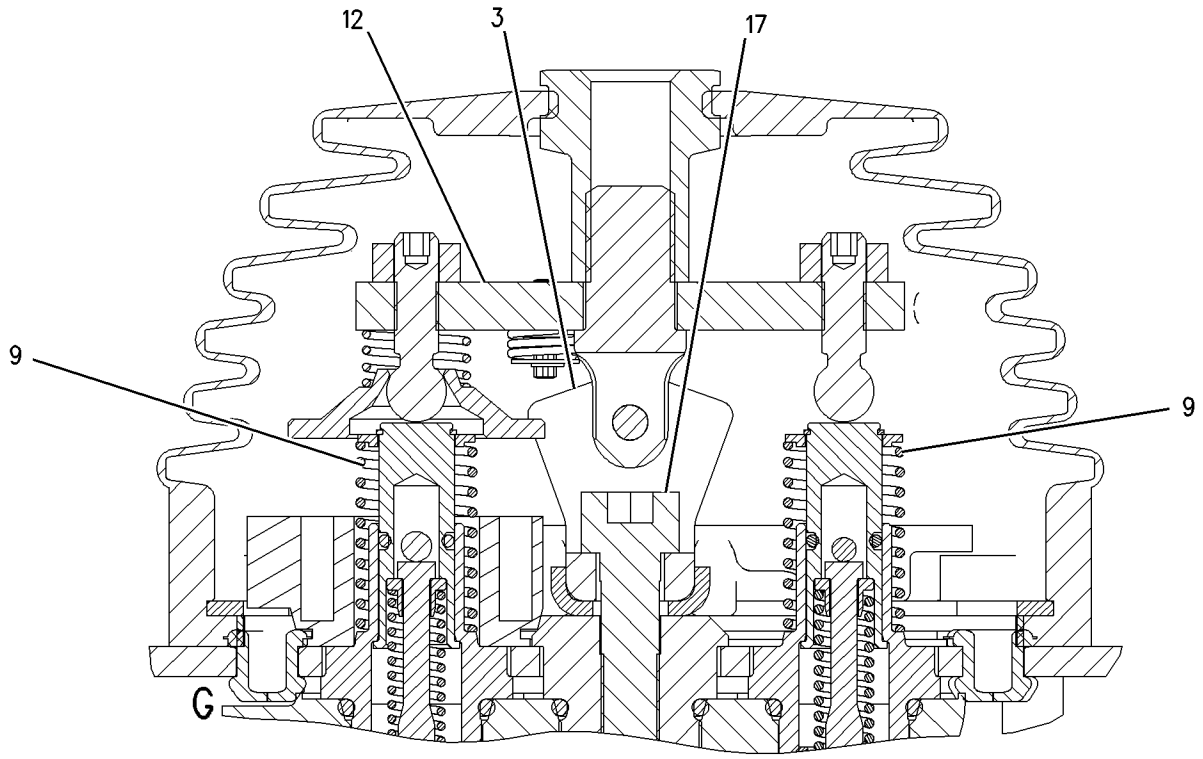

SECTION A–A

GRAPHIC #1 g00800879

175-9449 VALVE GP-PILOT *(contd.)* i01541229

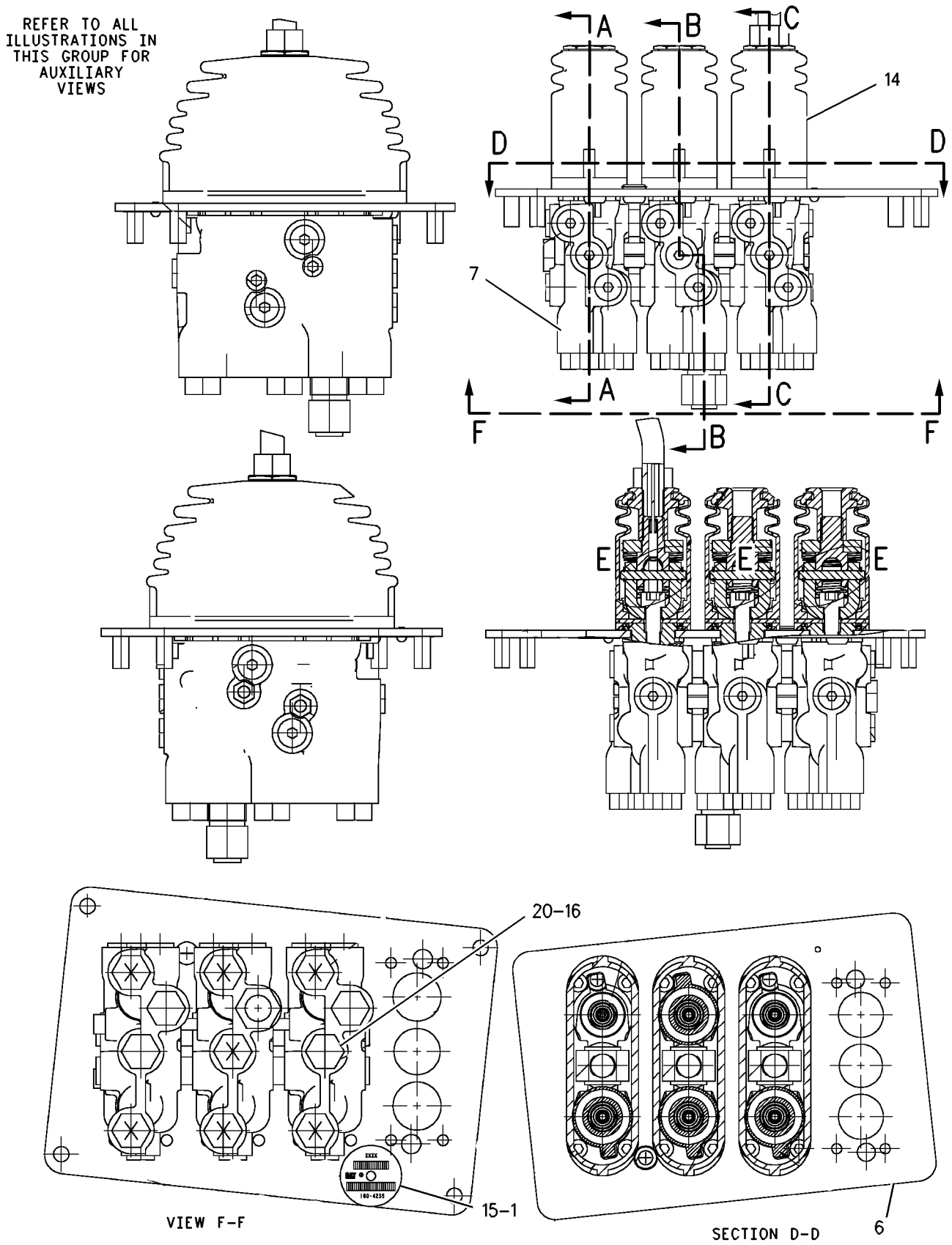

GRAPHIC #2 g00800881

175-9449 VALVE GP-PILOT *(contd.)* **i01541229**

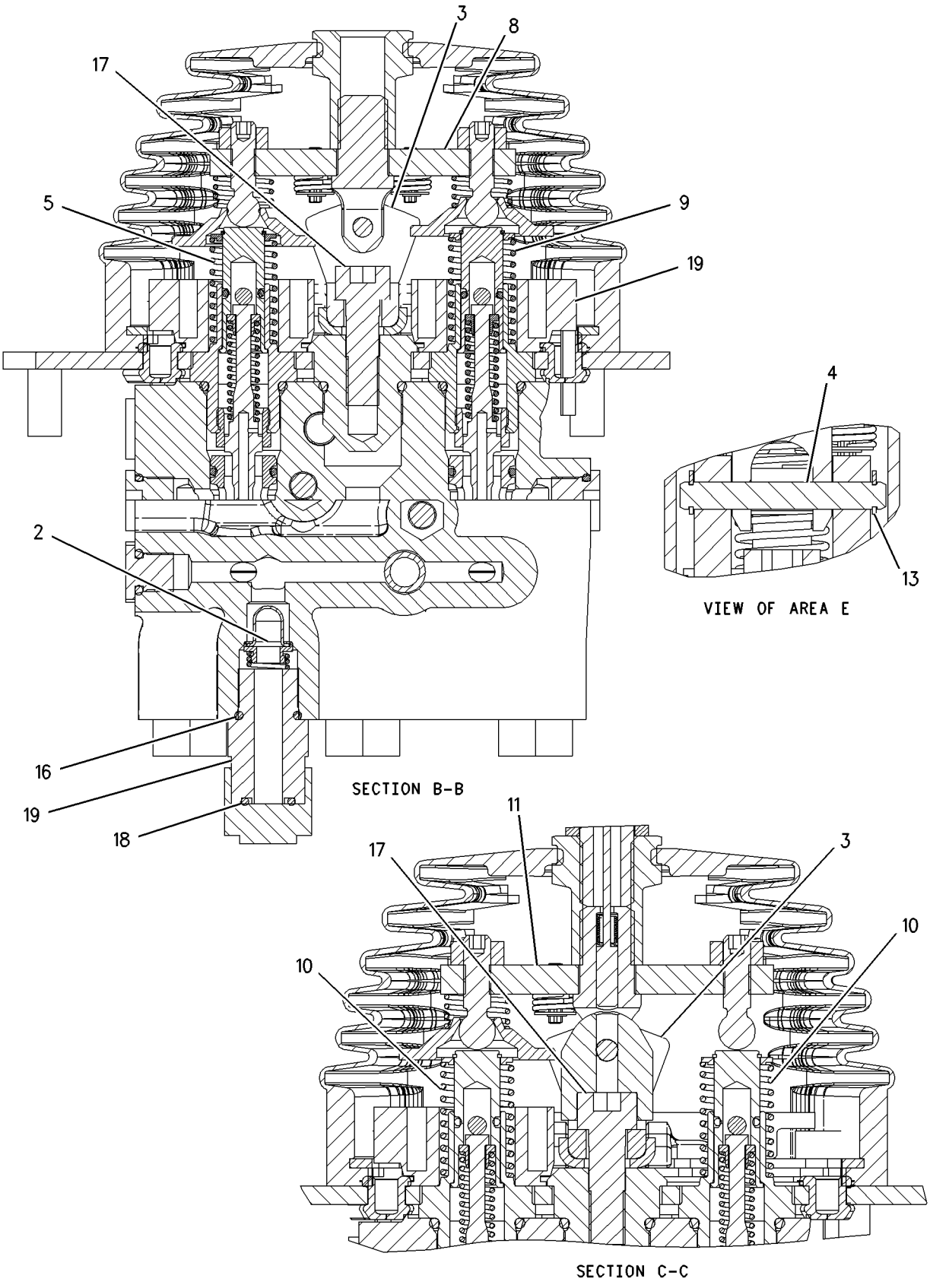

GRAPHIC #3 g00800886

HYDRAULIC SYSTEM

201-3359 VALVE GP-PILOT

S/N: DJD1-UP
PART OF 220-1506 CONTROL GP-PILOT OPERATED HYD
AN ATTACHMENT

SMCS-5059 **i01628227**

NOTE	REF NO	GRAPHIC REF	PART NUMBER	QTY	PART NAME 1 2 3 4 5 6 (PRODUCT LEVEL)	SEE PAGE
	1	1	**7B-3028**	1	SCREW-DRIVE (NO 4X3/16 IN)	
	2	1	**141-4852**	1	BOOT	
	3	1	**141-7481**	1	SPACER	
	4	1	**141-9236**	1	SCREEN AS	
	5	1	**146-8478**	1	CUP	
Y	6	1	**163-4637**	1	PLATE GP-PILOT VALVE	473
	7	1	**168-1877**	1	BODY AS	
		1	**3J-7354**	8	SEAL-O-RING	
		1	**9S-8002**	8	PLUG-O-RING	
Y	8	1	**168-6503**	2	VALVE GP-PILOT CARTRIDGE	534
Y	9	1	**168-6504**	1	VALVE GP-PILOT CARTRIDGE	536
Y	10	1	**202-1233**	1	VALVE GP-PILOT CARTRIDGE	538
	11	1	**202-1320**	1	PLATE-IDENTIFICATION	
	12	1	**102-8806**	1	KIT-RECEPTACLE (8 PIN)	
					(KIT SERVICES RECEPTACLE AS AND WEDGE)	
	13	1	**147-3322**	1	PLATE GP-PILOT VALVE (JOYSTICK)	
M		1	**178-7877**	1	SETSCREW	
M		1	**5C-2890**	4	NUT (M6X1 THD)	
		1	**146-6315**	3	PIN	
		1	**146-6317**	3	WASHER	
		1	**153-8945**	3	PLUNGER AS	
					(EACH INCLUDES)	
		1	**3H-7180**	1	SETSCREW (1/4-28X.25IN)	
		1	**6J-9996**	1	SPRING	
		1	**159-3781**	3	SPRING	
	14	1	**153-8947**	1	SWIVEL AS	
	15	1	**3J-1907**	1	SEAL-O-RING	
	16	1	**6V-8397**	1	SEAL-O-RING	
	17	1	**6V-8636**	1	CONNECTOR	
	18	1	**8T-8737**	2	PLUG-SEAL	

M-METRIC PART
Y-SEPARATE ILLUSTRATION

201-3359 VALVE GP-PILOT *(contd.)* **i01628227**

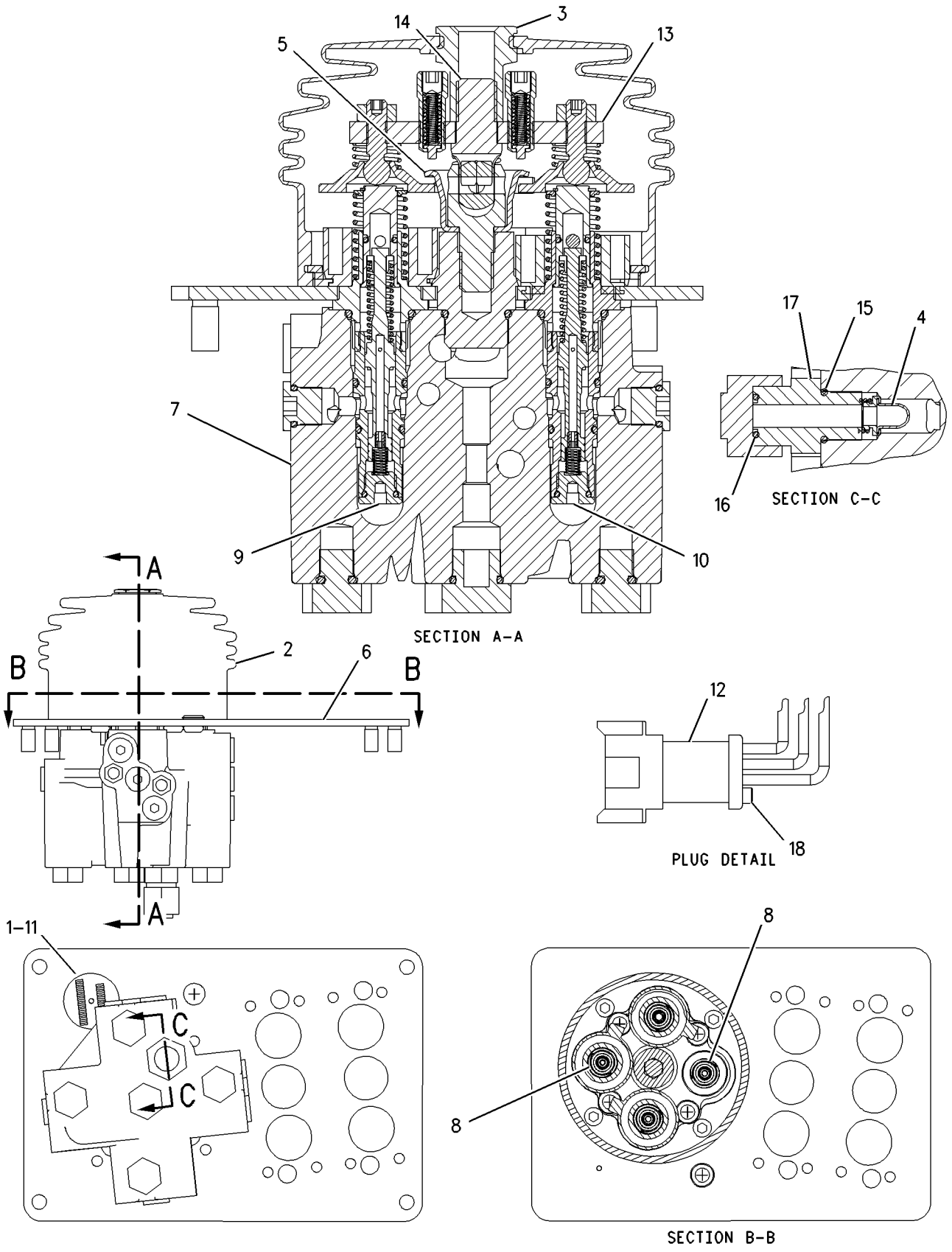

GRAPHIC #1 g00800942

HYDRAULIC SYSTEM

201-3360 VALVE GP-PILOT

S/N: DJD1-UP
PART OF 220-1505 CONTROL GP-PILOT OPERATED HYD
AN ATTACHMENT

SMCS-5059 **i01627711**

NOTE	REF NO	GRAPHIC REF	PART NUMBER	QTY	PART NAME 1 2 3 4 5 6 (PRODUCT LEVEL)	SEE PAGE
	1	1	**6V-8636**	1	CONNECTOR	
	2	1	**141-9236**	1	SCREEN AS	
	3	1	**146-8477**	2	BRACKET	
	4	1	**146-8981**	2	PIN	
Y	5	1	**168-6504**	1	VALVE GP-PILOT CARTRIDGE	536
Y	6	1	**175-9436**	1	PLATE GP-PILOT VALVE	474
	7	1	**175-9440**	1	BODY AS	
		1	**3J-7354**	16	SEAL-O-RING	
M		1	**5C-2890**	2	NUT (M6X1 THD)	
M		1	**8T-2397**	2	BOLT (M6X1X90MM)	
		1	**9S-8002**	12	PLUG-O-RING	
		1	**160-0750**	2	ADAPTER	
Y	8	1	**175-9443**	1	PIVOT GP-PILOT VALVE	466
Y	9	1	**175-9444**	1	PIVOT GP-PILOT VALVE	467
Y	10	1	**202-1233**	3	VALVE GP-PILOT CARTRIDGE	538
	11	1	**9S-4191**	2	PLUG-STRAIGHT THREAD	
	12	1	**033-9139**	4	RING-RETAINING	
	13	1	**136-9292**	2	BOOT	
	14	1	**3J-1907**	3	SEAL-O-RING	
M	15	1	**5A-3604**	2	BOLT-SOCKET HEAD (M8X1.25X25MM)	
	16	1	**6V-8397**	1	SEAL-O-RING	

M-METRIC PART
Y-SEPARATE ILLUSTRATION

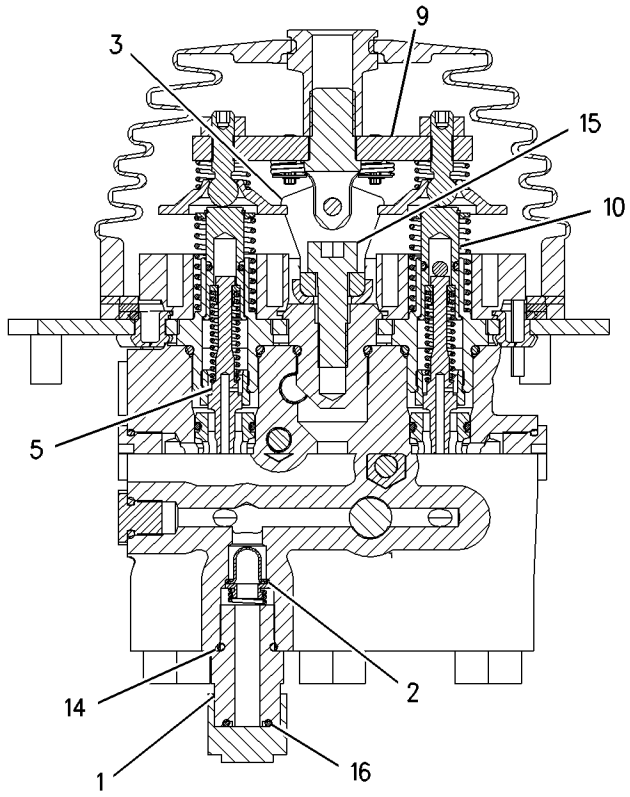

SECTION B-B

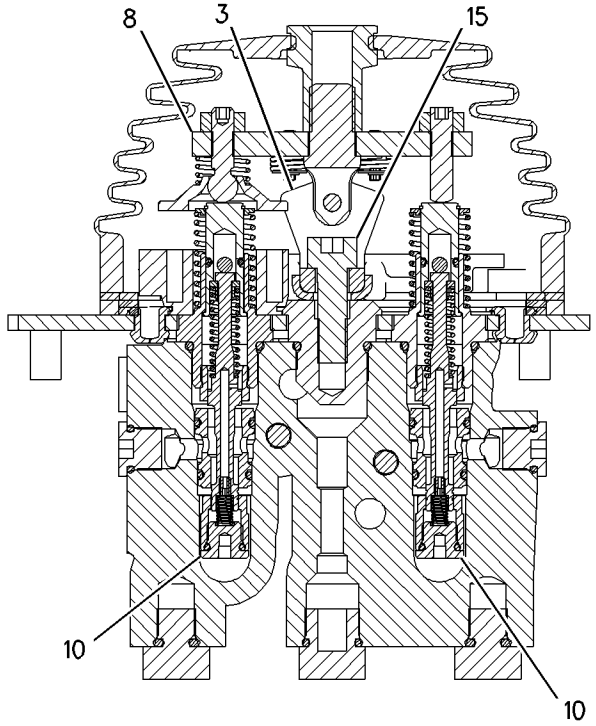

SECTION A-A

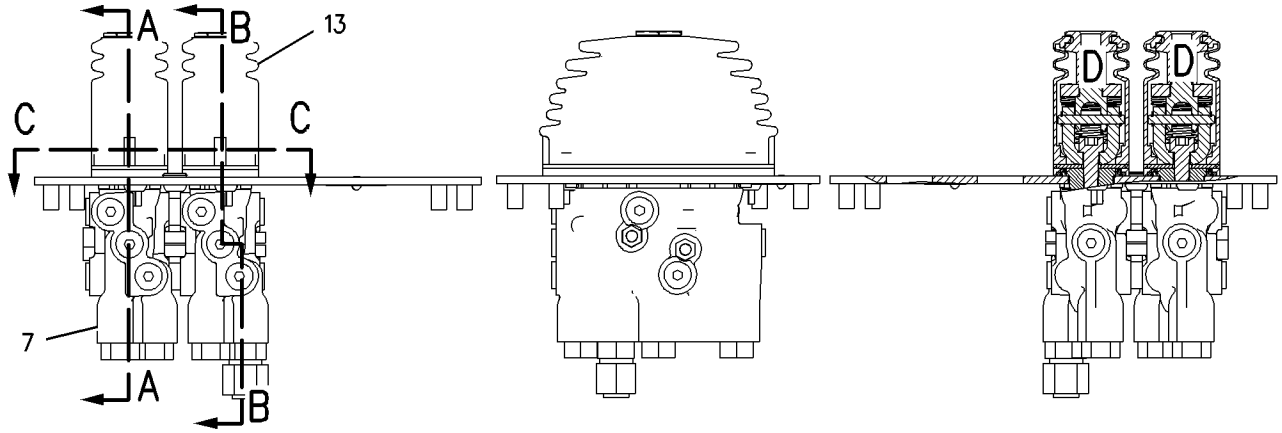

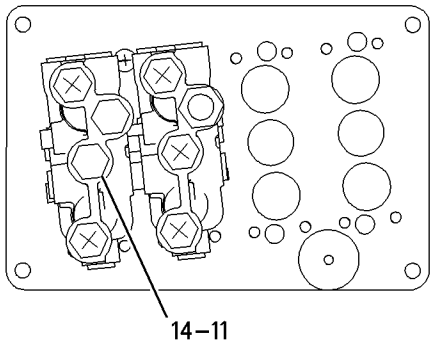

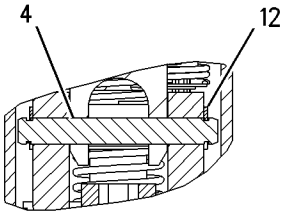

VIEW OF AREA D

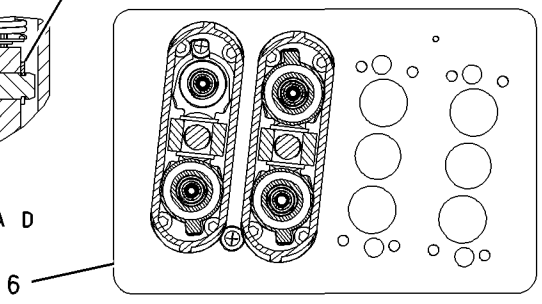

SECTION C-C

GRAPHIC #1 g00804927

HYDRAULIC SYSTEM

201-3361 VALVE GP-PILOT

S/N: DJD1-UP
PART OF 220-1509 CONTROL GP-PILOT OPERATED HYD
AN ATTACHMENT

SMCS-5059 **i01628215**

NOTE	REF NO	GRAPHIC REF	PART NUMBER	QTY	PART NAME 1 2 3 4 5 6 (PRODUCT LEVEL)	SEE PAGE
	1	2	**6V-8636**	1	CONNECTOR	
	2	1	**141-4852**	1	BOOT	
	3	1	**141-7481**	1	SPACER	
	4	2	**141-9236**	1	SCREEN AS	
	5	1	**146-8477**	1	BRACKET	
	6	1	**146-8478**	1	CUP	
	7	1	**146-8981**	1	PIN	
Y	8	1	**163-4636**	1	PLATE GP-PILOT VALVE	472
	9	1	**168-1878**	1	BODY AS	
		1	**3J-7354**	16	SEAL-O-RING	
M		1	**5C-2890**	2	NUT (M6X1 THD)	
		1	**9S-8002**	12	PLUG-O-RING	
M		1	**140-9926**	2	BOLT-SOCKET HEAD	
		1	**141-1095**	2	ADAPTER	
Y	10	1	**168-6503**	2	VALVE GP-PILOT CARTRIDGE	534
Y	11	2	**168-6504**	1	VALVE GP-PILOT CARTRIDGE	536
Y	12	2	**202-1233**	1	VALVE GP-PILOT CARTRIDGE	538
	13	2	**9S-4191**	2	PLUG-STRAIGHT THREAD	
Y	14	2	**202-2558**	2	VALVE GP-PILOT CARTRIDGE	540
Y	15	2	**202-2564**	1	PIVOT GP-PILOT VALVE	468
	16	1	**033-9139**	2	RING-RETAINING	
	17	2	**102-8806**	1	KIT-RECEPTACLE (8 PIN)	
	18	1	**136-9292**	1	BOOT	
	19	1	**147-3322**	1	PLATE GP-PILOT VALVE (JOYSTICK)	
M		1	**178-7877**	1	SETSCREW	
M		1	**5C-2890**	4	NUT (M6X1 THD)	
		1	**146-6315**	3	PIN	
		1	**146-6317**	3	WASHER	
		1	**153-8945**	3	PLUNGER AS	
					(EACH INCLUDES)	
		1	**3H-7180**	1	SETSCREW (1/4-28X.25IN)	
		1	**6J-9996**	1	SPRING	
		1	**159-3781**	3	SPRING	
	20	1	**153-8947**	1	SWIVEL AS	
	21	2	**3J-1907**	3	SEAL-O-RING	
M	22	1	**5A-3604**	1	BOLT-SOCKET HEAD (M8X1.25X25MM)	
	23	2	**6V-8397**	1	SEAL-O-RING	

M-METRIC PART
Y-SEPARATE ILLUSTRATION

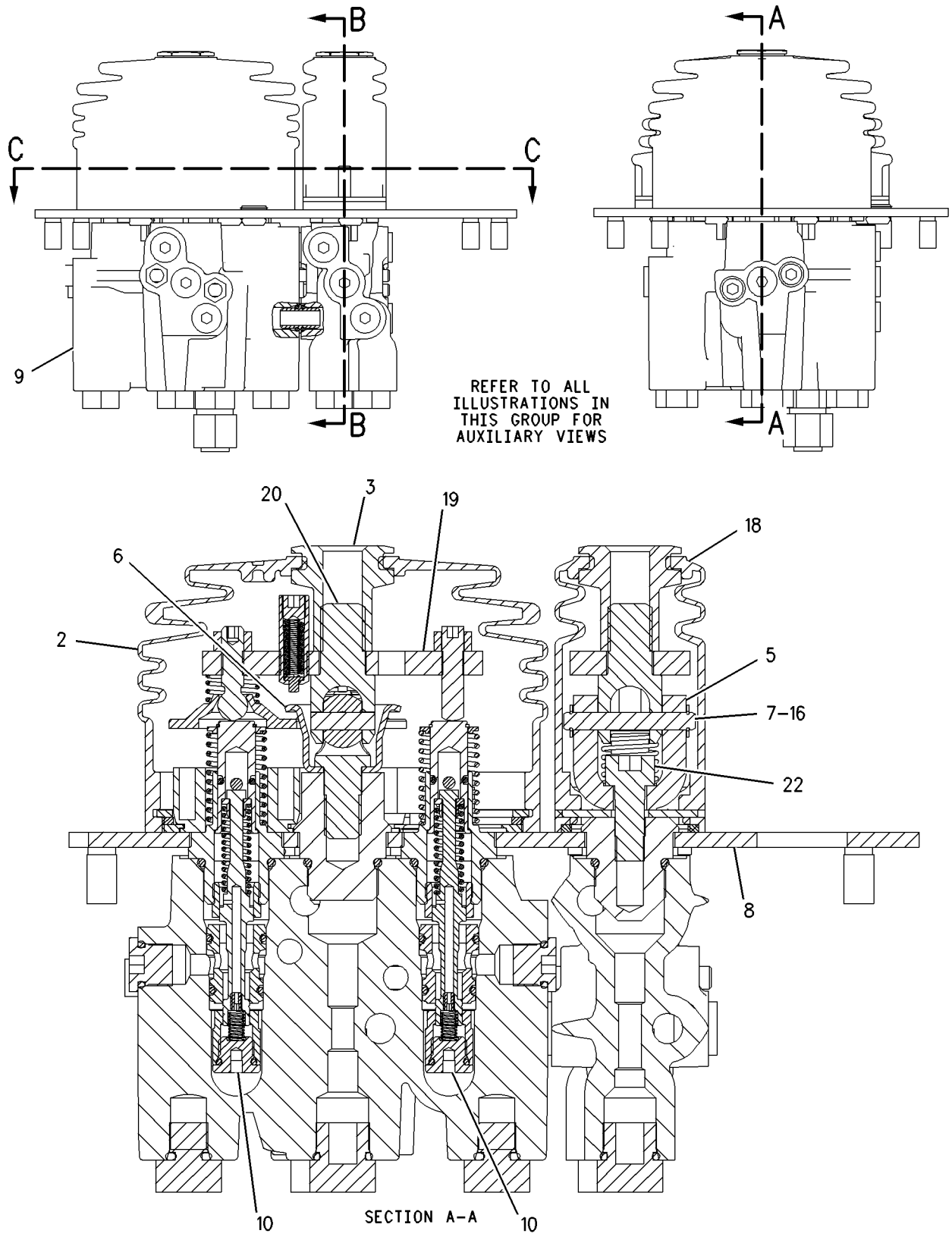

GRAPHIC #1 g00800975

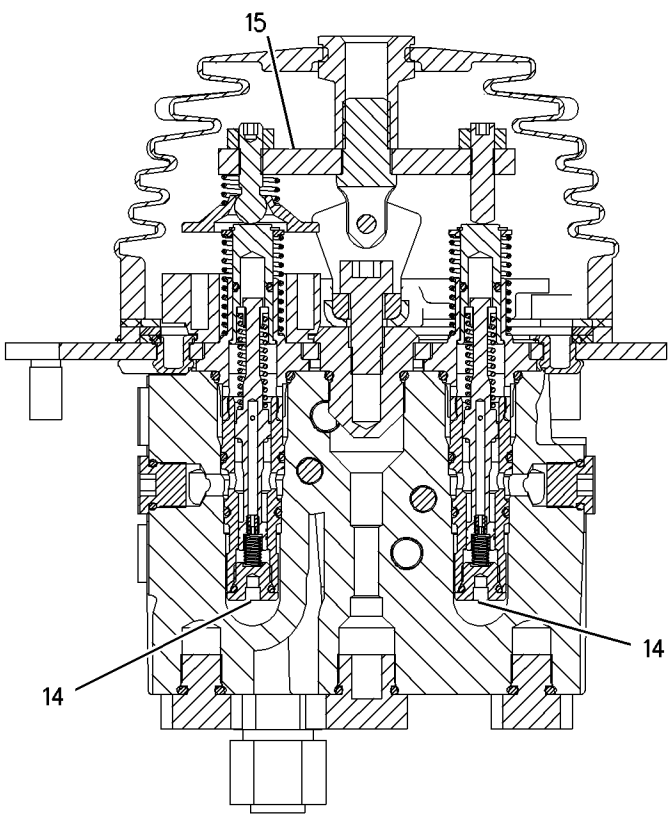

SECTION B-B

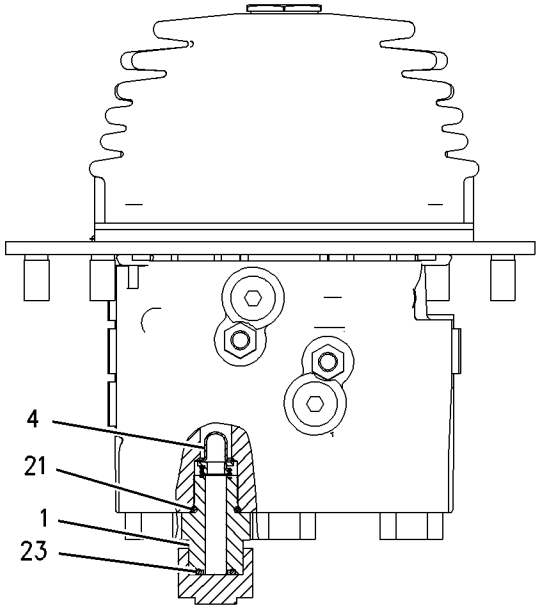

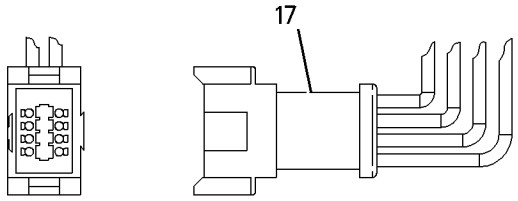

PLUG DETAIL

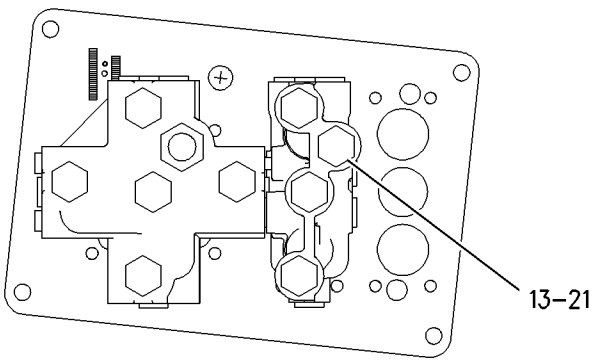

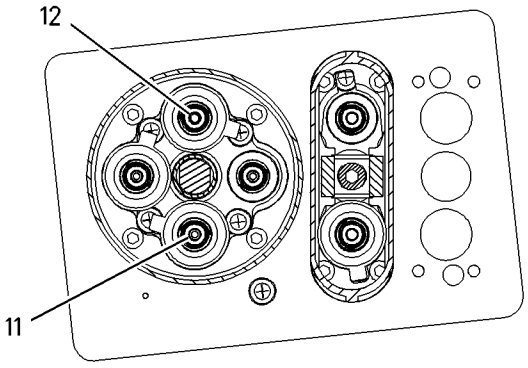

SECTION C-C

GRAPHIC #2 g00800976

MEMORANDA

HYDRAULIC SYSTEM

201-3362 VALVE GP-PILOT

S/N: DJD1-UP
PART OF 220-1507 CONTROL GP-PILOT OPERATED HYD
AN ATTACHMENT

SMCS-5059 **i01627736**

NOTE	REF NO	GRAPHIC REF	PART NUMBER	QTY	PART NAME 1 2 3 4 5 6 (PRODUCT LEVEL)	SEE PAGE
	1	1	**6V-8636**	1	CONNECTOR	
	2	1	**141-9236**	1	SCREEN AS	
	3	1	**146-8477**	3	BRACKET	
	4	1	**146-8981**	3	PIN	
Y	5	1	**168-6504**	1	VALVE GP-PILOT CARTRIDGE	536
Y	6	1	**175-9437**	1	PLATE GP-PILOT VALVE	475
	7	1	**175-9442**	1	BODY AS	
		1	**3J-7354**	24	SEAL-O-RING	
M		1	**5C-2890**	2	NUT (M6X1 THD)	
		1	**9S-8002**	16	PLUG-O-RING	
		1	**160-0750**	4	ADAPTER	
M		1	**168-4520**	2	BOLT-SOCKET HEAD	
Y	8	1	**175-9443**	1	PIVOT GP-PILOT VALVE	466
Y	9	1	**175-9444**	1	PIVOT GP-PILOT VALVE	467
Y	10	1	**202-1233**	3	VALVE GP-PILOT CARTRIDGE	538
	11	1	**9S-4191**	4	PLUG-STRAIGHT THREAD	
Y	12	1	**202-2558**	2	VALVE GP-PILOT CARTRIDGE	540
Y	13	1	**202-2564**	1	PIVOT GP-PILOT VALVE	468
	14	1	**033-9139**	6	RING-RETAINING	
	15	1	**136-9292**	3	BOOT	
	16	1	**3J-1907**	5	SEAL-O-RING	
M	17	1	**5A-3604**	3	BOLT-SOCKET HEAD (M8X1.25X25MM)	
	18	1	**6V-8397**	1	SEAL-O-RING	

M-METRIC PART
Y-SEPARATE ILLUSTRATION

201-3362 VALVE GP-PILOT *(contd.)* i01627736

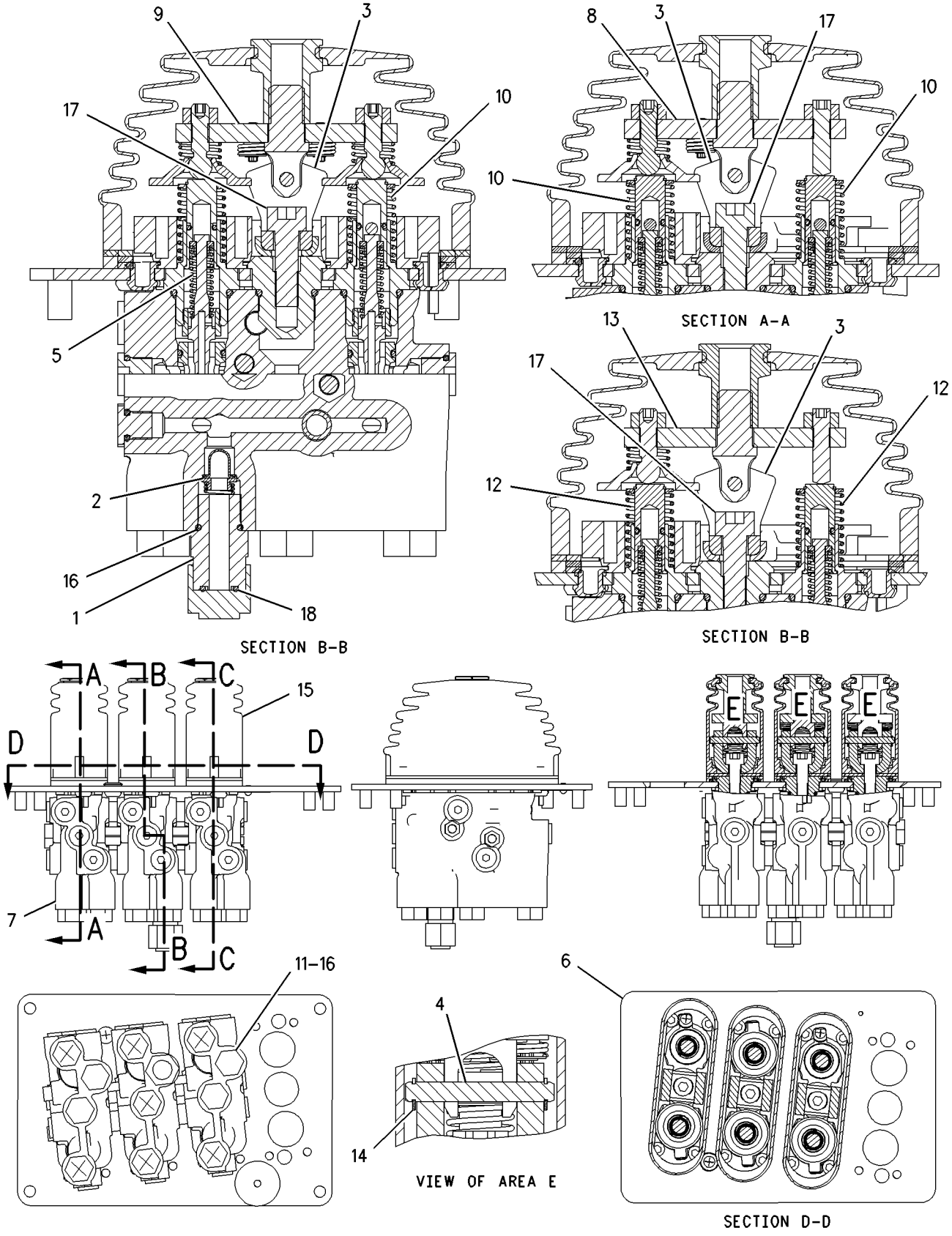

GRAPHIC #1 g00805005

HYDRAULIC SYSTEM

168-6503 VALVE GP-PILOT CARTRIDGE

S/N: DJD1-UP; DBT1-UP

PART OF 172-3206, 175-9446, 175-9448, 201-3359, 201-3361 VALVE GP-PILOT

AN ATTACHMENT

SMCS-5059 **i01541979**

NOTE	REF NO	GRAPHIC REF	PART NUMBER	QTY	PART NAME 1 2 3 4 5 6 (PRODUCT LEVEL)	SEE PAGE
	1	1	**116-4527**	1	ORIFICE	
	2	1	**136-9304**	1	ADAPTER	
	3	1	**146-6316**	2	RETAINER	
	4	1	**146-6318**	1	PLUNGER	
	5	1	**146-6319**	1	RETAINER	
	6	1	**153-8924**	1	SPOOL	
	7	1	**153-8925**	1	STOP	
	8	1	**153-8926**	1	SPRING	
	9	1	**153-8929**	1	CAGE	
	10	1	**157-2153**	1	SPRING	
	11	1	**201-4276**	1	SPRING	
	12	1	**1M-6718**	1	BALL	
	13	1	**2H-3429**	1	RING-RETAINING	
	14	1	**3K-0360**	1	SEAL-O-RING	
	15	1	**4K-2039**	1	SEAL-O-RING	
	16	1	**6M-5062**	1	SEAL-O-RING	
	17	1	**7I-6601**	1	SEAL-O-RING	
	18	1	**7J-0204**	1	SEAL-O-RING	

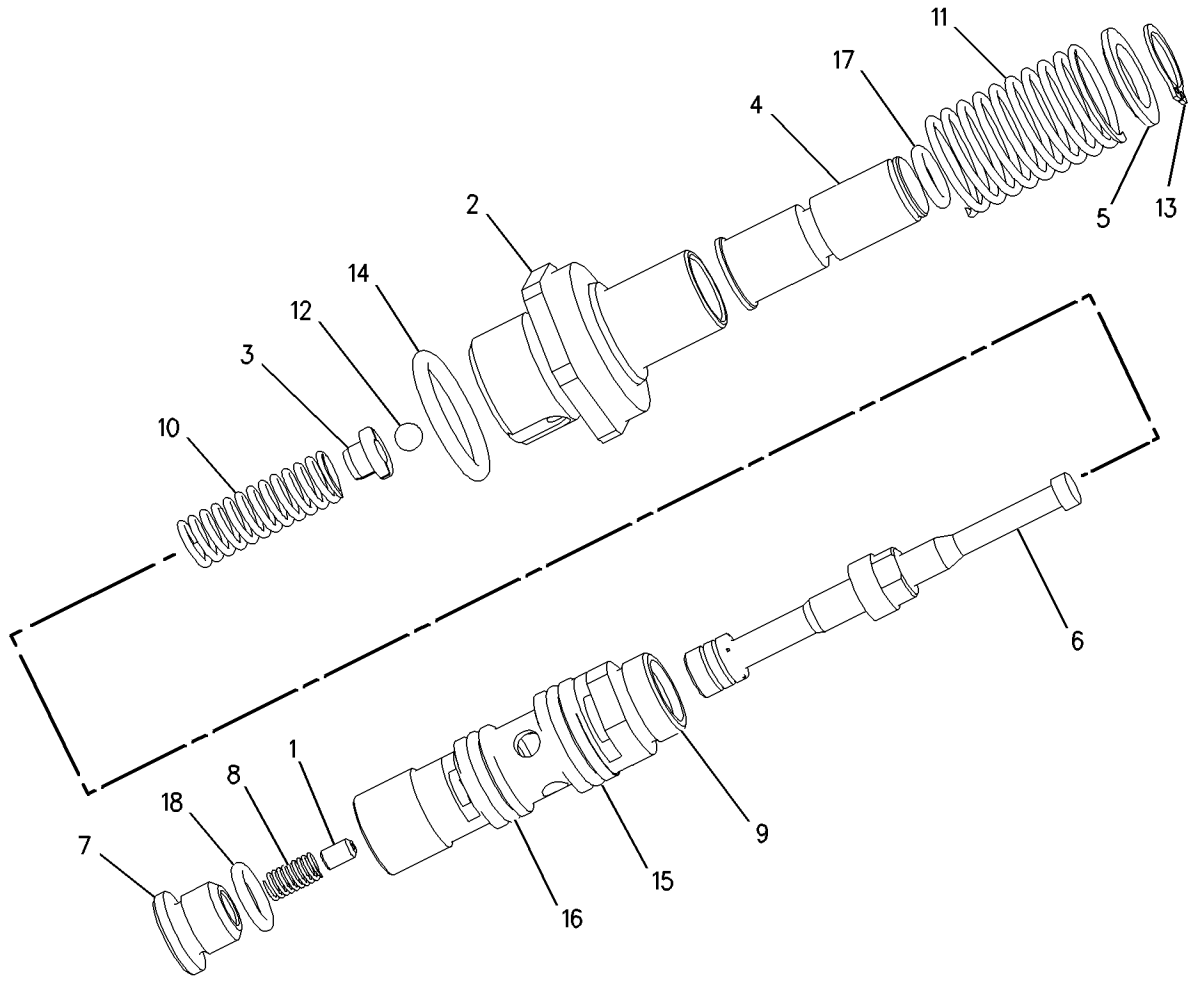

GRAPHIC #1 g00803859

MEMORANDA

168-6504 VALVE GP-PILOT CARTRIDGE

S/N: DJD1-UP; DBT1-UP

PART OF 172-3205, 172-3206, 175-9446, 175-9447, 175-9448, 175-9449, 201-3359, 201-3360, 201-3361, 201-3362 VALVE GP-PILOT

AN ATTACHMENT

SMCS-5059 **i01543994**

NOTE	REF NO	GRAPHIC REF	PART NUMBER	QTY	PART NAME 1 2 3 4 5 6 (PRODUCT LEVEL)	SEE PAGE
	1	1	**116-4527**	1	ORIFICE	
	2	1	**136-9304**	1	ADAPTER	
	3	1	**146-6316**	2	RETAINER	
	4	1	**146-6318**	1	PLUNGER	
	5	1	**146-6319**	1	RETAINER	
	6	1	**153-8924**	1	SPOOL	
	7	1	**153-8925**	1	STOP	
	8	1	**153-8926**	1	SPRING	
	9	1	**153-8929**	1	CAGE	
	10	1	**201-4275**	1	SPRING	
	11	1	**157-2152**	1	SPRING	
	12	1	**2H-3429**	1	RING-RETAINING	
	13	1	**3K-0360**	1	SEAL-O-RING	
	14	1	**4K-2039**	1	SEAL-O-RING	
	15	1	**6M-5062**	1	SEAL-O-RING	
	16	1	**7I-6601**	1	SEAL-O-RING	
	17	1	**7J-0204**	1	SEAL-O-RING	

168-6504 **VALVE GP-PILOT CARTRIDGE** ***(contd.)*** **i01543994**

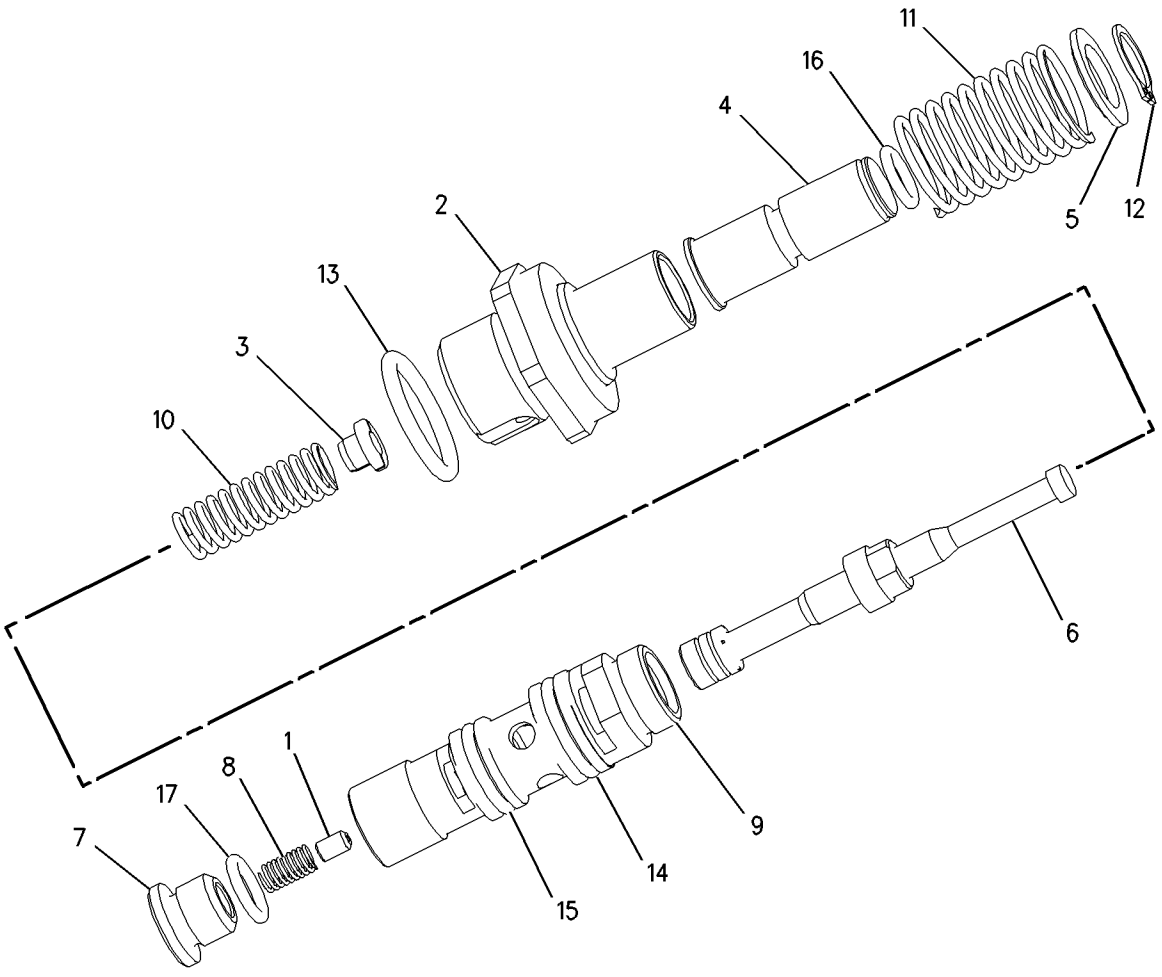

GRAPHIC #1 g00803868

202-1233 VALVE GP-PILOT CARTRIDGE

S/N: DJD1-UP; DBT1-UP

PART OF 172-3205, 172-3206, 175-9446, 175-9447, 175-9448, 175-9449, 201-3359, 201-3360, 201-3361, 201-3362 VALVE GP-PILOT

AN ATTACHMENT

SMCS-5059 **i01543788**

NOTE	REF NO	GRAPHIC REF	PART NUMBER	QTY	PART NAME 1 2 3 4 5 6 (PRODUCT LEVEL)	SEE PAGE
	1	1	**116-4527**	1	ORIFICE	
	2	1	**136-9304**	1	ADAPTER	
	3	1	**146-6316**	2	RETAINER	
	4	1	**146-6318**	1	PLUNGER	
	5	1	**146-6319**	1	RETAINER	
	6	1	**153-8924**	1	SPOOL	
	7	1	**153-8925**	1	STOP	
	8	1	**153-8926**	1	SPRING	
	9	1	**153-8929**	1	CAGE	
	10	1	**201-4276**	1	SPRING	
	11	1	**157-2152**	1	SPRING	
	12	1	**1M-6718**	1	BALL	
	13	1	**2H-3429**	1	RING-RETAINING	
	14	1	**3K-0360**	1	SEAL-O-RING	
	15	1	**4K-2039**	1	SEAL-O-RING	
	16	1	**6M-5062**	1	SEAL-O-RING	
	17	1	**7I-6601**	1	SEAL-O-RING	
	18	1	**7J-0204**	1	SEAL-O-RING	

202-1233 **VALVE GP-PILOT CARTRIDGE** *(contd.)* **i01543788**

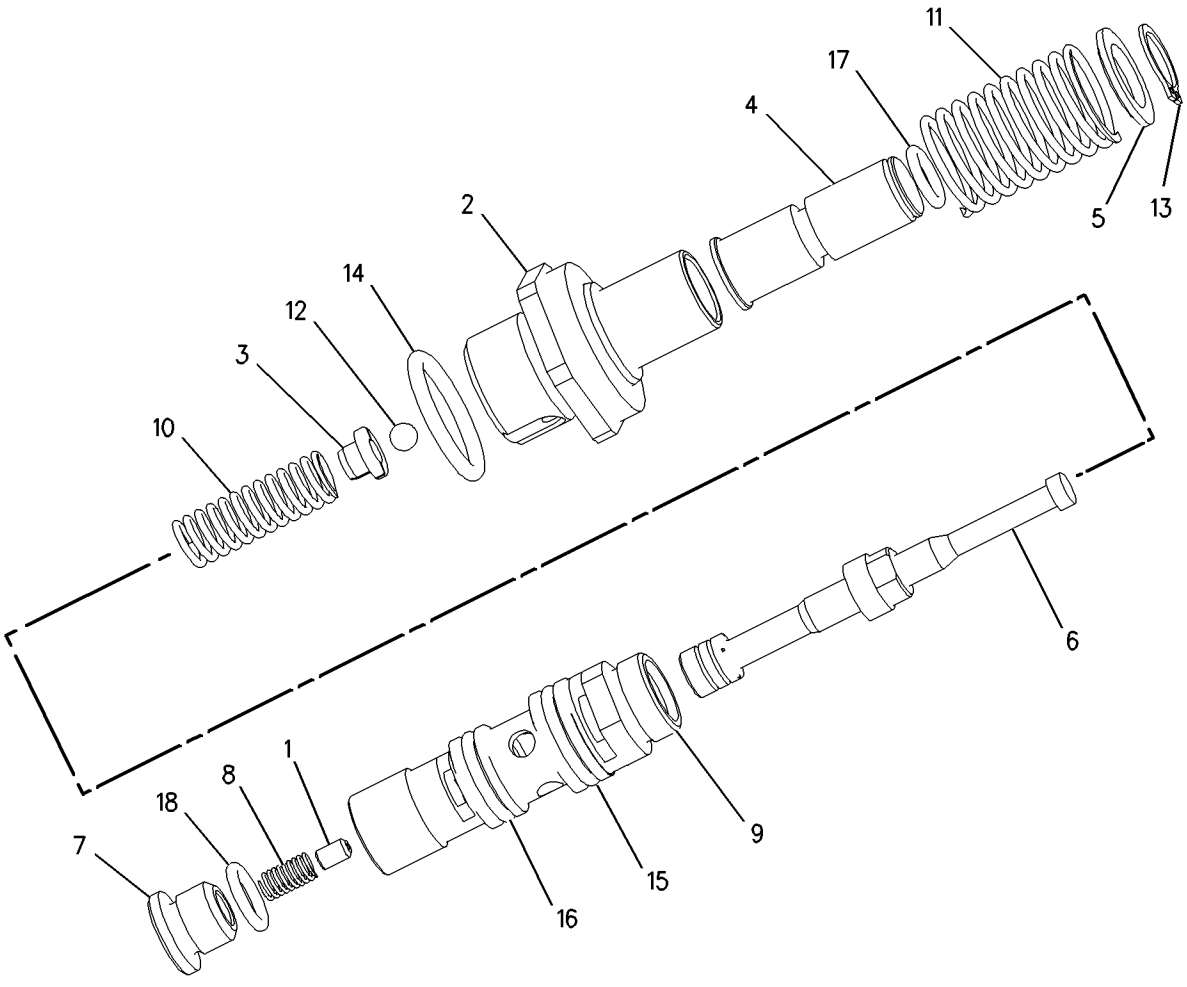

GRAPHIC #1 g00803859

HYDRAULIC SYSTEM

202-2558 VALVE GP-PILOT CARTRIDGE

S/N: DJD1-UP; DBT1-UP

PART OF 172-3205, 172-3206, 175-9448, 175-9449, 201-3361, 201-3362 VALVE GP-PILOT

AN ATTACHMENT

SMCS-5059 **i01627769**

NOTE	REF NO	GRAPHIC REF	PART NUMBER	QTY	PART NAME 1 2 3 4 5 6 (PRODUCT LEVEL)	SEE PAGE
	1	1	**116-4527**	1	ORIFICE	
	2	1	**136-9304**	1	ADAPTER	
	3	1	**146-6316**	2	RETAINER	
	4	1	**146-6318**	1	PLUNGER	
	5	1	**146-6319**	1	RETAINER	
	6	1	**153-8924**	1	SPOOL	
	7	1	**153-8925**	1	STOP	
	8	1	**153-8926**	1	SPRING	
	9	1	**153-8929**	1	CAGE	
	10	1	**201-4276**	1	SPRING	
	11	1	**157-2152**	1	SPRING	
	12	1	**2H-3429**	1	RING-RETAINING	
	13	1	**3K-0360**	1	SEAL-O-RING	
	14	1	**4K-2039**	1	SEAL-O-RING	
	15	1	**6M-5062**	1	SEAL-O-RING	
	16	1	**7I-6601**	1	SEAL-O-RING	
	17	1	**7J-0204**	1	SEAL-O-RING	

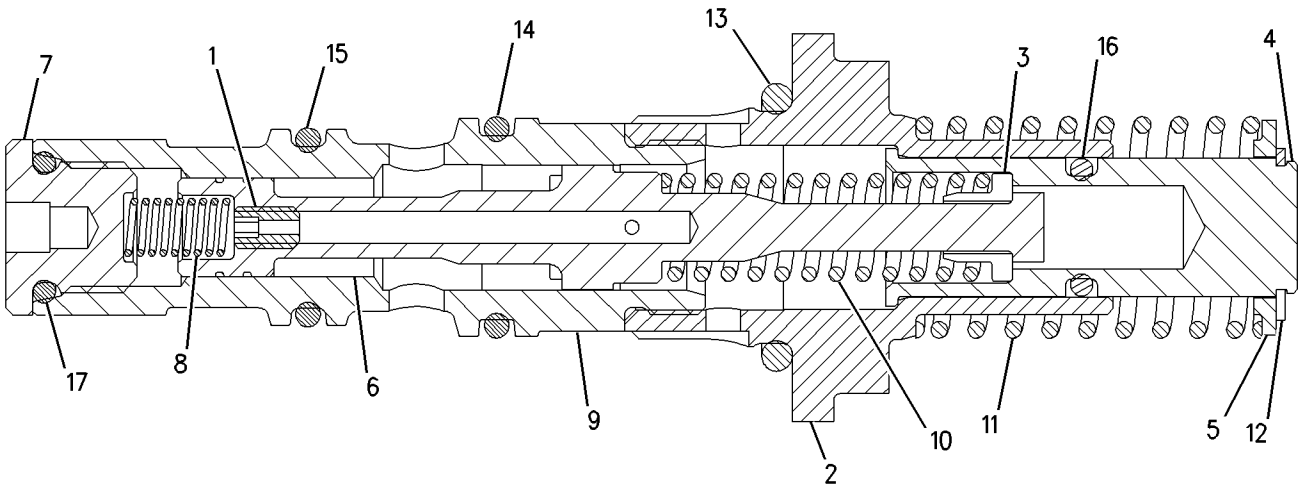

GRAPHIC #1 g00849284

MEMORANDA

HYDRAULIC SYSTEM

130-6235 VALVE GP-PRESS & FLOW CMPNSTR

S/N: DJD1-UP; DBT1-UP

PART OF 120-0140 PUMP GP-PISTON

SMCS-5086 **i00527362**

NOTE	REF NO	GRAPHIC REF	PART NUMBER	QTY	PART NAME 1 2 3 4 5 6 (PRODUCT LEVEL)	SEE PAGE
	1	1	**3J-6021**	3	PLUG	
	2	1	**9T-7062**	1	BODY	
	3	1	**9T-3816**	1	SPOOL	
	4	1	**9T-3815**	1	SEAT	
	5	1	**9T-3814**	1	SPRING	
	6	1	**5L-4758**	1	SEAL-O-RING (14.0MM ID)	
	7	1	**9T-3813**	1	PLUG	
	8	1	**9S-8003**	1	PLUG-O-RING (1/2-20 THD)	
	9	1	**1J-9671**	1	SEAL-O-RING (10.52MM ID)	
	10	1	**8T-7931**	1	SETSCREW	
	11	1	**9T-3812**	1	SEAT	
	12	1	**7L-8316**	1	SETSCREW-SOCKET (10-32X.25IN)	
	13	1	**130-3922**	1	SPRING-MARGIN	
	14	1	**9T-3810**	1	SEAT	
	15	1	**9T-3809**	1	SPOOL	
	16	1	**3E-4354**	1	BALL	
	17	1	**6E-0231**	1	SEAT-CHECK VALVE	
	18	1	**2S-9600**	1	DOWEL	
	19	1	**9S-8002**	1	PLUG-O-RING (7/16-20 THD)	
	20	1	**3J-7354**	1	SEAL-O-RING (8.92MM ID)	

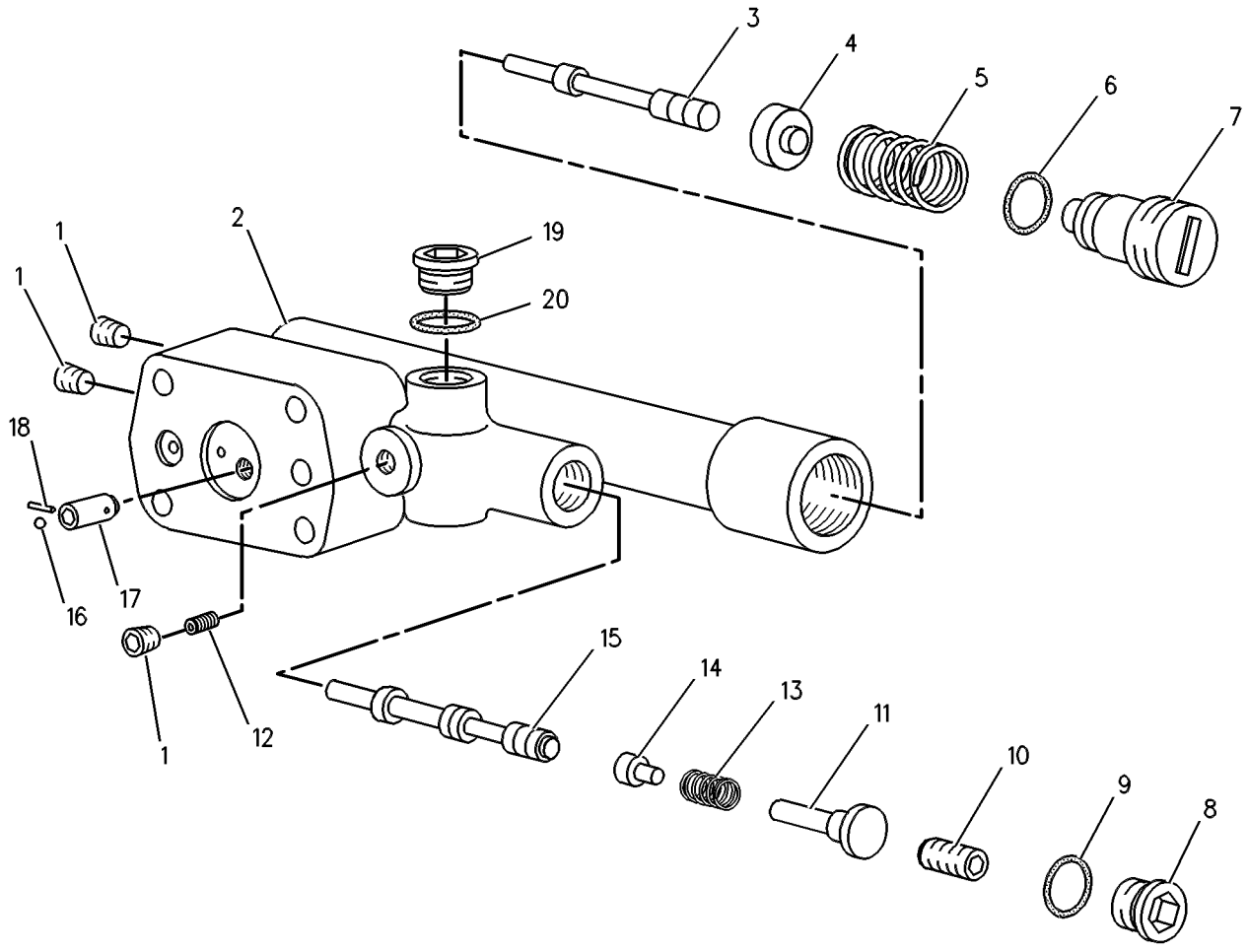

GRAPHIC #1 g00131718

184-9975 VALVE GP-PRESSURE REDUCING

S/N: DJD1-UP; DBT1-UP
PART OF 185-5209 VALVE GP-PRESSURE REDUCING
AN ATTACHMENT

SMCS-5117 **i01293568**

NOTE	REF NO	GRAPHIC REF	PART NUMBER	QTY	PART NAME 1 2 3 4 5 6 (PRODUCT LEVEL)	SEE PAGE
	1	1	**185-2327**	2	RING-BACKUP	
	2	1	**033-6027**	1	SEAL-O-RING (19.18MM ID)	
	3	1	**033-6043**	1	SEAL-O-RING (14MM ID)	
	4	1	**6V-5758**	1	SEAL-O-RING (12.42MM ID)	
	5	1	**6V-6924**	2	RING-BACKUP (14.73MM ID)	

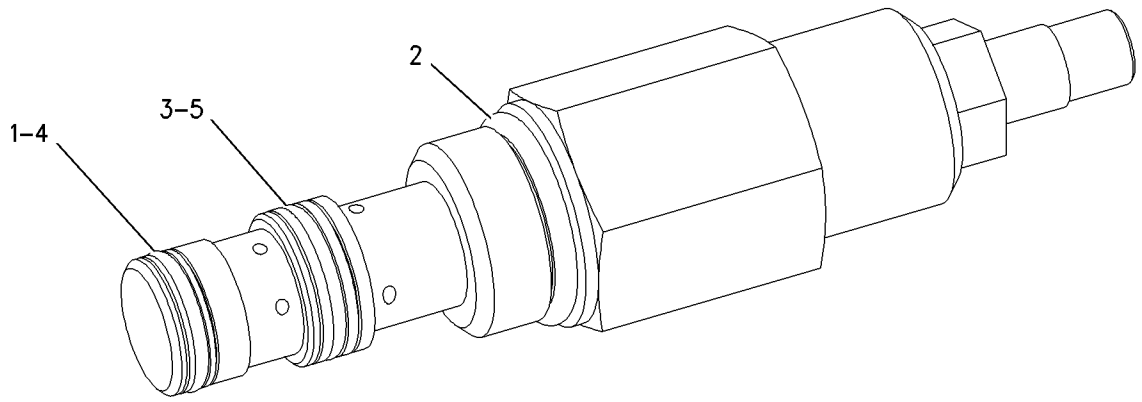

GRAPHIC #1 g00685791

185-5209 VALVE GP-PRESSURE REDUCING

S/N: DJD1-UP; DBT1-UP
PART OF 203-5924, 203-5925, 203-5926 LINES GP-PILOT
AN ATTACHMENT

SMCS-5117 **i01293577**

NOTE	REF NO	GRAPHIC REF	PART NUMBER	QTY	PART NAME 1 2 3 4 5 6 (PRODUCT LEVEL)	SEE PAGE
	1	1	**119-8397**	1	VALVE GP-CHECK	
		1	**9N-1756**	1	SEAL-O-RING (6.07MM ID)	
		1	**033-5853**	1	SEAL-O-RING (8.92MM ID)	
		1	**126-5985**	1	RING-BACKUP (6.73MM ID)	
Y	2	1	**184-9975**	1	VALVE GP-PRESSURE REDUCING	544

Y-SEPARATE ILLUSTRATION

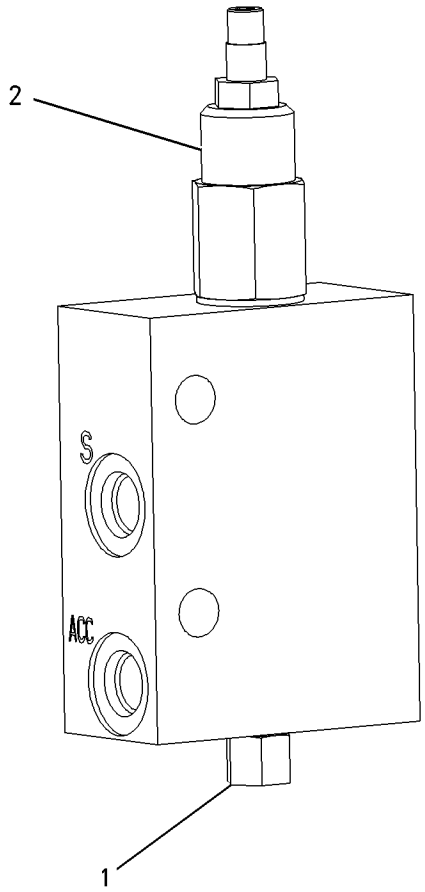

GRAPHIC #1 g00685814

193-4750 VALVE GP-QUICK COUPLER

S/N: DJD1-UP; DBT1-UP
PART OF 188-2860, 221-1707 LINES GP-COUPLER
AN ATTACHMENT

SMCS-5491 **i01826013**

NOTE	REF NO	GRAPHIC REF	PART NUMBER	QTY	PART NAME 1 2 3 4 5 6 (PRODUCT LEVEL)	SEE PAGE
Y	1	1	**3E-9205**	1	VALVE GP-SOLENOID (QUICK COUPLER)	561
	2	1	**154-5225**	2	VALVE-SHUTTLE	
	3	1	**201-8080**	1	MANIFOLD AS	

Y-SEPARATE ILLUSTRATION

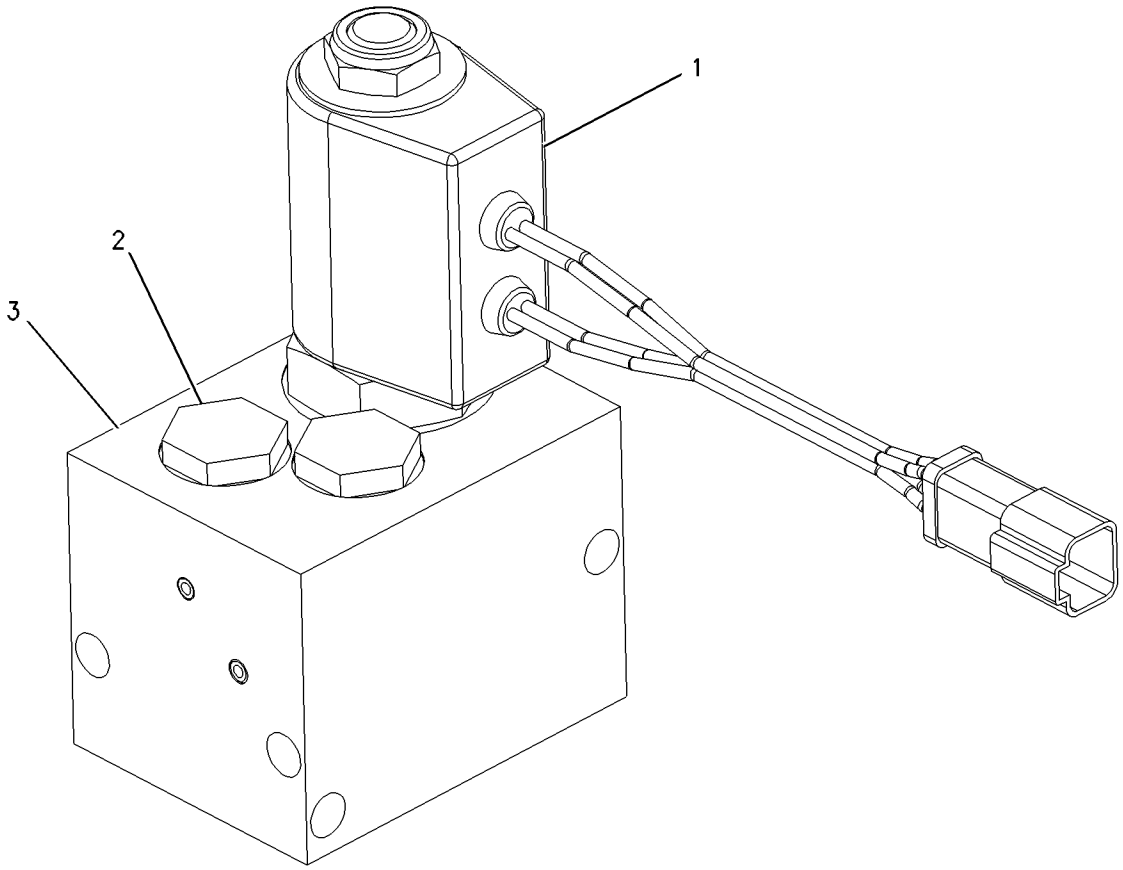

GRAPHIC #1 g00906392

108-6428 VALVE GP-RELIEF

S/N: DJD1-UP
PART OF 133-4234, 133-4235 VALVE GP-MAIN CONTROL
AN ATTACHMENT

SMCS-5069, 5117 **i00178403**

NOTE	REF NO	GRAPHIC REF	PART NUMBER	QTY	PART NAME 1 2 3 4 5 6 (PRODUCT LEVEL)	SEE PAGE
	1	1	**6E-1835**	1	RETAINER AS	
	2	1	**9X-6395**	1	NUT-ORFS (3/4-16 THD)	
	3	1	**3K-0360**	2	SEAL-O-RING (16.36MM ID)	
	4	1	**8T-4224**	1	WASHER-HARD (2MM THK)	
	5	1	**6J-6439**	1	VALVE	
	6	1	**4T-4942**	1	SPRING	
	7	1	**7J-9933**	1	SEAL-O-RING (21.89MM ID)	
	8	1	**4T-7571**	1	PLATE	

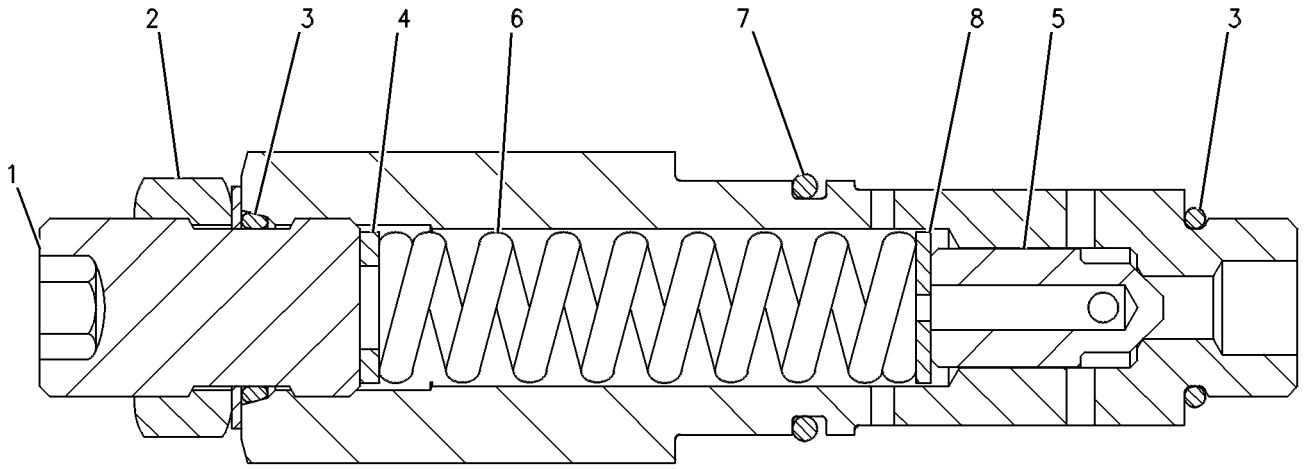

GRAPHIC #1 g00120574

HYDRAULIC SYSTEM

122-3595 VALVE GP-RELIEF

S/N: DBT1-UP

PART OF 133-4236, 133-4237, 179-8152 VALVE GP-MAIN CONTROL

AN ATTACHMENT

SMCS-5069, 5117 **i00959695**

NOTE	REF NO	GRAPHIC REF	PART NUMBER	QTY	PART NAME 1 2 3 4 5 6 (PRODUCT LEVEL)	SEE PAGE
	1	1	**6E-1835**	1	RETAINER AS	
	2	1	**9X-6395**	1	NUT-ORFS (3/4-16 THD)	
	3	1	**3K-0360**	2	SEAL-O-RING (16.36MM ID)	
	4	1	**8T-4224**	1	WASHER-HARD (2MM THK)	
	5	1	**6J-6439**	1	VALVE	
	6	1	**4T-4942**	1	SPRING	
	7	1	**7J-9933**	1	SEAL-O-RING (21.89MM ID)	
	8	1	**4T-7571**	1	PLATE	
Z	9	1			BODY VALVE	

Z-NOT SERVICED SEPARATELY

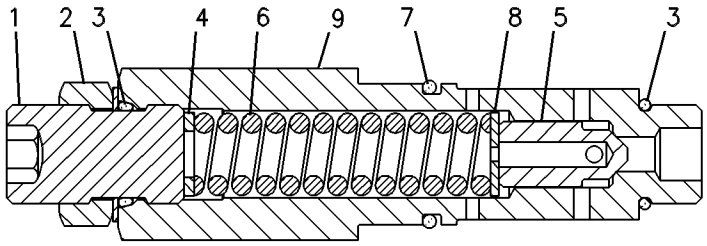

GRAPHIC #1 g00261155

133-5330 VALVE GP-RELIEF

S/N: DBT1-UP
PART OF 133-4861 VALVE GP-LOAD CONTROL
AN ATTACHMENT

SMCS-5069, 5117 **i01330784**

NOTE	REF NO	GRAPHIC REF	PART NUMBER	QTY	PART NAME 1 2 3 4 5 6 (PRODUCT LEVEL)	SEE PAGE
	1	1	**161-6149**	1	SEAL-O-RING	
	2	1	**161-6161**	2	RING-BACKUP	
	3	1	**2M-9780**	1	SEAL-O-RING (19.18MM ID)	
					AVAILABLE REPAIR KIT(S):	
			133-5545	1	KIT-SEAL	

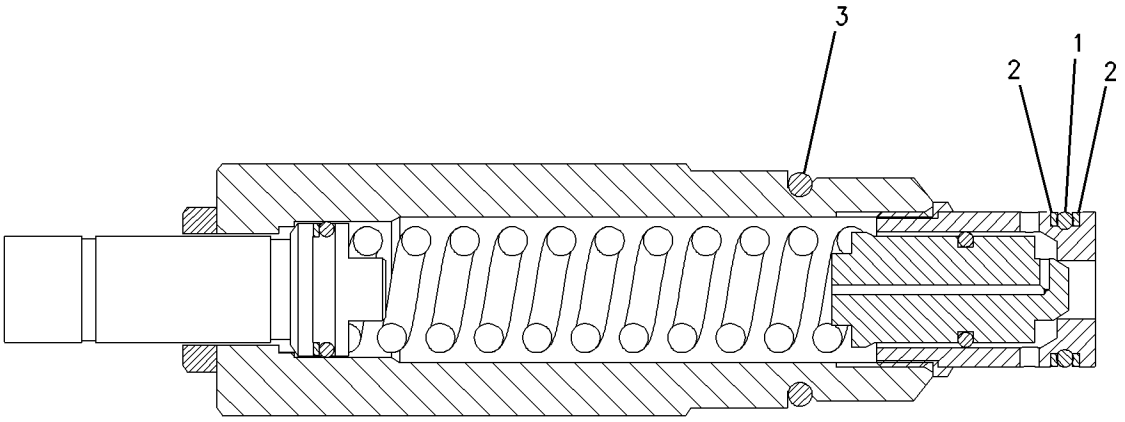

GRAPHIC #1 g00705020

HYDRAULIC SYSTEM

185-7708 VALVE GP-RELIEF

S/N: DJD1-UP
PART OF 133-4235 VALVE GP-MAIN CONTROL
AN ATTACHMENT

SMCS-5069, 5117 **i01481595**

NOTE	REF NO	GRAPHIC REF	PART NUMBER	QTY	PART NAME 1 2 3 4 5 6 (PRODUCT LEVEL)	SEE PAGE
	1	1	**9T-7266**	1	NUT (3/4-16 THD)	
	2	1	**033-6028**	1	SEAL-O-RING	
	3	1	**6E-3008**	1	SPRING	
	4	1	**130-1676**	1	SEAL-O-RING	
	5	1	**8L-2779**	1	SEAL-O-RING	

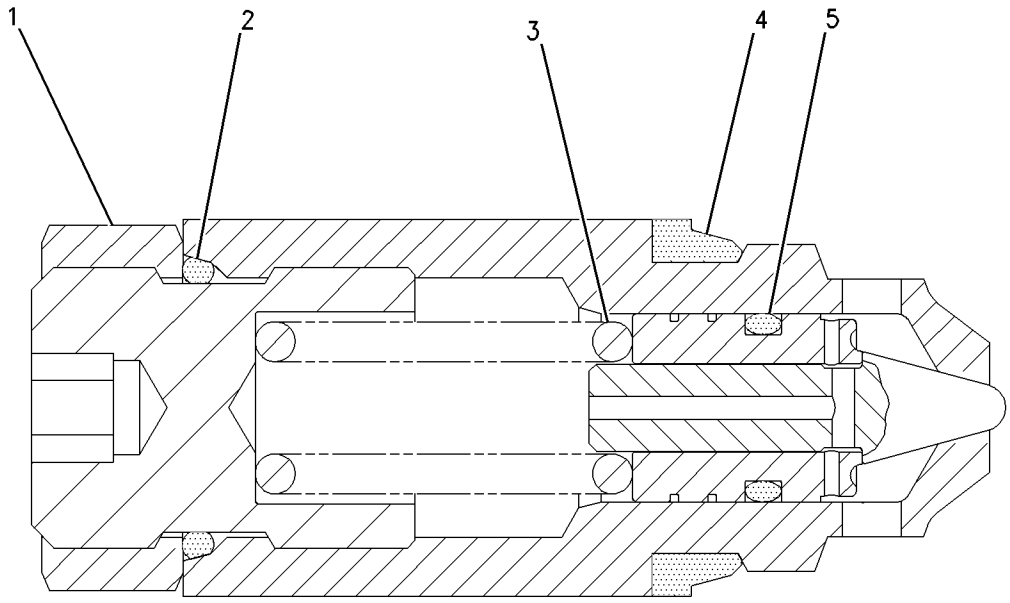

GRAPHIC #1 g00759080

185-7709 VALVE GP-RELIEF

S/N: DBT1-UP
PART OF 133-4237 VALVE GP-MAIN CONTROL
AN ATTACHMENT

SMCS-5069, 5117 **i01481612**

NOTE	REF NO	GRAPHIC REF	PART NUMBER	QTY	PART NAME 1 2 3 4 5 6 (PRODUCT LEVEL)	SEE PAGE
	1	1	**9T-7266**	1	NUT (3/4-16 THD)	
	2	1	**033-6028**	1	SEAL-O-RING	
	3	1	**6E-3008**	1	SPRING	
	4	1	**130-1676**	1	SEAL-O-RING	
	5	1	**8L-2779**	1	SEAL-O-RING	

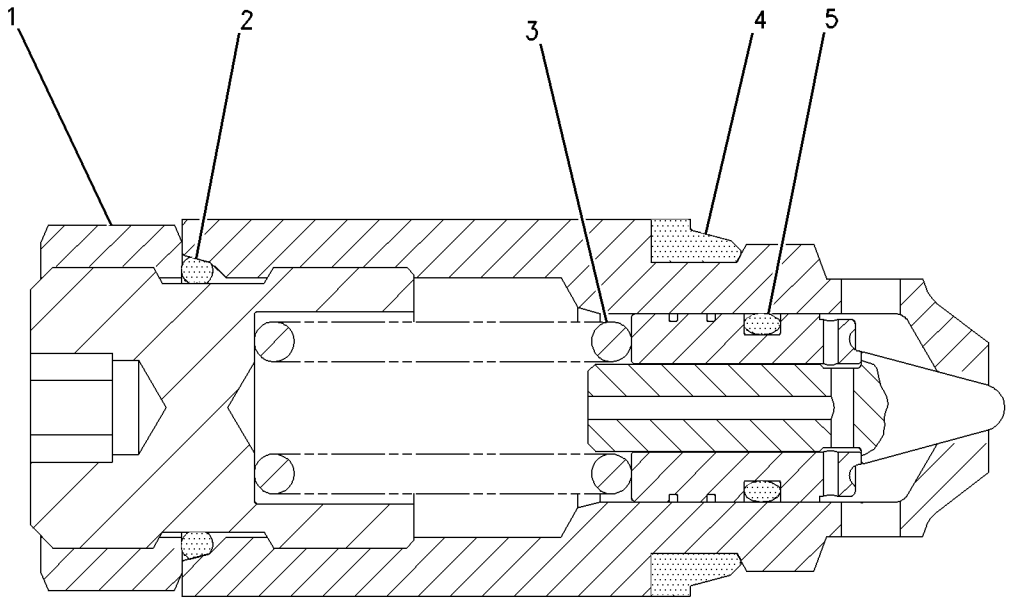

GRAPHIC #1 g00760627

HYDRAULIC SYSTEM

186-0903 VALVE GP-RELIEF

S/N: DBT1-UP

PART OF 133-4236, 133-4237, 179-8152 VALVE GP-MAIN CONTROL

AN ATTACHMENT

SMCS-5069, 5117 **i01290771**

NOTE	REF NO	GRAPHIC REF	PART NUMBER	QTY	PART NAME 1 2 3 4 5 6 (PRODUCT LEVEL)	SEE PAGE
	1	1	**039-5069**	1	NUT (3/8-24 THD)	
	2	1	**033-5879**	3	SEAL-O-RING (11.12MM ID)	
	3	1	**039-5070**	1	NUT (3/8-24 THD)	
	4	1	**186-2487**	1	RING-BACKUP	
	5	1	**033-6027**	2	SEAL-O-RING (19.18MM ID)	
	6	1	**9N-1756**	1	SEAL-O-RING (6.07MM ID)	
	7	1	**186-2488**	1	RING-BACKUP	
					AVAILABLE REPAIR KIT(S):	
			151-4003	1	KIT-SERVICE	
					(INCLUDES SPRINGS, SEALS, & RINGS)	

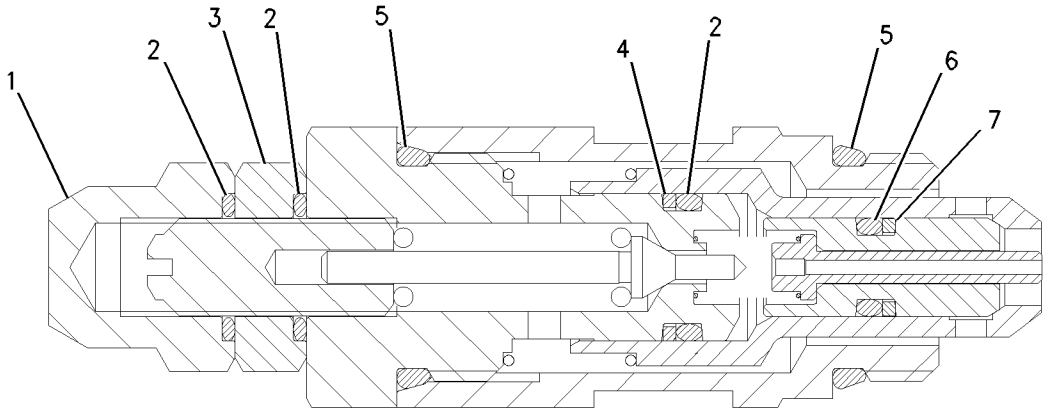

GRAPHIC #1 g00684900

186-0905 VALVE GP-RELIEF

S/N: DJD1-UP; DBT1-UP
PART OF 138-7841 VALVE GP-CONTROL, 133-4235, 133-4236, 133-4237 VALVE GP-MAIN CONTROL
AN ATTACHMENT

SMCS-5069, 5117 **i01352077**

NOTE	REF NO	GRAPHIC REF	PART NUMBER	QTY	PART NAME 1 2 3 4 5 6 (PRODUCT LEVEL)	SEE PAGE
	1	1	**039-5069**	1	NUT (3/8-24 THD)	
	2	1	**033-5879**	3	SEAL-O-RING (11.12MM ID)	
	3	1	**039-5070**	1	NUT (3/8-24 THD)	
	4	1	**186-2487**	1	RING-BACKUP	
	5	1	**033-6027**	2	SEAL-O-RING (19.18MM ID)	
	6	1	**9N-1756**	1	SEAL-O-RING (6.07MM ID)	
	7	1	**186-2488**	1	RING-BACKUP	
					AVAILABLE REPAIR KIT(S):	
			151-4003	1	KIT-SERVICE	

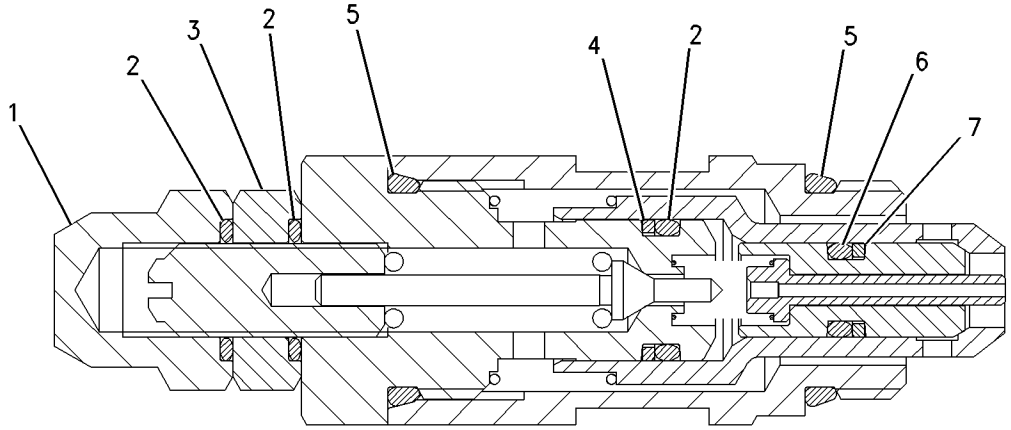

GRAPHIC #1 g00713746

HYDRAULIC SYSTEM

186-0908 VALVE GP-RELIEF

S/N: DBT1-UP
PILOT OPERATED
PART OF 6E-5958 VALVE GP-CONTROL
AN ATTACHMENT

SMCS-5069, 5117 **i01253887**

NOTE	REF NO	GRAPHIC REF	PART NUMBER	QTY	PART NAME 1 2 3 4 5 6 (PRODUCT LEVEL)	SEE PAGE
	1	1	**039-5069**	1	NUT (3/8-24 THD)	
	2	1	**033-5879**	3	SEAL-O-RING (11.12MM ID)	
	3	1	**039-5070**	1	NUT (3/8-24 THD)	
	4	1	**186-2487**	1	RING-BACKUP	
	5	1	**033-6027**	2	SEAL-O-RING (19.18MM ID)	
	6	1	**9N-1756**	1	SEAL-O-RING (6.07MM ID)	
	7	1	**186-2488**	1	RING-BACKUP	
					AVAILABLE REPAIR KIT(S):	
				1	KIT-SERVICE	
					(SERVICE KIT CONTAINS ALL SPRINGS, SEALS AND RINGS)	

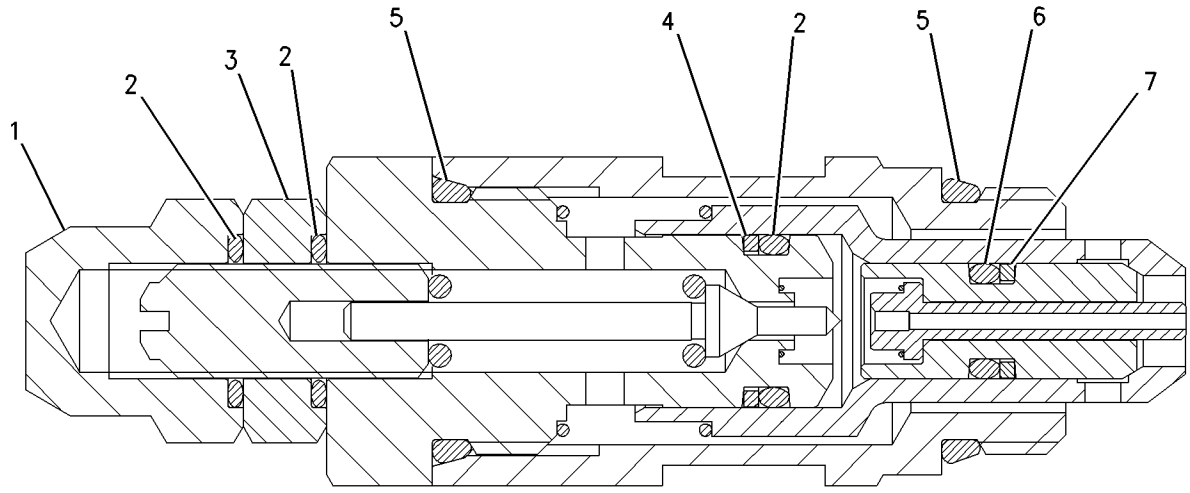

GRAPHIC #1 g00669011

186-0913 VALVE GP-RELIEF

S/N: DJD1-UP
PART OF 133-4234, 133-4235 VALVE GP-MAIN CONTROL
AN ATTACHMENT

SMCS-5069, 5117 **i01290952**

NOTE	REF NO	GRAPHIC REF	PART NUMBER	QTY	PART NAME 1 2 3 4 5 6 (PRODUCT LEVEL)	SEE PAGE
	1	1	**039-5069**	1	NUT (3/8-24 THD)	
	2	1	**033-5879**	3	SEAL-O-RING (11.12MM ID)	
	3	1	**039-5070**	1	NUT (3/8-24 THD)	
	4	1	**186-2487**	1	RING-BACKUP	
	5	1	**033-6027**	2	SEAL-O-RING (19.18MM ID)	
	6	1	**9N-1756**	1	SEAL-O-RING (6.07MM ID)	
	7	1	**186-2488**	1	RING-BACKUP	
					AVAILABLE REPAIR KIT(S):	
			151-4003	1	KIT-SERVICE	
					(INCLUDES SPRINGS, SEALS, & RINGS)	

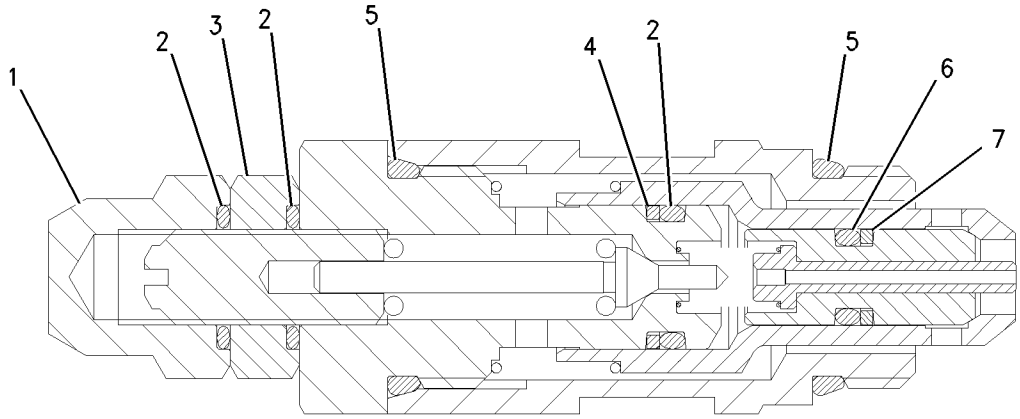

GRAPHIC #1 g00684896

192-0086 VALVE GP-RIDE CONTROL

S/N: DJD1-UP; DBT1-UP
PART OF 213-6217, 218-3673 LINES GP-RIDE CONTROL
AN ATTACHMENT

SMCS-5054 **i01808256**

NOTE	REF NO	GRAPHIC REF	PART NUMBER	QTY	PART NAME 1 2 3 4 5 6 (PRODUCT LEVEL)	SEE PAGE
	1	1	**160-0269**	1	ORIFICE GP	
		1	**4J-7533**	1	SEAL-O-RING	
	2	1	**190-8308**	1	CARTRIDGE AS	
		1	**193-5958**	1	KIT-SEAL	
					(KIT SERVICES SEALS AND RINGS)	
	3	1	**190-8310**	1	MANIFOLD AS	
		1	**219-1790**	3	PLUG AS	
		1	**4J-7533**	1	SEAL-O-RING	
	4	1	**190-8314**	1	SPOOL-VALVE	
Y	5	1	**201-0950**	1	VALVE GP-SOLENOID (RIDE CONTROL)	564
	6	1	**206-3632**	1	VALVE-CHECK	
		1	**143-5446**	1	KIT-SEAL	
					(KIT SERVICES SEALS AND RINGS)	
	7	1	**9S-8004**	3	PLUG	
					AVAILABLE REPAIR KIT(S):	
			196-2408	1	KIT-SERVICE	

Y-SEPARATE ILLUSTRATION

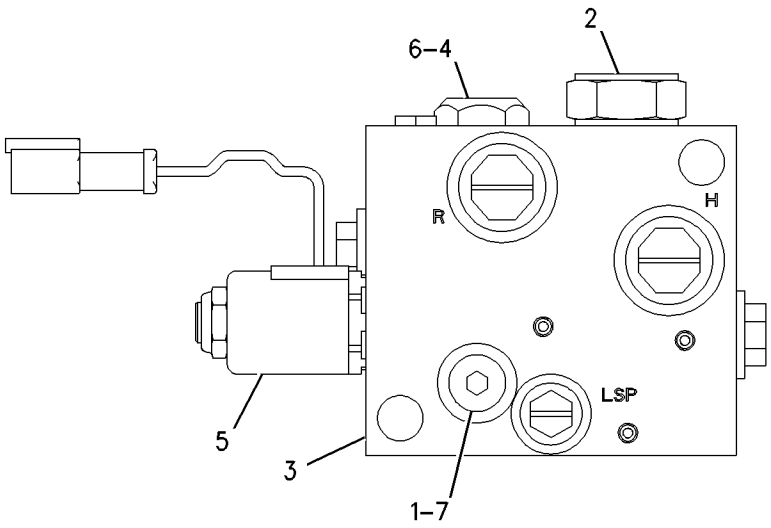

GRAPHIC #1 g00896832

MEMORANDA

HYDRAULIC SYSTEM

208-9665 VALVE GP-SHUTOFF

S/N: DBT1-UP

PART OF 122-6332 CONTROL GP-PILOT OPERATED HYD

AN ATTACHMENT

SMCS-5059, 5130 **i01654161**

NOTE	REF NO	GRAPHIC REF	PART NUMBER	QTY	PART NAME 1 2 3 4 5 6 (PRODUCT LEVEL)	SEE PAGE
	1	1	**2Y-5671**	3	WASHER (33X19.43X0.91MM THK)	
	2	1	**6R-3354**	1	BOOT-PROTECTION	
	3	1	**7X-1886**	1	SWITCH AS-BALL	
		1	**9B-7233**	2	LOCKWASHER	
		1	**141-4859**	2	SCREW-MACHINE	
M	4	1	**7Y-3173**	3	SCREW-BUTTON HEAD (M4X0.7X12MM)	
M	5	1	**8T-5432**	1	BOLT (M5X0.8X16MM)	
	6	1	**9X-6165**	1	WASHER (6.5X22X2.5MM THK)	
	7	1	**121-0254**	1	PLATE (6MM THK)	
	8	1	**121-0256**	1	PLATE (4MM THK)	
	9	1	**140-1344**	1	SPACER (4MM THK)	
	10	1	**148-8867**	1	LEVER AS	
	11	1	**156-5726**	1	VALVE-BALL	
		1	**112-9861**	1	KIT-SEAL	
	12	1	*164-5628*	1	CONNECTOR GP	
		1	**3J-1907**	1	SEAL-O-RING	
		1	**6V-8397**	1	SEAL-O-RING	
		1	**107-6631**	1	CONNECTOR	
	13	1	**208-7452**	1	HARNESS AS	
		1	**102-8802**	1	KIT-RECEPTACLE (2 PIN)	
					(KIT SERVICES PLUG AS AND WEDGE)	
	14	1	*148-8378*	1	ELBOW GP	
		1	**3J-1907**	1	SEAL-O-RING	
		1	**6V-8397**	1	SEAL-O-RING	
		1	**6V-8724**	1	ELBOW	
	15	1	**9G-5687**	1	GROMMET	

M-METRIC PART

208-9665 VALVE GP-SHUTOFF *(contd.)* **i01654161**

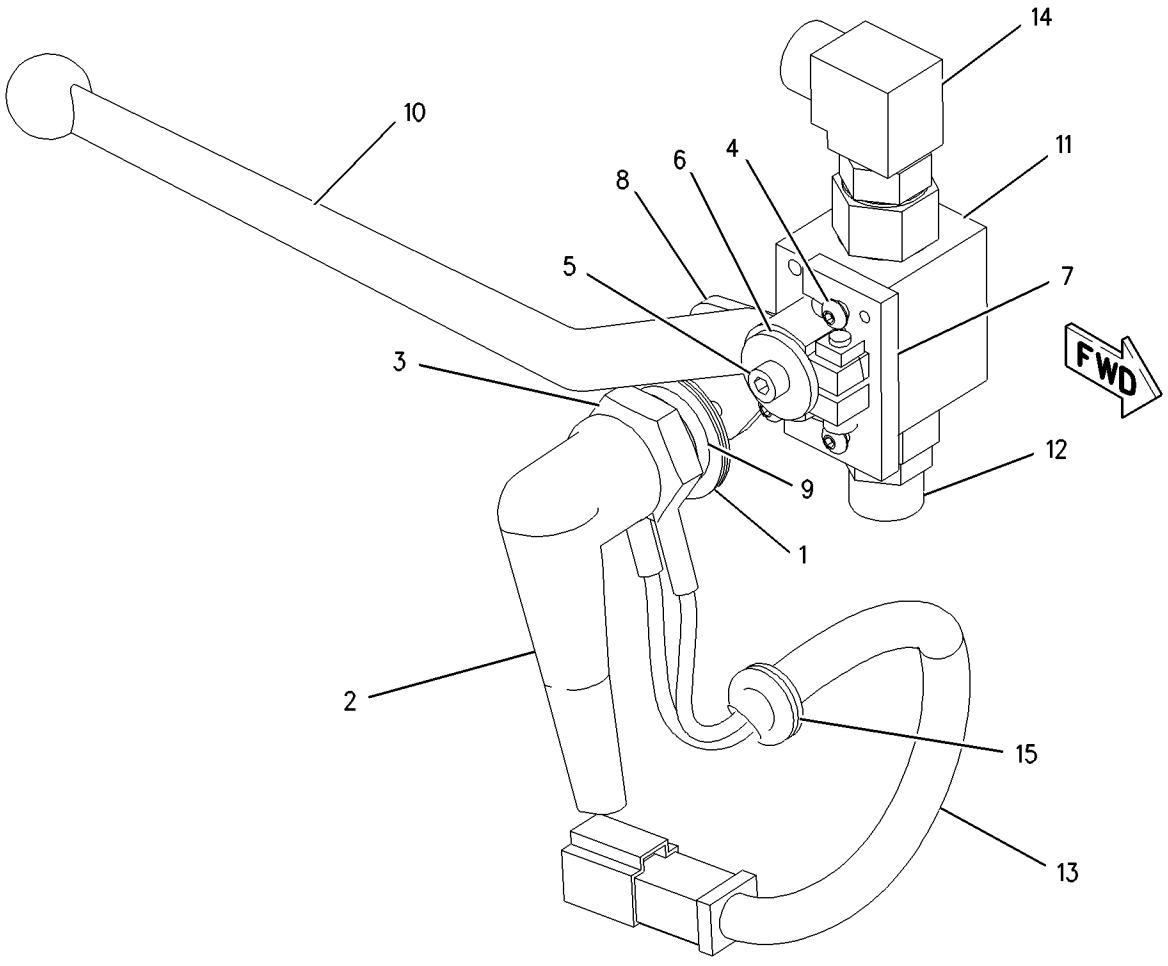

GRAPHIC #1 g00865209

HYDRAULIC SYSTEM

225-1057 VALVE GP-SHUTOFF

S/N: DJD1-UP; DBT1-UP

PART OF 219-4785, 219-4786, 219-4787, 219-4788, 219-4789, 219-4790, 220-1505, 220-1506, 220-1507, 220-1509 CONTROL GP-PILOT OPERATED HYD

AN ATTACHMENT

SMCS-5059, 5130 **i01785234**

NOTE	REF NO	GRAPHIC REF	PART NUMBER	QTY	PART NAME 1 2 3 4 5 6 (PRODUCT LEVEL)	SEE PAGE
	1	1	**6V-1178**	1	PLUG-BUTTON	
	2	1	**8R-3695**	1	GROMMET	
Y	3	1	**222-3138**	1	VALVE & MTG GP-SOLENOID	489
	4	1	**226-2095**	1	FILM	
	5	1	*148-8378*	3	ELBOW GP	
					(EACH INCLUDES)	
		1	**3J-1907**	1	SEAL-O-RING	
		1	**6V-8397**	1	SEAL-O-RING	
		1	**6V-8724**	1	ELBOW	
M	6	1	**2Y-5829**	2	NUT (M10X1.5 THD)	
	7	1	**6V-5839**	4	WASHER (11X21X2.5MM THK)	
M	8	1	**6V-7981**	2	BOLT (M10X1.50X70MM)	

M-METRIC PART
Y-SEPARATE ILLUSTRATION

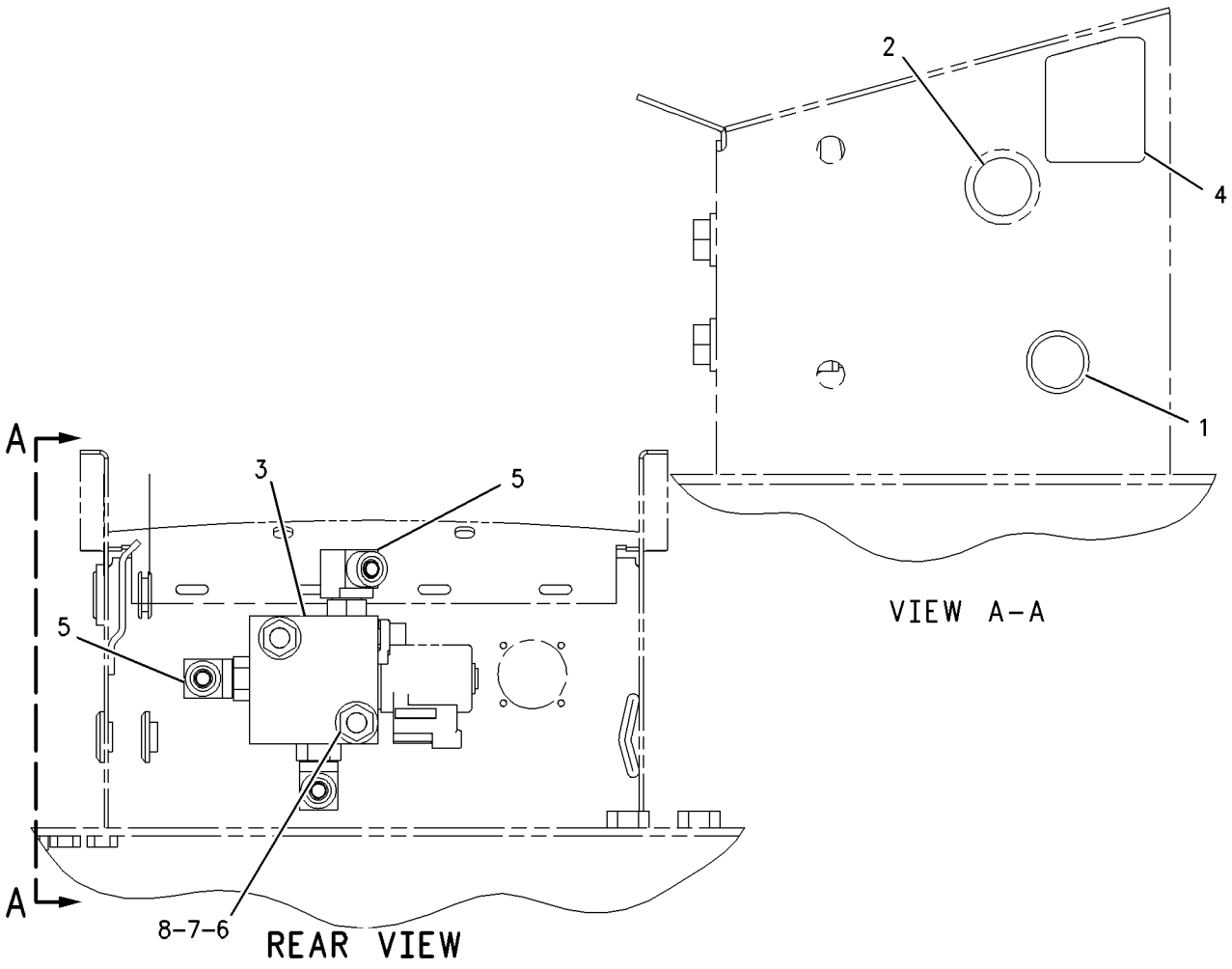

GRAPHIC #1 g00914458

HYDRAULIC SYSTEM

3E-9205 VALVE GP-SOLENOID

S/N: DJD1-UP; DBT1-UP
24 VOLT
PART OF 193-4750 VALVE GP-QUICK COUPLER
AN ATTACHMENT

SMCS-4805, 5132, 5479 **i01437288**

NOTE	REF NO	GRAPHIC REF	PART NUMBER	QTY	PART NAME 1 2 3 4 5 6 (PRODUCT LEVEL)	SEE PAGE
	1	1	**6T-9244**	1	CARTRIDGE AS	
	2	1	**3E-8581**	1	COIL AS	
	3	1	**102-8804**	1	KIT-RECEPTACLE (4 PIN)	
					(INCLUDES RECEPTACLE AS & WEDGE)	
		1	**3E-3377**	1	WEDGE-RECEPTACLE LOCK	
		1	**186-3735**	4	PIN-CONNECTOR	
	4	1	**1S-9593**	2	STRAP-CABLE	
	5	1	**157-2284**	1	LOCKNUT-SPECIAL (5/8-18 THD)	
	6	1	**160-5843**	1	WASHER-IDENTIFICATION	
	7	1	**160-5844**	1	SPRING-BELLEVILLE	
					AVAILABLE REPAIR KIT(S):	
			126-5948	1	KIT-SEAL	
					(INCLUDES SEAL-O-RINGS & RING-BACKUPS)	

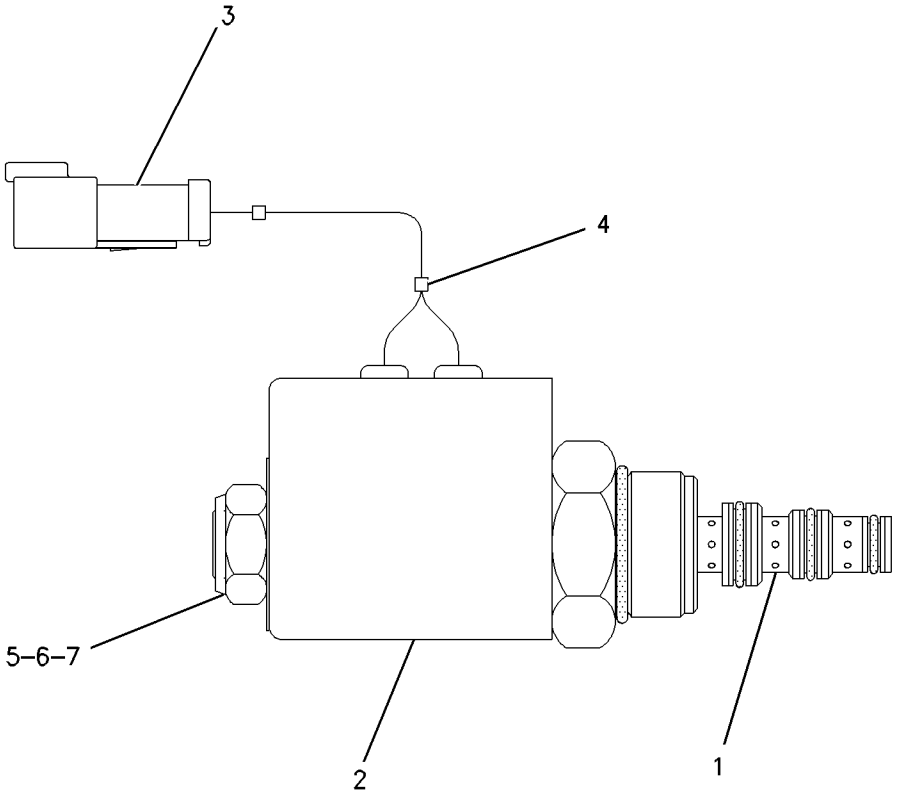

GRAPHIC #1 g00657410

122-1134 VALVE GP-SOLENOID—DEAD ENGINE, BUCKET LOWER

S/N: DBT1-UP
24 VOLTS DC
PART OF 133-4848 VALVE GP-LOAD CONTROL
AN ATTACHMENT

SMCS-4805, 5132, 5479 **i01673577**

NOTE	REF NO	GRAPHIC REF	PART NUMBER	QTY	PART NAME 1 2 3 4 5 6 (PRODUCT LEVEL)	SEE PAGE
	1	1	**7T-2053**	1	CARTRIDGE AS	
		1	**1H-1023**	1	SEAL-O-RING	
		1	**3K-0360**	1	SEAL-O-RING	
J	2	1	**122-1133**	1	COIL AS	
		1	**1S-9593**	2	STRAP-CABLE	
		1	**8T-8729**	2	PIN-CONNECTOR	
	3	1	**3J-9196**	1	NUT-JAM (1/2-20 THD)	
					AVAILABLE REPAIR KIT(S):	
			7T-1342	1	KIT-HARDWARE (SOLENOID VALVE)	
					(INCLUDES SEAL, WASHER, NUT & RING)	
J			**102-8802**	1	KIT-RECEPTACLE (2 PIN)	
					(INCLUDES RECEPTACLE AS & WEDGE)	

J-KIT MARKED J AVAILABLE FOR PART MARKED J

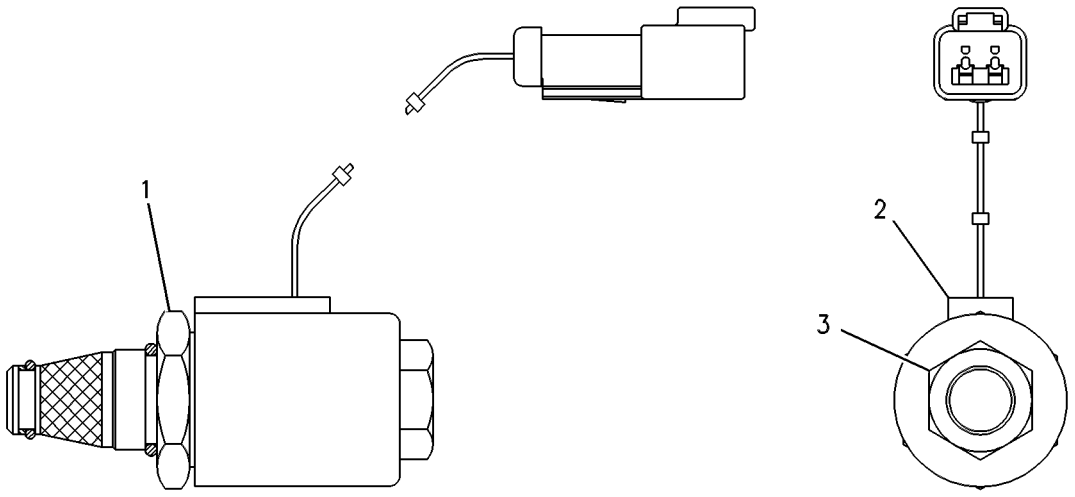

GRAPHIC #1 g00261238

189-2100 VALVE GP-SOLENOID–REVERSING FAN

S/N: DJD1-UP; DBT1-UP
PART OF 205-3668 MOTOR GP-GEAR
AN ATTACHMENT

SMCS-4805, 5132, 5479 **i01740159**

NOTE	REF NO	GRAPHIC REF	PART NUMBER	QTY	PART NAME 1 2 3 4 5 6 (PRODUCT LEVEL)	SEE PAGE
	1	1	**8C-9987**	1	WASHER (8.3X28X2.5MM THK)	
	2	1	**111-0343**	1	LOCKNUT (5/16-18 THD)	
	3	1	**189-0189**	1	COIL AS	
		1	**1S-9593**	2	STRAP-CABLE	
		1	**102-8802**	1	KIT-RECEPTACLE (2 PIN)	
					(KIT SERVICES RECEPTACLE AS AND WEDGE)	
		1	**3E-3365**	1	WEDGE-RECEPTACLE LOCK (2 PIN)	
		1	**186-3735**	1	PIN-CONNECTOR	
J	4	1	*189-2096*	1	CARTRIDGE AS-VALVE	
		1	**8C-9987**	1	WASHER (8.3X28X2.5MM THK)	
		1	**111-0343**	1	LOCKNUT (5/16-18 THD)	
					AVAILABLE REPAIR KIT(S):	
J			**6T-7054**	1	KIT-SEAL	

J-KIT MARKED J SERVICES PART MARKED J

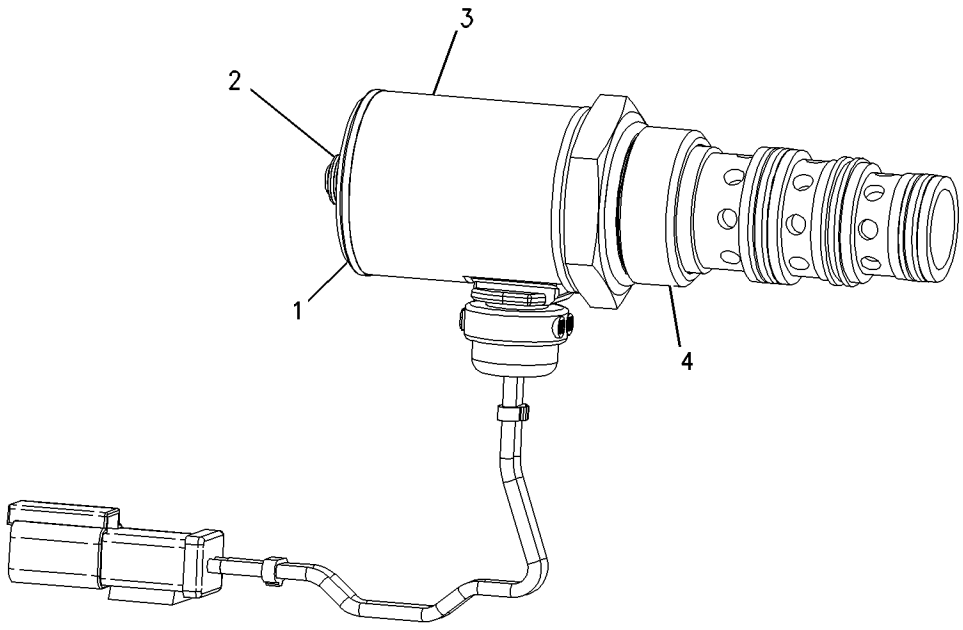

GRAPHIC #1 g00891427

201-0950 VALVE GP-SOLENOID—RIDE CONTROL

S/N: DJD1-UP; DBT1-UP
PART OF 192-0086 VALVE GP-RIDE CONTROL
AN ATTACHMENT

SMCS-4805, 5132, 5479 **i01729777**

NOTE	REF NO	GRAPHIC REF	PART NUMBER	QTY	PART NAME 1 2 3 4 5 6 (PRODUCT LEVEL)	SEE PAGE
	1	1	**122-1133**	1	COIL AS	
		1	**1S-9593**	2	STRAP-CABLE	
		1	**186-3735**	2	PIN-CONNECTOR	
		1	**102-8802**	1	KIT-RECEPTACLE (2 PIN)	
					(KIT SERVICES RECEPTACLE AS AND WEDGE)	
	2	1	**156-5970**	1	NUT (1/2-20-2B THD)	
	3	1	**171-8772**	1	VALVE AS-SOLENOID	
		1	**156-5970**	1	NUT (1/2-20-2B THD)	
					AVAILABLE REPAIR KIT(S):	
			195-7430	1	KIT-SEAL	

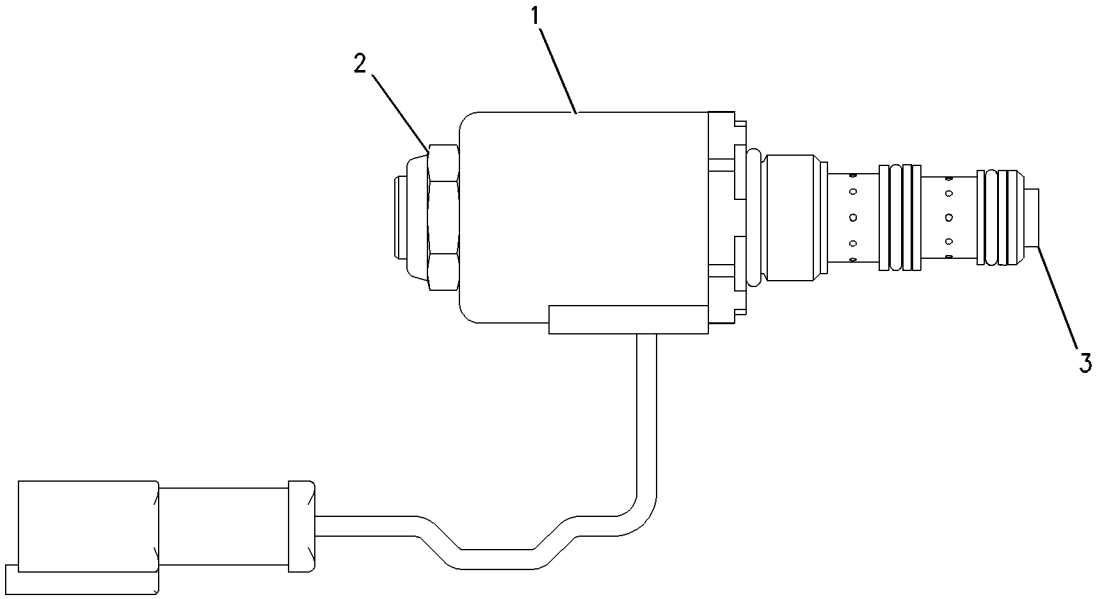

GRAPHIC #1 g00888488

211-2092 VALVE GP-SOLENOID–DEMAND FAN

S/N: DJD1-UP; DBT1-UP
PART OF 205-3668, 205-3669 MOTOR GP-GEAR
AN ATTACHMENT

SMCS-4805, 5132, 5479 **i01757186**

NOTE	REF NO	GRAPHIC REF	PART NUMBER	QTY	PART NAME 1 2 3 4 5 6 (PRODUCT LEVEL)	SEE PAGE
	1	1	**123-3132**	1	RING-BACKUP	
	2	1	**8L-2779**	1	SEAL-O-RING	
	3	1	**224-5846**	1	COIL AS	
		1	**033-6032**	1	SEAL-O-RING	
	4	1	**033-6028**	1	SEAL-O-RING	

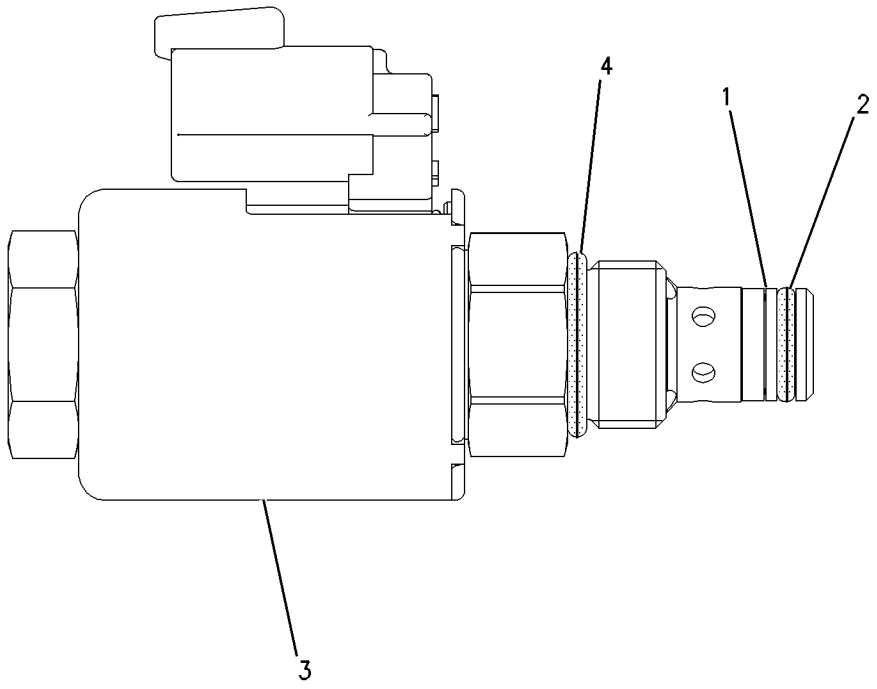

GRAPHIC #1 g00898928

216-2823 ARM AS-LIFT

S/N: DJD1-UP
AN ATTACHMENT

SMCS-6119 **i01831033**

NOTE	REF NO	GRAPHIC REF	PART NUMBER	QTY	PART NAME 1 2 3 4 5 6 (PRODUCT LEVEL)	SEE PAGE
	1	1	**1V-9148**	2	BEARING-SLEEVE (76.481MM ID)	
	2	1	**7P-3454**	2	BEARING-SLEEVE (63.741MM ID)	
	3	1	**118-1008**	2	BEARING	
	4	1	**9C-6809**	2	BLOCK	

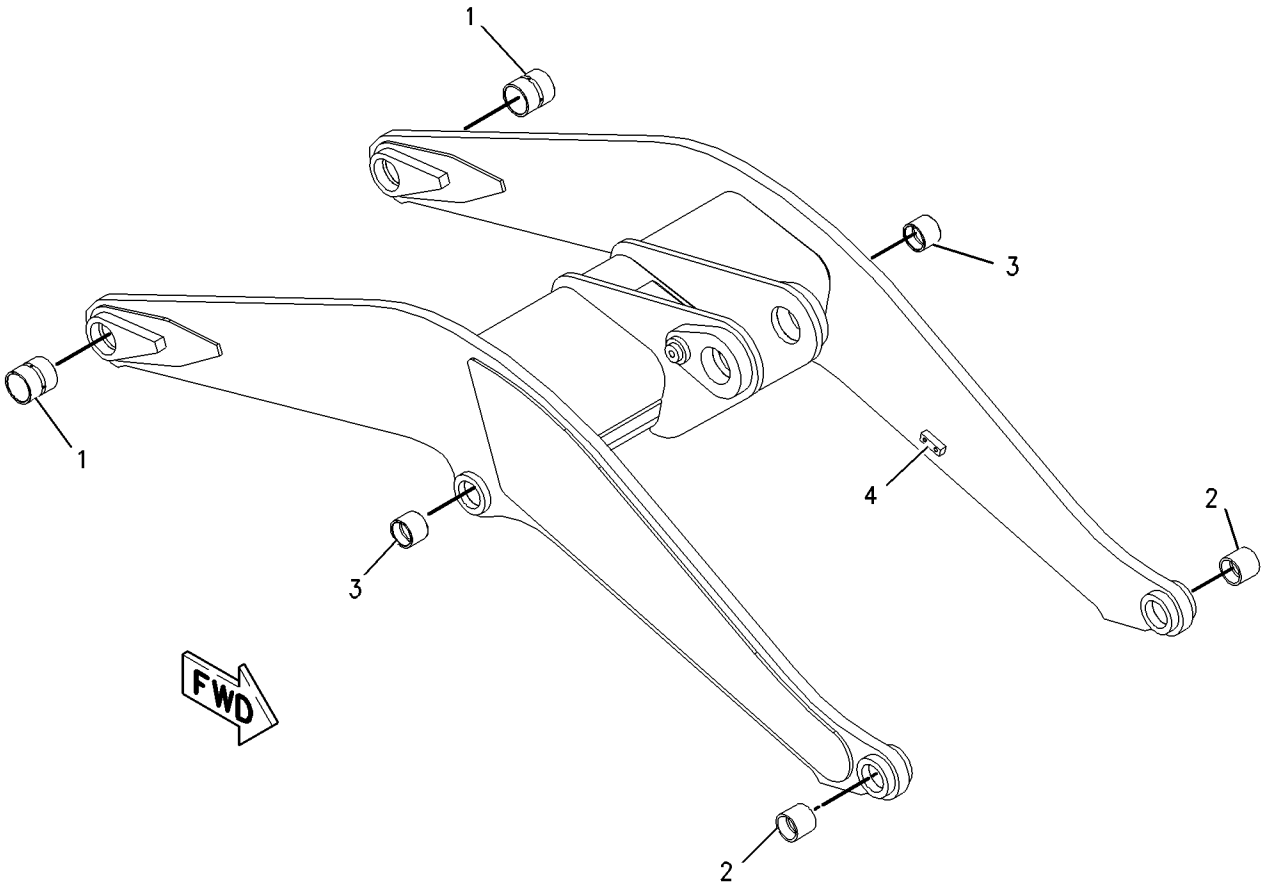

GRAPHIC #1 g00936123

IMPLEMENTS

142-8464 BRACKET GP-TRANSPORT

S/N: DJD1-UP; DBT1-UP
AN ATTACHMENT

SMCS-7505 **i01183580**

NOTE	REF NO	GRAPHIC REF	PART NUMBER	QTY	PART NAME 1 2 3 4 5 6 (PRODUCT LEVEL)	SEE PAGE
	1	1	**107-2503**	1	RETAINER	
	2	1	**140-3024**	2	BRACKET AS	
	3	1	**8T-4121**	2	WASHER (2.5MM THK)	
M	4	1	**8T-6685**	2	BOLT (M10X1.50X110MM)	

M-METRIC PART

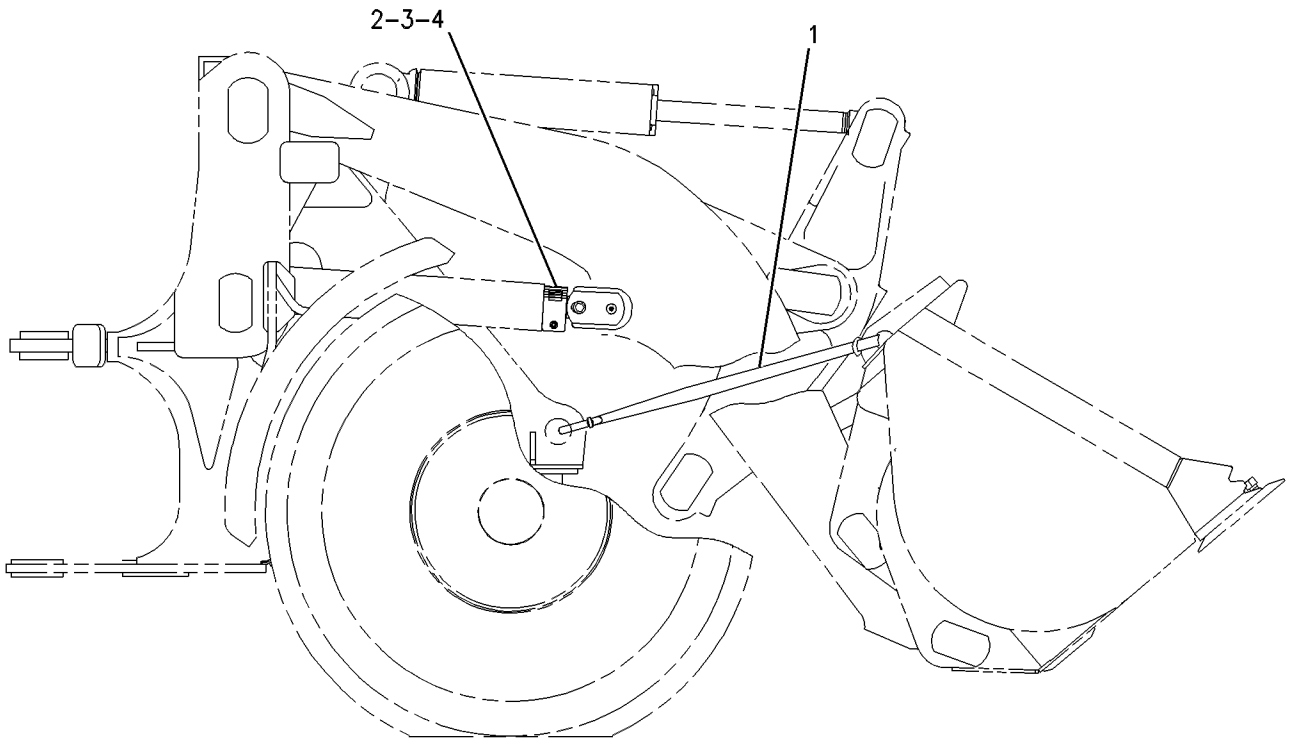

RIGHT SIDE VIEW

GRAPHIC #1 g00636691

113-3706 CONTROL GP-BUCKET

S/N: DJD1-UP

PART OF 204-4349 CHASSIS AR

SMCS-6107 **i01516387**

NOTE	REF NO	GRAPHIC REF	PART NUMBER	QTY	PART NAME 1 2 3 4 5 6 (PRODUCT LEVEL)	SEE PAGE
	1	1	**7K-9216**	2	SEAL-LIP (101.60MM ID)	
B	2	1	**176-0623**	6	WASHER	
B	3	1	**176-0624**	10	WASHER	
	4	1	**174-4217**	2	PIN AS	
B	5	1	**176-0626**	8	WASHER	
B	6	1	**176-0625**	4	WASHER	
	7	1	**174-4252**	1	LEVER AS	
		1	**4V-2879**	2	BEARING-SLEEVE (101.91MM ID)	
	8	1	**4V-4905**	2	SPACER (13.5MM THK)	
	9	1	**113-3797**	1	LINK AS	
		1	**4V-2883**	2	BEARING-SLEEVE (70.102MM ID)	
	10	1	**176-1593**	2	PIN AS	
	11	1	**118-0869**	2	PIN AS	
	12	1	**122-6378**	3	PIN AS	
M	13	1	**8T-4780**	1	BOLT (M20X2.5X30MM)	
	14	1	**128-0285**	1	PIN AS	
	15	1	**128-0294**	1	PIN AS	
	16	1	**177-1452**	1	WASHER-HARD	
	17	1	**3E-9411**	2	WASHER-HARD (6MM THK)	
	18	1	**3B-8489**	8	FITTING-GREASE	
	19	1	**3B-8491**	4	FITTING-STRAIGHT	
	20	1	**7K-9205**	12	SEAL-LIP	
	21	1	**7K-9208**	6	SEAL-LIP	
	22	1	**7K-9209**	6	SEAL-LIP	
	23	1	**7X-0618**	10	WASHER-HARD (13.5X40X5MM THK)	
M	24	1	**8T-4193**	2	BOLT (M16X2X50MM)	
M	25	1	**8T-4192**	10	BOLT (M12X1.75X25MM)	
	26	1	**113-3715**	1	ARM AS-LIFT	
	27	1	**9C-6809**	2	BLOCK	
	28	1	**7P-3454**	2	BEARING-SLEEVE (63.741MM ID)	
	29	1	**1V-9148**	2	BEARING-SLEEVE (76.481MM ID)	
	30	1	**118-1008**	2	BEARING	

B-USE AS REQUIRED
M-METRIC PART

113-3706 **CONTROL GP-BUCKET** ***(contd.)*** **i01516387**

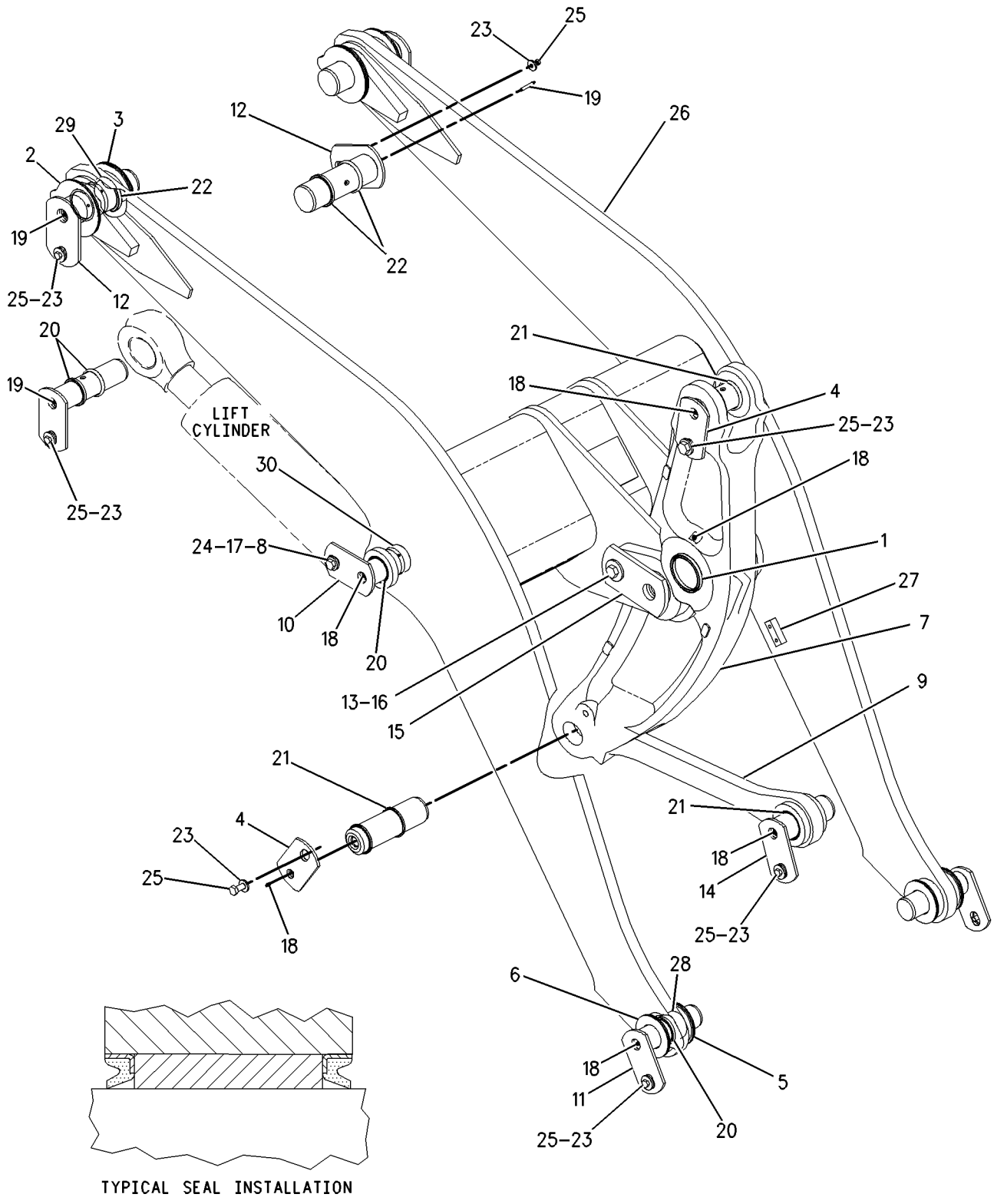

GRAPHIC #1 g00786848

IMPLEMENTS

113-3724 CONTROL GP-WORK TOOL

S/N: DBT1-UP

PART OF 176-5221 CHASSIS AR

SMCS-6116, 6117, 6119, 6700 **i01830033**

NOTE	REF NO	GRAPHIC REF	PART NUMBER	QTY	PART NAME 1 2 3 4 5 6 (PRODUCT LEVEL)	SEE PAGE
	1	1	**176-0623**	4	WASHER (78X160X1.6MM THK)	
	2	1	**176-0624**	8	WASHER (78X160X3MM THK)	
	3	1	**9V-4968**	6	PLATE	
	4	1	**113-3717**	2	LINK & BEARING AS	
					(EACH INCLUDES)	
		1	**7P-3454**	2	BEARING-SLEEVE (63.741MM ID)	
	5	1	**113-3727**	1	ARM & BEARING AS	
	5A	2	**118-1008**	2	BEARING	
	5B	2	**4V-8629**	2	BEARING-SLEEVE	
	5C	2	**4V-8674**	4	BEARING-SLEEVE (76.5MM ID)	
	5D	2	**9V-3406**	2	BEARING-SLEEVE	
C	6	1	**176-1593**	2	PIN AS	
	7	1	**118-0943**	10	SPACER	
	8	1	**122-6368**	2	LEVER AS-RH	
	9	1	**122-6369**	2	LEVER AS-LH	
	10	1	**122-6378**	2	PIN AS	
	11	1	**122-6381**	6	PIN AS	
	12	1	**122-6384**	2	PIN AS	
	13	1	**122-6387**	2	PIN AS	
	14	1	**122-6393**	4	PIN AS	
	15	1	**128-0153**	4	LINK AS	
	16	1	**128-0155**	2	PLATE	
	17	1	**3B-8489**	12	FITTING-GREASE	
	18	1	**3B-8491**	8	FITTING-GREASE	
	19	1	**7K-9203**	16	SEAL-LIP	
	20	1	**7K-9205**	8	SEAL-LIP	
	21	1	**7K-9206**	8	SEAL-LIP	
	22	1	**7K-9209**	8	SEAL-LIP	
	23	1	**7X-0618**	6	WASHER-HARD (13.5X40X5MM THK)	
M	24	1	**7X-2563**	4	BOLT (M20X2.5X60MM)	
	25	1	**7X-0564**	20	WASHER-HARD (20X51X3MM THK)	
M	26	1	**8T-4192**	6	BOLT (M12X1.75X25MM)	
	27	1	**8T-5439**	14	WASHER (21.5X45X6MM THK)	
M	28	1	**8T-5460**	8	BOLT (M20X2.5X40MM)	
	29	1	**3E-9411**	2	WASHER-HARD (17.5X38X6MM THK)	
M	30	1	**8T-4193**	2	BOLT (M16X2X50MM)	
	31	1	**7X-0567**	24	WASHER-HARD	
	32	1	**9C-7907**	4	SPACER (14MM THK)	
M	33	1	**8T-4141**	8	BOLT (M20X2.5X70MM)	
C	34	1	**176-1594**	2	PIN AS	

C-CHANGE FROM PREVIOUS TYPE
M-METRIC PART

113-3724 **CONTROL GP-WORK TOOL** *(contd.)* **i01830033**

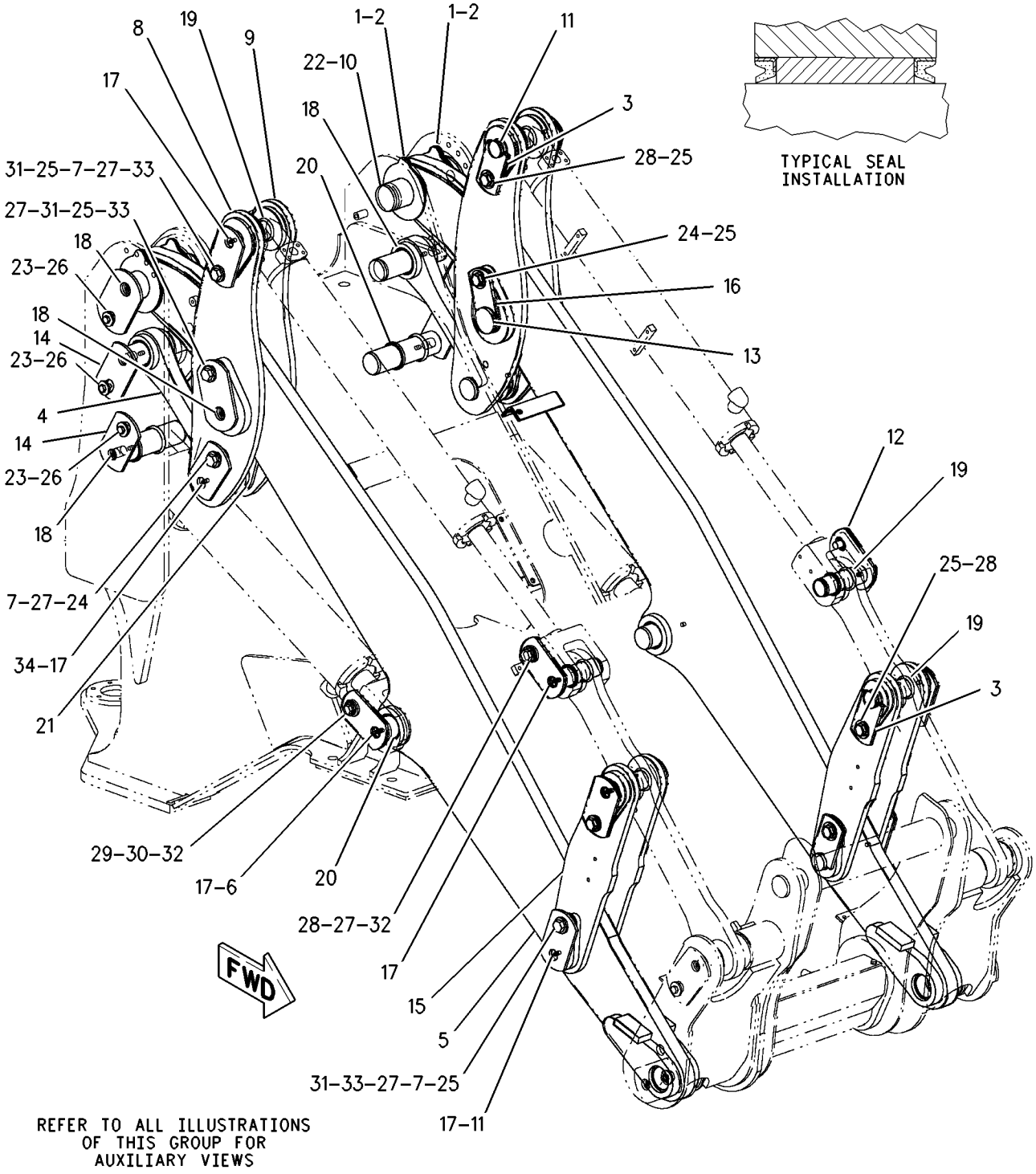

GRAPHIC #1 g00934160

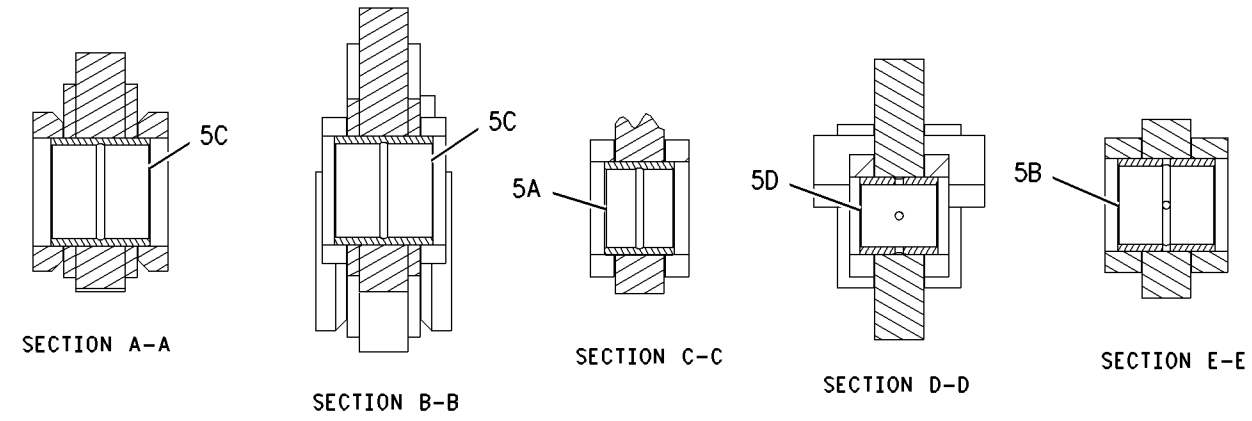

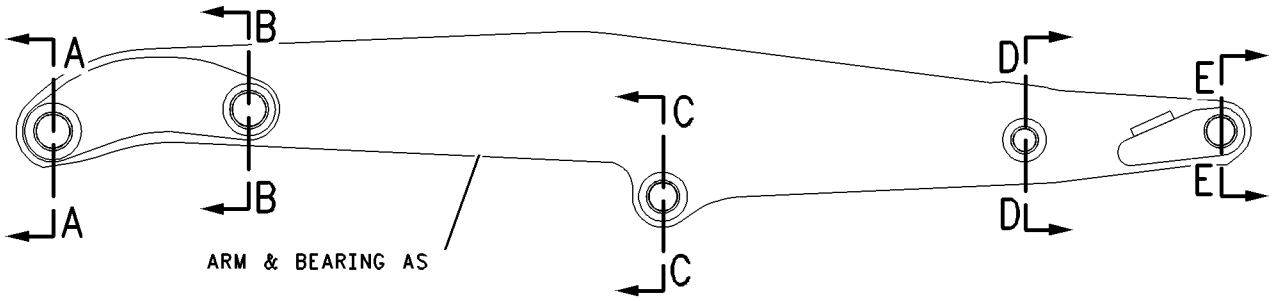

GRAPHIC #2 g00922398

WORK TOOLS

116-9713 ADAPTER GP-TIP

S/N: DJD1-UP; DBT1-UP
FOR USE WITH GENERAL PURPOSE BUCKETS
AN ATTACHMENT

SMCS-6803 **i01054975**

NOTE	PART NUMBER	QTY	PART NAME 1 2 3 4 5 6 (PRODUCT LEVEL)	SEE PAGE
	6I-9250	1	ADAPTER-LH	
	6I-9251	1	ADAPTER-RH	
	1U-0257	6	ADAPTER-STRAP	
	5P-8136	12	BOLT-PLOW	
	4F-4042	2	BOLT-PLOW	
	4J-9058	2	BOLT-PLOW (1-8X3.25 IN)	
	8J-2933	12	NUT (1-8 THD)	
	2J-3507	4	NUT-FULL (1-8 THD)	

<END>

WORK TOOLS

9V-1795 ARM GP-MATERIAL HANDLING

S/N: DJD1-UP; DBT1-UP
THREE PIECE EXTENDABLE BOOM
AN ATTACHMENT

SMCS-6542 **i00349696**

NOTE	REF NO	GRAPHIC REF	PART NUMBER	QTY	PART NAME 1 2 3 4 5 6 (PRODUCT LEVEL)	SEE PAGE
	1	1	**9V-1590**	1	BASE AS	
	2	1	**5G-2373**	2	PIN	
	3	1	**8D-3791**	2	PIN (LOCK)	
	4	1	**6W-5652**	1	EXTENSION AS	
	5	1	**6W-5656**	1	EXTENSION AS	
	6	1	**9V-2715**	1	SHACKLE	
	7	1	**9V-2714**	1	HOOK	
	8	1	**6W-5679**	1	RETAINER AS	
	9	1	**8T-4896**	2	WASHER-HARD (2.5MM THK)	
	10	1	**5M-3062**	2	BOLT (3/8-16X.750IN)	
	11	1	**6W-5678**	1	RETAINER AS	
	12	1	**1K-6870**	1	LOCKNUT (3/4-10 THD)	
	13	1	**7X-0371**	1	BOLT (3/4-10X3.75IN)	
	14	1	**8T-2356**	2	FILM-INSTRUCTION	

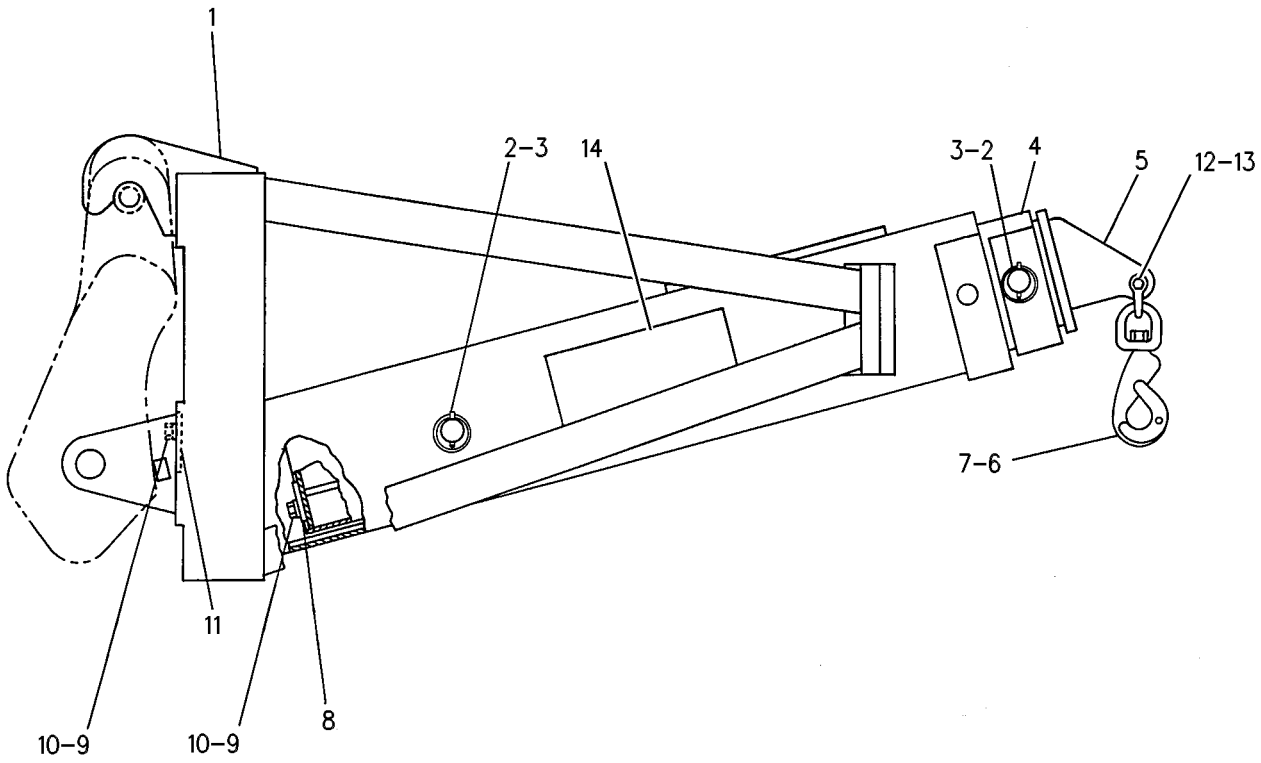

GRAPHIC #1 g00130013

119-1799 BUCKET AS-GENERAL PURPOSE

S/N: DJD1-UP
1.9 CU M
AN ATTACHMENT

SMCS-6101 **i01091236**

NOTE	REF NO	GRAPHIC REF	PART NUMBER	QTY	PART NAME 1 2 3 4 5 6 (PRODUCT LEVEL)	SEE PAGE
	1	1	**4E-0659**	1	EDGE-CUTTING	
	2	1	**8P-9770**	2	PLATE	
	3	1	**9V-4484**	4	PLATE	
	4	1	**119-1802**	1	HINGE AS (OUTER LH)	
	5	1	**119-1803**	1	HINGE AS (INNER LH)	
	6	1	**119-1804**	1	HINGE AS (INNER RH)	
	7	1	**119-1805**	1	HINGE AS (OUTER RH)	
	8	1	**119-1806**	1	HINGE AS (CENTER RH)	
	9	1	**119-1807**	1	HINGE AS (CENTER LH)	

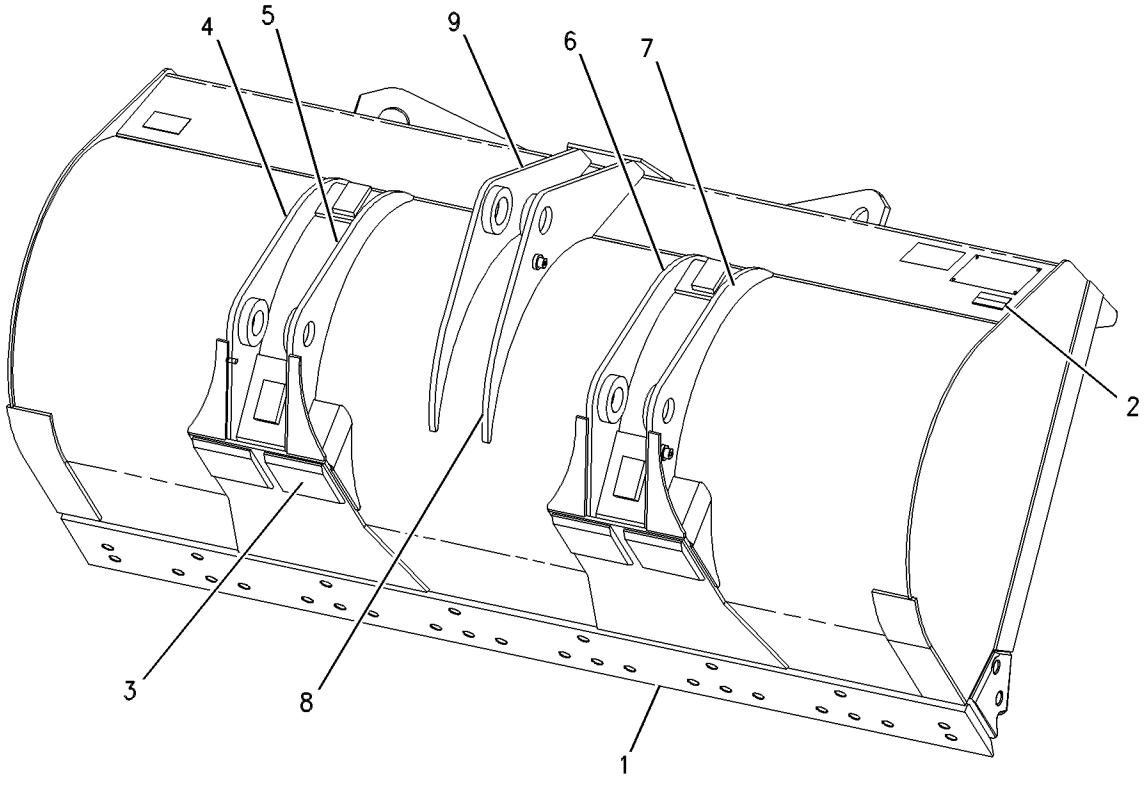

GRAPHIC #1 g00573184

WORK TOOLS

119-1800 BUCKET AS-GENERAL PURPOSE

S/N: DJD1-UP
2.2CU M (2.9CU YD)
AN ATTACHMENT

SMCS-6101 **i01819688**

NOTE	REF NO	GRAPHIC REF	PART NUMBER	QTY	PART NAME 1 2 3 4 5 6 (PRODUCT LEVEL)	SEE PAGE
	1	1	**4E-0659**	1	EDGE-CUTTING	
	2	1	**4E-0685**	2	BAR	
	3	1	**8P-9770**	2	PLATE	
	4	1	**9V-4484**	4	PLATE	
	5	1	**119-1802**	1	HINGE AS (OUTER)	
	6	1	**119-1803**	1	HINGE AS (INNER)	
	7	1	**119-1804**	1	HINGE AS (INNER)	
	8	1	**119-1805**	1	HINGE AS (OUTER)	
	9	1	**119-1806**	1	HINGE AS (UPPER)	
	10	1	**119-1807**	1	HINGE AS (UPPER)	

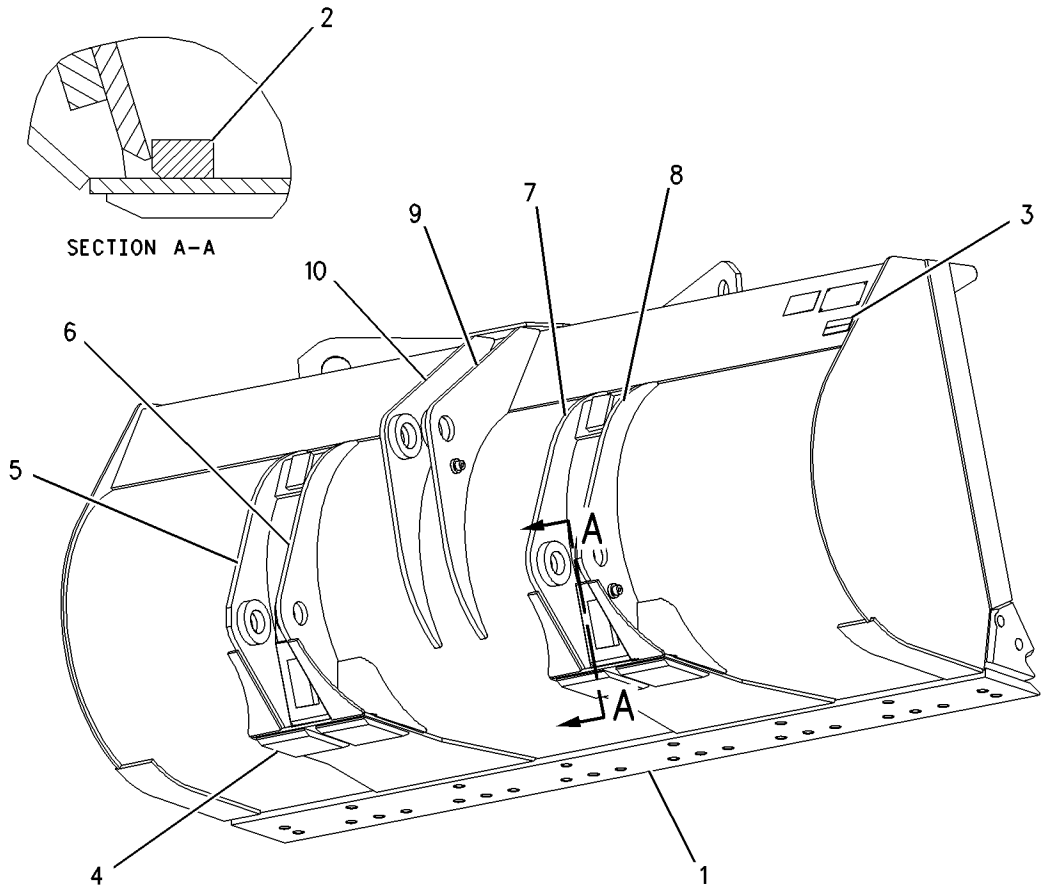

GRAPHIC #1 g00622882

WORK TOOLS

120-0162 BUCKET AS-GENERAL PURPOSE

S/N: DJD1-UP
2.1CU M (2.75CU YD). PENETRATION
AN ATTACHMENT

SMCS-6101 **i01153821**

NOTE	REF NO	GRAPHIC REF	PART NUMBER	QTY	PART NAME 1 2 3 4 5 6 (PRODUCT LEVEL)	SEE PAGE
	1	1	**4E-2482**	1	EDGE AS-CUTTING	
	1A	1	**1U-1254**	8	ADAPTER	
	1B	1	**4E-2483**	1	EDGE-CUTTING	
	2	1	**8P-9770**	2	PLATE	
	3	1	**120-0163**	1	HINGE AS (LH OUTER)	
	4	1	**120-0164**	1	HINGE AS (LH INNER)	
	5	1	**120-0165**	1	HINGE AS (RH INNER)	
	6	1	**120-0166**	1	HINGE AS (RH OUTER)	
	7	1	**120-0167**	1	HINGE AS (RH CENTER)	
	8	1	**120-0168**	1	HINGE AS (LH CENTER)	
	9	1	**120-0172**	2	PLATE	
	10	1	**120-0173**	4	PLATE	
	11	1	**120-0175**	1	PLATE	
	12	1	**120-0179**	2	PLATE	
	13	1	**4V-8285**	1	CORNER-RH	
	13A	1	**132-6762**	1	BAR	
	14	1	**4V-8286**	1	CORNER-LH	
	14A	1	**132-6762**	1	BAR	

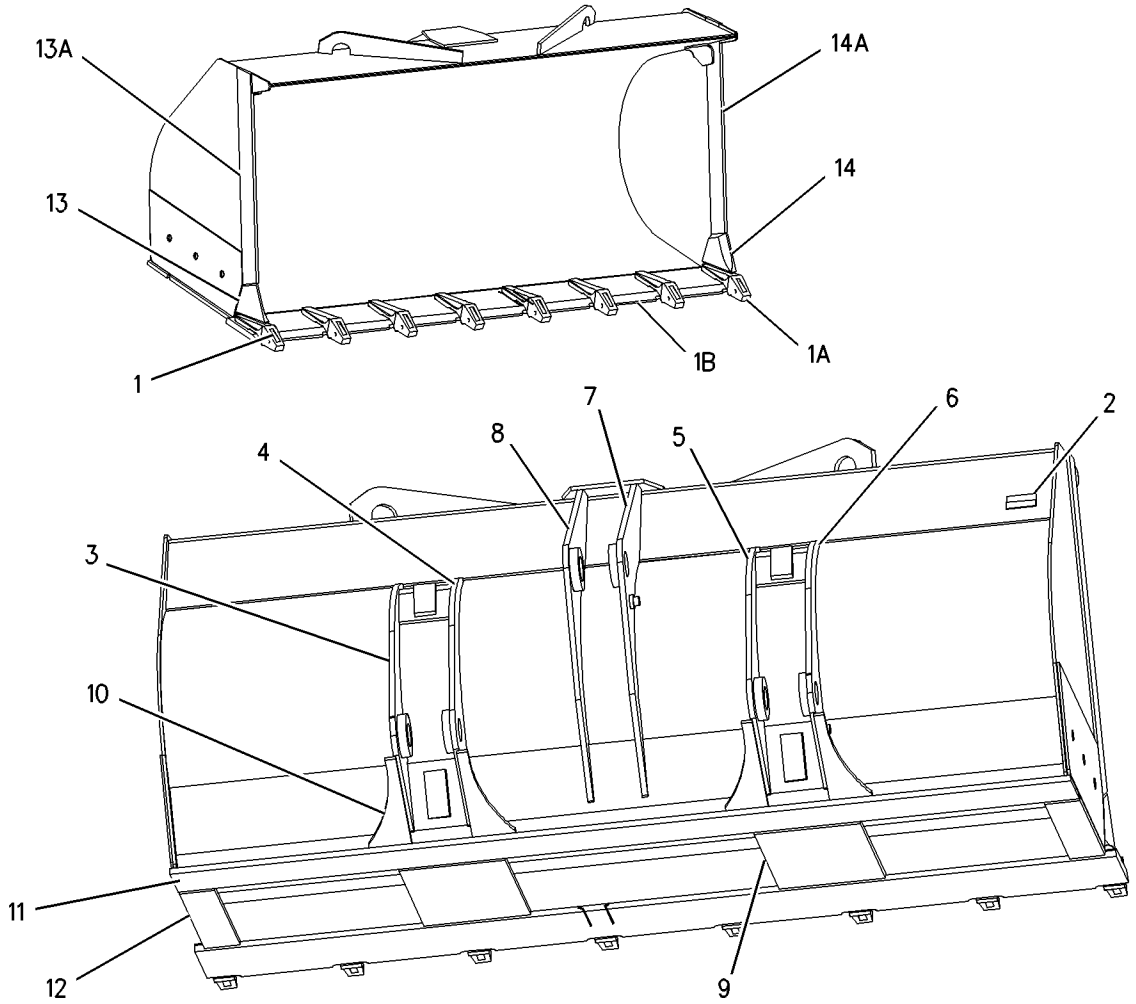

GRAPHIC #1 g00623081

WORK TOOLS

132-2258 BUCKET AS-GENERAL PURPOSE

S/N: DBT1-UP

AN ATTACHMENT

SMCS-6101 **i01091806**

NOTE	REF NO	GRAPHIC REF	PART NUMBER	QTY	PART NAME 1 2 3 4 5 6 (PRODUCT LEVEL)	SEE PAGE
	1	1	**4E-0659**	1	EDGE-CUTTING	
	2	1	**105-3213**	2	PLATE AS	
		1	**6K-4076**	1	BEARING-SLEEVE	
	3	1	**6W-1880**	4	PLATE	
	4	1	**8P-9770**	2	PLATE	

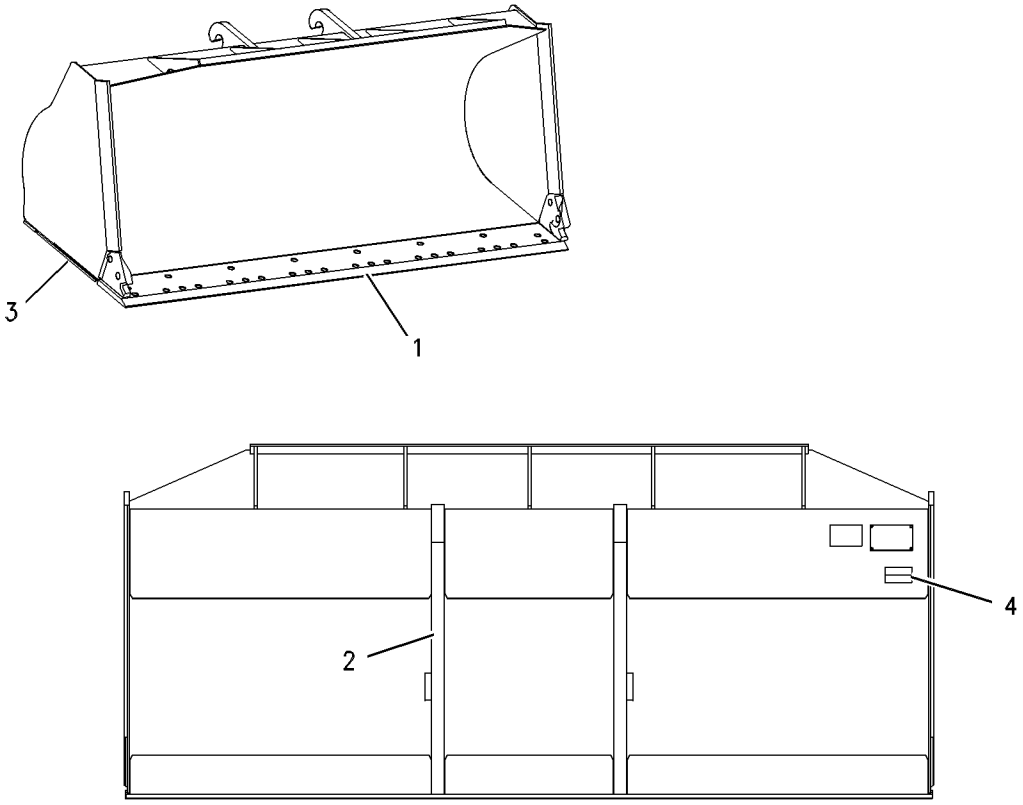

GRAPHIC #1 g00573337

WORK TOOLS

223-9730 BUCKET AS-GENERAL PURPOSE

S/N: DJD1-UP
2.3 CU M
AN ATTACHMENT

SMCS-6101 **i01820816**

NOTE	REF NO	GRAPHIC REF	PART NUMBER	QTY	PART NAME 1 2 3 4 5 6 (PRODUCT LEVEL)	SEE PAGE
	1	1	**4E-0659**	1	EDGE-CUTTING	
	2	1	**4E-0685**	2	BAR	
	3	1	**9V-4484**	4	PLATE	
	4	1	**119-1802**	1	HINGE AS (OUTER)	
	5	1	**119-1803**	1	HINGE AS (INNER)	
	6	1	**119-1804**	1	HINGE AS (INNER)	
	7	1	**119-1805**	1	HINGE AS (OUTER)	
	8	1	**119-1806**	1	HINGE AS (UPPER)	
	9	1	**119-1807**	1	HINGE AS (UPPER)	

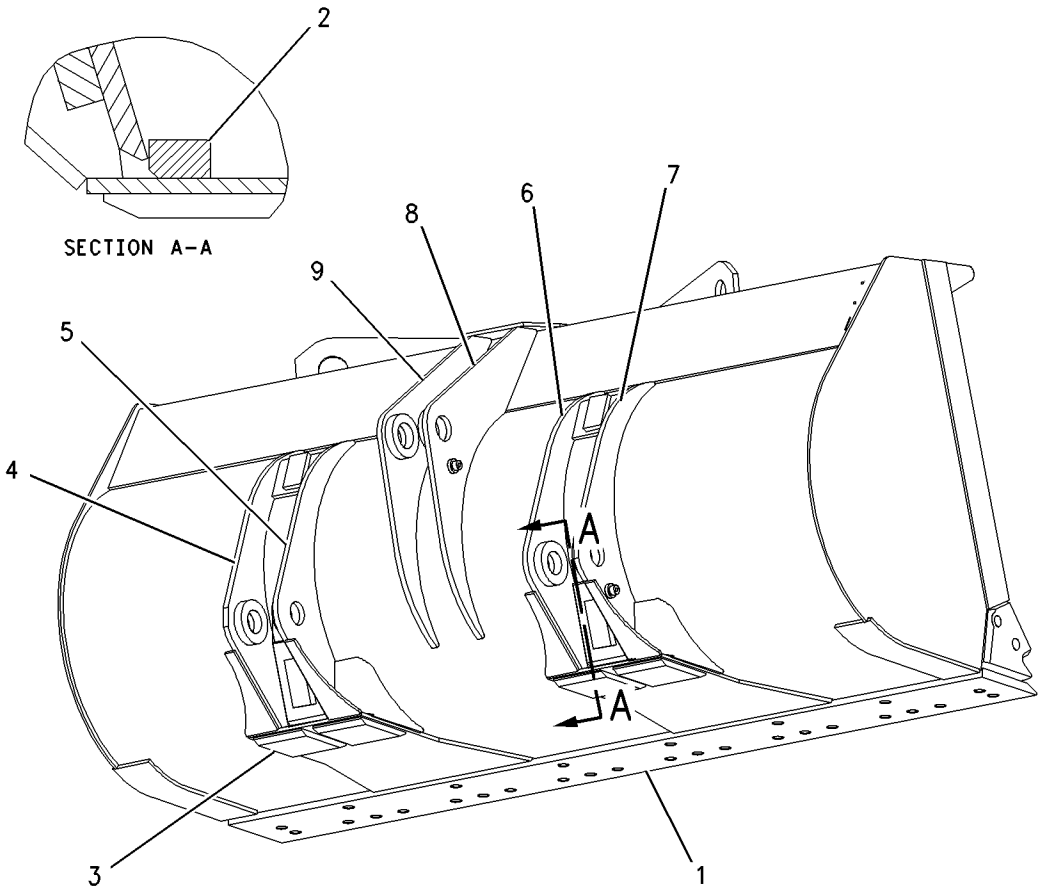

GRAPHIC #1 g00929658

228-7313 BUCKET AS-LIGHT MATERIAL

S/N: DJD1-UP
2.2CU M
AN ATTACHMENT

SMCS-6103 **i01820869**

NOTE	REF NO	GRAPHIC REF	PART NUMBER	QTY	PART NAME 1 2 3 4 5 6 (PRODUCT LEVEL)	SEE PAGE
	1	1	**4E-2482**	1	EDGE AS-CUTTING	
		1	**1U-1254**	8	ADAPTER	
		1	**4E-2483**	1	EDGE-CUTTING	
	2	1	**120-0163**	1	HINGE AS (OUTER LH)	
	3	1	**120-0164**	1	HINGE AS (INNER LH)	
	4	1	**120-0165**	1	HINGE AS (INNER RH)	
	5	1	**120-0166**	1	HINGE AS (OUTER RH)	
	6	1	**120-0167**	1	HINGE AS (CENTER RH)	
	7	1	**120-0168**	1	HINGE AS (CENTER LH)	
	8	1	**120-0172**	2	PLATE	
	9	1	**120-0173**	4	PLATE	
	10	1	**120-0175**	1	PLATE	
	11	1	**120-0179**	2	PLATE	

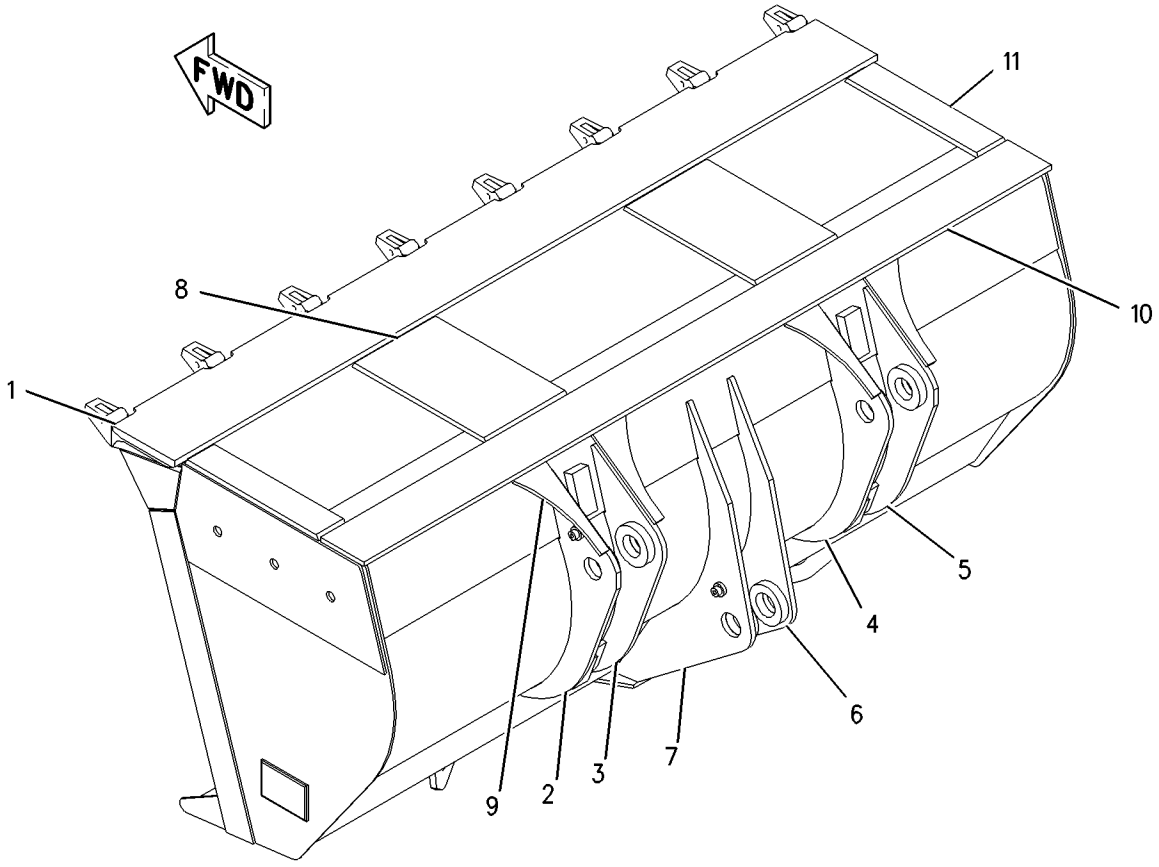

GRAPHIC #1 g00930474

WORK TOOLS

132-2256 BUCKET GP-GENERAL PURPOSE

S/N: DBT1-UP
1.8 CU M (2.4 CU YD)
AN ATTACHMENT

SMCS-6101 **i01147127**

NOTE	REF NO	GRAPHIC REF	PART NUMBER	QTY	PART NAME 1 2 3 4 5 6 (PRODUCT LEVEL)	SEE PAGE
	1	1	**9V-9480**	4	PLATE	
	2	1	**4E-0659**	1	EDGE-CUTTING	
	3	1	**105-3213**	2	PLATE AS	
					(EACH INCLUDES)	
		1	**6K-4076**	2	BEARING-SLEEVE	
	4	1	**8P-9770**	2	PLATE	
Y	5	1	**6I-8311**	1	CORNER-RH	583
Y	6	1	**6I-8310**	1	CORNER-LH	583
J	7	1	**9V-9463**	2	BAR	

J-QUANTITIES SHOWN ARE THOSE REQUIRED FOR BOTH LH AND RH SIDES
Y-SEPARATE ILLUSTRATION

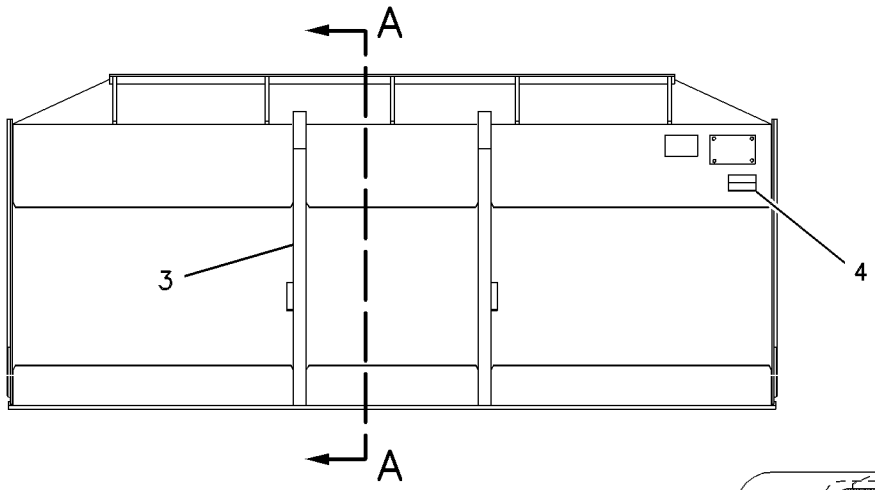

REAR VIEW

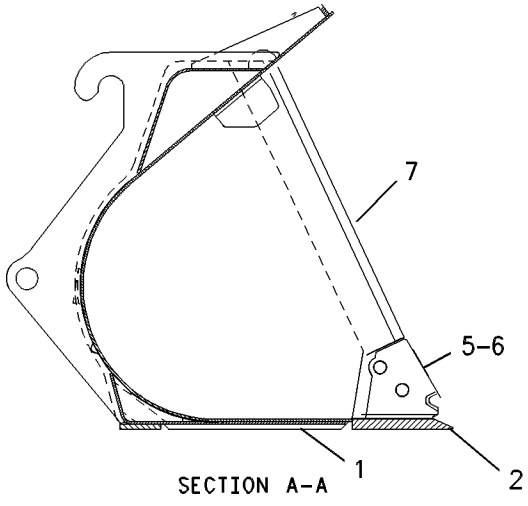

SECTION A-A

GRAPHIC #1 g00608460

224-0759 BUCKET GP-GENERAL PURPOSE

S/N: DJD1-UP; DBT1-UP
2.3 CU M (3.00 CU YD). GENERAL PURPOSE
AN ATTACHMENT

SMCS-6101 **i01832258**

NOTE	REF NO	GRAPHIC REF	PART NUMBER	QTY	PART NAME 1 2 3 4 5 6 (PRODUCT LEVEL)	SEE PAGE
	1	1	*223-9734*	1	BUCKET AS	
	2	1	**4E-0659**	1	EDGE-CUTTING	
	3	1	**6I-8310**	1	CORNER-LH	
	4	1	**6I-8311**	1	CORNER-RH	

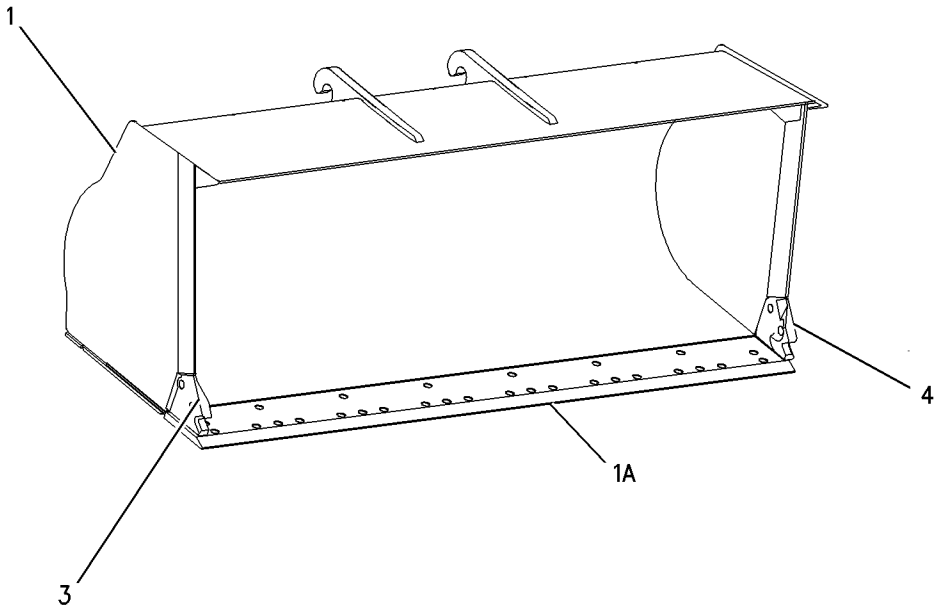

GRAPHIC #1 g00936103

6I-8310 CORNER-LH

S/N: DBT1-UP
PART OF 132-2256 BUCKET GP-GENERAL PURPOSE
FOR USE WITH 25MM (.98 IN) CUTTING EDGE AND NEW SINGLE STRAP DOUBLE BOLT CORNER ADAPTER OR UNI-TOOTH
AN ATTACHMENT

SMCS-6802 **i01077315**

NOTE	PART NUMBER	QTY	PART NAME 1 2 3 4 5 6 (PRODUCT LEVEL)	SEE PAGE
	6I-8312	1	CORNER-LH	
			—OR—	
	6I-8314	1	CORNER-LH	

<END>

6I-8311 CORNER-RH

S/N: DBT1-UP
PART OF 132-2256 BUCKET GP-GENERAL PURPOSE
FOR USE WITH 25 MM (.98 IN) CUTTING EDGE & NEW SINGLE STRAP DOUBLE BOLT CORNER ADAPTER OR UNI-TOOTH
AN ATTACHMENT

SMCS-6802 **i01077383**

NOTE	PART NUMBER	QTY	PART NAME 1 2 3 4 5 6 (PRODUCT LEVEL)	SEE PAGE
	6I-8313	1	CORNER-RH	
			—OR—	
	6I-8315	1	CORNER-RH	

<END>

122-6466 COUPLER AR-QUICK

S/N: DBT1-UP
AN ATTACHMENT

SMCS-6129 **i01653377**

NOTE	PART NUMBER	QTY	PART NAME 1 2 3 4 5 6 (PRODUCT LEVEL)	SEE PAGE
Y	*122-6401*	1	COUPLER GP-QUICK	586
Y	*196-1979*	1	CYLINDER & MTG GP-COUPLER	367
Y	*188-2860*	1	LINES GP-COUPLER	392

Y-SEPARATE ILLUSTRATION

<END>

WORK TOOLS

223-3378 COUPLER AR-QUICK

S/N: DJD1-UP

AN ATTACHMENT

SMCS-6129 **i01827918**

NOTE	PART NUMBER	QTY	PART NAME 1 2 3 4 5 6 (PRODUCT LEVEL)	SEE PAGE
Y	*196-1979*	1	CYLINDER & MTG GP-COUPLER	367
Y	*221-1707*	1	LINES GP-COUPLER	396
	223-6352	1	COUPLER GP-QUICK	
	223-6353	1	FRAME AS-COUPLER	
M	**8T-3490**	2	NUT-WELD (M10X1.5 THD)	
M	**8T-3612**	5	NUT-WELD (M8X1.25 THD)	
	8T-4224	5	WASHER-HARD (8.8X16X2MM THK)	
M	**8T-4908**	5	BOLT (M8X1.25X25MM)	
	225-7917	1	COVER AS	

M-METRIC PART
Y-SEPARATE ILLUSTRATION

<END>

MEMORANDA

WORK TOOLS

122-6401 COUPLER GP-QUICK

S/N: DBT1-UP
PART OF 122-6466 COUPLER AR-QUICK
AN ATTACHMENT

SMCS-6129 **i01640922**

NOTE	REF NO	GRAPHIC REF	PART NUMBER	QTY	PART NAME 1 2 3 4 5 6 (PRODUCT LEVEL)	SEE PAGE
	1	1	**7K-9205**	8	SEAL-LIP	
	2	1	**8T-9530**	4	TACK-FASTENER	
	3	1	**113-3898**	2	LEVER & BEARING AS	
					(EACH INCLUDES)	
	3A	1	**4V-8629**	1	BEARING-SLEEVE	
	3B	1	**6W-9172**	1	BEARING	
	3C	1	**9V-4975**	1	BEARING-SLEEVE	
B	4	1	**122-6520**	2	SHIM (3.18MM THK)	
B		1	**122-6521**	2	SHIM (6.35MM THK)	
	5	1	**8T-4224**	4	WASHER-HARD (8.8X16X2MM THK)	
	6	1	**145-9377**	1	PLATE-INSTRUCTION	
	7	1	**148-7834**	1	PLATE AS	
	8	1	**148-7836**	1	COUPLER AS	
	9	1	**122-6393**	4	PIN AS	
	10	1	**176-0625**	4	WASHER	
	11	1	**176-0626**	6	WASHER	
	12	1	**3B-8491**	4	FITTING-STRAIGHT (1/8-27 THD)	
	13	1	**7X-0618**	4	WASHER-HARD (13.5X40X5MM THK)	
M	14	1	**8T-4179**	4	BOLT (M12X1.75X20MM)	
M	15	1	**8T-4189**	4	BOLT (M8X1.25X20MM)	

B-USE AS REQUIRED
M-METRIC PART

122-6401 **COUPLER GP-QUICK** *(contd.)* **i01640922**

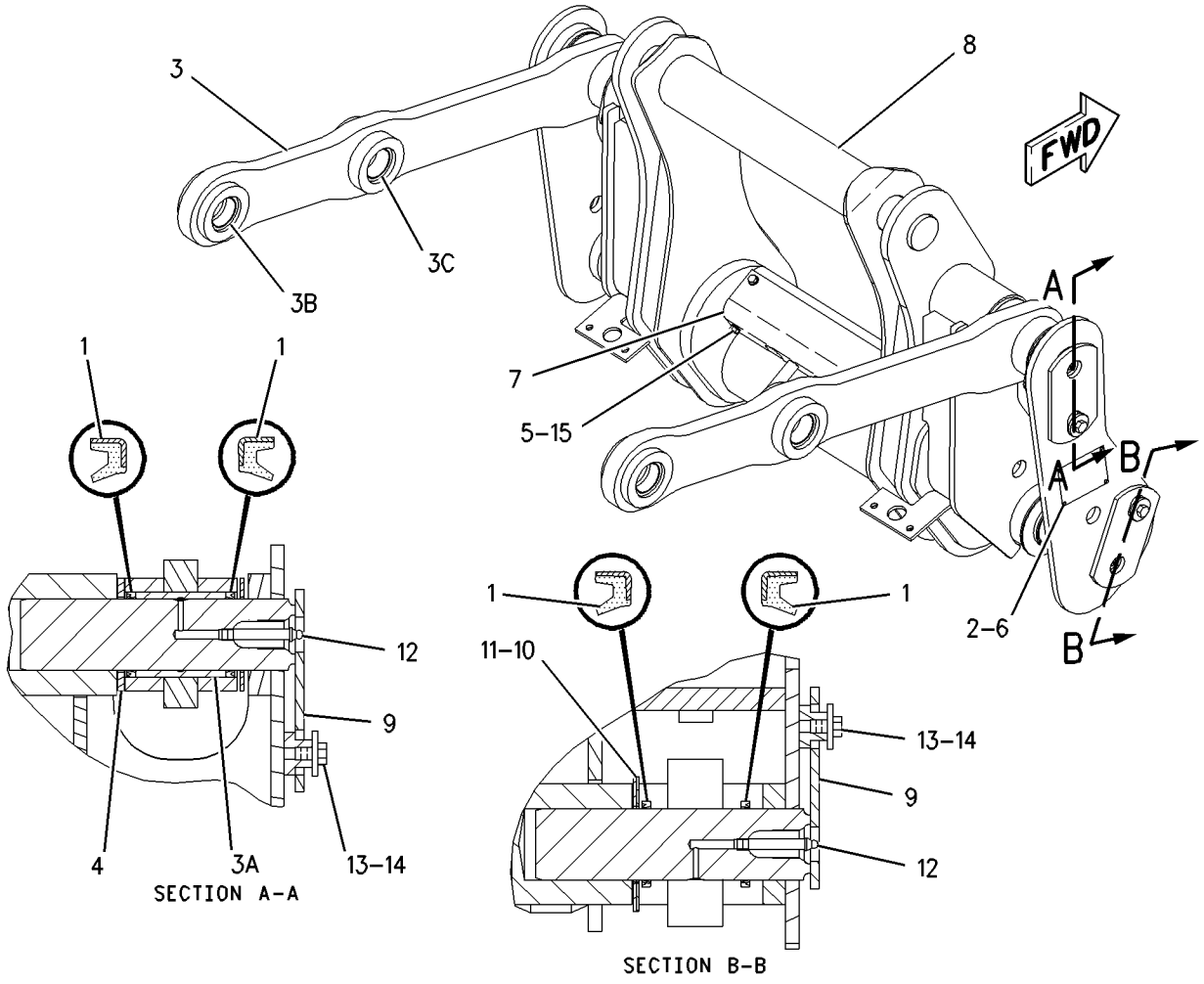

GRAPHIC #1 g00848606

WORK TOOLS

8E-4566 EDGE GP-CUTTING

S/N: DJD1-UP; DBT1-UP
AN ATTACHMENT

SMCS-6801 **i00958007**

NOTE	PART NUMBER	QTY	PART NAME 1 2 3 4 5 6 (PRODUCT LEVEL)	SEE PAGE
	1J-5607	10	BOLT-PLOW	
	8E-4567	2	EDGE-CUTTING	
	4T-8091	2	EDGE-END	
	2J-3507	10	NUT-FULL (1-8 THD)	

<END>

8E-4568 EDGE GP-SEGMENT

S/N: DJD1-UP; DBT1-UP
AN ATTACHMENT

SMCS-6818 **i00350075**

NOTE	PART NUMBER	QTY	PART NAME 1 2 3 4 5 6 (PRODUCT LEVEL)	SEE PAGE
	1J-5607	14	BOLT-PLOW	
	8E-4569	7	EDGE-SEGMENT	
	2J-3507	14	NUT-FULL (1-8 THD)	

<END>

WORK TOOLS

195-6937 F0RK GP

S/N: DJD1-UP; DBT1-UP

AN ATTACHMENT

i01724598

NOTE	REF NO	GRAPHIC REF	PART NUMBER	QTY	PART NAME 1 2 3 4 5 6 (PRODUCT LEVEL)	SEE PAGE
C	1	1	*221-3424*	1	POSITIONER GP-WORK TOOL	
		1	**195-6961**	1	INSERT	
		1	**221-3428**	1	PIN	

C-CHANGE FROM PREVIOUS TYPE

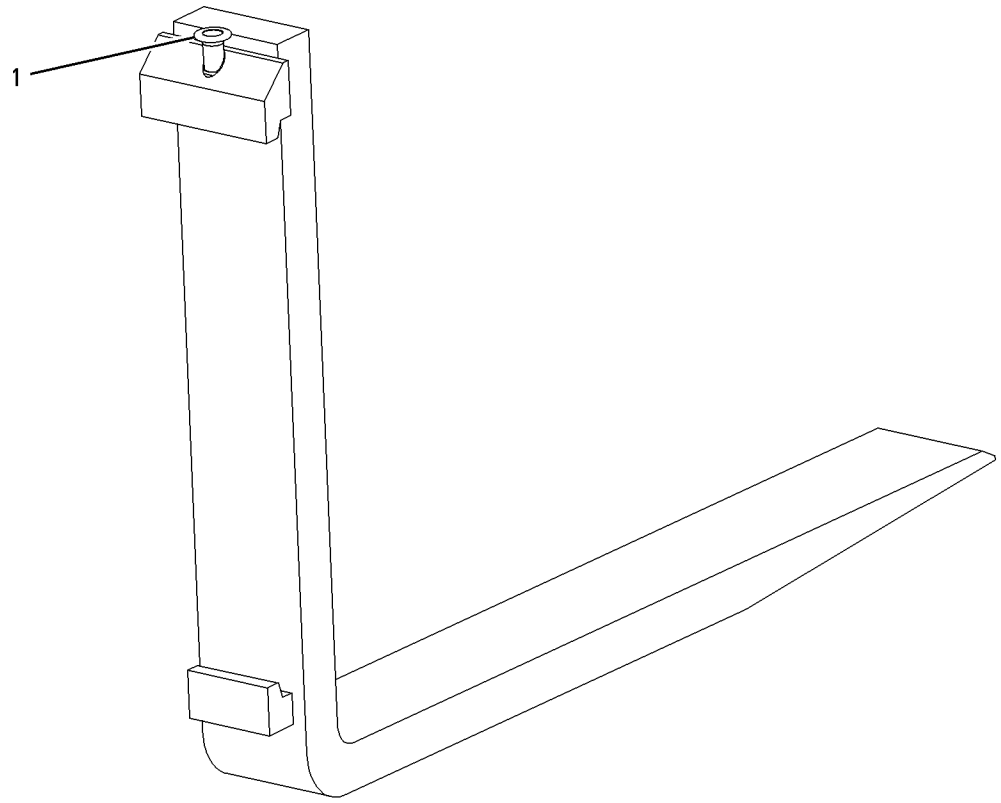

GRAPHIC #1

g00749486

WORK TOOLS

6W-8900 FORK GP-PALLET

S/N: DJD1-UP; DBT1-UP
1200MM (47 IN) LONG
AN ATTACHMENT

SMCS-6405 **i01211479**

NOTE	PART NUMBER	QTY	PART NAME 1 2 3 4 5 6 (PRODUCT LEVEL)	SEE PAGE
	091-1637	1	SERVICE GP-FORK POSITIONER	
	8T-0255	1	PIN-SPRING	
	091-1745	1	WASHER (1.2MM THK)	

<END>

6W-8933 FORK GP-PALLET

S/N: DJD1-UP; DBT1-UP
1050MM (41 IN) LONG
AN ATTACHMENT

SMCS-6405 **i01211487**

NOTE	PART NUMBER	QTY	PART NAME 1 2 3 4 5 6 (PRODUCT LEVEL)	SEE PAGE
	091-1637	1	SERVICE GP-FORK POSITIONER	
	8T-0255	1	PIN-SPRING	
	091-1745	1	WASHER (1.2MM THK)	

<END>

6W-8935 FORK GP-PALLET

S/N: DJD1-UP; DBT1-UP
130 MM (5.1 IN) WIDE-65 MM (2.6 IN) THICK- 1350 MM (53 IN) LONG
AN ATTACHMENT

SMCS-6405 **i01516322**

NOTE	PART NUMBER	QTY	PART NAME 1 2 3 4 5 6 (PRODUCT LEVEL)	SEE PAGE
	091-1637	2	SERVICE GP-FORK POSITIONER	
			(EACH INCLUDES)	
	8T-0255	1	PIN-SPRING	
	091-1745	1	WASHER (16.6X24X1.2MM THK)	

<END>

WORK TOOLS

195-6935 FORK GP-PALLET

S/N: DJD1-UP; DBT1-UP
AN ATTACHMENT

SMCS-6405 **i01724573**

NOTE	REF NO	GRAPHIC REF	PART NUMBER	QTY	PART NAME 1 2 3 4 5 6 (PRODUCT LEVEL)	SEE PAGE
C	1	1	*221-3424*	1	POSITIONER GP-WORK TOOL	
		1	**195-6961**	1	INSERT	
		1	**221-3428**	1	PIN	

C-CHANGE FROM PREVIOUS TYPE

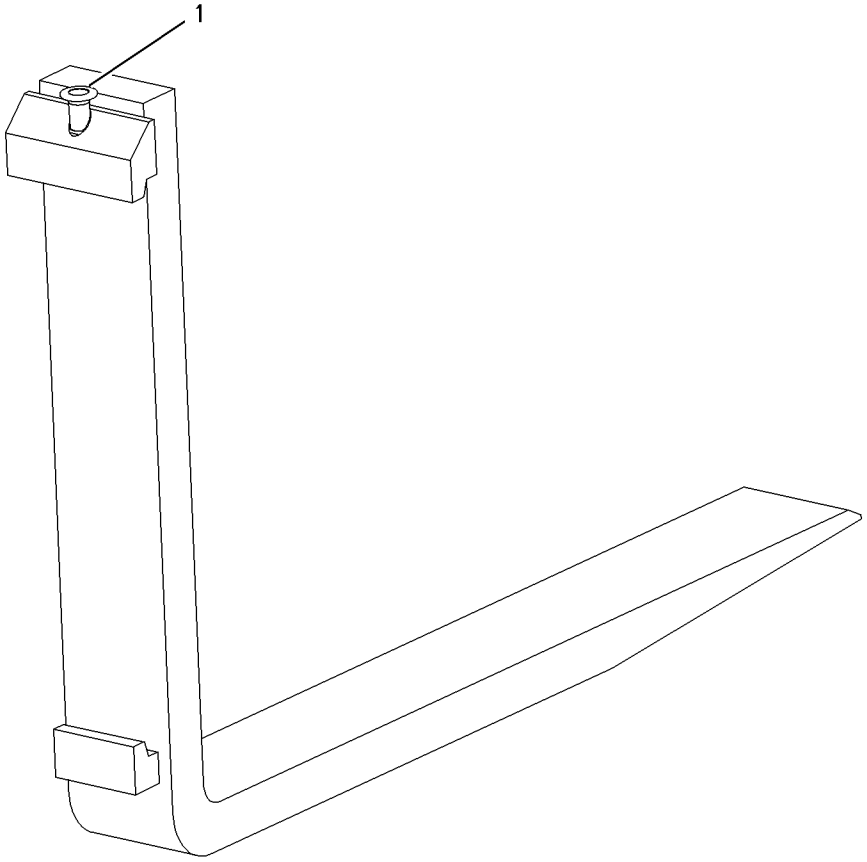

GRAPHIC #1 g00886299

WORK TOOLS

195-6938 F0RK GP-PALLET

S/N: DJD1-UP; DBT1-UP

AN ATTACHMENT

SMCS-6405 **i01724147**

NOTE	REF NO	GRAPHIC REF	PART NUMBER	QTY	PART NAME 1 2 3 4 5 6 (PRODUCT LEVEL)	SEE PAGE
C	1	1	**221-3424**	1	POSITIONER GP-WORK TOOL	
		1	**195-6961**	1	INSERT	
		1	**221-3428**	1	PIN	

C-CHANGE FROM PREVIOUS TYPE

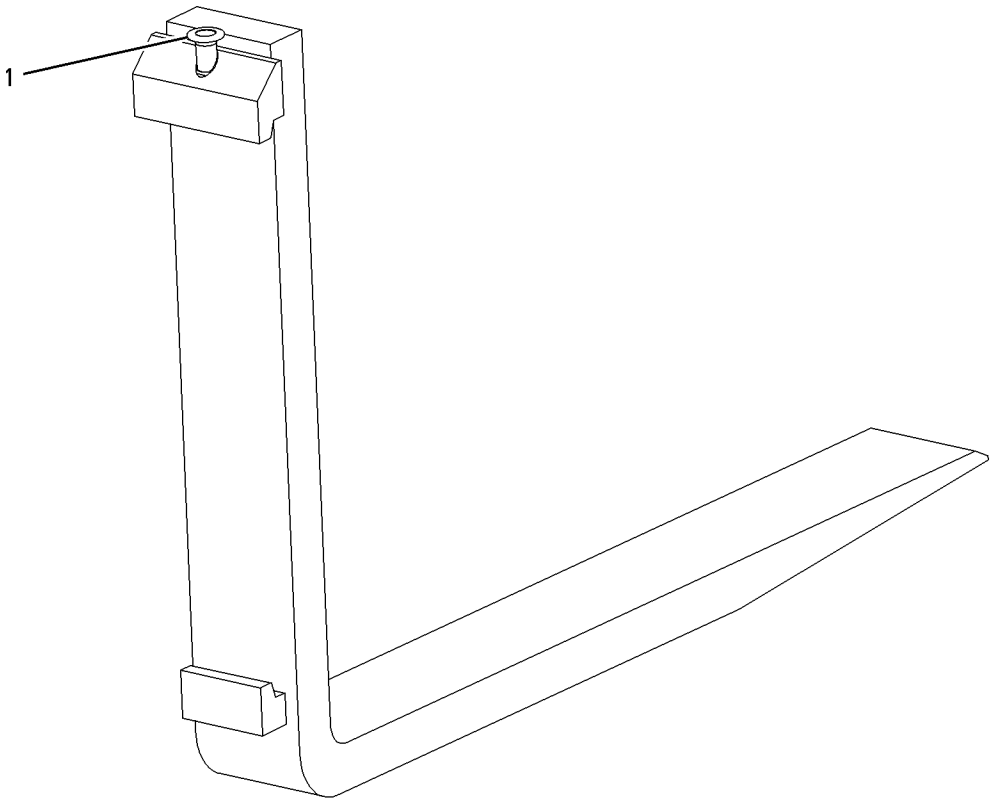

GRAPHIC #1 g00749486

142-8463 GUARD GP-BUCKET—TOOTH TIP

S/N: DJD1-UP; DBT1-UP
AN ATTACHMENT

SMCS-6800, 6805 **i01183578**

NOTE	REF NO	GRAPHIC REF	PART NUMBER	QTY	PART NAME 1 2 3 4 5 6 (PRODUCT LEVEL)	SEE PAGE
	1	1	**6C-7607**	2	CHAIN AS	
		1	**6C-7606**	2	ROD	
	2	1	**106-7743**	2	PLATE AS	
M		1	**8T-3490**	2	NUT-WELD (M10X1.5 THD)	
	3	1	**109-7669**	1	PLATE AS	
M		1	**5C-9553**	4	BOLT (M6X1.0X16MM)	
		1	**5P-4115**	4	WASHER (2MM THK)	
M		1	**6V-9632**	4	NUT-WELD (M6X1 THD)	
M	4	1	**8T-4196**	4	BOLT (M10X1.50X35MM)	

M-METRIC PART

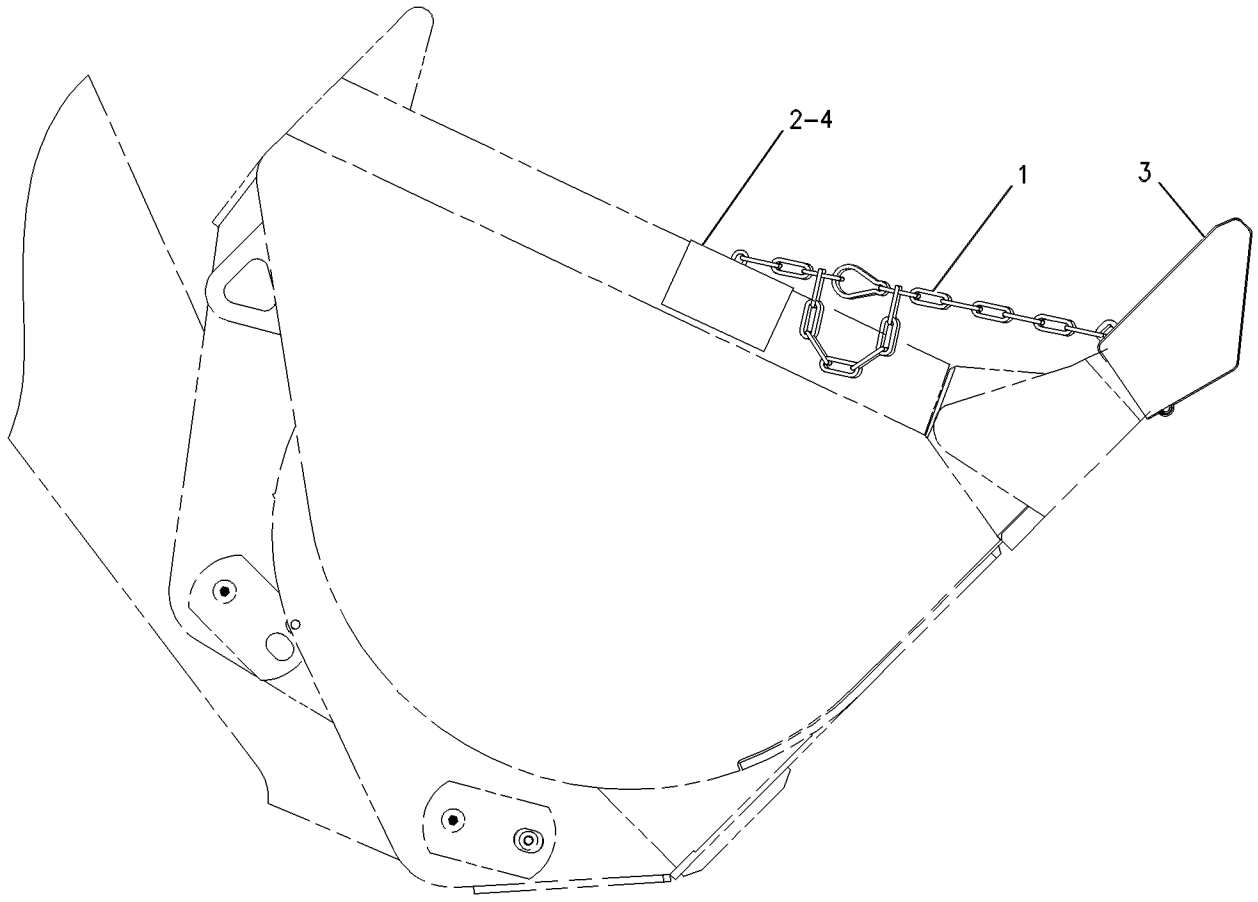

GRAPHIC #1 g00636685

196-4191 KIT-QUICK COUPLER

S/N: DJD1-UP; DBT1-UP
QUICK DISCONNECT COUPLER, WORKTOOLS
AN ATTACHMENT

SMCS-6129 **i01499956**

NOTE	REF NO	GRAPHIC REF	PART NUMBER	QTY	PART NAME 1 2 3 4 5 6 (PRODUCT LEVEL)	SEE PAGE
	1	1	**3D-2824**	2	SEAL-O-RING	
	2	1	**6V-0408**	2	SEAL-BONDED (27.05MM ID)	
	3	1	**195-6525**	1	COUPLING	
	4	1	**195-6527**	1	COUPLING	
	5	1	**196-4196**	2	ADAPTER	
F		1	**195-9877**	1	CAP-DUST	
F		1	**195-9878**	1	CAP-DUST	

F-NOT SHOWN

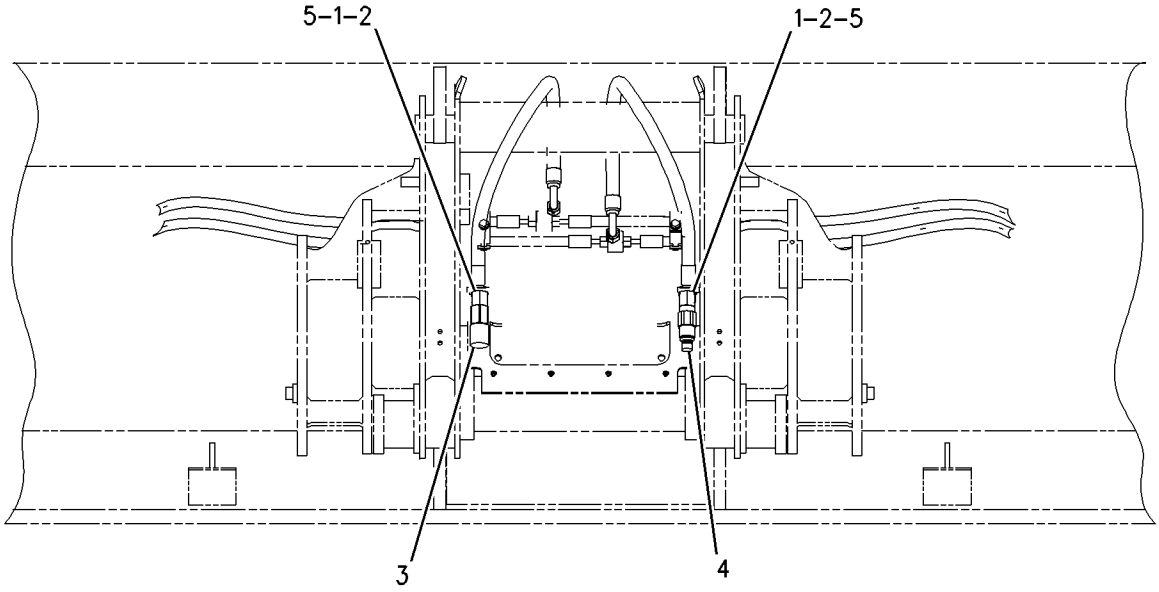

GRAPHIC #1 g00782885

9J-3169 TIP GP-LONG

S/N: DJD1-UP; DBT1-UP
PART OF 9W-8142 TIP GP-LONG, 3G-4017 TOOTH GP-LONG
FOR USE WITH CLAMSHELL BUCKETS
AN ATTACHMENT

SMCS-6805 **i01626994**

NOTE	PART NUMBER	QTY	PART NAME 1 2 3 4 5 6 (PRODUCT LEVEL)	SEE PAGE
	132-4763	1	PIN-G.E.T.	
	149-5733	1	RETAINER AS-G.E.T.	
C	**1U-3252**	1	TIP-LONG	

C-CHANGE FROM PREVIOUS TYPE

<END>

9W-8142 TIP GP-LONG

S/N: DJD1-UP; DBT1-UP
FOR USE WITH J250 ADAPTERS
AN ATTACHMENT

SMCS-6805 **i00631740**

NOTE	PART NUMBER	QTY	PART NAME 1 2 3 4 5 6 (PRODUCT LEVEL)	SEE PAGE
Y	*9J-3169*	8	TIP GP-LONG	595

Y-SEPARATE ILLUSTRATION

<END>

9J-3178 TIP GP-SHORT

S/N: DJD1-UP; DBT1-UP
PART OF 9W-8143 TIP GP-SHORT
AN ATTACHMENT

SMCS-6805 **i01542080**

NOTE	REF NO	GRAPHIC REF	PART NUMBER	QTY	PART NAME 1 2 3 4 5 6 (PRODUCT LEVEL)	SEE PAGE
	1	1	**132-4763**	1	PIN-G.E.T.	
		1	**149-5733**	1	RETAINER AS-G.E.T.	
C	2	1	**1U-3251**	1	TIP-SHORT	

C-CHANGE FROM PREVIOUS TYPE

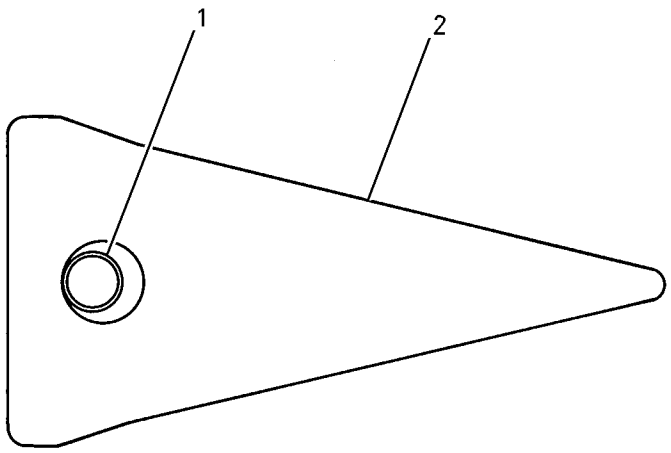

GRAPHIC #1 g00704305

WORK TOOLS

9W-8143 TIP GP-SHORT

S/N: DJD1-UP; DBT1-UP
AN ATTACHMENT

SMCS-6805 **i00631731**

NOTE	PART NUMBER	QTY	PART NAME 1 2 3 4 5 6 (PRODUCT LEVEL)	SEE PAGE
Y	*9J-3178*	8	TIP GP-SHORT	596

Y-SEPARATE ILLUSTRATION

<END>

WORK TOOLS

3G-4017 TOOTH GP-LONG

S/N: DJD1-UP; DBT1-UP

AN ATTACHMENT

SMCS-6822 **i00338042**

NOTE	REF NO	GRAPHIC REF	PART NUMBER	QTY	PART NAME 1 2 3 4 5 6 (PRODUCT LEVEL)	SEE PAGE
	1	1	**4J-9058**	2	BOLT-PLOW (1-8X3.25 IN)	
	2	1	**8J-2933**	14	NUT (1-8 THD)	
	3	1	**3G-4259**	1	ADAPTER-STRAP-RH	
		1	**3G-4258**	1	ADAPTER-STRAP-LH	
Y	4	1	*9J-3169*	8	TIP GP-LONG	595
	5	1	**1U-0257**	6	ADAPTER-STRAP	
	6	1	**8J-2928**	12	BOLT-PLOW	

Y-SEPARATE ILLUSTRATION

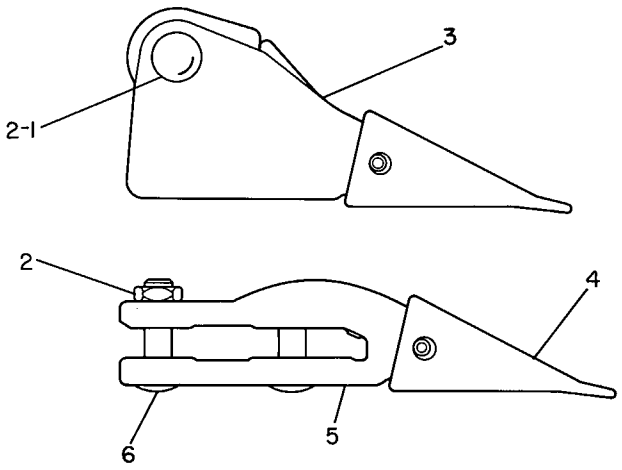

GRAPHIC #1 g00123878

WORK TOOLS

107-3296 TOOTH GP-UNI

S/N: DJD1-UP
AN ATTACHMENT

SMCS-6822 **i01069869**

NOTE	PART NUMBER	QTY	PART NAME 1 2 3 4 5 6 (PRODUCT LEVEL)	SEE PAGE
	4F-4042	2	BOLT-PLOW	
	4J-9058	2	BOLT-PLOW (1-8X3.25 IN)	
	8J-2928	12	BOLT-PLOW	
	8J-2933	16	NUT (1-8 THD)	
	1U-1857	6	TOOTH-UNI	
	6I-8388	1	TOOTH-UNI (LH)	
	6I-8389	1	TOOTH-UNI (RH)	

<END>

OPERATOR STATION

190-4605 AIR CONDITIONER & MOUNTING GP

S/N: DJD1-UP; DBT1-UP
PART OF 190-4402, 227-5317 AIR CONDITIONER AR, 190-4652 PLATFORM AR
AN ATTACHMENT

SMCS-7320 **i01826023**

NOTE	REF NO	GRAPHIC REF	PART NUMBER	QTY	PART NAME 1 2 3 4 5 6 (PRODUCT LEVEL)	SEE PAGE
D	1	1	**5P-5643**		SEAL (.2M)	
	2	1	**9X-8117**	2	TUBE AS	
	3	1	**118-7259**	1	GASKET	
	4	1	**156-4449**	1	CABLE AS	
		1	**2H-3920**	2	LOCKWASHER	
		1	**6V-8369**	1	NUT (7/16-28 THD)	
		1	**143-8874**	1	BOOT	
Y	5	1	**180-9873**	1	AIR CONDITIONER GP	604
	6	1	**195-0913**	1	SWITCH AS-ROCKER (AIR CONDITIONER)	
		1	**111-7899**	1	GASKET	
	7	1	**7X-0579**	11	WASHER-HARD (8.8X25.5X2MM THK)	
M	8	1	**8T-4908**	11	BOLT (M8X1.25X25MM)	

D-ORDER BY THE METER
M-METRIC PART
Y-SEPARATE ILLUSTRATION

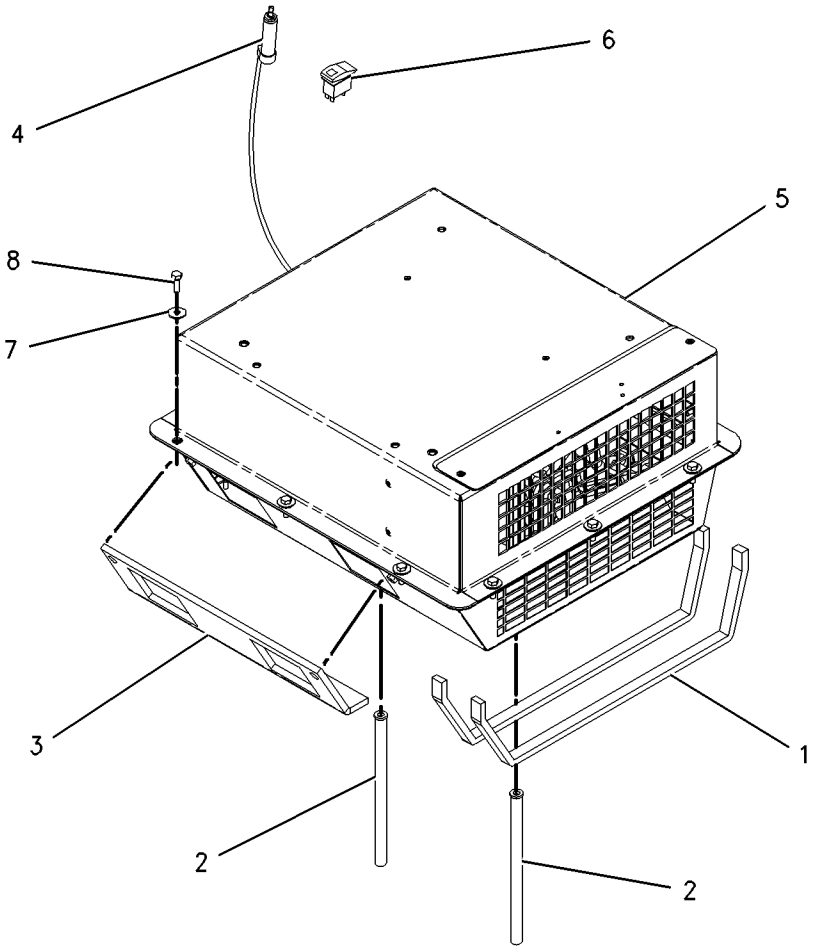

GRAPHIC #1 g00869013

OPERATOR STATION

190-4402 AIR CONDITIONER AR

S/N: DJD1-UP; DBT1-UP

AN ATTACHMENT

SMCS-7320 **i01787994**

NOTE	PART NUMBER	QTY	PART NAME 1 2 3 4 5 6 (PRODUCT LEVEL)	SEE PAGE
Y	*190-4605*	1	AIR CONDITIONER & MOUNTING GP	600
Y	*201-1802*	1	COMPRESSOR GP-REFRIGERANT	617
Y	*203-5937*	1	CONDENSER & MTG GP-REFRIGERANT	619
Y	*203-5932*	1	LINES GP-AIR CONDITIONER	656
Y	*203-5931*	1	LINES GP-HEATER	660
Y	*198-8965*	1	PANEL GP-TOP	300

Y-SEPARATE ILLUSTRATION

<END>

OPERATOR STATION

227-5317 AIR CONDITIONER AR

S/N: DJD1-UP; DBT1-UP
KIT-AIR CONDITIONER
FIELD INSTALLATION

SMCS-7320 **i01796495**

NOTE	REF NO	GRAPHIC REF	PART NUMBER	QTY	PART NAME 1 2 3 4 5 6 (PRODUCT LEVEL)	SEE PAGE
Y	1	1	*190-4605*	1	AIR CONDITIONER & MOUNTING GP	600
Y	2	1	*198-8965*	1	PANEL GP-TOP	300
Y	3	1	*201-1802*	1	COMPRESSOR GP-REFRIGERANT	617
Y	4	1	*203-5932*	1	LINES GP-AIR CONDITIONER	656
Y	5	1	*203-5937*	1	CONDENSER & MTG GP-REFRIGERANT	619

Y-SEPARATE ILLUSTRATION

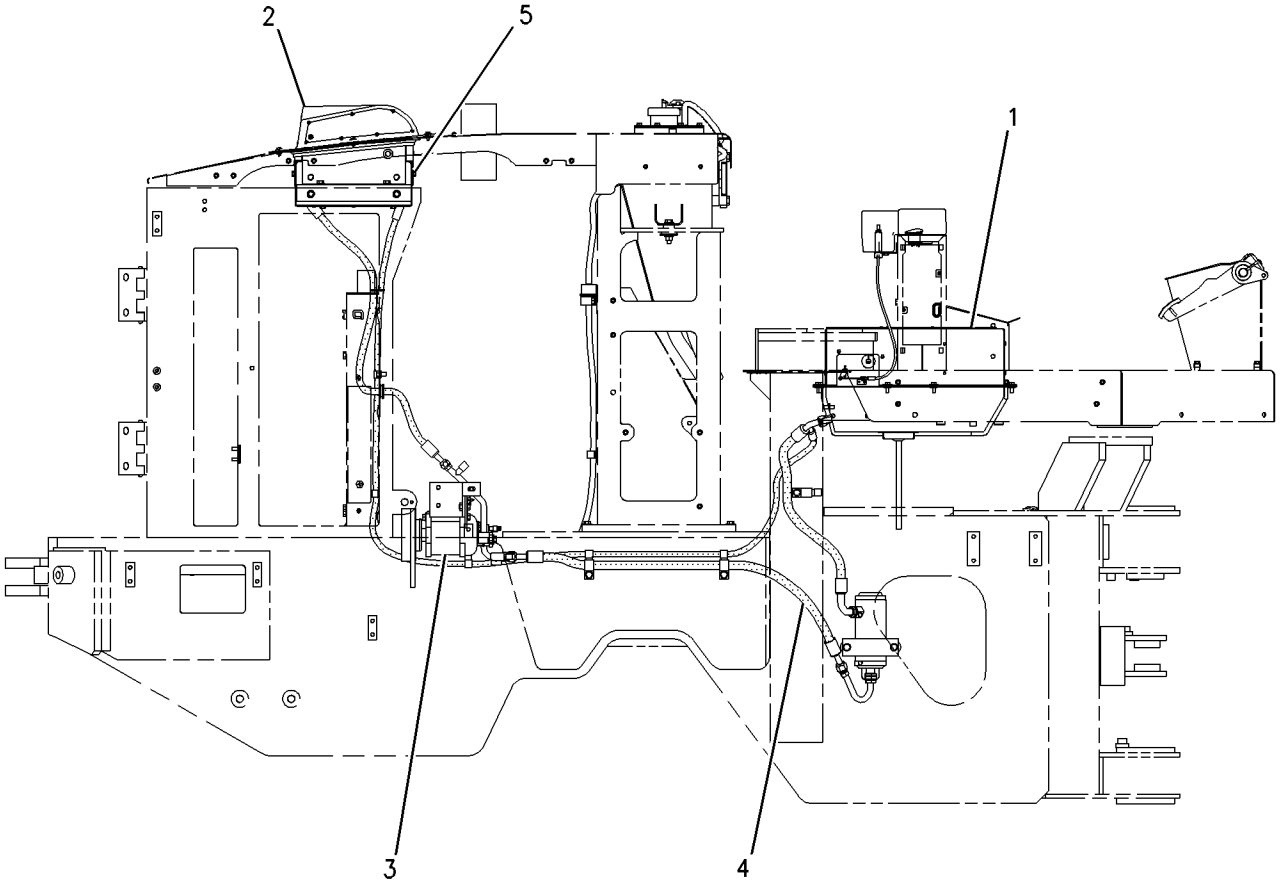

RIGHT SIDE VIEW

GRAPHIC #1 g00922007

MEMORANDA

OPERATOR STATION

180-9873 AIR CONDITIONER GP

S/N: DJD1-UP; DBT1-UP
PART OF 190-4605 AIR CONDITIONER & MOUNTING GP
AN ATTACHMENT

SMCS-7320 **i01758391**

NOTE	REF NO	GRAPHIC REF	PART NUMBER	QTY	PART NAME 1 2 3 4 5 6 (PRODUCT LEVEL)	SEE PAGE
E	1	1	**5P-5908**		SEAL (10CM)	
	2	1	**1P-6522**	1	GROMMET	
	3	1	**2H-3922**	1	LOCKWASHER	
	4	1	**2H-3923**	1	LOCKWASHER	
	5	1	**2S-3745**	6	SCREW-TAPPING (10-16X.5 IN)	
	6	1	**3B-4501**	2	LOCKWASHER	
	7	1	**3E-1841**	1	LEVER	
	8	1	**3E-5464**	1	SWITCH AS-THERMOSTAT	
	9	1	**3S-2093**	1	STRAP-CABLE	
M	10	1	**5C-9553**	4	BOLT (M6X1X16MM)	
	11	1	**6V-1668**	2	WASHER (6.5X29.1X3MM THK)	
	12	1	**7F-2050**	1	LOCKNUT (3/4-16 THD)	
	13	1	**7F-2060**	1	LOCKNUT (7/8-14 THD)	
	14	1	**8C-4586**	2	CLAMP	
M	15	1	**8C-8457**	1	SCREW-MACHINE	
	16	1	**8T-0154**	6	CLAMP-HOSE	
M	17	1	**8T-4171**	4	BOLT (M6X1X12MM)	
	18	1	**8T-4205**	13	WASHER-HARD (7.2X14.5X2MM THK)	
	19	1	**8T-6631**	2	SCREW-MACHINE (8-32X0.5 IN)	
	20	1	**8Y-5737**	1	CLIP	
	21	1	**9G-1950**	1	RESISTOR	
M	22	1	**9X-2044**	1	SCREW-TRUSS HEAD (M6X1X16MM)	
	23	1	**9X-2185**	4	SCREW (8-15X0.44 IN)	
	24	1	**037-4426**	1	RETAINER	
	25	1	**100-3143**	2	PLATE-ORIFICE	
	26	1	**100-3426**	2	WHEEL-BLOWER	
					(EACH INCLUDES)	
		1	**037-4838**	2	CLAMP	
	27	1	**102-0341**	1	CLIP (TAB)	
	28	1	**114-3140**	1	GROMMET	
	29	1	**118-5044**	1	HARNESS AS-HEATER (CAB)	
		1	**155-2270**	1	KIT-CONNECTING PLUG (2 PIN)	
					(INCLUDES PLUG AS,WEDGE & INTERFACE SEAL)	
		1	**102-8805**	1	KIT-RECEPTACLE (6 PIN)	
					(INCLUDES RECEPTACLE AS & WEDGE)	
		1	**3S-2093**	3	STRAP-CABLE	
	30	1	**118-5046**	1	HOUSING AS	
M		1	**6V-9632**	1	NUT-WELD (M6X1 THD)	
	31	1	**123-8851**	1	CASE AS	
M		1	**6V-9632**	7	NUT-WELD (M6X1 THD)	
	32	1	**124-8494**	2	GASKET	
	33	1	**124-8495**	1	VALVE AS-WATER	
M	34	1	**129-3178**	3	LOCKNUT (M6X1 THD)	
M	35	1	**141-9784**	1	BOLT-HEX HEAD (M6X190MM)	
	36	1	**151-0894**	1	COVER AS	
M		1	**7X-2478**	2	NUT-WELD	
M		1	**8T-3490**	4	NUT-WELD (M10X1.5 THD)	
	37	1	**174-1486**	1	MOTOR AS-BLOWER	
		1	**102-8802**	1	KIT-RECEPTACLE (2 PIN)	
					(INCLUDES RECEPTACLE AS AND WEDGE)	
		1	**3E-3365**	1	WEDGE-RECEPTACLE LOCK (2 PIN)	
		1	**9W-0852**	2	PIN-CONNECTOR	
	38	1	**180-3528**	1	COIL AS	
		1	**189-1707**	1	ORIFICE AS-AIR CONDITIONER	
	39	1	**183-7528**	1	COIL AS	

180-9873 **AIR CONDITIONER GP** ***(contd.)*** **i01758391**

NOTE	REF NO	GRAPHIC REF	PART NUMBER	QTY	PART NAME 1 2 3 4 5 6 (PRODUCT LEVEL)	SEE PAGE
M	40	1	**6V-7728**	1	BOLT (M6X1.0X45MM)	
D	41	1	**6V-1392**		SEAL (0.6M)	
D	41A	1	**6V-1392**	2	SEAL (1.7M EACH)	
E	42	1	**136-1953**		HOSE (18CM)	
E	42A	1	**136-1953**		HOSE (15CM)	
E	42B	1	**136-1953**		HOSE (23CM)	
D	43	1	**8T-5372**		SEAL (0.15M)	
D	43A	1	**8T-5372**	2	SEAL (0.12M EACH)	
D	44	1	**5P-7070**	2	INSULATION-STRIP (0.6M EACH)	
D	45	1	**5P-5643**		SEAL (0.4M)	

D-ORDER BY THE METER
E-ORDER BY THE CENTIMETER
M-METRIC PART

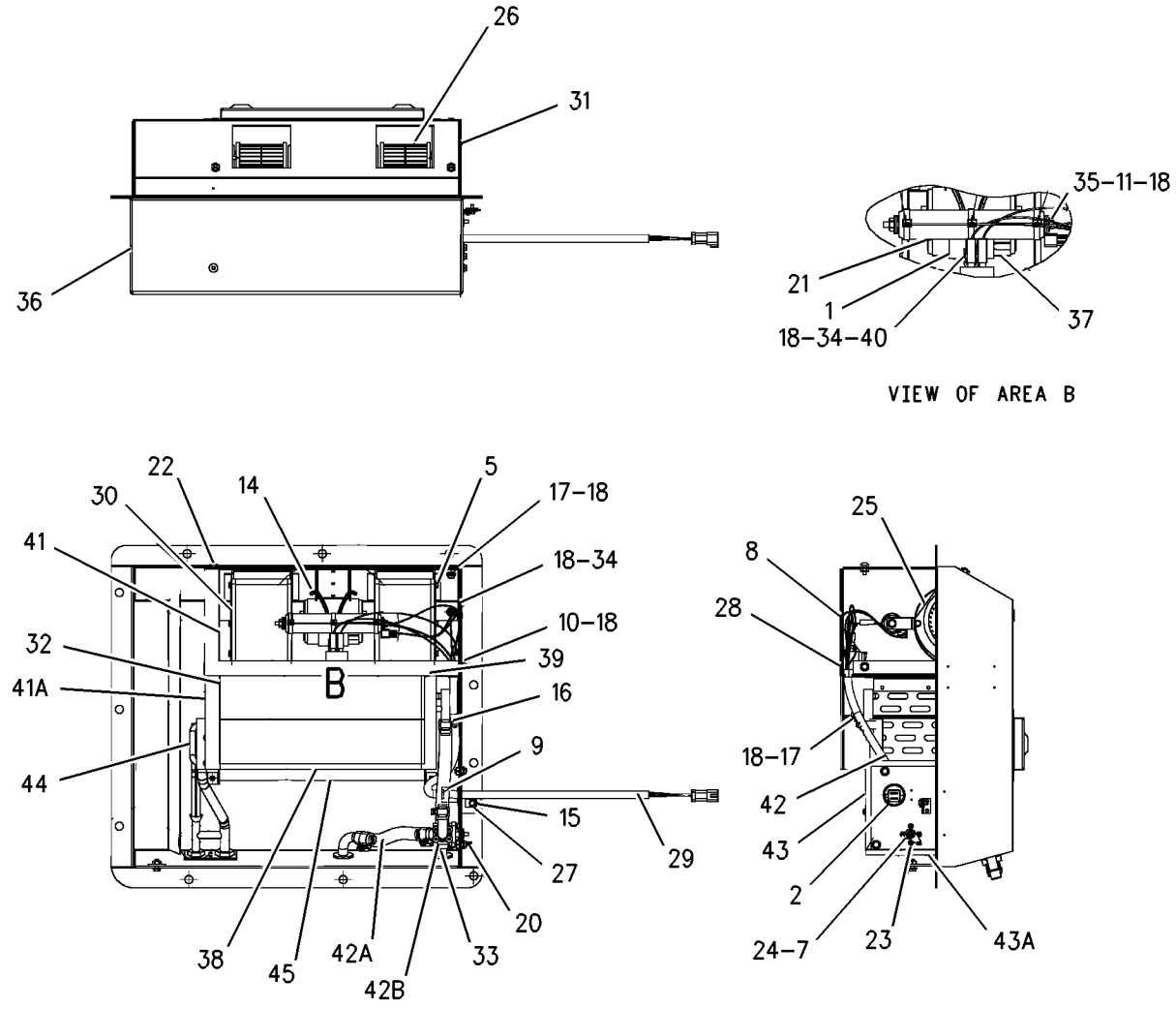

GRAPHIC #1 g00697006

8Y-4200 ARMREST GP–RH

S/N: DJD1-UP; DBT1-UP
PART OF 119-7128 SEAT GP, 8Y-6977 SEAT GP-SUSPENSION
AN ATTACHMENT

SMCS-7307, 7312 **i00983746**

NOTE	REF NO	GRAPHIC REF	PART NUMBER	QTY	PART NAME 1 2 3 4 5 6 (PRODUCT LEVEL)	SEE PAGE
Y	1	1	**8Y-5904**	1	ARMREST GP	608
	2	1	**8Y-5897**	1	BRACKET AS	
	3	1	**7X-0456**	1	BOLT (7/16-14X4.5IN)	
	4	1	**0S-1594**	1	BOLT (3/8-16X1.0IN)	
	5	1	**5V-1498**	1	LOCKNUT (3/8-16 THD)	
	6	1	**9X-8873**	1	BOLT (1/2-13X2.25IN)	
		1	**2M-0849**	1	WASHER (5MM THK)	
		1	**1K-6872**	1	LOCKNUT (1/2-13 THD)	

Y-SEPARATE ILLUSTRATION

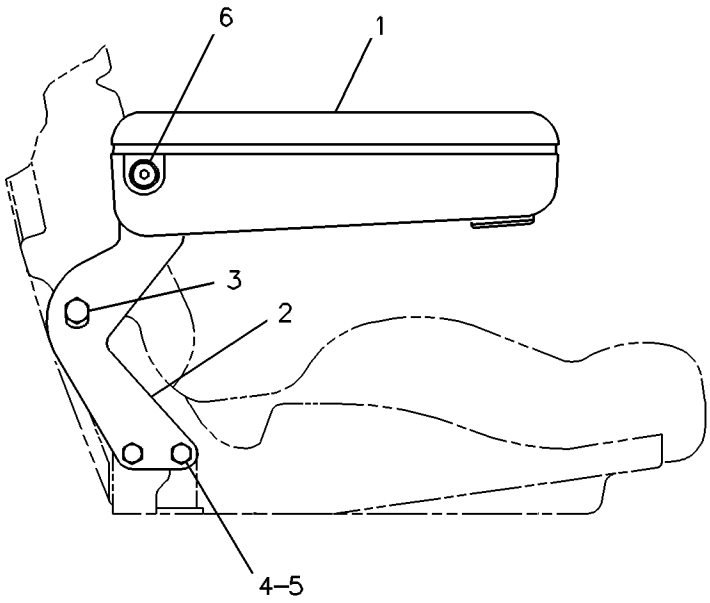

GRAPHIC #1 g00083050

OPERATOR STATION

8Y-5904 ARMREST GP

S/N: DJD1-UP; DBT1-UP
PART OF 8Y-4200, 8Y-6000 ARMREST GP
AN ATTACHMENT

SMCS-7307, 7312 **i01683504**

NOTE	REF NO	GRAPHIC REF	PART NUMBER	QTY	PART NAME 1 2 3 4 5 6 (PRODUCT LEVEL)	SEE PAGE
	1	1	**8Y-5906**	1	BASE-ARMREST	
L	2	1	**8S-7803**	1	RING-RETAINING	
J	3	1	**6V-2687**	4	SCREW-PAN HEAD	
L	4	1	**8T-8641**	1	WASHER (M9.8X16.0X0.8MM THK)	
L	5	1	**3E-4312**	1	NUT-SQUARE (3/8-16 THD)	
					AVAILABLE REPAIR KIT(S):	
J			**8Y-5988**	1	KIT-CUSHION (ARMREST)	
					(INCLUDES CUSHION AS & SCREWS)	
L			**8Y-6028**	1	KIT-ADJUSTER (ARMREST)	
					(INCLUDES KNOB AS, NUT, WASHER, RING & SPRING)	

J-KIT MARKED J INCLUDES PART MARKED J
L-KIT MARKED L INCLUDES PART(S) MARKED L

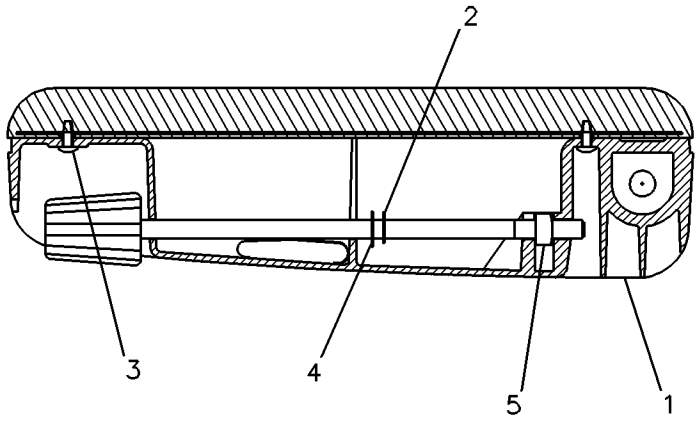

GRAPHIC #1 g00083048

8Y-6000 ARMREST GP–LH

S/N: DJD1-UP; DBT1-UP
PART OF 119-7128 SEAT GP, 8Y-6977 SEAT GP-SUSPENSION
AN ATTACHMENT

SMCS-7307, 7312 **i00978047**

NOTE	REF NO	GRAPHIC REF	PART NUMBER	QTY	PART NAME 1 2 3 4 5 6 (PRODUCT LEVEL)	SEE PAGE
Y	1	1	**8Y-5904**	1	ARMREST GP	608
	2	1	**8Y-5898**	1	BRACKET AS	
	3	1	**7X-0456**	1	BOLT (7/16-14X4.5IN)	
	4	1	**0S-1594**	1	BOLT (3/8X1.0IN)	
	5	1	**5V-1498**	1	LOCKNUT (3/8-16 THD)	
	6	1	**9X-8873**	1	BOLT (1/2-13X2.25IN)	
		1	**2M-0849**	1	WASHER (5MM THK)	
		1	**1K-6872**	1	LOCKNUT (1/2-13 THD)	

Y-SEPARATE ILLUSTRATION

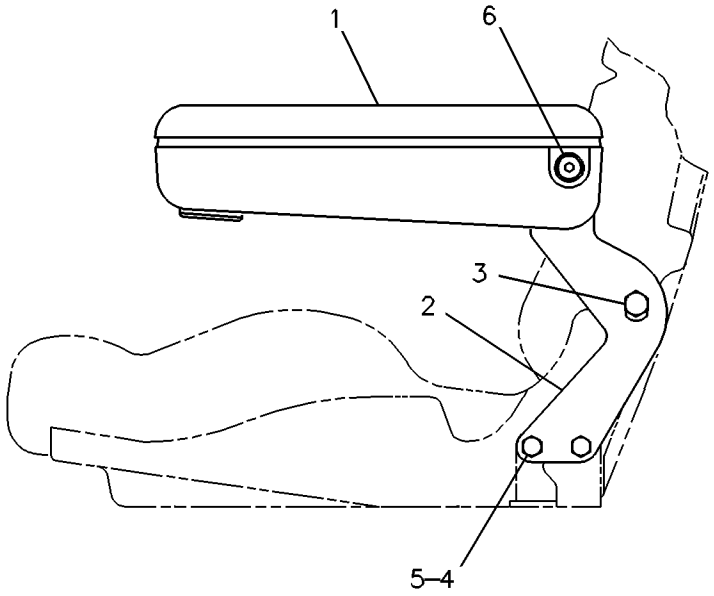

GRAPHIC #1 g00083046

OPERATOR STATION

190-4405 CAB AR

S/N: DJD1-UP; DBT1-UP
PART OF 190-4634, 190-4640 CAB AR
AN ATTACHMENT

SMCS-7301 **i01779747**

NOTE	PART NUMBER	QTY	PART NAME 1 2 3 4 5 6 (PRODUCT LEVEL)	SEE PAGE
Y	*168-7000*	1	CONTROL GP-PARKING BRAKE	302
Y	*190-4635*	1	CONTROL GP-STEERING	316
Y	*190-4690*	1	CONTROL GP-TRANSMISSION	194
Y	*207-5948*	1	DEFROSTER GP-CAB	625
Y	*107-4630*	1	DUCT GP-AIR	636
	118-0626	1	FILM-WINDOW (FRONT)	
Y	*119-4769*	1	FILTER GP-CAB AIR	639
Y	*107-4634*	1	LINER GP-CAB	651
Y	*107-4643*	1	MIRROR GP-REAR VIEW	663
Y	*190-4320*	1	PANEL GP-INSTRUMENT	676
Y	*190-4700*	1	PEDAL GP-GOVERNOR	681
Y	*107-6133*	1	SWITCH GP-WIPER	137
Y	*107-4628*	1	WIPER GP-WINDOW	716
Y	*190-4340*	1	WIRING GP-CAB	146

Y-SEPARATE ILLUSTRATION

<END>

190-4634 CAB AR

S/N: DJD1-UP; DBT1-UP
PART OF 190-4648 OPERATOR AR
AN ATTACHMENT

SMCS-7301 **i01790313**

NOTE	PART NUMBER	QTY	PART NAME 1 2 3 4 5 6 (PRODUCT LEVEL)	SEE PAGE
Y	*190-4405*	1	CAB AR	610
Y	*205-0522*	1	CAB AR	611

Y-SEPARATE ILLUSTRATION

<END>

190-4640 CAB AR

S/N: DJD1-UP; DBT1-UP
WITH SLIDING WINDOWS
PART OF 190-4650 OPERATOR AR
AN ATTACHMENT

SMCS-7301 **i01779676**

NOTE	PART NUMBER	QTY	PART NAME 1 2 3 4 5 6 (PRODUCT LEVEL)	SEE PAGE
Y	*190-4405*	1	CAB AR	610
Y	*205-0524*	1	CAB AR-ENCLOSED ROPS	611

Y-SEPARATE ILLUSTRATION

<END>

OPERATOR STATION

205-0522 CAB AR

S/N: DJD1-UP; DBT1-UP
PART OF 190-4634 CAB AR
AN ATTACHMENT

SMCS-7301 **i01790316**

NOTE	PART NUMBER	QTY	PART NAME 1 2 3 4 5 6 (PRODUCT LEVEL)	SEE PAGE
Y	*137-7602*	1	DOOR GP-CAB	626
Y	*117-9622*	1	LIGHTING GP-FLOOD	118
Y	*174-9749*	1	ROPS GP-ENCLOSED	684

Y-SEPARATE ILLUSTRATION

<END>

190-4668 CAB AR-ENCLOSED ROPS

S/N: DJD1-UP; DBT1-UP
WITH SLIDING WINDOWS
AN ATTACHMENT

SMCS-7301, 7325 **i01782065**

NOTE	PART NUMBER	QTY	PART NAME 1 2 3 4 5 6 (PRODUCT LEVEL)	SEE PAGE
Y	*190-4650*	1	OPERATOR AR	665
Y	*190-4666*	1	SKIRT GP-CAB	705

Y-SEPARATE ILLUSTRATION

<END>

205-0524 CAB AR-ENCLOSED ROPS

S/N: DJD1-UP; DBT1-UP
PART OF 190-4640 CAB AR
AN ATTACHMENT

SMCS-7301, 7325 **i01631917**

NOTE	PART NUMBER	QTY	PART NAME 1 2 3 4 5 6 (PRODUCT LEVEL)	SEE PAGE
Y	*137-7603*	1	DOOR GP-CAB	626
Y	*117-9622*	1	LIGHTING GP-FLOOD	118
Y	*174-9749*	1	ROPS GP-ENCLOSED	684

Y-SEPARATE ILLUSTRATION

<END>

OPERATOR STATION

174-9755 CAB GP

S/N: DJD1-UP; DBT1-UP
ENCLOSED
PART OF 174-9749 ROPS GP-ENCLOSED
AN ATTACHMENT

SMCS-7301, 7325, 7335 **i01823502**

NOTE	REF NO	GRAPHIC REF	PART NUMBER	QTY	PART NAME 1 2 3 4 5 6 (PRODUCT LEVEL)	SEE PAGE
	1	1	**8Y-6377**	2	STRIKER	
	2	1	**107-6144**	1	GLASS-FRONT (LH)	
	3	1	**107-6145**	1	GLASS-FRONT	
	4	1	**107-6146**	1	GLASS-CAB CORNER (LH REAR)	
	5	1	**108-4311**	2	SCREW-MACHINE	
	6	1	**111-0177**	1	GLASS-FRONT (RH)	
	7	1	**111-0178**	1	GLASS-CAB CORNER (RH REAR)	
	8	1	**111-0204**	1	PLATE AS	
	9	1	**111-0209**	1	PLATE AS	
	10	1	**161-8042**	1	GLASS AS-REAR	
	11	1	**161-9645**	2	STRIKER AS	
	12	1	**174-9753**	1	CAB AS	
	13	1	**198-3393**	4	INSERT	
	14	1	**5P-4116**	4	WASHER-HARD (8.8X20.5X2MM THK)	
	15	1	**8T-4121**	12	WASHER-HARD (11X21X2.5MM THK)	
M	16	1	**8T-4137**	4	BOLT (M10X1.5X20MM)	
M	17	1	**8T-4189**	16	BOLT (M8X1.25X20MM)	
	18	1	**8T-4224**	12	WASHER-HARD (8.8X16X2MM THK)	
M	19	1	**9X-2041**	8	SCREW-TRUSS HEAD (M10X1.5X20MM)	

M-METRIC PART

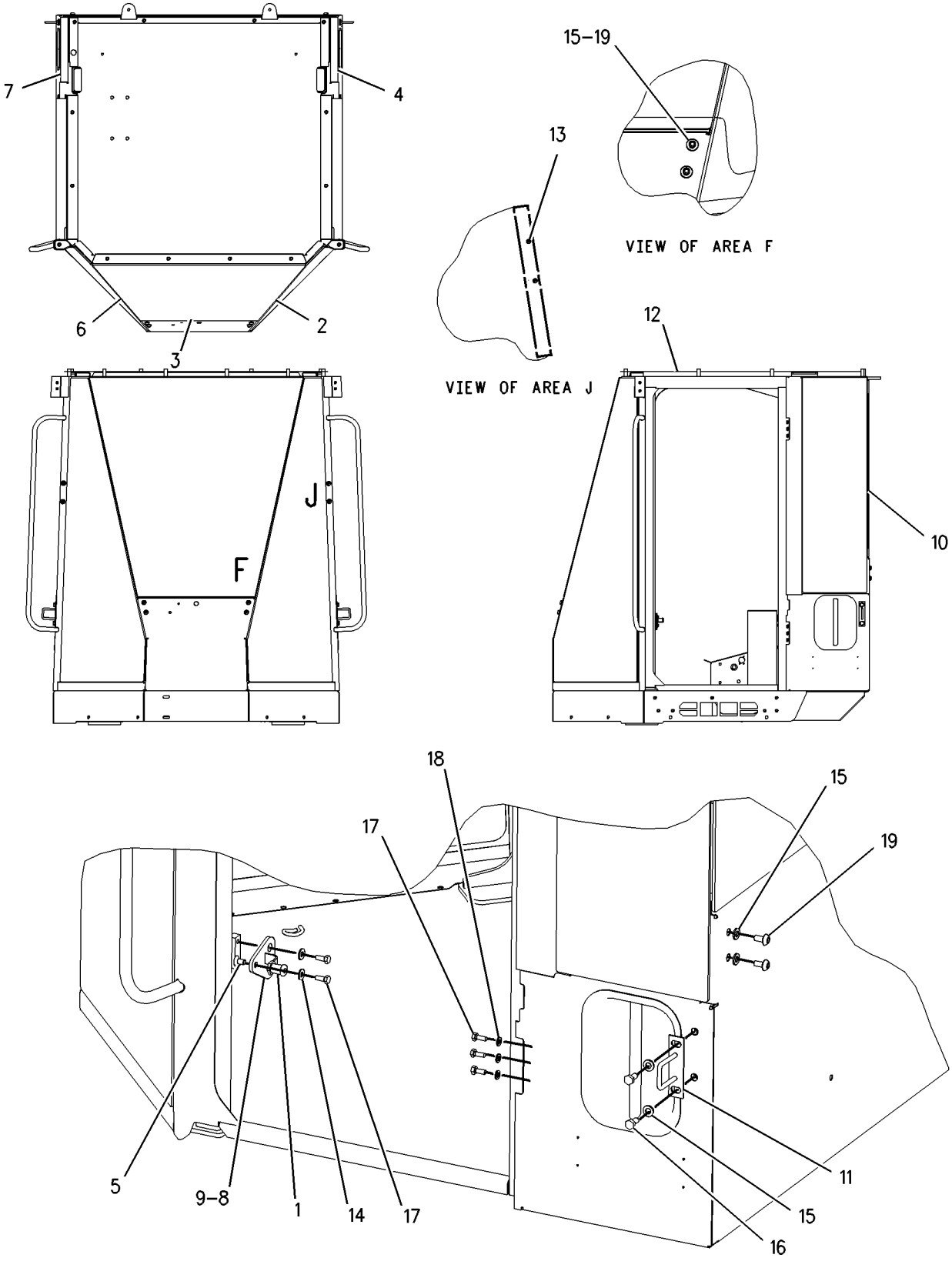

GRAPHIC #1 g00839137

OPERATOR STATION

190-4646 CANOPY AR-OPEN ROPS

S/N: DJD1-UP; DBT1-UP
PART OF 190-4654 OPERATOR AR
AN ATTACHMENT

SMCS-7302, 7323 **i01780285**

NOTE	PART NUMBER	QTY	PART NAME 1 2 3 4 5 6 (PRODUCT LEVEL)	SEE PAGE
Y	*190-4406*	1	CANOPY GP-OPEN ROPS	614
Y	*205-0520*	1	CANOPY GP-OPEN ROPS	615

Y-SEPARATE ILLUSTRATION

<END>

190-4661 CANOPY AR-OPEN ROPS

S/N: DJD1-UP; DBT1-UP
AN ATTACHMENT

SMCS-7302, 7323 **i01796042**

NOTE	PART NUMBER	QTY	PART NAME 1 2 3 4 5 6 (PRODUCT LEVEL)	SEE PAGE
Y	*190-4654*	1	OPERATOR AR	665
Y	**190-4665**	1	SKIRT GP-CAB	704

Y-SEPARATE ILLUSTRATION

<END>

190-4406 CANOPY GP-OPEN ROPS

S/N: DJD1-UP; DBT1-UP
PART OF 190-4646 CANOPY AR-OPEN ROPS
AN ATTACHMENT

SMCS-7323 **i01780290**

NOTE	PART NUMBER	QTY	PART NAME 1 2 3 4 5 6 (PRODUCT LEVEL)	SEE PAGE
Y	*168-7000*	1	CONTROL GP-PARKING BRAKE	302
Y	*190-4643*	1	CONTROL GP-STEERING	318
Y	*190-4690*	1	CONTROL GP-TRANSMISSION	194
Y	*118-0809*	1	DASH GP	624
Y	*107-4643*	1	MIRROR GP-REAR VIEW	663
Y	*190-4310*	1	PANEL GP-INSTRUMENT	672
Y	**190-4700**	1	PEDAL GP-GOVERNOR	681
Y	*118-0808*	1	SUPPORT GP-SEAT	706
Y	*190-4330*	1	WIRING GP-CAB	142

Y-SEPARATE ILLUSTRATION

<END>

OPERATOR STATION

205-0520 CANOPY GP-OPEN ROPS

S/N: DJD1-UP; DBT1-UP
PART OF 190-4646 CANOPY AR-OPEN ROPS
AN ATTACHMENT

SMCS-7323 **i01633999**

NOTE	PART NUMBER	QTY	PART NAME 1 2 3 4 5 6 (PRODUCT LEVEL)	SEE PAGE
Y	*120-6668*	1	LIGHTING GP-FLOOD	120
Y	*174-9764*	1	ROPS GP-OPEN	686

Y-SEPARATE ILLUSTRATION

<END>

106-5122 COMPRESSOR GP-REFRIGERANT

S/N: DJD1-UP; DBT1-UP
PART OF 201-1802 COMPRESSOR GP-REFRIGERANT
AN ATTACHMENT

SMCS-1802 **i01746411**

NOTE	REF NO	GRAPHIC REF	PART NUMBER	QTY	PART NAME 1 2 3 4 5 6 (PRODUCT LEVEL)	SEE PAGE
	1	1	**7T-4532**	1	PLUG AS	
	2	1	**9X-7385**	2	SEAL-O-RING	

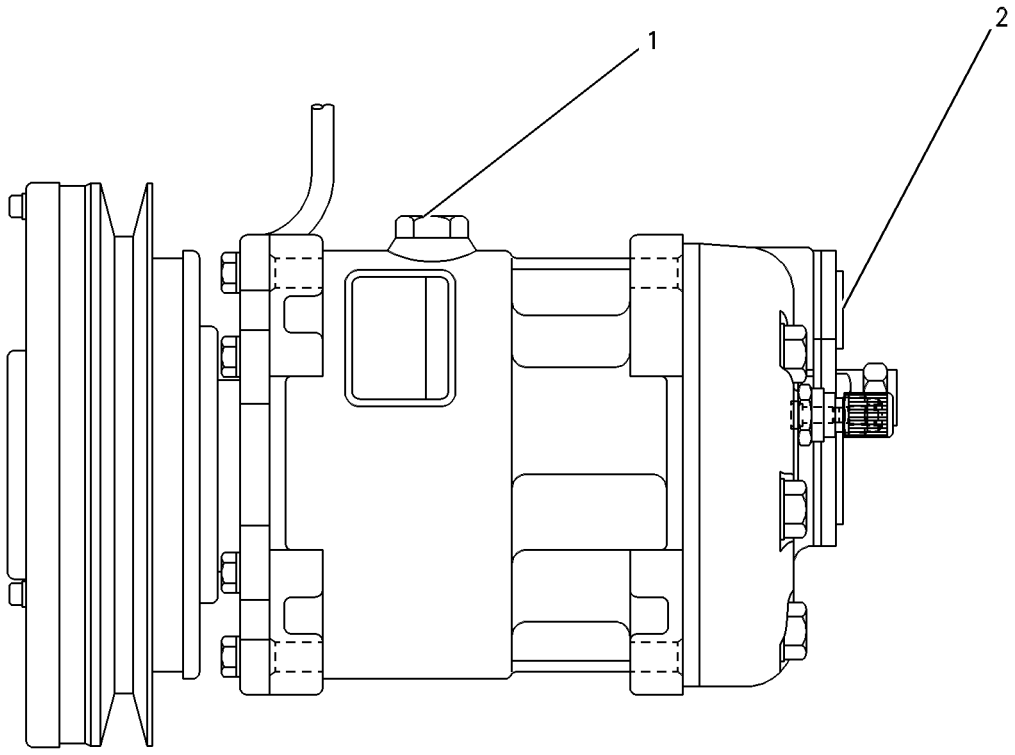

GRAPHIC #1 g00279110

201-1802 COMPRESSOR GP-REFRIGERANT

S/N: DJD1-UP; DBT1-UP
PART OF 190-4402, 227-5317 AIR CONDITIONER AR
AN ATTACHMENT

SMCS-1802 **i01696328**

NOTE	REF NO	GRAPHIC REF	PART NUMBER	QTY	PART NAME 1 2 3 4 5 6 (PRODUCT LEVEL)	SEE PAGE
	1	1	**1W-2934**	1	V-BELT	
Y	2	1	**106-5122**	1	COMPRESSOR GP-REFRIGERANT	616
	3	1	**149-5624**	1	BRACKET AS	
	4	1	**201-1803**	1	PLATE	
M	5	1	**150-5984**	1	BOLT-HEX HEAD (M10X1.50X140MM)	
	6	1	**7X-7729**	1	WASHER (11X25X3MM THK)	
	7	1	**8T-4121**	6	WASHER-HARD (11X21X2.5MM THK)	
M	8	1	**8T-4133**	2	NUT (M10X1.5 THD)	
M	9	1	**8T-4136**	4	BOLT (M10X1.5X25MM)	
M	10	1	**8T-4186**	1	BOLT (M10X1.5X40MM)	
	11	1	**8T-4222**	1	WASHER-PLATED (11X32X2.5MM THK)	

M-METRIC PART
Y-SEPARATE ILLUSTRATION

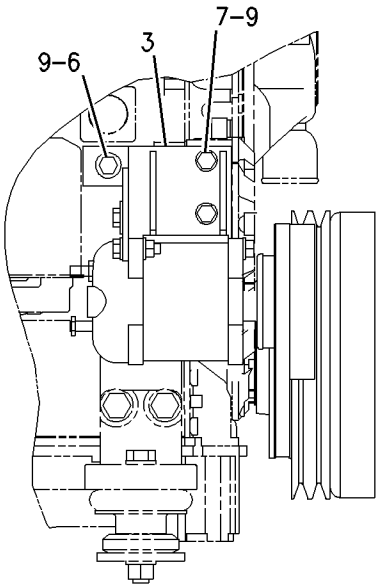

RIGHT SIDE VIEW

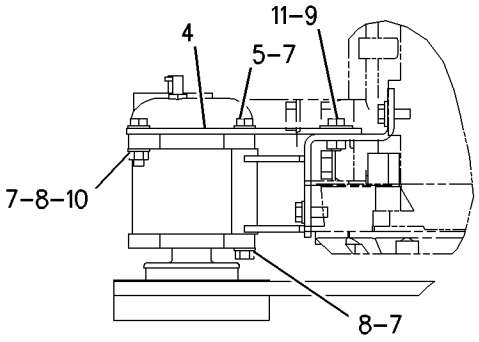

SECTION A-A

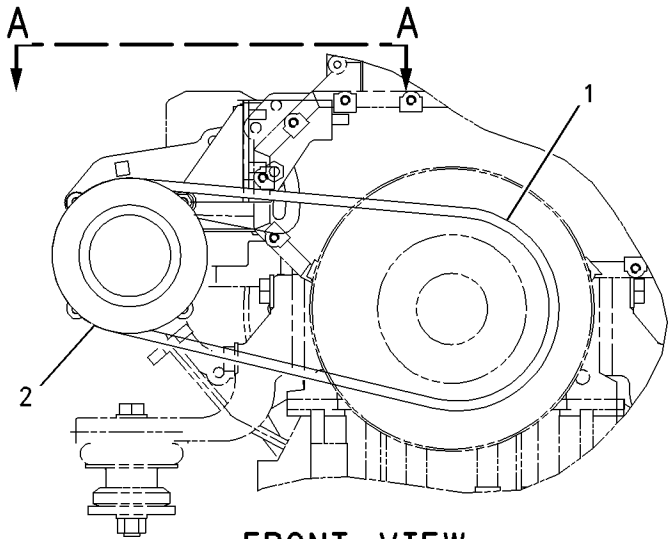

FRONT VIEW

GRAPHIC #1 g00877966

OPERATOR STATION

202-0363 CONDENSER & MTG GP-REFRIGERANT

S/N: DJD1-UP; DBT1-UP
PART OF 203-5937 CONDENSER & MTG GP-REFRIGERANT
AN ATTACHMENT

SMCS-1805 **i01744262**

NOTE	REF NO	GRAPHIC REF	PART NUMBER	QTY	PART NAME 1 2 3 4 5 6 (PRODUCT LEVEL)	SEE PAGE
Y	1	1	**199-7041**	1	CONDENSER GP-REFRIGERANT	620
	2	1	**205-6025**	1	BRACKET	
	3	1	**205-6026**	1	BRACKET	
	4	1	**205-6027**	1	BRACKET	
	5	1	**205-6028**	1	BRACKET	
M	6	1	**8T-4189**	10	BOLT (M8X1.25X20MM)	
	7	1	**8T-4224**	10	WASHER-HARD (8.8X16X2MM THK)	

M-METRIC PART
Y-SEPARATE ILLUSTRATION

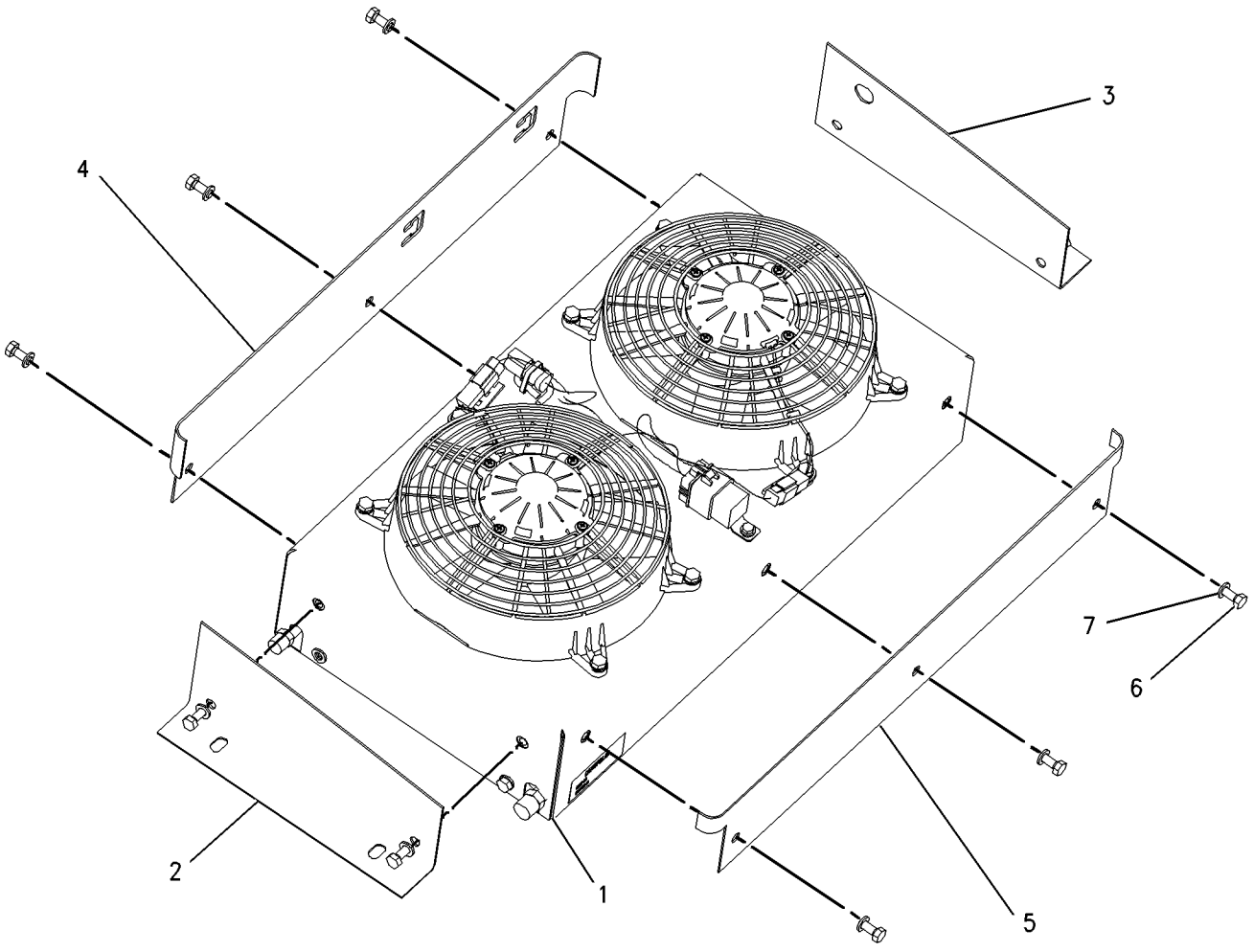

GRAPHIC #1 g00895692

OPERATOR STATION

203-5937 CONDENSER & MTG GP-REFRIGERANT

S/N: DJD1-UP; DBT1-UP
PART OF 190-4402, 227-5317 AIR CONDITIONER AR, 190-4652 PLATFORM AR
AN ATTACHMENT

SMCS-1805 **i01795832**

NOTE	REF NO	GRAPHIC REF	PART NUMBER	QTY	PART NAME 1 2 3 4 5 6 (PRODUCT LEVEL)	SEE PAGE
Y	1	1	*202-0363*	1	CONDENSER & MTG GP-REFRIGERANT	618
	2	1	**205-6024**	2	BRACKET AS	
					(EACH INCLUDES)	
M		1	**8T-3490**	4	NUT-WELD (M10X1.5 THD)	
	3	1	**8T-4121**	8	WASHER-HARD (11X21X2.5MM THK)	
M	4	1	**8T-4195**	8	BOLT (M10X1.5X30MM)	
BE	5	1	**112-9736**		SEAL (193CM)	

B-USE AS REQUIRED
E-ORDER BY THE CENTIMETER
M-METRIC PART
Y-SEPARATE ILLUSTRATION

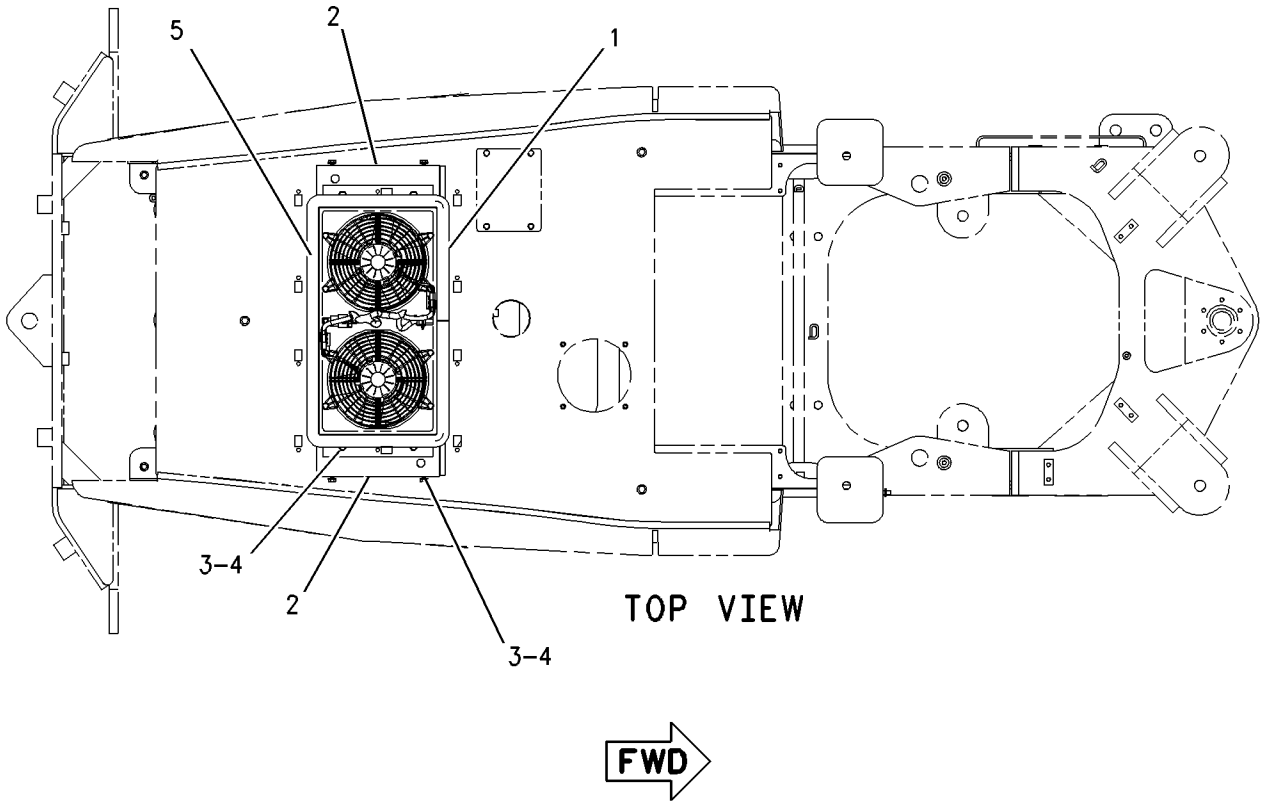

GRAPHIC #1 g00919510

OPERATOR STATION

199-7041 CONDENSER GP-REFRIGERANT

S/N: DJD1-UP; DBT1-UP
PART OF 202-0363 CONDENSER & MTG GP-REFRIGERANT
AN ATTACHMENT

SMCS-1805 **i01823504**

NOTE	REF NO	GRAPHIC REF	PART NUMBER	QTY	PART NAME 1 2 3 4 5 6 (PRODUCT LEVEL)	SEE PAGE
	1	1	**3E-5239**	1	RELAY AS (24 VOLT)	
	2	1	**3S-2093**	1	STRAP-CABLE	
	3	1	**8C-3756**	1	FILM-IDENTIFICATION (GROUP & SEQUENCE NO.)	
	4	1	**169-7434**	2	FAN AS	
	5	1	**169-7435**	1	HARNESS AS-AIR CONDITIONER (CONDENSER FANS)	
		1	**102-8803**	1	KIT-RECEPTACLE (3 PIN)	
		1	**155-2270**	2	KIT-CONNECTING PLUG (2 PIN)	
	6	1	**199-7042**	1	CASE AS	
	7	1	**199-7043**	1	COIL AS-CONDENSER	
	8	1	**4P-7581**	2	CLIP	
M	9	1	**5C-9553**	1	BOLT (M6X1X16MM)	
M	10	1	**8T-4200**	4	BOLT (M8X1.25X16MM)	
	11	1	**8T-4205**	1	WASHER-HARD (7.2X14.5X2MM THK)	
	12	1	**8T-4224**	12	WASHER-HARD (8.8X16X2MM THK)	
M	13	1	**8T-5093**	8	BOLT-LOCKING (M8X1.25X25MM)	

M-METRIC PART

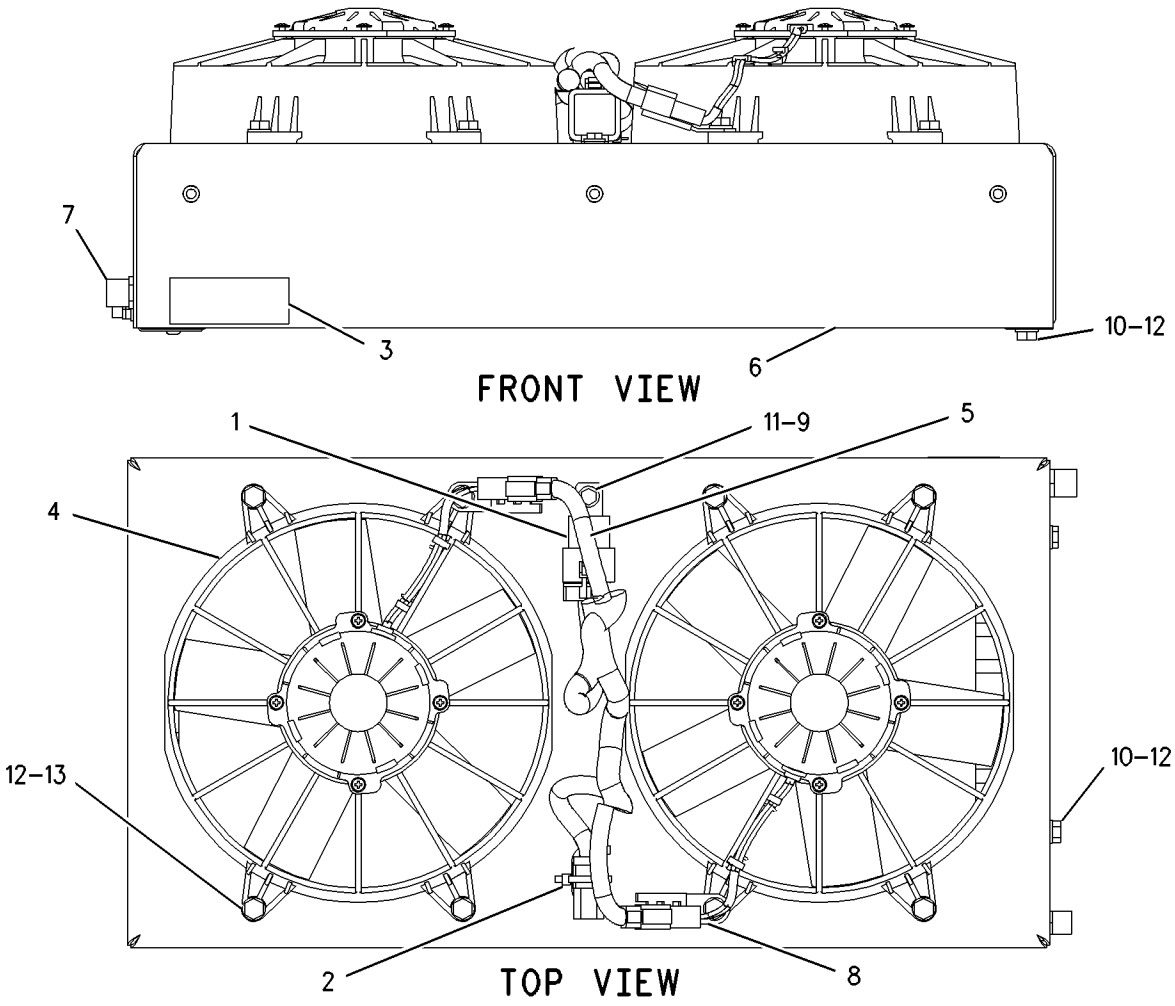

GRAPHIC #1 g00895759

OPERATOR STATION

202-6496 CONTROL GP-MONITOR–KIT

S/N: DJD1-UP

FIELD INSTALLATION

SMCS-7490, 7494, 7601 **i01820796**

NOTE	PART NUMBER	QTY	PART NAME 1 2 3 4 5 6 (PRODUCT LEVEL)	SEE PAGE
Y	**124-4672**	1	SENSOR GP-PRESSURE	128
	202-0681	1	ARM	
	6D-3025	2	BALL BEARING	
	9C-7863	1	BLOCK	
	202-0135	1	BLOCK	
M	**6V-2313**	2	BOLT (M5X0.8X30MM)	
M	**8T-4139**	2	BOLT (M12X1.75X30MM)	
M	**8T-4179**	3	BOLT (M12X1.75X20MM)	
M	**8T-4196**	2	BOLT (M10X1.5X35MM)	
M	**8T-4970**	2	BOLT (M6X1X14MM)	
	9B-7237	1	BOLT (3/8-16X1.25 IN)	
M	**9X-2480**	3	BOLT (M6X1.0X45MM)	
	4E-2448	1	BRACKET	
	1V-0117	3	CLIP	
	6V-8636	1	CONNECTOR	
	213-8795	1	CONTROL GP-MONITOR (PAYLOAD)	
	8C-3078	1	SEAL-O-RING	
	101-1785	1	BATTERY	
	129-9690	1	COVER	
	213-8794	1	SOFTWARE GP-MONITOR (PAYLOAD CONTROL SYSTEM)	
	136-9190	1	COVER	
	6V-9850	2	ELBOW-SWIVEL	
	2G-1133	1	GROMMET	
	135-1922	1	HARNESS AS-MONITOR (PAYLOAD CONTROL DISPLAY)	
	102-8801	1	KIT-RECEPTACLE (12 PIN)	
			(KIT SERVICES RECEPTACLE AS AND WEDGE)	
	102-8808	1	KIT-CONNECTING PLUG (3 PIN)	
			(KIT SERVICES PLUG AS AND WEDGE)	
	189-6136	1	HARNESS AS-MONITOR (PAYLOAD)	
	102-8802	2	KIT-RECEPTACLE (2 PIN)	
			(KIT SERVICES RECEPTACLE AS AND WEDGE)	
	155-2255	1	KIT-CONNECTING PLUG (12 PIN)	
			(KIT SERVICES PLUG AS AND WEDGE)	
	155-2260	1	KIT-CONNECTING PLUG (3 PIN)	
			(KIT SERVICES PLUG AS AND WEDGE)	
	155-2270	1	KIT-CONNECTING PLUG (2 PIN)	
			(KIT SERVICES PLUG AS AND WEDGE)	
I	**144-8155**	1	HOSE AS	
	168-0402	1	HOUSING	
	115-1748	1	LAMP (24 VOLT)	
	6S-4868	1	LEVER	
	7T-1099	3	LINK	
	3D-8752	1	LOCKNUT (5/16-24 THD)	
	149-3253	1	MODULE GP-PAYLOAD KEYPAD	
	102-8803	1	KIT-RECEPTACLE (3 PIN)	
			(KIT SERVICES RECEPTACLE AS AND WEDGE)	
	3E-3371	1	WEDGE-RECEPTACLE LOCK (3 PIN)	
	8T-8729	3	PIN-CONNECTOR	
	4B-1218	1	SCREW-MACHINE (6-32X1/4IN)	
	4B-2041	1	NUT (6-32 THD)	
	5D-6912	1	DIODE-RECTIFIER	
	8C-5607	6	MOUNT (ISOLATION)	
M	**5C-2890**	3	NUT (M6X1 THD)	
	6V-8186	1	NUT-FULL (5/16-24 THD)	
	8L-4496	1	NUT-JAM (5/16-24 LH THD)	
	9X-6580	1	NUT-O-RING SEAL	

202-6496 **CONTROL GP-MONITOR** *(contd.)* **i01820796**

NOTE	PART NUMBER	QTY	PART NAME 1 2 3 4 5 6 (PRODUCT LEVEL)	SEE PAGE
	136-9191	1	PLATE	
	136-9192	1	PLATE AS	
	148-8417	1	REDUCER AS	
	6V-8397	1	SEAL-O-RING	
	6V-8941	1	REDUCER	
	2H-3429	1	RING-RETAINING	
	2L-6726	1	RING-RETAINING	
	129-6791	1	ROD	
	5P-9683	1	ROD END	
	8K-1253	1	ROD END	
M	**7Y-7256**	8	SCREW-TRUSS HEAD (M4X0.7X35MM)	
M	**9X-2042**	6	SCREW-TRUSS HEAD (M6X1X12MM)	
M	**9X-2043**	3	SCREW-TRUSS HEAD (M6X1X14MM)	
	166-2232	1	SEAL-LIP TYPE	
	3J-1907	1	SEAL-O-RING	
	6V-0894	1	SEAL-O-RING	
	6V-8397	2	SEAL-O-RING	
	161-8906	1	SENSOR GP-POSITION	
E	**8C-7584**		WIRE-ELECTRICAL (78CM)	
	8T-8886	1	SEAL-LIP	
	8T-8731	1	PLUG-CONNECTOR	
	168-8774	1	SHAFT-GOVERNOR CONTROL	
	8C-5608	3	SPACER (6.5X9.5X25.4MM THK)	
	3S-2093	15	STRAP-CABLE	
	7I-3236	1	SUPPORT AS	
	148-8449	1	TEE GP-SWIVEL	
	6V-9746	2	SEAL-O-RING	
	6V-9839	1	TEE-SWIVEL	
	4B-4274	2	WASHER (5.5X13X1.2MM THK)	
	9X-6165	6	WASHER (6.5X22X2.5MM THK)	
	9X-8256	2	WASHER (6.6X12X2MM THK)	
	8T-2561	2	WASHER-HARD (10.5X28.5X5MM THK)	
	8T-4223	5	WASHER-HARD (13.5X25.5X3MM THK)	
	8T-4224	2	WASHER-HARD (8.8X16X2MM THK)	
	8T-4896	1	WASHER-HARD (10.2X18.5X2.5MM THK)	

E-ORDER BY THE CENTIMETER
I-SEE HOSE FABRICATION GUIDE
M-METRIC PART
Y-SEPARATE ILLUSTRATION

<END>

OPERATOR STATION

149-4612 COVER GP-CONSOLE

S/N: DJD1-UP; DBT1-UP

PART OF 202-0426, 202-0427, 203-5933, 203-5934, 203-5935, 203-5936 HYDRAULIC AR, 202-0421, 202-0422, 203-5927, 218-2456 HYDRAULIC AR-2 VALVE, 202-0423, 202-0424, 203-5928, 218-2457 HYDRAULIC AR-3 VALVE, 202-0425, 203-5929 HYDRAULIC AR-4 VALVE AN ATTACHMENT

SMCS-5258 **i01836574**

NOTE	REF NO	GRAPHIC REF	PART NUMBER	QTY	PART NAME 1 2 3 4 5 6 (PRODUCT LEVEL)	SEE PAGE
	1	1	**4E-1062**	1	CUSHION AS-ARMREST	
	2	1	**111-0149**	1	SUPPORT AS	
	3	1	**111-7875**	1	PLATE	
	4	1	**226-1832**	1	COVER AS	
	5	1	**187-2082**	1	LEVER-CONTROL	
M	6	1	**3E-8020**	2	SCREW-TRUSS HEAD (M6X1X25MM)	
M	7	1	**8T-4138**	2	BOLT (M6X1X20MM)	
	8	1	**8T-4205**	2	WASHER-HARD (7.2X14.5X2MM THK)	
M	9	1	**9X-2042**	6	SCREW-TRUSS HEAD (M6X1X12MM)	
E	10	1	**3E-3892**		SEAL (76CM)	
E	11	1	**3E-3892**		SEAL (120CM)	

E-ORDER BY THE CENTIMETER
M-METRIC PART

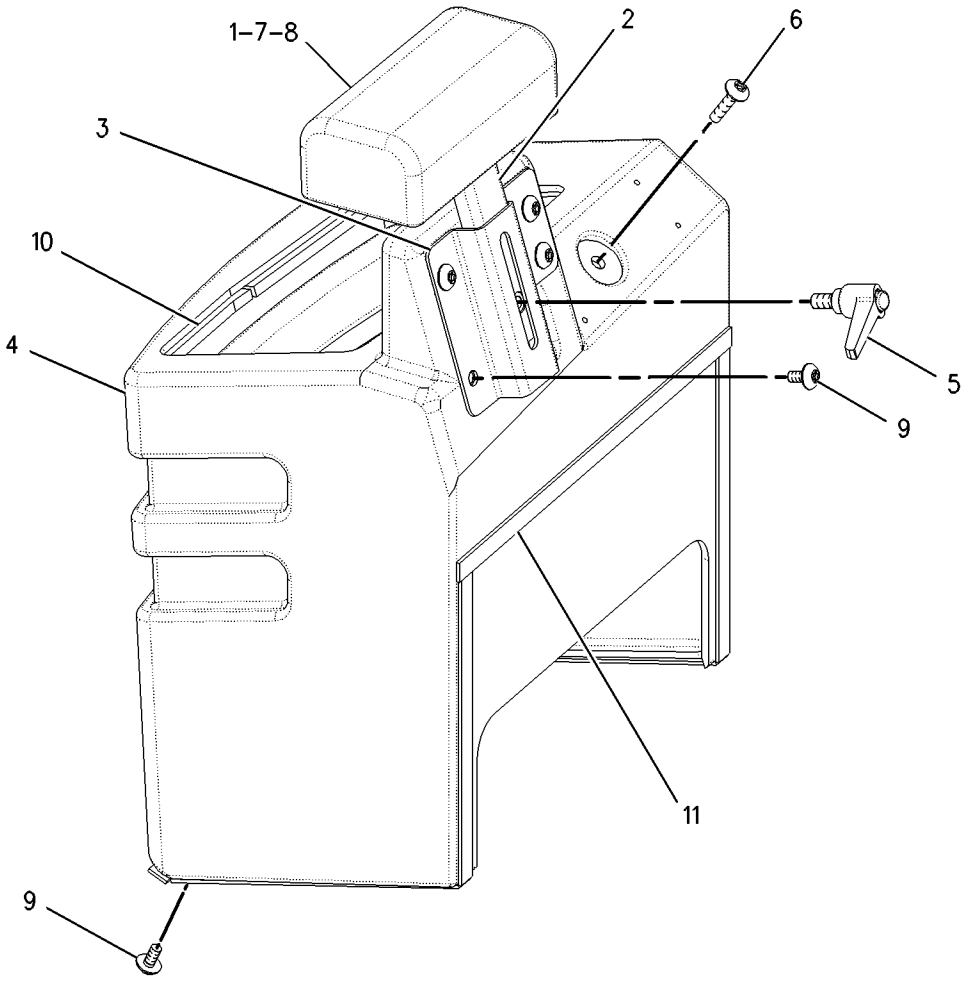

GRAPHIC #1 g00921886

OPERATOR STATION

118-0809 DASH GP

S/N: DJD1-UP; DBT1-UP
PART OF 190-4406 CANOPY GP-OPEN ROPS
AN ATTACHMENT

SMCS-7314 **i01388596**

NOTE	REF NO	GRAPHIC REF	PART NUMBER	QTY	PART NAME 1 2 3 4 5 6 (PRODUCT LEVEL)	SEE PAGE
C	1	1	**166-9287**	1	DASH AS	
	2	1	**5P-4116**	4	WASHER-HARD (8.8X20.5X2MM THK)	
M	3	1	**8T-4908**	4	BOLT (M8X1.25X25MM)	

C-CHANGE FROM PREVIOUS TYPE
M-METRIC PART

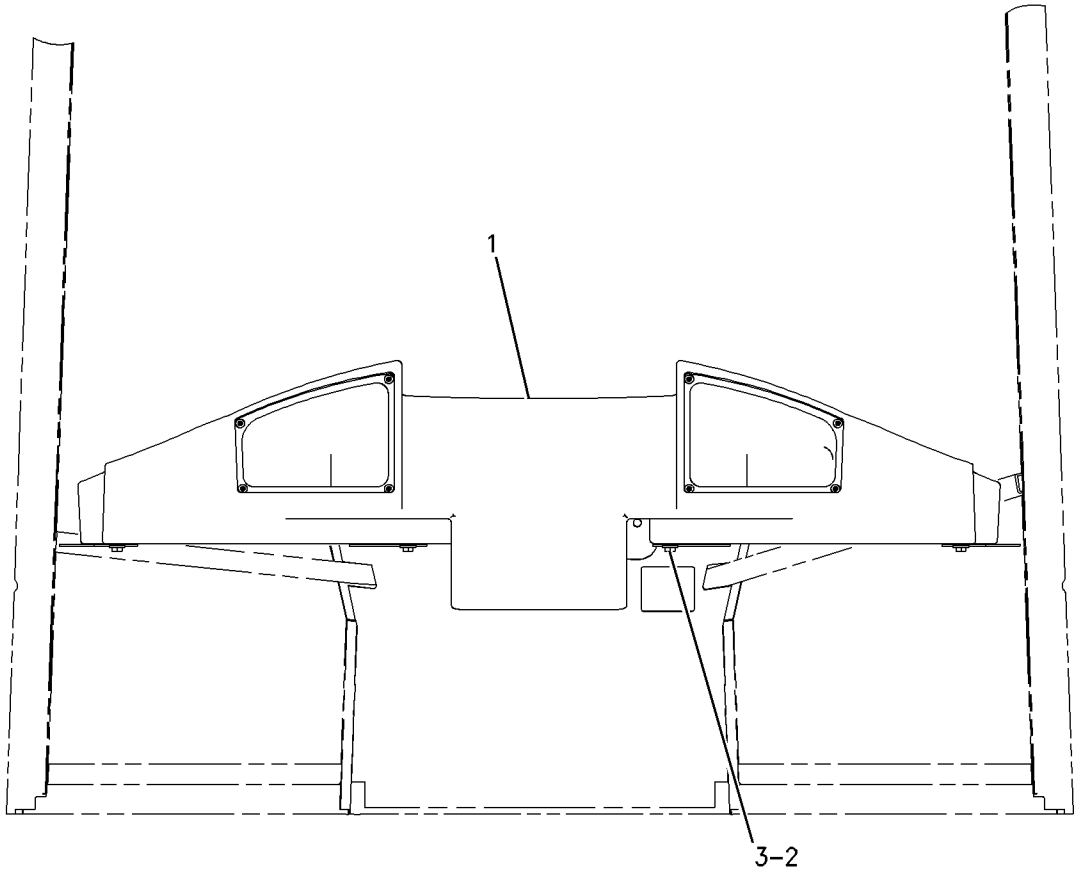

GRAPHIC #1 g00729083

OPERATOR STATION

207-5948 DEFROSTER GP-CAB

S/N: DJD1-UP; DBT1-UP
PART OF 190-4405 CAB AR
AN ATTACHMENT

SMCS-7304, 7316 **i01826041**

NOTE	REF NO	GRAPHIC REF	PART NUMBER	QTY	PART NAME 1 2 3 4 5 6 (PRODUCT LEVEL)	SEE PAGE
	1	1	**3E-5239**	1	RELAY AS (24 VOLT)	
	2	1	**204-8799**	1	SWITCH AS-ROCKER (DEFROSTER)	
		1	**111-7899**	1	GASKET	
	3	1	**8T-4205**	1	WASHER-HARD (7.2X14.5X2MM THK)	
M	4	1	**9X-2042**	1	SCREW-TRUSS HEAD (M6X1X12MM)	

M-METRIC PART

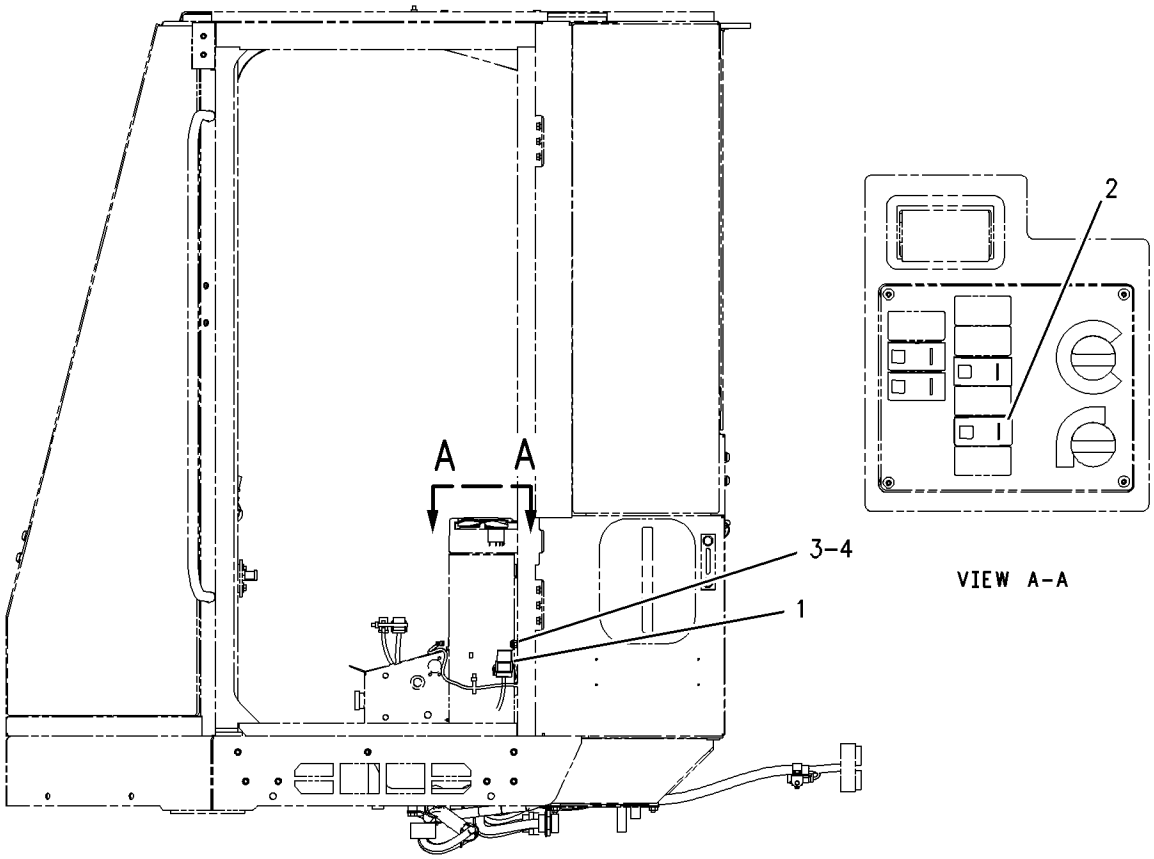

LEFT SIDE VIEW

GRAPHIC #1 g00917880

OPERATOR STATION

137-7602 DOOR GP-CAB

S/N: DJD1-UP; DBT1-UP
FIXED GLASS
PART OF 205-0522 CAB AR
AN ATTACHMENT

SMCS-7308 **i01097536**

NOTE	PART NUMBER	QTY	PART NAME 1 2 3 4 5 6 (PRODUCT LEVEL)	SEE PAGE
Y	**164-4563**	1	DOOR GP	628
Y	**164-4564**	1	DOOR GP	630

Y-SEPARATE ILLUSTRATION

<END>

137-7603 DOOR GP-CAB

S/N: DJD1-UP; DBT1-UP
WITH SLIDING WINDOW
PART OF 205-0524 CAB AR-ENCLOSED ROPS
AN ATTACHMENT

SMCS-7308 **i01218564**

NOTE	PART NUMBER	QTY	PART NAME 1 2 3 4 5 6 (PRODUCT LEVEL)	SEE PAGE
Y	**164-4565**	1	DOOR GP-CAB (LH)	632
Y	**164-4566**	1	DOOR GP-CAB (RH)	634

Y-SEPARATE ILLUSTRATION

<END>

MEMORANDA

OPERATOR STATION

164-4563 DOOR GP-CAB—LH

S/N: DJD1-UP; DBT1-UP
FIXED GLASS
PART OF 137-7602 DOOR GP-CAB
AN ATTACHMENT

SMCS-7308 **i01823507**

NOTE	REF NO	GRAPHIC REF	PART NUMBER	QTY	PART NAME 1 2 3 4 5 6 (PRODUCT LEVEL)	SEE PAGE
	1	1	**3T-5201**	1	BEARING	
	2	1	**4E-1384**	1	BUMPER-CONICAL	
	3	1	**7W-2108**	1	SPRING-BYPASS VALVE	
	4	1	**7X-2497**	1	HANDLE-DOOR	
M	5	1	**8T-4180**	4	SCREW-MACHINE (M5X0.8X20MM)	
	6	1	**8T-4742**	1	END-YOKE ROD	
	7	1	**8T-4747**	2	BRACKET	
	8	1	**8Y-4807**	1	HANDLE AS	
		1	**8Y-4501**	1	SPRING-HANDLE	
	9	1	**8Y-6386**	1	SEAL-HANDLE	
	10	1	**9G-2761**	1	LATCH AS-DOOR	
	11	1	**107-6117**	1	COVER-LH	
	12	1	**141-8580**	1	RING-RETAINING	
	13	1	**161-9640**	1	COVER	
	14	1	**161-9641**	1	PLATE	
	15	1	**161-9642**	1	ROD AS	
	16	1	**161-9647**	1	PLATE	
	17	1	**162-2188**	1	DOOR AS	
	17A	1	**107-6104**	2	INSERT	
	17B	1	**107-6125**	2	HINGE AS	
	17C	1	**107-6127**	1	STRIP	
	17D	1	**111-0200**	1	HANDHOLD	
	17E	1	**115-1552**	1	HANDLE-PULL	
	18	1	**162-2189**	1	GLASS-CAB DOOR (UPPER)	
	19	1	**162-2190**	1	GLASS-CAB DOOR (LOWER)	
	20	1	**168-2457**	1	LATCH AS	
	21	1	**169-3995**	1	SEAL	
M	22	1	**5C-2890**	1	NUT (M6X1 THD)	
M	23	1	**5C-7261**	2	NUT (M8X1.25 THD)	
M	24	1	**8T-4181**	5	BOLT (M6X1X20MM)	
	25	1	**8T-4205**	6	WASHER-HARD (7.2X14.5X2MM THK)	
M	26	1	**8T-4971**	4	BOLT (M6X1X30MM)	
M	27	1	**9X-2042**	11	SCREW-TRUSS HEAD (M6X1X12MM)	
E	28	1	**3E-3805**		SEAL (420CM)	
	29	1	**178-2593**	1	BUMPER	

E-ORDER BY THE CENTIMETER
M-METRIC PART

164-4563 DOOR GP-CAB *(contd.)*

i01823507

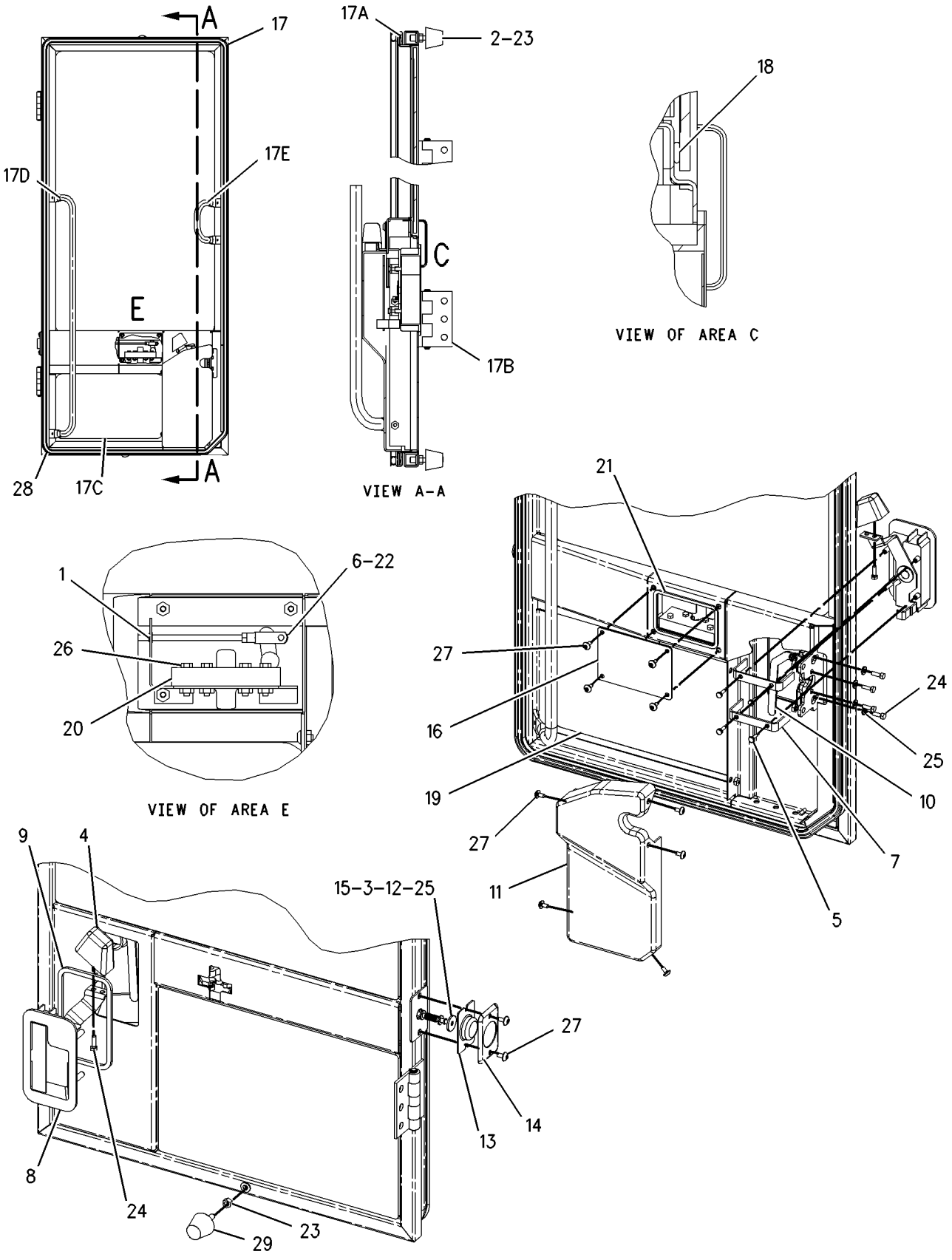

GRAPHIC #1

g00722768

OPERATOR STATION

164-4564 DOOR GP-CAB—RH

S/N: DJD1-UP; DBT1-UP
FIXED GLASS
PART OF 137-7602 DOOR GP-CAB
AN ATTACHMENT

SMCS-7308 **i01823511**

NOTE	REF NO	GRAPHIC REF	PART NUMBER	QTY	PART NAME 1 2 3 4 5 6 (PRODUCT LEVEL)	SEE PAGE
	1	1	**3T-5201**	1	BEARING	
	2	1	**4E-1384**	1	BUMPER-CONICAL	
	3	1	**7W-2108**	1	SPRING-BYPASS VALVE	
	4	1	**7X-2497**	1	HANDLE-DOOR	
M	5	1	**8T-4180**	4	SCREW-MACHINE (M5X0.8X20MM)	
	6	1	**8T-4742**	1	END-YOKE ROD	
	7	1	**8T-4747**	2	BRACKET	
	8	1	**8Y-6386**	1	SEAL-HANDLE	
	9	1	**9G-2759**	1	LATCH AS-DOOR	
	10	1	**111-0202**	1	COVER-RH	
	11	1	**112-1528**	1	HANDLE AS	
		1	**8Y-4501**	1	SPRING-HANDLE	
	12	1	**141-8580**	1	RING-RETAINING	
	13	1	**161-9640**	1	COVER	
	14	1	**161-9641**	1	PLATE	
	15	1	**161-9642**	1	ROD AS	
	16	1	**161-9647**	1	PLATE	
	17	1	**162-2189**	1	GLASS-CAB DOOR (UPPER)	
	18	1	**162-2190**	1	GLASS-CAB DOOR (LOWER)	
	19	1	**164-4562**	1	DOOR AS	
	19A	1	**107-6125**	2	HINGE AS	
					(EACH INCLUDES)	
		1	**096-2323**	2	RING-RETAINING	
	19B	1	**111-0201**	1	HANDHOLD	
	19C	1	**115-1552**	1	HANDLE-PULL	
		1	**107-6104**	2	INSERT	
	20	1	**168-2458**	1	LATCH AS	
	21	1	**169-3995**	1	SEAL	
M	22	1	**5C-2890**	1	NUT (M6X1 THD)	
M	23	1	**5C-7261**	2	NUT (M8X1.25 THD)	
M	24	1	**8T-4181**	5	BOLT (M6X1X20MM)	
	25	1	**8T-4205**	6	WASHER-HARD (7.2X14.5X2MM THK)	
M	26	1	**8T-4971**	4	BOLT (M6X1X30MM)	
M	27	1	**9X-2042**	11	SCREW-TRUSS HEAD (M6X1X12MM)	
E	28	1	**3E-3805**		SEAL (420CM)	
	29	1	**178-2593**	1	BUMPER	

E-ORDER BY THE CENTIMETER
M-METRIC PART

164-4564 D00R GP-CAB *(contd.)*

i01823511

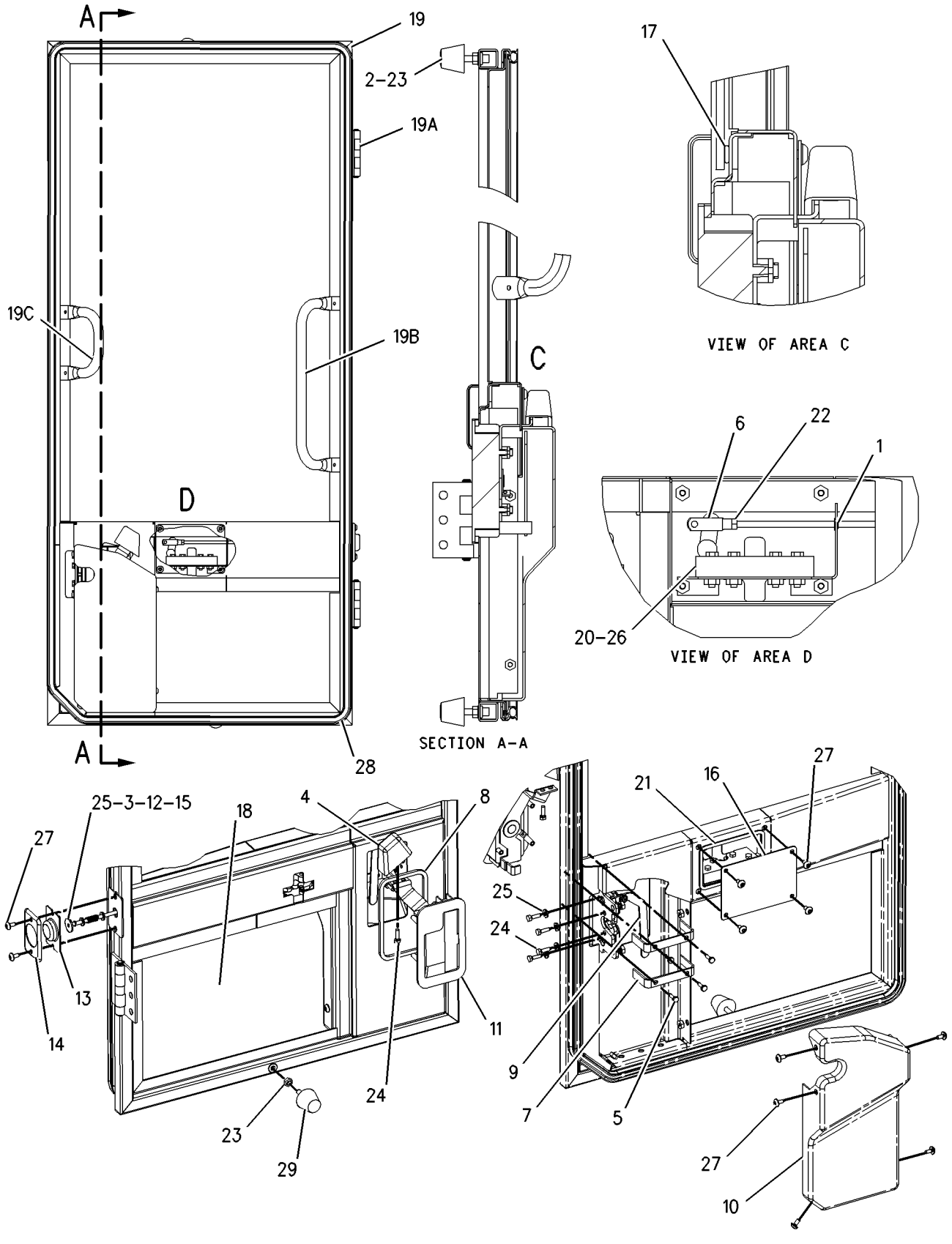

GRAPHIC #1

g00645065

OPERATOR STATION

164-4565 DOOR GP-CAB—LH

S/N: DJD1-UP; DBT1-UP
SLIDING WINDOW
PART OF 137-7603 DOOR GP-CAB
AN ATTACHMENT

SMCS-7308 **i01823513**

NOTE	REF NO	GRAPHIC REF	PART NUMBER	QTY	PART NAME 1 2 3 4 5 6 (PRODUCT LEVEL)	SEE PAGE
E	1	1	**3E-3805**		SEAL (420CM)	
	2	1	**3T-5201**	1	BEARING	
	3	1	**4E-1384**	1	BUMPER-CONICAL	
	4	1	**7W-2108**	1	SPRING-BYPASS VALVE	
	5	1	**7X-2497**	1	HANDLE-DOOR	
M	6	1	**8T-4180**	4	SCREW-MACHINE (M5X0.8X20MM)	
	7	1	**8T-4742**	1	END-YOKE ROD	
	8	1	**8T-4747**	2	BRACKET	
	9	1	**8Y-4807**	1	HANDLE AS	
		1	**8Y-4501**	1	SPRING-HANDLE	
	10	1	**8Y-6386**	1	SEAL-HANDLE	
	11	1	**9G-2761**	1	LATCH AS-DOOR	
	12	1	**107-6117**	1	COVER-LH	
Y	13	1	**180-2535**	1	WINDOW GP-DOOR (CAB)	715
	14	1	**141-8580**	1	RING-RETAINING	
	15	1	**161-9640**	1	COVER	
	16	1	**161-9641**	1	PLATE	
	17	1	**161-9642**	1	ROD AS	
	18	1	**161-9647**	1	PLATE	
	19	1	**162-2188**	1	DOOR AS	
		1	**107-6104**	2	INSERT	
		1	**107-6125**	2	HINGE AS	
		1	**107-6127**	1	STRIP	
		1	**111-0200**	1	HANDHOLD	
		1	**115-1552**	1	HANDLE-PULL	
	20	1	**162-2190**	1	GLASS-CAB DOOR (LOWER)	
	21	1	**168-2457**	1	LATCH AS	
	22	1	**169-3995**	1	SEAL	
M	23	1	**5C-2890**	1	NUT (M6X1 THD)	
M	24	1	**5C-7261**	2	NUT (M8X1.25 THD)	
M	25	1	**8T-4181**	5	BOLT (M6X1X20MM)	
	26	1	**8T-4205**	6	WASHER-HARD (7.2X14.5X2MM THK)	
M	27	1	**8T-4971**	4	BOLT (M6X1X30MM)	
M	28	1	**9X-2042**	11	SCREW-TRUSS HEAD (M6X1X12MM)	
	29	1	**178-2593**	1	BUMPER	

E-ORDER BY THE CENTIMETER
M-METRIC PART
Y-SEPARATE ILLUSTRATION

164-4565 DOOR GP-CAB *(contd.)*

i01823513

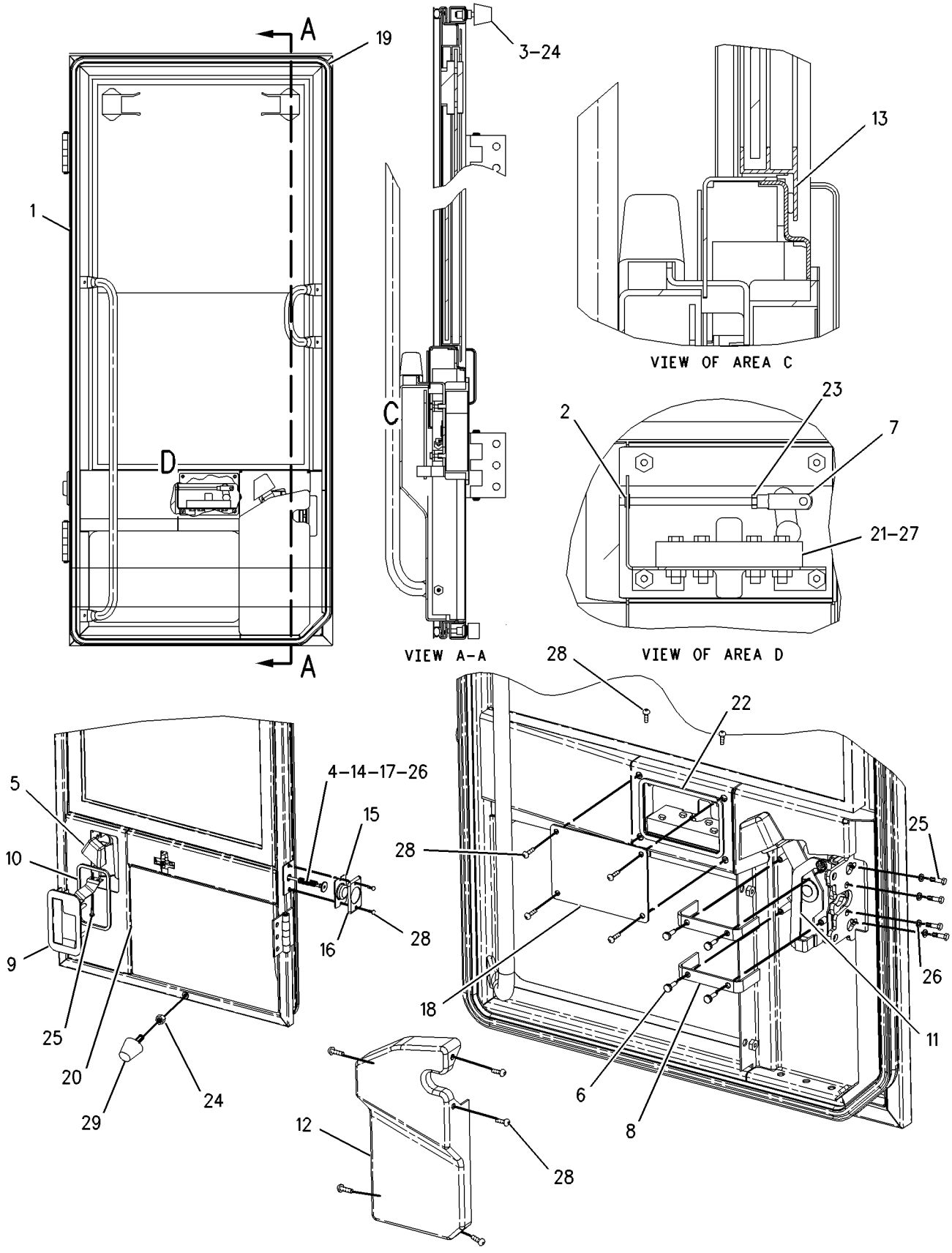

GRAPHIC #1

g00646081

OPERATOR STATION

164-4566 DOOR GP-CAB—RH

S/N: DJD1-UP; DBT1-UP
SLIDING WINDOW
PART OF 137-7603 DOOR GP-CAB
AN ATTACHMENT

SMCS-7308 **i01823520**

NOTE	REF NO	GRAPHIC REF	PART NUMBER	QTY	PART NAME 1 2 3 4 5 6 (PRODUCT LEVEL)	SEE PAGE
E	1	1	**3E-3805**		SEAL (420CM)	
	2	1	**3T-5201**	1	BEARING	
	3	1	**4E-1384**	1	BUMPER-CONICAL	
	4	1	**7W-2108**	1	SPRING-BYPASS VALVE	
	5	1	**7X-2497**	1	HANDLE-DOOR	
M	6	1	**8T-4180**	4	SCREW-MACHINE (M5X0.8X20MM)	
	7	1	**8T-4742**	1	END-YOKE ROD	
	8	1	**8T-4747**	2	BRACKET	
	9	1	**8Y-6386**	1	SEAL-HANDLE	
	10	1	**9G-2759**	1	LATCH AS-DOOR	
	11	1	**111-0202**	1	COVER-RH	
	12	1	**112-1528**	1	HANDLE AS	
		1	**8Y-4501**	1	SPRING-HANDLE	
Y	13	1	**180-2535**	1	WINDOW GP-DOOR (CAB)	715
	14	1	**141-8580**	1	RING-RETAINING	
	15	1	**161-9640**	1	COVER	
	16	1	**161-9641**	1	PLATE	
	17	1	**161-9642**	1	ROD AS	
	18	1	**161-9647**	1	PLATE	
	19	1	**162-2190**	1	GLASS-CAB DOOR (LOWER)	
	20	1	**164-4562**	1	DOOR AS	
		1	**107-6104**	2	INSERT	
		1	**107-6125**	2	HINGE AS	
		1	**111-0201**	1	HANDHOLD	
		1	**115-1552**	1	HANDLE-PULL	
	21	1	**168-2458**	1	LATCH AS	
	22	1	**169-3995**	1	SEAL	
M	23	1	**5C-2890**	1	NUT (M6X1 THD)	
M	24	1	**5C-7261**	2	NUT (M8X1.25 THD)	
M	25	1	**8T-4181**	5	BOLT (M6X1X20MM)	
	26	1	**8T-4205**	6	WASHER-HARD (7.2X14.5X2MM THK)	
M	27	1	**8T-4971**	4	BOLT (M6X1X30MM)	
M	28	1	**9X-2042**	11	SCREW-TRUSS HEAD (M6X1X12MM)	
	29	1	**178-2593**	1	BUMPER	

E-ORDER BY THE CENTIMETER
M-METRIC PART
Y-SEPARATE ILLUSTRATION

164-4566 DOOR GP-CAB *(contd.)* i01823520

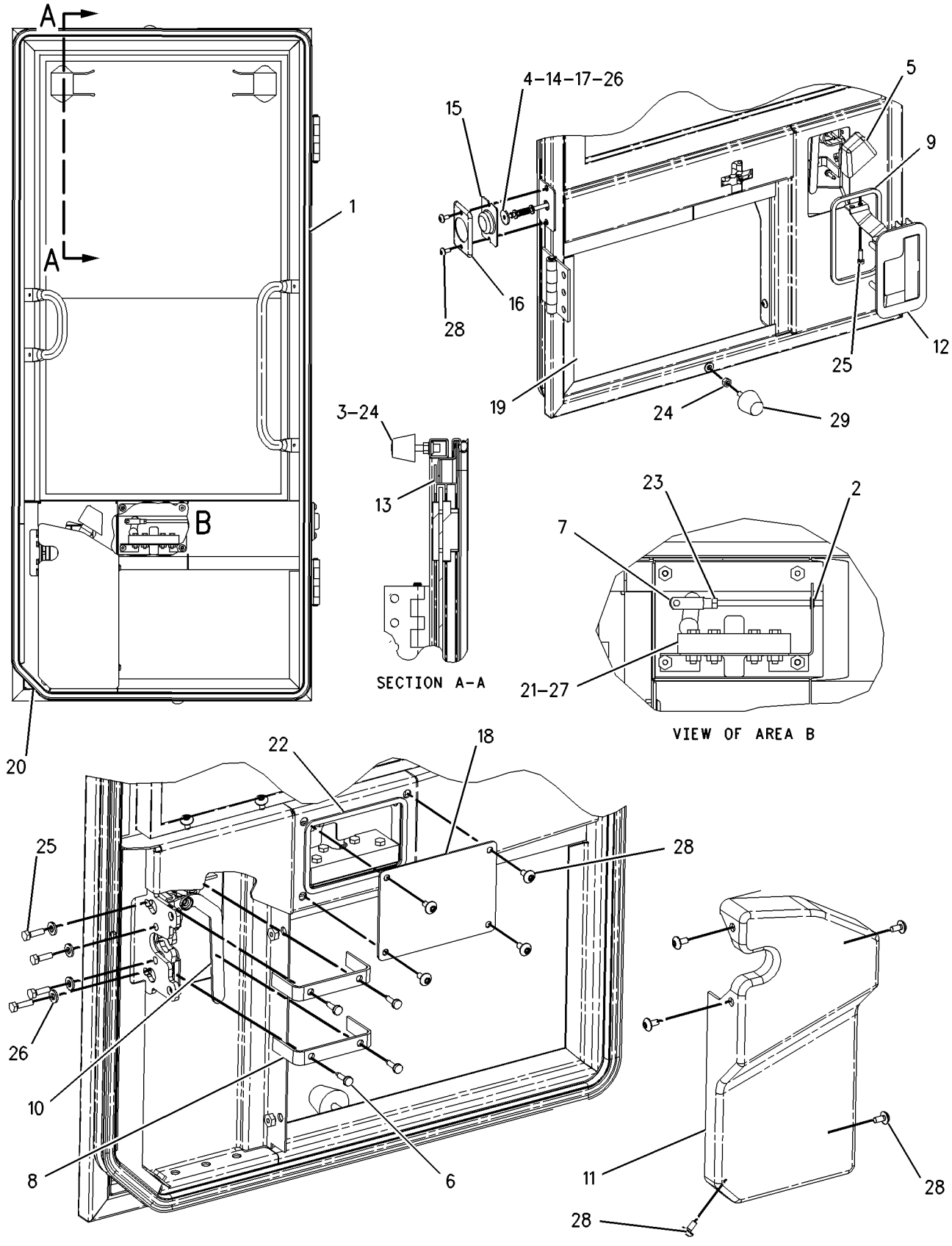

GRAPHIC #1 g00646437

OPERATOR STATION

107-4630 DUCT GP-AIR

S/N: DJD1-UP; DBT1-UP
PART OF 190-4405 CAB AR, 190-4652 PLATFORM AR
AN ATTACHMENT

SMCS-7304, 7320, 7337 **i01218578**

NOTE	REF NO	GRAPHIC REF	PART NUMBER	QTY	PART NAME 1 2 3 4 5 6 (PRODUCT LEVEL)	SEE PAGE
D	1	1	**5P-5927**		SEAL (1.06M)	
D	1A	1	**5P-5927**		SEAL (.93M)	
D	1B	1	**5P-5927**		SEAL (1.21M)	
C	2	1	**8Y-6388**	2	LOUVER AS	
C	3	1	**8Y-6391**	2	LOUVER AS	
	4	1	**104-2091**	12	SCREW-FLAT HEAD (NO.6-20X0.5IN)	
	5	1	**107-6079**	1	DUCT	
	6	1	**148-3626**	8	SCREW-FLAT HEAD	
C	7	1	**151-5715**	4	LOUVER AS	
	8	1	**161-7620**	12	SCREW-PAN HEAD	
C	9	1	**166-9286**	1	DUCT AS	
	10	1	**5P-4116**	4	WASHER (2MM THK)	
M	11	1	**8T-4908**	4	BOLT (M8X1.25X25MM)	

C-CHANGE FROM PREVIOUS TYPE
D-ORDER BY THE METER
M-METRIC PART

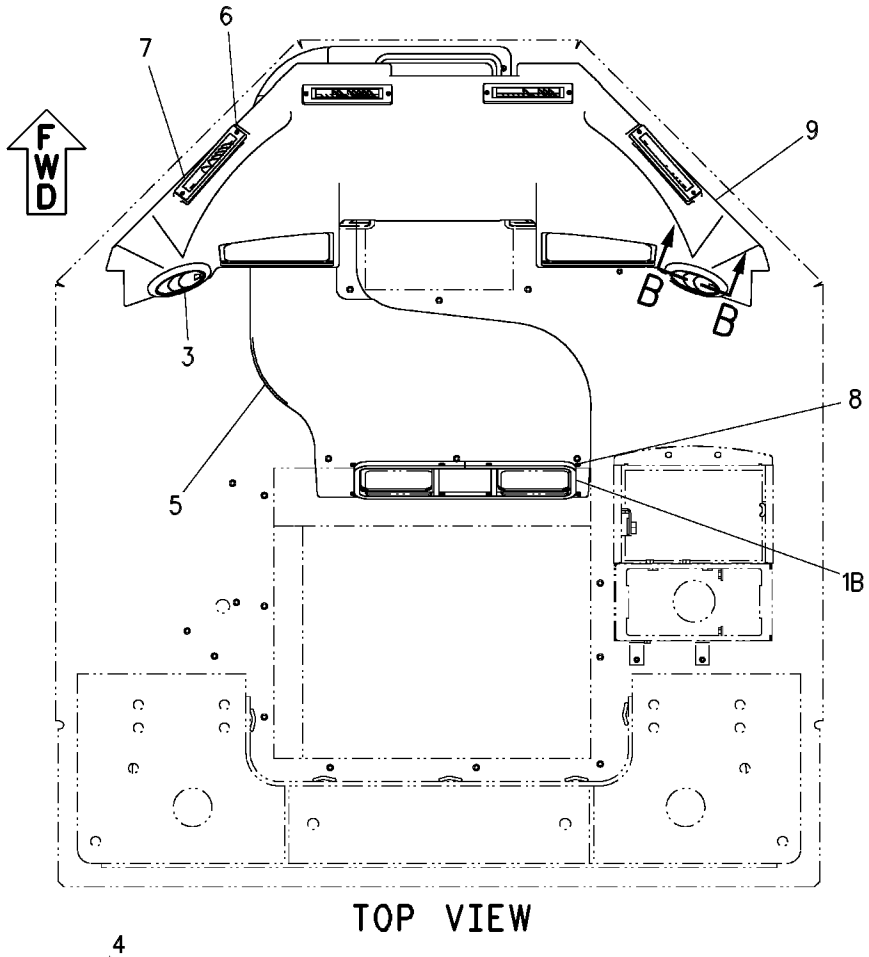

TOP VIEW

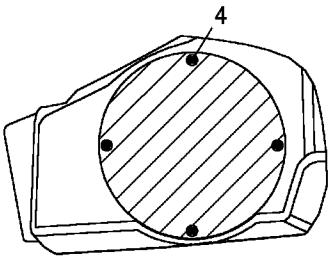

SECTION B-B

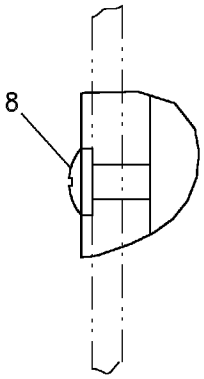

VIEW OF AREA A

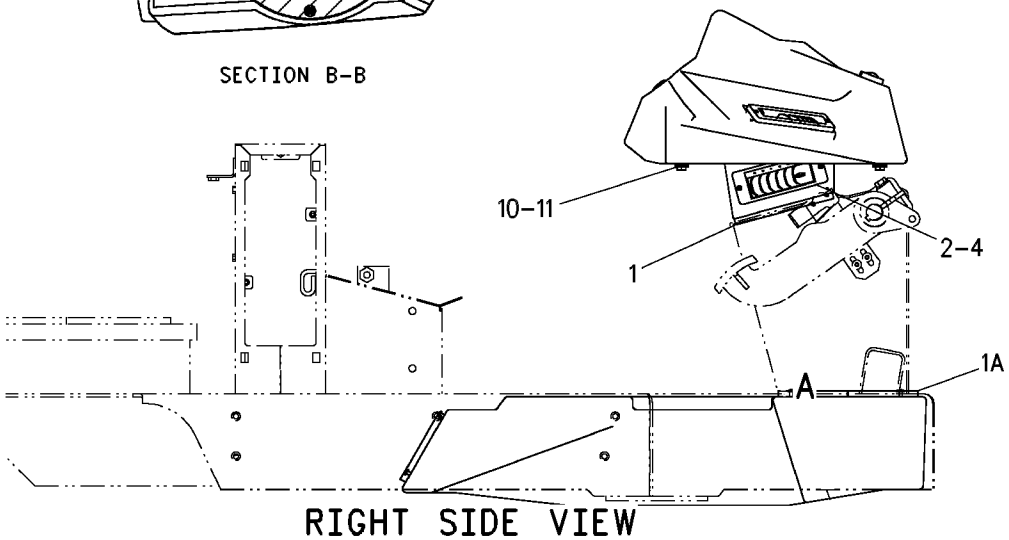

RIGHT SIDE VIEW

GRAPHIC #1 g00627948

OPERATOR STATION

8Y-6883 EXTENSION GP-BACKREST

S/N: DJD1-UP; DBT1-UP
GRAY FABRIC
PART OF 119-7128 SEAT GP, 8Y-6977 SEAT GP-SUSPENSION
AN ATTACHMENT

SMCS-7312 **i01829642**

NOTE	REF NO	GRAPHIC REF	PART NUMBER	QTY	PART NAME 1 2 3 4 5 6 (PRODUCT LEVEL)	SEE PAGE
L	1	1	**8Y-5947**	2	FASTENER	
	2	1	**8Y-5877**	1	PAN AS-EXTENSION	
					AVAILABLE REPAIR KIT(S):	
L			**119-7130**	1	KIT-CUSHION (CLOTH BACKREST)	
					(INCLUDES CUSHION AS AND FASTENERS)	

L-KIT MARKED L INCLUDES PART MARKED L

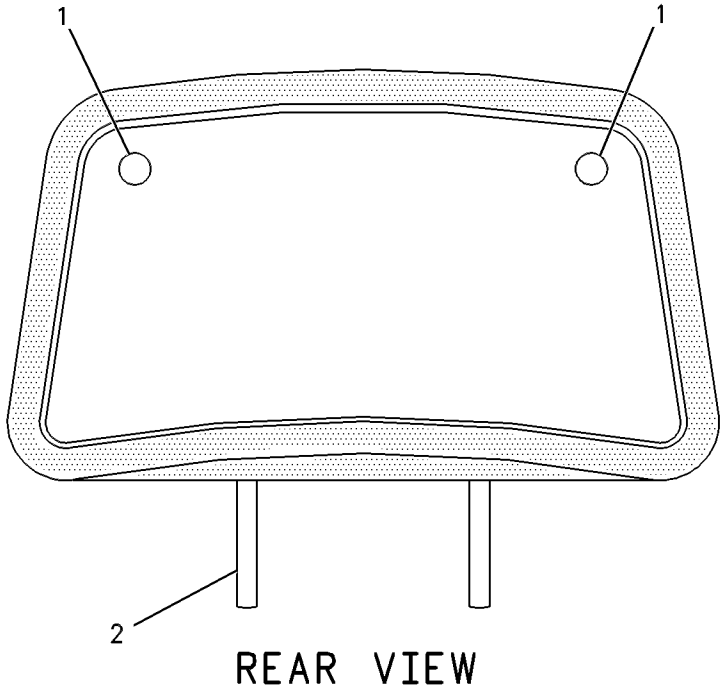

REAR VIEW

GRAPHIC #1 g00086580

OPERATOR STATION

119-4769 FILTER GP-CAB AIR

S/N: DJD1-UP; DBT1-UP
PART OF 190-4405 CAB AR, 190-4652 PLATFORM AR
AN ATTACHMENT

SMCS-7342 **i01234614**

NOTE	REF NO	GRAPHIC REF	PART NUMBER	QTY	PART NAME 1 2 3 4 5 6 (PRODUCT LEVEL)	SEE PAGE
	1	1	**111-8738**	1	FILTER	
	2	1	**180-7487**	2	FILTER	
	3	1	**114-3944**	1	COVER	
	4	1	**116-7856**	4	KNOB-CONTROL	
	5	1	**127-8613**	1	GASKET	
	6	1	**180-7486**	1	COVER AS	

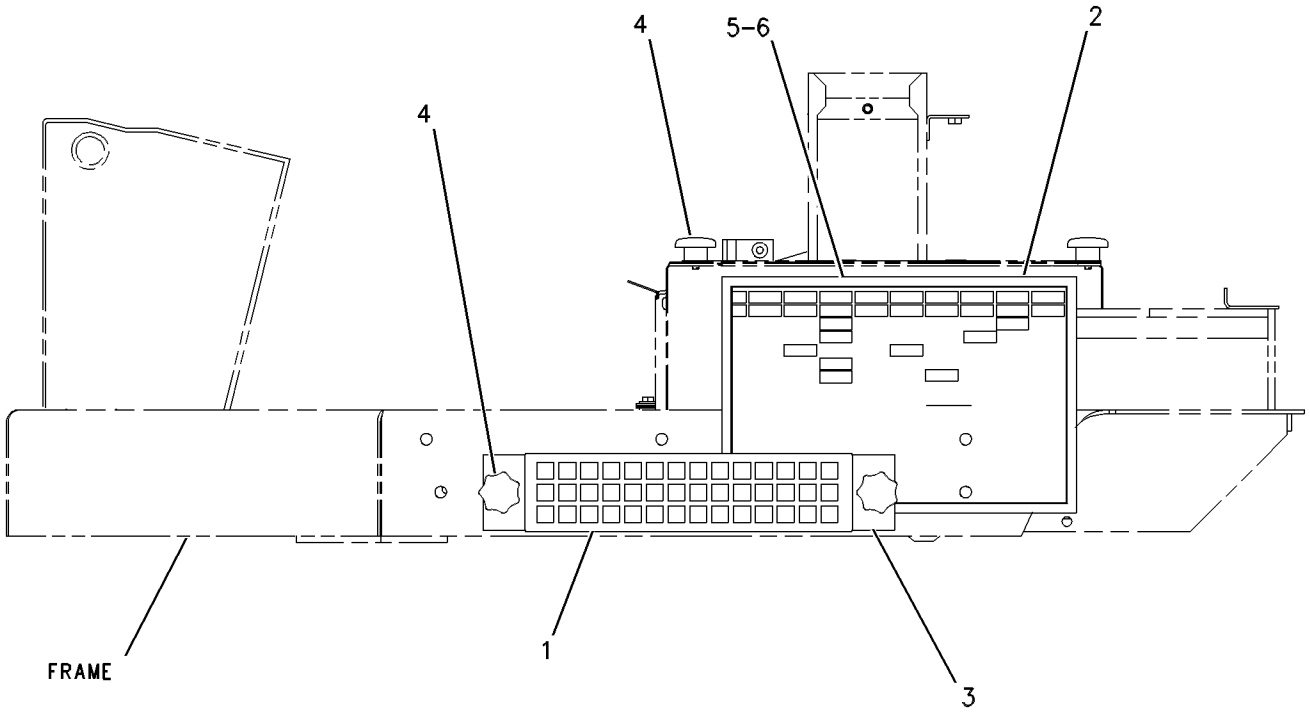

LEFT SIDE VIEW

GRAPHIC #1 g00661567

OPERATOR STATION

175-6750 GUARD GP-WINDOW

S/N: DJD1-UP; DBT1-UP
FIELD INSTALLED
AN ATTACHMENT

SMCS-7165 **i01452838**

NOTE	PART NUMBER	QTY	PART NAME 1 2 3 4 5 6 (PRODUCT LEVEL)	SEE PAGE
Y	*175-6760*	1	GUARD GP-WINDOW	641

Y-SEPARATE ILLUSTRATION

<END>

OPERATOR STATION

175-6760 GUARD GP-WINDOW

S/N: DJD1-UP; DBT1-UP

PART OF 175-6750 GUARD GP-WINDOW, 213-7244, 213-7245 WASTE HANDLING AR

AN ATTACHMENT

SMCS-7165 **i01664684**

NOTE	REF NO	GRAPHIC REF	PART NUMBER	QTY	PART NAME 1 2 3 4 5 6 (PRODUCT LEVEL)	SEE PAGE
	1	1	**2G-9524**	2	LATCH	
	2	1	**4E-1384**	4	BUMPER-CONICAL	
	3	1	**175-6746**	1	SCREEN AS	
	4	1	**175-6749**	2	PLATE	
	5	1	**175-6754**	1	SCREEN AS	
	6	1	**175-6759**	1	SCREEN AS	
M	7	1	**5C-7261**	4	NUT (M8X1.25 THD)	
M	8	1	**5C-9553**	4	BOLT (M6X1X16MM)	
	9	1	**6C-3679**	8	RIVET-POP	
M	10	1	**6V-9189**	4	LOCKNUT (M8X1.25 THD)	
	11	1	**8T-4121**	8	WASHER-HARD (11X21X2.5MM THK)	
	12	1	**8T-4224**	12	WASHER-HARD (8.8X16X2MM THK)	
M	13	1	**8T-7547**	8	BOLT (M8X1.25X30MM)	
M	14	1	**9X-2040**	4	SCREW-TRUSS HEAD (M10X1.5X25MM)	
	15	1	**9X-8256**	4	WASHER (6.6X12X2MM THK)	

M-METRIC PART

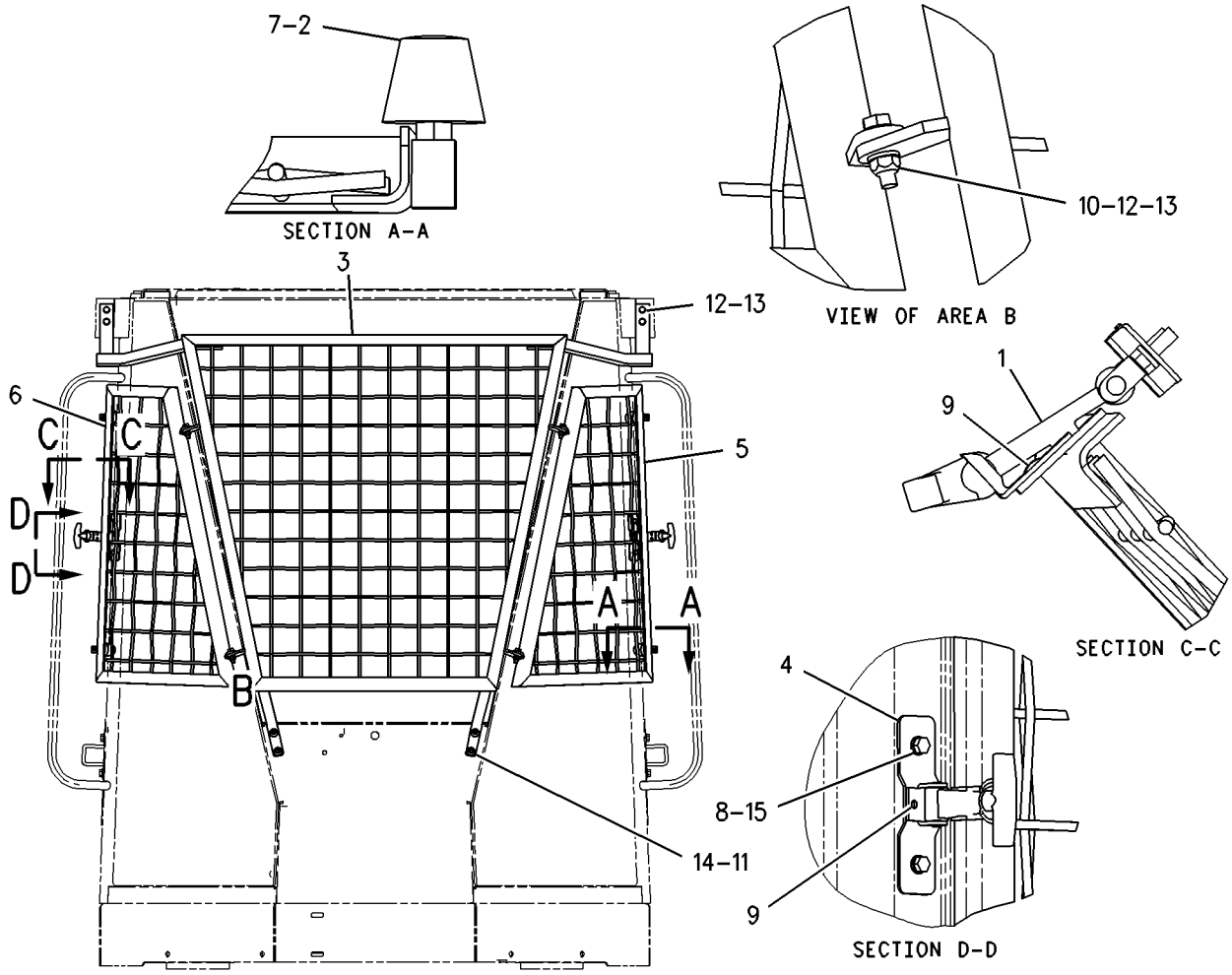

GRAPHIC #1 g00859583

OPERATOR STATION

107-4629 HEATER & MTG GP-CAB

S/N: DJD1-UP; DBT1-UP
PART OF 190-4401 HEATER AR-CAB
AN ATTACHMENT

SMCS-7304 **i01232637**

NOTE	REF NO	GRAPHIC REF	PART NUMBER	QTY	PART NAME 1 2 3 4 5 6 (PRODUCT LEVEL)	SEE PAGE
BD	1	1	**5P-5643**		SEAL	
CY	2	1	**180-9874**	1	HEATER GP-CAB	644
	3	1	**156-4449**	1	CABLE AS	
		1	**2H-3920**	2	LOCKWASHER (11.38MM ID)	
		1	**6V-8369**	1	NUT (7/16-28 THD)	
		1	**143-8874**	1	BOOT	
	4	1	**118-7259**	1	GASKET	
	5	1	**7X-0579**	11	WASHER-HARD (2.0MM THK)	
M	6	1	**8T-4908**	11	BOLT (M8X1.25X25MM)	

B-USE AS REQUIRED
C-CHANGE FROM PREVIOUS TYPE
D-ORDER BY THE METER
M-METRIC PART
Y-SEPARATE ILLUSTRATION

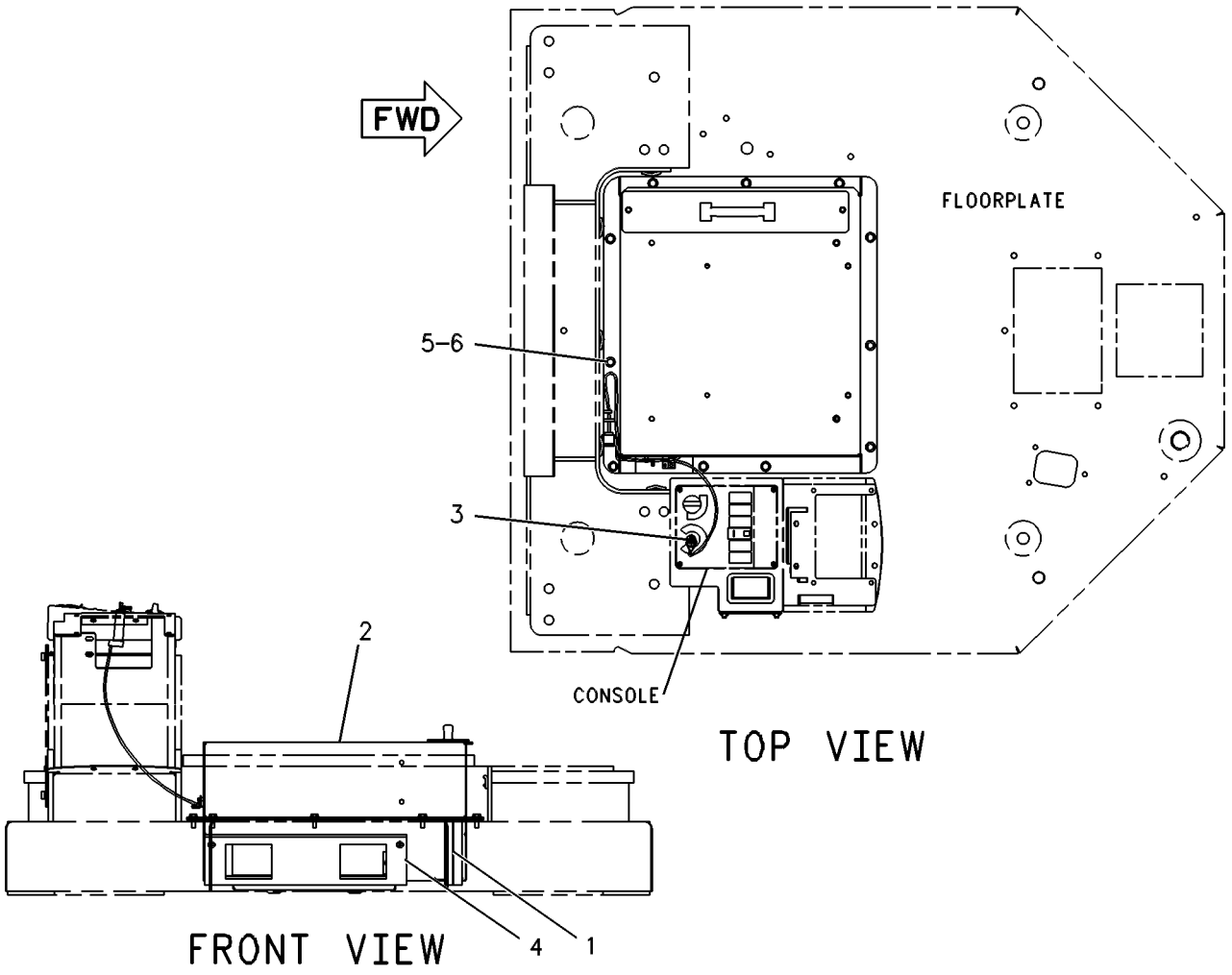

GRAPHIC #1 g00131666

OPERATOR STATION

190-4401 HEATER AR-CAB

S/N: DJD1-UP; DBT1-UP
AN ATTACHMENT

SMCS-7304 **i01729357**

NOTE	PART NUMBER	QTY	PART NAME 1 2 3 4 5 6 (PRODUCT LEVEL)	SEE PAGE
Y	*107-4629*	1	HEATER & MTG GP-CAB	642
Y	*203-5931*	1	LINES GP-HEATER	660
Y	*198-8964*	1	PANEL GP-TOP	298

Y-SEPARATE ILLUSTRATION

<END>

OPERATOR STATION

180-9874 HEATER GP-CAB

S/N: DJD1-UP; DBT1-UP
PART OF 107-4629 HEATER & MTG GP-CAB
AN ATTACHMENT

SMCS-7304 **i01578217**

NOTE	REF NO	GRAPHIC REF	PART NUMBER	QTY	PART NAME 1 2 3 4 5 6 (PRODUCT LEVEL)	SEE PAGE
D	1	1	**5P-5908**		SEAL (1M)	
	2	1	**1P-6522**	1	GROMMET	
	3	1	**2S-3745**	6	SCREW-TAPPING (10-16X.5 IN)	
	4	1	**3E-1841**	1	LEVER	
	5	1	**3S-2093**	2	STRAP-CABLE	
M	6	1	**5C-9553**	4	BOLT (M6X1X16MM)	
	7	1	**6V-1668**	2	WASHER (6.5X29.1X3MM THK)	
	8	1	**8C-4586**	2	CLAMP	
M	9	1	**8C-8457**	1	SCREW-MACHINE	
	10	1	**8T-0154**	6	CLAMP-HOSE	
M	11	1	**8T-4171**	2	BOLT (M6X1X12MM)	
	12	1	**8T-4205**	11	WASHER-HARD (7.2X14.5X2MM THK)	
	13	1	**8Y-5737**	1	CLIP	
	14	1	**9G-1950**	1	RESISTOR	
M	15	1	**9X-2044**	1	SCREW-TRUSS HEAD (M6X1X16MM)	
	16	1	**9X-2185**	4	SCREW (8-15X0.44 IN)	
	17	1	**037-4426**	1	RETAINER	
	18	1	**100-3143**	2	PLATE-ORIFICE	
	19	1	**100-3426**	2	WHEEL-BLOWER	
					(EACH INCLUDES)	
		1	**037-4838**	2	CLAMP	
	20	1	**102-0341**	1	CLIP (TAB)	
	21	1	**114-3140**	1	GROMMET	
	22	1	**118-5044**	1	HARNESS AS-HEATER (CAB)	
		1	**3E-3361**	1	PLUG AS-CONNECTOR	
					(INCLUDES PLUG AS & WEDGE)	
		1	**102-8805**	1	KIT-RECEPTACLE (6 PIN)	
					(INCLUDES RECEPTACLE AS & WEDGE)	
		1	**8T-8737**	1	PLUG-SEAL	
	23	1	**118-5046**	1	HOUSING AS	
M		1	**6V-9632**	1	NUT-WELD (M6X1 THD)	
	24	1	**124-8494**	1	GASKET	
	25	1	**124-8495**	1	VALVE AS-WATER	
M	26	1	**129-3178**	3	LOCKNUT (M6X1 THD)	
M	27	1	**141-9784**	1	BOLT-HEX HEAD (M6X190MM)	
	28	1	**151-0894**	1	COVER AS	
M		1	**8T-3490**	4	NUT-WELD (M10X1.5 THD)	
	29	1	**156-6819**	1	CASE AS	
M		1	**6V-9632**	9	NUT-WELD (M6X1 THD)	
	30	1	**174-1486**	1	MOTOR AS-BLOWER	
		1	**3E-3365**	1	WEDGE-RECEPTACLE LOCK (2 PIN)	
		1	**9W-0852**	2	PIN-CONNECTOR	
		1	**102-8802**	1	KIT-RECEPTACLE (2 PIN)	
					(INCLUDES RECEPTACLE & WEDGE)	
	31	1	**183-7528**	1	COIL AS	
M	32	1	**6V-7728**	1	BOLT (M6X1.0X45MM)	
E	33	1	**136-1953**		HOSE (56CM)	
D	34	1	**8T-5372**		SEAL (.4M)	
D	35	1	**6V-1392**		SEAL (.8M)	

D-ORDER BY THE METER
E-ORDER BY THE CENTIMETER
M-METRIC PART

180-9874 HEATER GP-CAB *(contd.)*

i01578217

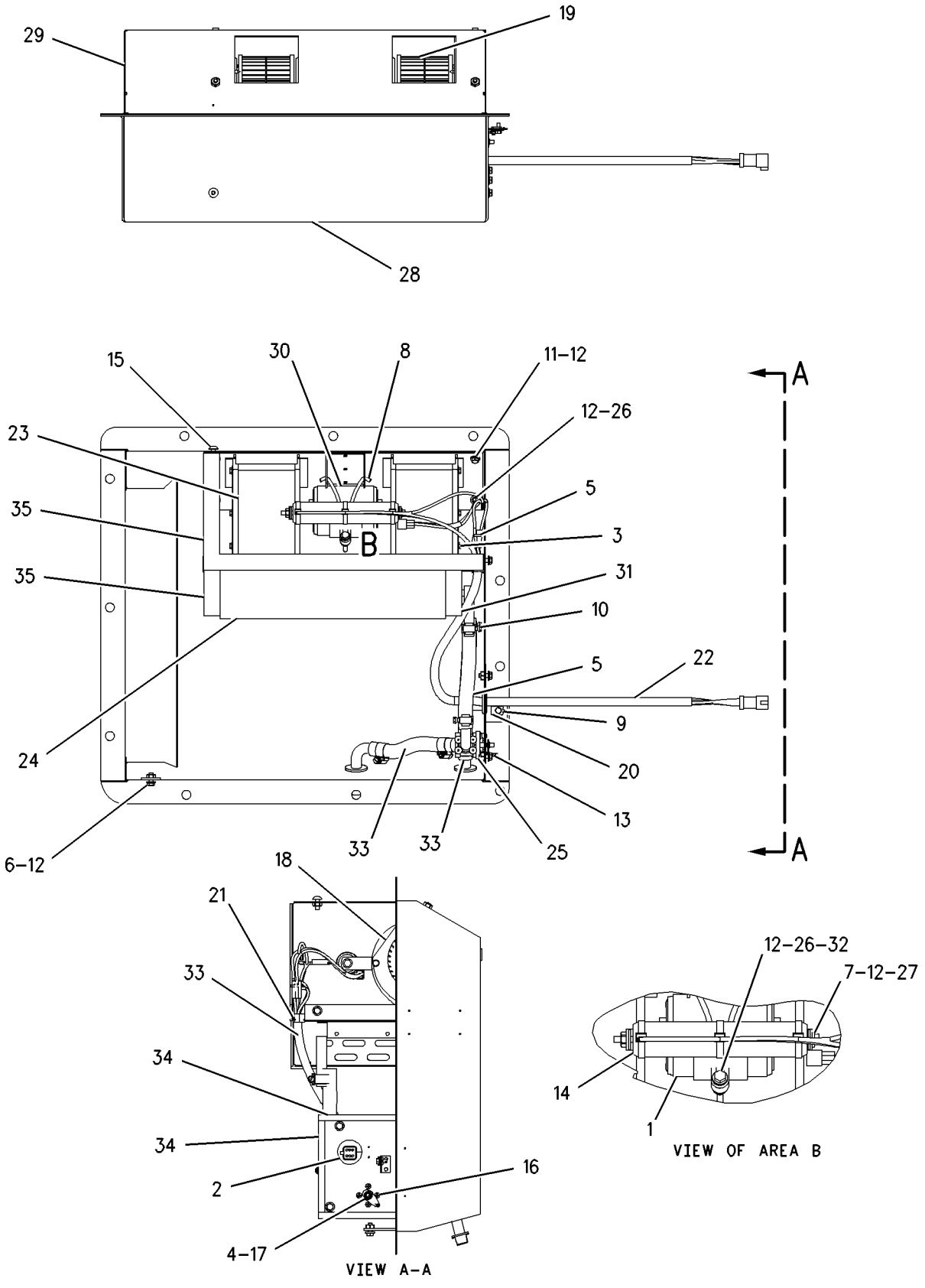

GRAPHIC #1

g00660004

OPERATOR STATION

108-4582 HOUSING GP-SEAT SUSPENSION

S/N: DJD1-UP; DBT1-UP
PART OF 108-4082 SUSPENSION GP-SEAT
AN ATTACHMENT

SMCS-7321, 7324 **i01569601**

NOTE	REF NO	GRAPHIC REF	PART NUMBER	QTY	PART NAME 1 2 3 4 5 6 (PRODUCT LEVEL)	SEE PAGE
	1	1	**161-5967**	1	SHAFT	
	2	1	**8Y-6066**	1	SPRING	
	3	1	**8Y-6069**	1	ADJUSTER AS	
	4	1	**8Y-6068**	1	NUT (3/8 X 16 THD)	
	5	1	**8Y-6029**	1	HOUSING AS-UPPER	
	6	1	**8Y-6047**	2	PIN	
	7	1	**2M-7819**	4	RING-RETAINING	
	8	1	**8Y-6041**	1	ARM AS	
	9	1	**8Y-6045**	1	CAM	
	10	1	**8Y-6046**	1	PIN	
	11	1	**8S-7803**	4	RING-RETAINING	
	12	1	**131-4242**	1	BOLT (3/8-16X5.18 IN)	
	13	1	**7M-7219**	1	BEARING-THRUST	
		1	**4N-2927**	2	RACE-THRUST BEARING	
	14	1	**3D-2975**	2	RING-RETAINING	
	15	1	**095-0878**	1	PIN-SPRING	
	16	1	**9X-8918**	3	SCREW-FLAT HEAD (8-32X0.50 IN)	
	17	1	**5P-8445**	4	RING-RETAINING	
	18	1	**4B-5059**	6	WASHER (29.5X15X2.5MM THK)	
	19	1	**8Y-6060**	2	ROLLER	
	20	1	**1Y-7927**	1	PIN	
	21	1	**7V-5191**	2	SPACER (28X10X7.1MM THK)	
	22	1	**5D-4822**	2	RING-RETAINING	
	23	1	**8Y-6062**	1	LINK-ACTUATOR-RH	
	24	1	**8Y-6063**	1	LINK-ACTUATOR-LH	
	25	1	**5V-0770**	2	BOLT-CARRIAGE	
		1	**2D-6235**	2	LOCKNUT (1/4-20 THD)	
	26	1	**8Y-6064**	2	ROLLER-SLIDER	
	27	1	**131-5167**	1	KNOB AS-WEIGHT	
	28	1	**8Y-6067**	1	SPACER (10.54MM THK)	
	29	1	**8L-8413**	2	STRAP-CABLE	
LZ	30	1		1	KNOB-HEIGHT	
LZ	31	1		1	KNOB-HEIGHT	
JZ	32	1		3	BUMPER	
PZ	33	1		2	BUSHING-GUIDE	
PZ	34	1		2	SPRING	
PZ	35	1		2	ROD	
PZ	36	1		2	SPACER	
QZ	37	1		2	SPRING	
QZ	38	1		2	BUSHING	
SZ	39	1		1	PIN	
SZ	40	1		1	FOLLOWER-CAM	
TZ	41	1		1	GUIDE	
TZ	42	1		1	TAPE-INDICATOR	
UZ	43	1		1	FOLLOWER-CAM	
UZ	44	1		1	PIN	
VZ	45	1		1	ROLLER AS	
VZ	46	1		2	ROLLER AS	
					AVAILABLE REPAIR KIT(S):	
J			**100-5179**	1	KIT-BUMPER	
L			**8Y-5945**	1	KIT-SUSPENSION KNOB	
P			**8Y-6860**	1	KIT-SPRING	
Q			**8Y-6859**	1	KIT-SPRING	
S			**108-4086**	1	KIT-FOLLOWER	

108-4582 HOUSING GP-SEAT SUSPENSION *(contd.)* i01569601

NOTE	REF NO	GRAPHIC REF	PART NUMBER	QTY	PART NAME 1 2 3 4 5 6 (PRODUCT LEVEL)	SEE PAGE
T			**100-3224**	1	KIT-INDICATOR	
U			**108-4087**	1	KIT-FOLLOWER	
V			**108-4103**	1	KIT-BEARING	

J-KIT MARKED J INCLUDES PART MARKED J
L-KIT MARKED L INCLUDES PARTS MARKED L
P-KIT MARKED P INCLUDES PARTS MARKED P
Q-KIT MARKED Q INCLUDES PARTS MARKED Q
S-KIT MARKED S INCLUDES PARTS MARKED S
T-KIT MARKED T INCLUDES PARTS MARKED T
U-KIT MARKED U INCLUDES PARTS MARKED U
V-KIT MARKED V INCLUDES PARTS MARKED V
Z-NOT SERVICED SEPARATELY

108-4582 HOUSING GP-SEAT SUSPENSION *(contd.)* i01569601

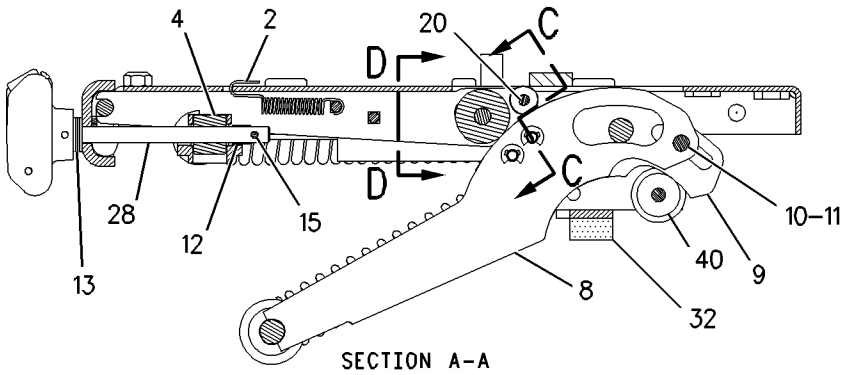

SECTION A-A

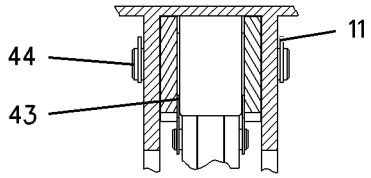

SECTION D-D

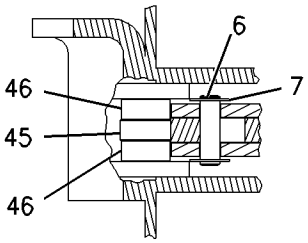

SECTION C-C

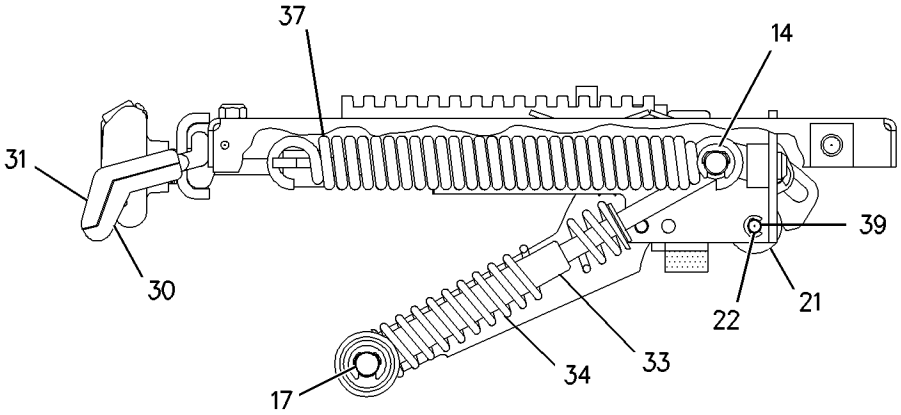

VIEW B-B

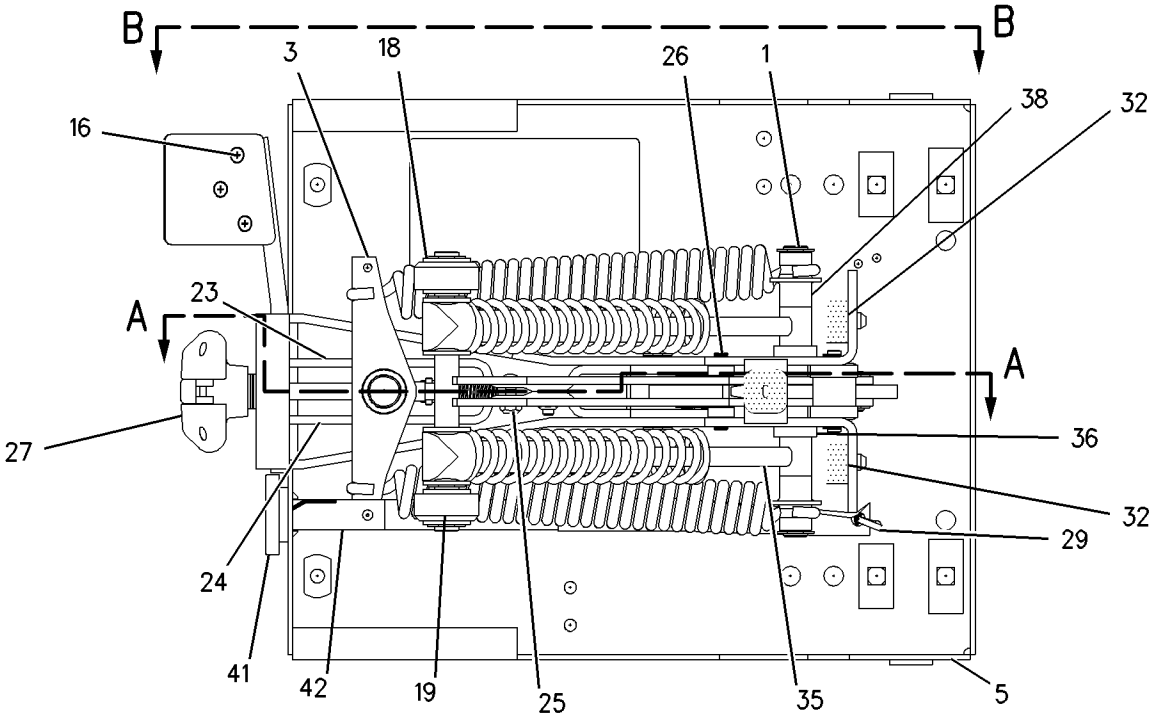

BOTTOM VIEW

GRAPHIC #1 g00692106

OPERATOR STATION

107-4645 INSTALLATION GP-RADIO

S/N: DJD1-UP; DBT1-UP
PART OF 225-4329 INSTALLATION GP-RADIO
AN ATTACHMENT

SMCS-7338 **i01823529**

NOTE	REF NO	GRAPHIC REF	PART NUMBER	QTY	PART NAME 1 2 3 4 5 6 (PRODUCT LEVEL)	SEE PAGE
	1	1	**4E-1411**	1	BUSHING-TERMINAL	
	2	1	**8C-6440**	8	SCREW-PAN HEAD (10-16X0.50 IN)	
M	3	1	**9X-2042**	4	SCREW-TRUSS HEAD (M6X1X12MM)	
	4	1	**168-8772**	2	SPEAKER AS	
	5	1	**174-6491**	1	HARNESS AS-RADIO	
		1	**102-8803**	1	KIT-RECEPTACLE (3 PIN)	
		1	**155-2265**	1	KIT-CONNECTING PLUG (8 PIN)	
	6	1	**114-3953**	1	BRACKET AS	
	7	1	**114-3954**	1	COVER	
	8	1	**9U-8263**	1	COVER	
	9	1	**5P-4115**	4	WASHER-HARD (7.2X19X2MM THK)	
	10	1	**5P-8524**	4	GROMMET	
	11	1	**7K-1181**	4	STRAP-CABLE	
M	12	1	**8T-4134**	4	NUT (M6X1 THD)	

M-METRIC PART

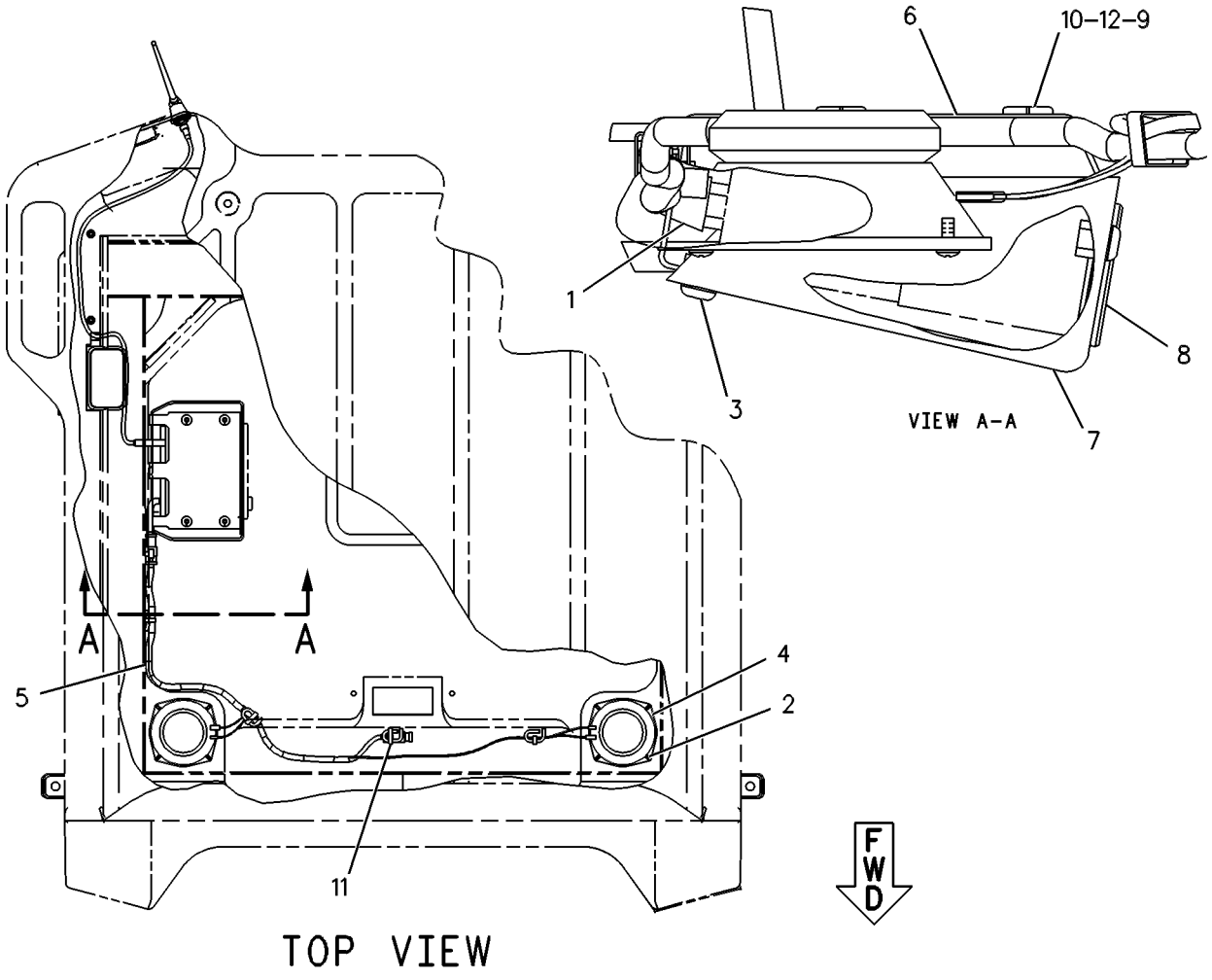

GRAPHIC #1 g00132022

OPERATOR STATION

225-4329 INSTALLATION GP-RADIO

S/N: DJD1-UP; DBT1-UP

CANNOT BE USED WITH 107-4645–PAGE 649, 207-5947–PAGE 109

AN ATTACHMENT

SMCS-7338 **i01782467**

NOTE	PART NUMBER	QTY	PART NAME 1 2 3 4 5 6 (PRODUCT LEVEL)	SEE PAGE
Y	*207-5947*	1	CONVERTER GP-ELECTRICAL	109
Y	*107-4645*	1	INSTALLATION GP-RADIO	649

Y-SEPARATE ILLUSTRATION

<END>

OPERATOR STATION

107-4634 LINER GP-CAB

S/N: DJD1-UP; DBT1-UP
UPPER
PART OF 190-4405 CAB AR
AN ATTACHMENT

SMCS-7329 **i01690953**

NOTE	REF NO	GRAPHIC REF	PART NUMBER	QTY	PART NAME 1 2 3 4 5 6 (PRODUCT LEVEL)	SEE PAGE
	1	1	**6V-8928**	1	HOOK-COAT	
	2	1	**107-6032**	1	LAMP GP-DOME	
		1	**112-5219**	1	LAMP	
	3	1	**145-5307**	1	PLATE	
	4	1	**180-5098**	1	INSULATION	
	5	1	**190-4705**	1	HEADLINER AS	
		1	**4E-8293**	6	FASTENER	
	6	1	**190-4706**	1	COVER AS	
	7	1	**190-4707**	1	COVER AS	
	8	1	**190-4708**	1	COVER AS	
M	9	1	**6V-8490**	4	BOLT (M6X1X25MM)	
M	10	1	**9X-2045**	1	SCREW-TRUSS HEAD (M6X1X20MM)	

M-METRIC PART

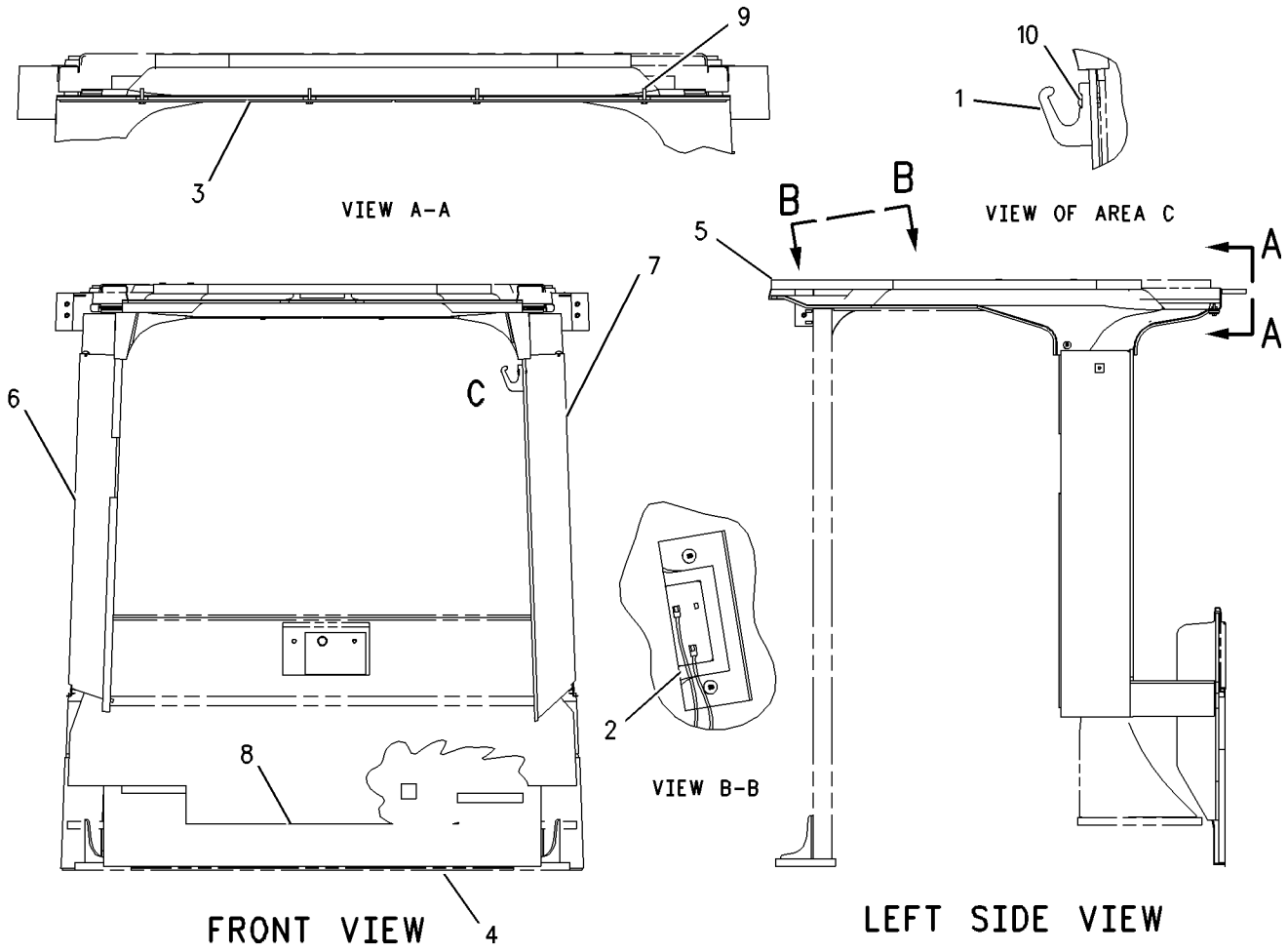

GRAPHIC #1 g00870818

OPERATOR STATION

125-3961 LINER GP-CAB

S/N: DJD1-UP; DBT1-UP
PART OF 190-4648, 190-4650 OPERATOR AR, 190-4652 PLATFORM AR
AN ATTACHMENT

SMCS-7329 **i01479591**

NOTE	REF NO	GRAPHIC REF	PART NUMBER	QTY	PART NAME 1 2 3 4 5 6 (PRODUCT LEVEL)	SEE PAGE
	1	1	**4E-2161**	1	STRAP	
BD	2	1	**5P-5637**		SEAL	
C	3	1	**125-7045**	1	COVER AS	
C	4	1	**125-7043**	1	BOX AS	
	5	1	**136-2109**	1	COVER AS	
		1	**128-0899**	4	RIVET	
		1	**4S-8264**	3	RIVET-POP	
		1	**120-0596**	1	BRACKET	
		1	**124-9015**	1	KIT-BRUSH SEAL	
C	6	1	**127-6510**	2	COVER	
	7	1	**154-4370**	1	FLOOR MAT	
	8	1	**111-7881**	1	COVER AS	
C	9	1	**8C-3426**	1	LOCK AS-CYLINDER	
		1	**7F-9223**	1	LOCKWASHER	
		1	**8T-5004**	1	SCREW-MACHINE (1/4-28X0.375 IN)	
	10	1	**141-4984**	1	INSULATION AS	
CM	11	1	**5C-2890**	2	NUT (M6X1 THD)	
	12	1	**115-1561**	1	COVER	
CM	13	1	**8T-4189**	3	BOLT (M8X1.25X20MM)	
	14	1	**8T-4224**	5	WASHER-HARD (8.8X16X2MM THK)	
CM	15	1	**9X-2042**	7	SCREW-TRUSS HEAD (M6X1X12MM)	
CM	16	1	**8T-4200**	2	BOLT (M8X1.25X16MM)	
C	17	1	**8T-4205**	2	WASHER-HARD (7.2X14.5X2MM THK)	
C	18	1	**8N-9033**	2	PLUG	
	19	1	**125-7046**	1	PLATE AS	
	20	1	**8T-3995**	5	NUT (M6X1 THD)	
M	21	1	**9X-2045**	2	SCREW-TRUSS HEAD (M6X1X20MM)	

B-USE AS REQUIRED
C-CHANGE FROM PREVIOUS TYPE
D-ORDER BY THE METER
M-METRIC PART

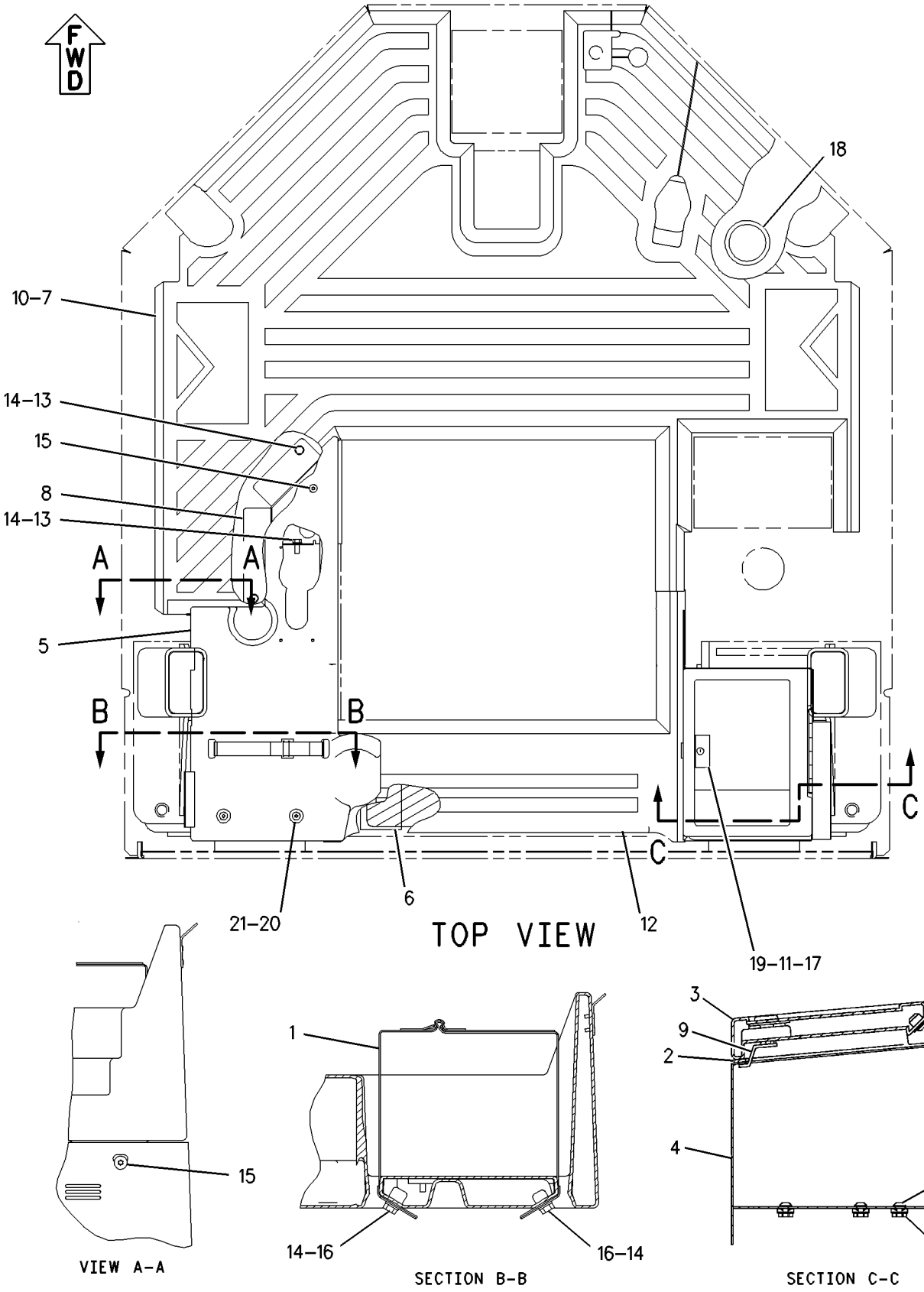

GRAPHIC #1 g00770449

OPERATOR STATION

125-3962 LINER GP-CAB

S/N: DJD1-UP; DBT1-UP
PART OF 190-4654 OPERATOR AR
AN ATTACHMENT

SMCS-7329 **i01628668**

NOTE	REF NO	GRAPHIC REF	PART NUMBER	QTY	PART NAME 1 2 3 4 5 6 (PRODUCT LEVEL)	SEE PAGE
	1	1	**4E-2161**	1	STRAP	
J	2	1	**8C-3426**	1	LOCK AS-CYLINDER	
		1	**7F-9223**	1	LOCKWASHER	
		1	**8T-5004**	1	SCREW-MACHINE (1/4-28X0.375 IN)	
	3	1	**8T-3995**	5	NUT (M6X1 THD)	
	4	1	**111-7881**	1	COVER AS	
	5	1	**125-7043**	1	BOX AS	
	6	1	**125-7045**	1	COVER AS	
	7	1	**125-7046**	1	PLATE AS	
	8	1	**126-1034**	1	HEADLINER AS	
	9	1	**126-1035**	1	PLATE AS	
	10	1	**126-1036**	1	PLATE AS	
	11	1	**126-1367**	1	INSULATION	
	12	1	**127-7457**	1	INSULATION	
	13	1	**136-2109**	1	COVER AS	
		1	**4S-8264**	3	RIVET-POP	
		1	**9R-2620**	1	PLUG	
		1	**120-0596**	1	BRACKET	
		1	**124-9015**	1	KIT-BRUSH SEAL	
		1	**128-0899**	4	RIVET	
	14	1	**141-4984**	1	INSULATION AS	
C	15	1	**154-4370**	1	FLOOR MAT	
M	16	1	**5C-2890**	2	NUT (M6X1 THD)	
M	17	1	**8T-4189**	3	BOLT (M8X1.25X20MM)	
M	18	1	**8T-4200**	2	BOLT (M8X1.25X16MM)	
	19	1	**8T-4205**	2	WASHER-HARD (7.2X14.5X2MM THK)	
	20	1	**8T-4224**	5	WASHER-HARD (8.8X16X2MM THK)	
	21	1	**9D-3769**	1	GROMMET	
M	22	1	**9X-2042**	11	SCREW-TRUSS HEAD (M6X1X12MM)	
M	23	1	**9X-2045**	4	SCREW-TRUSS HEAD (M6X1X20MM)	
BD	24	1	**5P-0798**		SEAL (0.8M)	

B-USE AS REQUIRED
C-CHANGE FROM PREVIOUS TYPE
D-ORDER BY THE METER
J-REQUIRES 5P8500 KEY
M-METRIC PART

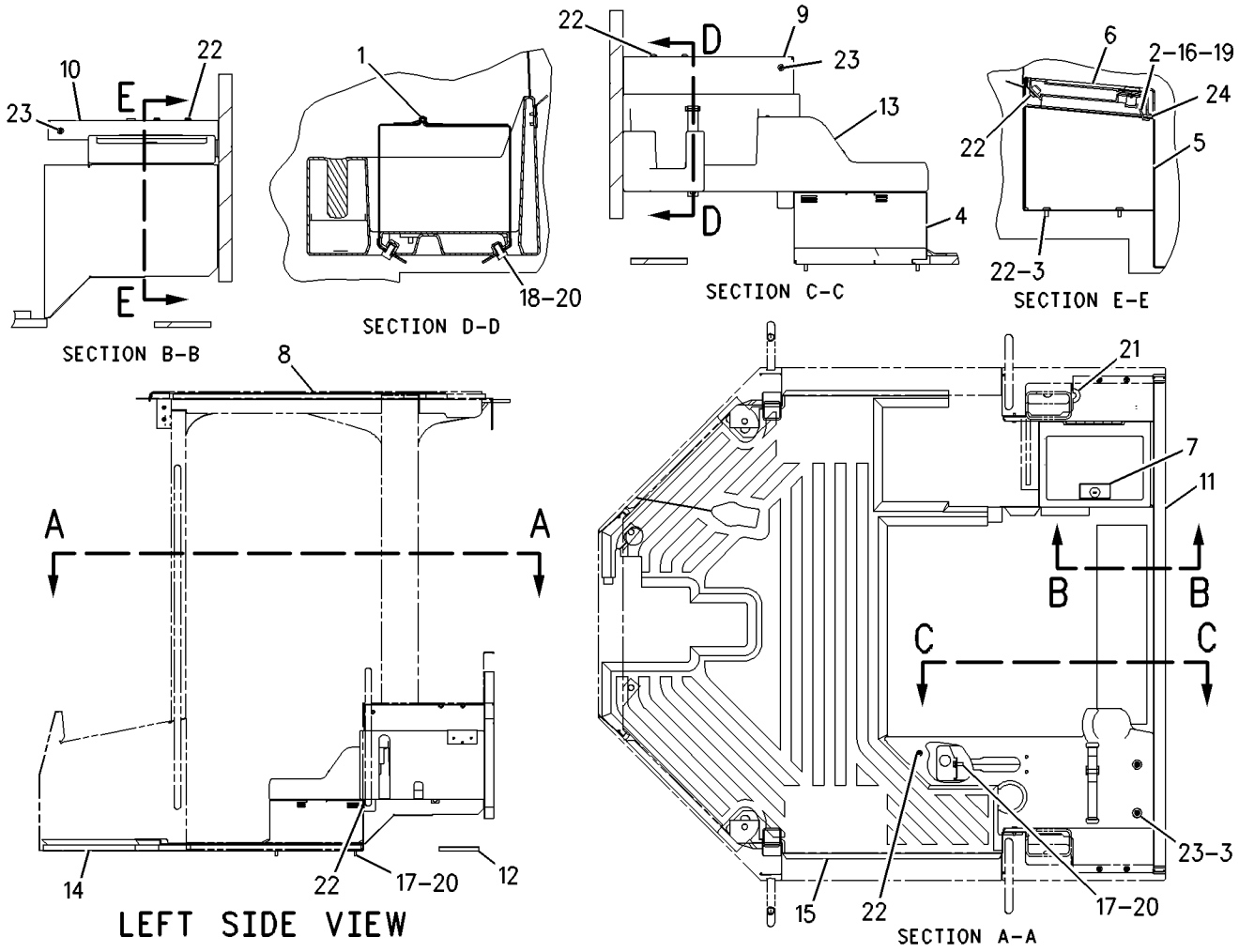

GRAPHIC #1

g00844220

OPERATOR STATION

203-5932 LINES GP-AIR CONDITIONER

S/N: DJD1-UP; DBT1-UP

PART OF 190-4402, 227-5317 AIR CONDITIONER AR, 190-4652 PLATFORM AR

AN ATTACHMENT

SMCS-1808 **i01832911**

NOTE	REF NO	GRAPHIC REF	PART NUMBER	QTY	PART NAME 1 2 3 4 5 6 (PRODUCT LEVEL)	SEE PAGE
BD	1	2	**6V-2495**		SEAL (.2M)	
	2	2	**1P-6356**	1	PLATE	
	3	1,2	**3S-2093**	8	STRAP-CABLE	
	4	2	**101-8296**	2	CLIP	
	5	2	**106-8704**	1	SUPPRESSOR AS-ARC	
		2	**102-8802**	1	KIT-RECEPTACLE (2 PIN)	
		2	**186-3735**	2	PIN-CONNECTOR	
	6	2	**114-5333**	1	SWITCH AS-PRESSURE (REFRIGERANT)	
		2	**102-8802**	1	KIT-RECEPTACLE (2 PIN)	
		2	**186-3735**	2	PIN-CONNECTOR	
	7	2	**155-9816**	1	FITTING AS-AIR CONDITIONER	
		2	**3E-4052**	1	CAP AS (AIR CONDITIONER)	
		2	**3E-4058**	1	VALVE AS (AIR CONDITIONER)	
	8	2	**163-9324**	1	PLATE-INSTRUCTION	
	9	2	**186-6190**	1	ACCUMULATOR-REFRIGERANT	
I	10	1	**206-4431**	1	HOSE AS	
I	11	1	**206-4432**	1	HOSE AS	
I	12	1	**206-4433**	1	HOSE AS	
	13	1	**206-4435**	1	BRACKET AS	
M		1	**8T-3490**	2	NUT-WELD (M10X1.5 THD)	
	14	1	**207-3362**	1	TUBE AS	
I	15	1	**207-3366**	1	HOSE AS	
	16	2	**1M-4543**	1	GROMMET	
	17	1,2	**1P-7009**	4	CLIP	
	18	2	**3E-4056**	1	FITTING AS-AIR CONDITIONER	
		2	**3E-4051**	1	CAP AS (AIR CONDITIONER)	
		2	**3E-4057**	1	VALVE AS (AIR CONDITIONER)	
	19	2	**4P-7581**	1	CLIP	
	20	1,2	**4S-1962**	2	CLIP	
	21	1	**5P-7648**	1	GROMMET	
	22	1	**7K-1181**	1	STRAP-CABLE	
	23	2	**8T-2561**	1	WASHER-HARD (10.5X28.5X5MM THK)	
	24	1,2	**8T-4121**	9	WASHER-HARD (11X21X2.5MM THK)	
M	25	1,2	**8T-4137**	5	BOLT (M10X1.5X20MM)	
M	26	1,2	**8T-4195**	3	BOLT (M10X1.5X30MM)	
M	27	2	**8T-6466**	1	BOLT (M10X1.50X60MM)	
	28	1	**9D-3768**	1	GROMMET	
	29	2	**9M-8406**	2	CLIP	
	30	2	**9X-7378**	1	SEAL-O-RING	
	31	1	**9X-7380**	1	SEAL-O-RING	
	32	1	**9X-7381**	3	SEAL-O-RING	
	33	1	**9X-7382**	3	SEAL-O-RING	
	34	2	**9X-7383**	2	SEAL-O-RING	
M	35	2	**8T-4186**	1	BOLT (M10X1.5X40MM)	
	36	2	**7W-3447**	1	SPACER (10.2X19.05X10.2MM THK)	
	37	2	**2L-9653**	1	CLIP	

B-USE AS REQUIRED
D-ORDER BY THE METER
I-SEE HOSE FABRICATION GUIDE
M-METRIC PART

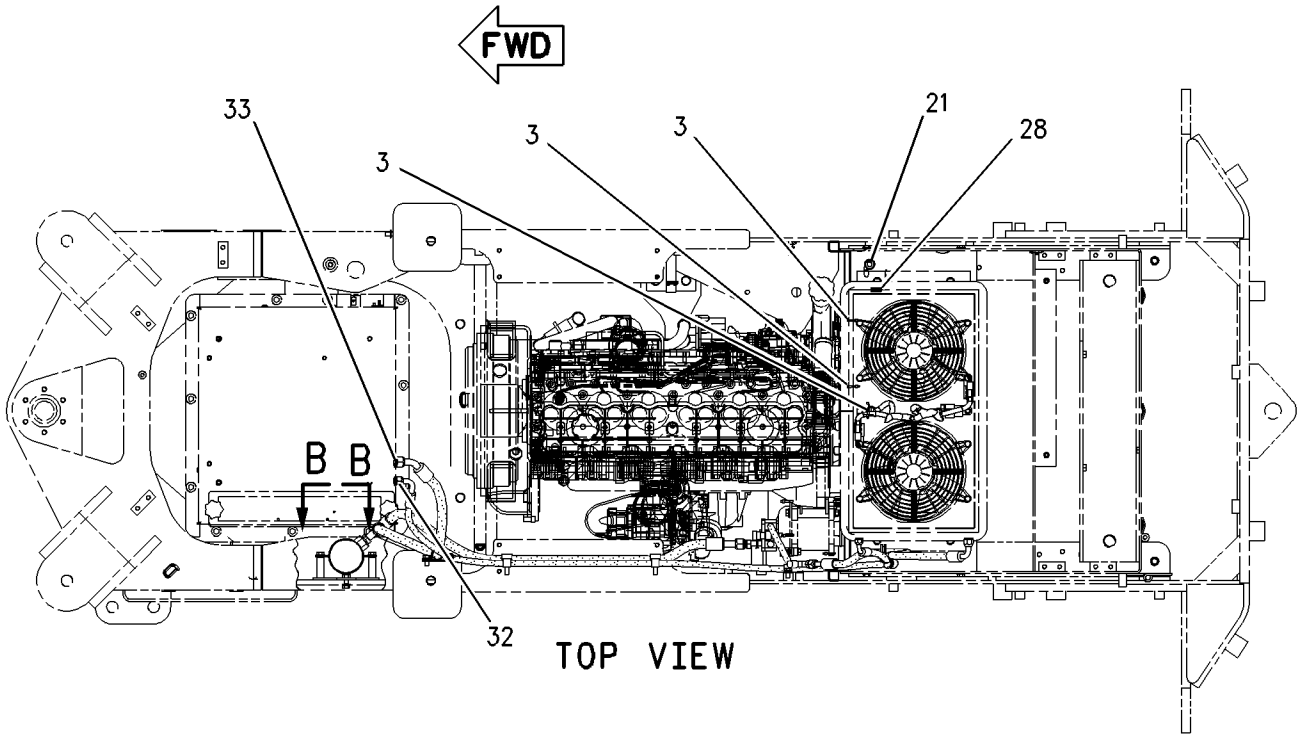

TOP VIEW

REFER TO ALL ILLUSTRATIONS OF THIS GROUP FOR AUXILIARY VIEWS

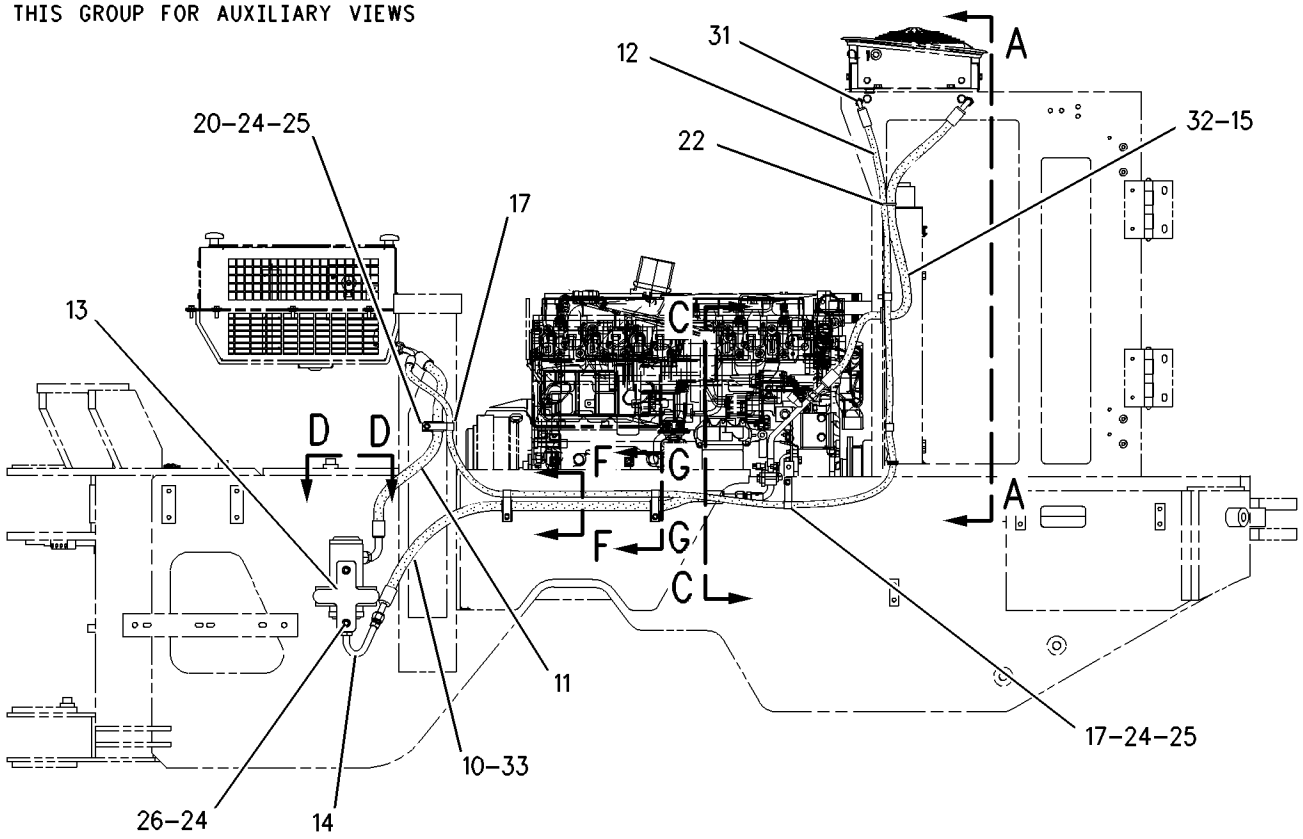

RIGHT SIDE VIEW

GRAPHIC #1 g00937980

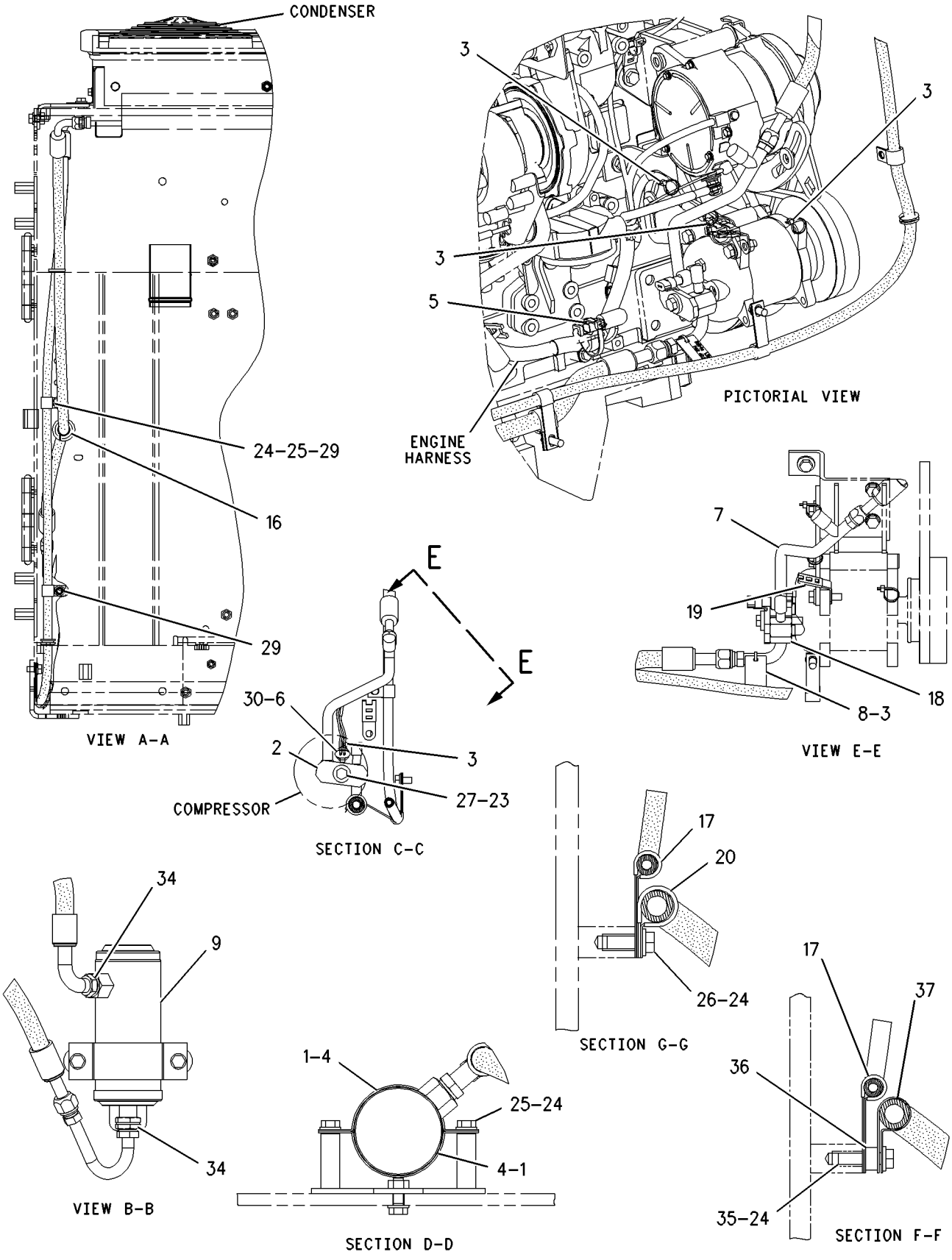

GRAPHIC #2

g00937958

MEMORANDA

OPERATOR STATION

203-5931 LINES GP-HEATER

S/N: DJD1-UP; DBT1-UP

PART OF 190-4402 AIR CONDITIONER AR, 190-4401 HEATER AR-CAB, 190-4652 PLATFORM AR AN ATTACHMENT

SMCS-7304 **i01831244**

NOTE	REF NO	GRAPHIC REF	PART NUMBER	QTY	PART NAME 1 2 3 4 5 6 (PRODUCT LEVEL)	SEE PAGE
BE	1	1	**5P-0767**		HOSE (109CM)	
	2	1	**5D-1026**	4	CLAMP-HOSE	
	3	1	**9M-4814**	2	CONNECTOR-HOSE	
	4	1	**219-8604**	1	PLATE AS	
M		1	**8T-3490**	1	NUT-WELD (M10X1.5 THD)	
	5	1	**6D-1641**	2	CLIP	
	6	1	**7X-7729**	1	WASHER (11X25X3MM THK)	
	7	1	**8T-4121**	1	WASHER-HARD (11X21X2.5MM THK)	
M	8	1	**8T-4137**	2	BOLT (M10X1.5X20MM)	
BE	9	1	**5P-0767**		HOSE (138CM)	

B-USE AS REQUIRED
E-ORDER BY THE CENTIMETER
M-METRIC PART

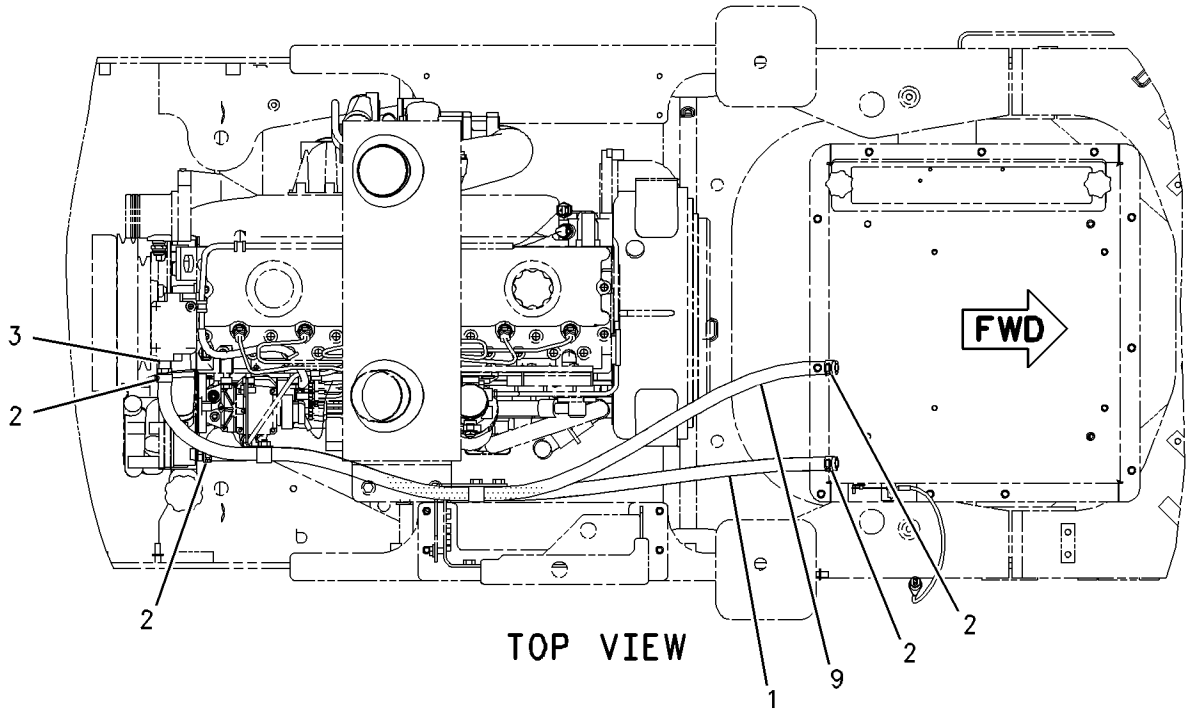

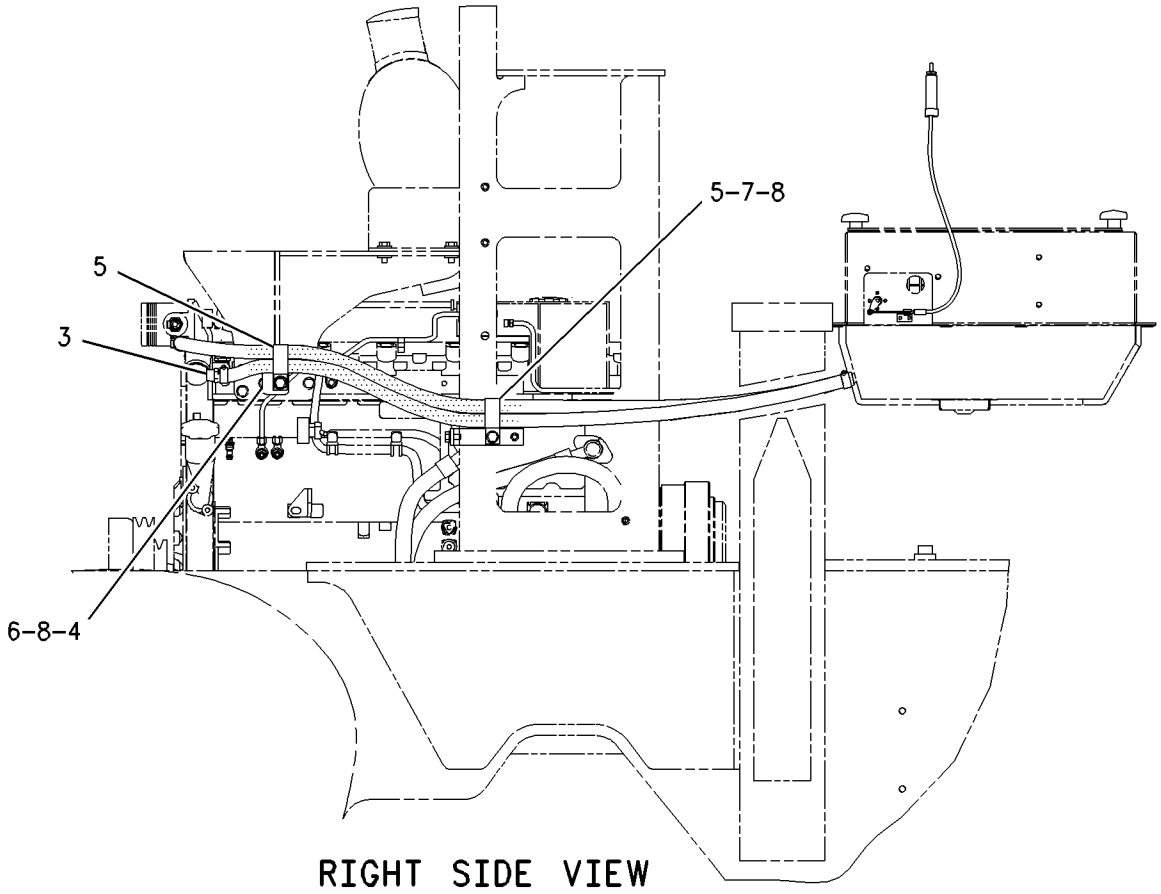

GRAPHIC #1 g00935519

OPERATOR STATION

107-4642 MIRROR GP-REAR VIEW–CAB

S/N: DJD1-UP; DBT1-UP
AN ATTACHMENT

SMCS-7319 **i01165039**

NOTE	REF NO	GRAPHIC REF	PART NUMBER	QTY	PART NAME 1 2 3 4 5 6 (PRODUCT LEVEL)	SEE PAGE
	1	1	**150-6582**	2	MIRROR AS	
	2	1	**123-6621**	1	BRACKET AS-LH	
	3	1	**123-6622**	1	BRACKET AS-RH	
M	4	1	**8T-4189**	4	BOLT (M8X1.25X20MM)	
	5	1	**8T-4224**	4	WASHER-HARD (2MM THK)	

M-METRIC PART

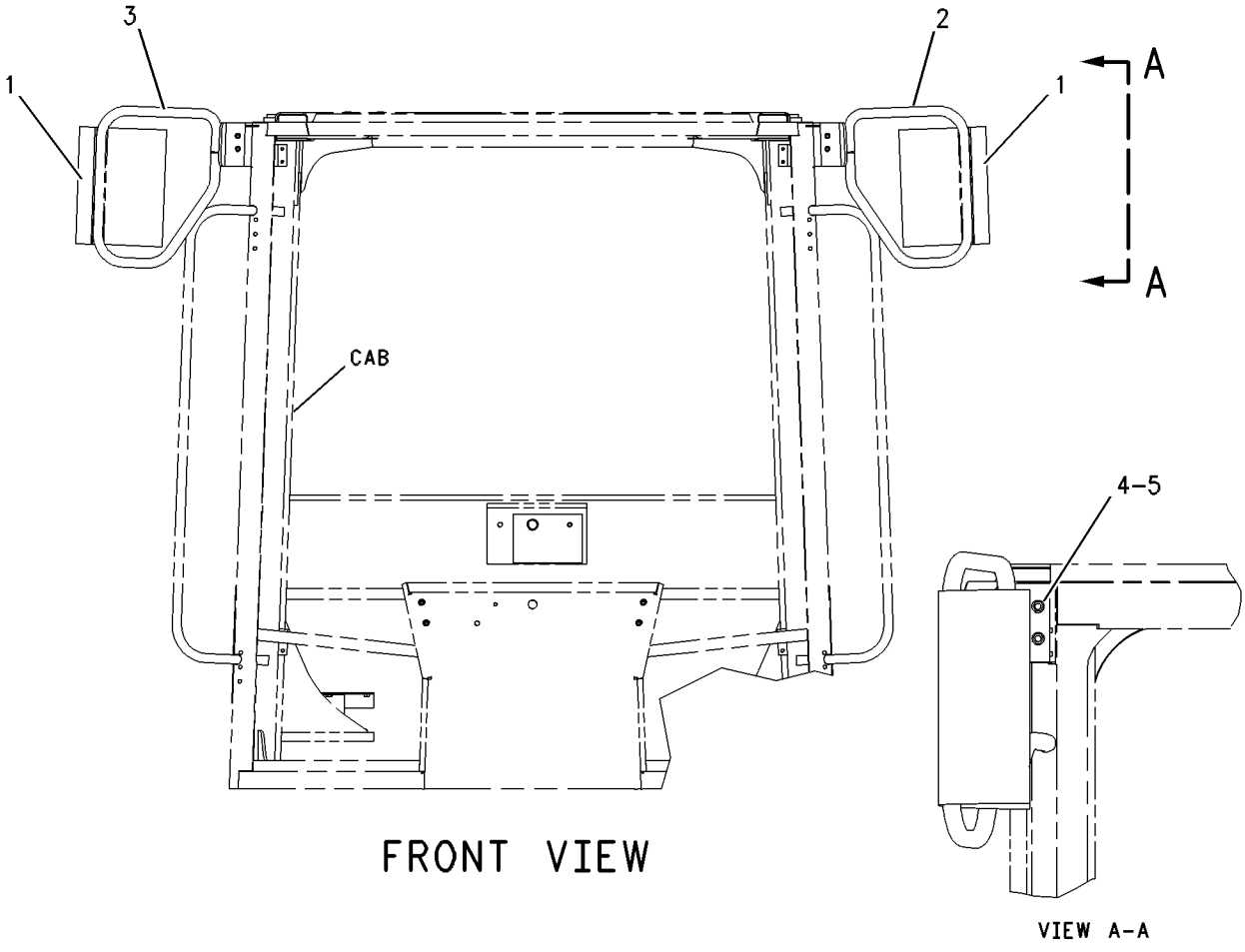

GRAPHIC #1 g00621208

OPERATOR STATION

107-4643 MIRROR GP-REAR VIEW—CAB

S/N: DJD1-UP; DBT1-UP
PART OF 190-4405 CAB AR, 190-4406 CANOPY GP-OPEN ROPS
AN ATTACHMENT

SMCS-7319 **i01165040**

NOTE	REF NO	GRAPHIC REF	PART NUMBER	QTY	PART NAME 1 2 3 4 5 6 (PRODUCT LEVEL)	SEE PAGE
	1	1	**5P-6872**	2	MIRROR	
	2	1	**114-3956**	2	PLATE	
M	3	1	**8T-4138**	4	BOLT (M6X1.0X20MM)	
	4	1	**8T-4205**	4	WASHER-HARD (2MM THK)	

M-METRIC PART

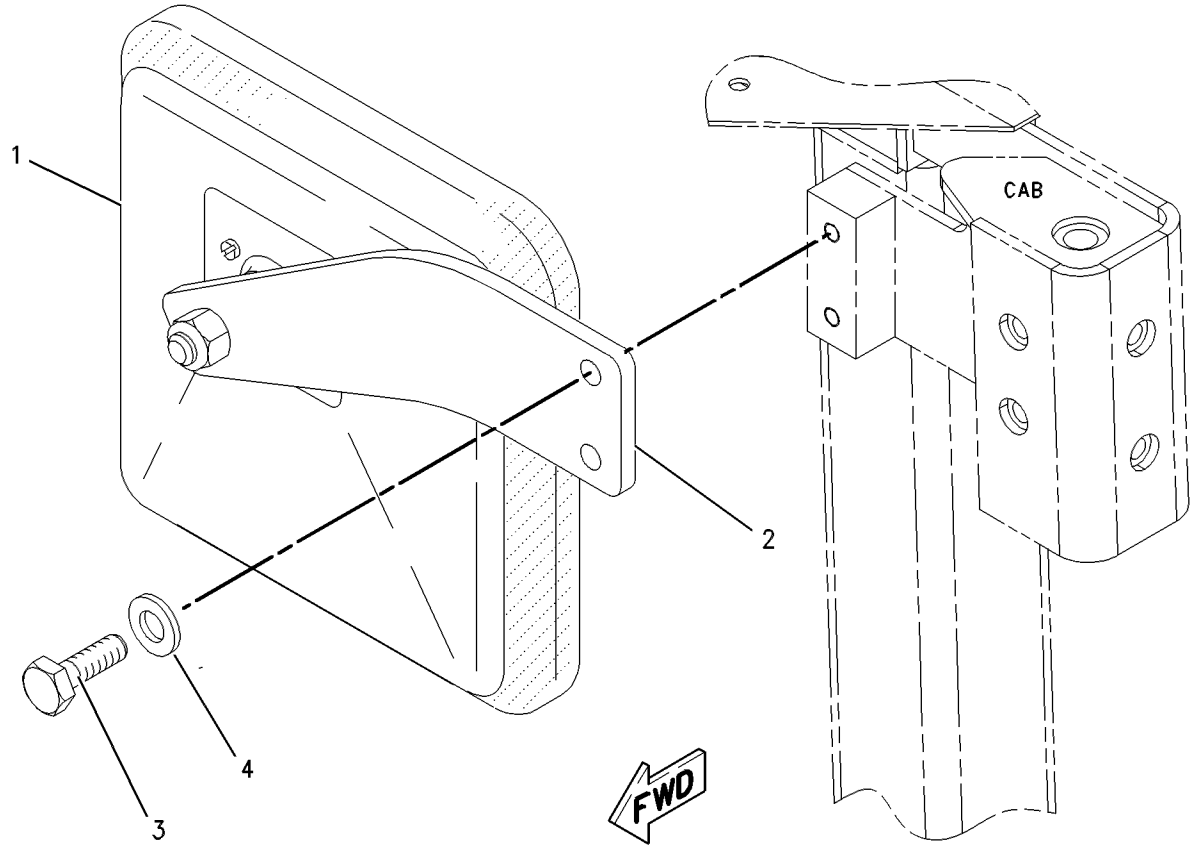

GRAPHIC #1 g00621211

OPERATOR STATION

156-4271 MOUNTING GP-CAB

S/N: DJD1-UP; DBT1-UP
PART OF 190-4648, 190-4650, 190-4654 OPERATOR AR, 190-4652 PLATFORM AR
AN ATTACHMENT

SMCS-7301 **i01206511**

NOTE	REF NO	GRAPHIC REF	PART NUMBER	QTY	PART NAME 1 2 3 4 5 6 (PRODUCT LEVEL)	SEE PAGE
	1	1	**6Y-2525**	4	SLEEVE-ROPS	
	2	1	**8Y-7119**	4	WASHER (12MM THK)	
	3	1	**9W-9940**	4	MOUNT AS	
M	4	1	**7X-2567**	4	BOLT (M24X3X160 MM)	
M	5	1	**8T-4001**	2	NUT (M24X3.00 THD)	
	6	1	**8T-4167**	6	WASHER (4.0MM THK)	

M-METRIC PART

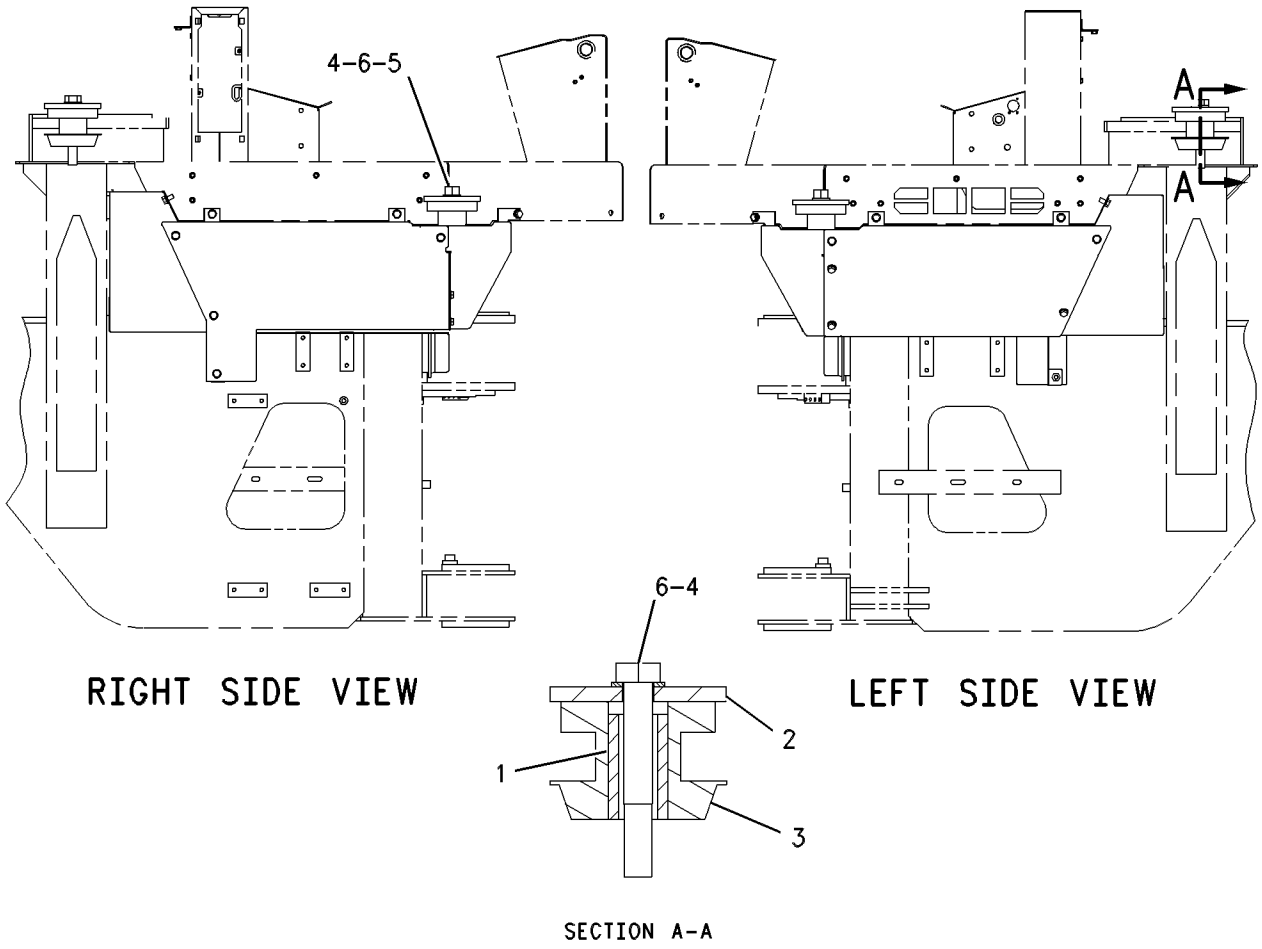

GRAPHIC #1 g00648781

OPERATOR STATION

190-4648 OPERATOR AR

S/N: DJD1-UP; DBT1-UP
WITH FIXED WINDOWS
PART OF 190-4664 OPERATOR AR
AN ATTACHMENT

SMCS-7301, 7325, 7335 **i01783071**

NOTE	PART NUMBER	QTY	PART NAME 1 2 3 4 5 6 (PRODUCT LEVEL)	SEE PAGE
Y	*125-3961*	1	LINER GP-CAB	652
Y	*131-1236*	1	WASHER GP-WINDOW	713
Y	*156-4271*	1	MOUNTING GP-CAB	664
Y	*184-5297*	1	PANEL GP-INSTRUMENT	670
Y	*190-4634*	1	CAB AR	610

Y-SEPARATE ILLUSTRATION

<END>

190-4650 OPERATOR AR

S/N: DJD1-UP; DBT1-UP
WITH SLIDING WINDOWS
PART OF 190-4668 CAB AR-ENCLOSED ROPS
AN ATTACHMENT

SMCS-7301, 7325, 7335 **i01781227**

NOTE	PART NUMBER	QTY	PART NAME 1 2 3 4 5 6 (PRODUCT LEVEL)	SEE PAGE
Y	*125-3961*	1	LINER GP-CAB	652
Y	*131-1236*	1	WASHER GP-WINDOW	713
Y	*156-4271*	1	MOUNTING GP-CAB	664
Y	*184-5297*	1	PANEL GP-INSTRUMENT	670
Y	*190-4640*	1	CAB AR	610

Y-SEPARATE ILLUSTRATION

<END>

190-4654 OPERATOR AR

S/N: DJD1-UP; DBT1-UP
OPEN
PART OF 190-4661 CANOPY AR-OPEN ROPS
AN ATTACHMENT

SMCS-7301, 7325, 7335 **i01796052**

NOTE	PART NUMBER	QTY	PART NAME 1 2 3 4 5 6 (PRODUCT LEVEL)	SEE PAGE
Y	*190-4646*	1	CANOPY AR-OPEN ROPS	614
Y	*125-3962*	1	LINER GP-CAB	654
Y	*156-4271*	1	MOUNTING GP-CAB	664
Y	*198-8964*	1	PANEL GP-TOP	298

Y-SEPARATE ILLUSTRATION

<END>

OPERATOR STATION

190-4664 OPERATOR AR

S/N: DJD1-UP; DBT1-UP
WITH FIXED WINDOWS
AN ATTACHMENT

SMCS-7301, 7325, 7335 **i01783074**

NOTE	PART NUMBER	QTY	PART NAME 1 2 3 4 5 6 (PRODUCT LEVEL)	SEE PAGE
Y	*190-4648*	1	OPERATOR AR	665
Y	*190-4666*	1	SKIRT GP-CAB	705

Y-SEPARATE ILLUSTRATION

<END>

OPERATOR STATION

108-8421 PAN GP-BACKREST

S/N: DJD1-UP; DBT1-UP
PART OF 8Y-6882 SEAT GP
AN ATTACHMENT

SMCS-7312 **i01818937**

NOTE	REF NO	GRAPHIC REF	PART NUMBER	QTY	PART NAME 1 2 3 4 5 6 (PRODUCT LEVEL)	SEE PAGE
	1	1	**9M-5733**	2	RIVET-POP (4.78MM DIA)	
	2	1	**8Y-6006**	1	LID AS	
	3	1	**8Y-6010**	1	LANYARD	
	4	1	**4S-8287**	8	RIVET-POP (6MM DIA)	
	5	1	**8Y-5972**	1	LATCH	
	6	1	**108-8423**	1	SHAFT AS-LUMBAR	
	7	1	**3E-4336**	1	STUD-BALL	
	8	1	**3E-4335**	1	CLIP	
	9	1	**2F-7306**	1	SCREW-MACHINE (6-32X.25 IN)	
	10	1	**8F-1462**	1	WASHER-PLATED	
E	11	1	**3E-6575**		SEAL (76CM)	
	12	1	**108-8424**	1	PAN-LUMBAR	
	13	1	**8Y-5903**	2	CAM	
	14	1	**3E-4362**	2	PIN-SPRING	

E-ORDER BY THE CENTIMETER

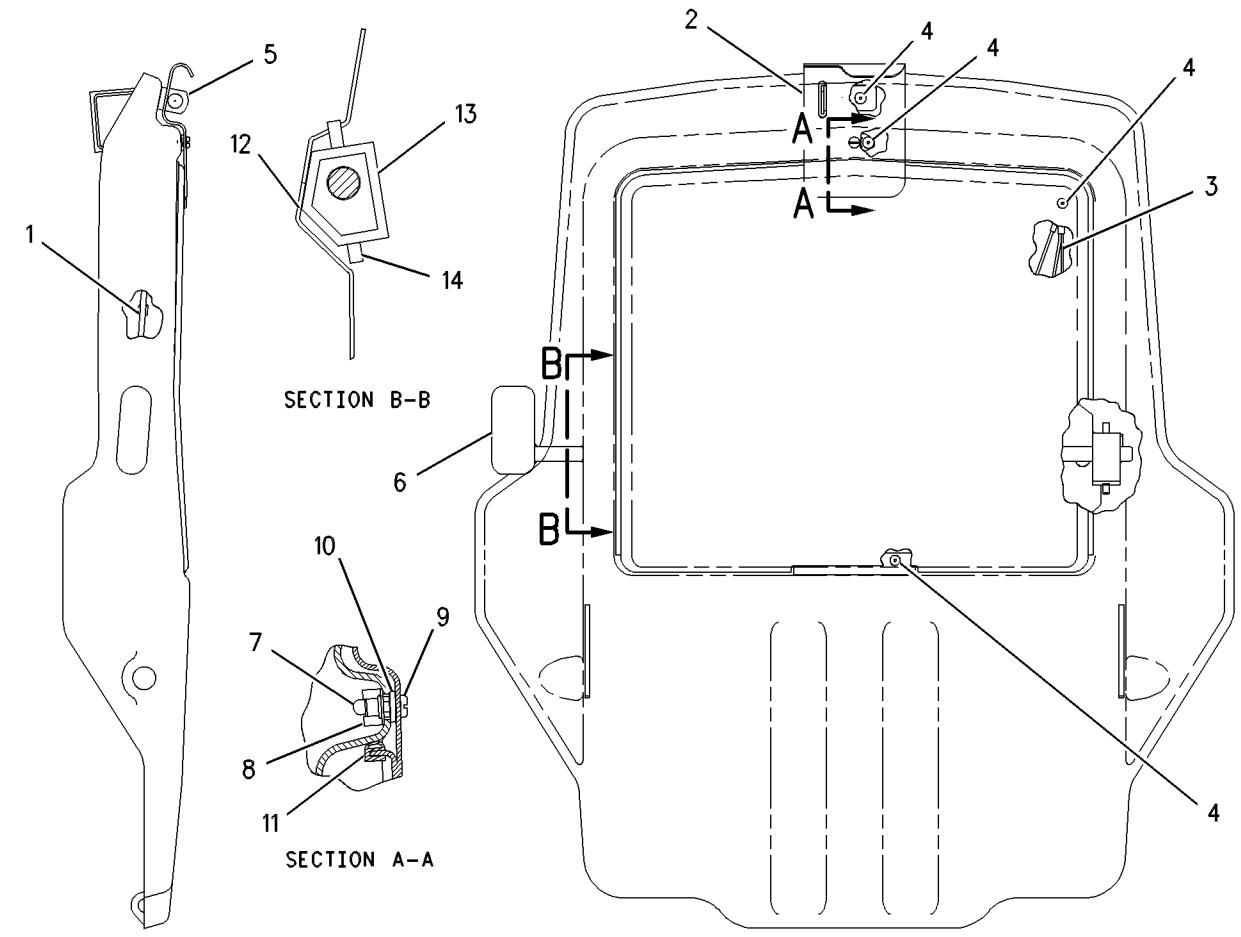

GRAPHIC #1 g00383446

OPERATOR STATION

8Y-5992 PAN GP-SEAT

S/N: DJD1-UP; DBT1-UP
PART OF 8Y-6882 SEAT GP
AN ATTACHMENT

SMCS-7312 **i01696104**

NOTE	REF NO	GRAPHIC REF	PART NUMBER	QTY	PART NAME 1 2 3 4 5 6 (PRODUCT LEVEL)	SEE PAGE
	1	1	**8Y-5892**	1	PAN AS-SEAT (BOTTOM)	
JL	2	1	**3K-4897**	4	PIN-SPRING	
N	3	1	**9M-5733**	1	RIVET-POP (4.78MM DIA)	
N	4	1	**6V-2456**	2	RING-RETAINING	
JZ	5	1		1	ROD AS (SEAT)	
JLZ	6	1		2	SPRING	
LZ	7	1		1	ROD AS (BACK)	
LZ	8	1		1	BUSHING-TERMINAL	
NZ	9	1		1	BRACKET	
NZ	10	1		1	CABLE AS	
NZ	11	1		1	PIN	
NZ	12	1		1	ADJUSTER AS	
					AVAILABLE REPAIR KIT(S):	
J			**8Y-5995**	1	KIT-SEAT TILT (SEAT PAN)	
					(INCLUDES ADDITIONAL PARTS)	
L			**8Y-5998**	1	KIT-BACK TILT (SEAT PAN)	
					(INCLUDES ADDITIONAL PARTS)	
N			**8Y-5999**	1	KIT-ADJUSTER (SEAT PAN)	

J-KIT MARKED J INCLUDES PART(S) MARKED J
L-KIT MARKED L INCLUDES PART(S) MARKED L
N-KIT MARKED N INCLUDES PART(S) MARKED N
Z-NOT SERVICED SEPARATELY

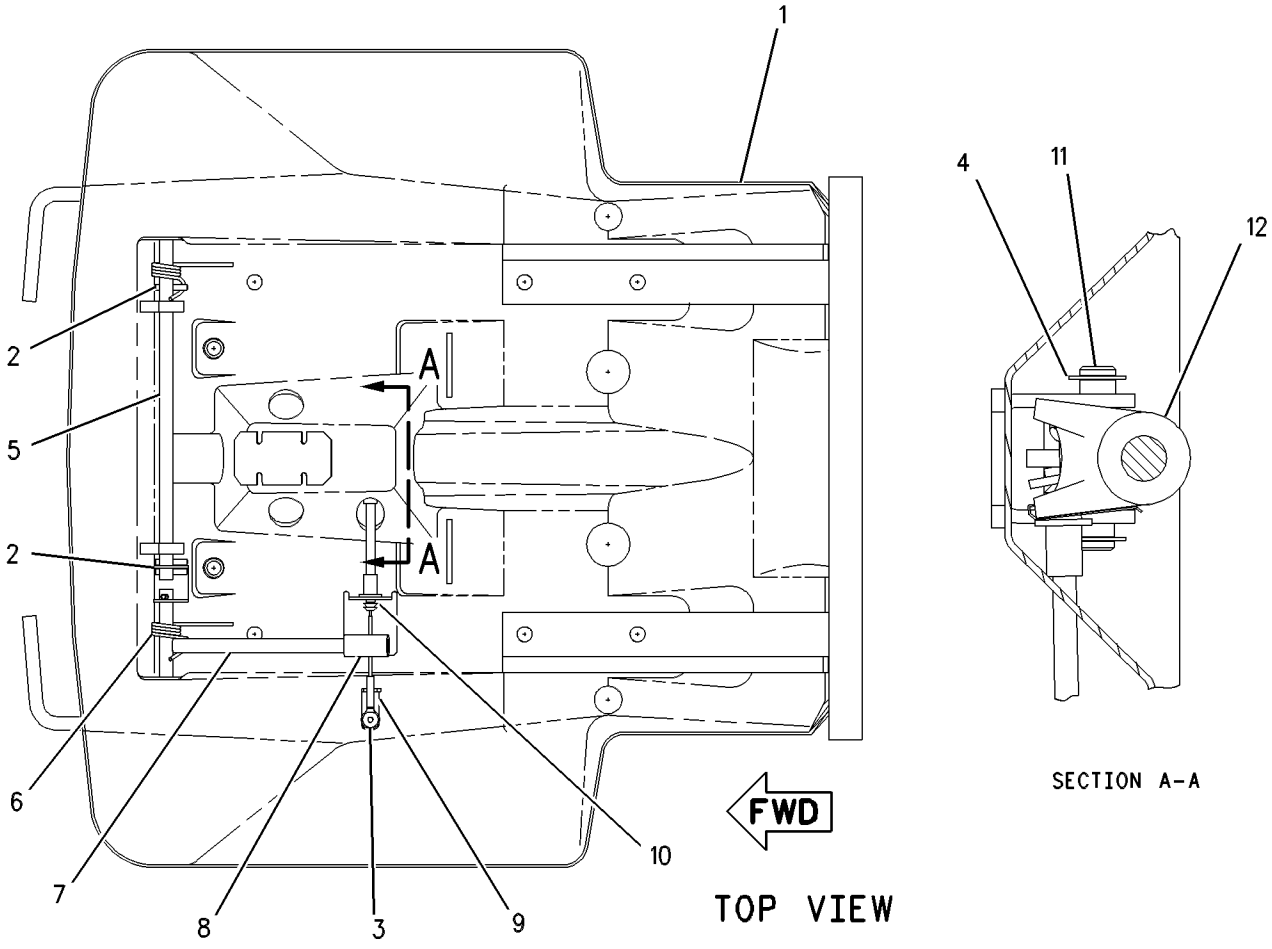

GRAPHIC #1 g00527029

OPERATOR STATION

184-5297 PANEL GP-INSTRUMENT

S/N: DJD1-UP; DBT1-UP
PART OF 190-4648, 190-4650 OPERATOR AR, 190-4652 PLATFORM AR
AN ATTACHMENT

SMCS-7451 **i01816134**

NOTE	REF NO	GRAPHIC REF	PART NUMBER	QTY	PART NAME 1 2 3 4 5 6 (PRODUCT LEVEL)	SEE PAGE
	1	1	**110-7887**	1	SWITCH GP-START (KEY)	
		1	**3E-3377**	1	WEDGE-RECEPTACLE LOCK	
		1	**7T-6799**	1	NUT-MOUNTING (1-32 THD)	
		1	**102-8804**	1	KIT-RECEPTACLE (4 PIN)	
		1	**186-3735**	4	PIN-CONNECTOR	
	2	1	**129-7184**	1	FILM-INSTRUCTION (ENGINE RUN, ON/OFF)	
	3	1	**184-5293**	1	PLUG	
	4	1	**185-5629**	1	PLATE AS	
	5	1	**190-4555**	1	HOUSING AS	
	6	1	**190-4556**	1	PLATE AS	
	7	1	**190-4563**	1	PLATE AS	
M		1	**6V-9632**	2	NUT-WELD (M6X1 THD)	
	8	1	**218-2401**	1	MODULE GP-DISPLAY	
	9	1	**1H-4393**	6	LOCKWASHER	
M	10	1	**5C-2890**	2	NUT (M6X1 THD)	
M	11	1	**5C-8312**	6	NUT (M4X0.7 THD)	
	12	1	**8T-4205**	4	WASHER-HARD (7.2X14.5X2MM THK)	
	13	1	**202-1129**	6	SCREW-TRUSS HEAD	
M	14	1	**6V-8490**	2	BOLT (M6X1X25MM)	
M	15	1	**9X-2045**	3	SCREW-TRUSS HEAD (M6X1X20MM)	
	16	1	**214-4916**	1	FILM	
M	17	1	**129-3178**	2	LOCKNUT (M6X1 THD)	
	18	1	**8C-9987**	2	WASHER (8.3X28X2.5MM THK)	

M-METRIC PART

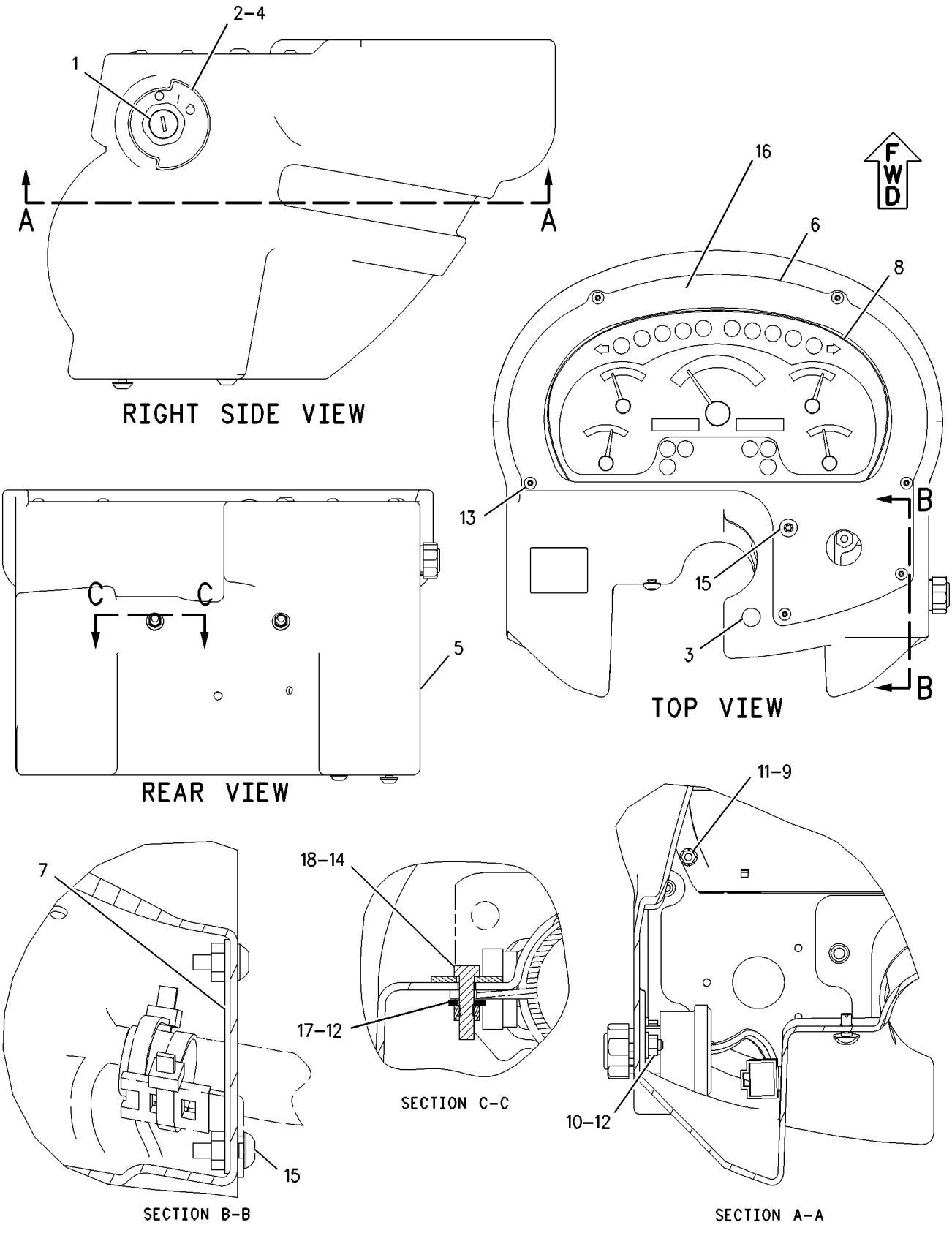

GRAPHIC #1

g00927674

OPERATOR STATION

190-4310 PANEL GP-INSTRUMENT

S/N: DJD1-UP; DBT1-UP
PART OF 190-4406 CANOPY GP-OPEN ROPS
AN ATTACHMENT

SMCS-7451 **i01835332**

NOTE	REF NO	GRAPHIC REF	PART NUMBER	QTY	PART NAME 1 2 3 4 5 6 (PRODUCT LEVEL)	SEE PAGE
E	1	2	**126-8472**		SEAL (14CM)	
	2	2	**154-5629**	1	ASHTRAY AS	
	3	2	**2G-5298**	1	WIRE AS	
	4	2	**4I-3038**	4	WASHER (3.3X8X0.5MM THK)	
	5	1	**6G-4195**	1	SWITCH AS-LIMIT	
		1	**3L-8187**	3	LOCKWASHER (3.70X7.24X.48MM THK)	
		1	**6V-8373**	3	SCREW-MACHINE (6-32X0.187 IN)	
	6	1	**6Y-6584**	1	STRAP AS-GROUND	
	7	1	**7K-1181**	42	STRAP-CABLE	
	8	2	**8C-6354**	1	CAP-RECEPTACLE	
	9	1	**9C-9785**	1	BUMPER	
	10	1	**107-6013**	1	SEAL	
	11	2	**107-6021**	1	HOUSING AS	
	12	2	**111-7899**	4	GASKET	
	13	1	**116-7471**	1	PULLER-MINIFUSE	
	14	1	**117-3787**	4	KNOB	
	15	1	**117-3788**	4	RECEPTACLE	
	16	1	**117-3789**	4	RETAINER	
	17	1	**118-7362**	1	GROMMET-SPLIT	
	18	1	**134-2540**	1	RECEPTACLE AS (3 PIN)	
	19	2	**134-4096**	1	PLATE AS	
	20	1	**148-5689**	1	GROMMET-SPLIT	
	21	2	**158-5089**	1	RELAY AS (PARKING BRAKE)	
	22	2	**160-6520**	1	PLATE	
	23	2	**165-0311**	4	PLUG	
Y	24	1	**167-0138**	1	SWITCH GP-MAGNETIC (FUSE RELAY) (MAIN RELAY)	136
	25	1	**170-7064**	1	BRACKET AS	
M		1	**159-9539**	1	NUT-WELD (M6X1 THD)	
	26	1	**178-1780**	1	CLIP	
	27	2	**195-0916**	1	SWITCH AS-ROCKER (THROTTLE LOCK SET/RESUME)	
		2	**111-7899**	1	GASKET	
	28	2	**195-0917**	1	SWITCH AS-ROCKER (THROTTLE LOCK ON/OFF)	
	29	2	**195-0921**	1	SWITCH AS-ROCKER (KICKOUT ON/OFF)	
		2	**111-7899**	1	GASKET	
	30	2	**202-1129**	4	SCREW-TRUSS HEAD	
	31	1	**206-1345**	2	STRAP-CABLE	
	32	1	**211-0052**	3	NUT	
	33	2	**224-8629**	1	SWITCH AS-ROCKER (IMPLEMENT DISABLE SWITCH)	
		2	**111-7899**	1	GASKET	
	34	1	**224-9609**	1	HARNESS AS-CAB (MAIN)	
		1	**102-8802**	3	KIT-RECEPTACLE (2 PIN)	
		1	**102-8803**	1	KIT-RECEPTACLE (3 PIN)	
		1	**102-8804**	1	KIT-RECEPTACLE (4 PIN)	
		1	**102-8805**	1	KIT-RECEPTACLE (6 PIN)	
		1	**102-8806**	2	KIT-RECEPTACLE (8 PIN)	
		1	**102-8801**	1	KIT-RECEPTACLE (12 PIN)	
		1	**155-2255**	4	KIT-CONNECTING PLUG (12 PIN)	
		1	**155-2265**	1	KIT-CONNECTING PLUG (8 PIN)	
		1	**155-2260**	4	KIT-CONNECTING PLUG (3 PIN)	
		1	**155-2270**	7	KIT-CONNECTING PLUG (2 PIN)	
		1	**155-2271**	1	KIT-CONNECTING PLUG (4 PIN)	
		1	**155-2274**	7	KIT-CONNECTING PLUG (6 PIN)	
		1	**174-0503**	1	KIT-CONNECTING PLUG (3 PIN)	
	35	2	**226-2065**	1	FILM (CONTROLS)	
	36	1	**226-2951**	1	BRACKET AS	

190-4310 **PANEL GP-INSTRUMENT** ***(contd.)*** **i01835332**

NOTE	REF NO	GRAPHIC REF	PART NUMBER	QTY	PART NAME 1 2 3 4 5 6 (PRODUCT LEVEL)	SEE PAGE
	37	1	**226-3378**	1	PLATE AS	
M		1	**8T-3490**	2	NUT-WELD (M10X1.5 THD)	
	38	1	**226-3407**	1	FILM-FUSE PANEL (FUSE/RELAY)	
	39	1	**107-6072**	1	PLATE	
	40	2	**142-2928**	4	LOCKNUT	
	41	1,2	**170-9360**	1	GROMMET	
	42	1	**2N-3477**	2	SCREW-MACHINE (6-32X1.25 IN)	
	43	1	**4B-5324**	2	WASHER (3.9X9.6X1.2MM THK)	
	44	1	**4P-7581**	2	CLIP	
	45	1	**4P-8134**	4	CLIP	
	46	2	**5P-4115**	4	WASHER-HARD (7.2X19X2MM THK)	
	47	1	**5P-4116**	1	WASHER-HARD (8.8X20.5X2MM THK)	
M	48	1	**6V-8837**	1	BOLT (M6X1X16 MM)	
	49	1	**7D-6922**	2	LOCKNUT (6-32 THD)	
	50	2	**7X-3308**	4	BOLT-HEX (4-40-THD)	
	51	1	**8T-4121**	6	WASHER-HARD (11X21X2.5MM THK)	
M	52	1	**8T-4133**	2	NUT (M10X1.5 THD)	
M	53	1	**8T-4137**	2	BOLT (M10X1.5X20MM)	
M	54	1	**8T-4189**	3	BOLT (M8X1.25X20MM)	
M	55	1	**8T-4195**	2	BOLT (M10X1.5X30MM)	
M	56	1	**8T-4199**	2	BOLT (M8X1.25X12MM)	
	57	1	**8T-4205**	3	WASHER-HARD (7.2X14.5X2MM THK)	
	58	1	**8T-4224**	4	WASHER-HARD (8.8X16X2MM THK)	
M	59	1,2	**9X-2042**	6	SCREW-TRUSS HEAD (M6X1X12MM)	
M	60	2	**9X-2045**	2	SCREW-TRUSS HEAD (M6X1X20MM)	
E	61	1	**103-2543**		SEAL (3CM)	

E-ORDER BY THE CENTIMETER
M-METRIC PART
Y-SEPARATE ILLUSTRATION

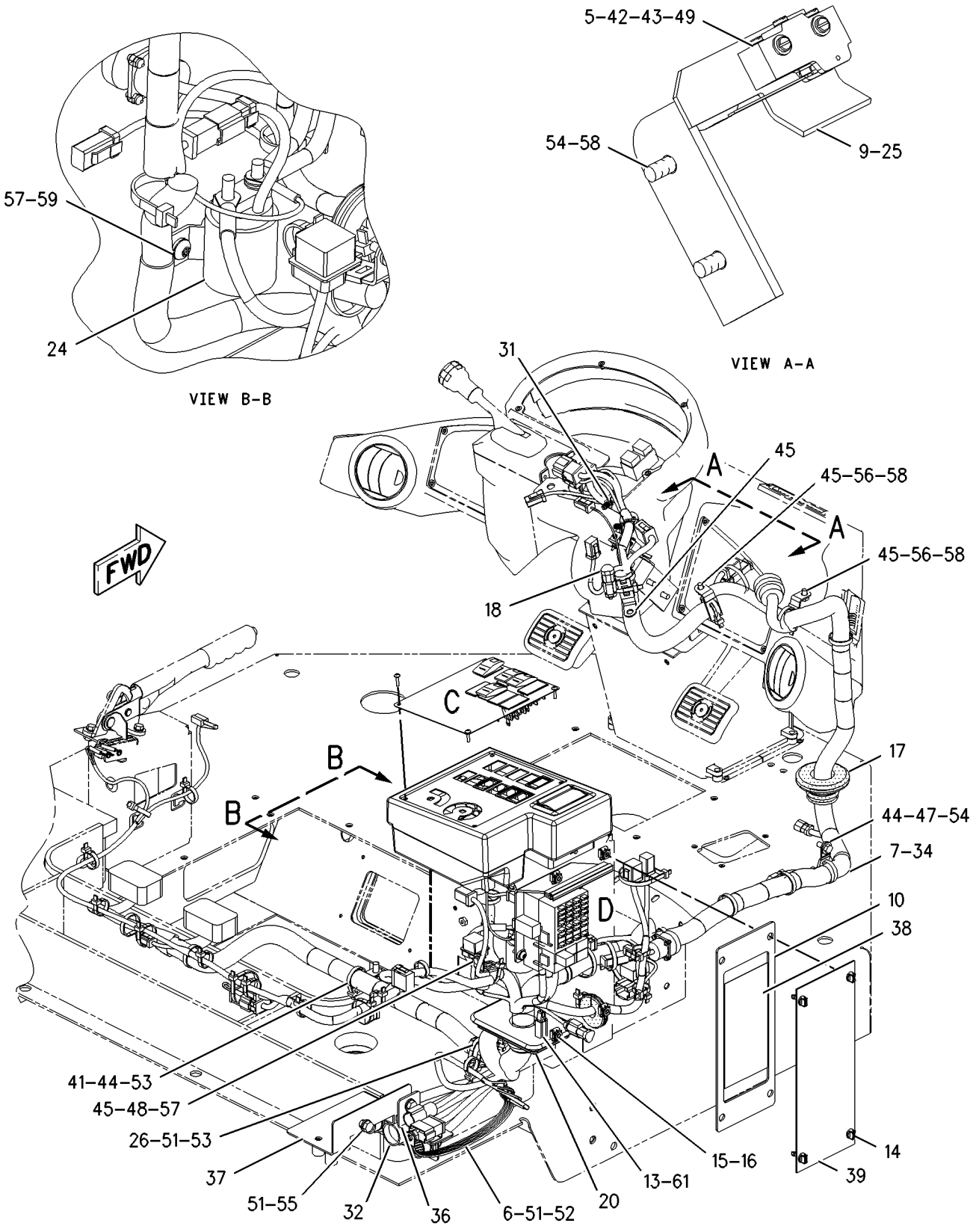

GRAPHIC #1

g00930543

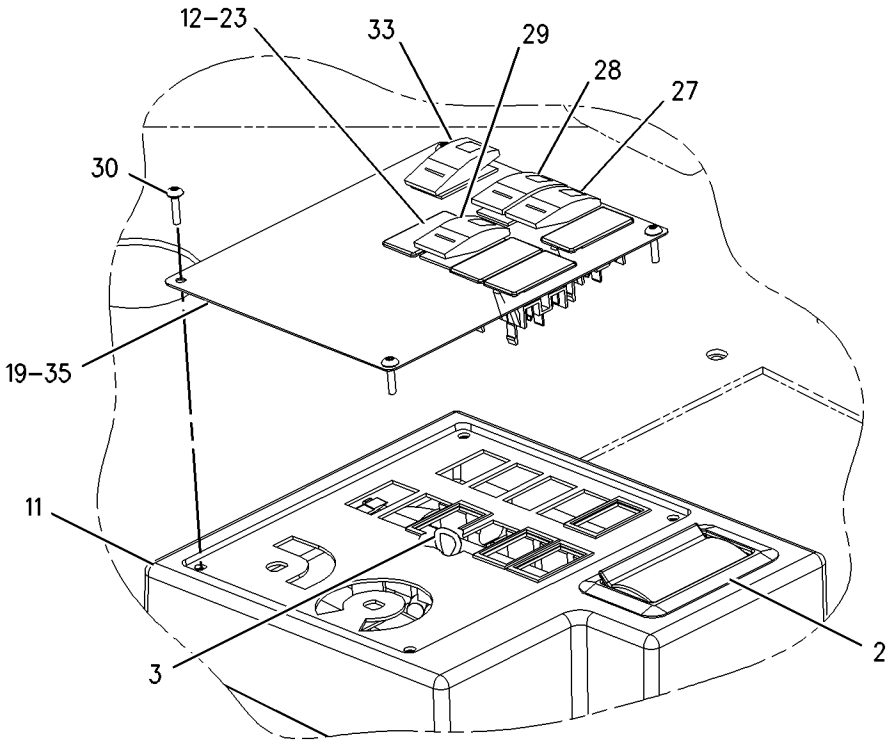

VIEW OF AREA C

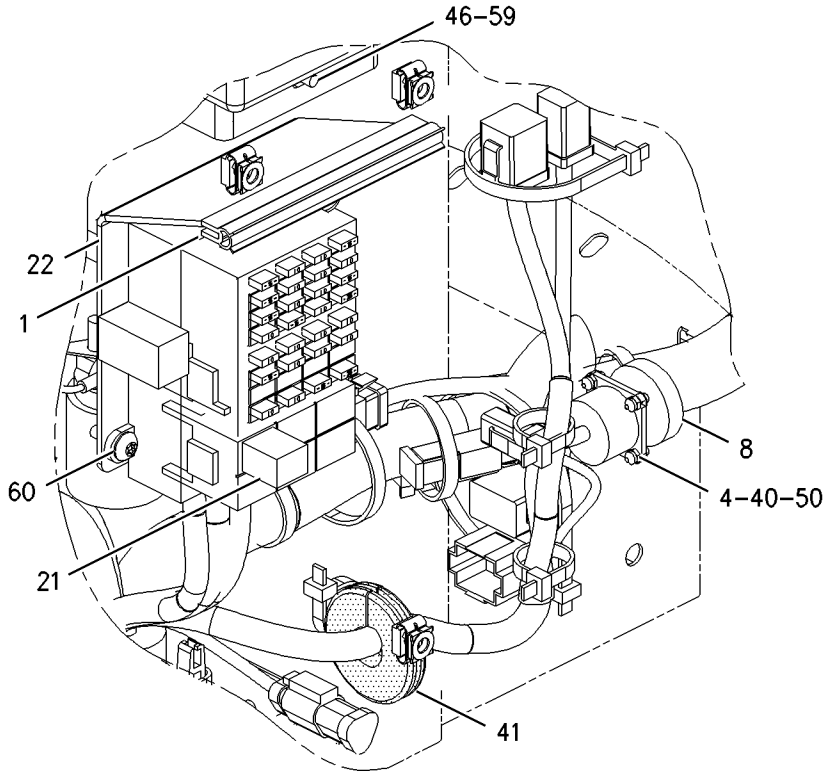

VIEW OF AREA D

GRAPHIC #2 g00930544

OPERATOR STATION

190-4320 PANEL GP-INSTRUMENT

S/N: DJD1-UP; DBT1-UP
PART OF 190-4405 CAB AR, 190-4652 PLATFORM AR
AN ATTACHMENT

SMCS-7451 **i01835105**

NOTE	REF NO	GRAPHIC REF	PART NUMBER	QTY	PART NAME 1 2 3 4 5 6 (PRODUCT LEVEL)	SEE PAGE
	1	1	**154-5629**	1	ASHTRAY AS	
B	2	2	**2G-5298**	1	WIRE AS	
	3	1	**4I-3038**	4	WASHER (3.3X8X0.5MM THK)	
	4	1	**6G-4195**	1	SWITCH AS-LIMIT (BRAKE PEDAL)	
		1	**3L-8187**	3	LOCKWASHER (3.70X7.24X.48MM THK)	
		1	**6V-8373**	3	SCREW-MACHINE (6-32X0.187 IN)	
	5	1	**6V-8369**	1	NUT (7/16-28 THD)	
	6	1	**6Y-6584**	1	STRAP AS-GROUND	
	7	1	**7K-1181**	39	STRAP-CABLE	
	8	1	**8C-6354**	1	CAP-RECEPTACLE	
	9	1	**9C-9785**	1	BUMPER	
	10	2	**107-6013**	1	SEAL	
	11	1	**107-6021**	1	HOUSING AS	
	12	1	**110-6109**	2	KNOB-CONTROL	
	13	1	**110-7890**	1	SWITCH AS-ROTARY (FAN BLOWER SPEED)	
		1	**3E-3383**	1	WEDGE-RECEPTACLE LOCK	
		1	**8T-8737**	1	PLUG-SEAL	
		1	**9W-0852**	5	PIN-CONNECTOR	
		1	**102-8805**	1	KIT-RECEPTACLE (6 PIN)	
B	14	1	**111-7899**	6	GASKET	
	15	2	**114-3951**	1	PLATE	
	16	2	**115-1748**	2	LAMP (24 VOLT)	
	17	2	**116-7471**	1	PULLER-MINIFUSE	
	18	1	**117-3787**	4	KNOB	
	19	1	**117-3788**	4	RECEPTACLE	
	20	1	**117-3789**	4	RETAINER	
	21	1	**118-7362**	1	GROMMET-SPLIT	
	22	1	**134-2540**	1	RECEPTACLE AS (3 PIN)	
	23	1	**134-4096**	1	PLATE AS	
	24	1	**148-5689**	1	GROMMET-SPLIT	
	25	2	**158-5089**	1	RELAY AS	
B	26	1	**165-0311**	6	PLUG	
Y	27	2	**167-0138**	1	SWITCH GP-MAGNETIC (FUSE RELAY) (MAIN RELAY)	136
	28	1	**170-7064**	1	BRACKET AS	
M		1	**159-9539**	1	NUT-WELD (M6X1 THD)	
	29	1	**178-1780**	3	CLIP	
	30	1	**195-0916**	1	SWITCH AS-ROCKER (THROTTLE LOCK SET/RESUME)	
		1	**111-7899**	1	GASKET	
	31	1	**195-0917**	1	SWITCH AS-ROCKER (THROTTLE LOCK ON/OFF)	
	32	1	**195-0921**	1	SWITCH AS-ROCKER (KICKOUT ON/OFF)	
		1	**111-7899**	1	GASKET	
	33	1	**202-1129**	4	SCREW-TRUSS HEAD	
	34	1	**206-1345**	2	STRAP-CABLE	
	35	2	**211-0052**	3	NUT	
	36	1	**224-8629**	1	SWITCH AS-ROCKER	
		1	**111-7899**	1	GASKET	
	37	1	**224-9609**	1	HARNESS AS-CAB (MAIN)	
		1	**102-8802**	3	KIT-RECEPTACLE (2 PIN)	
		1	**102-8803**	1	KIT-RECEPTACLE (3 PIN)	
		1	**102-8804**	1	KIT-RECEPTACLE (4 PIN)	
		1	**102-8805**	1	KIT-RECEPTACLE (6 PIN)	
		1	**102-8806**	2	KIT-RECEPTACLE (8 PIN)	
		1	**102-8801**	1	KIT-RECEPTACLE (12 PIN)	
		1	**155-2255**	4	KIT-CONNECTING PLUG (12 PIN)	
		1	**155-2265**	1	KIT-CONNECTING PLUG (8 PIN)	

190-4320 **PANEL GP-INSTRUMENT** ***(contd.)*** **i01835105**

NOTE	REF NO	GRAPHIC REF	PART NUMBER	QTY	PART NAME 1 2 3 4 5 6 (PRODUCT LEVEL)	SEE PAGE
		1	**155-2260**	4	KIT-CONNECTING PLUG (3 PIN)	
		1	**155-2270**	7	KIT-CONNECTING PLUG (2 PIN)	
		1	**155-2271**	1	KIT-CONNECTING PLUG (4 PIN)	
		1	**155-2274**	1	KIT-CONNECTING PLUG (6 PIN)	
		1	**174-0503**	1	KIT-CONNECTING PLUG (3 PIN)	
		1	**218-3623**	1	PLUG AS	
		1	**102-8801**	1	KIT-RECEPTACLE (12 PIN)	
	38	1	**226-2066**	1	FILM	
	39	1	**226-2951**	1	BRACKET AS	
	40	1	**226-3378**	1	PLATE AS	
M		1	**8T-3490**	2	NUT-WELD (M10X1.5 THD)	
	41	2	**226-3407**	1	FILM-FUSE PANEL	
	42	1	**107-6072**	1	PLATE	
	43	1	**142-2928**	4	LOCKNUT	
	44	2	**170-9360**	1	GROMMET	
	45	1	**2H-3920**	1	LOCKWASHER	
	46	1	**2N-3477**	2	SCREW-MACHINE (6-32X1.25 IN)	
	47	1	**4B-5324**	2	WASHER (3.9X9.6X1.2MM THK)	
	48	1	**4P-7581**	2	CLIP	
	49	1,2	**4P-8134**	4	CLIP	
	50	2	**5P-4115**	4	WASHER-HARD (7.2X19X2MM THK)	
	51	1	**5P-4116**	1	WASHER-HARD (8.8X20.5X2MM THK)	
M	52	2	**6V-8837**	1	BOLT (M6X1X16 MM)	
	53	1	**7D-6922**	2	LOCKNUT (6-32 THD)	
	54	1	**7X-3308**	4	BOLT-HEX (4-40-THD)	
	55	1	**8T-4121**	6	WASHER-HARD (11X21X2.5MM THK)	
M	56	1	**8T-4133**	2	NUT (M10X1.5 THD)	
M	57	1	**8T-4137**	2	BOLT (M10X1.5X20MM)	
M	58	1	**8T-4189**	3	BOLT (M8X1.25X20MM)	
M	59	1	**8T-4195**	2	BOLT (M10X1.5X30MM)	
M	60	1	**8T-4199**	2	BOLT (M8X1.25X12MM)	
	61	2	**8T-4205**	3	WASHER-HARD (7.2X14.5X2MM THK)	
	62	1	**8T-4224**	4	WASHER-HARD (8.8X16X2MM THK)	
M	63	2	**9X-2042**	6	SCREW-TRUSS HEAD (M6X1X12MM)	
M	64	2	**9X-2045**	2	SCREW-TRUSS HEAD (M6X1X20MM)	
E	65	2	**103-2543**		SEAL (3CM)	

B-USE AS REQUIRED
E-ORDER BY THE CENTIMETER
M-METRIC PART
Y-SEPARATE ILLUSTRATION

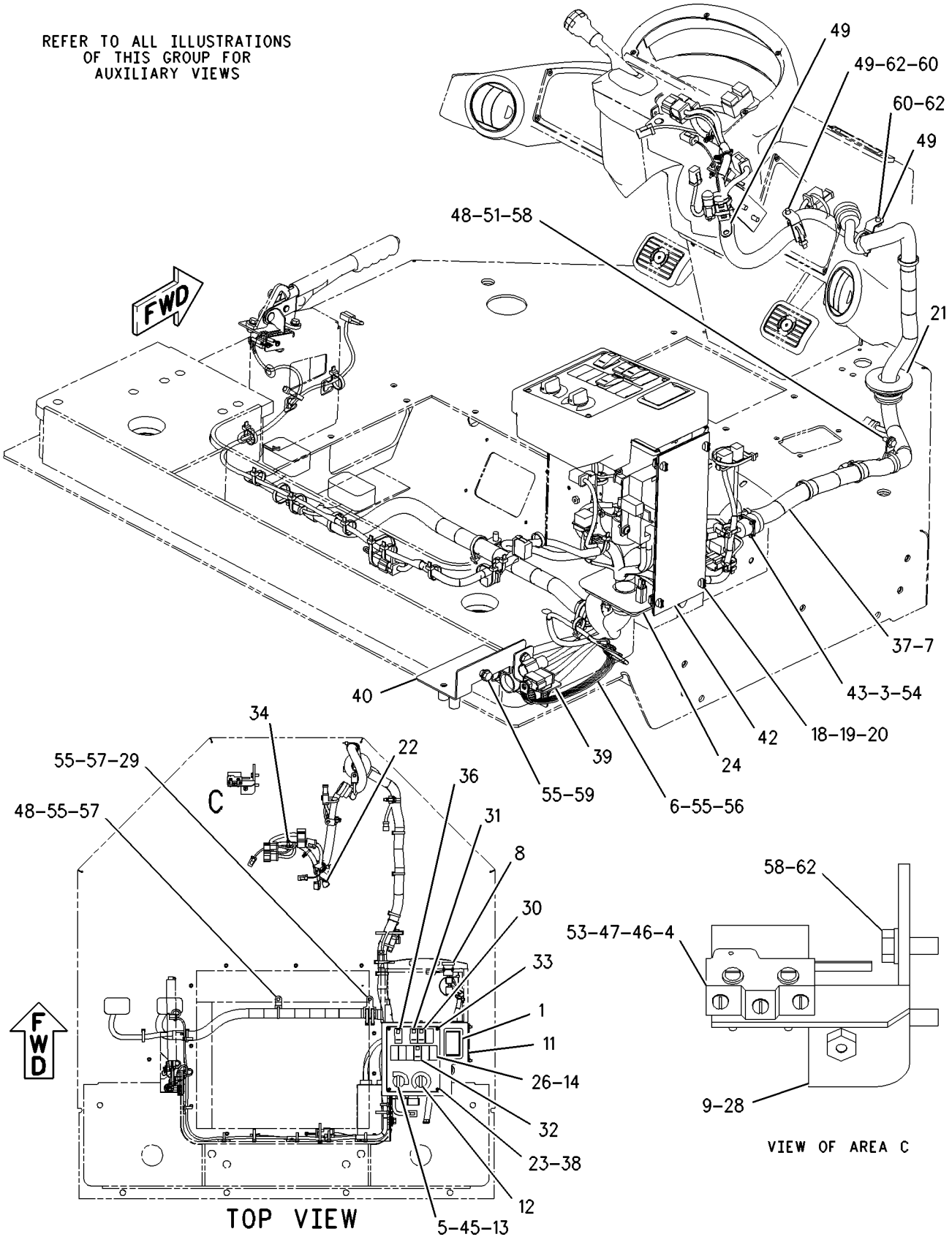

GRAPHIC #1 g00938166

190-4320 **PANEL GP-INSTRUMENT** *(contd.)* **i01835105**

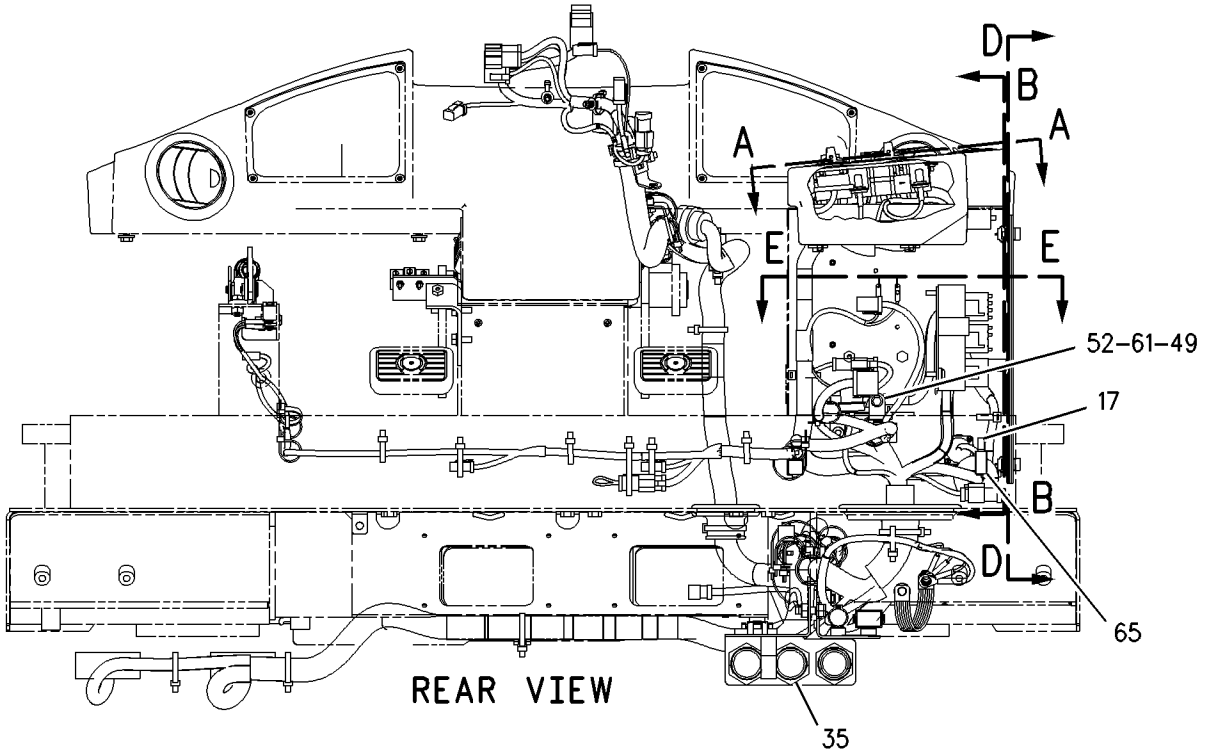

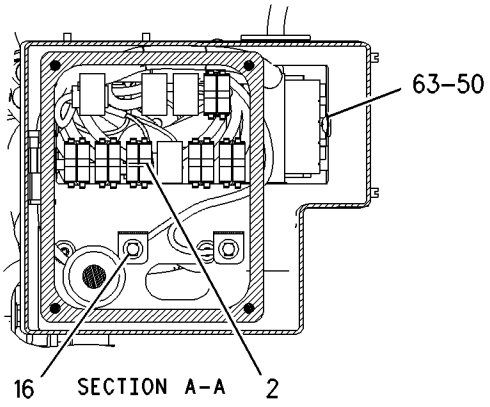

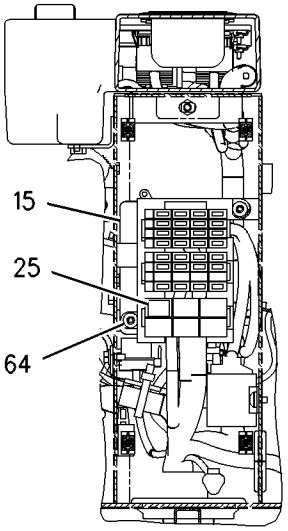

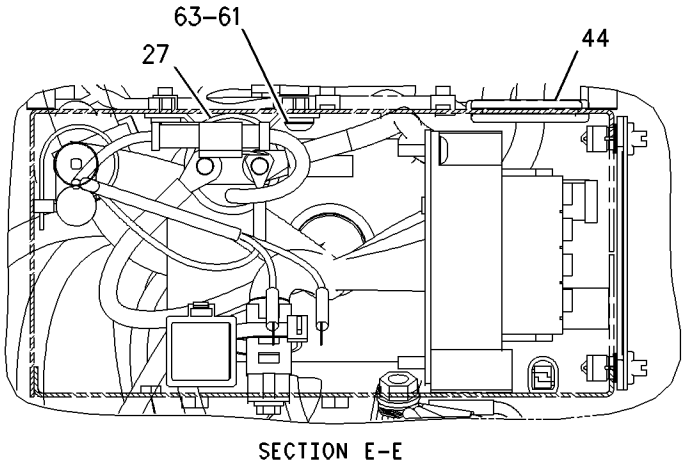

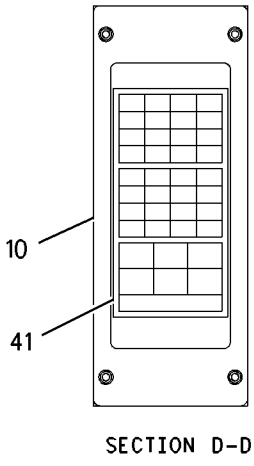

GRAPHIC #2 g00938176

OPERATOR STATION

174-9730 PEDAL GP-BRAKE

S/N: DJD1-UP; DBT1-UP
PART OF 219-2849 PLATFORM GP-OPERATOR, 174-9749 ROPS GP-ENCLOSED, 174-9764 ROPS GP-OPEN
AN ATTACHMENT

SMCS-4269, 4290 **i01273499**

NOTE	REF NO	GRAPHIC REF	PART NUMBER	QTY	PART NAME 1 2 3 4 5 6 (PRODUCT LEVEL)	SEE PAGE
	1	1	**1B-8723**	1	KEY-WOODRUFF	
	2	1	**6K-8088**	4	BEARING-ROLLER	
	4	1	**8R-6904**	2	TREAD-RUBBER	
	5	1	**107-6056**	1	PEDAL AS-LH	
	6	1	**111-0132**	1	PEDAL AS-RH	
	7	1	**174-9725**	1	SUPPORT AS	
	8	1	**8T-4121**	1	WASHER-HARD (2.5MM THK)	
M	9	1	**8T-4185**	1	BOLT (M10X1.5X50MM)	

M-METRIC PART

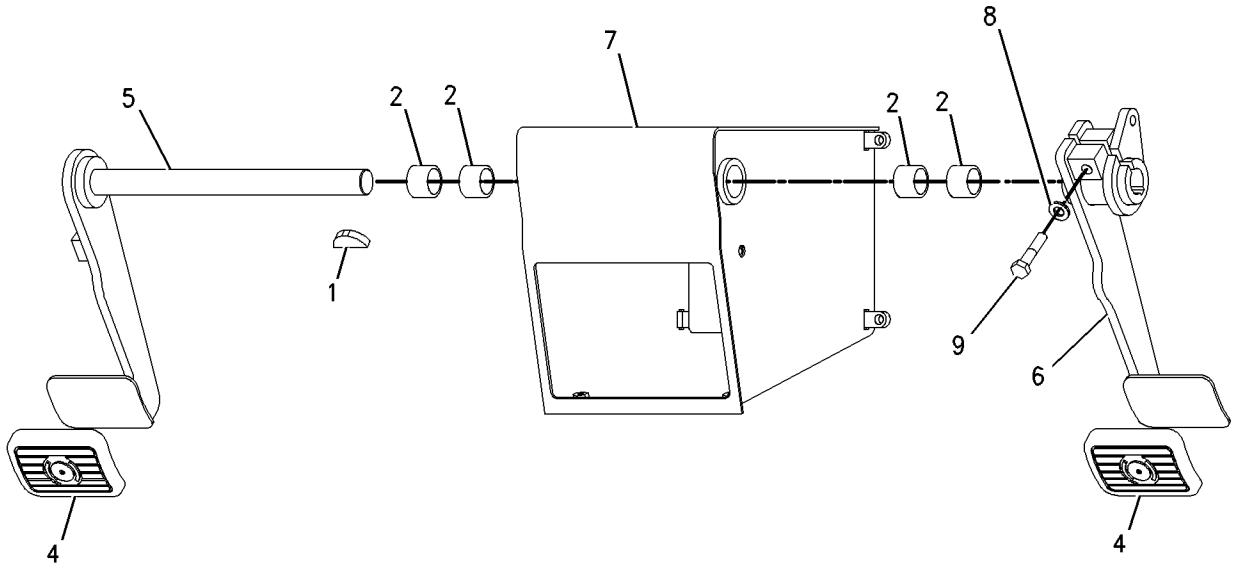

GRAPHIC #1 g00679688

OPERATOR STATION

190-4700 PEDAL GP-GOVERNOR

S/N: DJD1-UP; DBT1-UP
PART OF 190-4405 CAB AR, 190-4406 CANOPY GP-OPEN ROPS
AN ATTACHMENT

SMCS-1276 **i01790434**

NOTE	REF NO	GRAPHIC REF	PART NUMBER	QTY	PART NAME 1 2 3 4 5 6 (PRODUCT LEVEL)	SEE PAGE
	1	1	**190-4701**	1	PEDAL GP-GOVERNOR	
M	1A	1	**3C-3364**	1	NUT-HALF	
M	1B	1	**3C-4922**	1	SCREW-HEX HEAD	
Y	1C	1	**160-2443**	1	SENSOR GP-POSITION (THROTTLE)	127
M	2	1	**9X-2045**	3	SCREW-TRUSS HEAD (M6X1X20MM)	

M-METRIC PART
Y-SEPARATE ILLUSTRATION

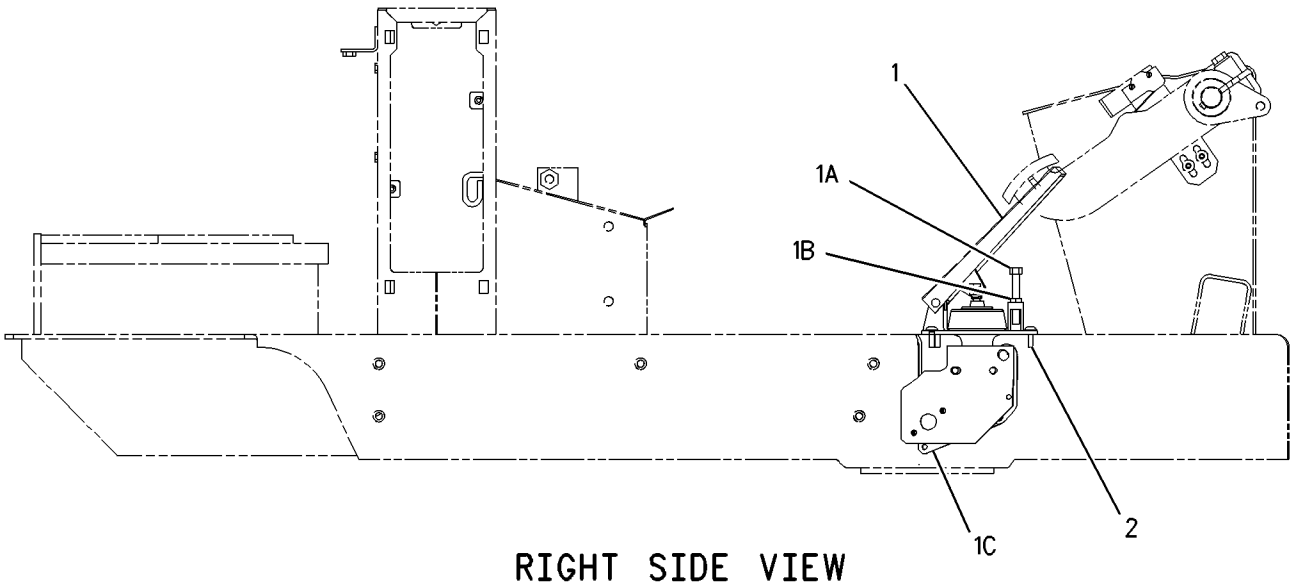

RIGHT SIDE VIEW

GRAPHIC #1 g00917905

OPERATOR STATION

190-4652 PLATFORM AR

S/N: DJD1-UP; DBT1-UP
2-MAN PREP , WITH A/C
AN ATTACHMENT

SMCS-7253 **i01783237**

NOTE	PART NUMBER	QTY	PART NAME 1 2 3 4 5 6 (PRODUCT LEVEL)	SEE PAGE
Y	*190-4605*	1	AIR CONDITIONER & MOUNTING GP	600
M	**8T-6430**	2	BOLT (M20X2.5X50MM)	
Y	*203-5937*	1	CONDENSER & MTG GP-REFRIGERANT	619
Y	*168-7000*	1	CONTROL GP-PARKING BRAKE	302
Y	*190-4635*	1	CONTROL GP-STEERING	316
Y	*190-4690*	1	CONTROL GP-TRANSMISSION	194
Y	*107-4630*	1	DUCT GP-AIR	636
Y	*119-4769*	1	FILTER GP-CAB AIR	639
Y	*125-3961*	1	LINER GP-CAB	652
Y	*203-5932*	1	LINES GP-AIR CONDITIONER	656
Y	*203-5931*	1	LINES GP-HEATER	660
Y	*156-4271*	1	MOUNTING GP-CAB	664
M	**8T-4131**	2	NUT (M20X2.5 THD)	
Y	*184-5297*	1	PANEL GP-INSTRUMENT	670
Y	*190-4320*	1	PANEL GP-INSTRUMENT	676
	198-8965	1	PANEL GP-TOP	
M	**8T-4138**	10	BOLT (M6X1X20MM)	
	172-8591	10	NUT-SPRING	
	186-0817	10	WASHER-HARD (7X19X2MM THK)	
	198-8956	1	COVER AS	
	190-4700	1	PEDAL GP-GOVERNOR	
M	**9X-2045**	3	SCREW-TRUSS HEAD (M6X1X20MM)	
	190-4701	1	PEDAL AS	
M	**3C-3364**	1	NUT-HALF	
M	**3C-4922**	1	SCREW-HEX HEAD	
Y	**160-2443**	1	SENSOR GP-POSITION	127
	119-9759	1	PLATFORM AS	
	7T-1099	2	LINK	
Y	*219-2849*	1	PLATFORM GP-OPERATOR	683
Y	*190-4666*	1	SKIRT GP-CAB	705
Y	*131-1236*	1	WASHER GP-WINDOW	713
	8T-4123	4	WASHER-PLATED (22X35X3.5MM THK)	
Y	*190-4340*	1	WIRING GP-CAB	146

M-METRIC PART
Y-SEPARATE ILLUSTRATION

<END>

OPERATOR STATION

219-2849 PLATFORM GP-OPERATOR

S/N: DJD1-UP; DBT1-UP
WITH BRAKES
PART OF 190-4652 PLATFORM AR
AN ATTACHMENT

SMCS-7253 **i01786747**

NOTE	REF NO	GRAPHIC REF	PART NUMBER	QTY	PART NAME 1 2 3 4 5 6 (PRODUCT LEVEL)	SEE PAGE
Y	1	1	*174-9730*	1	PEDAL GP-BRAKE	680
	2	1	**219-2850**	1	FLOORPLATE AS	
		1	**5G-8871**	8	BOSS (M6X1-6H THD)	
		1	**7T-1099**	22	LINK	
		1	**9G-9155**	2	CLIP	
		1	**9R-2672**	12	BOSS (M10X20MM)	
M	3	1	**8T-4189**	4	BOLT (M8X1.25X20MM)	
	4	1	**8T-4224**	4	WASHER-HARD (8.8X16X2MM THK)	

M-METRIC PART
Y-SEPARATE ILLUSTRATION

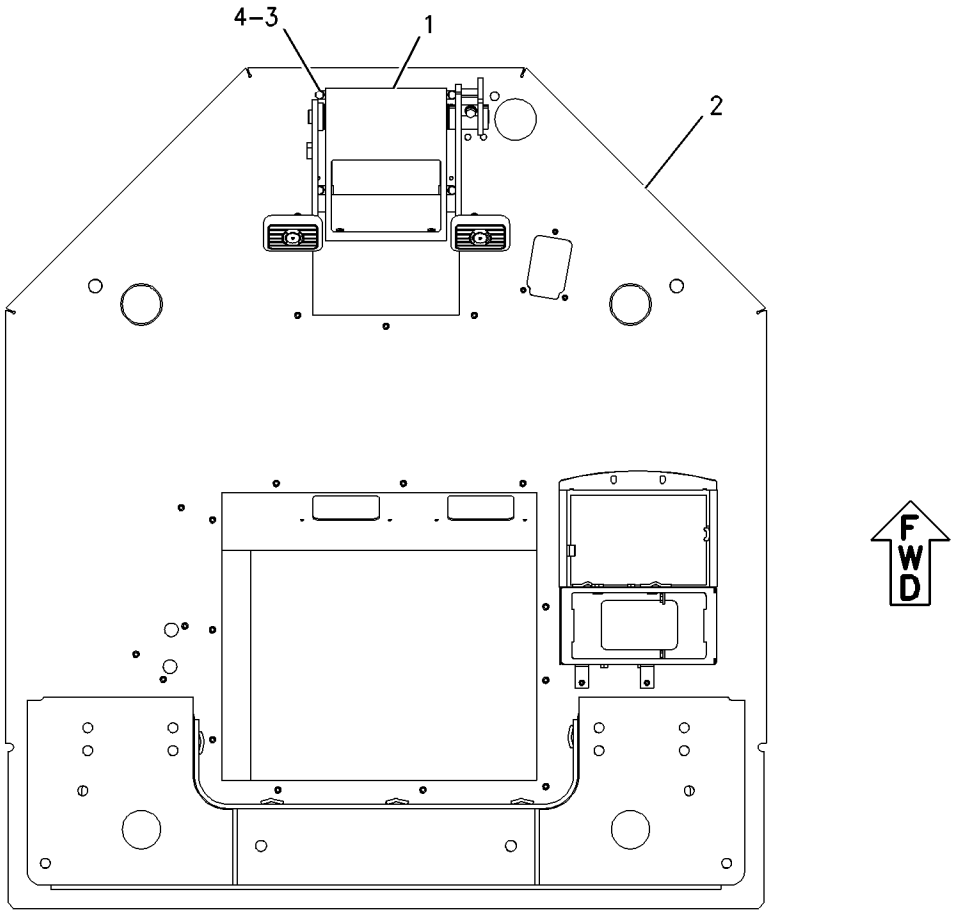

TOP VIEW

GRAPHIC #1 g00923884

OPERATOR STATION

174-9749 ROPS GP-ENCLOSED

S/N: DJD1-UP; DBT1-UP
PART OF 205-0522 CAB AR, 205-0524 CAB AR-ENCLOSED ROPS
AN ATTACHMENT

SMCS-7325 **i01816926**

NOTE	REF NO	GRAPHIC REF	PART NUMBER	QTY	PART NAME 1 2 3 4 5 6 (PRODUCT LEVEL)	SEE PAGE
	1	1	**091-0079**	7	PLUG	
Y	2	1	*174-9730*	1	PEDAL GP-BRAKE	680
Y	3	1	**174-9755**	1	CAB GP	612
	4	1	**3V-5349**	2	PLUG-BUTTON	
	5	1	**5P-5774**	4	PLUG	
M	6	1	**8T-4189**	4	BOLT (M8X1.25X20MM)	
	7	1	**8T-4224**	4	WASHER-HARD (8.8X16X2MM THK)	

M-METRIC PART
Y-SEPARATE ILLUSTRATION

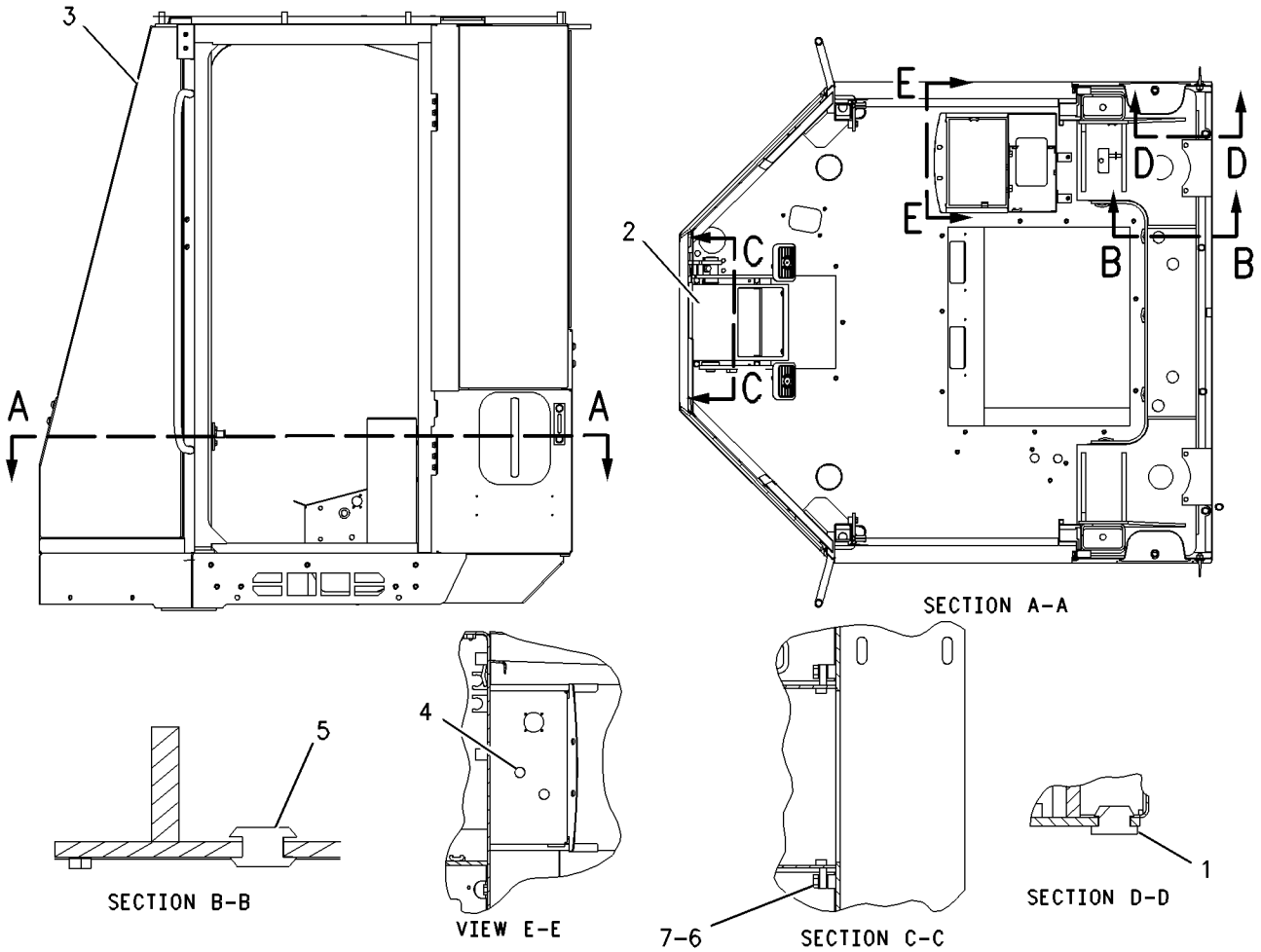

GRAPHIC #1 g00928561

MEMORANDA

OPERATOR STATION

174-9764 ROPS GP-OPEN

S/N: DJD1-UP; DBT1-UP
PART OF 205-0520 CANOPY GP-OPEN ROPS
AN ATTACHMENT

SMCS-7323 **i01277060**

NOTE	REF NO	GRAPHIC REF	PART NUMBER	QTY	PART NAME 1 2 3 4 5 6 (PRODUCT LEVEL)	SEE PAGE
	1	1	**118-7255**	1	COVER	
Y	2	1	*174-9730*	1	PEDAL GP-BRAKE	680
	3	1	**174-9763**	1	CANOPY AS	
	4	1	**8T-4121**	2	WASHER-HARD (2.5MM THK)	
M	5	1	**8T-4137**	2	BOLT (M10X1.50X20MM)	
M	6	1	**8T-4189**	4	BOLT (M8X1.25X20MM)	
	7	1	**8T-4224**	4	WASHER-HARD (8.8X16X2MM THK)	

M-METRIC PART
Y-SEPARATE ILLUSTRATION

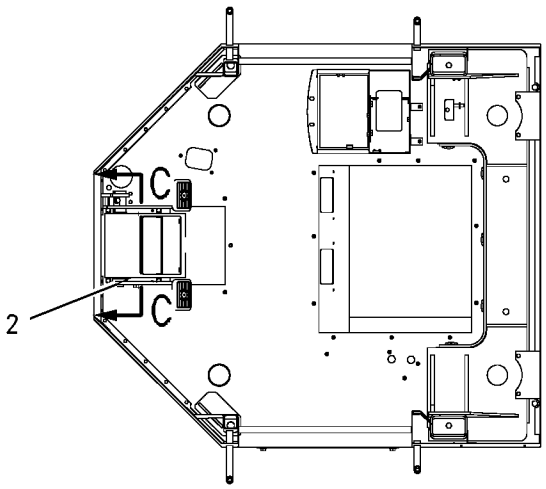

SECTION A-A

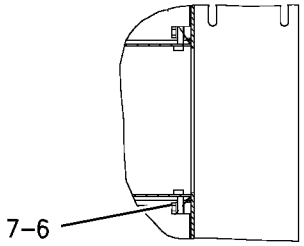

SECTION C-C

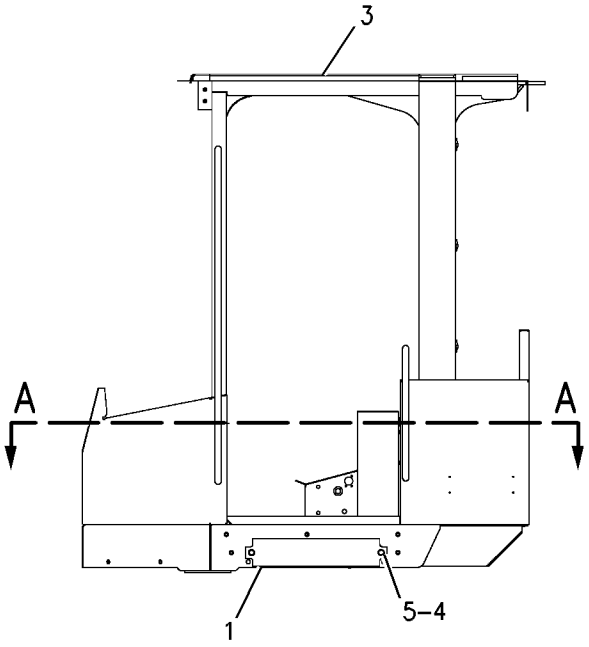

GRAPHIC #1 g00669460

OPERATOR STATION

118-7250 SCREEN GP-SUN

S/N: DJD1-UP; DBT1-UP

AN ATTACHMENT

SMCS-7165 **i01679611**

NOTE	REF NO	GRAPHIC REF	PART NUMBER	QTY	PART NAME 1 2 3 4 5 6 (PRODUCT LEVEL)	SEE PAGE
F			**119-2073**	2	HOOK-RETAINER	

F-NOT SHOWN

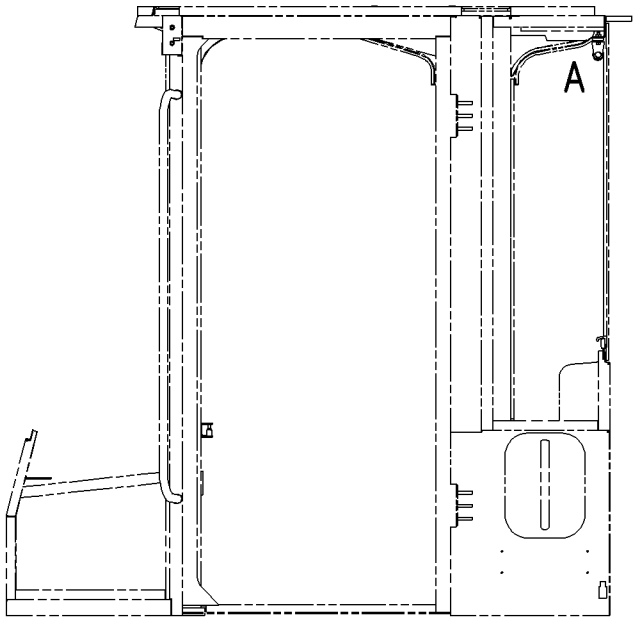

LEFT SIDE VIEW

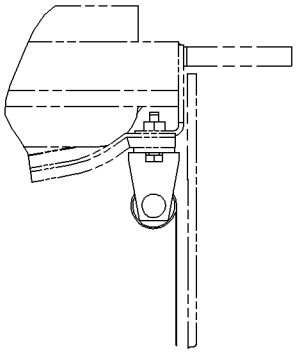

VIEW OF AREA A

GRAPHIC #1 g00869480

OPERATOR STATION

107-5977 SEAT & MOUNTING GP

S/N: DJD1-UP; DBT1-UP
AN ATTACHMENT

SMCS-7312 **i00534402**

NOTE	REF NO	GRAPHIC REF	PART NUMBER	QTY	PART NAME 1 2 3 4 5 6 (PRODUCT LEVEL)	SEE PAGE
Y	1	1	**129-7253**	1	SEAT BELT GP	693
M	2	1	**113-9232**	4	BOLT-HEX HEAD (8X1.25X30 MM)	
	3	1	**118-7236**	1	PLATE	
Y	4	1	**119-8263**	1	SEAT GP-SUSPENSION	702
M	5	1	**9X-2041**	4	SCREW-TRUSS HEAD (M10X1.5X20MM)	

M-METRIC PART
Y-SEPARATE ILLUSTRATION

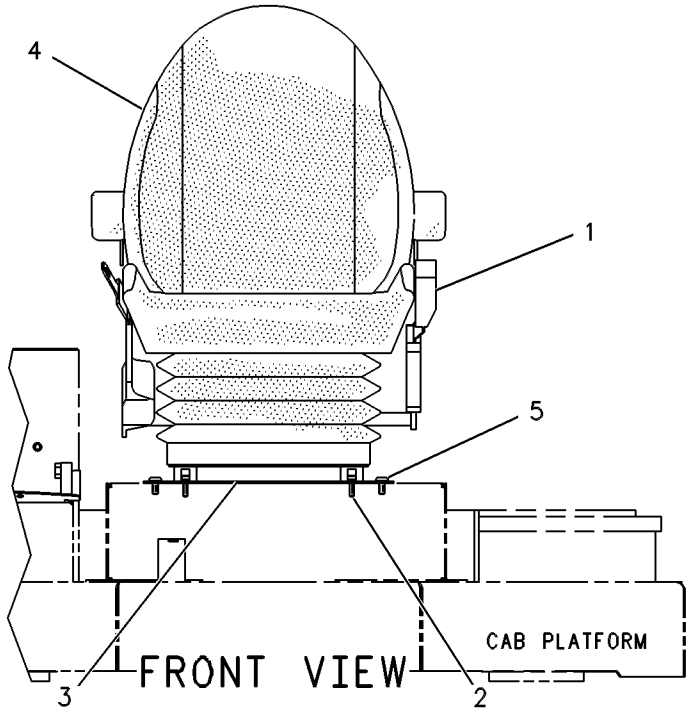

GRAPHIC #1 g00131403

OPERATOR STATION

107-5978 SEAT & MOUNTING GP

S/N: DJD1-UP; DBT1-UP
AN ATTACHMENT

SMCS-7312 **i00534430**

NOTE	REF NO	GRAPHIC REF	PART NUMBER	QTY	PART NAME 1 2 3 4 5 6 (PRODUCT LEVEL)	SEE PAGE
Y	1	1	**8Y-6977**	1	SEAT GP-SUSPENSION	699
M	2	1	**113-9232**	2	BOLT-HEX HEAD (8X1.25X30 MM)	
	3	1	**8T-4121**	4	WASHER (2.5MM THK)	
M	4	1	**9X-2125**	4	BOLT-LOCKING (M10X1.5X25MM)	

M-METRIC PART
Y-SEPARATE ILLUSTRATION

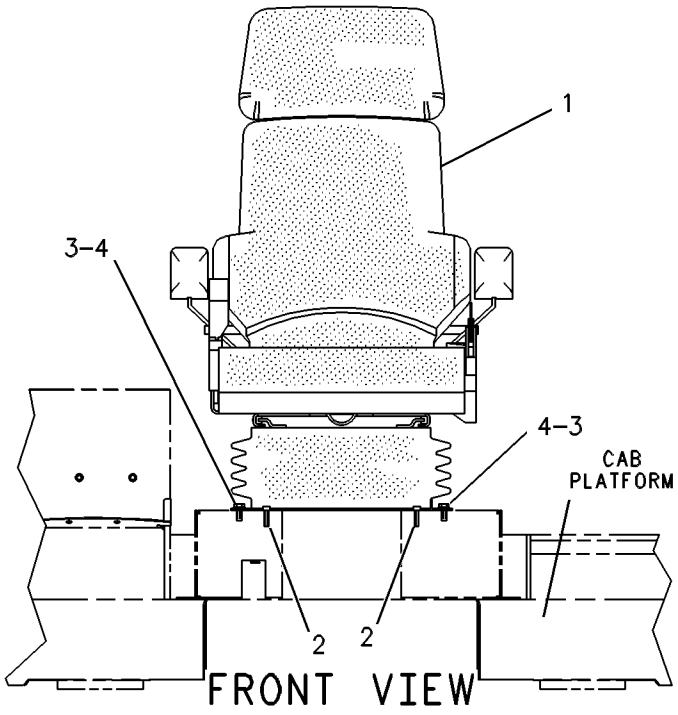

GRAPHIC #1 g00131404

OPERATOR STATION

118-0817 SEAT & MOUNTING GP

S/N: DJD1-UP; DBT1-UP
AN ATTACHMENT

SMCS-7312 **i00534877**

NOTE	REF NO	GRAPHIC REF	PART NUMBER	QTY	PART NAME 1 2 3 4 5 6 (PRODUCT LEVEL)	SEE PAGE
Y	1	1	**108-2192**	1	SEAT GP-SUSPENSION	700
Y	2	1	**129-7253**	1	SEAT BELT GP	693
M	3	1	**113-9232**	4	BOLT-HEX HEAD (8X1.25X30 MM)	
	4	1	**118-7236**	1	PLATE	
M	5	1	**9X-2041**	4	SCREW-TRUSS HEAD (M10X1.5X20MM)	

M-METRIC PART
Y-SEPARATE ILLUSTRATION

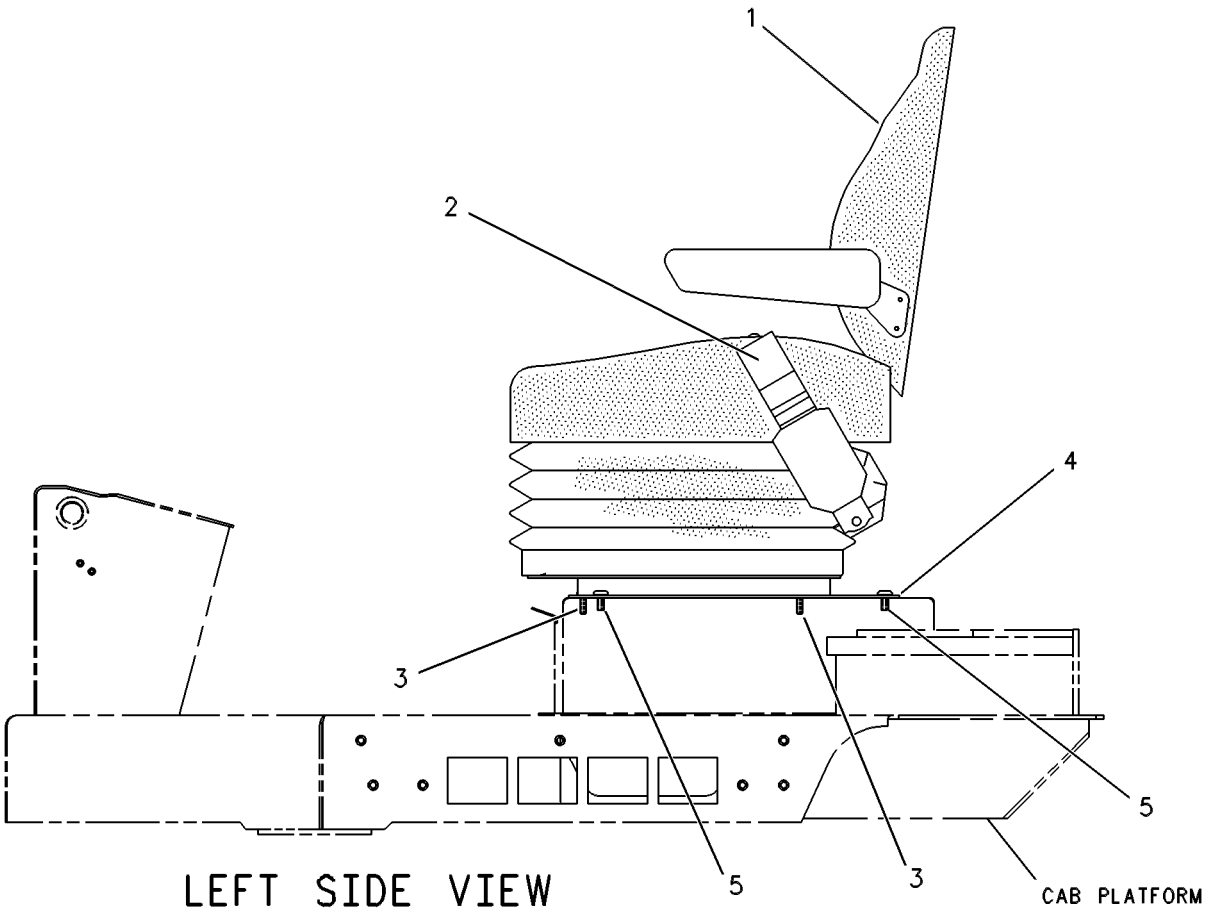

GRAPHIC #1 g00131414

OPERATOR STATION

118-0819 SEAT & MOUNTING GP

S/N: DJD1-UP; DBT1-UP
AN ATTACHMENT

SMCS-7312 **i01369987**

NOTE	REF NO	GRAPHIC REF	PART NUMBER	QTY	PART NAME 1 2 3 4 5 6 (PRODUCT LEVEL)	SEE PAGE
	1	1	**068-4209**	2	SCREW (8-32X0.75IN)	
M	2	1	**113-9232**	2	BOLT-HEX HEAD (8X1.25X30 MM)	
Y	3	1	*119-7128*	1	SEAT GP (CLOTH)	698
Y	4	1	**150-7718**	1	SUSPENSION GP-SEAT	710
	5	1	**161-9289**	4	BLOCK-SLIDER	
	6	1	**173-5787**	4	SETSCREW	
	7	1	**3T-2662**	1	CIRCUIT BREAKER AS (15 AMP) (AIR SEAT)	
		1	**6V-8376**	2	SCREW-MACHINE (8-32X.25 IN)	
		1	**9B-7233**	2	LOCKWASHER (NO.8)	
	8	1	**4F-4879**	1	BOLT (3/8-16X.5 IN)	
	9	1	**8T-4121**	4	WASHER-HARD (2.5MM THK)	
M	10	1	**9X-2125**	4	BOLT-LOCKING (M10X1.5X25MM)	

M-METRIC PART
Y-SEPARATE ILLUSTRATION

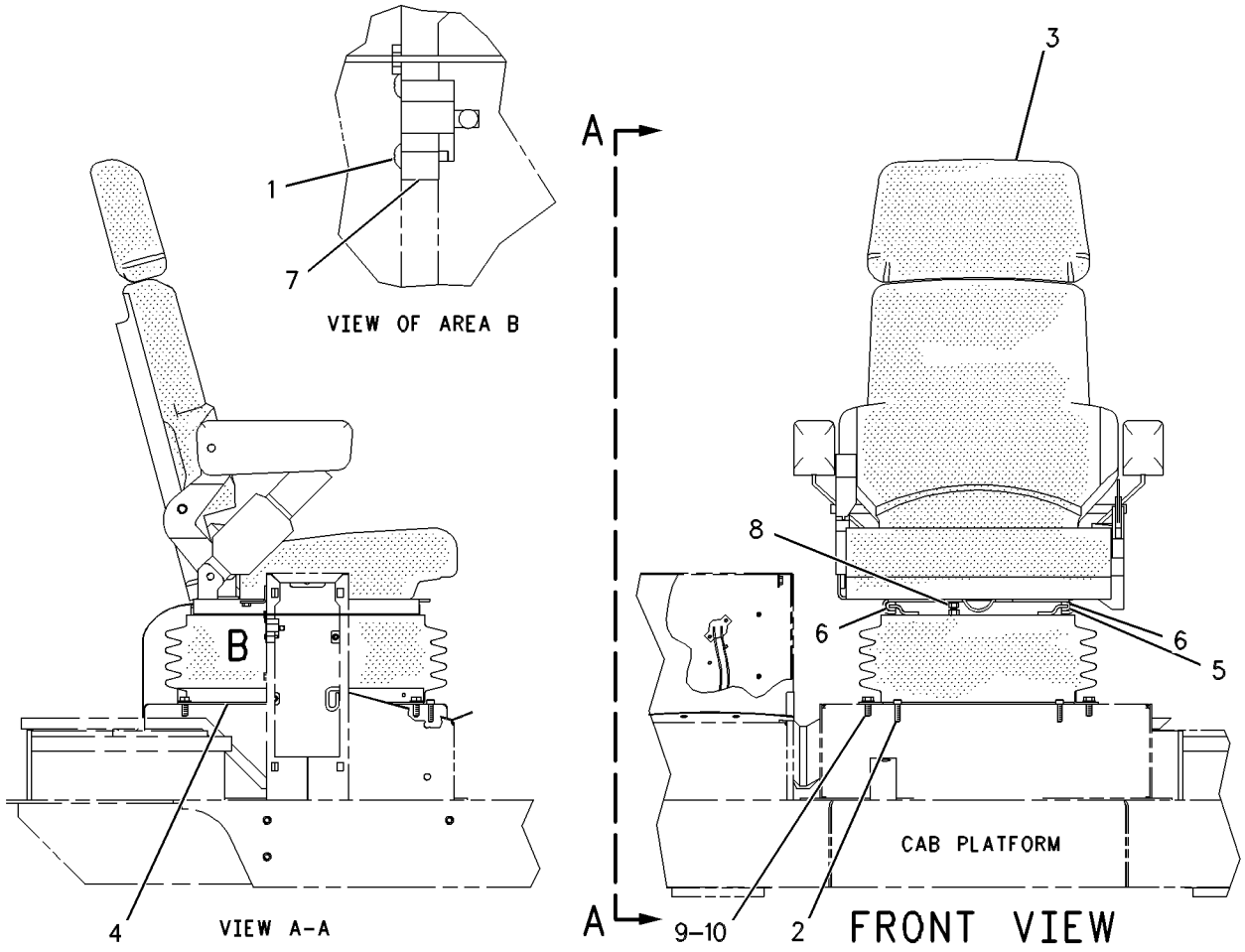

GRAPHIC #1 g00621349

OPERATOR STATION

129-7253 SEAT BELT GP

S/N: DJD1-UP; DBT1-UP
RETRACTABLE
PART OF 107-5977, 118-0817 SEAT & MOUNTING GP
AN ATTACHMENT

SMCS-7327 **i00173177**

NOTE	REF NO	GRAPHIC REF	PART NUMBER	QTY	PART NAME 1 2 3 4 5 6 (PRODUCT LEVEL)	SEE PAGE
	1	1	**8S-0934**	1	LOCKNUT-FLANGE (7/16-20 THD)	
	2	1	**1J-6298**	1	BOLT (7/16-20X3.5IN)	
	3	1	**8S-4723**	1	BOLT (7/16-20X1.5IN)	

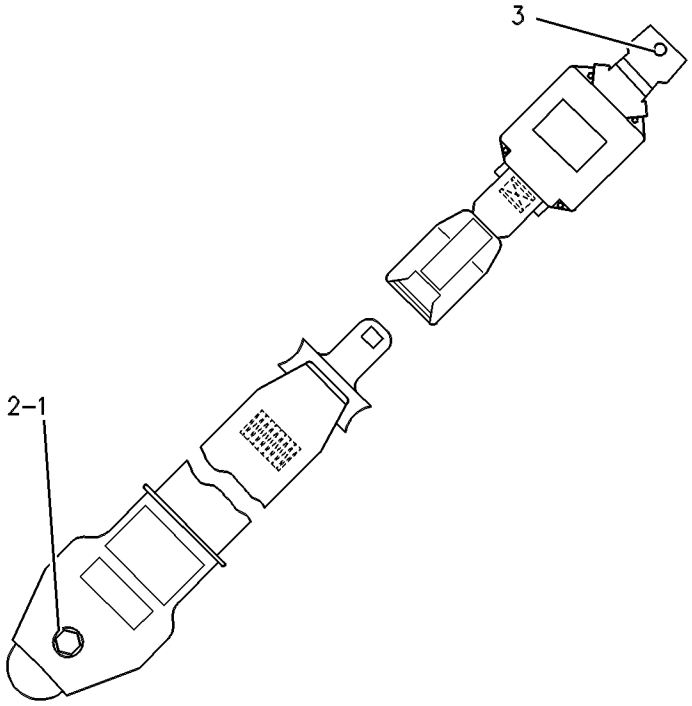

GRAPHIC #1 g00121683

156-1148 SEAT BELT GP–RETRACTABLE

S/N: DJD1-UP; DBT1-UP
PART OF 119-7128 SEAT GP, 8Y-6977 SEAT GP-SUSPENSION
AN ATTACHMENT

SMCS-7327 **i01674134**

NOTE	REF NO	GRAPHIC REF	PART NUMBER	QTY	PART NAME 1 2 3 4 5 6 (PRODUCT LEVEL)	SEE PAGE
	1	1	**1L-9080**	1	BOLT (7/16-20X1.5 IN)	
	2	1	**8T-5360**	1	WASHER (12X22.5X2.5MM THK)	
	3	1	**1A-4350**	1	BOLT (7/16-20X1.75 IN)	
	4	1	**4D-6432**	1	LOCKNUT (7/16-20 THD)	

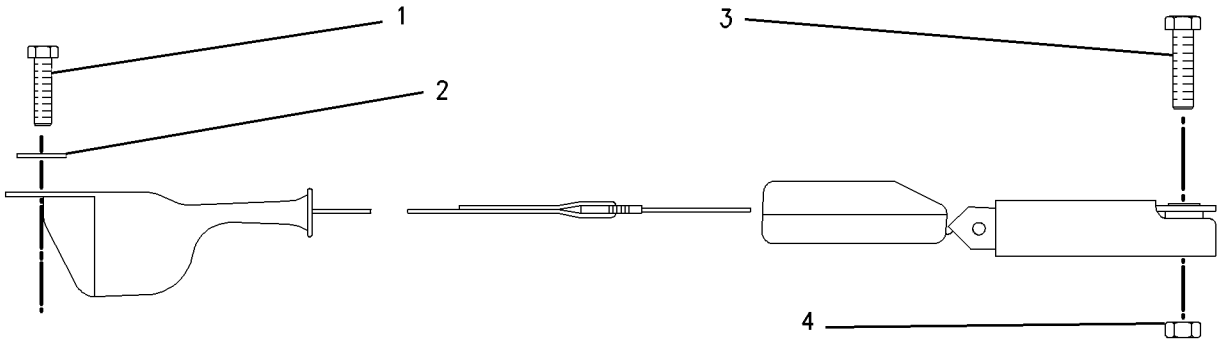

GRAPHIC #1 g00760019

MEMORANDA

OPERATOR STATION

8Y-6882 SEAT GP

S/N: DJD1-UP; DBT1-UP
CLOTH - GRAY
PART OF 119-7128 SEAT GP, 8Y-6977 SEAT GP-SUSPENSION
AN ATTACHMENT

SMCS-7312 **i01690946**

NOTE	REF NO	GRAPHIC REF	PART NUMBER	QTY	PART NAME 1 2 3 4 5 6 (PRODUCT LEVEL)	SEE PAGE
Y	1	1	**108-8421**	1	PAN GP-BACKREST (SEAT BACK)	667
	8	1	**8Y-5930**	1	BAR AS-SLIDE	
	9	1	**8Y-5931**	1	BAR AS-LATCH	
	10	1	**8S-7803**	2	RING-RETAINING	
	11	1	**8Y-5932**	1	LATCH AS	
	12	1	**8Y-5936**	1	SPRING	
	13	1	**095-0878**	1	PIN-SPRING	
	14	1	**8Y-6051**	2	SPACER (11.19X14.21X14.24MM THK)	
	15	1	**7B-7525**	2	BOLT-SOCKET HEAD (7/16-14X1.25 IN)	
	16	1	**8Y-5981**	2	BUSHING-BACKREST	
	17	1	**8Y-5937**	1	BRACKET AS-RH	
	18	1	**8Y-5938**	1	BRACKET AS-LH	
		1	**4D-6432**	1	LOCKNUT (7/16-20 THD)	
	19	1	**7U-4898**	6	SCREW (3/8-16X0.75 IN)	
	20	1	**2K-4973**	6	LOCKNUT (3/8-16 THD)	
	21	1	**095-1314**	1	PIN-CLEVIS	
	23	1	**8Y-5928**	2	SPRING	
	24	1	**2B-2695**	4	BOLT (5/16-18X0.875 IN)	
JS	25	1	**8Y-5947**	4	FASTENER	
	26	1	**8Y-6833**	1	SPRING	
	27	1	**8Y-6834**	1	SPRING	
	28	1	**1C-0569**	2	BOLT (5/16-18X0.5 IN)	
Y	29	1	*8Y-5992*	1	PAN GP-SEAT	668
L	30	1	**113-0899**	10	SCREW-FLAT HEAD (6-20X0.5 IN)	
	31	1	**119-7127**	1	CUSHION AS	
B	32	1	**061-8803**	4	SHIM (1.52MM THK)	
S	33	1	**9L-7469**	3	LOCK PIN	
	34	1	**8Y-5929**	1	PLATE AS-SLIDE	
		1	**4K-9097**	7	NUT-WELD (5/16-18 THD)	
JZ	35	1		1	CUSHION AS	
LZ	36	1		2	KNOB-SEAT TILT	
LZ	37	1		1	KNOB-SLIDE	
LZ	38	1		1	KNOB-SLIDE	
LZ	39	1		1	KNOB-BACK TILT	
LZ	40	1		1	KNOB-BACK TILT	
LZ	41	1		1	KNOB-SEAT TILT	
SZ	42	1		1	PAN AS	
					AVAILABLE REPAIR KIT(S):	
S			**8Y-6933**	1	KIT-TILT PAN	
L			**112-4577**	1	KIT-SEAT KNOB	
J			**119-7141**	1	KIT-SEAT CUSHION (CLOTH)	
			149-4745	1	KIT-SLIDER BLOCK	
					(INCLUDES BLOCKS AND BOLT)	

B-USE AS REQUIRED
J-KIT MARKED J INCLUDES PART(S) MARKED J
L-KIT MARKED L INCLUDES PART(S) MARKED L
S-KIT MARKED S INCLUDES PART(S) MARKED S
Y-SEPARATE ILLUSTRATION
Z-NOT SERVICED SEPARATELY

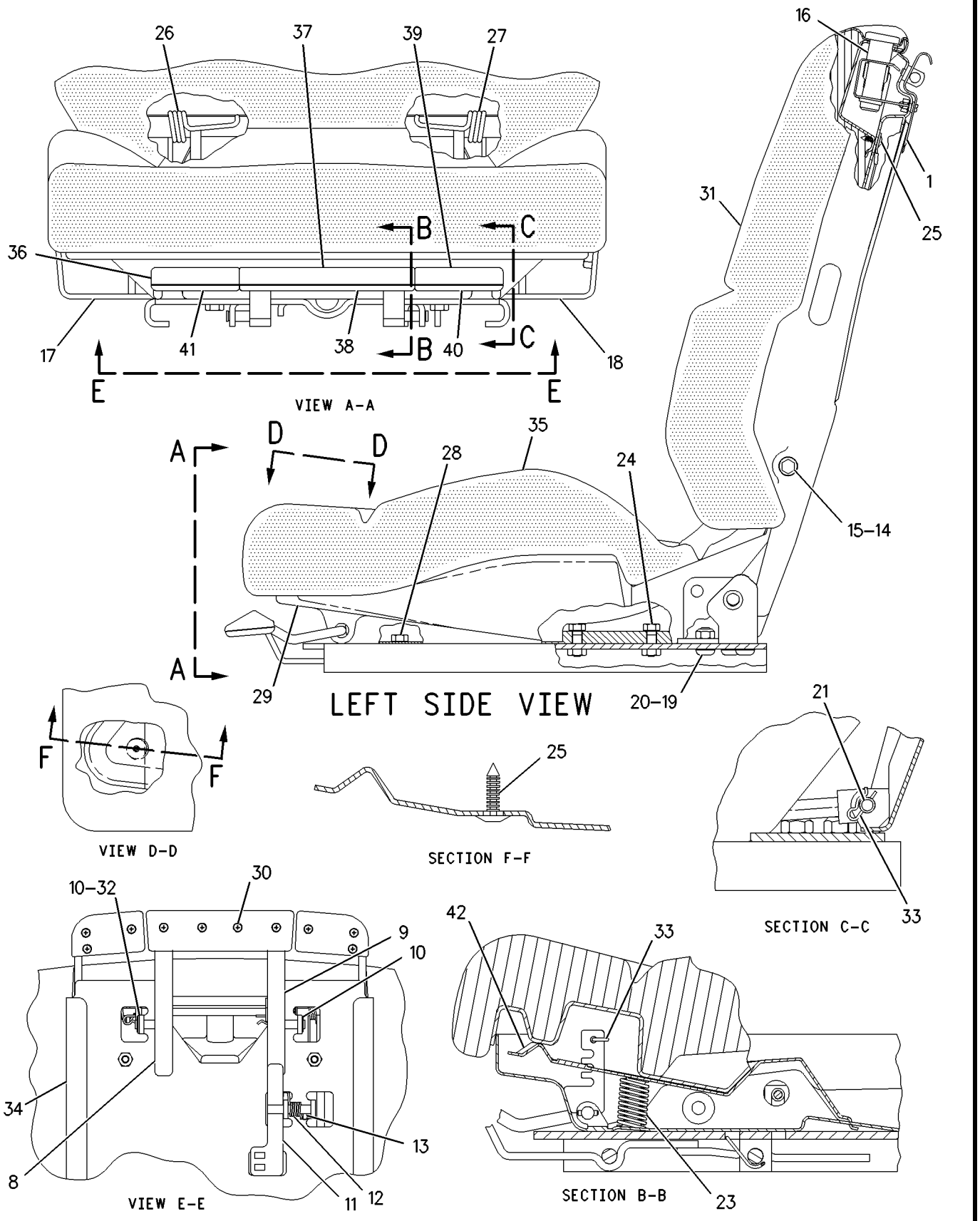

GRAPHIC #1 g00857460

119-7128 SEAT GP–CLOTH

S/N: DJD1-UP; DBT1-UP
LUMBAR - GRAY
PART OF 118-0819 SEAT & MOUNTING GP
AN ATTACHMENT

SMCS-7312 **i01578371**

NOTE	REF NO	GRAPHIC REF	PART NUMBER	QTY	PART NAME 1 2 3 4 5 6 (PRODUCT LEVEL)	SEE PAGE
Y	1	1	**8Y-6883**	1	EXTENSION GP-BACKREST	638
Y	2	1	**8Y-6882**	1	SEAT GP (CLOTH)	696
Y	3	1	**8Y-6000**	1	ARMREST GP (LH)	609
Y	4	1	**8Y-4200**	1	ARMREST GP (RH)	607
CY	5	1	**156-1148**	1	SEAT BELT GP	694

C-CHANGE FROM PREVIOUS TYPE
Y-SEPARATE ILLUSTRATION

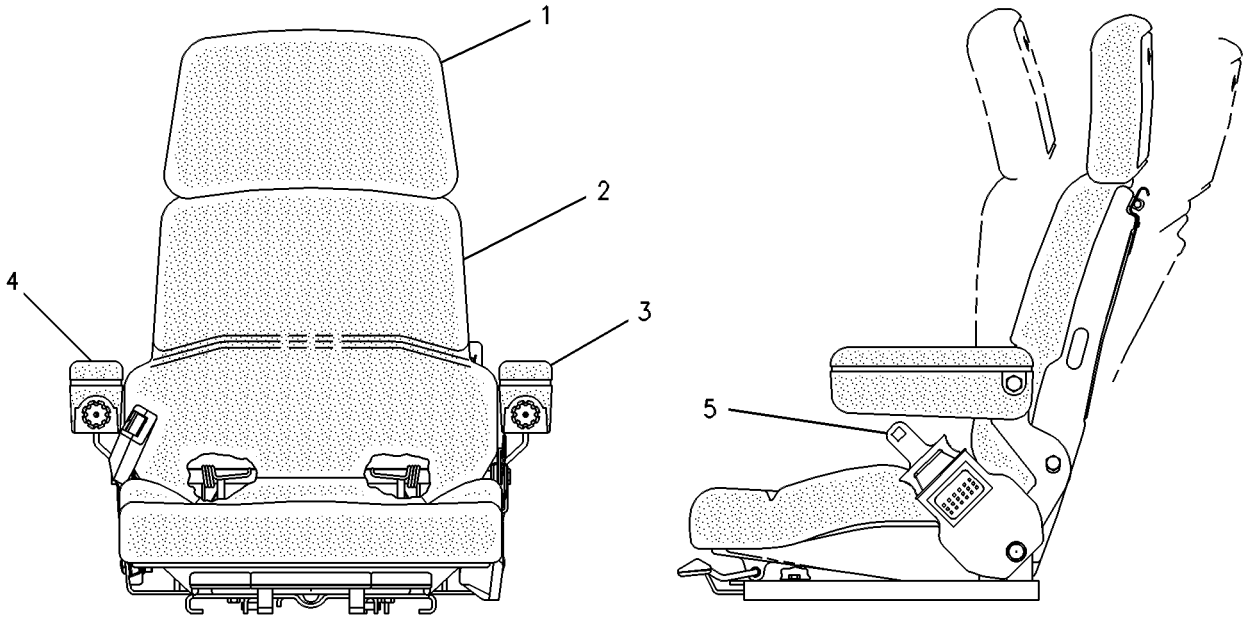

FRONT VIEW RIGHT SIDE VIEW

GRAPHIC #1 g00089006

OPERATOR STATION

8Y-6977 SEAT GP-SUSPENSION

S/N: DJD1-UP; DBT1-UP
LUMBAR - GRAY FABRIC
PART OF 107-5978 SEAT & MOUNTING GP
AN ATTACHMENT

SMCS-7324, 7336 **i01621742**

NOTE	REF NO	GRAPHIC REF	PART NUMBER	QTY	PART NAME 1 2 3 4 5 6 (PRODUCT LEVEL)	SEE PAGE
Y	1	1	**8Y-6883**	1	EXTENSION GP-BACKREST	638
Y	2	1	**8Y-6882**	1	SEAT GP (CLOTH)	696
Y	3	1	**8Y-6000**	1	ARMREST GP (LH)	609
Y	4	1	**8Y-4200**	1	ARMREST GP (RH)	607
Y	5	1	**108-4082**	1	SUSPENSION GP-SEAT	708
CY	6	1	**156-1148**	1	SEAT BELT GP	694
J	7	1	**4F-4879**	1	BOLT (3/8-16X.5 IN)	
					AVAILABLE REPAIR KIT(S):	
J			**149-4745**	1	KIT-SLIDER BLOCK	
					(INCLUDES 4 BLOCKS)	

C-CHANGE FROM PREVIOUS TYPE
J-KIT MARKED J INCLUDES PART MARKED J
Y-SEPARATE ILLUSTRATION

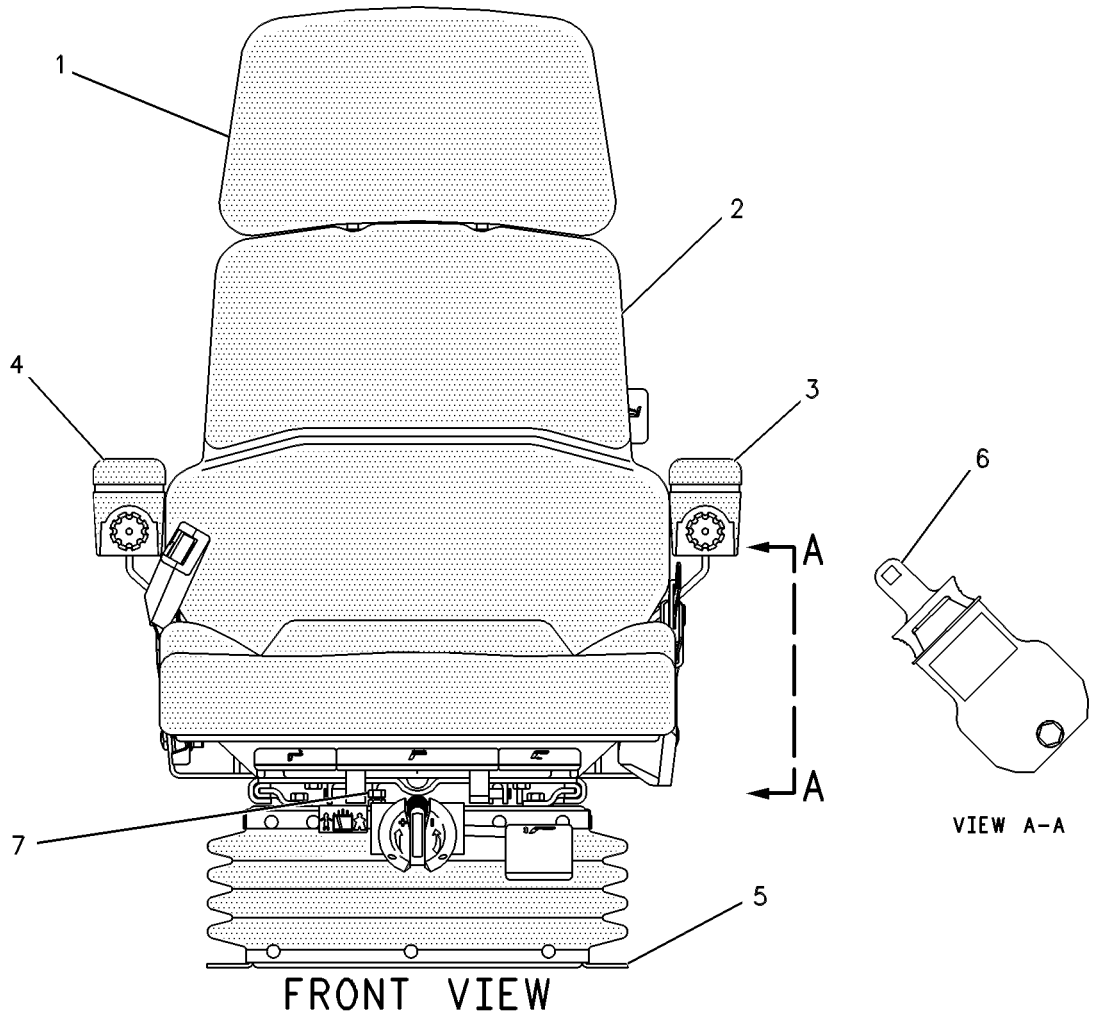

GRAPHIC #1 g00088970

OPERATOR STATION

108-2192 SEAT GP-SUSPENSION—VINYL

S/N: DJD1-UP; DBT1-UP
PART OF 118-0817 SEAT & MOUNTING GP
AN ATTACHMENT

SMCS-7324, 7336 **i01020833**

NOTE	REF NO	GRAPHIC REF	PART NUMBER	QTY	PART NAME 1 2 3 4 5 6 (PRODUCT LEVEL)	SEE PAGE
J	1	1	**110-5054**	1	KIT-COVER	
J	2	1	**110-5058**	1	KIT-COVER	
J	3	1	**110-5059**	1	KIT-FOAM	
J	4	1	**110-5056**	1	KIT-FOAM	
	5	1	**110-5060**	1	KIT-ARMREST-LH	
	6	1	**110-5061**	1	KIT-ARMREST-RH	
J	7	1	**110-5052**	1	KIT-FRAME AS	
	8	1	**7I-6756**	1	KIT-CABLE ADJUSTER	
	9	1	**110-5062**	1	KIT-SPRING	
	10	1	**110-5064**	1	KIT-LEVER AS	
	11	1	**110-5067**	1	KIT-HANDLE	
	12	1	**110-5074**	1	KIT-SUSPENSION BEARING	
	13	1	**110-5063**	1	KIT-HEIGHT RISER	
	14	1	**110-5072**	1	KIT-SLIDE RAIL	
	15	1	**110-5065**	1	KIT-DAMPER	
	16	1	**110-5073**	1	SUSPENSION AS	
	17	1	**128-2678**	1	KIT-TETHER	
	18	1	**110-5068**	1	KIT-ADJUSTER	
	19	1	**110-5066**	1	KIT-BUMPSTOP	
	20	1	**110-5071**	1	KIT-SUSPENSION COVER	
					AVAILABLE REPAIR KIT(S):	
J			**110-5051**	1	KIT-UPPER AS	

J-KIT MARKED J INCLUDES PARTS MARKED J

108-2192 SEAT GP-SUSPENSION *(contd.)* i01020833

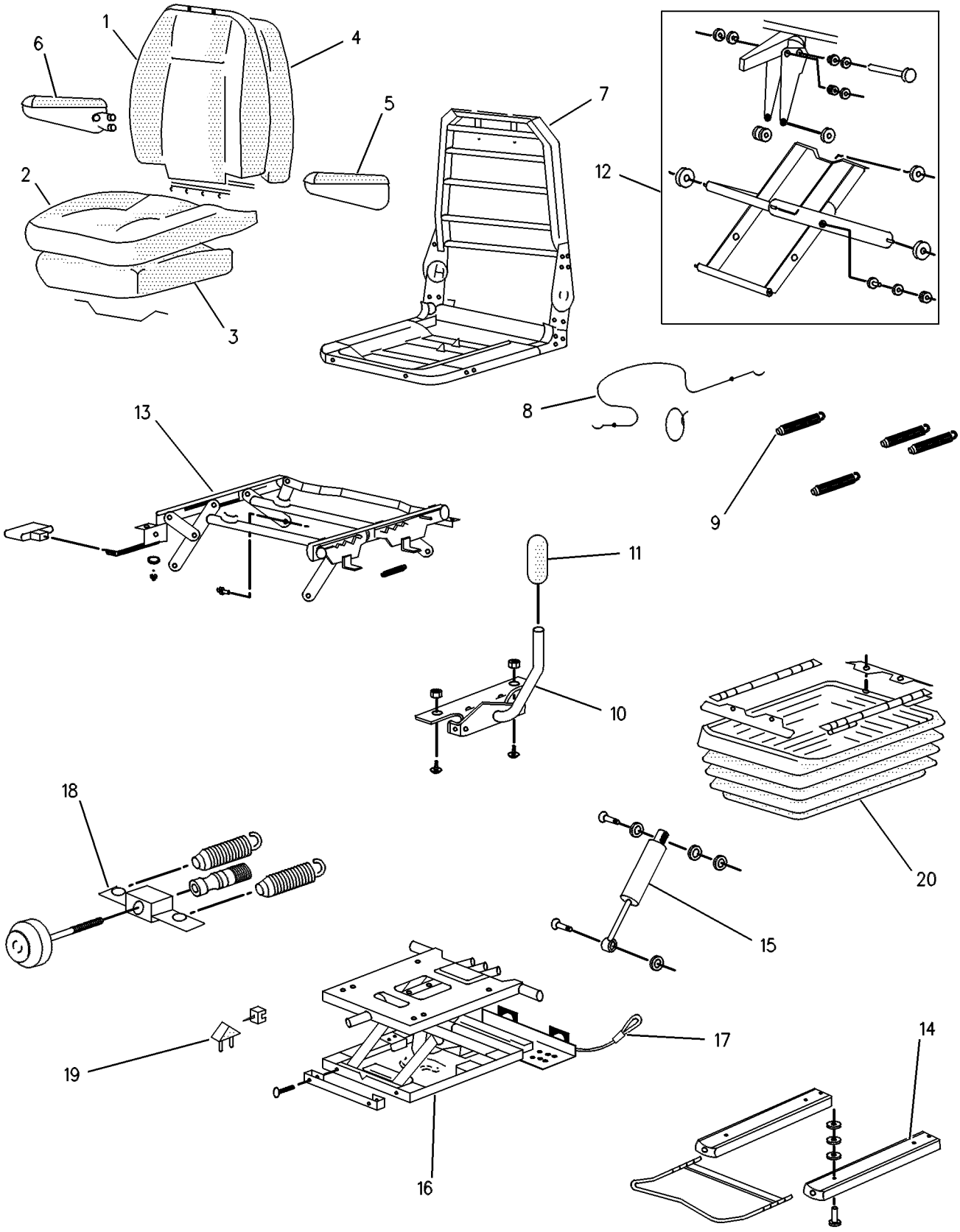

GRAPHIC #1 g00120293

OPERATOR STATION

119-8263 SEAT GP-SUSPENSION

S/N: DJD1-UP; DBT1-UP
FABRIC-GRAY
PART OF 107-5977 SEAT & MOUNTING GP
AN ATTACHMENT

SMCS-7324, 7336 **i00535034**

NOTE	REF NO	GRAPHIC REF	PART NUMBER	QTY	PART NAME 1 2 3 4 5 6 (PRODUCT LEVEL)	SEE PAGE
	1	1	**120-7733**	1	KIT-COVER	
	2	1	**120-7734**	1	KIT-COVER	
	3	1	**110-5059**	1	KIT-FOAM	
	4	1	**110-5056**	1	KIT-FOAM	
	5	1	**110-5060**	1	KIT-ARMREST-LH	
	6	1	**110-5061**	1	KIT-ARMREST-RH	
	7	1	**110-5052**	1	KIT-FRAME AS	
	8	1	**7I-6756**	1	KIT-CABLE ADJUSTER	
	9	1	**110-5062**	1	KIT-SPRING	
	10	1	**110-5064**	1	KIT-LEVER AS	
	11	1	**120-7732**	1	KIT-HANDLE	
	12	1	**110-5074**	1	KIT-SUSPENSION BEARING	
	13	1	**110-5063**	1	KIT-HEIGHT RISER	
	14	1	**110-5072**	1	KIT-SLIDE RAIL	
	15	1	**110-5065**	1	KIT-DAMPER	
	16	1	**110-5073**	1	SUSPENSION AS	
	17	1	**128-2678**	1	KIT-TETHER	
	18	1	**110-5068**	1	KIT-ADJUSTER	
	19	1	**110-5066**	1	KIT-BUMPSTOP	
	20	1	**110-5071**	1	KIT-SUSPENSION COVER	

119-8263 SEAT GP-SUSPENSION *(contd.)* i00535034

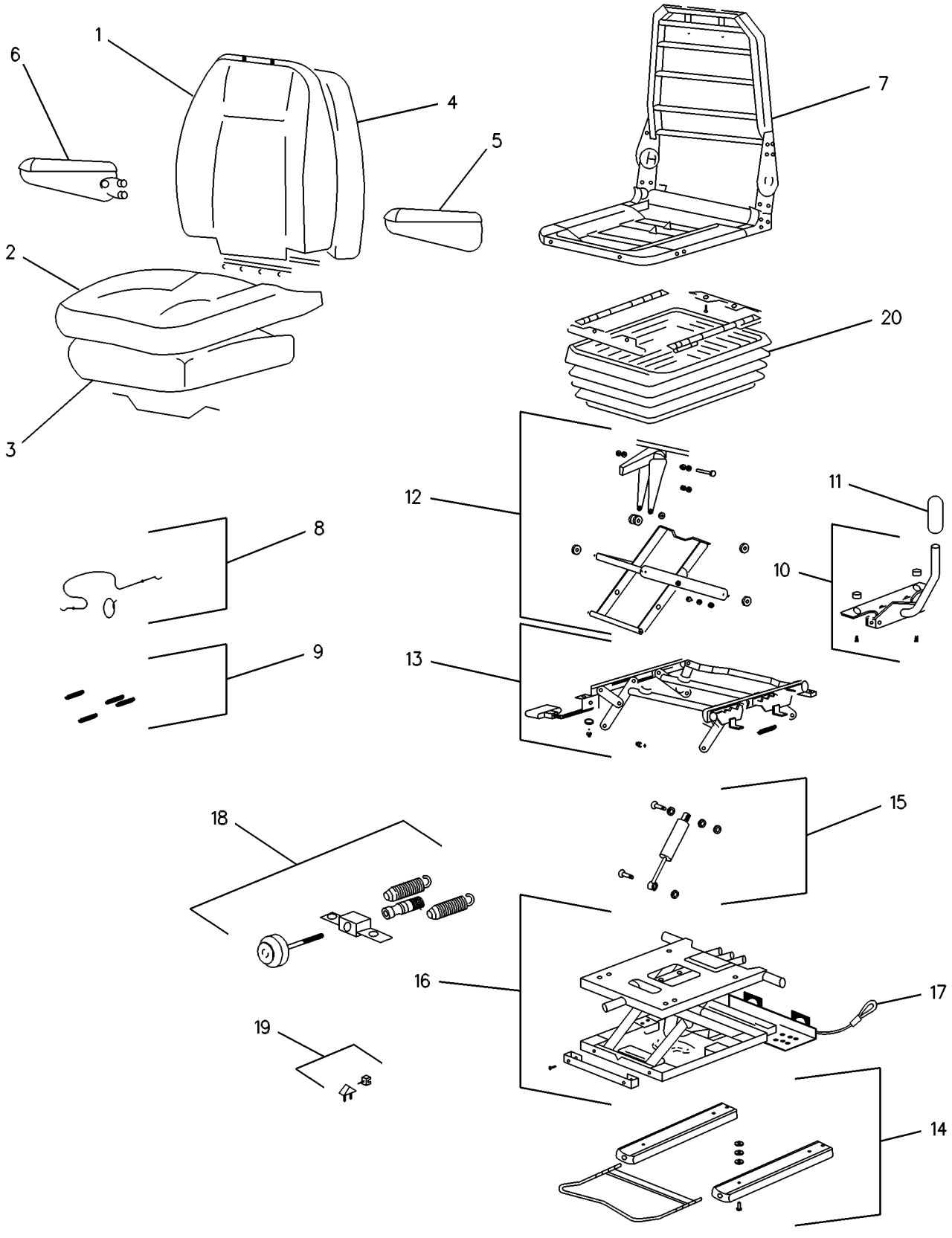

GRAPHIC #1 g00131422

OPERATOR STATION

190-4665 SKIRT GP-CAB

S/N: DJD1-UP; DBT1-UP
OROPS
PART OF 190-4661 CANOPY AR-OPEN ROPS
AN ATTACHMENT

SMCS-7301 **i01743817**

NOTE	REF NO	GRAPHIC REF	PART NUMBER	QTY	PART NAME 1 2 3 4 5 6 (PRODUCT LEVEL)	SEE PAGE
	1	1	**128-0783**	1	SHEET AS	
	2	1	**128-0785**	1	SHEET AS	
	3	1	**129-0335**	1	SHEET AS	
	4	1	**133-6562**	1	SHEET AS	
	5	1	**133-6563**	1	SHEET AS	
	6	1	**133-6564**	1	SHEET AS	
	7	1	**8T-4121**	22	WASHER-HARD (11X21X2.5MM THK)	
M	8	1	**8T-4137**	22	BOLT (M10X1.5X20MM)	

M-METRIC PART

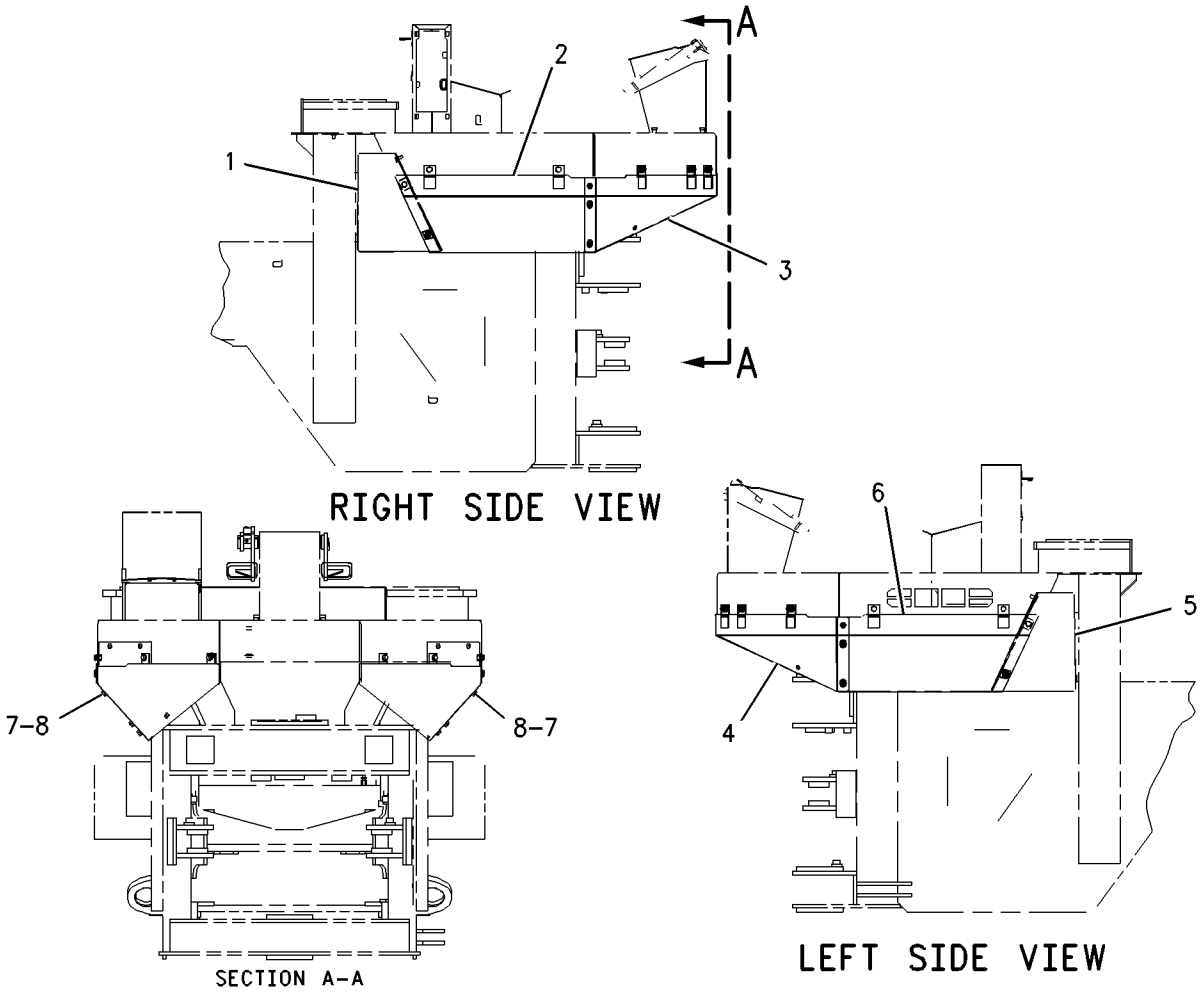

GRAPHIC #1 g00893138

OPERATOR STATION

190-4666 SKIRT GP-CAB

S/N: DJD1-UP; DBT1-UP
EROPS
PART OF 190-4668 CAB AR-ENCLOSED ROPS, 190-4664 OPERATOR AR, 190-4652 PLATFORM AR
AN ATTACHMENT

SMCS-7301 **i01782524**

NOTE	REF NO	GRAPHIC REF	PART NUMBER	QTY	PART NAME 1 2 3 4 5 6 (PRODUCT LEVEL)	SEE PAGE
	1	1	**128-0782**	1	SHEET AS	
M		1	**8T-3490**	2	NUT-WELD (M10X1.5 THD)	
	2	1	**128-0783**	1	SHEET AS	
M		1	**8T-3490**	2	NUT-WELD (M10X1.5 THD)	
	3	1	**128-0784**	1	SHEET AS	
M		1	**8T-3490**	2	NUT-WELD (M10X1.5 THD)	
	4	1	**128-0785**	1	SHEET AS	
	5	1	**129-0334**	1	SHEET AS	
M		1	**8T-3490**	1	NUT-WELD (M10X1.5 THD)	
	6	1	**129-0335**	1	SHEET AS	
M		1	**8T-3490**	3	NUT-WELD (M10X1.5 THD)	
	7	1	**132-3543**	1	STRAP AS	
M		1	**8T-3490**	2	NUT-WELD (M10X1.5 THD)	
	8	1	**8T-4121**	24	WASHER-HARD (11X21X2.5MM THK)	
M	9	1	**8T-4137**	24	BOLT (M10X1.5X20MM)	

M-METRIC PART

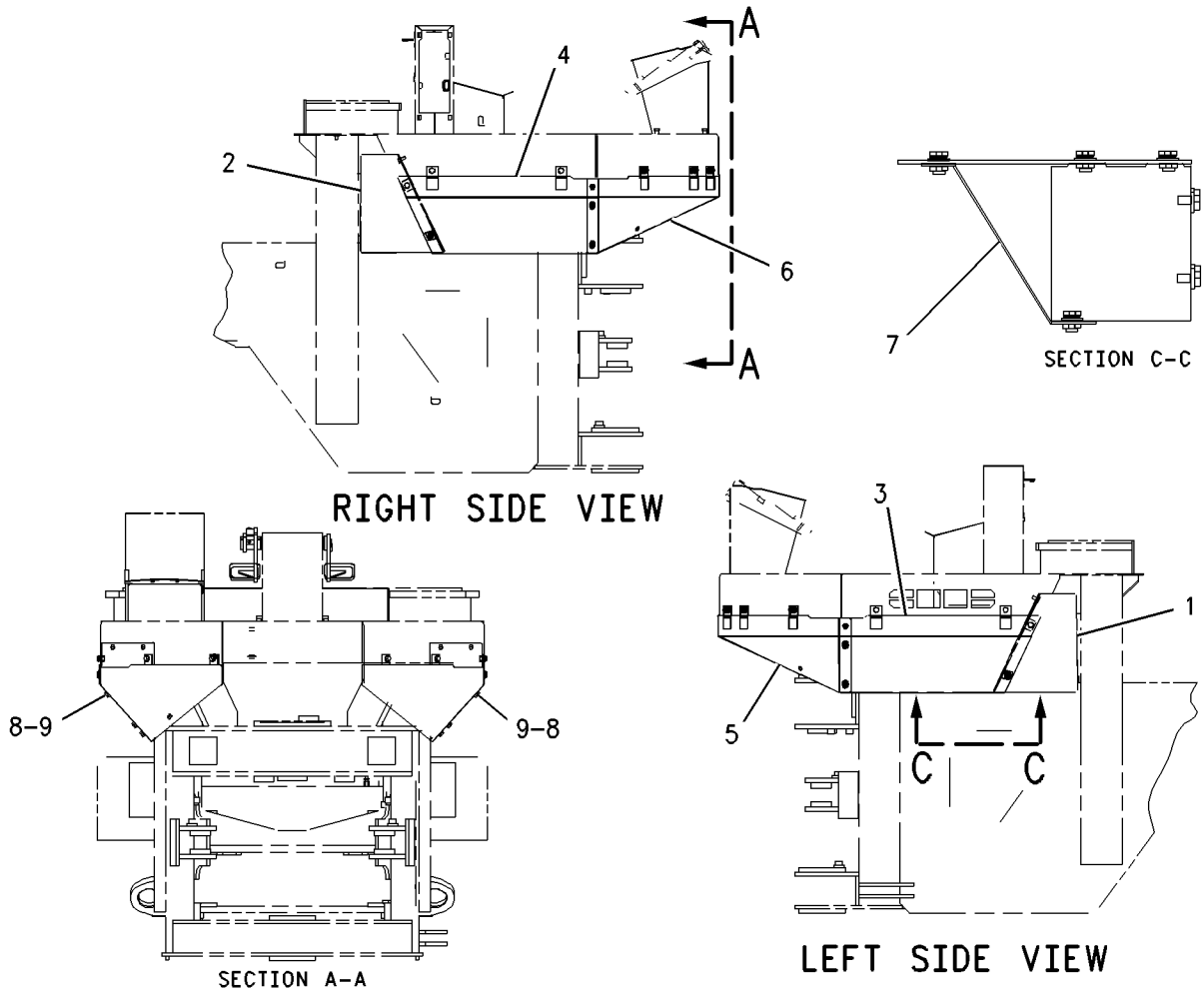

GRAPHIC #1 g00912404

OPERATOR STATION

118-0808 SUPPORT GP-SEAT

S/N: DJD1-UP; DBT1-UP
PART OF 190-4406 CANOPY GP-OPEN ROPS
AN ATTACHMENT

SMCS-7321 **i00534851**

NOTE	REF NO	GRAPHIC REF	PART NUMBER	QTY	PART NAME 1 2 3 4 5 6 (PRODUCT LEVEL)	SEE PAGE
	1	1	**119-8310**	1	COVER AS	
M		1	**8T-3490**	2	NUT-WELD (M10X1.5 THD)	
M		1	**8T-3612**	2	NUT-WELD (M8X1.25 THD)	
	2	1	**7X-0579**	11	WASHER-HARD (2.0MM THK)	
M	3	1	**8T-4908**	11	BOLT (M8X1.25X25MM)	

M-METRIC PART

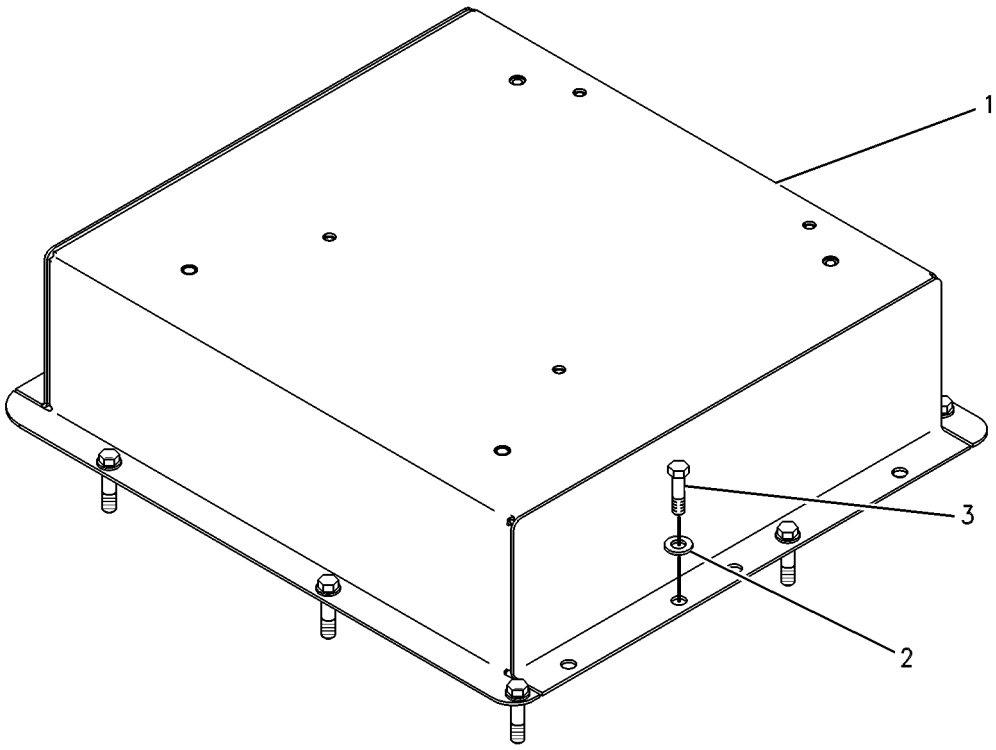

GRAPHIC #1 g00131738

MEMORANDA

OPERATOR STATION

108-4082 SUSPENSION GP-SEAT

S/N: DJD1-UP; DBT1-UP
PART OF 8Y-6977 SEAT GP-SUSPENSION
AN ATTACHMENT

SMCS-7324 **i01522501**

NOTE	REF NO	GRAPHIC REF	PART NUMBER	QTY	PART NAME 1 2 3 4 5 6 (PRODUCT LEVEL)	SEE PAGE
	1	1	**8Y-6022**	1	PLATE-SLIDE	
	2	1	**8Y-6023**	1	PLATE-SLIDE	
	3	1	**5M-3062**	2	BOLT (3/8-16X0.75 IN)	
	4	1	**5P-1075**	4	WASHER-HARD (10.2X22.5X3MM THK)	
	5	1	**2K-4973**	6	LOCKNUT (3/8-16 THD)	
	6	1	**1D-4677**	4	BOLT-ROUND HEAD (3/8-16X1 IN)	
	7	1	**8Y-6014**	1	HOUSING AS-LOWER	
	8	1	**8Y-6012**	1	ARM AS-SUSPENSION	
J	9	1	**101-0003**	20	FASTENER	
Y	10	1	**108-4582**	1	HOUSING GP-SEAT SUSPENSION	646
J	11	1	**166-6781**	6	FASTENER	
	12	1	**8Y-5965**	1	ABSORBER-SHOCK	
	13	1	**5V-1497**	1	RETAINER	
	14	1	**4V-7884**	2	BEARING	
	15	1	**4V-8577**	4	BEARING	
	16	1	**8Y-6024**	2	SHAFT AS	
J	17	1	**163-1146**	3	FASTENER	
	18	1	**145-0326**	1	FILM-INSTRUCTION (SEAT ADJUSTMENT)	
	19	1	**197-7689**	3	FASTENER	
					AVAILABLE REPAIR KIT(S):	
			101-4194	1	KIT-BELT TETHER	
					(INCLUDES 2 BELTS)	
			101-4195	1	KIT-SUSPENSION ROLLER	
					(INCLUDES 4 ROLLERS)	
J			**8Y-5944**	1	KIT-SUSPENSION BOOT	
					(INCLUDES BOOT & 2 RETAINERS)	

J-KIT MARKED J INCLUDES PARTS MARKED J
Y-SEPARATE ILLUSTRATION

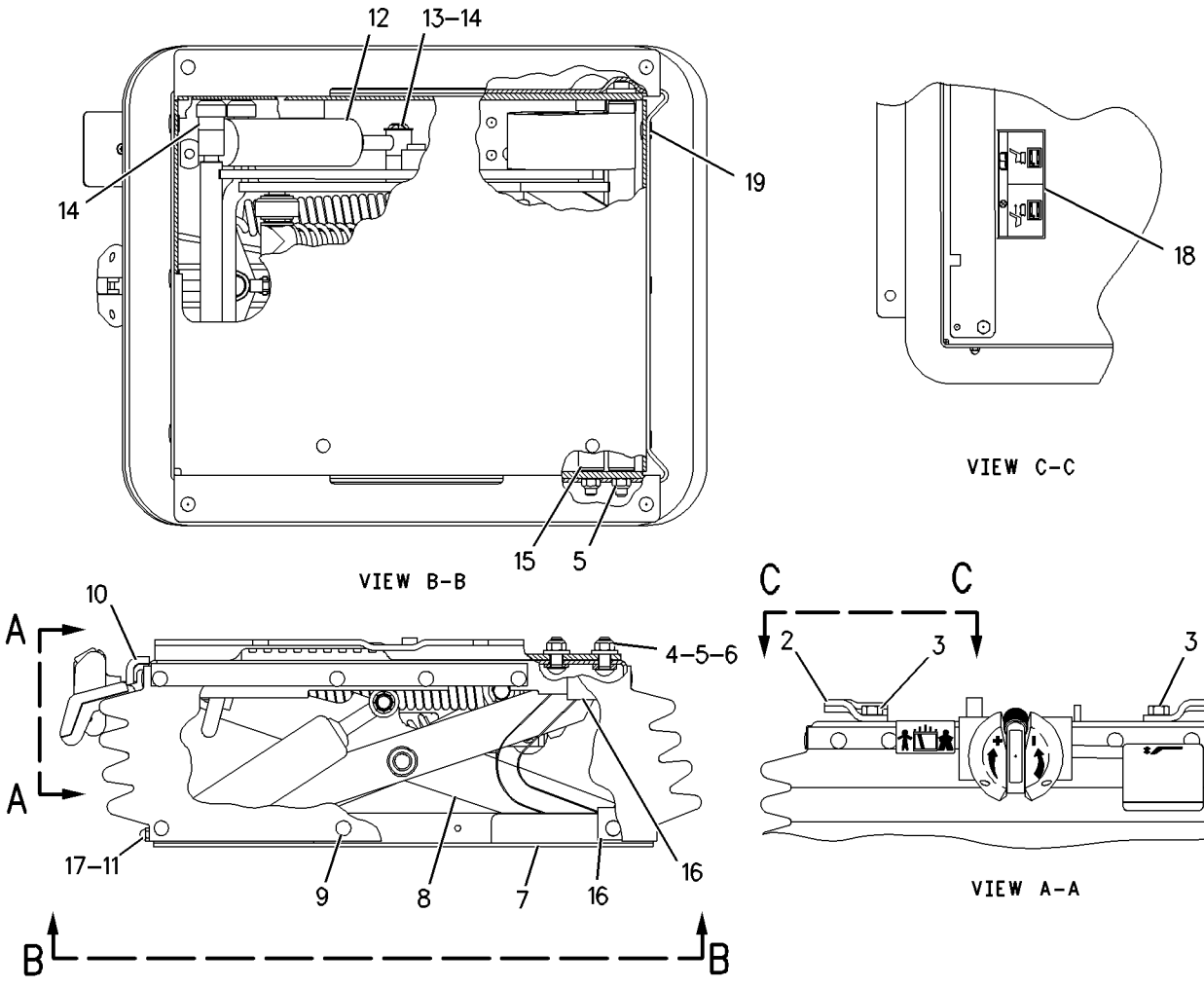

GRAPHIC #1 g00790940

OPERATOR STATION

150-7718 SUSPENSION GP-SEAT—AIR

S/N: DJD1-UP; DBT1-UP
PART OF 118-0819 SEAT & MOUNTING GP
AN ATTACHMENT

SMCS-7324 **i01395810**

NOTE	REF NO	GRAPHIC REF	PART NUMBER	QTY	PART NAME 1 2 3 4 5 6 (PRODUCT LEVEL)	SEE PAGE
	1	1	**4V-7884**	2	BEARING	
C	2	1	**166-7223**	1	HOUSING AS	
	3	1	**4V-8556**	1	BOLT (3/8-16X2.34IN)	
	5	1	**5P-8167**	1	BOLT (3/8-16X.625 IN)	
	6	1	**8Y-6917**	1	BOOT	
	7	1	**102-6317**	2	BUMPER	
	8	1	**124-7128**	1	BUSHING-RELIEF	
	9	1	**9M-0164**	1	CLAMP-HOSE	
	10	1	**145-0326**	1	FILM-INSTRUCTION (SEAT ADJUSTMENT)	
	11	1	**147-4549**	1	FITTING-ELBOW	
	12	1	**149-2400**	1	FITTING	
	13	1	**149-2399**	1	FITTING	
	14	1	**8Y-6922**	1	HOUSING AS	
C	15	1	**2K-4973**	1	LOCKNUT (3/8-16 THD)	
	16	1	**3J-4818**	4	LOCKWASHER	
	17	1	**1B-4430**	4	NUT-JAM (1/2-20 THD)	
	18	1	**124-7126**	1	KIT-SCISSORS	
	19	1	**8M-3267**	1	SCREW-HEX SOCKET	
	20	1	**123-8157**	2	SHAFT	
	21	1	**123-9131**	1	ABSORBER-SHOCK	
	22	1	**147-6522**	1	SPRING-AIR	
	23	1	**6K-0806**	1	STRAP-CABLE	
	24	1	**8L-8413**	4	STRAP-CABLE	
	25	1	**149-2403**	1	VALVE AS	
E	27	1	**147-6541**		TUBE (29CM)	
E	28	1	**147-6541**		TUBE (9CM)	
B	29	1	**160-7765**	1	WASHER (16.26X22.23X1.97MM THK)	
B	30	1	**160-7766**	6	WASHER (16.26X22.23X0.51MM THK)	
B	31	1	**160-7767**	6	WASHER (3.68X12.57X0.51MM THK)	
	32	1	**102-8802**	1	KIT-RECEPTACLE (2 PIN)	
					(INCLUDES RECEPTACLE AS & WEDGE)	
					AVAILABLE REPAIR KIT(S):	
			8Y-6928	1	KIT-FASTENER (SEAT SUSPENSION)	
					(INCLUDES RATCHET CLIPS)	
			123-9128	1	KIT-ROLLER	
					(INCLUDES FLANGED BEARINGS, ROLLERS, & TIE WRAP)	
			128-0613	1	KIT-TETHER	
			149-2398	1	KIT-AIR COMPRESSOR	
					(INCLUDES COMPRESSOR AS & SLEEVE)	

B-USE AS REQUIRED
C-CHANGE FROM PREVIOUS TYPE
E-ORDER BY THE CENTIMETER

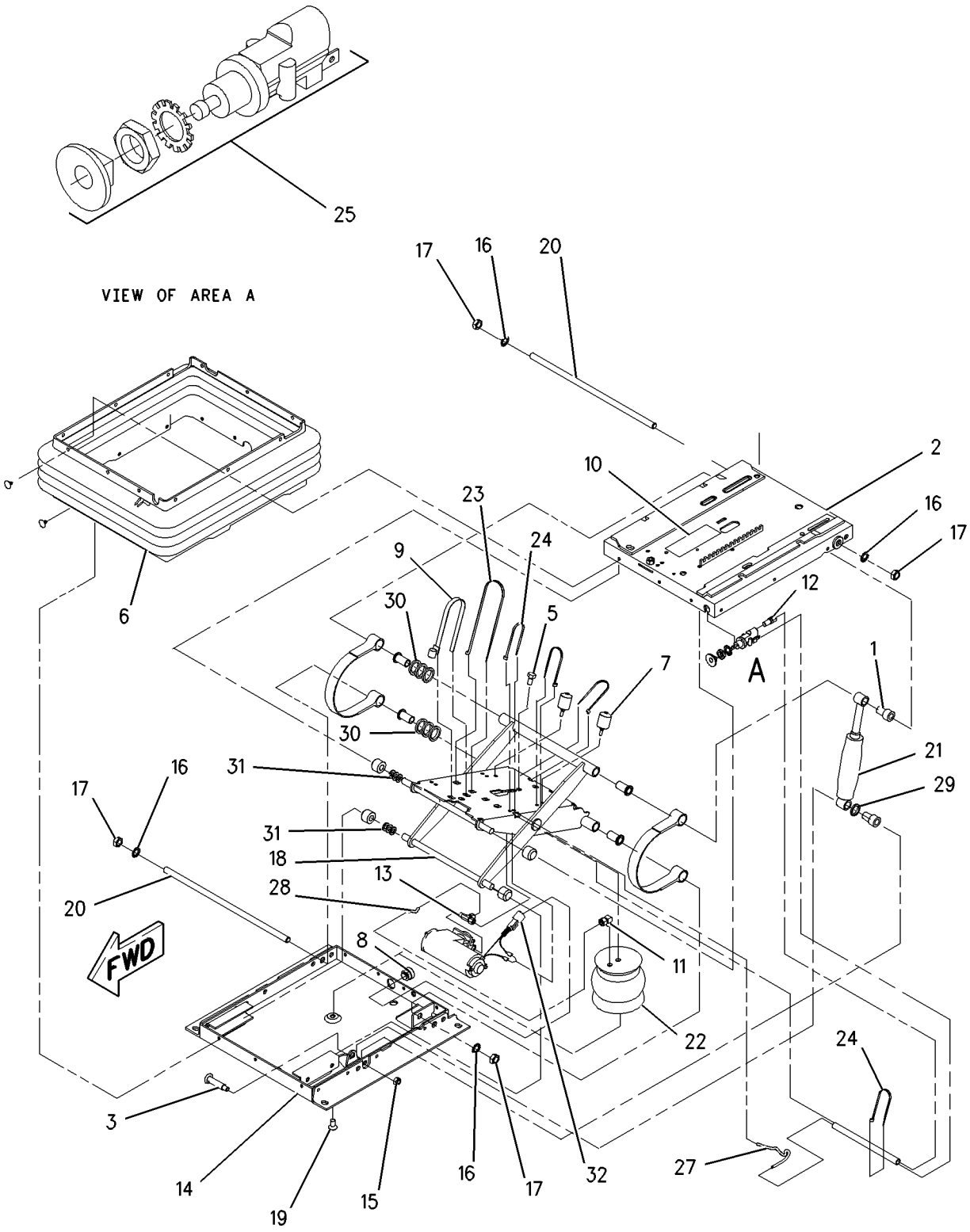

GRAPHIC #1 g00677809

OPERATOR STATION

107-4641 VISOR GP-CAB

S/N: DJD1-UP; DBT1-UP
AN ATTACHMENT

SMCS-7301, 7325, 7335 **i01165046**

NOTE	REF NO	GRAPHIC REF	PART NUMBER	QTY	PART NAME 1 2 3 4 5 6 (PRODUCT LEVEL)	SEE PAGE
	1	1	**9R-3203**	2	PLATE	
	2	1	**9R-3204**	1	PLATE AS	
M		1	**6V-9632**	2	NUT-WELD (M6X1 THD)	
	3	1	**9R-3205**	1	VISOR AS	
M	4	1	**9X-2042**	2	SCREW-TRUSS HEAD (M6X1.0X12MM)	
M	5	1	**9X-2045**	2	SCREW-TRUSS HEAD (M6X1X20MM)	

M-METRIC PART

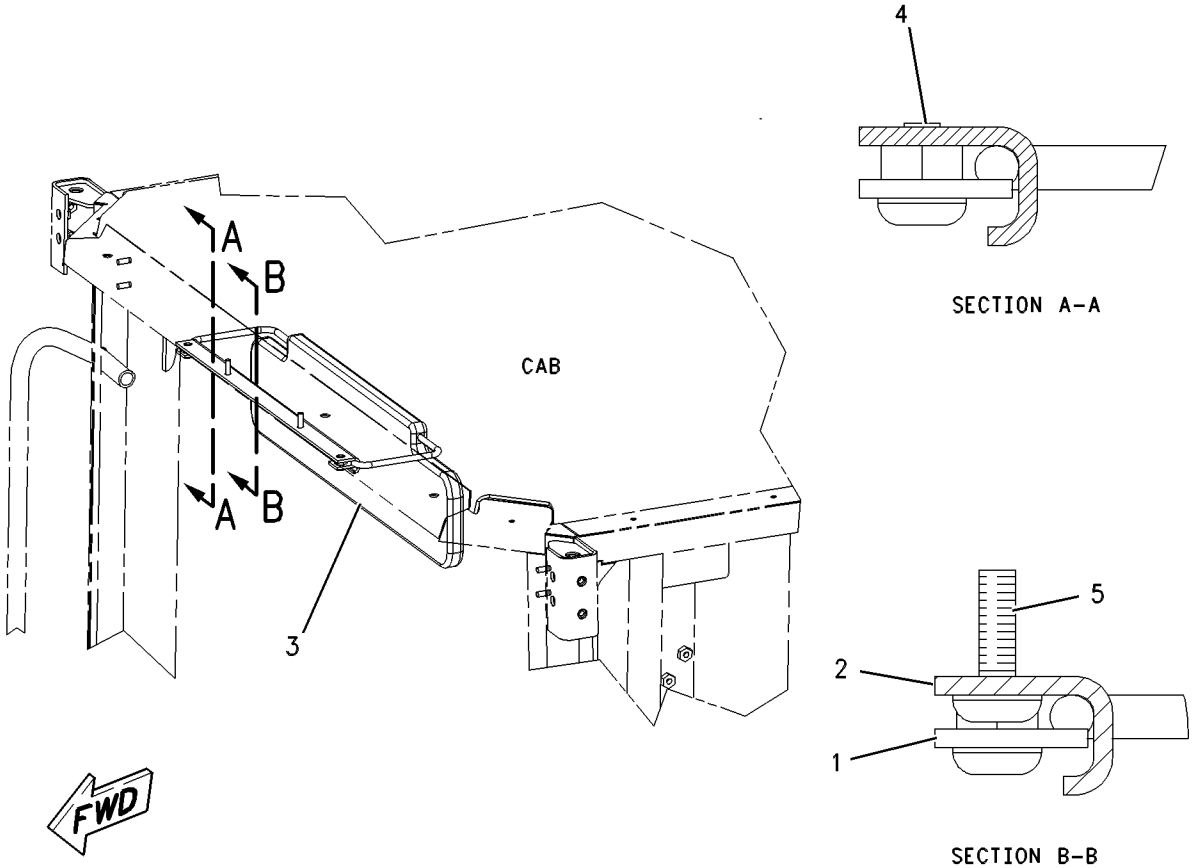

GRAPHIC #1 g00621214

131-1236 WASHER GP-WINDOW

S/N: DJD1-UP; DBT1-UP
PART OF 190-4648, 190-4650 OPERATOR AR, 190-4652 PLATFORM AR
AN ATTACHMENT

SMCS-7306 **i01649765**

NOTE	REF NO	GRAPHIC REF	PART NUMBER	QTY	PART NAME 1 2 3 4 5 6 (PRODUCT LEVEL)	SEE PAGE
E	1	1	**144-0195**		HOSE (267CM)	
	2	1	**4E-7316**	1	STRAP AS	
	3	1	**131-1237**	1	BRACKET AS	
	4	1	**131-1238**	1	BRACKET AS	
Y	5	1	**152-2764**	1	WASHER GP-WINDOW	714
	6	1	**3S-2093**	2	STRAP-CABLE	
	7	1	**8T-4121**	4	WASHER-HARD (11X21X2.5MM THK)	
M	8	1	**8T-4137**	4	BOLT (M10X1.5X20MM)	
M	9	1	**8T-4189**	2	BOLT (M8X1.25X20MM)	
	10	1	**8T-4224**	2	WASHER-HARD (8.8X16X2MM THK)	
E	11	1	**144-0195**		HOSE (137CM)	

E-ORDER BY THE CENTIMETER
M-METRIC PART
Y-SEPARATE ILLUSTRATION

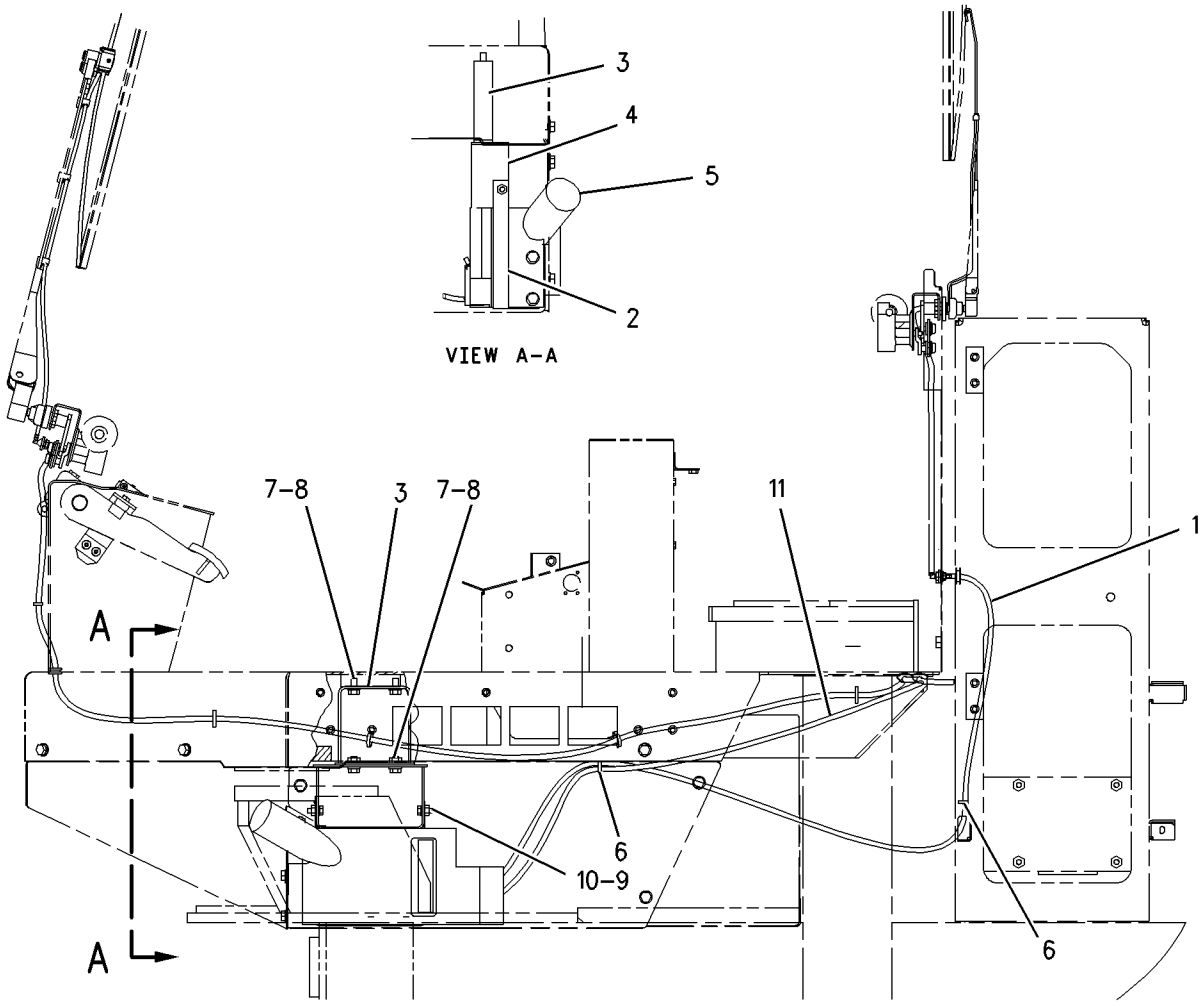

GRAPHIC #1 g00852386

OPERATOR STATION

152-2764 WASHER GP-WINDOW

S/N: DJD1-UP; DBT1-UP
PART OF 131-1236 WASHER GP-WINDOW
AN ATTACHMENT

SMCS-7306 **i01045473**

NOTE	REF NO	GRAPHIC REF	PART NUMBER	QTY	PART NAME 1 2 3 4 5 6 (PRODUCT LEVEL)	SEE PAGE
	1	1	**152-2763**	1	RESERVOIR	
	2	1	**8E-8292**	1	CAP-VENTED	
	3	1	**7T-8890**	2	PUMP AS-WASHER	
	4	1	**8T-5914**	2	GROMMET	
	5	1	**8T-5913**	2	FILTER-SCREEN	

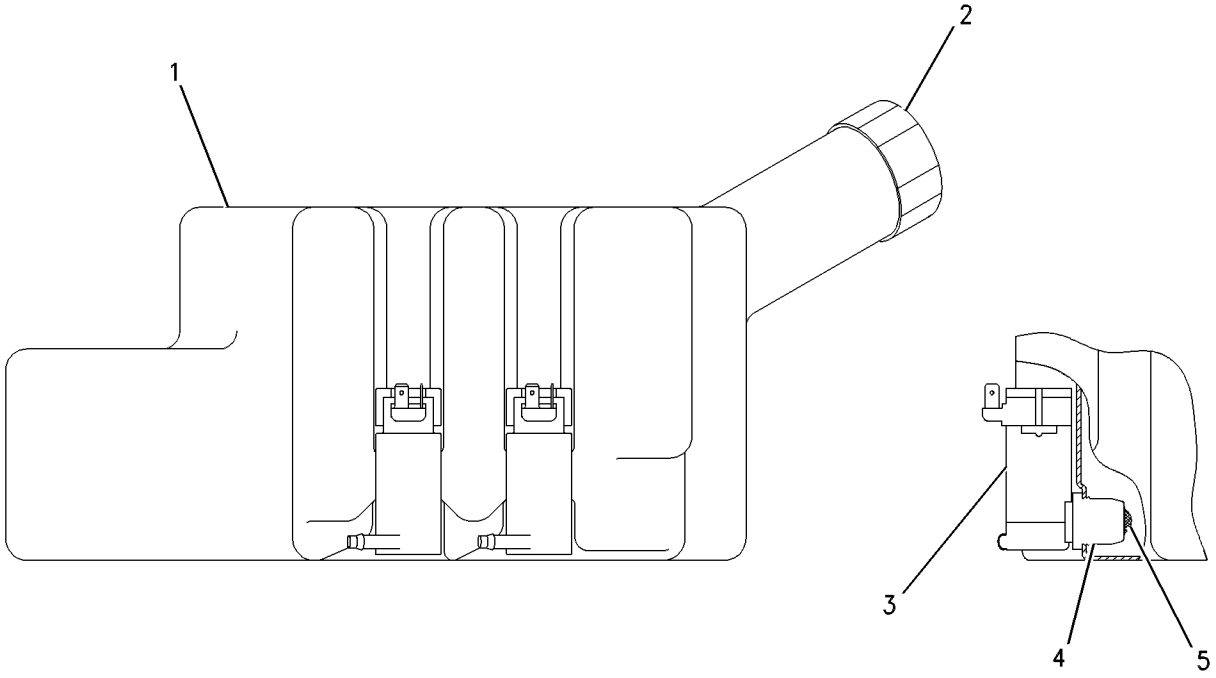

GRAPHIC #1 g00325164

OPERATOR STATION

180-2535 WINDOW GP-DOOR

S/N: DJD1-UP; DBT1-UP
PART OF 164-4565, 164-4566 DOOR GP-CAB
AN ATTACHMENT

SMCS-7310 **i01456840**

NOTE	REF NO	GRAPHIC REF	PART NUMBER	QTY	PART NAME 1 2 3 4 5 6 (PRODUCT LEVEL)	SEE PAGE
	1	1	**144-1569**	1	STOP	
	2	1	**187-5122**	1	FRAME	
	3	1	**187-5123**	1	RAIL	
	4	1	**187-5124**	1	GLASS-SLIDING	
	5	1	**187-5125**	1	GLASS-FIXED	
	6	1	**187-5126**	1	RAIL AS	
	7	1	**187-5127**	1	CATCH AS	
		1	**150-8015**	1	GASKET	
	8	1	**187-5128**	1	CATCH AS	
		1	**150-8015**	1	GASKET	
M	9	1	**8T-0306**	6	SCREW-MACHINE (M5X0.8X10MM)	
	10	1	**9X-2532**	1	SEAL	
BE	11	1	**137-2170**		SEAL (250 CM)	

B-USE AS REQUIRED
E-ORDER BY THE CENTIMETER
M-METRIC PART

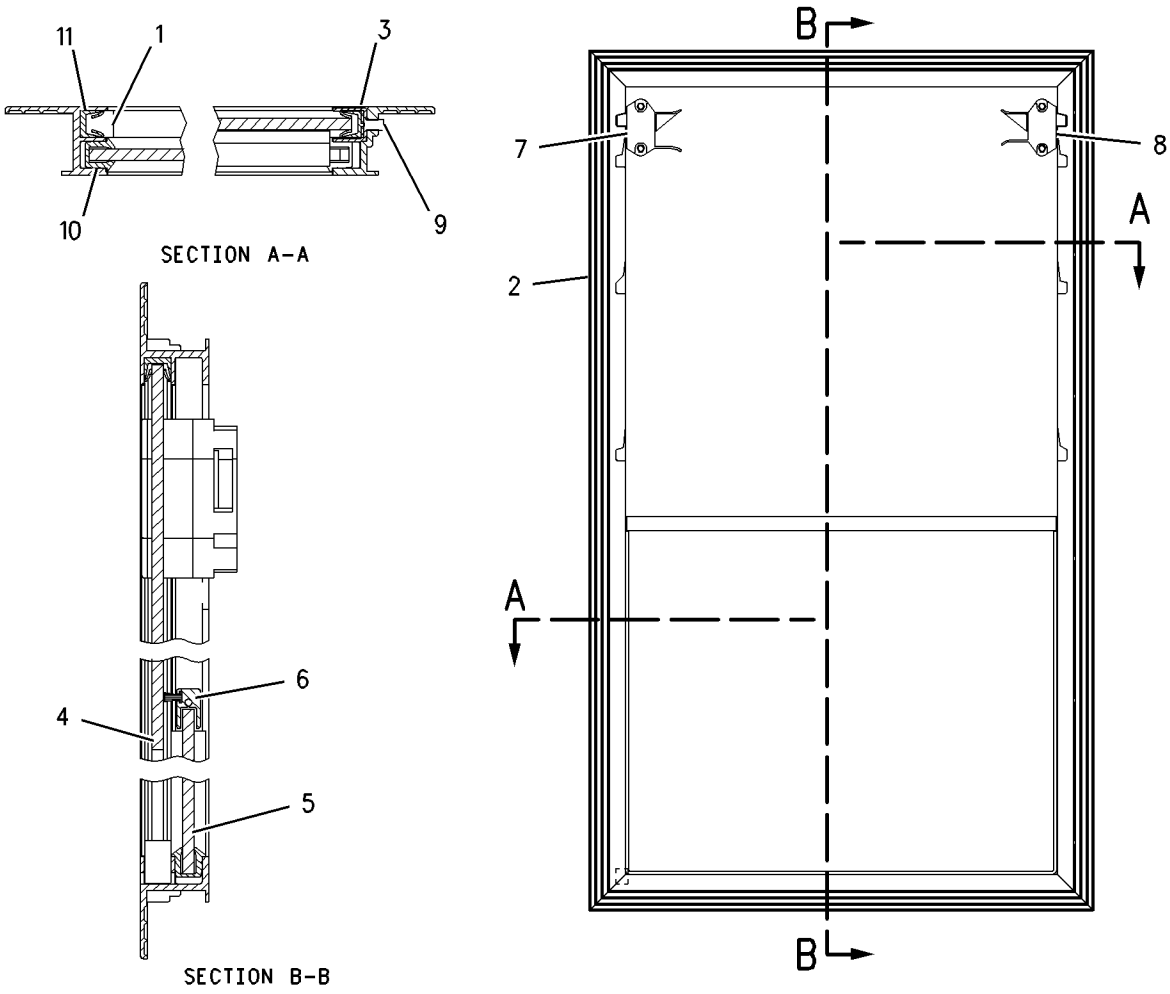

GRAPHIC #1 g00762052

OPERATOR STATION

107-4628 WIPER GP-WINDOW

S/N: DJD1-UP; DBT1-UP
PART OF 190-4405 CAB AR
AN ATTACHMENT

SMCS-7305 **i01826171**

NOTE	REF NO	GRAPHIC REF	PART NUMBER	QTY	PART NAME 1 2 3 4 5 6 (PRODUCT LEVEL)	SEE PAGE
C	1	1	**5C-8811**	1	BLADE AS-WIPER (REAR)	
	2	1	**6V-6210**	1	GASKET-SHAFT	
	3	1	**6V-7419**	1	BLADE AS-WIPER (FRONT)	
	4	1	**8T-5400**	4	CONNECTOR	
	5	1	**9R-2596**	1	PLATE	
C	6	1	**155-5779**	1	WIPER PIVOT AS	
C	7	1	**155-5781**	1	ARM AS-WIPER (REAR)	
C	8	1	**155-5782**	1	ARM AS-WIPER (FRONT)	
C	9	1	**155-5783**	1	MOTOR GP-WINDOW WIPER (24 VOLT) (FRONT)	
		1	**186-3735**	5	PIN-CONNECTOR	
		1	**8T-8737**	1	PLUG-SEAL	
		1	**102-8805**	1	KIT-RECEPTACLE (6 PIN)	
					(KIT SERVICES RECEPTACLE AS. AND WEDGE)	
C	10	1	**155-5784**	1	MOTOR GP-WINDOW WIPER (24 VOLT) (REAR)	
		1	**186-3735**	5	PIN-CONNECTOR	
		1	**8T-8737**	1	PLUG-SEAL	
		1	**102-8805**	1	KIT-RECEPTACLE (6 PIN)	
					(KIT SERVICES RECEPTACLE AS. AND WEDGE)	
	11	1	**3S-2093**	7	STRAP-CABLE	
	12	1	**4M-7470**	1	GROMMET	
M	13	1	**9X-2045**	2	SCREW-TRUSS HEAD (M6X1X20MM)	
D	14	1	**144-0195**		HOSE (2.67M)	
D	15	1	**144-0195**		HOSE (0.7M)	

C-CHANGE FROM PREVIOUS TYPE
D-ORDER BY THE METER
M-METRIC PART

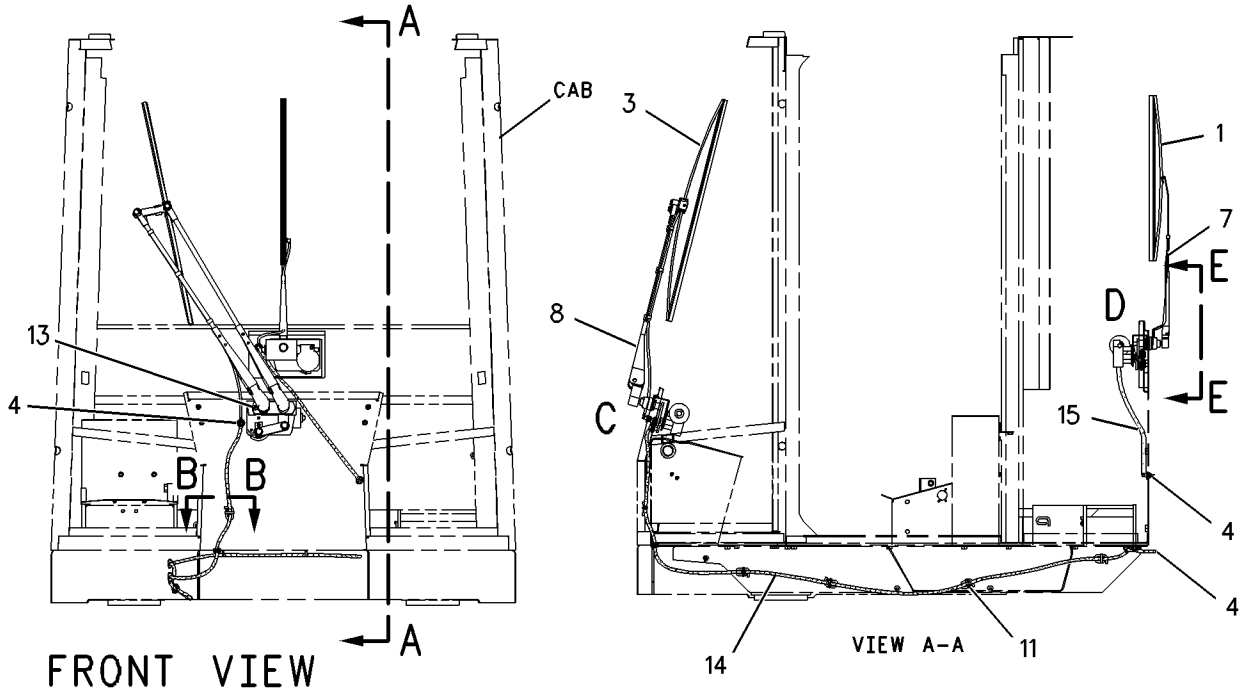

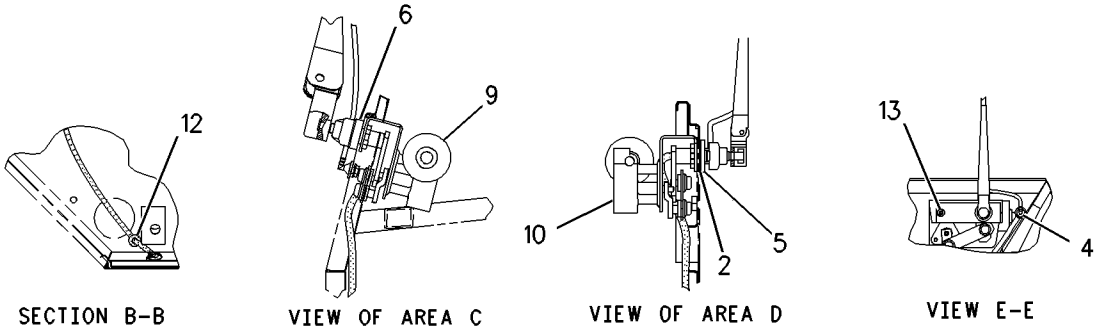

GRAPHIC #1 g00851880

SERVICE EQUIPMENT AND SUPPLIES

202-0428 BOX GP-TOOL

S/N: DJD1-UP; DBT1-UP

PART OF 176-5221, 204-4349 CHASSIS AR

SMCS-7259 **i01774629**

NOTE	REF NO	GRAPHIC REF	PART NUMBER	QTY	PART NAME 1 2 3 4 5 6 (PRODUCT LEVEL)	SEE PAGE
	1	1	**204-4341**	1	TOOL BOX	
	2	1	**204-4342**	1	CHANNEL	
	3	1	**3B-4605**	2	PIN-COTTER	
	4	1	**7X-7729**	4	WASHER (11X25X3MM THK)	
M	5	1	**8T-4137**	4	BOLT (M10X1.5X20MM)	
	6	1	**9S-1305**	2	PIN-CLEVIS	
E	7	1	**5P-5637**		SEAL (.3M)	

E-ORDER BY THE CENTIMETER
M-METRIC PART

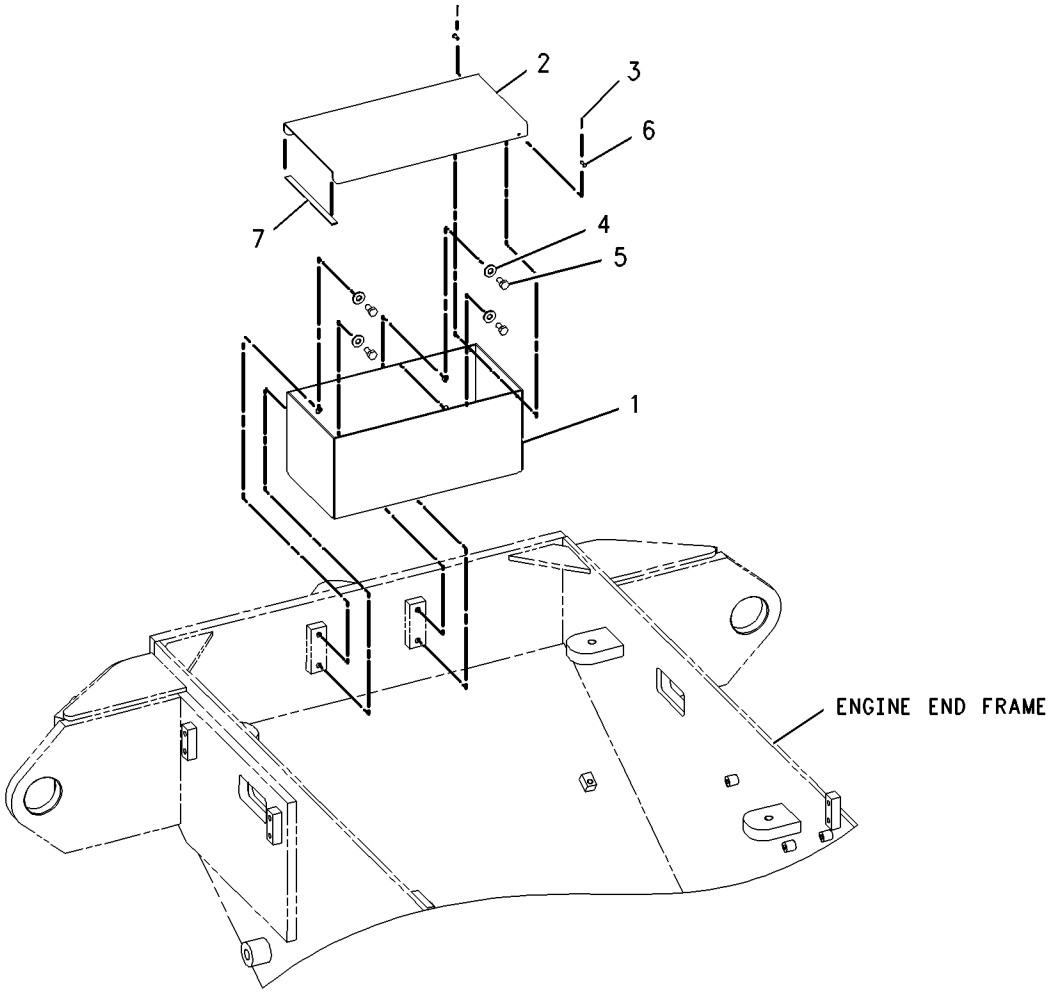

GRAPHIC #1 g00915483

SERVICE EQUIPMENT AND SUPPLIES

220-5564 FILM GP

S/N: DJD1-UP

PART OF 180-9744 PLATE & FILM GP

SMCS-7405, 7557 **i01808059**

NOTE	REF NO	GRAPHIC REF	PART NUMBER	QTY	PART NAME 1 2 3 4 5 6 (PRODUCT LEVEL)	SEE PAGE
	1	1	**208-4977**	1	FILM-CAT (RH)	
	2	1	**208-4978**	1	FILM-CAT (RH)	
	3	1	**208-4981**	2	FILM (STRIPE)	
	4	1	**208-4980**	1	FILM-CAT (LH)	
	5	1	**208-4979**	1	FILM-CAT (LH)	
	6	1	**208-4970**	2	FILM (928G)	
	7	1	**9X-2447**	1	FILM-CATERPILLAR	

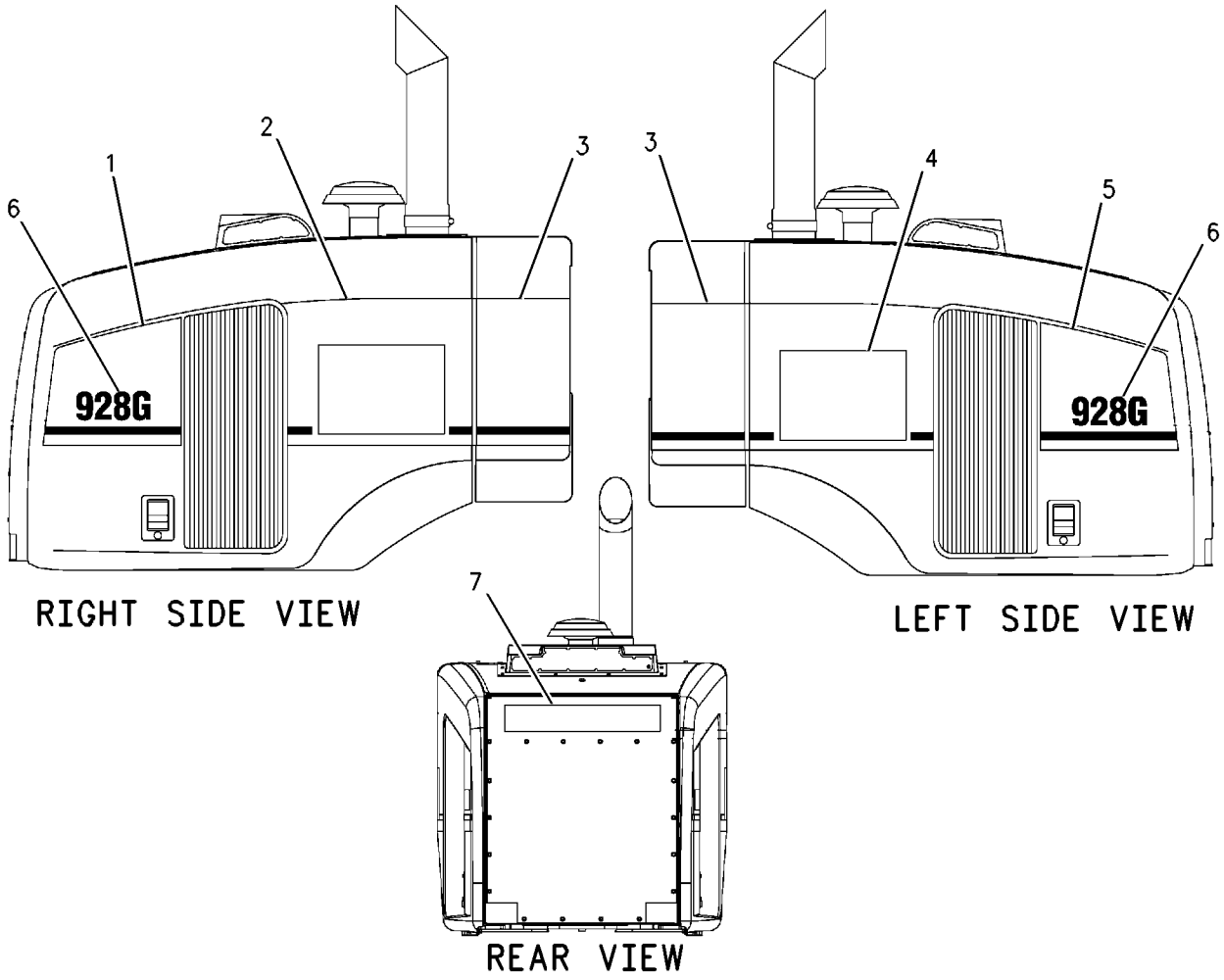

GRAPHIC #1 g00925021

SERVICE EQUIPMENT AND SUPPLIES

220-5565 FILM GP

S/N: DBT1-UP

PART OF 202-0429 PLATE & FILM GP

SMCS-7405, 7557 **i01808723**

NOTE	REF NO	GRAPHIC REF	PART NUMBER	QTY	PART NAME 1 2 3 4 5 6 (PRODUCT LEVEL)	SEE PAGE
	1	1	**208-4977**	1	FILM-CAT (RH)	
	2	1	**208-4978**	1	FILM-CAT (RH)	
	3	1	**208-4981**	2	FILM (STRIPE)	
	4	1	**208-4980**	1	FILM-CAT (LH)	
	5	1	**208-4979**	1	FILM-CAT (LH)	
	6	1	**208-4971**	2	FILM (IT28G)	
	7	1	**9X-2447**	1	FILM-CATERPILLAR	

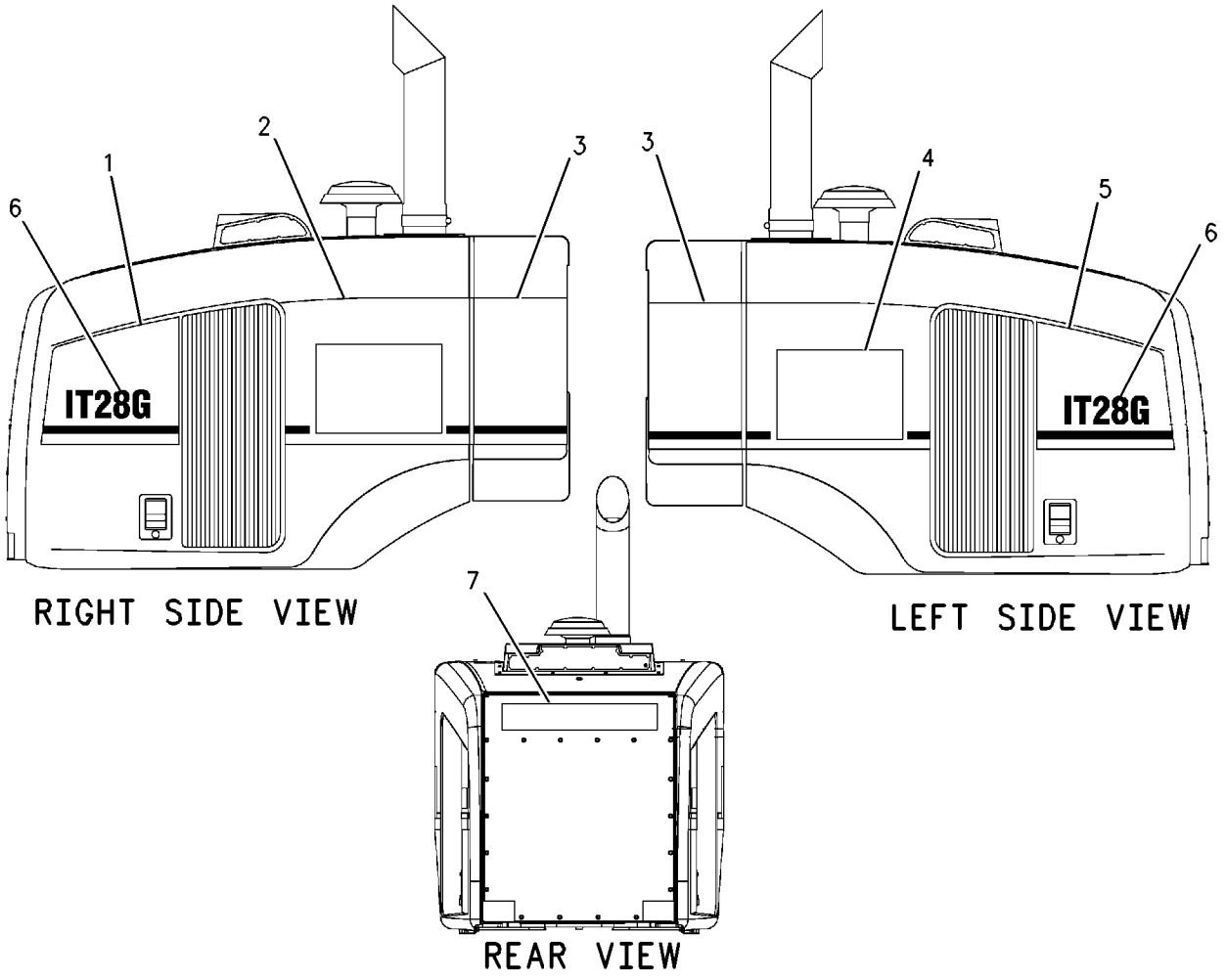

GRAPHIC #1 g00925072

SERVICE EQUIPMENT AND SUPPLIES

180-9744 PLATE & FILM GP

S/N: DJD1-UP

PART OF 204-4349 CHASSIS AR

SMCS-7405, 7557 **i01794754**

NOTE	PART NUMBER	QTY	PART NAME 1 2 3 4 5 6 (PRODUCT LEVEL)	SEE PAGE
	1S-6636	1	FILM-PATENT	
			(ON LH SIDE OF REAR FACE OF NON-ENGINE END FRAME CENTER SUPPORT PLATE)	
	4P-6422	1	FILM-WARNING (NO ETHER/AIR INTAKE)	
			(LH SIDE OF ENGINE COMPARTMENT HOOD NEAR PRE-AIRCLEANER)	
	5P-9884	1	FILM (HYDRAULIC OIL)	
			(ON TOP OF HYDRAULIC TANK)	
	7X-3229	4	FILM-LIFT & TIE DOWN	
			(LOCATED ABOVE EACH TIE DOWN EYE)	
	8T-9530	4	TACK-FASTENER	
	105-3330	2	FILM-WARNING (ACCUMULATOR PRESSURE)	
			(ONE FILM ON RH SIDE ADJACENT TO BRAKE ACCUMMULATORS)	
			(ONE FILM ON RH SIDE OF THE ENGINE END FRAME,ON THE FRONT CAB MOUNT POST ADJACENT TO PILOT ACCUMULATOR)	
	134-7258	1	FILM-IDENTIFICATION (EXTENDED LIFE COOLANT)	
			(ON THE UNDERSIDE OF THE SHUNT TANK ACCESS DOOR)	
	194-0856	1	PLATE (PRODUCT IDENTIFICATION)	
			(ON THE LH SIDE OF THE NON-ENGINE END FRAME)	
Y	**220-5564**	1	FILM GP (928G)	719
	220-5566	1	FILM (GREASE POINT) (GREASE POINT)	
			(BESIDE GREASE BLOCK ON ENGINE END FRAME)	
	220-5568	1	FILM (GREASE POINT)	
			(ON GREASE BLOCK ON NON-ENGINE END FRAME)	
	220-5572	1	FILM (GREASE POINT)	
			(ON LH SIDE OF NON-ENGINE END FRAME)	
	220-5574	1	FILM-INSTRUCTION (RADIATOR DOORS)	
			(ON FAN GUARD BELOW THE LATCH)	

Y-SEPARATE ILLUSTRATION

<END>

SERVICE EQUIPMENT AND SUPPLIES

202-0429 PLATE & FILM GP

S/N: DBT1-UP

PART OF 176-5221 CHASSIS AR

SMCS-7405, 7557 **i01800796**

NOTE	PART NUMBER	QTY	PART NAME 1 2 3 4 5 6 (PRODUCT LEVEL)	SEE PAGE
	4P-6422	1	FILM-WARNING (NO ETHER/AIR INTAKE)	
			(ON LH SIDE OF ENGINE COMPARTMENT HOOD NEAR PRE-AIRCLEANER)	
	5P-9884	1	FILM (HYDRAULIC OIL)	
			(ON TOP OF HYDRAULIC TANK, CENTERED ON SIGHT GAUGE)	
	7X-3229	4	FILM-LIFT & TIE DOWN	
			(ABOVE EACH TIE DOWN EYE)	
	8T-9530	4	TACK-FASTENER	
	105-3330	2	FILM-WARNING (ACCUMULATOR PRESSURE)	
			(ON LOADER ACCUMMULATOR RIDE CONTROL BRACKET)	
	134-7258	1	FILM-IDENTIFICATION (EXTENDED LIFE COOLANT)	
			(ON UNDERSIDE OF THE SHUNT TANK ACCESS DOOR)	
	194-0856	1	PLATE (PRODUCT IDENTIFICATION)	
			(PLATE ON THE LH SIDE OF THE NON-ENGINE END FRAME)	
Y	**220-5565**	1	FILM GP (IT28G)	720
	220-5566	1	FILM (GREASE POINT)	
			(BESIDE GREASE BLOCK ON ENGINE END FRAME)	
	220-5567	1	FILM (GREASE POINT)	
			(ON GREASE BLOCK ON NON-ENGINE END FRAME)	
	220-5574	1	FILM-INSTRUCTION (RADIATOR DOORS)	
			(ON THE FAN GUARD BELOW THE LATCH)	
	220-5738	1	FILM (GREASE)	
			(ON LH SIDE OF NON-ENGINE END FRAME BELOW THE 'A' PIN FLAG)	

Y-SEPARATE ILLUSTRATION

<END>

203-4641 PLATE & FILM GP

S/N: DJD1-UP; DBT1-UP
AN ATTACHMENT

SMCS-7405, 7557 **i01760515**

NOTE	PART NUMBER	QTY	PART NAME 1 2 3 4 5 6 (PRODUCT LEVEL)	SEE PAGE
	145-9123	2	FILM-WARNING	
			(LOCATE ON INSIDE OF BATTERY BOX)	
	5P-7244	2	PLATE-WARNING (NO CLEARANCE)	
			(LOCATE ON OUTER LOADER TOWER PLATE)	
	8T-9530	8	TACK-FASTENER	
			(LOCATE ON OUTER LOADER TOWER PLATE)	
	7K-6536	4	RIVET-POP	
			(LOCATE ON EXTERIOR CAB PANEL BEHIND LH CAB DOOR)	
	2S-2981	1	TAG-WARNING (STEERING FRAME LOCK LINK)	
			(ATTACH TO STEERING WHEEL)	
	220-5575	1	FILM-WARNING	
			(LOCATE ON BRACKET ON RH 'B' POST)	
	120-5106	1	FILM-WARNING (RADIATOR PRESSURE)	
			(LOCATE ON UNDERSIDE OF SHUNT TANK ACCESS DOOR)	

<END>

203-4642 PLATE & FILM GP—FRENCH

S/N: DJD1-UP; DBT1-UP
AN ATTACHMENT

SMCS-7405, 7557 **i01760568**

NOTE	PART NUMBER	QTY	PART NAME 1 2 3 4 5 6 (PRODUCT LEVEL)	SEE PAGE
	147-0345	2	FILM-WARNING	
			(LOCATE ON INSIDE OF BATTERY BOX)	
	1S-3399	2	PLATE-WARNING (NO CLEARANCE)	
			(LOCATE ON OUTER LOADER TOWER PLATE)	
	8T-9530	8	TACK-FASTENER	
			(LOCATE ON OUTER LOADER TOWER PLATE)	
	7K-6536	4	RIVET-POP	
			(LOCATE ON EXTERIOR CAB PANEL BEHIND LH CAB DOOR)	
	2S-2981	1	TAG-WARNING (STEERING FRAME LOCK LINK)	
			(ATTACH TO STEERING WHEEL)	
	220-5576	1	FILM-WARNING	
			(LOCATE ON BRACKET ON RH 'B' POST)	
	120-5139	1	FILM-WARNING (RADIATOR PRESSURE)	
			(LOCATE ON UNDERSIDE OF SHUNT TANK ACCESS DOOR)	

<END>

203-4643 PLATE & FILM GP–SPANISH

S/N: DJD1-UP; DBT1-UP
AN ATTACHMENT

SMCS-7405, 7557 **i01760606**

NOTE	PART NUMBER	QTY	PART NAME 1 2 3 4 5 6 (PRODUCT LEVEL)	SEE PAGE
	147-0346	2	FILM-WARNING	
			(LOCATE ON INSIDE OF BATTERY BOX)	
	1S-3400	2	PLATE-WARNING (NO CLEARANCE)	
			(LOCATE ON OUTER LOADER TOWER PLATE)	
	8T-9530	8	TACK-FASTENER	
			(LOCATE ON OUTER LOADER TOWER PLATE)	
	7K-6536	4	RIVET-POP	
			(LOCATE ON EXTERIOR CAB PANEL BEHIND LH CAB DOOR)	
	2S-2981	1	TAG-WARNING (STEERING FRAME LOCK LINK)	
			(ATTACH TO STEERING WHEEL)	
	220-5577	1	FILM-WARNING	
			(LOCATE ON BRACKET ON RH 'B' POST)	
	120-5140	1	FILM-WARNING (RADIATOR PRESSURE)	
			(LOCATE ON UNDERSIDE OF SHUNT TANK ACCESS DOOR)	

<END>

203-4644 PLATE & FILM GP–PORTUGUESE

S/N: DJD1-UP; DBT1-UP
AN ATTACHMENT

SMCS-7405, 7557 **i01760610**

NOTE	PART NUMBER	QTY	PART NAME 1 2 3 4 5 6 (PRODUCT LEVEL)	SEE PAGE
	147-0347	2	FILM-WARNING	
			(LOCATE ON INSIDE OF BATTERY BOX)	
	1S-3846	2	PLATE-WARNING (NO CLEARANCE)	
			(LOCATE ON OUTER LOADER TOWER PLATE)	
	8T-9530	8	TACK-FASTENER	
			(LOCATE ON OUTER LOADER TOWER PLATE)	
	7K-6536	4	RIVET-POP	
			(LOCATE ON EXTERIOR CAB PANEL BEHIND LH CAB DOOR)	
	2S-2981	1	TAG-WARNING (STEERING FRAME LOCK LINK)	
			(ATTACH TO STEERING WHEEL)	
	220-5578	1	FILM-WARNING	
			(LOCATE ON BRACKET ON RH 'B' POST)	
	127-5243	1	FILM-WARNING (RADIATOR PRESSURE)	
			(LOCATE ON UNDERSIDE OF SHUNT TANK ACCESS DOOR)	

<END>

203-4645 PLATE & FILM GP—GERMAN

S/N: DJD1-UP; DBT1-UP
AN ATTACHMENT

SMCS-7405, 7557 **i01760613**

NOTE	PART NUMBER	QTY	PART NAME 1 2 3 4 5 6 (PRODUCT LEVEL)	SEE PAGE
	147-0348	2	FILM-WARNING	
			(LOCATE ON INSIDE OF BATTERY BOX)	
	1S-3847	2	PLATE-WARNING (NO CLEARANCE)	
			(LOCATE ON OUTER LOADER TOWER PLATE)	
	8T-9530	8	TACK-FASTENER	
			(LOCATE ON OUTER LOADER TOWER PLATE)	
	7K-6536	4	RIVET-POP	
			(LOCATE ON EXTERIOR CAB PANEL BEHIND LH CAB DOOR)	
	2S-2981	1	TAG-WARNING (STEERING FRAME LOCK LINK)	
			(ATTACH TO STEERING WHEEL)	
	220-5579	1	FILM-WARNING	
			(LOCATE ON BRACKET ON RH 'B' POST)	
	120-5141	1	FILM-WARNING (RADIATOR PRESSURE)	
			(LOCATE ON UNDERSIDE OF SHUNT TANK ACCESS DOOR)	

<END>

203-4647 PLATE & FILM GP—ITALIAN

S/N: DJD1-UP; DBT1-UP
AN ATTACHMENT

SMCS-7405, 7557 **i01760615**

NOTE	PART NUMBER	QTY	PART NAME 1 2 3 4 5 6 (PRODUCT LEVEL)	SEE PAGE
	147-0349	1	FILM-WARNING	
			(LOCATE ON INSIDE OF BATTERY BOX)	
	6A-3034	2	PLATE-WARNING (NO CLEARANCE)	
			(LOCATE ON OUTER LOADER TOWER PLATE)	
	8T-9530	8	TACK-FASTENER	
			(LOCATE ON OUTER LOADER TOWER PLATE)	
	7K-6536	4	RIVET-POP	
			(LOCATE ON EXTERIOR CAB PANEL BEHIND LH CAB PANEL)	
	2S-2981	1	TAG-WARNING (STEERING FRAME LOCK LINK)	
			(ATTACH TO STEERING WHEEL)	
	220-5580	1	FILM-WARNING	
			(LOCATE ON BRACKET ON RH 'B' POST)	
	127-5242	1	FILM-WARNING (RADIATOR PRESSURE)	
			(LOCATE ON UNDERSIDE OF SHUNT TANK ACCESS DOOR)	

<END>

203-4648 PLATE & FILM GP—DANISH

S/N: DJD1-UP; DBT1-UP

AN ATTACHMENT

SMCS-7405, 7557 **i01760617**

NOTE	PART NUMBER	QTY	PART NAME 1 2 3 4 5 6 (PRODUCT LEVEL)	SEE PAGE
	147-0350	2	FILM-WARNING	
			(LOCATE ON INSIDE OF BATTERY BOX)	
	3E-0624	2	PLATE-WARNING (NO CLEARANCE)	
			(LOCATE ON OUTER LOADER TOWER PLATE)	
	8T-9530	8	TACK-FASTENER	
			(LOCATE ON OUTER LOADER TOWER PLATE)	
	7K-6536	4	RIVET-POP	
			(LOCATE ON EXTERIOR CAB PANEL BEHIND LH CAB DOOR)	
	2S-2981	1	TAG-WARNING (STEERING FRAME LOCK LINK)	
			(ATTACH TO STEERING WHEEL)	
	220-5581	1	FILM-WARNING	
			(LOCATE ON BRACKET ON RH 'B' POST)	
	127-5246	1	FILM-WARNING (RADIATOR PRESSURE)	
			(LOCATE ON UNDERSIDE OF SHUNT TANK ACCESS DOOR)	

<END>

203-4649 PLATE & FILM GP—GREEK

S/N: DJD1-UP; DBT1-UP

AN ATTACHMENT

SMCS-7405, 7557 **i01796666**

NOTE	PART NUMBER	QTY	PART NAME 1 2 3 4 5 6 (PRODUCT LEVEL)	SEE PAGE
	127-5245	1	FILM-WARNING (RADIATOR PRESSURE)	
			(UNDERSIDE OF SHUNT TANK ACCESS DOOR TO READ FROM LH SIDE OF MACHINE)	
	147-0351	2	FILM-WARNING	
			(INSIDE OF BATTERY BOX)	
	220-5582	1	FILM-WARNING	
			(BRACKET ON RH B POST INSIDE CAB)	
	3E-0625	2	PLATE-WARNING (NO CLEARANCE)	
			(OUTER LOADER TOWER)	
	8T-9530	8	TACK-FASTENER	
	2S-2981	1	TAG-WARNING (STEERING FRAME LOCK LINK)	
			(ATTACH TO STEERING WHEEL)	

<END>

203-4650 PLATE & FILM GP—DUTCH

S/N: DJD1-UP; DBT1-UP
AN ATTACHMENT

SMCS-7405, 7557 **i01760481**

NOTE	PART NUMBER	QTY	PART NAME 1 2 3 4 5 6 (PRODUCT LEVEL)	SEE PAGE
	147-0352	2	FILM-WARNING	
			(LOCATE ON INSIDE OF BATTERY BOX)	
	3E-0626	2	PLATE-WARNING (NO CLEARANCE)	
			(LOCATE ON OUTER LOADER TOWER PLATE)	
	8T-9530	8	TACK-FASTENER	
			(LOCATE ON OUTER LOADER TOWER PLATE)	
	7K-6536	4	RIVET-POP	
			(LOCATE ON EXTERIOR CAB PANEL LH CAB DOOR)	
	2S-2981	1	TAG-WARNING (STEERING FRAME LOCK LINK)	
			(ATTACH TO STEERING WHEEL)	
	220-5583	1	FILM-WARNING	
			(LOCATE ON BRACKET ON RH 'B' POST)	
	127-5244	1	FILM-WARNING (RADIATOR PRESSURE)	
			(LOCATE ON UNDERSIDE OF SHUNT TANK ACCESS DOOR)	

<END>

203-4651 PLATE & FILM GP—ARABIC

S/N: DJD1-UP; DBT1-UP
AN ATTACHMENT

SMCS-7405, 7557 **i01760566**

NOTE	PART NUMBER	QTY	PART NAME 1 2 3 4 5 6 (PRODUCT LEVEL)	SEE PAGE
	147-0353	2	FILM-WARNING	
			(LOCATE ON INSIDE OF BATTERY BOX)	
	6V-0589	2	PLATE-WARNING (NO CLEARANCE)	
			(LOCATE ON OUTER LOADER TOWER PLATE)	
	8T-9530	8	TACK-FASTENER	
			(LOCATE ON OUTER LOADER TOWER PLATE)	
	7K-6536	4	RIVET-POP	
			(LOCATE ON EXTERIOR CAB PANEL BEHIND LH CAB DOOR)	
	2S-2981	1	TAG-WARNING (STEERING FRAME LOCK LINK)	
			(ATTACH TO STEERING WHEEL)	
	220-5584	1	FILM-WARNING	
			(LOCATE ON BRACKET ON RH 'B' POST)	
	133-2988	1	FILM-WARNING (RADIATOR PRESSURE)	
			(LOCATE ON UNDERSIDE OF SHUNT TANK ACCESS DOOR)	

<END>

203-4652 PLATE & FILM GP—SWEDISH

S/N: DJD1-UP; DBT1-UP

AN ATTACHMENT

SMCS-7405, 7557 **i01760604**

NOTE	PART NUMBER	QTY	PART NAME 1 2 3 4 5 6 (PRODUCT LEVEL)	SEE PAGE
	147-0355	2	FILM-WARNING	
			(LOCATE ON INSIDE OF BATTERY BOX)	
	8T-9530	8	TACK-FASTENER	
			(LOCATE ON OUTER LOADER TOWER PLATE)	
	100-4676	2	PLATE-WARNING (NO CLEARANCE)	
			(LOCATE ON OUTER LOADER TOWER PLATE)	
	7K-6536	4	RIVET-POP	
			(LOCATE ON EXTERIOR CAB PANEL BEHIND LH CAB DOOR)	
	2S-2981	1	TAG-WARNING (STEERING FRAME LOCK LINK)	
			(ATTACH TO STEERING WHEEL)	
	220-5585	1	FILM-WARNING	
			(LOCATE ON BRACKET ON RH 'B' POST)	
	133-2991	1	FILM-WARNING (RADIATOR PRESSURE)	
			(LOCATE ON UNDERSIDE OF THE SHUNT TANK ACCESS DOOR)	

<END>

203-4653 PLATE & FILM GP—RUSSIAN

S/N: DJD1-UP; DBT1-UP

AN ATTACHMENT

SMCS-7405, 7557 **i01798390**

NOTE	PART NUMBER	QTY	PART NAME 1 2 3 4 5 6 (PRODUCT LEVEL)	SEE PAGE
	133-3949	1	FILM-WARNING (RADIATOR PRESSURE)	
			(LOCATED ON UNDERSIDE OF SHUNT TANK ACCESS DOOR)	
	153-5093	2	FILM-WARNING (JUMPER CABLES)	
			(LOCATED INSIDE THE BATTERY BOX ON THE FRONT SIDE PLATE NEAR THE TOP)	
	220-5586	1	FILM-WARNING (STARTING AID INSTRUCTIONS)	
			(LOCATED ON BRACKET ON RH 'B' POST INSIDE OF CAB)	
	5P-1377	2	PLATE-WARNING (NO CLEARANCE)	
			(LOCATED ON THE OUTER LOADER TOWER PLATE)	
B	**8T-9530**	8	TACK-FASTENER	

B-USE AS REQUIRED

<END>

203-4654 PLATE & FILM GP—FINNISH

S/N: DJD1-UP; DBT1-UP
AN ATTACHMENT

SMCS-7405, 7557 **i01798415**

NOTE	PART NUMBER	QTY	PART NAME 1 2 3 4 5 6 (PRODUCT LEVEL)	SEE PAGE
	133-2990	1	FILM-WARNING (RADIATOR PRESSURE)	
			(LOCATED ON UNDERSIDE OF SHUNT TANK ACCESS DOOR)	
	147-0356	2	FILM-WARNING (JUMPER CABLES)	
			(LOCATED INSIDE THE BATTERY BOX ON THE FRONT SIDE PLATE NEAR THE TOP)	
	220-5587	1	FILM-WARNING	
			(LOCATED ON BRACKET ON RH 'B' POST INSIDE OF CAB)	
	104-6418	2	PLATE-WARNING (NO CLEARANCE)	
			(LOCATED ON THE OUTER LOADER TOWER PLATE)	
B	**8T-9530**	8	TACK-FASTENER	

B-USE AS REQUIRED

<END>

203-4655 PLATE & FILM GP—NORWEGIAN

S/N: DJD1-UP; DBT1-UP
AN ATTACHMENT

SMCS-7405, 7557 **i01798450**

NOTE	PART NUMBER	QTY	PART NAME 1 2 3 4 5 6 (PRODUCT LEVEL)	SEE PAGE
	133-3948	1	FILM-WARNING (RADIATOR PRESSURE)	
			(LOCATED ON UNDERSIDE OF SHUNT TANK ACCESS DOOR)	
	154-2567	2	FILM-WARNING (JUMPER CABLES)	
			(LOCATED INSIDE THE BATTERY BOX ON THE FRONT SIDE PLATE NEAR THE TOP)	
	220-5588	1	FILM-WARNING (STARTING AID INSTRUCTIONS)	
			(LOCATED ON BRACKET ON RH 'B' POST INSIDE OF CAB)	
	104-6417	2	PLATE-WARNING (NO CLEARANCE)	
			(LOCATED ON THE OUTER LOADER TOWER PLATE)	
B	**8T-9530**	8	TACK-FASTENER	

B-USE AS REQUIRED

<END>

221-4057 PLATE & FILM GP–JAPANESE

S/N: DJD1-UP; DBT1-UP
AN ATTACHMENT

SMCS-7405, 7557 **i01831036**

NOTE	PART NUMBER	QTY	PART NAME 1 2 3 4 5 6 (PRODUCT LEVEL)	SEE PAGE
	221-4064	1	FILM	
			(UNDER PIN PLATE ON LH SIDE OF NON-ENGINE END FRAME)	
	134-2625	1	FILM-NOTICE (NO KEROSENE)	
			(ON RH SIDE OF REAR STRUCTURE)	
	178-8285	1	FILM-SOUND	
			(SHIP IN LITERATURE COMPARTMENT)	
	147-0354	2	FILM-WARNING (CABLE CONNECTION)	
			(ON THE INSIDE OF THE BATTERY BOX)	
	220-5589	1	FILM-WARNING (STARTING INSTRUCTIONS)	
			(ON STEERING COLUMN HOUSING)	

<END>

221-4058 PLATE & FILM GP–JAPANESE

S/N: DJD1-UP; DBT1-UP
AN ATTACHMENT

SMCS-7405, 7557 **i01809792**

NOTE	PART NUMBER	QTY	PART NAME 1 2 3 4 5 6 (PRODUCT LEVEL)	SEE PAGE
	221-4064	1	FILM	
			(UNDER PIN PLATE ON LH SIDE OF NON-ENGINE END FRAME)	
	134-2625	1	FILM-NOTICE (NO KEROSENE)	
			(ON RH SIDE OF REAR STRUCTURE)	
	178-8285	1	FILM-SOUND	
			(SHIP IN LITERATURE COMPARTMENT)	
	147-0354	2	FILM-WARNING (JUMPER CABLES)	
			(ON THE INSIDE OF BATTERY BOX)	
	220-5589	1	FILM-WARNING (STARTING INSTRUCTIONS)	
			(ON STEERING COLUMN HOUSING)	

<END>

PART NUMBER INDEX

Part	Page
0	
0S-1594	607
	609
1	
1A-2209	326
	336
1A-4350	694
1B-3057	62
1B-3978	184
	214
1B-3980	214
1B-4430	710
1B-8723	680
1B-8736	12
	24
1C-0569	696
1D-4677	708
1G-8878	208
1G-9963	6
	▶130
1H-1023	562
1H-3244	96
	98
	156
1H-4393	122
	350
	352
	354
	356
	360
	670
1H-6227	476
1H-9696	237
1J-5607	588
1J-6298	693
1J-9671	301
	542
1K-6853	248
1K-6870	574
1K-6872	607
	609
1K-7990	210
	212
1K-7991	210
	212
1K-8061	218
	222
1L-9080	694
1M-4543	656
1M-6718	534
	538
1M-7250	75
1N-3762	14
	16
1P-3703	406
	416
	420
	424
	452
1P-4278	80
1P-4576	206
1P-4582	406
1P-4584	406
1P-6356	656
1P-6522	604
	644
1P-7009	656
1R-0739	45
1S-0833	482
1S-3399	723
1S-3400	724
1S-3846	724
1S-3847	725
1S-6636	721
1S-7251	140
1S-7252	140
1S-9593	86
	561
	562
	563
	564
1U-0257	573
	598
1U-1254	577
	580
1U-1857	599
1U-3251	596
1U-3252	595
1U-8846	184
1V-0117	621
1V-2772	214
1V-8787	312
1V-9148	372
	566
	568
1W-2934	617
1Y-7927	646
2	
2B-0858	8
	39
2B-2695	696
2B-9373	236
2D-0598	184
2D-2507	241
2D-2508	241
2D-2509	241
2D-2628	261
2D-2629	261
2D-2630	261
2D-2631	261
2D-2633	261
2D-6235	646
2F-7306	667
2G-1133	621
2G-5298	142
	146
	672
	676
2G-6595	241
2G-8767	140
2G-9524	641
2H-1142	480
2H-3429	534
	536
	538
	540
	622
2H-3920	137
	600
	642
	677
2H-3922	134
	604
2H-3923	604
2H-3927	210
	212
2H-9524	162
2J-3507	573
	588
2J-3961	370
2J-6232	210
	212
2J-6233	210
	212
2J-7550	237
2K-4821	96
	98
2K-4973	696
	708
	710
2K-5957	224
2K-6830	374
	376
2K-9295	210
	212
2L-0043	203
2L-6726	260
	622
2L-8076	174
2L-9653	656
2M-0849	607
	609
2M-2570	462
	464
2M-7077	150
	152
2M-7819	646
2M-8191	480
2M-9780	52
	227
	314
	326
	327
	330
	335
	364
	365
	404
	406
	408
	412
	414
	428
	432
	436
	440
	444
	462
2N-3477	302
	673
	677
2N-7006	184
2N-7007	184
2P-1279	397
	412
	414
2P-1293	228
	400
	404
	409
2P-2537	52
2P-4173	18
2P-8104	132
2P-8421	428
	432
	436
2Q-5979	238
	239
	▶240
2S-1382	260
2S-2981	723
	724
	725
	726
	727
	728
2S-3745	604
	644
2S-4078	406
	428
	432
	436
2S-9600	542
2T-3360	316
	318
2W-1141	184
	188
	190
	192
2Y-5671	558
2Y-5829	560
3	
3B-0551	216
	218
	222
3B-4124	210
	212
3B-4501	604
3B-4503	122
3B-4605	718
3B-4610	303

▶ **PRIMARY REFERENCE**

PART NUMBER INDEX

Part	Page	Part	Page	Part	Page	Part	Page
3B-4617	304	3E-1841	604	3E-6238	132		440
3B-6552	294		644	3E-6328	►95		441
	295	3E-2332	304		122		444
3B-7734	294	3E-2338	216	3E-6450	326		452
3B-8488	248		218		336		508
3B-8489	247		222	3E-6575	667		512
	249	3E-3361	644	3E-6748	478		514
	288	3E-3365	95	3E-7692	226		516
	294		114	3E-7843	►106		518
	295		170		388		520
	568		173		390		524
	570		262	3E-7844	►105		526
3B-8491	568		414		388		528
	570		440		390		532
	586		563	3E-8016	310		558
3C-3364	681		604	3E-8020	623		560
	682		644	3E-8320	140		622
3C-4922	681	3E-3368	106	3E-8581	561	3J-4818	710
	682	3E-3371	105	3E-9205	546	3J-6021	542
3D-2824	196		114		►561	3J-7354	50
	206		127	3E-9411	568		208
	227		128		570		227
	228		166	3F-5792	338		304
	314		336	3F-6166	294		306
	326		621		295		326
	327	3E-3377	561	3F-9556	96		327
	330		670		98		330
	335	3E-3383	195	3G-1820	338		379
	372		340	3G-4017	►598		412
	402		350	3G-4258	598		414
	404		352	3G-4259	598		462
	406		354	3G-5285	372		464
	408		356	3G-6659	294		508
	412		360		295		512
	416		676	3G-6660	294		514
	420	3E-3389	137		295		516
	424		142	3H-7180	470		518
	428		146		524		520
	432		474		528		524
	436		475	3H-8538	302		526
	448		508	3J-1907	184		528
	450	3E-3805	628		208		532
	452		630		227		542
	464		632		228	3J-9069	452
	492		634		232	3J-9196	562
	494	3E-3892	623		259	3K-0360	18
	498	3E-4051	656		304		156
	500	3E-4052	656		306		227
	502	3E-4056	656		314		262
	504	3E-4057	656		379		314
	506	3E-4058	656		392		326
	594	3E-4296	314		393		327
3D-2891	188	3E-4312	608		396		330
	190	3E-4335	667		406		335
	192	3E-4336	667		408		336
3D-2975	646	3E-4354	542		416		402
3D-8358	188	3E-4362	667		420		406
	190	3E-5153	132		424		414
	192	3E-5154	132		425		429
3D-8752	621	3E-5239	156		428		433
3E-0154	►135		172		429		437
	174		620		432		440
3E-0624	726		625		433		444
3E-0625	726	3E-5464	604		436		462
3E-0626	727	3E-6237	132		437		471

► **PRIMARY REFERENCE**

PART NUMBER INDEX

Part	Page
	472
	473
	492
	494
	497
	534
	536
	538
	540
	547
	548
	562
3K-4897	668
3K-7056	214
3K-7057	214
3K-8106	156
3K-9520	62
3L-8187	302
	672
	676
3P-1967	452
3P-2404	228
	409
3P-5903	397
3P-5904	397
3P-8680	478
3P-9847	429
	433
	437
3S-2093	156
	226
	284
	286
	392
	408
	604
	620
	622
	644
	656
	713
	716
3S-6049	140
3S-6050	140
3S-8665	156
3S-9703	326
	330
3T-2094	236
3T-2662	156
	692
3T-5201	628
	630
	632
	634
3V-0905	200
3V-0906	200
3V-0908	200
3V-4791	108
	109
3V-5349	684
3W-6188	140
	174

4

Part	Page
4B-1218	621
4B-2041	621
4B-3665	237
4B-4274	122
	156
	270
	416
	420
	425
	622
4B-4277	86
4B-4863	68
	70
	156
4B-5059	646
4B-5324	302
	673
	677
4D-1326	135
4D-4431	322
	324
4D-6432	694
	696
4D-6466	80
4D-7388	62
	228
	406
	409
4D-7735	306
4D-8123	294
4D-9517	228
	409
4E-0659	575
	576
	578
	579
	581
	582
4E-0685	576
	579
4E-1062	623
4E-1357	250
4E-1384	628
	630
	632
	634
	641
4E-1411	649
4E-1526	450
	452
4E-1639	216
	222
4E-2161	652
	654
4E-2367	200
4E-2448	621
4E-2482	577
	580
4E-2483	577
	580
4E-2649	450
4E-2673	476
4E-3644	210

Part	Page
	212
4E-3896	210
	212
4E-3897	210
	212
4E-4031	210
	212
4E-4305	210
	212
4E-4307	210
4E-4524	320
4E-4691	450
4E-5984	246
4E-5985	246
4E-6102	200
4E-6103	▶200
	201
4E-6104	201
4E-7316	713
4E-7540	306
	428
	432
	436
4E-8293	651
4F-2294	136
4F-4042	573
	599
4F-4879	692
	699
4F-8824	214
4H-4063	428
	432
4I-3038	672
	676
4J-0520	450
	452
4J-0523	204
4J-0527	406
4J-4630	372
4J-5267	206
	416
	420
	425
4J-5477	226
	227
	326
	327
	330
	392
	396
	397
	408
	412
	414
	462
	464
4J-7533	496
	556
4J-9058	573
	598
	599
4J-9221	372
4J-9225	322
	324
4K-0173	216

Part	Page
	222
4K-2039	534
	536
	538
	540
4K-4879	240
	242
4K-4881	243
	244
4K-7464	288
4K-7502	20
4K-8302	80
4K-9097	696
4M-1677	182
4M-2381	455
4M-7470	716
4N-2927	646
4P-6422	721
	722
4P-7581	142
	146
	156
	170
	173
	262
	388
	393
	397
	425
	620
	656
	673
	677
4P-8134	142
	146
	156
	162
	170
	174
	390
	673
	677
4S-1962	656
4S-5879	184
4S-8264	652
	654
4S-8287	667
4T-3148	492
	494
	498
	500
	502
	504
	506
4T-4942	547
	548
4T-5613	374
	376
4T-6780	322
	324
4T-7571	547
	548
4T-8091	588
4T-8588	370
4V-0611	416

▶ **PRIMARY REFERENCE**

PART NUMBER INDEX

Part	Page	Part	Page	Part	Page	Part	Page
	420		80		376		677
	424		290	5J-5731	372	5P-4116	63
4V-0612	416		303	5J-7010	322		140
	420		306		324		174
	424		342	5J-8150	322		306
4V-2879	568		344		324		316
4V-2883	568		346	5K-5338	306		318
4V-4905	568		348	5K-9090	232		612
4V-7884	708		350		364		624
	710		352		365		636
4V-8285	577		354		400		673
4V-8286	577		356		406		677
4V-8556	710		358		416	5P-4484	216
4V-8577	708		360		420		218
4V-8629	370		362		424		222
	570		628		425	5P-4965	156
	586		630		428	5P-5148	428
4V-8674	570		632		432		432
4W-5359	24		634		436		436
4W-7356	312		641		448	5P-5291	218
	459	5C-8312	68		450		222
	460		70		452	5P-5637	290
			122	5L-4753	203		652
			670	5L-4758	542		718
5		5C-8811	716	5L-7200	122	5P-5639	118
		5C-8964	122	5M-3062	574		120
5A-3604	508	5C-9029	122		708	5P-5643	600
	512	5C-9553	170	5M-4987	236		605
	516		194	5M-6214	218		642
	518		593		222	5P-5755	62
	520		604	5P-0076	478	5P-5774	118
	526		620	5P-0599	68		120
	528		641		70		684
	532		644	5P-0713	184	5P-5777	227
5C-1777	90	5D-1026	18	5P-0743	18	5P-5908	604
5C-1796	48		62	5P-0747	140		644
5C-2874	122		76	5P-0761	140	5P-5927	636
5C-2890	116		660	5P-0767	660	5P-6039	116
	118	5D-4822	646	5P-0798	654	5P-6264	170
	120	5D-6912	621	5P-1075	440	5P-6718	34
	122	5D-9629	56		444	5P-6872	663
	290	5F-3999	372		708	5P-6887	63
	466	5F-9144	478	5P-1076	56	5P-7070	605
	467	5F-9657	52		100	5P-7211	56
	468	5G-2373	574		102		62
	469	5G-6973	304	5P-1377	728	5P-7244	723
	470	5G-7820	388	5P-1420	80	5P-7460	420
	508		390	5P-1442	482		425
	512	5G-7822	388	5P-1935	406	5P-7461	420
	516	5G-8871	683	5P-2304	184		425
	518	5H-1039	218	5P-2861	214	5P-7462	393
	520		222	5P-3723	216	5P-7463	393
	524	5H-3252	236		218	5P-7464	327
	526	5H-3701	216		222		330
	528		218	5P-3779	440	5P-7465	327
	532		222	5P-3863	184		330
	621	5H-6005	184	5P-4115	270	5P-7466	400
	628	5H-8848	322		272		404
	630		324		274		450
	632	5I-3762	350		290		452
	634		352		388	5P-7467	400
	652		354		390		404
	654		356		593		450
	670		360		649		452
5C-7261	63	5J-5402	374		673	5P-7468	204

PART NUMBER INDEX

Part	Page
	284
	285
	286
	429
	433
	437
	448
	450
5P-7469	204
	284
	285
	286
	429
	433
	437
	448
	450
5P-7483	62
5P-7648	656
5P-7684	184
5P-8112	400
	404
	450
	452
5P-8118	492
	494
5P-8136	573
5P-8167	710
5P-8196	52
5P-8244	314
5P-8245	198
	214
	218
	222
	462
	464
5P-8247	96
	98
	216
	218
	222
5P-8444	284
	285
	286
	429
	433
	437
	448
	450
5P-8445	646
5P-8500	204
	482
5P-8502	204
	482
5P-8524	649
5P-8837	296
5P-9085	80
5P-9186	18
5P-9212	298
5P-9297	303
5P-9299	174
5P-9683	622
5P-9884	721
	722
5R-0939	416
5R-0940	416
	420
	420
	425
5S-7349	96
	98
5T-6374	326
	330
5T-9772	294
	295
5V-0770	646
5V-1497	708
5V-1498	607
	609
5V-2998	122
5V-4410	304
5V-4999	296
5V-8780	56
6	
6A-3034	725
6A-5591	184
6C-3246	250
	251
	253
	254
6C-3247	256
6C-3522	222
6C-3679	641
6C-5303	222
6C-5304	216
	218
6C-7366	250
	251
	254
6C-7367	257
6C-7606	593
6C-7607	593
6D-0337	240
	242
	▶261
6D-0443	261
6D-1641	660
6D-3025	621
6D-3479	80
	140
	228
	397
6D-4244	142
	146
	327
	335
6D-4246	393
	397
	452
6D-7690	216
	218
	222
6E-0231	542
6E-0775	374
	376
6E-1835	547
6E-1979	338
6E-2314	372
6E-2833	226
6E-2943	312
6E-3008	498
	502
	506
	550
	551
6E-4940	322
	324
6E-5431	492
	494
	498
	500
	502
	504
	506
6E-5434	492
	494
	498
	500
	502
	504
	506
6E-5436	492
	494
	498
	500
	502
	504
	506
6E-5437	498
	500
	502
	504
	506
6E-5438	498
	500
	502
	504
	506
6E-5439	492
	494
	498
	500
	502
	504
	506
6E-5440	492
	494
	498
	500
	502
	504
	506
6E-5457	492
	494
	498
	500
	502
	504
	506
6E-5643	492
6E-5958	▶492
	494
6E-6129	492
	494
6E-6473	480
6E-6477	▶338
	480
6E-6480	480
6E-6481	478
6E-6488	338
6E-6490	338
6E-6491	338
6E-6492	338
6E-6493	338
6E-6494	338
6F-2956	212
	216
	218
	222
6F-3930	241
6F-7045	134
6G-0233	304
6G-2256	140
6G-2263	80
	140
6G-4195	302
	672
	676
6G-9933	294
6I-0217	10
	24
	34
	76
	86
	90
6I-0235	44
6I-0254	24
	27
	90
6I-0256	21
6I-0260	24
	34
	48
	51
	52
	71
6I-0289	34
6I-0291	34
	48
	52
	86
6I-0363	34
6I-0423	22
6I-0456	10
	60
6I-0572	34
6I-0593	8
	78
6I-0631	22

▶ **PRIMARY REFERENCE**

PART NUMBER INDEX

Part	Page
6I-0645	24
	60
6I-0646	8
6I-0650	32
6I-0654	26
6I-0686	14
6I-0787	48
6I-0789	24
6I-0839	24
	27
6I-0846	24
6I-0847	22
6I-1074	14
6I-1075	14
6I-1076	14
6I-1090	90
6I-1132	76
6I-1206	42
6I-1418	166
	194
6I-1497	46
6I-3717	42
6I-3718	42
6I-4079	46
6I-4200	22
6I-4354	14
6I-4374	10
	27
	48
	51
	60
6I-4681	34
6I-4709	34
6I-4710	34
6I-4714	40
6I-4716	40
6I-4786	52
6I-4793	60
6I-8310	581
	582
	▶583
6I-8311	581
	582
	▶583
6I-8312	583
6I-8313	583
6I-8314	583
6I-8315	583
6I-8388	599
6I-8389	599
6I-8390	188
	190
6I-8531	247
6I-8849	288
6I-8860	288
6I-9250	573
6I-9251	573
6I-9804	260
6I-9805	260
6I-9806	184
	▶260
6J-2680	406
6J-2797	374
	376
6J-6439	547
6J-7854	480
6J-9996	470
	524
	528
6K-0806	122
	710
6K-4076	578
	581
6K-4185	288
6K-4186	288
6K-4191	288
6K-6075	218
	222
6K-6307	184
6K-8088	680
6K-8987	234
6M-5062	534
	536
	538
	540
6N-6984	62
6R-2050	284
	286
6R-3354	558
6S-4868	621
6S-6646	302
6T-6593	192
6T-7054	563
6T-9244	561
6U-5219	440
	444
6V-0347	210
	212
	216
	218
	222
6V-0408	594
6V-0484	232
6V-0545	204
	283
	285
6V-0589	727
6V-0683	393
6V-0852	184
	208
	226
	232
	304
	406
	428
	432
	436
6V-0894	622
6V-1178	560
6V-1194	288
6V-1249	327
	331
6V-1363	68
	70
6V-1392	605
	644
6V-1668	604
	644
6V-1820	184
	237
6V-1889	156
	228
	409
6V-2313	621
6V-2317	262
6V-2383	294
6V-2394	192
6V-2456	668
6V-2495	656
6V-2687	608
6V-2689	174
6V-3265	397
6V-3668	214
6V-3821	262
6V-3822	262
6V-3965	184
	208
	228
	232
	304
	406
	428
	432
	436
6V-4249	30
	237
6V-4429	218
	222
6V-5217	86
	184
	262
6V-5218	262
6V-5223	262
6V-5230	184
6V-5683	203
	455
6V-5696	214
6V-5758	544
6V-5839	30
	184
	202
	262
	560
6V-5842	184
	236
6V-5845	322
	324
6V-6210	716
6V-6317	184
	237
6V-6635	124
	125
6V-6924	544
6V-7238	18
	406
6V-7345	157
6V-7357	118
	120
	270
	272
	274
6V-7419	716
6V-7529	50
6V-7644	270
6V-7728	605
	644
6V-7744	388
	429
	433
	437
6V-7981	236
	560
6V-8183	42
6V-8186	136
	621
6V-8187	156
6V-8189	96
	98
6V-8197	218
	222
6V-8212	202
6V-8218	259
6V-8337	199
6V-8369	137
	600
	642
	676
6V-8373	302
	672
	676
6V-8376	156
	692
6V-8378	135
	156
6V-8397	226
	227
	304
	306
	314
	327
	330
	392
	393
	396
	416
	420
	424
	425
	428
	429
	432
	433
	436
	437
	440
	444
	452
	508
	512
	514
	516
	518
	520
	524
	526
	528
	532
	558
	560

▶ **PRIMARY REFERENCE**

PART NUMBER INDEX

Part	Page	Part	Page	Part	Page	Part	Page
	622		444		433		452
6V-8398	227		508		437	6V-9169	393
	306		512		440		402
	314		514		444		412
	326		516		452		414
	327		518		558	6V-9172	232
	330		520		560	6V-9175	406
	335		524	6V-8758	303	6V-9189	388
	336		526	6V-8775	227		416
	364		528		327		420
	365		532		336		425
	392		621	6V-8781	306		641
	396	6V-8637	206		392	6V-9200	306
	402		227	6V-8782	429	6V-9632	56
	408		404		433		150
	412		406		437		152
	414		408	6V-8795	288		156
	428		416	6V-8801	135		194
	429		420		326		272
	432		424		336		292
	433		450		440		390
	436		452		444		450
	437	6V-8638	326	6V-8837	673		593
	440		330		677		604
	444		335	6V-8928	651		644
	462		365	6V-8936	429		670
	464		428		433		712
6V-8400	450		432		437	6V-9746	206
	452		436	6V-8939	306		226
6V-8490	651		440	6V-8941	622		227
	670		444	6V-8942	227		228
6V-8556	228	6V-8639	326		327		314
	327		330		330		326
	331		335		402		327
	409		414		408		330
6V-8624	227		462	6V-8979	412		335
	314	6V-8640	440		414		336
	327		444	6V-8981	412		400
	330	6V-8641	227		414		402
	408		392	6V-8993	396		404
6V-8625	227		396	6V-8995	392		406
6V-8626	440	6V-8642	364		402		408
	444		365	6V-8997	400		416
6V-8627	396	6V-8647	326		404		420
	408		330	6V-9000	227		421
6V-8628	327		412	6V-9001	306		424
	330		414		314		425
6V-8629	227		462		424		440
6V-8632	326		464		429		444
	330	6V-8675	214		432		450
6V-8635	232	6V-8716	402		436		452
	400		404	6V-9004	228		622
	416	6V-8721	227		408	6V-9829	425
	420		412	6V-9007	206	6V-9830	429
	424		414		314		433
6V-8636	304		462		326		437
	392		464		335	6V-9832	400
	396	6V-8722	441	6V-9008	232		416
	416		444		448		421
	420	6V-8724	304		450		425
	424		392		452		452
	428		416	6V-9032	406	6V-9835	397
	432		420	6V-9160	228	6V-9836	306
	436		425		408		392
	440		429	6V-9168	425		396

► **PRIMARY REFERENCE**

PART NUMBER INDEX

Part	Page
	425
	440
	444
	452
6V-9837	227
	327
	330
	392
	396
	429
	433
	437
6V-9839	416
	420
	425
	440
	444
	452
	622
6V-9842	227
6V-9843	306
6V-9844	227
	408
6V-9846	327
	336
6V-9847	450
	452
6V-9849	396
6V-9850	392
	621
6V-9851	440
	444
6V-9875	406
	428
	432
	436
6W-1880	578
6W-5652	574
6W-5656	574
6W-5678	574
6W-5679	574
6W-5760	367
6W-5761	367
6W-8246	288
6W-8900	▶590
6W-8933	▶590
6W-8935	▶590
6W-9172	586
6Y-0584	184
6Y-0869	196
6Y-0928	188
6Y-1300	188
	190
6Y-2349	404
6Y-2525	664
6Y-4464	236
6Y-4465	236
6Y-4618	237
6Y-4890	188
6Y-4997	236
6Y-5010	236
6Y-5027	192
6Y-5631	188
	190
	192
6Y-6584	672
	676
6Y-6712	▶236
	237
6Y-6952	188
6Y-7818	188
	190
	192
6Y-7922	192
6Y-7968	188
	190
	192
6Y-8069	224
6Y-8157	188
	190
	192
6Y-8265	192
6Y-8514	192
6Y-9016	184
6Y-9017	184
7B-1251	162
7B-3028	508
	518
	520
	524
7B-7525	696
7C-0351	34
7C-1224	34
7C-1281	10
7C-1493	52
7C-4616	24
7C-6467	304
7D-1728	68
	70
7D-5252	241
7D-6922	302
	673
	677
7D-7233	232
7D-8048	40
7E-1397	72
7F-2050	604
7F-2060	604
7F-8268	184
7F-9223	290
	652
	654
7G-5220	214
7I-3236	622
7I-6601	534
	536
	538
	540
7I-6756	700
	702
7J-0204	497
	534
	536
	538
	540
7J-9108	326
7J-9682	374
	376
7J-9933	492
	494
	547
	548
7K-1181	62
	108
	138
	142
	146
	150
	152
	156
	162
	166
	170
	172
	173
	174
	226
	262
	283
	285
	294
	295
	326
	336
	388
	390
	392
	396
	408
	414
	424
	428
	432
	436
	649
	656
	672
	676
7K-6536	723
	724
	725
	726
	727
	728
7K-9203	570
7K-9205	568
	570
	586
7K-9206	570
7K-9208	568
7K-9209	568
	570
7K-9216	568
7L-0688	478
7L-8316	542
7M-1201	30
7M-7219	646
7M-7410	10
	16
	86
7M-8485	184
	216
	218
	222
	226
	227
	228
	232
	400
	402
	404
	408
	416
	420
	424
	428
	432
	436
	448
	450
	452
7N-0718	▶134
	140
7N-5274	140
7P-3454	566
	568
	570
7S-2013	452
7S-3916	450
	453
7S-3919	450
	453
7T-0093	86
7T-1099	62
	156
	275
	276
	344
	346
	348
	350
	352
	354
	356
	358
	360
	362
	388
	390
	621
	682
	683
7T-1342	562
7T-2053	562
7T-2703	184
7T-4532	616
7T-6087	132
7T-6088	132
7T-6090	132

7

▶ **PRIMARY REFERENCE**

PART NUMBER INDEX

Part	Page
7T-6092	132
7T-6093	132
7T-6099	132
7T-6496	196
7T-6799	670
7T-7370	128
7T-8332	62
	482
7T-8890	714
7T-9752	478
7T-9753	478
7T-9754	478
7T-9755	478
7T-9831	478
7U-4898	696
7V-5191	646
7V-5626	388
	390
7V-5628	388
	390
7W-0815	62
7W-1251	156
7W-2108	628
	630
	632
	634
7W-2501	14
7W-2505	36
7W-2518	17
7W-2519	17
7W-2520	17
7W-2628	76
7W-2634	76
7W-3447	287
	656
7W-4553	90
7W-4589	12
7W-4590	12
7W-4591	12
7W-4592	12
7W-4632	40
7W-4634	40
7W-4635	40
7W-4642	22
7W-4648	48
7W-4650	48
7W-4782	48
7W-4816	12
7W-4817	12
7W-4818	12
7W-4819	12
7W-7381	304
7W-9028	52
7X-0338	100
	102
7X-0371	574
7X-0456	607
	609
7X-0474	184
7X-0515	228
7X-0564	570
7X-0567	570
7X-0578	287
7X-0579	600
	642
	706
7X-0603	316
	318
7X-0608	135
	326
	336
7X-0618	288
	320
	568
	570
	586
7X-0620	135
7X-0818	194
7X-1886	558
7X-2459	304
7X-2465	234
	265
	267
7X-2478	604
7X-2495	188
	190
7X-2497	628
	630
	632
	634
7X-2533	56
7X-2534	388
	390
7X-2535	290
7X-2540	290
7X-2543	228
	393
	397
7X-2544	429
	433
	437
7X-2557	228
7X-2563	570
7X-2567	234
	664
7X-2622	30
7X-3229	721
	722
7X-3308	673
	677
7X-3350	218
	222
7X-3393	62
7X-6315	104
	107
	110
7X-7729	56
	68
	70
	72
	74
	80
	100
	102
	204
	228
	264
	268
	270
	272
	274
	278
	290
	292
	327
	336
	378
	390
	397
	400
	406
	409
	416
	421
	425
	441
	444
	448
	450
	453
	482
	617
	660
	718
7X-8549	379
7Y-1734	30
7Y-3173	416
	421
	425
	558
7Y-3557	228
7Y-7256	622

8

Part	Page
8B-4884	294
8C-0564	428
	432
	436
8C-3056	156
8C-3078	621
8C-3079	338
8C-3205	416
	421
	425
8C-3206	450
	453
8C-3210	270
8C-3364	450
	452
8C-3426	652
	654
8C-3445	50
8C-3446	50
	208
	379
8C-3451	208
	379
8C-3681	62
	80
8C-3756	620
8C-3979	188
	190
	192
8C-3982	188
	190
	192
8C-4000	364
8C-4400	188
	190
8C-4436	100
	102
8C-4586	604
	644
8C-4982	68
	70
8C-5225	18
8C-5457	132
8C-5607	621
8C-5608	622
8C-5917	140
8C-6160	303
8C-6354	672
	676
8C-6440	649
8C-6965	157
8C-7584	622
8C-8408	226
8C-8451	272
	274
8C-8457	604
	644
8C-8478	30
8C-8988	425
	429
	433
	437
8C-8989	408
	429
	433
	437
8C-9029	226
8C-9122	322
	324
8C-9131	322
	324
8C-9778	132
8C-9783	132
8C-9987	563
	670
8D-2707	261
8D-3791	574
8D-9671	170
8E-1118	118
8E-3416	192
8E-4566	►588
8E-4567	588
8E-4568	►588
8E-4569	588
8E-5556	188
	190
8E-5707	188
	190
	192
8E-5726	188
	190
8E-5727	188
	190
8E-6115	192

► **PRIMARY REFERENCE**

PART NUMBER INDEX

Part	Page	Part	Page	Part	Page	Part	Page
8E-6117	192	8M-2773	228		409		182
8E-6120	192		306	8S-7803	608	8T-3282	322
8E-6558	192		425		646		324
8E-7841	262		441		696	8T-3293	214
8E-8292	714		444	8S-9129	184	8T-3490	80
8E-8296	304		453	8S-9130	184		156
8E-8313	188		482	8T-0099	198		204
	190	8M-3267	710	8T-0106	198		226
	192	8M-5251	262	8T-0154	604		232
8E-8317	192	8M-5254	111		644		275
8E-8425	203		112	8T-0198	428		276
8E-9968	236	8N-0869	140		432		292
8F-0212	492	8N-1725	140		436		298
	494	8N-9033	652	8T-0255	590		408
	498	8P-9770	575	8T-0267	472		584
	500		576		473		593
	502		577		474		604
	504		578		475		619
	506		581		508		644
8F-1434	132	8R-0512	216	8T-0306	715		656
	135		218	8T-0328	156		660
	156		222	8T-0336	216		673
8F-1462	667	8R-0721	396		218		677
8F-6437	63	8R-0768	140		222		705
	482	8R-1703	198	8T-0363	266		706
8F-9206	478	8R-1705	198	8T-0372	210	8T-3612	62
8F-9516	216	8R-2022	248		212		122
	218	8R-2189	216		247		226
	222		218	8T-0375	216		282
8G-0816	156		222		218		316
8H-5303	134	8R-2198	180		222		318
8H-5306	134		182	8T-0379	425		335
8H-7521	184	8R-2200	180		452		584
8I-1362	62		182	8T-0389	304		706
8I-5932	424	8R-2201	180	8T-0785	370	8T-3995	652
8I-6603	268		182		372		654
8J-0112	322	8R-2202	180	8T-1012	416	8T-4001	664
	324		182		420	8T-4121	3
8J-0426	184	8R-2211	198		425		4
8J-2928	598	8R-2212	198	8T-1138	466		30
	599	8R-2532	216		467		56
8J-2933	573		218		469		63
	598		222	8T-1158	489		74
	599	8R-2584	218	8T-1482	265		80
8J-4455	132		222		266		94
8J-8308	478	8R-2918	316		267		116
8K-1253	622		318	8T-1887	450		130
8K-1433	302	8R-3695	560		453		132
8L-2746	188	8R-3809	216	8T-1888	450		140
	190		218		453		142
	192		222	8T-1889	400		146
8L-2779	498	8R-5825	241		448		157
	502	8R-6904	680	8T-1890	400		162
	506	8R-7091	288		448		170
	550	8R-7092	288	8T-1905	393		174
	551	8R-7833	198	8T-2356	574		204
	565	8R-7834	198	8T-2397	516		206
8L-2786	474	8R-8121	210		526		228
	475		212	8T-2525	284		232
	508	8R-8847	287		286		275
8L-4496	621	8R-9831	200	8T-2561	622		276
8L-8413	646	8S-0934	693		656		277
	710	8S-3020	140	8T-2883	327		288
8M-2770	228	8S-4723	693		330		298
	409	8S-5107	228	8T-2925	180		303

PART NUMBER INDEX

Part	Page	Part	Page	Part	Page	Part	Page
	304		682		444	8T-4149	227
	306	8T-4127	270		482		408
	327	8T-4131	30		617	8T-4157	56
	331		682	8T-4137	56	8T-4158	56
	336	8T-4132	30		63	8T-4167	234
	342	8T-4133	63		80		235
	344		74		94		664
	346		94		118	8T-4170	30
	348		116		120	8T-4171	174
	350		132		140		604
	352		140		157		644
	354		142		162	8T-4172	288
	356		146		170		327
	358		157		206		331
	360		174		228		393
	362		228		270	8T-4178	232
	378		290		277		425
	388		292		298	8T-4179	265
	390		304		303		266
	393		306		304		586
	397		393		306		621
	400		397		342	8T-4180	628
	402		409		344		630
	404		421		346		632
	406		425		348		634
	409		429		350	8T-4181	628
	417		433		352		630
	421		437		354		632
	425		450		356		634
	429		453		358	8T-4182	63
	433		456		360		406
	437		457		362		417
	448		617		378		421
	450		673		388	8T-4183	30
	453		677		390		100
	456	8T-4134	649		409		102
	457	8T-4136	56		417	8T-4185	406
	476		68		421		680
	482		70		425	8T-4186	30
	484		80		476		157
	485		100		612		170
	486		102		656		228
	487		140		660		268
	488		174		673		272
	567		204		677		274
	612		228		686		292
	617		232		704		327
	619		264		705		335
	641		292		713		388
	656		306		718		397
	660		327	8T-4138	150		400
	673		335		152		409
	677		378		157		450
	680		388		172		482
	686		393		290		484
	690		397		298		485
	692		400		300		486
	704		404		623		487
	705		406		663		488
	713		409		682		617
8T-4122	30		425	8T-4139	306		656
	63		429		406	8T-4189	3
	246		433		621		54
8T-4123	425		437	8T-4140	246		62
	453		441	8T-4141	570		63

► **PRIMARY REFERENCE**

PART NUMBER INDEX

Part	Page
	80
	116
	142
	146
	157
	174
	226
	280
	282
	290
	302
	316
	318
	388
	390
	586
	612
	618
	652
	654
	662
	673
	677
	683
	684
	686
	713
8T-4191	157
	316
	318
	402
8T-4192	157
	288
	320
	568
	570
8T-4193	63
	568
	570
8T-4194	63
	150
	152
	288
	406
8T-4195	3
	4
	56
	63
	72
	74
	130
	157
	174
	206
	228
	270
	275
	276
	278
	287
	290
	292
	306
	390
	393
	397
	409
	421
	425
	429
	433
	437
	448
	453
	619
	656
	673
	677
8T-4196	74
	80
	204
	206
	304
	388
	393
	406
	417
	421
	425
	450
	453
	456
	457
	476
	593
	621
8T-4197	157
8T-4198	162
	441
	444
8T-4199	142
	146
	673
	677
8T-4200	62
	63
	138
	157
	280
	388
	390
	620
	652
	654
8T-4205	56
	96
	98
	118
	120
	122
	156
	170
	174
	270
	290
	298
	604
	620
	623
	625
	628
	630
	632
	634
	644
	652
	654
	663
	670
	673
	677
8T-4222	63
	617
8T-4223	30
	63
	100
	102
	150
	152
	157
	228
	250
	265
	266
	287
	288
	303
	306
	320
	406
	409
	482
	622
8T-4224	3
	54
	62
	63
	80
	96
	98
	100
	102
	116
	122
	138
	142
	146
	157
	216
	218
	222
	226
	280
	282
	290
	302
	306
	310
	327
	336
	342
	344
	346
	348
	350
	352
	354
	356
	358
	360
	362
	388
	390
	417
	421
	425
	482
	492
	494
	498
	500
	502
	504
	506
	547
	548
	584
	586
	612
	618
	620
	622
	641
	652
	654
	662
	673
	677
	683
	684
	686
	713
8T-4226	63
	118
	120
8T-4244	56
	340
	342
	346
	348
	350
	352
	354
	356
	360
	362
	482
8T-4648	228
	409
8T-4742	628
	630
	632
	634
8T-4747	628
	630
	632
	634
8T-4780	568
8T-4896	574
	622

► **PRIMARY REFERENCE**

PART NUMBER INDEX

Part	Page	Part	Page	Part	Page	Part	Page
8T-4908	63		140		474	8Y-5936	696
	226		429		514	8Y-5937	696
	290		433		524	8Y-5938	696
	306		437		644	8Y-5944	708
	482		656		676	8Y-5945	646
	584	8T-6631	604		716	8Y-5947	638
	600	8T-6663	226	8T-8827	156		696
	624	8T-6684	448	8T-8886	622	8Y-5965	708
	636	8T-6685	429	8T-8894	316	8Y-5972	667
	642		433		318	8Y-5981	696
	706		437	8T-8902	227	8Y-5988	608
8T-4910	482		567		440	8Y-5992	▶668
8T-4956	250	8T-6703	204	8T-9085	184		696
	287	8T-6868	320	8T-9386	364	8Y-5995	668
	303	8T-6869	316		365	8Y-5998	668
	476		318	8T-9530	586	8Y-5999	668
8T-4970	621		388		721	8Y-6000	▶609
8T-4971	150		417		722		698
	152		421		723		699
	628		425		724	8Y-6006	667
	630	8T-6870	3		725	8Y-6010	667
	632		100		726	8Y-6012	708
	634		102		727	8Y-6014	708
8T-5004	290		282		728	8Y-6022	708
	652		310		729	8Y-6023	708
	654		492	8T-9655	194	8Y-6024	708
8T-5005	228		494	8T-9757	140	8Y-6028	608
	307		498	8V-1412	249	8Y-6029	646
	397		500	8V-7315	248	8Y-6041	646
	417		502		249	8Y-6045	646
	421		504	8V-7623	214	8Y-6046	646
8T-5041	288		506	8W-4342	294	8Y-6047	646
	406	8T-6912	122		295	8Y-6051	696
8T-5089	478		157	8X-1147	428	8Y-6060	646
8T-5093	216	8T-7529	206		432	8Y-6062	646
	218	8T-7547	140		436	8Y-6063	646
	222		327	8X-9618	174	8Y-6064	646
	620		335	8X-9925	243	8Y-6066	646
8T-5353	196		641	8Y-0711	206	8Y-6067	646
	236	8T-7852	157	8Y-4200	▶607	8Y-6068	646
8T-5360	694	8T-7931	542		698	8Y-6069	646
8T-5372	605	8T-7963	140		699	8Y-6364	204
	644	8T-7971	476	8Y-4489	392		482
8T-5379	235	8T-8390	370	8Y-4501	628	8Y-6377	612
8T-5400	716	8T-8641	608		630	8Y-6386	628
8T-5429	412	8T-8729	105		632		630
	464		114		634		632
8T-5432	558		127	8Y-4807	628		634
8T-5436	453		128		632	8Y-6388	636
	484		137	8Y-5737	604	8Y-6391	636
	485		326		644	8Y-6833	696
	486		356	8Y-5877	638	8Y-6834	696
	487		360	8Y-5892	668	8Y-6859	646
	488		473	8Y-5897	607	8Y-6860	646
	492		562	8Y-5898	609	8Y-6882	▶696
	494		621	8Y-5903	667		698
8T-5439	30	8T-8730	106	8Y-5904	607		699
	570	8T-8731	622		▶608	8Y-6883	▶638
8T-5452	184	8T-8737	137		609		698
8T-5460	570		162	8Y-5906	608		699
8T-5913	714		350	8Y-5928	696	8Y-6917	710
8T-5914	714		352	8Y-5929	696	8Y-6922	710
8T-6430	682		354	8Y-5930	696	8Y-6928	710
8T-6431	304		356	8Y-5931	696	8Y-6933	696
8T-6466	80		360	8Y-5932	696	8Y-6977	690

▶ **PRIMARY REFERENCE**

PART NUMBER INDEX

Part	Page
	▶699
8Y-7047	288
8Y-7119	664
8Y-8387	306
	428
	432
	436
8Y-8388	307
	429
	433
	437
8Y-8898	306
9	
9B-7233	122
	156
	558
	692
9B-7237	621
9C-1999	420
	424
9C-2260	425
9C-5040	198
9C-5048	218
	222
9C-5049	218
	222
9C-6041	216
	218
	222
9C-6460	416
	420
9C-6461	416
	420
9C-6783	416
9C-6809	62
	275
	276
	566
	568
9C-7863	621
9C-7907	570
9C-9458	206
9C-9785	672
	676
9D-1535	320
9D-3768	656
9D-3769	654
9D-7924	316
	318
9F-2167	496
	497
9F-2247	478
9F-5644	134
9G-0002	140
9G-0004	140
9G-1950	604
	644
9G-2759	630
	634
9G-2761	628
	632
9G-3695	195
9G-5127	184
9G-5311	216
	218
	222
9G-5687	558
9G-8909	140
9G-9155	683
9H-1129	218
	222
9H-2258	288
9J-3169	595
	598
9J-3178	▶596
	597
9K-7951	241
9L-1566	174
9L-6074	272
	274
9L-6246	100
	102
9L-6770	96
	98
9L-7469	696
9L-9068	262
9L-9188	52
9M-0164	710
9M-1974	262
9M-4335	180
9M-4814	660
9M-4972	157
9M-5733	667
	668
9M-7958	62
9M-8406	63
	656
9M-9439	75
9N-0869	166
9N-1756	545
	552
	553
	554
	555
9N-4354	188
	190
	192
9N-4365	188
	190
	192
9R-1499	122
9R-1948	342
9R-2404	122
9R-2596	716
9R-2620	654
9R-2672	56
	62
	74
	226
	275
	276
	683
9R-2807	304
9R-3067	304
9R-3203	712
9R-3204	712
9R-3205	712
9R-4688	326
	330
9R-4750	150
	152
9R-5878	30
9R-7941	118
	120
9R-7942	115
9R-7958	115
9R-7980	118
	120
9R-9110	302
9R-9111	302
9S-1240	100
	102
9S-1305	718
9S-2011	478
9S-4181	184
9S-4183	330
9S-4190	404
	478
	492
	494
	498
	500
	502
	506
9S-4191	184
	259
	425
	508
	512
	516
	518
	520
	526
	528
	532
9S-8001	496
9S-8002	508
	512
	514
	516
	518
	520
	524
	526
	528
	532
	542
9S-8003	542
9S-8004	556
9S-8005	497
9S-8007	497
9S-8008	196
9T-1013	326
	336
9T-1636	478
9T-1710	478
9T-1752	478
9T-2000	478
9T-2001	478
9T-2002	478
9T-2003	478
9T-2011	478
9T-2014	478
9T-2015	478
9T-2017	478
9T-2031	478
	▶481
9T-2168	478
9T-2171	478
9T-2172	478
9T-2173	478
9T-2231	478
9T-2232	478
9T-2457	322
	324
9T-3598	275
	276
9T-3809	542
9T-3810	542
9T-3812	542
9T-3813	542
9T-3814	542
9T-3815	542
9T-3816	542
9T-3857	481
9T-3858	481
9T-3859	481
9T-3860	481
9T-3861	481
9T-3862	481
9T-3863	481
9T-3864	481
9T-3867	478
9T-3868	481
9T-5042	338
9T-5087	338
9T-5112	338
9T-6672	322
	324
9T-7062	542
9T-7266	498
	502
	506
	550
	551
9T-7634	▶491
	498
	500
	502
	504
	506
9T-8071	326
	336
9U-0710	303
9U-2743	210
	212
9U-2744	210
	212
9U-3409	210
	212
9U-3668	247
9U-8263	649
9U-8875	188
	190
	192
9U-9551	214
9U-9797	192

▶ **PRIMARY REFERENCE**

PART NUMBER INDEX

Part	Page
9V-1203	218
	222
9V-1590	574
9V-1795	▶574
9V-2412	210
	212
	247
9V-2714	574
9V-2715	574
9V-3406	570
9V-4484	575
	576
	579
9V-4968	570
9V-4975	586
9V-6343	288
9V-9463	581
9V-9480	581
9W-0335	142
	146
9W-0718	188
	190
	192
9W-0852	137
	142
	146
	604
	644
	676
9W-1454	184
9W-6068	196
9W-6466	192
9W-6904	188
	190
	192
9W-6912	188
9W-6922	192
9W-6927	192
9W-7159	184
9W-7764	188
9W-7765	192
9W-8013	188
9W-8142	▶595
9W-8143	▶597
9W-9371	188
	190
	192
9W-9372	188
	190
	192
9W-9399	192
9W-9436	192
9W-9662	188
9W-9718	188
	190
	192
9W-9915	30
9W-9940	664
9X-1046	108
	109
9X-1813	128
	262
	314
9X-2027	492
	494
9X-2036	132
9X-2040	344
	346
	348
	350
	352
	354
	356
	358
	360
	362
	641
9X-2041	342
	344
	346
	348
	350
	352
	354
	356
	358
	360
	362
	612
	689
	691
9X-2042	316
	318
	455
	622
	623
	625
	628
	630
	632
	634
	649
	652
	654
	673
	677
	712
9X-2043	622
9X-2044	604
	644
9X-2045	122
	316
	318
	651
	652
	654
	670
	673
	677
	681
	682
	712
	716
9X-2065	304
9X-2125	690
	692
9X-2132	390
9X-2133	62
9X-2185	604
	644
9X-2447	719
	720
9X-2480	621
9X-2532	715
9X-2621	210
	212
9X-2622	210
	212
9X-3463	113
	118
	120
	122
9X-4492	114
9X-4493	114
	122
9X-4609	184
9X-5617	105
	106
9X-6165	558
	622
9X-6395	547
	548
9X-6491	210
	212
9X-6493	216
	218
9X-6580	402
	621
9X-6581	306
9X-6615	122
9X-6643	226
9X-7264	372
9X-7378	656
9X-7380	656
9X-7381	656
9X-7382	656
9X-7383	656
9X-7385	616
9X-7849	115
9X-8117	600
9X-8121	115
9X-8139	115
9X-8256	109
	122
	150
	152
	157
	172
	194
	455
	622
	641
9X-8399	374
	376
9X-8482	63
9X-8699	290
9X-8873	607
	609
9X-8887	480
9X-8918	646
9Y-5015	14
9Y-8315	74
9Y-9380	310
0	
002-3455	478
004-1683	481
005-0469	184
005-0471	224
005-8593	478
006-8606	42
006-8663	322
	324
009-3101	62
	272
	274
030-1712	156
030-9613	301
031-5644	150
	152
032-8048	76
032-8100	80
032-9090	12
032-9091	12
033-5853	545
033-5879	552
	553
	554
	555
033-6027	491
	544
	552
	553
	554
	555
033-6028	478
	498
	502
	506
	550
	551
	565
033-6032	565
033-6043	544
033-7687	20
033-7849	80
	90
033-9139	508
	512
	516
	518
	520
	526
	528
	532
035-8063	38
035-8068	14
036-5802	14
037-4426	604
	644
037-4838	604
	644
039-5069	552
	553
	554
	555
039-5070	552
	553

▶ **PRIMARY REFERENCE**

PART NUMBER INDEX

Part	Page
	554
	555
053-0189	62
061-6712	216
	218
	222
061-7540	492
	494
061-8803	696
061-9457	338
067-6002	14
067-6043	16
067-6083	42
067-6087	42
067-6088	42
067-6095	44
067-6123	22
067-6178	24
067-6179	24
067-6268	84
067-6269	84
	90
067-6805	14
067-6808	14
067-6873	12
067-6874	12
067-6883	36
067-6897	24
067-6899	24
067-6900	24
067-6927	21
067-6928	21
067-6933	48
067-6998	126
067-6999	126
068-4209	692
069-1124	37
069-2535	301
069-2536	301
087-0991	314
	462
	464
091-0079	684
091-0081	140
	156
	226
	408
091-1637	590
091-1745	590
092-1136	62
092-2467	226
095-0673	216
	218
	222
095-0878	646
	696
095-1314	696
095-1750	314
096-2323	630
096-6166	156
099-3095	312
	459
	460
099-3649	166

1

Part	Page
100-3143	604
	644
100-3224	647
100-3426	604
	644
100-3685	132
100-3751	60
100-4104	10
100-4112	132
100-4115	132
100-4230	478
100-4231	478
100-4453	76
100-4454	76
100-4458	154
100-4461	52
100-4466	76
100-4676	728
100-4830	8
	86
	90
	154
100-5179	646
100-6659	132
101-0003	708
101-1785	621
101-1790	226
101-3771	60
101-3805	60
101-3877	86
101-3895	52
101-3906	90
101-3907	90
101-3927	126
101-3983	126
101-3984	126
101-4194	708
101-4195	708
101-7178	90
101-8296	656
101-9161	195
102-0341	604
	644
102-1957	22
102-2131	243
102-2203	450
	452
102-2204	450
	452
102-4176	140
102-6317	710
102-8801	122
	142
	146
	162
	621
	672
	676
	677
102-8802	95
	114
	138
	146

Part	Page
	156
	162
	166
	170
	172
	173
	226
	262
	388
	414
	424
	440
	558
	562
	563
	564
	604
	621
	644
	656
	672
	676
	710
102-8803	105
	114
	127
	128
	146
	156
	166
	170
	174
	262
	326
	336
	388
	390
	620
	621
	649
	672
	676
102-8804	118
	120
	162
	561
	670
	672
	676
102-8805	108
	122
	142
	146
	150
	152
	166
	195
	340
	350
	352
	354
	356
	360
	604
	644

Part	Page
	672
	676
	716
102-8806	137
	142
	146
	150
	152
	388
	390
	474
	475
	508
	512
	514
	518
	524
	528
	672
	676
102-8808	390
	621
102-9460	28
102-9941	40
102-9986	90
102-9987	90
102-9988	90
103-0280	30
103-2006	342
	344
	346
	348
	350
	352
	354
	356
	358
	360
	362
103-2543	673
	677
103-5796	277
104-2091	636
104-3173	428
	432
	436
104-6417	729
104-6418	729
104-6739	199
104-6740	199
104-6741	199
104-6742	199
104-6746	199
104-6754	199
104-8621	306
104-9054	364
105-2151	478
105-3213	578
	581
105-3330	721
	722
105-4775	214
105-4776	214
106-1017	370
106-4835	250

► **PRIMARY REFERENCE**

PART NUMBER INDEX

Part	Page
	251
	253
	254
106-4837	255
106-5122	▶616
	617
106-6394	388
106-7743	593
106-7799	203
106-8704	172
	173
	414
	424
	656
106-8916	48
106-9421	496
107-1852	▶111
107-2503	567
107-3114	262
107-3296	▶599
107-4628	610
	▶716
107-4629	▶642
	643
107-4630	610
	▶636
	682
107-4634	610
	▶651
107-4641	▶712
107-4642	▶662
107-4643	610
	614
	▶663
107-4645	▶649
	650
107-5977	▶689
107-5978	▶690
107-6007	316
	318
107-6013	672
	676
107-6021	672
	676
107-6032	651
107-6037	342
107-6050	342
	344
	346
	348
	350
	352
	354
	356
	358
	360
	362
107-6056	680
107-6072	673
	677
107-6079	636
107-6104	628
	630
	632
	634
107-6117	628
	632
107-6125	628
	630
	632
	634
107-6127	628
	632
107-6133	▶137
	610
107-6141	316
	318
107-6144	612
107-6145	612
107-6146	612
107-6631	558
107-7491	491
108-0358	122
108-1029	▶115
	124
	125
108-2192	691
	▶700
108-3320	142
	146
108-4082	699
	▶708
108-4086	646
108-4087	647
108-4103	647
108-4311	612
108-4582	▶646
	708
108-6428	498
	500
	▶547
108-8421	▶667
	696
108-8423	667
108-8424	667
109-1297	388
	390
109-4727	188
	190
109-4728	188
	192
109-4730	190
109-5351	73
109-7041	118
	120
	122
109-7669	593
109-8981	118
110-5051	700
110-5052	700
	702
110-5054	700
110-5056	700
	702
110-5058	700
110-5059	700
	702
110-5060	700
	702
110-5061	700
	702
110-5062	700
	702
110-5063	700
	702
110-5064	700
	702
110-5065	700
	702
110-5066	700
	702
110-5067	700
110-5068	700
	702
110-5071	700
	702
110-5072	700
	702
110-5073	700
	702
110-5074	700
	702
110-6109	142
	146
	676
110-7628	288
110-7849	372
	376
110-7886	137
110-7887	670
110-7890	676
111-0132	680
111-0149	623
111-0157	118
	120
111-0177	612
111-0178	612
111-0200	628
	632
111-0201	630
	634
111-0202	630
	634
111-0204	612
111-0209	612
111-0343	563
111-1815	14
111-5042	122
111-6940	140
	156
	306
111-7874	316
111-7875	623
111-7878	316
	318
111-7881	652
	654
111-7899	124
	125
	142
	146
	172
	173
	174
	342
111-8222	8
111-8529	420
	424
111-8738	639
111-9050	214
112-0885	277
112-1528	630
	634
112-1817	416
	420
	424
	▶490
112-2370	48
112-4577	696
112-4851	424
112-4854	424
	452
112-5219	651
112-5345	56
112-7292	122
112-7702	48
112-7704	48
112-9401	93
112-9736	619
112-9861	416
	420
	490
	558
113-0899	696
113-1504	10
113-1505	10
113-3632	462
	464
113-3652	380
	▶388
113-3682	428
	432
	436
113-3706	2
	▶568
113-3715	568
113-3717	570
113-3724	1
	▶570
113-3727	570
113-3783	1
	2
	▶296
113-3784	296
113-3785	2
	▶275
113-3790	1

▶ **PRIMARY REFERENCE**

PART NUMBER INDEX

Part	Page
	2
	▶288
113-3791	288
113-3793	288
113-3794	288
113-3795	1
	▶276
113-3797	568
113-3850	276
113-3898	586
113-3900	275
113-5280	34
113-5281	34
113-5282	34
113-7543	20
113-7913	28
113-8130	34
113-8231	34
113-9232	689
	690
	691
	692
114-1071	192
114-3140	604
	644
114-3937	342
	346
	348
	350
	352
	360
	362
114-3940	342
	348
	350
	352
	354
	356
	360
114-3944	639
114-3949	455
114-3951	676
114-3953	649
114-3954	649
114-3956	663
114-4363	86
	126
114-5333	656
114-6604	118
	120
	122
115-1317	▶108
	110
115-1552	628
	630
	632
	634
115-1558	▶116
115-1559	116
115-1561	652
115-1748	142
	146
	621
	676
115-2422	103
115-5327	180
	182
116-4527	534
	536
	538
	540
116-4858	214
116-4870	188
	190
116-4883	224
116-4884	190
116-4885	188
116-7471	672
	676
116-7711	180
116-7712	180
	182
116-7713	180
	182
116-7856	639
116-9713	▶573
117-0473	402
117-0811	122
117-1911	338
117-2311	108
	109
117-3319	216
117-3320	222
117-3468	▶113
	116
117-3787	672
	676
117-3788	672
	676
117-3789	672
	676
117-3915	326
	336
117-7798	304
117-7799	304
117-7836	▶238
	250
	251
	252
	253
	254
	255
117-7837	▶238
	251
	252
	254
	255
117-7839	238
	▶241
117-7840	238
	▶242
117-7848	▶250
117-7849	▶250
117-7851	▶250
117-7860	▶251
117-7861	▶251
117-7862	▶251
117-8258	178
	▶201
117-9622	▶118
	611
118-0626	610
118-0808	614
	▶706
118-0809	614
	▶624
118-0817	▶691
118-0819	▶692
118-0849	▶204
	235
118-0850	204
118-0861	380
	▶416
118-0862	380
	▶448
118-0869	568
118-0880	1
	2
	▶234
118-0885	388
118-0887	388
118-0888	388
118-0899	1
	2
	▶320
118-0911	327
	336
118-0939	428
	432
	436
118-0943	570
118-0955	275
	276
118-0970	428
	432
	436
118-0973	406
118-0982	448
118-0985	448
118-0992	400
118-0993	400
118-0996	400
118-0997	400
118-1008	566
	568
	570
118-1030	428
	432
	436
118-1032	428
	432
	436
118-1048	424
118-1049	452
118-1083	380
	▶476
118-1087	383
	384
	▶484
118-1094	384
	385
	▶400
118-1095	384
	385
	▶485
118-1121	▶283
118-3534	156
118-4918	▶188
	258
118-4921	▶190
	258
118-5044	604
	644
118-5046	604
	644
118-5597	174
118-7236	689
	691
118-7250	▶688
118-7255	686
118-7259	600
	642
118-7362	672
	676
118-8105	▶372
	380
118-8106	372
118-8110	372
118-8118	93
118-8119	93
119-0781	118
119-1060	▶370
	380
119-1062	370
119-1063	370
119-1799	▶575
119-1800	▶576
119-1802	575
	576
	579
119-1803	575
	576
	579
119-1804	575
	576
	579
119-1805	575
	576
	579
119-1806	575
	576
	579
119-1807	575
	576
	579
119-1852	▶374
	380
119-1853	374
119-2073	688
119-4769	610
	▶639
	682
119-5026	122
119-5155	62
119-7127	696
119-7128	692
	▶698
119-7130	638
119-7141	696
119-7698	476

▶ **PRIMARY REFERENCE**

PART NUMBER INDEX

Part	Page
	▶480
119-8263	689
	▶702
119-8310	706
119-8397	545
119-9759	682
120-0140	▶478
	480
120-0145	480
120-0146	480
120-0162	▶577
120-0163	577
	580
120-0164	577
	580
120-0165	577
	580
120-0166	577
	580
120-0167	577
	580
120-0168	577
	580
120-0172	577
	580
120-0173	577
	580
120-0175	577
	580
120-0179	577
	580
120-0596	652
	654
120-4481	224
120-4482	188
	190
120-4483	237
120-5106	723
120-5139	723
120-5140	724
120-5141	725
120-6668	▶120
	615
120-6679	370
120-7732	702
120-7733	702
120-7734	702
120-9051	462
121-0254	558
121-0256	558
121-0883	22
121-3395	372
121-4480	93
121-7746	70
	▶75
121-7981	390
121-7983	390
121-8917	▶237
	258
122-0473	80
122-1133	562
	564
122-1134	496
	▶562
122-3595	502
	504
	506
	▶548
122-4873	80
122-6177	416
	420
	424
122-6210	416
122-6211	416
122-6213	416
	420
	424
122-6214	416
	420
	424
122-6215	416
	420
	424
122-6216	416
	420
	424
122-6217	424
122-6218	416
	420
	424
122-6220	416
122-6233	452
122-6234	452
122-6235	452
122-6246	56
122-6268	283
	285
122-6322	383
	384
	385
	386
	▶450
122-6329	381
	382
	385
	▶486
122-6330	381
	382
	386
	▶487
122-6332	▶342
	386
122-6337	381
	382
	386
	▶402
122-6338	383
	384
	385
	386
	▶420
122-6342	▶284
122-6351	404
122-6352	402
122-6359	381
	382
	383
	▶452
122-6368	570
122-6369	570
122-6378	568
	570
122-6381	570
122-6384	570
122-6387	570
122-6393	570
	586
122-6401	583
	▶586
122-6453	204
122-6455	204
122-6466	▶583
122-6481	420
	424
122-6490	380
	▶390
122-6493	388
	390
122-6495	388
122-6511	448
122-6520	586
122-6521	586
122-7272	404
122-8352	209
	482
122-8353	209
	482
123-0227	496
123-0275	68
	70
123-3132	565
123-4065	364
	365
123-6621	662
123-6622	662
123-7333	1
	2
	▶162
123-8157	710
123-8851	604
123-8914	326
	336
123-9056	214
123-9128	710
123-9131	710
124-2456	272
	274
124-2528	74
124-3536	36
124-3708	86
124-3815	19
	34
	48
	52
	76
124-4401	342
	346
	348
	350
	352
	354
	356
	360
124-4672	▶128
124-5638	108
	109
124-6913	350
	352
	354
	356
	360
124-7126	710
124-7128	710
124-8335	259
124-8494	604
	644
124-8495	604
	644
124-9015	652
	654
125-0373	320
	▶322
125-0374	320
	▶324
125-0375	322
125-0376	324
125-2086	290
125-3961	▶652
	665
	682
125-3962	▶654
	665
125-7043	652
	654
125-7045	652
	654
125-7046	652
	654
125-7484	226
	408
125-8232	173
126-0747	232
	▶259
126-0748	259
126-1034	654
126-1035	654
126-1036	654
126-1367	654
126-1818	379
126-5948	561
126-5985	545
126-6916	440
126-8472	672
127-1647	327
	335
127-2956	129
127-3020	▶376
	380
127-3021	376
127-3294	14
127-5242	725
127-5243	724
127-5244	727
127-5245	726
127-5246	726
127-5447	292
127-6510	652
127-7457	654

▶ **PRIMARY REFERENCE**

PART NUMBER INDEX

Part	Page
127-8162	90
127-8286	60
127-8613	639
128-0153	570
128-0155	570
128-0164	306
128-0168	304
128-0169	304
128-0170	450
	452
128-0174	450
	452
128-0175	420
	424
128-0176	420
	424
128-0208	172
128-0219	218
	222
128-0274	404
128-0280	122
128-0285	568
128-0294	568
128-0298	▶285
128-0299	▶286
128-0613	710
128-0782	705
128-0783	704
	705
128-0784	705
128-0785	704
	705
128-0899	652
	654
128-2678	700
	702
128-5162	256
128-5164	256
128-5165	257
128-5167	256
128-5436	▶243
	244
128-5438	▶251
128-5439	▶252
128-5440	▶252
128-5441	▶252
128-5450	251
	252
	255
128-5451	252
128-8614	93
129-0334	705
129-0335	704
	705
129-0336	124
129-0337	125
129-3178	272
	274
	604
	644
	670
129-3270	316
	318
129-3493	42
129-5839	416
	424
129-6791	622
129-7184	670
129-7253	689
	691
	▶693
129-8087	226
	408
129-8732	188
	190
	192
129-8734	▶209
	235
129-9690	621
130-1676	498
	502
	506
	550
	551
130-1916	290
130-3216	100
	102
130-3922	542
130-4634	482
130-5300	262
130-6235	478
	▶542
130-9811	156
	262
130-9888	10
130-9901	322
	324
131-0715	312
131-1236	665
	682
	▶713
131-1237	713
131-1238	713
131-1812	93
131-2639	466
	467
	469
131-3201	156
131-3540	290
131-4242	646
131-5167	646
131-7866	122
131-7874	122
131-8829	69
132-0154	22
132-0988	304
132-0994	304
132-1333	424
132-2256	▶581
132-2258	▶578
132-2339	292
132-2397	306
132-2558	277
132-2685	1
	2
	▶103
132-3543	705
132-3789	304
132-4763	595
	596
132-5789	170
	262
132-6762	577
132-9623	192
133-1011	24
133-2988	727
133-2990	729
133-2991	728
133-3235	122
133-3948	729
133-3949	728
133-4234	484
	▶498
133-4235	485
	▶500
133-4236	486
	▶502
133-4237	487
	▶504
133-4293	218
133-4297	184
	214
133-4820	402
133-4826	326
	330
133-4848	424
	▶496
133-4861	452
	▶497
133-5330	497
	▶549
133-5545	549
133-6562	704
133-6563	704
133-6564	704
133-7668	86
133-7675	304
133-8305	198
133-8597	350
	352
	354
	356
	360
133-8773	370
133-8778	374
	376
133-8780	374
	376
134-0404	208
134-0673	304
134-1374	194
134-2540	156
	672
	676
134-2625	730
134-4096	672
	676
134-4126	104
	107
	110
134-4531	400
134-4630	390
134-4735	316
	318
134-5214	292
134-5215	292
134-6077	285
134-7258	721
	722
135-1922	621
135-3327	156
135-5935	459
	460
136-1953	605
	644
136-2109	652
	654
136-4593	202
136-4595	202
136-4794	388
	390
136-9190	621
136-9191	622
136-9192	622
136-9292	508
	512
	516
	518
	520
	526
	528
	532
136-9297	471
	472
	473
136-9298	471
	472
	473
136-9304	534
	536
	538
	540
137-2135	390
137-2170	715
137-6727	204
137-7602	611
	▶626
137-7603	611
	▶626
138-1645	180
	182
138-2042	76
138-2048	36
138-2050	16
138-2053	44
138-2054	42
138-2060	16
138-6791	388
138-6792	390
138-7793	450
	452
138-7841	▶494
	504
138-8484	268
138-8485	268
139-4189	466
	467
	468
	469
	508

▶ **PRIMARY REFERENCE**

PART NUMBER INDEX

Part	Page	Part	Page	Part	Page	Part	Page
	512	141-8615	▶202		474	146-6319	534
139-5514	42		258		475		536
140-1344	558	141-9188	342	145-4501	78		538
140-3024	567	141-9191	350	145-4911	20		540
140-7443	24		352	145-5307	651	146-6729	132
140-7444	24		354	145-6855	16	146-6783	▶238
140-7445	24		356	145-6856	16		252
140-7505	60		360	145-6858	16		253
140-7506	60	141-9193	342	145-6929	▶114		255
140-7512	60		344		122		257
140-7515	51		346	145-8327	86	146-6822	304
140-8783	52		348	145-8428	471	146-7824	504
	154		358		472		506
140-8911	6		362		473	146-7980	264
	▶50	141-9236	508		474	146-8477	508
140-9251	▶301		512		475		512
	306		514	145-9123	723		516
140-9289	306		516	145-9377	586		518
140-9312	62		518	146-0083	272		520
140-9926	518		520		274		526
	528		524	146-0084	272		528
141-1095	512		526		274		532
	518		528	146-0085	270	146-8478	512
	528		532	146-0089	274		514
141-1556	471	141-9777	76	146-0090	272		518
	472	141-9784	604	146-0098	272		524
	474		644		274		528
	475	142-2651	471	146-1841	76	146-8479	466
	508		472	146-2438	114		467
141-2032	471		473	146-3142	504		468
	472	142-2928	673		506		469
	474		677	146-3143	504		508
	475	142-5789	118	146-3337	466		512
	508		120		467	146-8956	▶42
141-4852	512		122		469		44
	514	142-5862	190	146-3728	314	146-8957	42
	518	142-5914	188	146-3765	344	146-8981	508
	524	142-5925	192		358		512
	528	142-8463	▶593	146-6274	▶203		516
141-4859	558	142-8464	▶567		258		518
141-4892	218	142-8828	94	146-6275	203		520
	222	142-8937	482	146-6277	203		526
141-4984	652	143-0541	130	146-6280	184		528
	654		▶132	146-6315	466		532
141-6188	51	143-1344	132		467	147-0345	723
141-6821	203	143-3193	303		468	147-0346	724
141-7481	466	143-5446	556		469	147-0347	724
	467	143-7899	204		470	147-0348	725
	468	143-8874	600		524	147-0349	725
	469		642		528	147-0350	726
	508	143-9069	455	146-6316	534	147-0351	726
	512	143-9542	156		536	147-0352	727
	514	144-0195	713		538	147-0353	727
	518		716		540	147-0354	730
	524	144-0367	406	146-6317	466	147-0355	728
	528	144-1569	715		467	147-0356	729
141-7844	78	144-5282	113		468	147-1773	156
141-8580	628	144-5283	113		469	147-1979	16
	630	144-5284	113		470	147-3114	508
	632	144-8155	621		524		512
	634	144-8521	304		528	147-3322	524
141-8589	76	145-0326	708	146-6318	534		528
141-8597	76		710		536	147-4549	710
141-8599	76	145-2334	471		538	147-5071	▶235
	86		472		540		238

▶ **PRIMARY REFERENCE**

PART NUMBER INDEX

Part	Page
	239
147-5484	239
	▶250
147-5524	5
	▶37
147-5532	5
	▶38
147-5553	76
147-6522	710
147-6541	710
148-0199	40
148-1928	184
148-2350	314
148-3026	14
148-3626	636
148-5318	156
148-5689	672
	676
148-7834	586
148-7836	586
148-7922	471
	472
	474
	475
148-8298	156
148-8306	227
148-8309	428
	432
	436
148-8316	326
	330
	412
	414
	462
	464
148-8321	428
	432
	436
148-8322	440
	444
148-8323	406
	428
	432
	436
148-8325	227
	392
	396
148-8327	206
	227
	404
	406
	408
	416
	420
	424
	452
148-8330	428
	432
	436
148-8335	232
	416
	420
	424
148-8336	304
	392
	396
	416
	420
	424
	429
	433
	436
	440
	444
148-8339	402
	404
148-8340	326
	330
	335
	414
	462
148-8342	326
	330
148-8345	326
	330
	335
	428
	432
	436
	440
	444
148-8347	206
	314
	326
	335
148-8351	396
148-8353	306
	314
	424
	428
	432
	436
148-8357	232
	452
148-8358	227
	314
	327
	330
	408
148-8361	306
148-8364	227
148-8367	392
148-8368	396
	408
148-8369	327
	330
148-8370	440
	444
148-8371	424
	429
	433
	436
148-8372	227
	412
	414
	462
	464
148-8373	452
148-8375	412
	414
148-8378	304
	392
	416
	420
	425
	429
	433
	437
	440
	444
	452
	558
	560
148-8381	412
	464
148-8384	412
	414
148-8385	227
148-8388	227
148-8390	440
	444
148-8407	425
148-8408	330
148-8410	404
148-8415	429
	433
	437
148-8416	306
148-8417	622
148-8418	227
	327
	330
	402
	408
148-8421	327
	330
148-8424	227
	440
148-8428	429
	433
	437
148-8433	306
	392
	396
	408
148-8434	306
148-8435	306
	392
148-8436	227
	327
	336
148-8437	416
	420
	425
148-8441	406
148-8443	304
148-8444	227
	327
	330
	392
	396
	429
	433
	437
148-8445	452
148-8448	227
148-8449	416
	420
	425
	440
	444
	452
	622
148-8455	404
148-8457	392
	402
148-8867	558
149-0777	337
149-2091	86
149-2398	710
149-2399	710
149-2400	710
149-2403	710
149-3253	621
149-4113	▶334
149-4359	340
149-4569	416
	420
149-4612	381
	382
	383
	384
	385
	386
	▶623
149-4745	696
	699
149-5470	471
	472
	473
149-5624	617
149-5733	595
	596
149-6117	90
149-8058	▶252
149-9176	22
150-1293	340
	350
	352
	354
	356
	360
150-3036	393
150-3065	232
150-4033	327
	336
150-4034	425
	452
150-4036	327
	336
150-4037	227
	408
150-4048	440
	444
150-4049	227
	408
150-4052	396

▶ **PRIMARY REFERENCE**

PART NUMBER INDEX

Part	Page	Part	Page	Part	Page	Part	Page
150-5968	396		473		672		467
150-5984	617	153-9706	292		677		468
150-6582	662		390	155-2274	108		469
150-6766	166	154-2567	729		142		470
150-7718	692	154-4370	652		146		524
	▶710		654		162		528
150-8015	715	154-5225	546		166	159-4995	▶112
151-0894	604	154-5508	▶239		672	159-4996	112
	644		253		677	159-5255	18
151-4003	552		255	155-2276	314	159-6003	67
	553		256	155-5399	424	159-6108	111
	555		257	155-5779	716	159-7446	176
151-5715	636	154-5629	672	155-5781	716		177
151-6142	176		676	155-5782	716		▶199
	177	154-8056	7	155-5783	716	159-7457	199
	▶198	154-8150	326	155-5784	716	159-7458	199
151-9826	406		336	155-6258	327	159-9322	166
152-0983	80	155-0576	86		335	159-9539	344
152-2763	714		166	155-9816	656		346
152-2764	713	155-2255	156	156-1148	▶694		348
	▶714		621		698		350
152-7217	67		672		699		352
	69		676	156-4130	306		354
152-7219	67	155-2259	195	156-4173	17		356
	69	155-2260	106	156-4271	▶664		358
152-7224	69		146		665		360
153-2985	482		166		682		362
153-4856	292		170	156-4449	600		672
153-5093	728		262		642		676
153-6237	228		314	156-5726	558	159-9541	344
	408		621	156-5970	564		346
153-6241	408		672	156-6819	644		348
	429		677	157-2152	536		350
	433	155-2261	136		538		352
	437	155-2262	195		540		354
153-6248	226	155-2265	142	157-2153	534		356
153-8924	534		146	157-2284	561		358
	536		150	157-2393	100		360
	538		152		102		362
	540		162	157-3645	280	160-0149	76
153-8925	534		195	157-3646	280	160-0269	556
	536		649	157-5544	428	160-0496	301
	538		672		432		428
	540		676		436		432
153-8926	534	155-2270	136	157-6144	512		436
	536		146	157-6155	512	160-0750	508
	538		156	158-2336	428		516
	540		162		432		520
153-8929	534		166		436		526
	536		170	158-2829	100		532
	538		172		102	160-2243	226
	540		173	158-5089	172		408
153-8945	470		262		173	160-2245	226
	524		388		174		284
	528		390		414		286
153-8946	466		424		424		408
	467		604		672	160-2443	▶127
	469		620		676		681
153-8947	512		621	158-8777	440		682
	514		672	159-2829	73	160-3510	24
	518		677	159-3260	▶67	160-5843	561
	524	155-2271	142		70	160-5844	561
	528		146	159-3261	68	160-6298	474
153-8952	471		162		70		475
	472		195	159-3781	466	160-6493	36

▶ **PRIMARY REFERENCE**

PART NUMBER INDEX

Part	Page
160-6494	36
160-6495	36
160-6496	36
160-6520	672
160-6988	10
160-7765	710
160-7766	710
160-7767	710
160-8499	314
161-5922	390
161-5967	646
161-6149	314
	549
161-6161	314
	549
161-7620	636
161-8042	612
161-8906	622
161-9289	692
161-9640	628
	630
	632
	634
161-9641	628
	630
	632
	634
161-9642	628
	630
	632
	634
161-9645	612
161-9647	628
	630
	632
	634
161-9820	17
162-0236	51
162-0237	51
162-0757	52
162-0761	52
162-1504	76
162-1565	10
162-2000	90
162-2188	628
	632
162-2189	628
	630
162-2190	628
	630
	632
	634
162-9754	52
162-9992	86
163-0264	5
	▶39
163-1146	708
163-1201	162
163-1869	354
	356
163-1870	352
	360
163-4295	408
163-4345	272
163-4347	270
163-4348	270
163-4635	▶471
	512
163-4636	▶472
	518
	528
163-4637	▶473
	514
	524
163-5512	471
	472
	473
	474
	475
163-5775	176
	177
	178
	▶180
163-5776	180
	182
163-6408	302
163-6412	302
163-7233	180
	182
163-7234	180
	182
163-9256	16
163-9324	656
164-1908	412
164-3207	86
164-4111	346
	362
164-4562	630
	634
164-4563	626
	▶628
164-4564	626
	▶630
164-4565	626
	▶632
164-4566	626
	▶634
164-4927	390
164-5362	388
164-5509	118
164-5567	208
	228
	232
	406
164-5578	406
164-5628	558
164-6862	228
	408
164-7556	113
165-0311	142
	146
	672
	676
165-5655	166
165-6365	304
166-2087	68
166-2232	622
166-3988	46
166-3990	46
166-6176	22
166-6781	708
166-7223	710
166-9286	636
166-9287	624
167-0138	▶136
	672
	676
167-2153	24
167-2195	374
	376
167-2201	370
	372
167-2304	374
	376
167-2312	370
	372
167-2457	374
	376
167-2463	370
	372
168-0402	621
168-1877	514
	524
168-1878	518
	528
168-2457	628
	632
168-2458	630
	634
168-4520	520
	532
168-4521	508
168-6503	512
	514
	518
	524
	528
	▶534
168-6504	508
	512
	514
	516
	518
	520
	524
	526
	528
	532
	▶536
168-7000	▶302
	610
	614
	682
168-8772	649
168-8774	622
169-3261	337
169-3995	628
	630
	632
	634
169-7434	620
169-7435	620
169-8352	184
170-0048	180
	182
170-0108	180
	182
170-0503	428
	432
	436
170-2464	5
	▶20
170-3711	5
	▶32
170-4698	180
	182
170-7064	672
	676
170-9360	673
	677
171-1076	60
171-1078	51
171-1090	5
	▶27
171-1410	5
	▶28
171-1411	28
171-1419	5
	▶84
171-1423	5
	▶19
171-2208	156
171-2211	156
171-5349	262
171-7198	244
171-7199	244
171-8689	244
171-8772	564
172-2307	146
172-2309	142
172-3205	350
	▶508
172-3206	342
	348
	▶512
172-4620	404
172-4622	226
172-4844	60
172-6755	150
172-8591	290
	298
	300
	682
173-3064	122
173-5787	692
173-9683	374
	376
173-9685	370
174-0503	156
	672
	677
174-1486	604
	644
174-3222	376
174-4217	568
174-4246	56
174-4252	568
174-6491	649
174-6899	255
174-9725	680

▶ **PRIMARY REFERENCE**

PART NUMBER INDEX

Part	Page
174-9730	▶680
	683
	684
	686
174-9749	611
	▶684
174-9753	612
174-9755	▶612
	684
174-9763	686
174-9764	615
	▶686
175-3915	52
175-6746	641
175-6749	641
175-6750	▶640
175-6754	641
175-6759	641
175-6760	3
	4
	640
	▶641
175-7310	222
175-7376	182
175-7900	374
	376
175-7903	370
175-9429	508
175-9433	518
175-9434	520
175-9435	508
175-9436	▶474
	516
	526
175-9437	▶475
	520
	532
175-9438	512
175-9439	508
175-9440	516
	526
175-9442	520
	532
175-9443	▶466
	526
	532
175-9444	▶467
	508
	516
	520
	526
	532
175-9446	344
	▶514
175-9447	354
	▶516
175-9448	346
	▶518
175-9449	352
	▶520
176-0118	244
176-0209	459
	460
176-0210	459
176-0302	162
176-0623	568
	570
176-0624	568
	570
176-0625	568
	586
176-0626	568
	586
176-0798	459
	460
176-1593	568
	570
176-1594	570
176-1705	244
176-1706	▶244
	245
176-1707	244
176-2435	264
176-2437	264
176-5187	2
	3
	▶235
176-5220	▶2
176-5221	▶1
	2
176-5222	2
	▶380
176-5223	2
	3
	▶6
176-5242	3
	▶380
176-9644	370
177-0017	235
	▶258
177-0018	▶184
	258
177-0019	184
	▶196
177-1452	568
177-1629	392
177-8782	60
177-9653	86
177-9953	▶96
	100
178-1780	672
	676
178-2593	628
	630
	632
	634
178-3893	368
178-7539	118
178-7877	466
	468
	469
	470
	508
	512
	524
	528
178-8285	730
179-1797	2
	3
	▶5
179-4324	270
179-8152	488
	▶506
180-2535	632
	634
	▶715
180-3528	604
180-3730	94
180-4686	94
180-5098	651
180-5100	118
	120
180-7486	639
180-7487	639
180-7502	184
180-8801	1
	2
	▶156
180-8804	1
	2
	▶170
180-8805	1
	2
	▶140
180-8807	1
	2
	▶138
180-8810	▶174
	335
	336
180-8852	262
180-8860	174
180-8871	140
180-8872	140
180-8873	140
180-8874	140
180-8983	1
	▶265
180-8984	2
	▶266
180-8986	▶267
180-8992	265
180-8993	265
180-8994	267
180-8996	266
180-8997	266
180-9740	1
	2
	▶72
180-9744	2
	▶721
180-9872	368
180-9873	600
	▶604
180-9874	642
	▶644
183-6317	24
183-6318	48
183-7528	604
	644
183-7600	428
	432
	436
183-8597	262
184-1333	1
	2
	▶80
184-2472	107
	110
184-5293	670
184-5296	▶340
	381
	383
	384
	385
	386
184-5297	665
	▶670
	682
184-5483	5
	▶40
184-5484	40
184-9975	▶544
	545
185-0882	16
185-1015	6
	▶62
185-1016	62
185-1017	62
185-1018	62
185-1019	62
185-1021	178
	179
185-1023	58
	178
	179
185-1024	58
	178
	179
185-1027	62
185-1028	226
185-1030	58
185-1031	58
185-1032	364
	365
185-1036	62
185-1039	226
185-1043	62
185-1044	62
185-1045	6
	▶54
185-1046	54
185-1047	62
185-1049	62
185-1546	42
185-2327	544
185-2638	96
	98
185-2639	96
	98
185-2643	96
185-2644	96
	98
185-2645	96
	98
185-2647	96
	98
185-2648	96
	98
185-2650	96

▶ **PRIMARY REFERENCE**

PART NUMBER INDEX

Part	Page	Part	Page	Part	Page	Part	Page
	98		555	188-0946	392		665
185-2651	96	186-2488	552	188-2484	392	190-4635	▶316
	98		553	188-2485	392		610
185-2653	96		554	188-2856	392		682
	98		555	188-2860	▶392	190-4640	▶610
185-2654	96	186-3735	95		583		665
	98		170	188-2865	381	190-4643	▶318
185-2655	96		173		382		614
	98		195		385	190-4646	▶614
185-2656	98		226		386		665
185-2657	98		262		▶404	190-4648	▶665
185-2658	96		336	188-2869	392		666
	98		340	188-3823	304	190-4650	611
185-2765	414		350	188-7675	253		▶665
185-2766	142		352	189-0189	563	190-4652	▶682
	146		354	189-1707	604	190-4654	614
185-2767	172		414	189-2096	563		▶665
	173		424	189-2100	462	190-4661	▶614
185-2768	174		440		▶563	190-4664	▶666
185-2769	142		471	189-4870	▶150	190-4665	614
	146		472	189-4871	▶166		▶704
185-5209	428		474	189-5601	48	190-4666	611
	432		561	189-6136	621		666
	436		563	189-6140	142		682
	▶545		564		146		▶705
185-5629	670		656	190-2446	▶110	190-4668	▶611
185-7688	376		670		166	190-4690	▶194
185-7690	374		716	190-2888	▶224		610
185-7691	374	186-3736	136		258		614
	376		195	190-2911	224		682
185-7708	498	186-4272	129	190-2914	▶192	190-4700	610
	500	186-4382	370		258		614
	▶550	186-4415	302	190-2915	▶214		▶681
185-7709	502	186-4942	242		258		682
	504		▶244	190-3085	367	190-4701	681
	506	186-4943	240		▶368		682
	▶551		▶245	190-3611	368	190-4705	651
186-0815	56	186-6190	656	190-4310	614	190-4706	651
186-0817	56	187-0534	5		▶672	190-4707	651
	300		▶22	190-4320	610	190-4708	651
	682	187-0541	314		▶676	190-8308	556
186-0903	502	187-1267	312		682	190-8310	556
	504		459	190-4330	▶142	190-8314	556
	506		460		614	190-8985	253
	▶552	187-2082	623	190-4340	▶146	190-8987	▶253
186-0905	494	187-2120	226		610	190-8992	257
	500	187-2868	68		682	190-9002	▶253
	502		70	190-4401	▶643	191-2226	249
	504	187-3662	388	190-4402	▶601	191-5049	10
	▶553	187-5122	715	190-4405	610	191-8920	471
186-0908	492	187-5123	715	190-4406	▶614	191-9177	62
	▶554	187-5124	715	190-4555	670	191-9182	62
186-0913	498	187-5125	715	190-4556	670	191-9184	62
	500	187-5126	715	190-4558	142	191-9188	298
	▶555	187-5127	715		146	191-9191	62
186-2337	6	187-5128	715	190-4559	142	191-9192	62
	▶18	187-9086	402		146	192-0086	440
186-2341	▶68	188-0938	392	190-4563	670		444
186-2344	6		396	190-4564	150		▶556
	▶74	188-0939	392		152	192-0732	280
186-2345	6		396	190-4605	▶600	192-0734	280
	▶30	188-0940	392		601	192-0735	4
186-2487	552		396		602		▶280
	553	188-0943	392		682	192-4339	6
	554	188-0945	392	190-4634	▶610		▶73

▶ **PRIMARY REFERENCE**

PART NUMBER INDEX

Part	Page
192-4352	73
192-4360	▶58
	179
192-4367	178
	179
192-7625	392
	396
192-7637	226
192-8662	496
	497
193-2200	216
	222
193-4640	247
	248
193-4750	392
	396
	▶546
193-5958	556
193-8549	107
193-8550	▶107
	110
194-0856	721
	722
194-1851	392
194-2466	36
194-4120	392
	396
194-4121	162
194-7265	170
194-8111	162
194-8112	162
194-8113	162
194-8114	162
194-8115	162
194-8116	162
195-0913	600
195-0914	424
195-0916	672
	676
195-0917	672
	676
195-0921	672
	676
195-0922	344
	346
	348
	350
	352
	354
195-0925	124
	125
195-3761	34
195-6525	402
	404
	594
195-6526	402
	404
195-6527	594
195-6935	▶591
195-6937	▶589
195-6938	▶592
195-6961	589
	591
	592
195-7004	42
195-7430	564
195-9877	402
	404
	594
195-9878	402
	404
	594
196-1185	262
196-1979	▶367
	583
	584
196-2408	556
196-3698	337
196-3699	337
196-4191	▶594
196-4196	594
196-9441	74
196-9442	73
197-1597	280
197-5023	3
	282
197-5024	3
	282
197-7122	1
	2
	▶303
197-7689	708
197-7995	247
197-8820	▶98
	102
198-3393	612
198-8211	428
	433
	437
198-8214	429
	433
	437
198-8933	290
198-8942	290
198-8943	290
198-8944	290
198-8945	290
198-8946	290
198-8954	290
198-8955	290
198-8956	300
	682
198-8957	298
198-8959	290
198-8961	290
198-8964	▶298
	643
	665
198-8965	▶300
	601
	602
	682
198-8970	1
	2
	▶290
199-4152	30
199-4284	72
199-4297	72
199-5067	74
199-5117	72
199-5681	▶459
	464
199-5682	▶460
	462
199-5683	▶312
	314
199-7041	618
	▶620
199-7042	620
199-7043	620
199-7891	96
199-8124	68
	▶69
199-8436	96
199-9252	86
199-9267	86
199-9751	86
	2
200-1898	392
	396
200-1922	30
200-1923	30
200-2042	258
	▶262
200-2043	262
200-2045	196
200-2371	489
200-2739	30
200-6345	306
	326
	330
	335
201-0211	194
	▶195
201-0950	556
	▶564
201-1024	142
	146
201-1068	382
	383
	384
	▶488
201-1802	601
	602
	▶617
201-1803	617
201-3359	358
	▶524
201-3360	356
	▶526
201-3361	362
	▶528
201-3362	360
	▶532
201-4275	536
201-4276	534
	538
	540
201-4825	316
	318
	▶337
201-5242	312
201-8080	546
201-8745	60
201-9041	104
201-9517	246
	▶248
202-0135	621
202-0354	1
	2
	▶94
202-0355	94
202-0358	94
202-0360	94
202-0363	▶618
	619
202-0370	290
202-0392	292
202-0393	292
202-0420	1
	2
	▶264
202-0421	▶383
202-0422	▶383
202-0423	▶384
202-0424	▶385
202-0425	▶386
202-0426	▶381
202-0427	▶381
202-0428	1
	2
	▶718
202-0429	1
	▶722
202-0430	1
	2
	▶304
202-0671	490
202-0673	490
202-0674	490
202-0681	621
202-1129	142
	146
	670
	672
	676
202-1233	508
	512
	514
	516
	518
	520
	524
	526
	528
	532
	▶538
202-1320	524
202-2558	508
	512
	518
	520
	528
	532
	▶540
202-2564	▶468
	508

▶ **PRIMARY REFERENCE**

PART NUMBER INDEX

Part	Page
	512
	518
	520
	528
	532
202-2567	▶469
	508
	516
	520
202-2568	▶470
	512
	514
	518
202-4338	235
	▶246
202-4339	247
202-4340	246
	▶247
202-6496	▶621
202-7215	1
	2
	▶56
202-7216	56
202-7479	122
202-7857	56
202-9801	482
202-9802	482
203-2234	218
203-2752	▶176
	178
203-2753	176
	177
	178
	▶210
203-2754	176
	177
	178
	▶218
203-2756	210
	212
203-2757	210
	212
203-2758	210
	212
203-2759	210
203-2761	▶176
203-2762	176
	▶212
203-2763	176
	▶216
203-2764	212
203-2766	▶177
	179
203-2767	177
	▶222
203-2768	177
	▶182
203-2769	▶177
	178
203-2770	▶176
203-2771	▶177
	179
203-2772	▶178
	179
203-3872	1
	2
	▶232
203-3877	▶378
	380
203-3881	178
	179
	▶408
203-3894	▶206
	235
203-3895	1
	2
	▶306
203-3897	380
	▶406
203-3898	▶310
	380
203-3900	▶335
203-4641	▶723
203-4642	▶723
203-4643	▶724
203-4644	▶724
203-4645	▶725
203-4647	▶725
203-4648	▶726
203-4649	▶726
203-4650	▶727
203-4651	▶727
203-4652	▶728
203-4653	▶728
203-4654	▶729
203-4655	▶729
203-4659	▶335
203-5852	182
203-5853	182
203-5920	▶458
203-5921	▶458
203-5922	▶458
203-5923	▶458
203-5924	382
	383
	384
	▶428
203-5925	381
	382
	384
	385
	▶432
203-5926	381
	382
	386
	▶436
203-5927	▶384
203-5928	▶385
203-5929	▶386
203-5931	601
	643
	▶660
	682
203-5932	601
	602
	▶656
	682
203-5933	▶382
203-5934	▶382
203-5935	▶382
203-5936	▶383
203-5937	601
	602
	▶619
	682
203-5947	▶178
203-5948	▶178
203-5949	▶179
203-5950	▶179
203-6590	314
203-8553	▶179
203-8558	▶339
203-8560	▶339
203-8599	277
203-8600	1
	2
	▶277
203-9203	10
204-0357	142
	146
204-0358	146
204-0359	142
204-0813	268
204-1370	170
204-2281	306
	326
	330
	336
	406
204-2593	192
204-2594	214
204-3540	246
	▶249
204-4148	312
204-4329	▶70
204-4332	267
204-4338	3
	4
	▶287
204-4339	287
204-4341	718
204-4342	718
204-4343	6
	▶46
204-4344	46
204-4349	▶2
	3
204-4350	▶3
204-5107	2
	▶294
204-5865	1
	▶295
204-8000	228
	327
	330
	406
	409
204-8799	625
204-9417	2
	3
	▶122
205-0520	614
	▶615
205-0522	610
	▶611
205-0524	610
	▶611
205-0626	98
205-0826	166
205-1627	68
	70
205-2214	56
205-3210	218
	222
205-3211	216
205-3652	226
205-3665	310
	▶314
205-3668	457
	▶462
205-3669	456
	▶464
205-3961	306
205-4285	108
	109
205-4587	314
205-5266	326
	336
205-5268	226
205-5407	482
205-5408	380
	▶482
205-5409	252
	255
205-6024	619
205-6025	618
205-6026	618
205-6027	618
205-6028	618
205-7102	406
205-7103	406
205-8439	482
206-1345	672
	676
206-3632	556
206-4127	16
206-4431	656
206-4432	656
206-4433	656
206-4435	656
206-4441	94
206-5142	258
206-5162	166
206-5208	166
206-7384	440
206-7385	440
	444
206-7386	440
	444
206-9546	482
207-0536	290
207-3362	656
207-3366	656
207-5268	110
207-5947	▶109
	650
207-5948	610
	▶625
207-6796	150

▶ **PRIMARY REFERENCE**

PART NUMBER INDEX

Part	Page
	152
207-8808	270
208-0011	270
208-0372	62
208-0792	460
208-0840	303
208-0886	462
208-2292	460
208-2293	312
208-2300	232
208-2301	232
208-2978	489
208-4970	719
208-4971	720
208-4977	719
	720
208-4978	719
	720
208-4979	719
	720
208-4980	719
	720
208-4981	719
	720
208-4983	▶270
208-4985	1
	2
	▶268
208-6055	73
208-6097	340
208-6246	1
	2
	▶292
208-7452	558
208-9645	174
208-9646	174
208-9665	342
	▶558
209-0091	42
209-0092	42
209-0787	406
209-3149	378
	▶379
209-4578	73
209-4579	73
209-4589	73
209-5502	8
209-5503	8
209-6416	152
209-6417	150
209-6427	459
	460
209-7295	455
209-7296	455
209-7763	▶455
209-7801	408
209-8712	3
	4
209-8713	3
	4
209-9218	13
209-9219	13
210-1672	▶100
210-1675	▶102
210-6776	▶104
211-0052	142
	146
	672
	676
211-0067	34
211-0542	392
211-2092	462
	464
	▶565
211-6643	326
	335
212-0061	489
212-4648	326
	330
212-4649	330
212-4650	326
	330
212-4652	206
212-4653	406
212-4654	428
	432
212-4656	▶330
	335
212-5085	226
	408
212-5940	226
	408
212-5942	226
	408
212-6056	226
	408
212-6282	▶412
	458
212-6283	▶414
	458
212-6301	▶456
	458
212-6304	▶457
	458
212-7770	406
212-8743	100
	102
212-9977	▶326
	335
213-1791	436
213-1792	436
213-1793	432
213-1794	428
213-4267	402
213-4555	314
213-5330	440
213-6217	339
	▶440
213-6218	440
	444
213-6219	440
	444
213-6220	440
	444
213-6221	440
	444
213-7244	▶3
213-7245	▶4
213-7253	3
	4
213-7435	306
213-7436	306
213-7437	306
213-7438	326
	335
213-8794	621
213-8795	621
213-9036	▶278
213-9100	138
214-1042	226
	408
214-1542	326
	335
214-1543	326
	335
214-1544	326
	335
214-1668	14
214-2282	326
	335
214-3203	8
214-3279	406
214-4768	214
214-4769	214
214-4916	670
214-5389	396
214-5390	396
214-5514	73
214-5515	73
214-5561	3
	▶282
214-7091	412
	414
214-7092	412
214-7458	58
214-9563	268
214-9564	268
215-2103	14
215-2643	272
215-2644	274
215-2645	270
	▶272
215-2646	270
	▶274
215-2884	110
215-2886	▶152
215-2889	▶172
	339
215-2890	▶173
	339
215-3112	73
215-3810	226
	408
215-3811	226
215-3813	414
215-3886	292
215-4011	58
	178
	179
215-4012	73
215-5644	414
215-5645	226
215-5646	226
215-6512	110
215-6671	314
215-6737	364
215-6740	365
215-6741	▶364
215-6743	▶365
	366
215-8058	216
	222
215-8125	210
	212
215-8978	62
215-9430	86
216-2823	▶566
216-2892	76
216-3041	226
216-3436	86
216-3446	86
216-3448	86
216-3450	86
216-3937	226
216-3938	226
216-4983	73
216-6944	58
	178
	179
216-6946	58
216-8231	5
	▶13
216-8235	13
	▶14
216-8314	12
216-8315	12
216-8316	5
	▶12
216-8323	36
216-8324	5
	▶36
216-8332	16
216-8333	16
216-8335	▶16
	17
216-8343	5
	▶17
216-8348	21
216-8619	5
	▶44
216-8620	5
	▶7
216-8625	48
216-8632	24
216-8633	24
216-8634	24
216-8685	76
216-8690	76
216-8699	76
216-8703	76
216-8705	76
216-8708	76
216-8709	76
216-8710	76
216-8712	76
216-9043	90
216-9053	90
216-9069	194
216-9086	90
216-9092	90

▶ **PRIMARY REFERENCE**

PART NUMBER INDEX

Part	Page
216-9600	10
216-9602	10
216-9604	10
216-9606	10
216-9612	5
216-9616	5
216-9637	52
216-9638	52
216-9641	52
216-9643	52
216-9645	52
216-9734	60
216-9737	51
216-9740	5
	▶51
216-9743	51
216-9752	90
216-9786	86
216-9790	86
216-9824	86
216-9826	86
216-9828	86
216-9830	86
216-9831	86
216-9834	86
216-9835	86
217-0099	86
217-0100	86
217-0109	5
	▶86
217-0594	5
	▶71
217-0595	71
217-0596	71
217-0640	5
	▶78
217-0721	90
217-0956	194
217-1499	5
	▶21
217-1573	36
217-4154	337
217-4155	337
217-8413	154
217-8477	154
217-8478	154
217-9038	154
217-9059	154
218-2401	670
218-2439	150
	152
218-2440	287
218-2456	▶384
218-2457	▶385
218-2792	68
	70
218-2833	278
218-3623	677
218-3673	339
	▶444
218-5129	381
	382
	383
	▶424
218-8836	▶124
218-8837	▶125
219-0669	62
219-1790	556
219-1803	10
219-1818	52
219-1854	5
	▶129
219-1855	5
	▶126
219-1856	126
219-2172	52
219-2418	278
219-2442	90
219-2443	90
219-2450	90
219-2451	90
219-2452	90
219-2453	90
219-2455	5
	▶90
219-2462	5
	▶154
219-2512	13
219-2849	682
	▶683
219-2850	683
219-3311	226
219-3313	179
	▶226
219-3314	226
219-4785	▶344
	383
219-4786	▶346
	381
	385
219-4787	▶348
	381
219-4788	▶350
	382
	386
219-4789	▶352
	382
	385
219-4790	▶354
	382
	384
219-6910	274
219-8604	660
220-0186	314
220-0691	298
220-1241	30
220-1505	▶356
	384
220-1506	▶358
	383
220-1507	▶360
	385
220-1509	▶362
	384
220-1865	80
220-2657	312
220-2658	312
220-2680	460
220-2681	459
220-5557	80
	▶93
220-5564	▶719
	721
220-5565	▶720
	722
220-5566	721
	722
220-5567	722
220-5568	721
220-5572	721
220-5574	721
	722
220-5575	723
220-5576	723
220-5577	724
220-5578	724
220-5579	725
220-5580	725
220-5581	726
220-5582	726
220-5583	727
220-5584	727
220-5585	728
220-5586	728
220-5587	729
220-5588	729
220-5589	730
220-5738	722
220-6148	5
	▶48
220-6151	48
220-7171	52
220-7925	176
	177
	178
221-1018	86
221-1241	5
	▶10
221-1707	▶396
	584
221-2959	5
	▶34
221-3242	110
221-3243	110
221-3424	589
	591
	592
221-3428	589
	591
	592
221-4057	▶730
221-4058	▶730
221-4064	730
221-4520	52
221-5278	52
221-5285	5
	▶52
221-5290	5
	▶45
221-5369	5
	▶60
221-6835	5
	▶24
221-6858	5
	▶8
221-6863	76
221-6864	76
221-6866	5
	▶76
221-6872	26
221-6875	5
	▶26
221-8455	3
	4
221-9774	420
222-1241	337
222-1259	108
222-3138	▶489
	560
222-3870	166
222-4879	2
	3
	▶110
223-2223	326
	330
223-3378	▶584
223-4717	344
	346
	348
	350
	352
	354
	356
	358
	360
	362
223-6352	584
223-6353	584
223-8276	226
223-9072	▶339
223-9074	▶335
223-9699	444
223-9730	▶579
223-9734	582
224-0759	▶582
224-3385	166
224-5846	565
224-6310	152
224-8629	672
	676
224-8930	290
224-9609	672
	676
224-9610	156
224-9611	166
224-9612	170
225-0066	156
225-0300	489
225-1057	344
	346
	348
	350
	352
	354
	356
	358
	360
	362
	▶560
225-3773	▶110

▶ **PRIMARY REFERENCE**

PART NUMBER INDEX

Part	Page	Part	Page	Part	Page	Part	Page
225-3800	290	229-4954	▶253				
225-3801	290	229-4955	▶254				
225-4287	62	229-4956	▶254				
225-4329	▶650	229-4957	▶254				
225-5224	156	229-4958	▶254				
225-7917	584	229-4962	▶255				
225-8383	56	229-4970	▶255				
226-0347	444	229-5039	257				
226-1354	226	229-5115	227				
	408		408				
226-1832	623	229-5152	306				
226-2065	672	230-0902	396				
226-2066	677	230-1233	396				
226-2095	560	230-4927	156				
226-2869	206	230-6142	227				
	▶208		408				
226-2951	672	230-7287	232				
	677	230-9671	▶255				
226-3378	673	230-9672	▶255				
	677	230-9673	▶256				
226-3407	673	230-9674	▶256				
	677	230-9675	▶256				
226-3681	150	230-9676	▶256				
	152	230-9677	▶257				
226-3865	428	230-9678	▶257				
	432	230-9679	▶257				
	436	230-9681	▶257				
226-3866	428	231-2995	270				
	432	231-2996	270				
	436	231-2997	270				
226-5554	428						
	432						
	436						
226-5923	156						
226-5951	396						
226-5952	396						
226-6059	140						
226-6471	396						
226-7264	396						
226-7265	396						
226-7282	396						
226-7657	396						
226-7658	396						
226-9424	80						
227-0067	396						
227-0113	396						
227-0179	396						
227-4306	226						
	408						
227-5317	▶602						
227-8233	406						
227-9400	▶366						
228-0382	194						
228-7313	▶580						
228-7696	290						
228-8943	86						
228-8956	86						
228-8960	86						
228-8963	86						
229-2935	232						
229-2938	232						
229-2939	378						
229-2940	232						
229-2941	232						
229-4953	▶253						

▶ **PRIMARY REFERENCE**

MEMORANDA



© 2002 Caterpillar
All Rights Reserved

Printed in U.S.A.