CATERPILLAR®

SEBP4614-02
December 2007

RUTHZIL TRATOR COMERCIAL DE PEÇAS LTDA 11 97083-6812 ROLANDO

Parts Manual

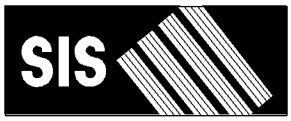

See "General Information" for New Parts Manual Features.

928Hz, 930H Wheel Loader

BYD1-Up (Machine)
FTD1-Up (Machine)
C6E1-Up (Engine)
J2W1-Up (Transmission)
J2X1-Up (Transmission)

Powered By C6.6 Engine
This Parts Manual is also available in .pdf Format on Compact Disc (CD-ROM) - Caterpillar Form No. SERP4614.

Product and Dealer Information

Note: For product identification plate locations, see the section “Product Identification Information” in the Operation and Maintenance Manual.

Delivery Date: _____

Product Information

Model: _____

Product Identification Number: _____

Engine Serial Number: _____

Transmission Serial Number: _____

Generator Serial Number: _____

Attachment Serial Numbers: _____

Attachment Information: _____

Customer Equipment Number: _____

Dealer Equipment Number: _____

Dealer Information

Name: _____ Branch: _____

Address: _____

_____

_____

	Dealer Contact	Phone Number	Hours
Sales:	_____	_____	_____
Parts:	_____	_____	_____
Service:	_____	_____	_____

Informations produit et concessionnaire

Nota: Voir l'emplacement de la plaque signalétique du produit au chapitre "Informations produit" du guide d'utilisation et d'entretien.

Date de livraison: _____

Informations produit

Modèle: _____

Numéro d'identification produit: _____

Numéro de série du moteur: _____

Numéro de série de la boîte de vitesses: _____

Numéro de série de l'alternateur: _____

Numéros de série d'équipement: _____

Informations sur l'équipement: _____

Numéro matériel client: _____

Numéro matériel concessionnaire: _____

Informations concessionnaire

Nom: _____ Agence: _____

Adresse: _____

_____

_____

	Contact concessionnaire	Numéro de téléphone	Heures
Ventes:			
Pièces:			
Service:			

Información del Producto/Distribuidor

Nota: Para saber la ubicación de las placas de identificación del producto, ver la sección “Información sobre identificación del producto” en el Manual de Operación y Mantenimiento.

Fecha de entrega: _____

Información del producto

Modelo: _____

Número de identificación del producto: _____

Número de serie del motor: _____

Número de serie de la transmisión: _____

Número de serie del generador: _____

Números de serie de los accesorios: _____

Información sobre los accesorios: _____

Número del equipo del cliente: _____

Número del equipo del distribuidor: _____

Información del distribuidor

Nombre: _____ Sucursal: _____

Dirección: _____

_____

_____

Comunicación con el distribuidor	Número de teléfono	Horas
Ventas: _____	_____	_____
Piezas: _____	_____	_____
Servicio: _____	_____	_____

Informações Sobre Produto e Revendedor

Nota: Para localizações da placa de identificação do produto, consulte a seção, “Informações Sobre Identificação do Produto” no Manual de Operação e Manutenção.

Data de Entrega: _____

Informações Sobre o Produto

Modelo: _____

Número de Identificação do Produto: _____

Número de Série do Motor: _____

Número de Série da Transmissão: _____

Número de Série do Gerador: _____

Números de Série de Acessórios: _____

Informações Sobre Acessórios: _____

Número do Equipamento do Cliente: _____

Número do Equipamento do Revendedor: _____

Informações Sobre o Revendedor

Nome: _____ Filial: _____

Endereço: _____

_____

_____

	Contato do Revendedor	Telefone	Horas
Vendas:	_____	_____	_____
Peças:	_____	_____	_____
Serviço:	_____	_____	_____

Produkt- und Händlerinformation

Anmerkung: Für die Lage der Produkt-Identnummer und Seriennummern siehe Abschnitt “Produkt-Identinformation” im Betriebs- und Wartungshandbuch.

Lieferdatum: _____

Produkt-Identinformation

Modell: _____

Produkt-Identnummer: _____

Seriennummer des Motors: _____

Seriennummer des Getriebes: _____

Seriennummer des Generators: _____

Seriennummern der Arbeitsgeräte: _____

Arbeitsgeräteinformation: _____

Kundennummer: _____

Händlernummer: _____

Händlerinformation

Name: _____ Niederlassung: _____

Adresse: _____

_____

_____

	Kontaktperson beim Händler	Telefon	Dienststunden
Verkauf:	_____	_____	_____
Ersatzteile:	_____	_____	_____
Service:	_____	_____	_____

MEMORANDA

TABLE OF CONTENTS

Name	Page
GENERAL INFORMATION	A27
REPAIR ALTERNATIVES	A46
SUPPLEMENTAL COOLANT ADDITIVES	A51
MAINTENANCE PARTS	A56
INDEX	A76
MACHINE ARRANGEMENT	1
CHASSIS AR	1
COMMON AR	3
CONVERSION AR-CERTIFICATION	4
WASTE HANDLING AR	6
ENGINE ARRANGEMENT	9
ENGINE AR	9
ENGINE AR-PRIMARY	12
INSTALLATION AR-ENGINE	15
BASIC ENGINE	16
CAMSHAFT GP	16
COVER GP-ENGINE	17
COVER GP-SOUND SUPPRESSION	18
COVER GP-VALVE MECHANISM	20
CRANKSHAFT GP	27
CYLINDER BLOCK AS	29
CYLINDER BLOCK GP	31
CYLINDER HEAD AS	32
CYLINDER HEAD GP	36
DRAIN GP-ENGINE OIL	38
DRIVE GP-FAN	40
FLYWHEEL GP	42
HOUSING GP-FLYWHEEL	43
HOUSING GP-FRONT	44
LIFTING GP-ENGINE	46
MOUNTING GP-ENGINE & TMSN	47
PAN GP-OIL	49
PISTON & ROD GP	51
PISTON GP	52
PLUG GP-ENGINE	53
PLUG GP-FLYWHEEL HOUSING	54
PULLEY GP-CRANKSHAFT	55
ROCKER ARM GP	56
SUPPRESSION AR-SOUND	60
VALVE MECHANISM GP	62
LUBRICATION SYSTEM	64
BREATHER GP	64
FILLER GP-ENGINE OIL	65
FILTER GP-ENGINE OIL	67
PUMP GP-ENGINE OIL	68
VALVE GP-FLUID SAMPLING	69
COOLING SYSTEM	70
CONNECTION GP-WATER	70
COOLER GP-FLTR BASE & ENG OIL	71
FAN GP-SUCTION	73
GUARD GP-FAN	74
LINES GP-WATER	76
PUMP GP-WATER	78
RADIATOR & AFTERCOOLER GP	80
RADIATOR GP	84
AIR INLET AND EXHAUST SYSTEM	88
AIR CLEANER GP	88
CONVERSION AR-AIR CLEANER	91
EXTENSION GP-EXHAUST	92
LINES GP-AIR	93
MANIFOLD GP-INLET	94
MUFFLER GP	95
TURBOCHARGER GP	96
FUEL SYSTEM	99
FILTER GP-SECONDARY FUEL	99
INJECTOR GP-FUEL	101
LINES GP-FUEL	102
PUMP GP-FUEL INJECTION	110
TANK & MTG GP-FUEL	121
TANK GP-FUEL	122
WATER SEP & FUEL PRM PUMP GP	123
ELECTRICAL AND STARTING SYSTEM	124
ALARM GP	124
ALTERNATOR GP-CHARGING	125
BATTERY & WIRING GP	128
BATTERY GP	133
CAMERA AR	133
CONTROL GP-LIFT KICKOUT	134
CONTROL GP-POSITION	135
CONVERTER GP-ELECTRICAL	136
ELECTRONICS AR-MACHINE	137
ELECTRONICS GP-COMMUNICATION	138
ELECTRONICS GP-POWER TRAIN	139
GLOW PLUG GP	140
HEATER GP-JACKET WATER	141
INSTALLATION AR-COMMUNICATION	143
INSTALLATION GP-SECURITY	145
LAMP GP-DOME	147
LAMP GP-FLOOD	148
LAMP GP-STOP & TAIL	151
LAMP GP-WARNING BEACON	152
LIGHTING AR-ROADING	153
LIGHTING GP-AUXILIARY	155
LIGHTING GP-FLOOD	156
LIGHTING GP-ROADING	161
LIGHTING GP-STOP & TAIL	167
LIGHTING GP-WARNING BEACON	169

TABLE OF CONTENTS

Name	Page
MOTOR GP-ELECTRIC	171
MOUNTING GP-CAMERA	172
RELAY GP	173
SENSOR GP-POSITION	174
SENSOR GP-TEMPERATURE	175
STARTING AID GP-ETHER	176
STARTING MOTOR GP-ELECTRIC	178
SWITCH GP-DIFFERENTIAL LOCK	181
SWITCH GP-DISCONNECT	182
SWITCH GP-MAGNETIC	183
SWITCH GP-TOGGLE	185
SWITCH GP-WIPER	186
VALVE GP-ETHER STARTING	187
WARNING GP-BACKUP	188
WIRING GP-CAB	189
WIRING GP-CAMERA	193
WIRING GP-ELECTRONIC CONTROL	194
WIRING GP-ENGINE	195
WIRING GP-FRONT	198
WIRING GP-REAR	201
WIRING GP-RIDE CONTROL	203
WIRING GP-SECONDARY STEERING	204
POWER TRAIN	208
AXLE AR-FIXED	208
AXLE AR-OSCILLATING	211
AXLE GP-OSCILLATING	212
BRAKE & PLANETARY GP	213
CASE & PARTS GP-TRANSMISSION	218
CLUTCH GP	224
CONTROL GP-DIFFERENTIAL LOCK	236
COOLER GP-AXLE OIL	237
COVER GP-TRANSMISSION	238
DIFFERENTIAL GP	240
DIFFERENTIAL GP-LIMITED SLIP	243
DRIVE GP-FLEXIBLE COUPLING	246
DRIVE GP-PUMP	247
FILLER GP-POWER TRAIN OIL	248
FILTER & LINES GP-TRANSMISSION	252
FILTER GP-OIL	256
GAUGE GP-SIGHT	257
GEAR GP-BEVEL & PINION	259
GEAR GP-INPUT TRANSFER	266
GEAR GP-OUTPUT TRANSFER	268
HOUSING GP-FIXED AXLE	272
HOUSING GP-OSCILLATING AXLE	278
LINES GP-AXLE OIL COOLER	282
LINES GP-DIFFERENTIAL LOCK	288
LINES GP-TORQUE CONV COOLER	290
MOUNTING GP-AXLE	292
MOUNTING GP-RIM	294
POWER TRAIN AR	294
PUMP GP-TRANSMISSION	296
RIM AR	300
RIM GP-DEMOUNTABLE	301
SHAFT GP-DRIVE	310
SLIP JOINT GP	312
STOP GP-AXLE OSCILLATION	314
TIRE & RIM AR	314
TIRE & RIM GP	319
TRANSMISSION AR	320
VALVE GP-BYPASS	321
VALVE GP-MODULATING	322
VALVE GP-PILOT	323
VALVE GP-RELIEF	330
VALVE GP-TIRE	333
VALVE GP-TRANSMISSION CONTROL	334
FRAME AND BODY	338
BAFFLE GP-SOUND SUPPRESSION	338
BOX GP-BATTERY	339
CONVERSION GP-ROADING	340
COUNTERWEIGHT GP	343
COVER GP-ACCESS	348
DOOR GP-ACCESS	349
FENDER AR-ROADING	353
FENDER GP	353
FENDER GP-FRONT	354
FENDER GP-REAR	358
FENDER GP-ROADING	360
FRAME AS-LOADER	362
FRAME GP-LOADER	363
FRAME GP-REAR	368
GUARD GP-SEAL	374
GUARD GP-DRIVE SHAFT	375
GUARD GP-LIGHTING	376
GUARD GP-LINES	378
GUARD GP-POWER TRAIN	383
GUARD GP-RADIATOR	384
HITCH GP-ARTICULATING	387
HOOD & GUARD GP	389
INSULATION GP-HEAT	392
LADDER GP	397
LINES GP-GREASE	400
LINK GP-STEERING FRAME LOCK	403
MOUNTING GP-BRACKET	405
PANEL GP-SOUND SUPPRESSION	406
PANEL GP-TOP	408
BRAKING SYSTEM	411
ACCUMULATOR GP-BRAKE	411
BRAKE GP-PARKING	412
CONTROL GP-PARKING BRAKE	413
CONTROL GP-SERVICE BRAKE	418
INSULATION GP-HEAT	422
LINES GP-SERVICE BRAKE	423
VALVE GP-SHUTTLE	431

TABLE OF CONTENTS

Name	Page
STEERING SYSTEM	432
CYLINDER & MTG GP-STEERING	432
CYLINDER GP-HYDRAULIC	434
CYLINDER GP-STEERING	436
LINES GP-SECONDARY STEERING	438
LINES GP-STEERING	446
PUMP & MOTOR GP-SEC STEERING	457
PUMP GP-GEAR	458
STEERING AR	459
STEERING AR-SECONDARY	459
STEERING AR-STANDARD	460
STEERING COLUMN GP-ADJUSTABLE	461
VALVE & MTG GP-SOLENOID	462
VALVE GP-PILOT	463
VALVE GP-PILOT CARTRIDGE	465
VALVE GP-SHUTTLE	476
VALVE GP-SOLENOID	477
HYDRAULIC SYSTEM	478
ACCUMULATOR GP-PILOT OIL	478
ACCUMULATOR GP-RIDE CONTROL	480
CARTRIDGE GP-VANE PUMP	481
CONTROL AR-RIDE	482
CONVERSION AR-HYDRAULIC	482
COOLER GP-HYD & TMSN OIL	483
COOLER GP-HYDRAULIC OIL	484
CYLINDER & MTG GP-COUPLER	485
CYLINDER GP-COUPLER	488
CYLINDER GP-LIFT	489
CYLINDER GP-MULTIPURPOSE BUKT	492
CYLINDER GP-TILT	493
FILTER & MTG GP-HYDRAULIC	496
FILTER GP-OIL	497
HYDRAULIC AR	498
HYDRAULIC AR-2 VALVE	499
HYDRAULIC AR-3 VALVE	500
HYDRAULIC AR-4 VALVE	501
HYDRAULIC AR-6 VALVE	503
KICKOUT & POSITIONER GP	504
LINES GP-BUCKET	508
LINES GP-CONNECTING	510
LINES GP-COUPLER	512
LINES GP-FRONT	527
LINES GP-HYDRAULIC	536
LINES GP-HYDRAULIC FAN	550
LINES GP-LIFT CYLINDER	557
LINES GP-PILOT	564
LINES GP-RIDE CONTROL	577
LINES GP-TILT CYLINDER	580
MANIFOLD GP-VALVE	585
MOTOR & MTG GP-HYDRAULIC FAN	588
MOTOR AR-HYDRAULIC FAN	589
MOTOR GP-GEAR	590
MOUNTING GP-CONTROL VALVE	595
PIVOT GP-PILOT VALVE	596
PLATE GP-PILOT VALVE	599
PUMP & MTG GP-BRAKE & HYD FAN	603
PUMP & MTG GP-IMPL & STEERING	604
PUMP GP-GEAR	606
PUMP GP-PISTON	609
PUMP GP-PISTON & VANE	613
ROTATING GP-PUMP	614
TANK & MTG GP-HYDRAULIC	615
TANK GP-HYDRAULIC	616
VALVE & MTG GP-MAIN CONTROL	618
VALVE & MTG GP-SOLENOID	623
VALVE GP-CHECK	626
VALVE GP-COMBINATION	629
VALVE GP-CONTROL	630
VALVE GP-MAIN CONTROL	646
VALVE GP-MANUAL	656
VALVE GP-PILOT	657
VALVE GP-PILOT CARTRIDGE	678
VALVE GP-PRESSURE REDUCING	679
VALVE GP-PUMP CONTROL	682
VALVE GP-PURGE	684
VALVE GP-QUICK COUPLER	685
VALVE GP-RELIEF	686
VALVE GP-RIDE CONTROL	690
VALVE GP-SHUTOFF	692
VALVE GP-SHUTTLE	694
VALVE GP-SOLENOID	696
IMPLEMENTS	701
ARM & BEARING AS-LIFT	701
CONTROL GP-BUCKET	702
CONTROL GP-WORK TOOL	705
LINKAGE AR-FRONT	709
WORK TOOLS	710
ADAPTER GP-TIP	710
ARM GP-MATERIAL HANDLING	711
BUCKET AR-GENERAL PURPOSE	712
BUCKET AR-LIGHT MATERIAL	717
BUCKET AR-MULTIPURPOSE	718
BUCKET AS-GENERAL PURPOSE	721
BUCKET AS-LIGHT MATERIAL	734
BUCKET AS-PENETRATION	737
BUCKET GP-GENERAL PURPOSE	740
BUCKET GP-LIGHT MATERIAL	753
BUCKET GP-MULTIPURPOSE	756
BUCKET GP-PENETRATION	758
CARRIAGE AS-FORK	760
CARRIAGE GP-FORK	761
COUPLER AR-QUICK	762
COUPLER GP-QUICK	763
EDGE GP-CUTTING	771
EDGE GP-SEGMENT	773

TABLE OF CONTENTS

Name	Page
FORK GP-PALLET	773
MOUNTING GP-BUCKET	777
PROTECTOR GP-LINKAGE	778
TIP GP-LONG	779
TIP GP-SHORT	781
OPERATOR STATION	783
ADJUSTER GP-SEAT	783
AIR COMPRESSOR GP-SEAT	784
AIR CONDITIONER & MOUNTING GP	785
AIR CONDITIONER GP	786
ARM GP-WINDOW WIPER	788
ARMREST GP	789
CAB AR-ENCLOSED ROPS	794
CAB GP-ENCLOSED ROPS	798
CANOPY AR-OPEN ROPS	800
CANOPY AR-SOFT	801
CANOPY GP-FOPS	802
CANOPY GP-OPEN ROPS	804
COMPRESSOR GP-REFRIGERANT	805
CONDENSER & MTG GP-REFRIGERANT	807
CONDENSER GP-REFRIGERANT	809
CONSOLE GP-OPERATOR	810
CONTROL GP-HANDLE	811
CONTROL GP-JOYSTICK	812
CONTROL GP-PILOT OPERATED HYD	814
CONTROL GP-STEERING	825
CONTROL GP-TRANSMISSION	827
DASH GP	829
DEFROSTER GP-CAB	830
DISPLAY GP-CAMERA	831
DOOR GP-CAB	832
DUCT GP-CAB AIR	846
EXTENSION GP-BACKREST	847
FILTER GP-CAB AIR	848
FLOOR GP	849
FLOOR MAT GP	851
GUARD GP-VANDALISM	853
GUARD GP-WINDOW	855
HEATER & MTG GP-CAB	857
HEATER AR-CAB	858
HEATER GP-CAB	859
HOUSING GP-SEAT SUSPENSION	861
INSTALLATION GP-RADIO	864
LINER GP-CAB	869
LINES GP-AIR CONDITIONER	871
LINES GP-CAB HEATER	873
LITERATURE GP	874
MIRROR GP	875
MIRROR GP-REAR VIEW	876
MOUNTING GP-CAB	887
MOUNTING GP-DISPLAY	888
OPERATOR AR-ENCLOSED ROPS	889
OPERATOR AR-OPEN ROPS	889
PAN GP-BACKREST	890
PAN GP-SEAT	893
PANEL GP-INSTRUMENT	895
PEDAL GP-BRAKE	905
PEDAL GP-GOVERNOR	906
PLATFORM AR	908
PLATFORM GP	910
PLATFORM GP-OPERATOR	912
RADIO GP-COMMUNICATION	914
RECLINER GP-SEAT	915
ROPS GP-ENCLOSED	916
ROPS GP-OPEN	917
SCREEN GP-SUN	919
SEAT & MOUNTING GP	920
SEAT BELT GP	924
SEAT GP	927
SEAT GP-SUSPENSION	932
SKIRT GP-CAB	941
SUPPORT GP-SEAT	946
SUSPENSION GP-SEAT	947
VISOR GP-CAB	951
WASHER GP-WINDOW	952
WINDOW GP-DOOR	954
WIPER GP-WINDOW	955
SERVICE EQUIPMENT AND SUPPLIES	957
CHOCK GP-WHEEL	957
FILM GP	958
FILM GP-INTERNATIONAL	962
PLATE & FILM GP	962
PART NUMBER INDEX	B1

TABLE DES MATIÈRES

Désignation	Page
GÉNÉRALITÉS	A30
OPTIONS DE RÉPARATION	A47
ADDITIFS POUR LIQUIDE DE REFROIDISSEMENT	A52
PIÈCES DE RECHANGE	A60
INDEX	A90
VERSION DE MACHINE	1
VERSION DE CHASSIS	1
VERSION NORMALE	3
VERSION DE TRANSFORMATION - HOMOLOGATION	4
ÉLIMINATION DES DÉCHETS (VERSION)	6
MOTEUR (VERSION)	9
MOTEUR (VERSION)	9
MOTEUR (VERSION PRINCIPALE)	12
MONTAGE DE MOTEUR (VERSION)	15
MOTEUR STANDARD	16
ARBRE A CAMES (ASS)	16
MOTEUR - COUVERCLE (ASS)	17
INSONORISATION - COUVERCLE (ASS)	18
CACHE-SOUPAPES (ASS)	20
VILEBREQUIN (ASS)	27
BLOC-CYLINDRES (ENS)	29
BLOC-CYLINDRES (ASS)	31
CULASSE (ENS)	32
CULASSE (ASS)	36
VIDANGE-HUILE DE MOTEUR (ASS)	38
ENTRAÎNEMENT DE VENTILATEUR (ASS)	40
VOLANT MOTEUR (ASS)	42
CARTER DE VOLANT (ASS)	43
CARTER AV (ASS)	44
OEILLETONS DE LEVAGE MOTEUR (ASS)	46
MONTAGE DE MOTEUR ET BOÎTE (ASS)	47
HUILE MOTEUR - CARTER (ASS)	49
PISTON ET BIELLE (ASS)	51
PISTON (ASS)	52
BOUCHON DE MOTEUR (ASS)	53
BOUCHON DU CARTER DE VOLANT (ASS)	54
VILEBREQUIN - POULIE (ASS)	55
AXE DE CULBUTEUR (ASS)	56
INSONORISATION (VERSION)	60
CULBUTERIE (ASS)	62
CIRCUIT DE GRAISSAGE	64
RENIFLARD (ASS)	64
BOUCHON DE REMPLISSAGE D'HUILE MOTEUR (ASS)	65
FILTRE À HUILE MOTEUR (ASS)	67
POMPE A HUILE MOTEUR (ASS)	68
ROBINET-PRÉLÈVEMENT D'ÉCHANTILLON DE LIQUIDE (ASS)	69
CIRCUIT DE REFROIDISSEMENT	70
RACCORD D'EAU (ASS)	70
SUPPORT DE FILTRE ET REFROIDISSEUR D'HUILE MOTEUR	71
VENTILATEUR ASPIRANT (ASS)	73
PROTECTION DE VENTILATEUR (ASS)	74
CANALISATIONS D'EAU (ASS)	76
POMPE A EAU (ASS)	78
RADIATEUR ET REFROIDISSEUR (ASS)	80
RADIATEUR (ASS)	84
CIRCUIT D'ADMISSION D'AIR ET D'ÉCHAPPEMENT	88
FILTRE A AIR (ASS)	88
VERSION DE TRANSFORMATION DE FILTRE À AIR	91
RALLONGE D'ÉCHAPPEMENT (ASS)	92
CANALISATIONS D'AIR (ASS)	93
COLLECTEUR D'ADMISSION (ASS)	94
SILENCIEUX (ASS)	95
TURBOCOMPRESSEUR (ASS)	96
CIRCUIT DE CARBURANT	99
FILTRE À CARBURANT SECONDAIRE (ASS)	99
INJECTEUR DE CARBURANT (ASS)	101
CANALISATIONS DE CARBURANT (ASS)	102
POMPE D'INJECTION DE CARBURANT (ASS)	110
RÉSERVOIR DE CARBURANT ET MONTAGE (ASS)	121
RÉSERVOIR DE CARBURANT (ASS)	122
POMPE DE SÉPARATEUR D'EAU ET D'AMORÇAGE DE CARBURANT (ASS)	123

* TRADUCTION NON DISPONIBLE AU MOMENT DE LA PUBLICATION

TABLE DES MATIÈRES

Désignation	Page
CIRCUIT ELECTRIQUE ET DE DEMARRAGE	124
AVERTISSEUR (ASS)	124
ALTERNATEUR DE CHARGE (ASS)	125
BATTERIE ET CÂBLAGE	128
BATTERIE (ASS)	133
VERSION DE CAMÉRA	133
COMMANDE ELECTRONIQUE DE LIMITEUR DE LEVAGE (ASS)	134
COMMANDE DE POSITION (ASS)	135
TRANSFORMATION ELECTRIQUE (ASS)	136
COMPOSANTS ÉLECTRONIQUES DE LA MACHINE (VERSION)	137
ÉLECTRONIQUE - COMMUNICATION (ASS)	138
ÉLECTRONIQUE DE TRANSMISSION (ASS)	139
BOUGIE DE PRÉCHAUFFAGE (ASS)	140
EAU DES CHEMISES - RECHAUFFEUR (ASS)	141
VERSION DE MONTAGE-COMMUNICATION	143
MONTAGE-SÉCURITÉ (ASS)	145
PLAFONNIER (ASS)	147
LAMPE - PHARE (ASS)	148
FEUX ARRIÈRE ET FEUX D'ARRÊT	151
LAMPE - GYROPHARE (ASS)	152
ÉCLAIRAGE - FEUX DE ROUTE (VERSION)	153
ÉCLAIRAGE - AUXILIAIRE (ASS)	155
ÉCLAIRAGE - PROJECTEURS (ASS)	156
ÉCLAIRAGE - FEUX DE ROUTE (ASS)	161
ÉCLAIRAGE-FEUX DE STOP ET ARRIÈRE (ASS)	167
ÉCLAIRAGE - GYROPHARE (ASS)	169
MOTEUR ELECTRIQUE (ASS)	171
MONTAGE DE CAMÉRA (ASS)	172
RELAIS (ASS)	173
SONDE - CIRCUIT DE CARBURANT	174
CAPTEUR DE TEMPERATURE (ASS)	175
AUXILIAIRE DE DÉMARRAGE À L'ÉTHER	176
DÉMARREUR ÉLECTRIQUE (ASS)	178
CONTACTEUR DE VERROUILLAGE DE DIFFÉRENTIEL (ASS)	181
ROBINET DE BATTERIE (ASS)	182
CONTACTEUR MAGNETIQUE (ASS)	183
INTERRUPTEUR À BASCULE (ASS)	185
INTERRUPTEUR D'ESSUIE-GLACE (ASS)	186
SOUPAPE DE DÉMARRAGE À L'ÉTHER (ASS)	187
AVERTISSEUR DE RECUL (ASS)	188
CABLAGE DE CABINE (ASS)	189
CÂBLAGE DE CAMÉRA (ASS)	193
COMMANDE ÉLECTRONIQUE - CABLAGE	194
CABLAGE DE MOTEUR (ASS)	195
CABLAGE AV (ASS)	198
CABLAGE AR (ASS)	201
CÂBLAGE DE COMMANDE DE TRANSLATION (ASS)	203
CABLAGE DE DIRECTION AUXILIAIRE (ASS)	204
TRANSMISSION	208
ESSIEU FIXE (VERSION)	208
ESSIEU OSCILLANT (VERSION)	211
ESSIEU OSCILLANT	212
FREIN ET TRAINS PLANÉTAIRES (ASS)	213
CARTER ET PIECES DE BOITE (ASS)	218
EMBRAYAGE (ASS)	224
COMMANDE DE DIFFÉRENTIEL - VERROUILLAGE (ASS)	236
REFROIDISSEUR D'HUILE D'ESSIEU (ASS)	237
COUVERCLE DE BOITE DE VITESSES (ASS)	238
DIFFERENTIEL (ASS)	240
DIFFÉRENTIEL - GLISSEMENT LIMITÉ (ASS)	243
ENTRAÎNEMENT D'ACCOUPLEMENT FLEXIBLE (ASS)	246
ENTRAÎNEMENT DE POMPE (ASS)	247
GOULOTTE DE REMPLISSAGE D'HUILE DE TRANSMISSION	248
FILTRE ET CANALISATIONS - BOÎTE DE VITESSE (ASS)	252
FILTRE A HUILE (ASS)	256
REGARD DE NIVEAU (ASS)	257
COURONNE CONIQUE ET PIGNON	259
*GEAR GP-INPUT TRANSFER	266
PIGNONNERIE D'ENTREE DE TRANSFERT (ASS)	267
ENGRENAGE DE TRANSFERT DE RENDEMENT (ASS)	268
CARTER D'ESSIEU FIXE	272
CARTER D'ESSIEU OSCILLANT	278
CANALISATIONS DE REFROIDISSEUR D'HUILE D'ESSIEU (ASS)	282
CANALISATIONS DE VERROUILLAGE DE DIFFÉRENTIEL	288
CANALIS. DE REFROIDISSEMENT DU CONV. DE COUPLE	290

* TRADUCTION NON DISPONIBLE AU MOMENT DE LA PUBLICATION

TABLE DES MATIÈRES

Désignation	Page
MONTAGE D'ESSIEU (ASS)	292
MONTAGE DE JANTE (ASS)	294
TRANSMISSION (VERSION)	294
POMPE DE BOÎTE DE VITESSES (ASS)	296
JANTE (VERSION)	300
JANTE DÉMONTABLE (ASS)	301
ARBRE D'ENTRAÎNEMENT (ASS)	310
CARDAN COULISSANT (ASS)	312
ARRÊT-OSCILLATION D'ESSIEU (ASS)	314
PNEU ET JANTE (VERSION)	314
PNEU ET JANTE (ASS)	319
BOÎTE DE VITESSES (VERSION)	320
SOUPAPE DE DÉRIVATION (ASS)	321
SOUPAPE DE MODULATION (ASS)	322
SOUPAPE PILOTE (ASS)	323
CLAPET DE DECHARGE (ASS)	330
PNEU - GROUPE DE VALVE	333
DISTRIBUTEUR DE BOITE (ASS)	334
CHÂSSIS ET BENNE	338
DÉFLECTEUR - INSONORISATION (ASS)	338
COMPARTIMENT DE BATTERIE (ASS)	339
GROUPE DE TRANSFORMATION - DÉPLACEMENT ROUTIER	340
CONTREPOIDS (ASS)	343
COUVERCLE DE VISITE (ASS)	348
PORTE DE VISITE (ASS)	349
GARDE-BOUE (VERSION)	353
GARDE-BOUE (ASS)	353
GARDE-BOUE AV (ASS)	354
GARDE-BOUE AR (ASS)	358
GARDE-BOUE (ASS)	360
BÂTI - CHARGEUSE (ENS)	362
BATI - CHARGEUSE (ASS)	363
BÂTI AR (ASS)	368
PROTECTION DE JOINT (ASS)	374
BLINDAGE D'ARBRE DE TRANSMISSION (ASS)	375
PROTECTION - ÉCLAIRAGE (ASS)	376
PROTECTEUR DES CANALISATIONS (ASS)	378
BLINDAGE DE TRANSMISSION (ASS)	383
PROTÈGE-RADIATEUR (ASS)	384
ATTELAGE D'ARTICULATION (ASS)	387
CAPOT ET PROTECTION (ASS)	389
GROUPE D'ISOLATION DE CHALEUR	392
ECHELLE (ASS)	397
CANALISATIONS DE GRAISSAGE (ASS)	400
LIAISON - VERROUILLAGE DE CHÂSSIS DE DIRECTION (ASS)	403
SUPPORT DE MONTAGE (ASS)	405
PANNEAU D'INSONORISATION (ASS)	406
PANNEAU SUPERIEUR (ASS)	408
CIRCUIT DE FREINS	411
ACCUMULATEUR - FREIN	411
FREIN DE STATIONNEMENT (ASS)	412
COMMANDE DE FREIN DE STATIONNEMENT (ASS)	413
FREIN DE MANOEUVRE - COMMANDE (ASS)	418
GROUPE D'ISOLATION DE CHALEUR	422
CANALISATIONS DU FREIN DE MANOEUVRE (ASS)	423
VANNE PILOTE (ASS)	431
CIRCUIT DE DIRECTION	432
VERIN DE DIRECTION ET MONTAGE (ASS)	432
VÉRIN HYDRAULIQUE (ASS)	434
VERIN DE DIRECTION (ASS)	436
CANALISATION DE DIRECTION AUXILIAIRE	438
CANALISATIONS DE DIRECTION (ASS)	446
POMPE DE DIRECTION AUXILIAIRE ET MONTAGE (ASS)	457
POMPE A ENGRENAGES (ASS)	458
DIRECTION (ENS)	459
DIRECTION AUXILIAIRE (VERSION)	459
VERSION DE DIRECTION STANDARD	460
COLONNE DE DIRECTION RÉGLABLE	461
SOUPAPE ET MONTAGE - SOLÉNOÏDE	462
SOUPAPE PILOTE (ASS)	463
SOUPAPE - CARTOUCHE PILOTE (ASS)	465
VANNE PILOTE (ASS)	476
SOUPAPE - SOLÉNOÏDE (ASS)	477
CIRCUIT HYDRAULIQUE	478
ACCUMULATEUR - HUILE PILOTE (ASS)	478
ACCUMULATEUR - COMMANDE DE TRANSLATION (ASS)	480
POMPE À AILETTES - CARTOUCHE	481
COMMANDE DE TRANSLATION (VERSION)	482
VERSION DE TRANSFORMATION - HYDRAULIQUE	482

* TRADUCTION NON DISPONIBLE AU MOMENT DE LA PUBLICATION

TABLE DES MATIÈRES

Désignation	Page
REFROIDISSEUR D'HUILE HYDRAULIQUE ET DE BOÎTE (ASS)	483
REFROIDISSEUR D'HUILE HYDRAULIQUE (ASS)	484
VERIN ET MONTAGE - COUPLEUR (ASS)	485
VÉRIN DE COUPLEUR (ASS)	488
VÉRIN DE LEVAGE (ASS)	489
VÉRIN - GODET TOUS-TRAVAUX (ASS)	492
VÉRIN D'INCLINAISON (ASS)	493
FILTRE À HUILE HYDRAULIQUE ET MONTAGE (ASS)	496
FILTRE A HUILE (ASS)	497
VERSION HYDRAULIQUE	498
DISTRIBUTEUR - 2 VOIES (VERSION)	499
DISTRIBUTEUR - 3 VOIES (VERSION)	500
DISTRIBUTEUR QUADRUPLE CORPS (VERSION)	501
VERSION DE 6 SOUPAPES HYDRAULIQUES	503
LIMITEUR DE LEVAGE ET RETOUR À L'ANGLE DE CAVAGE	504
ECLAIRAGE DE GODET (ASS)	508
CANALISATIONS - BRANCHEMENT (ASS)	510
CANALISATIONS DE COUPLEUR (ASS)	512
CANALISATIONS AV	527
CANALISATIONS HYDRAULIQUES (ASS)	536
CANALISATIONS HYDRAULIQUES DE VENTILATEUR (ASS)	550
CANALISATIONS DE VÉRIN DE LEVAGE (ASS)	557
CANALISATIONS A COMMANDE PILOTE (ASS)	564
CANALISATIONS DE COMMANDE DE MARCHE	577
CANALISATIONS DU VÉRIN D'INCLINAISON (ASS)	580
COLLECTEUR - SOUPAPE (ASS)	585
MOTEUR ET MONTAGE DE VENTILATEUR HYDRAULIQUE (ASS)	588
VERSION DE MOTEUR DE VENTILATEUR HYDRAULIQUE	589
MOTEUR À ENGRENAGES (ASS)	590
DISTRIBUTEUR ET MONTAGE (ASS)	595
ARTICULATION DE SOUPAPE PILOTE (ASS)	596
PLAQUE DE SOUPAPE PILOTE (ASS)	599
POMPE DE VENTILATEUR HYDRAULIQUE ET DE FREIN ET MONTAGE (ASS)	603
POMPE ET MONTAGE - ÉQUIPEMENT ET DIRECTION (ASS)	604
POMPE A ENGRENAGES (ASS)	606
POMPE A PISTONS (ASS)	609
POMPE À PISTONS ET PALETTES (ASS)	613
GROUPE DE ROTATION DE POMPE	614
RÉSERVOIR HYDRAULIQUE ET MONTAGE (ASS)	615
RÉSERVOIR HYDRAULIQUE (ASS)	616
COMMANDE PRINCIPALE DE SOUPAPE ET MONTAGE (ASS)	618
SOUPAPE ET MONTAGE - SOLÉNOÏDE	623
CLAPET DE RETENUE (ENS)	626
SOUPAPE DE COMBINAISON (ASS)	629
DISTRIBUTEUR (ASS)	630
SOUPAPE DE COMMANDE PRINCIPALE (ASS)	646
SOUPAPE A COMMANDE MANUELLE (ASS)	656
SOUPAPE PILOTE (ASS)	657
SOUPAPE - CARTOUCHE PILOTE (ASS)	678
SOUPAPE RÉDUCTRICE DE PRESSION (ASS)	679
DISTRIBUTEUR DE POMPE (ASS)	682
SOUPAPE DE PURGE (ASS)	684
SOUPAPE DE COUPLEUR EXPRESS (ASS)	685
CLAPET DE DECHARGE (ASS)	686
DISTRIBUTEUR DE COMMANDE ANTI-TANGAGE	690
SOUPAPE D'ARRÊT (ASS)	692
VANNE PILOTE (ASS)	694
SOUPAPE - SOLÉNOÏDE (ASS)	696
ÉQUIPEMENTS	701
BRAS ET PALIER DE LEVAGE (ENS)	701
COMMANDE DE GODET (ASS)	702
COMMANDE - OUTIL DE TRAVAIL (ASS)	705
VERSION DE TIMONERIE AVANT	709
OUTILS DE TRAVAIL	710
PORTE-POINTE (ASS)	710
BRAS DE MANUTENTION (ASS)	711
GODET NORMAL (VERSION)	712
GODET - MATÉRIAUX MEUBLES (VERSION)	717
GODET TOUS-TRAVAUX (VERSION)	718
GODET NORMAL (ENS)	721

* TRADUCTION NON DISPONIBLE AU MOMENT DE LA PUBLICATION

TABLE DES MATIÈRES

Désignation	Page
GODET POUR MATERIAUX MEUBLES (ENS)	734
GODET-PÉNÉTRATION (ENS)	737
GODET NORMAL (ASS)	740
GODET POUR MATERIAUX LEGERS (ASS)	753
GODET TOUS-TRAVAUX (ASS)	756
GODET PÉNÉTRATION (ASS)	758
TABLIER DE FOURCHE (ENS)	760
TABLIER - FOURCHE (ASS)	761
COUPLEUR EXPRESS (VERSION)	762
COUPLEUR EXPRESS (ASS)	763
LAME DE COUPE (ASS)	771
SEGMENT DE LAME DE COUPE (ASS)	773
FOURCHE PALLETTE (ASS)	773
GODET - MONTAGE (ASS)	777
GROUPE DE PROTECTION-OUTILS D'ATTAQUE AU SOL-TRINGLERIE	778
POINTE LONGUE (ASS)	779
POINTE COURTE (ASS)	781
POSTE DE CONDUITE	783
REGLAGE DE SIEGE (ASS)	783
SIÈGE - COMPRESSEUR D'AIR (ASS)	784
CLIMATISEUR ET MONTAGE (ASS)	785
CLIMATISEUR (ASS)	786
BRAS D'ESSUIE-GLACE (ASS)	788
ACCOUDOIR (ASS)	789
CABINE ROPS FERMÉE (VERSION)	794
*CAB GP-ENCLOSED ROPS	798
VERSION DE TOIT - ROPS OUVERT	800
PAVILLON (VERSION)	801
TOIT FOPS (ASS)	802
TOIT-ROPS OUVERT (ASS)	804
COMPRESSEUR DE REFRIGERANT (ASS)	805
CONDENSATEUR ET MONTAGE (RÉFRIGÉRANT)	807
CONDENSEUR DE RÉFRIGÉRANT	809
CONSOLE DE CONDUITE (ASS)	810
COMMANDE DE POIGNÉE (ASS)	811
PALONNIER - GROUPE DE COMMANDE (ASS)	812
COMMANDE HYDRAULIQUE PILOTE (ASS)	814
COMMANDE DE DIRECTION (ASS)	825
COMMANDE DE BOITE DE VITESSES (ASS)	827
TABLEAU DE BORD (ASS)	829
DEGIVREUR (ASS)	830
AFFICHAGE DE LA CAMÉRA (ASS)	831
PORTIÈRE DE CABINE (ASS)	832
GAINE D'AIR (ASS)	846
RALLONGE DU DOSSIER DE SIEGE	847
FILTRE À AIR DE CABINE (ASS)	848
PLANCHER - CABINE (ASS)	849
TAPIS DU PLANCHER (ASS)	851
PROTECTION ANTIVANDALISME (ASS)	853
PROTECTION DE GLACE (ASS)	855
CHAUFFAGE ET MONTAGE - CABINE (ASS)	857
CHAUFFAGE DE CABINE (VERSION)	858
CHAUFFAGE DE CABINE (ASS)	859
SUSPENSION DE SIEGE - CARTER (ASS)	861
MONTAGE DE RADIO (ASS)	864
CABINE - REVÊTEMENT (ASS)	869
CANALISATIONS DE CLIMATISEUR (ASS)	871
CANALISATIONS DE CHAUFFAGE DE CABINE (ASS)	873
LITTÉRATURE (ASS)	874
RÉTROVISEUR (ASS)	875
MONTAGE DE CABINE (ASS)	887
MONTAGE D'AFFICHAGE (ASS)	888
CABINE ROPS FERMÉE (VERSION)	889
CABINE ROPS OUVERTE (VERSION)	889
COUVERCLE INFÉRIEUR-DOSSIER (ASS)	890
SIEGE - COUVERCLE INFERIEUR (ASS)	893
TABLEAU DE BORD (ASS)	895
PEDALE DE FREIN (ASS)	905
RÉGULATEUR - PÉDALE (ASS)	906
PLATE-FORME (VERSION)	908
PLATE-FORME (ASS)	910
PLATE-FORME DE CABINE	912
RADIO -COMMUNICATION (ASS)	914
SIÈGE INCLINABLE (ASS)	915
CABINE ROPS FERMÉE (ASS)	916
TOIT ROPS - OUVERT (ASS)	917
PARE-SOLEIL (ASS)	919
SIÈGE ET MONTAGE (ASS)	920
CEINTURE DE SECURITE (ASS)	924
SIÈGE (ASS)	927
SIÈGE AVEC SUSPENSION (ASS)	932
JUPE DE PROTECTION DE CABINE (ASS)	941
SUPPORT DE SIÈGE (ASS)	946
SIÈGE AVEC SUSPENSION (ASS)	947
RETROVISEUR - CABINE (ASS)	951
LAVE-GLACE - VITRE (ASS)	952
GLACE DE PORTIÈRE (ASS)	954
ESSUIE-GLACE (ASS)	955

* TRADUCTION NON DISPONIBLE AU MOMENT DE LA PUBLICATION

TABLE DES MATIÈRES

Désignation	Page	Désignation	Page
MATÉRIEL ET FOURNITURES D'ENTRETIEN	957		
CALE DE ROUE (ASS)	957		
PLAQUE SIGNALÉTIQUE (ASS)	958		
AUTOCOLLANT (ASS)-INTERNATIONAL	962		
PLAQUES SIGNALETIQUES ET AUTOCOLLANTS (ASS)	962		
INDEX DE NUMÉROS DE PIÈCES	B1		

* TRADUCTION NON DISPONIBLE AU MOMENT DE LA PUBLICATION

CONTENIDO

Nombre	Página
INFORMACIÓN GENERAL	A34
ALTERNATIVAS DE REPARACIÓN	A48
ADITIVOS DE REFRIGERANTE SUPLEMENTARIOS	A53
PIEZAS DE MANTENIMIENTO	A64
INDICE	A105
CONFIGURACIÓN DE MÁQUINAS	1
CHASIS (CONFIG)	1
CONFIGURACIÓN COMÚN	3
CONFIGURACIÓN DE TRANSFORMACIÓN PARA CERTIFICACIÓN	4
CONFIGURACIÓN DE ELIMINACIÓN DE BASURAS	6
CONFIGURACION DE MOTOR	9
CONFIGURACIÓN DE MOTORES	9
MOTOR PRIMARIO (CONFIG)	12
CONFIGURACIÓN DE INSTALACIÓN DEL MOTOR	15
MOTOR BÁSICO	16
ÁRBOL DE LEVAS (GR)	16
TAPA DEL MOTOR (GR)	17
TAPA DEL INSONORIZADOR (GR)	18
TAPA DEL MECANISMO DE VÁLVULAS (GR)	20
CIGÜEÑAL (GR)	27
BLOQUE MOTOR (CONJ)	29
BLOQUE MOTOR (GR)	31
CULATA DE CILINDROS (CONJ)	32
CULATA DE CILINDROS (GR)	36
DRENAJE DEL ACEITE DE MOTOR	38
IMPULSOR DE VENTILADOR (GR)	40
VOLANTE (GR)	42
VOLANTE - CAJA DE (GR)	43
CAJA DELANTERA (GR)	44
CÁNCAMOS DE LEVANTAMIENTO DEL MOTOR (GR)	46
MONTAJE DEL MOTOR Y LA TRANSMISIÓN (GR)	47
CÁRTER - COLECTOR DEL (GR)	49
PISTÓN Y BIELA (GR)	51
PISTON (GR)	52
TAPÓN DEL MOTOR (GR)	53
TAPÓN DE LA CAJA DEL VOLANTE (GR)	54
CIGÜEÑAL - POLEA DE (GR)	55
BALANCÍN (GR)	56
INSONORIZADOR (CONFIG)	60
MECANISMO DE VÁLVULAS (GR)	62
SISTEMA DE LUBRICACIÓN	64
RESPIRADERO (GR)	64
TUBO DE LLENADO DE ACEITE (GR)	65
FILTRO DE ACEITE DEL MOTOR (GR)	67
BOMBA DE ACEITE DEL MOTOR (GR)	68
VÁLVULA DE MUESTREO (GR)	69
SISTEMA DE ENFRIAMIENTO	70
AGUA - CONEXIÓN DE (GR)	70
ENFRIADOR DE ACEITE DEL MOTOR Y BASE DEL FILTRO	71
SUCCIÓN - VENTILADOR DE (GR)	73
PROTECTOR DEL VENTILADOR (GR)	74
TUBERÍAS DEL AGUA (GR)	76
BOMBA DE AGUA (GR)	78
RADIADOR Y POSENFRIADOR (GR)	80
RADIADOR (GR)	84
SISTEMA DE AIRE DE ADMISIÓN Y ESCAPE	88
FILTRO DE AIRE (GR)	88
CONVERSION DE FILTRO DE AIRE (CONFIG)	91
EXTENSIÓN DEL ESCAPE (GR)	92
AIRE - TUBERÍAS DE (GR)	93
MÚLTIPLE DE ADMISIÓN (GR)	94
SILENCIADOR (GR)	95
TURBOCOMPRESOR (GR)	96
SISTEMA DE COMBUSTIBLE	99
FILTRO SECUNDARIO DE COMBUSTIBLE (GR)	99
INYECTOR DE COMBUSTIBLE (GR)	101
TUBERÍAS DE COMBUSTIBLE (GR)	102
BOMBA DE INYECCIÓN DE COMBUSTIBLE (GR)	110
TANQUE DE COMBUSTIBLE Y GRUPO DE MONTAJE	121
COMBUSTIBLE - TANQUE DE (GR)	122
SEPARADOR DE AGUA Y BOMBA DE CEBADO DE COMBUSTIBLE (GR)	123
SISTEMA ELECTRICO Y DE ARRANQUE	124
ALARMA (GR)	124
CARGA - ALTERNADOR DE (GR)	125
BATERÍA Y CABLES (GR)	128
BATERÍA (GR)	133
CONFIGURACIÓN DE CÁMARA	133
CONTROL DE DESCONEXIÓN DE LEVANTAMIENTO (GR)	134

* NO HAY TRADUCCION DISPONIBLE EN EL MOMENTO DE LA IMPRESION

CONTENIDO

Nombre	Página
CONTROL DE POSICION (GR)	135
CONVERTIDOR ELÉCTRICO (GR)	136
CONFIGURACIÓN ELECTRÓNICA DE LA MÁQUINA	137
GRUPO ELECTRONICO-COMUNICACION	138
TREN DE FUERZA-GRUPO ELECTRÓNICO	139
BUJÍA INCANDESCENTE (GR)	140
AGUA DE LAS CAMISAS - CALENTADOR DEL (GR)	141
INSTALACION DE COMUNICATION (CONFIG)	143
INSTALACION DE SEGURIDAD (GR)	145
LÁMPARA DEL TECHO (GR)	147
REFLECTOR (GR)	148
LUCES DE PARADA Y COLA (GR)	151
LÁMPARA DE BALIZA DE ADVERTENCIA (GR)	152
LUCES DE DESPLAZAMIENTO (CONFIG)	153
LUCES AUXILIARES (GR)	155
LUCES DE REFLECTOR (GR)	156
LUCES DE DESPLAZAMIENTO (GR)	161
LUCES DE PARADA Y DE COLA (GR)	167
LUZ DE BALIZA (GR)	169
MOTOR ELÉCTRICO (GR)	171
GRUPO DE MONTAJE DE CÁMARA	172
RELÉ (GR)	173
DETECTOR DE POSICIÓN (SISTEMA DE COMBUST.) (GR)	174
SENSOR DE TEMPERATURA (GR)	175
AUXILIAR DE ARRANQUE CON ÉTER (GR)	176
MOTOR DE ARRANQUE ELÉCTRICO (GR)	178
GRUPO DE INTERRUPTOR, TRABA DEL DIFERENCIAL	181
DISYUNTOR (GR)	182
INTERRUPTOR MAGNÉTICO (GR)	183
INTERRUPTOR DE VOLQUETE (GR)	185
INTERRUPTOR DEL LIMPIADOR (GR)	186
GRUPO DE VÁLVULA-ARRANQUE CON ÉTER	187
RETROCESO - ALARMA DE (GR)	188
CABLES DE LA CABINA (GR)	189
GRUPO DE CABLES DE CÁMARA	193
CABLES DEL CONTROL ELECTRÓNICO (GR)	194
CABLES DEL MOTOR (GR)	195
CABLES DELANTEROS (GR)	198
CABLES POSTERIORES (GR)	201
CABLES DE CONTROL DE AMORTIGUACIÓN (GR)	203
CABLES DE LA DIRECCIÓN SECUNDARIA	204
TREN DE FUERZA	208
EJE FIJO (CONFIG)	208
EJE OSCILANTE (CONFIG)	211
EJE OSCILANTE (GR)	212
FRENO Y PLANETARIOS (GR)	213
CAJA Y PIEZAS DE LA TRANSMISIÓN (GR)	218
EMBRAGUE (GR)	224
CONTROL DE TRABA DEL DIFERENCIAL (GR)	236
ENFRIADOR DE ACEITE DEL EJE (GR)	237
TAPA DE TRANSMISION (GR)	238
DIFERENCIAL (GR)	240
DIFERENCIAL DE DESLIZAMIENTO LIMITADO (GR)	243
ACOPLAMIENTO FLEXIBLE - MANDO DE (GR)	246
MANDO DE BOMBA (GR)	247
TUBO DE LLENADO DE ACEITE DE LA TRANSMISIÓN (GR)	248
TUBERÍAS DEL FILTRO Y LA TRANSMISIÓN (GR)	252
FILTRO DE ACEITE (GR)	256
MIRILLA DE MEDIDOR (GR)	257
ENGRANAJE DE CORONA Y PIÑÓN (GR)	259
*GEAR GP-INPUT TRANSFER	266
ENGRANAJE DE TRANSFERENCIA DE ENTRADA (GR)	267
ENGRANAJE DE TRANSFERENCIA DE SALIDA	268
CAJA DEL EJE OSCILANTE (GR)	272
CAJA DE EJE OSCILANTE (GR)	278
TUBERÍAS DEL ENFRIADOR DE ACEITE DEL EJE (GR)	282
TUBERÍAS DE TRABA DEL DIFERENCIAL (GR)	288
TUBERIAS DEL ENFRIADOR DEL CONVERTIDOR DE PAR	290
EJE - GRUPO DE MONTAJE	292
MONTAJE DE ARO	294
TREN DE FUERZA (CONFIG)	294
BOMBA DE LA TRANSMISIÓN (GR)	296
LLANTA (CONFIG)	300
ARO DESMONTABLE (GR)	301
EJE DE MANDO (GR)	310
JUNTA DESLIZANTE (GR)	312

* NO HAY TRADUCCION DISPONIBLE EN EL MOMENTO DE LA IMPRESION

CONTENIDO

Nombre	Página
TOPE DE OSCILACIÓN DEL EJE	314
ARO Y RUEDA	314
ARO Y LLANTA (GR)	319
TRANSMISION (CONFIG)	320
DERIVACIÓN - VÁLVULA DE (GR)	321
VÁLVULA DE MODULACIÓN (GR)	322
VÁLVULA PILOTO (GR)	323
VÁLVULA DE ALIVIO (GR)	330
VÁLVULA DEL NEUMÁTICO (GR)	333
VÁLVULA DE CONTROL DE LA TRANSMISIÓN (GR)	334
BASTIDOR Y CAJA	338
DEFLECTOR SUPRESOR DE SONIDO (GR)	338
CAJA DE BATERÍA	339
CONVERSION PARA DESPLAZAMIENTO POR CARRETERA (GR)	340
CONTRAPESO (GR)	343
GRUPO DE TAPA, ACCESO	348
PUERTA DE ACCESO (GR)	349
GUARDABARROS (CONFIG)	353
GUARDABARROS (GR)	353
GUARDABARROS DELANTERO (GR)	354
GUARDABARROS TRASERO (GR)	358
GUARDABARROS PARA DESPLAZAMIENTO EN CARRETERA (GR)	360
BASTIDOR DEL CARGADOR (CONJ)	362
BASTIDOR DEL CARGADOR (GR)	363
BASTIDOR TRASERO (GR)	368
PROTECTOR DE SELLO (GR)	374
PROTECTOR DEL EJE IMPULSOR (GR)	375
PROTECTOR DE LAS LUCES (GR)	376
PROTECTOR DE LAS TUBERÍAS (GR)	378
PROTECTOR DEL TREN DE FUERZA (GR)	383
PROTECTOR DEL RADIADOR (GR)	384
ENGANCHE ARTICULADO (GR)	387
CAPO Y PROTECTOR (GR)	389
AISLACIÓN DE CALOR (GR)	392
ESCALERILLA (GR)	397
TUBERÍAS DE ENGRASE (GR)	400
TIRANTE DE TRABA DEL BASTIDOR DE DIRECCIÓN (GR)	403
*MOUNTING GP-BRACKET	405
PANEL DE INSONORIZACIÓN (GR)	406
PANEL SUPERIOR (GR)	408
SISTEMA DE FRENOS	411
ACUMULADOR DEL FRENO (GR)	411
FRENO DE ESTACIONAMIENTO (GR)	412
CONTROL DEL FRENO DE ESTACIONAMIENTO	413
FRENO DE SERVICIO - CONTROL (GR)	418
*INSULATION GP-HEAT	422
TUBERÍAS DEL FRENO DE SERVICIO (GR)	423
VÁLVULA DE LANZADERA (GR)	431
SISTEMA DE DIRECCIÓN	432
CILINDRO DE DIRECCIÓN Y MONTAJE (GR)	432
CILINDRO HIDRÁULICO (GRUPO)	434
CILINDRO DE DIRECCIÓN (GR)	436
TUBERÍAS DE LA DIRECCIÓN SECUNDARIA (GR)	438
TUBERÍAS DE DIRECCIÓN (GR)	446
BOMBA Y MOTOR DE DIRECCION SECUNDARIA (GR)	457
BOMBA DE ENGRANAJES (GR)	458
DIRECCIÓN (CONFIG)	459
DIRECCIÓN SECUNDARIA (CONFIG)	459
*STEERING AR-STANDARD	460
COLUMNA DE DIRECCIÓN AJUSTABLE (GR)	461
VALVULA DE SOLENOIDE Y MONTAJE (GR	462
VÁLVULA PILOTO (GR)	463
VALVULA PILOTO DE CARTUCHO (GR)	465
VÁLVULA DE LANZADERA (GR)	476
VÁLVULA DE SOLENOIDE (GR)	477
SISTEMA HIDRÁULICO	478
ACUMULADOR DE ACEITE PILOTO (GR)	478
ACUMULADOR DE CONTROL DE AMORTIGUACION (GR)	480
BOMBA DE PALETAS-CARTUCHO (GR)	481
CONTROL DE AMORTIGUACIÓN (CONFIG)	482
CONVERSIÓN HIDRÁULICA (CONFIG)	482
GRUPO DE REFRIGERANTE, HIDRÁULICO Y ACEITE DE TRANSMISIÓN	483
ENFRIADOR DEL ACEITE HIDRAULICO (GR)	484
CILINDRO DE ACOPLAMINETO Y MONTAJE (GR)	485
CILINDRO DEL ACOPLADOR (GR)	488
CILINDRO DE LEVANTAMIENTO (GR)	489

* NO HAY TRADUCCION DISPONIBLE EN EL MOMENTO DE LA IMPRESION

CONTENIDO

Nombre	Página
CILINDRO DE CUCHARÓN DE USO MÚLTIPLE (GR)	492
INCLINACIÓN HORIZONTAL - CILINDRO DE (GR)	493
FILTRO DE ACEITE HIDRÁULICO Y MONTAJE (GR)	496
FILTRO DE ACEITE (GR)	497
HIDRÁULICA (CONFIG)	498
CONFIGURACIÓN HIDRÁULICA DE 2 VÁLVULAS	499
VÁLVULA HIDRÁULICA DE 3 VÍAS (CONFIG)	500
VÁLVULA HIDRÁULICA DE 4 VÍAS (CONFIG)	501
CONFIGURACIÓN HIDRÁULICA-6 VÁLVULAS	503
POSICIONADOR DEL CUCHARÓN Y DESCONEXIÓN (GR)	504
TUBERÍAS DEL CUCHARÓN (GR)	508
CABLES DE CONEXION (GR)	510
ACOPLADOR - TUBERÍAS DE (GR)	512
TUBERÍAS DELANTERAS (GR)	527
TUBERÍAS HIDRÁULICAS (GR)	536
TUBERÍAS HIDRÁULICAS DEL VENTILADOR (GR)	550
CILINDRO DE LEVANTAMIENTO - TUBERÍAS DEL (GR)	557
TUBERÍAS CON SERVOMANDO (GR)	564
TUBERIAS DE CONTROL DE LA SUSPENSIÓN (GR)	577
TUBERÍAS DEL CILINDRO DE INCLINACIÓN (GR)	580
MULTIPLE DE VALVULA (GR)	585
MOTOR Y MONTAJE DE VENTILADOR HIDRAULICO (GR)	588
MOTOR (CONFIG), VENTILADOR HIDRÁULICO	589
MOTOR DE ENGRANAJES (GR)	590
MONTAJE DE LA VÁLVULA DE CONTROL (GR)	595
GRUPO DE PIVOTE, VÁLVULA PILOTO	596
GRUPO DE PLANCHA, VÁLVULA PILOTO	599
GRUPO DE BOMBA Y MONTAJE, FRENOS Y VENTILADOR HIDRÁULICO	603
BOMBA DE DIRECCIÓN E IMPLEMENTOS Y MONTAJE (GR)	604
BOMBA DE ENGRANAJES (GR)	606
BOMBA DE PISTONES (GR)	609
BOMBA DE PISTONES Y PALETAS (GR)	613
GRUPO GIRATORIO DE BOMBA	614
TANQUE HIDRÁULICO Y MONTAJE (GR)	615
TANQUE HIDRÁULICO (GR)	616
MONTAJE Y VALVULA DEL CONTROL PRINCIPAL (GR)	618
VALVULA DE SOLENOIDE Y MONTAJE (GR	623
VÁLVULA DE RETENCIÓN (GR)	626
VÁLVULA DE COMBINACIÓN (GR)	629
VÁLVULA DE CONTROL (GR)	630
VÁLVULA DEL CONTROL PRINCIPAL (GR)	646
VÁLVULA DE CONTROL MANUAL (GR)	656
VÁLVULA PILOTO (GR)	657
VALVULA PILOTO DE CARTUCHO (GR)	678
VÁLVULA REDUCTORA DE PRESIÓN (GR)	679
VALVULA DE CONTROL DE LA BOMBA (GR)	682
VALVULA DE PURGA (GR)	684
VÁLVULA DE ACOPLAMIENTO RÁPIDO (GR)	685
VÁLVULA DE ALIVIO (GR)	686
VÁLVULA DE CONTROL DE LA AMORTIGUACIÓN (GR)	690
VÁLVULA DE CORTE (GR)	692
VÁLVULA DE LANZADERA (GR)	694
VÁLVULA DE SOLENOIDE (GR)	696
IMPLEMENTOS	701
CONJUNTO DE BRAZO Y COJINETE DE LEVANTAMIENTO	701
CONTROL DEL CUCHARÓN (GR)	702
CONTROL DE LA HERRAMIENTA DE TRABAJO (GR)	705
*LINKAGE AR-FRONT	709
HERRAMIENTAS	710
GRUPO DE PUNTA Y ADAPTADOR	710
AGUILÓN TELESCÓPICO (GR)	711
CUCHARÓN DE USO GENERAL (CONFIG)	712
CUCHARÓN PARA MATERIALES LIVIANOS (CONFIG)	717
CUCHARÓN DE USO MÚLTIPLE (CONFIG)	718
CUCHARÓN DE USO GENERAL (CONJ)	721
CUCHARÓN PARA MATERIALES LIVIANOS	734

* NO HAY TRADUCCION DISPONIBLE EN EL MOMENTO DE LA IMPRESION

CONTENIDO

Nombre	Página
CUCHARON PARA PENETRACIÓN (CONJ)	737
CUCHARÓN DE USO GENERAL (GR)	740
CUCHARÓN PARA MATERIALES LIVIANOS (GR)	753
CUCHARÓN DE USO MÚLTIPLE (GR)	756
PENETRACIÓN DEL CUCHARÓN	758
PORTAHORQUILLAS (CONJ)	760
PORTAHORQUILLAS (GR)	761
ACOPLADOR RÁPIDO (CONFIG)	762
ACOPLADOR RÁPIDO (GR)	763
CUCHILLA (GR)	771
SEGMENTO DE CUCHILLA (GR)	773
HORQUILLA PARA TARIMAS (GR)	773
MONTAJE DEL CUCHARÓN (GR)	777
PROTECTOR DE VARILLAJE (GR)	778
PUNTA LARGA (GR)	779
PUNTA CORTA (GR)	781
PUESTO DEL OPERADOR	783
AJUSTADOR DEL ASIENTO (GR)	783
COMPRESOR DE AIRE DEL ASIENTO (GR)	784
ACONDICIONADOR DE AIRE Y MONTAJE (GR)	785
ACONDICIONADOR DE AIRE (GR)	786
BRAZO DE LIMPIAPARABRISAS (GR)	788
POSABRAZOS (GR)	789
SISTEMA ROPS DE CABINA CERRADA (CONFIG)	794
CABINA INCLUYE ROPS (GR)	798
TECHO ROPS ABIERTO (CONFIG)	800
PABELLÓN (CONFIG)	801
TECHO CON LA ESTRUCTURA DE PROTECCION CONTRA OBJETOS QUE CAEN (GR)	802
TECHO ROPS ABIERTO (GR)	804
COMPRESOR DE REFRIGERANTE (GR)	805
CONDENSADOR DEL REFRIGERANTE Y MONTAJE (GR)	807
CONDENSADOR DE REFRIGERANTE (GR)	809
CONSOLA DEL OPERADOR (GR)	810
CONTROL DE MANIJA (GR)	811
PALANCA UNIVERSAL DE CONTROL (GR)	812
CONTROL HIDRÁULICO DE OPERACIÓN PILOTO (GR)	814
CONTROL DE DIRECCIÓN (GR)	825
CONTROL DE LA TRANSMISIÓN (GR)	827
CONSOLA (GR)	829
DESCONGELADOR DE LA CABINA (GR)	830
*DISPLAY GP-CAMERA	831
PUERTA DE CABINA	832
CONDUCTO DE AIRE (GR)	846
EXTENSIÓN DEL RESPALDO (GR)	847
FILTRO DE AIRE DE LA CABINA (GR)	848
PISO DE LA CABINA (GR)	849
ALFOMBRILLA DEL PISO (GR)	851
PROTECTOR CONTRA EL VANDALISMO (GR)	853
PROTECTOR DE LA VENTANA	855
CALEFACCIÓN Y MONTAJE DE LA CABINA (GR)	857
CALEFACCIÓN DE LA CABINA (CONFIG)	858
CALEFACCIÓN DE LA CABINA (GR)	859
CAJA DE LA SUSPENSIÓN DEL ASIENTO (GR)	861
INSTALACIÓN DE RADIO (GR)	864
REVESTIMIENTO DE LA CABINA (GR)	869
TUBERÍAS DE ACONDICIONADOR DE AIRE (GR)	871
TUBERÍAS DE CALEFACCIÓN DE LA CABINA	873
PUBLICACIONES (GR)	874
ESPEJO (GR)	875
RETROVISOR (GR)	876
GRUPO DE MONTAJE DE LA CABINA	887
MONTAJE DE PANTALLA (GR)	888
CABINA ROPS CERRADA (CONFIG)	889
CABINA ROPS ABIERTA (CONFIG)	889
SOPORTE DEL RESPALDO (GR)	890
CUBIERTA INFERIOR DEL ASIENTO DEL OPERADOR (GR)	893
TABLERO DE INSTRUMENTOS (GR)	895
PEDAL DE FRENO (GR)	905
REGULADOR - PEDAL DEL (GR)	906
PLATAFORMA (CONFIG)	908
PLATAFORMA (GR)	910
PLATAFORMA DE LA CABINA	912
*RADIO GP-COMMUNICATION	914
RECLINACION DE ASIENTO (GR)	915
CABINA ROPS CERRADA (GR)	916
ESTRUCTURA ROPS ABIERTA (GR)	917
PERSIANA PARA EL SOL (GR)	919
ASIENTO Y MONTAJE (GR)	920
CINTURÓN DE SEGURIDAD (GR)	924
ASIENTO (GR)	927
SUSPENSIÓN - ASIENTO CON (GR)	932
FALDON DE CABINA (GR)	941
SOPORTE DEL ASIENTO (GR)	946
ASIENTO CON SUSPENSIÓN (GR)	947

* NO HAY TRADUCCION DISPONIBLE EN EL MOMENTO DE LA IMPRESION

CONTENIDO

Nombre	Página	Nombre	Página
VISERA (GR)	951		
LAVAPARABRISAS DE LA VENTANA (GR)	952		
VENTANA DE LA PUERTA (GR)	954		
LIMPIAPARABRISAS DE LA VENTANA (GR)	955		
EQUIPO DE SERVICIO Y SUMINISTROS	957		
TRABA DE LA RUEDA (GR)	957		
ETIQUETA DE ADVERTENCIA (GR)	958		
*FILM GP-INTERNATIONAL	962		
CALCOMANÍAS Y PLACAS DE IDENTIFICACIÓN (GR)	962		
INDICE DE NUMEROS DE PIEZA	B1		

* NO HAY TRADUCCION DISPONIBLE EN EL MOMENTO DE LA IMPRESION

ÍNDICE

Designação	Página
INFORMAÇÃO GERAL	A38
ALTERNATIVAS DE REPARO	A49
ADITIVOS SUPLEMENTARES DO LÍQUIDO ARREFECEDOR	A54
PEÇAS DE MANUTENÇÃO	A68
ÍNDICE	A120
MÁQUINA - ARRANJO	1
CHASSI	1
ARRANJO BÁSICO	3
GR. DE CONVERSÃO - CERTIFICADO	4
ATERRO SANITÁRIO	6
MOTOR - ARRANJO	9
MOTOR	9
MOTOR PRIMÁRIO	12
GRUPO DE INSTALAÇÃO - MOTOR	15
MOTOR BÁSICO	16
EIXO-COMANDO DE VÁLVULA	16
TAMPA - MOTOR	17
TAMPA - REDUÇÃO DE RUÍDOS	18
TAMPA - MECANISMO DAS VÁLVULAS	20
VIRABREQUIM	27
BLOCO DO MOTOR	29
CABEÇOTE DO MOTOR	32
DRENO - ÓLEO DO MOTOR	38
COMANDO DO VENTILADOR	40
VOLANTE DO MOTOR	42
CAIXA DO VOLANTE DO MOTOR	43
CAIXA DIANTEIRA	44
LEVANTAMENTO DO MOTOR	46
MONTAGEM - MOTOR E TRANSMISSÃO	47
CÁRTER DO ÓLEO DO MOTOR	49
PISTÃO E BIELA	51
PISTÃO	52
BUJÃO DO MOTOR	53
BUJÃO - CAIXA DO VOLANTE DO MOTOR	54
POLIA DO VIRABREQUIM	55
BALANCIM	56
RUÍDO - ARRANJO PARA SUPRESSÃO	60
MECANISMO DAS VÁLVULAS	62
SISTEMA DE LUBRIFICAÇÃO	64
RESPIRO	64
BOCAL DE ENCHIMENTO DE ÓLEO DO MOTOR	65
FILTRO - ÓLEO DO MOTOR	67
BOMBA DE ÓLEO - MOTOR	68
VÁLVULA PARA TIRAR AMOSTRAS DE FLUIDOS	69
SISTEMA DE ARREFECIMENTO	70
CONEXÃO - TUBO D'ÁGUA	70
ARREFECEDOR DE ÓLEO DO MOTOR E BASE DO FILTRO	71
VENTILADOR DE SUCÇÃO	73
PROTETOR DO VENTILADOR	74
TUBOS - ÁGUA	76
BOMBA DE ÁGUA	78
RADIADOR E PÓS-ARREFECEDOR	80
RADIADOR	84
SISTEMA DA ADMISSÃO DE AR E DE ESCAPE	88
PURIFICADOR DE AR	88
CONVERSÃO - PURIFICADOR DE AR	91
EXTENSÃO DO TUBO DE ESCAPE	92
TUBOS - AR	93
COLETOR DE ADMISSÃO	94
SILENCIADOR	95
TURBOALIMENTADOR	96
SISTEMA DE COMBUSTÍVEL	99
FILTRO SECUNDÁRIO DE COMBUSTÍVEL	99
INJETOR DE COMBUSTÍVEL	101
TUBOS - COMBUSTÍVEL	102
BOMBA DE INJEÇÃO DO COMBUSTÍVEL	110
TANQUE DE COMBUSTÍVEL E MONTAGEM	121
TANQUE DE COMBUSTÍVEL	122
SEPARADOR DE ÁGUA E BOMBA DE ESCORVA DE COMBUSTÍVEL	123
SISTEMA ELÉTRICO E DE PARTIDA	124
ALARME	124
ALTERNADOR DE CORRENTE	125
BATERIA E CABOS / FIOS ELÉTRICOS	128
BATERIA	133
CÂMERA	133
CONTROLE - DESENGATE AUTOMÁTICO DE LEVANTAMENTO	134
CONTROLE - POSIÇÃO	135
CONVERSOR ELÉTRICO	136
SISTEMA ELETRÔNICO - MÁQUINA	137

* TRADUÇÃO NÃO DISPONÍVEL NO MOMENTO DA IMPRESSÃO

ÍNDICE

Designação	Página
SISTEMA ELETRÔNICO-COMUNICAÇÃO	138
SISTEMA ELETRÔNICO - TREM DE FORÇA	139
VELA DE AQUECIMENTO; VELA INCANDESCENTE	140
AQUECEDOR DA ÁGUA DO MOTOR	141
INSTALAÇÃO-COMUNICAÇÃO	143
INSTALAÇÃO-SEGURANÇA	145
LÂMPADA - TETO	147
LÂMPADA - FAROL	148
LUZ TRASEIRA E DE FREIO	151
LUZ GIRATÓRIA DE ALARME	152
ILUMINAÇÃO RODOVIÁRIA	153
ILUMINAÇÃO - AUXILIAR	155
SISTEMA DE ILUMINAÇÃO - FARÓIS	156
ILUMINAÇÃO - RODOVIÁRIA	161
ILUMINAÇÃO - FREIO E MARCHA À RÉ	167
SIST. DE ILUMINAÇÃO - PISCA-PISCA GIRATÓRIO DE ADVERTÊNCIA	169
MOTOR ELÉTRICO	171
MONTAGEM-CÂMERA	172
RELÉ	173
EMISSOR - POSIÇÃO	174
SENSOR - TEMPERATURA	175
AUXILIAR DE PARTIDA A ÉTER	176
MOTOR ELÉTRICO DE PARTIDA	178
INTERRUPTOR - TRAVA DO DIFERENCIAL	181
CHAVE GERAL	182
INTERRUPTOR - MAGNÉTICO	183
INTERRUPTOR - BALANCIM	185
INTERRUPTOR - LIMPADOR DO PÁRA-BRISA	186
VALVULA - PARTIDA A ETER	187
ALARME DE MARCHA À RÉ	188
CABOS/FIOS ELÉTRICOS - CABINE	189
FIAÇÃO-CÂMERA	193
CABOS/FIOS ELÉTRICOS - CONTROLE ELETRÔNICO	194
CABOS/FIOS ELÉTRICOS - MOTOR	195
CABOS/FIOS ELÉTRICOS - DIANTEIROS	198
CABOS/FIOS ELÉTRICOS - TRASEIROS	201
CABOS/FIOS ELÉTRICOS - ABSORÇÃO DE IMPACTOS	203
CABOS/FIOS ELÉTRICOS - DIREÇÃO SECUNDÁRIA	204
TREM DE FORÇA	208
EIXO FIXO	208
EIXO OSCILANTE	211
FREIOS E ENGRENAGENS PLANETARIAS	213
CAIXA E COMPONENTES - TRANSMISSÃO	218
EMBREAGEM	224
CONTROLE DA TRAVA DO DIFERENCIAL	236
ARREFECEDOR DO ÓLEO DO EIXO	237
TAMPA - TRANSMISSÃO	238
DIFERENCIAL	240
DIFERENCIAL - DESLIZAMENTO LIMITADO	243
COMANDO - ACOPLAMENTO FLEXÍVEL	246
COMANDO DA BOMBA	247
BOCAL DE ENCHIMENTO DE ÓLEO DO TREM DE FORÇA	248
FILTRO E TUBOS - TRANSMISSÃO	252
FILTRO - ÓLEO	256
VISOR DE NÍVEL	257
ENGRENAGEM-COROA E PINHÃO	259
*GEAR GP-INPUT TRANSFER	266
ENGRENAGEM - TRANSFERÊNCIA DE ENTRADA	267
ENGRENAGENS DE SAÍDA DE TRANSFERÊNCIA	268
CAIXA - EIXO FIXO	272
CAIXA - EIXO OSCILANTE	278
TUBOS - ARREFECEDOR DE ÓLEO DO EIXO	282
TUBOS - TRAVA DO DIFERENCIAL	288
TUBOS - ARREFECEDOR DO CONVERSOR DE TORQUE	290
MONTAGEM DO EIXO	292
MONTAGEM - ARO	294
TREM DE FORÇA	294
BOMBA DA TRANSMISSÃO	296
ARO	300
ARO DESMONTÁVEL	301
EIXO DE TRANSMISSÃO	310
JUNTA CORREDIÇA	312
BATENTE DE OSCILAÇÃO DO EIXO	314
PNEU E ARO	314
TRANSMISSÃO	320
VÁLVULA DE DERIVAÇÃO	321
VÁLVULA DE MODULAÇÃO	322
VÁLVULA DE CONTROLE PILOTO	323
VÁLVULA DE ALÍVIO	330
VÁLVULA DE PNEU	333
VÁLVULA DE CONTROLE - TRANSMISSÃO	334

* TRADUÇÃO NÃO DISPONÍVEL NO MOMENTO DA IMPRESSÃO

ÍNDICE

Designação	Página
CHASSI E CARROCERIA	338
DEFLETOR DE SUPRESSÃO DE RUÍDOS	338
CAIXA - BATERIA	339
GR. DE CONVERSÃO - OPERAÇÃO RODOVIÁRIA	340
CONTRAPESO	343
TAMPA - ACESSO	348
PORTA DE ACESSO	349
PÁRA-LAMA	353
PÁRA-LAMA DIANTEIRO	354
PÁRA-LAMA TRASEIRO	358
PÁRA-LAMA	360
CHASSI DIANTEIRO	362
CHASSI TRASEIRO	368
GUIA - VEDADOR	374
PROTETOR - EIXO DE TRANSMISSÃO	375
PROTETOR - ILUMINAÇÃO	376
PROTETOR - TUBOS	378
PROTETOR - TREM DE FORÇA	383
PROTETOR - RADIADOR	384
ENGATE - ARTICULAÇÃO	387
CAPÔ E PROTETOR	389
ISOLAMENTO CONTRA CALOR	392
ESCADA	397
TUBOS - GRAXA	400
ELO - TRAVA DA ARMAÇÃO DA DIREÇÃO	403
MONTAGEM - BRAÇADEIRA	405
PAINEL- REDUÇÃO DE RUÍDO	406
PAINEL - SUPERIOR	408
SISTEMA DE FREIO	411
ACUMULADOR - FREIO	411
FREIO DE ESTACIONAMENTO	412
CONTROLE DO FREIO DE ESTACIONAMENTO	413
CONTROLE DO FREIO DE SERVIÇO	418
ISOLAMENTO CONTRA CALOR	422
TUBOS - FREIO DE SERVIÇO	423
VÁLVULA DE SEPARAÇÃO	431
SISTEMA DE DIREÇÃO	432
CILINDRO DE DIREÇÃO E MONTAGEM	432
CILINDRO HIDRÁULICO	434
CILINDRO DA DIREÇÃO	436
TUBOS - DIREÇÃO SECUNDÁRIA	438
TUBOS - DIREÇÃO	446
BOMBA DE DIREÇÃO SECUNDÁRIA E MOTOR	457
BOMBA DE ENGRENAGENS	458
DIREÇÃO	459
DIREÇÃO SECUNDÁRIA	459
DIREÇÃO PADRÃO	460
COLUNA DE DIREÇÃO AJUSTÁVEL	461
VALVULA DO SOLENOIDE E MONTAGEM	462
VÁLVULA DE CONTROLE PILOTO	463
VÁLVULA DO CARTUCHO PILOTO	465
VÁLVULA DE SEPARAÇÃO	476
VÁLVULA SOLENÓIDE	477
SISTEMA HIDRÁULICO	478
ACUMULADOR D ÓLEO - PILOTO	478
ACUMULADOR DO SISTEMA DE ABSORÇÃO DE IMPACTOS	480
CARTUCHO - BOMBA DE PALHETAS	481
SISTEMA DE ABSORÇÃO DE IMPACTOS	482
ARRANJO DE CONVERSÃO - HIDRÁULICO	482
ARREFECEDOR - ÓLEO HIDRÁULICO E DA TRANSMISSÃO	483
ARREFECEDOR DO ÓLEO HIDRÁULICO	484
CILINDRO DO ACOPLADOR E MONTAGEM	485
CILINDRO - ACOPLADOR	488
CILINDRO DE LEVANTAMENTO	489
CILINDRO - CAÇAMBA DE MÚLTIPLAS APLICAÇÕES	492
CILINDRO DE INCLINAÇÃO	493
FILTRO HIDRÁULICO E MONTAGEM	496
FILTRO - ÓLEO	497
COMANDO HIDRÁULICO	498
ARRANJO HIDRÁULICO - 2 VÁLVULAS	499
ARRANJO HIDRÁULICO - 3 VÁLVULAS	500
ARRANJO HIDRÁULICO - 4 VÁLVULAS	501
ARRANJO HIDRÁULICO - 6 VÁLVULAS	503
DESENGATE E POSICIONADOR DA CAÇAMBA	504
TUBOS - CAÇAMBA	508
TUBOS DE CONEXÃO	510
TUBOS - ACOPLADOR	512
TUBOS - DIANTEIROS	527
TUBOS - ÓLEO HIDRÁULICO	536
TUBOS - VENTILADOR HIDRÁULICOS	550
TUBOS - CILINDRO DE LEVANTAMENTO	557
TUBOS - CIRCUITO PILOTO	564

* TRADUÇÃO NÃO DISPONÍVEL NO MOMENTO DA IMPRESSÃO

ÍNDICE

Designação	Página
TUBOS - ABSORÇÃO DE IMPACTOS	577
TUBOS - CILINDRO DE INCLINAÇÃO	580
COLETOR - VÁLVULA	585
MOTOR E MONTAGEM - VENTILADOR HIDRÁULICO	588
MOTOR - VENTILADOR HIDRÁULICO	589
MOTOR - ENGRENAGENS	590
MONTAGEM - VÁLVULA DE CONTROLE	595
ARTICULAÇÃO DA VÁLVULA PILOTO	596
PLACA DA VÁLVULA PILOTO	599
BOMBA E MONTAGEM - FREIO E VENTILADOR HIDRÁULICO	603
BOMBA DE DIREÇÃO E ACESSÓRIO E MONTAGEM	604
BOMBA DE ENGRENAGENS	606
BOMBA DE PISTÃO	609
BOMBA DE PISTÃO E PALHETA	613
GRUPO ROTATIVO DA BOMBA	614
TANQUE DE ÓLEO HIDRÁULICO E MONTAGEM	615
TANQUE HIDRÁULICO	616
VÁLVULA DO CONTROLE PRINCIPAL E MONTAGEM	618
VALVULA DO SOLENOIDE E MONTAGEM	623
VÁLVULA DE RETENÇÃO	626
VÁLVULA COMBINADA	629
VÁLVULA DE CONTROLE	630
VÁLVULA - CONTROLE PRINCIPAL	646
VÁLVULA MANUAL	656
VÁLVULA DE CONTROLE PILOTO	657
VÁLVULA DO CARTUCHO PILOTO	678
VÁLVULA DE REDUÇÃO DE PRESSÃO	679
VÁLVULA DE CONTROLE DA BOMBA	682
VÁLVULA DE PURIFICAÇÃO	684
VÁLVULA DE ACOPLAMENTO RÁPIDO	685
VÁLVULA DE ALÍVIO	686
VÁLVULA DE CONTROLE DE ABSORÇÃO DE IMPACTOS	690
VÁLVULA DE PARADA	692
VÁLVULA DE SEPARAÇÃO	694
VÁLVULA SOLENÓIDE	696
ACESSÓRIOS	701
BRACO DE LEVANTAMENTO E MANCAL	701
CONTROLE DA CAÇAMBA	702
CONTROLE DA FERRAMENTA DE TRABALHO	705
ARTICULAÇÃO-DIANTEIRA	709
FERRAMENTAS DE TRABALHO	710
ADAPTADOR DA PONTA	710
BRAÇO - MANIPULADOR DE MATERIAIS	711
CAÇAMBA - PARA APLICAÇAO GERAL	712
CAÇAMBA PARA MATERIAL LEVE	717
CAÇAMBA DE MÚLTIPLAS APLICAÇÕES	718
CAÇAMBA PARA APLICAÇÃO GERAL	721
CACAMBA PARA MATERIAL LEVE	734
CAÇAMBA PARA PENETRAÇÃO	737
CAÇAMBA PARA APLICAÇÃO GERAL	740
CAÇAMBA PARA MATERIAL LEVE	753
CAÇAMBA DE MÚLTIPLAS APLICAÇÕES	756
CAÇAMBA PARA PENETRAÇÃO	758
SUPORTE - GARFO	760
ACOPLADOR RÁPIDO	762
BORDA CORTANTE	771
BORDA SEGMENTADA DA CAÇAMBA	773
GARFO DE PALETAS	773
MONTAGEM - CAÇAMBA	777
PROTETOR - ARTICULAÇÃO	778
PONTA LONGA	779
PONTA CURTA	781
ESTAÇÃO DO OPERADOR	783
AJUSTADOR DO ASSENTO	783
COMPRESSOR DE AR - ASSENTO	784
CONDICIONADOR DE AR E MONTAGEM	785
CONDICIONADOR DE AR	786
BRACO DO LIMPADOR	788
BRAÇO DO ASSENTO	789
CABINE - ESTRUTURA ROPS COBERTA	794
CABINE - ESTRUTURA DE PROTEÇÃO CONTRA CAPOTAMENTO	798
TOLDO - ROPS ABERTA	800
TOLDO - FLEXÍVEL	801
TOLDO - FOPS	802
TOLDO - ESTRUTURA ROPS ABERTA	804
COMPRESSOR DE REFRIGERANTE	805
CONDENSADOR DO REFRIGERANTE E MONTAGEM	807
CONDENSADOR DE REFRIGERANTE	809
CONSOLE DO OPERADOR	810
CONTROLE-CABO	811
CONTROLE - ALAVANCA	812
CONTROLE HIDRÁULICO DE OPERAÇÃO PILOTO	814
CONTROLE DE DIREÇÃO	825

* TRADUÇÃO NÃO DISPONÍVEL NO MOMENTO DA IMPRESSÃO

ÍNDICE

Designação	Página
CONTROLE DA TRANSMISSÃO	827
PAINEL DE INSTRUMENTOS	829
DESEMBAÇADOR DA CABINE	830
VISOR-CÂMERA	831
PORTA DA CABINE	832
DUCTO DE AR	846
EXTENSÃO - ENCOSTO	847
FILTRO - AR DA CABINE	848
PISO	849
TAPETE	851
PROTETOR CONTRA VANDALISMO	853
PROTETOR - JANELA	855
AQUECEDOR DA CABINE E MONTAGEM	857
AQUECEDOR DA CABINE	858
CAIXA - SUSPENSÃO DO ASSENTO	861
INSTALAÇÃO DO RÁDIO	864
REVESTIMENTO DA CABINE	869
TUBOS - AR CONDICIONADO	871
TUBOS - AQUECEDOR DA CABINE	873
PUBLICAÇÃO	874
ESPELHO	875
ESPELHO RETROVISOR	876
MONTAGEM - CABINE	887
MONTAGEM - VISOR	888
CABINE - ESTRUTURA ROPS COBERTA	889
CABINE - ROPS ABERTA	889
FUNDO - ENCOSTO	890
ASSENTO - FUNDO	893
PAINEL DE INSTRUMENTOS	895
PEDAL DO FREIO	905
PEDAL DO GOVERNADOR	906
PISO	908
PLATAFORMA	910
PLATAFORMA DO OPERADOR	912
RÁDIO - COMUNICAÇÃO	914
RECLINAÇÃO - ASSENTO	915
ROPS FECHADA	916
ROPS ABERTA	917
TELA PÁRA-SOL	919
ASSENTO E MONTAGEM	920
CINTO DE SEGURANÇA	924
ASSENTO	927
ASSENTO COM SUSPENSÃO	932
PAINEL PROTETOR - CABINE	941
SUPORTE - ASSENTO	946
SUSPENSÃO - ASSENTO	947
PÁRA-SOL DA CABINE	951
LAVADOR DO VIDRO	952
VIDRO DA PORTA	954
LIMPADOR DO VIDRO	955
EQUIPAMENTOS DE SERVIÇO E SUPRIMENTOS	957
CALÇO DA RODA	957
DECALQUE	958
ADESIVO-INTERNACIONAL	962
PLACA E DECALQUE	962
ÍNDICE DE NÚMERO DE PEÇA	B1

* TRADUÇÃO NÃO DISPONÍVEL NO MOMENTO DA IMPRESSÃO

INHALTSVERZEICHNIS

Bezeichnung	Seite
ALLGEMEINE HINWEISE	A42
REPARATURALTERNATIVEN	A50
KÜHLMITTELZUSATZ	A55
WARTUNGSTEILE	A72
STICHWORTVERZEICHNIS	A134
MASCHINE	1
FAHRWERK	1
GRUNDAUSFÜHRUNG	3
UMBAUSATZ - ZULASSUNG	4
ABFALLBESEITIGUNGSMONTAGE	6
MOTOR	9
MOTORAUSFÜHRUNG	9
MOTOR-EINBAUSATZ	15
MOTOR (GRUNDAUSFÜHRUNG)	16
NOCKENWELLE	16
MOTORVERKLEIDUNG	17
SCHALLDÄMPFENDE VERKLEIDUNG	18
VENTILDECKEL	20
KURBELWELLE	27
MOTORBLOCK	29
ZYLINDERKOPF	32
MOTORÖLABLASS	38
LÜFTERANTRIEB	40
SCHWUNGRAD	42
SCHWUNGRADGEHÄUSE	43
STIRNRADGEHÄUSE	44
MOTORHUBÖSE	46
MOTOR- UND GETRIEBEAUFLAGER	47
ÖLWANNE	49
PLEUELSTANGE UND KOLBEN	51
KOLBEN	52
MOTORSTOPFEN	53
SCHWUNGRADGEHÄUSESTOPFEN	54
KURBELWELLEN-RIEMENSCHEIBE	55
VENTILKIPPHEBEL	56
SCHALLDÄMPFUNG	60
VENTILSTEUERUNG	62
SCHMIERSYSTEM	64
ENTLÜFTER	64
MOTORÖLEINFÜLLSTUTZEN	65
ÖLFILTER	67
SCHMIERPUMPE	68
PROBEENTNAHMEVENTIL	69
KÜHLSYSTEM	70
KÜHLWASSERANSCHLUSS	70
MOTORÖLKÜHLER UND FILTER-SOCKEL	71
SAUGLÜFTER	73
LÜFTERVERKLEIDUNG	74
KÜHLWASSERLEITUNGEN	76
KÜHLWASSERPUMPE	78
KÜHLER U. LADELUFTKÜHLER	80
KÜHLER	84
LUFTANSAUG- UND ABGASSYSTEM	88
LUFTREINIGER	88
LUFTREINIGER-UMBAUSATZ	91
AUSPUFFROHRVERLÄNGERUNG	92
DRUCKLUFTLEITUNGEN	93
ANSAUGKRÜMMER	94
SCHALLDÄMPFER	95
TURBOLADER	96
KRAFTSTOFFSYSTEM	99
KRAFTSTOFFSICHERHEITSFILTER	99
KRAFTSTOFFEINSPRITZDÜSE	101
KRAFTSTOFFLEITUNGEN	102
KRAFTSTOFFEINSPRITZPUMPE	110
KRAFTSTOFFTANK U. BEFESTIGUNG	121
KRAFTSTOFFTANK	122
WASSERABSCHEIDER U. KRAFTSTOFFENTLÜFTUNGSPUMPE	123
ELEKTRISCHE ANLAGE U. STARTSYSTEM	124
WARNVORRICHTUNG	124
DREHSTROMGENERATOR	125
BATTERIE UND VERDRAHTUNG	128
BATTERIE	133
KAMERA	133
HUBENDAUSSCHALTE-REGELUNG	134
STELLUNGSSTEUERUNG	135
ELEKTR. UMFORMER	136
ELEKTRONIK - MASCHINE	137
ELEKTRONIK, KOMMUNIKATION	138
KRAFTÜBERTRAGUNGSELEKTRONIK	139
GLÜHKERZE	140
UMLAUFKÜHLWASSERHEIZUNG	141
ÜBERTRAGUNGSEINBAUSATZ	143
SICHERHEITSEINBAUSATZ	145
FAHRERHAUSBELEUCHTUNG	147
ARBEITSLEUCHTEN	148
BREMS- UND RÜCKLEUCHTE	151
RUNDUM-KENNLEUCHTE	152

* ÜBERSETZUNG ZUM ZEITPUNKT DER DRUCKLEGUNG NICHT VORHANDEN

INHALTSVERZEICHNIS

Bezeichnung	Seite
BELEUCHTUNGSANLAGE (STRASSENAUSRÜSTUNG)	153
ZUSATZBELEUCHTUNG	155
ARBEITSLEUCHTEN	156
BELEUCHTUNGSANLAGE (STRASSENAUSRÜSTUNG)	161
BREMS- UND RÜCKLEUCHTEN	167
RUNDUM-KENNLEUCHTE	169
MOTOR, ELEKTR.	171
CAMERABEFESTIGUNG	172
RELAIS	173
STELLUNGSSENSOR	174
TEMPERATURSENSOR	175
ÄTHERSTARTHILFE	176
STARTERMOTOR	178
DIFFERENZIALSPERRENSCHALTER	181
TRENNSCHALTER	182
MAGNETSCHALTER	183
KIPPSCHALTER	185
SCHEIBENWISCHERSCHALTER	186
ÄTHERSTARTVENTIL	187
RÜCKFAHRWARNHORN	188
FAHRERHAUSVERDRAHTUNG	189
KAMERA, VERDRAHTUNG	193
VERDRAHTUNG (ELEKTRON. STEUERUNG)	194
MOTORVERDRAHTUNG	195
VERDRAHTUNG, VORNE	198
VERDRAHTUNG, HINTEN	201
SCHWINGUNGSDÄMPFUNGSVERDRAHTUNG	203
NOTLENKUNGSVERDRAHTUNG	204
KRAFTÜBERTRAGUNG	208
STARRACHSE	208
PENDELACHSE	211
BREMSE UND PLANETENGETRIEBE	213
GETRIEBEGEHÄUSE UND TEILE	218
KUPPLUNG	224
DIFFERENTIALSPERRENGESTÄNGE	236
ACHSÖLKÜHLER	237
GETRIEBEABDECKUNG	238
DIFFERENTIAL	240
DIFFERENTIAL (BEGRENZTER SCHLUPF)	243
KUPPLUNGSANTRIEB, ELAST.	246
PUMPENANTRIEB	247
GETRIEBEÖLFÜLLSTUTZEN	248
GETRIEBEFILTER UND -LEITUNGEN	252
ÖLFILTER	256
SCHAUGLAS	257
TELLER- UND KEGELRAD	259
*GEAR GP-INPUT TRANSFER	266
VERTEILERGETRIEBEANTRIEB	267
GEHÄUSE - STARRACHSE	272
GEHÄUSE - PENDELACHSE	278
ACHSENÖLKÜHLERLEITUNGEN	282
DIFFERENTIALSPERRENLEITUNGEN	288
DREHMOMENTWANDLER-KÜHLERLEITUNGEN	290
ACHSENANBAUSATZ	292
FELGENAUFHÄNGUNG	294
KRAFTÜBERTRAGUNG	294
GETRIEBEPUMPE	296
FELGE	300
FELGE (TEILBAR)	301
ANTRIEBSWELLE	310
ANTRIEBSWELLEN-KEILVERZAHNUNG	312
ACHSPENDELUNGSANSCHLAG	314
REIFEN UND FELGE	314
GETRIEBE	320
NEBENSTROMVENTIL	321
MODULATORVENTIL	322
VORSTEUERVENTIL	323
ÜBERDRUCKVENTIL	330
REIFENVENTIL	333
GETRIEBESTEUERVENTIL	334
RAHMEN UND FAHRGESTELL	338
LEITBLECH - SCHALLDÄMPFUNG	338
BATTERIEKASTEN	339
STRASSENFAHRT - UMRÜSTSATZ	340
GEGENGEWICHT	343
ZUGANGSKLAPPE	348
SCHUTZBLECHE (STRASSENAUSRÜSTUNG)	353
SCHUTZBLECHE	353
SCHUTZBLECHE, VORNE	354
SCHUTZBLECHE, HINTEN	358
SCHUTZBLECHE (STRASSENAUSRÜSTUNG)	360
LADERRAHMEN	362
RAHMEN, HINTEN	368
SCHUTZDICHTUNG	374
ANTRIEBSWELLENVERKLEIDUNG	375
BLITZSCHUTZ	376
LEITUNGSVERKLEIDUNG	378
ANTRIEBSSCHUTZ	383
KÜHLERSCHUTZ	384
KNICKGELENK-ANHÄNGUNG	387
MOTORHAUBE UND VERKLEIDUNG	389
WÄRMEISOLIERUNG	392
STEIGLEITER	397
SCHMIERLEITUNGEN	400

* ÜBERSETZUNG ZUM ZEITPUNKT DER DRUCKLEGUNG NICHT VORHANDEN

INHALTSVERZEICHNIS

Bezeichnung	Seite
KNICKGELENKSPERRE	403
BEFESTIGUNGSHALTERUNG	405
SCHALLDÄMPFUNG	406
OBERE ABDECKPLATTE	408
BREMSSYSTEM	411
BREMSDRUCKSPEICHER	411
FESTSTELLBREMSE	412
FESTSTELLBREMSGESTÄNGE	413
BREMSGESTÄNGE	418
WÄRMEISOLIERUNG	422
BETRIEBSBREMSLEITUNGEN	423
PENDELVENTIL	431
LENKSYSTEM	432
LENKZYLINDER UND AUFHÄNGUNG	432
HYDRAULIKZYLINDER	434
LENKZYLINDER	436
NOTLENKUNGSLEITUNGEN	438
LENKÖLLEITUNGEN	446
NOTLENKUNGSPUMPE UND -MOTOR	457
ZAHNRADPUMPE	458
LENKUNG	459
NOTLENKUNG	459
STANDARD-LENKUNG	460
LENKSÄULE, VERSTELLBAR	461
SOLENOIDVENTIL U. BEFESTIGUNGSTEILE	462
VORSTEUERVENTIL	463
EINBAUVORSTEUERVENTIL	465
PENDELVENTIL	476
MAGNETVENTIL	477
HYDRAULIKSYSTEM	478
VORSTEUERÖLDRUCKSAMMLER	478
DRUCKSPEICHER, HYDRAULISCHE SCHWINGUNGSDÄMPFUNG	480
FLÜGELZELLENPUMPENEINSATZ	481
HYDRAULISCHE SCHWINGUNGSDÄMPFUNG	482
HYDRAULIK-UMBAUSATZ	482
KÜHLUNG - HYDRAULIK- U. GETRIEBEÖL	483
HYDRAULIKÖLKÜHLER	484
SCHNELLWECHSELANSCHLUSSZYLINDER U. BEFESTIGUNGSTEILE	485
SCHNELLWECHSELANSCHLUSSZYLINDER	488
HUBZYLINDER	489
KOMBISCHAUFEL	492
KIPPZYLINDER	493
HYDRAULIKFILTER UND BEFESTIGUNGSTEILE	496
ÖLFILTER	497
HYDRAULIKSYSTEM	498
HYDRAULIKANORDNUNG (2-VENTIL-HYDRAULIK)	499
HYDRAULIKANORDNUNG (3-VENTIL-HYDRAULIK)	500
HYDRAULIKANORDNUNG (4-VENTIL-HYDRAULIK)	501
HYDRAULIKAUSFÜHRUNG - 6 VENTILE	503
SCHAUFELAUSSCHALTER UND -EINSTELLER	504
SCHAUFELLEITUNGEN	508
ANSCHLUSSLEITUNGEN	510
ANSCHLUSSKUPPLUNGSLEITUNGEN	512
LEITUNGEN, VORNE	527
HYDRAULIKLEITUNGEN	536
HYDRAULIKLÜFTERLEITUNGEN	550
HUBZYLINDERLEITUNGEN	557
VORSTEUERLEITUNGEN	564
SCHWINGUNGSDÄMPFUNGSLEITUNGEN	577
NEIGEZYLINDERLEITUNGEN	580
KRÜMMERVENTIL	585
HYDRAULIKKÜHLERMOTOR U. BEFESTIGUNG	588
HYDRAULIKLÜFTERMOTOR	589
MOTORANTRIEB	590
STEUERVENTILBEFESTIGUNG	595
VORSTEUERVENTIL	596
VORSTEUERVENTILPLATTE	599
PUMPE U. BEFESTIGUNG - BREMSE U. HYDRAULIKLÜFTER	603
ARBEITSGERÄTE- U. LENKPUMPE U. BEFESTIGUNGSTEILE	604
ZAHNRADPUMPE	606
KOLBENPUMPE	609
KOLBEN- UND MESSERPUMPE	613
KOLBENPUMPENUMLAUFSATZ	614
HYDRAULIKTANK UND BEFESTIGUNGSTEILE	615
HYDRAULIKTANK	616
VENTIL UND BEFESTIGUNGSTEILE - HAUPTSTEUERUNG	618
SOLENOIDVENTIL U. BEFESTIGUNGSTEILE	623
SPERRVENTIL	626
SAMMELVENTIL	629
STEUERVENTIL	630
HAUPTSTEUERVENTIL	646

* ÜBERSETZUNG ZUM ZEITPUNKT DER DRUCKLEGUNG NICHT VORHANDEN

INHALTSVERZEICHNIS

Bezeichnung	Seite
VENTIL, MECH.	656
VORSTEUERVENTIL	657
EINBAUVORSTEUERVENTIL	678
DRUCKREDUZIERVENTIL	679
PUMPENSTEUERVENTIL	682
ENTLEERVENTIL	684
SCHNELLKUPPLUNGSVENTIL	685
ÜBERDRUCKVENTIL	686
VENTIL - HYDRAULISCHE SCHWINGUNGS-DÄMPFUNG	690
ABSPERRVENTIL	692
PENDELVENTIL	694
MAGNETVENTIL	696
ARBEITSGERÄTE	701
HUBARM & LAGER	701
SCHAUFELSTEUERUNG	702
ARBEITSGERÄTESTEUERUNG	705
GESTÄNGE, VORN	709
ARBEITSGERÄTE	710
ZAHNHALTER	710
TRAGARM	711
UNIVERSALSCHAUFEL	712
LEICHTGUTSCHAUFEL	717
KOMBISCHAUFEL	718
UNIVERSALSCHAUFEL	721
LEICHTGUTSCHAUFEL	734
ERDBAUSCHAUFEL	737
UNEVERSALSCHAUFEL	740
LEICHTGUTSCHAUFEL	753
KOMBISCHAUFEL	756
ERDBAUSCHAUFEL	758
GABELTRÄGER	760
SCHNELLWECHSELVORRICHTUNG	762
SCHNELLWECHSELEINRICHTUNG	763
SCHNEIDMESSER	771
SCHNEIDMESSERSEGMENT	773
PALETTENGABEL	773
SCHAUFELAUFHÄNGUNG	777
UMLENKMECHANISMUS-SCHUTZAB-DECKUNG	778
ZAHNSPITZE, LANG	779
ZAHNSPITZE, KURZ	781
FAHRERHAUS	783
FAHRERSITZVERSTELLER	783
LUFTKOMPRESSORSITZ	784
KLIMAANLAGE UND AUFHÄNGUNG	785
KLIMAANLAGE	786
SCHEIBENWISCHERARM	788
ARMLEHNE	789
FAHRERHAUS MIT ÜBERROLL-SCHUTZ	794
OFFENES FAHRERHAUS MIT ÜBERROLLSCHUTZ	800
WETTERDACH	801
*CANOPY GP-FOPS	802
FAHRERHAUS M. OFFENEM ÜBERROLLSCHUTZ	804
KÄLTEMITTELKOMPRESSOR	805
KÄLTEMITTELKONDENSATOR U. BEFESTIGUNGSTEILE	807
KÄLTEMITTELKONDENSATOR	809
STEUERKONSOLE	810
STEUERHEBEL	811
JOYSTICK -STEUERUNG	812
HYDRAULIKBEDIENUNG (MIT VORSTEUERUNG)	814
LENKBETÄTIGUNG	825
GETRIEBESTEUERUNG	827
ARMATURENBRETT	829
ENTFROSTER - FAHRERHAUS	830
ANZEIGE - KAMERA	831
FAHRERHAUSTÜR	832
LUFTKANAL	846
RÜCKLEHNENVERLÄNGERUNG	847
FAHRERHAUSLUFTFILTER	848
BODENGRUPPE	849
FUSSMATTE	851
SCHUTZVERKLEIDUNG	853
SCHEIBENSCHUTZ	855
FAHRERHAUSHEIZUNG U. BEFESTI-GUNGSTEILE	857
FAHRERHAUSHEIZUNG	858
FAHRERSITZFEDERUNGSGEHÄUSE	861
RADIOEINBAUSATZ	864
FAHRERHAUSAUSKLEIDUNG	869
KLIMAANLAGENLEITUNGEN	871
FAHRERHAUSHEIZUNGSLEITUN-GEN	873
DOKUMENTATION	874
SPIEGEL	875
RÜCKSPIEGEL	876
FAHRERHAUSANBAUSATZ	887
*MOUNTING GP-DISPLAY	888
FAHRERHAUSAUSFÜHRUNG MIT GESCHL. ÜBERROLLSCHUTZ	889
FAHRERHAUS - OFFEN MIT ÜBERROLLSCHUTZ	889
SCHALE - RÜCKENLEHNE	890
FAHRERSITZVERKLEIDUNG	893
INSTRUMENTENTAFEL	895
BREMSPEDAL	905
GASPEDAL	906

* ÜBERSETZUNG ZUM ZEITPUNKT DER DRUCKLEGUNG NICHT VORHANDEN

INHALTSVERZEICHNIS

Bezeichnung	Seite
PLATTFORM	908
FAHRERPLATTFORM	912
RADIO - KOMMUNIKATION	914
VERSTELLBARER SITZ	915
ÜBERROLL-SCHUTZKABINE	916
ÜBERROLL-SCHUTZDACH	917
SONNENBLENDE	919
FAHRERSITZ UND UNTERBAU	920
SICHERHEITSGURT	924
FAHRERSITZ	927
SCHWINGSITZ	932
FAHRERHAUSSCHÜRZE	941
SITZUNTERBAU	946
FAHRERSITZFEDERUNG	947
FAHRERHAUS, SONNENBLENDE	951
SCHEIBENWASCHANLAGE	952
TÜRFENSTER	954
SCHEIBENWISCHER	955
WARTUNGSAUSRÜSTUNG UND -ZUBEHÖR	957
UNTERLEGKEIL FÜR RAD	957
AUFKLEBER	958
AUFKLEBER-INTERNATIONAL	962
SCHILD UND AUFKLEBER	962
ERSATZTEILNUMMERNINDEX	B1

* ÜBERSETZUNG ZUM ZEITPUNKT DER DRUCKLEGUNG NICHT VORHANDEN

GENERAL INFORMATION

1. MACHINE IDENTIFICATION

Caterpillar machines are identified by Product Identification Numbers (PIN). Some components included in a machine may be identified by Serial Numbers (S/N). Typical components that will be serialized include engines, transmissions, bulldozers, and rippers. The machine and engine are further identified by arrangement numbers and in some cases modification numbers. These numbers are shown on the product identification plate(s) and on the master plate in the operator's compartment.

Caterpillar dealers need all of these numbers to determine accurate parts identification.

SIS *New Feature*

Effective First Quarter 2001 the Caterpillar Product Identification Number (PIN) changed from 8 to 17 characters. In an effort to provide uniform equipment identification, Caterpillar and other construction equipment manufacturers are moving to comply with the latest version of the product identification numbering standard. Non-road machine PINs are defined by ISO 10261. The new PIN format will apply to all Caterpillar machines and generator sets. The PIN plates and frame marking will display the 17 character PIN. The new format will look like the following:

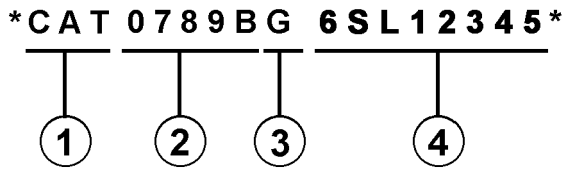

Where:

1. Caterpillar's World Manufacturing Code (characters 1-3)

2. Machine Descriptor (characters 4-8)

3. Check Character (character 9)

4. Machine Indicator Section (MIS) or Product Sequence Number (characters 10-17). These were previously referred to as the Serial Number.

Machines and generator sets produced before First Quarter 2001 will maintain their 8 character PIN format.

Components such as engines, transmissions, axles, etc. and work tools will continue to use an 8 character Serial Number (S/N).

2. ORDERING PARTS

⚠ WARNING

When replacement parts are required for this product Caterpillar recommends using Caterpillar replacement parts or parts with equivalent specifications including, but not limited to, physical dimensions, type, strength and material.

Failure to heed this warning can lead to premature failures, product damage, personal injury or death.

Quality Caterpillar replacement parts are available from Caterpillar dealers throughout the world. Their parts inventories are up to date and include all parts normally required to protect your investment in Caterpillar machines. Dealers may offer repair kits or remanufactured parts to allow selection of the most effective repair alternative for a particular situation. When ordering parts, your order should specify the quantity, part number, part name, and the serial number/product identification number of the machine for which the parts are needed.

3. PARTS MANUAL ORGANIZATION

Product information in this manual is presented as "information elements" that represent all of the components for the specific model. Engine Arrangement and Seat Group are examples of information elements. The information elements are organized alphabetically by part name and secondarily by part number within each major section of the manual.

4. TABLE OF CONTENTS

A table of contents (TOC) is found at the beginning of the manual. The TOC lists each section of the manual with a complete list of all information elements organized as they appear in the manual. Page numbers are provided for quick reference to detailed parts identification illustrations and serviceable consist lists.

5. MAINTENANCE PARTS INDEX

The Maintenance Parts Index, located near the beginning of the manual, references most frequently used maintenance part numbers, providing description, quantity, usage and page number. This information is organized alphabetically by part description.

6. INDEX

The index located near the front of the manual is an alphabetical listing of all information elements included in the manual. Page numbers are provided for quick reference to detailed parts identification illustrations and serviceable consist lists.

7. PART NUMBER INDEX

A numerical index listing all part numbers and the corresponding page number(s) appears at the back of the manual.

8. CAPTIONS

Captions located at the beginning of each information element identify the part number and part name along with additional descriptive information. PIN and S/N information found in each caption should be used to select correct information for a specific machine. Field replacement options, identification of optional attachment components, and where used ("part of") information is also provided.

The first line of a caption is shown in larger type font to indicate the beginning of an information element. Captions for additional pages that may be required to illustrate an information element will be shown in standard type font and will include the term *(contd.)* .

9. NON-SERVICED PARTS

In some instances it is necessary to display non-serviced parts that are a link to a lower level serviceable consist lists. These non-serviced part numbers are shown in *italic* type indicating that they are not available.

10. PARTS LIST REFERENCE NUMBERS

Numbers shown in the Ref No column correspond to numbers used in the associated graphic(s). An alphabetic suffix may be added to a reference number to identify lower level consist items. Numbers shown in the Graphic Ref column refer to the graphic number identifier displayed in the lower left corner of each illustration. The Graphic Ref number may be used in combination with the item Ref No to determine the correct part number. There may be intentional omission of a Ref No in a consist list as information is updated to reflect the latest serviceable part numbers.

11. INDENTED PART NAMES

When a part name is indented in a parts list, it is part of (included in) the group or assembly under which it is indented.

12. ILLUSTRATION REFERENCE LETTERS

When necessary, illustrations contain reference letters (A, B, C etc.) that are intended to track lines and harnesses from one point to another. They are also used to show where to reconnect illustrations that have been separated.

13. ABBREVIATIONS AND SYMBOLS

O.D. – Outside Diameter
I.D. – Inside Diameter
A – Not Part Of This Group
B – Use As Required
C – Change From Previous Type
D – Order By The Meter
E – Order By The Centimeter
F – Not Shown
G – Order By The Inch
I – Refer To Hydraulic Information System
M – Metric Part
R – Remfg Part May Be Available
Y – Separate Illustration
Z – Not Serviced Separately

SIS *New Feature*

14. DESCRIPTION OF TYPE CHANGES

Type - A type is defined as any configuration change that requires an additional Information Element for an Arrangement, Group, or Assembly. If serial number breaks for types are not available, a type # (Type 1, Type 2, etc.) will be displayed in the caption. These "type" changes are identified with a "C" note (change from previous type) in the Parts List. Only the "types" that apply to this Parts Manual will be included. Additional types may exist causing "C" notes to appear on an Information Element when no other types are shown.

15.<END>

This symbol indicates the end of an information element.

NOTE:

Continuing improvement and advancement of product design may cause changes to your machine which may not be included in this publication. Whenever a question arises regarding your caterpillar product or this publication, please consult your caterpillar dealer for the latest available information.

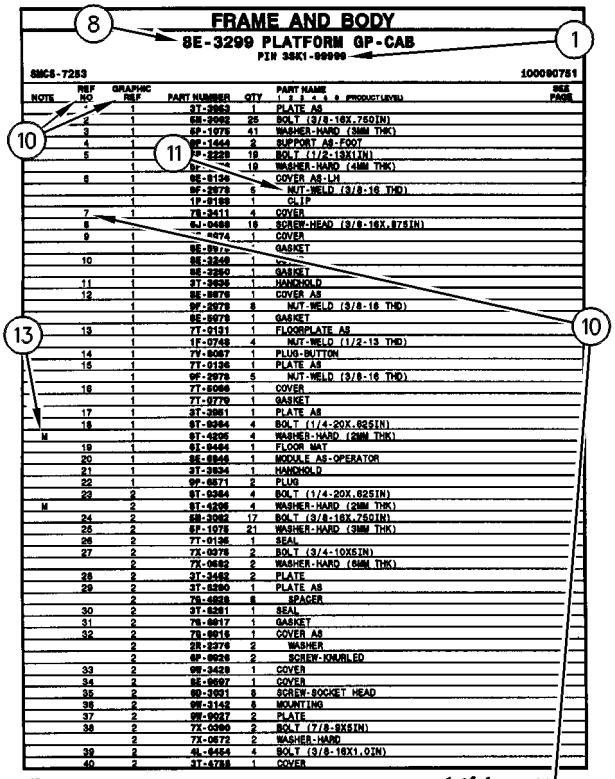
FRAME AND BODY
8E-3299 PLATFORM GP-CAB
PIN 3SK1-09999
SMCS-7253
100090751
NOTE REF NO GRAPHIC REF PART NUMBER QTY PART NAME SEE PAGE
1 1 3T-2953 1 PLATE AS
2 1 6E-2992 25 BOLT (3/8-16X.750IN)
3 1 6P-1076 41 WASHER-HARD (38MM THK)
4 1 9P-1444 2 SUPPORT AS-FOOT
5 1 7P-2229 19 BOLT (1/2-13X1IN)
1 19 WASHER-HARD (41MM THK)
6 1 8E-6136 COVER AS-LH
1 9F-2978 6 NUT-WELD (3/8-16 THD)
1 1P-0188 1 CLIP
7 1 7S-2411 4 COVER
8 9J-0498 18 SCREW-HEAD (3/8-16X.875IN)
9 1 1 COVER
1 GASKET
1 10
1 GASKET
11 1 3T-2638 1 HANDHOLD
12 1 8E-9078 1 COVER AS
1 9F-2978 8 NUT-WELD (3/8-16 THD)
1 GASKET
13 1 7T-0131 1 FLOORPLATE AS
1 1F-0748 4 NUT-WELD (1/2-13 THD)
14 1 7V-8067 1 PLUG-BUTTON
15 1 7T-0136 1 PLATE AS
1 9F-2978 5 NUT-WELD (3/8-16 THD)
16 1 7T-8066 1 COVER
1 7T-9779 1 GASKET
17 1 3T-3861 1 PLATE AS
18 1 6T-8364 4 BOLT (1/4-20X.625IN)
M 1 9T-4205 4 WASHER-HARD (26MM THK)
19 1 6L-8494 1 FLOOR MAT
20 1 8E-8846 1 MODULE AS-OPERATOR
21 1 3T-3834 1 HANDHOLD
22 1 9P-8671 2 PLUG
23 2 6T-8364 4 BOLT (1/4-20X.625IN)
M 2 9T-4205 4 WASHER-HARD (26MM THK)
24 2 6B-3062 17 BOLT (3/8-16X.750IN)
26 2 6P-1076 21 WASHER-HARD (38MM THK)
26 2 7T-0135 1 SEAL
27 2 7X-0075 2 BOLT (3/4-10X5IN)
2 7X-0682 2 WASHER-HARD (64MM THK)
28 2 3T-3462 2 PLATE
29 2 3T-8290 1 PLATE AS
2 7S-4828 8 SPACER
30 2 3T-8281 1 SEAL
31 2 7S-8817 1 GASKET
32 2 7S-8815 1 COVER AS
2 2R-3276 2 WASHER
2 6P-8626 2 SCREW-KNURLED
33 2 9W-3429 1 COVER
34 2 8E-8697 1 COVER
35 2 6D-3931 8 SCREW-SOCKET HEAD
36 2 9W-3142 8 MOUNTING
37 2 9W-8027 2 PLATE
38 2 7X-0390 2 BOLT (7/8-9X5IN)
2 7X-0672 2 WASHER-HARD
39 2 4L-8454 4 BOLT (3/8-16X1.0IN)
40 2 3T-4788 1 COVER
12 FRAME AND BODY
1 of 4
SELP4570-01

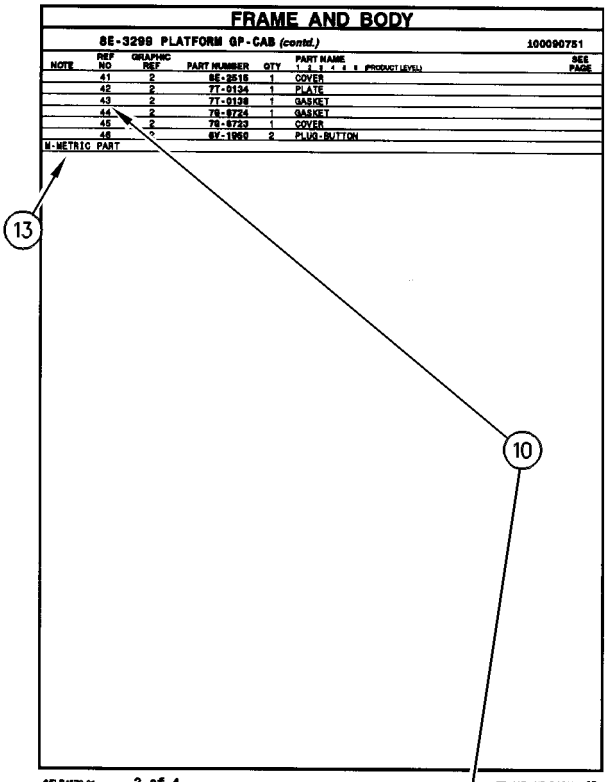
FRAME AND BODY
8E-3299 PLATFORM GP-CAB (contd.)
100090751
NOTE REF NO GRAPHIC REF PART NUMBER QTY PART NAME SEE PAGE
41 2 8E-2516 1 COVER
42 2 7T-0134 1 PLATE
43 2 7T-0138 1 GASKET
44 2 7S-8724 1 GASKET
45 2 7S-8723 1 COVER
46 2 6V-1950 2 PLUG-BUTTON
M-METRIC PART
SELP4570-01
2 of 4
FRAME AND BODY 13

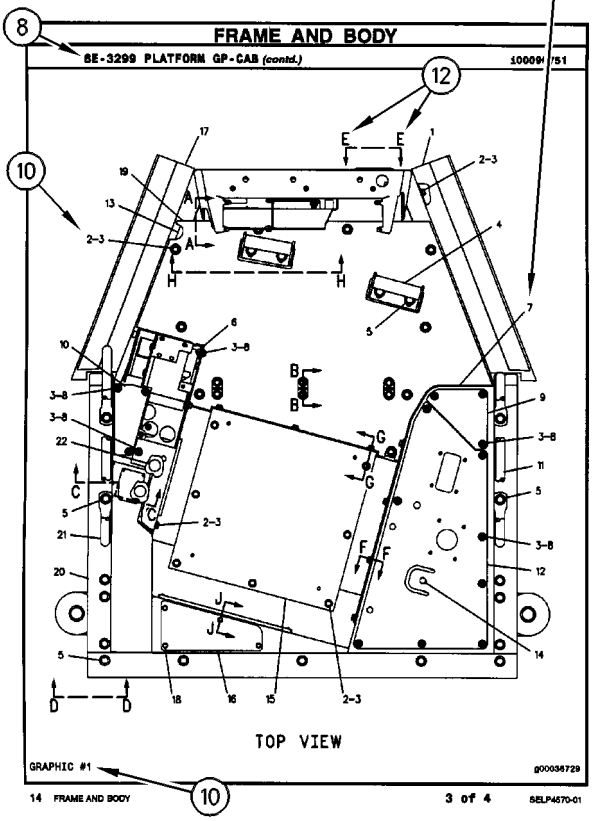
FRAME AND BODY
8E-3299 PLATFORM GP-CAB (contd.)
100090751
TOP VIEW
GRAPHIC #1
g00036729
14 FRAME AND BODY
3 of 4
SELP4570-01

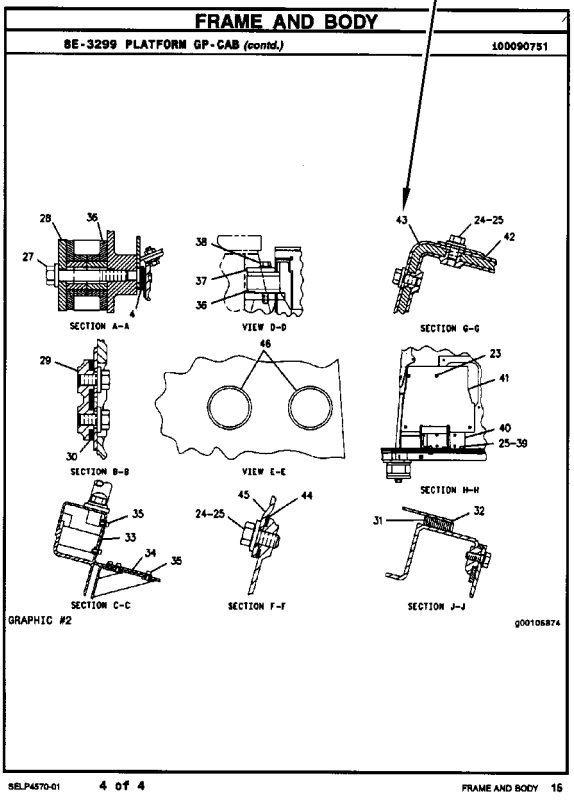
FRAME AND BODY
8E-3299 PLATFORM GP-CAB (contd.)
100090751
SECTION A-A
VIEW D-D
SECTION G-G
SECTION B-B
VIEW E-E
SECTION H-H
SECTION C-C
SECTION F-F
SECTION J-J
GRAPHIC #2
g00105874
SELP4570-01
4 of 4
FRAME AND BODY 15

GÉNÉRALITÉS

1. IDENTIFICATION DE LA MACHINE

Toutes les machines Caterpillar portent un numéro d'identification (PIN). Certains composants des machines peuvent porter des numéros de série (S/N). En général, parmi les composants qui portent des numéros de série il y a les moteurs, les transmissions, les bulldozers et les rippers. En plus, la machine et le moteur peuvent recevoir des numéros de version, et dans certains cas, de modification. Ces numéros figurent sur les plaques de numéro de série et sur la plaque signalétique principale qui se trouve dans le poste de conduite.

Les concessionnaires Caterpillar doivent connaître tous ces numéros pour identifier correctement les pièces.

SIS *Nouvelle Caractéristique*

À partir du premier trimestre 2001, le numéro d'identification produit (PIN) Caterpillar passe de 8 à 17 caractères. Afin de permettre une identification uniforme des matériels, Caterpillar et d'autres constructeurs de machines de travaux publics s'efforcent de se conformer à la norme la plus récente portant sur les numéros d'identification des produits. Les numéros d'identification (PIN) de machines de chantier sont définis par la norme ISO 10261. Le nouveau format du numéro d'identification est valable pour toutes les machines et tous les groupes électrogènes Caterpillar. Le numéro d'identification produit (PIN) figurant sur la plaque et sur le châssis se composera de 17 caractères. Le nouveau format ressemblera à ceci:

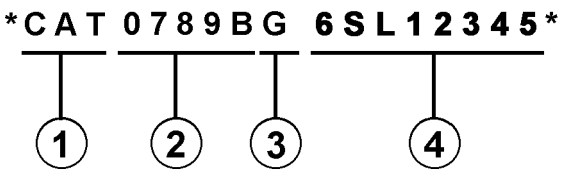

Il se décomposera de la façon suivante:

1. Code international de fabrication de Caterpillar (caractères 1 à 3)

2. Descriptif de la machine (caractères 4 à 8)

3. Contrôle (caractère 9)

4. Indicateur machine (MIS) ou numéro de séquence produit (caractères 10 à 17). Ceux-ci étaient auparavant désignés sous le terme de numéro de série.

Les machines et les groupes électrogènes construits avant le premier trimestre 2001 garderont le format à 8 caractères du numéro d'identification produit (PIN).

Les organes tels que les moteurs, les boîtes de vitesses, les essieux, etc., continueront d'être désignés par un numéro de série (S/N) à 8 caractères.

2. COMMANDE DE PIÈCES

⚠ DANGER

Lorsqu'il faut remplacer des pièces de rechange pour ce produit Caterpillar recommande d'utiliser les pièces de rechange Caterpillar ou les pièces qui ont des spécifications équivalentes dont les dimensions physiques, le type, la force et le matériau. Ces équivalences ne se limitent pas à l'énoncé précédent.

L'inobservation de cette mise en garde peut entraîner des défaillances prématurées, des dommages au produit, des blessures ou même la mort.

Les concessionnaires Caterpillar fournissent dans le monde entier des pièces de rechange de qualité Caterpillar. Leurs stocks de pièces sont constamment réapprovisionnés et comptent toutes les pièces nécessaires pour assurer la bonne marche de vos machines Caterpillar. Certains concessionnaires proposent également des kits de réparation ou des pièces rénovées, ce qui permet de choisir la solution la plus économique dans une situation donnée. Lors des commandes de pièces, mentionner la quantité, le numéro et la désignation des pièces ainsi que le numéro de série ou le numéro d'identification (PIN) de la machine pour laquelle ces pièces sont requises.

3. ORGANISATION DU CATALOGUE DE PIÈCES

Les renseignements sur les produits sont présentés sous forme de "Information element" (élément d'information) représentant tous les composants d'un modèle donné. "Engine Arrangement" (version de moteur) et "Seat Group" (assemblage de siège)" sont des exemples d'éléments d'information. Les éléments d'information sont classés par ordre alphabétique par la désignation standard des pièces et par numéros de pièces dans chaque partie importante du manuel.

4. TABLE DES MATIÈRES

SIS *Nouvelle Caractéristique*

La table des matières se trouve au début du manuel. La table des matières fournit la liste de tous les chapitres du manuel avec une liste complète de tous les éléments d'information classés par ordre d'apparition dans le manuel. Les numéros de page sont fournis afin que l'utilisateur puisse trouver rapidement les illustrations détaillées concernant l'identification des pièces et les listes des pièces d'entretien.

5. INDEX DES PIÈCES D'ENTRETIEN

La rubrique "Index des pièces d'entretien" qui se trouve au début du manuel renvoie aux pièces d'entretien les plus fréquemment utilisées en précisant la désignation, la quantité, là où la pièce est utilisée et le numéro de page. Ces pièces sont classés par ordre alphabétique.

6. INDEX

L'index qui se trouve vers le début du manuel est une liste alphabétique de tous les éléments d'information du manuel. Les numéros de page sont fournis afin que l'utilisateur puisse trouver rapidement les illustrations détaillées concernant l'identification des pièces et les listes des pièces d'entretien.

7. INDEX DES NUMÉROS DE PIÈCES

Une liste numérique de tous les numéros de pièces et des pages correspondantes se trouve à la fin du manuel.

8. LÉGENDES

Les légendes qui se trouvent en haut de chaque page de chaque élément d'information fournissent le numéro de pièce, la désignation ainsi que des renseignements supplémentaires sur les pièces. Les renseignements concernant les numéros de série (S/N) qui se trouvent dans chaque légende doivent être utilisés pour sélectionner les informations correctes pour un moteur donné. Les informations concernant les options de remplacement sur le chantier, l'identification des composants des équipements offerts en option et les lieux d'application sont aussi fournies.

SIS *Nouvelle Caractéristique*

Les lettres de la première ligne d'une légende sont présentées en police plus grande afin d'indiquer le début d'une unité d'information. Les légendes qui pourraient être requises pour des pages supplémentaires afin d'illustrer une unité d'information seront présentées en police standard et comprendront le terme (à suivre).

9. PIÈCES NON FOURNIES

SIS *Nouvelle Caractéristique*

Dans certains cas, il est nécessaire d'indiquer les pièces non fournies qui sont en aval de la liste des pièces d'entretien. Les numéros des pièces non fournies dans la liste des pièces et les légendes seront en italique pour signaler qu'ils ne sont pas disponibles.

10. NUMÉROS DE RÉFÉRENCE DE LA LISTE DES PIÈCES

SIS *Nouvelle Caractéristique*

Les numéros indiqués dans la colonne des numéros de références correspondent aux numéros utilisés dans les illustrations auxquelles ils sont associés. Un suffixe alphabétique peut être ajouté à un numéro de référence pour identifier la liste des articles en aval. Les numéros indiqués dans la colonne de référence de l'illustration renvoient à l'identification du numéro affiché dans le coin inférieur gauche de chaque illustration. Le numéro de référence de l'illustration pourrait être utilisé avec le numéro de référence de l'article pour déterminer le numéro de pièce correct. Il peut y avoir une omission intentionnelle d'un numéro de référence dans une liste de pièces suite à la mise à jour des informations en vue de refléter les numéros de pièces les plus récentes.

11. DÉSIGNATIONS DE PIÈCES EN RETRAIT

Lorsqu'une désignation de pièce est en retrait, cela veut dire que l'article en regard fait partie de l'ensemble sous lequel il figure.

12. LETTRES DE RÉFÉRENCE DES ILLUSTRATIONS

Quand cela est nécessaire, les illustrations comportent des lettres de référence (A, B, C, etc.) pour montrer le trajet des canalisations et faisceaux de câbles d'un point à l'autre. Elles sont utilisées également pour indiquer où relier les illustrations séparées auparavant.

13. ABRÉVIATIONS ET SYMBOLES

O.D. – Diamètre extérieur
I.D. – Diamètre intérieur
A – Ne fait pas partie de ce groupe
B – Utiliser selon besoin
C – Modification
D – Commander par mètre
E – Commander par centimètre
F – Non représenté
G – Commander par pouce
I – Voir "Hydraulic Information System"
M – Pièce métrique
R – Pièce rénovée éventuellement disponible
Y – Illustration séparée
Z – Non fourni séparément

NOTA:

En raison du progrès technique et des améliorations continuelles apportées au matériel, votre machine comporte peut-être des modifications qui n'apparaissent pas dans la présente publication. En cas de doute sur un détail de votre machine Caterpillar ou sur le texte de la présente publication, adressez-vous à votre concessionnaire Caterpillar.

FRAME AND BODY

8E-3299 PLATFORM GP-CAB

PIN 3SK1-09999

SMCS-7253 100090751

NOTE	REF NO	GRAPHIC REF	PART NUMBER	QTY	PART NAME (1 2 3 4 5 PRODUCT LEVEL)	SEE PAGE
	*	1	3T-3863	1	PLATE AS	
	2	1	6E-2062	25	BOLT (3/8-16X.750IN)	
	3	1	6F-1076	41	WASHER-HARD (3MM THK)	
	4	1	9F-1444	2	SUPPORT AS-FOOT	
	5	1	7P-2229	18	BOLT (1/2-13X1IN)	
		1	6F-	18	WASHER-HARD (4MM THK)	
	6	1	6E-6136		COVER AS-LH	
		1	9F-2978	6	NUT-WELD (3/8-16 THD)	
		1	1P-0188	1	CLIP	
	7	1	7S-3411	4	COVER	
	8	1	9J-0488	18	SCREW-HEAD (3/8-16X.875IN)	
	9	1	-4474	1	COVER	
		1	6E-897	1	GASKET	
	10	1	6E-3249	1		
		1	6E-3250	1	GASKET	
	11	1	3T-3638	1	HANDHOLD	
	12	1	6E-8978	1	COVER AS	
		1	9F-2978	6	NUT-WELD (3/8-16 THD)	
		1	6E-8979	1	GASKET	
	13	1	7T-0131	1	FLOORPLATE AS	
		1	1F-0748	4	NUT-WELD (1/2-13 THD)	
	14	1	7V-8067	1	PLUG-BUTTON	
	15	1	7T-0136	1	PLATE AS	
		1	9F-2978	5	NUT-WELD (3/8-16 THD)	
	16	1	7T-8066	1	COVER	
		1	7T-9779	1	GASKET	
	17	1	3T-3861	1	PLATE AS	
	18	1	6T-8364	4	BOLT (1/4-20X.625IN)	
M		1	6T-4205	4	WASHER-HARD (2MM THK)	
	19	1	6L-8494	1	FLOOR MAT	
	20	1	6E-6846	1	MODULE AS-OPERATOR	
	21	1	3T-3834	1	HANDHOLD	
	22	1	9F-8671	2	PLUG	
	23	2	6T-8364	4	BOLT (1/4-20X.625IN)	
M		2	6T-4205	4	WASHER-HARD (2MM THK)	
	24	2	6E-3062	17	BOLT (3/8-16X.750IN)	
	26	2	6F-1076	21	WASHER-HARD (3MM THK)	
	26	2	7T-0135	1	SEAL	
	27	2	7X-0075	2	BOLT (3/4-10X5IN)	
		2	7X-0682	2	WASHER-HARD (6MM THK)	
	28	2	3T-3462	2	PLATE	
	29	2	3T-3290	1	PLATE AS	
		2	7S-6828	8	SPACER	
	30	2	3T-8281	1	SEAL	
	31	2	7S-8817	1	GASKET	
	32	2	7S-8816	1	COVER AS	
		2	2R-3276	2	WASHER	
		2	6F-8626	2	SCREW-KNURLED	
	33	2	9W-3429	1	COVER	
	34	2	6E-8697	1	COVER	
	35	2	6D-3931	8	SCREW-SOCKET HEAD	
	36	2	9W-3142	8	MOUNTING	
	37	2	9W-8027	2	PLATE	
	38	2	7X-0090	2	BOLT (7/8-9X5IN)	
		2	7X-0672	2	WASHER-HARD	
	39	2	4L-6454	4	BOLT (3/8-16X1.0IN)	
	40	2	3T-4788	1	COVER	

12 FRAME AND BODY 1 of 4 SELP4570-01

FRAME AND BODY

8E-3299 PLATFORM GP-CAB (contd.)

100090751

NOTE	REF NO	GRAPHIC REF	PART NUMBER	QTY	PART NAME (1 2 3 4 5 PRODUCT LEVEL)	SEE PAGE
	41	2	6E-2616	1	COVER	
	42	2	7T-0134	1	PLATE	
	43	2	7T-0138	1	GASKET	
	44	2	7S-8724	1	GASKET	
	45	2	7S-8723	1	COVER	
	46	2	6V-1950	2	PLUG-BUTTON	

M-METRIC PART

SELP4570-01 2 of 4 FRAME AND BODY 13

FRAME AND BODY

8E-3299 PLATFORM GP-CAB (contd.)

100090751

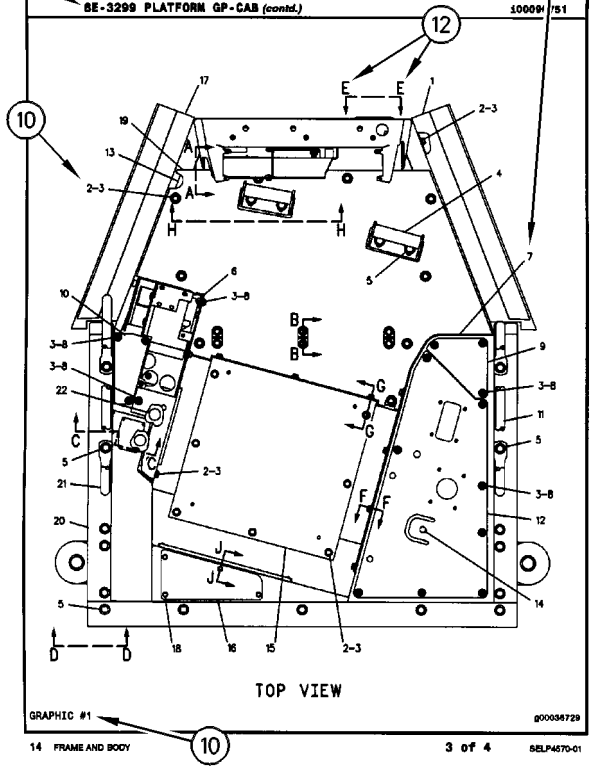

14 FRAME AND BODY 3 of 4 SELP4570-01

FRAME AND BODY

8E-3299 PLATFORM GP-CAB (contd.)

100090751

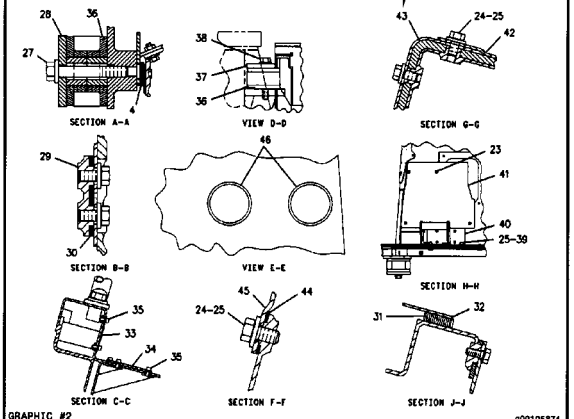

SELP4570-01 4 of 4 FRAME AND BODY 15

INFORMACIÓN GENERAL

1. MÁQUINAS

Las máquinas Caterpillar se identifican con Números de Identificación del Producto (PIN). Algunos componentes incluídos en la máquina pueden estar identificados con Números de Serie (N/S). Los componentes que tienen típicamente esta identificación incluyen motores, transmisiones, hojas topadoras y desgarradores. La máquina y el motor se identifican además con Números de Configuración y en algunos casos, Números de Modificación. Estos números están en las placas de identificación del producto o en la placa principal en la cabina del operador.

Los distribuidores Caterpillar necesitan estos números para identificar con exactitud los números de piezas de repuesto.

SIS *Nueva Característica*

A partir del primer trimestre del 2001, el Número de Identificación de Producto (PIN) de Caterpillar cambió de 8 a 17 caracteres. Para hacer más uniforme el método de identificación de equipos, Caterpillar y otros fabricantes de equipo de construcción han tomado medidas para cumplir con la versión más reciente de la norma de numeración de identificación de productos. Los Números de Identificación de Producto para máquinas que no se operan en carreteras son definidos por la norma ISO 10261. El nuevo formato PIN corresponderá a todas las máquinas y grupos electrógenos Caterpillar. Las placas y los caracteres PIN estampados en el bastidor mostrarán el PIN de 17 caracteres. El nuevo formato tendrá la apariencia siguiente:

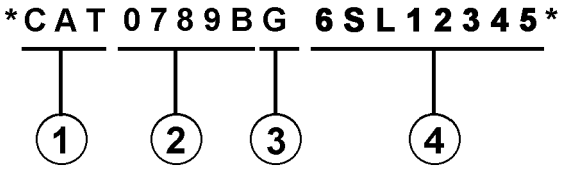

Significado de los caracteres:

1. Código de Fabricación Mundial de Caterpillar (caracteres 1-3)

2. Sección Descriptor de la Máquina (caracteres 4-8)

3. Carácter de Verificación (carácter 9)

4. Sección Indicador de la Máquina (MIS) o Número de Secuencia de Producto (caracteres 10-17). Anteriormente, estos caracteres constituían el Número de Serie.

Las máquinas y grupos electrógenos producidos antes del primer semestre del 2001 mantendrán su formato PIN de 8 caracteres.

Los componentes como motores, transmisiones, ejes, herramientas de trabajo, etc., continuarán usando un Número de Serie (S/N) de 8 caracteres.

2. COMO PEDIR REPUESTOS

⚠ ADVERTENCIA

Cuando se necesiten piezas de repuesto para este producto, Caterpillar recomienda usar piezas de repuesto Caterpillar o piezas que tengan especificaciones equivalentes incluyendo, pero sin estar limitadas a, dimensiones físicas, tipo, fortaleza y material.

El no hacer caso de esta advertencia puede llevar a fallas prematuras, daños al producto y lesiones graves o mortales.

Las piezas de repuesto Caterpillar de calidad están a la disposición de los distribuidores Caterpillar en todo el mundo. Sus existencias actualizadas incluyen todas las piezas normalmente requeridas para proteger su inversión en máquinas Caterpillar. Los distribuidores pueden tener juegos de reparación o piezas remanufacturadas para permitir la selección de la mejor alternativa de reparación en un caso en particular. Al pedir piezas de repuesto, especifique en su pedido la cantidad, el número de pieza, el nombre de la pieza y el número de serie/número de identificación del producto, de la máquina para la cual se necesitan estas piezas.

3. ORGANIZACION DEL MANUAL DE PIEZAS

La información sobre el producto, se presenta en este manual, como "elementos de información" que representan todos los componentes de un modelo específico. Las configuraciones de motores y los grupos de asientos son ejemplos de elementos de información. Los elementos de información están organizados primeramente por nombres de piezas en orden alfabético y en segundo lugar, por el número de pieza dentro de cada sección principal del manual.

4. CONTENIDO

La página de Contenido se encuentra al principio del manual. El Contenido indica cada sección del manual con una lista completa de todos los elementos de información organizados en el orden que aparecen en el manual. Los números de página proporcionan una referencia rápida a las ilustraciones detalladas de identificación de piezas y a las listas de componentes de repuesto de dichas piezas.

5. ÍNDICE DE PIEZAS DE MANTENIMIENTO

Al principio de este catálogo se encuentra un índice de los números de piezas utilizadas más frecuentemente para el mantenimiento, que incluye descripción, cantidad necesaria, lugar de utilización y número de página. Esta información está organizada alfabéticamente, por descripción de la pieza.

6. ÍNDICE

El Índice, ubicado cerca del principio del manual, es una lista en orden alfabético de todos los elementos de información incluídos en el manual. Los números de página proporcionan una referencia rápida a las ilustraciones detalladas de identificación de piezas y a las listas de componentes de repuesto de dichas piezas.

7. INDICE NUMÉRICO DE PIEZAS

Un índice numérico de piezas con el correspondiente número de página aparece al final de este catálogo.

8. TÍTULOS

Los títulos ubicados al principio de cada elemento de información identifican el número y el nombre de la pieza junto con información descriptiva. Se debe usar información sobre los Números de Identificación de Pieza (PIN) y los números de serie (S/N) para seleccionar la información que corresponda a una máquina en particular. También se suministra información sobre las opciones de reparación en el campo, la identificación de componentes de accesorios optativos y el lugar de ubicación de la pieza ("es parte de").

La primera línea del título se muestra con un tipo de letra más grande para indicar el comienzo de un elemento de información. Si se requieren páginas adicionales para ilustrar un elemento de información, los títulos se muestran con un tipo de letra normal y la continuación se indica entre paréntesis.

9. PIEZAS QUE NO SE SUMINISTRAN COMO REPUESTO

En algunos casos es necesario indicar piezas que no se suministran como repuesto pero que pueden estar conectadas a listas de componentes de otras piezas de repuesto. En tal caso, dichas piezas se muestran en cursiva para indicar que no son piezas disponibles.

10. NÚMEROS DE REFERENCIA

Los números en la columna de No. de Referencia corresponden a los números indicados en la ilustración que pertenece a ese número de pieza. Los números que tienen un sufijo alfabético identifican artículos de las listas de componentes de piezas. Los números en la columna de Referencia de la ilustración se identifican en la esquina inferior izquierda de cada ilustración. Para determinar el número de pieza correcto se puede utilizar tanto el No. de Referencia de la ilustración como el No. de Referencia del artículo. A medida que se actualiza la información para indicar los más recientes números de piezas de repuesto, puede omitirse intencionalmente un No. de Referencia en una lista de componentes de piezas.

11. NOMBRES DE PIEZA SANGRADOS

Cuando el nombre de una pieza está sangrado en una lista, significa que esta pieza forma parte del grupo o conjunto del renglón inmediatamente superior.

12. LETRAS DE REFERENCIA DE ILUSTRACIONES

Las ilustraciones contienen algunas veces letras de referencia (A, B, C etc.) cuyo propósito es seguir el trayecto de líneas y mazos de cables de un punto a otro. También se utilizan para mostrar dónde volver a unir ilustraciones que se habían separado.

13. ABREVIATURAS Y SIMBOLOS

O.D. – Diámetro exterior
I.D. – Diámetro interior
A – No es pieza de este grupo
B – Utilizado según la demanda
C – Indica cambio
D – Se pide por metro
E – Se pide por centímetro
F – No se muestra
G – Se pide por pulgada
I – Consulte el sistema de información hidráulica
M – Pieza métrica
R – Puede estar disponible como pieza remanufacturada
Y – Ilustración separada
Z – No se suministra por separado

SIS *Nueva Característica*

14. DESCRIPCIÓN DE LOS CAMBIOS DE TIPO

Tipo – Un tipo se define como cualquier cambio de configuración que requiere un Elemento de información adicional de una Configuración, Grupo o Conjunto. Si el número de serie se clasifica por tipos que no están disponibles, se mostrará un número de tipo (Tipo 1,Tipo 2,etc.) en el comentario de la fotografía. Estos cambios de "tipo" se identifican con una nota "C" (cambio con respecto al tipo anterior) en la Lista de Piezas. Se incluirían sólo los "tipos" que aplican a este Manual de Piezas. Es posible que haya tipos adicionales que causen la aparición de notas "C" en el Elemento de Información cuando no se muestran otros tipos."

15.<END>

Este símbolo indica el final de un elemento de información.

NOTA:

Las contínuas mejoras y adelantos en diseño podrían originar cambios a su máquina que no se incluyen en esta publicación. Cuando tenga alguna pregunta acerca de su producto Caterpillar o de esta publicación, consulte al distribuidor Caterpillar para obtener la información más reciente.

INFORMACIÓN GENERAL

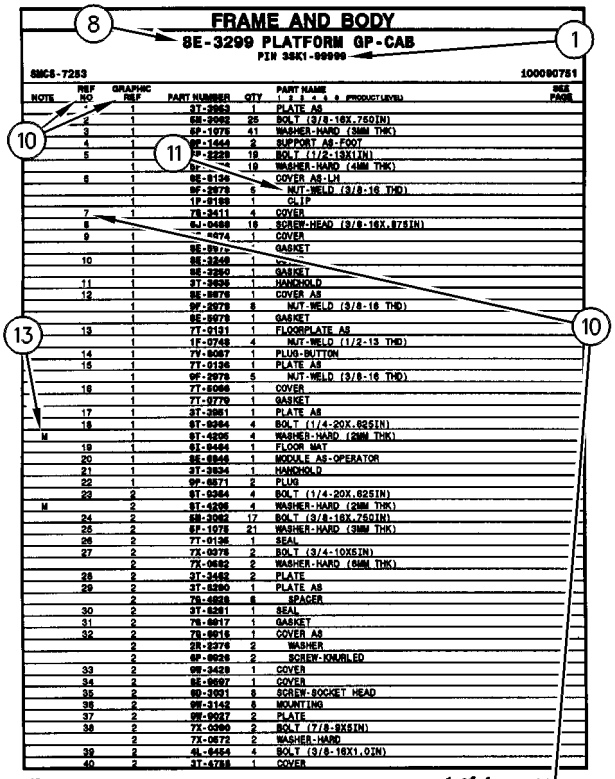

FRAME AND BODY

8E-3299 PLATFORM GP-CAB

PIN 3SK1-09999

SMCS-7253 100090751

NOTE	REF NO	GRAPHIC REF	PART NUMBER	QTY	PART NAME (1 2 3 4 5 6 PRODUCT LEVEL)	SEE PAGE
		1	3T-3953	1	PLATE AS	
	2	1	6E-2062	25	BOLT (3/8-16X.750IN)	
	3	1	6F-1076	41	WASHER-HARD (38MM THK)	
	4	1	9F-1444	2	SUPPORT AS-FOOT	
	5	1	7P-2229	18	BOLT (1/2-13X1IN)	
		1	6F-	18	WASHER-HARD (41MM THK)	
	6	1	6E-6136		COVER AS-LH	
		1	9F-2978	6	NUT-WELD (3/8-16 THD)	
		1	1P-0188	1	CLIP	
	7	1	7S-3411	4	COVER	
	8		9J-0488	18	SCREW-HEAD (3/8-16X.875IN)	
	9	1	-4474	1	COVER	
		1	6E-897		GASKET	
	10	1	6E-3249	1		
		1	6E-3250	1	GASKET	
	11	1	3T-3638	1	HANDHOLD	
	12	1	6E-9979	1	COVER AS	
		1	9F-2978	8	NUT-WELD (3/8-16 THD)	
		1	6E-9978	1	GASKET	
	13	1	7T-0131	1	FLOORPLATE AS	
		1	1F-0748	4	NUT-WELD (1/2-13 THD)	
	14	1	7V-8067	1	PLUG-BUTTON	
	15	1	7T-0136	1	PLATE AS	
		1	9F-2978	5	NUT-WELD (3/8-16 THD)	
	16	1	7T-8066	1	COVER	
		1	7T-9779	1	GASKET	
	17	1	3T-3951	1	PLATE AS	
	18	1	6T-8364	4	BOLT (1/4-20X.625IN)	
M		1	9T-4205	4	WASHER-HARD (20MM THK)	
	19	1	6L-8494	1	FLOOR MAT	
	20	1	8E-8846	1	MODULE AS-OPERATOR	
	21	1	3T-3834	1	HANDHOLD	
	22	1	9F-8671	2	PLUG	
	23	2	6T-8364	4	BOLT (1/4-20X.625IN)	
M		2	9T-4205	4	WASHER-HARD (20MM THK)	
	24	2	6E-3062	17	BOLT (3/8-16X.750IN)	
	26	2	6F-1076	21	WASHER-HARD (38MM THK)	
	26	2	7T-0135	1	SEAL	
	27	2	7X-0075	2	BOLT (3/4-10X5IN)	
		2	7X-0682	2	WASHER-HARD (64MM THK)	
	28	2	3T-3452	2	PLATE	
	29	2	3T-3290	1	PLATE AS	
		2	7S-4828	8	SPACER	
	30	2	3T-8281	1	SEAL	
	31	2	7S-8817	1	GASKET	
	32	2	7S-9615	1	COVER AS	
		2	2R-3276	2	WASHER	
		2	6F-9926	2	SCREW-KNURLED	
	33	2	9W-3429	1	COVER	
	34	2	8E-9697	1	COVER	
	35	2	6D-3931	8	SCREW-SOCKET HEAD	
	36	2	9W-3142	8	MOUNTING	
	37	2	9W-9027	2	PLATE	
	38	2	7X-0990	2	BOLT (7/8-9X5IN)	
		2	7X-0672	2	WASHER-HARD	
	39	2	4L-8454	4	BOLT (3/8-16X1.0IN)	
	40	2	3T-4788	1	COVER	

12 FRAME AND BODY 1 of 4 SELP4570-01

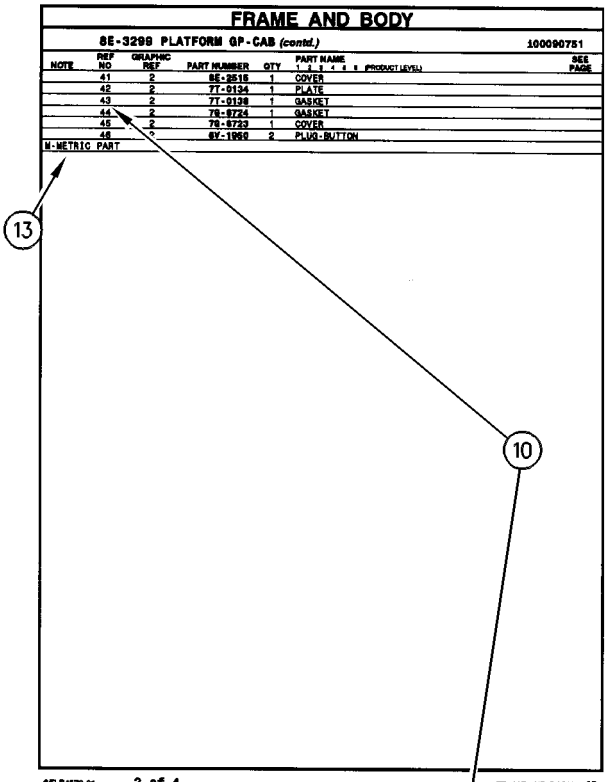

FRAME AND BODY

8E-3299 PLATFORM GP-CAB (contd.) 100090751

NOTE	REF NO	GRAPHIC REF	PART NUMBER	QTY	PART NAME (1 2 3 4 5 6 PRODUCT LEVEL)	SEE PAGE
	41	2	6E-2516	1	COVER	
	42	2	7T-0134	1	PLATE	
	43	2	7T-0138	1	GASKET	
	44	2	7S-9724	1	GASKET	
	45	2	7S-8723	1	COVER	
	46	2	6V-1950	2	PLUG-BUTTON	

M-METRIC PART

SELP4570-01 2 of 4 FRAME AND BODY 13

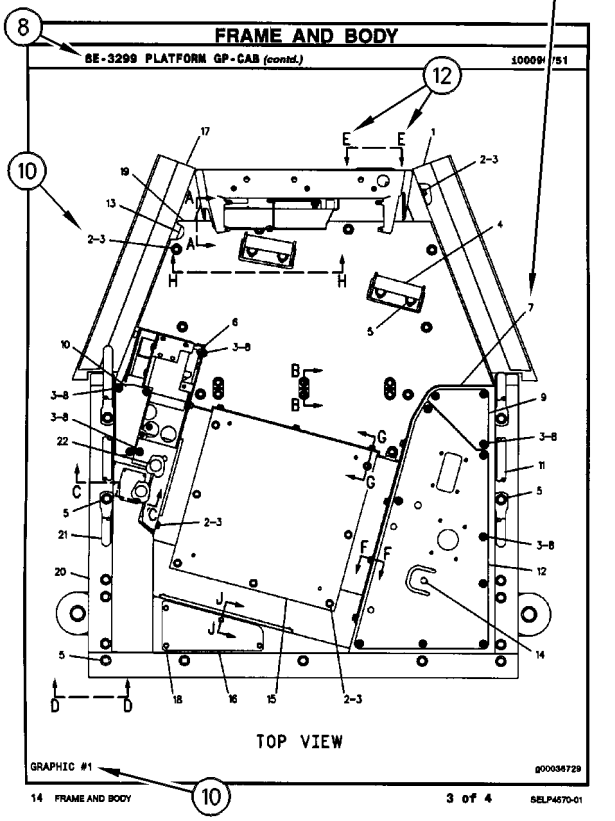

FRAME AND BODY

8E-3299 PLATFORM GP-CAB (contd.) 100090751

TOP VIEW

GRAPHIC #1 g00036729

14 FRAME AND BODY 3 of 4 SELP4570-01

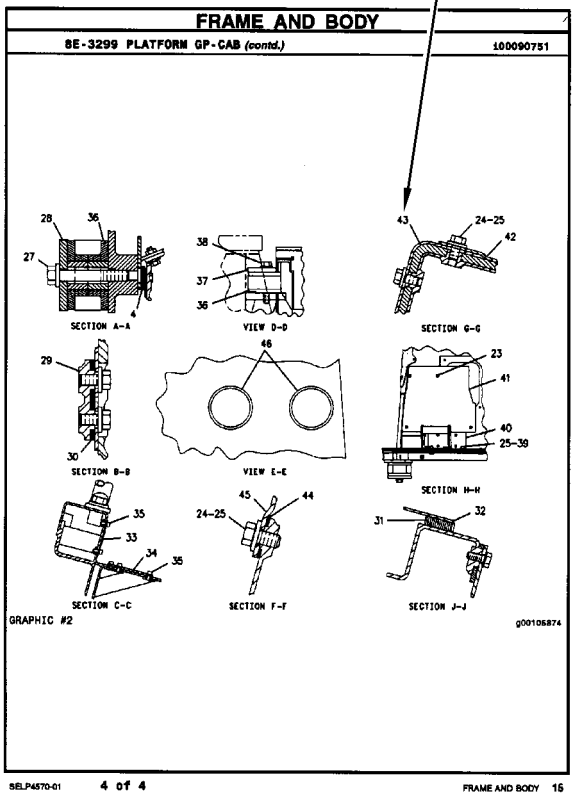

FRAME AND BODY

8E-3299 PLATFORM GP-CAB (contd.) 100090751

SECTION A-A

VIEW D-D

SECTION G-G

SECTION B-B

VIEW E-E

SECTION H-H

SECTION C-C

SECTION F-F

SECTION J-J

GRAPHIC #2 g00105874

SELP4570-01 4 of 4 FRAME AND BODY 16

INFORMAÇÃO GERAL

1. IDENTIFICAÇÃO DA MÁQUINA

As máquinas Caterpillar são identificadas pelos Números de Informação do Produto (PIN). Alguns componentes incluídos numa máquina podem ser identificados por Números de Série (S/N). Componentes típicos que serão enumerados com números de série incluem motores, transmissões, lâminas e ríperes. Além do número de série, a máquina e o motor são ainda identificados por números de arranjo e, em alguns casos, números de modificações. Tais números encontram-se na(s) placa(s) de identificação do produto e na placa mestre no compartimento do operador.

SIS *Novidades*

A partir do primeiro trimestre de 2001 o Número de Identificação de Produto da Caterpillar (PIN) precisa ser mudado de 8 para 17 caracteres. Esforçando-se para fornecer uma identificação uniforme de equipamentos, a Caterpillar e outros fabricantes de equipamento de construção estão mudando para atender a versão mais atualizada do padrão de identificação de produtos. Os números de PIN para produtos de aplicações não rodoviárias são definidos pela ISO 10261. O novo formato de número PIN será adotado em todas as máquinas e grupos geradores Caterpillar. As placas e as marcações do chassi mostrarão os 17 dígitos de PIN. O novo formato terá a seguinte disposição:

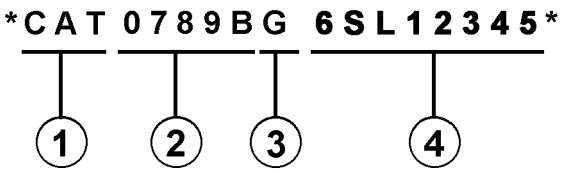

Onde:

1. Código de Fabricação Mundial da Caterpillar (dígitos 1-3)

2. Descrição da Máquina (dígitos 4-8)

3. Dígito de Verificação (dígito 9)

4. Seção de Indicador da Máquina (MIS) ou Número de Seqüência de Produto (dígitos 10-17). Estes eram anteriormente chamados de Número de Série.

Máquinas e grupos geradores produzidos antes do primeiro trimestre de 2001 manterão o formato de 8 caracteres de PIN.

Componentes como motores, transmissões, eixos, ferramentas de trabalho, etc. continuarão a usar Número de Série (S/N) com oito caracteres.

2. COMO OBTER PEÇAS

⚠ CUIDADO

Quando peças de substituição são exigidas para este produto, a Caterpillar recomenda a utilização de peças de substituição Caterpillar ou peças com as especificações equivalentes incluindo, mas não limitadas, à dimensões físicas, tipos, resistência e materiais.

A inobservância desta advertência poderá resultar em falhas prematuras, danos ao produto, ferimentos ou morte.

As Peças de Reposição de Qualidade Caterpillar encontram-se disponíveis nos revendedores Caterpillar no mundo inteiro. Seus estoques de peças são atualizados e incluem todas as peças normalmente necessárias para proteger seu investimento em máquinas Caterpillar. Alguns revendedores podem oferecer jogos de reparo ou peças de troca/remanufaturadas disponíveis como uma opção da alternativa de reparo mais eficaz para uma situação específica. Ao encomendar peças, seu pedido deve especificar a quantidade, o número e o nome da peça e o número de série/número de identificação do produto referentes à máquina para a qual as peças se destinam.

3. ORGANIZAÇÃO DO MANUAL DE PEÇAS

A informação do produto neste manual é apresentada em forma de "elementos de informação" que representam todos os componentes para o modelo específico. Arranjo de Motor e Grupo de Assento são exemplos de elementos de informação. Os elementos de informação são organizados em ordem alfabética por nome de peça ou secundariamente, por número de peça incluído em cada seção principal do manual.

4. LISTA DE CONTEÚDOS

A Lista de Conteúdos (TOC) se encontra no princípio do manual. A Lista de Conteúdos (TOC) relaciona em cada seção do manual uma lista completa com todos os elementos de informação organizados conforme aparecem no manual. Números de página são fornecidos para que se tenha referência rápida de ilustrações de peças detalhadas e listas de conteúdos que podem receber serviço de manutenção.

5. ÍNDICE DE PEÇAS DE MANUTENÇÃO

O Índice de Peças de Manutenção, localizado perto do princípio do manual, faz referência aos números de peça de manutenção usados com maior frequência, fornecendo uma descrição, a quantidade, o uso e o número de página. Esta informação é organizada com a descrição da peça em ordem alfabética.

6. ÍNDICE

O Índice localizado perto do princípio do manual, consiste de uma lista em ordem alfabética de todos os elementos de informação incluídos no manual. Números de página são fornecidos para que se tenha referência rápida de ilustrações de peças detalhadas e listas de conteúdos que podem receber serviço de manutenção.

7. ÍNDICE DE NÚMERO DE PEÇA

Um índice numérico relacionando todos os números de peça e a(s) página(s) correspondentes, aparece no final do manual.

8. LEGENDAS

As legendas localizadas no início de cada elemento de informação identificam o número e o nome de peça, juntamente com informação descritiva adicional. Informações sobre o Número de Informação do Produto (PIN) e o Número de Série (S/N) encontradas em cada legenda devem ser usadas para selecionar a informação correta sobre uma máquina específica. Opções de substituição no campo, identificação de componentes de acessórios opcionais e informações sobre onde são utilizados ("parte de") são também fornecidas.

A primeira linha de uma legenda é indicada em tipo maior para indicar o princípio de um elemento de informação. Legendas para páginas adicionais que podem ser necessárias para ilustrar um elemento de informação serão apresentadas em tipo padrão e incluirão o termo *(continua)* .

9. NÃO DISPONÍVEL SEPARADAMENTE

Em alguns casos, é necessário mostrar peças não disponíveis separadamente que têm uma ligação com listas de conteúdos de nível inferior que podem receber serviço de manutenção. Os números de peça destes componentes não disponíveis aparecerão em *itálico* , a fim de indicar que não estão disponíveis.

10. NÙMEROS DE REFERÊNCIA À LISTA DE PEÇAS

Os números indicados na coluna Ref No (No. de Referência) correspondem-se aos números usados no(s) gráfico(s) correspondente(s). Um sufixo com letras pode ser acrescentado a um número de referência para identificar itens de conteúdo de nível inferior. Os números indicados na coluna Graphic Ref (Referência de Gráfico) referem-se ao identificador de número de gráfico presente no canto esquerdo inferior de cada ilustração. O número de Referência de Gráfico pode ser usado em combinação com o item Ref No para determinar-se o número de peça correto. Poderá haver omissão intencional de um número de referência (Ref No) de uma lista de conteúdos uma vez que as informações são atualizadas para refletir os números de peça mais recentes que podem receber serviço de manutenção.

11. NOMES DE PEÇAS DESALINHADOS

Quando um nome de peça encontra-se desalinhado numa lista de peças, significa que tal item faz parte do (está incluído no) grupo ou conjunto sob o qual está relacionado.

12. LETRAS DE REFERÊNCIA NAS ILUSTRAÇÕES

Quando necessário, as ilustrações contêm letras de referência (A, B, C, etc.) que são utilizadas para seguir tubulações e cabos elétricos de um ponto a outro. Também foram utilizadas para indicar onde se pode reconectar as ilustrações que foram separadas.

13. ABREVIAÇÕES E SÍMBOLOS

O.D. – "Outside Diameter" (Diâmetro Externo)
I.D. – "Inside Diameter" (Diâmetro Interno)
A – Não faz parte deste grupo
B – Use conforme necessário
C – Indica modificação
D – Vendido por metro
E – Vendido por centímetro
F – Não ilustrado
G – Vendido por polegada
I – Consultar o Sistema de Informações Hidráulicas
M – Peça métrica
R – Peça remanufaturada pode estar disponível; consulte o seu revendedor Cat
Y – Ilustração separada
Z – Não disponível separadamente

SIS *Novidades*

14. <END>

Este símbolo indica o final de um elemento de informação.

INFORMAÇÃO GERAL

NOTA:

Os contínuos aperfeiçoamentos e avanços no projeto do produto podem ocasionar modificações em sua máquina que talvez ainda não estejam incluídas nesta publicação. Sempre que surgirem dúvidas quanto a um produto Caterpillar ou quanto à presente publicação, consulte o seu revendedor Caterpillar para obter as informações mais recentes disponíveis.

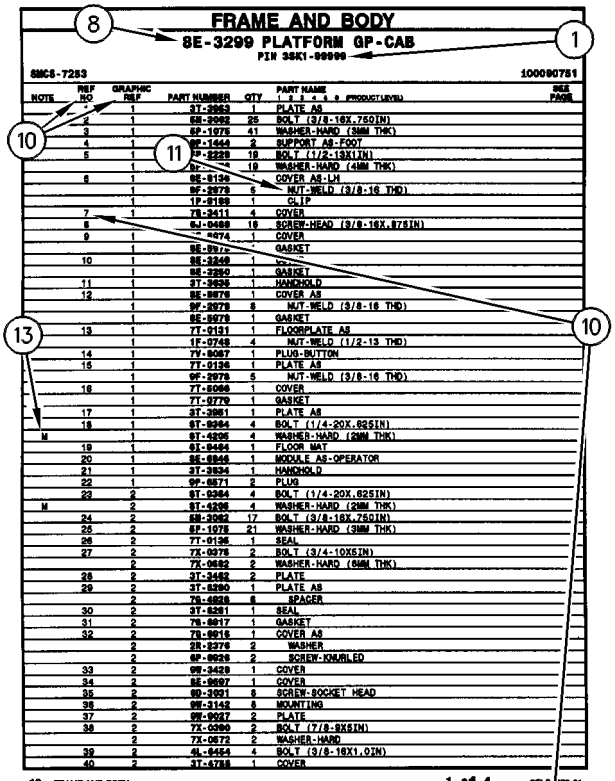

FRAME AND BODY

8E-3299 PLATFORM GP-CAB

PIN 3SK1-99999

SMCS-7253 100090751

NOTE	REF NO	GRAPHIC REF	PART NUMBER	QTY	PART NAME (1 2 3 4 5 6 PRODUCT LEVEL)	SEE PAGE
	*	1	3T-3863	1	PLATE AS	
	2	1	6E-2062	25	BOLT (3/8-16X.750IN)	
	3	1	6P-1076	41	WASHER-HARD (38MM THK)	
	4	1	9P-1644	2	SUPPORT AS-FOOT	
	5	1	7P-2229	18	BOLT (1/2-13X1IN)	
		1	6P-	18	WASHER-HARD (44MM THK)	
	6	1	6E-6136		COVER AS-LH	
		1	9F-2978	6	NUT-WELD (3/8-16 THD)	
		1	1P-0188	1	CLIP	
	7	1	7S-3411	4	COVER	
	8	1	9J-0488	18	SCREW-HEAD (3/8-16X.875IN)	
	9	1	-4474	1	COVER	
		1	6E-897	1	GASKET	
	10	1	6E-3249	1		
		1	6E-3250	1	GASKET	
	11	1	3T-3638	1	HANDHOLD	
	12	1	6E-8978	1	COVER AS	
		1	9F-2978	8	NUT-WELD (3/8-16 THD)	
		1	6E-8979	1	GASKET	
	13	1	7T-0131	1	FLOORPLATE AS	
		1	1F-0748	4	NUT-WELD (1/2-13 THD)	
	14	1	7V-8067	1	PLUG-BUTTON	
	15	1	7T-0136	1	PLATE AS	
		1	9F-2978	5	NUT-WELD (3/8-16 THD)	
	16	1	7T-8066	1	COVER	
		1	7T-9779	1	GASKET	
	17	1	3T-3861	1	PLATE AS	
	18	1	6T-8364	4	BOLT (1/4-20X.625IN)	
M		1	9T-4205	4	WASHER-HARD (26MM THK)	
	19	1	6L-8494	1	FLOOR MAT	
	20	1	8E-8846	1	MODULE AS-OPERATOR	
	21	1	3T-3834	1	HANDHOLD	
	22	1	9P-8671	2	PLUG	
	23	2	6T-8364	4	BOLT (1/4-20X.625IN)	
M		2	9T-4205	4	WASHER-HARD (26MM THK)	
	24	2	6E-3062	17	BOLT (3/8-16X.750IN)	
	25	2	6P-1076	21	WASHER-HARD (38MM THK)	
	26	2	7T-0135	1	SEAL	
	27	2	7X-0075	2	BOLT (3/4-10X5IN)	
		2	7X-0682	2	WASHER-HARD (64MM THK)	
	28	2	3T-3462	2	PLATE	
	29	2	3T-8290	1	PLATE AS	
		2	7S-6828	8	SPACER	
	30	2	3T-8281	1	SEAL	
	31	2	7S-8817	1	GASKET	
	32	2	7S-8816	1	COVER AS	
		2	2P-2276	2	WASHER	
		2	6P-8626	2	SCREW-KNURLED	
	33	2	9W-3429	1	COVER	
	34	2	8E-8697	1	COVER	
	35	2	6D-3931	8	SCREW-SOCKET HEAD	
	36	2	9W-3142	8	MOUNTING	
	37	2	9W-8027	2	PLATE	
	38	2	7X-0990	2	BOLT (7/8-9X5IN)	
		2	7X-0672	2	WASHER-HARD	
	39	2	4L-8454	4	BOLT (3/8-16X1.0IN)	
	40	2	3T-4788	1	COVER	

12 FRAME AND BODY 1 of 4 SELP4570-01

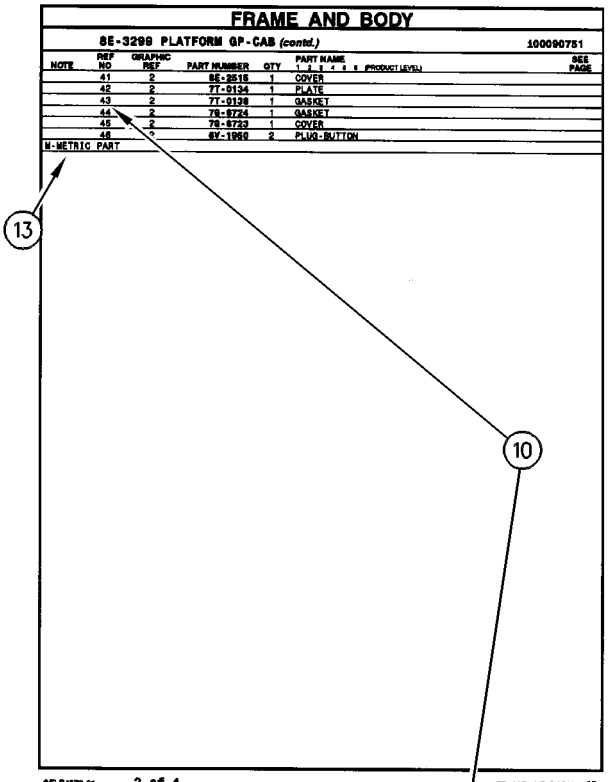

FRAME AND BODY

8E-3299 PLATFORM GP-CAB (contd.) 100090751

NOTE	REF NO	GRAPHIC REF	PART NUMBER	QTY	PART NAME (1 2 3 4 5 6 PRODUCT LEVEL)	SEE PAGE
	41	2	6E-2516	1	COVER	
	42	2	7T-0134	1	PLATE	
	43	2	7T-0138	1	GASKET	
	44	2	7S-8724	1	GASKET	
	45	2	7S-8723	1	COVER	
	46	2	6V-1950	2	PLUG-BUTTON	

M-METRIC PART

SELP4570-01 2 of 4 FRAME AND BODY 13

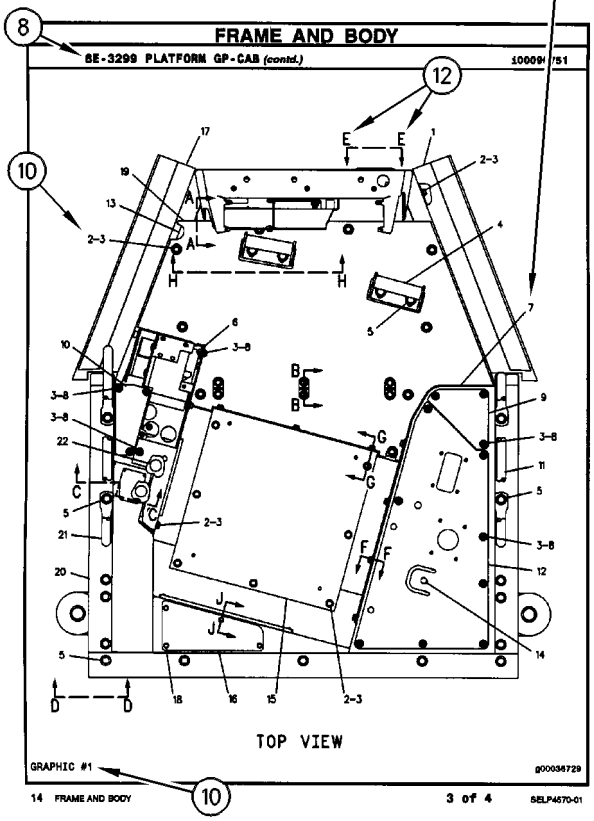

FRAME AND BODY

8E-3299 PLATFORM GP-CAB (contd.) 100090751

14 FRAME AND BODY 3 of 4 SELP4570-01

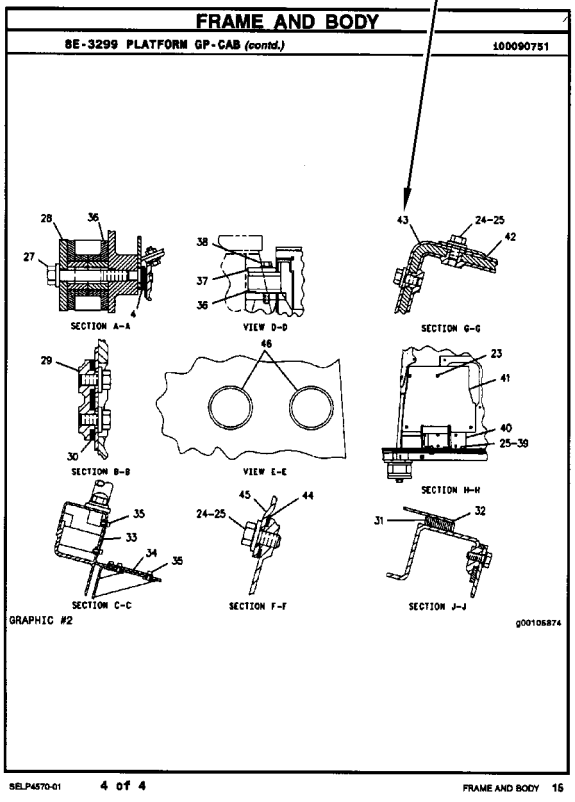

FRAME AND BODY

8E-3299 PLATFORM GP-CAB (contd.) 100090751

SELP4570-01 4 of 4 FRAME AND BODY 16

ALLGEMEINE HINWEISE

1. MASCHINENKENNZEICHNUNG

Caterpillar-Maschinen sind mit PRODUCT IDENTIFICATION NUMBERS (PIN) (Produkt-Identnummern) gekennzeichnet. Einige Baugruppen, z.B. Motoren, Getriebe, Planierschilde und Aufreißer, sind mit SERIAL NUMBERS (S/N) (Seriennummern) gekennzeichnet. An der Maschine und am Motor befinden sich außerdem ARRANGEMENT NUMBERS (Ausrüstungsnummern) sowie in einigen Fällen MODIFICATION NUMBERS (Änderungsnummern). Sie befinden sich auf den PIN-Schildern und auf dem Typenschild im Fahrerhaus.

Bei Ersatzteilbestellungen müssen dem Händler alle diese Nummern zur Verfügung gestellt werden.

SIS *Neu im Parts Manual*

Vom ersten Quartal 2001 ab wurde die Caterpillar Produkt-Identnummer (PIN) von 8 auf 17 Zeichen geändert. Um zur Standardisierung der Produkt-Identnummer beizutragen, sind Caterpillar und andere Baumaschinenhersteller bestrebt, die aktuellste Norm zur Produkt-Identnummerierung einzuführen. Produkt-Identnummern für Baumaschinen sind durch ISO 10261 definiert. Das neue Format der Produkt-Identnummern gilt für alle Caterpillar-Maschinen und -Stromaggregate. Die Produkt-Identschilder und -Identrahmenmarkierung enthalten die aus 17 Zeichen bestehende Identnummer. Das neue Format hat folgende Abschnitte:

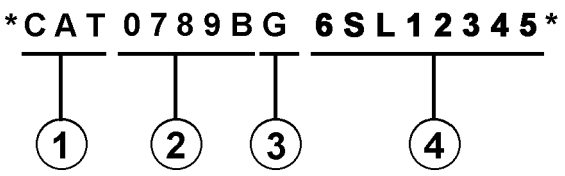

Abschnitte:

1. Caterpillars weltweiter Herstellungscode (Zeichen 1-3)

2. Modell (Zeichen 4-8)

3. Kontrollzeichen (Zeichen 9)

4. Maschinenspezifische Kennung (MIS) oder Produktsequenznummer (Zeichen 10-17). Diese wurde früher als Seriennummer bezeichnet.

Für vor dem ersten Quartal 2001 hergestellte Maschinen und Stromaggregate wird das aus 8 Zeichen bestehende PIN-Format beibehalten.

Bauteile wie z.B. Motoren, Getriebe, Achsen sowie Arbeitsgeräte werden weiterhin eine aus 8 Zeichen bestehende Seriennummer (S/N) aufweisen.

2. BESTELLEN VON ERSATZTEILEN

⚠ WARNUNG

Wenn für diese Maschine Ersatzteile benötigt werden, empfiehlt Caterpillar, ausschließlich Caterpillar-Ersatzteile oder solche zu verwenden, die die gleichen technischen Merkmale hinsichtlich Typ, Festigkeit, Werkzeugeigenschaften und die gleichen Maße aufweisen.

Bei Nichtbeachtung dieser Warnung besteht Verletzungs- oder sogar Lebensgefahr! Ferner kann Nichtbeachtung vorzeitige Ausfälle der Teile und Beschädigung der Maschine zur Folge haben.

Original Caterpillar-Ersatzteile können weltweit bei jedem Caterpillar-Händlern bestellt werden. Die umfangreichen Händlerlager enthalten normalerweise alle Teile, die Sie für Ihre Caterpillar-Maschine benötigen. Einige Händler bieten Reparatursätze, Austausch- oder werküberholte Teile an, so daß Sie eine Auswahl unter verschiedenen Reparaturmöglichkeiten treffen können. Ihre Bestellung muß folgende Angaben enthalten: Anzahl der benötigten Teile, Bestellnummer, Bezeichnung des Teils, Serien-Nr./Produkt-Ident-Nr., Ausrüstungs-Nr. und Änderungs-Nr. der Maschine, für die diese Teile benötigt werden.

3. AUFBAU DES PARTS MANUAL

Die Produktinformationen für alle Komponenten eines bestimmten Modells sind in INFORMATION ELEMENTS (Informationseinheiten) gegliedert. ENGINE ARRANGEMENT (Motorausführung) und SEAT GROUP (Fahrersitz) sind Beispiele für solche Informationseinheiten. Sie sind innerhalb jeder Gruppe alphabetisch, entsprechend der Ersatzteilbezeichnung, und zusätzlich numerisch, entsprechend der Ersatzteilnummer, geordnet.

4. INHALTSVERZEICHNIS

Das Inhaltsverzeichnis befindet sich am Anfang des Buches. Im Inhaltsverzeichnis werden die einzelnen Abschnitte des Buches aufgeführt. Die Abschnitte enthalten eine vollständige Aufstellung aller Informationseinheiten. Diese sind entsprechend ihrem Erscheinen im Buch geordnet. Das Inhaltsverzeichnis enthält Seitenangaben für Schnellverweise auf detaillierte Abbildungen und Teillisten.

ALLGEMEINE HINWEISE

5. INDEX FÜR WARTUNGSTEILE

Der Index für Wartungsteile vorn im Buch enthält die Bestellnummern, Seitenangaben, Mengenangaben und Informationen über den Einsatzbereich für die am häufigsten benötigten Ersatzteile. Die Angaben sind alphabetisch entsprechend der Teilebezeichnung geordnet.

6. INDEX

Der Index vorn im Buch enthält eine alphabetische Liste aller Informationseinheiten. Er enthält Seitenangaben für Schnellverweise auf detaillierte Abbildungen und Teillisten.

7. INDEX FÜR BESTELLNUMMERN

Hinten im Buch befindet sich ein numerischer Index, mit allen Bestellnummern und dem Hinweis auf die Seite, auf der sich die betreffende Abbildung befindet.

8. ÜBERSCHRIFTEN

Die Überschriften, die sich am Anfang jeder der Informationseinheiten befinden, enthalten Bestellnummern, Ersatzteilbezeichnungen und zusätzliche beschreibende Informationen. Produkt-Ident- und Seriennummern in den Überschriften sollten zur Auswahl der richtigen Informationen für die betreffende Maschine verwendet werden. Die Überschriften enthalten außerdem Informationen über möglichen Außendienstersatz, mögliche Baugerätekomponenten und die Baugruppe, zu der das Teil gehört.

Die erste Zeile einer Überschrift erscheint in einer größeren Schriftart, um den Anfang einer Informationseinheit zu kennzeichnen. Überschriften für zusätzliche Seiten, die zur Erläuterung einer Informationseinheit notwendig sind, erscheinen in normaler Schriftart und enthalten den Begriff "(contd.)".

9. NICHT EINZELN LIEFERBARE TEILE

In einigen Fällen ist es notwendig nicht lieferbare Teile, die selbst mit einer eigenen Teilliste im Buch vertreten sind, aufzuführen. Die Bestellnummern dieser nicht einzeln lieferbaren Teile erscheinen kursiv, wodurch angezeigt wird, daß sie nur in Verbindung mit anderen Teilen lieferbar sind.

10. REFERENZNUMMER FÜR ERSATZTEILE

Die Zahlen, die in der Spalte "Ref No" aufgeführt sind, stimmen mit den Zahlen in den beigefügten Abbildungen überein. Ein Buchstaben-Suffix kann zu einer Referenznummer hinzugefügt werden, um zu kennzeichnen, daß das Teil mit einer eigenen Teilliste im Buch aufgeführt ist. Die in der Spalte "Graphic Ref" angeführten Zahlen verweisen auf die Identifikationsnummer der Abbildung, die sich in der linken unteren Ecke der Abbildung befindet. Diese Nummer kann zusammen mit der Referenznummer des Teils angegeben werden, um die richtige Ersatzteilnummer zu ermitteln. Referenznummern können absichtlich weggelassen werden, da die Nummern der lieferbaren Ersatzteile ständig aktualisiert werden.

11. EINGERÜCKTE BEZEICHNUNGEN

Wenn eine Bezeichnung eingerückt ist, wird dadurch angezeigt, daß das Teil zu einer Baugruppe gehört, unter deren Bezeichnung es eingerückt ist.

12. REFERENZBUCHSTABEN

Falls erforderlich sind in den Abbildungen Referenzbuchstaben enthalten (z.B. A, B, C, usw.), die Leitungen und Kabelbäume von einem Punkt zum anderen verfolgen. Außerdem geben sie die Stelle an, an der getrennte Abbildungen fortgesetzt werden.

13. ABKÜRZUNGEN UND SYMBOLE

O.D. – Außendurchmesser
I.D. – Innendurchmesser
A – kein Teil dieser Gruppe
B – nach Bedarf verwenden
C – Hinweis auf eine Änderung
D – in Meter-Länge bestellen
E – in Zentimeter-Länge bestellen
F – nicht gezeigt
G – in Zoll-Länge bestellen
I – siehe Hydraulikinformationssystem
M – metrisches Teil
R – werküberholtes Teil unter Umständen lieferbar
Y – separate Abbildung
Z – nicht einzeln lieferbar

SIS *Neu im Parts Manual*

14. BESCHREIBUNG DER TYPENÄNDERUNGEN

Typ-A bezieht sich auf alle Konfigurationsänderungen, die ein zusätzliches Informationselement für Ausführung, Gruppe oder Einheit benötigen. Wenn kein Seriennummernumbruch für Typen erhältlich ist, wird in der Überschrift eine Typennummer (Typ 1, Typ 2, etc.) angegeben. Diese "Typenänderungen" sind in der Teileliste mit der Anmerkung "C" (Änderung des vorherigen Typs) versehen. Es werden nur die für dieses Ersatzteilhandbuch relevanten "Typen" angegeben. Es können zusätzliche Typen vorhanden sein, was zu "C" Anmerkungen zu einem Informationselement führen kann, wenn keine anderen Typen angegeben werden.

15. <END>

Dieses Symbol zeigt das Ende eines Informationselements an.

ANMERKUNG:

Ständig vorgenommene Verbesserungen und Weiterentwicklungen an Ihrer Maschine können Änderungen verursachen, die in der vorliegenden Ausgabe noch nicht berücksichtigt sind. Fragen zu Ihrer Caterpillar-Maschine oder diesem Ersatzteilbuch beantwortet Ihr Caterpillar-Händler.

ALLGEMEINE HINWEISE

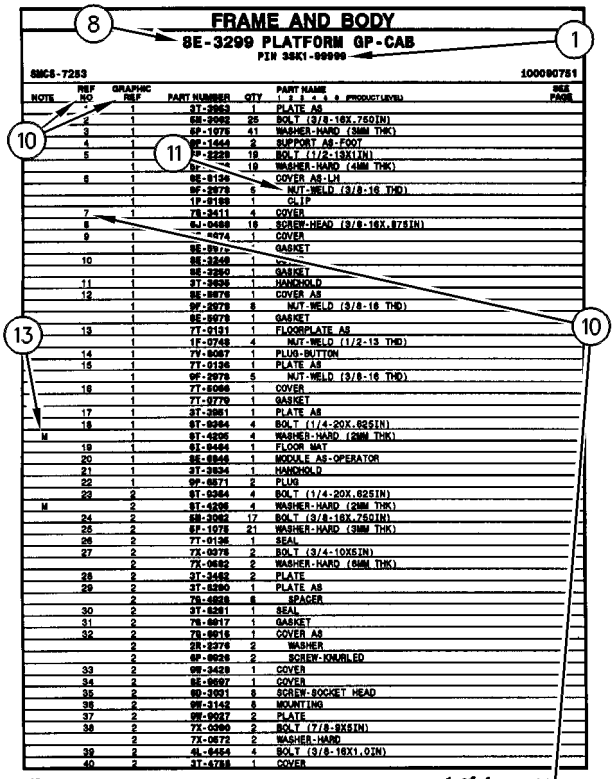

12 FRAME AND BODY 1 of 4 SELP4570-01

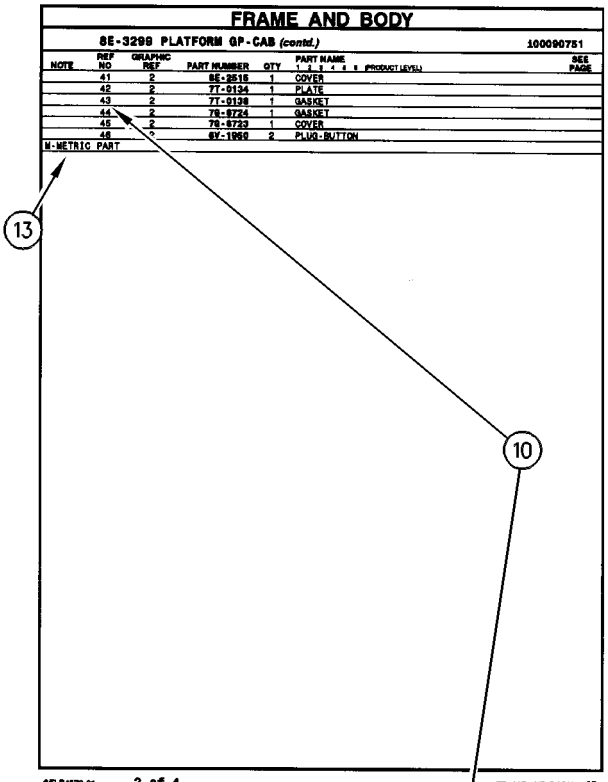

SELP4570-01 2 of 4 FRAME AND BODY 13

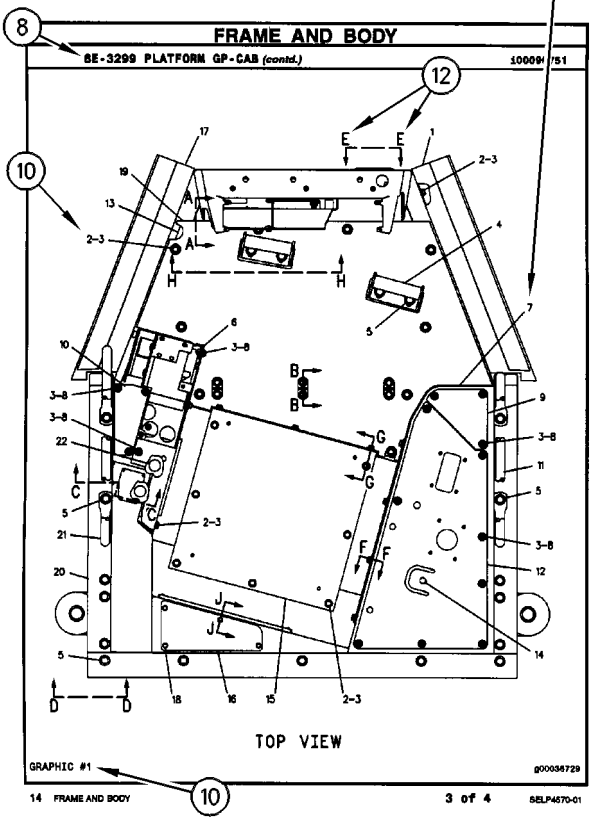

14 FRAME AND BODY 3 of 4 SELP4570-01

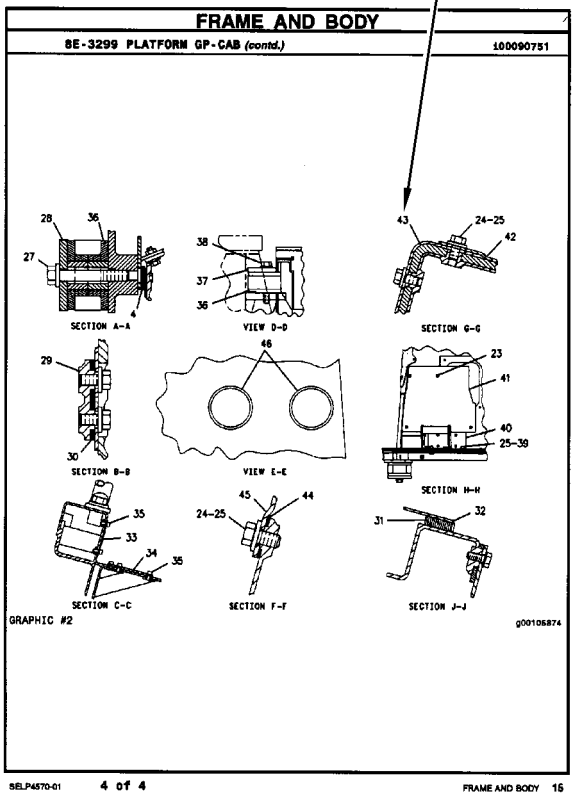

SELP4570-01 4 of 4 FRAME AND BODY 15

REPAIR ALTERNATIVES

REMANUFACTURED COMPONENTS

As an option when making repairs consider Caterpillar Remanufactured Components. Components that are available through the Caterpillar Remanufactured Program are identified three ways in the parts book:

- with the letter R in the note field of the parts list
- with an R* at the beginning of the first line of the caption
- with an *R at the end of the first line of the caption

Typical components included in the Remanufacturing Program include:

ALTERNATORS
CONNECTING RODS
CRANKSHAFTS - UNDERSIZE
CRANKSHAFTS - UPGRADE TO NEW
CYLINDER HEADS
ELECTRONIC CONTROL MODULES (ECM)
ELECTRONIC SENSORS
FUEL INJECTORS
FUEL NOZZLES
FUEL PUMPS
GOVERNORS
OIL PUMPS
PISTONS
SHORT BLOCKS
STARTERS
TURBOCHARGERS - COMPLETE
TURBOCHARGER CARTRIDGES
WATER PUMPS

Caterpillar Remanufactured engines for many engine arrangements are also available.

COMPOSANTS RÉNOVÉS

Comme option de réparation, considérer les composants rénovés Caterpillar. Les composants disponibles dans le cadre du programme Caterpillar de composants rénovés sont identifiés de trois façons dans le catalogue de pièces:

- avec la lettre "R" dans l'espace note de la liste des pièces
- avec R* au début de la première ligne des légendes
- avec *R à la fin de la première ligne des légendes

Les composants suivants figurent parmi les composants typiques du programme de rénovation:

ALTERNATEURS
BIELLES
VILEBREQUINS - SOUS-DIMENSIONNÉS
VILEBREQUINS - REMIS À NEUF
CULASSES
MODULES DE COMMANDE ÉLECTRONIQUE (ECM)
CAPTEURS ÉLECTRONIQUES
INJECTEURS
TÊTES D'INJECTEURS
POMPES À CARBURANT
RÉGULATEURS
POMPES À HUILE
PISTONS
BLOCS EMBIELLÉS
DÉMARREURS
TURBOCOMPRESSEURS - COMPLETS
CARTOUCHES DE TURBOCOMPRESSEUR
POMPES À EAU

Des moteurs rénovés sont aussi disponibles pour plusieurs versions de moteur.

ALTERNATIVAS DE REPARACIÓN

COMPONENTES REMANUFACTURADOS

Al hacer reparaciones, tenga en cuenta la opción de Componentes Remanufacturados Caterpillar. Los componentes que están disponibles por medio del programa de Productos Remanufacturados Caterpillar se identifican de tres maneras en el manual de piezas:

- con la letra R en el espacio de Nota de la lista de piezas
- con una R* al comienzo de la primera línea de la leyenda
- con una *R al final de la primera línea de la leyenda

Los componentes que se incluyen típicamente en el Programa de Productos Remanufacturados son:

ALTERNADORES
BIELAS
CIGÜEÑALES - BAJOMEDIDA
CIGÜEÑALES - REMANUFACTURADOS A NUEVO
CULATAS
MÓDULOS DE CONTROL ELECTRÓNICO (ECM)
SENSORES ELECTRONICOS
INYECTORES
BOQUILLAS
BOMBAS DE COMBUSTIBLE
REGULADORES
BOMBAS DE ACEITE
PISTONES
MONOBLOQUES
MOTORES DE ARRANQUE
TURBOCOMPRESORES - COMPLETOS
NÚCLEOS DE TURBOCOMPRESOR
BOMBAS DE AGUA

También hay disponibles motores Remanufacturados Caterpillar para muchas de las configuraciones de motores.

ALTERNATIVAS DE REPARO

COMPONENTES REMANUFATURADOS

Considere o uso de Componentes Remanufaturados Caterpillar ao efetuar reparos. Os componentes disponíveis através do Programa de Remanufatura Caterpillar são identificados de três formas no manual de peças:

- com um R na área da nota da lista de peças
- com um R* no princípio da primeira linha da legenda
- com um *R no final da primeira linha da legenda

Os componentes típicos que constam no Programa de Remanufatura incluem:

ALTERNADORES
BIELAS
VIRABREQUINS - SUBMEDIDAS
VIRABREQUINS - ATUALIZAÇÃO
CABEÇOTES
MÓDULOS DE CONTROLE ELETRÔNICO (ECM)
SENSORES ELETRÔNICOS
INJETORES DE COMBUSTÍVEL
BICOS DE ABASTECIMENTO DE COMBUSTÍVEL
BOMBAS DE COMBUSTÍVEL
GOVERNADORES
BOMBAS DE ÓLEO
PISTÕES
BLOCOS BÁSICOS DO MOTOR
MOTORES DE PARTIDA
TURBOALIMENTADORES - COMPLETOS
CARTUCHOS DE TURBOALIMENTADORES
BOMBAS D'ÁGUA

Motores Remanufaturados Caterpillar também encontram-se disponíveis para diversos arranjos de motor.

REPARATURALTERNATIVEN

WERKÜBERHOLTE AT-PRODUKTE

Bei Reparaturen sollten werküberholte AT-Produkte von Caterpillar in Betracht gezogen werden. Die durch das AT-Programm von Caterpillar erhältlichen Teile sind im Parts Book auf drei verschiedene Arten gekennzeichnet:

- mit dem Buchstaben R in der Spalte NOTE der Ersatzteilliste
- mit einem R* am Anfang der ersten Zeile der Überschrift
- mit einem *R am Ende der ersten Zeile der Überschrift

Das AT-Programm umfaßt u.a. folgende Produkte:

DREHSTROMGENERATOREN
PLEUELSTANGEN
KURBELWELLEN - MIT UNTERMASS
KURBELWELLEN - MIT ORIGINALMASS
ZYLINDERKÖPFE
ELEKTRONISCHE STEUEREINHEITEN (EMC)
ELEKTRONISCHE SENSOREN
PUMPENDÜSEN
EINSPRITZDÜSEN
KRAFTSTOFFPUMPEN
DREHZAHLREGLER
ÖLPUMPEN
KOLBEN
TEILMOTOREN
ANLASSER
TURBOLADER - KOMPLETT
TURBOLADERLAUFZEUGE
KÜHLWASSERPUMPEN

Viele Motoren können durch werküberholte AT-Motoren von Caterpillar ersetzt werden.

SUPPLEMENTAL COOLANT ADDITIVES

CUSTOMER BENEFITS:

Protects against cavitation, foam, erosion, corrosion, and scale buildup in cooling systems.

- Provides measured coolant conditioner.

DESCRIPTION:

Additives deplete from the coolant with normal operation. For this reason, Supplemental Coolant Additives (SCA) must be added to all heavy duty coolants at regular intervals. In addition, when not using a fully formulated, pre-charged antifreeze, like Caterpillar's DEAC, an initial charge of SCA must be added to the cooling system. The amount of SCA added to the system is dependent on the capacity of the system.

The SCA for initial fill is provided as a liquid. SCA's for maintenance intervals are available in liquid form and as a spin-on element. (No Spin-on available for 3600 Family of Engines)

NOTE:

The amount of SCA added at initial fill is not the same as the amount added at maintenance intervals.

The coolant additive elements can be used with any ethylene or propylene glycol type antifreeze which meets ASTM D4985 or ASTM D5345 Specifications.

NOTE:

For use with standard heavy duty coolant only, not for use with Extended Life Coolant.

PARTS NEEDED:

Cooling System Capacity		Liquid SCA at Initial Fill	Liquid SCA at Maintenance*	Spin-on SCA Maintenance Element*
Liters	Gallons			
22-30	(6-8)	3P-2044 (1)	6V-3542 (1)	111-2370 (1)
30-38	(8-10)	3P-2044 (1) 6V-3542 (1)	111-2372 (1)	111-2369 (1)
38-49	(10-13)	3P-2044 (1) 8T-1589 (1)	111-2372 (1)	111-2369 (1)
49-64	(13-17)	3P-2044 (2)	8T-1589 (1)	9N-3368 (1)
64-83	(17-22)	3P-2044 (2) 8T-1589 (1)	111-2372 (1) 6V-3542 (1)	111-2371 (1)
83-114	(22-30)	3P-2044 (3) 8T-1589 (1)	3P-2044 (1)	9N-3718 (1)
114-163	(30-43)	3P-2044 (5)	3P-2044 (1) 6V-3542 (1)	111-2371 (2)
163-242	(43-64)	3P-2044 (8)	3P-2044 (2)	9N-3718 (2)

** Normal maintenance period is 250 hrs. See your Operation and Maintenance Manual for complete coolant maintenance instructions.*

( ) Indicates quantity required.

ADDITIFS POUR LIQUIDE DE REFROIDISSEMENT

AVANTAGES POUR LE CLIENT

L'additif protège contre la cavitation, la mousse, l'érosion, la corrosion et l'accumulation de dépôts dans le circuit de refroidissement.

- L'additif complémentaire fournit une quantité mesurée d'additif.

DESCRIPTION:

Les additifs s'épuisent pendant l'utilisation du moteur. C'est pourquoi l'on doit ajouter de l'additif au liquide de refroidissement/antigel pour moteurs diesel à intervalles réguliers. En plus, si l'on n'utilise pas de l'antigel entièrement formulé et pré-chargé comme le liquide de refroidissement/antigel Caterpillar pour moteurs diesel, une quantité initiale d'additif doit être ajoutée au circuit de refroidissement. La quantité d'additif à ajouter au circuit dépend de la contenance du circuit.

L'additif pour le remplissage initial est fourni sous forme liquide. L'additif pour l'entretien ultérieur est disponible sous forme liquide et sous forme d'élément à visser. (Il n'y a pas d'élément à visser pour les moteurs de la famille 3600).

NOTA:

La quantité d'additif à ajouter au remplissage initial diffère de la quantité à ajouter aux intervalles d'entretien.

Les éléments d'additif peuvent être utilisés avec tout antigel de type éthylène ou propylène-glycol conforme à la norme ASTM D4985 ou ASTM D5345.

NOTA:

A utiliser uniquement avec du liquide de refroidissement pour moteurs diesel et non avec le liquide de refroidissement longue durée.

PIÈCES NÉCESSAIRES:

Contenance du circuit de refroidissement		Additif liquide au remplissage initial	Additif liquide aux intervalles d'entretien*	Elément d'additif à visser aux intervalles d'entretien*
Litres	Gallons U.S.			
22-30	(6-8)	3P-2044 (1)	6V-3542 (1)	111-2370 (1)
30-38	(8-10)	3P-2044 (1) 6V-3542 (1)	111-2372 (1)	111-2369 (1)
38-49	(10-13)	3P-2044 (1) 8T-1589 (1)	111-2372 (1)	111-2369 (1)
49-64	(13-17)	3P-2044 (2)	8T-1589 (1)	9N-3368 (1)
64-83	(17-22)	3P-2044 (2) 8T-1589 (1)	111-2372 (1) 6V-3542 (1)	111-2371 (1)
83-114	(22-30)	3P-2044 (3) 8T-1589 (1)	3P-2044 (1)	9N-3718 (1)
114-163	(30-43)	3P-2044 (5)	3P-2044 (1) 6V-3542 (1)	111-2371 (2)
163-242	(43-64)	3P-2044 (8)	3P-2044 (2)	9N-3718 (2)

** L'intervalle d'entretien normal est de 250 heures-service. Voir le Guide d'utilisation et d'entretien pour de plus amples renseignements concernant l'entretien du circuit de refroidissement.*

( ) Indique la quantité exigée.

ADITIVOS DE REFRIGERANTE SUPLEMENTARIOS

VENTAJAS PARA EL USUARIO:

Protegen contra la cavitación, la formación de espuma, la corrosión y la acumulación de escamas en los sistemas de enfriamiento.

- Suministra un acondicionador dosificado de refrigerante.

DESCRIPCIÓN:

Los aditivos en el refrigerante se agotan con la operación normal. Por esta razón, se debe agregar Aditivo de refrigerante suplementario (SCA) a todos los refrigerantes para servicio pesado, a intervalos regulares. Además, cuando no se usa un anticongelante de precarga completo, tal como el DEAC de Caterpillar, es necesario agregar una cantidad de aditivo de refrigerante suplementario inicial al sistema de enfriamiento. La cantidad de aditivo que se debe agregar depende de la capacidad del sistema.

El SCA de llenado inicial es líquido. El que se usa para el mantenimiento está disponible tanto en líquido como en un elemento enroscable. (No hay elemento enroscable disponible para la Familia de Motores 3600).

NOTA:

La cantidad de aditivo de llenado inicial no es la misma que se agrega en los intervalos de mantenimiento.

Los elementos de aditivo de refrigerante se pueden usar con cualquier anticongelante de tipo glicol etilénico o propílico que esté de acuerdo con las especificaciones de las normas ASTM D4985 o ASTM D5345.

NOTA:

Se debe utilizar únicamente con refrigerante estándar para servicio pesado; no se debe usar con Refrigerante de Larga Duración.

PIEZAS NECESARIAS:

Capacidad del Sistema de Enfriamiento		SCA líquido de llenado inicial	SCA líquido de mantenimiento*	Elemento de mantenimiento enroscable*
litros	gal EE.UU.			
22-30	6-8	3P-2044 (1)	6V-3542 (1)	111-2370 (1)
30-38	8-10	3P-2044 (1) 6V-3542 (1)	111-2372 (1)	111-2369 (1)
38-49	10-13	3P-2044 (1) 8T-1589 (1)	111-2372 (1)	111-2369 (1)
49-64	13-17	3P-2044 (2)	8T-1589 (1)	9N-3368 (1)
64-83	17-22	3P-2044 (2) 8T-1589 (1)	111-2372 (1) 6V-3542 (1)	111-2371 (1)
83-114	22-30	3P-2044 (3) 8T-1589 (1)	3P-2044 (1)	9N-3718 (1)
114-163	30-43	3P-2044 (5)	3P-2044 (1) 6V-3542 (1)	111-2371 (2)
163-242	43-64	3P-2044 (8)	3P-2044 (2)	9N-3718 (2)

** El período normal de mantenimiento es de 250 horas. Para ver las instrucciones completas sobre el mantenimiento del refrigerante, consulte el Manual de Operación y Mantenimiento.*

( ) Indica la cantidad necesaria.

ADITIVOS SUPLEMENTARES DO LÍQUIDO ARREFECEDOR

BENEFÍCIOS PARA O CLIENTE:

Protege contra cavitação, espuma, erosão, corrosão e acúmulo de crostas nos sistemas de arrefecimento.

- Fornece uma quantidade pré-determinada de condicionador de arrefecimento.

DESCRIÇÃO:

Com a operação normal, os aditivos se esgotam do líquido arrefecedor. Por isso, Aditivos Suplementares do Líquido Arrefecedor (SCA) devem ser acrescentados a todos os líquidos arrefecedores para serviço pesado em intervalos regulares. Além disso, quando um anticongelante pré-carregado, totalmente formulado não for usado, como o DEAC Caterpillar, uma carga inicial de SCA deve ser acrescentada ao sistema de arrefecimento. A quantidade de SCA acrescentada ao sistema depende da capacidade do sistema.

O SCA para abastecimento inicial é fornecido em forma de líquido. Os aditivos suplementares (SCA) para intervalos de manutenção estão à disposição em forma líquida e como um elemento com roscas. (Exceto os Motores da Família 3600)

NOTA:

A quantidade de SCA adicionada no abastecimento inicial não é a mesma que a acrescentada nos intervalos de manutenção.

Os elementos do aditivo do líquido arrefecedor podem ser usados com qualquer tipo de anticongelante etileno ou propileno que satisfaz as Especificações ASTM D4985 ou ASTM D5345.

NOTA:

Para uso apenas com líquido arrefecedor para serviço pesado padrão, não deve ser usado com Líquido Arrefecedor de Vida Longa.

PEÇAS NECESSÁRIAS:

Capacidade do Sistema de Arrefecimento		Líquido SCA Durante Abastecimento Inicial	Líquido SCA Durante Manutenção*	Elemento de Manutenção de SCA com Roscas*
Litros	Galões			
22-30	6-8	3P-2044 (1)	6V-3542 (1)	111-2370 (1)
30-38	8-10	3P-2044 (1) 6V-3542 (1)	111-2372 (1)	111-2369 (1)
38-49	10-13	3P-2044 (1) 8T-1589 (1)	111-2372 (1)	111-2369 (1)
49-64	13-17	3P-2044 (2)	8T-1589 (1)	9N-3368 (1)
64-83	17-22	3P-2044 (2) 8T-1589 (1)	111-2372 (1) 6V-3542 (1)	111-2371 (1)
83-114	22-30	3P-2044 (3) 8T-1589 (1)	3P-2044 (1)	9N-3718 (1)
114-163	30-43	3P-2044 (5)	3P-2044 (1) 6V-3542 (1)	111-2371 (2)
163-242	43-64	3P-2044 (8)	3P-2044 (2)	9N-3718 (2)

** O período normal de manutenção é de 250 horas. Consulte o Manual de Operação e Manutenção para obter instruções completas quanto à manutenção do líquido arrefecedor.*

( ) Indica a quantidade exigida.

KÜHLMITTELZUSATZ

VORTEILE FÜR DEN KUNDEN:

Schutz gegen Kavitation, Schaumbildung, Erosion, Korrosion und Kesselsteinbildung in Kühlsystemen.

- Richtig dosierter Kühlmittelzusatz

BESCHREIBUNG:

Additive erschöpfen sich während des Motorbetriebs. Deshalb muß allen HD-Kühlmitteln regelmäßig Kühlmittelzusatz beigefügt werden. Wenn bei Erstfüllung kein vollwertiges Fertigkühlmittel, wie das Frostschutz- und Kühlmittel für Dieselmotoren von Caterpiller (DEAC), verwendet wird, muß bei Erstfüllung Kühlmittelzusatz beigefügt werden. Wieviel Kühlmittelzusatz beigefügt werden muß, hängt vom Inhalt des Kühlsystems ab.

Für Erstfüllung ist Kühlmittelzusatz nur in flüssiger Form erhältlich. Für Wartungsintervalle ist Kühlmittelzusatz in flüssiger Form und als Zusatzelement erhältlich. (Für die Motorbaureihe 3600 sind keine Zusatzelemente erhältlich.)

ANMERKUNG:

Die Kühlmittelmenge bei Erstfüllung ist nicht die gleiche Menge, die bei Wartungsintervallen beigefügt werden muß.

Die Kühlmittelzusatzelemente können mit allen Frostschutzmitteln auf Ethylen- oder Propylenglykolbasis verwendet werden, die den Standards nach ASTM D4985 oder ASTM D5345 entsprechen.

ANMERKUNG:

Den Kühlmittelzusatz nicht mit Langzeitkühlmittel (ELC) von Caterpillar verwenden. Der Kühlmittelzusatz ist nur für HD-Kühlmittel bestimmt.

TEILEBEZEICHNUNG:

Kühlsysteminhalt		Kühlmittelzusatz bei Erstfüllung	Flüssiger Kühlmittelzusatz bei Wartung*	Kühlmittelzusatzelement bei Wartung*
Liter	US-Gall.			
22-30	(6-8)	3P-2044 (1)	6V-3542 (1)	111-2370 (1)
30-38	(8-10)	3P-2044 (1) 6V-3542 (1)	111-2372 (1)	111-2369 (1)
38-49	(10-13)	3P-2044 (1) 8T-1589 (1)	111-2372 (1)	111-2369 (1)
49-64	(13-17)	3P-2044 (2)	8T-1589 (1)	9N-3368 (1)
64-83	(17-22)	3P-2044 (2) 8T-1589 (1)	111-2372 (1) 6V-3542 (1)	111-2371 (1)
83-114	(22-30)	3P-2044 (3) 8T-1589 (1)	3P-2044 (1)	9N-3718 (1)
114-163	(30-43)	3P-2044 (5)	3P-2044 (1) 6V-3542 (1)	111-2371 (2)
163-242	(43-64)	3P-2044 (8)	3P-2044 (2)	9N-3718 (2)

** Der normale Wartungsintervall beträgt 250 Betriebsstunden. Für vollständige Anweisungen zur Wartung des Kühlsystems, siehe Betriebs- und Wartungshandbuch.*

( ) Erforderliche Anzahl

MAINTENANCE PARTS

DESCRIPTION	PART NUMBER	QTY	WHERE USED	PAGE
AIR INLET AND EXHAUST SYSTEM				
CAP-RAIN	166-2087	1	AIR CLEANER GP	88
FILTER ELEMENT AS-AIR (PRIMARY)	222-9020	1	AIR CLEANER GP	90
FILTER ELEMENT AS-AIR (SECONDARY)	222-9021	1	AIR CLEANER GP	90
BASIC ENGINE				
ELEMENT (BREATHER) (CRANKCASE)	185-3159	1	COVER GP-VALVE MECHANISM	20
		1	COVER GP-VALVE MECHANISM	23
GASKET-COVER	309-6664	1	COVER GP-VALVE MECHANISM	26
GASKET-COVER (VALVE)	309-6664	1	COVER GP-VALVE MECHANISM	20
		1	COVER GP-VALVE MECHANISM	23
GASKET-VALVE COVER	278-4693	1	COVER GP-VALVE MECHANISM	20
		1	COVER GP-VALVE MECHANISM	23
PLUG-DRAIN (ENGINE OIL)	7C-0351	1	DRAIN GP-ENGINE OIL	39
		2	PAN GP-OIL	49
PLUG-SEAL	8C-5225	1	DRAIN GP-ENGINE OIL	38
COOLING SYSTEM				
CAP AS-COOLANT TANK	251-3227	1	RADIATOR & AFTERCOOLER GP	80
GASKET-WATER REGULATOR (WATER TEMPERTAURE REGULATOR)	281-8744	1	CONNECTION GP-WATER	70
HOSE	185-1023	1	LINES GP-WATER	76
	290-6403	1	LINES GP-WATER	76
HOSE (LOWER)	290-6404	1	LINES GP-WATER	77
HOSE (UPPER)	185-1023	1	LINES GP-WATER	77
	290-6403	1	LINES GP-WATER	77
REGULATOR AS-WATER TEMPERATURE (CONNECTOR INCLUDED)	281-8745	1	CONNECTION GP-WATER	70

MAINTENANCE PARTS

DESCRIPTION	PART NUMBER	QTY	WHERE USED	PAGE
ELECTRICAL AND STARTING SYSTEM				
BATTERY (12-VOLT, 900-AMPERE)	9X-3404	2	BATTERY GP	133
BELT-DRIVE (WARNING BEACON) (WARNING BEACON)	9X-8139	1	LAMP GP-WARNING BEACON	152
BELT-SERPENTINE	226-0443	1	ALTERNATOR GP-CHARGING	127
FLASHER AS	295-0447	1	LIGHTING GP-ROADING	163
		1	LIGHTING GP-ROADING	165
	317-2284	1	LIGHTING GP-STOP & TAIL	167
FLASHER AS (12 TO 24-VDC)	317-2284	1	LIGHTING GP-ROADING	161
FUSE (100-AMPERE)	235-1845	2	WIRING GP-ENGINE	195
FUSE (20-AMPERE)	267-2680	1	RELAY GP	173
		1	WIRING GP-ENGINE	195
FUSE (30-AMPERE)	274-9872	1	RELAY GP	173
		1	WIRING GP-ENGINE	195
GLOW PLUG	292-9881	6	GLOW PLUG GP	140
KEY (BATTERY DISCONNECT)	8H-5306	1	SWITCH GP-DISCONNECT	182
LAMP-HALOGEN (24-VOLT, 65-WATT)	9X-3463	1	LIGHTING GP-FLOOD	157
		1	LIGHTING GP-FLOOD	159
		1	LAMP GP-FLOOD	148
		1	LAMP GP-FLOOD	149
LAMP (24-VOLT, 10-WATT)	112-5219	1	LAMP GP-DOME	147
LAMP (24-VOLT, 21-WATT) (STOP, TAIL)	9X-4493	1	LAMP GP-STOP & TAIL	151
LAMP (24-VOLT, 3-WATT)	115-1748	2	WIRING GP-CAB	189
		2	WIRING GP-CAB	191
LAMP (24-VOLT, 5-WATT) (STOP, TAIL)	9X-4492	1	LAMP GP-STOP & TAIL	151
LAMP (24-VOLT, 70-WATT)	9X-7849	1	LAMP GP-WARNING BEACON	152
RELAY GP	309-1620	1	WIRING GP-ENGINE	195
FRAME AND BODY				
LAMP (24-VOLT, 10-WATT)	5C-8315	1	CONVERSION GP-ROADING	340
		1	CONVERSION GP-ROADING	341
FUEL SYSTEM				
CAP-FUEL	304-3885	1	TANK GP-FUEL	122
FILTER AS-FUEL (ELEMENT)	271-9385	1	FILTER GP-SECONDARY FUEL	99
FILTER AS-FUEL (FILTER HEAD)	276-3905	1	FILTER GP-SECONDARY FUEL	99
FILTER AS-WATER SEP & FUEL	1R-0770	1	WATER SEP & FUEL PRM PUMP GP	123
FILTER ELEMENT-FUEL (FILLER NECK SCREEN)	180-3730	1	TANK GP-FUEL	122
FILTER-FUEL (ULTRA HIGH EFFICIENCY) (HIGH EFFICIENCY)	299-8229	1	FILTER GP-SECONDARY FUEL	100

MAINTENANCE PARTS

DESCRIPTION	PART NUMBER	QTY	WHERE USED	PAGE
HYDRAULIC SYSTEM				
BREATHER (HYDRAULIC TANK)	258-2829	1	TANK GP-HYDRAULIC	616
CAP AS-FILLER (HYDRAULIC TANK)	142-8937	1	TANK GP-HYDRAULIC	616
FILTER ELEMENT-OIL (ULTRA HIGH EFFICIENCY)	126-1818	1	FILTER GP-OIL	497
GASKET (HYDRAULIC TANK)	206-9546	1	TANK GP-HYDRAULIC	616
PLUG-SEAL	8C-5225	1	LINES GP-HYDRAULIC	542
		1	LINES GP-HYDRAULIC	547
		1	LINES GP-PILOT	572
SCREEN AS	141-9236	1	VALVE GP-PILOT	659
		1	VALVE GP-PILOT	661
SCREEN AS (PILOT OIL)	141-9236	1	VALVE GP-PILOT	657
		1	VALVE GP-PILOT	664
		1	VALVE GP-PILOT	666
		1	VALVE GP-PILOT	668
SCREEN-SUCTION	255-0759	1	TANK GP-HYDRAULIC	616
STRAINER	206-8818	1	TANK GP-HYDRAULIC	616
LUBRICATION SYSTEM				
BREATHER AS (CRANKCASE)	273-5711	1	BREATHER GP	64
CAP-OIL FILLER (ENGINE)	130-9888	1	FILLER GP-ENGINE OIL	65
FILTER AS (ENGINE OIL)	269-8325	1	FILTER GP-ENGINE OIL	67
OPERATOR STATION				
BLADE AS-WIPER (503-MM) (REAR)	6V-6543	1	WIPER GP-WINDOW	955
BLADE AS-WIPER (700-MM) (FRONT)	6V-7419	1	WIPER GP-WINDOW	955
CAP-VENTED (WINDOW WASHER)	8E-8292	1	WASHER GP-WINDOW	953
CIRCUIT BREAKER AS (20-AMPERE)	280-2710	1	HEATER & MTG GP-CAB	857
CIRCUIT BREAKER AS (20-AMPERE) (HOOD TILT ACTUATOR)	280-2710	1	AIR CONDITIONER & MOUNTING GP	785
FILTER (CAB AIR)	111-8738	1	FILTER GP-CAB AIR	848
	180-7487	1	FILTER GP-CAB AIR	848
GASKET (CAB FILTER)	127-8613	1	FILTER GP-CAB AIR	848
LAMP (24-VOLT, 3-WATT)	115-1748	1	PANEL GP-INSTRUMENT	897
RECEIVER DRYER AS (REFRIGERANT)	257-3227	1	LINES GP-AIR CONDITIONER	871
SEAT BELT GP (RETRACTABLE)	222-0345	1	SEAT & MOUNTING GP	923

MAINTENANCE PARTS

DESCRIPTION	PART NUMBER	QTY	WHERE USED	PAGE
POWER TRAIN				
BREATHER (POWER TRAIN OIL FILLER)	9G-5127	1	CASE & PARTS GP-TRANSMISSION	221
BREATHER (TRANSMISSION)	9G-5127	1	CASE & PARTS GP-TRANSMISSION	218
CAP-FILL (POWER TRAIN OIL)	137-6727	1	FILLER GP-POWER TRAIN OIL	248
		1	FILLER GP-POWER TRAIN OIL	250
FILTER AS-OIL (ADVANCED EFFICIENCY) (POWER TRAIN)	1G-8878	1	FILTER GP-OIL	256
FILTER-MAGNETIC	8S-9129	1	CASE & PARTS GP-TRANSMISSION	218
		1	CASE & PARTS GP-TRANSMISSION	221
PLUG-DRAIN (TRANSMISSION)	7T-2703	1	CASE & PARTS GP-TRANSMISSION	218
		1	CASE & PARTS GP-TRANSMISSION	221
PLUG-MAGNETIC	5P-4484	1	HOUSING GP-FIXED AXLE	272
		1	HOUSING GP-FIXED AXLE	274
		1	HOUSING GP-OSCILLATING AXLE	278
		1	HOUSING GP-OSCILLATING AXLE	280
PLUG-MAGNETIC (AXLE HOUSING)	5P-4484	1	HOUSING GP-FIXED AXLE	276
SCREEN AS (IN-LINE) (AXLE OIL)	299-5499	1	LINES GP-AXLE OIL COOLER	282
SCREEN AS (PILOT OIL)	141-9236	1	VALVE GP-PILOT	326
SCREEN-SUCTION (POWER TRAIN OIL)	8S-9130	1	CASE & PARTS GP-TRANSMISSION	221
SCREEN-SUCTION (TRANSMISSION CASE)	8S-9130	1	CASE & PARTS GP-TRANSMISSION	218
STEERING SYSTEM				
SCREEN AS (PILOT OIL)	141-9236	1	VALVE GP-PILOT	463

PIÈCES DE RECHANGE

DESCRIPTION	NUMÉRO DE PIECÈS	QTÉ	DOMAINE D'APPLICATION	PAGE
CHÂSSIS ET BENNE				
AMPOULE (24V, 10W)	5C-8315	1	GROUPE DE TRANSFORMATION - DÉPLACEMENT ROUTIER	340
		1	GROUPE DE TRANSFORMATION - DÉPLACEMENT ROUTIER	341
CIRCUIT D'ADMISSION D'AIR ET D'ÉCHAPPEMENT				
BOUCHON CONTRE LA PLUIE	166-2087	1	FILTRE A AIR (ASS)	88
ÉLÉMENT DE FILTRE À AIR (ENS) (PRINCIPAL)	222-9020	1	FILTRE A AIR (ASS)	90
ÉLÉMENT DE FILTRE À AIR (ENS) (SECONDAIRE)	222-9021	1	FILTRE A AIR (ASS)	90
CIRCUIT DE CARBURANT				
BOUCHON DE CARBURANT	304-3885	1	RÉSERVOIR DE CARBURANT (ASS)	122
ÉLÉMENT DE FILTRE À CARBURANT (TAMIS DE GOULOTTE DE REMPLISSAGE)	180-3730	1	RÉSERVOIR DE CARBURANT (ASS)	122
FILTRE - SÉPARATEUR D'EAU ET DE CARBURANT (ENS)	1R-0770	1	POMPE DE SÉPARATEUR D'EAU ET D'AMORÇAGE DE CARBURANT (ASS)	123
FILTRE A CARBURANT (ENS) (ÉLÉMENT)	271-9385	1	FILTRE À CARBURANT SECONDAIRE (ASS)	99
FILTRE A CARBURANT (ENS) (TÊTE DE FILTRE)	276-3905	1	FILTRE À CARBURANT SECONDAIRE (ASS)	99
FILTRE A CARBURANT (ULTRA-GRANDE EFFICACITÉ) (GRANDE EFFICACITÉ)	299-8229	1	FILTRE À CARBURANT SECONDAIRE (ASS)	100
CIRCUIT DE DIRECTION				
ÉCRAN (ENS) (HUILE TÉMOIN)	141-9236	1	SOUPAPE PILOTE (ASS)	463
CIRCUIT DE GRAISSAGE				
BOUCHON DE GOULOTTE DE REMPLISSAGE D'HUILE (MOTEUR)	130-9888	1	BOUCHON DE REMPLISSAGE D'HUILE MOTEUR (ASS)	65
FILTRE (ENS) (HUILE MOTEUR)	269-8325	1	FILTRE À HUILE MOTEUR (ASS)	67
RENIFLARD (ENS) (VILEBREQUIN)	273-5711	1	RENIFLARD (ASS)	64
CIRCUIT DE REFROIDISSEMENT				
BOUCHON DE RÉSERVOIR DE LIQUIDE DE REFROIDISSEMENT (ENS)	251-3227	1	RADIATEUR ET REFROIDISSEUR (ASS)	80
FLEXIBLE	185-1023	1	CANALISATIONS D'EAU (ASS)	76
	290-6403	1	CANALISATIONS D'EAU (ASS)	76
FLEXIBLE (INFÉRIEUR)	290-6404	1	CANALISATIONS D'EAU (ASS)	77
FLEXIBLE (SUPERIEUR)	185-1023	1	CANALISATIONS D'EAU (ASS)	77
	290-6403	1	CANALISATIONS D'EAU (ASS)	77
JOINT DE RÉGULATEUR D'EAU (THERMOMÈTRE)	281-8744	1	RACCORD D'EAU (ASS)	70
RÉGULATEUR DE TEMPÉRATURE D'EAU (ENS) (CONNECTEUR COMPRIS)	281-8745	1	RACCORD D'EAU (ASS)	70

* TRADUCTION NON DISPONIBLE AU MOMENT DE LA PUBLICATION

PIÈCES DE RECHANGE

DESCRIPTION	NUMÉRO DE PIECÈS	QTÉ	DOMAINE D'APPLICATION	PAGE
CIRCUIT ELECTRIQUE ET DE DEMARRAGE				
AMPOULE (24V, 10W)	112-5219	1	PLAFONNIER (ASS)	147
AMPOULE (24V, 21W) (STOP, ARRIÈRE)	9X-4493	1	FEUX ARRIÈRE ET FEUX D'ARRÊT	151
AMPOULE (24V, 3W)	115-1748	2	CABLAGE DE CABINE (ASS)	189
		2	CABLAGE DE CABINE (ASS)	191
AMPOULE (24V, 5W) (STOP, ARRIÈRE)	9X-4492	1	FEUX ARRIÈRE ET FEUX D'ARRÊT	151
AMPOULE (24V, 70W)	9X-7849	1	LAMPE - GYROPHARE (ASS)	152
BATTERIE (12V, 900A)	9X-3404	2	BATTERIE (ASS)	133
BOUGIE DE PRECHAUFFAGE	292-9881	6	BOUGIE DE PRÉCHAUFFAGE (ASS)	140
CLÉ (COUPE-BATTERIE)	8H-5306	1	ROBINET DE BATTERIE (ASS)	182
CLIGNOTANT (ENS)	295-0447	1	ÉCLAIRAGE - FEUX DE ROUTE (ASS)	163
		1	ÉCLAIRAGE - FEUX DE ROUTE (ASS)	165
	317-2284	1	ÉCLAIRAGE-FEUX DE STOP ET ARRIÈRE (ASS)	167
CLIGNOTANT (ENS) (*12 TO 24-VDC)	317-2284	1	ÉCLAIRAGE - FEUX DE ROUTE (ASS)	161
COURROIE MULTIPLE	226-0443	1	ALTERNATEUR DE CHARGE (ASS)	127
ENTRAÎNEMENT POUR COURROIE (GYROPHARE) (GYROPHARE)	9X-8139	1	LAMPE - GYROPHARE (ASS)	152
FUSIBLE (100A)	235-1845	2	CABLAGE DE MOTEUR (ASS)	195
FUSIBLE (20A)	267-2680	1	RELAIS (ASS)	173
		1	CABLAGE DE MOTEUR (ASS)	195
FUSIBLE (30A)	274-9872	1	RELAIS (ASS)	173
		1	CABLAGE DE MOTEUR (ASS)	195
LAMPE HALOGÈNE (24V, 65W)	9X-3463	1	LAMPE - PHARE (ASS)	148
		1	LAMPE - PHARE (ASS)	149
		1	ÉCLAIRAGE - PROJECTEURS (ASS)	157
		1	ÉCLAIRAGE - PROJECTEURS (ASS)	159
RELAIS (ASS)	309-1620	1	CABLAGE DE MOTEUR (ASS)	195

* TRADUCTION NON DISPONIBLE AU MOMENT DE LA PUBLICATION

PIÈCES DE RECHANGE

DESCRIPTION	NUMÉRO DE PIECÈS	QTÉ	DOMAINE D'APPLICATION	PAGE
CIRCUIT HYDRAULIQUE				
BOUCHON DE GOULOTTE DE REMPLISSAGE (ENS) (RÉSERVOIR HYDRAULIQUE)	142-8937	1	RÉSERVOIR HYDRAULIQUE (ASS)	616
BOUCHON-JOINT	8C-5225	1	CANALISATIONS A COMMANDE PILOTE (ASS)	572
		1	CANALISATIONS HYDRAULIQUES (ASS)	542
		1	CANALISATIONS HYDRAULIQUES (ASS)	547
CREPINE	206-8818	1	RÉSERVOIR HYDRAULIQUE (ASS)	616
ÉCRAN (ENS)	141-9236	1	SOUPAPE PILOTE (ASS)	659
		1	SOUPAPE PILOTE (ASS)	661
ÉCRAN (ENS) (HUILE TÉMOIN)	141-9236	1	SOUPAPE PILOTE (ASS)	657
		1	SOUPAPE PILOTE (ASS)	664
		1	SOUPAPE PILOTE (ASS)	666
		1	SOUPAPE PILOTE (ASS)	668
ÉLÉMENT DE FILTRE À HUILE (ULTRA-GRANDE EFFICACITÉ)	126-1818	1	FILTRE A HUILE (ASS)	497
JOINT PLAT (RÉSERVOIR HYDRAULIQUE)	206-9546	1	RÉSERVOIR HYDRAULIQUE (ASS)	616
RENIFLARD (RÉSERVOIR HYDRAULIQUE)	258-2829	1	RÉSERVOIR HYDRAULIQUE (ASS)	616
TAMIS D'ASPIRATION	255-0759	1	RÉSERVOIR HYDRAULIQUE (ASS)	616
MOTEUR STANDARD				
BOUCHON DE VIDANGE (HUILE MOTEUR)	7C-0351	2	HUILE MOTEUR - CARTER (ASS)	49
		1	VIDANGE-HUILE DE MOTEUR (ASS)	39
BOUCHON-JOINT	8C-5225	1	VIDANGE-HUILE DE MOTEUR (ASS)	38
ÉLÉMENT (RENIFLARD) (CARTER)	185-3159	1	CACHE-SOUPAPES (ASS)	23
		1	CACHE-SOUPAPES (ASS)	20
JOINT-CACHE-SOUPAPES	278-4693	1	CACHE-SOUPAPES (ASS)	20
		1	CACHE-SOUPAPES (ASS)	23
JOINT DE COUVERCLE	309-6664	1	CACHE-SOUPAPES (ASS)	26
JOINT DE COUVERCLE (SOUPAPE)	309-6664	1	CACHE-SOUPAPES (ASS)	20
		1	CACHE-SOUPAPES (ASS)	23

* TRADUCTION NON DISPONIBLE AU MOMENT DE LA PUBLICATION

PIÈCES DE RECHANGE

DESCRIPTION	NUMÉRO DE PIECÈS	QTÉ	DOMAINE D'APPLICATION	PAGE
POSTE DE CONDUITE				
AMPOULE (24V, 3W)	115-1748	1	TABLEAU DE BORD (ASS)	897
BALAI D'ESSUIE-GLACE (ENS) (503-MM) (ARRIÈRE)	6V-6543	1	ESSUIE-GLACE (ASS)	955
BALAI D'ESSUIE-GLACE (ENS) (700-MM) (AVANT)	6V-7419	1	ESSUIE-GLACE (ASS)	955
BOUCHON À ÉVENT (LAVE-GLACE)	8E-8292	1	LAVE-GLACE - VITRE (ASS)	953
CEINTURE DE SECURITE (ASS) (RÉTRACTABLE)	222-0345	1	SIÈGE ET MONTAGE (ASS)	923
DISJONCTEUR (ENS) (20A)	280-2710	1	CHAUFFAGE ET MONTAGE - CABINE (ASS)	857
DISJONCTEUR (ENS) (20A) (COMMANDE VÉRIN DE CAPOT)	280-2710	1	CLIMATISEUR ET MONTAGE (ASS)	785
FILTRE (AÉRATION DE LA CABINE)	111-8738	1	FILTRE À AIR DE CABINE (ASS)	848
FILTRE (AIR DE CABINE)	180-7487	1	FILTRE À AIR DE CABINE (ASS)	848
JOINT PLAT (FILTRE DE CABINE)	127-8613	1	FILTRE À AIR DE CABINE (ASS)	848
RÉCEPTEUR-DÉSHYDRATEUR (ENS) (RÉFRIGÉRANT)	257-3227	1	CANALISATIONS DE CLIMATISEUR (ASS)	871
TRANSMISSION				
BOUCHON AIMANTÉ	5P-4484	1	CARTER D'ESSIEU FIXE	272
		1	CARTER D'ESSIEU FIXE	274
		1	CARTER D'ESSIEU OSCILLANT	278
		1	CARTER D'ESSIEU OSCILLANT	280
BOUCHON AIMANTÉ (BOÎTIER D'ESSIEU)	5P-4484	1	CARTER D'ESSIEU FIXE	276
BOUCHON DE REMPLISSAGE (HUILE DE TRANSMISSION)	137-6727	1	GOULOTTE DE REMPLISSAGE D'HUILE DE TRANSMISSION	248
		1	GOULOTTE DE REMPLISSAGE D'HUILE DE TRANSMISSION	250
BOUCHON DE VIDANGE (BOîTE DE VITESSES)	7T-2703	1	CARTER ET PIECES DE BOITE (ASS)	218
		1	CARTER ET PIECES DE BOITE (ASS)	221
ÉCRAN (ENS) (EN LIGNE) (HUILE D'ESSIEU)	299-5499	1	CANALISATIONS DE REFROIDISSEUR D'HUILE D'ESSIEU (ASS)	282
ÉCRAN (ENS) (HUILE TÉMOIN)	141-9236	1	SOUPAPE PILOTE (ASS)	326
ÉCRAN MAGNÉTIQUE	8S-9129	1	CARTER ET PIECES DE BOITE (ASS)	218
		1	CARTER ET PIECES DE BOITE (ASS)	221
FILTRE À HUILE (ENS) (EFFICACITÉ AVANCÉE) (TRANSMISSION)	1G-8878	1	FILTRE A HUILE (ASS)	256
RENIFLARD (BOîTE DE VITESSES)	9G-5127	1	CARTER ET PIECES DE BOITE (ASS)	218
RENIFLARD (REMPLISSAGE D'HUILE DE TRANSMISSION)	9G-5127	1	CARTER ET PIECES DE BOITE (ASS)	221
TAMIS D'ASPIRATION (CARTER DE BOITE DE VITESSES)	8S-9130	1	CARTER ET PIECES DE BOITE (ASS)	218
TAMIS D'ASPIRATION (HUILE DE TRANSMISSION)	8S-9130	1	CARTER ET PIECES DE BOITE (ASS)	221

* TRADUCTION NON DISPONIBLE AU MOMENT DE LA PUBLICATION

PIEZAS DE MANTENIMIENTO

DESCRIPCION	NUMERO DE PIEZA	CANT	SE UTILIZA EN	PAGINA
BASTIDOR Y CAJA				
LÁMPARA (24 VOLTIOS, 10 VATIOS)	5C-8315	1	CONVERSION PARA DESPLAZAMIENTO POR CARRETERA (GR)	340
		1	CONVERSION PARA DESPLAZAMIENTO POR CARRETERA (GR)	341
MOTOR BÁSICO				
ELEMENTO (RESPIRADERO) (CÁRTER DEL MOTOR)	185-3159	1	TAPA DEL MECANISMO DE VÁLVULAS (GR)	20
		1	TAPA DEL MECANISMO DE VÁLVULAS (GR)	23
EMPAQUETADURA PARA CUBIERTA DE VÁLVULA	278-4693	1	TAPA DEL MECANISMO DE VÁLVULAS (GR)	20
		1	TAPA DEL MECANISMO DE VÁLVULAS (GR)	23
JUNTA DE LA TAPA DE VÁLVULAS	309-6664	1	TAPA DEL MECANISMO DE VÁLVULAS (GR)	26
JUNTA DE LA TAPA DE VÁLVULAS (VÁLVULA)	309-6664	1	TAPA DEL MECANISMO DE VÁLVULAS (GR)	20
		1	TAPA DEL MECANISMO DE VÁLVULAS (GR)	23
TAPÓN DE DRENAJE (ACEITE DE MOTOR)	7C-0351	2	CÁRTER - COLECTOR DEL (GR)	49
		1	DRENAJE DEL ACEITE DE MOTOR	39
TAPON DE SELLO	8C-5225	1	DRENAJE DEL ACEITE DE MOTOR	38
PUESTO DEL OPERADOR				
CINTURÓN DE SEGURIDAD (GR) (RETRACTIL)	222-0345	1	ASIENTO Y MONTAJE (GR)	923
DISYUNTOR (CONJ) (20-AMPERIOS)	280-2710	1	CALEFACCIÓN Y MONTAJE DE LA CABINA (GR)	857
DISYUNTOR (CONJ) (20-AMPERIOS) (ACCIONADOR DE INCLINACION DE CAPO)	280-2710	1	ACONDICIONADOR DE AIRE Y MONTAJE (GR)	785
EMPAQUETADURA (*CAB FILTER)	127-8613	1	FILTRO DE AIRE DE LA CABINA (GR)	848
FILTRO (AIRE DE CABINA)	180-7487	1	FILTRO DE AIRE DE LA CABINA (GR)	848
FILTRO (AIRE DE LA CABINA)	111-8738	1	FILTRO DE AIRE DE LA CABINA (GR)	848
HOJA DE LIMPIAPARABRISAS (CONJ) (*503-MM) (PARTE TRASERA)	6V-6543	1	LIMPIAPARABRISAS DE LA VENTANA (GR)	955
HOJA DE LIMPIAPARABRISAS (CONJ) (*700-MM) (DELANTERO)	6V-7419	1	LIMPIAPARABRISAS DE LA VENTANA (GR)	955
LÁMPARA (24-VOLTIOS, 3-VATIOS)	115-1748	1	TABLERO DE INSTRUMENTOS (GR)	897
SECADOR DE RECEPTOR (CONJ) (REFRIGERANTE)	257-3227	1	TUBERÍAS DE ACONDICIONADOR DE AIRE (GR)	871
TAPA CON RESPIRADERO (LIMPIAPARABRISAS)	8E-8292	1	LAVAPARABRISAS DE LA VENTANA (GR)	953

* NO HAY TRADUCCION DISPONIBLE EN EL MOMENTO DE LA IMPRESION

PIEZAS DE MANTENIMIENTO

DESCRIPCION	NUMERO DE PIEZA	CANT	SE UTILIZA EN	PAGINA
SISTEMA DE AIRE DE ADMISIÓN Y ESCAPE				
ELEMENTO DEL FILTRO DE AIRE (CONJ) (PRIMARIO)	222-9020	1	FILTRO DE AIRE (GR)	90
ELEMENTO DEL FILTRO DE AIRE (CONJ) (SECUNDARIO)	222-9021	1	FILTRO DE AIRE (GR)	90
TAPA PARA LLUVIA	166-2087	1	FILTRO DE AIRE (GR)	88
SISTEMA DE COMBUSTIBLE				
ELEMENTO DE FILTRO DE COMBUSTIBLE (REJILLA DE TUBO DE LLENADO)	180-3730	1	COMBUSTIBLE - TANQUE DE (GR)	122
FILTRO DE COMBUSTIBLE (CONJ) (ELEMENTO)	271-9385	1	FILTRO SECUNDARIO DE COMBUSTIBLE (GR)	99
FILTRO DE COMBUSTIBLE (CONJ) (*FILTER HEAD)	276-3905	1	FILTRO SECUNDARIO DE COMBUSTIBLE (GR)	99
FILTRO DE COMBUSTIBLE (EFICIENCIA ULTRA ALTA) (ALTA EFICIENCIA)	299-8229	1	FILTRO SECUNDARIO DE COMBUSTIBLE (GR)	100
FILTRO DE COMBUSTIBLE Y SEPARADOR DE AGUA (CONJ)	1R-0770	1	SEPARADOR DE AGUA Y BOMBA DE CEBADO DE COMBUSTIBLE (GR)	123
TAPA PARA EL COMBUSTIBLE	304-3885	1	COMBUSTIBLE - TANQUE DE (GR)	122
SISTEMA DE DIRECCIÓN				
PANTALLA (CONJ) (ACEITE PILOTO)	141-9236	1	VÁLVULA PILOTO (GR)	463
SISTEMA DE ENFRIAMIENTO				
*CAP AS-COOLANT TANK	251-3227	1	RADIADOR Y POSENFRIADOR (GR)	80
(CONJ) REGULADOR, TEMPERATURA DEL AGUA (*CONNECTOR INCLUDED)	281-8745	1	AGUA - CONEXIÓN DE (GR)	70
EMPAQUETADURA, REGULADOR DE AGUA (*WATER TEMPERTAURE REGULATOR)	281-8744	1	AGUA - CONEXIÓN DE (GR)	70
MANGUERA	185-1023	1	TUBERÍAS DEL AGUA (GR)	76
	290-6403	1	TUBERÍAS DEL AGUA (GR)	76
MANGUERA (INFERIOR)	290-6404	1	TUBERÍAS DEL AGUA (GR)	77
MANGUERA (SUPERIOR)	185-1023	1	TUBERÍAS DEL AGUA (GR)	77
	290-6403	1	TUBERÍAS DEL AGUA (GR)	77
SISTEMA DE LUBRICACIÓN				
FILTRO (CONJ) (ACEITE DEL MOTOR)	269-8325	1	FILTRO DE ACEITE DEL MOTOR (GR)	67
RESPIRADERO (CONJ) (CÁRTER DEL MOTOR)	273-5711	1	RESPIRADERO (GR)	64
TAPA DEL TUBO DE LLENADO DE ACEITE (MOTOR)	130-9888	1	TUBO DE LLENADO DE ACEITE (GR)	65

* NO HAY TRADUCCION DISPONIBLE EN EL MOMENTO DE LA IMPRESION

PIEZAS DE MANTENIMIENTO

DESCRIPCION	NUMERO DE PIEZA	CANT	SE UTILIZA EN	PAGINA
SISTEMA ELECTRICO Y DE ARRANQUE				
BATERÍA (12-VOLTIOS, 900-AMPERIOS)	9X-3404	2	BATERÍA (GR)	133
BUJÍA INCANDESCENTE	292-9881	6	BUJÍA INCANDESCENTE (GR)	140
CONJUNTO DE DESTELLADOR	295-0447	1	LUCES DE DESPLAZAMIENTO (GR)	163
		1	LUCES DE DESPLAZAMIENTO (GR)	165
	317-2284	1	LUCES DE PARADA Y DE COLA (GR)	167
CONJUNTO DE DESTELLADOR (*12 TO 24-VDC)	317-2284	1	LUCES DE DESPLAZAMIENTO (GR)	161
CORREA-SERPENTIN	226-0443	1	CARGA - ALTERNADOR DE (GR)	127
FUSIBLE (100-AMPERIOS)	235-1845	2	CABLES DEL MOTOR (GR)	195
FUSIBLE (20-AMPERIOS)	267-2680	1	RELÉ (GR)	173
		1	CABLES DEL MOTOR (GR)	195
FUSIBLE (30-AMPERIOS)	274-9872	1	RELÉ (GR)	173
		1	CABLES DEL MOTOR (GR)	195
LÁMPARA (24 VOLTIOS, 10 VATIOS)	112-5219	1	LÁMPARA DEL TECHO (GR)	147
LÁMPARA (24-VOLTIOS, 21 VATIOS) (PARADA, COLA)	9X-4493	1	LUCES DE PARADA Y COLA (GR)	151
LÁMPARA (24-VOLTIOS, 3-VATIOS)	115-1748	2	CABLES DE LA CABINA (GR)	189
		2	CABLES DE LA CABINA (GR)	191
LÁMPARA (24 VOLTIOS, 5 VATIOS) (PARADA, COLA)	9X-4492	1	LUCES DE PARADA Y COLA (GR)	151
LÁMPARA (24-VOLTIOS, 70-VATIOS)	9X-7849	1	LÁMPARA DE BALIZA DE ADVERTENCIA (GR)	152
LLAVE (INTERRUPTOR GENERAL)	8H-5306	1	DISYUNTOR (GR)	182
LUCES DE ALÓGENO (24 VOLTIOS, 65 VATIOS)	9X-3463	1	LUCES DE REFLECTOR (GR)	157
		1	LUCES DE REFLECTOR (GR)	159
		1	REFLECTOR (GR)	148
		1	REFLECTOR (GR)	149
MANDO DE CORREA (BALIZA DE ADVERTENCIA) (BALIZA GIRATORIA DE ADVERTENCIA)	9X-8139	1	LÁMPARA DE BALIZA DE ADVERTENCIA (GR)	152
RELÉ (GR)	309-1620	1	CABLES DEL MOTOR (GR)	195

* NO HAY TRADUCCION DISPONIBLE EN EL MOMENTO DE LA IMPRESION

PIEZAS DE MANTENIMIENTO

DESCRIPCION	NUMERO DE PIEZA	CANT	SE UTILIZA EN	PAGINA
SISTEMA HIDRÁULICO				
COLADOR	206-8818	1	TANQUE HIDRÁULICO (GR)	616
ELEMENTO DE FILTRO DE ACEITE (EFICIENCIA ULTRA ALTA)	126-1818	1	FILTRO DE ACEITE (GR)	497
EMPAQUETADURA (TANQUE HIDRÁULICO)	206-9546	1	TANQUE HIDRÁULICO (GR)	616
PANTALLA (CONJ)	141-9236	1	VÁLVULA PILOTO (GR)	659
		1	VÁLVULA PILOTO (GR)	661
PANTALLA (CONJ) (ACEITE PILOTO)	141-9236	1	VÁLVULA PILOTO (GR)	657
		1	VÁLVULA PILOTO (GR)	664
		1	VÁLVULA PILOTO (GR)	666
		1	VÁLVULA PILOTO (GR)	668
REJILLA DE SUCCIÓN	255-0759	1	TANQUE HIDRÁULICO (GR)	616
RESPIRADERO (TANQUE HIDRÁULICO)	258-2829	1	TANQUE HIDRÁULICO (GR)	616
TAPA DE LLENADO (CONJ) (TANQUE HIDRAULICO)	142-8937	1	TANQUE HIDRÁULICO (GR)	616
TAPON DE SELLO	8C-5225	1	TUBERÍAS CON SERVOMANDO (GR)	572
		1	TUBERÍAS HIDRÁULICAS (GR)	542
		1	TUBERÍAS HIDRÁULICAS (GR)	547
TREN DE FUERZA				
FILTRO DE ACEITE (CONJ) (EFICIENCIA AVANZADA) (TREN DE FUERZA)	1G-8878	1	FILTRO DE ACEITE (GR)	256
FILTRO MAGNÉTICO	8S-9129	1	CAJA Y PIEZAS DE LA TRANSMISIÓN (GR)	218
		1	CAJA Y PIEZAS DE LA TRANSMISIÓN (GR)	221
PANTALLA (CONJ) (ACEITE PILOTO)	141-9236	1	VÁLVULA PILOTO (GR)	326
PANTALLA (CONJ) (EN LÍNEA) (ACEITE DEL EJE)	299-5499	1	TUBERÍAS DEL ENFRIADOR DE ACEITE DEL EJE (GR)	282
REJILLA DE SUCCIÓN (ACEITE DEL TREN DE FUERZA)	8S-9130	1	CAJA Y PIEZAS DE LA TRANSMISIÓN (GR)	221
REJILLA DE SUCCIÓN (CAJA DE TRANSMISION)	8S-9130	1	CAJA Y PIEZAS DE LA TRANSMISIÓN (GR)	218
RESPIRADERO (TRANSMISION)	9G-5127	1	CAJA Y PIEZAS DE LA TRANSMISIÓN (GR)	218
RESPIRADERO (TUBO DE LLENADO DE TREN DE FUERZA)	9G-5127	1	CAJA Y PIEZAS DE LA TRANSMISIÓN (GR)	221
TAPA, LLENADO (ACEITE DEL TREN DE FUERZA)	137-6727	1	TUBO DE LLENADO DE ACEITE DE LA TRANSMISIÓN (GR)	248
		1	TUBO DE LLENADO DE ACEITE DE LA TRANSMISIÓN (GR)	250
TAPÓN DE DRENAJE (TRANSMISION)	7T-2703	1	CAJA Y PIEZAS DE LA TRANSMISIÓN (GR)	218
		1	CAJA Y PIEZAS DE LA TRANSMISIÓN (GR)	221
TAPÓN MAGNÉTICO	5P-4484	1	CAJA DE EJE OSCILANTE (GR)	278
		1	CAJA DE EJE OSCILANTE (GR)	280
		1	CAJA DEL EJE OSCILANTE (GR)	272
		1	CAJA DEL EJE OSCILANTE (GR)	274
TAPÓN MAGNÉTICO (CAJA DEL EJE)	5P-4484	1	CAJA DEL EJE OSCILANTE (GR)	276

* NO HAY TRADUCCION DISPONIBLE EN EL MOMENTO DE LA IMPRESION

PEÇAS DE MANUTENÇÃO

DESCRIÇÃO	NÚMERO DE PEÇA	QUANT	UTILIZADA EM	PÁGINA
CHASSI E CARROCERIA				
LÂMPADA (24 VOLTS, 10 WATTS)	5C-8315	1	GR. DE CONVERSÃO - OPERAÇÃO RODOVIÁRIA	340
		1	GR. DE CONVERSÃO - OPERAÇÃO RODOVIÁRIA	341
ESTAÇÃO DO OPERADOR				
CINTO DE SEGURANÇA (RETRÁTIL)	222-0345	1	ASSENTO E MONTAGEM	923
DISJUNTOR AUTOMÁTICO DE CIRCUITO (20-AMPERES)	280-2710	1	AQUECEDOR DA CABINE E MONTAGEM	857
DISJUNTOR AUTOMÁTICO DE CIRCUITO (20-AMPERES) (ACIONADOR DE INCLINAÇÃO DO CAPÔ)	280-2710	1	CONDICIONADOR DE AR E MONTAGEM	785
FILTRO (AR DA CABINE)	111-8738	1	FILTRO - AR DA CABINE	848
	180-7487	1	FILTRO - AR DA CABINE	848
JUNTA (FILTRO DA CABINE)	127-8613	1	FILTRO - AR DA CABINE	848
LÂMINA DO LIMPADOR DE PÁRA-BRISA (503 MM) (TRASEIRO)	6V-6543	1	LIMPADOR DO VIDRO	955
LÂMINA DO LIMPADOR DE PÁRA-BRISA (700 MM) (DIANTEIRO)	6V-7419	1	LIMPADOR DO VIDRO	955
LÂMPADA (24 VOLTS, 3 WATTS)	115-1748	1	PAINEL DE INSTRUMENTOS	897
RECEPTOR SECADOR (REFRIGERANTE)	257-3227	1	TUBOS - AR CONDICIONADO	871
TAMPA COM RESPIRO (LAVADOR DO VIDRO)	8E-8292	1	LAVADOR DO VIDRO	953
MOTOR BÁSICO				
BUJÃO DO DRENO (ÓLEO DO MOTOR)	7C-0351	2	CÁRTER DO ÓLEO DO MOTOR	49
		1	DRENO - ÓLEO DO MOTOR	39
BUJÃO-RETENTOR	8C-5225	1	DRENO - ÓLEO DO MOTOR	38
ELEMENTO (RESPIRO) (CÁRTER DO MOTOR)	185-3159	1	TAMPA - MECANISMO DAS VÁLVULAS	20
		1	TAMPA - MECANISMO DAS VÁLVULAS	23
JUNTA - TAMPA	309-6664	1	TAMPA - MECANISMO DAS VÁLVULAS	26
JUNTA - TAMPA DA VÁLVULA	278-4693	1	TAMPA - MECANISMO DAS VÁLVULAS	20
		1	TAMPA - MECANISMO DAS VÁLVULAS	23
JUNTA - TAMPA (VÁLVULA)	309-6664	1	TAMPA - MECANISMO DAS VÁLVULAS	20
		1	TAMPA - MECANISMO DAS VÁLVULAS	23
SISTEMA DA ADMISSÃO DE AR E DE ESCAPE				
ELEMENTO DO FILTRO DE AR (PRIMÁRIO)	222-9020	1	PURIFICADOR DE AR	90
ELEMENTO DO FILTRO DE AR (SECUNDÁRIO)	222-9021	1	PURIFICADOR DE AR	90
TAMPA - CHUVA	166-2087	1	PURIFICADOR DE AR	88

PEÇAS DE MANUTENÇÃO

DESCRIÇÃO	NÚMERO DE PEÇA	QUANT	UTILIZADA EM	PÁGINA
SISTEMA DE ARREFECIMENTO				
JUNTA - REGULADOR DA ÁGUA (TERMOSTATO DE ÁGUA)	281-8744	1	CONEXÃO - TUBO D'ÁGUA	70
MANGUEIRA	185-1023	1	TUBOS - ÁGUA	76
	290-6403	1	TUBOS - ÁGUA	76
MANGUEIRA (INFERIOR)	290-6404	1	TUBOS - ÁGUA	77
MANGUEIRA (SUPERIOR)	185-1023	1	TUBOS - ÁGUA	77
	290-6403	1	TUBOS - ÁGUA	77
REGULADOR - TEMPERATURA DA ÁGUA (CONECTOR INCLUÍDO)	281-8745	1	CONEXÃO - TUBO D'ÁGUA	70
TAMPA-TANQUE DO LÍQUIDO ARREFECEDOR	251-3227	1	RADIADOR E PÓS-ARREFECEDOR	80
SISTEMA DE COMBUSTÍVEL				
ELEMENTO DO FILTRO DE COMBUSTÍVEL (TELA DO BOCAL DE ENCHIMENTO)	180-3730	1	TANQUE DE COMBUSTÍVEL	122
FILTRO - COMBUSTÍVEL (CABEÇA DO FILTRO)	276-3905	1	FILTRO SECUNDÁRIO DE COMBUSTÍVEL	99
FILTRO - COMBUSTÍVEL (ELEMENTO)	271-9385	1	FILTRO SECUNDÁRIO DE COMBUSTÍVEL	99
FILTRO - COMBUSTÍVEL (EXTREMA EFICIÊNCIA) (ALTA EFICIÊNCIA)	299-8229	1	FILTRO SECUNDÁRIO DE COMBUSTÍVEL	100
FILTRO - SEPARADOR DE ÁGUA E COMBUSTÍVEL	1R-0770	1	SEPARADOR DE ÁGUA E BOMBA DE ESCORVA DE COMBUSTÍVEL	123
TAMPA - TANQUE DE COMBUSTÍVEL	304-3885	1	TANQUE DE COMBUSTÍVEL	122
SISTEMA DE DIREÇÃO				
TELA FILTRANTE (ÓLEO PILOTO)	141-9236	1	VÁLVULA DE CONTROLE PILOTO	463
SISTEMA DE LUBRIFICAÇÃO				
FILTRO (ÓLEO DO MOTOR)	269-8325	1	FILTRO - ÓLEO DO MOTOR	67
RESPIRO (CÁRTER)	273-5711	1	RESPIRO	64
TAMPA - BOCAL DE ENCHIMENTO DE ÓLEO (MOTOR)	130-9888	1	BOCAL DE ENCHIMENTO DE ÓLEO DO MOTOR	65

PEÇAS DE MANUTENÇÃO

DESCRIÇÃO	NÚMERO DE PEÇA	QUANT	UTILIZADA EM	PÁGINA
SISTEMA ELÉTRICO E DE PARTIDA				
BATERIA (12 VOLTS, 900 AMPÈRES)	9X-3404	2	BATERIA	133
CHAVE (DESCONEXÃO DA BATERIA)	8H-5306	1	CHAVE GERAL	182
CORREIA- SERPENTINA	226-0443	1	ALTERNADOR DE CORRENTE	127
CORREIA DE COMANDO (PISCA-ALERTA) (PISCA-PISCA DE ADVERTÊNCIA)	9X-8139	1	LUZ GIRATÓRIA DE ALARME	152
FUSÍVEL (100 AMPÈRES)	235-1845	2	CABOS/FIOS ELÉTRICOS - MOTOR	195
FUSÍVEL (20-AMPERES)	267-2680	1	RELÉ	173
		1	CABOS/FIOS ELÉTRICOS - MOTOR	195
FUSÍVEL (30 AMPERES)	274-9872	1	RELÉ	173
		1	CABOS/FIOS ELÉTRICOS - MOTOR	195
LÂMPADA - HALOGÊNEO (24 VOLTS, 65 WATTS)	9X-3463	1	LÂMPADA - FAROL	148
		1	LÂMPADA - FAROL	149
		1	SISTEMA DE ILUMINAÇÃO - FARÓIS	157
		1	SISTEMA DE ILUMINAÇÃO - FARÓIS	159
LÂMPADA (24 VOLTS, 10 WATTS)	112-5219	1	LÂMPADA - TETO	147
LÂMPADA (24 VOLTS, 21 WATTS) (DE PARADA, TRASEIRO)	9X-4493	1	LUZ TRASEIRA E DE FREIO	151
LÂMPADA (24 VOLTS, 3 WATTS)	115-1748	2	CABOS/FIOS ELÉTRICOS - CABINE	189
		2	CABOS/FIOS ELÉTRICOS - CABINE	191
LÂMPADA (24 VOLTS, 5 WATTS) (DE PARADA, TRASEIRO)	9X-4492	1	LUZ TRASEIRA E DE FREIO	151
LÂMPADA (24 VOLTS, 70 WATTS)	9X-7849	1	LUZ GIRATÓRIA DE ALARME	152
LUZ INTERMITENTE	295-0447	1	ILUMINAÇÃO - RODOVIÁRIA	163
		1	ILUMINAÇÃO - RODOVIÁRIA	165
	317-2284	1	ILUMINAÇÃO - FREIO E MARCHA À RÉ	167
LUZ INTERMITENTE (12 A 24 VDC)	317-2284	1	ILUMINAÇÃO - RODOVIÁRIA	161
RELÉ	309-1620	1	CABOS/FIOS ELÉTRICOS - MOTOR	195
VELA DE AQUECIMENTO; VELA INCANDESCENTE	292-9881	6	VELA DE AQUECIMENTO; VELA INCANDESCENTE	140
SISTEMA HIDRÁULICO				
BUJÃO-RETENTOR	8C-5225	1	TUBOS - CIRCUITO PILOTO	572
		1	TUBOS - ÓLEO HIDRÁULICO	542
		1	TUBOS - ÓLEO HIDRÁULICO	547
ELEMENTO FILTRANTE-ÓLEO (EXTREMA EFICIÊNCIA)	126-1818	1	FILTRO - ÓLEO	497
JUNTA (TANQUE HIDRÁULICO)	206-9546	1	TANQUE HIDRÁULICO	616
RESPIRO (TANQUE HIDRÁULICO)	258-2829	1	TANQUE HIDRÁULICO	616
TAMPA - BOCAL DE ENCHIMENTO (TANQUE HIDRÁULICO)	142-8937	1	TANQUE HIDRÁULICO	616
TELA DE SUCÇÃO	255-0759	1	TANQUE HIDRÁULICO	616
TELA FILTRANTE	141-9236	1	VÁLVULA DE CONTROLE PILOTO	659
		1	VÁLVULA DE CONTROLE PILOTO	661
	206-8818	1	TANQUE HIDRÁULICO	616
TELA FILTRANTE (ÓLEO PILOTO)	141-9236	1	VÁLVULA DE CONTROLE PILOTO	657
		1	VÁLVULA DE CONTROLE PILOTO	664
		1	VÁLVULA DE CONTROLE PILOTO	666
		1	VÁLVULA DE CONTROLE PILOTO	668

PEÇAS DE MANUTENÇÃO

DESCRIÇÃO	NÚMERO DE PEÇA	QUANT	UTILIZADA EM	PÁGINA
TREM DE FORÇA				
BUJÃO DO DRENO (TRANSMISSÃO)	7T-2703	1	CAIXA E COMPONENTES - TRANSMISSÃO	218
		1	CAIXA E COMPONENTES - TRANSMISSÃO	221
BUJÃO MAGNÉTICO	5P-4484	1	CAIXA - EIXO FIXO	272
		1	CAIXA - EIXO FIXO	274
		1	CAIXA - EIXO OSCILANTE	278
		1	CAIXA - EIXO OSCILANTE	280
BUJÃO MAGNÉTICO (ALOJAMENTO DO EIXO)	5P-4484	1	CAIXA - EIXO FIXO	276
FILTRO - MAGNÉTICO	8S-9129	1	CAIXA E COMPONENTES - TRANSMISSÃO	218
		1	CAIXA E COMPONENTES - TRANSMISSÃO	221
FILTRO - ÓLEO (EFICIÊNCIA AVANÇADA) (TREM DE FORÇA)	1G-8878	1	FILTRO - ÓLEO	256
RESPIRO (BOCAL DE ENCHIMENTO DE ÓLEO DE TREM DE FORÇA)	9G-5127	1	CAIXA E COMPONENTES - TRANSMISSÃO	221
RESPIRO (TRANSMISSÃO)	9G-5127	1	CAIXA E COMPONENTES - TRANSMISSÃO	218
TAMPA - ENCHIMENTO (ÓLEO DO TREM DE FORÇA)	137-6727	1	BOCAL DE ENCHIMENTO DE ÓLEO DO TREM DE FORÇA	248
		1	BOCAL DE ENCHIMENTO DE ÓLEO DO TREM DE FORÇA	250
TELA DE SUCÇÃO (CAIXA DE TRANSMISSÃO)	8S-9130	1	CAIXA E COMPONENTES - TRANSMISSÃO	218
TELA DE SUCÇÃO (ÓLEO DO TREM DE FORÇA)	8S-9130	1	CAIXA E COMPONENTES - TRANSMISSÃO	221
TELA FILTRANTE (EM LINHA) (ÓLEO DO EIXO)	299-5499	1	TUBOS - ARREFECEDOR DE ÓLEO DO EIXO	282
TELA FILTRANTE (ÓLEO PILOTO)	141-9236	1	VÁLVULA DE CONTROLE PILOTO	326

WARTUNGSTEILE

BESCHREIBUNG	ERSATZTEIL-NUMMER	MENGE	VERWENDET IN	SEITE
ELEKTRISCHE ANLAGE U. STARTSYSTEM				
BATTERIE (12 V, 900 A)	9X-3404	2	BATTERIE	133
BLINKER	295-0447	1	BELEUCHTUNGSANLAGE (STRASSENAUSRÜSTUNG)	163
		1	BELEUCHTUNGSANLAGE (STRASSENAUSRÜSTUNG)	165
	317-2284	1	BREMS- UND RÜCKLEUCHTEN	167
BLINKER (*12 TO 24-VDC)	317-2284	1	BELEUCHTUNGSANLAGE (STRASSENAUSRÜSTUNG)	161
GLÜHKERZE	292-9881	6	GLÜHKERZE	140
HALOGENSCHINWERFER (24V)(65W)	9X-3463	1	ARBEITSLEUCHTEN	148
		1	ARBEITSLEUCHTEN	149
		1	ARBEITSLEUCHTEN	157
		1	ARBEITSLEUCHTEN	159
LAUFBAND UND ANTRIEB (RUNDUM-KENNLEUCHTE) (RUNDUM-KENNLEUCHTE)	9X-8139	1	RUNDUM-KENNLEUCHTE	152
LEUCHTE (24 V, 3 W)	115-1748	2	FAHRERHAUSVERDRAHTUNG	189
		2	FAHRERHAUSVERDRAHTUNG	191
LEUCHTE (24 V, 5 W) (BREMSLEUCHTE, HECKLEUCHTE)	9X-4492	1	BREMS- UND RÜCKLEUCHTE	151
LEUCHTE (24 V, 70 W)	9X-7849	1	RUNDUM-KENNLEUCHTE	152
LEUCHTE (24V, 10W)	112-5219	1	FAHRERHAUSBELEUCHTUNG	147
LEUCHTE (24V, 21W) (BREMSLEUCHTE, HECKLEUCHTE)	9X-4493	1	BREMS- UND RÜCKLEUCHTE	151
RELAIS	309-1620	1	MOTORVERDRAHTUNG	195
SCHLÜSSEL (ELEKTRISCHER HAUPTSCHALTER)	8H-5306	1	TRENNSCHALTER	182
SERPENTINENFÖRMIGER RIEMEN	226-0443	1	DREHSTROMGENERATOR	127
SICHERUNG (100 A)	235-1845	2	MOTORVERDRAHTUNG	195
SICHERUNG (20 A)	267-2680	1	RELAIS	173
		1	MOTORVERDRAHTUNG	195
SICHERUNG (30 A)	274-9872	1	RELAIS	173
		1	MOTORVERDRAHTUNG	195

* ÜBERSETZUNG ZUM ZEITPUNKT DER DRUCKLEGUNG NICHT VORHANDEN

WARTUNGSTEILE

BESCHREIBUNG	ERSATZTEIL-NUMMER	MENGE	VERWENDET IN	SEITE
FAHRERHAUS				
DICHTUNG (*CAB FILTER)	127-8613	1	FAHRERHAUSLUFTFILTER	848
FILTER (FAHRERHAUS LUFT)	180-7487	1	FAHRERHAUSLUFTFILTER	848
FILTER (FAHRERHAUSLUFT)	111-8738	1	FAHRERHAUSLUFTFILTER	848
KAPPE MIT ENTLÜFTER (SCHEIBEN-WASCHER)	8E-8292	1	SCHEIBENWASCHANLAGE	953
LEUCHTE (24 V, 3 W)	115-1748	1	INSTRUMENTENTAFEL	897
SCHEIBENWISCHERBLATT (*503-MM) (HINTEN)	6V-6543	1	SCHEIBENWISCHER	955
SCHEIBENWISCHERBLATT (700 MM) (VORNE)	6V-7419	1	SCHEIBENWISCHER	955
SICHERHEITSGURT ((AUTOMATIKSICHERHEITSGURT))	222-0345	1	FAHRERSITZ UND UNTERBAU	923
TROCKNERSAMMLER (KÜHLMITTEL)	257-3227	1	KLIMAANLAGENLEITUNGEN	871
UNTERBRECHER (20 A)	280-2710	1	FAHRERHAUSHEIZUNG U. BEFESTIGUNGSTEILE	857
UNTERBRECHER (20 A) (HAUBENNEI-GESTELLGLIED)	280-2710	1	KLIMAANLAGE UND AUFHÄNGUNG	785
HYDRAULIKSYSTEM				
ANSAUGSIEB	255-0759	1	HYDRAULIKTANK	616
DICHTUNG (HYDRAULIKTANK)	206-9546	1	HYDRAULIKTANK	616
DICHTUNGSSTOPFEN	8C-5225	1	HYDRAULIKLEITUNGEN	542
		1	HYDRAULIKLEITUNGEN	547
		1	VORSTEUERLEITUNGEN	572
EINFÜLLKAPPE (HYDRAULIKTANK)	142-8937	1	HYDRAULIKTANK	616
ENTLÜFTER (HYDRAULIKTANK)	258-2829	1	HYDRAULIKTANK	616
ÖLFILTERELEMENT (FEINSTFILTER)	126-1818	1	ÖLFILTER	497
SIEB	141-9236	1	VORSTEUERVENTIL	659
		1	VORSTEUERVENTIL	661
	206-8818	1	HYDRAULIKTANK	616
SIEB (VORSTEUERÖL)	141-9236	1	VORSTEUERVENTIL	657
		1	VORSTEUERVENTIL	664
		1	VORSTEUERVENTIL	666
		1	VORSTEUERVENTIL	668
KRAFTSTOFFSYSTEM				
KRAFTSTOFFILTER (ELEMENT)	271-9385	1	KRAFTSTOFFSICHERHEITSFILTER	99
KRAFTSTOFFILTER (FEINSTFILTER) (HOCHLEISTUNG)	299-8229	1	KRAFTSTOFFSICHERHEITSFILTER	100
KRAFTSTOFFILTER (FILTERKOPF)	276-3905	1	KRAFTSTOFFSICHERHEITSFILTER	99
KRAFTSTOFFILTERELEMENT (EINFÜLLSTURZENSIEB)	180-3730	1	KRAFTSTOFFTANK	122
KRAFTSTOFFTANKKAPPE	304-3885	1	KRAFTSTOFFTANK	122
WASSERABSCHEIDER UND KRAFTSTOFFILTER	1R-0770	1	WASSERABSCHEIDER U. KRAFTSTOFFENTLÜFTUNGSPUMPE	123

* ÜBERSETZUNG ZUM ZEITPUNKT DER DRUCKLEGUNG NICHT VORHANDEN

WARTUNGSTEILE

BESCHREIBUNG	ERSATZTEIL-NUMMER	MENGE	VERWENDET IN	SEITE
KRAFTÜBERTRAGUNG				
ABLASSSTOPFEN (GETRIEBE)	7T-2703	1	GETRIEBEGEHÄUSE UND TEILE	218
		1	GETRIEBEGEHÄUSE UND TEILE	221
ANSAUGSIEB (GETRIEBEGEHÄUSE)	8S-9130	1	GETRIEBEGEHÄUSE UND TEILE	218
ANSAUGSIEB (KRAFTÜBERTRAGUNGSÖL)	8S-9130	1	GETRIEBEGEHÄUSE UND TEILE	221
EINFÜLLKAPPE (KRAFTÜBERTRAGUNGSÖL)	137-6727	1	GETRIEBEÖLFÜLLSTUTZEN	248
		1	GETRIEBEÖLFÜLLSTUTZEN	250
ENTLÜFTER (GETRIEBE)	9G-5127	1	GETRIEBEGEHÄUSE UND TEILE	218
ENTLÜFTER (KRAFTSÜBERTRAGUNG - ÖLEINFÜLLUNG)	9G-5127	1	GETRIEBEGEHÄUSE UND TEILE	221
MAGNETFILTER	8S-9129	1	GETRIEBEGEHÄUSE UND TEILE	218
		1	GETRIEBEGEHÄUSE UND TEILE	221
MAGNETSTOPFEN	5P-4484	1	GEHÄUSE - PENDELACHSE	278
		1	GEHÄUSE - PENDELACHSE	280
		1	GEHÄUSE - STARRACHSE	272
		1	GEHÄUSE - STARRACHSE	274
MAGNETSTOPFEN (ACHSGEHÄUSE)	5P-4484	1	GEHÄUSE - STARRACHSE	276
ÖLFILTER (HOCHLEISTUNG) (KRAFTÜBERTRAGUNG)	1G-8878	1	ÖLFILTER	256
SIEB (VORSTEUERÖL)	141-9236	1	VORSTEUERVENTIL	326
SIEB (ZWISCHENGESCHALTET) (ACHSENÖL)	299-5499	1	ACHSENÖLKÜHLERLEITUNGEN	282
KÜHLSYSTEM				
*CAP AS-COOLANT TANK	251-3227	1	KÜHLER U. LADELUFTKÜHLER	80
KÜHLWASSERTHERMOSTATDICHTUNG (THERMOSTAT)	281-8744	1	KÜHLWASSERANSCHLUSS	70
SCHLAUCHLEITUNG	185-1023	1	KÜHLWASSERLEITUNGEN	76
	290-6403	1	KÜHLWASSERLEITUNGEN	76
SCHLAUCHLEITUNG (OBEN)	185-1023	1	KÜHLWASSERLEITUNGEN	77
	290-6403	1	KÜHLWASSERLEITUNGEN	77
SCHLAUCHLEITUNG (UNTEN)	290-6404	1	KÜHLWASSERLEITUNGEN	77
THERMOSTAT (EINSCHL. VERBINDERUNGSSTÜCK)	281-8745	1	KÜHLWASSERANSCHLUSS	70
LENKSYSTEM				
SIEB (VORSTEUERÖL)	141-9236	1	VORSTEUERVENTIL	463
LUFTANSAUG- UND ABGASSYSTEM				
LUFTFILTER (HAUPTELEMENT)	222-9020	1	LUFTREINIGER	90
LUFTFILTER (HILFSELEMENT)	222-9021	1	LUFTREINIGER	90
REGENSCHUTZKAPPE	166-2087	1	LUFTREINIGER	88

* ÜBERSETZUNG ZUM ZEITPUNKT DER DRUCKLEGUNG NICHT VORHANDEN

WARTUNGSTEILE

BESCHREIBUNG	ERSATZTEIL-NUMMER	MENGE	VERWENDET IN	SEITE
MOTOR (GRUNDAUSFÜHRUNG)				
ABLASSSTOPFEN (MOTORÖL)	7C-0351	1	MOTORÖLABLASS	39
		2	ÖLWANNE	49
DICHTUNGSSTOPFEN	8C-5225	1	MOTORÖLABLASS	38
ELEMENT (ENTLÜFTER) (KURBELGEHÄUSE)	185-3159	1	VENTILDECKEL	20
		1	VENTILDECKEL	23
VENTILDECKELDICHTUNG	278-4693	1	VENTILDECKEL	20
		1	VENTILDECKEL	23
	309-6664	1	VENTILDECKEL	26
VENTILDECKELDICHTUNG (VENTIL)	309-6664	1	VENTILDECKEL	20
		1	VENTILDECKEL	23
RAHMEN UND FAHRGESTELL				
LEUCHTE (24V, 10W)	5C-8315	1	STRASSENFAHRT - UMRÜSTSATZ	340
		1	STRASSENFAHRT - UMRÜSTSATZ	341
SCHMIERSYSTEM				
ENTLÜFTER (KURBELGEHÄUSE)	273-5711	1	ENTLÜFTER	64
FILTERSATZ (MOTORÖL)	269-8325	1	ÖLFILTER	67
ÖLEINFÜLLKAPPE (MOTOR)	130-9888	1	MOTORÖLEINFÜLLSTUTZEN	65

* ÜBERSETZUNG ZUM ZEITPUNKT DER DRUCKLEGUNG NICHT VORHANDEN

INDEX

Name	Page

A

ACCUMULATOR GP-BRAKE–CHARGED 411
ACCUMULATOR GP-PILOT OIL–CHARGED 478
ACCUMULATOR GP-PILOT OIL–
UNCHARGED 479
ACCUMULATOR GP-RIDE CONTROL–
CHARGED 480
ACCUMULATOR-REFRIGERANT 871
ADAPTER GP-OIL PAN DRAIN 49
ADAPTER GP-TIP 710
ADJUSTER GP-SEAT 783
AFTERCOOLER AS 80
AIR CLEANER GP 88
90
AIR COMPRESSOR GP-SEAT 784
AIR CONDITIONER & MOUNTING GP–
WITH CABLE CONTROL 785
AIR CONDITIONER GP 786
ALARM GP–ACTION 124
ALTERNATOR GP-CHARGING 125
127
ARM & BEARING AS-LIFT 701
ARM GP-MATERIAL HANDLING 711
ARM GP-WINDOW WIPER 788
955
ARMREST GP 790
ARMREST GP–LH 791
792
ARMREST GP–RH 789
793
ATOMIZER AS-ETHER 177
AXLE AR-FIXED–
FRONT, DIFFERENTIAL LOCK 209
210
AXLE AR-FIXED–
FRONT, LIMITED SLIP DIFFERENTIAL–
SINGLE DISC BRAKE 208
209
210
AXLE AR-FIXED–
FRONT, STANDARD DIFFERENTIAL–
SINGLE DISC BRAKE 208
209
AXLE AR-FIXED–SINGLE DISC BRAKE 210
AXLE AR-OSCILLATING–LIMITED SLIP
DIFFERENTIAL, DUAL DISC BRAKE 211
AXLE AR-OSCILLATING–
REAR, LIMITED SLIP DIFFERENTIAL 211
AXLE AR-OSCILLATING–
REAR, LIMITED SLIP DIFFERENTIAL–
SINGLE DISC BRAKE 211
AXLE AR-OSCILLATING–
REAR, STANDARD DIFFERENTIAL–
SINGLE DISC BRAKE 212
AXLE GP-OSCILLATING–
REAR, LIMITED SLIP DIFFERENTIAL–
SINGLE DISC BRAKE 212
AXLE GP-OSCILLATING–
REAR, STANDARD DIFFERENTIAL–
SINGLE DISC BRAKE 212

B

BAFFLE GP-SOUND SUPPRESSION–HOOD . . . 338
BATTERY & WIRING GP 128
BATTERY & WIRING GP–
SECONDARY STEERING 130
BATTERY GP 133
BATTERY (12-VOLT, 900-AMPERE) 133
BEARING GP-PILLOW BLOCK 311
BELT-DRIVE (WARNING BEACON)
(WARNING BEACON) 152
BELT-SERPENTINE 127
BLADE AS-WIPER (503-MM) (REAR) 955
BLADE AS-WIPER (700-MM) (FRONT) 955
BOX GP-BATTERY 339
BRAKE & PLANETARY GP 215
BRAKE & PLANETARY GP–DUAL DISC 217
BRAKE & PLANETARY GP–SINGLE DISC 213
214
216
BRAKE GP-PARKING 412
BREATHER AS (CRANKCASE) 20
23
64
BREATHER GP–CRANKCASE 64
BREATHER (HYDRAULIC TANK) 616
BREATHER (POWER TRAIN OIL FILLER) 221
BREATHER (TRANSMISSION) 218
BUCKET AR-GENERAL PURPOSE 712
715
716
BUCKET AR-GENERAL PURPOSE–
QUICK COUPLER 713
714
BUCKET AR-LIGHT MATERIAL 717
BUCKET AR-MULTIPURPOSE–
QUICK COUPLER 718
719
720
BUCKET AS-GENERAL PURPOSE 721
722
727
728
732
733
BUCKET AS-GENERAL PURPOSE–
QUICK COUPLER 723
724

INDEX

Name	Page
	725
	726
	729
	730
	731
BUCKET AS-LIGHT MATERIAL	734
	736
BUCKET AS-PENETRATION	739
BUCKET AS-PENETRATION–QUICK COUPLER	737
	738
BUCKET GP-GENERAL PURPOSE	742
	745
	747
	750
	751
	752
BUCKET GP-GENERAL PURPOSE–QUICK COUPLER	740
	741
	743
	744
	746
	748
	749
BUCKET GP-LIGHT MATERIAL	753
	755
BUCKET GP-LIGHT MATERIAL–QUICK COUPLER	754
BUCKET GP-MULTIPURPOSE–QUICK COUPLER	756
BUCKET GP-PENETRATION	759
BUCKET GP-PENETRATION–QUICK COUPLER	758

C

CAB AR-ENCLOSED ROPS	794
	795
	796
	797
CAB AR-ENCLOSED ROPS–FIXED WINDOWS	794
	795
	796
CAB AR-ENCLOSED ROPS–JAPANESE MARKET ONLY	797
CAB AR-ENCLOSED ROPS–SLIDING WINDOWS	795
CAB GP-ENCLOSED ROPS	798
	800
CAMERA AR	133
CAMSHAFT GP	16
CANOPY AR-OPEN ROPS	800
CANOPY AR-SOFT	801
CANOPY GP-FOPS	802
	803
CANOPY GP-OPEN ROPS	804
CAP AS-COOLANT TANK	80
CAP AS-FILLER (HYDRAULIC TANK)	616
CAP-FILL (POWER TRAIN OIL)	248
	250
CAP-FUEL	122
CAP-OIL FILLER (ENGINE)	65
CAP-RAIN	88
CAP-VENTED (WINDOW WASHER)	953
CARRIAGE AS-FORK–QUICK COUPLER	760
CARRIAGE GP-FORK	761
CARTRIDGE GP-VANE PUMP–IMPLEMENT	481
CASE & PARTS GP-TRANSMISSION	218
	221
CHASSIS AR	1
	2
	3
CHOCK GP-WHEEL	957
CIRCUIT BREAKER AS (20-AMPERE)	857
CIRCUIT BREAKER AS (20-AMPERE) (HOOD TILT ACTUATOR)	785
CLUTCH GP–FIRST, THIRD	228
	232
CLUTCH GP–FORWARD HIGH, FORWARD LOW	226
	230
CLUTCH GP–REVERSE, SECOND	224
	234
COMMON AR	3
	4
COMPRESSOR GP-REFRIGERANT	805
	806
CONDENSER & MTG GP-REFRIGERANT	807
	808
CONDENSER GP-REFRIGERANT	809
CONNECTION GP-WATER	70
CONSOLE GP-OPERATOR	810
CONTROL AR-RIDE	482
CONTROL GP-BUCKET	702
CONTROL GP-DIFFERENTIAL LOCK	236
CONTROL GP-HANDLE–FNR, THIRD FUNCTION, PROPORTIONAL FLOW	811
CONTROL GP-HANDLE (DIRECTION, DOWNSHIFT SWITCHES)	329
	673
	674
	675
	676
CONTROL GP-HANDLE (JOYSTICK, AUXILIARY FUNCTIONS)	812
CONTROL GP-JOYSTICK–FNR, 3-FUNCTION, WITH PROPORTIONAL FLOW CONTROL	813

INDEX

Name	Page
CONTROL GP-JOYSTICK–4-FUNCTION, AUXILIARY	812
CONTROL GP-JOYSTICK (4-FUNCTION, AUXILIARY)	822
CONTROL GP-LIFT KICKOUT	134
CONTROL GP-PARKING BRAKE	414, 416
CONTROL GP-PARKING BRAKE–HANDLE	413
CONTROL GP-PILOT OPERATED HYD–JOYSTICK, 2-FUNCTION	816, 820
CONTROL GP-PILOT OPERATED HYD–JOYSTICK, 3-FUNCTION	818, 823
CONTROL GP-PILOT OPERATED HYD–JOYSTICK, 4-FUNCTION	821, 822, 824
CONTROL GP-PILOT OPERATED HYD–2-FUNCTION	814
CONTROL GP-POSITION–WORK TOOL	135
CONTROL GP-SERVICE BRAKE	418, 420
CONTROL GP-STEERING	825
CONTROL GP-TRANSMISSION	827, 828
CONTROL GP-UNPROGRAMMED	116
CONTROL GP-UNPROGRAMMED (ENGINE)	111
CONTROL GP-UNPROGRAMMED (POWER TRAIN)	827
CONTROL GP-WORK TOOL–HIGH LIFT MACHINES	707
CONTROL GP-WORK TOOL–STANDARD LIFT MACHINES	705
CONVERSION AR-AIR CLEANER	91
CONVERSION AR-CERTIFICATION	4, 5
CONVERSION AR-HYDRAULIC	482
CONVERSION GP-ROADING–ITALY	340
CONVERSION GP-ROADING–JAPANESE MARKET ONLY	341
CONVERTER GP-ELECTRICAL	136
CONVERTER GP-ELECTRICAL (24-VOLT TO 12-VOLT)	136
COOLANT HEATER LINES	873
COOLER AS-OIL (ENGINE)	71
COOLER GP-AXLE OIL	237
COOLER GP-FLTR BASE & ENG OIL	71
COOLER GP-HYD & TMSN OIL	483
COOLER GP-HYDRAULIC OIL	484
CORE AS-POWER TRAIN OIL COOLER	483
COUNTERWEIGHT GP	343, 344, 345, 346, 347
COUPLER AR-QUICK	762
COUPLER AR-QUICK–WIDE	762
COUPLER GP-QUICK	763
COUPLER GP-QUICK–STANDARD	764, 768
COUPLER GP-QUICK–WIDE	766
COVER GP-ACCESS–CAB FLOOR	348
COVER GP-ENGINE	17
COVER GP-SOUND SUPPRESSION–REAR FRAME	18, 19
COVER GP-TRANSMISSION	238
COVER GP-VALVE MECHANISM	20, 23, 26
CRANKSHAFT GP	27, 28
CYLINDER & MTG GP-COUPLER	485, 487
CYLINDER & MTG GP-COUPLER–WIDE	486
CYLINDER & MTG GP-STEERING	432, 433
CYLINDER BLOCK AS	29
CYLINDER BLOCK GP	31
CYLINDER GP-COUPLER	488
CYLINDER GP-HYDRAULIC–STEERING, RH	434
CYLINDER GP-LIFT	489, 491
CYLINDER GP-MULTIPURPOSE BUKT	492
CYLINDER GP-STEERING	437
CYLINDER GP-STEERING–LH	436
CYLINDER GP-TILT	493, 494
CYLINDER HEAD AS	32, 34
CYLINDER HEAD GP	36, 37

D

Name	Page
DASH GP	829
DEFROSTER GP-CAB	830
DIFFERENTIAL GP	242
DIFFERENTIAL GP–STANDARD	240, 241
DIFFERENTIAL GP-LIMITED SLIP	243, 245
DISPLAY GP-CAMERA	831
DOOR GP-ACCESS–HOOD SIDE	349, 350
DOOR GP-ACCESS–HOOD SIDE, LH	351
DOOR GP-ACCESS–HOOD SIDE, RH	352
DOOR GP-CAB	832, 839

INDEX

Name	Page
DOOR GP-CAB–FIXED WINDOW, LH	835
DOOR GP-CAB–FIXED WINDOW, RH	833
DOOR GP-CAB–LH	838
DOOR GP-CAB–RH	837
DOOR GP-CAB–SLIDING WINDOW, LH	843
DOOR GP-CAB–SLIDING WINDOW, RH	840
DRAIN GP-ENGINE OIL	38
	39
DRIVE GP-FAN	40
	41
DRIVE GP-FLEXIBLE COUPLING	246
DRIVE GP-PUMP–TRANSMISSION	247
DUCT GP-CAB AIR	846

E

EDGE GP-CUTTING	771
EDGE GP-CUTTING–RUBBER	772
EDGE GP-SEGMENT	773
ELBOW GP	533
ELECTRONICS AR-MACHINE	137
ELECTRONICS GP-COMMUNICATION	138
ELECTRONICS GP-POWER TRAIN	139
ELEMENT AS-JACKET WATER HEATER (240-VOLT, 1000-WATT)	142
ELEMENT (BREATHER) (CRANKCASE)	20
	23
ENGINE AR	9
	10
	11
ENGINE AR-PRIMARY	12
	13
	14
EXTENSION GP-BACKREST–CLOTH	847
EXTENSION GP-BACKREST (CLOTH)	931
EXTENSION GP-EXHAUST	92

F

FAN GP-SUCTION	73
FENDER AR-ROADING–HEAVY-DUTY	353
FENDER GP	353
FENDER GP-FRONT	354
	355
	356
FENDER GP-REAR–ROADING, LH	358
FENDER GP-REAR–ROADING, RH	359
FENDER GP-ROADING–REAR	360
FILLER GP-ENGINE OIL	65
FILLER GP-POWER TRAIN OIL	248
	250
FILM (BLACK)	542
	572
	692
FILM-CONTROLS (CONSOLE, RH)	897
FILM-CONTROLS (FUSE, RELAY PANEL)	901
FILM-FUSE/RELAY	901
FILM-FUSE/RELAY (IDENTIFICATION)	897
FILM GP	959
	960
	961
FILM GP–GERMAN ROADING	958
FILM GP-INTERNATIONAL	962
FILM GP-INTERNATIONAL (Z-BAR LINKAGE)	4
	5
FILM GP (WASTE HANDLER)	6
	7
	8
FILM (HIGH LIFT)	707
FILM-IDENTIFICATION (GROUP NUMBER)	809
FILM-IDENTIFICATION (IGNITION SWITCH)	145
FILM-IDENTIFICATION (WASTE HANDLER)	6
	7
	8
FILM-IDENTIFICATION (20-KM/H)	958
FILM-IDENTIFICATION (40-KM/H)	340
FILM-INFORMATION (12-VOLT)	136
FILM-INFORMATION (24-VOLT)	959
FILM-INSTRUCTION (ENGINE START)	895
FILM-INSTRUCTION (KICKOUT, POSITIONER CONTROL)	134
	135
FILM-INSTRUCTION (MACHINE SECURITY, INTL)	145
FILM-INSTRUCTION (SEAT ADJUSTMENT)	947
	949
FILM (INSTRUMENT PANEL COVER)	895
FILM-NOTICE (ROADING HEIGHT)	4
FILM-PANEL (LH)	189
	191
FILM (PANEL-RH)	189
FILM-PANEL (RH)	191
FILM-RATING (LOAD)	711
FILM-WARNING (ACCUM, HIGH PRESS, READ OMM)	480
FILM-WARNING (CRUSH HAZARD, READ OMM, INTL)	962
FILM-WARNING (HIGH PRESSURE, READ OMM, INTL)	577
FILM-WARNING (HIGH PRESSURE, READ OMM, U.S.)	577
FILM-WARNING (NO WELD, NO DRILL, READ OMM)	959
FILM-WARNING (PRODUCT LINK RADIO, INTL)	143
FILM-WARNING (PRODUCT LINK RADIO, U.S.)	143
FILM-WINDOW (FRONT)	794
FILM-WINDOW (FRONT)	961
FILTER & LINES GP-TRANSMISSION	252

INDEX

Name	Page
	254
FILTER & MTG GP-HYDRAULIC	496
FILTER AS (ENGINE OIL)	67
FILTER AS-FUEL (ELEMENT)	99
FILTER AS-FUEL (FILTER HEAD)	99
FILTER AS-OIL (ADVANCED EFFICIENCY) (POWER TRAIN)	256
FILTER AS-WATER SEP & FUEL	123
FILTER BASE & ENG OIL COOLER	71
FILTER (CAB AIR)	848
FILTER ELEMENT AS-AIR (PRIMARY)	90
FILTER ELEMENT AS-AIR (SECONDARY)	90
FILTER ELEMENT-FUEL (FILLER NECK SCREEN)	122
FILTER ELEMENT-OIL (ULTRA HIGH EFFICIENCY)	497
FILTER-FUEL (ULTRA HIGH EFFICIENCY) (HIGH EFFICIENCY)	100
FILTER GP-CAB AIR	848
FILTER GP-ENGINE OIL	67
FILTER GP-OIL–HYDRAULIC	497
FILTER GP-OIL–POWER TRAIN	256
FILTER GP-SECONDARY FUEL	99
	100
FILTER-MAGNETIC	218
	221
FLASHER AS	163
	165
	167
FLASHER AS (12 TO 24-VDC)	161
FLOOR GP	849
FLOOR MAT	849
	851
FLOOR MAT GP	851
FLYWHEEL GP	42
FORK GP-PALLET	773
	774
FORK GP-PALLET–LH	776
FORK GP-PALLET–RH	775
FRAME AS-LOADER	362
FRAME GP-LOADER	363
	364
	365
	367
FRAME GP-REAR	368
	369
	371
	372
FUSE (100-AMPERE)	195
FUSE (20-AMPERE)	173
	195
FUSE (30-AMPERE)	173
	195

G

Name	Page
GASKET (CAB FILTER)	848
GASKET-COVER	26
GASKET-COVER (VALVE)	20
	23
GASKET (HYDRAULIC TANK)	616
GASKET-VALVE COVER	20
	23
GASKET-WATER REGULATOR (WATER TEMPERTAURE REGULATOR)	70
GAUGE AS-OIL LEVEL (DIPSTICK)	272
	274
	278
	280
GAUGE AS-OIL LEVEL (DIPSTICK) (AXLE)	276
GAUGE GP-OIL LEVEL (DIPSTICK) (ENGINE)	49
GAUGE GP-SIGHT	258
GAUGE GP-SIGHT–POWER TRAIN OIL	257
GAUGE GP-SIGHT (POWER TRAIN OIL)	294
	295
GAUGE-SIGHT	616
GEAR GP-BEVEL & PINION	265
GEAR GP-BEVEL & PINION–FRONT	259
	263
GEAR GP-BEVEL & PINION–REAR	261
GEAR GP-INPUT TRANSFER	266
	267
GEAR GP-OUTPUT TRANSFER	268
	270
GLOW PLUG	140
GLOW PLUG GP	140
GUARD AS	6
	7
GUARD GP-CRANKCASE	6
	7
	60
	61
GUARD GP-DRIVE SHAFT	6
	7
	375
GUARD GP-FAN	74
GUARD GP-LIGHTING	376
	377
GUARD GP-LINES–COUPLER	382
GUARD GP-LINES–THIRD FUNCTION	379
	380
GUARD GP-LINES–TILT	378
	381
GUARD GP-POWER TRAIN	383
GUARD GP-RADIATOR	74
	385
GUARD GP-RADIATOR–WASTE HANDLER	384
GUARD GP-SEAL	374
GUARD GP-VANDALISM	853

INDEX

Name	Page
GUARD GP-WINDOW	855, 856

H

Name	Page
HANDLE GP-MODULAR (DIR, DNSFT, FLOW CONT SWITCHES)	811
HARNESS AS-CAB	897, 901
HARNESS AS-CAB (MAIN)	189, 191
HARNESS AS-CAB (UPPER)	189, 191
HARNESS AS-CONTROL (KICKOUT, POSITIONER)	506
HARNESS AS-CONTROL (KICKOUT, POSITIONER) (POSITIONER)	504
HARNESS AS-CONTROL (MACHINE SECURITY)	145
HARNESS AS-CONTROL (PRODUCT LINK)	143
HARNESS AS-ENGINE	195
HARNESS AS-ENGINE (ENGINE CONTROL MODULE)	194
HARNESS AS-FRONT	198, 200
HARNESS AS-FRONT LIGHTING (RH, LH)	163, 165, 167
HARNESS AS-HEATER & AIR COND	786
HARNESS AS-HEATER & AIR COND (CONDENSER FANS)	809
HARNESS AS-LIGHTING	157, 159
HARNESS AS-LIGHTING (ROADING)	341
HARNESS AS-LIGHTING (ROADING)	340
HARNESS AS-MONITOR	133, 831
HARNESS AS-RADIO	866, 868
HARNESS AS-RADIO (PRODUCT LINK)	143
HARNESS AS-RADIO (SPEAKERS)	864, 866
HARNESS AS-REAR	201
HARNESS AS-REAR LIGHTING (LH)	167
HARNESS AS-REAR LIGHTING (RH)	167
HARNESS AS-RIDE CONTROL	203
HARNESS AS-SOLENOID (FLOW CONTROL)	536
HARNESS AS-SOLENOID (HYDRAULIC LOCKOUT)	542, 572
HARNESS AS-STEERING (PRIMARY PRESSURE SWITCH)	206
HARNESS AS-STEERING (SECONDARY)	204, 206
HARNESS AS-SWITCH (DIFFERENTIAL LOCK)	181
HARNESS AS-VALVE (AUXILIARY)	620
HARNESS AS-VALVE (SEAT AIR COMPRESSOR)	949
HARNESS AS-WIRING (INJECTOR)	20, 23, 26
HEATER & MTG GP-CAB	857
HEATER AR-CAB	858
HEATER GP-CAB	859
HEATER GP-JACKET WATER	141, 142
HITCH GP-ARTICULATING	387
HOOD & GUARD GP	389
HOSE	76
HOSE (LOWER)	77
HOSE (UPPER)	77
HOUSING GP-FIXED AXLE	276
HOUSING GP-FIXED AXLE–FRONT	272, 274
HOUSING GP-FLYWHEEL	43
HOUSING GP-FRONT	44
HOUSING GP-OSCILLATING AXLE–LIMITED SLIP DIFFERENTIAL, REAR	280
HOUSING GP-OSCILLATING AXLE–REAR	278
HOUSING GP-SEAT SUSPENSION	861
HYDRAULIC AR	498, 499
HYDRAULIC AR–THIRD FUNCTION, CONTINUOUS FLOW	498
HYDRAULIC AR-2 VALVE–1-LEVER, WITH FNR	499, 500
HYDRAULIC AR-2 VALVE–2-LEVER	499
HYDRAULIC AR-3 VALVE	500
HYDRAULIC AR-3 VALVE–1-LEVER, 3RD FUNCTION, PROPORTIONAL FLOW	500
HYDRAULIC AR-3 VALVE–1-LEVER, 3RD FUNCTION, PROPORTIONAL FLOW, HIGH LIFT MACHINES	501
HYDRAULIC AR-3 VALVE–1-LEVER, 3RD FUNCTION, PROPORTIONAL FLOW, STANDARD LIFT MACHINES	501
HYDRAULIC AR-4 VALVE–JOYSTICK	501
HYDRAULIC AR-4 VALVE–2-LEVER, 3RD FUNCTION, PROPORTIONAL FLOW	502
HYDRAULIC AR-4 VALVE–2-LEVER, 3RD FUNCTION, PROPORTIONAL FLOW, HIGH LIFT MACHINES	503
HYDRAULIC AR-4 VALVE–2-LEVER, 3RD FUNCTION, PROPORTIONAL FLOW, STANDARD LIFT MACHINES	502
HYDRAULIC AR-4 VALVE–4-VALVE, 3-LEVER, STANDARD LIFT MACHINES	502

INDEX

Name	Page
HYDRAULIC AR-6 VALVE–2-LEVER, WITH FNR	503
HYDRAULIC AR-6 VALVE–2-LEVER, WITH FNR, STANDARD LIFT MACHINES	503

I

INDICATOR AS-AIR FILTER CHANGE	88
INDICATOR AS (DIFFERENTIAL LOCK)	181
INJECTOR GP-FUEL	101
INSTALLATION AR-COMMUNICATION	143
INSTALLATION AR-ENGINE	15
INSTALLATION GP-RADIO	864 866 868
INSTALLATION GP-SECURITY	145
INSULATION GP-HEAT–HOOD	392 422
INSULATION GP-HEAT–REAR FRAME	393 395

K

KEY	248 615 843 853
KEY (BATTERY DISCONNECT)	182
KEY (CAB)	840
KICKOUT & POSITIONER GP	504 506
KIT-ADJUSTER (ARMREST)	790
KIT-BEARING (CRANKSHAFT, CONNECTING ROD)	27 28
KIT-BEARING (CRANKSHAFT, MAIN)	28
KIT-BEARING (CRANKSHAFT, MAIN)	27
KIT-CUSHION (ARMREST)	790
KIT-SEAL	434
KIT-SEAL (HYDRAULIC ACCUMULATOR)	480
KIT-SEAL (SHUTTLE VALVE)	695

L

LADDER GP	397
LAMP GP-DOME	147
LAMP GP-DOME (24-VOLT)	869
LAMP GP-FLOOD	148 149 150
LAMP GP-FLOOD (24-VOLT)	157 159
LAMP GP-HEAD & SIGNAL	154
LAMP GP-HEAD & SIGNAL (LH)	153 163
	165
LAMP GP-HEAD & SIGNAL (RH)	153 163 165
LAMP GP-REGISTRATION PLATE	340 341
LAMP GP-STOP & TAIL	151
LAMP GP-WARNING BEACON–AMBER	152
LAMP GP-WARNING BEACON (AMBER, STROBE)	170
LAMP-HALOGEN (24-VOLT, 65-WATT)	157 159
LAMP-HALOGEN (24-VOLT, 65-WATT)	148 149
LAMP (24-VOLT, 10-WATT)	147 340 341
LAMP (24-VOLT, 21-WATT) (STOP, TAIL)	151
LAMP (24-VOLT, 3-WATT)	189 191 897
LAMP (24-VOLT, 5-WATT) (STOP, TAIL)	151
LAMP (24-VOLT, 70-WATT)	152
LIFTING GP-ENGINE	46
LIGHTER AS-CIGAR (24-VOLT)	189 191
LIGHTING AR-ROADING–ROADING, DIPPED, LH	153
LIGHTING AR-ROADING–ROADING,DIPPED,RH	154
LIGHTING GP-AUXILIARY–CAB FRONT	155
LIGHTING GP-FLOOD–CAB FRONT, REAR	157
LIGHTING GP-FLOOD–CANOPY FRONT	156
LIGHTING GP-FLOOD–CANOPY FRONT, REAR	159
LIGHTING GP-ROADING	161 163 165
LIGHTING GP-STOP & TAIL	167
LIGHTING GP-WARNING BEACON	169 170
LINER GP-CAB–UPPER	869
LINES GP-AIR	93
LINES GP-AIR CONDITIONER	871
LINES GP-AXLE OIL COOLER	282
LINES GP-BUCKET	508
LINES GP-CAB HEATER	873
LINES GP-CONNECTING–FIFTH, SIXTH FUNCTIONS, STANDARD LIFT MACHINES	510
LINES GP-COUPLER	514 522
LINES GP-COUPLER–HIGH LIFT MACHINES	520
LINES GP-COUPLER–STANDARD LIFT MACHINES	517 526

INDEX

Name	Page
LINES GP-COUPLER–STANDARD LIFT MACHINES, WIDE	524
LINES GP-COUPLER–THIRD FUNCTION, LOWER	512 513
LINES GP-DIFFERENTIAL LOCK	288
LINES GP-FRONT	527
LINES GP-FRONT–FOURTH FUNCTION	530 532
LINES GP-FRONT–THIRD FUNCTION	529 531
LINES GP-FRONT–THIRD FUNCTION, PROPORTIONAL FLOW	533
LINES GP-FUEL	102 104 107
LINES GP-GREASE	400 401
LINES GP-HYDRAULIC	542 547
LINES GP-HYDRAULIC–THIRD FUNCTION, CONTINUOUS FLOW	536
LINES GP-HYDRAULIC–3, 4, 6-VALVE	538
LINES GP-HYDRAULIC–4, 6-VALVE	540
LINES GP-HYDRAULIC FAN	550
LINES GP-HYDRAULIC FAN–REVERSING	555
LINES GP-HYDRAULIC FAN–STANDARD	553
LINES GP-LIFT CYLINDER	557 560
LINES GP-PILOT	572
LINES GP-PILOT–2-VALVE	564
LINES GP-PILOT–3-VALVE	568
LINES GP-RIDE CONTROL	577
LINES GP-SECONDARY STEERING	438 443
LINES GP-SERVICE BRAKE	423 426 429
LINES GP-STEERING	446 450 452 454
LINES GP-TILT CYLINDER	580 582
LINES GP-TORQUE CONV COOLER	290
LINES GP-WATER–WITH AXLE OIL COOLER	76
LINES GP-WATER–WITHOUT AXLE OIL COOLER	77
LINK GP-STEERING FRAME LOCK	403 404
LINKAGE AR-FRONT–HIGH LIFT MACHINES	709
LITERATURE GP	874
LOCK GP-CYLINDER	849 851

M

Name	Page
MANIFOLD GP-EXHAUST	96
MANIFOLD GP-INLET	94
MANIFOLD GP-VALVE–AUXILIARY, INLET	585
MANIFOLD GP-VALVE–INLET	586
MIRROR GP	875
MIRROR GP-REAR VIEW	885 886
MIRROR GP-REAR VIEW–EXTERIOR	876 878 879 882 883
MIRROR GP-REAR VIEW–EXTERIOR, LH	880
MIRROR GP-REAR VIEW–EXTERIOR, RH	881
MIRROR GP-REAR VIEW–INTERIOR	877
MIRROR GP-REAR VIEW–INTERIOR, LH	884
MODULE GP-DISPLAY (GAUGE CLUSTER)	895
MODULE GP-DISPLAY (WORK AREA VISUAL SYSTEM)	133 831
MODULE GP-INTERFACE (KEY)	145
MOTOR & MTG GP-HYDRAULIC FAN–REVERSING	588
MOTOR AR-HYDRAULIC FAN–REVERSING	589
MOTOR AR-HYDRAULIC FAN–STANDARD	589
MOTOR GP-ELECTRIC–SECONDARY STEERING	171
MOTOR GP-GEAR–HYDRAULIC FAN	590 592 594
MOTOR GP-GEAR–REVERSING FAN	591 593
MOTOR GP-WINDOW WIPER (24-VOLT) (FRONT)	955
MOTOR GP-WINDOW WIPER (24-VOLT) (REAR)	955
MOUNTING GP-AXLE	292 293
MOUNTING GP-BRACKET	405
MOUNTING GP-BRACKET (GREASE GUN)	1 2 3
MOUNTING GP-BUCKET	777
MOUNTING GP-CAB	887
MOUNTING GP-CAMERA–REAR VIEW	172
MOUNTING GP-CONTROL VALVE	595
MOUNTING GP-DISPLAY	888
MOUNTING GP-DISPLAY–REAR VIEW	888
MOUNTING GP-ENGINE & TMSN	47
MOUNTING GP-ETHER CANISTER	177
MOUNTING GP-RIM	294
MUFFLER GP	95

INDEX

Name	Page
O	
OPERATOR AR-ENCLOSED ROPS	889
OPERATOR AR-ENCLOSED ROPS–SLIDING WINDOWS	889
OPERATOR AR-OPEN ROPS	889
ORIFICE AS-AIR CONDITIONER	871
P	
PADLOCK GP	248
	250
	615
	853
PAN GP-BACKREST	890
	891
	892
PAN GP-OIL	49
PAN GP-SEAT	893
PANEL GP-INSTRUMENT	895
PANEL GP-INSTRUMENT–ENCLOSED ROPS	897
PANEL GP-INSTRUMENT–OPEN ROPS	901
PANEL GP-SOUND SUPPRESSION–CAB	406
PANEL GP-SOUND SUPPRESSION–REAR FRAME	407
PANEL GP-TOP–AIR CONDITIONER	410
PANEL GP-TOP–HEATER	408
PEDAL GP-BRAKE	905
PEDAL GP-GOVERNOR	906
	907
PISTON & ROD GP	51
PISTON GP	52
PIVOT GP-PILOT VALVE	596
	597
	598
PLATE & FILM GP	962
PLATE & FILM GP–INTERNATIONAL	964
PLATE GP-AXLE IDENTIFICATION	208
	209
	211
	212
PLATE GP-PILOT VALVE	599
	600
	601
	602
PLATE-IDENTIFICATION	212
PLATE-IDENTIFICATION (CAT)	734
PLATE-IDENTIFICATION (WORK TOOL)	724
	729
	743
	746
	747
	749
	750
	751
	752
	755
	756
	758
	759
PLATE-INSTRUCTION (AIR CONDITIONER)	871
PLATE-INSTRUCTION (BATTERY)	128
	130
PLATE-SERIAL NUMBER	221
PLATFORM AR	908
	909
PLATFORM GP	910
	911
PLATFORM GP-OPERATOR	912
	913
PLUG-DRAIN (ENGINE OIL)	49
PLUG-DRAIN (ENGINE OIL)	39
PLUG-DRAIN (TRANSMISSION)	218
	221
PLUG GP-CONTROL MANIFOLD	585
PLUG GP-ENGINE	53
PLUG GP-FLYWHEEL HOUSING	54
PLUG-MAGNETIC	272
	274
	278
	280
PLUG-MAGNETIC (AXLE HOUSING)	276
PLUG-SEAL	38
	542
	547
	572
POTENTIOMETER AS (PROPORTIONAL FLOW CONTROL)	813
POWER TRAIN AR	294
	295
PROTECTION GP-FUEL SYSTEM	117
PROTECTION GP-FUEL SYSTEM (LINE, LOW PRESSURE)	104
	107
	112
PROTECTOR GP-LINKAGE	778
PULLER-MINIFUSE	897
	901
PULLEY GP-CRANKSHAFT	55
PUMP & MOTOR GP-AXLE OIL CLR	282
PUMP & MOTOR GP-SEC STEERING–ELECTRIC DRIVE	457
PUMP & MTG GP-BRAKE & HYD FAN	603
PUMP & MTG GP-IMPL & STEERING	604
	605
PUMP GP-ENGINE OIL	68
PUMP GP-FUEL INJECTION	110
	111
	116

INDEX

Name	Page
PUMP GP-FUEL PRM & WATER SEP	123
PUMP GP-FUEL TRANSFER	110
PUMP GP-GEAR–BRAKE, HYDRAULIC FAN	606
	607
PUMP GP-GEAR–SECONDARY STEERING	458
PUMP GP-GEAR (SECONDARY STEERING)	457
PUMP GP-METERING (HMU)	443
	446
PUMP GP-METERING (HMU, QUICK STEER)	459
	460
PUMP GP-PISTON–IMPLEMENT, STEERING, PILOT	611
PUMP GP-PISTON–STEERING, PILOT	609
PUMP GP-PISTON & VANE–IMPLEMENT, STEERING, PILOT	613
PUMP GP-TRANSMISSION–1-SECTION GEAR	296
	297
	298
	299
PUMP GP-WATER	78

R

RADIATOR & AFTERCOOLER GP	80
RADIATOR GP	84
	86
RADIATOR GP–WASTE HANDLER	85
	87
RADIO GP-COMMUNICATION	914
RECEIVER DRYER AS (REFRIGERANT)	871
RECLINER GP-SEAT	915
REGULATOR AS-VOLTAGE (24-VOLT) (ALTERNATOR)	125
REGULATOR AS-WATER TEMPERATURE (CONNECTOR INCLUDED)	70
RELAY AS (24-VOLT)	830
RELAY AS (24-VOLT) (ALARM)	206
	901
RELAY AS (24-VOLT) (ALARM)	897
RELAY AS (24-VOLT) (CONDENSER)	809
RELAY AS (24-VOLT) (FRONT FLOODLIGHTS)	897
RELAY AS (24-VOLT) (FRONT FLOODLIGHTS)	901
RELAY AS (24-VOLT) (REVERSING FAN)	555
RELAY AS (24-VOLT) (RIDE CONTROL)	203
RELAY AS (24-VOLT) (ROADING LIGHTS)	163
RELAY AS (24-VOLT) (ROADING LIGHTS)	165
RELAY AS (24-VOLT) (SECONDARY STEERING)	204
RELAY GP	195
RELAY GP–MAIN POWER	173
RIM AR	300
RIM GP-DEMOUNTABLE	301
	302
	303
	304
	305
	306
	307
	308
	309
ROCKER ARM GP	56
	58
ROPS GP-ENCLOSED	916
ROPS GP-OPEN	917
ROTATING GP-PUMP–STEERING, PILOT	614

S

SCREEN AS	659
	661
SCREEN AS (IN-LINE) (AXLE OIL)	282
SCREEN AS (PILOT OIL)	326
	463
	657
	664
	666
	668
SCREEN GP-SUN	919
SCREEN-SUCTION	616
SCREEN-SUCTION (POWER TRAIN OIL)	221
SCREEN-SUCTION (TRANSMISSION CASE)	218
SEAL GP-DUO-CONE	272
	274
	276
	278
	280
SEAT & MOUNTING GP	920
	921
	923
SEAT BELT GP	924
SEAT BELT GP–2-IN	925
SEAT BELT GP–3-IN	926
SEAT BELT GP (RETRACTABLE)	923
SEAT GP–CLOTH	929
	931
SEAT GP–CLOTH, LUMBAR	927
SEAT GP-SUSPENSION–CLOTH	934
	937
SEAT GP-SUSPENSION–CLOTH, AIR	933
SEAT GP-SUSPENSION–CLOTH, HEATED	939
SEAT GP-SUSPENSION–CLOTH, LUMBAR	932
SEAT GP-SUSPENSION–VINYL	935
	936
SENDER AS-FUEL LEVEL	121
SENSOR AS-POSITION (ROTARY)	174
SENSOR GP-POSITION	174
SENSOR GP-PRESSURE (BRAKE OIL)	418

INDEX

Name	Page
	420
SENSOR GP-SPEED (FUEL PUMP)	110
SENSOR GP-SPEED (TMSN INTERMEDIATE OUTPUT 1)	334
SENSOR GP-SPEED (TMSN INTERMEDIATE OUTPUT 2)	334
SENSOR GP-SPEED (TORQUE CONVERTER OUTPUT)	334
SENSOR GP-SPEED (TRANSMISSION OUTPUT 1)	334
SENSOR GP-SPEED (TRANSMISSION OUTPUT 2)	334
SENSOR GP-TEMPERATURE	175
SENSOR GP-TEMPERATURE (ENGINE COOLANT)	195
SENSOR GP-TEMPERATURE (TORQUE CONVERTER OIL)	334
SENSOR GP-TEMPERATURE (TRANSMISSION OIL)	336
SENSOR-PRESSURE (FUEL RAIL PRESSURE)	111
SERVICE GP-FORK POSITIONER	773
	774
	775
	776
SERVICE GP-POWER TRAIN	139
SHAFT GP-DRIVE	310
SHAFT GP-DRIVE–FRONT	311
SKIRT GP-CAB	941
	942
SKIRT GP-CAB–ENCLOSED ROPS	945
SKIRT GP-CAB–OPEN ROPS	943
SLIP JOINT GP–CENTER	312
SLIP JOINT GP–REAR	313
SOFTWARE GP-COMMUNICATION (PRODUCT LINK 121SR)	914
SOFTWARE GP-COMMUNICATION (PRODUCT LINK 300)	138
SOFTWARE GP-POWER TRAIN	139
SOLENOID AS (WASTEGATE)	96
SPIDER & BEARING GP	311
SPRING AS-GAS	461
SPRING AS-GAS (HOOD)	389
STARTING AID GP-ETHER	176
	177
STARTING MOTOR GP-ELECTRIC	178
	179
STEERING AR–QUICK STEER	459
STEERING AR-SECONDARY	459
STEERING AR-SECONDARY–QUICK STEER	460
STEERING AR-STANDARD	460
STEERING AR-STANDARD–QUICK STEER	460
STEERING COLUMN GP-ADJUSTABLE	461
STOP GP-AXLE OSCILLATION	314
STRAINER	616
SUN VISOR	951
SUPPORT GP-SEAT	946
SUPPRESSION AR-SOUND	60
	61
SUSPENSION GP-SEAT	947
SUSPENSION GP-SEAT–AIR	949
SWITCH AS-FLOW (VARIABLE FLOW CONTROL)	536
SWITCH AS-FOOT	181
SWITCH AS-LIMIT (BRAKE PEDAL)	897
	901
SWITCH AS-LIMIT (PARKING BRAKE)	413
SWITCH AS-PRESSURE (AXLE OIL)	282
SWITCH AS-PRESSURE (HYDRAULIC OIL FILTER BYPASS)	497
SWITCH AS-PRESSURE (POWER TRAIN OIL FILTER BYPASS)	256
SWITCH AS-PRESSURE (REFRIGERANT)	871
SWITCH AS-PRESSURE (SECONDARY STEERING OIL)	438
	443
SWITCH AS-ROCKER (AIR CONDITIONER, HEATER CONT)	785
SWITCH AS-ROCKER (AUTOSHIFT CONTROL)	189
	191
SWITCH AS-ROCKER (AUXILIARY FLOW CONTROL) (24-VOLT)	813
SWITCH AS-ROCKER (BLOWER FAN SPEED)	897
SWITCH AS-ROCKER (BUCKET, FORK SELECT)	506
SWITCH AS-ROCKER (FLOODLIGHTS, FRONT)	189
	191
SWITCH AS-ROCKER (HAZARD WARNING LIGHTS)	189
	191
SWITCH AS-ROCKER (HEADLIGHT DIMMER)	167
SWITCH AS-ROCKER (HEADLIGHT DIMMER)	163
	165
SWITCH AS-ROCKER (HEATER CONTROL)	857
SWITCH AS-ROCKER (HYDRAULIC LOCKOUT)	514
	520
	897
SWITCH AS-ROCKER (HYDRAULIC LOCKOUT)	901
SWITCH AS-ROCKER (KICKOUT ON, OFF)	897
	901
SWITCH AS-ROCKER (QUICK COUPLER PIN LOCK)	517

INDEX

Name	Page
SWITCH AS-ROCKER (QUICK STEER)	450, 452
SWITCH AS-ROCKER (REVERSING FAN ON, OFF)	555
SWITCH AS-ROCKER (RIDE CONTROL)	203
SWITCH AS-ROCKER (ROADING)	191
SWITCH AS-ROCKER (ROADING LIGHTS)	189
SWITCH AS-ROCKER (SECONDARY STEERING)	204, 206
SWITCH AS-ROCKER (THROTTLE LOCK ON, OFF)	897, 901
SWITCH AS-ROCKER (THROTTLE LOCK SET, RESUME)	897, 901
SWITCH AS-ROCKER (TMSN NEUTRALIZER OVERRIDE CONT)	189, 191
SWITCH AS-ROCKER (WARNING BEACON)	169, 170
SWITCH AS-ROTARY (WIPER, WASHER) (REAR WIPER)	186
SWITCH AS-START (KEY) (ENGINE)	895
SWITCH AS (STARTER)	179
SWITCH AS-TEMPERATURE (AIR CONDITIONER)	786
SWITCH AS-TURN SIGNAL	161, 163, 165, 167
SWITCH AS-WIPER (24-VOLT) (FRONT)	186
SWITCH GP-DIFFERENTIAL LOCK	181
SWITCH GP-DISCONNECT–BATTERY	182
SWITCH GP-MAGNETIC	184
SWITCH GP-MAGNETIC– SECONDARY STEERING RELAY	183
SWITCH GP-MAGNETIC (24-VOLT) (MAIN RELAY)	195
SWITCH GP-TOGGLE– FUEL PRIMING PUMP ON, OFF	185
SWITCH GP-WIPER–INTERMITTENT	186

T

TANK & MTG GP-FUEL	121
TANK & MTG GP-HYDRAULIC	615
TANK GP-COOLANT	80
TANK GP-FUEL	122
TANK GP-HYDRAULIC	616
TIP GP-LONG	779, 780
TIP GP-SHORT	781, 782
TIRE & RIM AR	314, 315, 316, 317, 318, 319
TIRE & RIM GP	319
TRANSMISSION AR	320
TUBE GP-HYDRAULIC PUMP	49
TURBOCHARGER GP	96

U

UNION AS	288
UNION GP	524
UNIVERSAL JOINT GP	311

V

VALVE & MTG GP-MAIN CONTROL– AUXILIARY; 5TH, 6TH FUNCTIONS	620
VALVE & MTG GP-MAIN CONTROL– 2-FUNCTION	618
VALVE & MTG GP-MAIN CONTROL– 3-FUNCTION	619
VALVE & MTG GP-SOLENOID– HYDRAULIC LOCKOUT	623
VALVE & MTG GP-SOLENOID–QUICK STEER	462
VALVE & MTG GP-SOLENOID– THIRD FUNCTION, CONTINUOUS FLOW	624
VALVE & MTG GP-SOLENOID–THIRD FUNCTION, PROPORTIONAL FLOW	625
VALVE & MTG GP-SOLENOID (12 VDC)	288
VALVE AS-RELIEF (SECONDARY STEERING)	438, 443
VALVE AS-SHUTOFF	542, 547, 572
VALVE-BREATHER (CRANKCASE)	26
VALVE GP-ACCUMULATOR CHARGING (BRAKE)	607
VALVE GP-BRAKE CONTROL (SERVICE)	418, 420
VALVE GP-BYPASS– POWER TRAIN OIL COOLER	321
VALVE GP-CHECK	454, 542, 572, 627, 637
VALVE GP-CHECK–LOAD	626, 628
VALVE GP-CHECK (HYDRAULIC OIL COOLER BYPASS)	282, 550

INDEX

Name	Page
VALVE GP-CHECK (PILOT OIL)	644
VALVE GP-CHECK (SECONDARY STEERING)	438
VALVE GP-COMBINATION–TILT RELIEF	629
VALVE GP-CONTROL	637
	639
	641
	644
	681
VALVE GP-CONTROL–AUXILIARY; FIFTH, SIXTH FUNCTIONS	636
VALVE GP-CONTROL–AUXILIARY, FOURTH FUNCTION	634
VALVE GP-CONTROL–AUXILIARY, THIRD FUNCTION	632
VALVE GP-CONTROL–TILT	630
VALVE GP-ETHER STARTING	187
VALVE GP-FLOW CONTROL (AUXILIARY, INLET) (INLET MANIFOLD)	585
VALVE GP-FLUID SAMPLING–ENGINE OIL	69
VALVE GP-MAIN CONTROL–2-FUNCTION	646
	651
	654
VALVE GP-MAIN CONTROL–2-FUNCTION, AUXILIARY	650
VALVE GP-MAIN CONTROL–3-FUNCTION	648
	652
VALVE GP-MAIN CONTROL–4-FUNCTION	653
	655
VALVE GP-MANUAL–RESOLVER	656
VALVE GP-MANUAL (LOWERING CONTROL)	560
VALVE GP-MODULATING–TRANSMISSION CLUTCH	322
VALVE GP-PILOT–AUXILIARY	670
VALVE GP-PILOT–JOYSTICK, 2-FUNCTION	463
	657
	664
	668
	673
	674
	675
VALVE GP-PILOT–JOYSTICK, 3-FUNCTION	661
	666
	671
	672
	676
VALVE GP-PILOT–JOYSTICK, 4-FUNCTION	326
	329
VALVE GP-PILOT–2-FUNCTION	323
	659
	677
VALVE GP-PILOT CARTRIDGE	465
	467
	468
	469
	470
	471
	472
	473
	474
	475
	678
VALVE GP-PILOT (JOYSTICK, 3-FUNCTION)	823
	824
VALVE GP-PILOT (JOYSTICK, 4-FUNCTION)	821
VALVE GP-PRESSURE REDUCING	586
	679
	680
	681
VALVE GP-PRIORITY (STEERING)	542
	572
VALVE GP-PUMP CONTROL–PRESSURE, FLOW COMPENSATOR–STEERING, PILOT	682
VALVE GP-PURGE	684
VALVE GP-QUICK COUPLER	685
VALVE GP-RADIATOR DRAIN	84
	85
VALVE GP-RELIEF	686
VALVE GP-RELIEF–LINE	687
	688
	689
VALVE GP-RELIEF–TORQUE CONVERTER OUTLET	330
VALVE GP-RELIEF–TRANSMISSION HYDRAULIC CONTROL	331
VALVE GP-RELIEF (AUXILIARY; 5TH, 6TH FUNCTIONS)	636
VALVE GP-RELIEF (HYDRAULIC FAN MOTOR)	591
VALVE GP-RELIEF (MAIN)	586
VALVE GP-RELIEF (REFRIGERANT COMPRESSOR)	805
VALVE GP-RELIEF (SECONDARY STEERING)	438
	443
VALVE GP-RIDE CONTROL	690
VALVE GP-SHUTOFF–HYDRAULIC LOCKOUT	692
VALVE GP-SHUTTLE	431
	476
	694
	695
VALVE GP-SOLENOID	477
	696
	697
	698
	699
	700

INDEX

Name	Page
VALVE GP-SOLENOID (HYDRAULIC LOCKOUT)	586, 623
VALVE GP-SOLENOID (RIDE CONTROL)	690
VALVE GP-SOLENOID (THIRD FCTN, CONTINUOUS FLOW)	624
VALVE GP-SOLENOID (THIRD FCTN, PROPORTIONAL FLOW)	625
VALVE GP-SOLENOID (24-VOLT) (HYDRAULIC FAN)	590, 591
VALVE GP-SOLENOID (24-VOLT) (QUICK COUPLER)	685
VALVE GP-TIRE	333
VALVE GP-TRANSMISSION CONTROL	334, 336
VALVE MECHANISM GP	62
VISOR GP-CAB	951

W

Name	Page
WARNING GP-BACKUP	188
WASHER GP-WINDOW	952, 953
WASTE HANDLING AR	6, 7, 8
WASTE HANDLING AR–COSA	8
WATER SEP & FUEL PRM PUMP GP–PRIMARY FILTER	123
WINDOW GP-DOOR	954
WIPER GP-WINDOW	955
WIPER GP-WINDOW (FRONT)	955
WIRING GP-CAB–ENCLOSED ROPS	189
WIRING GP-CAB–OPEN ROPS	191
WIRING GP-CAMERA–REAR CHASSIS	193
WIRING GP-ELECTRONIC CONTROL	194
WIRING GP-ENGINE	195
WIRING GP-FRONT	198, 200
WIRING GP-REAR	201
WIRING GP-RIDE CONTROL	203
WIRING GP-SECONDARY STEERING	204, 206

INDEX

Désignation	Page

A

ACCOUDOIR (ASS)	789, 790, 791, 792, 793
ACCUMULATEUR - COMMANDE DE TRANSLATION (ASS)	480
ACCUMULATEUR - FREIN	411
ACCUMULATEUR - HUILE PILOTE (ASS)	478, 479
ACCUMULATEUR - RÉFRIGÉRANT	871
ACCUMULATEUR DE CHARGE - SOUPAPE (FREIN)	607
ADAPTATEUR DE VIDANGE DU CARTER D'HUILE (ASS)	49
AFFICHAGE DE LA CAMÉRA (ASS)	831
ALLUME-CIGARE (ENS) (24 VOLTS)	189, 191
ALTERNATEUR DE CHARGE (ASS)	125, 127
AMPOULE (24V, 10W)	147
AMPOULE (24V, 10W)	340, 341
AMPOULE (24V, 21W) (STOP, ARRIÈRE)	151
AMPOULE (24V, 3W)	189, 897
AMPOULE (24V, 3W)	191
AMPOULE (24V, 5W) (STOP, ARRIÈRE)	151
AMPOULE (24V, 70W)	152
ARBRE A CAMES (ASS)	16
ARBRE D'ENTRAÎNEMENT (ASS)	310, 311
ARRÊT-OSCILLATION D'ESSIEU (ASS)	314
ARTICULATION DE SOUPAPE PILOTE (ASS)	596, 597, 598
ATTELAGE D'ARTICULATION (ASS)	387
AUTOCOLLANT - GLACE (AVANT)	961
AUTOCOLLANT - GLACE (AVANT)	794
AUTOCOLLANT (ASS)- INTERNATIONAL	962
AUTOCOLLANT (ASS)- INTERNATIONAL (*Z-BAR LINKAGE)	4, 5
AUTOCOLLANT (COUVERCLE DE PANNEAU D'INSTRUMENTS)	895
AUTOCOLLANT DE FUSIBLE/ RELAIS	901
AUTOCOLLANT DE FUSIBLE/ RELAIS (IDENTIFICATION)	897
AUTOCOLLANT DE MISE EN GARDE (ACCUM, HAUTE PRESSION, LIRE LE GUIDE D'UTILISATION ET D'ENTRETIEN)	480
AUTOCOLLANT DE MISE EN GARDE (HAUTE PRESSION, LIRE LE GUIDE D'UTILISATION ET D'ENTRETIEN, INTERNATIONAL)	577
AUTOCOLLANT DE MISE EN GARDE (PAS DE SOUDAGE, PAS DE PERÇAGE, LIRE LE GUIDE D'UTILISATION ET D'ENTRETIEN)	959
AUTOCOLLANT DE MISE EN GARDE (PRESSION ÉLEVÉE, LIRE LE GUIDE D'UTILISATION ET D'ENTRETIEN, ÉTATS-UNIS)	577
AUTOCOLLANT DE MISE EN GARDE (PRODUCT LINK RADIO, INTL)	143
AUTOCOLLANT DE MISE EN GARDE (PRODUCT LINK RADIO, U.S.)	143
AUTOCOLLANT DE MISE EN GARDE (RISQUE D'ÉCRASEMENT, LIRE LE GUIDE D'UTILISATION ET D'ENTRETIEN, INTERNATIONAL)	962
AUTOCOLLANT DES COMMANDES (CONSOLE DE DROITE)	897
AUTOCOLLANT DES COMMANDES (PANNEAU DE RELAIS, FUSIBLE)	901
AUTOCOLLANT D'IDENTIFICATION (CONTACTEUR D'ALLUMAGE)	145
AUTOCOLLANT D'IDENTIFICATION (MANUTENTION DES DÉCHETS)	6, 7, 8
AUTOCOLLANT D'IDENTIFICATION (NUMÉRO D'ASSEMBLAGE)	809
AUTOCOLLANT D'IDENTIFICATION (20 KM/H)	958
AUTOCOLLANT D'IDENTIFICATION (40-KM/H)	340
AUTOCOLLANT DU PANNEAU (DROITE)	191
AUTOCOLLANT DU PANNEAU (GAUCHE)	189
AUTOCOLLANT DU PANNEAU (GAUCHE)	191
AUTOCOLLANT-INFORMATION (12 VOLTS)	136
AUTOCOLLANT-INFORMATION (24 VOLTS)	959
AUTOCOLLANT (LEVAGE HAUTE PORTÉE)	707
AUTOCOLLANT (NOIR)	542, 572, 692
AUTOCOLLANT (PANNEAU-DROIT)	189
AUTOCOLLANT-PUISSANCE (CHARGE)	711
AUXILIAIRE DE DÉMARRAGE À L'ÉTHER	176, 177
AVERTISSEUR (ASS)	124
AVERTISSEUR DE RECUL (ASS)	188
AXE DE CULBUTEUR (ASS)	56, 58

* TRADUCTION NON DISPONIBLE AU MOMENT DE LA PUBLICATION

INDEX

Désignation	Page

B

BALAI D'ESSUIE-GLACE (ENS) (503-MM) (ARRIÈRE) 955
BALAI D'ESSUIE-GLACE (ENS) (700-MM) (AVANT) 955
BATI - CHARGEUSE (ASS) 363
364
365
367
BÂTI - CHARGEUSE (ENS) 362
BÂTI AR (ASS) 368
369
371
372
BATTERIE (ASS) 133
BATTERIE ET CÂBLAGE 128
130
BATTERIE (12V, 900A) 133
*BEARING GP-PILLOW BLOCK 311
BLINDAGE D'ARBRE DE TRANSMISSION (ASS) 6
7
375
BLINDAGE DE TRANSMISSION (ASS) 383
BLOC-CYLINDRES (ASS) 31
BLOC-CYLINDRES (ENS) 29
BOÎTE DE VITESSES (VERSION) 320
BOUCHON À ÉVENT (LAVE-GLACE) 953
BOUCHON AIMANTÉ 272
274
278
280
BOUCHON AIMANTÉ (BOÎTIER D'ESSIEU) 276
BOUCHON CONTRE LA PLUIE 88
BOUCHON DE CARBURANT 122
BOUCHON DE COLLECTEUR DE COMMANDE (ASS) 585
BOUCHON DE GOULOTTE DE REMPLISSAGE D'HUILE (MOTEUR) 65
BOUCHON DE GOULOTTE DE REMPLISSAGE (ENS) (RÉSERVOIR HYDRAULIQUE) 616
BOUCHON DE MOTEUR (ASS) 53
BOUCHON DE REMPLISSAGE D'HUILE MOTEUR (ASS) 65
BOUCHON DE REMPLISSAGE (HUILE DE TRANSMISSION) 248
250
BOUCHON DE RÉSERVOIR DE LIQUIDE DE REFROIDISSEMENT (ENS) 80
BOUCHON DE VIDANGE (BOÎTE DE VITESSES) 218
221
BOUCHON DE VIDANGE (HUILE MOTEUR) 39
49
BOUCHON DU CARTER DE VOLANT (ASS) 54
BOUCHON-JOINT 38
542
547
572
BOUGIE DE PRECHAUFFAGE 140
BOUGIE DE PRÉCHAUFFAGE (ASS) 140
BRAS DE MANUTENTION (ASS) 711
BRAS D'ESSUIE-GLACE (ASS) 788
BRAS D'ESSUIE-GLACE (ASS) 955
BRAS ET PALIER DE LEVAGE (ENS) 701

C

*CAB GP-ENCLOSED ROPS 798
800
CABINE - REVÊTEMENT (ASS) 869
CABINE-FAISCEAU DE CÂBLES (ENS) 897
901
CABINE-FAISCEAU DE CÂBLES (ENS) (PRINCIPAL) 189
CABINE-FAISCEAU DE CÂBLES (ENS) (PRINCIPAL) 191
CABINE-FAISCEAU DE CÂBLES (ENS) (SUPÉRIEUR) 189
CABINE-FAISCEAU DE CÂBLES (ENS) (SUPÉRIEUR) 191
CABINE ROPS FERMÉE (ASS) 916
CABINE ROPS FERMÉE (VERSION) 794
889
CABINE ROPS FERMÉE (VERSION) 794
795
796
797
CABINE ROPS OUVERTE (VERSION) 889
CABLAGE AR (ASS) 201
CABLAGE AV (ASS) 200
CABLAGE AV (ASS) 198
CABLAGE DE CABINE (ASS) 189
CABLAGE DE CABINE (ASS) 191
CÂBLAGE DE CAMÉRA (ASS) 193
CÂBLAGE DE COMMANDE DE TRANSLATION (ASS) 203
CABLAGE DE DIRECTION AUXILIAIRE (ASS) . . . 204
206
CABLAGE DE MOTEUR (ASS) 195
CÂBLAGE-MONITEUR 133
831
CABLAGE MOTEUR (ENS) 195
CABLAGE MOTEUR (ENS) (MODULE DE COMMANDE MOTEUR) 194
CACHE-SOUPAPES (ASS) 20

* TRADUCTION NON DISPONIBLE AU MOMENT DE LA PUBLICATION

INDEX

Désignation	Page
	23
	26
CADENAS (ASS)	248
	250
	615
	853
CALE DE ROUE (ASS)	957
CANALIS. DE REFROIDISSEMENT DU CONV. DE COUPLE	290
CANALISATION DE DIRECTION AUXILIAIRE	438
	443
CANALISATIONS - BRANCHEMENT (ASS)	510
CANALISATIONS A COMMANDE PILOTE (ASS)	564
	568
	572
CANALISATIONS AV	527
	529
	530
	531
	532
	533
CANALISATIONS D'AIR (ASS)	93
CANALISATIONS DE CARBURANT (ASS)	107
CANALISATIONS DE CARBURANT (ASS)	102
	104
CANALISATIONS DE CHAUFFAGE DE CABINE (ASS)	873
CANALISATIONS DE CLIMATISEUR (ASS)	871
CANALISATIONS DE COMMANDE DE MARCHE	577
CANALISATIONS DE COUPLEUR (ASS)	512
	513
	514
	517
	520
	522
	524
	526
CANALISATIONS DE DIRECTION (ASS)	446
CANALISATIONS DE DIRECTION (ASS)	450
CANALISATIONS DE DIRECTION (ASS)	452
	454
CANALISATIONS DE GRAISSAGE (ASS)	400
	401
CANALISATIONS DE RÉCHAUFFEUR DE LIQUIDE DE REFROIDISSEMENT	873
CANALISATIONS DE REFROIDISSEUR D'HUILE D'ESSIEU (ASS)	282
CANALISATIONS DE VÉRIN DE LEVAGE (ASS)	557
	560
CANALISATIONS DE VERROUILLAGE DE DIFFÉRENTIEL	288
CANALISATIONS D'EAU (ASS)	76
	77
CANALISATIONS DU FREIN DE MANOEUVRE (ASS)	423
	426
	429
CANALISATIONS DU VÉRIN D'INCLINAISON (ASS)	580
	582
CANALISATIONS HYDRAULIQUES (ASS)	536
CANALISATIONS HYDRAULIQUES (ASS)	538
	540
	542
	547
CANALISATIONS HYDRAULIQUES DE VENTILATEUR (ASS)	550
	553
	555
CAPOT ET PROTECTION (ASS)	389
CAPTEUR DE POSITION (ENS) (ROTATIF)	174
CAPTEUR DE PRESSION (ASS) (HUILE DE FREIN)	418
	420
CAPTEUR DE PRESSION (PRESSION DE RAMPE D'ALIMENTATION)	111
CAPTEUR DE TEMPERATURE (ASS)	175
CAPTEUR DE TEMPERATURE (ASS) (HUILE DE BOÎTE)	336
CAPTEUR DE TEMPERATURE (ASS) (HUILE DU CONV. DE COUPLE)	334
CAPTEUR DE TEMPERATURE (ASS) (LIQUIDE DE REFROIDISSEMENT DU MOTEUR)	195
CAPTEUR DE VITESSE (ASS) (POMPE À CARBURANT)	110
CAPTEUR DE VITESSE (ASS) (SORTIE DU CONVERTISSEUR DE COUPLE)	334
CAPTEUR DE VITESSE (ASS) (SORTIE 1 DE BOÎTE)	334
CAPTEUR DE VITESSE (ASS) (SORTIE 2 DE BOÎTE)	334
CAPTEUR DE VITESSE (ASS) (*TMSN INTERMEDIATE OUTPUT 1)	334
CAPTEUR DE VITESSE (ASS) (*TMSN INTERMEDIATE OUTPUT 2)	334
CARDAN COULISSANT (ASS)	312
	313
CARTER - BLINDAGE (ASS)	6
	7
CARTER - BLINDAGE (ASS)	7
CARTER - BLINDAGE (ASS)	60
	61

* TRADUCTION NON DISPONIBLE AU MOMENT DE LA PUBLICATION

INDEX

Désignation	Page
CARTER AV (ASS)	44
CARTER DE VOLANT (ASS)	43
CARTER D'ESSIEU FIXE	272
	274
	276
CARTER D'ESSIEU OSCILLANT	278
	280
CARTER ET PIECES DE BOITE (ASS)	218
	221
CEINTURE DE SECURITE (ASS)	924
	925
	926
CEINTURE DE SECURITE (ASS) (RÉTRACTABLE)	923
CHAUFFAGE DE CABINE (ASS)	859
CHAUFFAGE DE CABINE (VERSION)	858
CHAUFFAGE ET MONTAGE - CABINE (ASS)	857
CLAPET DE DECHARGE (ASS)	330
	331
	686
	687
	688
	689
CLAPET DE DECHARGE (ASS) (AUXILIAIRE; 5E, 6E FONCTIONS)	636
CLAPET DE DECHARGE (ASS) (COMPRESSEUR DE RÉFRIGÉRANT)	805
CLAPET DE DECHARGE (ASS) (DIRECTION AUXILIAIRE)	438
	443
CLAPET DE DECHARGE (ASS) (MOTEUR DE VENTILATEUR HYDRAULIQUE)	591
CLAPET DE DECHARGE (ASS) (PRINCIPAL)	586
CLAPET DE DECHARGE (DIRECTION AUXILIAIRE)	438
	443
CLAPET DE RETENUE (ENS)	454
	542
	572
	626
	627
	628
CLAPET DE RETENUE (ENS)	637
CLAPET DE RETENUE (ENS) (DÉRIVATION DE REFROIDISSEUR D'HUILE HYDRAULIQUE)	282
	550
CLAPET DE RETENUE (ENS) (DIRECTION AUXILIAIRE)	438
CLAPET DE RETENUE (ENS) (HUILE TÉMOIN)	644
CLÉ	248
	615
	843
	853
CLÉ (CABINE)	840
CLÉ (COUPE-BATTERIE)	182
CLIGNOTANT (ENS)	163
	165
	167
CLIGNOTANT (ENS) (*12 TO 24-VDC)	161
CLIMATISEUR (ASS)	786
CLIMATISEUR ET MONTAGE (ASS)	785
COLLECTEUR - SOUPAPE (ASS)	585
	586
COLLECTEUR D'ADMISSION (ASS)	94
COLLECTEUR D'ÉCHAPPEMENT (ASS)	96
COLONNE DE DIRECTION RÉGLABLE	461
COMMANDE - OUTIL DE TRAVAIL (ASS)	705
	707
COMMANDE DE BOITE DE VITESSES (ASS)	827
	828
COMMANDE DE DIFFÉRENTIEL - VERROUILLAGE (ASS)	236
COMMANDE DE DIRECTION (ASS)	825
COMMANDE DE FAISCEAU (ENS) (LIAISON DE PRODUIT)	143
COMMANDE DE FAISCEAU (ENS) (POSITIONNEUR DE LIMITEUR)	506
COMMANDE DE FAISCEAU (ENS) (POSITIONNEUR DE LIMITEUR) (POSITIONNEUR)	504
COMMANDE DE FAISCEAU (ENS) (SÉCURITÉ MACHINE)	145
COMMANDE DE FREIN DE STATIONNEMENT (ASS)	413
	414
	416
COMMANDE DE GODET (ASS)	702
COMMANDE DE POIGNÉE (ASS)	811
COMMANDE DE POIGNÉE (ASS) (CONTACTEURS DE SENS DE MARCHE, RÉTROGRADATION)	329
COMMANDE DE POIGNÉE (ASS) (CONTACTEURS DE SENS DE MARCHE, RÉTROGRADATION)	673
	674
	675
	676
COMMANDE DE POIGNÉE (ASS) (*JOYSTICK, AUXILIARY FUNCTIONS)	812
COMMANDE DE POSITION (ASS)	135
COMMANDE DE TRANSLATION (VERSION)	482
COMMANDE ÉLECTRONIQUE - CABLAGE	194
COMMANDE ELECTRONIQUE DE LIMITEUR DE LEVAGE (ASS)	134

* TRADUCTION NON DISPONIBLE AU MOMENT DE LA PUBLICATION

INDEX

Désignation	Page
COMMANDE HYDRAULIQUE PILOTE (ASS)	814
	816
	818
	820
	821
	822
	823
	824
COMMANDE NON PROGRAMMEE (ASS)	116
COMMANDE NON PROGRAMMEE (ASS) (MOTEUR)	111
COMMANDE NON PROGRAMMEE (ASS) (TRANSMISSION)	827
COMMANDE PRINCIPALE DE SOUPAPE ET MONTAGE (ASS)	618
	619
	620
COMPARTIMENT DE BATTERIE (ASS)	339
COMPOSANTS ÉLECTRONIQUES DE LA MACHINE (VERSION)	137
COMPRESSEUR DE REFRIGERANT (ASS)	805
	806
CONDENSATEUR ET MONTAGE (RÉFRIGÉRANT)	807
	808
CONDENSEUR DE RÉFRIGÉRANT	809
CONSOLE DE CONDUITE (ASS)	810
CONTACTEUR DE CLIGNOTANT (ENS)	167
CONTACTEUR DE CLIGNOTANT (ENS)	161
	163
	165
CONTACTEUR DE DEBIT (ENS) (COMMANDE DE DÉBIT VARIABLE)	536
CONTACTEUR DE VERROUILLAGE DE DIFFÉRENTIEL (ASS)	181
CONTACTEUR (ENS) (DÉMARREUR)	179
CONTACTEUR MAGNETIQUE (ASS)	183
	184
CONTACTEUR MAGNETIQUE (ASS) (24 VOLTS) (RELAIS PRINCIPAL)	195
CONTREPOIDS (ASS)	343
	344
	345
	346
	347
COUDE (ASS)	533
COUPLEUR EXPRESS (ASS)	763
	764
	766
	768
COUPLEUR EXPRESS (VERSION)	762
COURONNE CONIQUE ET PIGNON	259
	261
	263
	265
COURROIE MULTIPLE	127
COUVERCLE DE BOITE DE VITESSES (ASS)	238
COUVERCLE DE VISITE (ASS)	348
COUVERCLE INFÉRIEUR-DOSSIER (ASS)	890
	891
	892
CREPINE	616
CROISILLON ET ROULEMENT	311
CULASSE (ASS)	36
	37
CULASSE (ENS)	32
	34
CULBUTERIE (ASS)	62

D

Désignation	Page
DÉFLECTEUR - INSONORISATION (ASS)	338
DEGIVREUR (ASS)	830
DÉMARREUR ÉLECTRIQUE (ASS)	178
	179
DIFFÉRENTIEL - GLISSEMENT LIMITÉ (ASS)	243
	245
DIFFERENTIEL (ASS)	240
	241
	242
DIRECTION AUXILIAIRE (VERSION)	459
	460
DIRECTION (ENS)	459
DISJONCTEUR DE SECURITE (ENS) (FREIN DE STATIONNEMENT)	413
DISJONCTEUR DE SECURITE (ENS) (PÉDALE DE FREIN)	897
	901
DISJONCTEUR (ENS) (20A)	857
DISJONCTEUR (ENS) (20A) (COMMANDE VÉRIN DE CAPOT)	785
DISTRIBUTEUR - 2 VOIES (VERSION)	499
	500
DISTRIBUTEUR - 3 VOIES (VERSION)	500
	501
DISTRIBUTEUR (ASS)	630
	632
	634
	636
	681
DISTRIBUTEUR (ASS)	637
	639
	641
	644
DISTRIBUTEUR DE BOITE (ASS)	334
DISTRIBUTEUR DE BOITE (ASS)	336

* TRADUCTION NON DISPONIBLE AU MOMENT DE LA PUBLICATION

INDEX

Désignation	Page
DISTRIBUTEUR DE COMMANDE ANTI-TANGAGE	690
DISTRIBUTEUR DE DÉBIT (ASS) (AUXILIAIRE, ADMISSION) (ADMISSION-COLLECTEUR)	585
DISTRIBUTEUR DE FREIN (ASS) (ENTRETIEN)	418
	420
DISTRIBUTEUR DE POMPE (ASS)	682
DISTRIBUTEUR ET MONTAGE (ASS)	595
DISTRIBUTEUR QUADRUPLE CORPS (VERSION)	501
	502
	503

E

EAU DES CHEMISES - RECHAUFFEUR (ASS)	141
	142
ECHELLE (ASS)	397
ÉCLAIRAGE - AUXILIAIRE (ASS)	155
ÉCLAIRAGE - FEUX DE ROUTE (ASS)	163
	165
ÉCLAIRAGE - FEUX DE ROUTE (ASS)	161
ÉCLAIRAGE - FEUX DE ROUTE (VERSION)	154
ÉCLAIRAGE - FEUX DE ROUTE (VERSION)	153
ÉCLAIRAGE - GYROPHARE (ASS)	169
	170
ÉCLAIRAGE - PROJECTEURS (ASS)	156
	157
	159
ECLAIRAGE DE GODET (ASS)	508
ÉCLAIRAGE-FEUX DE STOP ET ARRIÈRE (ASS)	167
ÉCRAN (ENS)	659
	661
ÉCRAN (ENS) (EN LIGNE) (HUILE D'ESSIEU)	282
ÉCRAN (ENS) (HUILE TÉMOIN)	326
	463
	657
	664
	666
	668
ÉCRAN MAGNÉTIQUE	218
	221
ÉLECTRONIQUE - COMMUNICATION (ASS)	138
ÉLECTRONIQUE DE TRANSMISSION (ASS)	139
ÉLÉMENT DE FILTRE À AIR (ENS) (PRINCIPAL)	90
ÉLÉMENT DE FILTRE À AIR (ENS) (SECONDAIRE)	90
ÉLÉMENT DE FILTRE À CARBURANT (TAMIS DE GOULOTTE DE REMPLISSAGE)	122
ÉLÉMENT DE FILTRE À HUILE (ULTRA-GRANDE EFFICACITÉ)	497
ÉLÉMENT DU RÉCHAUFFEUR D'EAU DES CHEMISES (ENS) (240V, 1000W)	142
ÉLÉMENT (RENIFLARD) (CARTER)	20
	23
ÉLIMINATION DES DÉCHETS (VERSION)	6
	7
	8
EMBRAYAGE (ASS)	224
	226
	228
	230
	232
	234
ENGRENAGE DE TRANSFERT DE RENDEMENT (ASS)	268
	270
ENTRAÎNEMENT D'ACCOUPLEMENT FLEXIBLE (ASS)	246
ENTRAÎNEMENT DE POMPE (ASS)	247
ENTRAÎNEMENT DE VENTILATEUR (ASS)	40
	41
ENTRAÎNEMENT POUR COURROIE (GYROPHARE) (GYROPHARE)	152
ENTRETIEN - POSITIONNEUR DE FOURCHE (ASS)	773
	774
	775
	776
ENTRETIEN DE LA TRANSMISSION (ASS)	139
ESSIEU FIXE (VERSION)	208
	209
	210
ESSIEU OSCILLANT	212
ESSIEU OSCILLANT (VERSION)	211
	212
ESSUIE-GLACE (ASS)	955
ESSUIE-GLACE (ASS) (AVANT)	955
EXTRACTEUR DE MINI-FUSIBLE	897
	901

F

FAISCEAU ARRIÈRE (ENS)	201
FAISCEAU DE CÂBLES AVANT (ENS)	198
	200
FAISCEAU DE CABLES (ENS) (INJECTEUR)	20
	23
FAISCEAU DE CABLES (ENS) (INJECTEUR)	26

* TRADUCTION NON DISPONIBLE AU MOMENT DE LA PUBLICATION

INDEX

Désignation	Page
FAISCEAU DE CHAUFFAGE ET CLIMATISATION	786
FAISCEAU DE CHAUFFAGE ET CLIMATISATION (VENTILATEURS DE CONDENSEUR)	809
FAISCEAU DE COMMANDE ANTITANGAGE (ENS)	203
FAISCEAU DE CONTACTEUR (ENS) (VERROUILLAGE DE DIFFÉRENTIEL)	181
FAISCEAU DE DIRECTION (ENS) (MANOCONTACT PRINCIPAL)	206
FAISCEAU DE DIRECTION (ENS) (SECONDAIRE)	204 206
FAISCEAU DE RADIO (ENS)	866 868
FAISCEAU DE RADIO (ENS) (HAUTS-PARLEURS)	864 866
FAISCEAU DE RADIO (ENS) (LIAISON DE PRODUIT)	143
FAISCEAU DE REFROIDISSEUR D'HUILE DE TRANSMISSION (ENS)	483
FAISCEAU DE SOLÉNOÏDE (ENS) (COMMANDE DE DÉBIT)	536
FAISCEAU DE SOLÉNOÏDE (ENS) (VERROUILLAGE HYDRAULIQUE)	572
FAISCEAU DE SOLÉNOÏDE (ENS) (VERROUILLAGE HYDRAULIQUE)	542
FAISCEAU DE SOUPAPE (ENS) (AUXILIAIRE)	620
FAISCEAU DE SOUPAPE (ENS) (COMPRESSEUR PNEUMATIQUE DE SIÈGE)	949
FAISCEAU D'ÉCLAIRAGE ARRIÈRE (ENS) (DROITE)	167
FAISCEAU D'ÉCLAIRAGE ARRIÈRE (ENS) (GAUCHE)	167
FAISCEAU D'ÉCLAIRAGE AVANT (ENS) (DROITE, GAUCHE)	163 165
FAISCEAU D'ÉCLAIRAGE AVANT (ENS) (DROITE, GAUCHE)	167
FAISCEAU D'ÉCLAIRAGE (ENS)	157 159
FAISCEAU D'ÉCLAIRAGE (ENS) (DÉPLACEMENT SUR ROUTE)	340 341
FEUX ARRIÈRE ET FEUX D'ARRÊT	151
FILTRE - SÉPARATEUR D'EAU ET DE CARBURANT (ENS)	123
FILTRE A AIR (ASS)	88 90
FILTRE À AIR DE CABINE (ASS)	848
FILTRE A CARBURANT (ENS) (ÉLÉMENT)	99
FILTRE A CARBURANT (ENS) (TÊTE DE FILTRE)	99
FILTRE À CARBURANT SECONDAIRE (ASS)	99
FILTRE À CARBURANT SECONDAIRE (ASS)	100
FILTRE A CARBURANT (ULTRA-GRANDE EFFICACITÉ) (GRANDE EFFICACITÉ)	100
FILTRE A HUILE (ASS)	256 497
FILTRE À HUILE (ENS) (EFFICACITÉ AVANCÉE) (TRANSMISSION)	256
FILTRE À HUILE HYDRAULIQUE ET MONTAGE (ASS)	496
FILTRE À HUILE MOTEUR (ASS)	67
FILTRE (AÉRATION DE LA CABINE)	848
FILTRE (AIR DE CABINE)	848
FILTRE (ENS) (HUILE MOTEUR)	67
FILTRE ET CANALISATIONS - BOÎTE DE VITESSE (ASS)	252 254
FLEXIBLE	76
FLEXIBLE (INFÉRIEUR)	77
FLEXIBLE (SUPERIEUR)	77
FOURCHE PALLETTE (ASS)	773 774 775 776
FREIN DE MANOEUVRE - COMMANDE (ASS)	418 420
FREIN DE STATIONNEMENT (ASS)	412
FREIN ET TRAINS PLANÉTAIRES (ASS)	213 214 215 216 217
FUSIBLE (100A)	195
FUSIBLE (20A)	173 195
FUSIBLE (30A)	173 195

G

GAINE D'AIR (ASS)	846
GARDE-BOUE AR (ASS)	358 359
GARDE-BOUE (ASS)	353 360
GARDE-BOUE AV (ASS)	354 355 356
GARDE-BOUE (VERSION)	353

* TRADUCTION NON DISPONIBLE AU MOMENT DE LA PUBLICATION

INDEX

Désignation	Page
*GEAR GP-INPUT TRANSFER	266
GICLEUR-ÉTHER (ENS)	177
GLACE DE PORTIÈRE (ASS)	954
GODET - MATÉRIAUX MEUBLES (VERSION)	717
GODET - MONTAGE (ASS)	777
GODET NORMAL (ASS)	740
	741
	742
	743
	744
	745
	746
	747
	748
	749
	750
	751
	752
GODET NORMAL (ENS)	725
	726
	727
	728
	729
	730
	731
	732
	733
GODET NORMAL (ENS)	721
	722
	723
	724
GODET NORMAL (VERSION)	712
	713
	714
	715
	716
GODET PÉNÉTRATION (ASS)	758
	759
GODET-PÉNÉTRATION (ENS)	737
	738
	739
GODET POUR MATERIAUX LEGERS (ASS)	753
	754
	755
GODET POUR MATERIAUX MEUBLES (ENS)	734
	736
GODET TOUS-TRAVAUX (ASS)	756
GODET TOUS-TRAVAUX (VERSION)	718
	719
	720
GOULOTTE DE REMPLISSAGE D'HUILE DE TRANSMISSION	248
	250
GROUPE DE PROTECTION-OUTILS D'ATTAQUE AU SOL-TRINGLERIE	778
GROUPE DE ROTATION DE POMPE	614
GROUPE DE TRANSFORMATION - DÉPLACEMENT ROUTIER	340
	341
GROUPE D'ISOLATION DE CHALEUR	392
	393
	395
	422

H

HUILE MOTEUR - CARTER (ASS)	49

I

INDICATEUR DE REMPLACEMENT DE FILTRE À AIR (ENS)	88
INDICATEUR (ENS) (VERROUILLAGE DE DIFFÉRENTIEL)	181
INJECTEUR DE CARBURANT (ASS)	101
INSONORISATION - COUVERCLE (ASS)	18
	19
INSONORISATION (VERSION)	60
	61
INTERRUPTEUR À BASCULE (ASS)	185
INTERRUPTEUR A PEDALE (ENS)	181
INTERRUPTEUR BALANCIER (ENS) (BLOCAGE HYDRAULIQUE)	514
	520
	897
	901
INTERRUPTEUR BALANCIER (ENS) (COMMANDE AUTOSHIFT)	189
INTERRUPTEUR BALANCIER (ENS) (COMMANDE AUTOSHIFT)	191
INTERRUPTEUR BALANCIER (ENS) (COMMANDE DE CLIMATISATION, CHAUFFAGE)	785
INTERRUPTEUR BALANCIER (ENS) (COMMANDE DE DÉBIT AUXILIAIRE) (24V)	813
INTERRUPTEUR BALANCIER (ENS) (COMMANDE DE NEUTRALISATION DE TRANSMISSION)	189
INTERRUPTEUR BALANCIER (ENS) (COMMANDE DE NEUTRALISATION DE TRANSMISSION)	191
INTERRUPTEUR BALANCIER (ENS) (COMMANDE DE RÉCHAUFFEUR)	857
INTERRUPTEUR BALANCIER (ENS) (COMMANDE DE TRANSLATION)	203

* TRADUCTION NON DISPONIBLE AU MOMENT DE LA PUBLICATION

INDEX

Désignation	Page
INTERRUPTEUR BALANCIER (ENS) (DÉPLACEMENT ROUTIER)	191
INTERRUPTEUR BALANCIER (ENS) (DIRECTION AUXILIAIRE)	204
	206
INTERRUPTEUR BALANCIER (ENS) (FEUX DE DÉTRESSE)	189
INTERRUPTEUR BALANCIER (ENS) (FEUX DE DÉTRESSE)	191
INTERRUPTEUR BALANCIER (ENS) (FEUX DE ROUTE)	189
INTERRUPTEUR BALANCIER (ENS) (GYROPHARE)	169
	170
INTERRUPTEUR BALANCIER (ENS) (INVERSEUR D'INTENSITÉ DE PHARES AVANT)	163
	165
	167
INTERRUPTEUR BALANCIER (ENS) (MARCHE, ARRÊT DU RAPPEL AUTOMATIQUE)	901
INTERRUPTEUR BALANCIER (ENS) (MARCHE, ARRÊT DU RAPPEL AUTOMATIQUE)	897
INTERRUPTEUR BALANCIER (ENS) (MARCHE, ARRÊT DU VENTILATEUR À PALES RÉVERSIBLES)	555
INTERRUPTEUR BALANCIER (ENS) (MARCHE RAPIDE)	450
	452
INTERRUPTEUR BALANCIER (ENS) (PROJECTEURS AVANT)	189
INTERRUPTEUR BALANCIER (ENS) (PROJECTEURS AVANT)	191
INTERRUPTEUR BALANCIER (ENS) (REPRISE, RÉGLAGE DU VERROUILLAGE D'ACCÉLÉRATEUR)	901
INTERRUPTEUR BALANCIER (ENS) (REPRISE, RÉGLAGE DU VERROUILLAGE D'ACCÉLÉRATEUR)	897
INTERRUPTEUR BALANCIER (ENS) (SÉLECTEUR DE GODET, FOURCHE)	506
INTERRUPTEUR BALANCIER (ENS) (VERROUILLAGE PAPILLON DES GAZ ENGAGÉ, DÉSENGAGÉ)	901
INTERRUPTEUR BALANCIER (ENS) (VERROUILLAGE PAPILLON DES GAZ ENGAGÉ, DÉSENGAGÉ)	897
INTERRUPTEUR BALANCIER (ENS) (VERROUILLAGE PAR AXE DU COUPLEUR EXPRESS)	517
INTERRUPTEUR BALANCIER (ENS) (VITESSE DU VENTILATEUR DE SOUFFLANTE)	897
INTERRUPTEUR DE DEMARRAGE (ENS) (CLAVETTE) (MOTEUR)	895
INTERRUPTEUR D'ESSUIE-GLACE (ASS)	186
INTERRUPTEUR D'ESSUIE-GLACE (24 VOLTS) (AVANT)	186
INTERRUPTEUR ROTATIF (ENS) (ESSUIE-GLACE, LAVE-GLACE) (ESSUIE-GLACE ARRIÈRE)	186

J

Désignation	Page
JANTE DÉMONTABLE (ASS)	301
	302
	303
	304
	305
	306
	307
	308
	309
JANTE (VERSION)	300
JAUGE D'HUILE MOTEUR (BAIONNETTE) (ASS) (MOTEUR)	49
JAUGE D'HUILE MOTEUR (BAÏONNETTE) (ENS)	272
	274
JAUGE D'HUILE MOTEUR (BAÏONNETTE) (ENS)	278
	280
JAUGE D'HUILE MOTEUR (BAÏONNETTE) (ENS) (ESSIEU)	276
JOINT-CACHE-SOUPAPES	20
	23
JOINT DE COUVERCLE	26
JOINT DE COUVERCLE (SOUPAPE)	20
	23
JOINT DE RÉGULATEUR D'EAU (THERMOMÈTRE)	70
JOINT DUO-CONE (ASS)	272
	274
	276
	278
	280
JOINT PLAT (FILTRE DE CABINE)	848
JOINT PLAT (RÉSERVOIR HYDRAULIQUE)	616
JOINT UNIVERSEL (ASS)	311
JUPE DE PROTECTION DE CABINE (ASS)	941
	942
	943
	945

* TRADUCTION NON DISPONIBLE AU MOMENT DE LA PUBLICATION

INDEX

Désignation	Page

K

KIT - COUSSIN (ACCOUDOIR) 790
KIT DE COUSSINET (VILEBREQUIN, BIELLE) . . . 27
28
KIT DE COUSSINET (VILEBREQUIN, PRINCIPAL) 27
28
KIT DE JOINTS 434
KIT DE JOINTS (ACCUMULATEUR HYDRAULIQUE) 480
KIT DE JOINTS (VANNE-PILOTE) 695
KIT DE REGLAGE (ACCOUDOIR) 790

L

LAME DE COUPE (ASS) 771
772
LAMPE - GYROPHARE (ASS) 152
LAMPE - GYROPHARE (ASS) (JAUNE, STROBOSCOPIQUE) 170
LAMPE - PHARE (ASS) 148
LAMPE - PHARE (ASS) 149
150
LAMPE - PHARE (ASS) (24 VOLTS) 157
159
LAMPE - PHARE ET CLIGNOTANT 154
LAMPE - PHARE ET CLIGNOTANT (DROITE) . . . 153
163
165
LAMPE - PHARE ET CLIGNOTANT (GAUCHE) . . . 153
163
165
LAMPE HALOGÈNE (24V, 65W) 157
159
LAMPE HALOGÈNE (24V, 65W) 148
149
LAMPE-PLAQUE D'IMMATRICULATION (ASS) 340
341
LAVE-GLACE - VITRE (ASS) 952
953
LIAISON - VERROUILLAGE DE CHÂSSIS DE DIRECTION (ASS) 403
404
LIMITEUR DE LEVAGE ET RETOUR À L'ANGLE DE CAVAGE 504
506
LITTÉRATURE (ASS) 874
LOGICIEL - TRANSMISSION (ENS) 139
LOGICIEL DE COMMUNICATION (ASS) (PRODUCT LINK 121SR) 914
LOGICIEL DE COMMUNICATION (ASS) (PRODUCT LINK 300) 138

Désignation	Page

M

MANOCONTACT (ENS) (DÉRIVATION DE FILTRE À HUILE HYDRAULIQUE) 497
MANOCONTACT (ENS) (DÉRIVATION DU FILTRE À HUILE DE TRANSMISSION) 256
MANOCONTACT (ENS) (HUILE DE DIRECTION AUXILIAIRE) 438
443
MANOCONTACT (ENS) (HUILE D'ESSIEU) 282
MANOCONTACT (ENS) (RÉFRIGÉRANT) 871
MODULE D'AFFICHAGE (ASS) (GROUPE D'INSTRUMENTS) 895
MODULE D'AFFICHAGE (ASS) (SYSTÈME DE VISION DE L'AIRE DE TRAVAIL) 831
MODULE D'AFFICHAGE (ASS) (SYSTÈME DE VISION DE L'AIRE DE TRAVAIL) 133
MODULE-INTERFACE (ASS) (CLAVETTE) 145
MONTAGE D'AFFICHAGE (ASS) 888
MONTAGE DE CABINE (ASS) 887
MONTAGE DE CAMÉRA (ASS) 172
MONTAGE DE CARTOUCHE D'ÉTHER (ASS) . . . 177
MONTAGE DE JANTE (ASS) 294
MONTAGE DE MOTEUR ET BOÎTE (ASS) 47
MONTAGE DE MOTEUR (VERSION) 15
MONTAGE DE RADIO (ASS) 864
MONTAGE DE RADIO (ASS) 866
868
MONTAGE D'ESSIEU (ASS) 292
293
MONTAGE-SÉCURITÉ (ASS) 145
MOTEUR - COUVERCLE (ASS) 17
MOTEUR À ENGRENAGES (ASS) 590
591
592
593
594
MOTEUR D'ESSUIE-GLACE (ASS) (24 VOLTS) (ARRIÈRE) 955
MOTEUR D'ESSUIE-GLACE (ASS) (24 VOLTS) (AVANT) 955
MOTEUR ELECTRIQUE (ASS) 171
MOTEUR ET MONTAGE DE VENTILATEUR HYDRAULIQUE (ASS) 588
MOTEUR (VERSION) 9
10
11
MOTEUR (VERSION PRINCIPALE) 12
13
14

O

OEILLETONS DE LEVAGE MOTEUR (ASS) 46

* TRADUCTION NON DISPONIBLE AU MOMENT DE LA PUBLICATION

INDEX

Désignation	Page
ORIFICE DE CLIMATISEUR (ENS)	871

P

Désignation	Page
PALONNIER - GROUPE DE COMMANDE (ASS)	812 813
PALONNIER - GROUPE DE COMMANDE (ASS) (4 FONCTIONS, AUXILIAIRE)	822
PANNEAU D'INSONORISATION (ASS)	406 407
PANNEAU SUPERIEUR (ASS)	408 410
PARE-SOLEIL	951
PARE-SOLEIL (ASS)	919
PAVILLON (VERSION)	801
PEDALE DE FREIN (ASS)	905
PIGNONNERIE D'ENTREE DE TRANSFERT (ASS)	267
PISTON (ASS)	52
PISTON ET BIELLE (ASS)	51
PLAFONNIER (ASS)	147
PLAFONNIER (ASS) (24 VOLTS)	869
PLANCHER - CABINE (ASS)	849
PLAQUE DE NUMÉRO DE SÉRIE	221
PLAQUE DE SOUPAPE PILOTE (ASS)	599 600 601 602
PLAQUE D'INSTRUCTIONS (BATTERIE)	128 130
PLAQUE D'INSTRUCTIONS (CLIMATISEUR)	871
PLAQUE (IDENTIFICATION)	212
PLAQUE (IDENTIFICATION) (CAT)	734
PLAQUE (IDENTIFICATION) (OUTIL DE TRAVAIL)	724 729 743 746 747 749 750 751 752 755
PLAQUE (IDENTIFICATION) (OUTIL DE TRAVAIL)	756 758 759
PLAQUE SIGNALÉTIQUE (ASS)	958 959 960 961
PLAQUE SIGNALÉTIQUE (ASS) (MANUTENTION DES DÉCHETS)	6 7 8
PLAQUE SIGNALÉTIQUE D'ESSIEU (ASS)	211 212
PLAQUE SIGNALÉTIQUE D'ESSIEU (ASS)	208 209
PLAQUE SIGNALÉTIQUE (REMARQUE) (HAUTEUR POUR DÉPLACEMENTS SUR ROUTE)	4
PLAQUES SIGNALETIQUES ET AUTOCOLLANTS (ASS)	962 964
PLATE-FORME (ASS)	910 911
PLATE-FORME DE CABINE	912 913
PLATE-FORME (VERSION)	908 909
PNEU - GROUPE DE VALVE	333
PNEU ET JANTE (ASS)	319
PNEU ET JANTE (VERSION)	314 315 316 317 318 319
POIGNÉE MODULAIRE (ASS) (*DIR, DNSFT, FLOW CONT SWITCHES)	811
POINTE COURTE (ASS)	781 782
POINTE LONGUE (ASS)	779 780
POMPE À AILETTES - CARTOUCHE	481
POMPE A EAU (ASS)	78
POMPE A ENGRENAGES (ASS)	458 606 607
POMPE A ENGRENAGES (ASS) (DIRECTION AUXILIAIRE)	457
POMPE A HUILE MOTEUR (ASS)	68
POMPE A PISTONS (ASS)	609 611
POMPE À PISTONS ET PALETTES (ASS)	613
POMPE D'ALIMENTATION EN CARBURANT (ASS)	110
POMPE D'AMORÇAGE DE CARBURANT ET SÉPARATEUR D'EAU (ASS)	123
POMPE DE BOÎTE DE VITESSES (ASS)	296 297 298 299

* TRADUCTION NON DISPONIBLE AU MOMENT DE LA PUBLICATION

INDEX

Désignation	Page
POMPE DE DIRECTION AUXILIAIRE ET MONTAGE (ASS)	457
POMPE DE REGULARISATION DE DEBIT (ASS) (MODULE DE RÉGULATION)	443
	446
POMPE DE REGULARISATION DE DEBIT (ASS) (POMPE DOSEUSE, BRAQUAGE RAPIDE)	459
	460
POMPE DE SÉPARATEUR D'EAU ET D'AMORÇAGE DE CARBURANT (ASS)	123
POMPE DE VENTILATEUR HYDRAULIQUE ET DE FREIN ET MONTAGE (ASS)	603
POMPE D'INJECTION DE CARBURANT (ASS)	110
	111
	116
POMPE ET MONTAGE - ÉQUIPEMENT ET DIRECTION (ASS)	604
	605
POMPE ET MOTEUR - NETTOYEUR D'HUILE D'ESSIEU (ASS)	282
PORTE DE VISITE (ASS)	349
	350
	351
	352
PORTE-POINTE (ASS)	710
PORTIÈRE DE CABINE (ASS)	832
	833
	835
	837
	838
	839
	840
	843
POTENTIOMETRE (ENS) (COMMANDE DE DÉBIT PROPORTIONNEL)	813
PROTECTEUR DES CANALISATIONS (ASS)	378
	379
	380
	381
	382
PROTECTION - CIRCUIT DE CARBURANT (ASS)	117
PROTECTION - CIRCUIT DE CARBURANT (ASS) (CANALISATION, BASSE PRESSION)	104
	107
PROTECTION - CIRCUIT DE CARBURANT (ASS) (CANALISATION, BASSE PRESSION)	112
PROTECTION - ÉCLAIRAGE (ASS)	376
	377
PROTECTION ANTIVANDALISME (ASS)	853
PROTECTION DE GLACE (ASS)	855
	856
PROTECTION DE JOINT (ASS)	374
PROTECTION DE VENTILATEUR (ASS)	74
PROTECTION (ENS)	6
	7
PROTÈGE-RADIATEUR (ASS)	74
	384
	385

R

RACCORD D'EAU (ASS)	70
RACCORD (UNION) (ASS)	524
RADIATEUR (ASS)	84
	85
	86
	87
RADIATEUR ET REFROIDISSEUR (ASS)	80
RADIO -COMMUNICATION (ASS)	914
RALLONGE D'ÉCHAPPEMENT (ASS)	92
RALLONGE DU DOSSIER DE SIEGE	847
RALLONGE DU DOSSIER DE SIEGE (TOILE)	931
RÉCEPTEUR-DÉSHYDRATEUR (ENS) (RÉFRIGÉRANT)	871
REFROIDISSEUR D'ADMISSION (ENS)	80
REFROIDISSEUR D'HUILE D'ESSIEU (ASS)	237
REFROIDISSEUR D'HUILE (ENS) (MOTEUR)	71
REFROIDISSEUR D'HUILE HYDRAULIQUE (ASS)	484
REFROIDISSEUR D'HUILE HYDRAULIQUE ET DE BOÎTE (ASS)	483
REFROIDISSEUR HUILE MOTEUR ET SUPPORT DE FILTRE	71
REGARD DE NIVEAU	616
REGARD DE NIVEAU (ASS)	257
	258
REGARD DE NIVEAU (ASS) (HUILE DE TRANSMISSION)	294
	295
REGLAGE DE SIEGE (ASS)	783
RÉGULATEUR - PÉDALE (ASS)	906
	907
REGULATEUR DE LA TENSION (ENS) (24 VOLTS) (ALTERNATEUR)	125
RÉGULATEUR DE TEMPÉRATURE D'EAU (ENS) (CONNECTEUR COMPRIS)	70
RELAIS (ASS)	173
	195
RELAIS (ENS) (24 VOLTS)	830
RELAIS (ENS) (24 VOLTS) (AVERTISSEUR)	206
RELAIS (ENS) (24 VOLTS) (AVERTISSEUR)	897
RELAIS (ENS) (24 VOLTS) (AVERTISSEUR)	901
RELAIS (ENS) (24 VOLTS) (COMMANDE DE TRANSLATION)	203

* TRADUCTION NON DISPONIBLE AU MOMENT DE LA PUBLICATION

INDEX

Désignation	Page
RELAIS (ENS) (24 VOLTS) (CONDENSATEUR)	809
RELAIS (ENS) (24 VOLTS) (DIRECTION AUXILIAIRE)	204
RELAIS (ENS) (24 VOLTS) (FEUX DE ROUTE)	163
RELAIS (ENS) (24 VOLTS) (FEUX DE ROUTE)	165
RELAIS (ENS) (24 VOLTS) (PROJECTEURS AVANT)	897
RELAIS (ENS) (24 VOLTS) (PROJECTEURS AVANT)	901
RELAIS (ENS) (24 VOLTS) (VENTILATEUR EN MARCHE ARRIÈRE)	555
RENIFLARD (ASS)	64
RENIFLARD (BOÎTE DE VITESSES)	218
RENIFLARD (ENS) (CARTER)	20
	23
RENIFLARD (ENS) (VILEBREQUIN)	64
RENIFLARD (REMPLISSAGE D'HUILE DE TRANSMISSION)	221
RENIFLARD (RÉSERVOIR HYDRAULIQUE)	616
RÉSERVOIR DE CARBURANT (ASS)	122
RÉSERVOIR DE CARBURANT ET MONTAGE (ASS)	121
RÉSERVOIR DU LIQUIDE DE REFROIDISSEMENT (ASS)	80
RÉSERVOIR HYDRAULIQUE (ASS)	616
RÉSERVOIR HYDRAULIQUE ET MONTAGE (ASS)	615
RETROVISEUR - CABINE (ASS)	951
RÉTROVISEUR (ASS)	875
	876
	877
	878
	879
	880
	881
	882
	883
	884
	885
	886
ROBINET DE BATTERIE (ASS)	182
ROBINET DE VIDANGE DE RADIATEUR (ASS)	84
	85
ROBINET-PRÉLÈVEMENT D'ÉCHANTILLON DE LIQUIDE (ASS)	69
ROTATION DE LA ROUE DU VENTILATEUR SOUFFLANT (DÉMARRAGE DU MOTEUR)	895
ROTATION DE LA ROUE DU VENTILATEUR SOUFFLANT (LIMITEUR, COMMANDE DE POSITIONNEUR)	134
	135
ROTATION DE LA ROUE DU VENTILATEUR SOUFFLANT (*MACHINE SECURITY, INTL)	145
ROTATION DE LA ROUE DU VENTILATEUR SOUFFLANT (RÉGLAGE DU SIÈGE)	947
	949

S

Désignation	Page
SEGMENT DE LAME DE COUPE (ASS)	773
SIÈGE - COMPRESSEUR D'AIR (ASS)	784
SIEGE - COUVERCLE INFERIEUR (ASS)	893
SIÈGE (ASS)	927
	929
	931
SIÈGE AVEC SUSPENSION (ASS)	932
	933
	934
	935
	936
	937
	939
	947
	949
SIÈGE ET MONTAGE (ASS)	920
	921
	923
SIÈGE INCLINABLE (ASS)	915
SILENCIEUX (ASS)	95
SOLÉNOÏDE (ENS) (KIT DE COMMANDE DE TURBOCOMPRESSEUR)	96
SONDE - CIRCUIT DE CARBURANT	174
SONDE - NIVEAU DE CARBURANT (ENS)	121
SOUPAPE - CARTOUCHE PILOTE (ASS)	678
SOUPAPE - CARTOUCHE PILOTE (ASS)	465
	467
	468
	469
	470
	471
	472
	473
	474
	475
SOUPAPE - RENIFLARD (CARTER)	26
SOUPAPE - SOLÉNOÏDE (ASS)	477
	696
	697
	698
	699
	700
SOUPAPE - SOLÉNOÏDE (ASS) (BLOCAGE HYDRAULIQUE)	623

* TRADUCTION NON DISPONIBLE AU MOMENT DE LA PUBLICATION

INDEX

Désignation	Page
SOUPAPE - SOLÉNOÏDE (ASS) (BLOCAGE HYDRAULIQUE)	586
SOUPAPE - SOLÉNOÏDE (ASS) (COMMANDE DE TRANSLATION)	690
SOUPAPE - SOLÉNOÏDE (ASS) (*THIRD FCTN, PROPORTIONAL FLOW)	625
SOUPAPE - SOLÉNOÏDE (ASS) (TROISIÈME FONCTION, DÉBIT CONTINU)	624
SOUPAPE - SOLÉNOÏDE (ASS) (24 VOLTS) (COUPLEUR EXPRESS)	685
SOUPAPE - SOLÉNOÏDE (ASS) (24 VOLTS) (VENTILATEUR HYDRAULIQUE)	590
	591
SOUPAPE A COMMANDE MANUELLE (ASS)	656
SOUPAPE A COMMANDE MANUELLE (ASS) (COMMANDE D'ABAISSEMENT)	560
SOUPAPE D'ARRET	542
	547
	572
SOUPAPE D'ARRÊT (ASS)	692
SOUPAPE DE COMBINAISON (ASS)	629
SOUPAPE DE COMMANDE PRINCIPALE (ASS)	646
	648
	650
	651
	652
	653
	654
	655
SOUPAPE DE COUPLEUR EXPRESS (ASS)	685
SOUPAPE DE DÉMARRAGE À L'ÉTHER (ASS)	187
SOUPAPE DE DÉRIVATION (ASS)	321
SOUPAPE DE MODULATION (ASS)	322
SOUPAPE DE PRIORITE (ASS) (DIRECTION)	542
	572
SOUPAPE DE PURGE (ASS)	684
SOUPAPE ET MONTAGE - SOLÉNOÏDE	462
	623
	624
	625
SOUPAPE ET MONTAGE - SOLÉNOÏDE (12 VCC)	288
SOUPAPE PILOTE (ASS)	323
	326
	329
	463
	657
	659
	661
	664
	666
	668
	670
	671
	672
	673
	674
	675
	676
	677
SOUPAPE PILOTE (ASS) (MANIPULATEUR, 3 FONCTIONS)	823
	824
SOUPAPE PILOTE (ASS) (MANIPULATEUR, 4-FONCTIONS)	821
SOUPAPE RÉDUCTRICE DE PRESSION (ASS)	586
SOUPAPE RÉDUCTRICE DE PRESSION (ASS)	679
	680
	681
SUPPORT DE FILTRE ET REFROIDISSEUR D'HUILE MOTEUR	71
SUPPORT DE MONTAGE (ASS)	405
SUPPORT DE MONTAGE (ASS) (POMPE À GRAISSE)	1
	2
	3
SUPPORT DE SIÈGE (ASS)	946
SUSPENSION DE SIEGE - CARTER (ASS)	861

T

TABLEAU DE BORD (ASS)	829
	895
	897
TABLEAU DE BORD (ASS)	901
TABLIER - FOURCHE (ASS)	761
TABLIER DE FOURCHE (ENS)	760
TAMIS D'ASPIRATION	616
TAMIS D'ASPIRATION (CARTER DE BOITE DE VITESSES)	218
TAMIS D'ASPIRATION (HUILE DE TRANSMISSION)	221
TAPIS DE PLANCHER	849
	851
TAPIS DU PLANCHER (ASS)	851
THERMOCONTACT (ENS) (CLIMATISEUR)	786
TOIT FOPS (ASS)	802
	803
TOIT ROPS - OUVERT (ASS)	917
TOIT-ROPS OUVERT (ASS)	804
TRANSFORMATION ELECTRIQUE (ASS)	136

* TRADUCTION NON DISPONIBLE AU MOMENT DE LA PUBLICATION

INDEX

Désignation	Page
TRANSFORMATION ELECTRIQUE (ASS) (24-VOLTS À 12-VOLTS)	136
TRANSMISSION (VERSION)	294
	295
TURBOCOMPRESSEUR (ASS)	96
TUYAU DE POMPE HYDRAULIQUE (ASS)	49
U	
*UNION AS	288
V	
VANNE PILOTE (ASS)	431
	476
	694
	695
VENTILATEUR ASPIRANT (ASS)	73
VÉRIN - GODET TOUS-TRAVAUX (ASS)	492
VÉRIN DE COUPLEUR (ASS)	488
VERIN DE DIRECTION (ASS)	436
	437
VERIN DE DIRECTION ET MONTAGE (ASS)	432
	433
VÉRIN DE LEVAGE (ASS)	489
	491
VÉRIN D'INCLINAISON (ASS)	493
	494
VERIN ET MONTAGE - COUPLEUR (ASS)	485
	486
	487
VERIN-GAZ (ENS)	461
VERIN-GAZ (ENS) (CAPOT)	389
VÉRIN HYDRAULIQUE (ASS)	434
VERROUILLAGE DE VÉRIN (ASS)	849
	851
VERSION DE CAMÉRA	133
VERSION DE CHASSIS	1
	2
	3
VERSION DE DIRECTION STANDARD	460
VERSION DE MONTAGE-COMMUNICATION	143
VERSION DE MOTEUR DE VENTILATEUR HYDRAULIQUE	589
VERSION DE TIMONERIE AVANT	709
VERSION DE TOIT - ROPS OUVERT	800
VERSION DE TRANSFORMATION - HOMOLOGATION	4
	5
VERSION DE TRANSFORMATION - HYDRAULIQUE	482
VERSION DE TRANSFORMATION DE FILTRE À AIR	91
VERSION DE 6 SOUPAPES HYDRAULIQUES	503
VERSION HYDRAULIQUE	498
	499
VERSION NORMALE	3
	4
VIDANGE-HUILE DE MOTEUR (ASS)	38
	39
VILEBREQUIN - POULIE (ASS)	55
VILEBREQUIN (ASS)	27
	28
VOLANT MOTEUR (ASS)	42

* TRADUCTION NON DISPONIBLE AU MOMENT DE LA PUBLICATION

INDICE

Nombre	Página
A	
ACONDICIONADOR DE AIRE (GR)	786
ACONDICIONADOR DE AIRE Y MONTAJE (GR)	785
ACOPLADOR - TUBERÍAS DE (GR)	512
	513
	514
	517
	520
	522
	524
	526
ACOPLADOR RÁPIDO (CONFIG)	762
ACOPLADOR RÁPIDO (GR)	763
	764
	766
	768
ACOPLAMIENTO FLEXIBLE - MANDO DE (GR)	246
ACUMULADOR DE ACEITE PILOTO (GR)	478
	479
ACUMULADOR DE CONTROL DE AMORTIGUACION (GR)	480
ACUMULADOR DE REFRIGERANTE	871
ACUMULADOR DEL FRENO (GR)	411
ADAPTADOR DE DRENAJE DEL COLECTOR DEL CÁRTER (GR)	49
AGUA - CONEXIÓN DE (GR)	70
AGUA DE LAS CAMISAS - CALENTADOR DEL (GR)	141
	142
AGUILÓN TELESCÓPICO (GR)	711
AIRE - TUBERÍAS DE (GR)	93
AISLACIÓN DE CALOR (GR)	392
	393
	395
AJUSTADOR DEL ASIENTO (GR)	783
ALARMA (GR)	124
ALFOMBRILLA DEL PISO	849
	851
ALFOMBRILLA DEL PISO (GR)	851
ÁRBOL DE LEVAS (GR)	16
ARO DESMONTABLE (GR)	301
	302
	303
	304
	305
	306
	307
	308
	309
ARO Y LLANTA (GR)	319
ARO Y RUEDA	314
	315
	316
	317
	318
	319
ASIENTO CON SUSPENSIÓN (GR)	949
ASIENTO CON SUSPENSIÓN (GR)	947
ASIENTO (GR)	927
	929
	931
ASIENTO Y MONTAJE (GR)	920
	921
	923
ATOMIZADOR DE ETER (CONJ)	177
AUXILIAR DE ARRANQUE CON ÉTER (GR)	176
	177
B	
BALANCÍN (GR)	56
	58
BASE DEL FILTRO Y ACEITE REFRIGERANTE DE MOTOR	71
BASTIDOR DEL CARGADOR (CONJ)	362
BASTIDOR DEL CARGADOR (GR)	363
	364
	365
	367
BASTIDOR TRASERO (GR)	368
	369
	371
	372
BATERÍA (GR)	133
BATERÍA Y CABLES (GR)	130
BATERÍA Y CABLES (GR)	128
BATERÍA (12-VOLTIOS, 900-AMPERIOS)	133
*BEARING GP-PILLOW BLOCK	311
BLOQUE MOTOR (CONJ)	29
BLOQUE MOTOR (GR)	31
BOMBA DE ACEITE DEL MOTOR (GR)	68
BOMBA DE AGUA (GR)	78
BOMBA DE DIRECCIÓN E IMPLEMENTOS Y MONTAJE (GR)	604
	605
BOMBA DE ENGRANAJES (GR)	458
	606
	607
BOMBA DE ENGRANAJES (GR) (DIRECCIÓN SECUNDARIA)	457
BOMBA DE INYECCIÓN DE COMBUSTIBLE (GR)	110
	111
	116

* NO HAY TRADUCCION DISPONIBLE EN EL MOMENTO DE LA IMPRESION

INDICE

Nombre	Página
BOMBA DE LA TRANSMISIÓN (GR)	296, 297, 298, 299
BOMBA DE PALETAS-CARTUCHO (GR)	481
BOMBA DE PISTONES (GR)	609, 611
BOMBA DE PISTONES Y PALETAS (GR)	613
BOMBA DE SEPARADOR DE AGUA Y CEBADO DE COMBUSTIBLE (GR)	123
BOMBA DE TRANSFERENCIA DE COMBUSTIBLE (GR)	110
BOMBA Y MOTOR DE DIRECCION SECUNDARIA (GR)	457
BOMBA Y MOTOR DEL ENFRIADOR DEL ACEITE DEL EJE (GR)	282
BRAZO DE LIMPIAPARABRISAS (GR)	955
BRAZO DE LIMPIAPARABRISAS (GR)	788
BUJÍA INCANDESCENTE	140
BUJÍA INCANDESCENTE (GR)	140

C

Nombre	Página
CABINA - MAZO DE CABLES DE LA	897, 901
CABINA - MAZO DE CABLES DE LA (PRINCIPAL)	189, 191
CABINA - MAZO DE CABLES DE LA (SUPERIOR)	189, 191
CABINA INCLUYE ROPS (GR)	798, 800
CABINA ROPS ABIERTA (CONFIG)	889
CABINA ROPS CERRADA (CONFIG)	889
CABINA ROPS CERRADA (GR)	916
CABLES DE CONEXION (GR)	510
CABLES DE CONTROL DE AMORTIGUACIÓN (GR)	203
CABLES DE LA CABINA (GR)	189, 191
CABLES DE LA DIRECCIÓN SECUNDARIA	204, 206
CABLES DEL CONTROL ELECTRÓNICO (GR)	194
CABLES DEL MOTOR (GR)	195
CABLES DELANTEROS (GR)	198, 200
CABLES POSTERIORES (GR)	201
CAJA DE BATERÍA	339
CAJA DE EJE OSCILANTE (GR)	278, 280
CAJA DE LA SUSPENSIÓN DEL ASIENTO (GR)	861
CAJA DEL EJE OSCILANTE (GR)	272, 274, 276
CAJA DELANTERA (GR)	44
CAJA Y PIEZAS DE LA TRANSMISIÓN (GR)	218, 221
CALCOMANIA, CLASIFICACIÓN (CARGA)	711
CALCOMANÍA DE ADVERTENCIA (*ACCUM, HIGH PRESS, READ OMM)	480
CALCOMANÍA DE ADVERTENCIA (ALTA PRESIÓN, LEER OMM, INTL)	577
CALCOMANÍA DE ADVERTENCIA (ALTURA DE DESPLAZAMIENTO)	4
CALCOMANÍA DE ADVERTENCIA (ARRANQUE DEL MOTOR)	895
CALCOMANÍA DE ADVERTENCIA (ASIENTO AJUSTABLE)	947, 949
CALCOMANÍA DE ADVERTENCIA (*CRUSH HAZARD, READ OMM, INTL)	962
CALCOMANÍA DE ADVERTENCIA (*KICKOUT, POSITIONER CONTROL)	134, 135
CALCOMANÍA DE ADVERTENCIA (*MACHINE SECURITY, INTL)	145
CALCOMANÍA DE ADVERTENCIA (NO SUELDE, NO TALADRE, LEA EL OMM)	959
CALCOMANÍA DE ADVERTENCIA (PRESIÓN ALTA, LEER OMM, EE.UU.)	577
CALCOMANÍA DE ADVERTENCIA (RADIO DE PRODUCT LINK, EE.UU.)	143
CALCOMANÍA DE ADVERTENCIA (RADIO DE PRODUCT LINK, INTERNACIONAL)	143
CALCOMANÍA DE IDENTIFICACIÓN (INTERRUPTOR DE ENCENDIDO)	145
CALCOMANÍA DE IDENTIFICACIÓN (MANIPULADOR DE DESPERDICIOS)	6, 7, 8
CALCOMANÍA DE IDENTIFICACIÓN (NOMBRE DE GRUPO)	809
CALCOMANÍA DE IDENTIFICACIÓN (20 KM/H)	958
CALCOMANÍA DE IDENTIFICACIÓN (40 KM/H)	340
CALCOMANIA-FUSIBLE/RELÉ	901
CALCOMANIA-FUSIBLE/RELÉ (IDENTIFICACIÓN)	897
CALCOMANÍA (LEVANTAMIENTO A GRAN ALTURA)	707
CALCOMANÍA (NEGRO)	542

* NO HAY TRADUCCION DISPONIBLE EN EL MOMENTO DE LA IMPRESION

INDICE

Nombre	Página
	572
	692
CALCOMANÍA (TABLERO, LADO DERECHO)	189
CALCOMANÍA (TAPA DEL TABLERO DE INSTRUMENTOS)	895
CALCOMANIA-VENTANA (DELANTERO)	794
CALCOMANIA-VENTANA (*FRONT)	961
CALCOMANÍAS Y PLACAS DE IDENTIFICACIÓN (GR)	962
	964
CALEFACCIÓN DE LA CABINA (CONFIG)	858
CALEFACCIÓN DE LA CABINA (GR)	859
CALEFACCIÓN Y MONTAJE DE LA CABINA (GR)	857
CÁNCAMOS DE LEVANTAMIENTO DEL MOTOR (GR)	46
CANDADO (GR)	248
	250
	615
	853
*CAP AS-COOLANT TANK	80
CAPO Y PROTECTOR (GR)	389
CARGA - ALTERNADOR DE (GR)	125
	127
CÁRTER - COLECTOR DEL (GR)	49
CÁRTER - PROTECTOR DEL (GR)	6
	7
CÁRTER - PROTECTOR DEL (GR)	60
	61
CHASIS (CONFIG)	1
	2
	3
CIGÜEÑAL - POLEA DE (GR)	55
CIGÜEÑAL (GR)	27
	28
CILINDRO DE ACOPLAMINETO Y MONTAJE (GR)	485
	486
	487
CILINDRO DE CUCHARÓN DE USO MÚLTIPLE (GR)	492
CILINDRO DE DIRECCIÓN (GR)	436
	437
CILINDRO DE DIRECCIÓN Y MONTAJE (GR)	432
	433
CILINDRO DE LEVANTAMIENTO - TUBERÍAS DEL (GR)	557
	560
CILINDRO DE LEVANTAMIENTO (GR)	489
	491
CILINDRO DEL ACOPLADOR (GR)	488
CILINDRO HIDRÁULICO (GRUPO)	434
CINTURÓN DE SEGURIDAD (GR)	924
	925
	926
CINTURÓN DE SEGURIDAD (GR) (RETRACTIL)	923
COLADOR	616
COLUMNA DE DIRECCIÓN AJUSTABLE (GR)	461
COMBUSTIBLE - TANQUE DE (GR)	122
COMPRESOR DE AIRE DEL ASIENTO (GR)	784
COMPRESOR DE REFRIGERANTE (GR)	805
	806
CONDENSADOR DE REFRIGERANTE (GR)	809
CONDENSADOR DEL REFRIGERANTE Y MONTAJE (GR)	807
	808
CONDUCTO DE AIRE (GR)	846
CONFIGURACIÓN COMÚN	3
	4
CONFIGURACIÓN DE CABLERIA, CALENTADOR Y ACONDICIONADOR DE AIRE	786
CONFIGURACIÓN DE CABLERIA, CALENTADOR Y ACONDICIONADOR DE AIRE (VENTILADORES DEL CONDENSADOR)	809
CONFIGURACIÓN DE CÁMARA	133
CONFIGURACIÓN DE ELIMINACIÓN DE BASURAS	6
	7
	8
CONFIGURACIÓN DE INSTALACIÓN DEL MOTOR	15
CONFIGURACIÓN DE MOTORES	9
	10
	11
CONFIGURACIÓN DE TRANSFORMACIÓN PARA CERTIFICACIÓN	4
	5
CONFIGURACIÓN ELECTRÓNICA DE LA MÁQUINA	137
CONFIGURACIÓN HIDRÁULICA DE 2 VÁLVULAS	499
	500
CONFIGURACIÓN HIDRÁULICA-6 VÁLVULAS	503
CONJ. ORIFICIO-AIRE ACONDICIONADO	871
(CONJ) REGULADOR, TEMPERATURA DEL AGUA (*CONNECTOR INCLUDED)	70
CONJUNTO DE BRAZO Y COJINETE DE LEVANTAMIENTO	701
CONJUNTO DE CABLERIA, RADIO	866
	868
CONJUNTO DE CABLERIA, RADIO (ALTAVOCES)	864

* NO HAY TRADUCCION DISPONIBLE EN EL MOMENTO DE LA IMPRESION

INDICE

Nombre	Página
	866
CONJUNTO DE CABLERIA, RADIO (ESLABON DE PRODUCTO)	143
CONJUNTO DE CABLES, VÁLVULA (AUXILIAR)	620
CONJUNTO DE CABLES, VÁLVULA (COMPRESOR DE AIRE DEL ASIENTO)	949
CONJUNTO DE DESTELLADOR	163
	165
	167
CONJUNTO DE DESTELLADOR (*12 TO 24-VDC)	161
CONJUNTO DE INTERRUPTOR DE SEÑAL DE GIRO	161
	163
	165
	167
CONJUNTO DE MAZO DE CABLES DE SOLENOIDE (CONTROL DE FLUJO)	536
CONJUNTO DE MAZO DE CABLES DE SOLENOIDE (TRABA HIDRÁULICA)	542
	572
CONJUNTO DE MAZO DE CABLES DEL CONTROL DE AMORTIGUACIÓN	203
CONJUNTO DE POSENFRIAMIENTO	80
CONJUNTO, MAZO DE CABLES, LUCES DELANTERAS (*RH, LH)	163
	165
	167
CONJUNTO REFRIGERANTE, ACEITE (MOTOR)	71
CONSOLA DEL OPERADOR (GR)	810
CONSOLA (GR)	829
CONTRAPESO (GR)	343
	344
	345
	346
	347
CONTROL DE AMORTIGUACIÓN (CONFIG)	482
CONTROL DE DESCONEXIÓN DE LEVANTAMIENTO (GR)	134
CONTROL DE DIRECCIÓN (GR)	825
CONTROL DE LA HERRAMIENTA DE TRABAJO (GR)	705
	707
CONTROL DE LA TRANSMISIÓN (GR)	827
	828
CONTROL DE MANIJA (GR)	811
CONTROL DE MANIJA (GR) (*DIRECTION, DOWNSHIFT SWITCHES)	329
CONTROL DE MANIJA (GR) (*DIRECTION, DOWNSHIFT SWITCHES)	673
	674
	675
	676
CONTROL DE MANIJA (GR) (*JOYSTICK, AUXILIARY FUNCTIONS)	812
CONTROL DE POSICION (GR)	135
CONTROL DE TRABA DEL DIFERENCIAL (GR)	236
CONTROL DEL CUCHARÓN (GR)	702
CONTROL DEL FRENO DE ESTACIONAMIENTO	413
	414
	416
CONTROL HIDRÁULICO DE OPERACIÓN PILOTO (GR)	814
	816
	818
	820
	821
	822
	823
	824
CONTROL NO PROGRAMADO (GR)	116
CONTROL NO PROGRAMADO (GR) (MOTOR)	111
CONTROL NO PROGRAMADO (GR) (TREN DE FUERZA)	827
CONVERSION DE FILTRO DE AIRE (CONFIG)	91
CONVERSIÓN HIDRÁULICA (CONFIG)	482
CONVERSION PARA DESPLAZAMIENTO POR CARRETERA (GR)	340
	341
CONVERTIDOR ELÉCTRICO (GR)	136
CONVERTIDOR ELÉCTRICO (GR) (24 VOLTIOS A 12 VOLTIOS)	136
CORREA-SERPENTIN	127
CRUCETA Y COJINETE (GR)	311
CUBIERTA INFERIOR DEL ASIENTO DEL OPERADOR (GR)	893
CUCHARÓN DE USO GENERAL (CONFIG)	712
	713
	714
	715
	716
CUCHARÓN DE USO GENERAL (CONJ)	721
	722
	723
	724
	725
	726
	727
	728
	729

* NO HAY TRADUCCION DISPONIBLE EN EL MOMENTO DE LA IMPRESION

INDICE

Nombre	Página
	730
	731
	732
	733
CUCHARÓN DE USO GENERAL (GR)	740
	741
	742
	743
	744
	745
	746
	747
	748
	749
	750
	751
	752
CUCHARÓN DE USO MÚLTIPLE (CONFIG)	718
	719
	720
CUCHARÓN DE USO MÚLTIPLE (GR)	756
CUCHARÓN PARA MATERIALES LIVIANOS	734
	736
CUCHARÓN PARA MATERIALES LIVIANOS (CONFIG)	717
CUCHARÓN PARA MATERIALES LIVIANOS (GR)	753
	754
	755
CUCHARON PARA PENETRACIÓN (CONJ)	737
	738
	739
CUCHILLA (GR)	771
	772
CULATA DE CILINDROS (CONJ)	32
	34
CULATA DE CILINDROS (GR)	36
	37

D

DEFLECTOR SUPRESOR DE SONIDO (GR)	338
DERIVACIÓN - VÁLVULA DE (GR)	321
DESCONGELADOR DE LA CABINA (GR)	830
DETECTOR DE NIVEL DEL COMBUSTIBLE	121
DETECTOR DE POSICIÓN (SISTEMA DE COMBUST.) (GR)	174
DIFERENCIAL DE DESLIZAMIENTO LIMITADO (GR)	243
	245
DIFERENCIAL (GR)	240
	241
	242
DIRECCIÓN (CONFIG)	459
DIRECCIÓN SECUNDARIA (CONFIG)	459
	460
*DISPLAY GP-CAMERA	831
DISYUNTOR (CONJ) (20-AMPERIOS)	857
DISYUNTOR (CONJ) (20-AMPERIOS) (ACCIONADOR DE INCLINACION DE CAPO)	785
DISYUNTOR (GR)	182
DOSIFICACIÓN - BOMBA DE (GR) (HMU)	443
	446
DOSIFICACIÓN - BOMBA DE (GR) (*HMU, QUICK STEER)	459
DOSIFICACIÓN - BOMBA DE (GR) (*HMU, QUICK STEER)	460
DRENAJE DEL ACEITE DE MOTOR	38
	39

E

EJE - GRUPO DE MONTAJE	292
	293
EJE DE MANDO (GR)	310
	311
EJE FIJO (CONFIG)	208
	209
	210
EJE OSCILANTE (CONFIG)	211
	212
EJE OSCILANTE (GR)	212
ELEMENTO DE FILTRO DE ACEITE (EFICIENCIA ULTRA ALTA)	497
ELEMENTO DE FILTRO DE COMBUSTIBLE (REJILLA DE TUBO DE LLENADO)	122
ELEMENTO DEL CALENTADOR DEL AGUA DE LAS CAMISAS (240 VOLTIOS, 1000 VATIOS)	142
ELEMENTO DEL FILTRO DE AIRE (CONJ) (PRIMARIO)	90
ELEMENTO DEL FILTRO DE AIRE (CONJ) (SECUNDARIO)	90
ELEMENTO (RESPIRADERO) (CÁRTER DEL MOTOR)	20
	23
EMBRAGUE (GR)	224
	226
	228
	230
	232
	234
EMPAQUETADURA (*CAB FILTER)	848
EMPAQUETADURA PARA CUBIERTA DE VÁLVULA	20

* NO HAY TRADUCCION DISPONIBLE EN EL MOMENTO DE LA IMPRESION

INDICE

Nombre	Página
	23
EMPAQUETADURA, REGULADOR DE AGUA (*WATER TEMPERTAURE REGULATOR)	70
EMPAQUETADURA (TANQUE HIDRÁULICO)	616
ENCENDEDOR DE CIGARRILLOS (CONJ) (24 VOLTIOS)	189
	191
ENFRIADOR DE ACEITE DEL EJE (GR)	237
ENFRIADOR DE ACEITE DEL MOTOR Y BASE DEL FILTRO	71
ENFRIADOR DEL ACEITE HIDRAULICO (GR)	484
ENGANCHE ARTICULADO (GR)	387
ENGRANAJE DE CORONA Y PIÑÓN (GR)	259
	261
	263
	265
ENGRANAJE DE TRANSFERENCIA DE ENTRADA (GR)	267
ENGRANAJE DE TRANSFERENCIA DE SALIDA	268
	270
ESCALERILLA (GR)	397
ESPEJO (GR)	875
ESTRUCTURA ROPS ABIERTA (GR)	917
ETIQUETA DE ADVERTENCIA (GR)	958
	960
	961
ETIQUETA DE ADVERTENCIA (GR)	959
ETIQUETA DE ADVERTENCIA (GR) (MANIPULADOR DE DESPERDICIOS)	6
	7
	8
EXTENSIÓN DEL ESCAPE (GR)	92
EXTENSIÓN DEL RESPALDO (GR)	847
EXTENSIÓN DEL RESPALDO (GR) (DE TELA)	931
EXTRACTOR DE MINIFUSIBLES	897
	901

F

Nombre	Página
FALDON DE CABINA (GR)	941
	942
	943
	945
*FILM GP-INTERNATIONAL	962
*FILM GP-INTERNATIONAL (*Z-BAR LINKAGE)	4
	5
FILTRO (AIRE DE CABINA)	848
FILTRO (AIRE DE LA CABINA)	848
FILTRO (CONJ) (ACEITE DEL MOTOR)	67
FILTRO DE ACEITE (CONJ) (EFICIENCIA AVANZADA) (TREN DE FUERZA)	256
FILTRO DE ACEITE DEL MOTOR (GR)	67
FILTRO DE ACEITE (GR)	256
	497
FILTRO DE ACEITE HIDRÁULICO Y MONTAJE (GR)	496
FILTRO DE AIRE DE LA CABINA (GR)	848
FILTRO DE AIRE (GR)	88
	90
FILTRO DE COMBUSTIBLE (CONJ) (ELEMENTO)	99
FILTRO DE COMBUSTIBLE (CONJ) (*FILTER HEAD)	99
FILTRO DE COMBUSTIBLE (EFICIENCIA ULTRA ALTA) (ALTA EFICIENCIA)	100
FILTRO DE COMBUSTIBLE Y SEPARADOR DE AGUA (CONJ)	123
FILTRO MAGNÉTICO	218
	221
FILTRO SECUNDARIO DE COMBUSTIBLE (GR)	99
	100
FRENO DE ESTACIONAMIENTO (GR)	412
FRENO DE SERVICIO - CONTROL (GR)	418
	420
FRENO Y PLANETARIOS (GR)	213
	214
	215
	216
	217
FUSIBLE (100-AMPERIOS)	195
FUSIBLE (20-AMPERIOS)	195
FUSIBLE (20-AMPERIOS)	173
FUSIBLE (30-AMPERIOS)	195
FUSIBLE (30-AMPERIOS)	173

G

Nombre	Página
*GEAR GP-INPUT TRANSFER	266
GRUPO DE BOMBA Y MONTAJE, FRENOS Y VENTILADOR HIDRÁULICO	603
GRUPO DE CABLES DE CÁMARA	193
GRUPO DE CODO	533
GRUPO DE INTERRUPTOR, TRABA DEL DIFERENCIAL	181
GRUPO DE MONTAJE DE CÁMARA	172
GRUPO DE MONTAJE DE LA CABINA	887
GRUPO DE PIVOTE, VÁLVULA PILOTO	596
	597
	598

* NO HAY TRADUCCION DISPONIBLE EN EL MOMENTO DE LA IMPRESION

INDICE

Nombre	Página
GRUPO DE PLACA DE IDENTIFICACIÓN DEL EJE	208 209 211 212
GRUPO DE PLANCHA, VÁLVULA PILOTO	599 600 601 602
GRUPO DE PUNTA Y ADAPTADOR	710
GRUPO DE REFRIGERANTE, HIDRÁULICO Y ACEITE DE TRANSMISIÓN	483
GRUPO DE SOFTWARE, COMUNICACIÓN (PRODUCT LINK 121SR)	914
GRUPO DE SOFTWARE, COMUNICACIÓN (PRODUCT LINK 300)	138
GRUPO DE TAPA, ACCESO	348
GRUPO DE TRABA-CILINDRO	849 851
GRUPO DE VÁLVULA-ARRANQUE CON ÉTER	187
GRUPO ELECTRONICO-COMUNICACION	138
GRUPO GIRATORIO DE BOMBA	614
GUARDABARROS (CONFIG)	353
GUARDABARROS DELANTERO (GR)	354 355 356
GUARDABARROS (GR)	353
GUARDABARROS PARA DESPLAZAMIENTO EN CARRETERA (GR)	360
GUARDABARROS TRASERO (GR)	358 359

H

Nombre	Página
HIDRÁULICA (CONFIG)	498 499
HOJA DE LIMPIAPARABRISAS (CONJ) (*503-MM) (PARTE TRASERA)	955
HOJA DE LIMPIAPARABRISAS (CONJ) (*700-MM) (DELANTERO)	955
HORQUILLA PARA TARIMAS (GR)	773 774 775 776

I

Nombre	Página
IMPULSOR DE VENTILADOR (GR)	40 41
INCLINACIÓN HORIZONTAL - CILINDRO DE (GR)	493 494
INDICADOR CONJ. -CAMBIO DE FILTRO DE AIRE	88
INDICADOR (CONJ) (TRABA DE DIFERENCIAL)	181
INDICADOR DEL NIVEL DE ACEITE (VARILLA) (GR) (MOTOR)	49
INDICADOR DEL NIVEL DEL ACEITE (VARILLA) (CONJ)	272 274 278 280
INDICADOR DEL NIVEL DEL ACEITE (VARILLA) (CONJ) (EJE)	276
INSONORIZADOR (CONFIG)	60
INSONORIZADOR (CONFIG)	60 61
INSTALACION DE COMUNICATION (CONFIG)	143
INSTALACIÓN DE RADIO (GR)	864 866 868
INSTALACION DE SEGURIDAD (GR)	145
*INSULATION GP-HEAT	422
INTERRUPTOR (CONJ) (ARRANQUE)	179
INTERRUPTOR DE ARRANQUE (CONJ) (LLAVE) (MOTOR)	895
INTERRUPTOR DE FLUJO (CONJ) (*VARIABLE FLOW CONTROL)	536
INTERRUPTOR DE LÍMITE (CONJ) (FRENO DE ESTACIONAMIENTO)	413
INTERRUPTOR DE LÍMITE (CONJ) (PEDAL DE FRENO)	897 901
INTERRUPTOR DE PEDAL (CONFIG)	181
INTERRUPTOR DE PRESIÓN (CONJ) (ACEITE DE LA DIRECCION SECUNDARIA)	438
INTERRUPTOR DE PRESIÓN (CONJ) (ACEITE DE LA DIRECCION SECUNDARIA)	443
INTERRUPTOR DE PRESIÓN (CONJ) (ACEITE DEL EJE)	282
INTERRUPTOR DE PRESIÓN (CONJ) (DERIVACION DE FILTRO DE ACEITE DE TREN DE FUERZA)	256
INTERRUPTOR DE PRESIÓN (CONJ) (DERIVACION DEL FILTRO DEL ACEITE HIDRAULICO)	497
INTERRUPTOR DE PRESIÓN (CONJ) (REFRIGERANTE)	871
INTERRUPTOR DE TEMPERATURA (CONJ) (AIRE ACONDICIONADO)	786
INTERRUPTOR DE VOLQUETE (CONJ) (AJUSTE DE TRABA DE ACELERADOR, ANULACIÓN)	897

* NO HAY TRADUCCION DISPONIBLE EN EL MOMENTO DE LA IMPRESION

INDICE

Nombre	Página
	901
INTERRUPTOR DE VOLQUETE (CONJ) (*AUXILIARY FLOW CONTROL) (24-VOLTIOS)	813
INTERRUPTOR DE VOLQUETE (CONJ) (BALIZA DE ADVERTENCIA)	169 170
INTERRUPTOR DE VOLQUETE (CONJ) (CONTROL DE ACONDICIONADOR DE AIRE Y CALENTADOR)	785
INTERRUPTOR DE VOLQUETE (CONJ) (CONTROL DE AMORTIGUADOR)	203
INTERRUPTOR DE VOLQUETE (CONJ) (CONTROL DE ANUALCION Y NEUTRALIZADOR DE TRANSMISION)	189 191
INTERRUPTOR DE VOLQUETE (CONJ) (CONTROL DE CALEFACCIÓN)	857
INTERRUPTOR DE VOLQUETE (CONJ) (CONTROL DE CAMBIO AUTOMÁTICO)	189 191
INTERRUPTOR DE VOLQUETE (CONJ) (DESCONEXION)	897 901
INTERRUPTOR DE VOLQUETE (CONJ) (DESCONEXIÓN HIDRÁULICA)	514 520 897 901
INTERRUPTOR DE VOLQUETE (CONJ) (DESPLAZAMIENTO POR CARRETERA)	191
INTERRUPTOR DE VOLQUETE (CONJ) (DIRECCION RAPIDA)	450 452
INTERRUPTOR DE VOLQUETE (CONJ) (DIRECCIÓN SECUNDARIA)	204 206
INTERRUPTOR DE VOLQUETE (CONJ) (*FLOODLIGHTS, FRONT)	189 191
INTERRUPTOR DE VOLQUETE (CONJ) (INTERRUPTOR DE CAMBIO DE LUCES)	163 165 167
INTERRUPTOR DE VOLQUETE (CONJ) (LUCES DE ADVERTENCIA DE PELIGRO)	189 191
INTERRUPTOR DE VOLQUETE (CONJ) (LUCES DE DESPLAZAMIENTO)	189
INTERRUPTOR DE VOLQUETE (CONJ) (*QUICK COUPLER PIN LOCK)	517
INTERRUPTOR DE VOLQUETE (CONJ) (*REVERSING FAN ON, OFF)	555
INTERRUPTOR DE VOLQUETE (CONJ) (SELECTOR CUCHARÓN, HORQUILLA)	506
INTERRUPTOR DE VOLQUETE (CONJ) (TRABA DEL ACELERADOR ACTIVA, INACTIVA)	897 901
INTERRUPTOR DE VOLQUETE (CONJ) (VELOCIDAD DEL VENTILADOR)	897
INTERRUPTOR DE VOLQUETE (GR)	185
INTERRUPTOR DEL LIMPIADOR (GR)	186
INTERRUPTOR DEL LIMPIAPARABRISAS (CONJ) (24 VOLTIOS) (DELANTERO)	186
INTERRUPTOR MAGNÉTICO (GR)	183 184
INTERRUPTOR MAGNÉTICO (GR) (24 VOLTIOS) (RELE PRINCIPAL)	195
INTERRUPTOR ROTATIVO (CONJ) (LIMPIA, LAVAPARABRISAS) (LIMPIAPARABRISAS TRASERO)	186
INYECTOR DE COMBUSTIBLE (GR)	101

J

JUEGO DE AJUSTE DEL ASIENTO (POSABRAZO)	790
JUEGO DE AMORTIGUADOR (POSABRAZO)	790
JUEGO DE COJINETES (*CRANKSHAFT, CONNECTING ROD)	27 28
JUEGO DE COJINETES (*CRANKSHAFT, MAIN)	27 28
JUEGO DE SELLOS	434
JUEGO DE SELLOS (ACUMULADOR HIDRÁULICO)	480
JUEGO DE SELLOS (VÁLVULA DE LANZADERA)	695
JUNTA DE LA TAPA DE VÁLVULAS	26
JUNTA DE LA TAPA DE VÁLVULAS (VÁLVULA)	20 23
JUNTA DESLIZANTE (GR)	312 313
JUNTA UNIVERSAL (GR)	311

L

LÁMPARA DE BALIZA DE ADVERTENCIA (GR)	152
LÁMPARA DE BALIZA DE ADVERTENCIA (GR) (*AMBER, STROBE)	170
LÁMPARA DE LUZ DELANTERA Y DE SEÑAL (GR)	154

* NO HAY TRADUCCION DISPONIBLE EN EL MOMENTO DE LA IMPRESION

INDICE

Nombre	Página
LÁMPARA DE LUZ DELANTERA Y DE SEÑAL (GR) (IZQUIERDO)	153, 163, 165
LÁMPARA DE LUZ DELANTERA Y DE SEÑAL (GR) (LADO DERECHO)	153, 163, 165
LAMPARA DE PLACA DE REGISTRO (GR)	340, 341
LÁMPARA DEL TECHO (GR)	147
LÁMPARA DEL TECHO (GR) (24 VOLTIOS)	869
LÁMPARA (24 VOLTIOS, 10 VATIOS)	147, 340, 341
LÁMPARA (24-VOLTIOS, 21 VATIOS) (PARADA, COLA)	151
LÁMPARA (24-VOLTIOS, 3-VATIOS)	189, 897
LÁMPARA (24-VOLTIOS, 3-VATIOS)	191
LÁMPARA (24 VOLTIOS, 5 VATIOS) (PARADA, COLA)	151
LÁMPARA (24-VOLTIOS, 70-VATIOS)	152
LAVAPARABRISAS DE LA VENTANA (GR)	952, 953
LIMPIAPARABRISAS DE LA VENTANA (GR)	955
LIMPIAPARABRISAS DE LA VENTANA (GR) (DELANTERO)	955
*LINKAGE AR-FRONT	709
LLANTA (CONFIG)	300
LLAVE	248, 615, 843, 853
LLAVE (CABINA)	840
LLAVE (INTERRUPTOR GENERAL)	182
LUCES AUXILIARES (GR)	155
LUCES DE ALÓGENO (24 VOLTIOS, 65 VATIOS)	148, 149, 157, 159
LUCES DE DESPLAZAMIENTO (CONFIG)	153, 154
LUCES DE DESPLAZAMIENTO (GR)	163, 165
LUCES DE DESPLAZAMIENTO (GR)	161
LUCES DE PARADA Y COLA (GR)	151
LUCES DE PARADA Y DE COLA (GR)	167
LUCES DE REFLECTOR (GR)	156, 157, 159
LUZ DE BALIZA (GR)	169, 170

M

Nombre	Página
MANDO DE BOMBA (GR)	247
MANDO DE CORREA (BALIZA DE ADVERTENCIA) (BALIZA GIRATORIA DE ADVERTENCIA)	152
MANGUERA	76
MANGUERA (INFERIOR)	77
MANGUERA (SUPERIOR)	77
MANIJA MODULAR (GR) (*DIR, DNSFT, FLOW CONT SWITCHES)	811
MAZO DE CABLES (CONJ) (*INJECTOR)	20, 23
MAZO DE CABLES (CONJ) (*INJECTOR)	26
MAZO DE CABLES DE CONTROL (CONJ) (DESCONEXIÓN, POSICIONADOR)	506
MAZO DE CABLES DE CONTROL (CONJ) (DESCONEXIÓN, POSICIONADOR) (*POSITIONER)	504
MAZO DE CABLES DE CONTROL (CONJ) (ESLABON DE PRODUCTO)	143
MAZO DE CABLES DE CONTROL (CONJ) (SEGURIDAD DE LA MÁQUINA)	145
MAZO DE CABLES DE DIRECCION (CONJ) (*PRIMARY PRESSURE SWITCH)	206
MAZO DE CABLES DE DIRECCION (CONJ) (SECUNDARIO)	204, 206
MAZO DE CABLES DE LUCES TRASERAS (CONJ) (IZQUIERDO)	167
MAZO DE CABLES DE LUCES TRASERAS (CONJ) (LADO DERECHO)	167
MAZO DE CABLES DEL INTERRUPTOR (CONFIG) (TRABA DE DIFERENCIAL)	181
MAZO DE CABLES DEL MONITOR (CONJ)	133, 831
MAZO DE CABLES DEL MOTOR (CONJ)	195
MAZO DE CABLES DEL MOTOR (CONJ) (*ENGINE CONTROL MODULE)	194
MAZO DE CABLES DELANTERO (CONJ)	198, 200
MAZO DE CABLES, LUCES	157, 159
MAZO DE CABLES, LUCES (*ROADING)	340
MAZO DE CABLES, LUCES (*ROADING)	341
MAZO DE CABLES TRASERO (CONJ)	201
MECANISMO DE VÁLVULAS (GR)	62
MIRILLA	616
MIRILLA DE MEDIDOR (GR)	257, 258

* NO HAY TRADUCCION DISPONIBLE EN EL MOMENTO DE LA IMPRESION

INDICE

Nombre	Página
MIRILLA DE MEDIDOR (GR) (*POWER TRAIN OIL)	294, 295
MODULO DE INTERFAZ (GR) (LLAVE)	145
MODULO DE LA PANTALLA (GR) (*GAUGE CLUSTER)	895
MODULO DE LA PANTALLA (GR) (*WORK AREA VISUAL SYSTEM)	133
MODULO DE LA PANTALLA (GR) (*WORK AREA VISUAL SYSTEM)	831
MONTAJE DE ARO	294
MONTAJE DE LA VÁLVULA DE CONTROL (GR)	595
MONTAJE DE PANTALLA (GR)	888
MONTAJE DEL CUCHARÓN (GR)	777
MONTAJE DEL MOTOR Y LA TRANSMISIÓN (GR)	47
MONTAJE Y VALVULA DEL CONTROL PRINCIPAL (GR)	618, 619, 620
MOTOR (CONFIG), VENTILADOR HIDRÁULICO	589
MOTOR DE ARRANQUE ELÉCTRICO (GR)	178, 179
MOTOR DE ENGRANAJES (GR)	590
MOTOR DE ENGRANAJES (GR)	592, 593, 594
MOTOR DE ENGRANAJES (GR)	591
MOTOR ELÉCTRICO (GR)	171
MOTOR-LIMPIAPARABRISAS (GR) (24 VOLTIOS) (DELANTERO)	955
MOTOR-LIMPIAPARABRISAS (GR) (24 VOLTIOS) (PARTE TRASERA)	955
MOTOR PRIMARIO (CONFIG)	12, 13, 14
MOTOR Y MONTAJE DE VENTILADOR HIDRAULICO (GR)	588
*MOUNTING GP-BRACKET	405
*MOUNTING GP-BRACKET (*GREASE GUN)	1, 2, 3
*MOUNTING GP-ETHER CANISTER	177
MUELLE DE GAS (CONJ)	461
MUELLE DE GAS (CONJ) (CAPÓ)	389
MÚLTIPLE DE ADMISIÓN (GR)	94
MÚLTIPLE DE ESCAPE (GR)	96
MULTIPLE DE VALVULA (GR)	585, 586

N

Nombre	Página
NÚCLEO CONJ.-ENFRIADOR DE ACEITE DE TREN DE FUERZA	483

P

Nombre	Página
PABELLÓN (CONFIG)	801
PALANCA UNIVERSAL DE CONTROL (GR)	812, 813
PALANCA UNIVERSAL DE CONTROL (GR) (*4-FUNCTION, AUXILIARY)	822
PANEL DE INSONORIZACIÓN (GR)	406, 407
PANEL SUPERIOR (GR)	408, 410
PANTALLA (CONJ)	659, 661
PANTALLA (CONJ) (ACEITE PILOTO)	326, 463
PANTALLA (CONJ) (ACEITE PILOTO)	657, 664, 666, 668
PANTALLA (CONJ) (EN LÍNEA) (ACEITE DEL EJE)	282
PEDAL DE FRENO (GR)	905
PENETRACIÓN DEL CUCHARÓN	758, 759
PERSIANA PARA EL SOL (GR)	919
PISO DE LA CABINA (GR)	849
PISTON (GR)	52
PISTÓN Y BIELA (GR)	51
PLACA DE IDENTIFICACION	212
PLACA DE IDENTIFICACION (CAT)	734
PLACA DE IDENTIFICACION (HERRAMIENTA)	743, 746, 747, 749, 750, 751, 752
PLACA DE IDENTIFICACION (HERRAMIENTA)	755
PLACA DE IDENTIFICACION (HERRAMIENTA)	724, 729
PLACA DE IDENTIFICACION (HERRAMIENTA)	756, 758, 759
PLACA DE INFORMACION (12 VOLTIOS)	136
PLACA DE INFORMACION (24 VOLTIOS)	959

* NO HAY TRADUCCION DISPONIBLE EN EL MOMENTO DE LA IMPRESION

INDICE

Nombre	Página
PLACA DE INSTRUCCIONES (ACONDICIONADOR DE AIRE)	871
PLACA DE INSTRUCCIONES (BATERÍA)	128
	130
PLACA DE PATRÓN DE LOS CONTROLES (CONSOLA, MANO DERECHA)	897
PLACA DE PATRÓN DE LOS CONTROLES (*FUSE, RELAY PANEL)	901
PLACA DEL NÚMERO DE SERIE	221
PLACA DEL TABLERO (IZQUIERDO)	189
	191
PLACA DEL TABLERO (LADO DERECHO)	191
PLATAFORMA (CONFIG)	908
	909
PLATAFORMA DE LA CABINA	912
	913
PLATAFORMA (GR)	910
	911
*PLUG GP-CONTROL MANIFOLD	585
PORTAHORQUILLAS (CONJ)	760
PORTAHORQUILLAS (GR)	761
POSABRAZOS (GR)	789
	790
	791
	792
	793
POSICIÓN DEL SENSOR (CONJ) (ROTATORIO)	174
POSICIONADOR DEL CUCHARÓN Y DESCONEXIÓN (GR)	504
	506
POTENCIÓMETRO (CONJ) (*PROPORTIONAL FLOW CONTROL)	813
PRIORIDAD - VÁLVULA DE (GR) (DIRECCIÓN)	542
	572
PROTECTOR (CONJ)	6
	7
PROTECTOR CONTRA EL VANDALISMO (GR)	853
PROTECTOR DE LA VENTANA	855
	856
PROTECTOR DE LAS LUCES (GR)	376
	377
PROTECTOR DE LAS TUBERÍAS (GR)	378
	379
	380
	381
	382
PROTECTOR DE SELLO (GR)	374
PROTECTOR DE VARILLAJE (GR)	778
PROTECTOR DEL EJE IMPULSOR (GR)	6
	7
PROTECTOR DEL EJE IMPULSOR (GR)	375
PROTECTOR DEL RADIADOR (GR)	74
	384
	385
PROTECTOR DEL SISTEMA DE COMBUSTIBLE (GR)	117
PROTECTOR DEL SISTEMA DE COMBUSTIBLE (GR) (*LINE, LOW PRESSURE)	104
	107
PROTECTOR DEL SISTEMA DE COMBUSTIBLE (GR) (*LINE, LOW PRESSURE)	112
PROTECTOR DEL TREN DE FUERZA (GR)	383
PROTECTOR DEL VENTILADOR (GR)	74
PUBLICACIONES (GR)	874
PUERTA DE ACCESO (GR)	349
	350
	351
	352
PUERTA DE CABINA	832
	833
	835
	837
	838
	839
	840
	843
PUNTA CORTA (GR)	781
	782
PUNTA LARGA (GR)	779
	780

R

RADIADOR (GR)	84
	85
	86
	87
RADIADOR Y POSENFRIADOR (GR)	80
*RADIO GP-COMMUNICATION	914
RECLINACION DE ASIENTO (GR)	915
REFLECTOR (GR)	148
	149
	150
REFLECTOR (GR) (24 VOLTIOS)	157
	159
REGULADOR - PEDAL DEL (GR)	906
	907
REGULADOR DE VOLTAJE (24 VOLTIOS) (ALTERNADOR)	125
REJILLA DE SUCCIÓN	616
REJILLA DE SUCCIÓN (ACEITE DEL TREN DE FUERZA)	221

* NO HAY TRADUCCION DISPONIBLE EN EL MOMENTO DE LA IMPRESION

INDICE

Nombre	Página
REJILLA DE SUCCIÓN (CAJA DE TRANSMISION)	218
RELÉ (CONJ) (24 VOLTIOS)	830
RELÉ (CONJ) (24 VOLTIOS) (ALARMA)	206, 897, 901
RELÉ (CONJ) (24 VOLTIOS) (CONDENSADOR)	809
RELÉ (CONJ) (24 VOLTIOS) (CONTROL DE AMORT.)	203
RELÉ (CONJ) (24 VOLTIOS) (DIRECCIÓN SECUNDARIA)	204
RELÉ (CONJ) (24 VOLTIOS) (LUCES DE DESPLAZAMIENTO)	163, 165
RELÉ (CONJ) (24 VOLTIOS) (REFLECTORES DELANTEROS)	897, 901
RELÉ (CONJ) (24 VOLTIOS) (REVERSA, VENTILADOR)	555
RELÉ (GR)	173, 195
RESPIRADERO (CONJ) (CÁRTER DEL MOTOR)	20, 23
RESPIRADERO (CONJ) (CÁRTER DEL MOTOR)	64
RESPIRADERO (GR)	64
RESPIRADERO (TANQUE HIDRÁULICO)	616
RESPIRADERO (TRANSMISION)	218
RESPIRADERO (TUBO DE LLENADO DE TREN DE FUERZA)	221
RETROCESO - ALARMA DE (GR)	188
RETROVISOR (GR)	876, 877, 878, 879, 880, 881, 882, 883, 884, 885, 886
REVESTIMIENTO DE LA CABINA (GR)	869

S

Nombre	Página
SECADOR DE RECEPTOR (CONJ) (REFRIGERANTE)	871
SEGMENTO DE CUCHILLA (GR)	773
SELLO DUOCONE (GR)	272, 274, 276, 278, 280
SENSOR DE PRESION (*FUEL RAIL PRESSURE)	111
SENSOR DE PRESIÓN (GR) (ACEITE DEL FRENO)	418, 420
SENSOR DE TEMPERATURA (GR)	175
SENSOR DE TEMPERATURA (GR) (ACEITE DE CONVERTIDOR DE PAR)	334
SENSOR DE TEMPERATURA (GR) (ACEITE DE LA TRANSMISIÓN)	336
SENSOR DE TEMPERATURA (GR) (REFRIGERANTE DEL MOTOR)	195
SENSOR DE VELOCIDAD (GR) (BOMBA DE COMBUSTIBLE)	110
SENSOR DE VELOCIDAD (GR) (SALIDA DE TRANSMISIÓN 1)	334
SENSOR DE VELOCIDAD (GR) (SALIDA DE TRANSMISIÓN 2)	334
SENSOR DE VELOCIDAD (GR) (SALIDA DEL CONVERTIDOR DE PAR)	334
SENSOR DE VELOCIDAD (GR) (*TMSN INTERMEDIATE OUTPUT 1)	334
SENSOR DE VELOCIDAD (GR) (*TMSN INTERMEDIATE OUTPUT 2)	334
SEPARADOR DE AGUA Y BOMBA DE CEBADO DE COMBUSTIBLE (GR)	123
SERVICIO DE POSICIONADOR DE HORQUILLA (GR)	773, 774, 775, 776
SERVICIO DE TREN DE FUERZA (GR)	139
SILENCIADOR (GR)	95
SISTEMA ROPS DE CABINA CERRADA (CONFIG)	794, 795, 796, 797
SOFTWARE DEL TREN DE FUERZA (GR)	139
SOLENOIDE (CONJ) (COMPUERTA DE ESCAPEN)	96
SOPORTE DEL ASIENTO (GR)	946
SOPORTE DEL RESPALDO (GR)	890, 891, 892
*STEERING AR-STANDARD	460
SUCCIÓN - VENTILADOR DE (GR)	73
SUSPENSIÓN - ASIENTO CON (GR)	932, 933, 934

* NO HAY TRADUCCION DISPONIBLE EN EL MOMENTO DE LA IMPRESION

INDICE

Nombre	Página
	935
	936
	937
	939

T

TABLERO DE INSTRUMENTOS (GR)	895
TABLERO DE INSTRUMENTOS (GR)	897
TABLERO DE INSTRUMENTOS (GR)	901
TANQUE DE COMBUSTIBLE Y GRUPO DE MONTAJE	121
TANQUE DE REFRIGERANTE (GR)	80
TANQUE HIDRÁULICO (GR)	616
TANQUE HIDRÁULICO Y MONTAJE (GR)	615
TAPA CON RESPIRADERO (LIMPIAPARABRISAS)	953
TAPA DE LLENADO (CONJ) (TANQUE HIDRAULICO)	616
TAPA DE TRANSMISION (GR)	238
TAPA DEL INSONORIZADOR (GR)	18
	19
TAPA DEL MECANISMO DE VÁLVULAS (GR)	20
	23
	26
TAPA DEL MOTOR (GR)	17
TAPA DEL TUBO DE LLENADO DE ACEITE (MOTOR)	65
TAPA, LLENADO (ACEITE DEL TREN DE FUERZA)	248
	250
TAPA PARA EL COMBUSTIBLE	122
TAPA PARA LLUVIA	88
TAPÓN DE DRENAJE (ACEITE DE MOTOR)	39
TAPÓN DE DRENAJE (ACEITE DE MOTOR)	49
TAPÓN DE DRENAJE (TRANSMISION)	218
	221
TAPÓN DE LA CAJA DEL VOLANTE (GR)	54
TAPON DE SELLO	38
	542
	547
	572
TAPÓN DEL MOTOR (GR)	53
TAPÓN MAGNÉTICO	272
	274
	278
	280
TAPÓN MAGNÉTICO (CAJA DEL EJE)	276
TECHO CON LA ESTRUCTURA DE PROTECCION CONTRA OBJETOS QUE CAEN (GR)	802
	803
TECHO ROPS ABIERTO (CONFIG)	800
TECHO ROPS ABIERTO (GR)	804
TIRANTE DE TRABA DEL BASTIDOR DE DIRECCIÓN (GR)	403
	404
TOPE DE OSCILACIÓN DEL EJE	314
TRABA DE LA RUEDA (GR)	957
TRANSMISION (CONFIG)	320
TREN DE FUERZA (CONFIG)	294
	295
TREN DE FUERZA-GRUPO ELECTRÓNICO	139
TUBERÍAS CON SERVOMANDO (GR)	564
	568
	572
TUBERÍAS DE ACONDICIONADOR DE AIRE (GR)	871
TUBERIAS DE CALEFACCION	873
TUBERÍAS DE CALEFACCIÓN DE LA CABINA	873
TUBERÍAS DE COMBUSTIBLE (GR)	102
	104
	107
TUBERIAS DE CONTROL DE LA SUSPENSIÓN (GR)	577
TUBERÍAS DE DIRECCIÓN (GR)	446
	450
	452
	454
TUBERÍAS DE ENGRASE (GR)	400
	401
TUBERÍAS DE LA DIRECCIÓN SECUNDARIA (GR)	438
	443
TUBERÍAS DE TRABA DEL DIFERENCIAL (GR)	288
TUBERÍAS DEL AGUA (GR)	76
	77
TUBERÍAS DEL CILINDRO DE INCLINACIÓN (GR)	580
	582
TUBERÍAS DEL CUCHARÓN (GR)	508
TUBERÍAS DEL ENFRIADOR DE ACEITE DEL EJE (GR)	282
TUBERIAS DEL ENFRIADOR DEL CONVERTIDOR DE PAR	290
TUBERÍAS DEL FILTRO Y LA TRANSMISIÓN (GR)	252
	254
TUBERÍAS DEL FRENO DE SERVICIO (GR)	423
	426
	429
TUBERÍAS DELANTERAS (GR)	527
	529
	530
	531

* NO HAY TRADUCCION DISPONIBLE EN EL MOMENTO DE LA IMPRESION

INDICE

Nombre	Página
	532
	533
TUBERÍAS HIDRÁULICAS DEL VENTILADOR (GR)	553
	555
TUBERÍAS HIDRÁULICAS DEL VENTILADOR (GR)	550
TUBERÍAS HIDRÁULICAS (GR)	536
	538
	540
	542
	547
TUBO DE BOMBA HIDRÁULICA (GR)	49
TUBO DE LLENADO DE ACEITE DE LA TRANSMISIÓN (GR)	248
	250
TUBO DE LLENADO DE ACEITE (GR)	65
TURBOCOMPRESOR (GR)	96

U

*UNION AS	288
UNIÓN (GR)	524

V

VÁLVULA DE ACOPLAMIENTO RÁPIDO (GR)	685
VÁLVULA DE ALIVIO (GR)	686
	687
	688
	689
VÁLVULA DE ALIVIO (GR)	330
	331
VÁLVULA DE ALIVIO (GR) (*AUXILIARY; 5TH, 6TH FUNCTIONS)	636
VÁLVULA DE ALIVIO (GR) (COMPRESOR DEL REFRIGERANTE)	805
VÁLVULA DE ALIVIO (GR) (DIRECCIÓN SECUNDARIA)	438
	443
VÁLVULA DE ALIVIO (GR) (MOTOR DEL VENTILADOR HIDRÁULICO)	591
VÁLVULA DE ALIVIO (GR) (PRINCIPAL)	586
VÁLVULA DE CARGA DEL ACUMULADOR (GR) (FRENO)	607
VÁLVULA DE COMBINACIÓN (GR)	629
VÁLVULA DE CONTROL DE FLUJO (GR) (*AUXILIARY, INLET) (MULTIPLE DE LA ADMISION)	585
VÁLVULA DE CONTROL DE LA AMORTIGUACIÓN (GR)	690
VALVULA DE CONTROL DE LA BOMBA (GR)	682
VÁLVULA DE CONTROL DE LA TRANSMISIÓN (GR)	334
	336
VÁLVULA DE CONTROL DEL FRENO (GR) (SERVICIO)	418
	420
VÁLVULA DE CONTROL (GR)	630
	632
	634
	636
	637
	639
	641
	644
	681
VÁLVULA DE CONTROL MANUAL (GR)	656
VÁLVULA DE CONTROL MANUAL (GR) (CONTROL DE BAJADA)	560
VALVULA DE CORTE (CONJ)	542
	547
VALVULA DE CORTE (CONJ)	572
VÁLVULA DE CORTE (GR)	692
VÁLVULA DE DRENAJE DEL RADIADOR (GR)	84
	85
VÁLVULA DE LANZADERA (GR)	431
	476
	694
	695
VÁLVULA DE MODULACIÓN (GR)	322
VÁLVULA DE MUESTREO (GR)	69
VALVULA DE PURGA (GR)	684
VÁLVULA DE RETENCIÓN (GR)	542
	572
	626
	627
	628
	637
VÁLVULA DE RETENCIÓN (GR)	454
VÁLVULA DE RETENCIÓN (GR) (ACEITE PILOTO)	644
VÁLVULA DE RETENCIÓN (GR) (DERIVACION DE ENFRIADOR DE ACEITE HIDRAULICO)	550
VÁLVULA DE RETENCIÓN (GR) (DERIVACIÓN DE ENFRIADOR DE ACEITE HIDRÁULICO)	282
VÁLVULA DE RETENCIÓN (GR) (DIRECCIÓN SECUNDARIA)	438
VÁLVULA DE SOLENOIDE (GR)	477
	696
	697
	698
	699
	700

* NO HAY TRADUCCION DISPONIBLE EN EL MOMENTO DE LA IMPRESION

INDICE

Nombre	Página
VÁLVULA DE SOLENOIDE (GR) (CONTROL DE AMORT.)	690
VÁLVULA DE SOLENOIDE (GR) (DESCONEXIÓN HIDRÁULICA)	586
	623
VÁLVULA DE SOLENOIDE (GR) (*THIRD FCTN, CONTINUOUS FLOW)	624
VÁLVULA DE SOLENOIDE (GR) (*THIRD FCTN, PROPORTIONAL FLOW)	625
VÁLVULA DE SOLENOIDE (GR) (24 VOLTIOS) (ACOPLADOR RAPIDO)	685
VÁLVULA DE SOLENOIDE (GR) (24 VOLTIOS) (VENTILADOR HIDRAULICO)	590
	591
VALVULA DE SOLENOIDE Y MONTAJE (GR	462
	623
	624
	625
VALVULA DE SOLENOIDE Y MONTAJE (GR (12 VOLTIOS CORRIENTE DIRECTA)	288
VÁLVULA DEL CONTROL PRINCIPAL (GR)	646
	648
	650
	651
	652
	653
	654
	655
VÁLVULA DEL NEUMÁTICO (GR)	333
VALVULA (DIRECCIÓN SECUNDARIA)	438
	443
VÁLVULA HIDRÁULICA DE 3 VÍAS (CONFIG)	500
	501
VÁLVULA HIDRÁULICA DE 4 VÍAS (CONFIG)	501
	502
	503
VALVULA PILOTO DE CARTUCHO (GR)	465
	467
	468
	469
	470
	471
	472
	473
	474
	475
	678
VÁLVULA PILOTO (GR)	323
	326
	329
	463
	657
	659
	661
	664
	666
	668
	670
	671
	672
	673
	674
	675
	676
	677
VÁLVULA PILOTO (GR) (*JOYSTICK, 4-FUNCTION)	821
VÁLVULA PILOTO (GR) (PALANCA UNIVERSAL, FUNCIÓN 3)	823
	824
VÁLVULA REDUCTORA DE PRESIÓN (GR)	586
	679
	680
	681
VÁLVULA-RESPIRADERO (CÁRTER DEL MOTOR)	26
VENTANA DE LA PUERTA (GR)	954
VISERA	951
VISERA (GR)	951
VOLANTE - CAJA DE (GR)	43
VOLANTE (GR)	42

* NO HAY TRADUCCION DISPONIBLE EN EL MOMENTO DE LA IMPRESION

ÍNDICE

Designação	Página

A

ACENDEDOR DE CIGARROS (24 VOLTS) 189
ACENDEDOR DE CIGARROS (24 VOLTS) 191
ACOPLADOR RÁPIDO 762
763
764
766
768
ACUMULADOR - FREIO 411
ACUMULADOR - REFRIGERANTE 871
ACUMULADOR D ÓLEO - PILOTO 478
479
ACUMULADOR DO SISTEMA DE ABSORÇÃO DE IMPACTOS 480
ADAPTADOR DA PONTA 710
ADAPTADOR DO DRENO DO CÁRTER DE OLEO 49
ADESIVO - CLASSIFICAÇÃO (CARGA) 711
ADESIVO - FUSÍVEL/RELÉ 901
ADESIVO - FUSÍVEL/RELÉ (IDENTIFICAÇÃO) 897
ADESIVO-INTERNACIONAL 962
ADESIVO-INTERNACIONAL (*Z-BAR LINKAGE) 4
5
AJUSTADOR DO ASSENTO 783
ALARME 124
ALARME DE MARCHA À RÉ 188
ALAVANCA DE CONTROLE - MODULAR (*DIR, DNSFT, FLOW CONT SWITCHES) 811
ALTERNADOR DE CORRENTE 125
127
AQUECEDOR DA ÁGUA DO MOTOR 141
142
AQUECEDOR DA CABINE 858
859
AQUECEDOR DA CABINE E MONTAGEM 857
ARO 300
ARO DESMONTÁVEL 301
302
303
304
305
306
307
308
309
ARRANJO BÁSICO 3
4
ARRANJO DE CONVERSÃO - HIDRÁULICO 482
ARRANJO HIDRÁULICO - 2 VÁLVULAS 499
500
ARRANJO HIDRÁULICO - 3 VÁLVULAS 500
501
ARRANJO HIDRÁULICO - 4 VÁLVULAS 501
502
503
ARRANJO HIDRÁULICO - 6 VÁLVULAS 503
ARREFECEDOR - ÓLEO HIDRÁULICO E DA TRANSMISSÃO 483
ARREFECEDOR - ÓLEO (MOTOR) 71
ARREFECEDOR DE ÓLEO DO MOTOR E BASE DO FILTRO 71
ARREFECEDOR DO ÓLEO DO EIXO 237
ARREFECEDOR DO ÓLEO HIDRÁULICO 484
ARTICULAÇÃO DA VÁLVULA PILOTO 596
597
598
ARTICULAÇÃO-DIANTEIRA 709
ASSENTO 927
929
931
ASSENTO - FUNDO 893
ASSENTO COM SUSPENSÃO 932
933
934
935
936
937
939
ASSENTO E MONTAGEM 920
921
923
ATERRO SANITÁRIO 6
7
8
ATOMIZADOR - ÉTER 177
AUXILIAR DE PARTIDA A ÉTER 176
177

B

BALANCIM 56
58
BATENTE DE OSCILAÇÃO DO EIXO 314
BATERIA 133
BATERIA E CABOS / FIOS ELÉTRICOS 128
130
BATERIA (12 VOLTS, 900 AMPÈRES) 133
BLOCO DO MOTOR 29
31
BOCAL DE ENCHIMENTO DE ÓLEO DO MOTOR 65
BOCAL DE ENCHIMENTO DE ÓLEO DO TREM DE FORÇA 248
250

* TRADUÇÃO NÃO DISPONÍVEL NO MOMENTO DA IMPRESSÃO

ÍNDICE

Designação	Página
BOMBA - ESCORVA DE COMBUSTÍVEL E SEPARADOR DE ÁGUA	123
BOMBA DA TRANSMISSÃO	296
	297
	298
	299
BOMBA DE ÁGUA	78
BOMBA DE DIREÇÃO E ACESSÓRIO E MONTAGEM	604
	605
BOMBA DE DIREÇÃO SECUNDÁRIA E MOTOR	457
BOMBA DE ENGRENAGENS	458
	606
	607
BOMBA DE ENGRENAGENS (DIREÇÃO SECUNDÁRIA)	457
BOMBA DE INJEÇÃO DO COMBUSTÍVEL	110
	111
	116
BOMBA DE ÓLEO - MOTOR	68
BOMBA DE PISTÃO	609
	611
BOMBA DE PISTÃO E PALHETA	613
BOMBA DE TRANSFERÊNCIA DO COMBUSTÍVEL	110
BOMBA E MONTAGEM - FREIO E VENTILADOR HIDRÁULICO	603
BOMBA E MOTOR - ARREFECEDOR DE ÓLEO DO EIXO	282
BOMBA REGULADORA (HMU)	443
BOMBA REGULADORA (HMU)	446
BOMBA REGULADORA (HMU, DIREÇÃO RÁPIDA)	459
	460
BORDA CORTANTE	771
	772
BORDA SEGMENTADA DA CAÇAMBA	773
BRAÇO - MANIPULADOR DE MATERIAIS	711
BRACO DE LEVANTAMENTO E MANCAL	701
BRAÇO DO ASSENTO	789
	790
	791
	792
	793
BRACO DO LIMPADOR	788
	955
BUJÃO - CAIXA DO VOLANTE DO MOTOR	54
BUJÃO-COLETOR DO CONTROLE	585
BUJÃO DO DRENO (ÓLEO DO MOTOR)	39
	49
BUJÃO DO DRENO (TRANSMISSÃO)	218
	221
BUJÃO DO MOTOR	53
BUJÃO MAGNÉTICO	272
	274
	278
	280
BUJÃO MAGNÉTICO (ALOJAMENTO DO EIXO)	276
BUJÃO-RETENTOR	38
	542
	547
	572

C

CABEÇOTE DO MOTOR	32
	34
	36
	37
CABINE - ESTRUTURA DE PROTEÇÃO CONTRA CAPOTAMENTO	798
	800
CABINE - ESTRUTURA ROPS COBERTA	794
	795
	796
	797
	889
CABINE - ROPS ABERTA	889
CABOS/FIOS ELÉTRICOS - ABSORÇÃO DE IMPACTOS	203
CABOS/FIOS ELÉTRICOS - CABINE	189
	191
CABOS/FIOS ELÉTRICOS - CONTROLE ELETRÔNICO	194
CABOS/FIOS ELÉTRICOS - DIANTEIROS	198
	200
CABOS/FIOS ELÉTRICOS - DIREÇÃO SECUNDÁRIA	204
	206
CABOS/FIOS ELÉTRICOS - MOTOR	195
CABOS/FIOS ELÉTRICOS - TRASEIROS	201
CAÇAMBA - PARA APLICAÇAO GERAL	712
	713
	714
	715
	716
CAÇAMBA DE MÚLTIPLAS APLICAÇÕES	718
	719
	720
	756
CAÇAMBA PARA APLICAÇÃO GERAL	721
	722
	723
	724

* TRADUÇÃO NÃO DISPONÍVEL NO MOMENTO DA IMPRESSÃO

ÍNDICE

Designação	Página
	725
	726
	727
	728
	729
	730
	731
	732
	733
	740
	741
	742
	743
	744
	745
	746
	747
	748
	749
	750
	751
	752
CACAMBA PARA MATERIAL LEVE	734
	736
CAÇAMBA PARA MATERIAL LEVE	717
	753
	754
	755
CAÇAMBA PARA PENETRAÇÃO	737
	738
	739
	758
	759
CADEADO	248
	250
	615
	853
CAIXA - BATERIA	339
CAIXA - EIXO FIXO	272
	274
	276
CAIXA - EIXO OSCILANTE	278
	280
CAIXA - SUSPENSÃO DO ASSENTO	861
CAIXA DIANTEIRA	44
CAIXA DO VOLANTE DO MOTOR	43
CAIXA E COMPONENTES - TRANSMISSÃO	218
	221
CALÇO DA RODA	957
CÂMERA	133
CANO - BOMBA HIDRÁULICA	49
CAPÔ E PROTETOR	389
CÁRTER DO ÓLEO DO MOTOR	49

Designação	Página
CARTUCHO - BOMBA DE PALHETAS	481
CHASSI	1
	2
	3
CHASSI DIANTEIRO	362
	363
	364
	365
	367
CHASSI TRASEIRO	368
	369
	371
	372
CHAVE	248
	615
	843
	853
CHAVE (CABINE)	840
CHAVE (DESCONEXÃO DA BATERIA)	182
CHAVE GERAL	182
CHICOTE - CABINE	897
	901
CHICOTE - CABINE (PRINCIPAL)	189
	191
CHICOTE - CABINE (SUPERIOR)	189
	191
CHICOTE - CABOS ELÉTRICOS (INJETOR)	20
	23
	26
CHICOTE - DIANTEIRO	198
	200
CHICOTE - ILUMINAÇÃO	157
	159
CHICOTE - ILUMINAÇÃO (RODAGEM)	340
	341
CHICOTE - MONITOR	133
	831
CHICOTE - MOTOR	195
CHICOTE - MOTOR (MÓDULO DE CONTROLE DO MOTOR)	194
CHICOTE - SOLENÓIDE (CONTROLE DE FLUXO)	536
CHICOTE - SOLENÓIDE (TRAVA HIDRÁULICA)	542
	572
CHICOTE - TRASEIRO	201
CHICOTE - VÁLVULA (AUXILIAR)	620
CHICOTE - VÁLVULA (COMPRESSOR DE AR DO ASSENTO)	949
CHICOTE-DIREÇÃO (INTERRUPTOR DA PRESSÃO PRIMÁRIA)	206
CHICOTE-DIREÇÃO (SECUNDÁRIO)	204
	206

* TRADUÇÃO NÃO DISPONÍVEL NO MOMENTO DA IMPRESSÃO

ÍNDICE

Designação	Página
CILINDRO - ACOPLADOR	488
CILINDRO - CAÇAMBA DE MÚLTIPLAS APLICAÇÕES	492
CILINDRO DA DIREÇÃO	436, 437
CILINDRO DE DIREÇÃO E MONTAGEM	432, 433
CILINDRO DE INCLINAÇÃO	493, 494
CILINDRO DE LEVANTAMENTO	489, 491
CILINDRO DO ACOPLADOR E MONTAGEM	485, 486, 487
CILINDRO HIDRÁULICO	434
CINTO DE SEGURANÇA	924, 925, 926
CINTO DE SEGURANÇA (RETRÁTIL)	923
COLETOR - VÁLVULA	585, 586
COLETOR DE ADMISSÃO	94
COLETOR DE ESCAPE	96
COLMÉIA-ARREFECEDOR DO ÓLEO DO TREM DE FORÇA	483
COLUNA DE DIREÇÃO AJUSTÁVEL	461
COMANDO - ACOPLAMENTO FLEXÍVEL	246
COMANDO DA BOMBA	247
COMANDO DO VENTILADOR	40, 41
COMANDO HIDRÁULICO	498, 499
COMPRESSOR DE AR - ASSENTO	784
COMPRESSOR DE REFRIGERANTE	805, 806
CONDENSADOR DE REFRIGERANTE	809
CONDENSADOR DO REFRIGERANTE E MONTAGEM	807, 808
CONDICIONADOR DE AR	786
CONDICIONADOR DE AR E MONTAGEM	785
CONEXÃO	524
CONEXÃO - TUBO D'ÁGUA	70
CONSOLE DO OPERADOR	810
CONTRAPESO	343, 344, 345, 346, 347
CONTROLE - ALAVANCA	812, 813
CONTROLE - ALAVANCA (4 FUNÇÕES, AUXILIARES)	822
CONTROLE - DESENGATE AUTOMÁTICO DE LEVANTAMENTO	134
CONTROLE - NÃO PROGRAMADO	116
CONTROLE - NÃO PROGRAMADO (MOTOR)	111
CONTROLE - NÃO PROGRAMADO (TREM DE FORÇA)	827
CONTROLE - POSIÇÃO	135
CONTROLE-CABO	811
CONTROLE-CABO (INTERRUPTORES DE SENTIDO, REDUÇÃO DE MARCHA)	329, 673, 674, 675, 676
CONTROLE-CABO (*JOYSTICK, AUXILIARY FUNCTIONS)	812
CONTROLE DA CAÇAMBA	702
CONTROLE DA FERRAMENTA DE TRABALHO	705, 707
CONTROLE DA TRANSMISSÃO	827, 828
CONTROLE DA TRAVA DO DIFERENCIAL	236
CONTROLE DE DIREÇÃO	825
CONTROLE DO FREIO DE ESTACIONAMENTO	413, 414, 416
CONTROLE DO FREIO DE SERVIÇO	418, 420
CONTROLE HIDRÁULICO DE OPERAÇÃO PILOTO	814, 816, 818, 820, 821, 822, 823, 824
CONVERSÃO - PURIFICADOR DE AR	91
CONVERSOR ELÉTRICO	136
CONVERSOR ELÉTRICO (24-VOLTS A 12-VOLTS)	136
CORREIA- SERPENTINA	127
CORREIA DE COMANDO (PISCA-ALERTA) (PISCA-PISCA DE ADVERTÊNCIA)	152
COTOVELO	533
CRUZETA E MANCAL	311

D

DECALQUE	958, 959

* TRADUÇÃO NÃO DISPONÍVEL NO MOMENTO DA IMPRESSÃO

ÍNDICE

Designação	Página
	960
	961
DECALQUE - ADVERTÊNCIA (ACUMULADOR, ALTA PRESSºAO, CONSULTAR OMM)	480
DECALQUE - ADVERTÊNCIA (ALTA PRESSÃO, CONSULTAR OMM, EUA)	577
DECALQUE - ADVERTÊNCIA (ALTA PRESSÃO, CONSULTAR OMM, INTERNACIONAL)	577
DECALQUE - ADVERTÊNCIA (NÃO SOLDAR, NÃO PERFURAR, CONSULTAR OMM)	959
DECALQUE - ADVERTÊNCIA (PERIGO DE ESMAGAMENTO, CONSULTE OMM, INTERNACIONAL)	962
DECALQUE - ADVERTÊNCIA (RAIO DO PRODUCT LINK, EUA)	143
DECALQUE - ADVERTÊNCIA (RAIO DO PRODUCT LINK, INTERNACIONAL)	143
DECALQUE - AVISO (ALTURA DE RODAGEM)	4
DECALQUE - CONTROLES (CONSOLE, LADO DIREITO)	897
DECALQUE - CONTROLES (FUSÍVEL, PAINEL DE RELÉS)	901
DECALQUE - IDENTIFICAÇÃO (IGNIÇÃO)	145
DECALQUE - IDENTIFICAÇÃO (MANIPULADOR DE RESÍDUOS)	6
	7
	8
DECALQUE - IDENTIFICAÇÃO (NÚMERO DE GRUPO)	809
DECALQUE - IDENTIFICAÇÃO (20-KM/H)	958
DECALQUE - IDENTIFICAÇÃO (40 KM-H)	340
DECALQUE - INFORMAÇÕES (12-VOLTS)	136
DECALQUE - INFORMAÇÕES (24 VOLTS)	959
DECALQUE - INSTRUÇÃO (AJUSTE DO ASSENTO)	947
	949
DECALQUE - INSTRUÇÃO (DESENGATE, CONTROLE DO ASSENTADOR)	134
	135
DECALQUE - INSTRUÇÃO (PARTIDA DO MOTOR)	895
DECALQUE - INSTRUÇÃO (SEGURANÇA DA MÁQUINA, INTERNACIONAL)	145
DECALQUE - PAINEL (LADO DIREITO)	191
DECALQUE - PAINEL (LADO ESQUERDO)	189
	191
DECALQUE - VIDRO (DIANTEIRO)	794
	961
DECALQUE (LEVANTAMENTO ALTO)	707
DECALQUE (MANIPULADOR DE RESÍDUOS)	6
	7
	8
DECALQUE (PAINEL - LADO DIREITO)	189
DECALQUE (PRETO)	542
	572
	692
DECALQUE (TAMPA DO PAINEL DE INSTRUMENTOS)	895
DEFLETOR DE SUPRESSÃO DE RUÍDOS	338
DESEMBAÇADOR DA CABINE	830
DESENGATE E POSICIONADOR DA CAÇAMBA	504
	506
DIFERENCIAL	240
	241
	242
DIFERENCIAL - DESLIZAMENTO LIMITADO	243
	245
DIREÇÃO	459
DIREÇÃO PADRÃO	460
DIREÇÃO SECUNDÁRIA	459
	460
DISJUNTOR AUTOMÁTICO DE CIRCUITO (20-AMPERES)	857
DISJUNTOR AUTOMÁTICO DE CIRCUITO (20-AMPERES) (ACIONADOR DE INCLINAÇÃO DO CAPÔ)	785
DRENO - ÓLEO DO MOTOR	38
	39
DUCTO DE AR	846

E

EIXO-COMANDO DE VÁLVULA	16
EIXO DE TRANSMISSÃO	310
	311
EIXO FIXO	208
	209
	210
EIXO OSCILANTE	211
	212
ELEMENTO - AQUECEDOR DE ÁGUA DA CAMISA (240 VOLTS, 1.000 WATTS)	142
ELEMENTO DO FILTRO DE AR (PRIMÁRIO)	90
ELEMENTO DO FILTRO DE AR (SECUNDÁRIO)	90
ELEMENTO DO FILTRO DE COMBUSTÍVEL (TELA DO BOCAL DE ENCHIMENTO)	122
ELEMENTO FILTRANTE-ÓLEO (EXTREMA EFICIÊNCIA)	497
ELEMENTO (RESPIRO) (CÁRTER DO MOTOR)	20
	23
ELO - TRAVA DA ARMAÇÃO DA DIREÇÃO	403
	404

* TRADUÇÃO NÃO DISPONÍVEL NO MOMENTO DA IMPRESSÃO

ÍNDICE

Designação	Página
EMBREAGEM	224 226 228 230 232 234
EMISSOR - NÍVEL DO COMBUSTÍVEL	121
EMISSOR - POSIÇÃO	174
ENGATE - ARTICULAÇÃO	387
ENGRENAGEM - TRANSFERÊNCIA DE ENTRADA	267
ENGRENAGEM-COROA E PINHÃO	259 261 263 265
ENGRENAGENS DE SAÍDA DE TRANSFERÊNCIA	268 270
ESCADA	397
ESPELHO	875
ESPELHO RETROVISOR	876 877 878 879 880 881 882 883 884 885 886
EXTENSÃO - ENCOSTO	847
EXTENSÃO - ENCOSTO (TECIDO)	931
EXTENSÃO DO TUBO DE ESCAPE	92

F

Designação	Página
FIAÇÃO - AQUECEDOR E AR CONDICIONADO	786
FIAÇÃO - AQUECEDOR E AR CONDICIONADO (VENTILADORES DO CONDENSADOR)	809
FIAÇÃO - CONTROLE DE PERCURSO	203
FIAÇÃO - CONTROLE (PARTIDA, POSICIONADOR)	506
FIAÇÃO - CONTROLE (PARTIDA, POSICIONADOR) (ASSENTADOR)	504
FIAÇÃO - CONTROLE (PRODUCT LINK)	143
FIAÇÃO - CONTROLE (SEGURANÇA DA MÁQUINA)	145
FIAÇÃO - INTERRUPTOR (TRAVA DE DIFERENCIAL)	181
FIAÇÃO - LUZES TRASEIRAS (LADO DIREITO)	167
FIAÇÃO - LUZES TRASEIRAS (LADO ESQUERDO)	167
FIAÇÃO -LUZES DIANTEIRAS (LADO DIREITO, LADO ESQUERDO)	163 165 167
FIAÇÃO-CÂMERA	193
FIAÇÃO-RÁDIO	866 868
FIAÇÃO-RÁDIO (ALTO-FALANTES)	864 866
FIAÇÃO-RÁDIO (PRODUCT LINK)	143
FILTRO - AR DA CABINE	848
FILTRO - COMBUSTÍVEL (CABEÇA DO FILTRO)	99
FILTRO - COMBUSTÍVEL (ELEMENTO)	99
FILTRO - COMBUSTÍVEL (EXTREMA EFICIÊNCIA) (ALTA EFICIÊNCIA)	100
FILTRO - MAGNÉTICO	218 221
FILTRO - ÓLEO	256 497
FILTRO - ÓLEO DO MOTOR	67
FILTRO - ÓLEO (EFICIÊNCIA AVANÇADA) (TREM DE FORÇA)	256
FILTRO - SEPARADOR DE ÁGUA E COMBUSTÍVEL	123
FILTRO (AR DA CABINE)	848
FILTRO E TUBOS - TRANSMISSÃO	252 254
FILTRO HIDRÁULICO E MONTAGEM	496
FILTRO (ÓLEO DO MOTOR)	67
FILTRO SECUNDÁRIO DE COMBUSTÍVEL	99 100
FREIO DE ESTACIONAMENTO	412
FREIOS E ENGRENAGENS PLANETARIAS	213 214 215 216 217
FUNDO - ENCOSTO	890 891 892
FUSÍVEL (100 AMPÈRES)	195
FUSÍVEL (20-AMPERES)	173
FUSÍVEL (20-AMPERES)	195
FUSÍVEL (30 AMPERES)	173
FUSÍVEL (30 AMPERES)	195

* TRADUÇÃO NÃO DISPONÍVEL NO MOMENTO DA IMPRESSÃO

ÍNDICE

Designação	Página

G

GARFO DE PALETAS 773 774 775 776
*GEAR GP-INPUT TRANSFER 266
GR. DE CONVERSÃO - CERTIFICADO 4 5
GR. DE CONVERSÃO - OPERAÇÃO RODOVIÁRIA 340 341
GR. DE SERVIÇO - POSICIONADOR DO GARFO 773 774 775 776
GR. DE SERVICO - TREM DE FORÇA 139
GRUPO DE INSTALAÇÃO - MOTOR 15
GRUPO ROTATIVO DA BOMBA 614
GUIA - VEDADOR 374

I

ILUMINAÇÃO - AUXILIAR 155
ILUMINAÇÃO - FREIO E MARCHA À RÉ 167
ILUMINAÇÃO - RODOVIÁRIA 161 163 165
ILUMINAÇÃO RODOVIÁRIA 153 154
INDICADOR - NÍVEL DO ÓLEO (VARETA) (MOTOR) 49
INDICADOR - TROCA DO FILTRO DE AR 88
INDICADOR - VARETA DO NÍVEL DE ÓLEO 272 274 278 280
INDICADOR - VARETA DO NÍVEL DE ÓLEO (EIXO) 276
INDICADOR (TRAVA DE DIFERENCIAL) 181
INJETOR DE COMBUSTÍVEL 101
INSTALAÇÃO-COMUNICAÇÃO 143
INSTALAÇÃO DO RÁDIO 864 866 868
INSTALAÇÃO-SEGURANÇA 145
INTERRUPTOR - BALANCIM 185
INTERRUPTOR - BALANCIM (AJUSTE DA TRAVA DO ACELERADOR, CONTINUAR) 897 901
INTERRUPTOR - BALANCIM (AR CONDICIONADO, AQUECEDOR CONT) 785

Designação	Página

INTERRUPTOR - BALANCIM (CAÇAMBA, SELEÇÃO DO GARFO) 506
INTERRUPTOR - BALANCIM (CONTROLE DE FLUXO AUXILIAR) (24 VOLTS) 813
INTERRUPTOR - BALANCIM (CONTROLE DE MUDANÇA DE MARCHA AUTOMÁTICA) 189 191
INTERRUPTOR - BALANCIM (CONTROLE DO AQUECEDOR) 857
INTERRUPTOR - BALANCIM (CONTROLE DO DESLIGADOR DO NEUTRALIZADOR DA TRANSMISSÃO) 189 191
INTERRUPTOR - BALANCIM (DESENGATE AUTOMÁTICO LIGAR, DESLIGAR) 897 901
INTERRUPTOR - BALANCIM (DIREÇÃO RÁPIDA) 450 452
INTERRUPTOR - BALANCIM (DIREÇÃO SECUNDÁRIA) 204 206
INTERRUPTOR - BALANCIM (HOLOFOTES, DIANTEIROS) 189 191
INTERRUPTOR - BALANCIM (ILUMINAÇÃO RODOVIÁRIA) 189
INTERRUPTOR - BALANCIM (LUZES DE ADVERTÊNCIA - PISCA-PISCA) 189 191
INTERRUPTOR - BALANCIM (PISCA-ALERTA) 169
INTERRUPTOR - BALANCIM (PISCA-ALERTA) 170
INTERRUPTOR - BALANCIM (REDUTOR DE LUMINOSIDADE - FAROL) . . . 167
INTERRUPTOR - BALANCIM (REDUTOR DE LUMINOSIDADE - FAROL) . . . 163 165
INTERRUPTOR - BALANCIM (RODAGEM) 191
INTERRUPTOR - BALANCIM (SISTEMA DE ABSORÇÃO DE IMPACTOS) . . . 203
INTERRUPTOR - BALANCIM (TRAVA DO ACELERADOR - LIGAR, DESLIGAR) 897 901
INTERRUPTOR - BALANCIM (TRAVA DO PINO DO ACOPLADOR RAPIDO) 517
INTERRUPTOR - BALANCIM (TRAVA HIDRÁULICA) 514 520 897

* TRADUÇÃO NÃO DISPONÍVEL NO MOMENTO DA IMPRESSÃO

ÍNDICE

Designação	Página
INTERRUPTOR - BALANCIM (TRAVA HIDRÁULICA)	901
INTERRUPTOR - BALANCIM (VELOCIDADE DO VENTILADOR)	897
INTERRUPTOR - BALANCIM (VENTILADOR REVERSÍVEL - LIGAR, DESLIGAR)	555
INTERRUPTOR - FLUXO (CONTROLE DE FLUXO VARIÁVEL)	536
INTERRUPTOR - LIMITADOR (FREIO DE ESTACIONAMENTO)	413
INTERRUPTOR - LIMITADOR (PEDAL DO FREIO)	897 901
INTERRUPTOR - LIMPADOR DO PÁRA-BRISA	186
INTERRUPTOR - LIMPADOR (24 VOLTS) (DIANTEIRO)	186
INTERRUPTOR - MAGNÉTICO	183 184
INTERRUPTOR - MAGNÉTICO (24 VOLTS) (RELÉ PRINCIPAL)	195
INTERRUPTOR - PARTIDA (CHAVE) (MOTOR)	895
INTERRUPTOR - PEDAL	181
INTERRUPTOR - PISCA-PISCA	161 163 165 167
INTERRUPTOR - PRESSÃO (DERIVAÇÃO DO FILTRO DE ÓLEO DO TREM DE FORÇA)	256
INTERRUPTOR - PRESSÃO (FILTRO DE DERIVAÇÃO DO ÓLEO HIDRÁULICO)	497
INTERRUPTOR - PRESSÃO (ÓLEO DA DIREÇÃO SECUNDÁRIA)	438 443
INTERRUPTOR - PRESSÃO (ÓLEO DO EIXO)	282
INTERRUPTOR - PRESSÃO (REFRIGERANTE)	871
INTERRUPTOR - ROTATIVO (LIMPADOR, LAVADOR DE PÁRA-BRISA) (LIMPADOR TRASEIRO)	186
INTERRUPTOR - TEMPERATURA (AR CONDICIONADO)	786
INTERRUPTOR - TRAVA DO DIFERENCIAL	181
INTERRUPTOR (MOTOR DE PARTIDA)	179
ISOLAMENTO CONTRA CALOR	392 393 395 422

J

Designação	Página
JOGO DE AJUSTADOR (ENCOSTO DO BRAÇO)	790
JOGO DE ALMOFADA (ENCOSTO DO BRAÇO)	790
JOGO DE MANCAL (VIRABREQUIM, HASTE DE CONEXÃO)	27 28
JOGO DE MANCAL (VIRABREQUIM, PRINCIPAL)	27 28
JOGO DE RETENTOR	434
JOGO DE RETENTOR (ACUMULADOR HIDRÁULICO)	480
JOGO DE RETENTOR (VÁLVULA DE VAIVÉM)	695
JUNTA - REGULADOR DA ÁGUA (TERMOSTATO DE ÁGUA)	70
JUNTA - TAMPA	26
JUNTA - TAMPA DA VÁLVULA	20 23
JUNTA - TAMPA (VÁLVULA)	20 23
JUNTA CORREDIÇA	312 313
JUNTA (FILTRO DA CABINE)	848
JUNTA (TANQUE HIDRÁULICO)	616
JUNTA UNIVERSAL	311

L

Designação	Página
LÂMINA DO LIMPADOR DE PÁRA-BRISA (503 MM) (TRASEIRO)	955
LÂMINA DO LIMPADOR DE PÁRA-BRISA (700 MM) (DIANTEIRO)	955
LÂMPADA - FAROL	148 149 150
LÂMPADA - FAROL (24 VOLTS)	157 159
LÂMPADA - HALOGÊNEO (24 VOLTS, 65 WATTS)	148 149 157 159
LÂMPADA - TETO	147
LÂMPADA - TETO (24 VOLTS)	869
LÂMPADA DIANTEIRA E DE SINAL	154
LÂMPADA DIANTEIRA E DE SINAL (LADO DIREITO)	153 163 165

* TRADUÇÃO NÃO DISPONÍVEL NO MOMENTO DA IMPRESSÃO

ÍNDICE

Designação	Página
LÂMPADA DIANTEIRA E DE SINAL (LADO ESQUERDO)	153, 163, 165
LAMPADA-PLACA DE REGISTRO	340, 341
LÂMPADA (24 VOLTS, 10 WATTS)	340, 341
LÂMPADA (24 VOLTS, 10 WATTS)	147
LÂMPADA (24 VOLTS, 21 WATTS) (DE PARADA, TRASEIRO)	151
LÂMPADA (24 VOLTS, 3 WATTS)	189, 191, 897
LÂMPADA (24 VOLTS, 5 WATTS) (DE PARADA, TRASEIRO)	151
LÂMPADA (24 VOLTS, 70 WATTS)	152
LAVADOR DO VIDRO	952, 953
LEVANTAMENTO DO MOTOR	46
LIMPADOR DO VIDRO	955
LIMPADOR DO VIDRO (DIANTEIRO)	955
LUZ GIRATÓRIA DE ALARME	152
LUZ GIRATÓRIA DE ALARME (ÂMBAR, INTERMITENTE)	170
LUZ INTERMITENTE	163, 165, 167
LUZ INTERMITENTE (12 A 24 VDC)	161
LUZ TRASEIRA E DE FREIO	151

M

Designação	Página
MANCAL EXTERIOR DA EMBREAGEM	311
MANGUEIRA	76
MANGUEIRA (INFERIOR)	77
MANGUEIRA (SUPERIOR)	77
MECANISMO DAS VÁLVULAS	62
MÓDULO - INTERFACE (CHAVE)	145
MÓDULO DO VISOR (GRUPO DE MEDIDORES)	895
MÓDULO DO VISOR (SISTEMA VISUAL DA ÁREA DE TRABALHO)	133, 831
MOLA ACIONADA A GAS	461
MOLA ACIONADA A GAS (CAPÔ)	389
MONTAGEM - ARO	294
MONTAGEM - BRAÇADEIRA	405
MONTAGEM - BRAÇADEIRA (BOMBA DE GRAXA)	1, 2, 3
MONTAGEM - CABINE	887
MONTAGEM - CAÇAMBA	777
MONTAGEM - MOTOR E TRANSMISSÃO	47
MONTAGEM - VÁLVULA DE CONTROLE	595
MONTAGEM - VISOR	888
MONTAGEM-CÂMERA	172
MONTAGEM DO EIXO	292, 293
MONTAGEM-RECIPIENTE DE ETER	177
MOTOR	9, 10, 11
MOTOR - ENGRENAGENS	590, 591, 592, 593, 594
MOTOR - LIMPADOR DO VIDRO (24 VOLTS) (DIANTEIRO)	955
MOTOR - LIMPADOR DO VIDRO (24 VOLTS) (TRASEIRO)	955
MOTOR - VENTILADOR HIDRÁULICO	589
MOTOR E MONTAGEM - VENTILADOR HIDRÁULICO	588
MOTOR ELÉTRICO	171
MOTOR ELÉTRICO DE PARTIDA	178, 179
MOTOR PRIMÁRIO	12, 13, 14

O

Designação	Página
ORIFÍCIO-CONDICIONADOR DE AR	871

P

Designação	Página
PAINEL - SUPERIOR	408, 410
PAINEL- REDUÇÃO DE RUÍDO	406, 407
PAINEL DE INSTRUMENTOS	829, 895, 897, 901
PAINEL PROTETOR - CABINE	941, 942, 943, 945
PÁRA-LAMA	353, 360
PÁRA-LAMA DIANTEIRO	354, 355, 356

* TRADUÇÃO NÃO DISPONÍVEL NO MOMENTO DA IMPRESSÃO

ÍNDICE

Designação	Página
PÁRA-LAMA TRASEIRO	358
	359
PÁRA-SOL	951
PÁRA-SOL DA CABINE	951
PEDAL DO FREIO	905
PEDAL DO GOVERNADOR	906
	907
PISO	849
	908
	909
PISTÃO	52
PISTÃO E BIELA	51
PLACA - IDENTIFICAÇÃO DO EIXO	208
	209
	211
	212
PLACA - NÚMERO DE SÉRIE	221
PLACA DA VÁLVULA PILOTO	599
	600
	601
	602
PLACA DE IDENTIFICAÇÃO	212
PLACA DE IDENTIFICAÇÃO (CATERPILLAR)	734
PLACA DE IDENTIFICAÇÃO (FERRAMENTA DE TRABALHO)	724
	729
	743
	746
	747
	749
	750
	751
	752
	755
	756
	758
	759
PLACA DE INSTRUÇÃO (BATERIA)	128
	130
PLACA DE INSTRUÇÃO (CONDICIONADOR DE AR)	871
PLACA E DECALQUE	962
	964
PLATAFORMA	910
	911
PLATAFORMA DO OPERADOR	912
	913
PNEU E ARO	314
	315
	316
	317
	318
	319
POLIA DO VIRABREQUIM	55
PONTA CURTA	781
	782
PONTA LONGA	779
	780
PORTA DA CABINE	832
	833
	835
	837
	838
	839
	840
	843
PORTA DE ACESSO	349
	350
	351
	352
PÓS-ARREFECEDOR	80
POSIÇÃO DO SENSOR (GIRATÓRIO)	174
POTENCIÔMETRO (CONTROLE DE FLUXO PROPORCIONAL)	813
PROTETOR	6
	7
PROTETOR - ARTICULAÇÃO	778
PROTETOR - CÁRTER DO ÓLEO DO MOTOR	6
	7
	60
	61
PROTETOR - EIXO DE TRANSMISSÃO	6
	7
	375
PROTETOR - ILUMINAÇÃO	376
	377
PROTETOR - JANELA	855
	856
PROTETOR - RADIADOR	74
	384
	385
PROTETOR - SISTEMA DE COMBUSTÍVEL	117
PROTETOR - SISTEMA DE COMBUSTÍVEL (TUBULAÇÃO, BAIXA PRESSÃO)	104
	107
	112
PROTETOR - TREM DE FORÇA	383
PROTETOR - TUBOS	378
	379
	380
	381
	382
PROTETOR CONTRA VANDALISMO	853
PROTETOR DO VENTILADOR	74
PUBLICAÇÃO	874
PURIFICADOR DE AR	88

* TRADUÇÃO NÃO DISPONÍVEL NO MOMENTO DA IMPRESSÃO

ÍNDICE

Designação	Página
	90
R	
RADIADOR	84 85 86 87
RADIADOR E PÓS-ARREFECEDOR	80
RÁDIO - COMUNICAÇÃO	914
RECEPTOR SECADOR (REFRIGERANTE)	871
RECLINAÇÃO - ASSENTO	915
REGULADOR - TEMPERATURA DA ÁGUA (CONECTOR INCLUÍDO)	70
REGULADOR DE VOLTAGEM (24 VOLTS) (ALTERNADOR)	125
RELÉ	173 195
RELÉ (CONJ) (24 VOLTS)	830
RELÉ (CONJ) (24 VOLTS) (ALARME)	206 901
RELÉ (CONJ) (24 VOLTS) (ALARME)	897
RELÉ (CONJ) (24 VOLTS) (CONDENSADOR)	809
RELÉ (CONJ) (24 VOLTS) (DIREÇÃO SECUNDÁRIA)	204
RELÉ (CONJ) (24 VOLTS) (FARÓIS DIANTEIROS)	897 901
RELÉ (CONJ) (24 VOLTS) (ILUMINAÇÃO RODOVIÁRIA)	163 165
RELÉ (CONJ) (24 VOLTS) (SISTEMA DE ABSORÇÃO DE IMPACTOS)	203
RELÉ (CONJ) (24 VOLTS) (VENTILDOR INVERTIDO)	555
RESPIRO	64
RESPIRO (BOCAL DE ENCHIMENTO DE ÓLEO DE TREM DE FORÇA)	221
RESPIRO (CÁRTER)	64
RESPIRO (CÁRTER DO MOTOR)	20 23
RESPIRO (TANQUE HIDRÁULICO)	616
RESPIRO (TRANSMISSÃO)	218
RETENTOR DUO-CONE	272 274 276 278 280
REVESTIMENTO DA CABINE	869
ROPS ABERTA	917
ROPS FECHADA	916
RUÍDO - ARRANJO PARA SUPRESSÃO	60 61

Designação	Página
S	
SACADOR - MINIFUSÍVEL	897 901
SENSOR - PRESSÃO (ÓLEO DO FREIO)	418 420
SENSOR - TEMPERATURA	175
SENSOR - TEMPERATURA (LÍQUIDO ARREFECEDOR DO MOTOR)	195
SENSOR - TEMPERATURA (ÓLEO DA TRANSMISSÃO)	336
SENSOR - TEMPERATURA (ÓLEO DO CONVERSOR DE TORQUE)	334
SENSOR DE PRESSÃO (PRESSÃO DO TRILHO DE COMBUSTÍVEL)	111
SENSOR DE VELOCIDADE (BOMBA DE COMBUSTÍVEL)	110
SENSOR DE VELOCIDADE (SAÍDA DA TRANSMISSÃO 1)	334
SENSOR DE VELOCIDADE (SAÍDA DA TRANSMISSÃO 2)	334
SENSOR DE VELOCIDADE (SAÍDA DO CONVERSOR DE TORQUE)	334
SENSOR DE VELOCIDADE (SAÍDA INTERMEDIÁRIA DA TRANSMISSÃO 1)	334
SENSOR DE VELOCIDADE (SAÍDA INTERMEDIÁRIA DA TRANSMISSÃO 2)	334
SEPARADOR DE ÁGUA E BOMBA DE ESCORVA DE COMBUSTÍVEL	123
SILENCIADOR	95
SIST. DE ILUMINAÇÃO - PISCA-PISCA GIRATÓRIO DE ADVERTÊNCIA	169 170
SISTEMA DE ABSORÇÃO DE IMPACTOS	482
SISTEMA DE ILUMINAÇÃO - FARÓIS	156 157 159
SISTEMA ELETRÔNICO - MÁQUINA	137
SISTEMA ELETRÔNICO - TREM DE FORÇA	139
SISTEMA ELETRÔNICO-COMUNICAÇÃO	138
SOFTWARE - COMUNICAÇÃO (PRODUCT LINK 121SR)	914
SOFTWARE - COMUNICAÇÃO (PRODUCT LINK 300)	138
SOFTWARE - TREM DE FORÇA	139
SOLENÓIDE (COMPORTA DE ALIMENTAÇÃO)	96
SUPORTE - ASSENTO	946
SUPORTE - GARFO	760 761
SUSPENSÃO - ASSENTO	947 949

* TRADUÇÃO NÃO DISPONÍVEL NO MOMENTO DA IMPRESSÃO

ÍNDICE

Designação	Página

T

TAMPA - ACESSO 348
TAMPA - BOCAL DE ENCHIMENTO DE ÓLEO (MOTOR) 65
TAMPA - BOCAL DE ENCHIMENTO (TANQUE HIDRÁULICO) 616
TAMPA - CHUVA 88
TAMPA - ENCHIMENTO (ÓLEO DO TREM DE FORÇA) 248
250
TAMPA - MECANISMO DAS VÁLVULAS 20
23
26
TAMPA - MOTOR 17
TAMPA - REDUÇÃO DE RUÍDOS 18
19
TAMPA - TANQUE DE COMBUSTÍVEL 122
TAMPA - TRANSMISSÃO 238
TAMPA COM RESPIRO (LAVADOR DO VIDRO) 953
TAMPA-TANQUE DO LÍQUIDO ARREFECEDOR 80
TANQUE - LÍQUIDO ARREFECEDOR 80
TANQUE DE COMBUSTÍVEL 122
TANQUE DE COMBUSTÍVEL E MONTAGEM 121
TANQUE DE ÓLEO HIDRÁULICO E MONTAGEM 615
TANQUE HIDRÁULICO 616
TAPETE 849
851
TELA DE SUCÇÃO 616
TELA DE SUCÇÃO (CAIXA DE TRANSMISSÃO) 218
TELA DE SUCÇÃO (ÓLEO DO TREM DE FORÇA) 221
TELA FILTRANTE 616
659
661
TELA FILTRANTE (EM LINHA) (ÓLEO DO EIXO) 282
TELA FILTRANTE (ÓLEO PILOTO) 326
463
657
664
666
668
TELA PÁRA-SOL 919
TOLDO - ESTRUTURA ROPS ABERTA 804
TOLDO - FLEXÍVEL 801
TOLDO - FOPS 802
803
TOLDO - ROPS ABERTA 800
TRANSMISSÃO 320

Designação	Página

TRAVA-CILINDRO 849
851
TREM DE FORÇA 294
295
TUBOS - ABSORÇÃO DE IMPACTOS 577
TUBOS - ACOPLADOR 512
513
514
517
520
522
524
526
TUBOS - ÁGUA 76
77
TUBOS - AQUECEDOR DA CABINE 873
TUBOS - AR 93
TUBOS - AR CONDICIONADO 871
TUBOS - ARREFECEDOR DE ÓLEO DO EIXO 282
TUBOS - ARREFECEDOR DO CONVERSOR DE TORQUE 290
TUBOS - CAÇAMBA 508
TUBOS - CILINDRO DE INCLINAÇÃO 580
582
TUBOS - CILINDRO DE LEVANTAMENTO 557
560
TUBOS - CIRCUITO PILOTO 564
568
572
TUBOS - COMBUSTÍVEL 102
104
107
TUBOS - DIANTEIROS 527
529
530
531
532
533
TUBOS - DIREÇÃO 446
450
452
454
TUBOS - DIREÇÃO SECUNDÁRIA 438
443
TUBOS - FREIO DE SERVIÇO 423
426
429
TUBOS - GRAXA 400
401
TUBOS - ÓLEO HIDRÁULICO 536
538
540

* TRADUÇÃO NÃO DISPONÍVEL NO MOMENTO DA IMPRESSÃO

ÍNDICE

Designação	Página
	542
	547
TUBOS - TRAVA DO DIFERENCIAL	288
TUBOS - VENTILADOR HIDRÁULICOS	550
	553
	555
TUBOS DE CONEXÃO	510
TUBOS DO AQUECEDOR	873
TURBOALIMENTADOR	96
U	
UNIAO	288
V	
VÁLVULA - CONTROLE PRINCIPAL	646
	648
	650
	651
	652
	653
	654
	655
VALVULA - PARTIDA A ETER	187
VÁLVULA COMBINADA	629
VÁLVULA DE ACOPLAMENTO RÁPIDO	685
VÁLVULA DE ALÍVIO	330
	331
	686
	687
	688
	689
VÁLVULA DE ALÍVIO (AUXILIAR, 5A, 6A FUNÇÕES)	636
VÁLVULA DE ALÍVIO (COMPRESSOR DO REFRIGERANTE)	805
VÁLVULA DE ALÍVIO (DIREÇÃO SECUNDÁRIA)	438
	443
VÁLVULA DE ALÍVIO (MOTOR DO VENTILADOR HIDRÁULICO)	591
VÁLVULA DE ALÍVIO (PRINCIPAL)	586
VÁLVULA DE CARGA DO ACUMULADOR (FREIO)	607
VÁLVULA DE CONTROLE	630
	632
	634
	636
	637
	639
	641
	644
	681
VÁLVULA DE CONTROLE - FLUXO (AUXILIAR, ADMISSÃO) (COLETOR DA ADMISSÃO)	585
VÁLVULA DE CONTROLE - TRANSMISSÃO	334
	336
VÁLVULA DE CONTROLE DA BOMBA	682
VÁLVULA DE CONTROLE DE ABSORÇÃO DE IMPACTOS	690
VÁLVULA DE CONTROLE DOS FREIOS (SERVIÇO)	418
VÁLVULA DE CONTROLE DOS FREIOS (SERVIÇO)	420
VÁLVULA DE CONTROLE PILOTO	323
	326
	329
	463
	657
	659
	661
	664
	666
	668
	670
	671
	672
	673
	674
	675
	676
	677
VÁLVULA DE CONTROLE PILOTO (ALAVANCA DE CONTROLE, 3 FUNÇÕES)	823
	824
VÁLVULA DE CONTROLE PILOTO (ALAVANCA DE CONTROLE, 4 FUNÇÕES)	821
VÁLVULA DE DERIVAÇÃO	321
VÁLVULA DE DRENAGEM DO RADIADOR	84
	85
VÁLVULA DE FECHAMENTO	542
	547
	572
VÁLVULA DE MODULAÇÃO	322
VÁLVULA DE PARADA	692
VÁLVULA DE PNEU	333
VÁLVULA DE PRIORIDADE (DIREÇÃO)	542
	572
VÁLVULA DE PURIFICAÇÃO	684
VÁLVULA DE REDUÇÃO DE PRESSÃO	586
	679
	680
	681
VÁLVULA DE RETENÇÃO	454

* TRADUÇÃO NÃO DISPONÍVEL NO MOMENTO DA IMPRESSÃO

ÍNDICE

Designação	Página
	542
	572
	626
	627
	628
	637
VÁLVULA DE RETENÇÃO (DERIVAÇÃO DO ARREFECEDOR DE ÓLEO HIDRÁULICO)	282
	550
VÁLVULA DE RETENÇÃO (DIREÇÃO SECUNDÁRIA)	438
VÁLVULA DE RETENÇÃO (ÓLEO PILOTO)	644
VÁLVULA DE SEPARAÇÃO	431
	476
	694
	695
VÁLVULA DO CARTUCHO PILOTO	465
	467
	468
	469
	470
	471
	472
	473
	474
	475
	678
VÁLVULA DO CONTROLE PRINCIPAL E MONTAGEM	618
	619
	620
VÁLVULA DO RESPIRO (CÁRTER DO MOTOR)	26
VALVULA DO SOLENOIDE E MONTAGEM	462
	623
	624
	625
VALVULA DO SOLENOIDE E MONTAGEM (12 VDC)	288
VÁLVULA MANUAL	656
VÁLVULA MANUAL (CONTROLE DE ABAIXAMENTO)	560
VÁLVULA PARA TIRAR AMOSTRAS DE FLUIDOS	69
VÁLVULA SOLENÓIDE	477
	696
	697
	698
	699
	700
VÁLVULA SOLENÓIDE (SISTEMA DE ABSORÇÃO DE IMPACTOS)	690
VÁLVULA SOLENÓIDE (TERCEIRA FUNÇAO, FLUXO CONTÍNUO)	624
VÁLVULA SOLENÓIDE (*THIRD FCTN, PROPORTIONAL FLOW)	625
VÁLVULA SOLENÓIDE (TRAVA HIDRÁULICA)	586
	623
VÁLVULA SOLENÓIDE (24 VOLTS) (ACOPLADOR RÁPIDO)	685
VÁLVULA SOLENÓIDE (24 VOLTS) (VENTILADOR HIDRÁULICO)	590
	591
VELA DE AQUECIMENTO; VELA INCANDESCENTE	140
VENTILADOR DE SUCÇÃO	73
VIDRO DA PORTA	954
VIGIA	616
VIRABREQUIM	27
	28
VISOR-CÂMERA	831
VISOR DE NÍVEL	257
	258
VISOR DE NÍVEL (ÓLEO DO TREM DE FORÇA)	294
	295
VOLANTE DO MOTOR	42

* TRADUÇÃO NÃO DISPONÍVEL NO MOMENTO DA IMPRESSÃO

STICHWORTVERZEICHNIS

Bezeichnung	Seite
A	
ABFALLBESEITIGUNGSMONTAGE	6, 7, 8
ABLASSSTOPFEN (GETRIEBE)	218, 221
ABLASSSTOPFEN (MOTORÖL)	39, 49
ABSPERRVENTIL	542, 547, 572, 692
ACHSE - IDENTIFIKATIONSSCHILD	208, 209, 211, 212
ACHSENANBAUSATZ	292, 293
ACHSENÖLKÜHLERLEITUNGEN	282
ACHSENÖLKÜHLERPUMPE UND MOTOR	282
ACHSÖLKÜHLER	237
ACHSPENDELUNGSANSCHLAG	314
ANSAUGKRÜMMER	94
ANSAUGSIEB	616
ANSAUGSIEB (GETRIEBEGEHÄUSE)	218
ANSAUGSIEB (KRAFTÜBERTRAGUNGSÖL)	221
ANSCHLUSSKUPPLUNGSLEITUNGEN	512, 513, 514, 517, 520, 522, 524, 526
ANSCHLUSSLEITUNGEN	510
ANTRIEBSSCHUTZ	383
ANTRIEBSSTRANG-WARTUNGSSATZ	139
ANTRIEBSWELLE	310, 311
ANTRIEBSWELLEN-KEILVERZAHNUNG	312, 313
ANTRIEBSWELLENVERKLEIDUNG	6, 7, 375
ANZEIGE - KAMERA	831
ANZEIGE (DIFFERENTIALSPERRE)	181
ANZEIGEMODUL (INSTRUMNENTENGRUPPE)	895
ANZEIGEMODUL (*WORK AREA VISUAL SYSTEM)	133, 831
ARBEITSGERÄTE- U. LENKPUMPE U. BEFESTIGUNGSTEILE	604
	605
ARBEITSGERÄTESTEUERUNG	705, 707
ARBEITSLEUCHTEN	148, 149, 150, 156, 157, 159
ARBEITSLEUCHTEN (24 V)	157, 159
ARMATURENBRETT	829
ARMLEHNE	789, 790, 791, 792, 793
ÄTHERSPRÜHGERÄT	177
ÄTHERSTARTHILFE	176, 177
ÄTHERSTARTVENTIL	187
AUFKLEBER	958, 959, 960, 961
AUFKLEBER - INFORMATION (12 V)	136
AUFKLEBER - INFORMATION (24 V)	959
AUFKLEBER - NENNLEISTUNG (LADEN)	711
AUFKLEBER - SOICHERUNG/RELAIS	901
AUFKLEBER - SOICHERUNG/RELAIS (KENNZEICHNUNG)	897
AUFKLEBER (ABFALLBESEITIGUNG)	6, 7, 8
AUFKLEBER FÜR FENSTER (VORN)	794, 961
AUFKLEBER (HÖHE BEI STRASSENFAHRT)	4
AUFKLEBER (HOHES HEBEN)	707
AUFKLEBER (INSTRUMENTENTAFELABDECKUNG)	895
AUFKLEBER-INTERNATIONAL	962
AUFKLEBER-INTERNATIONAL (*Z-BAR LINKAGE)	4, 5
AUFKLEBER (SCHWARZ)	542, 572, 692
AUFKLEBER (TAFEL - RECHTS)	189
AUSPUFFKRÜMMER	96
AUSPUFFROHRVERLÄNGERUNG	92

* ÜBERSETZUNG ZUM ZEITPUNKT DER DRUCKLEGUNG NICHT VORHANDEN

STICHWORTVERZEICHNIS

Bezeichnung	Seite
B	
BATTERIE	133
BATTERIE UND VERDRAHTUNG	128
	130
BATTERIE (12 V, 900 A)	133
BATTERIEKASTEN	339
*BEARING GP-PILLOW BLOCK	311
BEDIENUNGSHEBEL-AUFKLEBER (*FUSE, RELAY PANEL)	901
BEDIENUNGSHEBEL-AUFKLEBER (KONSOLE, RECHTS)	897
BEFESTIGUNGSHALTERUNG	405
BEFESTIGUNGSHALTERUNG (*GREASE GUN)	1
	2
	3
BELEUCHTUNGSANLAGE (STRASSENAUSRÜSTUNG)	153
	154
	161
	163
	165
BELEUCHTUNGSKABELSTRANG	157
	159
BELEUCHTUNGSKABELSTRANG (*ROADING)	340
	341
BETRIEBSBREMSLEITUNGEN	423
	426
	429
BLINKER	163
	165
	167
BLINKER (*12 TO 24-VDC)	161
BLITZSCHUTZ	376
	377
BODENGRUPPE	849
BREMS- UND RÜCKLEUCHTE	151
BREMS- UND RÜCKLEUCHTEN	167
BREMSDRUCKSPEICHER	411
BREMSE UND PLANETENGETRIEBE	213
	214
	215
	216
	217
BREMSGESTÄNGE	418
	420
BREMSPEDAL	905
BREMSSTEUERVENTIL (SERVICE)	418
	420

Bezeichnung	Seite
C	
CAMERABEFESTIGUNG	172
*CANOPY GP-FOPS	802
	803
*CAP AS-COOLANT TANK	80
D	
DICHTUNG (*CAB FILTER)	848
DICHTUNG (HYDRAULIKTANK)	616
DICHTUNGSSATZ	434
DICHTUNGSSATZ (HYDRAULIKDRUCKSPEICHER)	480
DICHTUNGSSATZ (WECHSELVENTIL)	695
DICHTUNGSSTOPFEN	38
	542
	547
	572
DIFFERENTIAL	240
	241
	242
DIFFERENTIAL (BEGRENZTER SCHLUPF)	243
	245
DIFFERENTIALSPERRENGESTÄNGE	236
DIFFERENTIALSPERRENLEITUNGEN	288
DIFFERENZIALSPERRENSCHALTER	181
DOKUMENTATION	874
DREHKNOPFSCHALTER (WISCHER, WASCHER) (HINTERER SCHEIBENWISCHER)	186
DREHMOMENTWANDLER-KÜHLERLEITUNGEN	290
DREHSTROMGENERATOR	125
	127
DREHZAHLSENSOR (DREHMOMENTWANDLERAUSGANG)	334
DREHZAHLSENSOR (GETRIEBEAUSGANG 1)	334
DREHZAHLSENSOR (GETRIEBEAUSGANG 2)	334
DREHZAHLSENSOR (KRAFTSTOFFPUMPE)	110
DREHZAHLSENSOR (*TMSN INTERMEDIATE OUTPUT 1)	334
DREHZAHLSENSOR (*TMSN INTERMEDIATE OUTPUT 2)	334
DRUCKBEGRENZUNGSVENTIL (NOTLENKUNG)	438
	443
DRUCKLUFTLEITUNGEN	93
DRUCKREDUZIERVENTIL	586
	679
	680
	681

* ÜBERSETZUNG ZUM ZEITPUNKT DER DRUCKLEGUNG NICHT VORHANDEN

STICHWORTVERZEICHNIS

Bezeichnung	Seite
DRUCKSCHALTER (ACHSENÖL)	282
DRUCKSCHALTER (HYDRAULIKÖLFILTER - UMGEHUNG)	497
DRUCKSCHALTER (KRAFTÜBERTRAGUNG - ÖLFILTERUMGEHUNG)	256
DRUCKSCHALTER (KÜHLMITTEL)	871
DRUCKSCHALTER (NOTLENKUNGSÖL)	438
	443
DRUCKSENSOR (BREMSÖL)	418
	420
DRUCKSENSOR (KRAFTSTOFF RAIL DRUCK)	111
DRUCKSPEICHER, HYDRAULISCHE SCHWINGUNGSDÄMPFUNG	480
DRUCKSPEICHERLADEVENTIL (BREMSE)	607

E

EINBAUVORSTEUERVENTIL	465
	467
	468
	469
	470
	471
	472
	473
	474
	475
	678
EINFÜLLKAPPE (HYDRAULIKTANK)	616
EINFÜLLKAPPE (KRAFTÜBERTRAGUNGS-ÖL)	248
	250
EINSTELLER-EINBAUSATZ (ARMLEHNE)	790
ELEKTR. UMFORMER	136
ELEKTR. UMFORMER (24V - 24V)	136
ELEKTRONIK - MASCHINE	137
ELEKTRONIK, KOMMUNIKATION	138
ELEMENT (ENTLÜFTER) (KURBELGEHÄUSE)	20
	23
ENDSCHALTER (BREMSPEDAL)	897
	901
ENDSCHALTER (FESTSTELLBREMSE)	413
ENTFROSTER - FAHRERHAUS	830
ENTLEERVENTIL	684
ENTLÜFTER	64
ENTLÜFTER (GETRIEBE)	218
ENTLÜFTER (HYDRAULIKTANK)	616
ENTLÜFTER (KRAFTSÜBERTRAGUNG - ÖLEINFÜLLUNG)	221
ENTLÜFTER (KURBELGEHÄUSE)	20
	23
	64
ENTLÜFTERVENTIL (KURBELGEHÄUSE)	26
ERDBAUSCHAUFEL	737
	738
	739
	758
	759

F

FAHRERHAUS - OFFEN MIT ÜBERROLL-SCHUTZ	889
FAHRERHAUS-KABELBAUM	897
	901
FAHRERHAUS-KABELBAUM (HAUPT)	189
	191
FAHRERHAUS-KABELBAUM (OBEN)	189
	191
FAHRERHAUS M. OFFENEM ÜBERROLL-SCHUTZ	804
FAHRERHAUS MIT ÜBERROLLSCHUTZ	794
	795
	796
	797
	798
	800
FAHRERHAUS, SONNENBLENDE	951
FAHRERHAUSANBAUSATZ	887
FAHRERHAUSAUSFÜHRUNG MIT GESCHL. ÜBERROLLSCHUTZ	889
FAHRERHAUSAUSKLEIDUNG	869
FAHRERHAUSBELEUCHTUNG	147
FAHRERHAUSBELEUCHTUNG (24 V)	869
FAHRERHAUSHEIZUNG	858
	859
FAHRERHAUSHEIZUNG U. BEFESTIGUNGS-TEILE	857
FAHRERHAUSHEIZUNGSLEITUNGEN	873
FAHRERHAUSLUFTFILTER	848
FAHRERHAUSSCHÜRZE	941
	942
	943
	945
FAHRERHAUSTÜR	832
	833
	835
	837
	838
	839
	840
	843
FAHRERHAUSVERDRAHTUNG	189
	191

* ÜBERSETZUNG ZUM ZEITPUNKT DER DRUCKLEGUNG NICHT VORHANDEN

STICHWORTVERZEICHNIS

Bezeichnung	Seite
FAHRERPLATTFORM	912
	913
FAHRERSITZ	927
	929
	931
FAHRERSITZ UND UNTERBAU	920
	921
	923
FAHRERSITZFEDERUNG	947
	949
FAHRERSITZFEDERUNGSGEHÄUSE	861
FAHRERSITZVERKLEIDUNG	893
FAHRERSITZVERSTELLER	783
FAHRWERK	1
	2
	3
FELGE	300
FELGE (TEILBAR)	301
	302
	303
	304
	305
	306
	307
	308
	309
FELGENAUFHÄNGUNG	294
FESTSTELLBREMSE	412
FESTSTELLBREMSGESTÄNGE	413
	414
	416
FILTER (FAHRERHAUS LUFT)	848
FILTER (FAHRERHAUSLUFT)	848
FILTERSATZ (MOTORÖL)	67
FILTERSOCKEL U. MOTORÖLKÜHLER	71
FILTERWECHSELANZEIGE	88
FLÜGELZELLENPUMPENEINSATZ	481
FUSSMATTE	849
	851

G

GABELTRÄGER	760
	761
GASFEDER	461
GASFEDER (HAUBE)	389
GASPEDAL	906
	907
*GEAR GP-INPUT TRANSFER	266
GEGENGEWICHT	343
	344
	345
	346
	347
GEHÄUSE - PENDELACHSE	278
	280
GEHÄUSE - STARRACHSE	272
	274
	276
GESTÄNGE, VORN	709
GETRIEBE	320
GETRIEBEABDECKUNG	238
GETRIEBEFILTER UND -LEITUNGEN	252
	254
GETRIEBEGEHÄUSE UND TEILE	218
	221
GETRIEBEÖLFÜLLSTUTZEN	248
	250
GETRIEBEPUMPE	296
	297
	298
	299
GETRIEBESTEUERUNG	827
	828
GETRIEBESTEUERVENTIL	334
	336
GLEITRINGDICHTUNG	272
	274
	276
	278
	280
GLÜHKERZE	140
GRUNDAUSFÜHRUNG	3
	4

H

HALOGENSCHINWERFER (24V)(65W)	148
	149
	157
	159
HAUPTSTEUERVENTIL	646
	648
	650
	651
	652
	653
	654
	655
HEIZUNGSLEITUNGEN	873
HINTERER KABELSTRANG	201
HUBARM & LAGER	701
HUBENDAUSSCHALTE-REGELUNG	134
HUBZYLINDER	489
	491
HUBZYLINDERLEITUNGEN	557

* ÜBERSETZUNG ZUM ZEITPUNKT DER DRUCKLEGUNG NICHT VORHANDEN

STICHWORTVERZEICHNIS

Bezeichnung	Seite
	560
HYDRAULIK-UMBAUSATZ	482
HYDRAULIKANORDNUNG (2-VENTIL-HYDRAULIK)	499
	500
HYDRAULIKANORDNUNG (3-VENTIL-HYDRAULIK)	500
	501
HYDRAULIKANORDNUNG (4-VENTIL-HYDRAULIK)	501
	502
	503
HYDRAULIKAUSFÜHRUNG - 6 VENTILE	503
HYDRAULIKBEDIENUNG (MIT VORSTEUERUNG)	822
	824
HYDRAULIKBEDIENUNG (MIT VORSTEUERUNG)	814
	816
	818
	820
	821
HYDRAULIKBEDIENUNG (MIT VORSTEUERUNG)	823
HYDRAULIKFILTER UND BEFESTIGUNGSTEILE	496
HYDRAULIKKÜHLERMOTOR U. BEFESTIGUNG	588
HYDRAULIKLEITUNGEN	536
	538
	540
	542
	547
HYDRAULIKLÜFTERLEITUNGEN	550
	553
	555
HYDRAULIKLÜFTERMOTOR	589
HYDRAULIKÖLKÜHLER	484
HYDRAULIKPUMPENROHR	49
HYDRAULIKSYSTEM	498
	499
HYDRAULIKTANK	616
HYDRAULIKTANK UND BEFESTIGUNGSTEILE	615
HYDRAULIKZYLINDER	434
HYDRAULISCHE SCHWINGUNGSDÄMPFUNG	482

I

Bezeichnung	Seite
IDENTIFIKATIONSSCHILD	212
IDENTIFIKATIONSSCHILD (ARBEITSGERÄT)	724
	729
	743
	746
	747
	749
	750
	751
	752
	755
	756
	758
	759
IDENTIFIKATIONSSCHILD (CAT)	734
IDENTIFIZIERUNGS-AUFKLEBER (ABFALLBESEITIGUNG)	6
	7
	8
IDENTIFIZIERUNGS-AUFKLEBER (GRUPPENNUMMER)	809
IDENTIFIZIERUNGS-AUFKLEBER (START-SCHLÜSSELSCHALTER)	145
IDENTIFIZIERUNGS-AUFKLEBER (20 KM/H)	958
IDENTIFIZIERUNGS-AUFKLEBER (40 KM/H)	340
INSTRUKTIONS-AUFKLEBER (AUSSCHALTER, STELLUNGSSTEUERUNG)	134
	135
INSTRUKTIONS-AUFKLEBER (FÜR SITZVERSTELLUNG)	947
	949
INSTRUKTIONS-AUFKLEBER (*MACHINE SECURITY, INTL)	145
INSTRUKTIONS-AUFKLEBER (MOTOR-START)	895
INSTRUKTONSSCHILD (BATTERIE)	128
	130
INSTRUKTONSSCHILD (KLIMAANLAGE)	871
INSTRUMENTENBRETT-AUFKLEBER (LINKS)	189
	191
INSTRUMENTENBRETT-AUFKLEBER (RECHTS)	191
INSTRUMENTENTAFEL	895
	897
	901

J

Bezeichnung	Seite
JOYSTICK -STEUERUNG	812
	813
JOYSTICK -STEUERUNG (4 FUNKTIONEN, ZUSATZ)	822

* ÜBERSETZUNG ZUM ZEITPUNKT DER DRUCKLEGUNG NICHT VORHANDEN

STICHWORTVERZEICHNIS

Bezeichnung	Seite
K	
KABELBAUM, VORNE	198, 200
KABELSTRANG - HECKBELEUCHTUNG (LINKS)	167
KABELSTRANG - HECKBELEUCHTUNG (RECHTS)	167
KABELSTRANG - HEIZUNG U. KLIMAANLAGE	786
KABELSTRANG - HEIZUNG U. KLIMAANLAGE (KONDESATORGEBLÄSE)	809
KABELSTRANG - LENKUNG (HILFSELEMENT)	204, 206
KABELSTRANG - LENKUNG (*PRIMARY PRESSURE SWITCH)	206
KABELSTRANG - VORDERE BELEUCHTUNG (*RH, LH)	163, 165, 167
KÄLTEMITTEL-DRUCKSPEICHER	871
KÄLTEMITTELKOMPRESSOR	805, 806
KÄLTEMITTELKONDENSATOR	809
KÄLTEMITTELKONDENSATOR U. BEFESTIGUNGSTEILE	807, 808
KAMERA	133
KAMERA, VERDRAHTUNG	193
KAPPE MIT ENTLÜFTER (SCHEIBENWASCHER)	953
KIPPSCHALTER	185
KIPPSCHALTER (ARBEITSSCHEINWERFER, VORN)	189, 191
KIPPSCHALTER (AUSSCHALTUNG EIN, AUS)	897, 901
KIPPSCHALTER (AUTOSHIFT-STEUERUNG)	189
KIPPSCHALTER (AUTOSHIFT-STEUERUNG)	191
KIPPSCHALTER (FAHRLEUCHTEN)	189
KIPPSCHALTER (FAHRSCHEINWERFER, DIMMER)	167
KIPPSCHALTER (FAHRSCHEINWERFER, DIMMER)	163, 165
KIPPSCHALTER (GASREGELUNGSPERRE, WIEDERAUFNAHME)	897, 901
KIPPSCHALTER (GASSPERRE EIN/AUS)	897, 901
KIPPSCHALTER (GEBLÄSEGESCHWINDIGKEIT)	897
KIPPSCHALTER (GETRIEBENEUTRALISIER-ÜBERSTEUERUNGSREGELUNG)	189, 191
KIPPSCHALTER (HEIZUNGSSTEUERUNG)	857
KIPPSCHALTER (HYDRAULIKSPERRE)	514, 520, 897
KIPPSCHALTER (HYDRAULIKSPERRE)	901
KIPPSCHALTER (KLIMAANLAGE, HEIZUNG REGELUNG)	785
KIPPSCHALTER (NOTLENKUNG)	204, 206
KIPPSCHALTER (*QUICK COUPLER PIN LOCK)	517
KIPPSCHALTER (*REVERSING FAN ON, OFF)	555
KIPPSCHALTER (RUNDUM-KENNLEUCHTE)	169, 170
KIPPSCHALTER (SCHAUFEL, GABELWAHL)	506
KIPPSCHALTER (SCHNELLENKUNG)	450, 452
KIPPSCHALTER (SCHWINGUNGSDÄMPFUNG)	203
KIPPSCHALTER (STRASSENFAHRT)	191
KIPPSCHALTER (WARNBLINKANLAGE)	189, 191
KIPPSCHALTER (ZUSATZFLUSSSTEUERUNG) (24 V)	813
KIPPZYLINDER	493, 494
KLIMAANLAGE	786
KLIMAANLAGE UND AUFHÄNGUNG	785
KLIMAANLAGENLEITUNGEN	871
KNICKGELENK-ANHÄNGUNG	387
KNICKGELENKSPERRE	403, 404
KNIESTÜCK	533
KOLBEN	52
KOLBEN- UND MESSERPUMPE	613
KOLBENPUMPE	609, 611
KOLBENPUMPENUMLAUFSATZ	614
KOMBISCHAUFEL	492, 718, 719, 720, 756
KRAFTSTOFFEINSPRITZDÜSE	101
KRAFTSTOFFEINSPRITZPUMPE	110, 111, 116
KRAFTSTOFFILTER (ELEMENT)	99

* ÜBERSETZUNG ZUM ZEITPUNKT DER DRUCKLEGUNG NICHT VORHANDEN

STICHWORTVERZEICHNIS

Bezeichnung	Seite
KRAFTSTOFFILTER (FEINSTFILTER) (HOCHLEISTUNG)	100
KRAFTSTOFFILTER (FILTERKOPF)	99
KRAFTSTOFFILTERELEMENT (EINFÜLLSTUR-ZENSIEB)	122
KRAFTSTOFFLEITUNGEN	102
	104
	107
KRAFTSTOFFÖRDERPUMPE	110
KRAFTSTOFFSICHERHEITSFILTER	99
	100
KRAFTSTOFFSTANDGEBER	121
KRAFTSTOFFSYSTEMSCHUTZ	117
KRAFTSTOFFSYSTEMSCHUTZ (LEITUNG, NIEDERDRUCK)	112
KRAFTSTOFFSYSTEMSCHUTZ (LEITUNG, NIEDERDRUCK)	104
	107
KRAFTSTOFFTANK	122
KRAFTSTOFFTANK U. BEFESTIGUNG	121
KRAFTSTOFFTANKKAPPE	122
KRAFTÜBERTRAGUNG	294
	295
KRAFTÜBERTRAGUNGSELEKTRONIK	139
KRAFTÜBERTRAGUNGSÖLKÜHLERBLOCK	483
KREUZGELENK	311
KREUZGELENK UND LAGER	311
KRÜMMERVENTIL	585
	586
KÜHLER	84
	85
	86
	87
KÜHLER U. LADELUFTKÜHLER	80
KÜHLERABLASSVENTIL	84
	85
KÜHLERSCHUTZ	74
	384
	385
KÜHLMITTELBEHÄLTER	80
KÜHLUNG - HYDRAULIK- U. GETRIEBEÖL	483
KÜHLWASSERANSCHLUSS	70
KÜHLWASSERLEITUNGEN	76
	77
KÜHLWASSERPUMPE	78
KÜHLWASSERTHERMOSTATDICHTUNG (THERMOSTAT)	70
KUPPLUNG	224
	226
	228
	230
	232
	234
KUPPLUNGSANTRIEB, ELAST.	246
KURBELWELLE	27
	28
KURBELWELLEN-RIEMENSCHEIBE	55

L

LADELUFTKÜHLER	80
LADERRAHMEN	362
	363
	364
	365
	367
LAGERSATZ (HAUPTKURBELWELLE)	27
	28
LAGERSATZ (KURBELWELLE, PLEUELSTAN-GE)	27
	28
LAUFBAND UND ANTRIEB (RUNDUM-KENN-LEUCHTE) (RUNDUM-KENNLEUCHTE)	152
LEICHTGUTSCHAUFEL	717
	734
	736
	753
	754
	755
LEITBLECH - SCHALLDÄMPFUNG	338
LEITUNGEN, VORNE	527
	529
	530
	531
	532
	533
LEITUNGSVERKLEIDUNG	378
	379
	380
	381
	382
LENKBETÄTIGUNG	825
LENKÖLLEITUNGEN	446
	450
	452
	454
LENKSÄULE, VERSTELLBAR	461
LENKUNG	459
LENKZYLINDER	436
	437
LENKZYLINDER UND AUFHÄNGUNG	432
	433
LEUCHTE (24 V, 3 W)	189
	191
	897

* ÜBERSETZUNG ZUM ZEITPUNKT DER DRUCKLEGUNG NICHT VORHANDEN

STICHWORTVERZEICHNIS

Bezeichnung	Seite
LEUCHTE (24 V, 5 W) (BREMSLEUCHTE, HECKLEUCHTE)	151
LEUCHTE (24 V, 70 W)	152
LEUCHTE (24V, 10W)	147
	340
	341
LEUCHTE (24V, 21W) (BREMSLEUCHTE, HECKLEUCHTE)	151
LÜFTERANTRIEB	40
	41
LÜFTERVERKLEIDUNG	74
LUFTFILTER (HAUPTELEMENT)	90
LUFTFILTER (HILFSELEMENT)	90
LUFTKANAL	846
LUFTKOMPRESSORSITZ	784
LUFTREINIGER	88
	90
LUFTREINIGER-UMBAUSATZ	91

M

MAGNETFILTER	218
	221
MAGNETSCHALTER	183
	184
MAGNETSCHALTER (24 V) (HAUPTRELAIS)	195
MAGNETSPULE (LADEDRUCKREGLER)	96
MAGNETSTOPFEN	272
	274
	278
	280
MAGNETSTOPFEN (ACHSGEHÄUSE)	276
MAGNETVENTIL	477
	696
	697
	698
	699
	700
MAGNETVENTIL (HYDRAULIKSPERRE)	586
	623
MAGNETVENTIL (SCHWINGUNGSDÄMPFUNG)	690
MAGNETVENTIL (*THIRD FCTN, CONTINUOUS FLOW)	624
MAGNETVENTIL (*THIRD FCTN, PROPORTIONAL FLOW)	625
MAGNETVENTIL (24 V) (HYDRAULIKLÜFTER)	590
	591
MAGNETVENTIL (24 V) (SCHNELLWECHSELEINRICHTUNG)	685
MINISICHERUNGSZIEHER	897
	901
MODULARHEBEL (*DIR, DNSFT, FLOW CONT SWITCHES)	811
MODULATORVENTIL	322
MONITOR - KABELBAUM	133
	831
MOTOR- UND GETRIEBEAUFLAGER	47
MOTOR-EINBAUSATZ	15
MOTOR, ELEKTR.	171
MOTORANTRIEB	590
	591
	592
	593
	594
MOTORAUSFÜHRUNG	9
	10
	11
	12
	13
	14
MOTORBLOCK	29
	31
MOTORHAUBE UND VERKLEIDUNG	389
MOTORHUBÖSE	46
MOTORKABELSTRANG	195
MOTORKABELSTRANG (MOTORSTEUERMODUL)	194
MOTORÖLABLASS	38
	39
MOTORÖLEINFÜLLSTUTZEN	65
MOTORÖLKÜHLER UND FILTERSOCKEL	71
MOTORSTOPFEN	53
MOTORVERDRAHTUNG	195
MOTORVERKLEIDUNG	17
*MOUNTING GP-DISPLAY	888
*MOUNTING GP-ETHER CANISTER	177

N

NEBENSTROMVENTIL	321
NEIGEZYLINDERLEITUNGEN	580
	582
NOCKENWELLE	16
NOTLENKUNG	459
	460
NOTLENKUNGSLEITUNGEN	438
	443
NOTLENKUNGSPUMPE UND -MOTOR	457
NOTLENKUNGSVERDRAHTUNG	204
	206

O

OBERE ABDECKPLATTE	408

* ÜBERSETZUNG ZUM ZEITPUNKT DER DRUCKLEGUNG NICHT VORHANDEN

STICHWORTVERZEICHNIS

Bezeichnung	Seite
	410
OFFENES FAHRERHAUS MIT ÜBERROLL-SCHUTZ	800
ÖFFNUNG - KLIMAANLAGE	871
ÖLABLASSADAPTER	49
ÖLEINFÜLLKAPPE (MOTOR)	65
ÖLFILTER	67
	256
	497
ÖLFILTER (HOCHLEISTUNG) (KRAFTÜBER-TRAGUNG)	256
ÖLFILTERELEMENT (FEINSTFILTER)	497
ÖLKÜHLER (MOTOR)	71
ÖLMESSSTAB	272
	274
	278
	280
ÖLMESSSTAB (ACHSE)	276
ÖLMESSSTAB (MOTOR)	49
ÖLWANNE	49

P

PALETTENGABEL	773
	774
	775
	776
PANZERWANNE	6
	7
	60
	61
PENDELACHSE	211
	212
PENDELVENTIL	431
	476
	694
	695
PLATTFORM	908
	909
	910
	911
PLEUELSTANGE UND KOLBEN	51
*PLUG GP-CONTROL MANIFOLD	585
POLSTEREINBAUSATZ (ARMLEHNE)	790
POTENTIOMETER (*PROPORTIONAL FLOW CONTROL)	813
PROBEENTNAHMEVENTIL	69
PUMPE FÜR KRAFTSTOFFENTLÜFTUNG U. WASSERABSCHEIDER	123
PUMPE U. BEFESTIGUNG - BREMSE U. HYDRAULIKLÜFTER	603
PUMPENANTRIEB	247
PUMPENSTEUERVENTIL	682

Bezeichnung	Seite

R

RADIO - KABELSTRANG	866
	868
RADIO - KABELSTRANG (LAUTSPRECHER)	864
	866
RADIO - KABELSTRANG (PRODUCT LINK RADIO)	143
RADIO - KOMMUNIKATION	914
RADIOEINBAUSATZ	864
	866
	868
RAHMEN, HINTEN	368
	369
	371
	372
REGENSCHUTZKAPPE	88
REIFEN UND FELGE	314
	315
	316
	317
	318
	319
REIFENVENTIL	333
RELAIS	173
	195
RELAIS (24 V)	830
RELAIS (24 V) (FAHRLEUCHTEN)	163
	165
RELAIS (24 V) (KONDENSATOR)	809
RELAIS (24 V) (LÜFTER MIT DREHRICHTUNGS-UMKEHRUNG)	555
RELAIS (24 V) (NOTLENKUNG)	204
RELAIS (24 V) (SCHWINGUNGSDÄMPFUNG)	203
RELAIS (24 V) (VORDERE ARBEITSLEUCH-TEN)	897
	901
RELAIS (24 V) (WARNEINRICHTUNG)	206
	897
	901
RICHTUNGSBLINKERSCHALTER	161
	163
	165
	167
RÜCKFAHRWARNHORN	188
RÜCKLEHNENVERLÄNGERUNG	847
RÜCKLEHNENVERLÄNGERUNG (STOFF)	931
RÜCKSPIEGEL	876
	877
	878
	879
	880
	881
	882

* ÜBERSETZUNG ZUM ZEITPUNKT DER DRUCKLEGUNG NICHT VORHANDEN

STICHWORTVERZEICHNIS

Bezeichnung	Seite
	883
	884
	885
	886
RUNDUM-KENNLEUCHTE	152
	169
	170
RUNDUM-KENNLEUCHTE (*AMBER, STROBE)	170

S

SAMMELVENTIL	629
SAUGLÜFTER	73
SCHALE - RÜCKENLEHNE	890
	891
	892
SCHALLDÄMPFENDE VERKLEIDUNG	18
	19
SCHALLDÄMPFER	95
SCHALLDÄMPFUNG	60
	61
	406
	407
SCHALTER, FUSSBETÄTIGT	181
SCHALTER (STARTER)	179
SCHALTERKABELSTRANG (DIFFERENTIAL-SPERRE)	181
SCHAUFELAUFHÄNGUNG	777
SCHAUFELAUSSCHALTER UND -EINSTELLER	504
	506
SCHAUFELLEITUNGEN	508
SCHAUFELSTEUERUNG	702
SCHAUGLAS	257
	258
	616
SCHAUGLAS (*POWER TRAIN OIL)	294
	295
SCHEIBENSCHUTZ	855
	856
SCHEIBENWASCHANLAGE	952
	953
SCHEIBENWISCHER	955
SCHEIBENWISCHER (VORNE)	955
SCHEIBENWISCHERARM	788
	955
SCHEIBENWISCHERBLATT (*503-MM) (HINTEN)	955
SCHEIBENWISCHERBLATT (700 MM) (VORNE)	955
SCHEIBENWISCHERMOTOR (24 V) (HINTEN)	955
SCHEIBENWISCHERMOTOR (24 V) (VORNE)	955
SCHEIBENWISCHERSCHALTER	186
SCHEIBENWISCHERSCHALTER (24 V) (VORNE)	186
SCHEINWERFER U. RICHTUNGSLEUCHTE	154
SCHEINWERFER U. RICHTUNGSLEUCHTE (LINKS)	153
	163
	165
SCHEINWERFER U. RICHTUNGSLEUCHTE (RECHTS)	153
SCHEINWERFER U. RICHTUNGSLEUCHTE (RECHTS)	163
	165
SCHILD UND AUFKLEBER	962
	964
SCHLAUCHLEITUNG	76
SCHLAUCHLEITUNG (OBEN)	77
SCHLAUCHLEITUNG (UNTEN)	77
SCHLÜSSEL	248
	615
	843
	853
SCHLÜSSEL (ELEKTRISCHER HAUPTSCHALTER)	182
SCHLÜSSEL (FAHRERHAUS)	840
SCHMIERLEITUNGEN	400
	401
SCHMIERPUMPE	68
SCHNEIDMESSER	771
	772
SCHNEIDMESSERSEGMENT	773
SCHNELLKUPPLUNGSVENTIL	685
SCHNELLWECHSELANSCHLUSSZYLINDER	488
SCHNELLWECHSELANSCHLUSSZYLINDER U. BEFESTIGUNGSTEILE	485
	486
	487
SCHNELLWECHSELEINRICHTUNG	763
	764
	766
	768
SCHNELLWECHSELVORRICHTUNG	762
SCHNITTSTELLENMODUL (TASTE)	145
SCHUTZ	6
	7
SCHUTZBLECHE	353
SCHUTZBLECHE, HINTEN	358
	359
SCHUTZBLECHE (STRASSENAUSRÜSTUNG)	353
	360
SCHUTZBLECHE, VORNE	354

* ÜBERSETZUNG ZUM ZEITPUNKT DER DRUCKLEGUNG NICHT VORHANDEN

STICHWORTVERZEICHNIS

Bezeichnung	Seite
	355
	356
SCHUTZDICHTUNG	374
SCHUTZVERKLEIDUNG	853
SCHWINGSITZ	932
	933
	934
	935
	936
	937
	939
SCHWINGUNGSDÄMPFUNG - KABELSTRANG	203
SCHWINGUNGSDÄMPFUNGSLEITUNGEN	577
SCHWINGUNGSDÄMPFUNGSVERDRAHTUNG	203
SCHWUNGRAD	42
SCHWUNGRADGEHÄUSE	43
SCHWUNGRADGEHÄUSESTOPFEN	54
SERIENNUMMERNSCHILD	221
SERPENTINENFÖRMIGER RIEMEN	127
SICHERHEITSEINBAUSATZ	145
SICHERHEITSGURT	924
	925
	926
SICHERHEITSGURT ((AUTOMATIKSICHERHEITSGURT))	923
SICHERUNG (100 A)	195
SICHERUNG (20 A)	173
SICHERUNG (20 A)	195
SICHERUNG (30 A)	173
SICHERUNG (30 A)	195
SIEB	616
	659
	661
SIEB (VORSTEUERÖL)	326
	463
	657
	664
	666
	668
SIEB (ZWISCHENGESCHALTET) (ACHSENÖL)	282
SITZUNTERBAU	946
SOFTWARE - KOMMUNIKATION (PRODUCT LINK 212SR)	914
SOFTWARE - KOMMUNIKATION (PRODUCT LINK 300)	138
SOFTWARE - KRAFTÜBERTRAGUNG	139
SOLENOIDVENTIL U. BEFESTIGUNGSTEILE	462
	623
	624
	625
SOLENOIDVENTIL U. BEFESTIGUNGSTEILE (12 V DC)	288
SONNENBLENDE	919
	951
SPANNUNGSREGLER (24 V) (DREHSTROMGENERATOR)	125
SPERRVENTIL	454
	542
	572
	626
	627
	628
	637
SPERRVENTIL (HYDRAULIKÖLNEBENSTROM)	282
	550
SPERRVENTIL (NOTLENKUNG)	438
SPERRVENTIL (VORSTEUERÖL)	644
SPIEGEL	875
STANDARD-LENKUNG	460
STARRACHSE	208
	209
	210
STARTERMOTOR	178
	179
STARTSCHALTER (TASTE) (MOTOR)	895
STEIGLEITER	397
STELLUNGSSENSOR	174
STELLUNGSSENSOR (ROTIEREND)	174
STELLUNGSSTEUERUNG	135
STEUERHEBEL	811
STEUERHEBEL (*DIRECTION, DOWNSHIFT SWITCHES)	329
	673
	674
	675
	676
STEUERHEBEL (*JOYSTICK, AUXILIARY FUNCTIONS)	812
STEUERKONSOLE	810
STEUERUNG - NICHT PROGRAMMIERT	116
STEUERUNG - NICHT PROGRAMMIERT (KRAFTÜBERTRAGUNG)	827
STEUERUNG - NICHT PROGRAMMIERT (MOTOR)	111
STEUERUNGS-KABELSTRANG (AUSSCHALTER, STELLUNGSREGELUNG)	506
STEUERUNGS-KABELSTRANG (AUSSCHALTER, STELLUNGSREGELUNG) (*POSITIONER)	504
STEUERUNGS-KABELSTRANG (MASCHINENSICHERHEIT)	145

* ÜBERSETZUNG ZUM ZEITPUNKT DER DRUCKLEGUNG NICHT VORHANDEN

STICHWORTVERZEICHNIS

Bezeichnung	Seite
STEUERUNGS-KABELSTRANG (PRODUCT LINK RADIO)	143
STEUERVENTIL	630 632 634 636 637 639 641 644 681
STEUERVENTILBEFESTIGUNG	595
STIRNRADGEHÄUSE	44
STRASSENFAHRT - UMRÜSTSATZ	340 341
STRÖMUNGSSCHALTER (VARIABLE FLUSSSTEUERUNG)	536

T

TELLER- UND KEGELRAD	259 261 263 265
TEMPERATURSCHALTER (KLIMAANLAGE)	786
TEMPERATURSENSOR	175
TEMPERATURSENSOR (DREHMOMENT-WANDLERÖL)	334
TEMPERATURSENSOR (GETRIEBEÖL)	336
TEMPERATURSENSOR (MOTORKÜHLMITTEL)	195
THERMOSTAT (EINSCHL. VERBINDERUNGSSTÜCK)	70
TRAGARM	711
TRENNSCHALTER	182
TROCKNERSAMMLER (KÜHLMITTEL)	871
TURBOLADER	96
TÜRFENSTER	954

U

ÜBERDRUCKVENTIL	330 331 686 687 688 689
ÜBERDRUCKVENTIL (*AUXILIARY; 5TH, 6TH FUNCTIONS)	636
ÜBERDRUCKVENTIL (HAUPTUNTERBRECHER)	586
ÜBERDRUCKVENTIL (HYDRAULISCHER LÜFTERMOTOR)	591
ÜBERDRUCKVENTIL (KÄLTEMITTELKOMPRESSOR)	805
ÜBERDRUCKVENTIL (NOTLENKUNG)	438 443
ÜBERROLL-SCHUTZDACH	917
ÜBERROLL-SCHUTZKABINE	916
ÜBERTRAGUNGSEINBAUSATZ	143
UMBAUSATZ - ZULASSUNG	4 5
UMLAUFKÜHLWASSERHEIZUNG	141 142
UMLAUFKÜHLWASSERHEIZUNGS-ELEMENT (240 V, 1000 W)	142
UMLENKMECHANISMUS-SCHUTZABDECKUNG	778
UNEVERSALSCHAUFEL	740 741 742 743 744 745 746 747 748 749 750 751 752
*UNION AS	288
UNIVERSALSCHAUFEL	712 713 714 715 716 721 722 723 724 725 726 727 728 729 730 731 732 733
UNTERBRECHER (20 A)	857
UNTERBRECHER (20 A) (HAUBENNEIGESTELLGLIED)	785
UNTERLEGKEIL FÜR RAD	957

* ÜBERSETZUNG ZUM ZEITPUNKT DER DRUCKLEGUNG NICHT VORHANDEN

STICHWORTVERZEICHNIS

Bezeichnung	Seite
V	
VEDRAHTUNG - SOLENOID (FLUSSSTEUERUNG)	536
VEDRAHTUNG - SOLENOID (HYDRAULIKSPERRE)	542, 572
VENTIL - HYDRAULISCHE SCHWINGUNGSDÄMPFUNG	690
VENTIL, MECH.	656
VENTIL, MECH. (ABSENKSTEUERUNG)	560
VENTIL UND BEFESTIGUNGSTEILE - HAUPTSTEUERUNG	618, 619, 620
VENTILDECKEL	20, 23, 26
VENTILDECKELDICHTUNG	20, 23, 26
VENTILDECKELDICHTUNG (VENTIL)	20, 23
VENTILKABELSTRANG (SITZ LUFTKOMPRESSOR)	949
VENTILKABELSTRANG (ZUSATZ)	620
VENTILKIPPHEBEL	56, 58
VENTILSTEUERUNG	62
VERBINDUNGSSTÜCK	524
VERDRAHTUNG (ELEKTRON. STEUERUNG)	194
VERDRAHTUNG, HINTEN	201
VERDRAHTUNG, VORNE	198, 200
VERDRAHTUNGSKABELBAUM (INJEKTOR)	20, 23, 26
VERSTELLBARER SITZ	915
VERTEILERGETRIEBEANTRIEB	267, 268, 270
VORHÄNGESCHLOSS	248, 250, 615, 853
VORRANGVENTIL (LENKUNG)	542, 572
VORSTEUERLEITUNGEN	564, 568, 572
VORSTEUERÖLDRUCKSAMMLER	478, 479
VORSTEUERVENTIL	323, 326, 329, 463, 596, 597, 598, 657, 659, 661, 664, 666, 668, 670, 671, 672, 673, 674, 675, 676, 677
VORSTEUERVENTIL (*JOYSTICK, 4-FUNCTION)	821
VORSTEUERVENTIL (STEUERHEBEL, 3 FUNKTION)	823, 824
VORSTEUERVENTILPLATTE	599, 600, 601, 602
W	
WÄRMEISOLIERUNG	392, 393, 395, 422
WARNAUFKLEBER (*CRUSH HAZARD, READ OMM, INTL)	962
WARNAUFKLEBER (DRUCKSAMMLER, HOCHDRUCK, HANDBUCH LESEN)	480
WARNAUFKLEBER (HOCHDRUCK, HANDBICH LESEN, INTL)	577
WARNAUFKLEBER (HOCHDRUCK, HANDBICH LESEN, US)	577
WARNAUFKLEBER (NICHT SCHWEISSEN, NICHT BOHREN, HANDBUCH LESEN)	959
WARNAUFKLEBER (PRODUCT LINK RADIO, INTERNATIONAL)	143
WARNAUFKLEBER (PRODUCT LINK RADIO, USA)	143
WARNVORRICHTUNG	124
WARTUNGSSATZ - PALETTENGABEL-POSITIONIERVORRICHTUNG	773, 774

* ÜBERSETZUNG ZUM ZEITPUNKT DER DRUCKLEGUNG NICHT VORHANDEN

STICHWORTVERZEICHNIS

Bezeichnung	Seite
	775
	776
WASSERABSCHEIDER U. KRAFTSTOFFENT-LÜFTUNGSPUMPE	123
WASSERABSCHEIDER UND KRAFTSTOFFILTER	123
WETTERDACH	801

Z

Bezeichnung	Seite
ZAHNHALTER	710
ZAHNRADPUMPE	458
	606
	607
ZAHNRADPUMPE (NOTLENKUNG)	457
ZAHNSPITZE, KURZ	781
	782
ZAHNSPITZE, LANG	779
	780
ZIGARETTENANZÜNDER (24 V)	189
	191
ZUFLUSSREGULIERVENTIL (*AUXILIARY, INLET) (EINLASSKRÜMMER)	585
ZUGANGSKLAPPE	348
	349
	350
	351
	352
ZULASSUNGSSCHILDLEUCHTE	340
	341
ZUMESSPUMPE (HMU)	443
	446
ZUMESSPUMPE (*HMU, QUICK STEER)	459
	460
ZUSATZBELEUCHTUNG	155
ZYLINDER - SPERRVORRICHTUNG	849
	851
ZYLINDERKOPF	32
	34
	36
	37

* ÜBERSETZUNG ZUM ZEITPUNKT DER DRUCKLEGUNG NICHT VORHANDEN

MEMORANDA

MACHINE ARRANGEMENT

289-8871 CHASSIS AR

S/N: BYD1-UP

PART OF 289-8870 COMMON AR

SMCS-7000 **i02824829**

NOTE	PART NUMBER	QTY	PART NAME 1 2 3 4 5 6 (PRODUCT LEVEL)	SEE PAGE
Y	*112-7167*	1	BATTERY GP (12-VOLT, 900-AMPERE)	133
Y	*202-0420*	1	BOX GP-BATTERY	339
Y	*113-3706*	1	CONTROL GP-BUCKET	702
Y	*294-9448*	1	CONTROL GP-PARKING BRAKE	416
Y	*202-0430*	1	CONTROL GP-SERVICE BRAKE	418
Y	*118-0899*	1	CYLINDER & MTG GP-STEERING	432
Y	*289-8960*	1	DOOR GP-ACCESS (HOOD SIDE)	349
Y	*113-3785*	1	FRAME GP-LOADER	363
Y	*257-1620*	1	FRAME GP-REAR	371
Y	*290-7198*	1	GUARD GP-FAN	74
Y	*113-3790*	1	HITCH GP-ARTICULATING	387
Y	*289-8912*	1	HOOD & GUARD GP	389
Y	*289-8913*	1	LADDER GP	397
Y	*289-8926*	1	LINES GP-SERVICE BRAKE	426
Y	*204-5107*	1	LINES GP-GREASE	400
Y	*289-8923*	1	LINES GP-TORQUE CONV COOLER	290
Y	*113-3783*	1	LINK GP-STEERING FRAME LOCK	404
Y	*6V-1970*	1	LITERATURE GP	874
Y	*118-0880*	1	MOUNTING GP-AXLE	292
Y	*312-4576*	1	PLATE & FILM GP	962
Y	*289-8911*	1	TANK & MTG GP-FUEL	121
Y	*289-8902*	1	WIRING GP-ENGINE	195
Y	*289-8957*	1	WIRING GP-FRONT	198
Y	*289-8959*	1	WIRING GP-REAR	201
	290-7202	1	MOUNTING GP-BRACKET (GREASE GUN)	
	1U-7684	2	HOLDER AS (GREASE GUN)	

Y-SEPARATE ILLUSTRATION

<END>

MACHINE ARRANGEMENT

289-8891 CHASSIS AR

S/N: FTD1-649

PART OF 289-8890 COMMON AR

SMCS-7000 **i02832192**

NOTE	PART NUMBER	QTY	PART NAME 1 2 3 4 5 6 (PRODUCT LEVEL)	SEE PAGE
Y	*112-7167*	1	BATTERY GP (12-VOLT, 900-AMPERE)	133
Y	*202-0420*	1	BOX GP-BATTERY	339
Y	*289-8930*	1	CONTROL GP-PARKING BRAKE	414
Y	*202-0430*	1	CONTROL GP-SERVICE BRAKE	418
Y	*235-7195*	1	CYLINDER & MTG GP-STEERING	433
Y	*289-8960*	1	DOOR GP-ACCESS (HOOD SIDE)	349
Y	*235-7200*	1	FRAME GP-LOADER	364
Y	*257-1600*	1	FRAME GP-REAR	368
Y	*290-7198*	1	GUARD GP-FAN	74
Y	*113-3790*	1	HITCH GP-ARTICULATING	387
Y	*289-8912*	1	HOOD & GUARD GP	389
Y	*235-6820*	1	KICKOUT & POSITIONER GP	506
Y	*289-8913*	1	LADDER GP	397
Y	*289-8977*	1	LINES GP-GREASE	401
Y	*289-8927*	1	LINES GP-SERVICE BRAKE	429
Y	*289-8923*	1	LINES GP-TORQUE CONV COOLER	290
Y	*7V-2885*	1	LINK GP-STEERING FRAME LOCK	403
Y	*6V-1970*	1	LITERATURE GP	874
Y	*132-2471*	1	MOUNTING GP-AXLE	293
Y	*235-6941*	1	MOUNTING GP-CONTROL VALVE	595
Y	*312-4577*	1	PLATE & FILM GP	964
Y	*289-8911*	1	TANK & MTG GP-FUEL	121
Y	*289-8902*	1	WIRING GP-ENGINE	195
Y	*289-8958*	1	WIRING GP-FRONT	200
Y	*289-8959*	1	WIRING GP-REAR	201
	290-7202	1	MOUNTING GP-BRACKET (GREASE GUN)	
	1U-7684	2	HOLDER AS (GREASE GUN)	
	7K-1181	2	STRAP-CABLE	

Y-SEPARATE ILLUSTRATION

<END>

MACHINE ARRANGEMENT

290-6498 CHASSIS AR

S/N: FTD650-UP

PART OF 289-8899 COMMON AR

SMCS-7000 **i02885861**

NOTE	PART NUMBER	QTY	PART NAME 1 2 3 4 5 6 (PRODUCT LEVEL)	SEE PAGE
Y	*112-7167*	1	BATTERY GP	133
Y	*202-0420*	1	BOX GP-BATTERY	339
Y	*289-8930*	1	CONTROL GP-PARKING BRAKE	414
Y	*202-0430*	1	CONTROL GP-SERVICE BRAKE	418
Y	*235-7195*	1	CYLINDER & MTG GP-STEERING	433
Y	*289-8960*	1	DOOR GP-ACCESS (HOOD SIDE)	349
Y	*257-1610*	1	FRAME GP-LOADER	367
Y	*257-1600*	1	FRAME GP-REAR	368
Y	*290-7198*	1	GUARD GP-FAN	74
Y	*113-3790*	1	HITCH GP-ARTICULATING	387
Y	*289-8912*	1	HOOD & GUARD GP	389
Y	*235-6820*	1	KICKOUT & POSITIONER GP	506
Y	*289-8913*	1	LADDER GP	397
Y	*289-8816*	1	LINES GP-SERVICE BRAKE	423
Y	*289-8977*	1	LINES GP-GREASE	401
Y	*289-8923*	1	LINES GP-TORQUE CONV COOLER	290
Y	*7V-2885*	1	LINK GP-STEERING FRAME LOCK	403
Y	*6V-1970*	1	LITERATURE GP	874
Y	*132-2471*	1	MOUNTING GP-AXLE	293
Y	*290-7202*	1	MOUNTING GP-BRACKET (GREASE GUN)	405
Y	*235-6941*	1	MOUNTING GP-CONTROL VALVE	595
Y	*312-4577*	1	PLATE & FILM GP	964
Y	*289-8911*	1	TANK & MTG GP-FUEL	121
Y	*289-8902*	1	WIRING GP-ENGINE	195
Y	*289-8958*	1	WIRING GP-FRONT	200
Y	*289-8959*	1	WIRING GP-REAR	201

Y-SEPARATE ILLUSTRATION

<END>

289-8870 COMMON AR

S/N: BYD1-UP

SMCS-7000 **i02829659**

NOTE	PART NUMBER	QTY	PART NAME 1 2 3 4 5 6 (PRODUCT LEVEL)	SEE PAGE
Y	*289-8871*	1	CHASSIS AR	1
Y	*289-8802*	1	ELECTRONICS AR-MACHINE	137
Y	*289-8863*	1	HYDRAULIC AR	498
Y	*289-8884*	1	INSTALLATION AR-ENGINE	15
Y	*289-8845*	1	POWER TRAIN AR	294

Y-SEPARATE ILLUSTRATION

<END>

MACHINE ARRANGEMENT

289-8890 COMMON AR

S/N: FTD1-649

SMCS-7000 **i02832195**

NOTE	PART NUMBER	QTY	PART NAME 1 2 3 4 5 6 (PRODUCT LEVEL)	SEE PAGE
Y	*289-8891*	1	CHASSIS AR	2
Y	*289-8802*	1	ELECTRONICS AR-MACHINE	137
Y	*289-8883*	1	HYDRAULIC AR	499
Y	*289-8884*	1	INSTALLATION AR-ENGINE	15
Y	*289-8835*	1	POWER TRAIN AR	294

Y-SEPARATE ILLUSTRATION

<END>

289-8899 COMMON AR

S/N: FTD650-UP

SMCS-7000 **i02885852**

NOTE	PART NUMBER	QTY	PART NAME 1 2 3 4 5 6 (PRODUCT LEVEL)	SEE PAGE
Y	*290-6498*	1	CHASSIS AR	3
Y	*289-8802*	1	ELECTRONICS AR-MACHINE	137
Y	*289-8843*	1	HYDRAULIC AR	498
Y	*289-8884*	1	INSTALLATION AR-ENGINE	15
Y	*289-8895*	1	POWER TRAIN AR	295

Y-SEPARATE ILLUSTRATION

<END>

289-8933 CONVERSION AR-CERTIFICATION

S/N: BYD1-UP

AN ATTACHMENT

SMCS-7000 **i02832672**

NOTE	PART NUMBER	QTY	PART NAME 1 2 3 4 5 6 (PRODUCT LEVEL)	SEE PAGE
	310-1943	1	FILM-NOTICE (ROADING HEIGHT)	
			(ON BOTTOM OF LH WINDSHIELD PANE DIRECTLY ABOVE INSTRUMENT PANEL & MUST BE READABLE FROM OPERATORS SEAT)	

<END>

308-3658 CONVERSION AR-CERTIFICATION

S/N: BYD1-UP

FOR USE WITH 289-8968—PAGE 459, 208-4982—PAGE 353, 289-8950—PAGE 61, 289-8947—PAGE 60. CANNOT BE USED WITH 308-3661—PAGE 5, 308-3664—PAGE 5

AN ATTACHMENT

SMCS-7000 **i02817746**

NOTE	PART NUMBER	QTY	PART NAME 1 2 3 4 5 6 (PRODUCT LEVEL)	SEE PAGE
Y	*219-2425*	1	CONVERSION GP-ROADING (ITALY)	340
Y	*290-6492*	1	FILM GP-INTERNATIONAL (Z-BAR LINKAGE)	962

Y-SEPARATE ILLUSTRATION

<END>

MACHINE ARRANGEMENT

308-3661 CONVERSION AR-CERTIFICATION

S/N: BYD1-UP

FOR USE WITH 308-3664—PAGE 5, 289-8947—PAGE 60, 289-8950—PAGE 61, 289-8968—PAGE 459, 219-2423—PAGE 958. CANNOT BE USED WITH 308-3658—PAGE 4, 308-3664—PAGE 5

AN ATTACHMENT

SMCS-7000 **i02817728**

NOTE	PART NUMBER	QTY	PART NAME 1 2 3 4 5 6 (PRODUCT LEVEL)	SEE PAGE
Y	*290-6492*	1	FILM GP-INTERNATIONAL (Z-BAR LINKAGE)	962
Y-SEPARATE ILLUSTRATION				

<END>

308-3664 CONVERSION AR-CERTIFICATION

S/N: BYD1-UP

CANNOT BE USED WITH 308-3658 CONVERSION AR-CERTIFICATION, 308-3661 CONVERSION AR-CERTIFICATION

AN ATTACHMENT

SMCS-7000 **i02817719**

NOTE	PART NUMBER	QTY	PART NAME 1 2 3 4 5 6 (PRODUCT LEVEL)	SEE PAGE
Y	*290-6492*	1	FILM GP-INTERNATIONAL (Z-BAR LINKAGE)	962
Y-SEPARATE ILLUSTRATION				

<END>

308-3668 CONVERSION AR-CERTIFICATION

S/N: FTD1-UP

AN ATTACHMENT

SMCS-7000 **i02811295**

NOTE	PART NUMBER	QTY	PART NAME 1 2 3 4 5 6 (PRODUCT LEVEL)	SEE PAGE
Y	*307-0479*	1	CONVERSION GP-ROADING (JAPANESE MARKET ONLY)	341
Y	*290-6487*	1	FILM GP (SCM)	959
Y-SEPARATE ILLUSTRATION				

<END>

MACHINE ARRANGEMENT

289-9000 WASTE HANDLING AR

S/N: FTD1-UP
CANNOT BE USED WITH 290-7176—PAGE 7
AN ATTACHMENT

SMCS-7000 **i02810690**

NOTE	PART NUMBER	QTY	PART NAME 1 2 3 4 5 6 (PRODUCT LEVEL)	SEE PAGE
Y	*300-1962*	1	GUARD GP-LIGHTING	376
Y	*209-8712*	1	GUARD GP-RADIATOR (WASTE HANDLER)	384
Y	*175-6760*	1	GUARD GP-WINDOW	856
	290-7213	1	GUARD GP-DRIVE SHAFT	
	7X-7729	4	WASHER (11X25X3-MM THK)	
M	**8T-4136**	4	BOLT (M10X1.5X25-MM)	
	295-0580	1	GUARD AS	
	310-5423	1	FILM GP (WASTE HANDLER)	
	309-9822	1	FILM-IDENTIFICATION (WASTE HANDLER)	

M-METRIC PART
Y-SEPARATE ILLUSTRATION

<END>

290-7175 WASTE HANDLING AR

S/N: BYD1-UP
CANNOT BE USED WITH 290-7179—PAGE 7, 290-7182—PAGE 8, 294-9497—PAGE 8
AN ATTACHMENT

SMCS-7000 **i02814773**

NOTE	PART NUMBER	QTY	PART NAME 1 2 3 4 5 6 (PRODUCT LEVEL)	SEE PAGE
Y	*239-0717*	1	GUARD GP-DRIVE SHAFT	375
Y	*300-1962*	1	GUARD GP-LIGHTING	376
Y	*294-0507*	1	GUARD GP-POWER TRAIN (TRANSMISSION)	383
Y	*209-8712*	1	GUARD GP-RADIATOR (WASTE HANDLER)	384
Y	*294-9493*	1	GUARD GP-AXLE SEAL	374
Y	*175-6760*	1	GUARD GP-WINDOW	856
	310-5423	1	FILM GP (WASTE HANDLER)	
	309-9822	1	FILM-IDENTIFICATION (WASTE HANDLER)	
	293-5221	1	GUARD GP-CRANKCASE	
M	**8T-4195**	4	BOLT (M10X1.5X30-MM)	
	7X-7729	4	WASHER (11X25X3-MM THK)	
	293-5222	1	PLATE AS	
	219-2418	1	PLATE AS	
M	**8T-3490**	2	NUT-WELD (M10X1.5-THD)	

M-METRIC PART
Y-SEPARATE ILLUSTRATION

<END>

MACHINE ARRANGEMENT

290-7176 WASTE HANDLING AR

S/N: FTD1-UP
CANNOT BE USED WITH 289-9000—PAGE 6
AN ATTACHMENT

SMCS-7000 **i02810688**

NOTE	PART NUMBER	QTY	PART NAME 1 2 3 4 5 6 (PRODUCT LEVEL)	SEE PAGE
Y	*300-1962*	1	GUARD GP-LIGHTING	376
Y	*294-0507*	1	GUARD GP-POWER TRAIN (TRANSMISSION)	383
Y	*209-8712*	1	GUARD GP-RADIATOR (WASTE HANDLER)	384
Y	*175-6760*	1	GUARD GP-WINDOW	856
	293-5221	1	GUARD GP-CRANKCASE	
	7X-7729	4	WASHER (11X25X3-MM THK)	
M	**8T-4195**	4	BOLT (M10X1.5X30-MM)	
	293-5222	1	PLATE AS	
	219-2418	1	PLATE AS	
	290-7213	1	GUARD GP-DRIVE SHAFT	
	7X-7729	4	WASHER (11X25X3-MM THK)	
M	**8T-4136**	4	BOLT (M10X1.5X25-MM)	
	295-0580	1	GUARD AS	
	310-5423	1	FILM GP (WASTE HANDLER)	
	309-9822	1	FILM-IDENTIFICATION (WASTE HANDLER)	

M-METRIC PART
Y-SEPARATE ILLUSTRATION

<END>

290-7179 WASTE HANDLING AR

S/N: BYD1-UP
CANNOT BE USED WITH 290-7175—PAGE 6, 290-7182—PAGE 8, 294-9497—PAGE 8
AN ATTACHMENT

SMCS-7000 **i02814765**

NOTE	PART NUMBER	QTY	PART NAME 1 2 3 4 5 6 (PRODUCT LEVEL)	SEE PAGE
Y	*239-0717*	1	GUARD GP-DRIVE SHAFT	375
Y	*302-7840*	1	GUARD GP-LIGHTING	377
Y	*294-0507*	1	GUARD GP-POWER TRAIN (TRANSMISSION)	383
Y	*209-8712*	1	GUARD GP-RADIATOR (WASTE HANDLER)	384
Y	*294-9493*	1	GUARD GP-SEAL	374
Y	*175-6760*	1	GUARD GP-WINDOW	856
	310-5423	1	FILM GP (WASTE HANDLER)	
	309-9822	1	FILM-IDENTIFICATION (WASTE HANDLER)	
	293-5221	1	GUARD GP-CRANKCASE	
	7X-7729	4	WASHER (11X25X3-MM THK)	
M	**8T-4195**	4	BOLT (M10X1.5X30-MM)	
	293-5222	1	PLATE AS	
	219-2418	1	PLATE AS	
M	**8T-3490**	2	NUT-WELD (M10X1.5-THD)	

M-METRIC PART
Y-SEPARATE ILLUSTRATION

<END>

MACHINE ARRANGEMENT

290-7182 WASTE HANDLING AR

S/N: BYD1-UP

CANNOT BE USED WITH 290-7175—PAGE 6, 290-7179—PAGE 7, 294-9497—PAGE 8

AN ATTACHMENT

SMCS-7000 **i02814451**

NOTE	PART NUMBER	QTY	PART NAME 1 2 3 4 5 6 (PRODUCT LEVEL)	SEE PAGE
Y	*294-9493*	1	GUARD GP-SEAL	374
Y	*239-0717*	1	GUARD GP-DRIVE SHAFT	375
Y	*302-7840*	1	GUARD GP-LIGHTING	377
Y	*209-8712*	1	GUARD GP-RADIATOR (WASTE HANDLER)	384
Y	*175-6760*	1	GUARD GP-WINDOW	856
	310-5423	1	FILM GP (WASTE HANDLER)	
	309-9822	1	FILM-IDENTIFICATION (WASTE HANDLER)	
Y-SEPARATE ILLUSTRATION				

<END>

294-9497 WASTE HANDLING AR—COSA

S/N: BYD1-UP

CANNOT BE USED WITH 290-7179—PAGE 7, 290-7175—PAGE 6, 290-7182—PAGE 8

AN ATTACHMENT

SMCS-7000 **i02831626**

NOTE	PART NUMBER	QTY	PART NAME 1 2 3 4 5 6 (PRODUCT LEVEL)	SEE PAGE
Y	*294-9493*	1	GUARD GP-AXLE SEAL	374
Y	*239-0717*	1	GUARD GP-DRIVE SHAFT	375
Y	*300-1962*	1	GUARD GP-LIGHTING	376
Y	*209-8712*	1	GUARD GP-RADIATOR (WASTE HANDLER)	384
Y	*175-6760*	1	GUARD GP-WINDOW	856
	310-5423	1	FILM GP (WASTE HANDLER)	
	309-9822	1	FILM-IDENTIFICATION (WASTE HANDLER)	
			(ALIGN FILM TO LEADIMG EDGE OF ACERT BADGE; IF NO DIMENSION IS SHOWN, CENTER IN AVAILABLE SPACE)	
Y-SEPARATE ILLUSTRATION				

<END>

ENGINE ARRANGEMENT

301-9714 ENGINE AR

S/N: BYD1-UP; FTD1-UP
AN ATTACHMENT

SMCS-1000 **i02812567**

NOTE	PART NUMBER	QTY	PART NAME 1 2 3 4 5 6 (PRODUCT LEVEL)	SEE PAGE
Y	**301-3361**	1	ENGINE AR-PRIMARY	14

Y-SEPARATE ILLUSTRATION

ENGINE ARRANGEMENT

301-9715 ENGINE AR

S/N: BYD1-UP; FTD1-UP

AN ATTACHMENT

SMCS-1000 **i02812566**

NOTE	PART NUMBER	QTY	PART NAME 1 2 3 4 5 6 (PRODUCT LEVEL)	SEE PAGE
Y	**292-5305**	1	ENGINE AR-PRIMARY	12

Y-SEPARATE ILLUSTRATION

ENGINE ARRANGEMENT

301-9746 ENGINE AR

S/N: FTD1-UP

AN ATTACHMENT

SMCS-1000 **i02812560**

NOTE	PART NUMBER	QTY	PART NAME 1 2 3 4 5 6 (PRODUCT LEVEL)	SEE PAGE
Y	**301-3360**	1	ENGINE AR-PRIMARY	13

Y-SEPARATE ILLUSTRATION

ENGINE ARRANGEMENT

292-5305 ENGINE AR-PRIMARY

S/N: C6E1-UP
114 BRAKE KW (152 BHP) AT 2300 RPM
PART OF 301-9715 ENGINE AR
AN ATTACHMENT

SMCS-1000 **i02896869**

NOTE	PART NUMBER	QTY	PART NAME 1 2 3 4 5 6 (PRODUCT LEVEL)	SEE PAGE
Y	*280-2050*	1	BREATHER GP (CRANKCASE)	64
Y	*277-0029*	1	CAMSHAFT GP	16
Y	*281-8748*	1	CONNECTION GP-WATER	70
Y	*283-4558*	1	COOLER GP-FLTR BASE & ENG OIL	71
Y	*277-4224*	1	COVER GP-ENGINE	17
Y	*320-6564*	1	COVER GP-VALVE MECHANISM	26
Y	*276-7392*	1	CRANKSHAFT GP	27
Y	*292-5856*	1	CYLINDER BLOCK GP	31
Y	*276-8135*	1	CYLINDER HEAD GP	36
Y	*291-2513*	1	DRAIN GP-ENGINE OIL	39
Y	*291-2515*	1	DRIVE GP-FAN	40
Y	*277-1973*	1	FILLER GP-ENGINE OIL	65
Y	*277-2912*	1	FILTER GP-ENGINE OIL	67
Y	*280-1394*	1	FILTER GP-SECONDARY FUEL	99
Y	*286-7834*	1	FLYWHEEL GP	42
Y	*277-4410*	1	GLOW PLUG GP	140
Y	*281-6332*	1	HOUSING GP-FLYWHEEL	43
Y	*277-3014*	1	HOUSING GP-FRONT	44
Y	*279-9653*	1	LIFTING GP-ENGINE	46
Y	*308-9075*	1	LINES GP-FUEL	104
Y	*288-7985*	1	MANIFOLD GP-INLET	94
Y	*289-3268*	1	PAN GP-OIL	49
Y	*276-7491*	1	PISTON GP	52
Y	*277-5007*	1	PLUG GP-ENGINE	53
Y	*299-3949*	1	PLUG GP-FLYWHEEL HOUSING	54
Y	*274-1929*	1	PULLEY GP-CRANKSHAFT	55
Y	*277-4262*	1	PUMP GP-ENGINE OIL	68
Y	*304-0292*	1	PUMP GP-FUEL INJECTION	111
Y	*277-2939*	1	PUMP GP-WATER	78
Y	*299-3954*	1	TURBOCHARGER GP	96
Y	*277-4694*	1	VALVE GP-FLUID SAMPLING (ENGINE OIL)	69
Y	*276-9229*	1	VALVE MECHANISM GP	62
Y	*299-3953*	1	WIRING GP-ELECTRONIC CONTROL (ENGINE)	194
	277-6990	1	CYLINDER BLOCK GP	
	299-3920	1	SOFTWARE GP-ENG RATINGS ELEK	

Y-SEPARATE ILLUSTRATION

ENGINE ARRANGEMENT

301-3360 ENGINE AR-PRIMARY

S/N: C6E1-UP
114 BRAKE KW (152 BHP) AT 2300 RPM
PART OF 301-9746 ENGINE AR
AN ATTACHMENT

SMCS-1000 **i02854135**

NOTE	PART NUMBER	QTY	PART NAME 1 2 3 4 5 6 (PRODUCT LEVEL)	SEE PAGE
			(NO SERVICED PARTS)	

ENGINE ARRANGEMENT

301-3361 ENGINE AR-PRIMARY

S/N: C6E1-UP
114 BRAKE KW (152 BHP) AT 2300 RPM
PART OF 301-9714 ENGINE AR
AN ATTACHMENT

SMCS-1000 **i02875959**

NOTE	PART NUMBER	QTY	PART NAME 1 2 3 4 5 6 (PRODUCT LEVEL)	SEE PAGE
Y	*281-8748*	1	CONNECTION GP-WATER	70
Y	*283-4558*	1	COOLER GP-FLTR BASE & ENG OIL	71
Y	*294-5393*	1	COVER GP-VALVE MECHANISM	20
Y	*277-4224*	1	COVER GP-ENGINE	17
Y	*292-5859*	1	CRANKSHAFT GP	28
Y	*292-5856*	1	CYLINDER BLOCK GP	31
Y	*292-5860*	1	CYLINDER HEAD GP	37
Y	*291-2513*	1	DRAIN GP-ENGINE OIL	39
Y	*291-2515*	1	DRIVE GP-FAN	40
Y	*297-5184*	1	DRIVE GP-FAN	41
Y	*277-1973*	1	FILLER GP-ENGINE OIL	65
Y	*277-2912*	1	FILTER GP-ENGINE OIL	67
Y	*280-1394*	1	FILTER GP-SECONDARY FUEL	99
Y	*286-7834*	1	FLYWHEEL GP	42
Y	*277-4410*	1	GLOW PLUG GP	140
Y	*281-6332*	1	HOUSING GP-FLYWHEEL	43
Y	*277-3014*	1	HOUSING GP-FRONT	44
Y	*279-9653*	1	LIFTING GP-ENGINE	46
Y	*308-9075*	1	LINES GP-FUEL	104
Y	*288-7985*	1	MANIFOLD GP-INLET	94
Y	*289-3268*	1	PAN GP-OIL	49
Y	*292-5857*	1	PISTON & ROD GP	51
Y	*277-5007*	1	PLUG GP-ENGINE	53
Y	*299-3949*	1	PLUG GP-FLYWHEEL HOUSING	54
Y	*274-1929*	1	PULLEY GP-CRANKSHAFT	55
Y	*277-4262*	1	PUMP GP-ENGINE OIL	68
Y	*304-0292*	1	PUMP GP-FUEL INJECTION	111
Y	*277-2939*	1	PUMP GP-WATER	78
Y	*292-5865*	1	ROCKER ARM GP	58
Y	*299-3954*	1	TURBOCHARGER GP	96
Y	*277-4694*	1	VALVE GP-FLUID SAMPLING (ENGINE OIL)	69
Y	*299-3953*	1	WIRING GP-ELECTRONIC CONTROL (ENGINE)	194
	277-6990	1	CYLINDER BLOCK GP	
	299-3920	1	SOFTWARE GP-ENG RATINGS ELEK	

Y-SEPARATE ILLUSTRATION

ENGINE ARRANGEMENT

289-8884 INSTALLATION AR-ENGINE

S/N: BYD1-UP; FTD1-UP

PART OF 289-8870, 289-8890, 289-8899 COMMON AR

SMCS-1000 **i02829648**

NOTE	PART NUMBER	QTY	PART NAME 1 2 3 4 5 6 (PRODUCT LEVEL)	SEE PAGE
Y	*289-3322*	1	AIR CLEANER GP	88
Y	*257-6549*	1	DRAIN GP-ENGINE OIL	38
Y	*311-2236*	1	EXTENSION GP-EXHAUST	92
Y	*185-1045*	1	FAN GP-SUCTION	73
Y	*289-3533*	1	LINES GP-AIR	93
Y	*289-8938*	1	LINES GP-FUEL	102
Y	*290-0637*	1	MOUNTING GP-ENGINE & TMSN	47
Y	*289-3232*	1	MUFFLER GP	95
Y	*317-1044*	1	RADIATOR & AFTERCOOLER GP	80
Y	*234-2667*	1	STARTING MOTOR GP-ELECTRIC	178

Y-SEPARATE ILLUSTRATION

BASIC ENGINE

277-0029 CAMSHAFT GP

S/N: C6E1-UP

PART OF 292-5305 ENGINE AR-PRIMARY

AN ATTACHMENT

SMCS-1210, 1211, 1212 **i02837363**

NOTE	REF NO	GRAPHIC REF	PART NUMBER	QTY	PART NAME 1 2 3 4 5 6 (PRODUCT LEVEL)	SEE PAGE
	1	1	**277-0009**	1	CAMSHAFT AS	
	2	1	**1B-8736**	1	KEY-WOODRUFF	
	3	1	**278-5125**	12	TAPPET	
	4	1	**278-5126**	12	PUSHROD	

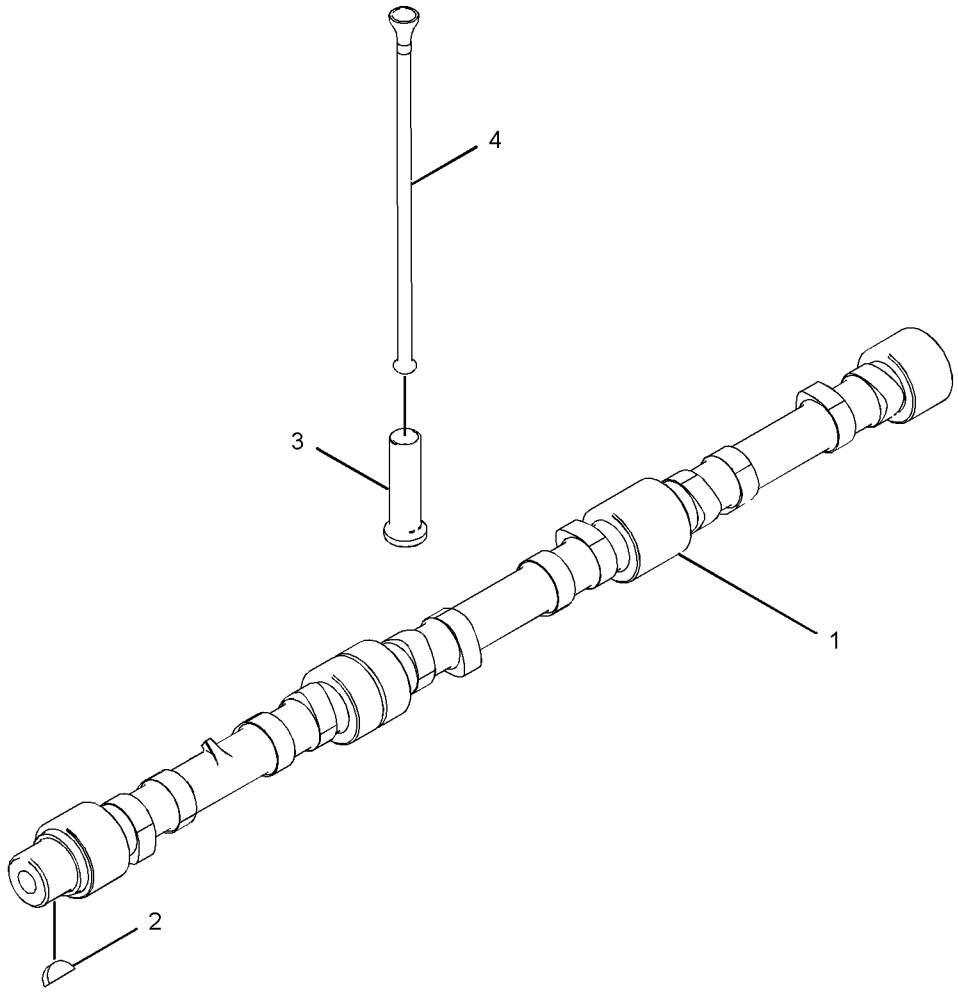

GRAPHIC #1 **<END>** g01210120

BASIC ENGINE

277-4224 COVER GP-ENGINE

S/N: C6E1-UP

PART OF 292-5305, 301-3361 ENGINE AR-PRIMARY

AN ATTACHMENT

SMCS-1000 **i02836812**

NOTE	REF NO	GRAPHIC REF	PART NUMBER	QTY	PART NAME 1 2 3 4 5 6 (PRODUCT LEVEL)	SEE PAGE
	1	1	**209-5502**	1	COVER AS (POWER TAKE-OFF)	
	2	1	**209-5503**	1	SEAL-COVER	
	3	1	**111-8222**	5	BOLT	
M	4	1	**100-4830**	1	BOLT (M10X1.5X20-MM)	
	5	1	**277-4223**	1	PLUG	

M-METRIC PART

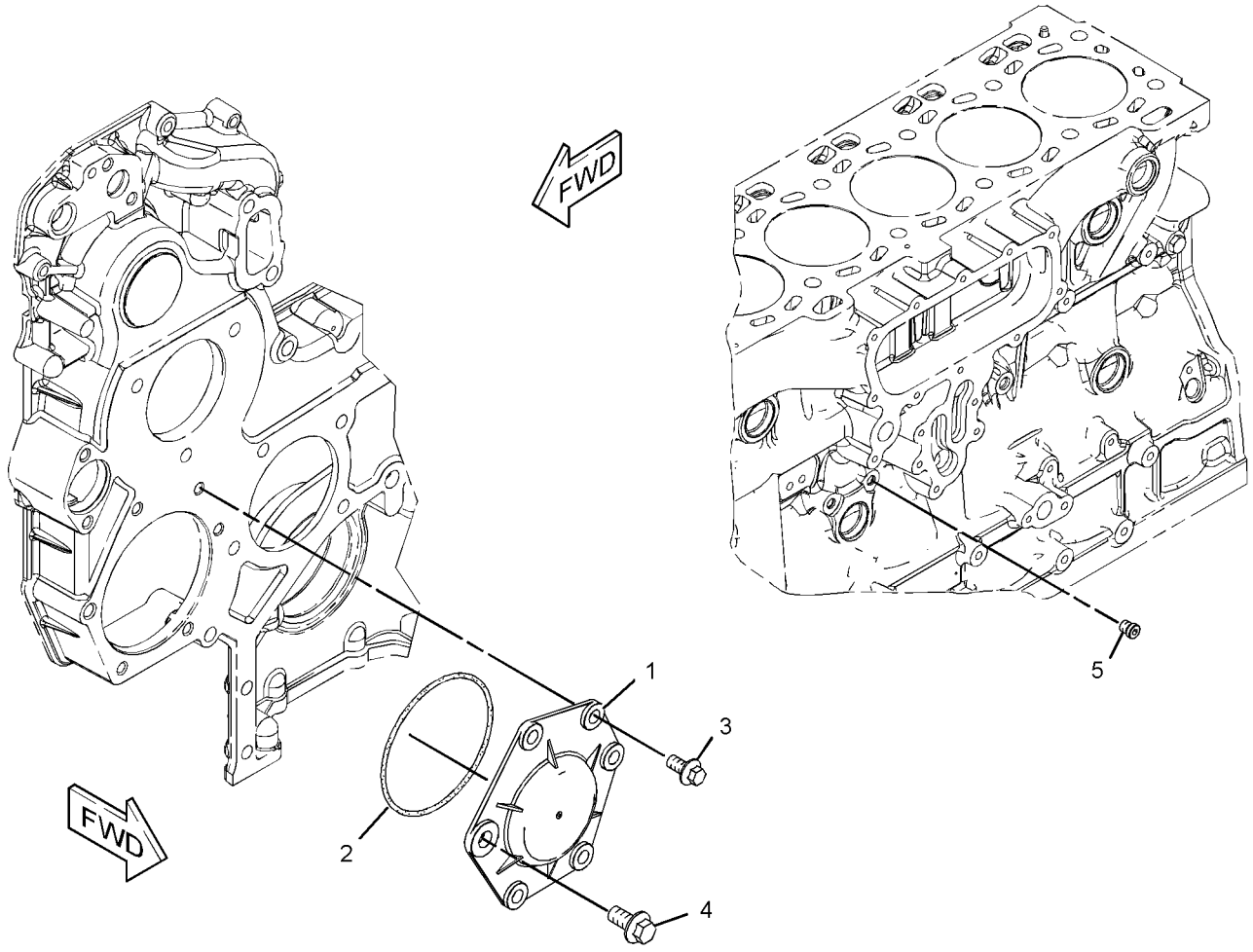

GRAPHIC #1 **<END>** g01195577

150-6564 COVER GP-SOUND SUPPRESSION–REAR FRAME

S/N: BYD1-UP

PART OF 289-8947, 289-8950 SUPPRESSION AR-SOUND

AN ATTACHMENT

SMCS-1801 **i02650886**

NOTE	REF NO	GRAPHIC REF	PART NUMBER	QTY	PART NAME 1 2 3 4 5 6 (PRODUCT LEVEL)	SEE PAGE
	1	1	**150-6576**	1	PLATE AS (LH)	
	2	1	**150-6577**	1	PLATE AS (RH)	
	3	1	**150-6579**	2	LATCH	

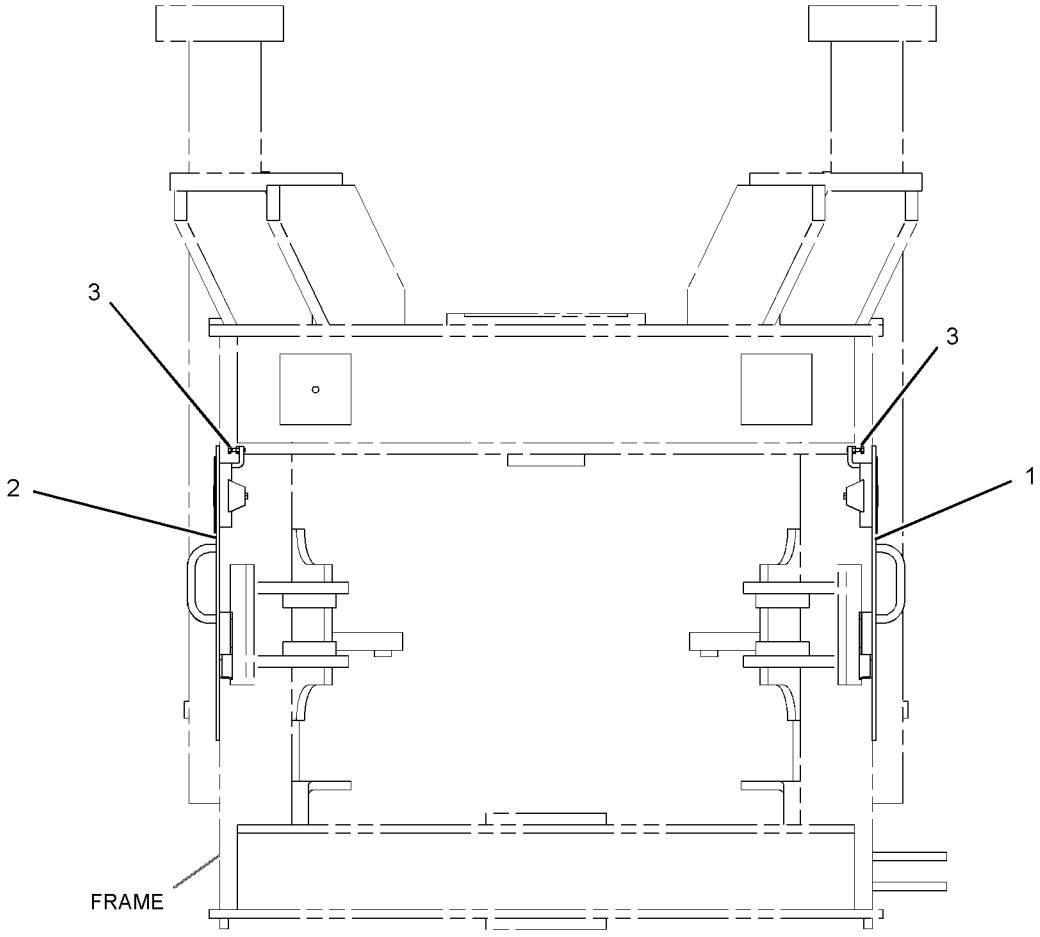

FRONT VIEW

GRAPHIC #1 **<END>** g01331779

295-1034 COVER GP-SOUND SUPPRESSION–REAR FRAME

S/N: FTD1-UP

PART OF 289-8948, 289-8951 SUPPRESSION AR-SOUND

AN ATTACHMENT

SMCS-1801 **i02810343**

NOTE	REF NO	GRAPHIC REF	PART NUMBER	QTY	PART NAME 1 2 3 4 5 6 (PRODUCT LEVEL)	SEE PAGE
	1	1	**295-1007**	1	BRACKET AS	
B	2	1	**295-1029**	1	PLATE	
	3	1	**295-1030**	1	PLATE AS	
B	4	1	**8T-4121**	2	WASHER-HARD (11X21X2.5-MM THK)	
BM	5	1	**8T-4133**	1	NUT (M10X1.5-THD)	
M	6	1	**8T-4186**	1	BOLT (M10X1.5X40-MM)	
BM	7	1	**8T-4189**	4	BOLT (M8X1.25X20-MM)	
B	8	1	**8T-4224**	6	WASHER-HARD (8.8X16X2-MM THK)	

B-USE AS REQUIRED
M-METRIC PART

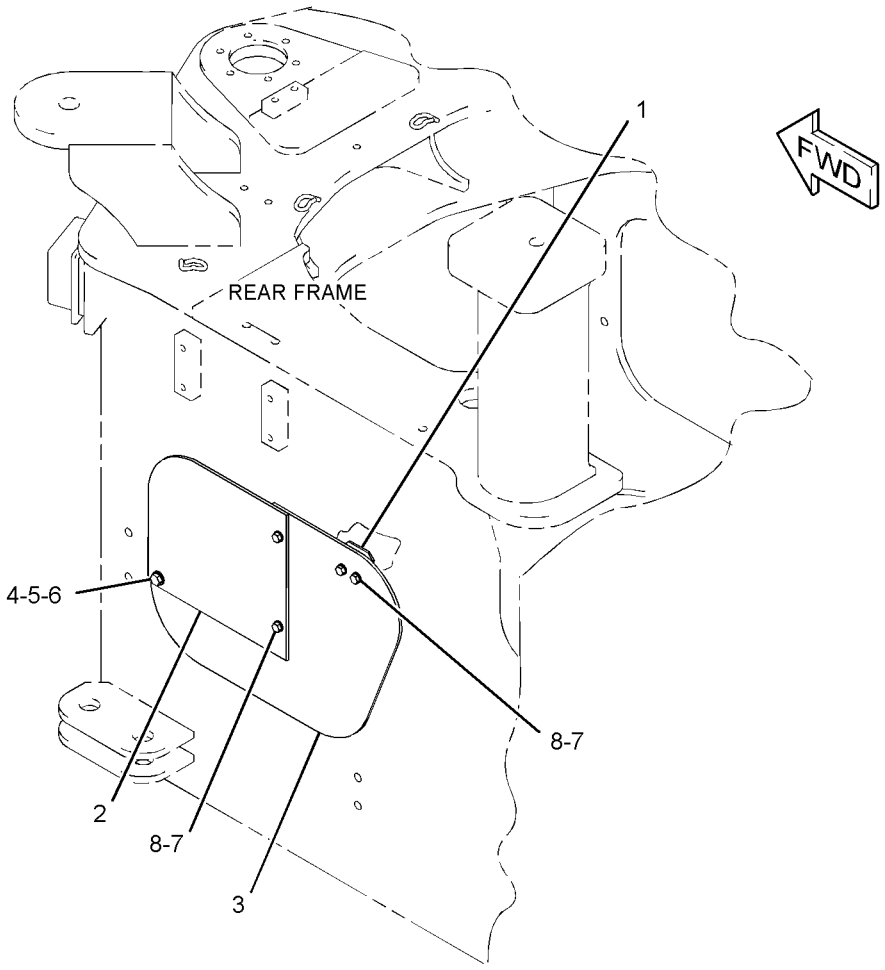

GRAPHIC #1 **<END>** g01404569

BASIC ENGINE

294-5393 COVER GP-VALVE MECHANISM

S/N: C6E1-404

PART OF 301-3361 ENGINE AR-PRIMARY

AN ATTACHMENT

SMCS-1107 **i02875888**

NOTE	REF NO	GRAPHIC REF	PART NUMBER	QTY	PART NAME 1 2 3 4 5 6 (PRODUCT LEVEL)	SEE PAGE
	1	1	**103-1066**	2	CLAMP-HOSE	
M	2	1	**6I-0217**	1	BOLT (M8X1.25X20-MM)	
	3	1	**6I-0917**	5	BOLT (M6X1X25-MM)	
	4	1	**277-5067**	6	SLEEVE	
	5	1	**277-5094**	1	COVER AS	
	5A	1	**277-5096**	1	SEAL-O-RING	
	6	1	**278-4695**	1	HOSE (CRANKCASE BREATHER)	
	7	1	**278-5927**	1	TUBE-BREATHER	
	8	1	**302-7818**	1	COVER AS-CYLINDER HEAD	
	8A	1	**277-5030**	1	SEAL-O-RING	
	8B	1	**278-4693**	1	GASKET-VALVE COVER	
	8C	1	**278-4694**	1	BREATHER AS (CRANKCASE)	
	8D	2	**124-0506**	1	SEAL	
	8E	2	**160-0526**	1	SEAL-O-RING	
	8F	2	**185-3159**	1	ELEMENT (BREATHER) (CRANKCASE)	
	8G	1	**295-1042**	4	SCREW-TAPPING	
	8H	1	**300-3907**	1	ADAPTER	
C	9	1	**277-5031**	9	BOLT-SPECIAL (SHOULDER)	
C	10	1	**312-3084**	1	COVER AS-CYLINDER HEAD	
	10A	1	**309-6664**	1	GASKET-COVER (VALVE)	
	10B	1	**277-5064**	3	SEAL-O-RING	
	10C	1	**277-5065**	3	CLIP	
	10D	1	**285-1975**	3	HARNESS AS-WIRING (INJECTOR)	
	11	1	**294-5408**	1	COVER AS	
M	11A	1	**100-4841**	5	BOLT (M6X1X10-MM)	
C	12	1	**298-4550**	6	BOLT-SPECIAL (SHOULDER)	
F			**2S-3440**	2	CLAMP-HOSE	
F			**289-2363**	1	SPACER	

C-CHANGE FROM PREVIOUS TYPE
F-NOT SHOWN
M-METRIC PART

294-5393 **COVER GP-VALVE MECHANISM** *(contd.)* **i02875888**

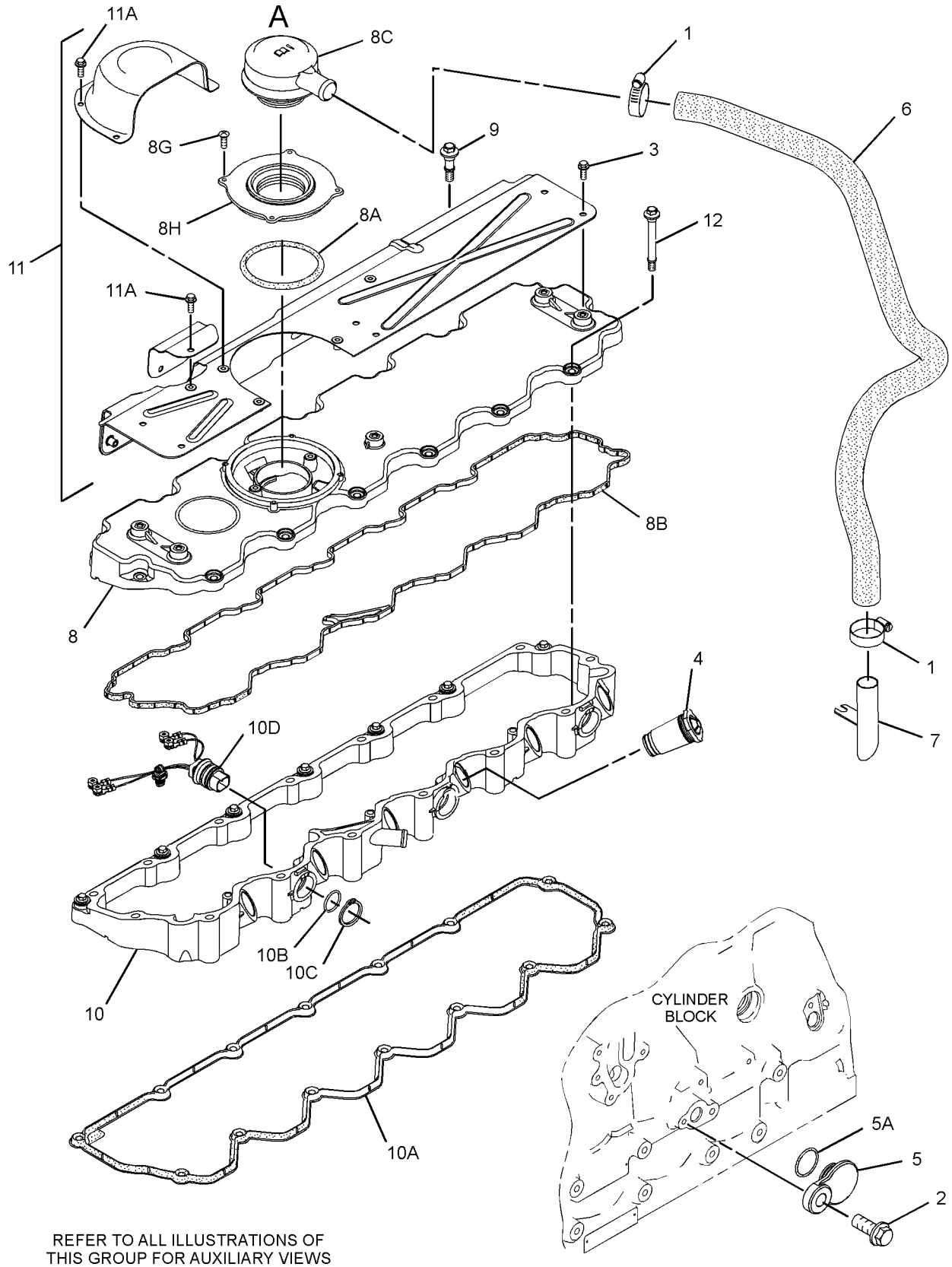

REFER TO ALL ILLUSTRATIONS OF THIS GROUP FOR AUXILIARY VIEWS

GRAPHIC #1 g01416820

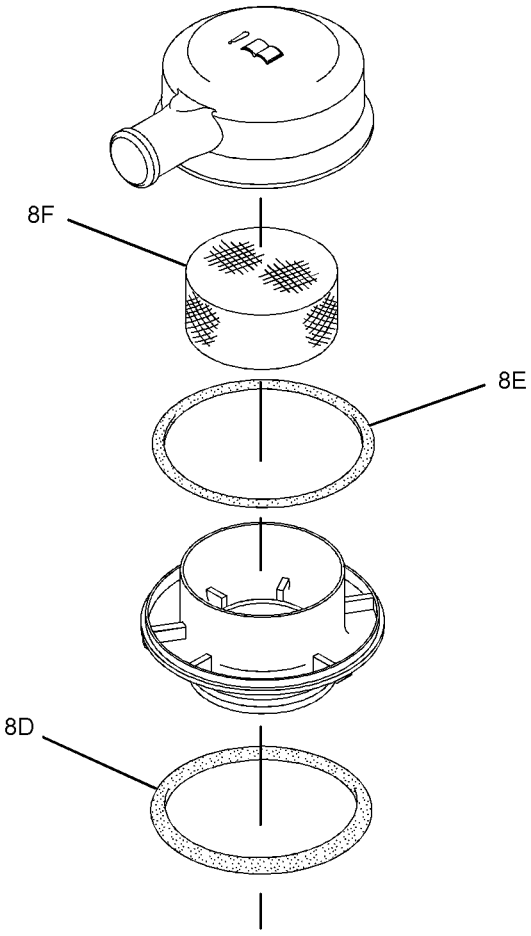

VIEW OF AREA A

GRAPHIC #2 **<END>** g01361202

294-5393 COVER GP-VALVE MECHANISM

S/N: C6E405-UP

PART OF 301-3361 ENGINE AR-PRIMARY

AN ATTACHMENT

SMCS-1107 **i02875892**

NOTE	REF NO	GRAPHIC REF	PART NUMBER	QTY	PART NAME 1 2 3 4 5 6 (PRODUCT LEVEL)	SEE PAGE
	1	1	**103-1066**	2	CLAMP-HOSE	
M	2	1	**6I-0217**	1	BOLT (M8X1.25X20-MM)	
CM	3	1	**100-4841**	5	BOLT (M6X1X10-MM)	
	4	1	**277-5067**	6	SLEEVE	
	5	1	**277-5094**	1	COVER AS	
	5A	1	**277-5096**	1	SEAL-O-RING	
	6	1	**278-4695**	1	HOSE (CRANKCASE BREATHER)	
	7	1	**278-5927**	1	TUBE-BREATHER	
	8	1	**302-7818**	1	COVER AS-CYLINDER HEAD	
	8A	1	**277-5030**	1	SEAL-O-RING	
	8B	1	**278-4693**	1	GASKET-VALVE COVER	
	8C	1	**278-4694**	1	BREATHER AS (CRANKCASE)	
	8D	2	**124-0506**	1	SEAL	
	8E	2	**160-0526**	1	SEAL-O-RING	
	8F	2	**185-3159**	1	ELEMENT (BREATHER) (CRANKCASE)	
	8G	1	**295-1042**	4	SCREW-TAPPING	
	8H	1	**300-3907**	1	ADAPTER	
	9	1	**277-5031**	9	BOLT-SPECIAL (SHOULDER)	
	10	1	**312-3084**	1	COVER AS-CYLINDER HEAD	
	10A	1	**309-6664**	1	GASKET-COVER (VALVE)	
	10B	1	**277-5064**	3	SEAL-O-RING	
	10C	1	**277-5065**	3	CLIP	
	10D	1	**285-1975**	3	HARNESS AS-WIRING (INJECTOR)	
	11	1	**294-5408**	1	COVER AS	
M	11A	1	**100-4841**	5	BOLT (M6X1X10-MM)	
	12	1	**298-4550**	6	BOLT-SPECIAL (SHOULDER)	
F			**2S-3440**	2	CLAMP-HOSE	

C-CHANGE FROM PREVIOUS TYPE
F-NOT SHOWN
M-METRIC PART

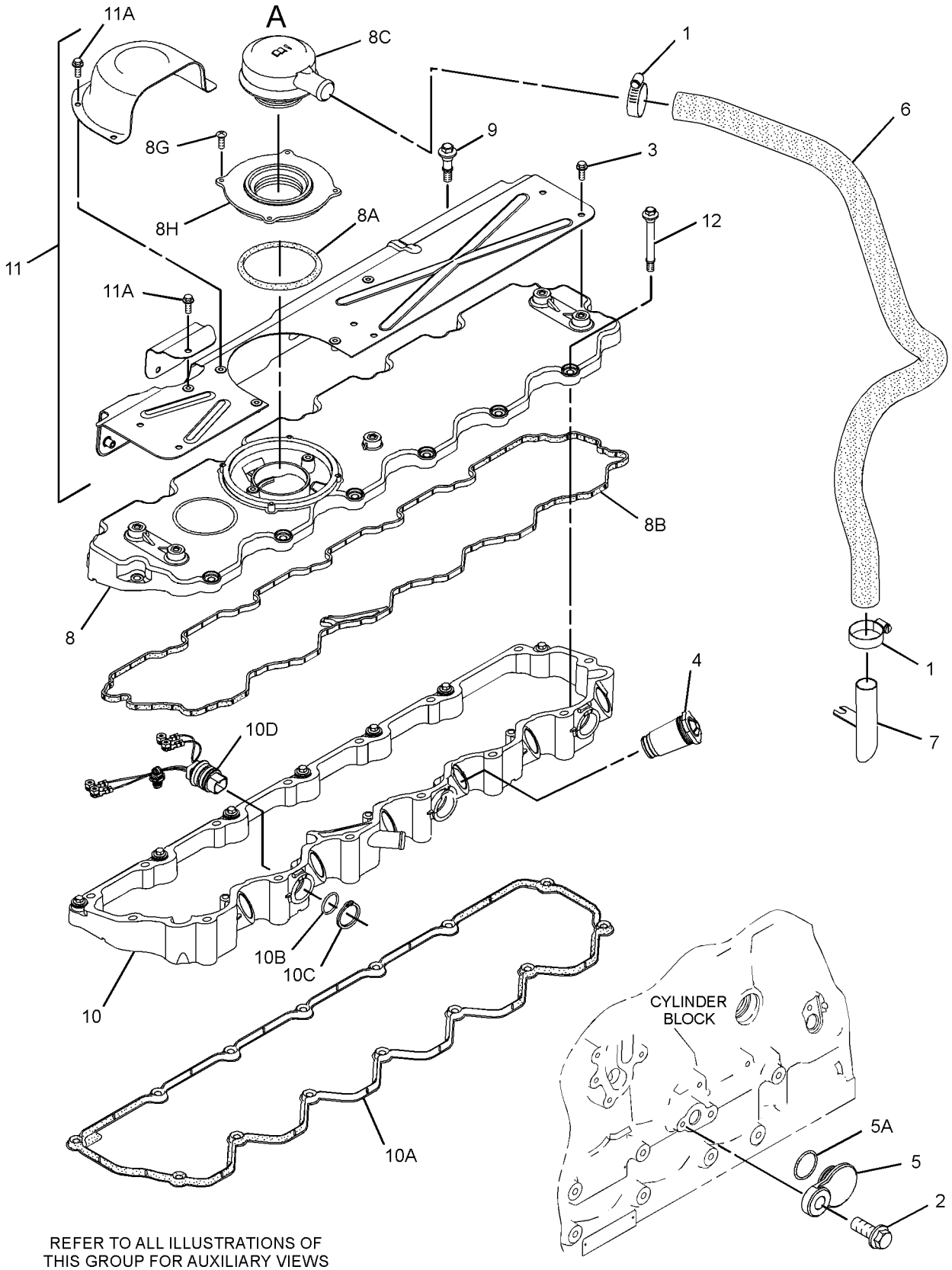

REFER TO ALL ILLUSTRATIONS OF THIS GROUP FOR AUXILIARY VIEWS

GRAPHIC #1

g01416820

294-5393 **COVER GP-VALVE MECHANISM** *(contd.)* **i02875892**

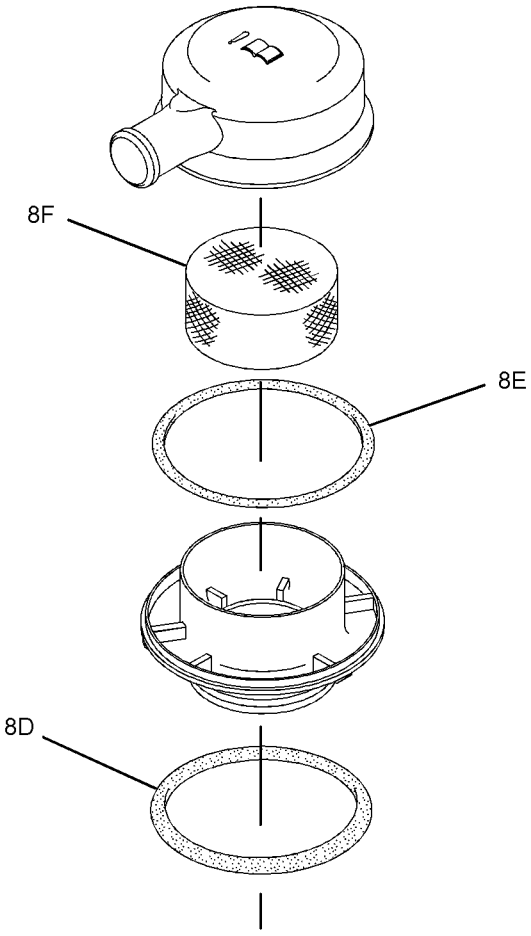

VIEW OF AREA A

GRAPHIC #2 **<END>** g01361202

320-6564 COVER GP-VALVE MECHANISM

S/N: C6E1-UP

PART OF 292-5305 ENGINE AR-PRIMARY

AN ATTACHMENT

SMCS-1107 **i02896876**

NOTE	PART NUMBER	QTY	PART NAME 1 2 3 4 5 6 (PRODUCT LEVEL)	SEE PAGE
	2S-3440	2	CLAMP-HOSE	
M	**6I-0217**	1	BOLT (M8X1.25X20-MM)	
	7C-1281	1	BRACKET	
M	**100-4841**	5	BOLT (M6X1X10-MM)	
	5D-1026	1	CLAMP-HOSE	
M	**101-3895**	2	BOLT (M8X1.25X35-MM)	
	277-5031	9	BOLT-SPECIAL (SHOULDER)	
	277-5067	6	SLEEVE	
	277-5094	1	COVER AS	
	277-5096	1	SEAL-O-RING	
	280-2023	1	HOSE	
	286-0014	1	BASE AS-FILTER	
	286-0015	1	STEM	
	298-4550	6	BOLT-SPECIAL (SHOULDER)	
	311-2825	1	SPACER	
	317-2717	1	BASE GP-VALVE COVER & INJ HARN	
	277-5064	3	SEAL-O-RING	
	277-5065	3	CLIP	
	285-1975	3	HARNESS AS-WIRING (INJECTOR)	
	309-6664	1	GASKET-COVER	
	318-8038	1	COVER GP-CYLINDER HEAD	
	298-4547	1	VALVE-BREATHER (CRANKCASE)	
	298-4549	1	SEAL-O-RING	
	317-3064	1	GASKET-COVER	
	318-1726	4	BOLT	
	320-6551	1	HEATSHIELD	

M-METRIC PART

<END>

276-7392 CRANKSHAFT GP

S/N: C6E1-UP
PART OF 292-5305 ENGINE AR-PRIMARY
AN ATTACHMENT

SMCS-1202 **i02849552**

NOTE	REF NO	GRAPHIC REF	PART NUMBER	QTY	PART NAME 1 2 3 4 5 6 (PRODUCT LEVEL)	SEE PAGE
	1	1	**276-7387**	1	CRANKSHAFT AS	
	1A	1	**1B-8736**	1	KEY-WOODRUFF	
	1B	1	**225-8839**	1	DOWEL	
	1C	1	**276-7388**	1	KIT-BEARING (CRANKSHAFT, MAIN)	
	1D	1	**276-7389**	1	KIT-BEARING (CRANKSHAFT, CONNECTING ROD)	
	1E	1	**276-7390**	2	WASHER-THRUST	
	1F	1	**276-7391**	1	GEAR (34-TEETH)	
	2	1	**276-7393**	1	RING-TIMING	
	3	1	**276-7394**	3	BOLT	

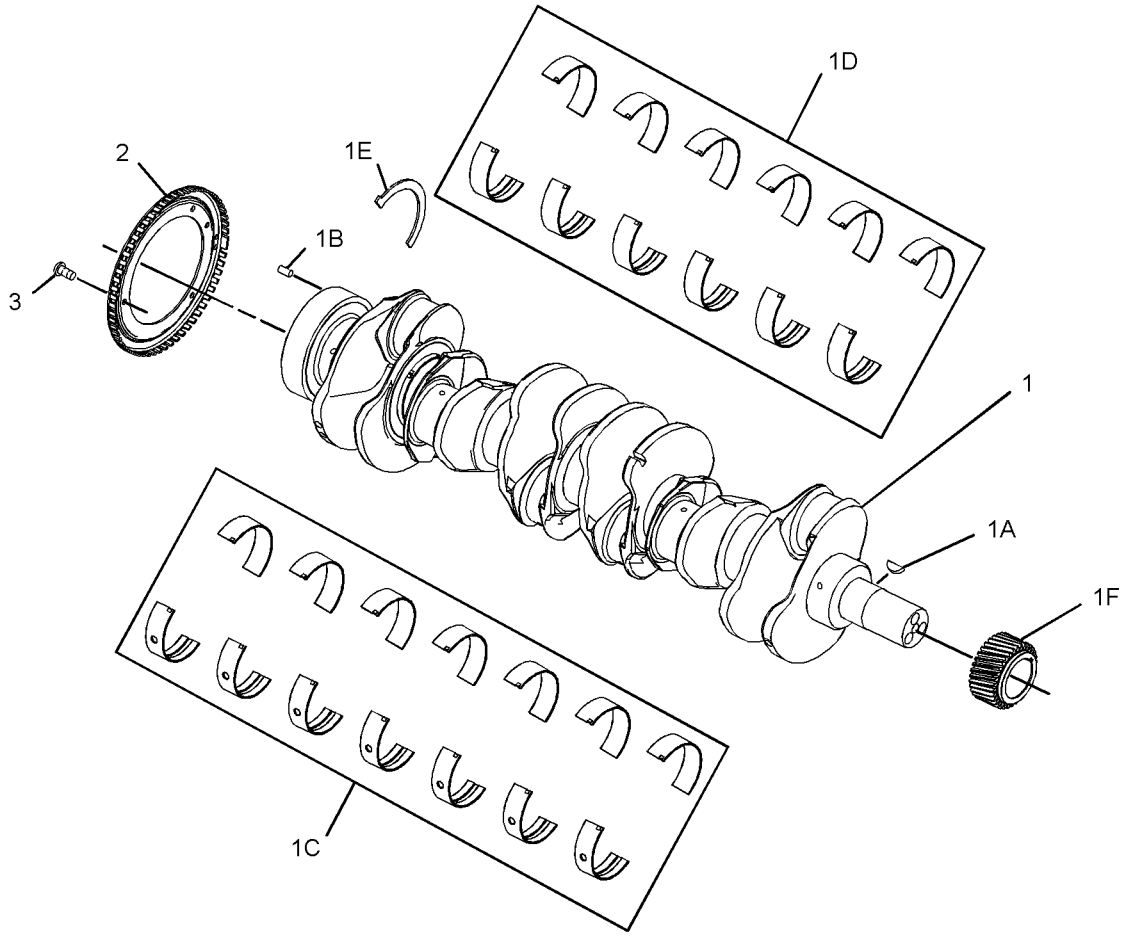

GRAPHIC #1 **<END>** g01358997

292-5859 CRANKSHAFT GP

S/N: C6E1-UP
PART OF 301-3361 ENGINE AR-PRIMARY
AN ATTACHMENT

SMCS-1202 **i02849551**

NOTE	REF NO	GRAPHIC REF	PART NUMBER	QTY	PART NAME 1 2 3 4 5 6 (PRODUCT LEVEL)	SEE PAGE
	1	1	**276-7387**	1	CRANKSHAFT AS	
	1A	1	**1B-8736**	1	KEY-WOODRUFF	
	1B	1	**225-8839**	1	DOWEL	
	1C	1	**276-7388**	1	KIT-BEARING (CRANKSHAFT, MAIN)	
	1D	1	**276-7389**	1	KIT-BEARING (CRANKSHAFT, CONNECTING ROD)	
	1E	1	**276-7390**	1	WASHER-THRUST	
	1F	1	**276-7391**	1	GEAR (34-TEETH)	
	2	1	**276-7393**	1	RING-TIMING	
	3	1	**276-7394**	3	BOLT	

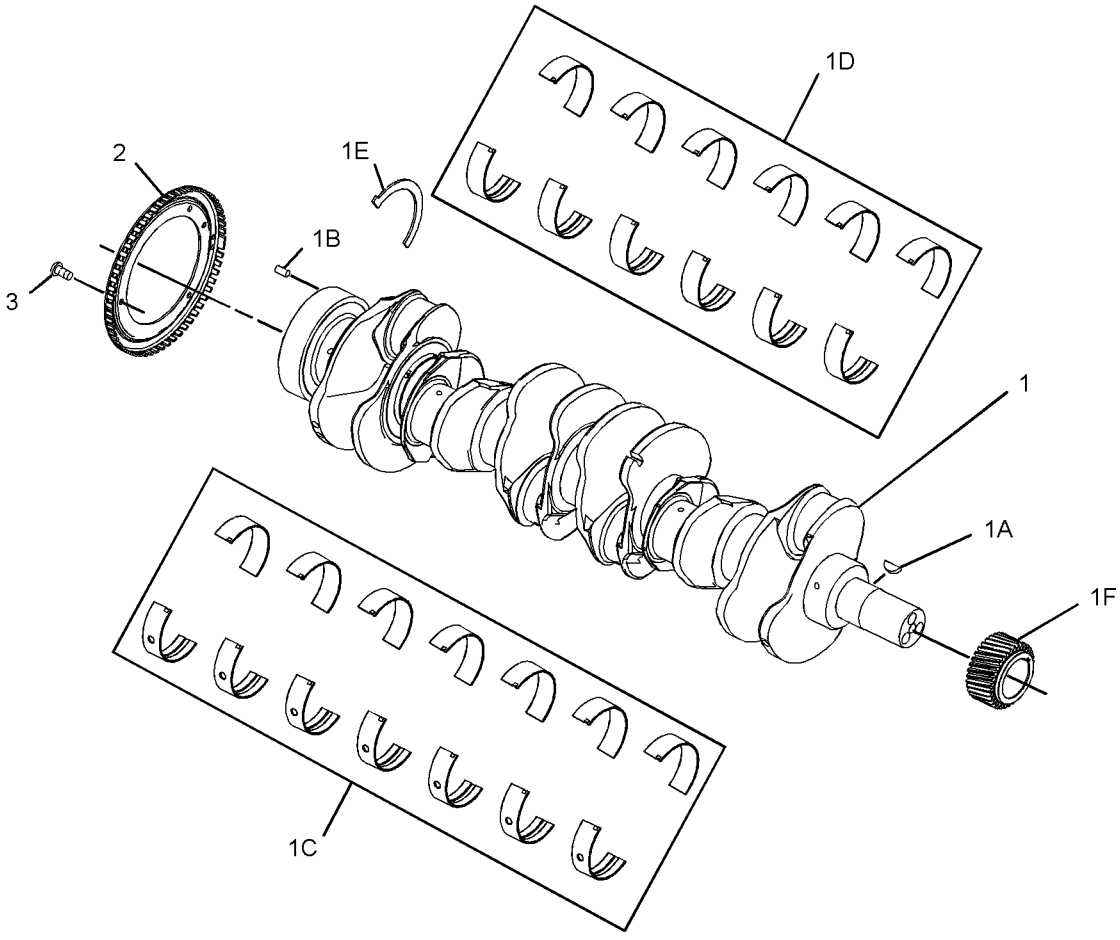

GRAPHIC #1 **<END>** g01358997

306-6845 CYLINDER BLOCK AS

S/N: C6E1-UP

PART OF 292-5856 CYLINDER BLOCK GP

AN ATTACHMENT

SMCS-1201 **i02837094**

NOTE	REF NO	GRAPHIC REF	PART NUMBER	QTY	PART NAME 1 2 3 4 5 6 (PRODUCT LEVEL)	SEE PAGE
	1	1	**2B-0858**	1	PLUG-PIPE	
	2	1	**067-6043**	5	PLUG-SIDE	
M	3	1	**100-4841**	6	BOLT (M6X1X10-MM)	
	4	1	**185-0884**	2	DOWEL	
	5	1	**225-8858**	1	PLUG	
	6	1	**232-1322**	1	PLUG	
	7	1	**232-7596**	1	PLUG	
	8	1	**232-7597**	2	PLUG	
	9	1	**232-7599**	2	PLUG	
	10	1	**276-5600**	14	BOLT-SPECIAL (BEARING CAP)	
	11	1	**276-5601**	1	BUSHING-CAMSHAFT	
	12	1	**276-5602**	6	PLUG-CORE	
	13	1	**276-5603**	1	SEAL-O-RING	
	14	1	**276-5604**	1	DOWEL	
	15	1	**276-5605**	6	JET AS-PISTON COOLING	

M-METRIC PART

306-6845 **CYLINDER BLOCK AS** *(contd.)* **i02837094**

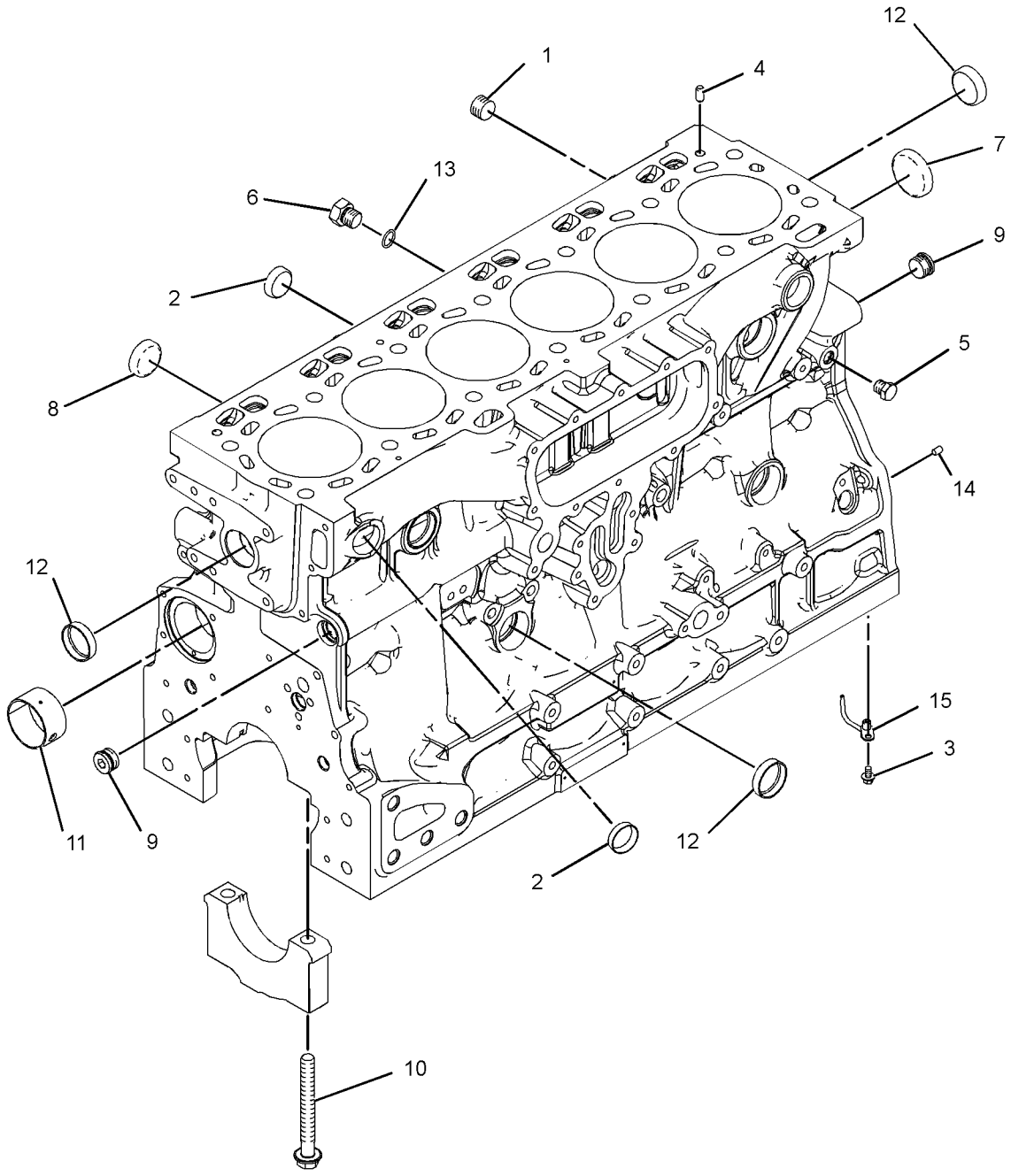

GRAPHIC #1 **<END>** g01339916

292-5856 CYLINDER BLOCK GP

S/N: C6E1-UP

PART OF 292-5305, 301-3361 ENGINE AR-PRIMARY

AN ATTACHMENT

SMCS-1201 **i02836822**

NOTE	REF NO	GRAPHIC REF	PART NUMBER	QTY	PART NAME 1 2 3 4 5 6 (PRODUCT LEVEL)	SEE PAGE
M	1	1	**209-9219**	8	BOLT (M8X1.25X16-MM)	
	2	1	**292-0886**	1	HOUSING-REAR	
Y	3	1	**306-6845**	1	CYLINDER BLOCK AS	29

M-METRIC PART
Y-SEPARATE ILLUSTRATION

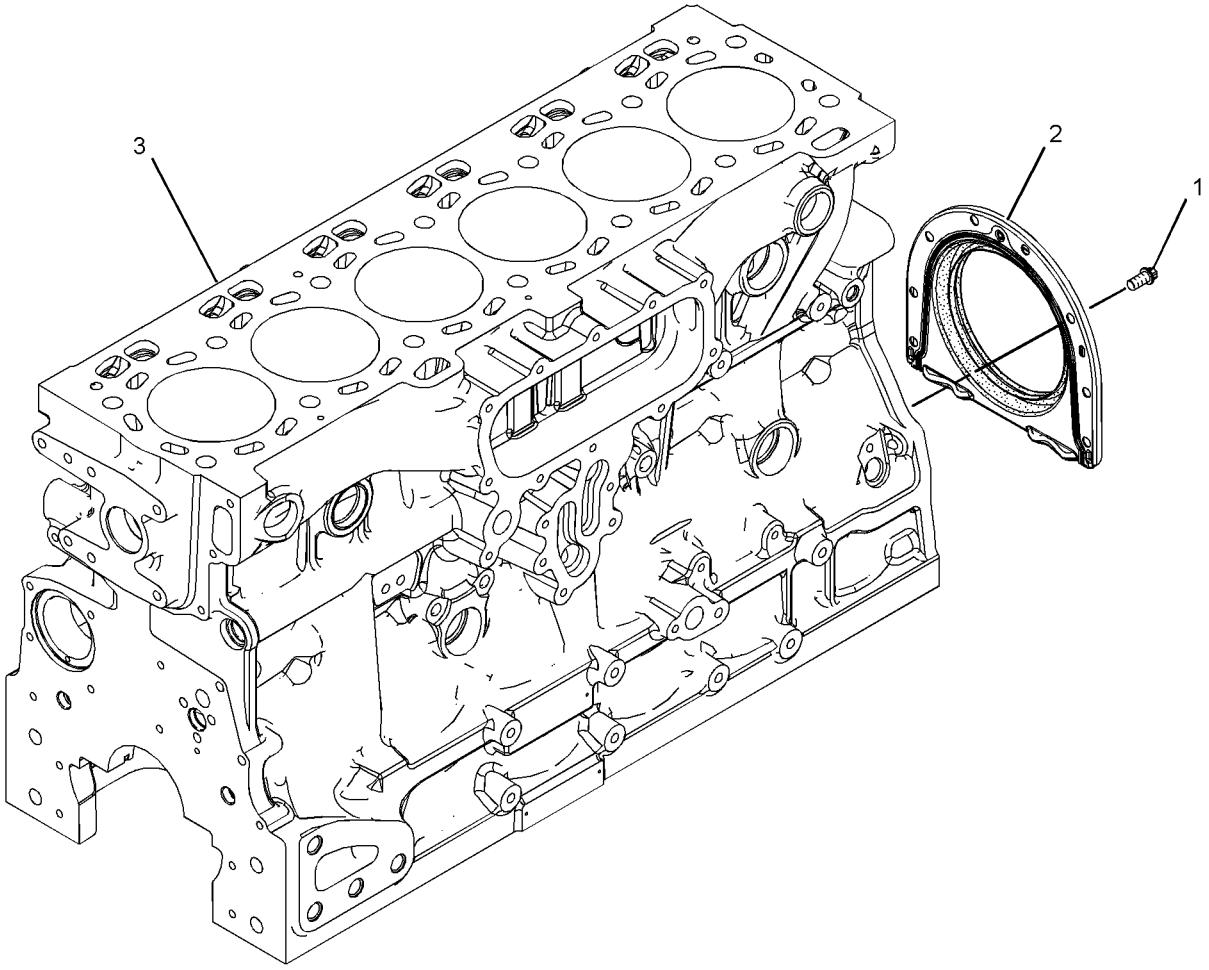

GRAPHIC #1 **<END>** g01355960

BASIC ENGINE

276-8115 CYLINDER HEAD AS

S/N: C6E1-UP

PART OF 276-8135 CYLINDER HEAD GP

AN ATTACHMENT

SMCS-1100, 1101 **i02837085**

NOTE	REF NO	GRAPHIC REF	PART NUMBER	QTY	PART NAME 1 2 3 4 5 6 (PRODUCT LEVEL)	SEE PAGE
	1	1	**2B-0858**	2	PLUG-PIPE	
	2	1	**199-9751**	1	SEAL-O-RING	
	3	1	**232-1322**	1	PLUG	
	4	1	**276-8116**	6	PLUG-CORE	
	5	1	**276-8117**	13	PLUG-CORE	
	6	1	**295-6661**	1	PLUG	
	7	1	**276-8122**	12	VALVE-INLET	
	8	1	**276-8123**	48	RETAINER	
	9	1	**276-8124**	12	VALVE-EXHAUST	
	10	1	**299-5511**	24	SEAL-VALVE STEM	
	11	1	**276-8132**	24	SPRING-VALVE	
	12	1	**276-8133**	24	CAP-VALVE	

276-8115 **CYLINDER HEAD AS** *(contd.)* **i02837085**

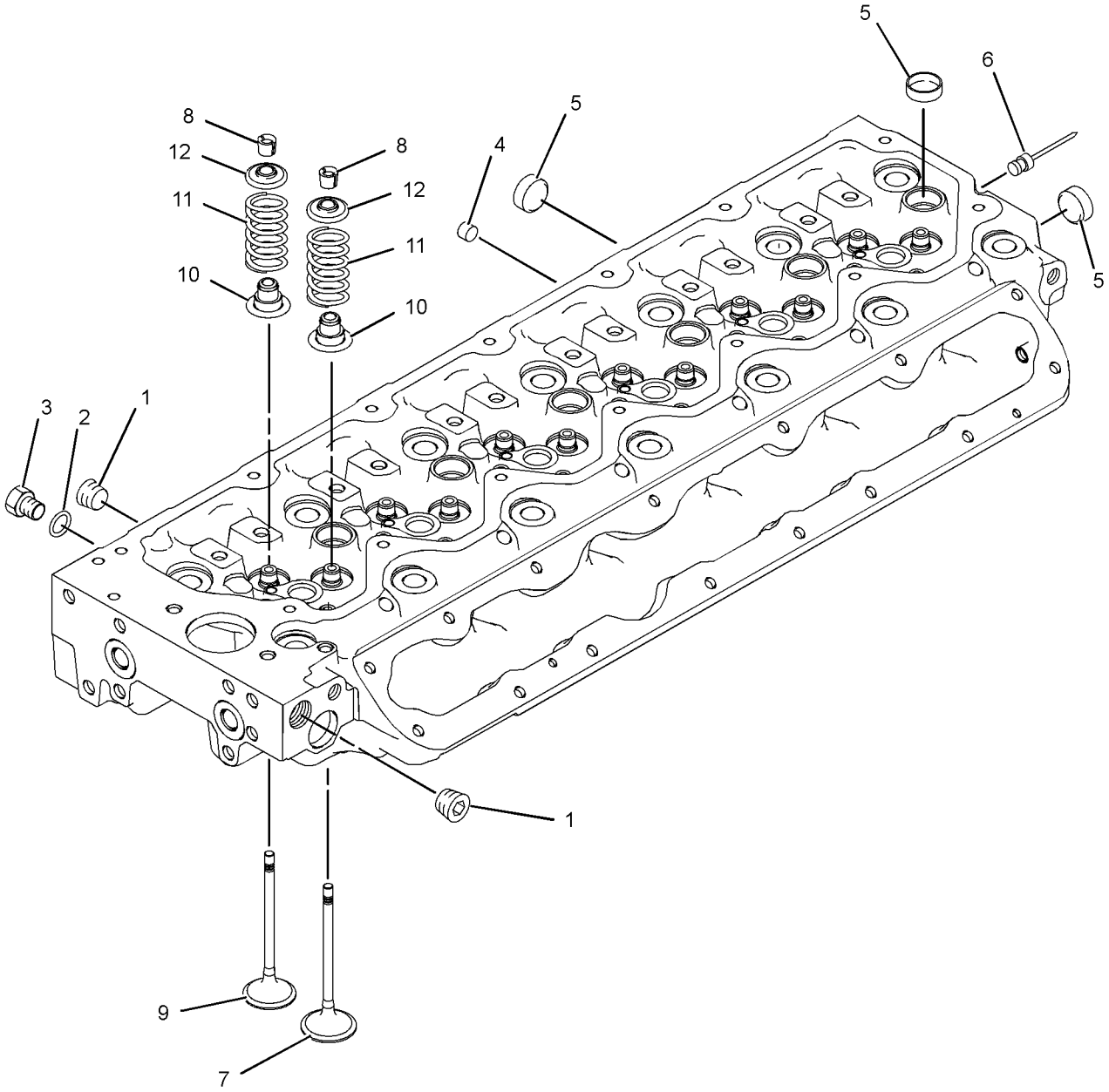

GRAPHIC #1 **<END>** g01235535

BASIC ENGINE

309-6663 CYLINDER HEAD AS

S/N: C6E1-UP

PART OF 292-5860 CYLINDER HEAD GP

AN ATTACHMENT

SMCS-1100, 1101 **i02837140**

NOTE	REF NO	GRAPHIC REF	PART NUMBER	QTY	PART NAME 1 2 3 4 5 6 (PRODUCT LEVEL)	SEE PAGE
	1	1	**2B-0858**	2	PLUG-PIPE	
	2	1	**199-9751**	1	SEAL-O-RING	
	3	1	**232-1322**	1	PLUG	
	4	1	**276-8116**	6	PLUG-CORE	
	5	1	**276-8117**	13	PLUG-CORE	
	6	1	**276-8123**	48	RETAINER	
	7	1	**276-8124**	12	VALVE-EXHAUST	
	8	1	**276-8132**	24	SPRING-VALVE	
	9	1	**276-8133**	24	CAP-VALVE	
	10	1	**295-6661**	1	PLUG	
	11	1	**299-5511**	24	SEAL-VALVE STEM	
	12	1	**309-6678**	12	VALVE-INLET	

309-6663 **CYLINDER HEAD AS** *(contd.)* **i02837140**

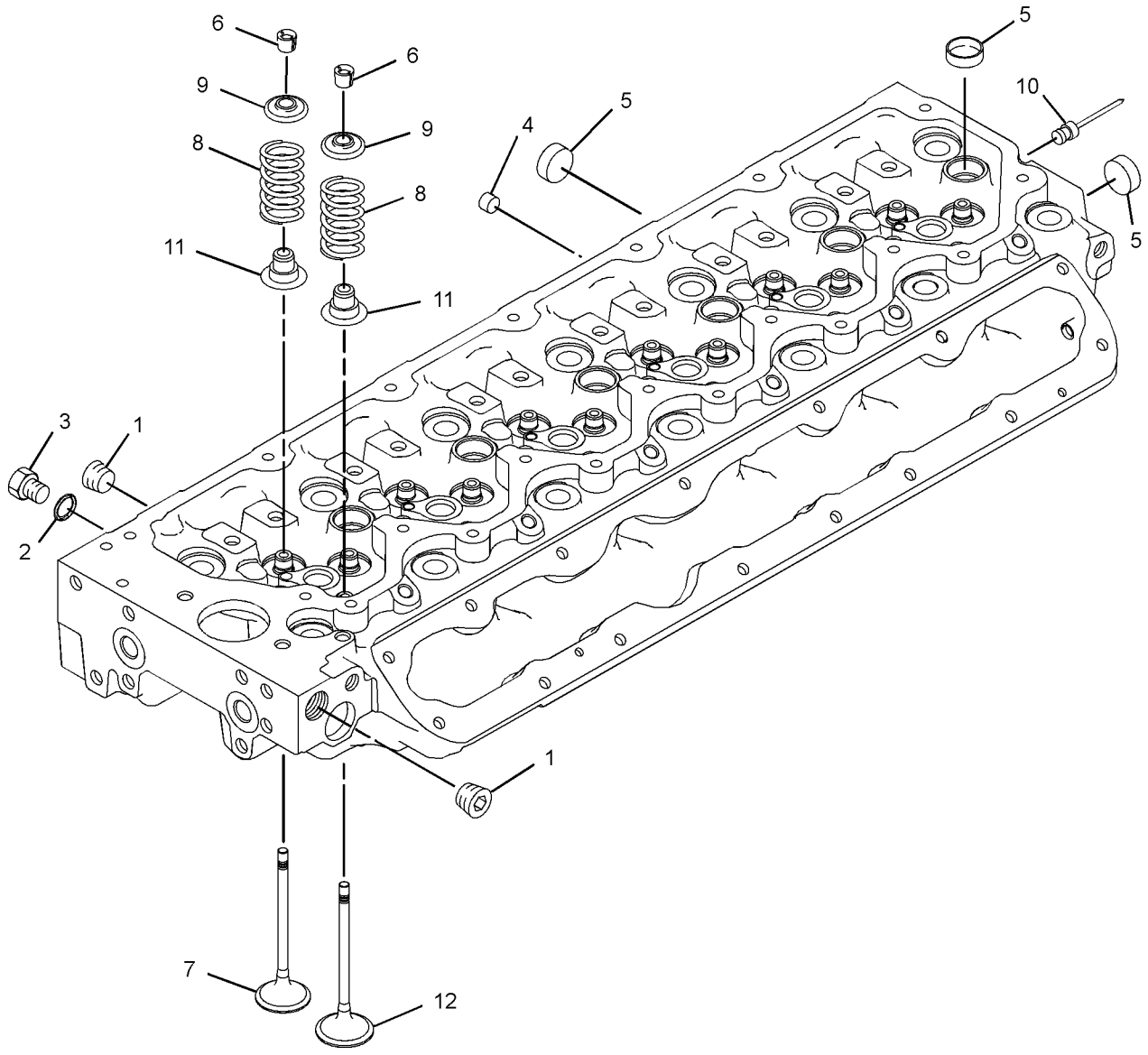

GRAPHIC #1 **<END>** g01400657

276-8135 CYLINDER HEAD GP

S/N: C6E1-UP
PART OF 292-5305 ENGINE AR-PRIMARY
AN ATTACHMENT

SMCS-1100 **i02837361**

NOTE	REF NO	GRAPHIC REF	PART NUMBER	QTY	PART NAME 1 2 3 4 5 6 (PRODUCT LEVEL)	SEE PAGE
	1	1	**176-3141**	1	GASKET-HEAD	
Y	2	1	**276-8115**	1	CYLINDER HEAD AS	32
	3	1	**276-8134**	14	BOLT-SPECIAL (CYLINDER HEAD)	

Y-SEPARATE ILLUSTRATION

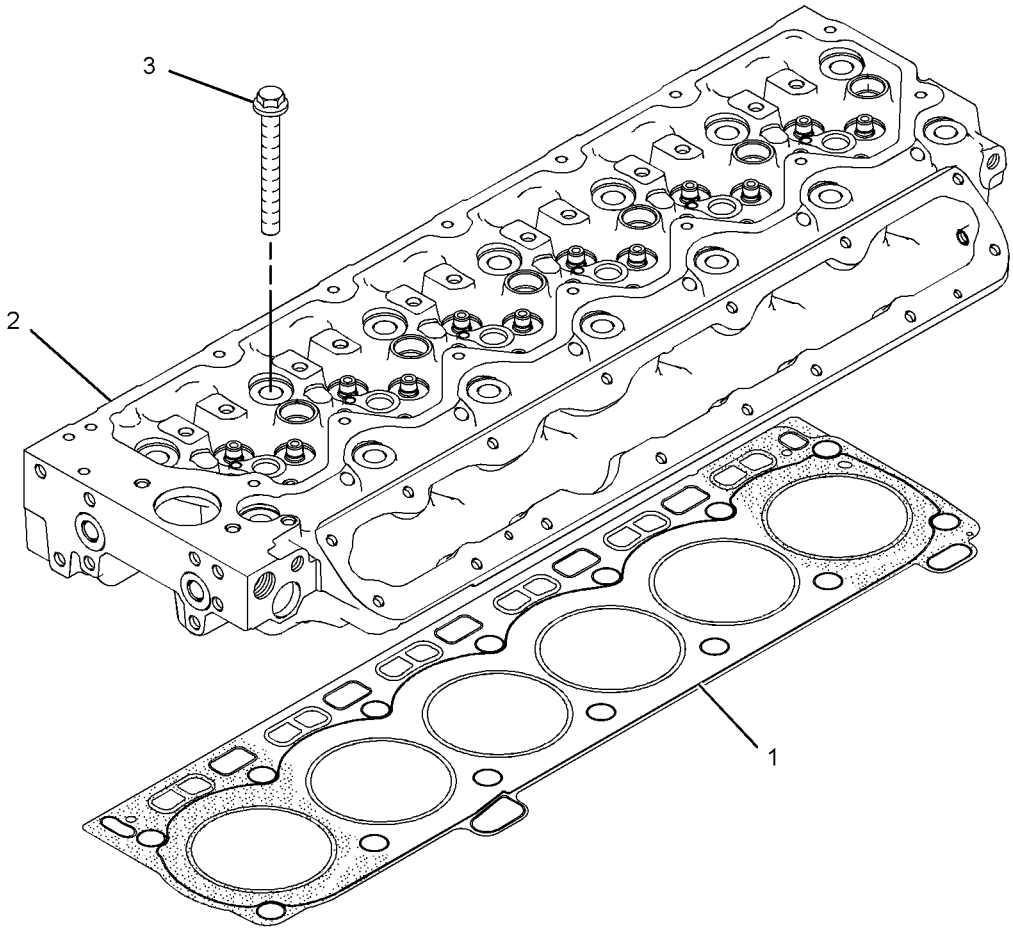

GRAPHIC #1 **<END>** g01265477

292-5860 CYLINDER HEAD GP

S/N: C6E1-UP
PART OF 301-3361 ENGINE AR-PRIMARY
AN ATTACHMENT

SMCS-1100 **i02837135**

NOTE	REF NO	GRAPHIC REF	PART NUMBER	QTY	PART NAME 1 2 3 4 5 6 (PRODUCT LEVEL)	SEE PAGE
	1	1	**176-3141**	1	GASKET-HEAD	
Y	2	1	**309-6663**	1	CYLINDER HEAD AS	34
	3	1	**276-8134**	14	BOLT-SPECIAL (CYLINDER HEAD)	

Y-SEPARATE ILLUSTRATION

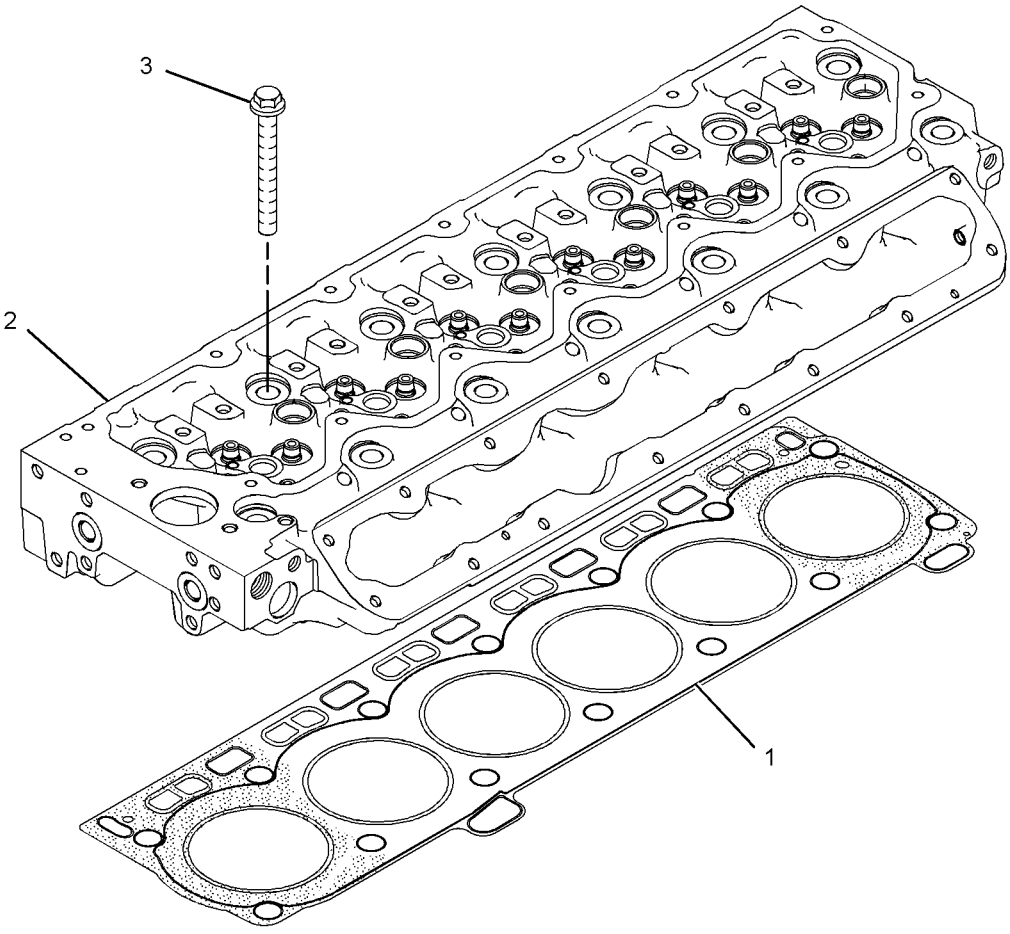

GRAPHIC #1 **<END>** g01265477

257-6549 DRAIN GP-ENGINE OIL

S/N: BYD1-UP; FTD1-UP

PART OF 289-8884 INSTALLATION AR-ENGINE

SMCS-1302 **i02807332**

NOTE	REF NO	GRAPHIC REF	PART NUMBER	QTY	PART NAME 1 2 3 4 5 6 (PRODUCT LEVEL)	SEE PAGE
	1	1	**2P-4173**	1	COCK-DRAIN	
	2	1	**5D-1026**	1	CLAMP-HOSE	
	3	1	**6V-7238**	1	VALVE-SHUTOFF	
	4	1	**8C-5225**	1	PLUG-SEAL	
	5	1	**157-0670**	1	CAP-DUST	
	6	1	**159-5255**	1	ADAPTER	
	7	1	**3J-7354**	1	SEAL-O-RING	
	8	1	**3K-0360**	1	SEAL-O-RING	
	9	1	**5P-6718**	1	SEAL-O-RING	
	10	1	**5P-7814**	1	SEAL-O-RING	
	11	1	**8C-3446**	1	VALVE-FLUID SAMPLING	
	12	1	**8T-9357**	1	ADAPTER	
	13	1	**5P-0743**		HOSE (30-CM)	

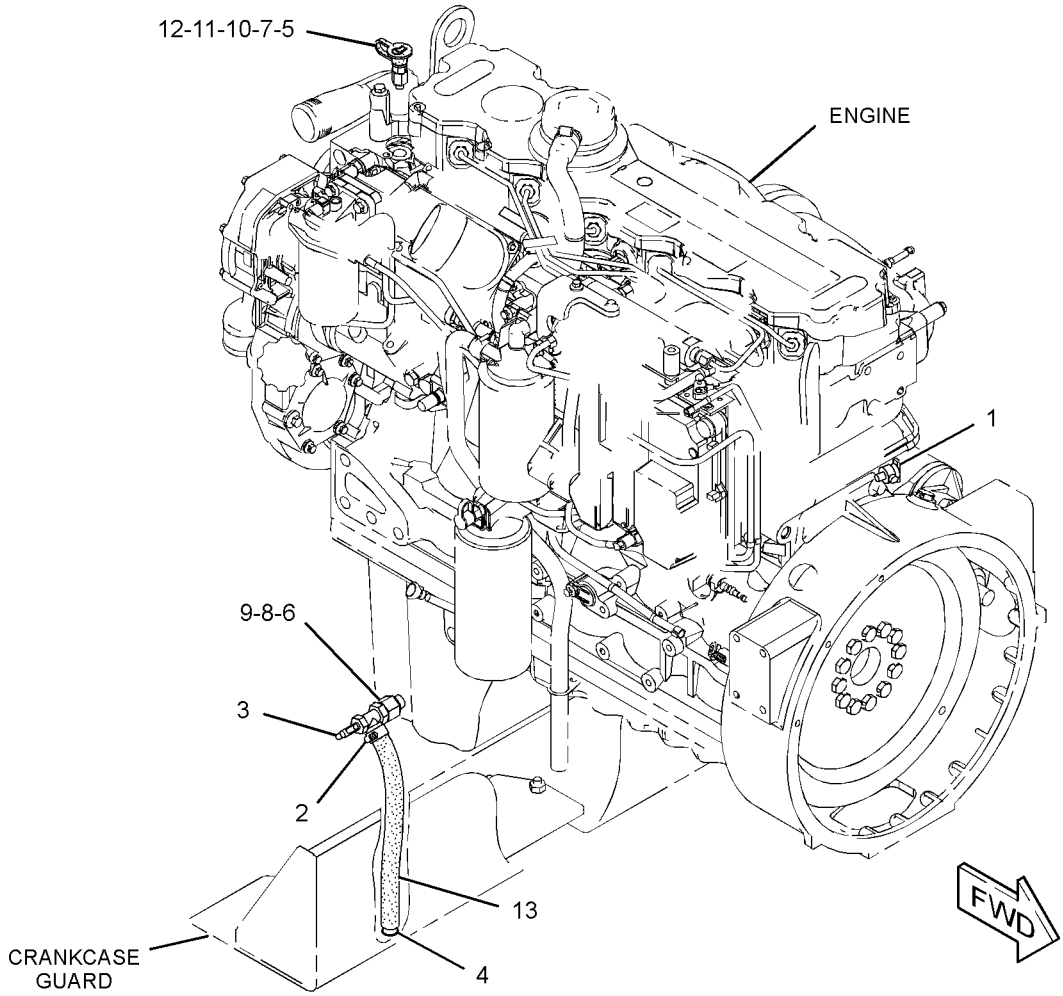

GRAPHIC #1 **<END>** g01405137

291-2513 DRAIN GP-ENGINE OIL

S/N: C6E1-UP

PART OF 292-5305, 301-3361 ENGINE AR-PRIMARY

AN ATTACHMENT

SMCS-1302 **i02836852**

NOTE	REF NO	GRAPHIC REF	PART NUMBER	QTY	PART NAME 1 2 3 4 5 6 (PRODUCT LEVEL)	SEE PAGE
	1	1	**275-9883**	1	SEAL	
	2	1	**7C-0351**	1	PLUG-DRAIN (ENGINE OIL)	

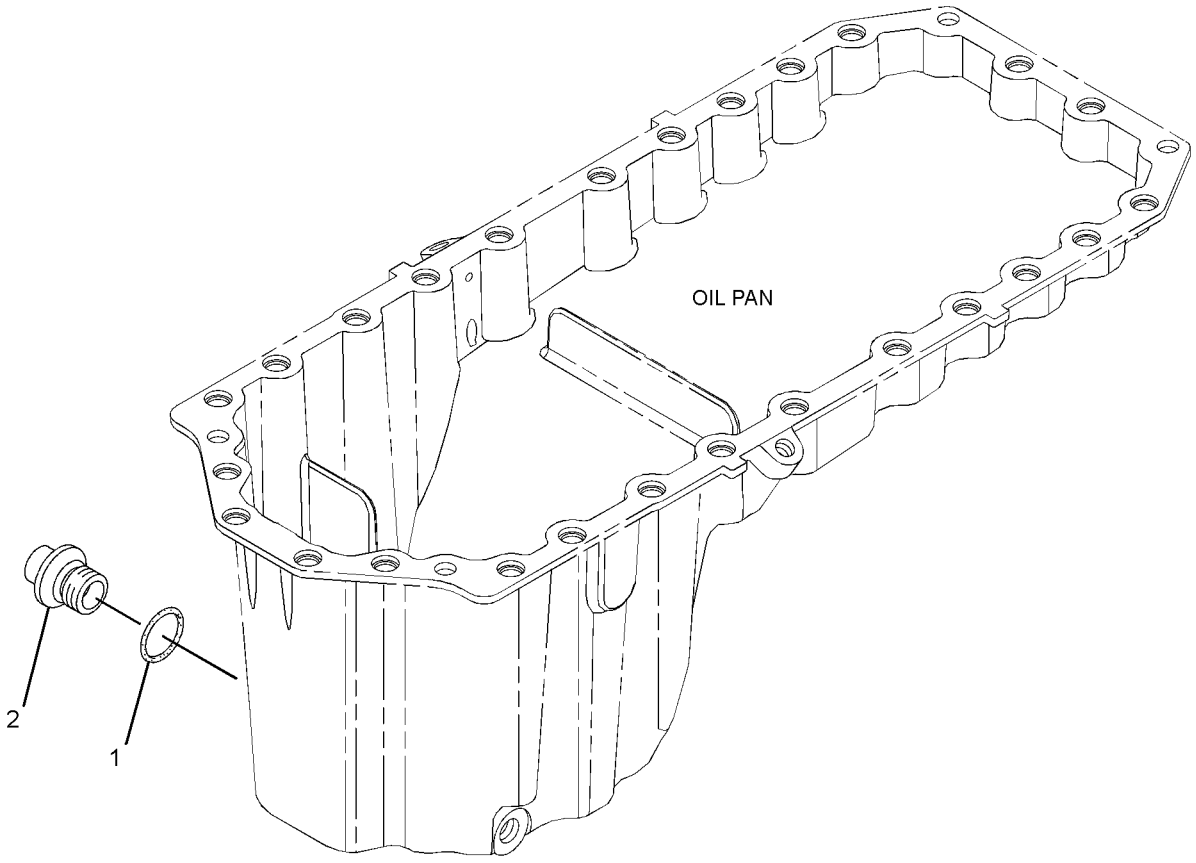

GRAPHIC #1 **<END>** g01266337

BASIC ENGINE

291-2515 DRIVE GP-FAN

S/N: C6E1-UP
PART OF 292-5305, 301-3361 ENGINE AR-PRIMARY
AN ATTACHMENT

SMCS-1359 **i02836878**

NOTE	REF NO	GRAPHIC REF	PART NUMBER	QTY	PART NAME 1 2 3 4 5 6 (PRODUCT LEVEL)	SEE PAGE
	1	1	**289-8336**	1	HOUSING AS	
	2	1	**111-0859**	4	BOLT (M10X1.5X35-MM)	
	3	1	**284-1026**	1	PULLEY	

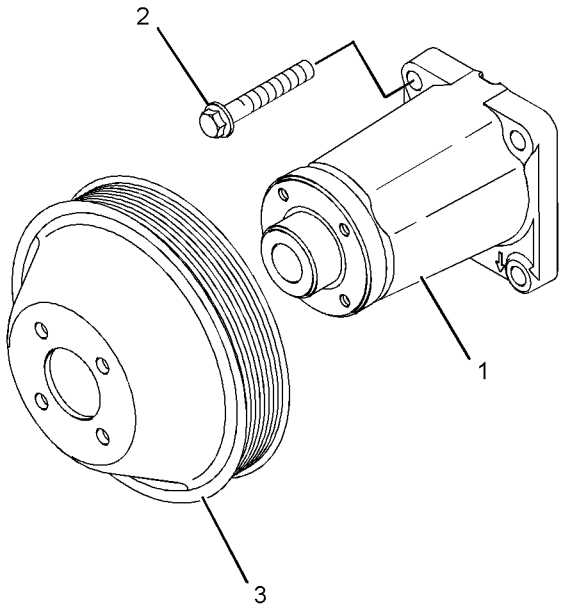

GRAPHIC #1 **<END>** g01289391

297-5184 DRIVE GP-FAN

S/N: C6E1-UP

PART OF 301-3361 ENGINE AR-PRIMARY

AN ATTACHMENT

SMCS-1359 **i02836883**

NOTE	REF NO	GRAPHIC REF	PART NUMBER	QTY	PART NAME 1 2 3 4 5 6 (PRODUCT LEVEL)	SEE PAGE
	1	1	**179-7071**	4	BOLT (M8X1.25X20-MM)	

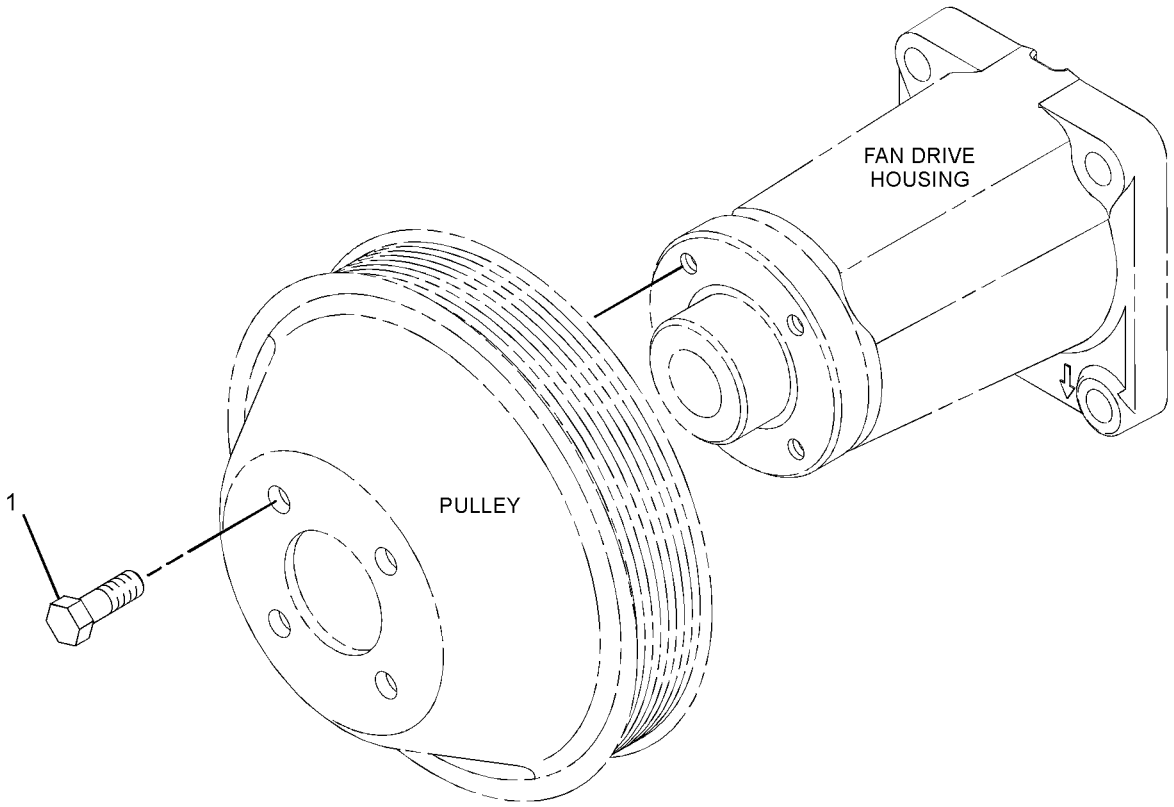

GRAPHIC #1 **<END>** g01340272

286-7834 FLYWHEEL GP

S/N: C6E1-UP
PART OF 292-5305, 301-3361 ENGINE AR-PRIMARY
AN ATTACHMENT

SMCS-1156 **i02836897**

NOTE	REF NO	GRAPHIC REF	PART NUMBER	QTY	PART NAME 1 2 3 4 5 6 (PRODUCT LEVEL)	SEE PAGE
	1	1	**4K-7502**	12	BOLT (1/2-20X1.375-IN)	
	2	1	**113-7543**	1	FLYWHEEL AS	
	2A	1	**033-7687**	1	RING-STARTING MOTOR (126-TEETH)	
	3	1	**5P-8245**	12	WASHER-HARD (13.5X25.5X3-MM THK)	

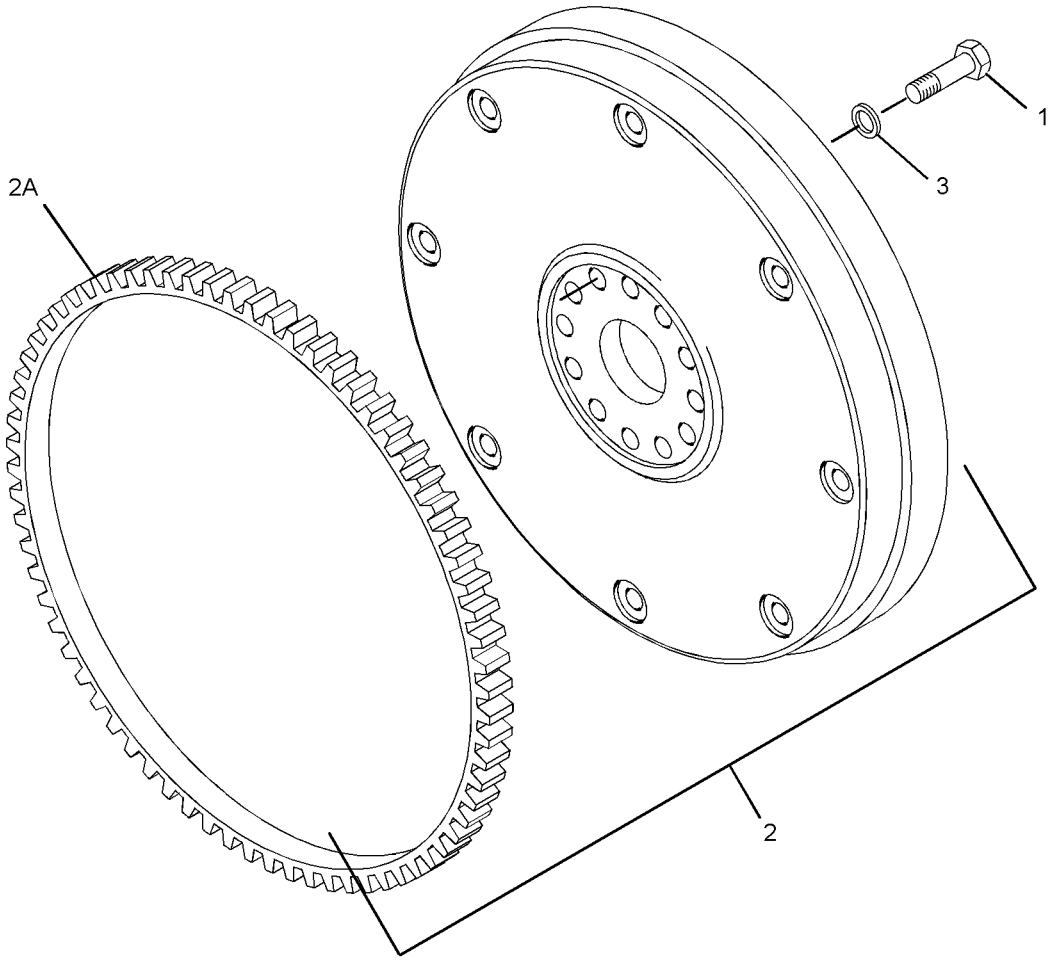

GRAPHIC #1 **<END>** g01276001

281-6332 HOUSING GP-FLYWHEEL

S/N: C6E1-UP

PART OF 292-5305, 301-3361 ENGINE AR-PRIMARY

AN ATTACHMENT

SMCS-1157 **i02836901**

NOTE	REF NO	GRAPHIC REF	PART NUMBER	QTY	PART NAME 1 2 3 4 5 6 (PRODUCT LEVEL)	SEE PAGE
	1	1	**281-6331**	1	HOUSING-FLYWHEEL	
M	2	1	**121-0883**	6	BOLT (M10X1.5X30-MM)	
M	3	1	**6I-0423**	2	BOLT (M12X1.75X30-MM)	
	4	1	**102-1957**	1	PLATE	
	5	1	**6I-0631**	2	BOLT (M6X1X12-MM)	
	6	1	**277-0118**	1	SEAL	
	7	1	**287-8597**	2	DOWEL	
	8	1	**6I-0847**	1	PLUG	
	9	1	**199-3108**	1	PLUG	
	10	1	**199-3109**	1	PLUG	

M-METRIC PART

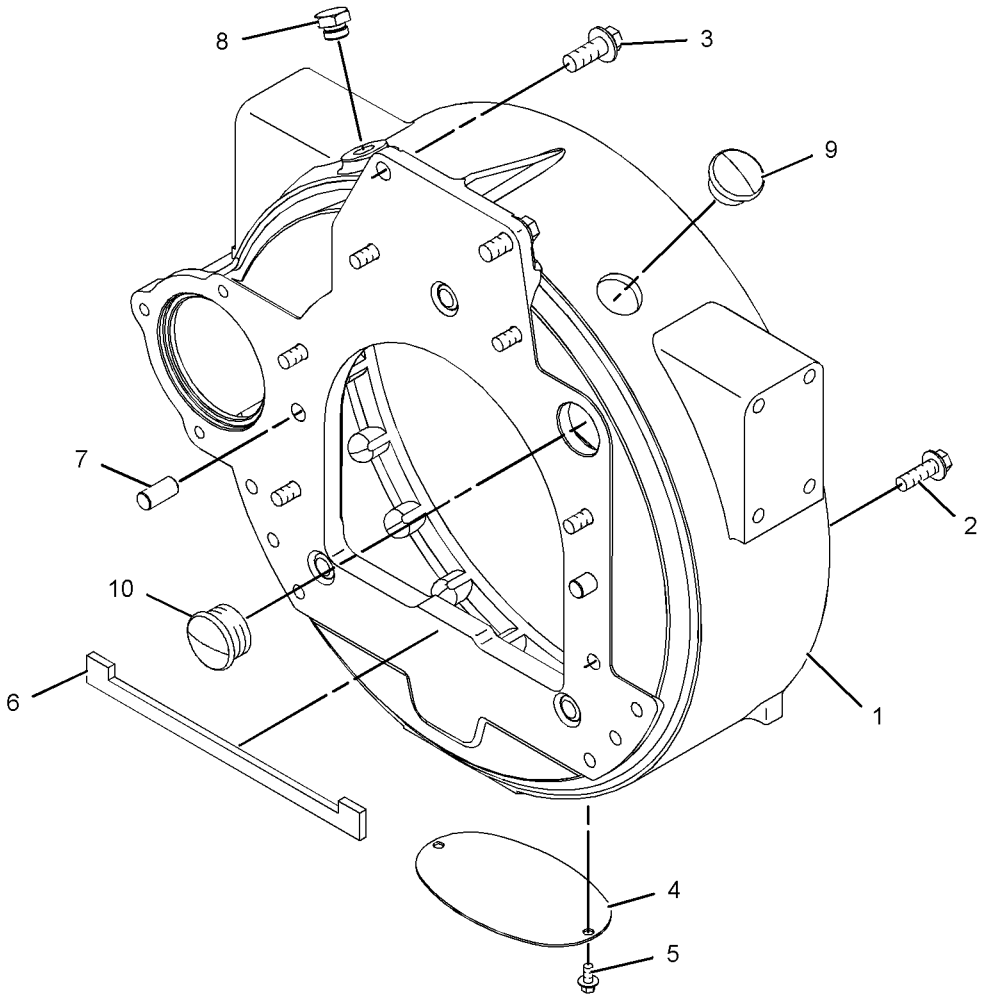

GRAPHIC #1 **<END>** g01218436

BASIC ENGINE

277-3014 HOUSING GP-FRONT

S/N: C6E1-UP

PART OF 292-5305, 301-3361 ENGINE AR-PRIMARY

AN ATTACHMENT

SMCS-1151, 1162, 1206 **i02839383**

NOTE	REF NO	GRAPHIC REF	PART NUMBER	QTY	PART NAME 1 2 3 4 5 6 (PRODUCT LEVEL)	SEE PAGE
	1	1	**293-1874**	1	HOUSING-FRONT	
	2	1	**277-3012**	1	GASKET-COVER	
	3	1	**277-3013**	1	SEAL	
M	4	1	**6I-0217**	6	BOLT (M8X1.25X20-MM)	
M	5	1	**6I-0645**	4	BOLT (M8X1.25X25-MM)	
M	6	1	**101-3895**	2	BOLT (M8X1.25X35-MM)	
C	7	1	**251-4336**	1	GEAR AS-IDLER (73-TEETH)	
CM	8	1	**6I-0650**	3	BOLT (M10X1.5X65-MM)	
	9	1	**216-8634**	1	GEAR-CAMSHAFT (68-TEETH)	
	10	1	**1B-8736**	1	KEY-WOODRUFF	
	11	1	**133-1011**	1	WASHER	
	12	1	**067-6179**	1	DOWEL	
	13	1	**232-3666**	1	WASHER-THRUST	
M	14	1	**124-3815**	9	BOLT (M8X16X1.25-MM)	
M	15	1	**100-3751**	5	BOLT (M8X1.25X65-MM)	
M	16	1	**100-4830**	1	BOLT (M10X1.5X20-MM)	
	17	1	**7C-4616**	1	BOLT (M12X1.75X45-MM)	
C	18	1	**282-9861**	1	HUB-IDLER GEAR	
C	19	1	**295-1711**	1	PLATE-RETAINING	
	20	1	**226-8767**	1	COVER AS-FRONT	
	20A	1	**226-8766**	1	GASKET-COVER	

C-CHANGE FROM PREVIOUS TYPE
M-METRIC PART

277-3014 **HOUSING GP-FRONT** *(contd.)* **i02839383**

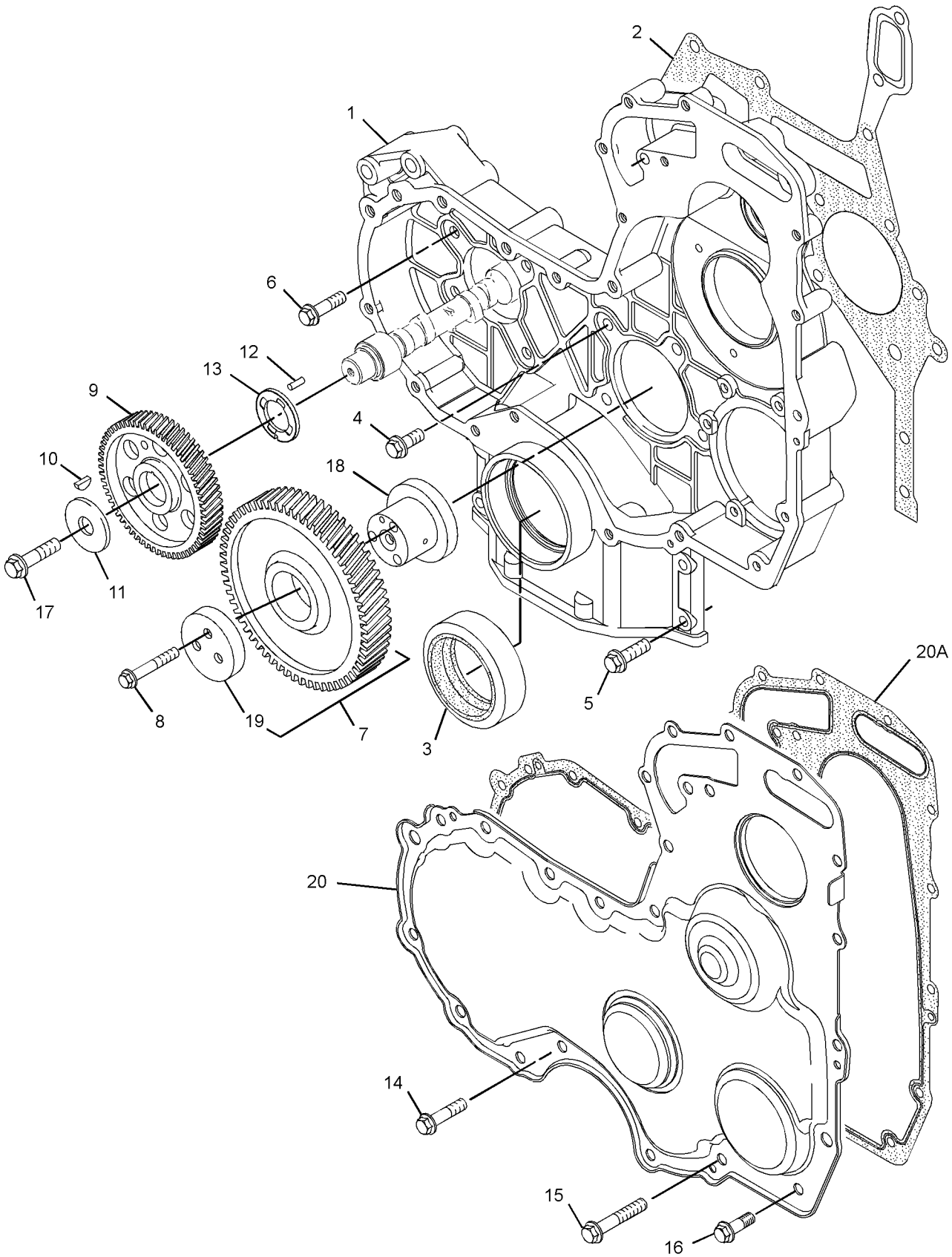

GRAPHIC #1 **<END>** g01379940

279-9653 LIFTING GP-ENGINE

S/N: C6E1-UP
PART OF 292-5305, 301-3361 ENGINE AR-PRIMARY
AN ATTACHMENT

SMCS-1122 **i02836906**

NOTE	REF NO	GRAPHIC REF	PART NUMBER	QTY	PART NAME 1 2 3 4 5 6 (PRODUCT LEVEL)	SEE PAGE
	1	1	**279-9651**	1	PLATE-LIFTING	
M	2	1	**6I-0654**	4	BOLT (M10X1.5X25-MM)	
	3	1	**279-9652**	1	PLATE-LIFTING	

M-METRIC PART

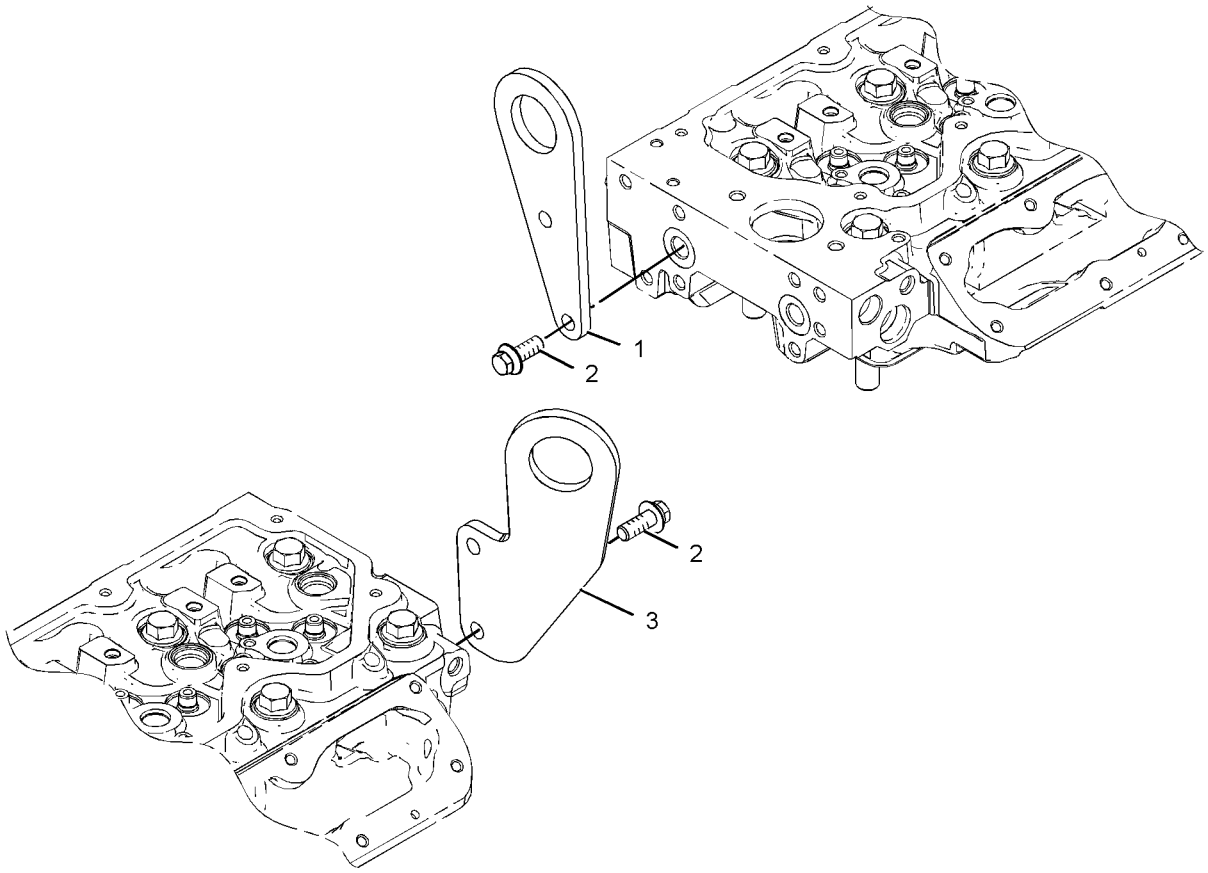

GRAPHIC #1 **<END>** g01195531

290-0637 MOUNTING GP-ENGINE & TMSN

S/N: BYD1-UP; FTD1-UP

PART OF 289-8884 INSTALLATION AR-ENGINE

SMCS-1152, 1154, 3082 **i02806634**

NOTE	REF NO	GRAPHIC REF	PART NUMBER	QTY	PART NAME 1 2 3 4 5 6 (PRODUCT LEVEL)	SEE PAGE
	1	1	**9W-6582**	2	SLEEVE	
	2	1	**9W-9930**	2	MOUNT AS	
	3	1	**220-1241**	2	MOUNT AS	
	4	1	**290-0643**	1	SUPPORT-ENGINE	
	5	1	**290-0644**	1	SUPPORT-ENGINE	
	6	1	**290-7895**	1	SUPPORT AS	
	7	1	**290-7896**	1	SUPPORT AS	
	8	1	**039-8557**	10	WASHER (13X26X6-MM THK)	
	9	1	**3E-4356**	8	WASHER-HARD (17.5X30X6-MM THK)	
M	10	1	**6V-4249**	8	BOLT (M10X1.5X50-MM)	
	11	1	**6V-5839**	8	WASHER (11X21X2.5-MM THK)	
	12	1	**6W-5760**	2	DOWEL	
M	13	1	**7X-2554**	4	BOLT (M16X2X70-MM)	
M	14	1	**8C-8478**	2	BOLT (M20X2.5X140-MM)	
	15	1	**8T-4121**	12	WASHER-HARD (11X21X2.5-MM THK)	
M	16	1	**8T-4131**	4	NUT (M20X2.5-THD)	
M	17	1	**8T-4170**	2	BOLT (M20X2.5X150-MM)	
M	18	1	**8T-4183**	10	BOLT (M12X1.75X40-MM)	
M	19	1	**8T-4186**	12	BOLT (M10X1.5X40-MM)	
	20	1	**8T-4223**	10	WASHER-HARD (13.5X25.5X3-MM THK)	
	21	1	**8T-5439**	8	WASHER-HARD (21.5X45X6-MM THK)	
M	22	1	**8T-7338**	4	BOLT (M16X2X45-MM)	
	23	1	**8X-0674**	2	WASHER (22X100X10-MM THK)	
	24	1	**9R-5878**	4	WASHER (21.5X114X3-MM THK)	
	25	1	**9W-6584**	2	WASHER (20.5X114X10-MM THK)	

M-METRIC PART

290-0637 **MOUNTING GP-ENGINE & TMSN** *(contd.)* **i02806634**

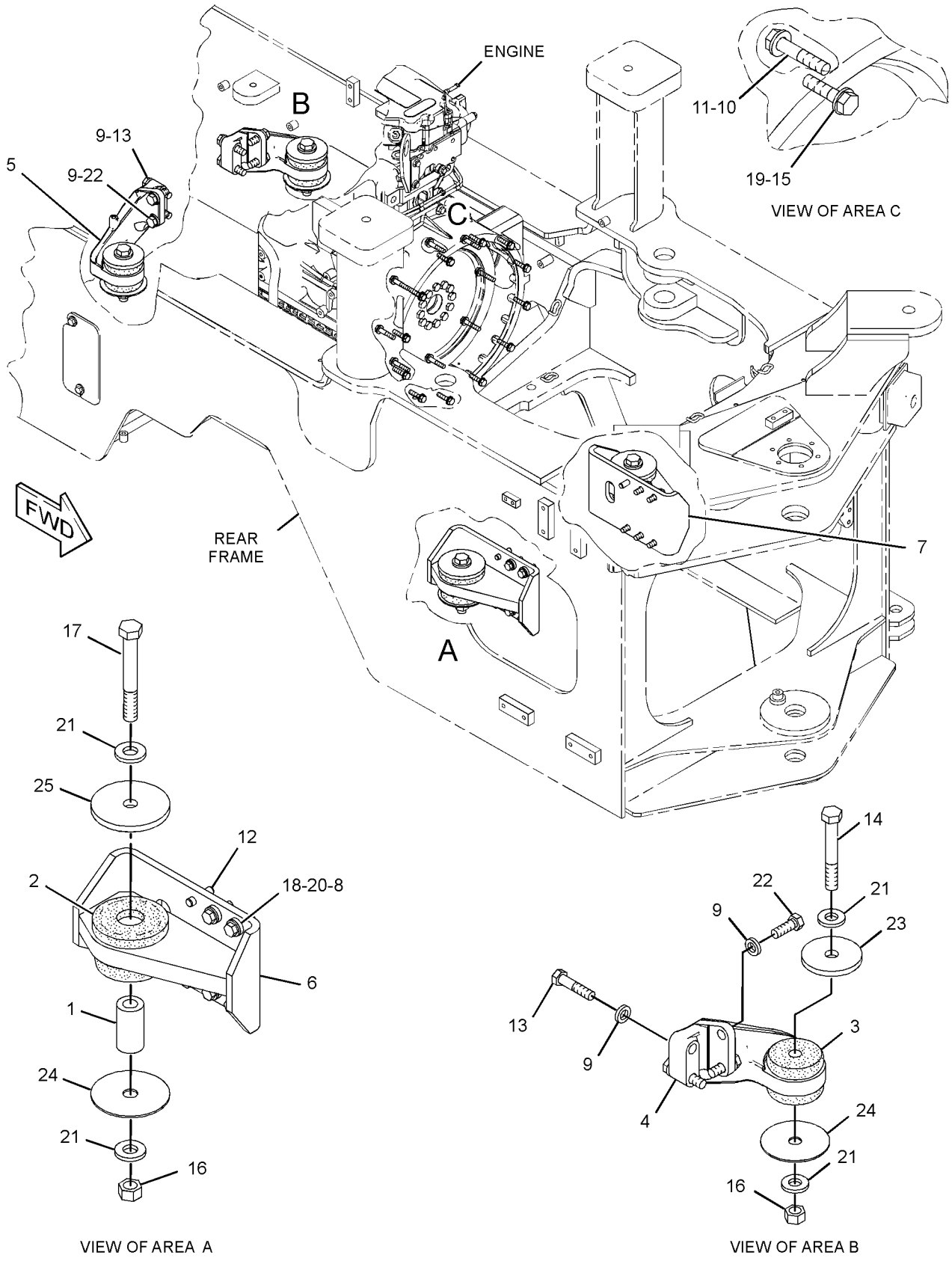

GRAPHIC #1 **<END>** g01404936

289-3268 PAN GP-OIL

S/N: C6E1-UP

PART OF 292-5305, 301-3361 ENGINE AR-PRIMARY

AN ATTACHMENT

SMCS-1302 **i02836912**

NOTE	REF NO	GRAPHIC REF	PART NUMBER	QTY	PART NAME 1 2 3 4 5 6 (PRODUCT LEVEL)	SEE PAGE
	1	1	**275-9883**	2	SEAL	
M	2	1	**6I-0260**	2	BOLT (M8X1.25X25-MM)	
	3	1	**6I-0289**	1	PLUG	
	4	1	**6I-1497**	1	SEAL	
	5	1	**6I-4681**	1	GASKET	
	6	1	**7C-0351**	2	PLUG-DRAIN (ENGINE OIL)	
	7	1	**251-8336**	1	TUBE AS	
	8	1	**275-9884**	1	GASKET	
	9	1	**275-9888**	28	BOLT-SPECIAL	
	10	1	**275-9889**	2	BOLT-SPECIAL	
	11	1	**276-0142**	6	BOLT-SPECIAL (TORX)	
	12	1	**280-1383**	1	GASKET	
	13	1	**289-9430**	1	PAN-OIL	
	14	1	**286-7847**	1	ADAPTER GP-OIL PAN DRAIN	
	15	1	**286-8817**	1	TUBE GP-HYDRAULIC PUMP	
	16	1	**289-3261**	1	GAUGE GP-OIL LEVEL (DIPSTICK) (ENGINE)	
	16A	1	**275-9891**	2	SEAL-O-RING	

M-METRIC PART

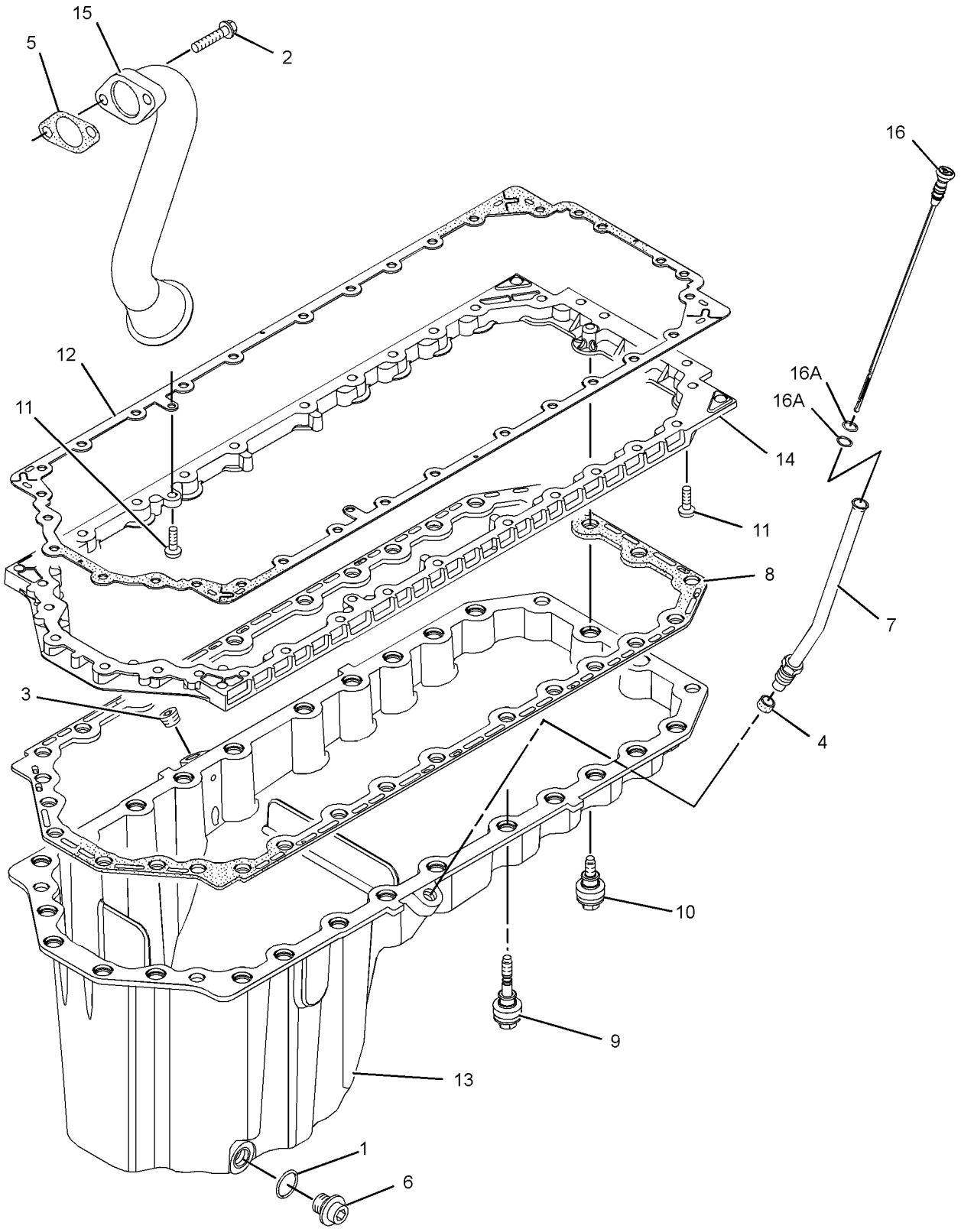

GRAPHIC #1 **<END>** g01330941

292-5857 PISTON & ROD GP

S/N: C6E1-UP
PART OF 301-3361 ENGINE AR-PRIMARY
AN ATTACHMENT

SMCS-1225 **i02837136**

NOTE	REF NO	GRAPHIC REF	PART NUMBER	QTY	PART NAME 1 2 3 4 5 6 (PRODUCT LEVEL)	SEE PAGE
	1	1	**276-7475**	6	PISTON AS	
					(EACH INCLUDES)	
	1A	1	**124-3536**	2	RING-RETAINING	
	2	1	**276-7476**	6	KIT-PISTON RING	
J	3	1	**276-7479**	6	ROD AS (F)	
					–OR–	
J		1	**276-7481**	6	ROD AS (L)	
					–OR–	
J		1	**276-7483**	6	ROD AS (J)	
					(EACH ROD AS INCLUDES)	
	3A	1	**225-5439**	2	BOLT-SPECIAL (CONNECTING ROD)	
	3B	1	**276-7478**	1	BUSHING	

J-ENSURE THAT CORRECT ROD LENGTH IS FITTED

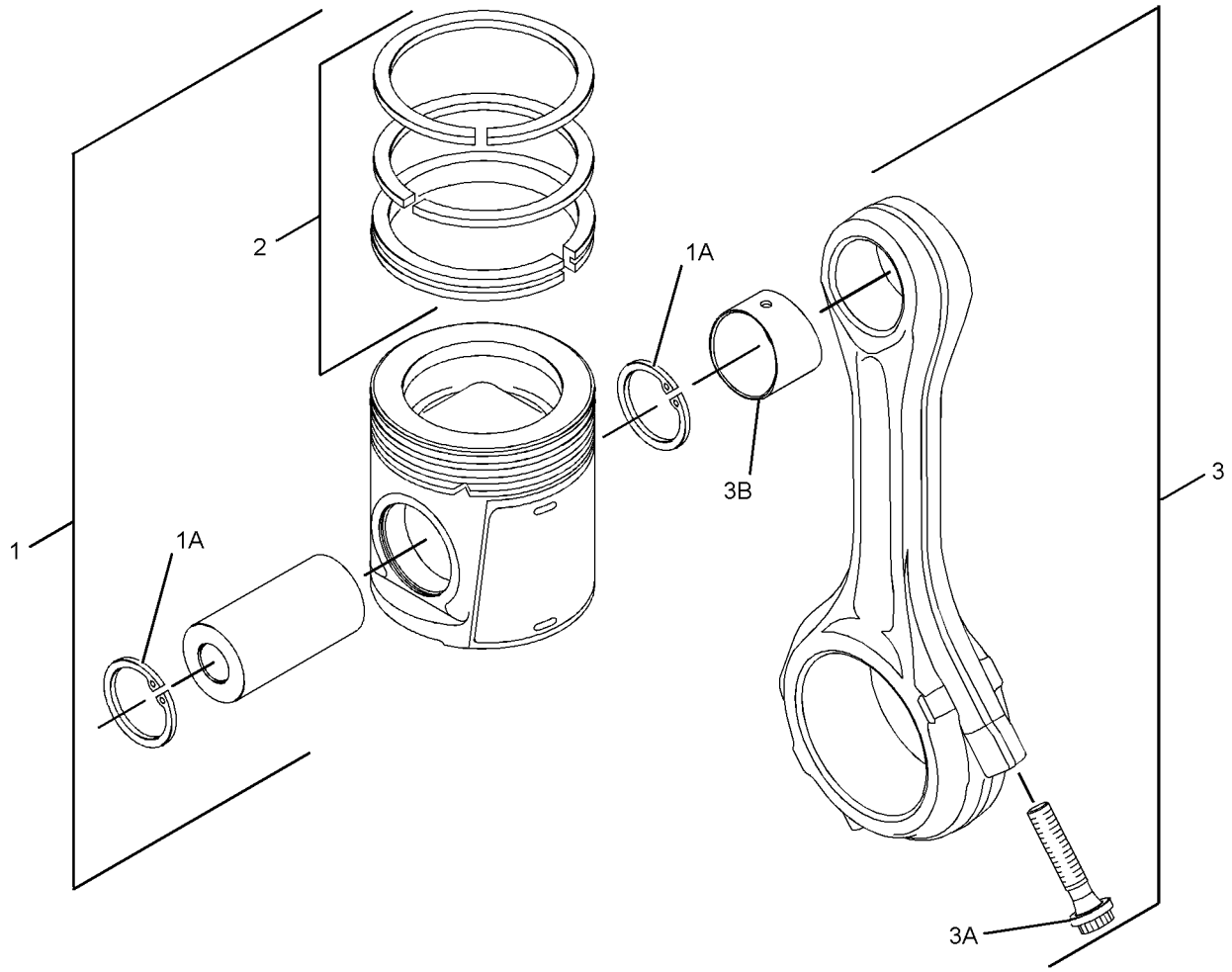

GRAPHIC #1 **<END>** g01265224

BASIC ENGINE

276-7491 PISTON GP

S/N: C6E1-UP
PART OF 292-5305 ENGINE AR-PRIMARY
AN ATTACHMENT

SMCS-1214 **i02837359**

NOTE	REF NO	GRAPHIC REF	PART NUMBER	QTY	PART NAME 1 2 3 4 5 6 (PRODUCT LEVEL)	SEE PAGE
	1	1	**276-7475**	6	PISTON AS	
					(EACH INCLUDES)	
	2	1	**124-3536**	2	RING-RETAINING	
	3	1	**276-7476**	6	KIT-PISTON RING	
BJ	4	1	**276-7479**	6	ROD AS (F)	
					—OR—	
BJ			**276-7481**	6	ROD AS (L)	
					—OR—	
BJ			**276-7483**	6	ROD AS (J)	
					(EACH ROD AS INCLUDES)	
	5	1	**225-5439**	2	BOLT	
	6	1	**276-7478**	1	BUSHING	

B-USE AS REQUIRED
J-ENSURE THAT CORRECT ROD LENGTH IS FITTED

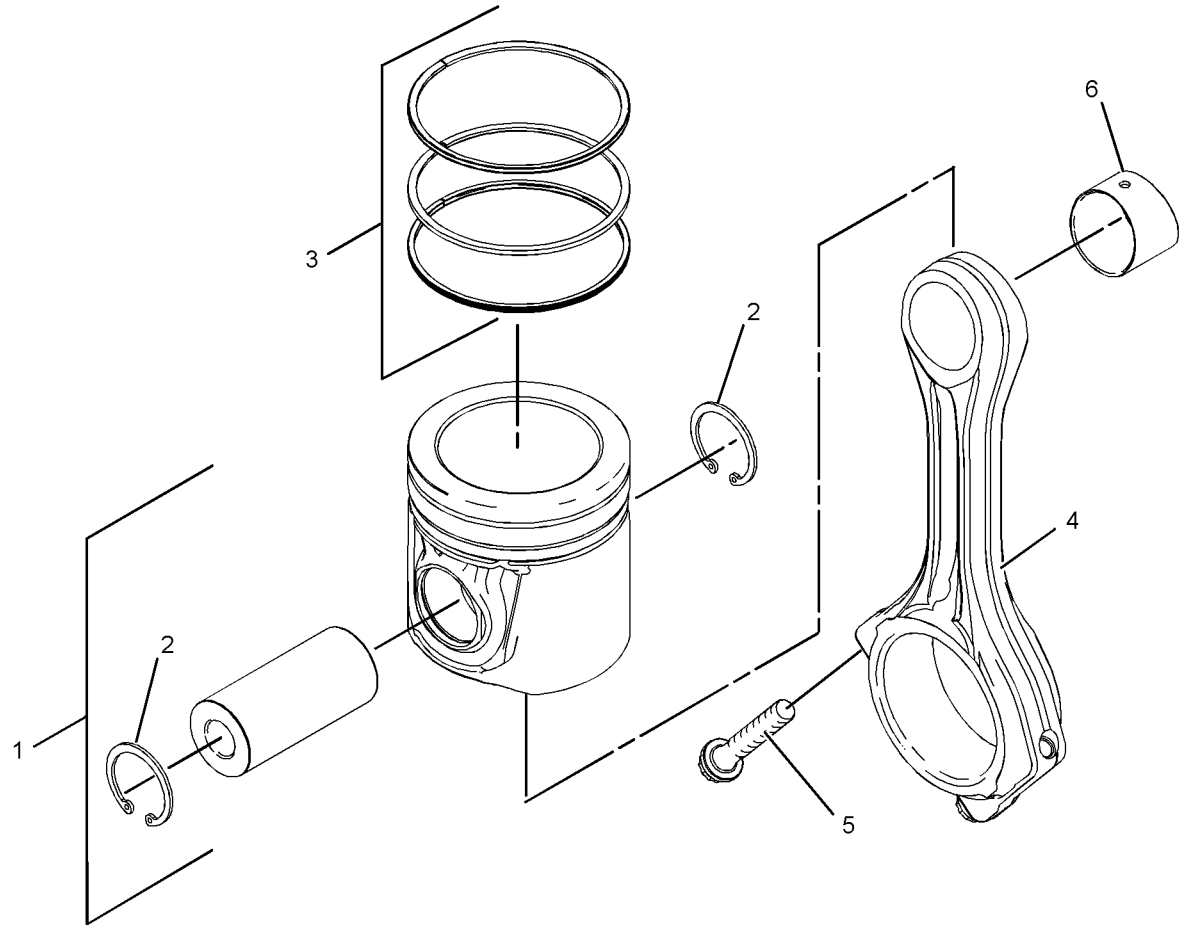

GRAPHIC #1 **<END>** g01214328

277-5007 PLUG GP-ENGINE

S/N: C6E1-UP
PART OF 292-5305, 301-3361 ENGINE AR-PRIMARY
AN ATTACHMENT

SMCS-1000 **i02836914**

NOTE	REF NO	GRAPHIC REF	PART NUMBER	QTY	PART NAME 1 2 3 4 5 6 (PRODUCT LEVEL)	SEE PAGE
	1	1	**2B-0858**	3	PLUG-PIPE	

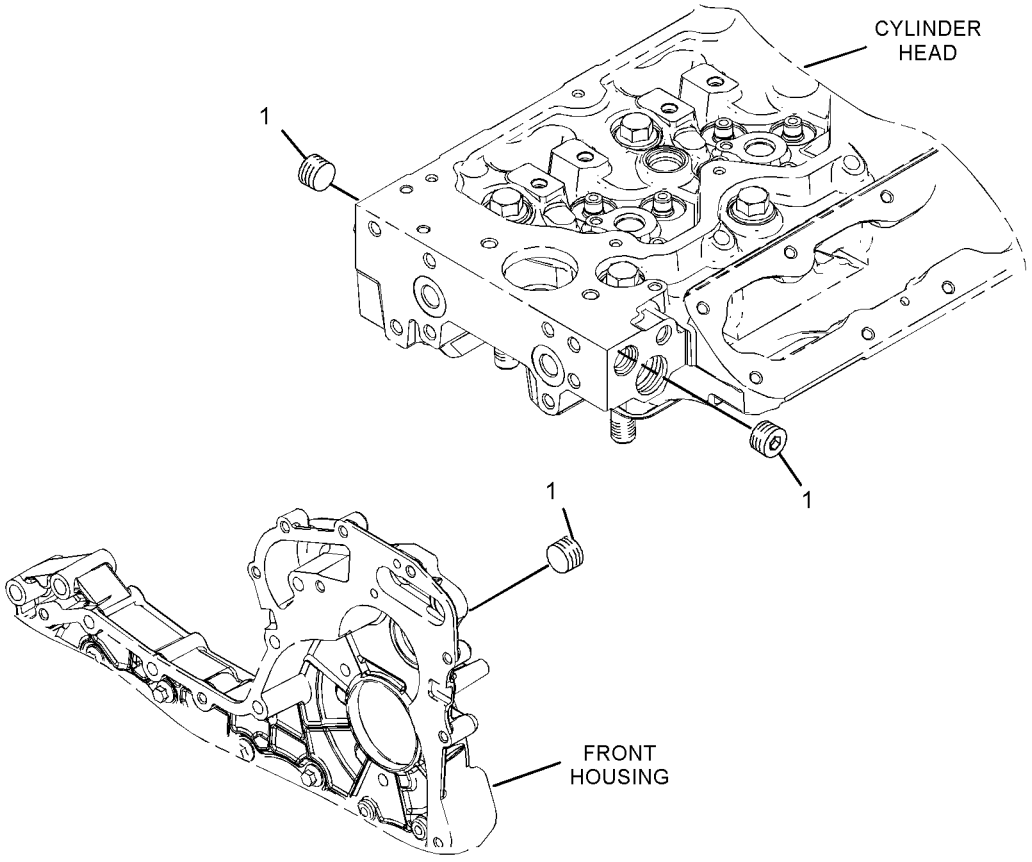

GRAPHIC #1 **<END>** g01209408

299-3949 PLUG GP-FLYWHEEL HOUSING

S/N: C6E1-UP
PART OF 292-5305, 301-3361 ENGINE AR-PRIMARY
AN ATTACHMENT

SMCS-1157 **i02836911**

NOTE	REF NO	GRAPHIC REF	PART NUMBER	QTY	PART NAME 1 2 3 4 5 6 (PRODUCT LEVEL)	SEE PAGE
	1	1	**259-0374**	6	PLUG AS	
					(EACH INCLUDES)	
	1A	1	**216-8581**	1	SEAL-O-RING	

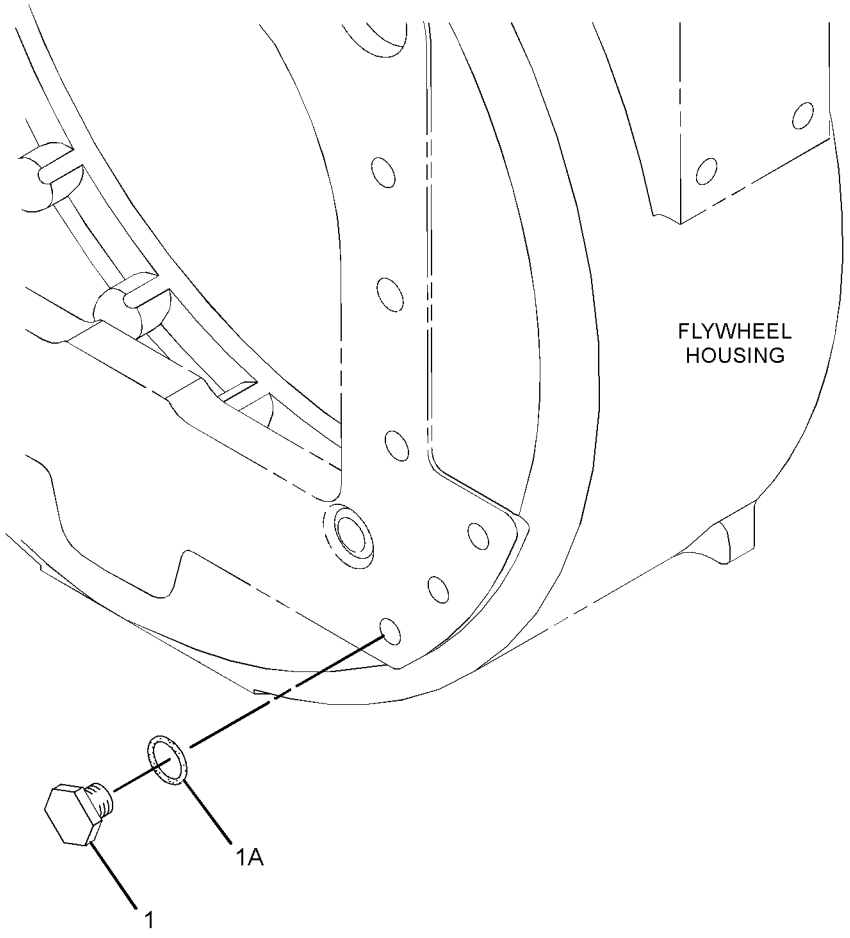

GRAPHIC #1 **<END>** g01333763

274-1929 PULLEY GP-CRANKSHAFT

S/N: C6E1-UP
PART OF 292-5305, 301-3361 ENGINE AR-PRIMARY
AN ATTACHMENT

SMCS-1205 **i02836915**

NOTE	REF NO	GRAPHIC REF	PART NUMBER	QTY	PART NAME 1 2 3 4 5 6 (PRODUCT LEVEL)	SEE PAGE
	1	1	**274-1930**	1	DAMPER	
	2	1	**274-1931**	1	PULLEY	
	3	1	**274-1932**	1	HUB	
	4	1	**274-1933**	1	BLOCK	
	5	1	**274-1934**	3	BOLT-SPECIAL (TORX)	
	6	1	**274-1935**	6	BOLT	

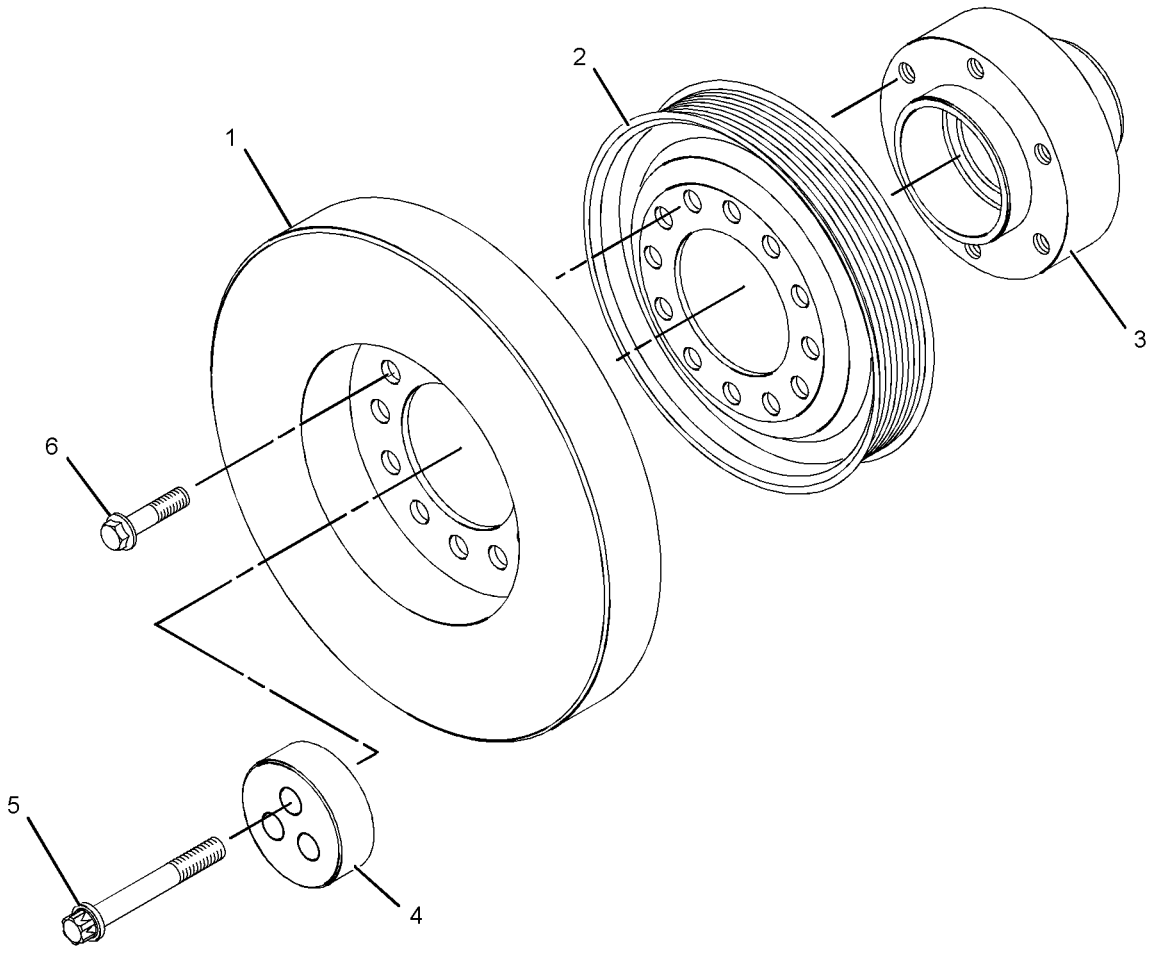

GRAPHIC #1 **<END>** g01157851

280-1911 ROCKER ARM GP

S/N: C6E1-UP

PART OF 292-5865 ROCKER ARM GP, 276-9229 VALVE MECHANISM GP

AN ATTACHMENT

SMCS-1123 **i02837097**

NOTE	REF NO	GRAPHIC REF	PART NUMBER	QTY	PART NAME 1 2 3 4 5 6 (PRODUCT LEVEL)	SEE PAGE
	1	1	**276-9201**	1	CLIP	
	2	1	**276-9206**	5	SPRING-SHAFT	
	3	1	**276-9207**	1	SPRING-SHAFT	
	4	1	**277-5307**	1	SHAFT AS-ROCKER ARM	
	4A	1	**276-9200**	1	PLUG-SHAFT END	
	5	1	**278-5111**	6	ROCKER ARM AS	
					(EACH INCLUDES)	
	5A	1	**276-9230**	1	NUT	
	5B	1	**278-5113**	1	ADJUSTING SCREW (TORX)	
	6	1	**278-5112**	6	ROCKER ARM AS	
					(EACH INCLUDES)	
	6A	1	**276-9230**	1	NUT	
	6B	1	**278-5113**	1	ADJUSTING SCREW (TORX)	
	7	1	**280-1912**	6	BRACKET	
	8	1	**280-1913**	6	RETAINER	
	9	1	**280-1914**	12	BOLT (M8X1.25X55-MM)	

280-1911 **ROCKER ARM GP** *(contd.)* **i02837097**

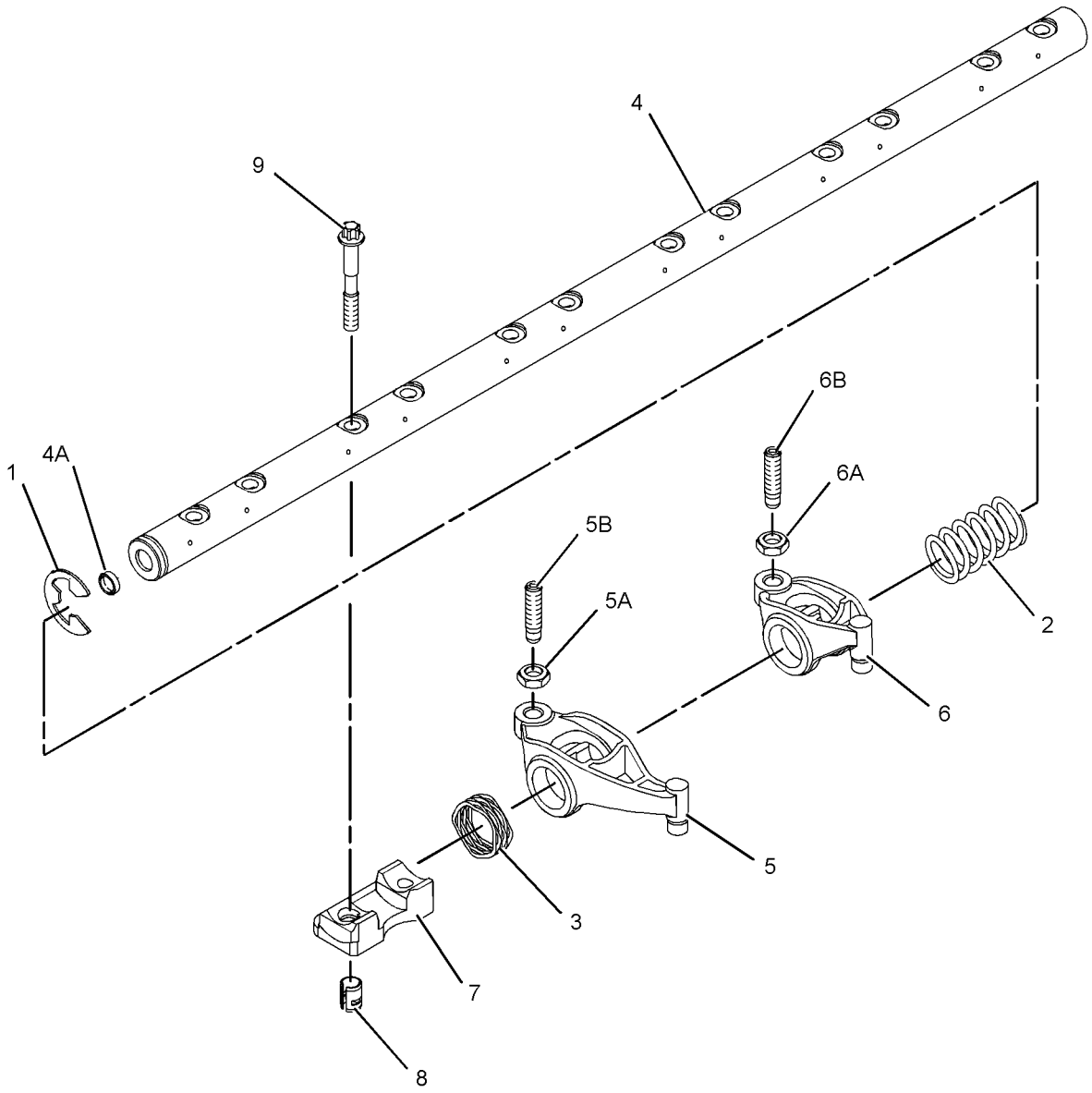

GRAPHIC #1 **<END>** g01235750

BASIC ENGINE

292-5865 ROCKER ARM GP

S/N: C6E1-UP

PART OF 301-3361 ENGINE AR-PRIMARY

AN ATTACHMENT

SMCS-1123 **i02837137**

NOTE	REF NO	GRAPHIC REF	PART NUMBER	QTY	PART NAME 1 2 3 4 5 6 (PRODUCT LEVEL)	SEE PAGE
	1	1	**276-9227**	12	LINK	
Y	2	1	**280-1911**	1	ROCKER ARM GP	56

Y-SEPARATE ILLUSTRATION

292-5865 **ROCKER ARM GP** *(contd.)* **i02837137**

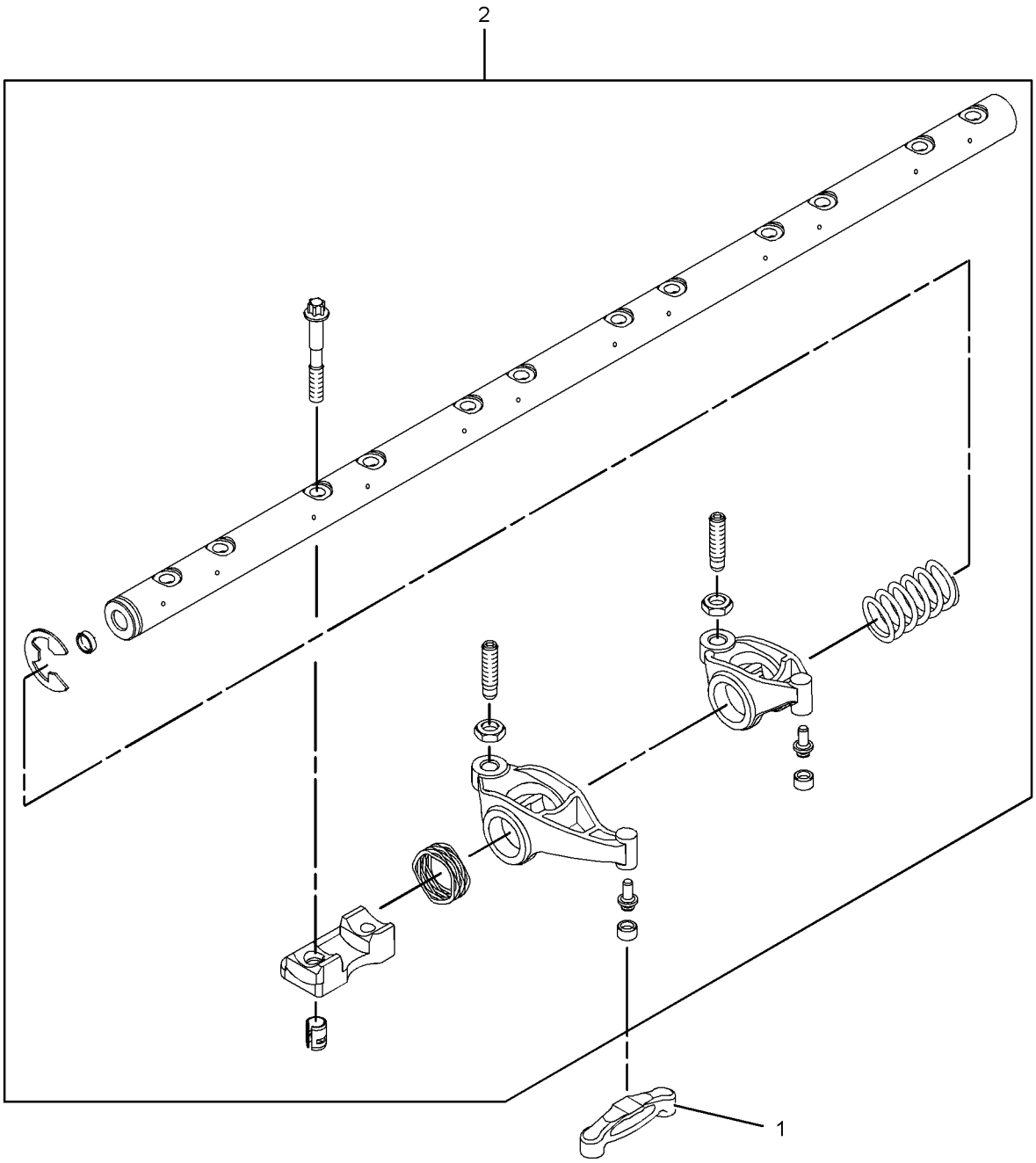

GRAPHIC #1 **<END>** g01235716

BASIC ENGINE

289-8947 SUPPRESSION AR-SOUND

S/N: BYD1-UP

AN ATTACHMENT

SMCS-1801 **i02810228**

NOTE	PART NUMBER	QTY	PART NAME 1 2 3 4 5 6 (PRODUCT LEVEL)	SEE PAGE
Y	*295-1016*	1	BAFFLE GP-SOUND SUPPRESSION (HOOD)	338
Y	*150-6564*	1	COVER GP-SOUND SUPPRESSION (REAR FRAME)	18
Y	*294-0507*	1	GUARD GP-POWER TRAIN (TRANSMISSION)	383
Y	*295-1011*	1	INSULATION GP-HEAT (ENCLOSURE)	422
Y	*295-1018*	1	INSULATION GP-HEAT (HOOD) (DOOR)	392
Y	*295-1024*	1	INSULATION GP-HEAT (REAR FRAME) (POWER TRAIN)	393
Y	*150-6566*	1	PANEL GP-SOUND SUPPRESSION (CAB)	406
	293-5221	1	GUARD GP-CRANKCASE	
	7X-7729	4	WASHER (11X25X3-MM THK)	
M	**8T-4195**	4	BOLT (M10X1.5X30-MM)	
	219-2418	1	PLATE AS	
	293-5222	1	PLATE AS	

M-METRIC PART
Y-SEPARATE ILLUSTRATION

<END>

289-8948 SUPPRESSION AR-SOUND

S/N: FTD1-UP

AN ATTACHMENT

SMCS-1801 **i02810233**

NOTE	PART NUMBER	QTY	PART NAME 1 2 3 4 5 6 (PRODUCT LEVEL)	SEE PAGE
Y	*295-1016*	1	BAFFLE GP-SOUND SUPPRESSION (HOOD)	338
Y	*295-1034*	1	COVER GP-SOUND SUPPRESSION (REAR FRAME)	19
Y	*294-0507*	1	GUARD GP-POWER TRAIN (TRANSMISSION)	383
Y	*295-1011*	1	INSULATION GP-HEAT (ENCLOSURE)	422
Y	*295-1018*	1	INSULATION GP-HEAT (HOOD) (DOOR)	392
Y	*295-1033*	1	INSULATION GP-HEAT (REAR FRAME) (POWER TRAIN)	395
Y	*243-0541*	1	PANEL GP-SOUND SUPPRESSION (REAR FRAME)	407
	293-5221	1	GUARD GP-CRANKCASE	
	7X-7729	4	WASHER (11X25X3-MM THK)	
M	**8T-4195**	4	BOLT (M10X1.5X30-MM)	
	219-2418	1	PLATE AS	
	293-5222	1	PLATE AS	

M-METRIC PART
Y-SEPARATE ILLUSTRATION

<END>

289-8950 SUPPRESSION AR-SOUND

S/N: BYD1-UP
AN ATTACHMENT

SMCS-1801 **i02811886**

NOTE	PART NUMBER	QTY	PART NAME 1 2 3 4 5 6 (PRODUCT LEVEL)	SEE PAGE
Y	*295-1016*	1	BAFFLE GP-SOUND SUPPRESSION (HOOD)	338
Y	*150-6564*	1	COVER GP-SOUND SUPPRESSION (REAR FRAME)	18
Y	*294-0507*	1	GUARD GP-POWER TRAIN (TRANSMISSION)	383
Y	*295-1011*	1	INSULATION GP-HEAT (ENCLOSURE)	422
Y	*295-1018*	1	INSULATION GP-HEAT (HOOD) (DOOR)	392
Y	*295-1024*	1	INSULATION GP-HEAT (REAR FRAME) (POWER TRAIN)	393
Y	*150-6566*	1	PANEL GP-SOUND SUPPRESSION (CAB)	406
	293-5221	1	GUARD GP-CRANKCASE	
	7X-7729	4	WASHER (11X25X3-MM THK)	
M	**8T-4195**	4	BOLT (M10X1.5X30-MM)	
	219-2418	1	PLATE AS	
	293-5222	1	PLATE AS	

M-METRIC PART
Y-SEPARATE ILLUSTRATION

<END>

289-8951 SUPPRESSION AR-SOUND

S/N: FTD1-UP
AN ATTACHMENT

SMCS-1801 **i02811880**

NOTE	PART NUMBER	QTY	PART NAME 1 2 3 4 5 6 (PRODUCT LEVEL)	SEE PAGE
Y	*295-1016*	1	BAFFLE GP-SOUND SUPPRESSION (HOOD)	338
Y	*295-1034*	1	COVER GP-SOUND SUPPRESSION (REAR FRAME)	19
Y	*294-0507*	1	GUARD GP-POWER TRAIN (TRANSMISSION)	383
Y	*295-1011*	1	INSULATION GP-HEAT (ENCLOSURE)	422
Y	*295-1018*	1	INSULATION GP-HEAT (HOOD) (DOOR)	392
Y	*295-1033*	1	INSULATION GP-HEAT (REAR FRAME) (POWER TRAIN)	395
Y	*243-0541*	1	PANEL GP-SOUND SUPPRESSION (REAR FRAME)	407
	293-5221	1	GUARD GP-CRANKCASE	
	7X-7729	4	WASHER (11X25X3-MM THK)	
M	**8T-4195**	4	BOLT (M10X1.5X30-MM)	
	219-2418	1	PLATE AS	
	293-5222	1	PLATE AS	

M-METRIC PART
Y-SEPARATE ILLUSTRATION

<END>

BASIC ENGINE

276-9229 VALVE MECHANISM GP

S/N: C6E1-UP

PART OF 292-5305 ENGINE AR-PRIMARY

AN ATTACHMENT

SMCS-1102, 1121, 1123 **i02837362**

NOTE	REF NO	GRAPHIC REF	PART NUMBER	QTY	PART NAME 1 2 3 4 5 6 (PRODUCT LEVEL)	SEE PAGE
	1	1	**276-9227**	12	LINK	
Y	2	1	**280-1911**	1	ROCKER ARM GP	56

Y-SEPARATE ILLUSTRATION

276-9229 **VALVE MECHANISM GP** *(contd.)* **i02837362**

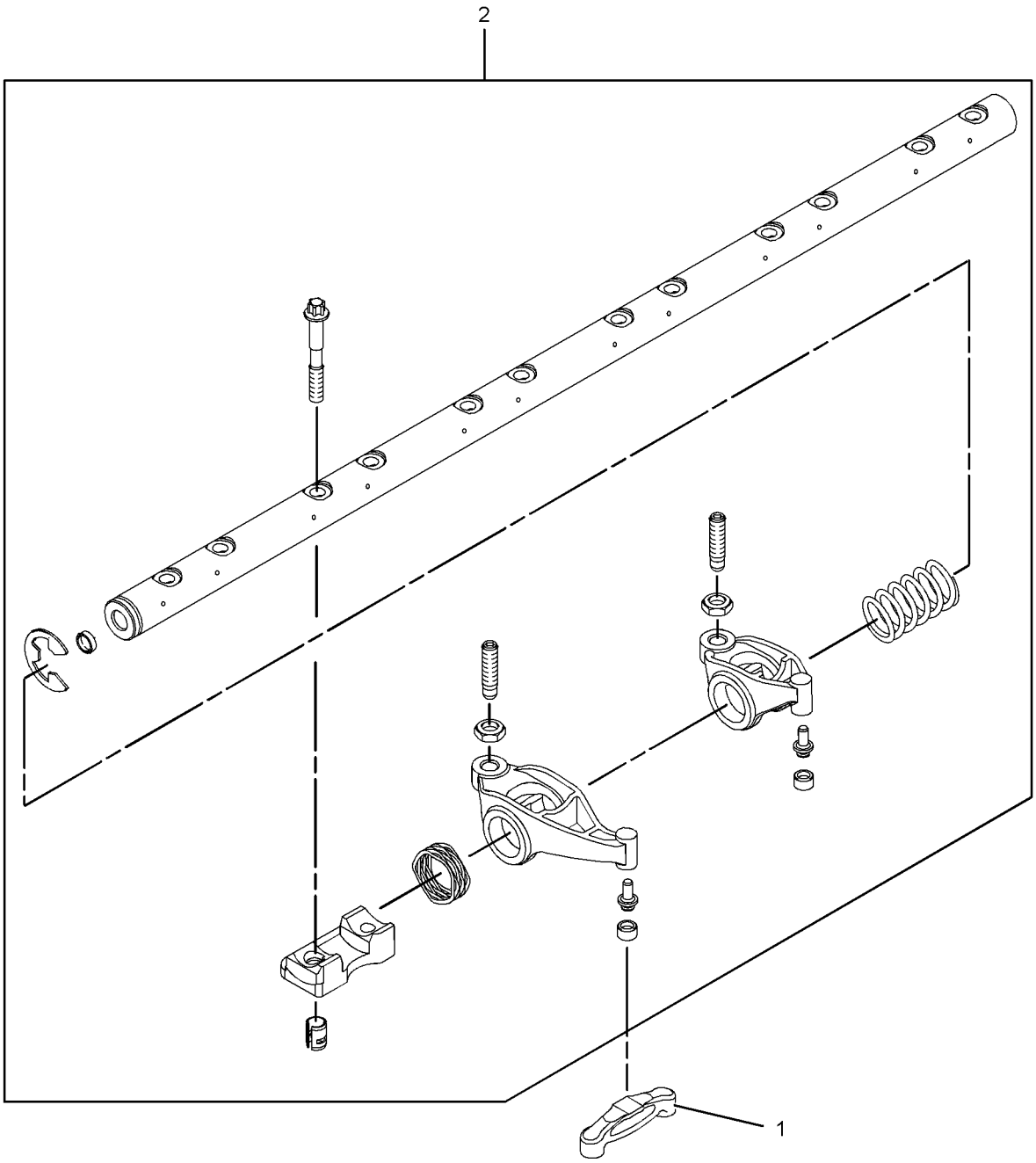

GRAPHIC #1 **<END>** g01235716

LUBRICATION SYSTEM

280-2050 BREATHER GP–CRANKCASE

S/N: C6E1-UP

PART OF 292-5305 ENGINE AR-PRIMARY

AN ATTACHMENT

SMCS-1317 **i02836805**

NOTE	REF NO	GRAPHIC REF	PART NUMBER	QTY	PART NAME 1 2 3 4 5 6 (PRODUCT LEVEL)	SEE PAGE
	1	1	**273-5711**	1	BREATHER AS (CRANKCASE)	

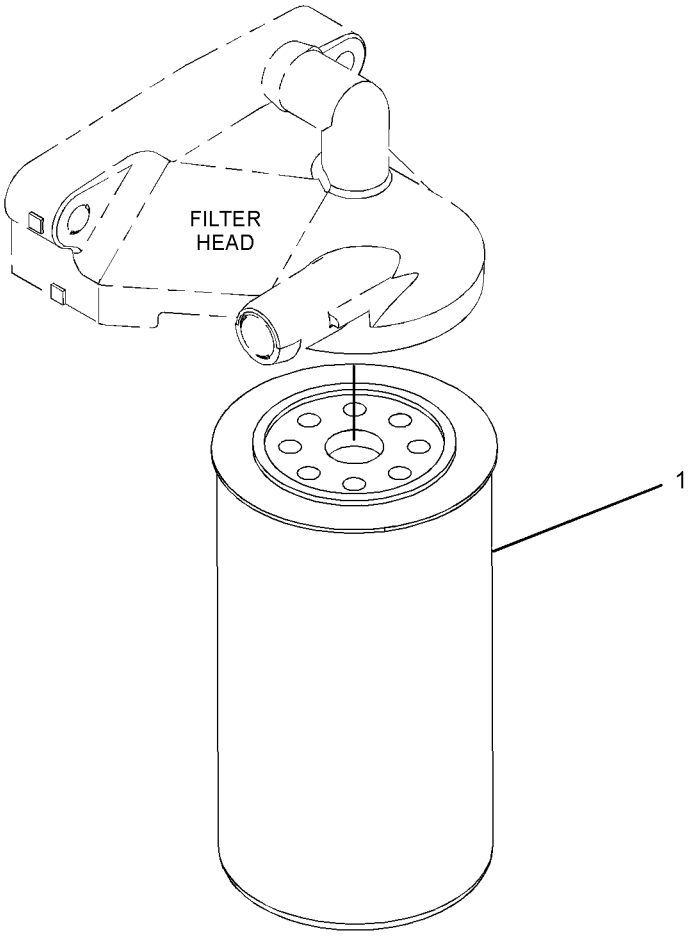

GRAPHIC #1 **<END>** g01290203

277-1973 FILLER GP-ENGINE OIL

S/N: C6E1-UP

PART OF 292-5305, 301-3361 ENGINE AR-PRIMARY

AN ATTACHMENT

SMCS-1316 **i02896495**

NOTE	REF NO	GRAPHIC REF	PART NUMBER	QTY	PART NAME 1 2 3 4 5 6 (PRODUCT LEVEL)	SEE PAGE
	1	1	**321-2383**	1	FILLER GP-ENGINE OIL	
	1A	1	**306-2337**	1	SEAL-O-RING	
	1B	1	**130-9888**	1	CAP-OIL FILLER (ENGINE)	
	1C	1	**113-1504**	1	SEAL-O-RING	
	2	1	**6I-4374**	1	BOLT (M8X1.25X60-MM)	
M	3	1	**6I-0254**	1	BOLT (M8X1.25X30-MM)	
	4	1	**277-1974**	1	PLATE AS	
	4A	1	**277-1975**	1	SEAL-O-RING	
M	5	1	**6I-0217**	2	BOLT (M8X1.25X20-MM)	

M-METRIC PART

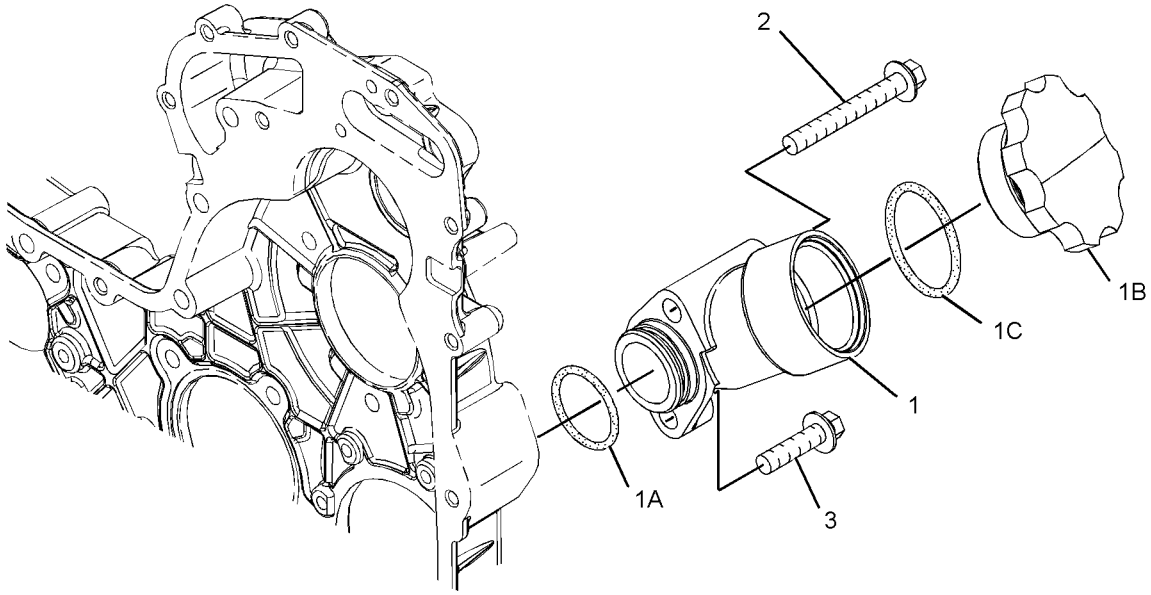

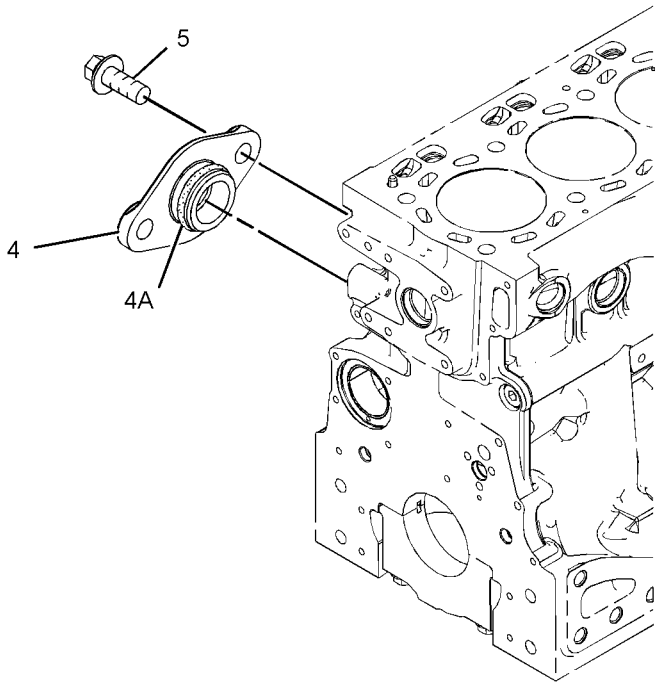

GRAPHIC #1 **<END>** g01208924

LUBRICATION SYSTEM

277-2912 FILTER GP-ENGINE OIL

S/N: C6E1-UP

PART OF 292-5305, 301-3361 ENGINE AR-PRIMARY

AN ATTACHMENT

SMCS-1306, 1308 **i02836889**

NOTE	REF NO	GRAPHIC REF	PART NUMBER	QTY	PART NAME 1 2 3 4 5 6 (PRODUCT LEVEL)	SEE PAGE
	1	1	**269-8325**	1	FILTER AS (ENGINE OIL)	

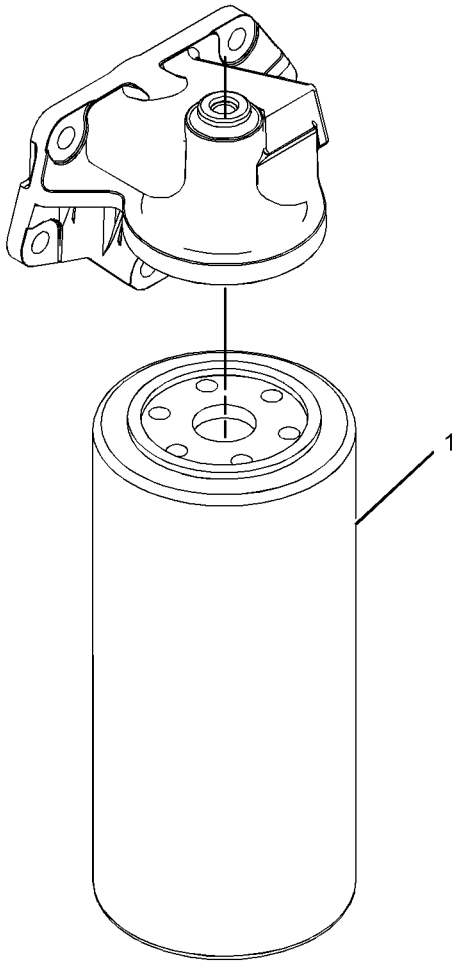

GRAPHIC #1 **<END>** g01198493

LUBRICATION SYSTEM

277-4262 PUMP GP-ENGINE OIL

S/N: C6E1-UP

PART OF 292-5305, 301-3361 ENGINE AR-PRIMARY

AN ATTACHMENT

SMCS-1304, 1315 **i02836916**

NOTE	REF NO	GRAPHIC REF	PART NUMBER	QTY	PART NAME 1 2 3 4 5 6 (PRODUCT LEVEL)	SEE PAGE
	1	1	**312-4545**	1	PUMP-OIL (ENGINE)	
	2	1	**6I-1090**	4	BOLT (M8X1.25X40-MM)	

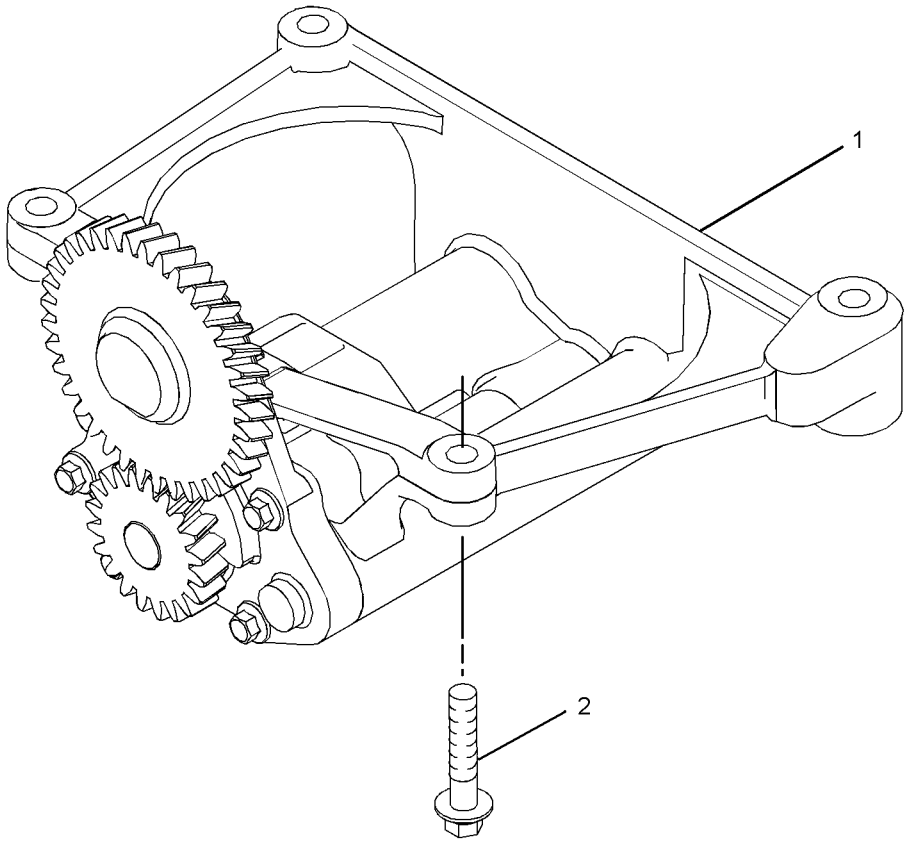

GRAPHIC #1 **<END>** g01380671

277-4694 VALVE GP-FLUID SAMPLING–ENGINE OIL

S/N: C6E1-UP

PART OF 292-5305, 301-3361 ENGINE AR-PRIMARY

AN ATTACHMENT

SMCS-7542 **i02836923**

NOTE	REF NO	GRAPHIC REF	PART NUMBER	QTY	PART NAME 1 2 3 4 5 6 (PRODUCT LEVEL)	SEE PAGE
	1	1	**216-9633**	1	VALVE AS-FLUID SAMPLING (ENGINE OIL)	
	2	1	**8C-3445**	1	CAP-DUST	
	3	1	**232-3861**	1	PLUG (BLANKING)	
	4	1	**199-9267**	1	SEAL-O-RING	

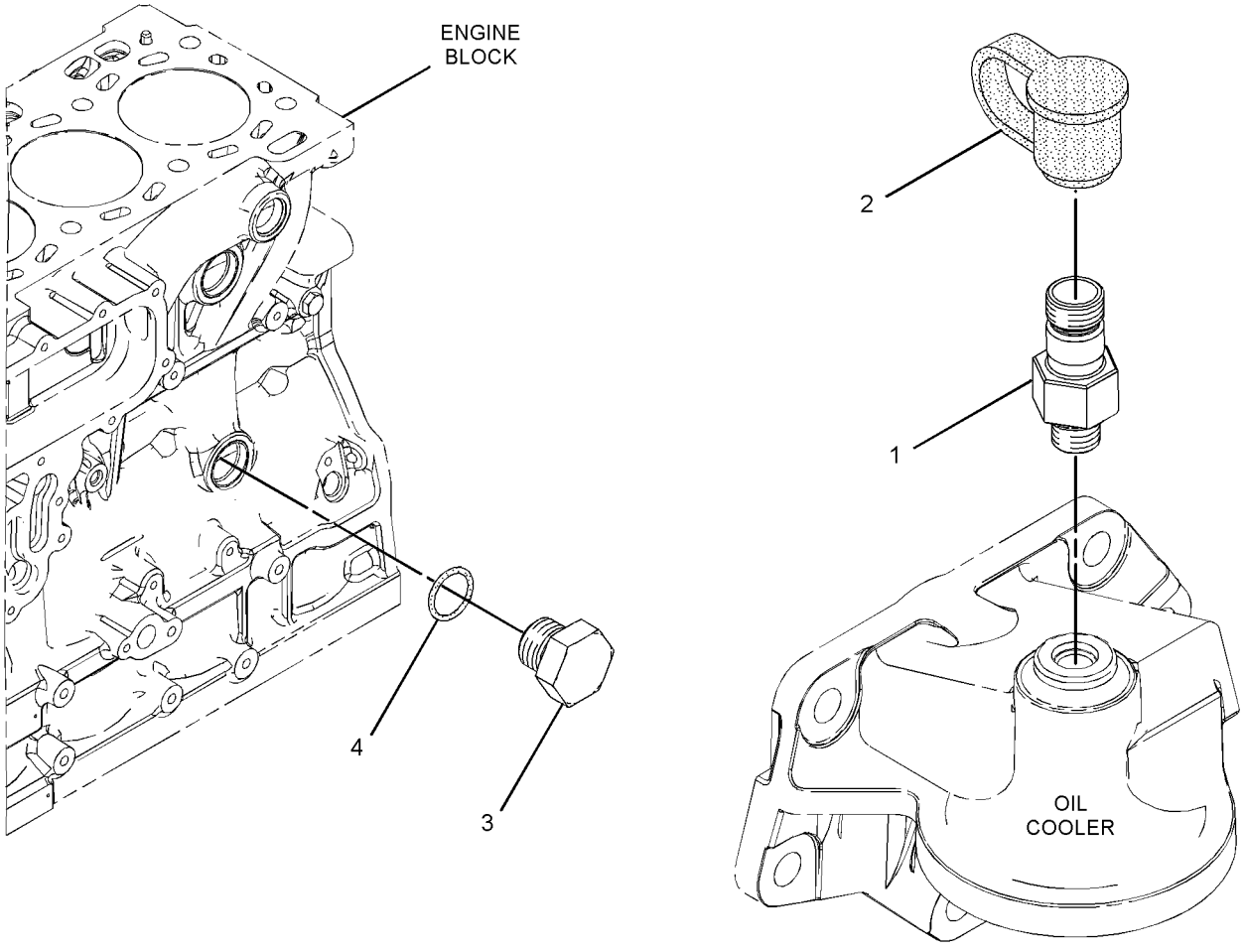

GRAPHIC #1 **<END>** g01198300

281-8748 CONNECTION GP-WATER

S/N: C6E1-UP

PART OF 292-5305, 301-3361 ENGINE AR-PRIMARY

AN ATTACHMENT

SMCS-1380 **i02836808**

NOTE	REF NO	GRAPHIC REF	PART NUMBER	QTY	PART NAME 1 2 3 4 5 6 (PRODUCT LEVEL)	SEE PAGE
M	1	1	**103-5687**	1	BOLT (M10X1.5X85-MM)	
	2	1	**123-2899**	1	BOLT (M10X1.5X40-MM)	
	3	1	**281-8744**	1	GASKET-WATER REGULATOR (WATER TEMPERTAURE REGULATOR)	
	4	1	**281-8745**	1	REGULATOR AS-WATER TEMPERATURE (CONNECTOR INCLUDED)	
					(INCLUDES WATER TEMPERATURE REGULATOR)	
	4A	1	**281-8746**	1	PLUG	
	4B	1	**281-8747**	1	SEAL-O-RING	

M-METRIC PART

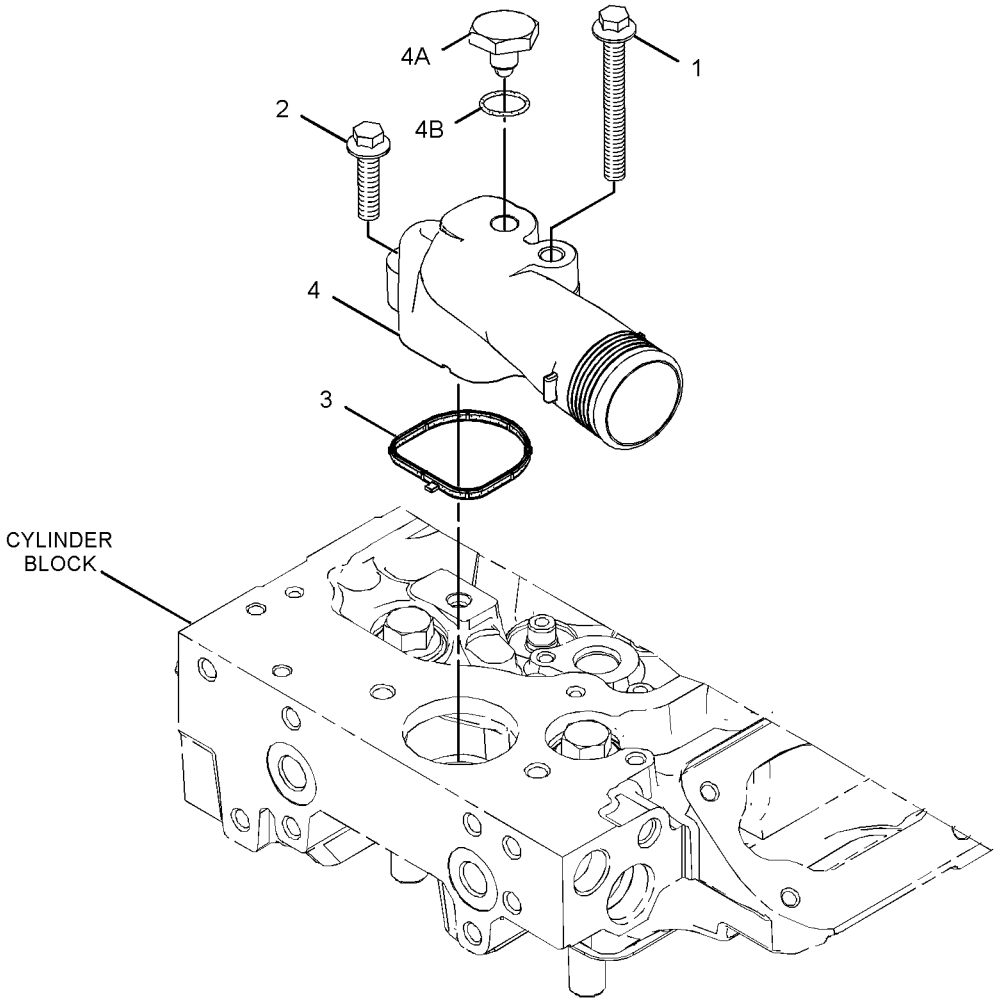

GRAPHIC #1 **<END>** g01414416

283-4558 COOLER GP-FLTR BASE & ENG OIL

S/N: C6E1-UP

PART OF 292-5305, 301-3361 ENGINE AR-PRIMARY

AN ATTACHMENT

SMCS-1306, 1378 **i02836810**

NOTE	REF NO	GRAPHIC REF	PART NUMBER	QTY	PART NAME 1 2 3 4 5 6 (PRODUCT LEVEL)	SEE PAGE
	1	2	**281-7038**	1	COOLER AS-OIL (ENGINE)	
	2	2	**6I-4793**	4	BOLT (M8X1.25X50-MM)	
	3	2	**281-7039**	1	COOLER-OIL (ENGINE)	
	4	2	**281-7040**	1	GASKET	
	5	2	**277-2500**	1	GASKET	
M	6	2	**6I-0260**	3	BOLT (M8X1.25X25-MM)	
M	7	1	**6I-0217**	10	BOLT (M8X1.25X20-MM)	
	8	2	**6I-4793**	7	BOLT (M8X1.25X50-MM)	
	9	2	**283-4559**	1	HEAD AS-OIL FILTER	
	10	1,2	**225-7944**	3	GASKET	
	11	2	**6I-0455**	4	BOLT (M8X1.25X55-MM)	
	12	1	**232-3751**	2	PLATE	
	13	1	**277-2537**	1	PLATE	
	14	1	**277-2538**	1	GASKET	

M-METRIC PART

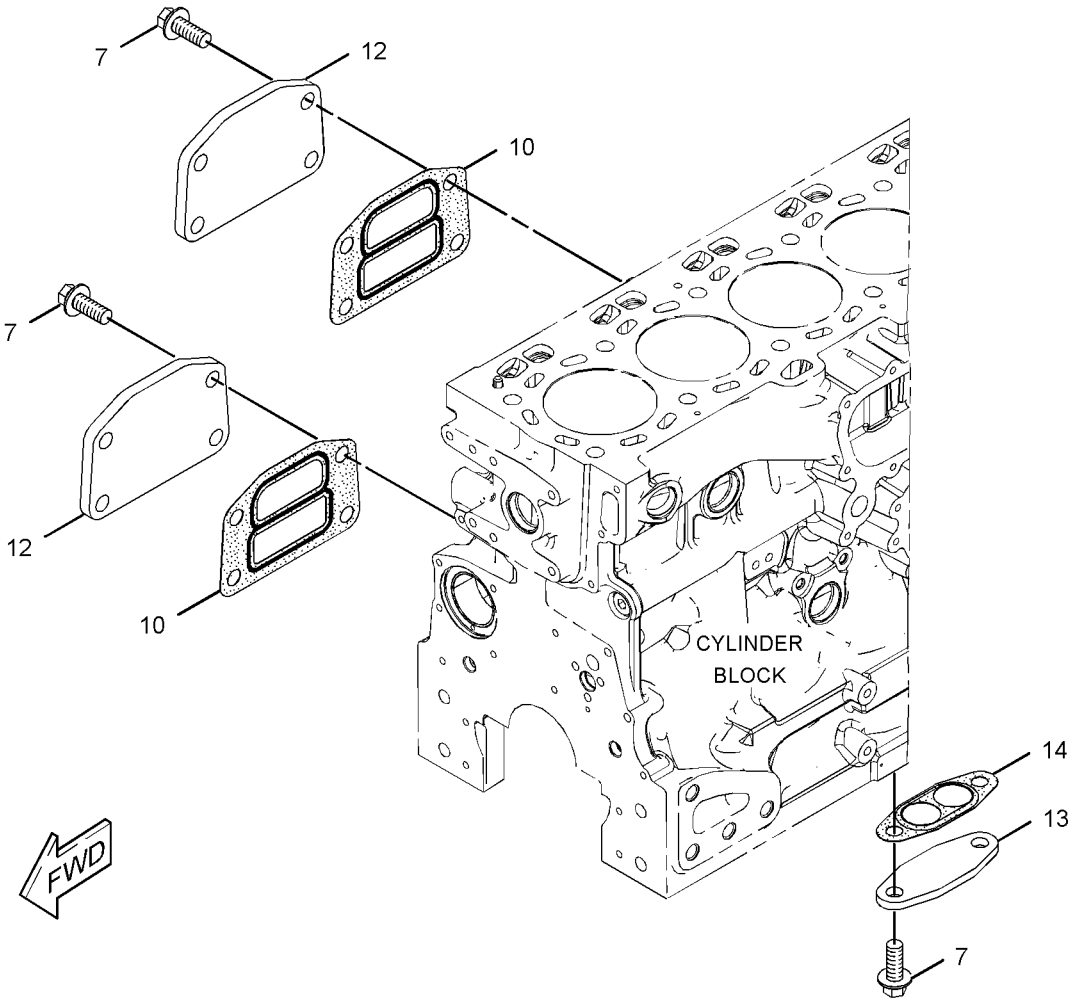

GRAPHIC #1 g01207438

283-4558 **COOLER GP-FLTR BASE & ENG OIL** *(contd.)* **i02836810**

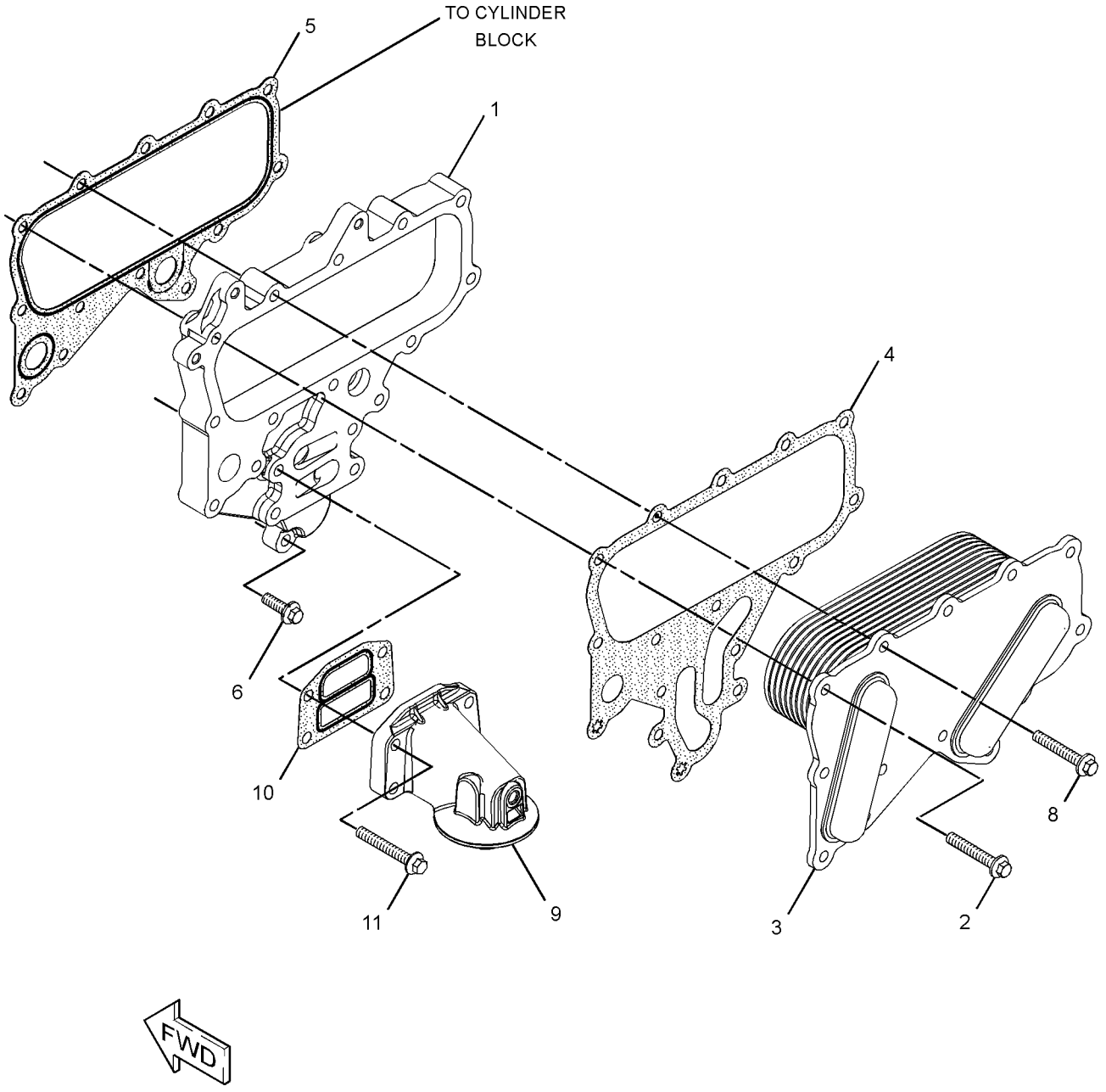

GRAPHIC #2 **<END>** g01207440

185-1045 FAN GP-SUCTION

S/N: BYD1-UP; FTD1-UP

PART OF 289-8884 INSTALLATION AR-ENGINE

SMCS-1356 **i01804762**

NOTE	REF NO	GRAPHIC REF	PART NUMBER	QTY	PART NAME 1 2 3 4 5 6 (PRODUCT LEVEL)	SEE PAGE
	1	1	**185-1046**	1	SPIDER AS-FAN	
M	2	1	**8T-4189**	4	BOLT (M8X1.25X20MM)	
	3	1	**8T-4224**	4	WASHER-HARD (8.8X16X2MM THK)	

M-METRIC PART

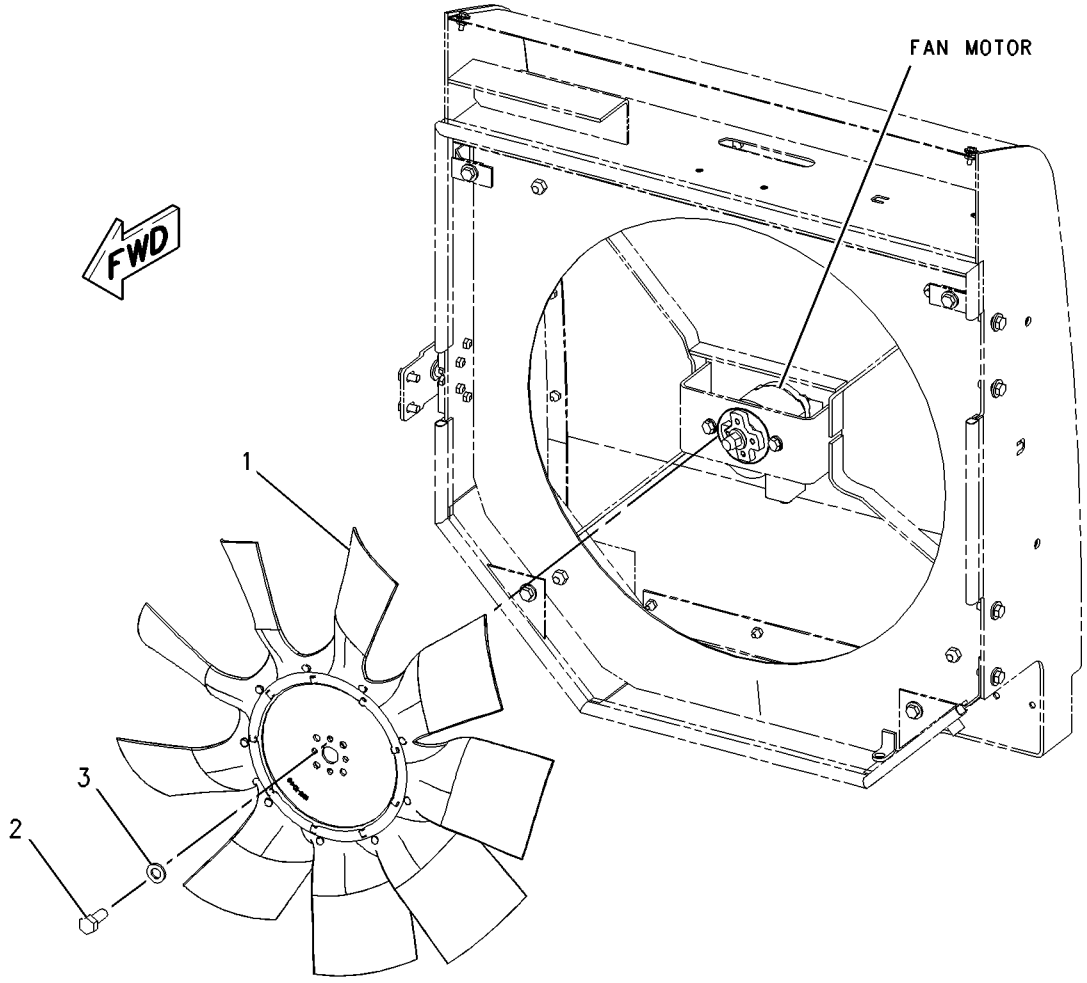

GRAPHIC #1 **<END>** g00923981

COOLING SYSTEM

290-7198 GUARD GP-FAN

S/N: BYD1-UP; FTD1-UP

PART OF 289-8871, 289-8891, 290-6498 CHASSIS AR

SMCS-1360 **i02803213**

NOTE	REF NO	GRAPHIC REF	PART NUMBER	QTY	PART NAME 1 2 3 4 5 6 (PRODUCT LEVEL)	SEE PAGE
	1	1	**5V-8780**	1	KNOB	
	2	1	**8T-4157**	1	STRIKER AS	
		1	**8T-4158**	1	WASHER-SPECIAL (CONICAL)	
	3	1	**009-3101**	1	RING-RETAINING	
	4	1	**112-5345**	1	LATCH AS-DOOR	
	5	1	**122-6246**	1	PLATE	
	6	1	**174-4246**	1	BRACKET	
	7	1	**202-7857**	1	MOUNT AS	
		1	**5D-9629**	2	ROD	
	8	1	**205-2214**	1	GRILL AS	
	9	1	**239-3322**	1	ROD	
	10	1	**256-7271**	1	PLATE	
	11	1	**289-8794**	1	GUARD GP-RADIATOR	
	12	1	**290-7199**	1	BRACKET	
M	13	1	**186-0815**	20	BOLT (M6X1X20-MM)	
	14	1	**186-0817**	20	WASHER-HARD (7X19X2-MM THK)	
	15	1	**5P-1076**	1	WASHER-HARD (13.5X30X4-MM THK)	
M	16	1	**7X-2533**	4	BOLT (M6X1X35-MM)	
	17	1	**7X-7729**	14	WASHER (11X25X3-MM THK)	
	18	1	**8T-4121**	4	WASHER-HARD (11X21X2.5-MM THK)	
M	19	1	**8T-4136**	4	BOLT (M10X1.5X25-MM)	
M	20	1	**8T-4137**	10	BOLT (M10X1.5X20-MM)	
M	21	1	**8T-4195**	4	BOLT (M10X1.5X30-MM)	
	22	1	**8T-4205**	4	WASHER-HARD (7.2X14.5X2-MM THK)	
M	23	1	**8T-4244**	1	NUT (M12X1.75-THD)	
D	24	1	**5P-7211**		SEAL (1.3-M)	
D	24A	1	**5P-7211**		SEAL (1.2-M)	
D	24B	1	**5P-7211**		SEAL (0.3-M)	

D-ORDER BY THE METER
M-METRIC PART

290-7198 **GUARD GP-FAN** *(contd.)* **i02803213**

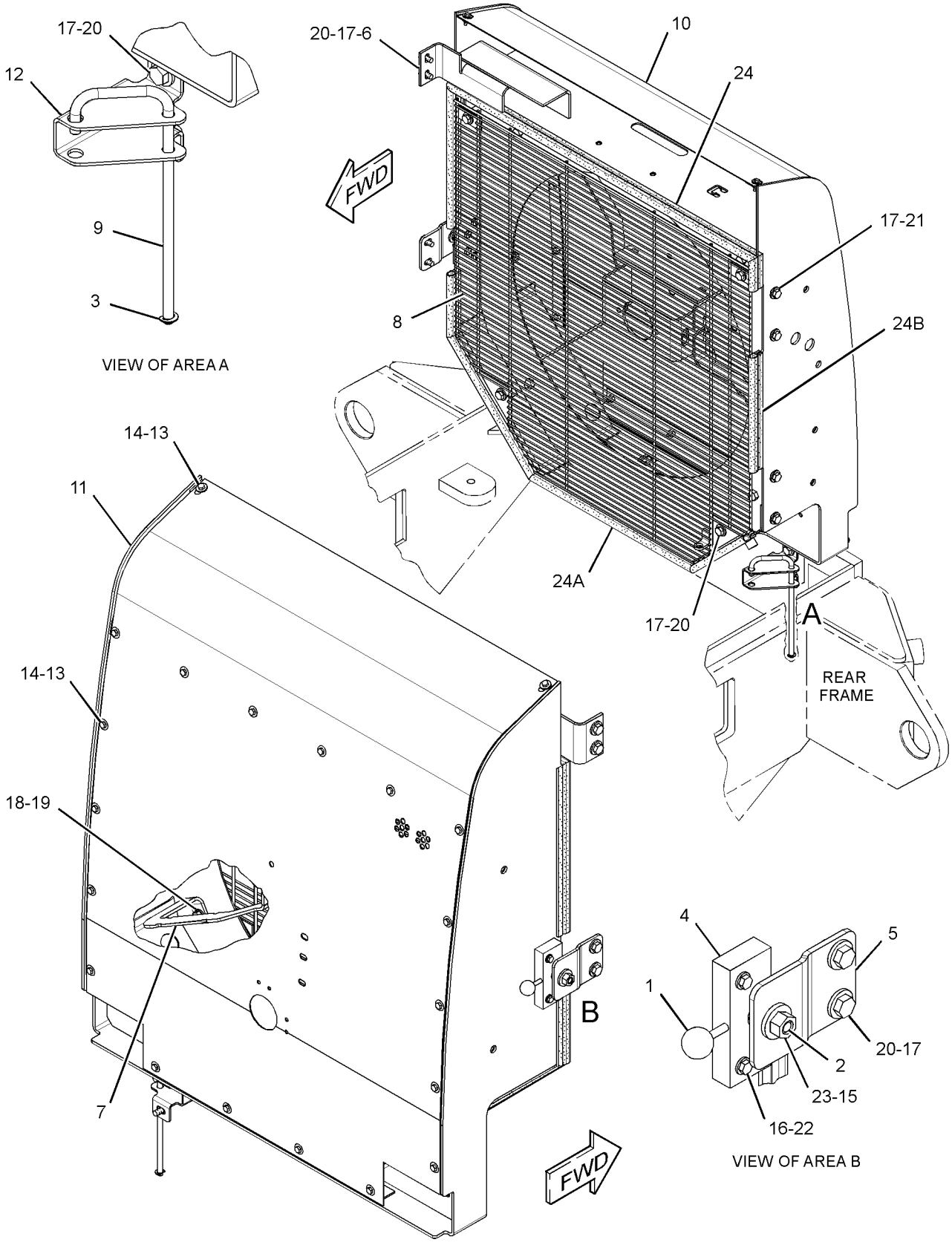

GRAPHIC #1 **<END>** g01405473

290-6406 LINES GP-WATER—WITH AXLE OIL COOLER

S/N: FTD1-UP

PART OF 289-8987 AXLE AR-OSCILLATING

AN ATTACHMENT

SMCS-1380 **i02793422**

NOTE	REF NO	GRAPHIC REF	PART NUMBER	QTY	PART NAME 1 2 3 4 5 6 (PRODUCT LEVEL)	SEE PAGE
	1	1	**185-1023**	1	HOSE	
	2	1	**185-1030**	1	HOSE	
	3	1	**214-7458**	3	CLAMP-HOSE	
	4	1	**216-6945**	3	CLAMP-HOSE	
	5	1	**216-6946**	2	CLAMP	
	6	1	**290-6403**	1	HOSE	
	7	1	**290-6405**	1	HOSE	

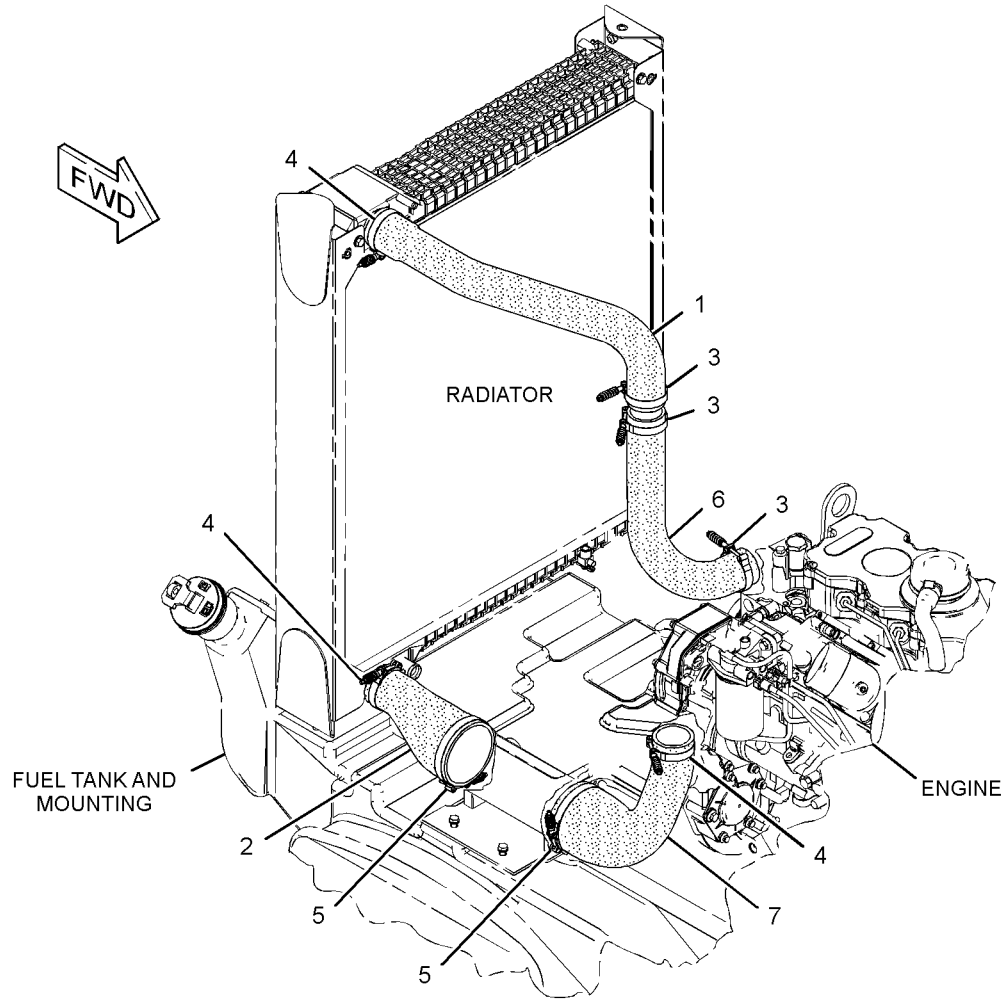

GRAPHIC #1

<END>

g01406572

290-6407 LINES GP-WATER—WITHOUT AXLE OIL COOLER

S/N: BYD1-UP; FTD1-UP

PART OF 289-8990, 289-8993 AXLE AR-OSCILLATING AN ATTACHMENT

SMCS-1380 **i02865541**

NOTE	REF NO	GRAPHIC REF	PART NUMBER	QTY	PART NAME 1 2 3 4 5 6 (PRODUCT LEVEL)	SEE PAGE
	1	1	**185-1023**	1	HOSE (UPPER)	
	2	1	**290-6403**	1	HOSE (UPPER)	
	3	1	**290-6404**	1	HOSE (LOWER)	
	4	1	**8T-4984**	3	CLAMP-HOSE	
	5	1	**8T-6703**	3	CLAMP-HOSE	

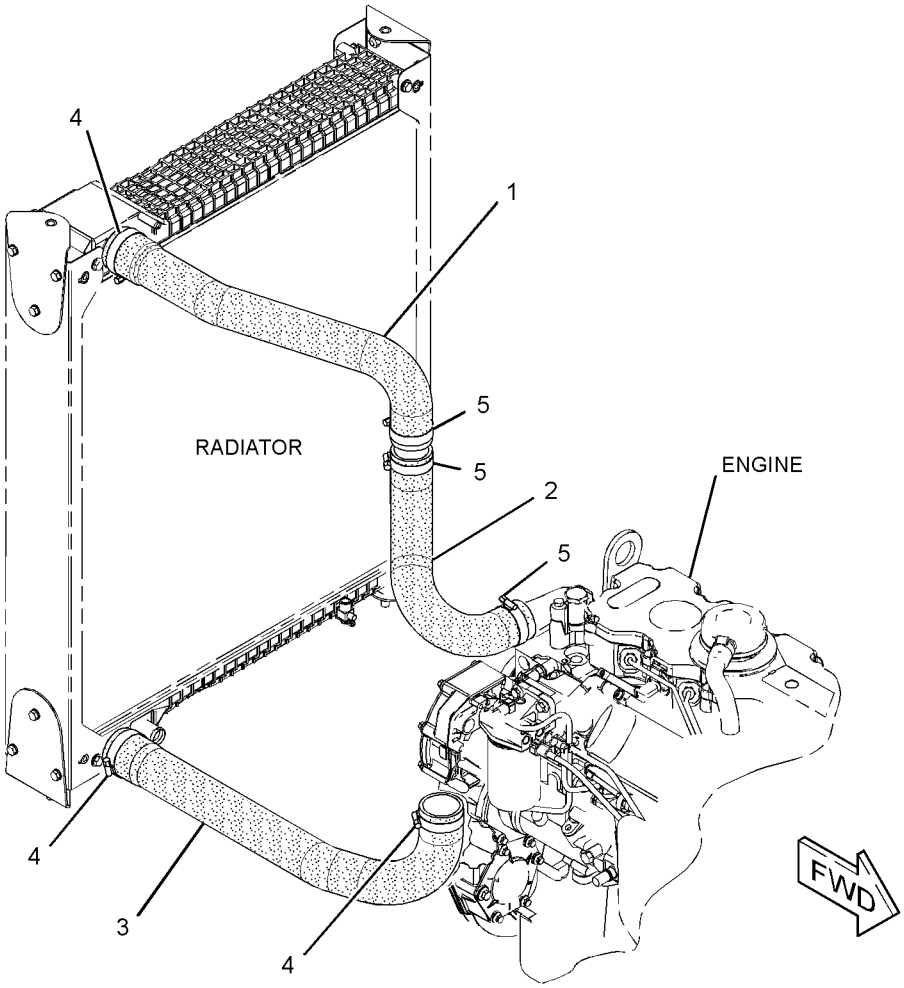

GRAPHIC #1 **<END>** g01435173

COOLING SYSTEM

277-2939 PUMP GP-WATER

S/N: C6E1-UP

PART OF 292-5305, 301-3361 ENGINE AR-PRIMARY

AN ATTACHMENT

SMCS-1361 **i02836920**

NOTE	REF NO	GRAPHIC REF	PART NUMBER	QTY	PART NAME 1 2 3 4 5 6 (PRODUCT LEVEL)	SEE PAGE
	1	1	**307-9843**	1	PUMP GP-WATER	
	1A	1	**287-7430**	1	GASKET-COVER	
	1B	1	**225-8019**	1	GASKET	
	1C	1	**278-3242**	2	BOLT-FLANGE HEAD	
M	5	1	**6I-0254**	2	BOLT (M8X1.25X30-MM)	
	6	1	**113-8129**	7	BOLT (M8X75-MM)	
	7	1	**277-2925**	1	CONNECTION AS	
	7A	1	**225-7738**	1	SEAL-O-RING	
	7B	1	**277-2923**	1	GASKET	
M	10	1	**6I-0217**	2	BOLT (M8X1.25X20-MM)	

M-METRIC PART

277-2939 **PUMP GP-WATER** *(contd.)* **i02836920**

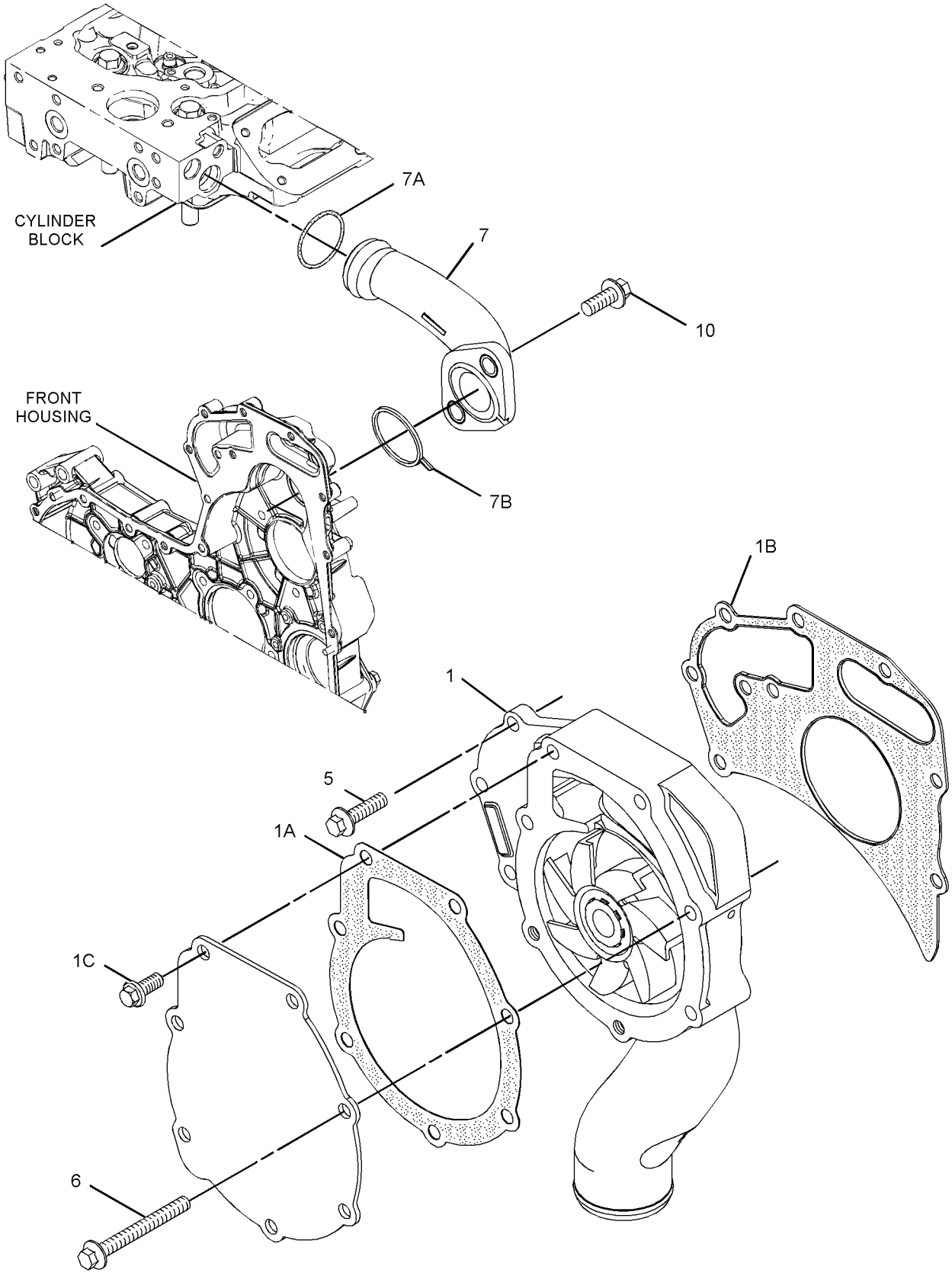

GRAPHIC #1 **<END>** g01365038

COOLING SYSTEM

317-1044 RADIATOR & AFTERCOOLER GP

S/N: BYD1-UP; FTD1-UP

PART OF 289-8884 INSTALLATION AR-ENGINE

SMCS-1063, 1353 **i02829651**

NOTE	REF NO	GRAPHIC REF	PART NUMBER	QTY	PART NAME 1 2 3 4 5 6 (PRODUCT LEVEL)	SEE PAGE
	1	1,2	**3S-2093**	4	STRAP-CABLE	
	2	2	**5D-1026**	6	CLAMP-HOSE	
	3	1	**6N-6984**	4	MOUNT-RUBBER	
	4	1	**7K-1181**	1	STRAP-CABLE	
	5	1	**7T-8332**	4	MOUNTING	
	6	2	**9X-3965**	1	TEE	
	7	2	**133-3260**	1	SPACER (11X19X10-MM THK)	
	8	2	**185-1017**	1	AFTERCOOLER AS	
	9	1	**185-1036**	1	BRACKET	
	10	1	**191-9182**	1	PLATE	
	11	1	**191-9184**	1	PLATE	
	12	1	**191-9192**	1	PLATE	
	13	1,2	**200-6345**	2	MOUNT (DUAL SWIVEL)	
	14	2	**212-3863**	1	TEE	
Y	15	1	**290-4074**	1	GUARD GP-RADIATOR	385
	16	2	*291-6621*	1	TANK GP-COOLANT	
		2	**251-3227**	1	CAP AS-COOLANT TANK	
		2	**291-6623**	1	TANK AS-COOLANT	
	17	1	**291-6629**	1	SUPPORT AS	
	18	2	**292-0239**	1	CHANNEL AS	
M		2	**8T-3490**	1	NUT-WELD (M10X1.5-THD)	
	19	2	**292-0240**	1	COOLER AS-FUEL	
	20	2	**292-0241**	1	SUPPORT AS	
M		2	**8T-3490**	2	NUT-WELD (M10X1.5-THD)	
	21	2	**292-8113**	1	HOSE	
Y	22	2	**293-2239**	1	COOLER GP-HYD & TMSN OIL	483
	23	2	**293-3032**	1	SEAL	
	24	2	**294-0565**	1	SEAL	
	25	1	**300-3174**	1	PLATE AS	
	26	2	**311-1723**	1	HOSE-MOLDED	
	27	1	**053-0189**	1	GROMMET	
	28	2	**091-0081**	6	SPACER (10.5X20X10-MM THK)	
	29	2	**3K-9520**	1	GROMMET	
	30	2	**4B-0418**	3	CLIP	
	31	2	**4D-7388**	2	CLIP	
M	32	2	**5C-7261**	8	NUT (M8X1.25-THD)	
	33	2	**5P-4116**	16	WASHER-HARD (8.8X20.5X2-MM THK)	
	34	1	**5P-6887**	1	GROMMET	
	35	1	**7X-7729**	15	WASHER (11X25X3-MM THK)	
	36	2	**7X-7958**	4	CLAMP-HOSE	
	37	1	**8F-6437**	2	WASHER (13.5X50.8X4.76-MM THK)	
	38	1,2	**8T-4121**	16	WASHER-HARD (11X21X2.5-MM THK)	
	39	1	**8T-4122**	4	WASHER-HARD (17X32X3.5-MM THK)	
M	40	1	**8T-4133**	8	NUT (M10X1.5-THD)	
M	41	1,2	**8T-4136**	6	BOLT (M10X1.5X25-MM)	
M	42	1,2	**8T-4137**	18	BOLT (M10X1.5X20-MM)	
M	43	1	**8T-4182**	4	BOLT (M10X1.5X45-MM)	
M	44	2	**8T-4186**	6	BOLT (M10X1.5X40-MM)	
M	45	2	**8T-4189**	4	BOLT (M8X1.25X20-MM)	
M	46	1	**8T-4193**	4	BOLT (M16X2X50-MM)	
M	47	1	**8T-4194**	2	BOLT (M12X1.75X50-MM)	
M	48	1	**8T-4195**	4	BOLT (M10X1.5X30-MM)	
M	49	2	**8T-4196**	1	BOLT (M10X1.5X35-MM)	
M	50	1	**8T-4200**	4	BOLT (M8X1.25X16-MM)	
	51	1,2	**8T-4222**	16	WASHER-PLATED (11X32X2.5-MM THK)	
	52	1	**8T-4223**	2	WASHER-HARD (13.5X25.5X3-MM THK)	

317-1044 **RADIATOR & AFTERCOOLER GP** *(contd.)* **i02829651**

NOTE	REF NO	GRAPHIC REF	PART NUMBER	QTY	PART NAME 1 2 3 4 5 6 (PRODUCT LEVEL)	SEE PAGE
	53	1	**8T-4224**	4	WASHER-HARD (8.8X16X2-MM THK)	
	54	1	**8T-4226**	4	WASHER-PLATED (10.5X45X3-MM THK)	
M	55	2	**8T-7547**	4	BOLT (M8X1.25X30-MM)	
D	56	1	**5P-7211**		SEAL (0.34-M)	
D	56A	1	**5P-7211**		SEAL (0.76-M)	
D	56B	1	**5P-7211**		SEAL (0.85-M)	
D	57	1	**5P-5755**		SEAL (2.35-M)	
D	57A	1	**5P-5755**		SEAL (2.26-M)	
D	57B	1	**5P-5755**		SEAL (3.05-M)	
D	57C	1	**5P-5755**		SEAL (0.85-M)	
E	58	2	**5P-1506**		HOSE (22-CM)	
E	58A	2	**5P-1506**		HOSE (135-CM)	
E	59	2	**8C-3681**		HOSE (147-CM)	
E	59A	1	**8C-3681**		HOSE (117.5-CM)	
E	60	2	**9X-2133**		HOSE (84-CM)	

D-ORDER BY THE METER
E-ORDER BY THE CENTIMETER
M-METRIC PART
Y-SEPARATE ILLUSTRATION

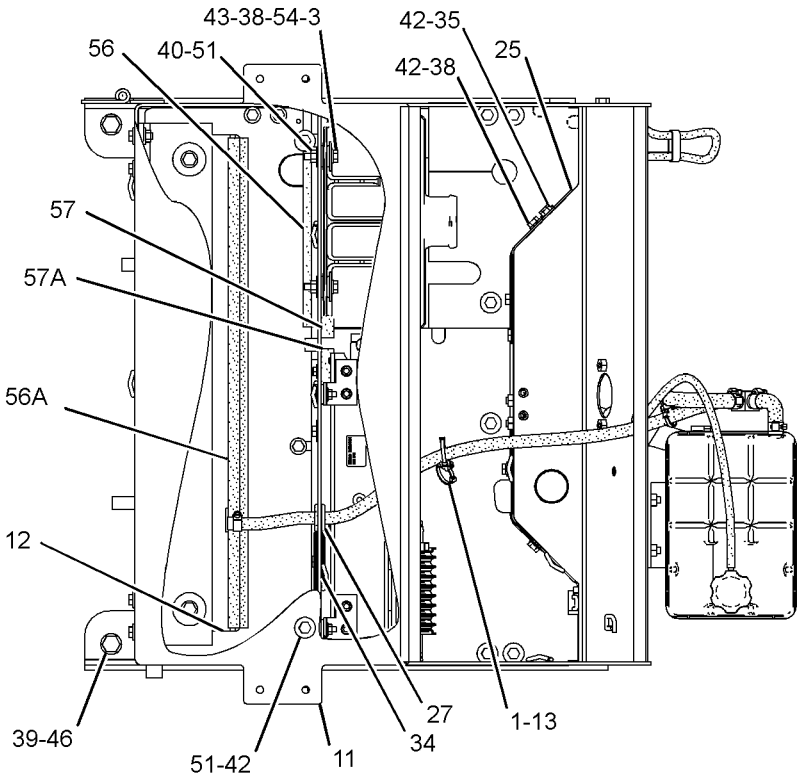

FWD TOP VIEW

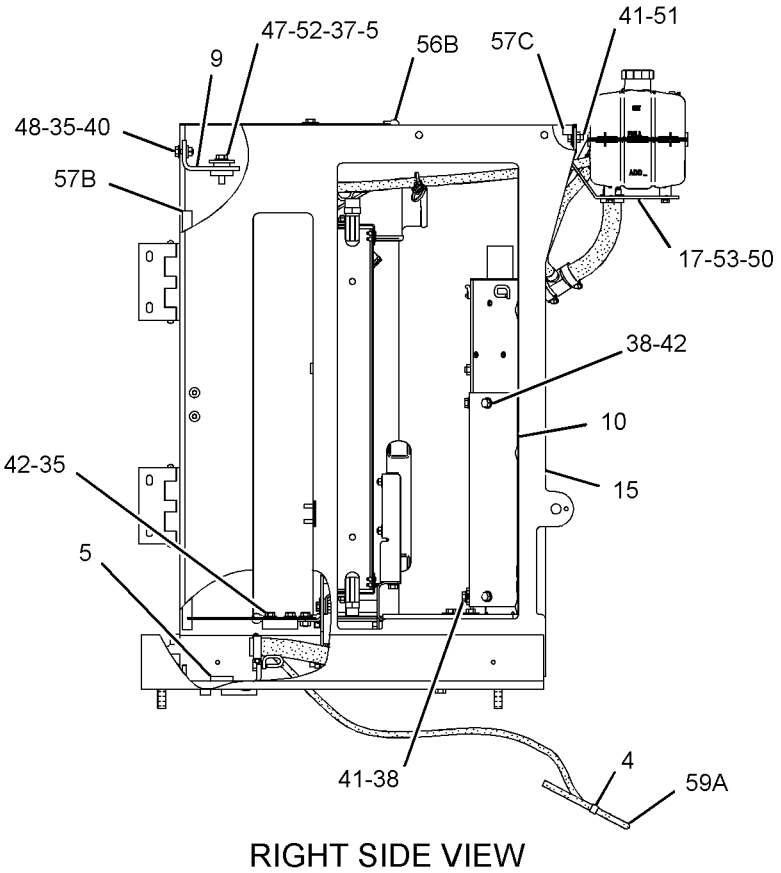

RIGHT SIDE VIEW

GRAPHIC #1 g01413943

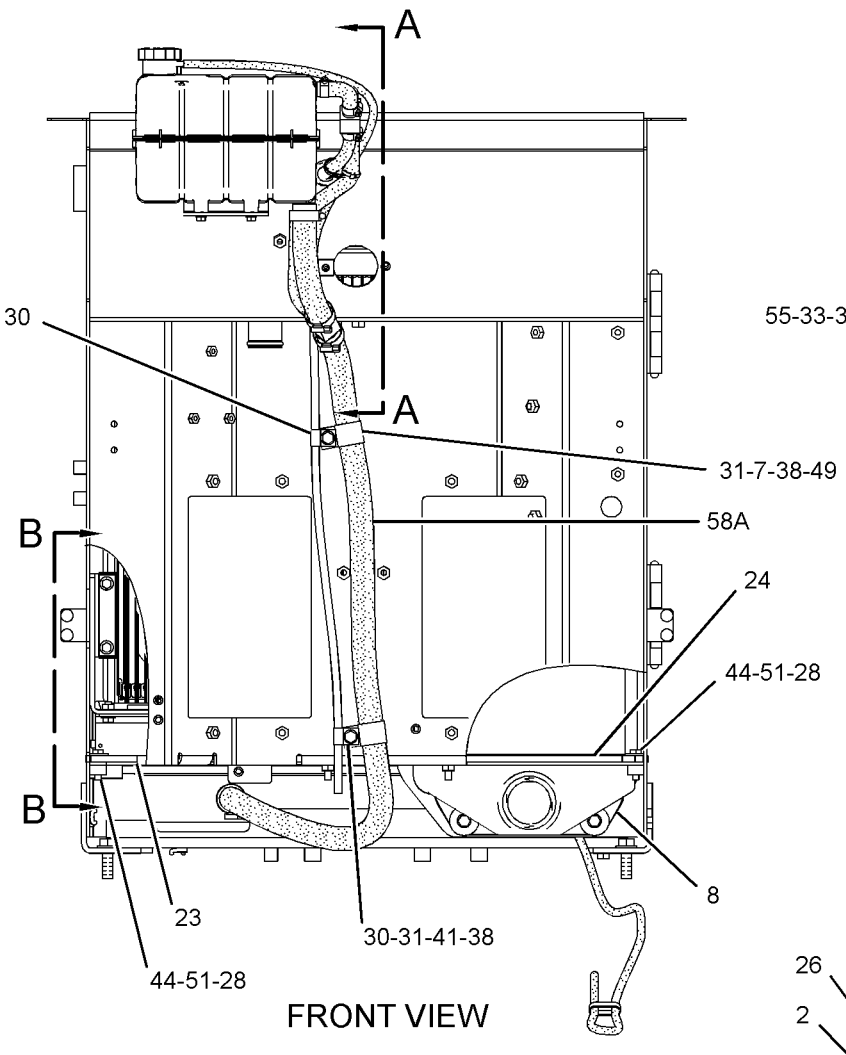

FRONT VIEW

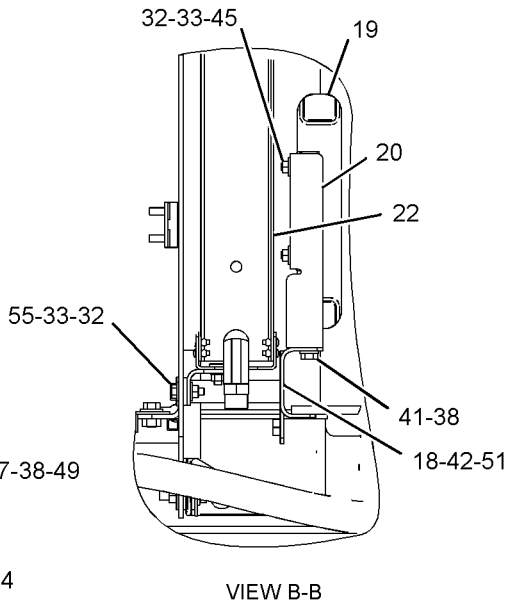

VIEW B-B

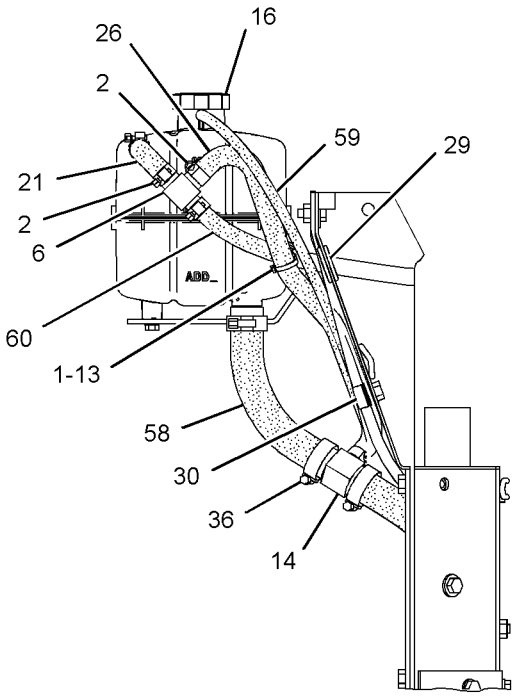

SECTION A-A

GRAPHIC #2 **<END>** g01413945

COOLING SYSTEM

185-1016 RADIATOR GP

S/N: BYD1-UP; FTD1-UP
PART OF 239-7396 RADIATOR GP
AN ATTACHMENT

SMCS-1353 **i02849556**

NOTE	REF NO	GRAPHIC REF	PART NUMBER	QTY	PART NAME 1 2 3 4 5 6 (PRODUCT LEVEL)	SEE PAGE
	1	1	**185-1027**	4	BRACKET AS	
	2	1	**225-4287**	1	VALVE GP-RADIATOR DRAIN	
	3	1	**7X-3393**	8	WASHER-HARD (8.3X19X1.83-MM THK)	
M	4	1	**8T-4189**	8	BOLT (M8X1.25X20-MM)	
M	5	1	**8T-4200**	12	BOLT (M8X1.25X16-MM)	
	6	1	**8T-4224**	12	WASHER-HARD (8.8X16X2-MM THK)	

M-METRIC PART

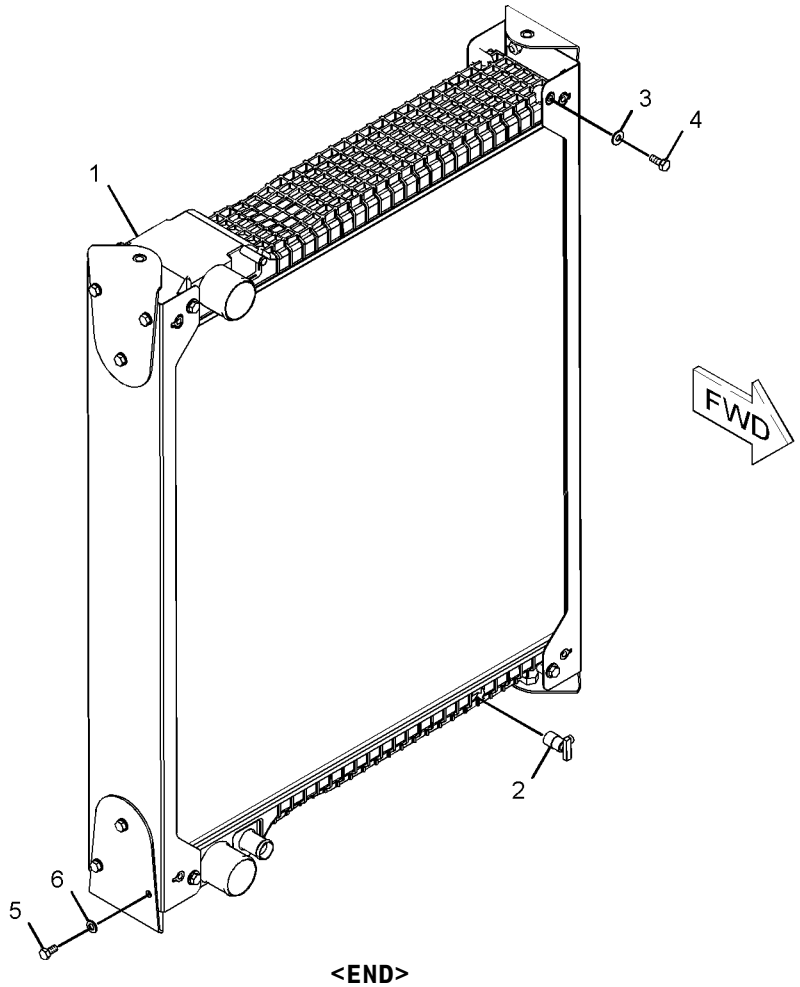

GRAPHIC #1 **<END>** g01013363

238-6658 RADIATOR GP–WASTE HANDLER

S/N: BYD1-UP; FTD1-UP
PART OF 239-7397 RADIATOR GP
AN ATTACHMENT

SMCS-1353 **i02849555**

NOTE	REF NO	GRAPHIC REF	PART NUMBER	QTY	PART NAME 1 2 3 4 5 6 (PRODUCT LEVEL)	SEE PAGE
	1	1	**185-1027**	4	BRACKET AS	
	2	1	**225-4287**	1	VALVE GP-RADIATOR DRAIN	
	3	1	**7X-3393**	8	WASHER-HARD (8.3X19X1.83-MM THK)	
M	4	1	**8T-4189**	8	BOLT (M8X1.25X20-MM)	
M	5	1	**8T-4200**	12	BOLT (M8X1.25X16-MM)	
	6	1	**8T-4224**	12	WASHER-HARD (8.8X16X2-MM THK)	

M-METRIC PART

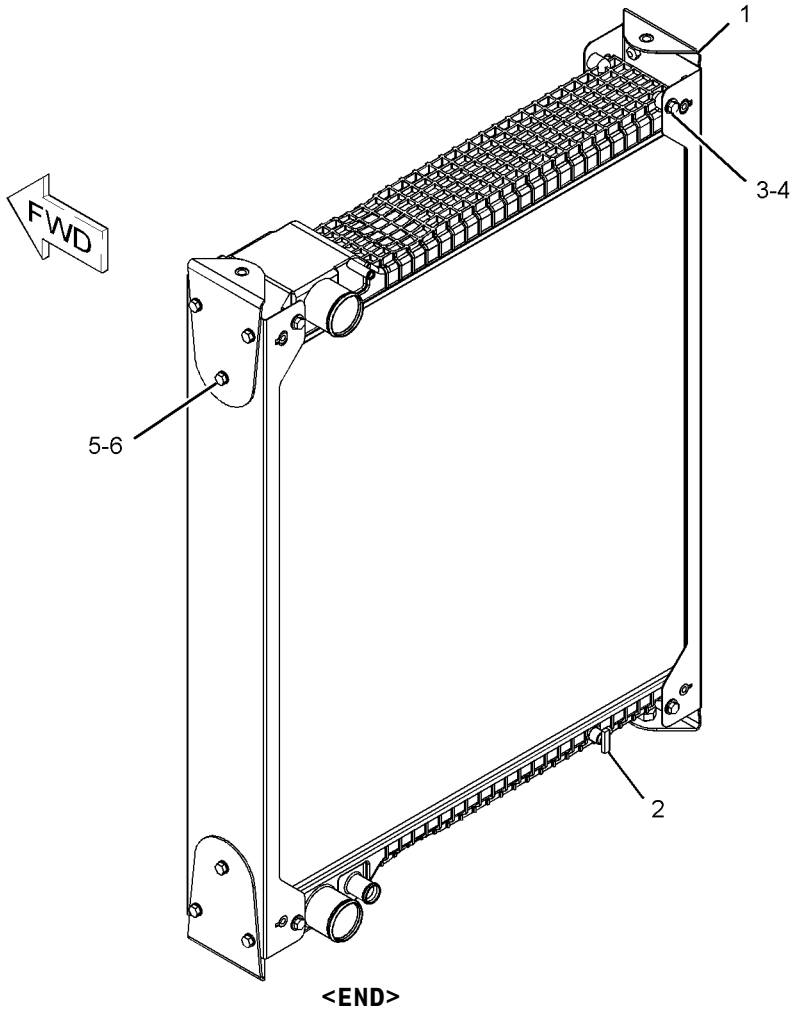

GRAPHIC #1 **<END>** g01079211

239-7396 RADIATOR GP

S/N: BYD1-UP; FTD1-UP
CANNOT BE USED WITH 239-7397—PAGE 87
AN ATTACHMENT

SMCS-1353 **i02061890**

NOTE	REF NO	GRAPHIC REF	PART NUMBER	QTY	PART NAME 1 2 3 4 5 6 (PRODUCT LEVEL)	SEE PAGE
Y	1	1	**185-1016**	1	RADIATOR GP	84
M	2	1	**9X-8482**	2	SETSCREW-SOCKET (M12X1.75X70-MM)	

M-METRIC PART
Y-SEPARATE ILLUSTRATION

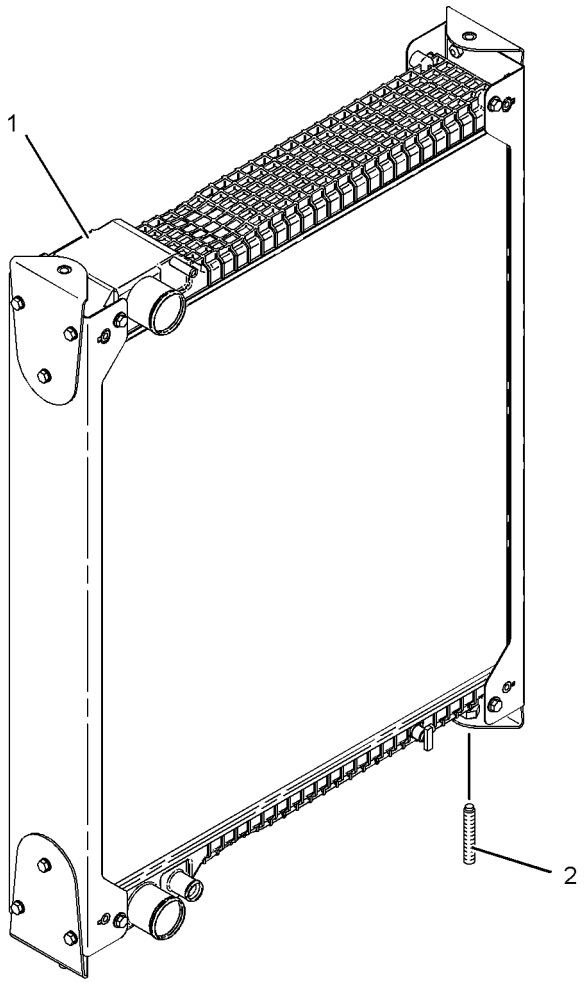

GRAPHIC #1 **<END>** g01087525

239-7397 RADIATOR GP—WASTE HANDLER

S/N: BYD1-UP; FTD1-UP

CANNOT BE USED WITH 239-7396—PAGE 86

AN ATTACHMENT

SMCS-1353 **i02830507**

NOTE	REF NO	GRAPHIC REF	PART NUMBER	QTY	PART NAME 1 2 3 4 5 6 (PRODUCT LEVEL)	SEE PAGE
Y	1	1	**238-6658**	1	RADIATOR GP (DRAIN)	85
M	2	1	**9X-8482**	2	SETSCREW-SOCKET (M12X1.75X70-MM)	

M-METRIC PART
Y-SEPARATE ILLUSTRATION

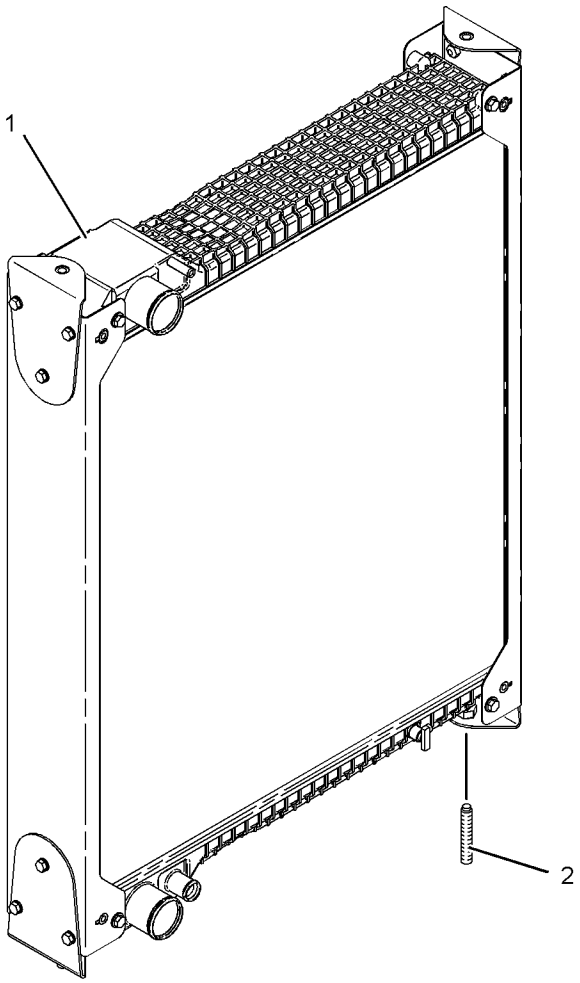

GRAPHIC #1 **<END>** g01087525

AIR INLET AND EXHAUST SYSTEM

289-3322 AIR CLEANER GP

S/N: BYD1-UP; FTD1-UP

PART OF 289-8884 INSTALLATION AR-ENGINE

SMCS-1051, 1054 **i02807312**

NOTE	REF NO	GRAPHIC REF	PART NUMBER	QTY	PART NAME 1 2 3 4 5 6 (PRODUCT LEVEL)	SEE PAGE
	1	1	**166-2087**	1	CAP-RAIN	
	2	1	**5P-1717**	2	CLAMP-HOSE	
M	3	1	**8C-4982**	2	BOLT-SOCKET HEAD (M4X0.7X20-MM)	
	4	1	*218-2792*	1	INDICATOR GP-AIR FILTER CHANGE	
		1	**187-2868**	1	INDICATOR AS-AIR FILTER CHANGE	
		1	**205-1627**	1	BRACKET	
	5	1	**255-4692**	1	CONNECTOR-FILTER	
	6	1	**289-3326**	1	BRACKET AS	
M		1	**9X-2032**	2	NUT-WELD (M4X0.7-THD)	
	7	1	**289-3327**	1	HOSE	
Y	8	1	**289-3740**	1	AIR CLEANER GP	90
	9	1	**4B-4863**	2	WASHER (4.7X11X1.2-MM THK)	
M	10	1	**5C-7261**	2	NUT (M8X1.25-THD)	
	11	1	**5P-4116**	4	WASHER-HARD (8.8X20.5X2-MM THK)	
	12	1	**7X-7729**	2	WASHER (11X25X3-MM THK)	
M	13	1	**8T-4195**	2	BOLT (M10X1.5X30-MM)	
M	14	1	**8T-7547**	2	BOLT (M8X1.25X30-MM)	
D	15	1	**6V-1363**		HOSE (0.4-M)	

D-ORDER BY THE METER
M-METRIC PART
Y-SEPARATE ILLUSTRATION

289-3322 **AIR CLEANER GP** *(contd.)* **i02807312**

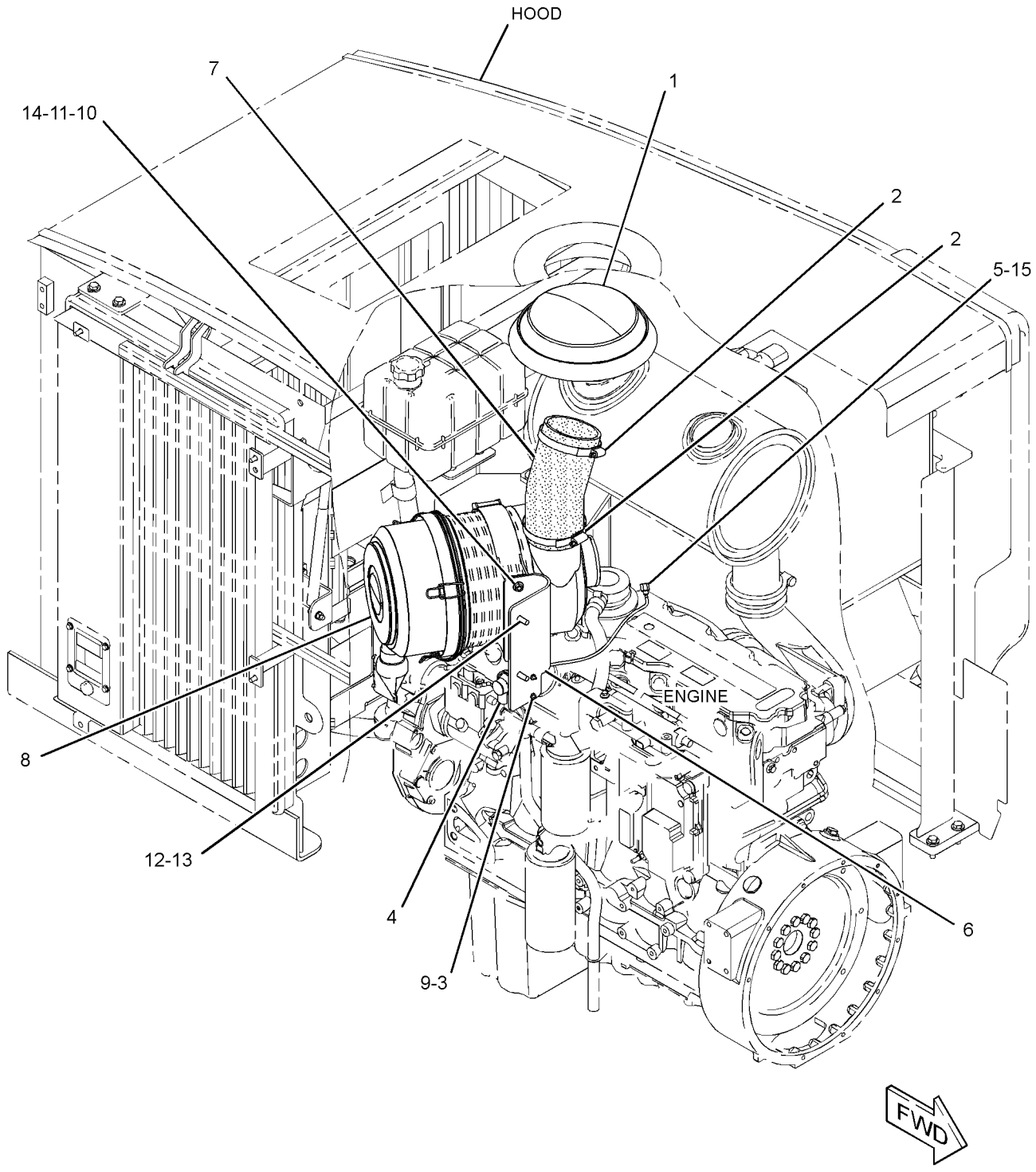

GRAPHIC #1 **<END>** g01389525

AIR INLET AND EXHAUST SYSTEM

289-3740 AIR CLEANER GP

S/N: BYD1-UP; FTD1-649

PART OF 289-3322 AIR CLEANER GP

SMCS-1051, 1054 **i02807293**

NOTE	REF NO	GRAPHIC REF	PART NUMBER	QTY	PART NAME 1 2 3 4 5 6 (PRODUCT LEVEL)	SEE PAGE
	1	1	**222-8652**	1	BRACKET-MOUNTING	
	2	1	**222-9020**	1	FILTER ELEMENT AS-AIR (PRIMARY)	
	3	1	**222-9021**	1	FILTER ELEMENT AS-AIR (SECONDARY)	
	4	1	**224-2263**	1	VALVE AS-AIR	
	5	1	**284-9491**	1	COVER AS-AIR CLEANER	

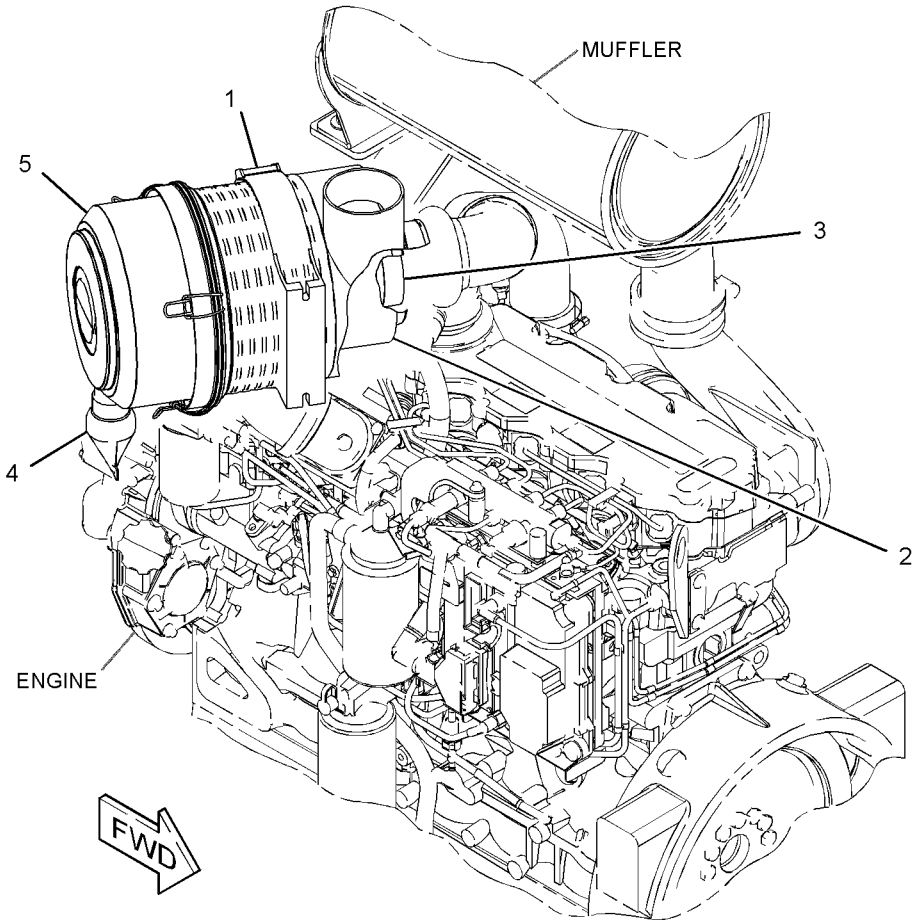

GRAPHIC #1 **<END>** g01391943

AIR INLET AND EXHAUST SYSTEM

193-3808 CONVERSION AR-AIR CLEANER

S/N: FTD1-UP
AIR INTAKE, SNOW REMOVAL
PART OF 308-1933 PLATFORM AR
AN ATTACHMENT

SMCS-1051, 1062 **i02637355**

NOTE	PART NUMBER	QTY	PART NAME 1 2 3 4 5 6 (PRODUCT LEVEL)	SEE PAGE
	5P-0599	1	CLAMP-BAND	
	7N-4247	1	BOOT	
	194-0711	1	CAP AS-SCREEN	
			–OR–	
	286-4696	1	CAP AS-AIR CLEANER	

<END>

AIR INLET AND EXHAUST SYSTEM

311-2236 EXTENSION GP-EXHAUST

S/N: BYD1-UP; FTD1-UP

PART OF 289-8884 INSTALLATION AR-ENGINE

SMCS-1061 **i02829658**

NOTE	REF NO	GRAPHIC REF	PART NUMBER	QTY	PART NAME 1 2 3 4 5 6 (PRODUCT LEVEL)	SEE PAGE
	1	1	**302-5195**	1	TUBE AS	
	2	1	**311-2237**	1	SUPPORT AS	
	3	1	**311-2239**	1	PLATE	
	4	1	**7X-7729**	4	WASHER (11X25X3-MM THK)	
M	5	1	**8T-4195**	4	BOLT (M10X1.5X30-MM)	

M-METRIC PART

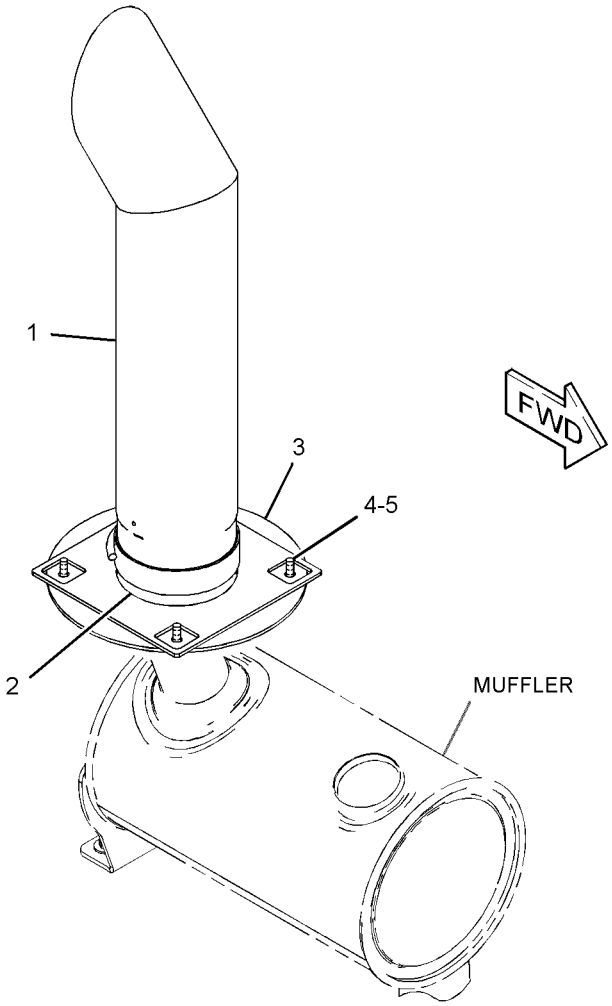

GRAPHIC #1 **<END>** g01413567

AIR INLET AND EXHAUST SYSTEM

289-3533 LINES GP-AIR

S/N: BYD1-UP; FTD1-UP

PART OF 289-8884 INSTALLATION AR-ENGINE

SMCS-1071 **i02807280**

NOTE	REF NO	GRAPHIC REF	PART NUMBER	QTY	PART NAME 1 2 3 4 5 6 (PRODUCT LEVEL)	SEE PAGE
	1	1	**109-5351**	1	HOSE	
	2	1	**159-2829**	1	HOSE	
	3	1	**209-4578**	1	CLAMP	
	4	1	**215-4012**	1	CLAMP	
	5	1	**216-4983**	2	CLAMP	
	6	1	**285-0824**	1	TUBE AS	
	7	1	**289-3534**	1	TUBE	
	8	1	**289-3536**	1	HOSE	
	9	1	**289-3537**	1	HOSE	
	10	1	**312-0806**	1	HOSE AS	
	11	1	**312-8743**	1	HOSE	
	12	1	**312-8744**	1	TUBE	
	13	1	**144-0367**	2	CLAMP-HOSE	
	14	1	**8T-4121**	2	WASHER-HARD (11X21X2.5-MM THK)	
M	15	1	**8T-4136**	2	BOLT (M10X1.5X25-MM)	
	16	1	**8T-4985**	2	CLAMP-HOSE	
	17	1	**9X-2201**	4	CLAMP-HOSE	

M-METRIC PART

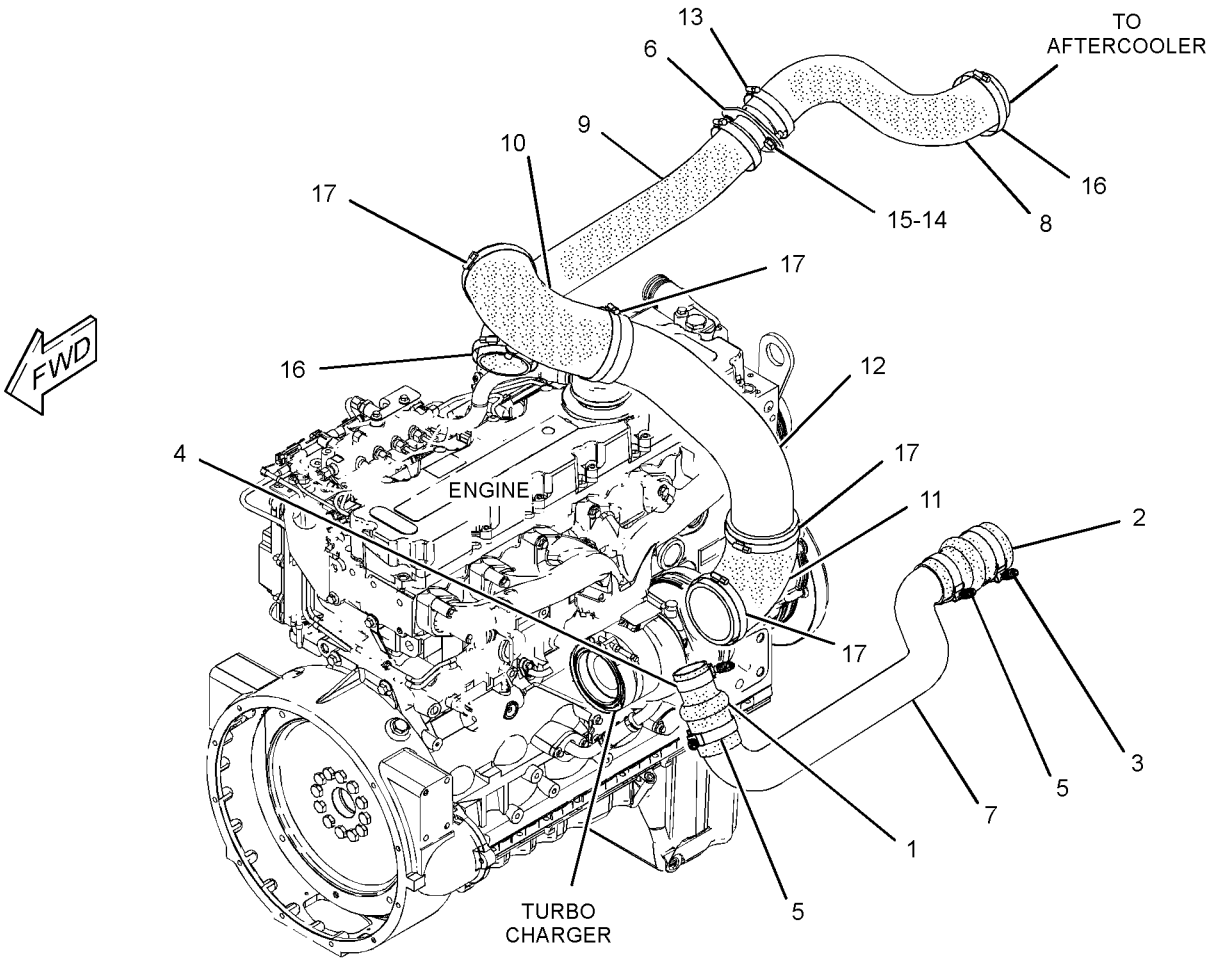

GRAPHIC #1 **<END>** g01403165

288-7985 MANIFOLD GP-INLET

S/N: C6E1-UP

PART OF 292-5305, 301-3361 ENGINE AR-PRIMARY

AN ATTACHMENT

SMCS-1058 **i02836909**

NOTE	REF NO	GRAPHIC REF	PART NUMBER	QTY	PART NAME 1 2 3 4 5 6 (PRODUCT LEVEL)	SEE PAGE
M	1	1	**6I-0645**	19	BOLT (M8X1.25X25-MM)	
	2	1	**9F-2247**	1	PLUG-PIPE	
	3	1	**234-3030**	1	GASKET	
	4	1	**295-0912**	1	COVER AS	
	4A	1	**277-4302**	2	DOWEL	
	4B	1	**278-5128**	1	GASKET-MANIFOLD	
	5	1	**280-1291**	1	ELBOW AS	

M-METRIC PART

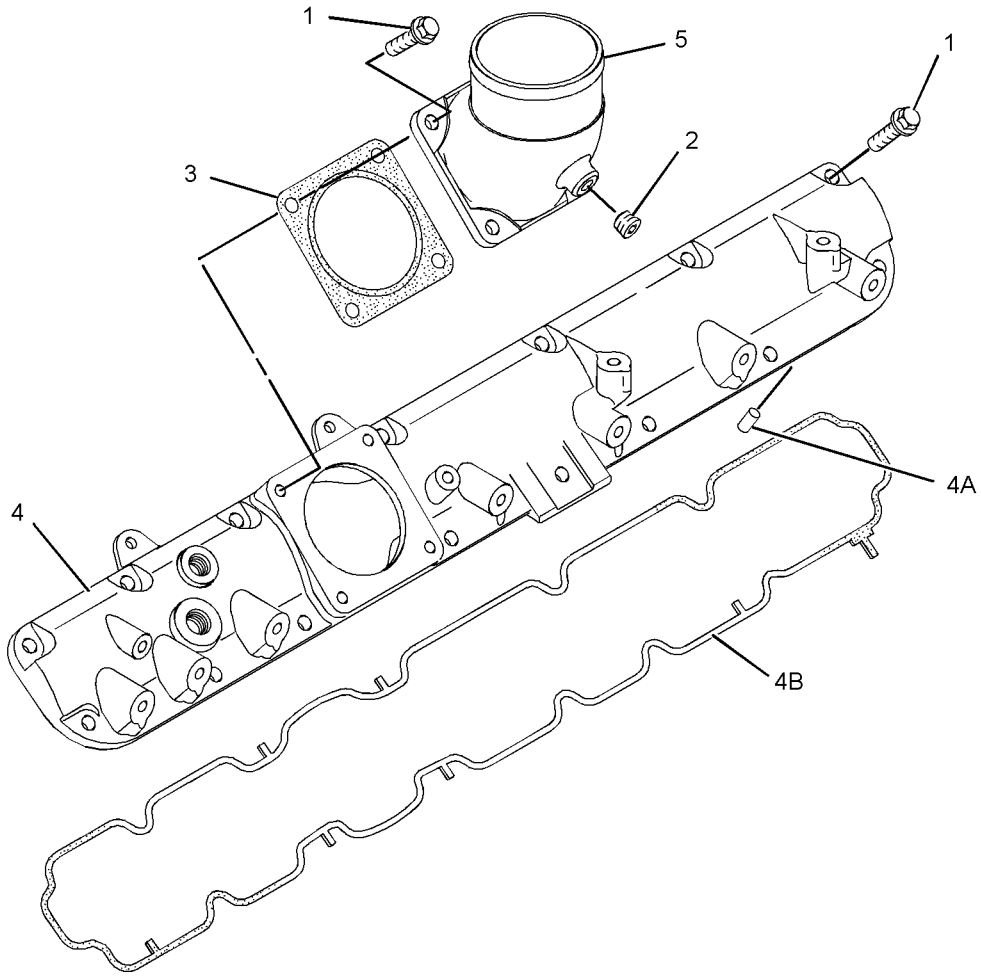

GRAPHIC #1 **<END>** g01271480

AIR INLET AND EXHAUST SYSTEM

289-3232 MUFFLER GP

S/N: BYD1-UP; FTD1-UP

PART OF 289-8884 INSTALLATION AR-ENGINE

SMCS-1062 **i02895413**

NOTE	REF NO	GRAPHIC REF	PART NUMBER	QTY	PART NAME 1 2 3 4 5 6 (PRODUCT LEVEL)	SEE PAGE
	1	1	**280-2424**	1	ADAPTER	
	2	1	**289-3233**	1	MUFFLER AS	
	3	1	**289-3234**	1	BRACKET	
	4	1	**289-3235**	1	ELBOW-EXHAUST	
	5	1	**7X-7729**	2	WASHER (11X25X3-MM THK)	
	6	1	**8T-4121**	2	WASHER-HARD (11X21X2.5-MM THK)	
M	7	1	**8T-4133**	2	NUT (M10X1.5-THD)	
M	8	1	**8T-4136**	2	BOLT (M10X1.5X25-MM)	
M	9	1	**8T-4185**	2	BOLT (M10X1.5X50-MM)	
M	10	1	**8T-4196**	2	BOLT (M10X1.5X35-MM)	
	11	1	**8T-4222**	4	WASHER-PLATED (11X32X2.5-MM THK)	
	12	1	**9Y-8315**	1	CLAMP-PIPE	

M-METRIC PART

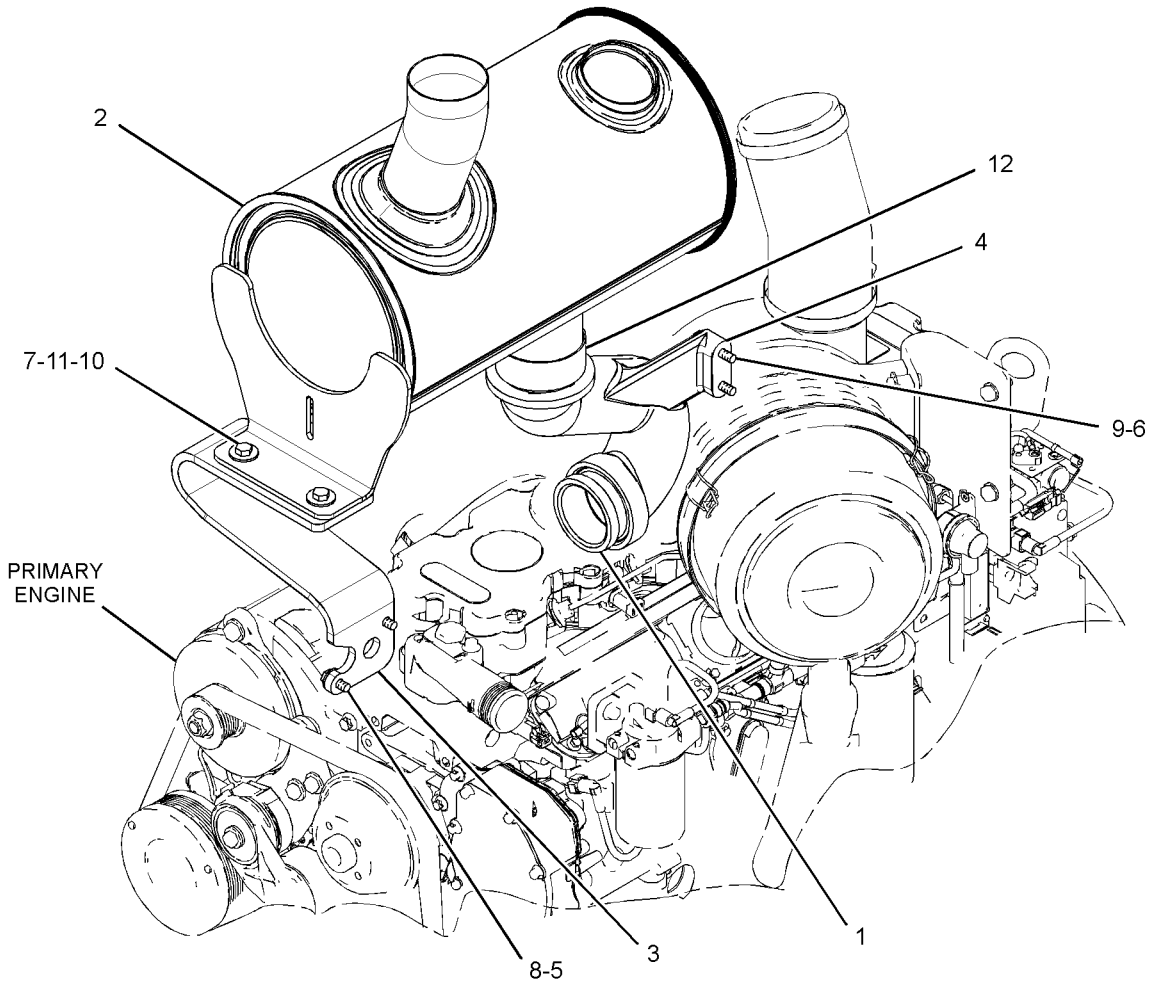

GRAPHIC #1 **<END>** g01442498

AIR INLET AND EXHAUST SYSTEM

299-3954 TURBOCHARGER GP

S/N: C6E1-UP

PART OF 292-5305, 301-3361 ENGINE AR-PRIMARY

AN ATTACHMENT

SMCS-1052, 1053 **i02854951**

NOTE	REF NO	GRAPHIC REF	PART NUMBER	QTY	PART NAME 1 2 3 4 5 6 (PRODUCT LEVEL)	SEE PAGE
	1	2	**6I-0817**	1	ADAPTER	
M	3	1	**6I-0217**	5	BOLT (M8X1.25X20-MM)	
M	4	2	**100-4830**	2	BOLT (M10X1.5X20-MM)	
	5	1	**278-0361**	4	BOLT (M10X1.5X45-MM)	
	6	1	**238-8292**	8	BOLT-FLANGE HEAD	
	8	1	**277-9463**	1	CLAMP	
	9	2	**303-2116**	5	CLIP	
	10	1	**278-0016**	1	GASKET	
	11	1	**278-0017**	1	GASKET	
	12	1	**279-9361**	2	GASKET-EXHAUST	
	13	1	**288-6985**	1	MANIFOLD GP-EXHAUST	
	14	2	**278-0310**	1	SOLENOID AS (WASTEGATE)	
	15	1	**286-7851**	8	SPACER	
	16	2	**278-0311**	1	TUBE AS	
	16A	2	**4B-8774**	1	NUT-FLARED	
	16B	2	**032-8047**	1	FERRULE	
	16C	2	**107-2348**	2	CLIP	
	16D	2	**133-9469**	1	CLIP	
	16E	2	**277-9605**	1	HOSE	
	17	2	**285-3197**	1	TUBE AS	
	17A	2	**4B-8774**	1	NUT-FLARED	
	17B	2	**032-8047**	2	FERRULE	
	17C	2	**035-8014**	1	NUT (7/16-IN)	
	18	1	**277-9941**	1	TUBE AS-TURBOCHARGER	
M	18A	1	**277-9938**	1	BOLT (BANJO)	
	18B	1	**277-9939**	2	WASHER	
	18C	1	**277-9940**	1	SEAL-O-RING	
	19	1	**278-0015**	1	TUBE AS-TURBOCHARGER	
	20	1	**315-9810**	1	TURBOCHARGER	
	20A	1	**277-9602**	1	CLAMP	
	20B	1	**277-9603**	1	CLAMP	
	21	2	**9Y-9381**	1	WASHER-HARD	
	22	1	**6I-0563**	4	NUT (M10X1.15-THD)	
	23	1	**141-8589**	1	GASKET	
	24	1	**147-5553**	4	STUD	

M-METRIC PART

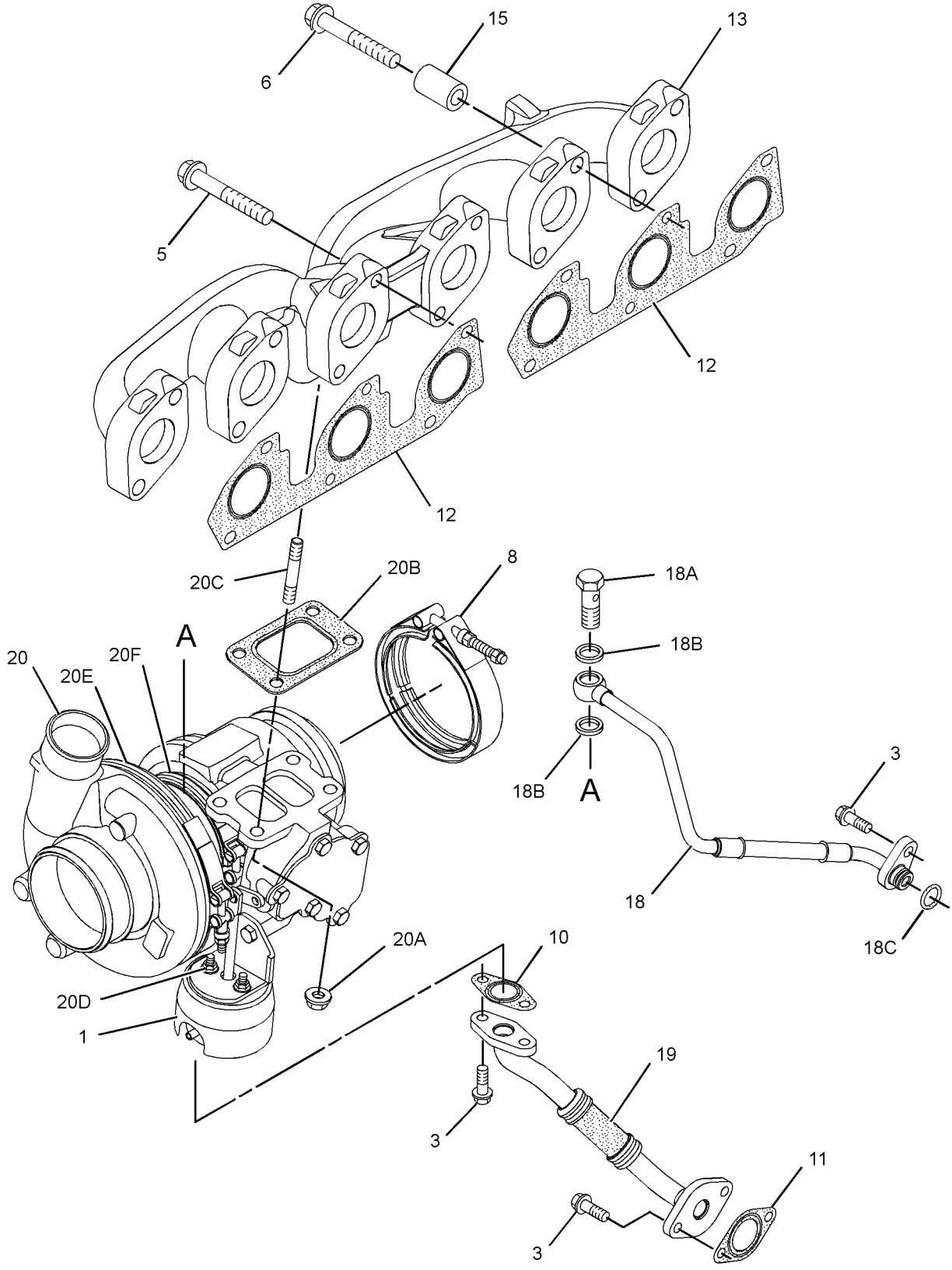

GRAPHIC #1 g01332858

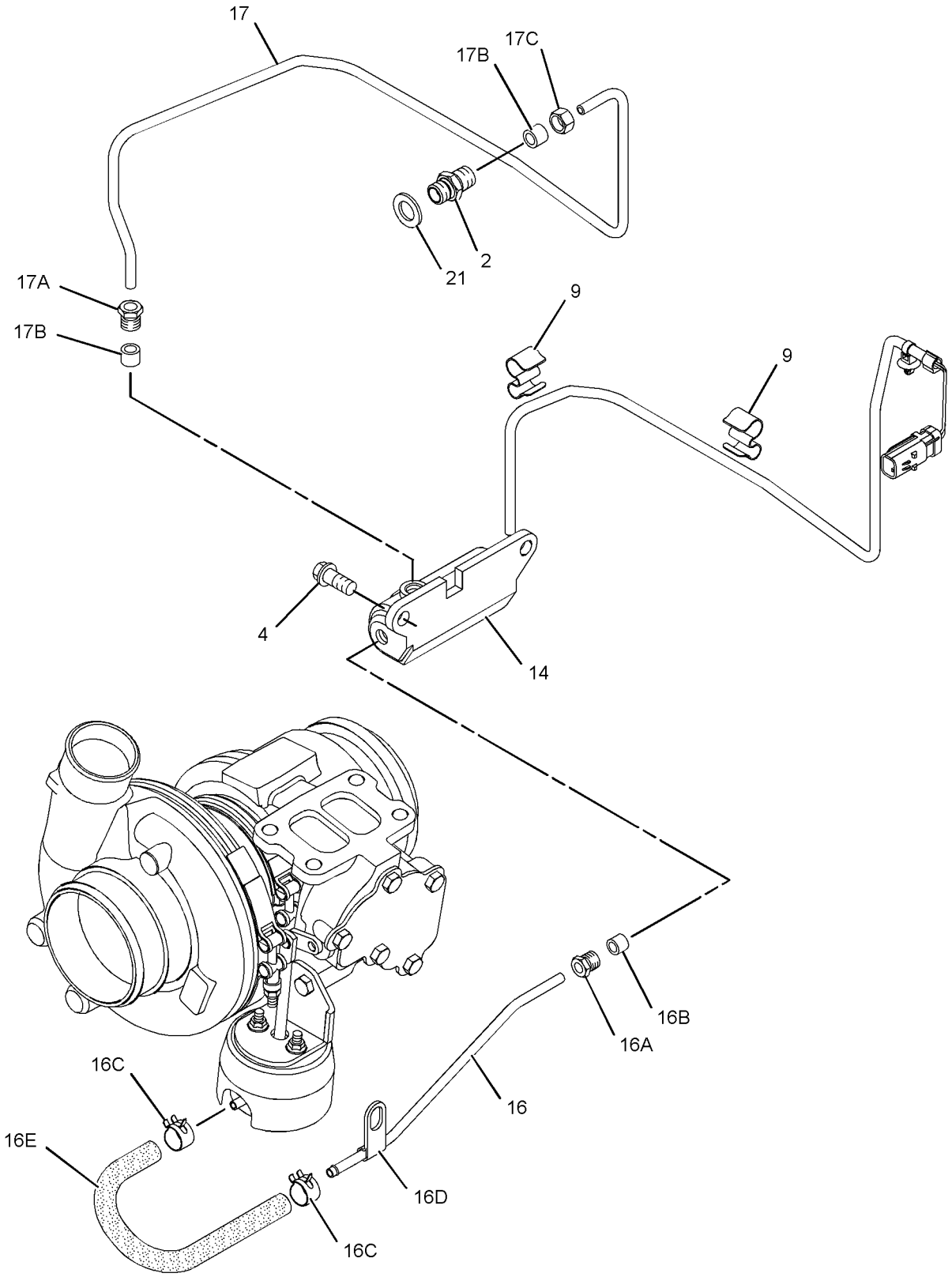

GRAPHIC #2 **<END>** g01332847

280-1394 FILTER GP-SECONDARY FUEL

S/N: C6E1-2313
PART OF 292-5305, 301-3361 ENGINE AR-PRIMARY
AN ATTACHMENT

SMCS-1261 **i02836894**

NOTE	REF NO	GRAPHIC REF	PART NUMBER	QTY	PART NAME 1 2 3 4 5 6 (PRODUCT LEVEL)	SEE PAGE
	1	1	**276-3905**	1	FILTER AS-FUEL (FILTER HEAD)	
	2	1	**271-9385**	1	FILTER AS-FUEL (ELEMENT)	

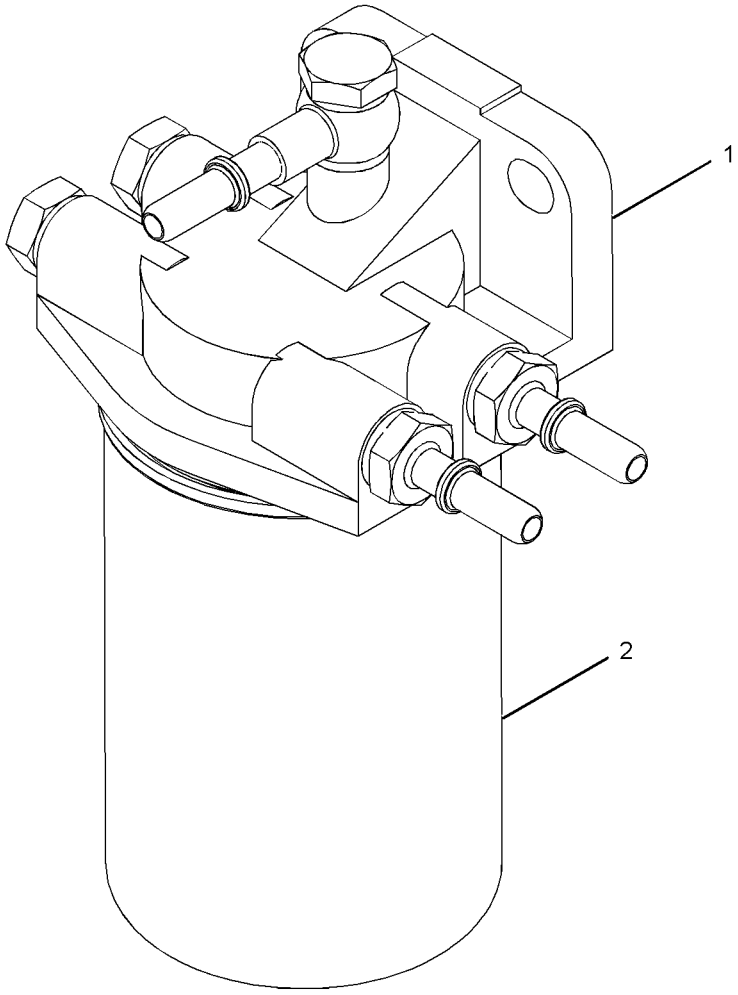

GRAPHIC #1 **<END>** g01209335

280-1394 FILTER GP-SECONDARY FUEL

S/N: C6E2314-UP

PART OF 292-5305, 301-3361 ENGINE AR-PRIMARY

AN ATTACHMENT

SMCS-1261 **i02839225**

NOTE	REF NO	GRAPHIC REF	PART NUMBER	QTY	PART NAME 1 2 3 4 5 6 (PRODUCT LEVEL)	SEE PAGE
C	1	1	**308-7480**	1	FILTER AS-FUEL (FILTER HEAD)	
	1A	1	**299-8229**	1	FILTER-FUEL (ULTRA HIGH EFFICIENCY) (HIGH EFFICIENCY)	

C-CHANGE FROM PREVIOUS TYPE

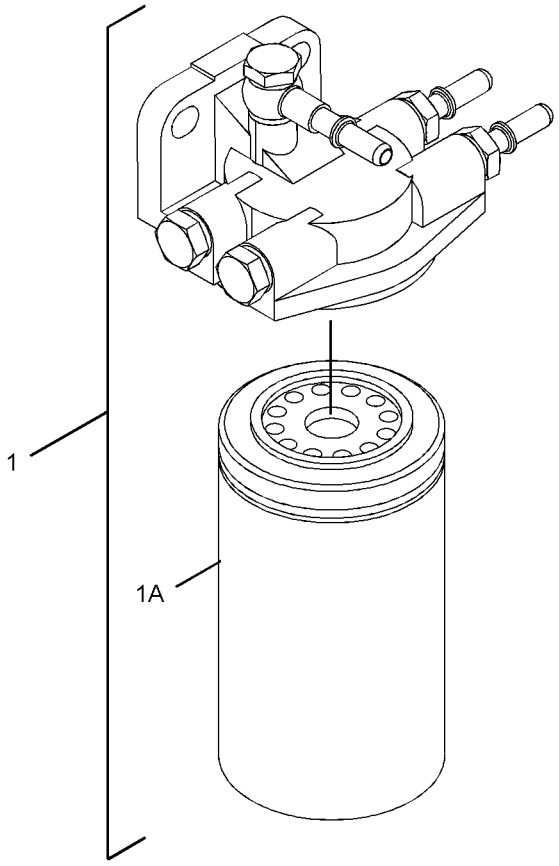

GRAPHIC #1 **<END>** g01416398

292-3790 INJECTOR GP-FUEL

S/N: C6E1-UP
PART OF 304-0292 PUMP GP-FUEL INJECTION
AN ATTACHMENT

SMCS-1251, 1254, 1290, 1713 **i02837340**

NOTE	REF NO	GRAPHIC REF	PART NUMBER	QTY	PART NAME 1 2 3 4 5 6 (PRODUCT LEVEL)	SEE PAGE
	1	1	**287-7637**	1	WASHER	
	2	1	**274-1639**	1	SEAL	

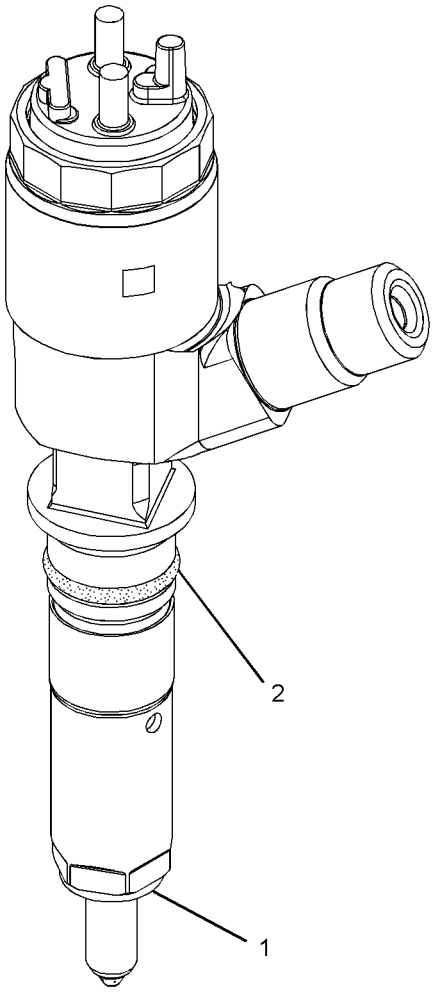

GRAPHIC #1 **<END>** g01321917

FUEL SYSTEM

289-8938 LINES GP-FUEL

S/N: BYD1-UP; FTD1-UP

PART OF 289-8884 INSTALLATION AR-ENGINE

SMCS-1274 **i02855341**

NOTE	REF NO	GRAPHIC REF	PART NUMBER	QTY	PART NAME 1 2 3 4 5 6 (PRODUCT LEVEL)	SEE PAGE
	1	1	**3S-2093**	2	STRAP-CABLE	
	2	1	**6S-8620**	8	CLAMP-HOSE	
	3	1	**6T-6969**	1	GUARD-SWITCH	
	4	1	**6V-5653**	2	ELBOW	
	5	1	**8T-9655**	8	MOUNT-ISOLATION	
	6	1	*164-5619*	2	PLUG AS	
					(EACH INCLUDES)	
		1	**2M-9780**	1	SEAL-O-RING	
		1	**9S-8006**	1	PLUG-O-RING	
Y	7	1	**165-5970**	1	SWITCH GP-TOGGLE (FUEL PRIMING PUMP ON, OFF)	185
	8	1	**185-1047**	1	ADAPTER	
Y	9	1	**212-3657**	1	WATER SEP & FUEL PRM PUMP GP (ELECTRIC) (PRIMARY FILTER)	123
	10	1	**232-1374**	1	BRACKET	
	11	1	**232-1376**	2	SPACER (8.5X12.7X139.1-MM THK)	
	12	1	**291-9943**	1	BRACKET AS	
M		1	**8T-3490**	1	NUT-WELD (M10X1.5-THD)	
	13	1	**293-9795**	1	BRACKET AS	
M		1	**8T-3490**	1	NUT-WELD (M10X1.5-THD)	
	14	1	**300-8841**	1	PLATE AS	
M		1	**8T-3490**	2	NUT-WELD (M10X1.5-THD)	
	15	1	**301-4852**	1	ADAPTER	
	16	1	**191-1782**	1	SPACER (8.5X12.7X38.2-MM THK)	
	17	1	**219-0669**	1	SEAL-O-RING	
	18	1	**238-5081**	3	SEAL-O-RING	
	19	1	**5K-4778**	1	CLIP	
	20	1	**5K-5338**	1	CLIP	
	21	1	**5K-8451**	1	CLIP	
	22	1	**6D-3479**	2	CLIP	
	23	1	**8S-0948**	1	CLIP	
	24	1	**8T-4121**	8	WASHER-HARD (11X21X2.5-MM THK)	
M	25	1	**8T-4136**	5	BOLT (M10X1.5X25-MM)	
M	26	1	**8T-4195**	3	BOLT (M10X1.5X30-MM)	
M	27	1	**8T-6869**	1	BOLT (M8X1.25X60-MM)	
M	28	1	**8T-7352**	2	BOLT (M8X160-MM)	
	29	1	**9N-0869**	6	WASHER-HARD (8.8X25.5X2-MM THK)	
E	30	1	**7I-1024**		GUARD (HOSE) (45-CM)	
E	31	1	**8C-3681**		HOSE (33-CM)	
E	32	1	**5P-1442**		HOSE (190-CM)	
E	32A	1	**5P-1442**		HOSE (55-CM)	
E	33	1	**5P-1505**		HOSE (175-CM)	
E	33A	1	**5P-1505**		HOSE (83-CM)	

E-ORDER BY THE CENTIMETER
M-METRIC PART
Y-SEPARATE ILLUSTRATION

289-8938 **LINES GP-FUEL** *(contd.)* **i02855341**

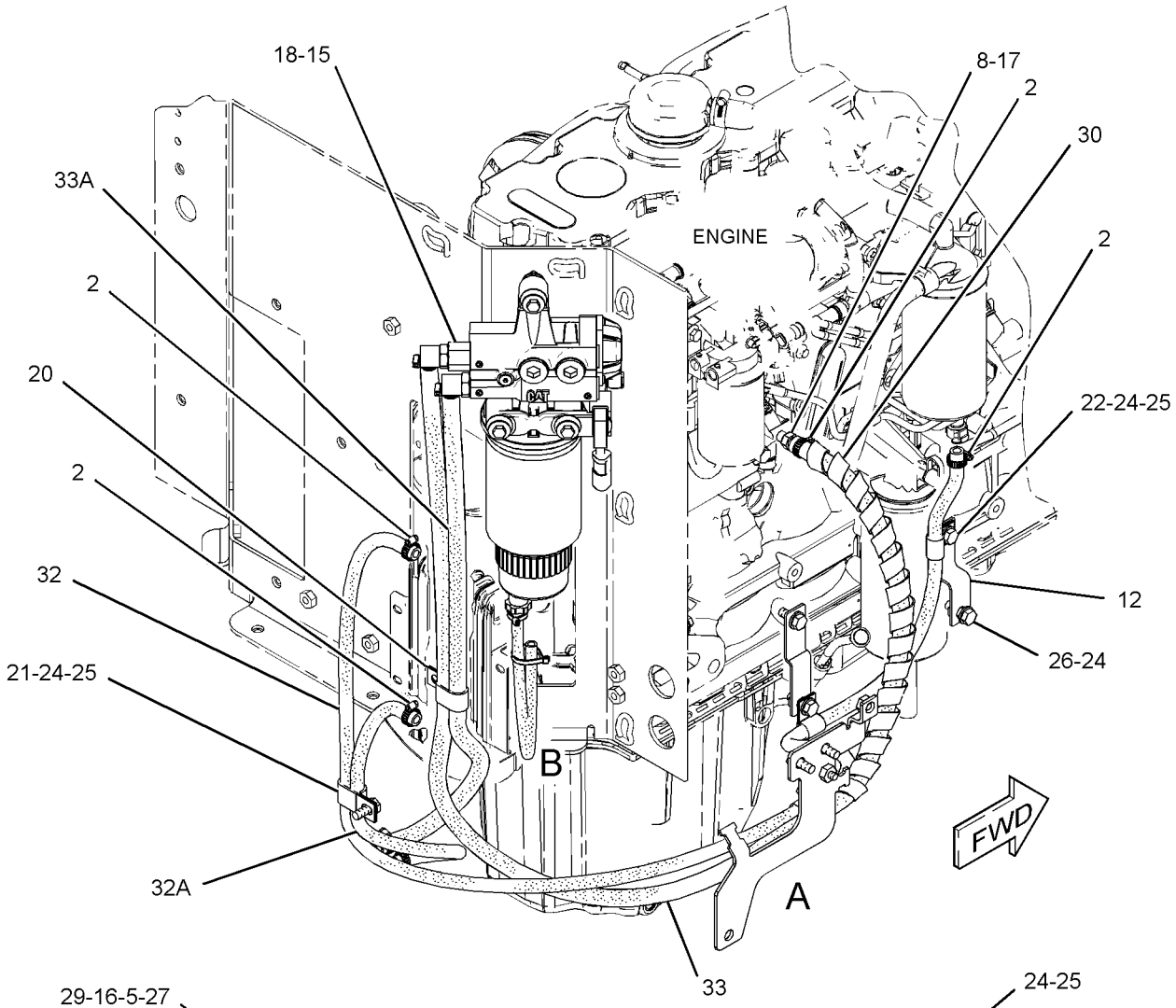

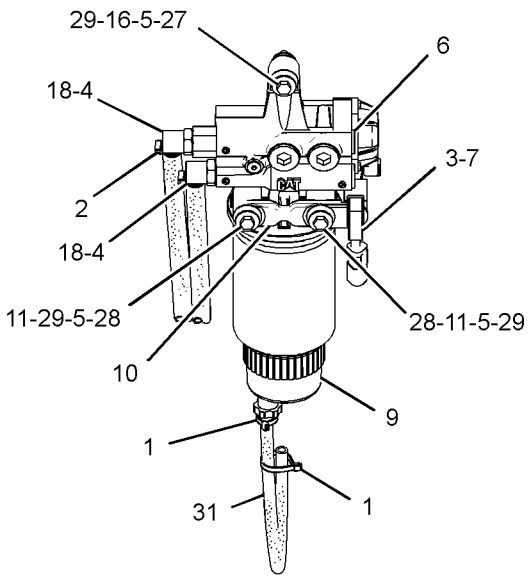

VIEW OF AREA B

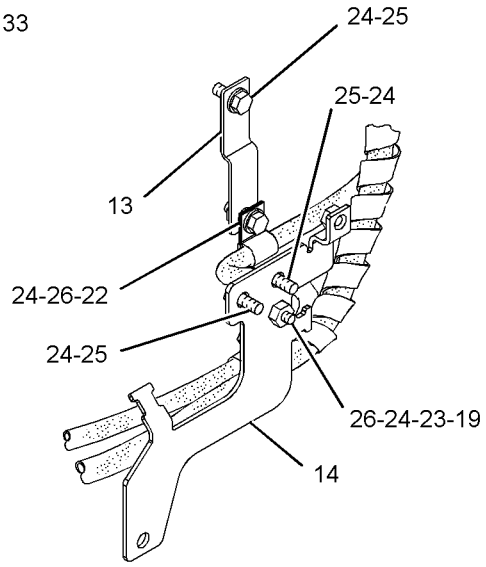

VIEW OF AREA A

GRAPHIC #1 **<END>** g01411999

FUEL SYSTEM

308-9075 LINES GP-FUEL

S/N: C6E1-2313

PART OF 292-5305, 301-3361 ENGINE AR-PRIMARY

AN ATTACHMENT

SMCS-1274 **i02836908**

NOTE	REF NO	GRAPHIC REF	PART NUMBER	QTY	PART NAME 1 2 3 4 5 6 (PRODUCT LEVEL)	SEE PAGE
M	1	1	**6I-0260**	4	BOLT (M8X1.25X25-MM)	
M	2	1	**6I-0593**	2	BOLT (M10X1.5X30-MM)	
M	4	2	**6I-0654**	1	BOLT (M10X1.5X25-MM)	
	5	2	**106-8916**	1	BOLT (M6X16-MM)	
M	6	2	**124-3815**	1	BOLT (M8X16X1.25-MM)	
	7	1	**215-9509**	1	FITTING AS (QUICK DISCONNECT)	
	8	2	**216-9752**	2	WASHER	
	9	2	**232-1115**	1	CLIP-PIPE	
	10	1	**234-3063**	1	CLIP	
	11	1,2	**277-6165**	2	CONNECTION-FUEL	
	12	2	**278-0314**	1	SPACER	
	13	1	**281-9106**	1	TUBE-FUEL	
	14	2	**281-9115**	1	TUBE-FUEL	
	15	1	**287-6849**	1	BRACKET AS	
	15A	1	**232-1115**	2	CLIP-PIPE	
	16	2	**287-6853**	1	BRACKET AS	
	16A	2	**232-1115**	2	CLIP-PIPE	
	17	2	**290-5735**	1	BRACKET AS	
	17A	2	**278-0315**	1	CLIP-PIPE	
	18	2	**293-8068**	1	TUBE-FUEL	
	19	2	**293-8069**	1	TUBE-FUEL	
	20	2	**295-4670**	1	BOLT-SPECIAL (BANJO)	
	21	1	**305-6157**	1	BRACKET	
	22	2	**306-5432**	1	BRACKET	
	23	2	**308-9076**	1	BRACKET AS	
	23A	2	**232-1115**	2	CLIP-PIPE	
	24	1	**308-9077**	1	TUBE	
	25	1	**308-9078**	1	BRACKET AS	
	25A	1	**232-1115**	5	CLIP-PIPE	
	26	2	**308-9079**	1	BRACKET AS	
	26A	2	**232-1115**	2	CLIP-PIPE	
F			**278-4138**	5	PROTECTION GP-FUEL SYSTEM (LINE, LOW PRESSURE)	

F-NOT SHOWN
M-METRIC PART

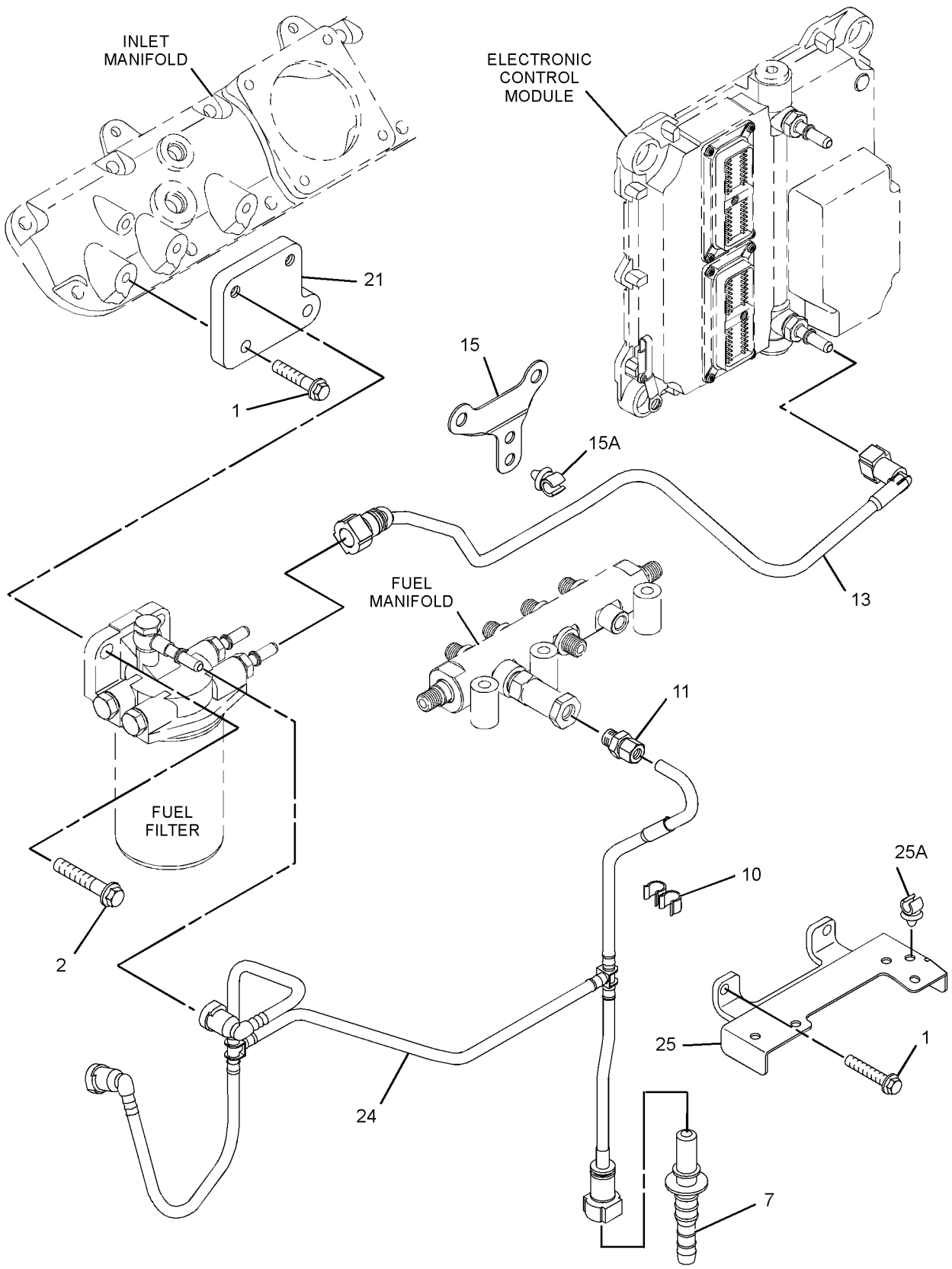

GRAPHIC #1 g01405296

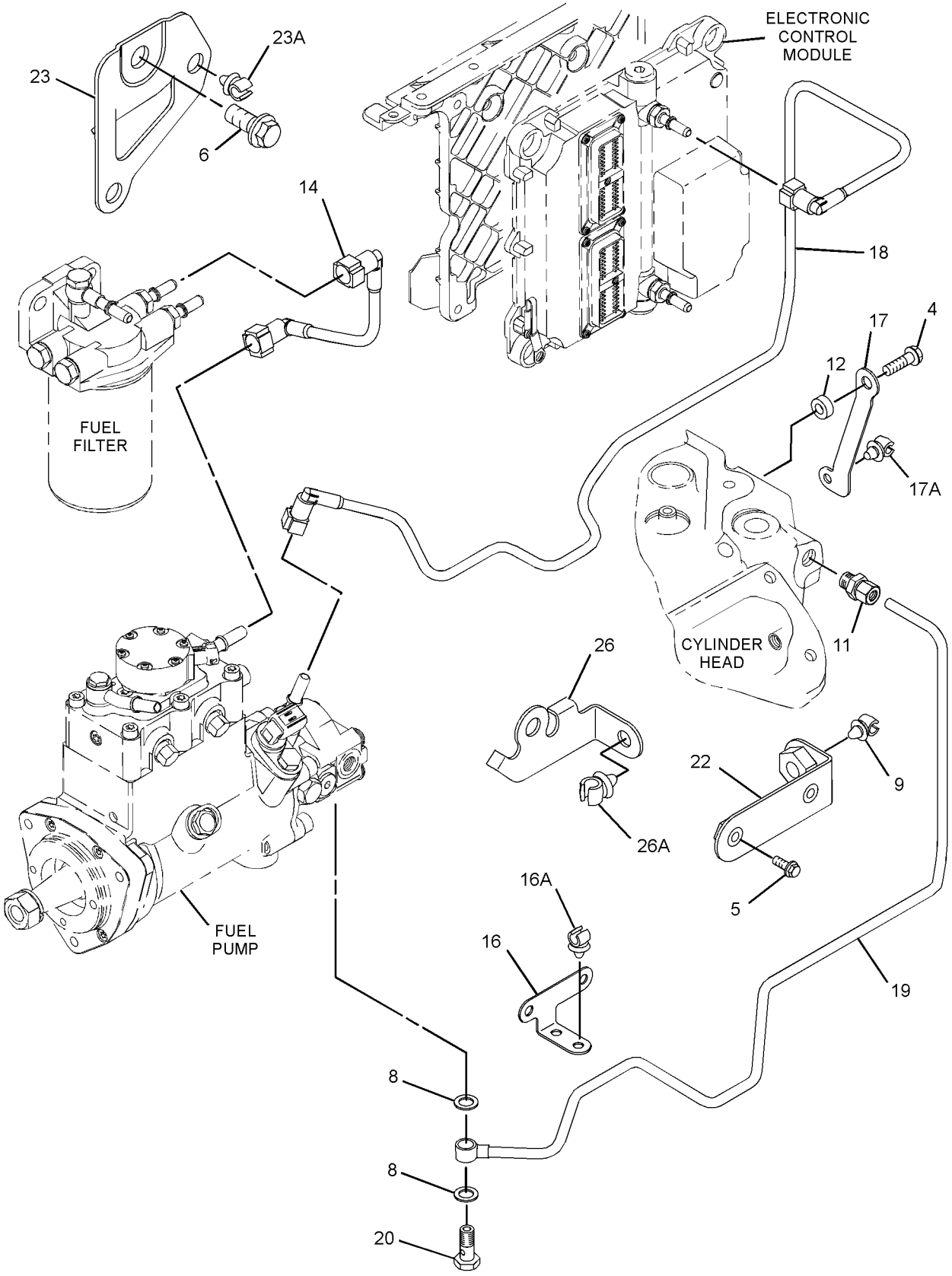

GRAPHIC #2

<END>

g01405297

308-9075 LINES GP-FUEL

S/N: C6E2314-UP
PART OF 292-5305, 301-3361 ENGINE AR-PRIMARY
AN ATTACHMENT

SMCS-1274 **i02897952**

NOTE	REF NO	GRAPHIC REF	PART NUMBER	QTY	PART NAME 1 2 3 4 5 6 (PRODUCT LEVEL)	SEE PAGE
M	1	1	**6I-0260**	4	BOLT (M8X1.25X25-MM)	
M	2	1	**6I-0593**	2	BOLT (M10X1.5X30-MM)	
M	4	2	**6I-0654**	1	BOLT (M10X1.5X25-MM)	
	5	2	**106-8916**	1	BOLT (M6X16-MM)	
M	6	2	**124-3815**	1	BOLT (M8X16X1.25-MM)	
	7	1	**215-9509**	1	FITTING AS (QUICK DISCONNECT)	
	8	2	**216-9752**	2	WASHER	
	9	2	**232-1115**	1	CLIP-PIPE	
	10	1	**234-3063**	1	CLIP	
	11	1,2	**277-6165**	2	CONNECTION-FUEL	
	12	2	**278-0314**	1	SPACER	
C	13	1	**295-4662**	1	TUBE-FUEL	
C	14	2	**311-1684**	1	TUBE	
C	15	1	**311-1952**	1	BRACKET AS	
	15A	1	**232-1115**	4	CLIP-PIPE	
	16	2	**287-6853**	1	BRACKET AS	
	16A	2	**232-1115**	2	CLIP-PIPE	
	17	2	**290-5735**	1	BRACKET AS	
	17A	2	**278-0315**	1	CLIP-PIPE	
	18	2	**293-8068**	1	TUBE-FUEL	
C	19	2	**309-0857**	1	TUBE	
	20	2	**295-4670**	1	BOLT-SPECIAL (BANJO)	
C	21	1	**311-1666**	1	BRACKET	
	22	2	**306-5432**	1	BRACKET	
	23	2	**308-9076**	1	BRACKET AS	
	23A	2	**232-1115**	2	CLIP-PIPE	
C	24	1	**311-1180**	1	TUBE	
C	25	1	**305-6471**	1	BRACKET AS	
	25A	1	**232-1115**	6	CLIP-PIPE	
	26	2	**308-9079**	1	BRACKET AS	
	26A	2	**232-1115**	2	CLIP-PIPE	
F			**278-4138**	5	PROTECTION GP-FUEL SYSTEM (LINE, LOW PRESSURE)	

C-CHANGE FROM PREVIOUS TYPE
F-NOT SHOWN
M-METRIC PART

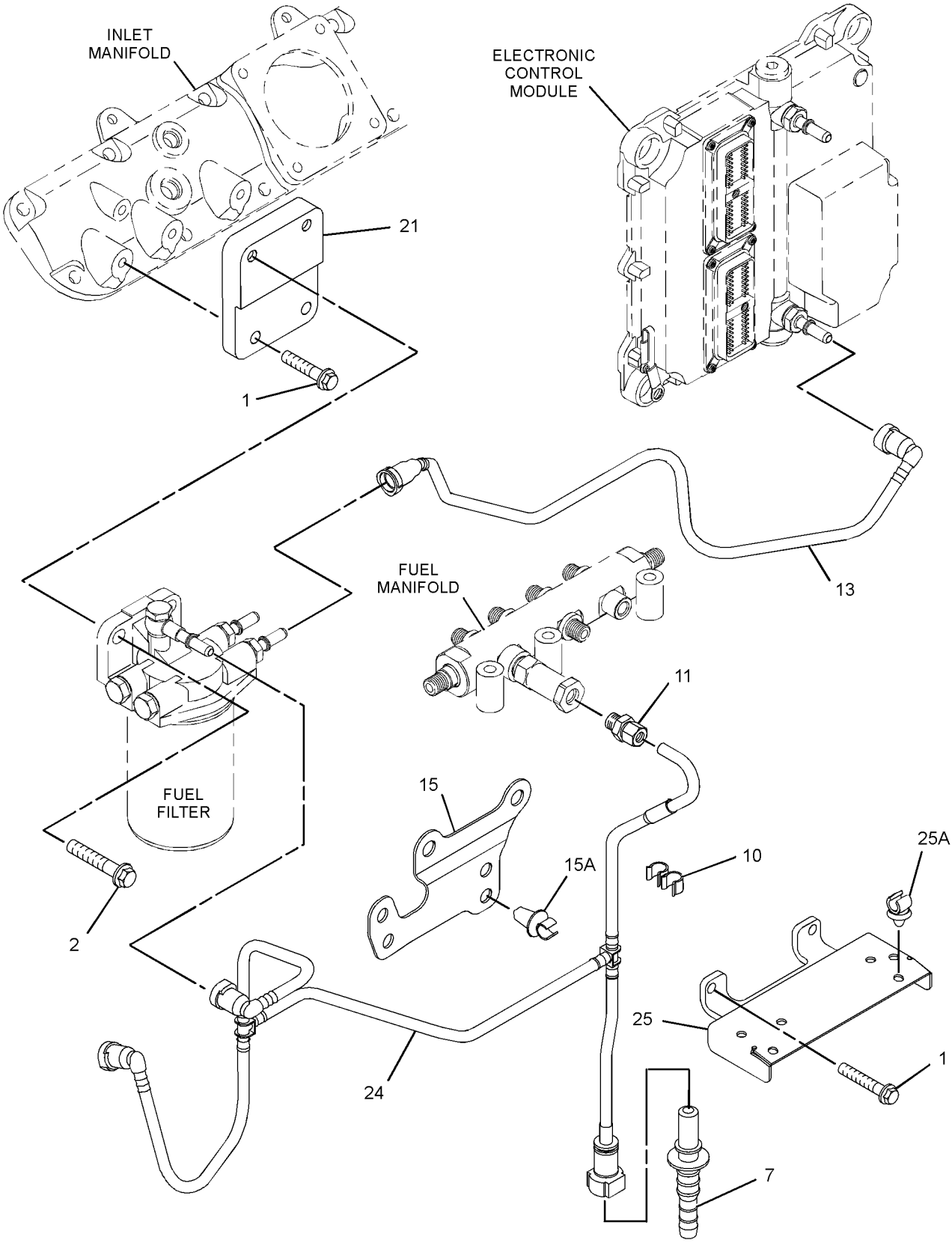

GRAPHIC #1

g01444798

308-9075 **LINES GP-FUEL** *(contd.)* **i02897952**

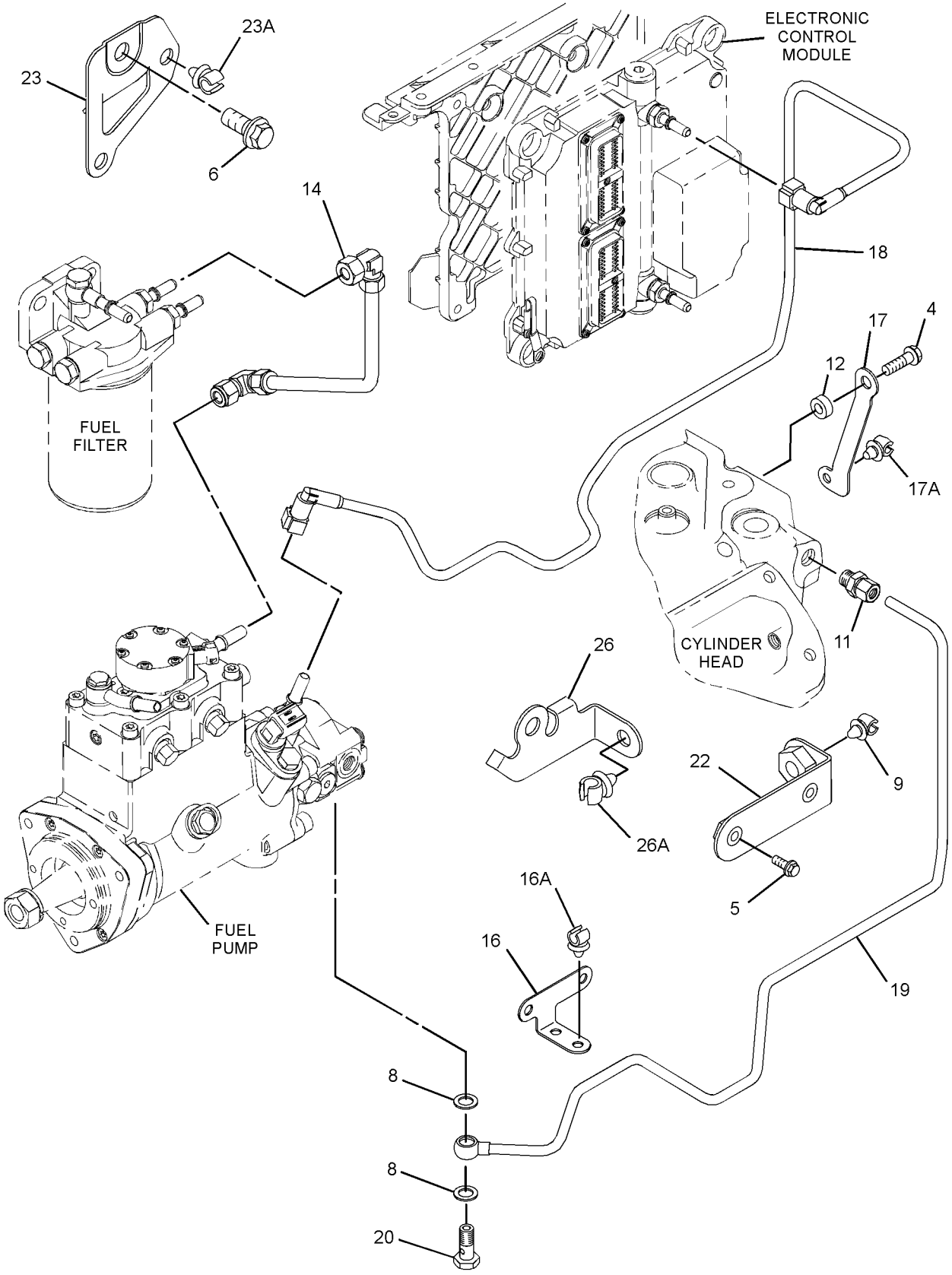

GRAPHIC #2 **<END>** g01444799

276-8398 PUMP GP-FUEL INJECTION

S/N: C6E1-UP

PART OF 304-0292 PUMP GP-FUEL INJECTION

AN ATTACHMENT

SMCS-1251, 1290 **i02863598**

NOTE	REF NO	GRAPHIC REF	PART NUMBER	QTY	PART NAME 1 2 3 4 5 6 (PRODUCT LEVEL)	SEE PAGE
	1	1	**228-7100**	1	SEAL-O-RING	
	2	1	**238-0120**	1	SENSOR GP-SPEED (FUEL PUMP)	
	3	1	**247-6019**	1	SEAL	
	4	1	**248-1066**	1	FITTING-FUEL	
	5	1	**293-0249**	1	PUMP GP-FUEL TRANSFER	
	6	1	**117-1385**	1	SEAL-O-RING	
M	7	1	**5A-3604**	5	BOLT-SOCKET HEAD (M8X1.25X25-MM)	
	8	1	**6D-7889**	1	SEAL-O-RING	
M	9	1	**8T-4200**	1	BOLT (M8X1.25X16-MM)	

M-METRIC PART

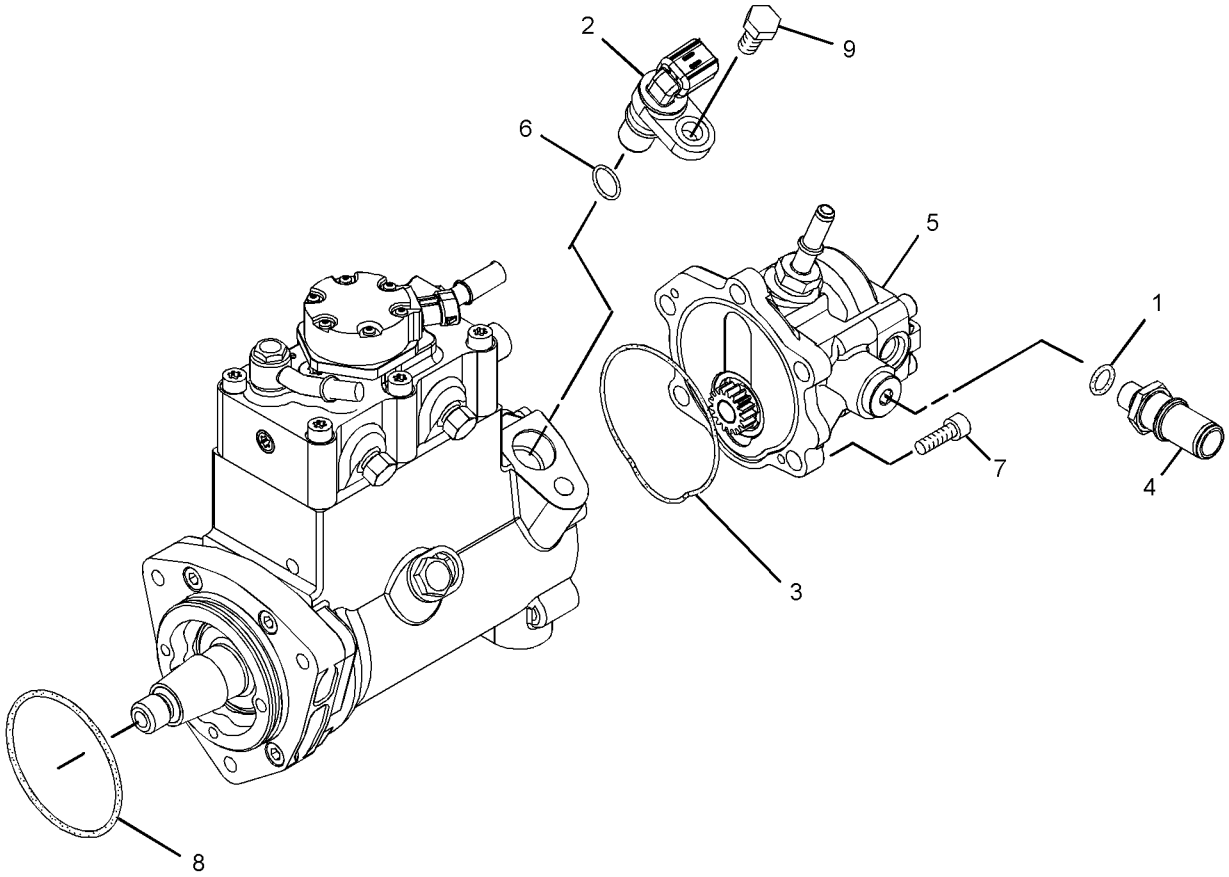

GRAPHIC #1 **<END>** g01427445

304-0292 PUMP GP-FUEL INJECTION

S/N: C6E1-3159
PART OF 292-5305, 301-3361 ENGINE AR-PRIMARY
AN ATTACHMENT

SMCS-1251, 1290 **i02847167**

NOTE	REF NO	GRAPHIC REF	PART NUMBER	QTY	PART NAME 1 2 3 4 5 6 (PRODUCT LEVEL)	SEE PAGE
M	1	1,2	**6I-0217**	6	BOLT (M8X1.25X20-MM)	
M	2	1	**6I-0254**	4	BOLT (M8X1.25X30-MM)	
M	3	1	**6I-0260**	3	BOLT (M8X1.25X25-MM)	
	4	2	**6I-0456**	4	BOLT (M8X1.25X45-MM)	
	5	1	**6I-4374**	2	BOLT (M8X1.25X60-MM)	
	6	1	**6I-4793**	1	BOLT (M8X1.25X50-MM)	
	7	2	**7W-2632**	1	WASHER (8.5X16.8X1.6-MM THK)	
M	8	1	**101-3895**	1	BOLT (M8X1.25X35-MM)	
M	9	3	**124-3815**	1	BOLT (M8X16X1.25-MM)	
	10	2	**155-0576**	8	MOUNT-ISOLATION	
	11	1	**216-9752**	2	WASHER	
	12	2	**217-0099**	4	SPACER (8.2X25X2-MM THK)	
	13	1	**225-8524**	1	BOLT (M10X1X23-MM)	
	14	1	**230-8989**	1	GEAR-FUEL PUMP (68-TEETH)	
	15	1	**232-3149**	6	WASHER (8.35X16.85X1.55-MM THK)	
C	16	1	**217-9039**	1	STRAP-CABLE	
	17	1	**241-4291**	4	SCREW	
	18	1	**308-8426**	1	RAIL AS-FUEL	
	19	2	**268-6677**	1	BRACKET AS	
		2	**260-3718**	1	BRACKET	
	19A	2	**260-3939**	1	SCREW-HEX HEAD	
	20	2	**268-6678**	1	BRACKET AS	
		2	**260-3719**	1	BRACKET	
	20A	2	**260-3939**	1	SCREW-HEX HEAD	
Y	21	1	**276-8398**	1	PUMP GP-FUEL INJECTION	110
	22	1	**278-5168**	6	CLAMP-INJECTOR	
	23	1	**278-5170**	6	BOLT	
	24	1	**278-5180**	2	CLIP	
	25	2	**278-5201**	2	CONNECTION	
	26	2	**278-5202**	2	SEAL-O-RING	
	27	2	**278-5203**	4	SPACER	
	30	3	**278-5225**	1	KIT-SENSOR (ENGINE OIL PRESSURE)	
	30A	3	**278-5226**	1	SEAL-O-RING	
	31	3	**311-3858**	1	KIT-SENSOR (ENGINE SPEED) (ENGINE SPEED)	
	31A	3	**274-1639**	1	SEAL	
	32	3	**278-5272**	1	KIT-SENSOR (INTAKE AIR TEMPERATURE)	
	32A	3	**278-5226**	1	SEAL-O-RING	
	33	3	**278-5273**	1	KIT-SENSOR (AIR PRESSURE)	
	33A	3	**199-9252**	1	SEAL-O-RING	
	34	3	**278-5307**	1	KIT-SENSOR (COOLANT TEMPERATURE)	
	34A	3	**199-9267**	1	SEAL-O-RING	
	35	1	**311-6342**	1	SENSOR-PRESSURE (FUEL RAIL PRESSURE)	
	35A	1	**309-8006**	1	WASHER	
	36	1	**280-1889**	4	CLAMP	
	37	1	**280-1890**	4	CLAMP	
	38	1	**280-1891**	4	ISOLATOR	
	39	1	**310-7918**	1	BRACKET-SUPPORT	
	40	2	**286-3683**	1	CONTROL GP-UNPROGRAMMED (ENGINE)	
	41	1	**287-6838**	1	BRACKET	
	42	1	**287-6839**	2	BOLT	
	43	1	**290-3910**	1	TUBE-FUEL INJECTION	
	44	1	**290-3911**	1	TUBE-FUEL INJECTION (CYL NO. 1)	
	45	1	**290-3912**	1	TUBE-FUEL INJECTION (CYL NO. 2)	
	46	1	**290-3913**	1	TUBE-FUEL INJECTION (CYL NO. 3)	
	47	1	**290-3914**	1	TUBE-FUEL INJECTION (CYL NO. 4)	

304-0292 **PUMP GP-FUEL INJECTION** *(contd.)* **i02847167**

NOTE	REF NO	GRAPHIC REF	PART NUMBER	QTY	PART NAME 1 2 3 4 5 6 (PRODUCT LEVEL)	SEE PAGE
	48	1	**290-3915**	1	TUBE-FUEL INJECTION (CYL NO. 5)	
	49	1	**290-3916**	1	TUBE-FUEL INJECTION (CYL NO. 6)	
	50	1	**292-0848**	1	TUBE	
Y	51	1	**292-3790**	6	INJECTOR GP-FUEL	101
	52	2	**293-9901**	1	BRACKET	
	53	1	**300-2940**	1	BRACKET	
F			**278-4138**	5	PROTECTION GP-FUEL SYSTEM (LINE, LOW PRESSURE)	

C-CHANGE FROM PREVIOUS TYPE
F-NOT SHOWN
M-METRIC PART
Y-SEPARATE ILLUSTRATION

304-0292 **PUMP GP-FUEL INJECTION** *(contd.)* **i02847167**

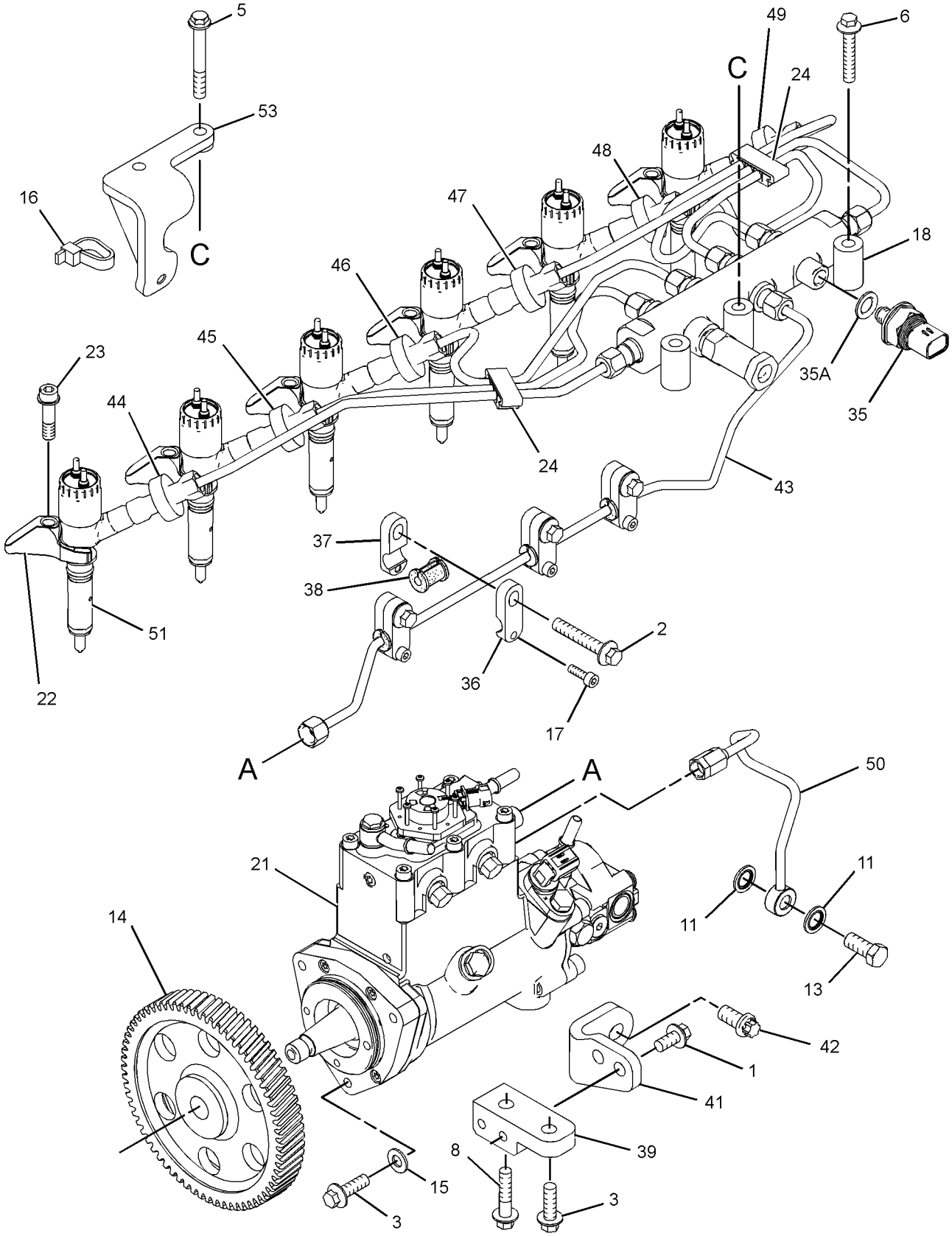

GRAPHIC #1 g01361783

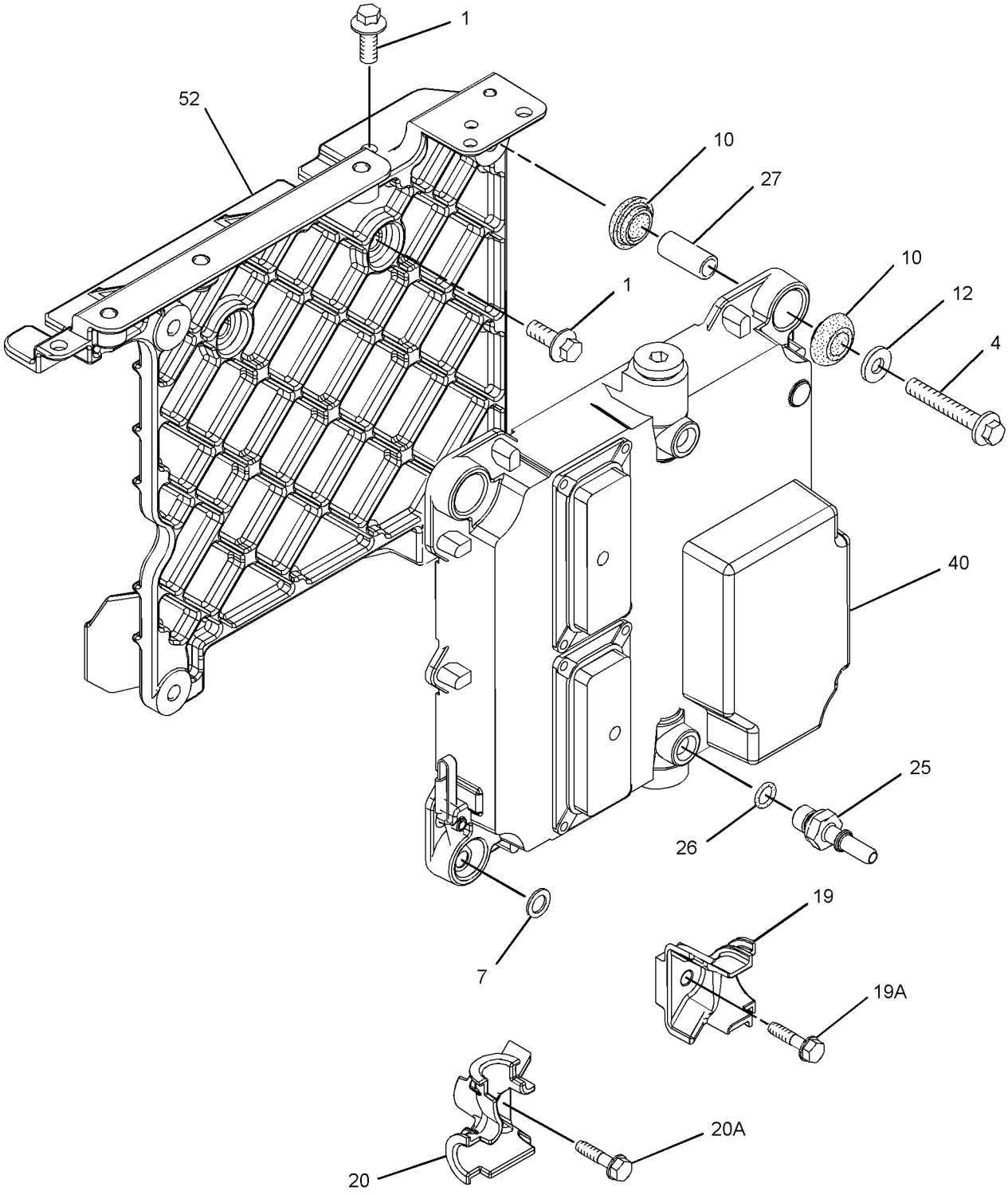

GRAPHIC #2 g01361785

304-0292 **PUMP GP-FUEL INJECTION** *(contd.)* **i02847167**

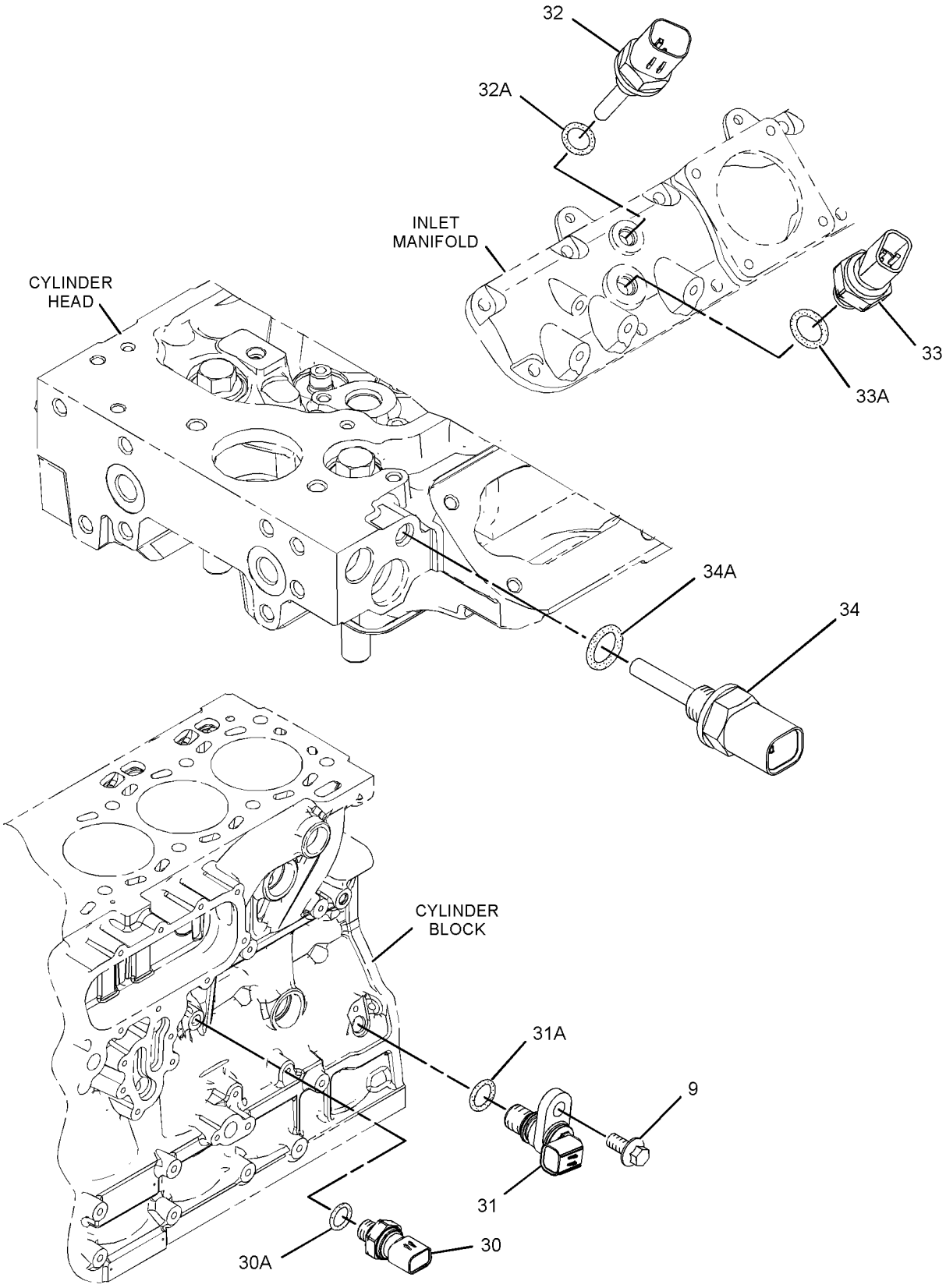

GRAPHIC #3 **<END>** g01361787

FUEL SYSTEM

304-0292 PUMP GP-FUEL INJECTION

S/N: C6E1-UP

PART OF 292-5305, 301-3361 ENGINE AR-PRIMARY

AN ATTACHMENT

SMCS-1251, 1290 **i02837252**

NOTE	REF NO	GRAPHIC REF	PART NUMBER	QTY	PART NAME 1 2 3 4 5 6 (PRODUCT LEVEL)	SEE PAGE
M	1	1,2	**6I-0217**	6	BOLT (M8X1.25X20-MM)	
M	2	1	**6I-0254**	4	BOLT (M8X1.25X30-MM)	
M	3	1	**6I-0260**	3	BOLT (M8X1.25X25-MM)	
	4	2	**6I-0456**	4	BOLT (M8X1.25X45-MM)	
	5	1	**6I-4374**	2	BOLT (M8X1.25X60-MM)	
	6	1	**6I-4793**	1	BOLT (M8X1.25X50-MM)	
	7	2	**7W-2632**	1	WASHER (8.5X16.8X1.6-MM THK)	
M	8	1	**101-3895**	1	BOLT (M8X1.25X35-MM)	
M	9	3	**124-3815**	1	BOLT (M8X16X1.25-MM)	
	10	2	**155-0576**	8	MOUNT-ISOLATION	
	11	1	**216-9752**	2	WASHER	
	12	2	**217-0099**	4	SPACER (8.2X25X2-MM THK)	
	13	1	**225-8524**	1	BOLT (M10X1X23-MM)	
	14	1	**230-8989**	1	GEAR-FUEL PUMP (68-TEETH)	
	15	1	**232-3149**	6	WASHER (8.35X16.85X1.55-MM THK)	
	16	1	**238-8028**	1	TIE-CABLE	
	17	1	**241-4291**	4	SCREW	
	18	1	**265-8125**	1	RAIL AS-FUEL	
	19	2	**268-6677**	1	BRACKET AS	
		2	**260-3718**	1	BRACKET	
	19A	2	**260-3939**	1	SCREW-HEX HEAD	
	20	2	**268-6678**	1	BRACKET AS	
		2	**260-3719**	1	BRACKET	
	20A	2	**260-3939**	1	SCREW-HEX HEAD	
Y	21	1	**276-8398**	1	PUMP GP-FUEL INJECTION	110
	22	1	**278-5168**	6	CLAMP-INJECTOR	
	23	1	**278-5170**	6	BOLT	
	24	1	**278-5180**	2	CLIP	
	25	2	**278-5201**	2	CONNECTION	
	26	2	**278-5202**	2	SEAL-O-RING	
	27	2	**278-5203**	4	SPACER	
	30	3	**278-5225**	1	KIT-SENSOR (ENGINE OIL PRESSURE)	
	30A	3	**278-5226**	1	SEAL-O-RING	
	31	3	**278-5228**	1	KIT-SENSOR (ENGINE SPEED)	
	31A	3	**278-5227**	1	SEAL-O-RING	
	32	3	**278-5272**	1	KIT-SENSOR (INTAKE AIR TEMPERATURE)	
	32A	3	**278-5226**	1	SEAL-O-RING	
	33	3	**278-5273**	1	KIT-SENSOR (AIR PRESSURE)	
	33A	3	**199-9252**	1	SEAL-O-RING	
	34	3	**278-5307**	1	KIT-SENSOR (COOLANT TEMPERATURE)	
	34A	3	**199-9267**	1	SEAL-O-RING	
	35	1	**278-5308**	1	KIT-SENSOR (FUEL RAIL PRESSURE)	
	35A	1	**278-5309**	1	WASHER	
	36	1	**280-1889**	4	CLAMP	
	37	1	**280-1890**	4	CLAMP	
	38	1	**280-1891**	4	ISOLATOR	
	39	1	**282-3233**	1	BRACKET	
	40	2	**286-3683**	1	CONTROL GP-UNPROGRAMMED	
	41	1	**287-6838**	1	BRACKET	
	42	1	**287-6839**	2	BOLT	
	43	1	**290-3910**	1	TUBE-FUEL INJECTION	
	44	1	**290-3911**	1	TUBE-FUEL INJECTION (CYL NO. 1)	
	45	1	**290-3912**	1	TUBE-FUEL INJECTION (CYL NO. 2)	
	46	1	**290-3913**	1	TUBE-FUEL INJECTION (CYL NO. 3)	
	47	1	**290-3914**	1	TUBE-FUEL INJECTION (CYL NO. 4)	

304-0292 **PUMP GP-FUEL INJECTION** *(contd.)* **i02837252**

NOTE	REF NO	GRAPHIC REF	PART NUMBER	QTY	PART NAME 1 2 3 4 5 6 (PRODUCT LEVEL)	SEE PAGE
	48	1	**290-3915**	1	TUBE-FUEL INJECTION (CYL NO. 5)	
	49	1	**290-3916**	1	TUBE-FUEL INJECTION (CYL NO. 6)	
	50	1	**292-0848**	1	TUBE	
Y	51	1	**292-3790**	6	INJECTOR GP-FUEL	101
	52	2	**293-9901**	1	BRACKET	
	53	1	**300-2940**	1	BRACKET	
F			**278-4138**	5	PROTECTION GP-FUEL SYSTEM	
F			**278-5209**	1	BRACKET	
F			**278-5210**	1	BOLT	

F-NOT SHOWN
M-METRIC PART
Y-SEPARATE ILLUSTRATION

304-0292 **PUMP GP-FUEL INJECTION** *(contd.)* **i02837252**

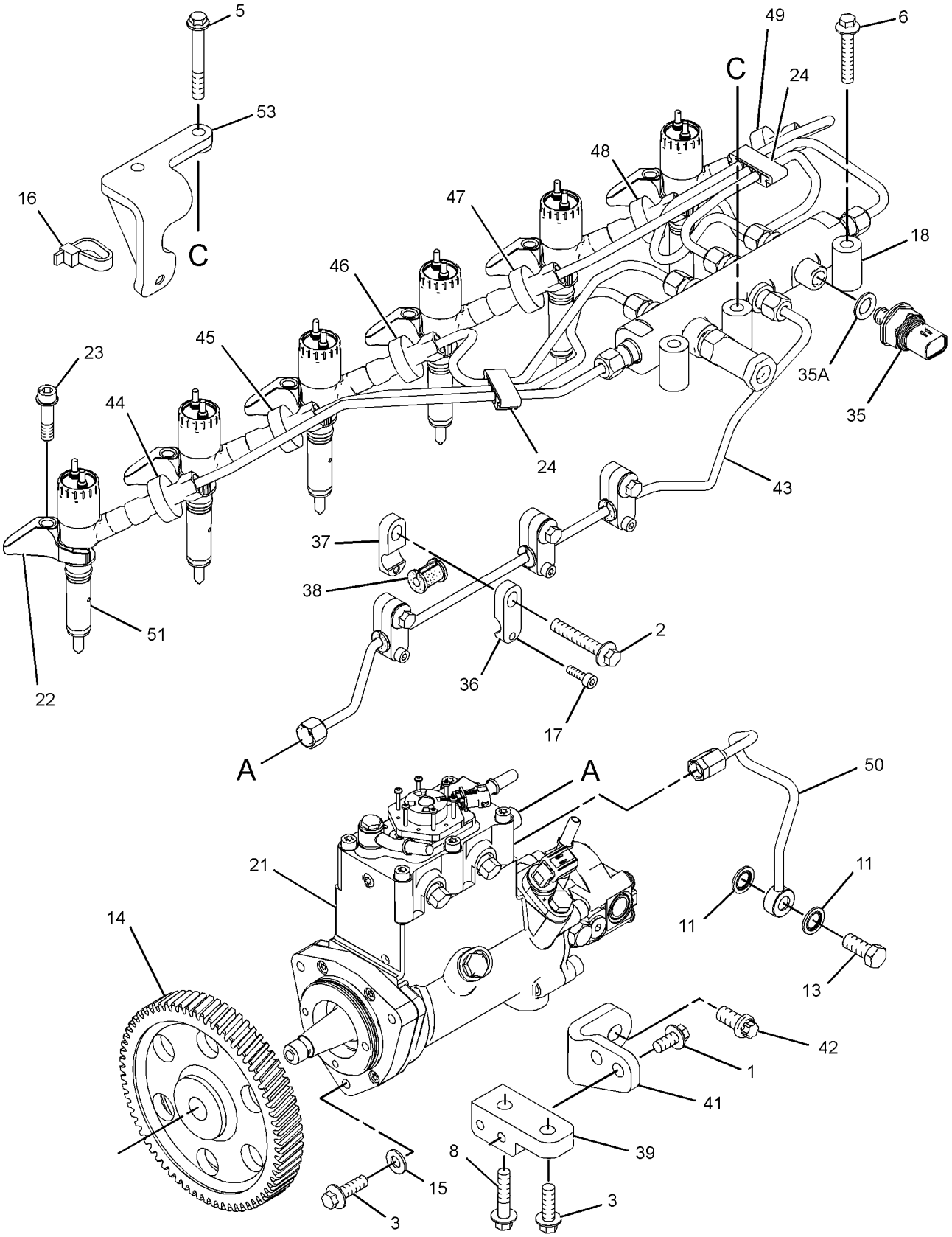

GRAPHIC #1 g01361783

304-0292 **PUMP GP-FUEL INJECTION** *(contd.)* **i02837252**

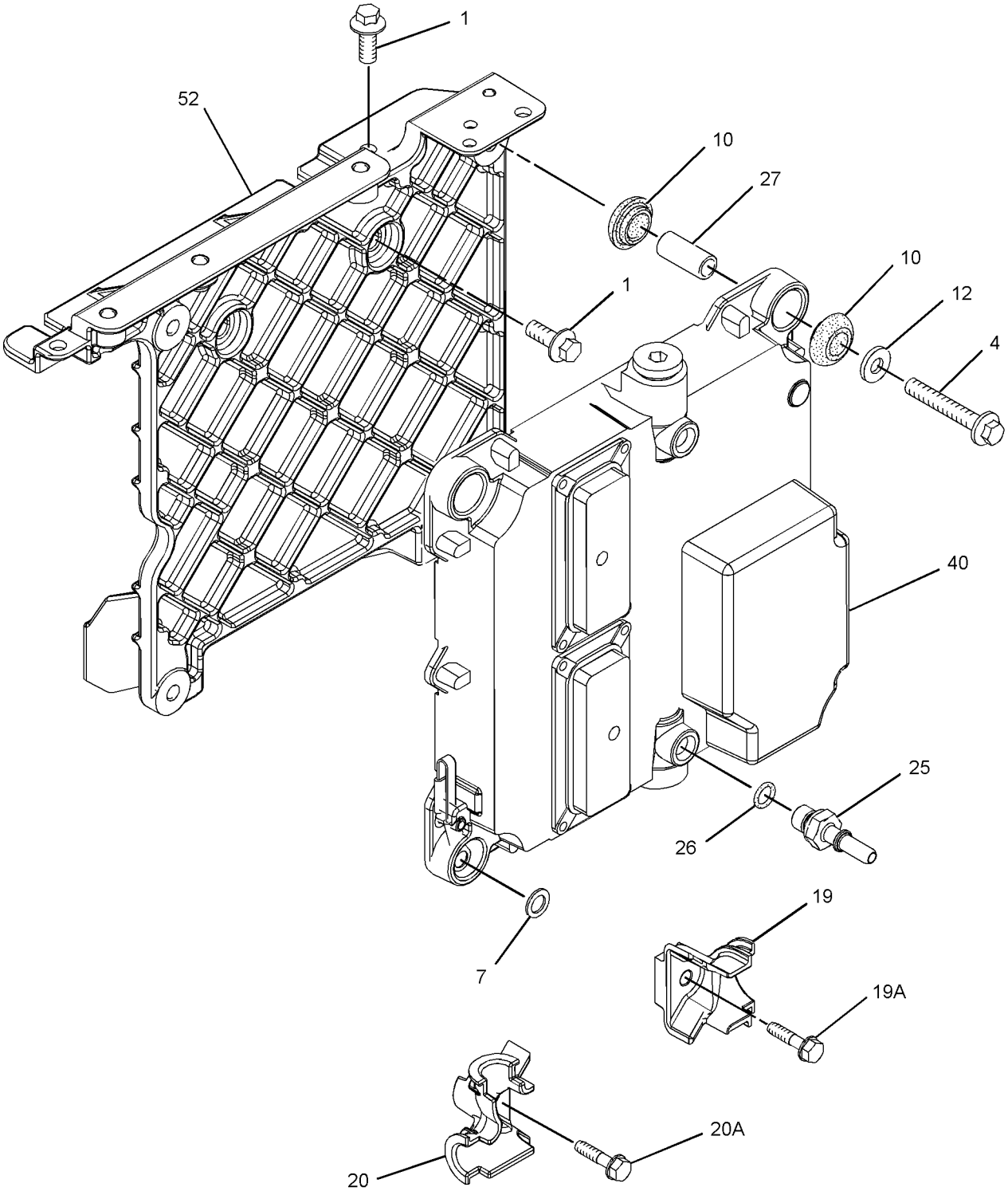

GRAPHIC #2 g01361785

304-0292 **PUMP GP-FUEL INJECTION** *(contd.)* **i02837252**

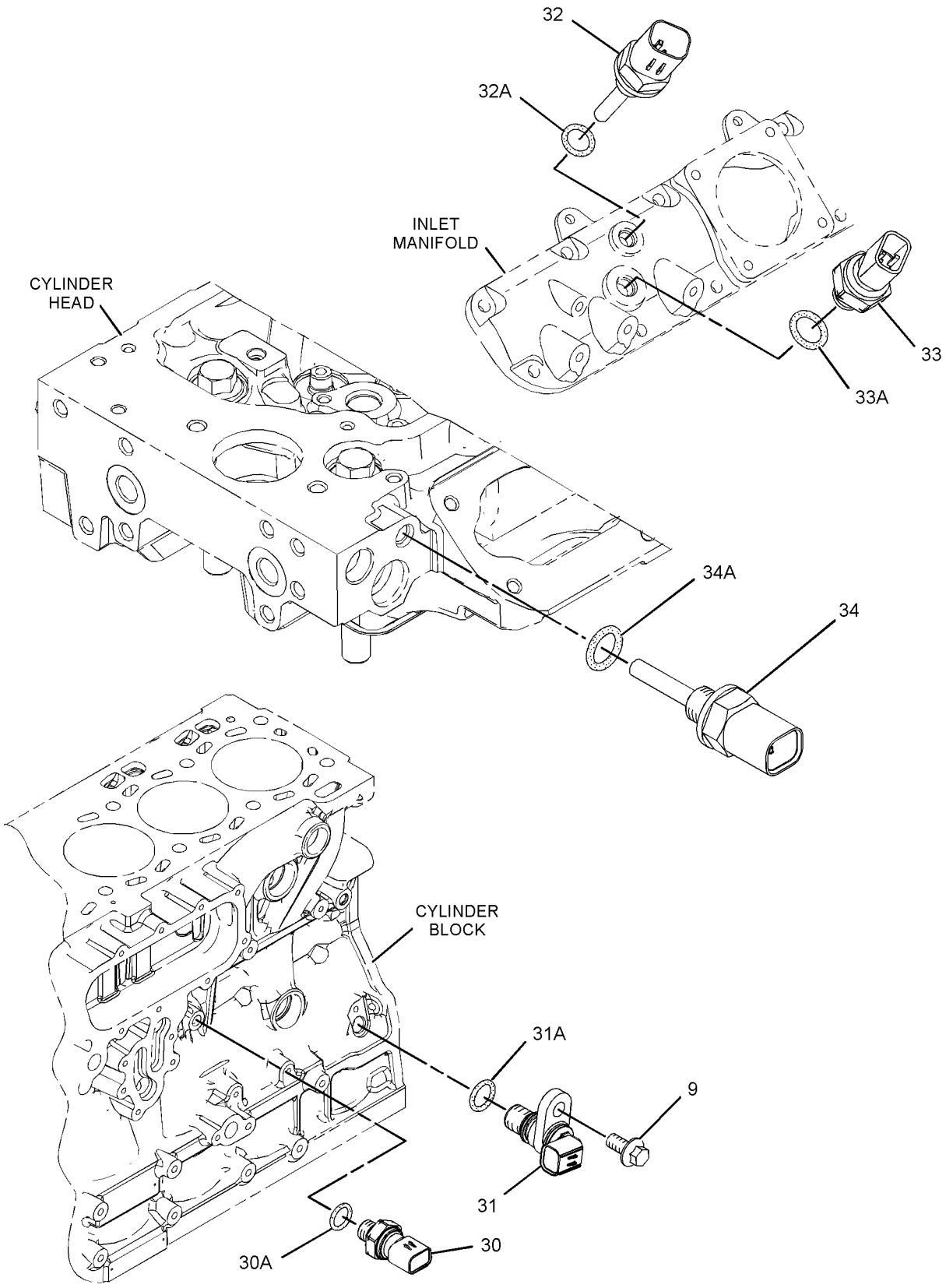

GRAPHIC #3 **<END>** g01361787

289-8911 TANK & MTG GP-FUEL

S/N: BYD1-UP; FTD1-UP

PART OF 289-8871, 289-8891, 290-6498 CHASSIS AR

SMCS-1273 **i02803645**

NOTE	REF NO	GRAPHIC REF	PART NUMBER	QTY	PART NAME 1 2 3 4 5 6 (PRODUCT LEVEL)	SEE PAGE
	1	1	**202-0360**	2	STRAP AS	
					(EACH INCLUDES)	
		1	**202-0358**	1	STRAP	
	2	1	**204-1370**	1	GASKET	
	3	1	**242-8159**	1	PLATE AS	
Y	4	1	**290-3931**	1	TANK GP-FUEL	122
	5	1	**308-3458**	1	SENDER AS-FUEL LEVEL	
M	6	1	**180-4686**	2	BOLT (M10X1.5X60-MM)	
M	7	1	**5C-9553**	8	BOLT (M6X1X16-MM)	
	8	1	**8T-4121**	6	WASHER-HARD (11X21X2.5-MM THK)	
M	9	1	**8T-4133**	2	NUT (M10X1.5-THD)	
M	10	1	**8T-4137**	2	BOLT (M10X1.5X20-MM)	
	11	1	**8T-4205**	8	WASHER-HARD (7.2X14.5X2-MM THK)	

M-METRIC PART
Y-SEPARATE ILLUSTRATION

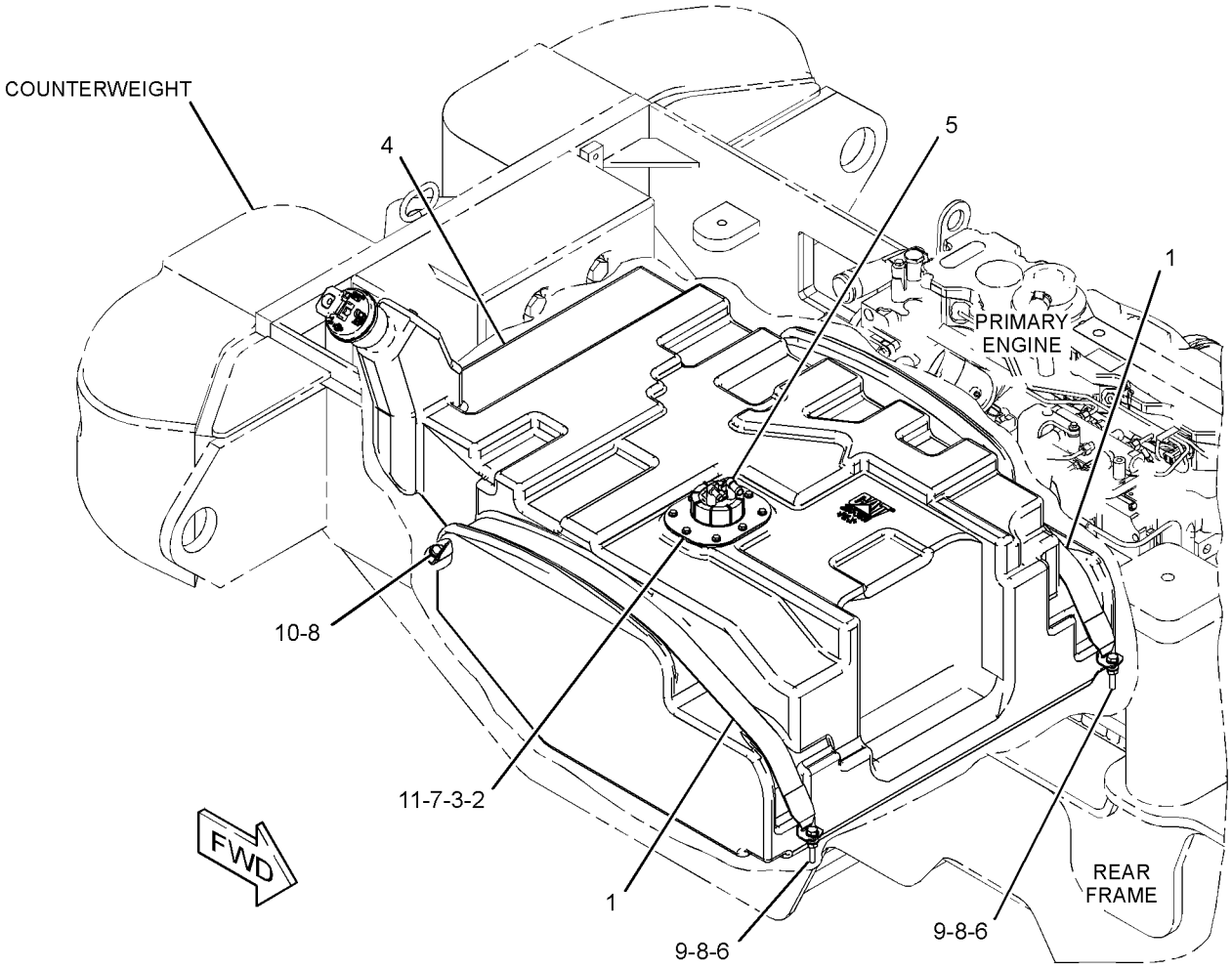

GRAPHIC #1 **<END>** g01389261

FUEL SYSTEM

290-3931 TANK GP-FUEL

S/N: BYD1-UP; FTD1-UP

PART OF 289-8911 TANK & MTG GP-FUEL

SMCS-1273 **i02807212**

NOTE	REF NO	GRAPHIC REF	PART NUMBER	QTY	PART NAME 1 2 3 4 5 6 (PRODUCT LEVEL)	SEE PAGE
	1	1	**5M-6213**	1	PLUG-PIPE	
	2	1	**180-3730**	1	FILTER ELEMENT-FUEL (FILLER NECK SCREEN)	
	3	1	**206-4441**	1	ADAPTER-FUEL CAP	
	5	1	**304-3885**	1	CAP-FUEL	
	6	1	**313-4553**	1	PLUG	
	7	1	**2M-9780**	1	SEAL-O-RING	

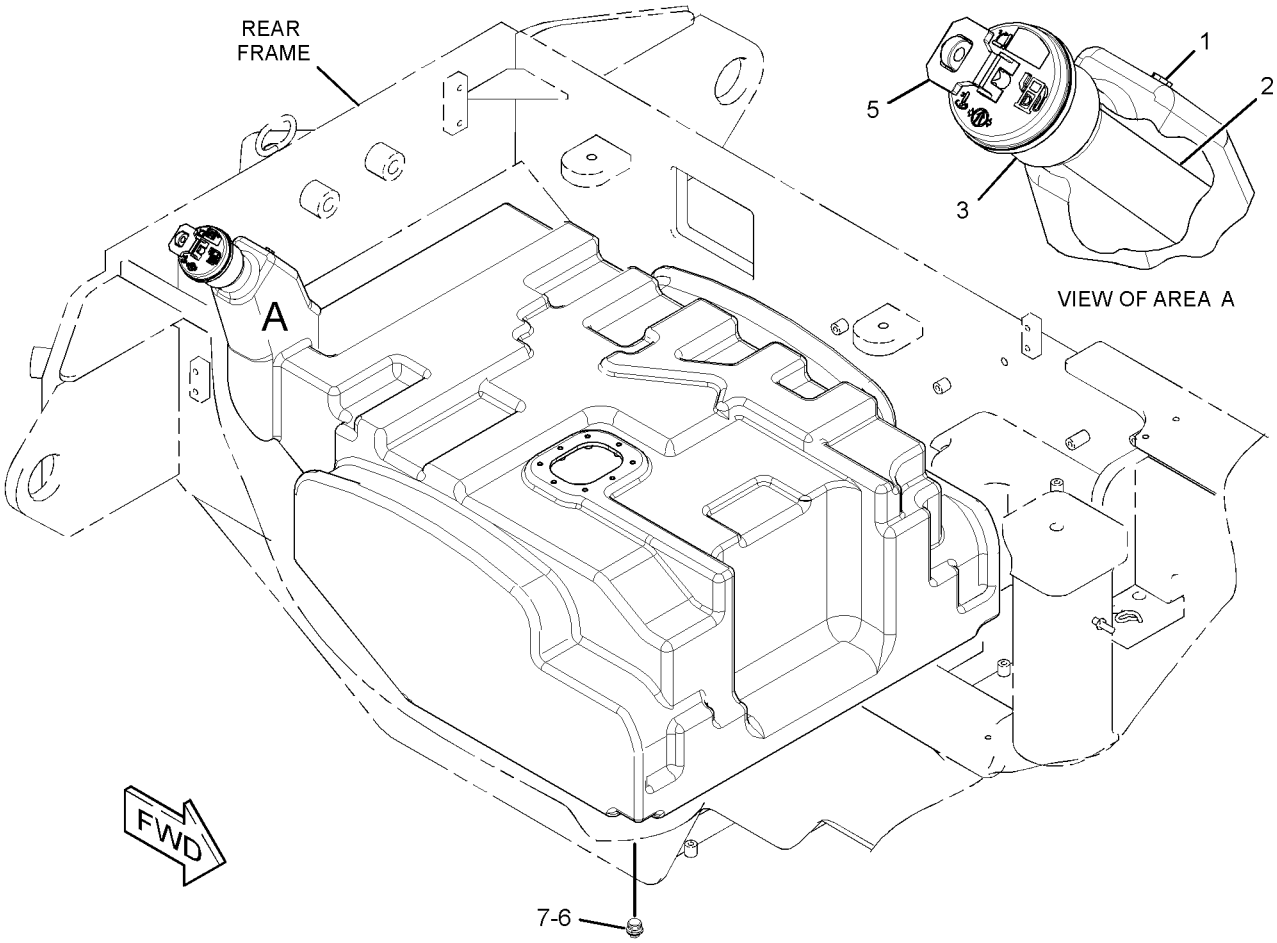

GRAPHIC #1 **<END>** g01405125

212-3657 WATER SEP & FUEL PRM PUMP GP–PRIMARY FILTER

S/N: BYD1-UP; FTD1-649

PART OF 289-8938 LINES GP-FUEL

SMCS-1258, 1263 **i02807204**

NOTE	REF NO	GRAPHIC REF	PART NUMBER	QTY	PART NAME 1 2 3 4 5 6 (PRODUCT LEVEL)	SEE PAGE
	1	1	*174-9570*	1	FILTER GP-WATER SEP & FUEL	
		1	**1R-0770**	1	FILTER AS-WATER SEP & FUEL	
		1	**220-8678**	1	SEAL-RING	
		1	**270-5320**	1	BOWL AS	
	2	1	**217-8339**	1	BASE AS-FUEL FILTER	
		1	**6D-5801**	2	LOCKNUT (8-32-THD)	
		1	**9S-2437**	3	SCREW-TAPPING (10-24X19.05-MM)	
		1	**9S-8002**	1	PLUG-O-RING	
		1	**179-7400**	2	SEAL (FUEL)	
		1	**236-6717**	2	SEAL-O-RING	

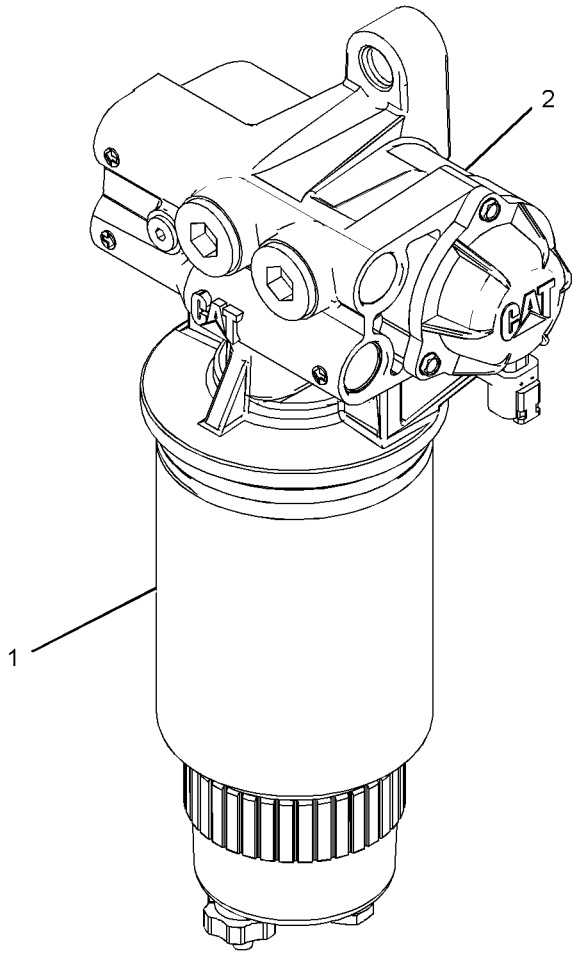

GRAPHIC #1 **<END>** g01412019

3E-6328 ALARM GP–ACTION

S/N: BYD1-UP; FTD1-UP

PART OF 290-7222, 310-6793, 311-4518 LIGHTING GP-ROADING, 290-7228 LIGHTING GP-STOP & TAIL, 226-1845 SEAT & MOUNTING GP

AN ATTACHMENT

SMCS-7400, 7402, 7407 **i01825013**

NOTE	REF NO	GRAPHIC REF	PART NUMBER	QTY	PART NAME 1 2 3 4 5 6 (PRODUCT LEVEL)	SEE PAGE
J	1	1	**102-8802**	1	KIT-RECEPTACLE (2-PIN)	
					(INCLUDES RECEPTACLE AS & PART MARKED J)	
	2	1	**186-3735**	2	PIN-CONNECTOR (16-GA TO 18-GA)	
J	3	1	**3E-3365**	1	WEDGE-RECEPTACLE LOCK (2-PIN)	
J-KIT MARKED J INCLUDES PART MARKED J						

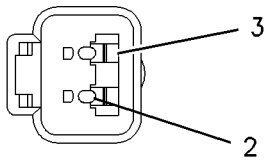

VIEW A–A

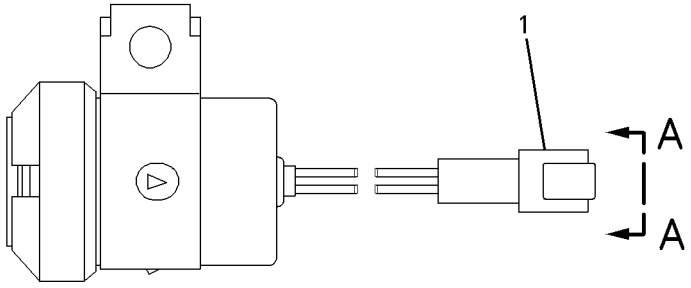

GRAPHIC #1 **<END>** g00826023

ELECTRICAL AND STARTING SYSTEM

197-8820 ALTERNATOR GP-CHARGING*R

S/N: BYD1-UP; FTD1-UP
24 VOLT,95 AMP
PART OF 259-4137 ALTERNATOR GP-CHARGING
AN ATTACHMENT

SMCS-1405 **i02849800**

NOTE	REF NO	GRAPHIC REF	PART NUMBER	QTY	PART NAME 1 2 3 4 5 6 (PRODUCT LEVEL)	SEE PAGE
	1	1	**185-2653**	1	FRAME	
	2	1	**5S-7349**	1	BOLT (1/4-20X0.5-IN)	
	3	1	**185-2639**	1	FAN AS	
	4	1	**1H-3244**	1	LOCKWASHER	
	5	1	**185-2645**	1	FRAME	
	6	1	**2K-4821**	1	LOCKNUT (5/8-18-THD)	
	7	1	**5P-8247**	1	WASHER-HARD (17X32X3.5-MM THK)	
	8	1	**185-2651**	1	COVER	
	9	1	**8T-4205**	1	WASHER-HARD (7.2X14.5X2-MM THK)	
	10	1	**185-2647**	1	GROMMET	
	11	1	**9L-6770**	1	CAP-DUST (ALTERNATOR AC TAP)	
	12	1	**205-0626**	1	STATOR AS-ALTERNATOR	
	13	1	**185-2638**	2	COLLAR	
	14	1	**185-2654**	1	PLATE	
	15	1	**185-2650**	1	ROTOR AS	
	16	1	**185-2644**	1	COIL AS	
	17	1	**185-2648**	1	REGULATOR AS-VOLTAGE (24-VOLT) (ALTERNATOR)	
	18	1	**6V-8189**	1	NUT (5/16-18-THD)	
	19	1	**8T-4224**	1	WASHER-HARD (8.8X16X2-MM THK)	
	20	1	**3F-9556**	1	LOCKWASHER	
					AVAILABLE REPAIR KIT(S):	
			185-2655		KIT-BEARING (ALTERNATOR)	
					(INCLUDES 2 BEARINGS)	
			199-8436		KIT-TERMINAL (ALTERNATOR)	
					(INCLUDES HOLDER AS, PLATE, INSULATOR, PIN, BOLTS, GROMMET & NUT)	
			199-7891		KIT-TERMINAL (ALTERNATOR)	
					(INCLUDES INSULATORS, WASHERS & NUTS)	
			185-2658		KIT-HARDWARE (ALTERNATOR)	
					(INCLUDES BOLTS)	

197-8820 **ALTERNATOR GP-CHARGING** *(contd.)* **i02849800**

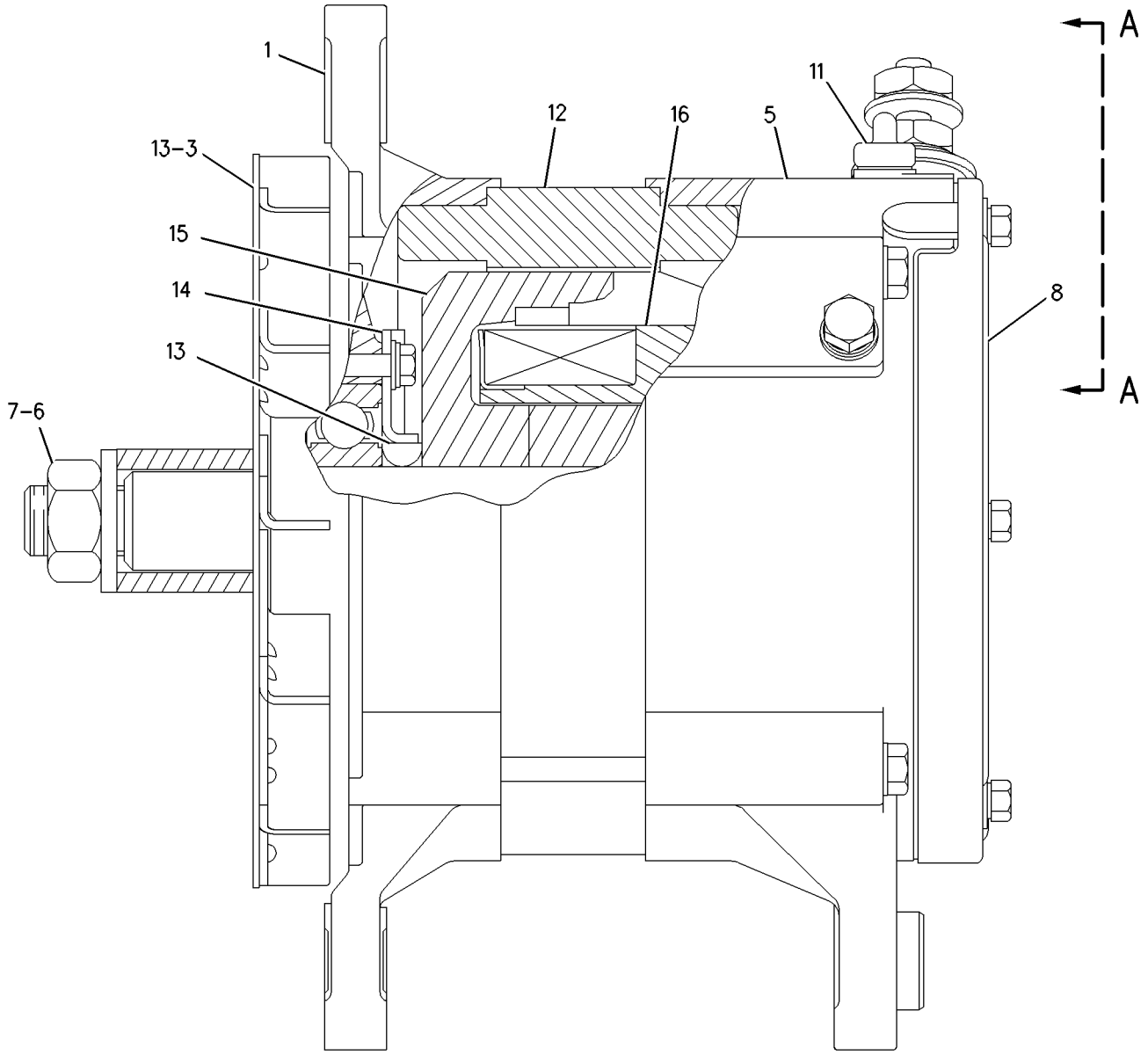

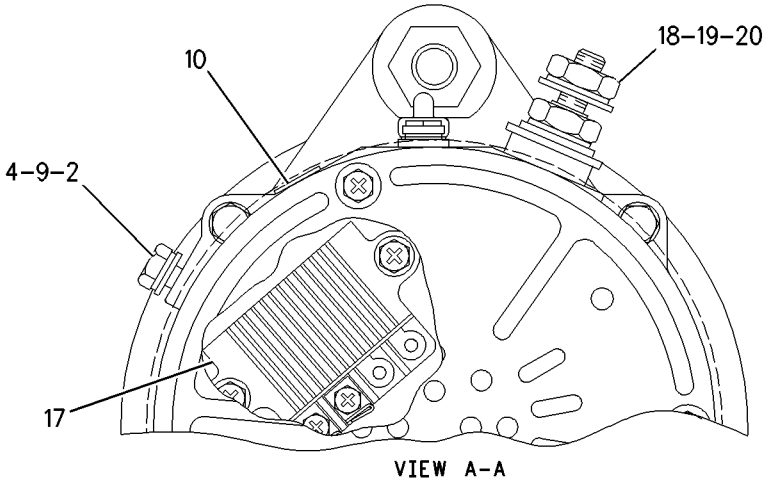

VIEW A-A

GRAPHIC #1 **<END>** g00873198

259-4137 ALTERNATOR GP-CHARGING

S/N: BYD1-UP; FTD1-UP
PART OF 290-8483 CANOPY AR-OPEN ROPS, 290-8750 HEATER AR-CAB
AN ATTACHMENT

SMCS-1405 **i02792841**

NOTE	REF NO	GRAPHIC REF	PART NUMBER	QTY	PART NAME 1 2 3 4 5 6 (PRODUCT LEVEL)	SEE PAGE
	1	1	**129-5096**	1	PULLEY-ALTERNATOR	
	2	1	**190-0642**	1	BELT TENSIONER	
YR	3	1	**197-8820**	1	ALTERNATOR GP-CHARGING (24-VOLT, 95-AMPERE)	125
	4	1	**226-0443**	1	BELT-SERPENTINE	
	5	1	**262-7562**	1	BRACKET	
	6	1	**267-7283**	1	BRACKET	
	7	1	**7X-7729**	7	WASHER (11X25X3-MM THK)	
	8	1	**8C-4436**	1	BOLT (1/2-13X1.375-IN)	
M	9	1	**8T-4136**	3	BOLT (M10X1.5X25-MM)	
M	10	1	**8T-4172**	1	BOLT (M10X1.5X80-MM)	
M	11	1	**8T-4184**	2	BOLT (M12X1.75X45-MM)	
M	12	1	**8T-4195**	2	BOLT (M10X1.5X30-MM)	
M	13	1	**8T-4196**	1	BOLT (M10X1.5X35-MM)	
	14	1	**8T-4223**	3	WASHER-HARD (13.5X25.5X3-MM THK)	

M-METRIC PART
R-REMFG PART MAY BE AVAILABLE
Y-SEPARATE ILLUSTRATION

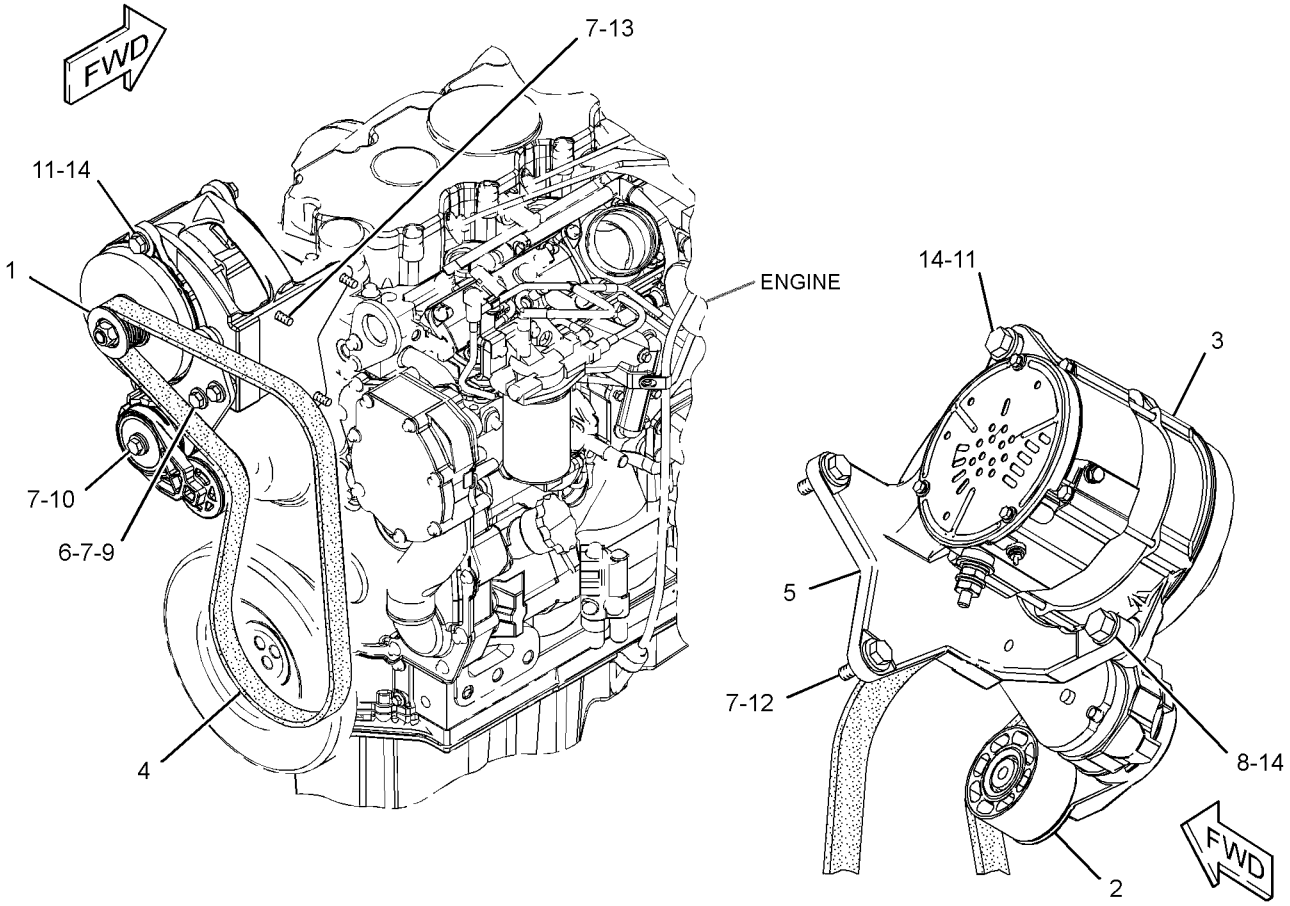

GRAPHIC #1 **<END>** g01416878

ELECTRICAL AND STARTING SYSTEM

290-7203 BATTERY & WIRING GP

S/N: BYD1-UP; FTD1-UP

PART OF 289-8966 STEERING AR, 294-9434, 294-9441 STEERING AR-STANDARD

AN ATTACHMENT

SMCS-1401, 1402, 1408 **i02791367**

NOTE	REF NO	GRAPHIC REF	PART NUMBER	QTY	PART NAME 1 2 3 4 5 6 (PRODUCT LEVEL)	SEE PAGE
	1	1	**2G-8767**	2	WASHER (10.5X60X3-MM THK)	
	2	1	**3E-8320**	1	PLATE-INSTRUCTION (BATTERY)	
	3	1	**6G-2256**	2	CLAMP	
	4	1	**6G-2263**	2	SPACER (10.5X19X28.5-MM THK)	
	5	1	**7K-1181**	1	STRAP-CABLE	
Y	6	1	**7N-0718**	1	SWITCH GP-DISCONNECT (BATTERY)	182
	7	1	**8R-0768**	4	ROD-RETAINING	
	8	1	**102-4176**	2	HOLD-DOWN-BATTERY	
	9	1	**151-4841**	1	BLOCK	
	10	1	**180-8871**	1	CABLE AS	
E		1	**5P-0761**		CABLE (00-GA, RED) (145-CM)	
		1	**7N-5274**	1	COVER-TERMINAL (BLACK)	
		1	**8N-1725**	1	COVER-TERMINAL (RED)	
	11	1	**180-8874**	1	CABLE AS	
		1	**1S-7251**	1	TERMINAL-CABLE (00-GA, 1/2-IN BOLT)	
		1	**8S-3020**	1	TERMINAL-CABLE	
		1	**9G-8909**	1	COVER-TERMINAL (BLACK)	
		1	**150-8050**		BRACKET (30-CM)	
	12	1	**204-2281**	1	STRAP-TIE	
	13	1	**293-5283**	1	CABLE AS	
E		1	**5P-0747**	1	CABLE (00-GA, BLACK) (36-CM)	
		1	**216-7790**	1	TERMINAL-RING	
		1	**315-0180**	1	TERMINAL-RING	
	14	1	**293-5284**	1	CABLE AS	
E		1	**5P-0747**		CABLE (00-GA, BLACK) (136-CM)	
		1	**7N-5274**	1	COVER-TERMINAL (BLACK)	
		1	**9G-8909**	1	COVER-TERMINAL (BLACK)	
		1	**3S-6050**	1	TERMINAL AS-BATTERY (NEGATIVE)	
E		1	**125-7876**	1	TUBE-HEAT SHRINK (17.78-MM DIA) (4-CM)	
		1	**216-7790**	1	TERMINAL-RING	
	15	1	**293-5532**	1	BRACKET	
	16	1	**299-9124**	1	BRACKET AS	
M		1	**8T-3490**	2	NUT-WELD (M10X1.5-THD)	
	17	1	**314-7513**	1	CABLE AS	
E		1	**159-8049**		CABLE (00-GA, RED) (170-CM)	
		1	**8N-0869**	1	COVER-TERMINAL (RED)	
		1	**8N-1725**	1	COVER-TERMINAL (RED)	
		1	**125-7876**		TUBE-HEAT SHRINK (17.78-MM DIA) (4-CM)	
		1	**216-7790**	1	TERMINAL-RING	
		1	**3S-6049**	1	TERMINAL AS-BATTERY (POSITIVE)	
		1	**1M-6119**	1	BOLT (5/16-18X1.375-IN)	
		1	**1M-6120**		NUT (5/16-18-THD)	
	18	1	**1B-3057**	1	CLIP	
	19	1	**5P-4116**	4	WASHER-HARD (8.8X20.5X2-MM THK)	
	20	1	**6D-3479**	7	CLIP	
	21	1	**8T-4121**	17	WASHER-HARD (11X21X2.5-MM THK)	
M	22	1	**8T-4133**	5	NUT (M10X1.5-THD)	
M	23	1	**8T-4136**	5	BOLT (M10X1.5X25-MM)	
M	24	1	**8T-4137**	4	BOLT (M10X1.5X20-MM)	
M	25	1	**8T-4195**	1	BOLT (M10X1.5X30-MM)	
M	26	1	**8T-6466**	2	BOLT (M10X1.5X60-MM)	
M	27	1	**8T-7963**	4	LOCKNUT (M8X1.25-THD)	

E-ORDER BY THE CENTIMETER
M-METRIC PART
Y-SEPARATE ILLUSTRATION

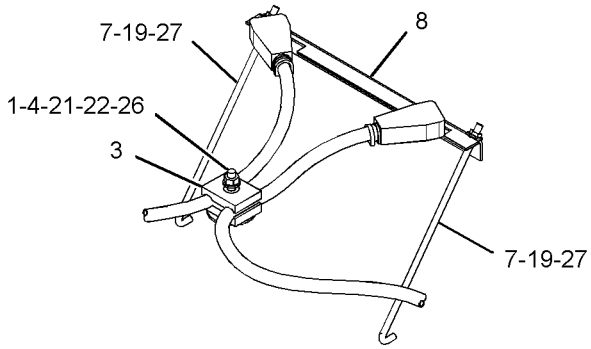

VIEW OF AREA A

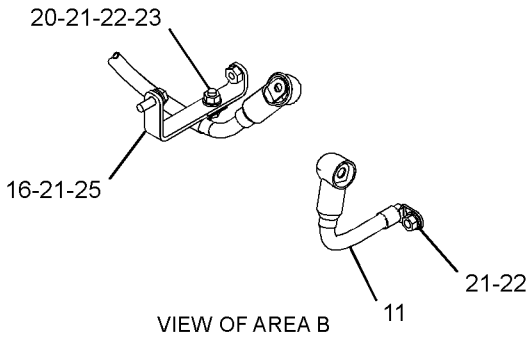

VIEW OF AREA B

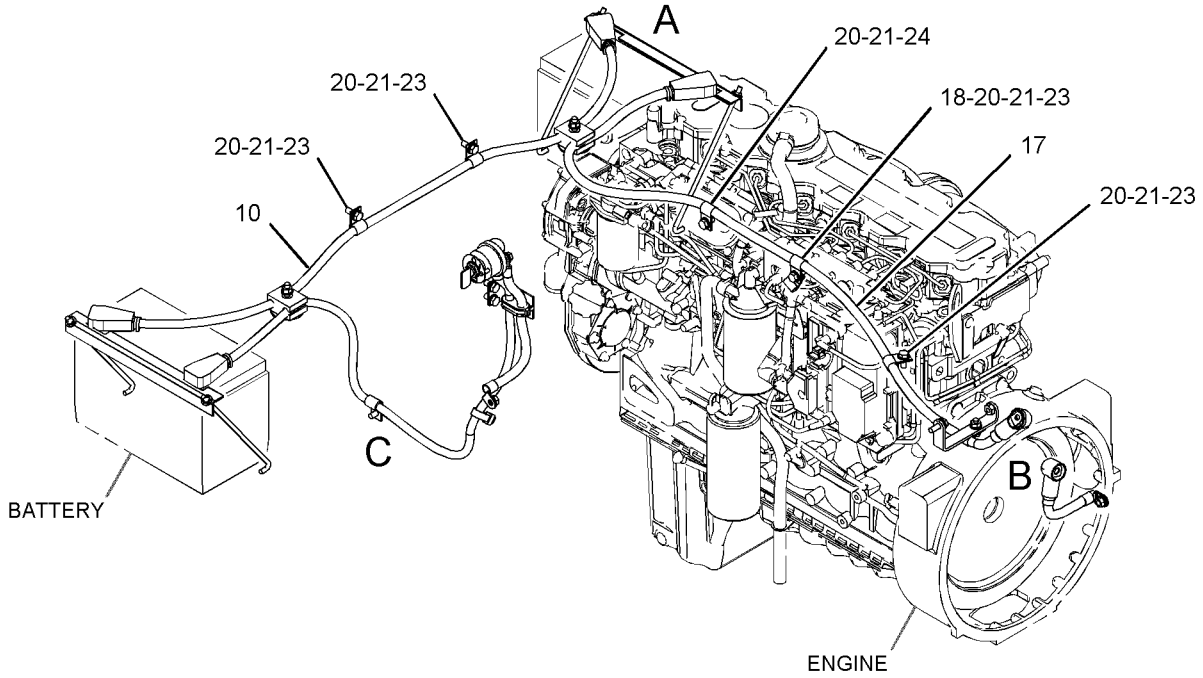

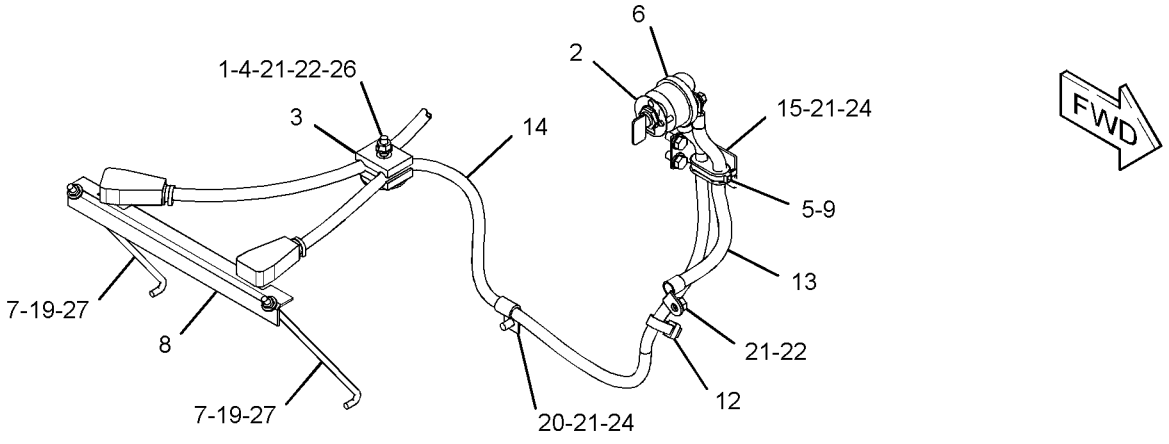

VIEW OF AREA C

GRAPHIC #1 **<END>** g01414977

302-1885 BATTERY & WIRING GP—SECONDARY STEERING

S/N: BYD1-UP; FTD1-UP

PART OF 289-8968, 289-8969, 289-8970 STEERING AR-SECONDARY

AN ATTACHMENT

SMCS-1401, 1402, 1408 **i02832793**

NOTE	REF NO	GRAPHIC REF	PART NUMBER	QTY	PART NAME 1 2 3 4 5 6 (PRODUCT LEVEL)	SEE PAGE
	1	1	**2G-8767**	2	WASHER (10.5X60X3-MM THK)	
	2	1	**3E-8320**	1	PLATE-INSTRUCTION (BATTERY)	
	3	1	**6G-2256**	2	CLAMP	
	4	1	**6G-2263**	2	SPACER (10.5X19X28.5-MM THK)	
	5	1	**7K-1181**	1	STRAP-CABLE	
Y	6	1	**7N-0718**	1	SWITCH GP-DISCONNECT (BATTERY)	182
	7	1	**8R-0768**	4	ROD-RETAINING	
	8	1	**102-4176**	2	HOLD-DOWN-BATTERY	
	9	1	**151-4841**	1	BLOCK	
	10	1	**180-8871**	1	CABLE AS	
E		1	**5P-0761**		CABLE (00-GA, RED) (145-CM)	
		1	**7N-5274**	1	COVER-TERMINAL (BLACK)	
		1	**8N-1725**	1	COVER-TERMINAL (RED)	
		1	**3S-6050**	1	TERMINAL AS-BATTERY (NEGATIVE)	
		1	**1M-6119**	1	BOLT (5/16-18X1.375-IN)	
		1	**1M-6120**	1	NUT (5/16-18-THD)	
		1	**3S-6049**	1	TERMINAL AS-BATTERY (POSITIVE)	
		1	**1M-6119**	1	BOLT (5/16-18X1.375-IN)	
		1	**1M-6120**	1	NUT (5/16-18-THD)	
B		1	**1P-0810**		TAPE-ELECTRICAL	
	11	1	**180-8874**	1	CABLE AS	
		1	**9G-9809**	1	CARRIER AS-RING	
		1	**1S-7251**	1	TERMINAL-CABLE (00-GA, 1/2-IN BOLT)	
		1	**8S-3020**	1	TERMINAL-CABLE	
	12	1	**204-2281**	1	STRAP-TIE	
	13	1	**293-5283**	1	CABLE AS	
		1	**315-0180**	1	TERMINAL-RING	
E		1	**5P-0747**		CABLE (00-GA, BLACK) (36-CM)	
		1	**216-7790**	1	TERMINAL-RING	
	14	1	**293-5284**	1	CABLE AS	
E		1	**5P-0747**		CABLE (00-GA, BLACK) (136-CM)	
		1	**7N-5274**	1	COVER-TERMINAL (BLACK)	
		1	**8L-8413**	1	STRAP-CABLE	
		1	**9G-8909**	1	COVER-TERMINAL (BLACK)	
		1	**3S-6050**	1	TERMINAL AS-BATTERY (NEGATIVE)	
		1	**1M-6119**	1	BOLT (5/16-18X1.375-IN)	
		1	**1M-6120**	1	NUT (5/16-18-THD)	
E		1	**125-7876**		TUBE-HEAT SHRINK (17.78-MM DIA) (4-CM)	
		1	**216-7790**	1	TERMINAL-RING	
	15	1	**293-5532**	1	BRACKET	
	16	1	**295-7795**	1	CABLE AS	
		1	**8T-8827**	1	BOOT (RED)	
E		1	**159-8049**		CABLE (00-GA, RED) (188-CM)	
		1	**8N-0869**	1	COVER-TERMINAL (RED)	
		1	**8N-1725**	1	COVER-TERMINAL (RED)	
		1	**8L-8413**	1	STRAP-CABLE	
		1	**216-7790**	2	TERMINAL-RING	
		1	**3S-6049**	1	TERMINAL AS-BATTERY (POSITIVE)	
		1	**1M-6119**	1	BOLT (5/16-18X1.375-IN)	
		1	**1M-6120**	1	NUT (5/16-18-THD)	
E		1	**125-7876**		TUBE-HEAT SHRINK (17.78-MM DIA) (7-CM)	
	17	1	**299-9124**	1	BRACKET AS	
M		1	**8T-3490**	2	NUT-WELD (M10X1.5-THD)	
	18	1	**1B-3057**	1	CLIP	
	19	1	**5P-4116**	4	WASHER-HARD (8.8X20.5X2-MM THK)	

302-1885 **BATTERY & WIRING GP** ***(contd.)*** **i02832793**

NOTE	REF NO	GRAPHIC REF	PART NUMBER	QTY	PART NAME 1 2 3 4 5 6 (PRODUCT LEVEL)	SEE PAGE
	20	1	**6D-3479**	7	CLIP	
	21	1	**8T-4121**	17	WASHER-HARD (11X21X2.5-MM THK)	
M	22	1	**8T-4133**	5	NUT (M10X1.5-THD)	
M	23	1	**8T-4136**	5	BOLT (M10X1.5X25-MM)	
M	24	1	**8T-4137**	4	BOLT (M10X1.5X20-MM)	
M	25	1	**8T-4195**	1	BOLT (M10X1.5X30-MM)	
M	26	1	**8T-6466**	2	BOLT (M10X1.5X60-MM)	
M	27	1	**8T-7963**	4	LOCKNUT (M8X1.25-THD)	

B-USE AS REQUIRED
E-ORDER BY THE CENTIMETER
M-METRIC PART
Y-SEPARATE ILLUSTRATION

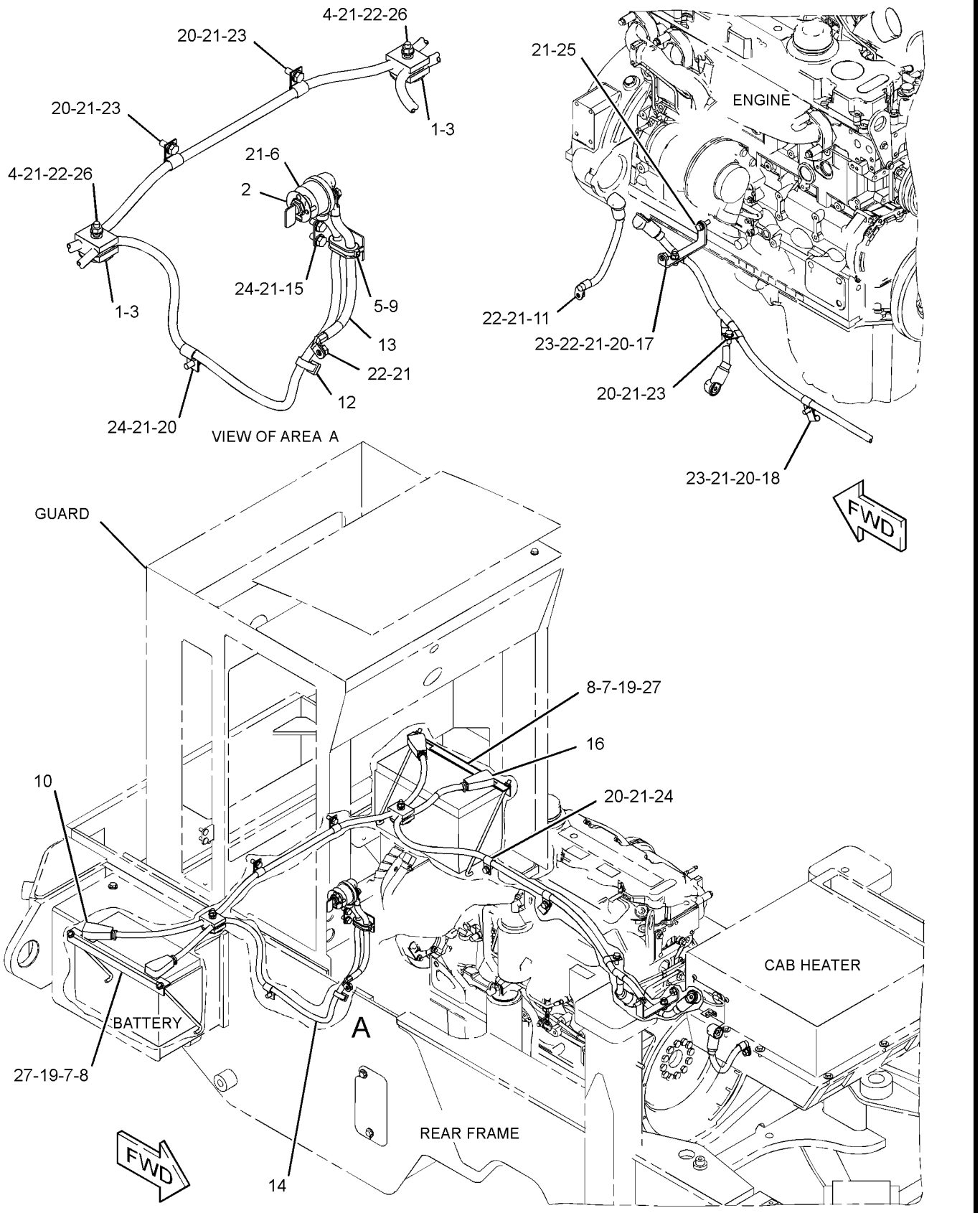

GRAPHIC #1 **<END>** g01405253

112-7167 BATTERY GP

S/N: BYD1-UP; FTD1-UP
PART OF 289-8871, 289-8891, 290-6498 CHASSIS AR

SMCS-1401 **i00526812**

NOTE	PART NUMBER	QTY	PART NAME 1 2 3 4 5 6 (PRODUCT LEVEL)	SEE PAGE
	9X-3404	2	BATTERY (12-VOLT, 900-AMPERE)	

<END>

302-8662 CAMERA AR

S/N: BYD1-UP; FTD1-UP
AN ATTACHMENT

SMCS-7348 **i02780294**

NOTE	PART NUMBER	QTY	PART NAME 1 2 3 4 5 6 (PRODUCT LEVEL)	SEE PAGE
Y	*260-3183*	1	MIRROR GP-REAR VIEW (INTERIOR, LH)	884
Y	*256-7265*	1	MOUNTING GP-CAMERA (REAR VIEW)	172
Y	*256-7267*	1	MOUNTING GP-DISPLAY	888
Y	*256-7269*	1	WIRING GP-CAMERA (REAR CHASSIS)	193
	1V-9409	1	GROMMET	
	290-0662	1	DISPLAY GP-CAMERA	
	249-9076	7	CLIP	
	261-3224	1	MODULE GP-DISPLAY (WORK AREA VISUAL SYSTEM)	
	8T-8737	1	PLUG-SEAL	
	102-8805	1	KIT-RECEPTACLE (6-PIN)	
			(INCLUDES RECEPTACLE AS & WEDGE)	
	186-3735	1	PIN-CONNECTOR (16-GA TO 18-GA)	
	280-2691	1	CABLE AS	
	290-0661	1	HARNESS AS-MONITOR	

Y-SEPARATE ILLUSTRATION

<END>

320-9968 CAMERA AR

S/N: BYD1-UP; FTD1-UP
FOR USE WITH REAR CAMERA OPTION
AN ATTACHMENT

SMCS-7348 **i02895576**

NOTE	PART NUMBER	QTY	PART NAME 1 2 3 4 5 6 (PRODUCT LEVEL)	SEE PAGE
Y	*290-0662*	1	DISPLAY GP-CAMERA (REAR VIEW)	831
Y	*320-9967*	1	MIRROR GP-REAR VIEW (BASIC)	886
Y	*256-7265*	1	MOUNTING GP-CAMERA (REAR VIEW)	172
Y	*256-7267*	1	MOUNTING GP-DISPLAY	888
Y	*256-7269*	1	WIRING GP-CAMERA (REAR CHASSIS)	193
	1V-9409	1	GROMMET	

Y-SEPARATE ILLUSTRATION

<END>

3E-7844 CONTROL GP-LIFT KICKOUT

S/N: BYD1-UP; FTD1-UP

PART OF 113-3652, 235-6820 KICKOUT & POSITIONER GP

SMCS-5109 **i02599050**

NOTE	REF NO	GRAPHIC REF	PART NUMBER	QTY	PART NAME 1 2 3 4 5 6 (PRODUCT LEVEL)	SEE PAGE
	1	1	**9X-5617**	1	FILM-INSTRUCTION (KICKOUT, POSITIONER CONTROL)	
	2	1	**102-8803**	1	KIT-RECEPTACLE (3-PIN)	
					(INCLUDES RECEPTACLE AS & WEDGE)	
	3	1	**8T-8729**	3	PIN-CONNECTOR	

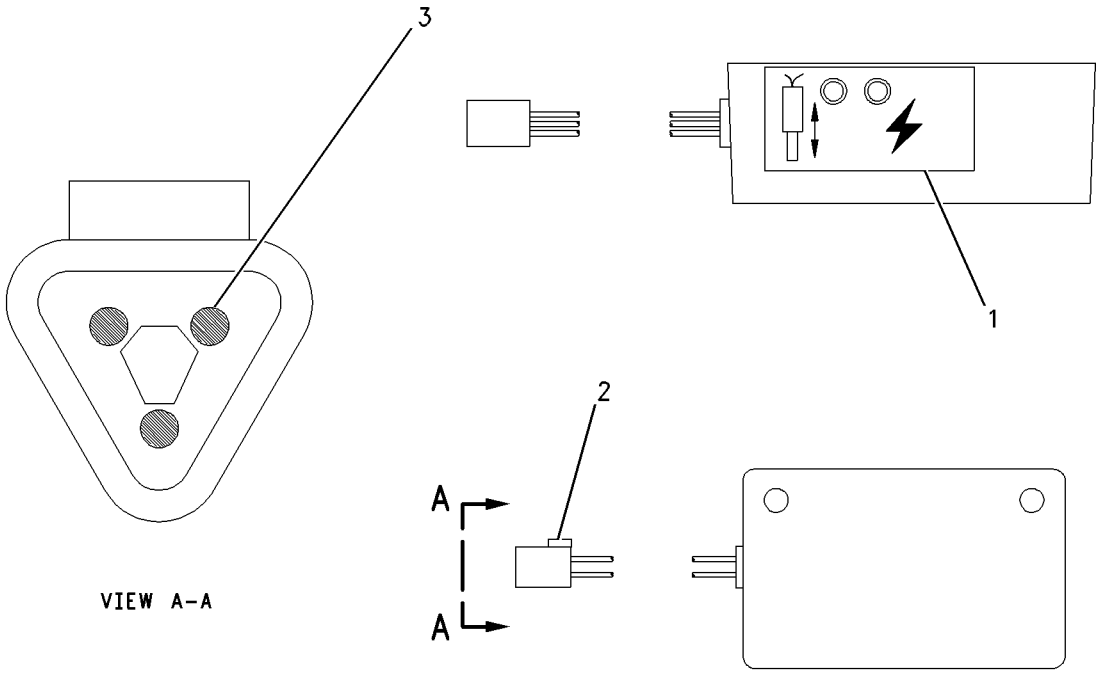

GRAPHIC #1 **<END>** g00868774

3E-7843 CONTROL GP-POSITION–WORK TOOL

S/N: BYD1-UP; FTD1-UP

PART OF 113-3652, 235-6820 KICKOUT & POSITIONER GP

SMCS-5112 **i02599055**

NOTE	REF NO	GRAPHIC REF	PART NUMBER	QTY	PART NAME 1 2 3 4 5 6 (PRODUCT LEVEL)	SEE PAGE
	1	1	**9X-5617**	1	FILM-INSTRUCTION (KICKOUT, POSITIONER CONTROL)	
	2	1	**8T-8730**	3	SOCKET-CONNECTOR (16-GA TO 18-GA)	
	3	1	**155-2260**	1	KIT-CONNECTING PLUG (3-PIN)	
					(INCLUDES PLUG AS, WEDGE, & INTERFACE SEAL)	

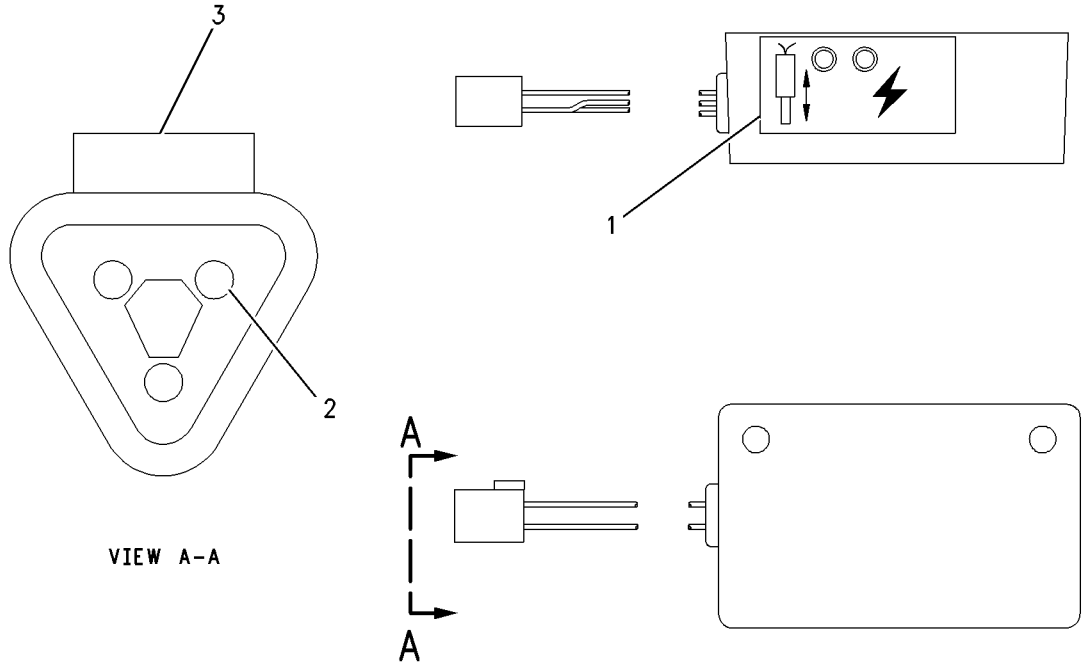

GRAPHIC #1 **<END>** g00868780

207-5947 CONVERTER GP-ELECTRICAL

S/N: BYD1-UP; FTD1-UP
PART OF 225-4329 INSTALLATION GP-RADIO
CANNOT BE USED WITH 225-4329—PAGE 868
AN ATTACHMENT

SMCS-1421 **i01750540**

NOTE	REF NO	GRAPHIC REF	PART NUMBER	QTY	PART NAME 1 2 3 4 5 6 (PRODUCT LEVEL)	SEE PAGE
	1	1	**117-2311**	1	RECEPTACLE AS-POWER (12-VOLT)	
	2	1	**124-5638**	1	FILM-INFORMATION (12-VOLT)	
	3	1	**205-4285**	1	CONVERTER GP-ELECTRICAL (24-VOLT TO 12-VOLT)	
	4	1	**3V-4791**	1	GROMMET	
M	5	1	**9X-1046**	2	SCREW (M4X0.7X18-MM)	
	6	1	**9X-8256**	2	WASHER (6.6X12X2-MM THK)	

M-METRIC PART

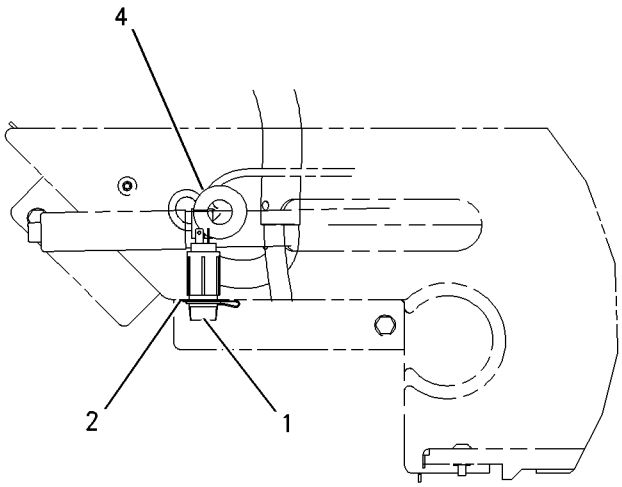

LEFT SIDE VIEW
(PARK BRAKE & COVER AS.)

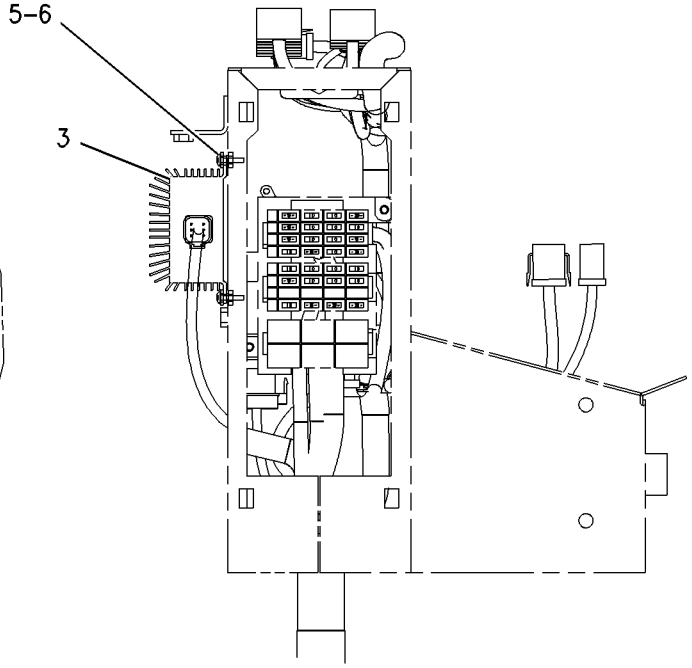

RIGHT SIDE VIEW
(FUSE BOX)

GRAPHIC #1 **<END>** g00895503

ELECTRICAL AND STARTING SYSTEM

289-8802 ELECTRONICS AR-MACHINE

S/N: BYD1-UP; FTD1-UP

PART OF 289-8870, 289-8890, 289-8899 COMMON AR

SMCS-7610, 7620 **i02803101**

NOTE	PART NUMBER	QTY	PART NAME 1 2 3 4 5 6 (PRODUCT LEVEL)	SEE PAGE
Y	*292-5554*	1	ELECTRONICS GP-POWER TRAIN	139
Y-SEPARATE ILLUSTRATION				

<END>

262-1421 ELECTRONICS GP-COMMUNICATION

S/N: BYD1-UP

PART OF 273-4068 INSTALLATION AR-COMMUNICATION

AN ATTACHMENT

SMCS-7606, 7610, 7620 **i02532840**

NOTE	REF NO	GRAPHIC REF	PART NUMBER	QTY	PART NAME 1 2 3 4 5 6 (PRODUCT LEVEL)	SEE PAGE
	1	1	**268-4698**	1	SOFTWARE GP-COMMUNICATION (PRODUCT LINK 300)	
					-OR-	
	2	1	**268-4699**	1	SERVICE GP-COMMUNICATION (PRODUCT LINK 300)	
					(OPTIONAL SERVICE REPLACEMENT)(INCLUDES CONTROL GP & SOFTWARE)	

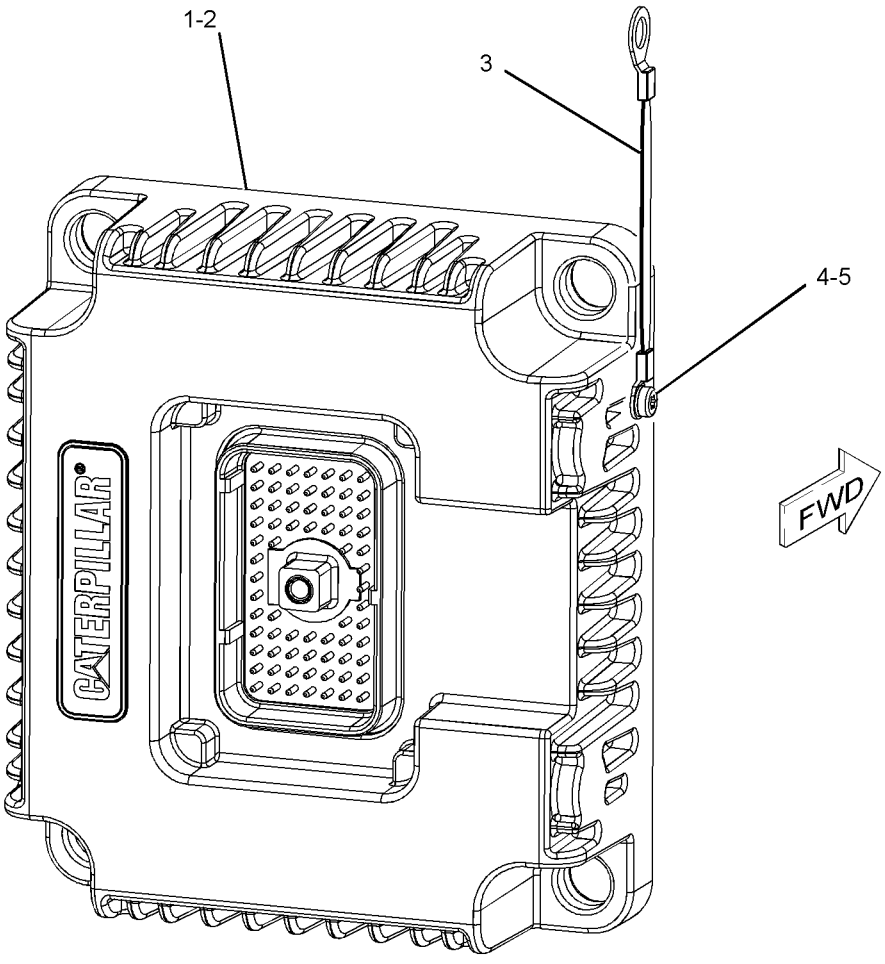

GRAPHIC #1 **<END>** g01157176

292-5554 ELECTRONICS GP-POWER TRAIN

S/N: BYD1-UP; FTD1-UP

PART OF 289-8802 ELECTRONICS AR-MACHINE

SMCS-4800, 4808, 7610, 7620 **i02879362**

NOTE	PART NUMBER	QTY	PART NAME 1 2 3 4 5 6 (PRODUCT LEVEL)	SEE PAGE
	319-9405	1	SOFTWARE GP-POWER TRAIN	
			-OR-	
	319-9406	1	SERVICE GP-POWER TRAIN	
			(OPTIONAL SERVICE REPLACEMENT) (INCLUDES CONTROL GP & SOFTWARE)	

<END>

277-4410 GLOW PLUG GP

S/N: C6E1-UP

PART OF 292-5305, 301-3361 ENGINE AR-PRIMARY

AN ATTACHMENT

SMCS-1412 **i02839364**

NOTE	REF NO	GRAPHIC REF	PART NUMBER	QTY	PART NAME 1 2 3 4 5 6 (PRODUCT LEVEL)	SEE PAGE
C	1	1	**292-9881**	6	GLOW PLUG	
	2	1	**277-4407**	1	BAR AS	
	2A	1	**277-4408**	1	CABLE AS	
M	2B	1	**5C-2890**	1	NUT (M6X1-THD)	
	4	1	**275-2428**	1	INSULATOR	
M	5	1	**5C-2890**	2	NUT (M6X1-THD)	
	6	1	**277-4409**	1	CAP	
	8	1	**100-4838**	1	BOLT (M6X20-MM)	

C-CHANGE FROM PREVIOUS TYPE
M-METRIC PART

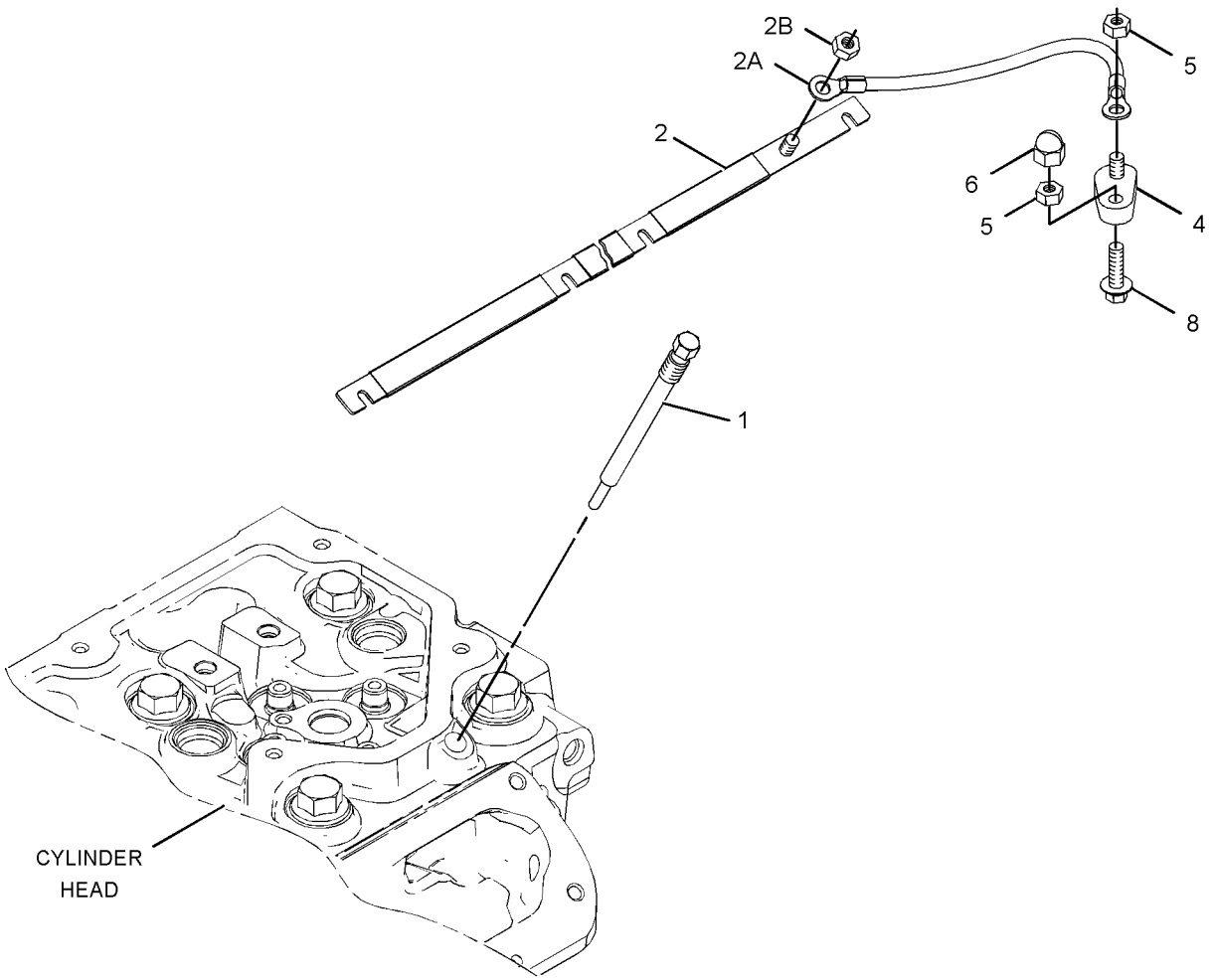

GRAPHIC #1 **<END>** g01318111

293-4050 HEATER GP-JACKET WATER

S/N: BYD1-UP; FTD1-UP
AN ATTACHMENT

SMCS-1383 **i02768070**

NOTE	REF NO	GRAPHIC REF	PART NUMBER	QTY	PART NAME 1 2 3 4 5 6 (PRODUCT LEVEL)	SEE PAGE
	1	1	**6N-1604**	1	CAP AS-DUST	
	2	1	**9X-6772**	1	STRAP-CABLE (213-MM)	
	3	1	**260-1555**	1	ELEMENT AS-JACKET WATER HEATER (120-VOLT, 1000-WATT)	
		1	**4D-9986**	1	SEAL-O-RING	
	4	1	**260-1566**	1	CORD AS-HEATER	
	5	1	**3S-2093**	3	STRAP-CABLE (PLASTIC)	
M	6	1	**8T-4200**	1	BOLT (M8X1.25X16-MM)	
	7	1	**8T-4224**	1	WASHER-HARD (8.8X16X2-MM THK)	

M-METRIC PART

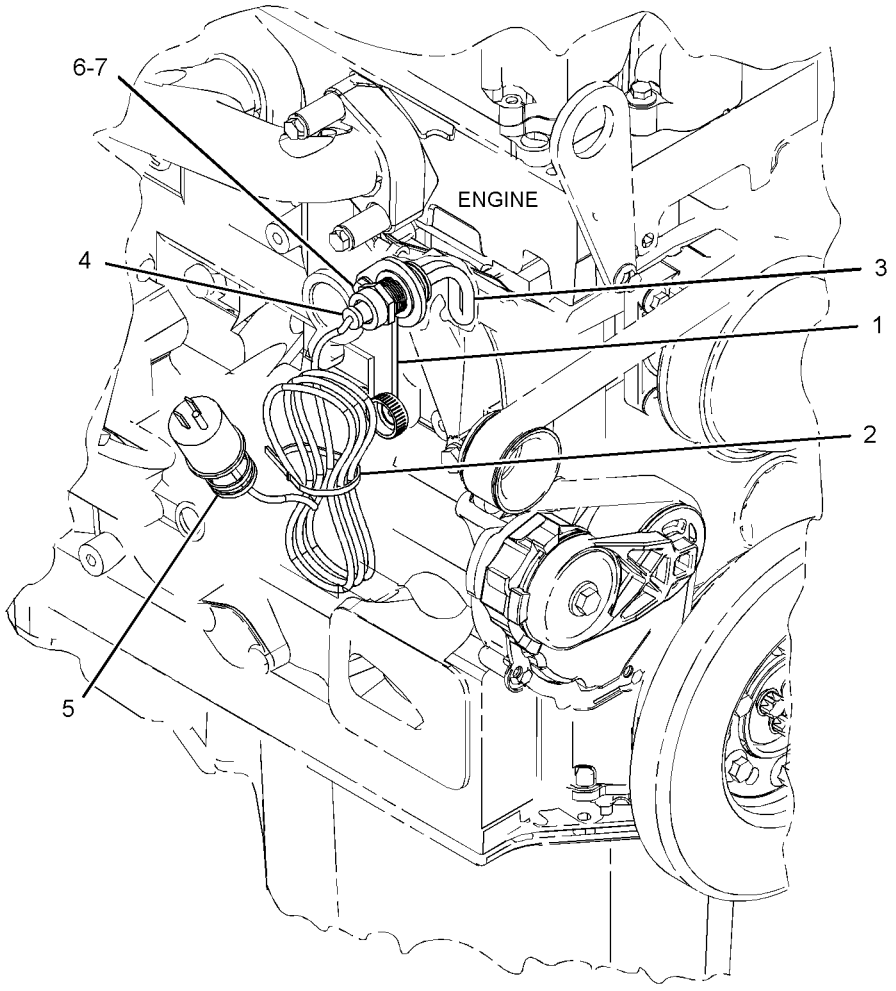

GRAPHIC #1 **<END>** g01406942

293-4052 HEATER GP-JACKET WATER

S/N: BYD1-UP; FTD1-UP

AN ATTACHMENT

SMCS-1383 **i02790643**

NOTE	REF NO	GRAPHIC REF	PART NUMBER	QTY	PART NAME 1 2 3 4 5 6 (PRODUCT LEVEL)	SEE PAGE
	1	1	**6N-1604**	1	CAP AS-DUST	
	2	1	**9X-6772**	1	STRAP-CABLE	
	3	1	**260-1556**	1	ELEMENT AS-JACKET WATER HEATER (240-VOLT, 1000-WATT)	
		1	**4D-9986**	1	SEAL-O-RING	
	4	1	**260-1569**	1	CORD AS-HEATER	
	5	1	**3S-2093**	3	STRAP-CABLE	
M	6	1	**8T-4200**	1	BOLT (M8X1.25X16-MM)	
	7	1	**8T-4224**	1	WASHER-HARD (8.8X16X2-MM THK)	

M-METRIC PART

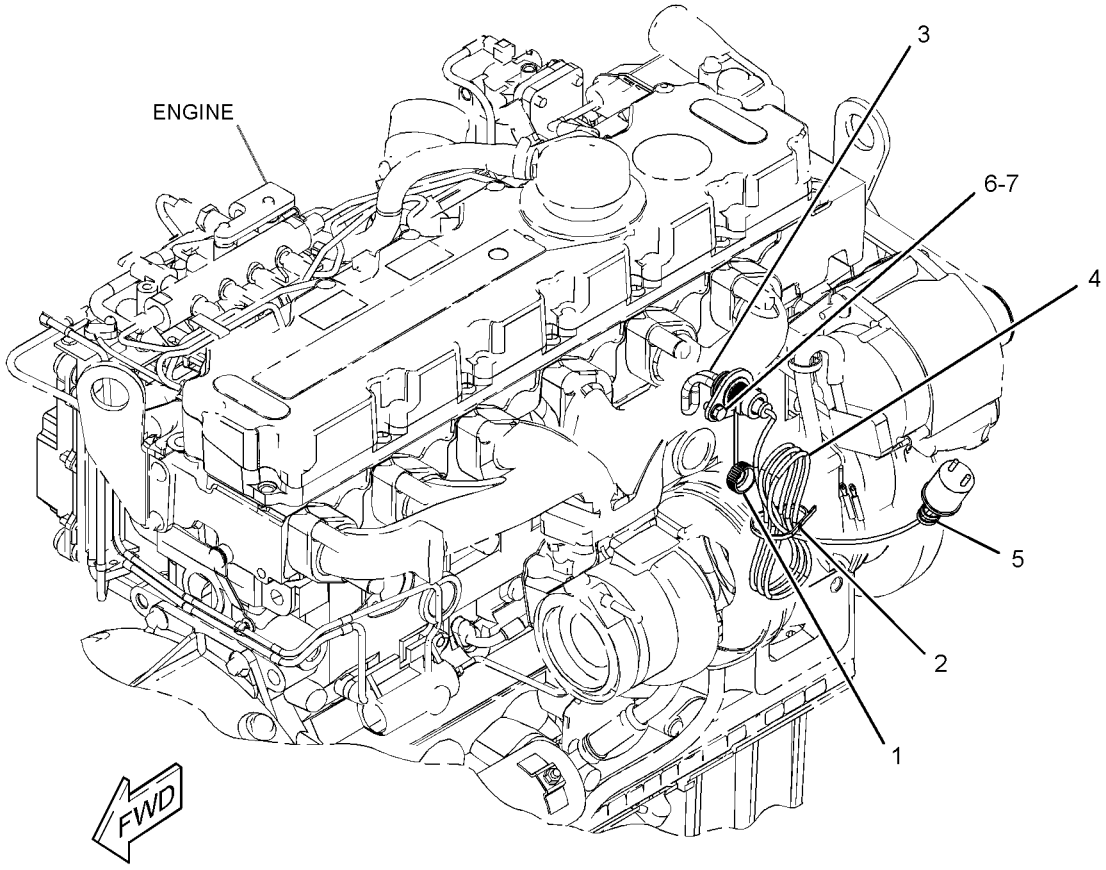

GRAPHIC #1 **<END>** g01394762

273-4068 INSTALLATION AR-COMMUNICATION

S/N: BYD1-UP
AN ATTACHMENT

SMCS-7606 **i02817707**

NOTE	REF NO	GRAPHIC REF	PART NUMBER	QTY	PART NAME 1 2 3 4 5 6 (PRODUCT LEVEL)	SEE PAGE
	1	1	**7K-1181**	9	STRAP-CABLE	
	2	1	**8C-5607**	8	MOUNT-ISOLATION	
	3	1	**8C-5608**	4	SPACER (6.5X9.5X25.4-MM THK)	
	4	1	**9R-4750**	1	BOSS	
	5	1	**031-5644**	6	CLIP	
	6	1	**226-3681**	1	PLATE	
	7	1	**230-1340**	1	FILM-WARNING (PRODUCT LINK RADIO, U.S.)	
	8	1	**230-1341**	1	FILM-WARNING (PRODUCT LINK RADIO, INTL)	
	9	1	**256-6803**	1	HARNESS AS-RADIO (PRODUCT LINK)	
	10	1	**256-6804**	1	HARNESS AS-CONTROL (PRODUCT LINK)	
Y	11	1	*262-1421*	1	ELECTRONICS GP-COMMUNICATION (PRODUCT LINK 300)	138
	12	1	**263-8948**	1	ANTENNA AS	
Y	13	1	**263-9088**	1	RADIO GP-COMMUNICATION (PRODUCT LINK 121SR)	914
	14	1	**308-1477**	1	PLATE AS	
M		1	**6V-9632**	8	NUT-WELD (M6X1-THD)	
	15	1	**2G-8096**	1	MOUNTING	
M	16	1	**8C-8451**	4	BOLT (M6X1X40-MM)	
M	17	1	**8T-4138**	4	BOLT (M6X1X20-MM)	
M	18	1	**8T-4189**	3	BOLT (M8X1.25X20-MM)	
M	19	1	**8T-4194**	1	BOLT (M12X1.75X50-MM)	
	20	1	**8T-4224**	3	WASHER-HARD (8.8X16X2-MM THK)	
	21	1	**9X-6165**	4	WASHER (6.5X22X2.5-MM THK)	
	22	1	**9X-8256**	4	WASHER (6.6X12X2-MM THK)	

M-METRIC PART
Y-SEPARATE ILLUSTRATION

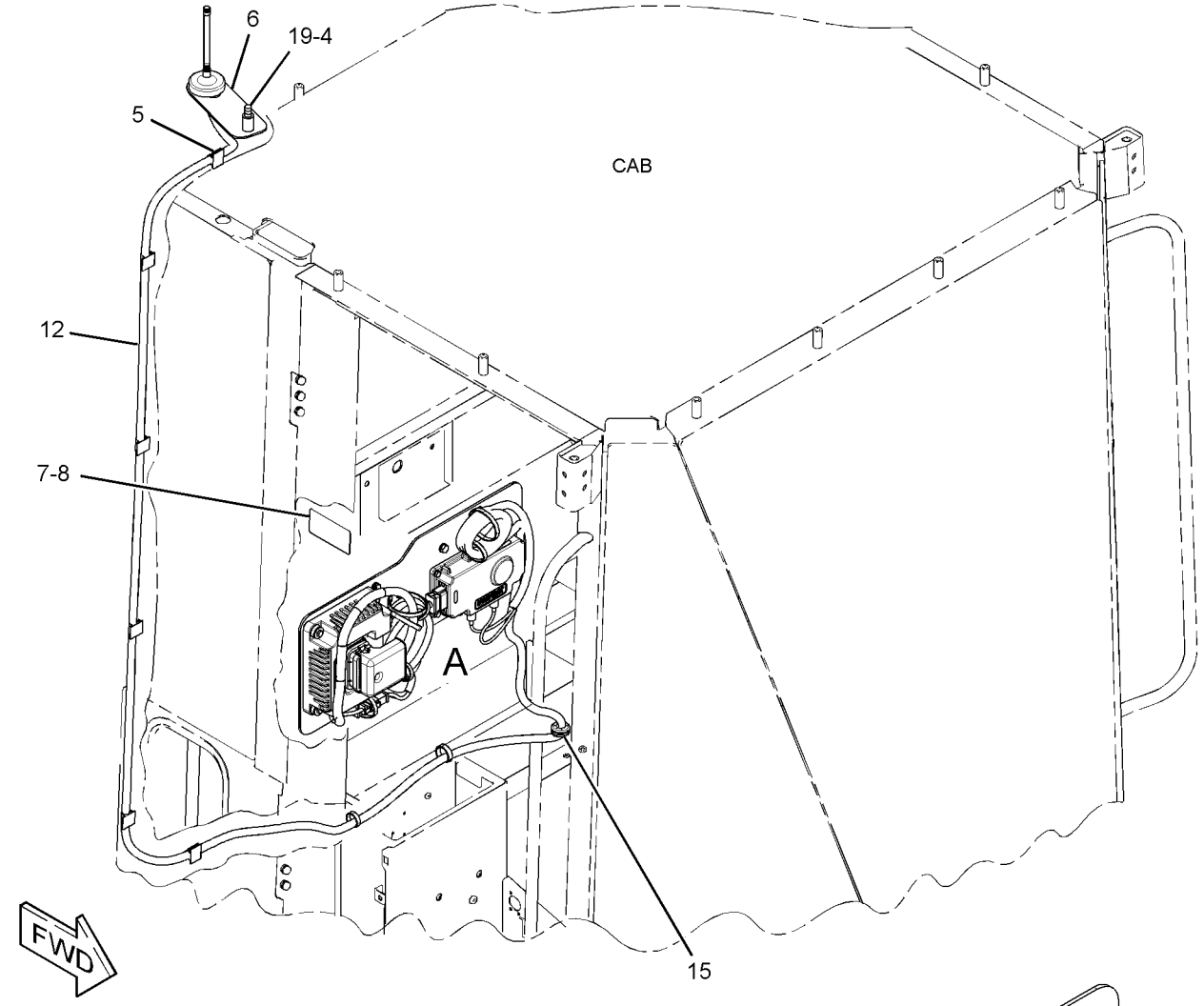

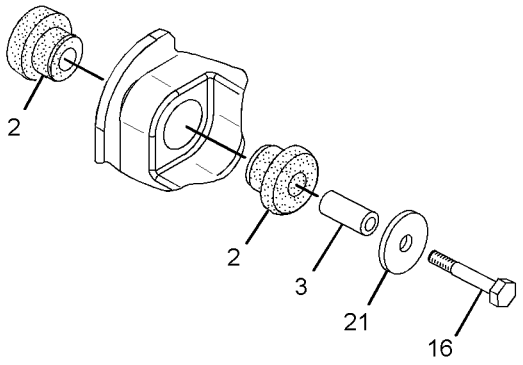

VIEW OF
AREA B
(EXPLODED)

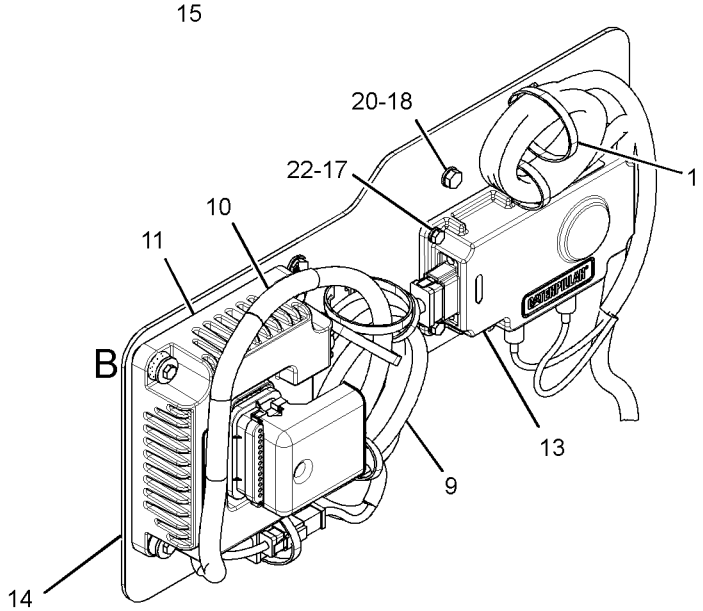

VIEW OF AREA A

GRAPHIC #1 **<END>** g01406574

243-0516 INSTALLATION GP-SECURITY

S/N: BYD1-UP; FTD1-UP
AN ATTACHMENT

SMCS-7631 **i02672656**

NOTE	REF NO	GRAPHIC REF	PART NUMBER	QTY	PART NAME 1 2 3 4 5 6 (PRODUCT LEVEL)	SEE PAGE
	1	1	**198-5389**	1	FILM-IDENTIFICATION (IGNITION SWITCH)	
	2	1	**205-0826**	1	FILM-INSTRUCTION (MACHINE SECURITY, INTL)	
	3	1	**206-5162**	2	KEY AS-ELECTRONIC (SECURITY)	
	4	1	*206-5208*	1	COIL AS (EXCITER)	
		1	**102-8802**	1	KIT-RECEPTACLE (2-PIN)	
					(INCLUDES RECEPTACLE AS & WEDGE)	
		1	**205-8257**	1	COIL AS (EXCITER)	
D		1	**5P-5677**		WIRE (18-GA, BLACK) (0.4-M)	
		1	**186-3735**	2	PIN-CONNECTOR (16-GA TO 18-GA)	
	5	1	**218-0404**	1	MODULE GP-INTERFACE (KEY)	
	6	1	**219-6314**	2	KEY RING (IDENTIFICATION)	
	7	1	**243-0517**	1	HARNESS AS-CONTROL (MACHINE SECURITY)	
		1	**102-8802**	1	KIT-RECEPTACLE (2-PIN)	
		1	**102-8803**	1	KIT-RECEPTACLE (3-PIN)	
		1	**102-8804**	1	KIT-RECEPTACLE (4-PIN)	
					(EACH RECEPTACLE KIT INCLUDES RECEPTACLE AS & WEDGE)	
		1	**8L-8413**	21	STRAP-CABLE	
E		1	**125-7874**		TUBE-HEAT SHRINK (5.72-MM DIA) (20-CM)	
		1	**155-2265**	1	KIT-CONNECTING PLUG (8-PIN)	
		1	**155-2260**	1	KIT-CONNECTING PLUG (3-PIN)	
		1	**155-2270**	2	KIT-CONNECTING PLUG (2-PIN)	
		1	**155-2271**	1	KIT-CONNECTING PLUG (4-PIN)	
					(EACH PLUG KIT INCLUDES PLUG AS, WEDGE & INTERFACE SEAL)	
FJ		1	*238-5014*	1	CONFIGURATION-PREMIUM	

D-ORDER BY THE METER
E-ORDER BY THE CENTIMETER
F-NOT SHOWN
J-DLR INSTALL CONFIG:SEE IRM:EES03-01

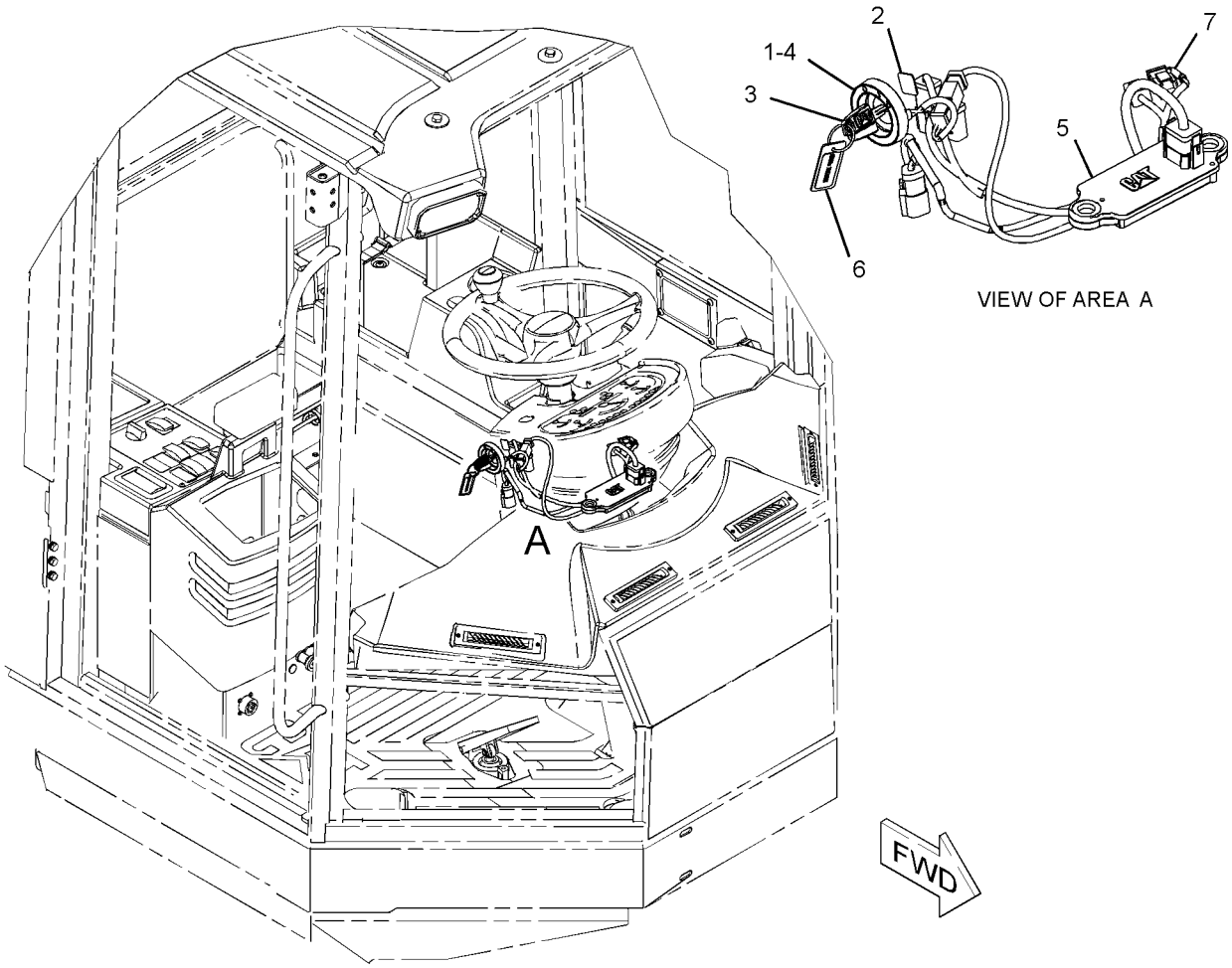

VIEW OF AREA A

GRAPHIC #1 **<END>** g01351427

107-6032 LAMP GP-DOME

S/N: BYD1-UP; FTD1-UP
24-VOLT
PART OF 241-8564 LINER GP-CAB
AN ATTACHMENT

SMCS-1433 **i02038780**

NOTE	REF NO	GRAPHIC REF	PART NUMBER	QTY	PART NAME 1 2 3 4 5 6 (PRODUCT LEVEL)	SEE PAGE
	1	1	**112-5219**	1	LAMP (24-VOLT, 10-WATT)	

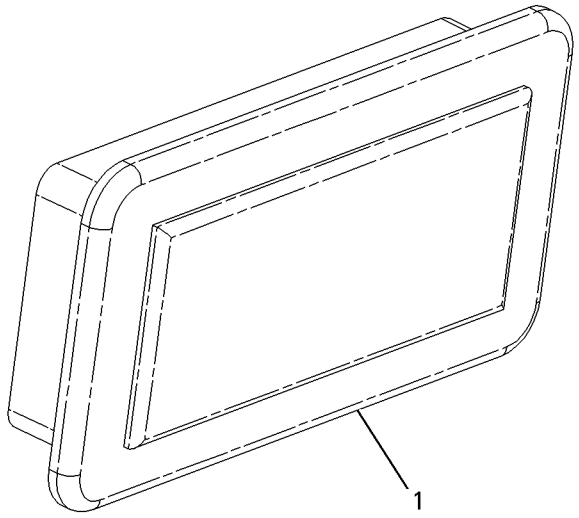

GRAPHIC #1 **<END>** g00866999

9X-1439 LAMP GP-FLOOD

S/N: BYD1-UP
24-VOLT. VERTICAL MOUNT
PART OF 119-9758 LIGHTING GP-FLOOD
AN ATTACHMENT

SMCS-1434 **i02038778**

NOTE	REF NO	GRAPHIC REF	PART NUMBER	QTY	PART NAME 1 2 3 4 5 6 (PRODUCT LEVEL)	SEE PAGE
	1	1	**9X-4244**	4	SCREW-SPECIAL	
	2	1	**9X-4174**	1	LENS AS (FLOODLIGHT)	
		1	**9X-4243**	1	SEAL	
M	3	1	**8T-0337**	2	SCREW-MACHINE (M4X0.7X12-MM)	
	4	1	**9X-3455**	1	BODY AS-LAMP	
	5	1	**9X-3463**	1	LAMP-HALOGEN (24-VOLT, 65-WATT)	

M-METRIC PART

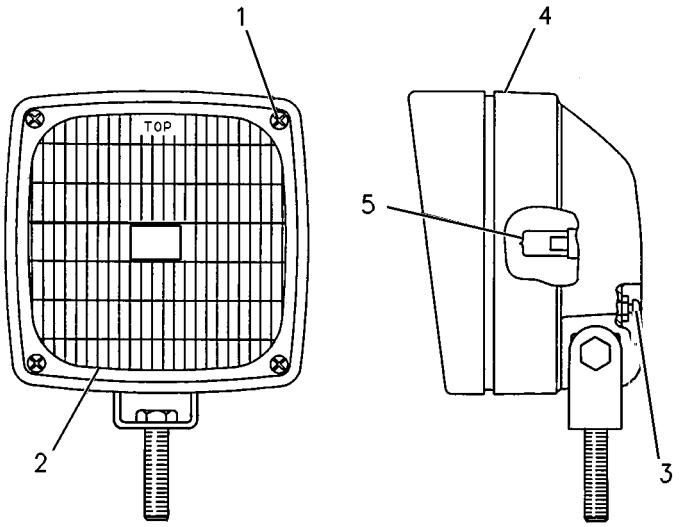

GRAPHIC #1 **<END>** g00795892

234-4325 LAMP GP-FLOOD

S/N: BYD1-UP; FTD1-UP
24-VOLT
PART OF 115-1558 LIGHTING GP-AUXILIARY
AN ATTACHMENT

SMCS-1434 **i02048893**

NOTE	REF NO	GRAPHIC REF	PART NUMBER	QTY	PART NAME 1 2 3 4 5 6 (PRODUCT LEVEL)	SEE PAGE
	1	1	**9X-3463**	1	LAMP-HALOGEN (24-VOLT, 65-WATT)	
M	2	1	**8T-4133**	1	NUT (M10X1.5-THD)	
	3	1	**9X-4244**	2	SCREW-SPECIAL	
	4	1	**202-6614**	1	LENS AS	
	5	1	**234-7730**	1	BODY AS	
	6	1	**164-7556**	1	BRACKET (LAMP RETAINING)	
	7	1	**234-7731**	1	BRACKET AS	

M-METRIC PART

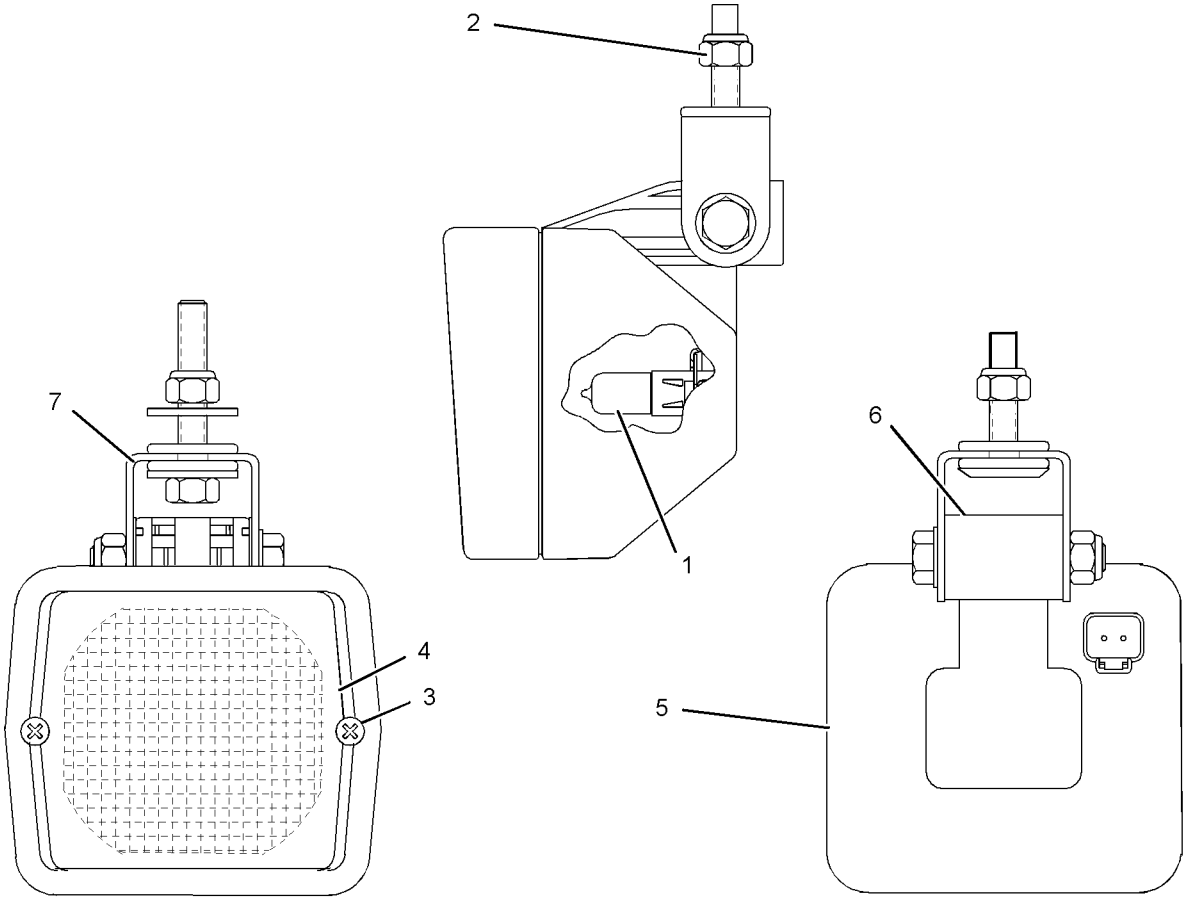

GRAPHIC #1 **<END>** g01044247

302-0406 LAMP GP-FLOOD

S/N: BYD1-UP
PART OF 290-7222 LIGHTING GP-ROADING
AN ATTACHMENT

SMCS-1434 **i02882114**

NOTE	PART NUMBER	QTY	PART NAME 1 2 3 4 5 6 (PRODUCT LEVEL)	SEE PAGE
			(NO BREAKDOWN OF SERVICEABLE PARTS AT TIME OF PUBLICATION.)	

<END>

302-0408 LAMP GP-FLOOD

S/N: BYD1-UP
PART OF 290-7222 LIGHTING GP-ROADING
AN ATTACHMENT

SMCS-1434 **i02882078**

NOTE	PART NUMBER	QTY	PART NAME 1 2 3 4 5 6 (PRODUCT LEVEL)	SEE PAGE
			(NO BREAKDOWN OF SERVICEABLE PARTS AT TIME OF PUBLICATION.)	

<END>

145-6929 LAMP GP-STOP & TAIL

S/N: BYD1-UP; FTD1-UP
24-VOLT
PART OF 290-7222, 310-6793, 311-4518 LIGHTING GP-ROADING, 290-7228 LIGHTING GP-STOP & TAIL
AN ATTACHMENT

SMCS-1432 **i02784102**

NOTE	REF NO	GRAPHIC REF	PART NUMBER	QTY	PART NAME 1 2 3 4 5 6 (PRODUCT LEVEL)	SEE PAGE
	1	1	**9X-4493**	1	LAMP (24-VOLT, 21-WATT) (STOP, TAIL)	
	2	1	**9X-4492**	1	LAMP (24-VOLT, 5-WATT) (STOP, TAIL)	
	3	1	**102-8802**	1	KIT-RECEPTACLE (2-PIN)	
					(INCLUDES RECEPTACLE AS & WEDGE)	
	4	1	**102-8803**	1	KIT-RECEPTACLE (3-PIN)	
					(INCLUDES RECEPTACLE AS & WEDGE)	
M	5	1	**5C-2890**	2	NUT (M6X1-THD)	
	6	1	**1H-3244**	2	LOCKWASHER	
	7	1	**186-3735**	5	PIN-CONNECTOR (16-GA TO 18-GA)	
	8	1	**267-2809**	1	LENS (STOP, TAIL, TURN)	

M-METRIC PART

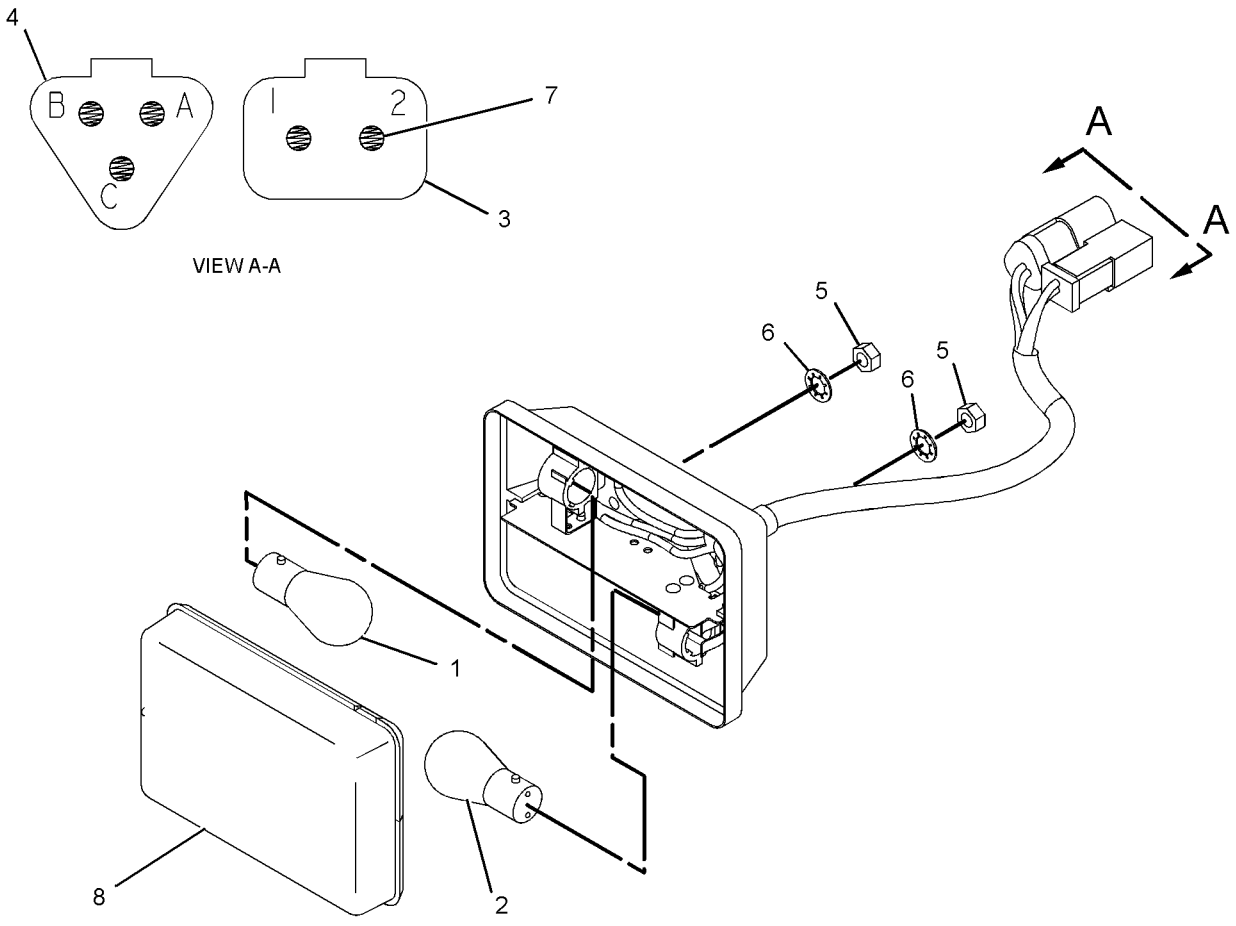

GRAPHIC #1 **<END>** g01344656

108-1029 LAMP GP-WARNING BEACON–AMBER

S/N: BYD1-UP; FTD1-UP
24-VOLT
PART OF 218-8836 LIGHTING GP-WARNING BEACON
AN ATTACHMENT

SMCS-1431 **i02830539**

NOTE	REF NO	GRAPHIC REF	PART NUMBER	QTY	PART NAME 1 2 3 4 5 6 (PRODUCT LEVEL)	SEE PAGE
	1	1	**272-9800**	1	LENS (AMBER)	
	2	1	**9X-7849**	1	LAMP (24-VOLT, 70-WATT)	
	3	1	**9X-8139**	1	BELT-DRIVE (WARNING BEACON) (WARNING BEACON)	
	4	1	**9R-7958**	1	CORD AS	
	5	1	**9R-7942**	1	PLUG AS	

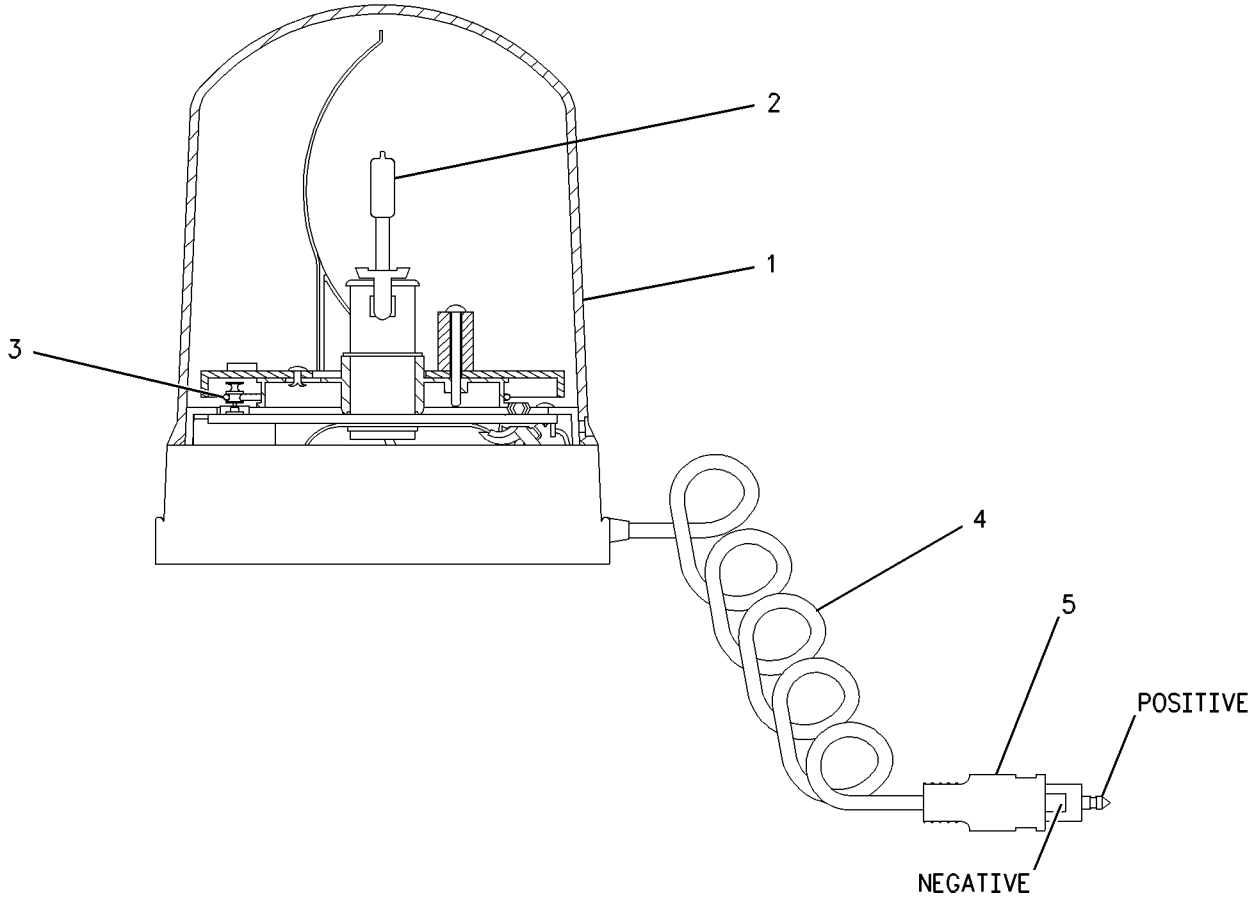

GRAPHIC #1 **<END>** g00600509

303-4112 LIGHTING AR-ROADING—ROADING, DIPPED, LH

S/N: BYD1-UP; FTD1-UP

CANNOT BE USED WITH 303-4113—PAGE 154

AN ATTACHMENT

SMCS-1429 **i02814209**

NOTE	REF NO	GRAPHIC REF	PART NUMBER	QTY	PART NAME 1 2 3 4 5 6 (PRODUCT LEVEL)	SEE PAGE
	1	1	**302-0412**	1	LAMP GP-HEAD & SIGNAL (RH)	
	2	1	**302-0413**	1	LAMP GP-HEAD & SIGNAL (LH)	

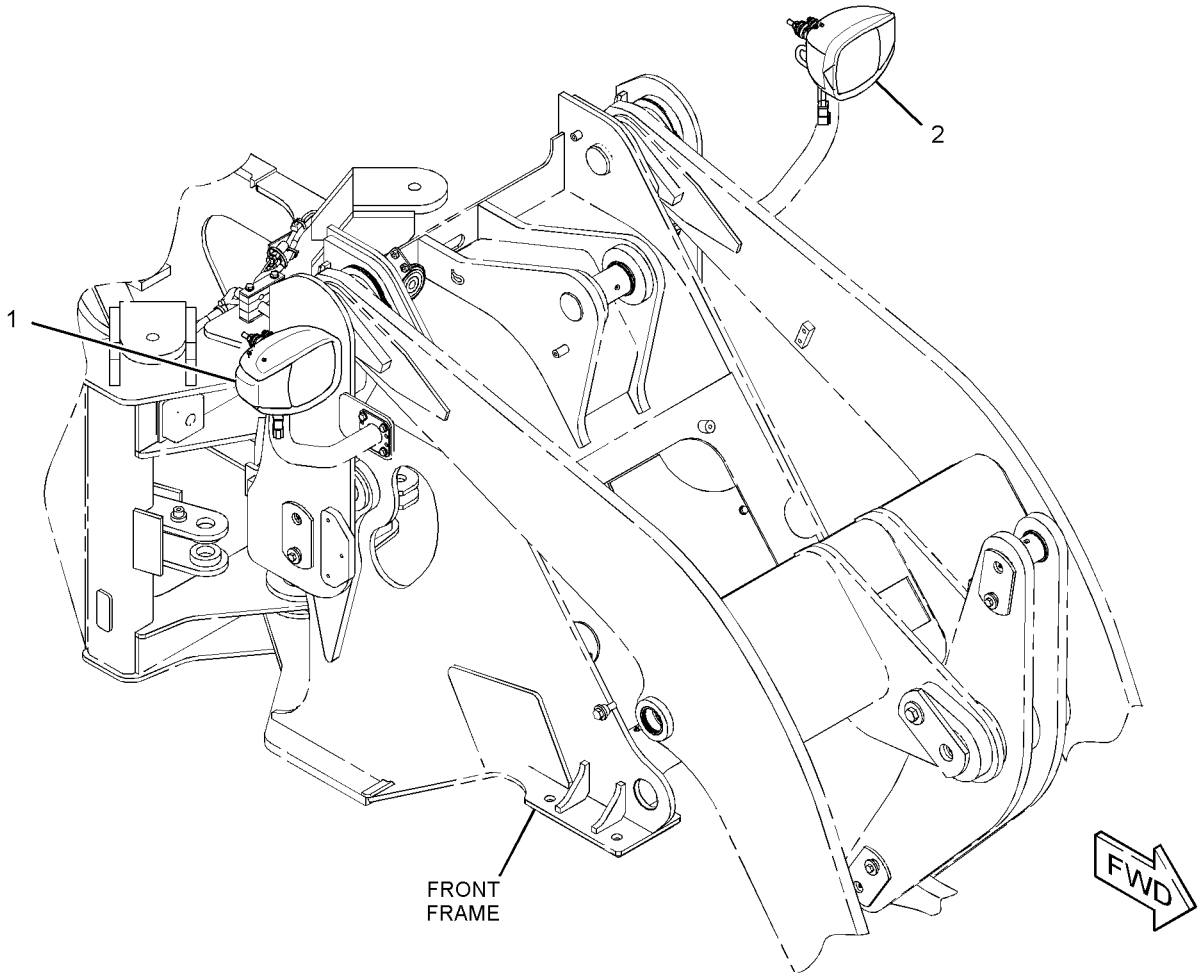

GRAPHIC #1 **<END>** g01409738

303-4113 LIGHTING AR-ROADING—ROADING,DIPPED,RH

S/N: BYD1-UP; FTD1-UP

CANNOT BE USED WITH 303-4112—PAGE 153

AN ATTACHMENT

SMCS-1429 **i02814200**

NOTE	REF NO	GRAPHIC REF	PART NUMBER	QTY	PART NAME 1 2 3 4 5 6 (PRODUCT LEVEL)	SEE PAGE
	1	1	**302-0409**	1	LAMP GP-HEAD & SIGNAL	
	2	1	**302-0411**	1	LAMP GP-HEAD & SIGNAL	

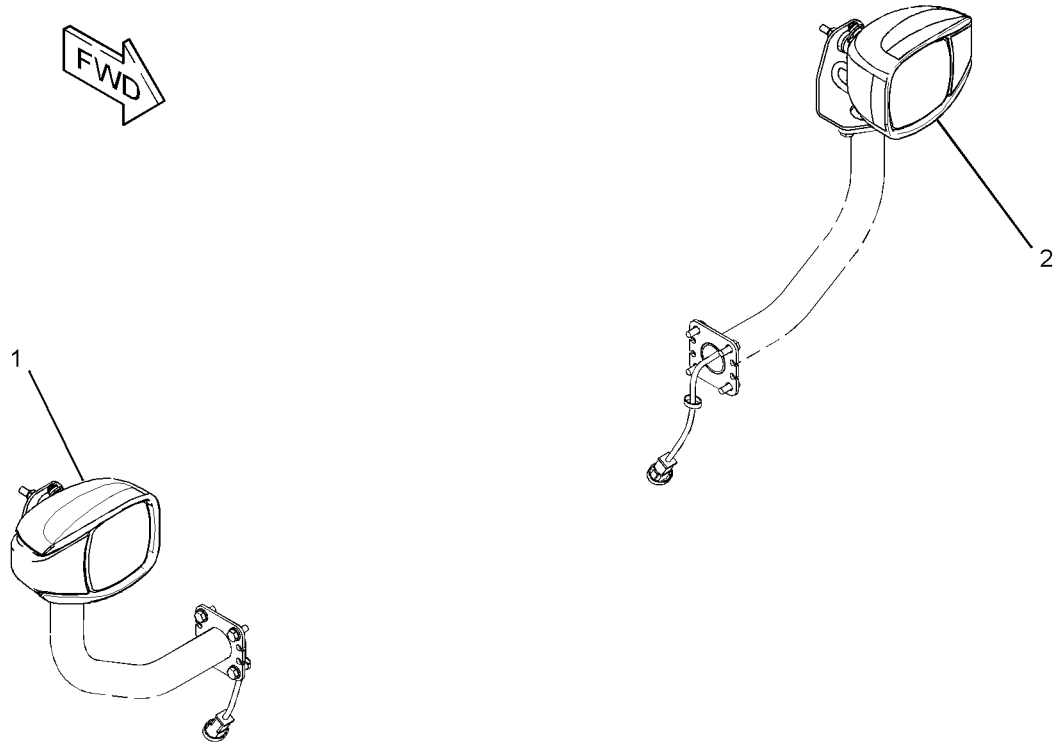

GRAPHIC #1 **<END>** g01409013

115-1558 LIGHTING GP-AUXILIARY—CAB FRONT

S/N: BYD1-UP; FTD1-UP
PART OF 308-2276, 308-2279 CAB AR-ENCLOSED ROPS
AN ATTACHMENT

SMCS-1429 **i02829759**

NOTE	REF NO	GRAPHIC REF	PART NUMBER	QTY	PART NAME 1 2 3 4 5 6 (PRODUCT LEVEL)	SEE PAGE
	1	1	**115-1559**	2	PLATE	
CY	2	1	**234-4325**	2	LAMP GP-FLOOD (24-VOLT)	149
C	3	1	**235-5762**	2	WIRE AS	
M	4	1	**5C-2890**	4	NUT (M6X1-THD)	
M	5	1	**8T-4189**	4	BOLT (M8X1.25X20-MM)	
	6	1	**8T-4224**	4	WASHER-HARD (8.8X16X2-MM THK)	

C-CHANGE FROM PREVIOUS TYPE
M-METRIC PART
Y-SEPARATE ILLUSTRATION

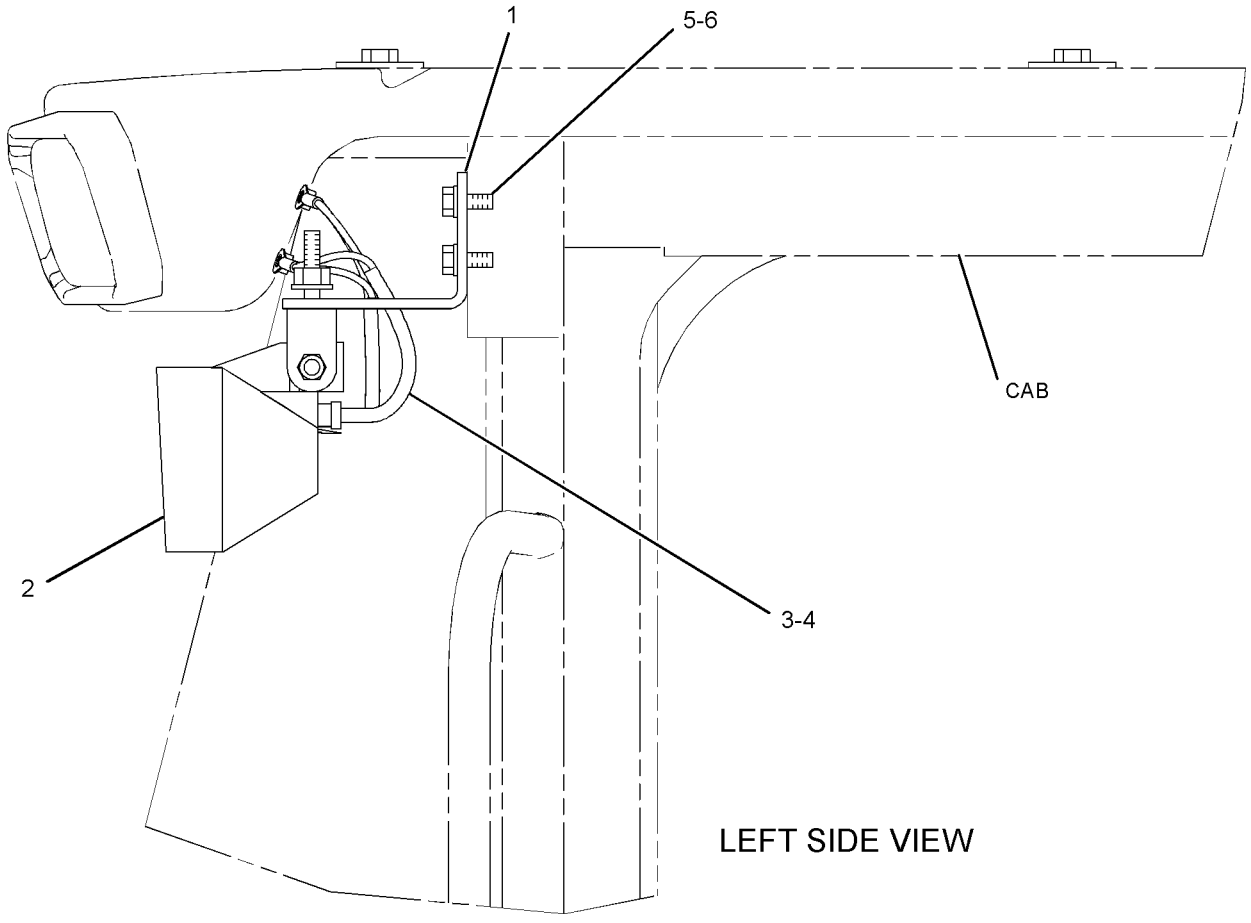

GRAPHIC #1 **<END>** g01411897

119-9758 LIGHTING GP-FLOOD—CANOPY FRONT

S/N: BYD1-UP
PART OF 304-9256 CANOPY AR-SOFT
AN ATTACHMENT

SMCS-1434 **i01046117**

NOTE	REF NO	GRAPHIC REF	PART NUMBER	QTY	PART NAME 1 2 3 4 5 6 (PRODUCT LEVEL)	SEE PAGE
Y	1	1	**9X-1439**	2	LAMP GP-FLOOD (24-VOLT)	148
M	2	1	**8T-4133**	2	NUT (M10X1.5-THD)	
	3	1	**8T-4121**	2	WASHER-HARD (11X21X2.5-MM THK)	
	4	1	**119-9810**	1	HARNESS AS	
	5	1	**7K-1181**	12	STRAP-CABLE	
	6	1	**5P-8438**	2	GROMMET	

M-METRIC PART
Y-SEPARATE ILLUSTRATION

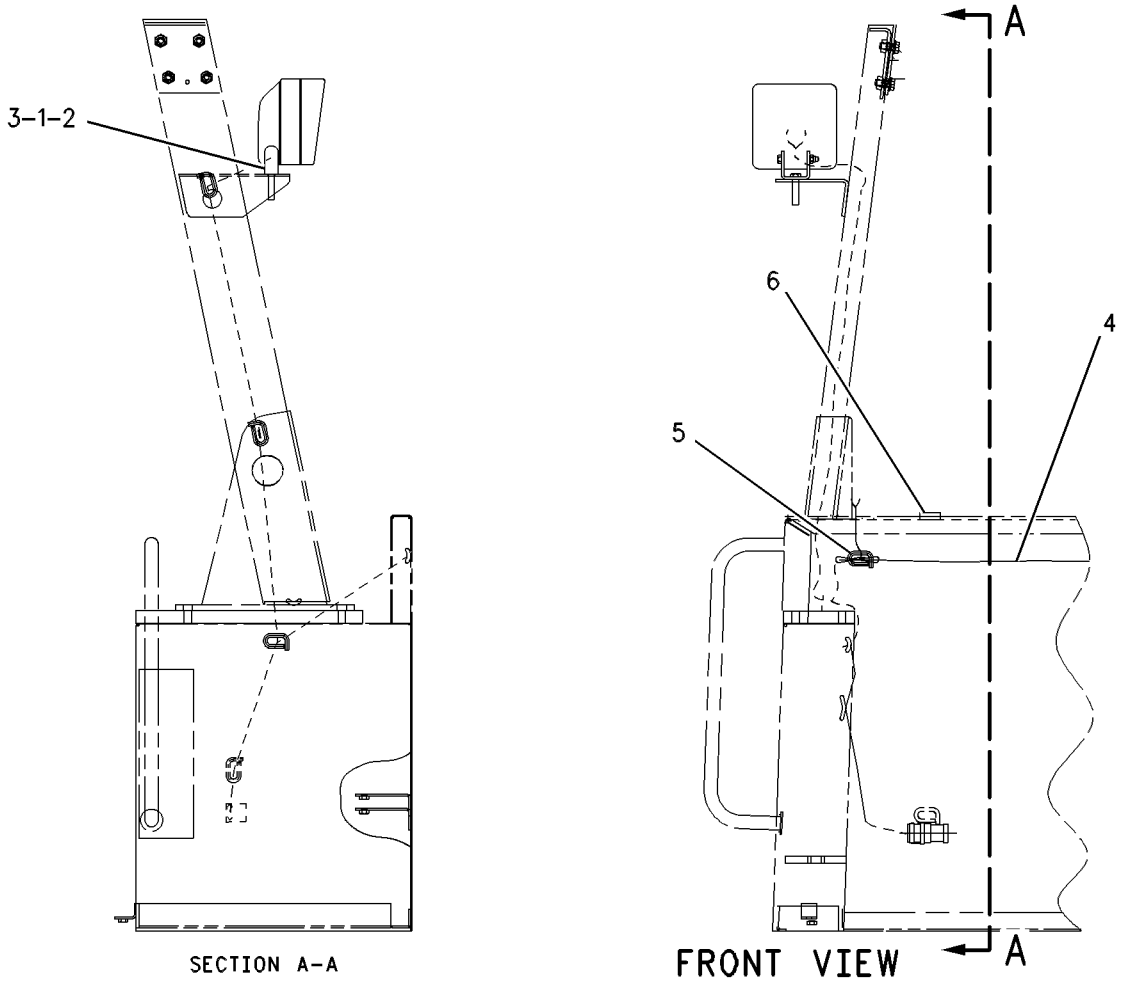

GRAPHIC #1 **<END>** g00541716

290-8181 LIGHTING GP-FLOOD—CAB FRONT, REAR

S/N: BYD1-UP; FTD1-UP

PART OF 290-8503 CAB AR-ENCLOSED ROPS, 290-8520 CAB GP-ENCLOSED ROPS AN ATTACHMENT

SMCS-1434 **i02793321**

NOTE	REF NO	GRAPHIC REF	PART NUMBER	QTY	PART NAME 1 2 3 4 5 6 (PRODUCT LEVEL)	SEE PAGE
	1	1	**8E-1118**	1	ANTENNA AS	
	2	1	**9R-7941**	1	SOCKET AS	
		1	**9R-7980**	1	COVER	
	3	1	**109-7041**	4	LAMP GP-FLOOD (24-VOLT)	
		1	**9X-3463**	1	LAMP-HALOGEN (24-VOLT, 65-WATT)	
		1	**142-5789**	4	SCREW (M6.5X40-MM)	
	4	1	**109-8981**	1	CABLE AS-COAXIAL	
	5	1	**114-6604**	16	NUT-SPEED	
	6	1	**119-0781**	1	ADHESIVE	
	7	1	**164-5509**	1	BLOCK	
	8	1	**289-9167**	1	HARNESS AS-LIGHTING	
	9	1	**292-0509**	1	ROOF	
M	10	1	**5C-2890**	4	NUT (M6X1-THD)	
M	11	1	**5C-7261**	2	NUT (M8X1.25-THD)	
M	12	1	**6V-7357**	4	BOLT (M6X1X25-MM)	
M	13	1	**8T-4137**	12	BOLT (M10X1.5X20-MM)	
	14	1	**8T-4205**	8	WASHER-HARD (7.2X14.5X2-MM THK)	
	15	1	**8T-4224**	4	WASHER-HARD (8.8X16X2-MM THK)	
	16	1	**8T-4226**	12	WASHER-PLATED (10.5X45X3-MM THK)	
M	17	1	**8T-4908**	2	BOLT (M8X1.25X25-MM)	
L	18	1	**5P-5639**		SEAL (5.1-DM)	
L	18A	1	**5P-5639**		SEAL (3.2-DM EACH)	
L	18B	1	**5P-5639**		SEAL (2.7-DM EACH)	

L-ORDER BY DECIMETER
M-METRIC PART

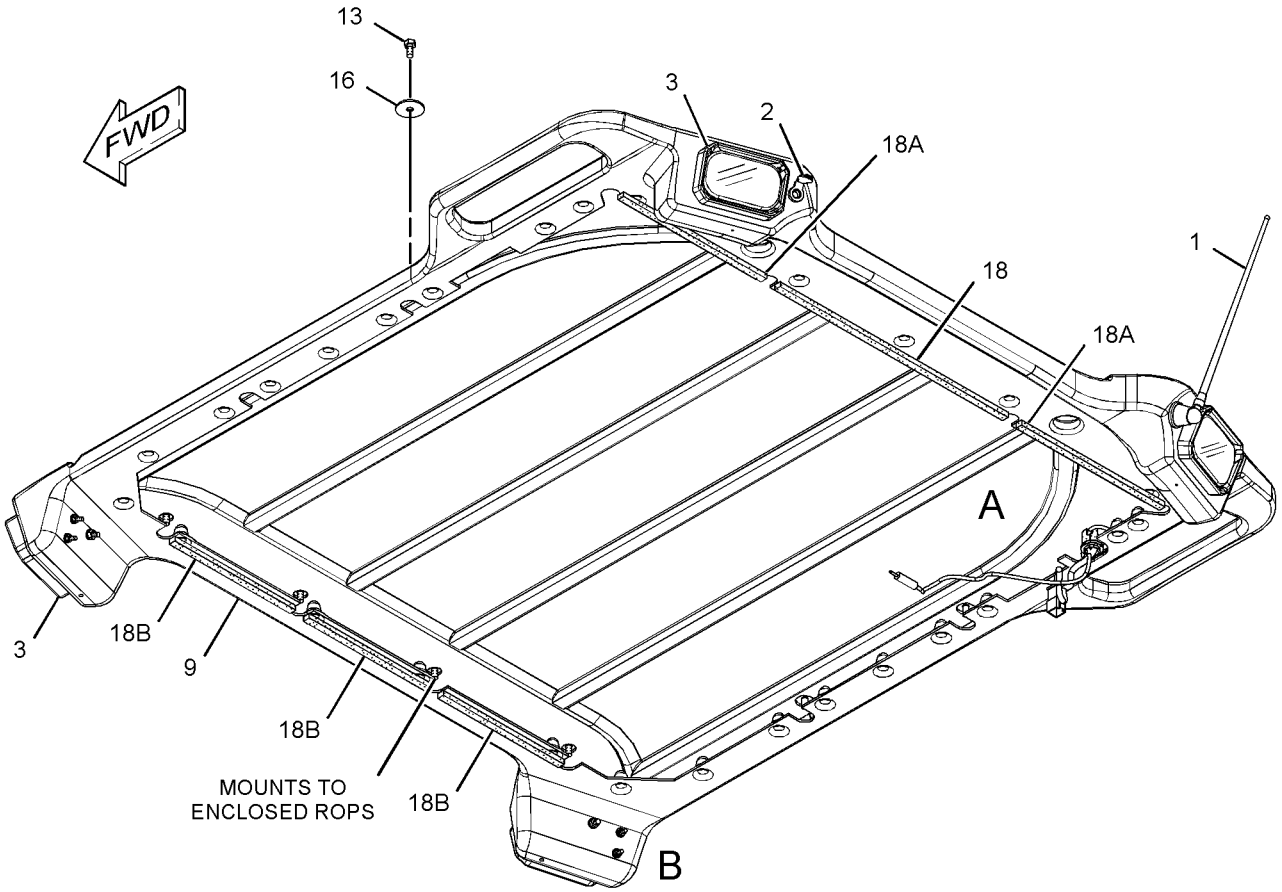

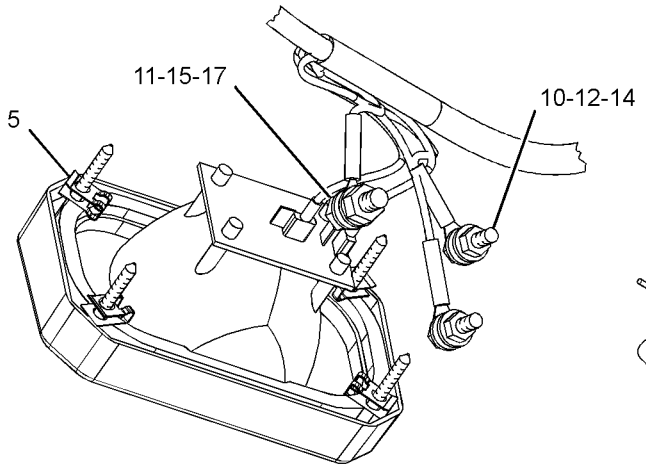

VIEW OF AREA B
(ROOF REMOVED)

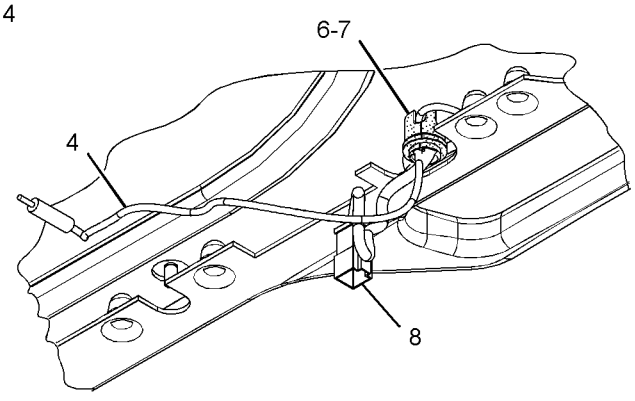

VIEW OF AREA A

GRAPHIC #1 **<END>** g01408408

313-4572 LIGHTING GP-FLOOD—CANOPY FRONT, REAR

S/N: FTD1-UP

PART OF 290-8179 CANOPY GP-OPEN ROPS

AN ATTACHMENT

SMCS-1434 **i02835394**

NOTE	REF NO	GRAPHIC REF	PART NUMBER	QTY	PART NAME 1 2 3 4 5 6 (PRODUCT LEVEL)	SEE PAGE
	1	1	**5P-5639**		SEAL (.2-M)	
	2	1	**5P-5774**	1	PLUG	
	3	1	**9R-7941**	1	SOCKET AS	
		1	**9R-7980**	1	COVER	
	4	1	**109-7041**	4	LAMP GP-FLOOD (24-VOLT)	
					(EACH INCLUDES)	
		1	**9X-3463**	1	LAMP-HALOGEN (24-VOLT, 65-WATT)	
		1	**142-5789**	4	SCREW (M6.5X40-MM)	
	5	1	**114-6604**	16	NUT-SPEED	
	6	1	**289-9167**	1	HARNESS AS-LIGHTING	
	7	1	**292-0509**	1	ROOF	
M	8	1	**5C-2890**	4	NUT (M6X1-THD)	
M	9	1	**5C-7261**	2	NUT (M8X1.25-THD)	
M	10	1	**6V-7357**	4	BOLT (M6X1X25-MM)	
M	11	1	**8T-4137**	12	BOLT (M10X1.5X20-MM)	
	12	1	**8T-4205**	8	WASHER-HARD (7.2X14.5X2-MM THK)	
	13	1	**8T-4224**	4	WASHER-HARD (8.8X16X2-MM THK)	
	14	1	**8T-4226**	12	WASHER-PLATED (10.5X45X3-MM THK)	
M	15	1	**8T-4908**	2	BOLT (M8X1.25X25-MM)	

M-METRIC PART

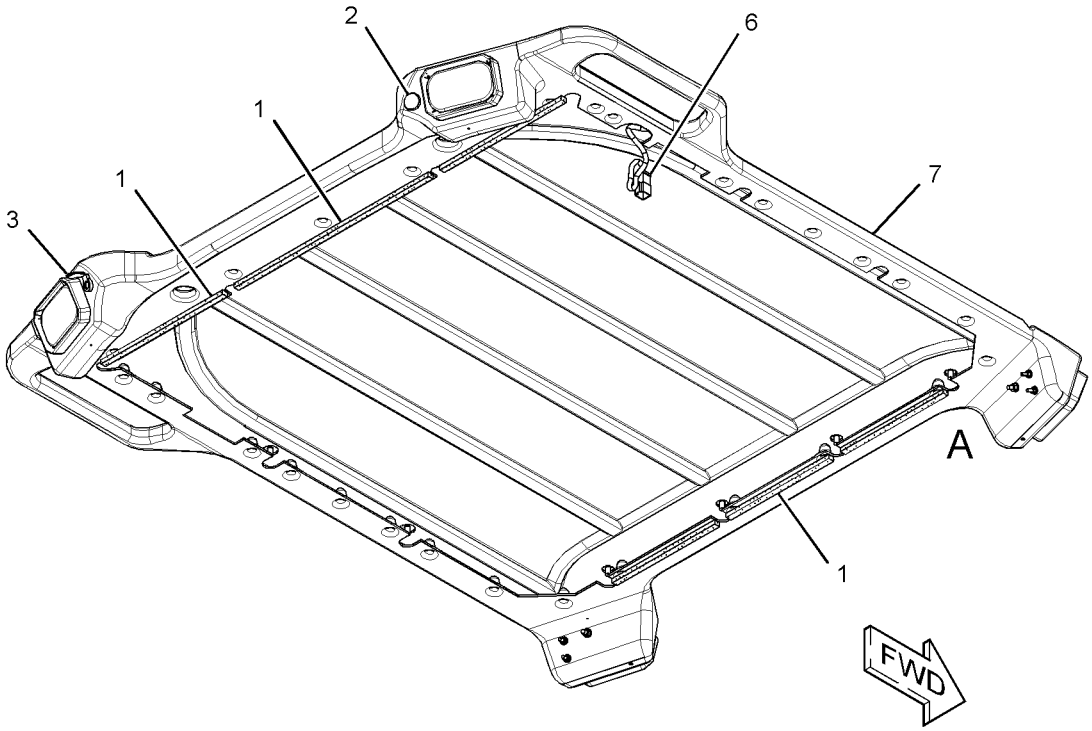

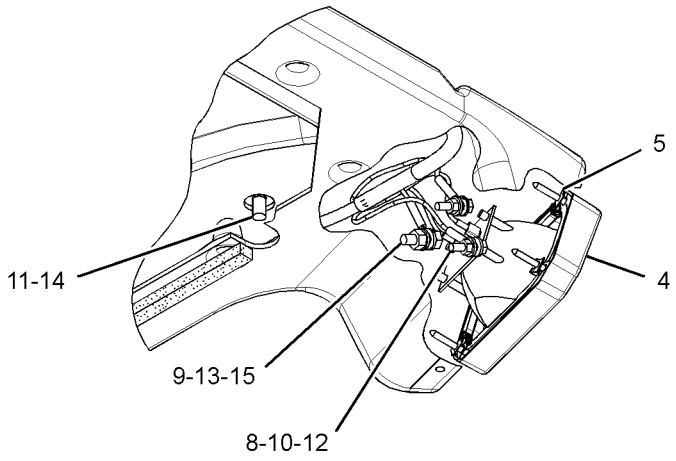

VIEW OF AREA A

GRAPHIC #1 **<END>** g01414711

290-7222 LIGHTING GP-ROADING

S/N: BYD1-UP
CANNOT BE USED WITH 290-7228—PAGE 167
AN ATTACHMENT

SMCS-1429 **i02877840**

NOTE	REF NO	GRAPHIC REF	PART NUMBER	QTY	PART NAME 1 2 3 4 5 6 (PRODUCT LEVEL)	SEE PAGE
Y	1	1	**3E-6328**	1	ALARM GP (24-VOLT) (ACTION)	124
	2	1	**9R-1499**	2	REFLECTOR	
	3	1	**9R-2404**	6	REFLECTOR-AMBER	
	4	1	**134-9569**	1	SWITCH AS-TURN SIGNAL	
		1	**5L-7200**	1	SCREW (8-32X0.375-IN)	
		1	**9B-7233**	1	LOCKWASHER	
Y	5	1	**145-6929**	2	LAMP GP-STOP & TAIL (24-VOLT)	151
	6	1	**201-5555**	1	PLATE-INSTRUCTION (TURN SIGNAL)	
	7	1	**317-2284**	1	FLASHER AS (12 TO 24-VDC)	
	8	1	**300-1645**	2	BRACKET AS	
Y	9	1	**302-0406**	1	LAMP GP-FLOOD (RH)	150
Y	10	1	**302-0408**	1	LAMP GP-FLOOD (LH)	150
	11	1	**133-3235**	1	LEVER	
	12	1	**1H-4393**	3	LOCKWASHER	
	13	1	**3S-2093**	3	STRAP-CABLE	
M	14	1	**5C-2890**	1	NUT (M6X1-THD)	
M	15	1	**5C-8312**	3	NUT (M4X0.7-THD)	
	16	1	**8T-4121**	16	WASHER-HARD (11X21X2.5-MM THK)	
M	17	1	**8T-4133**	8	NUT (M10X1.5-THD)	
M	18	1	**8T-4195**	8	BOLT (M10X1.5X30-MM)	
	19	1	**8T-4205**	5	WASHER-HARD (7.2X14.5X2-MM THK)	
M	20	1	**9X-2045**	1	SCREW-TRUSS HEAD (M6X1X20-MM)	

M-METRIC PART
Y-SEPARATE ILLUSTRATION

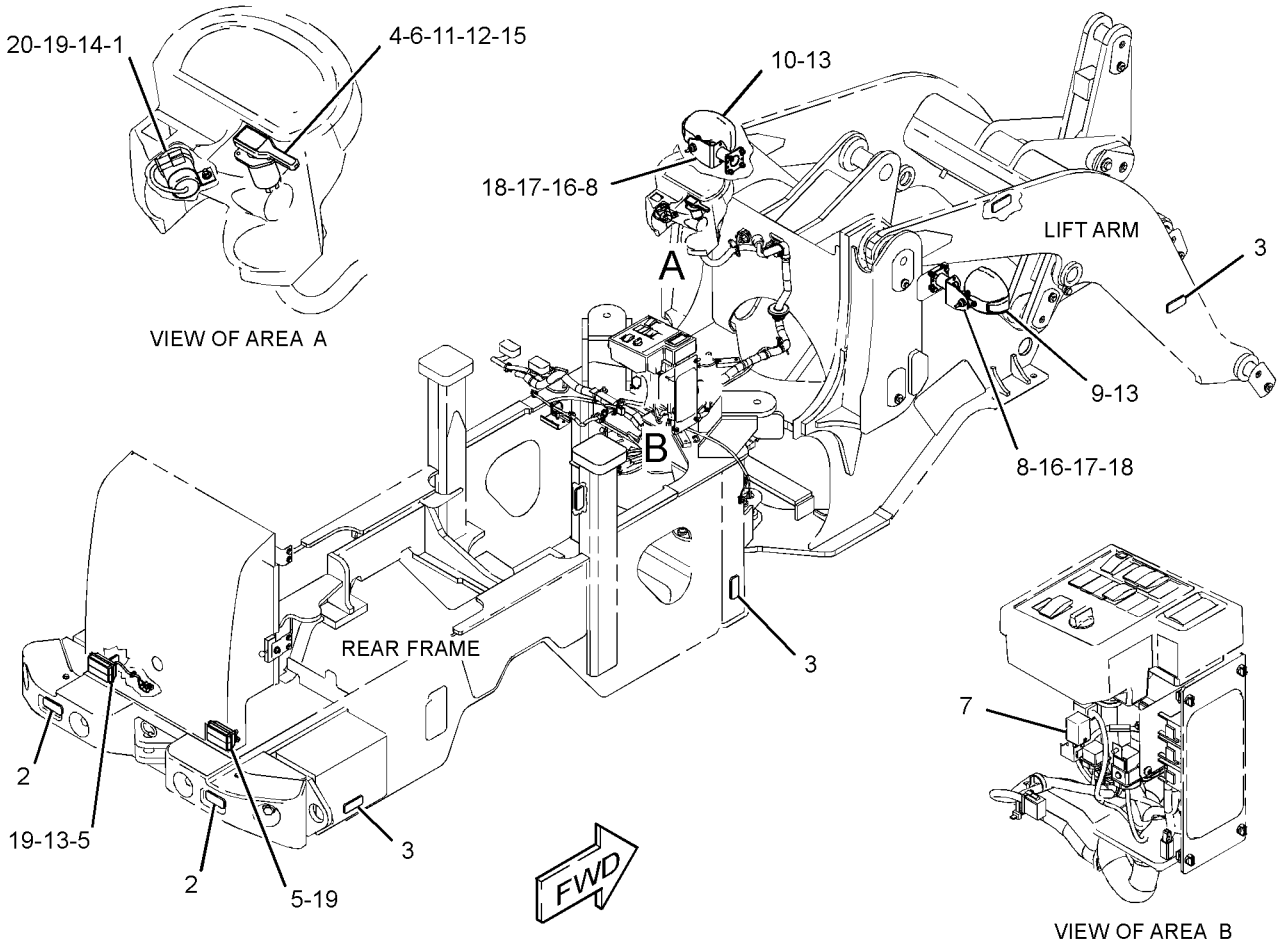

GRAPHIC #1

<END>

g01411773

310-6793 LIGHTING GP-ROADING

S/N: FTD1-UP
AN ATTACHMENT

SMCS-1429 **i02849803**

NOTE	REF NO	GRAPHIC REF	PART NUMBER	QTY	PART NAME 1 2 3 4 5 6 (PRODUCT LEVEL)	SEE PAGE
Y	1	1	**3E-6328**	1	ALARM GP (24-VOLT)	124
	2	1	**7K-1181**	5	STRAP-CABLE	
	3	1	**9R-2404**	6	REFLECTOR-AMBER	
	4	1	**134-9569**	1	SWITCH AS-TURN SIGNAL	
		1	**5L-7200**	1	SCREW (8-32X0.375-IN)	
		1	**9B-7233**	1	LOCKWASHER	
Y	5	1	**145-6929**	2	LAMP GP-STOP & TAIL (24-VOLT)	151
	6	1	**158-5089**	1	RELAY AS (24-VOLT) (ROADING LIGHTS)	
	7	1	**195-0926**	1	SWITCH AS-ROCKER (HEADLIGHT DIMMER)	
		1	**111-7899**	1	GASKET	
	8	1	**201-5555**	1	PLATE-INSTRUCTION (TURN SIGNAL)	
	9	1	**250-0779**	2	HARNESS AS-FRONT LIGHTING (RH, LH)	
	10	1	**295-0447**	1	FLASHER AS	
	11	1	**298-6161**	2	PLATE	
	12	1	**302-0412**	1	LAMP GP-HEAD & SIGNAL (RH)	
	13	1	**302-0413**	1	LAMP GP-HEAD & SIGNAL (LH)	
	14	1	**302-7833**	2	TUBE AS	
	15	1	**133-3235**	1	LEVER	
	16	1	**1H-4393**	3	LOCKWASHER	
M	17	1	**5C-2890**	1	NUT (M6X1-THD)	
M	18	1	**5C-8312**	3	NUT (M4X0.7-THD)	
	19	1	**8T-4121**	12	WASHER-HARD (11X21X2.5-MM THK)	
M	20	1	**8T-4136**	12	BOLT (M10X1.5X25-MM)	
	21	1	**8T-4205**	4	WASHER-HARD (7.2X14.5X2-MM THK)	
M	22	1	**9X-2045**	1	SCREW-TRUSS HEAD (M6X1X20-MM)	
	23	1	**9X-8256**	1	WASHER (6.6X12X2-MM THK)	

M-METRIC PART
Y-SEPARATE ILLUSTRATION

310-6793 **LIGHTING GP-ROADING** *(contd.)* **i02849803**

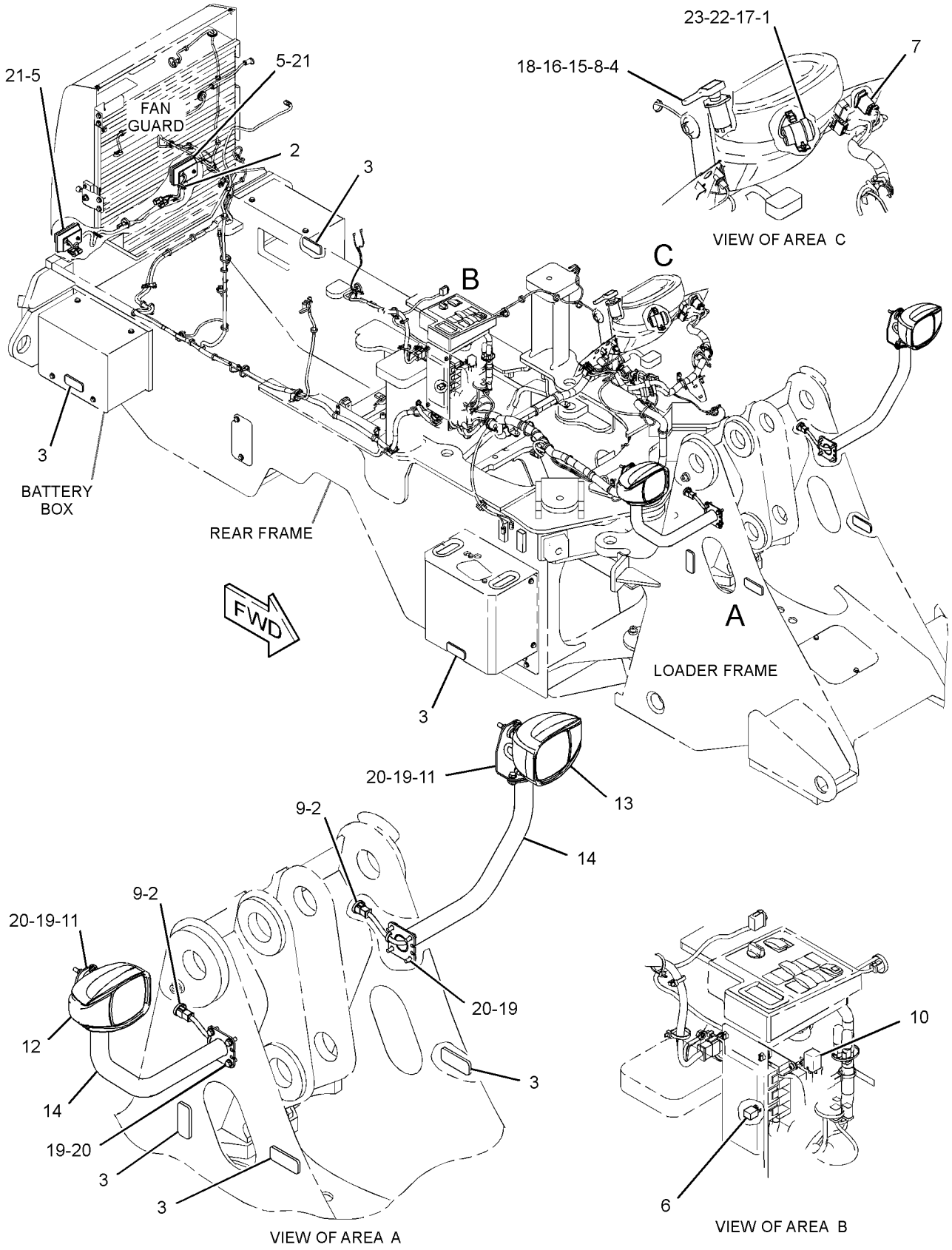

GRAPHIC #1 **<END>** g01405189

ELECTRICAL AND STARTING SYSTEM

311-4518 LIGHTING GP-ROADING

S/N: FTD1-UP
AN ATTACHMENT

SMCS-1429 **i02849801**

NOTE	REF NO	GRAPHIC REF	PART NUMBER	QTY	PART NAME 1 2 3 4 5 6 (PRODUCT LEVEL)	SEE PAGE
Y	1	1	**3E-6328**	1	ALARM GP (24-VOLT)	124
	2	1	**7K-1181**	5	STRAP-CABLE	
	3	1	**9R-2404**	6	REFLECTOR-AMBER	
	4	1	**134-9569**	1	SWITCH AS-TURN SIGNAL	
		1	**5L-7200**	1	SCREW (8-32X0.375-IN)	
		1	**9B-7233**	1	LOCKWASHER	
Y	5	1	**145-6929**	2	LAMP GP-STOP & TAIL (24-VOLT)	151
	6	1	**158-5089**	1	RELAY AS (24-VOLT) (ROADING LIGHTS)	
	7	1	**195-0926**	1	SWITCH AS-ROCKER (HEADLIGHT DIMMER)	
	8	1	**201-5555**	1	PLATE-INSTRUCTION (TURN SIGNAL)	
	9	1	**250-0779**	2	HARNESS AS-FRONT LIGHTING (RH, LH)	
	10	1	**295-0447**	1	FLASHER AS	
	11	1	**298-6161**	2	PLATE	
	12	1	**302-0412**	1	LAMP GP-HEAD & SIGNAL (RH)	
	13	1	**302-0413**	1	LAMP GP-HEAD & SIGNAL (LH)	
	14	1	**302-7833**	2	TUBE AS	
	15	1	**302-7839**	2	TUBE AS	
	16	1	**133-3235**	1	LEVER	
	17	1	**1H-4393**	3	LOCKWASHER	
M	18	1	**5C-2890**	1	NUT (M6X1-THD)	
M	19	1	**5C-8312**	3	NUT (M4X0.7-THD)	
	20	1	**8T-4121**	16	WASHER-HARD (11X21X2.5-MM THK)	
M	21	1	**8T-4136**	16	BOLT (M10X1.5X25-MM)	
	22	1	**8T-4205**	4	WASHER-HARD (7.2X14.5X2-MM THK)	
M	23	1	**9X-2045**	1	SCREW-TRUSS HEAD (M6X1X20-MM)	
	24	1	**9X-8256**	1	WASHER (6.6X12X2-MM THK)	

M-METRIC PART
Y-SEPARATE ILLUSTRATION

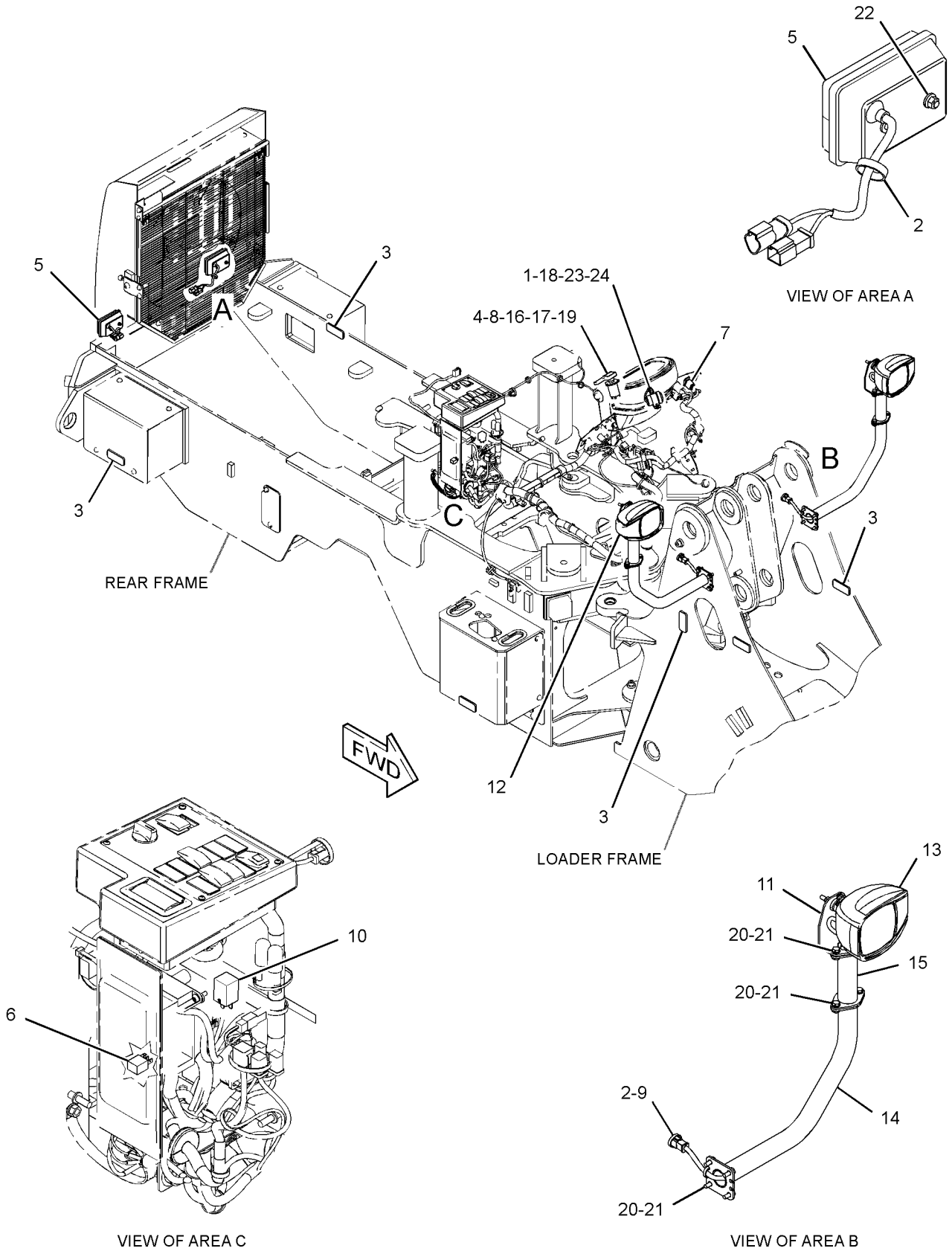

GRAPHIC #1 **<END>** g01405210

290-7228 LIGHTING GP-STOP & TAIL

S/N: BYD1-UP

FOR USE WITH 303-4112—PAGE 153, 303-4113—PAGE 154. CANNOT BE USED WITH 290-7222—PAGE 161, 300-1962—PAGE 376 AN ATTACHMENT

SMCS-1432 **i02877845**

NOTE	REF NO	GRAPHIC REF	PART NUMBER	QTY	PART NAME 1 2 3 4 5 6 (PRODUCT LEVEL)	SEE PAGE
Y	1	1	**3E-6328**	1	ALARM GP (24-VOLT)	124
	2	1	**6K-0806**	2	STRAP-CABLE	
	3	1	**7K-1181**	2	STRAP-CABLE	
	4	1	**9R-1499**	2	REFLECTOR	
	5	1	**9R-2404**	6	REFLECTOR-AMBER	
	6	1	**9R-9901**	8	FASTENER (CLIP)	
	7	1	**134-9569**	1	SWITCH AS-TURN SIGNAL	
		1	**5L-7200**	1	SCREW (8-32X0.375-IN)	
		1	**9B-7233**	1	LOCKWASHER	
	8	1	**136-2218**	2	HARNESS AS-FRONT LIGHTING (RH, LH)	
	9	1	**140-9293**	4	WASHER (8.2X16X3.1-MM THK)	
Y	10	1	**145-6929**	2	LAMP GP-STOP & TAIL (24-VOLT)	151
	11	1	**148-7901**	2	BRACKET AS	
	12	1	**154-4911**	1	ARM AS (LH)	
	13	1	**163-4363**	2	PLATE	
	14	1	**163-4370**	1	ARM AS (RH)	
	15	1	**163-4373**	2	BOOT	
	16	1	**163-4376**	1	COVER (RH)	
	17	1	**163-4377**	1	COVER (LH)	
	18	1	**171-6031**	1	HARNESS AS-REAR LIGHTING (LH)	
	19	1	**171-6032**	1	HARNESS AS-REAR LIGHTING (RH)	
	20	1	**195-0926**	1	SWITCH AS-ROCKER (HEADLIGHT DIMMER)	
	21	1	**201-5555**	1	PLATE-INSTRUCTION (TURN SIGNAL)	
	22	1	**317-2284**	1	FLASHER AS	
	23	1	**298-6161**	2	PLATE	
	24	1	**302-7834**	2	TUBE AS	
	25	1	**133-3235**	1	LEVER	
	26	1	**1H-4393**	3	LOCKWASHER	
M	27	1	**5C-2890**	1	NUT (M6X1-THD)	
M	28	1	**5C-7261**	6	NUT (M8X1.25-THD)	
M	29	1	**5C-8312**	3	NUT (M4X0.7-THD)	
	30	1	**6K-8180**	2	GROMMET	
	31	1	**8T-4121**	20	WASHER-HARD (11X21X2.5-MM THK)	
M	32	1	**8T-4133**	8	NUT (M10X1.5-THD)	
M	33	1	**8T-4136**	4	BOLT (M10X1.5X25-MM)	
M	34	1	**8T-4195**	8	BOLT (M10X1.5X30-MM)	
	35	1	**8T-4224**	10	WASHER-HARD (8.8X16X2-MM THK)	
M	36	1	**8T-6412**	4	SCREW-MACHINE (M6X1X20-MM)	
M	37	1	**8T-6870**	2	BOLT (M8X1.25X70-MM)	
M	38	1	**8T-6912**	4	BOLT (M8X1.25X50-MM)	
	39	1	**9D-3769**	1	GROMMET	
M	40	1	**9X-2045**	1	SCREW-TRUSS HEAD (M6X1X20-MM)	
	41	1	**8T-4205**	1	WASHER-HARD (7.2X14.5X2-MM THK)	

M-METRIC PART
Y-SEPARATE ILLUSTRATION

290-7228 **LIGHTING GP-STOP & TAIL** *(contd.)* **i02877845**

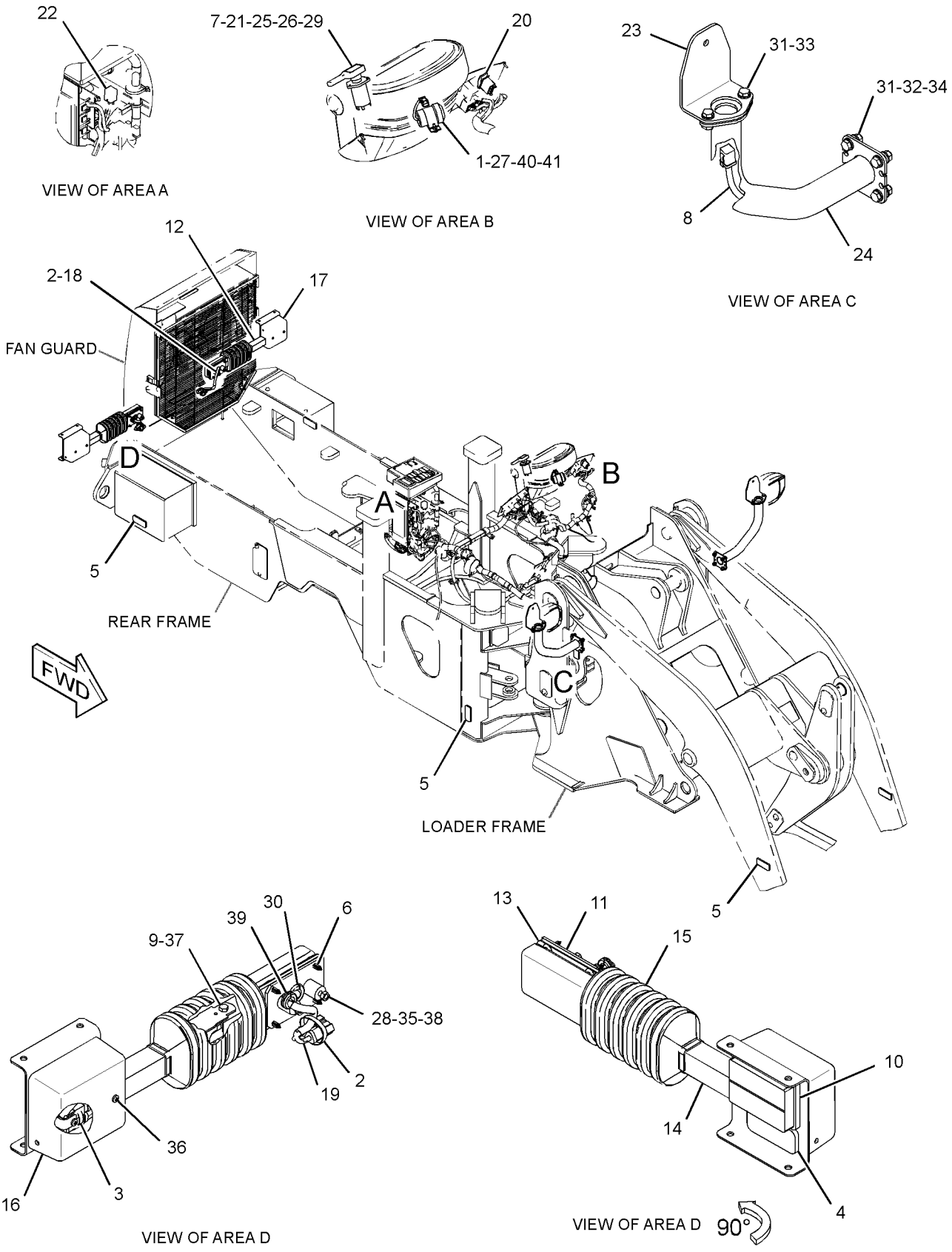

GRAPHIC #1

<END>

g01409594

218-8836 LIGHTING GP-WARNING BEACON

S/N: BYD1-UP; FTD1-UP
AN ATTACHMENT

SMCS-1431 **i02602726**

NOTE	REF NO	GRAPHIC REF	PART NUMBER	QTY	PART NAME 1 2 3 4 5 6 (PRODUCT LEVEL)	SEE PAGE
Y	1	1	**108-1029**	1	LAMP GP-WARNING BEACON (24-VOLT)	152
	2	1	**129-0336**	1	PLATE	
	3	1	**195-0925**	1	SWITCH AS-ROCKER (WARNING BEACON)	
		1	**111-7899**	1	GASKET	
	4	1	**6V-6635**	4	SCREW-PAN HEAD	

Y-SEPARATE ILLUSTRATION

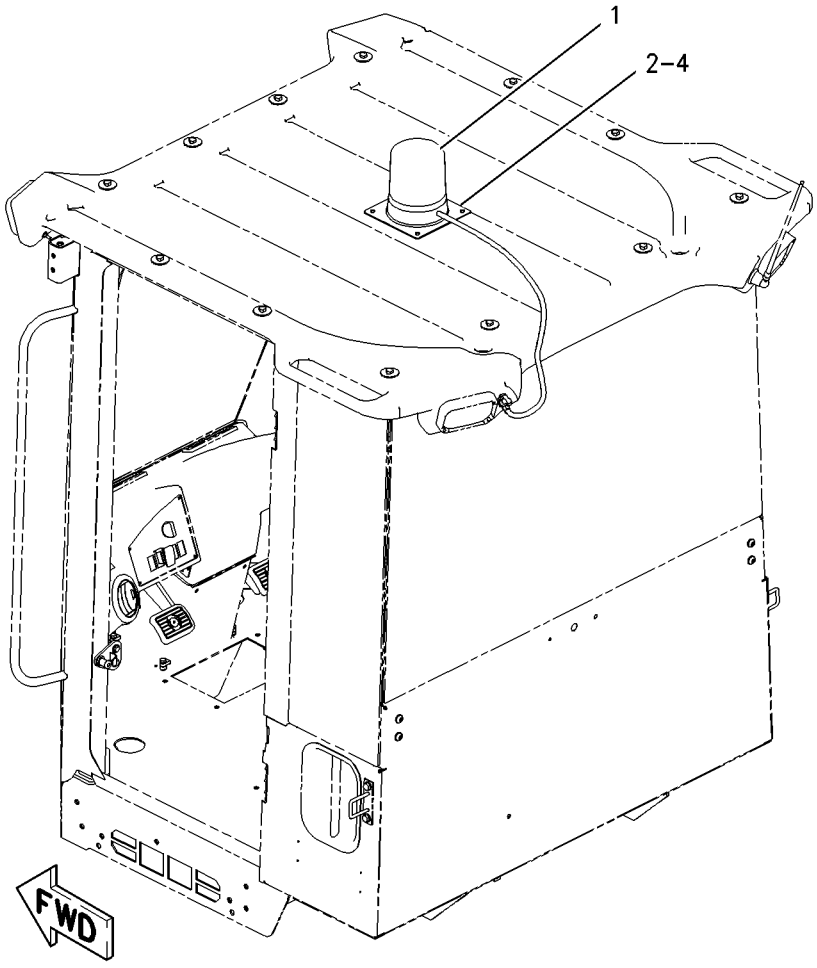

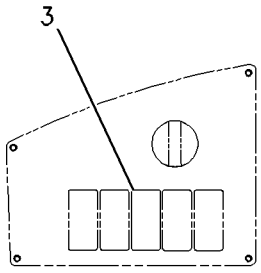

LH SWITCH PANEL
(924, 928, IT28G)

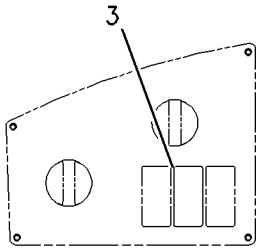

LH SWITCH PANEL
(938, IT38G11)

GRAPHIC #1 **<END>** g00905707

ELECTRICAL AND STARTING SYSTEM

289-8906 LIGHTING GP-WARNING BEACON

S/N: BYD1-UP

AN ATTACHMENT

SMCS-1431 **i02814251**

NOTE	REF NO	GRAPHIC REF	PART NUMBER	QTY	PART NAME 1 2 3 4 5 6 (PRODUCT LEVEL)	SEE PAGE
	1	1	**129-0336**	1	PLATE	
	2	1	**140-3668**	1	LAMP GP-WARNING BEACON (AMBER, STROBE)	
		1	**9R-7942**	1	PLUG AS	
	3	1	**195-0925**	1	SWITCH AS-ROCKER (WARNING BEACON)	
	4	1	**6V-6635**	4	SCREW-PAN HEAD	

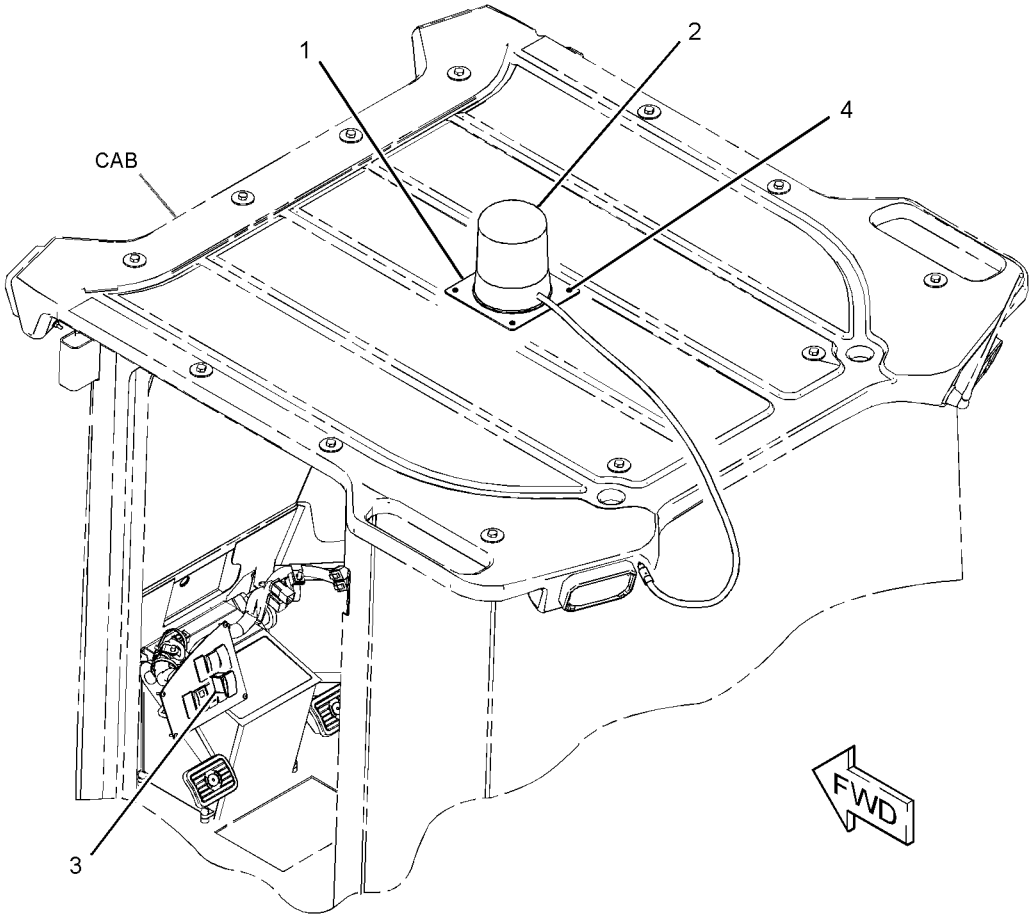

GRAPHIC #1 **<END>** g01409823

117-3915 MOTOR GP-ELECTRIC—SECONDARY STEERING

S/N: BYD1-UP; FTD1-UP
PART OF 293-2470 PUMP & MOTOR GP-SEC STEERING
AN ATTACHMENT

SMCS-5703 **i00791442**

NOTE	REF NO	GRAPHIC REF	PART NUMBER	QTY	PART NAME 1 2 3 4 5 6 (PRODUCT LEVEL)	SEE PAGE
	1	1	**6V-8801**	2	NUT (3/8-16 THD)	
	2	1	**7X-0608**	2	WASHER-HARD (10.2X16X2-MM THK)	

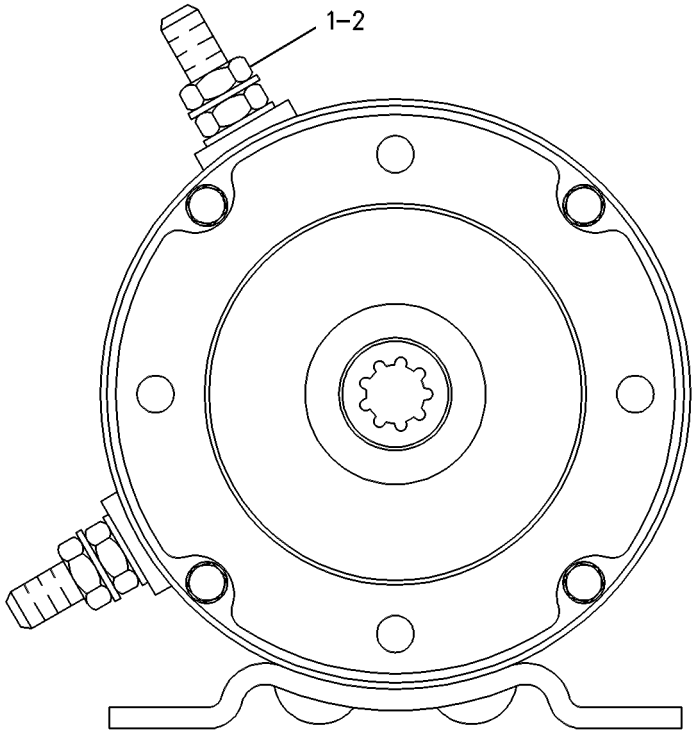

GRAPHIC #1 **<END>** g00085784

256-7265 MOUNTING GP-CAMERA–REAR VIEW

S/N: BYD1-UP; FTD1-UP
PART OF 302-8662, 320-9968 CAMERA AR
AN ATTACHMENT

SMCS-7348 **i02285200**

NOTE	REF NO	GRAPHIC REF	PART NUMBER	QTY	PART NAME 1 2 3 4 5 6 (PRODUCT LEVEL)	SEE PAGE
	1	1	**256-7266**	1	BRACKET AS	
M	2	1	**186-0815**	2	BOLT (M6X1X20-MM)	
	3	1	**186-0817**	2	WASHER-HARD (7X19X2-MM THK)	

M-METRIC PART

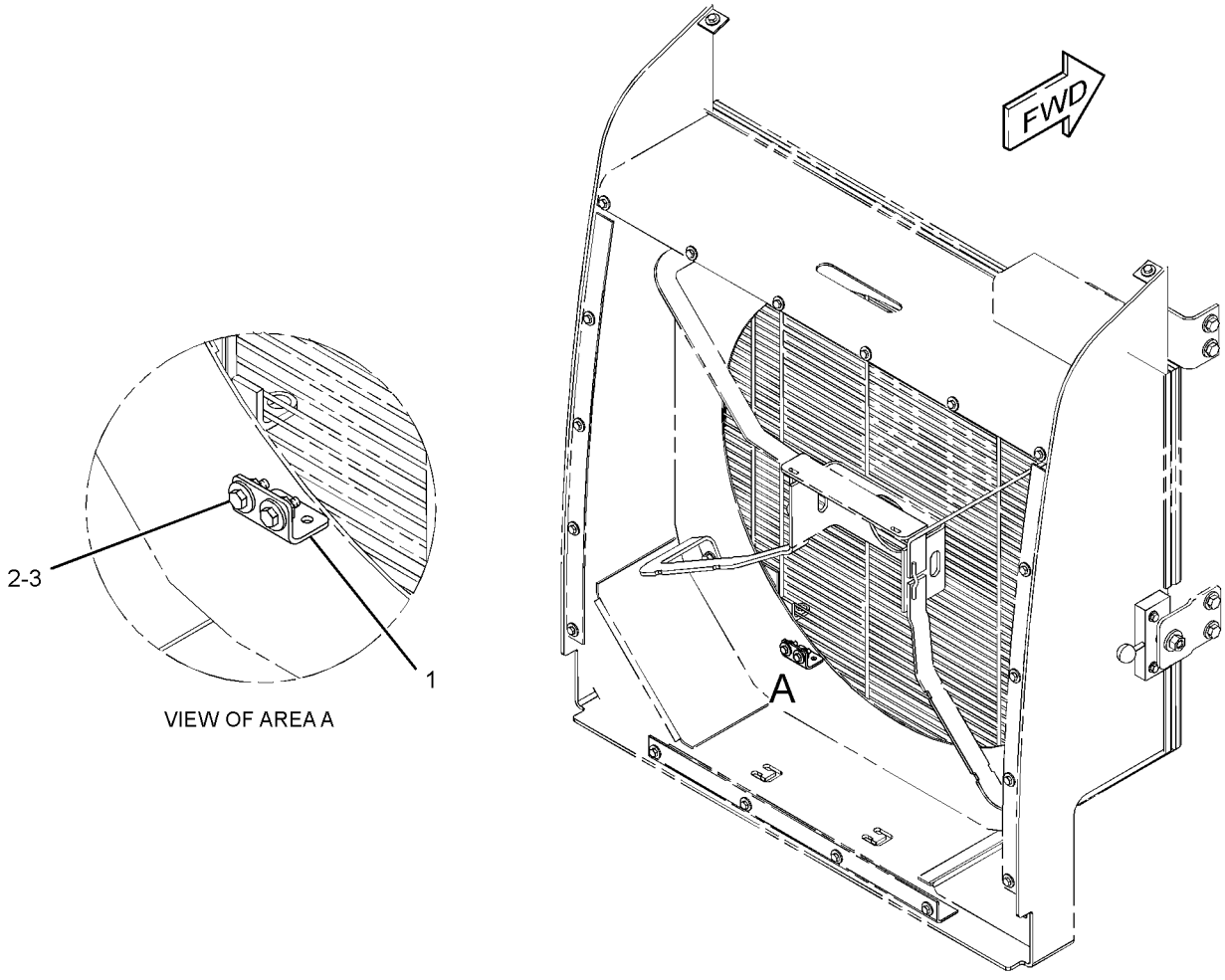

GRAPHIC #1 **<END>** g01181311

309-1620 RELAY GP–MAIN POWER

S/N: BYD1-UP; FTD1-UP

PART OF 289-8902 WIRING GP-ENGINE

SMCS-1422, 4493 **i02854408**

NOTE	REF NO	GRAPHIC REF	PART NUMBER	QTY	PART NAME 1 2 3 4 5 6 (PRODUCT LEVEL)	SEE PAGE
	1	1	**267-2680**	1	FUSE (20-AMPERE)	
	2	1	**274-9872**	1	FUSE (30-AMPERE)	
M	3	1	**5C-2890**	2	NUT (M6X1-THD)	
	4	1	**8T-4205**	2	WASHER-HARD (7.2X14.5X2-MM THK)	
	5	1	**1H-3244**	2	LOCKWASHER	
M	6	1	**5C-7261**	1	NUT (M8X1.25-THD)	
	7	1	**8T-4224**	1	WASHER-HARD (8.8X16X2-MM THK)	
	8	1	**9F-5644**	1	LOCKWASHER	

M-METRIC PART

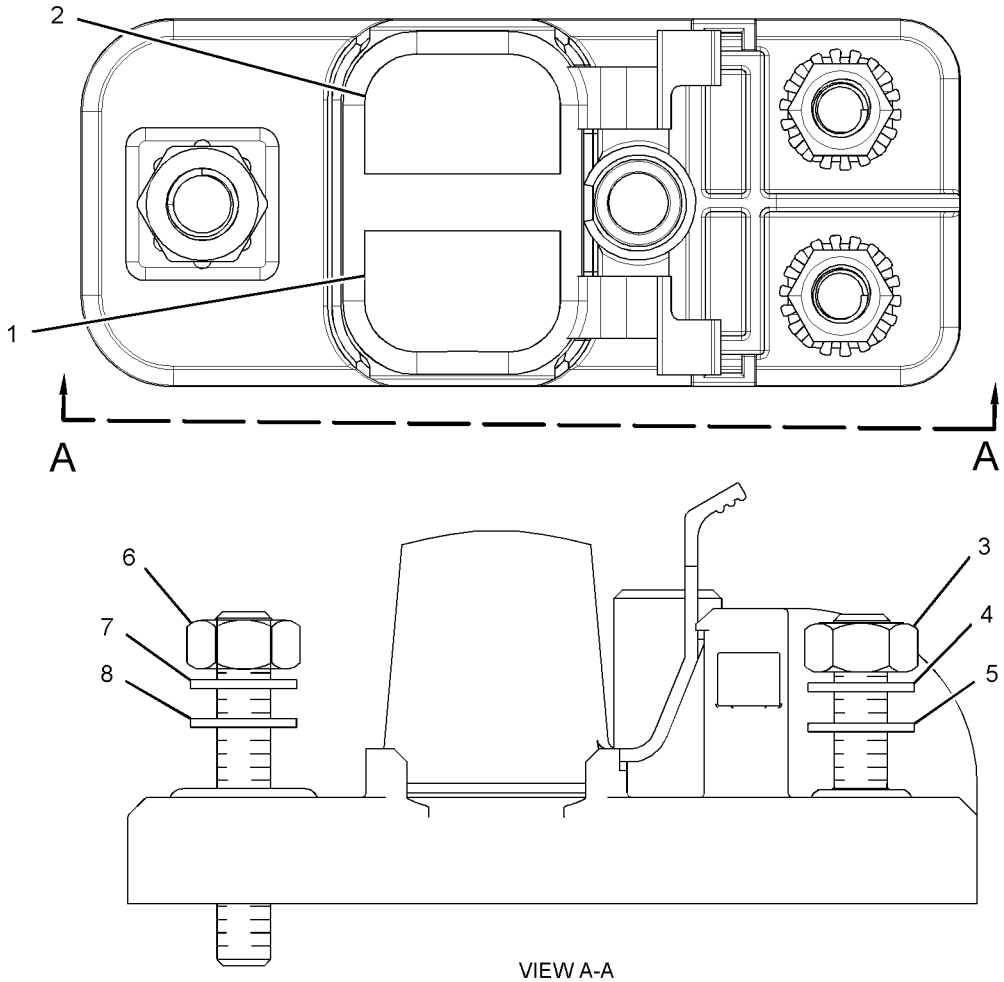

VIEW A-A

GRAPHIC #1 **<END>** g01427672

160-2443 SENSOR GP-POSITION

S/N: BYD1-UP; FTD1-UP
PART OF 190-4701 PEDAL GP-GOVERNOR
AN ATTACHMENT

SMCS-4269, 5702, 5736, 5737, 7494 **i02061394**

NOTE	REF NO	GRAPHIC REF	PART NUMBER	QTY	PART NAME 1 2 3 4 5 6 (PRODUCT LEVEL)	SEE PAGE
	1	1	*160-2444*	1	SENSOR AS-POSITION (ROTARY)	
		1	**8T-8886**	1	SEAL-LIP TYPE	
	2	1	**186-3735**	3	PIN-CONNECTOR (16-GA TO 18-GA)	
	3	1	**3E-3371**	1	WEDGE-RECEPTACLE LOCK (3-PIN)	
	4	1	**102-8803**	1	KIT-RECEPTACLE (3-PIN)	
					(INCLUDES RECEPTACLE AS & WEDGE)	

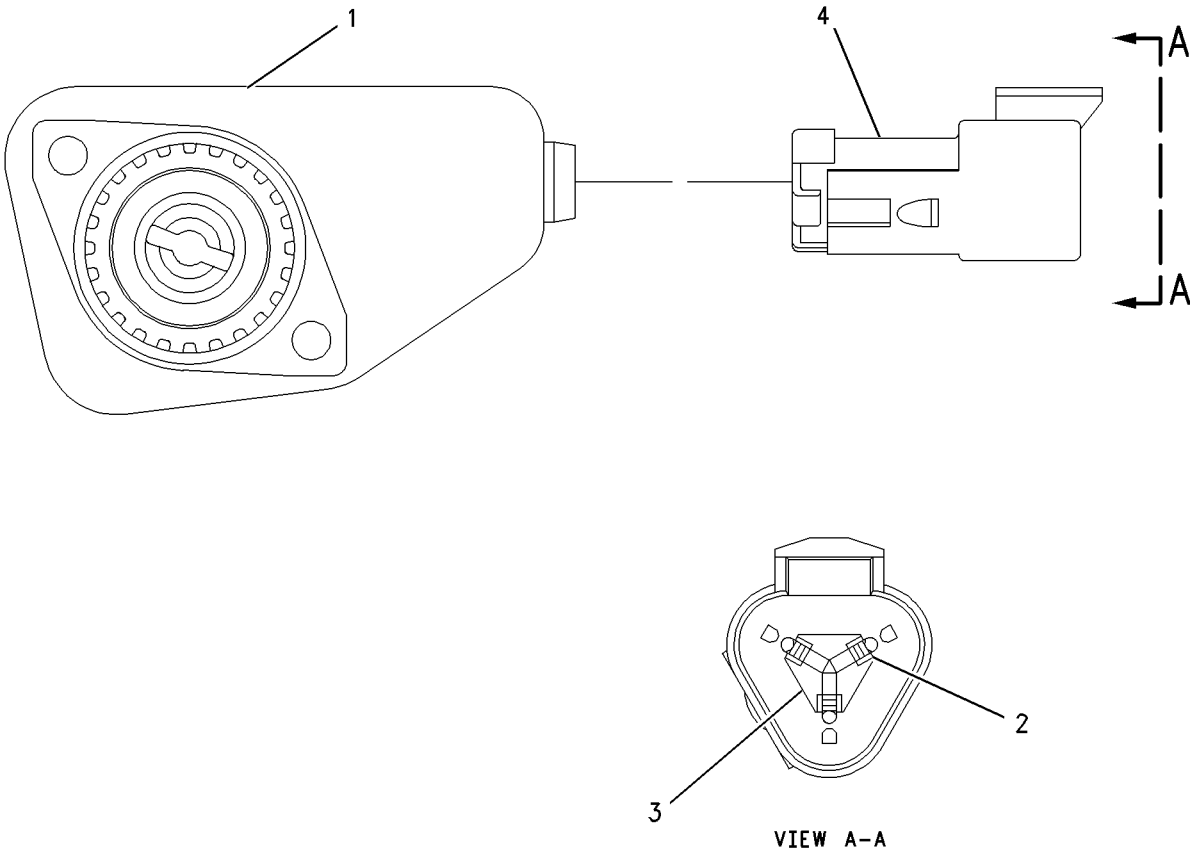

GRAPHIC #1 **<END>** g00915376

134-2252 SENSOR GP-TEMPERATURE

S/N: J2W1-UP; J2X1-UP

PART OF 200-2043 VALVE GP-TRANSMISSION CONTROL

SMCS-1408, 1906, 1919, 1921, 1922, 1928, 1929, 301T, 3194, 429T, 509T

i01905777

NOTE	REF NO	GRAPHIC REF	PART NUMBER	QTY	PART NAME 1 2 3 4 5 6 (PRODUCT LEVEL)	SEE PAGE
J	1	1	**3E-3371**	1	WEDGE-RECEPTACLE LOCK (3-PIN)	
BE	2	1	**9X-1386**		SLEEVE	
	3	1	**102-8803**	1	KIT-RECEPTACLE (3-PIN)	
					(INCLUDES RECEPTACLE AS & PART MARKED J)	
	4	1	**8T-8729**	3	PIN-CONNECTOR	

B-USE AS REQUIRED
E-ORDER BY THE CENTIMETER
J-PART MARKED J IS SERVICED BY KIT MARKED J

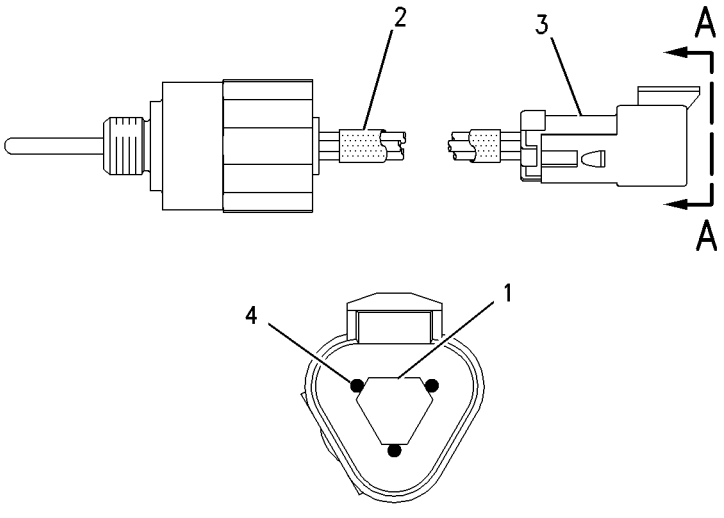

VIEW A-A

GRAPHIC #1

<END>

g00658816

290-4432 STARTING AID GP-ETHER

S/N: BYD1-UP
AN ATTACHMENT

SMCS-1456 **i02810689**

NOTE	REF NO	GRAPHIC REF	PART NUMBER	QTY	PART NAME 1 2 3 4 5 6 (PRODUCT LEVEL)	SEE PAGE
Y	1	1	*290-8781*	1	STARTING AID GP-ETHER	177
	3	1	**5P-4116**	4	WASHER-HARD (8.8X20.5X2-MM THK)	
M	4	1	**8T-4908**	4	BOLT (M8X1.25X25-MM)	

M-METRIC PART
Y-SEPARATE ILLUSTRATION

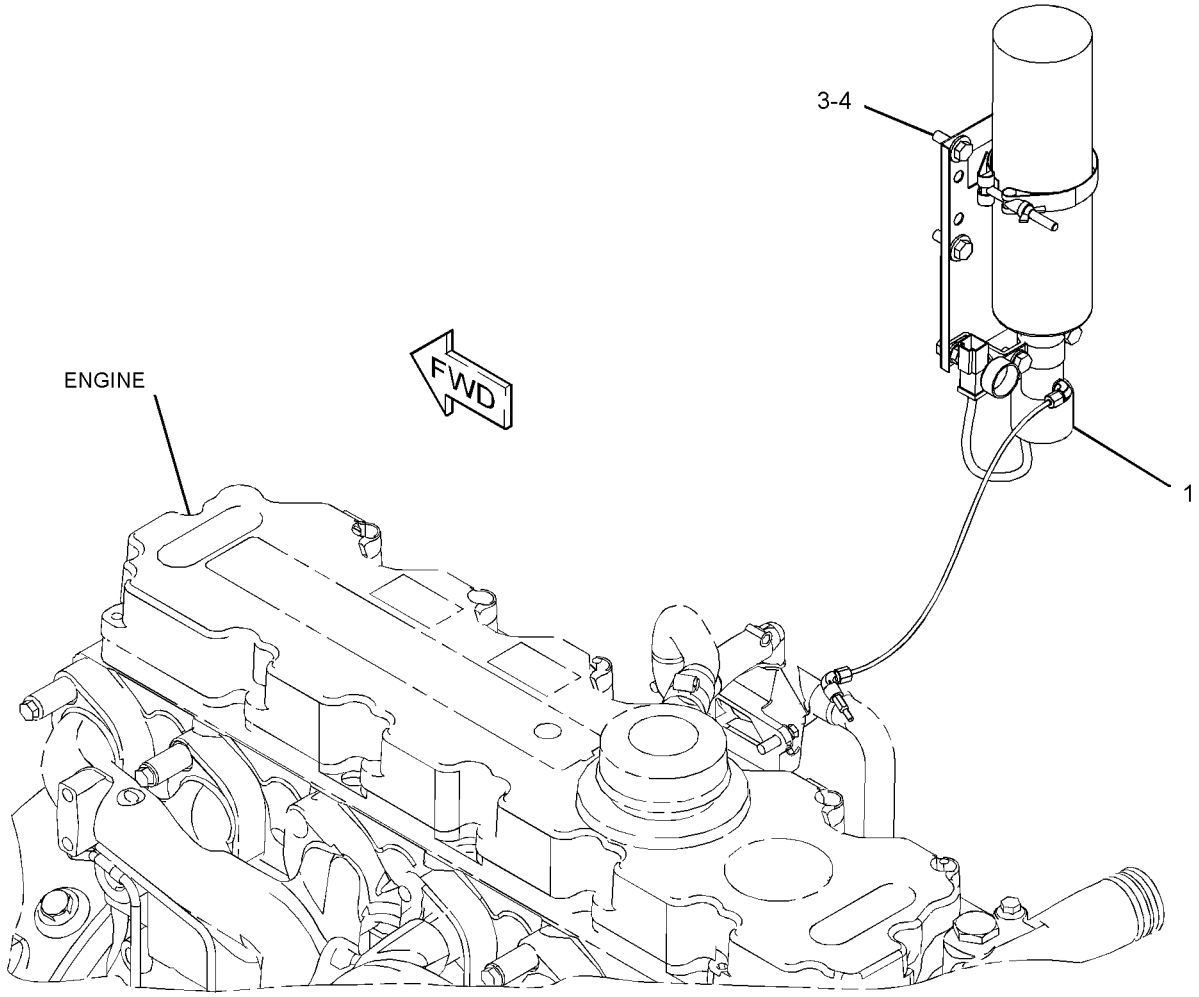

GRAPHIC #1 **<END>** g01415024

290-8781 STARTING AID GP-ETHER

S/N: BYD1-UP

PART OF 290-4432 STARTING AID GP-ETHER

AN ATTACHMENT

SMCS-1456 **i02834820**

NOTE	REF NO	GRAPHIC REF	PART NUMBER	QTY	PART NAME 1 2 3 4 5 6 (PRODUCT LEVEL)	SEE PAGE
Y	1	1	**239-1134**	1	VALVE GP-ETHER STARTING (24-VOLT)	187
	2	1	**276-3810**	1	ATOMIZER AS-ETHER	
		1	**236-4545**	1	NUT-SLEEVE (5/16-24-THD)	
	3	1	**276-5436**	1	FITTING AS	
		1	**236-4545**	1	NUT-SLEEVE (5/16-24-THD)	
	4	1	**276-6597**	1	MOUNTING GP-ETHER CANISTER	
		1	**236-8013**	1	BRACKET	
		1	**276-6596**	1	CLAMP	
M	5	1	**5C-7261**	2	NUT (M8X1.25-THD)	
M	6	1	**8T-4200**	4	BOLT (M8X1.25X16-MM)	
	7	1	**8T-4224**	6	WASHER-HARD (8.8X16X2-MM THK)	
D	8	1	**5P-5630**		TUBE (1-M)	

D-ORDER BY THE METER
M-METRIC PART
Y-SEPARATE ILLUSTRATION

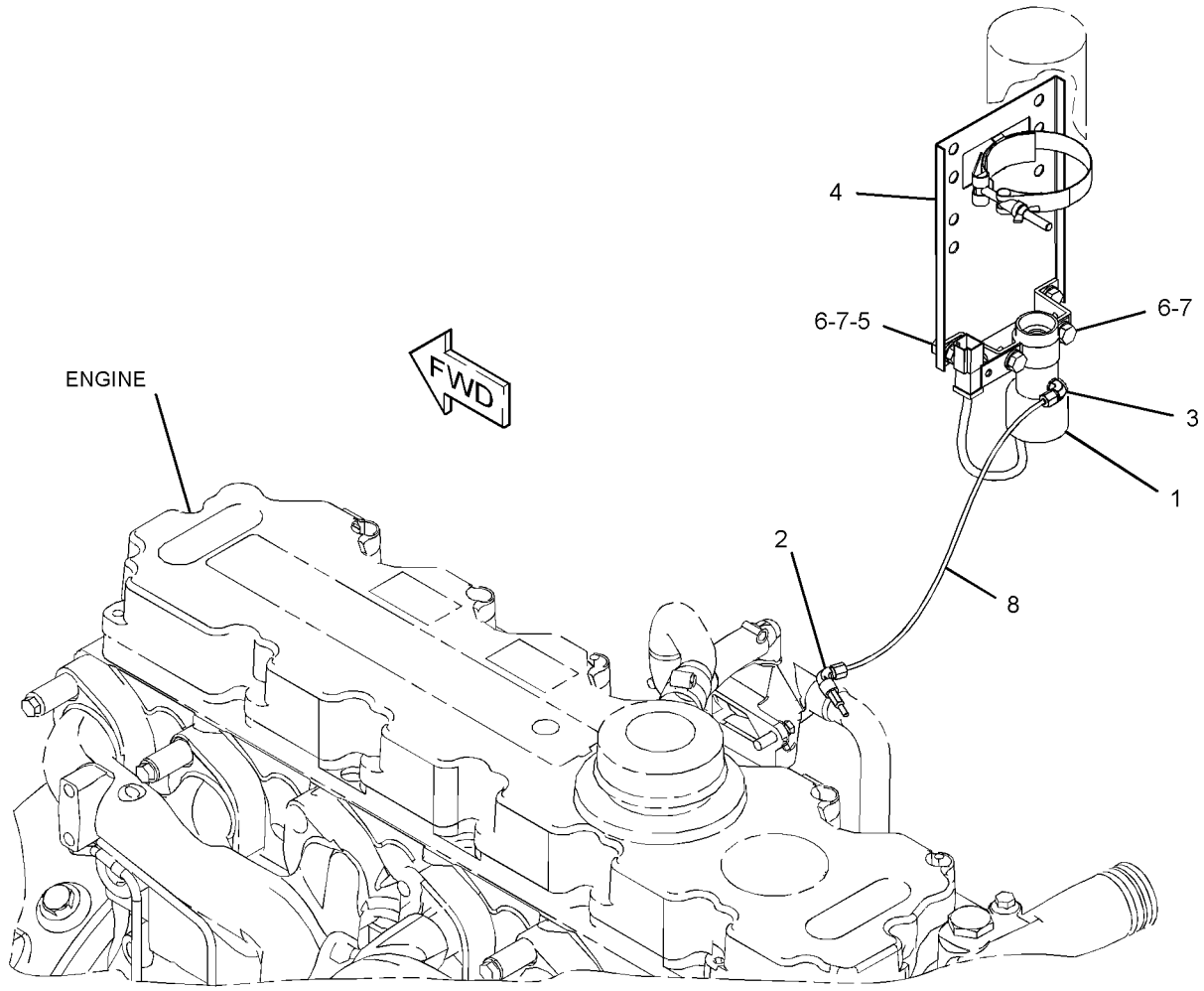

GRAPHIC #1 **<END>** g01415041

234-2667 STARTING MOTOR GP-ELECTRIC

S/N: BYD1-UP; FTD1-UP

PART OF 289-8884 INSTALLATION AR-ENGINE

SMCS-1453 **i02807366**

NOTE	REF NO	GRAPHIC REF	PART NUMBER	QTY	PART NAME 1 2 3 4 5 6 (PRODUCT LEVEL)	SEE PAGE
Y	1	1	**300-6868**	1	STARTING MOTOR GP-ELECTRIC	179
	2	1	**7W-4540**	1	SPACER	
	3	1	**8T-4121**	3	WASHER-HARD (11X21X2.5-MM THK)	
M	4	1	**8T-4185**	3	BOLT (M10X1.5X50-MM)	

M-METRIC PART
Y-SEPARATE ILLUSTRATION

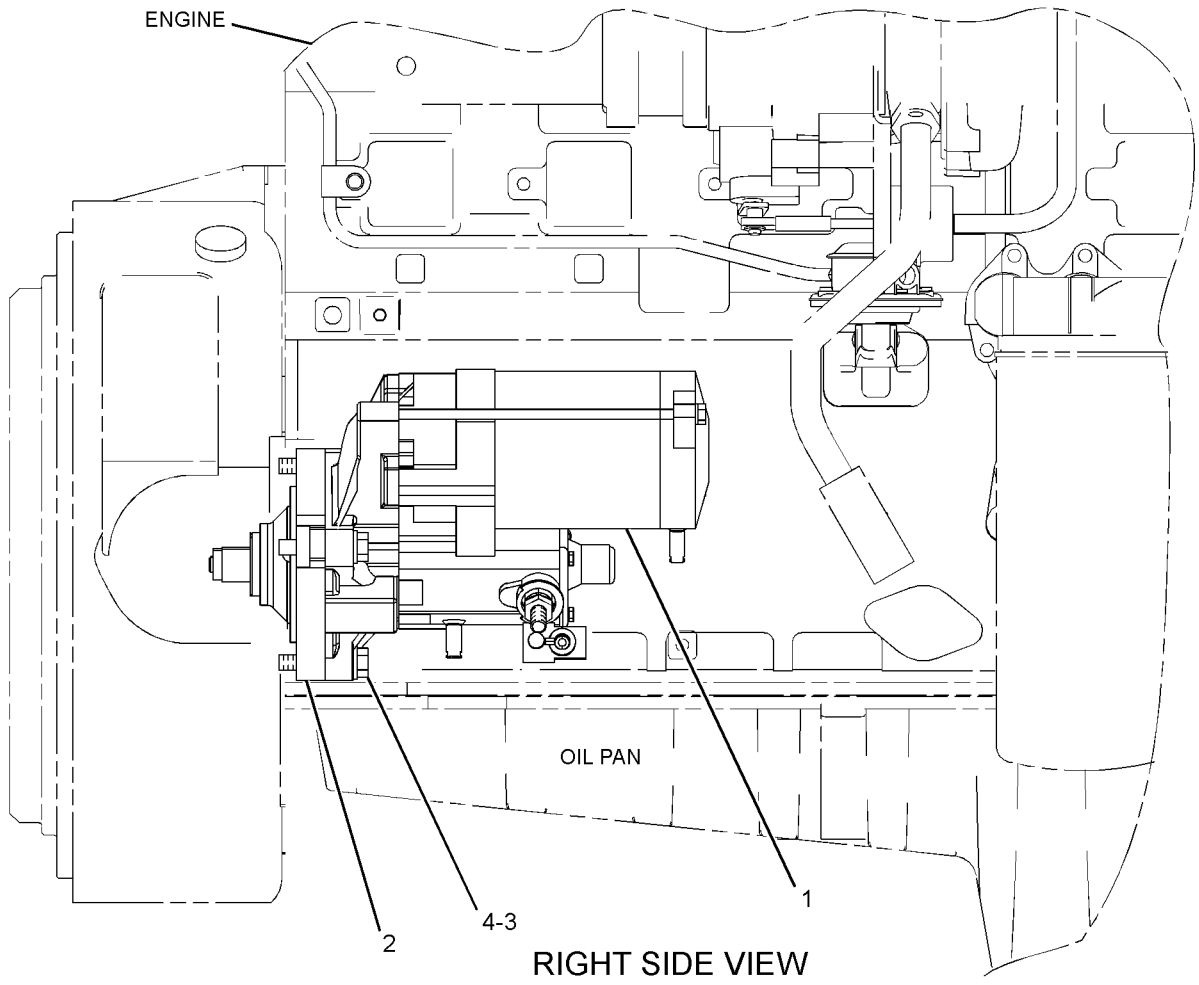

RIGHT SIDE VIEW

GRAPHIC #1 **<END>** g01407441

300-6868 STARTING MOTOR GP-ELECTRIC

S/N: BYD1-UP; FTD1-UP

PART OF 234-2667 STARTING MOTOR GP-ELECTRIC

SMCS-1453 **i02807360**

NOTE	REF NO	GRAPHIC REF	PART NUMBER	QTY	PART NAME 1 2 3 4 5 6 (PRODUCT LEVEL)	SEE PAGE
	1	1	**9X-1279**	1	CASE AS-STARTING MOTOR	
	2	1	**9X-1280**	1	ARMATURE AS (STARTING MOTOR)	
	3	1	**242-5441**	1	DRIVE AS-STARTING MOTOR	
	4	1	**242-5443**	1	HOUSING-STARTING MOTOR	
	5	1	**242-5444**	1	SWITCH AS (STARTER)	
	6	1	**9X-1275**	1	HOLDER AS-BRUSH	
	7	1	**242-5445**	1	FRAME-STARTER	
	8	1	**8J-4455**	1	BALL	
	9	1	**7T-6090**	1	SPRING	
	10	1	**9X-1278**	1	BOOT	
	11	1	**7T-6087**	1	WASHER	
	12	1	**8T-4121**	2	WASHER-HARD (11X21X2.5-MM THK)	
M	13	1	**8T-4133**	2	NUT (M10X1.5-THD)	
M	14	1	**096-2617**	1	SCREW-MACHINE (M5X0.8X6-MM)	
	15	1	**3E-5153**	1	COVER-STARTING MOTOR	
	16	1	**8C-9778**	1	PLUNGER AS (STARTER)	
	17	1	**242-5442**	1	COVER-STARTER	
	18	1	**3E-5154**	1	BUSHING-STARTING MOTOR	
	19	1	**100-3685**	1	CAP	
	20	1	**2P-8104**	1	BEARING	
	21	1	**8L-4070**	1	BALL BEARING	
	22	1	**8F-1434**	1	LOCKWASHER	
					AVAILABLE REPAIR KIT(S):	
			9X-1282	1	KIT-STARTING MOTOR GEAR	
					(INCLUDES PINIONS, ROLLERS & RETAINER)	
			9X-1283	1	KIT-HARDWARE (STARTING MOTOR)	
					(INCLUDES BOLTS, NUT & SCREW AS)	
			9X-1284	1	KIT-STARTING MOTOR SEAL	
					(INCLUDES SEALS & GASKET)	
			9X-1285	1	KIT-BRUSH (STARTING MOTOR)	
					(INCLUDES BRUSH AS & SCREW AS)	

M-METRIC PART

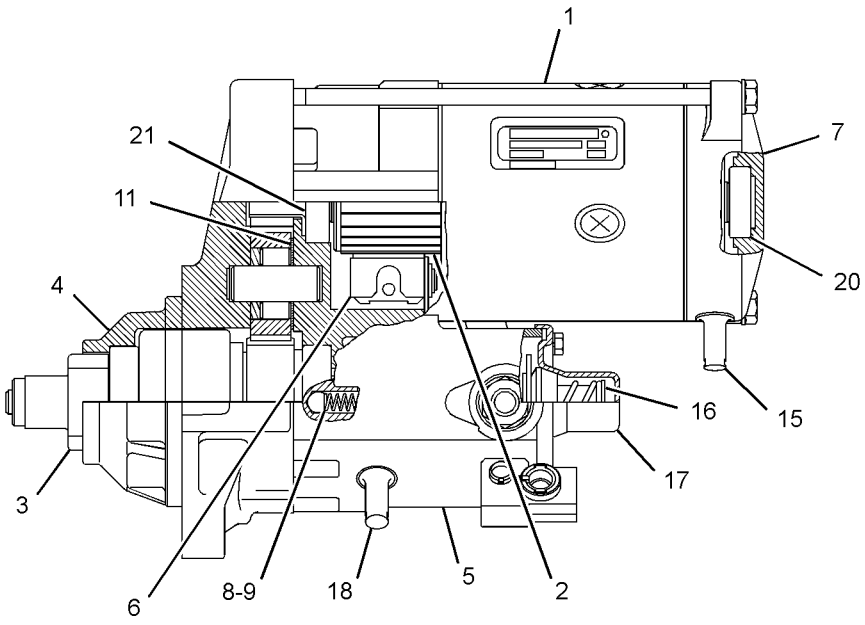

LEFT SIDE VIEW

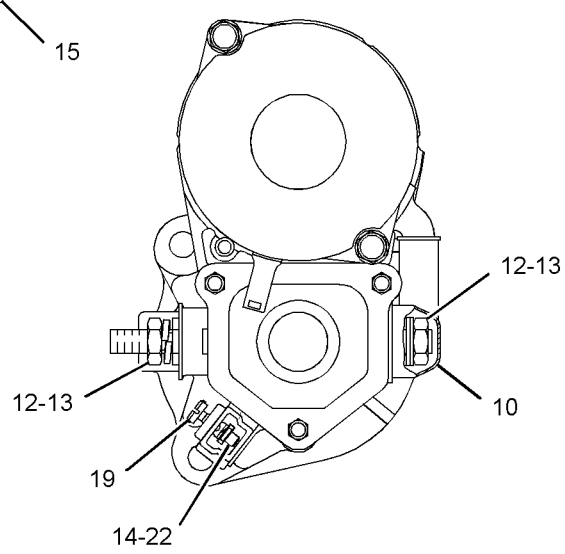

REAR VIEW

GRAPHIC #1 **<END>** g01389450

290-7197 SWITCH GP-DIFFERENTIAL LOCK

S/N: FTD650-UP

PART OF 289-8981 AXLE AR-FIXED

SMCS-1435, 3264 **i02832279**

NOTE	REF NO	GRAPHIC REF	PART NUMBER	QTY	PART NAME 1 2 3 4 5 6 (PRODUCT LEVEL)	SEE PAGE
	1	1	**201-9459**	1	BOOT	
	2	1	**204-0775**	1	SWITCH AS-FOOT	
	3	1	**205-6298**	1	ACTUATOR	
	4	1	**228-0712**	1	BRACKET AS	
	5	1	**291-5986**	1	INDICATOR AS (DIFFERENTIAL LOCK)	
	6	1	**299-7621**	1	HARNESS AS-SWITCH (DIFFERENTIAL LOCK)	
	7	1	**301-4350**	1	PLATE AS	
		1	**7S-4408**	2	WASHER (8.7X14.3X1.6-MM THK)	
	8	1	**8P-8540**	1	GROMMET	
M	9	1	**9X-2045**	3	SCREW-TRUSS HEAD (M6X1X20-MM)	

M-METRIC PART

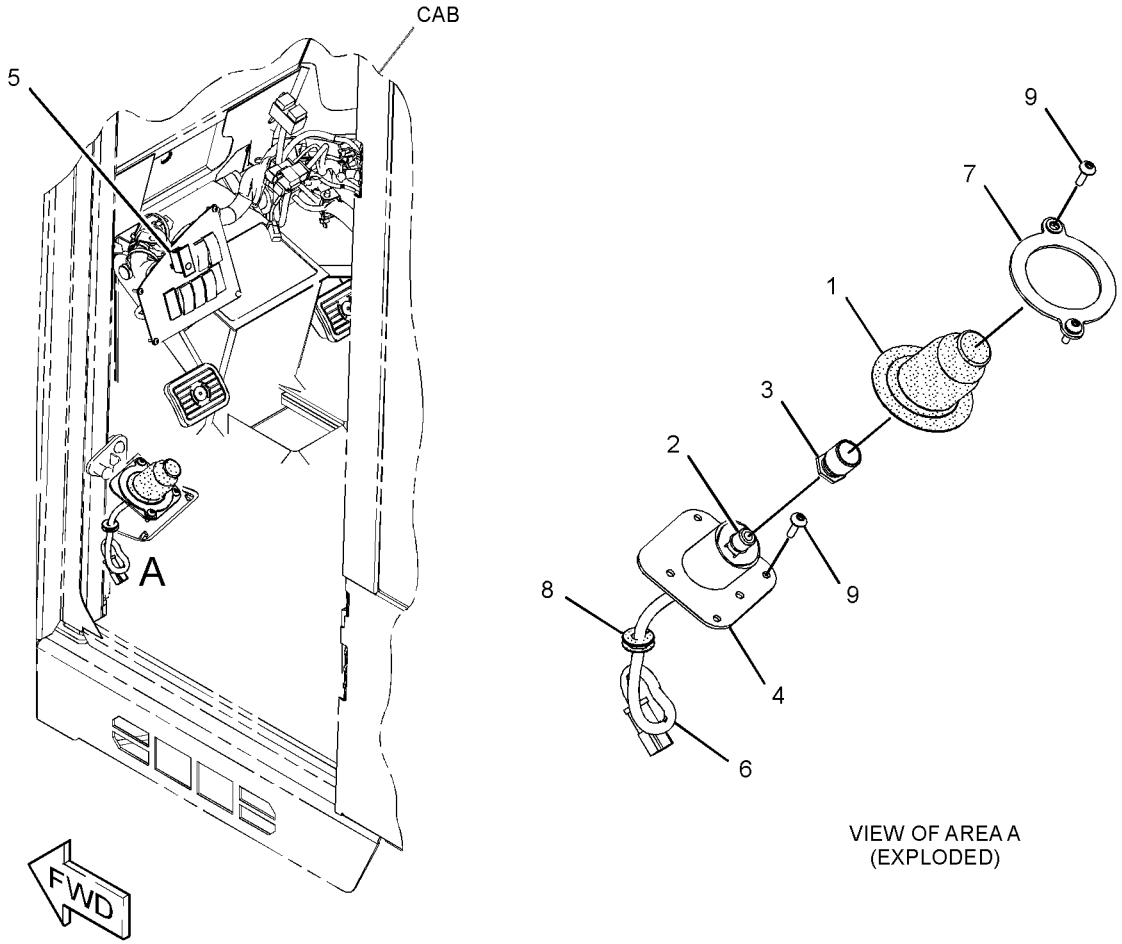

GRAPHIC #1 **<END>** g01413480

7N-0718 SWITCH GP-DISCONNECT–BATTERY

S/N: BYD1-UP; FTD1-UP

PART OF 290-7203, 302-1885 BATTERY & WIRING GP

AN ATTACHMENT

SMCS-1411 **i02544993**

NOTE	REF NO	GRAPHIC REF	PART NUMBER	QTY	PART NAME 1 2 3 4 5 6 (PRODUCT LEVEL)	SEE PAGE
	1	1	**8H-5306**	1	KEY (BATTERY DISCONNECT)	
	2	1	**8H-5303**	1	NUT (3/4-16-THD)	
	3	1	**2H-3922**	2	LOCKWASHER	
	4	1	**9F-5644**	2	LOCKWASHER	
	5	1	**6F-7045**	2	NUT-FULL (3/8-24-THD)	

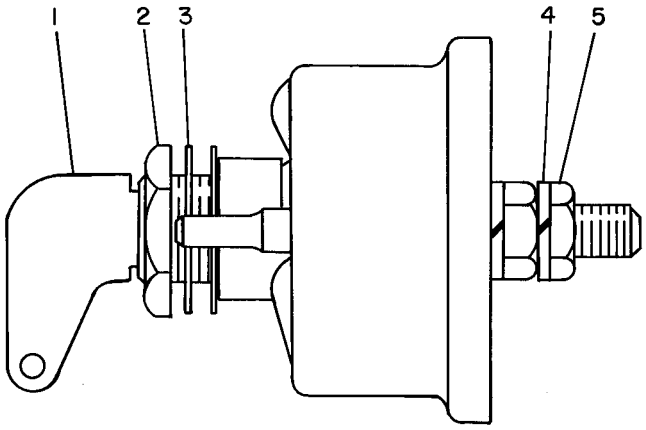

GRAPHIC #1 **<END>** g00084912

179-0006 SWITCH GP-MAGNETIC—SECONDARY STEERING RELAY

S/N: BYD1-UP; FTD1-UP

PART OF 290-7219, 290-7220 WIRING GP-SECONDARY STEERING AN ATTACHMENT

SMCS-7499 **i02588793**

NOTE	REF NO	GRAPHIC REF	PART NUMBER	QTY	PART NAME 1 2 3 4 5 6 (PRODUCT LEVEL)	SEE PAGE
	1	1	**7X-0620**	2	WASHER-HARD (5.5X13X1.6-MM THK)	
	2	1	**8F-1434**	2	LOCKWASHER	
	3	1	**6V-8378**	2	NUT (10-32-THD)	
	4	1	**4L-6499**	2	WASHER (0.38X0.88X0.06-IN THK)	
	5	1	**4D-1326**	2	LOCKWASHER	
	6	1	**1B-2578**	2	NUT (3/8-16-THD)	

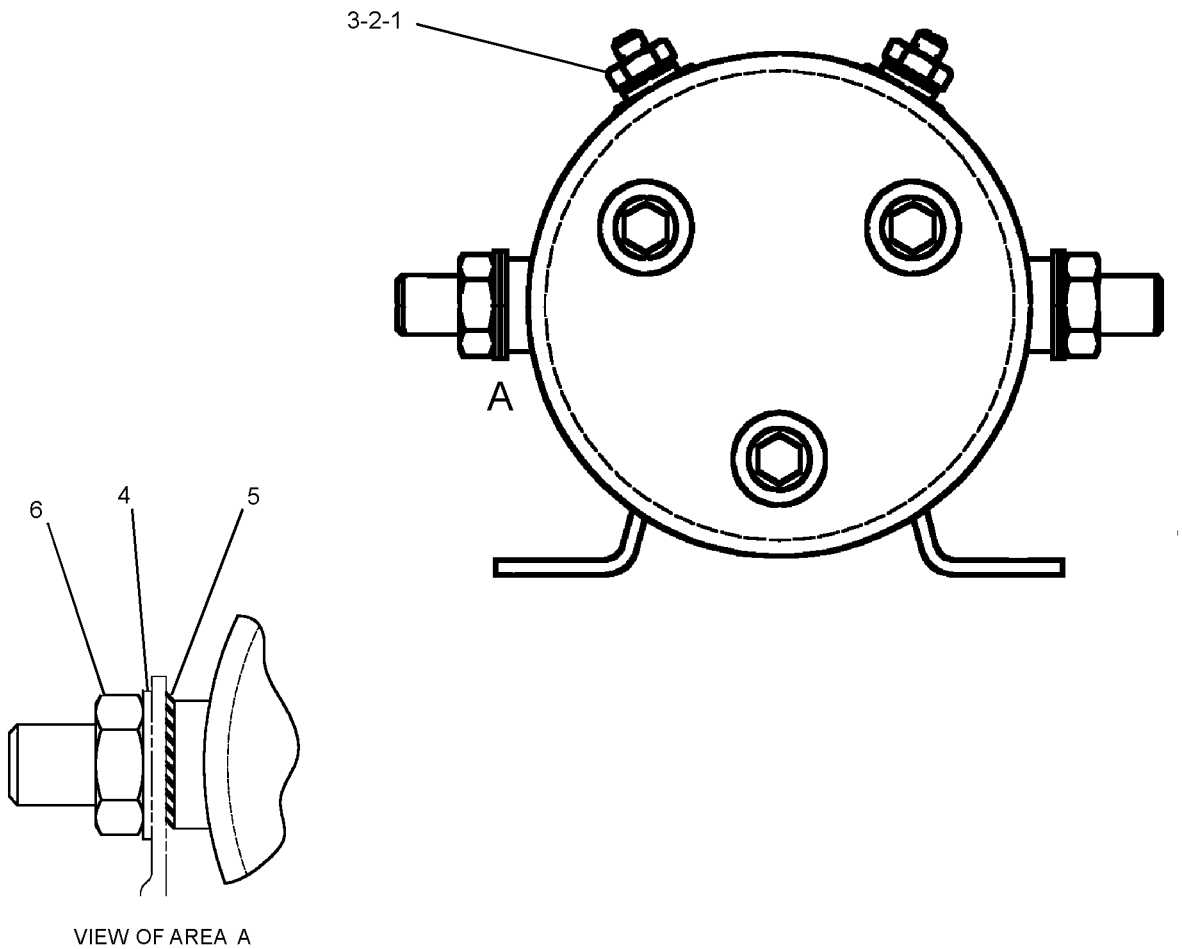

VIEW OF AREA A

GRAPHIC #1 **<END>** g01296451

241-8368 SWITCH GP-MAGNETIC

S/N: BYD1-UP; FTD1-UP

PART OF 290-8171, 290-8174 PANEL GP-INSTRUMENT, 289-8902 WIRING GP-ENGINE

ALSO AN ATTACHMENT

SMCS-7499 **i02289686**

NOTE	REF NO	GRAPHIC REF	PART NUMBER	QTY	PART NAME 1 2 3 4 5 6 (PRODUCT LEVEL)	SEE PAGE
	1	1	**155-2270**	1	KIT-CONNECTING PLUG (2-PIN)	
					(INCLUDES PLUG AS, WEDGE & INTERFACE SEAL)	
	2	1	**4F-2294**	2	NUT-JAM (5/16-24-THD)	
	3	1	**186-3736**	2	SOCKET-CONNECTOR (16-GA TO 18-GA)	

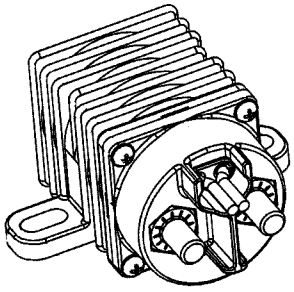

ISOMETRIC VIEW

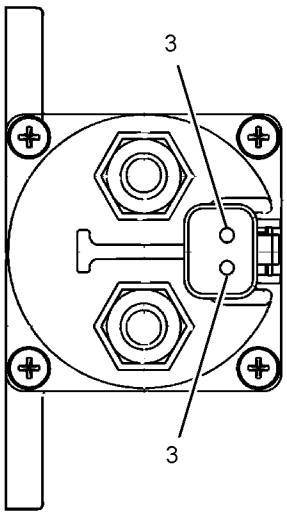

VIEW A-A

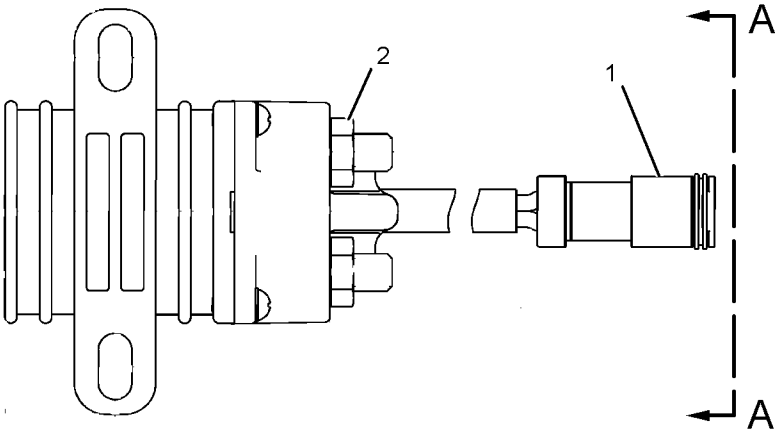

GRAPHIC #1 **<END>** g01077362

165-5970 SWITCH GP-TOGGLE–FUEL PRIMING PUMP ON, OFF

S/N: BYD1-UP; FTD1-649

PART OF 289-8938 LINES GP-FUEL

SMCS-7332 **i02816255**

NOTE	REF NO	GRAPHIC REF	PART NUMBER	QTY	PART NAME 1 2 3 4 5 6 (PRODUCT LEVEL)	SEE PAGE
	1	1	**6T-3631**	2	NUT-HEX (15/32-32-THD)	
	2	1	**6T-3632**	1	LOCKWASHER	
	3	1	**6T-3633**	1	RING-LOCKING	
	4	1	**102-8803**	1	KIT-RECEPTACLE (3-PIN)	
					(INCLUDES RECEPTACLE AS & WEDGE)	
	5	1	**186-3735**	3	PIN-CONNECTOR (16-GA TO 18-GA)	

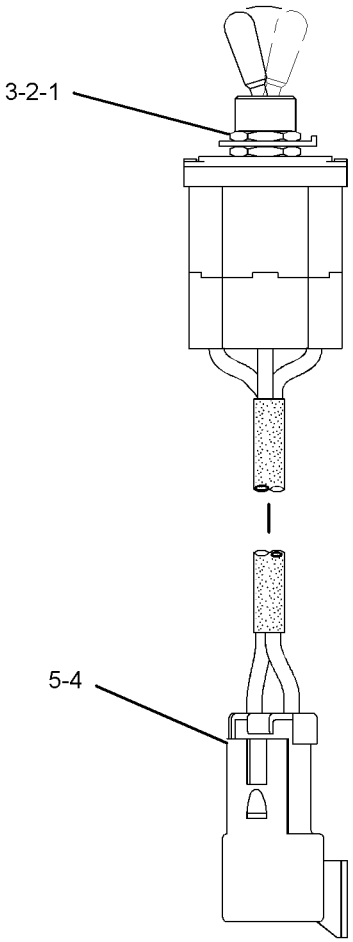

GRAPHIC #1 **<END>** g01404497

107-6133 SWITCH GP-WIPER–INTERMITTENT

S/N: BYD1-UP; FTD1-UP

PART OF 190-4405 CAB AR-ENCLOSED ROPS, 308-1933 PLATFORM AR

AN ATTACHMENT

SMCS-7332 **i02041000**

NOTE	REF NO	GRAPHIC REF	PART NUMBER	QTY	PART NAME 1 2 3 4 5 6 (PRODUCT LEVEL)	SEE PAGE
	1	1	**110-7886**	1	SWITCH AS-WIPER (24-VOLT) (FRONT)	
	1A	1	**2H-3920**	1	LOCKWASHER	
	1B	1	**3E-3389**	1	WEDGE-RECEPTACLE LOCK	
	1C	1	**6V-8369**	1	NUT (7/16-28-THD)	
	1D	1	**8T-8737**	1	PLUG-SEAL	
	1E	1	**9W-0852**	4	PIN-CONNECTOR (14-GA)	
	1F	1	**102-8806**	1	KIT-RECEPTACLE (8-PIN)	
	1G	1	**186-3735**	3	PIN-CONNECTOR (16-GA TO 18-GA)	
	2	1	**112-6174**	1	SWITCH AS-ROTARY (WIPER, WASHER) (REAR WIPER)	
	2A	1	**2H-3920**	1	LOCKWASHER	
	2B	1	**3E-3389**	1	WEDGE-RECEPTACLE LOCK	
	2C	1	**6V-8369**	1	NUT (7/16-28-THD)	
	2D	1	**186-3735**	6	PIN-CONNECTOR (16-GA TO 18-GA)	
	2E	1	**8T-8737**	2	PLUG-SEAL	
	2F	1	**102-8806**	1	KIT-RECEPTACLE (8-PIN)	

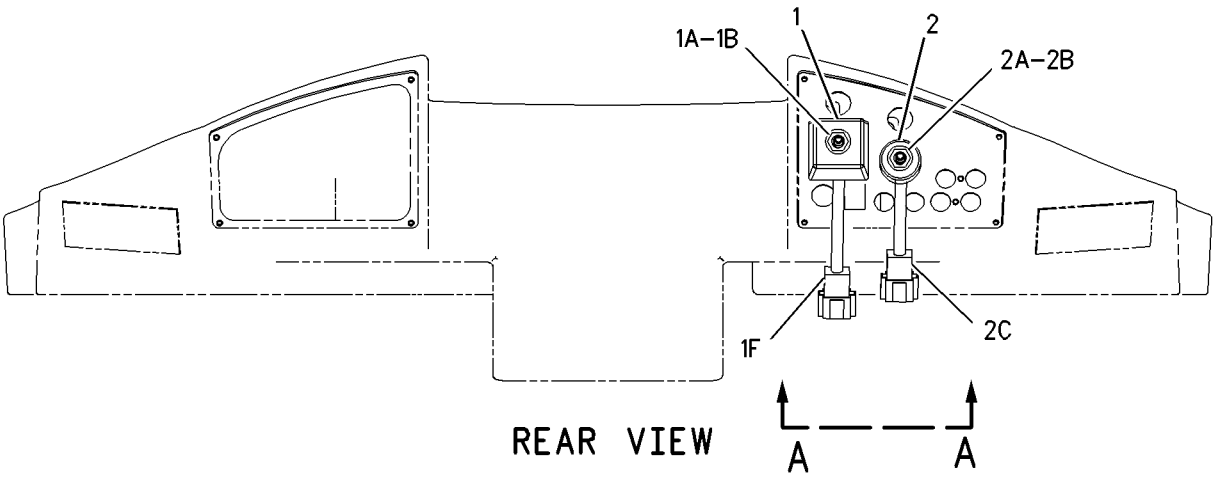

REAR VIEW

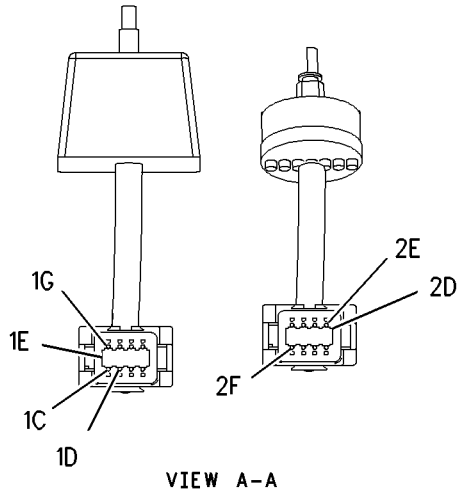

VIEW A-A

GRAPHIC #1 **<END>** g00995127

239-1134 VALVE GP-ETHER STARTING

S/N: BYD1-UP
PART OF 290-8781 STARTING AID GP-ETHER
AN ATTACHMENT

SMCS-1456 **i02837332**

NOTE	REF NO	GRAPHIC REF	PART NUMBER	QTY	PART NAME 1 2 3 4 5 6 (PRODUCT LEVEL)	SEE PAGE
	1	1	**7N-9801**	1	GASKET	
	2	1	**102-8802**	1	KIT-RECEPTACLE (2-PIN)	
					(INCLUDES RECEPTACLE AS & WEDGE)	
	3	1	**186-3735**	2	PIN-CONNECTOR (16-GA TO 18-GA)	

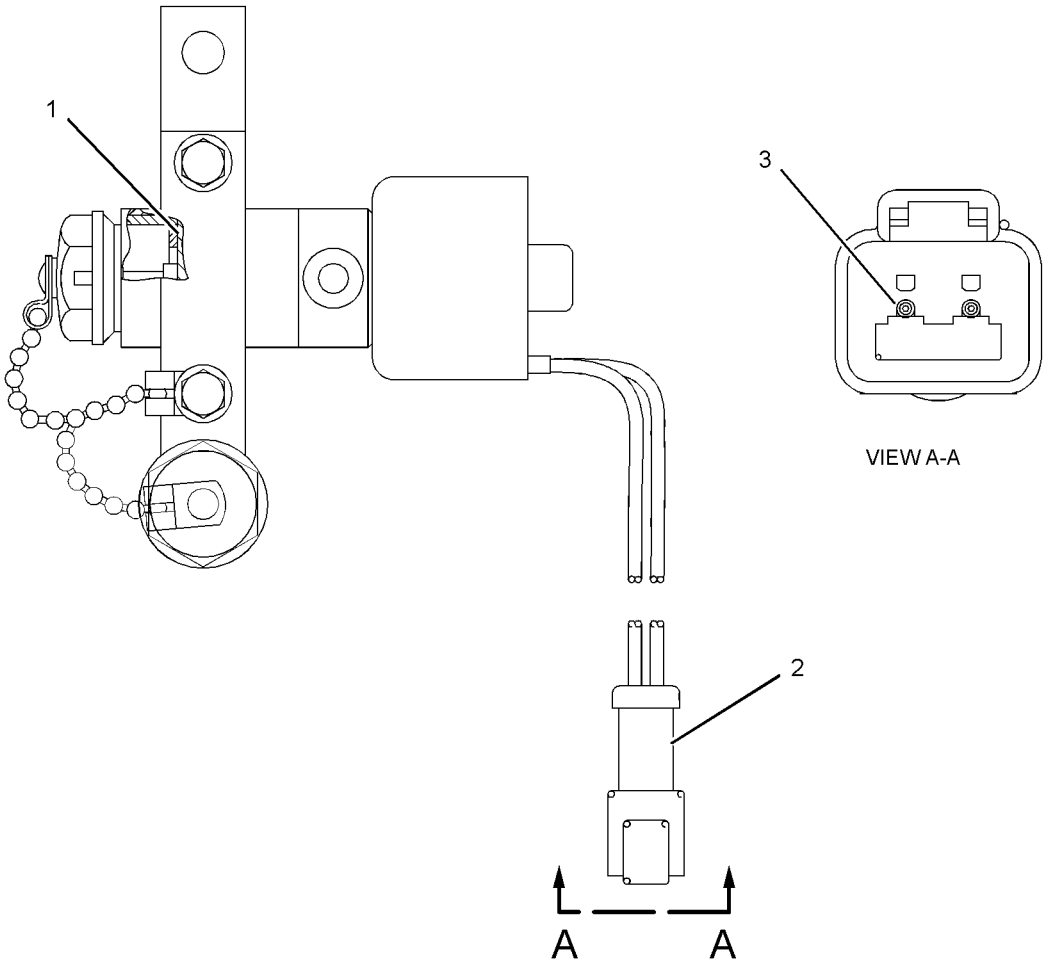

GRAPHIC #1 **<END>** g01375620

ELECTRICAL AND STARTING SYSTEM

180-8807 WARNING GP-BACKUP

S/N: BYD1-UP; FTD1-UP

AN ATTACHMENT

SMCS-7406 **i02830594**

NOTE	REF NO	GRAPHIC REF	PART NUMBER	QTY	PART NAME 1 2 3 4 5 6 (PRODUCT LEVEL)	SEE PAGE
	1	1	**7K-1181**	1	STRAP-CABLE	
	2	1	**213-9100**	1	ALARM GP (BACKUP)	
		1	**102-8802**	1	KIT-RECEPTACLE (2-PIN)	
					(INCLUDES RECEPTACLE AS & WEDGE)	
M	3	1	**8T-4200**	2	BOLT (M8X1.25X16-MM)	
	4	1	**8T-4224**	2	WASHER-HARD (8.8X16X2-MM THK)	

M-METRIC PART

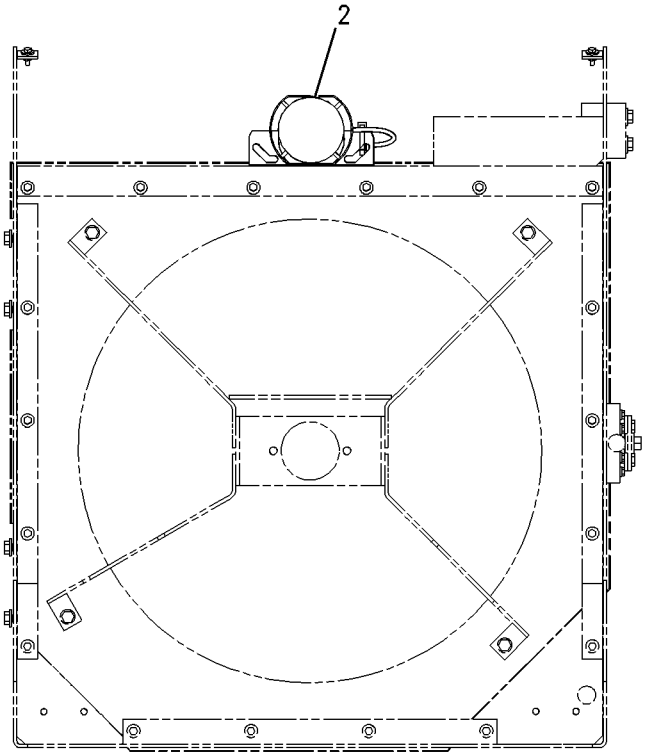

REAR VIEW

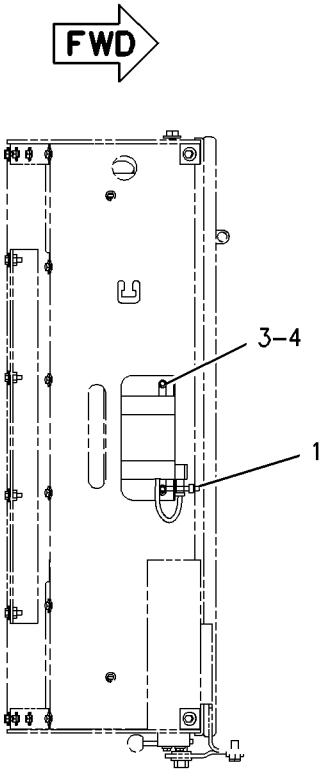

TOP VIEW

GRAPHIC #1 **<END>** g00915611

289-8903 WIRING GP-CAB—ENCLOSED ROPS

S/N: BYD1-UP; FTD1-UP

PART OF 304-9256 CANOPY AR-SOFT, 290-8508, 290-8525 OPERATOR AR-ENCLOSED ROPS, 304-9255, 308-1933 PLATFORM AR

AN ATTACHMENT

SMCS-1408, 7301 **i02888635**

NOTE	REF NO	GRAPHIC REF	PART NUMBER	QTY	PART NAME 1 2 3 4 5 6 (PRODUCT LEVEL)	SEE PAGE
	1	1	**110-6109**	2	KNOB-CONTROL (CONTROL PANEL SWITCHES)	
	2	1	**115-1748**	2	LAMP (24-VOLT, 3-WATT)	
B	3	1	**165-0311**	4	PLUG	
	4	1	**165-0312**	1	WIRE AS	
	5	1	**185-2766**	1	SWITCH AS-ROCKER (AUTOSHIFT CONTROL)	
	6	1	**190-4559**	1	PLATE AS	
	7	1	**193-9056**	1	SWITCH AS-ROCKER (HAZARD WARNING LIGHTS)	
		1	**111-7899**	1	GASKET	
	8	1	**201-1024**	1	BRACKET	
	9	1	**202-1129**	8	SCREW-TRUSS HEAD (M4X0.7X18-MM)	
	10	1	**204-0358**	1	FILM (PANEL-RH)	
	11	1	**211-0052**	1	NUT (11/16-18-THD)	
	12	1	**250-8115**	1	SWITCH AS-ROCKER (TMSN NEUTRALIZER OVERRIDE CONT)	
	13	1	**286-3594**	1	SWITCH AS-ROCKER (FLOODLIGHTS, FRONT)	
	14	1	**289-9168**	1	HARNESS AS-CAB (UPPER)	
	15	1	**290-0659**	1	HARNESS AS-CAB (MAIN)	
	16	1	**291-0638**	1	PLATE	
	17	1	**291-6008**	1	FILM-PANEL (LH)	
	18	1	**291-9121**	1	SWITCH AS-ROCKER (ROADING LIGHTS)	
	19	1	**7K-1181**	20	STRAP-CABLE	
	20	1	**204-6101**	8	WASHER-HARD (5.3X10X1-MM THK)	
	21	1	**4P-7581**	1	CLIP (LADDER)	
	22	1	**4P-8134**	1	CLIP (LADDER)	
	23	1	**6D-4244**	1	CLIP (SLOT)	
	24	1	**8T-4121**	1	WASHER-HARD (11X21X2.5-MM THK)	
M	25	1	**8T-4133**	1	NUT (M10X1.5-THD)	
M	26	1	**8T-4199**	2	BOLT (M8X1.25X12-MM)	
	27	1	**8T-4224**	3	WASHER-HARD (8.8X16X2-MM THK)	
M	28	1	**8T-4908**	1	BOLT (M8X1.25X25-MM)	
	29	1	**9W-0335**	1	LIGHTER AS-CIGAR (24-VOLT)	
D	30	1	**5P-6038**		WRAP (SPIRAL) (0.15-M)	

B-USE AS REQUIRED
D-ORDER BY THE METER
M-METRIC PART

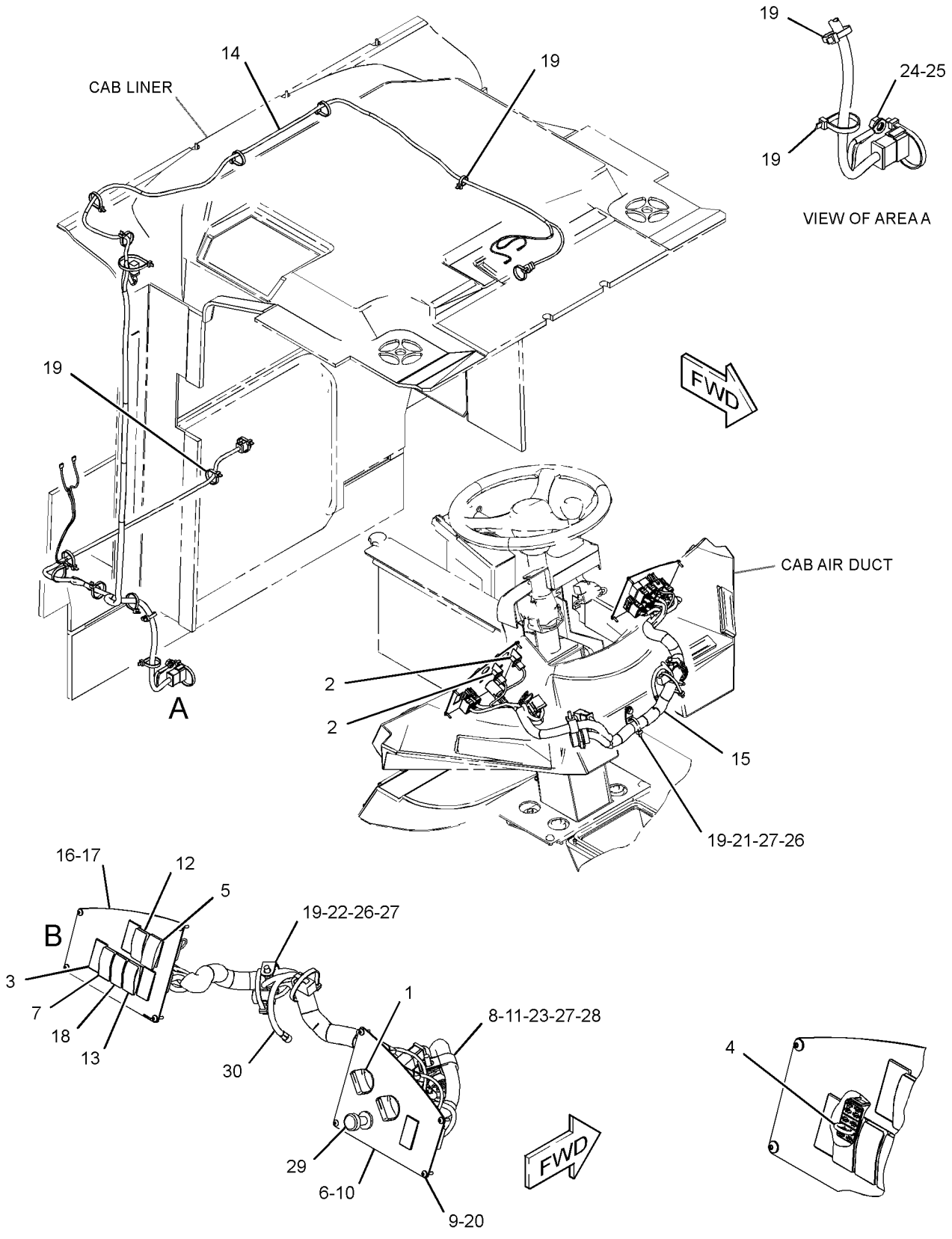

GRAPHIC #1 **<END>** g01406068

289-8904 WIRING GP-CAB–OPEN ROPS

S/N: FTD1-UP
PART OF 290-8186 OPERATOR AR-OPEN ROPS
AN ATTACHMENT

SMCS-1408, 7301 **i02793126**

NOTE	REF NO	GRAPHIC REF	PART NUMBER	QTY	PART NAME 1 2 3 4 5 6 (PRODUCT LEVEL)	SEE PAGE
	1	1	**115-1748**	2	LAMP (24-VOLT, 3-WATT)	
	2	1	**165-0311**	4	PLUG	
	3	1	**165-0312**	1	WIRE AS	
	4	1	**185-2766**	1	SWITCH AS-ROCKER (AUTOSHIFT CONTROL)	
	5	1	**190-4559**	1	PLATE AS	
	6	1	**193-9056**	1	SWITCH AS-ROCKER (HAZARD WARNING LIGHTS)	
		1	**111-7899**	1	GASKET	
	7	1	**201-1024**	1	BRACKET	
	8	1	**202-1129**	8	SCREW-TRUSS HEAD (M4X0.7X18-MM)	
	9	1	**204-0359**	1	FILM-PANEL (RH)	
	10	1	**211-0052**	1	NUT (11/16-18-THD)	
	11	1	**250-8115**	1	SWITCH AS-ROCKER (TMSN NEUTRALIZER OVERRIDE CONT)	
	12	1	**286-3594**	1	SWITCH AS-ROCKER (FLOODLIGHTS, FRONT)	
	13	1	**289-9172**	1	HARNESS AS-CAB (UPPER)	
	14	1	**290-0659**	1	HARNESS AS-CAB (MAIN)	
	15	1	**291-0638**	1	PLATE	
	16	1	**291-6008**	1	FILM-PANEL (LH)	
	17	1	**291-9121**	1	SWITCH AS-ROCKER (ROADING)	
	18	1	**7K-1181**	11	STRAP-CABLE	
	19	1	**204-6101**	8	WASHER-HARD (5.3X10X1-MM THK)	
	20	1	**102-8802**	2	KIT-RECEPTACLE (2-PIN)	
					(EACH INCLUDES RECEPTACLE AS & WEDGE)	
	21	1	**4P-7581**	1	CLIP	
	22	1	**4P-8134**	1	CLIP	
	23	1	**6D-4244**	1	CLIP	
	24	1	**8T-4121**	1	WASHER-HARD (11X21X2.5-MM THK)	
M	25	1	**8T-4133**	1	NUT (M10X1.5-THD)	
M	26	1	**8T-4199**	2	BOLT (M8X1.25X12-MM)	
	27	1	**8T-4224**	3	WASHER-HARD (8.8X16X2-MM THK)	
M	28	1	**8T-4908**	1	BOLT (M8X1.25X25-MM)	
	29	1	**9W-0335**	1	LIGHTER AS-CIGAR (24-VOLT)	
D	30	1	**5P-6038**		WRAP (SPIRAL) (0.2-M)	
B	31	1	**7K-1181**	1	STRAP-CABLE	

B-USE AS REQUIRED
D-ORDER BY THE METER
M-METRIC PART

289-8904 **WIRING GP-CAB** *(contd.)* **i02793126**

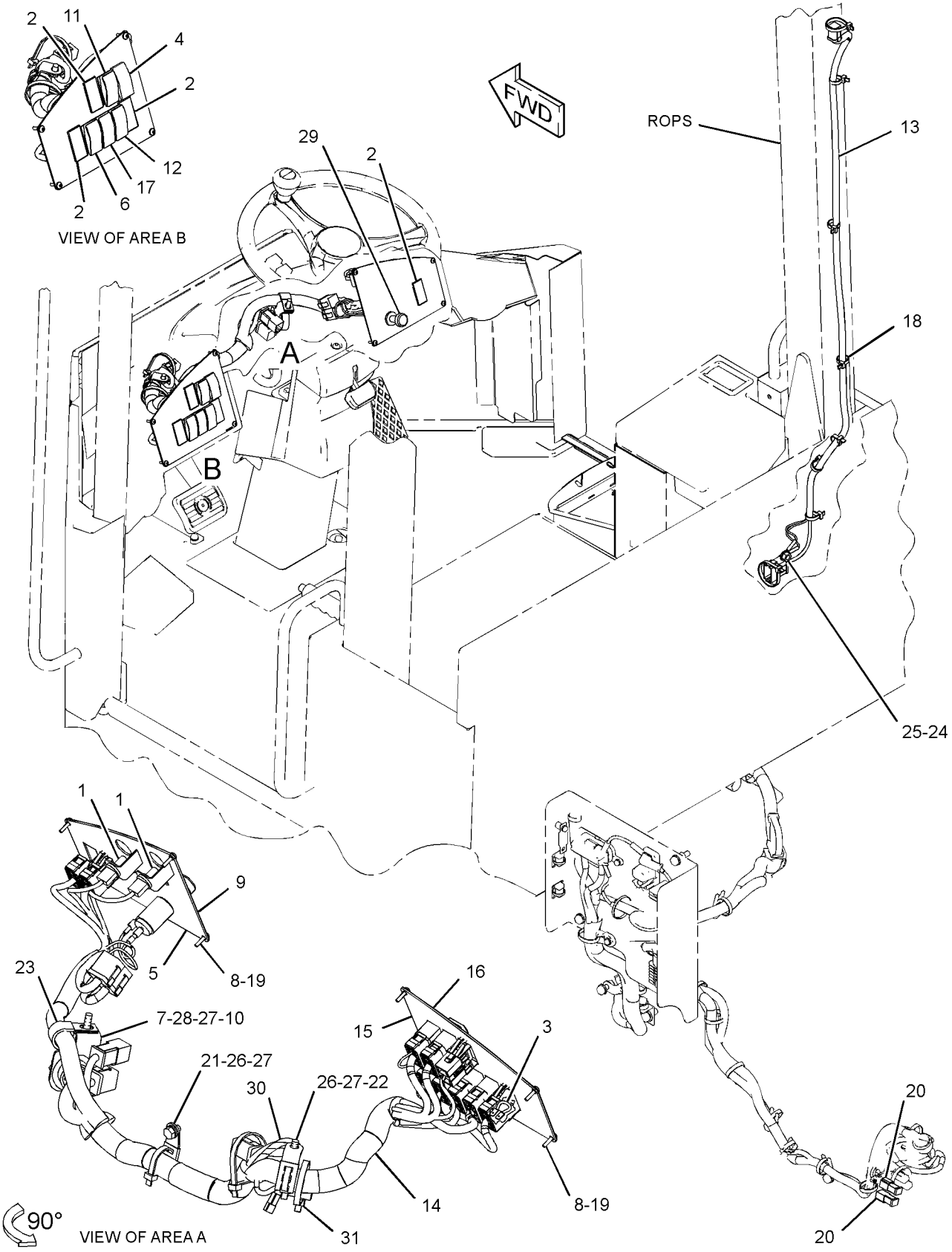

GRAPHIC #1 **<END>** g01414174

256-7269 WIRING GP-CAMERA–REAR CHASSIS

S/N: BYD1-UP; FTD1-UP
PART OF 302-8662, 320-9968 CAMERA AR
AN ATTACHMENT

SMCS-1408, 7348 **i02413003**

NOTE	REF NO	GRAPHIC REF	PART NUMBER	QTY	PART NAME 1 2 3 4 5 6 (PRODUCT LEVEL)	SEE PAGE
	1	1	**251-4160**	1	CAMERA GP (115-DEGREE, COLOR)	
	2	1	**251-8248**	2	CABLE AS-COMMUNICATION (5-M)	
	3	1	**3S-2093**	25	STRAP-CABLE	

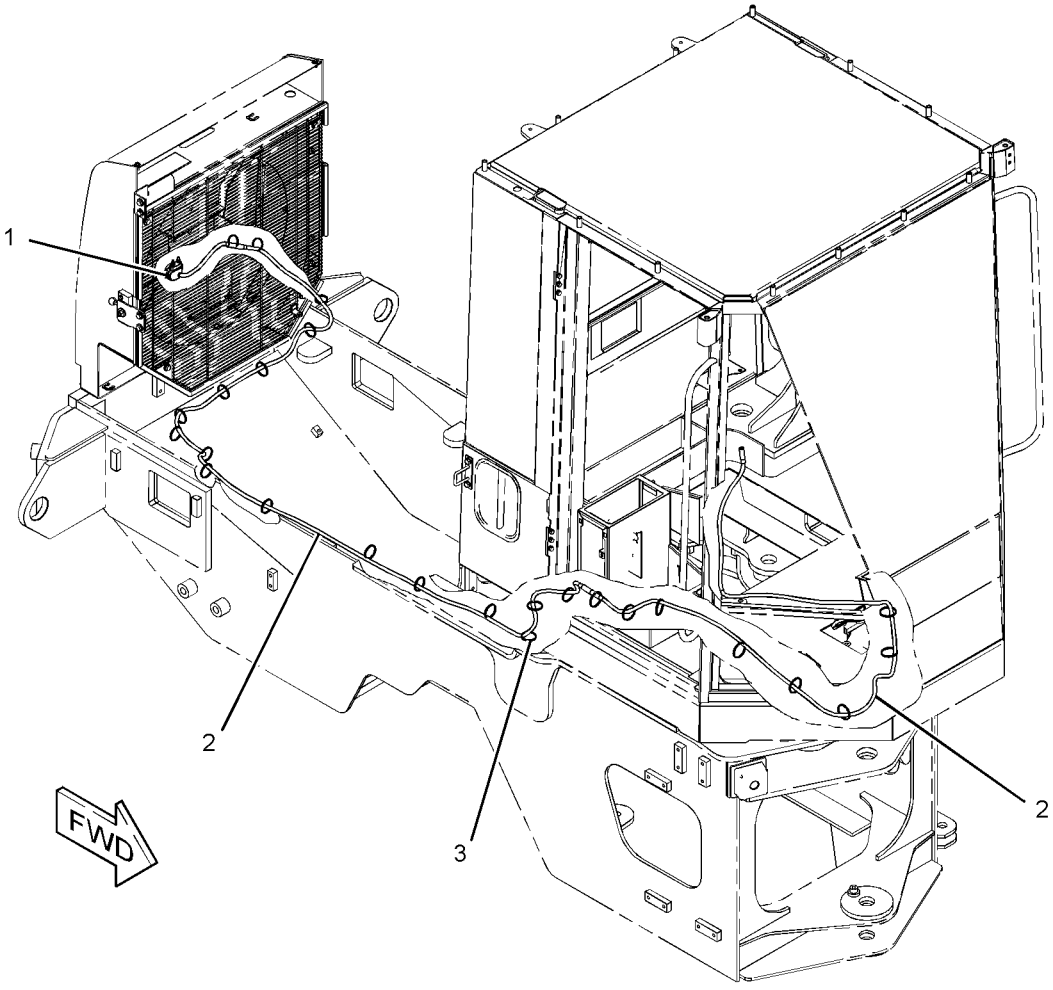

GRAPHIC #1 **<END>** g01181282

299-3953 WIRING GP-ELECTRONIC CONTROL

S/N: C6E1-UP
PART OF 292-5305, 301-3361 ENGINE AR-PRIMARY
AN ATTACHMENT

SMCS-1408 **i02839696**

NOTE	REF NO	GRAPHIC REF	PART NUMBER	QTY	PART NAME 1 2 3 4 5 6 (PRODUCT LEVEL)	SEE PAGE
	1	1	**293-1880**	1	BRACKET	
	2	1	**260-5542**	1	HARNESS AS-ENGINE (ENGINE CONTROL MODULE)	
	3	1	**217-9039**	3	STRAP-CABLE	
	5	1	**278-5209**	1	BRACKET	
	6	1	**278-5210**	1	BOLT	

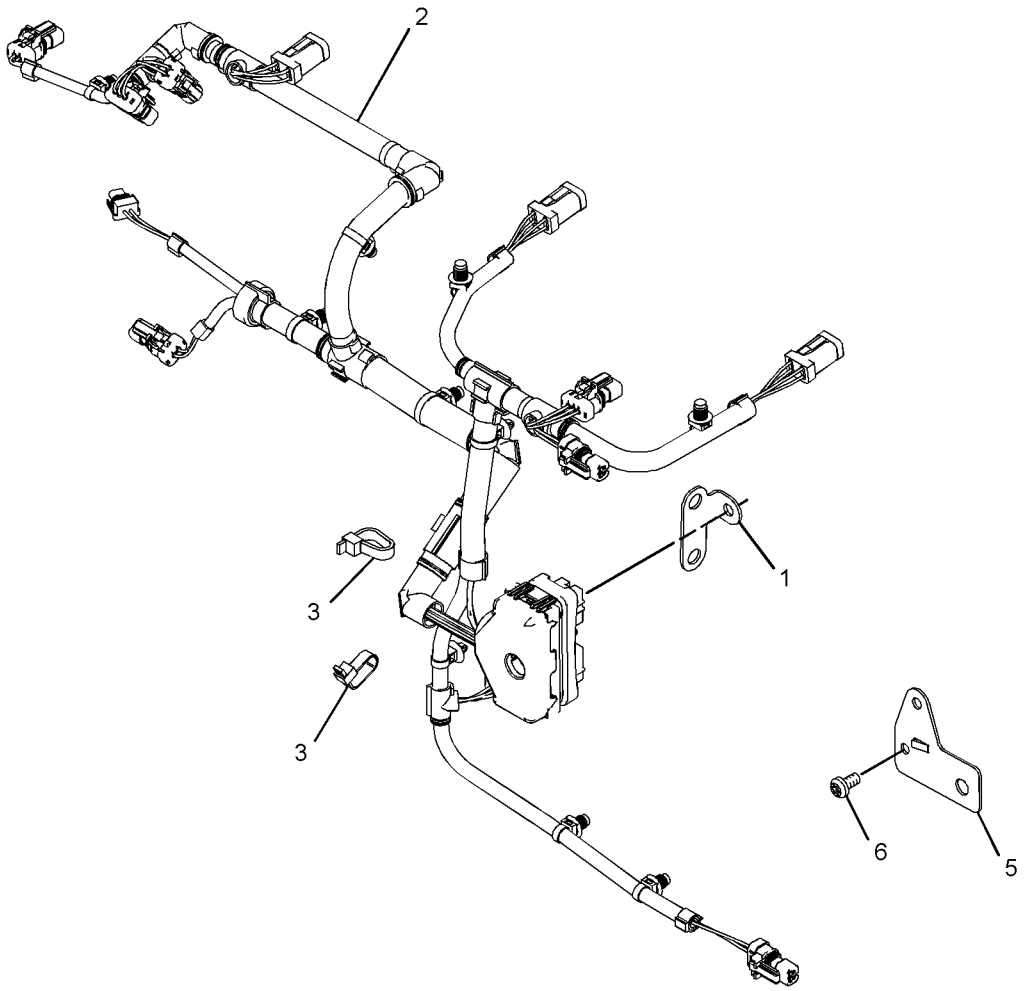

GRAPHIC #1 **<END>** g01416338

289-8902 WIRING GP-ENGINE

S/N: BYD1-UP; FTD1-UP

PART OF 289-8871, 289-8891, 290-6498 CHASSIS AR

SMCS-1403, 1408 **i02854407**

NOTE	REF NO	GRAPHIC REF	PART NUMBER	QTY	PART NAME 1 2 3 4 5 6 (PRODUCT LEVEL)	SEE PAGE
	1	1,2	**7K-1181**	20	STRAP-CABLE	
	2	2	**8T-8799**	7	BOOT	
	3	2	**129-8087**	4	SPACER (13.9X17.1X14-MM THK)	
	4	1	**132-7551**	1	SPACER (11X19X6-MM THK)	
	5	1	**135-3327**	1	PLATE AS	
M		1	**8T-3490**	1	NUT-WELD (M10X1.5-THD)	
	6	1	**200-6345**	1	MOUNT (DUAL SWIVEL)	
	7	1	**204-2281**	4	STRAP-TIE	
	8	1	**232-1115**	1	CLIP-PIPE	
	9	2	**235-1845**	2	FUSE (100-AMPERE)	
Y	10	2	**241-8368**	2	SWITCH GP-MAGNETIC (24-VOLT) (MAIN RELAY)	184
	11	2	**264-4297**	1	SENSOR GP-TEMPERATURE (ENGINE COOLANT)	
	12	2	**267-2680**	1	FUSE (20-AMPERE)	
	13	2	**267-2744**	1	HOLDER AS-FUSE	
M		2	**5C-7261**	2	NUT (M8X1.25-THD)	
		2	**7X-0608**	2	WASHER-HARD (10.2X16X2-MM THK)	
		2	**9F-5644**	2	LOCKWASHER	
		2	**267-2746**	1	COVER AS	
	14	1	**269-3311**	1	BRACKET	
	15	2	**274-9872**	1	FUSE (30-AMPERE)	
	16	1	**289-9166**	1	HARNESS AS-ENGINE	
	17	1	**292-2354**	1	CABLE AS	
		1	**6T-5598**	2	TERMINAL-SOLDER (FOR 5/16-IN BOLT)	
		1	**8T-8827**	1	BOOT (RED)	
	18	2	**292-2358**	1	WIRE AS	
	19	2	**295-1813**	1	WIRE AS	
	20	1	**297-8966**	1	WIRE AS	
	21	1	**300-1271**	1	BRACKET	
	22	2	**308-5075**	1	PLATE AS	
Y	23	2	**309-1620**	1	RELAY GP	173
	24	1,2	**204-8000**	3	ANCHOR-TIE (WRAP)	
	25	2	**3K-0360**	1	SEAL-O-RING	
	26	1,2	**3S-2093**	7	STRAP-CABLE	
	27	1	**3S-8665**	1	CLIP	
	28	1	**4P-7581**	7	CLIP	
	29	1,2	**4P-8134**	6	CLIP	
M	30	2	**5C-2890**	2	NUT (M6X1-THD)	
M	31	2	**5C-7261**	3	NUT (M8X1.25-THD)	
	32	1	**5P-4116**	1	WASHER-HARD (8.8X20.5X2-MM THK)	
M	33	2	**6V-7728**	1	BOLT (M6X1X45-MM)	
	34	2	**7X-0608**	2	WASHER-HARD (10.2X16X2-MM THK)	
	35	1,2	**8T-4121**	15	WASHER-HARD (11X21X2.5-MM THK)	
M	36	2	**8T-4133**	1	NUT (M10X1.5-THD)	
M	37	2	**8T-4136**	1	BOLT (M10X1.5X25-MM)	
M	38	1	**8T-4137**	9	BOLT (M10X1.5X20-MM)	
M	39	2	**8T-4138**	7	BOLT (M6X1X20-MM)	
M	40	2	**8T-4171**	1	BOLT (M6X1X12-MM)	
M	41	1	**8T-4189**	1	BOLT (M8X1.25X20-MM)	
M	42	1	**8T-4192**	1	BOLT (M12X1.75X25-MM)	
M	43	2	**8T-4196**	4	BOLT (M10X1.5X35-MM)	
	44	2	**8T-4205**	3	WASHER-HARD (7.2X14.5X2-MM THK)	
	45	1	**8T-4223**	1	WASHER-HARD (13.5X25.5X3-MM THK)	
	46	1,2	**8T-4224**	2	WASHER-HARD (8.8X16X2-MM THK)	
M	47	1	**8T-7547**	1	BOLT (M8X1.25X30-MM)	
	48	2	**9F-5644**	2	LOCKWASHER	
	49	2	**9X-8256**	7	WASHER (6.6X12X2-MM THK)	

M-METRIC PART
Y-SEPARATE ILLUSTRATION

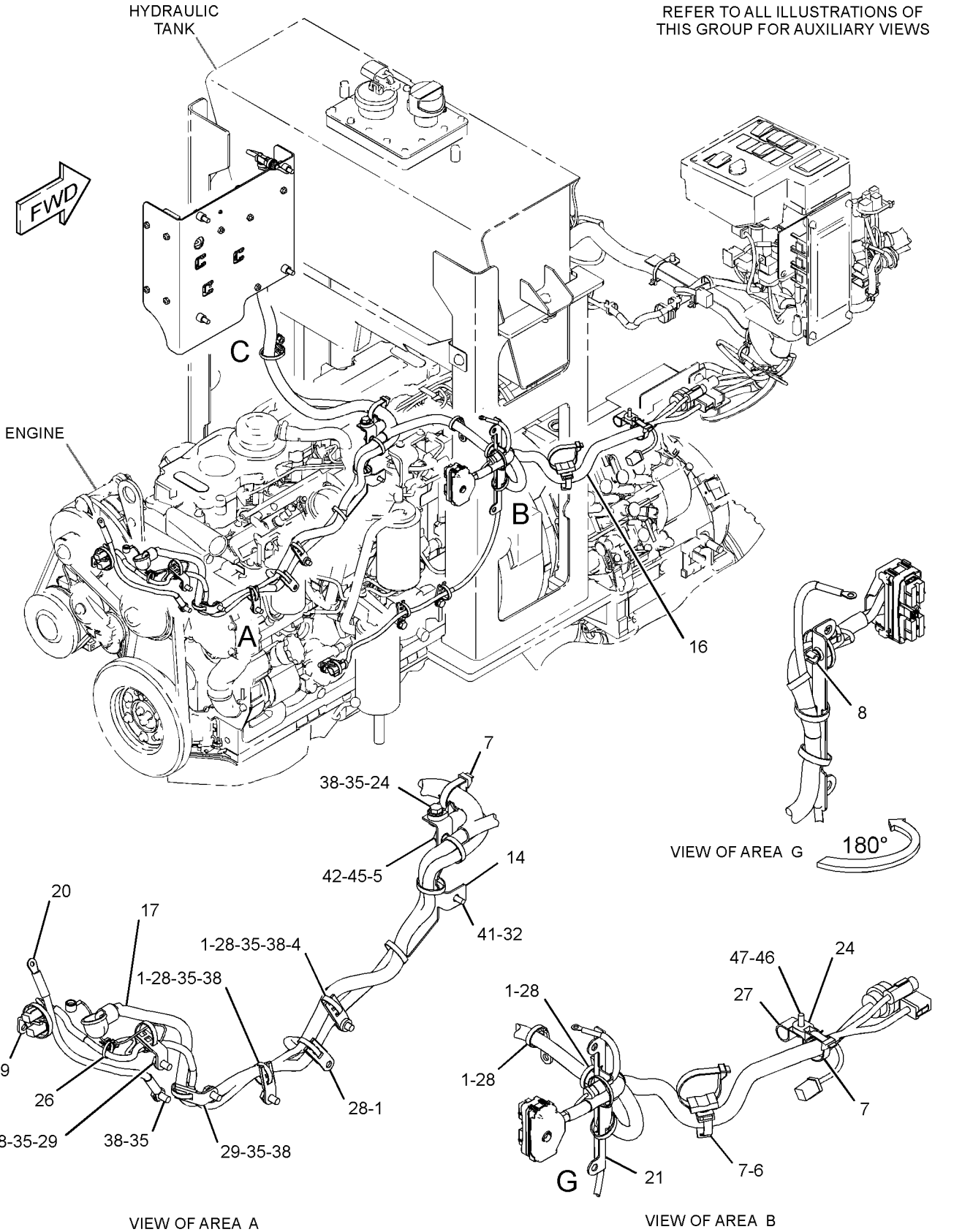

GRAPHIC #1

g01424903

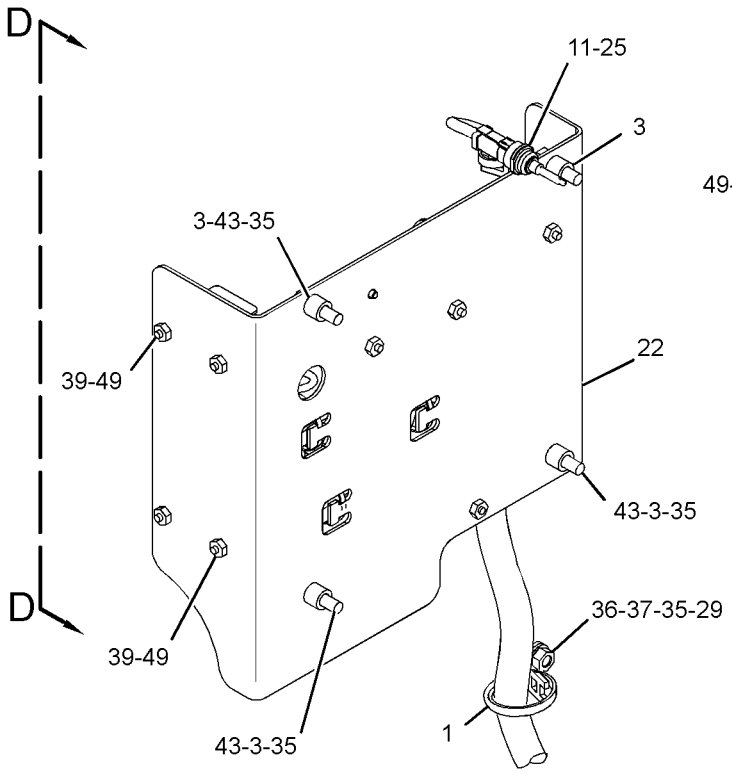

VIEW OF AREA C

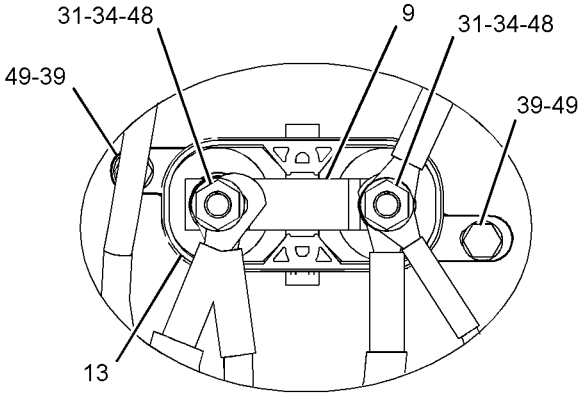

VIEW OF AREA F
(FUSED HOLDER COVER REMOVED FOR CLARITY)

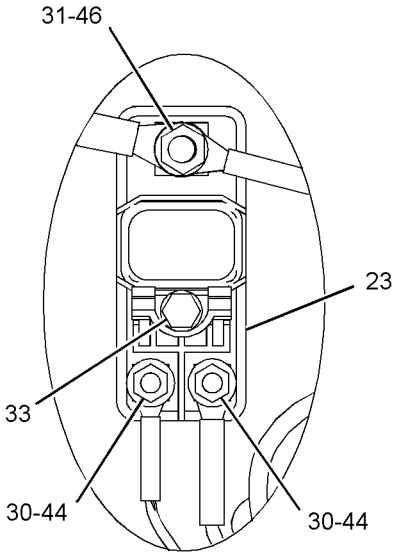

VIEW OF AREA E
(BOOTS REMOVED FOR CLARITY)

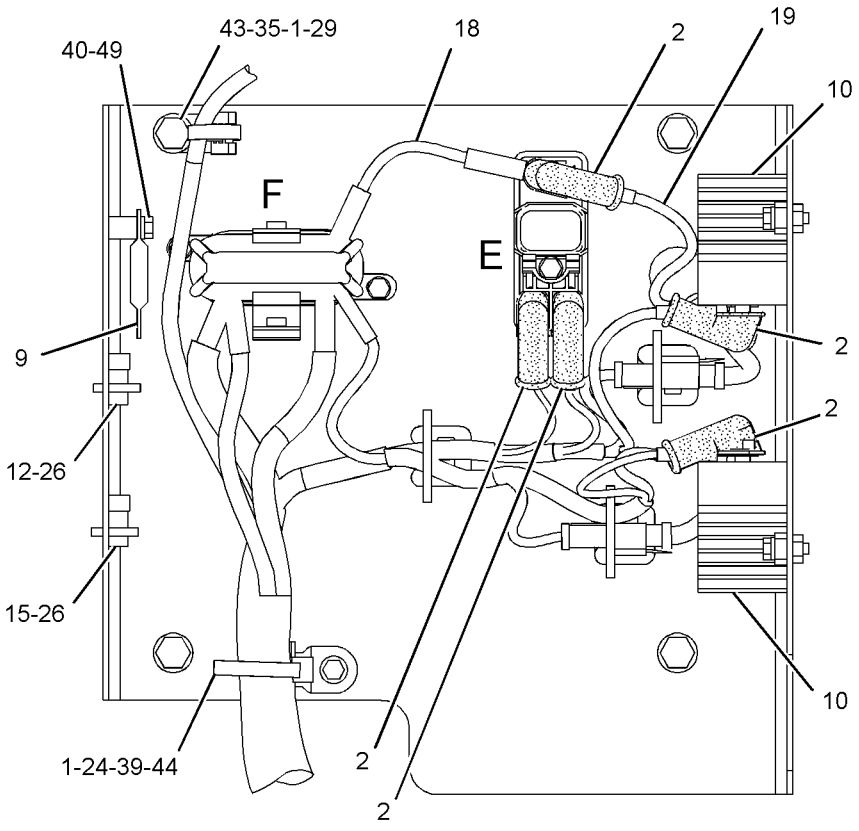

VIEW D-D

GRAPHIC #2 **<END>** g01424904

289-8957 WIRING GP-FRONT

S/N: BYD1-UP

PART OF 289-8871 CHASSIS AR

SMCS-5734 **i02814808**

NOTE	REF NO	GRAPHIC REF	PART NUMBER	QTY	PART NAME 1 2 3 4 5 6 (PRODUCT LEVEL)	SEE PAGE
	1	1	**7K-1181**	23	STRAP-CABLE	
	2	1	**163-1201**	1	HORN AS (24-VOLT, LOW TONE)	
		1	**177-9853**	1	RECEPTACLE AS (2-PIN)	
		1	**178-3586**	1	LOCK	
	3	1	**194-4121**	4	SPACER (10.1X15.9X70-MM THK)	
	4	1	**194-8111**	1	PLATE AS	
M		1	**8T-3490**	2	NUT-WELD (M10X1.5-THD)	
	5	1	**194-8112**	1	PLATE AS	
M		1	**8T-3490**	1	NUT-WELD (M10X1.5-THD)	
	6	1	**194-8113**	2	PLATE	
	7	1	**194-8114**	2	BLOCK	
	8	1	**200-6345**	1	MOUNT (DUAL SWIVEL)	
	9	1	**231-7994**	2	BLOCK	
	10	1	**231-7995**	2	BLOCK	
	11	1	**289-9175**	1	HARNESS AS-FRONT	
	12	1	**2H-9524**	2	GROMMET	
	13	1	**4P-7581**	2	CLIP	
	14	1	**4P-8134**	1	CLIP	
	15	1	**7B-1251**	2	GROMMET	
	16	1	**8T-4121**	8	WASHER-HARD (11X21X2.5-MM THK)	
M	17	1	**8T-4137**	4	BOLT (M10X1.5X20-MM)	
M	18	1	**8T-4198**	4	BOLT (M10X1.5X100-MM)	

M-METRIC PART

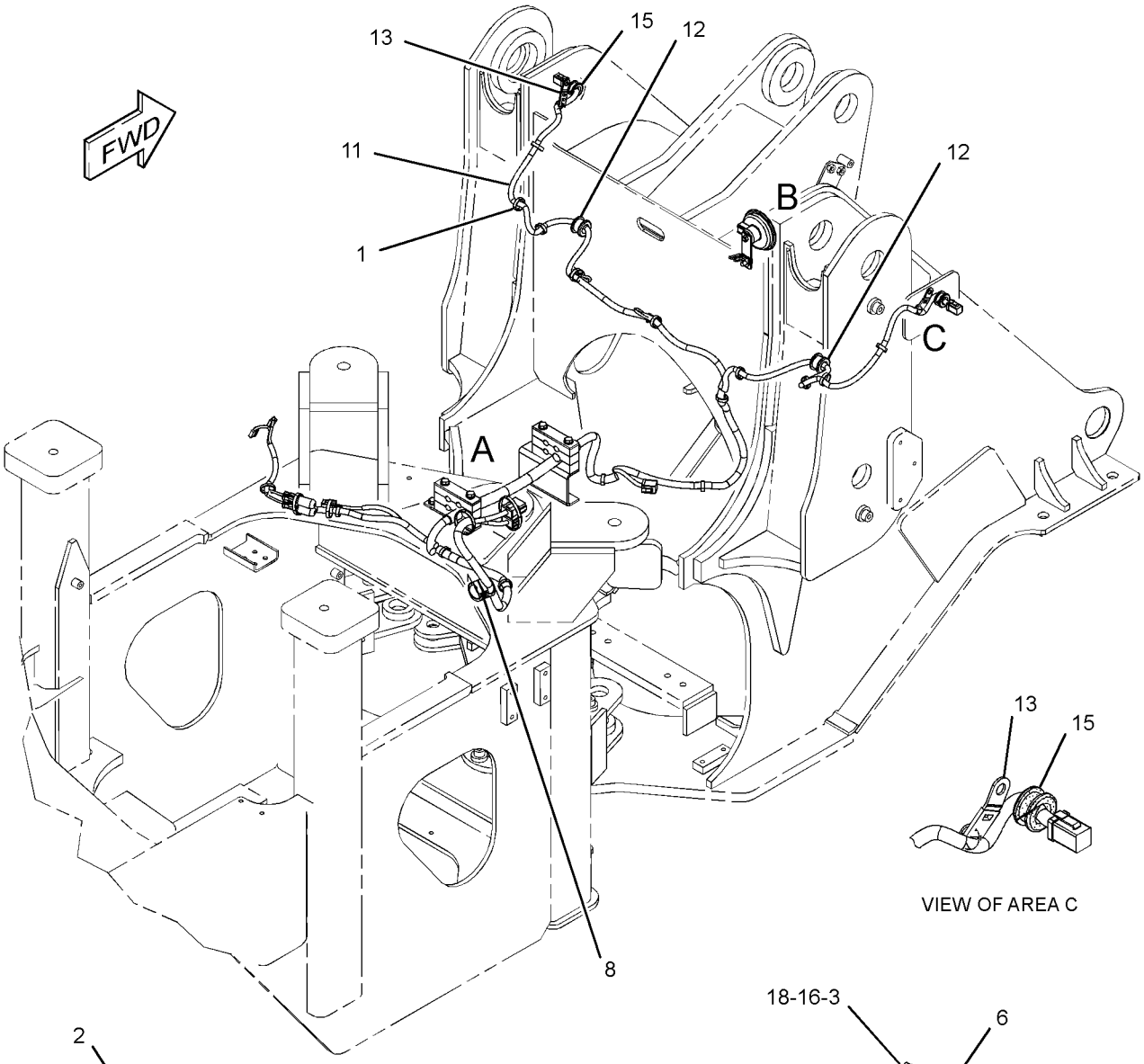

VIEW OF AREA C

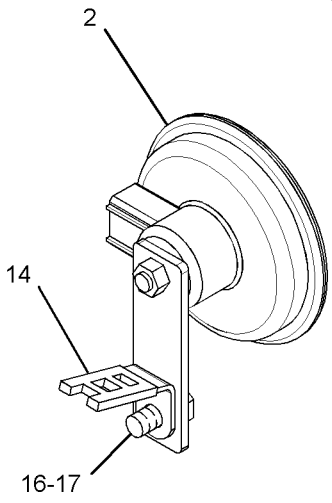

VIEW OF AREA B

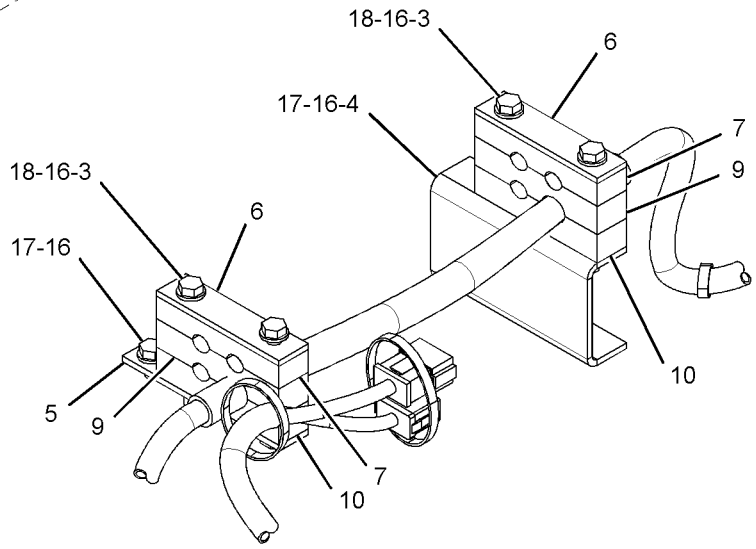

VIEW OF AREA A

GRAPHIC #1 **<END>** g01408981

289-8958 WIRING GP-FRONT

S/N: FTD1-UP

PART OF 289-8891, 290-6498 CHASSIS AR

SMCS-5734 **i02807989**

NOTE	REF NO	GRAPHIC REF	PART NUMBER	QTY	PART NAME 1 2 3 4 5 6 (PRODUCT LEVEL)	SEE PAGE
	1	1	**7K-1181**	26	STRAP-CABLE	
	2	1	**163-1201**	1	HORN AS (24-VOLT, LOW TONE)	
	3	1	**200-6345**	1	MOUNT (DUAL SWIVEL)	
	4	1	**206-2423**	1	SADDLE	
	5	1	**245-8145**	4	BLOCK	
	6	1	**246-2228**	1	PLATE AS	
M		1	**6V-9632**	2	NUT-WELD (M6X1-THD)	
	7	1	**246-2230**	1	BRACKET AS	
M		1	**6V-9632**	2	NUT-WELD (M6X1-THD)	
	8	1	**252-8958**	2	PLATE	
	9	1	**289-9176**	1	HARNESS AS-FRONT	
	10	1	**4P-7581**	4	CLIP	
M	11	1	**7X-2534**	4	BOLT (M6X1X50-MM)	
	12	1	**8T-4121**	6	WASHER-HARD (11X21X2.5-MM THK)	
M	13	1	**8T-4137**	5	BOLT (M10X1.5X20-MM)	
M	14	1	**8T-4191**	1	BOLT (M10X1.5X16-MM)	

M-METRIC PART

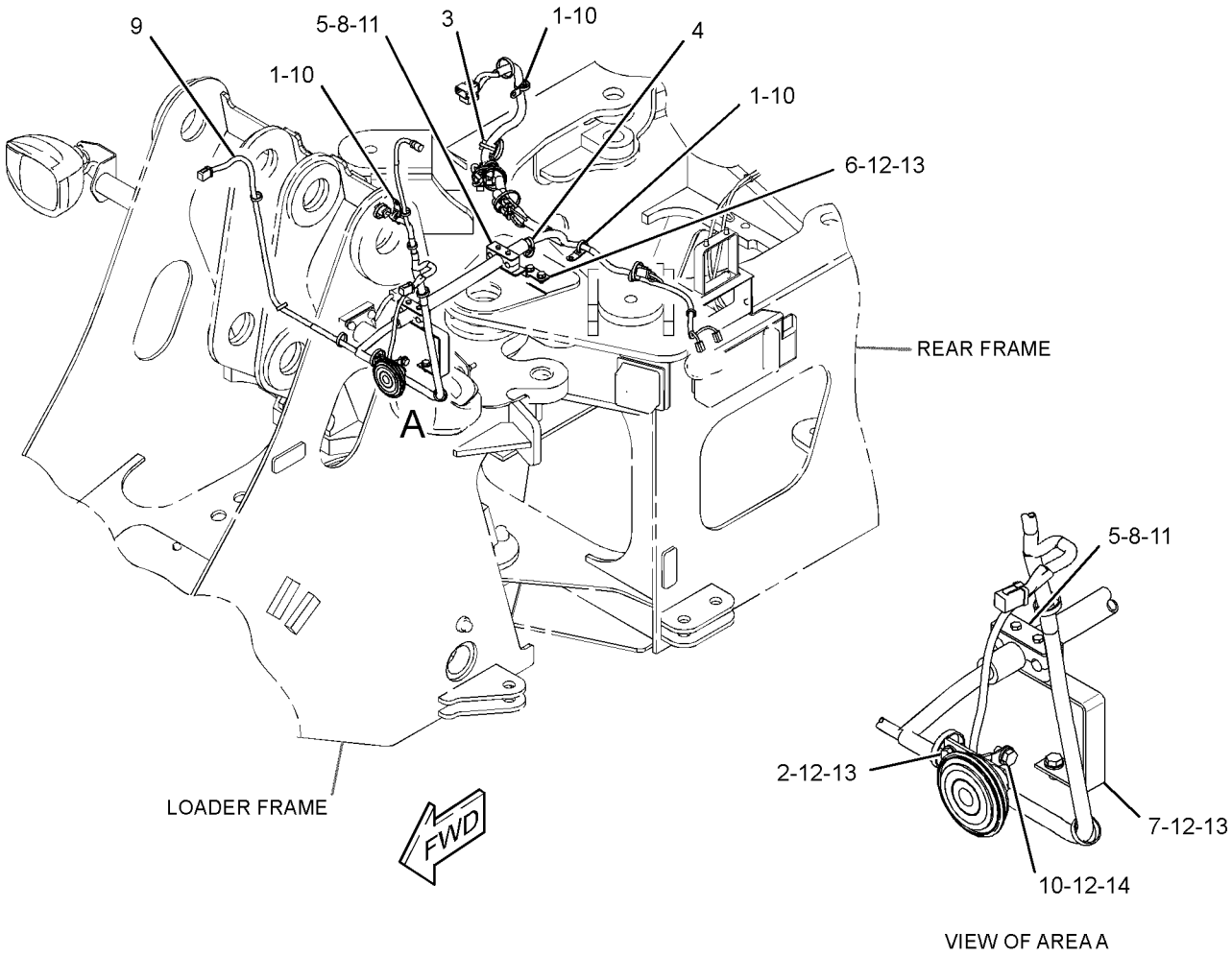

GRAPHIC #1 **<END>** g01391705

ELECTRICAL AND STARTING SYSTEM

289-8959 WIRING GP-REAR

S/N: BYD1-UP; FTD1-UP

PART OF 289-8871, 289-8891, 290-6498 CHASSIS AR

SMCS-1408 **i02829992**

NOTE	REF NO	GRAPHIC REF	PART NUMBER	QTY	PART NAME 1 2 3 4 5 6 (PRODUCT LEVEL)	SEE PAGE
	1	1	**7K-1181**	38	STRAP-CABLE	
	2	1	**206-1345**	2	STRAP-CABLE	
	3	1	**289-9169**	1	HARNESS AS-REAR	
	4	1	**132-5789**	2	CLIP	
	5	1	**1M-4543**	1	GROMMET	
	6	1	**3S-2093**	6	STRAP-CABLE	
	7	1	**4P-7581**	5	CLIP	
	8	1	**4P-8134**	1	CLIP	
	9	1	**5P-4116**	1	WASHER-HARD (8.8X20.5X2-MM THK)	
	10	1	**5P-6264**	4	GROMMET	
	11	1	**8D-9671**	1	CLIP	
	12	1	**8T-4121**	6	WASHER-HARD (11X21X2.5-MM THK)	
M	13	1	**8T-4137**	5	BOLT (M10X1.5X20-MM)	
M	14	1	**8T-4191**	1	BOLT (M10X1.5X16-MM)	
M	15	1	**8T-4908**	1	BOLT (M8X1.25X25-MM)	

M-METRIC PART

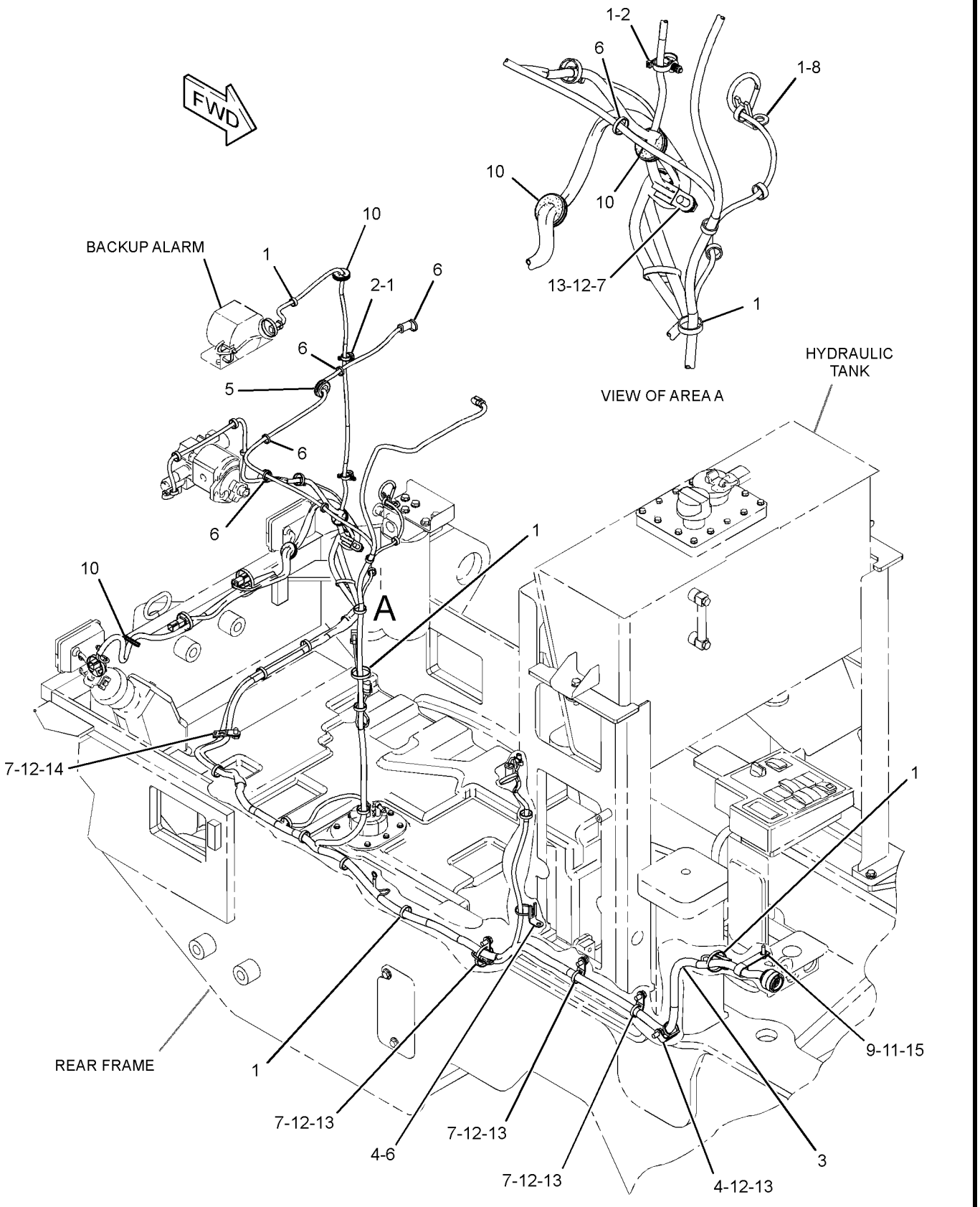

GRAPHIC #1 **<END>** g01412138

312-8309 WIRING GP-RIDE CONTROL

S/N: BYD1-UP

PART OF 290-6481 CONTROL AR-RIDE

AN ATTACHMENT

SMCS-5004, 5734 **i02831614**

NOTE	REF NO	GRAPHIC REF	PART NUMBER	QTY	PART NAME 1 2 3 4 5 6 (PRODUCT LEVEL)	SEE PAGE
	1	1	**125-8232**	1	HARNESS AS-RIDE CONTROL	
	2	1	**158-5089**	1	RELAY AS (24-VOLT) (RIDE CONTROL)	
	3	1	**189-3158**	1	SUPPRESSOR-ARC	
	4	1	**292-5606**	1	SWITCH AS-ROCKER (RIDE CONTROL)	
	5	1	**7K-1181**	2	STRAP-CABLE	
	6	1	**4P-7581**	1	CLIP (LADDER)	

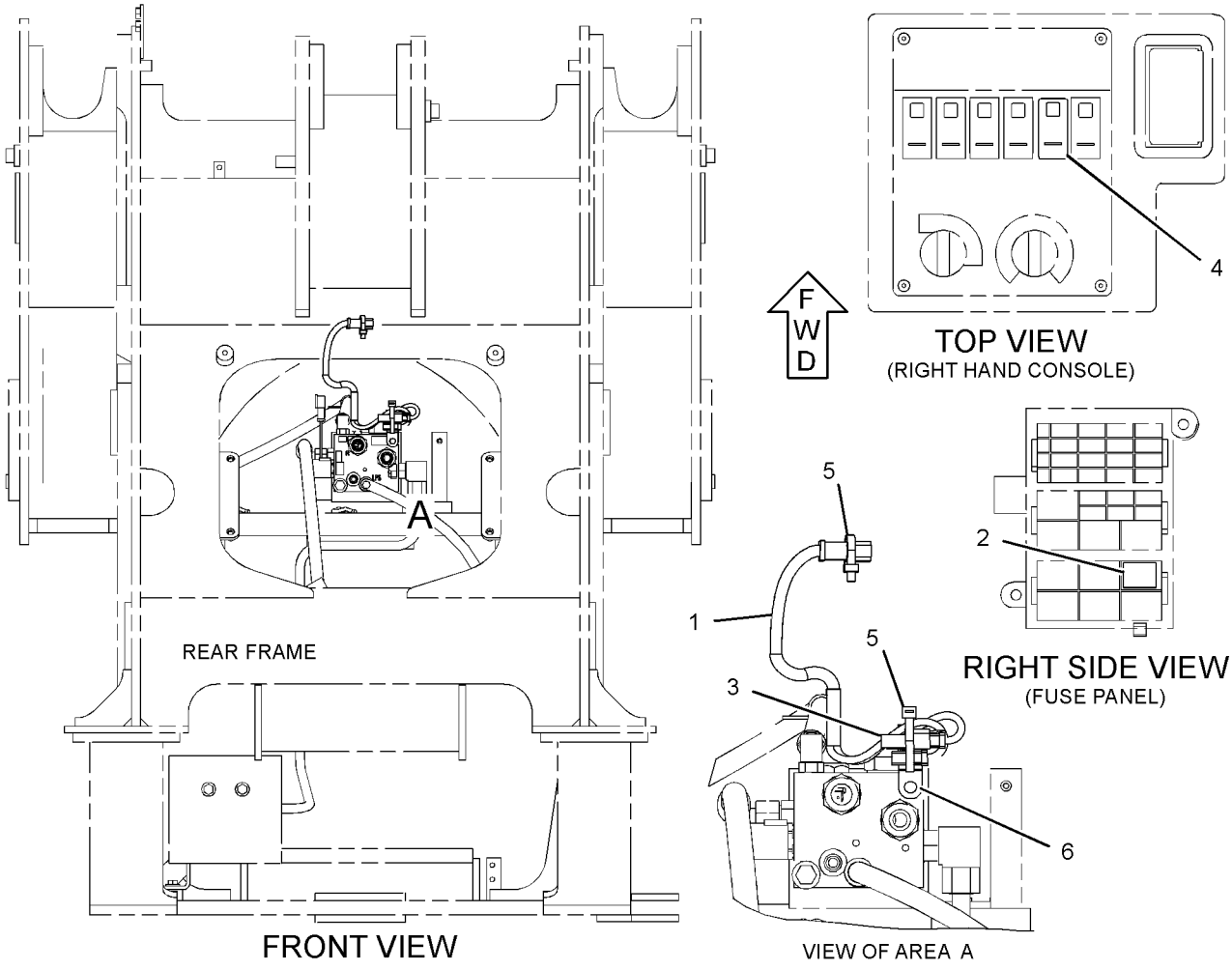

GRAPHIC #1 **<END>** g01412793

290-7219 WIRING GP-SECONDARY STEERING

S/N: BYD1-UP

PART OF 289-8968 STEERING AR-SECONDARY

AN ATTACHMENT

SMCS-1408, 4334 **i02829981**

NOTE	REF NO	GRAPHIC REF	PART NUMBER	QTY	PART NAME 1 2 3 4 5 6 (PRODUCT LEVEL)	SEE PAGE
	1	1	**7K-1181**	6	STRAP-CABLE	
	2	1	**314-9832**	1	CABLE AS	
E		1	**5P-0760**		CABLE (00-GA, RED) (30-CM)	
		1	**170-3793**	2	RING-TERMINAL	
		1	**8T-8827**	2	BOOT (RED)	
	3	1	**118-5597**	1	DIODE AS	
	4	1	**158-5089**	1	RELAY AS (24-VOLT) (SECONDARY STEERING)	
Y	5	1	**179-0006**	1	SWITCH GP-MAGNETIC (24-VOLT TO 32-VOLT) (SECONDARY STEERING RELAY)	183
	6	1	**180-8860**	1	HARNESS AS-STEERING (SECONDARY)	
	7	1	**185-2768**	1	SWITCH AS-ROCKER (SECONDARY STEERING)	
	8	1	**313-5495**	1	CABLE AS	
E		1	**5P-0746**		CABLE (0-GA, BLACK) (35-CM)	
		1	**170-3793**	2	RING-TERMINAL	
	9	1	**4P-8134**	1	CLIP	
	10	1	**8T-4121**	2	WASHER-HARD (11X21X2.5-MM THK)	
M	11	1	**8T-4133**	1	NUT (M10X1.5-THD)	
M	12	1	**8T-4136**	1	BOLT (M10X1.5X25-MM)	
M	13	1	**8T-4171**	4	BOLT (M6X1X12-MM)	
	14	1	**8T-4205**	4	WASHER-HARD (7.2X14.5X2-MM THK)	

E-ORDER BY THE CENTIMETER
M-METRIC PART
Y-SEPARATE ILLUSTRATION

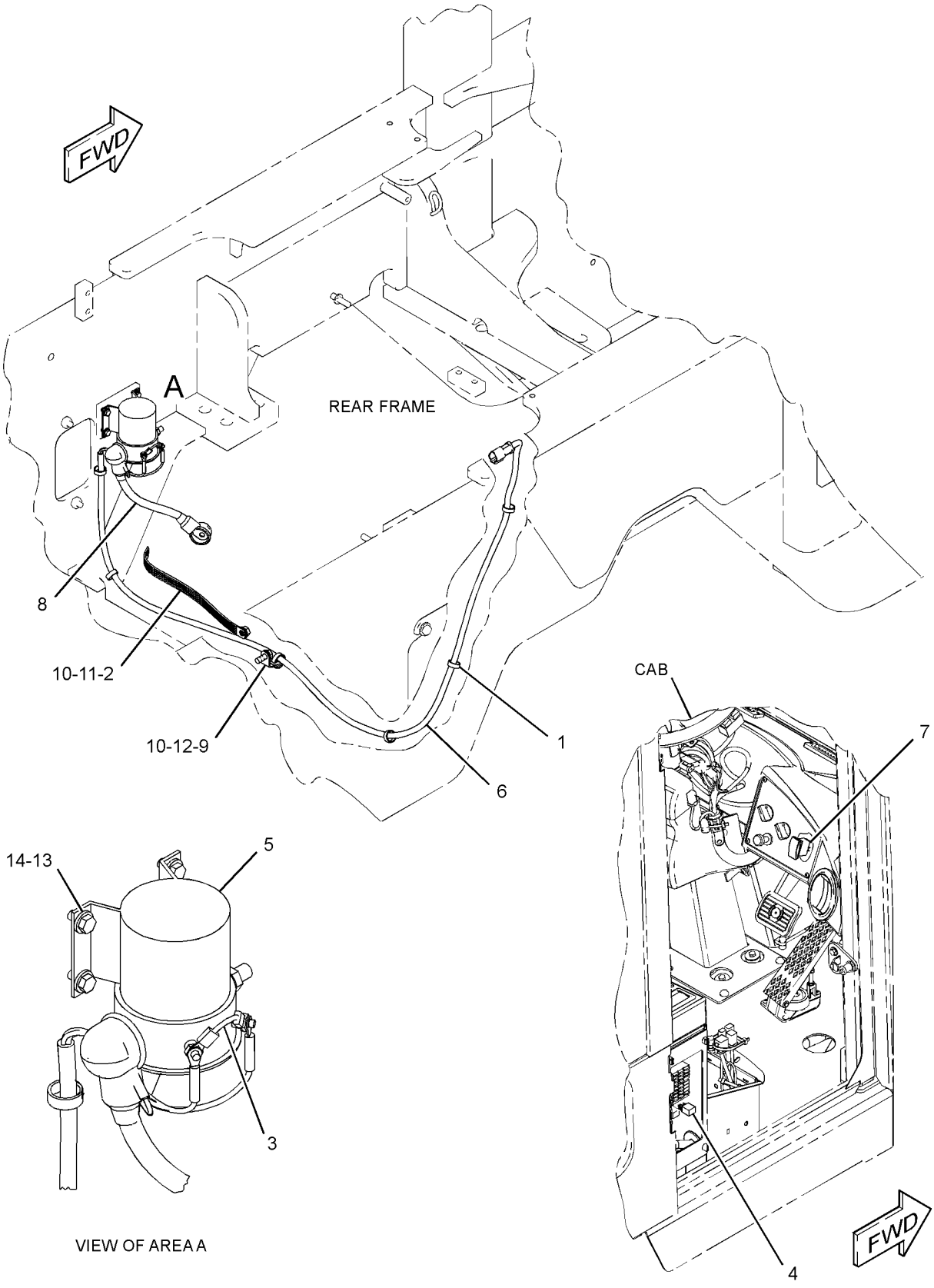

GRAPHIC #1 **<END>** g01405389

ELECTRICAL AND STARTING SYSTEM

290-7220 WIRING GP-SECONDARY STEERING

S/N: FTD1-UP

PART OF 289-8969, 289-8970 STEERING AR-SECONDARY

AN ATTACHMENT

SMCS-1408, 4334 **i02832797**

NOTE	REF NO	GRAPHIC REF	PART NUMBER	QTY	PART NAME 1 2 3 4 5 6 (PRODUCT LEVEL)	SEE PAGE
	1	1	**7K-1181**	8	STRAP-CABLE	
	2	1	**118-5597**	1	DIODE AS	
	3	1	**158-5089**	1	RELAY AS (24-VOLT) (ALARM)	
Y	4	1	**179-0006**	1	SWITCH GP-MAGNETIC (24-VOLT TO 32-VOLT) (SECONDARY STEERING RELAY)	183
	5	1	**180-8860**	1	HARNESS AS-STEERING (SECONDARY)	
	6	1	**185-2768**	1	SWITCH AS-ROCKER (SECONDARY STEERING)	
	7	1	**251-9968**	1	HARNESS AS-STEERING (PRIMARY PRESSURE SWITCH)	
	8	1	**314-9832**	1	CABLE AS	
E		1	**5P-0760**		CABLE (00-GA, RED) (30-CM)	
		1	**8T-8827**	2	BOOT	
		1	**170-3793**	2	RING-TERMINAL	
	9	1	**313-5495**	1	CABLE AS	
E		1	**5P-0746**	1	CABLE (0-GA, BLACK)	
		1	**170-3793**	1	RING-TERMINAL	
	10	1	**4P-8134**	1	CLIP	
	11	1	**8T-4121**	2	WASHER-HARD (11X21X2.5-MM THK)	
M	12	1	**8T-4133**	1	NUT (M10X1.5-THD)	
M	13	1	**8T-4136**	1	BOLT (M10X1.5X25-MM)	
M	14	1	**8T-4171**	4	BOLT (M6X1X12-MM)	
	15	1	**8T-4205**	4	WASHER-HARD (7.2X14.5X2-MM THK)	

E-ORDER BY THE CENTIMETER
M-METRIC PART
Y-SEPARATE ILLUSTRATION

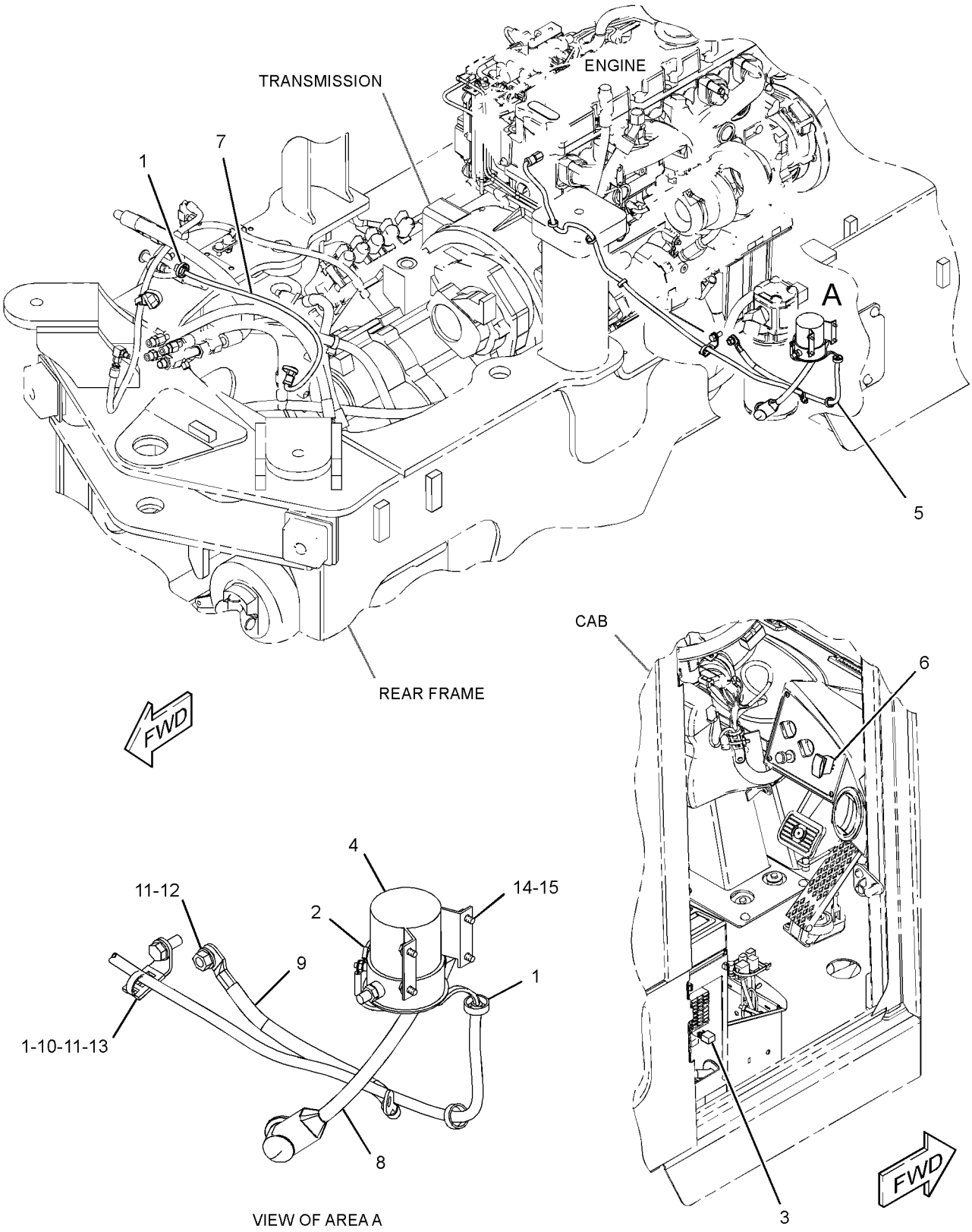

GRAPHIC #1 **<END>** g01413617

203-2761 AXLE AR-FIXED—FRONT, STANDARD DIFFERENTIAL—SINGLE DISC BRAKE

S/N: BYD1-UP

PART OF 289-8975 AXLE AR-FIXED

AN ATTACHMENT

SMCS-3013, 3278 **i02853486**

NOTE	PART NUMBER	QTY	PART NAME 1 2 3 4 5 6 (PRODUCT LEVEL)	SEE PAGE
Y	*163-5775*	2	BRAKE & PLANETARY GP (SINGLE DISC)	213
Y	**151-6142**	1	DIFFERENTIAL GP (STANDARD)	240
Y	*203-2762*	1	GEAR GP-BEVEL & PINION (FRONT)	259
Y	**203-2763**	1	HOUSING GP-FIXED AXLE (FRONT)	272
	220-7925	1	PLATE GP-AXLE IDENTIFICATION	

Y-SEPARATE ILLUSTRATION

<END>

203-2770 AXLE AR-FIXED—FRONT, LIMITED SLIP DIFFERENTIAL—SINGLE DISC BRAKE

S/N: BYD1-UP

PART OF 289-8978 AXLE AR-FIXED

AN ATTACHMENT

SMCS-3013, 3278 **i02853487**

NOTE	PART NUMBER	QTY	PART NAME 1 2 3 4 5 6 (PRODUCT LEVEL)	SEE PAGE
Y	*163-5775*	2	BRAKE & PLANETARY GP (SINGLE DISC)	213
Y	**159-7446**	1	DIFFERENTIAL GP-LIMITED SLIP	243
Y	*203-2762*	1	GEAR GP-BEVEL & PINION (FRONT)	259
Y	*203-2763*	1	HOUSING GP-FIXED AXLE (FRONT)	272
	220-7925	1	PLATE GP-AXLE IDENTIFICATION	

Y-SEPARATE ILLUSTRATION

<END>

234-4253 AXLE AR-FIXED—FRONT, STANDARD DIFFERENTIAL—SINGLE DISC BRAKE

S/N: BYD1-UP; FTD1-UP

PART OF 289-8976 AXLE AR-FIXED

AN ATTACHMENT

SMCS-3013, 3278 **i02252812**

NOTE	PART NUMBER	QTY	PART NAME 1 2 3 4 5 6 (PRODUCT LEVEL)	SEE PAGE
Y	*234-4249*	2	BRAKE & PLANETARY GP (SINGLE DISC)	214
Y	**235-5811**	1	DIFFERENTIAL GP (STANDARD)	241
Y	*236-7496*	1	GEAR GP-BEVEL & PINION (FRONT)	263
Y	*234-4246*	1	HOUSING GP-FIXED AXLE (FRONT)	274
	220-7925	1	PLATE GP-AXLE IDENTIFICATION	

Y-SEPARATE ILLUSTRATION

<END>

234-4255 AXLE AR-FIXED—FRONT, LIMITED SLIP DIFFERENTIAL—SINGLE DISC BRAKE

S/N: BYD1-UP; FTD1-UP

PART OF 294-9436 AXLE AR-FIXED

AN ATTACHMENT

SMCS-3013, 3278 **i02853488**

NOTE	PART NUMBER	QTY	PART NAME 1 2 3 4 5 6 (PRODUCT LEVEL)	SEE PAGE
Y	*234-4249*	2	BRAKE & PLANETARY GP (SINGLE DISC)	214
Y	**236-0931**	1	DIFFERENTIAL GP-LIMITED SLIP	245
Y	*236-7496*	1	GEAR GP-BEVEL & PINION (FRONT)	263
Y	*234-4246*	1	HOUSING GP-FIXED AXLE (FRONT)	274
	220-7925	1	PLATE GP-AXLE IDENTIFICATION	

Y-SEPARATE ILLUSTRATION

<END>

257-1712 AXLE AR-FIXED—FRONT, DIFFERENTIAL LOCK

S/N: FTD650-UP

PART OF 289-8981 AXLE AR-FIXED

SMCS-3013, 3278 **i02900895**

NOTE	PART NUMBER	QTY	PART NAME 1 2 3 4 5 6 (PRODUCT LEVEL)	SEE PAGE
Y	*258-6945*	2	BRAKE & PLANETARY GP (SINGLE DISC)	215
Y	*252-8037*	1	CONTROL GP-DIFFERENTIAL LOCK	236
Y	**252-7939**	1	DIFFERENTIAL GP (LOCKING)	242
Y	*252-8442*	1	GEAR GP-BEVEL & PINION (LOCKING DIFFERENTIAL, FRONT)	265
Y	*252-8449*	1	HOUSING GP-FIXED AXLE (LOCKING DIFFERENTIAL, FRONT)	276

Y-SEPARATE ILLUSTRATION

<END>

289-8975 AXLE AR-FIXED—FRONT, STANDARD DIFFERENTIAL—SINGLE DISC BRAKE

S/N: BYD1-UP

AN ATTACHMENT

SMCS-3013, 3278 **i02832239**

NOTE	PART NUMBER	QTY	PART NAME 1 2 3 4 5 6 (PRODUCT LEVEL)	SEE PAGE
Y	*203-2761*	1	AXLE AR-FIXED (FRONT, STANDARD DIFFERENTIAL) (SINGLE DISC BRAKE)	208
Y	*301-4353*	1	COVER GP-ACCESS (CAB FLOOR)	348

Y-SEPARATE ILLUSTRATION

<END>

289-8976 AXLE AR-FIXED—SINGLE DISC BRAKE

S/N: BYD1-UP; FTD1-649
CANNOT BE USED WITH 294-9436 AXLE AR-FIXED
AN ATTACHMENT

SMCS-3013, 3278 **i02807930**

NOTE	PART NUMBER	QTY	PART NAME 1 2 3 4 5 6 (PRODUCT LEVEL)	SEE PAGE
Y	*234-4253*	1	AXLE AR-FIXED (FRONT, STANDARD DIFFERENTIAL) (SINGLE DISC BRAKE)	208
Y	*301-4353*	1	COVER GP-ACCESS (CAB FLOOR)	348
Y-SEPARATE ILLUSTRATION				

<END>

289-8978 AXLE AR-FIXED—FRONT, LIMITED SLIP DIFFERENTIAL—SINGLE DISC BRAKE

S/N: BYD1-UP
AN ATTACHMENT

SMCS-3013, 3278 **i02832235**

NOTE	PART NUMBER	QTY	PART NAME 1 2 3 4 5 6 (PRODUCT LEVEL)	SEE PAGE
Y	*203-2770*	1	AXLE AR-FIXED (FRONT, LIMITED SLIP DIFF)	208
Y	*301-4353*	1	COVER GP-ACCESS (CAB FLOOR)	348
Y-SEPARATE ILLUSTRATION				

<END>

289-8981 AXLE AR-FIXED—FRONT, DIFFERENTIAL LOCK

S/N: FTD650-UP
PART OF 289-8895 POWER TRAIN AR
CANNOT BE USED WITH 289-8976—PAGE 210, 294-9436—PAGE 210

SMCS-3013, 3278 **i02885874**

NOTE	PART NUMBER	QTY	PART NAME 1 2 3 4 5 6 (PRODUCT LEVEL)	SEE PAGE
Y	*257-1712*	1	AXLE AR-FIXED (FRONT, DIFFERENTIAL LOCK)	209
Y	*289-8929*	1	LINES GP-DIFFERENTIAL LOCK	288
Y	*290-7197*	1	SWITCH GP-DIFFERENTIAL LOCK	181
Y-SEPARATE ILLUSTRATION				

<END>

294-9436 AXLE AR-FIXED—FRONT, LIMITED SLIP DIFFERENTIAL—SINGLE DISC BRAKE

S/N: BYD1-UP; FTD1-649
CANNOT BE USED WITH 289-8976 AXLE AR-FIXED
AN ATTACHMENT

SMCS-3013, 3278 **i02779061**

NOTE	PART NUMBER	QTY	PART NAME 1 2 3 4 5 6 (PRODUCT LEVEL)	SEE PAGE
Y	*234-4255*	1	AXLE AR-FIXED (FRONT, LIMITED SLIP DIFF)	209
Y	*301-4353*	1	COVER GP-ACCESS (CAB FLOOR)	348
Y-SEPARATE ILLUSTRATION				

<END>

267-7380 AXLE AR-OSCILLATING–
REAR, LIMITED SLIP DIFFERENTIAL
S/N: FTD1-UP
PART OF 289-8987 AXLE AR-OSCILLATING
AN ATTACHMENT

SMCS-3013, 3278 **i02596108**

NOTE	PART NUMBER	QTY	PART NAME 1 2 3 4 5 6 (PRODUCT LEVEL)	SEE PAGE
Y	*267-7418*	2	BRAKE & PLANETARY GP (DUAL DISC)	217
Y	**236-0931**	1	DIFFERENTIAL GP-LIMITED SLIP	245
Y	*236-7495*	1	GEAR GP-BEVEL & PINION (REAR)	261
Y	*234-4248*	1	HOUSING GP-OSCILLATING AXLE (REAR)	280
	220-7925	1	PLATE GP-AXLE IDENTIFICATION	

Y-SEPARATE ILLUSTRATION

<END>

289-8987 AXLE AR-OSCILLATING–
LIMITED SLIP DIFFERENTIAL, DUAL DISC BRAKE
S/N: FTD1-UP
AN ATTACHMENT

SMCS-3013, 3278 **i02814180**

NOTE	PART NUMBER	QTY	PART NAME 1 2 3 4 5 6 (PRODUCT LEVEL)	SEE PAGE
Y	*267-7380*	1	AXLE AR-OSCILLATING (REAR, LIMITED SLIP DIFF)	211
Y	*289-8922*	1	LINES GP-AXLE OIL COOLER	282
Y	*290-6406*	1	LINES GP-WATER (WITH AXLE OIL COOLER)	76

Y-SEPARATE ILLUSTRATION

<END>

289-8990 AXLE AR-OSCILLATING–
REAR, LIMITED SLIP DIFFERENTIAL–SINGLE DISC BRAKE
S/N: BYD1-UP; FTD1-UP
AN ATTACHMENT

SMCS-3013, 3278 **i02814175**

NOTE	PART NUMBER	QTY	PART NAME 1 2 3 4 5 6 (PRODUCT LEVEL)	SEE PAGE
Y	*267-7378*	1	AXLE GP-OSCILLATING (REAR, LIMITED SLIP DIFF)	212
Y	*289-8918*	1	LINES GP-HYDRAULIC FAN	550
Y	*290-6407*	1	LINES GP-WATER (WITHOUT AXLE OIL COOLER)	77

Y-SEPARATE ILLUSTRATION

<END>

289-8993 AXLE AR-OSCILLATING—
REAR, STANDARD DIFFERENTIAL—SINGLE DISC BRAKE
S/N: BYD1-UP; FTD1-UP
AN ATTACHMENT

SMCS-3013, 3278 **i02814157**

NOTE	PART NUMBER	QTY	PART NAME 1 2 3 4 5 6 (PRODUCT LEVEL)	SEE PAGE
Y	*267-7377*	1	AXLE GP-OSCILLATING (REAR, STANDARD DIFFERENTIAL)	212
Y	*289-8918*	1	LINES GP-HYDRAULIC FAN	550
Y	*290-6407*	1	LINES GP-WATER (WITHOUT AXLE OIL COOLER)	77

Y-SEPARATE ILLUSTRATION

<END>

267-7377 AXLE GP-OSCILLATING—
REAR, STANDARD DIFFERENTIAL—SINGLE DISC BRAKE
S/N: BYD1-UP; FTD1-UP
PART OF 289-8993 AXLE AR-OSCILLATING
AN ATTACHMENT

SMCS-3278 **i02602764**

NOTE	PART NUMBER	QTY	PART NAME 1 2 3 4 5 6 (PRODUCT LEVEL)	SEE PAGE
Y	*267-7417*	2	BRAKE & PLANETARY GP (SINGLE DISC)	216
Y	**235-5811**	1	DIFFERENTIAL GP (STANDARD)	241
Y	*236-7495*	1	GEAR GP-BEVEL & PINION (REAR)	261
Y	*234-4247*	1	HOUSING GP-OSCILLATING AXLE (REAR)	278
	220-7925	1	PLATE GP-AXLE IDENTIFICATION	
	109-8895	1	PLATE-IDENTIFICATION	
	220-3681	1	TAPE	
			—OR—	
	082-2817	4	TACK	

Y-SEPARATE ILLUSTRATION

<END>

267-7378 AXLE GP-OSCILLATING—
REAR, LIMITED SLIP DIFFERENTIAL—SINGLE DISC BRAKE
S/N: BYD1-UP; FTD1-UP
PART OF 289-8990 AXLE AR-OSCILLATING
AN ATTACHMENT

SMCS-3278 **i02602765**

NOTE	PART NUMBER	QTY	PART NAME 1 2 3 4 5 6 (PRODUCT LEVEL)	SEE PAGE
Y	*267-7417*	2	BRAKE & PLANETARY GP (SINGLE DISC)	216
Y	**236-0931**	1	DIFFERENTIAL GP-LIMITED SLIP	245
Y	*236-7495*	1	GEAR GP-BEVEL & PINION (REAR)	261
Y	*234-4247*	1	HOUSING GP-OSCILLATING AXLE (REAR)	278

Y-SEPARATE ILLUSTRATION

<END>

163-5775 BRAKE & PLANETARY GP—SINGLE DISC

S/N: BYD1-UP

PART OF 203-2761, 203-2770 AXLE AR-FIXED

AN ATTACHMENT

SMCS-4011, 4255 **i01126285**

NOTE	REF NO	GRAPHIC REF	PART NUMBER	QTY	PART NAME 1 2 3 4 5 6 (PRODUCT LEVEL)	SEE PAGE
	1	1	**116-7711**	1	GEAR-SUN (18-TEETH)	
	2	1	**163-5776**	1	PISTON	
	3	1	**163-7233**	1	SEAL-D-RING	
	4	1	**163-7234**	1	SEAL-D-RING	
	5	1	**170-0048**	1	DISC-FRICTION	
	6	1	**170-4698**	1	PLATE-REACTION	
	7	1	**115-5327**	3	DOWEL	
	8	1	**116-7713**	1	GEAR-RING (87-TEETH)	
	9	1	**8R-2198**	1	CARRIER-PLANETARY	
	10	1	**8R-2200**	3	SHAFT-PLANETARY	
	11	1	**8T-2925**	3	PIN-SPRING	
	12	1	**8R-2202**	6	WASHER-THRUST	
	13	1	**8R-2201**	3	BEARING-SLEEVE	
	14	1	**116-7712**	3	GEAR-PLANETARY (33-TEETH)	
	15	1	**170-0108**	3	SPRING	
	16	1	**9M-4335**	3	DOWEL-REACTION	
	17	1	**138-1645**	3	PIN-SPRING	

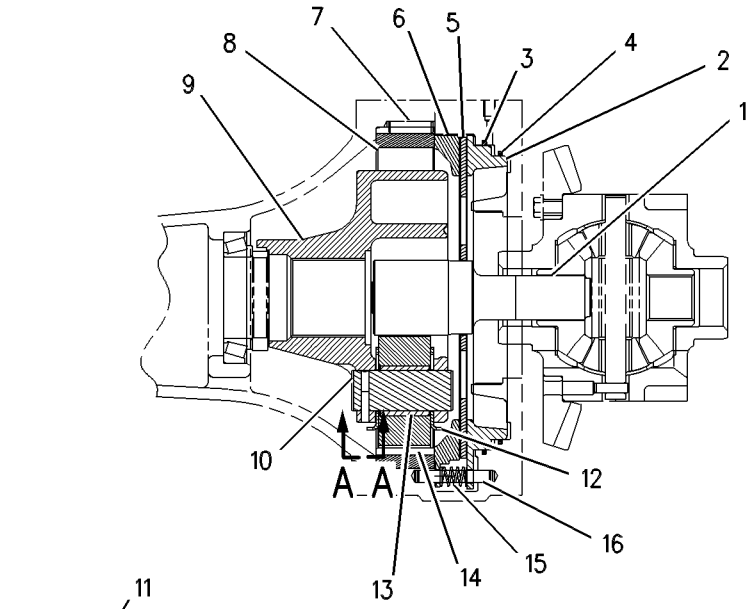

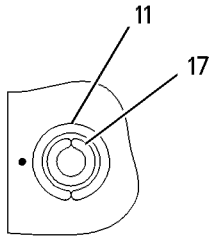

VIEW A-A

GRAPHIC #1 **<END>** g00594276

234-4249 BRAKE & PLANETARY GP—SINGLE DISC

S/N: BYD1-UP; FTD1-UP
PART OF 234-4253, 234-4255 AXLE AR-FIXED
AN ATTACHMENT

SMCS-4011, 4255 **i02252640**

NOTE	REF NO	GRAPHIC REF	PART NUMBER	QTY	PART NAME 1 2 3 4 5 6 (PRODUCT LEVEL)	SEE PAGE
	1	1	**8R-2200**	3	SHAFT-PLANETARY	
	2	1	**8R-2202**	6	WASHER-THRUST	
	3	1	**163-5776**	1	PISTON	
	4	1	**163-7233**	1	SEAL-D-RING	
	5	1	**163-7234**	1	SEAL-D-RING	
	6	1	**170-0108**	3	SPRING	
	7	1	**170-4698**	1	PLATE-REACTION	
	8	1	**218-3171**	1	GEAR-RING (87-TEETH)	
	9	1	**218-3172**	3	GEAR-PLANETARY (33-TEETH)	
	10	1	**218-3173**	1	GEAR-SUN (18-TEETH)	
	11	1	**218-3174**	1	CARRIER-PLANETARY	
	12	1	**234-4251**	3	BEARING-SLEEVE	
	13	1	**250-1845**	1	DISC-FRICTION	
	14	1	**115-5327**	3	DOWEL	
	15	1	**138-1645**	3	PIN-SPRING	
	16	1	**8T-2925**	3	PIN-SPRING	
	17	1	**9M-4335**	3	DOWEL-REACTION	

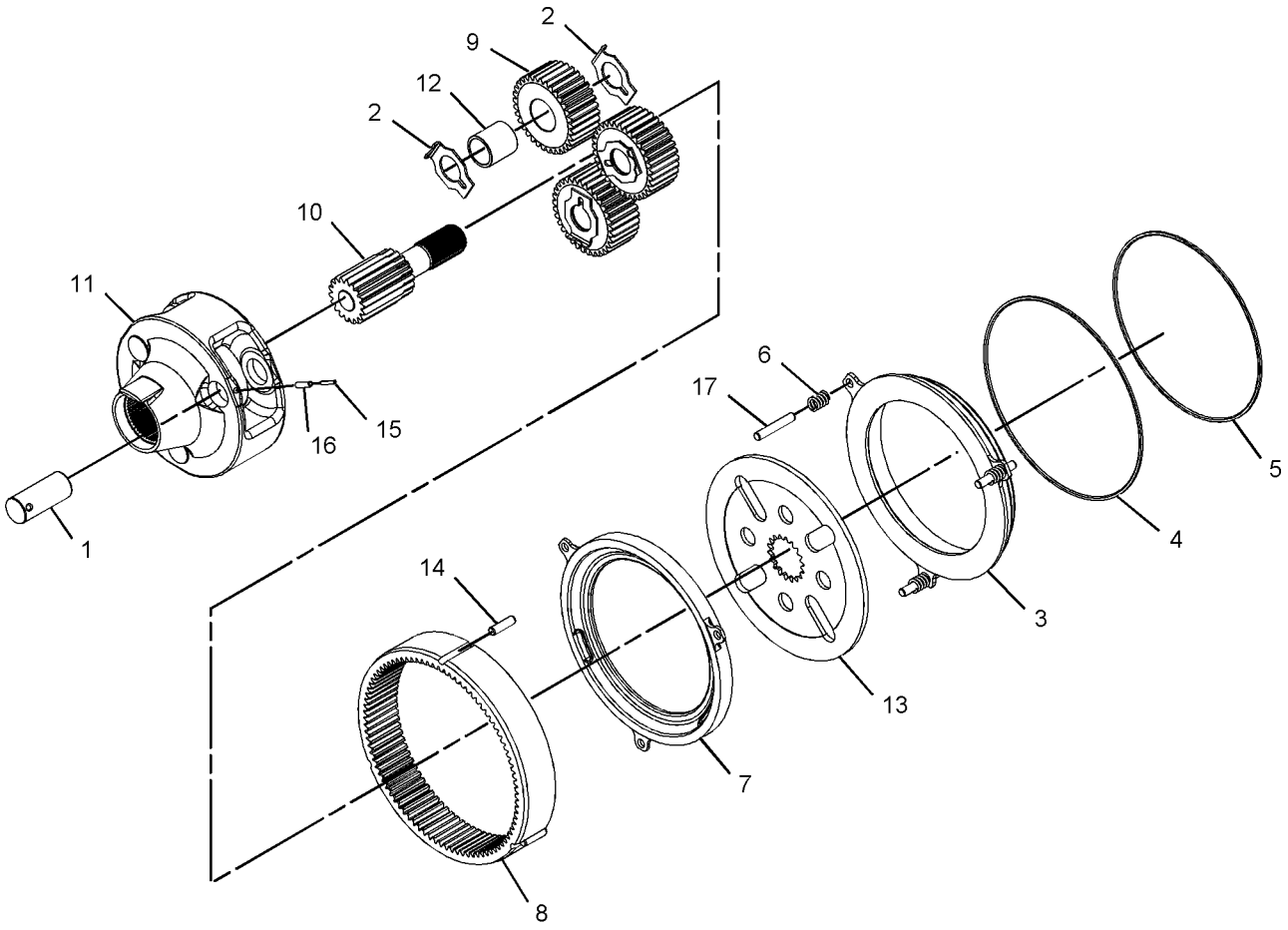

GRAPHIC #1 **<END>** g01112612

258-6945 BRAKE & PLANETARY GP

S/N: FTD650-UP

PART OF 257-1712 AXLE AR-FIXED

SMCS-4011, 4255 **i02900983**

NOTE	PART NUMBER	QTY	PART NAME 1 2 3 4 5 6 (PRODUCT LEVEL)	SEE PAGE
	234-4251	3	BEARING-SLEEVE	
	218-3174	1	CARRIER-PLANETARY	
	250-1845	1	DISC-FRICTION	
	115-5327	3	DOWEL	
	9M-4335	3	DOWEL-REACTION	
	218-3172	3	GEAR-PLANETARY (33-TEETH)	
	218-3171	1	GEAR-RING (87-TEETH)	
	254-3963	1	GEAR-SUN (18-TEETH)	
	138-1645	3	PIN-SPRING	
	8T-2925	3	PIN-SPRING	
	163-5776	1	PISTON	
	170-4698	1	PLATE-REACTION	
	163-7233	1	SEAL-D-RING	
	163-7234	1	SEAL-D-RING	
	8R-2200	3	SHAFT-PLANETARY	
	170-0108	3	SPRING	
	8R-2202	6	WASHER-THRUST	

<END>

267-7417 BRAKE & PLANETARY GP—SINGLE DISC

S/N: BYD1-UP; FTD1-UP

PART OF 267-7377, 267-7378 AXLE GP-OSCILLATING

AN ATTACHMENT

SMCS-4011, 4255 **i02581429**

NOTE	REF NO	GRAPHIC REF	PART NUMBER	QTY	PART NAME 1 2 3 4 5 6 (PRODUCT LEVEL)	SEE PAGE
	1	1	**8R-2200**	3	SHAFT-PLANETARY	
	2	1	**8R-2202**	6	WASHER-THRUST	
	3	1	**163-5776**	1	PISTON (REACTION PLATE)	
	4	1	**163-7233**	1	SEAL-D-RING	
	5	1	**163-7234**	1	SEAL-D-RING	
	6	1	**170-0108**	3	SPRING	
	7	1	**170-4698**	1	PLATE-REACTION	
	8	1	**193-8638**	1	DISC-FRICTION	
	9	1	**218-3171**	1	GEAR-RING (87-TEETH)	
	10	1	**218-3172**	3	GEAR-PLANETARY (33-TEETH)	
	11	1	**218-3173**	1	GEAR-SUN (18-TEETH)	
	12	1	**218-3174**	1	CARRIER-PLANETARY	
	13	1	**234-4251**	3	BEARING-SLEEVE	
	14	1	**115-5327**	3	DOWEL	
	15	1	**138-1645**	3	PIN-SPRING (SLOTTED)	
	16	1	**8T-2925**	3	PIN-SPRING	
	17	1	**9M-4335**	3	DOWEL-REACTION	

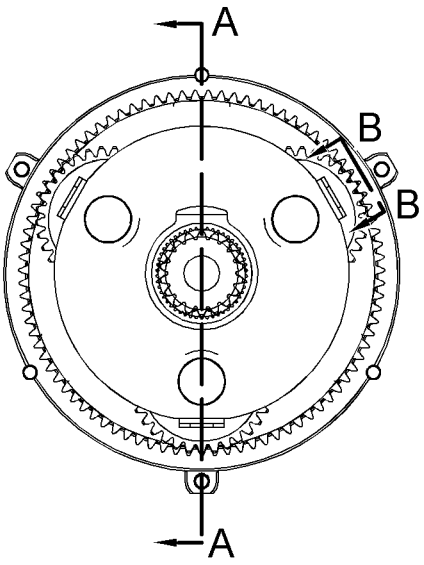

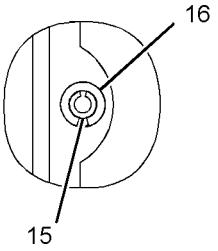

VIEW B-B

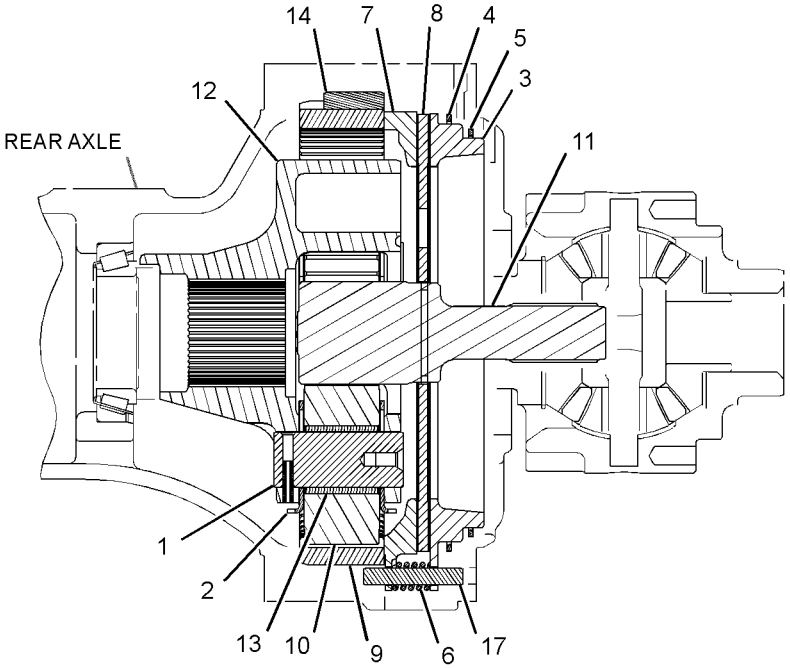

SECTION A-A

GRAPHIC #1 **<END>** g01296377

267-7418 BRAKE & PLANETARY GP—DUAL DISC

S/N: FTD1-UP
PART OF 267-7380 AXLE AR-OSCILLATING
AN ATTACHMENT

SMCS-4011, 4255 **i02578273**

NOTE	REF NO	GRAPHIC REF	PART NUMBER	QTY	PART NAME 1 2 3 4 5 6 (PRODUCT LEVEL)	SEE PAGE
	1	1	**8R-2200**	3	SHAFT-PLANETARY	
	2	1	**8R-2202**	6	WASHER-THRUST	
	3	1	**163-5776**	1	PISTON	
	4	1	**163-7233**	1	SEAL-D-RING	
	5	1	**163-7234**	1	SEAL-D-RING	
	6	1	**170-0108**	3	SPRING	
	7	1	**170-4698**	1	PLATE-REACTION	
	8	1	**193-8638**	2	DISC-FRICTION	
	9	1	**203-5852**	1	PLATE	
	10	1	**203-5853**	3	SLEEVE	
	11	1	**218-3171**	1	GEAR-RING (87-TEETH)	
	12	1	**218-3172**	3	GEAR-PLANETARY (33-TEETH)	
	13	1	**218-3174**	1	CARRIER-PLANETARY	
	14	1	**234-4251**	3	BEARING-SLEEVE	
	15	1	**234-4252**	1	GEAR-SUN (18-TEETH)	
	16	1	**115-5327**	3	DOWEL	
	17	1	**138-1645**	3	PIN-SPRING	
	18	1	**4M-1677**	3	DOWEL-REACTION	
	19	1	**8T-2925**	3	PIN-SPRING	

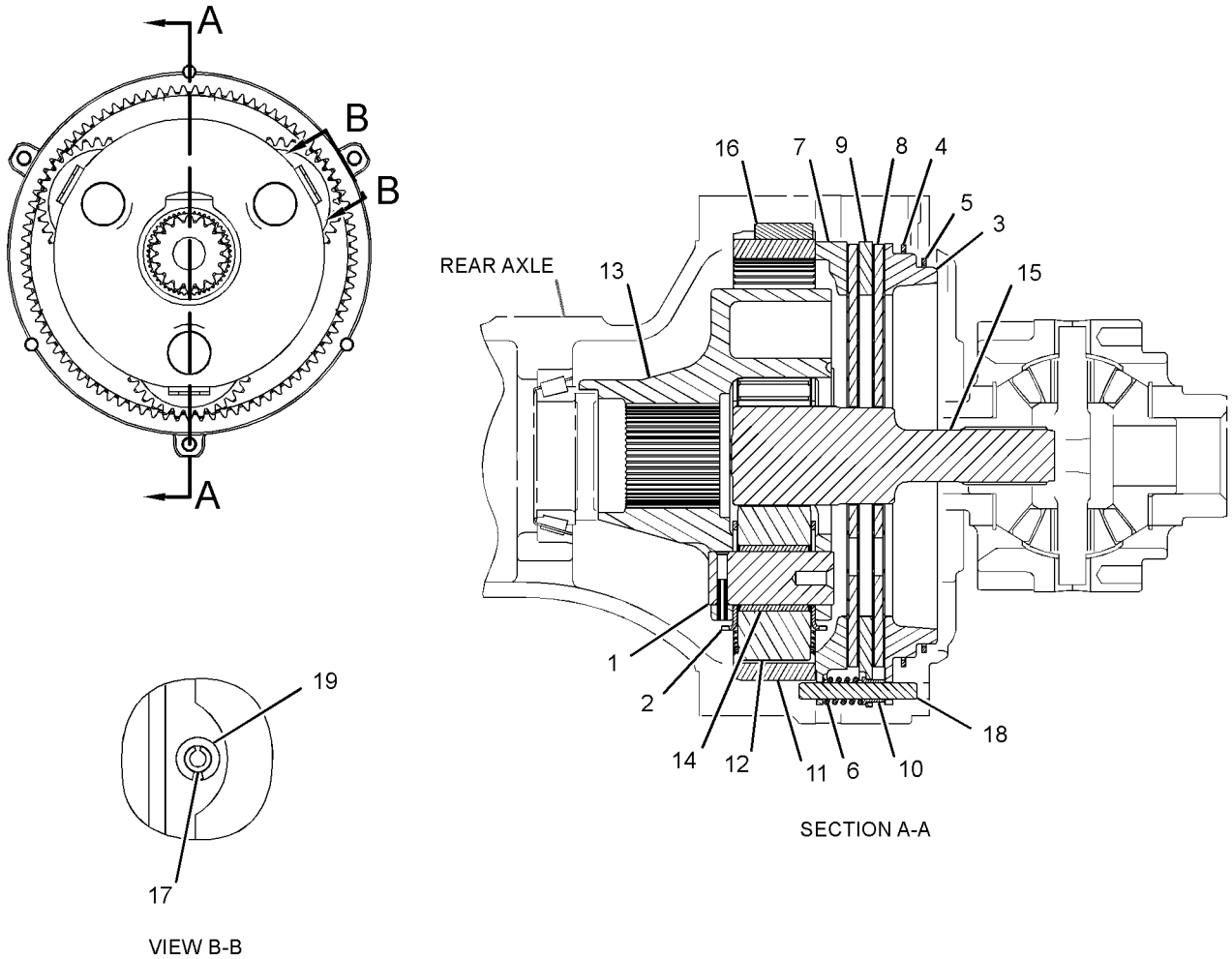

GRAPHIC #1 **<END>** g01296523

177-0018 CASE & PARTS GP-TRANSMISSION

S/N: J2X1-UP

PART OF 290-2719 TRANSMISSION AR

SMCS-3064 **i02853517**

NOTE	REF NO	GRAPHIC REF	PART NUMBER	QTY	PART NAME 1 2 3 4 5 6 (PRODUCT LEVEL)	SEE PAGE
M	1	2	**6V-1820**	14	BOLT (M10X1.5X30-MM)	
	2	1,2	**6V-5839**	16	WASHER (11X21X2.5-MM THK)	
Y	3	1	**177-0019**	1	COVER GP-TRANSMISSION	238
	4	1	**1U-8846**	1	SEALANT-GASKET	
	5	1	**180-7502**	1	HOUSING	
	6	1	**9S-4181**	2	PLUG-O-RING	
	7	2	**9G-5127**	1	BREATHER (TRANSMISSION)	
M	8	2	**7X-0474**	2	BOLT (M10X1.5X220-MM)	
M	9	2	**6V-6317**	3	BOLT (M10X1.5X20-MM)	
	10	1,2	**3J-1907**	4	SEAL-O-RING	
	11	2	**169-8352**	1	SHIELD AS	
M	12	2	**6A-5591**	4	BOLT (M12X1.75X25-MM)	
	13	2	**2N-7006**	1	COVER	
	14	2	**2N-7007**	1	GASKET	
M	15	1,2	**6V-5230**	13	BOLT (M10X1.5X60-MM)	
	16	1	**8J-0426**	1	PLUG	
	17	1	**133-4297**	1	SEAL-LIP TYPE	
	18	2	**6Y-0584**	1	RACE-ROLLER BEARING	
	19	2	**2W-1141**	4	BEARING-ROLLER	
	20	2	**5P-2304**	1	RACE & ROLLER AS	
	21	2	**005-0469**	2	CUP-BEARING	
	22	2	**5P-0713**	1	SEAL-LIP TYPE	
	23	2	**6Y-9017**	1	CAGE-BEARING	
	24	2	**8H-7521**	1	SEAL-O-RING	
	25	1	**2D-0598**	1	SEAL-O-RING	
	26	1	**9W-1454**	1	COVER	
	27	1	**5P-3863**	1	SEAL-O-RING	
M	28	1	**6V-5217**	3	BOLT (M8X1.25X20-MM)	
	29	1	**8S-9130**	1	SCREEN-SUCTION (TRANSMISSION CASE)	
	30	1	**8S-9129**	1	FILTER-MAGNETIC	
M	31	1	**6V-5842**	8	BOLT (M10X1.5X40-MM)	
	32	1	**7T-2703**	1	PLUG-DRAIN (TRANSMISSION)	
	33	1	**7M-8485**	3	SEAL-O-RING	
M	34	1	**8T-9085**	1	BOLT (M10X1.5X150-MM)	
	35	1	**148-1928**	1	VALVE-RELIEF	
	36	1	**9X-4609**	1	SEAL-O-RING	
	38	1	**5H-6005**	4	SEAL-O-RING	
	39	2	**6Y-9016**	1	SHIM PACK (INCLUDES 12-SHIMS)	
	40	1	**1B-3978**	1	CUP-BEARING (TAPERED ROLLER)	
	41	1	**9W-7159**	2	SHIM PACK (INCLUDES 12-SHIMS)	
	42	2	**9S-4191**	2	PLUG-O-RING	
	43	1	**7F-8268**	1	SEAL-O-RING	
	44	1,2	**6V-3965**	2	COUPLER-QUICK DISCONNECT	
	45	1,2	**6V-0852**	2	CAP-DUST	
Y	46	1	**6I-9806**	1	VALVE GP-RELIEF (TORQUE CONVERTER OUTLET)	330
	47	1	**8T-5452**	2	SEAL-O-RING	
	48	2	**146-6280**	1	COVER	
	49	2	**4S-5879**	1	SEAL-O-RING	
	50	2	**5P-7684**	1	PLUG	
	51	2	**6K-6307**	1	SEAL-O-RING	

M-METRIC PART
Y-SEPARATE ILLUSTRATION

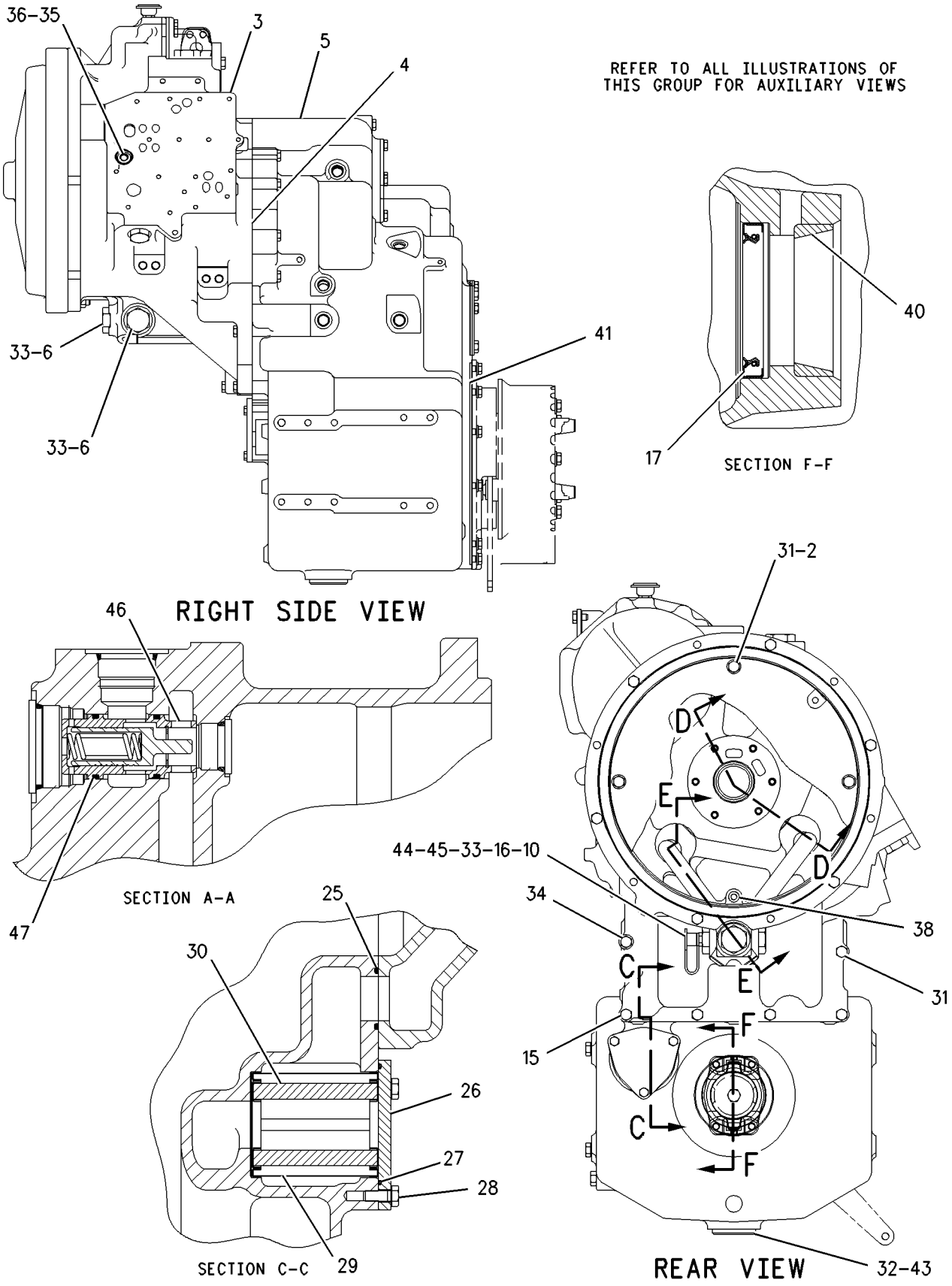

GRAPHIC #1

g00921843

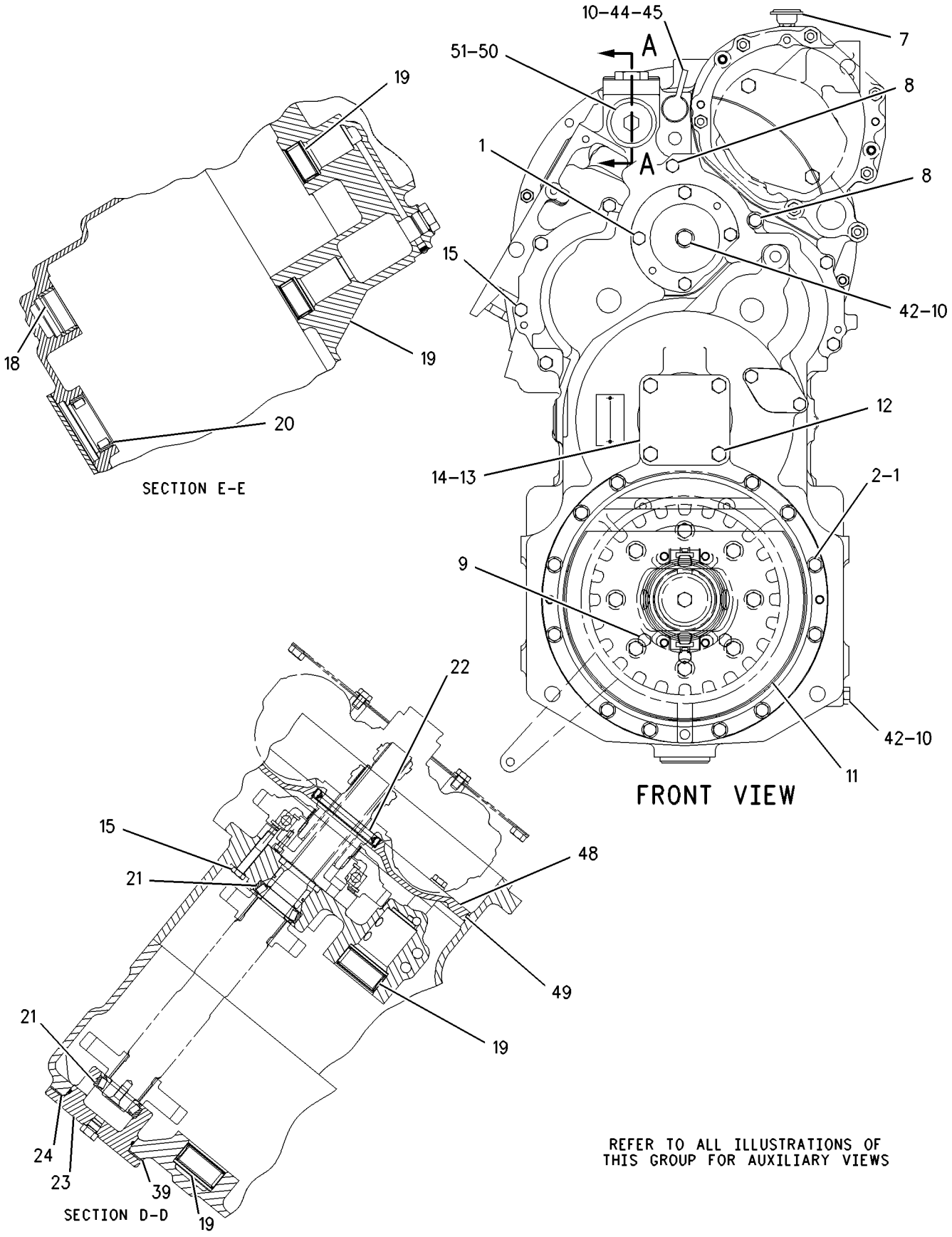

REFER TO ALL ILLUSTRATIONS OF THIS GROUP FOR AUXILIARY VIEWS

GRAPHIC #2 **<END>** g00921845

POWER TRAIN

239-5608 CASE & PARTS GP-TRANSMISSION

S/N: J2W1-UP

PART OF 290-2720 TRANSMISSION AR

SMCS-3064 **i02603198**

NOTE	REF NO	GRAPHIC REF	PART NUMBER	QTY	PART NAME 1 2 3 4 5 6 (PRODUCT LEVEL)	SEE PAGE
M	1	1	**6V-1820**	14	BOLT (M10X1.5X30-MM)	
	2	1	**6V-5839**	16	WASHER (11X21X2.5-MM THK)	
Y	3	1	**177-0019**	1	COVER GP-TRANSMISSION	238
B	4	1	**1U-8846**		SEALANT-GASKET	
	5	1	**239-5607**	1	CASE-TRANSMISSION	
	6	1	**9S-4181**	2	PLUG-O-RING	
	7	1	**9G-5127**	1	BREATHER (POWER TRAIN OIL FILLER)	
M	8	1	**7X-0474**	2	BOLT (M10X1.5X220-MM)	
M	9	1	**6V-6317**	3	BOLT (M10X1.5X20-MM)	
	10	1	**3J-1907**	4	SEAL-O-RING	
	11	1	**169-8352**	1	SHIELD AS	
M	12	1	**6A-5591**	4	BOLT (M12X1.75X25-MM)	
	13	1	**2N-7006**	1	COVER	
	14	1	**2N-7007**	1	GASKET	
M	15	1,2	**6V-5230**	13	BOLT (M10X1.5X60-MM)	
	16	1	**8J-0426**	1	PLUG	
	17	2	**133-4297**	1	SEAL-LIP TYPE	
	18	2	**6Y-0584**	1	RACE-ROLLER BEARING	
	19	2	**2W-1141**	4	BEARING-ROLLER	
	20	2	**5P-2304**	1	RACE & ROLLER AS	
	21	2	**005-0469**	2	CUP-BEARING	
	22	2	**5P-0713**	1	SEAL-LIP TYPE	
	23	2	**6Y-9017**	1	CAGE-BEARING	
	24	2	**8H-7521**	1	SEAL-O-RING	
	25	2	**2D-0598**	1	SEAL-O-RING	
	26	2	**9W-1454**	1	COVER	
	27	2	**5P-3863**	1	SEAL-O-RING	
M	28	2	**6V-5217**	3	BOLT (M8X1.25X20-MM)	
	29	2	**8S-9130**	1	SCREEN-SUCTION (POWER TRAIN OIL)	
	30	2	**8S-9129**	1	FILTER-MAGNETIC	
M	31	1	**6V-5842**	8	BOLT (M10X1.5X40-MM)	
	32	1	**7T-2703**	1	PLUG-DRAIN (TRANSMISSION)	
	33	1	**7M-8485**	3	SEAL-O-RING	
M	34	1	**8T-9085**	1	BOLT (M10X1.5X150-MM)	
	35	2	**148-1928**	1	VALVE-RELIEF (TORQUE CONVERTER INLET)	
	36	2	**9X-4609**	1	SEAL-O-RING	
	37	1	**6V-1720**	1	PLATE-SERIAL NUMBER	
	38	1	**5H-6005**	4	SEAL-O-RING	
	39	2	**6Y-9016**	1	SHIM PACK (INCLUDES 12-SHIMS)	
	40	2	**1B-3978**	1	CUP-BEARING (TAPERED ROLLER)	
	41	1	**9W-7159**	2	SHIM PACK (INCLUDES 12-SHIMS)	
	42	1	**9S-4191**	2	PLUG-O-RING	
	43	1	**7F-8268**	1	SEAL-O-RING	
	44	1	**6V-3965**	2	COUPLER-QUICK DISCONNECT	
	45	1	**6V-0852**	2	CAP-DUST	
Y	46	2	**6I-9806**	1	VALVE GP-RELIEF (TORQUE CONVERTER OUTLET)	330
	47	2	**8T-5452**	2	SEAL-O-RING	
	48	2	**146-6280**	1	COVER	
	49	2	**4S-5879**	1	SEAL-O-RING	
	50	1	**5P-7684**	1	PLUG	
	51	1	**6K-6307**	1	SEAL-O-RING	

B-USE AS REQUIRED
M-METRIC PART
Y-SEPARATE ILLUSTRATION

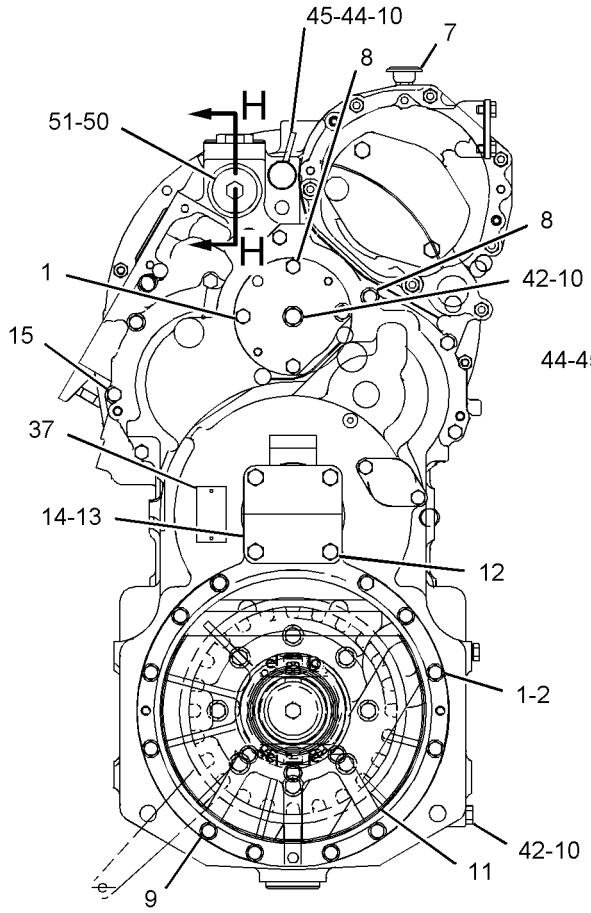

FRONT VIEW

REFER TO ALL ILLUSTRATIONS OF THIS GROUP FOR AUXILIARY VIEWS

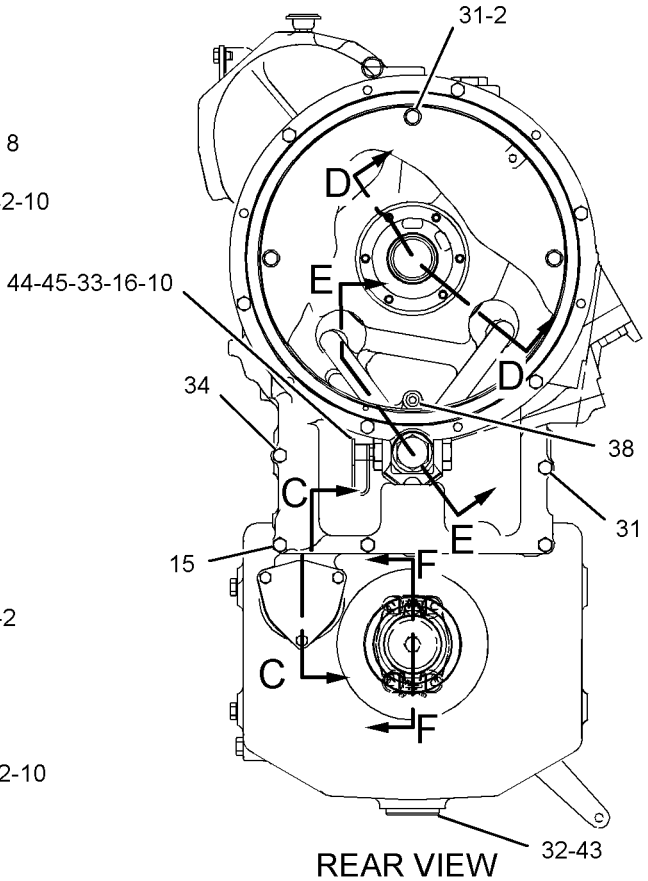

REAR VIEW

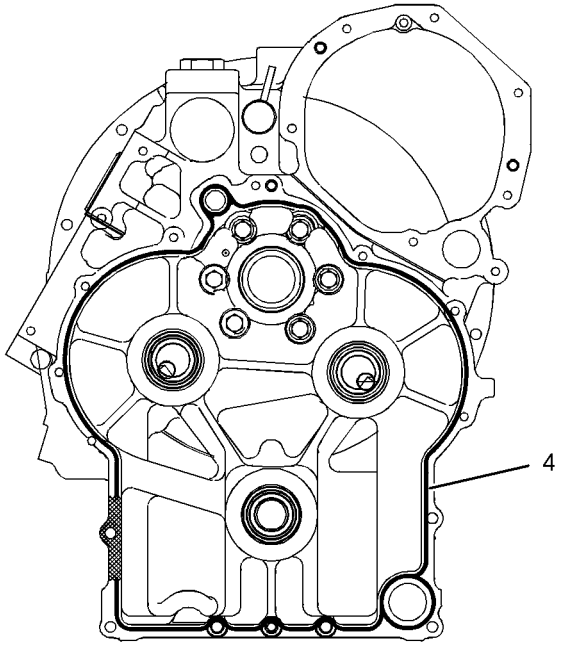

SECTION G-G

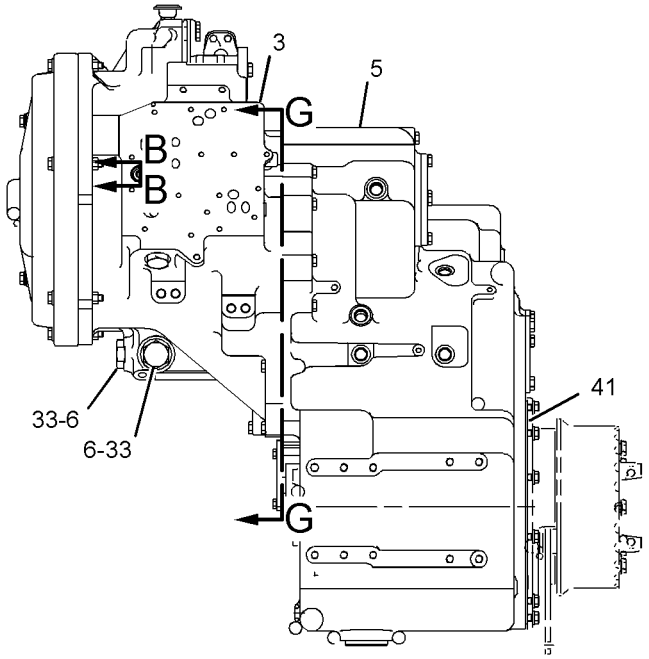

LEFT SIDE VIEW

GRAPHIC #1

g01110977

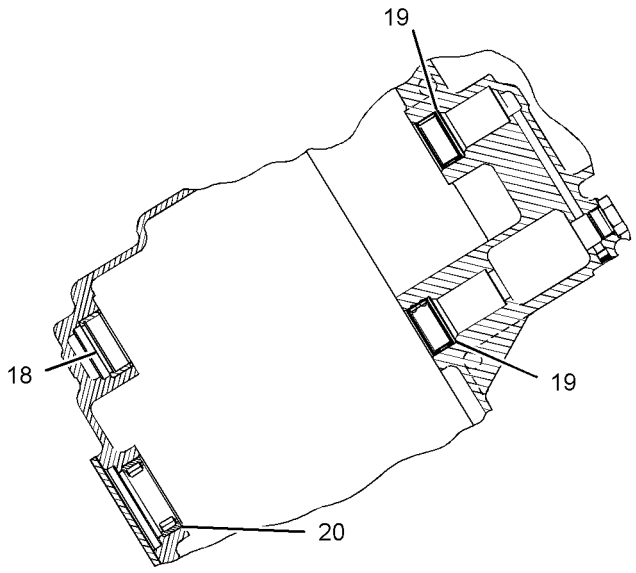

SECTION E-E

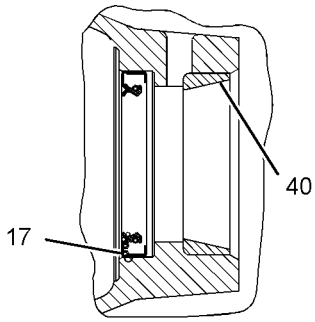

SECTION F-F

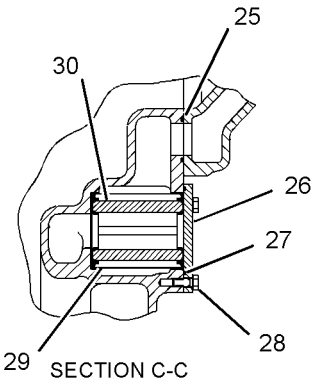

SECTION C-C

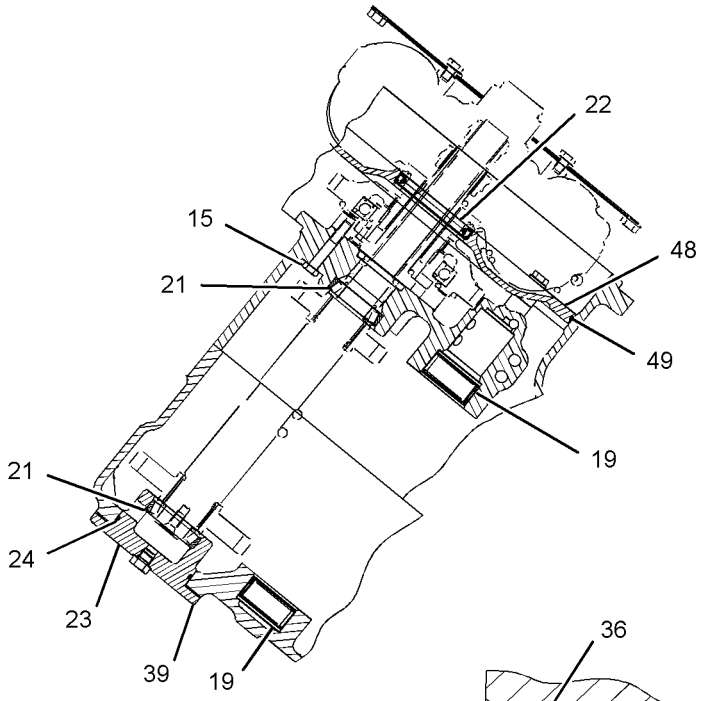

SECTION D-D

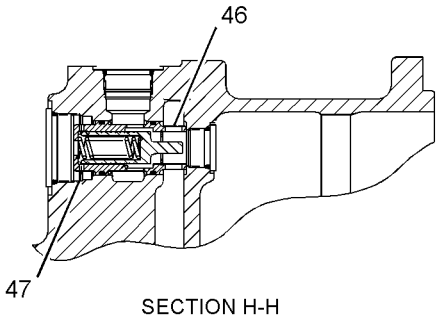

SECTION H-H

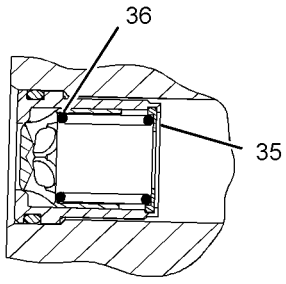

SECTION B-B

GRAPHIC #2 **<END>** g01110978

118-4918 CLUTCH GP–REVERSE, SECOND

S/N: J2X1-UP

PART OF 290-2719 TRANSMISSION AR

SMCS-3155 **i01995580**

NOTE	REF NO	GRAPHIC REF	PART NUMBER	QTY	PART NAME 1 2 3 4 5 6 (PRODUCT LEVEL)	SEE PAGE
	1	1	**6I-8390**	3	RING-SEAL	
	2	1	**142-5914**	1	SHAFT AS	
		1	**9W-0718**	2	PLUG	
	3	1	**8C-3979**	2	RING-RETAINING	
	4	1	**120-4482**	1	GEAR (37-TEETH) (50 TEETH)	
	5	1	**8T-1742**	1	RING-RETAINING	
	6	1	**8E-5726**	1	PLATE-END	
	7	1	**6Y-1300**	6	DISC-FRICTION	
	8	1	**8E-5556**	6	PLATE-CLUTCH	
	9	1	**9W-9372**	2	RING-SEAL	
	10	1	**9W-9371**	2	RING-SEAL	
	11	1	**6Y-5631**	6	PLATE-CLUTCH	
	12	1	**6Y-7968**	6	DISC-FRICTION	
	13	1	**9U-8875**	1	RING-RETAINING	
	14	1	**116-4885**	1	GEAR (50 TEETH)	
	15	1	**9W-6912**	1	SPACER-SPECIAL	
	16	1	**9W-7764**	1	GEAR (28-TEETH)	
	17	1	**6Y-0928**	1	SPACER (36X50X6.5-MM THK)	
	18	1	**6Y-4890**	1	BEARING	
	19	1	**9W-9662**	1	WASHER-THRUST	
	20	1	**109-4728**	1	HUB AS	
		1	**2W-1141**	1	BEARING-ROLLER	
		1	**7X-2495**	1	RING-RETAINING	
		1	**9W-8013**	1	HUB AS	
	21	1	**8E-5707**	1	PLATE-END	
	22	1	**9W-6904**	2	RING-RETAINING	
	23	1	**9W-9718**	1	RETAINER-SPRING	
	24	1	**6Y-7818**	2	SPRING	
	25	1	**6Y-8157**	1	PISTON	
	26	1	**116-4870**	1	PISTON	
	27	1	**8E-5727**	1	RETAINER-SPRING	
	28	1	**109-4727**	1	HUB AS	
		1	**2W-1141**	1	BEARING-ROLLER	
		1	**6Y-6952**	1	HUB AS	
		1	**7X-2495**	1	RING-RETAINING	
	29	1	**8E-8313**	4	DISC-THRUST	
	30	1	**8C-3982**	1	RING-RETAINING	
	31	1	**9N-4354**	2	BODY-VALVE	
	32	1	**3D-2891**	2	BALL	
	33	1	**129-8732**	2	SPRING	
	34	1	**8L-2746**	1	SEAL-O-RING	
	35	1	**9N-4365**	2	RETAINER-SPRING	
	36	1	**3D-8358**	2	RING-RETAINING	

118-4918 **CLUTCH GP** *(contd.)* **i01995580**

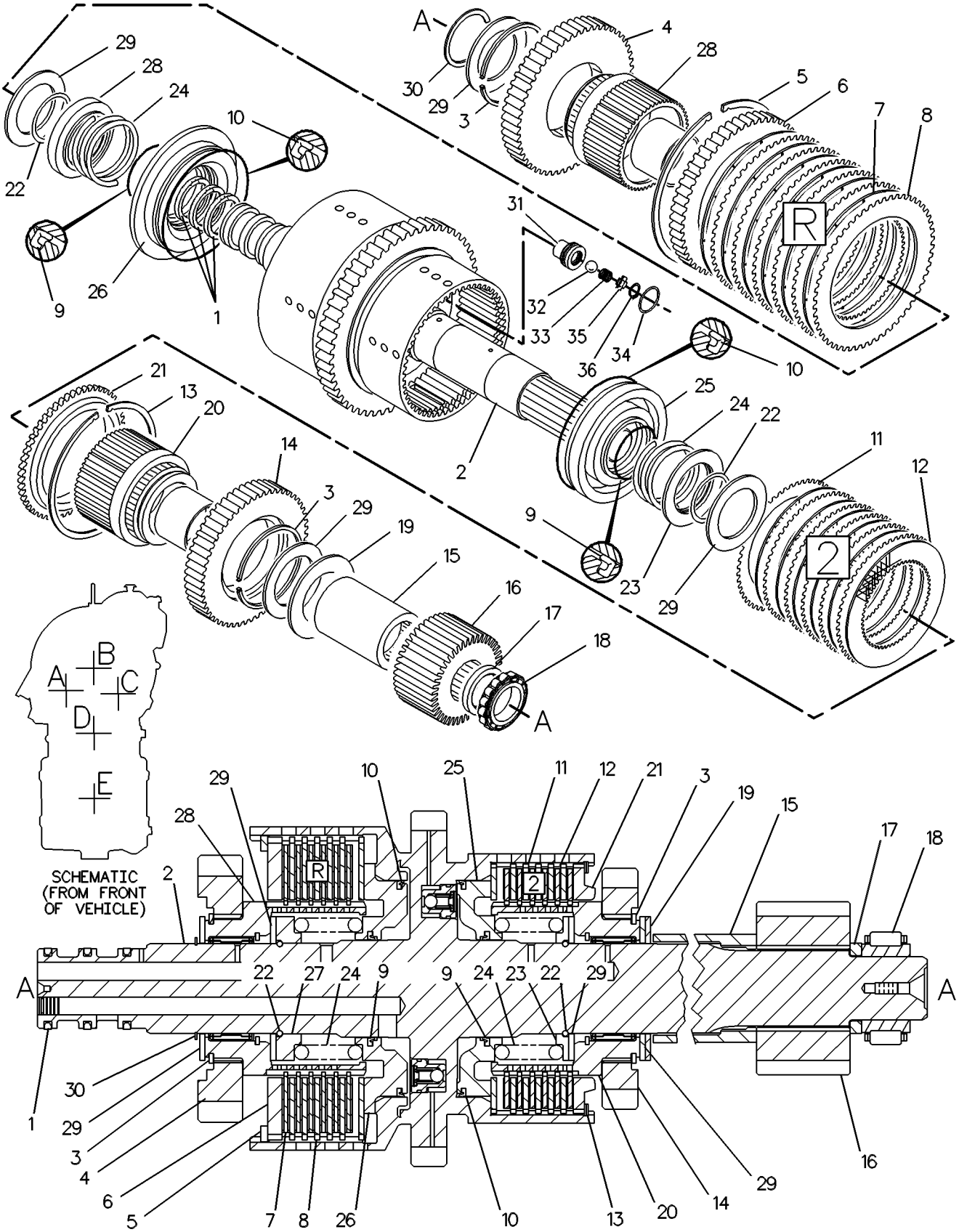

GRAPHIC #1 **<END>** g00131719

118-4921 CLUTCH GP–FORWARD HIGH, FORWARD LOW

S/N: J2X1-UP

PART OF 290-2719 TRANSMISSION AR

SMCS-3155 **i01995587**

NOTE	REF NO	GRAPHIC REF	PART NUMBER	QTY	PART NAME 1 2 3 4 5 6 (PRODUCT LEVEL)	SEE PAGE
	1	1	**6I-8390**	3	RING-SEAL	
	2	1	**142-5862**	1	SHAFT AS	
		1	**9W-0718**	2	PLUG	
	3	1	**8C-3982**	2	RING-RETAINING	
	4	1	**120-4482**	1	GEAR (37-TEETH)	
	5	1	**8T-1742**	1	RING-RETAINING	
	6	1	**8E-5726**	1	PLATE-END	
	7	1	**6Y-1300**	6	DISC-FRICTION	
	8	1	**8E-5556**	6	PLATE-CLUTCH	
	9	1	**9W-9372**	2	RING-SEAL	
	10	1	**9W-9371**	2	RING-SEAL	
	11	1	**6Y-5631**	4	PLATE-CLUTCH	
	12	1	**6Y-7968**	4	DISC-FRICTION	
	13	1	**9U-8875**	1	RING-RETAINING	
	14	1	**8E-5707**	1	PLATE-END	
	15	1	**8E-8313**	4	DISC-THRUST	
	16	1	**8C-3979**	2	RING-RETAINING	
	17	1	**116-4884**	1	GEAR (34-TEETH)	
	18	1	**109-4730**	1	HUB AS	
		1	**2W-1141**	1	BEARING-ROLLER	
		1	**7X-2495**	1	RING-RETAINING	
	19	1	**9W-6904**	2	RING-RETAINING	
	20	1	**9W-9718**	1	RETAINER-SPRING	
	21	1	**6Y-7818**	2	SPRING	
	22	1	**6Y-8157**	1	PISTON	
	23	1	**116-4870**	1	PISTON	
	24	1	**8E-5727**	1	RETAINER-SPRING	
	25	1	**109-4727**	1	HUB AS	
		1	**2W-1141**	1	BEARING-ROLLER	
		1	**7X-2495**	1	RING-RETAINING	
	26	1	**9N-4354**	2	BODY-VALVE	
	27	1	**3D-2891**	2	BALL	
	28	1	**129-8732**	2	SPRING	
	29	1	**8L-2746**	2	SEAL-O-RING	
	30	1	**9N-4365**	2	RETAINER-SPRING	
	31	1	**3D-8358**	2	RING-RETAINING	

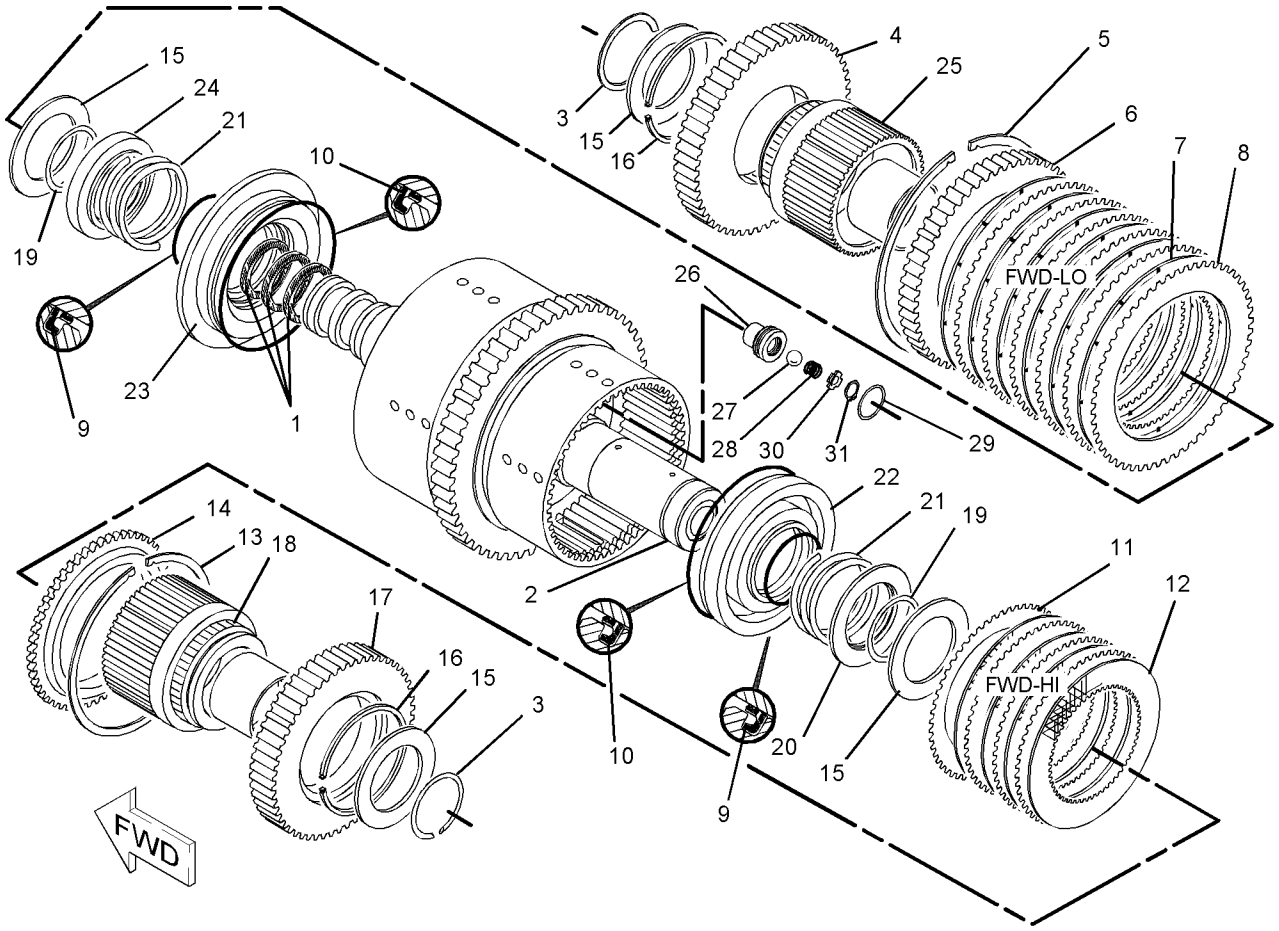

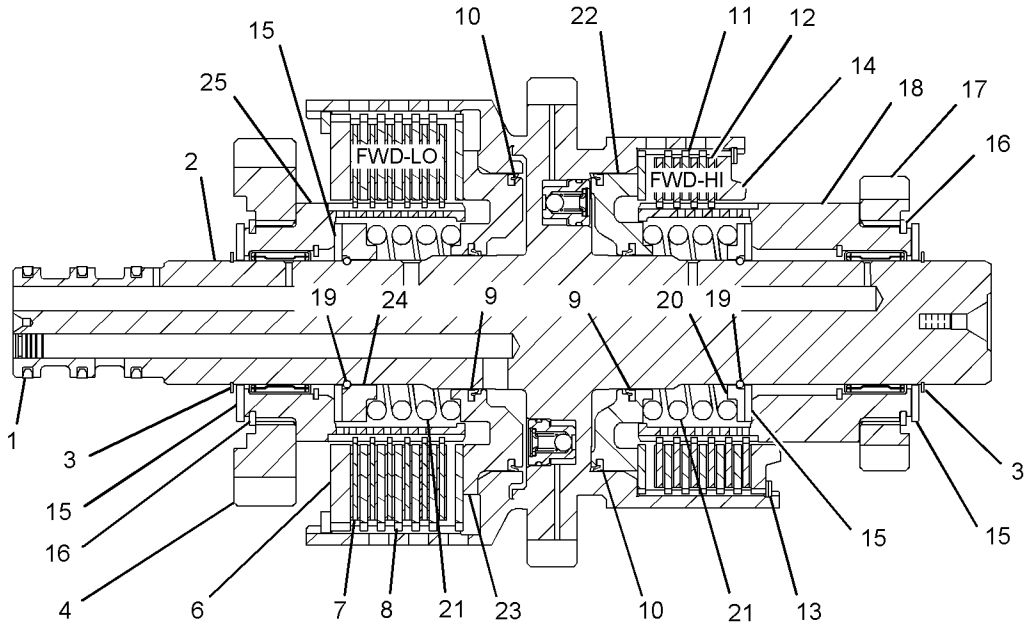

LEFT SIDE VIEW
(SECTIONED)

GRAPHIC #1 **<END>** g01086576

190-2914 CLUTCH GP–FIRST, THIRD

S/N: J2X1-UP

PART OF 290-2719 TRANSMISSION AR

SMCS-3155 **i01716127**

NOTE	REF NO	GRAPHIC REF	PART NUMBER	QTY	PART NAME 1 2 3 4 5 6 (PRODUCT LEVEL)	SEE PAGE
	1	1	**6T-6593**	3	RING-SEAL	
	2	1	**8C-3982**	2	RING-RETAINING	
	3	1	**8C-3979**	1	RING-RETAINING	
	4	1	**9W-7765**	1	GEAR (40-TEETH)	
	5	1	**109-4728**	1	HUB AS	
		1	**2W-1141**	1	BEARING-ROLLER	
	6	1	**9W-9718**	1	RETAINER-SPRING	
	7	1	**6Y-7818**	1	SPRING	
	8	1	**9W-9372**	1	RING-SEAL	
	9	1	**6Y-8157**	1	PISTON	
	10	1	**9W-9371**	1	RING-SEAL	
	11	1	**6Y-8265**	1	SEAL AS-BALANCE	
	12	1	**6Y-5027**	1	RING-RETAINING	
	13	1	**9W-6922**	1	WASHER-THRUST	
	14	1	**8E-6117**	1	GEAR (93-TEETH)	
	15	1	**204-2593**	1	GEAR (51-TEETH)	
	16	1	**9W-6466**	1	WASHER-THRUST	
	17	1	**8E-6558**	1	RACE-ROLLER BEARING	
	18	1	**142-5925**	1	SHAFT AS	
		1	**9W-0718**	2	PLUG	
	19	1	**8E-8317**	2	DISC-THRUST	
	20	1	**6V-2394**	1	RING-RETAINING	
	21	1	**8E-6120**	1	HUB AS	
		1	**8E-3416**	1	BEARING-SLEEVE	
	22	1	**6Y-8514**	1	PLATE-END	
	23	1	**9U-9797**	1	RING-RETAINING	
	24	1	**9W-6927**	2	RING-RETAINING	
	25	1	**6Y-7922**	9	DISC-FRICTION	
	26	1	**8E-6115**	9	PLATE-CLUTCH	
	27	1	**114-1071**	1	PISTON	
	28	1	**132-9623**	1	SPRING-WAVE	
	29	1	**6Y-5631**	5	PLATE-CLUTCH	
	30	1	**6Y-7968**	5	DISC-FRICTION	
	31	1	**9U-8875**	1	RING-RETAINING	
	32	1	**8E-5707**	1	PLATE-END	
	33	1	**9W-6904**	1	RING-RETAINING	
	34	1	**8E-8313**	2	DISC-THRUST	
	35	1	**9W-9436**	1	RING-SEAL	
	36	1	**9W-9399**	1	RING-SEAL	
	37	1	**9N-4354**	1	BODY-VALVE	
	38	1	**3D-2891**	1	BALL	
	39	1	**129-8732**	1	SPRING	
	40	1	**8L-2746**	1	SEAL-O-RING	
	41	1	**9N-4365**	1	RETAINER-SPRING	
	42	1	**3D-8358**	1	RING-RETAINING	

190-2914 **CLUTCH GP** *(contd.)* **i01716127**

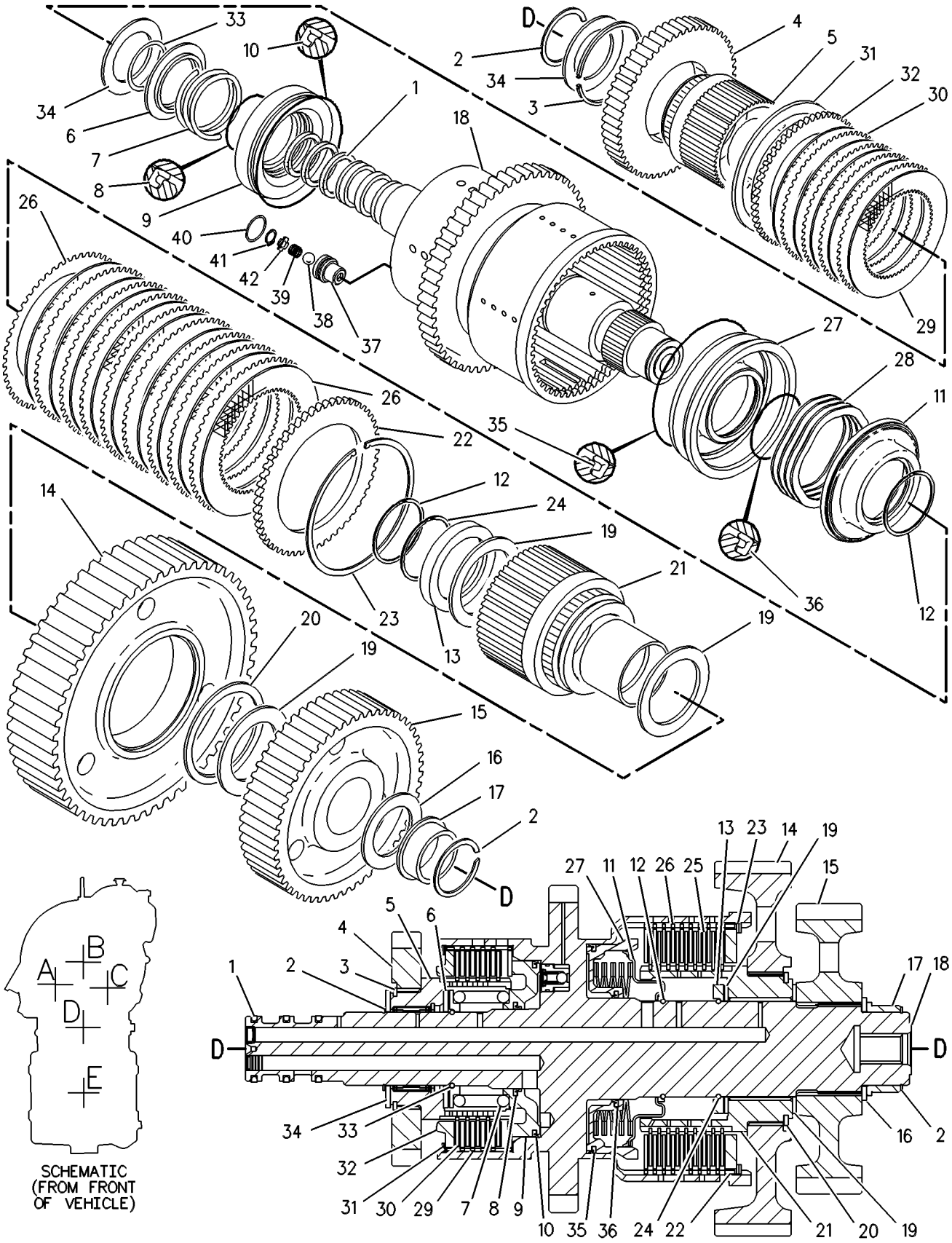

GRAPHIC #1 **<END>** g00131628

234-8854 CLUTCH GP—FORWARD HIGH, FORWARD LOW

S/N: J2W1-UP

PART OF 290-2720 TRANSMISSION AR

SMCS-3155 **i02250032**

NOTE	REF NO	GRAPHIC REF	PART NUMBER	QTY	PART NAME 1 2 3 4 5 6 (PRODUCT LEVEL)	SEE PAGE
	1	1	**6I-8390**	3	RING-SEAL	
	2	1	**142-5862**	1	SHAFT AS	
		1	**9W-0718**	2	PLUG	
	3	1	**8C-3982**	2	RING-RETAINING	
	4	1	**120-4482**	1	GEAR (37-TEETH)	
	5	1	**8T-1742**	1	RING-RETAINING	
	6	1	**8E-5726**	1	PLATE-END	
	7	1	**6Y-1300**	6	DISC-FRICTION	
	8	1	**8E-5556**	6	PLATE-CLUTCH	
	9	1	**9W-9372**	2	RING-SEAL	
	10	1	**9W-9371**	2	RING-SEAL	
	11	1	**6Y-5631**	4	PLATE-CLUTCH	
	12	1	**6Y-7968**	4	DISC-FRICTION	
	13	1	**9U-8875**	1	RING-RETAINING	
	14	1	**8E-5707**	1	PLATE-END	
	15	1	**8E-8313**	4	DISC-THRUST	
	16	1	**8C-3979**	1	RING-RETAINING	
	17	1	**234-8853**	1	GEAR AS	
		1	**2W-1141**	1	BEARING-ROLLER	
		1	**7X-2495**	1	RING-RETAINING	
	18	1	**9W-6904**	2	RING-RETAINING	
	19	1	**9W-9718**	1	RETAINER-SPRING	
	20	1	**6Y-7818**	2	SPRING	
	21	1	**6Y-8157**	1	PISTON	
	22	1	**116-4870**	1	PISTON	
	23	1	**8E-5727**	1	RETAINER-SPRING	
	24	1	**109-4727**	1	HUB AS	
		1	**2W-1141**	1	BEARING-ROLLER	
		1	**7X-2495**	1	RING-RETAINING	
	25	1	**9N-4354**	2	BODY-VALVE	
	26	1	**3D-2891**	2	BALL	
	27	1	**129-8732**	2	SPRING	
	28	1	**8L-2746**	2	SEAL-O-RING	
	29	1	**9N-4365**	2	RETAINER-SPRING	
	30	1	**3D-8358**	2	RING-RETAINING	

234-8854 **CLUTCH GP** *(contd.)* **i02250032**

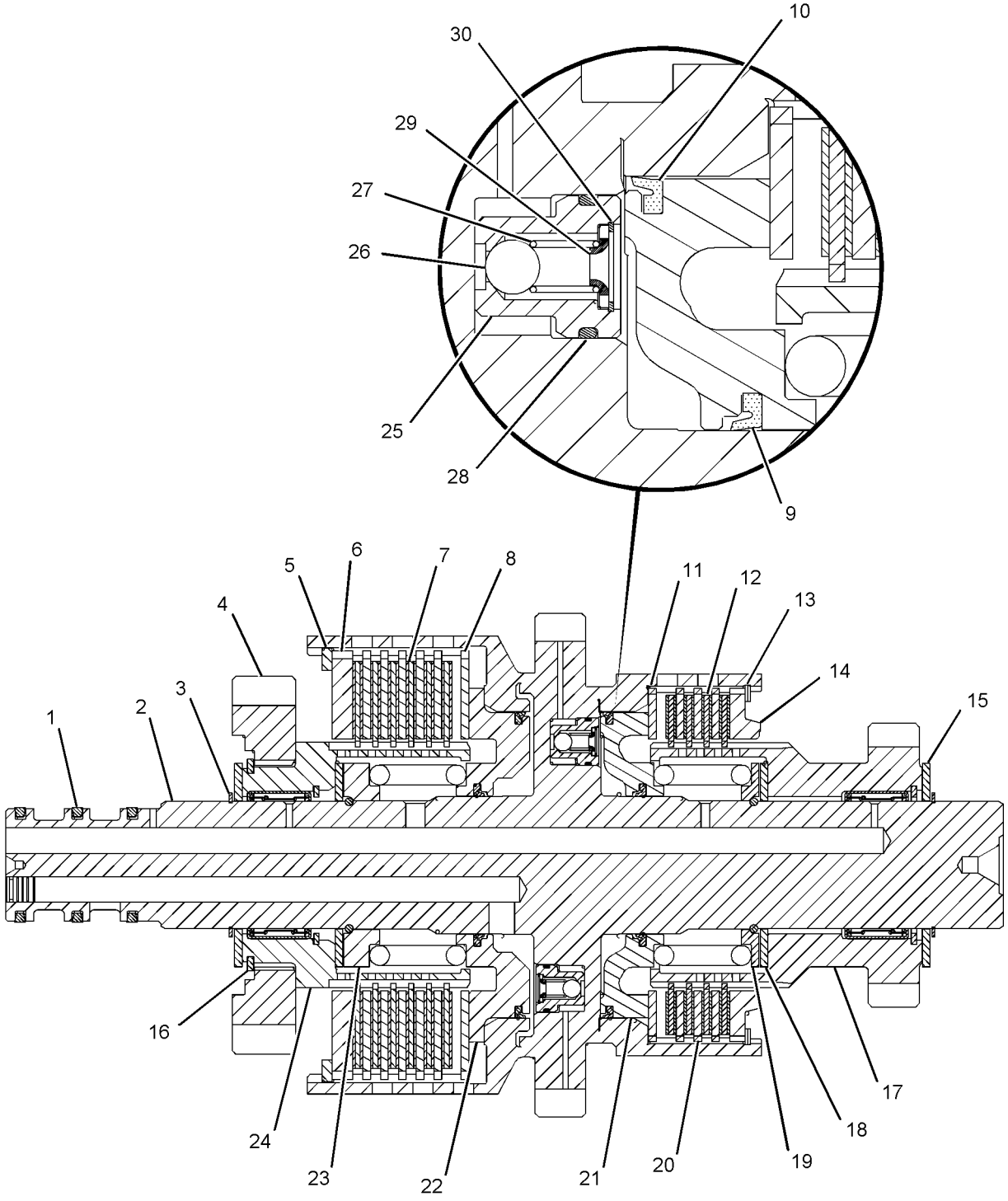

GRAPHIC #1 **<END>** g01108786

POWER TRAIN

234-8857 CLUTCH GP—FIRST, THIRD

S/N: J2W1-UP

PART OF 290-2720 TRANSMISSION AR

SMCS-3155 **i02250044**

NOTE	REF NO	GRAPHIC REF	PART NUMBER	QTY	PART NAME 1 2 3 4 5 6 (PRODUCT LEVEL)	SEE PAGE
	1	1	**6I-8390**	3	RING-SEAL	
	2	1	**8C-3982**	2	RING-RETAINING	
	3	1	**8C-3979**	1	RING-RETAINING	
	4	1	**9W-7765**	1	GEAR (40-TEETH)	
	5	1	**109-4728**	1	HUB AS	
		1	**2W-1141**	1	BEARING-ROLLER	
		1	**7X-2495**	1	RING-RETAINING	
	6	1	**9W-9718**	1	RETAINER-SPRING	
	7	1	**6Y-7818**	1	SPRING	
	8	1	**9W-9372**	1	RING-SEAL	
	9	1	**6Y-8157**	1	PISTON	
	10	1	**9W-9371**	1	RING-SEAL	
	11	1	**6Y-8265**	1	SEAL AS-BALANCE	
	12	1	**6Y-5027**	1	RING-RETAINING	
	13	1	**9W-6922**	1	WASHER-THRUST	
	14	1	**8E-6117**	1	GEAR (93-TEETH)	
	15	1	**234-8858**	1	GEAR (49-TEETH)	
	16	1	**9W-6466**	1	WASHER-THRUST	
	17	1	**8E-6558**	1	RACE-ROLLER BEARING	
	18	1	**234-8863**	1	SHAFT AS	
		1	**9W-0718**	2	PLUG	
	19	1	**8E-8317**	2	DISC-THRUST	
	20	1	**6V-2394**	1	RING-RETAINING	
	21	1	**8E-6120**	1	HUB AS	
		1	**8E-3416**	1	BEARING-SLEEVE	
	22	1	**6Y-8514**	1	PLATE-END	
	23	1	**236-2541**	1	RING-RETAINING	
	24	1	**9W-6927**	2	RING-RETAINING	
	25	1	**6Y-7922**	9	DISC-FRICTION	
	26	1	**8E-6115**	9	PLATE-CLUTCH	
	27	1	**114-1071**	1	PISTON	
	28	1	**132-9623**	1	SPRING-WAVE	
	29	1	**6Y-5631**	5	PLATE-CLUTCH	
	30	1	**6Y-7968**	5	DISC-FRICTION	
	31	1	**9U-8875**	1	RING-RETAINING	
	32	1	**8E-5707**	1	PLATE-END	
	33	1	**9W-6904**	1	RING-RETAINING	
	34	1	**8E-8313**	2	DISC-THRUST	
	35	1	**9W-9436**	1	RING-SEAL	
	36	1	**9W-9399**	1	RING-SEAL	

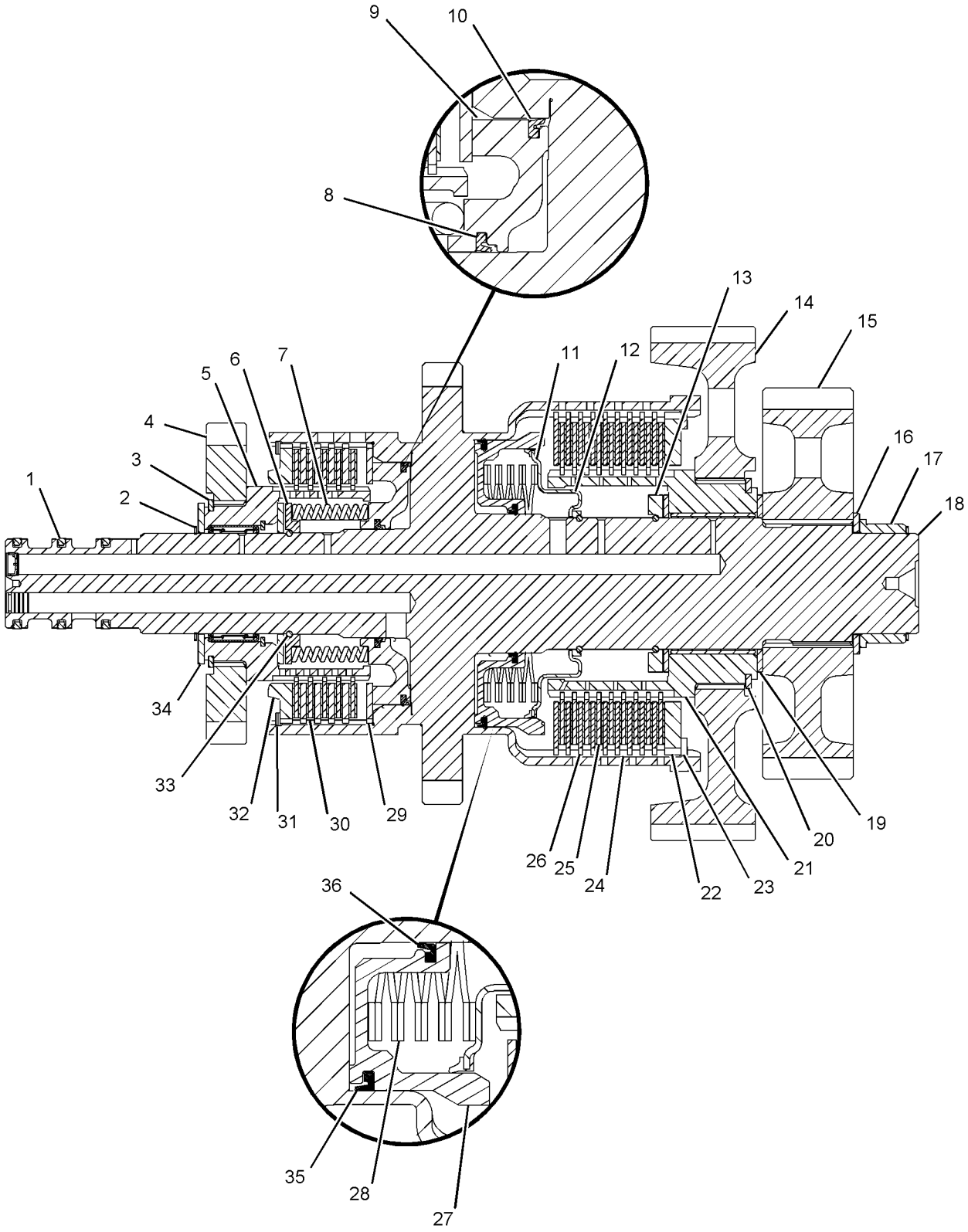

GRAPHIC #1 **<END>** g01108405

234-8861 CLUTCH GP–REVERSE, SECOND

S/N: J2W1-UP

PART OF 290-2720 TRANSMISSION AR

SMCS-3155 **i02250076**

NOTE	REF NO	GRAPHIC REF	PART NUMBER	QTY	PART NAME 1 2 3 4 5 6 (PRODUCT LEVEL)	SEE PAGE
	1	1	**6I-8390**	3	RING-SEAL	
	2	1	**142-5914**	1	SHAFT AS	
		1	**9W-0718**	2	PLUG	
	3	1	**8C-3979**	2	RING-RETAINING	
	4	1	**120-4482**	1	GEAR (37-TEETH)	
	5	1	**8T-1742**	1	RING-RETAINING	
	6	1	**8E-5726**	1	PLATE-END	
	7	1	**6Y-1300**	6	DISC-FRICTION	
	8	1	**8E-5556**	6	PLATE-CLUTCH	
	9	1	**9W-9372**	2	RING-SEAL	
	10	1	**9W-9371**	2	RING-SEAL	
	11	1	**6Y-5631**	6	PLATE-CLUTCH	
	12	1	**6Y-7968**	6	DISC-FRICTION	
	13	1	**9U-8875**	1	RING-RETAINING	
	14	1	**234-8862**	1	GEAR (34-TEETH)	
	15	1	**9W-6912**	1	SPACER-SPECIAL	
	16	1	**9W-7764**	1	GEAR (28-TEETH)	
	17	1	**6Y-0928**	1	SPACER (36X50X6.5-MM THK)	
	18	1	**6Y-4890**	1	BEARING	
	19	1	**9W-9662**	1	WASHER-THRUST	
	20	1	**109-4728**	1	HUB AS	
		1	**2W-1141**	1	BEARING-ROLLER	
		1	**7X-2495**	1	RING-RETAINING	
	21	1	**8E-5707**	1	PLATE-END	
	22	1	**9W-6904**	2	RING-RETAINING	
	23	1	**9W-9718**	1	RETAINER-SPRING	
	24	1	**6Y-7818**	2	SPRING	
	25	1	**6Y-8157**	1	PISTON	
	26	1	**116-4870**	1	PISTON	
	27	1	**8E-5727**	1	RETAINER-SPRING	
	28	1	**109-4727**	1	HUB AS	
		1	**2W-1141**	1	BEARING-ROLLER	
		1	**7X-2495**	1	RING-RETAINING	
	29	1	**8E-8313**	4	DISC-THRUST	
	30	1	**8C-3982**	1	RING-RETAINING	
	31	1	**9N-4354**	2	BODY-VALVE	
	32	1	**3D-2891**	2	BALL	
	33	1	**129-8732**	2	SPRING	
	34	1	**8L-2746**	2	SEAL-O-RING	
	35	1	**9N-4365**	2	RETAINER-SPRING	
	36	1	**3D-8358**	2	RING-RETAINING	

234-8861 **CLUTCH GP** *(contd.)* **i02250076**

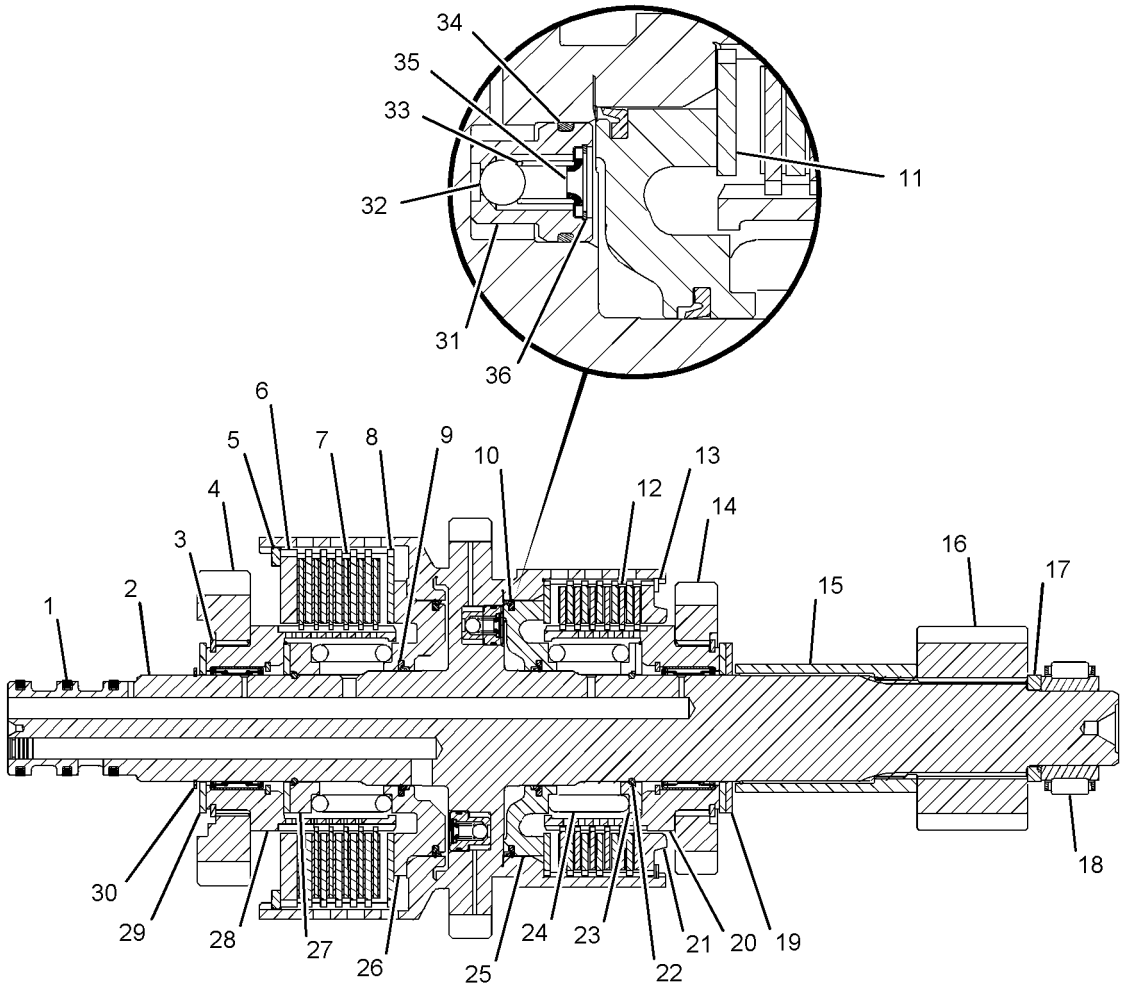

GRAPHIC #1 **<END>** g01109043

252-8037 CONTROL GP-DIFFERENTIAL LOCK

S/N: FTD1-UP

PART OF 257-1712 AXLE AR-FIXED

SMCS-3264, 3272 **i02865575**

NOTE	REF NO	GRAPHIC REF	PART NUMBER	QTY	PART NAME 1 2 3 4 5 6 (PRODUCT LEVEL)	SEE PAGE
	1	1	**174-4647**	1	BUSHING	
	2	1	**174-4650**	2	SPACER (20X32X8-MM THK)	
	3	1	**199-0652**	2	CLIP-PIN	
	4	1	**199-0676**	2	SPRING	
	5	1	**252-7922**	1	COLLAR	
	6	1	**252-7923**	1	FORK	
	7	1	**254-5048**	1	PISTON	
	8	1	**254-5059**	1	ROD	
	9	1	**310-9262**	4	PIN	
	10	1	**4F-9029**	2	SEAL	
	11	1	**5L-4758**	4	SEAL-O-RING	

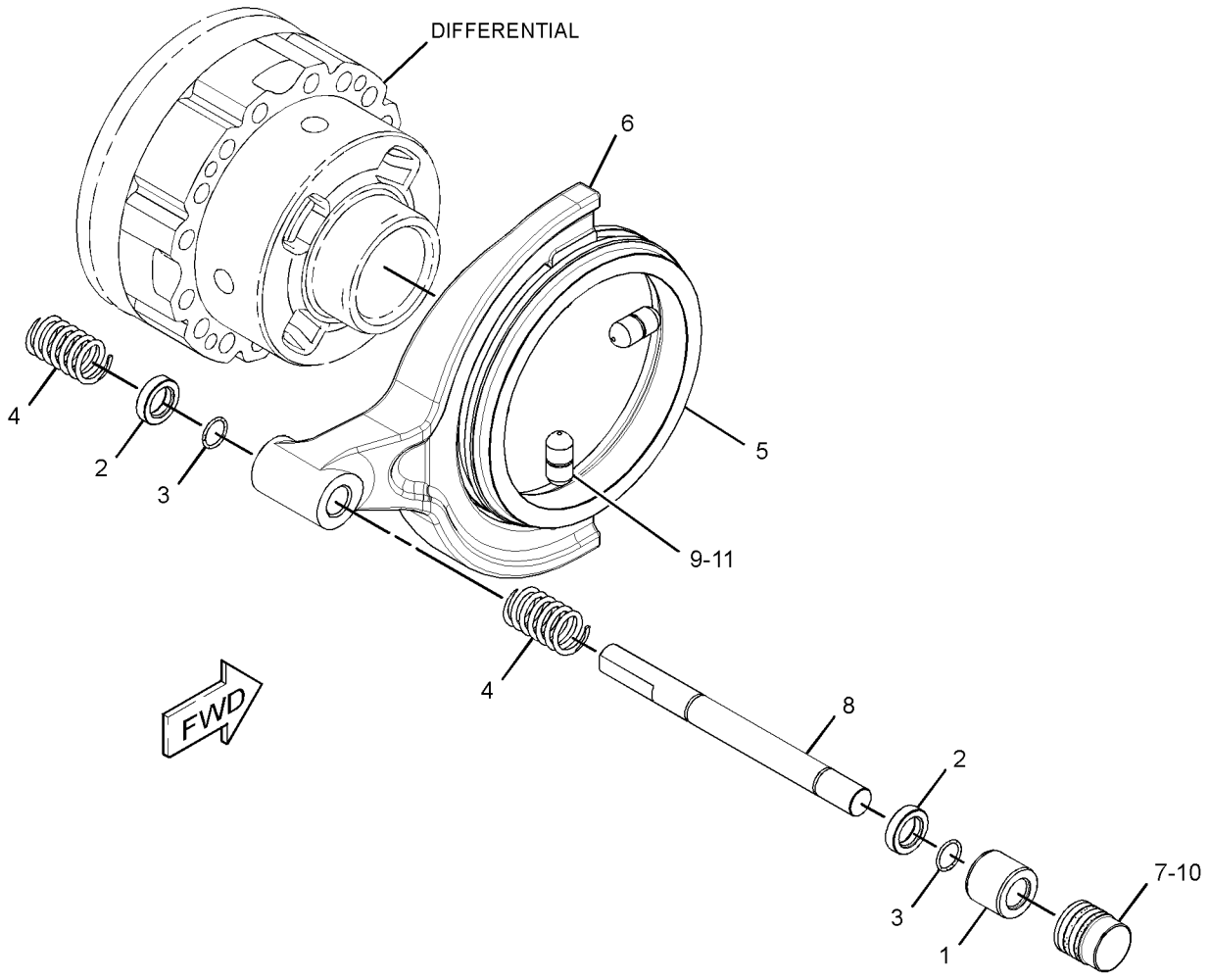

GRAPHIC #1 **<END>** g01442515

185-1028 COOLER GP-AXLE OIL

S/N: FTD1-UP

PART OF 289-8922 LINES GP-AXLE OIL COOLER

AN ATTACHMENT

SMCS-1365 **i02139123**

NOTE	REF NO	GRAPHIC REF	PART NUMBER	QTY	PART NAME 1 2 3 4 5 6 (PRODUCT LEVEL)	SEE PAGE
	1	1	**185-1039**	1	BRACKET AS	
	2	1	**205-3652**	1	CORE AS-AXLE OIL COOLER	
M	3	1	**8T-4189**	2	BOLT (M8X1.25X20-MM)	
	4	1	**8T-4224**	4	WASHER-HARD (8.8X16X2-MM THK)	
M	5	1	**8T-4908**	2	BOLT (M8X1.25X25-MM)	

M-METRIC PART

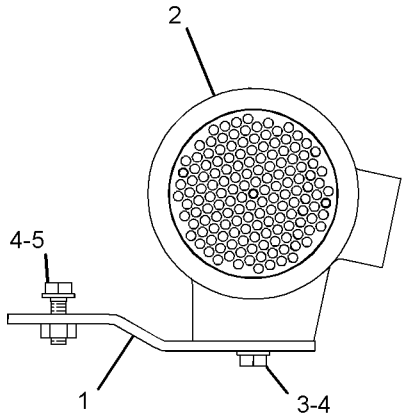

VIEW OF AREA A

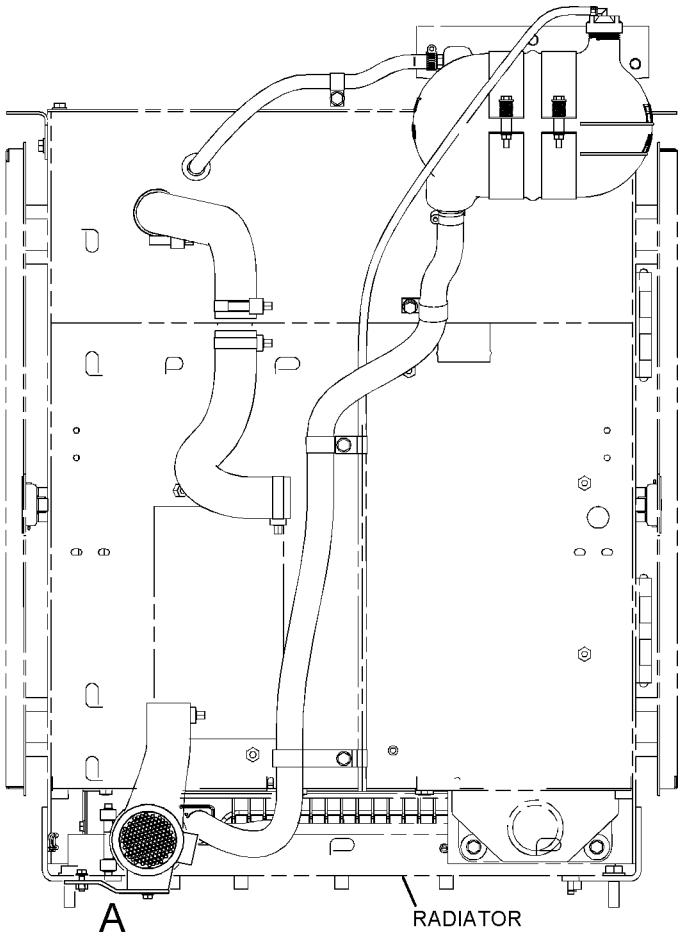

FRONT VIEW

GRAPHIC #1

<END>

g01088727

177-0019 COVER GP-TRANSMISSION

S/N: J2W1-UP; J2X1-UP

PART OF 177-0018, 239-5608 CASE & PARTS GP-TRANSMISSION

SMCS-3030 **i01811169**

NOTE	REF NO	GRAPHIC REF	PART NUMBER	QTY	PART NAME 1 2 3 4 5 6 (PRODUCT LEVEL)	SEE PAGE
	1	1	**200-2045**	1	COVER	
	2	1	**7T-6496**	2	PLUG	
	3	1	**6Y-0869**	4	PLUG	
	4	1	**8T-5353**	2	DOWEL	
	5	1	**9S-8008**	4	PLUG-O RING	
	6	1	**3D-2824**	4	SEAL-O-RING	
	7	1	**9W-6068**	1	PLUG	

177-0019 **COVER GP-TRANSMISSION** *(contd.)* **i01811169**

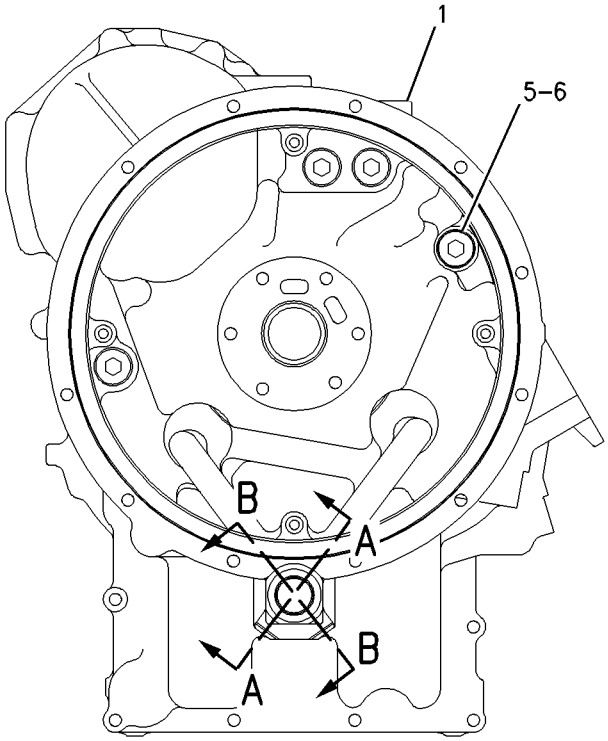

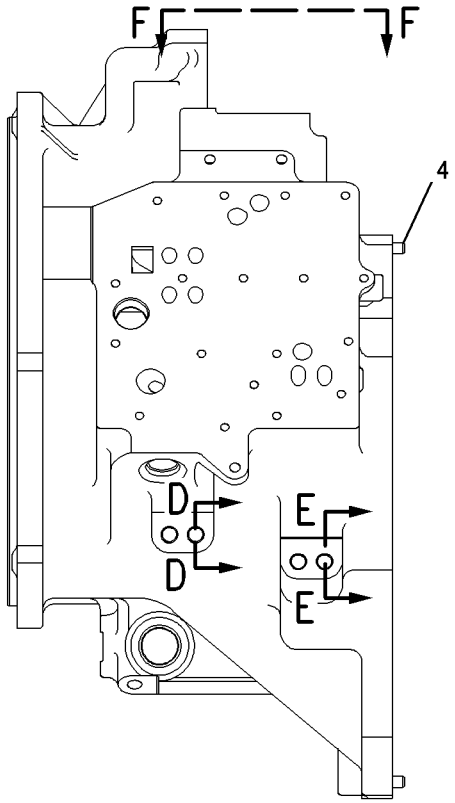

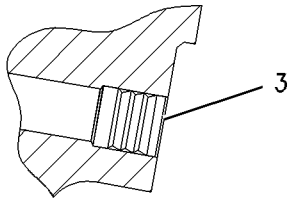

SECTION D-D

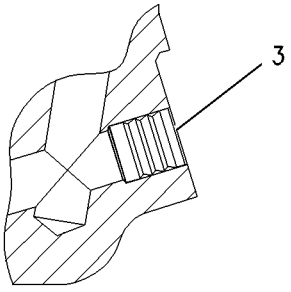

SECTION E-E

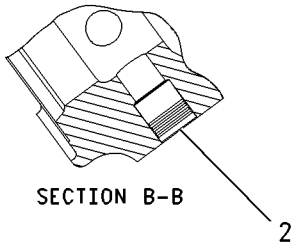

SECTION B-B

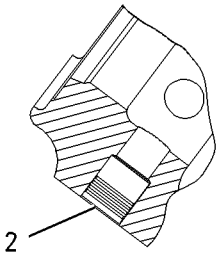

SECTION A-A

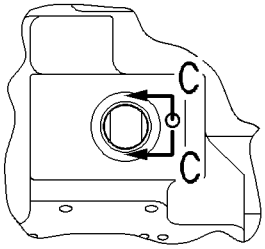

VIEW F-F

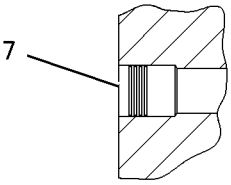

SECTION C-C

GRAPHIC #1 **<END>** g00921862

151-6142 DIFFERENTIAL GP–STANDARD

S/N: BYD1-UP
PART OF 203-2761 AXLE AR-FIXED
AN ATTACHMENT

SMCS-3258 **i00933641**

NOTE	REF NO	GRAPHIC REF	PART NUMBER	QTY	PART NAME 1 2 3 4 5 6 (PRODUCT LEVEL)	SEE PAGE
	1	1	**8R-7834**	1	CASE AS-DIFFERENTIAL	
		1	**5P-8245**	4	WASHER-HARD (13.5X25.5X3-MM THK)	
M		1	**8T-0106**	4	BOLT (M12X1.75X100-MM)	
	2	1	**8R-1705**	2	GEAR-DIFFERENTIAL BEVEL (16-TEETH)	
	3	1	**8R-7833**	1	SHAFT	
	4	1	**9C-5040**	2	WASHER-THRUST (64.5X110.5X3.05-MM THK)	
	5	1	**133-8305**	2	WASHER-THRUST	
	6	1	**8T-0099**	1	DOWEL	
	7	1	**8R-2211**	2	BEARING-SLEEVE	
	8	1	**8R-1703**	2	PINION-DIFFERENTIAL BEVEL (10-TEETH)	
	9	1	**8R-2212**	1	SPACER (82-MM THK)	

M-METRIC PART

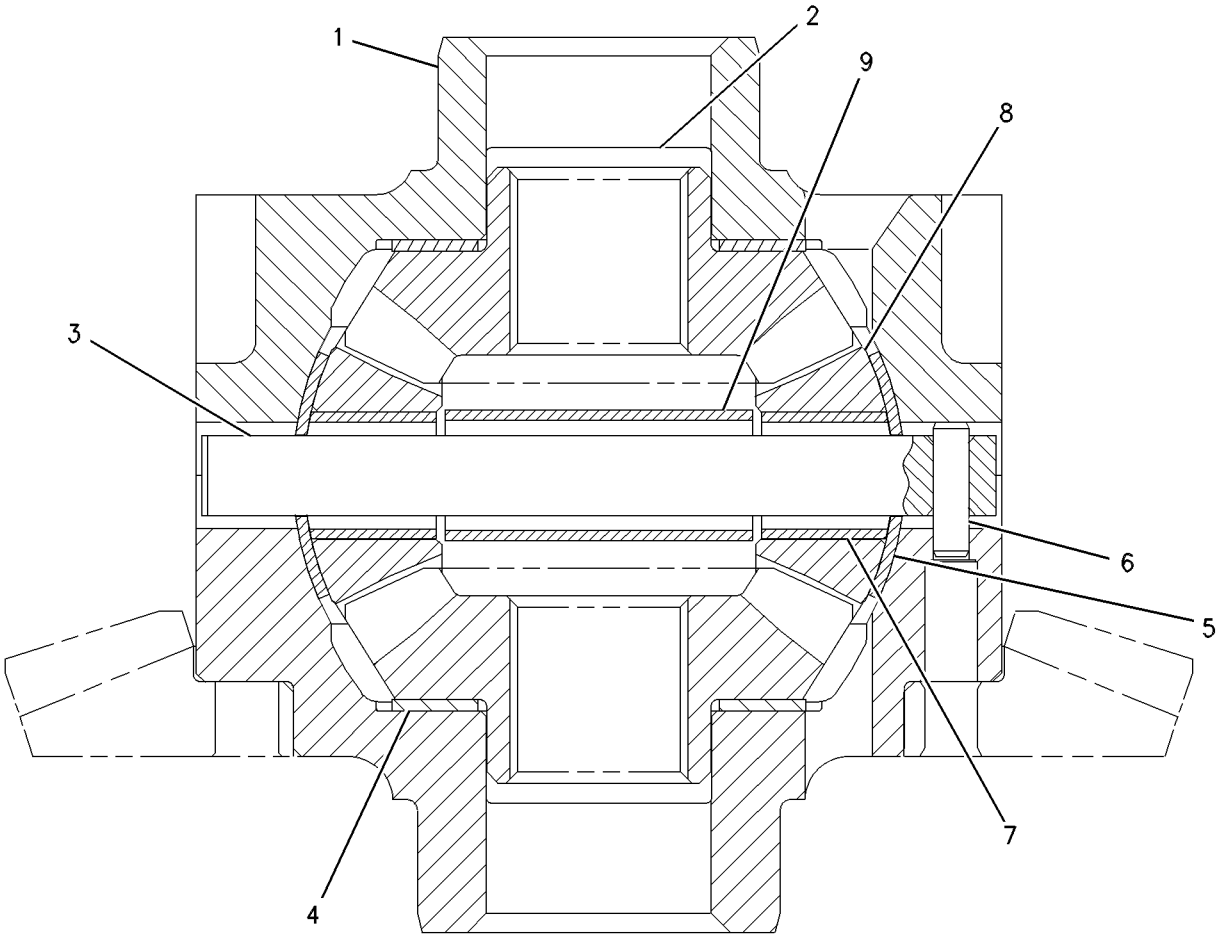

GRAPHIC #1 **<END>** g00368833

235-5811 DIFFERENTIAL GP—STANDARD

S/N: BYD1-UP; FTD1-UP

PART OF 234-4253 AXLE AR-FIXED, 267-7377 AXLE GP-OSCILLATING

AN ATTACHMENT

SMCS-3258 **i02252840**

NOTE	REF NO	GRAPHIC REF	PART NUMBER	QTY	PART NAME 1 2 3 4 5 6 (PRODUCT LEVEL)	SEE PAGE
	1	1	**4E-6104**	1	CASE AS-DIFFERENTIAL	
	2	1	**5V-1274**	1	SPIDER	
	3	1	**8R-1703**	4	PINION-DIFFERENTIAL BEVEL (10-TEETH)	
	4	1	**8R-1705**	2	GEAR-DIFFERENTIAL BEVEL (16-TEETH)	
	5	1	**8R-2211**	4	BEARING-SLEEVE	
	6	1	**9C-5040**	2	WASHER-THRUST (64.5X110.5X3.05-MM THK)	
	7	1	**217-3680**	4	WASHER-THRUST (3-MM THK)	

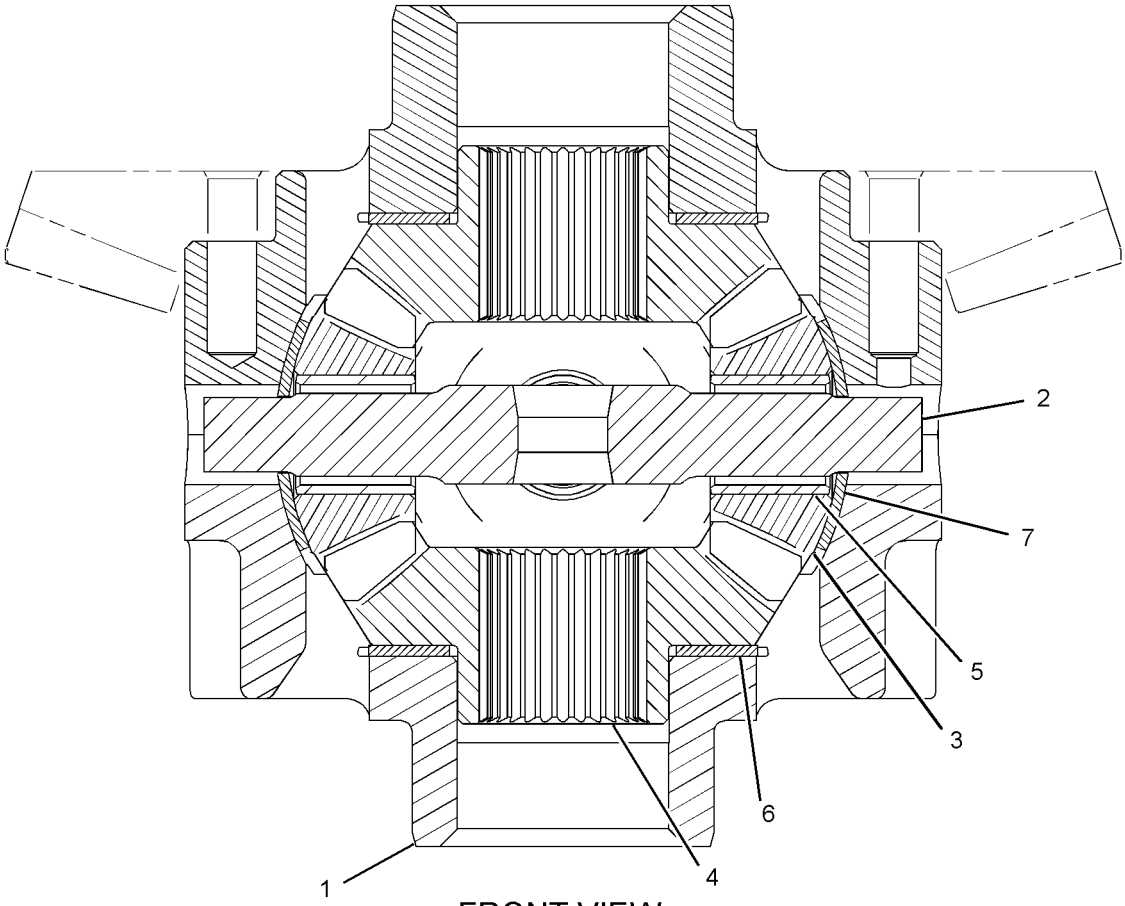

FRONT VIEW

GRAPHIC #1 **<END>** g01111589

252-7939 DIFFERENTIAL GP

S/N: FTD650-UP

PART OF 257-1712 AXLE AR-FIXED

SMCS-3258 **i02901017**

NOTE	REF NO	GRAPHIC REF	PART NUMBER	QTY	PART NAME 1 2 3 4 5 6 (PRODUCT LEVEL)	SEE PAGE
	1	1	**252-7930**	1	GEAR-DIFFERENTIAL (20-TEETH)	
	2	1	**252-7931**	1	GEAR-DIFFERENTIAL (20-TEETH)	
	3	1	**252-7932**	4	PINION-DIFFERENTIAL	
	4	1	**252-7933**	1	SPIDER	
	5	1	**252-7934**	2	WASHER-THRUST (66X97.5X3.05-MM THK)	
	6	1	**252-7935**	4	WASHER-SPECIAL	
	7	1	**252-7936**	4	BEARING-SLEEVE	
	8	1	**252-7945**	1	CASE AS-DIFFERENTIAL	

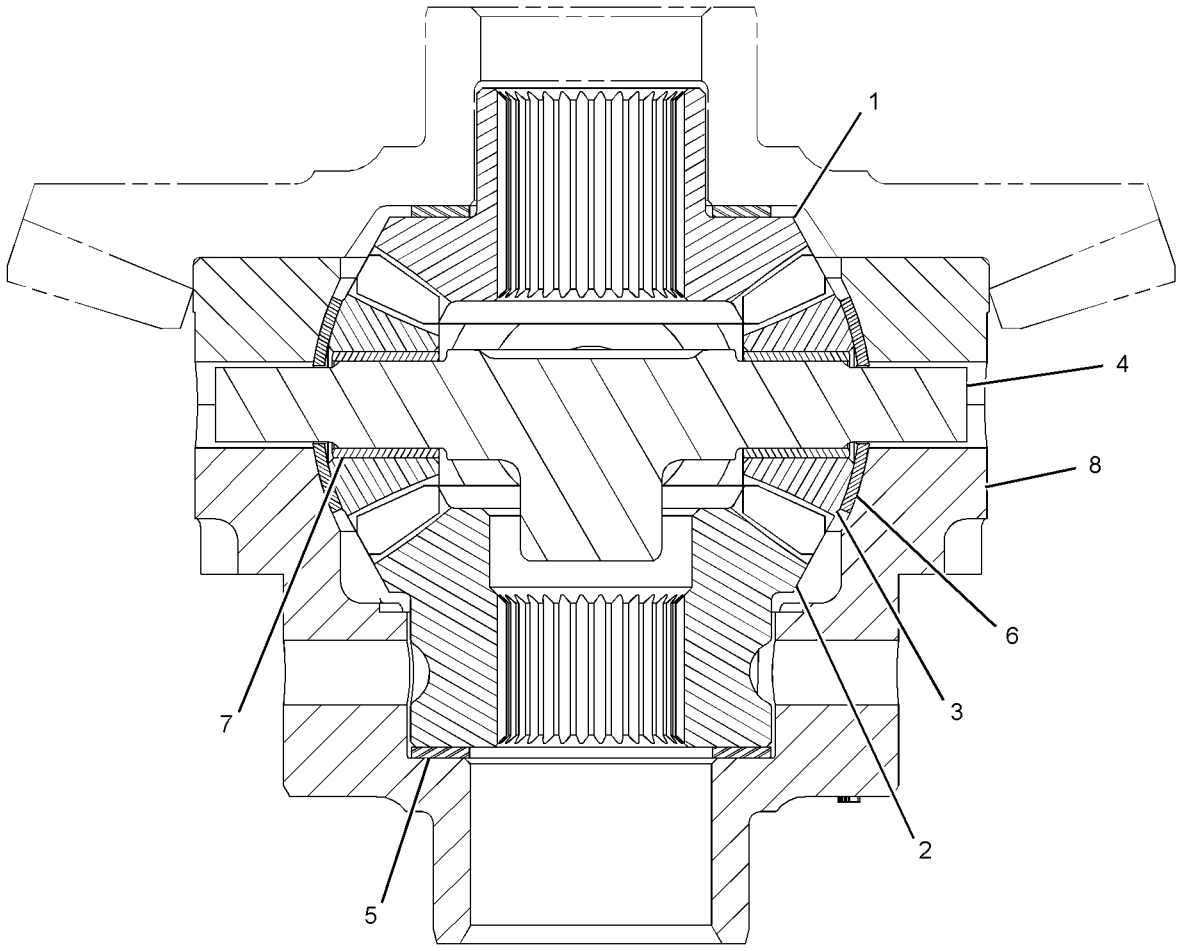

GRAPHIC #1 **<END>** g01389395

159-7446 DIFFERENTIAL GP-LIMITED SLIP

S/N: BYD1-UP
PART OF 203-2770 AXLE AR-FIXED
AN ATTACHMENT

SMCS-3263 **i02288422**

NOTE	REF NO	GRAPHIC REF	PART NUMBER	QTY	PART NAME 1 2 3 4 5 6 (PRODUCT LEVEL)	SEE PAGE
	1	1	**104-6754**	2	WASHER-THRUST (48.5X65.28X3.96-MM THK)	
	2	1	**104-6740**	4	PINION (9-TEETH)	
	3	1	**104-6741**	2	SHAFT-PINION	
	4	1	**104-6739**	2	GEAR-DIFFERENTIAL BEVEL (14-TEETH)	
	5	1	**159-7458**	2	KIT-THICK DISC	
	6	1	**159-7457**	2	KIT-THIN DISC	
	7	1	**104-6742**	2	HOUSING-ACTUATOR	

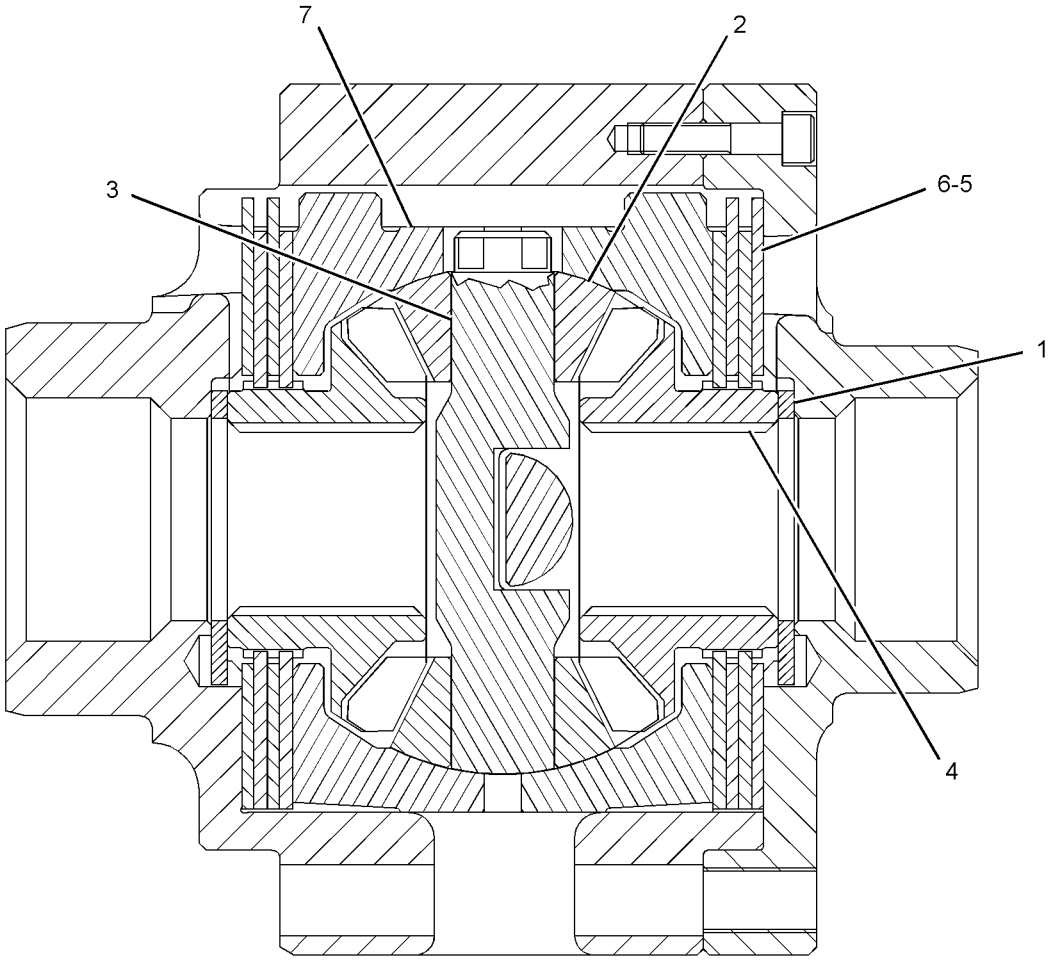

SECTION A-A

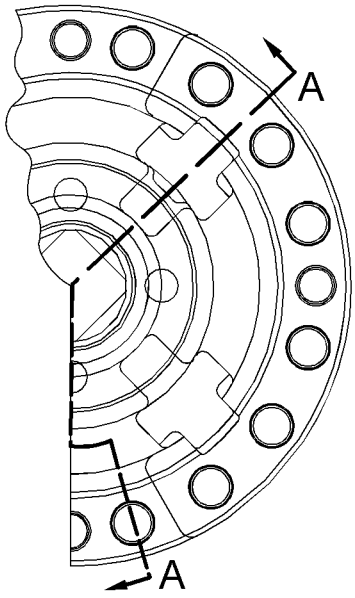

GRAPHIC #1 **<END>** g01289233

236-0931 DIFFERENTIAL GP-LIMITED SLIP

S/N: BYD1-UP; FTD1-UP

PART OF 234-4255 AXLE AR-FIXED, 267-7380 AXLE AR-OSCILLATING, 267-7378 AXLE GP-OSCILLATING

AN ATTACHMENT

SMCS-3263 **i02252650**

NOTE	REF NO	GRAPHIC REF	PART NUMBER	QTY	PART NAME 1 2 3 4 5 6 (PRODUCT LEVEL)	SEE PAGE
	1	1	**104-6739**	2	GEAR-DIFFERENTIAL BEVEL (14-TEETH)	
	2	1	**104-6740**	4	PINION (9-TEETH)	
	3	1	**104-6742**	2	HOUSING-ACTUATOR	
	4	1	**104-6754**	2	WASHER-THRUST (48.5X65.28X3.96-MM THK)	
	5	1	**159-7457**	2	KIT-THIN DISC	
	6	1	**159-7458**	2	KIT-THICK DISC	
	7	1	**242-1830**	2	SHAFT-PINION	

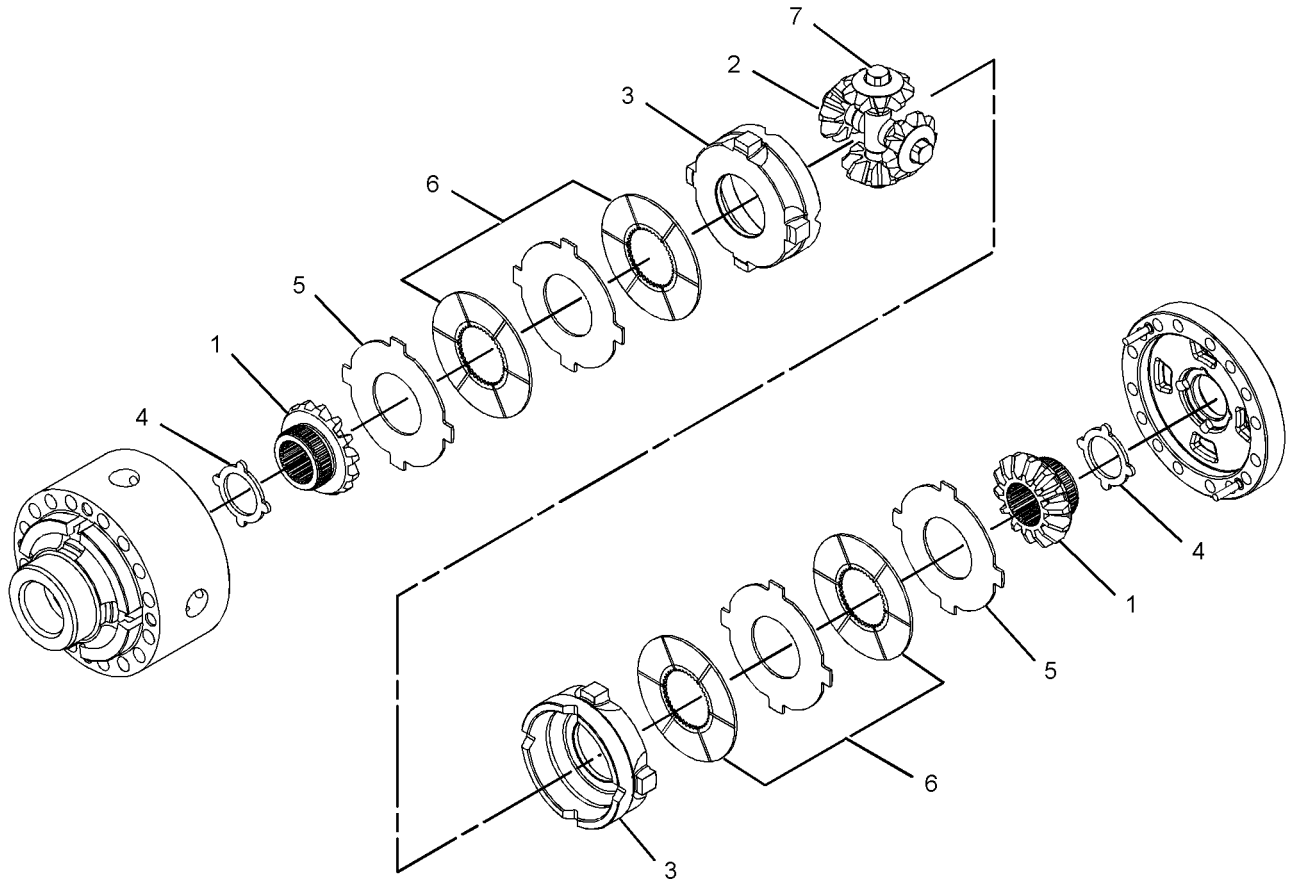

GRAPHIC #1 **<END>** g01139812

141-8615 DRIVE GP-FLEXIBLE COUPLING

S/N: J2W1-UP; J2X1-UP

PART OF 290-2719, 290-2720 TRANSMISSION AR

SMCS-3252 **i01084973**

NOTE	REF NO	GRAPHIC REF	PART NUMBER	QTY	PART NAME 1 2 3 4 5 6 (PRODUCT LEVEL)	SEE PAGE
	1	1	**136-4595**	1	PLATE AS	
M	2	1	**6V-8212**	6	BOLT (M10X1.50X16MM)	
	3	1	**6V-5839**	6	WASHER (2.5MM THK)	
	4	1	**136-4593**	1	PLATE	

M-METRIC PART

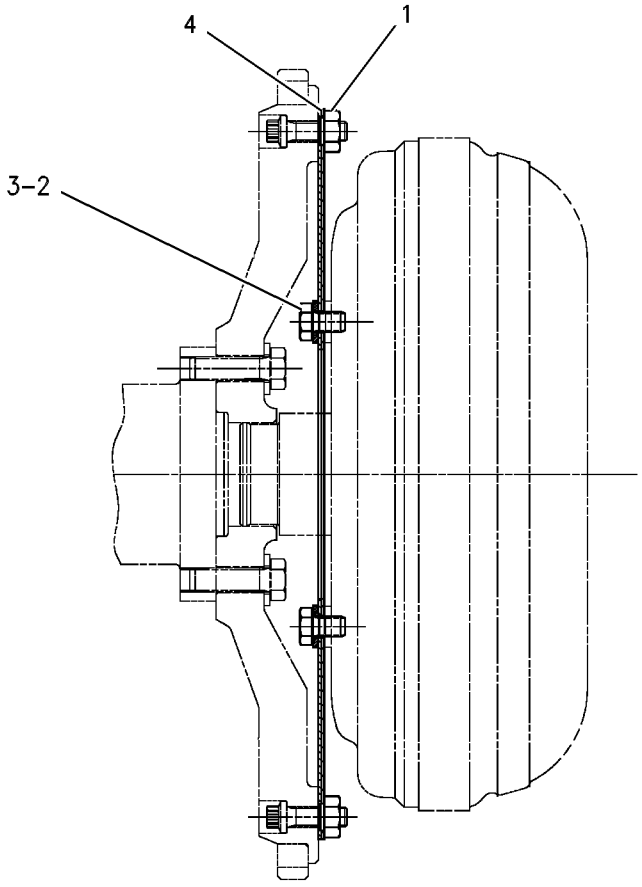

GRAPHIC #1 **<END>** g00572183

146-6274 DRIVE GP-PUMP–TRANSMISSION

S/N: J2W1-UP; J2X1-UP

PART OF 290-2719, 290-2720 TRANSMISSION AR

SMCS-3108 **i02038270**

NOTE	REF NO	GRAPHIC REF	PART NUMBER	QTY	PART NAME 1 2 3 4 5 6 (PRODUCT LEVEL)	SEE PAGE
M	1	1	**6V-5683**	4	BOLT (M6X1X16-MM)	
	2	1	**2L-0043**	1	RING-RETAINING	
	3	1	**146-6275**	1	SUPPORT AS-BEARING	
	4	1	**141-6821**	1	GEAR-DRIVE	
	5	1	**146-6277**	1	SUPPORT-STATOR	
	6	1	**5L-4753**	1	RING-RETAINING	
	7	1	**106-7799**	1	BALL BEARING	

M-METRIC PART

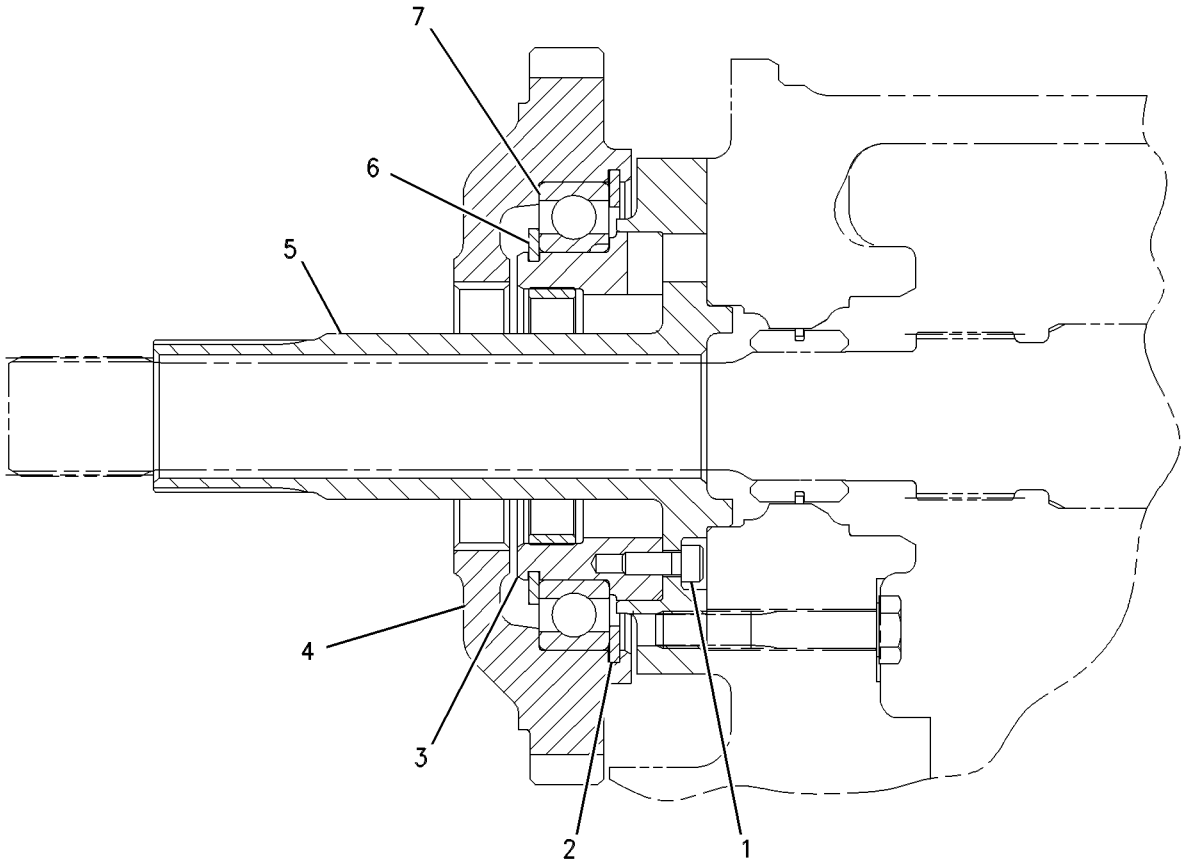

GRAPHIC #1 **<END>** g00656122

118-0849 FILLER GP-POWER TRAIN OIL

S/N: BYD1-UP

PART OF 289-8845 POWER TRAIN AR

SMCS-3005, 3081 **i02853553**

NOTE	REF NO	GRAPHIC REF	PART NUMBER	QTY	PART NAME 1 2 3 4 5 6 (PRODUCT LEVEL)	SEE PAGE
	1	1	**5P-8502**	1	PADLOCK GP	
A		1	**5P-8500**	1	KEY	
A		1	**8Y-6364**	1	SLEEVE	
	2	1	**8T-6703**	2	CLAMP-HOSE	
	3	1	**113-6402**	1	HOSE	
	4	1	**118-0850**	1	TUBE AS	
	5	1	**122-6453**	1	TUBE GP	
	6	1	**122-6455**	1	BRACKET AS	
M		1	**8T-3490**	1	NUT-WELD (M10X1.5-THD)	
	7	1	**137-6727**	1	CAP-FILL (POWER TRAIN OIL)	
	8	1	**5P-7468**	1	CLIP (SLOT)	
	9	1	**5P-7469**	1	CLIP (TAB)	
	10	1	**4J-0523**	1	SEAL-O-RING	
	11	1	**8T-4121**	4	WASHER-HARD (11X21X2.5-MM THK)	
M	12	1	**8T-4136**	3	BOLT (M10X1.5X25-MM)	
M	13	1	**8T-4196**	2	BOLT (M10X1.5X35-MM)	
	14	1	**7X-7729**	1	WASHER (11X25X3-MM THK)	
	15	1	**6V-0545**	1	GROMMET	

A-NOT PART OF THIS GROUP
M-METRIC PART

118-0849 **FILLER GP-POWER TRAIN OIL** ***(contd.)*** **i02853553**

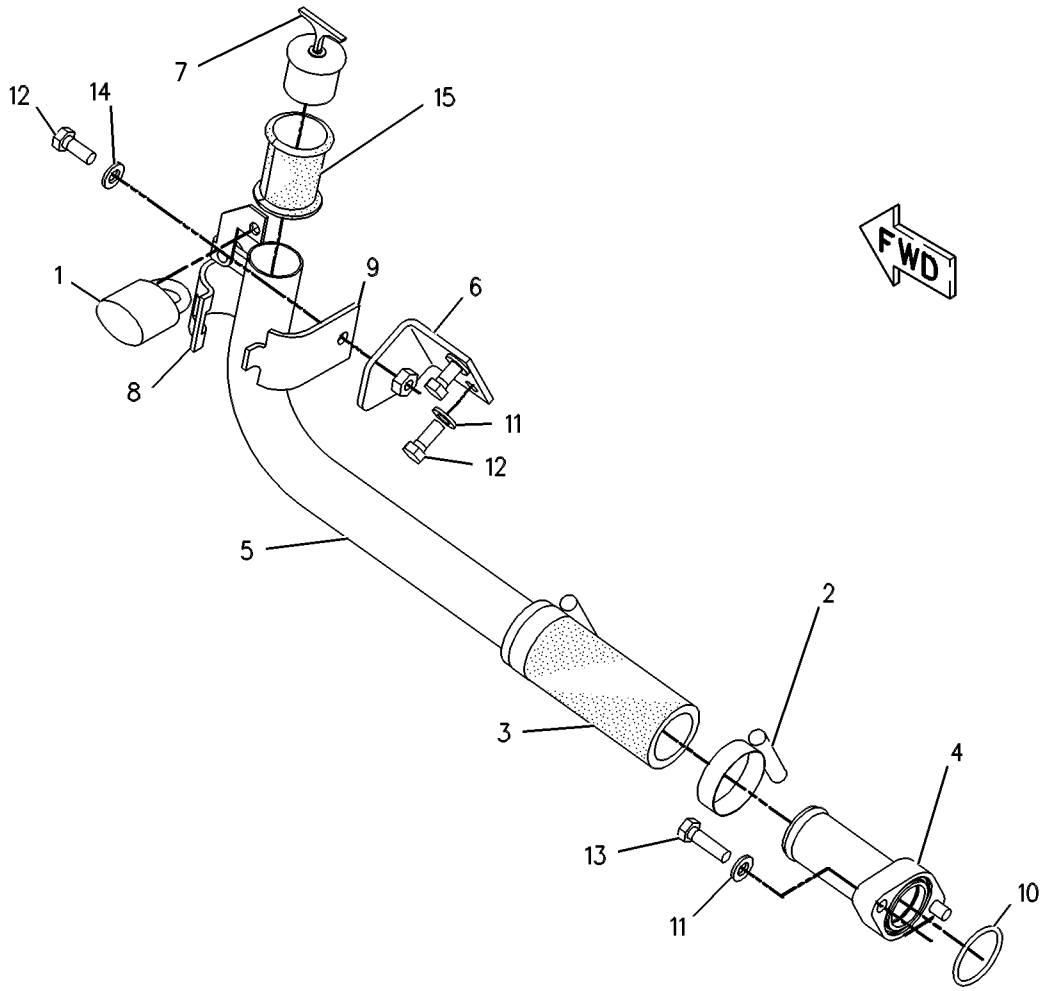

GRAPHIC #1 **<END>** g00131930

243-0515 FILLER GP-POWER TRAIN OIL

S/N: FTD1-UP

PART OF 289-8835, 289-8895 POWER TRAIN AR

SMCS-3005, 3081 **i02602768**

NOTE	REF NO	GRAPHIC REF	PART NUMBER	QTY	PART NAME 1 2 3 4 5 6 (PRODUCT LEVEL)	SEE PAGE
	1	1	**246-2641**	1	PADLOCK GP	
					(EACH INCLUDES)	
		1	**5P-8500**	1	KEY	
					(WITH PLASTIC OVERMOLD)	
					—OR—	
		1	**199-6309**	1	KEY (CORPORATE)	
					(OPTIONAL SERVICE REPLACEMENT)	
					(PLAIN KEY WITHOUT PLASTIC OVERMOLD)	
	2	1	**8T-6703**	2	CLAMP-HOSE	
	3	1	**118-0850**	1	TUBE AS	
	4	1	**122-6453**	1	TUBE GP	
	5	1	**137-6727**	1	CAP-FILL (POWER TRAIN OIL)	
	6	1	**143-7899**	1	HOSE	
	7	1	**4J-0523**	1	SEAL-O-RING	
	8	1	**5P-7468**	1	CLIP (SLOT)	
	9	1	**5P-7469**	1	CLIP (TAB)	
	10	1	**6V-0545**	1	GROMMET	
	11	1	**7X-7729**	1	WASHER (11X25X3-MM THK)	
	12	1	**8T-4121**	2	WASHER-HARD (11X21X2.5-MM THK)	
M	13	1	**8T-4195**	1	BOLT (M10X1.5X30-MM)	
M	14	1	**8T-4196**	2	BOLT (M10X1.5X35-MM)	

M-METRIC PART

243-0515 **FILLER GP-POWER TRAIN OIL** *(contd.)* **i02602768**

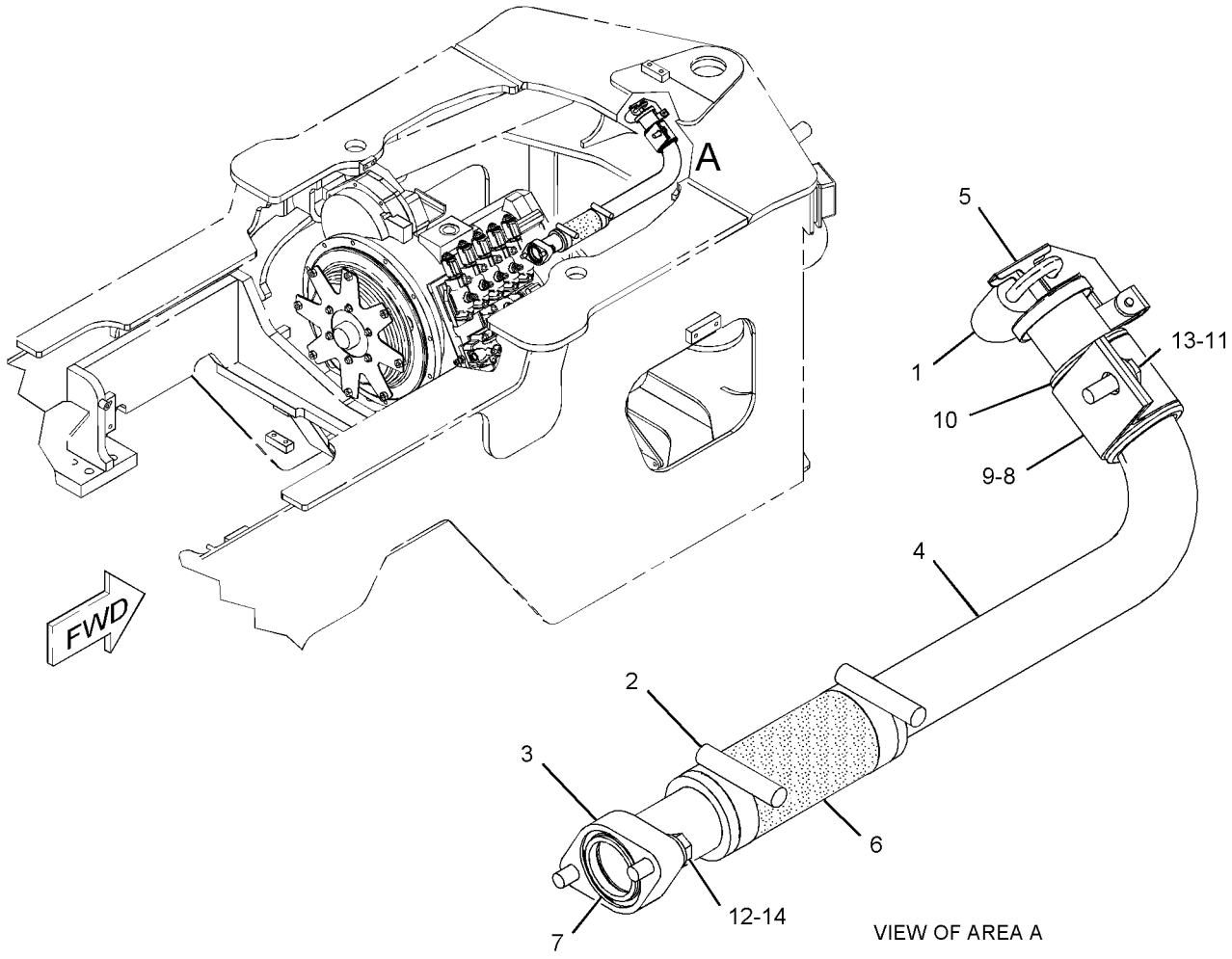

GRAPHIC #1 **<END>** g01108463

POWER TRAIN

203-3894 FILTER & LINES GP-TRANSMISSION

S/N: BYD1-UP

PART OF 289-8845 POWER TRAIN AR

SMCS-3067, 3154 **i02853554**

NOTE	REF NO	GRAPHIC REF	PART NUMBER	QTY	PART NAME 1 2 3 4 5 6 (PRODUCT LEVEL)	SEE PAGE
I	1	1	**8Y-0711**	1	HOSE AS	
	2	1	**9C-9458**	1	BRACKET AS	
M		1	**8T-3490**	1	NUT-WELD (M10X1.5-THD)	
Y	3	1	**226-2869**	1	FILTER GP-OIL (POWER TRAIN)	256
I	4	1	**212-4652**	1	HOSE AS	
	5	1	*148-8327*	1	CONNECTOR AS	
		1	**3D-2824**	1	SEAL-O-RING	
		1	**6V-8637**	1	CONNECTOR	
		1	**6V-9746**	1	SEAL-O-RING	
	6	1	*148-8347*	2	ELBOW AS	
					(EACH INCLUDES)	
		1	**3D-2824**	1	SEAL-O-RING	
		1	**6V-9007**	1	ELBOW	
		1	**6V-9746**	1	SEAL-O-RING	
	7	1	**1P-4576**	2	FLANGE-HALF	
	8	1	**4J-5267**	1	SEAL-O-RING	
	9	1	**8T-4121**	10	WASHER-HARD (11X21X2.5-MM THK)	
M	10	1	**8T-4137**	5	BOLT (M10X1.5X20-MM)	
M	11	1	**8T-4195**	1	BOLT (M10X1.5X30-MM)	
M	12	1	**8T-4196**	4	BOLT (M10X1.5X35-MM)	
	13	1	**8T-7529**	1	CLIP	
	14	1	**6V-0852**	1	CAP-DUST	
	15	1	*164-5567*	1	COUPLER AS-QUICK DISCONNECT	
		1	**3J-1907**	1	SEAL-O-RING	
		1	**6V-3965**	1	COUPLER-QUICK DISCONNECT	
	16	1	**8C-3447**	1	CAP-DUST (TRANSMISSION OIL)	

I-REFER TO HYDRAULIC INFORMATION SYSTEM
M-METRIC PART
Y-SEPARATE ILLUSTRATION

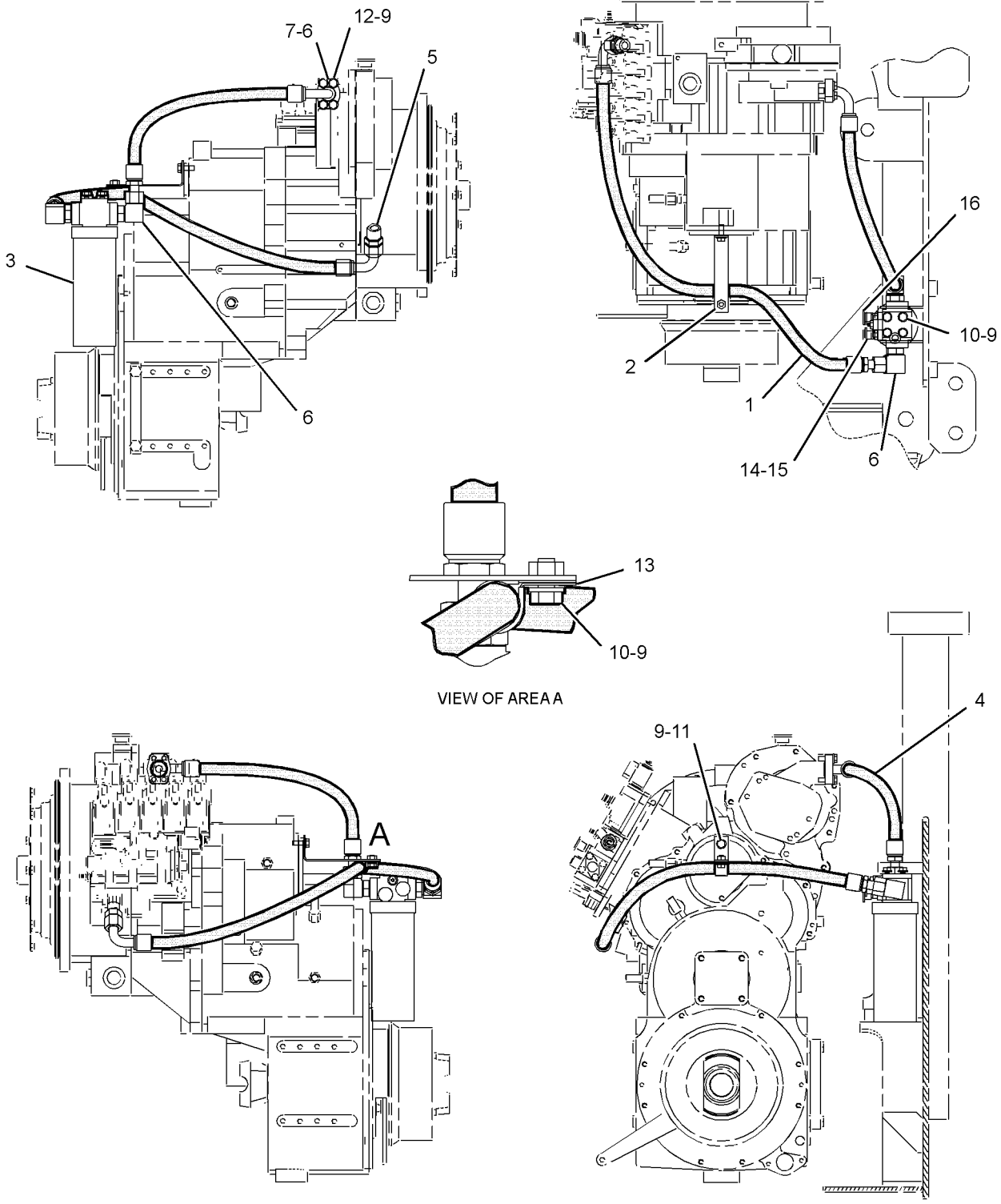

GRAPHIC #1 **<END>** g01343442

235-6807 FILTER & LINES GP-TRANSMISSION

S/N: FTD1-UP

PART OF 289-8835, 289-8895 POWER TRAIN AR

SMCS-3067, 3154 **i02672187**

NOTE	REF NO	GRAPHIC REF	PART NUMBER	QTY	PART NAME 1 2 3 4 5 6 (PRODUCT LEVEL)	SEE PAGE
I	1	1	**8Y-0711**	1	HOSE AS	
Y	2	1	**226-2869**	1	FILTER GP-OIL (POWER TRAIN)	256
I	3	1	**243-3772**	1	HOSE AS	
	4	1	*148-8327*	1	CONNECTOR AS	
		1	**3D-2824**	1	SEAL-O-RING	
		1	**6V-8637**	1	CONNECTOR	
		1	**6V-9746**	1	SEAL-O-RING	
	5	1	*148-8347*	1	ELBOW AS	
		1	**3D-2824**	1	SEAL-O-RING	
		1	**6V-9007**	1	ELBOW	
		1	**6V-9746**	1	SEAL-O-RING	
	6	1	*153-6237*	1	ELBOW AS	
		1	**3D-2824**	1	SEAL-O-RING	
		1	**6V-9004**	1	ELBOW	
		1	**6V-9746**	1	SEAL-O-RING	
	7	1	**1P-4576**	2	FLANGE-HALF	
	8	1	**4J-5267**	1	SEAL-O-RING	
	9	1	**8T-4121**	8	WASHER-HARD (11X21X2.5-MM THK)	
M	10	1	**8T-4137**	4	BOLT (M10X1.5X20-MM)	
	11	1	**6V-0852**	1	CAP-DUST	
M	12	1	**8T-4196**	4	BOLT (M10X1.5X35-MM)	
	13	1	*164-5567*	1	COUPLER AS-QUICK DISCONNECT	
		1	**3J-1907**	1	SEAL-O-RING	
		1	**6V-3965**	1	COUPLER-QUICK DISCONNECT	
	14	1	**164-4227**	2	CLIP	
	15	1	*164-6874*	1	FITTING AS-ELBOW	
		1	**3J-1907**	1	SEAL-O-RING	
		1	**085-7356**	1	FITTING	
	16	1	**8C-3447**	1	CAP-DUST (TRANSMISSION OIL)	

I-REFER TO HYDRAULIC INFORMATION SYSTEM
M-METRIC PART
Y-SEPARATE ILLUSTRATION

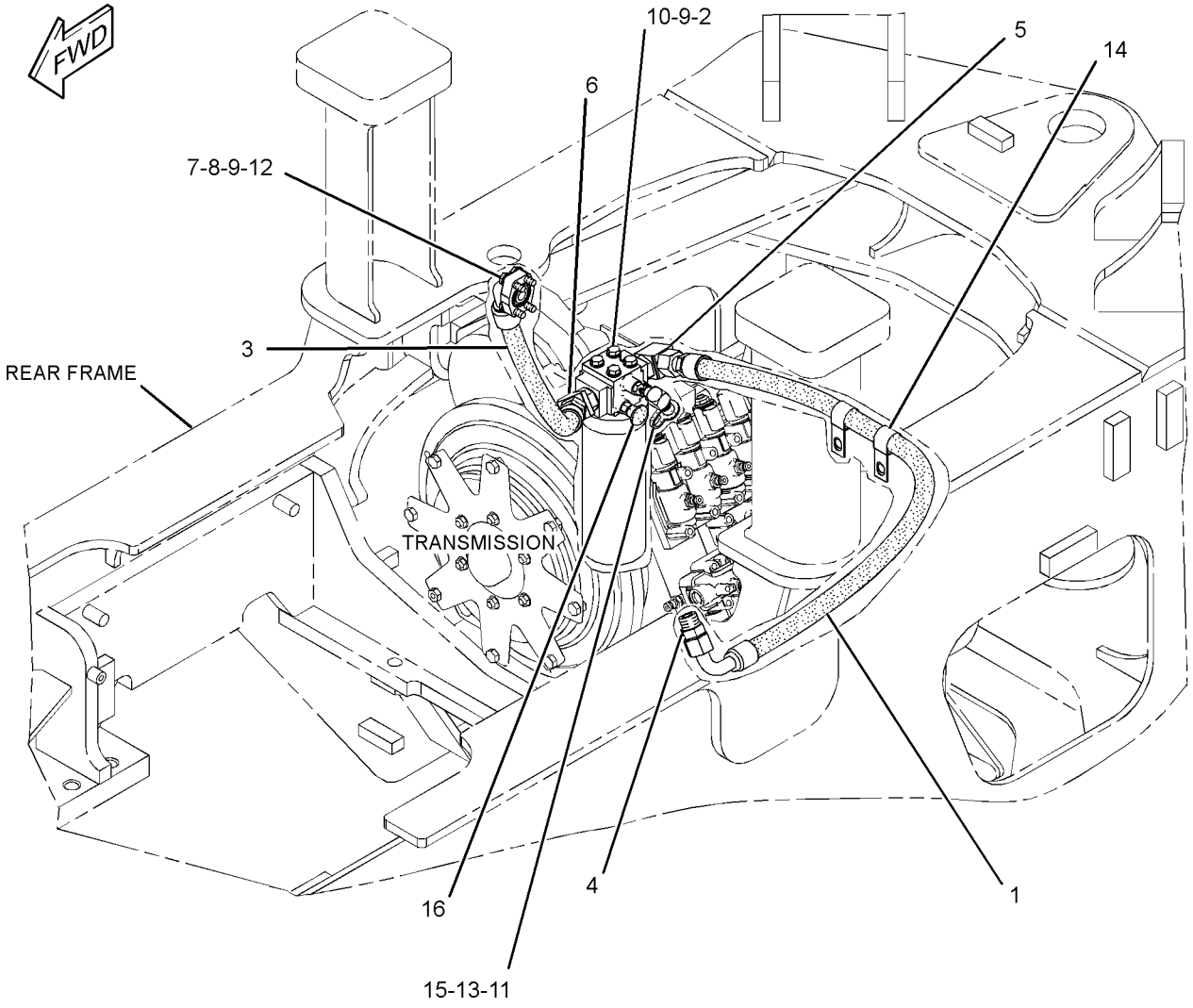

GRAPHIC #1 **<END>** g01343527

226-2869 FILTER GP-OIL—POWER TRAIN

S/N: BYD1-UP; FTD1-UP

PART OF 203-3894, 235-6807 FILTER & LINES GP-TRANSMISSION

SMCS-3004, 3067 **i02672185**

NOTE	REF NO	GRAPHIC REF	PART NUMBER	QTY	PART NAME 1 2 3 4 5 6 (PRODUCT LEVEL)	SEE PAGE
	1	1	**1G-8878**	1	FILTER AS-OIL (ADVANCED EFFICIENCY) (POWER TRAIN)	
	3	1	**134-0404**	1	SWITCH AS-PRESSURE (POWER TRAIN OIL FILTER BYPASS)	
	4	1	**3J-1907**	1	SEAL-O-RING	
	5	1	**3J-7354**	1	SEAL-O-RING	
	6	1	**8C-3446**	1	VALVE-FLUID SAMPLING (POWER TRAIN OIL)	

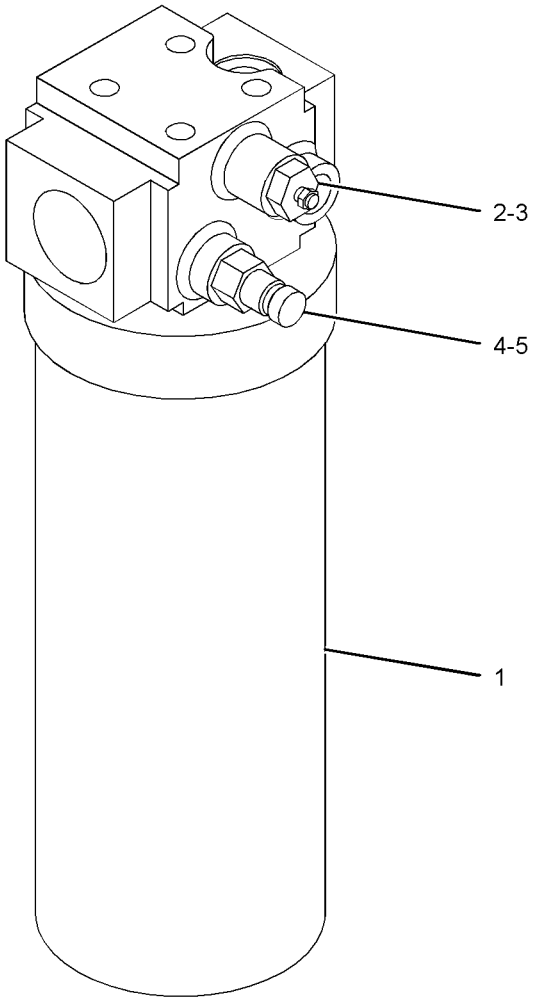

GRAPHIC #1

<END>

g01342808

129-8734 GAUGE GP-SIGHT–POWER TRAIN OIL

S/N: BYD1-UP

PART OF 289-8845 POWER TRAIN AR

SMCS-7479 **i01019996**

NOTE	REF NO	GRAPHIC REF	PART NUMBER	QTY	PART NAME 1 2 3 4 5 6 (PRODUCT LEVEL)	SEE PAGE
	1	1	**122-8353**	2	BOLT	
	2	1	**122-8352**	4	SEAL-O-RING	

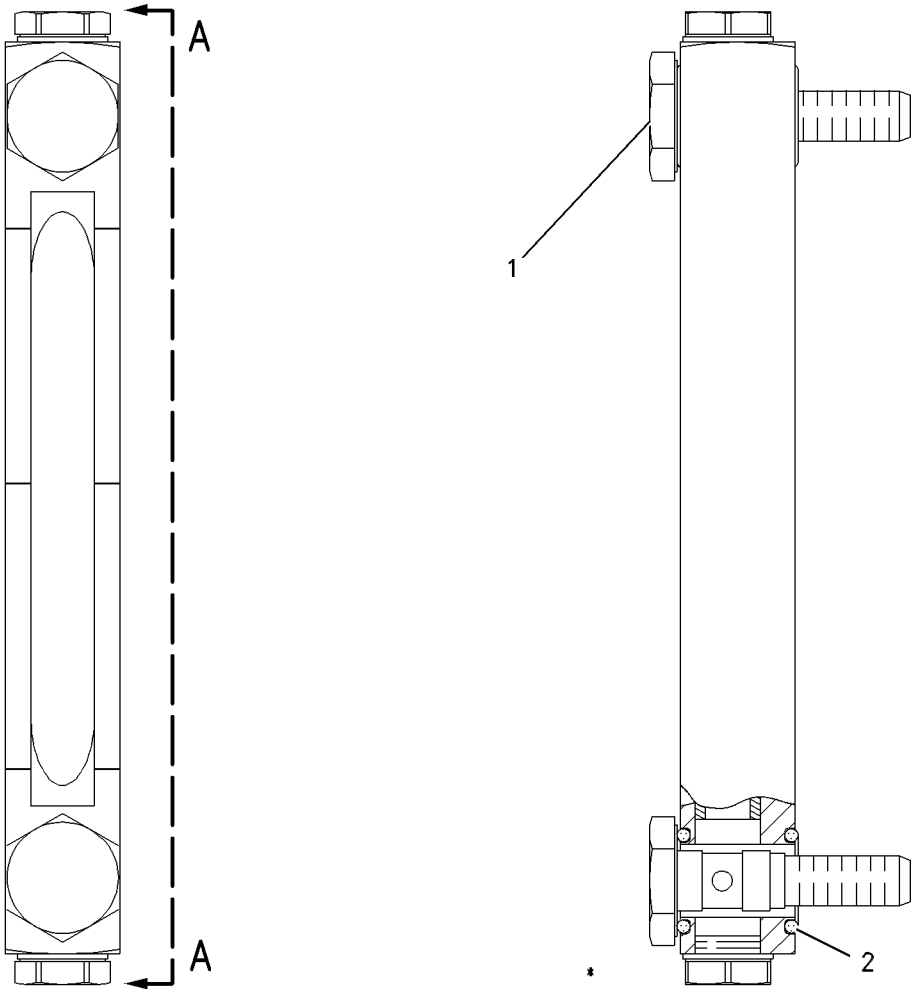

GRAPHIC #1 **<END>** g00523313

304-9464 GAUGE GP-SIGHT

S/N: FTD650-UP

PART OF 289-8895 POWER TRAIN AR

SMCS-7479 **i02885878**

NOTE	REF NO	GRAPHIC REF	PART NUMBER	QTY	PART NAME 1 2 3 4 5 6 (PRODUCT LEVEL)	SEE PAGE
	1	1	**122-8353**	2	BOLT (M12X46.5-MM)	
	2	1	**5J-2974**	4	SEAL-O-RING	

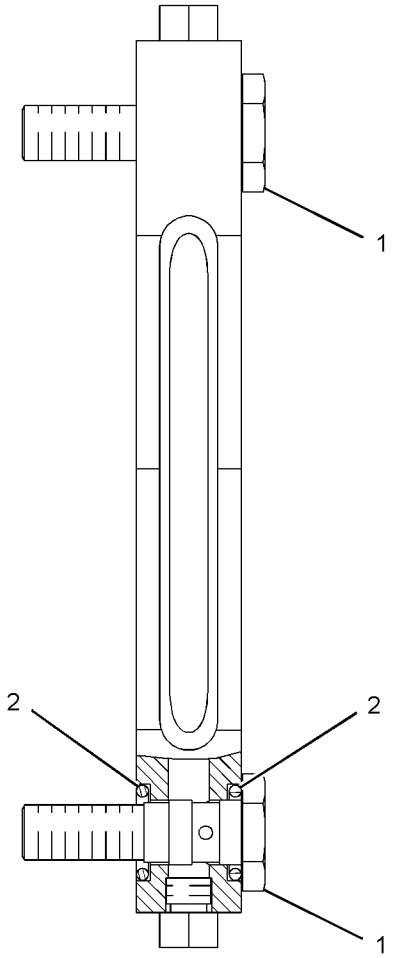

GRAPHIC #1 **<END>** g01438921

203-2762 GEAR GP-BEVEL & PINION–FRONT

S/N: BYD1-UP

PART OF 203-2761, 203-2770 AXLE AR-FIXED

AN ATTACHMENT

SMCS-3254, 3256 **i01728729**

NOTE	REF NO	GRAPHIC REF	PART NUMBER	QTY	PART NAME 1 2 3 4 5 6 (PRODUCT LEVEL)	SEE PAGE
	1	1	**1K-7990**	1	CONE-BEARING	
	2	1	**1K-7991**	1	CUP-BEARING	
	3	1	**2J-6232**	1	CUP-BEARING	
	4	1	**2J-6233**	1	CONE-BEARING	
	5	1	**2K-9295**	1	BEARING AS-TAPERED ROLLER	
	6	1	**6V-0347**	1	CONE-BEARING	
	7	1	**4E-3644**	1	NUT-ADJUSTMENT	
M	8	1	**4E-3896**	2	BOLT (M6X1X14-MM)	
	9	1	**4E-3897**	2	LOCK	
	10	1	**4E-4305**	1	NUT-ADJUSTMENT	
	11	1	**9U-2743**	1	SLEEVE AS	
		1	**3B-4124**	1	CUP-BEARING (TAPERED ROLLER)	
	12	1	**9U-2744**	1	SLEEVE AS	
		1	**6F-2956**	1	CUP-BEARING	
B	13	1	**9U-3409**	1	SHIM PACK (INCLUDES 20-SHIMS)	
	14	1	**9V-2412**	1	RETAINER	
	15	1	**203-2756**	1	SET-BEVEL GEAR & PINION	
		1	**8R-8121**	1	GEAR-BEVEL (42-TEETH)	
		1	**203-2757**	1	SHAFT-PINION (14-TEETH)	
	16	1	**203-2758**	1	SPACER (55.9X76X10.52-MM THK)	
	17	1	**203-2764**	1	YOKE AS	
		1	**215-8125**	1	GUARD	
	18	1	**2H-3927**	1	SEAL-O-RING	
	19	1	**4E-4031**	2	PIN	
M	20	1	**8T-0372**	1	BOLT (M12X1.75X90-MM)	
	21	1	**9X-2621**	4	PIN-SPRING	
	22	1	**9X-2622**	4	PIN-SPRING	
M	23	1	**9X-6491**	16	BOLT (M16X2X150-MM)	

B-USE AS REQUIRED
M-METRIC PART

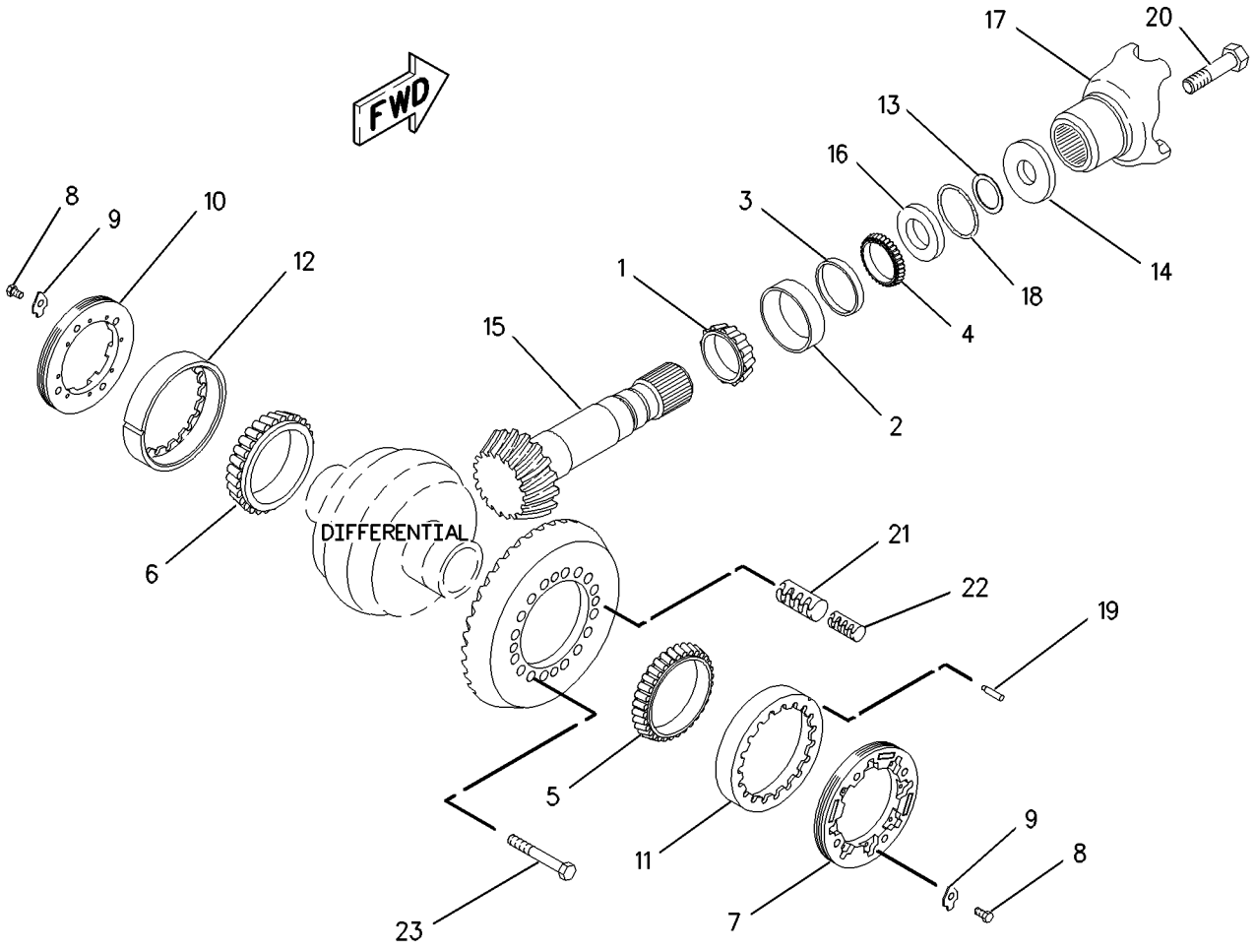

GRAPHIC #1 **<END>** g00888571

236-7495 GEAR GP-BEVEL & PINION–REAR

S/N: BYD1-UP; FTD1-UP

PART OF 267-7380 AXLE AR-OSCILLATING, 267-7377, 267-7378 AXLE GP-OSCILLATING AN ATTACHMENT

SMCS-3254, 3256 **i02252885**

NOTE	REF NO	GRAPHIC REF	PART NUMBER	QTY	PART NAME 1 2 3 4 5 6 (PRODUCT LEVEL)	SEE PAGE
	1	1	**1K-7991**	1	CUP-BEARING	
	2	1	**2J-6232**	1	CUP-BEARING	
	3	1	**2J-6233**	1	CONE-BEARING	
	4	1	**2K-9295**	1	BEARING AS-TAPERED ROLLER	
	5	1	**1K-7990**	1	CONE-BEARING	
	6	1	**6V-0347**	1	CONE-BEARING	
	7	1	**4E-3644**	1	NUT-ADJUSTMENT	
M	8	1	**4E-3896**	2	BOLT (M6X1X14-MM)	
	9	1	**4E-3897**	2	LOCK	
	10	1	**4E-4305**	1	NUT-ADJUSTMENT	
	11	1	**9U-2743**	1	SLEEVE AS	
		1	**3B-4124**	1	CUP-BEARING (TAPERED ROLLER)	
	12	1	**9U-2744**	1	SLEEVE AS	
		1	**4E-4307**	1	SLEEVE	
		1	**6F-2956**	1	CUP-BEARING	
	13	1	**9U-3409**	1	SHIM PACK (INCLUDES 20-SHIMS)	
	14	1	**9V-2412**	1	RETAINER	
	15	1	**203-2758**	1	SPACER (55.9X76X10.52-MM THK)	
	16	1	**203-2759**	1	YOKE AS	
		1	**215-8125**	1	GUARD	
	17	1	**236-7493**	1	SET-BEVEL GEAR	
	18	1	**2H-3927**	1	SEAL-O-RING	
	19	1	**4E-4031**	2	PIN	
M	20	1	**8T-0372**	1	BOLT (M12X1.75X90-MM)	
	21	1	**9X-2621**	4	PIN-SPRING	
	22	1	**9X-2622**	4	PIN-SPRING	
M	23	1	**9X-6491**	16	BOLT (M16X2X150-MM)	

M-METRIC PART

236-7495 **GEAR GP-BEVEL & PINION** *(contd.)* **i02252885**

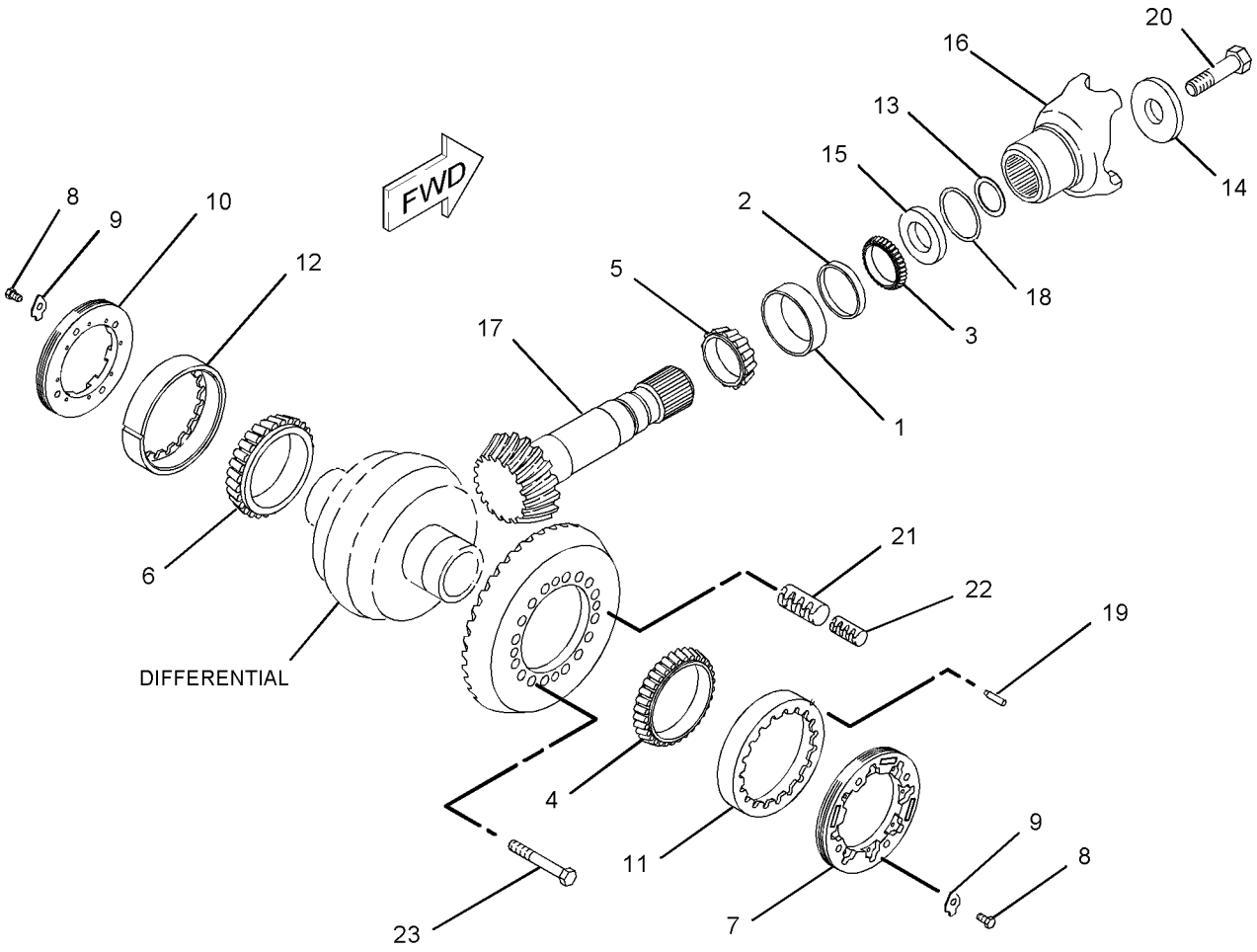

GRAPHIC #1 **<END>** g01112706

236-7496 GEAR GP-BEVEL & PINION—FRONT

S/N: BYD1-UP; FTD1-UP
PART OF 234-4253, 234-4255 AXLE AR-FIXED
AN ATTACHMENT

SMCS-3254, 3256 **i02252700**

NOTE	REF NO	GRAPHIC REF	PART NUMBER	QTY	PART NAME 1 2 3 4 5 6 (PRODUCT LEVEL)	SEE PAGE
	1	1	**1K-7991**	1	CUP-BEARING	
	2	1	**2J-6232**	1	CUP-BEARING	
	3	1	**2J-6233**	1	CONE-BEARING	
	4	1	**2K-9295**	1	BEARING AS-TAPERED ROLLER	
	5	1	**1K-7990**	1	CONE-BEARING	
	6	1	**6V-0347**	1	CONE-BEARING	
	7	1	**4E-3644**	1	NUT-ADJUSTMENT	
M	8	1	**4E-3896**	2	BOLT (M6X1X14-MM)	
	9	1	**4E-3897**	2	LOCK	
	10	1	**4E-4305**	1	NUT-ADJUSTMENT	
	11	1	**9U-2743**	1	SLEEVE AS	
		1	**3B-4124**	1	CUP-BEARING (TAPERED ROLLER)	
	12	1	**9U-2744**	1	SLEEVE AS	
		1	**4E-4307**	1	SLEEVE	
		1	**6F-2956**	1	CUP-BEARING	
	13	1	**9U-3409**	1	SHIM PACK (INCLUDES 20-SHIMS)	
	14	1	**9V-2412**	1	RETAINER	
	15	1	**203-2758**	1	SPACER (55.9X76X10.52-MM THK)	
	16	1	**203-2764**	1	YOKE AS	
		1	**215-8125**	1	GUARD	
	17	1	**236-7493**	1	SET-BEVEL GEAR	
	18	1	**2H-3927**	1	SEAL-O-RING	
	19	1	**4E-4031**	2	PIN	
M	20	1	**8T-0372**	1	BOLT (M12X1.75X90-MM)	
	21	1	**9X-2621**	4	PIN-SPRING	
	22	1	**9X-2622**	4	PIN-SPRING	
M	23	1	**9X-6491**	16	BOLT (M16X2X150-MM)	

M-METRIC PART

236-7496 **GEAR GP-BEVEL & PINION** *(contd.)* **i02252700**

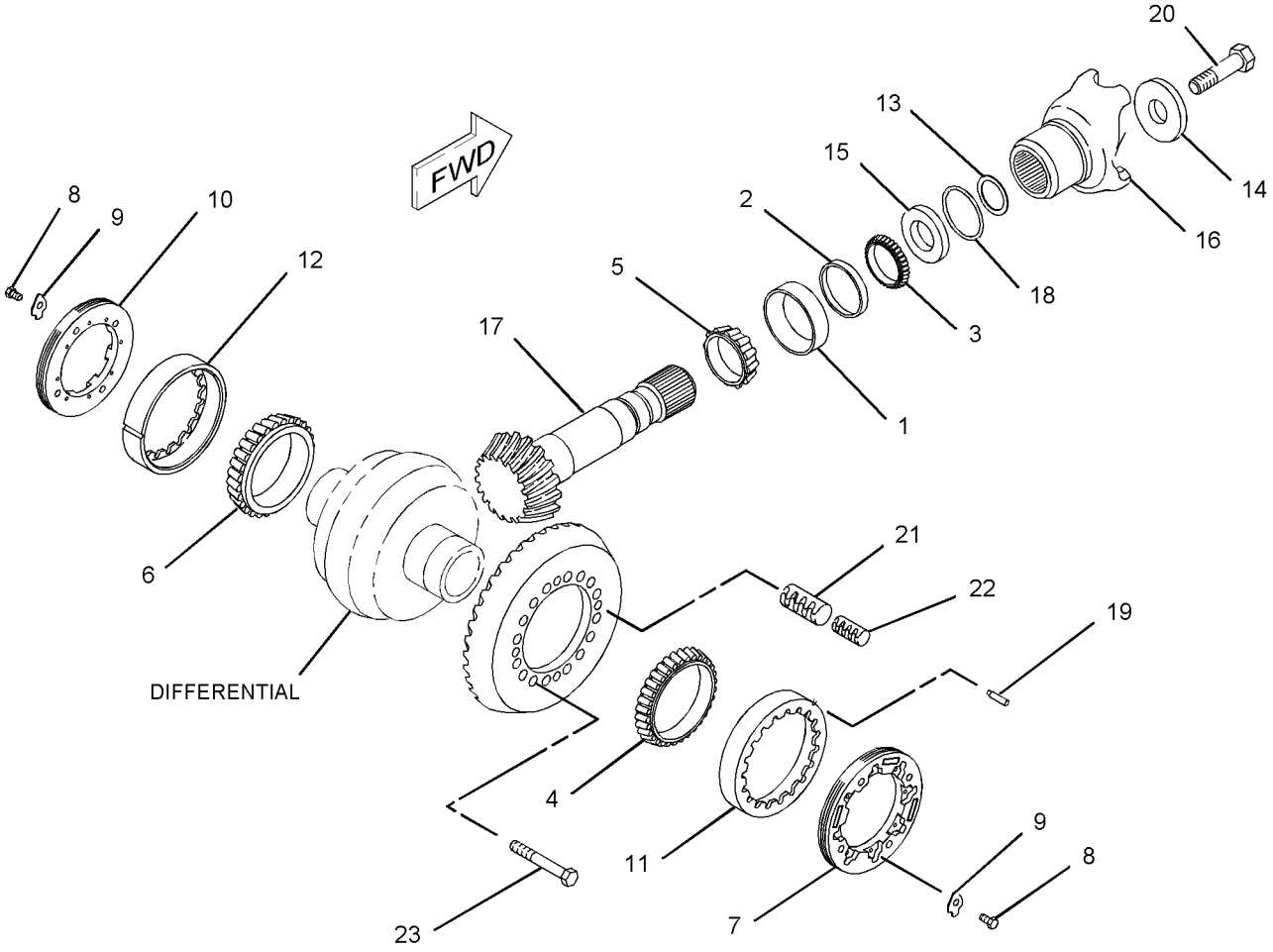

GRAPHIC #1 **<END>** g01112976

252-8442 GEAR GP-BEVEL & PINION

S/N: FTD650-UP

PART OF 257-1712 AXLE AR-FIXED

SMCS-3254, 3256 **i02901020**

NOTE	REF NO	GRAPHIC REF	PART NUMBER	QTY	PART NAME 1 2 3 4 5 6 (PRODUCT LEVEL)	SEE PAGE
	1	1	**1P-3934**	1	CUP-BEARING	
	2	1	**1P-3935**	1	CONE-BEARING	
	3	1	**4L-7249**	1	CUP-BEARING	
	4	1	**9U-3409**	1	SHIM PACK (INCLUDES 20-SHIMS)	
	5	1	**9V-2412**	1	RETAINER	
	6	1	**109-5502**	1	LOCK-BEARING	
	7	1	**203-2764**	1	YOKE AS	
		1	**215-8125**	1	GUARD	
	8	1	**258-8338**	1	BEARING AS-TAPERED ROLLER	
	9	1	**259-0608**	1	CONE-TAPERED	
	10	1	**259-3125**	1	SET-BEVEL GEAR	
	11	1	**259-4727**	1	NUT-BEARING	
	12	1	**260-3126**	1	SPACER	
	13	1	**259-7014**	16	BOLT (M16X2X85-MM)	
	14	1	**2H-3927**	1	SEAL-O-RING	
	15	1	**6F-2956**	1	CUP-BEARING	
	16	1	**6V-0347**	1	CONE-BEARING	
M	17	1	**6V-8210**	1	BOLT (M8X1.25X16-MM)	
M	18	1	**8T-0372**	1	BOLT (M12X1.75X90-MM)	

M-METRIC PART

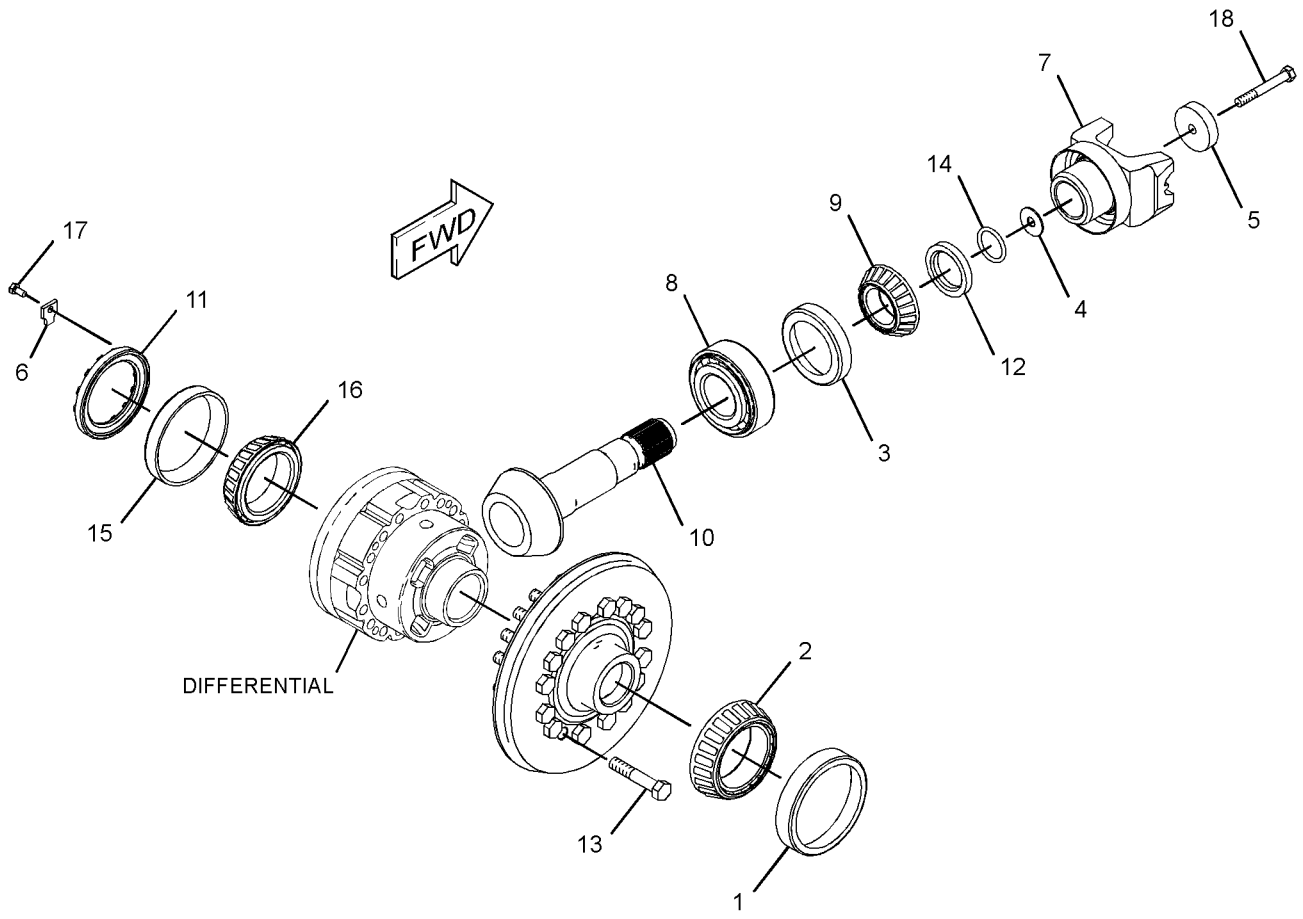

GRAPHIC #1 **<END>** g01390536

190-2888 GEAR GP-INPUT TRANSFER

S/N: J2X1-UP

PART OF 290-2719 TRANSMISSION AR

SMCS-3159 **i01576508**

NOTE	REF NO	GRAPHIC REF	PART NUMBER	QTY	PART NAME 1 2 3 4 5 6 (PRODUCT LEVEL)	SEE PAGE
	1	1	**190-2911**	1	SHAFT-INPUT	
	2	1	**6Y-8069**	1	CARRIER-SEAL	
	3	1	**2K-5957**	1	RING-SEALING	
	4	1	**120-4481**	1	GEAR	
	5	1	**116-4883**	1	GEAR	
	6	1	**005-0471**	2	CONE-BEARING	

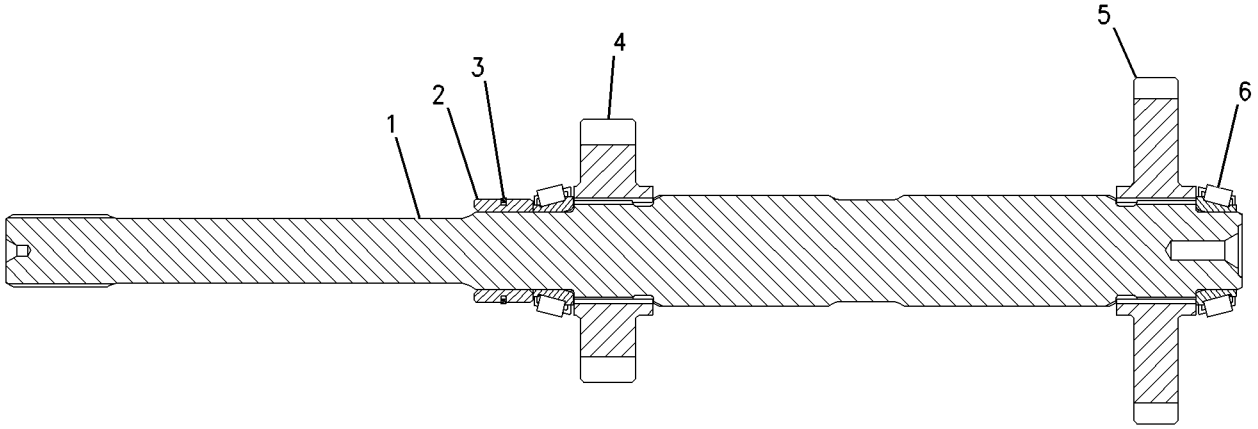

GRAPHIC #1 **<END>** g00819860

234-8852 GEAR GP-INPUT TRANSFER

S/N: J2W1-UP

PART OF 290-2720 TRANSMISSION AR

SMCS-3159 **i02250028**

NOTE	REF NO	GRAPHIC REF	PART NUMBER	QTY	PART NAME 1 2 3 4 5 6 (PRODUCT LEVEL)	SEE PAGE
	1	1	**190-2911**	1	SHAFT-INPUT	
	2	1	**6Y-8069**	1	CARRIER-SEAL	
	3	1	**2K-5957**	1	RING-SEALING	
	4	1	**120-4481**	1	GEAR (32-TEETH)	
	5	1	**234-8855**	1	GEAR (48-TEETH)	
	6	1	**005-0471**	2	CONE-BEARING	

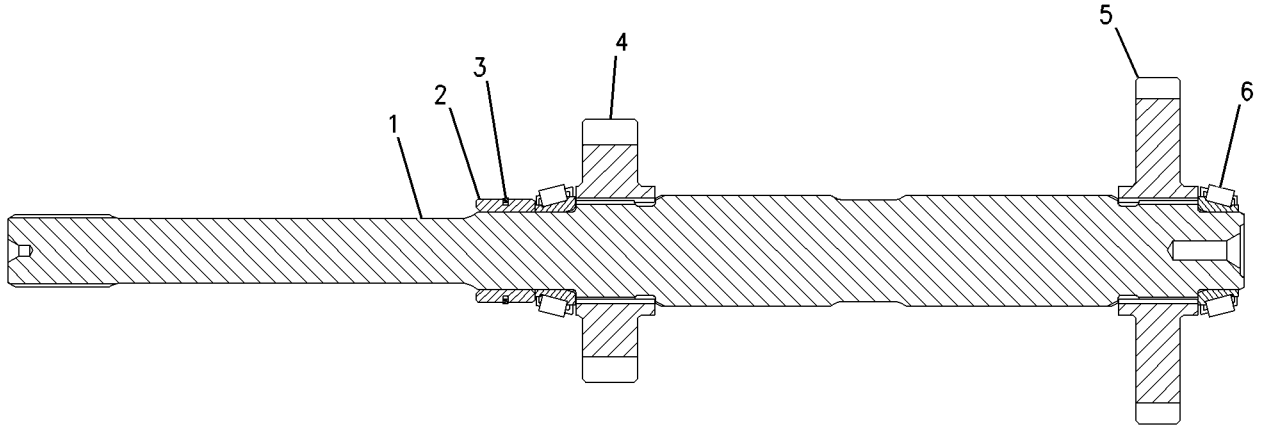

GRAPHIC #1 **<END>** g00819860

190-2915 GEAR GP-OUTPUT TRANSFER

S/N: J2X1-UP

PART OF 290-2719 TRANSMISSION AR

SMCS-3075, 3159 **i01753935**

NOTE	REF NO	GRAPHIC REF	PART NUMBER	QTY	PART NAME 1 2 3 4 5 6 (PRODUCT LEVEL)	SEE PAGE
	1	1	**4F-8824**	2	SEAL-O-RING	
M	2	1	**6V-5696**	2	BOLT (M12X1.75X80-MM)	
	3	1	**7G-5220**	2	RETAINER	
	4	1	**1B-3978**	1	CUP-BEARING (TAPERED ROLLER)	
	5	1	**1B-3980**	2	CONE-BEARING (TAPERED ROLLER)	
	6	1	**204-2594**	1	GEAR	
	7	1	**8T-3293**	1	RING-RETAINING	
	8	1	**5P-2861**	1	SEAL-O-RING	
	9	1	**9U-9551**	1	CAGE-BEARING	
	10	1	**8V-7623**	1	DRUM-BRAKE	
	11	1	*214-4769*	1	BRAKE GP-PARKING	
		1	**214-4768**	1	PLATE AS	
		1	**1V-2772**	1	SPRING-EXTENSION	
		1	**3K-7056**	1	SPRING-EXTENSION	
		1	**3K-7057**	1	SPRING-EXTENSION	
		1	**111-9050**	2	SHOE AS-LINED	
M	12	1	**6V-8675**	4	BOLT (M12X1.75X35-MM)	
	13	1	**105-4776**	1	YOKE-BRAKE FLANGE	
M	14	1	**6V-3668**	8	BOLT (M12X1.75X30-MM)	
	15	1	**5P-8245**	12	WASHER-HARD (13.5X25.5X3-MM THK)	
	16	1	**133-4297**	1	SEAL-LIP TYPE	
	17	1	**123-9056**	1	LEVER AS	
	18	1	**116-4858**	1	SHAFT	
	19	1	**105-4775**	1	YOKE-OUTPUT	

M-METRIC PART

190-2915 **GEAR GP-OUTPUT TRANSFER** *(contd.)* **i01753935**

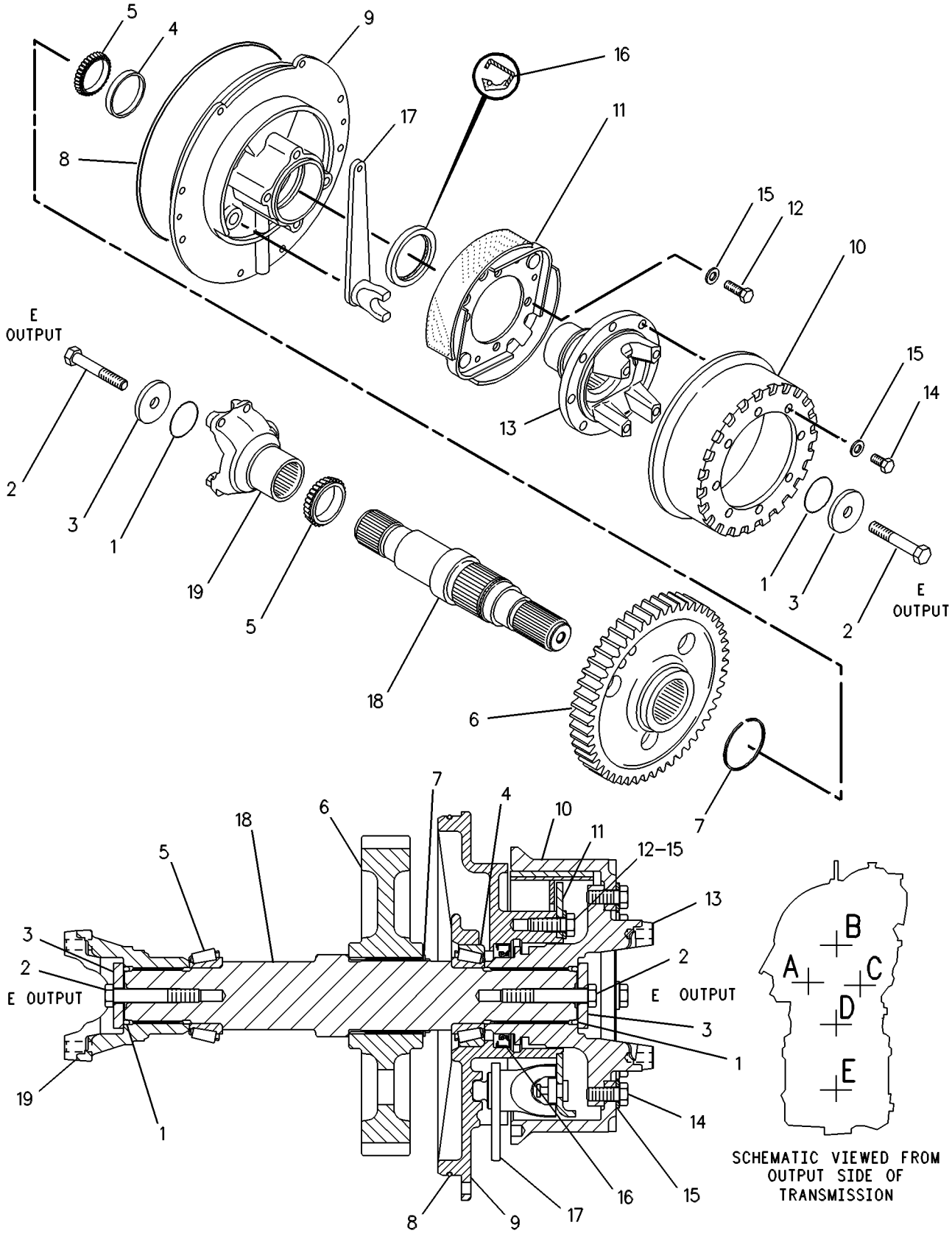

GRAPHIC #1 **<END>** g00131629

234-8859 GEAR GP-OUTPUT TRANSFER

S/N: J2W1-UP

PART OF 290-2720 TRANSMISSION AR

SMCS-3075, 3159 **i02668630**

NOTE	REF NO	GRAPHIC REF	PART NUMBER	QTY	PART NAME 1 2 3 4 5 6 (PRODUCT LEVEL)	SEE PAGE
	1	1	**4F-8824**	2	SEAL-O-RING	
M	2	1	**6V-5696**	2	BOLT (M12X1.75X80-MM)	
	3	1	**7G-5220**	2	RETAINER	
	4	1	**1B-3978**	1	CUP-BEARING (TAPERED ROLLER)	
	5	1	**1B-3980**	2	CONE-BEARING (TAPERED ROLLER)	
	6	1	**234-8860**	1	GEAR (76-TEETH)	
	7	1	**8T-3293**	1	RING-RETAINING	
	8	1	**5P-2861**	1	SEAL-O-RING	
	9	1	**9U-9551**	1	CAGE-BEARING	
	10	1	**8V-7623**	1	DRUM-BRAKE	
CY	11	1	**283-9971**	1	BRAKE GP-PARKING	412
M	12	1	**6V-8675**	4	BOLT (M12X1.75X35-MM)	
	13	1	**105-4776**	1	YOKE-BRAKE FLANGE	
M	14	1	**6V-3668**	8	BOLT (M12X1.75X30-MM)	
	15	1	**5P-8245**	12	WASHER-HARD (13.5X25.5X3-MM THK)	
	16	1	**133-4297**	1	SEAL-LIP TYPE	
	17	1	**123-9056**	1	LEVER AS	
	18	1	**116-4858**	1	SHAFT	
	19	1	**105-4775**	1	YOKE-OUTPUT	

C-CHANGE FROM PREVIOUS TYPE
M-METRIC PART
Y-SEPARATE ILLUSTRATION

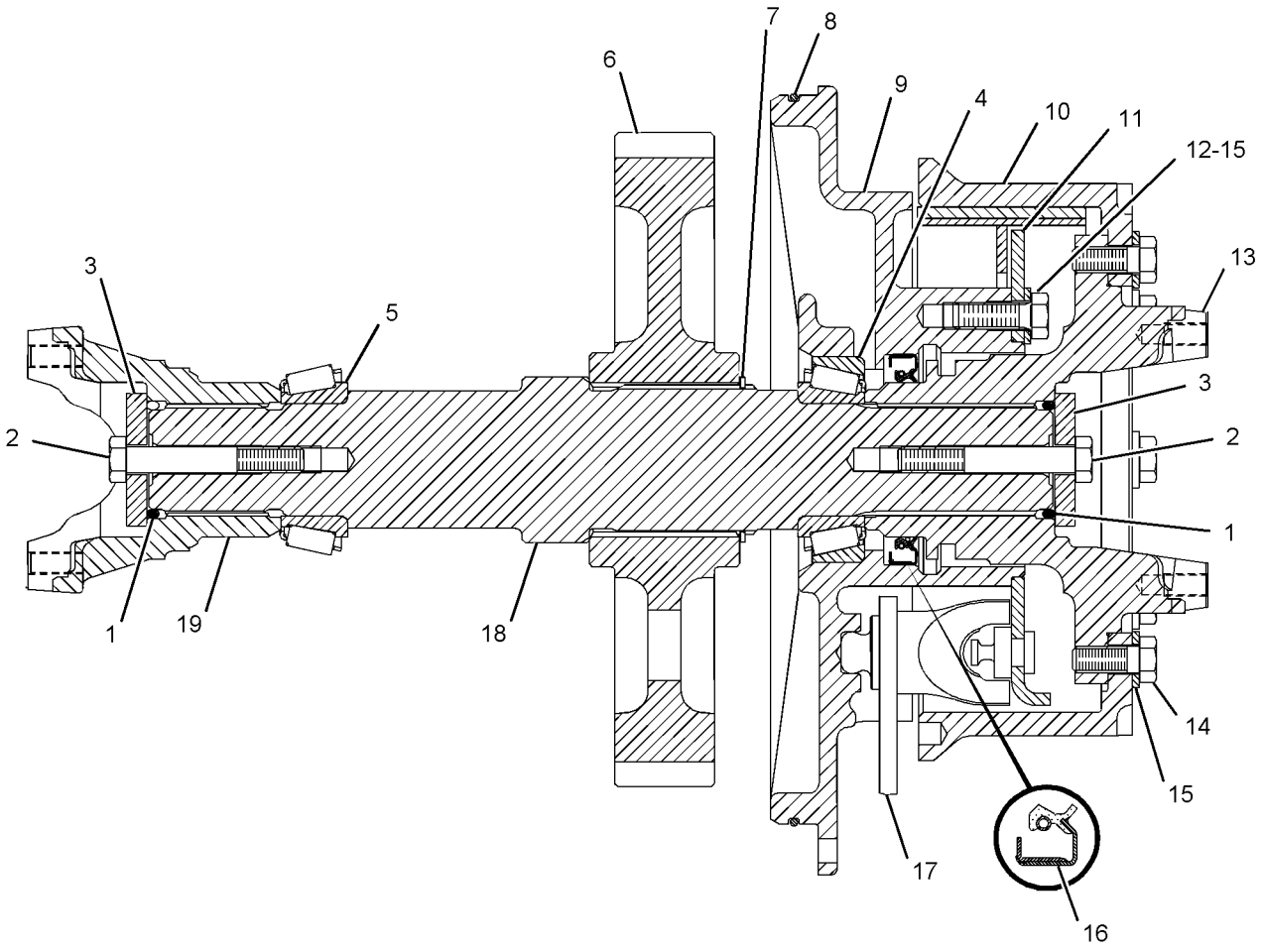

GRAPHIC #1 **<END>** g01108944

203-2763 HOUSING GP-FIXED AXLE—FRONT

S/N: BYD1-UP
FIXED
PART OF 203-2761, 203-2770 AXLE AR-FIXED
AN ATTACHMENT

SMCS-3260 **i01728609**

NOTE	REF NO	GRAPHIC REF	PART NUMBER	QTY	PART NAME 1 2 3 4 5 6 (PRODUCT LEVEL)	SEE PAGE
	1	1	**117-3319**	2	HOUSING-FIXED AXLE (OUTER)	
	2	1	**215-8058**	1	RETAINER-SEAL	
M	3	1	**8T-0375**	8	BOLT (M16X2X45-MM)	
	4	1	**5P-8247**	40	WASHER-HARD (17X32X3.5-MM THK)	
	5	1	**9G-5311**	2	SEAL GP-DUO-CONE	
					(EACH INCLUDES)	
		1	**4K-0173**	2	RING-SEALING	
	6	1	**5P-3723**	2	CONE-BEARING	
	7	1	**6D-7690**	2	CUP-BEARING	
	8	1	**5H-3701**	2	SCREW-PURGE (7/16-20-THD)	
	9	1	**8T-0336**	1	FITTING-PRESSURE RELIEF	
	10	1	**205-3211**	1	HOUSING AS-FIXED AXLE (CENTER)	
M		1	**095-0673**	3	BOLT-SOCKET HEAD (M12X1.75X60-MM)	
	11	1	**3B-0551**	1	PLUG-PIPE	
	12	1	**8R-0512**	1	GAUGE AS-OIL LEVEL (DIPSTICK)	
	13	1	**4E-1639**	2	SHAFT-AXLE	
M	14	1	**6C-5304**	16	BOLT (M16X2X110-MM)	
	15	1	**5P-4484**	1	PLUG-MAGNETIC	
M	16	1	**9X-6493**	16	BOLT (M16X2X180-MM)	
	17	1	**9C-6041**	3	DOWEL	
	18	1	**061-6712**	2	RING-RETAINING	
	19	1	**8R-2532**	2	NUT-BEARING (M85X2-THD)	
	20	1	**6F-2956**	2	CUP-BEARING	
	21	1	**6V-0347**	2	CONE-BEARING	
	22	1	**193-2200**	1	SEAL-LIP TYPE	
M	23	1	**8T-5093**	6	BOLT-LOCKING (M8X1.25X25-MM)	
	24	1	**8T-4224**	6	WASHER-HARD (8.8X16X2-MM THK)	
	25	1	**8R-2189**	1	HOUSING-PINION	
B	26	1	**8R-3809**	1	SHIM PACK (INCLUDES 8-SHIMS)	
	27	1	**8F-9516**	1	SEAL-O-RING	
	28	1	**3E-2338**	2	PLUG-PIPE	
	29	1	**7M-8485**	3	SEAL-O-RING	

B-USE AS REQUIRED
M-METRIC PART

203-2763 **HOUSING GP-FIXED AXLE** *(contd.)* **i01728609**

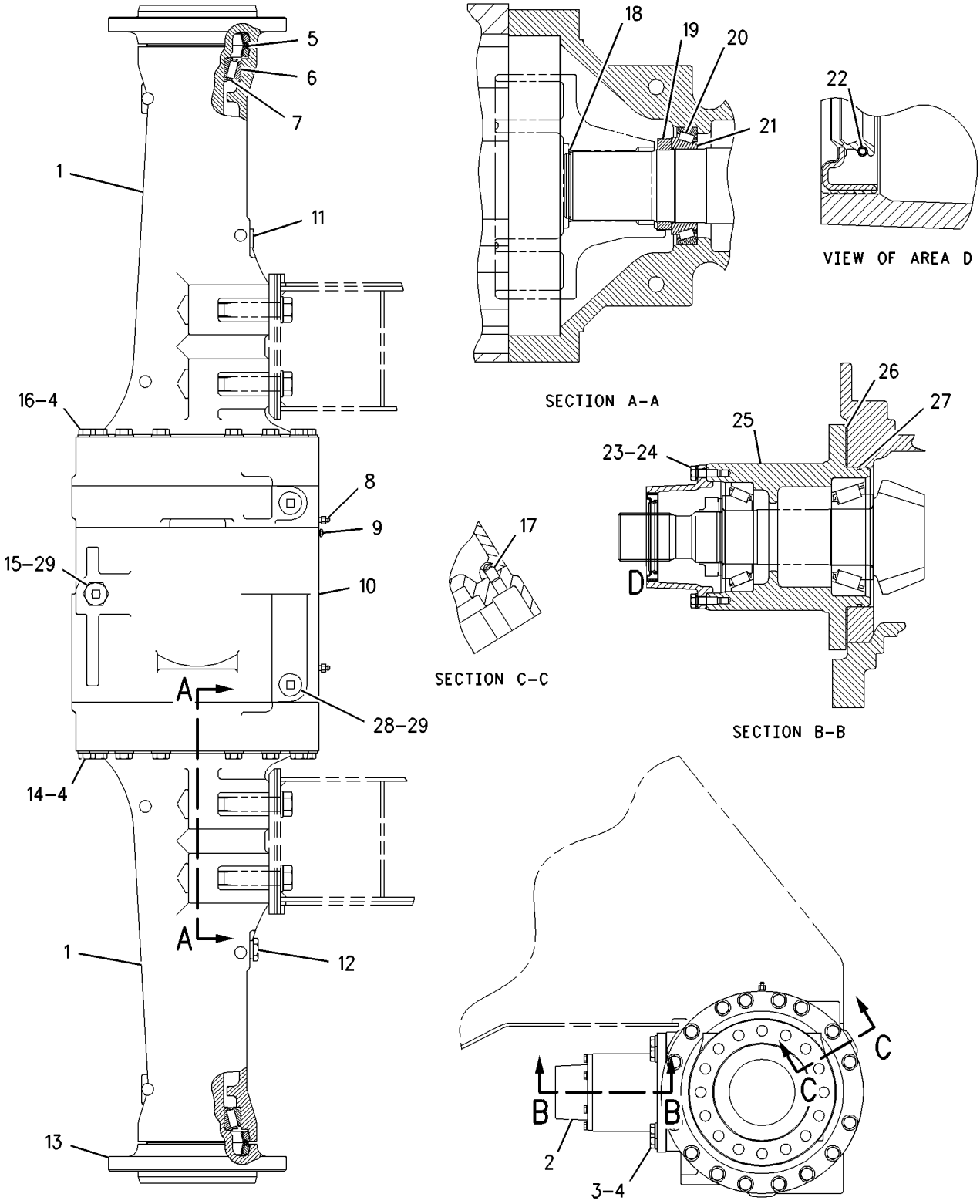

GRAPHIC #1 **<END>** g00888645

234-4246 HOUSING GP-FIXED AXLE–FRONT

S/N: BYD1-UP; FTD1-UP
PART OF 234-4253, 234-4255 AXLE AR-FIXED
AN ATTACHMENT

SMCS-3260 **i02252636**

NOTE	REF NO	GRAPHIC REF	PART NUMBER	QTY	PART NAME 1 2 3 4 5 6 (PRODUCT LEVEL)	SEE PAGE
	1	1	**5P-3723**	2	CONE-BEARING	
	2	1	**6D-7690**	2	CUP-BEARING	
	3	1	**6F-2956**	2	CUP-BEARING	
	4	1	**6V-0347**	2	CONE-BEARING	
	5	1	**5H-3701**	2	SCREW-PURGE (7/16-20-THD)	
	6	1	**5P-4484**	1	PLUG-MAGNETIC	
	7	1	**8R-0512**	1	GAUGE AS-OIL LEVEL (DIPSTICK)	
	8	1	**8R-2189**	1	HOUSING-PINION	
	9	1	**8R-2532**	2	NUT-BEARING (M85X2-THD)	
	10	1	**8R-3809**	1	SHIM PACK (INCLUDES 8-SHIMS)	
	11	1	**8T-0336**	1	FITTING-PRESSURE RELIEF	
	12	1	**9G-5311**	2	SEAL GP-DUO-CONE	
	13	1	**193-2200**	1	SEAL-LIP TYPE	
	14	1	**205-3211**	1	HOUSING AS-FIXED AXLE (CENTER)	
M		1	**095-0673**	3	BOLT-SOCKET HEAD (M12X1.75X60-MM)	
	15	1	**215-8058**	1	RETAINER-SEAL	
	16	1	**234-4243**	2	HOUSING-FIXED AXLE (OUTER)	
	17	1	**234-4245**	2	SHAFT-AXLE	
	18	1	**235-9631**	16	BOLT (M16X2X120-MM)	
	19	1	**236-0483**	16	BOLT (M16X2X190-MM)	
	20	1	**061-6712**	2	RING-RETAINING	
	21	1	**3B-0551**	1	PLUG-PIPE	
	22	1	**3E-2338**	2	PLUG-PIPE	
	23	1	**5P-8247**	40	WASHER-HARD (17X32X3.5-MM THK)	
	24	1	**7M-8485**	3	SEAL-O-RING	
	25	1	**8F-9516**	1	SEAL-O-RING	
M	26	1	**8T-0375**	8	BOLT (M16X2X45-MM)	
	27	1	**8T-4224**	6	WASHER-HARD (8.8X16X2-MM THK)	
M	28	1	**8T-5093**	6	BOLT-LOCKING (M8X1.25X25-MM)	
	29	1	**9C-6041**	3	DOWEL	
B	30	1	**1U-8846**		SEALANT-GASKET	

B-USE AS REQUIRED
M-METRIC PART

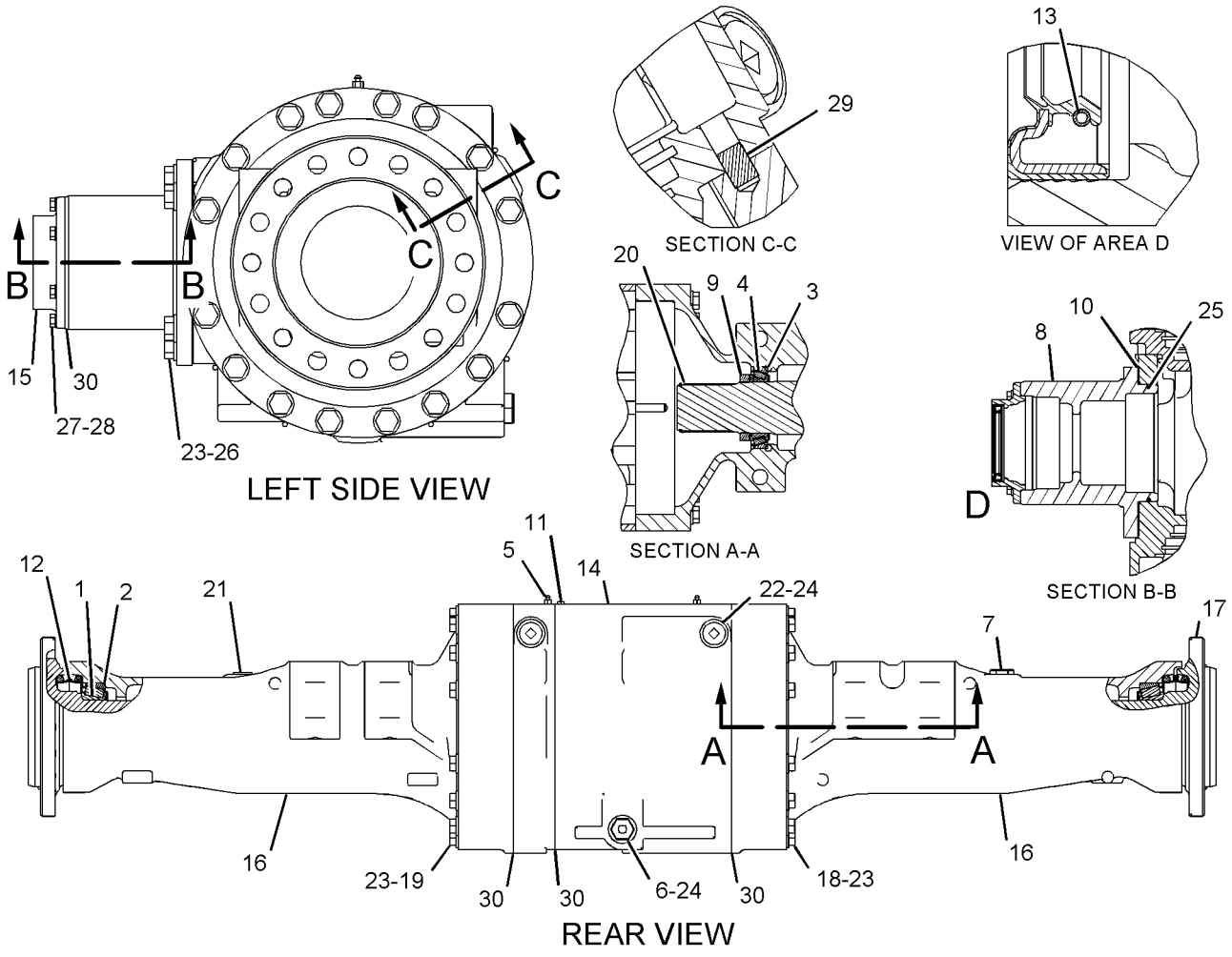

GRAPHIC #1 **<END>** g01111707

252-8449 HOUSING GP-FIXED AXLE

S/N: FTD650-UP

PART OF 257-1712 AXLE AR-FIXED

SMCS-3260 **i02901021**

NOTE	REF NO	GRAPHIC REF	PART NUMBER	QTY	PART NAME 1 2 3 4 5 6 (PRODUCT LEVEL)	SEE PAGE
	1	1	**3B-0551**	1	PLUG-PIPE	
	2	1	**5H-3701**	2	SCREW-PURGE (7/16-20-THD)	
	3	1	**5P-3723**	2	CONE-BEARING	
	4	1	**5P-4484**	1	PLUG-MAGNETIC (AXLE HOUSING)	
	5	1	**6D-7690**	2	CUP-BEARING	
	6	1	**6F-2956**	2	CUP-BEARING	
	7	1	**8R-0512**	1	GAUGE AS-OIL LEVEL (DIPSTICK) (AXLE)	
	8	1	**8R-2532**	2	NUT-BEARING (M85X2-THD)	
B	9	1	**8R-3809**	1	SHIM PACK (INCLUDES 8-SHIMS)	
	10	1	**8T-0336**	1	FITTING-PRESSURE RELIEF	
	11	1	**9G-5311**	2	SEAL GP-DUO-CONE	
					(EACH INCLUDES)	
		1	**4K-0173**	2	RING-SEALING	
	12	1	**193-2200**	1	SEAL-LIP TYPE	
	13	1	**215-8058**	1	RETAINER-SEAL	
	14	1	**234-4245**	2	SHAFT-AXLE	
	15	1	**235-9631**	16	BOLT (M16X2X120-MM)	
	16	1	**236-0483**	16	BOLT (M16X2X190-MM)	
	17	1	**252-7949**	1	HOUSING AS-FIXED AXLE (CENTER)	
M		1	**095-0673**	3	BOLT-SOCKET HEAD (M12X1.75X60-MM)	
	18	1	**254-3956**	1	HOUSING-FIXED AXLE (OUTER, RH)	
	19	1	**258-6939**	1	HOUSING-PINION	
	20	1	**264-9652**	1	HOUSING-FIXED AXLE (OUTER, LH)	
	21	1	**061-6712**	2	RING-RETAINING	
	22	1	*183-7263*	1	PLUG AS	
		1	**3J-7354**	1	SEAL-O-RING	
		1	**9S-8002**	1	PLUG-O-RING	
	23	1	**3E-2338**	2	PLUG-PIPE	
	24	1	**4L-7711**	1	SEAL-O-RING	
	25	1	**5P-8247**	40	WASHER-HARD (17X32X3.5-MM THK)	
	26	1	**6V-0347**	2	CONE-BEARING	
	27	1	**7M-8485**	3	SEAL-O-RING	
	28	1	**8F-9516**	1	SEAL-O-RING	
M	29	1	**8T-0375**	8	BOLT (M16X2X45-MM)	
	30	1	**8T-4224**	6	WASHER-HARD (8.8X16X2-MM THK)	
M	31	1	**8T-5093**	6	BOLT-LOCKING (M8X1.25X25-MM)	
	32	1	**9C-6041**	3	DOWEL	

B-USE AS REQUIRED
M-METRIC PART

252-8449 **HOUSING GP-FIXED AXLE** *(contd.)* **i02901021**

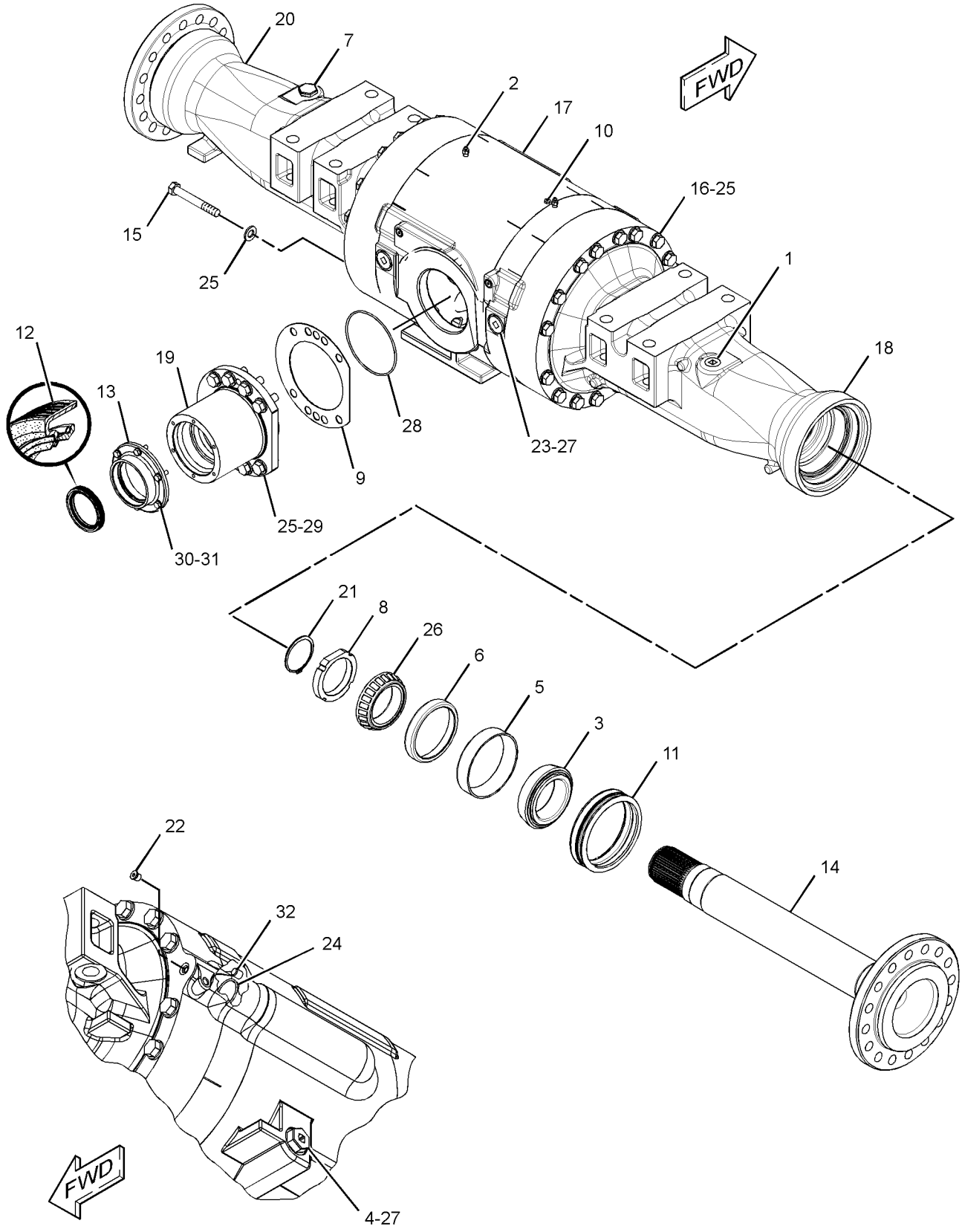

GRAPHIC #1 **<END>** g01392453

234-4247 HOUSING GP-OSCILLATING AXLE–REAR

S/N: BYD1-UP; FTD1-UP

PART OF 267-7377, 267-7378 AXLE GP-OSCILLATING

AN ATTACHMENT

SMCS-3260, 3268 **i02721503**

NOTE	REF NO	GRAPHIC REF	PART NUMBER	QTY	PART NAME 1 2 3 4 5 6 (PRODUCT LEVEL)	SEE PAGE
	1	1	**5P-3723**	2	CONE-BEARING	
	2	1	**6D-7690**	2	CUP-BEARING	
	3	1	**6F-2956**	2	CUP-BEARING	
	4	1	**6V-0347**	2	CONE-BEARING	
	5	1	**1K-8061**	2	WASHER-THRUST (4.03X5.72X0.265-IN THK)	
	6	1	**5H-3701**	2	SCREW-PURGE (7/16-20-THD)	
	7	1	**5P-4484**	1	PLUG-MAGNETIC	
	8	1	**6K-6075**	1	COVER	
	9	1	**8R-0512**	1	GAUGE AS-OIL LEVEL (DIPSTICK)	
	10	1	**8R-2189**	1	HOUSING-PINION	
	11	1	**8R-2532**	2	NUT-BEARING (M85X2-THD)	
	12	1	**8R-2584**	1	TRUNNION	
	13	1	**8R-3809**	1	SHIM PACK (INCLUDES 8-SHIMS)	
	14	1	**8T-0336**	2	FITTING-PRESSURE RELIEF	
	15	1	**9C-5048**	1	BEARING-SLEEVE	
	16	1	**9G-5311**	2	SEAL GP-DUO-CONE	
	17	1	**9H-1129**	2	SEAL-LIP TYPE	
	18	1	**9V-1203**	1	PLATE-THRUST	
	19	1	**128-0219**	1	SUPPORT-TRUNNION (FRONT)	
	20	1	**141-4892**	1	SUPPORT-TRUNNION (REAR)	
	21	1	**193-2200**	1	SEAL-LIP TYPE	
	22	1	**205-3210**	1	HOUSING AS-OSCILLATING AXLE (CENTER)	
M		1	**095-0673**	3	BOLT-SOCKET HEAD (M12X1.75X60-MM)	
	23	1	**215-8058**	1	RETAINER-SEAL	
	24	1	**234-4244**	2	HOUSING-OSCILLATING AXLE (OUTER)	
	25	1	**234-4245**	2	SHAFT-AXLE	
	26	1	**235-9631**	16	BOLT (M16X2X120-MM)	
	27	1	**236-0483**	16	BOLT (M16X2X190-MM)	
M	28	1	**259-1456**	6	BOLT (12X1.75X35-MM)	
	29	1	**061-6712**	2	RING-RETAINING	
	30	1	**3B-0551**	1	PLUG-PIPE	
	31	1	**3E-2338**	2	PLUG-PIPE	
	32	1	**5H-1039**	1	SEAL-O-RING	
	33	1	**5M-6214**	2	PLUG-PIPE	
	34	1	**5P-5291**	1	RING-RETAINING	
	35	1	**5P-8245**	12	WASHER-HARD (13.5X25.5X3-MM THK)	
	36	1	**5P-8247**	48	WASHER-HARD (17X32X3.5-MM THK)	
M	37	1	**6V-4429**	8	BOLT (M16X2X40-MM)	
M	38	1	**6V-8197**	6	BOLT (M12X1.75X40-MM)	
	39	1	**7M-8485**	3	SEAL-O-RING	
	40	1	**8F-9516**	1	SEAL-O-RING	
M	41	1	**8T-0375**	8	BOLT (M16X2X45-MM)	
	42	1	**8T-4224**	6	WASHER-HARD (8.8X16X2-MM THK)	
M	43	1	**8T-5093**	6	BOLT-LOCKING (M8X1.25X25-MM)	
	44	1	**9C-5049**	1	BEARING-SLEEVE	
	45	1	**9C-6041**	3	DOWEL	
B	46	1	**1U-8846**		SEALANT-GASKET	

B-USE AS REQUIRED
M-METRIC PART

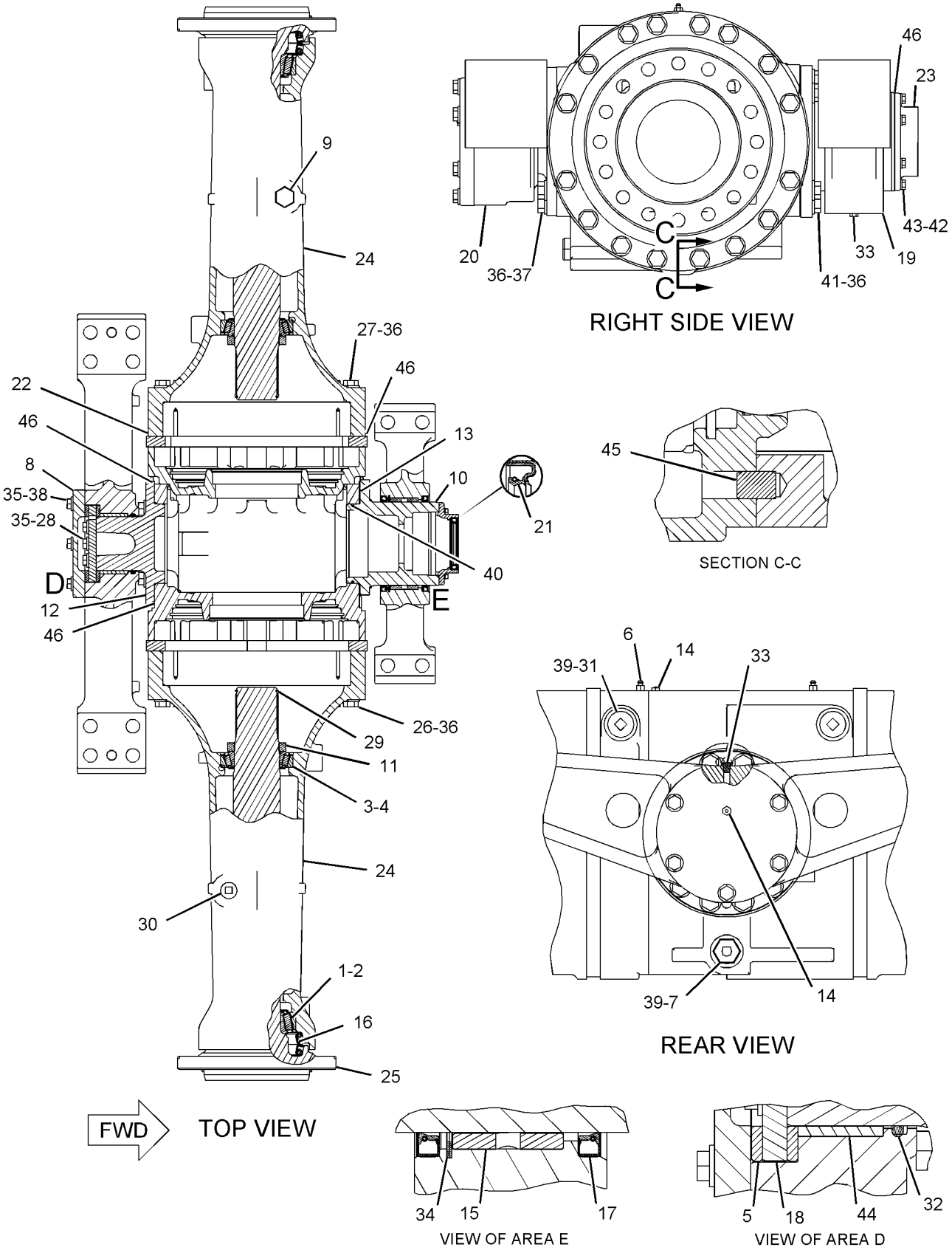

GRAPHIC #1 **<END>** g01113141

234-4248 HOUSING GP-OSCILLATING AXLE–
LIMITED SLIP DIFFERENTIAL, REAR
S/N: FTD1-UP
PART OF 267-7380 AXLE AR-OSCILLATING
AN ATTACHMENT

SMCS-3260, 3268 **i02721506**

NOTE	REF NO	GRAPHIC REF	PART NUMBER	QTY	PART NAME 1 2 3 4 5 6 (PRODUCT LEVEL)	SEE PAGE
	1	1	**5P-3723**	2	CONE-BEARING	
	2	1	**6D-7690**	2	CUP-BEARING	
	3	1	**6F-2956**	2	CUP-BEARING	
	4	1	**6V-0347**	2	CONE-BEARING	
	5	1	**1K-8061**	2	WASHER-THRUST (4.03X5.72X0.265-IN THK)	
	6	1	**5H-3701**	2	SCREW-PURGE (7/16-20-THD)	
	7	1	**5P-4484**	1	PLUG-MAGNETIC	
	8	1	**6K-6075**	1	COVER	
	9	1	**8R-0512**	1	GAUGE AS-OIL LEVEL (DIPSTICK)	
	10	1	**8R-2189**	1	HOUSING-PINION	
	11	1	**8R-2532**	2	NUT-BEARING (M85X2-THD)	
	12	1	**8R-2584**	1	TRUNNION	
	13	1	**8R-3809**	1	SHIM PACK (INCLUDES 8-SHIMS)	
	14	1	**8T-0336**	2	FITTING-PRESSURE RELIEF	
	15	1	**9C-5048**	1	BEARING-SLEEVE	
	16	1	**9G-5311**	2	SEAL GP-DUO-CONE	
	17	1	**9H-1129**	2	SEAL-LIP TYPE	
	18	1	**9V-1203**	1	PLATE-THRUST	
	19	1	**128-0219**	1	SUPPORT-TRUNNION (FRONT)	
	20	1	**141-4892**	1	SUPPORT-TRUNNION (REAR)	
	21	1	**175-7310**	2	PLATE-SPACER	
	22	1	**193-2200**	1	SEAL-LIP TYPE	
	23	1	**205-3210**	1	HOUSING AS-OSCILLATING AXLE (CENTER)	
M		1	**095-0673**	3	BOLT-SOCKET HEAD (M12X1.75X60-MM)	
	24	1	**215-8058**	1	RETAINER-SEAL	
	25	1	**234-4244**	2	HOUSING-OSCILLATING AXLE (OUTER)	
	26	1	**234-4245**	2	SHAFT-AXLE	
M	27	1	**235-8810**	16	BOLT (M16X2X140-MM)	
M	28	1	**235-8811**	16	BOLT (M16X2X210-MM)	
M	29	1	**259-1456**	6	BOLT (12X1.75X35-MM)	
	30	1	**061-6712**	2	RING-RETAINING	
	31	1	**3B-0551**	1	PLUG-PIPE	
	32	1	**3E-2338**	2	PLUG-PIPE	
	33	1	**5H-1039**	1	SEAL-O-RING	
	34	1	**5M-6214**	2	PLUG-PIPE	
	35	1	**5P-5291**	1	RING-RETAINING	
	36	1	**5P-8245**	12	WASHER-HARD (13.5X25.5X3-MM THK)	
	37	1	**5P-8247**	48	WASHER-HARD (17X32X3.5-MM THK)	
M	38	1	**6V-4429**	8	BOLT (M16X2X40-MM)	
M	39	1	**6V-8197**	6	BOLT (M12X1.75X40-MM)	
	40	1	**7M-8485**	3	SEAL-O-RING	
	41	1	**8F-9516**	1	SEAL-O-RING	
M	42	1	**8T-0375**	8	BOLT (M16X2X45-MM)	
	43	1	**8T-4224**	6	WASHER-HARD (8.8X16X2-MM THK)	
M	44	1	**8T-5093**	6	BOLT-LOCKING (M8X1.25X25-MM)	
	45	1	**9C-5049**	1	BEARING-SLEEVE	
	46	1	**9C-6041**	3	DOWEL	
B	47	1	**1U-8846**		SEALANT-GASKET	

B-USE AS REQUIRED
M-METRIC PART

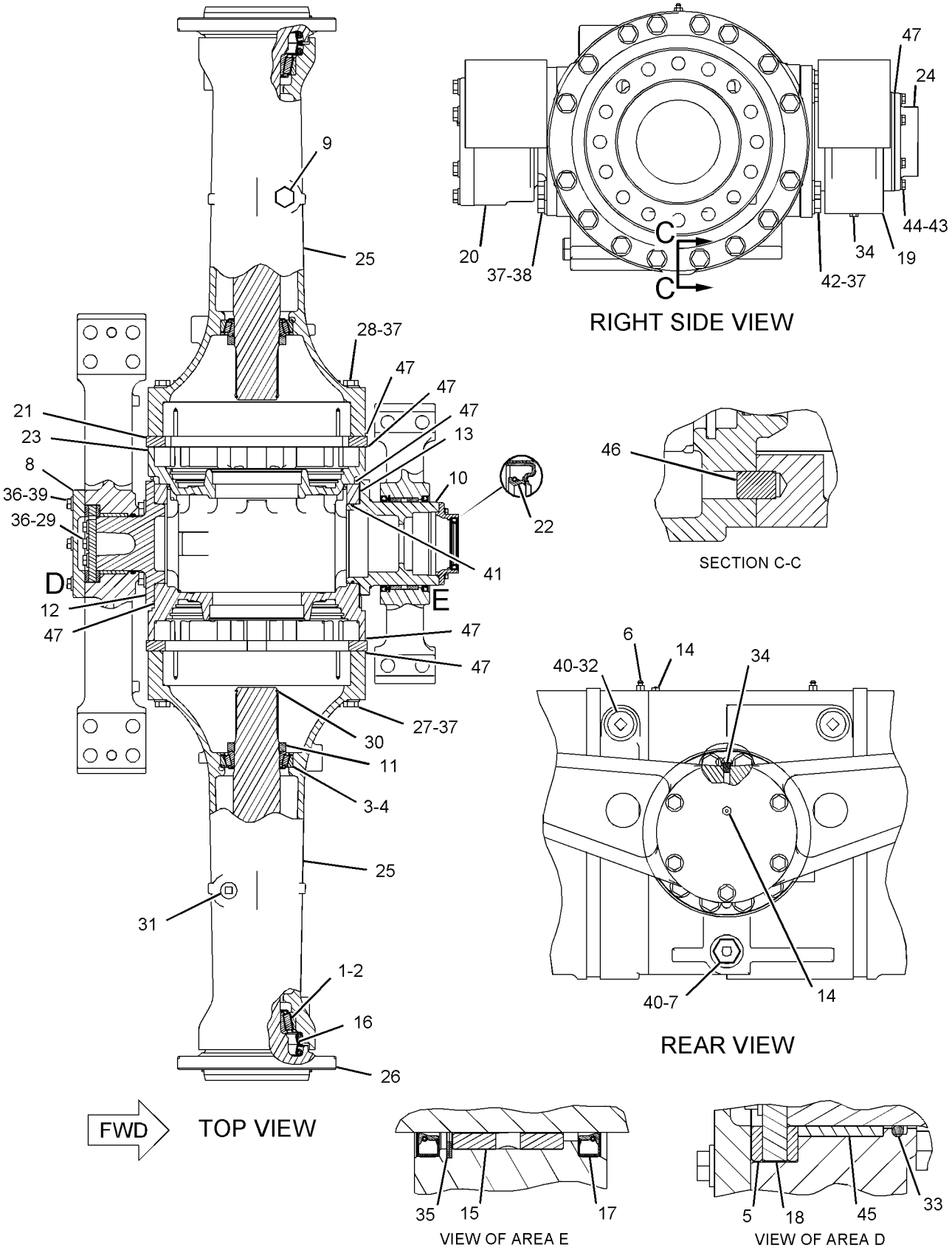

GRAPHIC #1 **<END>** g01112480

POWER TRAIN

289-8922 LINES GP-AXLE OIL COOLER

S/N: FTD1-UP

PART OF 289-8987 AXLE AR-OSCILLATING

AN ATTACHMENT

SMCS-1365, 3016 **i02814188**

NOTE	REF NO	GRAPHIC REF	PART NUMBER	QTY	PART NAME 1 2 3 4 5 6 (PRODUCT LEVEL)	SEE PAGE
	1	2	**3E-7690**	1	SWITCH AS-PRESSURE (AXLE OIL)	
		2	**102-8802**	1	KIT-RECEPTACLE (2-PIN)	
					(INCLUDES RECEPTACLE AS & WEDGE)	
		2	**186-3735**	2	PIN-CONNECTOR (16-GA TO 18-GA)	
	2	2	**6V-0852**	1	CAP-DUST	
	3	1,2,3	**130-9984**	3	CLIP	
	4	2	*148-8373*	1	ELBOW AS	
		2	**6V-8400**	1	SEAL-O-RING	
		2	**7M-8485**	1	SEAL-O-RING	
		2	**8C-3364**	1	ELBOW	
	5	2	*148-8424*	1	TEE AS	
		2	**6V-8397**	1	SEAL-O-RING	
		2	**8T-8902**	1	TEE	
	6	2	**158-3049**	1	COUPLING	
	7	2	*172-5277*	1	TEE AS	
		2	**3D-2824**	1	SEAL-O-RING	
		2	**6V-9746**	1	SEAL-O-RING	
		2	**8T-8901**	1	TEE-O-RING PORT	
Y	8	2	*185-1028*	1	COOLER GP-AXLE OIL	237
I	9	2	**185-1922**	1	HOSE AS	
	10	2	**200-6345**	1	MOUNT (DUAL SWIVEL)	
	11	2	**204-2281**	4	STRAP-TIE	
I	12	1	**219-3314**	1	HOSE AS	
	13	1	**240-0180**	2	PLATE	
	14	1	**241-6755**	1	PLATE AS (GUARD)	
M		1	**8T-3597**	4	NUT-WELD (M12X1.75-THD)	
	15	2	**259-0558**	1	VALVE GP-CHECK (HYDRAULIC OIL COOLER BYPASS)	
		2	**6V-9746**	2	SEAL-O-RING	
I	16	1	**262-5666**	1	HOSE AS	
I	17	1	**262-5694**	1	HOSE AS	
I	18	1	**262-5695**	1	HOSE AS	
J	19	2	**288-4166**	1	PUMP & MOTOR GP-AXLE OIL CLR	
I	20	1	**292-9687**	1	HOSE AS	
I	21	1	**292-9688**	1	HOSE AS	
I	22	1	**292-9698**	1	HOSE AS	
	23	1	**293-6603**	1	BRACKET AS	
M		1	**8T-3490**	1	NUT-WELD (M10X1.5-THD)	
	24	1	**295-1466**	1	HOSE AS	
I	25	2	**295-1467**	1	HOSE AS	
I	26	2	**295-1468**	1	HOSE AS	
I	27	1	**297-4888**	1	HOSE AS	
	28	1	**299-5499**	1	SCREEN AS (IN-LINE) (AXLE OIL)	
	30	2	**300-4459**	2	PLATE	
I	31	1	**300-8840**	1	HOSE AS	
I	32	1	**304-5735**	1	HOSE AS	
I	33	2	**304-5736**	1	HOSE AS	
	34	2	**312-4106**	1	BRACKET AS	
M		2	**8T-3490**	1	NUT-WELD (M10X1.5-THD)	
I	35	1	**312-4696**	1	HOSE AS	
	36	1,2,3	**7K-1181**	7	STRAP-CABLE	
	37	2	*148-8316*	1	CONNECTOR AS	
		2	**6V-8647**	1	CONNECTOR	
		2	**3J-7354**	1	SEAL-O-RING	
		2	**4J-5477**	1	SEAL-O-RING	
	38	2	*148-8317*	1	CONNECTOR AS	

289-8922 LINES GP-AXLE OIL COOLER *(contd.)* i02814188

NOTE	REF NO	GRAPHIC REF	PART NUMBER	QTY	PART NAME 1 2 3 4 5 6 (PRODUCT LEVEL)	SEE PAGE
		2	**6V-8714**	1	CONNECTOR	
		2	**5K-9090**	1	SEAL-O-RING	
		2	**3D-2824**	1	SEAL-O-RING	
	39	2	*148-8325*	1	CONNECTOR AS	
		2	**6V-8641**	1	CONNECTOR	
		2	**3J-1907**	1	SEAL-O-RING	
		2	**4J-5477**	1	SEAL-O-RING	
	40	1	*148-8356*	1	ELBOW AS	
		1	**6V-9009**	1	ELBOW	
		1	**6V-8400**	1	SEAL-O-RING	
		1	**2S-4078**	1	SEAL-O-RING	
	41	1,2,3	*148-8364*	4	ELBOW AS	
					(EACH INCLUDES)	
		1,2,3	**6V-8625**	1	ELBOW	
		1,2,3	**3K-0360**	1	SEAL-O-RING	
		1,2,3	**6V-8398**	1	SEAL-O-RING	
	42	2	*148-8390*	1	ELBOW AS	
		2	**6V-8626**	1	ELBOW	
		2	**2M-9780**	1	SEAL-O-RING	
		2	**7J-9108**	1	SEAL-O-RING	
	43	1	*148-8431*	1	TEE AS	
		1	**6V-8785**	1	TEE	
		1	**7M-8485**	1	SEAL-O-RING	
		1	**5K-9090**	2	SEAL-O-RING	
	44	1	*148-8436*	1	TEE AS	
		1	**6V-8775**	1	TEE-FACE SEAL	
		1	**3K-0360**	1	SEAL-O-RING	
		1	**6V-8398**	2	SEAL-O-RING	
	45	2	*148-8444*	1	TEE AS-SWIVEL	
		2	**6V-9837**	1	TEE-SWIVEL	
		2	**6V-8398**	2	SEAL-O-RING	
	46	2	*148-8448*	1	FITTING AS	
		2	**6V-9842**	1	TEE-SWIVEL	
		2	**4J-5477**	2	SEAL-O-RING	
	47	2	*153-6230*	1	CONNECTOR AS	
		2	**8T-9386**	1	CONNECTOR	
		2	**5K-9090**	1	SEAL-O-RING	
		2	**2M-9780**	1	SEAL-O-RING	
	48	2	*153-6248*	1	ADAPTER AS	
		2	**8T-6663**	1	ADAPTER-PORT	
		2	**6V-8397**	1	SEAL-O-RING	
	49	2,3	*155-3504*	2	ELBOW AS	
					(EACH INCLUDES)	
		2,3	**6V-9003**	1	ELBOW	
		2,3	**2M-9780**	1	SEAL-O-RING	
		2,3	**7J-9108**	1	SEAL-O-RING	
	50	2	*164-5567*	1	COUPLER AS-QUICK DISCONNECT	
		2	**6V-3965**	1	COUPLER-QUICK DISCONNECT	
		2	**3J-1907**	1	SEAL-O-RING	
	51	3	*164-5577*	1	ELBOW AS	
		3	**5K-9090**	2	SEAL-O-RING	
		3	**6V-8984**	1	ELBOW	
	52	1	*164-5641*	1	TEE AS	
		1	**128-7625**	1	TEE	
		1	**3D-2824**	1	SEAL-O-RING	
		1	**5K-9090**	1	SEAL-O-RING	
		1	**6V-9746**	1	SEAL-O-RING	
	53	3	*164-6860*	1	TEE AS	
		3	**6V-9350**	1	TEE-BULKHEAD	

289-8922 LINES GP-AXLE OIL COOLER *(contd.)* i02814188

NOTE	REF NO	GRAPHIC REF	PART NUMBER	QTY	PART NAME 1 2 3 4 5 6 (PRODUCT LEVEL)	SEE PAGE
		3	**7J-9108**	3	SEAL-O-RING	
	54	2	**1M-4543**	1	GROMMET	
	55	1	**1S-0396**	1	CLIP	
	56	1	*268-1521*	2	ADAPTER	
					(EACH INCLUDES)	
		1	**7M-8485**	1	SEAL-O-RING	
		1	**268-1520**	1	ADAPTER	
	57	2	**3D-2824**	1	SEAL-O-RING	
	58	2	**3J-1907**	1	SEAL-O-RING	
	59	1	**4D-7388**	3	CLIP	
	60	2	**4P-8134**	1	CLIP	
	61	1	**5K-9090**	1	SEAL-O-RING	
	62	2	**5P-7468**	1	CLIP (SLOT)	
	63	2	**5P-7469**	1	CLIP (TAB)	
	64	2	**5P-8444**	1	GROMMET	
	65	1,2	**6V-1889**	3	CLIP	
	66	3	**6V-9170**	1	NUT-BULKHEAD (1-14-THD)	
	67	3	**6V-9172**	1	NUT (1-7/16-12-THD)	
	68	1	**6V-9832**	1	CAP AS (HYDRAULIC TANK)	
	69	1	**6V-9833**	1	CAP AS (HYDRAULIC RETURN)	
	70	1	**7X-0515**	4	WASHER-HARD (17X35X5-MM THK)	
M	71	1	**7X-2558**	2	BOLT (M16X2X150-MM)	
M	72	1	**7X-2560**	2	BOLT (M16X2X220-MM)	
	73	1,2	**7X-7729**	4	WASHER (11X25X3-MM THK)	
	74	2	**8C-3174**	1	GROMMET	
	75	2,3	**8M-2770**	2	CLIP	
	76	1,3	**8M-2773**	2	CLIP	
	77	2	**8S-0948**	1	CLIP	
	78	1,2,3	**8T-4121**	21	WASHER-HARD (11X21X2.5-MM THK)	
M	79	2	**8T-4133**	3	NUT (M10X1.5-THD)	
M	80	1,2,3	**8T-4136**	7	BOLT (M10X1.5X25-MM)	
M	81	1,2,3	**8T-4137**	7	BOLT (M10X1.5X20-MM)	
M	82	1	**8T-4186**	1	BOLT (M10X1.5X40-MM)	
M	83	1,2	**8T-4195**	2	BOLT (M10X1.5X30-MM)	
M	84	1,2	**8T-4196**	4	BOLT (M10X1.5X35-MM)	
	85	1	**8T-4223**	4	WASHER-HARD (13.5X25.5X3-MM THK)	
M	86	1	**8T-4956**	4	BOLT (M12X1.75X35-MM)	
	87	1	**9C-5344**	1	SPACER (10.5X20X18-MM THK)	
	88	1	**9M-4972**	1	CLIP	
					AVAILABLE REPAIR KIT(S):	
J			**296-6706**	1	KIT-SEAL (AXLE OIL CLR, SYSTEMS CASE DR)	
					(INCLUDES SHAFT SEALS & O-RINGS)	

I-REFER TO HYDRAULIC INFORMATION SYSTEM
J-KIT MARKED J SERVICES PART(S) MARKED J
M-METRIC PART
Y-SEPARATE ILLUSTRATION

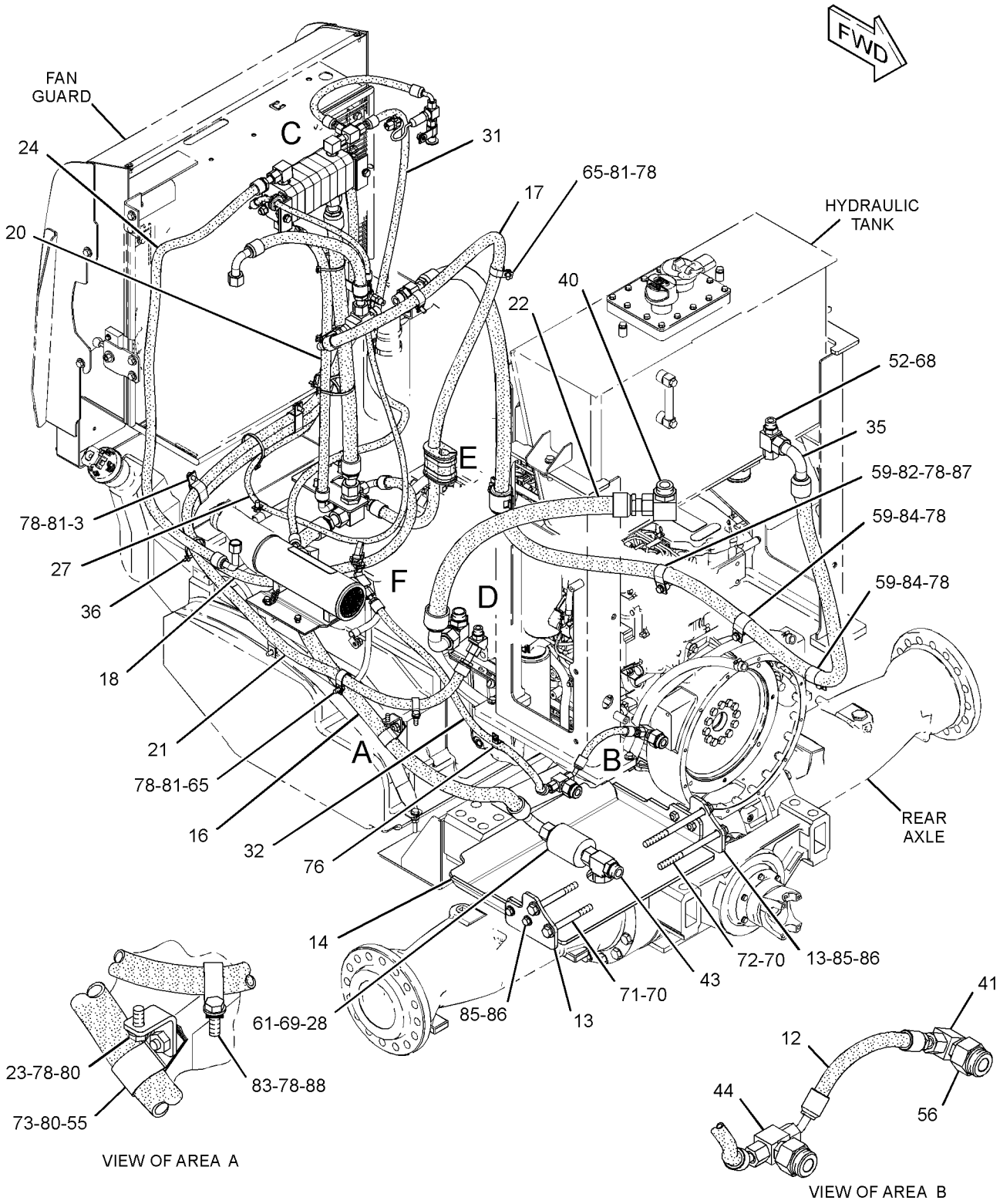

GRAPHIC #1

g01418242

289-8922 **LINES GP-AXLE OIL COOLER** *(contd.)* **i02814188**

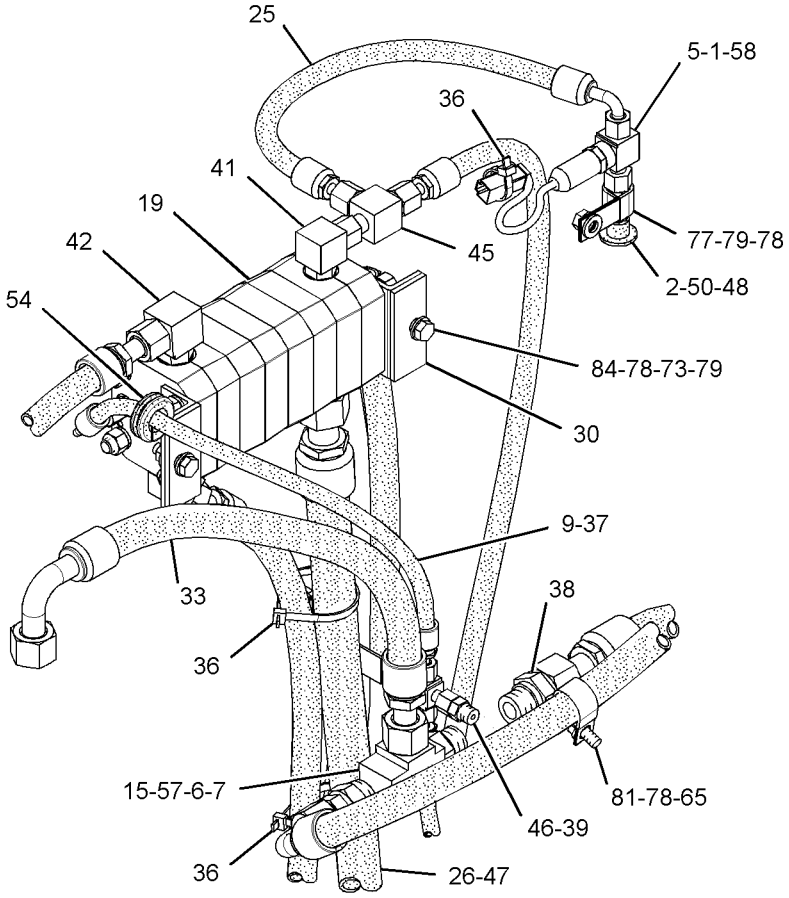

VIEW OF AREA C

REFER TO ALL ILLUSTRATIONS OF THIS GROUP FOR AUXILIARY VIEWS

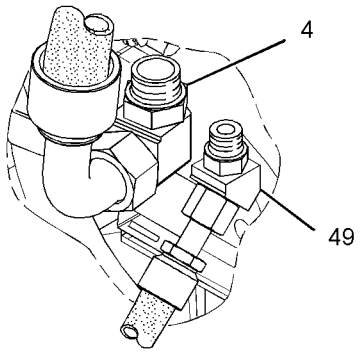

VIEW OF AREA D

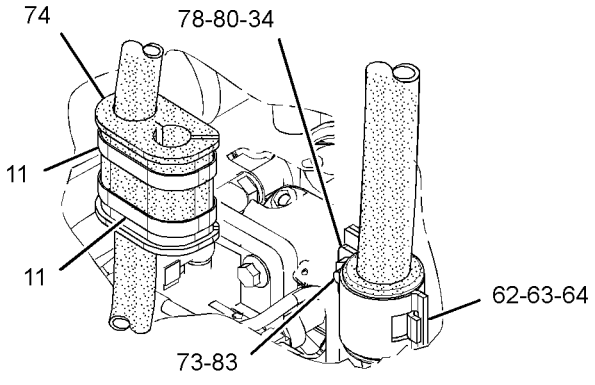

VIEW OF AREA E

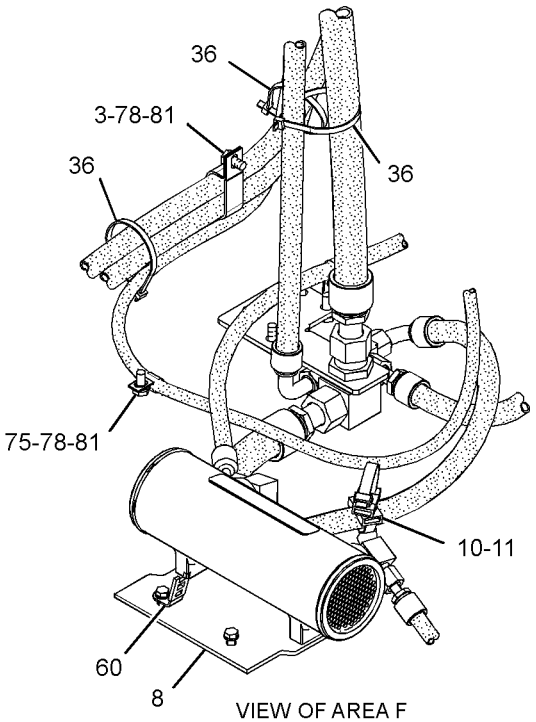

VIEW OF AREA F

GRAPHIC #2

g01418244

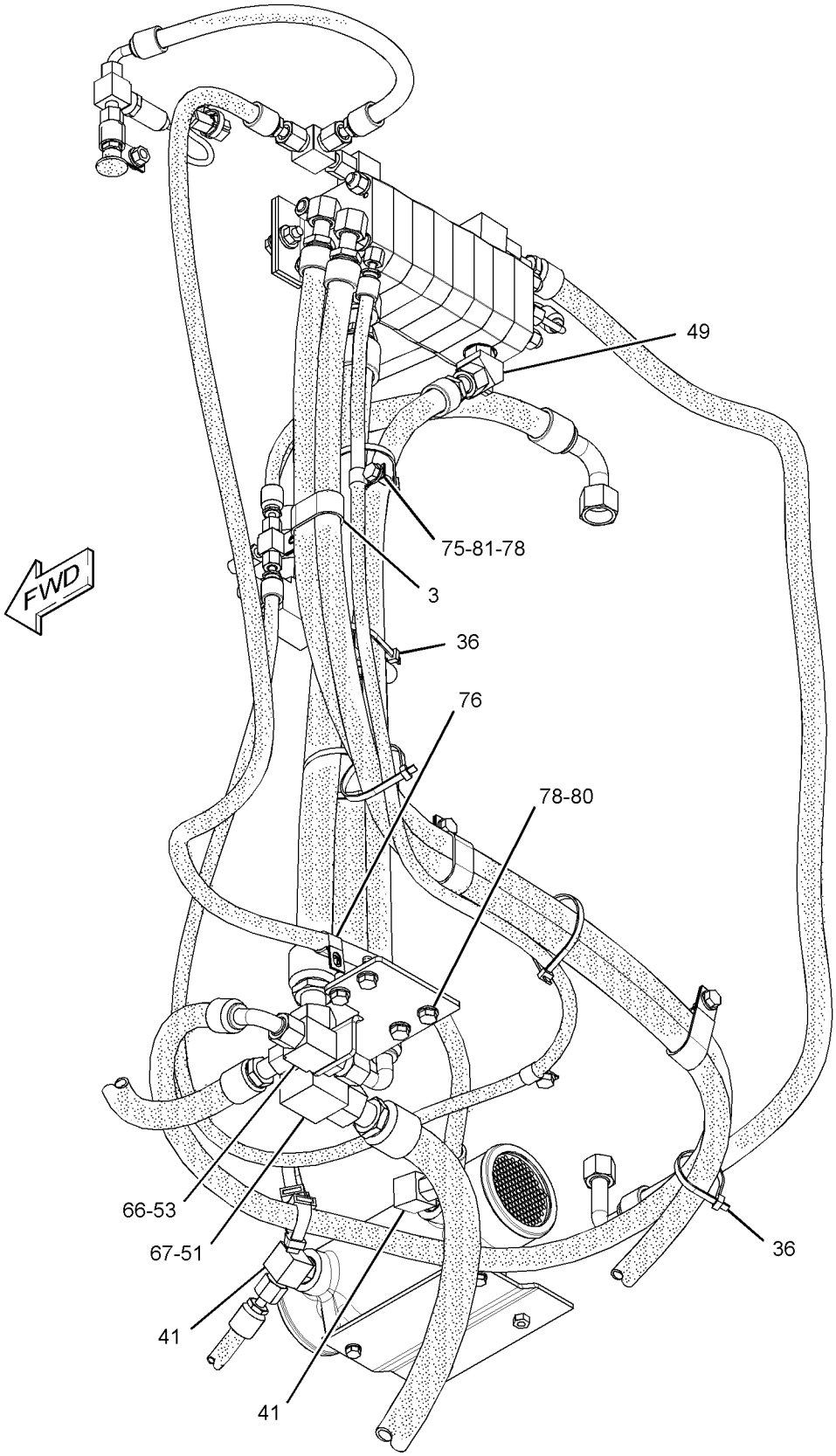

GRAPHIC #3 **<END>** g01418245

289-8929 LINES GP-DIFFERENTIAL LOCK

S/N: FTD650-UP

PART OF 289-8981 AXLE AR-FIXED

SMCS-3016, 3264 **i02885894**

NOTE	REF NO	GRAPHIC REF	PART NUMBER	QTY	PART NAME 1 2 3 4 5 6 (PRODUCT LEVEL)	SEE PAGE
I	1	1	**195-6086**	1	HOSE AS	
	2	1	**200-6345**	1	MOUNT (DUAL SWIVEL)	
	3	1	**204-2281**	4	STRAP-TIE	
I	4	1	**208-7058**	1	HOSE AS	
Y	5	1	**233-7133**	1	VALVE & MTG GP-SOLENOID (12 VDC)	623
	6	1	**262-5693**	1	TUBE AS	
I	7	1	**292-7124**	1	HOSE AS	
	8	1	**295-0128**	1	GUARD AS	
	9	1	**296-5673**	1	BRACKET	
	10	1	**297-6381**	1	BRACKET AS	
I	11	1	**300-1246**	1	HOSE AS	
	12	1	*148-8336*	1	CONNECTOR AS	
		1	**3J-1907**	1	SEAL-O-RING	
		1	**6V-8397**	1	SEAL-O-RING	
		1	**6V-8636**	1	CONNECTOR	
	13	1	*148-8353*	1	ELBOW AS	
		1	**3J-1907**	1	SEAL-O-RING	
		1	**6V-8397**	1	SEAL-O-RING	
		1	**6V-9001**	1	ELBOW	
	14	1	*148-8361*	1	ELBOW AS	
		1	**3J-7354**	1	SEAL-O-RING	
		1	**6V-8397**	1	SEAL-O-RING	
		1	**6V-9200**	1	ELBOW	
	15	1	*148-8367*	1	ELBOW AS	
		1	**6V-8397**	1	SEAL-O-RING	
		1	**6V-9850**	1	ELBOW	
	16	1	*148-8378*	1	ELBOW AS	
		1	**3J-1907**	1	SEAL-O-RING	
		1	**6V-8397**	1	SEAL-O-RING	
		1	**6V-8724**	1	ELBOW	
	17	1	*148-8435*	1	TEE AS	
		1	**3J-1907**	1	SEAL-O-RING	
		1	**6V-8397**	2	SEAL-O-RING	
		1	**6V-8781**	1	TEE-FACE SEAL	
	18	1	*148-8458*	1	UNION AS	
		1	**6V-8397**	2	SEAL-O-RING	
		1	**6V-9807**	1	UNION	
	19	1	**4P-8134**	1	CLIP (LADDER)	
	20	1	**5P-1076**	1	WASHER-HARD (13.5X30X4-MM THK)	
	21	1	**5P-9297**	1	CLIP	
	22	1	**6D-4246**	1	CLIP	
	23	1	**7X-7729**	4	WASHER (11X25X3-MM THK)	
	24	1	**8T-4121**	5	WASHER-HARD (11X21X2.5-MM THK)	
M	25	1	**8T-4136**	5	BOLT (M10X1.5X25-MM)	
M	26	1	**8T-4137**	2	BOLT (M10X1.5X20-MM)	
M	27	1	**8T-4139**	1	BOLT (M12X1.75X30-MM)	
M	28	1	**8T-6466**	2	BOLT (M10X1.5X60-MM)	

I-REFER TO HYDRAULIC INFORMATION SYSTEM
M-METRIC PART
Y-SEPARATE ILLUSTRATION

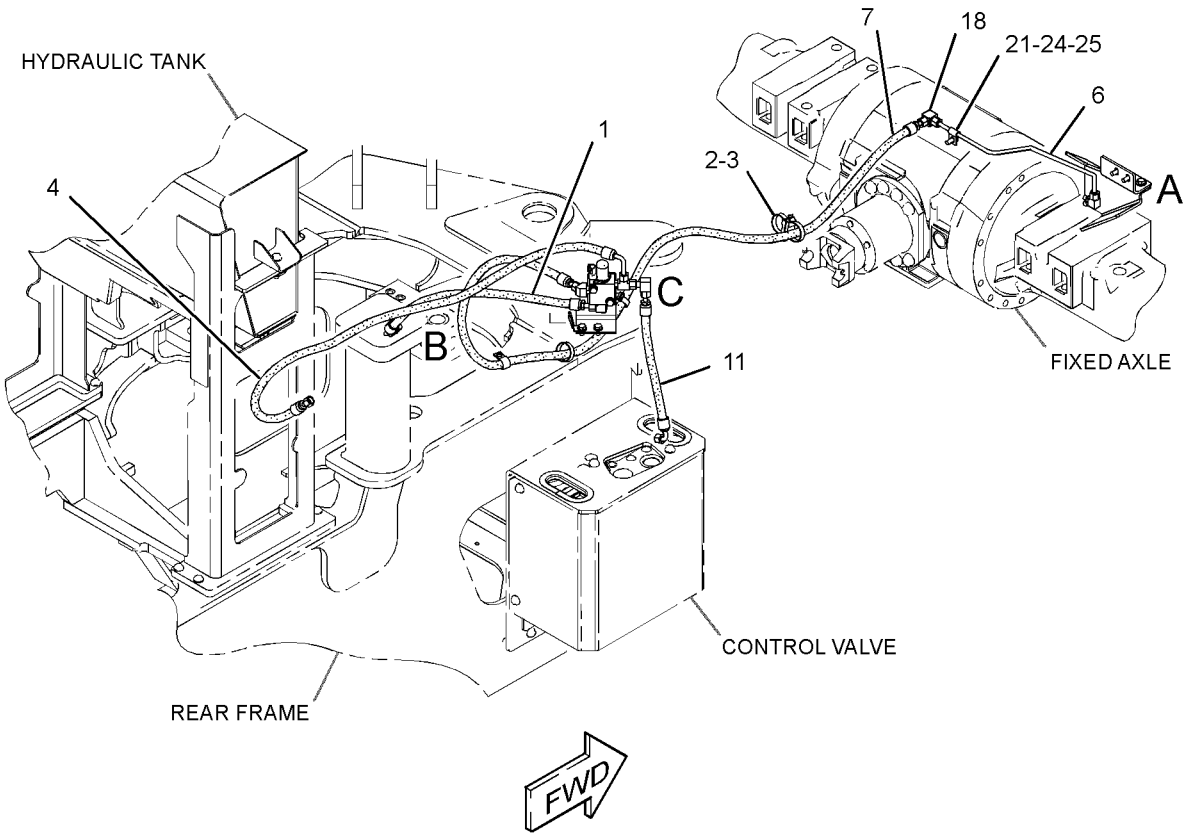

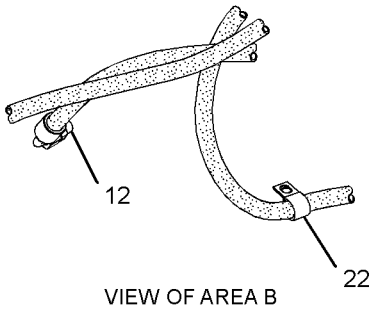

VIEW OF AREA B

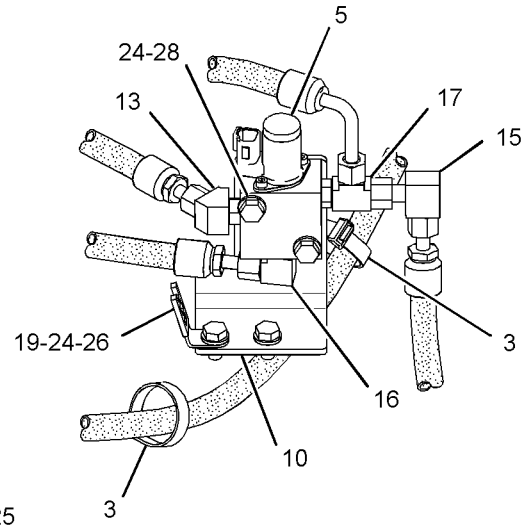

VIEW OF AREA C

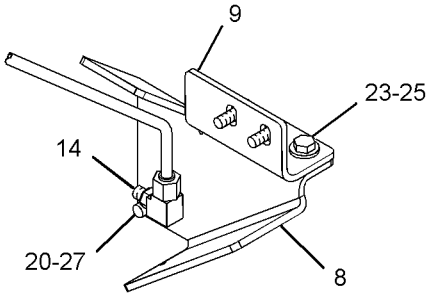

VIEW OF AREA A

GRAPHIC #1 **<END>** g01437363

POWER TRAIN

289-8923 LINES GP-TORQUE CONV COOLER

S/N: BYD1-UP; FTD1-UP

PART OF 289-8871, 289-8891, 290-6498 CHASSIS AR

SMCS-1375, 3016 **i02870236**

NOTE	REF NO	GRAPHIC REF	PART NUMBER	QTY	PART NAME 1 2 3 4 5 6 (PRODUCT LEVEL)	SEE PAGE
	1	1	**5P-4362**	1	CONNECTOR	
	2	1	**6V-0852**	1	CAP-DUST	
	3	1	**7K-1181**	1	STRAP-CABLE	
	4	1	**7X-7958**	4	CLAMP-HOSE	
Y	5	1	**126-0747**	1	VALVE GP-BYPASS	321
E	6	1	**146-7453**		HOSE (55-CM)	
	7	1	*177-1061*	1	ELBOW AS	
		1	**5K-9090**	1	SEAL-O-RING	
		1	**142-0038**	1	ELBOW	
	8	1	**229-2940**	1	PLATE AS	
M		1	**8T-3490**	3	NUT-WELD (M10X1.5-THD)	
	9	1	*241-6172*	1	ELBOW AS	
		1	**7M-8485**	1	SEAL-O-RING	
		1	**173-0064**	1	ELBOW	
	10	1	**243-0686**	1	HOSE AS	
I	11	1	**262-5661**	1	HOSE AS	
I	12	1	**262-5663**	1	HOSE AS	
	13	1	**293-5828**	2	TUBE AS	
I	14	1	**314-7670**	1	HOSE AS	
	15	1	*148-8335*	5	CONNECTOR AS	
					(EACH INCLUDES)	
		1	**5K-9090**	1	SEAL-O-RING	
		1	**6V-8635**	1	CONNECTOR	
		1	**7M-8485**	1	SEAL-O-RING	
	16	1	*148-8352*	1	ELBOW AS	
		1	**5K-9090**	1	SEAL-O-RING	
		1	**6V-9854**	1	ELBOW	
	17	1	*150-3065*	1	ADAPTER AS	
		1	**3J-1907**	1	SEAL-O-RING	
		1	**6V-0484**	1	ADAPTER-O-RING	
	18	1	*155-2026*	1	UNION AS	
		1	**5K-9090**	2	SEAL-O-RING	
		1	**6V-8998**	1	UNION	
	19	1	*155-6344*	1	ELBOW AS	
		1	**5K-9090**	2	SEAL-O-RING	
		1	**6V-8991**	1	ELBOW	
	20	1	*164-5567*	1	COUPLER AS-QUICK DISCONNECT	
		1	**3J-1907**	1	SEAL-O-RING	
		1	**6V-3965**	1	COUPLER-QUICK DISCONNECT	
	21	1	*214-0095*	1	UNION AS	
		1	**5K-9090**	2	SEAL-O-RING	
		1	**7X-2464**	1	UNION	
	22	1	**4D-7388**	3	CLIP	
	23	1	**6V-9172**	3	NUT (1-7/16-12-THD)	
	24	1	**7M-8485**	1	SEAL-O-RING	
	25	1	**7X-0606**	4	WASHER-HARD (37X60X3-MM THK)	
	26	1	**8T-4121**	7	WASHER-HARD (11X21X2.5-MM THK)	
M	27	1	**8T-4136**	4	BOLT (M10X1.5X25-MM)	
M	28	1	**8T-4178**	3	BOLT (M10X1.5X90-MM)	

E-ORDER BY THE CENTIMETER
I-REFER TO HYDRAULIC INFORMATION SYSTEM
M-METRIC PART
Y-SEPARATE ILLUSTRATION

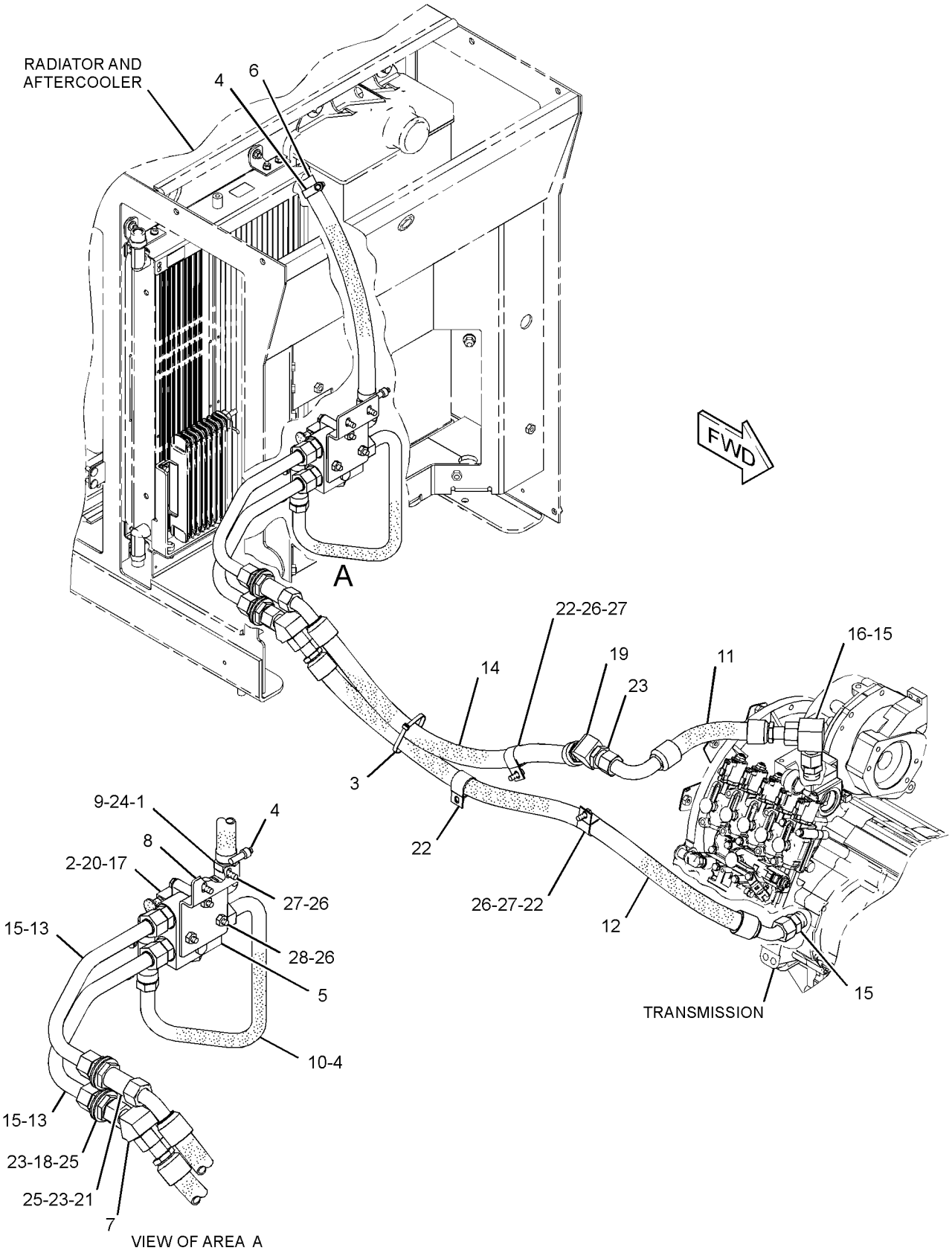

GRAPHIC #1 **<END>** g01442927

118-0880 MOUNTING GP-AXLE

S/N: BYD1-UP

PART OF 289-8871 CHASSIS AR

SMCS-3268, 3278 **i00723507**

NOTE	REF NO	GRAPHIC REF	PART NUMBER	QTY	PART NAME 1 2 3 4 5 6 (PRODUCT LEVEL)	SEE PAGE
	1	1	**6K-8987**	2	DOWEL	
M	2	1	**7X-2465**	12	BOLT (M24X3.0X180MM)	
M	3	1	**7X-2567**	8	BOLT (M24X3X160 MM)	
	4	1	**8T-4167**	20	WASHER (4.0MM THK)	

M-METRIC PART

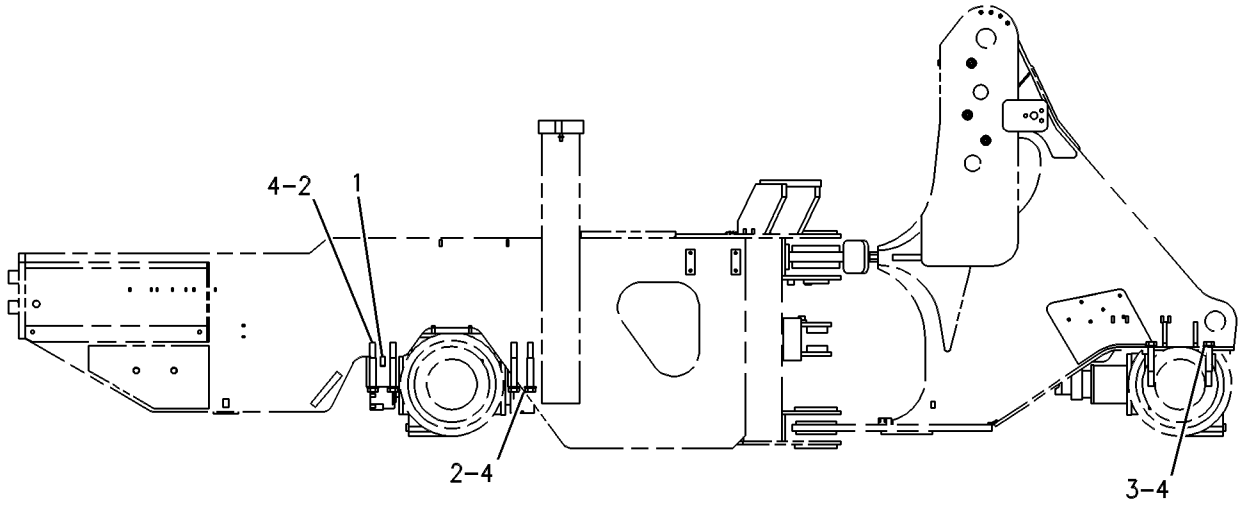

RIGHT SIDE VIEW

GRAPHIC #1 **<END>** g00131636

132-2471 MOUNTING GP-AXLE

S/N: FTD1-UP

PART OF 289-8891, 290-6498 CHASSIS AR

SMCS-3268, 3278 **i01115691**

NOTE	REF NO	GRAPHIC REF	PART NUMBER	QTY	PART NAME 1 2 3 4 5 6 (PRODUCT LEVEL)	SEE PAGE
	1	1	**6K-8987**	2	DOWEL	
M	2	1	**7X-2465**	20	BOLT (M24X3.0X180MM)	
	3	1	**8T-4167**	20	WASHER (4.0MM THK)	

M-METRIC PART

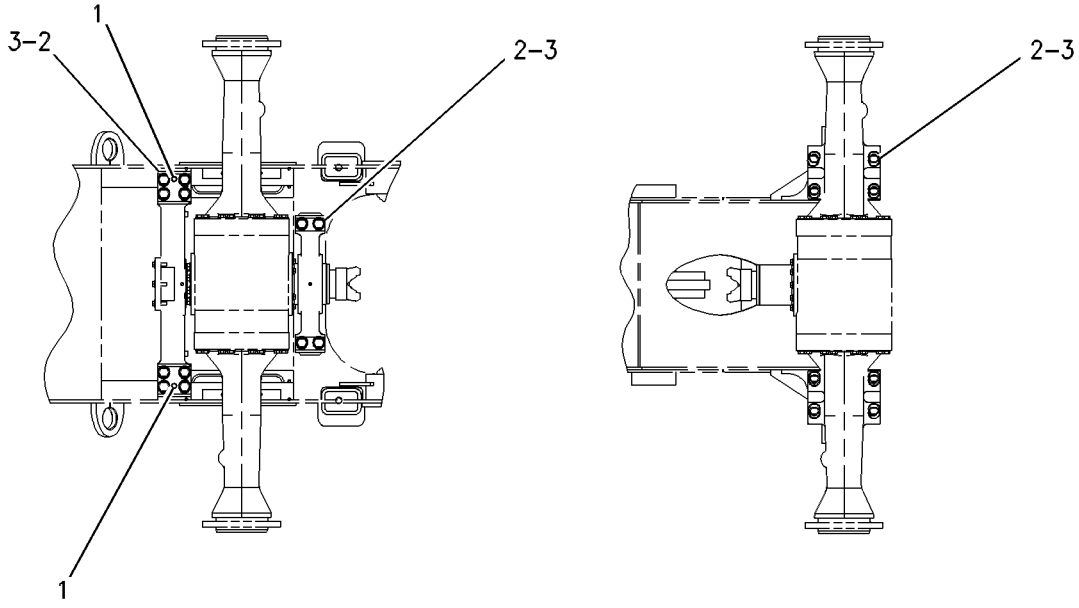

GRAPHIC #1 **<END>** g00594580

147-5071 MOUNTING GP-RIM

S/N: BYD1-UP; FTD1-UP
PART OF 117-7836, 117-7837, 118-8596, 154-5508 RIM AR
AN ATTACHMENT

SMCS-4202, 4209 **i01836742**

NOTE	PART NUMBER	QTY	PART NAME 1 2 3 4 5 6 (PRODUCT LEVEL)	SEE PAGE
M	**8T-5379**	16	BOLT (M24X3X50MM)	
	8T-4167	16	WASHER-HARD (26X44X4MM THK)	

M-METRIC PART

<END>

289-8835 POWER TRAIN AR

S/N: FTD1-649
PART OF 289-8890 COMMON AR

SMCS-3000, 4000 **i02808636**

NOTE	PART NUMBER	QTY	PART NAME 1 2 3 4 5 6 (PRODUCT LEVEL)	SEE PAGE
Y	*243-0515*	1	FILLER GP-POWER TRAIN OIL	250
Y	*235-6807*	1	FILTER & LINES GP-TRANSMISSION	254
Y	*202-4338*	1	SHAFT GP-DRIVE	310
Y	**290-2720**	1	TRANSMISSION AR	320
	304-9464	1	GAUGE GP-SIGHT (POWER TRAIN OIL)	
	5J-2974	4	SEAL-O-RING	
	122-8353	2	BOLT (M12X46.5-MM)	

Y-SEPARATE ILLUSTRATION

<END>

289-8845 POWER TRAIN AR

S/N: BYD1-UP
PART OF 289-8870 COMMON AR

SMCS-3000, 4000 **i02809062**

NOTE	PART NUMBER	QTY	PART NAME 1 2 3 4 5 6 (PRODUCT LEVEL)	SEE PAGE
Y	*118-0849*	1	FILLER GP-POWER TRAIN OIL	248
Y	*203-3894*	1	FILTER & LINES GP-TRANSMISSION	252
Y	**129-8734**	1	GAUGE GP-SIGHT (POWER TRAIN OIL)	257
Y	*202-4338*	1	SHAFT GP-DRIVE	310
Y	*290-2719*	1	TRANSMISSION AR	320

Y-SEPARATE ILLUSTRATION

<END>

289-8895 POWER TRAIN AR

S/N: FTD650-UP

PART OF 289-8899 COMMON AR

SMCS-3000, 4000 **i02885860**

NOTE	PART NUMBER	QTY	PART NAME 1 2 3 4 5 6 (PRODUCT LEVEL)	SEE PAGE
Y	*289-8981*	1	AXLE AR-FIXED (FRONT, DIFFERENTIAL LOCK)	210
Y	*243-0515*	1	FILLER GP-POWER TRAIN OIL	250
Y	*235-6807*	1	FILTER & LINES GP-TRANSMISSION	254
Y	**304-9464**	1	GAUGE GP-SIGHT (POWER TRAIN OIL)	258
Y	*202-4338*	1	SHAFT GP-DRIVE	310
Y	**290-2720**	1	TRANSMISSION AR	320

Y-SEPARATE ILLUSTRATION

<END>

6Y-6712 PUMP GP-TRANSMISSION–1-SECTION GEAR

S/N: J2X1-UP

PART OF 121-8917 PUMP GP-TRANSMISSION

SMCS-3066 **i00527164**

NOTE	REF NO	GRAPHIC REF	PART NUMBER	QTY	PART NAME 1 2 3 4 5 6 (PRODUCT LEVEL)	SEE PAGE
M	1	1	**6V-5842**	1	BOLT (M10X1.5X40-MM)	
M	2	1	**6V-7981**	5	BOLT (M10X1.5X70-MM)	
		1	**6Y-5010**	1	WASHER (10.16X19X0.84-MM THK)	
	3	1	**8E-9968**	1	BODY AS	
	4	1	**3T-2094**	2	BEARING-SLEEVE	
	5	1	**5M-4987**	2	DOWEL	
	6	1	**8T-5353**	2	DOWEL	
	7	1	**6Y-4464**	1	GEAR AS-OIL PUMP (17-TEETH)	
	8	1	**5H-3252**	1	SEAL-O-RING	
	9	1	**6Y-4997**	1	COVER AS	
	10	1	**3T-2094**	2	BEARING-SLEEVE	
	11	1	**6Y-4465**	1	GEAR (15-TEETH)	

M-METRIC PART

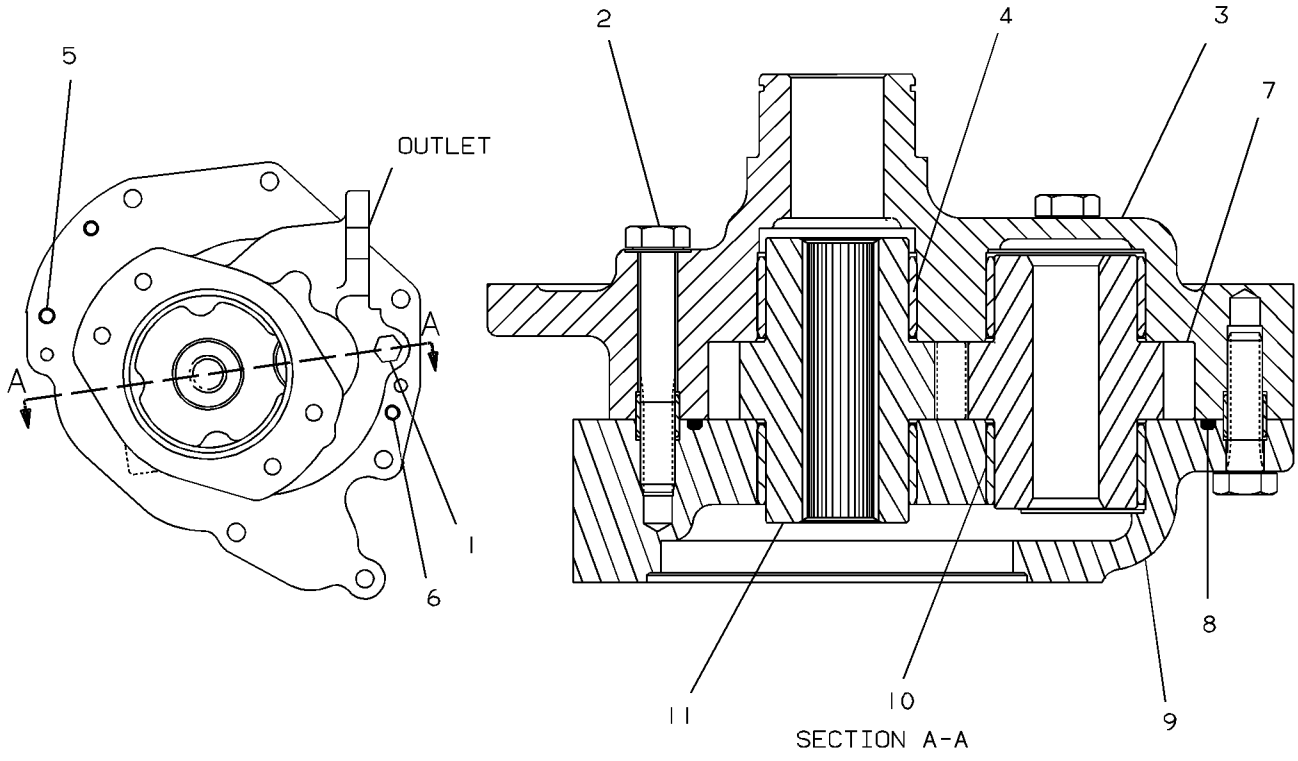

GRAPHIC #1 **<END>** g00126574

121-8917 PUMP GP-TRANSMISSION–1-SECTION GEAR

S/N: J2X1-UP

PART OF 290-2719 TRANSMISSION AR

SMCS-3066 **i00524117**

NOTE	REF NO	GRAPHIC REF	PART NUMBER	QTY	PART NAME 1 2 3 4 5 6 (PRODUCT LEVEL)	SEE PAGE
Y	1	1	**6Y-6712**	1	PUMP GP-TRANSMISSION (1-SECTION GEAR)	296
	2	1	**120-4483**	1	GEAR-DRIVE (68-TEETH)	
M	3	1	**6V-6317**	6	BOLT (M10X1.5X20-MM)	
	4	1	**2J-7550**	1	RING-RETAINING	
	5	1	**6Y-4618**	1	SHAFT	
	6	1	**4B-3665**	1	BALL BEARING	
	7	1	**1H-9696**	1	SEAL-O-RING	
M	8	1	**6V-4249**	2	BOLT (M10X1.5X50-MM)	
M	9	1	**6V-1820**	5	BOLT (M10X1.5X30-MM)	
B	10	1	**1U-8846**	1	SEALANT-GASKET	

B-USE AS REQUIRED
M-METRIC PART
Y-SEPARATE ILLUSTRATION

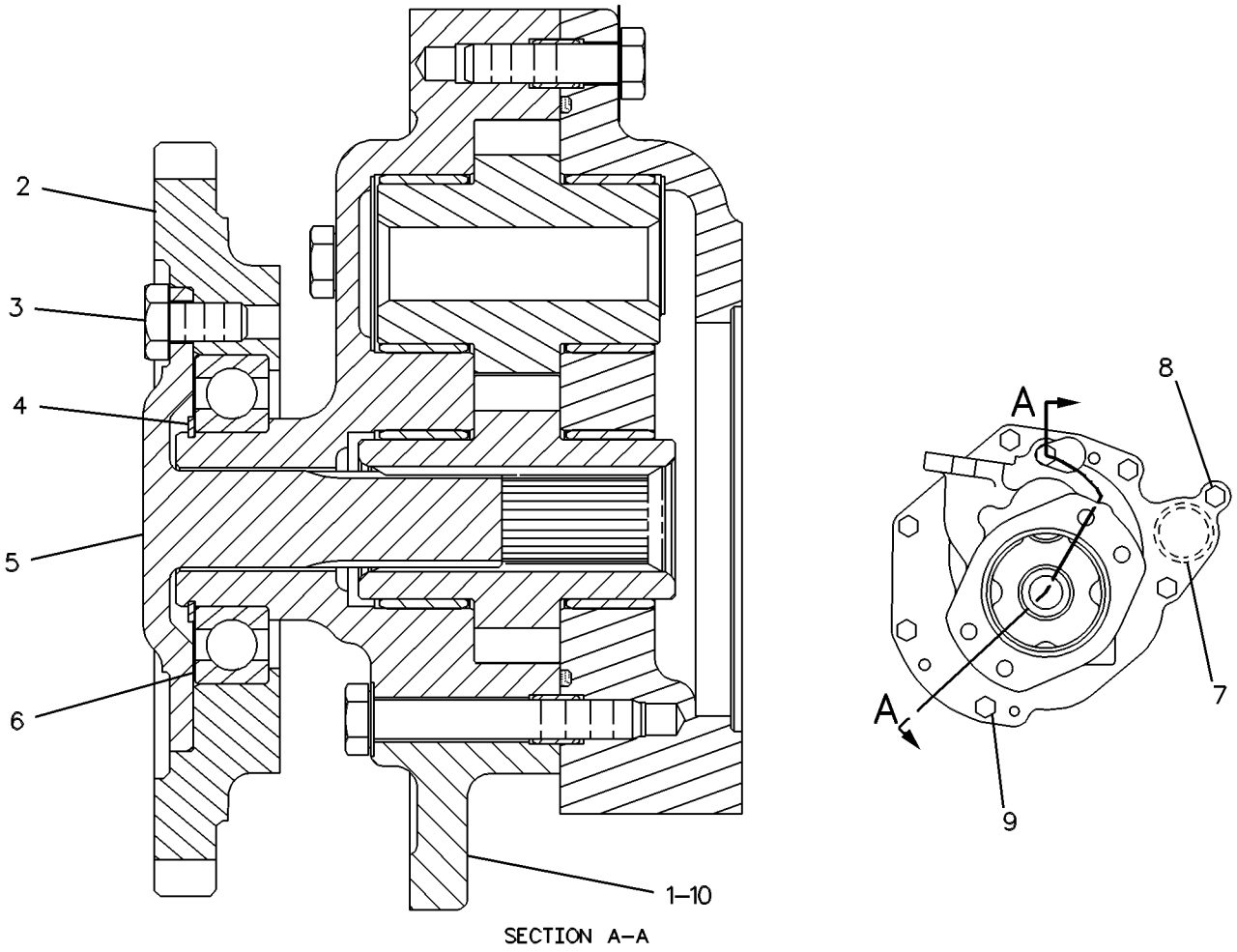

SECTION A–A

GRAPHIC #1 **<END>** g00103796

234-8803 PUMP GP-TRANSMISSION—1-SECTION GEAR

S/N: J2W1-UP

PART OF 234-8867 PUMP GP-TRANSMISSION

SMCS-3066 **i02250094**

NOTE	REF NO	GRAPHIC REF	PART NUMBER	QTY	PART NAME 1 2 3 4 5 6 (PRODUCT LEVEL)	SEE PAGE
	1	1	**234-8806**	1	BODY AS	
		1	**3P-7898**	2	BEARING-SLEEVE	
		1	**5M-4987**	2	DOWEL	
		1	**8T-5353**	2	DOWEL	
	2	1	**6Y-4997**	1	COVER AS	
		1	**3P-7898**	2	BEARING-SLEEVE	
	3	1	**6Y-4464**	1	GEAR AS-OIL PUMP (17-TEETH)	
	4	1	**234-8808**	1	GEAR (17-TEETH)	
	5	1	**5H-3252**	1	SEAL-O-RING	
M	6	1	**6V-7981**	5	BOLT (M10X1.5X70-MM)	
	7	1	**6Y-5010**	1	WASHER (10.16X19X0.84-MM THK)	
M	8	1	**6V-5842**	1	BOLT (M10X1.5X40-MM)	

M-METRIC PART

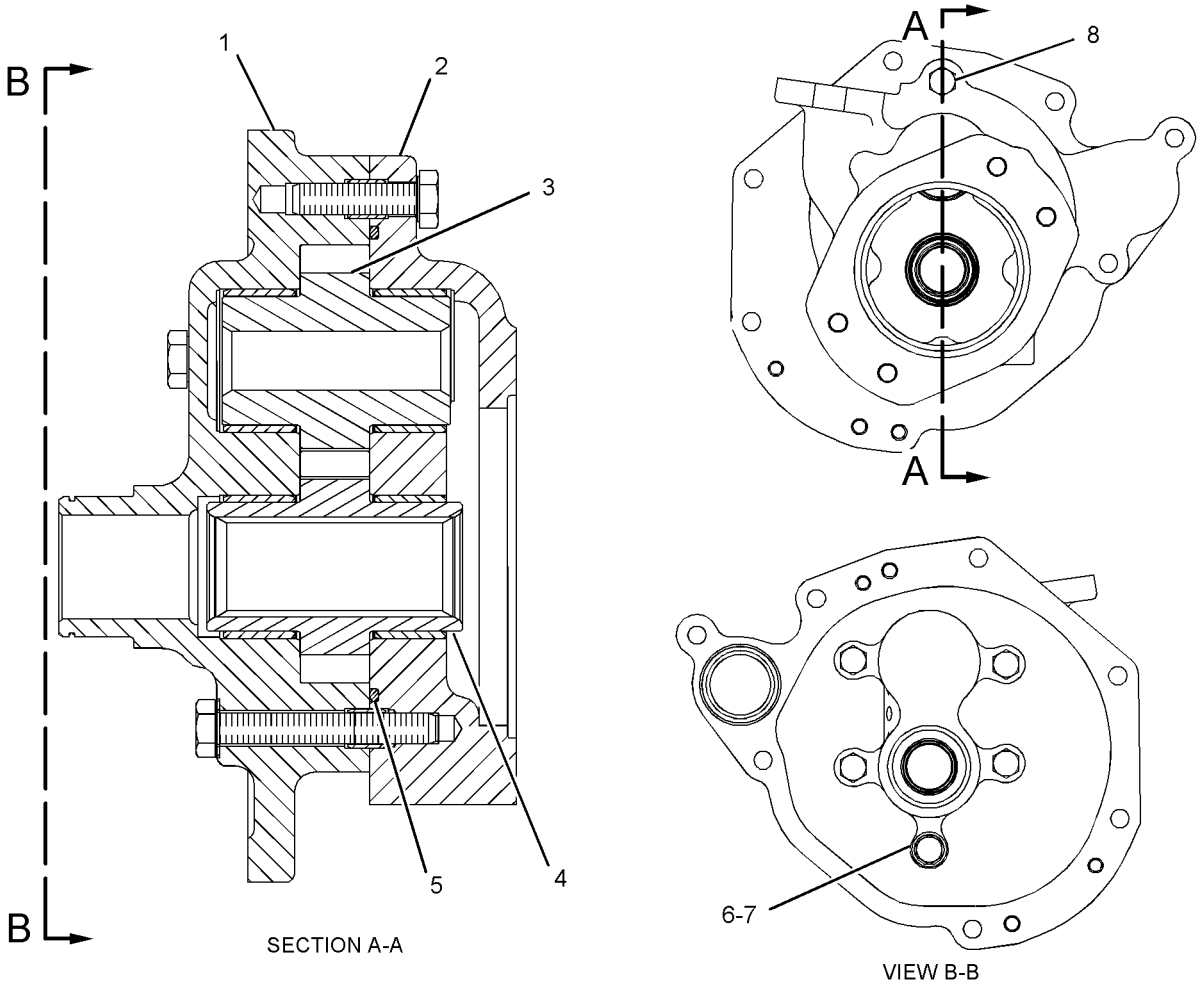

SECTION A-A

VIEW B-B

GRAPHIC #1 **<END>** g01108808

234-8867 PUMP GP-TRANSMISSION—1-SECTION GEAR

S/N: J2W1-UP

PART OF 290-2720 TRANSMISSION AR

SMCS-3066 **i02250089**

NOTE	REF NO	GRAPHIC REF	PART NUMBER	QTY	PART NAME 1 2 3 4 5 6 (PRODUCT LEVEL)	SEE PAGE
Y	1	1	**234-8803**	1	PUMP GP-TRANSMISSION (1-SECTION GEAR)	298
	2	1	**120-4483**	1	GEAR-DRIVE (68-TEETH)	
M	3	1	**6V-6317**	6	BOLT (M10X1.5X20-MM)	
	4	1	**2J-7550**	1	RING-RETAINING	
	5	1	**194-1651**	1	SHAFT	
	6	1	**4B-3665**	1	BALL BEARING	
	7	1	**1H-9696**	1	SEAL-O-RING	
M	8	1	**6V-4249**	2	BOLT (M10X1.5X50-MM)	
M	9	1	**6V-1820**	5	BOLT (M10X1.5X30-MM)	
B	10	1	**1U-8846**		SEALANT-GASKET	

B-USE AS REQUIRED
M-METRIC PART
Y-SEPARATE ILLUSTRATION

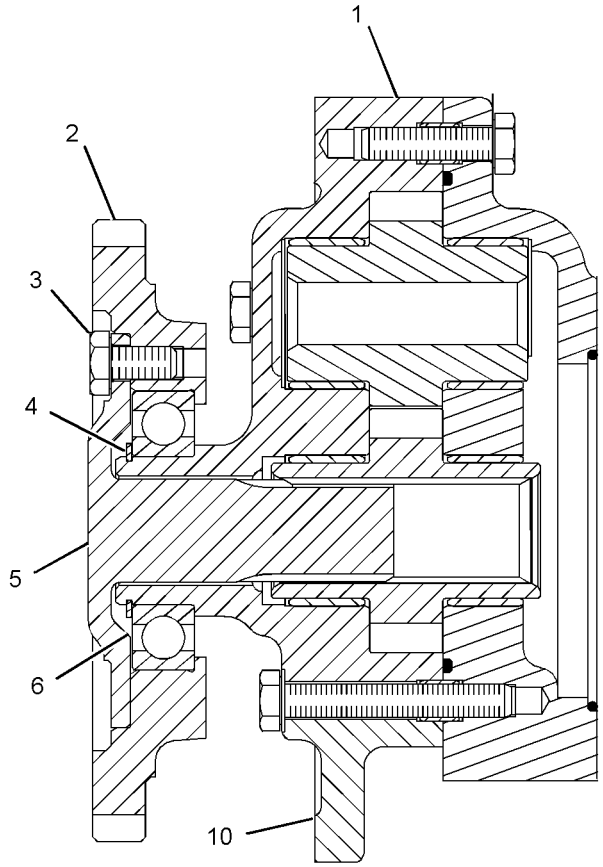

SECTION B-B

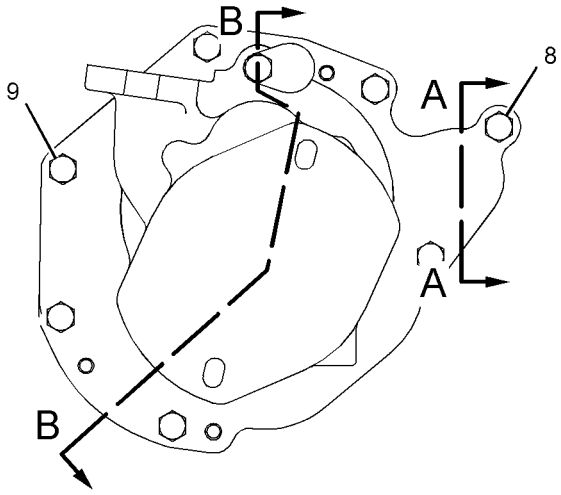

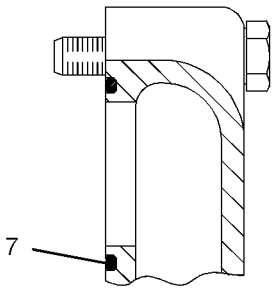

SECTION A-A

GRAPHIC #1 **<END>** g01108626

117-7836 RIM AR

S/N: BYD1-UP; FTD1-UP
15.5-25 OR 17.5-25 TUBELESS TIRES. 1 PIECE
PART OF 229-4953, 229-4954, 229-4955, 229-4962, 9Z-8537 TIRE & RIM AR
AN ATTACHMENT

SMCS-4209 **i02060963**

NOTE	PART NUMBER	QTY	PART NAME 1 2 3 4 5 6 (PRODUCT LEVEL)	SEE PAGE
Y	*147-5071*	1	MOUNTING GP-RIM	294
Y	*117-7839*	4	RIM GP-DEMOUNTABLE	303

Y-SEPARATE ILLUSTRATION

<END>

117-7837 RIM AR

S/N: BYD1-UP; FTD1-UP
PART OF 226-5964, 229-4956, 229-4957, 229-4958, 229-4969, 229-4970, 241-2827, 264-0153 TIRE & RIM AR
AN ATTACHMENT

SMCS-4209 **i01197577**

NOTE	PART NUMBER	QTY	PART NAME 1 2 3 4 5 6 (PRODUCT LEVEL)	SEE PAGE
Y	*147-5071*	1	MOUNTING GP-RIM	294
Y	*117-7840*	4	RIM GP-DEMOUNTABLE	304

Y-SEPARATE ILLUSTRATION

<END>

118-8596 RIM AR

S/N: BYD1-UP; FTD1-UP
3-PIECE
PART OF 128-5443, 229-4959, 229-4960, 229-4961, 286-0037 TIRE & RIM AR
AN ATTACHMENT

SMCS-4209 **i01343783**

NOTE	PART NUMBER	QTY	PART NAME 1 2 3 4 5 6 (PRODUCT LEVEL)	SEE PAGE
Y	*147-5071*	1	MOUNTING GP-RIM	294
Y	*119-5841*	4	RIM GP-DEMOUNTABLE	305
Y	*147-5484*	1	STOP GP-AXLE OSCILLATION	314

Y-SEPARATE ILLUSTRATION

<END>

154-5508 RIM AR

S/N: BYD1-UP; FTD1-UP
PART OF 230-9678, 250-6612, 255-3623 TIRE & RIM AR
AN ATTACHMENT

SMCS-4209 **i01622978**

NOTE	PART NUMBER	QTY	PART NAME 1 2 3 4 5 6 (PRODUCT LEVEL)	SEE PAGE
Y	*147-5071*	1	MOUNTING GP-RIM	294
Y	*2Q-5979*	1	RIM GP-DEMOUNTABLE	301
Y	*147-5484*	1	STOP GP-AXLE OSCILLATION	314

Y-SEPARATE ILLUSTRATION

<END>

2Q-5979 RIM GP-DEMOUNTABLE

S/N: BYD1-UP; FTD1-UP
17.00 X 25 3-PIECE
PART OF 154-5508 RIM AR
AN ATTACHMENT

SMCS-4209 **i01327062**

NOTE	REF NO	GRAPHIC REF	PART NUMBER	QTY	PART NAME 1 2 3 4 5 6 (PRODUCT LEVEL)	SEE PAGE
CY	1	1	**186-4943**	1	RIM GP-DEMOUNTABLE	309
Y	2	1	**6D-0337**	1	VALVE GP-TIRE	333
	3	1	**4K-4879**	1	SEAL-O-RING	

C-CHANGE FROM PREVIOUS TYPE
Y-SEPARATE ILLUSTRATION

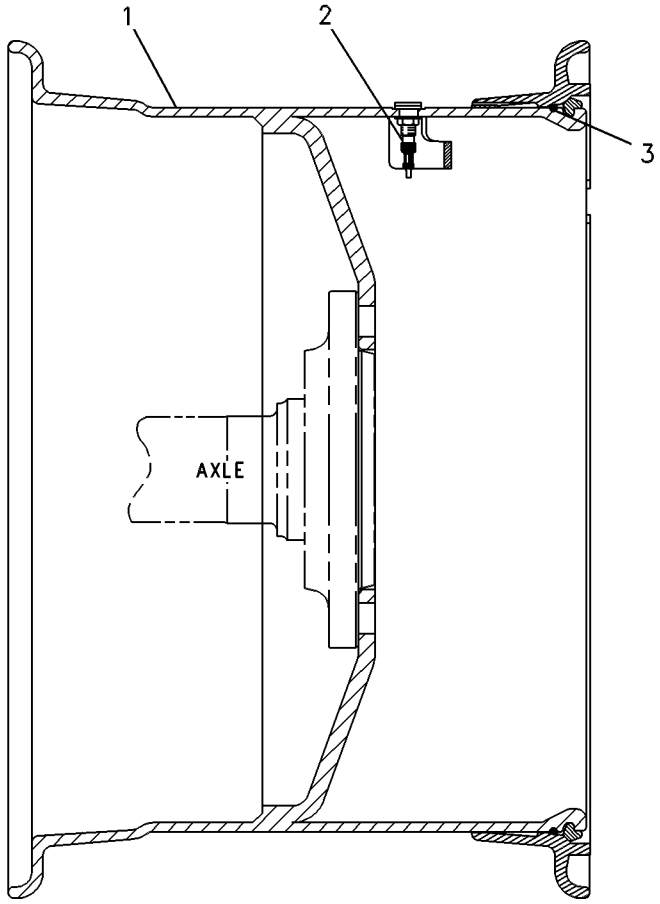

GRAPHIC #1 **<END>** g00278075

2Q-5980 RIM GP-DEMOUNTABLE

S/N: BYD1-UP; FTD1-UP
17.00 X 25 3-PIECE
PART OF 186-4943 RIM GP-DEMOUNTABLE
AN ATTACHMENT

SMCS-4209 **i00714877**

NOTE	REF NO	GRAPHIC REF	PART NUMBER	QTY	PART NAME 1 2 3 4 5 6 (PRODUCT LEVEL)	SEE PAGE
	1	1	**8Q-4333**	1	RIM AS	
	2	1	**8W-9576**	1	FLANGE AS	
	3	1	**4K-4881**	1	LOCKRING	

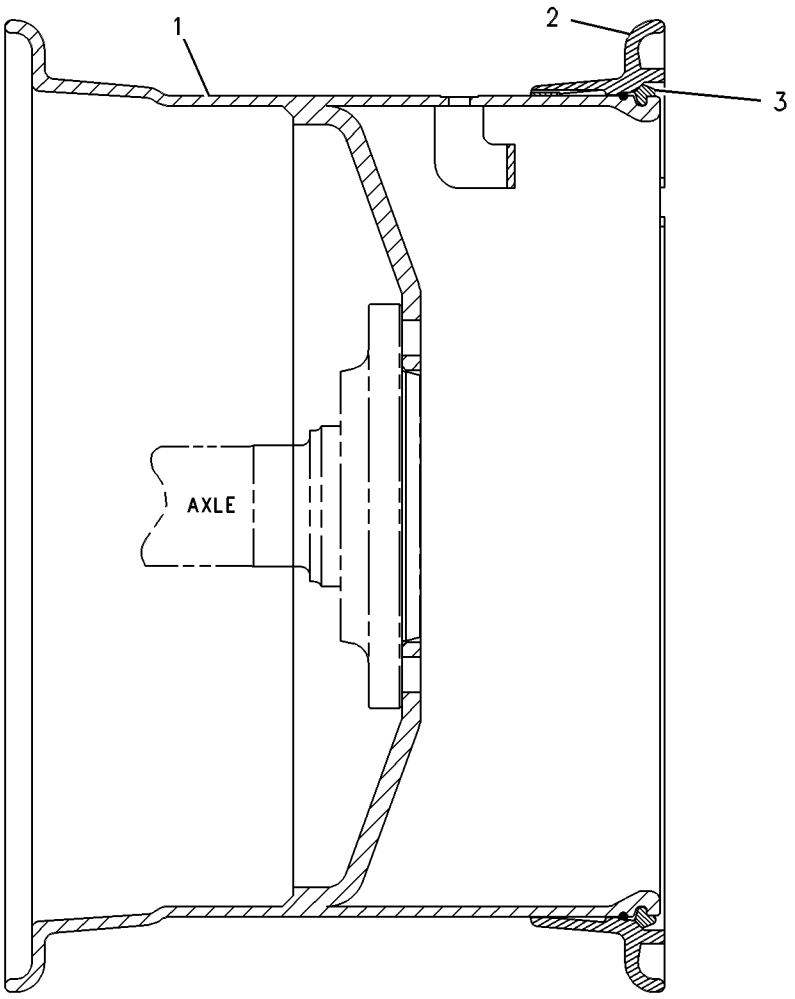

GRAPHIC #1 **<END>** g00271647

117-7839 RIM GP-DEMOUNTABLE

S/N: BYD1-UP; FTD1-UP
17.5 X R25 . 1 PIECE
PART OF 117-7836 RIM AR
AN ATTACHMENT

SMCS-4209 **i00524741**

NOTE	REF NO	GRAPHIC REF	PART NUMBER	QTY	PART NAME 1 2 3 4 5 6 (PRODUCT LEVEL)	SEE PAGE
	1	1	**8R-5825**	1	RIM AS	
	2	1	**2G-6595**	1	VALVE GP-TIRE	
		1	**6F-3930**	1	CORE-VALVE	
		1	**9K-7951**	1	CAP-VALVE	
		1	**7D-5252**	1	SPUD AS	
		1	**2D-2507**	1	SPUD	
		1	**2D-2508**	1	GROMMET	
		1	**2D-2509**	1	LOCKNUT	

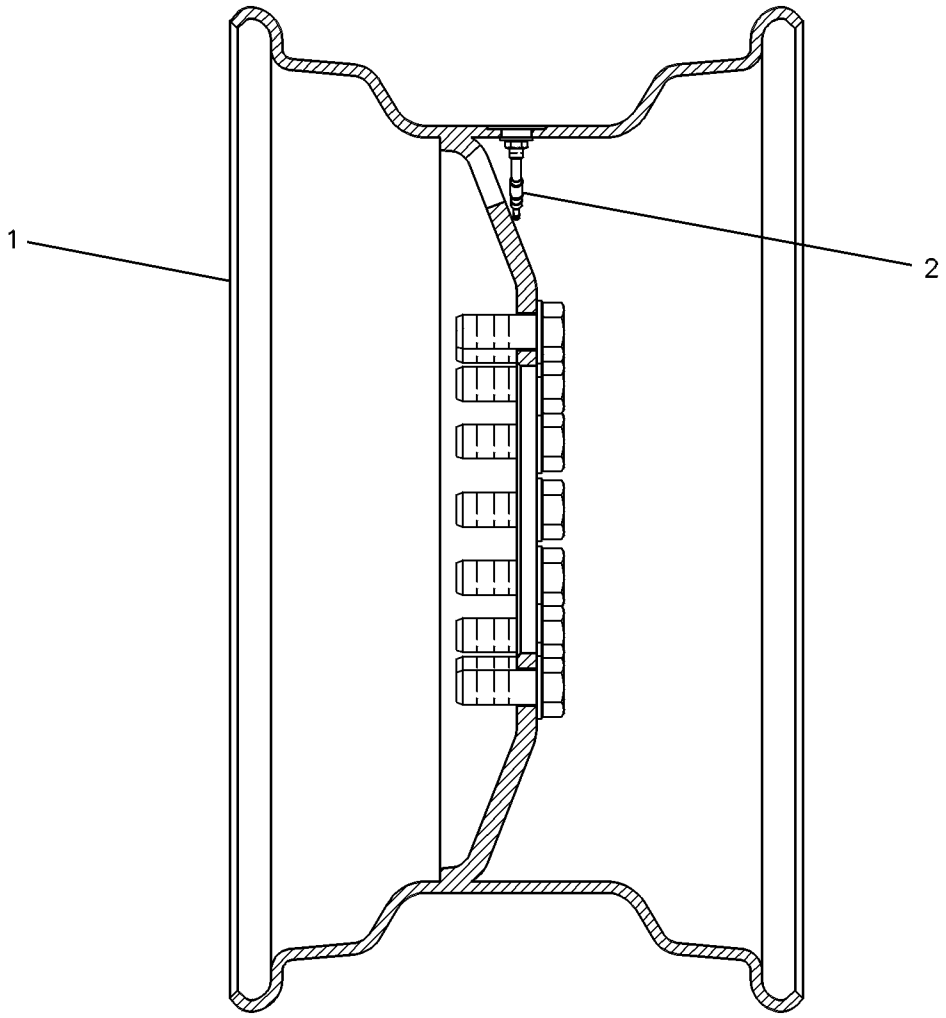

GRAPHIC #1 **<END>** g00243143

117-7840 RIM GP-DEMOUNTABLE

S/N: BYD1-UP; FTD1-UP
14.00 X 25 - 3 PIECE
PART OF 117-7837 RIM AR
AN ATTACHMENT

SMCS-4209 **i02830957**

NOTE	REF NO	GRAPHIC REF	PART NUMBER	QTY	PART NAME 1 2 3 4 5 6 (PRODUCT LEVEL)	SEE PAGE
CY	1	1	**186-4942**	1	RIM GP-DEMOUNTABLE (3-PIECE)	308
	2	1	**4K-4879**	1	SEAL-O-RING	
Y	3	1	**6D-0337**	1	VALVE GP-TIRE	333

C-CHANGE FROM PREVIOUS TYPE
Y-SEPARATE ILLUSTRATION

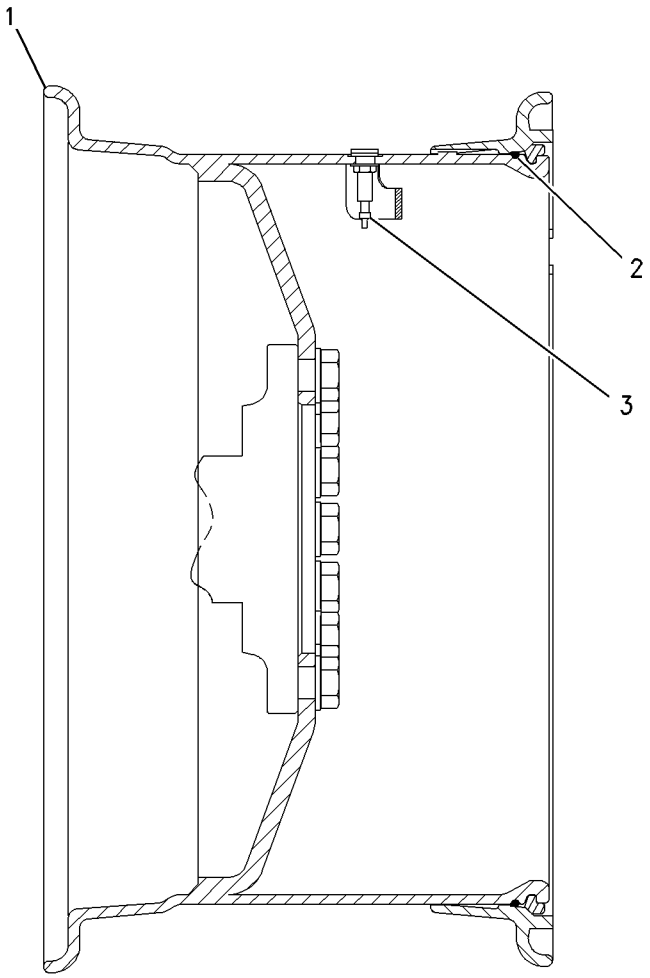

GRAPHIC #1 **<END>** g00702440

119-5841 RIM GP-DEMOUNTABLE

S/N: BYD1-UP; FTD1-UP
17.00 X 25, 3 PIECE
PART OF 118-8596 RIM AR, 232-0679, 232-0681 TIRE & RIM GP
AN ATTACHMENT

SMCS-4209 **i00723621**

NOTE	REF NO	GRAPHIC REF	PART NUMBER	QTY	PART NAME 1 2 3 4 5 6 (PRODUCT LEVEL)	SEE PAGE
CY	1	1	*129-1884*	1	RIM GP-DEMOUNTABLE	307
	2	1	**4K-4879**	2	SEAL-O-RING	
Y	3	1	**6D-0337**	1	VALVE GP-TIRE	333
	4	1	**6D-0443**	1	HOUSING AS-CORE	
	5	1	**2D-2633**	1	CAP	
		1	**2D-2628**	1	CORE-VALVE	
	6	1	**8D-2707**	1	SPUD AS	
	7	1	**2D-2629**	1	GROMMET	
	8	1	**2D-2630**	1	WASHER	
	9	1	**2D-2631**	1	NUT (0.482-26-THD)	

C-CHANGE FROM PREVIOUS TYPE
Y-SEPARATE ILLUSTRATION

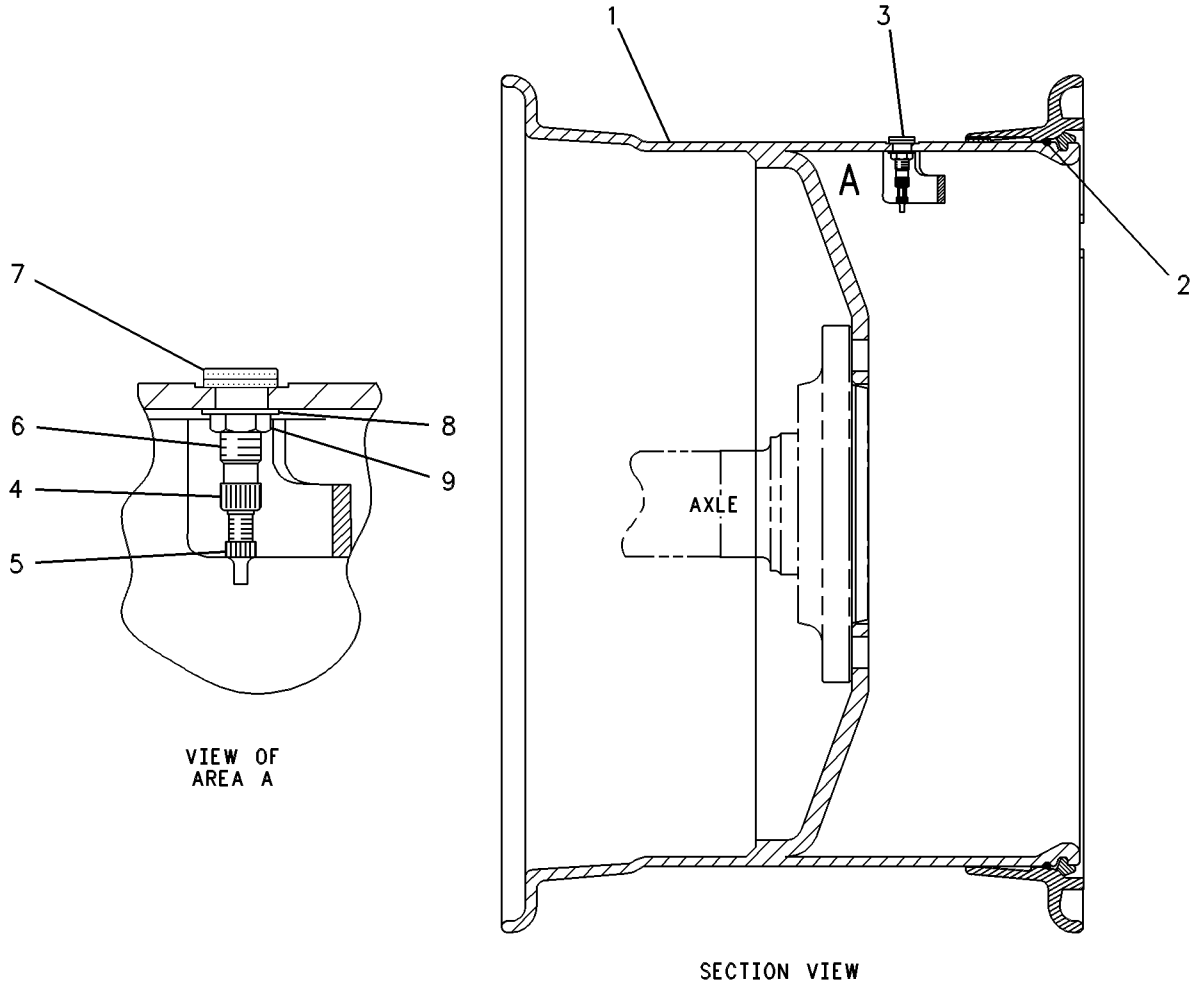

GRAPHIC #1 **<END>** g00279443

128-5436 RIM GP-DEMOUNTABLE

S/N: BYD1-UP; FTD1-UP
14.00 X 25 - 3 PIECE
PART OF 186-4942 RIM GP-DEMOUNTABLE
AN ATTACHMENT

SMCS-4209 **i00718370**

NOTE	REF NO	GRAPHIC REF	PART NUMBER	QTY	PART NAME 1 2 3 4 5 6 (PRODUCT LEVEL)	SEE PAGE
	1	1	**102-2131**	1	RIM AS	
	2	1	**8X-9925**	1	FLANGE	
	3	1	**4K-4881**	1	LOCKRING	

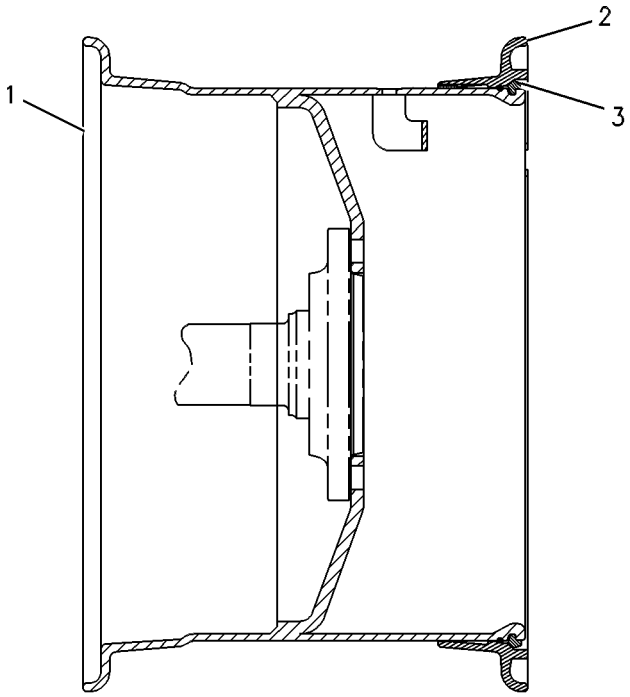

GRAPHIC #1 **<END>** g00276538

129-1884 RIM GP-DEMOUNTABLE

S/N: BYD1-UP; FTD1-UP
17.00 X 25, 3 PIECE
PART OF 119-5841 RIM GP-DEMOUNTABLE
AN ATTACHMENT

SMCS-4209 **i00729365**

NOTE	REF NO	GRAPHIC REF	PART NUMBER	QTY	PART NAME 1 2 3 4 5 6 (PRODUCT LEVEL)	SEE PAGE
	1	1	**8R-3223**	1	RIM AS	
	2	1	**8W-9576**	1	FLANGE AS	
	3	1	**4K-4881**	1	LOCKRING	

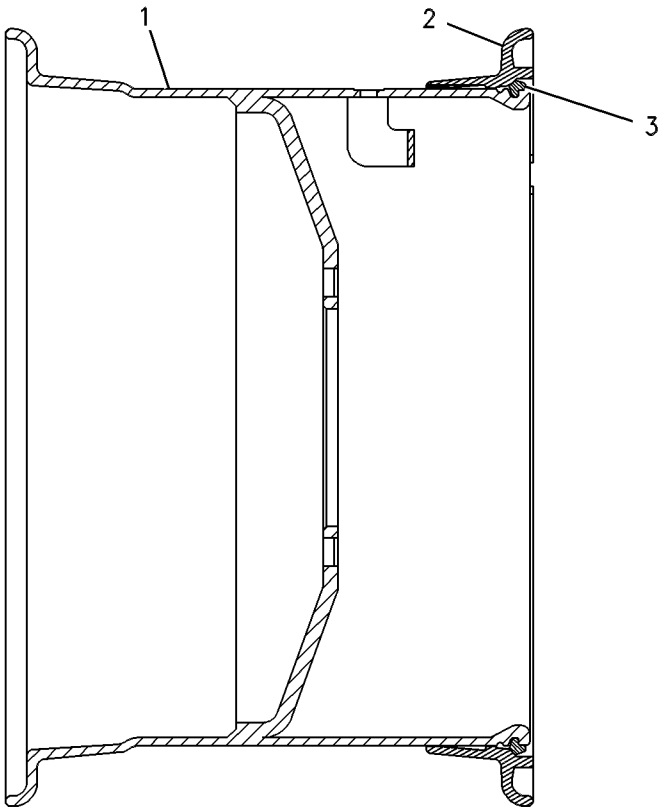

GRAPHIC #1 **<END>** g00276557

176-1705 RIM GP-DEMOUNTABLE

S/N: BYD1-UP; FTD1-UP
14.00 X 24 3 PIECE
PART OF 186-4942 RIM GP-DEMOUNTABLE
AN ATTACHMENT

SMCS-4209 **i01326210**

NOTE	PART NUMBER	QTY	PART NAME 1 2 3 4 5 6 (PRODUCT LEVEL)	SEE PAGE
	176-0118	1	DRIVER	
	171-7198	1	FLANGE AS	
	4K-4881	1	LOCKRING	
	171-7199	1	RIM AS	

<END>

176-1706 RIM GP-DEMOUNTABLE

S/N: BYD1-UP; FTD1-UP
17.00 X 25. 3 PIECE
PART OF 186-4943 RIM GP-DEMOUNTABLE
AN ATTACHMENT

SMCS-4209 **i01326398**

NOTE	PART NUMBER	QTY	PART NAME 1 2 3 4 5 6 (PRODUCT LEVEL)	SEE PAGE
	176-0118	1	DRIVER	
	171-8689	1	FLANGE AS	
	4K-4881	1	LOCKRING	
	176-1707	1	RIM AS	

<END>

186-4942 RIM GP-DEMOUNTABLE

S/N: BYD1-UP; FTD1-UP
14.00 X 25 3 PIECE
PART OF 117-7840 RIM GP-DEMOUNTABLE
AN ATTACHMENT

SMCS-4209 **i01327051**

NOTE	PART NUMBER	QTY	PART NAME 1 2 3 4 5 6 (PRODUCT LEVEL)	SEE PAGE
Y	**128-5436**	1	RIM GP-DEMOUNTABLE	306
Y	*176-1705*	1	RIM GP-DEMOUNTABLE	308

Y-SEPARATE ILLUSTRATION

<END>

186-4943 RIM GP-DEMOUNTABLE

S/N: BYD1-UP; FTD1-UP
17.00 X 25. 3 PIECE
PART OF 2Q-5979 RIM GP-DEMOUNTABLE
AN ATTACHMENT

SMCS-4209 **i01326231**

NOTE	PART NUMBER	QTY	PART NAME 1 2 3 4 5 6 (PRODUCT LEVEL)	SEE PAGE
Y	**2Q-5980**	1	RIM GP-DEMOUNTABLE	302
Y	*176-1706*	1	RIM GP-DEMOUNTABLE	308

Y-SEPARATE ILLUSTRATION

<END>

202-4338 SHAFT GP-DRIVE

S/N: BYD1-UP; FTD1-UP

PART OF 289-8835, 289-8845, 289-8895 POWER TRAIN AR

SMCS-3253 **i02853569**

NOTE	REF NO	GRAPHIC REF	PART NUMBER	QTY	PART NAME 1 2 3 4 5 6 (PRODUCT LEVEL)	SEE PAGE
	1	1	**4E-5984**	10	STRAP	
Y	2	1	**201-9517**	1	SLIP JOINT GP (CENTER)	312
CY	3	1	**238-9593**	1	SHAFT GP-DRIVE (FRONT)	311
Y	4	1	**204-3540**	4	SLIP JOINT GP (REAR)	313
M	5	1	**4E-5985**	20	BOLT-12 POINT HEAD (M10X1.25X20-MM)	
	6	1	**8T-4122**	2	WASHER-HARD (17X32X3.5-MM THK)	
M	7	1	**8T-4140**	2	BOLT (M16X2X60-MM)	

C-CHANGE FROM PREVIOUS TYPE
M-METRIC PART
Y-SEPARATE ILLUSTRATION

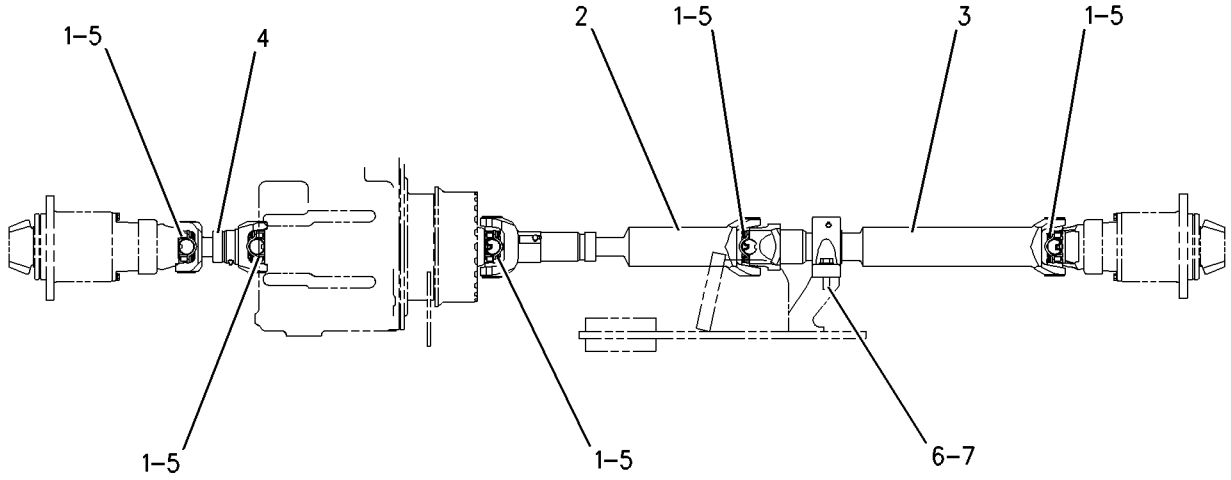

GRAPHIC #1 **<END>** g00920552

238-9593 SHAFT GP-DRIVE–FRONT

S/N: BYD1-UP; FTD1-UP

PART OF 202-4338 SHAFT GP-DRIVE

SMCS-3253 **i02087687**

NOTE	REF NO	GRAPHIC REF	PART NUMBER	QTY	PART NAME 1 2 3 4 5 6 (PRODUCT LEVEL)	SEE PAGE
	1	1	**6I-8531**	1	BEARING GP-PILLOW BLOCK	
		1	**3B-8489**	1	FITTING-GREASE	
	2	1	**9U-3668**	1	YOKE	
	3	1	**238-9594**	1	UNIVERSAL JOINT GP	
		1	**193-4640**	1	SPIDER & BEARING GP	
		1	**8V-7315**	4	RING	
M	4	1	**8T-0372**	1	BOLT (M12X1.75X90-MM)	
	5	1	**9V-2412**	1	RETAINER	

M-METRIC PART

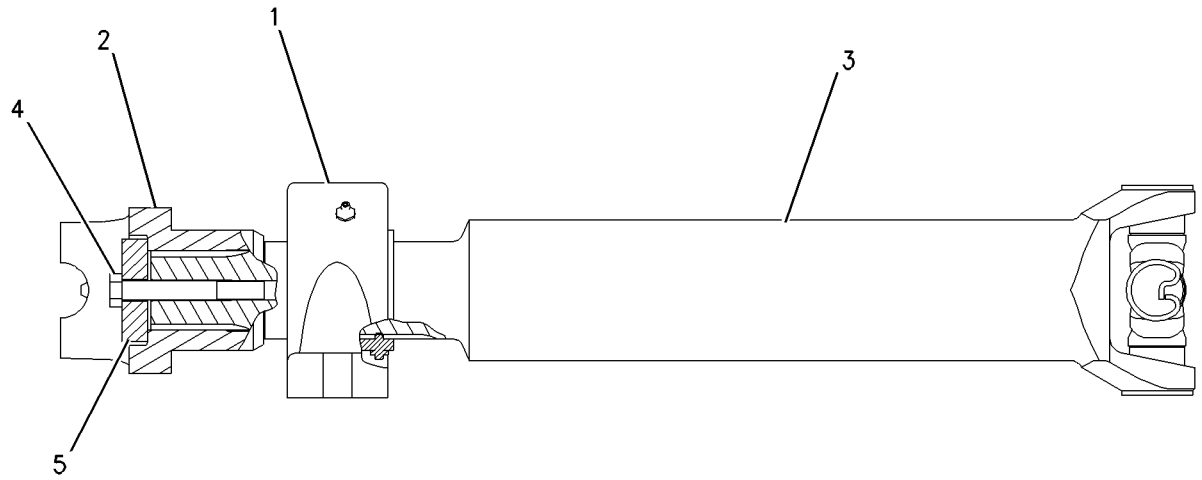

GRAPHIC #1 **<END>** g00920523

201-9517 SLIP JOINT GP–CENTER

S/N: BYD1-UP; FTD1-UP

PART OF 202-4338 SHAFT GP-DRIVE

SMCS-3251 **i01834789**

NOTE	REF NO	GRAPHIC REF	PART NUMBER	QTY	PART NAME 1 2 3 4 5 6 (PRODUCT LEVEL)	SEE PAGE
	1	1	**1K-6853**	1	FITTING	
	2	1	**3B-8488**	1	FITTING-GREASE	
	3	1	**8R-2022**	1	SEAL	
	4	1	**193-4640**	2	SPIDER & BEARING GP	
					(EACH INCLUDES)	
		1	**8V-7315**	4	RING	

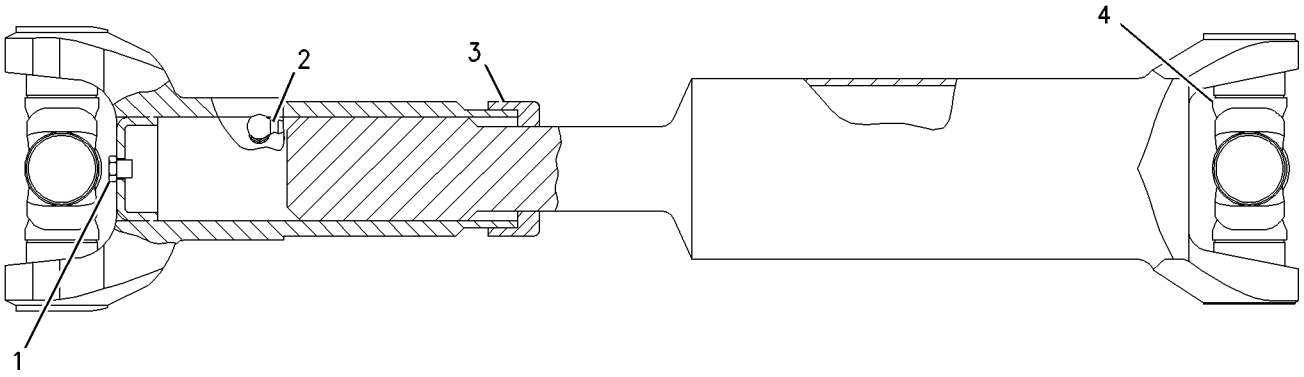

GRAPHIC #1 **<END>** g00914281

204-3540 SLIP JOINT GP–REAR

S/N: BYD1-UP; FTD1-UP

PART OF 202-4338 SHAFT GP-DRIVE

SMCS-3251 **i01819682**

NOTE	REF NO	GRAPHIC REF	PART NUMBER	QTY	PART NAME 1 2 3 4 5 6 (PRODUCT LEVEL)	SEE PAGE
	1	1	**3B-8489**	1	FITTING-GREASE	
	2	1	**8V-1412**	1	RETAINER	
	3	1	**191-2226**	2	SPIDER & BEARING GP	
		1	**8V-7315**	4	RING	

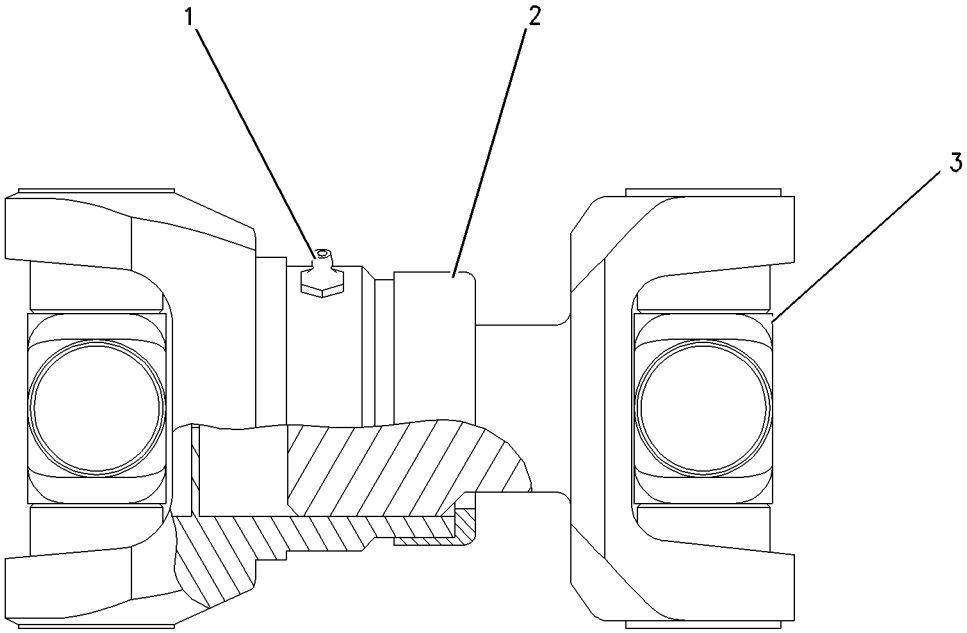

GRAPHIC #1 **<END>** g00920541

147-5484 STOP GP-AXLE OSCILLATION

S/N: BYD1-UP; FTD1-UP
PART OF 118-8596, 154-5508 RIM AR
AN ATTACHMENT

SMCS-3259 **i01093363**

NOTE	PART NUMBER	QTY	PART NAME 1 2 3 4 5 6 (PRODUCT LEVEL)	SEE PAGE
	4E-1357	2	BLOCK	
M	**8T-4956**	4	BOLT (M12X1.75X35-MM)	
	8T-4223	4	WASHER-HARD (13.5X25.5X3-MM THK)	

M-METRIC PART

<END>

9Z-8537 TIRE & RIM AR

S/N: FTD1-UP
SNOW
AN ATTACHMENT

SMCS-4202 **i01816146**

NOTE	PART NUMBER	QTY	PART NAME 1 2 3 4 5 6 (PRODUCT LEVEL)	SEE PAGE
Y	*117-7836*	1	RIM AR	300
	190-8986	4	TIRE (17.5-25)	

Y-SEPARATE ILLUSTRATION

<END>

128-5443 TIRE & RIM AR

S/N: BYD1-UP; FTD1-UP
AN ATTACHMENT

SMCS-4202 **i01217631**

NOTE	PART NUMBER	QTY	PART NAME 1 2 3 4 5 6 (PRODUCT LEVEL)	SEE PAGE
Y	*118-8596*	1	RIM AR	300
J	*134-0797*	4	TIRE (20.5-25)	

J-PROCURE LOCALLY
Y-SEPARATE ILLUSTRATION

<END>

226-5964 TIRE & RIM AR

S/N: BYD1-UP; FTD1-UP
AN ATTACHMENT

SMCS-4202 **i02301708**

NOTE	PART NUMBER	QTY	PART NAME 1 2 3 4 5 6 (PRODUCT LEVEL)	SEE PAGE
Y	*117-7837*	1	RIM AR	300
	8R-5280	4	TIRE (17.5-R25)	

Y-SEPARATE ILLUSTRATION

<END>

POWER TRAIN

229-4953 TIRE & RIM AR

S/N: BYD1-UP; FTD1-UP

AN ATTACHMENT

SMCS-4202 **i02301711**

NOTE	PART NUMBER	QTY	PART NAME 1 2 3 4 5 6 (PRODUCT LEVEL)	SEE PAGE
Y	*117-7836*	1	RIM AR	300
	106-4835	4	TIRE (17.5-R25)	

Y-SEPARATE ILLUSTRATION

<END>

229-4954 TIRE & RIM AR

S/N: BYD1-UP; FTD1-UP

AN ATTACHMENT

SMCS-4202 **i02301712**

NOTE	PART NUMBER	QTY	PART NAME 1 2 3 4 5 6 (PRODUCT LEVEL)	SEE PAGE
Y	*117-7836*	1	RIM AR	300
	6C-3246	4	TIRE (17.5-R25)	

Y-SEPARATE ILLUSTRATION

<END>

229-4955 TIRE & RIM AR

S/N: BYD1-UP; FTD1-UP

AN ATTACHMENT

SMCS-4202 **i02301713**

NOTE	PART NUMBER	QTY	PART NAME 1 2 3 4 5 6 (PRODUCT LEVEL)	SEE PAGE
Y	*117-7836*	1	RIM AR	300
	6C-7366	4	TIRE (17.5-R25)	

Y-SEPARATE ILLUSTRATION

<END>

229-4956 TIRE & RIM AR

S/N: BYD1-UP; FTD1-UP

AN ATTACHMENT

SMCS-4202 **i01820779**

NOTE	PART NUMBER	QTY	PART NAME 1 2 3 4 5 6 (PRODUCT LEVEL)	SEE PAGE
	106-4835	4	TIRE (17.5-R25)	
Y	*117-7837*	1	RIM AR	300

Y-SEPARATE ILLUSTRATION

<END>

229-4957 TIRE & RIM AR

S/N: BYD1-UP; FTD1-UP
AN ATTACHMENT

SMCS-4202 **i01820778**

NOTE	PART NUMBER	QTY	PART NAME 1 2 3 4 5 6 (PRODUCT LEVEL)	SEE PAGE
	6C-3246	4	TIRE (17.5-R25)	
Y	*117-7837*	1	RIM AR	300

Y-SEPARATE ILLUSTRATION

<END>

229-4958 TIRE & RIM AR

S/N: BYD1-UP; FTD1-UP
AN ATTACHMENT

SMCS-4202 **i01820737**

NOTE	PART NUMBER	QTY	PART NAME 1 2 3 4 5 6 (PRODUCT LEVEL)	SEE PAGE
	6C-7366	4	TIRE (17.5 R25 * GP2B6S)	
Y	*117-7837*	1	RIM AR	300

Y-SEPARATE ILLUSTRATION

<END>

229-4959 TIRE & RIM AR

S/N: BYD1-UP; FTD1-UP
AN ATTACHMENT

SMCS-4202 **i02301714**

NOTE	PART NUMBER	QTY	PART NAME 1 2 3 4 5 6 (PRODUCT LEVEL)	SEE PAGE
Y	*118-8596*	1	RIM AR	300
	106-4837	4	TIRE (20.5-R25)	

Y-SEPARATE ILLUSTRATION

<END>

229-4960 TIRE & RIM AR

S/N: BYD1-UP; FTD1-UP
AN ATTACHMENT

SMCS-4202 **i02301715**

NOTE	PART NUMBER	QTY	PART NAME 1 2 3 4 5 6 (PRODUCT LEVEL)	SEE PAGE
Y	*118-8596*	1	RIM AR	300
	6C-3247	4	TIRE (20.5-R25)	

Y-SEPARATE ILLUSTRATION

<END>

229-4961 TIRE & RIM AR

S/N: BYD1-UP; FTD1-UP
AN ATTACHMENT

SMCS-4202 **i02301716**

NOTE	PART NUMBER	QTY	PART NAME 1 2 3 4 5 6 (PRODUCT LEVEL)	SEE PAGE
Y	*118-8596*	1	RIM AR	300
	6C-7367	4	TIRE (20.5-R25)	

Y-SEPARATE ILLUSTRATION

<END>

229-4962 TIRE & RIM AR

S/N: FTD1-UP
AN ATTACHMENT

SMCS-4202 **i02301717**

NOTE	PART NUMBER	QTY	PART NAME 1 2 3 4 5 6 (PRODUCT LEVEL)	SEE PAGE
Y	*117-7836*	1	RIM AR	300
	128-5450	4	TIRE (17.5-25)	

Y-SEPARATE ILLUSTRATION

<END>

229-4969 TIRE & RIM AR

S/N: FTD1-UP
AN ATTACHMENT

SMCS-4202 **i01878117**

NOTE	PART NUMBER	QTY	PART NAME 1 2 3 4 5 6 (PRODUCT LEVEL)	SEE PAGE
Y	*117-7837*	1	RIM AR	300
	180-9853	4	TIRE (17.5-25)	

Y-SEPARATE ILLUSTRATION

<END>

229-4970 TIRE & RIM AR

S/N: BYD1-UP; FTD1-UP
AN ATTACHMENT

SMCS-4202 **i01878118**

NOTE	PART NUMBER	QTY	PART NAME 1 2 3 4 5 6 (PRODUCT LEVEL)	SEE PAGE
Y	*117-7837*	1	RIM AR (3-PIECE)	300
	174-6899	4	TIRE (17.5-25)	

Y-SEPARATE ILLUSTRATION

<END>

230-9678 TIRE & RIM AR

S/N: BYD1-UP
AN ATTACHMENT

SMCS-4202 **i02822628**

NOTE	PART NUMBER	QTY	PART NAME 1 2 3 4 5 6 (PRODUCT LEVEL)	SEE PAGE
Y	*154-5508*	1	RIM AR	300
	6C-7367	4	TIRE (20.5-R25)	

Y-SEPARATE ILLUSTRATION

<END>

241-2827 TIRE & RIM AR

S/N: BYD1-UP; FTD1-UP
AN ATTACHMENT

SMCS-4202 **i02087843**

NOTE	PART NUMBER	QTY	PART NAME 1 2 3 4 5 6 (PRODUCT LEVEL)	SEE PAGE
Y	*117-7837*	1	RIM AR	300
	241-2826	4	TIRE (17.5-R25)	

Y-SEPARATE ILLUSTRATION

<END>

250-6612 TIRE & RIM AR

S/N: BYD1-UP
AN ATTACHMENT

SMCS-4202 **i02832221**

NOTE	PART NUMBER	QTY	PART NAME 1 2 3 4 5 6 (PRODUCT LEVEL)	SEE PAGE
Y	*154-5508*	1	RIM AR	300
	250-6606	4	TIRE (600/65-R25)	

Y-SEPARATE ILLUSTRATION

<END>

255-3623 TIRE & RIM AR

S/N: BYD1-UP; FTD1-UP
AN ATTACHMENT

SMCS-4202 **i02578125**

NOTE	PART NUMBER	QTY	PART NAME 1 2 3 4 5 6 (PRODUCT LEVEL)	SEE PAGE
Y	*154-5508*	1	RIM AR	300
	207-6031	4	TIRE (20.5-R25)	

Y-SEPARATE ILLUSTRATION

<END>

264-0153 TIRE & RIM AR

S/N: BYD1-UP; FTD1-UP
AN ATTACHMENT

SMCS-4202 **i02277775**

NOTE	PART NUMBER	QTY	PART NAME 1 2 3 4 5 6 (PRODUCT LEVEL)	SEE PAGE
Y	*117-7837*	1	RIM AR	300
	264-0155	4	TIRE (17.5-R25)	

Y-SEPARATE ILLUSTRATION

<END>

286-0037 TIRE & RIM AR

S/N: BYD1-UP; FTD1-UP
AN ATTACHMENT

SMCS-4202 **i02574013**

NOTE	PART NUMBER	QTY	PART NAME 1 2 3 4 5 6 (PRODUCT LEVEL)	SEE PAGE
Y	*118-8596*	1	RIM AR	300
	128-5164	4	TIRE (20.5-25)	

Y-SEPARATE ILLUSTRATION

<END>

232-0679 TIRE & RIM GP

S/N: BYD1-UP
AN ATTACHMENT

SMCS-4202 **i02014072**

NOTE	PART NUMBER	QTY	PART NAME 1 2 3 4 5 6 (PRODUCT LEVEL)	SEE PAGE
Y	*119-5841*	1	RIM GP-DEMOUNTABLE	305
	106-4837	1	TIRE (20.5XR25)	

Y-SEPARATE ILLUSTRATION

<END>

232-0681 TIRE & RIM GP

S/N: BYD1-UP
AN ATTACHMENT

SMCS-4202 **i02014241**

NOTE	PART NUMBER	QTY	PART NAME 1 2 3 4 5 6 (PRODUCT LEVEL)	SEE PAGE
Y	*119-5841*	1	RIM GP-DEMOUNTABLE	305
	6C-3247	1	TIRE (20.5XR25)	

Y-SEPARATE ILLUSTRATION

<END>

290-2719 TRANSMISSION AR

S/N: J2X1-UP

PART OF 289-8845 POWER TRAIN AR

SMCS-3030 **i02853571**

NOTE	PART NUMBER	QTY	PART NAME 1 2 3 4 5 6 (PRODUCT LEVEL)	SEE PAGE
Y	*177-0018*	1	CASE & PARTS GP-TRANSMISSION	218
Y	*118-4918*	1	CLUTCH GP (REVERSE, SECOND)	224
Y	*118-4921*	1	CLUTCH GP (FORWARD HIGH, FORWARD LOW)	226
Y	*190-2914*	1	CLUTCH GP (FIRST, THIRD)	228
Y	*141-8615*	1	DRIVE GP-FLEXIBLE COUPLING	246
Y	*146-6274*	1	DRIVE GP-PUMP (TRANSMISSION)	247
Y	*190-2888*	1	GEAR GP-INPUT TRANSFER	266
Y	*190-2915*	1	GEAR GP-OUTPUT TRANSFER	268
Y	*121-8917*	1	PUMP GP-TRANSMISSION (1-SECTION GEAR)	297
Y	*200-2042*	1	VALVE GP-TRANSMISSION CONTROL	334
	283-3307	1	TORQUE CONVERTER AS	

Y-SEPARATE ILLUSTRATION

<END>

290-2720 TRANSMISSION AR

S/N: J2W1-UP

PART OF 289-8835, 289-8895 POWER TRAIN AR

SMCS-3030 **i02853572**

NOTE	PART NUMBER	QTY	PART NAME 1 2 3 4 5 6 (PRODUCT LEVEL)	SEE PAGE
Y	*239-5608*	1	CASE & PARTS GP-TRANSMISSION	221
Y	*234-8854*	1	CLUTCH GP (FORWARD HIGH, FORWARD LOW)	230
Y	*234-8857*	1	CLUTCH GP (FIRST, THIRD)	232
Y	*234-8861*	1	CLUTCH GP (REVERSE, SECOND)	234
Y	*141-8615*	1	DRIVE GP-FLEXIBLE COUPLING	246
Y	*146-6274*	1	DRIVE GP-PUMP (TRANSMISSION)	247
Y	*234-8852*	1	GEAR GP-INPUT TRANSFER	267
Y	*234-8859*	1	GEAR GP-OUTPUT TRANSFER	270
Y	*234-8867*	1	PUMP GP-TRANSMISSION (1-SECTION GEAR)	299
Y	*200-2042*	1	VALVE GP-TRANSMISSION CONTROL	334
	283-3307	1	TORQUE CONVERTER AS	

Y-SEPARATE ILLUSTRATION

<END>

126-0747 VALVE GP-BYPASS–POWER TRAIN OIL COOLER

S/N: BYD1-UP; FTD1-UP

PART OF 289-8923 LINES GP-TORQUE CONV COOLER

SMCS-3184 **i02252403**

NOTE	REF NO	GRAPHIC REF	PART NUMBER	QTY	PART NAME 1 2 3 4 5 6 (PRODUCT LEVEL)	SEE PAGE
	1	1	**124-8335**	1	VALVE AS-CONTROL	
	2	1	**126-0748**	1	BODY	
	3	1	*148-8407*	1	PLUG AS	
		1	**9S-4191**	1	PLUG-O-RING	
		1	**3J-1907**	1	SEAL-O-RING	
	4	1	**6V-8218**	1	SEAL-O-RING	

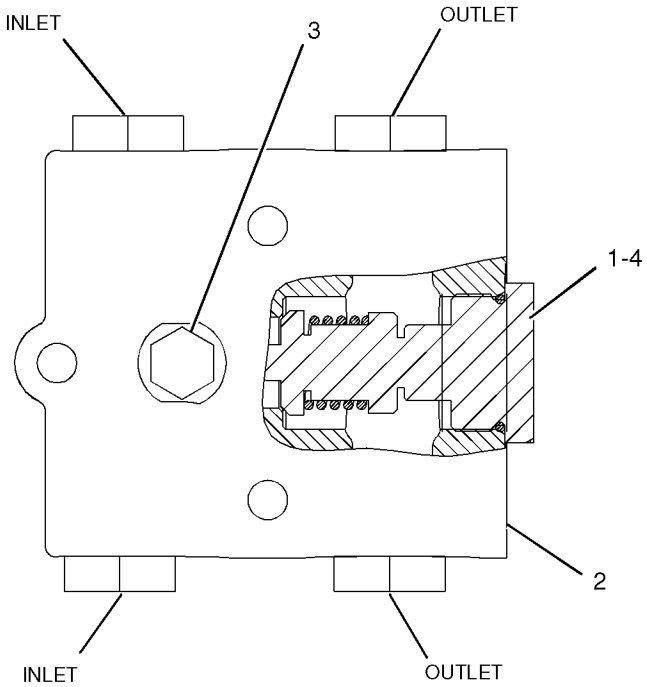

GRAPHIC #1 **<END>** g01044349

216-5338 VALVE GP-MODULATING—TRANSMISSION CLUTCH

S/N: J2W1-649; J2X1-UP

PART OF 200-2043 VALVE GP-TRANSMISSION CONTROL

SMCS-3139 **i01905752**

NOTE	REF NO	GRAPHIC REF	PART NUMBER	QTY	PART NAME 1 2 3 4 5 6 (PRODUCT LEVEL)	SEE PAGE
	1	1	**6V-3965**	1	COUPLER-QUICK DISCONNECT	
	2	1	**145-1144**	1	COIL AS	
	3	1	**3J-1907**	1	SEAL-O-RING	
	4	1	**164-2108**	1	WASHER (13.03X25.4X2.38-MM THK)	
	5	1	**167-9524**	1	NUT-SELF-LOCKING (1/2-28-THD)	

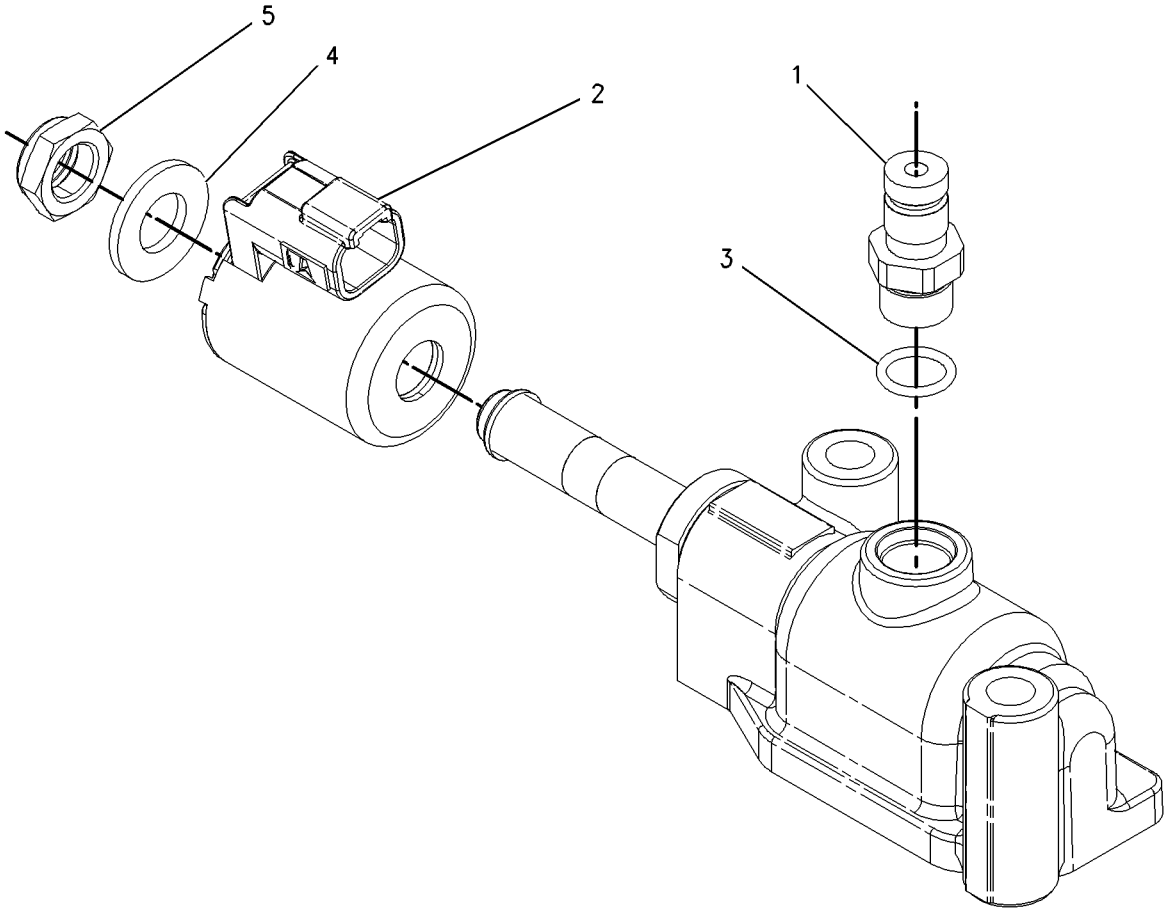

GRAPHIC #1 **<END>** g00919065

145-5256 VALVE GP-PILOT–2-FUNCTION

S/N: FTD1-UP

PART OF 212-1307 VALVE GP-PILOT

AN ATTACHMENT

SMCS-5059 **i01745293**

NOTE	REF NO	GRAPHIC REF	PART NUMBER	QTY	PART NAME 1 2 3 4 5 6 (PRODUCT LEVEL)	SEE PAGE
	1	2	**145-2322**	1	PIVOT GP-PILOT VALVE (LIFT)	
		2	**1W-9509**	2	SPRING	
		2	**139-4189**	1	PLATE	
		2	**141-7481**	1	SPACER	
		2	**146-6315**	2	PIN-ADJUSTMENT	
		2	**146-6317**	2	RETAINER	
		2	**146-8479**	1	SWIVEL	
		2	**146-3337**	4	PLUNGER AS	
					(EACH INCLUDES)	
		2	**8T-1138**	2	RING-RETAINING	
		2	**146-3514**	2	WASHER	
M		2	**5C-2890**	2	NUT (M6X1-THD)	
	2	2	**146-8477**	2	BRACKET	
	3	1	**146-8981**	2	PIN	
	4	2	**147-2038**	1	PIVOT GP-PILOT VALVE (TILT)	
		2	**1W-9509**	1	SPRING	
		2	**139-4189**	1	PLATE	
		2	**141-7481**	1	SPACER	
		2	**146-6315**	2	PIN-ADJUSTMENT	
		2	**153-8941**	1	WASHER	
		2	**146-8479**	1	SWIVEL	
M		2	**5C-2890**	2	NUT (M6X1-THD)	
	5	1	**163-4639**	1	PLATE AS	
	6	1	**033-9139**	4	RING-RETAINING	
M	7	2	**5A-3604**	2	BOLT-SOCKET HEAD (M8X1.25X25-MM)	
Y	8	2	**145-8710**	4	VALVE GP-PILOT CARTRIDGE	467
F			**136-9292**	2	BOOT	

F-NOT SHOWN
M-METRIC PART
Y-SEPARATE ILLUSTRATION

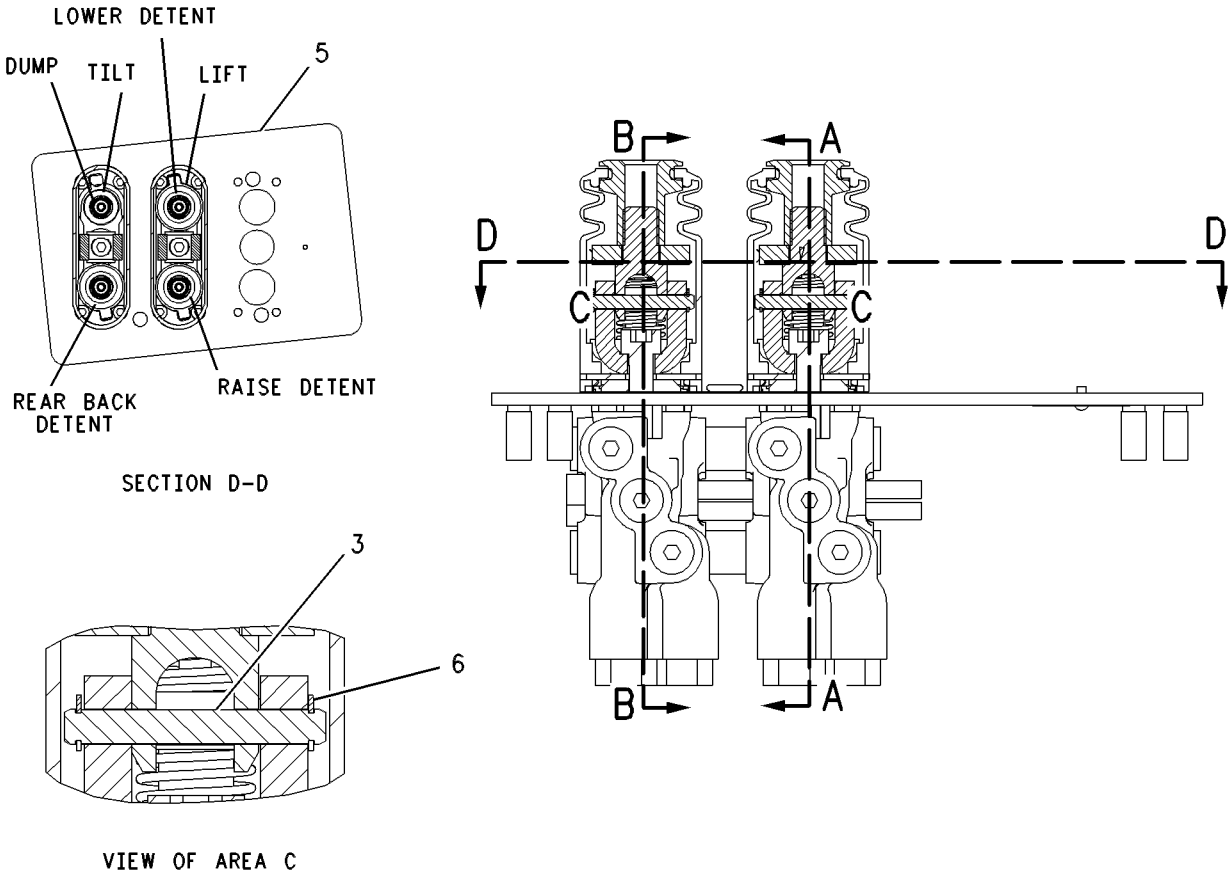

GRAPHIC #1 g00579735

145-5256 **VALVE GP-PILOT** *(contd.)* **i01745293**

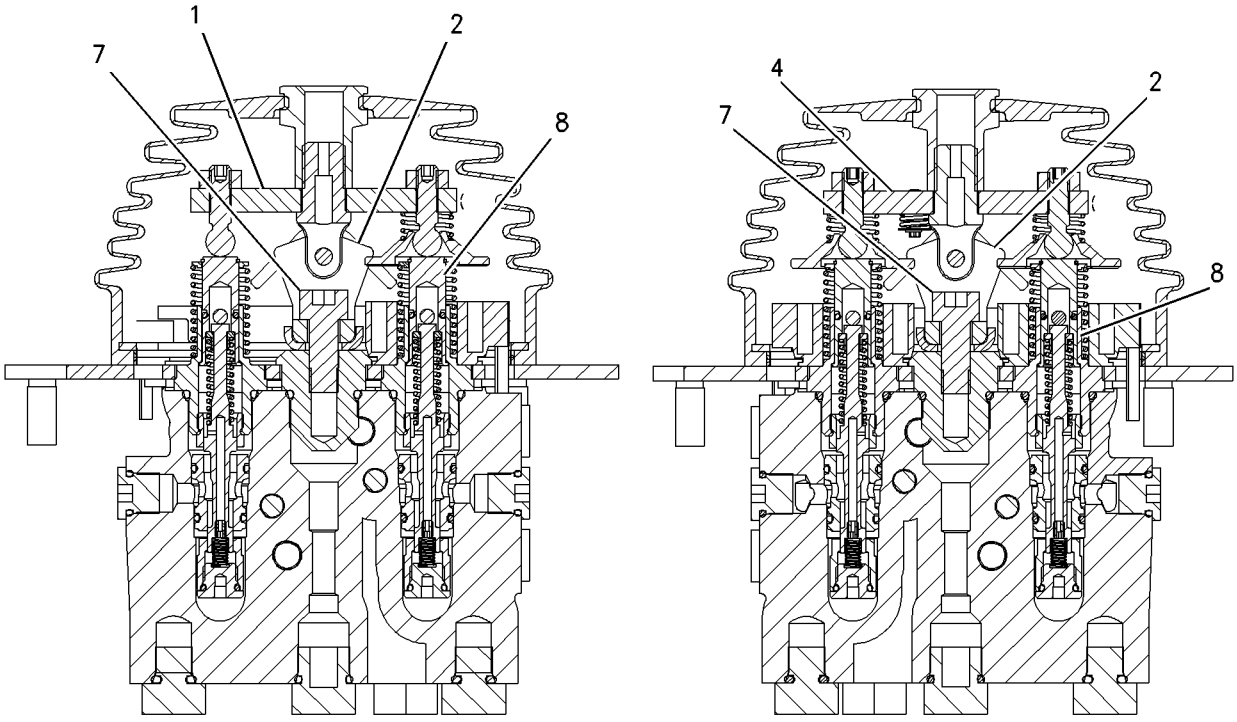

SECTION B-B

SECTION A-A

GRAPHIC #2 **<END>** g00893448

212-1307 VALVE GP-PILOT–JOYSTICK, 4-FUNCTION

S/N: FTD1-UP

PART OF 287-2064 VALVE GP-PILOT

AN ATTACHMENT

SMCS-5059 **i02602980**

NOTE	REF NO	GRAPHIC REF	PART NUMBER	QTY	PART NAME 1 2 3 4 5 6 (PRODUCT LEVEL)	SEE PAGE
Y	1	1	**145-5256**	2	VALVE GP-PILOT (2-FUNCTION)	323
	2	1	**141-1095**	2	ADAPTER	
	3	2	**141-1556**	2	RETAINER	
	4	2	**141-2032**	2	PLATE	
	5	1	**141-4852**	1	BOOT	
	6	2	**141-7481**	1	SPACER	
	7	1	**141-9236**	1	SCREEN AS (PILOT OIL)	
	8	2	**142-2651**	1	PLATE AS	
	9	2	**145-2334**	2	ADAPTER	
	10	2	**146-8477**	2	BRACKET	
	11	2	**146-8478**	1	CUP	
	12	2	**146-8981**	2	PIN	
	13	2	**147-3114**	1	PIVOT GP-PILOT VALVE (AUXILIARY)	
M		2	**5C-2890**	2	NUT (M6X1-THD)	
		2	**139-4189**	1	PLATE	
		2	**141-7481**	1	SPACER	
		2	**146-8479**	1	SWIVEL	
M		2	**178-7877**	2	SETSCREW (M6X1X25-MM)	
	14	2	**148-7922**	2	PLATE	
	15	2	**153-8947**	1	SWIVEL AS	
		2	**146-8479**	1	SWIVEL	
	16	2	**153-8952**	1	ADAPTER	
	17	1	**163-5512**	9	GROMMET	
Y	18	2	**175-9443**	1	PIVOT GP-PILOT VALVE (AUXILIARY) (AUXILIARY)	596
	19	2	**033-9139**	4	RING-RETAINING	
	20	2	**102-8806**	1	KIT-RECEPTACLE (8-PIN)	
					(KIT SERVICES RECEPTACLE AS AND WEDGE)	
Y	21	1	**136-9289**	1	VALVE GP-PILOT (JOYSTICK, 2-FUNCTION)	463
	22	1	**136-9292**	2	BOOT	
	23	2	**136-9297**	1	PLATE	
	24	2	**136-9298**	1	RETAINER	
	25	2	**145-8428**	4	COIL AS-DETENT	
Y	26	2	**147-3322**	1	PLATE GP-PILOT VALVE (JOYSTICK)	599
	27	2	**149-5470**	1	PLATE	
	28	1	**157-6144**	2	ADAPTER	
M	29	1	**157-6155**	2	BOLT-SOCKET HEAD	
M	30	1	**191-8920**	12	BOLT-SOCKET HEAD (M6X1X12-MM)	
Y	31	1,2	**212-4962**	6	VALVE GP-PILOT CARTRIDGE (LIFT, LOWER, AUXILIARY)	474
Y	32	1	**212-4963**	2	VALVE GP-PILOT CARTRIDGE (DUMP, TILT BACK)	475
	33	1,2	**9S-8002**	16	PLUG-O-RING	
	34	1	**3J-1907**	5	SEAL-O-RING	
	35	1,2	**3J-7354**	24	SEAL-O-RING	
	36	1	**9S-4191**	4	PLUG-O-RING	
M	37	2	**5A-3604**	2	BOLT-SOCKET HEAD (M8X1.25X25-MM)	
M	38	1	**5C-2890**	2	NUT (M6X1-THD)	
	39	1	**6V-8397**	1	SEAL-O-RING	
	40	1	**6V-8636**	1	CONNECTOR	
	41	2	**8L-2786**	3	SEAL-O-RING	

M-METRIC PART
Y-SEPARATE ILLUSTRATION

212-1307 VALVE GP-PILOT *(contd.)* **i02602980**

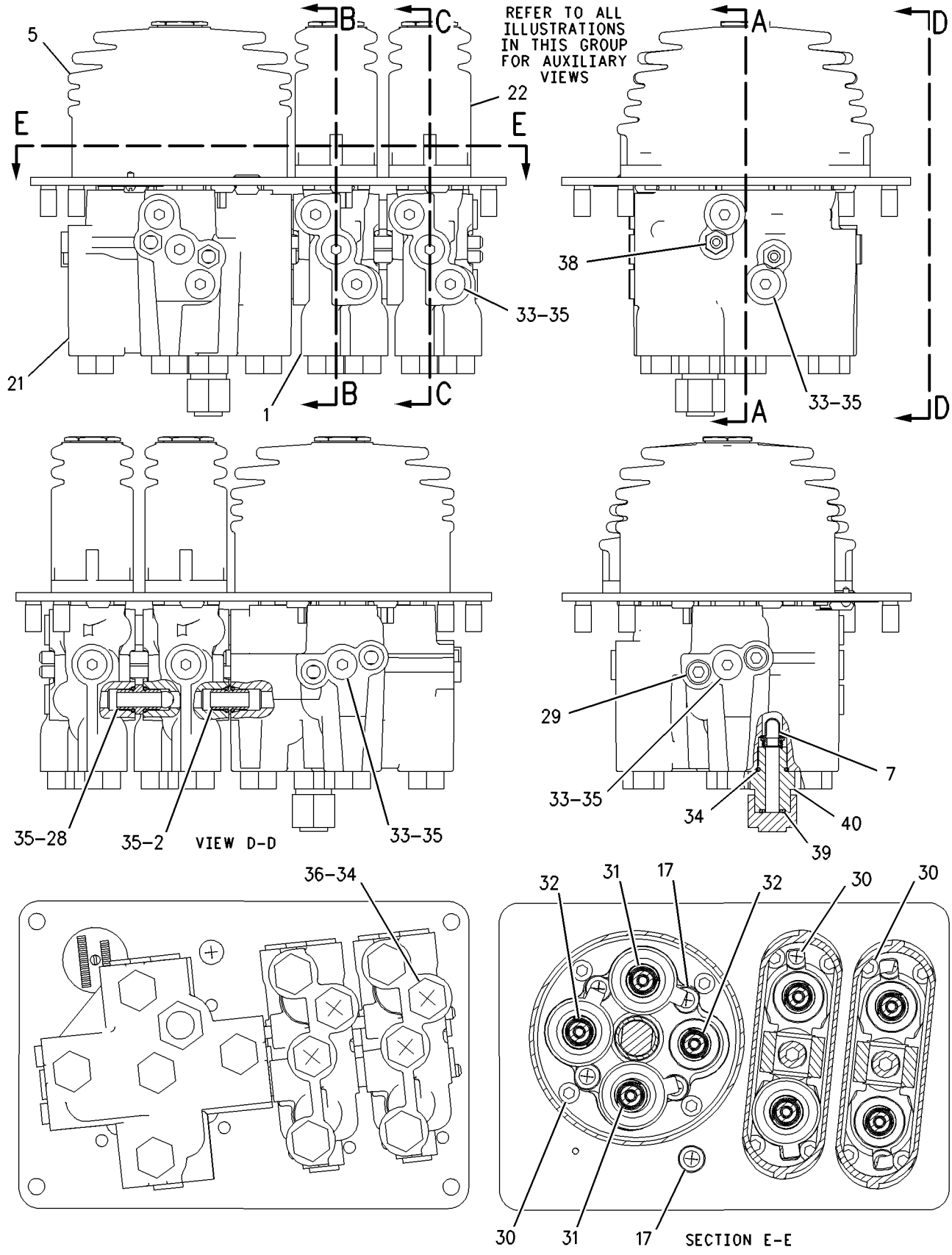

GRAPHIC #1 g00886161

212-1307 VALVE GP-PILOT *(contd.)* **i02602980**

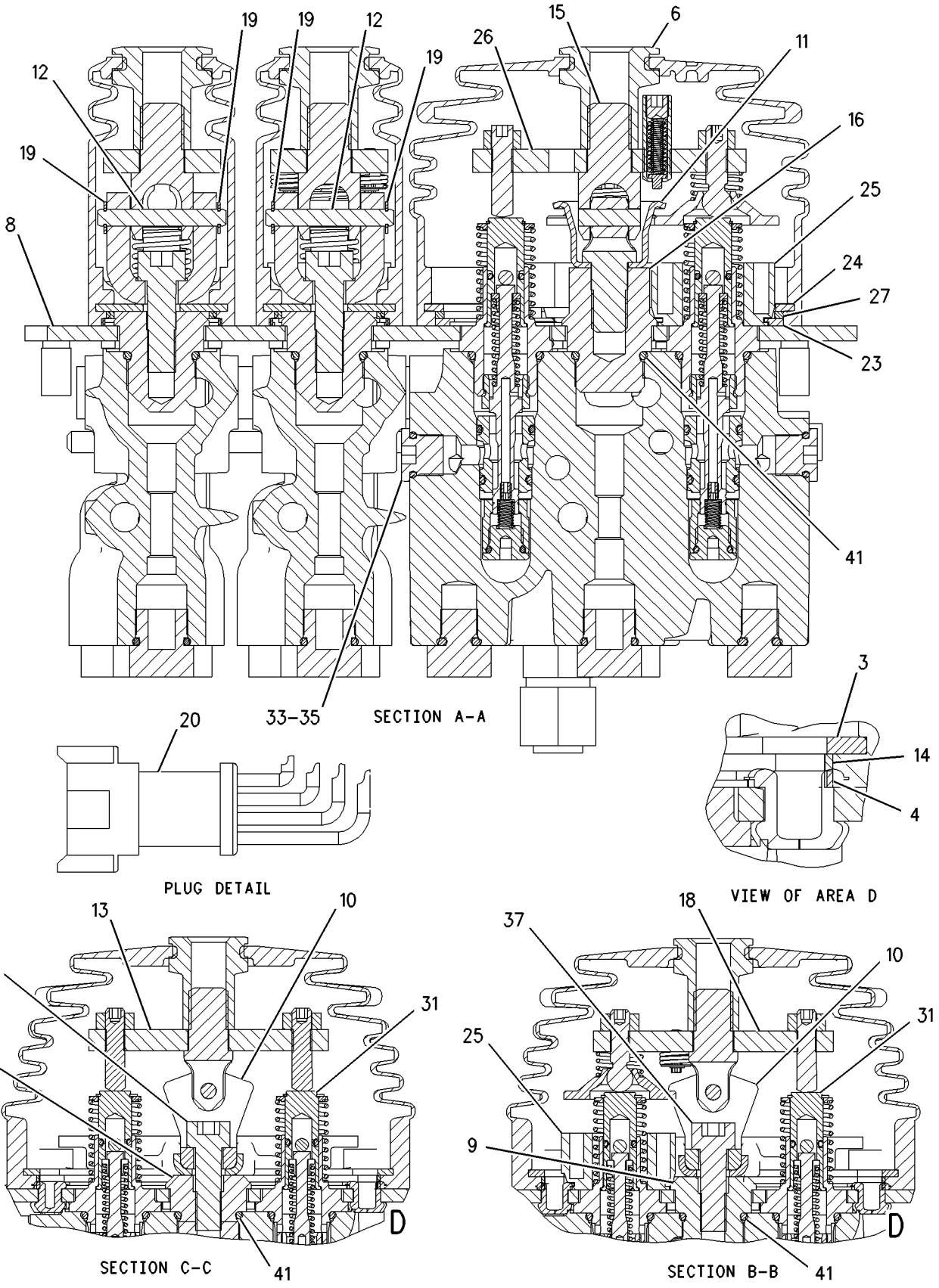

GRAPHIC #2 **<END>** g00886168

287-2064 VALVE GP-PILOT—JOYSTICK, 4-FUNCTION

S/N: FTD1-UP

PART OF 235-6860 CONTROL GP-PILOT OPERATED HYD

AN ATTACHMENT

SMCS-5059 **i02706980**

NOTE	REF NO	GRAPHIC REF	PART NUMBER	QTY	PART NAME 1 2 3 4 5 6 (PRODUCT LEVEL)	SEE PAGE
	1	1	**114-3937**	1	ROD	
	2	1	**114-3940**	1	ROD	
	3	1	**124-4401**	2	KNOB	
	4	1	**149-4359**	1	ROD-CONTROL	
Y	5	1	**212-1307**	1	VALVE GP-PILOT (JOYSTICK, 4-FUNCTION)	326
	6	1	**259-1161**	1	PLATE	
	7	1	**270-7612**	1	SEAL	
	8	1	**287-0524**	1	CONTROL GP-HANDLE (DIRECTION, DOWNSHIFT SWITCHES)	
		1	**186-3735**	6	PIN-CONNECTOR (16-GA TO 18-GA)	
M	9	1	**150-1293**	2	SCREW-BUTTON HEAD (M4X0.7X12-MM)	
M	10	1	**8T-4244**	3	NUT (M12X1.75-THD)	

M-METRIC PART
Y-SEPARATE ILLUSTRATION

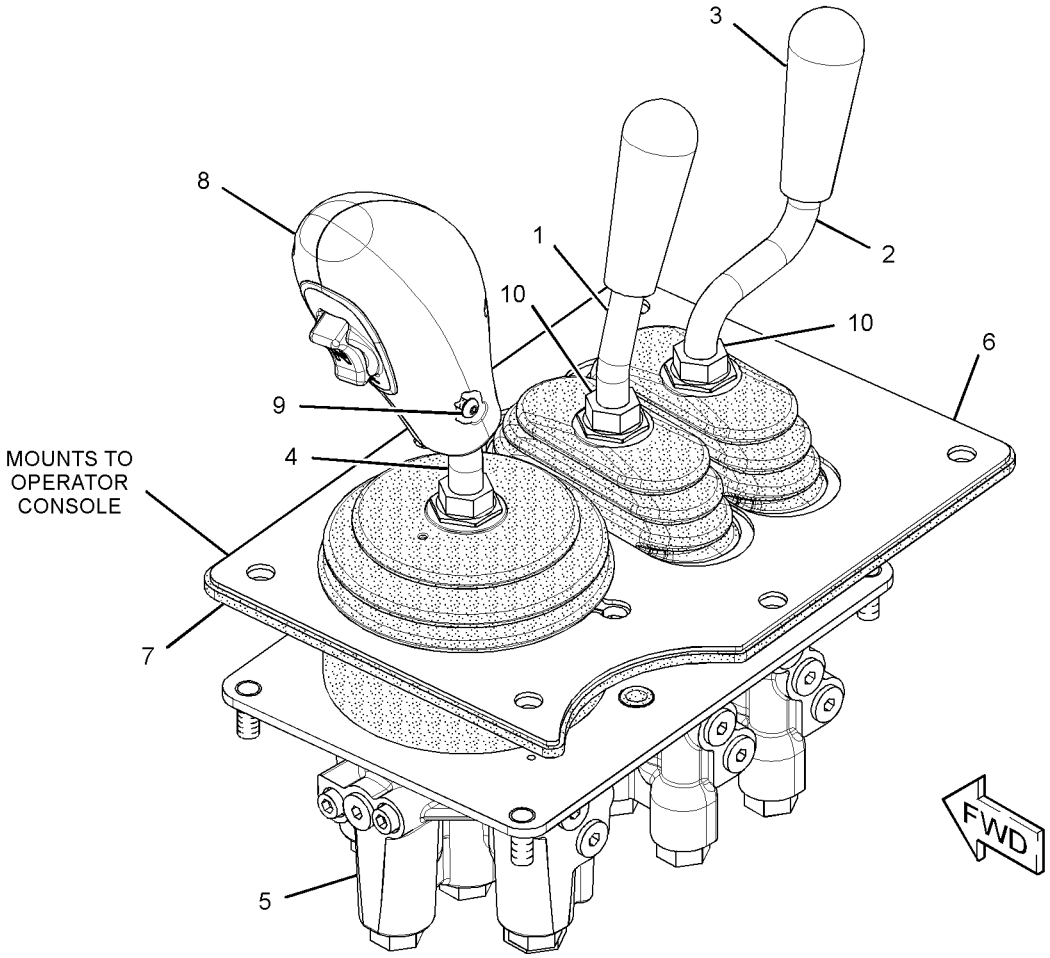

GRAPHIC #1 **<END>** g01394558

6I-9806 VALVE GP-RELIEF–TORQUE CONVERTER OUTLET

S/N: J2W1-UP; J2X1-UP

PART OF 177-0018, 239-5608 CASE & PARTS GP-TRANSMISSION

SMCS-3133, 3182, 3210, 3213 **i01212646**

NOTE	REF NO	GRAPHIC REF	PART NUMBER	QTY	PART NAME 1 2 3 4 5 6 (PRODUCT LEVEL)	SEE PAGE
	1	1	**6I-9805**	1	BODY	
	2	1	**2S-1382**	1	SPRING	
	3	1	**6I-9804**	1	SPOOL	
	4	1	**2L-6726**	1	RING-RETAINING	

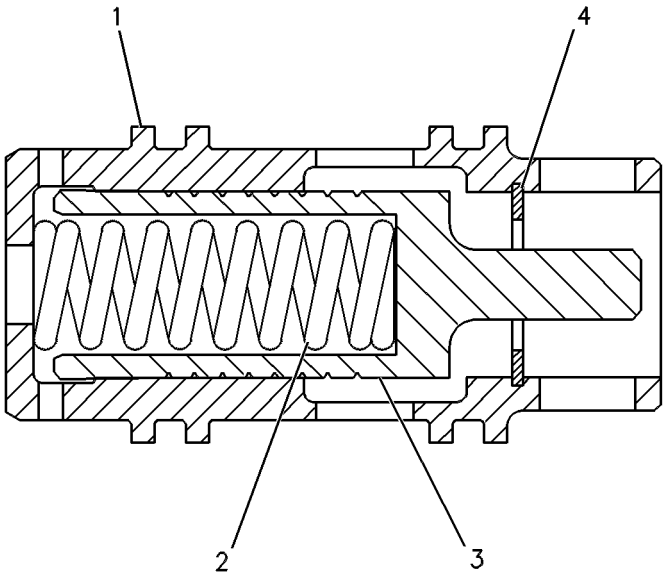

GRAPHIC #1 **<END>** g00128535

177-0026 VALVE GP-RELIEF—TRANSMISSION HYDRAULIC CONTROL

S/N: J2W1-649; J2X1-UP

PART OF 200-2043 VALVE GP-TRANSMISSION CONTROL

SMCS-3133, 3182, 3210, 3213 **i01781128**

NOTE	REF NO	GRAPHIC REF	PART NUMBER	QTY	PART NAME 1 2 3 4 5 6 (PRODUCT LEVEL)	SEE PAGE
	1	1	**2S-4663**	1	SEAL-O-RING	
	2	1	**2S-5835**	1	PISTON-LOAD	
	3	1	**3J-1907**	3	SEAL-O-RING	
	4	1	**3K-0360**	1	SEAL-O-RING	
	5	1	**4M-5905**	1	SCREW-ADJUSTMENT (5/16-18X1-IN)	
	6	1	**6V-0852**	1	CAP-DUST	
	7	1	**6V-3965**	1	COUPLER-QUICK DISCONNECT	
	8	1	**7B-3028**	1	SCREW-DRIVE (NO 4X3/16-IN)	
	9	1	**8E-1143**	1	SLUG	
	10	1	**8M-5253**	1	SEAL-O-RING	
	11	1	**9M-2110**	1	COVER-ADJUSTMENT	
	12	1	**115-4550**	1	COVER	
	13	1	**172-7966**	1	BODY	
	14	1	**172-7968**	1	SPOOL AS	
		1	**3D-8317**	1	RING-RETAINING	
		1	**4B-9880**	1	BALL	
		1	**4M-2381**	1	SPRING	
		1	**9U-8669**	1	RETAINER	
	15	1	**174-7449**	1	SPRING	
	16	1	**9S-8005**	1	PLUG-O-RING	
	17	1	**6V-0484**	1	ADAPTER-O-RING	
M	18	1	**6V-3940**	2	BOLT (M8X1.25X25-MM)	
M	19	1	**6V-5218**	2	BOLT (M8X1.25X35-MM)	
	20	1	**9M-1974**	2	WASHER-HARD (8.8X16X2-MM THK)	
	21	1	**9S-8004**	1	PLUG-O-RING	

M-METRIC PART

177-0026 VALVE GP-RELIEF *(contd.)* **i01781128**

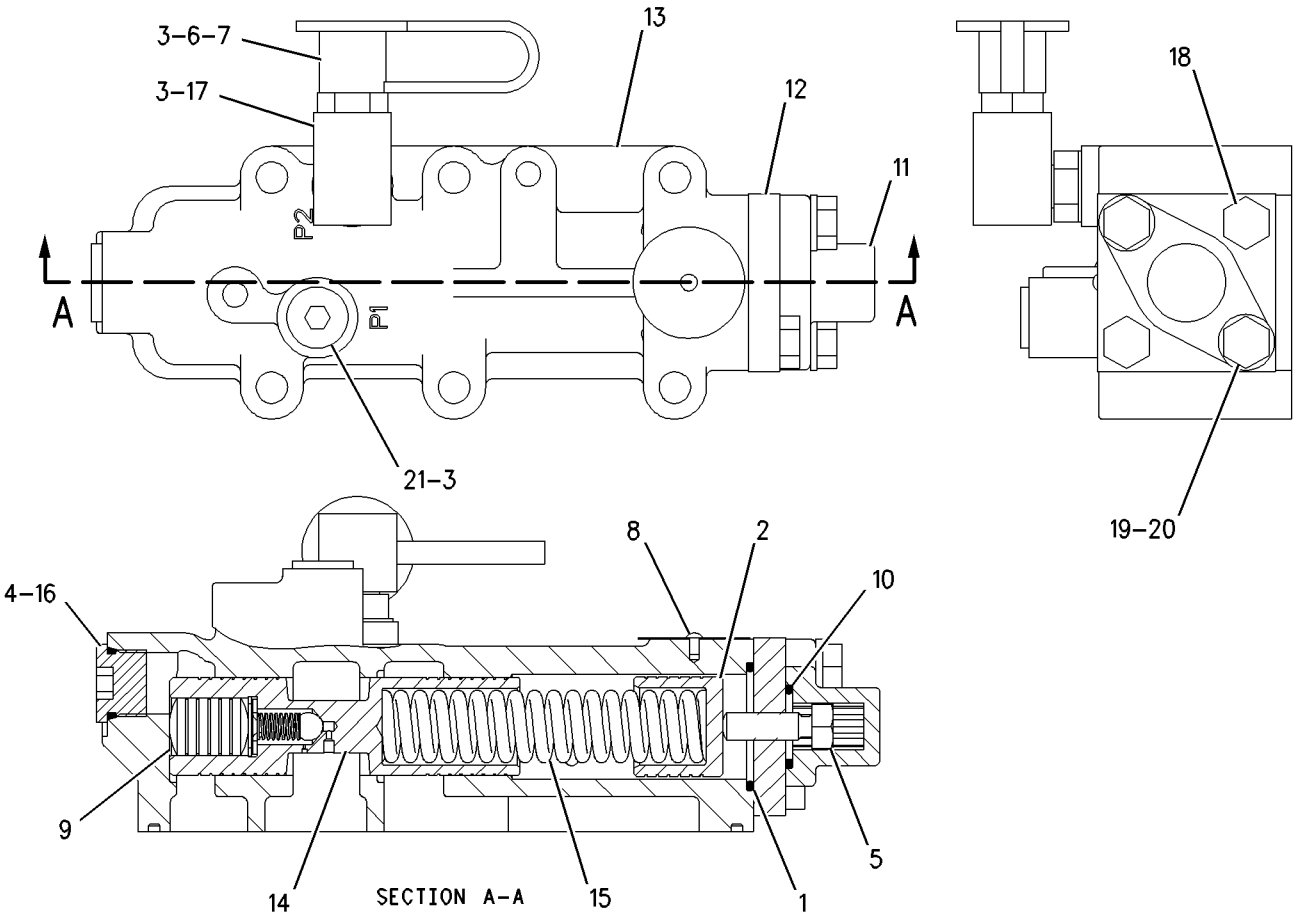

GRAPHIC #1 **<END>** g00989055

6D-0337 VALVE GP-TIRE

S/N: BYD1-UP; FTD1-UP
PART OF 117-7840, 119-5841, 2Q-5979 RIM GP-DEMOUNTABLE
AN ATTACHMENT

SMCS-4203 **i01954585**

NOTE	REF NO	GRAPHIC REF	PART NUMBER	QTY	PART NAME 1 2 3 4 5 6 (PRODUCT LEVEL)	SEE PAGE
	1	1	**6D-0443**	1	HOUSING AS-CORE	
	2	1	**2D-2628**	1	CORE-VALVE	
	3	1	**2D-2633**	1	CAP (VALVE STEM)	
	4	1	**8D-2707**	2	SPUD AS	
					(EACH INCLUDES)	
	5	1	**2D-2629**	1	GROMMET	
	6	1	**2D-2630**	1	WASHER	
	7	1	**2D-2631**	1	NUT (0.482-26-THD)	

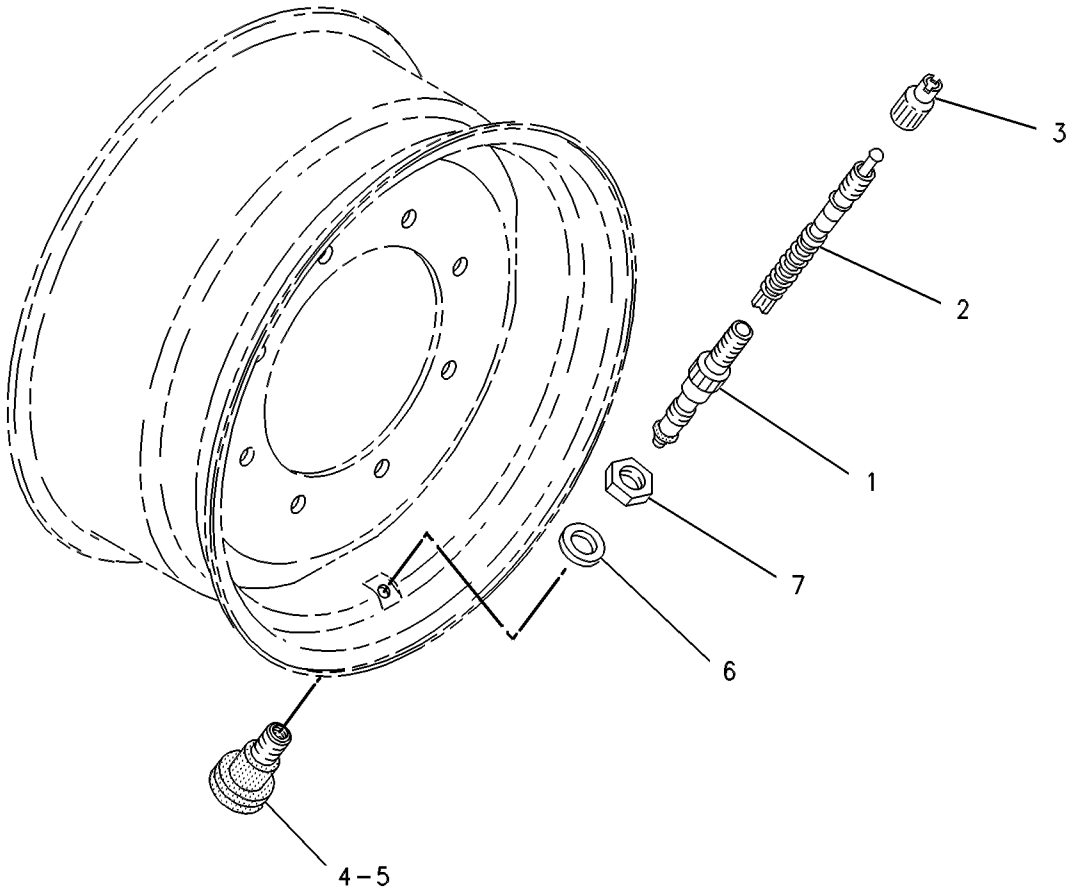

GRAPHIC #1 **<END>** g00121904

POWER TRAIN

200-2042 VALVE GP-TRANSMISSION CONTROL

S/N: J2W1-UP; J2X1-UP

PART OF 290-2719, 290-2720 TRANSMISSION AR

SMCS-3073, 3167 **i02294986**

NOTE	REF NO	GRAPHIC REF	PART NUMBER	QTY	PART NAME 1 2 3 4 5 6 (PRODUCT LEVEL)	SEE PAGE
	1	1	**7K-1181**	10	STRAP-CABLE	
	2	1	**8E-7841**	2	CLIP AS-CONNECTING	
	3	1	**9L-9068**	2	DOWEL	
	4	1	**130-9811**	1	SENSOR GP-TEMPERATURE (TORQUE CONVERTER OIL)	
	5	1	**180-8852**	1	HARNESS AS-VALVE (TRANSMISSION CONTROL)	
		1	**102-8803**	1	KIT-RECEPTACLE (3-PIN)	
					(RECEPTACLE KIT INCLUDES RECEPTACLE AS & WEDGE)	
		1	**155-2260**	2	KIT-CONNECTING PLUG (3-PIN)	
		1	**155-2270**	12	KIT-CONNECTING PLUG (2-PIN)	
					(KIT INCLUDES PLUG AS, WEDGE & INTERFACE SEAL)	
Y	6	1	**200-2043**	1	VALVE GP-TRANSMISSION CONTROL	336
	7	1	**107-3114**	1	SEAL-O-RING	
	8	1	**130-5300**	2	CLIP	
	9	1	**132-5789**	8	CLIP	
	10	1	**183-8597**	1	SENSOR GP-SPEED (TMSN INTERMEDIATE OUTPUT 1)	
	10A	1	**183-8597**	1	SENSOR GP-SPEED (TMSN INTERMEDIATE OUTPUT 2)	
					(EACH INCLUDES)	
		1	**102-8802**	1	KIT-RECEPTACLE (2-PIN)	
					(RECEPTACLE KIT INCLUDES RECEPTACLE AS & WEDGE)	
		1	**3E-3365**	1	WEDGE-RECEPTACLE LOCK (2-PIN)	
		1	**186-3735**	2	PIN-CONNECTOR (16-GA TO 18-GA)	
E		1	**9X-1813**		SLEEVE (14-CM)	
		1	**171-5349**	1	STRAP-MARKER	
	11	1	**196-1185**	1	SENSOR GP-SPEED (TRANSMISSION OUTPUT 1)	
	11A	1	**196-1185**	1	SENSOR GP-SPEED (TRANSMISSION OUTPUT 2)	
					(EACH INCLUDES)	
		1	**102-8802**	1	KIT-RECEPTACLE (2-PIN)	
					(RECEPTACLE KIT INCLUDES RECEPTACLE AS & WEDGE)	
		1	**3E-3365**	1	WEDGE-RECEPTACLE LOCK (2-PIN)	
		1	**186-3735**	2	PIN-CONNECTOR (16-GA TO 18-GA)	
		1	**9X-1813**		SLEEVE (14-CM)	
		1	**171-5349**	1	STRAP-MARKER	
	12	1	**3K-0360**	6	SEAL-O-RING	
	13	1	**4P-7581**	2	CLIP	
M	14	1	**6V-2317**	1	BOLT (M8X1.25X30-MM)	
M	15	1	**6V-3821**	4	BOLT (M8X1.25X110-MM)	
M	16	1	**6V-3822**	1	BOLT (M10X1.5X35-MM)	
M	17	1	**6V-5217**	2	BOLT (M8X1.25X20-MM)	
M	18	1	**6V-5218**	3	BOLT (M8X1.25X35-MM)	
M	19	1	**6V-5223**	9	BOLT (M8X1.25X100-MM)	
	20	1	**6V-5839**	1	WASHER (11X21X2.5-MM THK)	
	21	1	**8M-5251**	5	SEAL-O-RING	
	22	1	**9M-1974**	19	WASHER-HARD (8.8X16X2-MM THK)	
	23	1	**183-8597**	1	SENSOR GP-SPEED (TORQUE CONVERTER OUTPUT)	
		1	**102-8802**	1	KIT-RECEPTACLE (2-PIN)	
					(RECEPTACLE KIT INCLUDES RECEPTACLE AS & WEDGE)	
		1	**3E-3365**	1	WEDGE-RECEPTACLE LOCK (2-PIN)	
		1	**186-3735**	2	PIN-CONNECTOR (16-GA TO 18-GA)	
		1	**9X-1813**		SLEEVE (14-CM)	
		1	**171-5349**	1	STRAP-MARKER	

E-ORDER BY THE CENTIMETER
M-METRIC PART
Y-SEPARATE ILLUSTRATION

200-2042 **VALVE GP-TRANSMISSION CONTROL** *(contd.)* **i02294986**

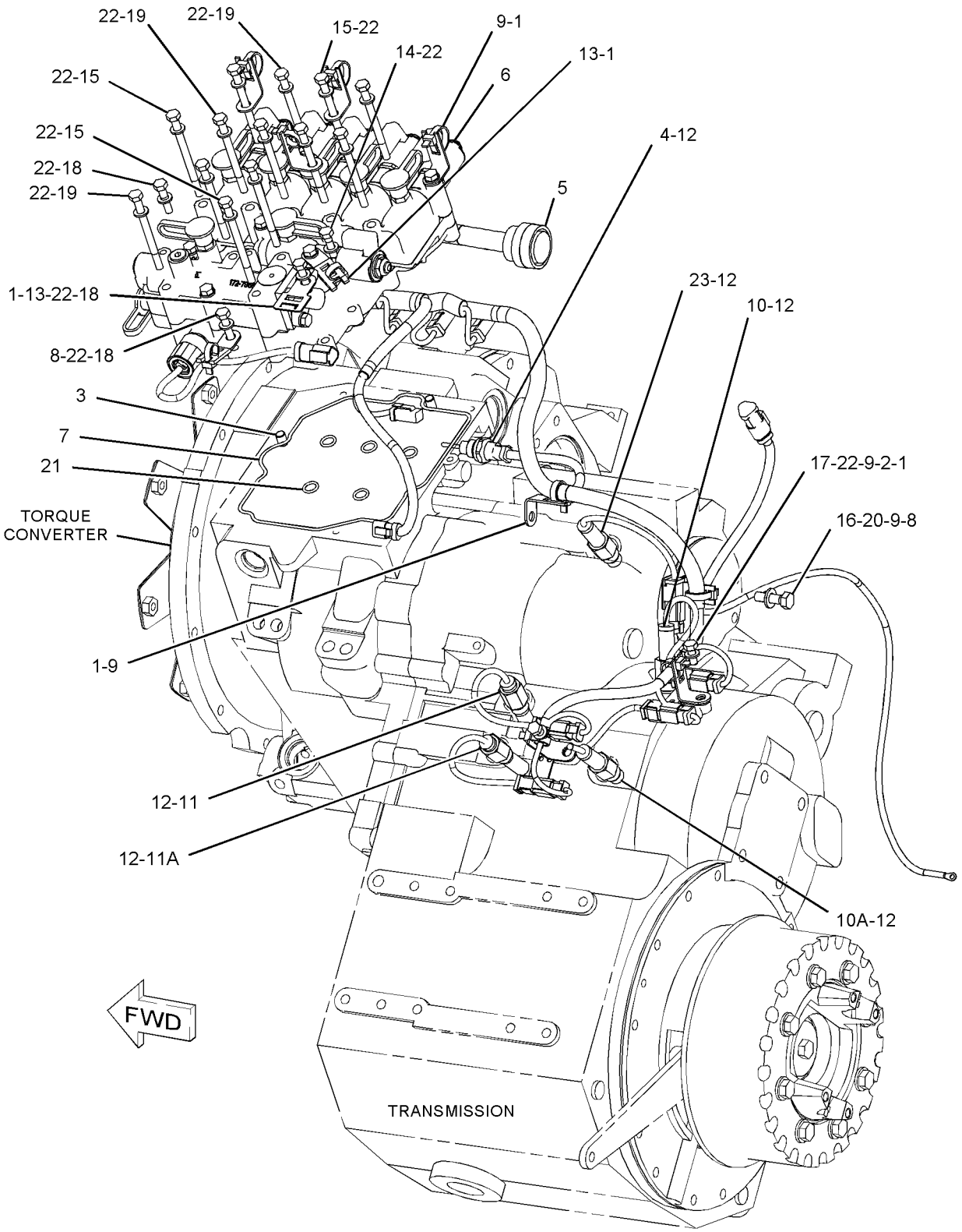

GRAPHIC #1 **<END>** g01074571

200-2043 VALVE GP-TRANSMISSION CONTROL

S/N: J2W1-UP; J2X1-UP

PART OF 200-2042 VALVE GP-TRANSMISSION CONTROL

SMCS-3073, 3167 **i02223427**

NOTE	REF NO	GRAPHIC REF	PART NUMBER	QTY	PART NAME 1 2 3 4 5 6 (PRODUCT LEVEL)	SEE PAGE
	1	1	**5P-5397**	1	SEAL-O-RING	
	2	1	**6V-0852**	7	CAP-DUST	
	3	1	**6V-3965**	1	COUPLER-QUICK DISCONNECT	
	4	1	**8S-0768**	6	SEAL-O-RING	
	5	1	**9L-9068**	4	DOWEL	
Y	6	1	**177-0026**	1	VALVE GP-RELIEF (TRANSMISSION HYDRAULIC CONTROL)	331
	7	1	**200-2044**	1	MANIFOLD	
	8	1	**201-3316**	1	MANIFOLD	
Y	9	1	**216-5338**	6	VALVE GP-MODULATING (24-VOLT) (TRANSMISSION CLUTCH)	322
Y	10	1	**134-2252**	1	SENSOR GP-TEMPERATURE (TRANSMISSION OIL)	175
C	11	1	**3J-1907**	3	SEAL-O-RING	
	12	1	**5J-3886**	1	SEAL-O-RING	
M	13	1	**6V-5221**	1	BOLT (M8X1.25X80-MM)	
M	14	1	**5P-8347**	4	BOLT (M8X1.25X70-MM)	
	15	1	**9M-1974**	5	WASHER-HARD (8.8X16X2-MM THK)	
	16	1	**6V-0484**	1	ADAPTER-O-RING	

C-CHANGE FROM PREVIOUS TYPE
M-METRIC PART
Y-SEPARATE ILLUSTRATION

200-2043 **VALVE GP-TRANSMISSION CONTROL** *(contd.)* **i02223427**

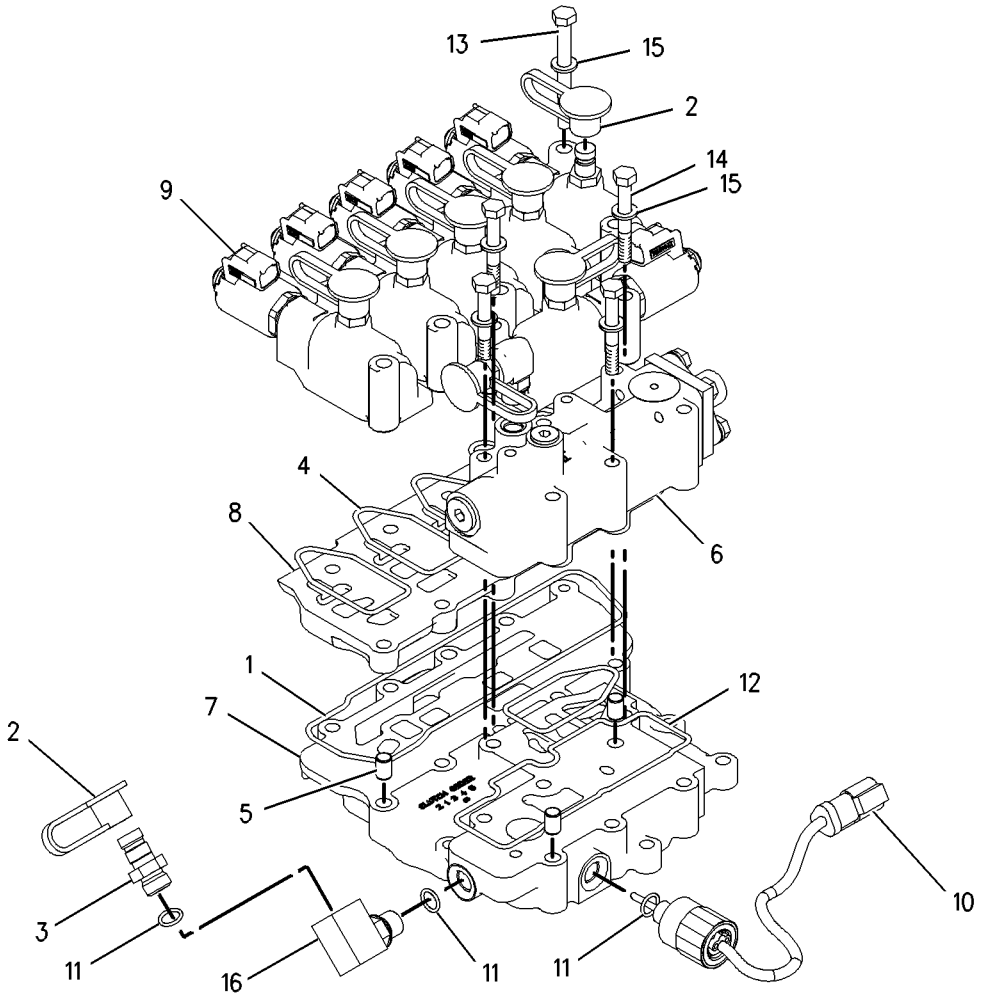

GRAPHIC #1 **<END>** g00992260

295-1016 BAFFLE GP-SOUND SUPPRESSION–HOOD

S/N: BYD1-UP; FTD1-UP

PART OF 289-8947, 289-8948, 289-8950, 289-8951 SUPPRESSION AR-SOUND

AN ATTACHMENT

SMCS-1806, 7261 **i02810333**

NOTE	REF NO	GRAPHIC REF	PART NUMBER	QTY	PART NAME 1 2 3 4 5 6 (PRODUCT LEVEL)	SEE PAGE
	1	1	**103-0280**	4	SPACER (13X20X7-MM THK)	
	2	1	**295-1017**	1	BAFFLE	
	3	1	**8T-4121**	4	WASHER-HARD (11X21X2.5-MM THK)	
M	4	1	**8T-4133**	4	NUT (M10X1.5-THD)	
M	5	1	**8T-4136**	4	BOLT (M10X1.5X25-MM)	
	6	1	**8T-4222**	4	WASHER-PLATED (11X32X2.5-MM THK)	
D	7	1	**5P-5643**		SEAL (0.13-M)	

D-ORDER BY THE METER
M-METRIC PART

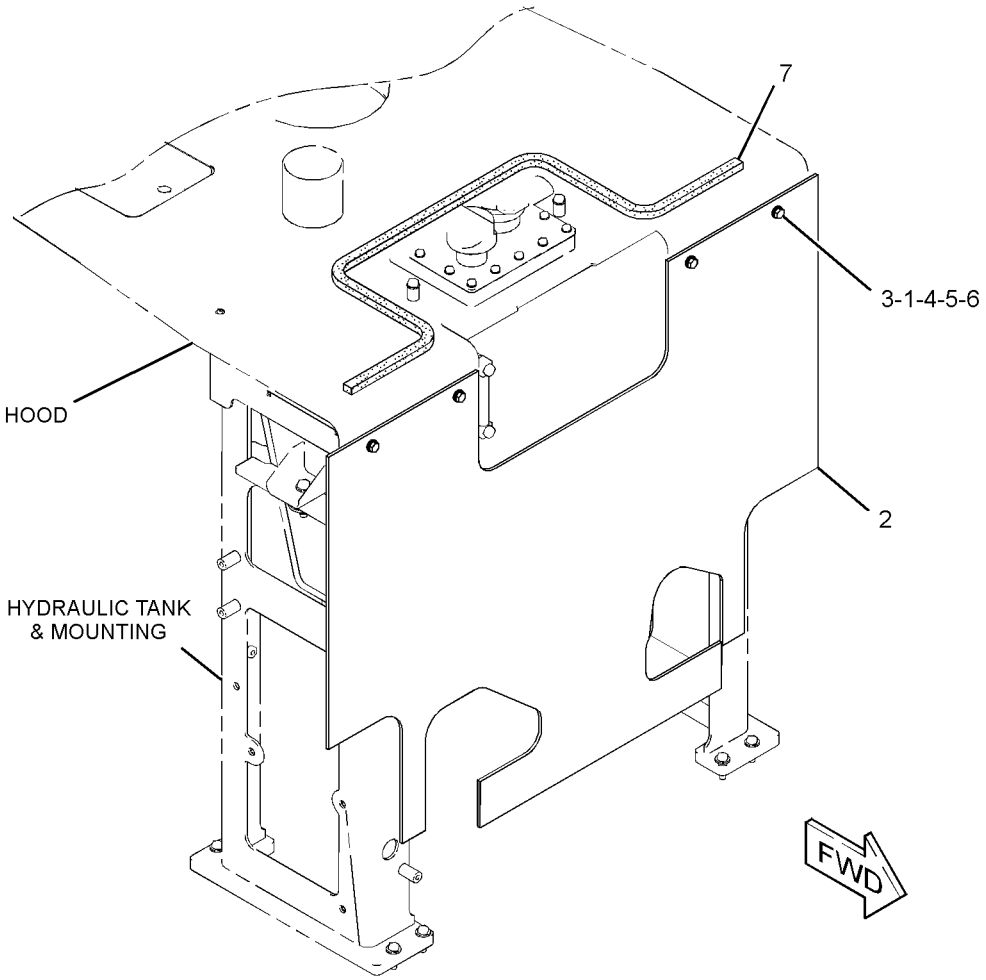

GRAPHIC #1 **<END>** g01404437

202-0420 BOX GP-BATTERY

S/N: BYD1-UP; FTD1-UP

PART OF 289-8871, 289-8891, 290-6498 CHASSIS AR

SMCS-7257 **i02106035**

NOTE	REF NO	GRAPHIC REF	PART NUMBER	QTY	PART NAME 1 2 3 4 5 6 (PRODUCT LEVEL)	SEE PAGE
	1	1	**176-2435**	2	BOX AS	
	2	1	**237-0120**	2	COVER	
	3	1	**7X-7729**	16	WASHER (11X25X3-MM THK)	
M	4	1	**8T-4136**	16	BOLT (M10X1.5X25-MM)	

M-METRIC PART

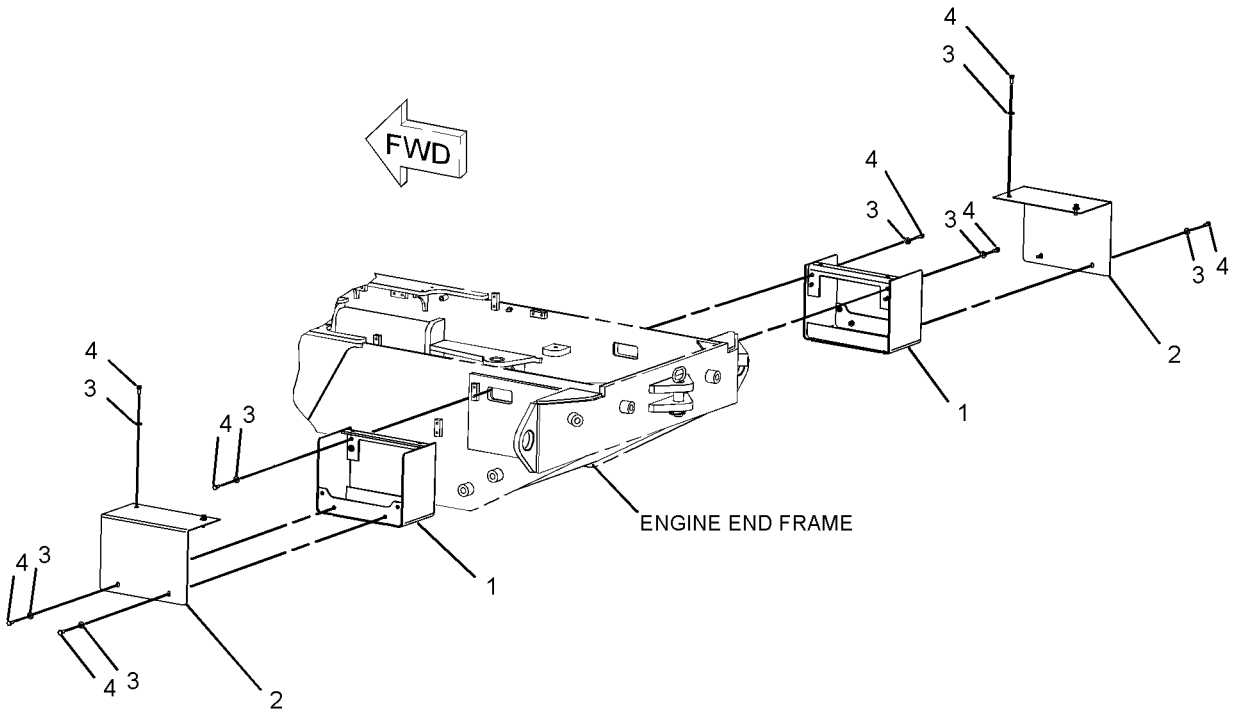

GRAPHIC #1 **<END>** g01065272

219-2425 CONVERSION GP-ROADING–ITALY

S/N: BYD1-UP
WITHOUT ELECTRONIC SPEED CONTROL
PART OF 308-3658 CONVERSION AR-CERTIFICATION
AN ATTACHMENT

SMCS-7000 **i02853589**

NOTE	REF NO	GRAPHIC REF	PART NUMBER	QTY	PART NAME 1 2 3 4 5 6 (PRODUCT LEVEL)	SEE PAGE
	1	1	**6C-7581**	1	LAMP GP-REGISTRATION PLATE	
		1	**5C-8315**	1	LAMP (24-VOLT, 10-WATT)	
	2	1	**7K-1181**	4	STRAP-CABLE	
	3	1	**108-1786**	3	FILM-IDENTIFICATION (40-KM/H)	
	4	1	**133-9625**	1	PLATE AS	
M		1	**6V-9632**	2	NUT-WELD (M6X1-THD)	
	5	1	**173-6923**	1	HARNESS AS-LIGHTING (ROADING)	
		1	**155-2270**	1	KIT-CONNECTING PLUG (2-PIN)	
	6	1	**4B-4863**	2	WASHER (4.7X11X1.2-MM THK)	
M	7	1	**5C-8312**	2	NUT (M4X0.7-THD)	
M	8	1	**6V-7743**	4	LOCKNUT (M6X1-THD)	
M	9	1	**6V-9672**	2	SCREW-MACHINE (M4X0.7X16-MM)	
M	10	1	**8T-4138**	4	BOLT (M6X1X20-MM)	
	11	1	**8T-4205**	8	WASHER-HARD (7.2X14.5X2-MM THK)	

M-METRIC PART

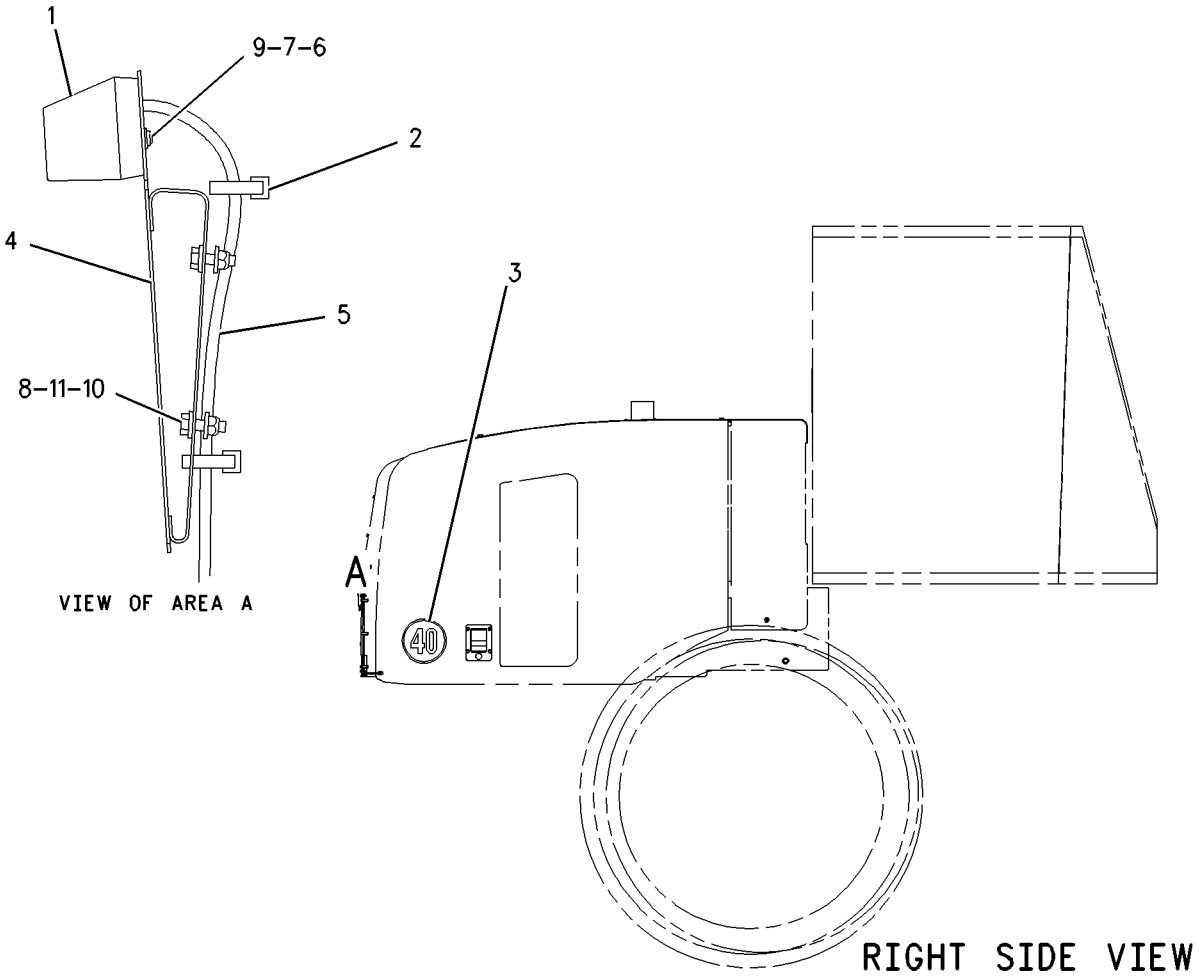

GRAPHIC #1 **<END>** g00922193

307-0479 CONVERSION GP-ROADING—JAPANESE MARKET ONLY

S/N: FTD1-UP

PART OF 308-3668 CONVERSION AR-CERTIFICATION

AN ATTACHMENT

SMCS-7000 **i02811287**

NOTE	REF NO	GRAPHIC REF	PART NUMBER	QTY	PART NAME 1 2 3 4 5 6 (PRODUCT LEVEL)	SEE PAGE
	1	1	**4Y-3307**	1	MIRROR-UNDER VIEW	
	2	1	**6C-7581**	1	LAMP GP-REGISTRATION PLATE	
		1	**5C-8315**	1	LAMP (24-VOLT, 10-WATT)	
	3	1	**7K-1181**	4	STRAP-CABLE	
	4	1	**8T-1887**	1	CLIP (SLOT)	
	5	1	**8T-1888**	1	CLIP (TAB)	
	6	1	**133-9625**	1	PLATE AS	
	7	1	**173-6923**	1	HARNESS AS-LIGHTING (ROADING)	
	8	1	**311-8473**	1	BRACKET	
	9	1	**4B-4863**	2	WASHER (4.7X11X1.2-MM THK)	
M	10	1	**5C-8312**	2	NUT (M4X0.7-THD)	
M	11	1	**6V-7743**	4	LOCKNUT (M6X1-THD)	
M	12	1	**6V-9672**	2	SCREW-MACHINE (M4X0.7X16-MM)	
	13	1	**8T-4121**	2	WASHER-HARD (11X21X2.5-MM THK)	
M	14	1	**8T-4133**	1	NUT (M10X1.5-THD)	
M	15	1	**8T-4136**	1	BOLT (M10X1.5X25-MM)	
M	16	1	**8T-4138**	4	BOLT (M6X1X20-MM)	
	17	1	**8T-4205**	8	WASHER-HARD (7.2X14.5X2-MM THK)	

M-METRIC PART

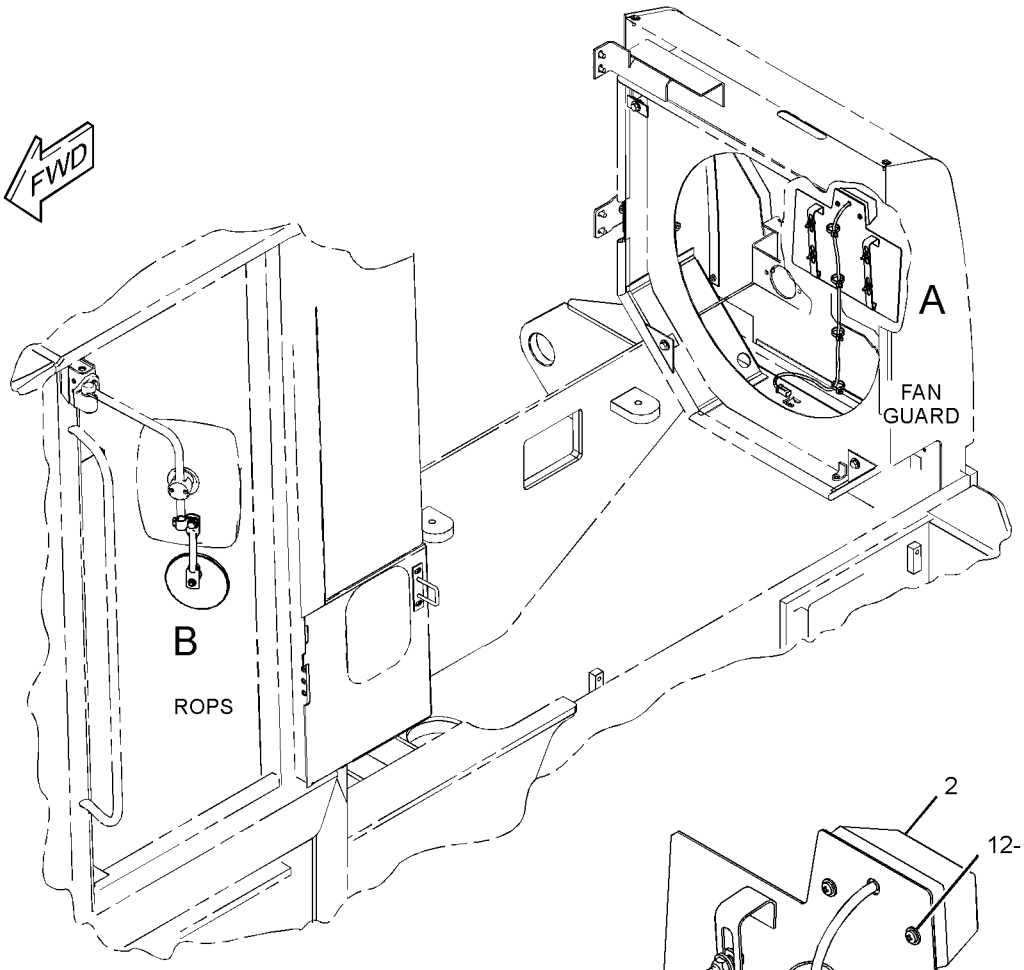

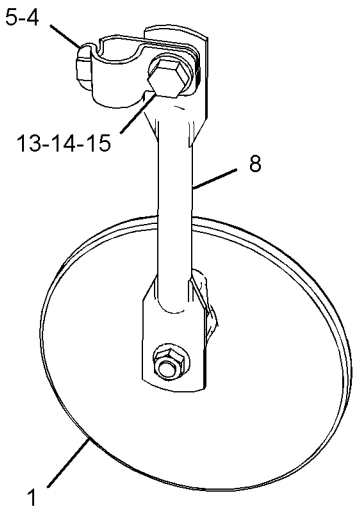

VIEW OF AREA B

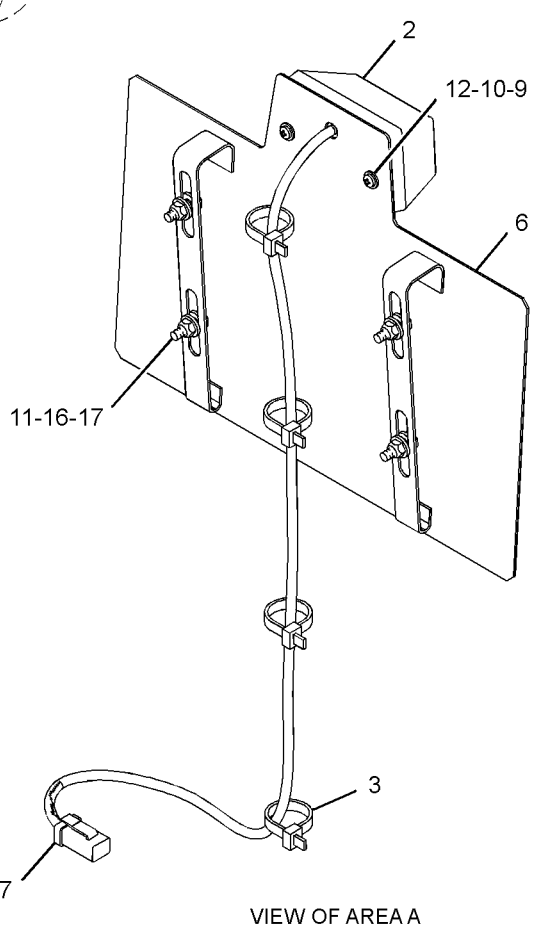

VIEW OF AREA A

GRAPHIC #1 **<END>** g01404982

180-8984 COUNTERWEIGHT GP

S/N: BYD1-UP

CANNOT BE USED WITH 257-1627—PAGE 346, 257-1628—PAGE 347

AN ATTACHMENT

SMCS-7056 **i01836175**

NOTE	REF NO	GRAPHIC REF	PART NUMBER	QTY	PART NAME 1 2 3 4 5 6 (PRODUCT LEVEL)	SEE PAGE
	1	1	**180-8996**	1	COUNTERWEIGHT AS (RH)	
	2	1	**180-8997**	1	COUNTERWEIGHT AS (LH)	
M	3	1	**8T-0363**	4	BOLT (M24X3X120-MM)	
	4	1	**8T-1482**	4	WASHER-HARD (26X50X8-MM THK)	
M	5	1	**8T-4179**	2	BOLT (M12X1.75X20-MM)	
	6	1	**8T-4223**	2	WASHER-HARD (13.5X25.5X3-MM THK)	

M-METRIC PART

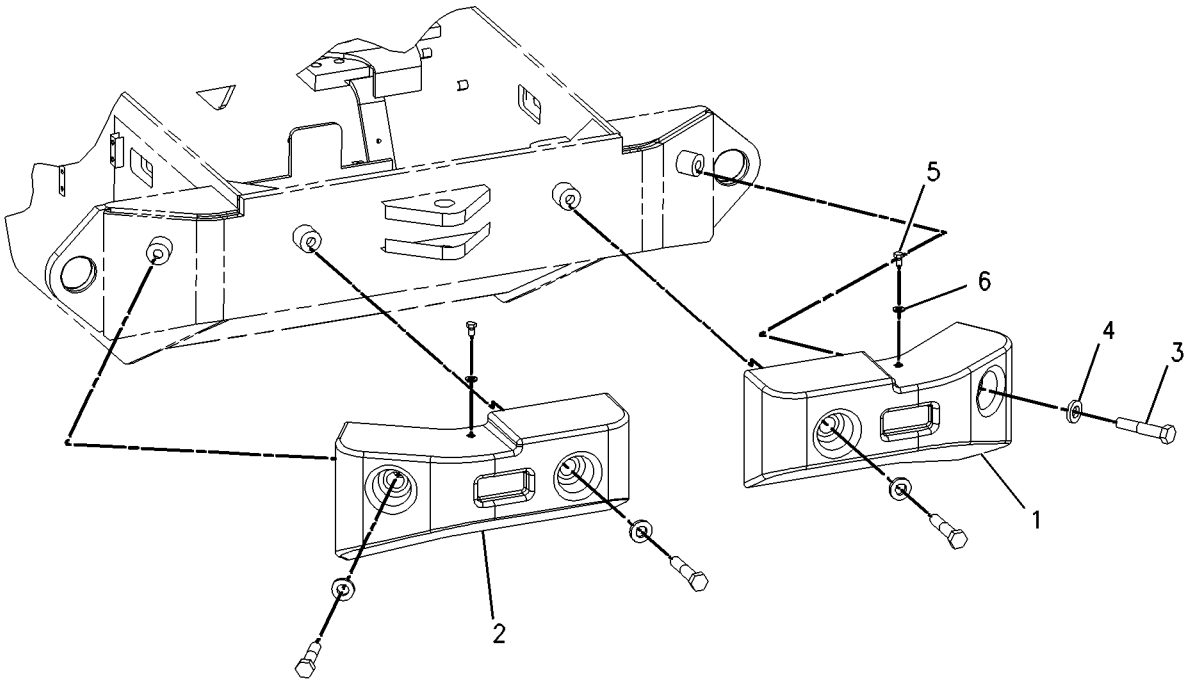

GRAPHIC #1 **<END>** g00894434

257-1604 COUNTERWEIGHT GP

S/N: FTD1-UP
CANNOT BE USED WITH 257-1626—PAGE 345
AN ATTACHMENT

SMCS-7056 **i02782967**

NOTE	REF NO	GRAPHIC REF	PART NUMBER	QTY	PART NAME 1 2 3 4 5 6 (PRODUCT LEVEL)	SEE PAGE
	1	1	**180-8992**	1	COUNTERWEIGHT AS (RH)	
	2	1	**180-8993**	1	COUNTERWEIGHT AS (LH)	
	3	1	**257-1605**	1	COUNTERWEIGHT AS	
M	4	1	**7X-2465**	6	BOLT (M24X3X180-MM)	
	5	1	**8T-1482**	6	WASHER-HARD (26X50X8-MM THK)	
M	6	1	**8T-4179**	2	BOLT (M12X1.75X20-MM)	
	7	1	**8T-4223**	2	WASHER-HARD (13.5X25.5X3-MM THK)	
	8	1	**193-5915**	1	PLUG (PROTECTION)	

M-METRIC PART

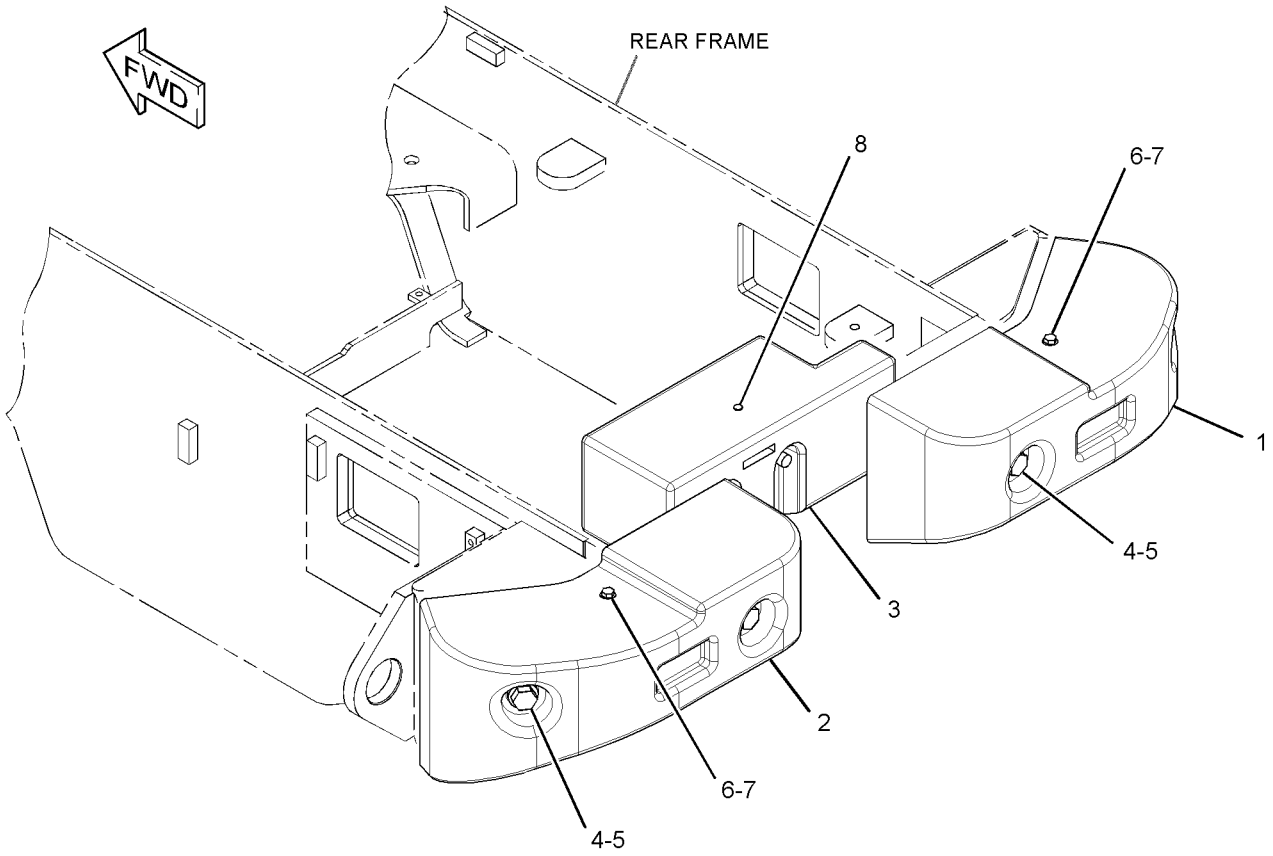

GRAPHIC #1 **<END>** g01413132

257-1626 COUNTERWEIGHT GP

S/N: FTD1-UP

CANNOT BE USED WITH 257-1604—PAGE 344

AN ATTACHMENT

SMCS-7056 **i02876862**

NOTE	REF NO	GRAPHIC REF	PART NUMBER	QTY	PART NAME 1 2 3 4 5 6 (PRODUCT LEVEL)	SEE PAGE
	1	1	**180-8992**	1	COUNTERWEIGHT AS (RH)	
	2	1	**180-8993**	1	COUNTERWEIGHT AS (LH)	
	3	1	**193-5915**	1	PLUG	
	4	1	**256-7516**	1	COUNTERWEIGHT-LH	
	5	1	**256-7517**	1	COUNTERWEIGHT-RH	
	6	1	**257-1605**	1	COUNTERWEIGHT AS	
M	7	1	**121-7897**	4	BOLT (M24X3X315-MM)	
M	8	1	**7X-2465**	6	BOLT (M24X3X180-MM)	
	9	1	**8T-1482**	10	WASHER-HARD (26X50X8-MM THK)	
M	10	1	**8T-4179**	2	BOLT (M12X1.75X20-MM)	
	11	1	**8T-4223**	2	WASHER-HARD (13.5X25.5X3-MM THK)	

M-METRIC PART

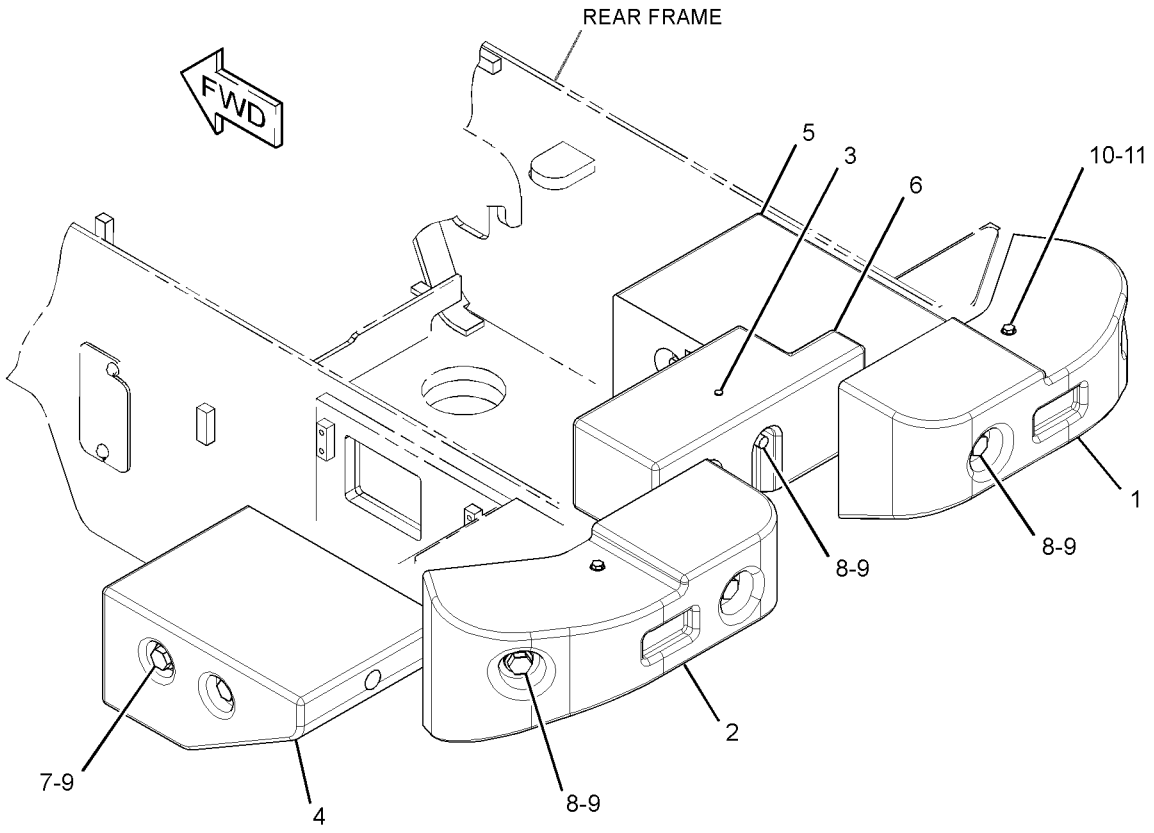

GRAPHIC #1 **<END>** g01405255

257-1627 COUNTERWEIGHT GP

S/N: BYD1-UP

CANNOT BE USED WITH 180-8984—PAGE 343, 257-1628—PAGE 347

AN ATTACHMENT

SMCS-7056 **i02816797**

NOTE	REF NO	GRAPHIC REF	PART NUMBER	QTY	PART NAME 1 2 3 4 5 6 (PRODUCT LEVEL)	SEE PAGE
	1	1	**180-8994**	1	COUNTERWEIGHT (RH)	
	2	1	**180-8996**	1	COUNTERWEIGHT AS (RH)	
	3	1	**180-8997**	1	COUNTERWEIGHT AS (LH)	
	4	1	**204-4332**	1	COUNTERWEIGHT (LH)	
M	5	1	**7X-2465**	4	BOLT (M24X3X180-MM)	
M	6	1	**8T-0363**	4	BOLT (M24X3X120-MM)	
	7	1	**8T-1482**	8	WASHER-HARD (26X50X8-MM THK)	
M	8	1	**8T-4179**	2	BOLT (M12X1.75X20-MM)	
	9	1	**8T-4223**	2	WASHER-HARD (13.5X25.5X3-MM THK)	

M-METRIC PART

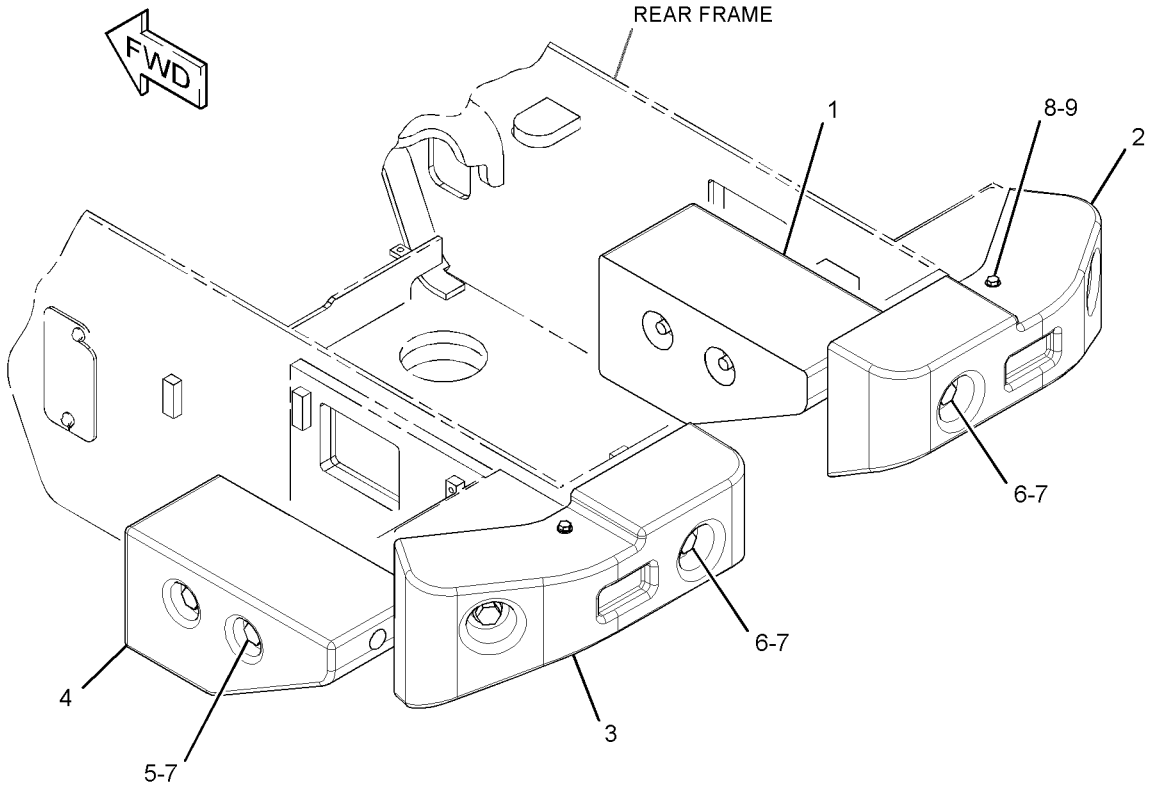

GRAPHIC #1 **<END>** g01405617

257-1628 COUNTERWEIGHT GP

S/N: BYD1-UP

CANNOT BE USED WITH 257-1627—PAGE 346, 180-8984—PAGE 343

AN ATTACHMENT

SMCS-7056 **i02829667**

NOTE	REF NO	GRAPHIC REF	PART NUMBER	QTY	PART NAME 1 2 3 4 5 6 (PRODUCT LEVEL)	SEE PAGE
	1	1	**180-8996**	1	COUNTERWEIGHT AS (RH)	
	2	1	**180-8997**	1	COUNTERWEIGHT AS (LH)	
	3	1	**256-7516**	1	COUNTERWEIGHT-LH	
	4	1	**256-7517**	1	COUNTERWEIGHT-RH	
M	5	1	**121-7897**	4	BOLT (M24X3X315-MM)	
M	6	1	**8T-0363**	4	BOLT (M24X3X120-MM)	
	7	1	**8T-1482**	8	WASHER-HARD (26X50X8-MM THK)	
M	8	1	**8T-4179**	2	BOLT (M12X1.75X20-MM)	
	9	1	**8T-4223**	2	WASHER-HARD (13.5X25.5X3-MM THK)	

M-METRIC PART

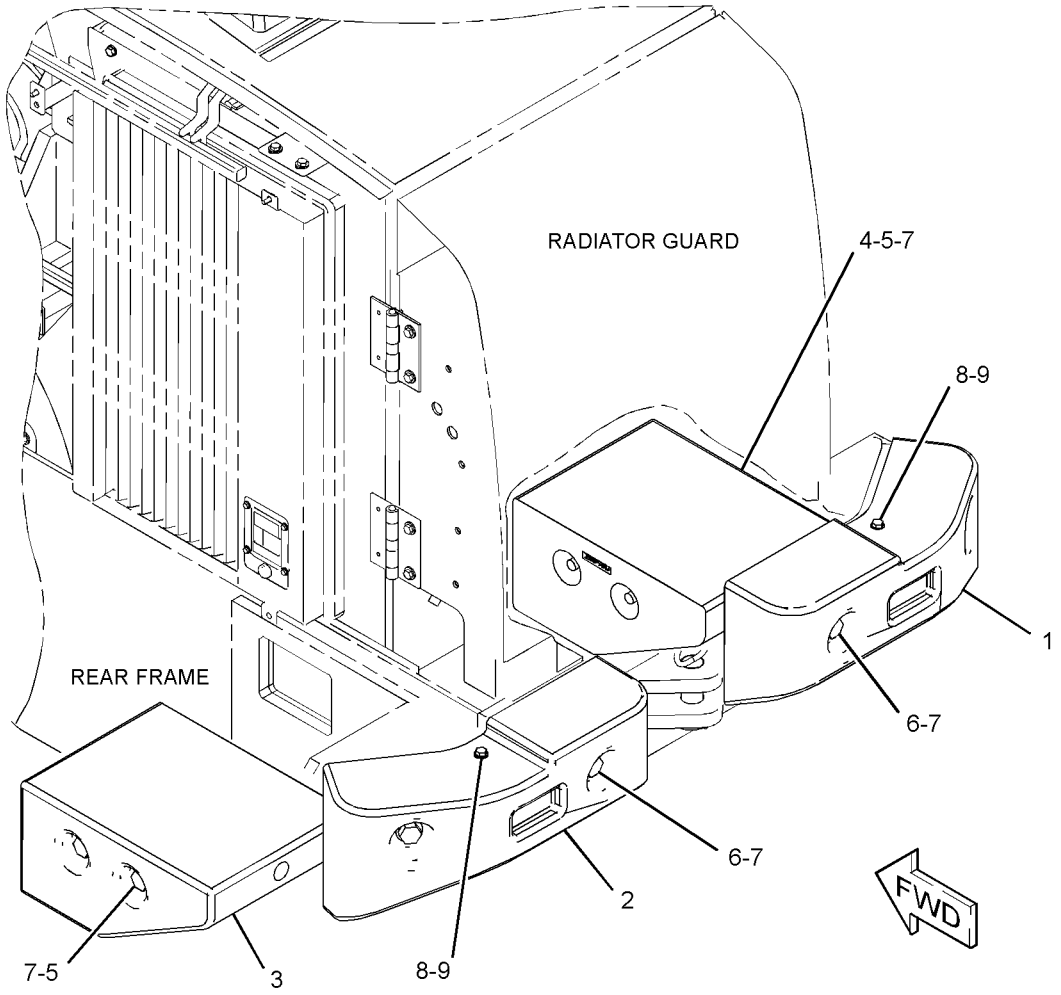

GRAPHIC #1 **<END>** g01412045

301-4353 COVER GP-ACCESS—CAB FLOOR

S/N: BYD1-UP; FTD1-UP

PART OF 289-8975, 289-8976, 289-8978, 294-9436 AXLE AR-FIXED

AN ATTACHMENT

SMCS-726A **i02807525**

NOTE	REF NO	GRAPHIC REF	PART NUMBER	QTY	PART NAME 1 2 3 4 5 6 (PRODUCT LEVEL)	SEE PAGE
	1	1	**4H-3001**	1	PLUG-BUTTON	
	2	1	**301-4354**	1	PLATE	
	3	1	**301-4355**	1	TREAD	
	4	1	**9X-2038**	2	WASHER (7X19X2-MM THK)	
M	5	1	**9X-2045**	2	SCREW-TRUSS HEAD (M6X1X20-MM)	

M-METRIC PART

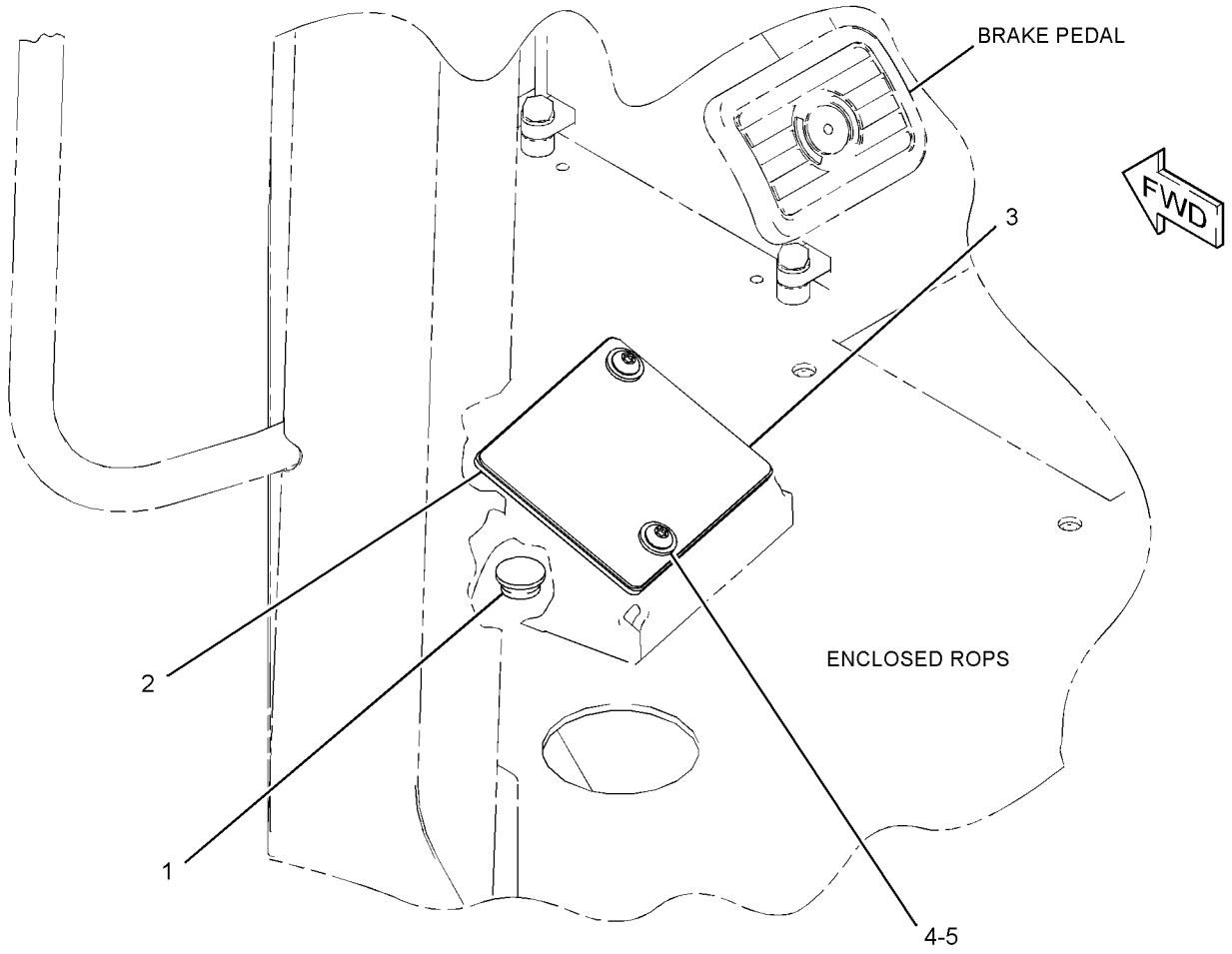

GRAPHIC #1 **<END>** g01404893

289-8960 DOOR GP-ACCESS—HOOD SIDE

S/N: BYD1-UP; FTD1-UP
PART OF 289-8871, 289-8891, 290-6498 CHASSIS AR
ALSO AN ATTACHMENT

SMCS-7273 **i02803848**

NOTE	REF NO	GRAPHIC REF	PART NUMBER	QTY	PART NAME 1 2 3 4 5 6 (PRODUCT LEVEL)	SEE PAGE
	1	1	**198-8945**	1	DOOR AS (RH)	
	2	1	*289-8900*	1	DOOR AS-ACCESS	
	2A	1	**198-8946**	1	DOOR AS (LH)	
	2B	1	**295-4221**	1	INSULATION	
	2C	1	**295-4222**	1	INSULATION	
	2D	1	**295-4223**	1	INSULATION	

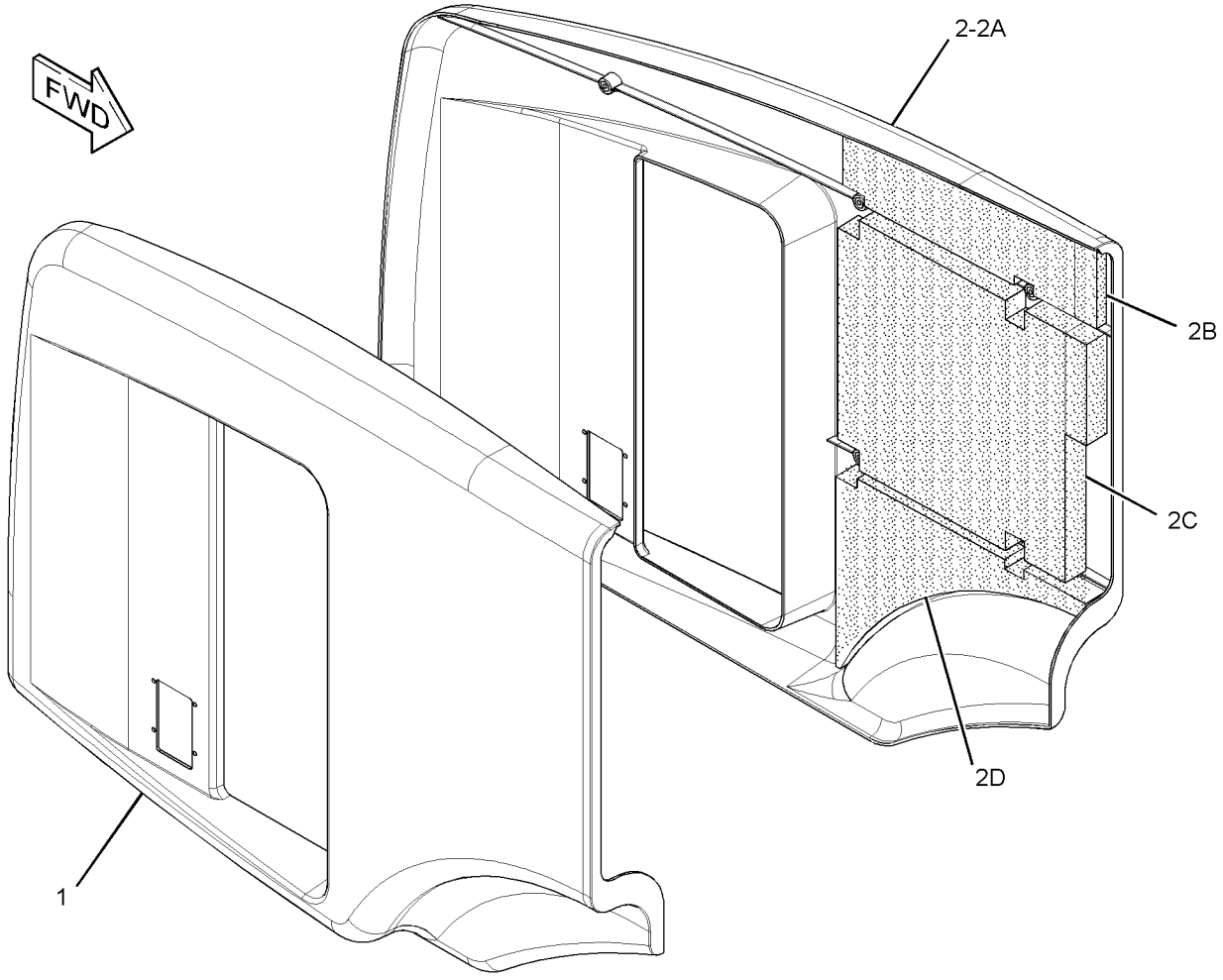

GRAPHIC #1 **<END>** g01403709

289-8961 DOOR GP-ACCESS—HOOD SIDE

S/N: BYD1-UP

CANNOT BE USED WITH 289-8960—PAGE 349

AN ATTACHMENT

SMCS-7273 **i02810691**

NOTE	REF NO	GRAPHIC REF	PART NUMBER	QTY	PART NAME 1 2 3 4 5 6 (PRODUCT LEVEL)	SEE PAGE
Y	1	1	*291-5006*	1	DOOR GP-ACCESS (HOOD SIDE, LH)	351
Y	2	1	*291-5010*	1	DOOR GP-ACCESS (HOOD SIDE, RH)	352

Y-SEPARATE ILLUSTRATION

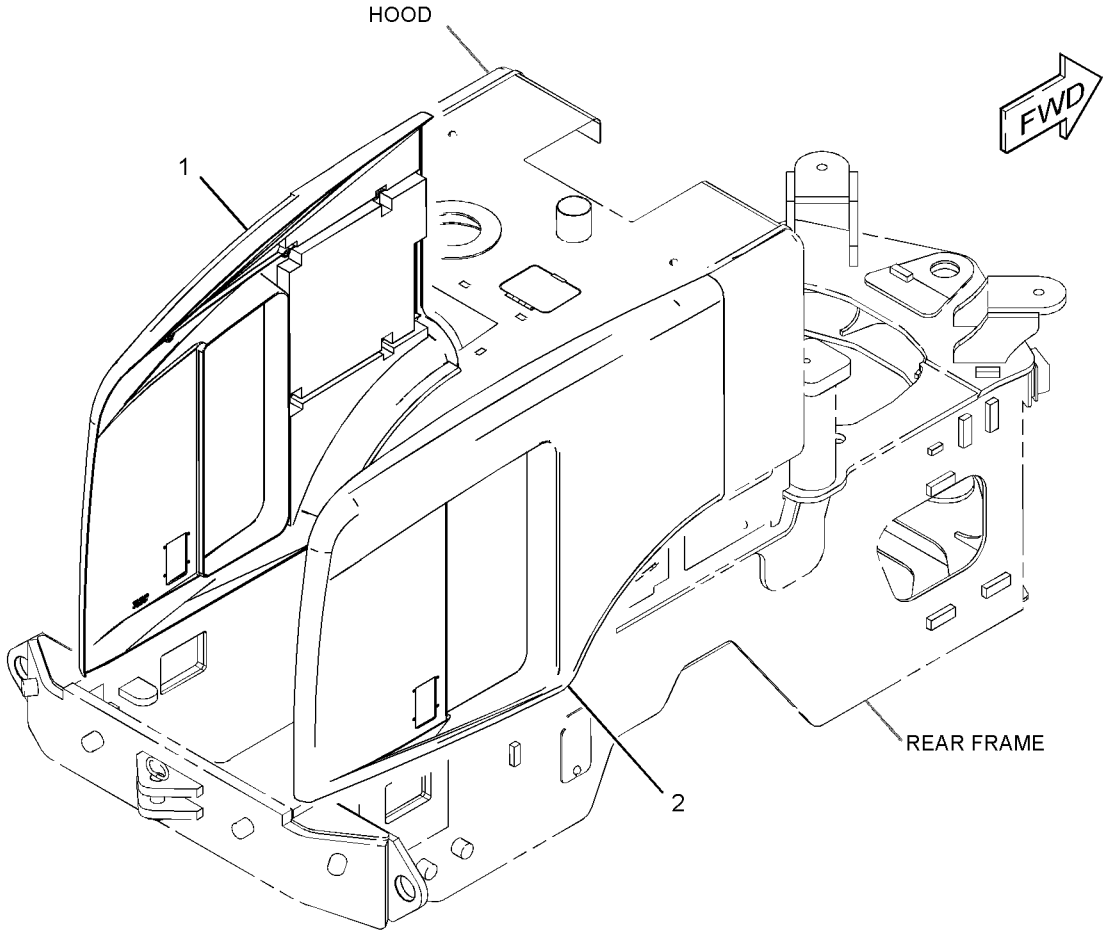

GRAPHIC #1 **<END>** g01395205

291-5006 DOOR GP-ACCESS—HOOD SIDE, LH

S/N: BYD1-UP

PART OF 289-8961 DOOR GP-ACCESS

AN ATTACHMENT

SMCS-7273 **i02810721**

NOTE	REF NO	GRAPHIC REF	PART NUMBER	QTY	PART NAME 1 2 3 4 5 6 (PRODUCT LEVEL)	SEE PAGE
E	1	1	**147-2355**		SEAL (55-CM)	
	2	1	**198-8946**	1	DOOR AS (LH)	
	3	1	**295-4221**	1	INSULATION	
	4	1	**295-4222**	1	INSULATION	
	5	1	**295-4223**	1	INSULATION (LH)	

E-ORDER BY THE CENTIMETER

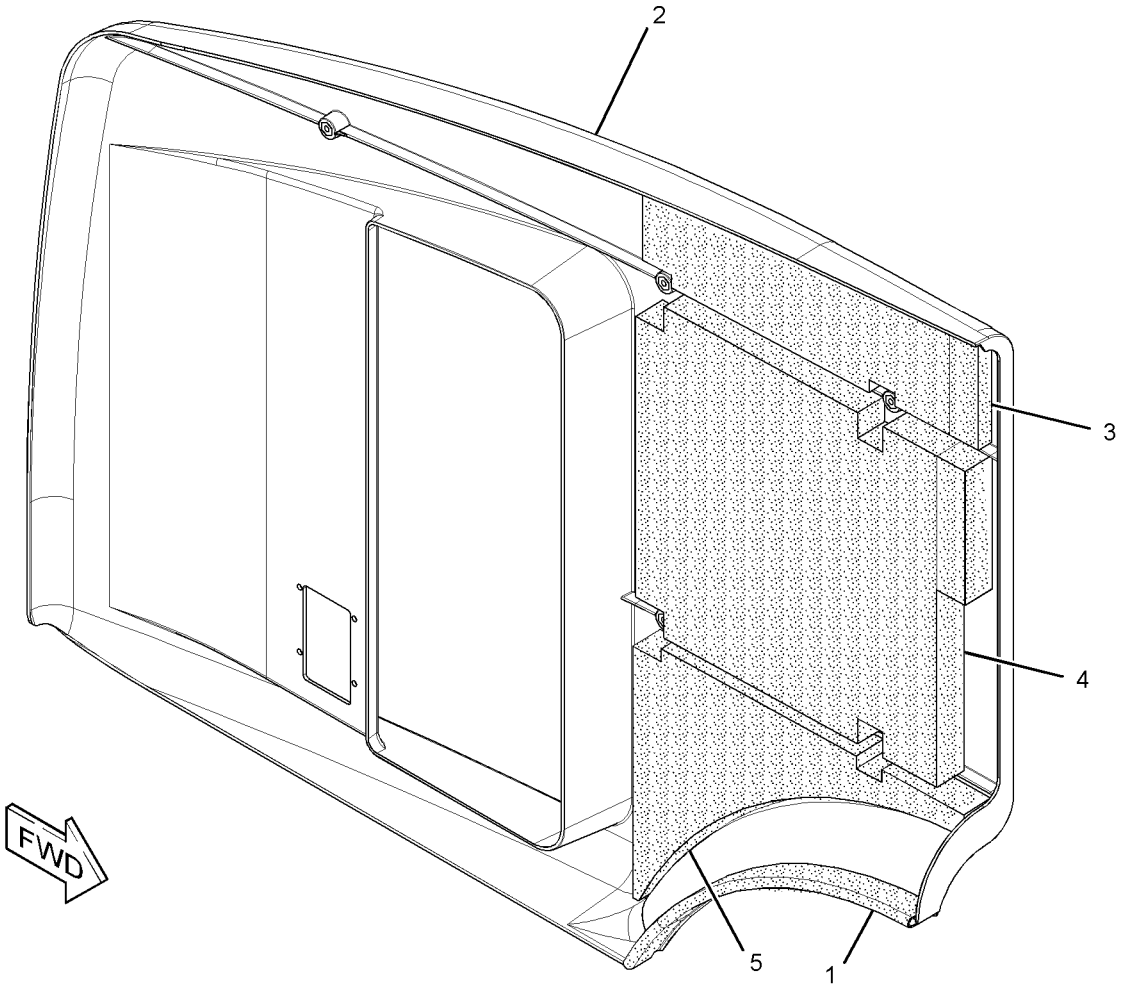

GRAPHIC #1 **<END>** g01404570

FRAME AND BODY

291-5010 DOOR GP-ACCESS—HOOD SIDE, RH

S/N: BYD1-UP

PART OF 289-8961 DOOR GP-ACCESS

AN ATTACHMENT

SMCS-7273 **i02814526**

NOTE	REF NO	GRAPHIC REF	PART NUMBER	QTY	PART NAME 1 2 3 4 5 6 (PRODUCT LEVEL)	SEE PAGE
E	1	1	**147-2355**		SEAL (55-CM)	
	2	1	**198-8945**	1	DOOR AS (RH)	

E-ORDER BY THE CENTIMETER

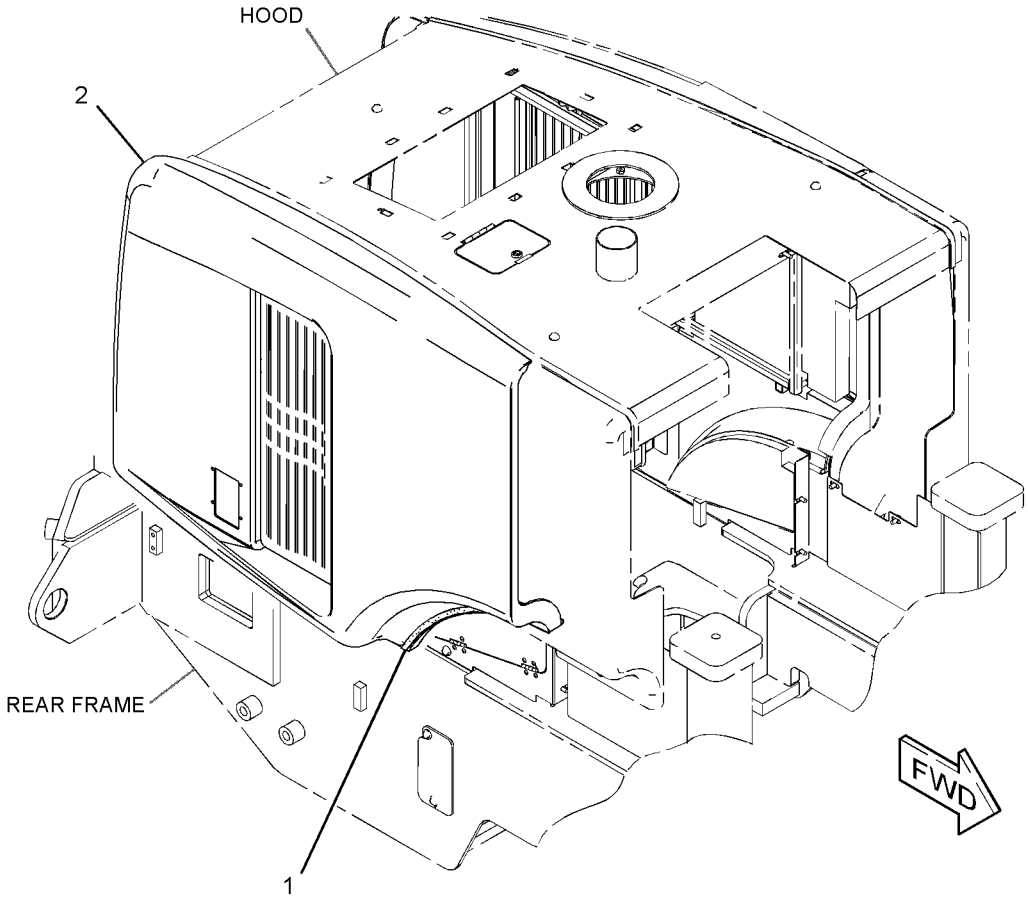

GRAPHIC #1 **<END>** g01409374

235-6955 FENDER AR-ROADING—HEAVY-DUTY

S/N: FTD1-UP

CANNOT BE USED WITH 140-9295—PAGE 354, 208-0310—PAGE 353, 226-1186—PAGE 356

AN ATTACHMENT

SMCS-7252 **i02589452**

NOTE	PART NUMBER	QTY	PART NAME 1 2 3 4 5 6 (PRODUCT LEVEL)	SEE PAGE
Y	*226-1186*	1	FENDER GP-FRONT	356
Y	*208-4983*	1	FENDER GP-ROADING (REAR)	360

Y-SEPARATE ILLUSTRATION

<END>

208-0310 FENDER GP

S/N: FTD1-UP

CANNOT BE USED WITH 208-4982—PAGE 353, 208-4985—PAGE 355, 140-9295—PAGE 354, 235-6955—PAGE 353, 226-1186—PAGE 356

AN ATTACHMENT

SMCS-7252 **i01832135**

NOTE	PART NUMBER	QTY	PART NAME 1 2 3 4 5 6 (PRODUCT LEVEL)	SEE PAGE
Y	*140-9295*	1	FENDER GP-FRONT	354
Y	*208-4983*	1	FENDER GP-ROADING (REAR)	360

Y-SEPARATE ILLUSTRATION

<END>

208-4982 FENDER GP

S/N: BYD1-UP

CANNOT BE USED WITH 208-4985—PAGE 355

AN ATTACHMENT

SMCS-7252 **i01819689**

NOTE	PART NUMBER	QTY	PART NAME 1 2 3 4 5 6 (PRODUCT LEVEL)	SEE PAGE
Y	*208-4985*	1	FENDER GP-FRONT (FRONT)	355
Y	*208-4983*	1	FENDER GP-ROADING (REAR)	360

Y-SEPARATE ILLUSTRATION

<END>

140-9295 FENDER GP-FRONT

S/N: FTD1-UP
PART OF 208-0310 FENDER GP
CANNOT BE USED WITH 208-0310—PAGE 353, 226-1186—PAGE 356, 235-6955—PAGE 353
AN ATTACHMENT

SMCS-7252 **i01714177**

NOTE	REF NO	GRAPHIC REF	PART NUMBER	QTY	PART NAME 1 2 3 4 5 6 (PRODUCT LEVEL)	SEE PAGE
	1	1	**140-9296**	2	BRACKET AS	
	2	1	**214-9563**	2	FENDER	
	3	1	**214-9564**	8	PLATE	
	4	1	**204-0813**	8	BOLT	
	5	1	**7X-7729**	8	WASHER (11X25X3MM THK)	
M	6	1	**8T-4136**	8	BOLT (M10X1.5X25MM)	

M-METRIC PART

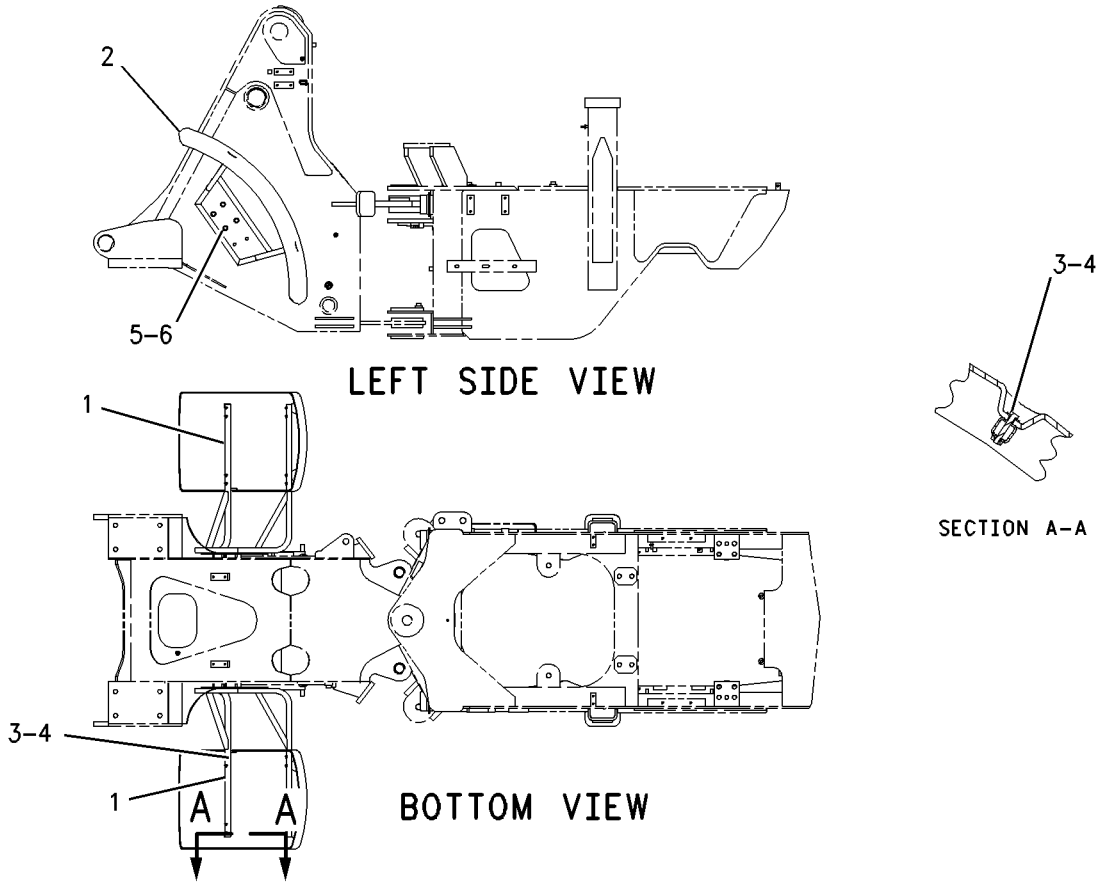

GRAPHIC #1 **<END>** g00882113

208-4985 FENDER GP-FRONT

S/N: BYD1-UP
PART OF 208-4982 FENDER GP
CANNOT BE USED WITH 208-4982–PAGE 353
AN ATTACHMENT

SMCS-7252 **i01739068**

NOTE	REF NO	GRAPHIC REF	PART NUMBER	QTY	PART NAME 1 2 3 4 5 6 (PRODUCT LEVEL)	SEE PAGE
	1	1	**8I-6603**	4	INSERT-SQUARE	
	2	1	**138-8484**	1	BRACKET AS (LH)	
	3	1	**138-8485**	1	BRACKET AS (RH)	
	4	1	**214-9563**	2	FENDER	
	5	1	**214-9564**	8	PLATE	
	6	1	**204-0813**	8	BOLT	
	7	1	**7X-7729**	6	WASHER (11X25X3MM THK)	
M	8	1	**8T-4186**	6	BOLT (M10X1.5X40MM)	

M-METRIC PART

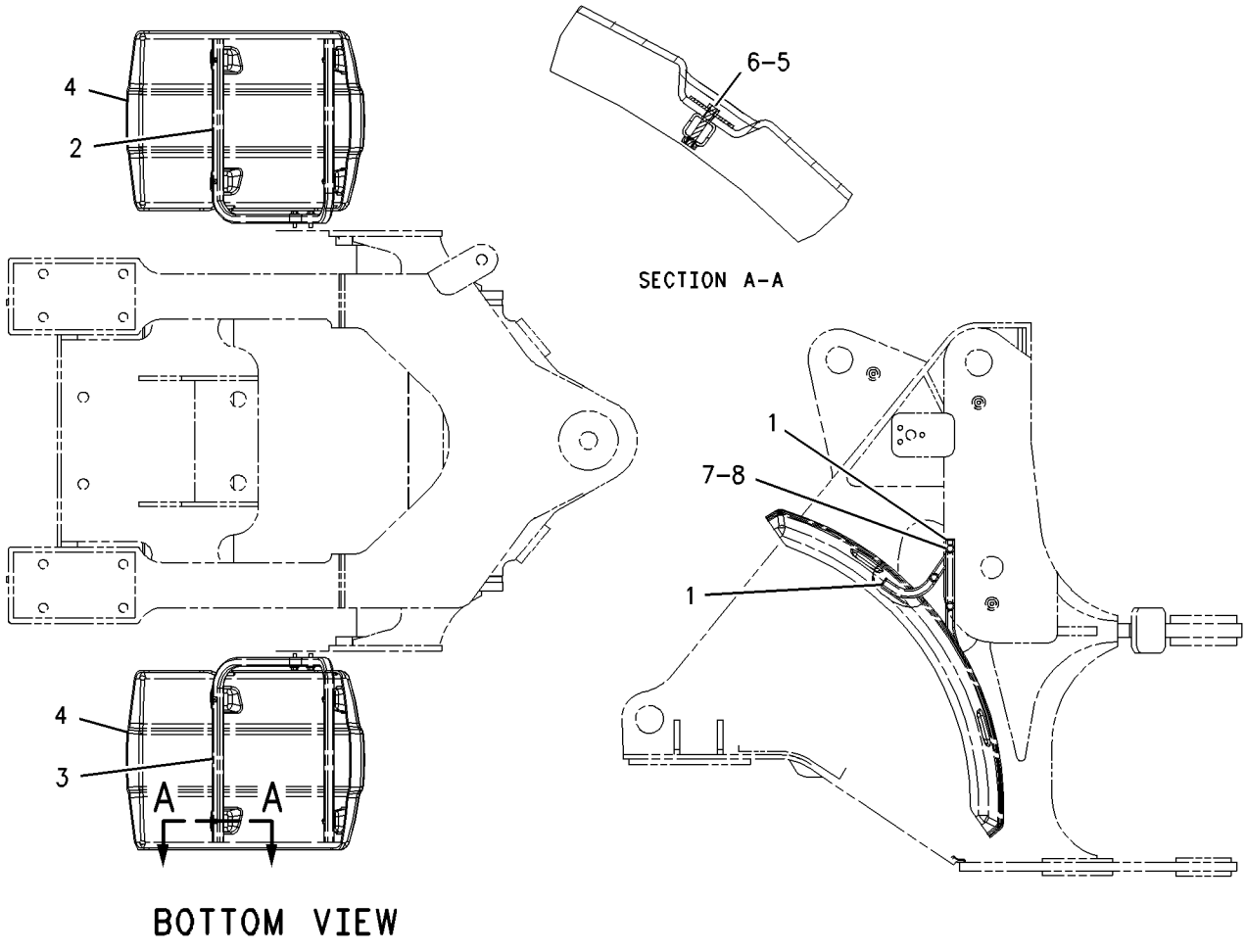

GRAPHIC #1 **<END>** g00892007

226-1186 FENDER GP-FRONT

S/N: FTD1-UP

PART OF 235-6955 FENDER AR-ROADING

CANNOT BE USED WITH 140-9295—PAGE 354, 208-0310—PAGE 353, 235-6955—PAGE 353

AN ATTACHMENT

SMCS-7252 **i01829348**

NOTE	REF NO	GRAPHIC REF	PART NUMBER	QTY	PART NAME 1 2 3 4 5 6 (PRODUCT LEVEL)	SEE PAGE
	1	1	**221-0839**	2	PLATE AS	
	2	1	**221-0840**	2	BRACKET AS	
	3	1	**221-0845**	2	FENDER AS	
	4	1	**228-4710**	4	SPACER (14X30X20-MM THK)	
	5	1	**5P-1076**	8	WASHER-HARD (13.5X30X4-MM THK)	
	6	1	**5P-4116**	20	WASHER-HARD (8.8X20.5X2-MM THK)	
	7	1	**7X-7729**	8	WASHER (11X25X3-MM THK)	
M	8	1	**8T-4136**	8	BOLT (M10X1.5X25-MM)	
M	9	1	**8T-4244**	4	NUT (M12X1.75-THD)	
M	10	1	**8T-4908**	12	BOLT (M8X1.25X25-MM)	
M	11	1	**8T-4910**	4	BOLT (M12X1.75X60-MM)	
M	12	1	**8T-6869**	8	BOLT (M8X1.25X60-MM)	

M-METRIC PART

226-1186 **FENDER GP-FRONT** *(contd.)* **i01829348**

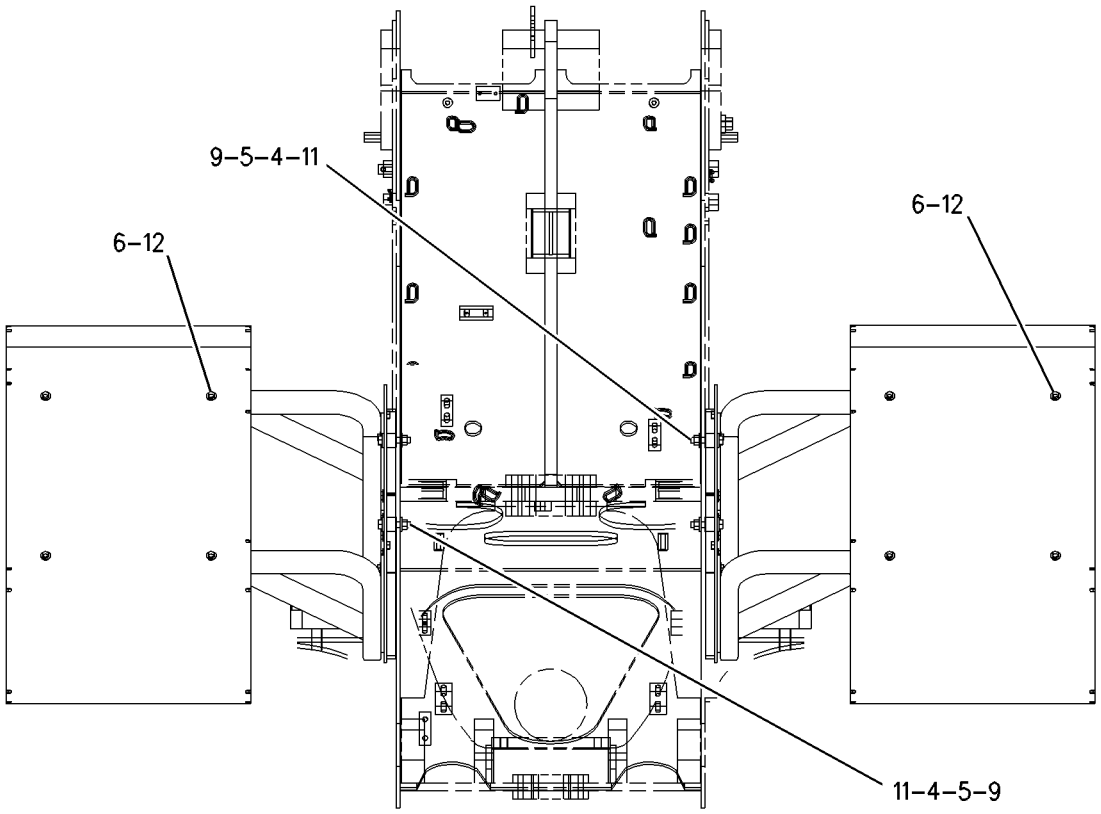

REAR VIEW

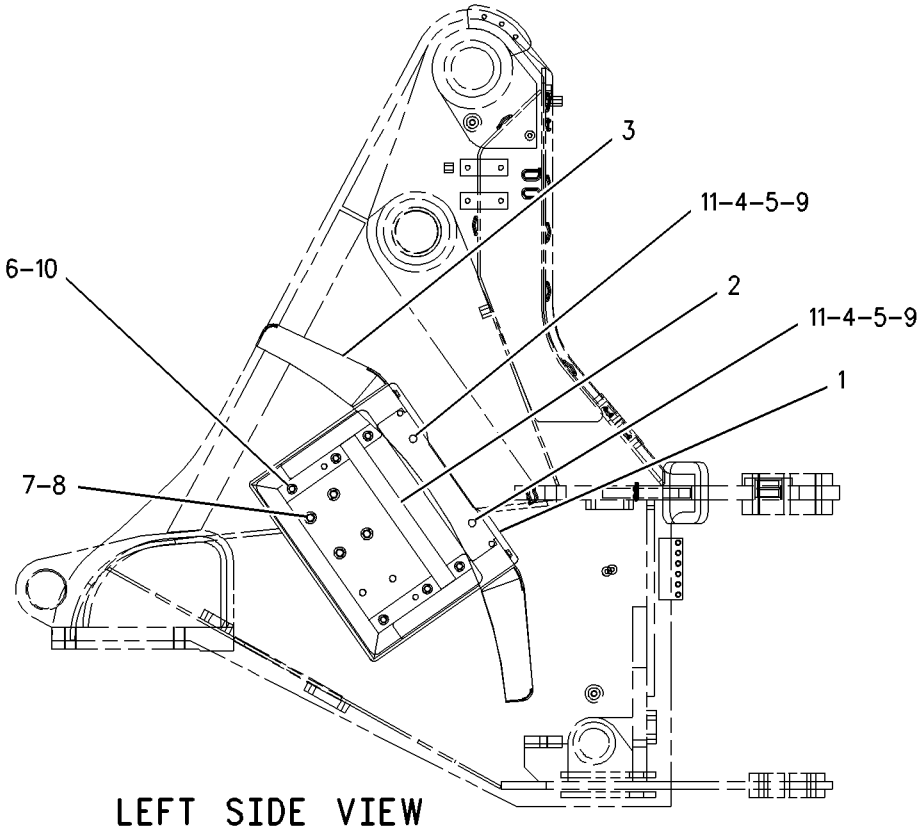

LEFT SIDE VIEW

GRAPHIC #1 **<END>** g00925523

215-2645 FENDER GP-REAR–ROADING, LH

S/N: BYD1-UP; FTD1-UP
PART OF 208-4983 FENDER GP-ROADING
AN ATTACHMENT

SMCS-7252 **i01963880**

NOTE	REF NO	GRAPHIC REF	PART NUMBER	QTY	PART NAME 1 2 3 4 5 6 (PRODUCT LEVEL)	SEE PAGE
	1	1	**009-3101**	1	RING-RETAINING	
	2	1	**124-2456**	1	FILM-INSTRUCTION (NO STEP)	
	3	1	**146-0083**	1	PLATE	
	4	1	**146-0084**	1	ROD	
	5	1	**146-0090**	1	PIVOT AS-LH	
	6	1	**146-0098**	2	BUSHING	
	7	1	**163-4345**	1	DEFLECTOR	
	8	1	**215-2643**	1	BRACKET AS	
	9	1	**219-6911**	1	FENDER (LH)	
M	10	1	**129-3178**	3	LOCKNUT (M6X1 THD)	
	11	1	**5P-4115**	13	WASHER-HARD (7.2X19X2-MM THK)	
M	12	1	**6V-7357**	3	BOLT (M6X1X25-MM)	
	13	1	**7X-7729**	3	WASHER (11X25X3-MM THK)	
M	14	1	**8C-8451**	7	BOLT (M6X1X40-MM)	
M	15	1	**8T-4186**	3	BOLT (M10X1.5X40-MM)	
	16	1	**9L-6074**	1	GROMMET	

M-METRIC PART

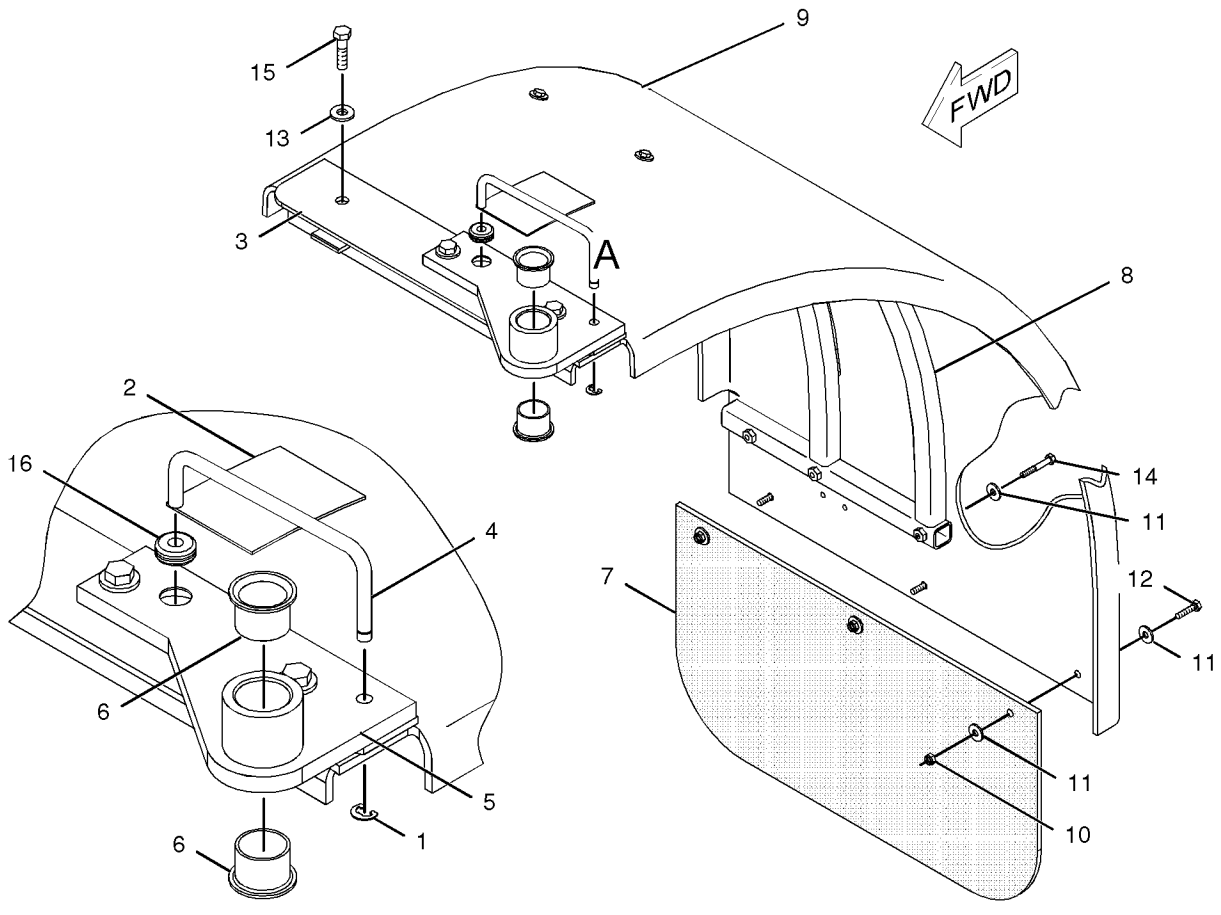

VIEW OF AREA A

GRAPHIC #1 **<END>** g01020239

215-2646 FENDER GP-REAR–ROADING, RH

S/N: BYD1-UP; FTD1-UP
PART OF 208-4983 FENDER GP-ROADING
AN ATTACHMENT

SMCS-7252 **i01754097**

NOTE	REF NO	GRAPHIC REF	PART NUMBER	QTY	PART NAME 1 2 3 4 5 6 (PRODUCT LEVEL)	SEE PAGE
	1	1	**009-3101**	1	RING-RETAINING	
	2	1	**124-2456**	1	FILM-INSTRUCTION (NO STEP)	
	3	1	**146-0083**	1	PLATE	
	4	1	**146-0084**	1	ROD	
	5	1	**146-0089**	1	PIVOT AS-RH	
	6	1	**146-0098**	2	BUSHING	
	7	1	**9L-6074**	1	GROMMET	
	8	1	**215-2644**	1	BRACKET AS	
	9	1	**219-6910**	1	FENDER	
M	10	1	**129-3178**	3	LOCKNUT (M6X1 THD)	
	11	1	**5P-4115**	13	WASHER-HARD (7.2X19X2-MM THK)	
M	12	1	**6V-7357**	3	BOLT (M6X1X25-MM)	
	13	1	**7X-7729**	3	WASHER (11X25X3-MM THK)	
M	14	1	**8C-8451**	7	BOLT (M6X1X40-MM)	
M	15	1	**8T-4186**	3	BOLT (M10X1.5X40-MM)	

M-METRIC PART

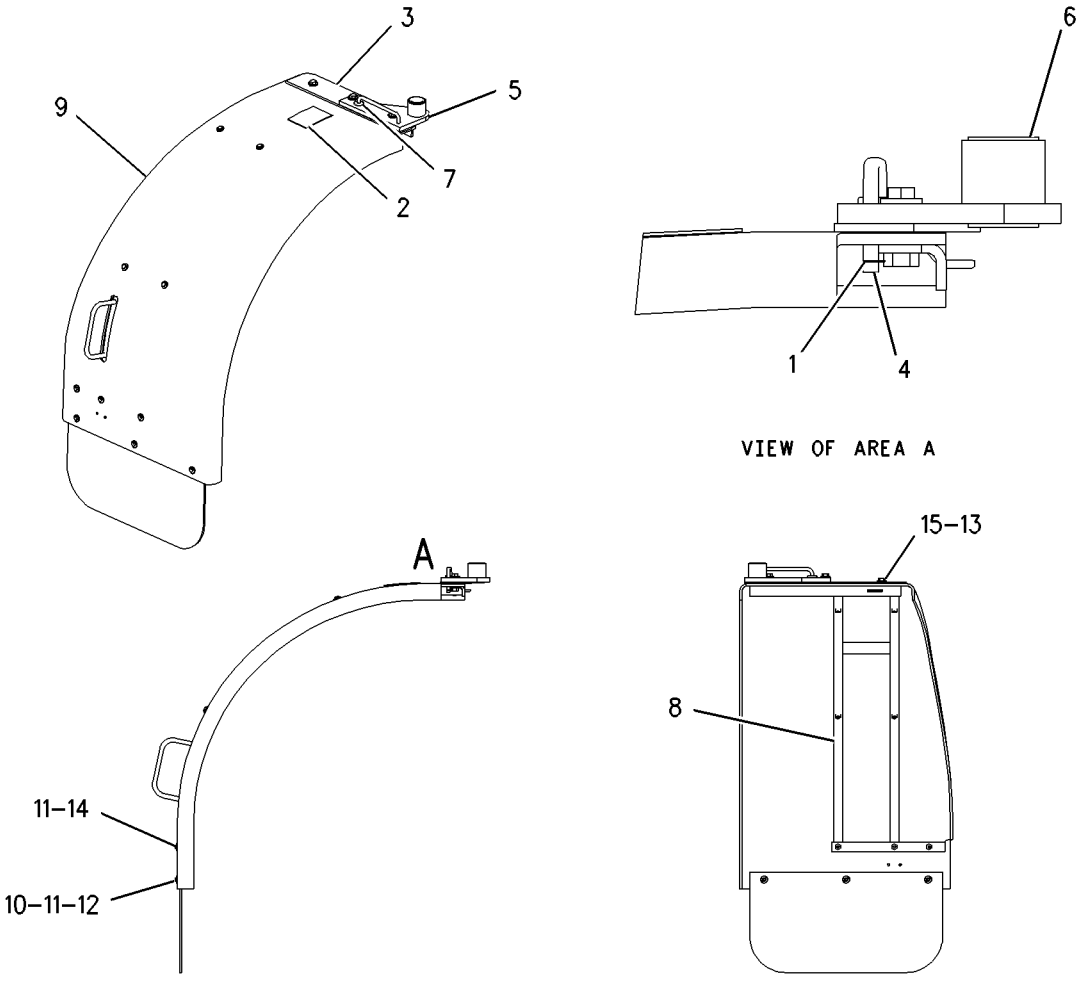

GRAPHIC #1 **<END>** g00897462

208-4983 FENDER GP-ROADING–REAR

S/N: BYD1-UP; FTD1-UP

PART OF 235-6955 FENDER AR-ROADING, 208-0310, 208-4982 FENDER GP

AN ATTACHMENT

SMCS-7252 **i02294991**

NOTE	REF NO	GRAPHIC REF	PART NUMBER	QTY	PART NAME 1 2 3 4 5 6 (PRODUCT LEVEL)	SEE PAGE
	1	1	**146-0085**	2	PIVOT AS	
	2	1	**163-4347**	2	GUIDE	
	3	1	**163-4348**	2	COVER	
M	4	1	**179-4324**	8	LOCKNUT (M5X0.8-THD)	
	5	1	**208-0011**	2	LATCH AS	
Y	6	1	*215-2645*	1	FENDER GP-REAR (ROADING, LH)	358
Y	7	1	*215-2646*	1	FENDER GP-REAR (ROADING, RH)	359
	8	1	**231-2995**	1	PLATE (RH)	
	9	1	**231-2996**	1	PLATE (LH)	
	10	1	**231-2997**	2	ROD	
	11	1	**4B-4274**	16	WASHER (5.5X13X1.2-MM THK)	
	12	1	**5P-4115**	2	WASHER-HARD (7.2X19X2-MM THK)	
M	13	1	**6V-7357**	4	BOLT (M6X1X25-MM)	
	14	1	**6V-7644**	2	RING-RETAINING	
	15	1	**7X-7729**	8	WASHER (11X25X3-MM THK)	
M	16	1	**8C-3210**	2	BOLT (M6X1X16-MM)	
M	17	1	**8T-4127**	8	SCREW-MACHINE (M5X0.8X20-MM)	
M	18	1	**8T-4137**	4	BOLT (M10X1.5X20-MM)	
M	19	1	**8T-4195**	4	BOLT (M10X1.5X30-MM)	
	20	1	**8T-4205**	4	WASHER-HARD (7.2X14.5X2-MM THK)	

M-METRIC PART
Y-SEPARATE ILLUSTRATION

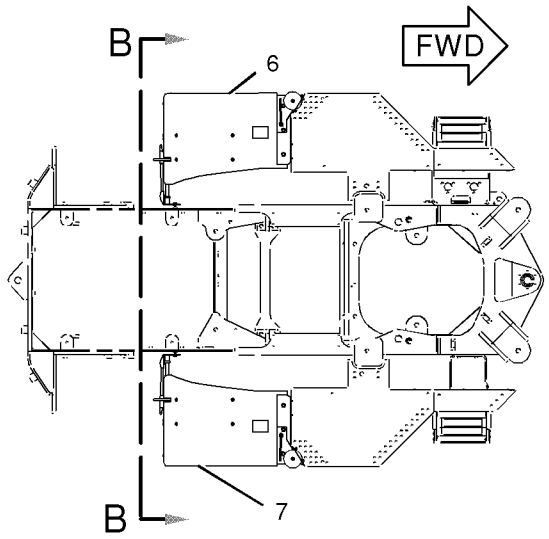

TOP VIEW

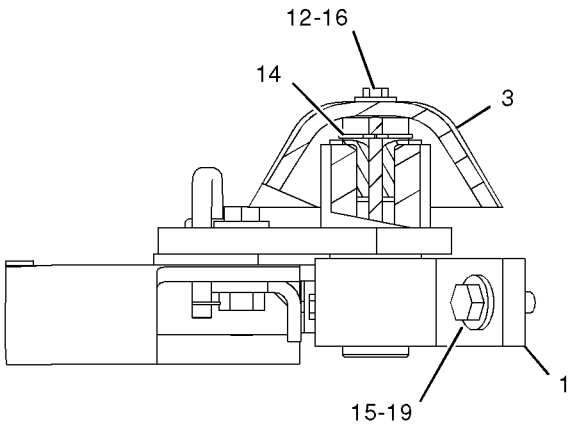

VIEW OF AREA A

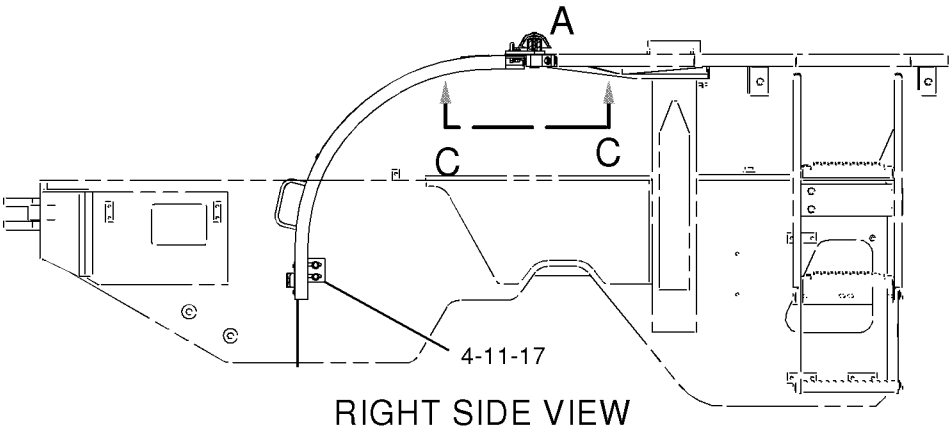

RIGHT SIDE VIEW

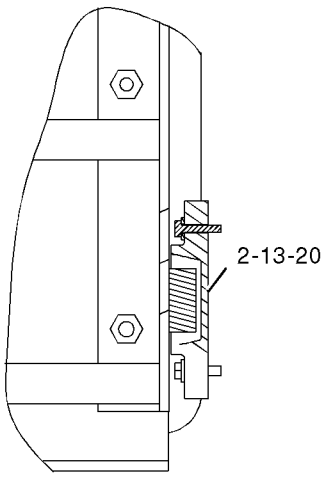

VIEW C-C

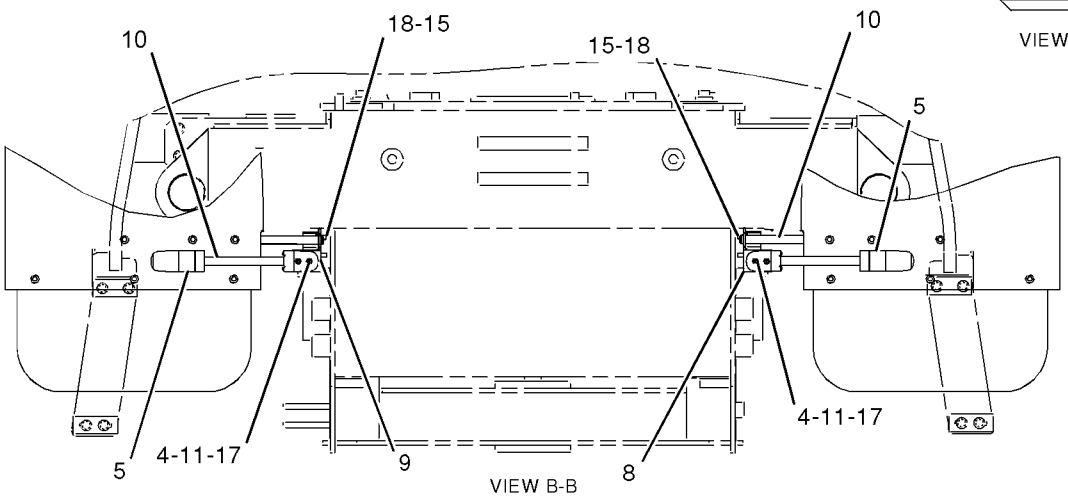

VIEW B-B

GRAPHIC #1 **<END>** g01011413

FRAME AND BODY

113-3900 FRAME AS-LOADER

S/N: BYD1-UP

PART OF 113-3785 FRAME GP-LOADER

SMCS-7054 **i00976410**

NOTE	REF NO	GRAPHIC REF	PART NUMBER	QTY	PART NAME 1 2 3 4 5 6 (PRODUCT LEVEL)	SEE PAGE
	1	1	**7T-1099**	15	LINK	
	2	1	**9C-6809**	2	BLOCK (M10X1.5-THD)	
M	3	1	**9R-2672**	3	BOSS (M10X1.5X20-MM)	
	4	1	**9T-3598**	3	BOSS (M10X1.5-THD)	
	5	1	**113-3853**	1	HITCH AS	
	6	1	**113-3854**	1	HITCH AS	
	7	1	**113-3885**	1	PLATE	
M	8	1	**8T-3490**	4	NUT-WELD (M10X1.5-THD)	

M-METRIC PART

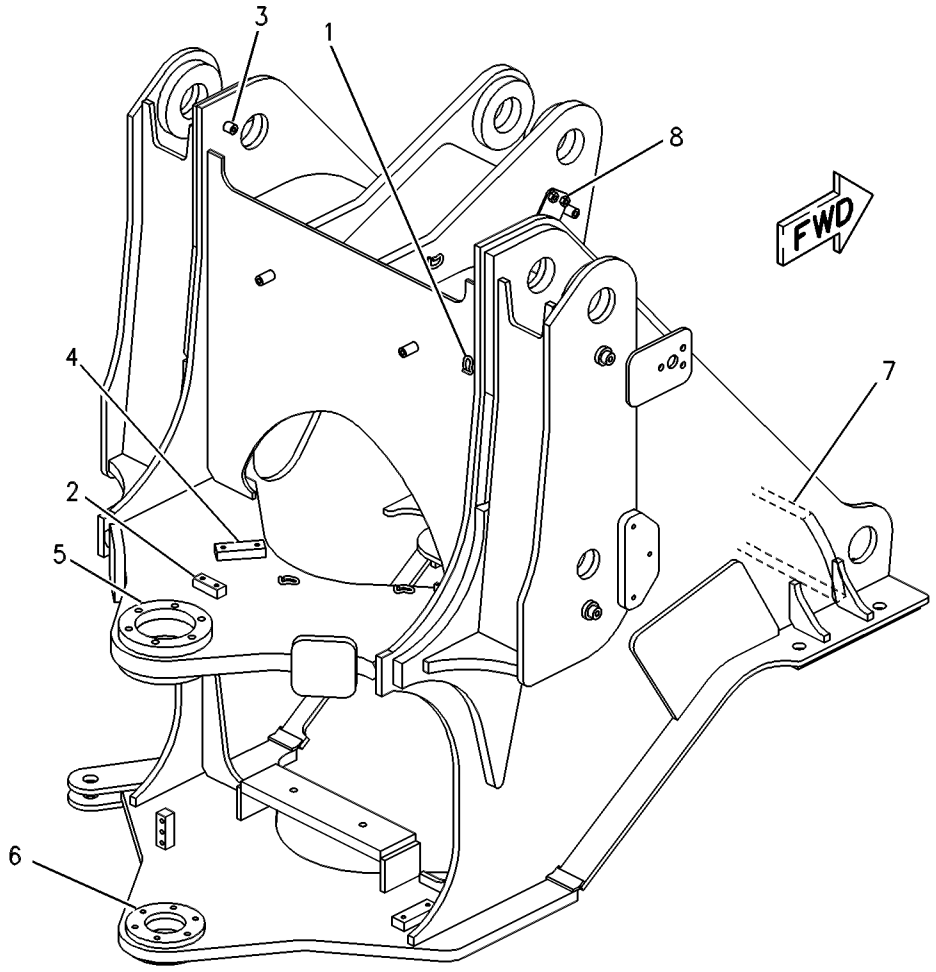

GRAPHIC #1 **<END>** g00132014

113-3785 FRAME GP-LOADER

S/N: BYD1-UP

PART OF 289-8871 CHASSIS AR

SMCS-7054 **i00974770**

NOTE	REF NO	GRAPHIC REF	PART NUMBER	QTY	PART NAME 1 2 3 4 5 6 (PRODUCT LEVEL)	SEE PAGE
M	1	1	**8T-4195**	4	BOLT (M10X1.5X30-MM)	
	2	1	**118-0955**	1	PLATE	
	3	1	**8T-4121**	4	WASHER-HARD (11X21X2.5-MM THK)	
Y	4	1	**113-3900**	1	FRAME AS-LOADER	362
	5	1	**7T-1099**	17	LINK	
M	6	1	**9R-2672**	2	BOSS (M10X1.5X20-MM)	
	7	1	**9C-6809**	3	BLOCK (M10X1.5-THD)	
M	8	1	**8T-3490**	4	NUT-WELD (M10X1.5-THD)	
	9	1	**9T-3598**	1	BOSS (M10X1.5-THD)	

M-METRIC PART
Y-SEPARATE ILLUSTRATION

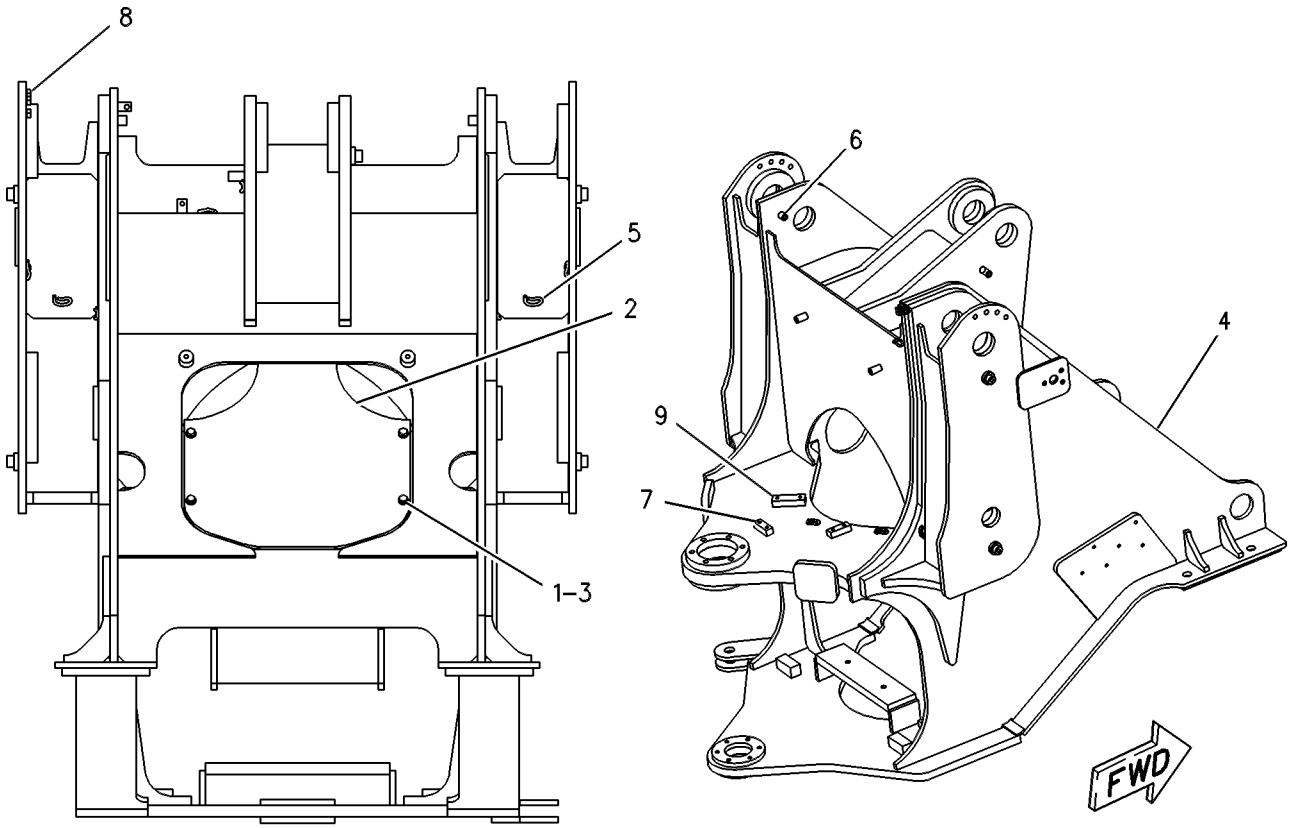

FRONT VIEW OF MACHINE

GRAPHIC #1 **<END>** g00131710

235-7200 FRAME GP-LOADER

S/N: FTD1-649

PART OF 289-8891 CHASSIS AR

SMCS-7054 **i02518153**

NOTE	REF NO	GRAPHIC REF	PART NUMBER	QTY	PART NAME 1 2 3 4 5 6 (PRODUCT LEVEL)	SEE PAGE
Y	1	1	**235-7201**	1	FRAME GP-LOADER	365
	2	1	**240-9451**	1	PLATE	
	3	1	**8T-4121**	4	WASHER-HARD (11X21X2.5-MM THK)	
M	4	1	**8T-4195**	2	BOLT (M10X1.5X30-MM)	

M-METRIC PART
Y-SEPARATE ILLUSTRATION

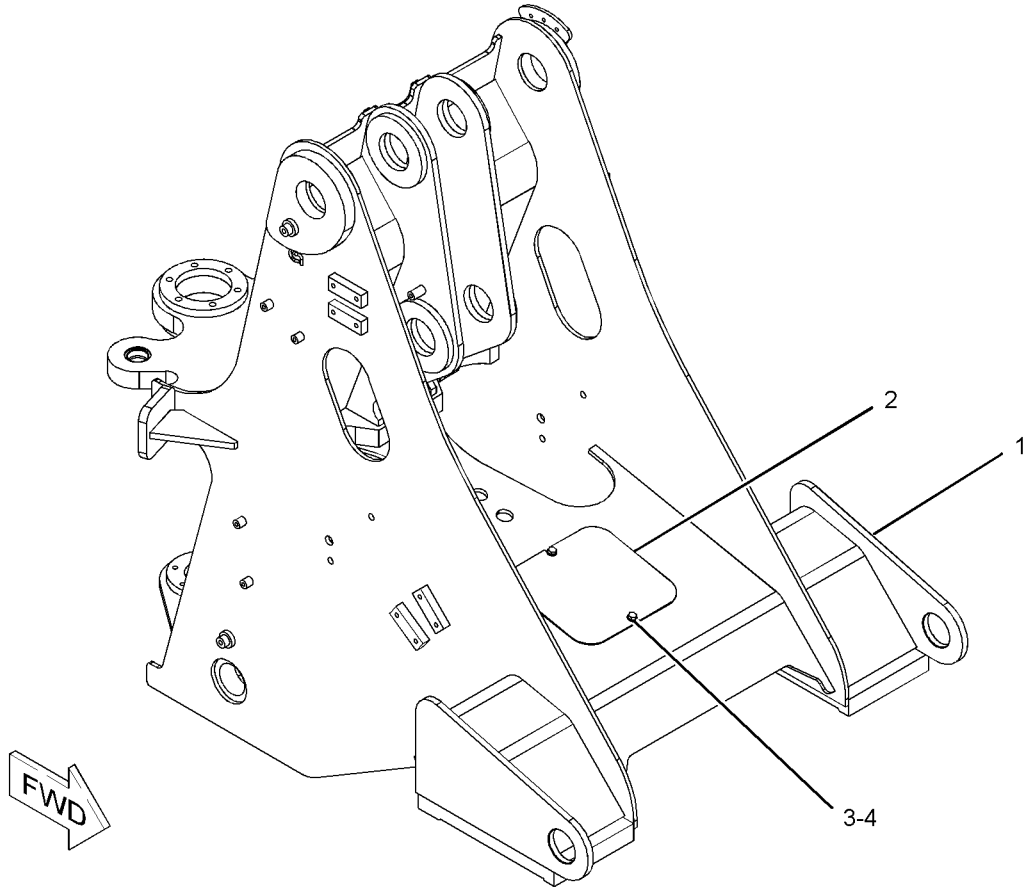

GRAPHIC #1 **<END>** g01109146

235-7201 FRAME GP-LOADER

S/N: FTD1-649

PART OF 235-7200 FRAME GP-LOADER

SMCS-7054 **i02252186**

NOTE	REF NO	GRAPHIC REF	PART NUMBER	QTY	PART NAME 1 2 3 4 5 6 (PRODUCT LEVEL)	SEE PAGE
	1	1	**092-1136**	1	BOSS (M10X1.5-THD)	
	2	1	**7T-1099**	13	LINK	
M	3	1	**8T-3490**	6	NUT-WELD (M10X1.5-THD)	
M	4	1	**8Y-4489**	1	BOSS (M10X1.5-THD)	
M	5	1	**9R-2672**	14	BOSS (M10X1.5X20-MM)	
	6	1	**9T-3598**	10	BOSS (M10X1.5-THD)	

M-METRIC PART

235-7201 FRAME GP-LOADER *(contd.)* **i02252186**

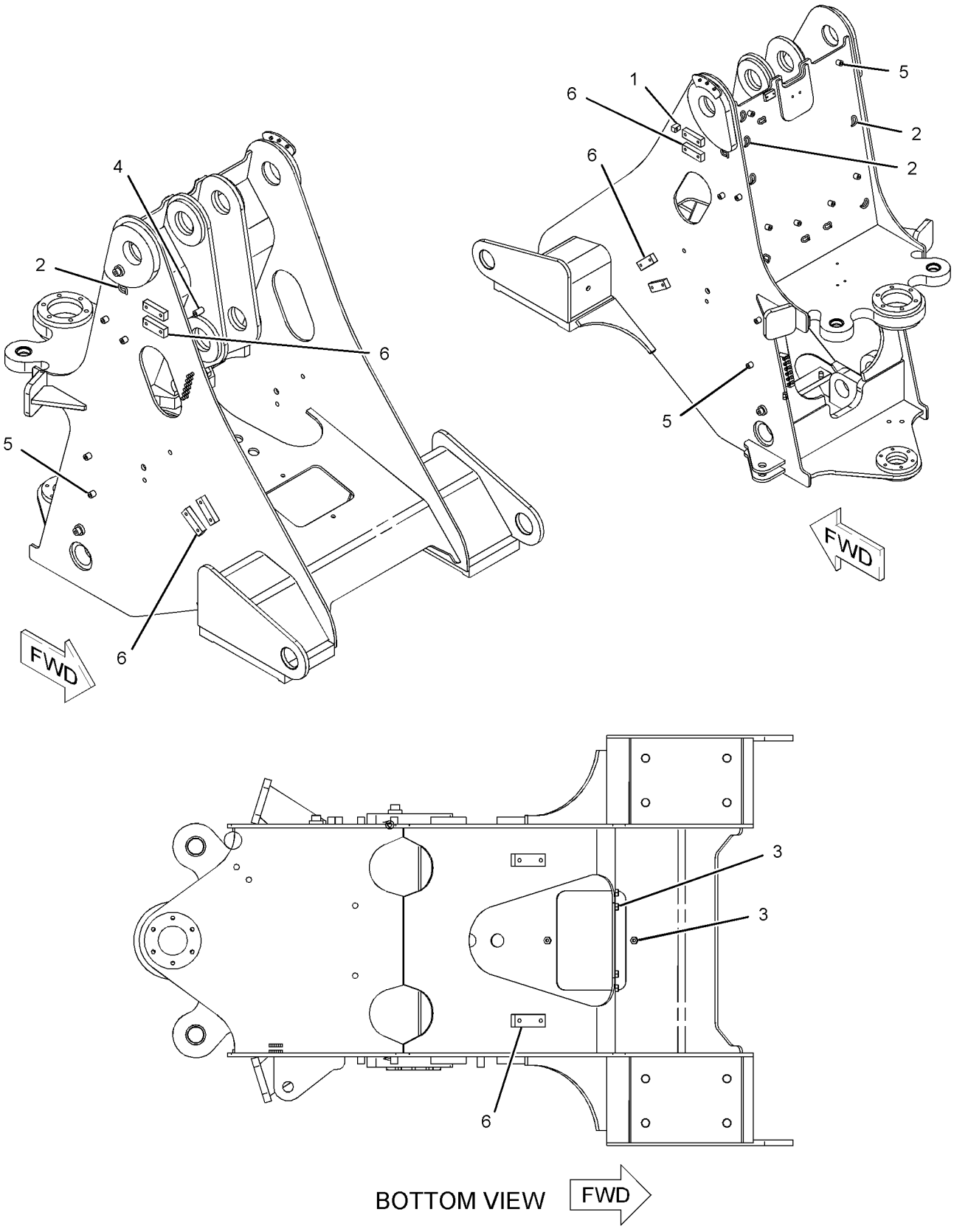

GRAPHIC #1 **<END>** g01111595

257-1610 FRAME GP-LOADER

S/N: FTD1-UP

PART OF 290-6498 CHASSIS AR

SMCS-7054 **i02886261**

NOTE	REF NO	GRAPHIC REF	PART NUMBER	QTY	PART NAME 1 2 3 4 5 6 (PRODUCT LEVEL)	SEE PAGE
	1	1	**240-9451**	1	PLATE	
	2	1	**257-1611**	1	FRAME GP-LOADER	
	3	1	**8T-4121**	4	WASHER-HARD (11X21X2.5-MM THK)	
M	4	1	**8T-4195**	2	BOLT (M10X1.5X30-MM)	

M-METRIC PART

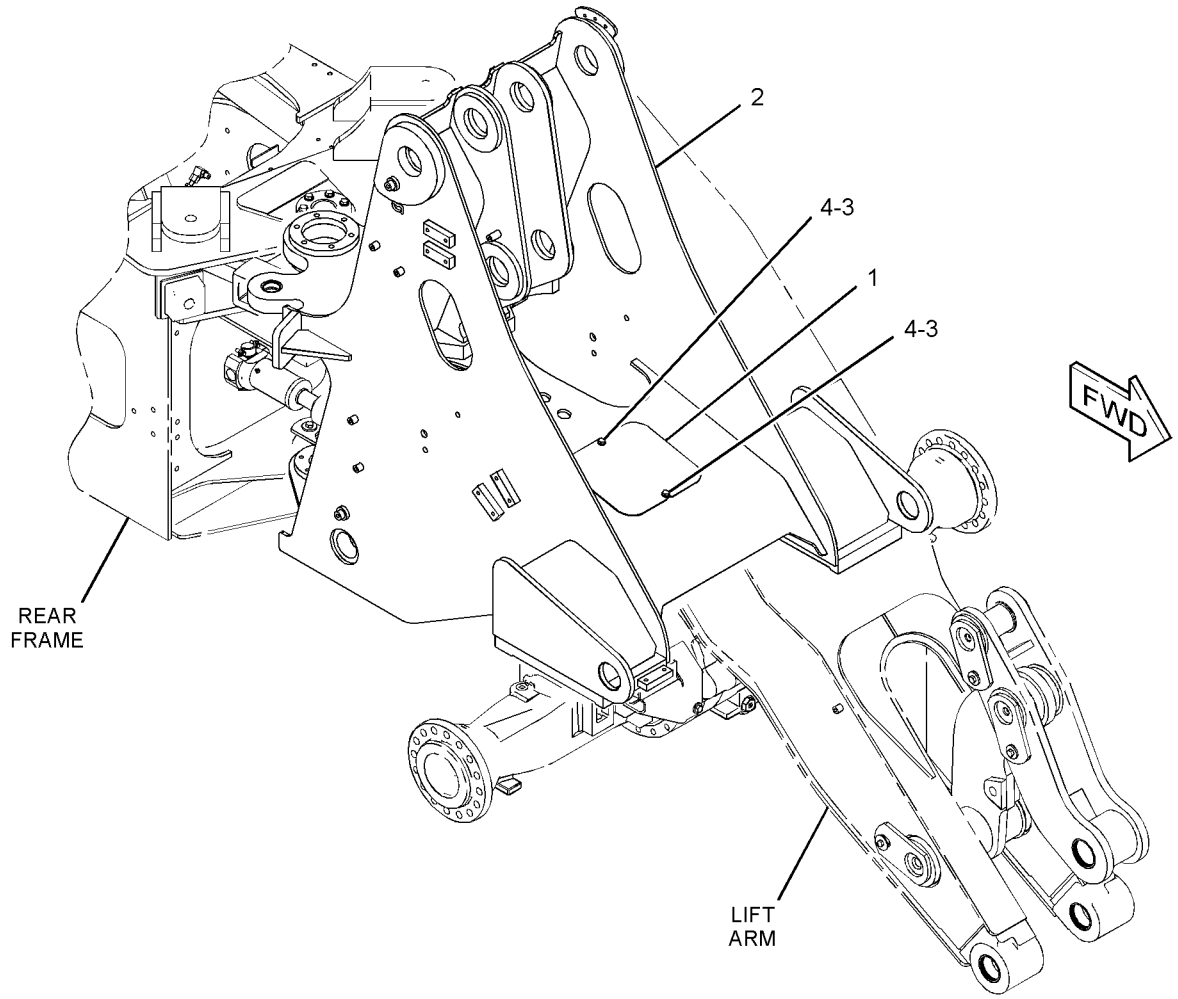

GRAPHIC #1 **<END>** g01444146

257-1600 FRAME GP-REAR

S/N: FTD1-UP

PART OF 289-8891, 290-6498 CHASSIS AR

SMCS-7051 **i02807982**

NOTE	REF NO	GRAPHIC REF	PART NUMBER	QTY	PART NAME 1 2 3 4 5 6 (PRODUCT LEVEL)	SEE PAGE
	1	1	**103-5796**	1	PIN-KEEPER	
	2	1	**112-0885**	2	PAD AS-RESILIENT	
	3	1	**132-2558**	1	PIN AS	
Y	4	1	**257-1601**	1	FRAME GP-REAR	369
	5	1	**257-1615**	2	PLATE	
	6	1	**7X-7729**	4	WASHER (11X25X3-MM THK)	
	7	1	**8T-4121**	2	WASHER-HARD (11X21X2.5-MM THK)	
M	8	1	**8T-4137**	2	BOLT (M10X1.5X20-MM)	
M	9	1	**8T-4196**	4	BOLT (M10X1.5X35-MM)	

M-METRIC PART
Y-SEPARATE ILLUSTRATION

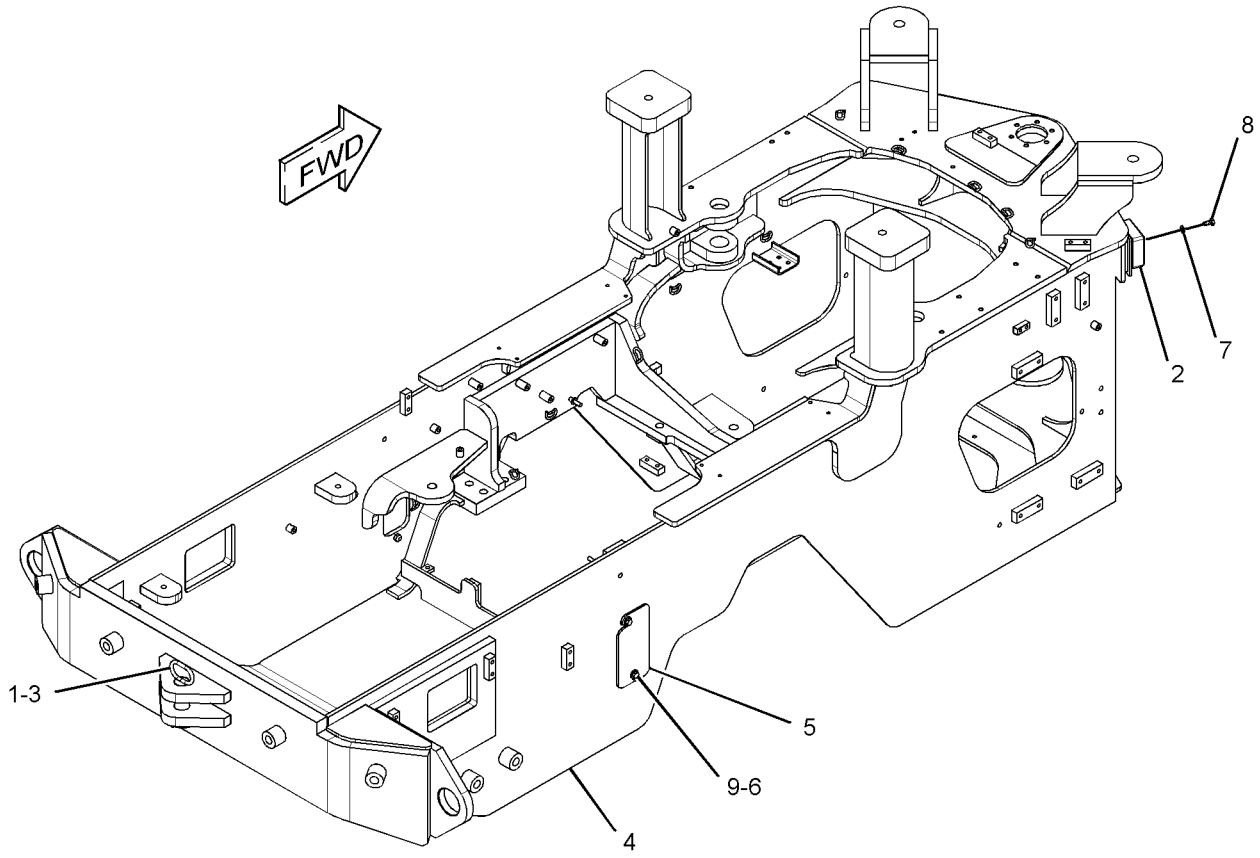

GRAPHIC #1 **<END>** g01403712

257-1601 FRAME GP-REAR

S/N: FTD1-UP

PART OF 257-1600 FRAME GP-REAR

SMCS-7051 **i02809915**

NOTE	REF NO	GRAPHIC REF	PART NUMBER	QTY	PART NAME 1 2 3 4 5 6 (PRODUCT LEVEL)	SEE PAGE
	1	1	**092-1136**	2	BOSS (M10X1.5-THD)	
	2	1	**128-7954**	2	BLOCK	
M	3	1	**110-2023**	4	STUD-WELD (M10X1.5X25-MM)	
	4	1	**7T-1099**	18	LINK	
M	5	1	**8T-3490**	8	NUT-WELD (M10X1.5-THD)	
M	6	1	**8Y-4489**	7	BOSS (M10X1.5-THD)	
	7	1	**8Y-7023**	1	BOSS (M12X1.75-THD)	
	8	1	**9C-6809**	14	BLOCK (M10X1.5-THD) (M10X1.5-MM)	
	9	1	**9C-7862**	4	BOSS (M24X3-THD) (M24X3-MM)	
M	10	1	**9R-2672**	15	BOSS (M10X1.5X20-MM)	
	11	1	**9T-3598**	9	BOSS (M10X1.5-THD) (M10X1.5-MM)	

M-METRIC PART

257-1601 **FRAME GP-REAR** *(contd.)* **i02809915**

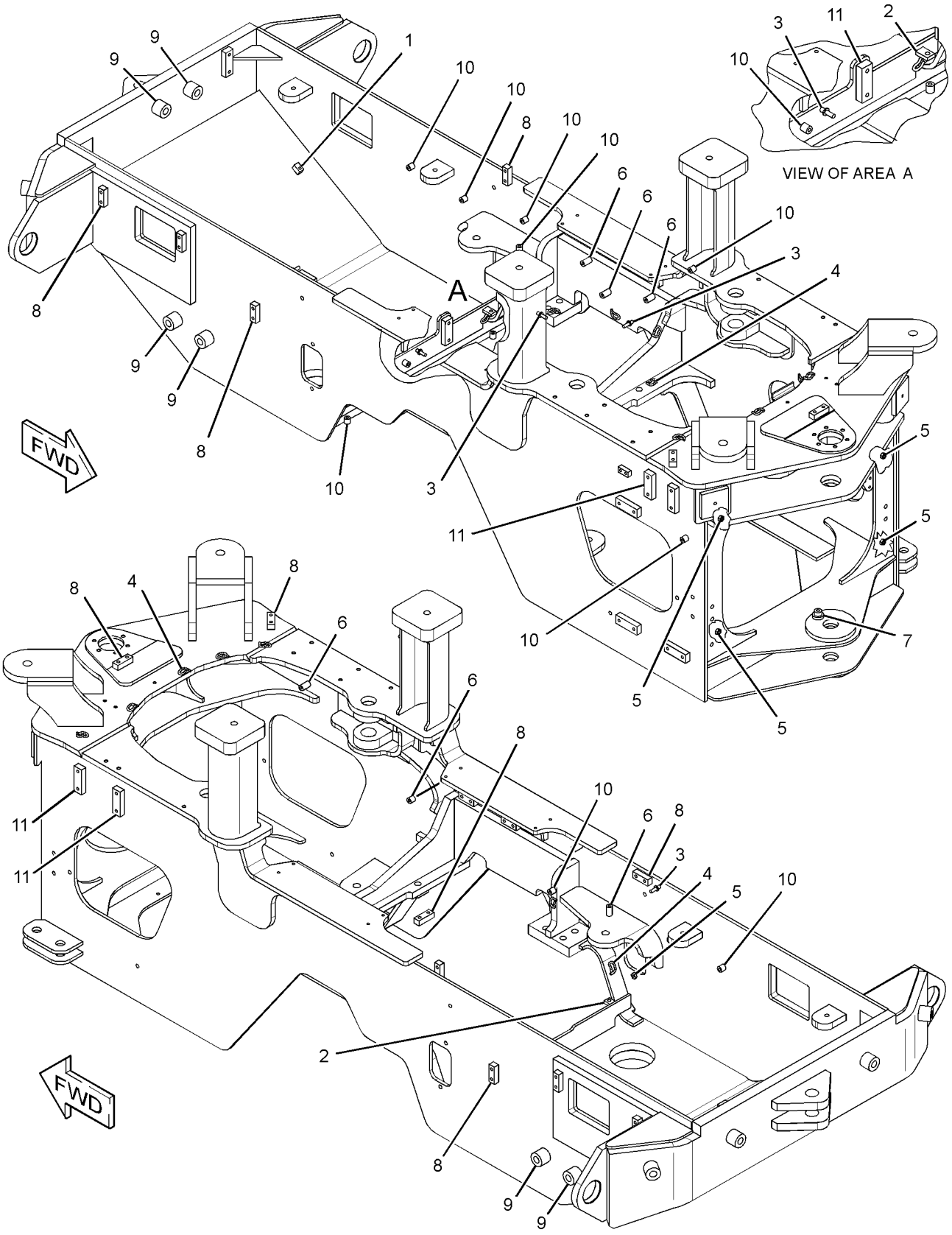

GRAPHIC #1 **<END>** g01409894

FRAME AND BODY

257-1620 FRAME GP-REAR

S/N: BYD1-UP

PART OF 289-8871 CHASSIS AR

SMCS-7051 **i02811904**

NOTE	REF NO	GRAPHIC REF	PART NUMBER	QTY	PART NAME 1 2 3 4 5 6 (PRODUCT LEVEL)	SEE PAGE
	1	1	**103-5796**	1	PIN-KEEPER	
	2	1	**112-0885**	2	PAD AS-RESILIENT	
	3	1	**132-2558**	1	PIN AS	
	4	1	**257-1615**	2	PLATE	
Y	5	1	**257-1621**	1	FRAME GP-REAR	372
	6	1	**7X-7729**	4	WASHER (11X25X3-MM THK)	
	7	1	**8T-4121**	2	WASHER-HARD (11X21X2.5-MM THK)	
M	8	1	**8T-4137**	2	BOLT (M10X1.5X20-MM)	
M	9	1	**8T-4196**	4	BOLT (M10X1.5X35-MM)	

M-METRIC PART
Y-SEPARATE ILLUSTRATION

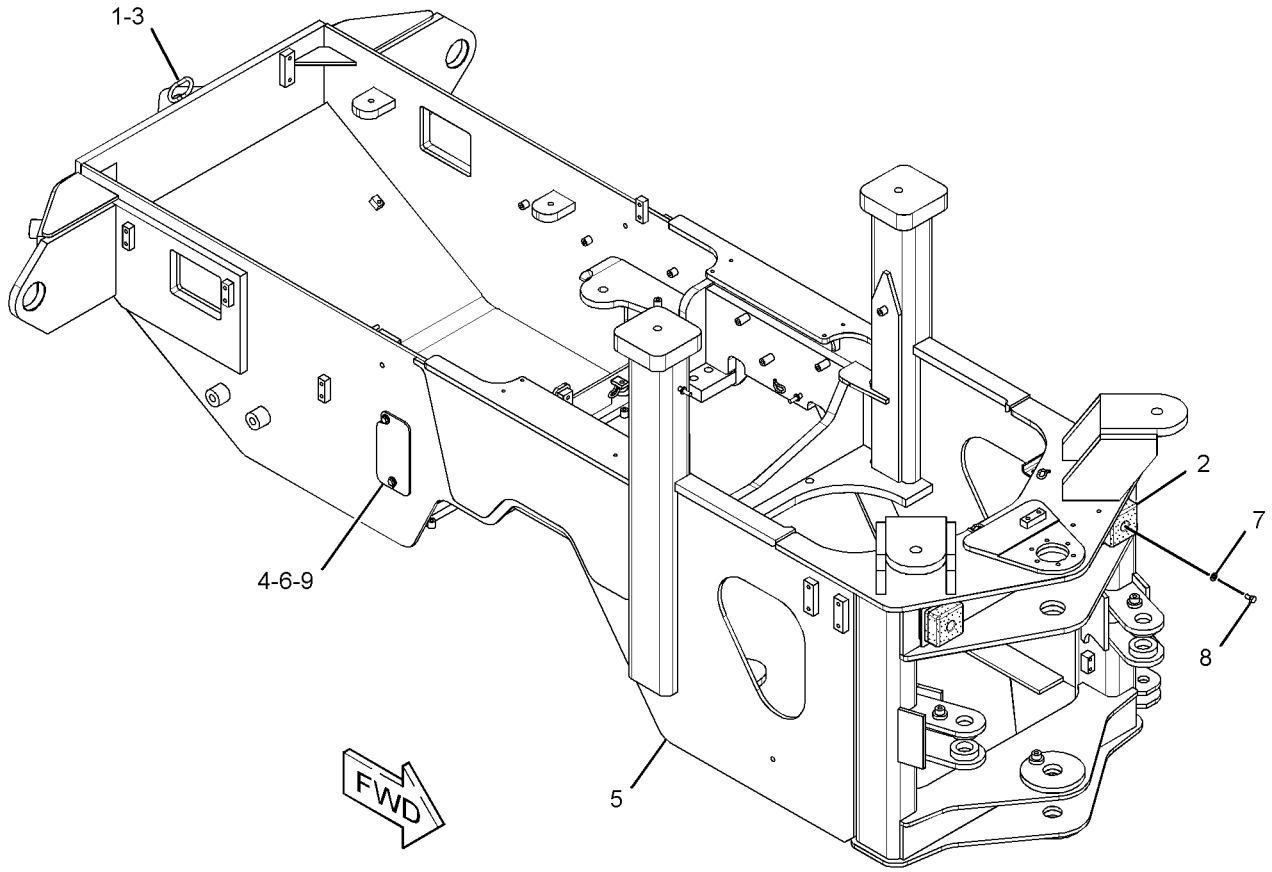

GRAPHIC #1 **<END>** g01389473

FRAME AND BODY

257-1621 FRAME GP-REAR

S/N: BYD1-UP

PART OF 257-1620 FRAME GP-REAR

SMCS-7051 **i02811927**

NOTE	REF NO	GRAPHIC REF	PART NUMBER	QTY	PART NAME 1 2 3 4 5 6 (PRODUCT LEVEL)	SEE PAGE
	1	1	**092-1136**	2	BOSS (M10X1.5-THD)	
	2	1	**128-7954**	2	BLOCK	
M	3	1	**110-2023**	4	STUD-WELD (M10X1.5X25-MM)	
	4	1	**7T-1099**	12	LINK	
M	5	1	**8T-3490**	4	NUT-WELD (M10X1.5-THD)	
M	6	1	**8Y-4489**	6	BOSS (M10X1.5-THD)	
	7	1	**8Y-7023**	3	BOSS (M12X1.75-THD)	
	8	1	**9C-6809**	16	BLOCK (M10X1.5-THD)	
	9	1	**9C-7862**	4	BOSS (M24X3-THD)	
M	10	1	**9R-2672**	16	BOSS (M10X1.5X20-MM)	
	11	1	**9T-3598**	7	BOSS (M10X1.5-THD)	

M-METRIC PART

257-1621 **FRAME GP-REAR** *(contd.)* **i02811927**

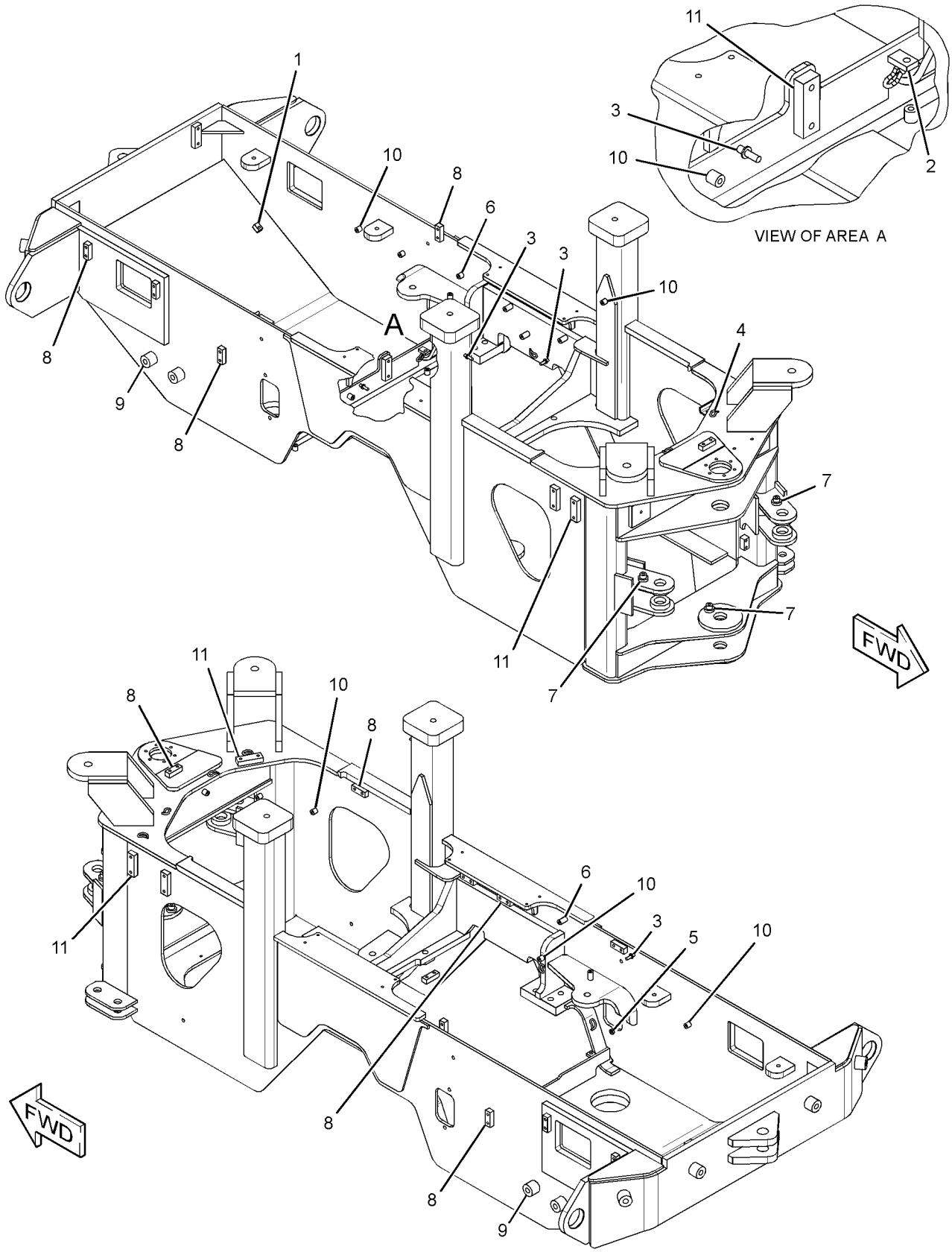

GRAPHIC #1 **<END>** g01410447

294-9493 GUARD GP-SEAL

S/N: BYD1-UP

PART OF 290-7175, 290-7179, 290-7182, 294-9497 WASTE HANDLING AR AN ATTACHMENT

SMCS-3259, 3260 **i02814761**

NOTE	REF NO	GRAPHIC REF	PART NUMBER	QTY	PART NAME 1 2 3 4 5 6 (PRODUCT LEVEL)	SEE PAGE
	1	1	**231-6042**	4	PLATE AS	
	2	1	**234-2007**	8	BOLT (M24X3X100-MM)	
M	3	1	**8T-4001**	8	NUT (M24X3-THD)	
	4	1	**8T-4167**	8	WASHER-HARD (26X44X4-MM THK)	

M-METRIC PART

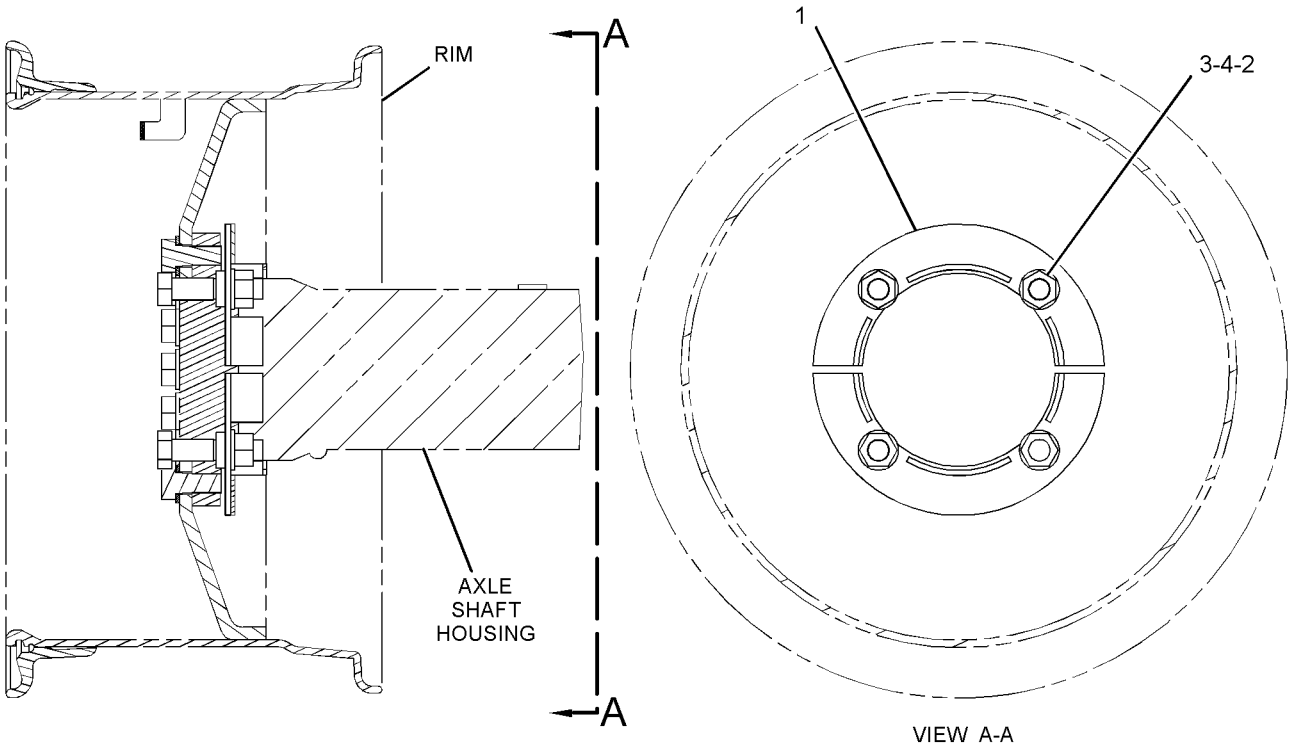

GRAPHIC #1 **<END>** g01409566

239-0717 GUARD GP-DRIVE SHAFT

S/N: BYD1-UP

PART OF 290-7175, 290-7179, 290-7182, 294-9497 WASTE HANDLING AR AN ATTACHMENT

SMCS-7153 **i02289643**

NOTE	REF NO	GRAPHIC REF	PART NUMBER	QTY	PART NAME 1 2 3 4 5 6 (PRODUCT LEVEL)	SEE PAGE
	1	1	**229-3481**	1	PLATE AS	
	2	1	**229-3489**	2	BRACKET AS	
	3	1	**229-9841**	1	PLATE AS	
M		1	**8T-3490**	4	NUT-WELD (M10X1.5-THD)	
	4	1	**7X-7729**	8	WASHER (11X25X3-MM THK)	
M	5	1	**8T-4133**	2	NUT (M10X1.5-THD)	
M	6	1	**8T-4186**	2	BOLT (M10X1.5X40-MM)	
M	7	1	**8T-4195**	2	BOLT (M10X1.5X30-MM)	
M	8	1	**8T-4196**	4	BOLT (M10X1.5X35-MM)	
M	9	1	**8T-6466**	2	BOLT (M10X1.5X60-MM)	

M-METRIC PART

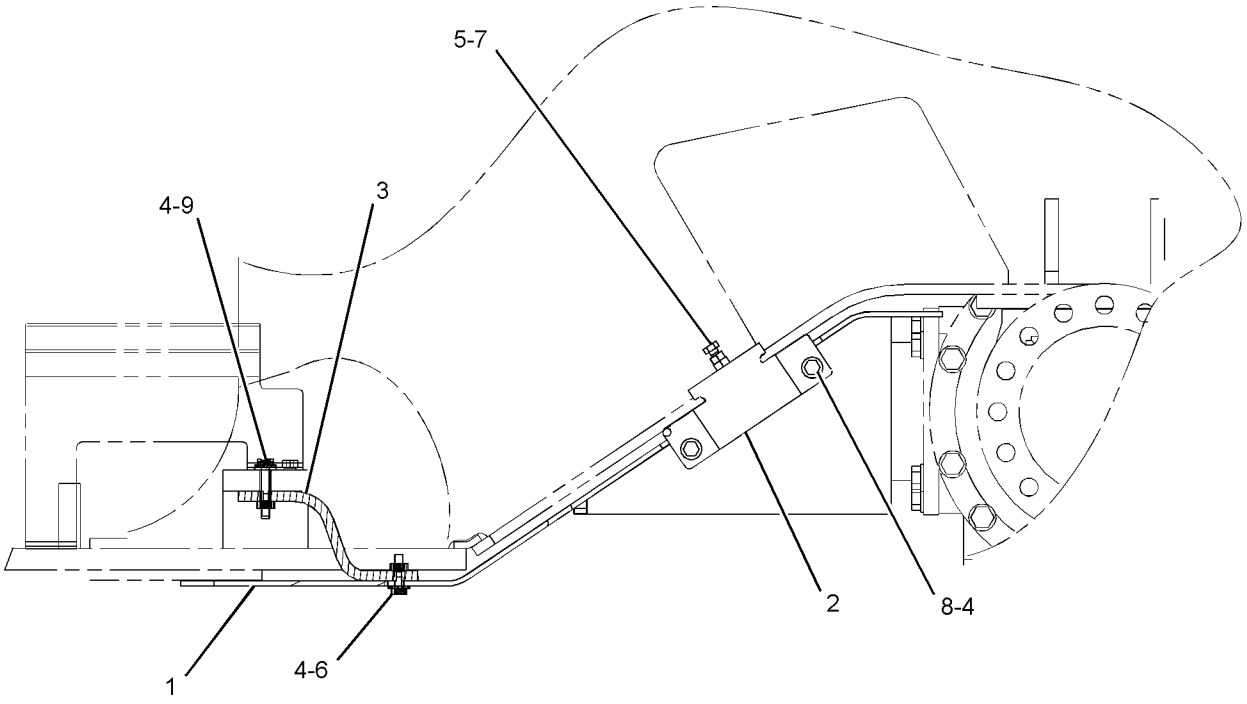

RIGHT SIDE VIEW

GRAPHIC #1 **<END>** g01088885

300-1962 GUARD GP-LIGHTING

S/N: BYD1-UP; FTD1-UP
PART OF 289-9000, 290-7175, 290-7176, 294-9497 WASTE HANDLING AR
AN ATTACHMENT

SMCS-715L **i02879460**

NOTE	REF NO	GRAPHIC REF	PART NUMBER	QTY	PART NAME 1 2 3 4 5 6 (PRODUCT LEVEL)	SEE PAGE
	1	1	**310-1917**	2	GUARD AS	
	2	1	**8T-4121**	4	WASHER-HARD (11X21X2.5-MM THK)	
M	3	1	**8T-4136**	4	BOLT (M10X1.5X25-MM)	
E	4	1	**3E-6600**		SEAL (27-CM)	

E-ORDER BY THE CENTIMETER
M-METRIC PART

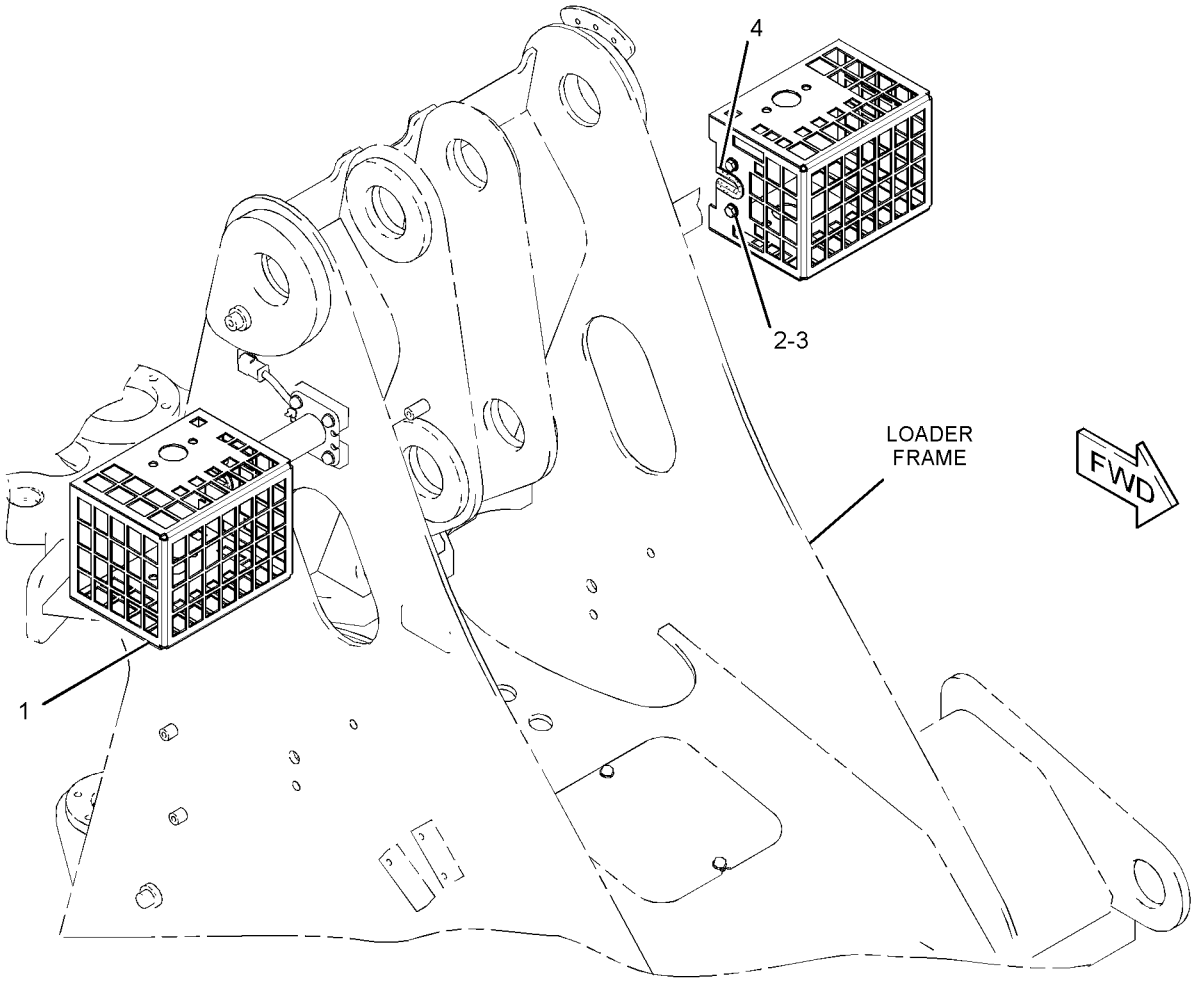

GRAPHIC #1 **<END>** g01441584

302-7840 GUARD GP-LIGHTING

S/N: BYD1-UP
PART OF 290-7179, 290-7182 WASTE HANDLING AR
CANNOT BE USED WITH 300-1962—PAGE 376
AN ATTACHMENT

SMCS-715L **i02879457**

NOTE	REF NO	GRAPHIC REF	PART NUMBER	QTY	PART NAME 1 2 3 4 5 6 (PRODUCT LEVEL)	SEE PAGE
	1	1	**197-1597**	2	GUARD AS	
	2	1	**310-1917**	2	GUARD AS	
M	3	1	**8T-4200**	8	BOLT (M8X1.25X16-MM)	
	4	1	**8T-4224**	8	WASHER-HARD (8.8X16X2-MM THK)	

M-METRIC PART

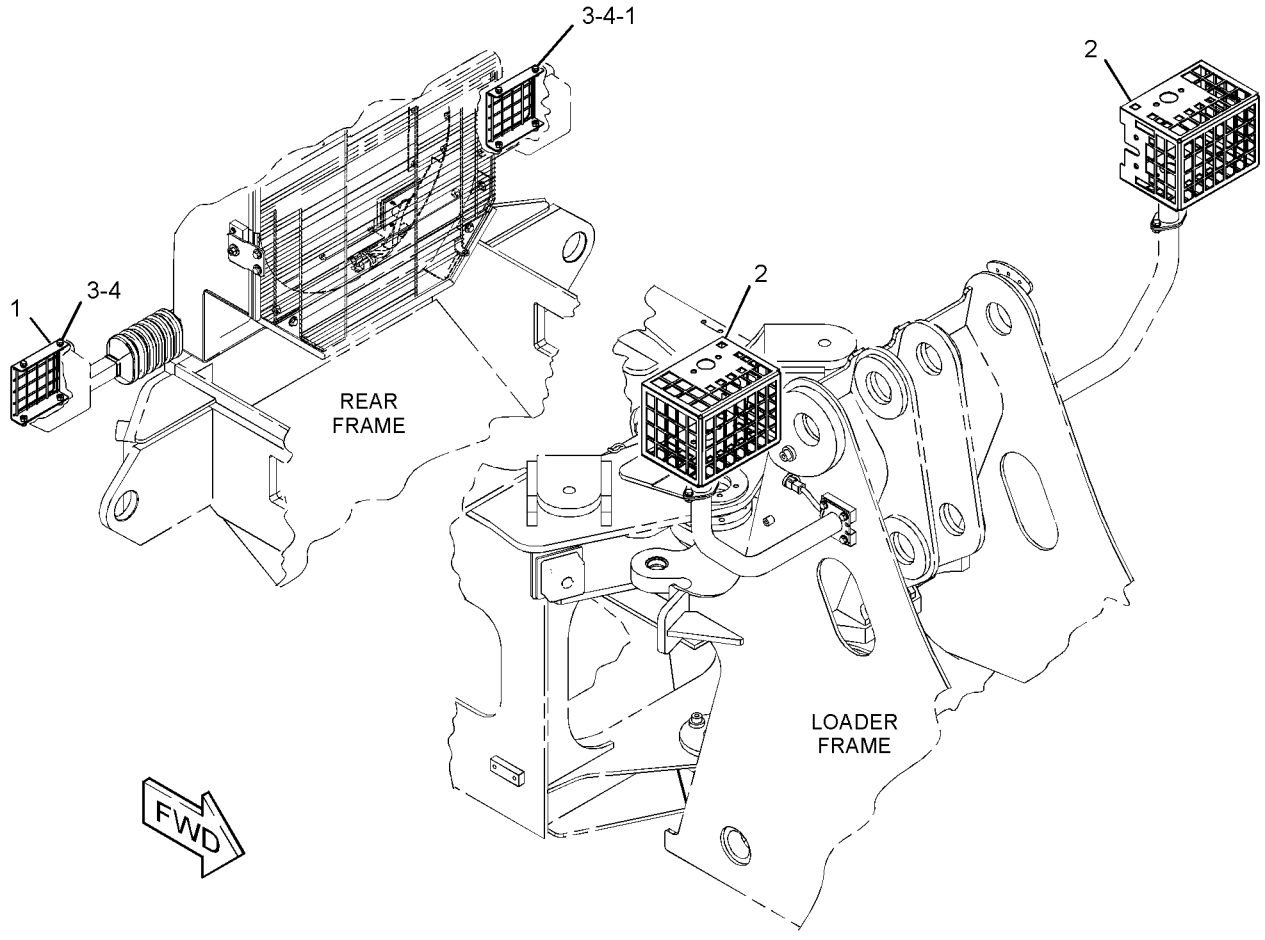

GRAPHIC #1 **<END>** g01441978

118-1121 GUARD GP-LINES–TILT

S/N: BYD1-UP
CANNOT BE USED WITH 128-0298–PAGE 379
AN ATTACHMENT

SMCS-7167 **i00523535**

NOTE	REF NO	GRAPHIC REF	PART NUMBER	QTY	PART NAME 1 2 3 4 5 6 (PRODUCT LEVEL)	SEE PAGE
	1	1	**7K-1181**	8	STRAP-CABLE	
	2	1	**122-6268**	2	GUARD-HOSE	

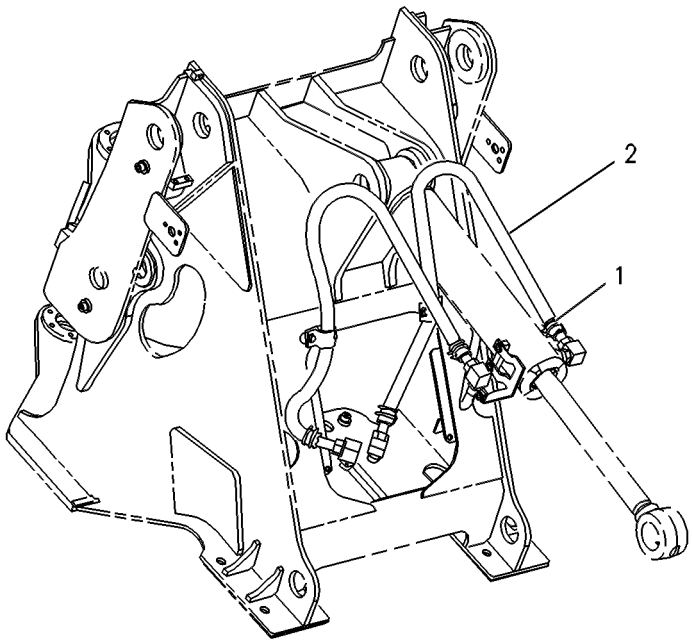

GRAPHIC #1 **<END>** g00131726

128-0298 GUARD GP-LINES—THIRD FUNCTION

S/N: BYD1-UP
3 VALVE
AN ATTACHMENT

SMCS-7167 **i02795481**

NOTE	REF NO	GRAPHIC REF	PART NUMBER	QTY	PART NAME 1 2 3 4 5 6 (PRODUCT LEVEL)	SEE PAGE
	1	1	**7K-1181**	8	STRAP-CABLE	
G	2	1	**160-2248**		SLEEVE-ABRASION (84-IN)	
	3	1	**5P-7468**	2	CLIP (SLOT)	
	4	1	**5P-7469**	2	CLIP (TAB)	
	5	1	**5P-8444**	2	GROMMET	

G-ORDER BY THE INCH

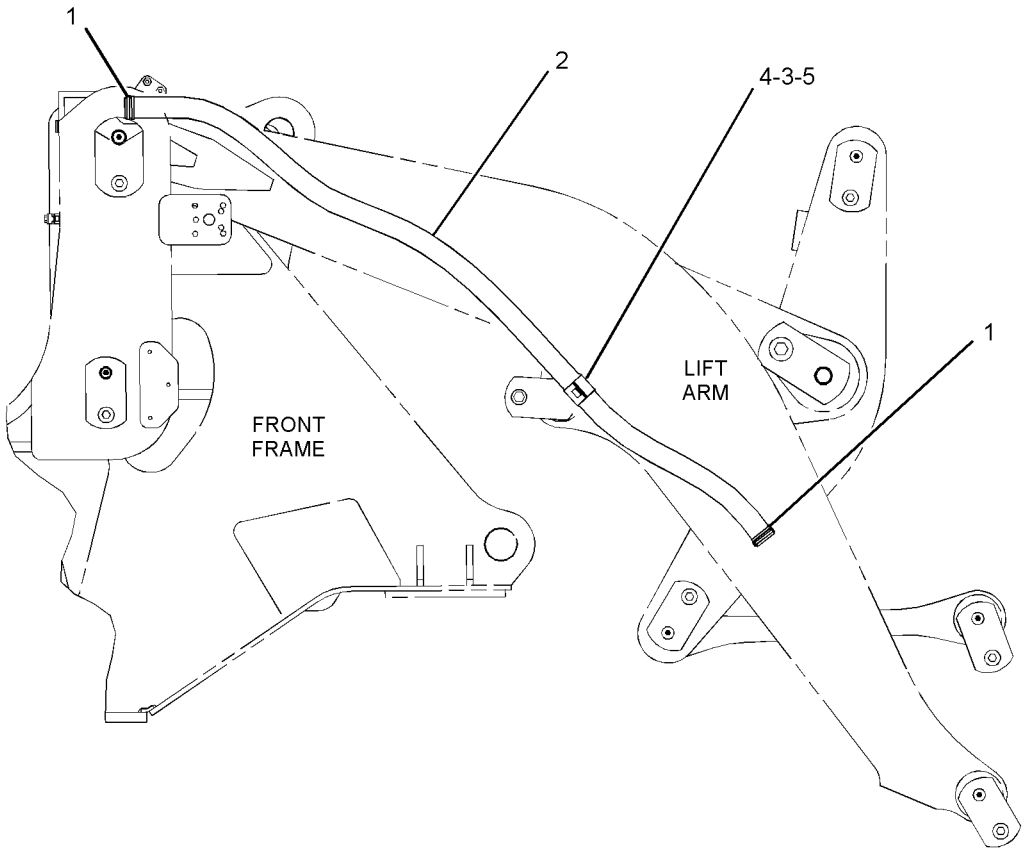

RIGHT SIDE VIEW

GRAPHIC #1 **<END>** g01404481

235-6877 GUARD GP-LINES—THIRD FUNCTION

S/N: FTD1-UP
AN ATTACHMENT

SMCS-7167 **i02271802**

NOTE	REF NO	GRAPHIC REF	PART NUMBER	QTY	PART NAME 1 2 3 4 5 6 (PRODUCT LEVEL)	SEE PAGE
	1	1	**6K-0806**	8	STRAP-CABLE	
BG	2	1	**160-2248**		SLEEVE-ABRASION	

B-USE AS REQUIRED
G-ORDER BY THE INCH

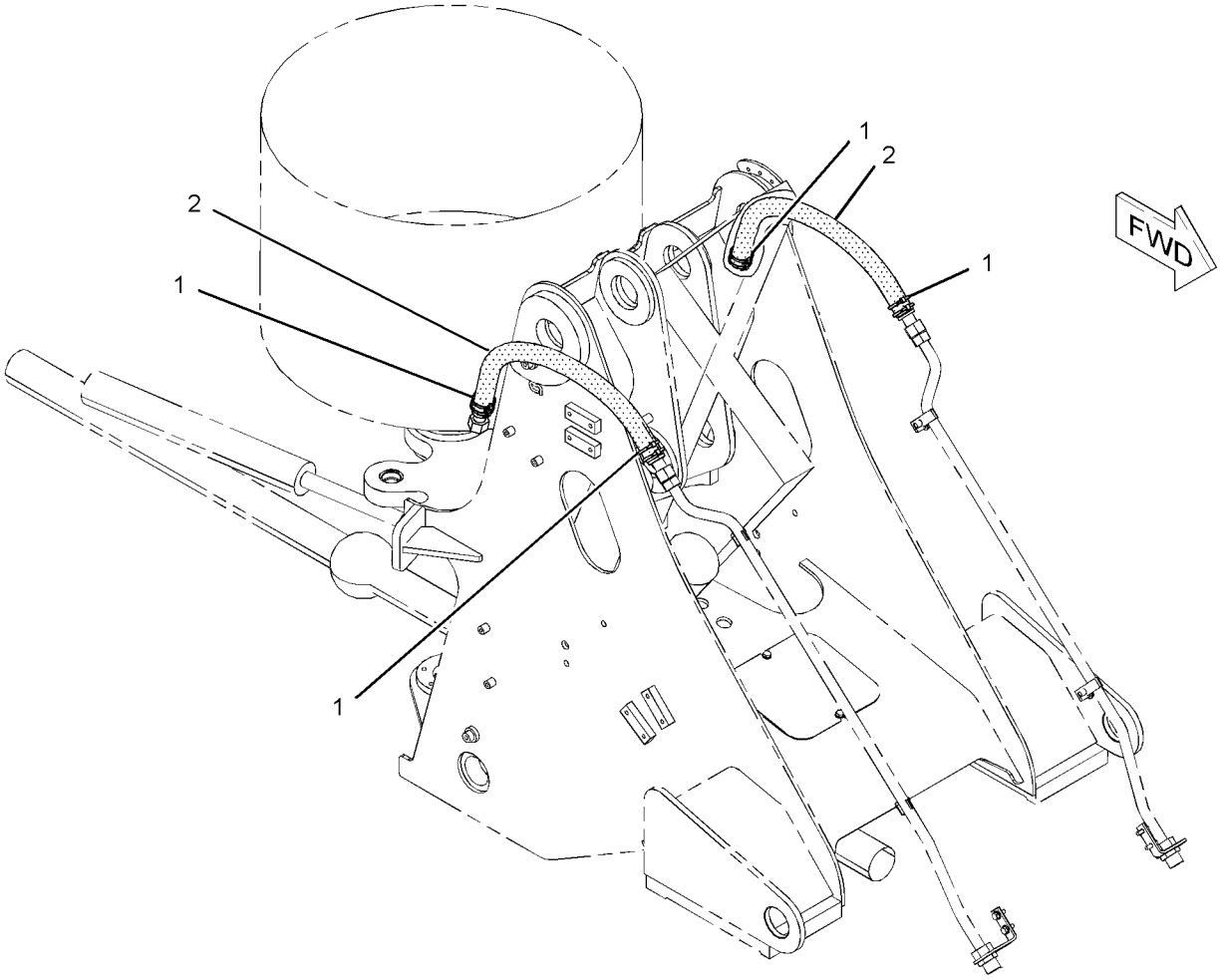

GRAPHIC #1 **<END>** g01115006

FRAME AND BODY

235-6879 GUARD GP-LINES—TILT

S/N: FTD1-UP
FOR USE WITH 290-8483—PAGE 800
AN ATTACHMENT

SMCS-7167 **i02271966**

NOTE	REF NO	GRAPHIC REF	PART NUMBER	QTY	PART NAME 1 2 3 4 5 6 (PRODUCT LEVEL)	SEE PAGE
	1	1	**6K-0806**	8	STRAP-CABLE	
BG	2	1	**160-2248**		SLEEVE-ABRASION	

B-USE AS REQUIRED
G-ORDER BY THE INCH

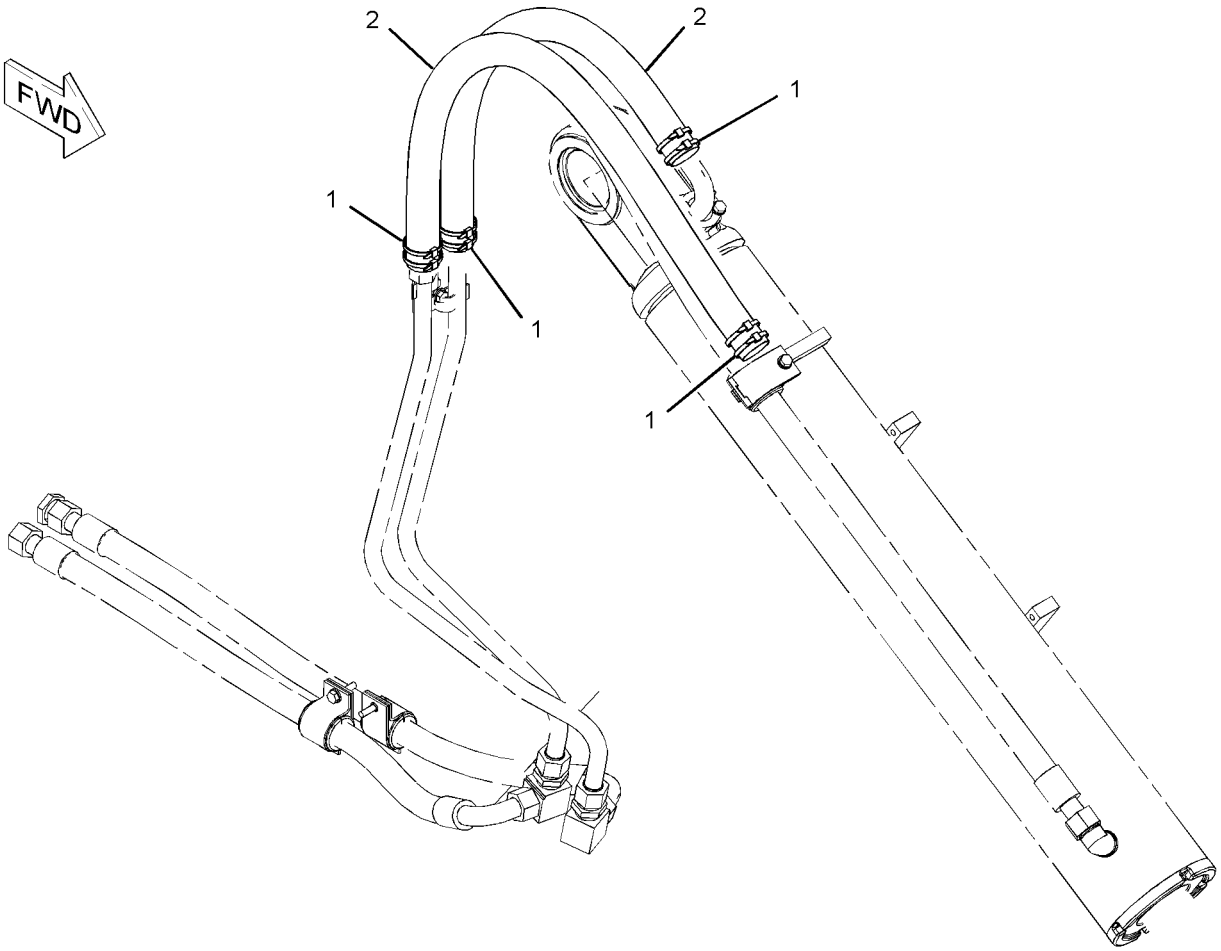

GRAPHIC #1 **<END>** g01114975

235-6880 GUARD GP-LINES—COUPLER

S/N: BYD1-UP; FTD1-UP
FOR USE WITH 290-8483—PAGE 800
AN ATTACHMENT

SMCS-7167 **i02271967**

NOTE	REF NO	GRAPHIC REF	PART NUMBER	QTY	PART NAME 1 2 3 4 5 6 (PRODUCT LEVEL)	SEE PAGE
	1	1	**6K-0806**	8	STRAP-CABLE	
BG	2	1	**160-2243**		SLEEVE-ABRASION	

B-USE AS REQUIRED
G-ORDER BY THE INCH

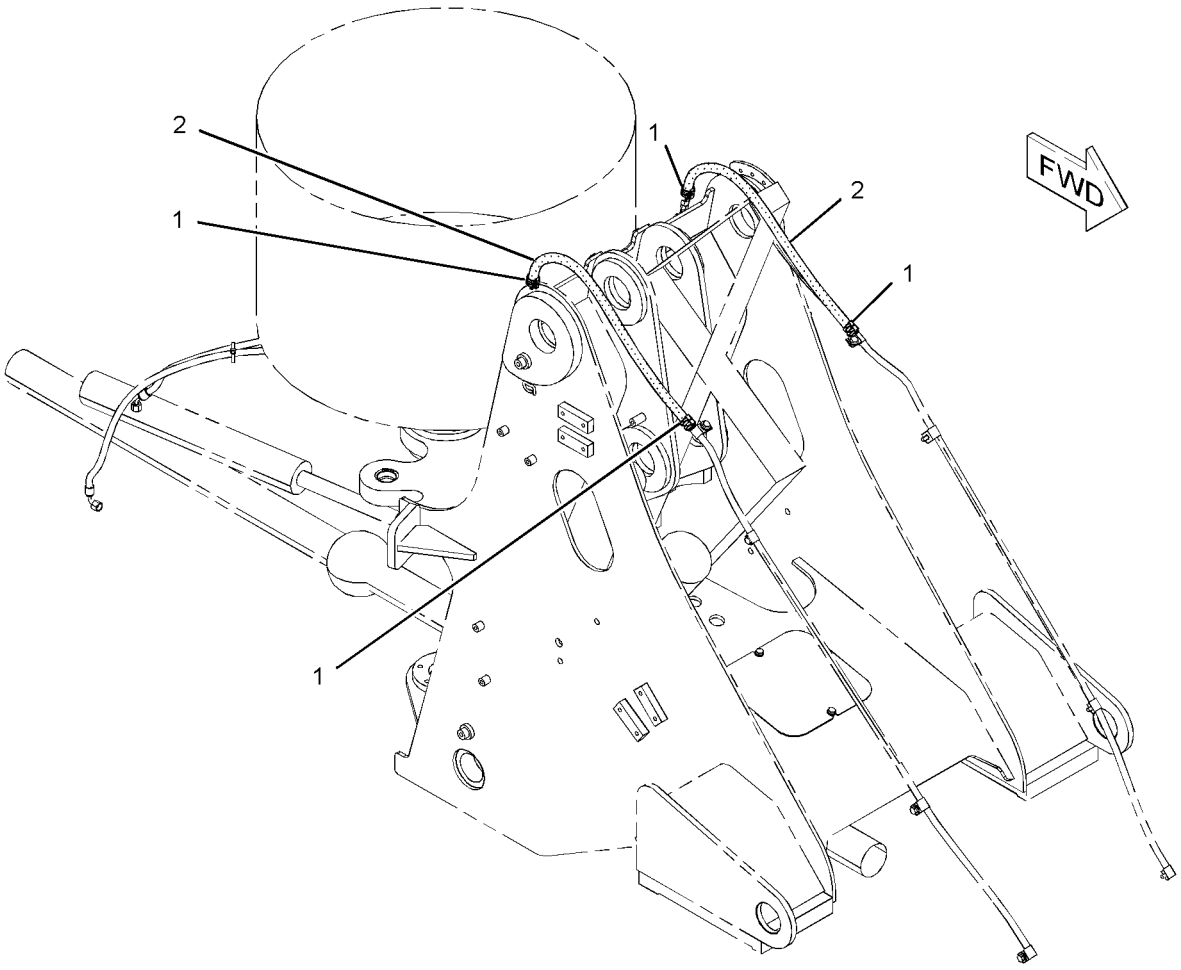

GRAPHIC #1 **<END>** g01115035

294-0507 GUARD GP-POWER TRAIN

S/N: BYD1-UP; FTD1-UP

PART OF 289-8947, 289-8948, 289-8950, 289-8951 SUPPRESSION AR-SOUND, 290-7175, 290-7176, 290-7179 WASTE HANDLING AR

AN ATTACHMENT

SMCS-7153 **i02810326**

NOTE	REF NO	GRAPHIC REF	PART NUMBER	QTY	PART NAME 1 2 3 4 5 6 (PRODUCT LEVEL)	SEE PAGE
	1	1	**7W-3447**	3	SPACER (10.2X19.05X10.2-MM THK)	
	2	1	**8R-8847**	1	RETAINER-SPRING	
	3	1	**218-2440**	1	PLATE	
	4	1	**294-0506**	1	PLATE AS	
	5	1	**7X-0578**	3	WASHER-HARD (10.2X32X2.5-MM THK)	
M	6	1	**8T-4195**	3	BOLT (M10X1.5X30-MM)	
	7	1	**8T-4223**	2	WASHER-HARD (13.5X25.5X3-MM THK)	
M	8	1	**8T-4956**	2	BOLT (M12X1.75X35-MM)	

M-METRIC PART

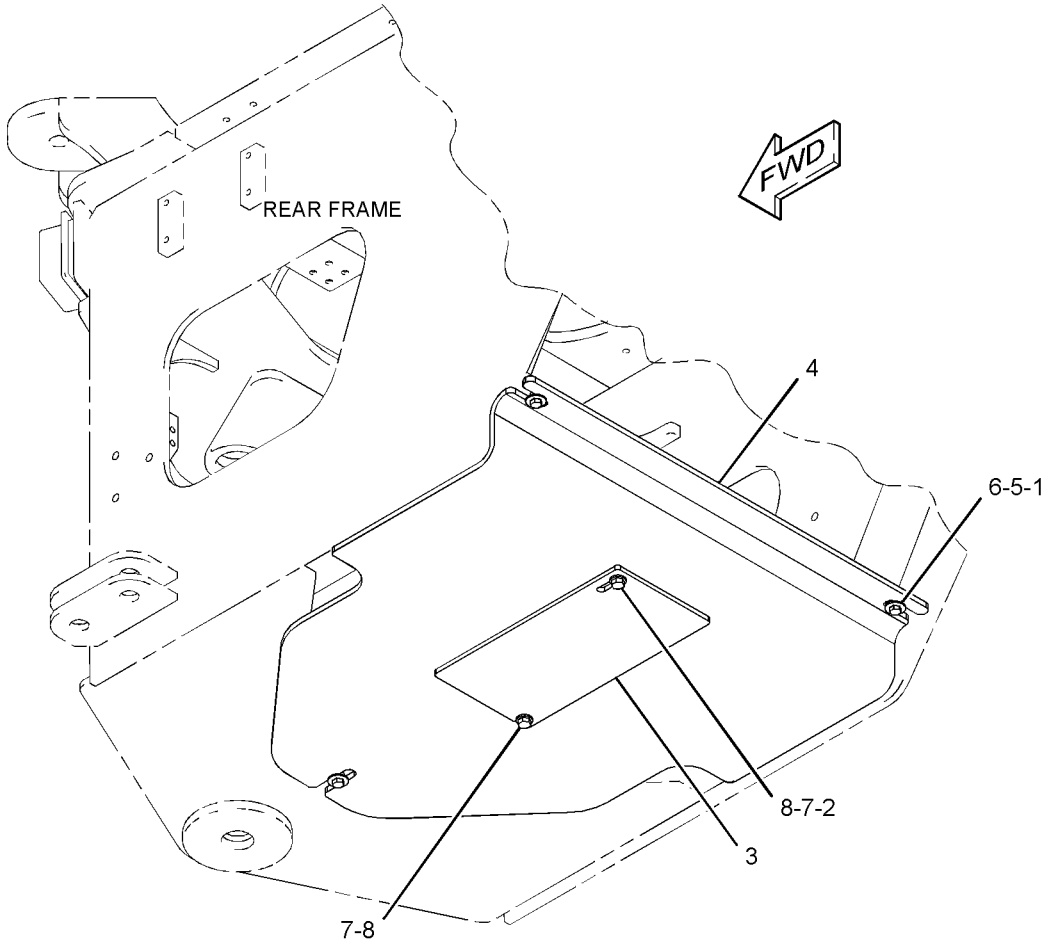

GRAPHIC #1 **<END>** g01404572

209-8712 GUARD GP-RADIATOR—WASTE HANDLER

S/N: BYD1-UP; FTD1-UP

PART OF 289-9000, 290-7175, 290-7176, 290-7179, 290-7182, 294-9497 WASTE HANDLING AR

AN ATTACHMENT

SMCS-7155 **i02697950**

NOTE	REF NO	GRAPHIC REF	PART NUMBER	QTY	PART NAME 1 2 3 4 5 6 (PRODUCT LEVEL)	SEE PAGE
	1	1	**209-8713**	1	GUARD AS	
	2	1	**7X-7729**	4	WASHER (11X25X3-MM THK)	
M	3	1	**8T-4195**	4	BOLT (M10X1.5X30-MM)	

M-METRIC PART

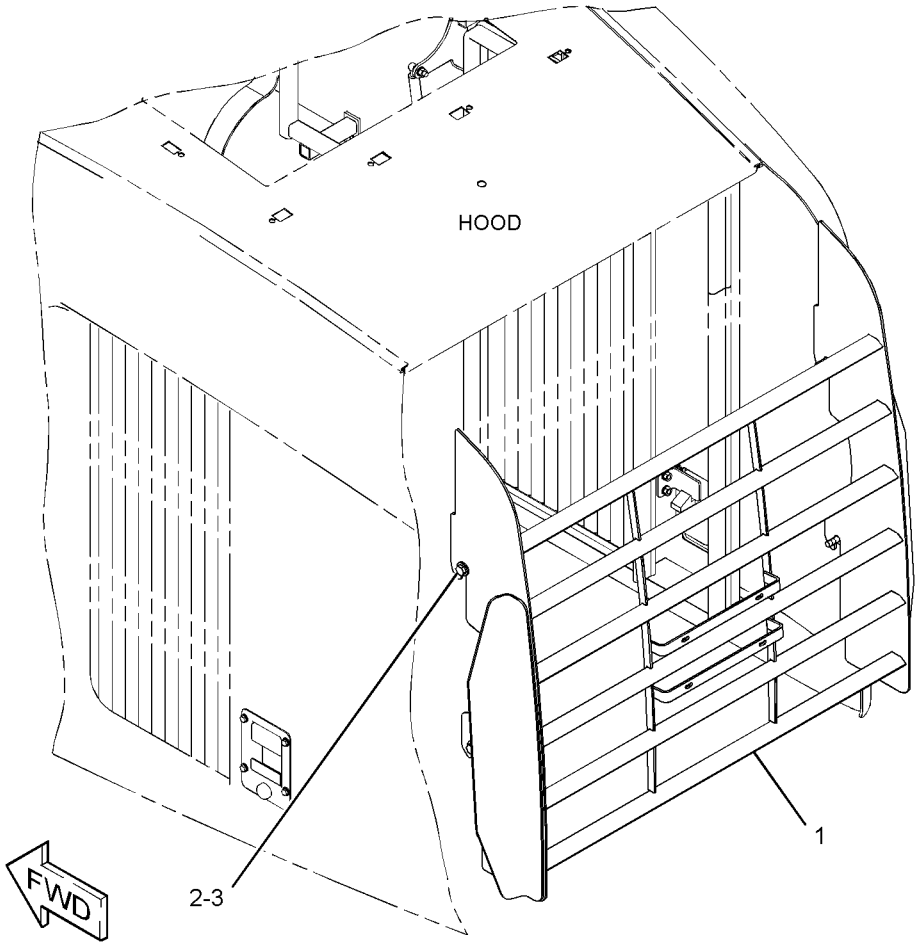

GRAPHIC #1 **<END>** g01357142

290-4074 GUARD GP-RADIATOR

S/N: BYD1-UP; FTD1-649

PART OF 317-1044 RADIATOR & AFTERCOOLER GP

SMCS-7155 **i02829656**

NOTE	REF NO	GRAPHIC REF	PART NUMBER	QTY	PART NAME 1 2 3 4 5 6 (PRODUCT LEVEL)	SEE PAGE
	1	1	**092-1136**	2	BOSS (M10X1.5-THD)	
	2	1	**140-9312**	2	HINGE AS	
	3	1	*214-0620*	2	PLATE AS	
					(EACH INCLUDES)	
M		1	**3E-6908**	2	STUD-WELD (M8X1.25X20-MM)	
	4	1	*296-4322*	1	CHANNEL AS	
		1	**7T-1099**	1	LINK	
M		1	**8T-3490**	2	NUT-WELD (M10X1.5-THD)	
		1	**9C-6809**	3	BLOCK (M10X1.5-THD)	
M		1	**9R-2672**	1	BOSS (M10X1.5X20-MM)	
	5	1	*300-1724*	1	PLATE AS	
		1	**5P-1076**	4	WASHER-HARD (13.5X30X4-MM THK)	
		1	**7T-1099**	5	LINK	
M		1	**8T-3490**	1	NUT-WELD (M10X1.5-THD)	
M		1	**9R-2672**	1	BOSS (M10X1.5X20-MM)	
	6	1	**7T-1099**	7	LINK	
M	7	1	**8T-3490**	2	NUT-WELD (M10X1.5-THD)	
M	8	1	**8Y-4489**	1	BOSS (M10X1.5-THD)	
	9	1	**9C-6809**	5	BLOCK (M10X1.5-THD)	
M	10	1	**9R-2672**	3	BOSS (M10X1.5X20-MM)	

M-METRIC PART

290-4074 **GUARD GP-RADIATOR** *(contd.)* **i02829656**

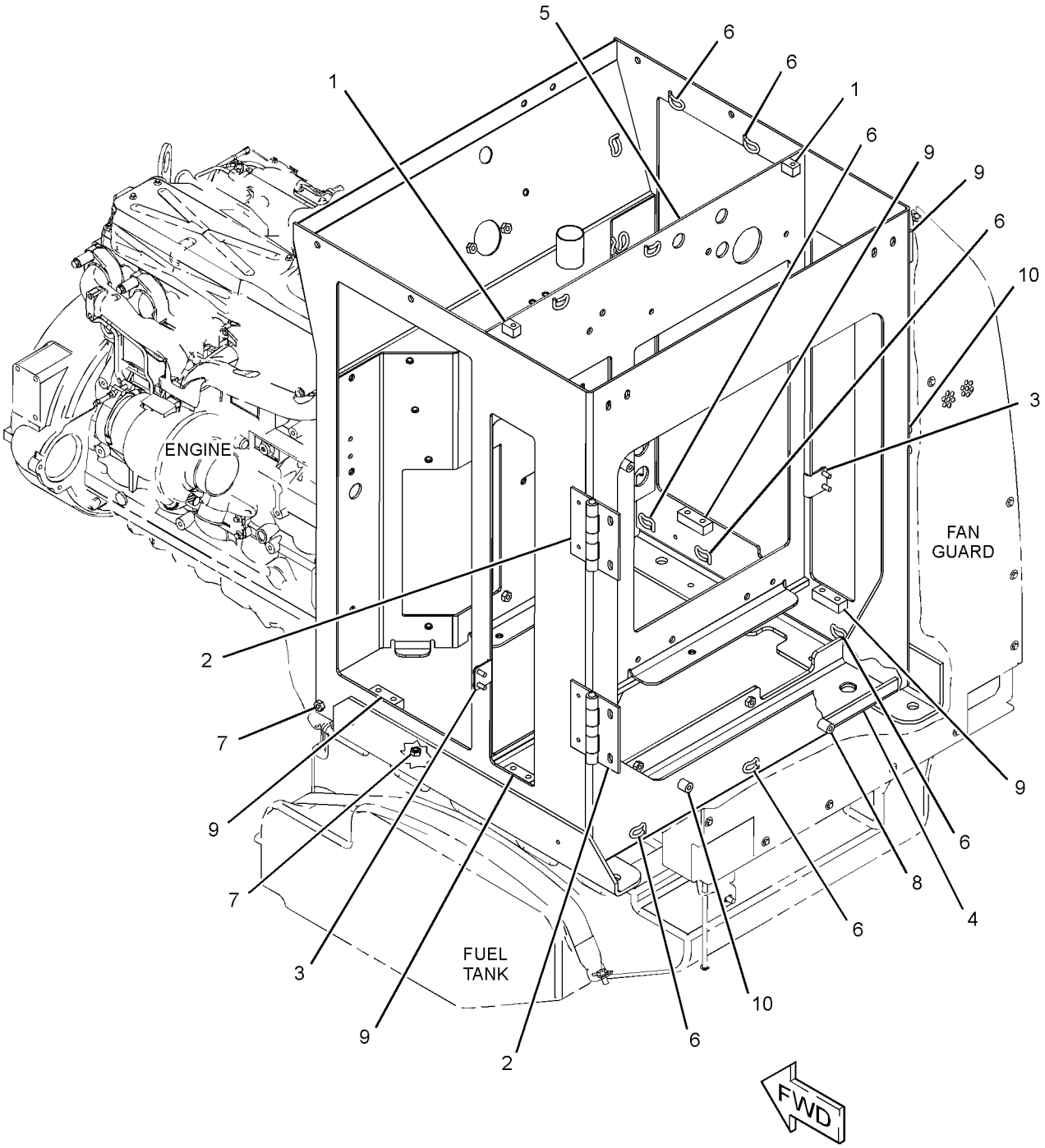

GRAPHIC #1 **<END>** g01406632

113-3790 HITCH GP-ARTICULATING

S/N: BYD1-UP; FTD1-UP

PART OF 289-8871, 289-8891, 290-6498 CHASSIS AR

SMCS-7057, 7100 **i01506223**

NOTE	REF NO	GRAPHIC REF	PART NUMBER	QTY	PART NAME 1 2 3 4 5 6 (PRODUCT LEVEL)	SEE PAGE
B	1	1	**4K-7464**	1	SHIM PACK (INCLUDES 19-SHIMS)	
	2	1	**6I-8860**	2	CUP-BEARING	
	3	1	**6K-4185**	1	SPACER (1.44-IN THK)	
	4	1	**6K-4191**	1	CAP-UPPER	
	5	1	**6V-1194**	2	CUP-BEARING	
	6	1	**6V-8795**	2	CONE-BEARING	
B	7	1	**6W-8246**	1	SHIM PACK (INCLUDES 27-SHIMS)	
	8	1	**7K-0394**	2	CONE-BEARING	
	9	1	**8R-7091**	1	CAP	
	10	1	**8R-7092**	1	CAP	
	11	1	**8Y-7047**	1	PIN AS	
	12	1	**9V-6343**	1	CAP	
	13	1	**110-7628**	1	SHIM	
	14	1	**113-3791**	1	PIN AS	
	15	1	**113-3793**	1	PLATE	
B	16	1	**113-3794**	2	SHIM PACK (INCLUDES 19-SHIMS)	
	17	1	**3B-8489**	2	FITTING-GREASE	
	18	1	**6K-4186**	2	SEAL-LIP TYPE	
	19	1	**7X-0618**	1	WASHER-HARD (13.5X40X5-MM THK)	
	20	1	**8T-4121**	6	WASHER-HARD (11X21X2.5-MM THK)	
M	21	1	**8T-4192**	1	BOLT (M12X1.75X25-MM)	
M	22	1	**8T-4172**	6	BOLT (M10X1.5X80-MM)	
M	23	1	**8T-4194**	10	BOLT (M12X1.75X50-MM)	
	24	1	**8T-4223**	16	WASHER-HARD (13.5X25.5X3-MM THK)	
M	25	1	**8T-5041**	6	BOLT (M12X1.75X120-MM)	
	26	1	**9H-2258**	2	SEAL-LIP TYPE	

B-USE AS REQUIRED
M-METRIC PART

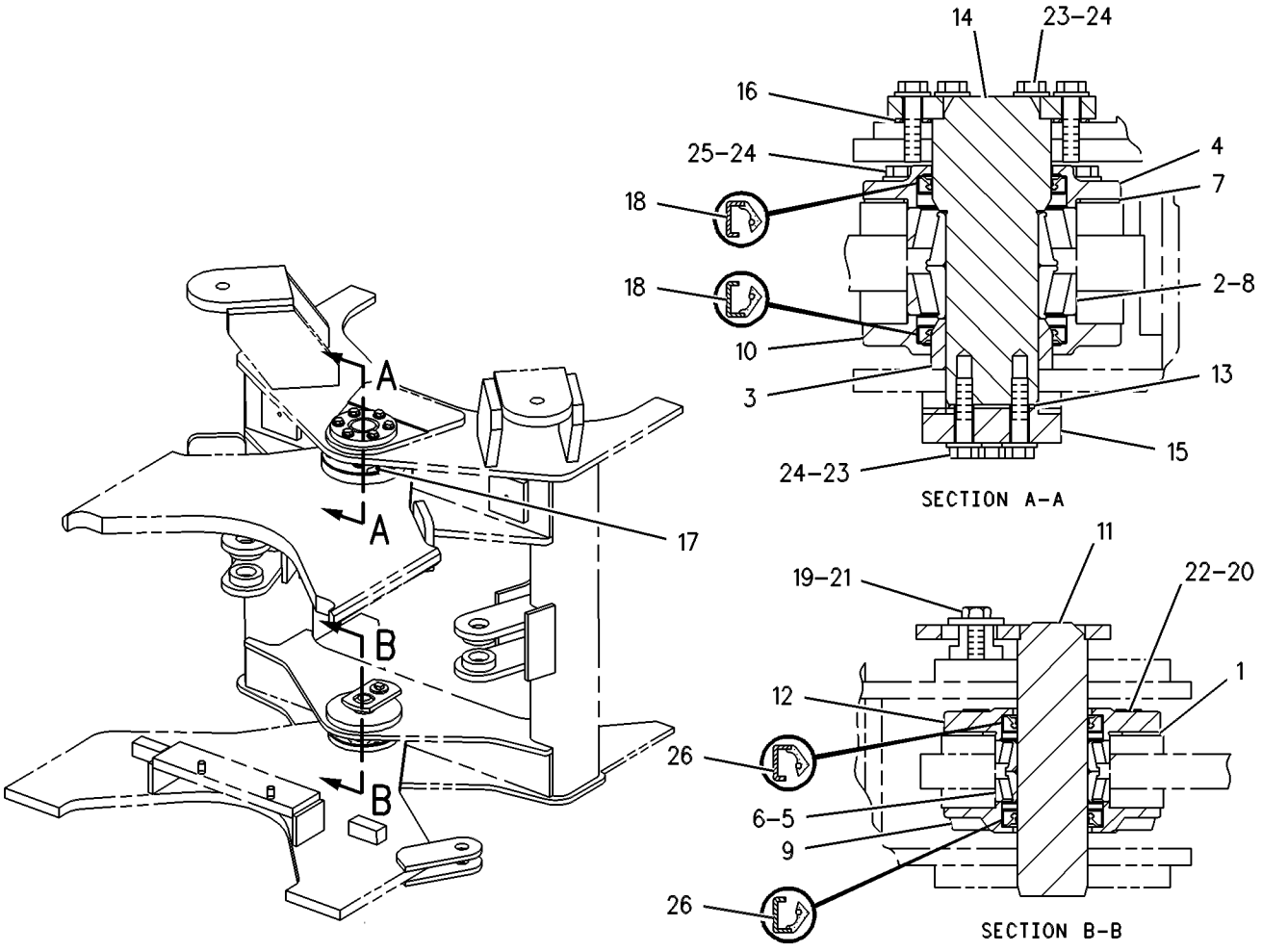

GRAPHIC #1 **<END>** g00131887

FRAME AND BODY

289-8912 HOOD & GUARD GP

S/N: BYD1-UP; FTD1-UP

PART OF 289-8871, 289-8891, 290-6498 CHASSIS AR

SMCS-7251 **i02870237**

NOTE	REF NO	GRAPHIC REF	PART NUMBER	QTY	PART NAME 1 2 3 4 5 6 (PRODUCT LEVEL)	SEE PAGE
H	1	2	**5P-5637**	1	SEAL (1-DM)	
	2	2	*125-2086*	1	LOCK AS-CYLINDER	
		2	**226-0294**	1	LOCK AS	
		2	**226-0339**	1	CAM	
	3	1	**130-1916**	4	STUD-BALL	
	4	1	**172-8591**	2	NUT-SPRING	
	5	1	**198-8933**	4	HINGE	
	6	1	**198-8942**	2	BRACKET	
	7	1	**198-8943**	2	BRACKET	
	8	1	**198-8944**	2	PLATE	
	9	1	**198-8954**	1	PANEL AS (RH)	
	10	1	**198-8955**	1	PANEL AS (LH)	
	11	1,2	**198-8961**	2	PLATE	
	12	1	**9X-2299**	2	LATCH AS (PADDLE)	
	13	1	**225-3800**	1	HINGE AS (RH)	
	14	1	**225-3801**	1	HINGE AS (LH)	
	15	1	**228-7696**	2	SPRING AS-GAS (HOOD)	
	16	2	**290-4068**	1	HOOD AS	
	17	1	**290-4073**	2	PLATE	
	18	1	**291-5008**	1	PLATE AS	
		1	**6C-1834**	5	RIVET	
		1	**6C-3681**	8	RIVET-POP	
		1	**301-5754**	2	HINGE AS	
		1	**302-4285**	1	LATCH	
	19	2	**292-1086**	1	PLATE AS	
		2	**6C-1834**	5	RIVET	
		2	**6C-3681**	8	RIVET-POP	
		2	**301-5754**	2	HINGE AS	
		2	**302-4285**	1	LATCH	
	20	2	**292-2559**	1	RING	
M	21	1	**131-3540**	4	LOCKNUT (M8X1.25-THD)	
M	22	1	**5C-2890**	8	NUT (M6X1-THD)	
M	23	1	**5C-7261**	12	NUT (M8X1.25-THD)	
	24	1	**5P-4115**	2	WASHER-HARD (7.2X19X2-MM THK)	
M	25	1	**7X-2535**	2	BOLT (M6X1X60-MM)	
M	26	1	**7X-2540**	4	BOLT (M8X1.25X120-MM)	
	27	1,2	**7X-7729**	39	WASHER (11X25X3-MM THK)	
M	28	1	**8T-4133**	4	NUT (M10X1.5-THD)	
M	29	1,2	**8T-4137**	12	BOLT (M10X1.5X20-MM)	
M	30	1	**8T-4138**	8	BOLT (M6X1X20-MM)	
M	31	1,2	**8T-4189**	4	BOLT (M8X1.25X20-MM)	
M	32	1,2	**8T-4195**	23	BOLT (M10X1.5X30-MM)	
	33	1	**8T-4205**	16	WASHER-HARD (7.2X14.5X2-MM THK)	
	34	1,2	**8T-4224**	42	WASHER-HARD (8.8X16X2-MM THK)	
M	35	1	**8T-4908**	4	BOLT (M8X1.25X25-MM)	
E	36	1	**9X-8699**		SEAL (307-CM EACH)	
E	36A	1	**9X-8699**		SEAL (91-CM EACH)	
H	37	2	**136-7728**		SEAL-COMPOSITE (18-DM EACH)	
	38	2	**295-1038**	1	INSULATION (LH)	
M	39	1,2	**8T-4200**	14	BOLT (M8X1.25X16-MM)	

E-ORDER BY THE CENTIMETER
H-ORDER BY THE DECIMETER
M-METRIC PART

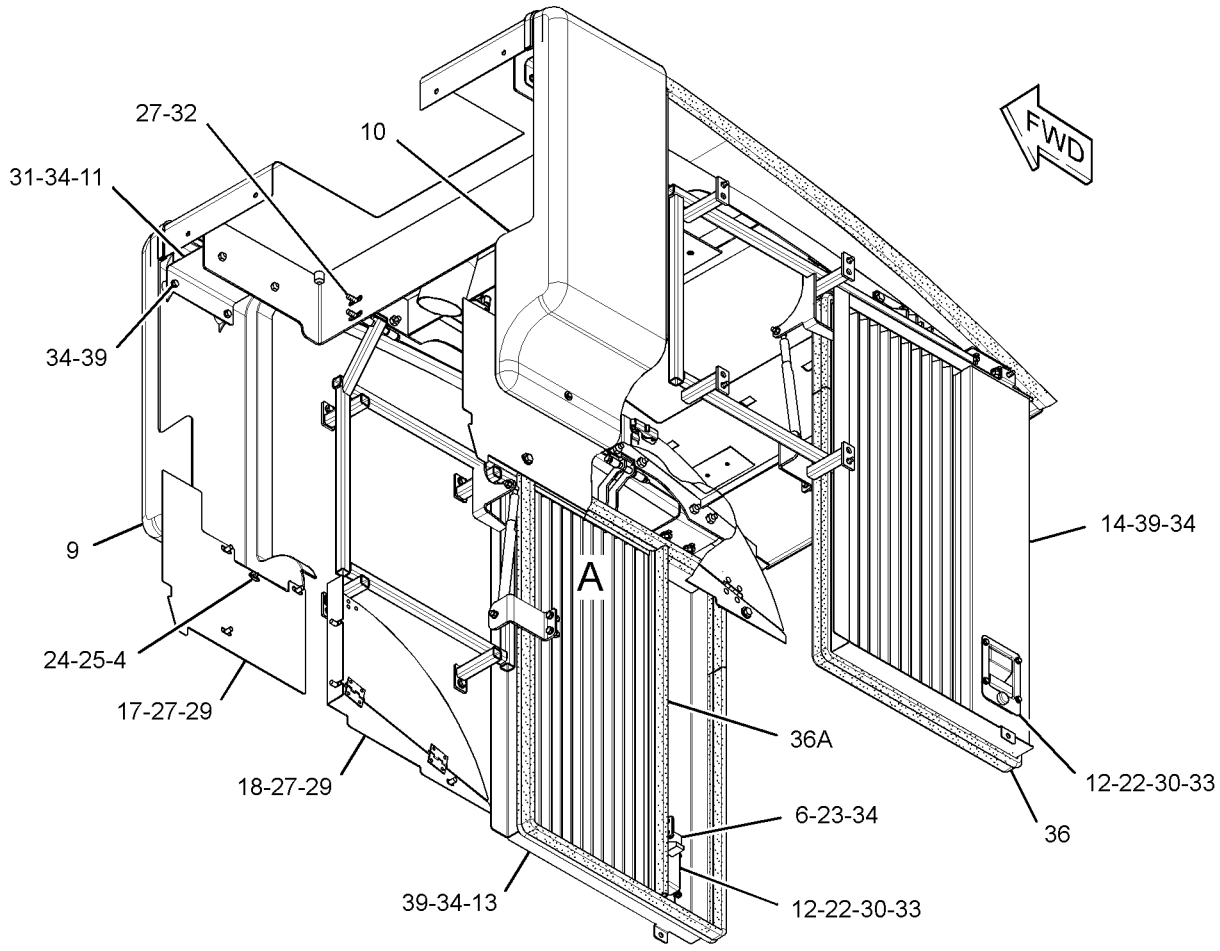

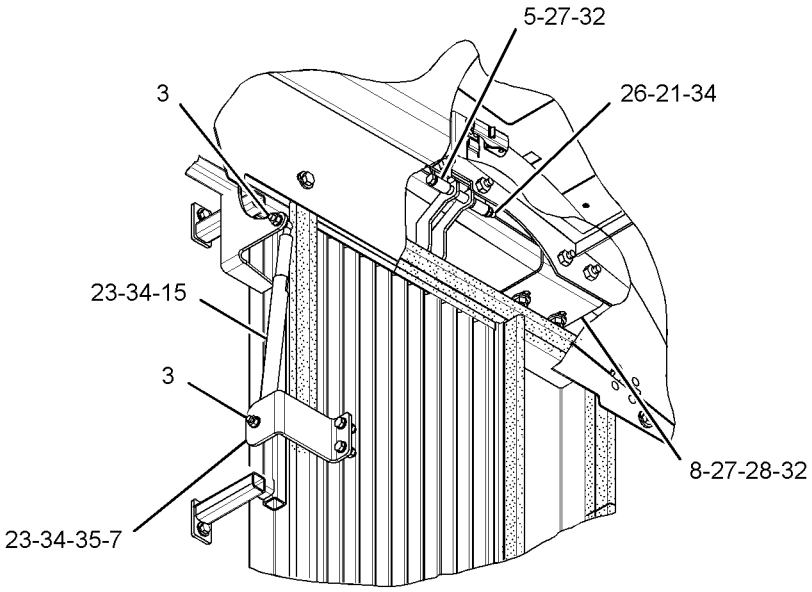

VIEW OF AREA A

GRAPHIC #1

g01434355

289-8912 **HOOD & GUARD GP** *(contd.)* **i02870237**

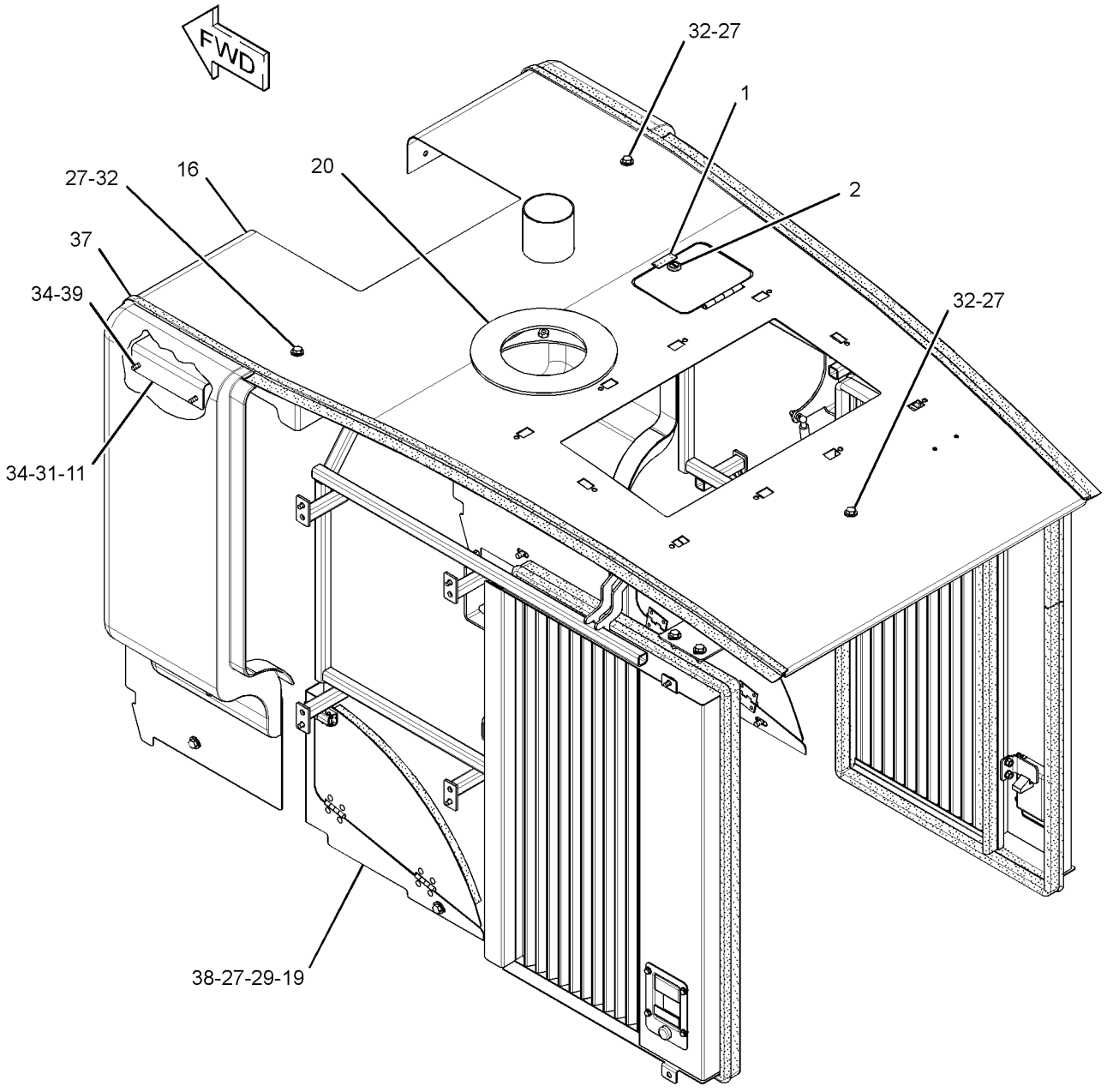

GRAPHIC #2 **<END>** g01434354

295-1018 INSULATION GP-HEAT–HOOD

S/N: BYD1-UP; FTD1-UP

PART OF 289-8947, 289-8948, 289-8950, 289-8951 SUPPRESSION AR-SOUND AN ATTACHMENT

SMCS-7051, 7150, 7251 **i02810339**

NOTE	REF NO	GRAPHIC REF	PART NUMBER	QTY	PART NAME 1 2 3 4 5 6 (PRODUCT LEVEL)	SEE PAGE
	1	1	**295-1037**	1	INSULATION (RH)	
	2	1	**295-4220**	2	INSULATION	
	3	1	**295-4221**	1	INSULATION	
	4	1	**295-4222**	1	INSULATION	
	5	1	**295-4224**	1	INSULATION (RH)	

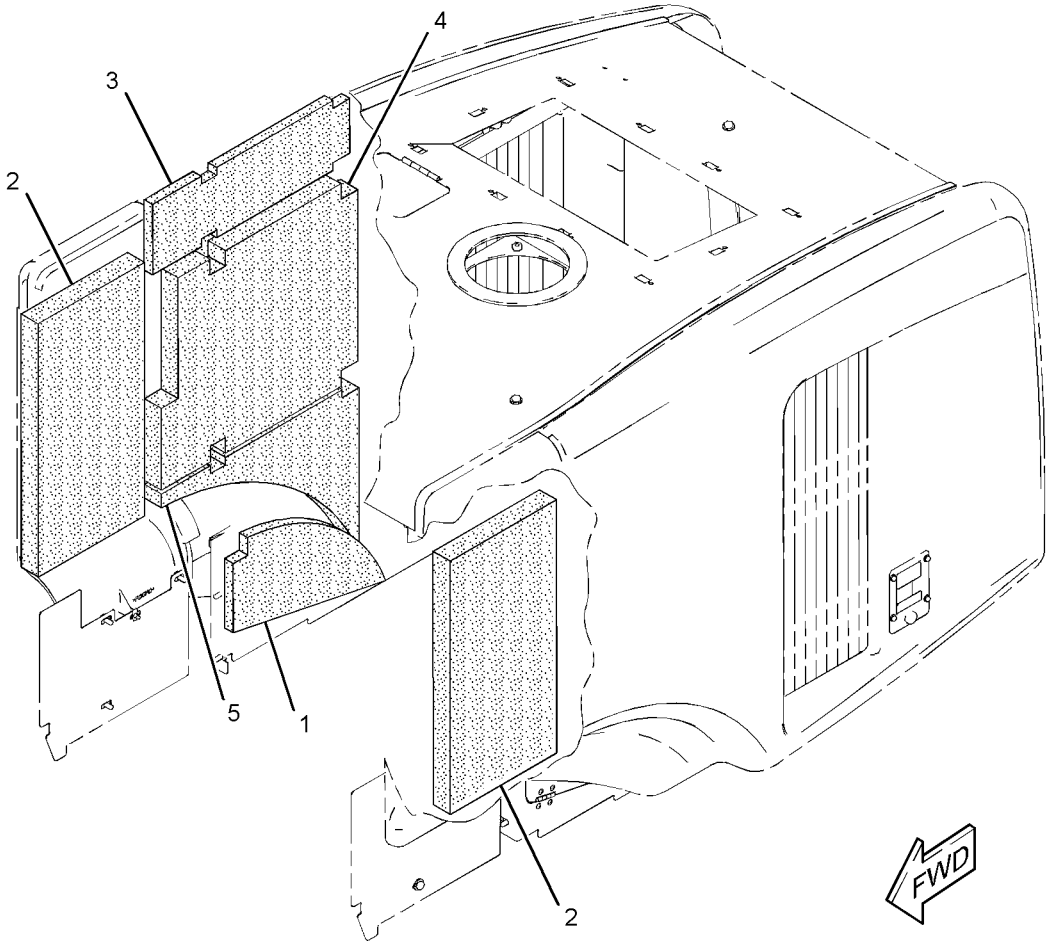

GRAPHIC #1 **<END>** g01404573

295-1024 INSULATION GP-HEAT–REAR FRAME

S/N: BYD1-UP

PART OF 289-8947, 289-8950 SUPPRESSION AR-SOUND

AN ATTACHMENT

SMCS-7051, 7150, 7251 **i02810366**

NOTE	REF NO	GRAPHIC REF	PART NUMBER	QTY	PART NAME 1 2 3 4 5 6 (PRODUCT LEVEL)	SEE PAGE
	1	1	**103-0280**	8	SPACER (13X20X7-MM THK)	
	2	1	**149-2500**	2	PLATE AS	
	3	1	**172-9862**	4	SPACER (11X503-MM THK)	
	4	1	**222-7058**	1	INSULATION	
	5	1	**229-9940**	1	INSULATION	
	6	1	**230-1346**	1	INSULATION	
	7	1	**230-1514**	1	BRACKET AS	
	8	1	**230-1542**	1	BRACKET AS	
	9	1	**230-1544**	1	BRACKET AS	
	10	1	**230-3048**	1	BRACKET AS	
	11	1	**230-3222**	1	INSULATION	
	12	1	**230-3223**	1	INSULATION	
	13	1	**295-1028**	1	BAFFLE	
	14	1	**295-4219**	1	INSULATION	
	15	1	**7X-7729**	8	WASHER (11X25X3-MM THK)	
M	16	1	**8T-4137**	2	BOLT (M10X1.5X20-MM)	
M	17	1	**8T-4195**	4	BOLT (M10X1.5X30-MM)	
M	18	1	**8T-5005**	6	BOLT (M10X1.5X70-MM)	

M-METRIC PART

295-1024 **INSULATION GP-HEAT** *(contd.)* **i02810366**

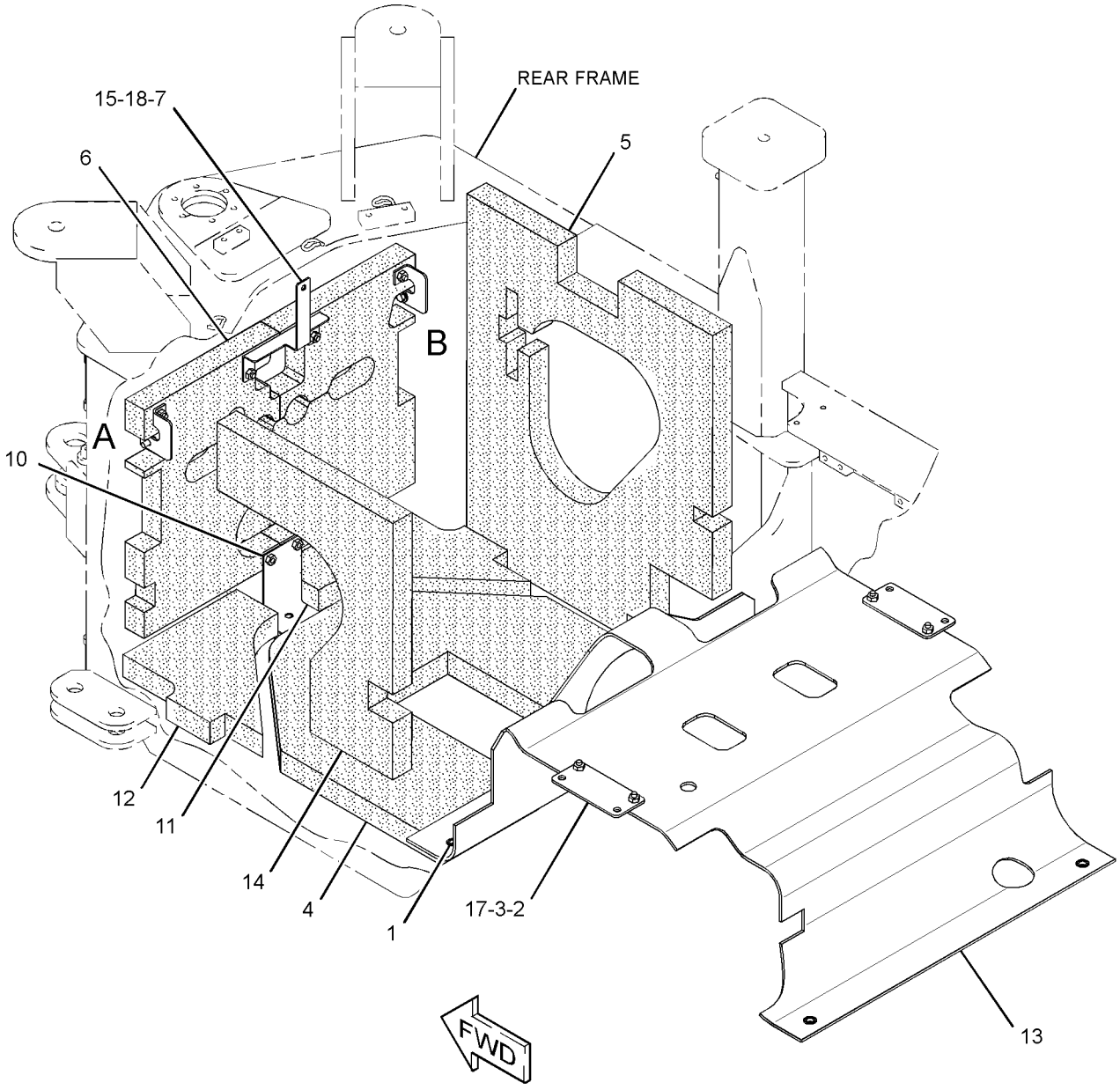

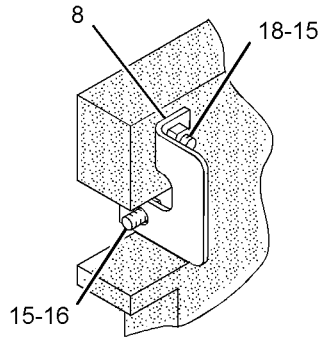

VIEW OF AREA A

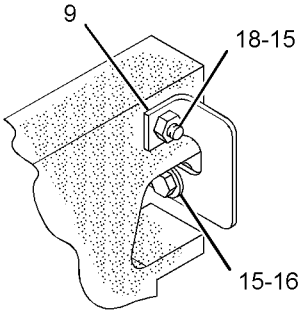

VIEW OF AREA B

GRAPHIC #1 **<END>** g01404571

295-1033 INSULATION GP-HEAT–REAR FRAME

S/N: FTD1-UP

PART OF 289-8948, 289-8951 SUPPRESSION AR-SOUND

AN ATTACHMENT

SMCS-7051, 7150, 7251 **i02879462**

NOTE	REF NO	GRAPHIC REF	PART NUMBER	QTY	PART NAME 1 2 3 4 5 6 (PRODUCT LEVEL)	SEE PAGE
	1	1	**103-0280**	8	SPACER (13X20X7-MM THK)	
	2	1	**149-2500**	2	PLATE AS	
	3	1	**152-5372**	2	KNOB	
	4	1	**172-9862**	4	SPACER (11X503-MM THK)	
	5	1	**222-7058**	1	INSULATION	
	6	1	**243-0530**	1	INSULATION (RH)	
	7	1	**318-8102**	1	INSULATION (LH)	
	8	1	**243-0532**	1	INSULATION	
	9	1	**243-0542**	1	BRACKET AS	
	10	1	**261-7651**	4	SPACER (12X20X4-MM THK)	
	11	1	**284-2200**	2	TUBE	
	12	1	**295-1028**	1	BAFFLE	
	13	1	**295-1035**	1	INSULATION AS	
	14	1	**303-9272**	1	PLATE AS	
	15	1	**303-9273**	1	PLATE	
M	16	1	**5C-2890**	2	NUT (M6X1-THD)	
	17	1	**8T-4121**	6	WASHER-HARD (11X21X2.5-MM THK)	
M	18	1	**8T-4138**	2	BOLT (M6X1X20-MM)	
M	19	1	**8T-4195**	6	BOLT (M10X1.5X30-MM)	
M	20	1	**8T-4196**	4	BOLT (M10X1.5X35-MM)	
	21	1	**8T-4205**	4	WASHER-HARD (7.2X14.5X2-MM THK)	
D	22	1	**5P-5649**		SEAL (1.7-M)	

D-ORDER BY THE METER
M-METRIC PART

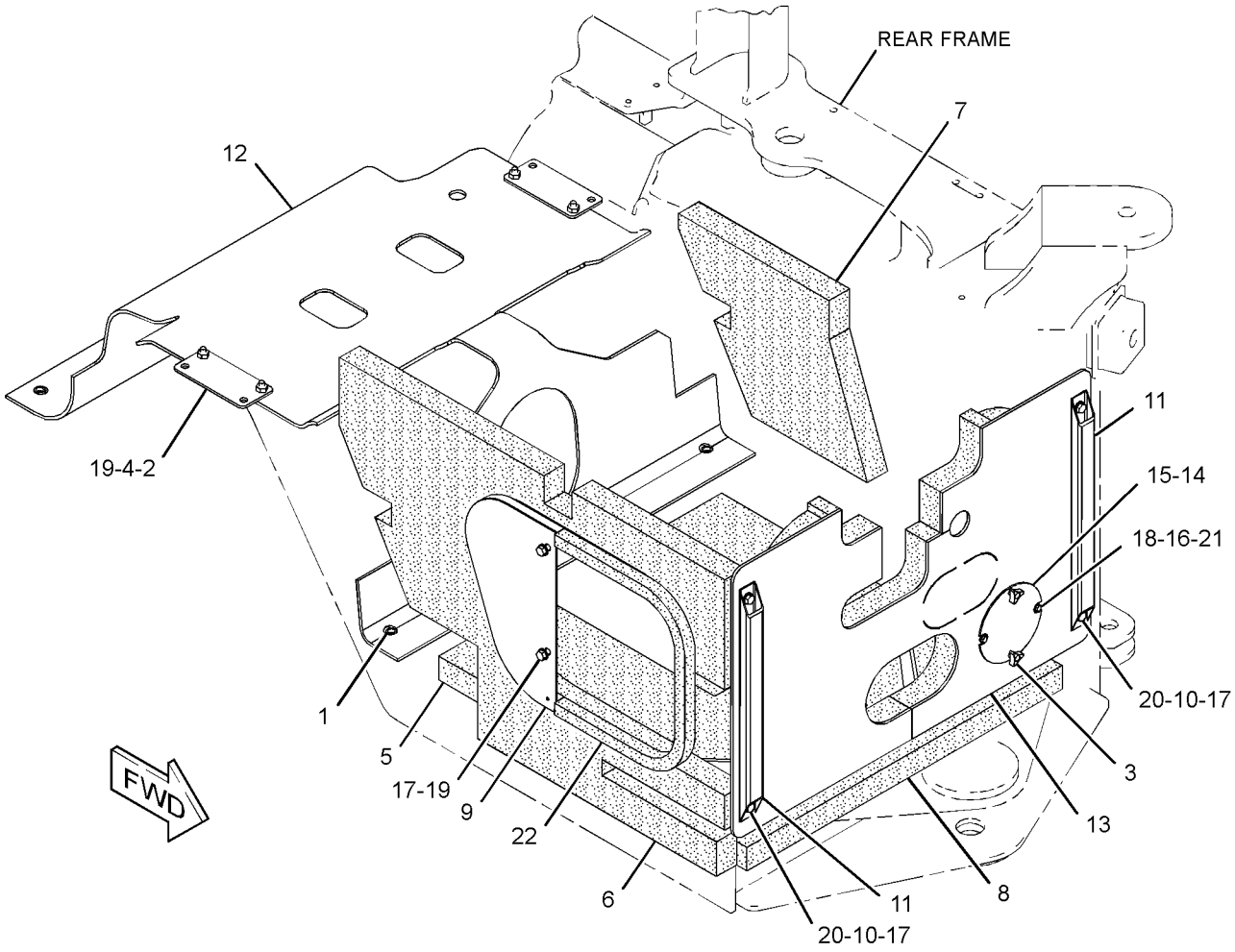

GRAPHIC #1 **<END>** g01441102

289-8913 LADDER GP

S/N: BYD1-UP; FTD1-UP

PART OF 289-8871, 289-8891, 290-6498 CHASSIS AR

SMCS-7254 **i02803525**

NOTE	REF NO	GRAPHIC REF	PART NUMBER	QTY	PART NAME 1 2 3 4 5 6 (PRODUCT LEVEL)	SEE PAGE
	1	2	**134-5214**	1	STEP AS	
M		2	**8T-3490**	2	NUT-WELD (M10X1.5-THD)	
	2	1	**134-5215**	1	STEP AS	
M		1	**8T-3490**	2	NUT-WELD (M10X1.5-THD)	
	3	1,2	**153-9706**	8	PLATE	
	4	1,2	**154-2302**	16	SPACER (11X20X15-MM THK)	
	5	1	**189-0942**	1	BRACKET AS	
	6	1	**202-0392**	1	PLATFORM AS (RH)	
M		1	**6V-9632**	2	NUT-WELD (M6X1-THD)	
M		1	**8T-3490**	2	NUT-WELD (M10X1.5-THD)	
	7	2	**202-0393**	1	PLATFORM AS (LH)	
M		2	**6V-9632**	2	NUT-WELD (M6X1-THD)	
M		2	**8T-3490**	2	NUT-WELD (M10X1.5-THD)	
	8	1,2	**283-8385**	4	SUPPORT-STEP (RUBBER)	
	9	1,2	**284-8491**	2	STEP AS	
	10	1,2	**284-8497**	2	LADDER AS	
	11	2	**284-8504**	1	BRACKET AS	
	12	1,2	**7X-7729**	52	WASHER (11X25X3-MM THK)	
M	13	1,2	**8T-4136**	22	BOLT (M10X1.5X25-MM)	
M	14	1,2	**8T-4186**	24	BOLT (M10X1.5X40-MM)	
M	15	1,2	**8T-4195**	8	BOLT (M10X1.5X30-MM)	
	16	1	**8T-4222**	2	WASHER-PLATED (11X32X2.5-MM THK)	

M-METRIC PART

289-8913 **LADDER GP** *(contd.)* **i02803525**

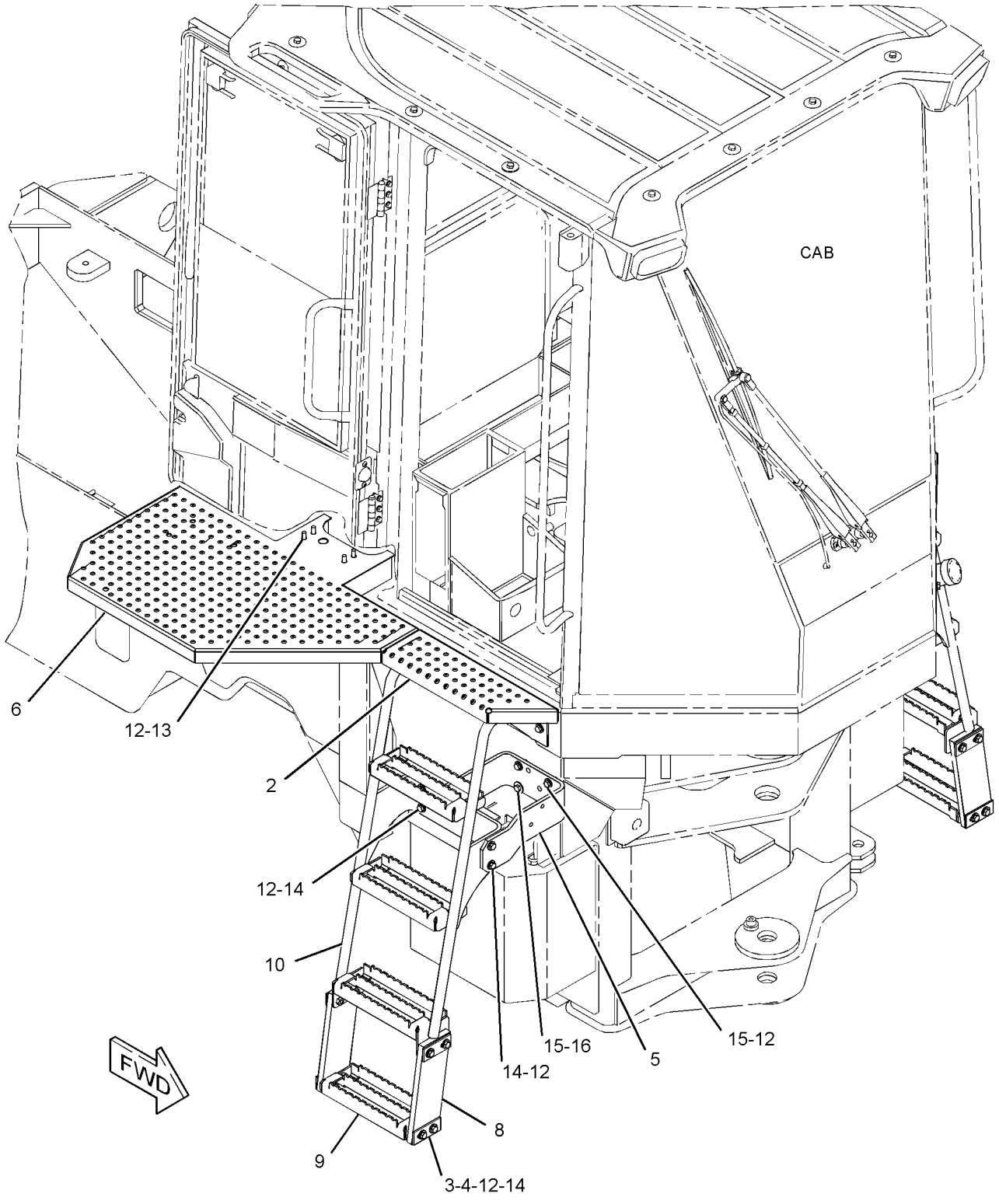

GRAPHIC #1 g01389406

289-8913 **LADDER GP** *(contd.)* **i02803525**

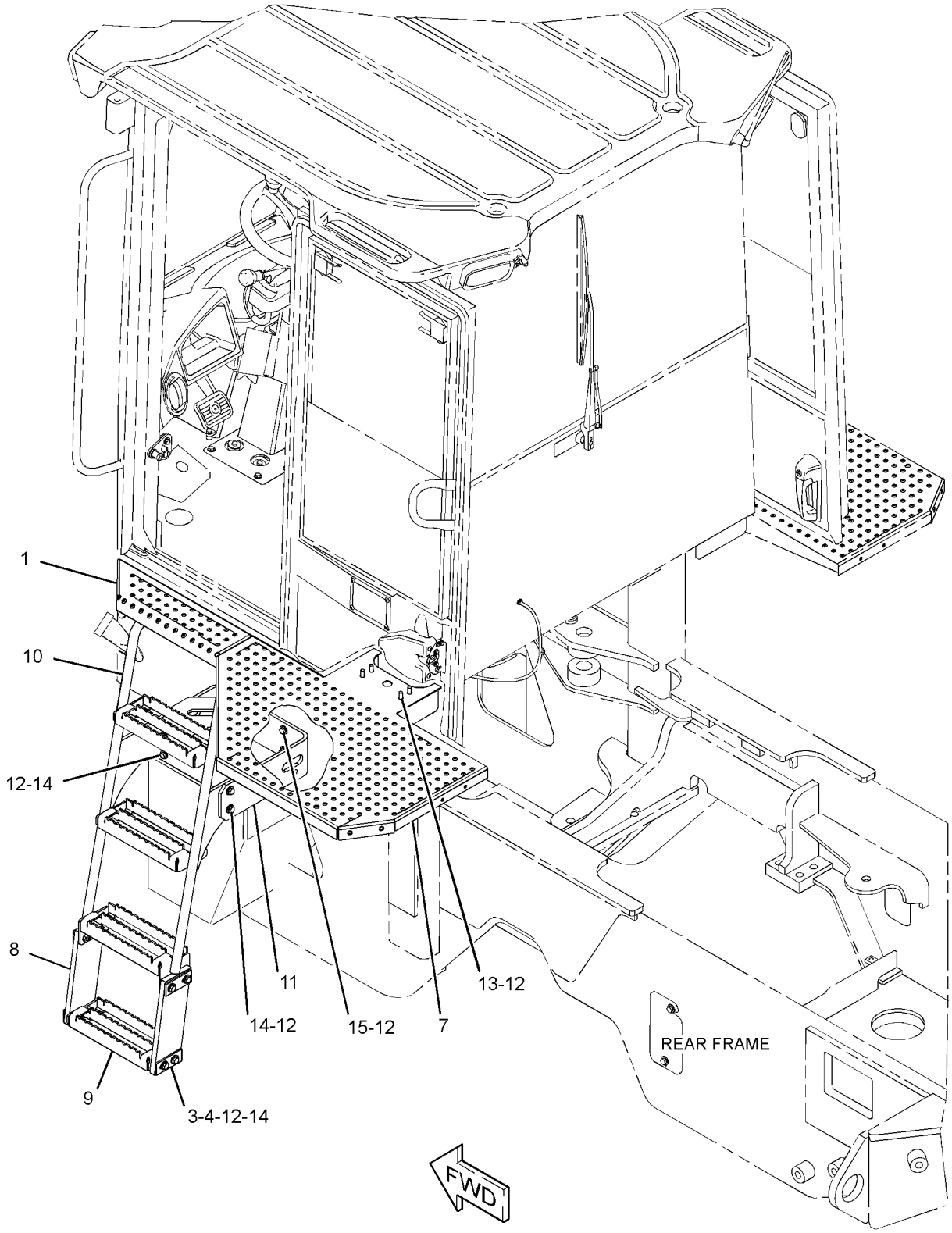

GRAPHIC #2 **<END>** g01389505

FRAME AND BODY

204-5107 LINES GP-GREASE

S/N: BYD1-UP

PART OF 289-8871 CHASSIS AR

SMCS-7510 **i01692942**

NOTE	REF NO	GRAPHIC REF	PART NUMBER	QTY	PART NAME 1 2 3 4 5 6 (PRODUCT LEVEL)	SEE PAGE
	1	1	**3B-6552**	3	ELBOW	
	2	1	**3B-7734**	1	NIPPLE-PIPE	
	3	1	**3F-6166**	2	EXTENSION	
I	4	1	**3G-6659**	1	HOSE AS	
	5	1	**3G-6660**	1	HOSE AS	
	6	1	**5T-9772**	1	HOSE AS	
	7	1	**6G-9933**	1	HOSE AS	
	8	1	**7K-1181**	5	STRAP-CABLE	
	9	1	**8B-4884**	1	ELBOW	
	10	1	**8W-4342**	1	HOSE AS	
	11	1	**3B-8489**	7	FITTING-GREASE	
	12	1	**4D-8123**	1	CLIP	
	13	1	**6V-2383**	1	CLIP	

I-REFER TO HYDRAULIC INFORMATION SYSTEM

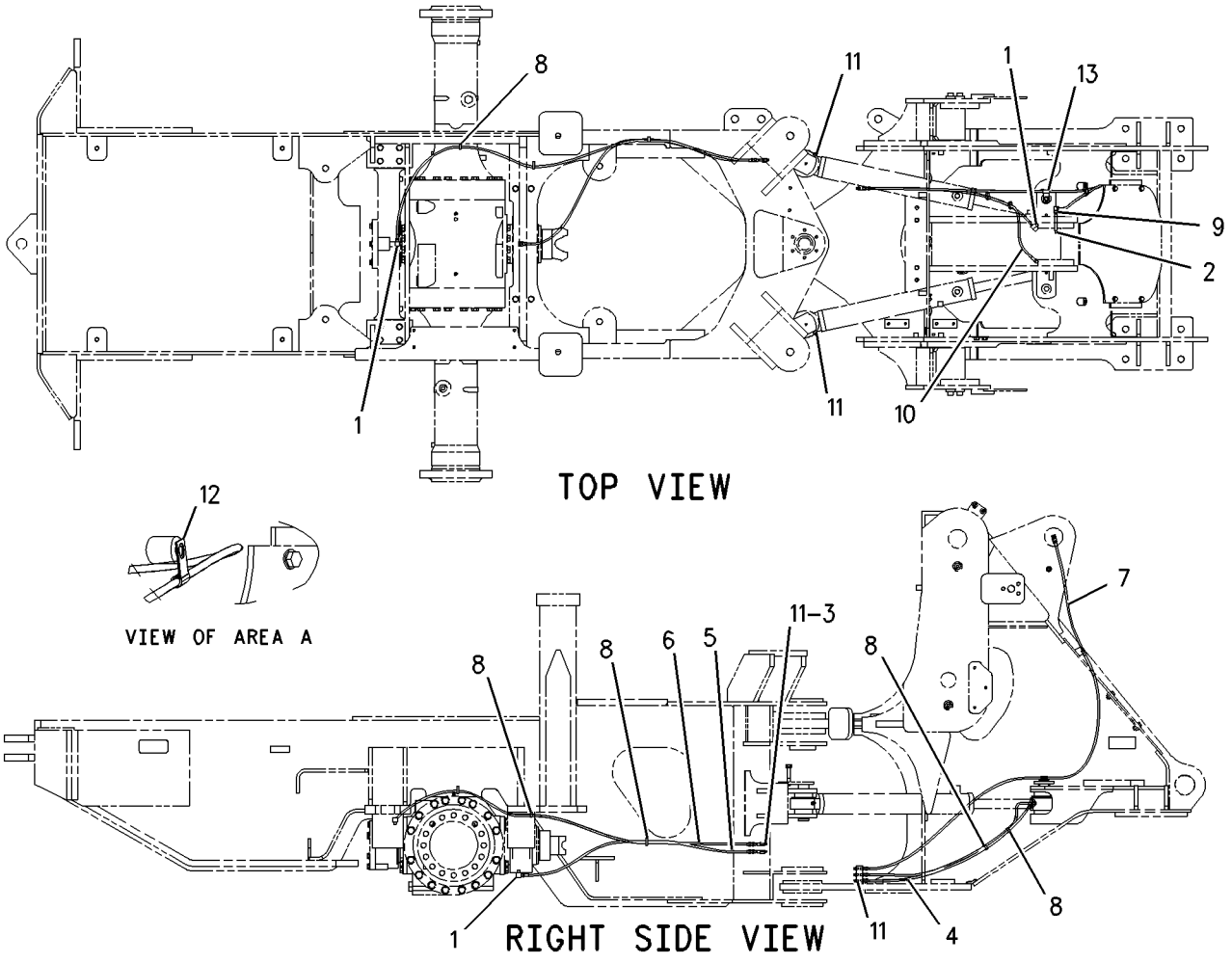

GRAPHIC #1 **<END>** g00877025

FRAME AND BODY

289-8977 LINES GP-GREASE

S/N: FTD1-UP

PART OF 289-8891, 290-6498 CHASSIS AR

SMCS-7510 **i02807993**

NOTE	REF NO	GRAPHIC REF	PART NUMBER	QTY	PART NAME 1 2 3 4 5 6 (PRODUCT LEVEL)	SEE PAGE
	1	1	**3G-6660**	1	HOSE AS	
	2	1	**5T-9771**	1	HOSE AS	
	3	1	**6G-9933**	3	HOSE AS	
	4	1	**7K-1181**	15	STRAP-CABLE	
G	5	1	**160-2243**		SLEEVE-ABRASION (1-IN)	
	6	1	**243-0536**	1	HOSE AS	
	7	1	**243-0537**	1	HOSE AS	
	8	1	**300-5441**	1	HOSE AS	
	9	1	**002-0639**	1	ADAPTER-PIPE	
	10	1	**300-5443**	2	HOSE AS	
	11	1	**3B-6552**	8	ELBOW (PIPE)	
	12	1	**3B-7734**	1	NIPPLE-PIPE	
	13	1	**3B-8489**	12	FITTING-GREASE	
	14	1	**8B-4884**	1	ELBOW (PIPE)	

G-ORDER BY THE INCH

289-8977 **LINES GP-GREASE** *(contd.)* **i02807993**

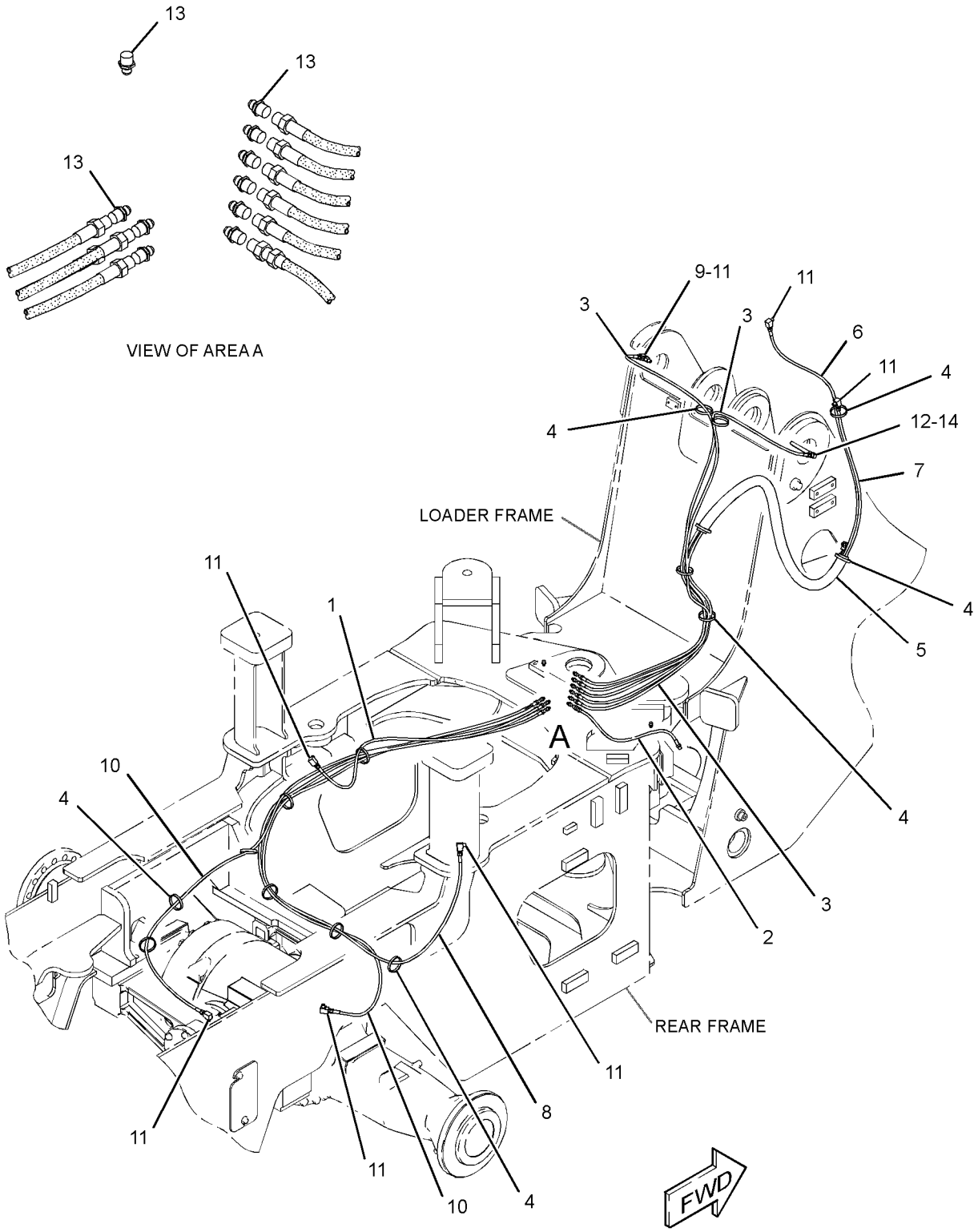

GRAPHIC #1 **<END>** g01391231

7V-2885 LINK GP-STEERING FRAME LOCK

S/N: FTD1-UP

PART OF 289-8891, 290-6498 CHASSIS AR

SMCS-7506 **i01183105**

NOTE	REF NO	GRAPHIC REF	PART NUMBER	QTY	PART NAME 1 2 3 4 5 6 (PRODUCT LEVEL)	SEE PAGE
	1	1	**5V-4998**	1	LINK	
	2	1	**5V-4999**	2	PIN	
	3	1	**5P-8837**	2	LOCKPIN	

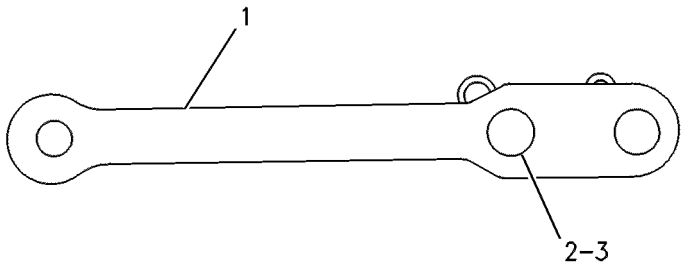

GRAPHIC #1 **<END>** g00120262

113-3783 LINK GP-STEERING FRAME LOCK

S/N: BYD1-UP

PART OF 289-8871 CHASSIS AR

SMCS-7506 **i01046937**

NOTE	REF NO	GRAPHIC REF	PART NUMBER	QTY	PART NAME 1 2 3 4 5 6 (PRODUCT LEVEL)	SEE PAGE
	1	1	**5P-8837**	2	LOCKPIN	
	2	1	**5V-4999**	2	PIN	
	3	1	**113-3784**	1	LINK	

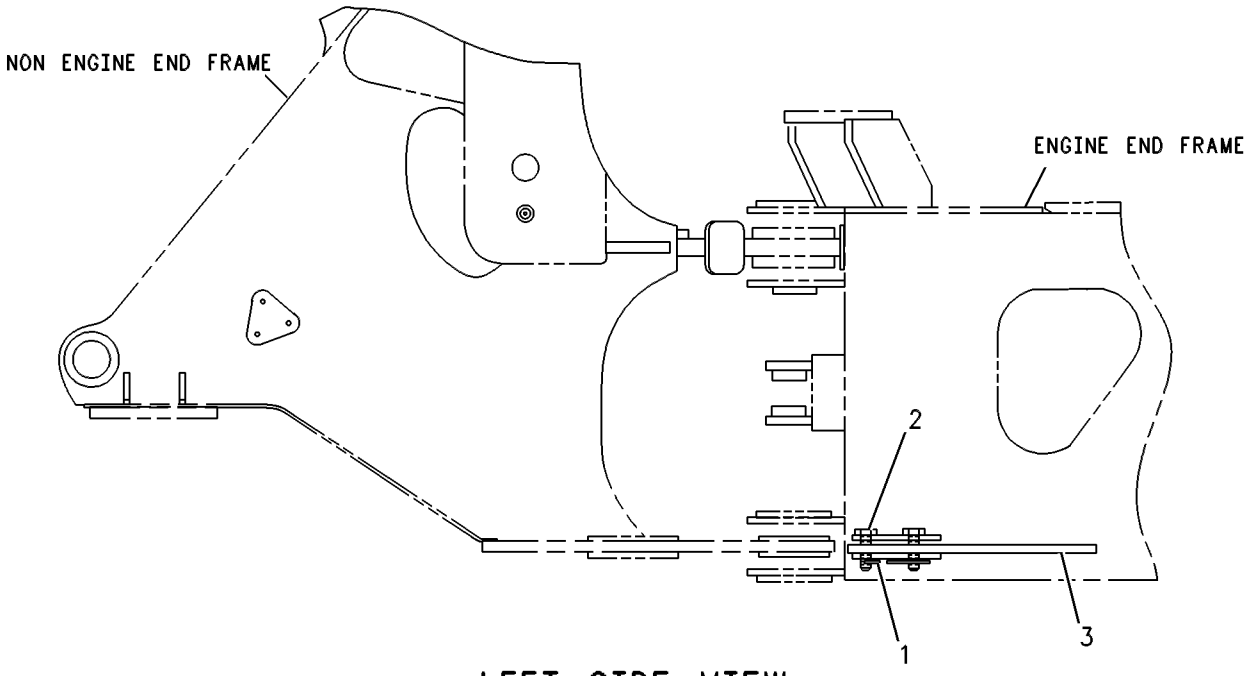

LEFT SIDE VIEW

GRAPHIC #1 **<END>** g00131599

290-7202 MOUNTING GP-BRACKET

S/N: FTD650-UP

PART OF 290-6498 CHASSIS AR

SMCS-7050 **i02886274**

NOTE	REF NO	GRAPHIC REF	PART NUMBER	QTY	PART NAME 1 2 3 4 5 6 (PRODUCT LEVEL)	SEE PAGE
	1	1	**1U-7684**	2	HOLDER AS (GREASE GUN)	

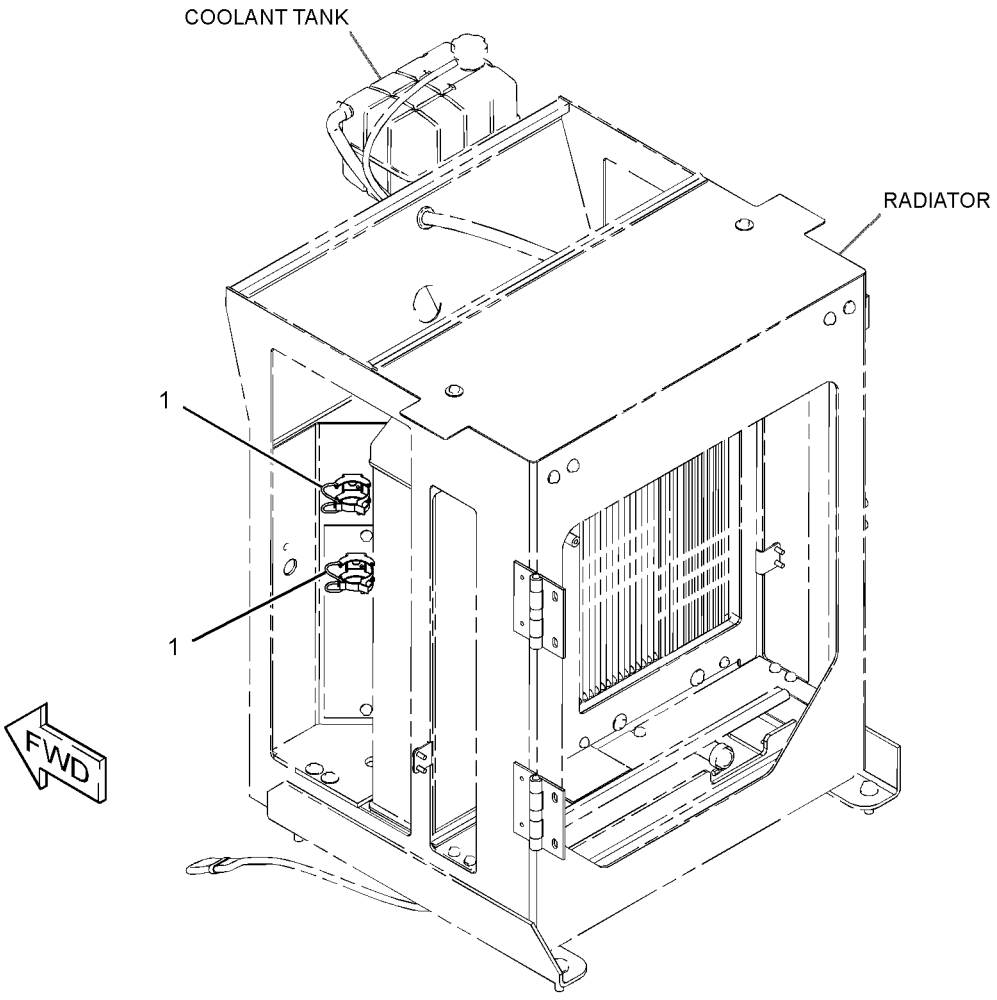

GRAPHIC #1 **<END>** g01437044

150-6566 PANEL GP-SOUND SUPPRESSION–CAB

S/N: BYD1-UP

PART OF 289-8947, 289-8950 SUPPRESSION AR-SOUND

AN ATTACHMENT

SMCS-7076, 7261 **i02650415**

NOTE	REF NO	GRAPHIC REF	PART NUMBER	QTY	PART NAME 1 2 3 4 5 6 (PRODUCT LEVEL)	SEE PAGE
	1	1	**118-1041**	1	PLATE	
	2	1	**118-1042**	1	PLATE AS	
	3	1	**118-1043**	1	INSULATION	
C	4	1	**118-1050**	1	INSULATION	
	5	1	**118-1051**	1	INSULATION-RH	
	6	1	**118-1054**	1	INSULATION-LH	
	7	1	**118-1055**	1	INSULATION-LH	
	8	1	**118-1056**	1	INSULATION-RH	
	9	1	**118-1057**	1	INSULATION	
	10	1	**118-1059**	1	INSULATION	
	11	1	**118-1061**	1	INSULATION	
	12	1	**118-1062**	1	INSULATION-LH	
	13	1	**118-1063**	1	INSULATION-RH	
C	14	1	**201-0432**	1	INSULATION	
	15	1	**7X-7729**	7	WASHER (11X25X3-MM THK)	
M	16	1	**8T-4137**	2	BOLT (M10X1.5X20-MM)	

C-CHANGE FROM PREVIOUS TYPE
M-METRIC PART

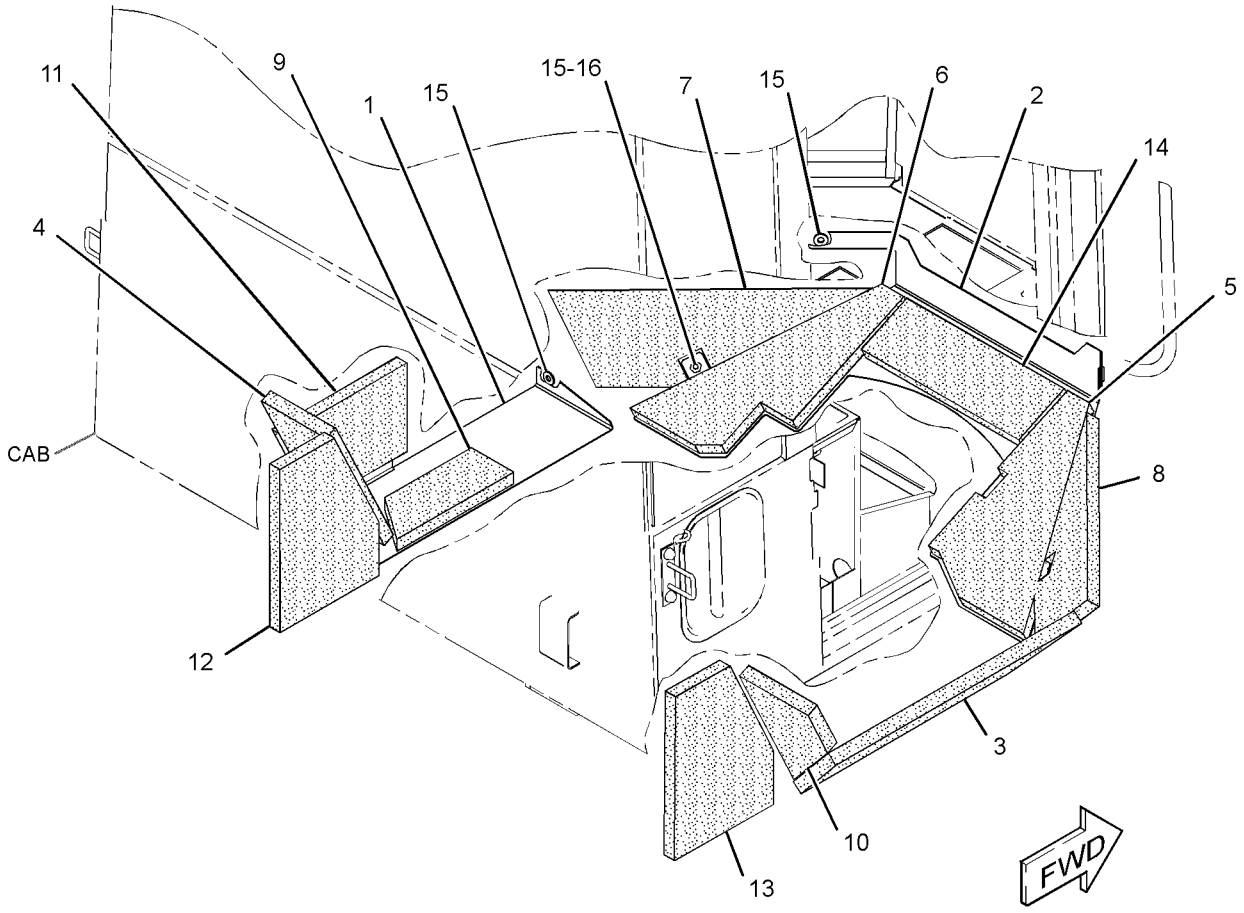

GRAPHIC #1 **<END>** g01342555

243-0541 PANEL GP-SOUND SUPPRESSION–REAR FRAME

S/N: FTD1-UP

PART OF 289-8948, 289-8951 SUPPRESSION AR-SOUND

AN ATTACHMENT

SMCS-7076, 7261 **i02274409**

NOTE	REF NO	GRAPHIC REF	PART NUMBER	QTY	PART NAME 1 2 3 4 5 6 (PRODUCT LEVEL)	SEE PAGE
	1	1	**118-1050**	1	INSULATION	
	2	1	**118-1051**	1	INSULATION-RH	
	3	1	**118-1054**	1	INSULATION-LH	
	4	1	**118-1055**	1	INSULATION-LH	
	5	1	**118-1056**	1	INSULATION-RH	
	6	1	**118-1061**	1	INSULATION	
	7	1	**201-0432**	1	INSULATION	
	8	1	**243-0544**	1	PLATE AS	
M		1	**8T-3490**	2	NUT-WELD (M10X1.5-THD)	
	9	1	**251-5644**	1	INSULATION	
	10	1	**251-5645**	1	INSULATION	
	11	1	**252-5596**	1	INSULATION	
	12	1	**7X-7729**	4	WASHER (11X25X3-MM THK)	
M	13	1	**8T-4137**	2	BOLT (M10X1.5X20-MM)	

M-METRIC PART

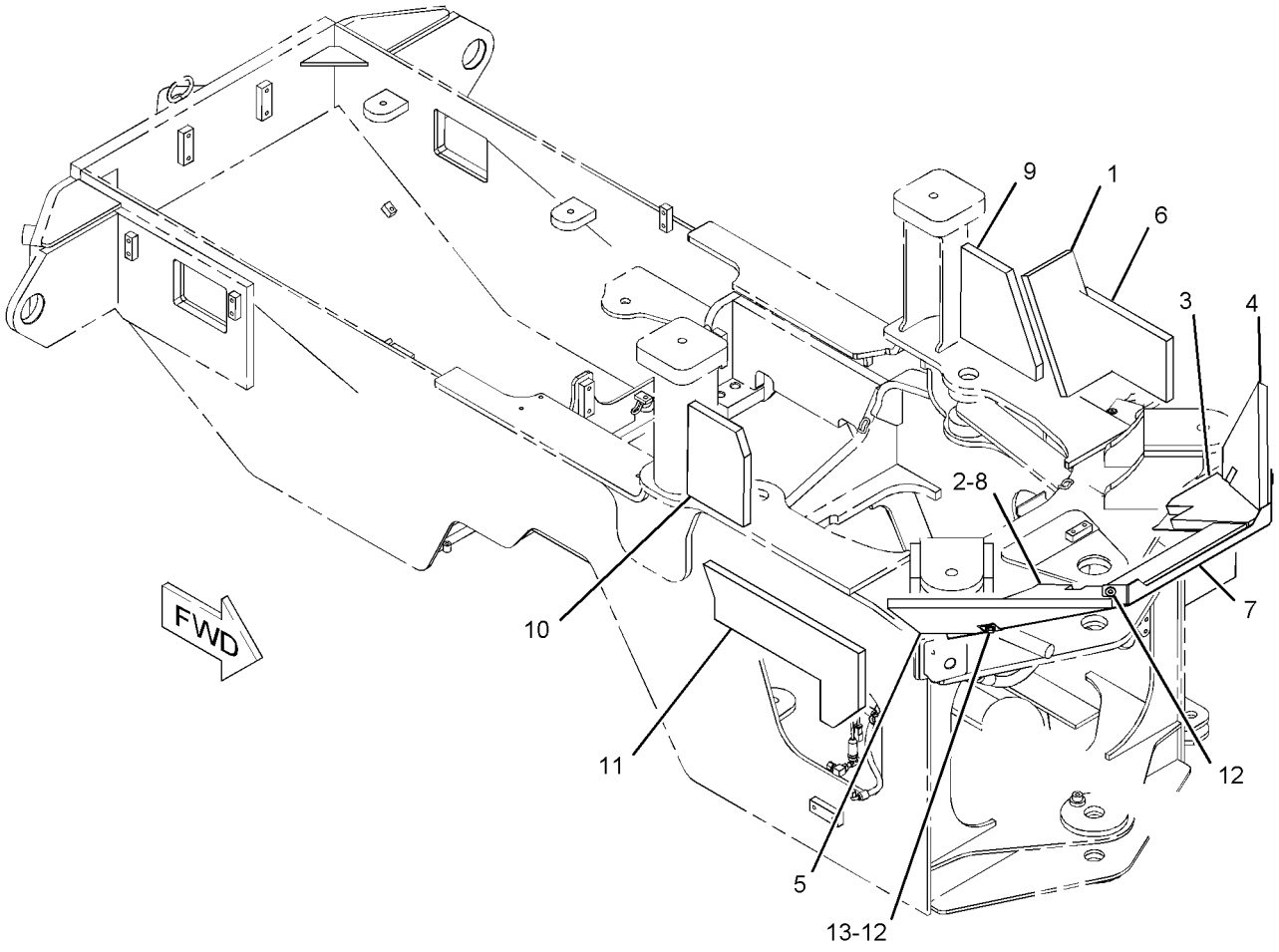

GRAPHIC #1 **<END>** g01139911

198-8964 PANEL GP-TOP–HEATER

S/N: BYD1-UP; FTD1-UP
PART OF 304-9256 CANOPY AR-SOFT, 290-8750 HEATER AR-CAB, 290-8186 OPERATOR
AR-OPEN ROPS
AN ATTACHMENT

SMCS-7251 **i01822580**

NOTE	REF NO	GRAPHIC REF	PART NUMBER	QTY	PART NAME 1 2 3 4 5 6 (PRODUCT LEVEL)	SEE PAGE
	1	1	**172-8591**	10	NUT-SPRING	
	2	1	**191-9188**	1	PLATE	
	3	1	**198-8957**	1	PLATE	
	4	1	**220-0691**	4	PLATE AS	
					(EACH INCLUDES)	
M		1	**8T-3490**	2	NUT-WELD (M10X1.5-THD)	
	5	1	**5P-9212**	1	PLUG	
	6	1	**8T-4121**	8	WASHER-HARD (11X21X2.5-MM THK)	
M	7	1	**8T-4137**	8	BOLT (M10X1.5X20-MM)	
M	8	1	**8T-4138**	10	BOLT (M6X1X20-MM)	
	9	1	**8T-4205**	10	WASHER-HARD (7.2X14.5X2-MM THK)	

M-METRIC PART

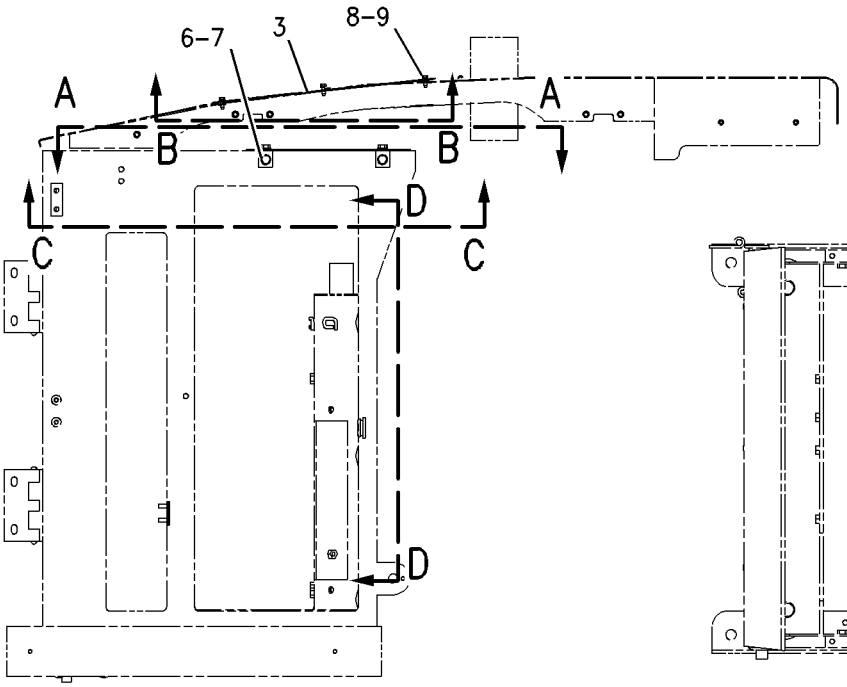

RIGHT SIDE VIEW

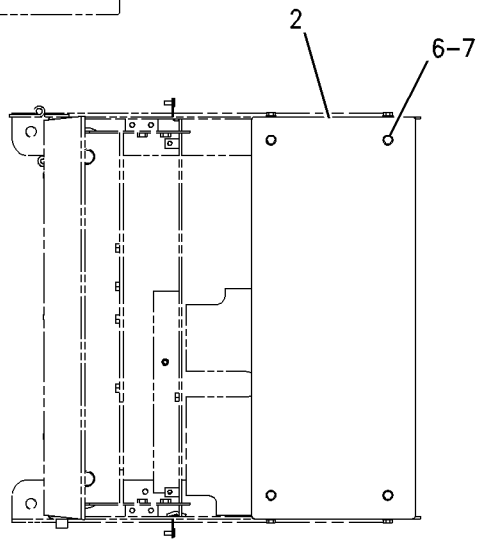

VIEW A-A

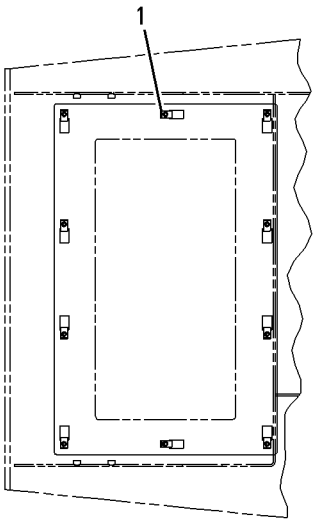

VIEW B-B

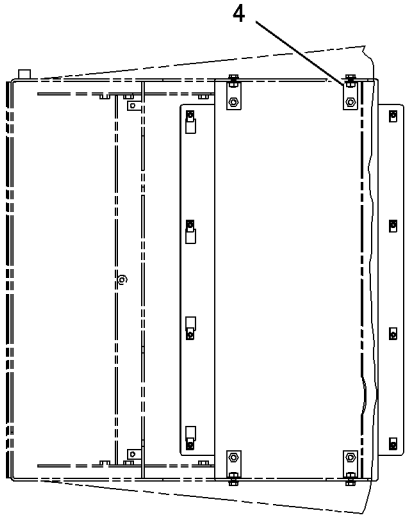

VIEW C-C

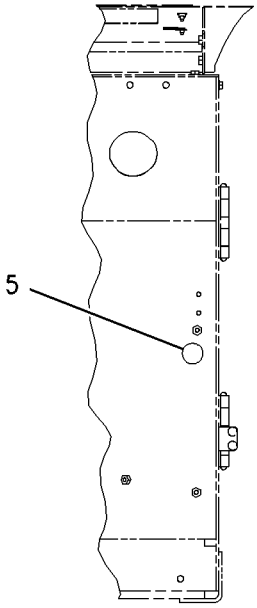

VIEW D-D

GRAPHIC #1 **<END>** g00917920

198-8965 PANEL GP-TOP–AIR CONDITIONER

S/N: BYD1-UP
PART OF 304-9255 PLATFORM AR
AN ATTACHMENT

SMCS-7251 **i01814781**

NOTE	REF NO	GRAPHIC REF	PART NUMBER	QTY	PART NAME 1 2 3 4 5 6 (PRODUCT LEVEL)	SEE PAGE
	1	1	**172-8591**	10	NUT-SPRING	
	2	1	**198-8956**	1	COVER AS	
	3	1	**186-0817**	10	WASHER-HARD (7X19X2-MM THK)	
M	4	1	**8T-4138**	10	BOLT (M6X1X20-MM)	

M-METRIC PART

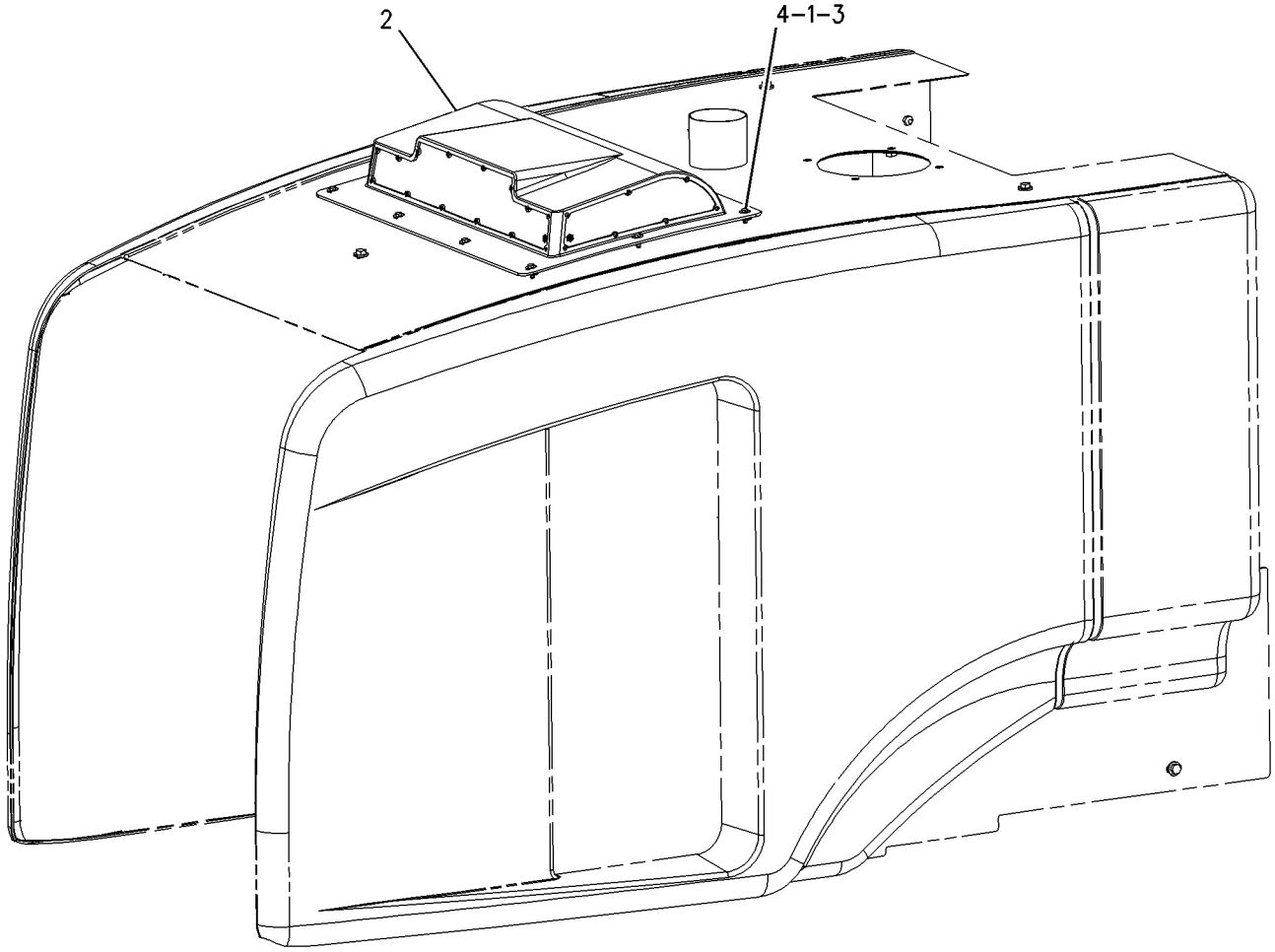

GRAPHIC #1 **<END>** g00917899

140-9251 ACCUMULATOR GP-BRAKE–CHARGED

S/N: BYD1-UP; FTD1-UP

PART OF 289-8816, 289-8926, 289-8927 LINES GP-SERVICE BRAKE

SMCS-4263 **i02301707**

NOTE	REF NO	GRAPHIC REF	PART NUMBER	QTY	PART NAME 1 2 3 4 5 6 (PRODUCT LEVEL)	SEE PAGE
	1	1	**030-9613**	2	SCREW-FORMING (10-24X0.37-IN)	
	2	1	**1J-9671**	1	SEAL-O-RING	
	3	1	**069-2535**	1	VALVE-GAS	
	4	1	**069-2536**	1	PROTECTOR-GAS VALVE	
F		1	**160-0496**	1	KIT-SEAL (ACCUMULATOR)	

F-NOT SHOWN

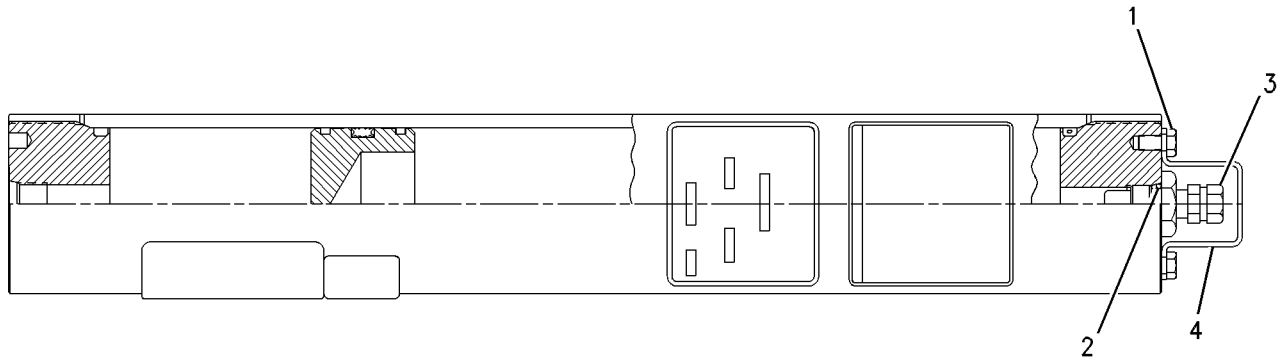

GRAPHIC #1 **<END>** g00649352

BRAKING SYSTEM

283-9971 BRAKE GP-PARKING

S/N: J2W1-UP

PART OF 234-8859 GEAR GP-OUTPUT TRANSFER

SMCS-4267 **i02668858**

NOTE	REF NO	GRAPHIC REF	PART NUMBER	QTY	PART NAME 1 2 3 4 5 6 (PRODUCT LEVEL)	SEE PAGE
	1	1	**1V-2772**	1	SPRING-EXTENSION	
	2	1	**3K-7057**	1	SPRING-EXTENSION	
	3	1	**283-9972**	2	SHOE AS-LINED	
	4	1	**214-4768**	1	PLATE AS	
	5	1	**3K-7056**	1	SPRING-EXTENSION	

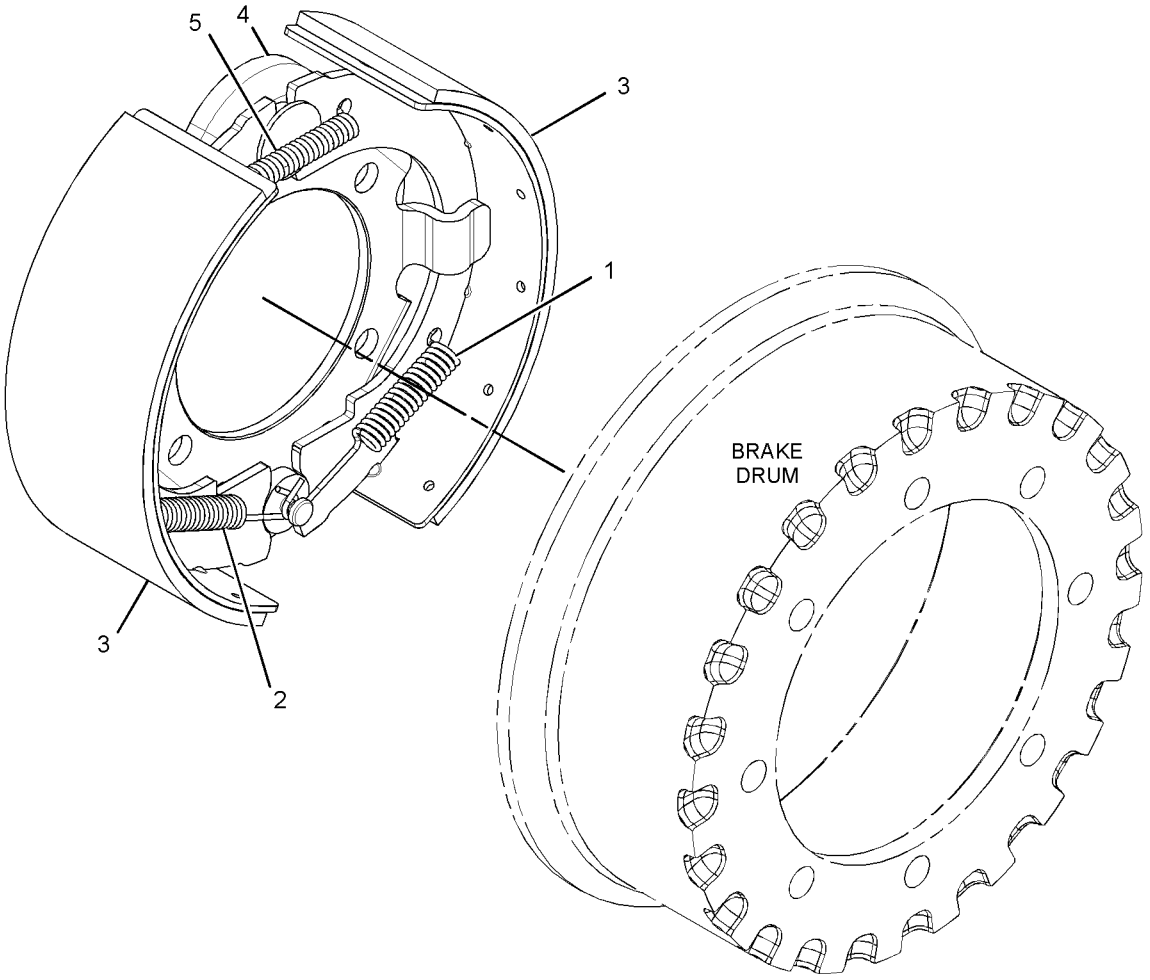

GRAPHIC #1 **<END>** g01349682

168-7000 CONTROL GP-PARKING BRAKE–HANDLE

S/N: BYD1-UP; FTD1-UP

PART OF 190-4405 CAB AR-ENCLOSED ROPS, 304-9256 CANOPY AR-SOFT, 190-4406 CANOPY GP-OPEN ROPS, 304-9255, 308-1933 PLATFORM AR AN ATTACHMENT

SMCS-4282, 4284 **i01836172**

NOTE	REF NO	GRAPHIC REF	PART NUMBER	QTY	PART NAME 1 2 3 4 5 6 (PRODUCT LEVEL)	SEE PAGE
	1	1	**3H-8538**	1	PIN	
	2	1	**6G-4195**	1	SWITCH AS-LIMIT (PARKING BRAKE)	
		1	**3L-8187**	3	LOCKWASHER	
		1	**6V-8373**	3	SCREW-MACHINE (6-32X0.187-IN)	
	3	1	**6S-6646**	1	PIN-COTTER	
	4	1	**8K-1433**	1	GROMMET	
	5	1	**163-6408**	1	BRACKET AS	
	6	1	**163-6412**	1	LEVER AS	
		1	**9R-9110**	1	BUTTON	
		1	**9R-9111**	1	SPRING-COMPRESSION	
	7	1	**186-4415**	1	CLEVIS	
	8	1	**2N-3477**	2	SCREW-MACHINE (6-32X1.25-IN)	
	9	1	**4B-5324**	4	WASHER (3.9X9.6X1.2-MM THK)	
	10	1	**7D-6922**	2	LOCKNUT (6-32-THD)	
M	11	1	**8T-4189**	4	BOLT (M8X1.25X20-MM)	
	12	1	**8T-4224**	4	WASHER-HARD (8.8X16X2-MM THK)	

M-METRIC PART

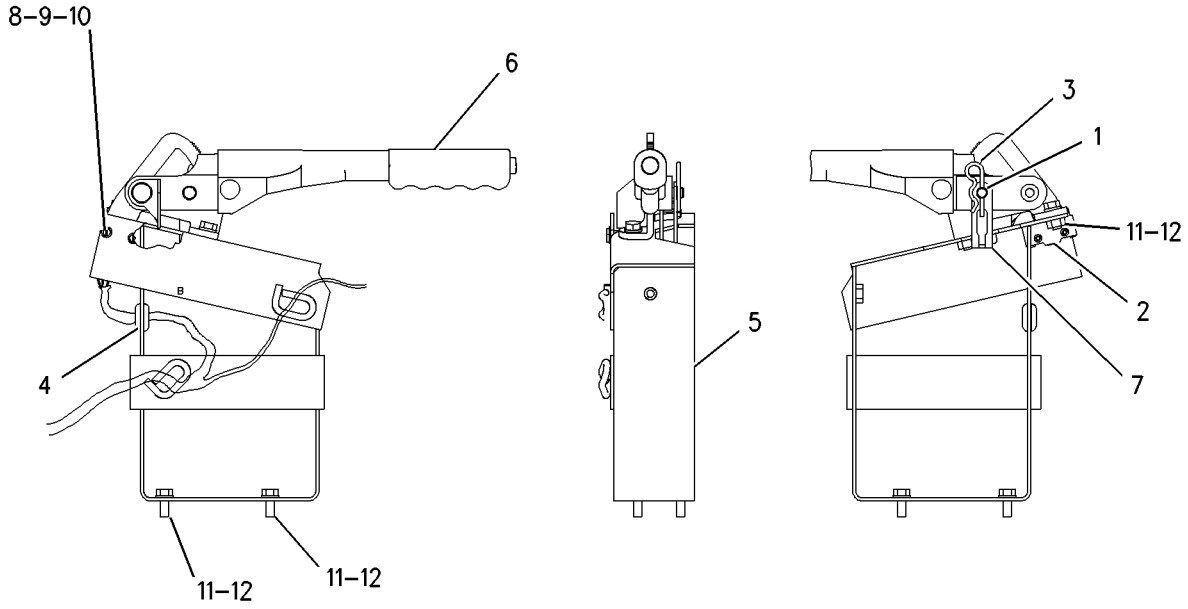

GRAPHIC #1 **<END>** g00768639

BRAKING SYSTEM

289-8930 CONTROL GP-PARKING BRAKE

S/N: FTD1-UP

PART OF 289-8891, 290-6498 CHASSIS AR

SMCS-4282, 4284 **i02807393**

NOTE	REF NO	GRAPHIC REF	PART NUMBER	QTY	PART NAME 1 2 3 4 5 6 (PRODUCT LEVEL)	SEE PAGE
	1	1	**8C-6160**	1	CLEVIS AS	
	2	1	**9U-0710**	2	CLIP	
	3	1	**143-3193**	1	CABLE AS-PARKING BRAKE CONTROL	
	4	1	**293-2840**	1	PLATE AS	
	5	1	**293-2841**	1	PLATE	
	6	1	**3B-4610**	1	PIN-COTTER	
M	7	1	**5C-7261**	1	NUT (M8X1.25-THD)	
	8	1	**5P-9297**	3	CLIP (SLOT)	
	9	1	**6V-8758**	1	PIN-CLEVIS	
	10	1	**8T-4121**	5	WASHER-HARD (11X21X2.5-MM THK)	
M	11	1	**8T-4136**	2	BOLT (M10X1.5X25-MM)	
M	12	1	**8T-4137**	3	BOLT (M10X1.5X20-MM)	
M	13	1	**8T-4192**	4	BOLT (M12X1.75X25-MM)	
	14	1	**8T-4223**	4	WASHER-HARD (13.5X25.5X3-MM THK)	

M-METRIC PART

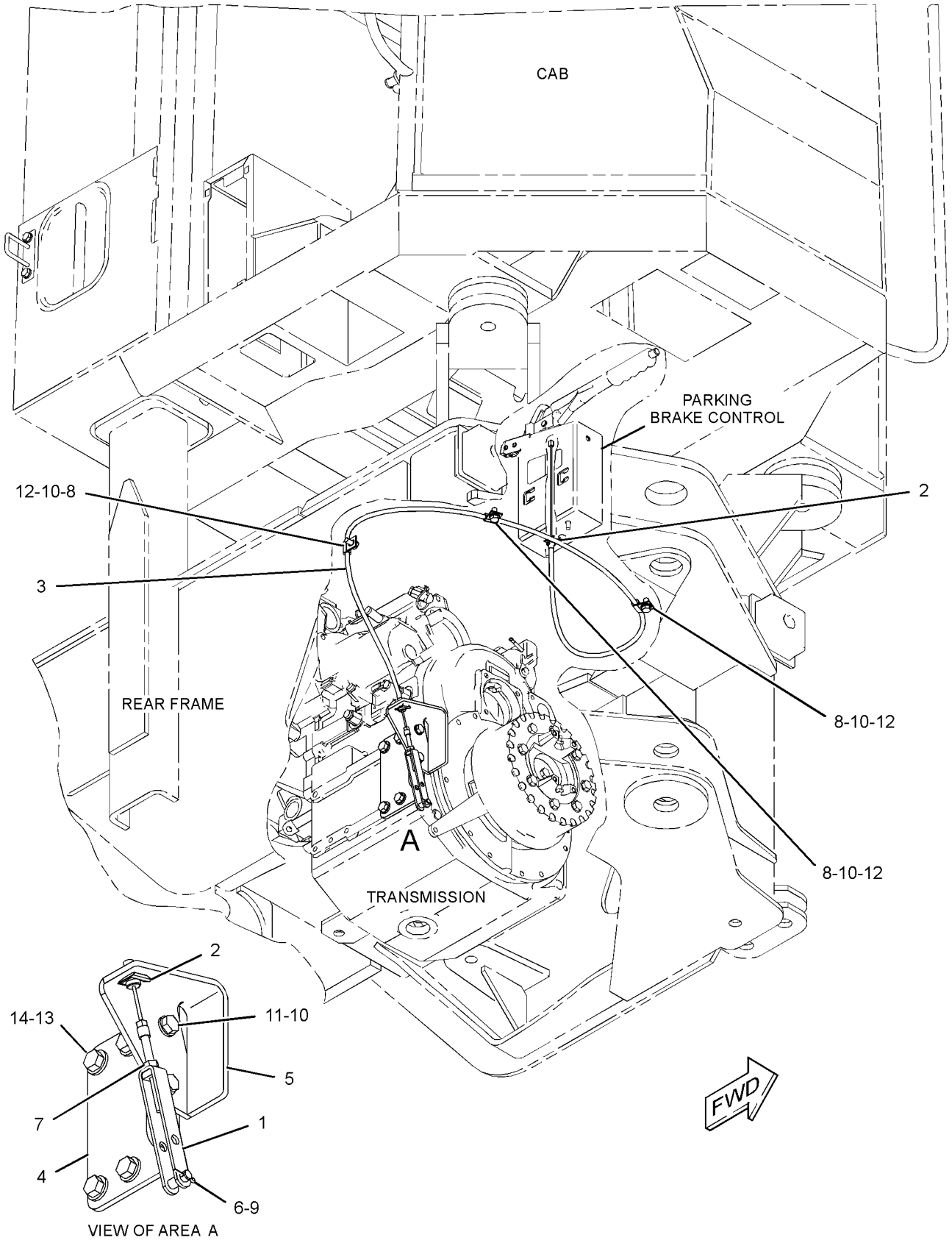

GRAPHIC #1 **<END>** g01390737

BRAKING SYSTEM

294-9448 CONTROL GP-PARKING BRAKE

S/N: BYD1-UP

PART OF 289-8871 CHASSIS AR

SMCS-4282, 4284 **i02807933**

NOTE	REF NO	GRAPHIC REF	PART NUMBER	QTY	PART NAME 1 2 3 4 5 6 (PRODUCT LEVEL)	SEE PAGE
	1	1	**8C-6160**	1	CLEVIS AS	
	2	1	**9U-0710**	2	CLIP	
	3	1	**143-3193**	1	CABLE AS-PARKING BRAKE CONTROL	
	4	1	**293-2840**	1	PLATE AS	
	5	1	**293-2841**	1	PLATE	
	6	1	**3B-4610**	1	PIN-COTTER	
M	7	1	**5C-7261**	1	NUT (M8X1.25-THD)	
	8	1	**5P-9297**	2	CLIP	
	9	1	**6V-8758**	1	PIN-CLEVIS	
	10	1	**8T-4121**	4	WASHER-HARD (11X21X2.5-MM THK)	
M	11	1	**8T-4136**	2	BOLT (M10X1.5X25-MM)	
M	12	1	**8T-4137**	2	BOLT (M10X1.5X20-MM)	
M	13	1	**8T-4192**	4	BOLT (M12X1.75X25-MM)	
	14	1	**8T-4223**	4	WASHER-HARD (13.5X25.5X3-MM THK)	

M-METRIC PART

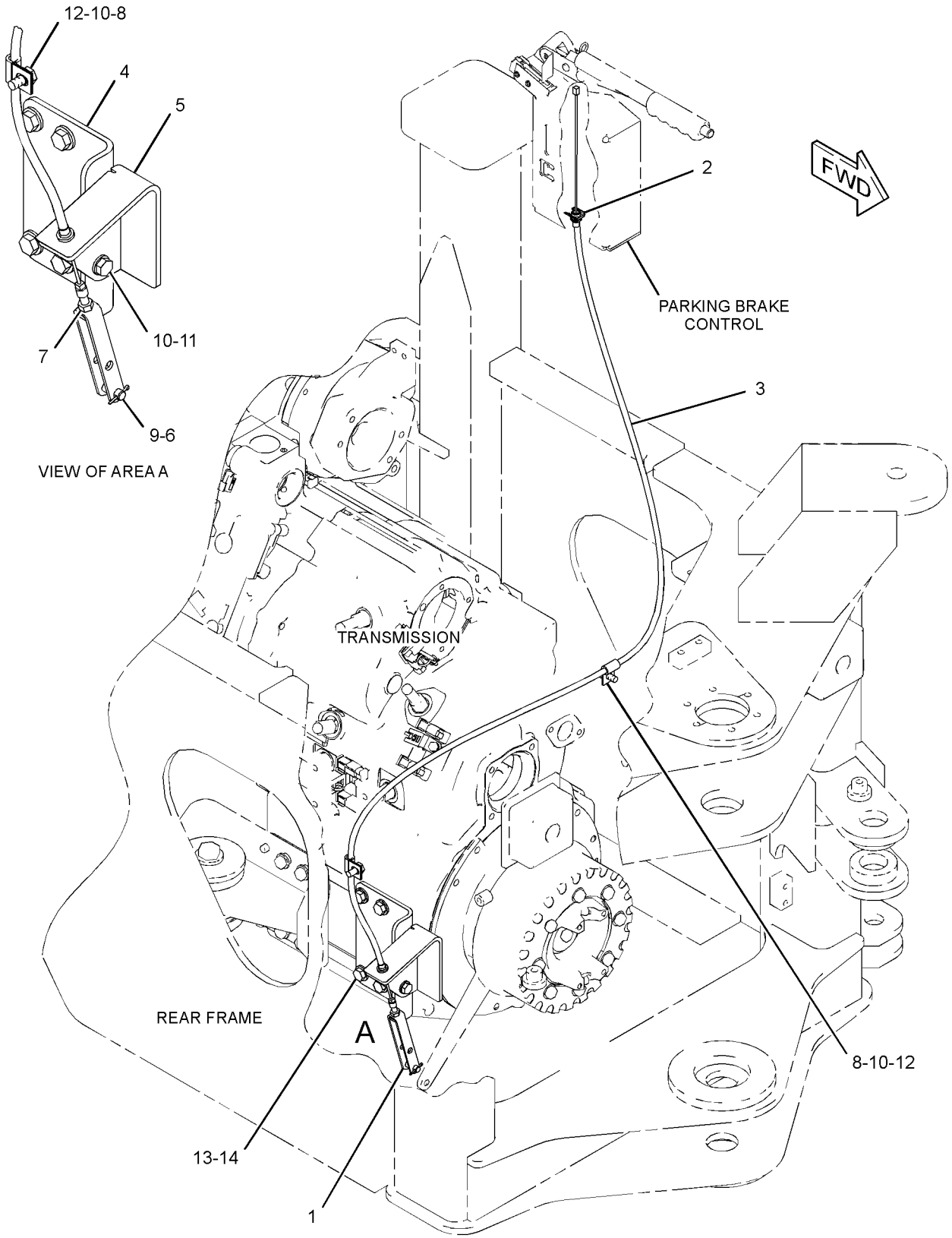

GRAPHIC #1 **<END>** g01404905

BRAKING SYSTEM

202-0430 CONTROL GP-SERVICE BRAKE

S/N: FTD1-UP

PART OF 289-8891, 290-6498 CHASSIS AR

SMCS-4257, 4258, 4263, 4265, 4269, 4280 **i02895867**

NOTE	REF NO	GRAPHIC REF	PART NUMBER	QTY	PART NAME 1 2 3 4 5 6 (PRODUCT LEVEL)	SEE PAGE
	1	1	**3B-4617**	2	PIN-COTTER	
	3	1	**6G-0233**	1	BOOT	
	4	1	**6V-0852**	1	CAP-DUST	
C	5	1	*164-5567*	1	COUPLER AS-QUICK DISCONNECT	
		1	**3J-1907**	1	SEAL-O-RING	
		1	**6V-3965**	1	COUPLER-QUICK DISCONNECT	
	6	1	**7C-6467**	2	PLUG	
	7	1	**8E-8296**	2	DISC-THRUST	
	8	1	**8T-6431**	1	ROD END	
M	9	1	**9X-2065**	1	NUT (M10X1.15-THD)	
	10	1	**128-0168**	1	ROD	
	11	1	**128-0169**	1	ROLLER	
	12	1	**132-0988**	1	BRACKET AS	
		1	**5G-6973**	2	LUG	
	13	1	**132-0994**	1	END-BEARING ROD	
	14	1	**294-2016**	1	PLATE	
	15	1	**133-7675**	1	SPRING	
M	16	1	**134-0673**	2	BOLT (M10X1.5X50-MM)	
	17	1	**144-8521**	1	VALVE GP-BRAKE CONTROL (SERVICE)	
		1	**117-7798**	1	BOOT	
		1	**117-7799**	1	KIT-SEAL (BRAKE VALVE)	
					(INCLUDES O-RINGS, QUAD RING, CUP & BOOT)	
	18	1	**294-2018**	1	LEVER AS	
	18A	1	**5V-4410**	2	BEARING-SLEEVE	
	20	1	**290-5825**	1	SENSOR GP-PRESSURE (BRAKE OIL)	
		1	**102-8803**	1	KIT-RECEPTACLE (3-PIN)	
					(INCLUDES RECEPTACLE AS & WEDGE)	
		1	**186-3735**	3	PIN-CONNECTOR (16-GA TO 18-GA)	
E		1	**9X-1813**		SLEEVE (34-CM)	
	21	1	*148-8336*	2	CONNECTOR AS	
					(EACH INCLUDES)	
		1	**6V-8636**	1	CONNECTOR	
		1	**3J-1907**	1	SEAL-O-RING	
		1	**6V-8397**	1	SEAL-O-RING	
	22	1	*148-8378*	1	ELBOW AS	
		1	**3J-1907**	1	SEAL-O-RING	
		1	**6V-8397**	1	SEAL-O-RING	
		1	**6V-8724**	1	ELBOW	
	23	1	*148-8443*	2	TEE AS	
					(EACH INCLUDES)	
		1	**3J-1907**	1	SEAL-O-RING	
		1	**6V-8397**	1	SEAL-O-RING	
		1	**7X-2459**	1	TEE-O-RING	
M	27	1	**8T-0389**	2	LOCKNUT (M10X1.5-THD)	
	28	1	**8T-4121**	14	WASHER-HARD (11X21X2.5-MM THK)	
M	29	1	**8T-4133**	1	NUT (M10X1.5-THD)	
M	30	1	**8T-4137**	5	BOLT (M10X1.5X20-MM)	
M	31	1	**8T-4196**	2	BOLT (M10X1.5X35-MM)	
	32	1	**9R-2807**	1	CLIP	
	33	1	**9R-3067**	1	PIN	
	34	1	**7K-1181**	1	STRAP-CABLE	
	35	1	**294-2017**	1	BEARING	
C	36	1	*173-7223*	1	ADAPTER AS	
		1	**3J-1907**	1	SEAL-O-RING	
		1	**3J-7354**	1	SEAL-O-RING	
		1	**9X-0261**	1	ADAPTER	

202-0430 **CONTROL GP-SERVICE BRAKE** *(contd.)* **i02895867**

C-CHANGE FROM PREVIOUS TYPE
E-ORDER BY THE CENTIMETER
M-METRIC PART

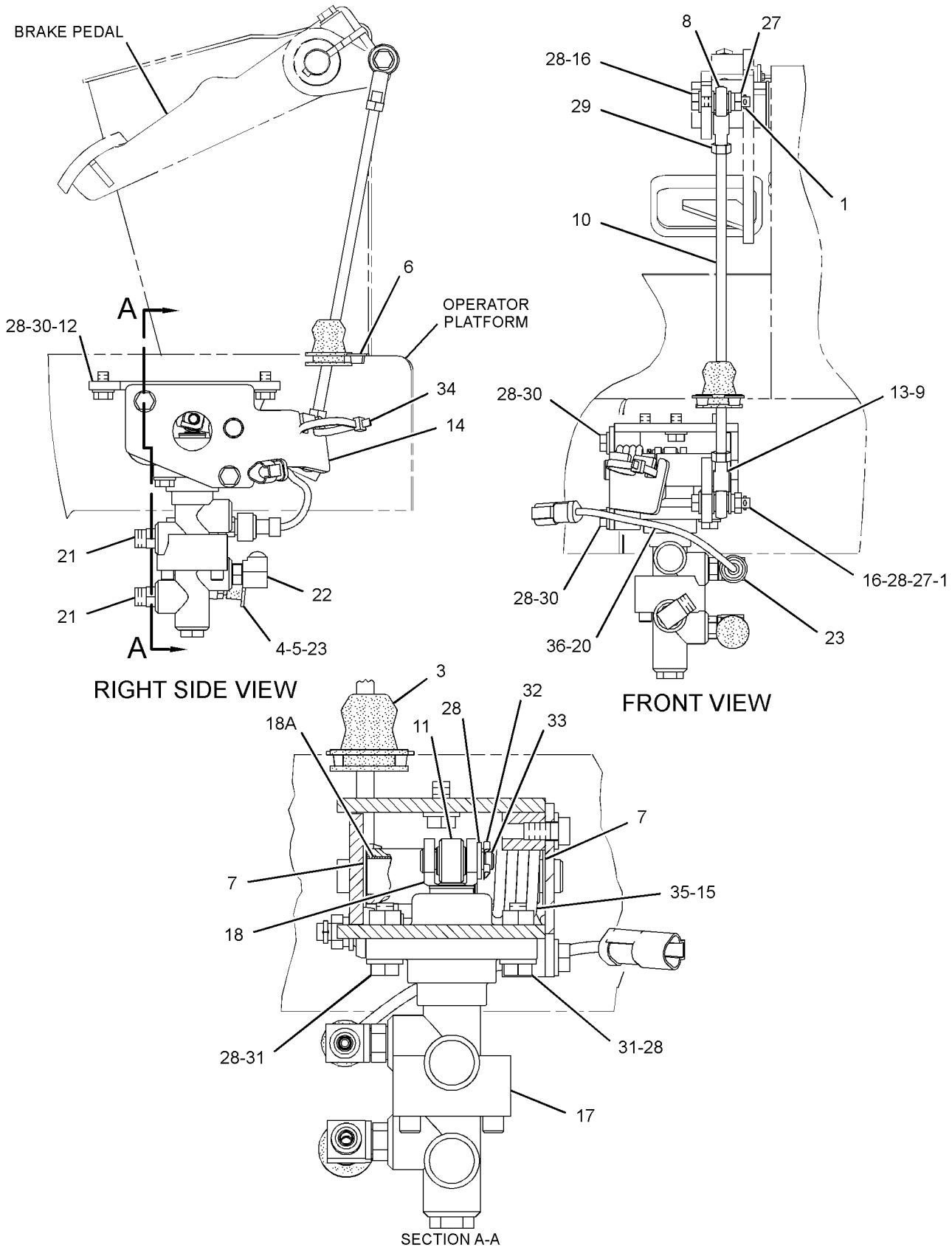

GRAPHIC #1 **<END>** g01444101

BRAKING SYSTEM

202-0430 CONTROL GP-SERVICE BRAKE

S/N: BYD1-UP

PART OF 289-8871 CHASSIS AR

SMCS-4257, 4258, 4263, 4265, 4269, 4280 **i02807922**

NOTE	REF NO	GRAPHIC REF	PART NUMBER	QTY	PART NAME 1 2 3 4 5 6 (PRODUCT LEVEL)	SEE PAGE
	1	1	**3B-4617**	2	PIN-COTTER	
	2	1	**3E-2332**	1	ELBOW	
	3	1	**6G-0233**	1	BOOT	
	4	1	**6V-0852**	1	CAP-DUST	
	5	1	**6V-3965**	1	COUPLER-QUICK DISCONNECT	
	6	1	**7C-6467**	2	PLUG	
	7	1	**8E-8296**	2	DISC-THRUST	
	8	1	**8T-6431**	1	ROD END	
M	9	1	**9X-2065**	1	NUT (M10X1.15-THD)	
	10	1	**128-0168**	1	ROD	
	11	1	**128-0169**	1	ROLLER	
	12	1	**132-0988**	1	BRACKET AS	
		1	**5G-6973**	2	LUG	
	13	1	**132-0994**	1	END-BEARING ROD	
C	14	1	**294-2016**	1	PLATE	
	15	1	**133-7675**	1	SPRING	
M	16	1	**134-0673**	2	BOLT (M10X1.5X50-MM)	
	17	1	**144-8521**	1	VALVE GP-BRAKE CONTROL (SERVICE)	
		1	**117-7798**	1	BOOT	
		1	**117-7799**	1	KIT-SEAL (BRAKE VALVE)	
					(INCLUDES O-RINGS, QUAD RING, CUP & BOOT)	
C	18	1	**294-2018**	1	LEVER AS	
	18A	1	**5V-4410**	2	BEARING-SLEEVE	
	19	1	*165-6365*	1	FITTING AS	
		1	**3J-1907**	1	SEAL-O-RING	
		1	**7W-7381**	1	FITTING-OUTLET	
	20	1	**290-5825**	1	SENSOR GP-PRESSURE (BRAKE OIL)	
		1	**102-8803**	1	KIT-RECEPTACLE (3-PIN)	
					(INCLUDES RECEPTACLE AS & WEDGE)	
		1	**186-3735**	3	PIN-CONNECTOR (16-GA TO 18-GA)	
E		1	**9X-1813**		SLEEVE (34-CM)	
	21	1	*148-8336*	2	CONNECTOR AS	
					(EACH INCLUDES)	
		1	**6V-8636**	1	CONNECTOR	
		1	**3J-1907**	1	SEAL-O-RING	
		1	**6V-8397**	1	SEAL-O-RING	
	22	1	*148-8378*	1	ELBOW AS	
		1	**3J-1907**	1	SEAL-O-RING	
		1	**6V-8397**	1	SEAL-O-RING	
		1	**6V-8724**	1	ELBOW	
	23	1	*148-8443*	2	TEE AS	
					(EACH INCLUDES)	
		1	**3J-1907**	1	SEAL-O-RING	
		1	**6V-8397**	1	SEAL-O-RING	
		1	**7X-2459**	1	TEE-O-RING	
	24	1	**3J-1907**	2	SEAL-O-RING	
	25	1	**3J-7354**	1	SEAL-O-RING	
M	27	1	**8T-0389**	2	LOCKNUT (M10X1.5-THD)	
C	28	1	**8T-4121**	14	WASHER-HARD (11X21X2.5-MM THK)	
M	29	1	**8T-4133**	1	NUT (M10X1.5-THD)	
CM	30	1	**8T-4137**	5	BOLT (M10X1.5X20-MM)	
M	31	1	**8T-4196**	2	BOLT (M10X1.5X35-MM)	
	32	1	**9R-2807**	1	CLIP	
	33	1	**9R-3067**	1	PIN	
C	34	1	**7K-1181**	1	STRAP-CABLE	
C	35	1	**294-2017**	1	BEARING	

202-0430 **CONTROL GP-SERVICE BRAKE** *(contd.)* **i02807922**

C-CHANGE FROM PREVIOUS TYPE
E-ORDER BY THE CENTIMETER
M-METRIC PART

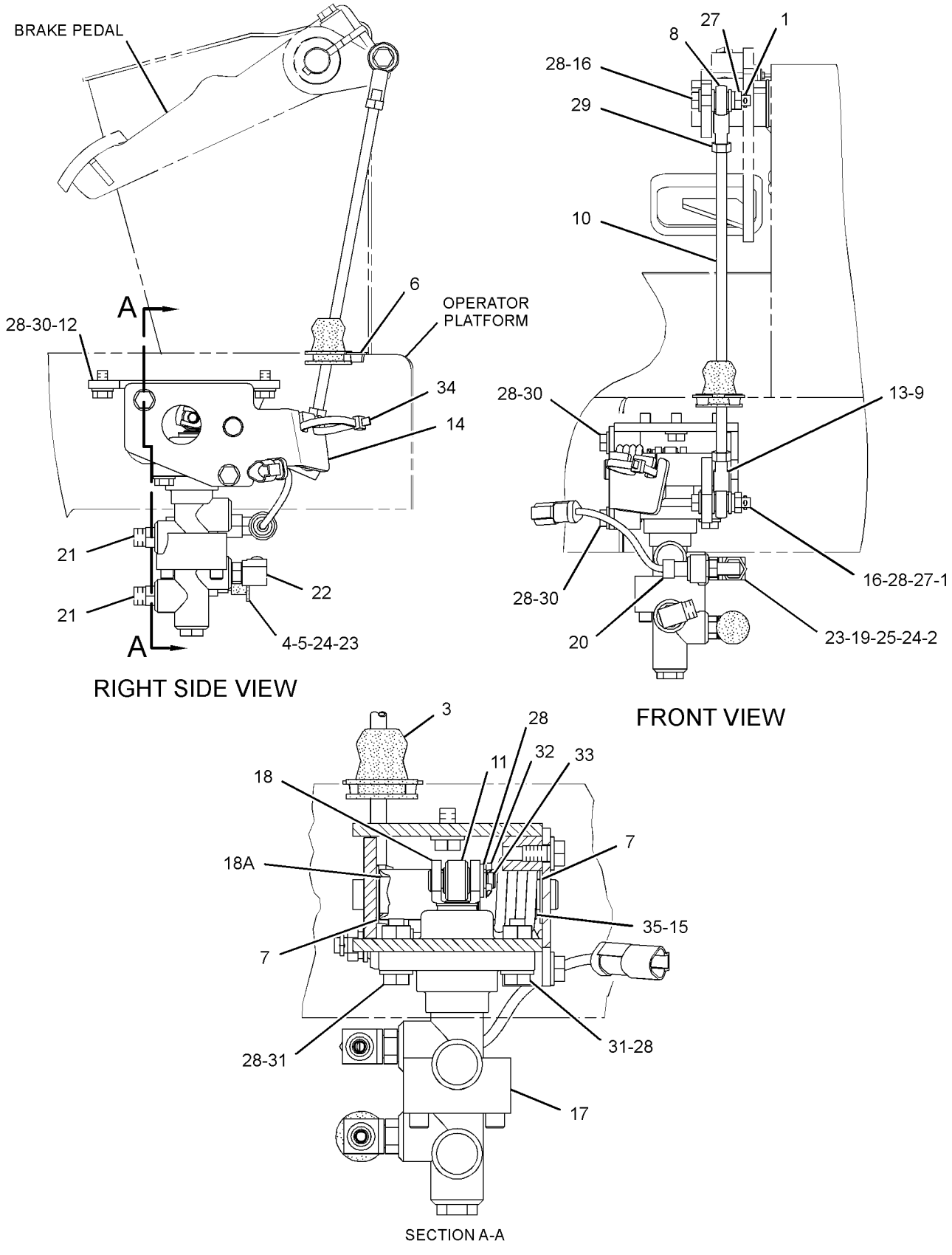

GRAPHIC #1 **<END>** g01416064

295-1011 INSULATION GP-HEAT–HOOD

S/N: BYD1-UP; FTD1-UP

PART OF 289-8947, 289-8948, 289-8950, 289-8951 SUPPRESSION AR-SOUND AN ATTACHMENT

SMCS-4284 **i02810363**

NOTE	REF NO	GRAPHIC REF	PART NUMBER	QTY	PART NAME 1 2 3 4 5 6 (PRODUCT LEVEL)	SEE PAGE
	1	1	**208-2806**	1	INSULATION	
	2	1	**221-9211**	2	INSULATION	
	3	1	**221-9221**	1	INSULATION (LH)	
	4	1	**230-2507**	1	INSULATION	
	5	1	**233-6973**	1	INSULATION (RH)	
	6	1	**295-1012**	1	INSULATION	
	7	1	**295-1013**	1	INSULATION	
	8	1	**295-1014**	1	INSULATION	
	9	1	**295-1015**	1	INSULATION	
	10	1	**295-1019**	1	INSULATION	
	11	1	**295-1020**	1	INSULATION	
	12	1	**295-1021**	1	INSULATION	
	13	1	**295-1022**	1	INSULATION	
	14	1	**295-4212**	2	INSULATION	
	15	1	**295-4213**	1	INSULATION	
	16	1	**295-4214**	1	INSULATION	
	17	1	**295-4215**	1	INSULATION	
	18	1	**295-4218**	1	INSULATION	
	19	1	**225-9499**	1	INSULATION	

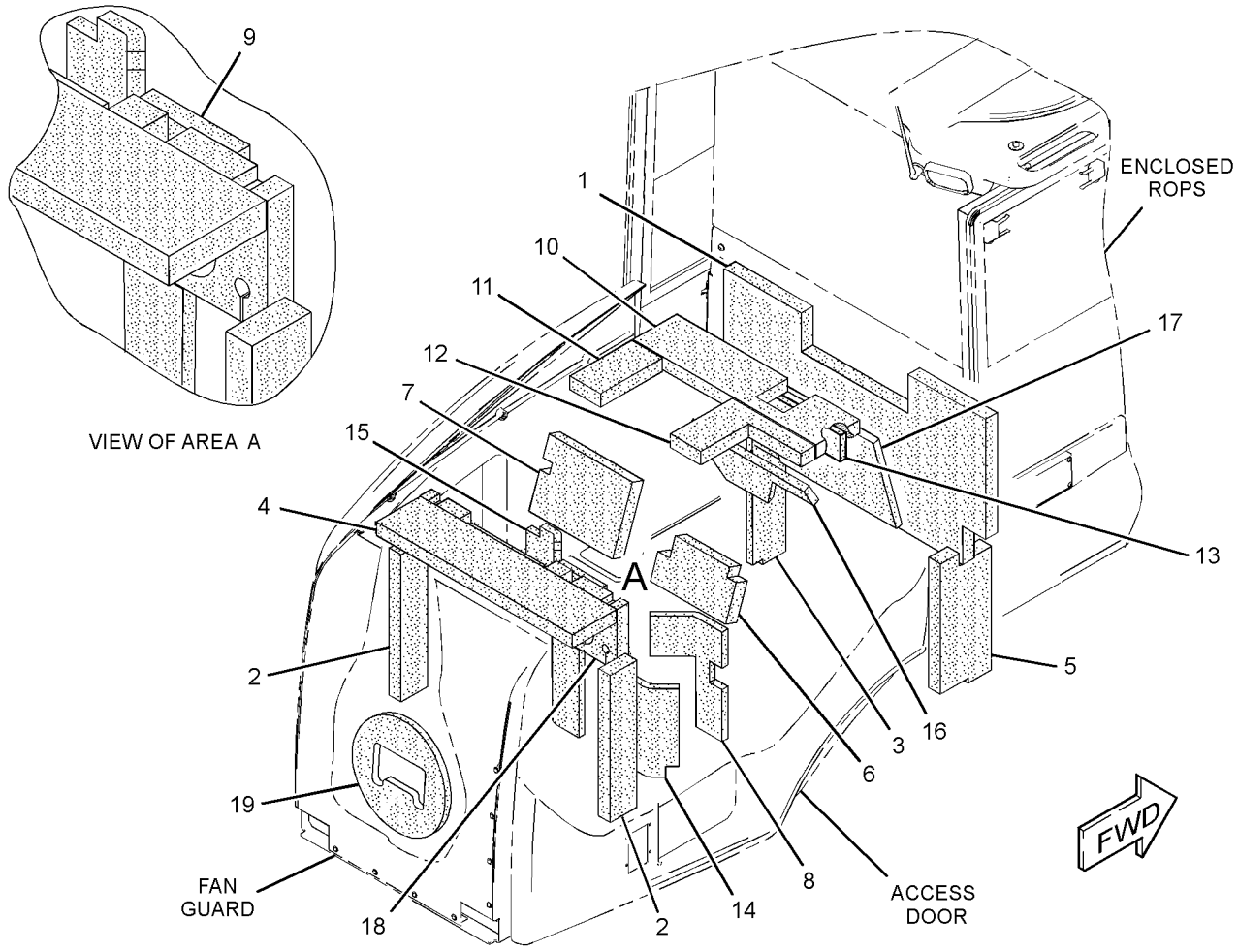

GRAPHIC #1 **<END>** g01410489

BRAKING SYSTEM

289-8816 LINES GP-SERVICE BRAKE

S/N: FTD650-UP

PART OF 290-6498 CHASSIS AR

SMCS-4257 **i02902561**

NOTE	REF NO	GRAPHIC REF	PART NUMBER	QTY	PART NAME 1 2 3 4 5 6 (PRODUCT LEVEL)	SEE PAGE
	1	1	**3S-2093**	4	STRAP-CABLE	
	2	1	**4E-7540**	1	ANGLE	
I	3	1	**7I-3972**	1	HOSE AS	
	4	1	**8Y-8387**	4	BLOCK	
	5	1	**111-6940**	4	SPACER (13.1X15.9X36.5-MM THK)	
Y	6	1	**140-9251**	2	ACCUMULATOR GP-BRAKE (CHARGED)	411
	7	1	**156-4130**	4	CLIP-TUBE	
I	8	1	**164-3873**	2	HOSE AS	
	9	1	**200-6345**	2	MOUNT (DUAL SWIVEL)	
	10	1	**204-2281**	4	STRAP-TIE	
	11	1	**205-5469**	1	GUARD-HOSE	
I	12	1	**214-8917**	2	HOSE AS	
I	13	1	**218-0001**	2	HOSE AS	
I	14	1	**260-6171**	1	HOSE AS	
I	15	1	**297-4717**	1	HOSE AS	
	16	1	**300-9097**	1	BRACKET AS	
	17	1	**300-9622**	1	BRACKET AS	
	18	1	**300-9623**	1	BRACKET AS	
	19	1	**7K-1181**	1	STRAP-CABLE	
	20	1	*148-8336*	1	CONNECTOR AS	
		1	**3J-1907**	1	SEAL-O-RING	
		1	**6V-8397**	1	SEAL-O-RING	
		1	**6V-8636**	1	CONNECTOR (FACE SEAL)	
	21	1	*148-8361*	3	ELBOW AS	
					(EACH INCLUDES)	
		1	**3J-7354**	1	SEAL-O-RING	
		1	**6V-8397**	1	SEAL-O-RING	
		1	**6V-9200**	1	ELBOW (90-DEG)	
	22	1	*148-8367*	1	ELBOW AS	
		1	**6V-8397**	1	SEAL-O-RING	
		1	**6V-9850**	1	ELBOW (SWIVEL)	
	23	1	*148-8378*	1	ELBOW AS	
		1	**3J-1907**	1	SEAL-O-RING	
		1	**6V-8397**	1	SEAL-O-RING	
		1	**6V-8724**	1	ELBOW (90-DEG)	
	24	1	*148-8433*	1	TEE AS	
		1	**6V-8397**	2	SEAL-O-RING	
		1	**6V-9836**	1	TEE-SWIVEL	
	25	1	*148-8435*	2	TEE AS	
					(EACH INCLUDES)	
		1	**3J-1907**	1	SEAL-O-RING	
		1	**6V-8397**	2	SEAL-O-RING	
		1	**6V-8781**	1	TEE-FACE SEAL	
	26	1	*173-7225*	1	TEE AS	
	27	1	**4D-7735**	1	CLIP (SLOT)	
M	28	1	**5C-7261**	1	NUT (M8X1.25-THD)	
	29	1	**5K-5338**	2	CLIP (SLOT)	
	30	1	**5P-4116**	2	WASHER-HARD (8.8X20.5X2-MM THK)	
	31	1	**6D-4246**	1	CLIP (SLOT)	
	32	1	**7X-7729**	8	WASHER (11X25X3-MM THK)	
	33	1	**8M-2773**	1	CLIP (LARGE)	
	34	1	**8T-4121**	7	WASHER-HARD (11X21X2.5-MM THK)	
M	35	1	**8T-4133**	2	NUT (M10X1.5-THD)	
M	36	1	**8T-4136**	4	BOLT (M10X1.5X25-MM)	
M	37	1	**8T-4195**	8	BOLT (M10X1.5X30-MM)	
M	38	1	**8T-4196**	1	BOLT (M10X1.5X35-MM)	

289-8816 LINES GP-SERVICE BRAKE *(contd.)* i02902561

NOTE	REF NO	GRAPHIC REF	PART NUMBER	QTY	PART NAME 1 2 3 4 5 6 (PRODUCT LEVEL)	SEE PAGE
	39	1	**8T-4223**	4	WASHER-HARD (13.5X25.5X3-MM THK)	
	40	1	**8T-4224**	1	WASHER-HARD (8.8X16X2-MM THK)	
M	41	1	**8T-4908**	1	BOLT (M8X1.25X25-MM)	
M	42	1	**8T-5005**	4	BOLT (M10X1.5X70-MM)	
	43	1	**8Y-8388**	2	PLATE	

I-REFER TO HYDRAULIC INFORMATION SYSTEM
M-METRIC PART
Y-SEPARATE ILLUSTRATION

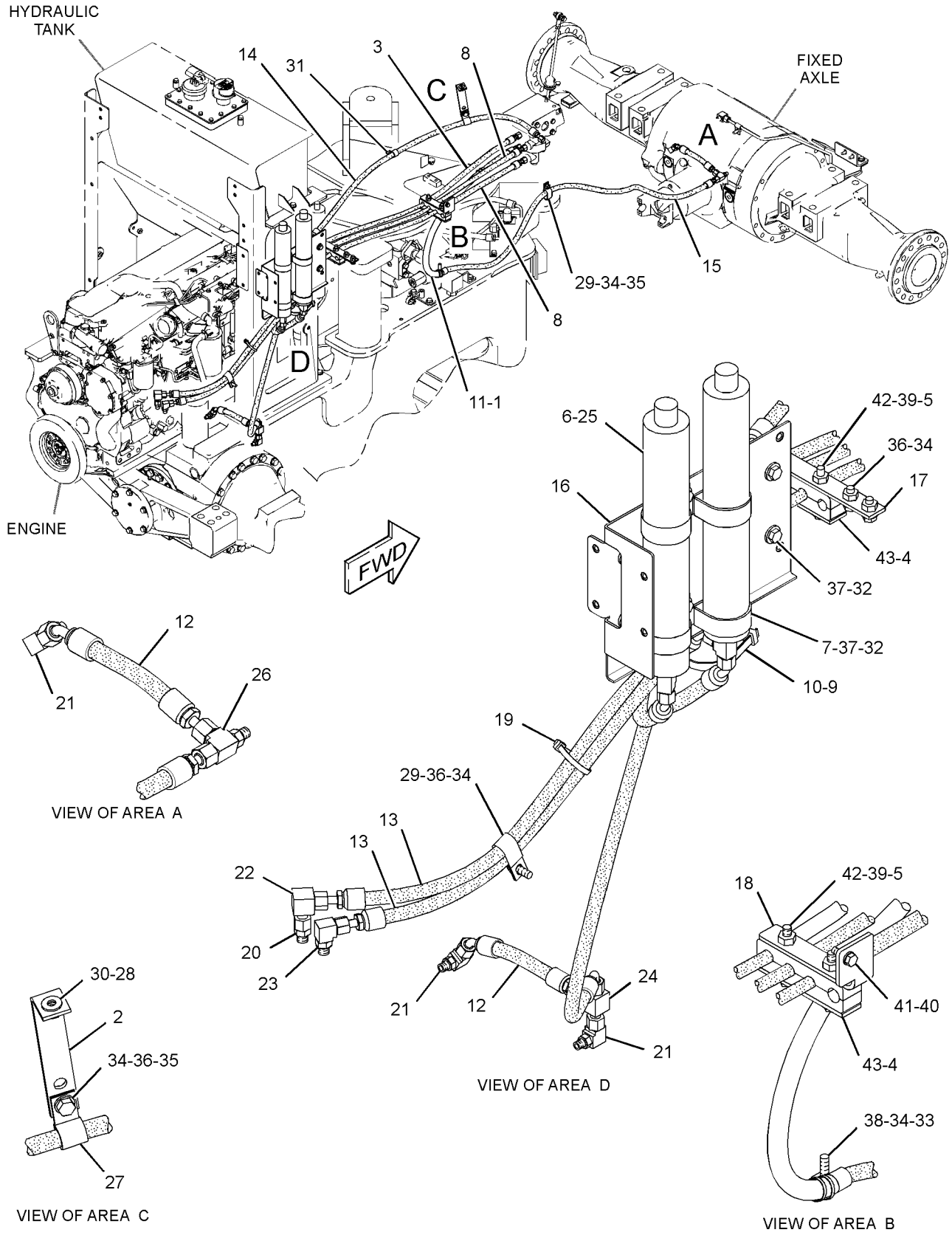

GRAPHIC #1 **<END>** g01442761

BRAKING SYSTEM

289-8926 LINES GP-SERVICE BRAKE

S/N: BYD1-UP

PART OF 289-8871 CHASSIS AR

SMCS-4257 **i02870235**

NOTE	REF NO	GRAPHIC REF	PART NUMBER	QTY	PART NAME 1 2 3 4 5 6 (PRODUCT LEVEL)	SEE PAGE
	1	1	**4E-7540**	1	ANGLE	
I	2	1	**7I-3972**	1	HOSE AS	
	3	1	**8Y-8387**	4	BLOCK	
I	4	1	**104-8621**	1	HOSE AS	
	5	1	**111-6940**	4	SPACER (13.1X15.9X36.5-MM THK)	
I	6	1	**128-0164**	1	HOSE AS	
Y	7	1	*140-9251*	2	ACCUMULATOR GP-BRAKE (CHARGED)	411
	8	1	**156-4130**	4	CLIP-TUBE	
I	9	1	**164-3873**	2	HOSE AS	
	10	1	**200-6345**	2	MOUNT (DUAL SWIVEL)	
	11	1	**204-2281**	4	STRAP-TIE	
I	12	1	**214-8917**	2	HOSE AS	
I	13	1	**218-0001**	2	HOSE AS	
	14	1	**300-9097**	1	BRACKET AS	
	15	1	**300-9622**	1	BRACKET AS	
	16	1	**300-9623**	1	BRACKET AS	
	17	1	*148-8336*	1	CONNECTOR AS	
		1	**6V-8636**	1	CONNECTOR (FACE SEAL)	
		1	**6V-8397**	1	SEAL-O-RING	
		1	**3J-1907**	1	SEAL-O-RING	
	18	1	*148-8361*	4	ELBOW AS	
					(EACH INCLUDES)	
		1	**3J-7354**	1	SEAL-O-RING	
		1	**6V-8397**	1	SEAL-O-RING	
		1	**6V-9200**	1	ELBOW (90-DEG)	
	19	1	*148-8367*	1	ELBOW AS	
		1	**6V-8397**	1	SEAL-O-RING	
		1	**6V-9850**	1	ELBOW (SWIVEL)	
	20	1	*148-8378*	1	ELBOW AS	
		1	**3J-1907**	1	SEAL-O-RING	
		1	**6V-8397**	1	SEAL-O-RING	
		1	**6V-8724**	1	ELBOW (90-DEG)	
	21	1	*148-8433*	1	TEE AS	
		1	**6V-8397**	2	SEAL-O-RING	
		1	**6V-9836**	1	TEE-SWIVEL	
	22	1	*148-8434*	1	TEE AS	
		1	**6V-8397**	2	SEAL-O-RING	
		1	**6V-9843**	1	TEE-SWIVEL	
	23	1	*148-8435*	2	TEE AS	
					(EACH INCLUDES)	
		1	**3J-1907**	1	SEAL-O-RING	
		1	**6V-8397**	2	SEAL-O-RING	
		1	**6V-8781**	1	TEE-FACE SEAL	
	24	1	**4D-7735**	1	CLIP	
M	25	1	**5C-7261**	1	NUT (M8X1.25-THD)	
	26	1	**5K-5338**	1	CLIP	
	27	1	**5P-4116**	2	WASHER-HARD (8.8X20.5X2-MM THK)	
	28	1	**7X-7729**	8	WASHER (11X25X3-MM THK)	
	29	1	**8M-2773**	4	CLIP	
	30	1	**8T-4121**	10	WASHER-HARD (11X21X2.5-MM THK)	
M	31	1	**8T-4133**	1	NUT (M10X1.5-THD)	
M	32	1	**8T-4136**	5	BOLT (M10X1.5X25-MM)	
M	33	1	**8T-4195**	8	BOLT (M10X1.5X30-MM)	
	34	1	**8T-4224**	1	WASHER-HARD (8.8X16X2-MM THK)	
M	35	1	**8T-4908**	1	BOLT (M8X1.25X25-MM)	
M	36	1	**8T-5005**	4	BOLT (M10X1.5X70-MM)	

289-8926 **LINES GP-SERVICE BRAKE** *(contd.)* **i02870235**

NOTE	REF NO	GRAPHIC REF	PART NUMBER	QTY	PART NAME 1 2 3 4 5 6 (PRODUCT LEVEL)	SEE PAGE
	37	1	**8Y-8388**	2	PLATE	
	38	1	**7K-1181**	1	STRAP-CABLE	

I-REFER TO HYDRAULIC INFORMATION SYSTEM
M-METRIC PART
Y-SEPARATE ILLUSTRATION

289-8926 **LINES GP-SERVICE BRAKE** *(contd.)* **i02870235**

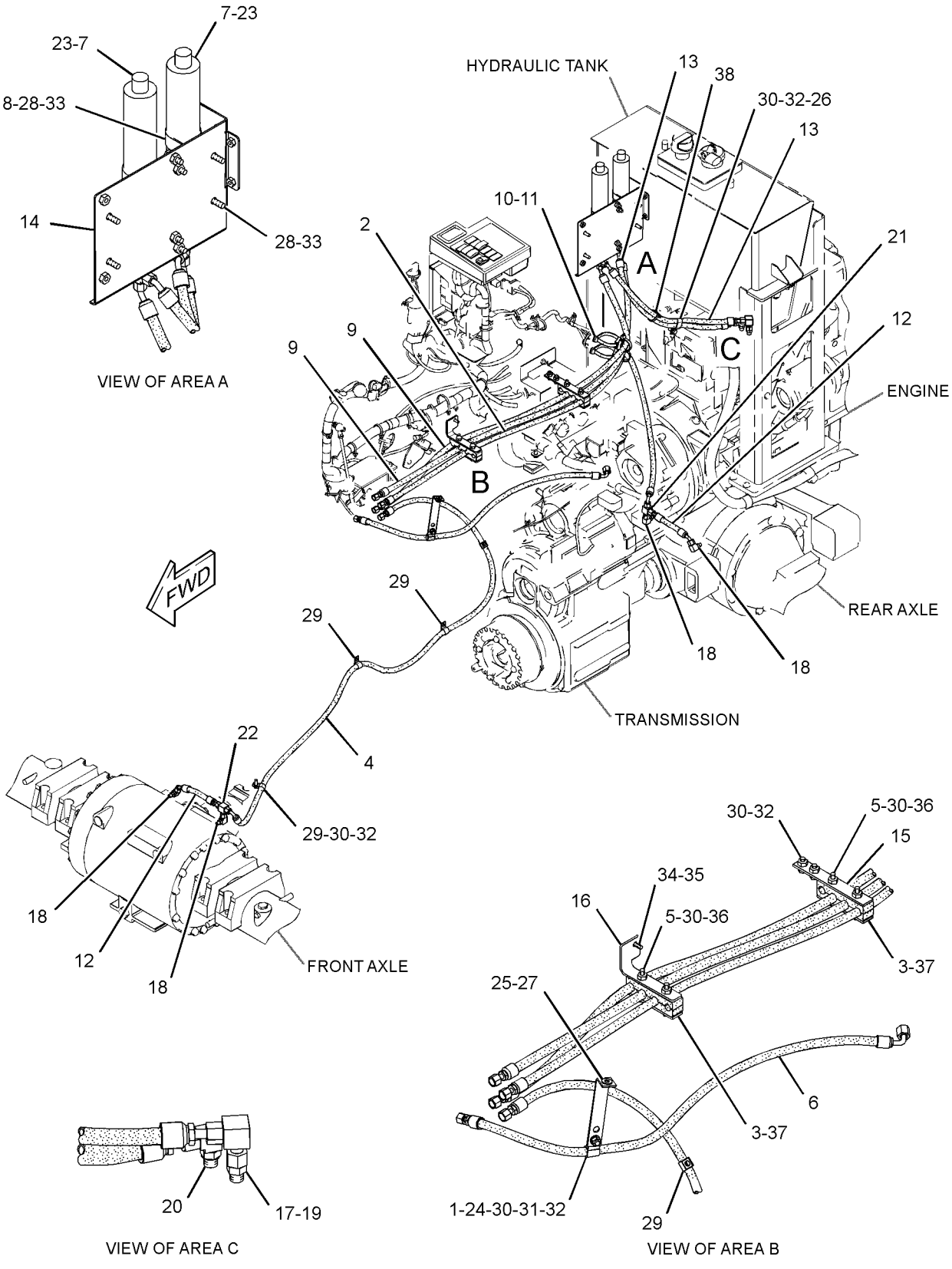

GRAPHIC #1 **<END>** g01440492

BRAKING SYSTEM

289-8927 LINES GP-SERVICE BRAKE

S/N: FTD1-649

PART OF 289-8891 CHASSIS AR

SMCS-4257 **i02807983**

NOTE	REF NO	GRAPHIC REF	PART NUMBER	QTY	PART NAME 1 2 3 4 5 6 (PRODUCT LEVEL)	SEE PAGE
	1	1	**4E-7540**	1	ANGLE	
I	2	1	**7I-3972**	1	HOSE AS	
	3	1	**7K-1181**	2	STRAP-CABLE	
	4	1	**8Y-8387**	4	BLOCK	
	5	1	**111-6940**	4	SPACER (13.1X15.9X36.5-MM THK)	
Y	6	1	*140-9251*	2	ACCUMULATOR GP-BRAKE (CHARGED)	411
	7	1	**156-4130**	4	CLIP-TUBE	
I	8	1	**164-3873**	2	HOSE AS	
	9	1	**200-6345**	2	MOUNT (DUAL SWIVEL)	
	10	1	**204-2281**	4	STRAP-TIE	
I	11	1	**214-8917**	2	HOSE AS	
I	12	1	**218-0001**	2	HOSE AS	
I	13	1	**260-6171**	1	HOSE AS	
I	14	1	**297-4717**	1	HOSE AS	
	15	1	**300-9097**	1	BRACKET AS	
	16	1	**300-9622**	1	BRACKET AS	
	17	1	**300-9623**	1	BRACKET AS	
	18	1	*148-8361*	3	ELBOW AS	
					(EACH INCLUDES)	
		1	**3J-7354**	1	SEAL-O-RING	
		1	**6V-8397**	1	SEAL-O-RING	
		1	**6V-9200**	1	ELBOW	
	19	1	*148-8378*	2	ELBOW AS	
					(EACH INCLUDES)	
		1	**3J-1907**	1	SEAL-O-RING	
		1	**6V-8397**	1	SEAL-O-RING	
		1	**6V-8724**	1	ELBOW	
	20	1	*148-8433*	1	TEE AS	
		1	**6V-8397**	2	SEAL-O-RING	
		1	**6V-9836**	1	TEE-SWIVEL	
	21	1	*148-8435*	2	TEE AS	
					(EACH INCLUDES)	
		1	**3J-1907**	1	SEAL-O-RING	
		1	**6V-8397**	2	SEAL-O-RING	
		1	**6V-8781**	1	TEE-FACE SEAL	
	22	1	*173-7225*	1	TEE AS	
		1	**3J-7354**	1	SEAL-O-RING	
		1	**6V-8397**	2	SEAL-O-RING	
		1	**6V-9161**	1	TEE	
	23	1	**4D-7735**	1	CLIP	
	24	1	**4P-7429**	1	CLIP	
M	25	1	**5C-7261**	1	NUT (M8X1.25-THD)	
	26	1	**5P-4116**	2	WASHER-HARD (8.8X20.5X2-MM THK)	
	27	1	**6D-4246**	1	CLIP	
	28	1	**7X-7729**	8	WASHER (11X25X3-MM THK)	
	29	1	**8M-2773**	2	CLIP	
	30	1	**8T-4121**	6	WASHER-HARD (11X21X2.5-MM THK)	
M	31	1	**8T-4133**	2	NUT (M10X1.5-THD)	
M	32	1	**8T-4136**	4	BOLT (M10X1.5X25-MM)	
M	33	1	**8T-4195**	8	BOLT (M10X1.5X30-MM)	
	34	1	**8T-4223**	4	WASHER-HARD (13.5X25.5X3-MM THK)	
	35	1	**8T-4224**	1	WASHER-HARD (8.8X16X2-MM THK)	
M	36	1	**8T-4908**	1	BOLT (M8X1.25X25-MM)	
M	37	1	**8T-5005**	4	BOLT (M10X1.5X70-MM)	
	38	1	**8Y-8388**	2	PLATE	

I-REFER TO HYDRAULIC INFORMATION SYSTEM
M-METRIC PART
Y-SEPARATE ILLUSTRATION

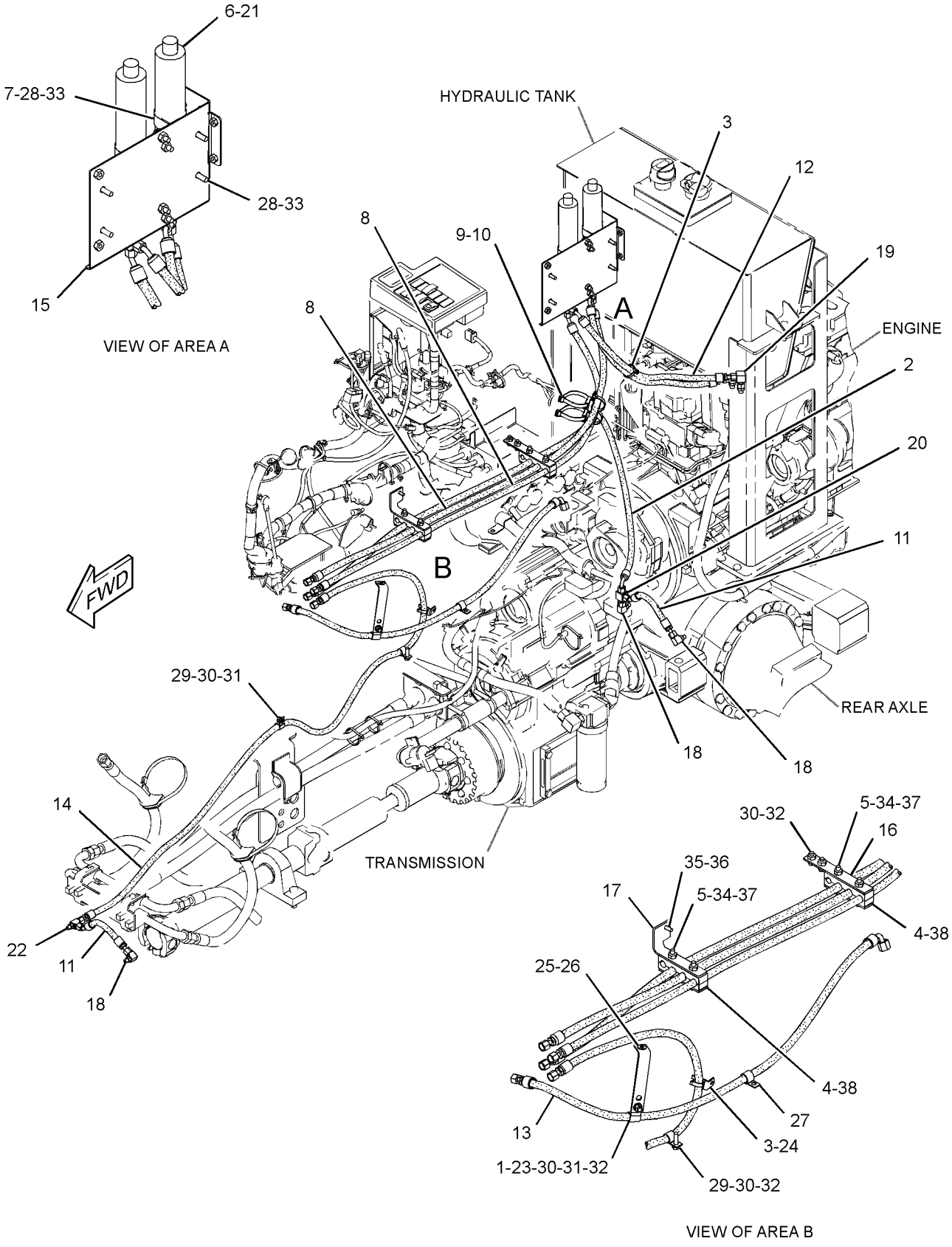

GRAPHIC #1 **<END>** g01405585

125-3657 VALVE GP-SHUTTLE

S/N: BYD1-UP
PART OF 141-1481 VALVE GP-SHUTTLE
AN ATTACHMENT

SMCS-4289 **i02567343**

NOTE	REF NO	GRAPHIC REF	PART NUMBER	QTY	PART NAME 1 2 3 4 5 6 (PRODUCT LEVEL)	SEE PAGE
	1	1	**2M-9780**	1	SEAL-O-RING	
	2	1	**6V-5142**	1	SEAL-O-RING	
	3	1	**095-1751**	1	SEAL-O-RING	
	4	1	**161-6149**	1	SEAL-O-RING	
	5	1	**169-1617**	2	RING-BACKUP	
	6	1	**169-1616**	2	RING-BACKUP	
	7	1	**161-6161**	2	RING-BACKUP	

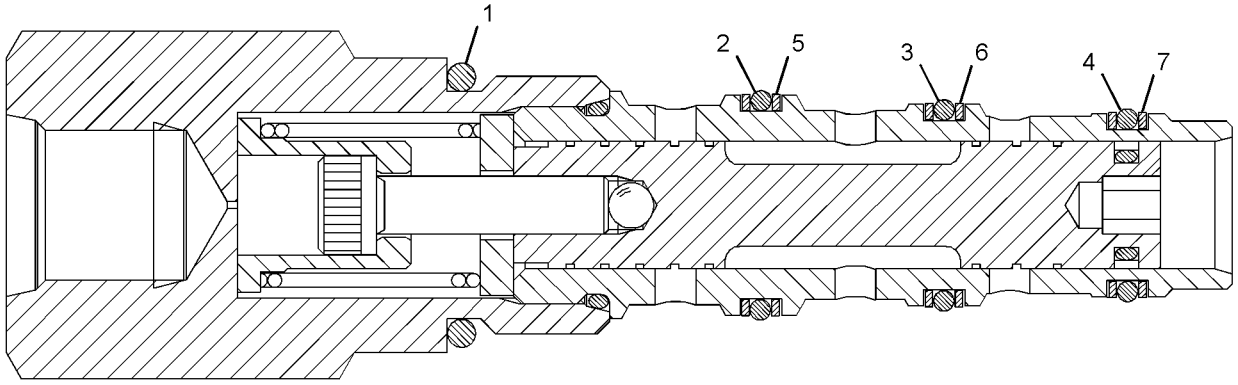

GRAPHIC #1 **<END>** g01286134

STEERING SYSTEM

118-0899 CYLINDER & MTG GP-STEERING

S/N: BYD1-UP

PART OF 289-8871 CHASSIS AR

SMCS-4303 **i02862252**

NOTE	REF NO	GRAPHIC REF	PART NUMBER	QTY	PART NAME 1 2 3 4 5 6 (PRODUCT LEVEL)	SEE PAGE
	1	1	**4E-4524**	4	PIN AS	
B	2	1	**9D-1535**	12	WASHER-THRUST (44.8X101.6X1.22-MM THK)	
Y	3	1	**125-0373**	1	CYLINDER GP-HYDRAULIC (RH)	434
Y	4	1	**125-0374**	1	CYLINDER GP-STEERING (LH) (LH)	436
	5	1	**7X-0618**	2	WASHER-HARD (13.5X40X5-MM THK)	
M	6	1	**8T-4192**	2	BOLT (M12X1.75X25-MM)	
	7	1	**8T-4223**	4	WASHER-HARD (13.5X25.5X3-MM THK)	
M	8	1	**8T-6868**	2	BOLT (M12X1.75X80-MM)	

B-USE AS REQUIRED
M-METRIC PART
Y-SEPARATE ILLUSTRATION

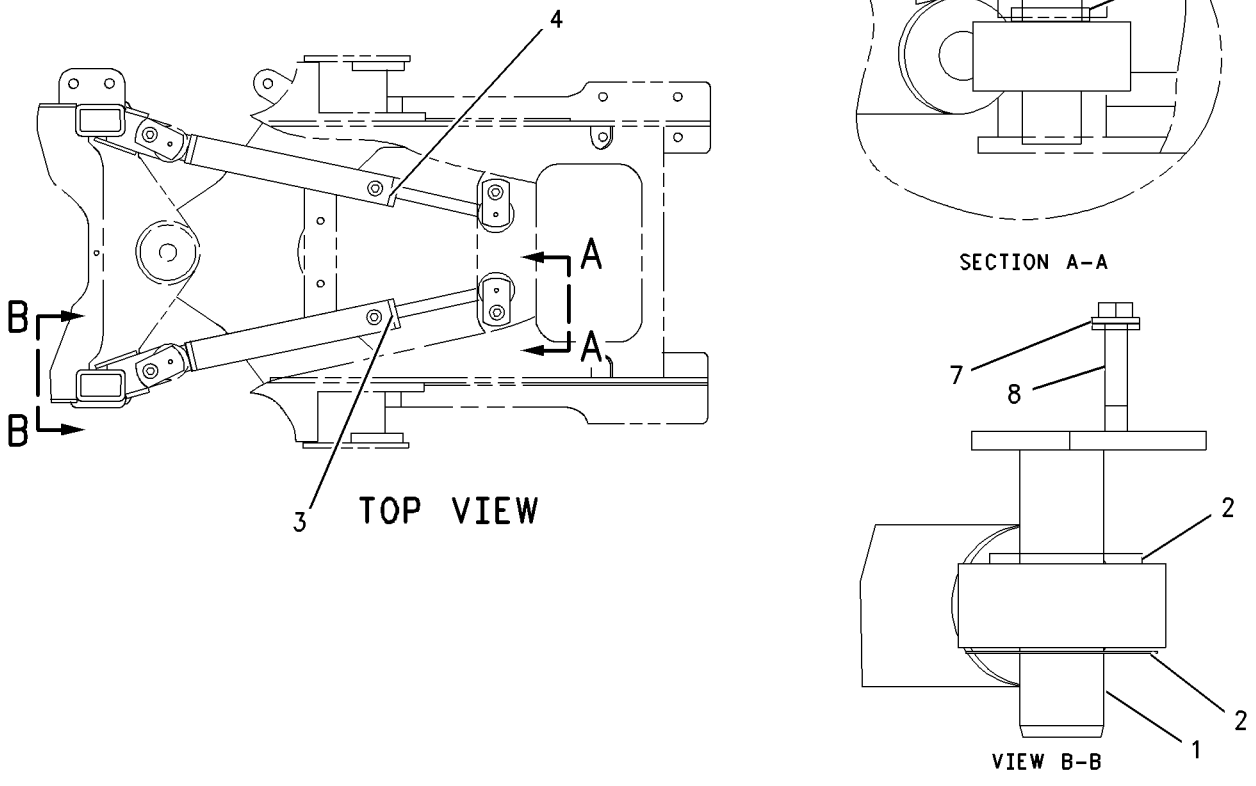

GRAPHIC #1 **<END>** g00651380

235-7195 CYLINDER & MTG GP-STEERING

S/N: FTD1-UP

PART OF 289-8891, 290-6498 CHASSIS AR

SMCS-4303 **i02252178**

NOTE	REF NO	GRAPHIC REF	PART NUMBER	QTY	PART NAME 1 2 3 4 5 6 (PRODUCT LEVEL)	SEE PAGE
	1	1	**132-2553**	2	PIN	
	2	1	**148-7871**	2	PIN AS	
Y	3	1	**237-9271**	2	CYLINDER GP-STEERING	437
	4	1	**6V-3213**	2	RING-RETAINING	
	5	1	**7X-0618**	2	WASHER-HARD (13.5X40X5-MM THK)	
M	6	1	**8T-4183**	2	BOLT (M12X1.75X40-MM)	
	7	1	**9C-7907**	2	SPACER (21.5X28X14-MM THK)	
B	8	1	**9D-1535**	12	WASHER-THRUST (44.8X101.6X1.22-MM THK)	

B-USE AS REQUIRED
M-METRIC PART
Y-SEPARATE ILLUSTRATION

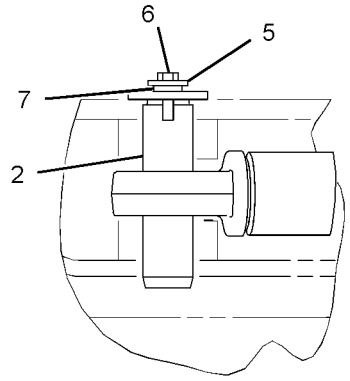

VIEW OF AREA A

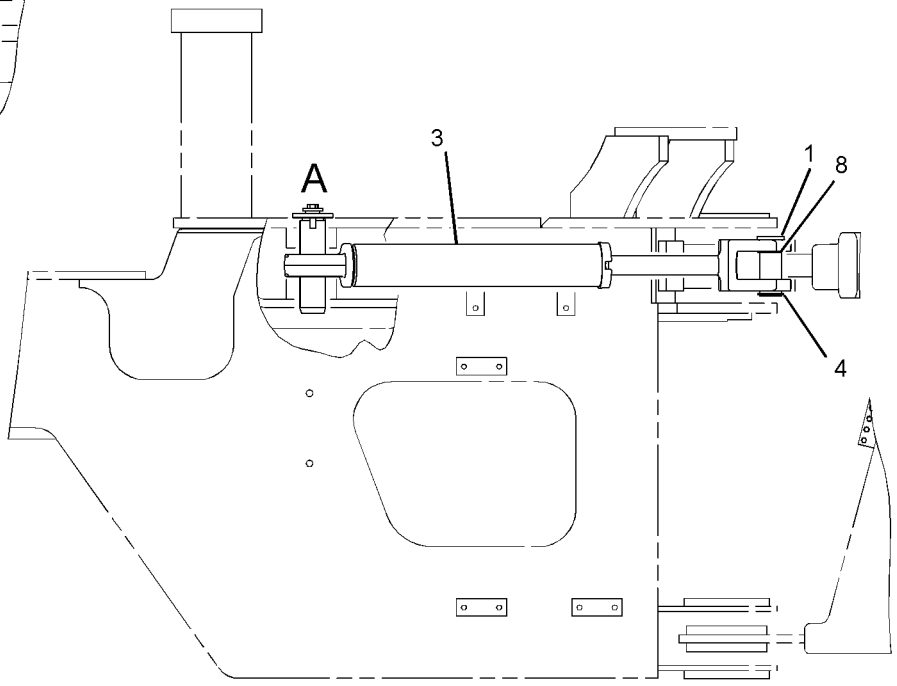

RIGHT SIDE VIEW

GRAPHIC #1 **<END>** g01127142

125-0373 CYLINDER GP-HYDRAULIC—STEERING, RH

S/N: BYD1-UP

69.85MM (2.75 IN) BORE X 472MM (18.6 IN) STROKE

PART OF 118-0899 CYLINDER & MTG GP-STEERING

SMCS-4303 **i01858145**

NOTE	REF NO	GRAPHIC REF	PART NUMBER	QTY	PART NAME 1 2 3 4 5 6 (PRODUCT LEVEL)	SEE PAGE
	1	1	**125-0375**	1	CYLINDER AS-RH	
	1A	1	**4D-4431**	1	BEARING-ALIGNING	
M	2	1	**173-9685**	1	BOLT (M20X2.5X70-MM)	
	3	1	**8T-3282**	1	WASHER-HARD (22X35X3.5-MM THK)	
	4	1	**5J-7010**	1	SEAL AS	
	5	1	**8J-0112**	1	RING-WEAR	
	6	1	**9T-2457**	1	PISTON	
	7	1	**175-7895**	1	SEAL-O-RING	
	8	1	**4J-9225**	1	RING-BACKUP	
	9	1	**6E-4940**	1	HEAD	
	10	1	**9T-6672**	1	ROD AS	
	10A	1	**4D-4431**	1	BEARING-ALIGNING	
	11	1	**4T-6780**	1	RING-WEAR	
	12	1	**167-2186**	1	SEAL AS-BUFFER	
	13	1	**167-2294**	1	SEAL-U-CUP	
	14	1	**226-8202**	1	SEAL-WIPER	
					AVAILABLE REPAIR KIT(S):	
			185-6596	1	KIT-SEAL	
					(INCLUDES RINGS AND SEALS)	

M-METRIC PART

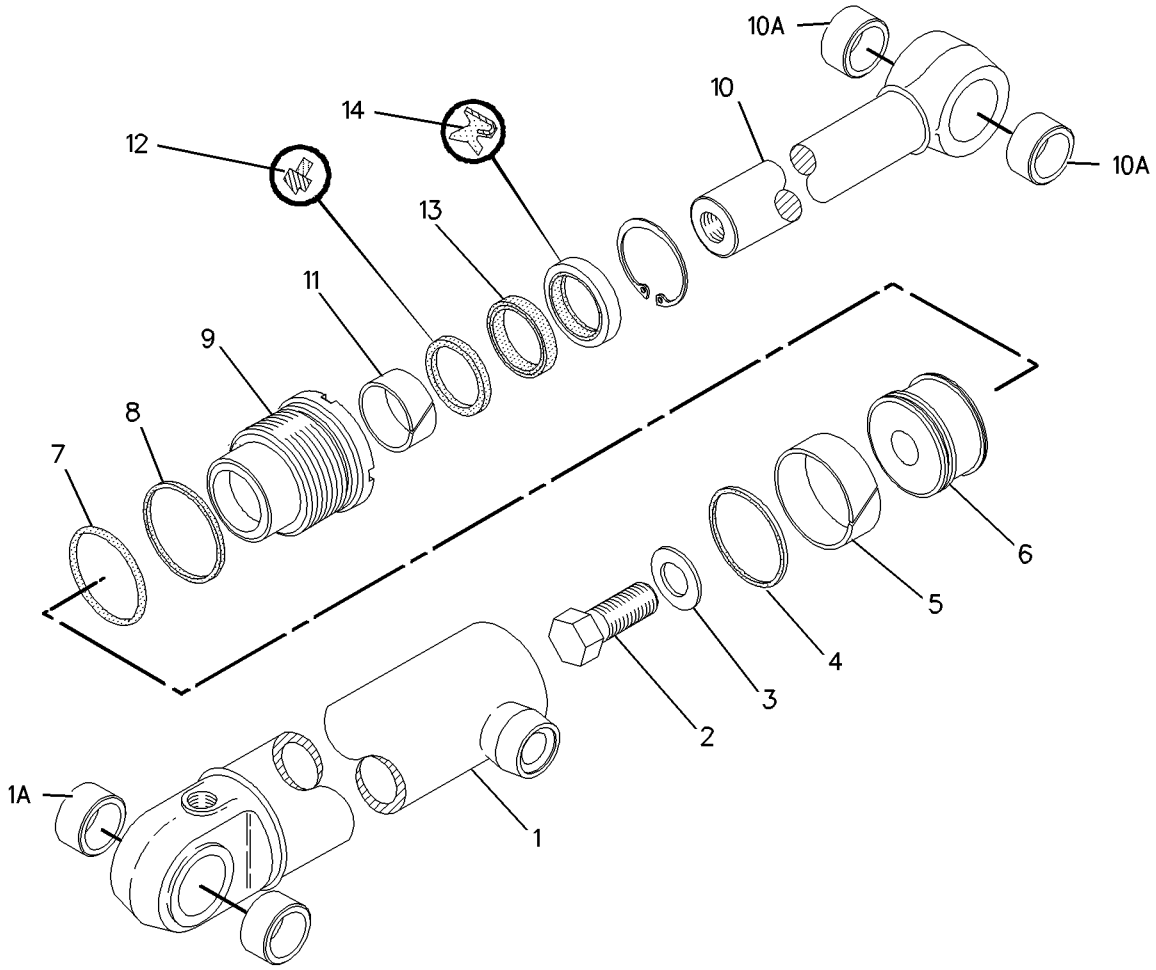

GRAPHIC #1 **<END>** g00947493

STEERING SYSTEM

125-0374 CYLINDER GP-STEERING–LH

S/N: BYD1-UP
69.85MM BORE X 472MM STROKE
PART OF 118-0899 CYLINDER & MTG GP-STEERING

SMCS-4303 **i01858394**

NOTE	REF NO	GRAPHIC REF	PART NUMBER	QTY	PART NAME 1 2 3 4 5 6 (PRODUCT LEVEL)	SEE PAGE
	1	1	**125-0376**	1	CYLINDER AS-LH	
		1	**4D-4431**	1	BEARING-ALIGNING	
M	2	1	**173-9685**	1	BOLT (M20X2.5X70-MM)	
	3	1	**8T-3282**	1	WASHER-HARD (22X35X3.5-MM THK)	
	4	1	**5J-7010**	1	SEAL AS	
	5	1	**8J-0112**	1	RING-WEAR	
	6	1	**9T-2457**	1	PISTON	
	7	1	**175-7895**	1	SEAL-O-RING	
	8	1	**4J-9225**	1	RING-BACKUP	
	9	1	**6E-4940**	1	HEAD	
	10	1	**9T-6672**	1	ROD AS	
		1	**4D-4431**	1	BEARING-ALIGNING	
	11	1	**4T-6780**	1	RING-WEAR	
	12	1	**167-2186**	1	SEAL AS-BUFFER	
	13	1	**167-2294**	1	SEAL-U-CUP	
	14	1	**226-8202**	1	SEAL-WIPER	

M-METRIC PART

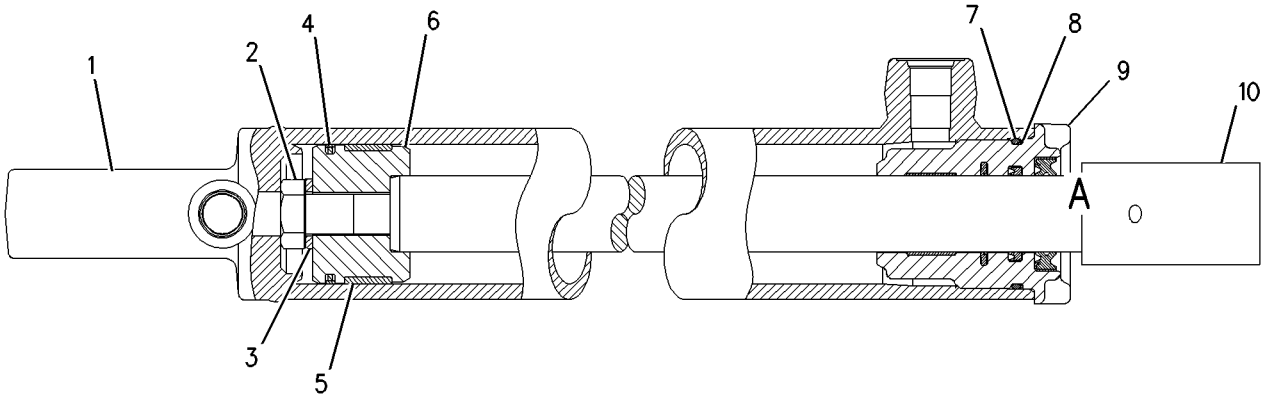

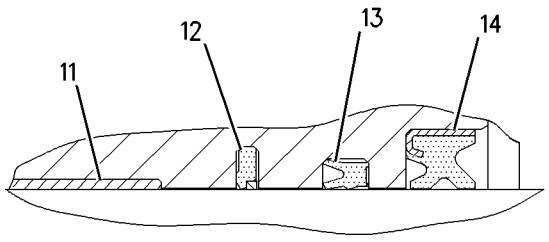

VIEW OF AREA A

GRAPHIC #1 **<END>** g00992443

237-9271 CYLINDER GP-STEERING

S/N: FTD1-UP

69.8-MM (2.7-IN) BORE X 351-6-MM (13.8-IN) STROKE

PART OF 235-7195 CYLINDER & MTG GP-STEERING

SMCS-4303 **i02252183**

NOTE	REF NO	GRAPHIC REF	PART NUMBER	QTY	PART NAME 1 2 3 4 5 6 (PRODUCT LEVEL)	SEE PAGE
	1	1	**142-7568**	1	PISTON	
	2	1	**201-1063**	1	HEAD	
	3	1	**241-6995**	1	ROD AS	
	4	1	**241-6997**	1	CYLINDER AS	
	5	1	**167-2186**	1	SEAL AS-BUFFER	
	6	1	**167-2294**	1	SEAL-U-CUP	
M	7	1	**173-9779**	1	BOLT (M24X3X80-MM)	
	8	1	**175-7895**	1	SEAL-O-RING	
	9	1	**1H-5728**	1	SEAL-O-RING	
	10	1	**226-8202**	1	SEAL-WIPER	
	11	1	**4J-9225**	1	RING-BACKUP	
	12	1	**4T-6780**	1	RING-WEAR	
	13	1	**5J-7010**	1	SEAL AS	
	14	1	**6V-8237**	1	WASHER (26X44X4-MM THK)	
	15	1	**8J-0112**	1	RING-WEAR	

M-METRIC PART

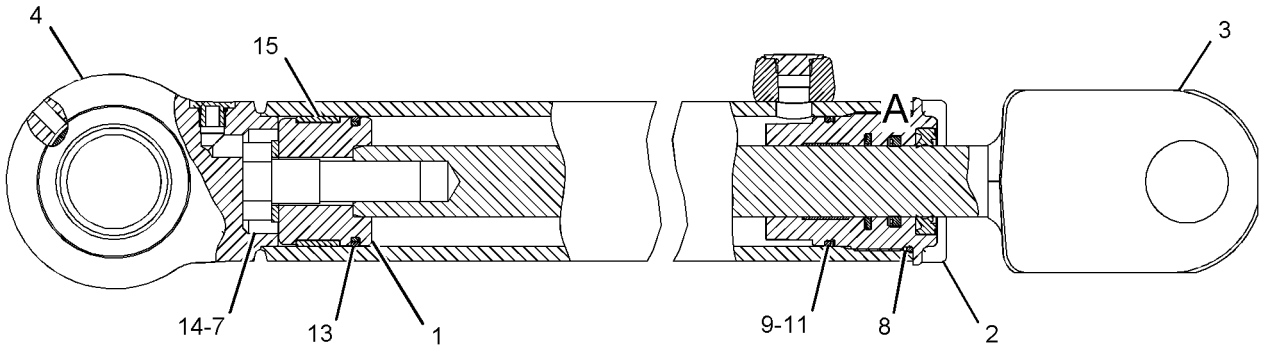

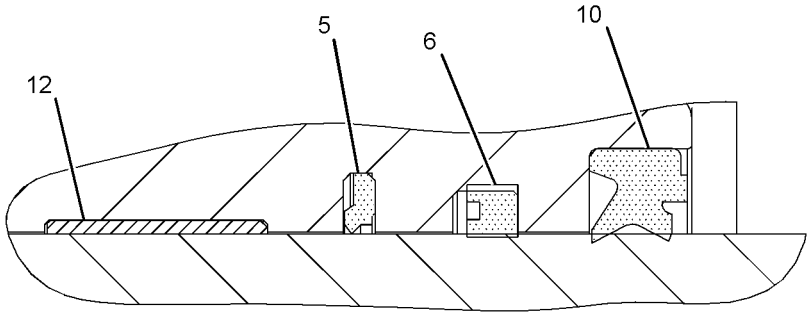

VIEW OF AREA A

GRAPHIC #1 **<END>** g01112083

STEERING SYSTEM

289-8910 LINES GP-SECONDARY STEERING

S/N: FTD1-UP

PART OF 289-8969, 289-8970 STEERING AR-SECONDARY

AN ATTACHMENT

SMCS-4304 **i02808840**

NOTE	REF NO	GRAPHIC REF	PART NUMBER	QTY	PART NAME 1 2 3 4 5 6 (PRODUCT LEVEL)	SEE PAGE
	1	2	**4I-0899**	1	FITTING	
	2	2	**6V-0852**	1	CAP-DUST	
Y	3	2	**8J-6875**	1	VALVE GP-SHUTTLE	476
	4	2	**9T-1013**	1	VALVE AS-CHECK	
		2	**3K-0360**	1	SEAL-O-RING	
		2	**6V-8398**	1	SEAL-O-RING	
I	5	2	**115-8427**	1	HOSE AS	
	6	2	**130-9984**	1	CLIP (LOOP)	
I	7	1	**135-2779**	1	HOSE AS	
I	8	1	**150-3182**	1	HOSE AS	
I	9	2	**153-2318**	1	HOSE AS	
	10	2	*164-9640*	1	CONNECTOR AS	
		2	**3J-1907**	1	SEAL-O-RING	
		2	**4J-5477**	1	SEAL-O-RING	
		2	**145-2237**	1	CONNECTOR	
	11	2	**192-2684**	1	VALVE AS-CHECK	
	12	2	**200-6345**	2	MOUNT (DUAL SWIVEL)	
	13	1,2	**204-2281**	7	STRAP-TIE	
I	14	1	**211-8851**	1	HOSE AS	
I	15	1	**214-1542**	1	HOSE AS	
I	16	2	**214-9348**	1	HOSE AS	
	17	2	*217-5293*	1	TEE AS	
		2	**3J-1907**	1	SEAL-O-RING	
		2	**6V-1625**	1	TEE-O-RING	
	18	2	**230-5771**	1	SWITCH AS-PRESSURE (SECONDARY STEERING OIL)	
		2	**102-8803**	1	KIT-RECEPTACLE (3-PIN)	
					(INCLUDES RECEPTACLE AS & WEDGE)	
		2	**186-3735**	3	PIN-CONNECTOR (16-GA TO 18-GA)	
E		2	**9X-1813**		SLEEVE (30-CM)	
I	19	2	**242-0180**	1	HOSE AS	
I	20	1	**249-1054**	1	HOSE AS	
	21	2	**251-0907**	1	VALVE GP-RELIEF (SECONDARY STEERING)	
		2	**251-9615**	1	VALVE AS-RELIEF (SECONDARY STEERING)	
	22	2	**252-7964**	1	PLATE	
I	23	1	**258-7159**	1	HOSE AS	
	24	1	**262-5667**	1	PLATE AS	
I	25	1	**262-5690**	1	HOSE AS	
	26	2	**263-5474**	1	TUBE AS	
	27	2	**263-8476**	1	VALVE GP-CHECK (SECONDARY STEERING)	
		2	**6V-9746**	2	SEAL-O-RING	
	28	2	*268-1601*	1	CONNECTOR AS-ORIFICE	
		2	**3J-7354**	1	SEAL-O-RING	
		2	**4J-5477**	1	SEAL-O-RING	
		2	**112-2628**	1	CONNECTOR	
I	29	1	**284-6993**	2	HOSE AS	
	30	2	**293-2468**	1	PLATE AS	
I	31	1	**293-2469**	1	HOSE AS	
Y	32	1	*293-2470*	1	PUMP & MOTOR GP-SEC STEERING (ELECTRIC DRIVE)	457
	33	2	*148-8324*	1	CONNECTOR AS	
		2	**3K-0360**	1	SEAL-O-RING	
		2	**6V-9746**	1	SEAL-O-RING	
		2	**6V-9874**	1	CONNECTOR	
	34	2	*148-8325*	2	CONNECTOR AS	
					(EACH INCLUDES)	
		2	**3J-1907**	1	SEAL-O-RING	

289-8910 LINES GP-SECONDARY STEERING *(contd.)* i02808840

NOTE	REF NO	GRAPHIC REF	PART NUMBER	QTY	PART NAME 1 2 3 4 5 6 (PRODUCT LEVEL)	SEE PAGE
		2	**4J-5477**	1	SEAL-O-RING	
		2	**6V-8641**	1	CONNECTOR	
	35	2	*148-8327*	1	CONNECTOR AS	
		2	**3D-2824**	1	SEAL-O-RING	
		2	**6V-8637**	1	CONNECTOR	
		2	**6V-9746**	1	SEAL-O-RING	
	36	1	*148-8328*	1	CONNECTOR AS	
		1	**3D-2824**	1	SEAL-O-RING	
		1	**6V-8398**	1	SEAL-O-RING	
		1	**6V-8633**	1	CONNECTOR	
	37	2	*148-8340*	4	CONNECTOR AS	
					(EACH INCLUDES)	
		2	**3K-0360**	1	SEAL-O-RING	
		2	**6V-8398**	1	SEAL-O-RING	
		2	**6V-8639**	1	CONNECTOR	
	38	1,2	*148-8364*	2	ELBOW AS	
					(EACH INCLUDES)	
		1,2	**3K-0360**	1	SEAL-O-RING	
		1,2	**6V-8398**	1	SEAL-O-RING	
		1,2	**6V-8625**	1	ELBOW (90-DEG)	
	39	1	*148-8365*	1	ELBOW AS	
		1	**3J-1907**	1	SEAL-O-RING	
		1	**6V-8398**	1	SEAL-O-RING	
		1	**8T-6876**	1	ELBOW (90-DEG)	
	40	2	*148-8368*	1	ELBOW AS	
		2	**3J-1907**	1	SEAL-O-RING	
		2	**4J-5477**	1	SEAL-O-RING	
		2	**6V-8627**	1	ELBOW (FACE SEAL)	
	41	1	*148-8369*	1	ELBOW AS	
		1	**3J-7354**	1	SEAL-O-RING	
		1	**4J-5477**	1	SEAL-O-RING	
		1	**6V-8628**	1	ELBOW (FACE SEAL)	
	42	1	*148-8372*	1	ELBOW AS	
		1	**2M-9780**	1	SEAL-O-RING	
		1	**6V-8398**	1	SEAL-O-RING	
		1	**6V-8721**	1	ELBOW (FACE SEAL)	
	43	2	*148-8392*	1	ELBOW AS	
		2	**6V-9746**	1	SEAL-O-RING	
		2	**6V-9853**	1	ELBOW (90-DEG)	
	44	2	*148-8436*	1	TEE AS	
		2	**3K-0360**	1	SEAL-O-RING	
		2	**6V-8398**	2	SEAL-O-RING	
		2	**6V-8775**	1	TEE-FACE SEAL	
	45	1,2	*148-8444*	2	TEE AS-SWIVEL	
					(EACH INCLUDES)	
		1,2	**6V-8398**	2	SEAL-O-RING	
		1,2	**6V-9837**	1	TEE-SWIVEL	
	46	2	*148-8448*	1	FITTING AS	
		2	**4J-5477**	2	SEAL-O-RING	
		2	**6V-9842**	1	TEE-SWIVEL	
	47	1	*150-4043*	1	CONNECTOR AS	
		1	**3J-1907**	1	SEAL-O-RING	
		1	**6V-8398**	1	SEAL-O-RING	
		1	**6V-9873**	1	CONNECTOR (SPL)	
	48	1	*153-6237*	1	ELBOW AS	
		1	**3D-2824**	1	SEAL-O-RING	
		1	**6V-9004**	1	ELBOW (45-DEG)	
		1	**6V-9746**	1	SEAL-O-RING	
	49	1	*153-6241*	1	ELBOW AS	

289-8910 LINES GP-SECONDARY STEERING *(contd.)* i02808840

NOTE	REF NO	GRAPHIC REF	PART NUMBER	QTY	PART NAME 1 2 3 4 5 6 (PRODUCT LEVEL)	SEE PAGE
		1	**6V-8398**	1	SEAL-O-RING	
		1	**8C-8989**	1	ELBOW (45-DEG)	
	50	1	**164-4225**	1	CLIP	
	51	2	*164-5567*	1	COUPLER AS-QUICK DISCONNECT	
		2	**3J-1907**	1	SEAL-O-RING	
		2	**6V-3965**	1	COUPLER-QUICK DISCONNECT	
	52	1	*164-9869*	1	CONNECTOR AS	
		1	**3J-1907**	1	SEAL-O-RING	
		1	**6V-8397**	1	SEAL-O-RING	
		1	**9X-2297**	1	CONNECTOR	
	53	2	**204-8000**	1	ANCHOR-TIE	
	54	2	**3J-7354**	1	SEAL-O-RING	
	55	2	**3K-0360**	1	SEAL-O-RING	
	56	2	**4J-5477**	1	SEAL-O-RING	
M	57	1	**5C-7261**	4	NUT (M8X1.25-THD)	
	58	2	**6V-1889**	1	CLIP (SLOT)	
B	59	2	**6V-9828**	1	CAP AS	
B	60	1	**6V-9829**	1	CAP AS	
M	61	2	**7X-2534**	2	BOLT (M6X1X50-MM)	
	62	1	**7X-7729**	2	WASHER (11X25X3-MM THK)	
	63	2	**8T-4121**	7	WASHER-HARD (11X21X2.5-MM THK)	
M	64	2	**8T-4133**	1	NUT (M10X1.5-THD)	
M	65	2	**8T-4136**	2	BOLT (M10X1.5X25-MM)	
M	66	2	**8T-4137**	2	BOLT (M10X1.5X20-MM)	
M	67	2	**8T-4182**	1	BOLT (M10X1.5X45-MM)	
M	68	2	**8T-4186**	1	BOLT (M10X1.5X40-MM)	
M	69	1	**8T-4195**	2	BOLT (M10X1.5X30-MM)	
	70	1	**8T-4224**	8	WASHER-HARD (8.8X16X2-MM THK)	
M	71	1	**8T-4908**	4	BOLT (M8X1.25X25-MM)	
	72	2	**9X-8256**	2	WASHER (6.6X12X2-MM THK)	

B-USE AS REQUIRED
E-ORDER BY THE CENTIMETER
I-REFER TO HYDRAULIC INFORMATION SYSTEM
M-METRIC PART
Y-SEPARATE ILLUSTRATION

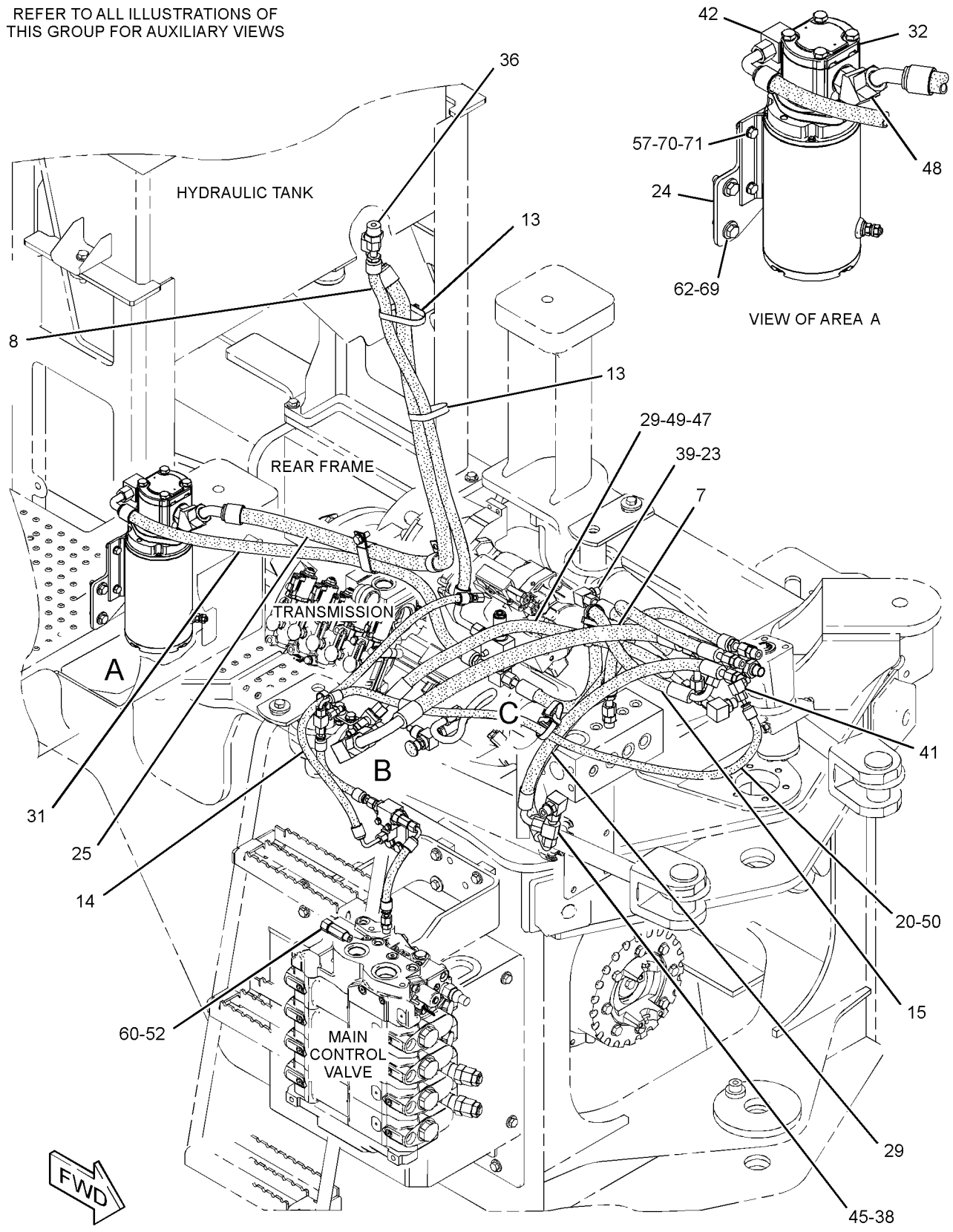

GRAPHIC #1 g01409011

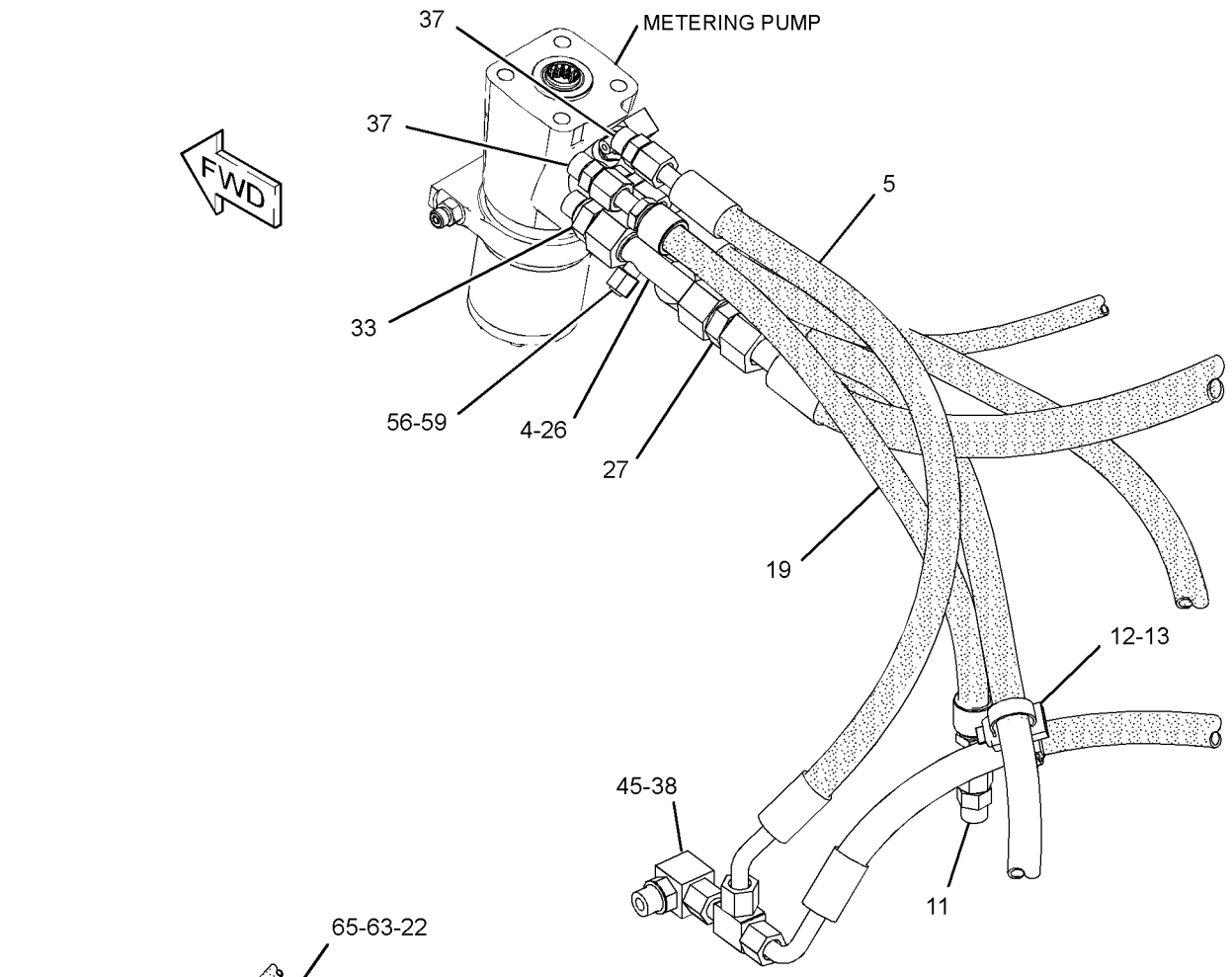

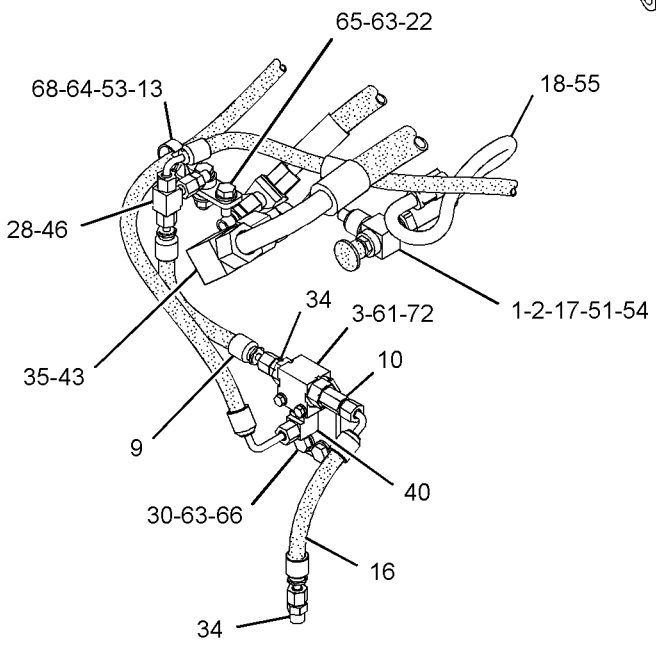

VIEW OF AREA B

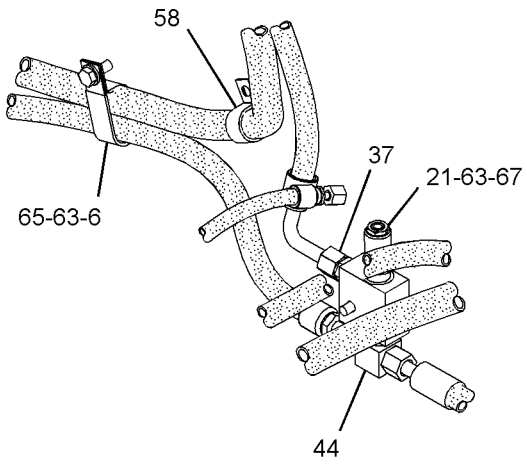

VIEW OF AREA C

GRAPHIC #2 **<END>** g01408551

STEERING SYSTEM

289-8932 LINES GP-SECONDARY STEERING

S/N: BYD1-UP

PART OF 289-8968 STEERING AR-SECONDARY

AN ATTACHMENT

SMCS-4304 **i02870234**

NOTE	REF NO	GRAPHIC REF	PART NUMBER	QTY	PART NAME 1 2 3 4 5 6 (PRODUCT LEVEL)	SEE PAGE
	1	1	**3S-9703**	2	TUBE-RETAINER	
	2	1	**5T-6374**	1	SPACER (10.5X20X40-MM THK)	
I	3	1	**7T-9258**	1	HOSE AS	
I	4	1	**9R-4688**	1	HOSE AS	
	5	1	**9T-1013**	2	VALVE AS-CHECK	
					(EACH INCLUDES)	
		1	**3K-0360**	1	SEAL-O-RING	
		1	**6V-8398**	1	SEAL-O-RING	
	6	1	**130-9984**	1	CLIP	
I	7	1	**133-4826**	2	HOSE AS	
I	8	1	**150-3182**	1	HOSE AS	
I	9	1	**151-7214**	1	HOSE AS	
	10	1	**200-6345**	1	MOUNT (DUAL SWIVEL)	
	11	1	**204-2281**	5	STRAP-TIE	
I	12	1	**212-4648**	1	HOSE AS	
I	13	1	**212-4650**	1	HOSE AS	
I	14	1	**214-1542**	1	HOSE AS	
	15	1	**223-2223**	1	PUMP GP-METERING (HMU)	
	16	1	**230-5771**	1	SWITCH AS-PRESSURE (SECONDARY STEERING OIL)	
		1	**102-8803**	1	KIT-RECEPTACLE (3-PIN)	
					(INCLUDES RECEPTACLE AS & WEDGE)	
		1	**186-3735**	3	PIN-CONNECTOR (16-GA TO 18-GA)	
E		1	**9X-1813**		SLEEVE (30-CM)	
	17	1	*250-1466*	1	CROSS AS	
		1	**3D-2824**	1	SEAL-O-RING	
		1	**6V-8397**	1	SEAL-O-RING	
		1	**6V-8398**	1	SEAL-O-RING	
		1	**254-5968**	1	CROSS AS	
	18	1	**251-0907**	1	VALVE GP-RELIEF (SECONDARY STEERING)	
		1	**251-9615**	1	VALVE AS-RELIEF (SECONDARY STEERING)	
	19	1	**262-5667**	1	PLATE AS	
I	20	1	**262-5690**	1	HOSE AS	
I	21	1	**293-2469**	1	HOSE AS	
Y	22	1	*293-2470*	1	PUMP & MOTOR GP-SEC STEERING (ELECTRIC DRIVE)	457
	23	1	**7K-1181**	1	STRAP-CABLE	
	24	1	*148-8316*	1	CONNECTOR AS	
		1	**3J-7354**	1	SEAL-O-RING	
		1	**4J-5477**	1	SEAL-O-RING	
		1	**6V-8647**	1	CONNECTOR	
	25	1	*148-8328*	1	CONNECTOR AS	
		1	**3D-2824**	1	SEAL-O-RING	
		1	**6V-8398**	1	SEAL-O-RING	
		1	**6V-8633**	1	CONNECTOR	
	26	1	*148-8340*	3	CONNECTOR AS	
					(EACH INCLUDES)	
		1	**3K-0360**	1	SEAL-O-RING	
		1	**6V-8398**	1	SEAL-O-RING	
		1	**6V-8639**	1	CONNECTOR (SEAL)	
	27	1	*148-8342*	1	CONNECTOR AS	
		1	**3K-0360**	1	SEAL-O-RING	
		1	**6V-8632**	1	CONNECTOR	
		1	**7J-9108**	1	SEAL-O-RING	
	28	1	*148-8345*	4	CONNECTOR AS	
					(EACH INCLUDES)	
		1	**2M-9780**	1	SEAL-O-RING	

289-8932 LINES GP-SECONDARY STEERING *(contd.)* i02870234

NOTE	REF NO	GRAPHIC REF	PART NUMBER	QTY	PART NAME 1 2 3 4 5 6 (PRODUCT LEVEL)	SEE PAGE
		1	**6V-8398**	1	SEAL-O-RING	
		1	**6V-8638**	1	CONNECTOR (O-RING)	
	29	1	*148-8369*	1	ELBOW AS	
		1	**3J-7354**	1	SEAL-O-RING	
		1	**4J-5477**	1	SEAL-O-RING	
		1	**6V-8628**	1	ELBOW (90-DEG)	
	30	1	*148-8372*	1	ELBOW AS	
		1	**2M-9780**	1	SEAL-O-RING	
		1	**6V-8398**	1	SEAL-O-RING	
		1	**6V-8721**	1	ELBOW (90-DEG)	
	31	1	*148-8436*	1	TEE AS	
		1	**3K-0360**	1	SEAL-O-RING	
		1	**6V-8398**	2	SEAL-O-RING	
		1	**6V-8775**	1	TEE-FACE SEAL	
	32	1	*148-8444*	2	TEE AS-SWIVEL	
					(EACH INCLUDES)	
		1	**6V-8398**	2	SEAL-O-RING	
		1	**6V-9837**	1	TEE-SWIVEL	
	33	1	*150-4036*	1	TEE AS	
		1	**3K-0360**	1	SEAL-O-RING	
		1	**118-0911**	1	TEE-O-RING PORT	
	34	1	*153-6237*	1	ELBOW AS	
		1	**3D-2824**	1	SEAL-O-RING	
		1	**6V-9004**	1	ELBOW (45-DEG)	
		1	**6V-9746**	1	SEAL-O-RING	
	35	1	**204-8000**	1	ANCHOR-TIE (WRAP)	
	36	1	**3K-0360**	1	SEAL-O-RING	
	37	1	**4P-7581**	1	CLIP	
M	38	1	**5C-7261**	4	NUT (M8X1.25-THD)	
	39	1	**5P-7464**	6	CLIP (SLOT)	
	40	1	**5P-7465**	6	CLIP (TAB)	
	41	1	**6V-1249**	6	GROMMET	
	42	1	**6V-1889**	1	CLIP	
	43	1	**7X-7729**	2	WASHER (11X25X3-MM THK)	
	44	1	**8T-4121**	3	WASHER-HARD (11X21X2.5-MM THK)	
M	45	1	**8T-4136**	1	BOLT (M10X1.5X25-MM)	
M	46	1	**8T-4172**	1	BOLT (M10X1.5X80-MM)	
M	47	1	**8T-4182**	1	BOLT (M10X1.5X45-MM)	
M	48	1	**8T-4195**	2	BOLT (M10X1.5X30-MM)	
	49	1	**8T-4224**	8	WASHER-HARD (8.8X16X2-MM THK)	
M	50	1	**8T-4908**	4	BOLT (M8X1.25X25-MM)	

E-ORDER BY THE CENTIMETER
I-REFER TO HYDRAULIC INFORMATION SYSTEM
M-METRIC PART
Y-SEPARATE ILLUSTRATION

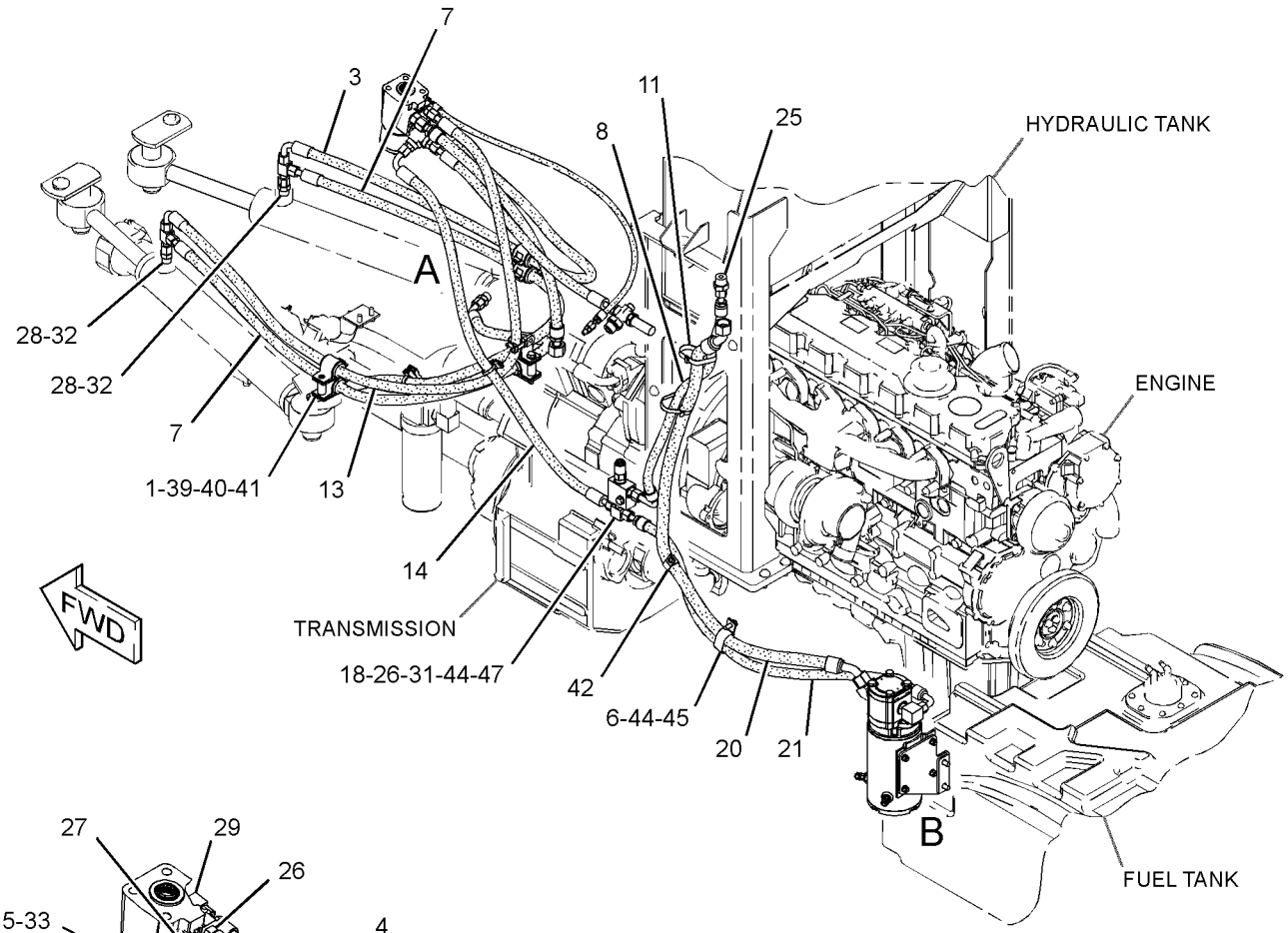

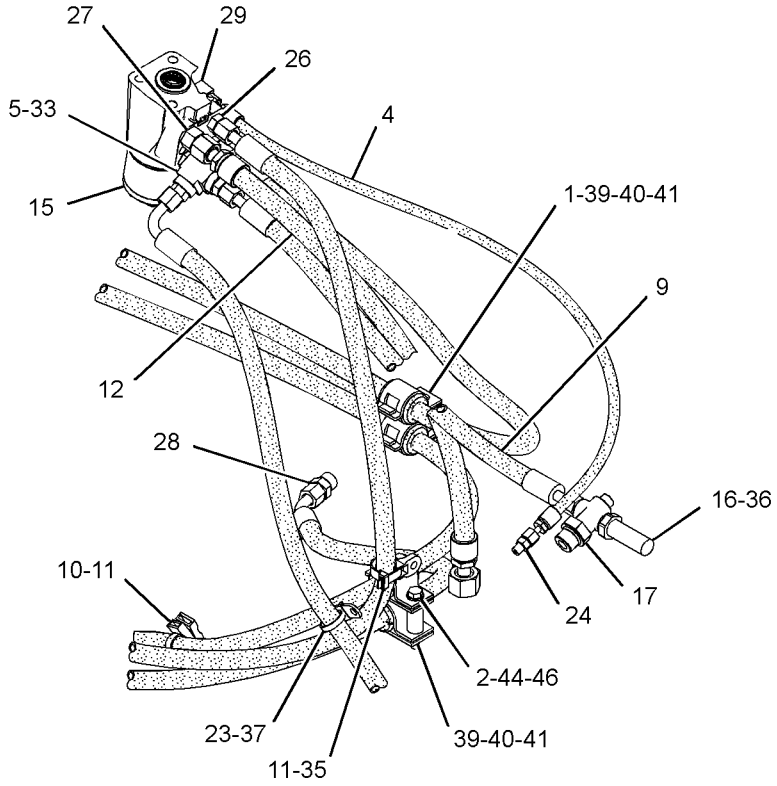

VIEW OF AREA A

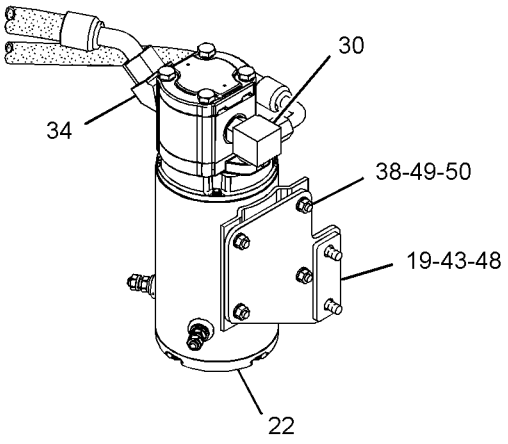

VIEW OF AREA B

GRAPHIC #1 **<END>** g01400919

STEERING SYSTEM

212-4656 LINES GP-STEERING

S/N: BYD1-UP

PART OF 294-9441 STEERING AR-STANDARD

AN ATTACHMENT

SMCS-4304 **i02549865**

NOTE	REF NO	GRAPHIC REF	PART NUMBER	QTY	PART NAME 1 2 3 4 5 6 (PRODUCT LEVEL)	SEE PAGE
	1	2	**3S-9703**	2	TUBE-RETAINER	
	2	2	**5T-6374**	1	SPACER (10.5X20X40-MM THK)	
I	3	1	**9R-4688**	1	HOSE AS	
	4	1	**223-2223**	1	PUMP GP-METERING (HMU)	
I	5	1	**212-4650**	1	HOSE AS	
C	6	1	**204-2281**	1	STRAP-TIE	
I	7	1	**212-4648**	1	HOSE AS	
I	8	1	**8R-5174**	1	HOSE AS	
CI	9	1	**7T-9258**	1	HOSE AS	
I	10	1	**133-4826**	2	HOSE AS	
	11	1	*148-8316*	1	CONNECTOR AS	
		1	**3J-7354**	1	SEAL-O-RING	
		1	**4J-5477**	1	SEAL-O-RING	
		1	**6V-8647**	1	CONNECTOR	
	12	2	*148-8340*	3	CONNECTOR AS	
					(EACH INCLUDES)	
		2	**3K-0360**	1	SEAL-O-RING	
		2	**6V-8398**	1	SEAL-O-RING	
		2	**6V-8639**	1	CONNECTOR	
	13	2	*148-8342*	1	CONNECTOR AS	
		2	**3K-0360**	1	SEAL-O-RING	
		2	**6V-8632**	1	CONNECTOR	
		2	**7J-9108**	1	SEAL-O-RING	
	14	1	*148-8345*	4	CONNECTOR AS	
					(EACH INCLUDES)	
		1	**2M-9780**	1	SEAL-O-RING	
		1	**6V-8398**	1	SEAL-O-RING	
		1	**6V-8638**	1	CONNECTOR	
	15	2	**9X-6580**	1	NUT (1-3/16-12-THD)	
	16	1	*148-8369*	1	ELBOW AS	
		1	**3J-7354**	1	SEAL-O-RING	
		1	**4J-5477**	1	SEAL-O-RING	
		1	**6V-8628**	1	ELBOW	
	17	2	*148-8418*	1	REDUCER AS	
		2	**6V-8398**	1	SEAL-O-RING	
		2	**6V-8942**	1	REDUCER-O-RING	
	18	2	*148-8421*	1	TEE AS	
		2	**3D-2824**	1	SEAL-O-RING	
		2	**6V-8397**	1	SEAL-O-RING	
		2	**6V-9746**	1	SEAL-O-RING	
		2	**8T-2883**	1	TEE	
	19	1	*148-8444*	2	TEE AS-SWIVEL	
					(EACH INCLUDES)	
		1	**6V-8398**	2	SEAL-O-RING	
		1	**6V-9837**	1	TEE-SWIVEL	
	20	1	*148-8408*	1	PLUG AS	
		1	**3D-2824**	1	SEAL-O-RING	
		1	**9S-4183**	1	PLUG-O-RING	
	21	2	**204-8000**	1	ANCHOR-TIE	
	22	2	**5P-7464**	6	CLIP (SLOT)	
	23	2	**5P-7465**	6	CLIP (TAB)	
M	24	2	**8T-4172**	1	BOLT (M10X1.5X80-MM)	
	25	2	**6V-1249**	6	GROMMET	
	26	2	**8T-4121**	1	WASHER-HARD (11X21X2.5-MM THK)	

C-CHANGE FROM PREVIOUS TYPE
I-REFER TO HYDRAULIC INFORMATION SYSTEM
M-METRIC PART

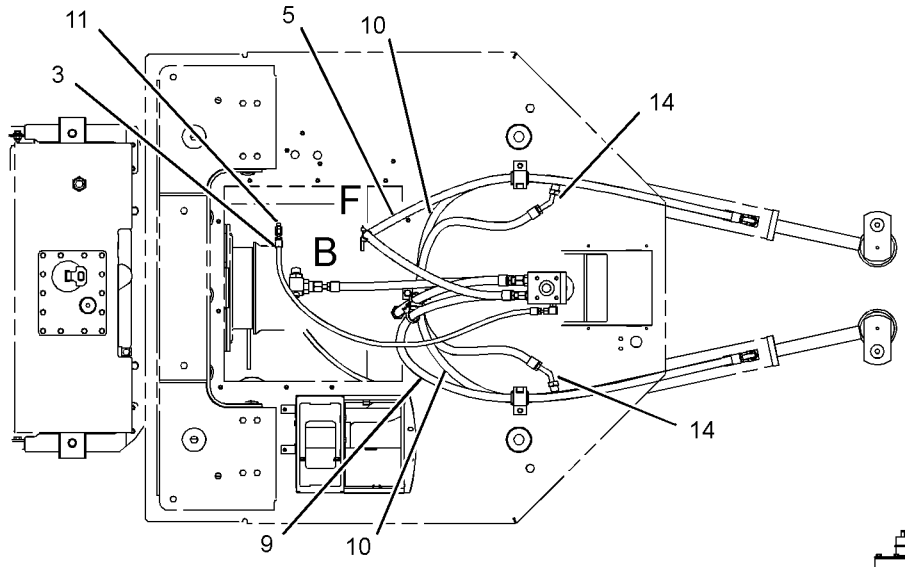

TOP VIEW

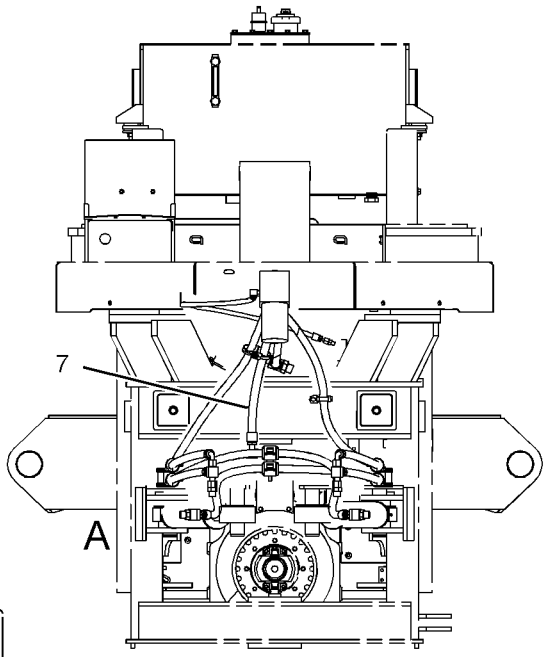

FRONT VIEW

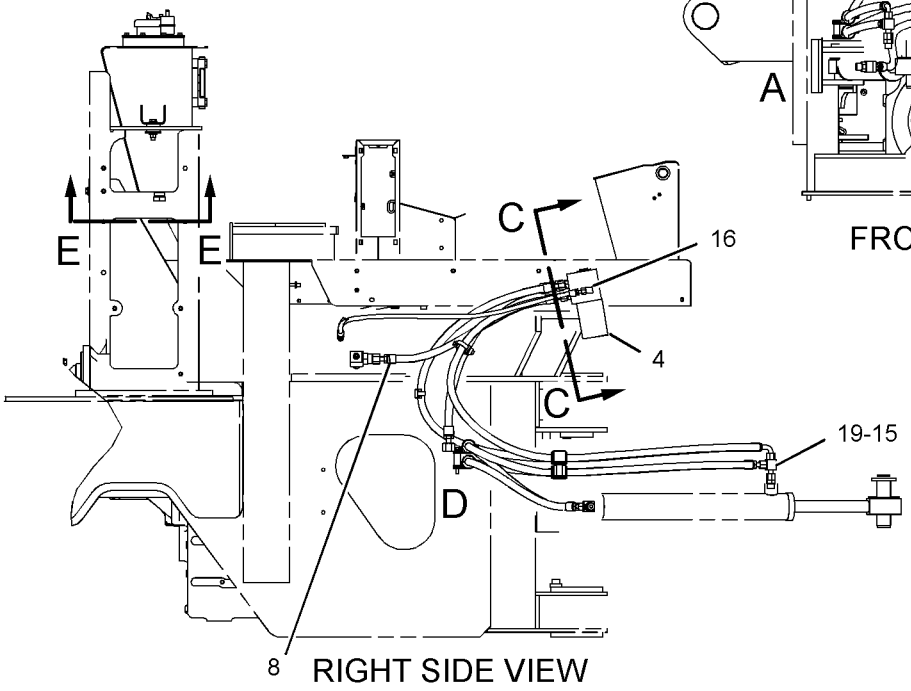

RIGHT SIDE VIEW

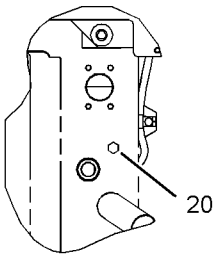

VIEW E-E

GRAPHIC #1

g01174139

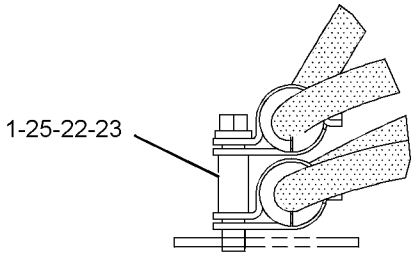

VIEW OF AREA A

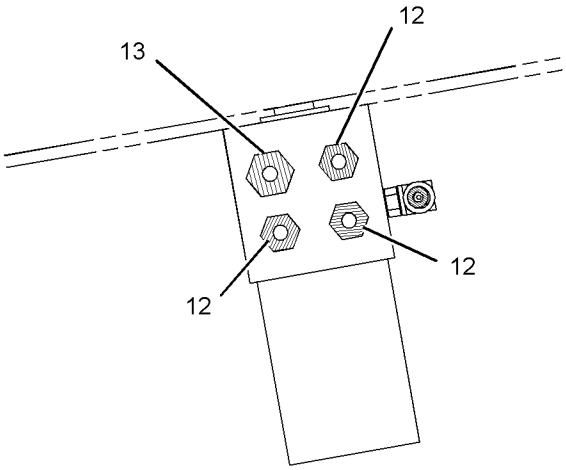

SECTION C-C

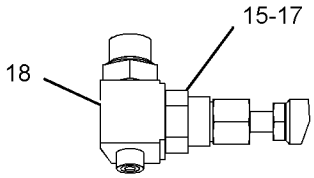

VIEW OF AREA B

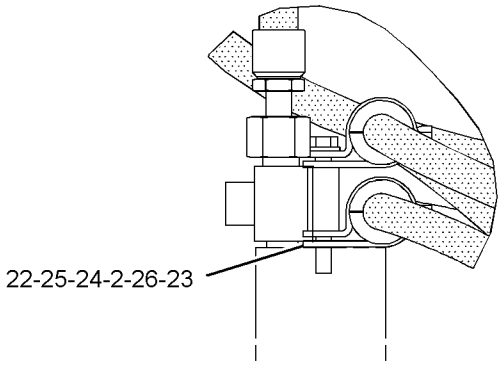

VIEW OF AREA D

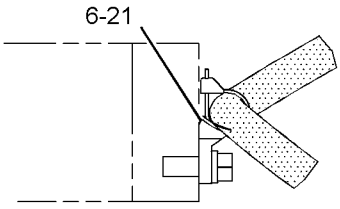

VIEW OF AREA F

GRAPHIC #2 **<END>** g01019616

STEERING SYSTEM

290-7196 LINES GP-STEERING

S/N: FTD1-UP

PART OF 289-8970 STEERING AR-SECONDARY

AN ATTACHMENT

SMCS-4304 **i02808852**

NOTE	REF NO	GRAPHIC REF	PART NUMBER	QTY	PART NAME 1 2 3 4 5 6 (PRODUCT LEVEL)	SEE PAGE
I	1	1	**117-3255**	2	HOSE AS	
I	2	1	**153-8303**	1	HOSE AS	
	3	1	**177-2215**	1	STRAP-DUAL CLAMP	
	4	1	**200-6345**	1	MOUNT (DUAL SWIVEL)	
	5	1	**204-2281**	3	STRAP-TIE	
	6	1	**243-4171**	1	SWITCH AS-ROCKER (QUICK STEER)	
		1	**111-7899**	1	GASKET	
Y	7	1	**247-4503**	1	VALVE & MTG GP-SOLENOID (QUICK STEER)	462
	8	1	**251-4319**	1	BRACKET AS	
I	9	1	**251-4389**	1	HOSE AS	
	10	1	*148-8325*	3	CONNECTOR AS	
					(EACH INCLUDES)	
		1	**3J-1907**	1	SEAL-O-RING	
		1	**4J-5477**	1	SEAL-O-RING	
		1	**6V-8641**	1	CONNECTOR	
	11	1	*148-8351*	1	ELBOW AS	
		1	**4J-5477**	1	SEAL-O-RING	
		1	**6V-9849**	1	ELBOW	
	12	1	*148-8368*	2	ELBOW AS	
					(EACH INCLUDES)	
		1	**3J-1907**	1	SEAL-O-RING	
		1	**4J-5477**	1	SEAL-O-RING	
		1	**6V-8627**	1	ELBOW	
M	13	1	**7X-2534**	2	BOLT (M6X1X50-MM)	
M	14	1	**8T-4192**	2	BOLT (M12X1.75X25-MM)	
	15	1	**8T-4205**	2	WASHER-HARD (7.2X14.5X2-MM THK)	
	16	1	**8T-4223**	2	WASHER-HARD (13.5X25.5X3-MM THK)	

I-REFER TO HYDRAULIC INFORMATION SYSTEM
M-METRIC PART
Y-SEPARATE ILLUSTRATION

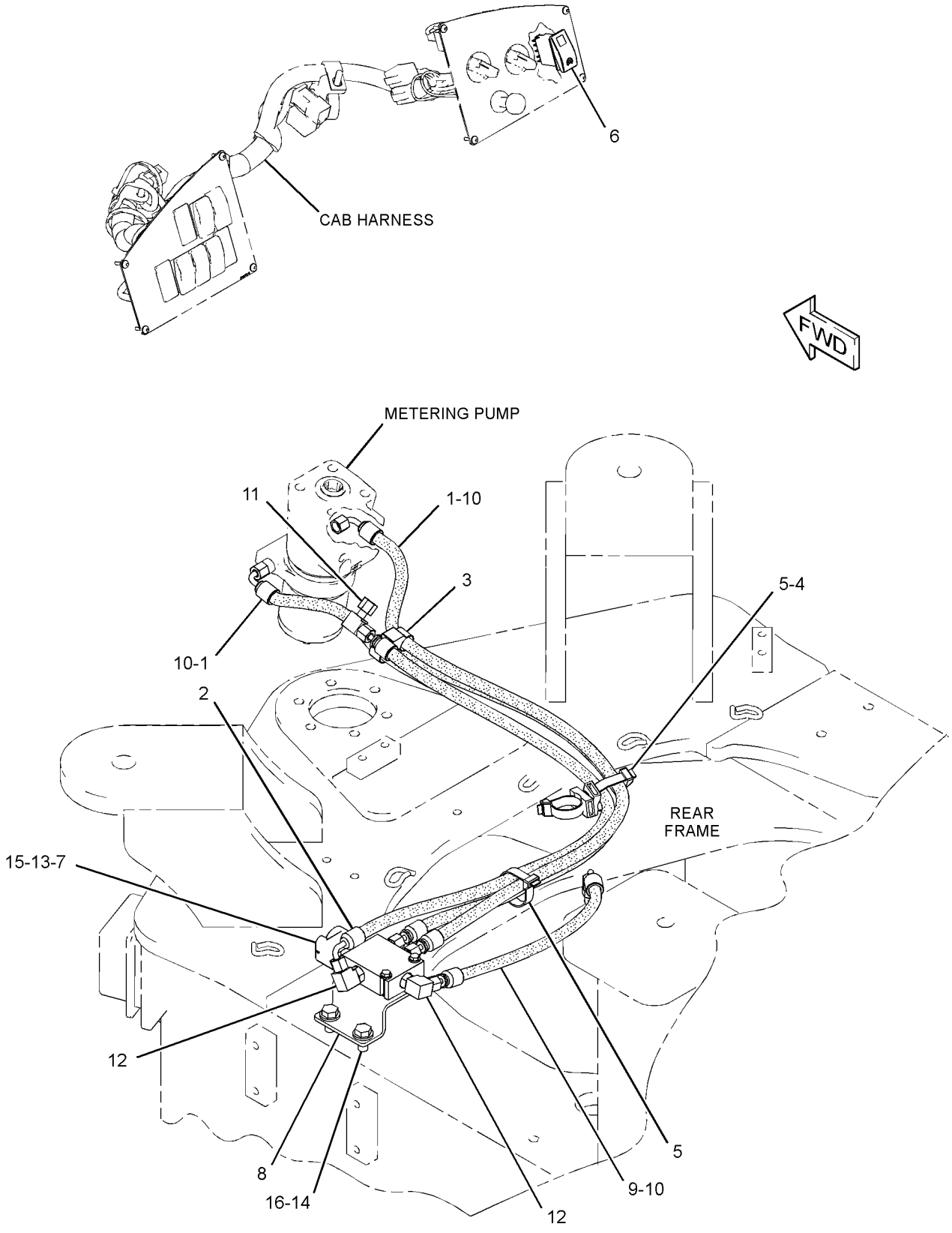

GRAPHIC #1 **<END>** g01404509

STEERING SYSTEM

290-7218 LINES GP-STEERING

S/N: FTD1-UP
PART OF 289-8966 STEERING AR
AN ATTACHMENT

SMCS-4304 **i02808902**

NOTE	REF NO	GRAPHIC REF	PART NUMBER	QTY	PART NAME 1 2 3 4 5 6 (PRODUCT LEVEL)	SEE PAGE
I	1	1	**117-3255**	2	HOSE AS	
I	2	1	**153-8303**	1	HOSE AS	
	3	1	**177-2215**	1	STRAP-DUAL CLAMP	
	4	1	**200-6345**	1	MOUNT (DUAL SWIVEL)	
	5	1	**204-2281**	3	STRAP-TIE	
	6	1	**243-4171**	1	SWITCH AS-ROCKER (QUICK STEER)	
		1	**111-7899**	1	GASKET	
Y	7	1	**247-4503**	1	VALVE & MTG GP-SOLENOID (QUICK STEER)	462
	8	1	**251-4319**	1	BRACKET AS	
I	9	1	**251-4389**	1	HOSE AS	
	10	1	*148-8325*	3	CONNECTOR AS	
					(EACH INCLUDES)	
		1	**3J-1907**	1	SEAL-O-RING	
		1	**4J-5477**	1	SEAL-O-RING	
		1	**6V-8641**	1	CONNECTOR	
	11	1	*148-8368*	3	ELBOW AS	
					(EACH INCLUDES)	
		1	**3J-1907**	1	SEAL-O-RING	
		1	**4J-5477**	1	SEAL-O-RING	
		1	**6V-8627**	1	ELBOW	
	12	1	*148-8430*	1	TEE AS	
		1	**6V-9746**	1	SEAL-O-RING	
		1	**7X-0873**	1	TEE	
M	13	1	**7X-2534**	2	BOLT (M6X1X50-MM)	
M	14	1	**8T-4192**	2	BOLT (M12X1.75X25-MM)	
	15	1	**8T-4205**	2	WASHER-HARD (7.2X14.5X2-MM THK)	
	16	1	**8T-4223**	2	WASHER-HARD (13.5X25.5X3-MM THK)	

I-REFER TO HYDRAULIC INFORMATION SYSTEM
M-METRIC PART
Y-SEPARATE ILLUSTRATION

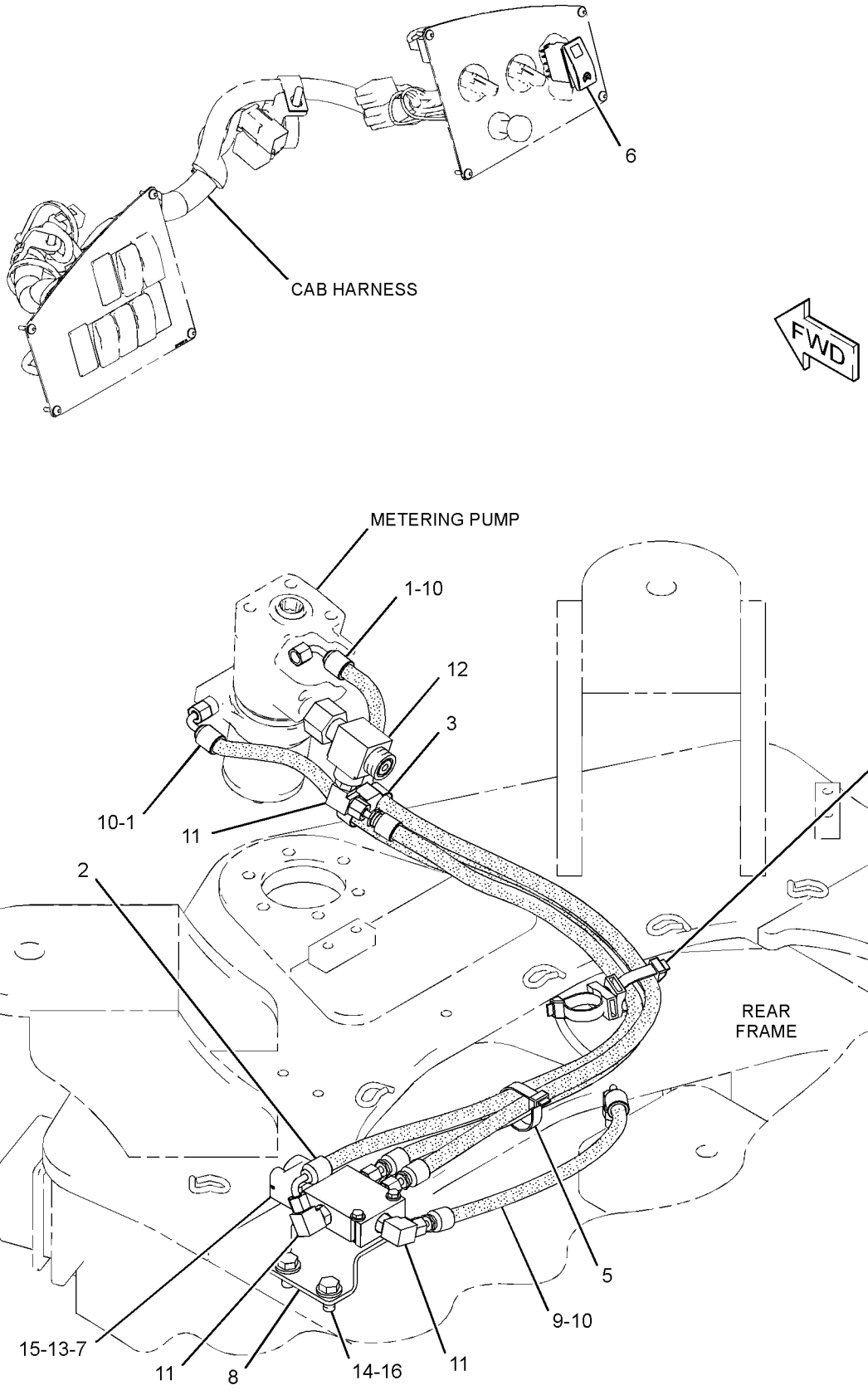

GRAPHIC #1 **<END>** g01404537

STEERING SYSTEM

290-7230 LINES GP-STEERING

S/N: FTD1-UP

PART OF 289-8966 STEERING AR, 294-9434 STEERING AR-STANDARD

AN ATTACHMENT

SMCS-4304 **i02832791**

NOTE	REF NO	GRAPHIC REF	PART NUMBER	QTY	PART NAME 1 2 3 4 5 6 (PRODUCT LEVEL)	SEE PAGE
	1	1	**6V-0852**	1	CAP-DUST	
Y	2	1	**8J-6875**	1	VALVE GP-SHUTTLE	476
I	3	1	**115-8427**	1	HOSE AS	
I	4	1	**153-2318**	1	HOSE AS	
	5	1	*164-9640*	1	CONNECTOR AS	
		1	**3J-1907**	1	SEAL-O-RING	
		1	**4J-5477**	1	SEAL-O-RING	
		1	**145-2237**	1	CONNECTOR	
	6	1	**192-2684**	1	VALVE AS-CHECK	
	7	1	**200-6345**	1	MOUNT (DUAL SWIVEL)	
	8	1	**204-2281**	3	STRAP-TIE	
I	9	1	**211-8851**	1	HOSE AS	
I	10	1	**214-9348**	1	HOSE AS	
I	11	1	**242-0180**	1	HOSE AS	
I	12	1	**249-1054**	1	HOSE AS	
	13	1	**252-7964**	1	PLATE	
I	14	1	**258-7159**	1	HOSE AS	
	15	1	**263-8475**	1	VALVE GP-CHECK	
		1	**3K-0360**	1	SEAL-O-RING	
		1	**6V-9746**	1	SEAL-O-RING	
	16	1	*268-1601*	1	CONNECTOR AS-ORIFICE	
		1	**3J-7354**	1	SEAL-O-RING	
		1	**4J-5477**	1	SEAL-O-RING	
		1	**112-2628**	1	CONNECTOR	
I	17	1	**284-6993**	2	HOSE AS	
	18	1	**293-2468**	1	PLATE AS	
M		1	**6V-9632**	2	NUT-WELD (M6X1-THD)	
I	19	1	**300-9099**	1	HOSE AS	
	20	1	**110-6349**	1	FITTING AS (QUICK DISCONNECT)	
	21	1	*148-8325*	2	CONNECTOR AS	
					(EACH INCLUDES)	
		1	**3J-1907**	1	SEAL-O-RING	
		1	**4J-5477**	1	SEAL-O-RING	
		1	**6V-8641**	1	CONNECTOR	
	22	1	*148-8327*	1	CONNECTOR AS	
		1	**3D-2824**	1	SEAL-O-RING	
		1	**6V-8637**	1	CONNECTOR	
		1	**6V-9746**	1	SEAL-O-RING	
	23	1	*148-8340*	3	CONNECTOR AS	
					(EACH INCLUDES)	
		1	**3K-0360**	1	SEAL-O-RING	
		1	**6V-8398**	1	SEAL-O-RING	
		1	**6V-8639**	1	CONNECTOR	
	24	1	*148-8364*	2	ELBOW AS	
					(EACH INCLUDES)	
		1	**3K-0360**	1	SEAL-O-RING	
		1	**6V-8398**	1	SEAL-O-RING	
		1	**6V-8625**	1	ELBOW	
	25	1	*148-8365*	1	ELBOW AS	
		1	**3J-1907**	1	SEAL-O-RING	
		1	**6V-8398**	1	SEAL-O-RING	
		1	**8T-6876**	1	ELBOW	
	26	1	*148-8368*	1	ELBOW AS	
		1	**3J-1907**	1	SEAL-O-RING	
		1	**4J-5477**	1	SEAL-O-RING	

290-7230 **LINES GP-STEERING** *(contd.)* **i02832791**

NOTE	REF NO	GRAPHIC REF	PART NUMBER	QTY	PART NAME 1 2 3 4 5 6 (PRODUCT LEVEL)	SEE PAGE
		1	**6V-8627**	1	ELBOW	
	27	1	*148-8369*	1	ELBOW AS	
		1	**3J-7354**	1	SEAL-O-RING	
		1	**4J-5477**	1	SEAL-O-RING	
		1	**6V-8628**	1	ELBOW	
	28	1	*148-8392*	1	ELBOW AS	
		1	**6V-9746**	1	SEAL-O-RING	
		1	**6V-9853**	1	ELBOW	
	29	1	*148-8444*	2	TEE AS-SWIVEL	
					(EACH INCLUDES)	
		1	**6V-8398**	2	SEAL-O-RING	
		1	**6V-9837**	1	TEE-SWIVEL	
	30	1	*148-8448*	1	FITTING AS	
		1	**4J-5477**	2	SEAL-O-RING	
		1	**6V-9842**	1	TEE-SWIVEL	
	31	1	*150-4043*	1	CONNECTOR AS	
		1	**3J-1907**	1	SEAL-O-RING	
		1	**6V-8398**	1	SEAL-O-RING	
		1	**6V-9873**	1	CONNECTOR	
	32	1	*153-6241*	1	ELBOW AS	
		1	**6V-8398**	1	SEAL-O-RING	
		1	**8C-8989**	1	ELBOW	
	33	1	**164-4225**	1	CLIP	
	34	1	*164-9869*	1	CONNECTOR AS	
		1	**3J-1907**	1	SEAL-O-RING	
		1	**6V-8397**	1	SEAL-O-RING	
		1	**9X-2297**	1	CONNECTOR	
	35	1	**204-8000**	1	ANCHOR-TIE	
	36	1	**6V-9829**	1	CAP AS	
M	37	1	**7X-2534**	2	BOLT (M6X1X50-MM)	
	38	1	**8T-4121**	5	WASHER-HARD (11X21X2.5-MM THK)	
M	39	1	**8T-4133**	1	NUT (M10X1.5-THD)	
M	40	1	**8T-4136**	1	BOLT (M10X1.5X25-MM)	
M	41	1	**8T-4137**	2	BOLT (M10X1.5X20-MM)	
M	42	1	**8T-4186**	1	BOLT (M10X1.5X40-MM)	
	43	1	**9X-8256**	2	WASHER (6.6X12X2-MM THK)	

I-REFER TO HYDRAULIC INFORMATION SYSTEM
M-METRIC PART
Y-SEPARATE ILLUSTRATION

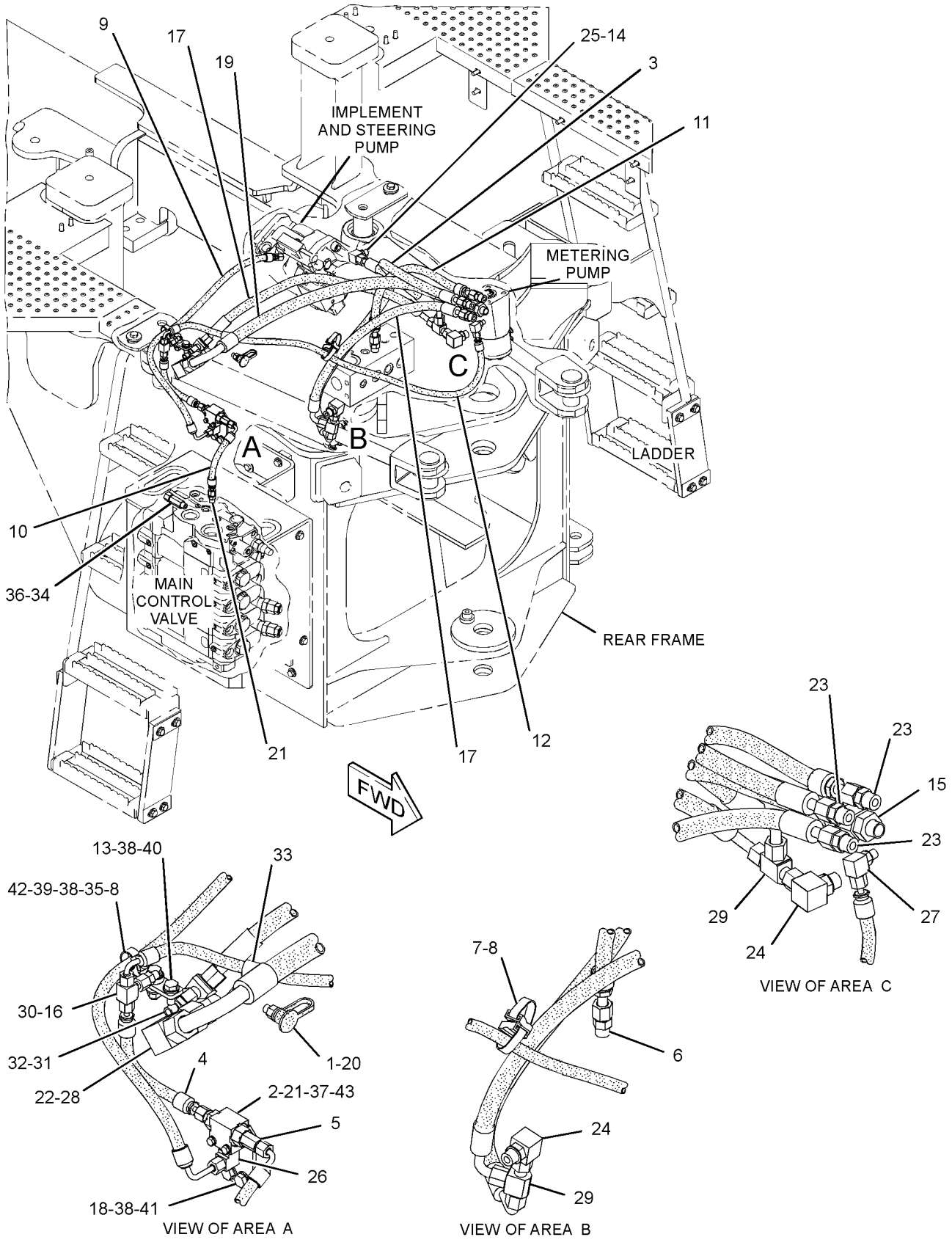

GRAPHIC #1 **<END>** g01400394

293-2470 PUMP & MOTOR GP-SEC STEERING—ELECTRIC DRIVE

S/N: BYD1-UP; FTD1-UP

PART OF 289-8910, 289-8932 LINES GP-SECONDARY STEERING

AN ATTACHMENT

SMCS-4324, 4325 **i02847354**

NOTE	REF NO	GRAPHIC REF	PART NUMBER	QTY	PART NAME 1 2 3 4 5 6 (PRODUCT LEVEL)	SEE PAGE
Y	1	1	**117-3915**	1	MOTOR GP-ELECTRIC (SECONDARY STEERING)	171
	2	1	**169-6714**	1	GASKET	
Y	3	1	**240-9137**	1	PUMP GP-GEAR (SECONDARY STEERING)	458
	4	1	**1A-2209**	2	BOLT (3/8-24X1.25-IN)	
	5	1	**8T-4896**	2	WASHER-HARD (10.2X18.5X2.5-MM THK)	

Y-SEPARATE ILLUSTRATION

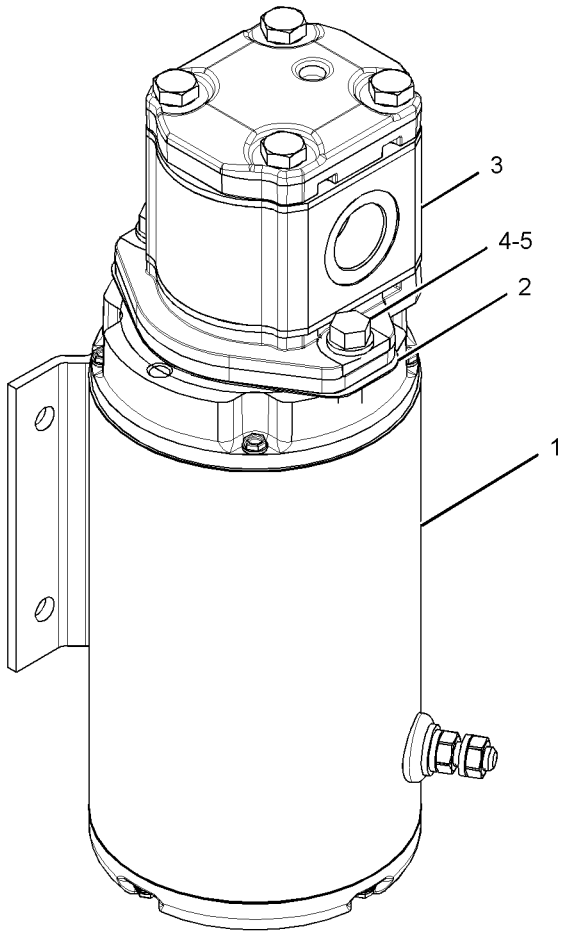

GRAPHIC #1 **<END>** g01404096

240-9137 PUMP GP-GEAR–SECONDARY STEERING

S/N: BYD1-UP; FTD1-UP

PART OF 293-2470 PUMP & MOTOR GP-SEC STEERING

AN ATTACHMENT

SMCS-4268, 4306, 5073 **i02789731**

NOTE	REF NO	GRAPHIC REF	PART NUMBER	QTY	PART NAME 1 2 3 4 5 6 (PRODUCT LEVEL)	SEE PAGE
	1	1	**230-3739**	2	SEAL	
	2	1	**096-0194**	1	RING-RETAINING	

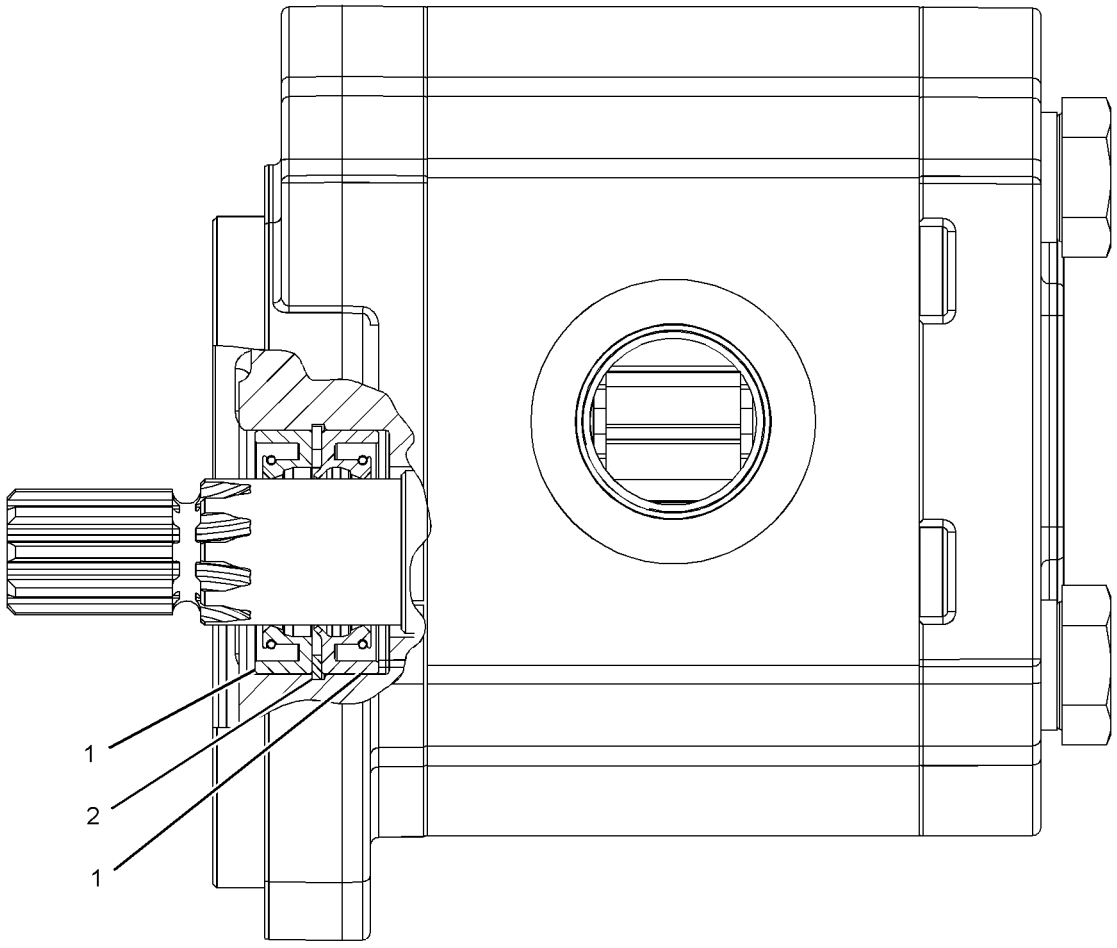

GRAPHIC #1 **<END>** g01406618

289-8966 STEERING AR—QUICK STEER

S/N: FTD1-UP

CANNOT BE USED WITH 289-8969—PAGE 459, 289-8970—PAGE 460

AN ATTACHMENT

SMCS-4300 **i02808896**

NOTE	PART NUMBER	QTY	PART NAME 1 2 3 4 5 6 (PRODUCT LEVEL)	SEE PAGE
Y	*290-7203*	1	BATTERY & WIRING GP	128
Y	*290-7218*	1	LINES GP-STEERING (QUICK STEER) (DUAL MODE)	452
Y	*290-7230*	1	LINES GP-STEERING (STANDARD)	454
J	**282-6945**	1	PUMP GP-METERING (HMU, QUICK STEER)	
			AVAILABLE REPAIR KIT(S):	
J	**257-8471**	1	KIT-SEAL (HMU STEERING PUMP)	
			(INCLUDES INSTALLER GP)	

J-KIT MARKED J SERVICES PART MARKED J
Y-SEPARATE ILLUSTRATION

<END>

289-8968 STEERING AR-SECONDARY

S/N: BYD1-UP

AN ATTACHMENT

SMCS-4300 **i02811766**

NOTE	PART NUMBER	QTY	PART NAME 1 2 3 4 5 6 (PRODUCT LEVEL)	SEE PAGE
Y	*302-1885*	1	BATTERY & WIRING GP (SECONDARY STEERING)	130
Y	*289-8932*	1	LINES GP-SECONDARY STEERING	443
Y	*290-7219*	1	WIRING GP-SECONDARY STEERING	204

Y-SEPARATE ILLUSTRATION

<END>

289-8969 STEERING AR-SECONDARY

S/N: FTD1-UP

CANNOT BE USED WITH 289-8966—PAGE 459, 289-8970—PAGE 460

AN ATTACHMENT

SMCS-4300 **i02808895**

NOTE	PART NUMBER	QTY	PART NAME 1 2 3 4 5 6 (PRODUCT LEVEL)	SEE PAGE
Y	*302-1885*	1	BATTERY & WIRING GP (SECONDARY STEERING)	130
Y	*289-8910*	1	LINES GP-SECONDARY STEERING	438
Y	*290-7220*	1	WIRING GP-SECONDARY STEERING	206
J	**296-6719**	1	PUMP GP-METERING (HMU) (BASIC)	
			AVAILABLE REPAIR KIT(S):	
J	**257-8471**	1	KIT-SEAL (HMU STEERING PUMP)	
			(INCLUDES INSTALLER GP)	

J-KIT MARKED J SERVICES PART MARKED J
Y-SEPARATE ILLUSTRATION

<END>

289-8970 STEERING AR-SECONDARY—QUICK STEER

S/N: FTD1-UP
CANNOT BE USED WITH 289-8966—PAGE 459, 289-8969—PAGE 459
AN ATTACHMENT

SMCS-4300 **i02808824**

NOTE	PART NUMBER	QTY	PART NAME 1 2 3 4 5 6 (PRODUCT LEVEL)	SEE PAGE
Y	*302-1885*	1	BATTERY & WIRING GP (SECONDARY STEERING)	130
Y	*289-8910*	1	LINES GP-SECONDARY STEERING	438
Y	*290-7196*	1	LINES GP-STEERING (QUICK STEER)	450
Y	*290-7220*	1	WIRING GP-SECONDARY STEERING	206
J	**282-6945**	1	PUMP GP-METERING (HMU, QUICK STEER)	
			AVAILABLE REPAIR KIT(S):	
J	**257-8471**	1	KIT-SEAL (HMU STEERING)	
			(INCLUDES INSTALLER GP)	

J-KIT MARKED J SERVICES PART MARKED J
Y-SEPARATE ILLUSTRATION

<END>

294-9434 STEERING AR-STANDARD—QUICK STEER

S/N: FTD1-UP
CANNOT BE USED WITH 289-8969—PAGE 459, 289-8970—PAGE 460
AN ATTACHMENT

SMCS-4300, 4307 **i02811303**

NOTE	PART NUMBER	QTY	PART NAME 1 2 3 4 5 6 (PRODUCT LEVEL)	SEE PAGE
Y	*290-7203*	1	BATTERY & WIRING GP	128
Y	*290-7230*	1	LINES GP-STEERING (STANDARD)	454
J	**296-6719**	1	PUMP GP-METERING (HMU)	
			AVAILABLE REPAIR KIT(S):	
J	**257-8471**	1	KIT-SEAL (HMU STEERING PUMP)	
			(INCLUDES SEAL-U-CUP & SEAL-O-RING)	

J-KIT MARKED J SERVICES PART MARKED J
Y-SEPARATE ILLUSTRATION

<END>

294-9441 STEERING AR-STANDARD

S/N: BYD1-UP
CANNOT BE USED WITH 289-8968—PAGE 459
AN ATTACHMENT

SMCS-4300, 4307 **i02791346**

NOTE	PART NUMBER	QTY	PART NAME 1 2 3 4 5 6 (PRODUCT LEVEL)	SEE PAGE
Y	*290-7203*	1	BATTERY & WIRING GP	128
Y	*212-4656*	1	LINES GP-STEERING (STANDARD)	446

Y-SEPARATE ILLUSTRATION

<END>

STEERING SYSTEM

280-6837 STEERING COLUMN GP-ADJUSTABLE

S/N: BYD1-UP; FTD1-UP
PART OF 190-4635 CONTROL GP-STEERING
AN ATTACHMENT

SMCS-4338 **i02879470**

NOTE	REF NO	GRAPHIC REF	PART NUMBER	QTY	PART NAME 1 2 3 4 5 6 (PRODUCT LEVEL)	SEE PAGE
	1	1	**9G-3695**	1	PLUG	
	2	1	**102-8802**	1	KIT-RECEPTACLE (2-PIN)	
					(INCLUDES RECEPTACLE AS & WEDGE)	
	3	1	**149-0777**	1	KNOB (STEERING COLUMN TILT)	
	4	1	**186-3735**	1	PIN-CONNECTOR (16-GA TO 18-GA)	
	5	1	**217-4154**	1	SPRING AS-GAS	
	6	1	**217-4155**	1	KIT-TILT LEVER (STEERING COLUMN)	
					(INCLUDES BOLTS, ROLL PIN, DOWEL, SPRING & TILT LEVER)	
	7	1	**252-8054**	1	KIT-CONTACT (STEERING COLUMN)	
					(INCLUDES HORN CONTACT AS, SCREWS & LOCKWASHERS)	
	8	1	**316-1961**	1	KIT-PIVOT (STEERING COLUMN)	
					(INCLUDES BUSHING-PIVOTS & PIN-PIVOTS)	
M	9	1	**6V-8227**	1	NUT (M18X1.5-THD)	
	10	1	**311-8557**	1	COLUMN AS-STEERING	

M-METRIC PART

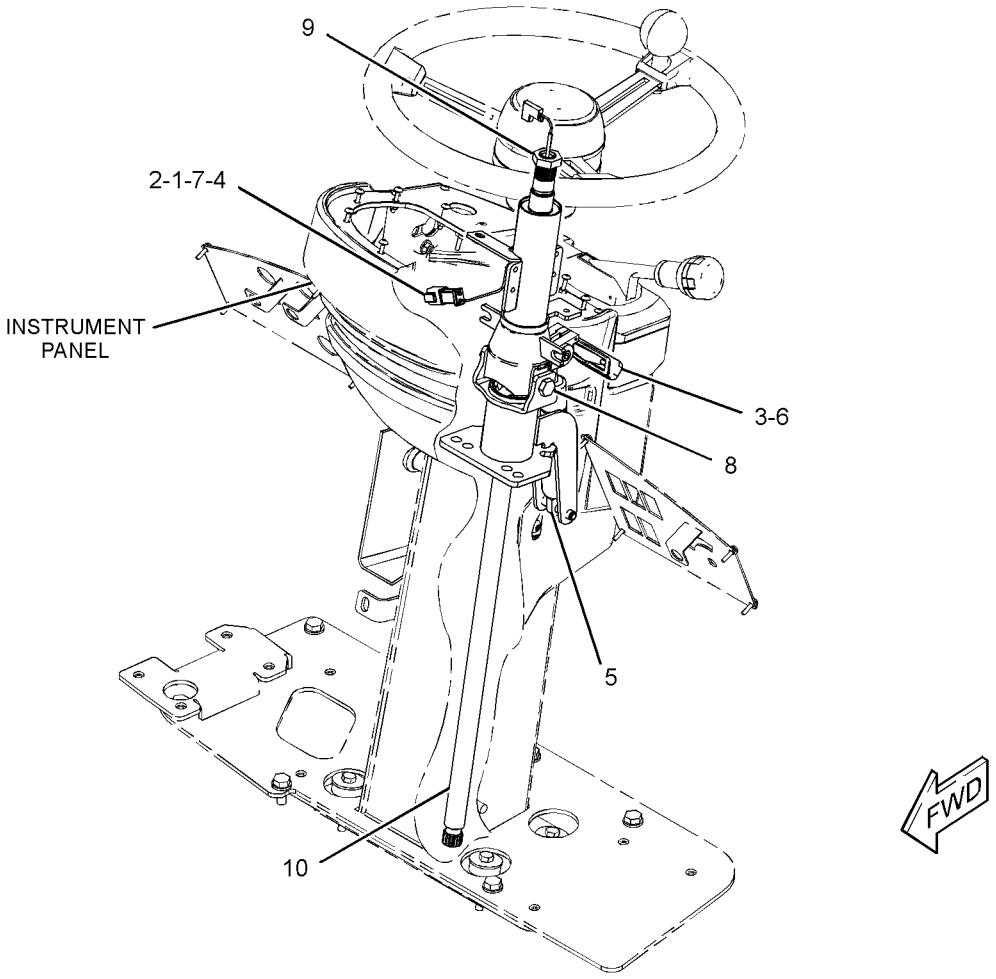

GRAPHIC #1 **<END>** g01423407

STEERING SYSTEM

247-4503 VALVE & MTG GP-SOLENOID—QUICK STEER

S/N: FTD1-UP

PART OF 290-7196, 290-7218 LINES GP-STEERING

AN ATTACHMENT

SMCS-5479 **i02273072**

NOTE	REF NO	GRAPHIC REF	PART NUMBER	QTY	PART NAME 1 2 3 4 5 6 (PRODUCT LEVEL)	SEE PAGE
Y	1	1	**247-4502**	1	VALVE GP-SOLENOID (24-VOLT) (QUICK STEER)	477

Y-SEPARATE ILLUSTRATION

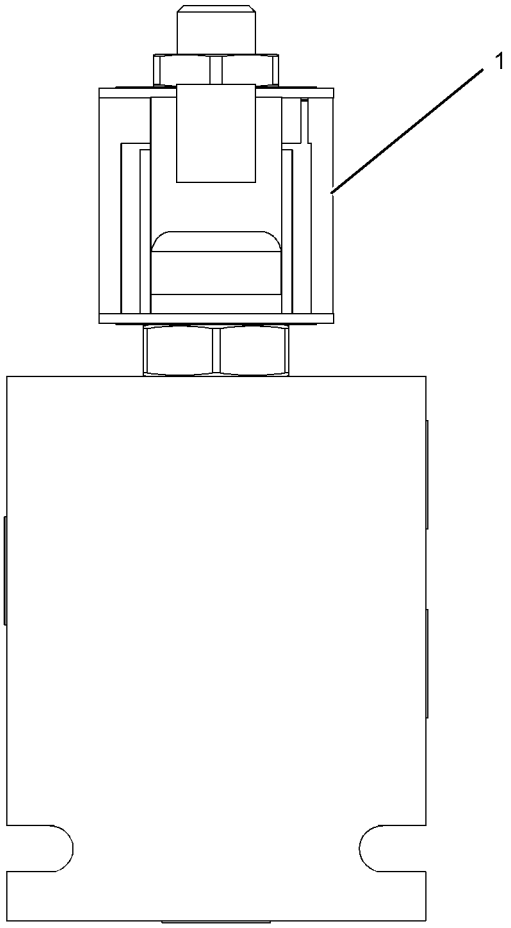

GRAPHIC #1 **<END>** g01115474

136-9289 VALVE GP-PILOT—JOYSTICK, 2-FUNCTION

S/N: FTD1-UP

PART OF 212-1307 VALVE GP-PILOT

AN ATTACHMENT

SMCS-4342 **i02602946**

NOTE	REF NO	GRAPHIC REF	PART NUMBER	QTY	PART NAME 1 2 3 4 5 6 (PRODUCT LEVEL)	SEE PAGE
Y	2	1	**137-0266**	1	VALVE GP-PILOT CARTRIDGE (LIFT)	465
	3	1	**141-7481**	1	SPACER	
	4	1	**141-9236**	1	SCREEN AS (PILOT OIL)	
	5	1	**142-2651**	1	PLATE AS	
	6	1	**146-8478**	1	CUP	
	7	1	**153-8952**	1	ADAPTER	
	8	1	**163-5512**	5	GROMMET	
Y	9	1	**170-8513**	1	VALVE GP-PILOT CARTRIDGE (LOWER)	471
Y	10	1	**172-0223**	1	VALVE GP-PILOT CARTRIDGE (DUMP)	472
	11	1	**102-8806**	1	KIT-RECEPTACLE (8-PIN)	
					(KIT INCLUDES RECEPTACLE AS AND WEDGE)	
	12	1	**136-9297**	1	PLATE	
	13	1	**136-9298**	1	RETAINER	
	14	1	**141-4852**	1	BOOT	
	15	1	**145-8428**	3	COIL AS-DETENT	
					(EACH INCLUDES)	
		1	**8T-8729**	2	PIN-CONNECTOR	
Y	16	1	**145-8711**	1	VALVE GP-PILOT CARTRIDGE (TILT BACK)	468
Y	17	1	**147-3322**	1	PLATE GP-PILOT VALVE (JOYSTICK)	599
	19	1	**149-5470**	1	PLATE	
	20	1	**153-8947**	1	SWIVEL AS	
	21	1	**3J-1907**	1	SEAL-O-RING	
	22	1	**3J-7354**	8	SEAL-O-RING	
	24	1	**6V-8397**	1	SEAL-O-RING	
	25	1	**6V-8636**	1	CONNECTOR	
	26	1	**8L-2786**	1	SEAL-O-RING	
M	27	1	**8T-0267**	4	BOLT-SOCKET HEAD (M6X1X12-MM)	
	28	1	**8T-8737**	2	PLUG-SEAL	
	29	1	**9S-8002**	8	PLUG-O-RING	

M-METRIC PART
Y-SEPARATE ILLUSTRATION

136-9289 VALVE GP-PILOT *(contd.)* i02602946

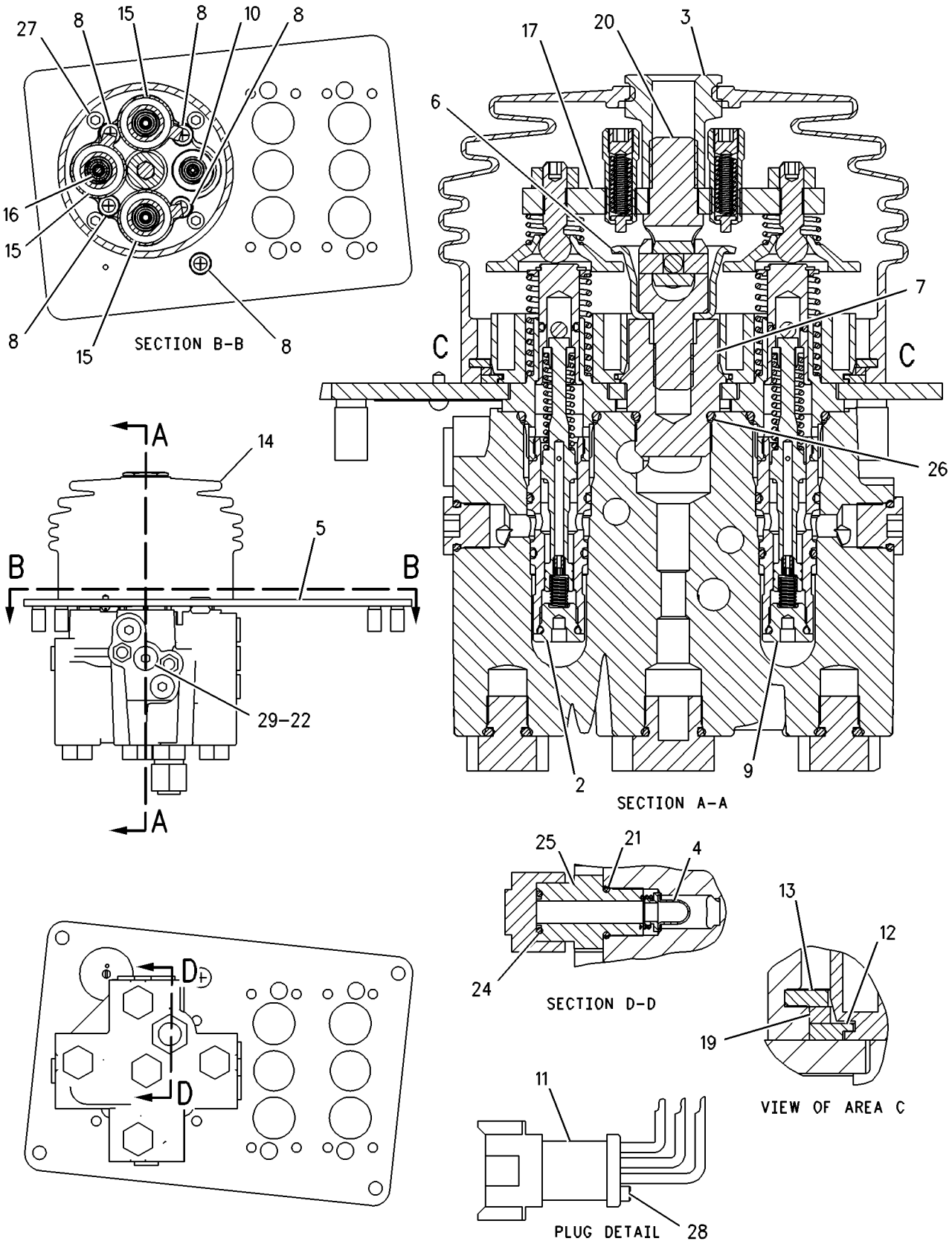

GRAPHIC #1 **<END>** g00658636

137-0266 VALVE GP-PILOT CARTRIDGE

S/N: FTD1-UP
PART OF 136-9289 VALVE GP-PILOT
AN ATTACHMENT

SMCS-4342 **i02305362**

NOTE	REF NO	GRAPHIC REF	PART NUMBER	QTY	PART NAME 1 2 3 4 5 6 (PRODUCT LEVEL)	SEE PAGE
Z	1	1		1	ADAPTER	
	2	1	**145-8707**	1	SPRING	
	3	1	**146-6316**	2	RETAINER	
	4	1	**146-6319**	1	RETAINER	
	5	1	**153-8925**	1	STOP	
	6	1	**116-4527**	1	ORIFICE	
	7	1	**146-6318**	1	PLUNGER	
	8	1	**191-3029**	1	SPOOL	
	9	1	**153-8926**	1	SPRING	
	10	1	**191-3028**	1	CAGE	
	11	1	**157-2152**	1	SPRING	
	12	1	**1M-6718**	1	BALL	
	13	1	**2H-3429**	1	RING-RETAINING	
	14	1	**3K-0360**	1	SEAL-O-RING	
	15	1	**4K-2039**	1	SEAL-O-RING	
	16	1	**6M-5062**	1	SEAL-O-RING	
	17	1	**259-0509**	1	SEAL-O-RING	
	18	1	**7J-0204**	1	SEAL-O-RING	

Z-NOT SERVICED SEPARATELY

137-0266 VALVE GP-PILOT CARTRIDGE *(contd.)* **i02305362**

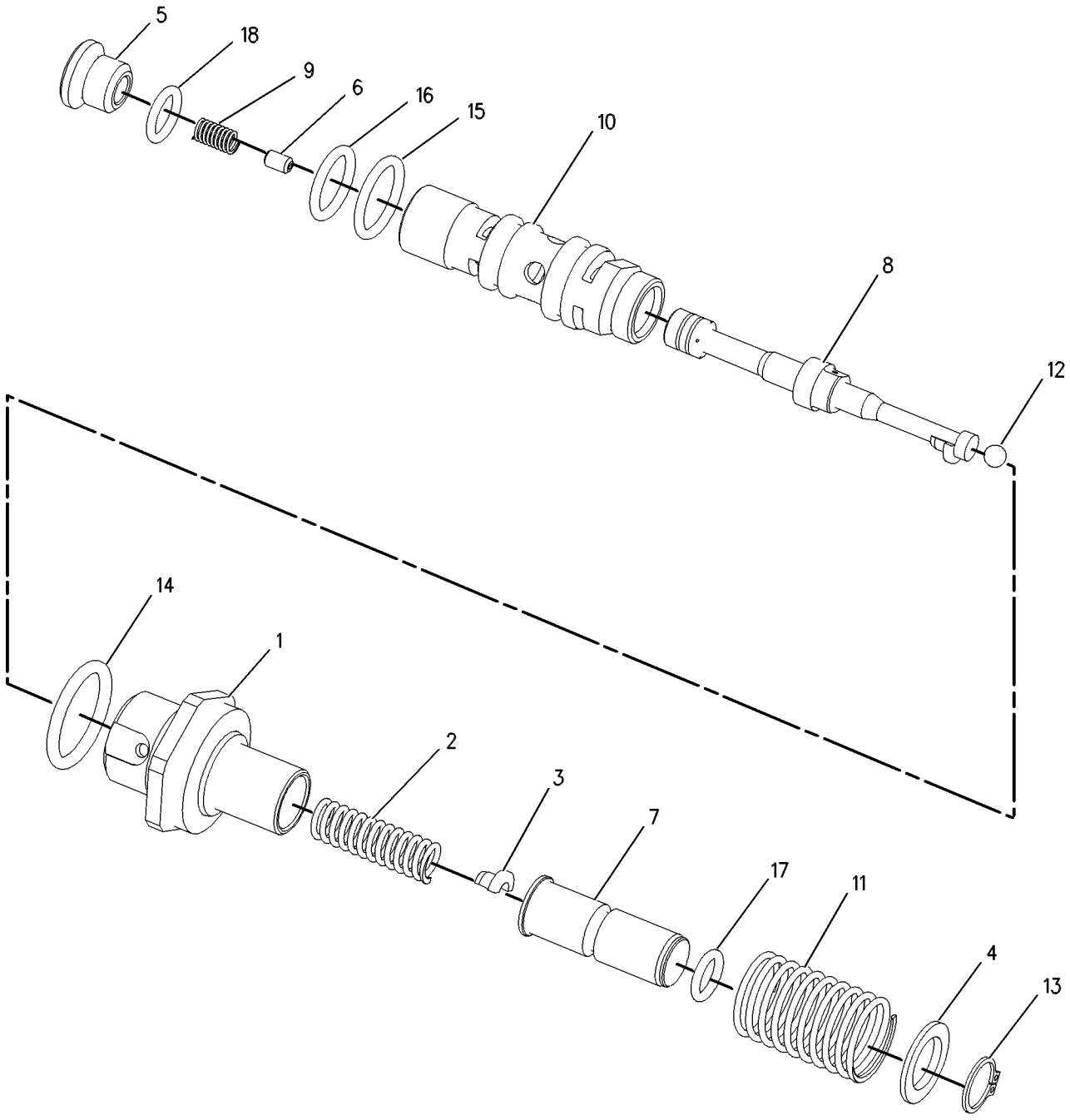

GRAPHIC #1 **<END>** g01154080

STEERING SYSTEM

145-8710 VALVE GP-PILOT CARTRIDGE

S/N: FTD1-UP
PART OF 145-5256 VALVE GP-PILOT
AN ATTACHMENT

SMCS-4342 **i01745377**

NOTE	REF NO	GRAPHIC REF	PART NUMBER	QTY	PART NAME 1 2 3 4 5 6 (PRODUCT LEVEL)	SEE PAGE
	1	1	**136-9301**	1	SPRING	
	2	1	**136-9304**	1	ADAPTER	
	3	1	**141-5151**	1	SPRING	
	4	1	**146-6316**	2	RETAINER	
	5	1	**146-6319**	1	RETAINER	
	6	1	**153-8925**	1	STOP	
	7	1	**116-4527**	1	ORIFICE	
	8	1	**146-6318**	1	PLUNGER	
	9	1	**153-8924**	1	SPOOL	
	10	1	**153-8926**	1	SPRING	
	11	1	**153-8929**	1	CAGE	
	12	1	**1M-6718**	1	BALL	
	13	1	**2H-3429**	1	RING-RETAINING	
	14	1	**3K-0360**	1	SEAL-O-RING	
	15	1	**4K-2039**	1	SEAL-O-RING	
	16	1	**6M-5062**	1	SEAL-O-RING	
	17	1	**7I-6601**	1	SEAL-O-RING	
	18	1	**7J-0204**	1	SEAL-O-RING	

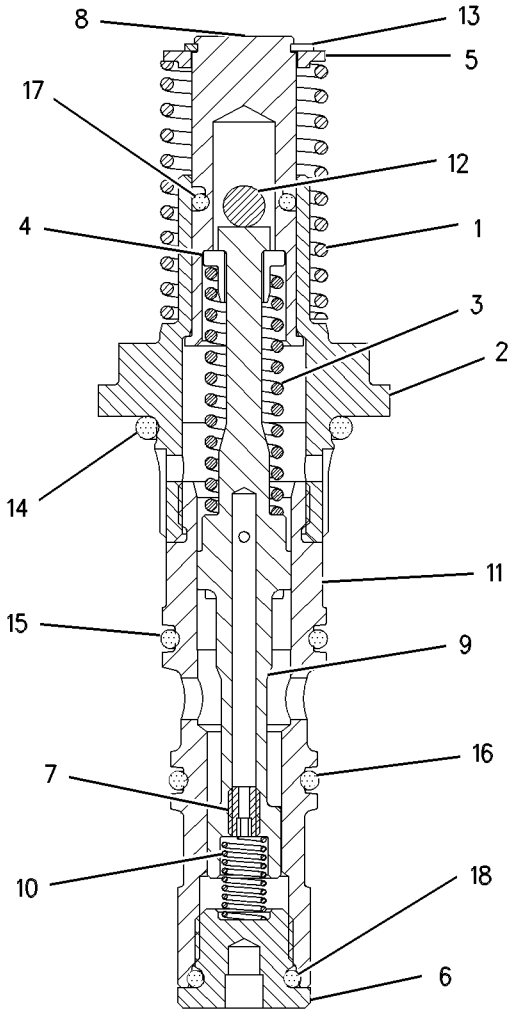

GRAPHIC #1 **<END>** g00577903

145-8711 VALVE GP-PILOT CARTRIDGE

S/N: FTD1-UP
PART OF 136-9289 VALVE GP-PILOT
AN ATTACHMENT

SMCS-4342 **i01126163**

NOTE	REF NO	GRAPHIC REF	PART NUMBER	QTY	PART NAME 1 2 3 4 5 6 (PRODUCT LEVEL)	SEE PAGE
	1	1	**136-9304**	1	ADAPTER	
	2	1	**145-8707**	1	SPRING	
	3	1	**146-6316**	2	RETAINER	
	4	1	**146-6319**	1	RETAINER	
	5	1	**153-8925**	1	STOP	
	6	1	**116-4527**	1	ORIFICE	
	7	1	**146-6318**	1	PLUNGER	
	8	1	**153-8924**	1	SPOOL	
	9	1	**153-8926**	1	SPRING	
	10	1	**153-8929**	1	CAGE	
	11	1	**157-2153**	1	SPRING	
	12	1	**1M-6718**	1	BALL	
	13	1	**2H-3429**	1	RING-RETAINING	
	14	1	**3K-0360**	1	SEAL-O-RING	
	15	1	**4K-2039**	1	SEAL-O-RING	
	16	1	**6M-5062**	1	SEAL-O-RING	
	17	1	**7I-6601**	1	SEAL-O-RING	
	18	1	**7J-0204**	1	SEAL-O-RING	

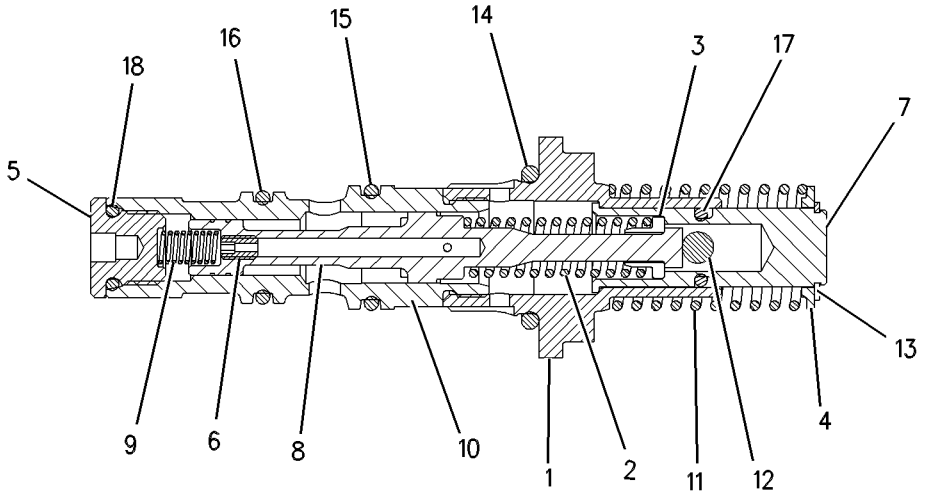

GRAPHIC #1 **<END>** g00605140

168-6503 VALVE GP-PILOT CARTRIDGE

S/N: BYD1-UP

PART OF 201-3359, 201-3361 VALVE GP-PILOT

AN ATTACHMENT

SMCS-4342 **i02289727**

NOTE	REF NO	GRAPHIC REF	PART NUMBER	QTY	PART NAME 1 2 3 4 5 6 (PRODUCT LEVEL)	SEE PAGE
	1	1	**116-4527**	1	ORIFICE	
Z	2	1		1	ADAPTER	
	3	1	**146-6316**	2	RETAINER	
Z	4	1		1	PLUNGER	
	5	1	**146-6319**	1	RETAINER	
	6	1	**153-8925**	1	STOP	
	7	1	**153-8926**	1	SPRING	
	8	1	**157-2153**	1	SPRING	
	9	1	**191-3028**	1	CAGE	
	10	1	**191-3029**	1	SPOOL	
	11	1	**201-4276**	1	SPRING	
	12	1	**1M-6718**	1	BALL	
	13	1	**2H-3429**	1	RING-RETAINING	
	14	1	**3K-0360**	1	SEAL-O-RING	
	15	1	**4K-2039**	1	SEAL-O-RING	
	16	1	**6M-5062**	1	SEAL-O-RING	
	17	1	**259-0509**	1	SEAL-O-RING	
	18	1	**7J-0204**	1	SEAL-O-RING	

Z-NOT SERVICED SEPARATELY

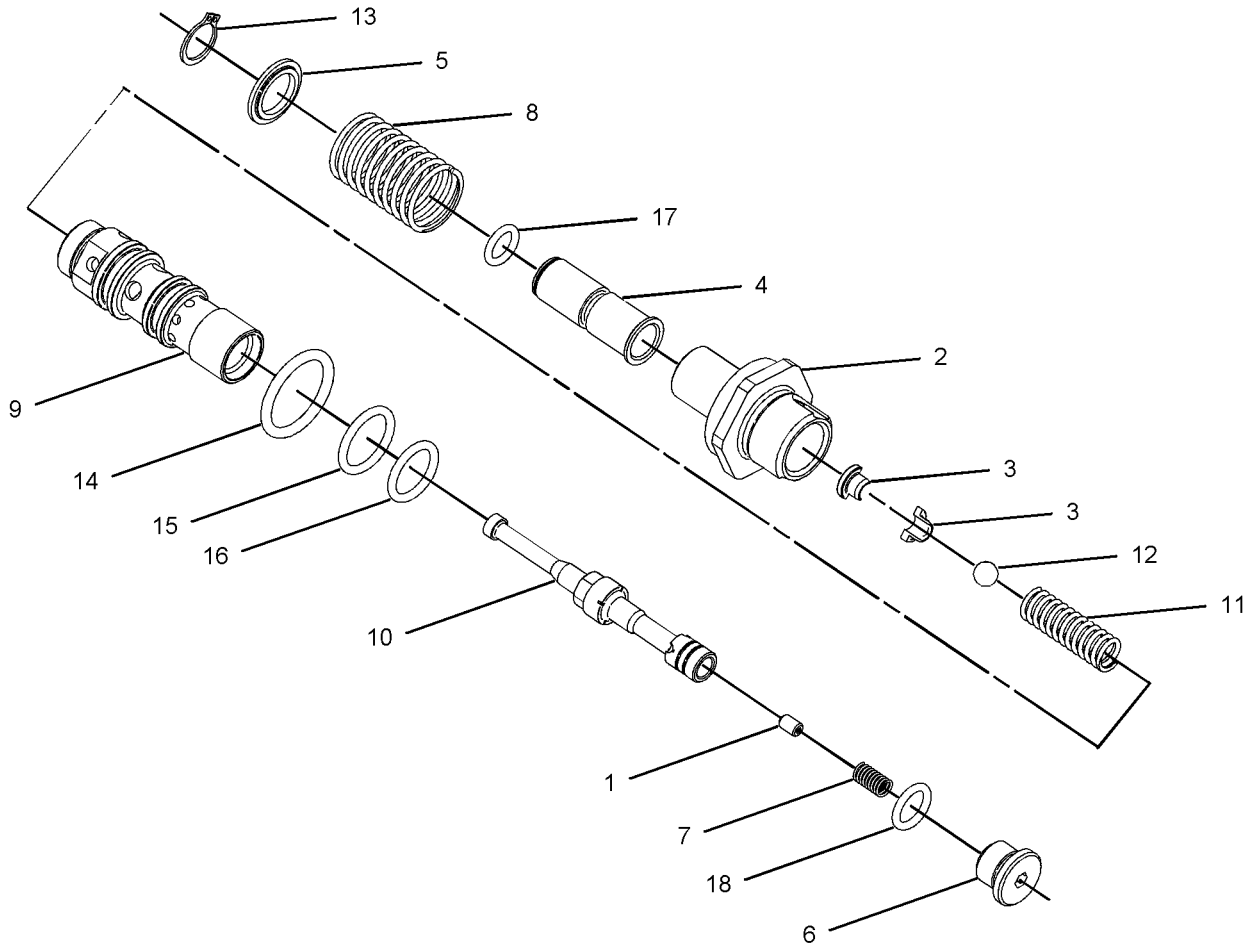

GRAPHIC #1 **<END>** g01009610

STEERING SYSTEM

168-6504 VALVE GP-PILOT CARTRIDGE

S/N: BYD1-UP

PART OF 201-3359, 201-3360, 201-3361 VALVE GP-PILOT

AN ATTACHMENT

SMCS-4342 **i02289730**

NOTE	REF NO	GRAPHIC REF	PART NUMBER	QTY	PART NAME 1 2 3 4 5 6 (PRODUCT LEVEL)	SEE PAGE
	1	1	**116-4527**	1	ORIFICE	
Z	2	1		1	ADAPTER	
	3	1	**146-6316**	2	RETAINER	
Z	4	1		1	PLUNGER	
	5	1	**146-6319**	1	RETAINER	
	6	1	**153-8925**	1	STOP	
	7	1	**153-8926**	1	SPRING (INNER)	
	8	1	**191-3028**	1	CAGE	
	9	1	**191-3029**	1	SPOOL	
	10	1	**201-4275**	1	SPRING (MIDDLE)	
	11	1	**157-2152**	1	SPRING (OUTER)	
	12	1	**2H-3429**	1	RING-RETAINING	
	13	1	**3K-0360**	1	SEAL-O-RING	
	14	1	**4K-2039**	1	SEAL-O-RING	
	15	1	**6M-5062**	1	SEAL-O-RING	
	16	1	**259-0509**	1	SEAL-O-RING	
	17	1	**7J-0204**	1	SEAL-O-RING	

Z-NOT SERVICED SEPARATELY

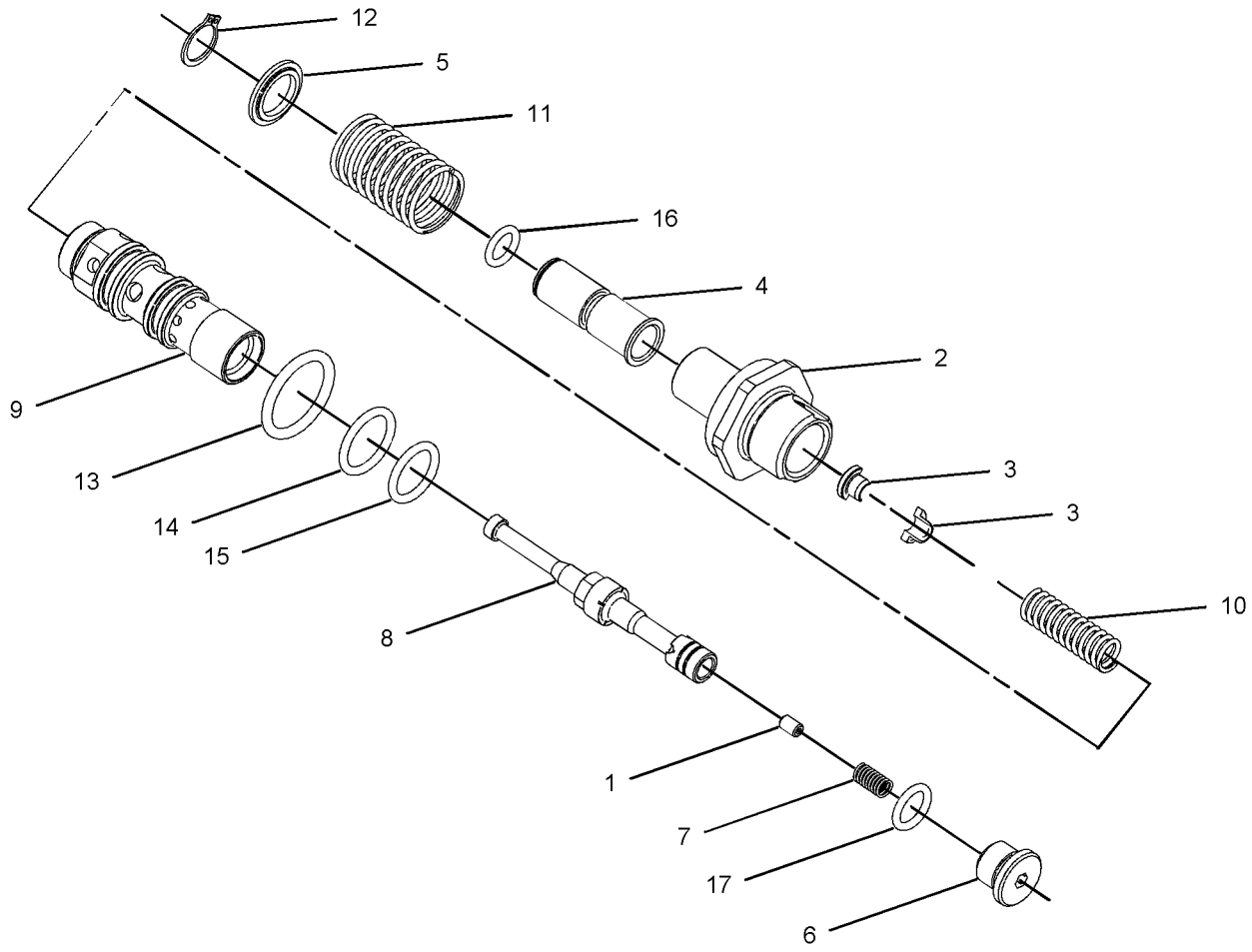

GRAPHIC #1 **<END>** g01029600

170-8513 VALVE GP-PILOT CARTRIDGE

S/N: FTD1-UP
PART OF 136-9289 VALVE GP-PILOT
AN ATTACHMENT

SMCS-4342 **i01111783**

NOTE	REF NO	GRAPHIC REF	PART NUMBER	QTY	PART NAME 1 2 3 4 5 6 (PRODUCT LEVEL)	SEE PAGE
	1	1	**136-9304**	1	ADAPTER	
	2	1	**141-5151**	1	SPRING	
	3	1	**146-6316**	2	RETAINER	
	4	1	**146-6319**	1	RETAINER	
	5	1	**153-8925**	1	STOP	
	6	1	**116-4527**	1	ORIFICE	
	7	1	**146-6318**	1	PLUNGER	
	8	1	**153-8924**	1	SPOOL	
	9	1	**153-8926**	1	SPRING	
	10	1	**153-8929**	1	CAGE	
	11	1	**157-2152**	1	SPRING	
	12	1	**1M-6718**	1	BALL	
	13	1	**2H-3429**	1	RING-RETAINING	
	14	1	**3K-0360**	1	SEAL-O-RING	
	15	1	**4K-2039**	1	SEAL-O-RING	
	16	1	**6M-5062**	1	SEAL-O-RING	
	17	1	**7I-6601**	1	SEAL-O-RING	
	18	1	**7J-0204**	1	SEAL-O-RING	

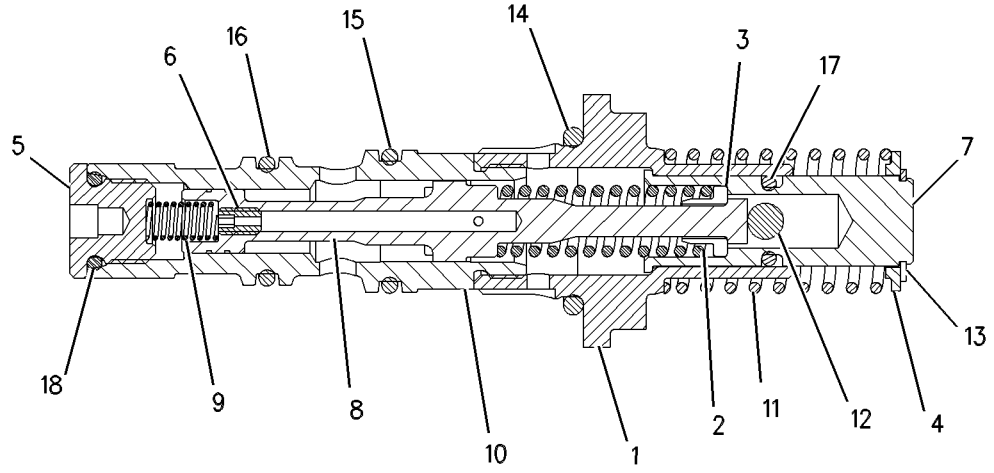

GRAPHIC #1 **<END>** g00597577

172-0223 VALVE GP-PILOT CARTRIDGE

S/N: FTD1-UP
PART OF 136-9289 VALVE GP-PILOT
AN ATTACHMENT

SMCS-4342 **i01129830**

NOTE	REF NO	GRAPHIC REF	PART NUMBER	QTY	PART NAME 1 2 3 4 5 6 (PRODUCT LEVEL)	SEE PAGE
	1	1	**136-9304**	1	ADAPTER	
	2	1	**146-6316**	2	RETAINER	
	3	1	**146-6319**	1	RETAINER	
	4	1	**153-8925**	1	STOP	
	5	1	**171-4055**	1	SPRING	
	6	1	**116-4527**	1	ORIFICE	
	7	1	**146-6318**	1	PLUNGER	
	8	1	**153-8924**	1	SPOOL	
	9	1	**153-8926**	1	SPRING	
	10	1	**153-8929**	1	CAGE	
	11	1	**157-2153**	1	SPRING	
	12	1	**2H-3429**	1	RING-RETAINING	
	13	1	**3E-4354**	1	BALL	
	14	1	**3K-0360**	1	SEAL-O-RING	
	15	1	**4K-2039**	1	SEAL-O-RING	
	16	1	**6M-5062**	1	SEAL-O-RING	
	17	1	**7I-6601**	1	SEAL-O-RING	
	18	1	**7J-0204**	1	SEAL-O-RING	

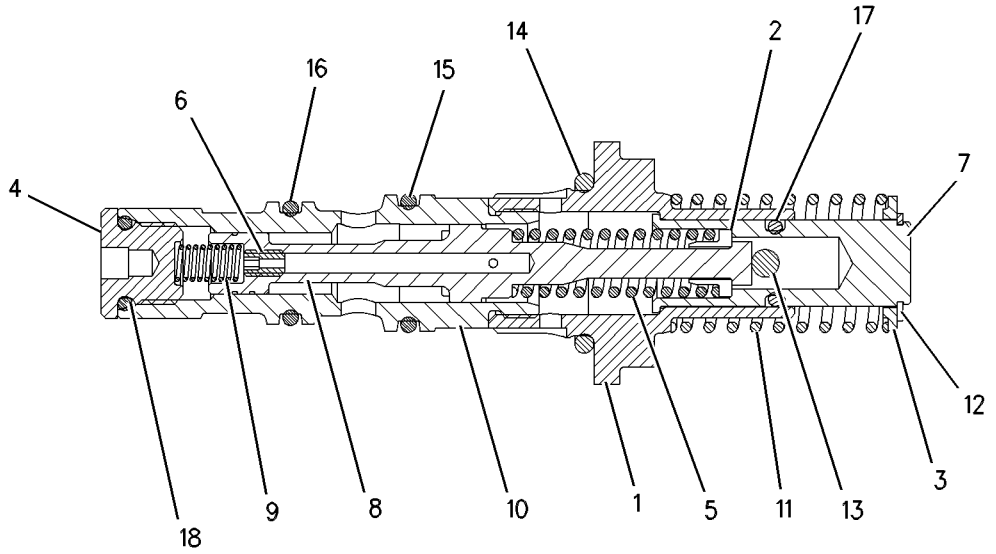

GRAPHIC #1 **<END>** g00598085

202-1233 VALVE GP-PILOT CARTRIDGE

S/N: BYD1-UP

PART OF 201-3359, 201-3360, 201-3361 VALVE GP-PILOT

AN ATTACHMENT

SMCS-4342 **i01543769**

NOTE	REF NO	GRAPHIC REF	PART NUMBER	QTY	PART NAME 1 2 3 4 5 6 (PRODUCT LEVEL)	SEE PAGE
	1	1	**116-4527**	1	ORIFICE	
	2	1	**136-9304**	1	ADAPTER	
	3	1	**146-6316**	2	RETAINER	
	4	1	**146-6318**	1	PLUNGER	
	5	1	**146-6319**	1	RETAINER	
	6	1	**153-8924**	1	SPOOL	
	7	1	**153-8925**	1	STOP	
	8	1	**153-8926**	1	SPRING	
	9	1	**153-8929**	1	CAGE	
	10	1	**201-4276**	1	SPRING	
	11	1	**157-2152**	1	SPRING	
	12	1	**1M-6718**	1	BALL	
	13	1	**2H-3429**	1	RING-RETAINING	
	14	1	**3K-0360**	1	SEAL-O-RING	
	15	1	**4K-2039**	1	SEAL-O-RING	
	16	1	**6M-5062**	1	SEAL-O-RING	
	17	1	**7I-6601**	1	SEAL-O-RING	
	18	1	**7J-0204**	1	SEAL-O-RING	

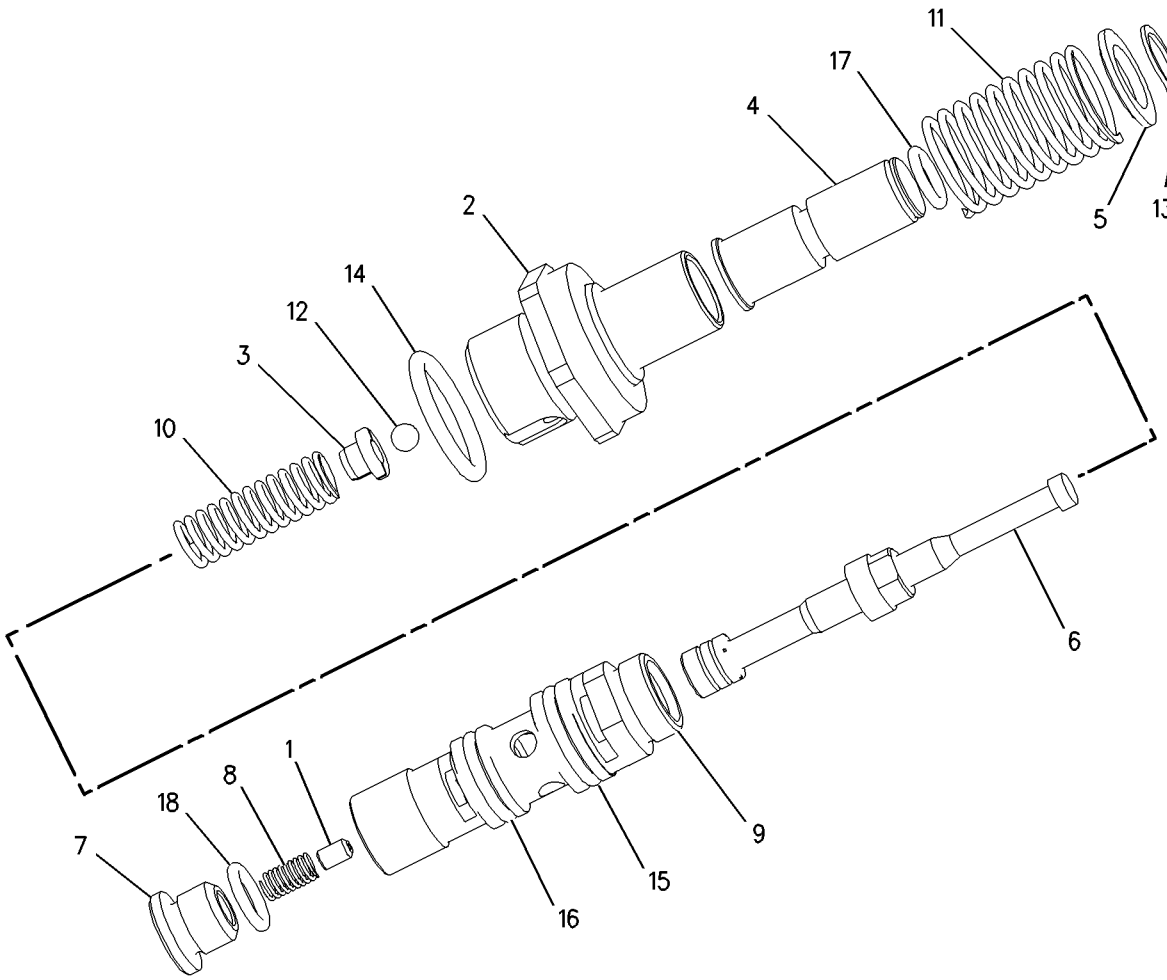

GRAPHIC #1 **<END>** g00803859

212-4962 VALVE GP-PILOT CARTRIDGE

S/N: FTD1-UP

PART OF 212-1302, 212-1305, 212-1307, 250-8085 VALVE GP-PILOT

AN ATTACHMENT

SMCS-4342 **i01697147**

NOTE	REF NO	GRAPHIC REF	PART NUMBER	QTY	PART NAME 1 2 3 4 5 6 (PRODUCT LEVEL)	SEE PAGE
	1	1	**116-4527**	1	ORIFICE	
	2	1	**136-9304**	1	ADAPTER	
	3	1	**146-6316**	2	RETAINER	
	4	1	**146-6318**	1	PLUNGER	
	5	1	**146-6319**	1	RETAINER	
	6	1	**153-8924**	1	SPOOL	
	7	1	**153-8925**	1	STOP	
	8	1	**153-8926**	1	SPRING	
	9	1	**153-8929**	1	CAGE	
	10	1	**7J-0204**	1	SEAL-O-RING	
	11	1	**157-2152**	1	SPRING	
	12	1	**2H-3429**	1	RING-RETAINING	
	13	1	**3E-4354**	1	BALL	
	14	1	**3K-0360**	1	SEAL-O-RING	
	15	1	**4K-2039**	1	SEAL-O-RING	
	16	1	**6M-5062**	1	SEAL-O-RING	
	17	1	**7I-6601**	1	SEAL-O-RING	

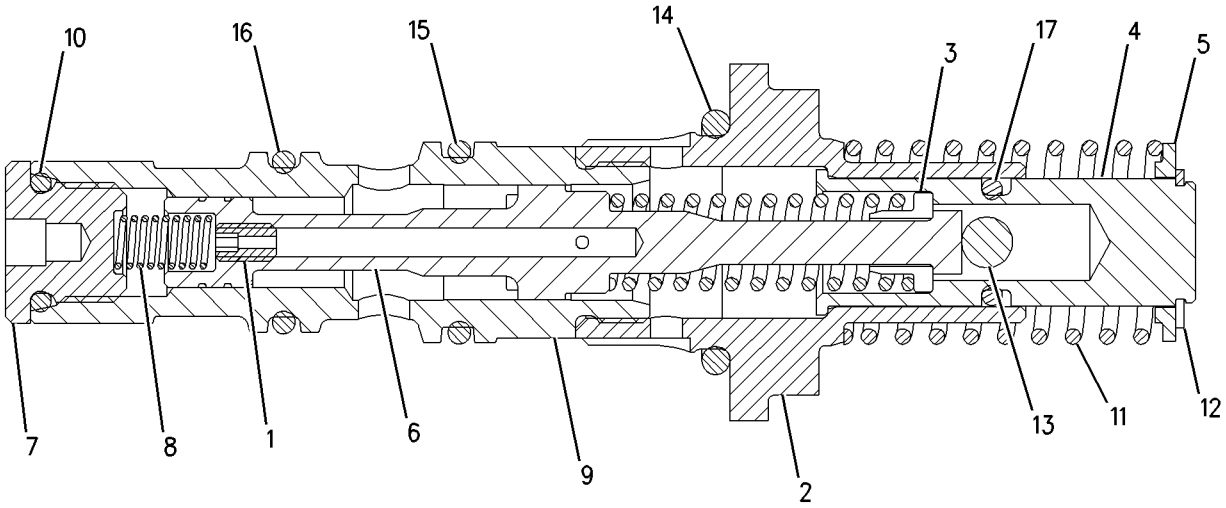

GRAPHIC #1 **<END>** g00873723

212-4963 VALVE GP-PILOT CARTRIDGE

S/N: FTD1-UP

PART OF 212-1302, 212-1305, 212-1307, 250-8085 VALVE GP-PILOT

AN ATTACHMENT

SMCS-4342 **i01693496**

NOTE	REF NO	GRAPHIC REF	PART NUMBER	QTY	PART NAME 1 2 3 4 5 6 (PRODUCT LEVEL)	SEE PAGE
	1	1	**116-4527**	1	ORIFICE	
	2	1	**136-9304**	1	ADAPTER	
	3	1	**146-6316**	2	RETAINER	
	4	1	**146-6318**	1	PLUNGER	
	5	1	**146-6319**	1	RETAINER	
	6	1	**153-8924**	1	SPOOL	
	7	1	**153-8925**	1	STOP	
	8	1	**153-8926**	1	SPRING	
	9	1	**153-8929**	1	CAGE	
	10	1	**157-2153**	1	SPRING	
	11	1	**212-4961**	1	SPRING	
	12	1	**2H-3429**	1	RING-RETAINING	
	13	1	**3E-4354**	1	BALL	
	14	1	**3K-0360**	1	SEAL-O-RING	
	15	1	**4K-2039**	1	SEAL-O-RING	
	16	1	**6M-5062**	1	SEAL-O-RING	
	17	1	**7I-6601**	1	SEAL-O-RING	
	18	1	**7J-0204**	1	SEAL-O-RING	

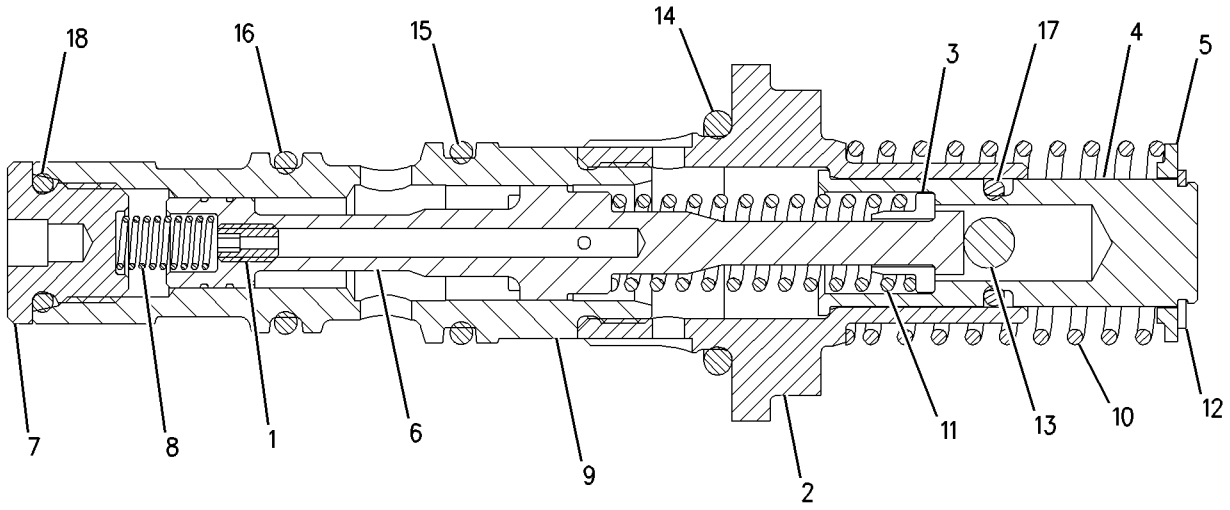

GRAPHIC #1 **<END>** g00871801

8J-6875 VALVE GP-SHUTTLE

S/N: FTD1-UP

PART OF 289-8910 LINES GP-SECONDARY STEERING, 290-7230 LINES GP-STEERING

AN ATTACHMENT

SMCS-4289 **i02772547**

NOTE	REF NO	GRAPHIC REF	PART NUMBER	QTY	PART NAME 1 2 3 4 5 6 (PRODUCT LEVEL)	SEE PAGE
	1	1	**4T-9905**	2	ADAPTER	
	2	1	**2M-9780**	2	SEAL-O-RING	
	3	1	**4B-9784**	1	BALL	

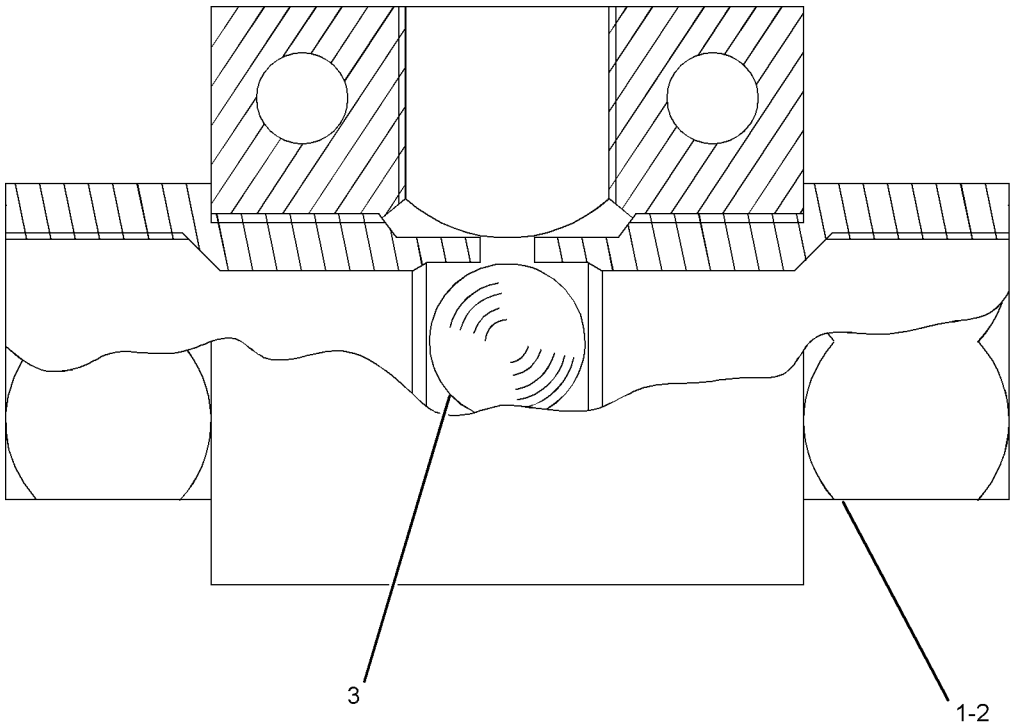

GRAPHIC #1 **<END>** g01047576

247-4502 VALVE GP-SOLENOID

S/N: FTD1-UP
PART OF 247-4503 VALVE & MTG GP-SOLENOID
AN ATTACHMENT

SMCS-4804, 4805, 5479 **i02849554**

NOTE	REF NO	GRAPHIC REF	PART NUMBER	QTY	PART NAME 1 2 3 4 5 6 (PRODUCT LEVEL)	SEE PAGE
	1	1	**250-6148**	1	COIL AS (24-VOLT)	
					AVAILABLE REPAIR KIT(S):	
			106-3108	1	KIT-SEAL (SOLENOID VALVE, QUICK STEER)	

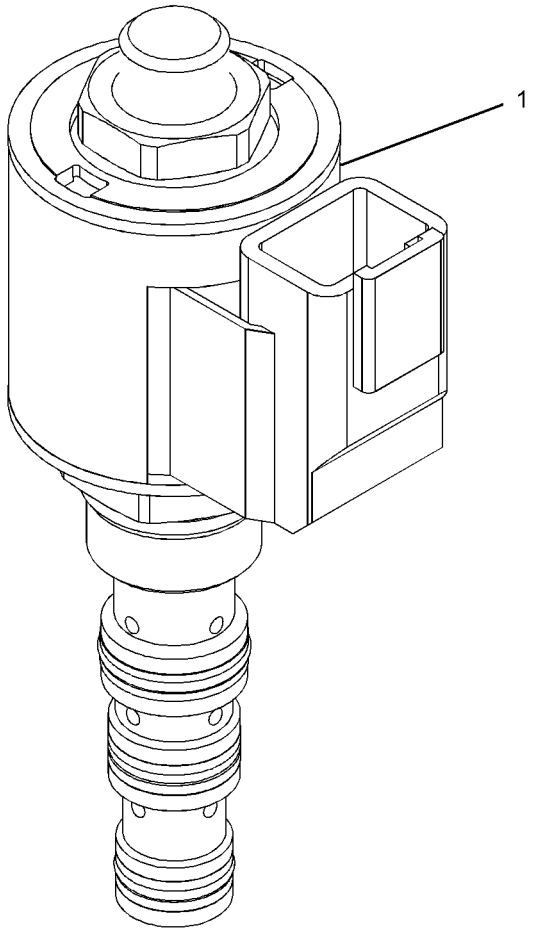

GRAPHIC #1 **<END>** g01114427

243-4398 ACCUMULATOR GP-PILOT OIL–CHARGED

S/N: FTD1-UP

PART OF 289-8806 LINES GP-HYDRAULIC, 289-8924 LINES GP-PILOT

FIELD REPLACEMENT ORDER 250-0393–PAGE 479

SMCS-5077 **i02808496**

NOTE	REF NO	GRAPHIC REF	PART NUMBER	QTY	PART NAME 1 2 3 4 5 6 (PRODUCT LEVEL)	SEE PAGE
	1	1	**224-5152**	1	VALVE-GAS	
	2	1	**224-5132**	1	CAP (GAS VALVE)	
	3	1	**3J-7354**	1	SEAL-O-RING	
	4	1	**1J-9671**	1	SEAL-O-RING	

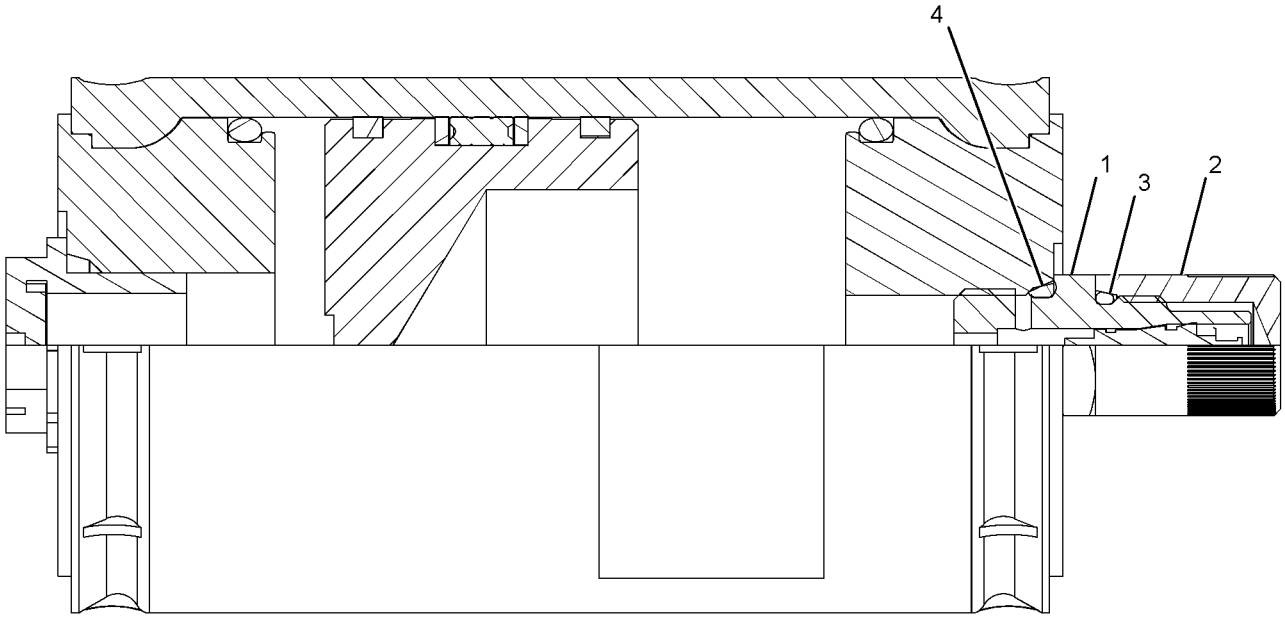

GRAPHIC #1 **<END>** g01404951

250-0393 ACCUMULATOR GP-PILOT OIL–UNCHARGED

S/N: BYD1-UP
PART OF 203-5924, 203-5925 LINES GP-PILOT
FIELD REPLACEMENT FOR 243-4398–PAGE 478
AN ATTACHMENT

SMCS-5077 **i02271217**

NOTE	REF NO	GRAPHIC REF	PART NUMBER	QTY	PART NAME 1 2 3 4 5 6 (PRODUCT LEVEL)	SEE PAGE
	1	1	**224-5152**	1	VALVE-GAS	

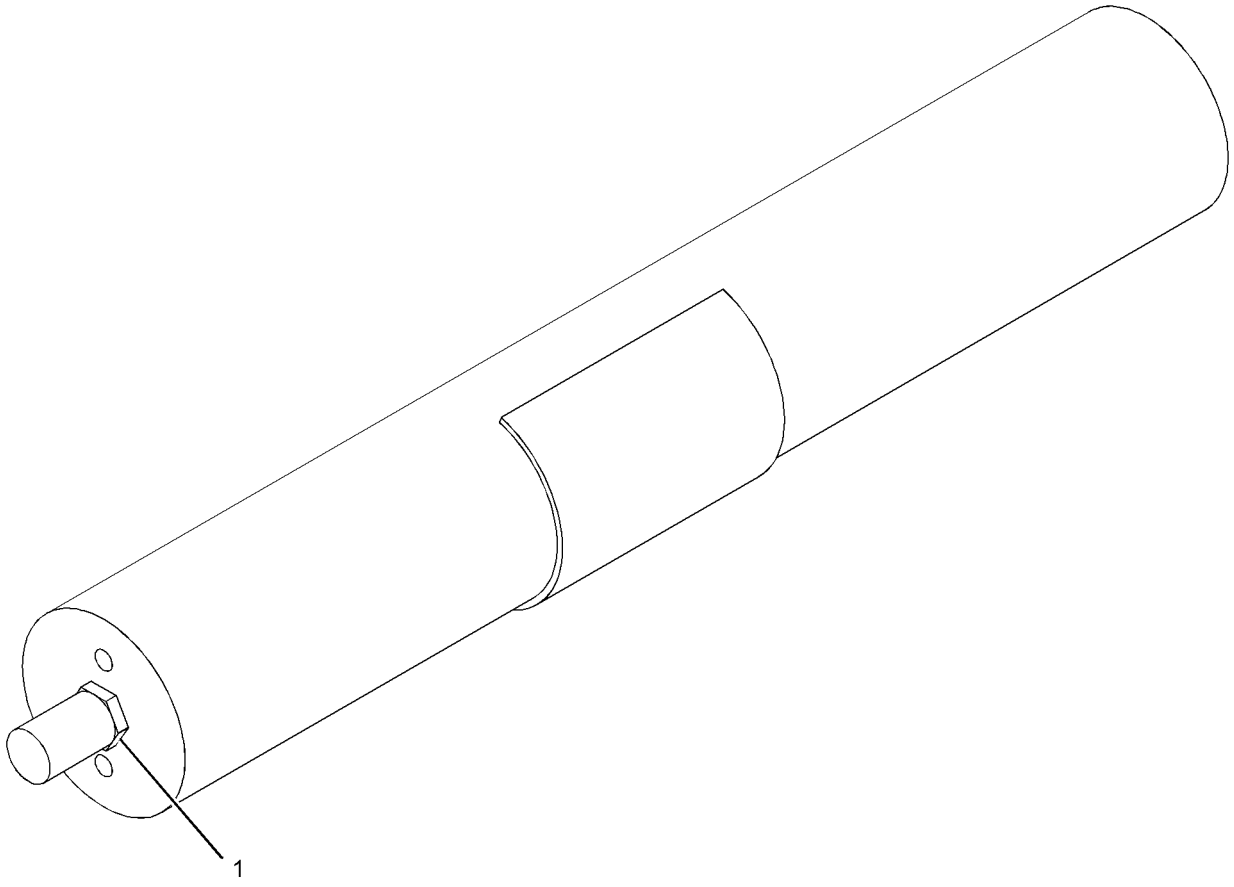

GRAPHIC #1 **<END>** g01107941

223-9698 ACCUMULATOR GP-RIDE CONTROL–CHARGED

S/N: BYD1-UP

PART OF 218-3673 LINES GP-RIDE CONTROL

AN ATTACHMENT

SMCS-5077 **i02602797**

NOTE	REF NO	GRAPHIC REF	PART NUMBER	QTY	PART NAME 1 2 3 4 5 6 (PRODUCT LEVEL)	SEE PAGE
	1	1	**069-2535**	1	VALVE-GAS	
	2	1	**170-0503**	1	FILM-WARNING (ACCUM, HIGH PRESS, READ OMM)	
					AVAILABLE REPAIR KIT(S):	
			170-0493	1	KIT-SEAL (HYDRAULIC ACCUMULATOR)	
					(INCLUDES SEAL-O-RINGS, PISTON RINGS, PISTON SEAL & BACKUP WASHERS)	

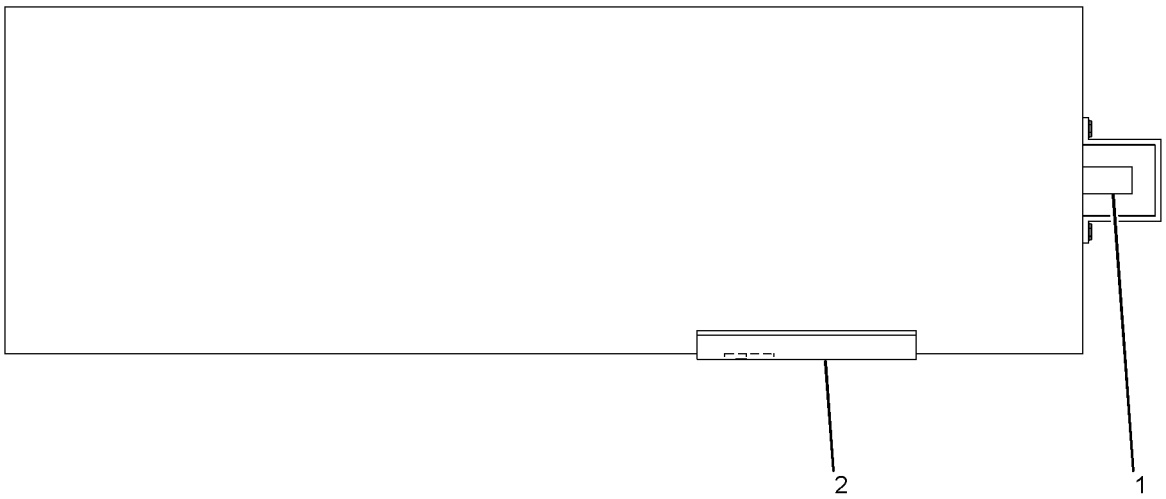

GRAPHIC #1 **<END>** g01119164

6E-6477 CARTRIDGE GP-VANE PUMP–IMPLEMENT*R

S/N: BYD1-UP

PART OF 119-7698 PUMP GP-PISTON & VANE

SMCS-5055 **i00527157**

NOTE	REF NO	GRAPHIC REF	PART NUMBER	QTY	PART NAME 1 2 3 4 5 6 (PRODUCT LEVEL)	SEE PAGE
	1	1	**8C-3079**	4	SEAL-O-RING	
	2	1	**117-1911**	4	SEAL & RETAINER AS	
	3	1	**9T-5042**	2	DOWEL	
	4	1	**6E-6494**	1	PLATE AS-INLET	
	5	1	**6E-1979**	1	KIT-VANE	
		1	**6E-6492**	1	ROTOR	
	6	1	**6E-6493**	1	RING-CAM	
	7	1	**3F-5792**	1	SEAL-O-RING	
	8	1	**061-9457**	1	SEAL-O-RING	
	9	1	**9T-5087**	1	RING	
	10	1	**6E-6488**	1	PLATE-OUTLET	
	11	1	**3G-1820**	1	RING-SEAL	
	12	1	**6E-6490**	1	PLATE-FLEX	
	13	1	**6E-6491**	1	PLATE-FLEX	
	14	1	**9T-5112**	2	SCREW (1/4-28X2.87-IN)	

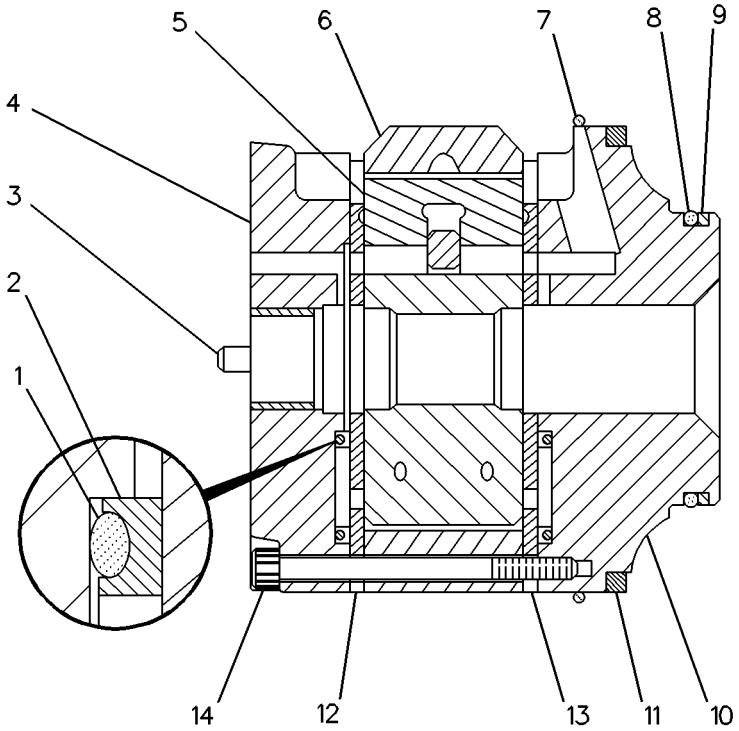

GRAPHIC #1 **<END>** g00119390

HYDRAULIC SYSTEM

290-6481 CONTROL AR-RIDE

S/N: BYD1-UP
AN ATTACHMENT

SMCS-5004 **i02870748**

NOTE	PART NUMBER	QTY	PART NAME 1 2 3 4 5 6 (PRODUCT LEVEL)	SEE PAGE
Y	*218-3673*	1	LINES GP-RIDE CONTROL	577
Y	*312-8309*	1	WIRING GP-RIDE CONTROL	203

Y-SEPARATE ILLUSTRATION

<END>

241-1049 CONVERSION AR-HYDRAULIC

S/N: BYD1-UP
AN ATTACHMENT

SMCS-5051, 5057, 5059, 5117, 5479 **i02736534**

NOTE	PART NUMBER	QTY	PART NAME 1 2 3 4 5 6 (PRODUCT LEVEL)	SEE PAGE
Y	*118-1094*	1	LINES GP-FRONT	527
Y	**133-4235**	1	VALVE GP-MAIN CONTROL (3-FUNCTION)	648
Y	*287-2062*	1	VALVE GP-PILOT (JOYSTICK, 3-FUNCTION) (JOYSTICK, 3-FUNCTION)	676
	148-8321	2	CONNECTOR AS	
			(EACH INCLUDES)	
	3J-1907	1	SEAL-O-RING	
	6V-8397	1	SEAL-O-RING	
	8C-0564	1	CONNECTOR	
	148-8336	2	CONNECTOR AS	
			(EACH INCLUDES)	
	3J-1907	1	SEAL-O-RING	
	6V-8397	1	SEAL-O-RING	
	6V-8636	1	CONNECTOR	
	164-4111	1	COVER	
I	**200-7742**	2	HOSE AS	
I	**213-1793**	1	HOSE AS	
	7K-1181	2	STRAP-CABLE	
	5P-5148	1	STRAP-TIE	
	4V-9798	2	TAG-IDENTIFICATION (LETTER, NUMBER C2)	
	4V-9799	2	TAG-IDENTIFICATION (LETTER, NUMBER C1)	

I-REFER TO HYDRAULIC INFORMATION SYSTEM
Y-SEPARATE ILLUSTRATION

<END>

293-2239 COOLER GP-HYD & TMSN OIL

S/N: BYD1-UP; FTD1-649

PART OF 317-1044 RADIATOR & AFTERCOOLER GP

SMCS-1374, 1375 **i02806701**

NOTE	REF NO	GRAPHIC REF	PART NUMBER	QTY	PART NAME 1 2 3 4 5 6 (PRODUCT LEVEL)	SEE PAGE
	1	1	**123-4065**	32	RIVET-POP	
	2	1	**252-6841**	1	CORE AS-POWER TRAIN OIL COOLER	
Y	3	1	**293-2240**	1	COOLER GP-HYDRAULIC OIL	484

Y-SEPARATE ILLUSTRATION

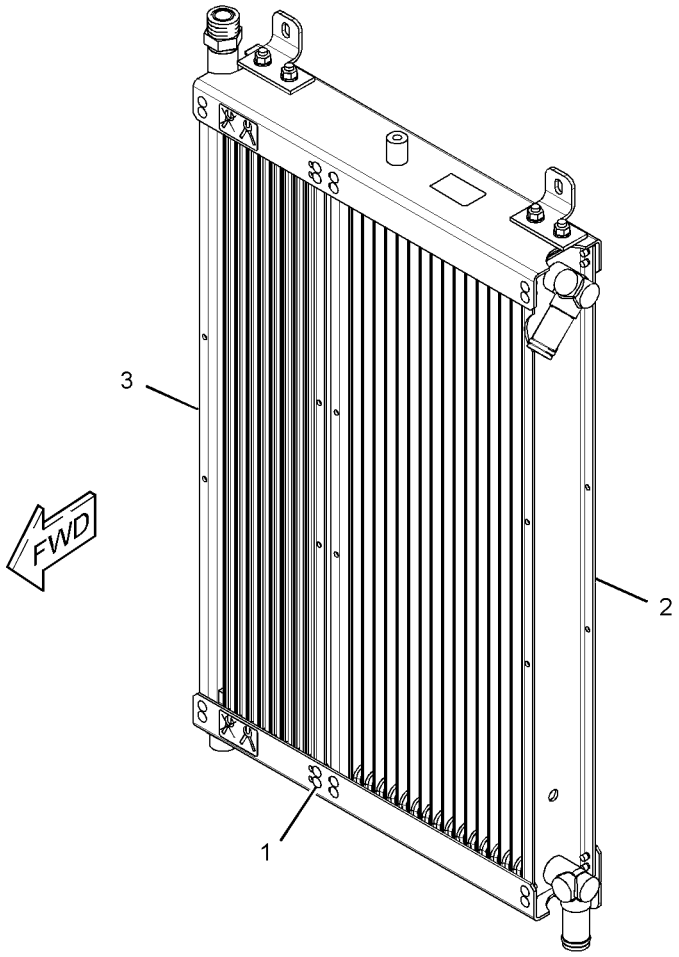

GRAPHIC #1 **<END>** g01391141

293-2240 COOLER GP-HYDRAULIC OIL

S/N: BYD1-UP; FTD1-649

PART OF 293-2239 COOLER GP-HYD & TMSN OIL

SMCS-1374 **i02806724**

NOTE	REF NO	GRAPHIC REF	PART NUMBER	QTY	PART NAME 1 2 3 4 5 6 (PRODUCT LEVEL)	SEE PAGE
	1	1	**2M-9780**	2	SEAL-O-RING	
	2	1	**6V-8640**	1	CONNECTOR (SEAL)	
	3	1	**6V-8642**	1	CONNECTOR (SEAL)	
	4	1	**6V-9746**	1	SEAL-O-RING	
	5	1	**7J-9108**	1	SEAL-O-RING	

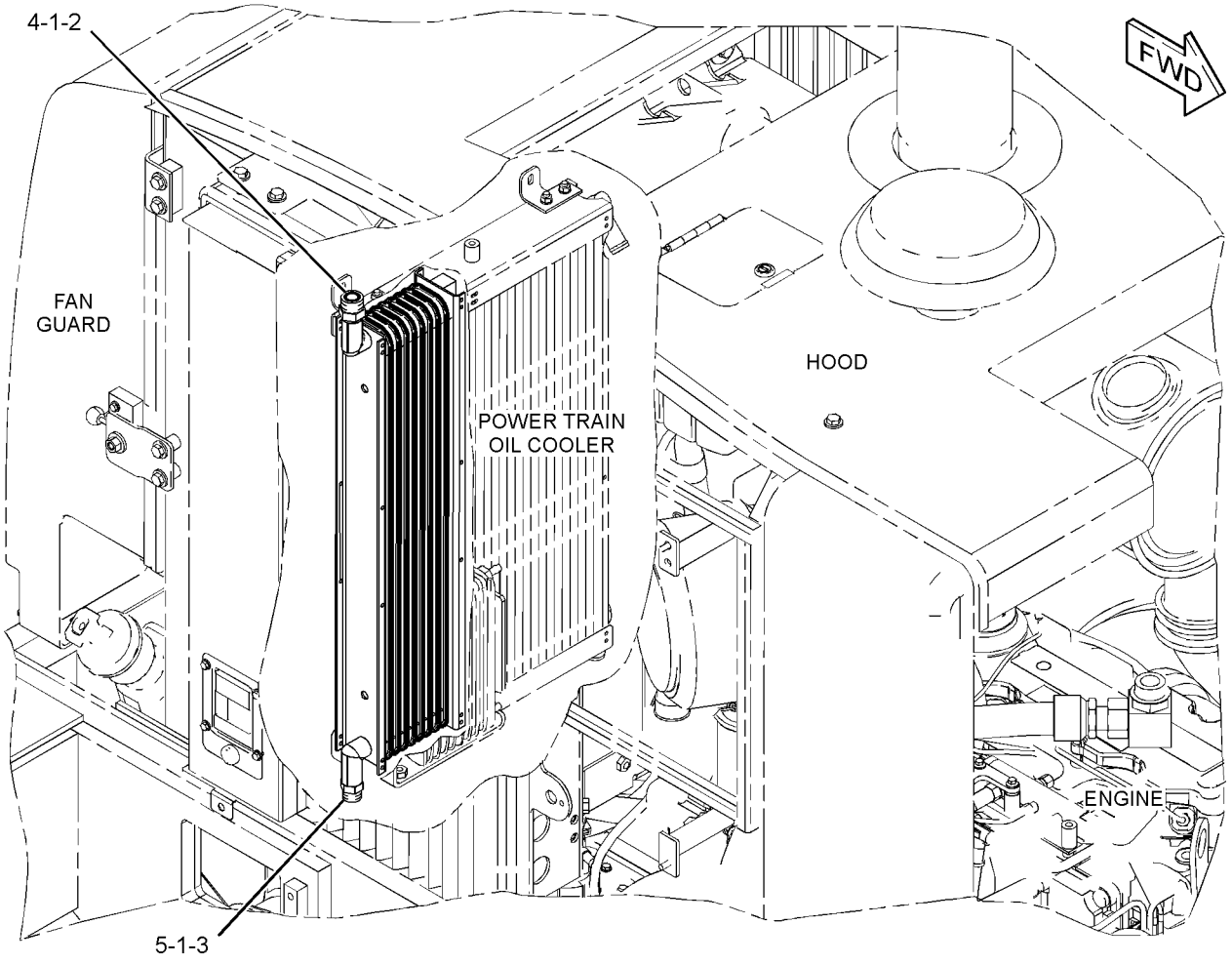

GRAPHIC #1 **<END>** g01391175

148-7827 CYLINDER & MTG GP-COUPLER

S/N: FTD1-UP
PART OF 303-2048 COUPLER AR-QUICK
AN ATTACHMENT

SMCS-5133 **i01217319**

NOTE	REF NO	GRAPHIC REF	PART NUMBER	QTY	PART NAME 1 2 3 4 5 6 (PRODUCT LEVEL)	SEE PAGE
	1	1	**178-3720**	1	CYLINDER GP-COUPLER	
	2	1	**178-3893**	2	ROD	
	3	1	**6W-5760**	2	DOWEL	
	4	1	**6W-5761**	2	PIN	

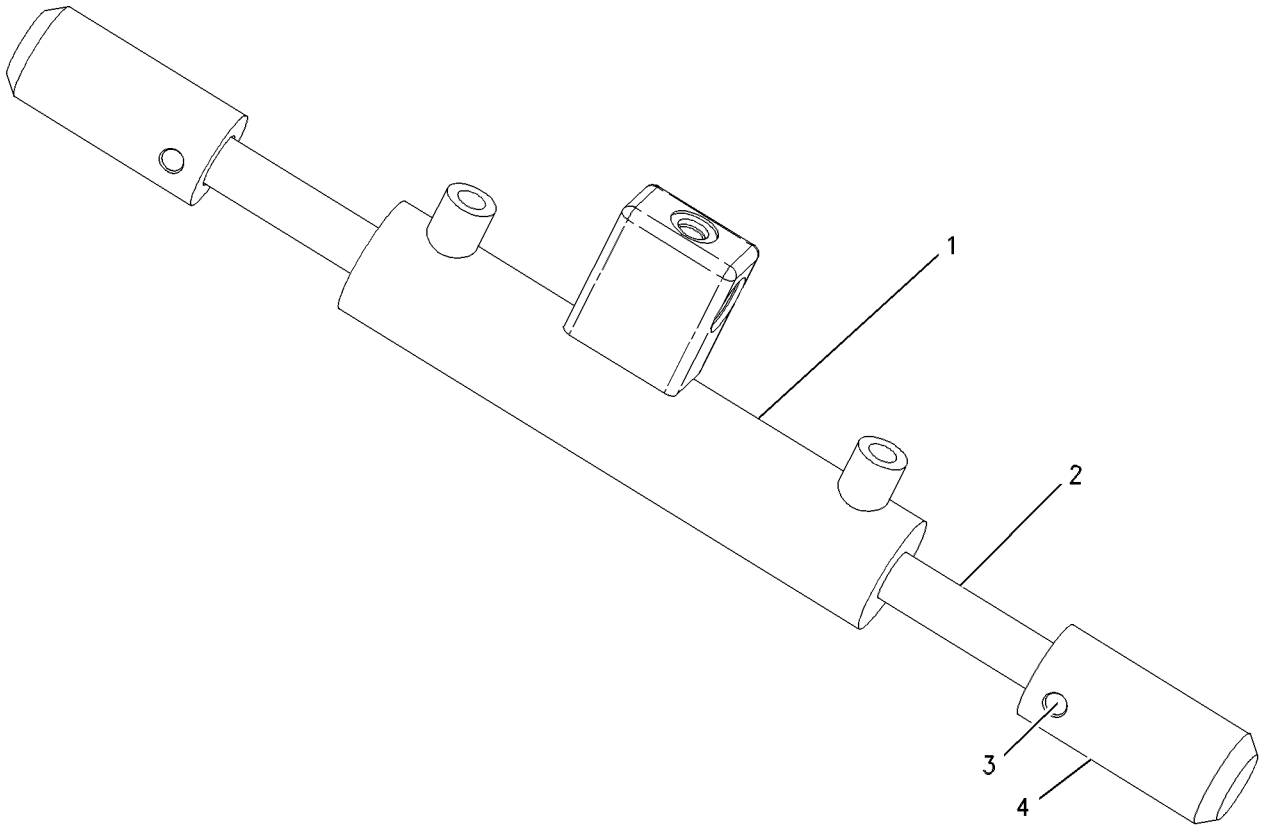

GRAPHIC #1 **<END>** g00659640

HYDRAULIC SYSTEM

176-0720 CYLINDER & MTG GP-COUPLER—WIDE

S/N: FTD1-UP

PART OF 303-2049 COUPLER AR-QUICK

AN ATTACHMENT

SMCS-5133 **i01285778**

NOTE	PART NUMBER	QTY	PART NAME 1 2 3 4 5 6 (PRODUCT LEVEL)	SEE PAGE
	188-0982	1	CYLINDER GP-COUPLER	
	6W-5760	2	DOWEL	
	142-3955	2	PIN	
Y-SEPARATE ILLUSTRATION				

<END>

196-1979 CYLINDER & MTG GP-COUPLER

S/N: BYD1-UP

PART OF 294-9437 COUPLER AR-QUICK

AN ATTACHMENT

SMCS-5133 **i01753781**

NOTE	REF NO	GRAPHIC REF	PART NUMBER	QTY	PART NAME 1 2 3 4 5 6 (PRODUCT LEVEL)	SEE PAGE
	1	1	**6W-5760**	2	DOWEL	
	2	1	**6W-5761**	2	PIN	
Y	3	1	**190-3085**	1	CYLINDER GP-COUPLER	488

Y-SEPARATE ILLUSTRATION

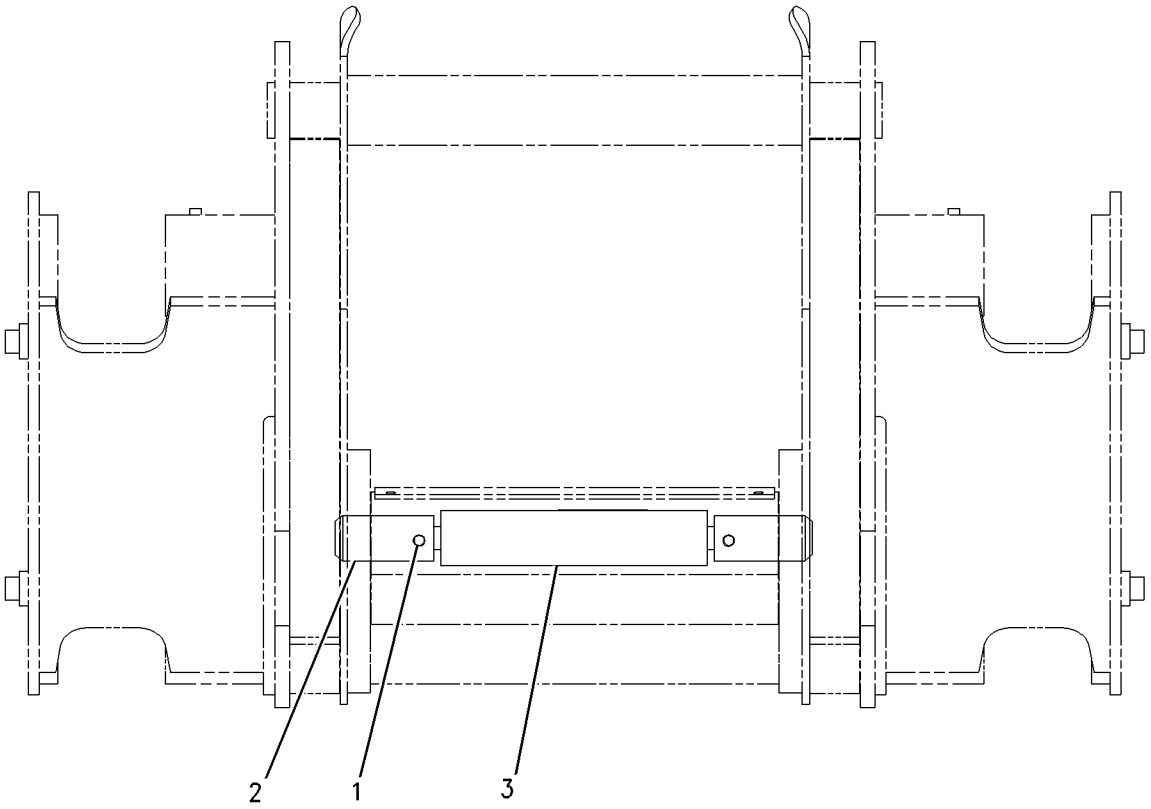

GRAPHIC #1 **<END>** g00897220

HYDRAULIC SYSTEM

190-3085 CYLINDER GP-COUPLER

S/N: BYD1-UP; FTD1-UP
PART OF 304-1061 COUPLER GP-QUICK, 196-1979 CYLINDER & MTG GP-COUPLER
AN ATTACHMENT

SMCS-5133 **i02602806**

NOTE	REF NO	GRAPHIC REF	PART NUMBER	QTY	PART NAME 1 2 3 4 5 6 (PRODUCT LEVEL)	SEE PAGE
	1	1	**178-3893**	2	ROD	
	2	1	**190-3611**	1	VALVE GP-CHECK	
					AVAILABLE REPAIR KIT(S):	
			180-9872	1	KIT-SEAL (COUPLER CYLINDER)	
					(INCLUDES LOCKNUT, SEALS, RINGS, & RETAINER)	

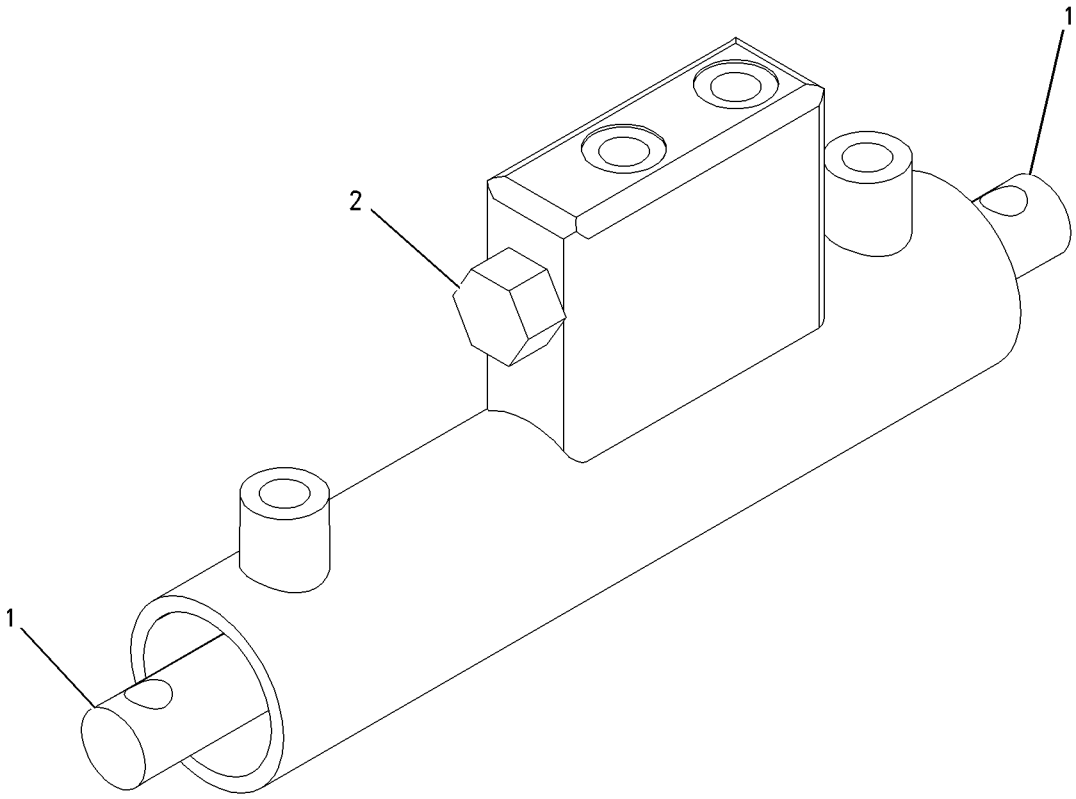

GRAPHIC #1 **<END>** g00944484

119-1060 CYLINDER GP-LIFT

S/N: BYD1-UP
120.65MM BORE X 685MM STROKE
PART OF 289-8863 HYDRAULIC AR

SMCS-5102 **i02853588**

NOTE	REF NO	GRAPHIC REF	PART NUMBER	QTY	PART NAME 1 2 3 4 5 6 (PRODUCT LEVEL)	SEE PAGE
R	1	1	**119-1062**	1	CYLINDER AS	
		1	*176-9644*	1	CAP AS	
		1	**4V-8629**		BEARING-SLEEVE	
M	2	1	**173-9682**	1	BOLT (M36X4X100-MM)	
	3	1	**106-1017**	1	WASHER (36.7X77X6-MM THK)	
	4	1	**5J-4987**	1	SEAL AS	
	5	1	**8T-8390**	1	RING-WEAR	
	6	1	**133-8773**	1	PISTON	
	7	1	**175-7903**	1	SEAL-O-RING	
	8	1	**2J-3961**	1	RING-BACKUP	
	9	1	**8T-0785**	1	RING-WEAR	
R	10	1	**119-1063**	1	ROD AS	
	11	1	**120-6679**	1	HEAD	
	12	1	**167-2201**	1	SEAL AS-BUFFER	
	13	1	**167-2312**	1	SEAL-U-CUP	
	14	1	**225-3281**	1	SEAL-WIPER	
					AVAILABLE REPAIR KIT(S):	
			186-4382	1	KIT-SEAL	

M-METRIC PART
R-REMFG PART MAY BE AVAILABLE

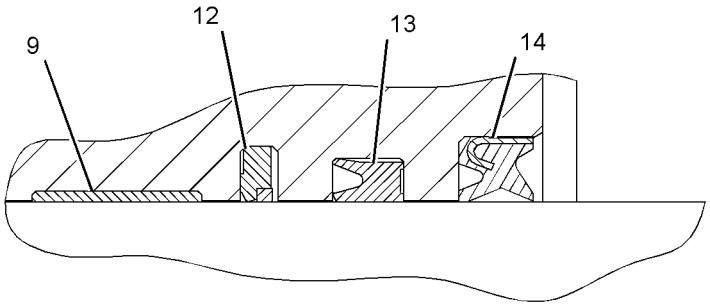

VIEW OF AREA A

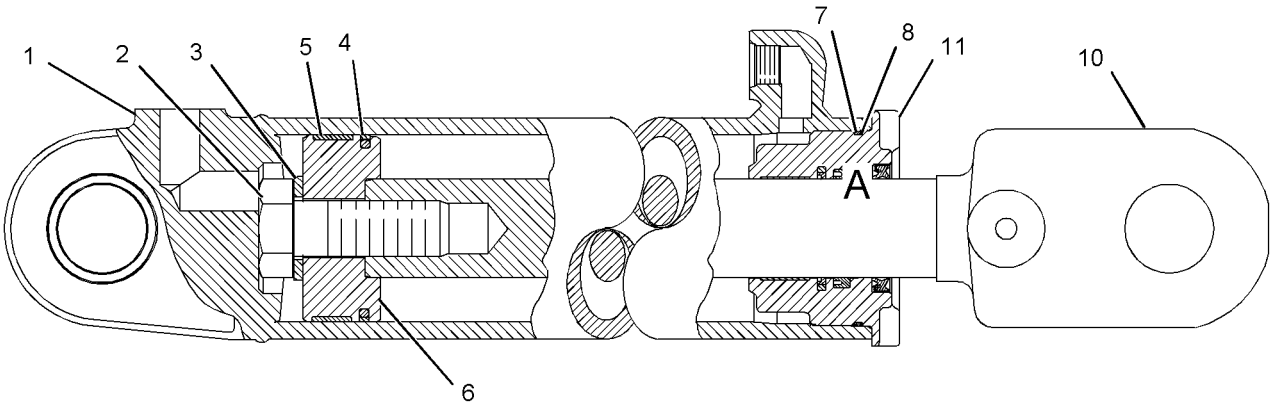

GRAPHIC #1 **<END>** g01112198

235-6823 CYLINDER GP-LIFT

S/N: FTD1-UP
114.3-MM (4.5-IN) BORE X 777-MM (30.6-IN) STROKE
PART OF 289-8843, 289-8883 HYDRAULIC AR

SMCS-5102 **i02250803**

NOTE	REF NO	GRAPHIC REF	PART NUMBER	QTY	PART NAME 1 2 3 4 5 6 (PRODUCT LEVEL)	SEE PAGE
	1	1	**169-2969**	1	PISTON	
	2	1	**199-1361**	1	ROD AS	
		1	**7J-9709**	1	BEARING-SLEEVE	
	3	1	**199-1363**	1	CYLINDER AS	
		1	**6V-9746**	1	SEAL-O-RING	
	4	1	**235-9832**	1	HEAD	
	5	1	**167-2201**	1	SEAL AS-BUFFER	
	6	1	**167-2312**	1	SEAL-U-CUP	
	7	1	**175-7902**	1	SEAL-O-RING	
	8	1	**225-3281**	1	SEAL-WIPER	
	9	1	**3S-6162**	1	WASHER-HARD (40.5X67X6-MM THK)	
	10	1	**4J-3745**	1	RING-WEAR	
	11	1	**4J-9220**	1	RING-BACKUP	
	12	1	**4M-0189**	1	SEAL-O-RING	
	13	1	**5J-4986**	1	SEAL AS	
	14	1	**8F-5535**	1	BOLT (1-1/2-12X4-IN)	
	15	1	**8T-0785**	1	RING-WEAR	

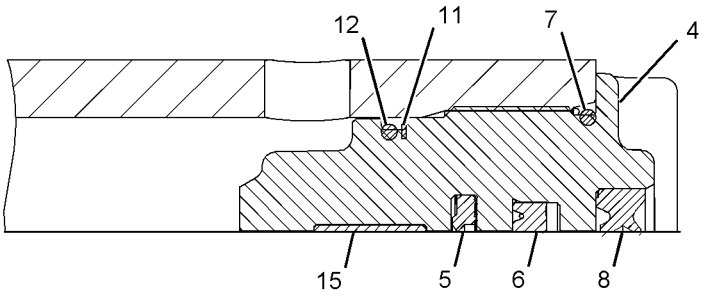

VIEW OF AREA A

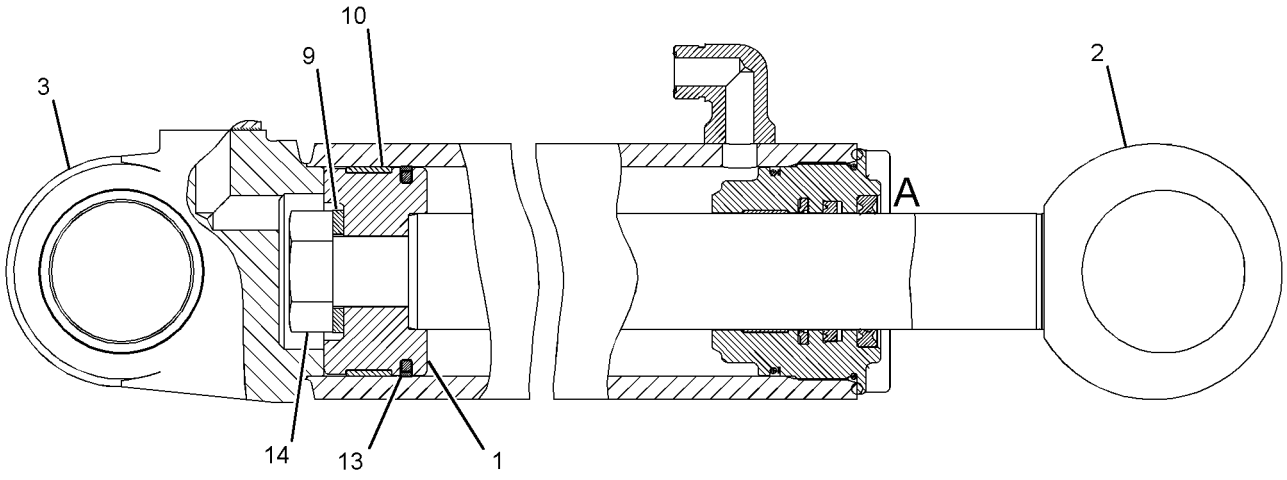

GRAPHIC #1 **<END>** g01106987

268-1322 CYLINDER GP-MULTIPURPOSE BUKT

S/N: FTD1-UP
88.9-MM (3.5-IN) BORE X 260-MM (10.2-IN) STROKE
PART OF 292-9190 BUCKET AR-MULTIPURPOSE
AN ATTACHMENT

SMCS-5498 **i02743063**

NOTE	REF NO	GRAPHIC REF	PART NUMBER	QTY	PART NAME 1 2 3 4 5 6 (PRODUCT LEVEL)	SEE PAGE
	1	1	**271-1450**	2	BEARING-SLEEVE	
	2	1	**3B-8489**	1	FITTING-GREASE	
	3	1	**3J-1907**	2	SEAL-O-RING	
	4	1	**9S-8004**	2	PLUG-O-RING	
					AVAILABLE REPAIR KIT(S):	
			271-1529	1	KIT-SEAL	
					(INCLUDES SEALS, RINGS & SCREWS)	

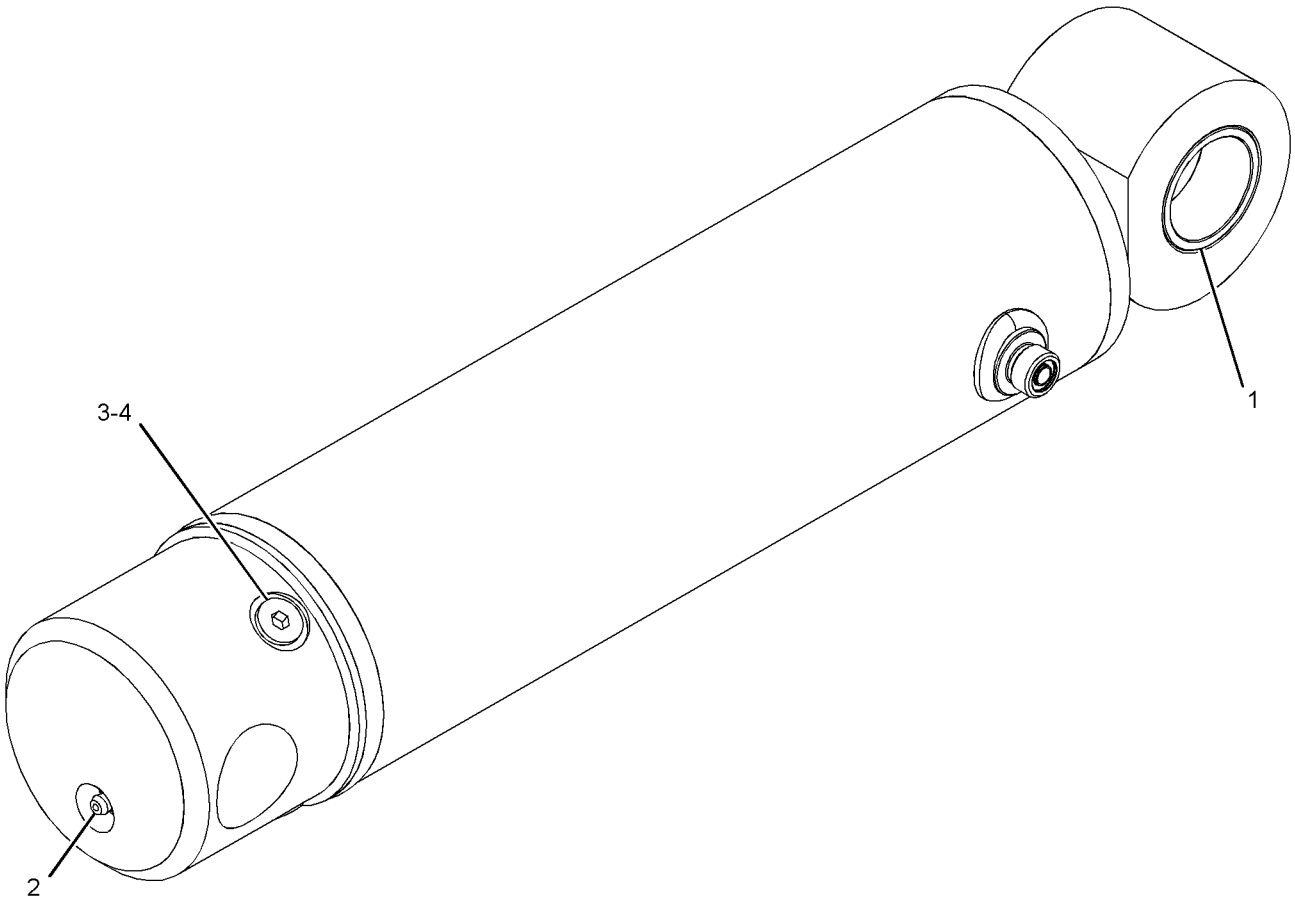

GRAPHIC #1 **<END>** g01186156

118-8105 CYLINDER GP-TILT

S/N: BYD1-UP
127MM BORE X 550MM STROKE
PART OF 289-8863 HYDRAULIC AR

SMCS-5104 **i02616363**

NOTE	REF NO	GRAPHIC REF	PART NUMBER	QTY	PART NAME 1 2 3 4 5 6 (PRODUCT LEVEL)	SEE PAGE
	1	1	**118-8106**	1	CYLINDER AS	
		1	**110-7849**	2	LUG	
	2	1	**5J-5731**	1	LOCKNUT (1-3/4-12-THD)	
J	3	1	**4J-4630**	1	RING-WEAR	
J	4	1	**9X-7264**	1	SEAL AS	
	5	1	**6E-2314**	1	PISTON	
J	6	1	**5F-3999**	1	SEAL-O-RING	
J	7	1	**4J-9221**	1	RING-BACKUP	
	8	1	**291-3834**	1	HEAD	
	9	1	**118-8110**	1	ROD AS	
		1	**3G-5285**	1	BEARING-SLEEVE	
J	10	1	**225-3281**	1	SEAL-WIPER	
J	11	1	**167-2312**	1	SEAL-U-CUP	
J	12	1	**167-2201**	1	SEAL AS-BUFFER	
J	13	1	**8T-0785**	1	RING-WEAR	
					AVAILABLE REPAIR KIT(S):	
J			**227-5347**	1	KIT-SEAL	

J-KIT MARKED J SERVICES PARTS MARKED J

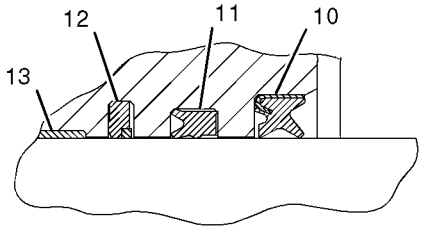

VIEW OF AREA A

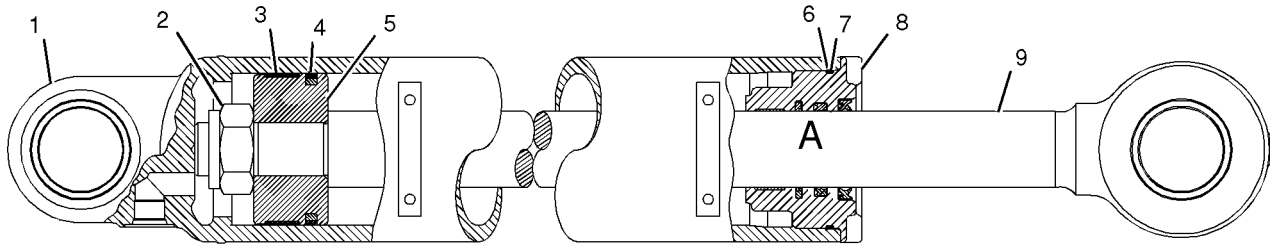

GRAPHIC #1 **<END>** g01026537

235-6824 CYLINDER GP-TILT

S/N: FTD1-UP
65-MM (2.56 IN) BORE X 295-MM (11.61 IN
PART OF 289-8843, 289-8883 HYDRAULIC AR

SMCS-5104 **i02250810**

NOTE	REF NO	GRAPHIC REF	PART NUMBER	QTY	PART NAME 1 2 3 4 5 6 (PRODUCT LEVEL)	SEE PAGE
	1	1	**1J-0708**	1	RING-WEAR	
	2	1	**5J-4989**	1	SEAL AS	
	3	1	**242-0435**	1	HEAD	
	4	1	**242-0436**	1	PISTON	
	5	1	**242-0439**	1	ROD AS	
	5A	1	**4V-8674**	1	BEARING-SLEEVE	
	6	1	**242-0443**	1	CYLINDER AS	
	6A	1	**5K-9090**	1	SEAL-O-RING	
	6B	1	**110-7849**	1	LUG	
	6C	1	**4V-8520**	1	BEARING-SLEEVE	
	7	1	**167-2207**	1	SEAL AS-BUFFER	
	8	1	**167-2317**	1	SEAL-U-CUP	
	9	1	**225-3283**	1	SEAL-WIPER	
	10	1	**2J-0564**	1	LOCKNUT (2-12-THD)	
	11	1	**6D-9157**	1	SEAL-O-RING	
	12	1	**8C-9200**	1	RING-WEAR	
	13	1	**8F-8733**	1	SEAL-O-RING	
	14	1	**8J-1717**	1	RING-BACKUP	

235-6824 CYLINDER GP-TILT *(contd.)* **i02250810**

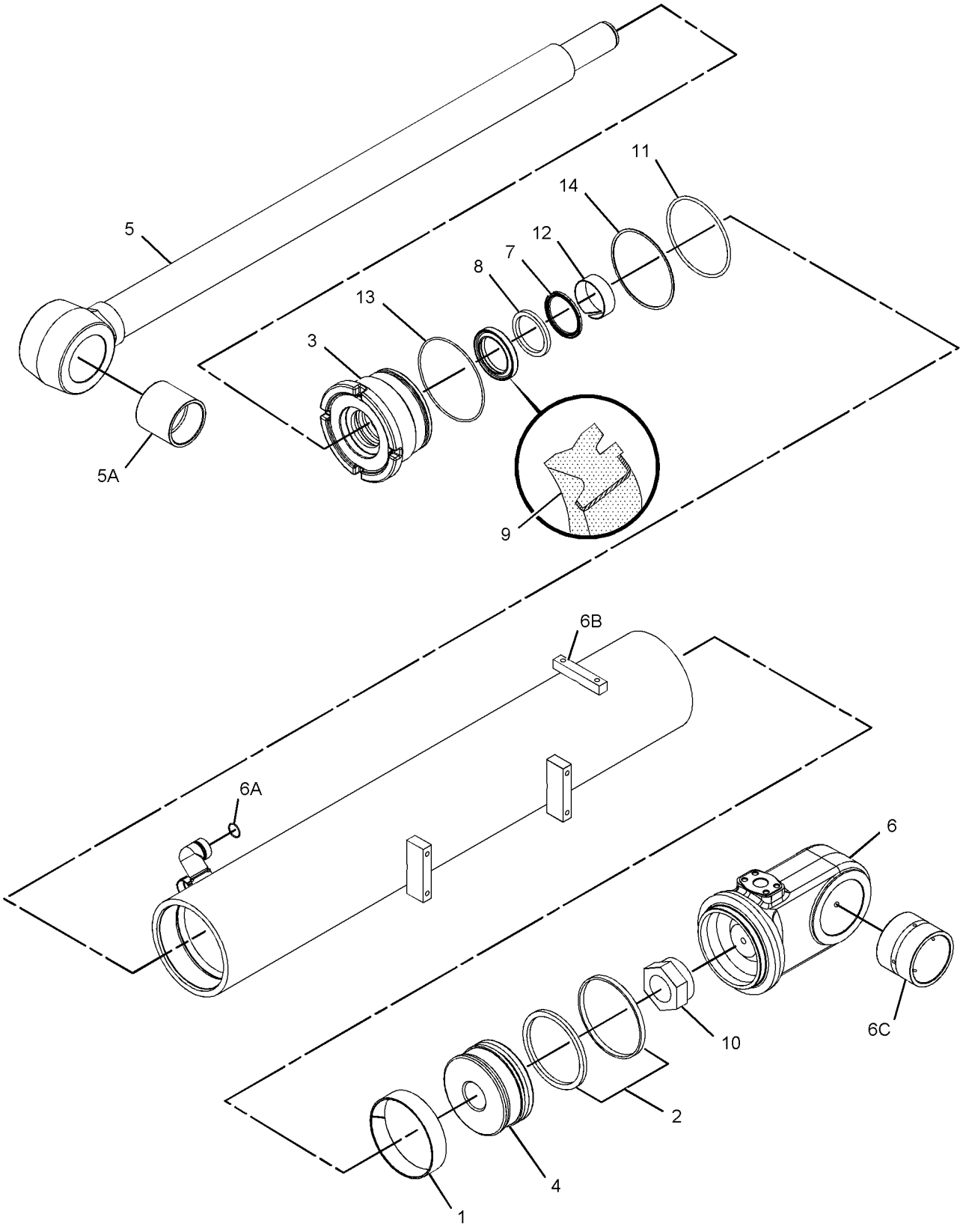

GRAPHIC #1 **<END>** g01107186

203-3877 FILTER & MTG GP-HYDRAULIC

S/N: BYD1-UP; FTD1-UP

PART OF 289-8843, 289-8863, 289-8883 HYDRAULIC AR

SMCS-5068 **i02294988**

NOTE	REF NO	GRAPHIC REF	PART NUMBER	QTY	PART NAME 1 2 3 4 5 6 (PRODUCT LEVEL)	SEE PAGE
	1	1	**229-2939**	1	BRACKET	
Y	2	1	**209-3149**	1	FILTER GP-OIL (HYDRAULIC)	497
	3	1	**7X-7729**	2	WASHER (11X25X3-MM THK)	
	4	1	**8T-4121**	4	WASHER-HARD (11X21X2.5-MM THK)	
M	5	1	**8T-4136**	2	BOLT (M10X1.5X25-MM)	
M	6	1	**8T-4137**	4	BOLT (M10X1.5X20-MM)	

M-METRIC PART
Y-SEPARATE ILLUSTRATION

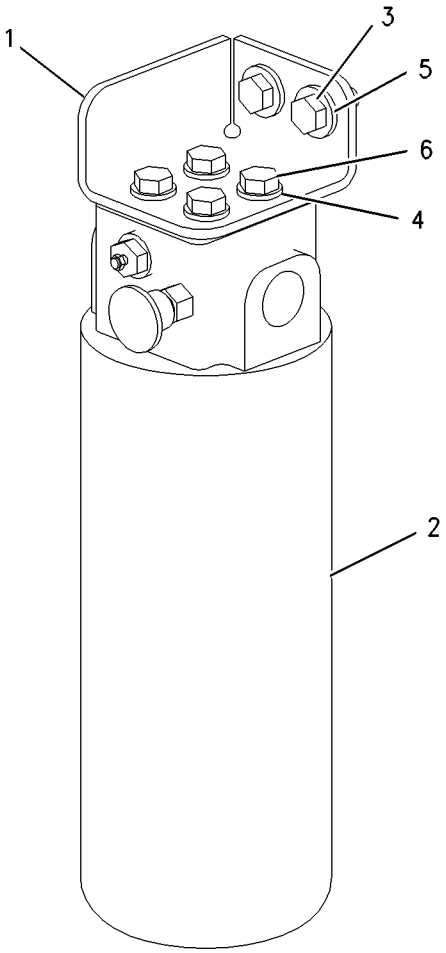

GRAPHIC #1 **<END>** g00916670

209-3149 FILTER GP-OIL–HYDRAULIC

S/N: BYD1-UP; FTD1-UP

PART OF 203-3877 FILTER & MTG GP-HYDRAULIC

SMCS-5068, 5091, 5092 **i02602810**

NOTE	REF NO	GRAPHIC REF	PART NUMBER	QTY	PART NAME 1 2 3 4 5 6 (PRODUCT LEVEL)	SEE PAGE
	1	1	**126-1818**	1	FILTER ELEMENT-OIL (ULTRA HIGH EFFICIENCY)	
	2	1	**3J-7354**	2	SEAL-O-RING	
	3	1	**7X-8549**	1	SWITCH AS-PRESSURE (HYDRAULIC OIL FILTER BYPASS)	
		1	**3J-1907**	1	SEAL-O-RING	
	4	1	**8C-3446**	1	VALVE-FLUID SAMPLING	
	5	1	**8C-3451**	1	CAP-DUST (FLUID SAMPLING VALVE)	
	6	1	**3J-1907**	1	SEAL-O-RING	
	7	1	**151-5145**	1	ELBOW	

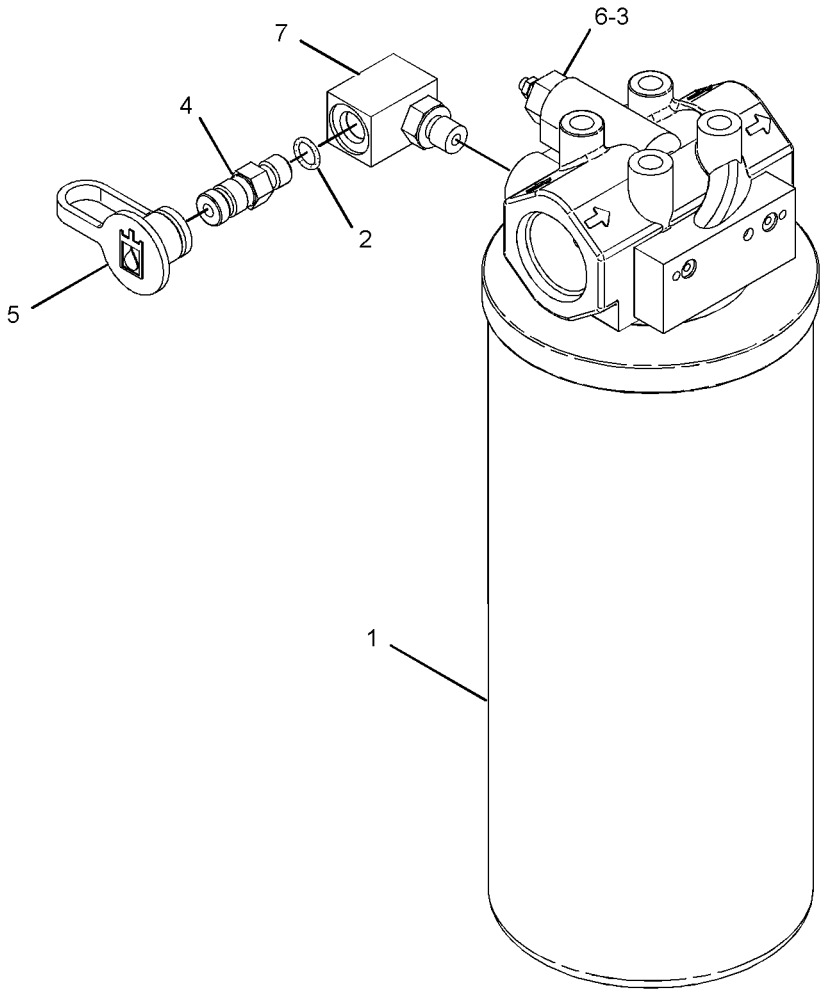

GRAPHIC #1 **<END>** g01013699

242-0092 HYDRAULIC AR—THIRD FUNCTION, CONTINUOUS FLOW

S/N: FTD1-UP

CANNOT BE USED WITH 241-0943—PAGE 500, 241-0944—PAGE 502

AN ATTACHMENT

SMCS-5051 **i02276473**

NOTE	PART NUMBER	QTY	PART NAME 1 2 3 4 5 6 (PRODUCT LEVEL)	SEE PAGE
Y	*242-0093*	1	LINES GP-HYDRAULIC (3RD FUNCTION, CONTINUOUS FLOW)	536

Y-SEPARATE ILLUSTRATION

<END>

289-8843 HYDRAULIC AR

S/N: FTD650-UP

PART OF 289-8899 COMMON AR

SMCS-5051 **i02885857**

NOTE	PART NUMBER	QTY	PART NAME 1 2 3 4 5 6 (PRODUCT LEVEL)	SEE PAGE
Y	**235-6823**	2	CYLINDER GP-LIFT	491
Y	**235-6824**	1	CYLINDER GP-TILT	494
Y	*203-3877*	1	FILTER & MTG GP-HYDRAULIC	496
Y	*289-8806*	1	LINES GP-HYDRAULIC	542
Y	*290-6476*	1	LINES GP-LIFT CYLINDER	560
Y	*245-4856*	1	LINES GP-TILT CYLINDER	582
Y	*289-8919*	1	PUMP & MTG GP-BRAKE & HYD FAN	603
Y	*235-6830*	1	PUMP & MTG GP-IMPL & STEERING	605
Y	*289-8901*	1	TANK & MTG GP-HYDRAULIC	615

Y-SEPARATE ILLUSTRATION

<END>

289-8863 HYDRAULIC AR

S/N: BYD1-UP

PART OF 289-8870 COMMON AR

SMCS-5051 **i02811895**

NOTE	PART NUMBER	QTY	PART NAME 1 2 3 4 5 6 (PRODUCT LEVEL)	SEE PAGE
Y	**119-1060**	2	CYLINDER GP-LIFT	489
Y	**118-8105**	1	CYLINDER GP-TILT	493
Y	*203-3877*	1	FILTER & MTG GP-HYDRAULIC	496
Y	*113-3652*	1	KICKOUT & POSITIONER GP	504
Y	*289-8935*	1	LINES GP-HYDRAULIC	547
Y	*118-0861*	1	LINES GP-LIFT CYLINDER	557
Y	*118-0862*	1	LINES GP-TILT CYLINDER	580
Y	*289-8919*	1	PUMP & MTG GP-BRAKE & HYD FAN	603
Y	*118-1083*	1	PUMP & MTG GP-IMPL & STEERING	604
Y	*289-8901*	1	TANK & MTG GP-HYDRAULIC	615

Y-SEPARATE ILLUSTRATION

<END>

289-8883 HYDRAULIC AR

S/N: FTD1-649

PART OF 289-8890 COMMON AR

SMCS-5051 **i02808631**

NOTE	PART NUMBER	QTY	PART NAME 1 2 3 4 5 6 (PRODUCT LEVEL)	SEE PAGE
Y	**235-6823**	2	CYLINDER GP-LIFT	491
Y	**235-6824**	1	CYLINDER GP-TILT	494
Y	*203-3877*	1	FILTER & MTG GP-HYDRAULIC	496
Y	*289-8924*	1	LINES GP-PILOT	572
Y	*290-6476*	1	LINES GP-LIFT CYLINDER	560
Y	*245-4856*	1	LINES GP-TILT CYLINDER	582
Y	*289-8919*	1	PUMP & MTG GP-BRAKE & HYD FAN	603
Y	*235-6830*	1	PUMP & MTG GP-IMPL & STEERING	605
Y	*289-8901*	1	TANK & MTG GP-HYDRAULIC	615
Y-SEPARATE ILLUSTRATION				

<END>

202-0421 HYDRAULIC AR-2 VALVE—1-LEVER, WITH FNR

S/N: BYD1-UP

CANNOT BE USED WITH 203-5927—PAGE 499, 202-0423—PAGE 500

AN ATTACHMENT

SMCS-5051 **i02712125**

NOTE	PART NUMBER	QTY	PART NAME 1 2 3 4 5 6 (PRODUCT LEVEL)	SEE PAGE
Y	*184-5296*	1	CONTROL GP-HANDLE (DIRECTION, DOWNSHIFT)	
Y	*220-1506*	1	CONTROL GP-PILOT OPERATED HYD (JOYSTICK, 2-FUNCTION)	816
Y	*203-5924*	1	LINES GP-PILOT (2-VALVE)	564
Y	*118-1087*	1	VALVE & MTG GP-MAIN CONTROL (2-FUNCTION)	618
Y-SEPARATE ILLUSTRATION				

<END>

203-5927 HYDRAULIC AR-2 VALVE—2-LEVER

S/N: BYD1-UP

CANNOT BE USED WITH 202-0421—PAGE 499, 202-0423—PAGE 500

AN ATTACHMENT

SMCS-5051 **i02189554**

NOTE	PART NUMBER	QTY	PART NAME 1 2 3 4 5 6 (PRODUCT LEVEL)	SEE PAGE
Y	*220-1505*	1	CONTROL GP-PILOT OPERATED HYD (2-FUNCTION)	814
Y	*203-5924*	1	LINES GP-PILOT (2-VALVE)	564
Y	*118-1087*	1	VALVE & MTG GP-MAIN CONTROL (2-FUNCTION)	618
Y-SEPARATE ILLUSTRATION				

<END>

HYDRAULIC SYSTEM

240-9452 HYDRAULIC AR-2 VALVE—1-LEVER, WITH FNR

S/N: FTD1-UP

CANNOT BE USED WITH 303-2042—PAGE 501, 303-2043—PAGE 501, 303-2038—PAGE 502, 303-2040—PAGE 503, 303-2044—PAGE 502, 303-2045—PAGE 503

AN ATTACHMENT

SMCS-5051 **i02893906**

NOTE	PART NUMBER	QTY	PART NAME 1 2 3 4 5 6 (PRODUCT LEVEL)	SEE PAGE
Y	*184-5296*	1	CONTROL GP-HANDLE (DIRECTION, DOWNSHIFT)	
Y	*235-6853*	1	CONTROL GP-PILOT OPERATED HYD (JOYSTICK, 2-FUNCTION)	820
Y	**280-1996**	1	VALVE GP-MAIN CONTROL (2-FUNCTION)	651
			S/N: FTD1-189	
Y	**317-6905**	1	VALVE GP-MAIN CONTROL (2-FUNCTION)	654
			S/N: FTD190-UP	

Y-SEPARATE ILLUSTRATION

<END>

202-0423 HYDRAULIC AR-3 VALVE

S/N: BYD1-UP

2-LEVER, WITH FNR

CANNOT BE USED WITH 202-0421—PAGE 499, 203-5927—PAGE 499

AN ATTACHMENT

SMCS-5051 **i02712400**

NOTE	PART NUMBER	QTY	PART NAME 1 2 3 4 5 6 (PRODUCT LEVEL)	SEE PAGE
Y	*184-5296*	1	CONTROL GP-HANDLE (DIRECTION, DOWNSHIFT)	
Y	*220-1509*	1	CONTROL GP-PILOT OPERATED HYD (JOYSTICK, 3-FUNCTION)	818
Y	*118-1094*	1	LINES GP-FRONT	527
Y	*203-5925*	1	LINES GP-PILOT (3-VALVE)	568
Y	*118-1095*	1	VALVE & MTG GP-MAIN CONTROL (3-FUNCTION)	619

Y-SEPARATE ILLUSTRATION

<END>

241-0943 HYDRAULIC AR-3 VALVE—1-LEVER, 3RD FUNCTION, PROPORTIONAL FLOW

S/N: FTD1-UP

PART OF 303-2042, 303-2043 HYDRAULIC AR-3 VALVE

AN ATTACHMENT

SMCS-5051 **i02627976**

NOTE	PART NUMBER	QTY	PART NAME 1 2 3 4 5 6 (PRODUCT LEVEL)	SEE PAGE
Y	*266-7545*	1	CONTROL GP-JOYSTICK (3-FCTN, W/PROPNL FLOW, FNR)	813
Y	*263-5810*	1	CONTROL GP-PILOT OPERATED HYD (JOYSTICK, 3-FUNCTION)	823
Y	*238-2656*	1	LINES GP-FRONT (3RD FCTN, PROPORTIONAL FLOW)	533
Y	**280-1997**	1	VALVE GP-MAIN CONTROL (3-FUNCTION)	652

Y-SEPARATE ILLUSTRATION

<END>

303-2042 HYDRAULIC AR-3 VALVE–
1-LEVER, 3RD FUNCTION, PROPORTIONAL FLOW, STANDARD LIFT MACHINES
S/N: FTD1-UP
CANNOT BE USED WITH 303-2047–PAGE 709
AN ATTACHMENT

SMCS-5051 **i02725355**

NOTE	PART NUMBER	QTY	PART NAME 1 2 3 4 5 6 (PRODUCT LEVEL)	SEE PAGE
Y	*241-0943*	1	HYDRAULIC AR-3 VALVE (1-LEVER, 3RD FCTN, PROPN FLOW)	500
Y	*235-6916*	1	LINES GP-FRONT (THIRD FUNCTION)	529
Y-SEPARATE ILLUSTRATION				

<END>

303-2043 HYDRAULIC AR-3 VALVE–
1-LEVER, 3RD FUNCTION, PROPORTIONAL FLOW, HIGH LIFT MACHINES
S/N: FTD1-UP
CANNOT BE USED WITH 303-2046 LINES GP-COUPLER
AN ATTACHMENT

SMCS-5051 **i02736158**

NOTE	PART NUMBER	QTY	PART NAME 1 2 3 4 5 6 (PRODUCT LEVEL)	SEE PAGE
Y	*241-0943*	1	HYDRAULIC AR-3 VALVE (1-LEVER, 3RD FCTN, PROPN FLOW)	500
Y	*235-6923*	1	LINES GP-FRONT (THIRD FUNCTION)	531
Y-SEPARATE ILLUSTRATION				

<END>

240-9454 HYDRAULIC AR-4 VALVE–JOYSTICK
S/N: FTD1-UP
PART OF 303-2038 HYDRAULIC AR-4 VALVE
AN ATTACHMENT

SMCS-5051 **i02706990**

NOTE	PART NUMBER	QTY	PART NAME 1 2 3 4 5 6 (PRODUCT LEVEL)	SEE PAGE
Y	*184-5296*	1	CONTROL GP-HANDLE (DIRECTION, DOWNSHIFT)	
Y	*235-6860*	1	CONTROL GP-PILOT OPERATED HYD (JOYSTICK, 4-FUNCTION)	821
Y	*245-4858*	1	LINES GP-HYDRAULIC (THIRD FUNCTION)	538
Y	*245-4861*	1	LINES GP-HYDRAULIC (FOURTH FUNCTION)	540
Y	**280-1998**	1	VALVE GP-MAIN CONTROL (4-FUNCTION)	653
Y-SEPARATE ILLUSTRATION				

<END>

241-0944 HYDRAULIC AR-4 VALVE–
2-LEVER, 3RD FUNCTION, PROPORTIONAL FLOW
S/N: FTD1-UP
PART OF 303-2044, 303-2045 HYDRAULIC AR-4 VALVE
AN ATTACHMENT

SMCS-5051 **i02893478**

NOTE	PART NUMBER	QTY	PART NAME 1 2 3 4 5 6 (PRODUCT LEVEL)	SEE PAGE
Y	*266-7545*	1	CONTROL GP-JOYSTICK (3-FCTN, W/PROPNL FLOW, FNR)	813
Y	*263-5812*	1	CONTROL GP-PILOT OPERATED HYD (JOYSTICK, 4-FUNCTION)	824
Y	*238-2656*	1	LINES GP-FRONT (3RD FCTN, PROPORTIONAL FLOW)	533
Y	*245-4861*	1	LINES GP-HYDRAULIC (FOURTH FUNCTION)	540
Y	**280-1998**	1	VALVE GP-MAIN CONTROL (4-FUNCTION)	653
			–OR–	
Y	**317-6909**	1	VALVE GP-MAIN CONTROL (4-FUNCTION)	655

Y-SEPARATE ILLUSTRATION

<END>

303-2038 HYDRAULIC AR-4 VALVE–
4-VALVE, 3-LEVER, STANDARD LIFT MACHINES
S/N: FTD1-UP
CANNOT BE USED WITH 303-2047 LINKAGE AR-FRONT
AN ATTACHMENT

SMCS-5051 **i02814130**

NOTE	PART NUMBER	QTY	PART NAME 1 2 3 4 5 6 (PRODUCT LEVEL)	SEE PAGE
Y	*240-9454*	1	HYDRAULIC AR-4 VALVE (3-LEVER, WITH FNR)	501
Y	*235-6916*	1	LINES GP-FRONT (THIRD FUNCTION)	529
Y	*235-6917*	1	LINES GP-FRONT (FOURTH FUNCTION)	530

Y-SEPARATE ILLUSTRATION

<END>

303-2044 HYDRAULIC AR-4 VALVE–
2-LEVER, 3RD FUNCTION, PROPORTIONAL FLOW, STANDARD LIFT MACHINES
S/N: FTD1-UP
CANNOT BE USED WITH 303-2047–PAGE 709
AN ATTACHMENT

SMCS-5051 **i02736240**

NOTE	PART NUMBER	QTY	PART NAME 1 2 3 4 5 6 (PRODUCT LEVEL)	SEE PAGE
Y	*241-0944*	1	HYDRAULIC AR-4 VALVE (2-LEVER, 3RD FCTN, PROPN FLOW)	502
Y	*235-6916*	1	LINES GP-FRONT (THIRD FUNCTION)	529
Y	*235-6917*	1	LINES GP-FRONT (FOURTH FUNCTION)	530

Y-SEPARATE ILLUSTRATION

<END>

303-2045 HYDRAULIC AR-4 VALVE–
2-LEVER, 3RD FUNCTION, PROPORTIONAL FLOW, HIGH LIFT MACHINES
S/N: FTD1-UP
CANNOT BE USED WITH 303-2046–PAGE 526
AN ATTACHMENT

SMCS-5051 **i02736271**

NOTE	PART NUMBER	QTY	PART NAME 1 2 3 4 5 6 (PRODUCT LEVEL)	SEE PAGE
Y	*241-0944*	1	HYDRAULIC AR-4 VALVE (2-LEVER, 3RD FCTN, PROPN FLOW)	502
Y	*235-6923*	1	LINES GP-FRONT (THIRD FUNCTION)	531
Y	*235-6924*	1	LINES GP-FRONT (FOURTH FUNCTION)	532
Y-SEPARATE ILLUSTRATION				

<END>

242-0100 HYDRAULIC AR-6 VALVE–2-LEVER, WITH FNR
S/N: FTD1-UP
PART OF 303-2040 HYDRAULIC AR-6 VALVE
AN ATTACHMENT

SMCS-5051 **i02893565**

NOTE	PART NUMBER	QTY	PART NAME 1 2 3 4 5 6 (PRODUCT LEVEL)	SEE PAGE
Y	*253-1995*	1	CONTROL GP-JOYSTICK (2-FUNCTION, W/FNR, DOWNSHIFT)	
Y	*242-0096*	1	CONTROL GP-PILOT OPERATED HYD (JOYSTICK, 4-FUNCTION)	822
Y	*245-4858*	1	LINES GP-HYDRAULIC (THIRD FUNCTION)	538
Y	*245-4861*	1	LINES GP-HYDRAULIC (FOURTH FUNCTION)	540
Y	*242-0098*	1	VALVE & MTG GP-MAIN CONTROL (AUXILIARY; 5TH, 6TH FUNCTIONS)	620
Y	**280-1998**	1	VALVE GP-MAIN CONTROL (4-FUNCTION)	653
			–OR–	
Y	**317-6909**	1	VALVE GP-MAIN CONTROL (4-FUNCTION)	655
Y-SEPARATE ILLUSTRATION				

<END>

303-2040 HYDRAULIC AR-6 VALVE–
2-LEVER, WITH FNR, STANDARD LIFT MACHINES
S/N: FTD1-UP
CANNOT BE USED WITH 303-2047–PAGE 709
AN ATTACHMENT

SMCS-5051 **i02738381**

NOTE	PART NUMBER	QTY	PART NAME 1 2 3 4 5 6 (PRODUCT LEVEL)	SEE PAGE
Y	*242-0100*	1	HYDRAULIC AR-6 VALVE (2-LEVER, WITH FNR)	503
Y	*244-8945*	1	LINES GP-CONNECTING (FIFTH, SIXTH FCTN, STD LIFT)	510
Y	*235-6916*	1	LINES GP-FRONT (THIRD FUNCTION)	529
Y	*235-6917*	1	LINES GP-FRONT (FOURTH FUNCTION)	530
Y-SEPARATE ILLUSTRATION				

<END>

HYDRAULIC SYSTEM

113-3652 KICKOUT & POSITIONER GP

S/N: BYD1-UP

PART OF 289-8863 HYDRAULIC AR

SMCS-5109, 5112 **i02492913**

NOTE	REF NO	GRAPHIC REF	PART NUMBER	QTY	PART NAME 1 2 3 4 5 6 (PRODUCT LEVEL)	SEE PAGE
Y	1	1	**3E-7843**	1	CONTROL GP-POSITION	135
Y	2	1	**3E-7844**	1	CONTROL GP-LIFT KICKOUT	134
	3	1	**5G-7820**	1	MAGNET AS	
	4	1	**5P-4115**	2	WASHER-HARD (7.2X19X2-MM THK)	
C	5	1	**5P-4116**	2	WASHER-HARD (8.8X20.5X2-MM THK)	
C	6	1	**7K-1181**	9	STRAP-CABLE	
	7	1	**7V-5626**	4	CLAMP	
	8	1	**7V-5628**	1	PLATE	
	9	1	**118-0885**	1	SHAFT AS	
	10	1	**118-0887**	1	CLAMP AS	
	11	1	**122-6493**	1	PLATE AS	
M		1	**6V-9632**	2	NUT-WELD (M6X1-THD)	
	12	1	**136-4794**	1	PLATE AS	
M		1	**6V-9632**	2	NUT-WELD (M6X1-THD)	
	13	1	**138-6791**	1	PLATE	
	14	1	**187-3662**	1	CLIP	
C	15	1	**262-0318**	1	TUBE AS	
C	16	1	**271-6452**	1	HARNESS AS-CONTROL (KICKOUT, POSITIONER) (POSITIONER)	
		1	**155-2260**	1	KIT-CONNECTING PLUG (3-PIN)	
		1	**155-2270**	1	KIT-CONNECTING PLUG (2-PIN)	
					(EACH PLUG KIT INCLUDES PLUG AS, WEDGE & INTERFACE SEAL)	
		1	**102-8803**	1	KIT-RECEPTACLE (3-PIN)	
		1	**102-8806**	1	KIT-RECEPTACLE (8-PIN)	
					(EACH RECEPTACLE KIT INCLUDES RECEPTACLE AS & WEDGE)	
E		1	**125-7874**		TUBE-HEAT SHRINK (5.72-MM DIA) (10-CM)	
D		1	**6V-2722**		TUBE-HEAT SHRINK (25.4-MM DIA) (0.1-M)	
G		1	**9X-2384**		HOSE (29.5 IN)	
	17	1	**090-1740**	1	BAR	
	18	1	**4P-7581**	2	CLIP	
M	19	1	**6V-7744**	1	LOCKNUT (M10X1.5-THD)	
M	20	1	**6V-9189**	1	LOCKNUT (M8X1.25-THD)	
M	21	1	**7X-2534**	4	BOLT (M6X1X50-MM)	
	22	1	**8T-4121**	8	WASHER-HARD (11X21X2.5-MM THK)	
M	23	1	**8T-4136**	2	BOLT (M10X1.5X25-MM)	
M	24	1	**8T-4137**	2	BOLT (M10X1.5X20-MM)	
M	25	1	**8T-4186**	1	BOLT (M10X1.5X40-MM)	
CM	26	1	**8T-4189**	5	BOLT (M8X1.25X20-MM)	
M	27	1	**8T-4196**	2	BOLT (M10X1.5X35-MM)	
M	28	1	**8T-4200**	2	BOLT (M8X1.25X16-MM)	
C	29	1	**8T-4224**	7	WASHER-HARD (8.8X16X2-MM THK)	
M	30	1	**8T-6869**	1	BOLT (M8X1.25X60-MM)	

C-CHANGE FROM PREVIOUS TYPE
D-ORDER BY THE METER
E-ORDER BY THE CENTIMETER
G-ORDER BY THE INCH
M-METRIC PART
Y-SEPARATE ILLUSTRATION

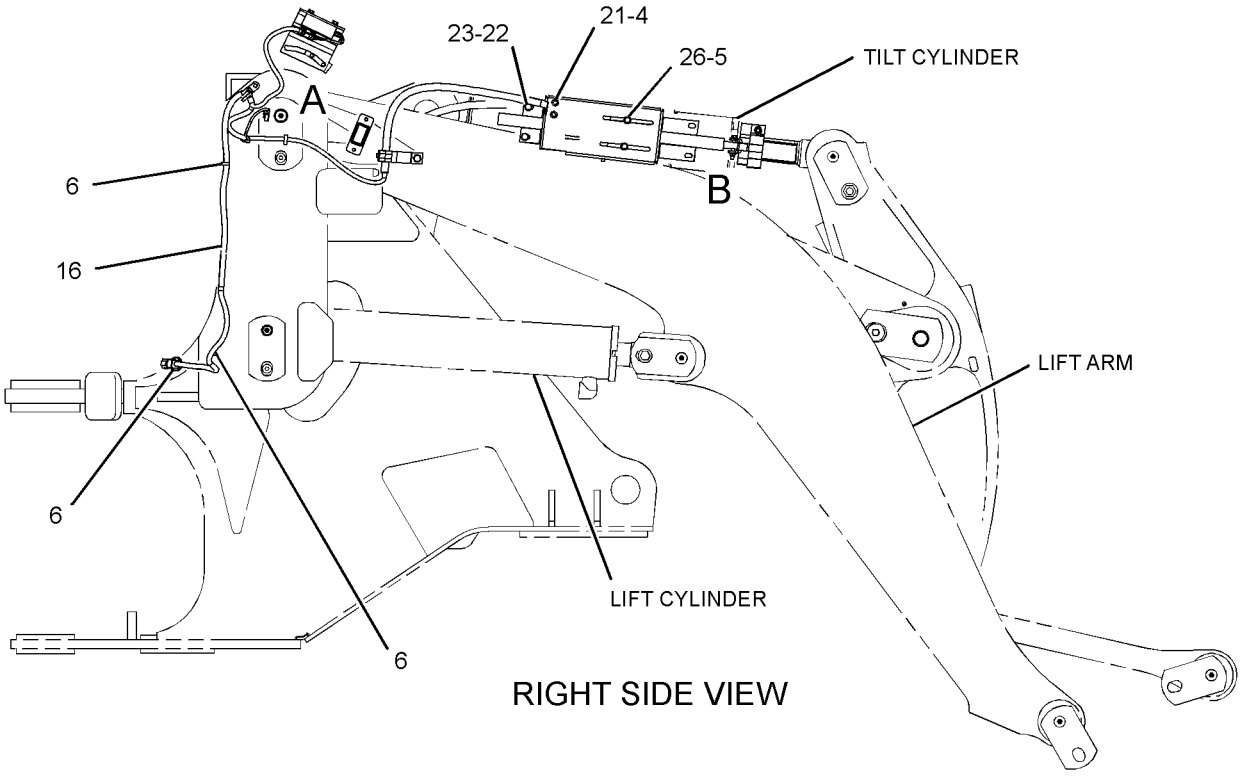

RIGHT SIDE VIEW

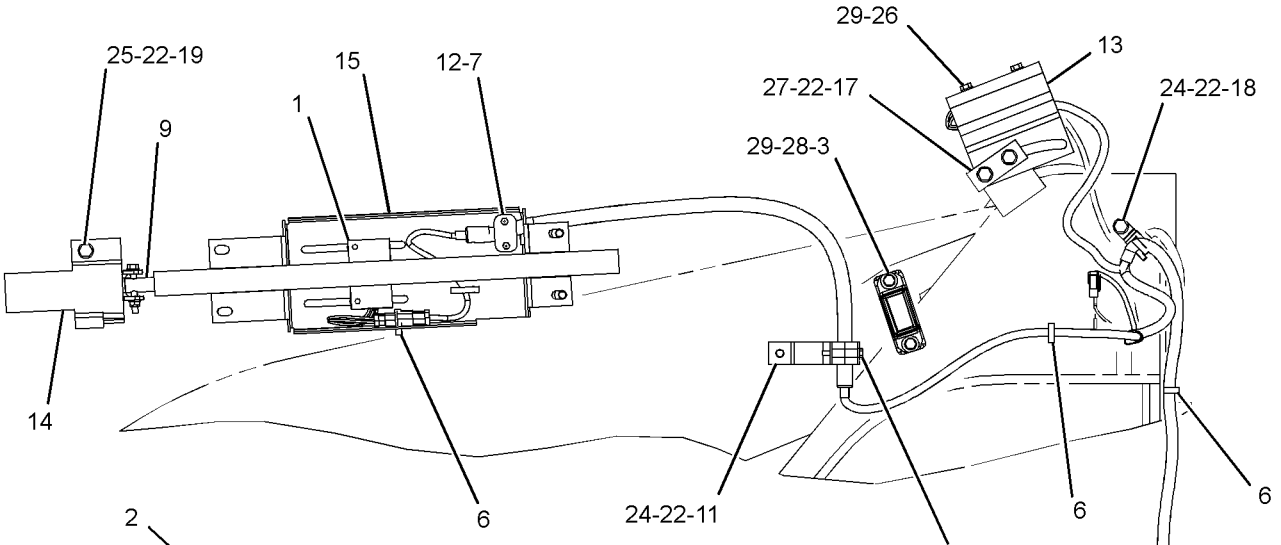

LEFT SIDE VIEW

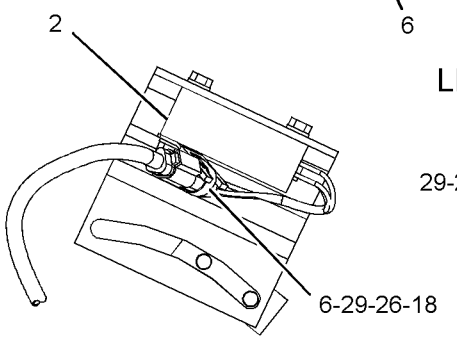

VIEW OF AREA A

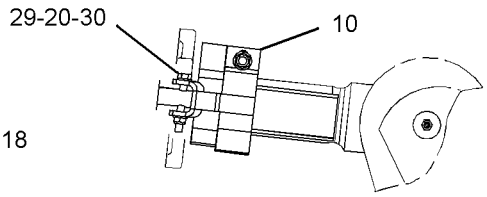

VIEW OF AREA B

GRAPHIC #1 **<END>** g01276348

HYDRAULIC SYSTEM

235-6820 KICKOUT & POSITIONER GP

S/N: FTD1-UP

PART OF 289-8891, 290-6498 CHASSIS AR

SMCS-5109, 5112 **i02602817**

NOTE	REF NO	GRAPHIC REF	PART NUMBER	QTY	PART NAME 1 2 3 4 5 6 (PRODUCT LEVEL)	SEE PAGE
Y	1	1	**3E-7843**	2	CONTROL GP-POSITION (WORK TOOL)	135
Y	2	1	**3E-7844**	1	CONTROL GP-LIFT KICKOUT	134
	3	1	**5G-7820**	1	MAGNET AS	
	4	1	**7K-1181**	2	STRAP-CABLE	
	5	1	**7V-5626**	4	CLAMP	
	6	1	**7V-5628**	1	PLATE	
	7	1	**132-2694**	1	HARNESS AS-CONTROL (KICKOUT, POSITIONER)	
		1	**102-8803**	2	KIT-RECEPTACLE (3-PIN)	
		1	**102-8805**	1	KIT-RECEPTACLE (6-PIN)	
					(EACH RECEPTACLE KIT INCLUDES RECEPTACLE AS & WEDGE)	
	8	1	**136-4794**	1	PLATE AS	
M		1	**6V-9632**	2	NUT-WELD (M6X1-THD)	
	9	1	**148-7860**	1	SHAFT AS	
	10	1	**195-0922**	1	SWITCH AS-ROCKER (BUCKET, FORK SELECT)	
		1	**111-7899**	1	GASKET	
	11	1	**240-5843**	1	TUBE AS	
	12	1	**240-9450**	1	BRACKET	
	13	1	**264-7734**	1	SPACER	
	14	1	**4P-7581**	1	CLIP	
	15	1	**5P-4115**	2	WASHER-HARD (7.2X19X2-MM THK)	
	16	1	**5P-4116**	6	WASHER-HARD (8.8X20.5X2-MM THK)	
M	17	1	**7X-2534**	4	BOLT (M6X1X50-MM)	
	18	1	**7X-7729**	2	WASHER (11X25X3-MM THK)	
	19	1	**8T-4121**	4	WASHER-HARD (11X21X2.5-MM THK)	
M	20	1	**8T-4136**	2	BOLT (M10X1.5X25-MM)	
M	21	1	**8T-4137**	4	BOLT (M10X1.5X20-MM)	
M	22	1	**8T-4189**	8	BOLT (M8X1.25X20-MM)	
	23	1	**8T-4224**	3	WASHER-HARD (8.8X16X2-MM THK)	
M	24	1	**8T-6870**	1	BOLT (M8X1.25X70-MM)	

M-METRIC PART
Y-SEPARATE ILLUSTRATION

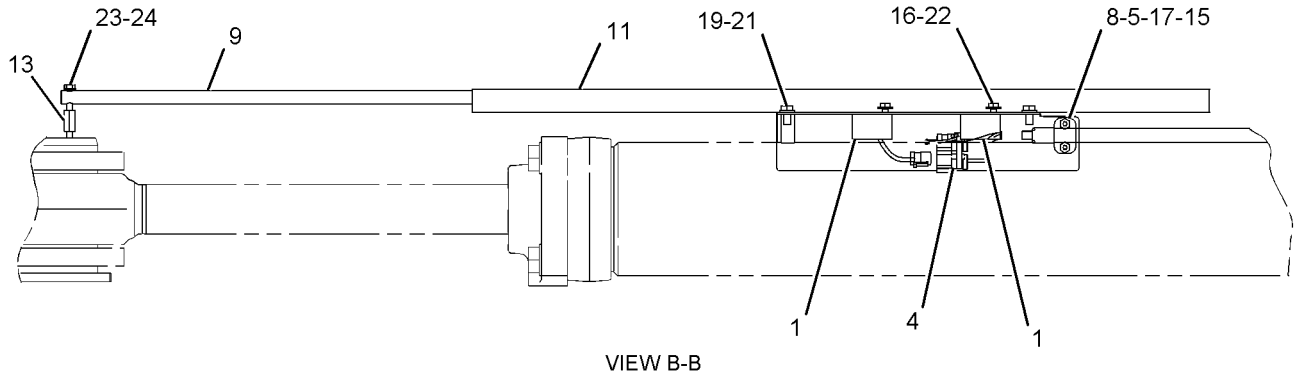

VIEW B-B

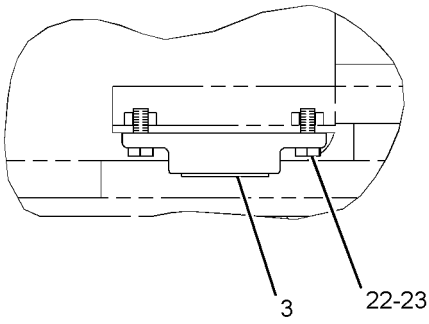

VIEW A-A

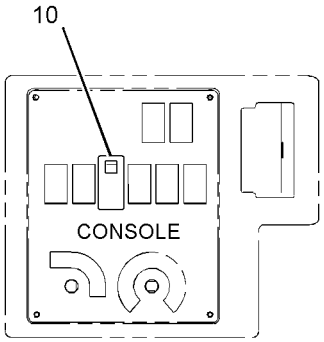

TOP VIEW
(RIGHT SIDE CONSOLE)

FWD

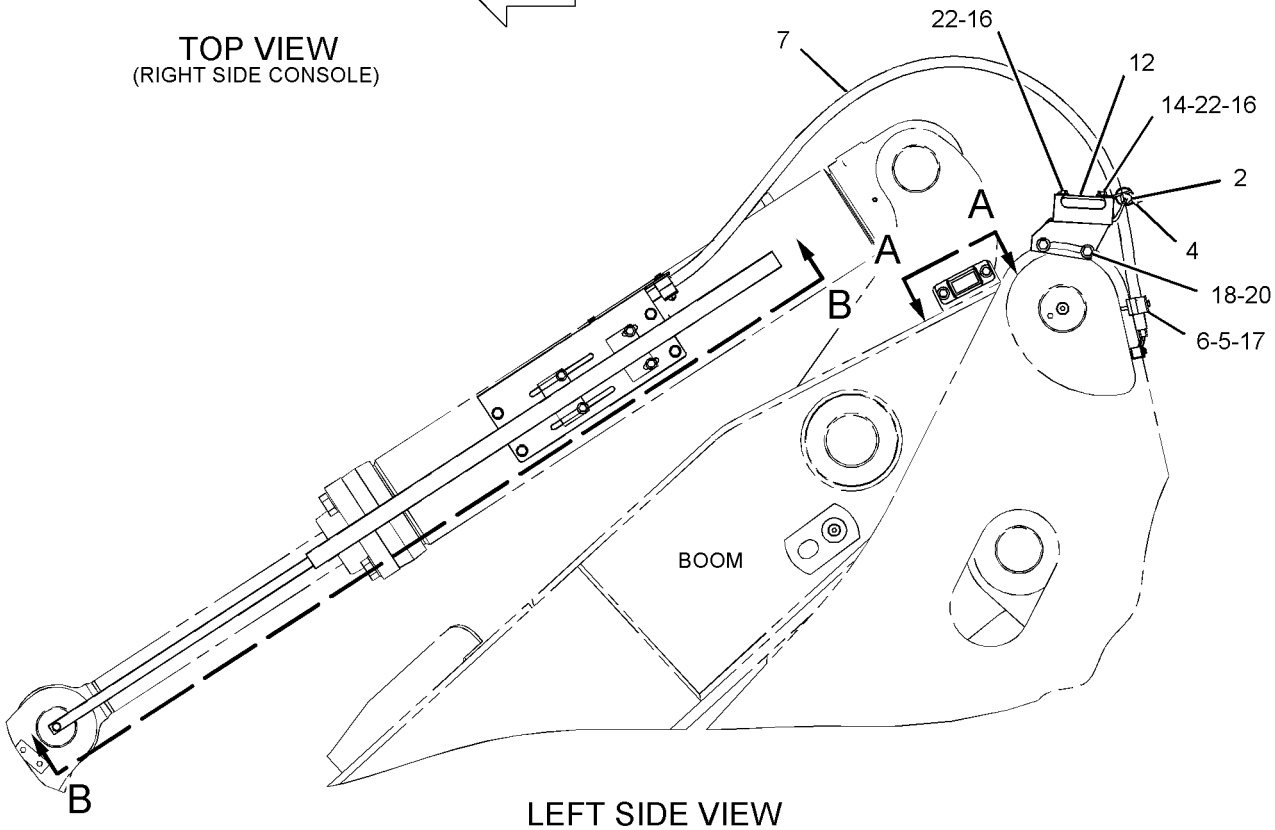

LEFT SIDE VIEW

GRAPHIC #1 **<END>** g01138441

HYDRAULIC SYSTEM

281-1595 LINES GP-BUCKET

S/N: FTD1-UP

PART OF 292-9190 BUCKET AR-MULTIPURPOSE

AN ATTACHMENT

SMCS-5057 **i02743143**

NOTE	REF NO	GRAPHIC REF	PART NUMBER	QTY	PART NAME 1 2 3 4 5 6 (PRODUCT LEVEL)	SEE PAGE
	1	1	**4V-0611**	8	CLAMP	
	2	1	**4V-0612**	4	PLATE	
	3	1	**5P-1717**	2	CLAMP-HOSE	
I	4	1	**5T-9986**	1	HOSE AS	
I	5	1	**9C-8990**	1	HOSE AS	
	6	1	**9R-8870**	2	BLOCK	
I	7	1	**9U-3226**	1	HOSE AS	
I	8	1	**9W-3008**	1	HOSE AS	
I	9	1	**150-8982**	2	HOSE AS	
	10	1	**195-6525**	1	FITTING AS (QUICK DISCONNECT, FEMALE)	
	11	1	**195-6526**	1	FITTING AS (QUICK DISCONNECT, MALE)	
	12	1	*148-8328*	2	CONNECTOR AS	
					(EACH INCLUDES)	
		1	**3D-2824**	1	SEAL-O-RING	
		1	**6V-8398**	1	SEAL-O-RING	
		1	**6V-8633**	1	CONNECTOR	
	13	1	*148-8378*	2	ELBOW AS	
					(EACH INCLUDES)	
		1	**3J-1907**	1	SEAL-O-RING	
		1	**6V-8397**	1	SEAL-O-RING	
		1	**6V-8724**	1	ELBOW	
	14	1	*150-3060*	2	TEE AS	
					(EACH INCLUDES)	
		1	**6V-8397**	2	SEAL-O-RING	
		1	**6V-8398**	1	SEAL-O-RING	
		1	**8T-3444**	1	TEE-UNION	
	15	1	**5P-7464**	2	CLIP (SLOT)	
	16	1	**5P-7465**	2	CLIP (TAB)	
	17	1	**6V-1249**	2	GROMMET	
	18	1	**6V-8397**	2	SEAL-O-RING	
M	19	1	**8T-4139**	2	BOLT (M12X1.75X30-MM)	
	20	1	**8T-4223**	2	WASHER-HARD (13.5X25.5X3-MM THK)	
	21	1	**8T-4224**	4	WASHER-HARD (8.8X16X2-MM THK)	
M	22	1	**8T-6869**	4	BOLT (M8X1.25X60-MM)	

I-REFER TO HYDRAULIC INFORMATION SYSTEM
M-METRIC PART

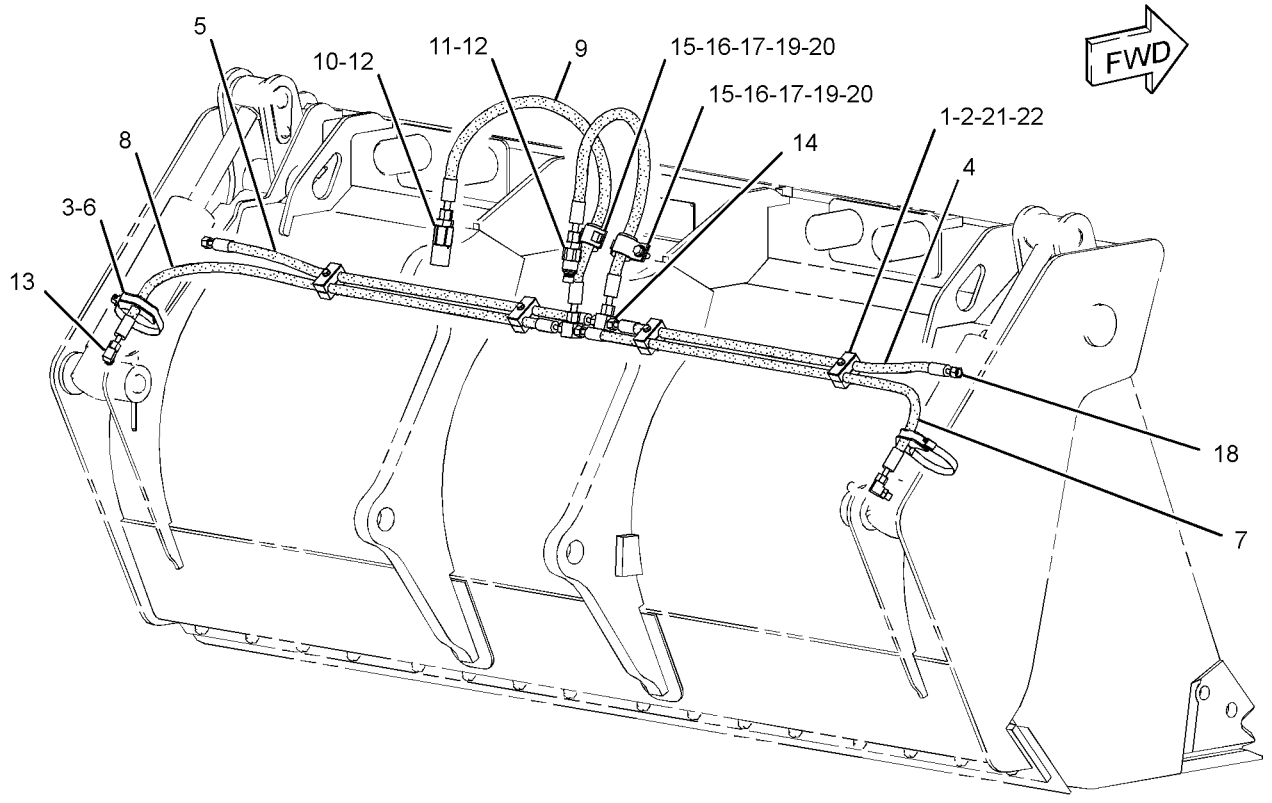

GRAPHIC #1 **<END>** g01291632

HYDRAULIC SYSTEM

244-8945 LINES GP-CONNECTING–
FIFTH, SIXTH FUNCTIONS, STANDARD LIFT MACHINES
S/N: FTD1-UP
PART OF 303-2040 HYDRAULIC AR-6 VALVE
AN ATTACHMENT

SMCS-5057 **i02578071**

NOTE	REF NO	GRAPHIC REF	PART NUMBER	QTY	PART NAME 1 2 3 4 5 6 (PRODUCT LEVEL)	SEE PAGE
	1	1	**7K-1181**	2	STRAP-CABLE	
	3	1	**9X-6581**	4	NUT-O-RING SEAL (1-14-THD)	
I	4	1	**103-1847**	2	HOSE AS	
CI	5	1	**154-7279**	2	HOSE AS	
	6	1	**158-3412**	16	CLIP (SLOT)	
	7	1	*190-9821*	2	ELBOW AS	
					(EACH INCLUDES)	
		1	**6V-8989**	1	ELBOW	
		1	**7J-9108**	2	SEAL-O-RING	
	8	1	**234-1885**	2	TUBE AS	
	9	1	**234-1890**	2	BRACKET	
	10	1	**242-5078**	1	TUBE AS	
	11	1	**242-5080**	1	TUBE AS	
I	12	1	**242-5276**	4	HOSE AS	
	13	1	**242-5284**	1	TUBE AS	
	14	1	**242-5285**	1	TUBE AS	
	15	1	**242-5286**	1	TUBE AS	
	16	1	**242-5287**	1	TUBE AS	
	17	1	**243-3224**	1	PLATE	
	19	1	*148-8416*	4	REDUCER AS	
					(EACH INCLUDES)	
		1	**6V-8398**	1	SEAL-O-RING	
		1	**6V-8939**	1	REDUCER	
	21	1	*169-7409*	4	UNION AS	
					(EACH INCLUDES)	
		1	**6V-8996**	1	UNION	
		1	**7J-9108**	2	SEAL-O-RING	
	22	1	**6V-8398**	8	SEAL-O-RING	
	23	1	**6V-9170**	8	NUT-BULKHEAD (1-14-THD)	
	24	1	**6V-9831**	4	CAP AS	
	25	1	**7J-9108**	2	SEAL-O-RING	
	26	1	**8T-4121**	12	WASHER-HARD (11X21X2.5-MM THK)	
M	27	1	**8T-4137**	10	BOLT (M10X1.5X20-MM)	
M	28	1	**8T-4184**	2	BOLT (M12X1.75X45-MM)	
	29	1	**8T-4223**	4	WASHER-HARD (13.5X25.5X3-MM THK)	
M	30	1	**8T-4244**	2	NUT (M12X1.75-THD)	
	31	1	**9R-7803**	8	CLIP (TAB)	
	32	1	**264-1131**	1	BRACKET AS	
M		1	**8T-3490**	1	NUT-WELD (M10X1.5-THD)	
	33	1	**264-0437**	1	BRACKET AS	
M		1	**8T-3490**	1	NUT-WELD (M10X1.5-THD)	
M	34	1	**8T-4136**	2	BOLT (M10X1.5X25-MM)	
	35	1	**204-2281**	1	STRAP-TIE	
C	36	1	*268-1604*	4	CONNECTOR AS	
					(EACH INCLUDES)	
		1	**2M-9780**	1	SEAL-O-RING	
		1	**6V-8398**	1	SEAL-O-RING	
		1	**104-9054**	1	CONNECTOR	

C-CHANGE FROM PREVIOUS TYPE
I-REFER TO HYDRAULIC INFORMATION SYSTEM
M-METRIC PART

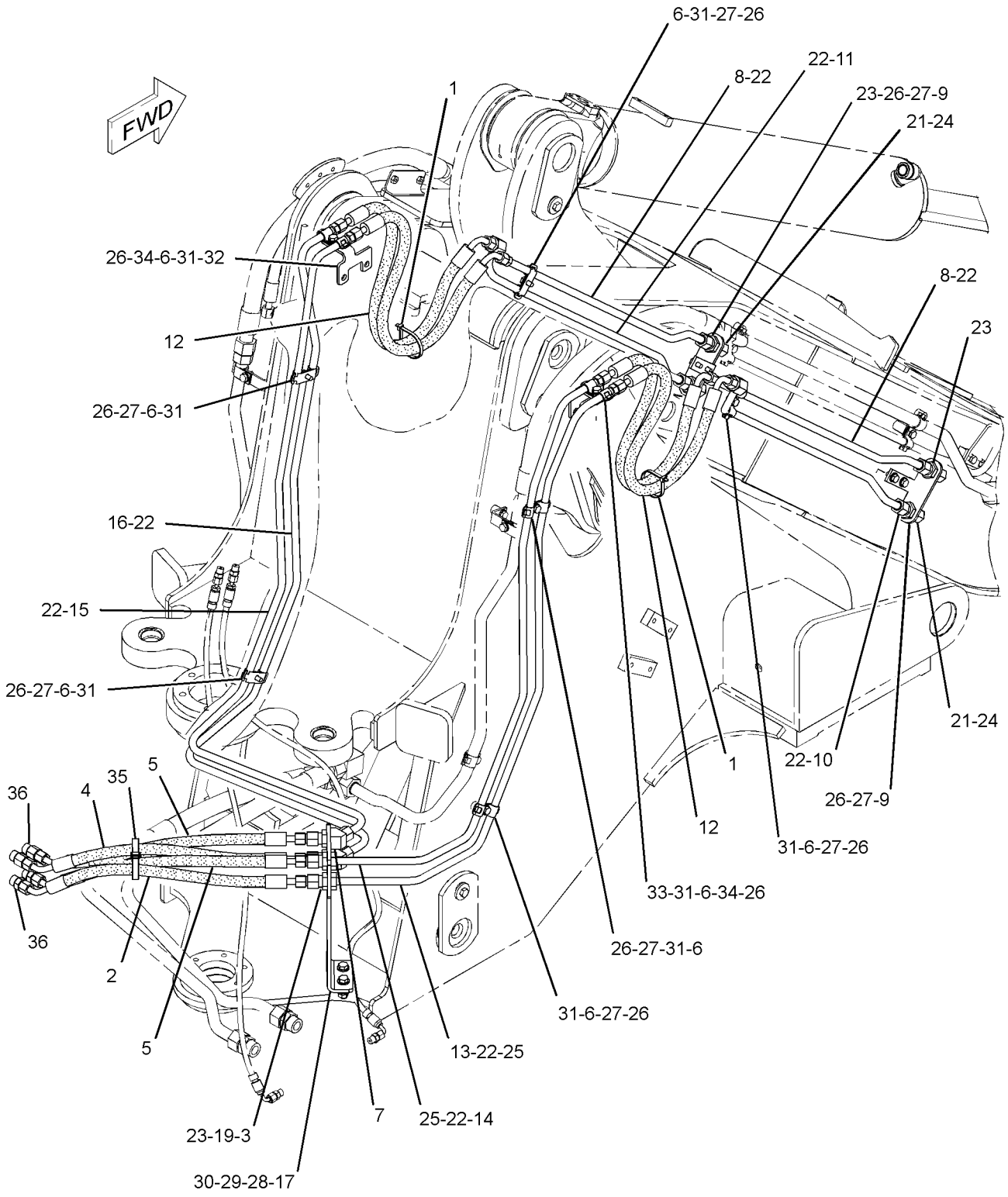

GRAPHIC #1 **<END>** g01284269

248-5415 LINES GP-COUPLER—THIRD FUNCTION, LOWER

S/N: FTD1-UP

FOR USE WITH 303-2049—PAGE 762

AN ATTACHMENT

SMCS-5057, 5133 **i02274432**

NOTE	REF NO	GRAPHIC REF	PART NUMBER	QTY	PART NAME 1 2 3 4 5 6 (PRODUCT LEVEL)	SEE PAGE
	1	1	**152-5717**	1	CAP-DUST	
	2	1	**152-5718**	1	CAP-DUST	
	3	1	**241-6189**	1	FITTING AS (QUICK DISCONNECT, MALE)	
	4	1	**241-6190**	1	FITTING AS (QUICK DISCONNECT, FEMALE)	
I	5	1	**244-1122**	2	HOSE AS	
M	6	1	**5C-2890**	2	NUT (M6X1-THD)	
M	7	1	**5C-9553**	2	BOLT (M6X1X16-MM)	
	8	1	**5K-9090**	2	SEAL-O-RING	
	9	1	**6V-9172**	2	NUT (1-7/16-12-THD)	
	10	1	**8M-2771**	2	CLIP	
	11	1	**8T-4205**	4	WASHER-HARD (7.2X14.5X2-MM THK)	

I-REFER TO HYDRAULIC INFORMATION SYSTEM
M-METRIC PART

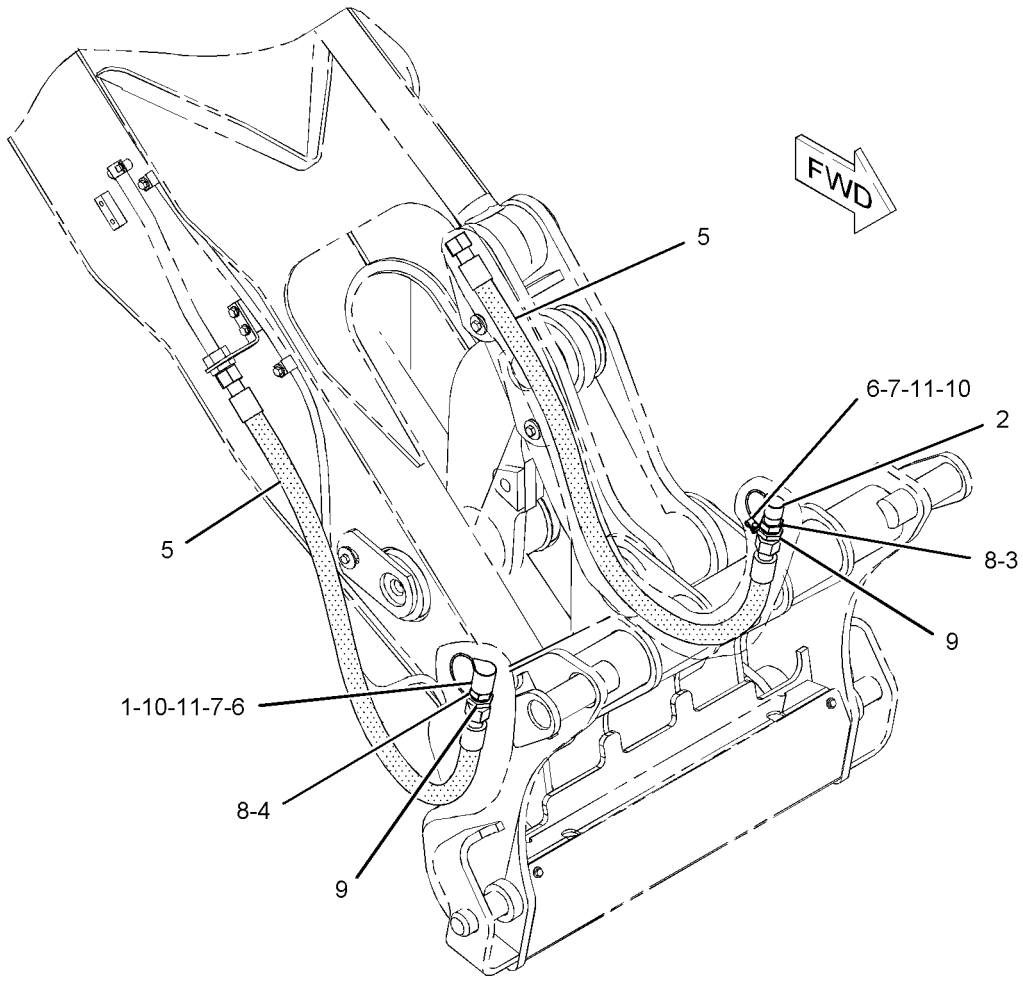

GRAPHIC #1 **<END>** g01113677

248-5416 LINES GP-COUPLER—THIRD FUNCTION, LOWER

S/N: FTD1-UP

FOR USE WITH 303-2048—PAGE 762

AN ATTACHMENT

SMCS-5057, 5133 **i02274435**

NOTE	REF NO	GRAPHIC REF	PART NUMBER	QTY	PART NAME 1 2 3 4 5 6 (PRODUCT LEVEL)	SEE PAGE
	1	1	**152-5717**	1	CAP-DUST	
	2	1	**152-5718**	1	CAP-DUST	
	3	1	**241-6189**	1	FITTING AS (QUICK DISCONNECT, MALE)	
	4	1	**241-6190**	1	FITTING AS (QUICK DISCONNECT, FEMALE)	
I	5	1	**261-7854**	2	HOSE AS	
	6	1	**261-7855**	2	TUBE AS	
M	7	1	**5C-2890**	2	NUT (M6X1-THD)	
M	8	1	**5C-9553**	2	BOLT (M6X1X16-MM)	
	9	1	**5K-9090**	4	SEAL-O-RING	
	10	1	**6V-9172**	2	NUT (1-7/16-12-THD)	
	11	1	**7X-7729**	2	WASHER (11X25X3-MM THK)	
	12	1	**8M-2771**	2	CLIP	
	13	1	**8T-1889**	2	CLIP (SLOT)	
	14	1	**8T-1890**	2	CLIP (TAB)	
M	15	1	**8T-4137**	2	BOLT (M10X1.5X20-MM)	
	16	1	**8T-4205**	4	WASHER-HARD (7.2X14.5X2-MM THK)	

I-REFER TO HYDRAULIC INFORMATION SYSTEM
M-METRIC PART

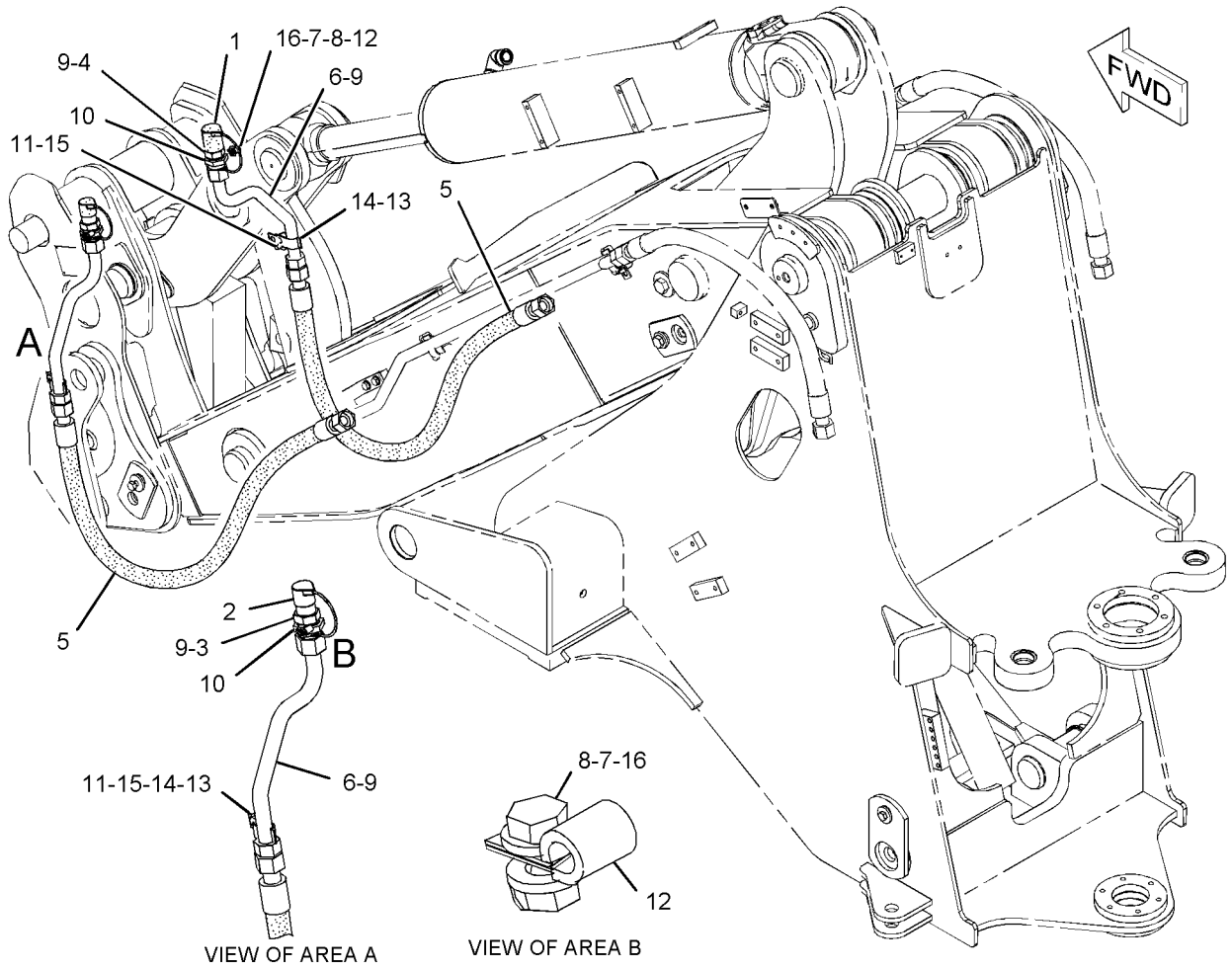

GRAPHIC #1 **<END>** g01140605

HYDRAULIC SYSTEM

290-7205 LINES GP-COUPLER

S/N: BYD1-UP

PART OF 294-9437 COUPLER AR-QUICK

AN ATTACHMENT

SMCS-5057, 5133 **i02853772**

NOTE	REF NO	GRAPHIC REF	PART NUMBER	QTY	PART NAME 1 2 3 4 5 6 (PRODUCT LEVEL)	SEE PAGE
	1	2	**7K-1181**	1	STRAP-CABLE	
	2	2	**8R-0721**	2	SPACER (11X16X35-MM THK)	
I	3	2	**160-6066**	1	HOSE AS	
I	4	1	**176-7807**	1	HOSE AS	
I	5	1	**188-0938**	1	HOSE AS	
	6	1	**192-7625**	1	SWITCH AS-ROCKER (HYDRAULIC LOCKOUT)	
	7	1,2	**194-4120**	4	SPACER (5.6X15.9X40-MM THK)	
I	8	2	**214-5389**	1	HOSE AS	
I	9	2	**214-5390**	1	HOSE AS	
	10	1	**226-5951**	1	TUBE AS	
	11	2	**226-5952**	1	TUBE AS	
I	12	2	**144-6969**	2	HOSE AS	
	13	1	**226-7264**	2	BRACKET	
	14	2	**226-7265**	2	BRACKET AS	
M		2	**8T-3490**	1	NUT-WELD (M10X1.5-THD)	
I	15	1	**185-9336**	2	HOSE AS	
I	16	1	**226-7657**	1	HOSE AS	
I	17	1	**226-7658**	1	HOSE AS	
	18	1,2	**227-0067**	4	BLOCK	
	19	2	**227-0113**	4	BLOCK	
	20	1,2	**227-0179**	4	PLATE	
	21	1	**230-0902**	1	BRACKET AS	
M		1	**8T-3490**	1	NUT-WELD (M10X1.5-THD)	
	22	2	**230-1233**	1	BRACKET AS	
M		2	**8T-3490**	1	NUT-WELD (M10X1.5-THD)	
Y	23	2	**233-2549**	1	VALVE GP-QUICK COUPLER (24-VOLT)	685
	24	2	*148-8325*	6	CONNECTOR AS	
					(EACH INCLUDES)	
		2	**3J-1907**	1	SEAL-O-RING	
		2	**4J-5477**	1	SEAL-O-RING	
		2	**6V-8641**	1	CONNECTOR	
	25	2	*148-8336*	2	CONNECTOR AS	
					(EACH INCLUDES)	
		2	**3J-1907**	1	SEAL-O-RING	
		2	**6V-8397**	1	SEAL-O-RING	
		2	**6V-8636**	1	CONNECTOR	
	26	2	*148-8351*	3	ELBOW AS	
					(EACH INCLUDES)	
		2	**4J-5477**	1	SEAL-O-RING	
		2	**6V-9849**	1	ELBOW	
	27	2	*148-8368*	2	ELBOW AS	
					(EACH INCLUDES)	
		2	**3J-1907**	1	SEAL-O-RING	
		2	**4J-5477**	1	SEAL-O-RING	
		2	**6V-8627**	1	ELBOW	
	28	1	*148-8433*	1	TEE AS	
		1	**6V-8397**	2	SEAL-O-RING	
		1	**6V-9836**	1	TEE-SWIVEL	
	29	1	*148-8444*	1	TEE AS-SWIVEL	
		1	**6V-8398**	2	SEAL-O-RING	
		1	**6V-9837**	1	TEE-SWIVEL	
	30	1	*150-4052*	2	UNION AS	
					(EACH INCLUDES)	
		1	**4J-5477**	2	SEAL-O-RING	
		1	**6V-8993**	1	UNION	

290-7205 **LINES GP-COUPLER** *(contd.)* **i02853772**

NOTE	REF NO	GRAPHIC REF	PART NUMBER	QTY	PART NAME 1 2 3 4 5 6 (PRODUCT LEVEL)	SEE PAGE
	31	2	*150-5968*	2	TEE AS	
					(EACH INCLUDES)	
		2	**4J-5477**	2	SEAL-O-RING	
		2	**6V-9835**	1	TEE-SWIVEL	
	32	1	**2P-1279**	2	LOCKNUT (9/16-18-THD)	
	33	2	**3P-5903**	2	CLIP (TAB)	
	34	2	**3P-5904**	2	CLIP (SLOT)	
	35	2	**4D-7735**	1	CLIP	
	36	1,2	**4J-5477**	4	SEAL-O-RING	
	37	2	**4P-7581**	1	CLIP	
	38	1	**6D-3479**	2	CLIP	
	39	1,2	**6V-3265**	4	CLIP	
M	40	2	**7X-2543**	2	BOLT (M10X1.5X120-MM)	
	41	2	**7X-7729**	3	WASHER (11X25X3-MM THK)	
	42	1,2	**8T-4121**	26	WASHER-HARD (11X21X2.5-MM THK)	
M	43	2	**8T-4133**	4	NUT (M10X1.5-THD)	
M	44	1,2	**8T-4136**	12	BOLT (M10X1.5X25-MM)	
M	45	2	**8T-4186**	2	BOLT (M10X1.5X40-MM)	
M	46	1	**8T-4195**	2	BOLT (M10X1.5X30-MM)	
M	47	1,2	**8T-5005**	6	BOLT (M10X1.5X70-MM)	

I-REFER TO HYDRAULIC INFORMATION SYSTEM
M-METRIC PART
Y-SEPARATE ILLUSTRATION

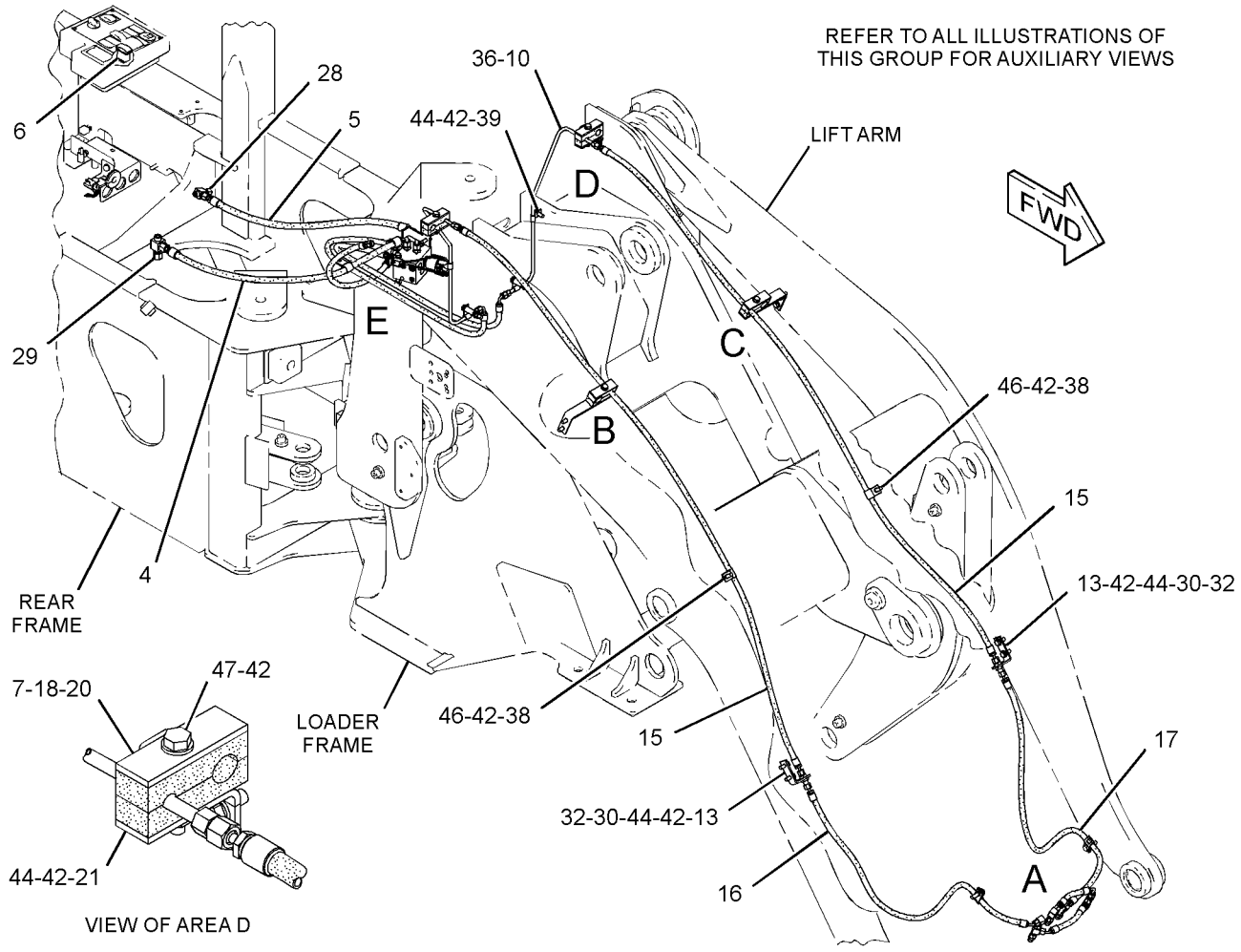

GRAPHIC #1 g01407095

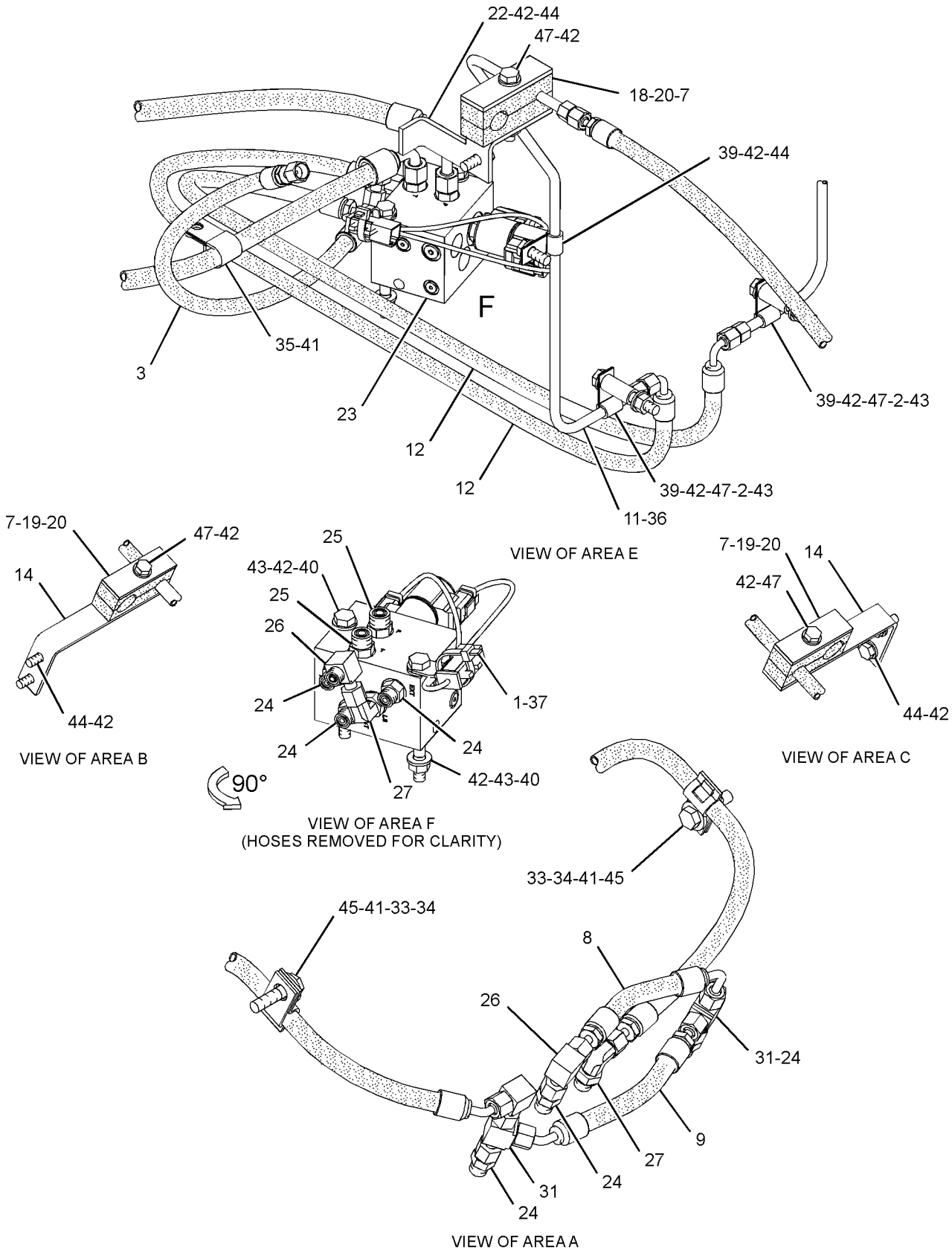

GRAPHIC #2 **<END>** g01407096

296-6814 LINES GP-COUPLER—STANDARD LIFT MACHINES

S/N: FTD1-UP

PART OF 303-2046 LINES GP-COUPLER

AN ATTACHMENT

SMCS-5057, 5133 **i02832794**

NOTE	REF NO	GRAPHIC REF	PART NUMBER	QTY	PART NAME 1 2 3 4 5 6 (PRODUCT LEVEL)	SEE PAGE
	1	1	**7K-1181**	1	STRAP-CABLE	
I	2	1	**109-5368**	1	HOSE AS	
I	3	1	**148-8467**	1	HOSE AS	
I	4	1	**156-1771**	1	HOSE AS	
	5	1	**192-7625**	1	SWITCH AS-ROCKER (QUICK COUPLER PIN LOCK)	
Y	6	1	**233-2549**	1	VALVE GP-QUICK COUPLER (24-VOLT)	685
	7	1	**242-9977**	1	BRACKET AS	
M		1	**8T-3490**	2	NUT-WELD (M10X1.5-THD)	
	8	1	**244-2643**	2	TUBE AS	
I	9	1	**244-5086**	1	HOSE AS	
I	10	1	**280-9178**	1	HOSE AS	
	11	1	**295-4690**	1	BRACKET	
	12	1	**295-4691**	1	BRACKET	
	13	1	**298-3586**	1	TUBE AS	
	14	1	**298-3587**	1	TUBE AS	
I	15	1	**298-3809**	2	HOSE AS	
	16	1	*148-8325*	3	CONNECTOR AS	
					(EACH INCLUDES)	
		1	**3J-1907**	1	SEAL-O-RING	
		1	**4J-5477**	1	SEAL-O-RING	
		1	**6V-8641**	1	CONNECTOR	
	17	1	*148-8351*	2	ELBOW AS	
					(EACH INCLUDES)	
		1	**4J-5477**	1	SEAL-O-RING	
		1	**6V-9849**	1	ELBOW	
	18	1	*148-8368*	3	ELBOW AS	
					(EACH INCLUDES)	
		1	**3J-1907**	1	SEAL-O-RING	
		1	**4J-5477**	1	SEAL-O-RING	
		1	**6V-8627**	1	ELBOW	
	19	1	*148-8407*	1	PLUG AS	
		1	**3J-1907**	1	SEAL-O-RING	
		1	**9S-4191**	1	PLUG-O-RING	
	20	1	*148-8417*	1	REDUCER AS	
		1	**6V-8397**	1	SEAL-O-RING	
		1	**6V-8941**	1	REDUCER	
	21	1	*149-5452*	2	UNION AS	
					(EACH INCLUDES)	
		1	**6V-8397**	2	SEAL-O-RING	
		1	**6V-8994**	1	UNION	
	22	1	**4J-5477**	4	SEAL-O-RING	
	23	1	**5P-9297**	12	CLIP	
	24	1	**6V-8397**	2	SEAL-O-RING	
	25	1	**6V-9168**	2	NUT (11/16-16-THD)	
B	26	1	**6V-9829**	2	CAP AS	
	27	1	**7X-7729**	2	WASHER (11X25X3-MM THK)	
	28	1	**8T-4121**	18	WASHER-HARD (11X21X2.5-MM THK)	
M	29	1	**8T-4136**	2	BOLT (M10X1.5X25-MM)	
M	30	1	**8T-4137**	16	BOLT (M10X1.5X20-MM)	
M	31	1	**8T-4198**	2	BOLT (M10X1.5X100-MM)	
	32	1	**9X-6580**	1	NUT (1-3/16-12-THD)	
	33	1	**204-2281**	2	STRAP-TIE	
	34	1	**200-6345**	1	MOUNT (DUAL SWIVEL)	

B-USE AS REQUIRED
I-REFER TO HYDRAULIC INFORMATION SYSTEM
M-METRIC PART
Y-SEPARATE ILLUSTRATION

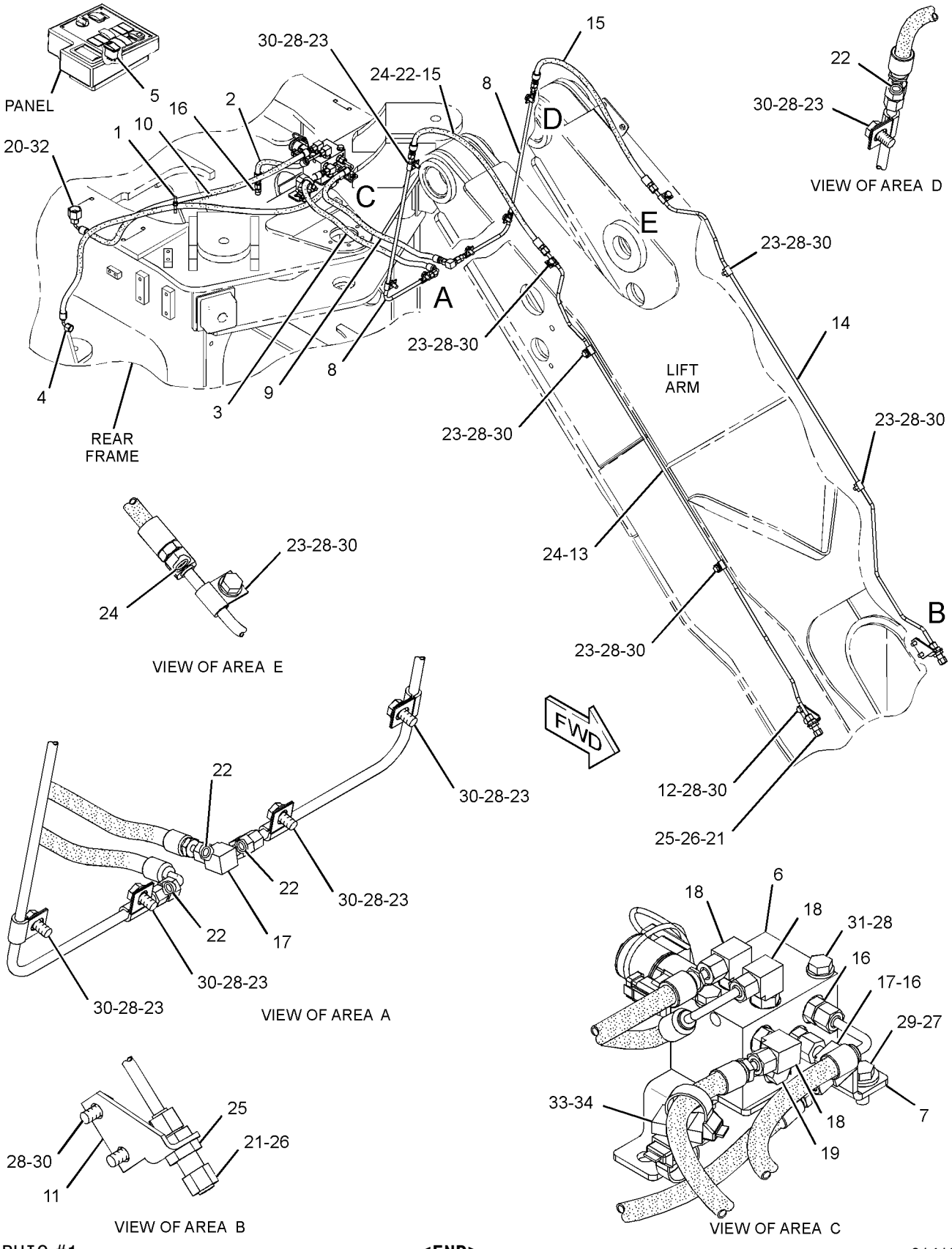

GRAPHIC #1 **<END>** g01413569

HYDRAULIC SYSTEM

296-6815 LINES GP-COUPLER—HIGH LIFT MACHINES

S/N: FTD1-UP

PART OF 303-2047 LINKAGE AR-FRONT

AN ATTACHMENT

SMCS-5057, 5133 **i02726063**

NOTE	REF NO	GRAPHIC REF	PART NUMBER	QTY	PART NAME 1 2 3 4 5 6 (PRODUCT LEVEL)	SEE PAGE
	1	1	**7K-1181**	1	STRAP-CABLE	
I	2	1	**109-5368**	1	HOSE AS	
I	3	1	**170-5678**	1	HOSE AS	
I	4	1	**109-5194**	1	HOSE AS	
	5	1	**192-7625**	1	SWITCH AS-ROCKER (HYDRAULIC LOCKOUT)	
Y	6	1	**233-2549**	1	VALVE GP-QUICK COUPLER (24-VOLT)	685
	7	1	**242-9977**	1	BRACKET AS	
	8	1	**244-2643**	2	TUBE AS	
I	9	1	**244-5086**	1	HOSE AS	
I	10	1	**280-9178**	1	HOSE AS	
	11	1	**295-4690**	1	BRACKET	
	12	1	**295-4691**	1	BRACKET	
	13	1	**298-3588**	1	TUBE AS	
	14	1	**298-3589**	1	TUBE AS	
I	15	1	**298-3809**	2	HOSE AS	
	16	1	*148-8325*	3	CONNECTOR AS	
					(EACH INCLUDES)	
		1	**3J-1907**	1	SEAL-O-RING	
		1	**4J-5477**	1	SEAL-O-RING	
		1	**6V-8641**	1	CONNECTOR	
	17	1	*148-8351*	2	ELBOW AS	
					(EACH INCLUDES)	
		1	**4J-5477**	1	SEAL-O-RING	
		1	**6V-9849**	1	ELBOW	
	18	1	*148-8368*	3	ELBOW AS	
					(EACH INCLUDES)	
		1	**3J-1907**	1	SEAL-O-RING	
		1	**4J-5477**	1	SEAL-O-RING	
		1	**6V-8627**	1	ELBOW	
	19	1	*148-8407*	1	PLUG AS	
		1	**3J-1907**	1	SEAL-O-RING	
		1	**9S-4191**	1	PLUG-O-RING	
	20	1	*148-8417*	1	REDUCER AS	
		1	**6V-8397**	1	SEAL-O-RING	
		1	**6V-8941**	1	REDUCER	
	21	1	*149-5452*	2	UNION AS	
					(EACH INCLUDES)	
		1	**6V-8397**	2	SEAL-O-RING	
		1	**6V-8994**	1	UNION	
	22	1	**4J-5477**	4	SEAL-O-RING	
	23	1	**5P-9297**	14	CLIP	
	24	1	**6V-8397**	2	SEAL-O-RING	
	25	1	**6V-9168**	2	NUT (11/16-16-THD)	
	26	1	**6V-9829**	2	CAP AS	
	27	1	**7X-7729**	2	WASHER (11X25X3-MM THK)	
	28	1	**8T-4121**	20	WASHER-HARD (11X21X2.5-MM THK)	
M	29	1	**8T-4136**	2	BOLT (M10X1.5X25-MM)	
M	30	1	**8T-4137**	18	BOLT (M10X1.5X20-MM)	
M	31	1	**8T-4198**	2	BOLT (M10X1.5X100-MM)	
	32	1	**9X-6580**	1	NUT (1-3/16-12-THD)	
	33	1	**200-6345**	1	MOUNT (DUAL SWIVEL)	
	34	1	**204-2281**	2	STRAP-TIE	

I-REFER TO HYDRAULIC INFORMATION SYSTEM
M-METRIC PART
Y-SEPARATE ILLUSTRATION

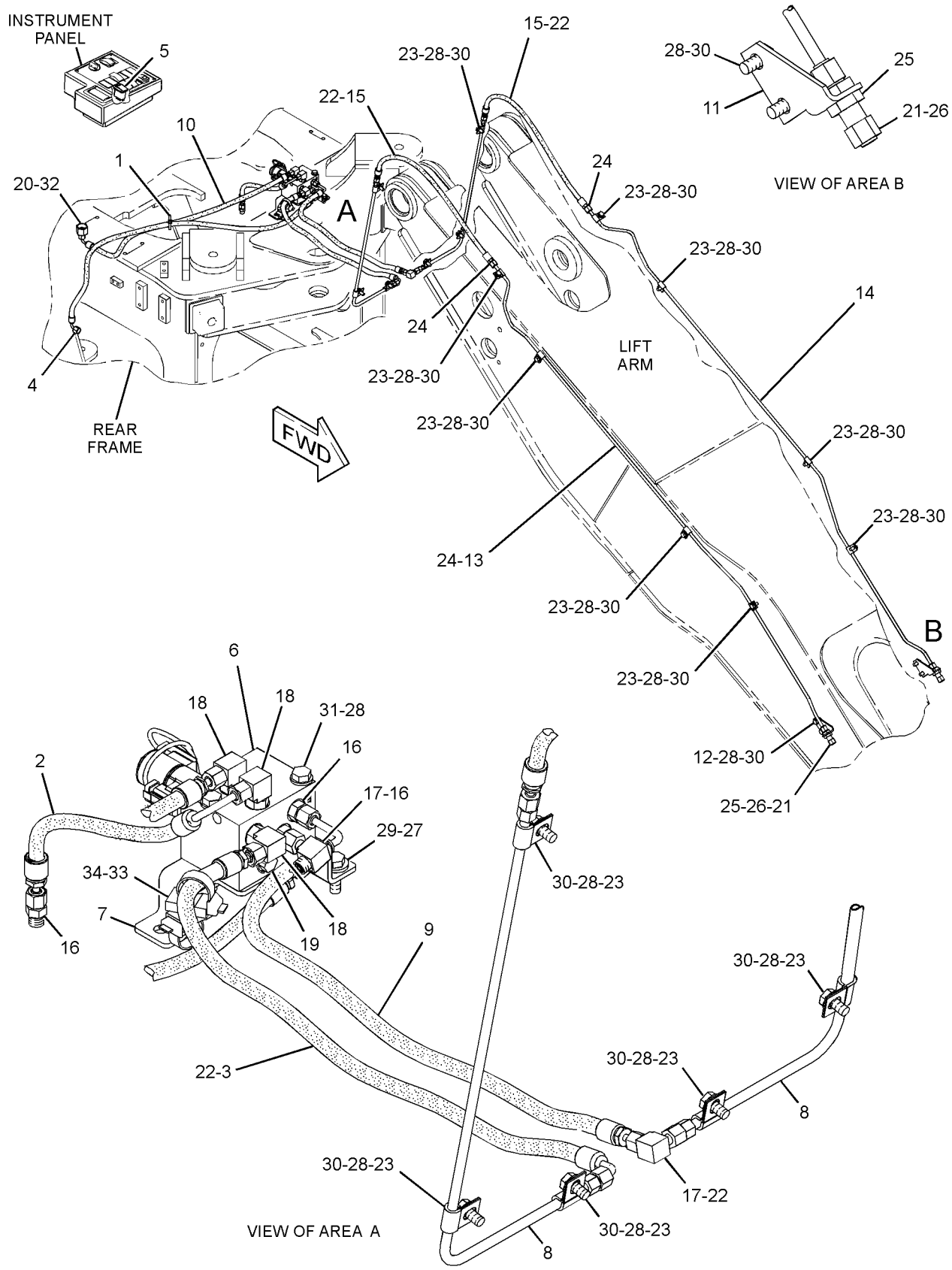

GRAPHIC #1 **<END>** g01411311

HYDRAULIC SYSTEM

297-2470 LINES GP-COUPLER

S/N: FTD1-UP
PART OF 303-2048 COUPLER AR-QUICK
AN ATTACHMENT

SMCS-5057, 5133 **i02726165**

NOTE	REF NO	GRAPHIC REF	PART NUMBER	QTY	PART NAME 1 2 3 4 5 6 (PRODUCT LEVEL)	SEE PAGE
I	1	1	**214-5389**	1	HOSE AS	
I	2	1	**214-5390**	1	HOSE AS	
I	3	1	**297-2778**	1	HOSE AS	
I	4	1	**297-2779**	1	HOSE AS	
	5	1	*148-8325*	3	CONNECTOR AS	
					(EACH INCLUDES)	
		1	**3J-1907**	1	SEAL-O-RING	
		1	**4J-5477**	1	SEAL-O-RING	
		1	**6V-8641**	1	CONNECTOR	
	6	1	*148-8351*	1	ELBOW AS	
		1	**4J-5477**	1	SEAL-O-RING	
		1	**6V-9849**	1	ELBOW	
	7	1	*148-8368*	1	ELBOW AS	
		1	**3J-1907**	1	SEAL-O-RING	
		1	**4J-5477**	1	SEAL-O-RING	
		1	**6V-8627**	1	ELBOW	
	8	1	*150-5968*	2	TEE AS	
					(EACH INCLUDES)	
		1	**4J-5477**	2	SEAL-O-RING	
		1	**6V-9835**	1	TEE-SWIVEL	
	9	1	**5P-7462**	2	CLIP (SLOT)	
	10	1	**5P-7463**	2	CLIP (TAB)	
	11	1	**6V-0683**	2	GROMMET	
	12	1	**7X-7729**	4	WASHER (11X25X3-MM THK)	
	13	1	**8T-1893**	4	CLIP (SLOT)	
	14	1	**8T-1894**	4	CLIP (TAB)	
M	15	1	**8T-4137**	4	BOLT (M10X1.5X20-MM)	
	16	1	**8T-4223**	2	WASHER-HARD (13.5X25.5X3-MM THK)	

I-REFER TO HYDRAULIC INFORMATION SYSTEM
M-METRIC PART

297-2470 **LINES GP-COUPLER** *(contd.)* **i02726165**

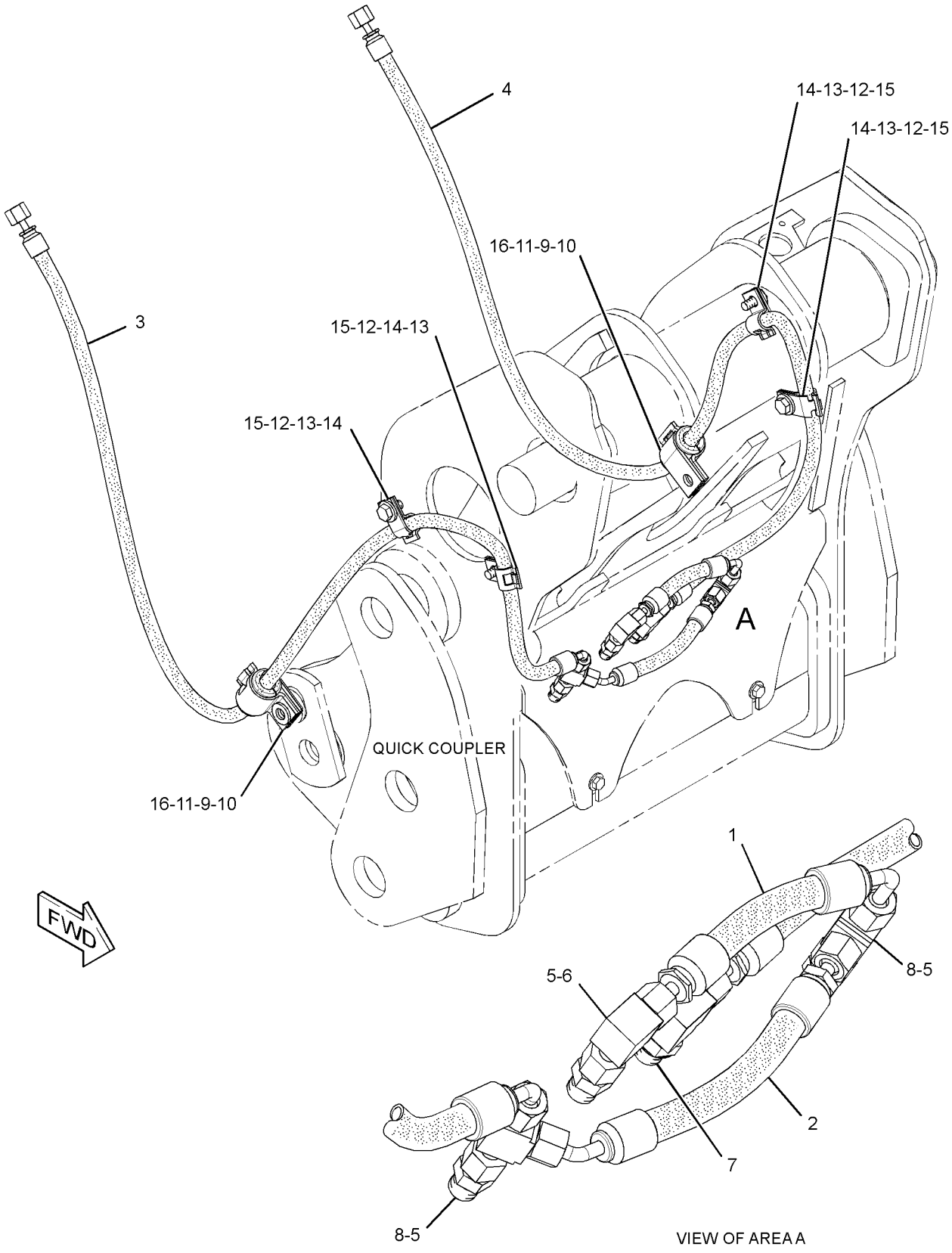

GRAPHIC #1 **<END>** g01371885

HYDRAULIC SYSTEM

297-2471 LINES GP-COUPLER—STANDARD LIFT MACHINES, WIDE

S/N: FTD1-UP

PART OF 303-2049 COUPLER AR-QUICK

AN ATTACHMENT

SMCS-5057, 5133 **i02738368**

NOTE	REF NO	GRAPHIC REF	PART NUMBER	QTY	PART NAME 1 2 3 4 5 6 (PRODUCT LEVEL)	SEE PAGE
I	1	1	**196-9560**	1	HOSE AS	
	2	1	*196-9994*	1	UNION GP	
		1	**4J-5477**	1	SEAL-O-RING	
		1	**6V-8397**	1	SEAL-O-RING	
		1	**6V-8736**	1	UNION	
I	3	1	**198-8064**	1	HOSE AS	
I	4	1	**297-2788**	1	HOSE AS	
I	5	1	**297-2789**	1	HOSE AS	
	6	1	*148-8351*	2	ELBOW AS	
					(EACH INCLUDES)	
		1	**4J-5477**	1	SEAL-O-RING	
		1	**6V-9849**	1	ELBOW	
	7	1	*148-8368*	3	ELBOW AS	
					(EACH INCLUDES)	
		1	**3J-1907**	1	SEAL-O-RING	
		1	**4J-5477**	1	SEAL-O-RING	
		1	**6V-8627**	1	ELBOW	
	8	1	*150-4050*	1	ELBOW AS	
		1	**3J-1907**	1	SEAL-O-RING	
		1	**8T-0788**	1	ELBOW	
	9	1	*150-5968*	2	TEE AS	
					(EACH INCLUDES)	
		1	**4J-5477**	2	SEAL-O-RING	
		1	**6V-9835**	1	TEE-SWIVEL	
	10	1	**5P-7462**	2	CLIP (SLOT)	
	11	1	**5P-7463**	2	CLIP (TAB)	
	12	1	**6V-0683**	2	GROMMET	
	13	1	**8T-4223**	2	WASHER-HARD (13.5X25.5X3-MM THK)	

I-REFER TO HYDRAULIC INFORMATION SYSTEM

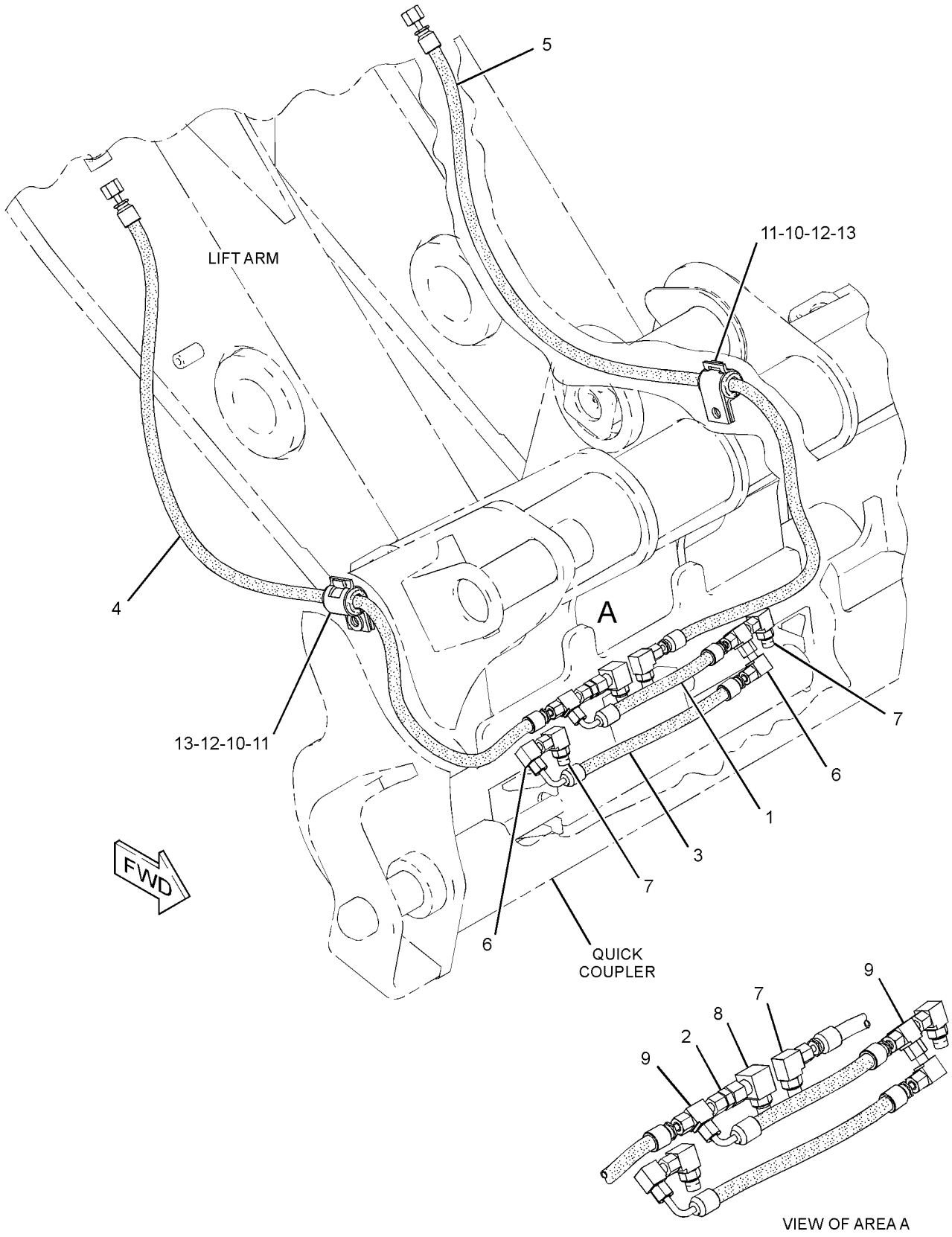

GRAPHIC #1 **<END>** g01388051

HYDRAULIC SYSTEM

303-2046 LINES GP-COUPLER—STANDARD LIFT MACHINES

S/N: FTD1-UP

CANNOT BE USED WITH 303-2047—PAGE 709

AN ATTACHMENT

SMCS-5057, 5133 **i02726097**

NOTE	PART NUMBER	QTY	PART NAME 1 2 3 4 5 6 (PRODUCT LEVEL)	SEE PAGE
Y	*235-7300*	1	CONTROL GP-WORK TOOL (STANDARD LIFT MACHINES)	705
Y	*296-6814*	1	LINES GP-COUPLER (STANDARD LIFT MACHINES)	517

Y-SEPARATE ILLUSTRATION

<END>

HYDRAULIC SYSTEM

118-1094 LINES GP-FRONT

S/N: BYD1-UP

PART OF 241-1049 CONVERSION AR-HYDRAULIC, 202-0423 HYDRAULIC AR-3 VALVE AN ATTACHMENT

SMCS-5057 **i01857241**

NOTE	REF NO	GRAPHIC REF	PART NUMBER	QTY	PART NAME 1 2 3 4 5 6 (PRODUCT LEVEL)	SEE PAGE
	1	1	**6V-9832**	2	CAP AS	
C	2	1	**118-0996**	1	BRACKET	
C	3	1	**118-0997**	1	BRACKET	
I	4	1	**134-4531**	2	HOSE AS	
C	5	1	**227-3989**	1	TUBE AS	
C	6	1	**227-3990**	1	TUBE AS	
B	7	1	**230-0902**	1	BRACKET AS	
M		1	**8T-3490**	1	NUT-WELD (M10X1.5-THD)	
B	8	1	**230-1233**	1	BRACKET AS	
M		1	**8T-3490**	1	NUT-WELD (M10X1.5-THD)	
	9	1	*148-8335*	2	CONNECTOR AS	
					(EACH INCLUDES)	
		1	**5K-9090**	1	SEAL-O-RING	
		1	**6V-8635**	1	CONNECTOR	
		1	**7M-8485**	1	SEAL-O-RING	
	10	1	*148-8455*	2	UNION AS	
					(EACH INCLUDES)	
		1	**6V-8997**	1	UNION	
		1	**6V-9746**	2	SEAL-O-RING	
	11	1	**2P-1293**	2	LOCKNUT (1-3/16-12-THD)	
	12	1	**5P-7466**	2	CLIP (SLOT)	
	13	1	**5P-7467**	2	CLIP (TAB)	
	14	1	**5P-8112**	2	GROMMET	
	15	1	**6V-9746**	2	SEAL-O-RING	
	16	1	**7X-7729**	2	WASHER (11X25X3-MM THK)	
B	17	1	**8T-1889**	4	CLIP (SLOT)	
B	18	1	**8T-1890**	4	CLIP (TAB)	
BC	19	1	**8T-4121**	10	WASHER-HARD (11X21X2.5-MM THK)	
BCM	20	1	**8T-4136**	10	BOLT (M10X1.5X25-MM)	
M	21	1	**8T-4186**	2	BOLT (M10X1.5X40-MM)	

B-USE AS REQUIRED
C-CHANGE FROM PREVIOUS TYPE
I-REFER TO HYDRAULIC INFORMATION SYSTEM
M-METRIC PART

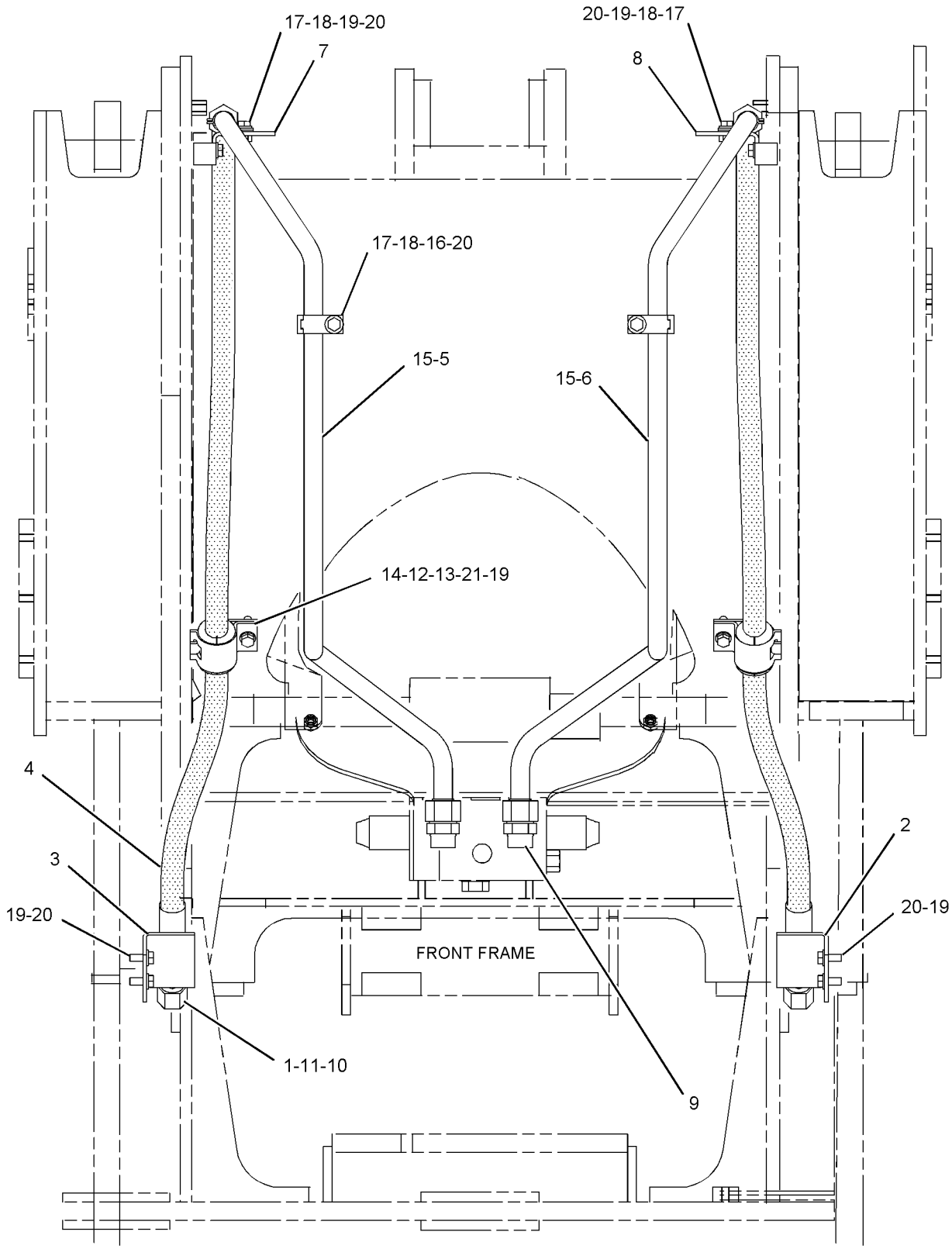

REAR VIEW

GRAPHIC #1

<END>

g01008234

235-6916 LINES GP-FRONT—THIRD FUNCTION

S/N: FTD1-UP

PART OF 303-2042 HYDRAULIC AR-3 VALVE, 303-2038, 303-2044 HYDRAULIC AR-4 VALVE, 303-2040 HYDRAULIC AR-6 VALVE

AN ATTACHMENT

SMCS-5057 **i02808470**

NOTE	REF NO	GRAPHIC REF	PART NUMBER	QTY	PART NAME 1 2 3 4 5 6 (PRODUCT LEVEL)	SEE PAGE
	1	1	**242-5079**	1	TUBE AS	
	2	1	**243-4914**	1	TUBE AS	
	3	1	**243-5250**	1	BRACKET	
	4	1	**243-5251**	1	BRACKET	
I	5	1	**260-6163**	2	HOSE AS	
	6	1	**5K-9090**	4	SEAL-O-RING	
	7	1	**6V-9172**	2	NUT (1-7/16-12-THD)	
	8	1	**8T-1889**	4	CLIP (SLOT)	
	9	1	**8T-1890**	4	CLIP (TAB)	
	10	1	**8T-4121**	8	WASHER-HARD (11X21X2.5-MM THK)	
BM	11	1	**8T-4136**	4	BOLT (M10X1.5X25-MM)	
M	12	1	**8T-4195**	4	BOLT (M10X1.5X30-MM)	
B	13	1	**6V-9833**	2	CAP AS (HYDRAULIC RETURN)	

B-USE AS REQUIRED
I-REFER TO HYDRAULIC INFORMATION SYSTEM
M-METRIC PART

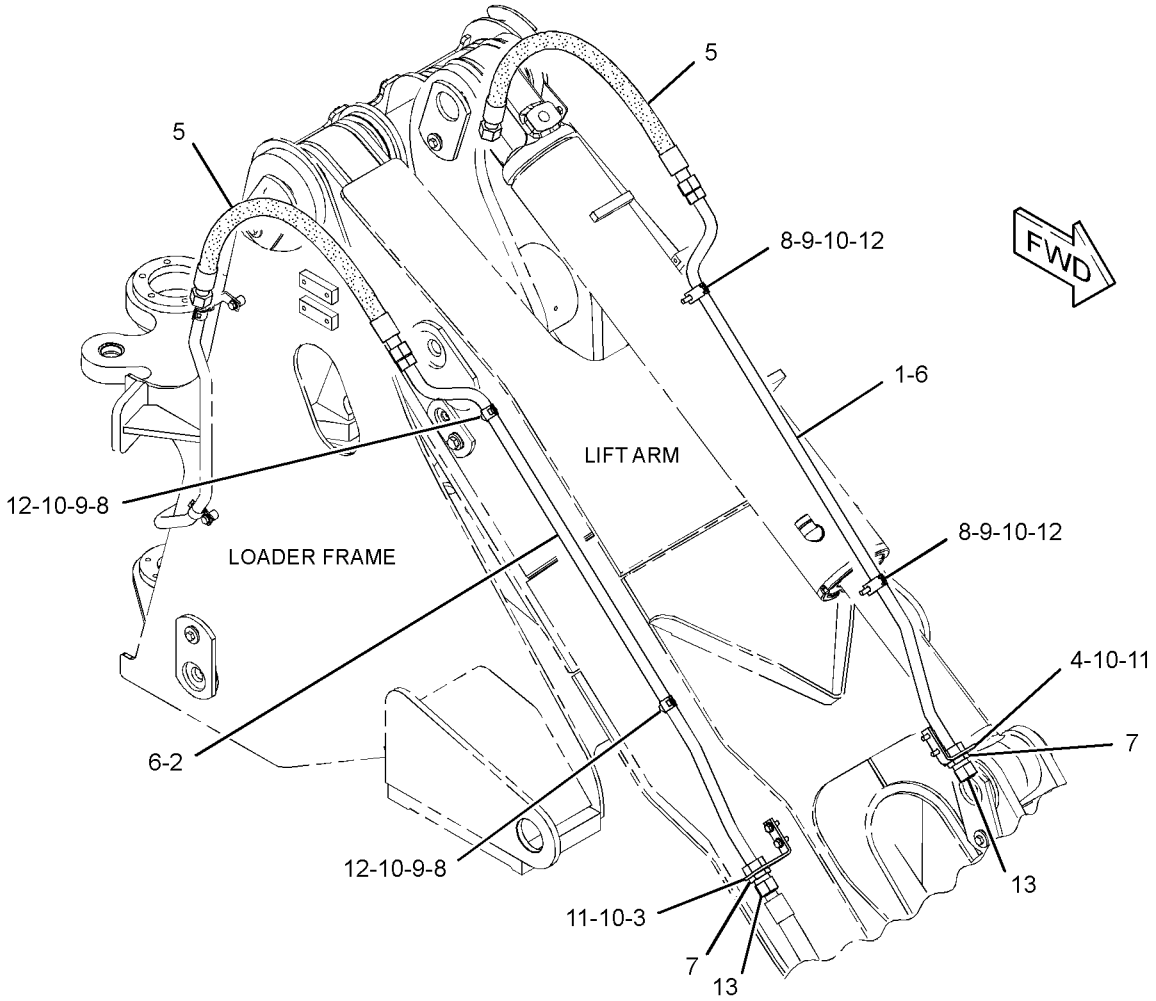

GRAPHIC #1 **<END>** g01404884

HYDRAULIC SYSTEM

235-6917 LINES GP-FRONT—FOURTH FUNCTION

S/N: FTD1-UP

PART OF 303-2038, 303-2044 HYDRAULIC AR-4 VALVE, 303-2040 HYDRAULIC AR-6 VALVE

FOR USE WITH 240-9454—PAGE 501, 242-0100—PAGE 503

AN ATTACHMENT

SMCS-5057 **i02682912**

NOTE	REF NO	GRAPHIC REF	PART NUMBER	QTY	PART NAME 1 2 3 4 5 6 (PRODUCT LEVEL)	SEE PAGE
	1	1	**152-5717**	1	CAP-DUST	
	2	1	**152-5718**	1	CAP-DUST	
	3	1	**193-8334**	1	FITTING AS (QUICK DISCONNECT, MALE)	
	4	1	**193-8335**	1	FITTING AS (QUICK DISCONNECT, FEMALE)	
	5	1	**243-4955**	1	TUBE AS	
	6	1	**243-5130**	1	TUBE AS	
	7	1	**243-5193**	2	BRACKET	
CI	8	1	**247-5571**	2	HOSE AS	
	9	1	**6V-8398**	2	SEAL-O-RING	
	10	1	**6V-9170**	2	NUT-BULKHEAD (1-14-THD)	
	11	1	**7J-9108**	2	SEAL-O-RING	
M	12	1	**8T-4195**	4	BOLT (M10X1.5X30-MM)	
	13	1	**9R-1004**	4	CLIP (TAB)	
	14	1	**9R-1005**	4	CLIP (SLOT)	

C-CHANGE FROM PREVIOUS TYPE
I-REFER TO HYDRAULIC INFORMATION SYSTEM
M-METRIC PART

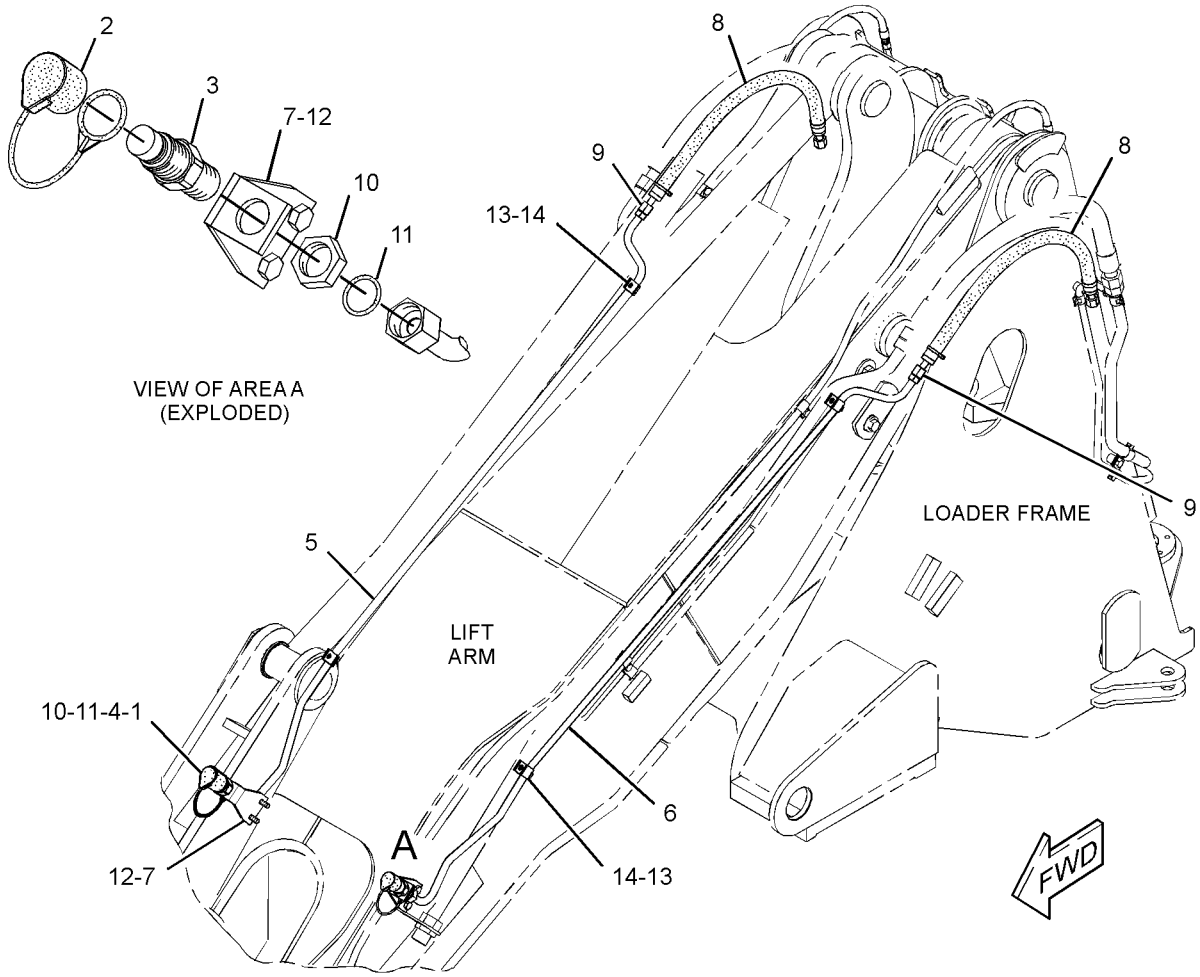

GRAPHIC #1 **<END>** g01308581

235-6923 LINES GP-FRONT—THIRD FUNCTION

S/N: FTD1-UP

PART OF 303-2043 HYDRAULIC AR-3 VALVE, 303-2045 HYDRAULIC AR-4 VALVE
FOR USE WITH 235-7500—PAGE 707, 240-9454—PAGE 501, 242-0100—PAGE 503
AN ATTACHMENT

SMCS-5057 **i02814196**

NOTE	REF NO	GRAPHIC REF	PART NUMBER	QTY	PART NAME 1 2 3 4 5 6 (PRODUCT LEVEL)	SEE PAGE
	1	1	**243-5250**	1	BRACKET	
	2	1	**243-5251**	1	BRACKET	
	3	1	**244-7133**	1	TUBE AS	
	4	1	**244-7134**	1	TUBE AS	
I	5	1	**260-6163**	2	HOSE AS	
	6	1	**5K-9090**	4	SEAL-O-RING	
	7	1	**6V-9172**	2	NUT (1-7/16-12-THD)	
	8	1	**8T-1889**	4	CLIP (SLOT)	
	9	1	**8T-1890**	4	CLIP (TAB)	
	10	1	**8T-4121**	8	WASHER-HARD (11X21X2.5-MM THK)	
M	11	1	**8T-4136**	4	BOLT (M10X1.5X25-MM)	
M	12	1	**8T-4195**	4	BOLT (M10X1.5X30-MM)	
	13	1	**6V-9833**	2	CAP AS	

I-REFER TO HYDRAULIC INFORMATION SYSTEM
M-METRIC PART

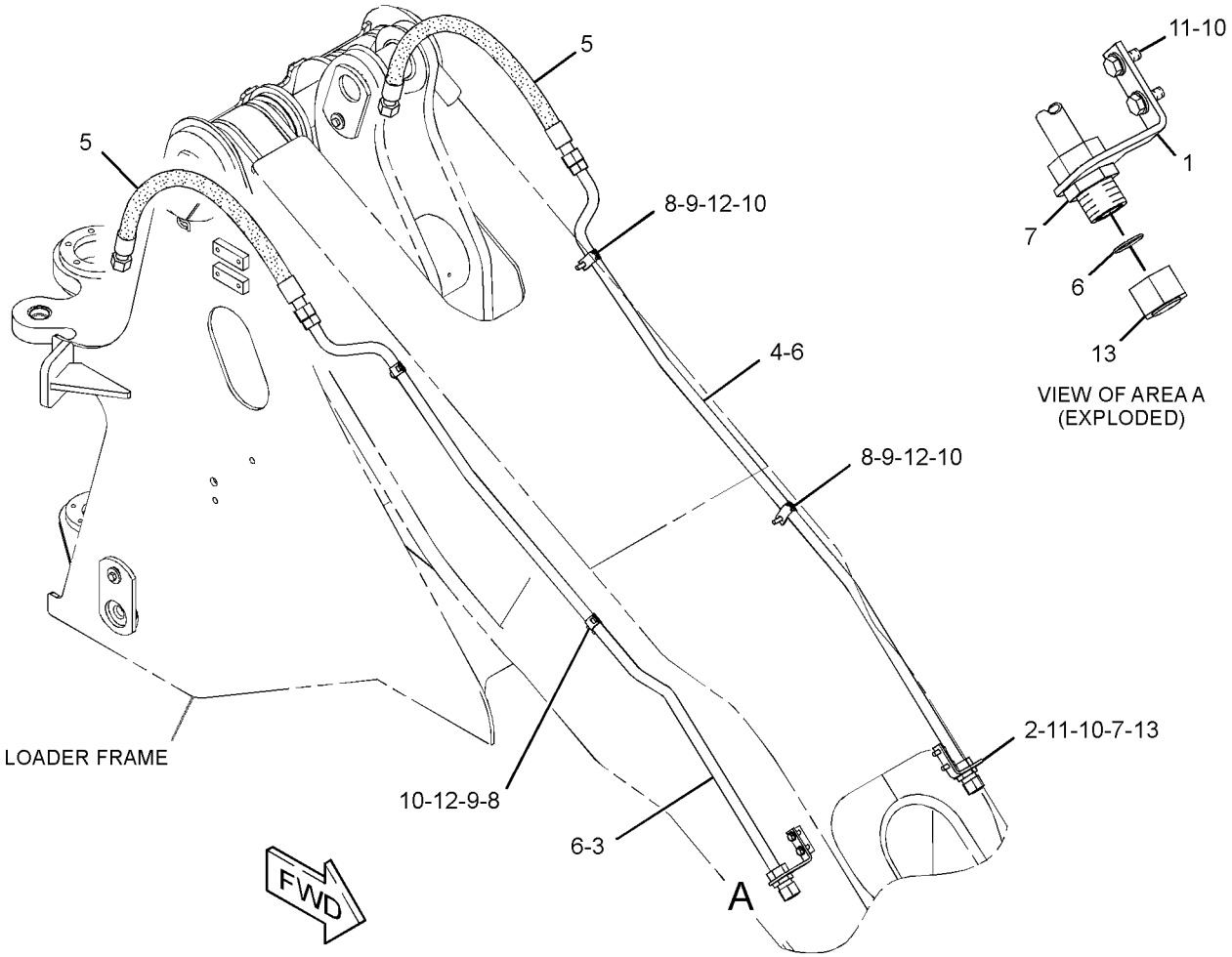

GRAPHIC #1 **<END>** g01409574

235-6924 LINES GP-FRONT—FOURTH FUNCTION

S/N: FTD1-UP

PART OF 303-2045 HYDRAULIC AR-4 VALVE

FOR USE WITH 235-7500—PAGE 707, 240-9454—PAGE 501, 242-0100—PAGE 503

AN ATTACHMENT

SMCS-5057 **i02682904**

NOTE	REF NO	GRAPHIC REF	PART NUMBER	QTY	PART NAME 1 2 3 4 5 6 (PRODUCT LEVEL)	SEE PAGE
	1	1	**152-5717**	1	CAP-DUST	
	2	1	**152-5718**	1	CAP-DUST	
	3	1	**193-8334**	1	FITTING AS (QUICK DISCONNECT, MALE)	
	4	1	**193-8335**	1	FITTING AS (QUICK DISCONNECT, FEMALE)	
	5	1	**243-5193**	2	BRACKET	
	6	1	**244-9503**	1	TUBE AS	
	7	1	**244-9504**	1	TUBE AS	
CI	8	1	**247-5571**	2	HOSE AS	
	9	1	**6V-8398**	2	SEAL-O-RING	
	10	1	**6V-9170**	2	NUT-BULKHEAD (1-14-THD)	
	11	1	**7J-9108**	2	SEAL-O-RING	
M	12	1	**8T-4195**	4	BOLT (M10X1.5X30-MM)	
	13	1	**9R-1004**	4	CLIP (TAB)	
	14	1	**9R-1005**	4	CLIP (SLOT)	

C-CHANGE FROM PREVIOUS TYPE
I-REFER TO HYDRAULIC INFORMATION SYSTEM
M-METRIC PART

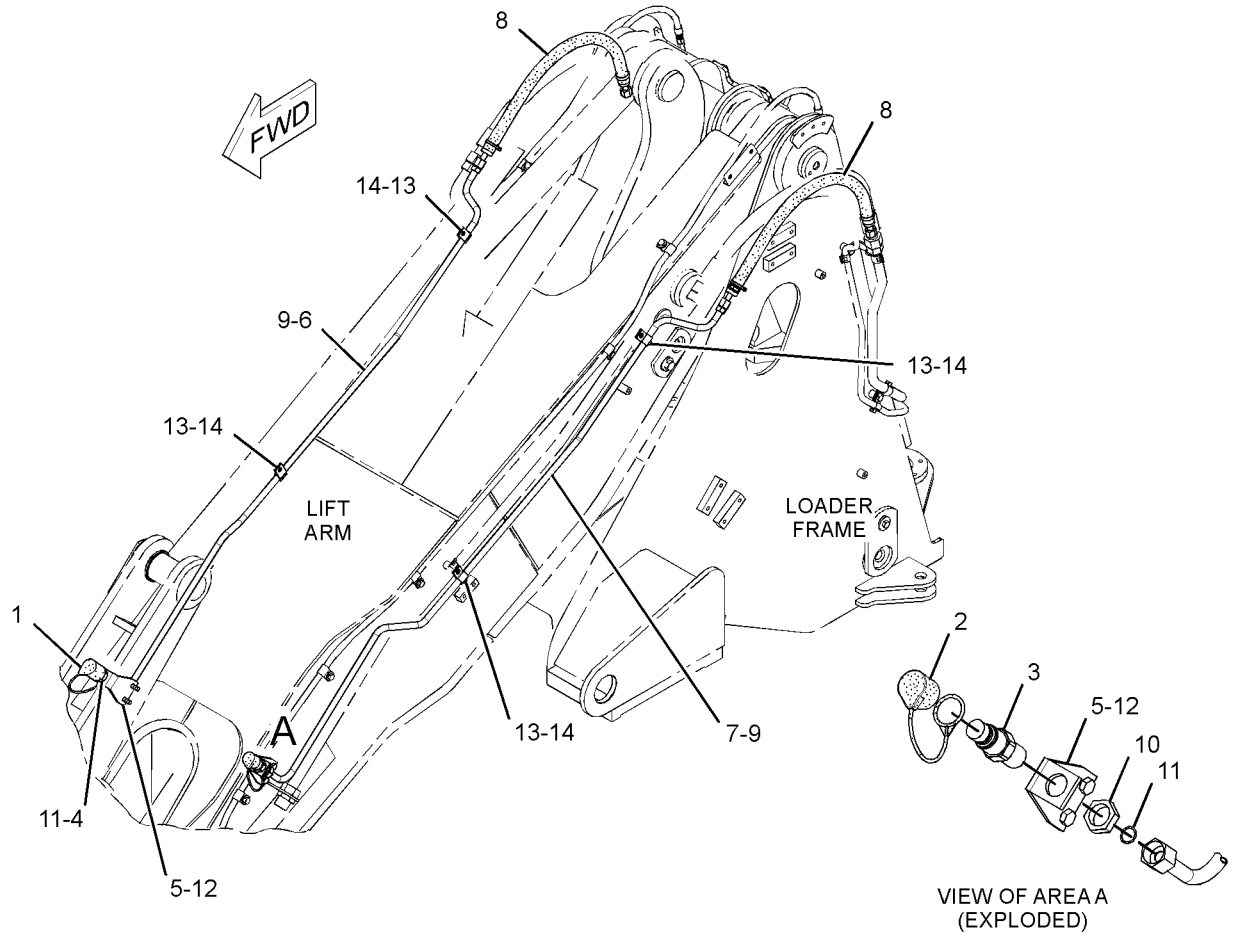

GRAPHIC #1 **<END>** g01325267

HYDRAULIC SYSTEM

238-2656 LINES GP-FRONT—THIRD FUNCTION, PROPORTIONAL FLOW

S/N: FTD1-UP

PART OF 241-0943 HYDRAULIC AR-3 VALVE, 241-0944 HYDRAULIC AR-4 VALVE AN ATTACHMENT

SMCS-5057 **i02862992**

NOTE	REF NO	GRAPHIC REF	PART NUMBER	QTY	PART NAME 1 2 3 4 5 6 (PRODUCT LEVEL)	SEE PAGE
CM	1	1	**8T-4195**	2	BOLT (M10X1.5X30-MM)	
	3	1	*104-4980*	1	ELBOW GP	
		1	**3J-1907**	1	SEAL-O-RING	
		1	**4J-5477**	1	SEAL-O-RING	
		1	**153-6267**	1	ELBOW	
	5	1	**227-7474**	2	SPACER (13X20X7-MM)	
CI	6	1	**296-2927**	1	HOSE AS	
CI	7	1	**296-2928**	1	HOSE AS	
	8	1	**283-7724**	1	TUBE AS	
	9	1	**283-7725**	1	TUBE AS	
C	11	1	**295-4831**	1	ROD AS	
C	12	1	*148-8355*	1	ELBOW AS	
		1	**5K-9090**	1	SEAL-O-RING	
		1	**6V-9005**	1	ELBOW	
		1	**7M-8485**	1	SEAL-O-RING	
Y	13	1	*262-9706*	1	VALVE & MTG GP-SOLENOID (THIRD FCTN, PROPORTIONAL FLOW)	625
	14	1	*148-8325*	2	CONNECTOR AS	
					(EACH INCLUDES)	
		1	**3J-1907**	1	SEAL-O-RING	
		1	**4J-5477**	1	SEAL-O-RING	
		1	**6V-8641**	1	CONNECTOR	
C	15	1	*148-8335*	1	CONNECTOR AS	
		1	**5K-9090**	1	SEAL-O-RING	
		1	**6V-8635**	1	CONNECTOR	
		1	**7M-8485**	1	SEAL-O-RING	
	16	1	*148-8368*	3	ELBOW AS	
					(EACH INCLUDES)	
		1	**3J-1907**	1	SEAL-O-RING	
		1	**4J-5477**	1	SEAL-O-RING	
		1	**6V-8627**	1	ELBOW	
	17	1	*148-8433*	1	TEE AS	
		1	**6V-8397**	2	SEAL-O-RING	
		1	**6V-9836**	1	TEE-SWIVEL	
	18	1	*150-5968*	1	TEE AS	
		1	**4J-5477**	2	SEAL-O-RING	
		1	**6V-9835**	1	TEE-SWIVEL	
	19	1	*164-5577*	2	ELBOW AS	
					(EACH INCLUDES)	
		1	**5K-9090**	2	SEAL-O-RING	
		1	**6V-8984**	1	ELBOW	
I	20	1	**112-5965**	1	HOSE AS	
I	21	1	**252-2363**	1	HOSE AS	
I	22	1	**252-2364**	2	HOSE AS	
	23	1	**4V-9798**	2	TAG-IDENTIFICATION (LETTER, NUMBER C2)	
	24	1	**4V-9799**	2	TAG-IDENTIFICATION (LETTER, NUMBER C1)	
C	25	1	**5K-9090**	2	SEAL-O-RING	
C	27	1	**6V-9172**	2	NUT (1-7/16-12-THD)	
M	28	1	**7X-2543**	2	BOLT (M10X1.5X120-MM)	
	29	1	**7S-3919**	4	CLIP (SLOT)	
	30	1	**7S-3916**	4	CLIP (TAB)	
C	31	1	**8T-4121**	10	WASHER-HARD (11X21X2.5-MM THK)	
M	32	1	**8T-4136**	6	BOLT (M10X1.5X25-MM)	
	33	1	**280-2280**	1	BRACKET AS (RH)	
	34	1	**280-2281**	1	BRACKET AS (LH)	

C-CHANGE FROM PREVIOUS TYPE
I-REFER TO HYDRAULIC INFORMATION SYSTEM
M-METRIC PART
Y-SEPARATE ILLUSTRATION

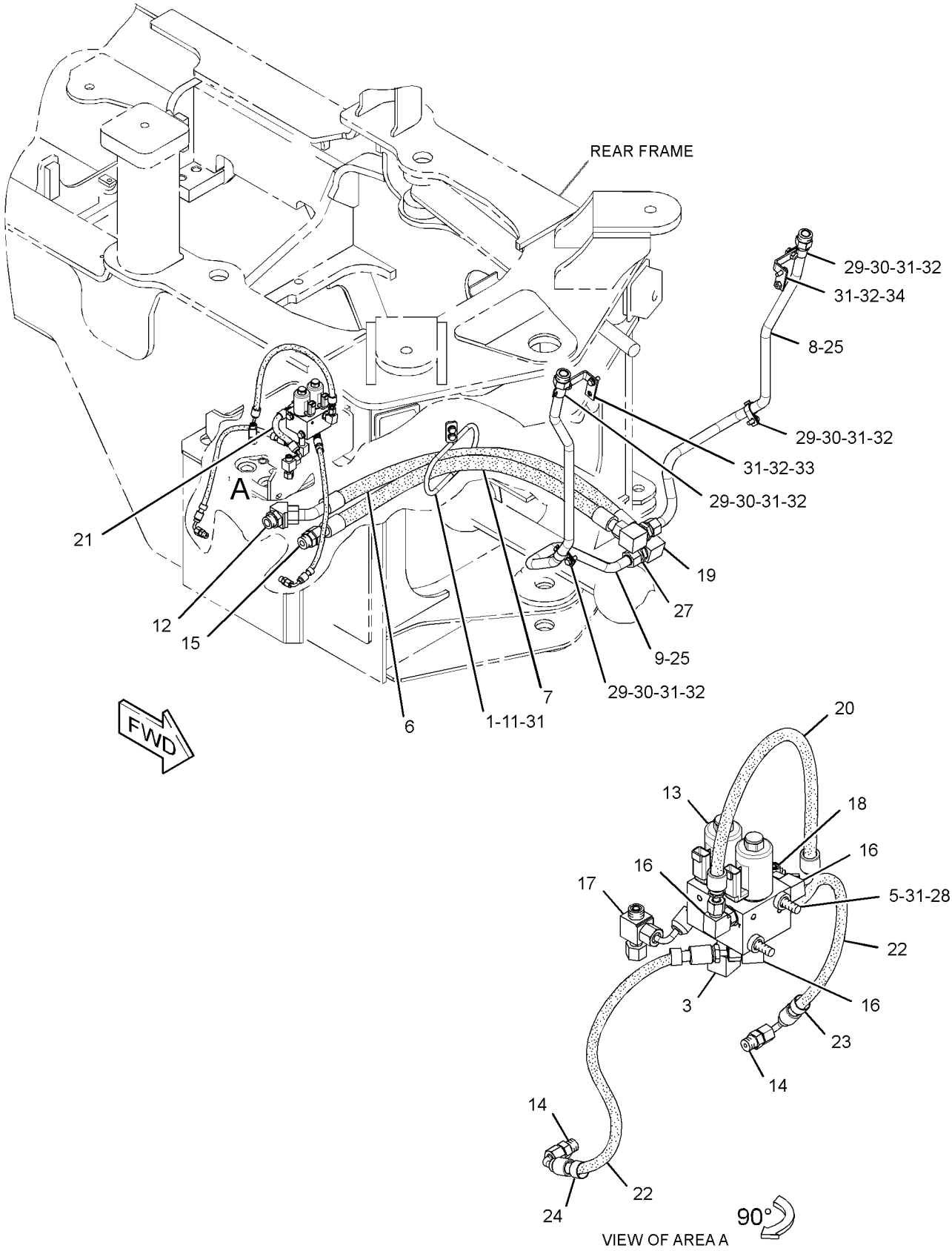

GRAPHIC #1 **<END>** g01441041

242-0093 LINES GP-HYDRAULIC–
THIRD FUNCTION, CONTINUOUS FLOW
S/N: FTD1-UP
PART OF 242-0092 HYDRAULIC AR
AN ATTACHMENT

SMCS-5057 **i02703791**

NOTE	REF NO	GRAPHIC REF	PART NUMBER	QTY	PART NAME 1 2 3 4 5 6 (PRODUCT LEVEL)	SEE PAGE
	1	1	**7K-1181**	2	STRAP-CABLE	
	2	1	**110-6109**	1	KNOB-CONTROL (FLOW CONTROL SWITCH)	
Y	3	1	*243-0651*	1	VALVE & MTG GP-SOLENOID (THIRD FCTN, CONTINUOUS FLOW)	624
	4	1	**243-4167**	1	HARNESS AS-SOLENOID (FLOW CONTROL)	
	5	1	**243-4168**	1	SWITCH AS-FLOW (VARIABLE FLOW CONTROL)	
	6	1	**251-3250**	1	HOSE AS	
	7	1	**251-3251**	1	HOSE AS	
CM	8	1	**8T-0643**	2	BOLT (M10X1.5X80-MM)	
	9	1	*148-8325*	3	CONNECTOR AS	
					(EACH INCLUDES)	
		1	**3J-1907**	1	SEAL-O-RING	
		1	**4J-5477**	1	SEAL-O-RING	
		1	**6V-8641**	1	CONNECTOR	
	10	1	*150-3033*	1	ELBOW AS	
		1	**3J-1907**	1	SEAL-O-RING	
		1	**4J-5477**	1	SEAL-O-RING	
		1	**8T-0164**	1	ELBOW	
	11	1	**248-2821**	1	NUT-SPECIAL (1/2-28-THD)	
M	12	1	**2Y-5829**	2	NUT (M10X1.5-THD)	
	13	1	**3J-4818**	1	LOCKWASHER	
C	15	1	**6V-5839**	4	WASHER (11X21X2.5-MM THK)	
C	16	1	**298-7736**	2	COLLAR	

C-CHANGE FROM PREVIOUS TYPE
M-METRIC PART
Y-SEPARATE ILLUSTRATION

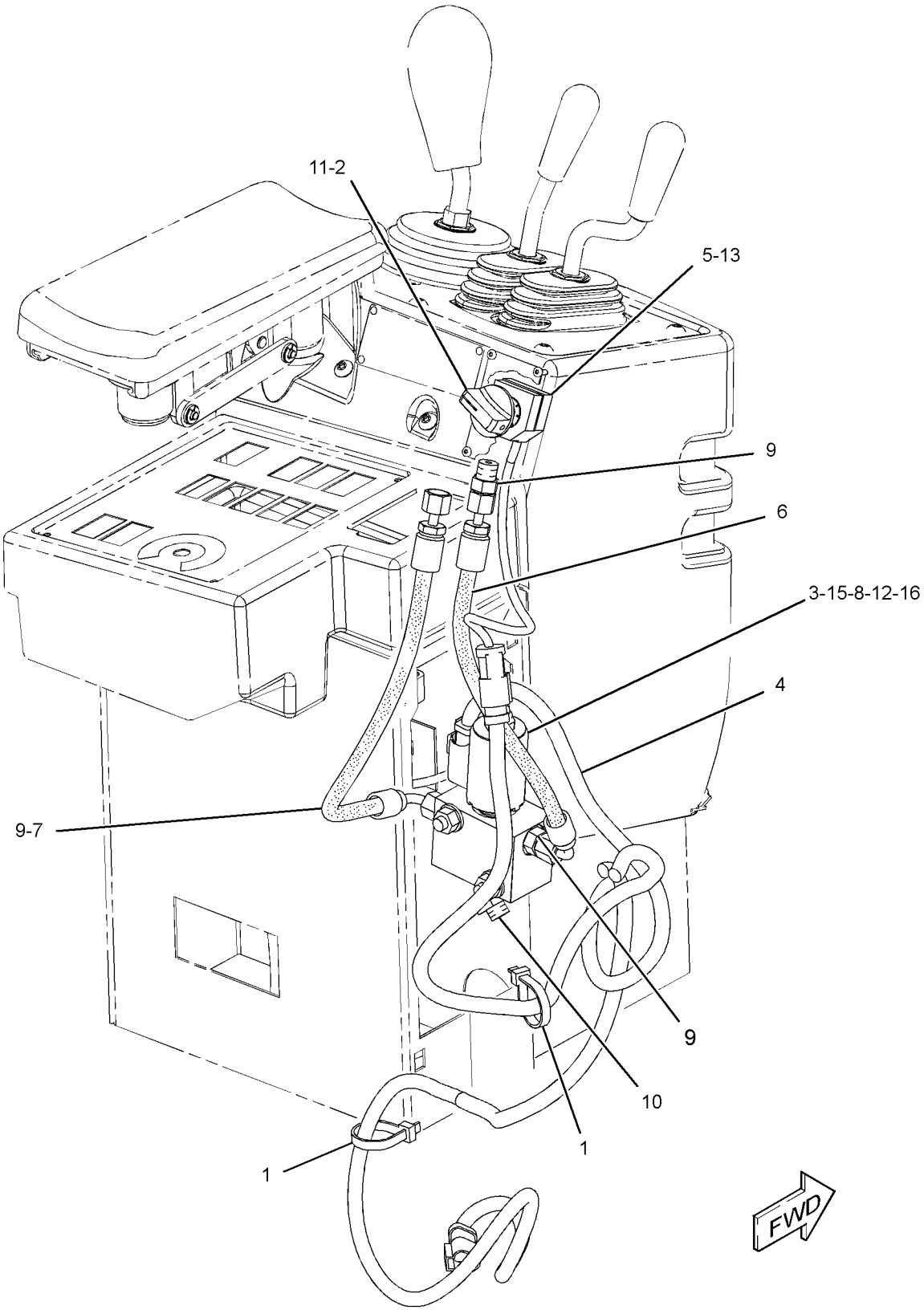

GRAPHIC #1 **<END>** g01400459

HYDRAULIC SYSTEM

245-4858 LINES GP-HYDRAULIC–3, 4, 6-VALVE

S/N: FTD1-UP

PART OF 240-9454 HYDRAULIC AR-4 VALVE, 242-0100 HYDRAULIC AR-6 VALVE AN ATTACHMENT

SMCS-5057 **i02682294**

NOTE	REF NO	GRAPHIC REF	PART NUMBER	QTY	PART NAME 1 2 3 4 5 6 (PRODUCT LEVEL)	SEE PAGE
	1	1	**4I-9523**	2	BAND-MARKER (BLUE, L3)	
	2	1	**4I-9527**	2	BAND-MARKER (GREEN, R3)	
I	3	1	**275-5768**	2	HOSE AS	
CI	4	1	**296-2928**	1	HOSE AS	
	5	1	**283-7724**	1	TUBE AS	
	6	1	**283-7725**	1	TUBE AS	
C	7	1	*148-8355*	1	ELBOW AS	
		1	**5K-9090**	1	SEAL-O-RING	
		1	**6V-9005**	1	ELBOW	
		1	**7M-8485**	1	SEAL-O-RING	
C	8	1	**295-4831**	1	ROD AS	
	10	1	*148-8325*	4	CONNECTOR AS	
					(EACH INCLUDES)	
		1	**3J-1907**	1	SEAL-O-RING	
		1	**4J-5477**	1	SEAL-O-RING	
		1	**6V-8641**	1	CONNECTOR	
C	11	1	*148-8335*	1	CONNECTOR AS	
		1	**5K-9090**	1	SEAL-O-RING	
		1	**6V-8635**	1	CONNECTOR	
		1	**7M-8485**	1	SEAL-O-RING	
	12	1	*164-5577*	2	ELBOW AS	
					(EACH INCLUDES)	
		1	**5K-9090**	2	SEAL-O-RING	
		1	**6V-8984**	1	ELBOW	
C	13	1	**5K-9090**	2	SEAL-O-RING	
C	14	1	**6V-9172**	2	NUT (1-7/16-12-THD)	
	15	1	**7S-3919**	4	CLIP (SLOT)	
	16	1	**7S-3916**	4	CLIP (TAB)	
C	17	1	**8T-4121**	8	WASHER-HARD (11X21X2.5-MM THK)	
M	18	1	**8T-4136**	6	BOLT (M10X1.5X25-MM)	
CI	19	1	**296-2927**	1	HOSE AS	
CM	20	1	**8T-4195**	2	BOLT (M10X1.5X30-MM)	
	21	1	**280-2280**	1	BRACKET AS	
	22	1	**280-2281**	1	BRACKET AS	

C-CHANGE FROM PREVIOUS TYPE
I-REFER TO HYDRAULIC INFORMATION SYSTEM
M-METRIC PART

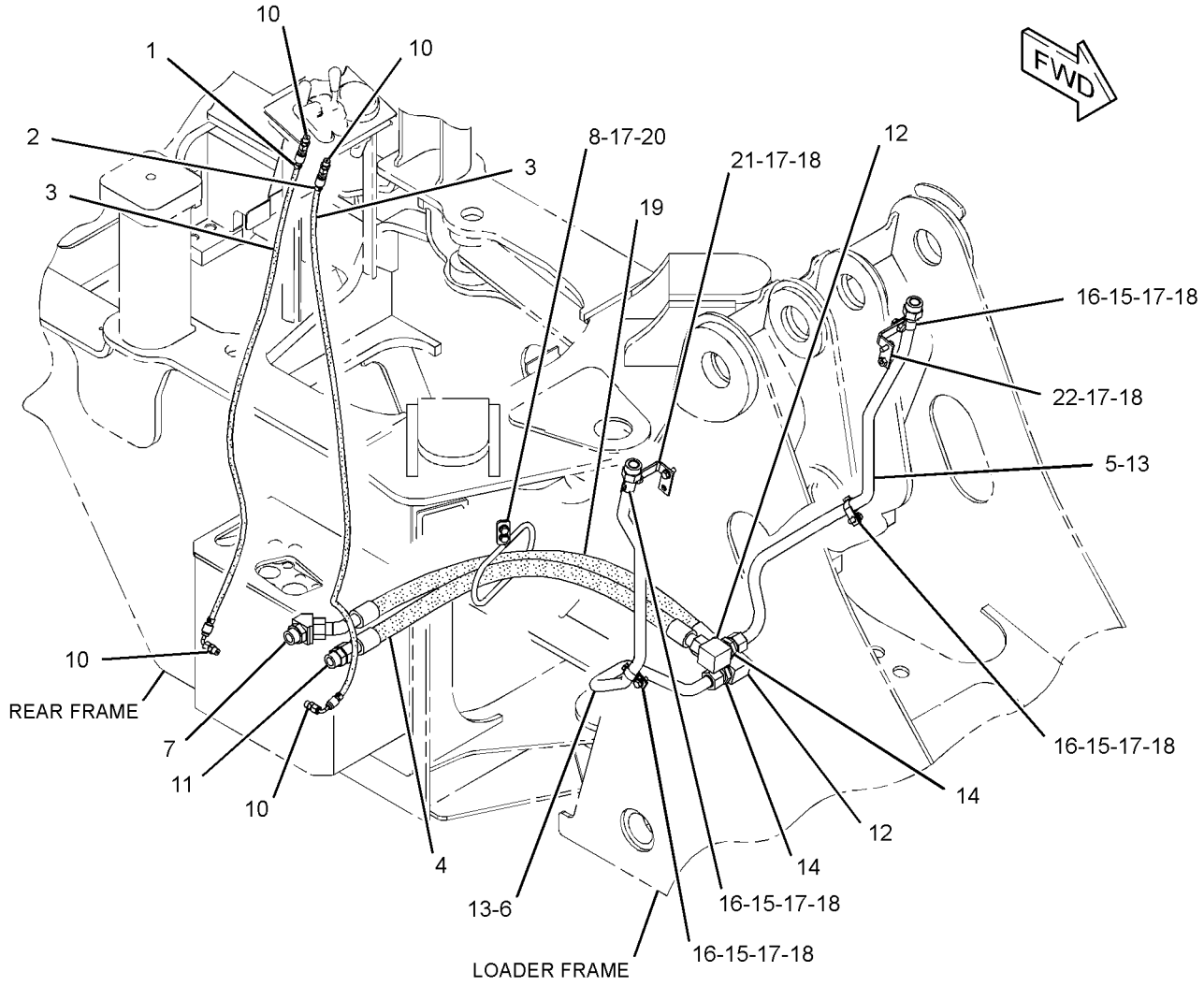

GRAPHIC #1 **<END>** g01347725

HYDRAULIC SYSTEM

245-4861 LINES GP-HYDRAULIC–4, 6-VALVE

S/N: FTD1-UP

PART OF 240-9454, 241-0944 HYDRAULIC AR-4 VALVE, 242-0100 HYDRAULIC AR-6 VALVE AN ATTACHMENT

SMCS-5057 **i02682305**

NOTE	REF NO	GRAPHIC REF	PART NUMBER	QTY	PART NAME 1 2 3 4 5 6 (PRODUCT LEVEL)	SEE PAGE
	1	1	**4I-9524**	2	BAND-MARKER (BROWN, L4)	
	2	1	**4I-9528**	2	BAND-MARKER (PURPLE, R4)	
C	3	1	*153-6252*	2	CONNECTOR AS	
					(EACH INCLUDES)	
		1	**6V-8398**	1	SEAL-O-RING	
		1	**7M-8485**	1	SEAL-O-RING	
		1	**9X-8408**	1	CONNECTOR	
	4	1	**243-6525**	2	HOSE AS	
C	5	1	*153-6241*	1	ELBOW AS	
		1	**6V-8398**	1	SEAL-O-RING	
		1	**8C-8989**	1	ELBOW	
	6	1	**244-7177**	1	TUBE AS	
	7	1	**244-7178**	1	TUBE AS	
CI	8	1	**295-2982**	1	HOSE AS	
CI	9	1	**295-4753**	1	HOSE AS	
	10	1	*148-8325*	4	CONNECTOR AS	
					(EACH INCLUDES)	
		1	**3J-1907**	1	SEAL-O-RING	
		1	**4J-5477**	1	SEAL-O-RING	
		1	**6V-8641**	1	CONNECTOR	
C	11	1	**6V-8398**	4	SEAL-O-RING	
C	12	1	**6V-9169**	2	NUT-BULKHEAD (13/16-16-THD)	
	13	1	**9R-1004**	4	CLIP (TAB)	
	14	1	**9R-1005**	4	CLIP (SLOT)	
M	16	1	**8T-4136**	2	BOLT (M10X1.5X25-MM)	
C	18	1	**8T-4121**	2	WASHER-HARD (11X21X2.5-MM THK)	

C-CHANGE FROM PREVIOUS TYPE
I-REFER TO HYDRAULIC INFORMATION SYSTEM
M-METRIC PART

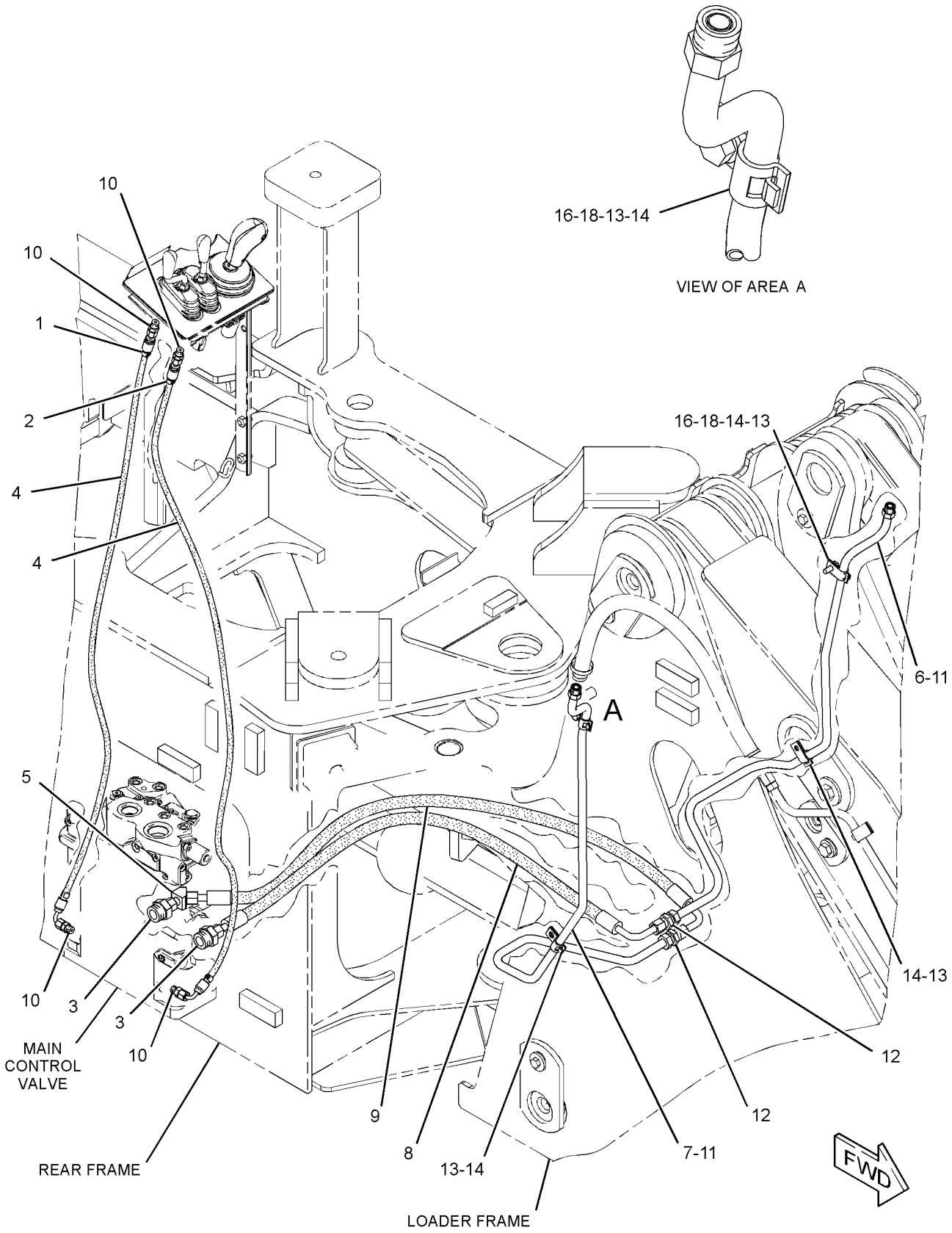

GRAPHIC #1

<END>

g01347731

HYDRAULIC SYSTEM

289-8806 LINES GP-HYDRAULIC

S/N: FTD650-UP

PART OF 289-8843 HYDRAULIC AR

SMCS-5057 **i02885865**

NOTE	REF NO	GRAPHIC REF	PART NUMBER	QTY	PART NAME 1 2 3 4 5 6 (PRODUCT LEVEL)	SEE PAGE
	1	1	**5I-4376**	1	FITTING	
	2	1	**5P-0743**		HOSE (54-CM)	
	3	1,2	**6V-0852**	3	CAP-DUST	
	4	2	**6V-1178**	1	PLUG-BUTTON	
	5	1	**8C-5225**	1	PLUG-SEAL	
	6	2	**8T-0154**	1	CLAMP-HOSE	
	7	1	**8T-4984**	2	CLAMP-HOSE	
	8	2	**9X-6581**	1	NUT-O-RING SEAL (1-14-THD)	
	9	1	**144-0367**	2	CLAMP-HOSE	
	10	1	*148-8424*	1	TEE AS	
	11	1	**156-4130**	3	CLIP-TUBE (LOOP)	
I	12	1	*164-3485*	1	HOSE AS	
	13	1	*164-9640*	1	CONNECTOR AS	
	14	2	*165-2273*	1	VALVE AS-SHUTOFF	
		2	**3K-0360**	1	SEAL-O-RING	
		2	**6V-7238**	1	VALVE-SHUTOFF	
	15	1	**177-2215**	1	STRAP-DUAL CLAMP	
	16	1	**200-6345**	1	MOUNT (DUAL SWIVEL)	
	17	1	**204-2281**	8	STRAP-TIE	
	18	2	**226-2095**	1	FILM (BLACK)	
I	19	1	*241-6481*	1	HOSE AS	
I	20	1	*242-0181*	1	HOSE AS	
	21	2	**242-0265**	1	MANIFOLD	
	22	1	**242-0575**	1	TUBE AS	
		1	**6V-8558**	1	NUT-FACE SEAL (1-11/16-12-THD)	
		1	**6V-8565**	1	SLEEVE-FACE SEAL	
		1	**6V-8727**	1	CONNECTOR	
I	23	1	*242-0968*	1	HOSE AS	
	24	2	**242-8872**	1	BRACKET AS	
	25	1	**242-9594**	1	TUBE AS	
		1	**6V-0425**	1	PLUG	
	26	1	**242-9597**	1	BRACKET AS	
Y	27	1	**243-4398**	1	ACCUMULATOR GP-PILOT OIL (CHARGED)	478
I	28	1	*244-0727*	1	HOSE AS	
	29	1	**252-0303**	1	HARNESS AS-SOLENOID (HYDRAULIC LOCKOUT)	
	30	1	**262-5656**	1	HOSE	
	31	1	**262-5659**	1	HOSE AS	
	32	2	**294-0932**	1	VALVE GP-CHECK	
I	33	1	*300-9098*	1	HOSE AS	
I	34	1	*300-9104*	1	HOSE AS	
	35	1	**307-3181**	1	VALVE GP-PRIORITY (STEERING)	
	36	1	**7K-1181**	3	STRAP-CABLE	
	37	2	**091-0079**	1	PLUG	
	38	2	**110-6349**	1	FITTING AS (QUICK DISCONNECT)	
	39	1	*148-8323*	1	CONNECTOR AS	
		1	**2S-4078**	1	SEAL-O-RING	
		1	**5K-9090**	1	SEAL-O-RING	
		1	**6V-9875**	1	CONNECTOR (FACE SEAL)	
	40	2	*148-8325*	1	CONNECTOR AS	
		2	**3J-1907**	1	SEAL-O-RING	
		2	**4J-5477**	1	SEAL-O-RING	
		2	**6V-8641**	1	CONNECTOR (O-RING FACE SEAL)	
	41	1	*148-8334*	1	CONNECTOR AS	
	42	1	*148-8336*	3	CONNECTOR AS	
	43	1	*148-8355*	1	ELBOW AS	
		1	**5K-9090**	1	SEAL-O-RING	

289-8806 **LINES GP-HYDRAULIC** *(contd.)* **i02885865**

NOTE	REF NO	GRAPHIC REF	PART NUMBER	QTY	PART NAME 1 2 3 4 5 6 (PRODUCT LEVEL)	SEE PAGE
		1	**6V-9005**	1	ELBOW (45-DEG)	
		1	**7M-8485**	1	SEAL-O-RING	
	44	1	*148-8363*	1	ELBOW AS	
		1	**3K-0360**	1	SEAL-O-RING	
		1	**6V-8397**	1	SEAL-O-RING	
		1	**6V-9876**	1	ELBOW	
	45	2	*148-8365*	1	ELBOW AS	
		2	**3J-1907**	1	SEAL-O-RING	
		2	**6V-8398**	1	SEAL-O-RING	
		2	**8T-6876**	1	ELBOW (90-DEG)	
	46	2	*148-8385*	1	ELBOW AS	
		2	**3J-7354**	1	SEAL-O-RING	
		2	**4J-5477**	1	SEAL-O-RING	
		2	**6V-9000**	1	ELBOW (45-DEG)	
	47	2	*148-8387*	1	ELBOW AS	
	48	2	*148-8407*	2	PLUG AS	
	49	2	*148-8416*	1	REDUCER AS	
		2	**6V-8398**	1	SEAL-O-RING	
		2	**6V-8939**	1	REDUCER	
	50	1	*148-8434*	1	TEE AS	
	51	2	*148-8441*	1	TEE AS	
	52	1	*150-4043*	2	CONNECTOR AS	
					(EACH INCLUDES)	
		1	**3J-1907**	1	SEAL-O-RING	
		1	**6V-8398**	1	SEAL-O-RING	
		1	**6V-9873**	1	CONNECTOR (SPL)	
	53	1	*153-6237*	1	ELBOW AS	
		1	**3D-2824**	1	SEAL-O-RING	
		1	**6V-9004**	1	ELBOW (45-DEG)	
		1	**6V-9746**	1	SEAL-O-RING	
	54	1	*153-6243*	1	TEE AS	
		1	**2S-4078**	1	SEAL-O-RING	
		1	**5K-9090**	1	SEAL-O-RING	
		1	**6V-9746**	1	SEAL-O-RING	
		1	**8T-1120**	1	TEE-O-RING PORT	
	55	2	*164-4180*	1	PLUG AS	
		2	**7M-8485**	1	SEAL-O-RING	
		2	**9S-4181**	1	PLUG-O-RING	
	56	1	*164-5567*	2	COUPLER AS-QUICK DISCONNECT	
	57	2	*171-6723*	1	ELBOW AS	
		2	**6V-9746**	1	SEAL-O-RING	
		2	**8T-8899**	1	ELBOW (45-DEG)	
	58	1	**204-8000**	1	ANCHOR-TIE	
	59	1	**1P-3708**	1	SEAL-RECTANGULAR	
	60	2	**1P-4582**	2	FLANGE-HALF	
	61	1	**1P-4584**	2	FLANGE-HALF	
	62	1	**4J-0520**	1	SEAL-O-RING	
	63	2	**4J-0527**	1	SEAL-O-RING	
	64	1	**4P-7581**	1	CLIP (LADDER)	
	65	1	**6J-2680**	1	SEAL-O-RING	
	66	1	**6V-8400**	1	SEAL-O-RING	
M	67	1	**7X-2549**	6	BOLT (M12X1.75X100-MM)	
	68	1	**7X-7729**	2	WASHER (11X25X3-MM THK)	
	69	1	**8C-3206**	2	FLANGE-HALF	
	70	1,2	**8T-4121**	7	WASHER-HARD (11X21X2.5-MM THK)	
M	71	1	**8T-4136**	1	BOLT (M10X1.5X25-MM)	
M	72	2	**8T-4139**	4	BOLT (M12X1.75X30-MM)	
M	73	2	**8T-4183**	4	BOLT (M12X1.75X40-MM)	
M	74	1	**8T-4192**	4	BOLT (M12X1.75X25-MM)	

289-8806 **LINES GP-HYDRAULIC** ***(contd.)*** **i02885865**

NOTE	REF NO	GRAPHIC REF	PART NUMBER	QTY	PART NAME 1 2 3 4 5 6 (PRODUCT LEVEL)	SEE PAGE
M	75	1	**8T-4194**	4	BOLT (M12X1.75X50-MM)	
M	76	1	**8T-4195**	2	BOLT (M10X1.5X30-MM)	
M	77	1	**8T-4196**	4	BOLT (M10X1.5X35-MM)	
	78	1,2	**8T-4223**	22	WASHER-HARD (13.5X25.5X3-MM THK)	
M	79	2	**8T-5436**	2	BOLT (M10X1.5X130-MM)	
	80	2	*148-8411*	1	PLUG AS	
					(NOT REQUIRED WITH RIDE CONTROL)	
	81	1	**6V-9829**	1	CAP AS	
					(NOT REQUIRED WITH RIDE CONTROL)	
	82	1	**6V-9830**	1	CAP AS	
					(NOT REQUIRED WITH RIDE CONTROL)	
	83	2	*148-8411*	1	PLUG AS	
					(NOT REQUIRED WITH 5TH,6TH FUNCTION)	
	84	2	*148-8407*	1	PLUG AS	
					(NOT REQUIRED WITH QUICK COUPLER)	
	85	1	**6V-9832**	1	CAP AS	
					(NOT REQUIRED WITH QUICK COUPLER)	
	86	2	*148-8407*	1	PLUG AS	
					(NOT REQUIRED WITH DUAL MODE STEERING)	

I-REFER TO HYDRAULIC INFORMATION SYSTEM
M-METRIC PART
Y-SEPARATE ILLUSTRATION

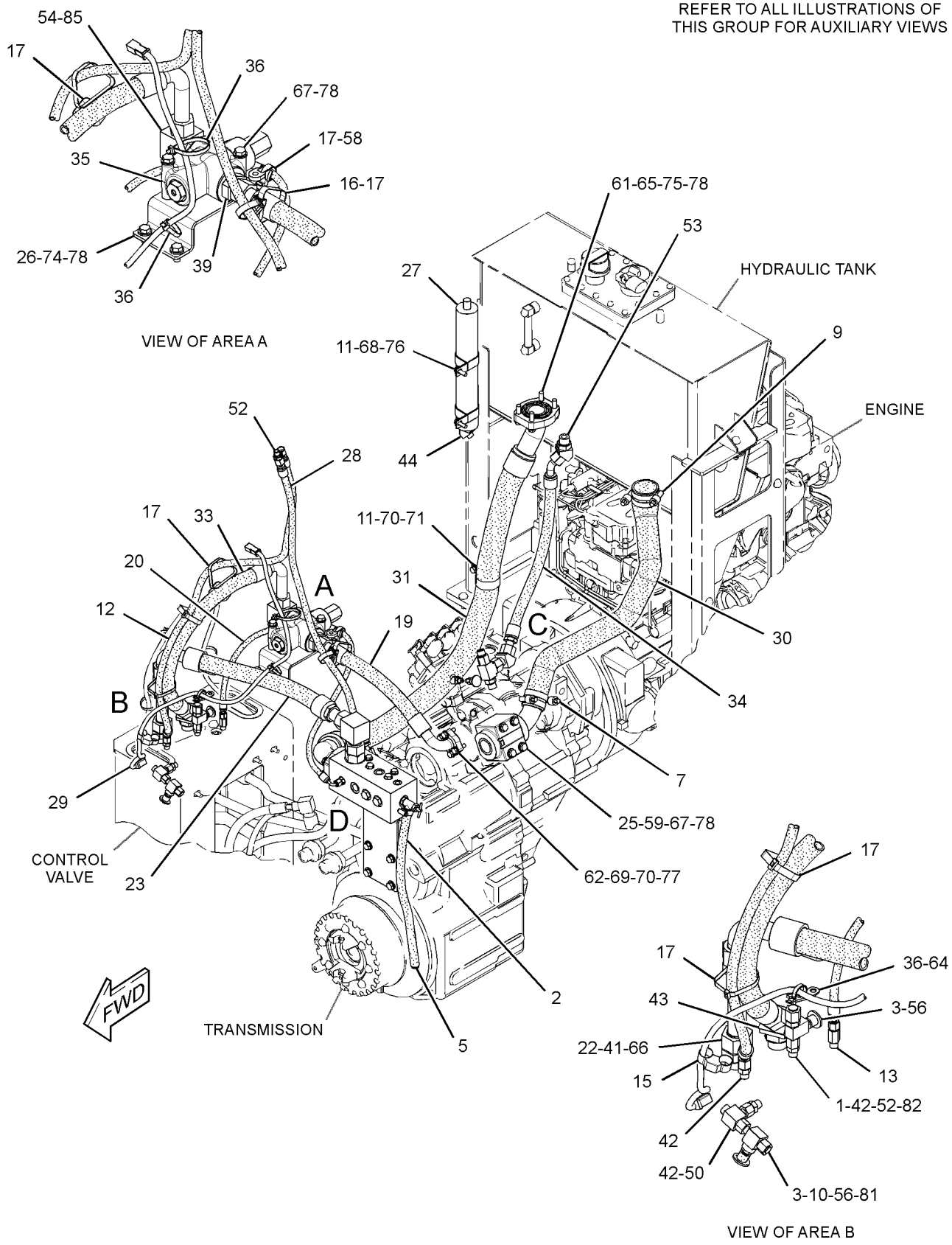

GRAPHIC #1

g01443153

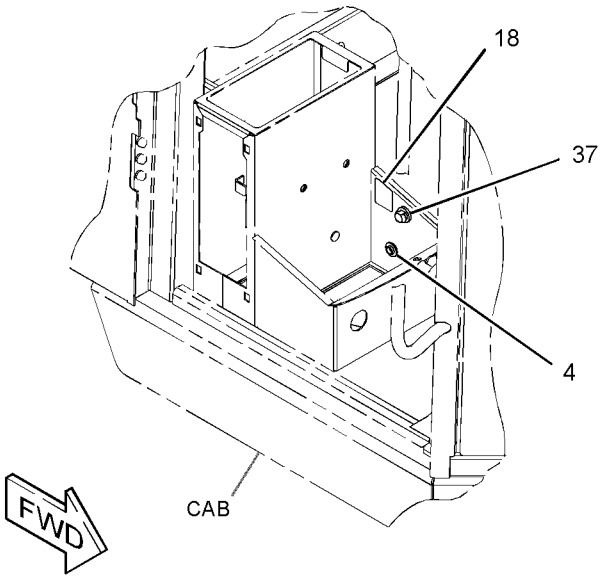

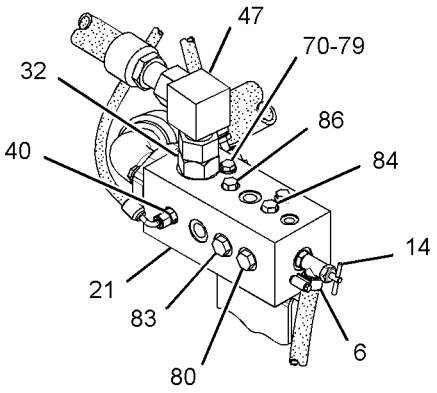

VIEW OF AREA D

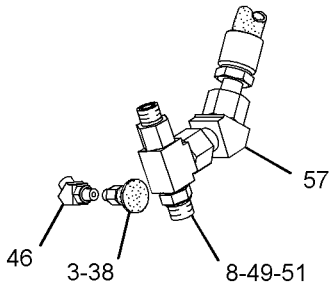

VIEW OF AREA C

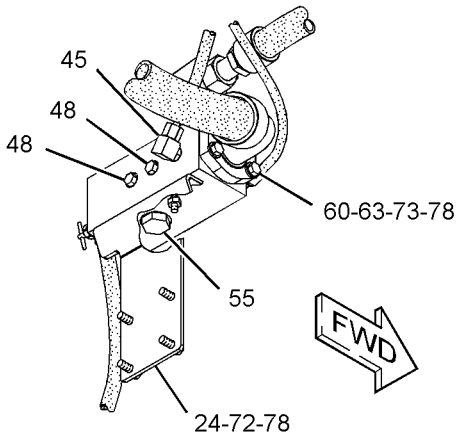

GRAPHIC #2 **<END>** g01443154

HYDRAULIC SYSTEM

289-8935 LINES GP-HYDRAULIC

S/N: BYD1-UP

PART OF 289-8863 HYDRAULIC AR

SMCS-5057 **i02811893**

NOTE	REF NO	GRAPHIC REF	PART NUMBER	QTY	PART NAME 1 2 3 4 5 6 (PRODUCT LEVEL)	SEE PAGE
E	1	2	**5P-0743**		HOSE (47-CM)	
	2	2	**6V-0852**	1	CAP-DUST	
	3	2	**8C-5225**	1	PLUG-SEAL	
	4	2	**8T-0154**	1	CLAMP-HOSE	
	5	1	**118-0973**	1	TUBE AS	
I	6	1	**135-7902**	1	HOSE AS	
	7	1,2	**144-0367**	4	CLAMP-HOSE	
	8	1	**151-9826**	1	PLATE AS	
M		1	**8T-3490**	2	NUT-WELD (M10X1.5-THD)	
	9	1	**156-4130**	1	CLIP-TUBE	
	10	2	*162-8264*	1	TEE AS	
		2	**6V-8398**	1	SEAL-O-RING	
		2	**081-5645**	1	TEE	
	11	2	*164-5567*	1	COUPLER AS-QUICK DISCONNECT	
		2	**3J-1907**	1	SEAL-O-RING	
		2	**6V-3965**	1	COUPLER-QUICK DISCONNECT	
	12	2	*165-2273*	1	VALVE AS-SHUTOFF	
		2	**3K-0360**	1	SEAL-O-RING	
		2	**6V-7238**	1	VALVE-SHUTOFF	
	13	2	**209-0787**	1	MANIFOLD	
I	14	2	**212-4653**	1	HOSE AS	
	15	2	**212-7770**	1	TUBE AS	
I	16	1	**214-3279**	1	HOSE AS	
	17	1	**262-5657**	1	HOSE	
	18	1	*268-1641*	1	CONNECTOR AS	
		1	**2M-9780**	1	SEAL-O-RING	
		1	**6V-9746**	1	SEAL-O-RING	
		1	**268-1640**	1	CONNECTOR	
I	19	1	**300-9103**	1	HOSE AS	
	20	1,2	*148-8323*	4	CONNECTOR AS	
					(EACH INCLUDES)	
		1,2	**2S-4078**	1	SEAL-O-RING	
		1,2	**5K-9090**	1	SEAL-O-RING	
		1,2	**6V-9875**	1	CONNECTOR	
	21	1	*148-8418*	1	REDUCER AS	
		1	**6V-8398**	1	SEAL-O-RING	
		1	**6V-8942**	1	REDUCER-O-RING	
	22	1	*150-4033*	1	TEE AS	
		1	**6V-9746**	2	SEAL-O-RING	
		1	**6V-9846**	1	TEE-SWIVEL	
	23	2	*150-4043*	1	CONNECTOR AS	
		2	**3J-1907**	1	SEAL-O-RING	
		2	**6V-8398**	1	SEAL-O-RING	
		2	**6V-9873**	1	CONNECTOR	
	24	1	*153-6237*	1	ELBOW AS	
		1	**3D-2824**	1	SEAL-O-RING	
		1	**6V-9004**	1	ELBOW	
		1	**6V-9746**	1	SEAL-O-RING	
	25	2	*164-5578*	1	TEE AS	
		2	**3D-2824**	1	SEAL-O-RING	
		2	**6V-9175**	1	TEE (FACE SEAL)	
		2	**6V-9746**	1	SEAL-O-RING	
		2	**7J-9108**	1	SEAL-O-RING	
	26	2	**1P-3703**	1	SEAL-RECTANGULAR	
	27	2	**1P-4582**	2	FLANGE-HALF	
	28	1	**1P-4584**	2	FLANGE-HALF	

289-8935 **LINES GP-HYDRAULIC** *(contd.)* **i02811893**

NOTE	REF NO	GRAPHIC REF	PART NUMBER	QTY	PART NAME 1 2 3 4 5 6 (PRODUCT LEVEL)	SEE PAGE
	29	2	**4D-7388**	1	CLIP	
	30	2	**4J-0527**	1	SEAL-O-RING	
	31	2	**5P-1935**	1	SEAL	
	32	1	**6J-2680**	1	SEAL-O-RING	
	33	2	**6V-9830**	1	CAP AS	
	34	1,2	**7X-7729**	6	WASHER (11X25X3-MM THK)	
	35	1,2	**8T-4121**	5	WASHER-HARD (11X21X2.5-MM THK)	
M	36	1	**8T-4136**	1	BOLT (M10X1.5X25-MM)	
M	37	2	**8T-4139**	4	BOLT (M12X1.75X30-MM)	
M	38	1	**8T-4182**	2	BOLT (M10X1.5X45-MM)	
M	39	2	**8T-4185**	4	BOLT (M10X1.5X50-MM)	
M	40	1	**8T-4194**	4	BOLT (M12X1.75X50-MM)	
M	41	2	**8T-4196**	4	BOLT (M10X1.5X35-MM)	
	42	1,2	**8T-4223**	12	WASHER-HARD (13.5X25.5X3-MM THK)	
M	43	2	**8T-5041**	4	BOLT (M12X1.75X120-MM)	
	44	1	**9X-6580**	1	NUT (1-3/16-12-THD)	

E-ORDER BY THE CENTIMETER
I-REFER TO HYDRAULIC INFORMATION SYSTEM
M-METRIC PART

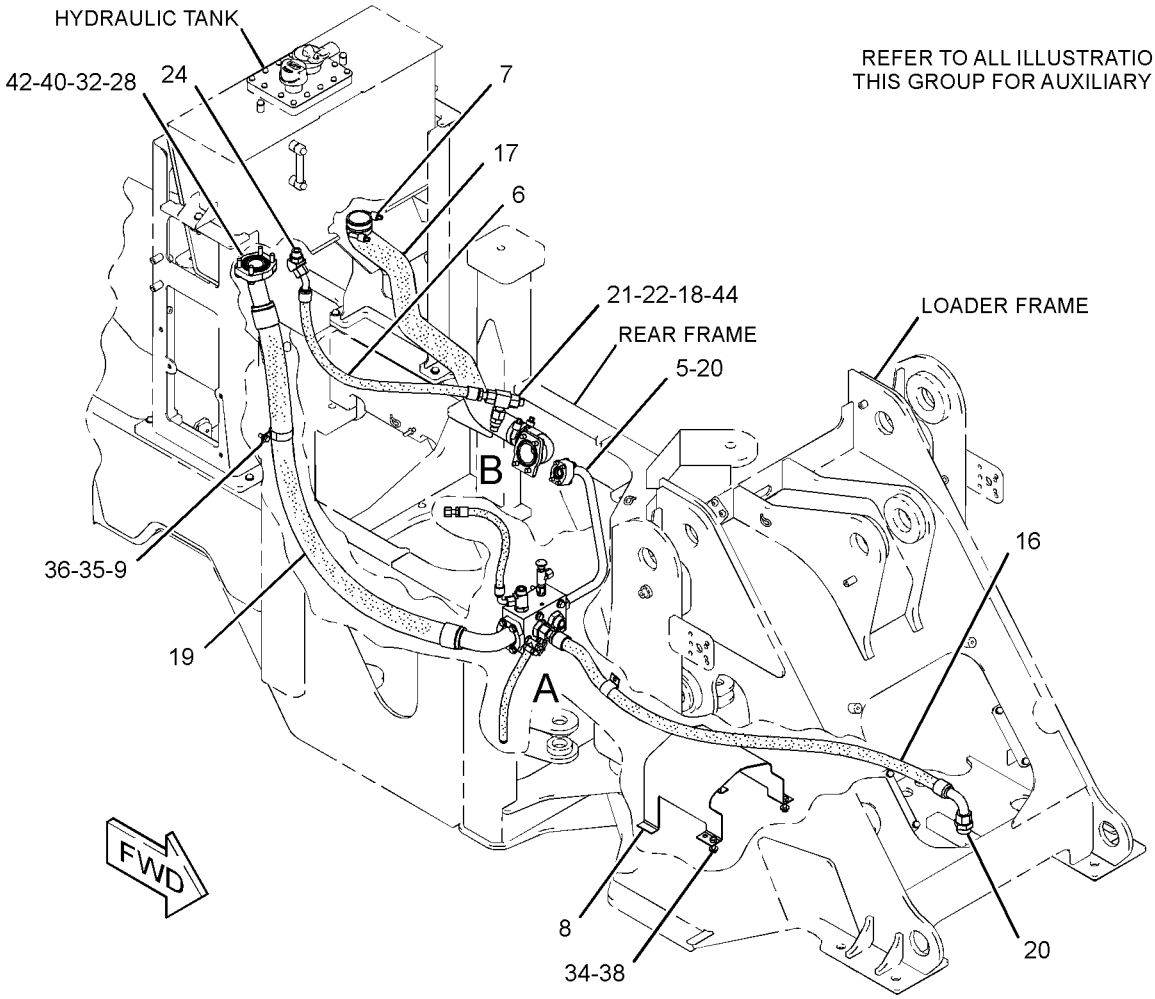

GRAPHIC #1 g01405398

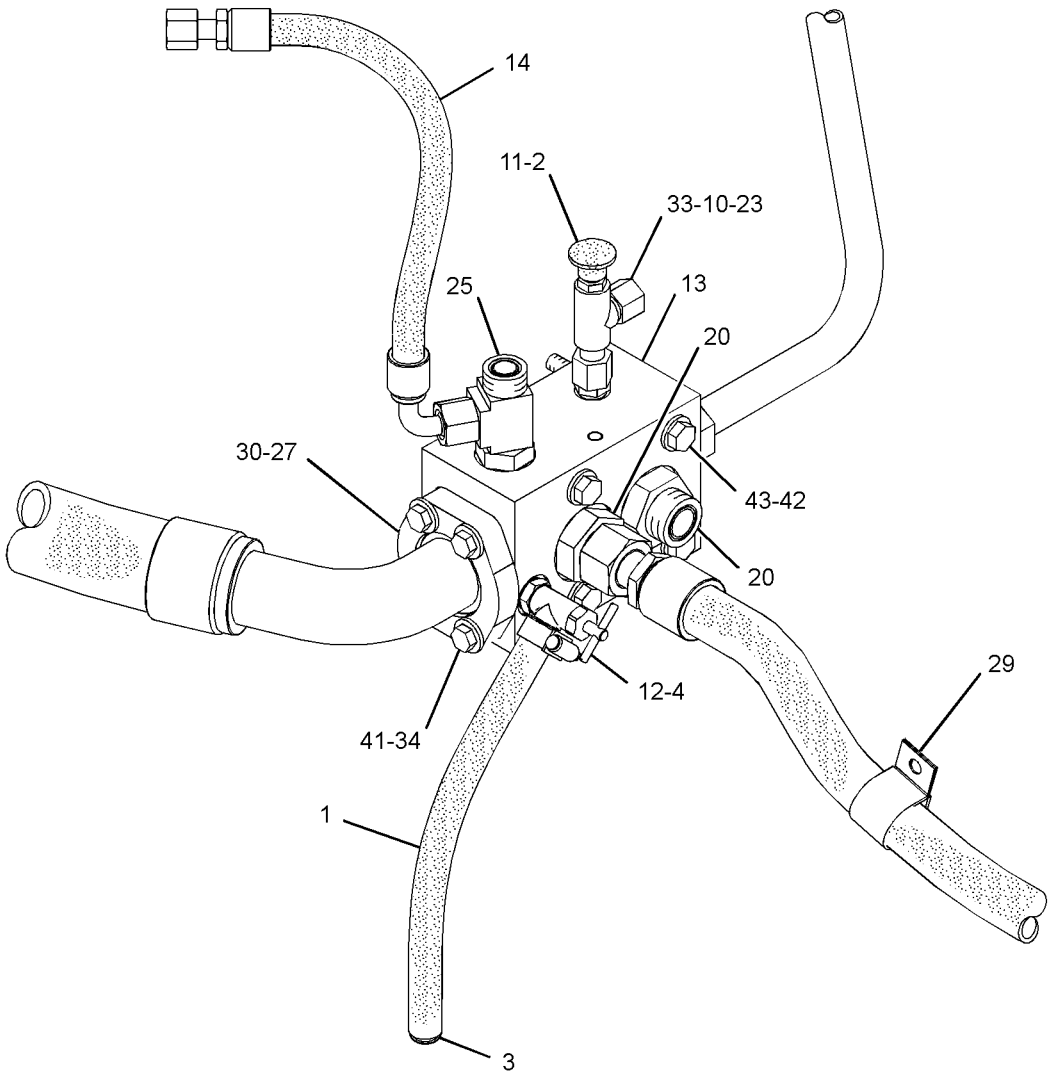

VIEW OF AREA A

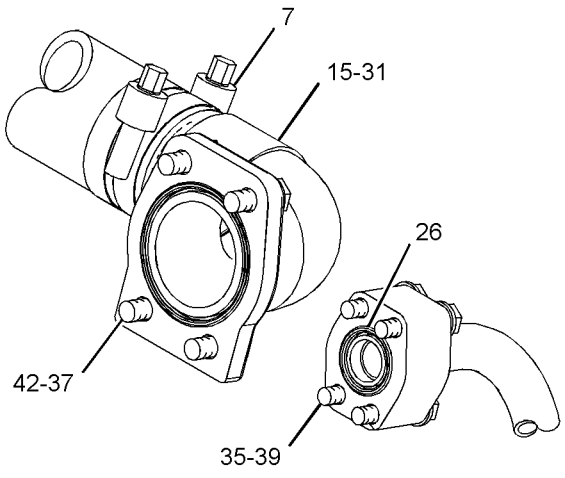

VIEW OF AREA B

GRAPHIC #2 **<END>** g01405505

HYDRAULIC SYSTEM

289-8918 LINES GP-HYDRAULIC FAN

S/N: BYD1-UP; FTD1-UP
PART OF 289-8990, 289-8993 AXLE AR-OSCILLATING
AN ATTACHMENT

SMCS-1386, 1387, 5057 **i02847547**

NOTE	REF NO	GRAPHIC REF	PART NUMBER	QTY	PART NAME 1 2 3 4 5 6 (PRODUCT LEVEL)	SEE PAGE
	1	1	**130-9984**	3	CLIP (LOOP)	
	2	1	**145-8983**	1	VALVE GP-CHECK (HYDRAULIC OIL COOLER BYPASS)	
		1	**6V-9746**	1	SEAL-O-RING	
	3	1	*148-8373*	1	ELBOW AS	
		1	**6V-8400**	1	SEAL-O-RING	
		1	**7M-8485**	1	SEAL-O-RING	
		1	**8C-3364**	1	ELBOW (90-DEG)	
	4	1	*172-5277*	1	TEE AS	
		1	**3D-2824**	1	SEAL-O-RING	
		1	**6V-9746**	1	SEAL-O-RING	
		1	**8T-8901**	1	TEE-O-RING PORT	
	5	1	**200-6345**	1	MOUNT (DUAL SWIVEL)	
	6	1	**204-2281**	4	STRAP-TIE	
I	7	1	**262-5694**	1	HOSE AS	
I	8	1	**262-5695**	1	HOSE AS	
I	9	1	**292-9688**	1	HOSE AS	
I	10	1	**292-9698**	1	HOSE AS	
I	11	1	**297-4888**	1	HOSE AS	
	12	1	**300-4148**	1	PLATE	
I	13	1	**302-6378**	1	HOSE AS	
I	14	1	**304-5736**	1	HOSE AS	
	15	1	**312-4106**	1	BRACKET AS	
M		1	**8T-3490**	1	NUT-WELD (M10X1.5-THD)	
I	16	1	**312-4696**	1	HOSE AS	
	17	1	**7K-1181**	3	STRAP-CABLE	
	18	1	*148-8317*	1	CONNECTOR AS	
		1	**3D-2824**	1	SEAL-O-RING	
		1	**5K-9090**	1	SEAL-O-RING	
		1	**6V-8714**	1	CONNECTOR	
	19	1	*148-8325*	1	CONNECTOR AS	
		1	**3J-1907**	1	SEAL-O-RING	
		1	**4J-5477**	1	SEAL-O-RING	
		1	**6V-8641**	1	CONNECTOR (O-RING FACE SEAL)	
	20	1	*148-8351*	1	ELBOW AS	
		1	**4J-5477**	1	SEAL-O-RING	
		1	**6V-9849**	1	ELBOW (SWIVEL)	
	21	1	*148-8356*	1	ELBOW AS	
		1	**2S-4078**	1	SEAL-O-RING	
		1	**6V-9009**	1	ELBOW (90-DEG)	
		1	**6V-8400**	1	SEAL-O-RING	
	22	1	*155-3504*	1	ELBOW AS	
		1	**2M-9780**	1	SEAL-O-RING	
		1	**6V-9003**	1	ELBOW (SEAL)	
		1	**7J-9108**	1	SEAL-O-RING	
	23	1	*164-5641*	1	TEE AS	
		1	**128-7625**	1	TEE	
		1	**3D-2824**	1	SEAL-O-RING	
		1	**5K-9090**	1	SEAL-O-RING	
		1	**6V-9746**	1	SEAL-O-RING	
	24	1	*164-6860*	1	TEE AS	
		1	**6V-9350**	1	TEE-BULKHEAD	
		1	**7J-9108**	3	SEAL-O-RING	
	25	1	**4D-7388**	3	CLIP	
	26	1	**5P-7468**	1	CLIP (SLOT)	
	27	1	**5P-7469**	1	CLIP (TAB)	

289-8918 **LINES GP-HYDRAULIC FAN** *(contd.)* **i02847547**

NOTE	REF NO	GRAPHIC REF	PART NUMBER	QTY	PART NAME 1 2 3 4 5 6 (PRODUCT LEVEL)	SEE PAGE
	28	1	**5P-8444**	1	GROMMET	
	29	1	**6V-1889**	3	CLIP	
	30	1	**6V-9170**	1	NUT-BULKHEAD (1-14-THD)	
	31	1	**6V-9832**	1	CAP AS	
	32	1	**7X-7729**	1	WASHER (11X25X3-MM THK)	
	33	1	**8C-3174**	1	GROMMET	
	34	1	**8M-2770**	2	CLIP	
	35	1	**8T-4121**	16	WASHER-HARD (11X21X2.5-MM THK)	
M	36	1	**8T-4136**	5	BOLT (M10X1.5X25-MM)	
M	37	1	**8T-4137**	7	BOLT (M10X1.5X20-MM)	
M	38	1	**8T-4186**	1	BOLT (M10X1.5X40-MM)	
M	39	1	**8T-4195**	2	BOLT (M10X1.5X30-MM)	
M	40	1	**8T-4196**	2	BOLT (M10X1.5X35-MM)	
	41	1	**9C-5344**	1	SPACER (10.5X20X18-MM THK)	
	42	1	**9M-4972**	1	CLIP	

I-REFER TO HYDRAULIC INFORMATION SYSTEM
M-METRIC PART

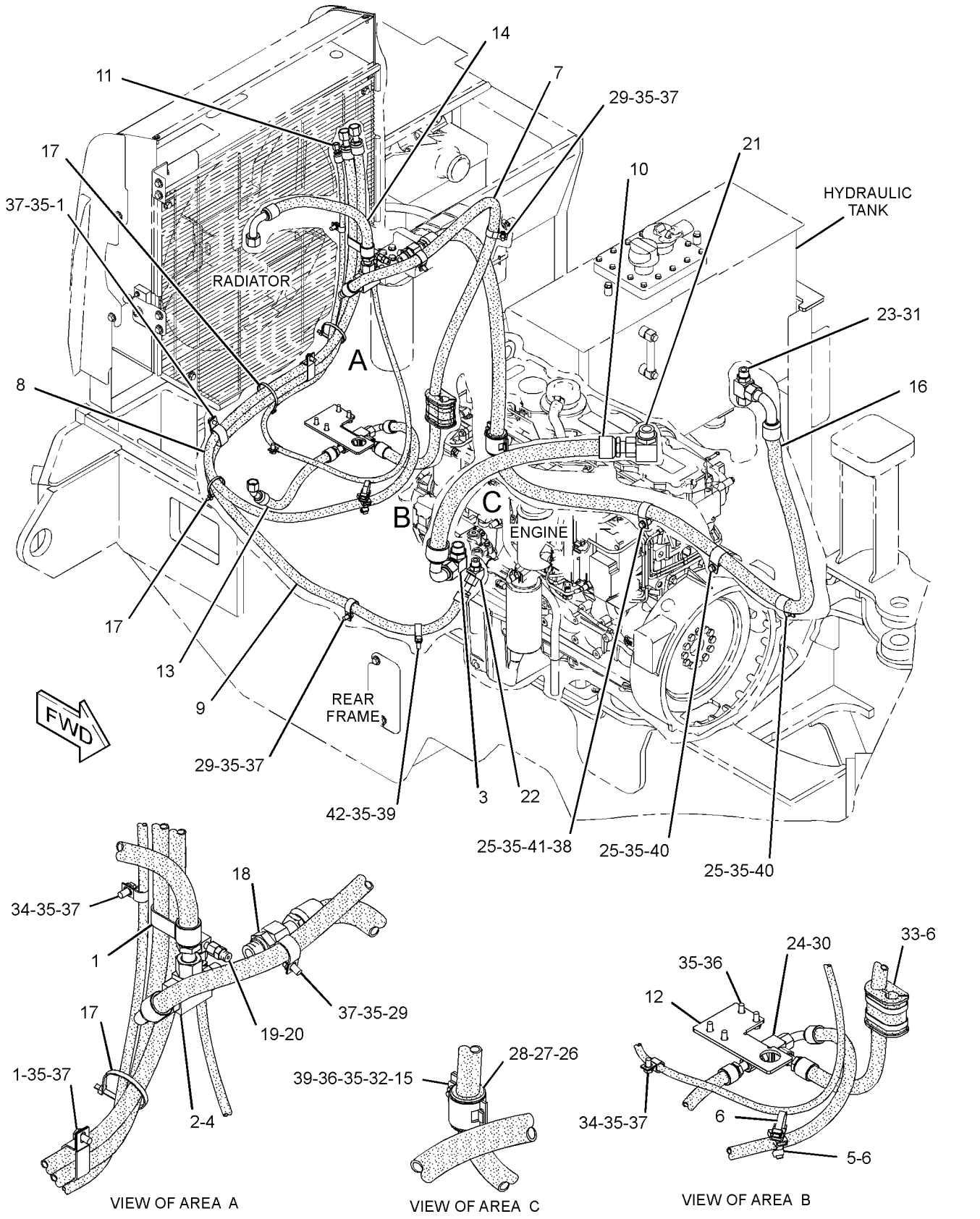

GRAPHIC #1

<END>

g01414722

290-7200 LINES GP-HYDRAULIC FAN–STANDARD

S/N: BYD1-UP

PART OF 289-8963 MOTOR AR-HYDRAULIC FAN

AN ATTACHMENT

SMCS-1386, 1387, 5057 **i02814253**

NOTE	REF NO	GRAPHIC REF	PART NUMBER	QTY	PART NAME 1 2 3 4 5 6 (PRODUCT LEVEL)	SEE PAGE
I	1	1	**109-5369**	1	HOSE AS	
	2	1	**130-9984**	2	CLIP	
	3	1	**200-6345**	2	MOUNT (DUAL SWIVEL)	
	4	1	**204-2281**	4	STRAP-TIE	
I	5	1	**293-2462**	1	HOSE AS	
I	6	1	**293-2463**	1	HOSE AS	
	7	1	*148-8316*	1	CONNECTOR AS	
		1	**3J-7354**	1	SEAL-O-RING	
		1	**4J-5477**	1	SEAL-O-RING	
		1	**6V-8647**	1	CONNECTOR	
	8	1	*148-8351*	1	ELBOW AS	
		1	**4J-5477**	1	SEAL-O-RING	
		1	**6V-9849**	1	ELBOW	
	9	1	*148-8382*	1	ELBOW AS	
		1	**3D-2824**	1	SEAL-O-RING	
		1	**7J-9108**	1	SEAL-O-RING	
		1	**8T-0404**	1	ELBOW	
	10	1	*148-8384*	1	ELBOW AS	
		1	**4J-5477**	2	SEAL-O-RING	
		1	**6V-8979**	1	ELBOW	
	11	1	*148-8390*	1	ELBOW AS	
		1	**2M-9780**	1	SEAL-O-RING	
		1	**6V-8626**	1	ELBOW	
		1	**7J-9108**	1	SEAL-O-RING	
	12	1	*169-7404*	2	ELBOW AS	
					(EACH INCLUDES)	
		1	**6V-8982**	1	ELBOW	
		1	**7J-9108**	2	SEAL-O-RING	
	13	1	**2P-1279**	1	LOCKNUT (9/16-18-THD)	
	14	1	**6V-9170**	2	NUT-BULKHEAD (1-14-THD)	
	15	1	**8T-4121**	2	WASHER-HARD (11X21X2.5-MM THK)	
M	16	1	**8T-4136**	2	BOLT (M10X1.5X25-MM)	

I-REFER TO HYDRAULIC INFORMATION SYSTEM
M-METRIC PART

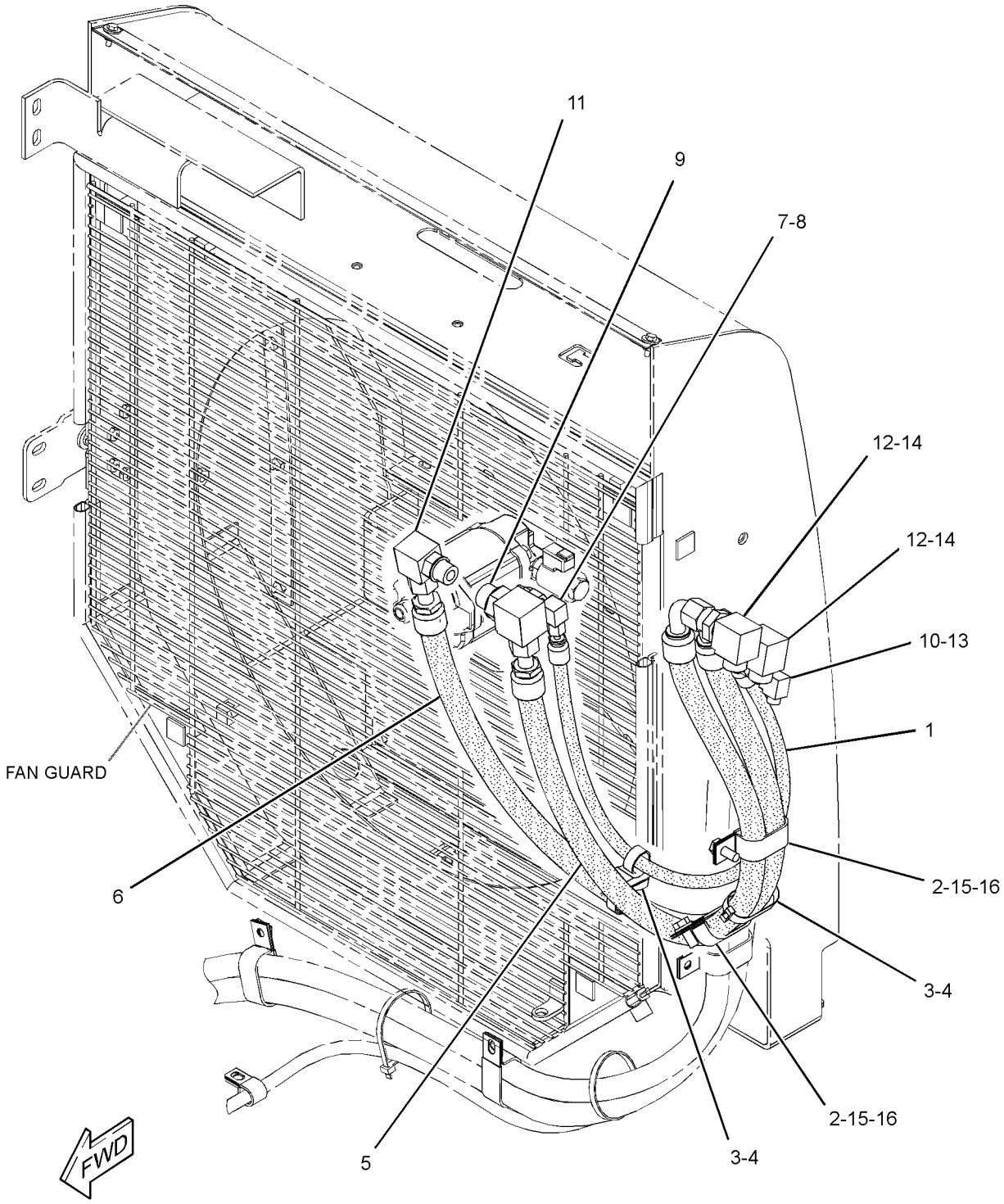

GRAPHIC #1 **<END>** g01409514

290-7201 LINES GP-HYDRAULIC FAN–REVERSING

S/N: BYD1-UP

PART OF 289-8965 MOTOR AR-HYDRAULIC FAN

AN ATTACHMENT

SMCS-1386, 1387, 5057 **i02853788**

NOTE	REF NO	GRAPHIC REF	PART NUMBER	QTY	PART NAME 1 2 3 4 5 6 (PRODUCT LEVEL)	SEE PAGE
	1	1	**106-8704**	1	SUPPRESSOR AS-ARC	
	2	1	**158-5089**	1	RELAY AS (24-VOLT) (REVERSING FAN)	
I	3	1	**180-6567**	1	HOSE AS	
	4	1	**185-2765**	1	SWITCH AS-ROCKER (REVERSING FAN ON, OFF)	
		1	**111-7899**	1	GASKET	
I	5	1	**202-8928**	1	HOSE AS	
	6	1	**204-2281**	2	STRAP-TIE	
I	7	1	**293-2464**	1	HOSE AS	
	8	1	**7K-1181**	1	STRAP-CABLE	
	9	1	*148-8316*	1	CONNECTOR AS	
		1	**3J-7354**	1	SEAL-O-RING	
		1	**4J-5477**	1	SEAL-O-RING	
		1	**6V-8647**	1	CONNECTOR (SEAL)	
	10	1	*148-8341*	1	CONNECTOR AS	
		1	**3D-2824**	1	SEAL-O-RING	
		1	**6V-8713**	1	CONNECTOR (SEAL)	
		1	**7J-9108**	1	SEAL-O-RING	
	11	1	*148-8351*	1	ELBOW AS	
		1	**4J-5477**	1	SEAL-O-RING	
		1	**6V-9849**	1	ELBOW (SWIVEL)	
	12	1	*148-8384*	1	ELBOW AS	
		1	**4J-5477**	2	SEAL-O-RING	
		1	**6V-8979**	1	ELBOW	
	13	1	*148-8390*	1	ELBOW AS	
		1	**2M-9780**	1	SEAL-O-RING	
		1	**6V-8626**	1	ELBOW (FACE SEAL)	
		1	**7J-9108**	1	SEAL-O-RING	
	14	1	*148-8393*	1	ELBOW AS	
		1	**6V-9852**	1	ELBOW	
		1	**7J-9108**	1	SEAL-O-RING	
	15	1	*169-7404*	2	ELBOW AS	
					(EACH INCLUDES)	
		1	**6V-8982**	1	ELBOW	
		1	**7J-9108**	2	SEAL-O-RING	
	16	1	**2P-1279**	1	LOCKNUT (9/16-18-THD)	
	17	1	**6V-9170**	2	NUT-BULKHEAD (1-14-THD)	

I-REFER TO HYDRAULIC INFORMATION SYSTEM

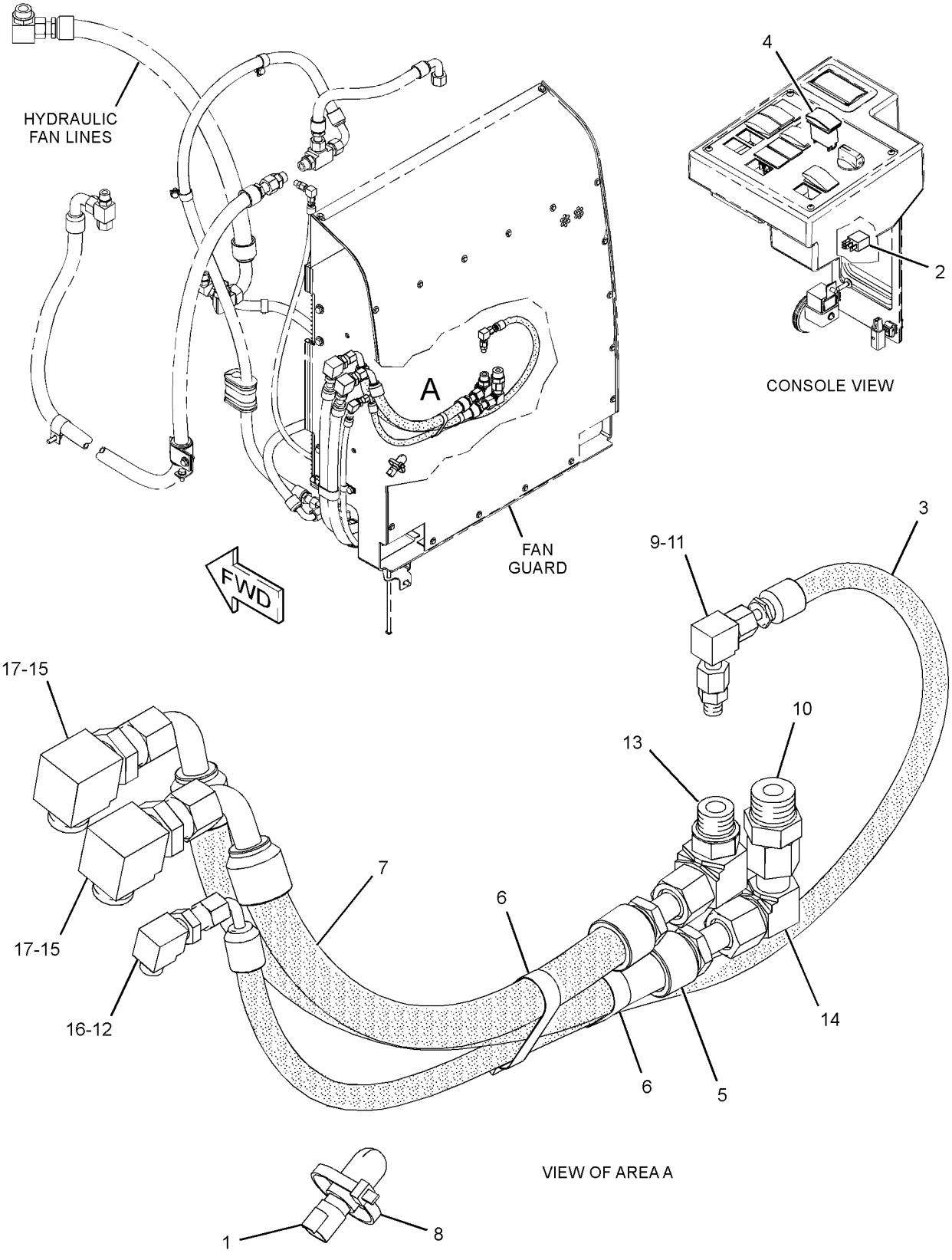

GRAPHIC #1 **<END>** g01409376

HYDRAULIC SYSTEM

118-0861 LINES GP-LIFT CYLINDER

S/N: BYD1-UP

PART OF 289-8863 HYDRAULIC AR

SMCS-5057, 5102 **i02567618**

NOTE	REF NO	GRAPHIC REF	PART NUMBER	QTY	PART NAME 1 2 3 4 5 6 (PRODUCT LEVEL)	SEE PAGE
	1	1	**1P-3703**	2	SEAL-RECTANGULAR	
	2	1	**4V-0611**	4	CLAMP	
	3	1	**4V-0612**	2	PLATE	
	4	1	**9C-6460**	1	ELBOW (RH)	
	5	1	**9C-6461**	1	ELBOW (LH)	
I	6	1	**9C-6783**	2	HOSE AS	
Y	7	1	**112-1817**	1	VALVE GP-MANUAL (LOWERING CONTROL)	656
	8	1	**122-6177**	1	PLATE	
	9	1	**122-6210**	1	TUBE AS	
	10	1	**122-6211**	1	TUBE AS	
	11	1	**122-6213**	1	TUBE AS	
	12	1	**122-6214**	1	TUBE AS	
	13	1	**122-6215**	1	TUBE AS	
	14	1	**122-6216**	1	TUBE AS	
	15	1	**122-6218**	1	TUBE AS	
I	16	1	**122-6220**	2	HOSE AS	
	17	1	**149-4569**	1	TUBE AS	
I	18	1	**221-9774**	1	HOSE AS	
	19	1	*148-8327*	2	CONNECTOR AS	
					(EACH INCLUDES)	
		1	**3D-2824**	1	SEAL-O-RING	
		1	**6V-8637**	1	CONNECTOR	
		1	**6V-9746**	1	SEAL-O-RING	
	20	1	*148-8335*	2	CONNECTOR AS	
					(EACH INCLUDES)	
		1	**5K-9090**	1	SEAL-O-RING	
		1	**6V-8635**	1	CONNECTOR	
		1	**7M-8485**	1	SEAL-O-RING	
	21	1	*148-8336*	1	CONNECTOR AS	
		1	**3J-1907**	1	SEAL-O-RING	
		1	**6V-8397**	1	SEAL-O-RING	
		1	**6V-8636**	1	CONNECTOR	
C	22	1	*148-8439*	1	TEE AS	
		1	**3J-1907**	1	SEAL-O-RING	
		1	**6V-8397**	2	SEAL-O-RING	
		1	**6V-8774**	1	TEE	
	23	1	*148-8437*	2	TEE AS	
					(EACH INCLUDES)	
		1	**5K-9090**	1	SEAL-O-RING	
		1	**6V-9746**	2	SEAL-O-RING	
		1	**8T-1012**	1	TEE-FACE SEAL	
	24	1	*148-8449*	2	TEE AS-SWIVEL	
					(EACH INCLUDES)	
		1	**6V-9746**	2	SEAL-O-RING	
		1	**6V-9839**	1	TEE-SWIVEL	
	25	1	**4B-4274**	4	WASHER (5.5X13X1.2-MM THK)	
	26	1	**4J-5267**	4	SEAL-O-RING	
	27	1	**5R-0939**	2	CLIP (TAB)	
	28	1	**5R-0940**	2	CLIP (SLOT)	
	29	1	**6V-8397**	1	SEAL-O-RING	
M	30	1	**6V-9189**	2	LOCKNUT (M8X1.25-THD)	
	31	1	**6V-9746**	4	SEAL-O-RING	
	32	1	**6V-9832**	2	CAP AS	
	33	1	**7X-7729**	2	WASHER (11X25X3-MM THK)	
M	34	1	**116-6952**	4	BOLT (M4X0.7X10-MM)	
	35	1	**8C-3205**	8	FLANGE-HALF	

118-0861 **LINES GP-LIFT CYLINDER** *(contd.)* **i02567618**

NOTE	REF NO	GRAPHIC REF	PART NUMBER	QTY	PART NAME 1 2 3 4 5 6 (PRODUCT LEVEL)	SEE PAGE
	36	1	**8T-4121**	16	WASHER-HARD (11X21X2.5-MM THK)	
M	37	1	**8T-4137**	2	BOLT (M10X1.5X20-MM)	
M	38	1	**8T-4182**	4	BOLT (M10X1.5X45-MM)	
M	39	1	**8T-4196**	16	BOLT (M10X1.5X35-MM)	
	40	1	**8T-4224**	4	WASHER-HARD (8.8X16X2-MM THK)	
M	41	1	**8T-5005**	4	BOLT (M10X1.5X70-MM)	
M	42	1	**8T-6869**	2	BOLT (M8X1.25X60-MM)	
C	43	1	**6V-9829**	1	CAP AS	

C-CHANGE FROM PREVIOUS TYPE
I-REFER TO HYDRAULIC INFORMATION SYSTEM
M-METRIC PART
Y-SEPARATE ILLUSTRATION

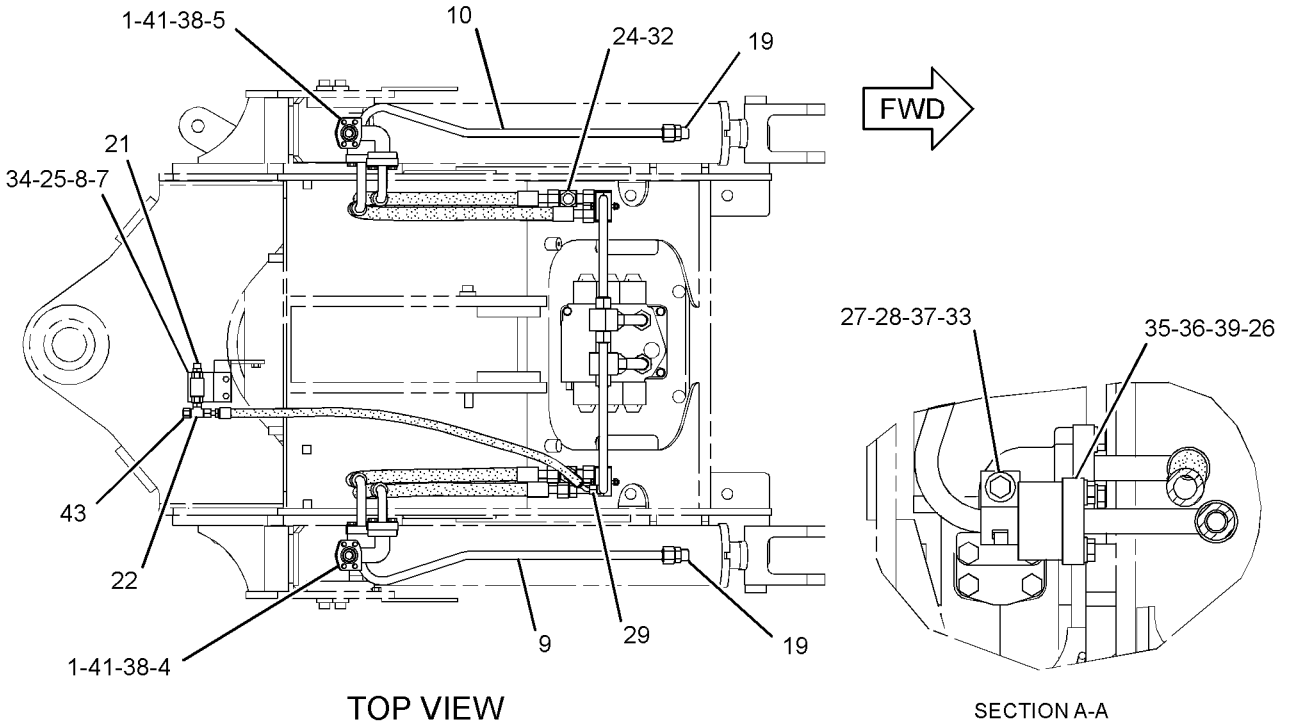

GRAPHIC #1 **<END>** g01279021

HYDRAULIC SYSTEM

290-6476 LINES GP-LIFT CYLINDER

S/N: FTD1-UP

PART OF 289-8843, 289-8883 HYDRAULIC AR

SMCS-5057, 5102 **i02832219**

NOTE	REF NO	GRAPHIC REF	PART NUMBER	QTY	PART NAME 1 2 3 4 5 6 (PRODUCT LEVEL)	SEE PAGE
	1	1	**4I-9522**	2	BAND-MARKER (YELLOW, L2)	
	2	1	**4I-9526**	2	BAND-MARKER (WHITE, R2)	
	3	1	**5P-3860**	2	CLAMP-HOSE	
	4	1	**9R-9572**	2	BLOCK	
I	5	1	**185-9562**	2	HOSE AS	
	6	2	**191-9783**	1	VALVE GP-MANUAL (LOWERING CONTROL)	
	7	1	**204-2281**	2	STRAP-TIE	
I	8	1	**243-6221**	2	HOSE AS	
I	9	1	**243-6521**	2	HOSE AS	
I	10	1	**244-1434**	1	HOSE AS	
	11	1	**245-4885**	1	TUBE AS	
	12	1	**245-4886**	1	TUBE AS	
	13	2	**248-5238**	1	TUBE AS	
	14	2	**248-5239**	1	TUBE AS	
I	15	1	**248-6326**	1	HOSE AS	
	16	2	**261-0013**	1	BRACKET	
I	17	1	**261-0442**	2	HOSE AS	
	18	1	**293-6577**	1	PLATE AS	
	19	2	**295-1915**	1	BRACKET AS	
	20	1	*148-8325*	4	CONNECTOR AS	
					(EACH INCLUDES)	
		1	**3J-1907**	1	SEAL-O-RING	
		1	**4J-5477**	1	SEAL-O-RING	
		1	**6V-8641**	1	CONNECTOR	
	21	1	*148-8335*	2	CONNECTOR AS	
					(EACH INCLUDES)	
		1	**5K-9090**	1	SEAL-O-RING	
		1	**6V-8635**	1	CONNECTOR	
		1	**7M-8485**	1	SEAL-O-RING	
	22	2	*148-8336*	1	CONNECTOR AS	
		2	**3J-1907**	1	SEAL-O-RING	
		2	**6V-8397**	1	SEAL-O-RING	
		2	**6V-8636**	1	CONNECTOR	
	23	2	*148-8353*	1	ELBOW AS	
		2	**3J-1907**	1	SEAL-O-RING	
		2	**6V-8397**	1	SEAL-O-RING	
		2	**6V-9001**	1	ELBOW	
	24	1	*148-8378*	1	ELBOW AS	
		1	**3J-1907**	1	SEAL-O-RING	
		1	**6V-8397**	1	SEAL-O-RING	
		1	**6V-8724**	1	ELBOW	
M	25	2	**150-4086**	4	SCREW (M4X0.7X16-MM)	
	26	2	**4B-4274**	4	WASHER (5.5X13X1.2-MM THK)	
	27	1	**4J-5267**	2	SEAL-O-RING	
	28	1	**5K-9090**	4	SEAL-O-RING	
	29	2	**6V-7359**	4	GROMMET	
	30	2	**6V-8397**	1	SEAL-O-RING	
	31	1	**6V-9172**	2	NUT (1-7/16-12-THD)	
	32	1,2	**6V-9746**	4	SEAL-O-RING	
	33	1	**6V-9831**	2	CAP AS	
	34	2	**7G-5984**	2	CLIP (TAB)	
	35	2	**7G-5985**	2	CLIP (SLOT)	
	36	2	**7G-5986**	2	GROMMET	
	37	1,1	**7J-9108**	2	SEAL-O-RING	
	38	1	**7X-0606**	4	WASHER-HARD (37X60X3-MM THK)	
	39	1	**8C-3205**	4	FLANGE-HALF	

290-6476 **LINES GP-LIFT CYLINDER** *(contd.)* **i02832219**

NOTE	REF NO	GRAPHIC REF	PART NUMBER	QTY	PART NAME 1 2 3 4 5 6 (PRODUCT LEVEL)	SEE PAGE
	40	1	**8M-2773**	1	CLIP	
	41	2	**8T-1899**	4	CLIP (SLOT)	
	42	2	**8T-1900**	4	CLIP (TAB)	
	43	1,2	**8T-4121**	25	WASHER-HARD (11X21X2.5-MM THK)	
M	44	2	**8T-4133**	4	NUT (M10X1.5-THD)	
M	45	1,2	**8T-4136**	7	BOLT (M10X1.5X25-MM)	
M	46	2	**8T-4184**	4	BOLT (M12X1.75X45-MM)	
M	47	2	**8T-4195**	6	BOLT (M10X1.5X30-MM)	
M	48	1	**8T-4196**	8	BOLT (M10X1.5X35-MM)	
	49	2	**8T-4223**	4	WASHER-HARD (13.5X25.5X3-MM THK)	

I-REFER TO HYDRAULIC INFORMATION SYSTEM
M-METRIC PART

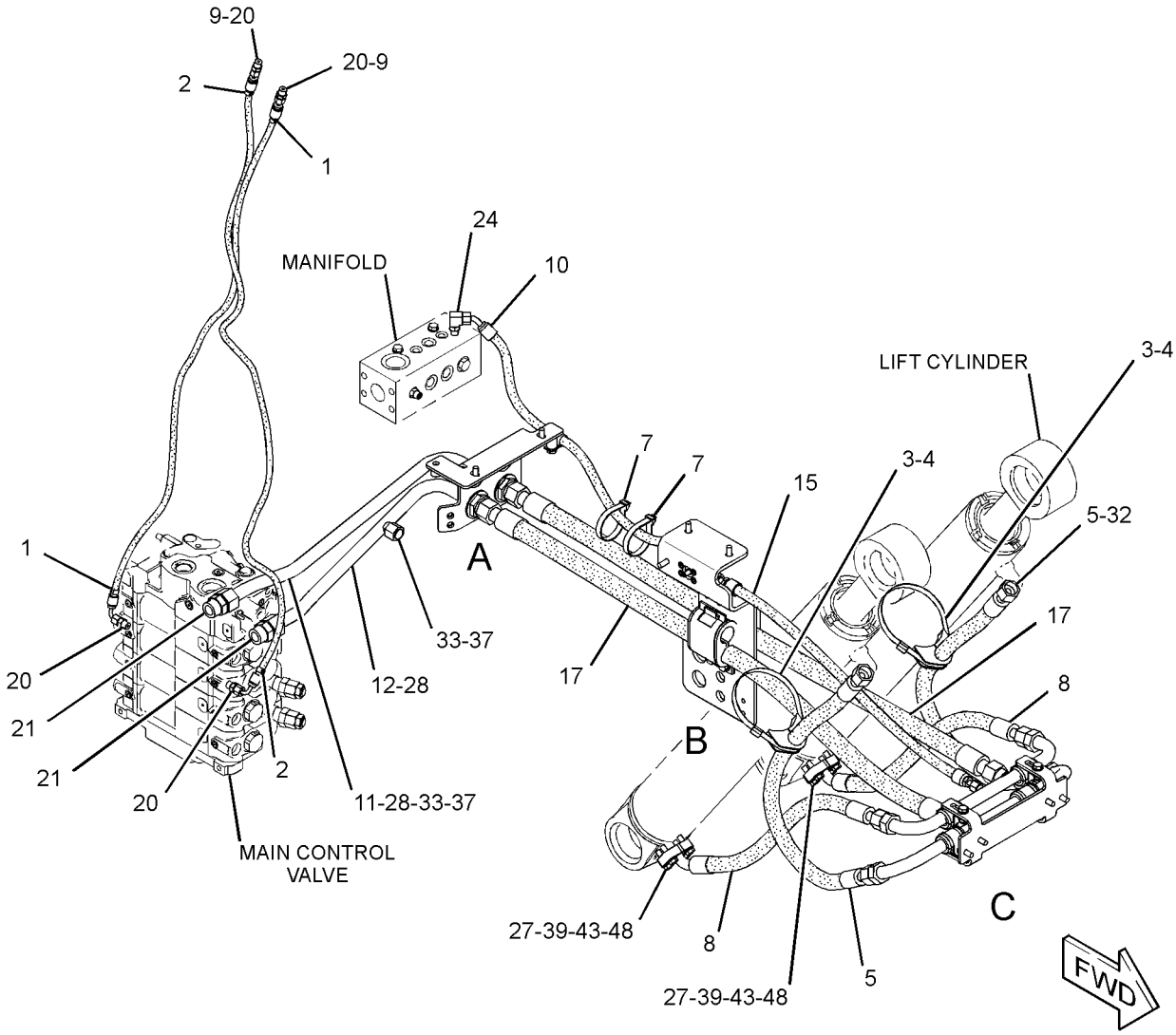

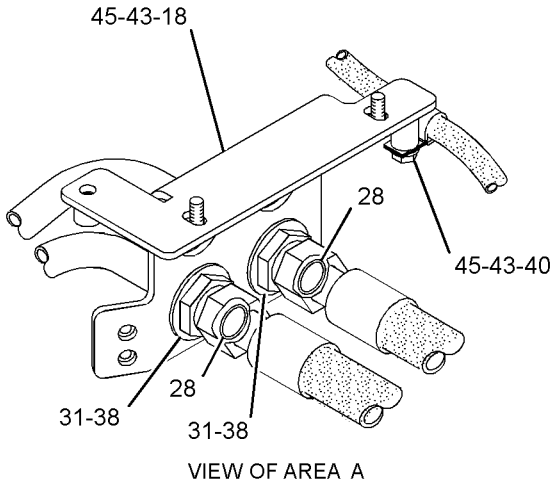

VIEW OF AREA A

REFER TO ALL ILLUSTRATIONS OF THIS GROUP FOR AUXILIARY VIEWS

GRAPHIC #1

g01416204

290-6476 **LINES GP-LIFT CYLINDER** *(contd.)* **i02832219**

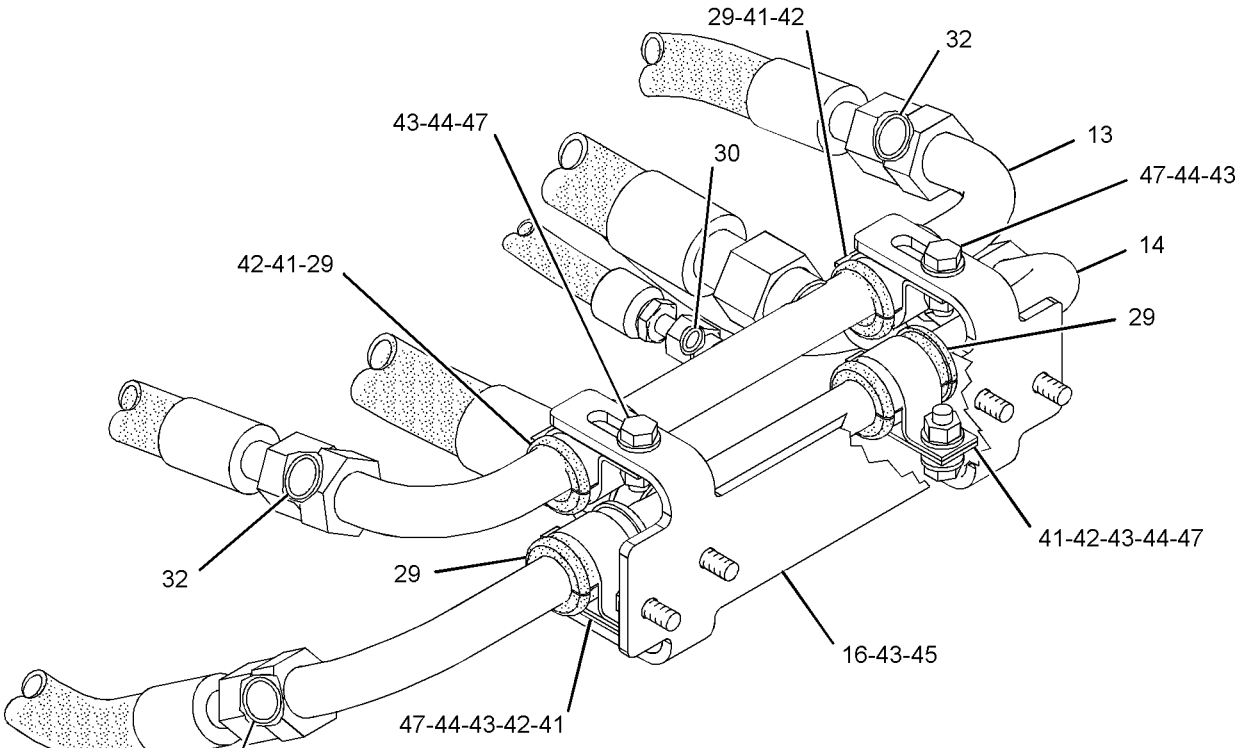

VIEW OF AREA C

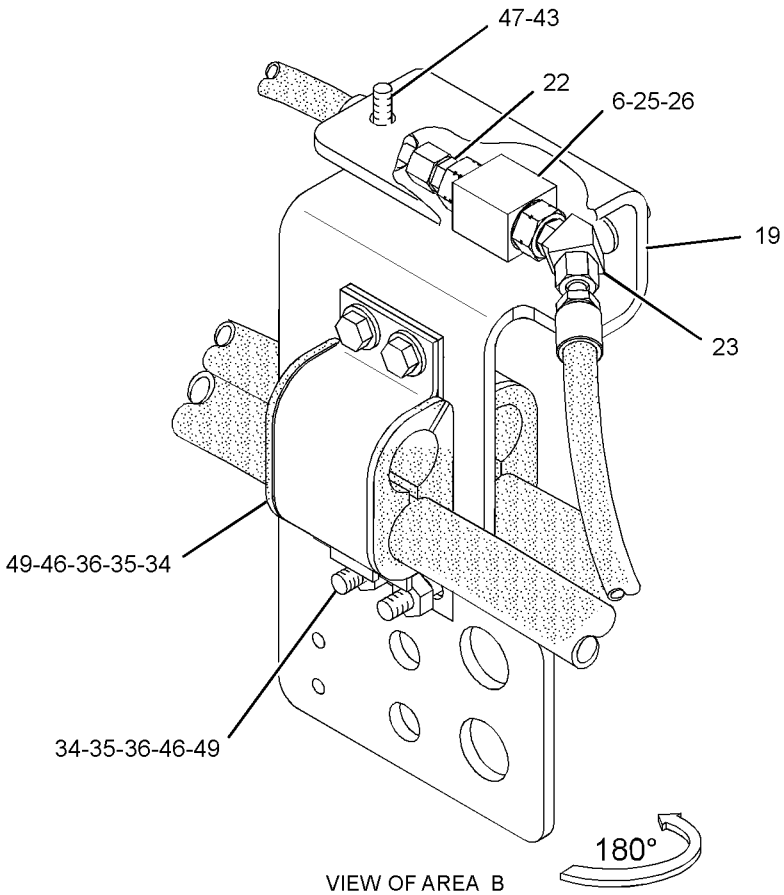

VIEW OF AREA B

GRAPHIC #2 **<END>** g01416282

HYDRAULIC SYSTEM

203-5924 LINES GP-PILOT–2-VALVE

S/N: BYD1-UP

PART OF 202-0421, 203-5927 HYDRAULIC AR-2 VALVE AN ATTACHMENT

SMCS-5057, 5059 **i02853946**

NOTE	REF NO	GRAPHIC REF	PART NUMBER	QTY	PART NAME 1 2 3 4 5 6 (PRODUCT LEVEL)	SEE PAGE
	1	2	**4E-7540**	1	ANGLE	
	2	2	**5P-5148**	1	STRAP-TIE	
	3	2	**6V-0852**	2	CAP-DUST	
	4	2	*164-5567*	2	COUPLER AS-QUICK DISCONNECT	
					(EACH INCLUDES)	
		2	**3J-1907**	1	SEAL-O-RING	
		2	**6V-3965**	1	COUPLER-QUICK DISCONNECT	
	5	2	**7K-1181**	1	STRAP-CABLE	
M	6	2	**8T-4195**	5	BOLT (M10X1.5X30-MM)	
M	7	2	**8T-6466**	1	BOLT (M10X1.5X60-MM)	
M	8	1,2	**8T-6685**	4	BOLT (M10X1.5X110-MM)	
	9	1,2	**8Y-8388**	3	PLATE	
	10	1,2	**8X-1147**	6	SPACER (10.3X15.9X74.7-MM THK)	
	11	1,2	**8Y-8387**	12	BLOCK	
Y	12	1	*250-0393*	1	ACCUMULATOR GP-PILOT OIL (UNCHARGED)	479
	13	2	**113-3682**	1	PLATE AS	
	14	1	**118-0939**	1	PLATE AS	
	15	2	**118-0970**	2	PLATE AS	
I	16	1	**118-1030**	1	HOSE AS	
I	17	1	**140-9024**	1	HOSE AS	
Y	18	2	**185-5209**	1	VALVE GP-PRESSURE REDUCING (PILOT OIL)	680
I	19	1,2	**200-7742**	4	HOSE AS	
I	20	1	**264-3705**	1	HOSE AS	
I	21	1	**118-1045**	1	HOSE AS	
I	22	2	**226-3865**	1	HOSE AS	
I	23	2	**169-0419**	1	HOSE AS	
CI	24	1	**252-2375**	1	HOSE AS	
	25	2	**104-3173**	2	CLIP	
	26	1	*148-8374*	1	ELBOW AS	
		1	**3K-0360**	1	SEAL-O-RING	
		1	**6V-8397**	1	SEAL-O-RING	
		1	**6V-8723**	1	ELBOW	
	27	1	*148-8321*	4	CONNECTOR AS	
					(EACH INCLUDES)	
		1	**3J-1907**	1	SEAL-O-RING	
		1	**6V-8397**	1	SEAL-O-RING	
		1	**8C-0564**	1	CONNECTOR	
	28	1	*148-8323*	1	CONNECTOR AS	
		1	**2S-4078**	1	SEAL-O-RING	
		1	**5K-9090**	1	SEAL-O-RING	
		1	**6V-9875**	1	CONNECTOR	
	29	2	*148-8330*	1	CONNECTOR AS	
		2	**5K-9090**	1	SEAL-O-RING	
		2	**7M-8485**	1	SEAL-O-RING	
		2	**8T-0198**	1	CONNECTOR	
	30	1	*148-8336*	5	CONNECTOR AS	
					(EACH INCLUDES)	
		1	**3J-1907**	1	SEAL-O-RING	
		1	**6V-8397**	1	SEAL-O-RING	
		1	**6V-8636**	1	CONNECTOR	
	31	2	*148-8345*	1	CONNECTOR AS	
		2	**2M-9780**	1	SEAL-O-RING	
		2	**6V-8398**	1	SEAL-O-RING	
		2	**6V-8638**	1	CONNECTOR	
	32	2	*148-8353*	1	ELBOW AS	

203-5924 **LINES GP-PILOT** ***(contd.)*** **i02853946**

NOTE	REF NO	GRAPHIC REF	PART NUMBER	QTY	PART NAME 1 2 3 4 5 6 (PRODUCT LEVEL)	SEE PAGE
		2	**3J-1907**	1	SEAL-O-RING	
		2	**6V-8397**	1	SEAL-O-RING	
		2	**6V-9001**	1	ELBOW	
	33	2	*148-8370*	1	ELBOW AS	
		2	**6V-8398**	1	SEAL-O-RING	
		2	**6V-9851**	1	ELBOW	
	34	2	*148-8378*	2	ELBOW AS	
					(EACH INCLUDES)	
		2	**3J-1907**	1	SEAL-O-RING	
		2	**6V-8397**	1	SEAL-O-RING	
		2	**6V-8724**	1	ELBOW	
M	35	2	**8T-4136**	4	BOLT (M10X1.5X25-MM)	
	36	2	*148-8428*	1	TEE AS	
		2	**3K-0360**	1	SEAL-O-RING	
		2	**6V-8398**	2	SEAL-O-RING	
		2	**6V-8782**	1	TEE	
	37	2	*148-8444*	2	TEE AS-SWIVEL	
					(EACH INCLUDES)	
		2	**6V-8398**	2	SEAL-O-RING	
		2	**6V-9837**	1	TEE-SWIVEL	
	38	2	*153-6241*	1	ELBOW AS	
		2	**6V-8398**	1	SEAL-O-RING	
		2	**8C-8989**	1	ELBOW	
I	39	2	**198-8214**	1	HOSE AS	
M	40	2	**7X-2543**	1	BOLT (M10X1.5X120-MM)	
	41	2	**3P-9847**	1	CLIP	
	42	2	**5P-7468**	1	CLIP (SLOT)	
	43	2	**5P-7469**	1	CLIP (TAB)	
	44	2	**5P-8444**	1	GROMMET	
M	45	2	**6V-7744**	2	LOCKNUT (M10X1.5-THD)	
	46	2	**6V-9830**	1	CAP AS	
M	47	2	**7X-2544**	1	BOLT (M10X1.5X104-MM)	
	48	1,2	**8T-4121**	20	WASHER-HARD (11X21X2.5-MM THK)	
M	49	2	**8T-4133**	1	NUT (M10X1.5-THD)	
	50	1	**7K-3971**	2	TAG-IDENTIFICATION (LETTER, NUMBER L1)	
	51	2	**7K-3972**	2	TAG-IDENTIFICATION (LETTER, NUMBER L2)	
	52	1	**7K-3974**	2	TAG-IDENTIFICATION (LETTER, NUMBER T1)	
	53	2	**7K-3975**	2	TAG-IDENTIFICATION (LETTER, NUMBER T2)	

C-CHANGE FROM PREVIOUS TYPE
I-REFER TO HYDRAULIC INFORMATION SYSTEM
M-METRIC PART
Y-SEPARATE ILLUSTRATION

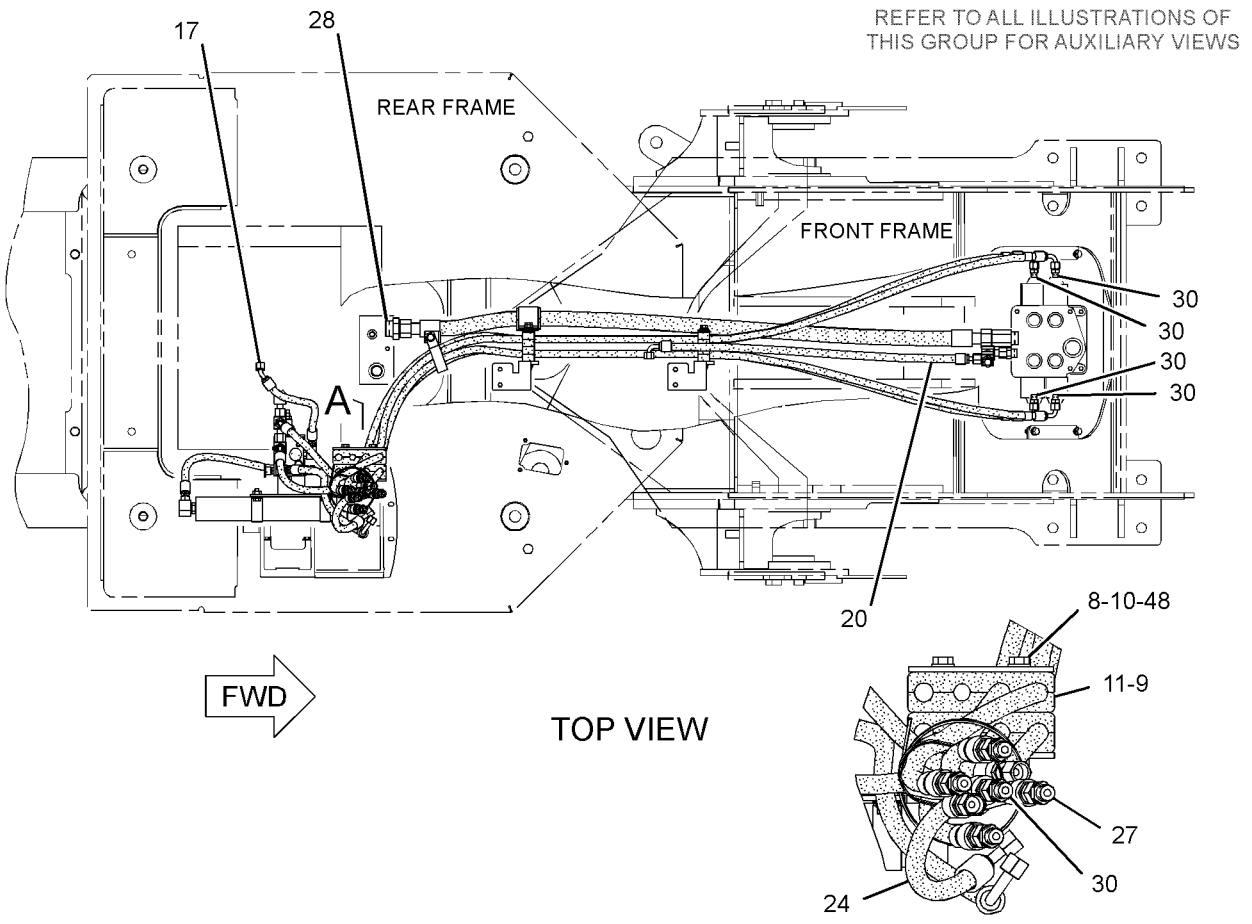

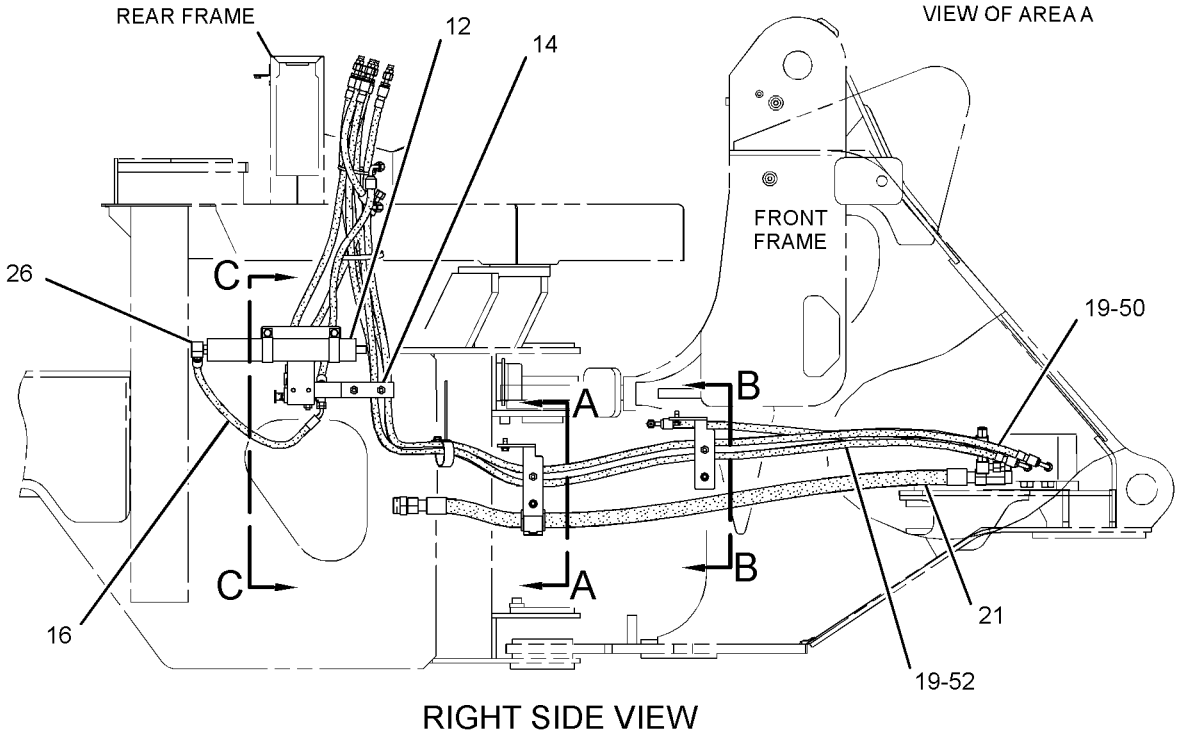

GRAPHIC #1 g01366386

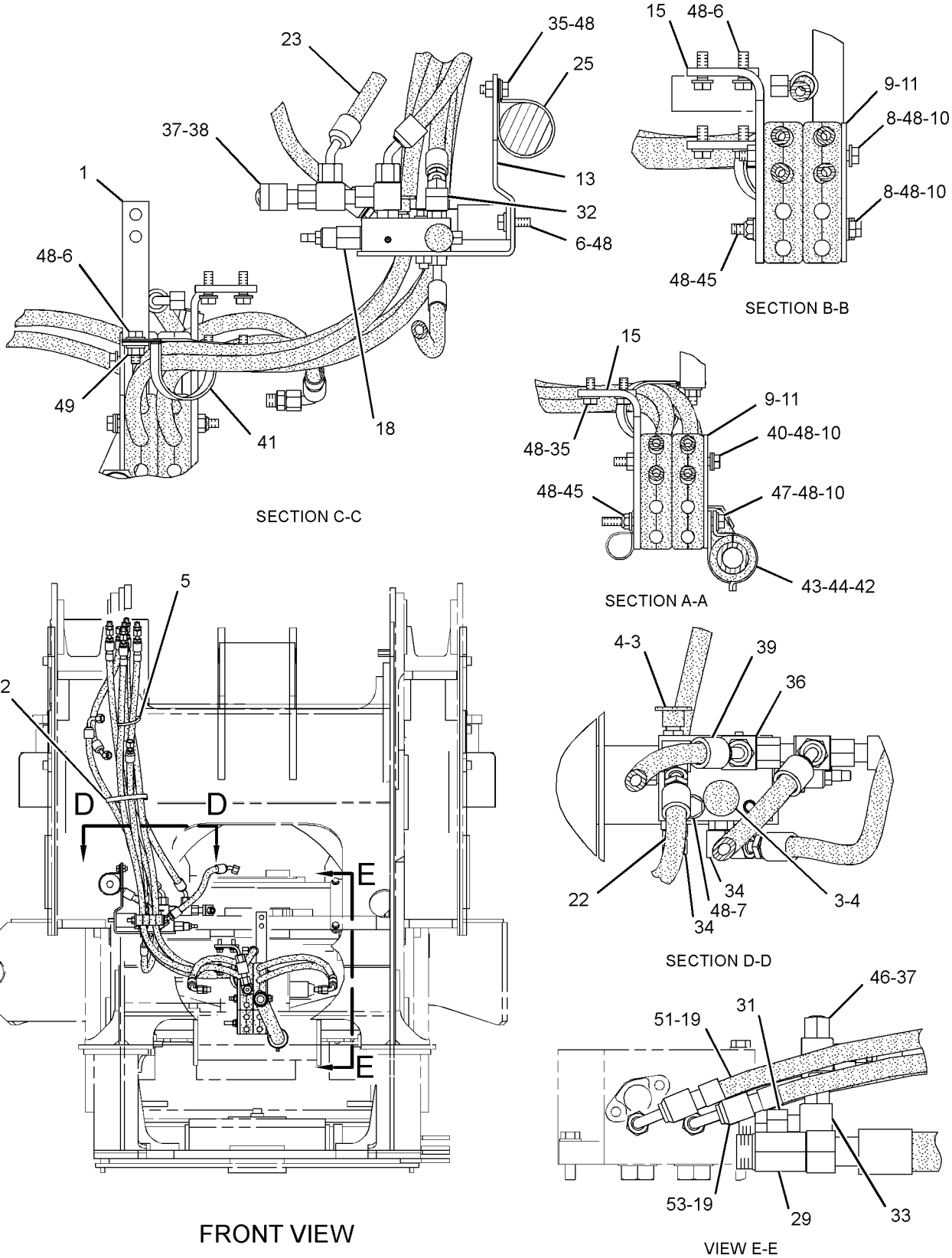

GRAPHIC #2 **<END>** g01366387

HYDRAULIC SYSTEM

203-5925 LINES GP-PILOT–3-VALVE

S/N: BYD1-UP

PART OF 202-0423 HYDRAULIC AR-3 VALVE

AN ATTACHMENT

SMCS-5057, 5059 **i02703653**

NOTE	REF NO	GRAPHIC REF	PART NUMBER	QTY	PART NAME 1 2 3 4 5 6 (PRODUCT LEVEL)	SEE PAGE
	1	2	**4E-7540**	1	ANGLE	
M	2	2	**8T-4133**	1	NUT (M10X1.5-THD)	
M	3	2	**8T-4136**	4	BOLT (M10X1.5X25-MM)	
	4	2	**5P-5148**	1	STRAP-TIE	
	5	2	**6V-0852**	2	CAP-DUST	
	6	2	*164-5567*	2	COUPLER AS-QUICK DISCONNECT	
					(EACH INCLUDES)	
		2	**3J-1907**	1	SEAL-O-RING	
		2	**6V-3965**	1	COUPLER-QUICK DISCONNECT	
	7	2	**7K-1181**	1	STRAP-CABLE	
M	8	2	**8T-4195**	5	BOLT (M10X1.5X30-MM)	
M	9	2	**8T-6466**	1	BOLT (M10X1.5X60-MM)	
M	10	1,2	**8T-6685**	4	BOLT (M10X1.5X110-MM)	
	11	1,2	**8Y-8388**	3	PLATE	
	12	1,2	**8X-1147**	6	SPACER (10.3X15.9X74.7-MM THK)	
	13	1,2	**8Y-8387**	12	BLOCK	
Y	14	1	**250-0393**	1	ACCUMULATOR GP-PILOT OIL (UNCHARGED)	479
	15	2	**113-3682**	1	PLATE AS	
	16	1	**118-0939**	1	PLATE AS	
	17	2	**118-0970**	2	PLATE AS	
I	18	1	**118-1030**	1	HOSE AS	
I	19	1	**140-9024**	1	HOSE AS	
Y	20	2	**185-5209**	1	VALVE GP-PRESSURE REDUCING (PILOT OIL)	680
I	21	1	**264-3704**	1	HOSE AS	
I	22	1	**213-1793**	1	HOSE AS	
I	23	2	**226-3865**	1	HOSE AS	
I	24	2	**169-0419**	1	HOSE AS	
CI	25	1	**252-2375**	1	HOSE AS	
	26	2	**104-3173**	2	CLIP	
	27	1,2	**8T-4121**	20	WASHER-HARD (11X21X2.5-MM THK)	
	28	1	*148-8321*	6	CONNECTOR AS	
					(EACH INCLUDES)	
		1	**3J-1907**	1	SEAL-O-RING	
		1	**6V-8397**	1	SEAL-O-RING	
		1	**8C-0564**	1	CONNECTOR	
	29	1	*148-8323*	1	CONNECTOR AS	
		1	**2S-4078**	1	SEAL-O-RING	
		1	**5K-9090**	1	SEAL-O-RING	
		1	**6V-9875**	1	CONNECTOR	
	30	2	*148-8330*	1	CONNECTOR AS	
		2	**5K-9090**	1	SEAL-O-RING	
		2	**7M-8485**	1	SEAL-O-RING	
		2	**8T-0198**	1	CONNECTOR	
	31	1	*148-8336*	7	CONNECTOR AS	
					(EACH INCLUDES)	
		1	**3J-1907**	1	SEAL-O-RING	
		1	**6V-8397**	1	SEAL-O-RING	
		1	**6V-8636**	1	CONNECTOR	
	32	2	*148-8345*	1	CONNECTOR AS	
		2	**2M-9780**	1	SEAL-O-RING	
		2	**6V-8398**	1	SEAL-O-RING	
		2	**6V-8638**	1	CONNECTOR	
	33	2	*148-8353*	1	ELBOW AS	
		2	**3J-1907**	1	SEAL-O-RING	
		2	**6V-8397**	1	SEAL-O-RING	

203-5925 **LINES GP-PILOT** ***(contd.)*** **i02703653**

NOTE	REF NO	GRAPHIC REF	PART NUMBER	QTY	PART NAME 1 2 3 4 5 6 (PRODUCT LEVEL)	SEE PAGE
		2	**6V-9001**	1	ELBOW	
	34	2	*148-8370*	1	ELBOW AS	
		2	**6V-8398**	1	SEAL-O-RING	
		2	**6V-9851**	1	ELBOW	
	35	2	*148-8378*	2	ELBOW AS	
					(EACH INCLUDES)	
		2	**3J-1907**	1	SEAL-O-RING	
		2	**6V-8397**	1	SEAL-O-RING	
		2	**6V-8724**	1	ELBOW	
	36	1	*148-8374*	1	ELBOW AS	
		1	**3K-0360**	1	SEAL-O-RING	
		1	**6V-8397**	1	SEAL-O-RING	
		1	**6V-8723**	1	ELBOW	
	37	2	*148-8428*	1	TEE AS	
		2	**3K-0360**	1	SEAL-O-RING	
		2	**6V-8398**	2	SEAL-O-RING	
		2	**6V-8782**	1	TEE	
	38	2	*148-8444*	2	TEE AS-SWIVEL	
					(EACH INCLUDES)	
		2	**6V-8398**	2	SEAL-O-RING	
		2	**6V-9837**	1	TEE-SWIVEL	
	39	2	*153-6241*	1	ELBOW AS	
		2	**6V-8398**	1	SEAL-O-RING	
		2	**8C-8989**	1	ELBOW	
I	40	1,2	**200-7742**	6	HOSE AS	
I	41	2	**198-8214**	1	HOSE AS	
M	42	2	**7X-2543**	1	BOLT (M10X1.5X120-MM)	
	43	2	**3P-9847**	1	CLIP	
	44	2	**5P-7468**	1	CLIP (SLOT)	
	45	2	**5P-7469**	1	CLIP (TAB)	
	46	2	**5P-8444**	1	GROMMET	
M	47	2	**6V-7744**	2	LOCKNUT (M10X1.5-THD)	
	48	2	**6V-9830**	1	CAP AS	
M	49	2	**7X-2544**	1	BOLT (M10X1.5X104-MM)	
	50	2	**4V-9798**	2	TAG-IDENTIFICATION (LETTER, NUMBER C2)	
	51	1	**4V-9799**	2	TAG-IDENTIFICATION (LETTER, NUMBER C1)	
	52	1	**7K-3971**	2	TAG-IDENTIFICATION (LETTER, NUMBER L1)	
	53	2	**7K-3972**	2	TAG-IDENTIFICATION (LETTER, NUMBER L2)	
	54	1	**7K-3974**	2	TAG-IDENTIFICATION (LETTER, NUMBER T1)	
	55	2	**7K-3975**	2	TAG-IDENTIFICATION (LETTER, NUMBER T2)	

C-CHANGE FROM PREVIOUS TYPE
I-REFER TO HYDRAULIC INFORMATION SYSTEM
M-METRIC PART
Y-SEPARATE ILLUSTRATION

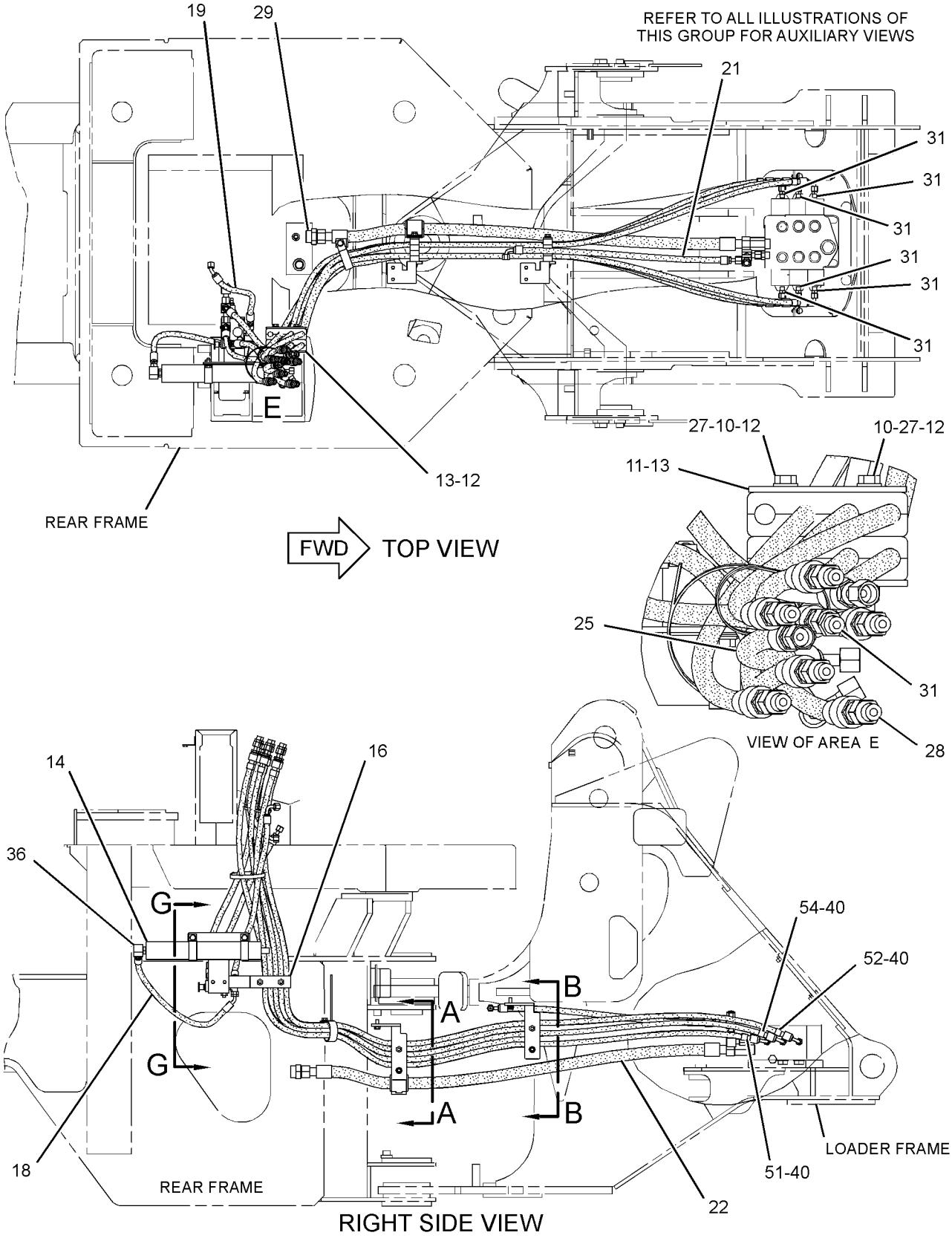

GRAPHIC #1

g01366544

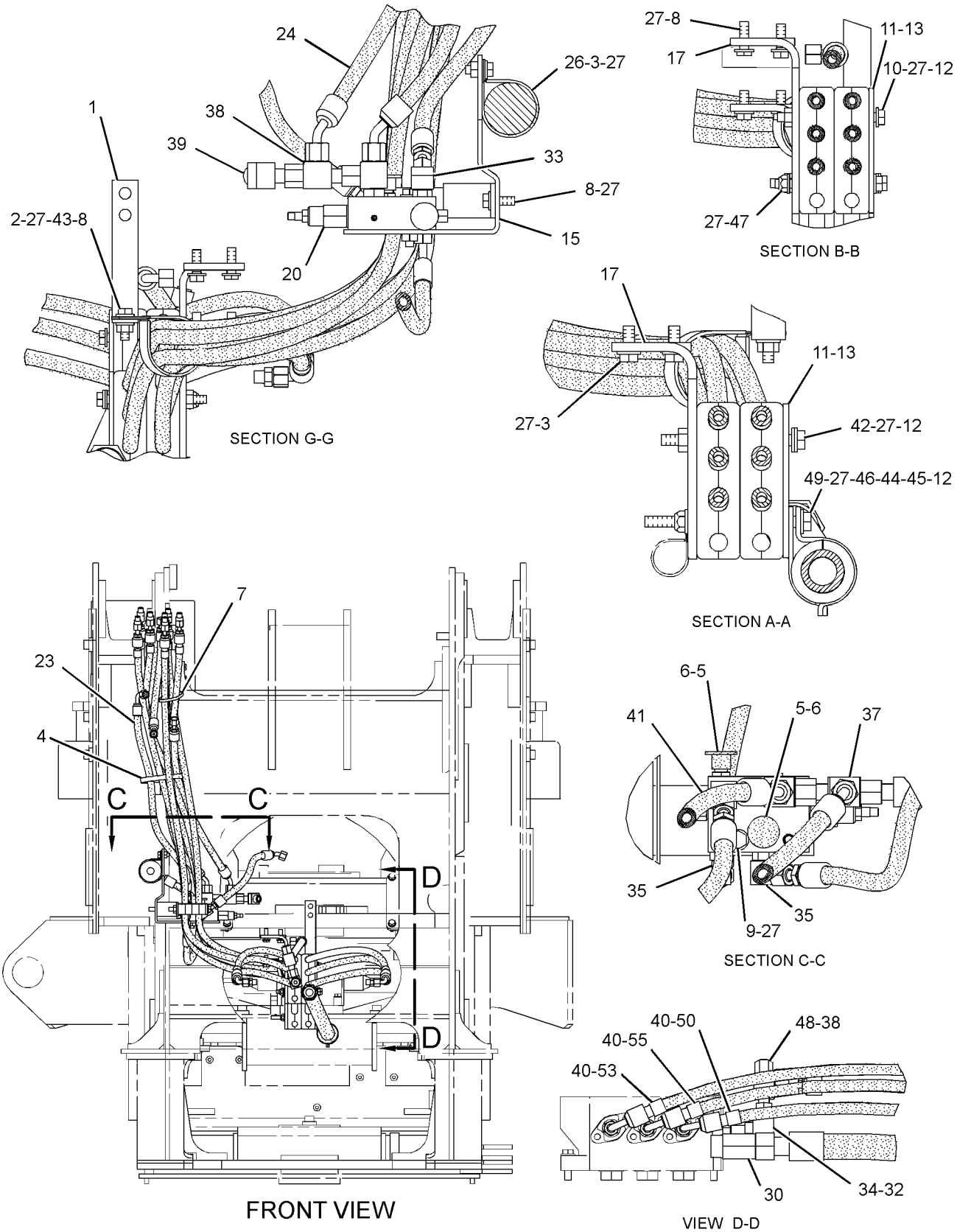

GRAPHIC #2 **<END>** g01366542

HYDRAULIC SYSTEM

289-8924 LINES GP-PILOT

S/N: FTD1-649

PART OF 289-8883 HYDRAULIC AR

SMCS-5057, 5059 **i02808621**

NOTE	REF NO	GRAPHIC REF	PART NUMBER	QTY	PART NAME 1 2 3 4 5 6 (PRODUCT LEVEL)	SEE PAGE
	1	2	**5I-4376**	1	FITTING	
E	2	1,2	**5P-0743**		HOSE (54-CM)	
	3	2	**6V-0852**	3	CAP-DUST	
	4	2	**6V-1178**	1	PLUG-BUTTON	
	5	1,2	**8C-5225**	1	PLUG-SEAL	
	6	2	**8T-0154**	1	CLAMP-HOSE	
	7	1	**8T-4984**	2	CLAMP-HOSE	
	8	2	**9X-6581**	1	NUT-O-RING SEAL (1-14-THD)	
	9	1	**144-0367**	4	CLAMP-HOSE	
	10	2	*148-8424*	1	TEE AS	
		2	**8T-8902**	1	TEE	
		2	**6V-8397**	1	SEAL-O-RING	
	11	1	**156-4130**	3	CLIP-TUBE	
I	12	1	**164-3485**	1	HOSE AS	
	13	2	*164-5567*	2	COUPLER AS-QUICK DISCONNECT	
					(EACH INCLUDES)	
		2	**6V-3965**	1	COUPLER-QUICK DISCONNECT	
		2	**3J-1907**	1	SEAL-O-RING	
	14	2	*164-9640*	1	CONNECTOR AS	
		2	**145-2237**	1	CONNECTOR	
		2	**3J-1907**	1	SEAL-O-RING	
		2	**4J-5477**	1	SEAL-O-RING	
	15	2	*165-2273*	1	VALVE AS-SHUTOFF	
		2	**6V-7238**	1	VALVE-SHUTOFF	
		2	**3K-0360**	1	SEAL-O-RING	
	16	2	**177-2215**	1	STRAP-DUAL CLAMP	
	17	2	**200-6345**	1	MOUNT (DUAL SWIVEL)	
	18	2	**204-2281**	8	STRAP-TIE	
	19	2	**226-2095**	1	FILM (BLACK)	
I	20	2	**241-6481**	1	HOSE AS	
I	21	2	**242-0181**	1	HOSE AS	
	22	2	**242-0265**	1	MANIFOLD	
	23	2	**242-0575**	1	TUBE AS	
I	24	2	**242-0968**	1	HOSE AS	
	25	1	**242-8872**	1	BRACKET AS	
	26	1	**242-9594**	1	TUBE AS	
	27	2	**242-9597**	1	BRACKET AS	
Y	28	1	*243-4398*	1	ACCUMULATOR GP-PILOT OIL (CHARGED)	478
I	29	1	**244-0727**	1	HOSE AS	
	30	2	**252-0303**	1	HARNESS AS-SOLENOID (HYDRAULIC LOCKOUT)	
I	31	1	**261-5762**	1	HOSE AS	
	32	1	**262-5656**	1	HOSE	
	33	1	**262-5659**	1	HOSE AS	
	34	2	**294-0932**	1	VALVE GP-CHECK	
		2	**2S-4078**	1	SEAL-O-RING	
		2	**6V-8400**	1	SEAL-O-RING	
I	35	2	*300-9098*	1	HOSE AS	
I	36	1	**300-9104**	1	HOSE AS	
	37	2	**307-3181**	1	VALVE GP-PRIORITY (STEERING)	
	38	2	**7K-1181**	3	STRAP-CABLE	
	39	2	**110-6349**	1	FITTING AS (QUICK DISCONNECT)	
	40	2	*148-8323*	1	CONNECTOR AS	
		2	**6V-9875**	1	CONNECTOR	
		2	**2S-4078**	1	SEAL-O-RING	
		2	**5K-9090**	1	SEAL-O-RING	
	41	2	*148-8325*	1	CONNECTOR AS	

289-8924 **LINES GP-PILOT** ***(contd.)*** **i02808621**

NOTE	REF NO	GRAPHIC REF	PART NUMBER	QTY	PART NAME 1 2 3 4 5 6 (PRODUCT LEVEL)	SEE PAGE
		2	**6V-8641**	1	CONNECTOR	
		2	**3J-1907**	1	SEAL-O-RING	
		2	**4J-5477**	1	SEAL-O-RING	
	42	2	*148-8334*	1	CONNECTOR AS	
		2	**8T-3611**	1	CONNECTOR	
		2	**2S-4078**	1	SEAL-O-RING	
		2	**6V-8400**	1	SEAL-O-RING	
	43	2	*148-8336*	3	CONNECTOR AS	
					(EACH INCLUDES)	
		2	**6V-8636**	1	CONNECTOR	
		2	**3J-1907**	1	SEAL-O-RING	
		2	**6V-8397**	1	SEAL-O-RING	
	44	2	*148-8355*	1	ELBOW AS	
		2	**6V-9005**	1	ELBOW	
		2	**5K-9090**	1	SEAL-O-RING	
		2	**7M-8485**	1	SEAL-O-RING	
	45	1	*148-8363*	1	ELBOW AS	
		1	**6V-9876**	1	ELBOW	
		1	**3K-0360**	1	SEAL-O-RING	
		1	**6V-8397**	1	SEAL-O-RING	
	46	2	*148-8365*	1	ELBOW AS	
		2	**8T-6876**	1	ELBOW	
		2	**3J-1907**	1	SEAL-O-RING	
		2	**6V-8398**	1	SEAL-O-RING	
	47	2	*148-8367*	1	ELBOW AS	
		2	**6V-9850**	1	ELBOW	
		2	**6V-8397**	1	SEAL-O-RING	
	48	2	*148-8385*	1	ELBOW AS	
		2	**6V-9000**	1	ELBOW	
		2	**3J-7354**	1	SEAL-O-RING	
		2	**4J-5477**	1	SEAL-O-RING	
	49	2	*148-8387*	1	ELBOW AS	
		2	**6V-9855**	1	ELBOW	
		2	**6V-8400**	1	SEAL-O-RING	
	50	2	*148-8407*	2	PLUG AS	
					(EACH INCLUDES)	
		2	**9S-4191**	1	PLUG-O-RING	
		2	**3J-1907**	1	SEAL-O-RING	
	51	2	*148-8416*	1	REDUCER AS	
		2	**6V-8939**	1	REDUCER	
		2	**6V-8398**	1	SEAL-O-RING	
	52	2	*148-8434*	1	TEE AS	
		2	**6V-9843**	1	TEE-SWIVEL	
		2	**6V-8397**	2	SEAL-O-RING	
	53	2	*148-8441*	1	TEE AS	
		2	**6V-9032**	1	TEE-O-RING	
		2	**2M-9780**	1	SEAL-O-RING	
		2	**6V-9746**	1	SEAL-O-RING	
		2	**7J-9108**	1	SEAL-O-RING	
	54	1,2	*150-4043*	2	CONNECTOR AS	
					(EACH INCLUDES)	
		1,2	**6V-9873**	1	CONNECTOR	
		1,2	**3J-1907**	1	SEAL-O-RING	
		1,2	**6V-8398**	1	SEAL-O-RING	
	55	1	*153-6237*	1	ELBOW AS	
		1	**6V-9004**	1	ELBOW	
		1	**3D-2824**	1	SEAL-O-RING	
		1	**6V-9746**	1	SEAL-O-RING	
	56	2	*153-6243*	1	TEE AS	

289-8924 **LINES GP-PILOT** ***(contd.)*** **i02808621**

NOTE	REF NO	GRAPHIC REF	PART NUMBER	QTY	PART NAME 1 2 3 4 5 6 (PRODUCT LEVEL)	SEE PAGE
		2	**8T-1120**	1	TEE-O-RING PORT	
		2	**2S-4078**	1	SEAL-O-RING	
		2	**5K-9090**	1	SEAL-O-RING	
		2	**6V-9746**	1	SEAL-O-RING	
	57	2	*164-4180*	1	PLUG AS	
		2	**9S-4181**	1	PLUG-O-RING	
		2	**7M-8485**	1	SEAL-O-RING	
	58	2	*171-6723*	1	ELBOW AS	
		2	**8T-8899**	1	ELBOW	
		2	**6V-9746**	1	SEAL-O-RING	
	59	2	**204-8000**	1	ANCHOR-TIE	
	60	1	**1P-3708**	1	SEAL-RECTANGULAR	
	61	2	**1P-4582**	2	FLANGE-HALF	
	62	1	**1P-4584**	2	FLANGE-HALF	
	63	2	**4J-0520**	1	SEAL-O-RING	
	64	1	**4J-0527**	1	SEAL-O-RING	
	65	2	**4P-7581**	1	CLIP	
	66	2	**6D-4246**	1	CLIP	
	67	1	**6J-2680**	1	SEAL-O-RING	
	68	2	**6V-8400**	1	SEAL-O-RING	
M	69	1,2	**7X-2549**	6	BOLT (M12X1.75X100-MM)	
	70	1	**7X-7729**	2	WASHER (11X25X3-MM THK)	
	71	2	**8C-3206**	2	FLANGE-HALF	
	72	2	**8R-3695**	1	GROMMET	
	73	1,2	**8T-4121**	8	WASHER-HARD (11X21X2.5-MM THK)	
M	74	1	**8T-4136**	1	BOLT (M10X1.5X25-MM)	
M	75	1	**8T-4139**	4	BOLT (M12X1.75X30-MM)	
M	76	2	**8T-4183**	4	BOLT (M12X1.75X40-MM)	
M	77	2	**8T-4192**	4	BOLT (M12X1.75X25-MM)	
M	78	1	**8T-4194**	4	BOLT (M12X1.75X50-MM)	
M	79	1	**8T-4195**	2	BOLT (M10X1.5X30-MM)	
M	80	2	**8T-4196**	4	BOLT (M10X1.5X35-MM)	
	81	1,2	**8T-4223**	22	WASHER-HARD (13.5X25.5X3-MM THK)	
M	82	2	**8T-5005**	1	BOLT (M10X1.5X70-MM)	
M	83	2	**8T-5436**	2	BOLT (M10X1.5X130-MM)	
	84	2	**9R-3884**	1	SPACER (13X20X45-MM THK)	
B	85	2	*148-8411*	1	PLUG AS	
		2	**9S-4185**	1	PLUG-O-RING	
		2	**3K-0360**	1	SEAL-O-RING	
B	86	2	**6V-9829**	1	CAP AS	
B	87	2	**6V-9830**	1	CAP AS	
B	88	2	*148-8411*	1	PLUG AS	
		2	**9S-4185**	1	PLUG-O-RING	
		2	**3K-0360**	1	SEAL-O-RING	
B	89	2	*148-8407*	1	PLUG AS	
		2	**9S-4191**	1	PLUG-O-RING	
		2	**3J-1907**	1	SEAL-O-RING	
B	90	2	**6V-9832**	1	CAP AS	
B	91	2	*148-8407*	1	PLUG AS	
		2	**9S-4191**	1	PLUG-O-RING	
		2	**3J-1907**	1	SEAL-O-RING	

B-USE AS REQUIRED
E-ORDER BY THE CENTIMETER
I-REFER TO HYDRAULIC INFORMATION SYSTEM
M-METRIC PART
Y-SEPARATE ILLUSTRATION

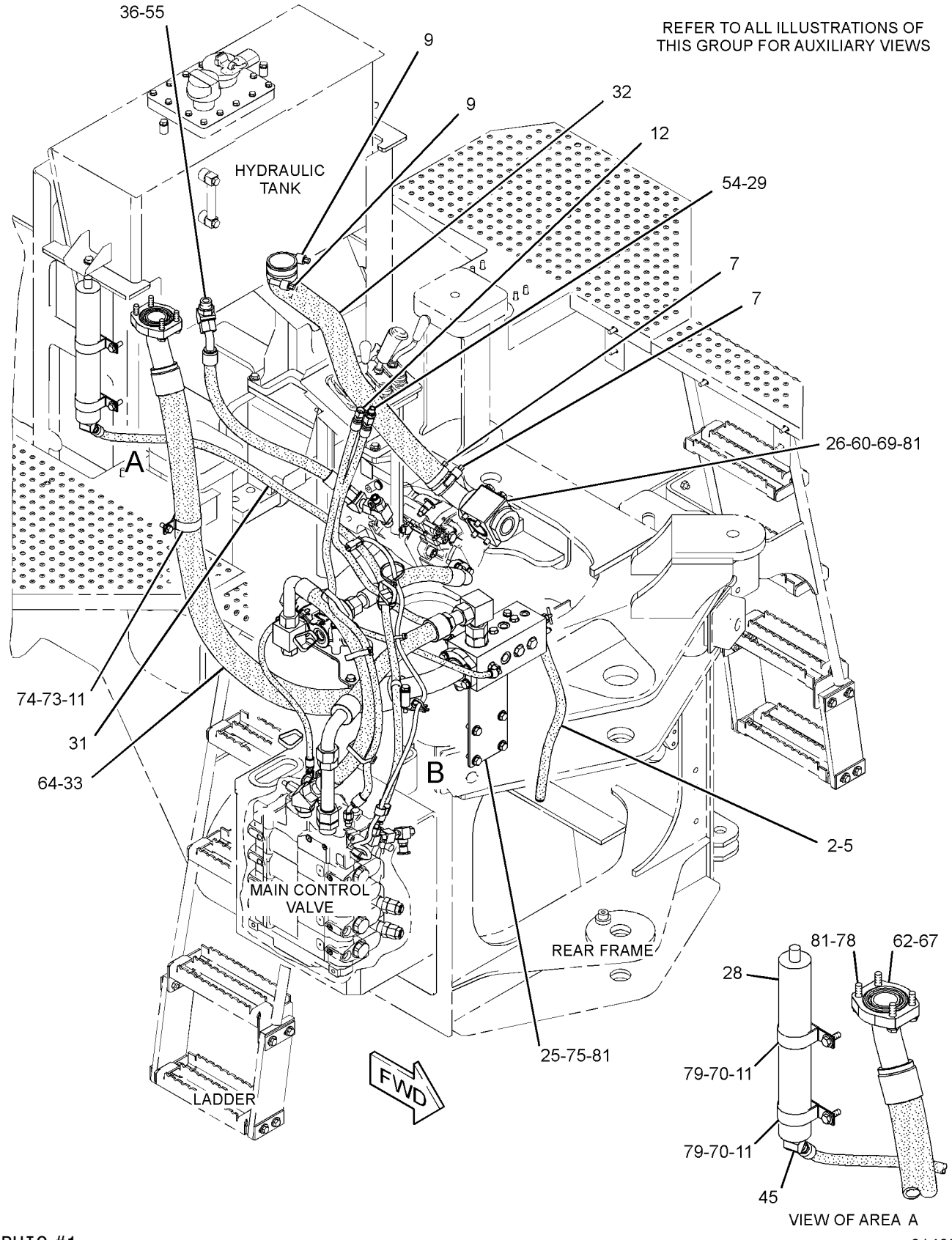

GRAPHIC #1

g01405941

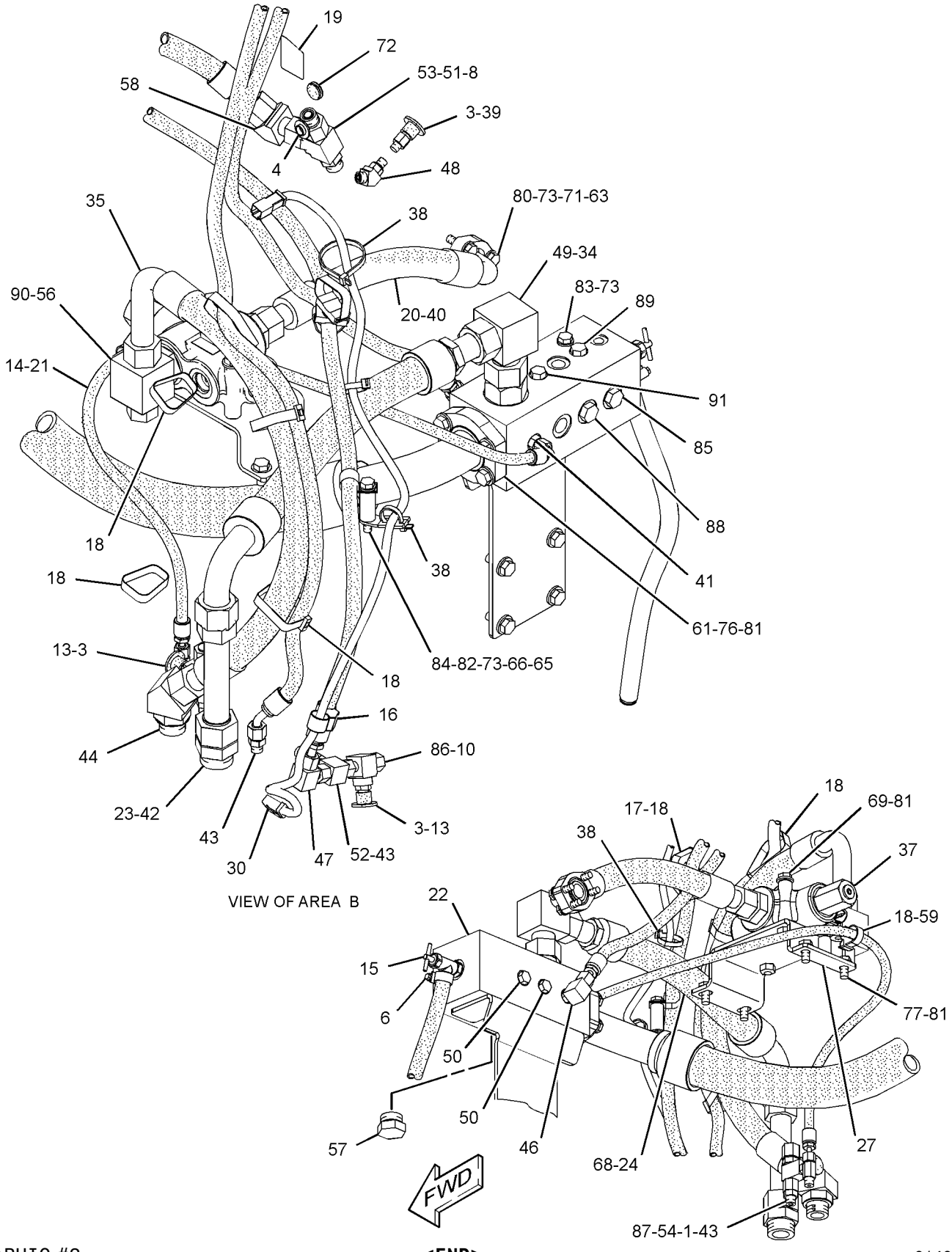

GRAPHIC #2

<END>

g01405942

HYDRAULIC SYSTEM

218-3673 LINES GP-RIDE CONTROL

S/N: BYD1-UP

PART OF 290-6481 CONTROL AR-RIDE

AN ATTACHMENT

SMCS-5004, 5057, 5077 **i02668706**

NOTE	REF NO	GRAPHIC REF	PART NUMBER	QTY	PART NAME 1 2 3 4 5 6 (PRODUCT LEVEL)	SEE PAGE
	1	1	**6U-5219**	2	U-CLAMP AS	
					(EACH INCLUDES)	
		1	**5P-1075**	2	WASHER-HARD (10.2X22.5X3-MM THK)	
		1	**6V-8801**	2	NUT (3/8-16-THD)	
C	2	1	**9T-1013**	1	VALVE AS-CHECK	
		1	**6V-8398**	1	SEAL-O-RING	
		1	**3K-0360**	1	SEAL-O-RING	
I	3	1	**124-4844**	1	HOSE AS	
CY	4	1	**141-1481**	1	VALVE GP-SHUTTLE	694
Y	5	1	**297-1209**	1	VALVE GP-RIDE CONTROL	690
I	6	1	**148-7785**	1	HOSE AS	
	7	1	**206-7384**	1	BRACKET AS	
M		1	**6V-9632**	1	NUT-WELD (M6X1-THD)	
M		1	**8T-3490**	2	NUT-WELD (M10X1.5-THD)	
	8	1	**206-7385**	1	BRACKET AS	
M		1	**8T-3490**	2	NUT-WELD (M10X1.5-THD)	
	9	1	**206-7386**	1	PLATE	
I	10	1	**213-6219**	2	HOSE AS	
Y	11	1	*223-9698*	1	ACCUMULATOR GP-RIDE CONTROL (CHARGED)	480
	12	1	**224-0672**	1	FILM-WARNING (HIGH PRESSURE, READ OMM, INTL)	
					—OR—	
	13	1	**224-7830**	1	FILM-WARNING (HIGH PRESSURE, READ OMM, U.S.)	
	14	1	**226-0347**	1	TUBE AS	
CI	15	1	**254-3349**	1	HOSE AS	
CI	16	1	**254-4461**	1	HOSE AS	
CI	17	1	**297-1861**	1	HOSE AS	
CI	18	1	**255-0639**	1	HOSE AS	
CI	19	1	**277-8241**	1	HOSE AS	
	20	1	*148-8322*	2	CONNECTOR AS	
					(EACH INCLUDES)	
		1	**2M-9780**	1	SEAL-O-RING	
		1	**6V-8640**	1	CONNECTOR	
		1	**6V-9746**	1	SEAL-O-RING	
	21	1	*148-8336*	1	CONNECTOR AS	
		1	**3J-1907**	1	SEAL-O-RING	
		1	**6V-8397**	1	SEAL-O-RING	
		1	**6V-8636**	1	CONNECTOR	
	22	1	*148-8345*	1	CONNECTOR AS	
		1	**2M-9780**	1	SEAL-O-RING	
		1	**6V-8398**	1	SEAL-O-RING	
		1	**6V-8638**	1	CONNECTOR	
C	23	1	*148-8354*	1	ELBOW AS	
		1	**3K-0360**	1	SEAL-O-RING	
		1	**6V-8398**	1	SEAL-O-RING	
		1	**6V-9002**	1	ELBOW	
C	24	1	*148-8364*	1	ELBOW AS	
		1	**3K-0360**	1	SEAL-O-RING	
		1	**6V-8398**	1	SEAL-O-RING	
		1	**6V-8625**	1	ELBOW	
C	25	1	*148-8370*	3	ELBOW AS	
					(EACH INCLUDES)	
		1	**6V-8398**	1	SEAL-O-RING	
		1	**6V-9851**	1	ELBOW	
	26	1	*148-8378*	1	ELBOW AS	
		1	**3J-1907**	1	SEAL-O-RING	

218-3673 **LINES GP-RIDE CONTROL** *(contd.)* **i02668706**

NOTE	REF NO	GRAPHIC REF	PART NUMBER	QTY	PART NAME 1 2 3 4 5 6 (PRODUCT LEVEL)	SEE PAGE
		1	**6V-8397**	1	SEAL-O-RING	
		1	**6V-8724**	1	ELBOW	
C	27	1	*148-8416*	1	REDUCER AS	
		1	**6V-8398**	1	SEAL-O-RING	
		1	**6V-8939**	1	REDUCER	
C	28	1	*148-8428*	1	TEE AS	
		1	**3K-0360**	1	SEAL-O-RING	
		1	**6V-8398**	2	SEAL-O-RING	
		1	**6V-8782**	1	TEE	
C	29	1	*148-8433*	1	TEE AS	
		1	**6V-8397**	2	SEAL-O-RING	
		1	**6V-9836**	1	TEE-SWIVEL	
C	30	1	*148-8444*	1	TEE AS-SWIVEL	
		1	**6V-8398**	2	SEAL-O-RING	
		1	**6V-9837**	1	TEE-SWIVEL	
	31	1	*150-4048*	1	ELBOW AS	
		1	**3K-0360**	1	SEAL-O-RING	
		1	**6V-8722**	1	ELBOW	
		1	**7J-9108**	1	SEAL-O-RING	
C	32	1	*155-3503*	1	TEE AS	
		1	**2M-9780**	1	SEAL-O-RING	
		1	**6V-8776**	1	TEE-FACE SEAL	
		1	**7J-9108**	2	SEAL-O-RING	
C	34	1	**5I-3978**	1	CLIP	
C	35	1	**9X-6581**	1	NUT-O-RING SEAL (1-14-THD)	
CM	36	1	**7X-2534**	2	BOLT (M6X1X50-MM)	
	37	1	**7X-7729**	10	WASHER (11X25X3-MM THK)	
M	38	1	**8T-4136**	8	BOLT (M10X1.5X25-MM)	
M	39	1	**8T-4198**	2	BOLT (M10X1.5X100-MM)	
C	40	1	**9X-8256**	2	WASHER (6.6X12X2-MM THK)	
	41	1	**204-2281**	2	STRAP-TIE	
	42	1	**200-6345**	1	MOUNT (DUAL SWIVEL)	
	43	1	**6D-4246**	1	CLIP	

C-CHANGE FROM PREVIOUS TYPE
I-REFER TO HYDRAULIC INFORMATION SYSTEM
M-METRIC PART
Y-SEPARATE ILLUSTRATION

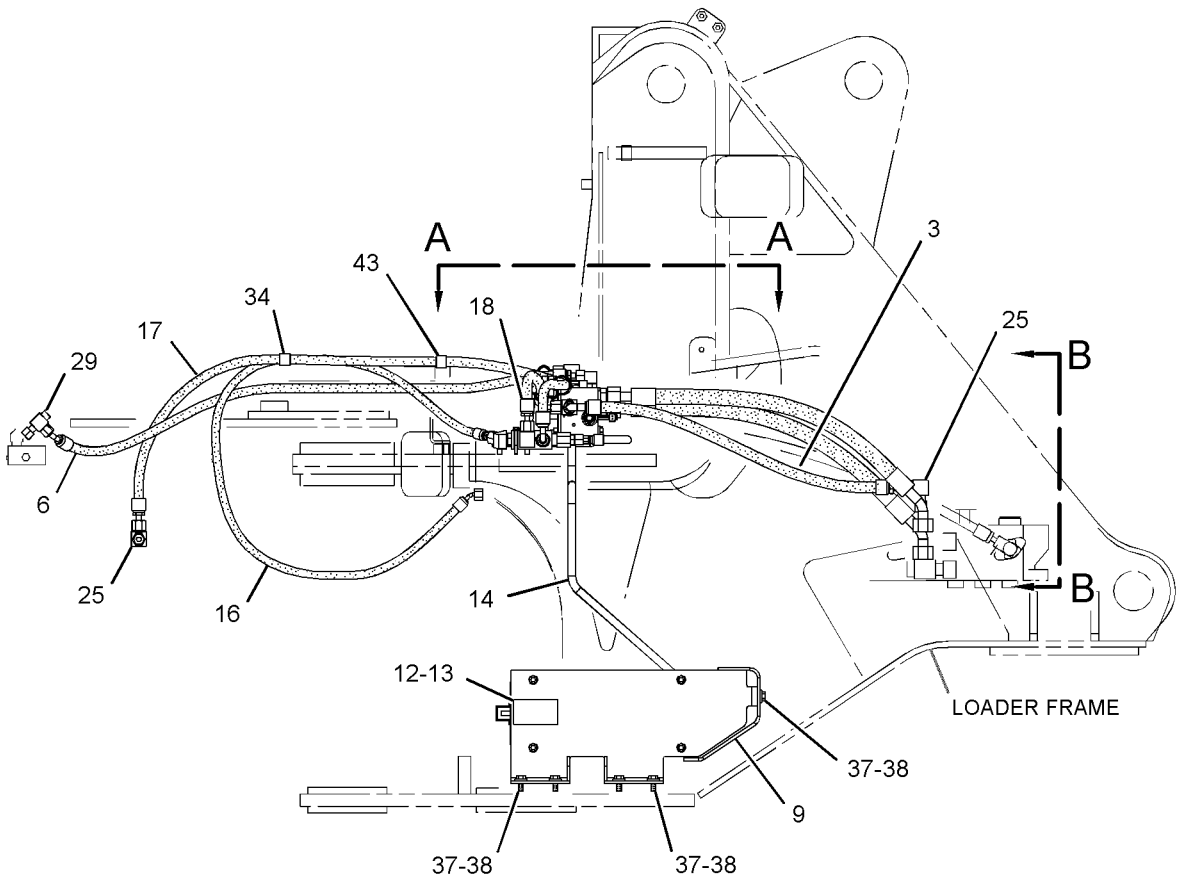

RIGHT SIDE VIEW

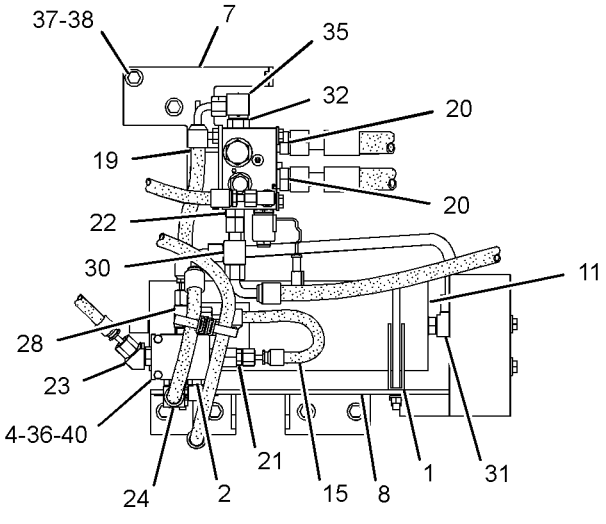

VIEW A-A

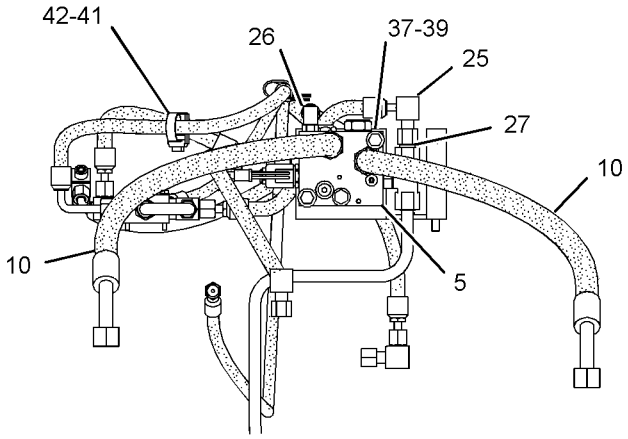

VIEW B-B

GRAPHIC #1 **<END>** g01345413

HYDRAULIC SYSTEM

118-0862 LINES GP-TILT CYLINDER

S/N: BYD1-UP

PART OF 289-8863 HYDRAULIC AR

SMCS-5057, 5104 **i02863494**

NOTE	REF NO	GRAPHIC REF	PART NUMBER	QTY	PART NAME 1 2 3 4 5 6 (PRODUCT LEVEL)	SEE PAGE
	1	1	**118-0982**	1	TUBE AS	
	2	1	**118-0985**	1	BRACKET AS	
M		1	**8T-3490**	1	NUT-WELD (M10X1.5-THD)	
I	3	1	**122-6511**	2	HOSE AS	
	4	1	*148-8357*	2	ELBOW AS	
					(EACH INCLUDES)	
		1	**5K-9090**	1	SEAL-O-RING	
		1	**7M-8485**	1	SEAL-O-RING	
		1	**6V-9008**	1	ELBOW	
	5	1	*148-8362*	2	ELBOW AS	
					(EACH INCLUDES)	
		1	**3D-2824**	1	SEAL-O-RING	
		1	**5K-9090**	1	SEAL-O-RING	
		1	**8T-6684**	1	ELBOW	
	6	1	**5K-9090**	1	SEAL-O-RING	
	7	1	**5P-7468**	2	CLIP (SLOT)	
	8	1	**5P-7469**	2	CLIP (TAB)	
	9	1	**5P-8444**	2	GROMMET	
	10	1	**7F-6998**	2	LOCKWASHER	
	11	1	**7X-7729**	2	WASHER (11X25X3-MM THK)	
	12	1	**8T-1889**	1	CLIP (SLOT)	
	13	1	**8T-1890**	1	CLIP (TAB)	
	14	1	**8T-4121**	3	WASHER-HARD (11X21X2.5-MM THK)	
M	15	1	**8T-4195**	5	BOLT (M10X1.5X30-MM)	

I-REFER TO HYDRAULIC INFORMATION SYSTEM
M-METRIC PART

118-0862 **LINES GP-TILT CYLINDER** *(contd.)* **i02863494**

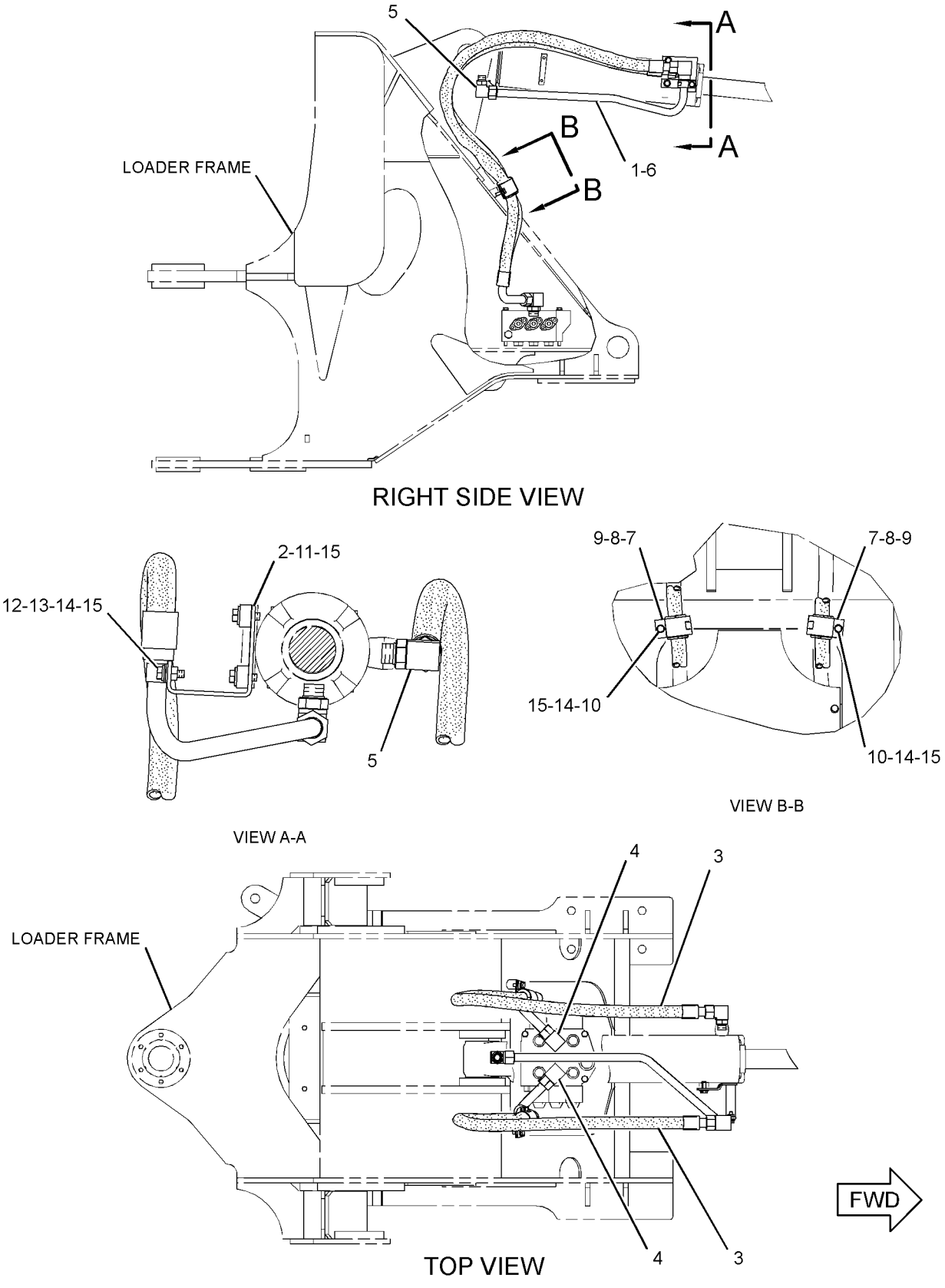

GRAPHIC #1

<END>

g01433394

HYDRAULIC SYSTEM

245-4856 LINES GP-TILT CYLINDER

S/N: FTD1-UP

PART OF 289-8843, 289-8883 HYDRAULIC AR

SMCS-5057, 5104 **i02682273**

NOTE	REF NO	GRAPHIC REF	PART NUMBER	QTY	PART NAME 1 2 3 4 5 6 (PRODUCT LEVEL)	SEE PAGE
	1	1	**4I-9521**	2	BAND-MARKER (RED, L1)	
	2	1	**4I-9525**	2	BAND-MARKER (ORANGE, R1)	
	3	1	**6V-0852**	2	CAP-DUST	
	4	1	*169-5862*	2	ELBOW AS	
					(EACH INCLUDES)	
		1	**3J-1907**	1	SEAL-O-RING	
		1	**8C-6712**	1	ELBOW	
Y	5	1	**173-4032**	1	VALVE GP-COMBINATION (TILT RELIEF)	629
I	6	1	**241-6486**	1	HOSE AS	
I	7	1	**241-6487**	1	HOSE AS	
I	8	1	**242-0081**	1	HOSE AS	
	9	1	**242-9754**	1	BRACKET AS	
I	10	1	**275-5769**	2	HOSE AS	
	14	1	**244-6645**	1	TUBE AS	
	15	1	**244-6646**	1	TUBE AS	
I	16	1	**258-6404**	1	HOSE AS	
I	17	1	**260-6150**	1	HOSE AS	
	18	1	**110-6349**	2	FITTING AS (QUICK DISCONNECT)	
	19	1	*148-8316*	1	CONNECTOR AS	
		1	**3J-7354**	1	SEAL-O-RING	
		1	**4J-5477**	1	SEAL-O-RING	
		1	**6V-8647**	1	CONNECTOR	
	20	1	*148-8325*	4	CONNECTOR AS	
					(EACH INCLUDES)	
		1	**3J-1907**	1	SEAL-O-RING	
		1	**4J-5477**	1	SEAL-O-RING	
		1	**6V-8641**	1	CONNECTOR	
	21	1	*148-8335*	2	CONNECTOR AS	
					(EACH INCLUDES)	
		1	**5K-9090**	1	SEAL-O-RING	
		1	**6V-8635**	1	CONNECTOR	
		1	**7M-8485**	1	SEAL-O-RING	
	22	1	*148-8340*	2	CONNECTOR AS	
					(EACH INCLUDES)	
		1	**3K-0360**	1	SEAL-O-RING	
		1	**6V-8398**	1	SEAL-O-RING	
		1	**6V-8639**	1	CONNECTOR	
	23	1	*148-8354*	1	ELBOW AS	
		1	**3K-0360**	1	SEAL-O-RING	
		1	**6V-8398**	1	SEAL-O-RING	
		1	**6V-9002**	1	ELBOW	
	24	1	*148-8372*	1	ELBOW AS	
		1	**2M-9780**	1	SEAL-O-RING	
		1	**6V-8398**	1	SEAL-O-RING	
		1	**6V-8721**	1	ELBOW	
	25	1	*164-5577*	2	ELBOW AS	
					(EACH INCLUDES)	
		1	**5K-9090**	2	SEAL-O-RING	
		1	**6V-8984**	1	ELBOW	
	26	1	**4J-0520**	1	SEAL-O-RING	
	27	1	**5K-9090**	4	SEAL-O-RING	
C	28	1	**5P-7468**	3	CLIP (SLOT)	
C	29	1	**5P-7469**	3	CLIP (TAB)	
C	30	1	**5P-8444**	3	GROMMET	
	31	1	**6V-8397**	1	SEAL-O-RING	
	32	1	**6V-9172**	4	NUT (1-7/16-12-THD)	

245-4856 **LINES GP-TILT CYLINDER** *(contd.)* **i02682273**

NOTE	REF NO	GRAPHIC REF	PART NUMBER	QTY	PART NAME 1 2 3 4 5 6 (PRODUCT LEVEL)	SEE PAGE
M	33	1	**7X-2534**	1	BOLT (M6X1X50-MM)	
	34	1	**8C-3206**	2	FLANGE-HALF	
	35	1	**8T-1889**	2	CLIP (SLOT)	
	36	1	**8T-1890**	2	CLIP (TAB)	
C	37	1	**8T-4121**	13	WASHER-HARD (11X21X2.5-MM THK)	
M	38	1	**8T-4133**	1	NUT (M10X1.5-THD)	
M	41	1	**8T-4195**	7	BOLT (M10X1.5X30-MM)	
M	42	1	**8T-4196**	5	BOLT (M10X1.5X35-MM)	
	43	1	**9X-8256**	1	WASHER (6.6X12X2-MM THK)	
	44	1	**7X-0606**	4	WASHER-HARD (37X60X3-MM THK)	
I	45	1	**136-4560**	1	HOSE AS	
	46	1	**274-7513**	1	TUBE AS	
	47	1	**274-7514**	1	TUBE AS	
	48	1	**274-7579**	1	PLATE AS	
I	49	1	**274-9186**	1	HOSE AS	

C-CHANGE FROM PREVIOUS TYPE
I-REFER TO HYDRAULIC INFORMATION SYSTEM
M-METRIC PART
Y-SEPARATE ILLUSTRATION

245-4856 **LINES GP-TILT CYLINDER** *(contd.)* **i02682273**

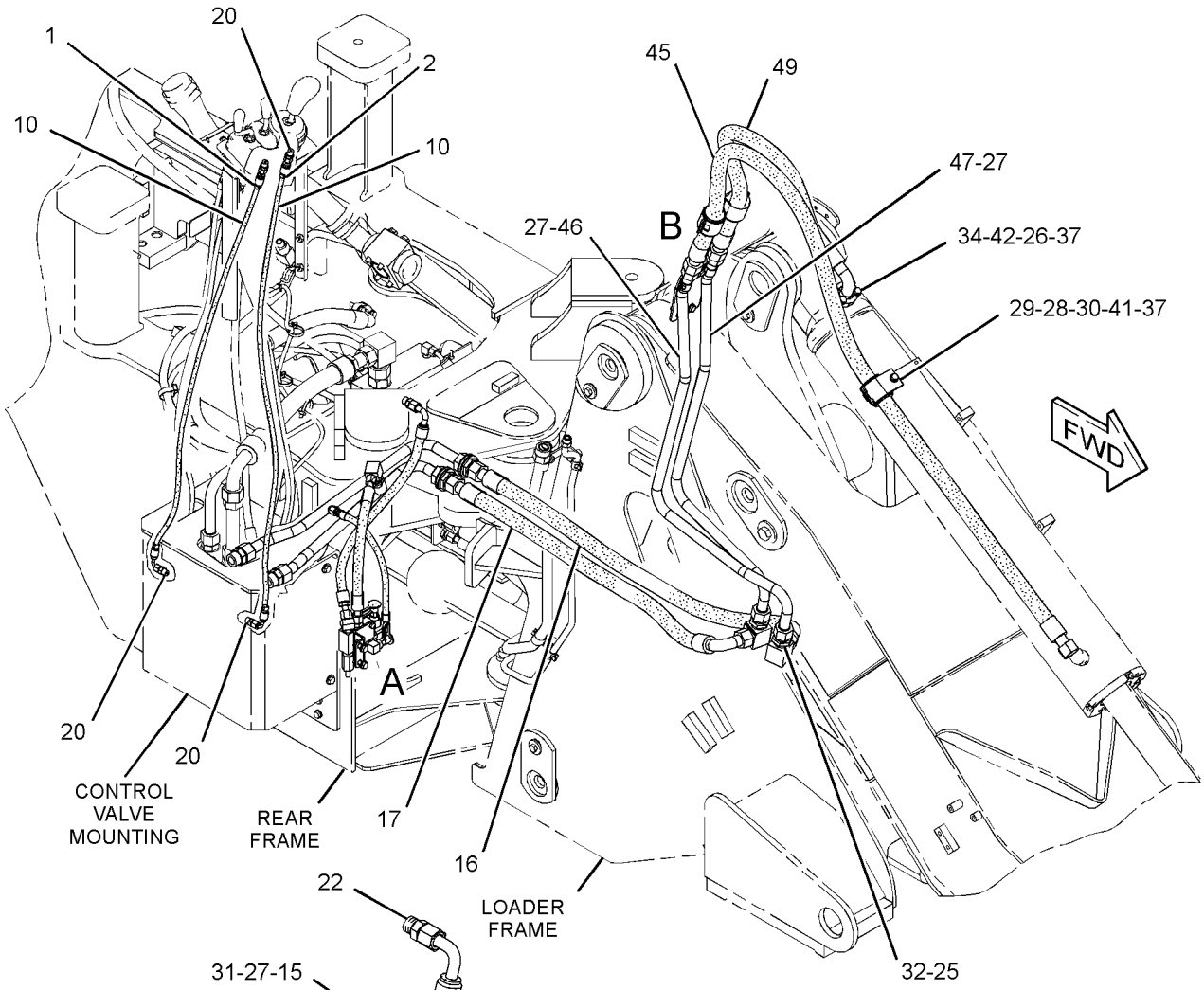

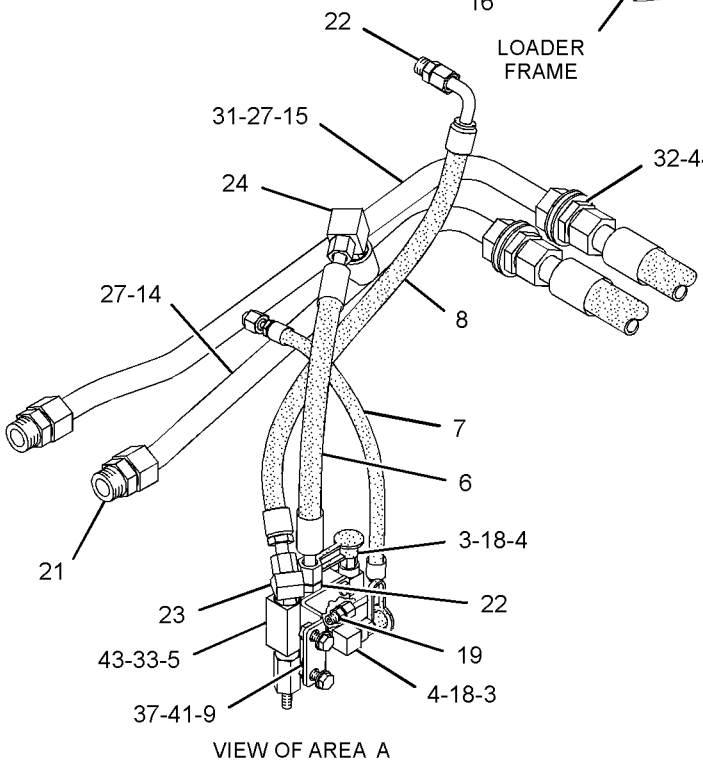

VIEW OF AREA A

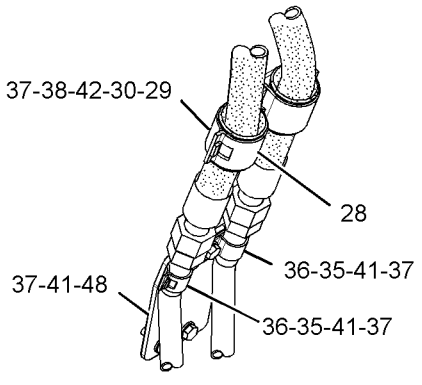

VIEW OF AREA B

GRAPHIC #1 **<END>** g01347730

260-3016 MANIFOLD GP-VALVE—AUXILIARY, INLET

S/N: FTD1-UP

PART OF 242-0117 VALVE GP-MAIN CONTROL

AN ATTACHMENT

SMCS-5264 **i02712645**

NOTE	REF NO	GRAPHIC REF	PART NUMBER	QTY	PART NAME 1 2 3 4 5 6 (PRODUCT LEVEL)	SEE PAGE
	1	1	**3J-1907**	2	SEAL-O-RING	
	2	1	**9S-8004**	2	PLUG-O-RING	
	3	1	**227-1185**	1	VALVE GP-FLOW CONTROL (AUXILIARY, INLET) (INLET MANIFOLD)	
	4	1	**257-7723**	1	PLUG GP-CONTROL MANIFOLD	
		1	**227-1199**	1	KIT-SEAL (LOAD SENSING SIGNAL RELIEF) (CONTROL VALVE)	
					(INCLUDES SEAL-O-RINGS AND BACKUP RING)	
	5	1	**9S-8008**	2	PLUG-O-RING	
	6	1	**3D-2824**	2	SEAL-O-RING	

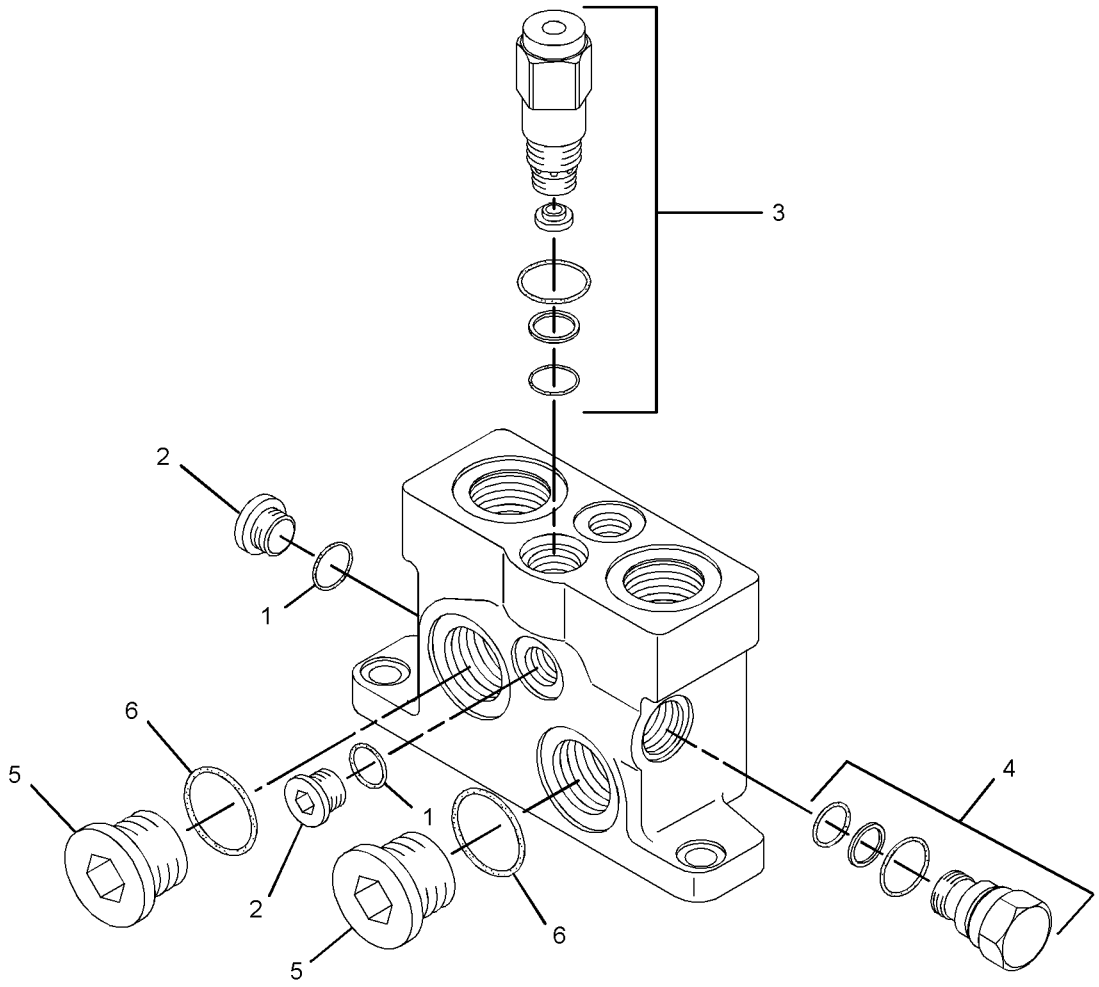

GRAPHIC #1 **<END>** g01274785

HYDRAULIC SYSTEM

283-9380 MANIFOLD GP-VALVE–INLET

S/N: FTD1-UP

PART OF 280-1996, 280-1997, 280-1998, 317-6905, 317-6909 VALVE GP-MAIN CONTROL AN ATTACHMENT

SMCS-5264 **i02634377**

NOTE	REF NO	GRAPHIC REF	PART NUMBER	QTY	PART NAME 1 2 3 4 5 6 (PRODUCT LEVEL)	SEE PAGE
	1	1	**1T-0936**	1	PLUG-PIPE	
	2	1	*3J-3679*	1	PLUG AS	
		1	**1J-9671**	1	SEAL-O-RING	
		1	**9S-8003**	1	PLUG	
	3	1	**3T-8236**	1	SPRING	
	5	1	**6E-5066**	1	SCREEN	
Y	6	1	**131-8350**	1	VALVE GP-PURGE	684
	7	1	**148-9359**	1	PLUG	
Y	8	1	**193-1665**	1	VALVE GP-PRESSURE REDUCING (SIGNAL DUPLICATION)	681
Y	9	1	**225-0300**	1	VALVE GP-SOLENOID (HYDRAULIC LOCKOUT)	699
	10	1	**240-1725**	1	VALVE GP-PRESSURE REDUCING	
	11	1	**247-2971**	1	MANIFOLD-VALVE (INLET)	
	12	1	**251-4686**	1	VALVE GP-RELIEF (MAIN)	
		1	**225-9611**	1	KIT-SEAL (RELIEF VALVE) (FLOW CONTROL VALVE) (INCLUDES RINGS)	
Y	13	1	**260-8590**	1	VALVE GP-SHUTTLE	695
	15	1	*148-8411*	1	PLUG AS	
		1	**3K-0360**	1	SEAL-O-RING	
		1	**9S-4185**	1	PLUG-O-RING	
	16	1	*155-3624*	1	PLUG AS	
		1	**3J-7354**	1	SEAL-O-RING	
		1	**9S-4182**	1	PLUG-O-RING	
Y	17	1	**158-9956**	1	VALVE GP-CHECK	627
	18	1	*162-0177*	1	PLUG AS	
		1	**3J-1907**	1	SEAL-O-RING	
		1	**9S-8004**	1	PLUG-O-RING	
	19	1	*173-3993*	11	PLUG AS (EACH INCLUDES)	
		1	**4J-7533**	1	SEAL-O-RING	
		1	**9S-8001**	1	PLUG-O-RING	
	20	1	*183-7263*	2	PLUG AS (EACH INCLUDES)	
		1	**3J-7354**	1	SEAL-O-RING	
		1	**9S-8002**	1	PLUG-O-RING	
	21	1	**1P-3703**	1	SEAL-RECTANGULAR	
	22	1	**3K-0360**	1	SEAL-O-RING	
	23	1	**4J-9535**	2	SEAL-O-RING	
	24	1	**5F-8000**	1	SEAL-O-RING	
	25	1	**6J-3134**	3	SEAL-O-RING	
	26	1	**6V-8398**	1	SEAL-O-RING	
	27	1	**7X-4776**	2	RING-BACKUP	
M	28	1	**8T-1158**	1	BOLT-SOCKET HEAD (M8X1.25X20-MM)	

M-METRIC PART
Y-SEPARATE ILLUSTRATION

283-9380 MANIFOLD GP-VALVE *(contd.)* **i02634377**

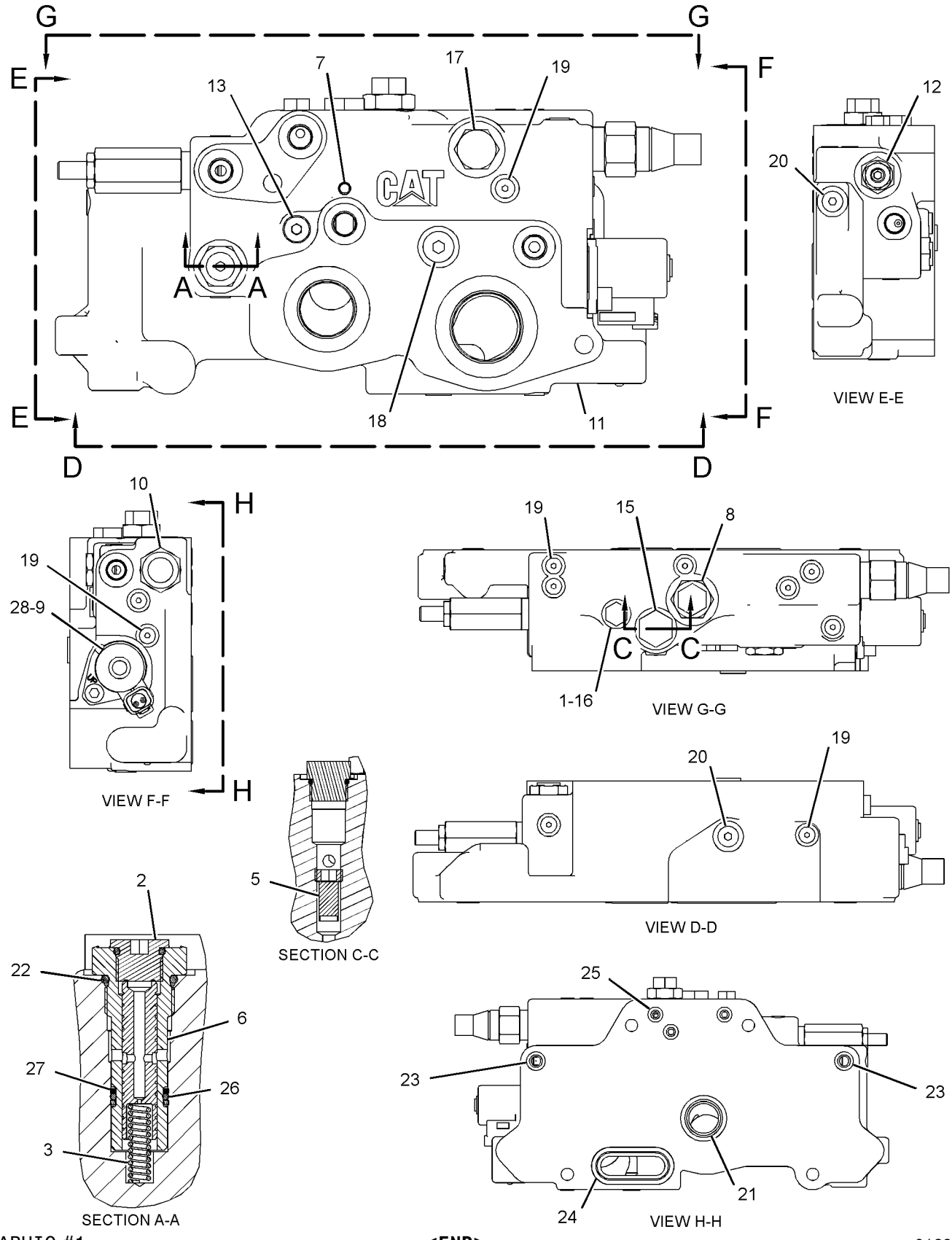

GRAPHIC #1 **<END>** g01297916

289-8964 MOTOR & MTG GP-HYDRAULIC FAN–REVERSING

S/N: BYD1-UP

PART OF 289-8965 MOTOR AR-HYDRAULIC FAN

AN ATTACHMENT

SMCS-1386 **i02811843**

NOTE	REF NO	GRAPHIC REF	PART NUMBER	QTY	PART NAME 1 2 3 4 5 6 (PRODUCT LEVEL)	SEE PAGE
Y	1	1	**289-6394**	1	MOTOR GP-GEAR (REVERSING FAN)	591
	2	1	**8T-4121**	4	WASHER-HARD (11X21X2.5-MM THK)	
M	3	1	**8T-4133**	2	NUT (M10X1.5-THD)	
M	4	1	**8T-4196**	2	BOLT (M10X1.5X35-MM)	

M-METRIC PART
Y-SEPARATE ILLUSTRATION

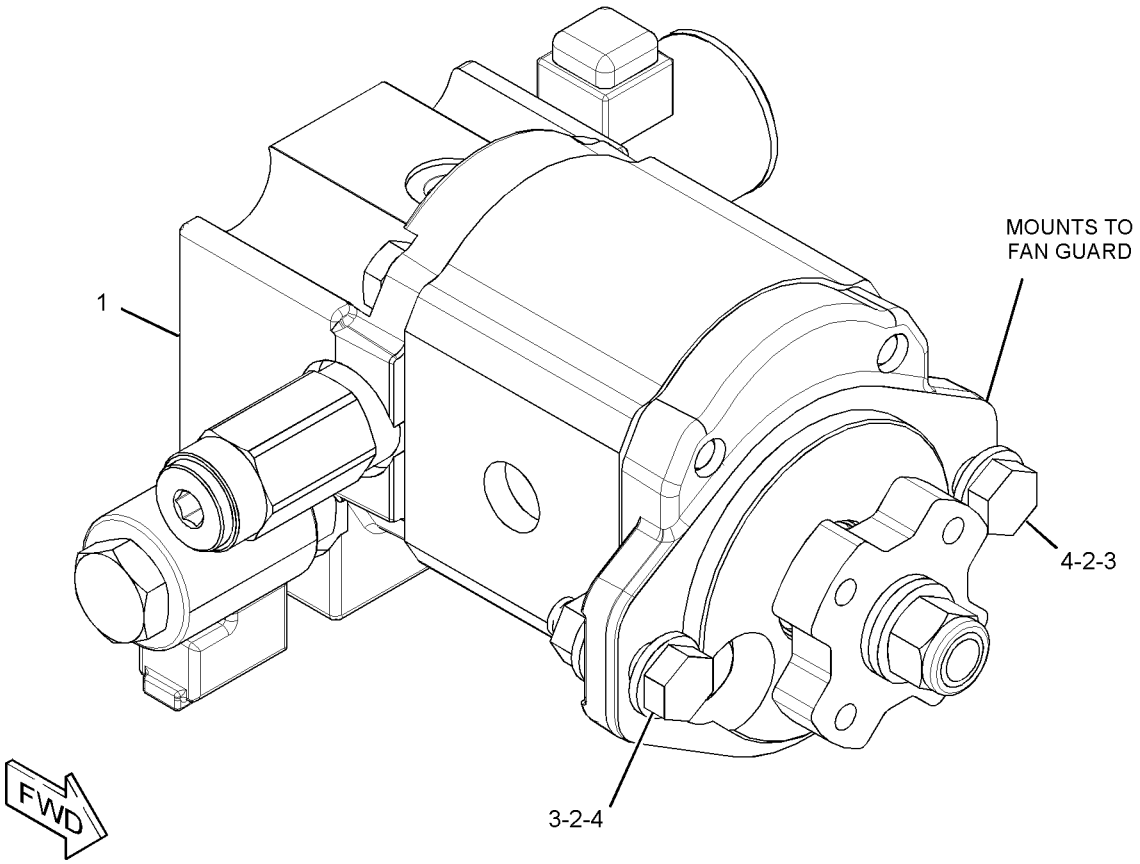

GRAPHIC #1 **<END>** g01411523

289-8963 MOTOR AR-HYDRAULIC FAN—STANDARD

S/N: BYD1-UP
CANNOT BE USED WITH 289-8965—PAGE 589
AN ATTACHMENT

SMCS-1386 **i02814243**

NOTE	PART NUMBER	QTY	PART NAME 1 2 3 4 5 6 (PRODUCT LEVEL)	SEE PAGE
Y	*290-7200*	1	LINES GP-HYDRAULIC FAN (STANDARD)	553
Y	*289-8962*	1	MOTOR GP-GEAR (HYDRAULIC FAN)	592
Y-SEPARATE ILLUSTRATION				

<END>

289-8965 MOTOR AR-HYDRAULIC FAN—REVERSING

S/N: BYD1-UP
CANNOT BE USED WITH 289-8963—PAGE 589
AN ATTACHMENT

SMCS-1386 **i02814218**

NOTE	PART NUMBER	QTY	PART NAME 1 2 3 4 5 6 (PRODUCT LEVEL)	SEE PAGE
Y	*290-7201*	1	LINES GP-HYDRAULIC FAN (REVERSING)	555
Y	*289-8964*	1	MOTOR & MTG GP-HYDRAULIC FAN (REVERSING)	588
Y-SEPARATE ILLUSTRATION				

<END>

289-6393 MOTOR GP-GEAR–HYDRAULIC FAN

S/N: BYD1-UP
PART OF 289-8962 MOTOR GP-GEAR
AN ATTACHMENT

SMCS-1386, 5061 **i02869526**

NOTE	REF NO	GRAPHIC REF	PART NUMBER	QTY	PART NAME 1 2 3 4 5 6 (PRODUCT LEVEL)	SEE PAGE
	1	1	**113-3632**	1	ADAPTER-FAN	
Y	2	1	**211-2092**	1	VALVE GP-SOLENOID (24-VOLT) (HYDRAULIC FAN)	698
	3	1	**087-0991**	1	VALVE AS-CHECK	
	4	1	**2M-2570**	1	LOCKNUT (1/2-20-THD)	
	5	1	**5P-8245**	1	WASHER-HARD (13.5X25.5X3-MM THK)	
	6	1	**6V-8647**	1	CONNECTOR	
	7	1	**3J-7354**	1	SEAL-O-RING	
	8	1	**4J-5477**	1	SEAL-O-RING	
Y	9	1	**299-3940**	1	MOTOR GP-GEAR (HYDRAULIC FAN)	594

Y-SEPARATE ILLUSTRATION

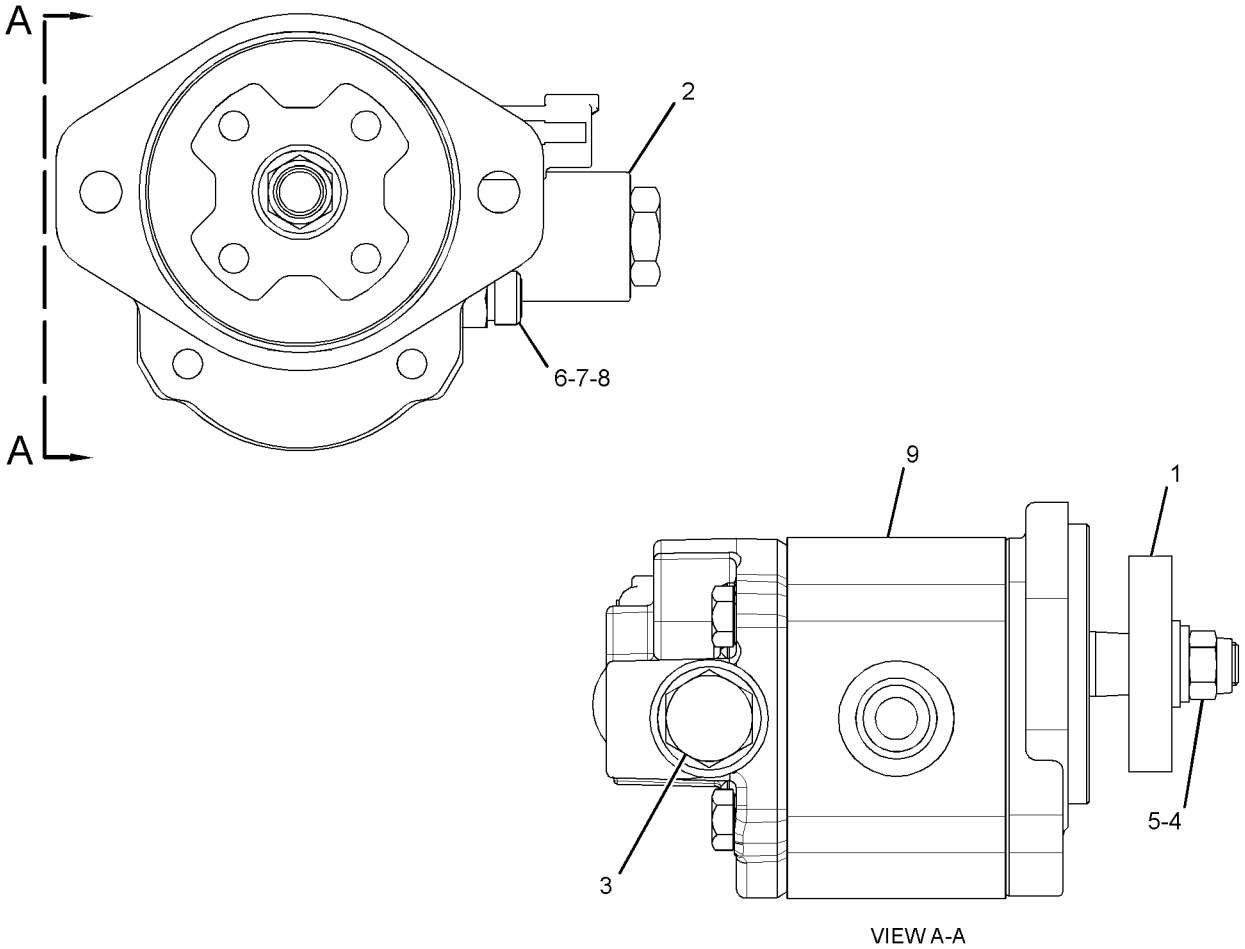

VIEW A-A

GRAPHIC #1 **<END>** g01430276

289-6394 MOTOR GP-GEAR–REVERSING FAN

S/N: BYD1-UP

PART OF 289-8964 MOTOR & MTG GP-HYDRAULIC FAN

AN ATTACHMENT

SMCS-1386, 5061 **i02811861**

NOTE	REF NO	GRAPHIC REF	PART NUMBER	QTY	PART NAME 1 2 3 4 5 6 (PRODUCT LEVEL)	SEE PAGE
	1	1	**113-3632**	1	ADAPTER-FAN	
Y	2	1	**211-2092**	1	VALVE GP-SOLENOID (24-VOLT) (HYDRAULIC FAN)	698
Y	3	1	**189-2100**	1	VALVE GP-SOLENOID (24-VOLT) (HYDRAULIC FAN)	696
	4	1	**208-0886**	1	VALVE GP-RELIEF (HYDRAULIC FAN MOTOR)	
	5	1	**087-0991**	1	VALVE AS-CHECK	
	6	1	**2M-2570**	1	LOCKNUT (1/2-20-THD)	
	7	1	**5P-8245**	1	WASHER-HARD (13.5X25.5X3-MM THK)	
Y	8	1	**299-3939**	1	MOTOR GP-GEAR (REVERSING FAN) (BASIC)	593

Y-SEPARATE ILLUSTRATION

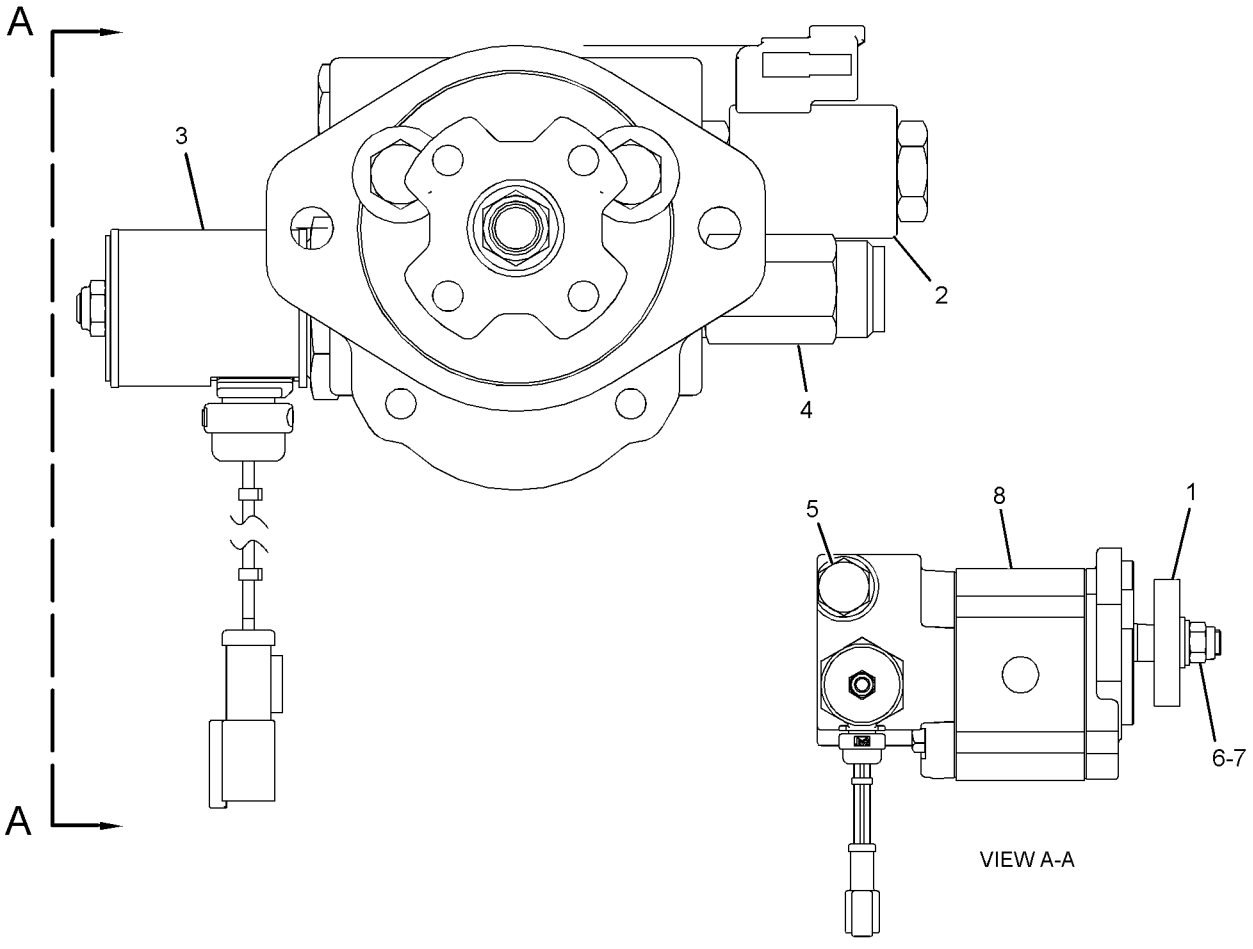

GRAPHIC #1 **<END>** g01410880

289-8962 MOTOR GP-GEAR–HYDRAULIC FAN

S/N: BYD1-UP
PART OF 289-8963 MOTOR AR-HYDRAULIC FAN
AN ATTACHMENT

SMCS-1386, 5061 **i02808779**

NOTE	REF NO	GRAPHIC REF	PART NUMBER	QTY	PART NAME 1 2 3 4 5 6 (PRODUCT LEVEL)	SEE PAGE
Y	1	1	**289-6393**	1	MOTOR GP-GEAR (HYDRAULIC FAN)	590
	2	1	**8T-4121**	4	WASHER-HARD (11X21X2.5-MM THK)	
M	3	1	**8T-4133**	2	NUT (M10X1.5-THD)	
M	4	1	**8T-4196**	2	BOLT (M10X1.5X35-MM)	

M-METRIC PART
Y-SEPARATE ILLUSTRATION

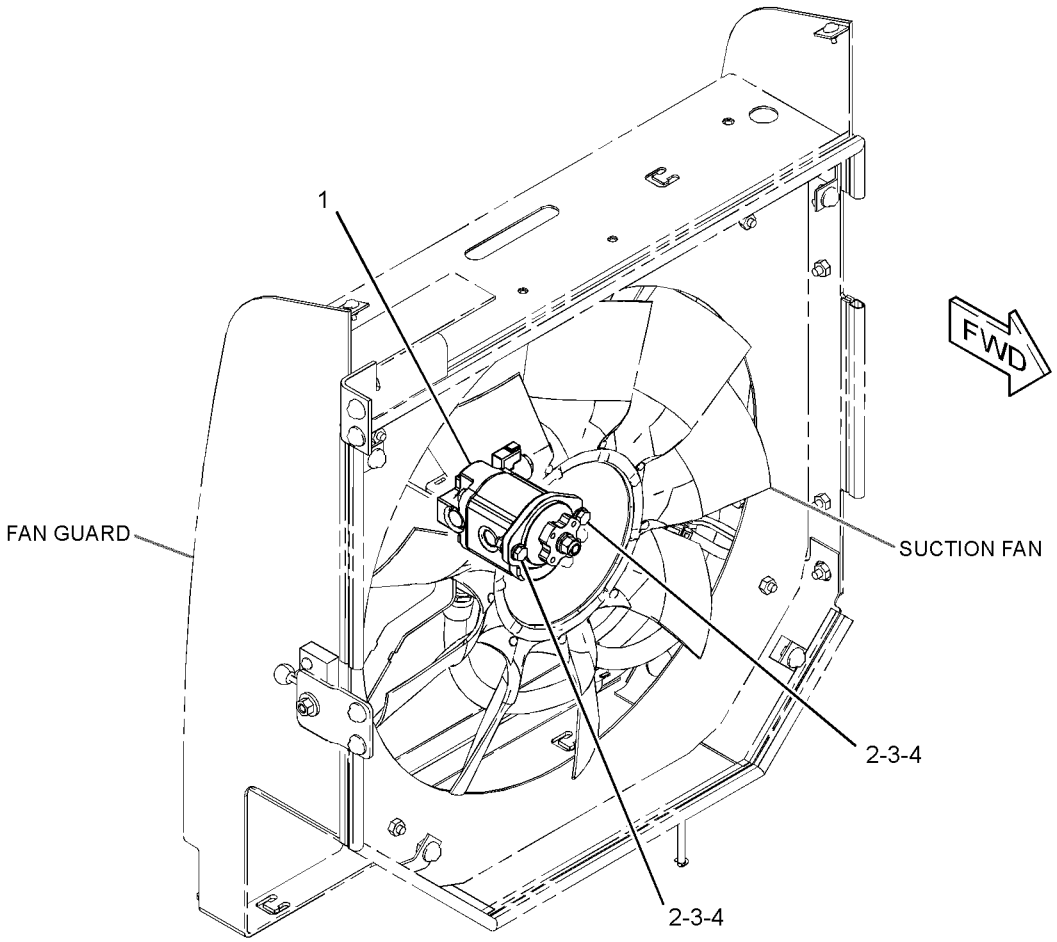

GRAPHIC #1 **<END>** g01391757

299-3939 MOTOR GP-GEAR–REVERSING FAN

S/N: BYD1-UP

PART OF 289-6394 MOTOR GP-GEAR

AN ATTACHMENT

SMCS-1386, 5061 **i02837524**

NOTE	REF NO	GRAPHIC REF	PART NUMBER	QTY	PART NAME 1 2 3 4 5 6 (PRODUCT LEVEL)	SEE PAGE
	1	1	**208-2293**	4	BOLT (M10X1.5X97.8-MM)	
J	2	1	**296-6031**	1	SEAL-LIP TYPE	
J	3	1	**8J-6273**	1	RING-RETAINING	
J	4	1	**135-5935**	1	SEAL-SHAFT	
	5	1	**208-0792**	1	FLANGE	
J	6	1	**4W-7356**	2	SEAL-O-RING	
	7	1	**099-3095**	4	DOWEL	
	8	1	**220-2680**	1	CAP-END	
					PARTS SHOWN IN GRAPHIC(S) WITHOUT A REFERENCE NUMBER ARE NOT SERVICED SEPARATELY	
					AVAILABLE REPAIR KIT(S):	
J			**293-5449**	1	KIT-SEAL	
					(INCLUDES SEAL-O-RING,SEAL-SHAFT,RING-RETAINING,SEAL-LIP TYPE)	

J-KIT MARKED J INCLUDES PARTS MARKED J

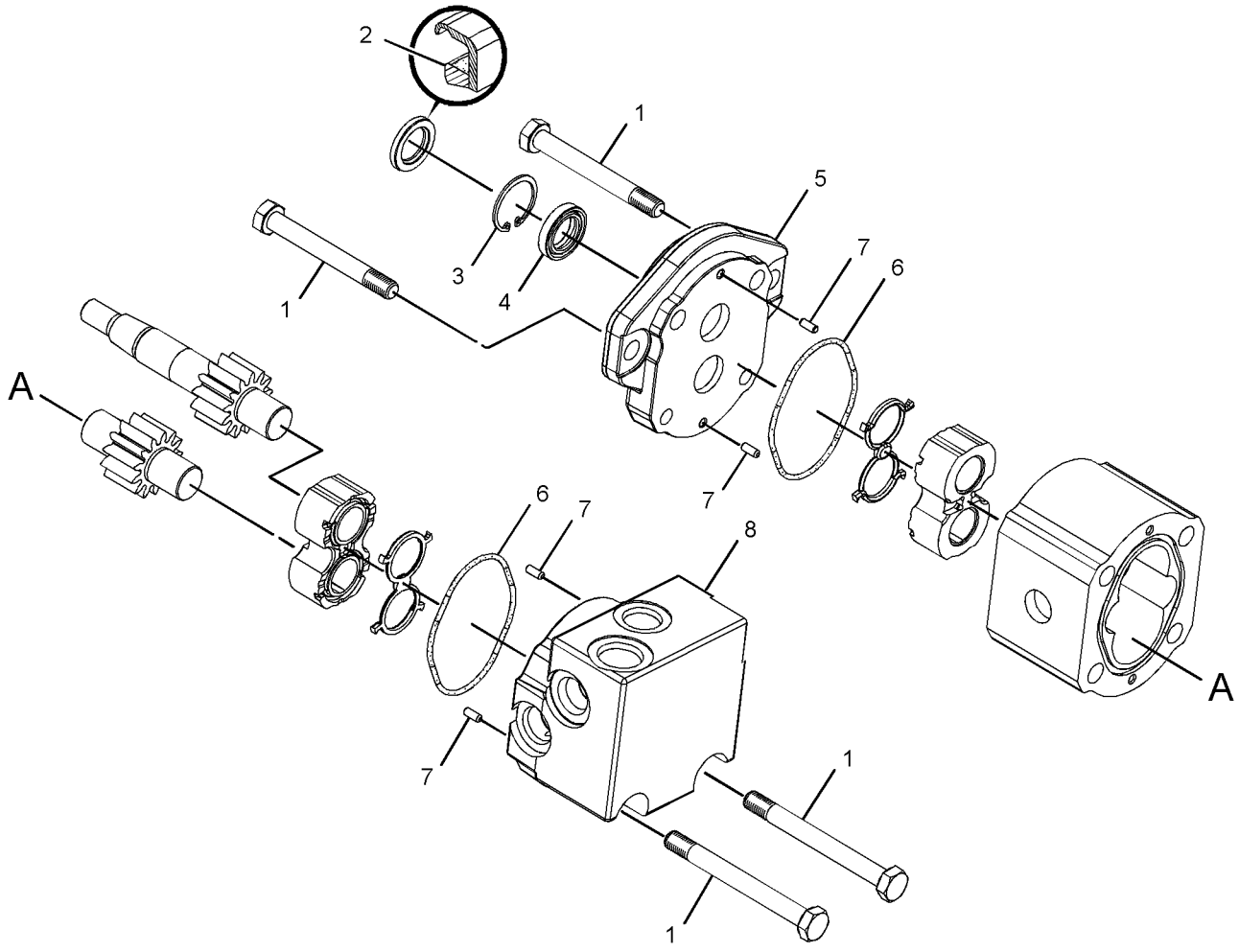

GRAPHIC #1 **<END>** g01405973

HYDRAULIC SYSTEM

299-3940 MOTOR GP-GEAR–HYDRAULIC FAN

S/N: BYD1-UP

PART OF 289-6393 MOTOR GP-GEAR

AN ATTACHMENT

SMCS-1386, 5061 **i02837528**

NOTE	REF NO	GRAPHIC REF	PART NUMBER	QTY	PART NAME 1 2 3 4 5 6 (PRODUCT LEVEL)	SEE PAGE
	1	1	**176-0210**	1	FLANGE	
	2	1	**099-3095**	4	DOWEL	
	3	1	**220-2681**	1	CAP-END	
	4	1	**304-5866**	4	BOLT (M10X1.5X101.6-MM)	
J	5	1	**296-6031**	1	SEAL-LIP TYPE	
J	6	1	**8J-6273**	1	RING-RETAINING	
	7	1	**135-5935**	1	SEAL-SHAFT	
J	8	1	**4W-7356**	2	SEAL-O-RING	
					AVAILABLE REPAIR KIT(S):	
J			**293-5449**	1	KIT-SEAL	
					(KIT ALSO INCLUDES SEAL-SHAFT)	

J-KIT MARKED J INCLUDES PARTS MARKED J

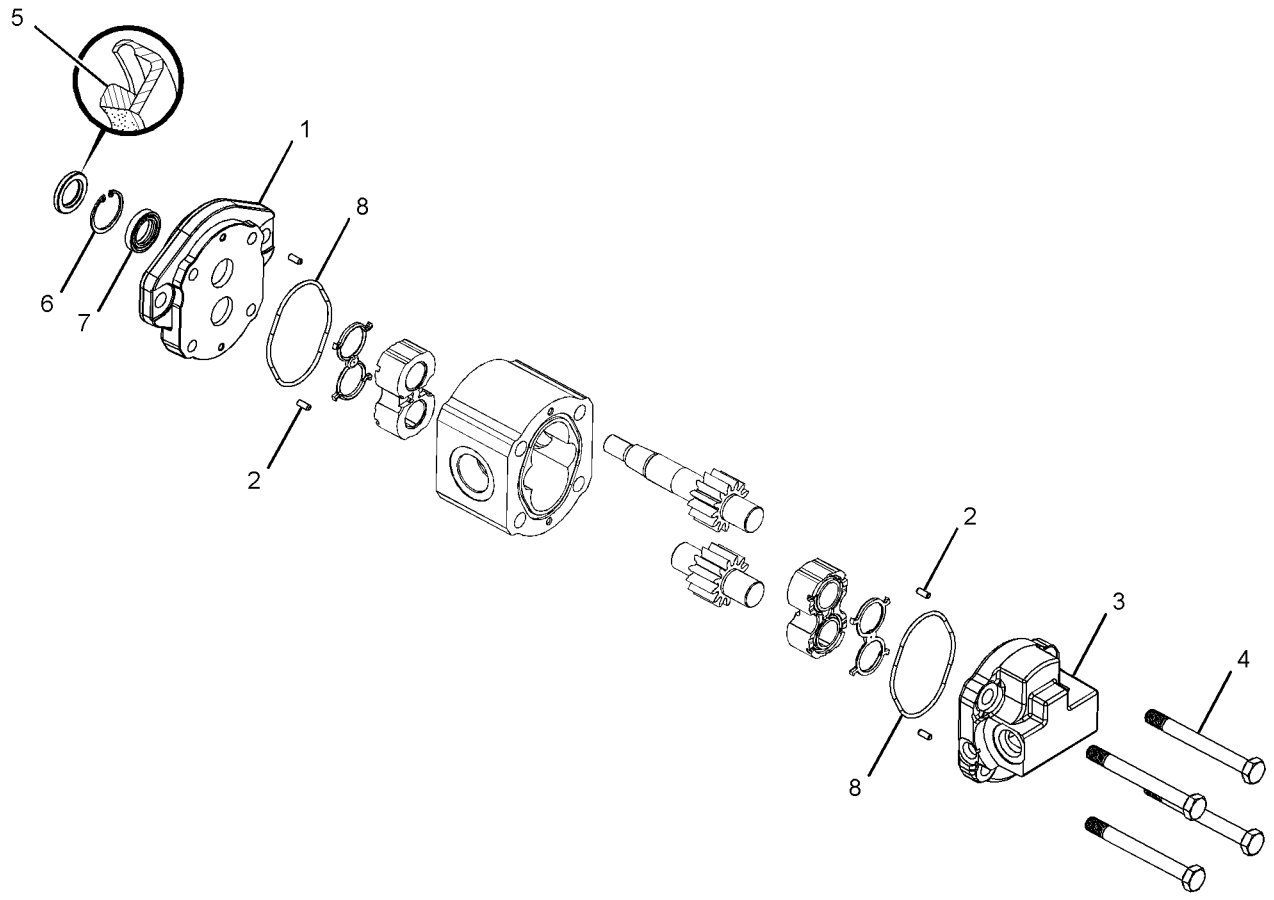

GRAPHIC #1 **<END>** g01391762

HYDRAULIC SYSTEM

235-6941 MOUNTING GP-CONTROL VALVE

S/N: FTD1-UP

PART OF 289-8891, 290-6498 CHASSIS AR

SMCS-5051 **i02703763**

NOTE	REF NO	GRAPHIC REF	PART NUMBER	QTY	PART NAME 1 2 3 4 5 6 (PRODUCT LEVEL)	SEE PAGE
	1	1	**239-9512**	1	COVER	
	2	1	**281-4782**	1	BRACKET AS	
	3	1	**244-6621**	1	BRACKET AS	
C	4	1	**7X-7729**	11	WASHER (11X25X3-MM THK)	
C	5	1	**8T-4121**	2	WASHER-HARD (11X21X2.5-MM THK)	
M	6	1	**8T-4137**	4	BOLT (M10X1.5X20-MM)	
M	7	1	**8T-4192**	3	BOLT (M12X1.75X25-MM)	
M	8	1	**8T-4195**	9	BOLT (M10X1.5X30-MM)	
	9	1	**8T-4223**	3	WASHER-HARD (13.5X25.5X3-MM THK)	
D	10	1	**8T-3425**		CHANNEL-TRIM (0.325-M EACH)	

C-CHANGE FROM PREVIOUS TYPE
D-ORDER BY THE METER
M-METRIC PART

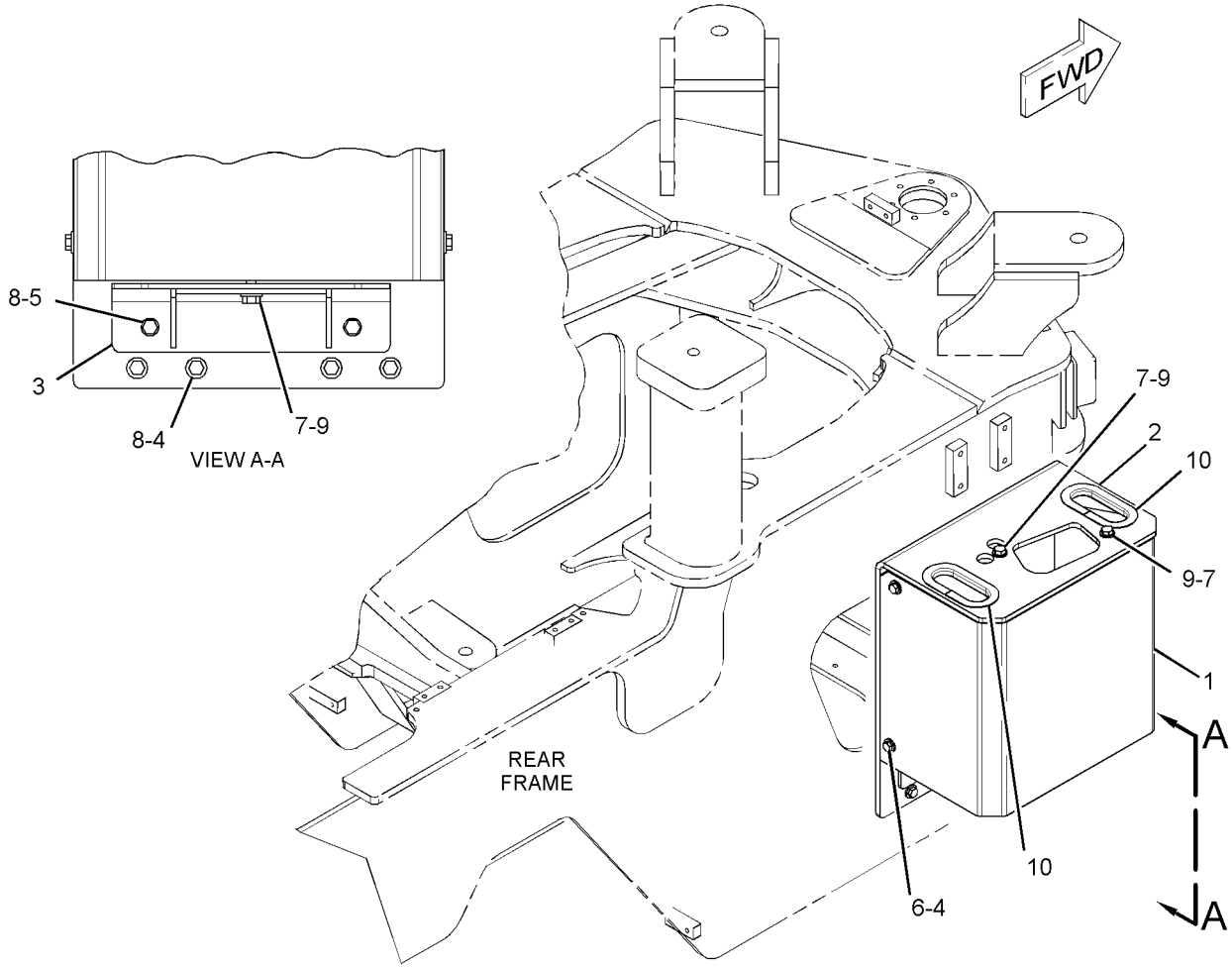

GRAPHIC #1 **<END>** g01364483

HYDRAULIC SYSTEM

175-9443 PIVOT GP-PILOT VALVE

S/N: BYD1-UP; FTD1-UP
PART OF 201-3360, 212-1305, 212-1307 VALVE GP-PILOT
AN ATTACHMENT

SMCS-5059 **i01832901**

NOTE	REF NO	GRAPHIC REF	PART NUMBER	QTY	PART NAME 1 2 3 4 5 6 (PRODUCT LEVEL)	SEE PAGE
	1	1	**139-4189**	1	PLATE	
	2	1	**141-7481**	1	SPACER	
	3	1	**146-3337**	2	PLUNGER AS	
					(EACH INCLUDES)	
		1	**8T-1138**	2	RING-RETAINING	
		1	**131-2639**	1	WASHER (3.2X9X0.5-MM THK)	
	4	1	**146-6315**	1	PIN-ADJUSTMENT	
	5	1	**146-8479**	1	SWIVEL	
	6	1	**153-8946**	2	SPRING	
M	7	1	**178-7877**	1	SETSCREW (M6X1X25-MM)	
	8	1	**146-6317**	1	RETAINER	
	9	1	**159-3781**	1	SPRING	
M	10	1	**5C-2890**	2	NUT (M6X1-THD)	

M-METRIC PART

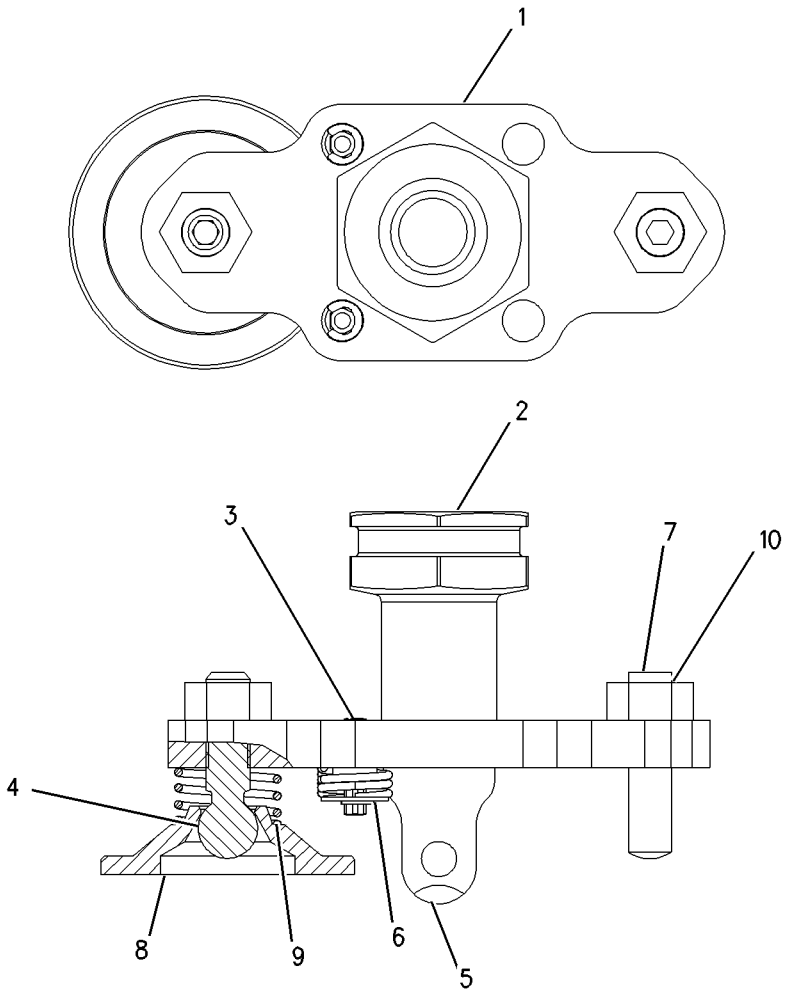

GRAPHIC #1 **<END>** g00649676

175-9444 PIVOT GP-PILOT VALVE

S/N: BYD1-UP
PART OF 201-3360 VALVE GP-PILOT
AN ATTACHMENT

SMCS-5059 **i01613490**

NOTE	REF NO	GRAPHIC REF	PART NUMBER	QTY	PART NAME 1 2 3 4 5 6 (PRODUCT LEVEL)	SEE PAGE
	1	1	**139-4189**	1	PLATE	
	2	1	**141-7481**	1	SPACER	
	3	1	**146-3337**	4	PLUNGER AS	
					(EACH INCLUDES)	
		1	**8T-1138**	2	RING-RETAINING	
		1	**131-2639**	1	WASHER (3.2X9X0.5-MM THK)	
	4	1	**146-6315**	2	PIN-ADJUSTMENT	
	5	1	**146-6317**	2	RETAINER	
	6	1	**146-8479**	1	SWIVEL	
	7	1	**153-8946**	4	SPRING	
	8	1	**159-3781**	2	SPRING	
M	9	1	**5C-2890**	2	NUT (M6X1-THD)	

M-METRIC PART

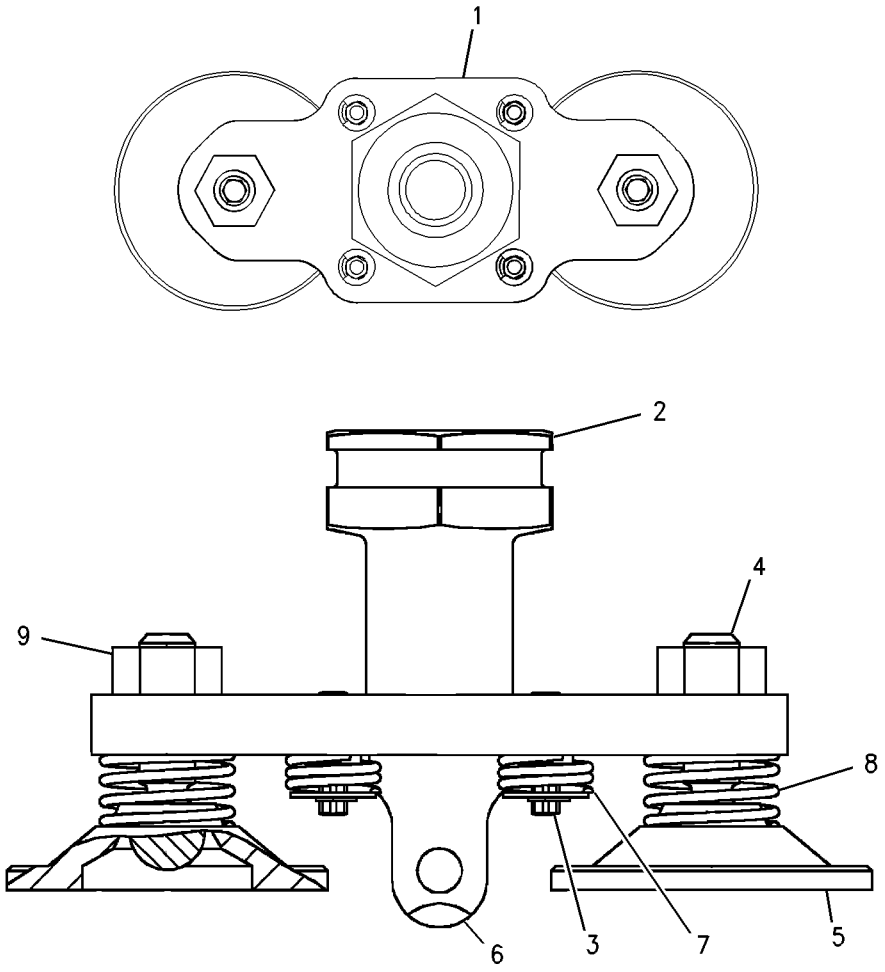

GRAPHIC #1 **<END>** g00807285

HYDRAULIC SYSTEM

202-2564 PIVOT GP-PILOT VALVE

S/N: BYD1-UP
PART OF 201-3361 VALVE GP-PILOT
AN ATTACHMENT

SMCS-5059 **i02034161**

NOTE	REF NO	GRAPHIC REF	PART NUMBER	QTY	PART NAME 1 2 3 4 5 6 (PRODUCT LEVEL)	SEE PAGE
	1	1	**139-4189**	1	PLATE	
	2	1	**141-7481**	1	SPACER	
	3	1	**146-6315**	1	PIN-ADJUSTMENT	
	4	1	**146-6317**	1	RETAINER	
	5	1	**146-8479**	1	SWIVEL	
	6	1	**159-3781**	1	SPRING	
M	7	1	**178-7877**	1	SETSCREW (M6X1X25-MM)	
M	8	1	**5C-2890**	2	NUT (M6X1-THD)	

M-METRIC PART

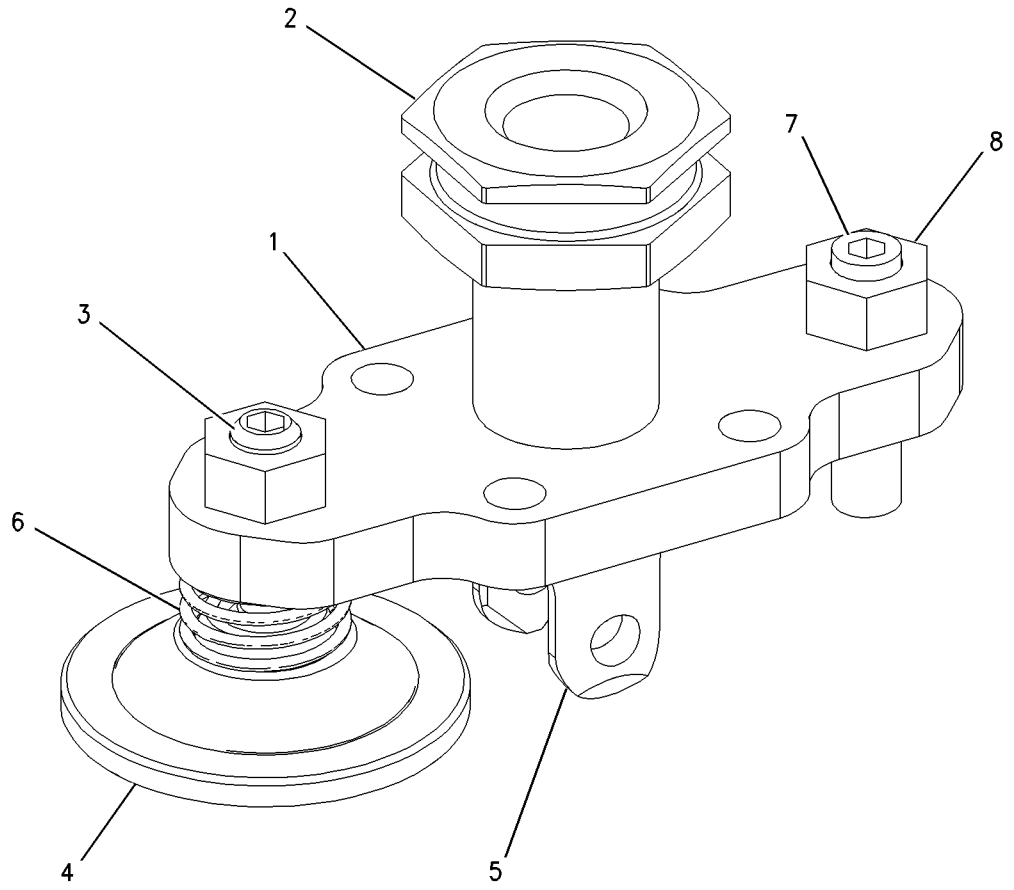

GRAPHIC #1 **<END>** g00803469

147-3322 PLATE GP-PILOT VALVE

S/N: BYD1-UP; FTD1-UP
PART OF 136-9289, 201-3359, 201-3361, 212-1302, 212-1305, 212-1307, 250-8085
VALVE GP-PILOT
AN ATTACHMENT

SMCS-5059 **i02036865**

NOTE	REF NO	GRAPHIC REF	PART NUMBER	QTY	PART NAME 1 2 3 4 5 6 (PRODUCT LEVEL)	SEE PAGE
M	1	1	**5C-2890**	4	NUT (M6X1-THD)	
	2	1	**146-6315**	3	PIN-ADJUSTMENT	
	3	1	**153-8945**	3	PLUNGER AS	
					(EACH INCLUDES)	
		1	**3H-7180**	1	SETSCREW (1/4-28X0.25-IN)	
		1	**6J-9996**	1	SPRING	
M	4	1	**178-7877**	1	SETSCREW (M6X1X25-MM)	
	5	1	**146-6317**	3	RETAINER	
	6	1	**159-3781**	3	SPRING	

M-METRIC PART

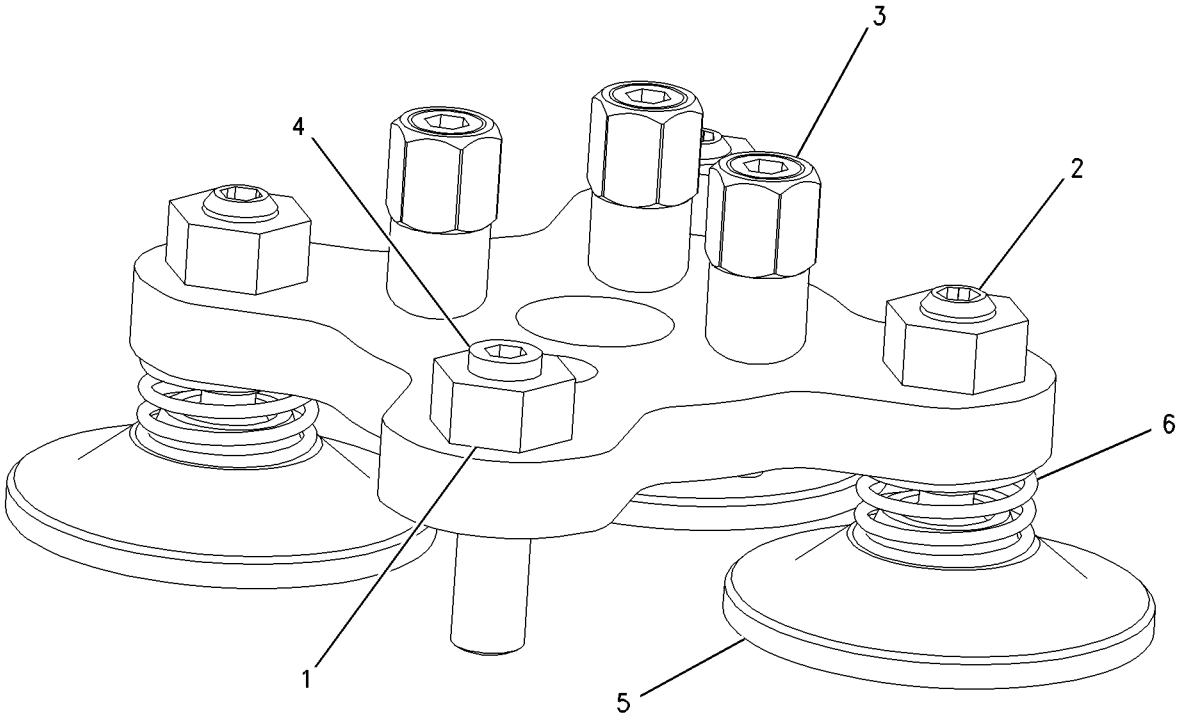

GRAPHIC #1 **<END>** g00810224

163-4636 PLATE GP-PILOT VALVE

S/N: BYD1-UP
PART OF 201-3361 VALVE GP-PILOT
AN ATTACHMENT

SMCS-5059 **i02021398**

NOTE	REF NO	GRAPHIC REF	PART NUMBER	QTY	PART NAME 1 2 3 4 5 6 (PRODUCT LEVEL)	SEE PAGE
	1	1	**136-9297**	1	PLATE	
	2	1	**136-9298**	1	RETAINER	
	3	1	**141-1556**	1	RETAINER	
	4	1	**141-2032**	1	PLATE	
	5	1	**142-2651**	1	PLATE AS	
	6	1	**145-2334**	1	ADAPTER	
	7	1	**148-7922**	1	PLATE	
	8	1	**149-5470**	1	PLATE	
	9	1	**153-8952**	1	ADAPTER	
	10	1	**163-5512**	7	GROMMET	
	11	1	**145-8428**	4	COIL AS-DETENT	
					(EACH INCLUDES)	
BD		1	**6V-2689**		TUBE-HEAT SHRINK (6.35-MM DIA)	
		1	**186-3735**	2	PIN-CONNECTOR (16-GA TO 18-GA)	
M	12	1	**191-8920**	8	BOLT-SOCKET HEAD (M6X1X12-MM)	
	13	1	**3K-0360**	2	SEAL-O-RING	

B-USE AS REQUIRED
D-ORDER BY THE METER
M-METRIC PART

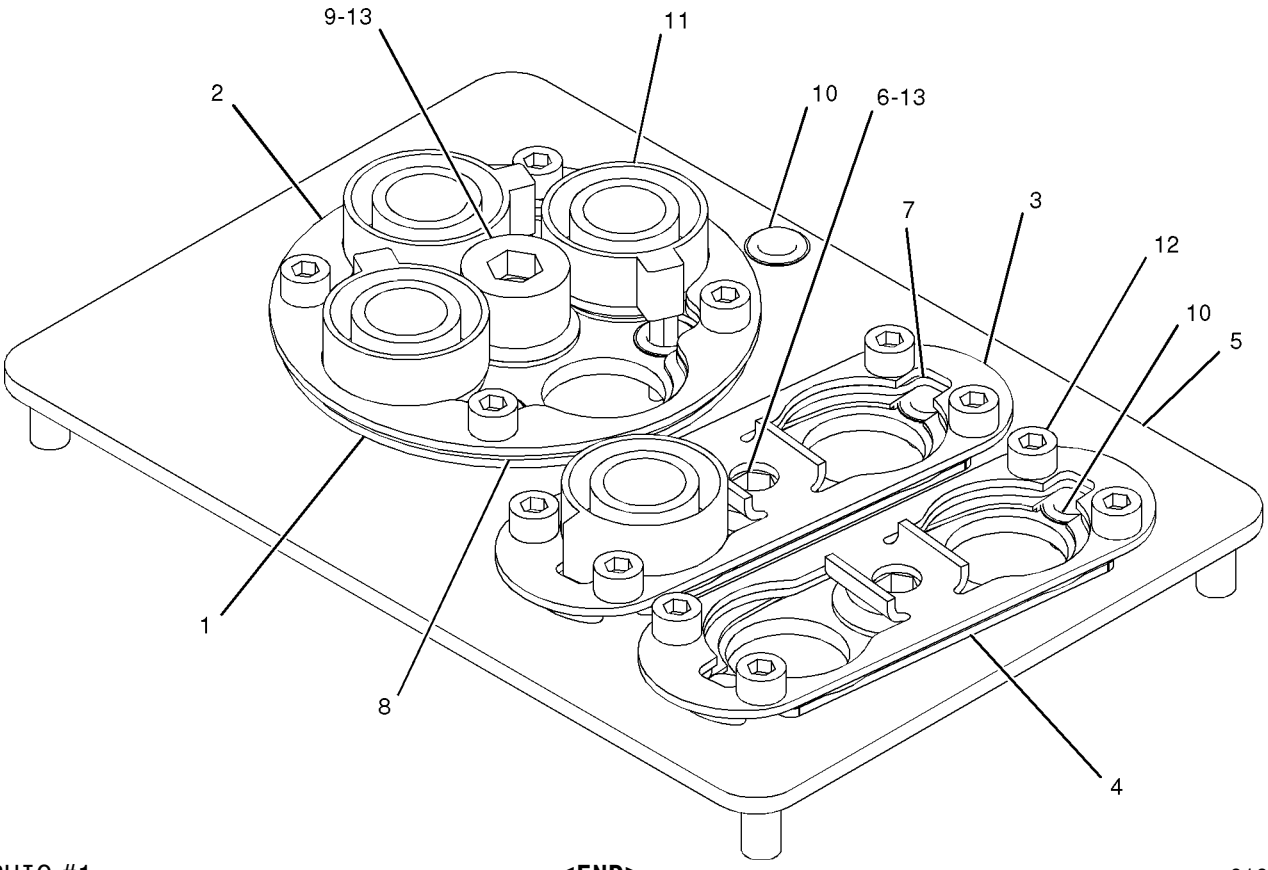

GRAPHIC #1 **<END>** g01043835

HYDRAULIC SYSTEM

163-4637 PLATE GP-PILOT VALVE

S/N: BYD1-UP
PART OF 201-3359 VALVE GP-PILOT
AN ATTACHMENT

SMCS-5059 **i02021397**

NOTE	REF NO	GRAPHIC REF	PART NUMBER	QTY	PART NAME 1 2 3 4 5 6 (PRODUCT LEVEL)	SEE PAGE
	1	1	**136-9297**	1	PLATE	
	2	1	**136-9298**	1	RETAINER	
	3	1	**142-2651**	1	PLATE AS	
	4	1	**149-5470**	1	PLATE	
	5	1	**153-8952**	1	ADAPTER	
	6	1	**163-5512**	5	GROMMET	
	7	1	**145-8428**	3	COIL AS-DETENT	
					(EACH INCLUDES)	
BD		1	**6V-2689**		TUBE-HEAT SHRINK (6.35-MM DIA)	
		1	**186-3735**	2	PIN-CONNECTOR (16-GA TO 18-GA)	
M	8	1	**191-8920**	4	BOLT-SOCKET HEAD (M6X1X12-MM)	
	9	1	**3K-0360**	1	SEAL-O-RING	

B-USE AS REQUIRED
D-ORDER BY THE METER
M-METRIC PART

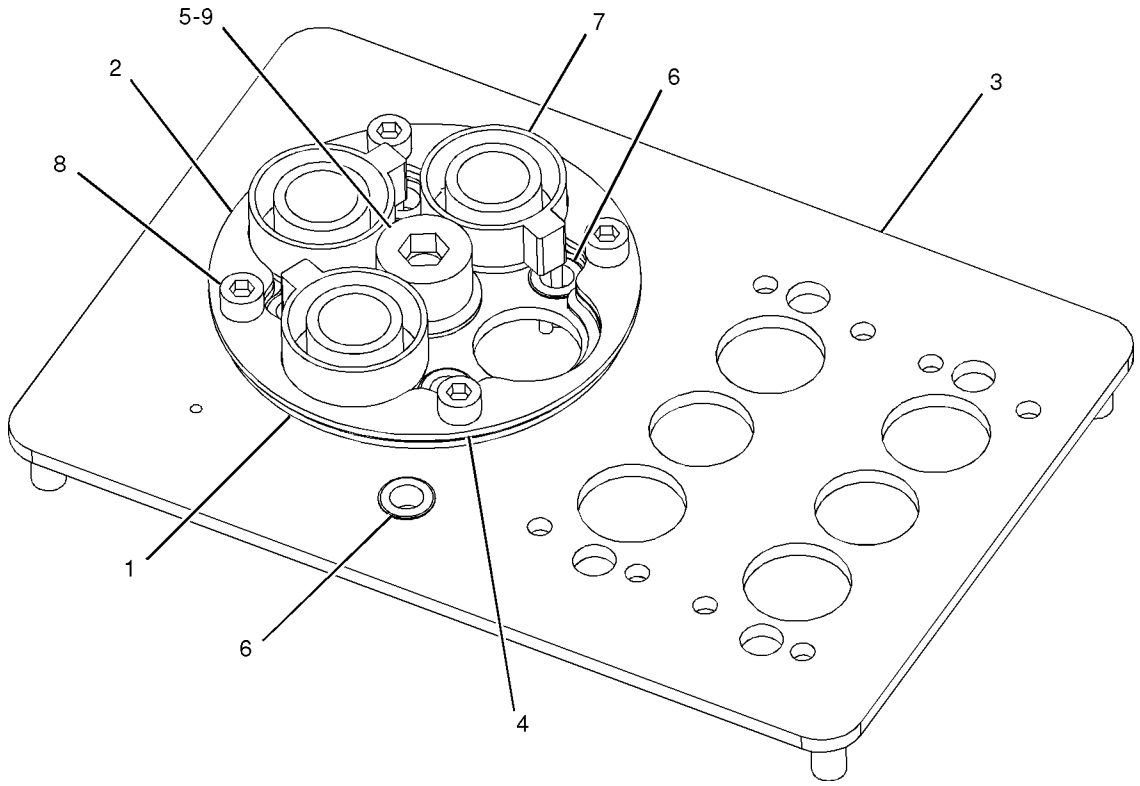

GRAPHIC #1 **<END>** g01043834

HYDRAULIC SYSTEM

175-9436 PLATE GP-PILOT VALVE

S/N: BYD1-UP
PART OF 201-3360 VALVE GP-PILOT
AN ATTACHMENT

SMCS-5059 **i01613499**

NOTE	REF NO	GRAPHIC REF	PART NUMBER	QTY	PART NAME 1 2 3 4 5 6 (PRODUCT LEVEL)	SEE PAGE
	1	1	**141-1556**	2	RETAINER	
	2	1	**141-2032**	2	PLATE	
	3	1	**148-7922**	2	PLATE	
	4	1	**163-5512**	5	GROMMET	
	5	1	**145-2334**	2	ADAPTER	
	6	1	**145-8428**	3	COIL AS-DETENT	
					(EACH INCLUDES)	
		1	**186-3735**	2	PIN-CONNECTOR (16-GA TO 18-GA)	
	7	1	**160-6298**	1	PLATE AS	
	8	1	**102-8806**	1	KIT-RECEPTACLE (8-PIN)	
	9	1	**3E-3389**	1	WEDGE-RECEPTACLE LOCK	
	10	1	**8L-2786**	2	SEAL-O-RING	
M	11	1	**8T-0267**	8	BOLT-SOCKET HEAD (M6X1X12-MM)	
	12	1	**8T-8737**	2	PLUG-SEAL	

M-METRIC PART

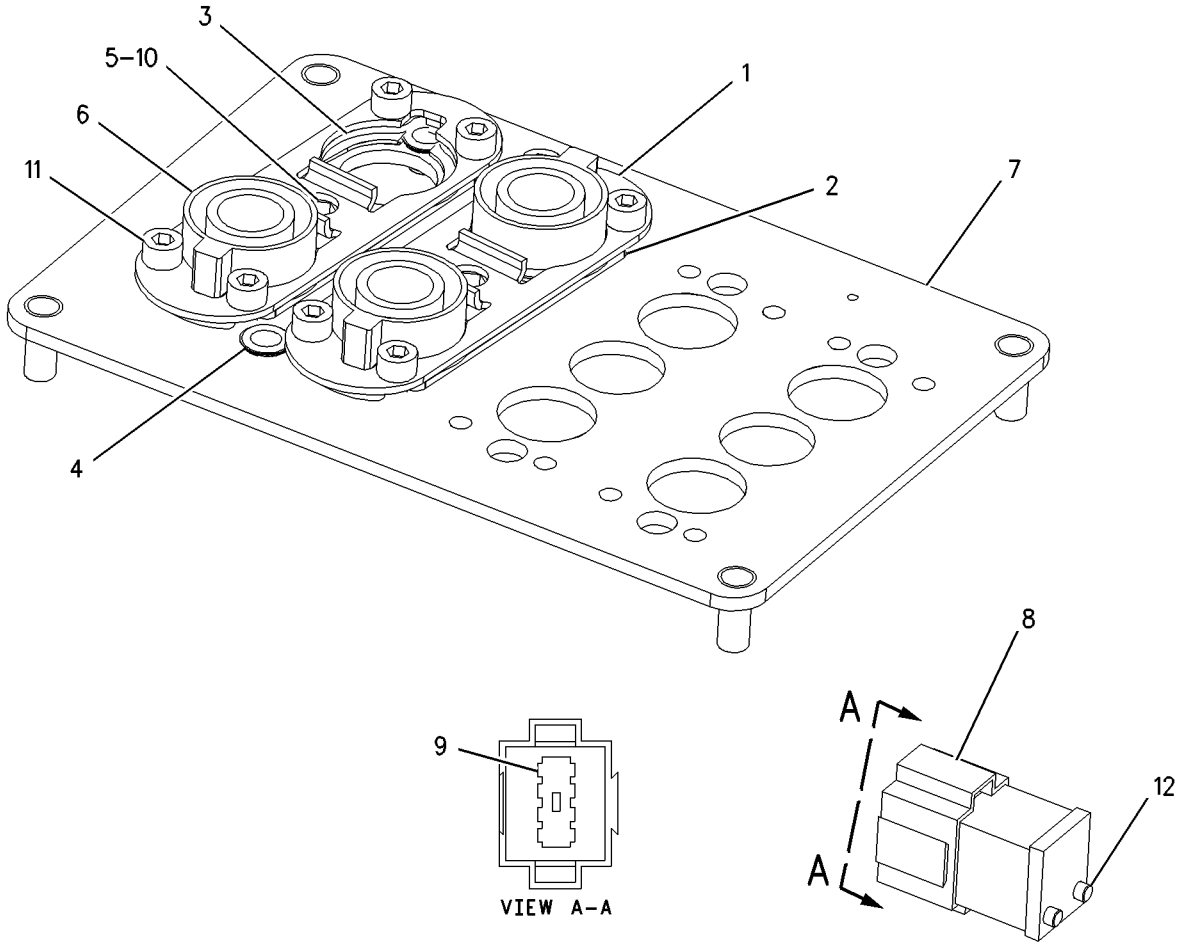

GRAPHIC #1 **<END>** g00836591

289-8919 PUMP & MTG GP-BRAKE & HYD FAN

S/N: BYD1-UP; FTD1-UP

PART OF 289-8843, 289-8863, 289-8883 HYDRAULIC AR

SMCS-1387, 4268 **i02807374**

NOTE	REF NO	GRAPHIC REF	PART NUMBER	QTY	PART NAME 1 2 3 4 5 6 (PRODUCT LEVEL)	SEE PAGE
	1	1	**9Y-9380**	1	GASKET	
Y	2	1	**288-4162**	1	PUMP GP-GEAR (BRAKE, HYDRAULIC FAN) (BRAKE, HYDRAULIC FAN)	606
M	3	1	**3E-8016**	4	BOLT-SELF-LOCKING (M8X1.25X25-MM)	
M	4	1	**5A-3604**	1	BOLT-SOCKET HEAD (M8X1.25X25-MM)	
	5	1	**8T-4224**	7	WASHER-HARD (8.8X16X2-MM THK)	
M	6	1	**8T-6870**	1	BOLT (M8X1.25X70-MM)	

M-METRIC PART
Y-SEPARATE ILLUSTRATION

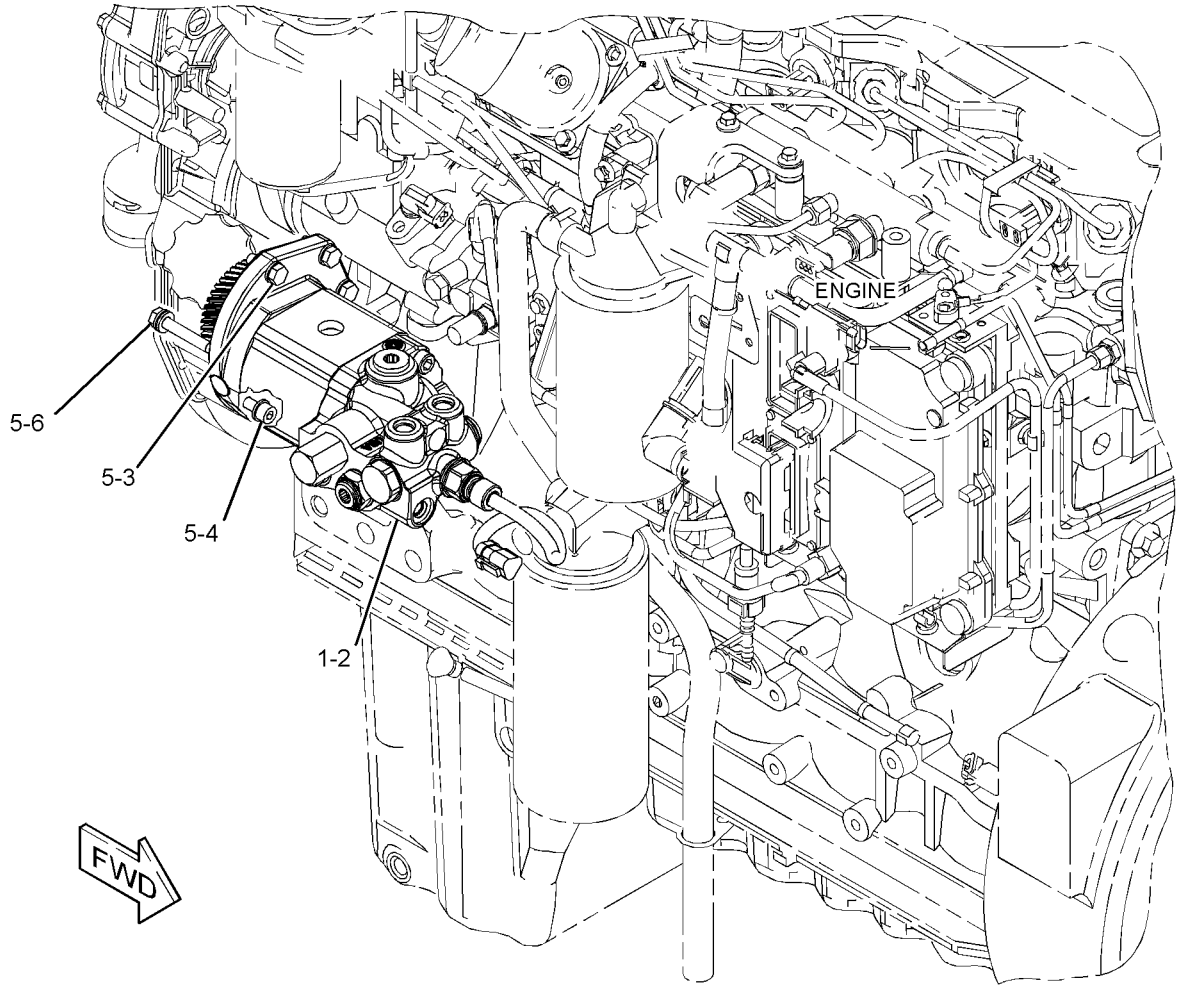

GRAPHIC #1 **<END>** g01399293

HYDRAULIC SYSTEM

118-1083 PUMP & MTG GP-IMPL & STEERING

S/N: BYD1-UP

PART OF 289-8863 HYDRAULIC AR

SMCS-4306, 5055, 5070, 5084 **i01945704**

NOTE	REF NO	GRAPHIC REF	PART NUMBER	QTY	PART NAME 1 2 3 4 5 6 (PRODUCT LEVEL)	SEE PAGE
	1	1	**4E-2673**	1	BRACKET AS	
Y	2	1	**119-7698**	1	PUMP GP-PISTON & VANE	613
	3	1	**1H-6227**	1	SEAL-O-RING	
	4	1	**8T-4121**	4	WASHER-HARD (11X21X2.5-MM THK)	
M	5	1	**8T-4136**	2	BOLT (M10X1.5X25-MM)	
M	6	1	**8T-4196**	2	BOLT (M10X1.5X35-MM)	
M	7	1	**8T-4956**	2	BOLT (M12X1.75X35-MM)	
	8	1	**8T-7971**	2	WASHER-HARD (13.5X25.5X5-MM THK)	

M-METRIC PART
Y-SEPARATE ILLUSTRATION

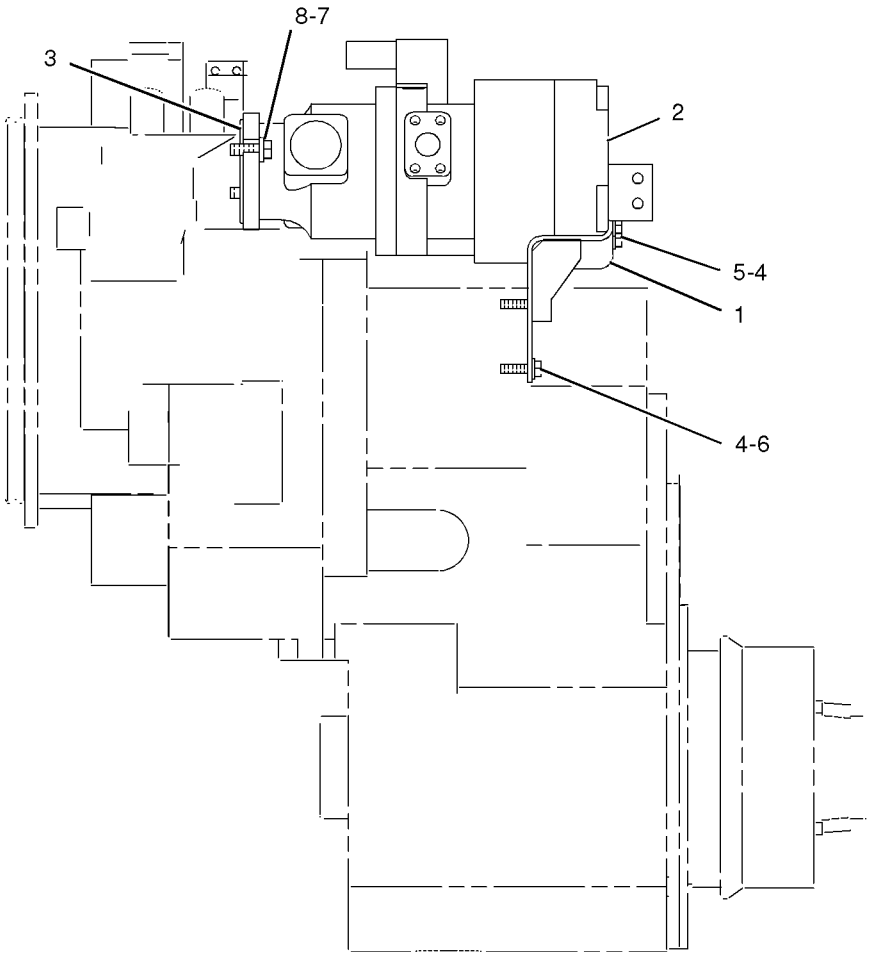

GRAPHIC #1 **<END>** g01044707

HYDRAULIC SYSTEM

235-6830 PUMP & MTG GP-IMPL & STEERING

S/N: FTD1-UP

PART OF 289-8843, 289-8883 HYDRAULIC AR

SMCS-4306, 5055, 5070, 5084 **i02896147**

NOTE	REF NO	GRAPHIC REF	PART NUMBER	QTY	PART NAME 1 2 3 4 5 6 (PRODUCT LEVEL)	SEE PAGE
Y	1	1	**237-0292**	1	PUMP GP-PISTON (IMPLEMENT, STEERING, PILOT)	611
	2	1	**1H-6227**	1	SEAL-O-RING	
CM	3	1	**8T-4183**	2	BOLT (M12X1.75X40-MM)	
	4	1	**8T-7971**	2	WASHER-HARD (13.5X25.5X5-MM THK)	

C-CHANGE FROM PREVIOUS TYPE
M-METRIC PART
Y-SEPARATE ILLUSTRATION

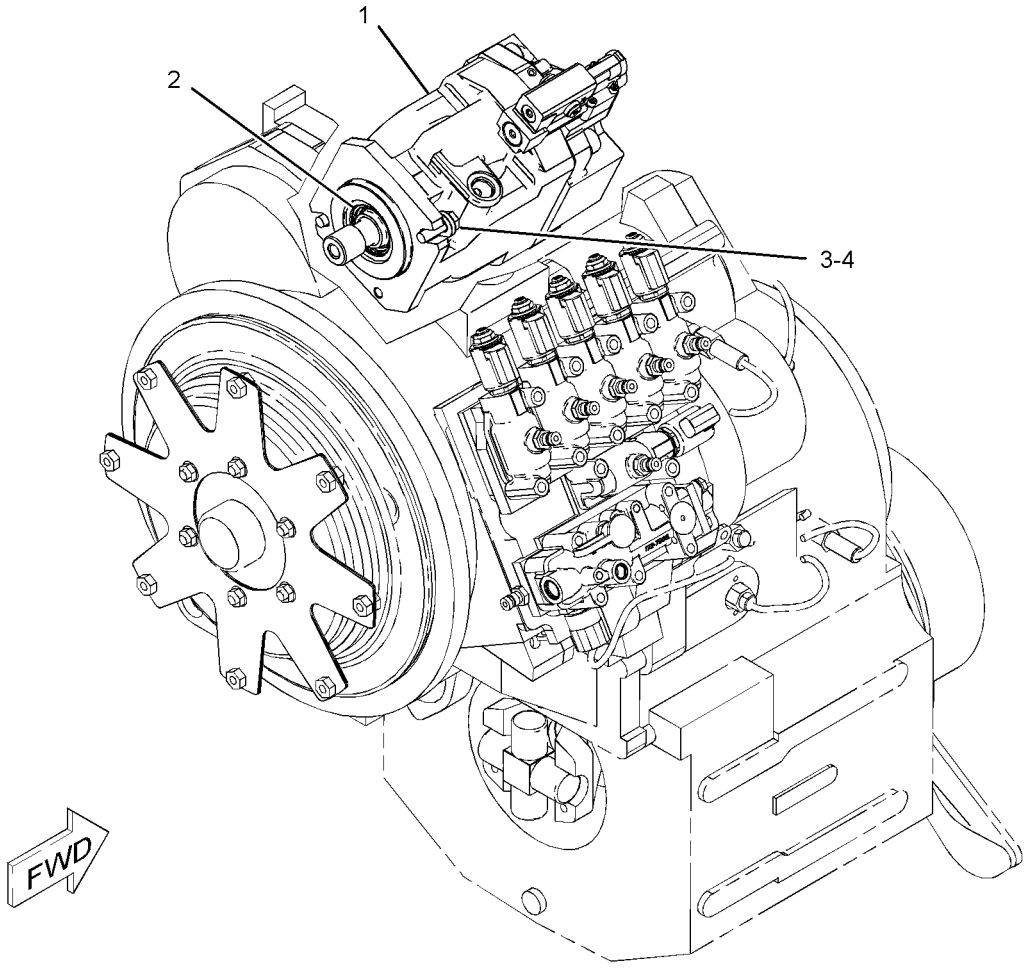

GRAPHIC #1 **<END>** g01107060

288-4162 PUMP GP-GEAR–BRAKE, HYDRAULIC FAN

S/N: BYD1-UP; FTD1-UP

PART OF 289-8919 PUMP & MTG GP-BRAKE & HYD FAN

SMCS-5073 **i02807381**

NOTE	REF NO	GRAPHIC REF	PART NUMBER	QTY	PART NAME 1 2 3 4 5 6 (PRODUCT LEVEL)	SEE PAGE
	1	1	**205-4587**	1	GEAR (33-TEETH)	
M	2	1	**160-8499**	1	NUT (M12X1.5-THD)	
	3	1	**5P-8244**	1	WASHER-HARD (12X22.5X2.5-MM THK)	
Y	4	1	**299-3941**	1	PUMP GP-GEAR (BRAKE, HYDRAULIC FAN)	607
	5	1	**1J-9671**	1	SEAL-O-RING	
					PARTS SHOWN IN GRAPHIC(S) WITHOUT A REFERENCE NUMBER ARE NOT SERVICED SEPARATELY	

M-METRIC PART
Y-SEPARATE ILLUSTRATION

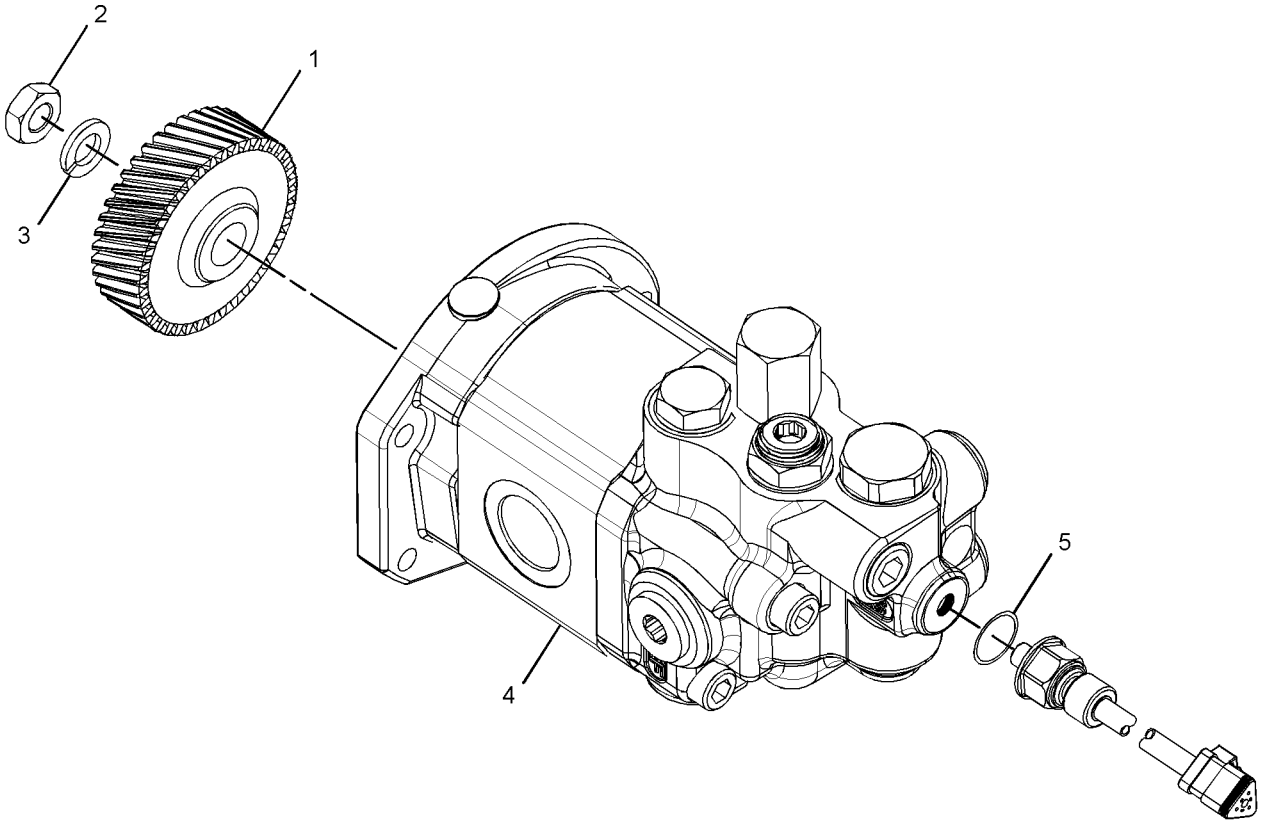

GRAPHIC #1 **<END>** g01414693

299-3941 PUMP GP-GEAR–BRAKE, HYDRAULIC FAN

S/N: BYD1-UP; FTD1-UP

PART OF 288-4162 PUMP GP-GEAR

SMCS-5073 **i02837541**

NOTE	REF NO	GRAPHIC REF	PART NUMBER	QTY	PART NAME 1 2 3 4 5 6 (PRODUCT LEVEL)	SEE PAGE
	1	1	**204-4148**	1	SEAL-SHAFT	
	2	1	**131-0715**	1	SEAL-SHAFT	
	3	1	**220-2657**	1	FLANGE	
	4	1	**099-3095**	3	DOWEL	
J	5	1	**4W-7356**	2	SEAL-O-RING	
	6	1	**6E-2943**	1	PLUG (DRAIN)	
	7	1	**270-2615**	1	VALVE GP-ACCUMULATOR CHARGING (BRAKE)	
		1	**270-2616**	1	KIT-SEAL	
					(INCLUDES SEALS, POPPETS, PLUG & FILTER)	
	8	1	**199-3778**	2	BOLT-SOCKET HEAD	
M	9	1	**8T-0272**	1	BOLT-SOCKET HEAD (M10X1.5X110-MM)	
M	10	1	**086-2369**	1	BOLT-SOCKET HEAD (M10X1.5X130-MM)	
					PARTS SHOWN IN GRAPHIC(S) WITHOUT A REFERENCE NUMBER ARE NOT SERVICED SEPARATELY	
					AVAILABLE REPAIR KIT(S):	
J			**201-5242**	1	KIT-SEAL (GEAR PUMP)	
					(INCLUDES SEALS & RINGS)	

J-KIT MARKED J SERVICES PART MARKED J
M-METRIC PART

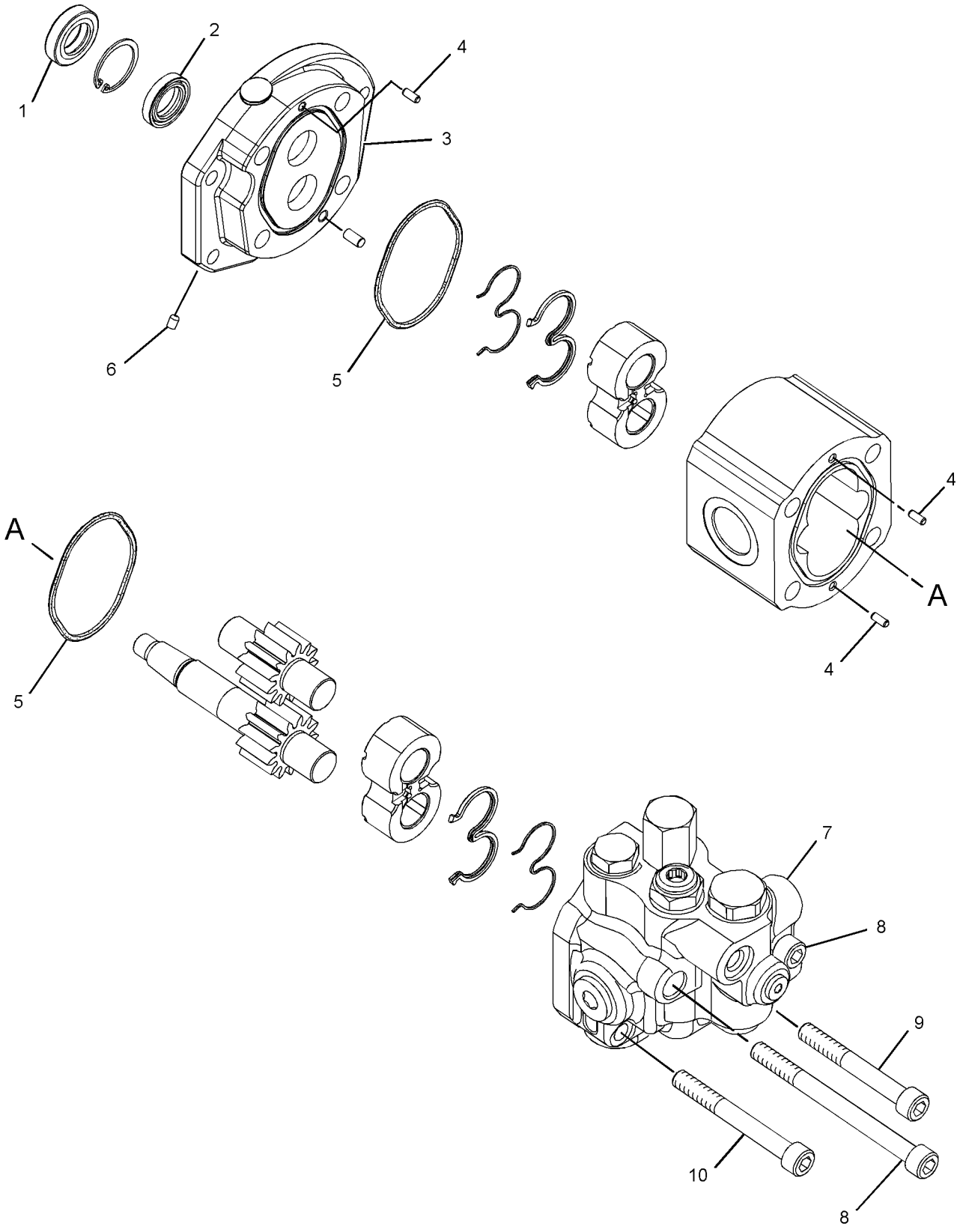

GRAPHIC #1 **<END>** g01398192

120-0140 PUMP GP-PISTON—STEERING, PILOT*R

S/N: BYD1-UP

PART OF 119-7698 PUMP GP-PISTON & VANE

SMCS-5070 **i00534037**

NOTE	REF NO	GRAPHIC REF	PART NUMBER	QTY	PART NAME 1 2 3 4 5 6 (PRODUCT LEVEL)	SEE PAGE
	1	1	**105-2151**	1	HEAD-PUMP	
	2	1	**9F-2247**	1	PLUG-PIPE	
	3	1	**9T-3867**	1	SPRING	
	4	1	**9T-1710**	1	POPPET	
	5	1	**9T-1636**	1	SEAT	
	6	1	**9T-2017**	2	SPACER (12.2-MM THK)	
	7	1	**005-8593**	2	SEAL-O-RING	
	8	1	**9T-2011**	1	SHIM PACK	
	9	1	**3P-8680**	2	CUP-BEARING	
	10	1	**7T-9831**	2	CONE-BEARING	
	11	1	**9T-2015**	1	HOUSING	
	12	1	**9T-2014**	2	COVER	
	13	1	**5P-0076**	6	BOLT-12 POINT HEAD (3/8-16X1.5-IN)	
	14	1	**9T-1752**	1	GASKET	
	15	1	**9S-4190**	1	PLUG-O-RING	
	16	1	**2M-9780**	1	SEAL-O-RING	
	17	1	**8T-5089**	2	PIN-SPRING	
	18	1	**7L-0688**	4	BOLT-SOCKET HEAD (10-24X1.2-IN)	
Y	19	1	**130-6235**	1	VALVE GP-PUMP CONTROL (PRESSURE, FLOW COMPENSATOR)	682
Y	20	1	**9T-2031**	1	ROTATING GP-PUMP	614
	21	1	**9T-2231**	1	SWASHPLATE	
	22	1	**6E-6481**	1	SHAFT	
	23	1	**002-3455**	1	RING-RETAINING	
	24	1	**3E-6748**	1	SEAL-LIP TYPE	
	25	1	**7T-9755**	1	CUP-BEARING	
	26	1	**7T-9754**	1	CONE-BEARING	
	27	1	**9T-2000**	1	KIT-SPACER	
	28	1	**9T-2232**	1	PLATE-WAFER	
	29	1	**9T-2001**	1	PIN	
	30	1	**7T-9753**	1	CUP-BEARING	
	31	1	**7T-9752**	1	CONE-BEARING	
	32	1	**9T-2173**	1	SEAT	
	33	1	**8J-8308**	1	PIN-ROLL	
	34	1	**9T-2168**	1	SPRING	
	35	1	**9T-2171**	1	SEAT	
	36	1	**9T-2172**	1	PISTON	
	37	1	**033-6028**	1	SEAL-O-RING	
	38	1	**100-4230**	1	ROD-CONTROL	
	39	1	**100-4231**	1	CONNECTOR	
	40	1	**8F-9206**	2	SEAL-O-RING	
	41	1	**9T-2002**	1	GASKET	
	42	1	**5F-9144**	1	SEAL-O-RING	
	43	1	**9T-2003**	1	RING	
	44	1	**9S-2011**	8	SCREW-MACHINE (1/4-20X0.5-IN)	

Y-SEPARATE ILLUSTRATION

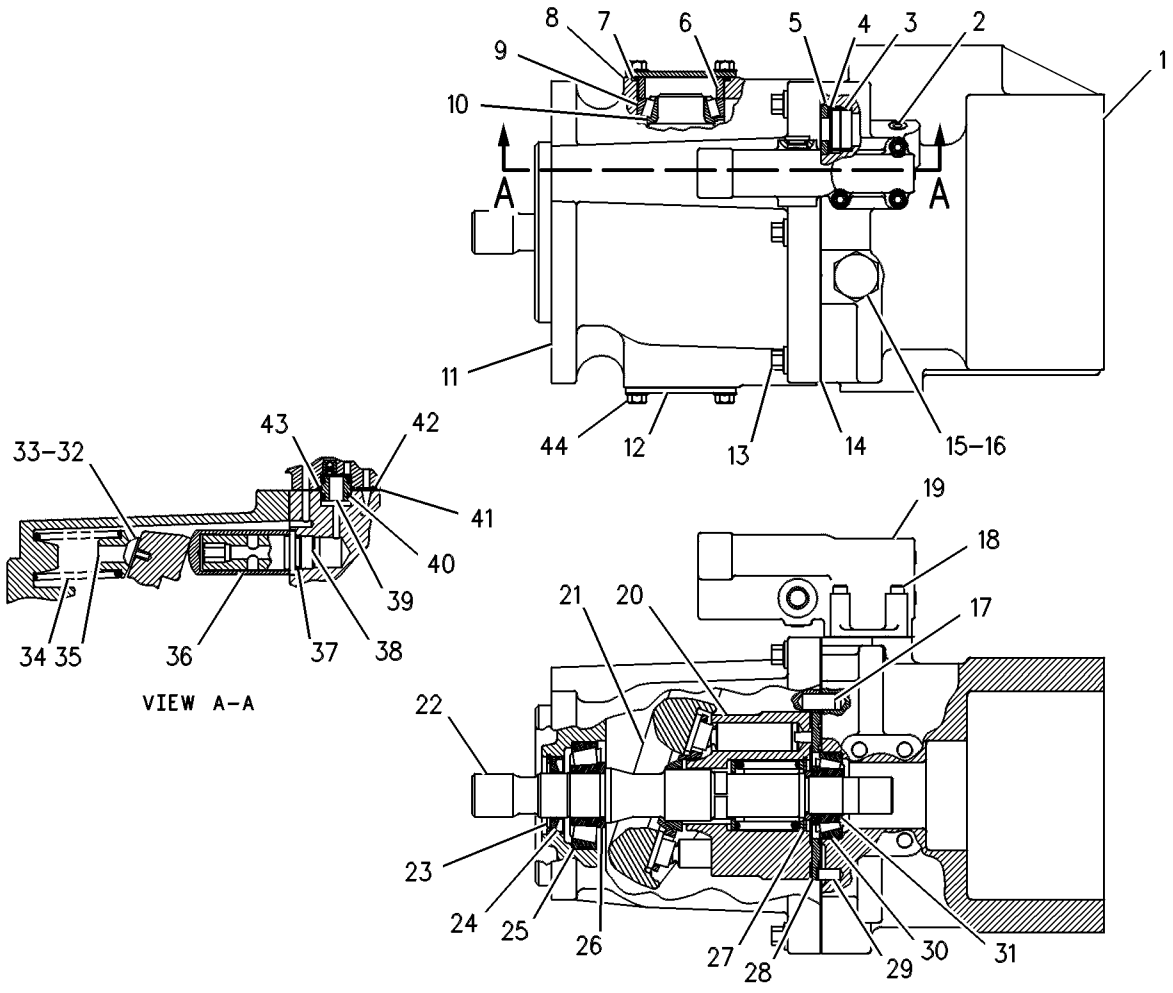

GRAPHIC #1 **<END>** g00131202

237-0292 PUMP GP-PISTON–IMPLEMENT, STEERING, PILOT

S/N: FTD1-UP

PART OF 235-6830 PUMP & MTG GP-IMPL & STEERING

SMCS-5070 **i02602870**

NOTE	REF NO	GRAPHIC REF	PART NUMBER	QTY	PART NAME 1 2 3 4 5 6 (PRODUCT LEVEL)	SEE PAGE
	1	1	**261-0438**	1	KIT-BEARING (STEERING, IMPLEMENT PILOT)	
					(INCLUDES BEARINGS)	
	2	1	**1P-6872**	1	CUP-BEARING	
	3	1	**8C-7110**	1	CONE-BEARING	
	4	1	**002-0754**	1	CUP-BEARING	
	5	1	**031-1348**	1	CONE-BEARING	
	6	1	**261-0434**	1	SHAFT-DRIVE	
	7	1	**248-1353**	1	KIT-PUMP (STEERING, IMPLEMENT PILOT)	
	8	1	**261-0437**	1	SWASHPLATE	
	9	1	**248-1159**	1	PLATE-VALVE	
	10	1	**248-1348**	1	KIT-CONTROL (STEERING, IMPLEMENT PILOT)	
	11	1	**8L-2777**	1	SEAL-O-RING	
	12	1	**6J-2245**	1	SEAL-O-RING	
	13	1	**3J-7354**	6	SEAL-O-RING	
	14	1	**234-4173**	4	SEAL-O-RING	
	15	1	**3K-0360**	1	SEAL-O-RING	
	16	1	**2M-9780**	2	SEAL-O-RING	
	17	1	**261-4173**	1	SEAL-LIP TYPE	
	18	1	**6J-7855**	1	RING-LOCK	
					AVAILABLE REPAIR KIT(S):	
			261-0431	1	KIT-SEAL (STEERING, IMPLEMENT PILOT)	
					(INCLUDES RINGS & SEALS)	

237-0292 PUMP GP-PISTON *(contd.)* **i02602870**

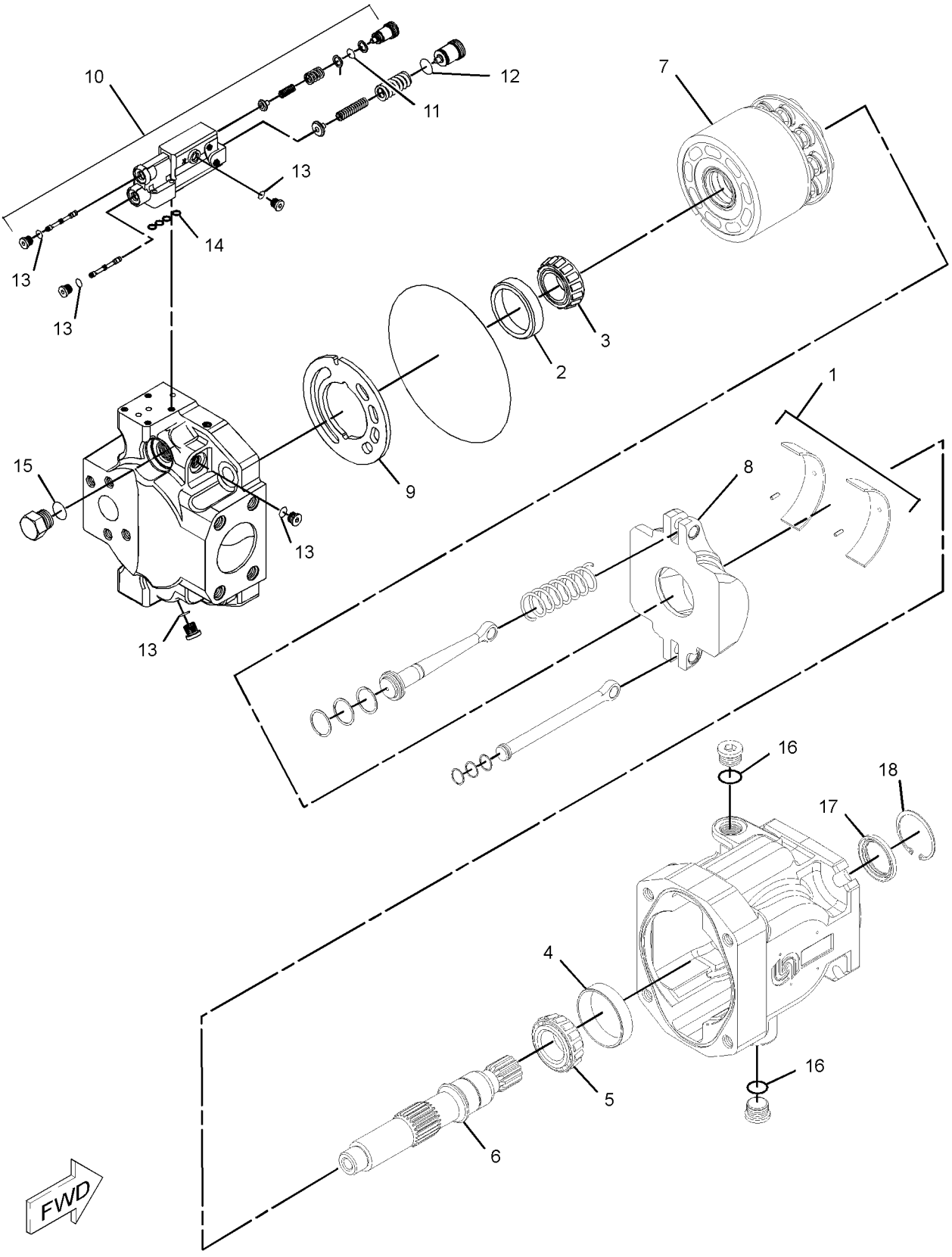

GRAPHIC #1 **<END>** g01302742

119-7698 PUMP GP-PISTON & VANE–
IMPLEMENT, STEERING, PILOT
S/N: BYD1-UP
PART OF 118-1083 PUMP & MTG GP-IMPL & STEERING

SMCS-5055, 5070 **i02853822**

NOTE	REF NO	GRAPHIC REF	PART NUMBER	QTY	PART NAME 1 2 3 4 5 6 (PRODUCT LEVEL)	SEE PAGE
YR	1	1	*120-0140*	1	PUMP GP-PISTON (STEERING, PILOT)	609
	2	1	**2M-8191**	2	RING-SNAP	
YR	3	1	**6E-6477**	1	CARTRIDGE GP-VANE PUMP (IMPLEMENT)	481
	4	1	**120-0145**	1	SHAFT-PUMP	
	5	1	**120-0146**	1	COVER-PUMP	
	6	1	**2H-1142**	1	RING-RETAINING	
	7	1	**6E-6480**	1	BEARING	
	8	1	**6J-7854**	2	RING-SNAP	
	9	1	**6E-6473**	1	COUPLING	
	10	1	**9X-8887**	4	BOLT (3/4-10X3-IN)	

R-REMFG PART MAY BE AVAILABLE
Y-SEPARATE ILLUSTRATION

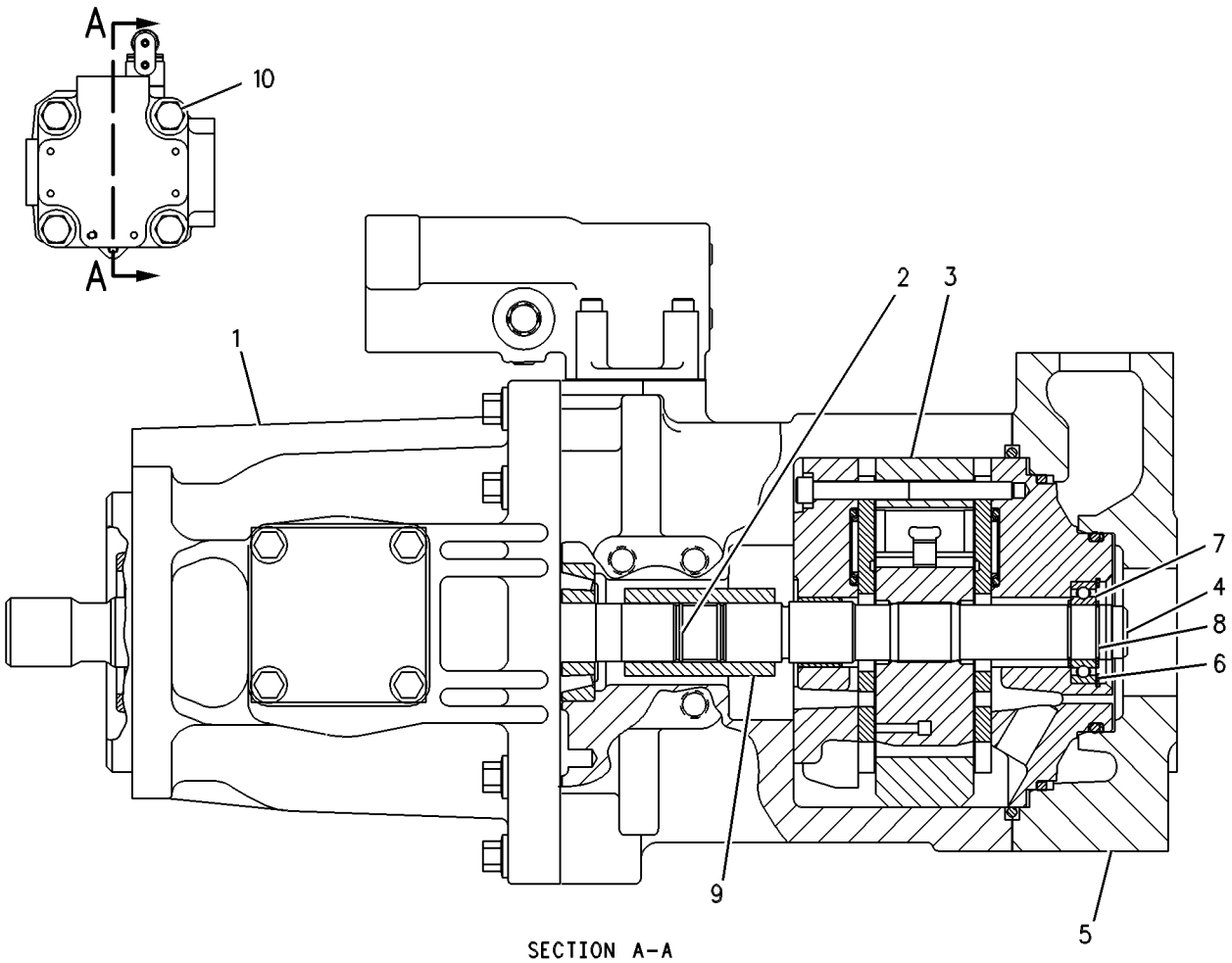

SECTION A-A

GRAPHIC #1 **<END>** g00131711

HYDRAULIC SYSTEM

9T-2031 ROTATING GP-PUMP—STEERING, PILOT

S/N: BYD1-UP

PART OF 120-0140 PUMP GP-PISTON

SMCS-1387, 5070, 5084 **i00527855**

NOTE	REF NO	GRAPHIC REF	PART NUMBER	QTY	PART NAME 1 2 3 4 5 6 (PRODUCT LEVEL)	SEE PAGE
	1	1	**9T-3868**	1	KIT-PISTON	
	2	1	**9T-3860**	1	PLATE	
	3	1	**9T-3859**	1	WASHER (1.068X1.139X0.099-MM THK)	
	4	1	**9T-3862**	1	RETAINER	
	5	1	**9T-3857**	3	PIN	
	6	1	**9T-3863**	1	BARREL	
	7	1	**9T-3861**	1	WASHER (1.062X1.58X0.095-MM THK)	
	8	1	**9T-3858**	1	SPRING	
	9	1	**9T-3864**	1	WASHER (1.2X1.58X0.095-MM THK)	
	10	1	**004-1683**	1	RING-SNAP	

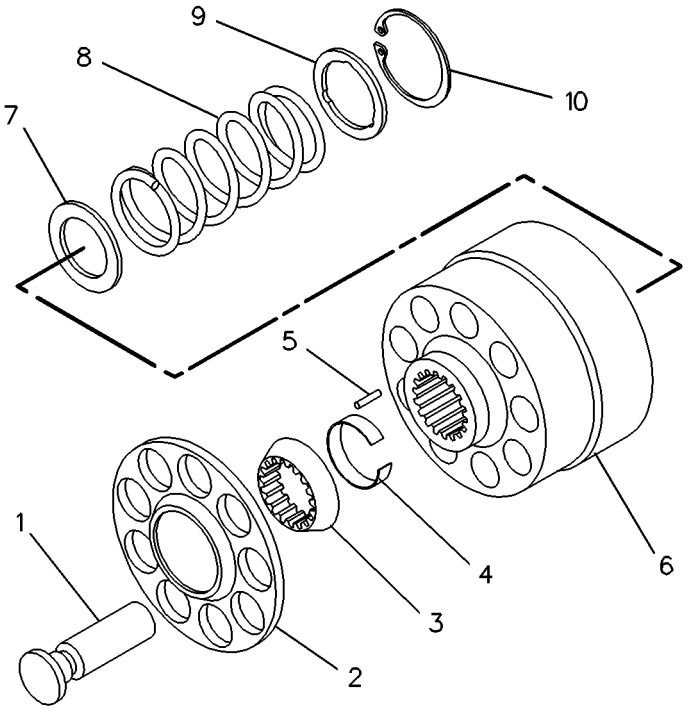

GRAPHIC #1 **<END>** g00119400

HYDRAULIC SYSTEM

289-8901 TANK & MTG GP-HYDRAULIC

S/N: BYD1-UP; FTD1-UP

PART OF 289-8843, 289-8863, 289-8883 HYDRAULIC AR

SMCS-5056 **i02807365**

NOTE	REF NO	GRAPHIC REF	PART NUMBER	QTY	PART NAME 1 2 3 4 5 6 (PRODUCT LEVEL)	SEE PAGE
	1	1	**246-2641**	1	PADLOCK GP	
		1	**5P-8500**		KEY	
	2	1	**7T-8332**	4	MOUNTING	
Y	3	1	*262-5654*	1	TANK GP-HYDRAULIC	616
	4	1	**289-9620**	1	PLATE AS	
	5	1	**289-9621**	1	PLATE AS	
	6	1	**290-4734**	1	PLATE AS	
	7	1	**7X-7729**	10	WASHER (11X25X3-MM THK)	
	8	1	**8F-6437**	4	WASHER (13.5X50.8X4.76-MM THK)	
	9	1	**8T-4121**	2	WASHER-HARD (11X21X2.5-MM THK)	
M	10	1	**8T-4136**	2	BOLT (M10X1.5X25-MM)	
M	11	1	**8T-4137**	2	BOLT (M10X1.5X20-MM)	
M	12	1	**8T-4186**	8	BOLT (M10X1.5X40-MM)	
	13	1	**8T-4223**	8	WASHER-HARD (13.5X25.5X3-MM THK)	
M	14	1	**8T-4244**	4	NUT (M12X1.75-THD)	
M	15	1	**8T-4910**	4	BOLT (M12X1.75X60-MM)	

M-METRIC PART
Y-SEPARATE ILLUSTRATION

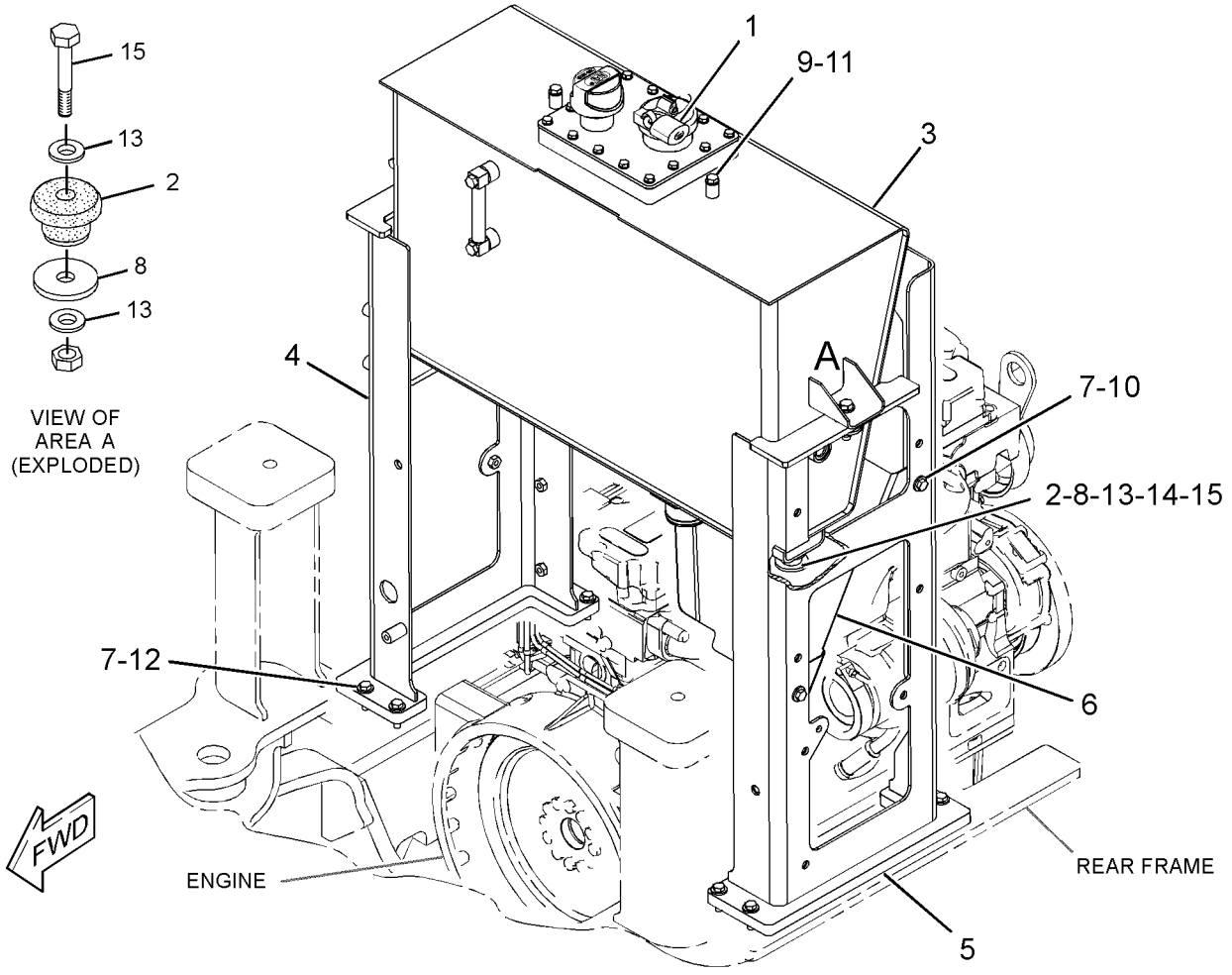

GRAPHIC #1 **<END>** g01408490

HYDRAULIC SYSTEM

262-5654 TANK GP-HYDRAULIC

S/N: BYD1-UP; FTD1-UP

PART OF 289-8901 TANK & MTG GP-HYDRAULIC

SMCS-5056 **i02853825**

NOTE	REF NO	GRAPHIC REF	PART NUMBER	QTY	PART NAME 1 2 3 4 5 6 (PRODUCT LEVEL)	SEE PAGE
	1	1	**142-8937**	1	CAP AS-FILLER (HYDRAULIC TANK)	
	2	1	**206-8818**	1	STRAINER	
	3	1	**206-9546**	1	GASKET (HYDRAULIC TANK)	
	4	1	**253-8295**	1	GAUGE-SIGHT	
	5	1	**255-0759**	1	SCREEN-SUCTION	
	6	1	**258-2829**	1	BREATHER (HYDRAULIC TANK)	
	7	1	**262-5653**	1	TANK AS-HYDRAULIC	
	8	1	**135-7940**	1	SEAL-O-RING	
	9	1	**300-1301**	1	COVER AS-HYDRAULIC TANK	
		1	**5P-4116**	1	WASHER-HARD (8.8X20.5X2-MM THK)	
M		1	**8T-6912**	1	BOLT (M8X1.25X50-MM)	
		1	**299-7996**	1	PLATE	
		1	**299-7997**	1	SCREEN	
		1	**299-7998**	1	PLATE AS	
	10	1	**8T-4224**	14	WASHER-HARD (8.8X16X2-MM THK)	
M	11	1	**8T-4908**	14	BOLT (M8X1.25X25-MM)	

M-METRIC PART

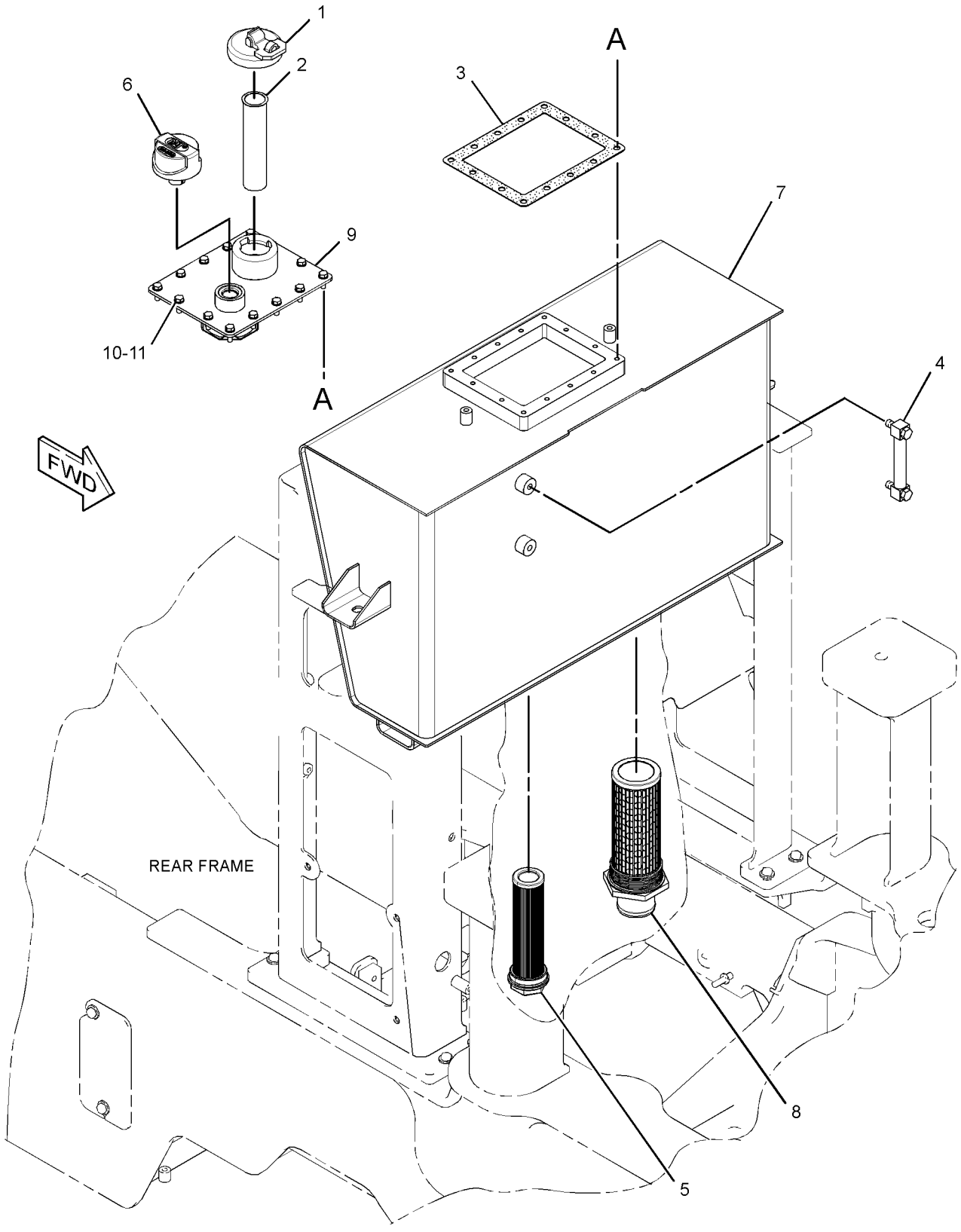

GRAPHIC #1 **<END>** g01403710

HYDRAULIC SYSTEM

118-1087 VALVE & MTG GP-MAIN CONTROL–2-FUNCTION

S/N: BYD1-UP

PART OF 202-0421, 203-5927 HYDRAULIC AR-2 VALVE

AN ATTACHMENT

SMCS-5051 **i00527600**

NOTE	REF NO	GRAPHIC REF	PART NUMBER	QTY	PART NAME 1 2 3 4 5 6 (PRODUCT LEVEL)	SEE PAGE
Y	1	1	**133-4234**	1	VALVE GP-MAIN CONTROL (2-FUNCTION)	646
	2	1	**8T-4121**	3	WASHER-HARD (11X21X2.5-MM THK)	
M	3	1	**8T-4186**	2	BOLT (M10X1.5X40-MM)	
M	4	1	**8T-5436**	1	BOLT (M10X1.5X130-MM)	

M-METRIC PART
Y-SEPARATE ILLUSTRATION

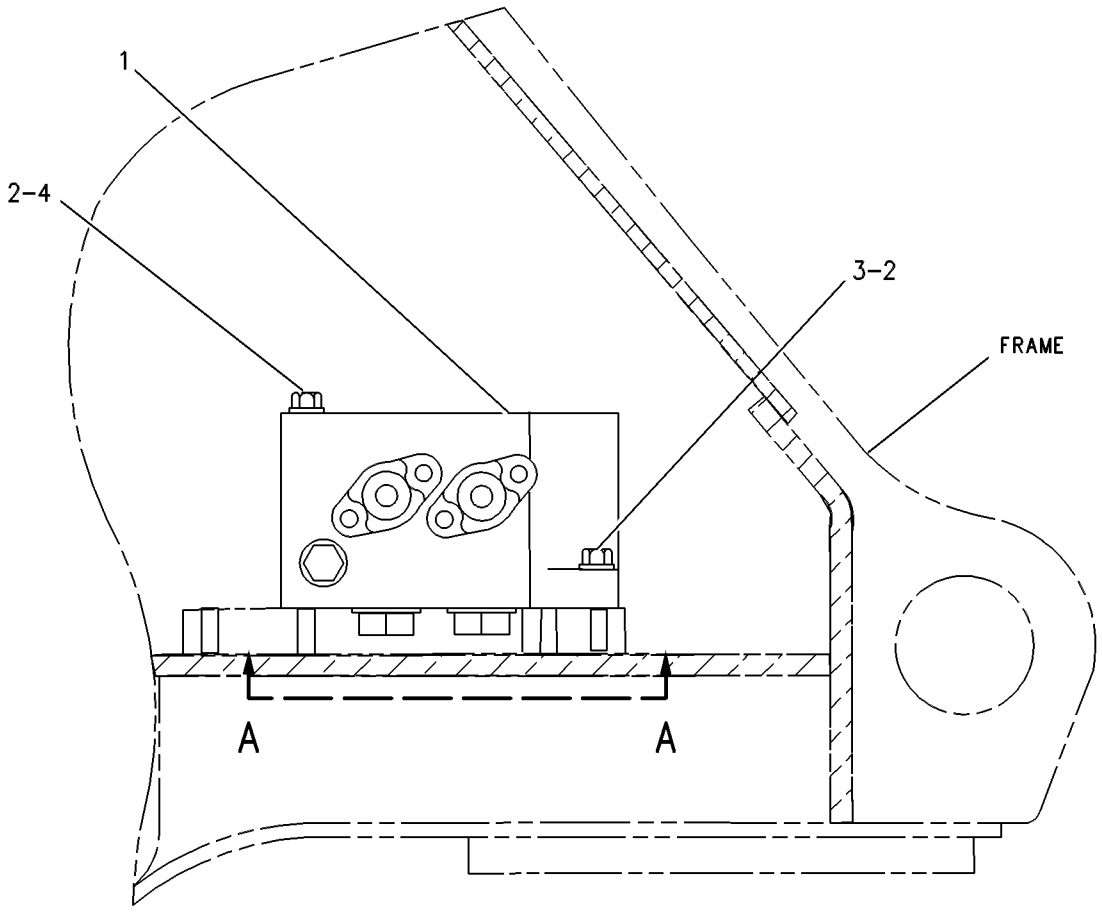

RIGHT SIDE VIEW

GRAPHIC #1 **<END>** g00131730

118-1095 VALVE & MTG GP-MAIN CONTROL–3-FUNCTION

S/N: BYD1-UP
PART OF 202-0423 HYDRAULIC AR-3 VALVE
AN ATTACHMENT

SMCS-5051 **i00527796**

NOTE	REF NO	GRAPHIC REF	PART NUMBER	QTY	PART NAME 1 2 3 4 5 6 (PRODUCT LEVEL)	SEE PAGE
Y	1	1	**133-4235**	1	VALVE GP-MAIN CONTROL (3-FUNCTION)	648
	2	1	**8T-4121**	3	WASHER-HARD (11X21X2.5-MM THK)	
M	3	1	**8T-4186**	2	BOLT (M10X1.5X40-MM)	
M	4	1	**8T-5436**	1	BOLT (M10X1.5X130-MM)	

M-METRIC PART
Y-SEPARATE ILLUSTRATION

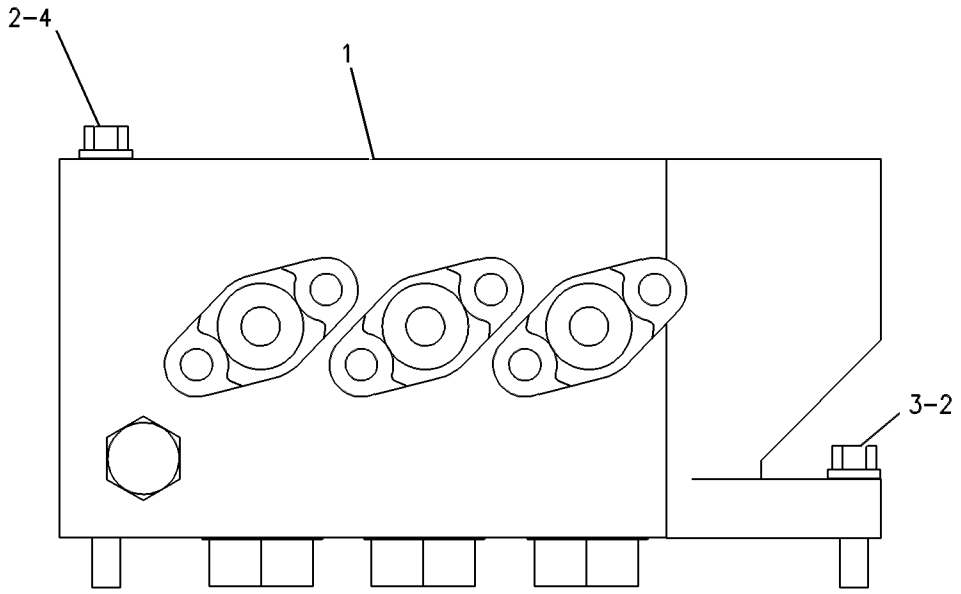

GRAPHIC #1 **<END>** g00131724

HYDRAULIC SYSTEM

242-0098 VALVE & MTG GP-MAIN CONTROL–
AUXILIARY; 5TH, 6TH FUNCTIONS
S/N: FTD1-UP
PART OF 242-0100 HYDRAULIC AR-6 VALVE
AN ATTACHMENT

SMCS-5051 **i02712669**

NOTE	REF NO	GRAPHIC REF	PART NUMBER	QTY	PART NAME 1 2 3 4 5 6 (PRODUCT LEVEL)	SEE PAGE
	1	1	**7K-1181**	13	STRAP-CABLE	
	2	1	*168-1968*	1	TEE AS	
		1	**3J-1907**	1	SEAL-O-RING	
		1	**6V-8397**	1	SEAL-O-RING	
		1	**126-6872**	1	TEE	
	3	1	**200-6345**	3	MOUNT (DUAL SWIVEL)	
I	4	1	**218-6535**	1	HOSE AS	
Y	5	1	**242-0117**	1	VALVE GP-MAIN CONTROL (AUXILIARY; 5TH, 6TH FUNCTIONS)	650
I	6	1	**244-0735**	1	HOSE AS	
I	7	1	**244-1123**	1	HOSE AS	
I	8	1	**245-1441**	1	HOSE AS	
I	9	1	**245-1442**	1	HOSE AS	
I	10	1	**245-1443**	1	HOSE AS	
	11	1	**247-5902**	1	PLATE AS	
M		1	**8T-3490**	4	NUT-WELD (M10X1.5-THD)	
M		1	**9R-2672**	3	BOSS (M10X1.5X20-MM)	
	12	1	**252-0302**	1	HARNESS AS-VALVE (AUXILIARY)	
		1	**102-8802**	1	KIT-RECEPTACLE (2-PIN)	
					(INCLUDES RECEPTACLE AS & WEDGE)	
		1	**8L-8413**	9	STRAP-CABLE	
E		1	**119-3662**		TUBE-HEAT SHRINK (10.85-MM DIA) (13-CM)	
E		1	**125-7875**		TUBE-HEAT SHRINK (7.44-MM DIA) (10-CM)	
		1	**155-2255**	1	KIT-CONNECTING PLUG (12-PIN)	
					(INCLUDES PLUG AS & WEDGE)	
		1	**155-2270**	4	KIT-CONNECTING PLUG (2-PIN)	
					(INCLUDES PLUG AS & WEDGE)	
	13	1	*148-8336*	2	CONNECTOR AS	
					(EACH INCLUDES)	
		1	**3J-1907**	1	SEAL-O-RING	
		1	**6V-8397**	1	SEAL-O-RING	
		1	**6V-8636**	1	CONNECTOR	
	14	1	*148-8341*	2	CONNECTOR AS	
					(EACH INCLUDES)	
		1	**3D-2824**	1	SEAL-O-RING	
		1	**6V-8713**	1	CONNECTOR	
		1	**7J-1908**	1	SEAL	
	15	1	*148-8342*	1	CONNECTOR AS	
		1	**3K-0360**	1	SEAL-O-RING	
		1	**6V-8632**	1	CONNECTOR	
		1	**7J-1908**	1	SEAL	
	16	1	*148-8353*	1	ELBOW AS	
		1	**3J-1907**	1	SEAL-O-RING	
		1	**6V-8397**	1	SEAL-O-RING	
		1	**6V-9001**	1	ELBOW	
	17	1	*148-8367*	1	ELBOW AS	
		1	**6V-8397**	1	SEAL-O-RING	
		1	**6V-9850**	1	ELBOW	
	18	1	*148-8368*	1	ELBOW AS	
		1	**3J-1907**	1	SEAL-O-RING	
		1	**4J-5477**	1	SEAL-O-RING	
		1	**6V-8627**	1	ELBOW	
	19	1	*148-8370*	1	ELBOW AS	
		1	**6V-8398**	1	SEAL-O-RING	

242-0098 VALVE & MTG GP-MAIN CONTROL *(contd.)* i02712669

NOTE	REF NO	GRAPHIC REF	PART NUMBER	QTY	PART NAME 1 2 3 4 5 6 (PRODUCT LEVEL)	SEE PAGE
		1	**6V-9851**	1	ELBOW	
	20	1	*148-8393*	2	ELBOW AS	
		1	**6V-9852**	1	ELBOW	
		1	**7J-9108**	1	SEAL-O-RING	
	21	1	*148-8407*	1	PLUG AS	
		1	**3J-1907**	1	SEAL-O-RING	
		1	**9S-4191**	1	PLUG-O-RING	
	22	1	*148-8411*	4	PLUG AS	
	23	1	*148-8414*	1	REDUCER AS	
		1	**6V-8943**	1	REDUCER	
		1	**7J-9108**	1	SEAL-O-RING	
	24	1	*148-8433*	2	TEE AS	
	25	1	*148-8444*	1	TEE AS-SWIVEL	
		1	**6V-8398**	2	SEAL-O-RING	
		1	**6V-9837**	1	TEE-SWIVEL	
	26	1	*148-8449*	1	TEE AS-SWIVEL	
		1	**6V-9746**	2	SEAL-O-RING	
		1	**6V-9839**	1	TEE-SWIVEL	
	27	1	**4P-7581**	2	CLIP	
	28	1	**6V-9832**	1	CAP AS	
	29	1	**7X-7729**	3	WASHER (11X25X3-MM THK)	
	30	1	**8T-4121**	4	WASHER-HARD (11X21X2.5-MM THK)	
M	31	1	**8T-4195**	3	BOLT (M10X1.5X30-MM)	
M	32	1	**8T-4196**	4	BOLT (M10X1.5X35-MM)	

E-ORDER BY THE CENTIMETER
I-REFER TO HYDRAULIC INFORMATION SYSTEM
M-METRIC PART
Y-SEPARATE ILLUSTRATION

242-0098 **VALVE & MTG GP-MAIN CONTROL** *(contd.)* **i02712669**

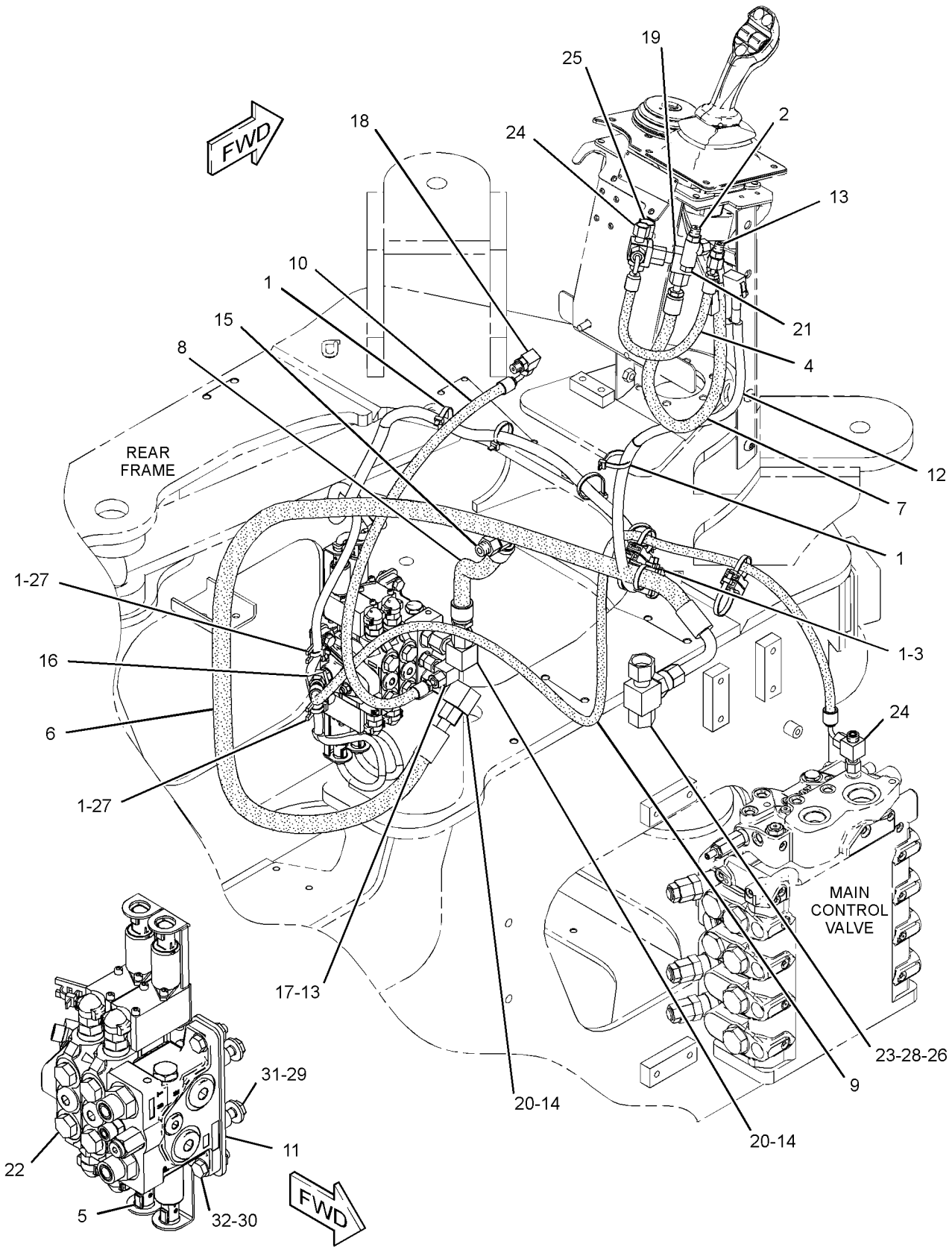

GRAPHIC #1 **<END>** g01267781

233-7133 VALVE & MTG GP-SOLENOID—HYDRAULIC LOCKOUT

S/N: BYD1-UP; FTD650-UP

PART OF 289-8929 LINES GP-DIFFERENTIAL LOCK, 225-1057 VALVE GP-SHUTOFF

ALSO AN ATTACHMENT

SMCS-4805, 5479, 5571 **i02853851**

NOTE	REF NO	GRAPHIC REF	PART NUMBER	QTY	PART NAME 1 2 3 4 5 6 (PRODUCT LEVEL)	SEE PAGE
J	1	1	**233-7126**	1	VALVE GP-SOLENOID (HYDRAULIC LOCKOUT)	
M	2	1	**096-5968**	2	BOLT-SOCKET HEAD (M5X0.8X8-MM)	
					AVAILABLE REPAIR KIT(S):	
J			**250-8330**	1	KIT-SEAL	
					(INCLUDES RINGS)	

J-KIT MARKED J AVAILABLE FOR PART MARKED J
M-METRIC PART

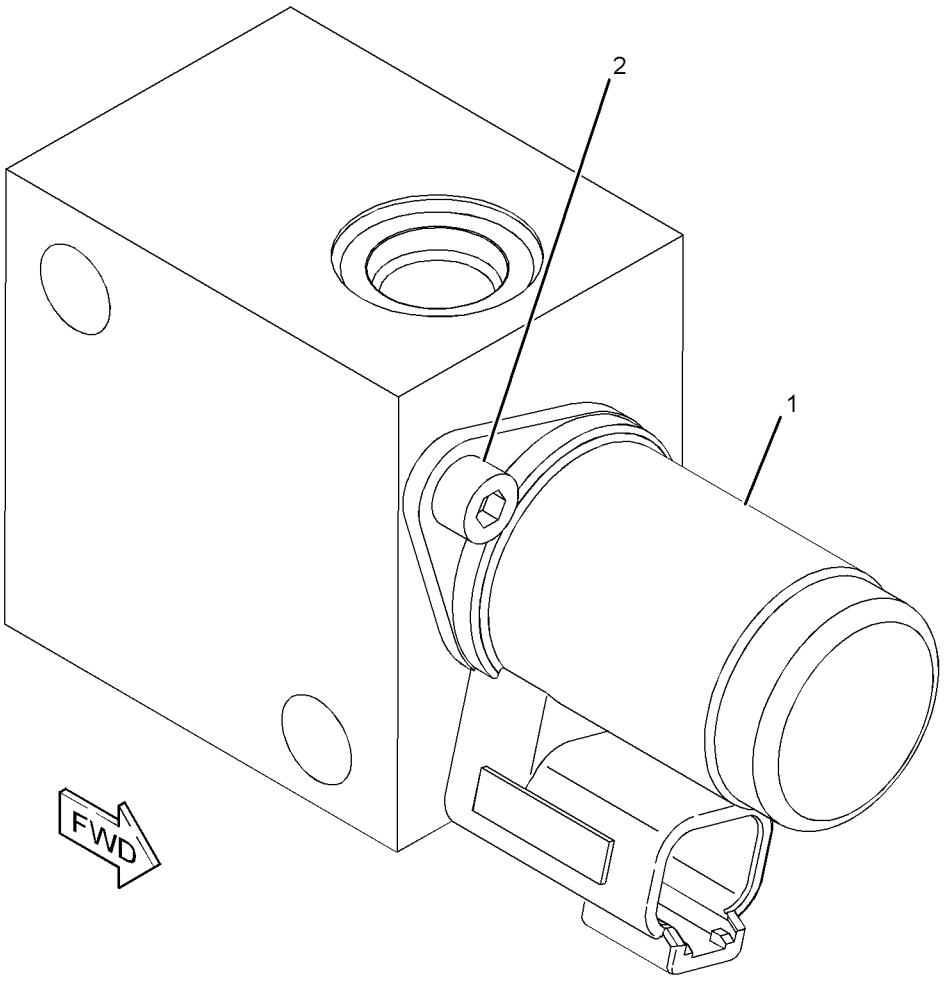

GRAPHIC #1 **<END>** g01183188

HYDRAULIC SYSTEM

243-0651 VALVE & MTG GP-SOLENOID–

THIRD FUNCTION, CONTINUOUS FLOW

S/N: FTD1-UP

PART OF 242-0093 LINES GP-HYDRAULIC

AN ATTACHMENT

SMCS-4805, 5479 **i02853860**

NOTE	REF NO	GRAPHIC REF	PART NUMBER	QTY	PART NAME 1 2 3 4 5 6 (PRODUCT LEVEL)	SEE PAGE
Y	1	1	**235-4605**	1	VALVE GP-SOLENOID (THIRD FCTN, CONTINUOUS FLOW)	700
	2	1	**243-0652**	1	MANIFOLD	

Y-SEPARATE ILLUSTRATION

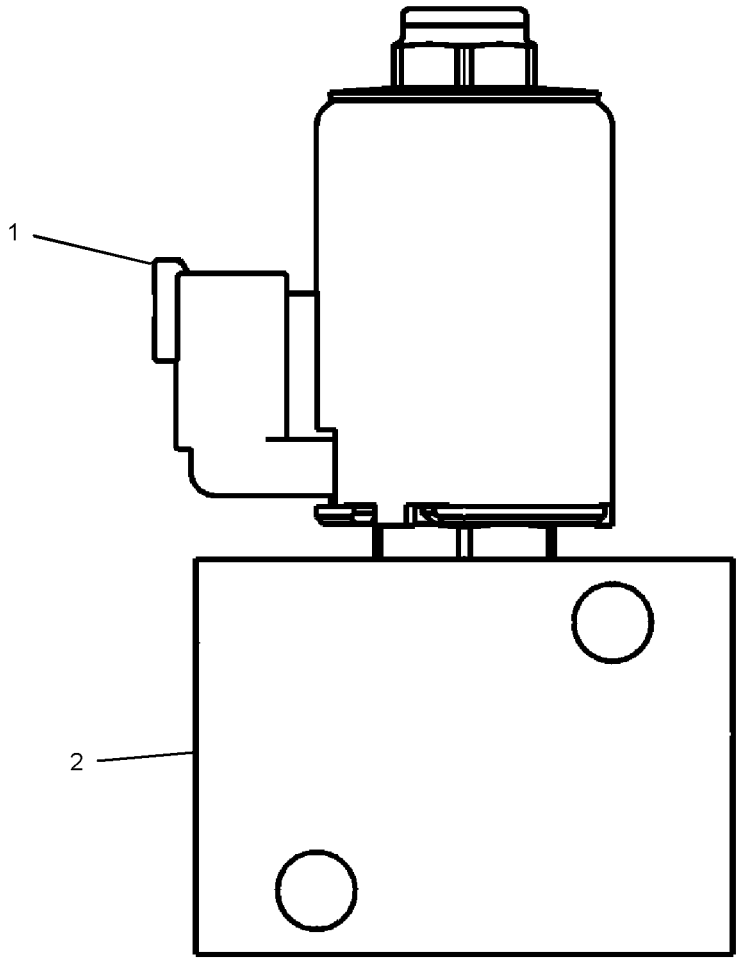

GRAPHIC #1 **<END>** g01140602

262-9706 VALVE & MTG GP-SOLENOID–
THIRD FUNCTION, PROPORTIONAL FLOW
S/N: FTD1-UP
PART OF 238-2656 LINES GP-FRONT
AN ATTACHMENT

SMCS-4805, 5479 **i02527920**

NOTE	PART NUMBER	QTY	PART NAME 1 2 3 4 5 6 (PRODUCT LEVEL)	SEE PAGE
Y	**235-4605**	2	VALVE GP-SOLENOID (THIRD FCTN, PROPORTIONAL FLOW)	700
	262-9705	1	MANIFOLD AS-HYDRAULIC	
	148-9359	4	PLUG	

Y-SEPARATE ILLUSTRATION

<END>

HYDRAULIC SYSTEM

9T-7634 VALVE GP-CHECK–LOAD

S/N: BYD1-UP

PART OF 133-4234, 133-4235 VALVE GP-MAIN CONTROL

AN ATTACHMENT

SMCS-5067 **i00942540**

NOTE	REF NO	GRAPHIC REF	PART NUMBER	QTY	PART NAME 1 2 3 4 5 6 (PRODUCT LEVEL)	SEE PAGE
J	1	1	**033-6027**	1	SEAL-O-RING	
					AVAILABLE REPAIR KIT(S):	
J			**107-7491**	1	KIT-SEAL	
J-KIT MARKED J INCLUDES PART MARKED J						

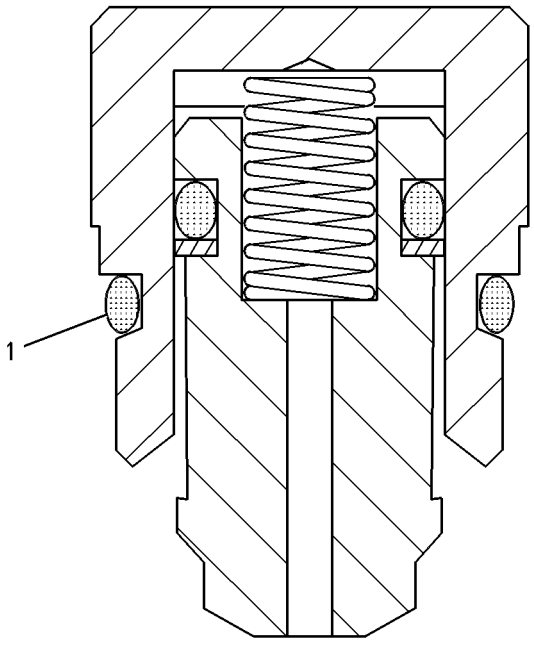

GRAPHIC #1 **<END>** g00120239

158-9956 VALVE GP-CHECK

S/N: FTD1-UP
PART OF 283-9380 MANIFOLD GP-VALVE
AN ATTACHMENT

SMCS-5067 **i02262497**

NOTE	REF NO	GRAPHIC REF	PART NUMBER	QTY	PART NAME 1 2 3 4 5 6 (PRODUCT LEVEL)	SEE PAGE
	1	1	**3K-0360**	1	SEAL-O-RING	
	2	1	**161-6154**	1	SEAL-O-RING	
	3	1	**6E-0381**	1	RING-BACKUP	

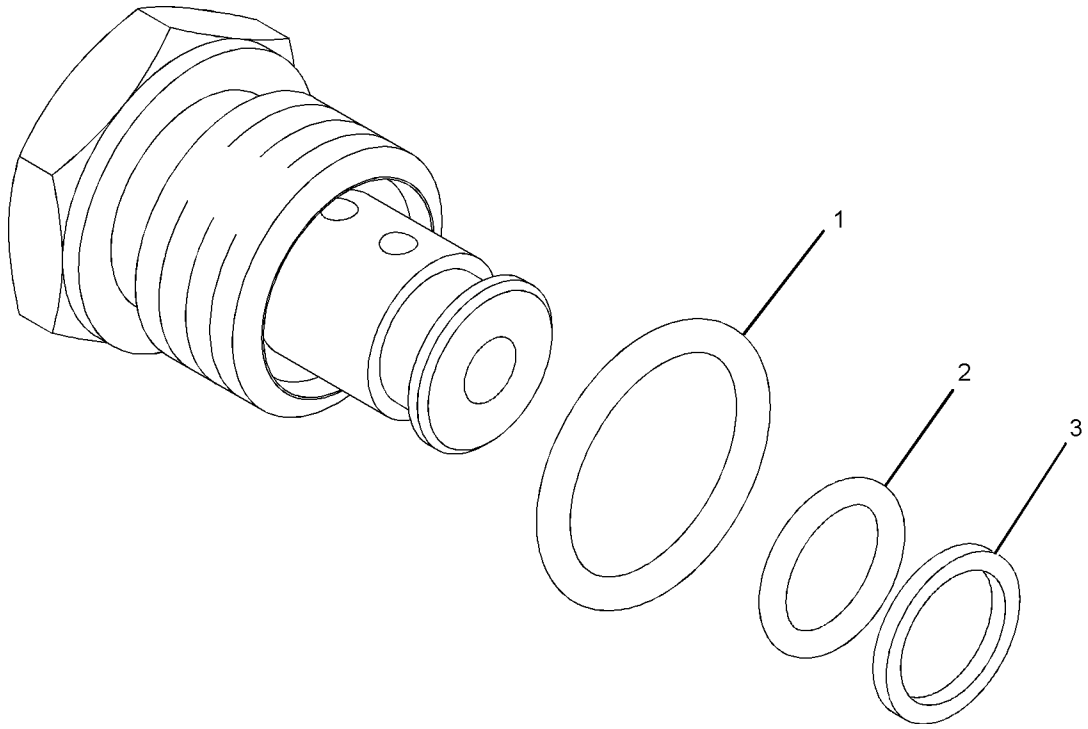

GRAPHIC #1 **<END>** g01016882

HYDRAULIC SYSTEM

270-0350 VALVE GP-CHECK–LOAD

S/N: FTD1-UP

PART OF 238-4832, 294-9504, 311-8279 VALVE GP-CONTROL

AN ATTACHMENT

SMCS-5067 **i02364791**

NOTE	REF NO	GRAPHIC REF	PART NUMBER	QTY	PART NAME 1 2 3 4 5 6 (PRODUCT LEVEL)	SEE PAGE
	1	1	**3D-2824**	1	SEAL-O-RING	
	2	1	**6F-4855**	1	SEAL-O-RING	
	3	1	**9J-0707**	1	RING-BACKUP	

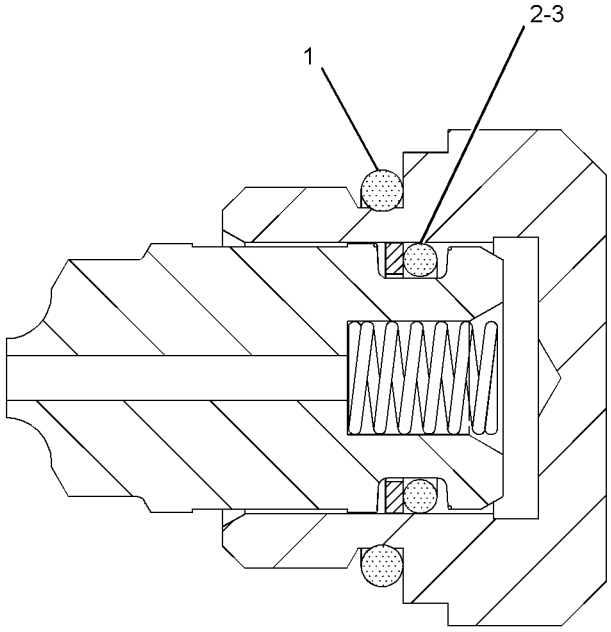

GRAPHIC #1 **<END>** g01113599

173-4032 VALVE GP-COMBINATION–TILT RELIEF

S/N: FTD1-UP

PART OF 245-4856 LINES GP-TILT CYLINDER

SMCS-5064 **i01826004**

NOTE	REF NO	GRAPHIC REF	PART NUMBER	QTY	PART NAME 1 2 3 4 5 6 (PRODUCT LEVEL)	SEE PAGE
	1	1	**173-7061**	1	VALVE GP-RELIEF (TILT)	
	2	1	**173-7062**	1	VALVE GP-DIVERTER (TILT)	
	3	1	**3J-7354**	1	SEAL-O-RING	
	4	1	**3K-0360**	2	SEAL-O-RING	
	5	1	**9S-8002**	1	PLUG-O-RING	
	6	1	**9S-8005**	2	PLUG-O-RING	

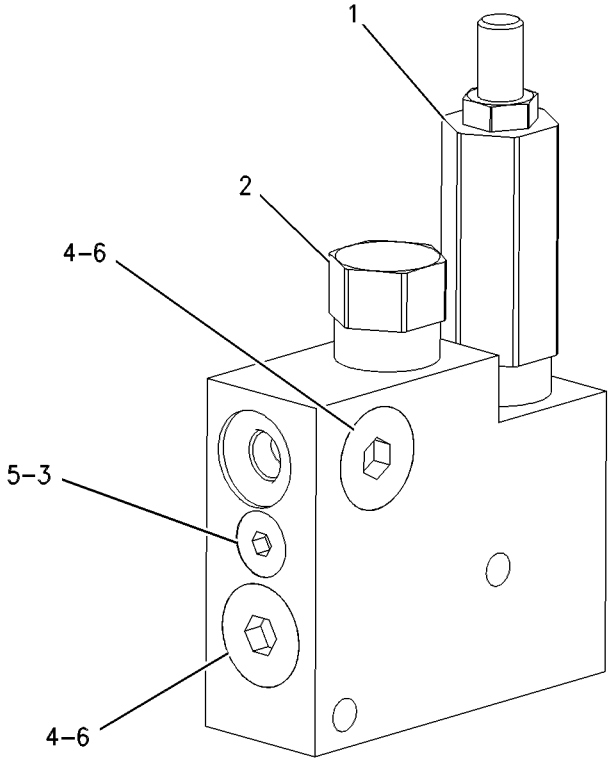

GRAPHIC #1 **<END>** g00658201

HYDRAULIC SYSTEM

238-4832 VALVE GP-CONTROL–TILT

S/N: FTD1-UP

PART OF 280-1996, 280-1997, 280-1998 VALVE GP-MAIN CONTROL

AN ATTACHMENT

SMCS-5051 **i02610259**

NOTE	REF NO	GRAPHIC REF	PART NUMBER	QTY	PART NAME 1 2 3 4 5 6 (PRODUCT LEVEL)	SEE PAGE
	1	1	**1T-0936**	1	PLUG-PIPE	
	2	1	**2W-1776**	1	SPRING	
	3	1	**5F-8000**	1	SEAL-O-RING	
Y	4	1	**270-0350**	1	VALVE GP-CHECK (LOAD)	628
	5	1	**9W-7783**	2	PLUG	
	6	1	**148-9359**	2	PLUG	
Y	7	1	**260-8590**	1	VALVE GP-SHUTTLE	695
	8	1	**240-1863**	2	SPRING	
	9	1	**240-1865**	2	SPRING	
	10	1	**240-1866**	2	RETAINER-SPRING	
	11	1	**240-1867**	2	PLUG-RETAINER	
	12	1	**240-6016**	1	PLUG-RETAINER	
	13	1	**240-6017**	1	SPRING	
Y	14	1	**251-9918**	1	VALVE GP-RELIEF (LINE, TILT)	689
	15	1	**173-3993**	2	PLUG AS	
					(EACH INCLUDES)	
		1	**4J-7533**	1	SEAL-O-RING	
		1	**9S-8001**	1	PLUG-O-RING	
	16	1	*183-7263*	1	PLUG AS	
		1	**3J-7354**	1	SEAL-O-RING	
		1	**9S-8002**	1	PLUG-O-RING	
	17	1	**1P-3703**	1	SEAL-RECTANGULAR	
	18	1	**4J-9535**	2	SEAL-O-RING	
	19	1	**4K-1388**	1	SEAL-O-RING	
	20	1	**6J-3134**	2	SEAL-O-RING	
	21	1	**7M-8485**	2	SEAL-O-RING	

Y-SEPARATE ILLUSTRATION

238-4832 VALVE GP-CONTROL *(contd.)* **i02610259**

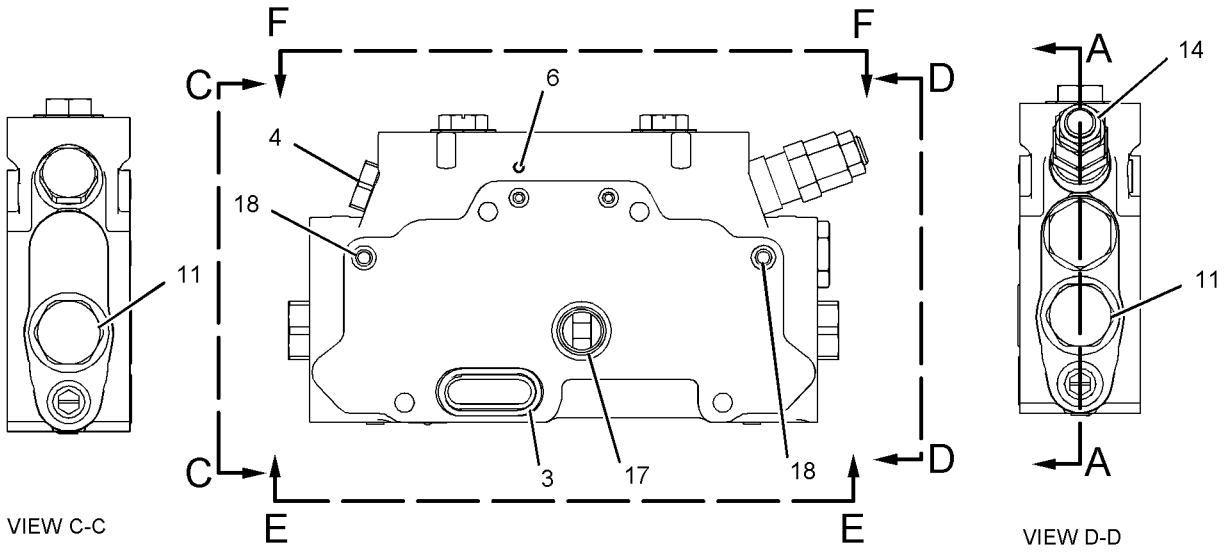

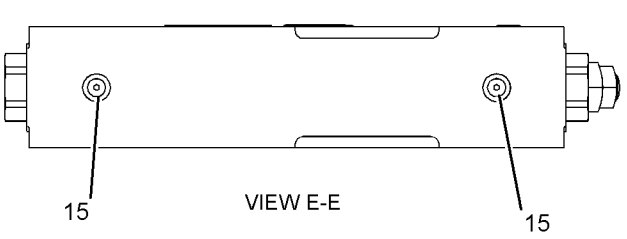

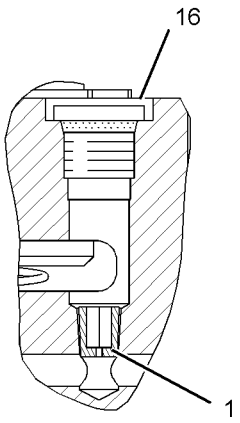

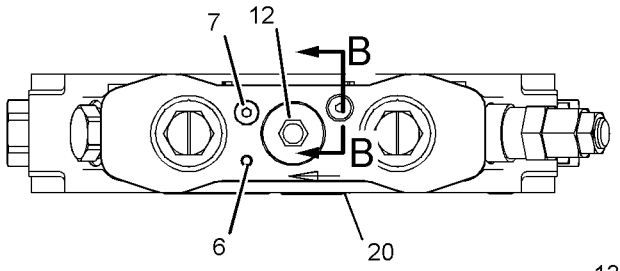

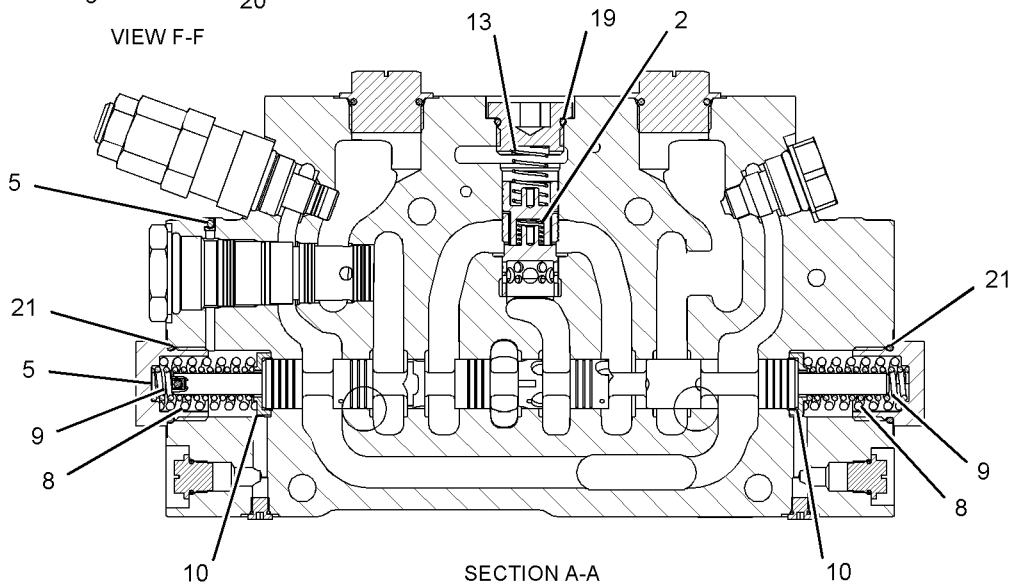

GRAPHIC #1 **<END>** g01127067

HYDRAULIC SYSTEM

240-9590 VALVE GP-CONTROL–AUXILIARY, THIRD FUNCTION

S/N: FTD1-UP

PART OF 280-1997, 280-1998 VALVE GP-MAIN CONTROL

AN ATTACHMENT

SMCS-5051 **i02647778**

NOTE	REF NO	GRAPHIC REF	PART NUMBER	QTY	PART NAME 1 2 3 4 5 6 (PRODUCT LEVEL)	SEE PAGE
	1	1	**1T-0936**	1	PLUG-PIPE	
	2	1	**2W-1776**	1	SPRING	
	3	1	**5F-8000**	1	SEAL-O-RING	
	4	1	**148-2557**	1	PLUG	
	5	1	**148-9359**	2	PLUG	
Y	6	1	**260-8590**	1	VALVE GP-SHUTTLE (BALL RESOLVER)	695
	7	1	**240-1863**	2	SPRING	
	8	1	**240-1865**	2	SPRING	
	9	1	**240-1866**	2	RETAINER-SPRING	
	10	1	**240-1867**	2	PLUG-RETAINER	
	11	1	**240-6016**	1	PLUG-RETAINER	
	12	1	**240-6017**	1	SPRING	
Y	13	1	**251-9918**	1	VALVE GP-RELIEF (LINE, AUXILIARY)	689
Y	14	1	**251-9918**	1	VALVE GP-RELIEF (LINE, AUXILIARY)	689
	15	1	*173-3993*	2	PLUG AS	
					(EACH INCLUDES)	
		1	**4J-7533**	1	SEAL-O-RING	
		1	**9S-8001**	1	PLUG-O-RING	
	16	1	*183-7263*	1	PLUG AS	
		1	**9S-8002**		PLUG-O-RING	
		1	**3J-7354**		SEAL-O-RING	
	17	1	**1P-3703**	1	SEAL-RECTANGULAR	
	18	1	**4K-1388**	1	SEAL-O-RING	
	19	1	**6J-3134**	2	SEAL-O-RING	
	20	1	**7M-8485**	2	SEAL-O-RING	
	21	1	**4J-9535**	2	SEAL-O-RING	

Y-SEPARATE ILLUSTRATION

240-9590 VALVE GP-CONTROL *(contd.)* **i02647778**

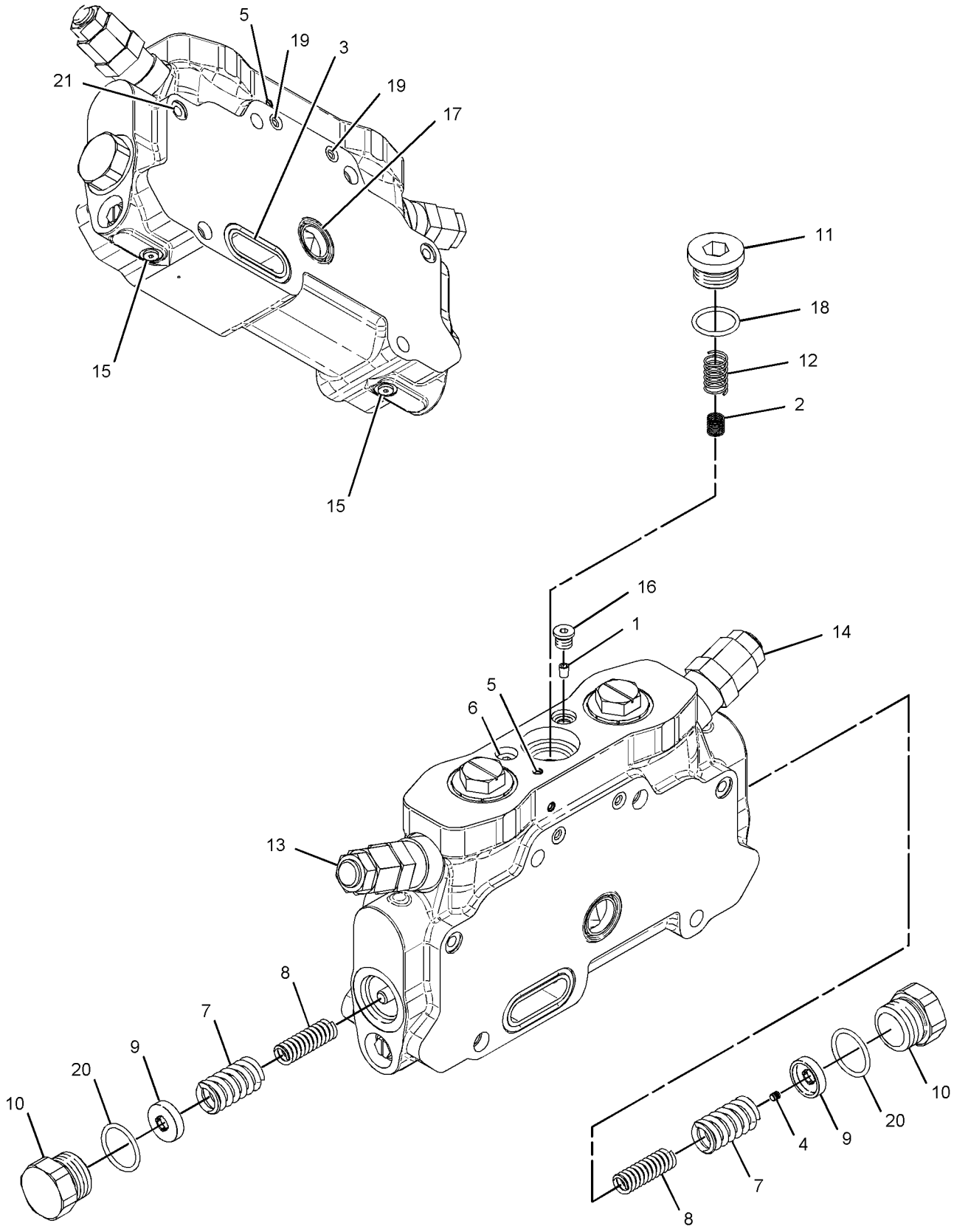

GRAPHIC #1 **<END>** g01140855

HYDRAULIC SYSTEM

254-5630 VALVE GP-CONTROL—AUXILIARY, FOURTH FUNCTION

S/N: FTD1-UP

PART OF 280-1998 VALVE GP-MAIN CONTROL

AN ATTACHMENT

SMCS-5051 **i02853861**

NOTE	REF NO	GRAPHIC REF	PART NUMBER	QTY	PART NAME 1 2 3 4 5 6 (PRODUCT LEVEL)	SEE PAGE
	1	1	**1T-0936**	1	PLUG-PIPE	
	2	1	**2W-1776**	1	SPRING	
	3	1	**5F-8000**	1	SEAL-O-RING	
	4	1	**148-9359**	2	PLUG	
Y	5	1	**260-8590**	1	VALVE GP-SHUTTLE (BALL RESOLVER)	695
	6		**240-1863**	2	SPRING	
	7	1	**240-1865**	2	SPRING	
	8	1	**240-1866**	2	RETAINER-SPRING	
	9	1	**240-1867**	2	PLUG-RETAINER	
	10	1	**240-6016**	1	PLUG-RETAINER	
	11	1	**240-6017**	1	SPRING	
Y	12	1	**251-9918**	1	VALVE GP-RELIEF (LINE, AUXILIARY)	689
Y	13	1	**251-9918**	1	VALVE GP-RELIEF (LINE, AUXILIARY)	689
	14	1	**173-3993**	2	PLUG AS	
					(EACH INCLUDES)	
		1	**4J-7533**	1	SEAL-O-RING	
		1	**9S-8001**	1	PLUG-O-RING	
	15	1	*183-7263*	1	PLUG AS	
		1	**9S-8002**	1	PLUG-O-RING	
		1	**3J-7354**	1	SEAL-O-RING	
	16	1	**1P-3703**	1	SEAL-RECTANGULAR	
	17	1	**4K-1388**	1	SEAL-O-RING	
	18	1	**6J-3134**	2	SEAL-O-RING	
	19	1	**7M-8485**	2	SEAL-O-RING	
	20	1	**148-2557**	1	PLUG	
	21	1	**4J-9535**	2	SEAL-O-RING	

Y-SEPARATE ILLUSTRATION

254-5630 VALVE GP-CONTROL *(contd.)* **i02853861**

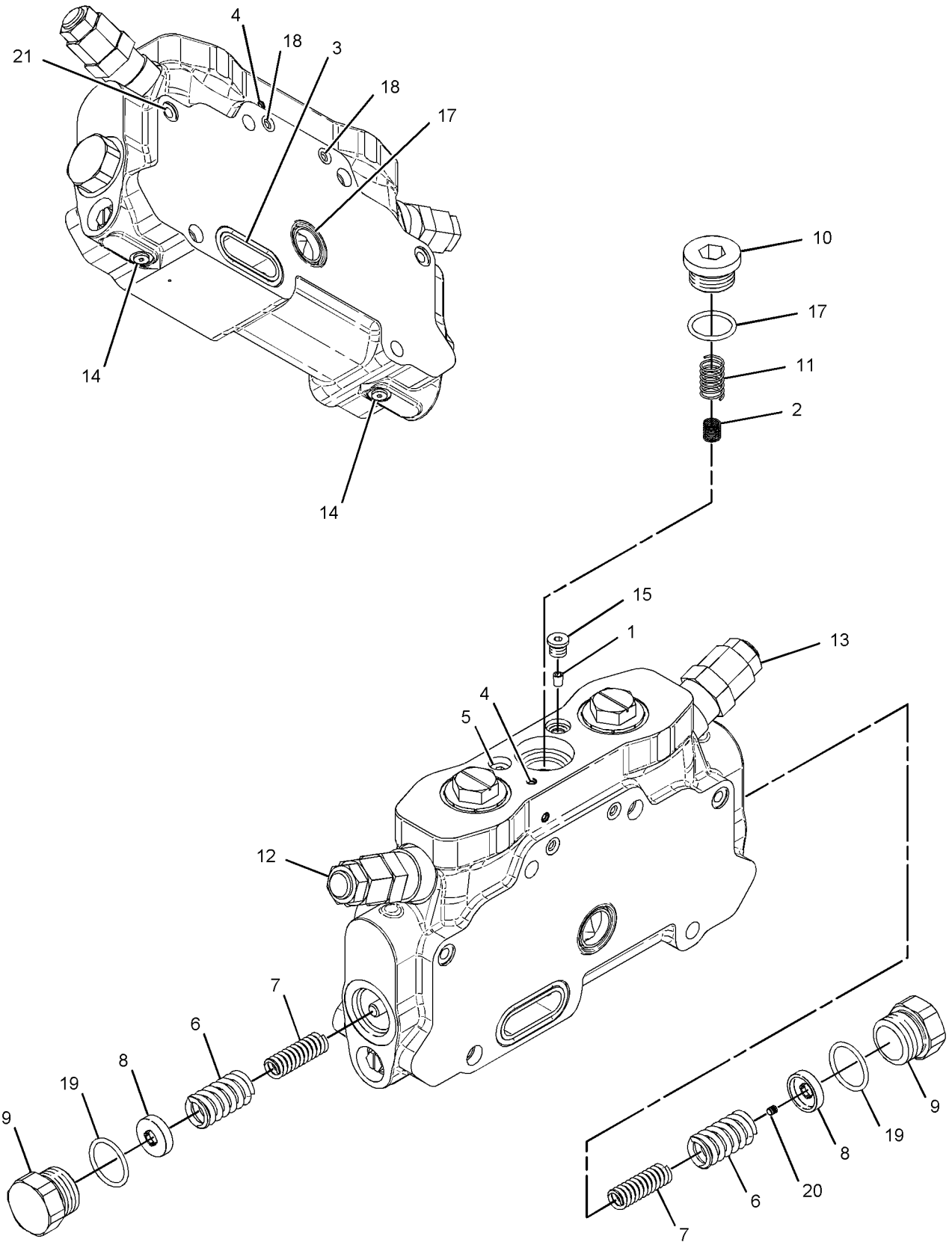

GRAPHIC #1 **<END>** g01127446

260-3018 VALVE GP-CONTROL–
AUXILIARY; FIFTH, SIXTH FUNCTIONS
S/N: FTD1-UP
PART OF 242-0117 VALVE GP-MAIN CONTROL
AN ATTACHMENT

SMCS-5051 **i02712684**

NOTE	REF NO	GRAPHIC REF	PART NUMBER	QTY	PART NAME 1 2 3 4 5 6 (PRODUCT LEVEL)	SEE PAGE
	1	1	**266-2589**	2	VALVE GP-RELIEF (AUXILIARY; 5TH, 6TH FUNCTIONS)	
					(EACH INCLUDES)	
		1	**169-1616**	1	RING-BACKUP	
		1	**095-1751**	1	SEAL-O-RING	
		1	**8J-2413**	1	SEAL-O-RING	
	2	1	**227-1186**	2	VALVE AS-CHECK	
	3	1	**252-5065**	2	KIT-SOLENOID (CONTROL VALVE LINES)	
					(EACH KIT INCLUDES SOLENOID,FLANGE & SCREW)	
	4	1	**3G-1209**	4	SEAL-O-RING	
	5	1	**6V-0894**	2	SEAL-O-RING	
	6	1	**257-0468**	2	CAP-PROTECTION	

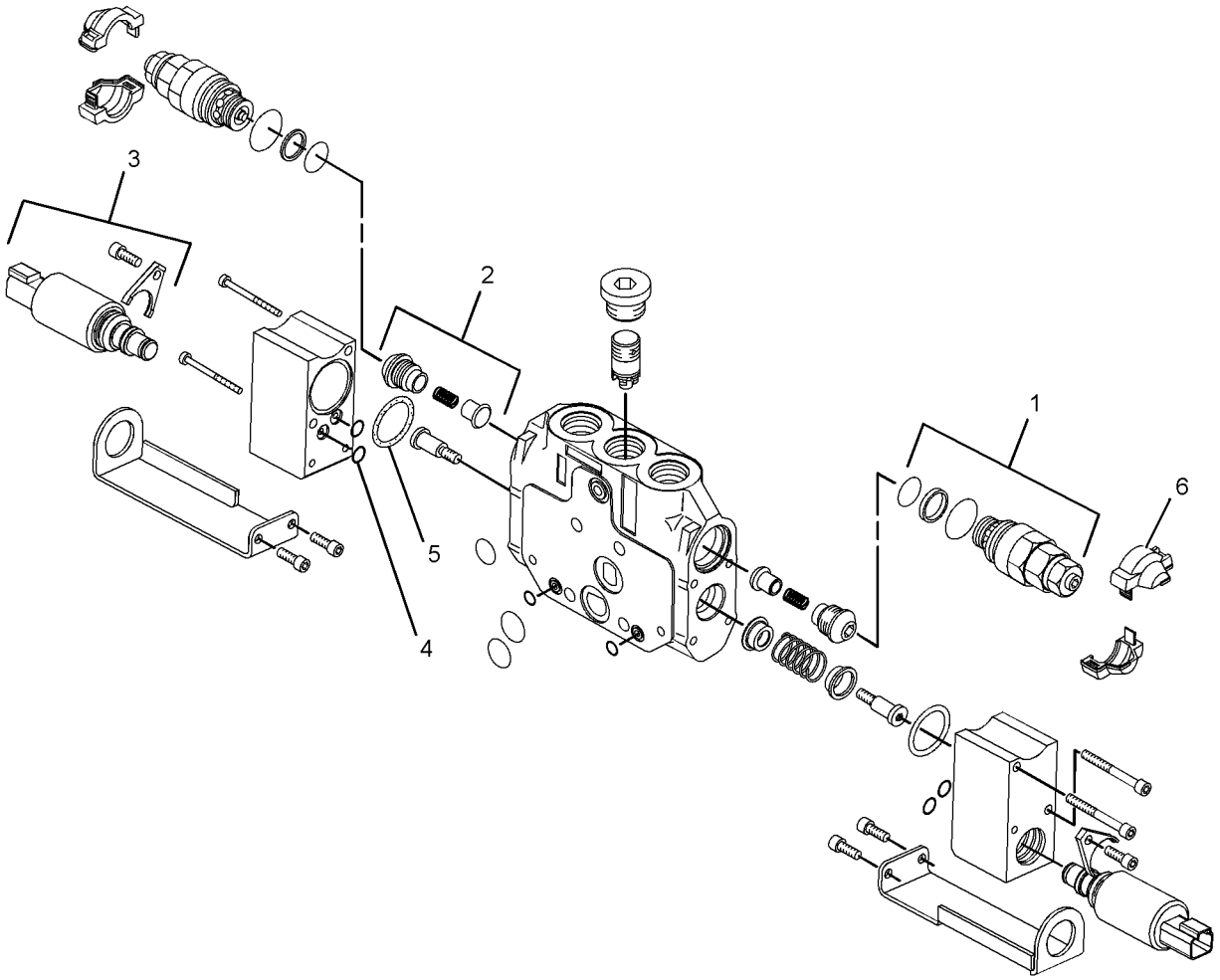

GRAPHIC #1 **<END>** g01274900

294-9504 VALVE GP-CONTROL

S/N: FTD1-UP

PART OF 280-1996, 280-1997, 280-1998, 317-6905, 317-6909 VALVE GP-MAIN CONTROL AN ATTACHMENT

SMCS-5051 **i02627649**

NOTE	REF NO	GRAPHIC REF	PART NUMBER	QTY	PART NAME 1 2 3 4 5 6 (PRODUCT LEVEL)	SEE PAGE
	1	1	**1T-0936**	1	PLUG-PIPE	
	2	1	**2W-1776**	1	SPRING	
	4	1	**9W-7783**	1	PLUG	
	5	1	**148-2557**	1	PLUG	
	6	1	**148-9359**	2	PLUG	
	10	1	**240-1863**	2	SPRING	
	11	1	**240-1865**	2	SPRING	
	12	1	**240-1866**	2	RETAINER-SPRING	
	13	1	**240-1867**	2	PLUG-RETAINER	
	14	1	**240-6016**	1	PLUG-RETAINER	
	15	1	**240-6017**	1	SPRING	
J	16	1	**240-6832**	1	VALVE GP-CHECK	
Y	17	1	**260-8590**	1	VALVE GP-SHUTTLE (BALL RESOLVER)	695
Y	18	1	**270-0350**	2	VALVE GP-CHECK (LOAD)	628
	19	1	**288-3716**	1	STEM-LIFT	
	21	1	*173-3993*	2	PLUG AS	
					(EACH INCLUDES)	
		1	**4J-7533**	1	SEAL-O-RING	
		1	**9S-8001**	1	PLUG-O-RING	
	22	1	*183-7263*	1	PLUG AS	
		1	**3J-7354**	1	SEAL-O-RING	
		1	**9S-8002**	1	PLUG-O-RING	
	23	1	**1P-3703**	1	SEAL-RECTANGULAR	
	24	1	**4J-9535**	2	SEAL-O-RING	
	25	1	**4K-1388**	1	SEAL-O-RING	
	26	1	**5F-8000**	1	SEAL-O-RING	
	27	1	**6J-3134**	2	SEAL-O-RING	
	28	1	**7M-8485**	2	SEAL-O-RING	
					PARTS SHOWN IN GRAPHIC(S) WITHOUT A REFERENCE NUMBER ARE NOT SERVICED SEPARATELY	
					AVAILABLE REPAIR KIT(S):	
J			**276-5434**		KIT-SEAL	
					(INCLUDES O-RINGS & BACKUP RINGS)	

J-KIT MARKED J SERVICES PART MARKED J
Y-SEPARATE ILLUSTRATION

294-9504 VALVE GP-CONTROL *(contd.)* i02627649

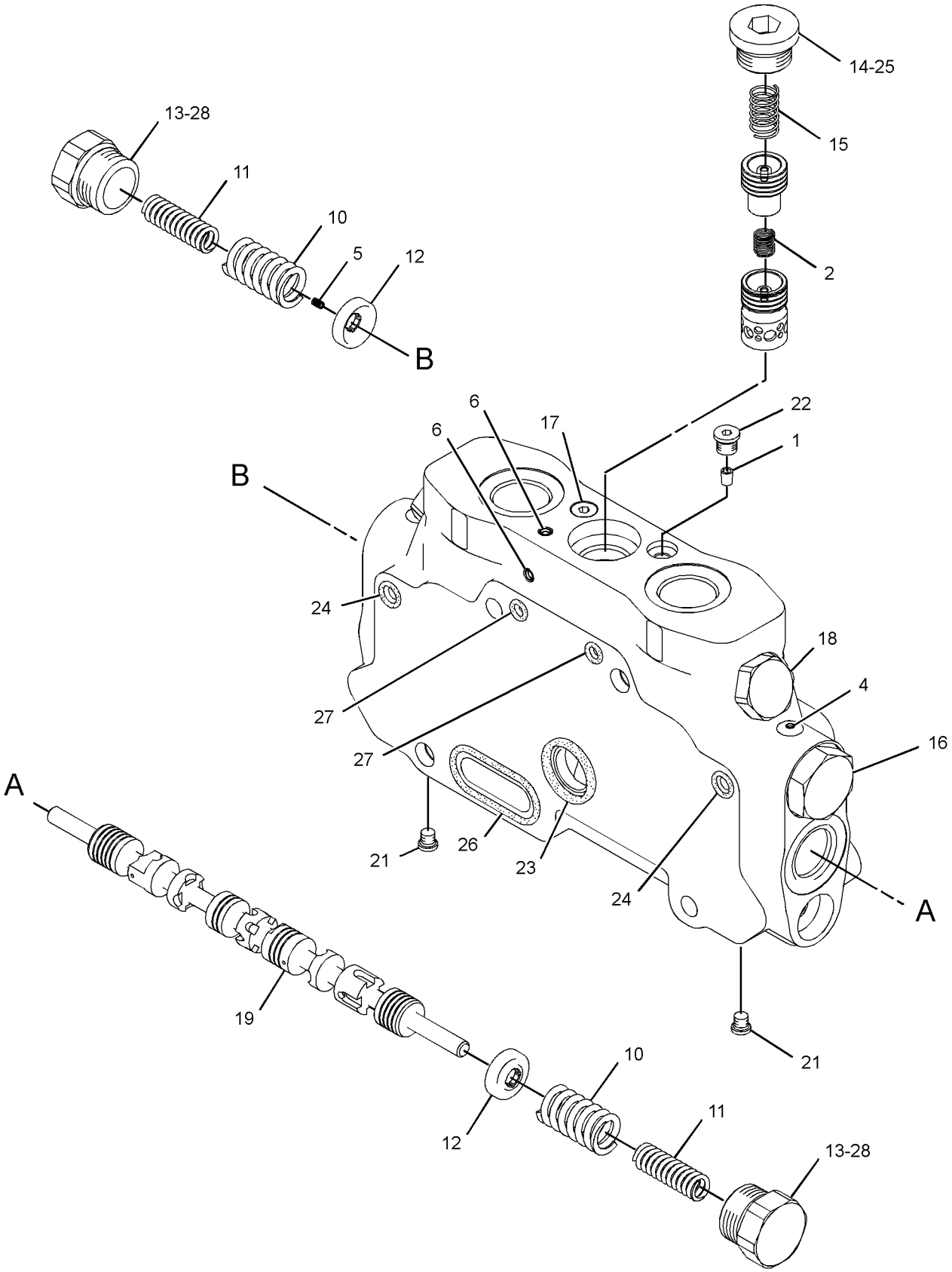

GRAPHIC #1 **<END>** g01322777

HYDRAULIC SYSTEM

311-8271 VALVE GP-CONTROL

S/N: FTD190-UP

PART OF 317-6909 VALVE GP-MAIN CONTROL

AN ATTACHMENT

SMCS-5051 **i02902658**

NOTE	REF NO	GRAPHIC REF	PART NUMBER	QTY	PART NAME 1 2 3 4 5 6 (PRODUCT LEVEL)	SEE PAGE
	1	1	**1T-0936**	1	PLUG-PIPE	
	2	1	**2W-1776**	1	SPRING	
	3	1	**4B-4158**	1	SCREW-DRIVE (3/16X0.25-IN)	
	4	1	**148-2557**	1	PLUG	
	5	1	**148-9359**	2	PLUG	
	6	1	**240-1863**	2	SPRING	
	7	1	**240-1865**	2	SPRING	
	8	1	**240-1866**	2	RETAINER-SPRING	
	9	1	**240-1867**	2	PLUG-RETAINER	
	10	1	**240-6016**	1	PLUG-RETAINER	
	11	1	**240-6017**	1	SPRING	
	12	1	*240-9592*	1	BODY-VALVE	
Y	13	1	**251-9918**	2	VALVE GP-RELIEF (LINE, AUXILIARY)	689
Y	14	1	**260-8590**	1	VALVE GP-SHUTTLE	695
	15	1	*173-3993*	2	PLUG AS	
					(EACH INCLUDES)	
		1	**4J-7533**	1	SEAL-O-RING	
		1	**9S-8001**	1	PLUG-O-RING	
	16	1	*183-7263*	1	PLUG AS	
		1	**3J-7354**	1	SEAL-O-RING	
		1	**9S-8002**	1	PLUG-O-RING	
	17	1	**1P-3703**	1	SEAL-RECTANGULAR	
	18	1	**4J-9535**	2	SEAL-O-RING	
	19	1	**4K-1388**	1	SEAL-O-RING	
	20	1	**5F-8000**	1	SEAL-O-RING	
	21	1	**6J-3134**	2	SEAL-O-RING	
	22	1	**7M-8485**	2	SEAL-O-RING	

Y-SEPARATE ILLUSTRATION

311-8271 **VALVE GP-CONTROL** *(contd.)* **i02902658**

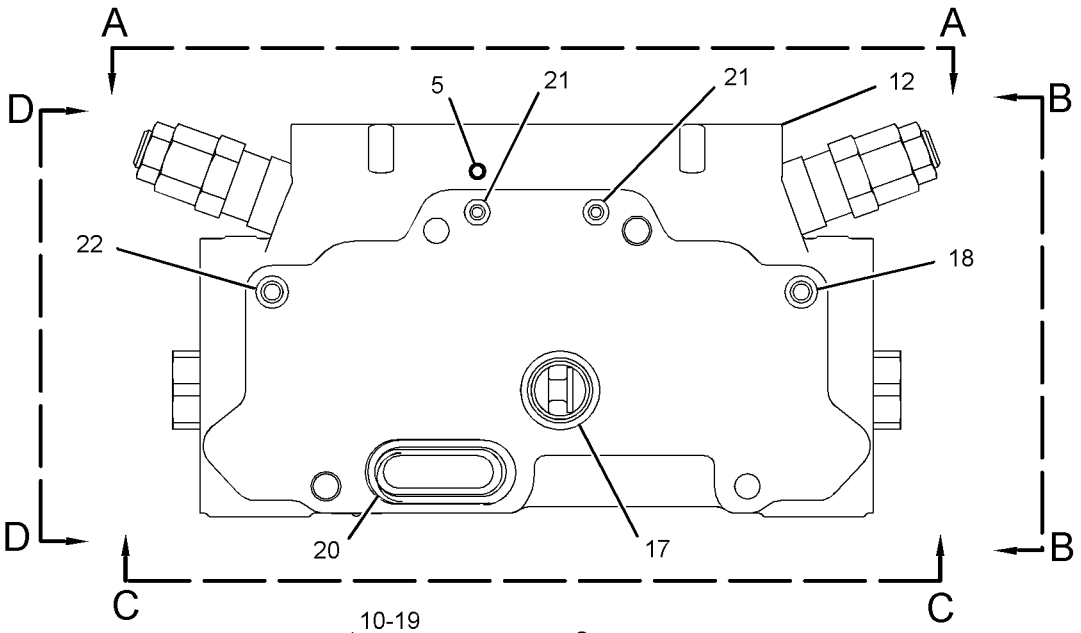

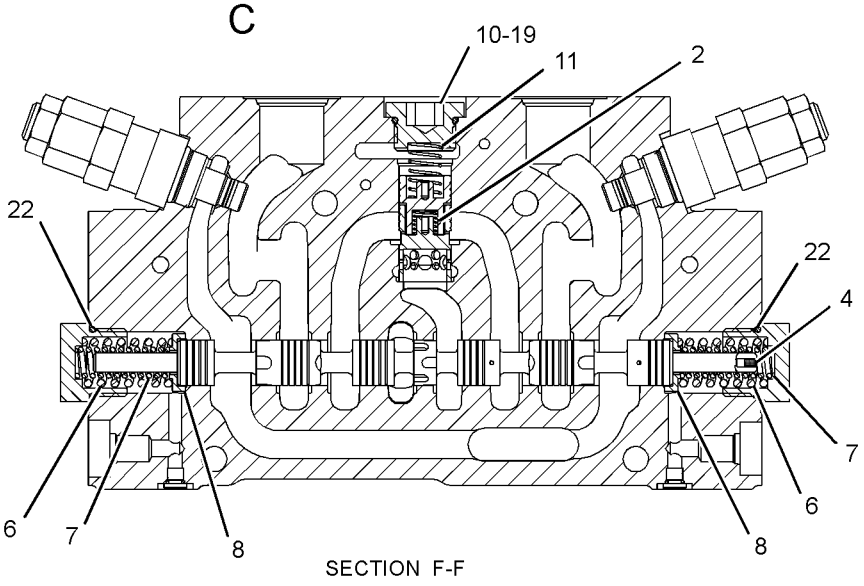

SECTION F-F

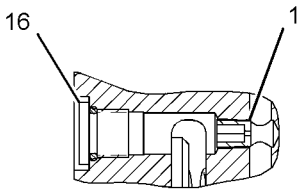

SECTION E-E

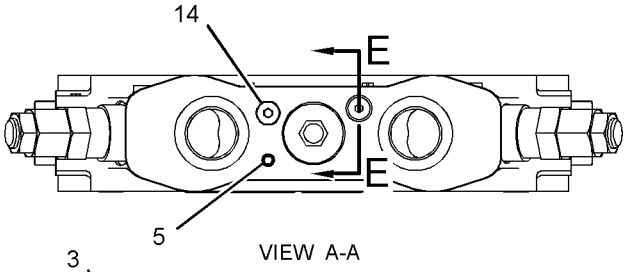

VIEW A-A

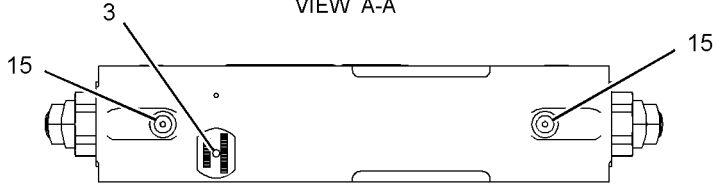

VIEW C-C

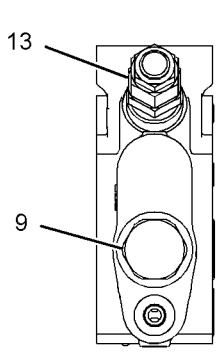

VIEW D-D

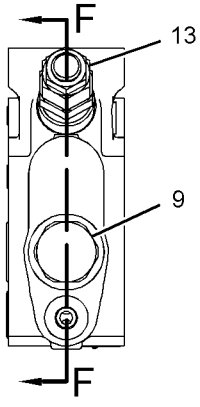

VIEW B-B

GRAPHIC #1 **<END>** g01410999

HYDRAULIC SYSTEM

311-8273 VALVE GP-CONTROL

S/N: FTD190-UP

PART OF 317-6909 VALVE GP-MAIN CONTROL

AN ATTACHMENT

SMCS-5051 **i02902662**

NOTE	REF NO	GRAPHIC REF	PART NUMBER	QTY	PART NAME 1 2 3 4 5 6 (PRODUCT LEVEL)	SEE PAGE
	1	1	**1T-0936**	1	PLUG-PIPE	
	2	2	**2W-1776**	1	SPRING	
	3	1	**4B-4158**	1	SCREW-DRIVE (3/16X0.25-IN)	
	4	2	**148-2557**	1	PLUG	
	5	1	**148-9359**	2	PLUG	
	8	2	**240-1863**	2	SPRING	
	9	2	**240-1865**	2	SPRING	
	10	2	**240-1866**	2	RETAINER-SPRING	
	11	2	**240-1867**	2	PLUG-RETAINER	
	12	2	**240-6016**	1	PLUG-RETAINER	
	13	2	**240-6017**	1	SPRING	
Y	15	2	**251-9918**	2	VALVE GP-RELIEF (LINE, AUXILIARY)	689
Y	16	1	**260-8590**	1	VALVE GP-SHUTTLE	695
	19	2	*173-3993*	2	PLUG AS	
					(EACH INCLUDES)	
		2	**4J-7533**	1	SEAL-O-RING	
		2	**9S-8001**	1	PLUG-O-RING	
	20	1	*183-7263*	1	PLUG AS	
		1	**3J-7354**	1	SEAL-O-RING	
		1	**9S-8002**	1	PLUG-O-RING	
	21	1	**1P-3703**	1	SEAL-RECTANGULAR	
	22	1	**4J-9535**	2	SEAL-O-RING	
	23	2	**4K-1388**	1	SEAL-O-RING	
	24	1	**5F-8000**	1	SEAL-O-RING	
	25	1	**6J-3134**	2	SEAL-O-RING	
	26	2	**7M-8485**	2	SEAL-O-RING	

Y-SEPARATE ILLUSTRATION

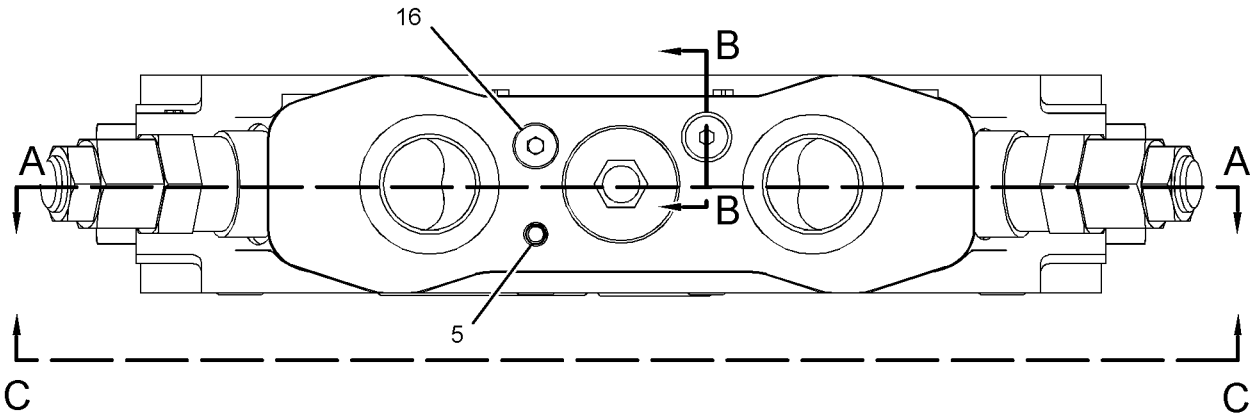

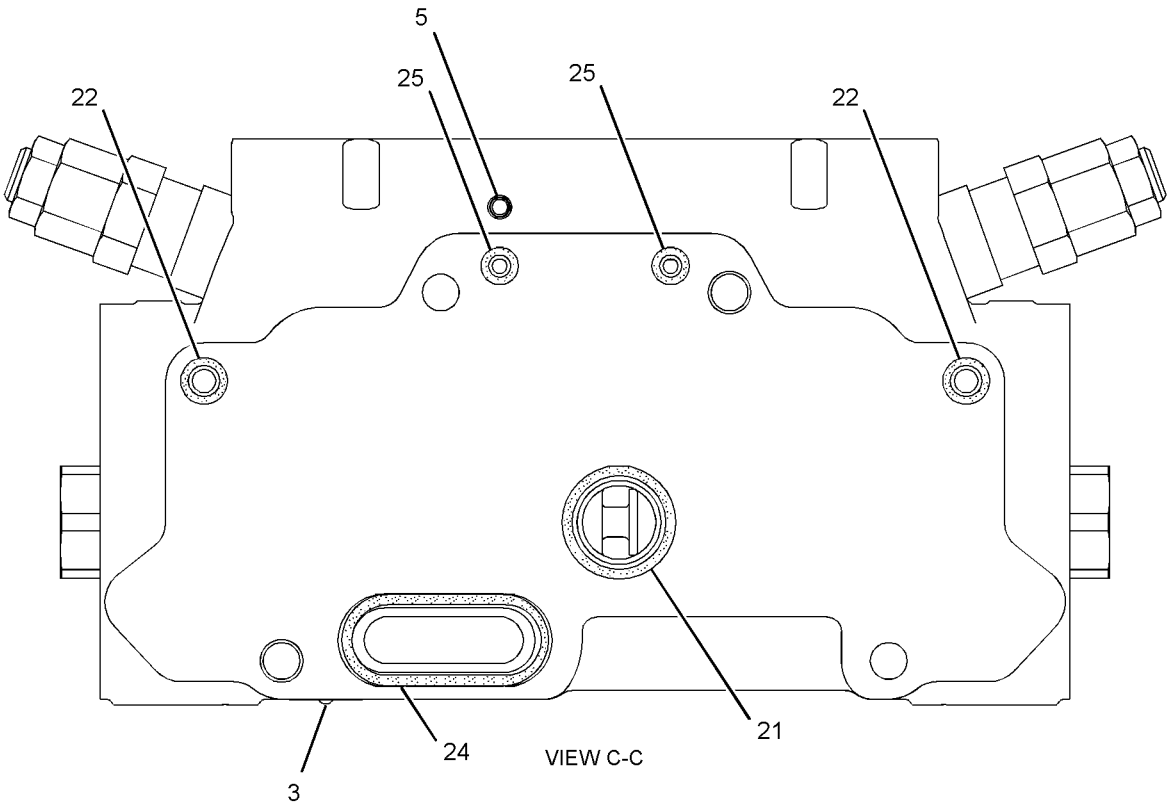

VIEW C-C

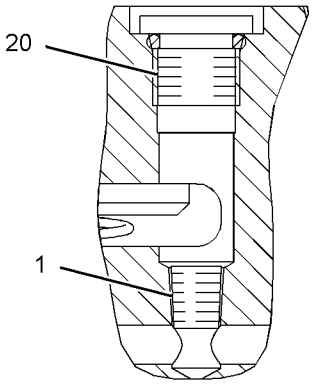

SECTION B-B

REFER TO ALL ILLUSTRATIONS OF THIS GROUP FOR AUXILIARY VIEWS

GRAPHIC #1

g01408277

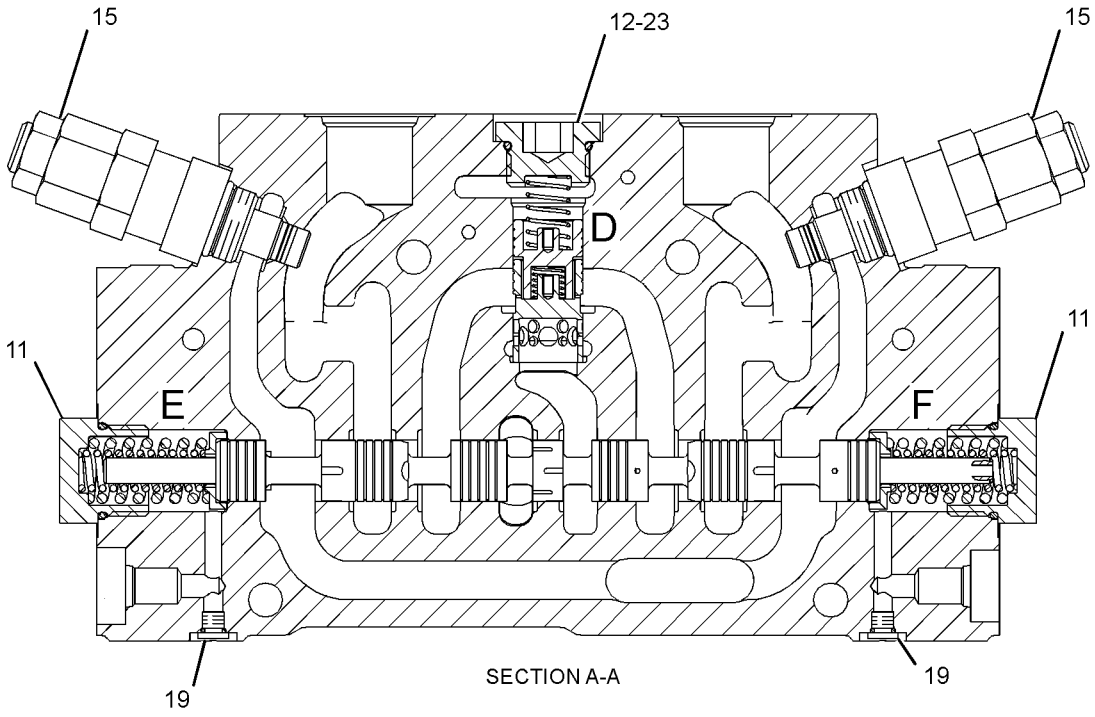

SECTION A-A

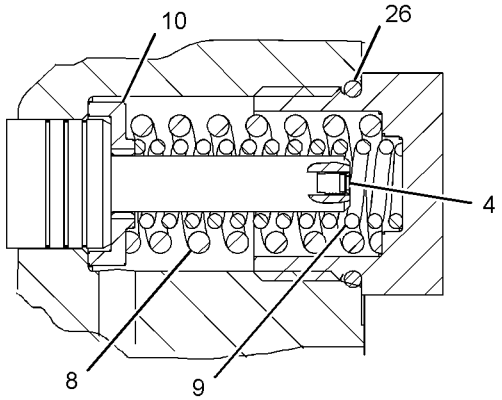

VIEW OF AREA F

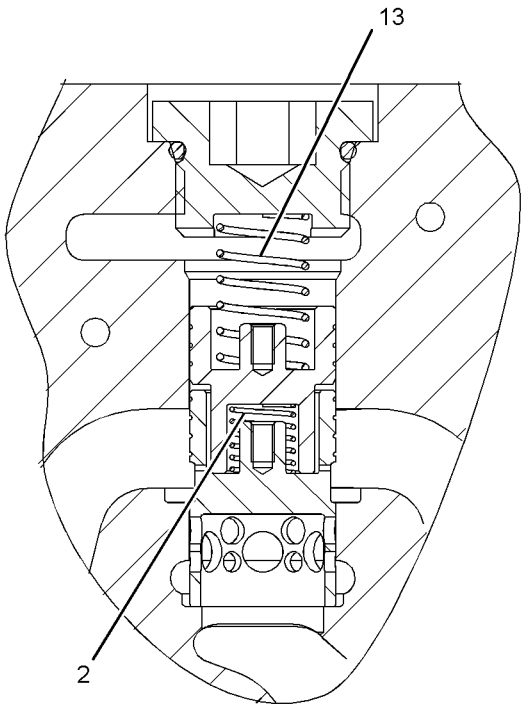

VIEW OF AREA D

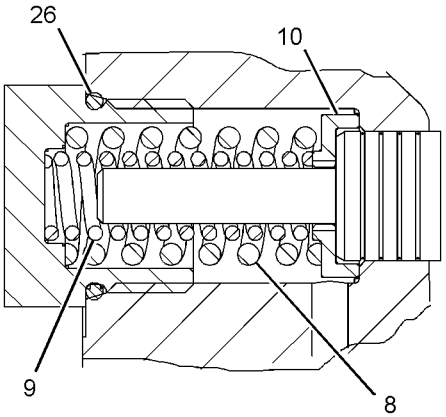

VIEW OF AREA E

GRAPHIC #2 **<END>** g01408518

HYDRAULIC SYSTEM

311-8279 VALVE GP-CONTROL

S/N: FTD190-UP
PART OF 317-6905, 317-6909 VALVE GP-MAIN CONTROL
AN ATTACHMENT

SMCS-5051 **i02902592**

NOTE	REF NO	GRAPHIC REF	PART NUMBER	QTY	PART NAME 1 2 3 4 5 6 (PRODUCT LEVEL)	SEE PAGE
	1	1	**1T-0936**	1	PLUG-PIPE	
	2	1	**2W-1776**	1	SPRING	
	4	1	**5F-8000**	1	SEAL-O-RING	
	5	1	**9W-7783**	1	PLUG	
	6	1	**148-2557**	1	PLUG	
	7	1	**148-9359**	2	PLUG	
	11	1	**240-1863**	2	SPRING	
	12	1	**240-1865**	2	SPRING	
	13	1	**240-1866**	2	RETAINER-SPRING	
	14	1	**240-1867**	2	PLUG-RETAINER	
	15	1	**240-6016**	1	PLUG-RETAINER	
	16	1	**240-6017**	1	SPRING	
J	17	1	**240-6832**	1	VALVE GP-CHECK (PILOT OIL)	
Y	18	1	**251-9918**	1	VALVE GP-RELIEF (PILOT OPERATED)	689
Y	19	1	**260-8590**	1	VALVE GP-SHUTTLE (BALL RESOLVER)	695
Y	20	1	**270-0350**	1	VALVE GP-CHECK (LOAD)	628
	23	1	*173-3993*	2	PLUG AS	
					(EACH INCLUDES)	
		1	**4J-7533**	1	SEAL-O-RING	
		1	**9S-8001**	1	PLUG-O-RING	
	24	1	*183-7263*	1	PLUG AS	
		1	**3J-7354**	1	SEAL-O-RING	
		1	**9S-8002**	1	PLUG-O-RING	
	25	1	**1P-3703**	1	SEAL-RECTANGULAR	
	26	1	**4J-9535**	2	SEAL-O-RING	
	27	1	**4K-1388**	1	SEAL-O-RING	
	28	1	**6J-3134**	2	SEAL-O-RING	
	29	1	**7M-8485**	2	SEAL-O-RING	
					AVAILABLE REPAIR KIT(S):	
J			**276-5434**	1	KIT-SEAL	
					(INCLUDES O-RINGS & BACKUP RINGS)	

J-KIT MARKED J SERVICES PART(S) MARKED J
Y-SEPARATE ILLUSTRATION

311-8279 **VALVE GP-CONTROL** *(contd.)* **i02902592**

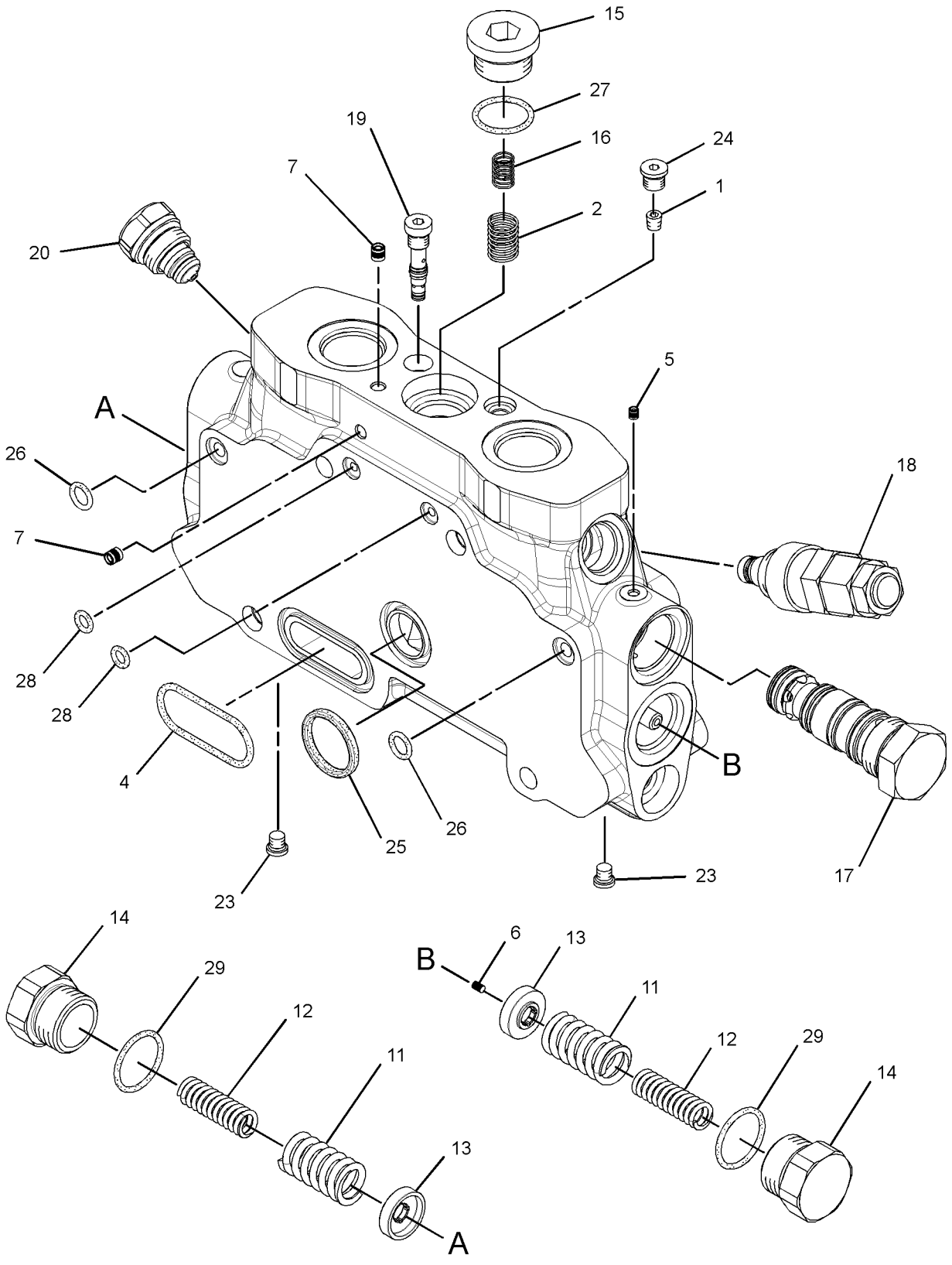

GRAPHIC #1 **<END>** g01444126

HYDRAULIC SYSTEM

133-4234 VALVE GP-MAIN CONTROL–2-FUNCTION

S/N: BYD1-UP

PART OF 118-1087 VALVE & MTG GP-MAIN CONTROL

AN ATTACHMENT

SMCS-5051 **i02710265**

NOTE	REF NO	GRAPHIC REF	PART NUMBER	QTY	PART NAME 1 2 3 4 5 6 (PRODUCT LEVEL)	SEE PAGE
	1	1	**8F-0212**	4	SEAL-O-RING	
	2	1	**6E-5434**	4	HOUSING-PILOT	
M	3	1	**8T-6870**	8	BOLT (M8X1.25X70-MM)	
	4	1	**8T-4224**	8	WASHER-HARD (8.8X16X2-MM THK)	
Y	5	1	**108-6428**	1	VALVE GP-RELIEF (MAIN)	686
	6	1	**9S-4190**	1	PLUG-O-RING	
	7	1	**2M-9780**	1	SEAL-O-RING	
Y	8	1	**9T-7634**	1	VALVE GP-CHECK (MAKEUP)	626
B	9	1	**6E-5431**	10	SHIM (0.5-MM THK)	
	10	1	**6E-5457**	2	PLUG	
	11	1	**6E-5643**	2	VALVE (LOAD CHECK)	
	12	1	**4T-3148**	2	SPRING	
	13	1	**3D-2824**	2	SEAL-O-RING	
CY	14	1	**186-0913**	2	VALVE GP-RELIEF (LINE, TILT)	688
	15	1	**6E-5437**	2	SPRING	
	16	1	**6E-5438**	2	SPRING	
	17	1	**6E-5439**	2	SPRING	
	18	1	**6E-5440**	2	SPRING	
	19	1	**6E-5436**	4	RETAINER-SPRING	
	20	1	**185-7708**	1	VALVE GP-RELIEF (LINE, TILT)	
		1	**6E-3008**	1	SPRING	
		1	**8L-2779**	1	SEAL-O-RING	
		1	**9T-7266**	1	NUT (3/4-16-THD)	
		1	**033-6028**	1	SEAL-O-RING	
		1	**130-1676**	1	SEAL-O-RING	

B-USE AS REQUIRED
C-CHANGE FROM PREVIOUS TYPE
M-METRIC PART
Y-SEPARATE ILLUSTRATION

133-4234 VALVE GP-MAIN CONTROL *(contd.)* **i02710265**

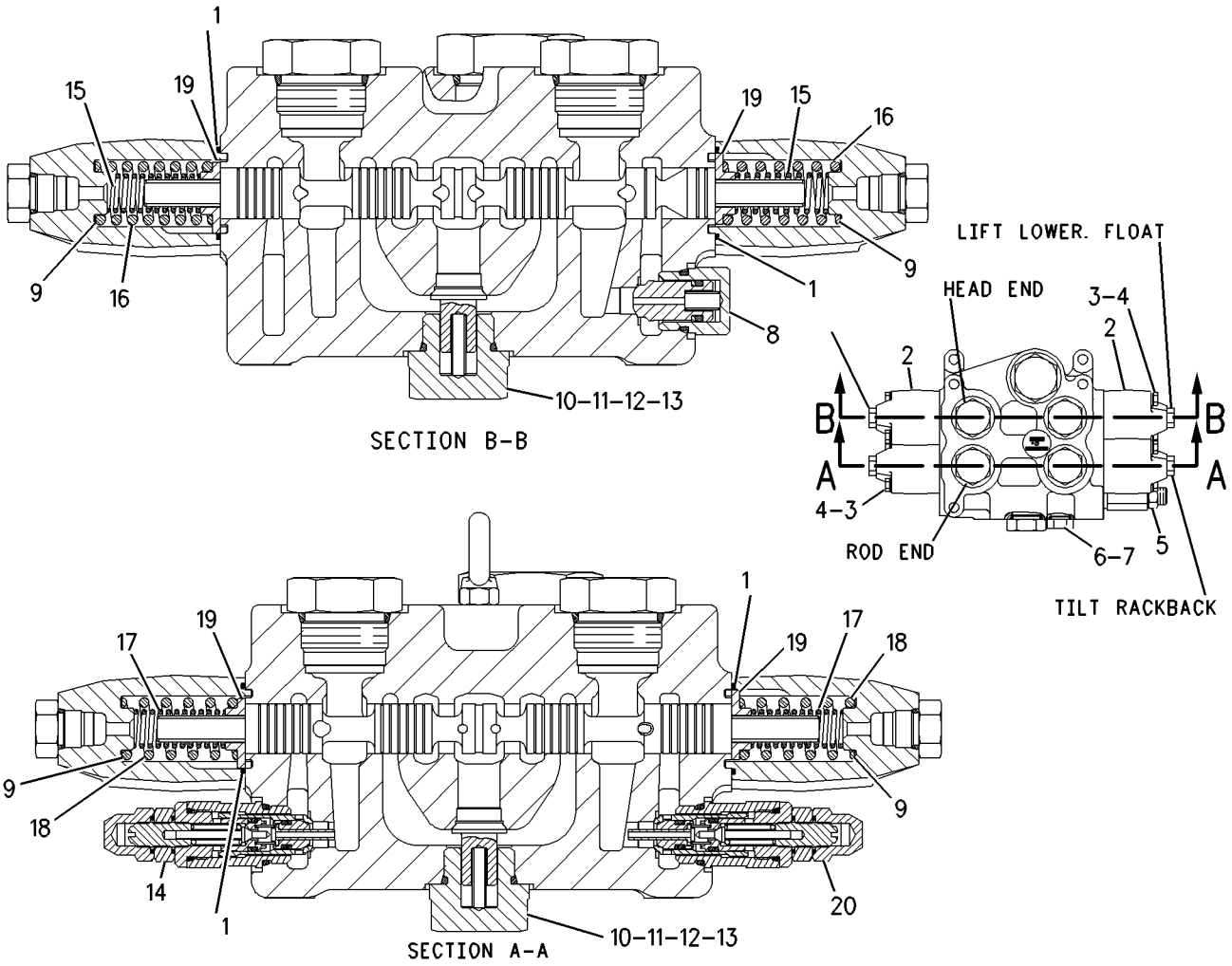

GRAPHIC #1 **<END>** g00812243

HYDRAULIC SYSTEM

133-4235 VALVE GP-MAIN CONTROL–3-FUNCTION

S/N: BYD1-UP

PART OF 241-1049 CONVERSION AR-HYDRAULIC, 118-1095 VALVE & MTG GP-MAIN CONTROL AN ATTACHMENT

SMCS-5051 **i02710255**

NOTE	REF NO	GRAPHIC REF	PART NUMBER	QTY	PART NAME 1 2 3 4 5 6 (PRODUCT LEVEL)	SEE PAGE
Y	1	1	**9T-7634**	1	VALVE GP-CHECK (MAKEUP)	626
	2	1	**6E-5434**	6	HOUSING-PILOT	
M	3	1	**8T-6870**	12	BOLT (M8X1.25X70-MM)	
	4	1	**8T-4224**	12	WASHER-HARD (8.8X16X2-MM THK)	
Y	5	1	**108-6428**	1	VALVE GP-RELIEF (MAIN)	686
	6	1	**9S-4190**	1	PLUG-O-RING	
	7	1	**2M-9780**	1	SEAL-O-RING	
CY	8	1	**186-0913**	1	VALVE GP-RELIEF (LINE, TILT)	688
B	9	1	**6E-5431**	14	SHIM (0.5-MM THK)	
	10	1	**6E-5457**	3	PLUG	
	11	1	**6E-5643**	3	VALVE (LOAD CHECK)	
	12	1	**4T-3148**	3	SPRING	
	13	1	**3D-2824**	3	SEAL-O-RING	
Y	14	1	**186-0905**	2	VALVE GP-RELIEF (LINE, AUXILIARY)	687
	15	1	**6E-5437**	2	SPRING	
	16	1	**6E-5438**	2	SPRING	
	17	1	**6E-5439**	4	SPRING	
	18	1	**6E-5440**	4	SPRING	
	19	1	**6E-5436**	6	RETAINER-SPRING	
	20	1	**8F-0212**	6	SEAL-O-RING	
C	21	1	**185-7708**	1	VALVE GP-RELIEF (LINE, TILT)	
		1	**6E-3008**	1	SPRING	
		1	**8L-2779**	1	SEAL-O-RING	
		1	**9T-7266**	1	NUT (3/4-16-THD)	
		1	**033-6028**	1	SEAL-O-RING	
		1	**130-1676**	1	SEAL-O-RING	

B-USE AS REQUIRED
C-CHANGE FROM PREVIOUS TYPE
M-METRIC PART
Y-SEPARATE ILLUSTRATION

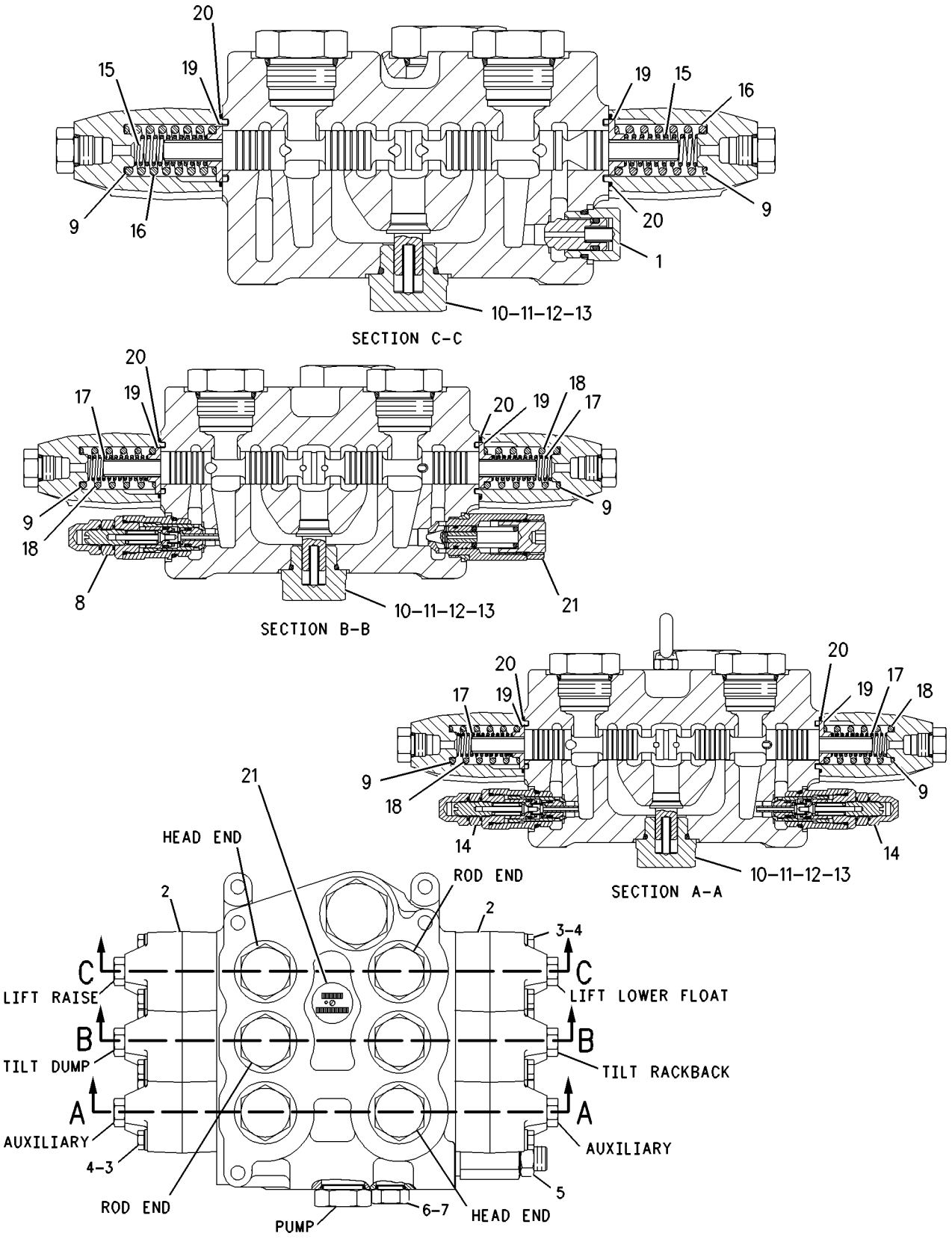

GRAPHIC #1 **<END>** g00789641

242-0117 VALVE GP-MAIN CONTROL–2-FUNCTION, AUXILIARY

S/N: FTD1-UP

PART OF 242-0098 VALVE & MTG GP-MAIN CONTROL

AN ATTACHMENT

SMCS-5051 **i02712644**

NOTE	REF NO	GRAPHIC REF	PART NUMBER	QTY	PART NAME 1 2 3 4 5 6 (PRODUCT LEVEL)	SEE PAGE
	1	1	**9T-4057**	3	SEAL-O-RING	
	2	1	**8U-5943**	6	SEAL-O-RING	
	3	1	**187-1979**	4	SEAL-O-RING	
	4	1	**260-3015**	1	KIT-FASTENER (FLOW CONTROL VALVE)	
					(INCLUDES LOCKNUTS & TIE RODS)	
Y	5	1	**260-3016**	1	MANIFOLD GP-VALVE (AUXILIARY, INLET)	585
	6	1	**260-3017**	1	COVER	
		1	**227-1189**	1	SCREEN (PILOT)	
Y	7	1	**260-3018**	2	VALVE GP-CONTROL (AUXILIARY; 5TH, 6TH FUNCTIONS)	636

Y-SEPARATE ILLUSTRATION

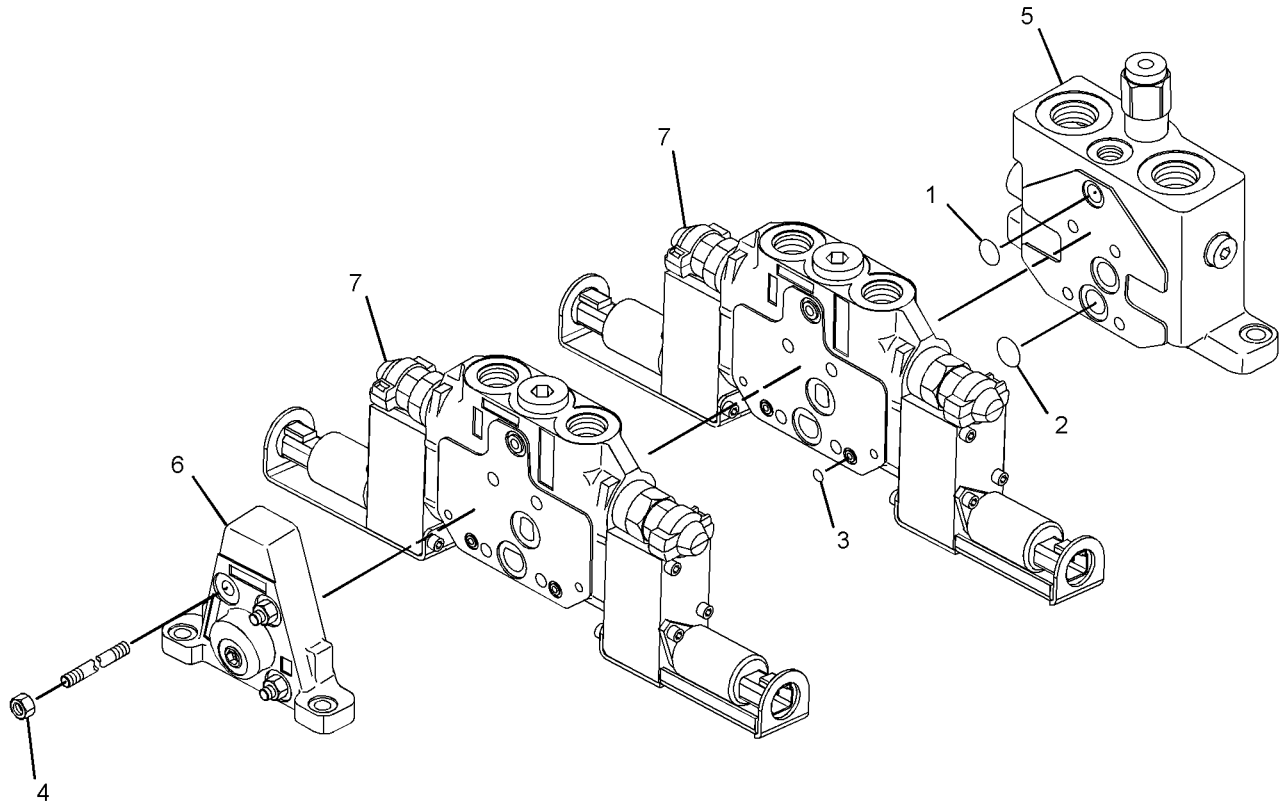

GRAPHIC #1 **<END>** g01273401

280-1996 VALVE GP-MAIN CONTROL–2-FUNCTION

S/N: FTD1-189
PART OF 240-9452 HYDRAULIC AR-2 VALVE
AN ATTACHMENT

SMCS-5051 **i02627926**

NOTE	REF NO	GRAPHIC REF	PART NUMBER	QTY	PART NAME 1 2 3 4 5 6 (PRODUCT LEVEL)	SEE PAGE
Y	1	1	**238-4832**	1	VALVE GP-CONTROL	630
Y	2	1	**294-9504**	1	VALVE GP-CONTROL (LIFT)	637
	3	1	**240-8660**	4	BOLT (M12X1.75X180-MM)	
	4	1	**267-5203**	1	COVER	
Y	5	1	**283-9380**	1	MANIFOLD GP-VALVE (INLET)	586
	6	1	*183-7263*	1	PLUG AS	
		1	**3J-7354**	1	SEAL-O-RING	
		1	**9S-8002**	1	PLUG-O-RING	

Y-SEPARATE ILLUSTRATION

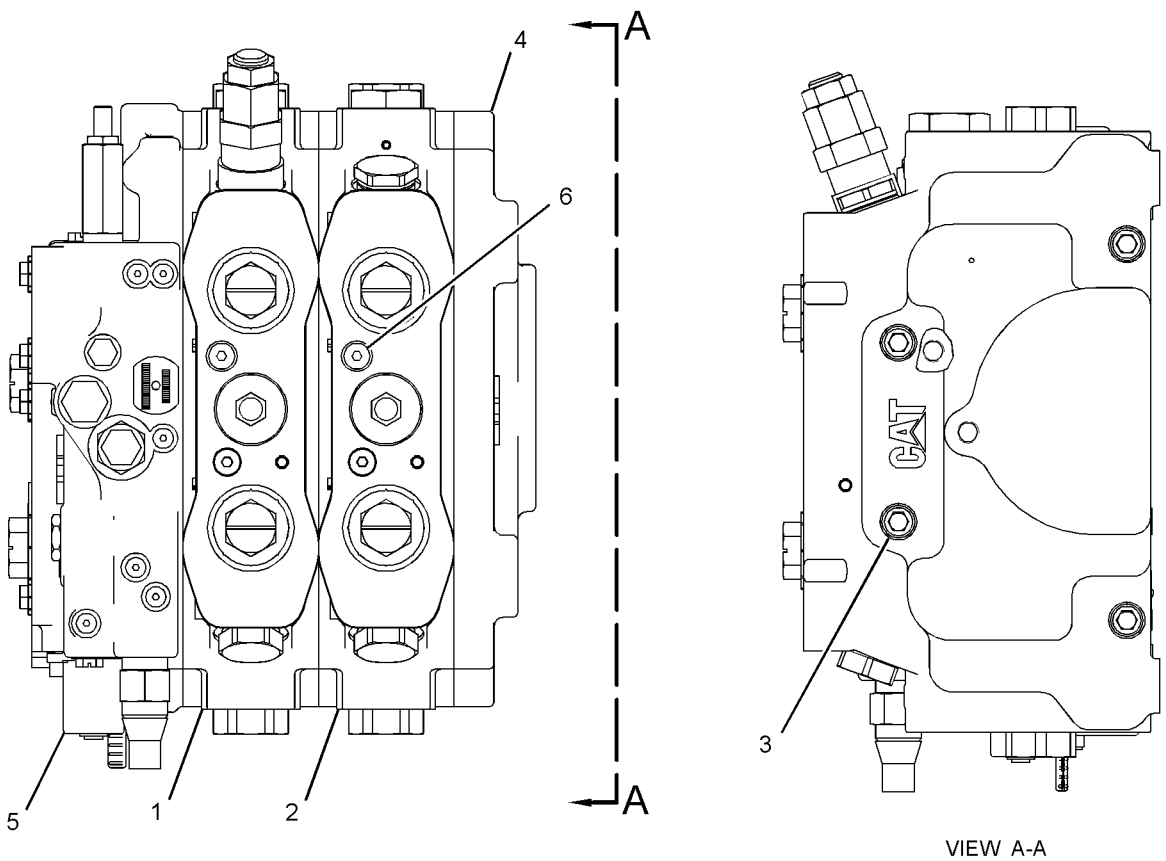

GRAPHIC #1 **<END>** g01297804

HYDRAULIC SYSTEM

280-1997 VALVE GP-MAIN CONTROL–3-FUNCTION

S/N: FTD1-UP

PART OF 241-0943 HYDRAULIC AR-3 VALVE

AN ATTACHMENT

SMCS-5051 **i02628024**

NOTE	REF NO	GRAPHIC REF	PART NUMBER	QTY	PART NAME 1 2 3 4 5 6 (PRODUCT LEVEL)	SEE PAGE
Y	1	1	**238-4832**	1	VALVE GP-CONTROL	630
M	2	1	**240-8661**	4	BOLT (M12X1.75X255-MM)	
Y	3	1	**240-9590**	1	VALVE GP-CONTROL (AUXILIARY, THIRD, FOURTH FCTN)	632
	4	1	**267-5203**	1	COVER	
Y	5	1	**283-9380**	1	MANIFOLD GP-VALVE (INLET)	586
Y	6	1	**294-9504**	1	VALVE GP-CONTROL (LIFT)	637
	7	1	*183-7263*	1	PLUG AS	
		1	**3J-7354**	1	SEAL-O-RING	
		1	**9S-8002**	1	PLUG-O-RING	

M-METRIC PART
Y-SEPARATE ILLUSTRATION

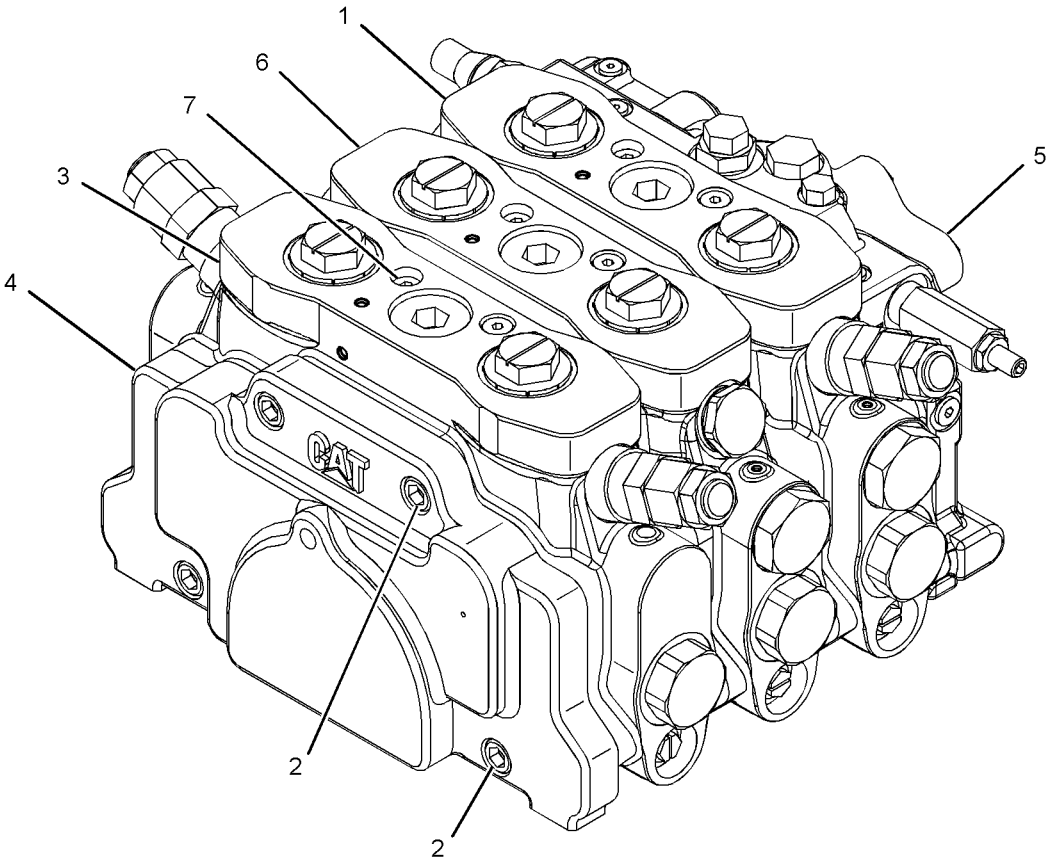

GRAPHIC #1 **<END>** g01352155

HYDRAULIC SYSTEM

280-1998 VALVE GP-MAIN CONTROL–4-FUNCTION

S/N: FTD1-UP

PART OF 240-9454, 241-0944 HYDRAULIC AR-4 VALVE, 242-0100 HYDRAULIC AR-6 VALVE AN ATTACHMENT

SMCS-5051 **i02628019**

NOTE	REF NO	GRAPHIC REF	PART NUMBER	QTY	PART NAME 1 2 3 4 5 6 (PRODUCT LEVEL)	SEE PAGE
	1	1	**4B-4158**	1	SCREW-DRIVE (3/16X0.25-IN)	
Y	2	1	**238-4832**	1	VALVE GP-CONTROL	630
	3	1	**240-8662**	4	BOLT-SOCKET HEAD (M12X1.75X330-MM)	
Y	4	1	**240-9590**	1	VALVE GP-CONTROL (AUXILIARY, THIRD, FOURTH FCTN)	632
Y	5	1	**254-5630**	1	VALVE GP-CONTROL (AUXILIARY, FOURTH FUNCTION)	634
	6	1	**267-5203**	1	COVER	
	7	1	*183-7263*	1	PLUG AS	
		1	**3J-7354**	1	SEAL-O-RING	
		1	**9S-8002**	1	PLUG-O-RING	
Y	8	1	**283-9380**	1	MANIFOLD GP-VALVE (INLET)	586
Y	9	1	**294-9504**	1	VALVE GP-CONTROL (LIFT)	637

Y-SEPARATE ILLUSTRATION

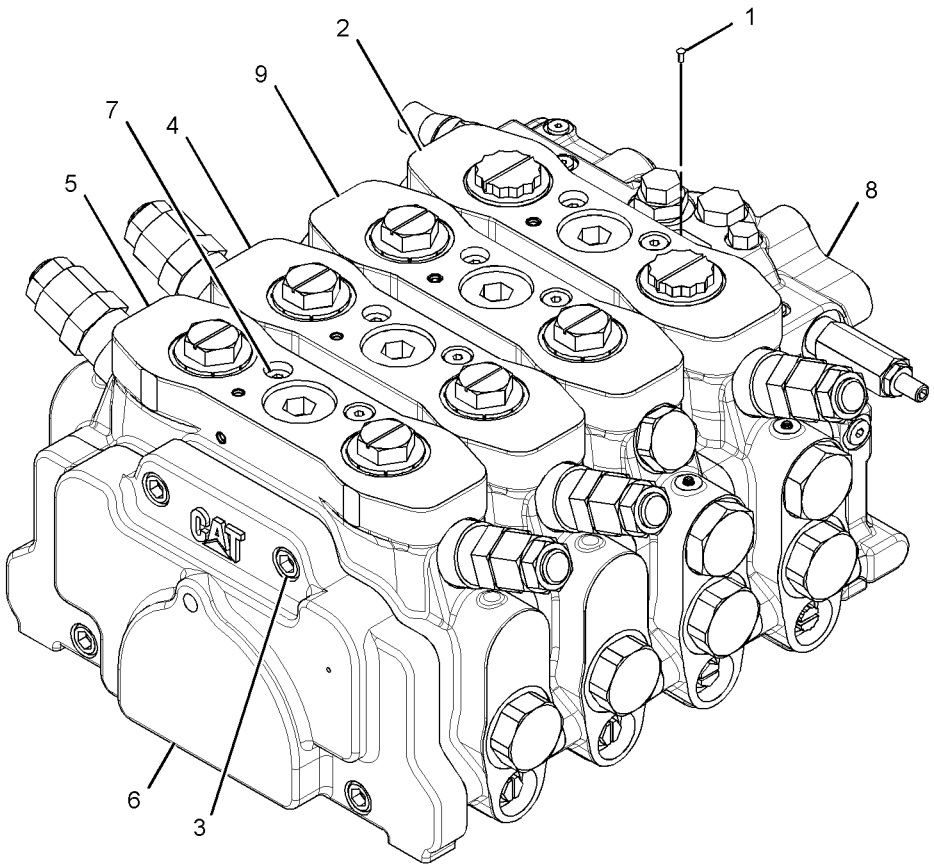

GRAPHIC #1 **<END>** g01352171

HYDRAULIC SYSTEM

317-6905 VALVE GP-MAIN CONTROL–2-FUNCTION

S/N: FTD190-UP

PART OF 240-9452 HYDRAULIC AR-2 VALVE

AN ATTACHMENT

SMCS-5051 **i02861514**

NOTE	REF NO	GRAPHIC REF	PART NUMBER	QTY	PART NAME 1 2 3 4 5 6 (PRODUCT LEVEL)	SEE PAGE
	1	1	*183-7263*	1	PLUG AS	
		1	**3J-7354**	1	SEAL-O-RING	
		1	**9S-8002**	1	PLUG-O-RING	
	2	1	**240-8660**	4	BOLT (M12X1.75X180-MM)	
	3	1	**267-5203**	1	COVER	
Y	4	1	**283-9380**	1	MANIFOLD GP-VALVE (INLET)	586
Y	5	1	**294-9504**	1	VALVE GP-CONTROL (LIFT)	637
Y	6	1	**311-8279**	1	VALVE GP-CONTROL (TILT)	644

Y-SEPARATE ILLUSTRATION

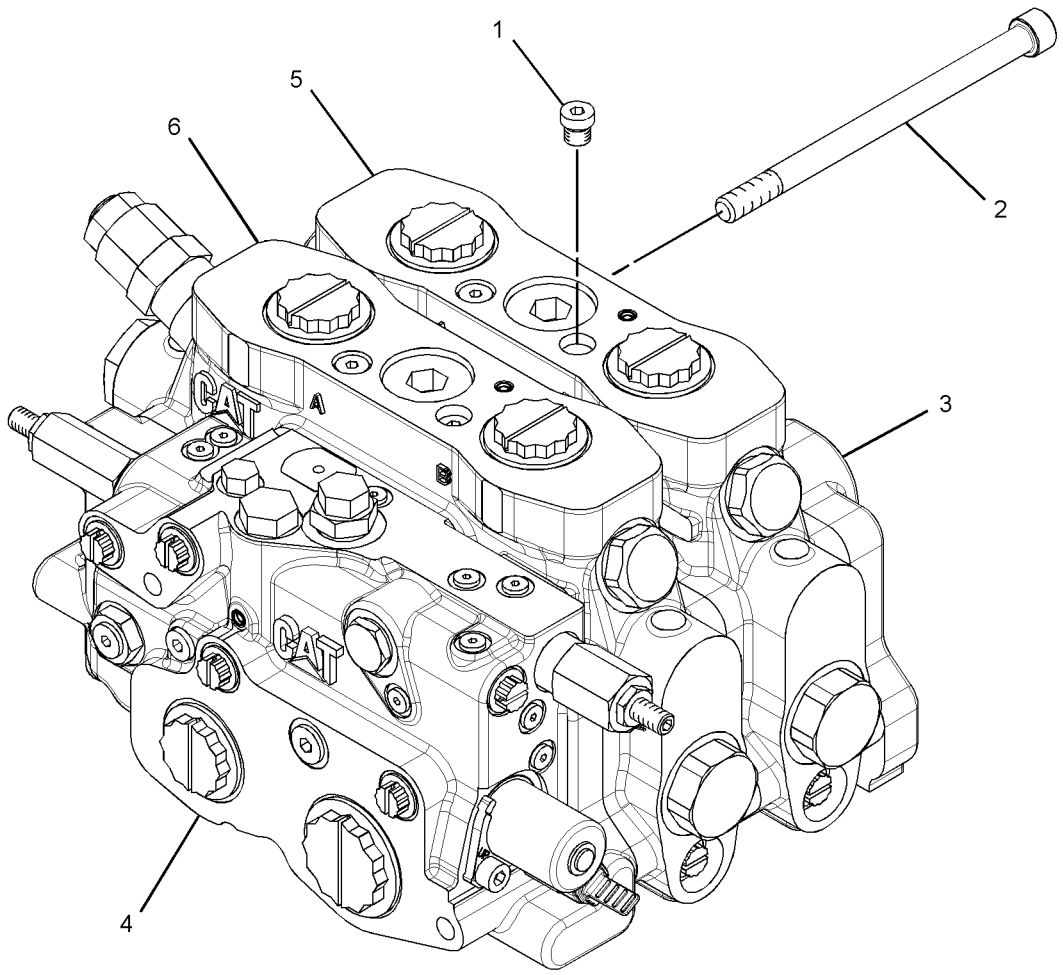

GRAPHIC #1 **<END>** g01433020

317-6909 VALVE GP-MAIN CONTROL–4-FUNCTION

S/N: FTD190-UP

PART OF 241-0944 HYDRAULIC AR-4 VALVE, 242-0100 HYDRAULIC AR-6 VALVE AN ATTACHMENT

SMCS-5051 **i02861526**

NOTE	REF NO	GRAPHIC REF	PART NUMBER	QTY	PART NAME 1 2 3 4 5 6 (PRODUCT LEVEL)	SEE PAGE
	1	1	*183-7263*	1	PLUG AS	
		1	**3J-7354**	1	SEAL-O-RING	
		1	**9S-8002**	1	PLUG-O-RING	
	2	1	**240-8662**	4	BOLT-SOCKET HEAD (M12X1.75X330-MM)	
	3	1	**267-5203**	1	COVER	
Y	4	1	**283-9380**	1	MANIFOLD GP-VALVE (INLET)	586
Y	5	1	**294-9504**	1	VALVE GP-CONTROL (LIFT)	637
Y	6	1	**311-8271**	1	VALVE GP-CONTROL (AUXILIARY)	639
Y	7	1	**311-8273**	1	VALVE GP-CONTROL (AUXILIARY)	641
Y	8	1	**311-8279**	1	VALVE GP-CONTROL (TILT)	644

Y-SEPARATE ILLUSTRATION

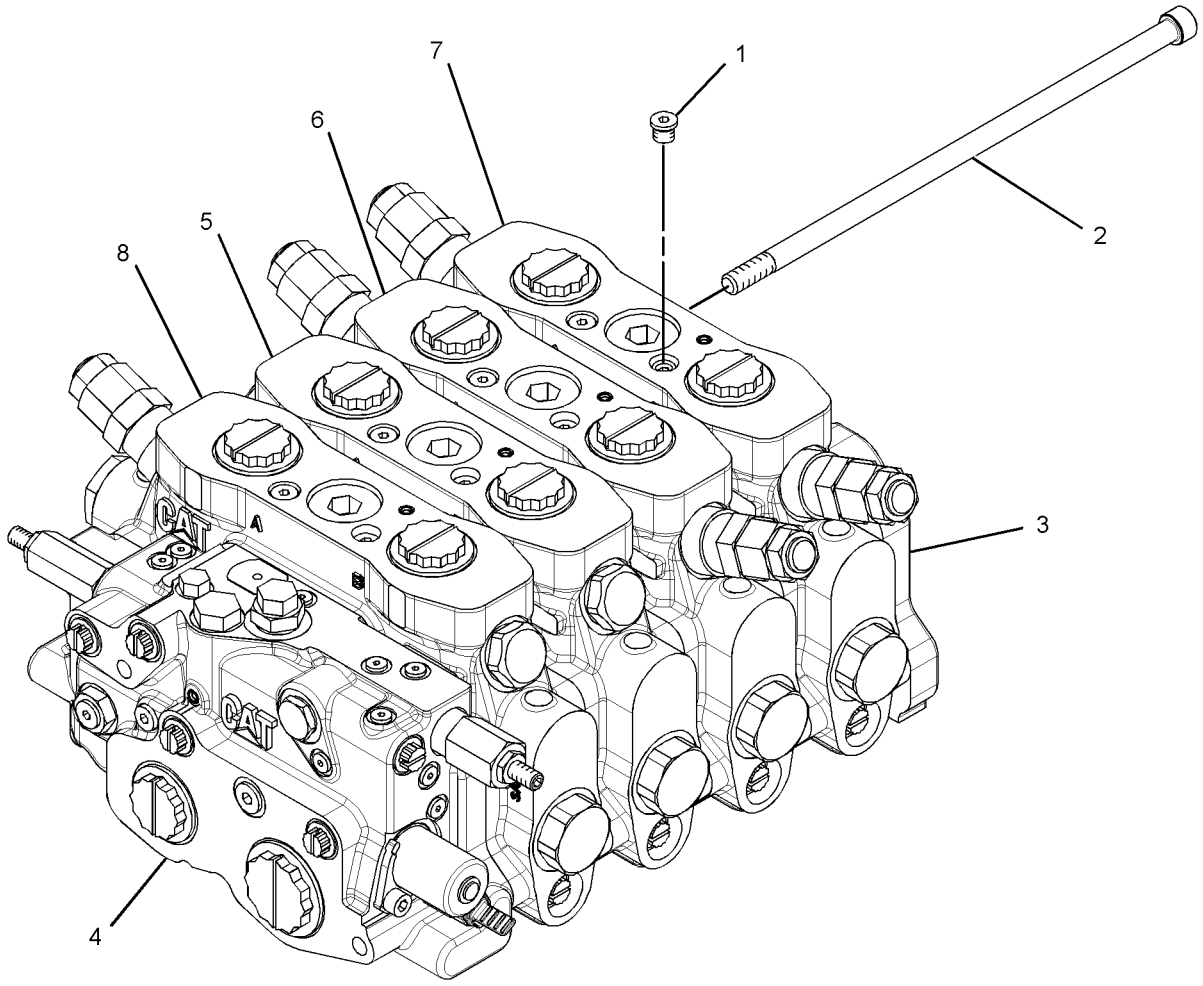

GRAPHIC #1 **<END>** g01433449

112-1817 VALVE GP-MANUAL–RESOLVER

S/N: BYD1-UP

PART OF 118-0861 LINES GP-LIFT CYLINDER

SMCS-5001, 5130, 5147 **i02327220**

NOTE	PART NUMBER	QTY	PART NAME 1 2 3 4 5 6 (PRODUCT LEVEL)	SEE PAGE
J	*202-0671*	1	VALVE GP-MANUAL	
			–OR–	
J	*202-0673*	1	VALVE GP-MANUAL	
			–OR–	
J	*202-0674*	1	VALVE GP-MANUAL	
			AVAILABLE REPAIR KIT(S):	
J	**112-9861**	1	KIT-SEAL	
			(INCLUDES SEALS, CONNECTORS & THRUST RING)	

J-KIT MARKED J AVAILABLE FOR PART(S) MARKED J

<END>

201-3359 VALVE GP-PILOT—JOYSTICK, 2-FUNCTION

S/N: BYD1-UP

PART OF 287-2061 VALVE GP-PILOT

AN ATTACHMENT

SMCS-5059 **i02853570**

NOTE	REF NO	GRAPHIC REF	PART NUMBER	QTY	PART NAME 1 2 3 4 5 6 (PRODUCT LEVEL)	SEE PAGE
	1	1	**7B-3028**	1	SCREW-DRIVE (NO 4X3/16-IN)	
	2	1	**141-4852**	1	BOOT	
	3	1	**141-7481**	1	SPACER	
	4	1	**141-9236**	1	SCREEN AS (PILOT OIL)	
	5	1	**146-8478**	1	CUP	
Y	6	1	**163-4637**	1	PLATE GP-PILOT VALVE	601
	7	1	**168-1877**	1	BODY AS	
		1	**3J-7354**	8	SEAL-O-RING	
		1	**9S-8002**	8	PLUG-O-RING	
Y	8	1	**168-6503**	2	VALVE GP-PILOT CARTRIDGE	469
Y	9	1	**168-6504**	1	VALVE GP-PILOT CARTRIDGE	470
Y	10	1	**202-1233**	1	VALVE GP-PILOT CARTRIDGE	473
	11	1	**202-1320**	1	PLATE-IDENTIFICATION	
	12	1	**102-8806**	1	KIT-RECEPTACLE (8-PIN)	
					(KIT SERVICES RECEPTACLE AS AND WEDGE)	
Y	13	1	**147-3322**	1	PLATE GP-PILOT VALVE (JOYSTICK)	599
	14	1	**153-8947**	1	SWIVEL AS	
	15	1	**3J-1907**	1	SEAL-O-RING	
	16	1	**6V-8397**	1	SEAL-O-RING	
	17	1	**6V-8636**	1	CONNECTOR	
	18	1	**8T-8737**	2	PLUG-SEAL	

Y-SEPARATE ILLUSTRATION

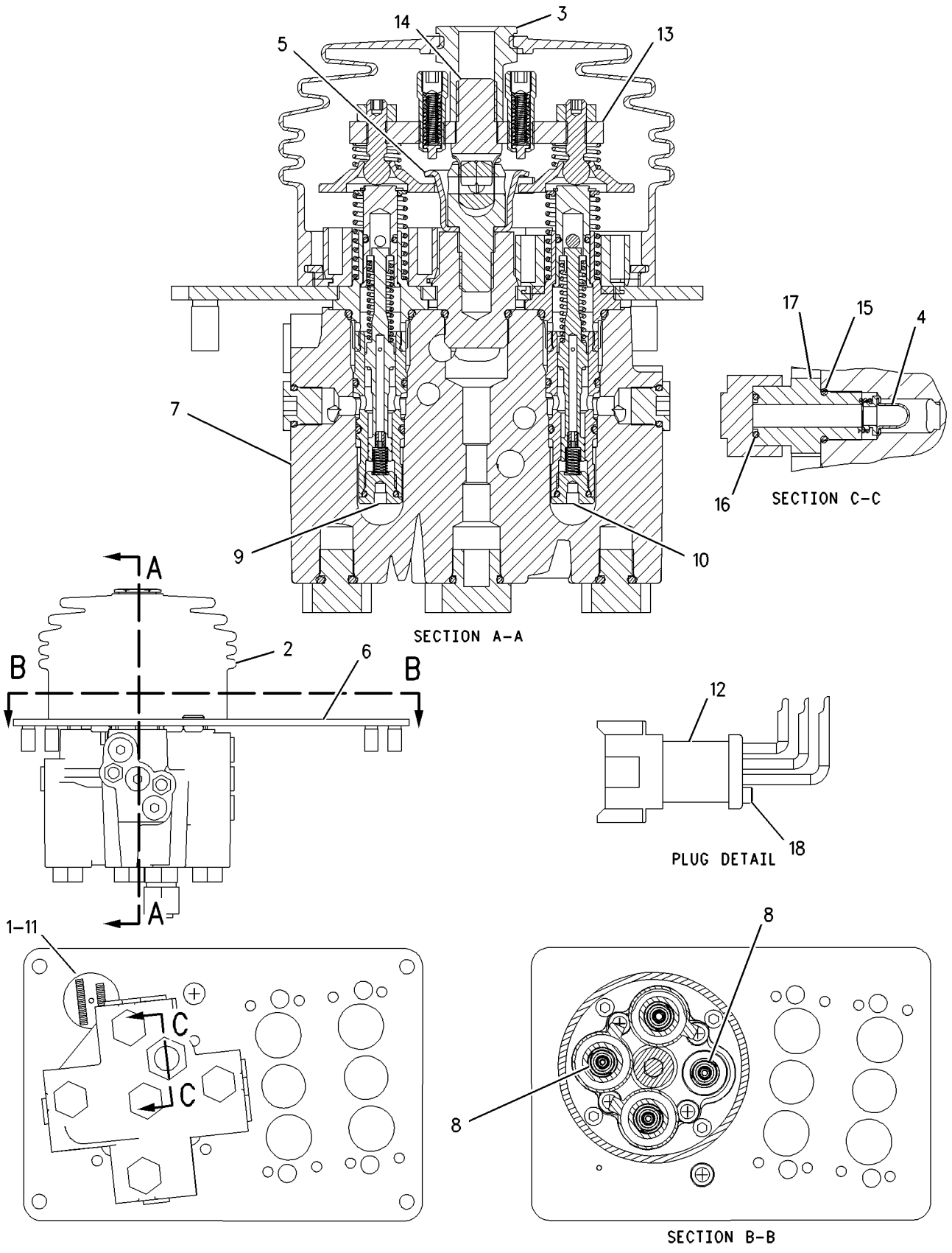

GRAPHIC #1 **<END>** g00800942

201-3360 VALVE GP-PILOT–2-FUNCTION

S/N: BYD1-UP
PART OF 287-2065 VALVE GP-PILOT
AN ATTACHMENT

SMCS-5059 **i01613528**

NOTE	REF NO	GRAPHIC REF	PART NUMBER	QTY	PART NAME 1 2 3 4 5 6 (PRODUCT LEVEL)	SEE PAGE
	1	1	**6V-8636**	1	CONNECTOR	
	2	1	**141-9236**	1	SCREEN AS	
	3	1	**146-8477**	2	BRACKET	
	4	1	**146-8981**	2	PIN	
Y	5	1	**168-6504**	1	VALVE GP-PILOT CARTRIDGE	470
Y	6	1	**175-9436**	1	PLATE GP-PILOT VALVE	602
	7	1	**175-9440**	1	BODY AS	
		1	**160-0750**	2	ADAPTER	
		1	**3J-7354**	16	SEAL-O-RING	
M		1	**5C-2890**	2	NUT (M6X1-THD)	
M		1	**8T-2397**	2	BOLT (M6X1X90-MM)	
		1	**9S-8002**	12	PLUG-O-RING	
Y	8	1	**175-9443**	1	PIVOT GP-PILOT VALVE (AUXILIARY)	596
Y	9	1	**175-9444**	1	PIVOT GP-PILOT VALVE	597
Y	10	1	**202-1233**	3	VALVE GP-PILOT CARTRIDGE	473
	11	1	**9S-4191**	2	PLUG-O-RING	
	12	1	**033-9139**	4	RING-RETAINING	
	13	1	**136-9292**	2	BOOT	
	14	1	**3J-1907**	3	SEAL-O-RING	
M	15	1	**5A-3604**	2	BOLT-SOCKET HEAD (M8X1.25X25-MM)	
	16	1	**6V-8397**	1	SEAL-O-RING	

M-METRIC PART
Y-SEPARATE ILLUSTRATION

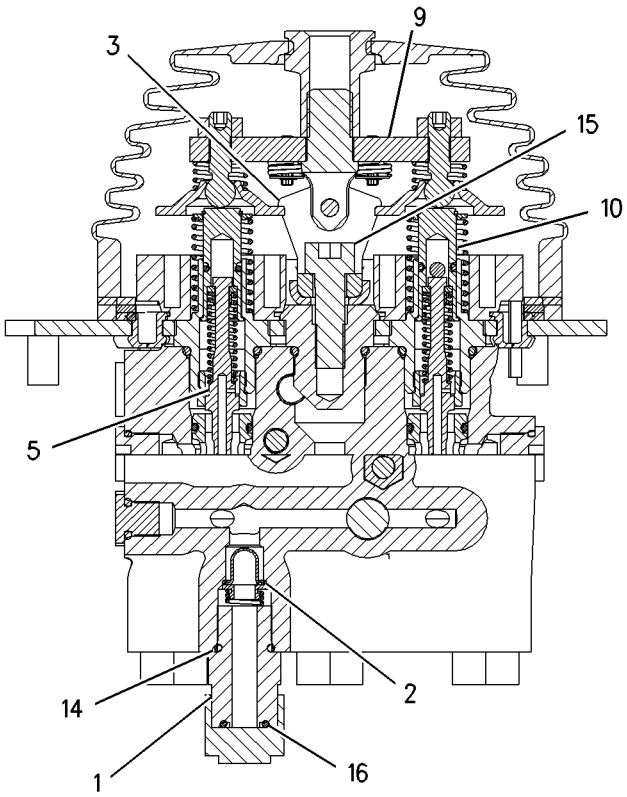

SECTION B-B

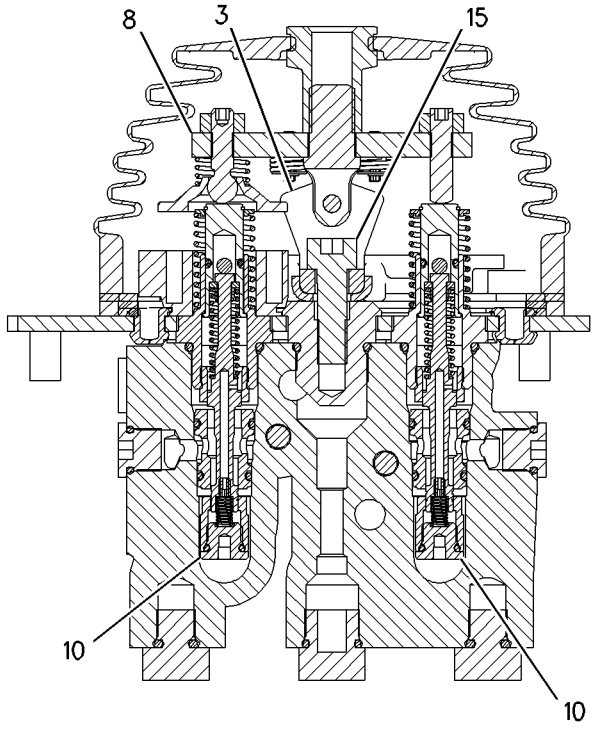

SECTION A-A

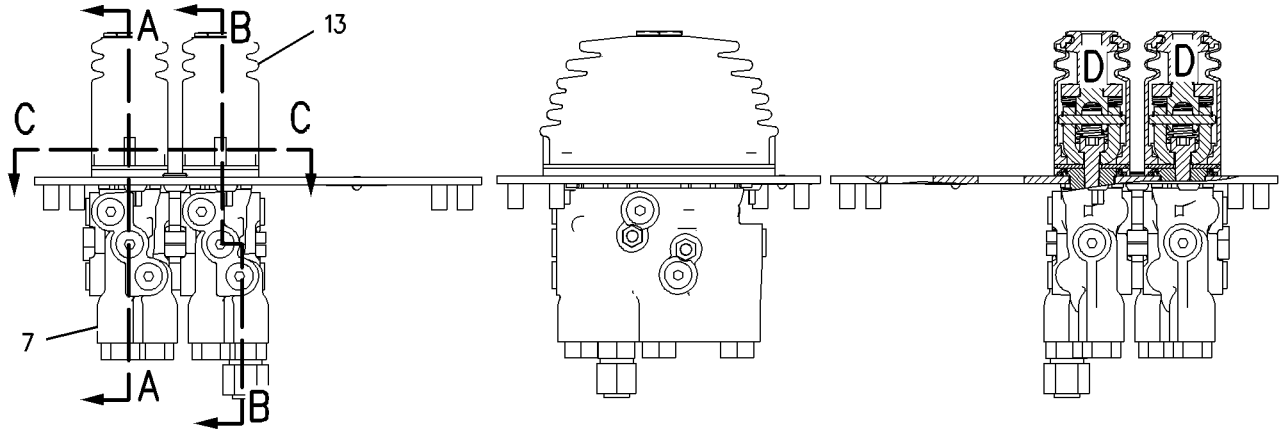

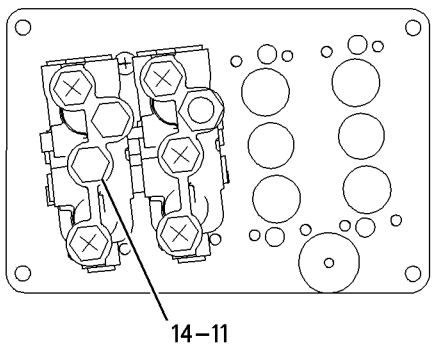

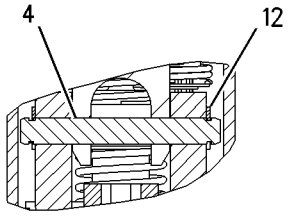

VIEW OF AREA D

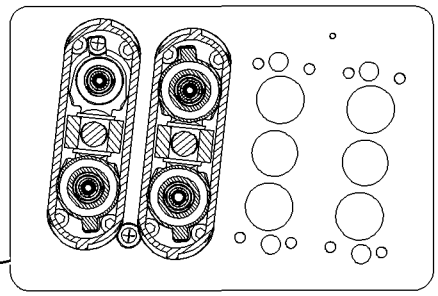

SECTION C-C

GRAPHIC #1 **<END>** g00804927

201-3361 VALVE GP-PILOT—JOYSTICK, 3-FUNCTION

S/N: BYD1-UP

PART OF 287-2062 VALVE GP-PILOT

AN ATTACHMENT

SMCS-5059 **i01719823**

NOTE	REF NO	GRAPHIC REF	PART NUMBER	QTY	PART NAME 1 2 3 4 5 6 (PRODUCT LEVEL)	SEE PAGE
	1	2	**6V-8636**	1	CONNECTOR	
	2	1	**141-4852**	1	BOOT	
	3	1	**141-7481**	1	SPACER	
	4	2	**141-9236**	1	SCREEN AS	
	5	1	**146-8477**	1	BRACKET	
	6	1	**146-8478**	1	CUP	
	7	1	**146-8981**	1	PIN	
Y	8	1	**163-4636**	1	PLATE GP-PILOT VALVE	600
	9	1	**168-1878**	1	BODY AS	
M		1	**5C-2890**	2	NUT (M6X1-THD)	
		1	**3J-7354**	16	SEAL-O-RING	
		1	**9S-8002**	12	PLUG-O-RING	
M		1	**140-9926**	2	BOLT-SOCKET HEAD	
		1	**141-1095**	2	ADAPTER	
Y	10	1	**168-6503**	2	VALVE GP-PILOT CARTRIDGE	469
Y	11	2	**168-6504**	1	VALVE GP-PILOT CARTRIDGE	470
Y	12	2	**202-1233**	1	VALVE GP-PILOT CARTRIDGE	473
	13	2	**9S-4191**	2	PLUG-O-RING	
Y	14	2	**202-2558**	2	VALVE GP-PILOT CARTRIDGE	678
Y	15	2	**202-2564**	1	PIVOT GP-PILOT VALVE	598
	16	1	**033-9139**	2	RING-RETAINING	
	17	2	**102-8806**	1	KIT-RECEPTACLE (8-PIN)	
	18	1	**136-9292**	1	BOOT	
Y	19	1	**147-3322**	1	PLATE GP-PILOT VALVE (JOYSTICK)	599
	20	1	**153-8947**	1	SWIVEL AS	
		1	**146-8479**	1	SWIVEL	
	21	2	**3J-1907**	3	SEAL-O-RING	
M	22	1	**5A-3604**	1	BOLT-SOCKET HEAD (M8X1.25X25-MM)	
	23	2	**6V-8397**	1	SEAL-O-RING	

M-METRIC PART
Y-SEPARATE ILLUSTRATION

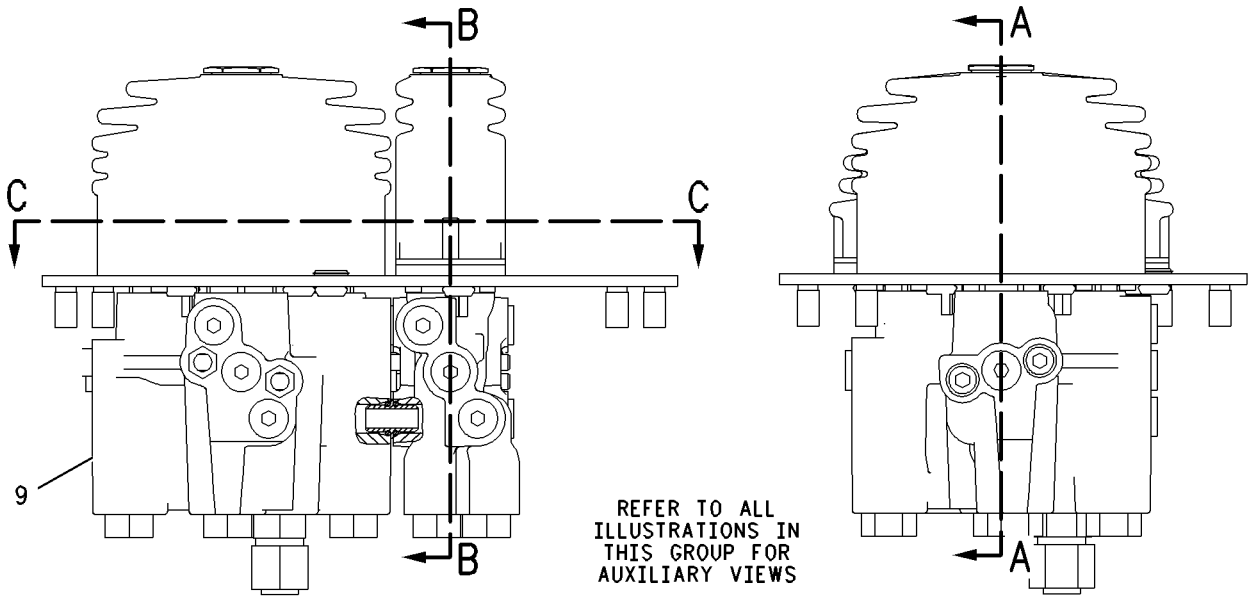

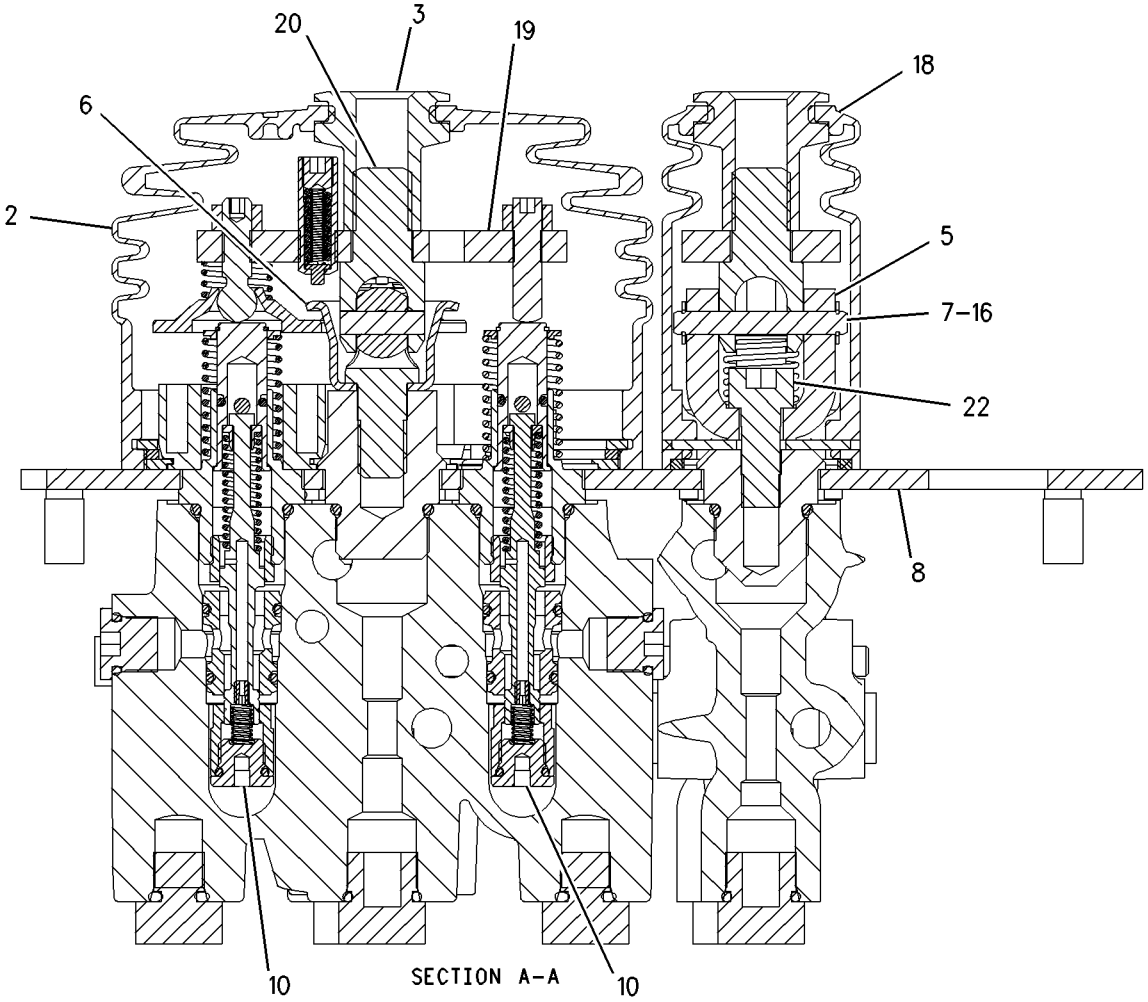

GRAPHIC #1 g00800975

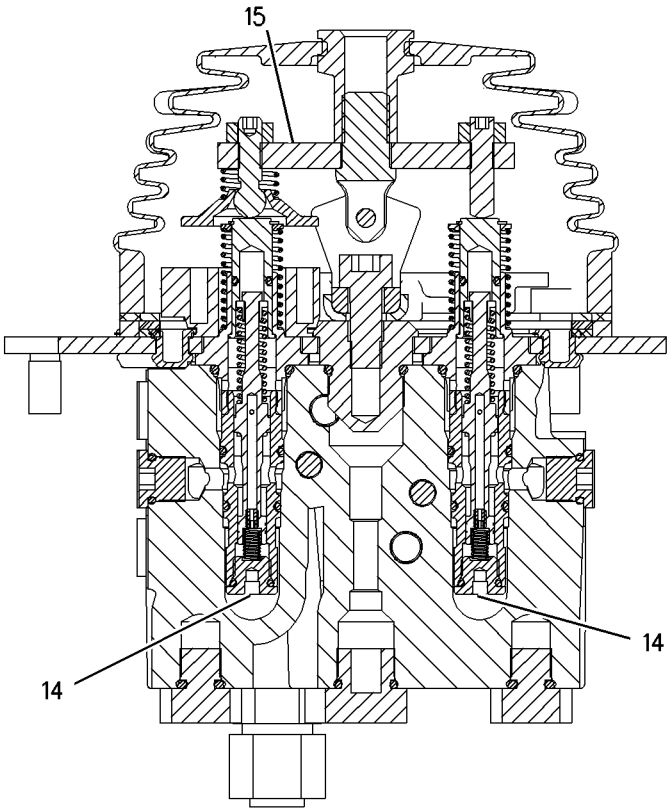

SECTION B-B

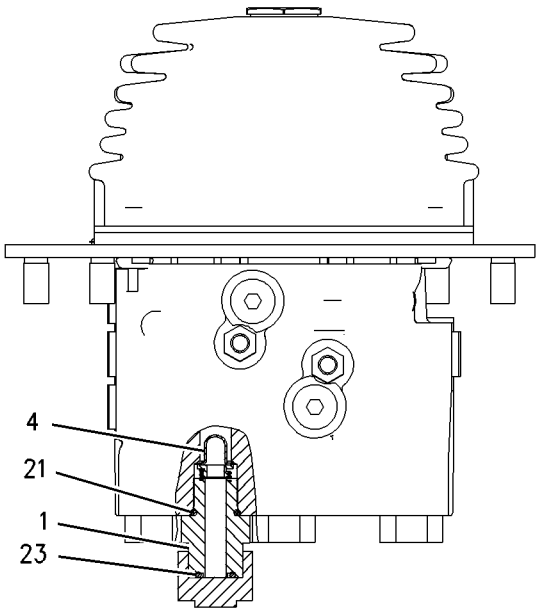

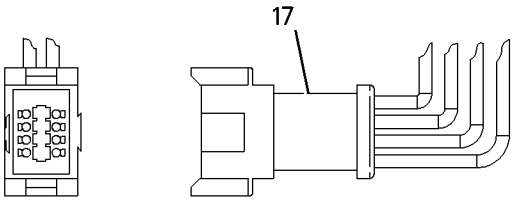

PLUG DETAIL

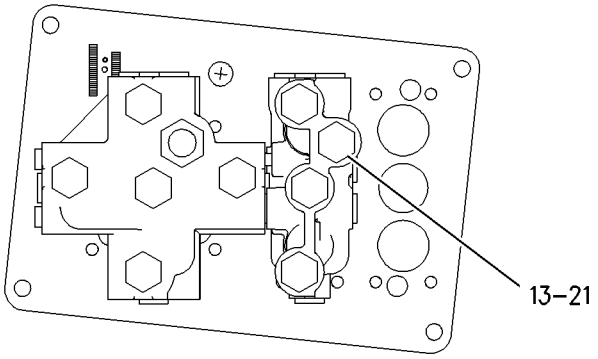

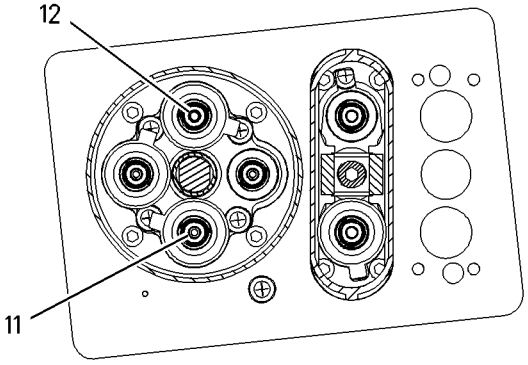

SECTION C-C

GRAPHIC #2 **<END>** g00800976

212-1302 VALVE GP-PILOT–JOYSTICK, 2-FUNCTION

S/N: FTD1-UP

PART OF 287-2053, 287-2058 VALVE GP-PILOT

AN ATTACHMENT

SMCS-5059 **i02610057**

NOTE	REF NO	GRAPHIC REF	PART NUMBER	QTY	PART NAME 1 2 3 4 5 6 (PRODUCT LEVEL)	SEE PAGE
	1	1	**141-4852**	1	BOOT	
	2	1	**141-7481**	1	SPACER	
	3	1	**141-9236**	1	SCREEN AS (PILOT OIL)	
	4	1	**142-2651**	1	PLATE AS	
	5	1	**146-8478**	1	CUP	
	6	1	**153-8947**	1	SWIVEL AS	
	7	1	**153-8952**	1	ADAPTER	
	8	1	**163-5512**	5	GROMMET	
	9	1	**102-8806**	1	KIT-RECEPTACLE (8-PIN)	
					(INCLUDES RECEPTACLE & AND WEDGE)	
	10	1	*136-9291*	1	BODY	
	11	1	**136-9297**	1	PLATE	
	12	1	**136-9298**	1	RETAINER	
	13	1	**145-8428**	3	COIL AS-DETENT	
					(EACH INCLUDES)	
D		1	**6V-2689**		TUBE-HEAT SHRINK (6.35-MM DIA) (.8M)	
		1	**186-3735**	2	PIN-CONNECTOR (16-GA TO 18-GA)	
Y	14	1	**147-3322**	1	PLATE GP-PILOT VALVE (JOYSTICK)	599
	15	1	**149-5470**	1	PLATE	
M	16	1	**191-8920**	4	BOLT-SOCKET HEAD (M6X1X12-MM)	
Y	17	1	**212-4962**	2	VALVE GP-PILOT CARTRIDGE (LIFT, LOWER)	474
Y	18	1	**212-4963**	2	VALVE GP-PILOT CARTRIDGE (DUMP, TILT BACK)	475
	19	1	**9S-8002**	8	PLUG-O-RING	
	20	1	**3J-1907**	1	SEAL-O-RING	
	21	1	**3J-7354**	8	SEAL-O-RING	
	22	1	**8T-8737**	2	PLUG-SEAL	
	23	1	**6V-8397**	1	SEAL-O-RING	
	24	1	**6V-8636**	1	CONNECTOR	
	25	1	**8L-2786**	1	SEAL-O-RING	

D-ORDER BY THE METER
M-METRIC PART
Y-SEPARATE ILLUSTRATION

212-1302 VALVE GP-PILOT *(contd.)* i02610057

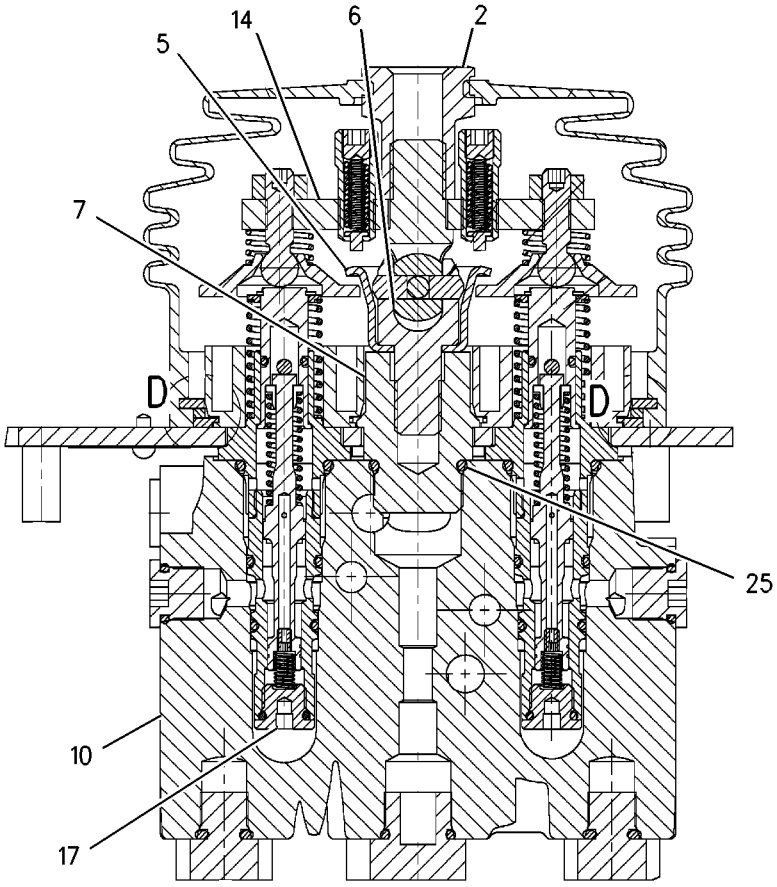

SECTION A-A

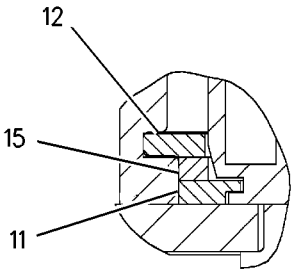

VIEW OF AREA D

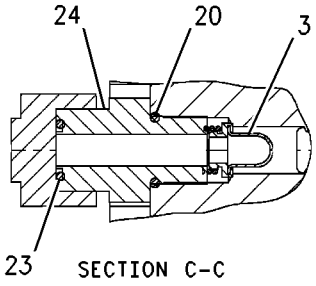

SECTION C-C

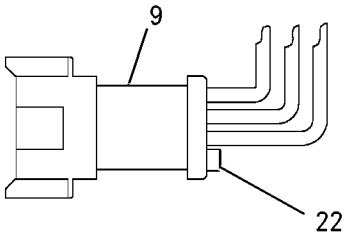

PLUG DETAIL

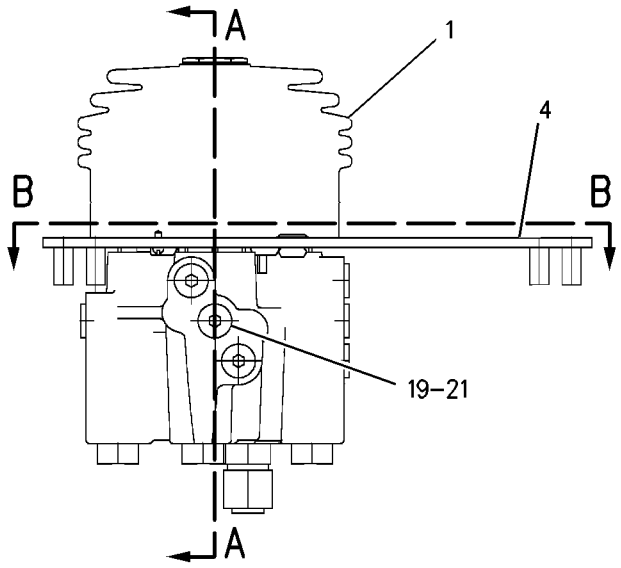

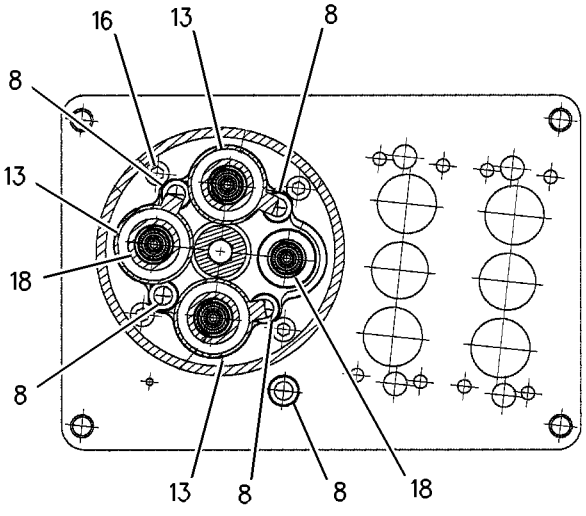

SECTION B-B

GRAPHIC #1 **<END>** g00886130

212-1305 VALVE GP-PILOT–JOYSTICK, 3-FUNCTION

S/N: FTD1-UP

PART OF 287-2051 VALVE GP-PILOT

AN ATTACHMENT

SMCS-5059 **i02602975**

NOTE	REF NO	GRAPHIC REF	PART NUMBER	QTY	PART NAME 1 2 3 4 5 6 (PRODUCT LEVEL)	SEE PAGE
	1	1	**6V-8636**	1	CONNECTOR	
	2	1	**8L-2786**	2	SEAL-O-RING	
	3	1	**141-1095**	2	ADAPTER	
	4	1	**141-1556**	1	RETAINER	
	5	1	**141-2032**	1	PLATE	
	6	1	**141-4852**	1	BOOT	
	7	1	**141-7481**	1	SPACER	
	8	1	**141-9236**	1	SCREEN AS (PILOT OIL)	
	9	1	**142-2651**	1	PLATE AS	
	10	1	**145-2334**	1	ADAPTER	
	11	1	**146-8477**	1	BRACKET	
	12	1	**146-8478**	1	CUP	
	13	1	**146-8981**	1	PIN	
	14	1	**148-7922**	1	PLATE	
	15	1	**153-8947**	1	SWIVEL AS	
		1	**146-8479**	1	SWIVEL	
	16	1	**153-8952**	1	ADAPTER	
	17	1	**163-5512**	7	GROMMET	
Y	18	1	**175-9443**	1	PIVOT GP-PILOT VALVE (AUXILIARY) (AUXILIARY)	596
	19	1	**033-9139**	2	RING-RETAINING	
	20	1	**102-8806**	1	KIT-RECEPTACLE (8-PIN)	
					(KIT SERVICES RECEPTACLE AS AND WEDGE)	
	21	1	**9S-8002**	12	PLUG-O-RING	
	22	1	**136-9292**	1	BOOT	
	23	1	**136-9297**	1	PLATE	
	24	1	**136-9298**	1	RETAINER	
M	25	1	**140-9926**	2	BOLT-SOCKET HEAD	
	26	1	**145-8428**	4	COIL AS-DETENT	
		1	**6V-2689**	1	TUBE-HEAT SHRINK (6.35-MM DIA)	
		1	**186-3735**	2	PIN-CONNECTOR (16-GA TO 18-GA)	
Y	27	1	**147-3322**	1	PLATE GP-PILOT VALVE (JOYSTICK)	599
	28	1	**149-5470**	1	PLATE	
M	29	1	**191-8920**	8	BOLT-SOCKET HEAD (M6X1X12-MM)	
Y	30	1	**212-4962**	4	VALVE GP-PILOT CARTRIDGE (LIFT, LOWER, DUMP, TILT BACK)	474
Y	31	1	**212-4963**	2	VALVE GP-PILOT CARTRIDGE (AUXILIARY)	475
	32	1	**9S-4191**	2	PLUG-O-RING	
	33	1	**3J-1907**	3	SEAL-O-RING	
	34	1	**3J-7354**	16	SEAL-O-RING	
M	35	1	**5A-3604**	1	BOLT-SOCKET HEAD (M8X1.25X25-MM)	
M	36	1	**5C-2890**	2	NUT (M6X1-THD)	
	37	1	**6V-8397**	1	SEAL-O-RING	

M-METRIC PART
Y-SEPARATE ILLUSTRATION

212-1305 VALVE GP-PILOT *(contd.)* i02602975

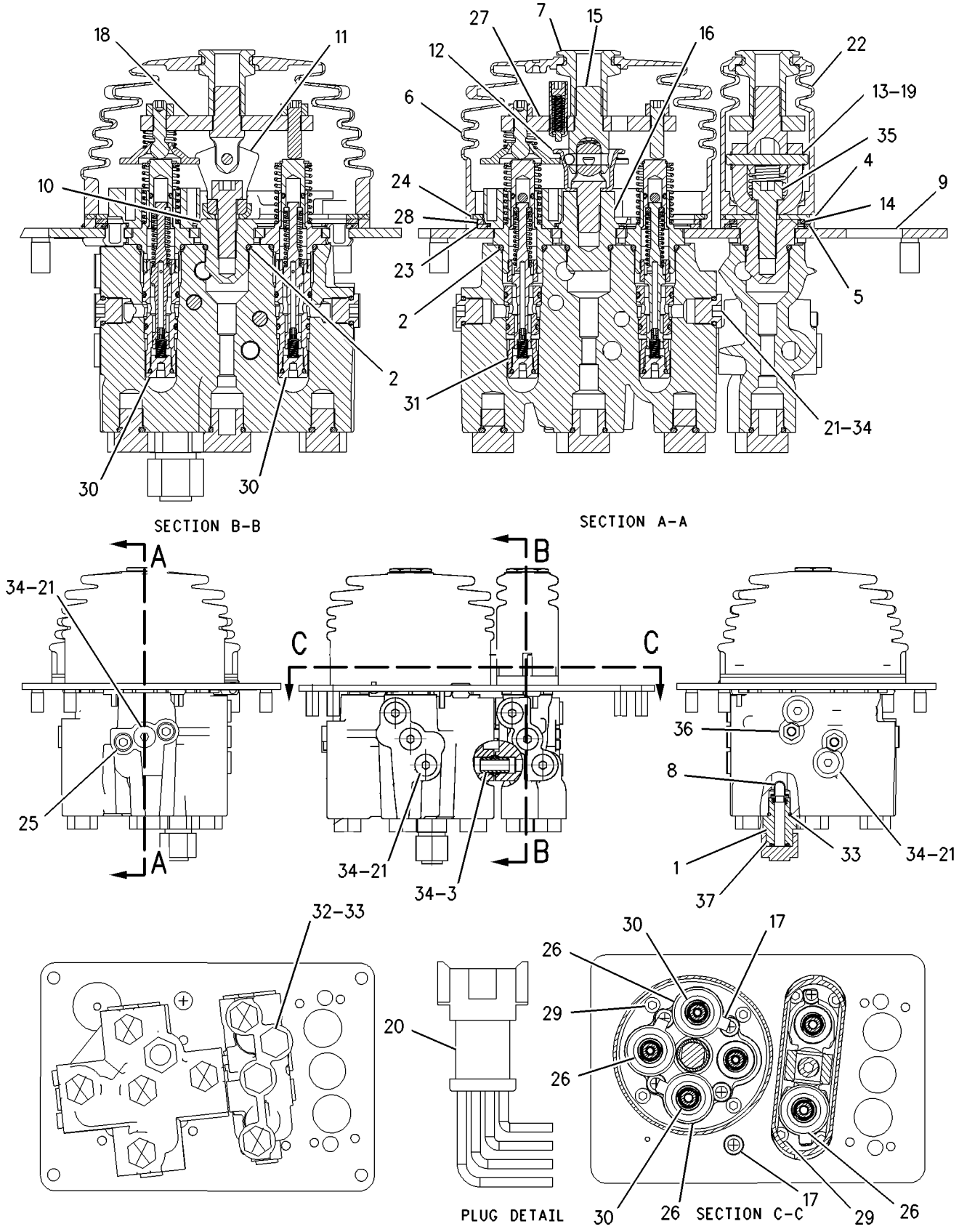

GRAPHIC #1 **<END>** g00875369

HYDRAULIC SYSTEM

250-8085 VALVE GP-PILOT–JOYSTICK, 2-FUNCTION

S/N: FTD1-UP

PART OF 287-2056 VALVE GP-PILOT

AN ATTACHMENT

SMCS-5059 **i02610417**

NOTE	REF NO	GRAPHIC REF	PART NUMBER	QTY	PART NAME 1 2 3 4 5 6 (PRODUCT LEVEL)	SEE PAGE
	1	1	**141-4852**	1	BOOT	
	2	1	**141-7481**	1	SPACER	
	3	1	**141-9236**	1	SCREEN AS (PILOT OIL)	
	4	1	**146-8478**	1	CUP	
	5	1	**153-8952**	1	ADAPTER	
	6	1	**163-5512**	5	GROMMET	
Y	7	1	**212-4962**	2	VALVE GP-PILOT CARTRIDGE (LIFT, LOWER)	474
Y	8	1	**212-4963**	2	VALVE GP-PILOT CARTRIDGE (DUMP, TILT BACK)	475
	9	1	**250-8083**	1	PLATE AS	
M		1	**6V-9632**	3	NUT-WELD (M6X1-THD)	
	10	1	**102-8806**	1	KIT-RECEPTACLE (8-PIN)	
					(INCLUDES RECEPTACLE AS & WEDGE)	
	11	1	**136-9297**	1	PLATE	
	12	1	**136-9298**	1	RETAINER	
	13	1	**145-8428**	3	COIL AS-DETENT	
					(EACH INCLUDES)	
BD		1	**6V-2689**		TUBE-HEAT SHRINK (6.35-MM DIA)	
		1	**186-3735**	2	PIN-CONNECTOR (16-GA TO 18-GA)	
Y	14	1	**147-3322**	1	PLATE GP-PILOT VALVE (JOYSTICK)	599
	15	1	**149-5470**	1	PLATE	
	16	1	**153-8947**	1	SWIVEL AS	
		1	**146-8479**	1	SWIVEL	
	17	1	*183-7263*	8	PLUG AS	
					(EACH INCLUDES)	
		1	**3J-7354**	1	SEAL-O-RING	
		1	**9S-8002**	1	PLUG-O-RING	
M	18	1	**191-8920**	4	BOLT-SOCKET HEAD (M6X1X12-MM)	
	19	1	**3J-1907**	1	SEAL-O-RING	
	20	1	**6V-8397**	1	SEAL-O-RING	
	21	1	**6V-8636**	1	CONNECTOR	
	22	1	**8L-2786**	1	SEAL-O-RING	
	23	1	**8T-8737**	2	PLUG-SEAL	

B-USE AS REQUIRED
D-ORDER BY THE METER
M-METRIC PART
Y-SEPARATE ILLUSTRATION

250-8085 VALVE GP-PILOT *(contd.)* **i02610417**

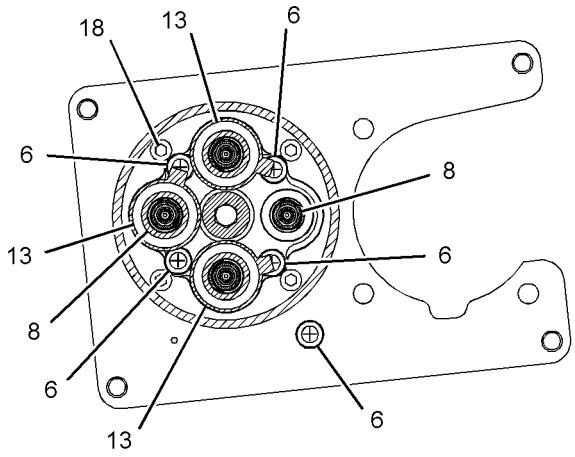

SECTION B-B

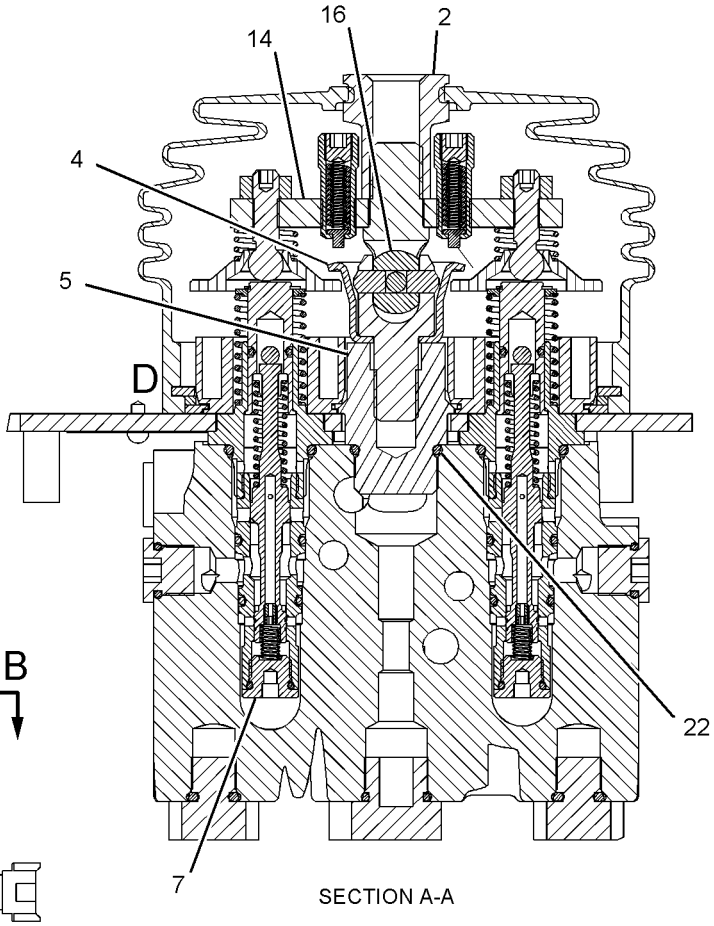

SECTION A-A

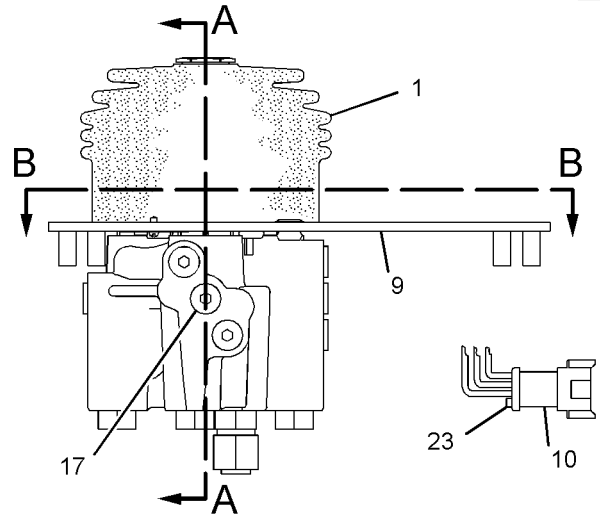

RIGHT SIDE VIEW

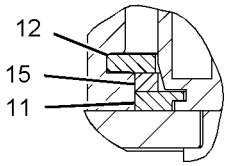

VIEW OF AREA D

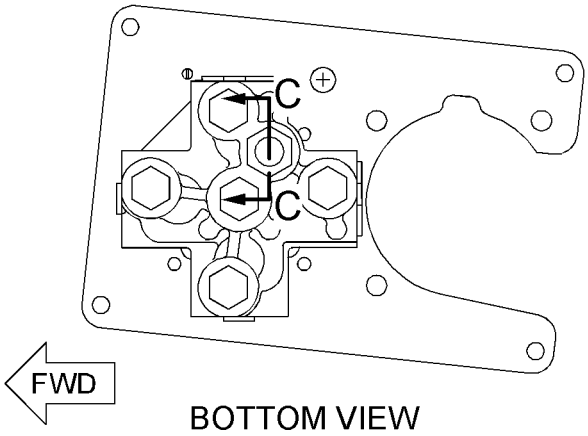

BOTTOM VIEW

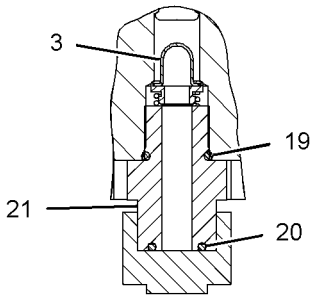

SECTION C-C

GRAPHIC #1 **<END>** g01117328

260-3024 VALVE GP-PILOT–AUXILIARY

S/N: FTD1-UP
PART OF 247-0841 CONTROL GP-JOYSTICK
AN ATTACHMENT

SMCS-5059 **i02808546**

NOTE	REF NO	GRAPHIC REF	PART NUMBER	QTY	PART NAME 1 2 3 4 5 6 (PRODUCT LEVEL)	SEE PAGE
	1	1	**7K-1181**	1	STRAP-CABLE	
	2	1	**260-3014**	1	COIL AS	
M	3	1	**8T-9405**	1	BOLT-SOCKET HEAD (M4X0.7X16-MM)	

M-METRIC PART

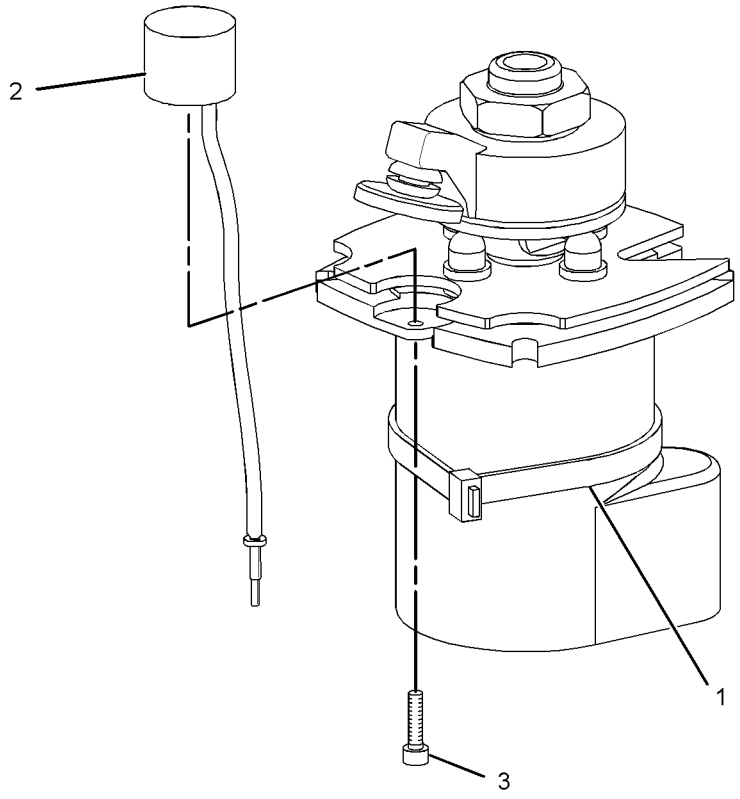

GRAPHIC #1 **<END>** g01402044

287-2051 VALVE GP-PILOT—JOYSTICK, 3-FUNCTION

S/N: FTD1-UP

PART OF 263-5812 CONTROL GP-PILOT OPERATED HYD

AN ATTACHMENT

SMCS-5059 **i02733302**

NOTE	REF NO	GRAPHIC REF	PART NUMBER	QTY	PART NAME 1 2 3 4 5 6 (PRODUCT LEVEL)	SEE PAGE
	1	1	**114-3940**	1	ROD	
	2	1	**124-4401**	1	KNOB	
Y	3	1	**212-1305**	1	VALVE GP-PILOT (JOYSTICK, 3-FUNCTION)	666
	4	1	**259-1160**	1	PLATE	
Y	5	1	**266-3439**	1	CONTROL GP-HANDLE (DIR, 3RD FCTN, PROPNL FLOW)	811
	6	1	**270-7610**	1	SEAL	
M	7	1	**095-1207**	1	NUT (M12X1.75-THD)	
M	8	1	**8T-4244**	1	NUT (M12X1.75-THD)	
E	9	1	**3E-6600**		SEAL (10-CM)	

E-ORDER BY THE CENTIMETER
M-METRIC PART
Y-SEPARATE ILLUSTRATION

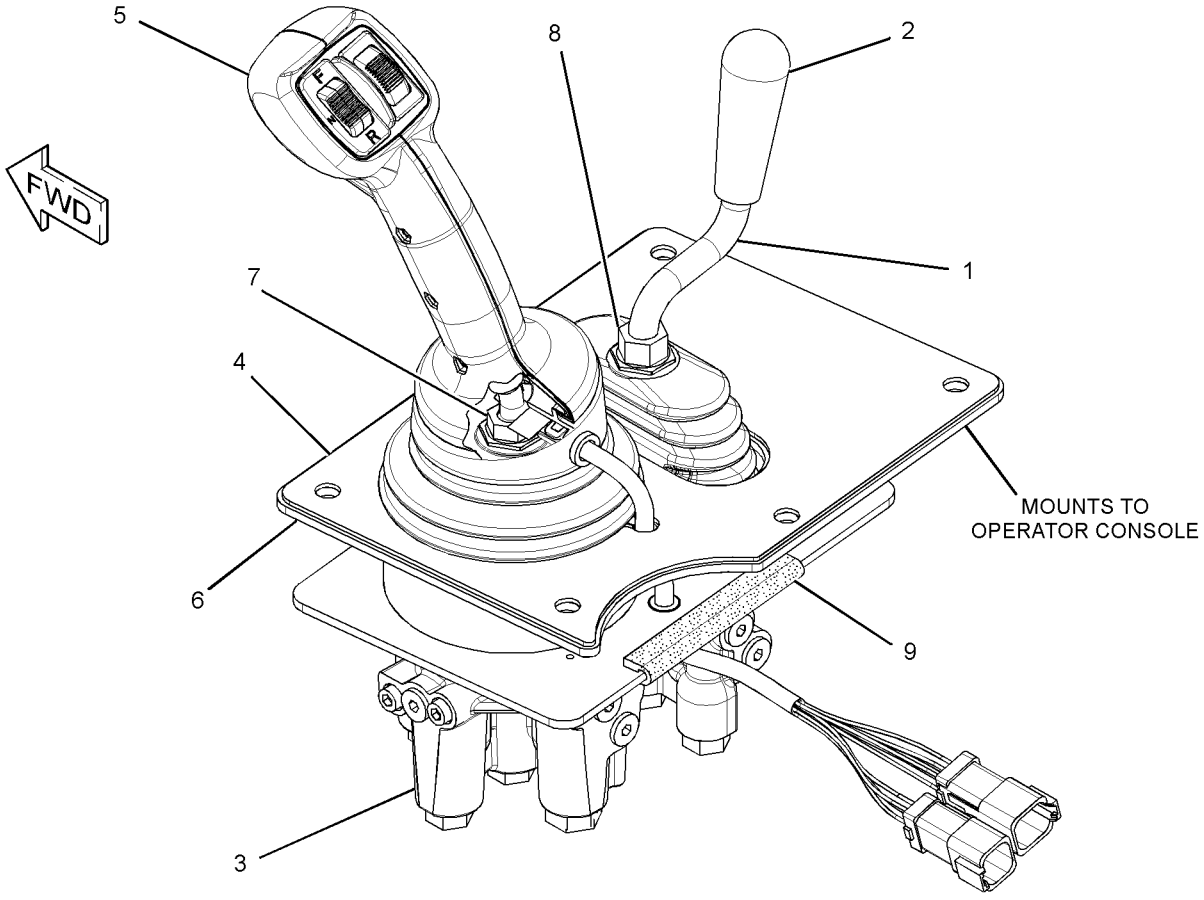

GRAPHIC #1 **<END>** g01381951

287-2053 VALVE GP-PILOT–JOYSTICK, 3-FUNCTION

S/N: FTD1-UP

PART OF 263-5810 CONTROL GP-PILOT OPERATED HYD

AN ATTACHMENT

SMCS-5059 **i02732299**

NOTE	REF NO	GRAPHIC REF	PART NUMBER	QTY	PART NAME 1 2 3 4 5 6 (PRODUCT LEVEL)	SEE PAGE
Y	1	1	**212-1302**	1	VALVE GP-PILOT (JOYSTICK, 2-FUNCTION)	664
	2	1	**259-1159**	1	PLATE	
Y	3	1	**266-3439**	1	CONTROL GP-HANDLE (DIR, 3RD FCTN, PROPNL FLOW)	811
	4	1	**270-7610**	1	SEAL	
M	5	1	**095-1207**	1	NUT (M12X1.75-THD)	
E	6	1	**3E-6600**		SEAL (10-CM)	

E-ORDER BY THE CENTIMETER
M-METRIC PART
Y-SEPARATE ILLUSTRATION

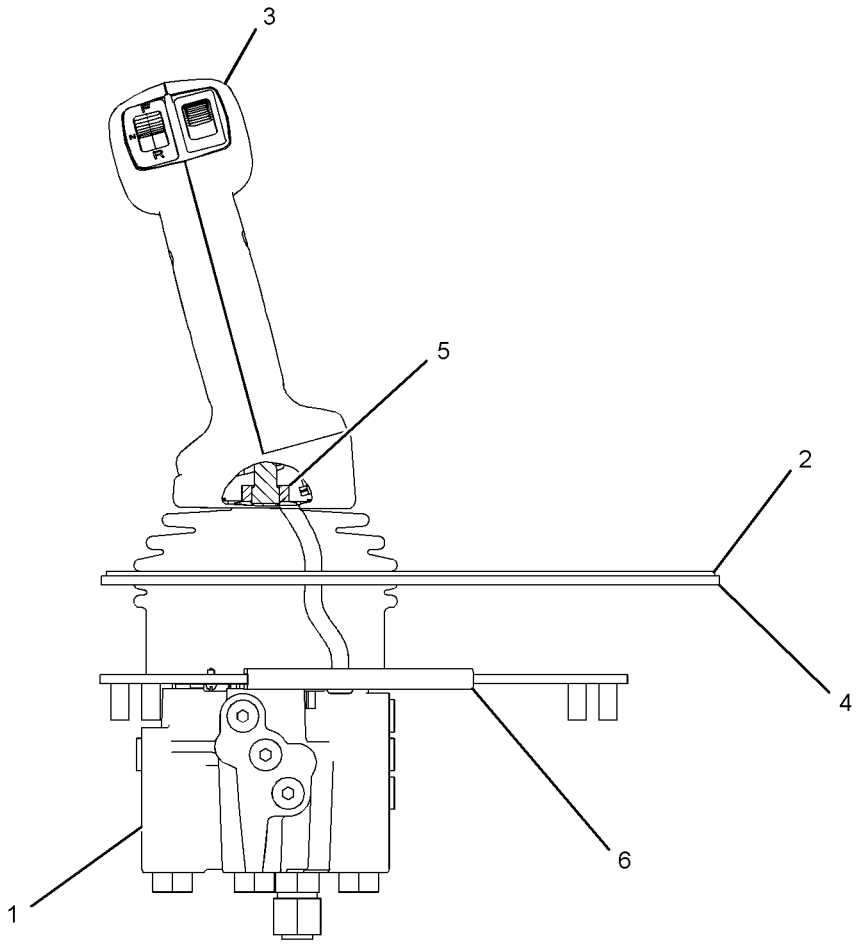

REAR VIEW

GRAPHIC #1 **<END>** g01372594

287-2056 VALVE GP-PILOT–JOYSTICK, 2-FUNCTION

S/N: FTD1-UP

PART OF 242-0096 CONTROL GP-PILOT OPERATED HYD

AN ATTACHMENT

SMCS-5059 **i02712570**

NOTE	REF NO	GRAPHIC REF	PART NUMBER	QTY	PART NAME 1 2 3 4 5 6 (PRODUCT LEVEL)	SEE PAGE
Y	1	1	**250-8085**	1	VALVE GP-PILOT (JOYSTICK, 2-FUNCTION)	668
	2	1	**252-8646**	1	ROD	
	3	1	**259-1151**	1	PLATE	
	4	1	**259-1157**	1	SEAL	
	5	1	**287-0524**	1	CONTROL GP-HANDLE (DIRECTION, DOWNSHIFT SWITCHES)	
		1	**186-3735**	6	PIN-CONNECTOR (16-GA TO 18-GA)	
M	6	1	**150-1293**	2	SCREW-BUTTON HEAD (M4X0.7X12-MM)	
M	7	1	**8T-4244**	1	NUT (M12X1.75-THD)	

M-METRIC PART
Y-SEPARATE ILLUSTRATION

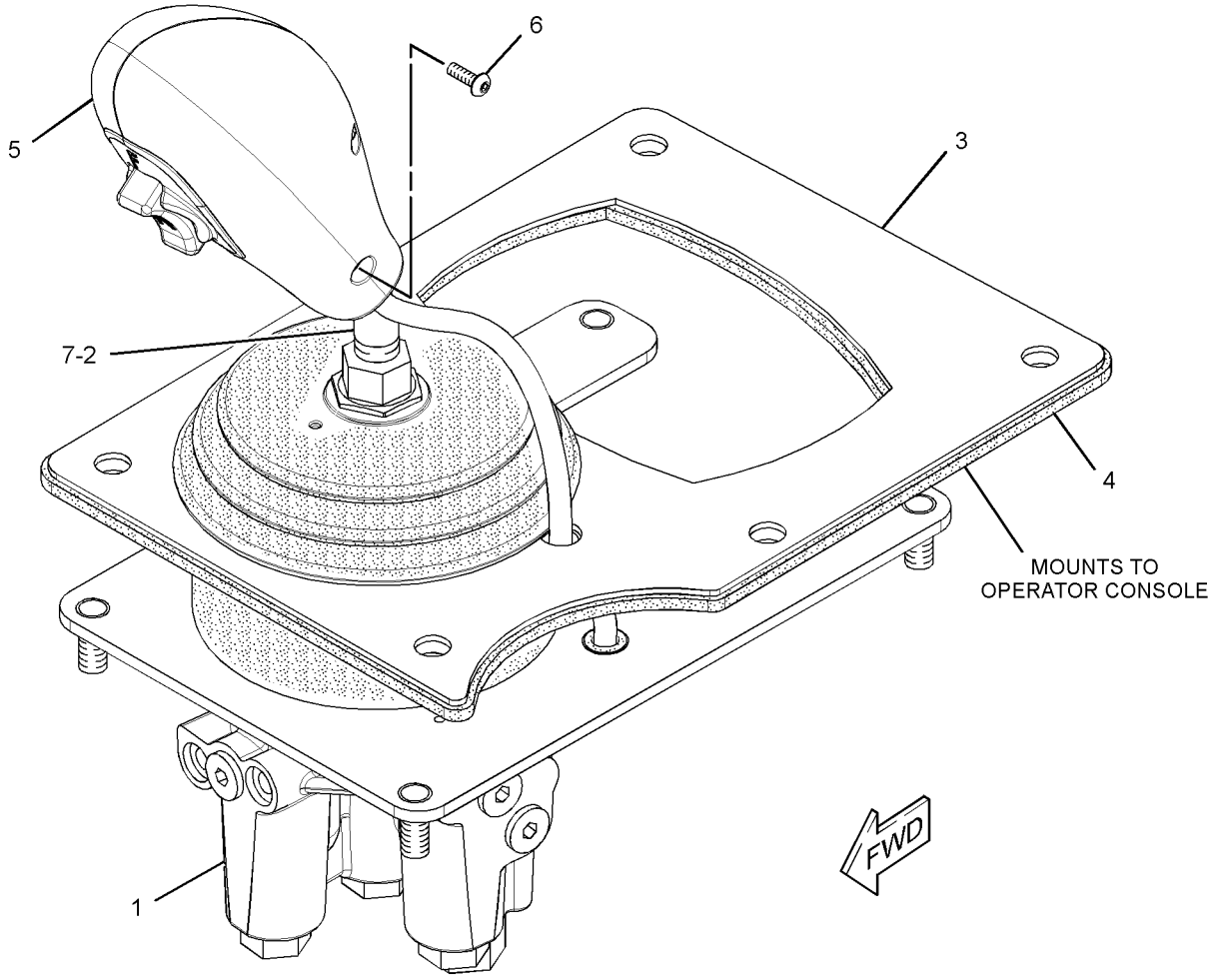

GRAPHIC #1 **<END>** g01366401

287-2058 VALVE GP-PILOT–JOYSTICK, 2-FUNCTION

S/N: FTD1-UP

PART OF 235-6853 CONTROL GP-PILOT OPERATED HYD

AN ATTACHMENT

SMCS-5059 **i02712460**

NOTE	REF NO	GRAPHIC REF	PART NUMBER	QTY	PART NAME 1 2 3 4 5 6 (PRODUCT LEVEL)	SEE PAGE
	1	1	**149-4359**	1	ROD-CONTROL	
Y	2	1	**212-1302**	1	VALVE GP-PILOT (JOYSTICK, 2-FUNCTION)	664
	3	1	**259-1159**	1	PLATE	
	4	1	**270-7612**	1	SEAL	
	5	1	**287-0524**	1	CONTROL GP-HANDLE (DIRECTION, DOWNSHIFT SWITCHES)	
		1	**186-3735**	6	PIN-CONNECTOR (16-GA TO 18-GA)	
M	6	1	**150-1293**	2	SCREW-BUTTON HEAD (M4X0.7X12-MM)	
M	7	1	**8T-4244**	1	NUT (M12X1.75-THD)	

M-METRIC PART
Y-SEPARATE ILLUSTRATION

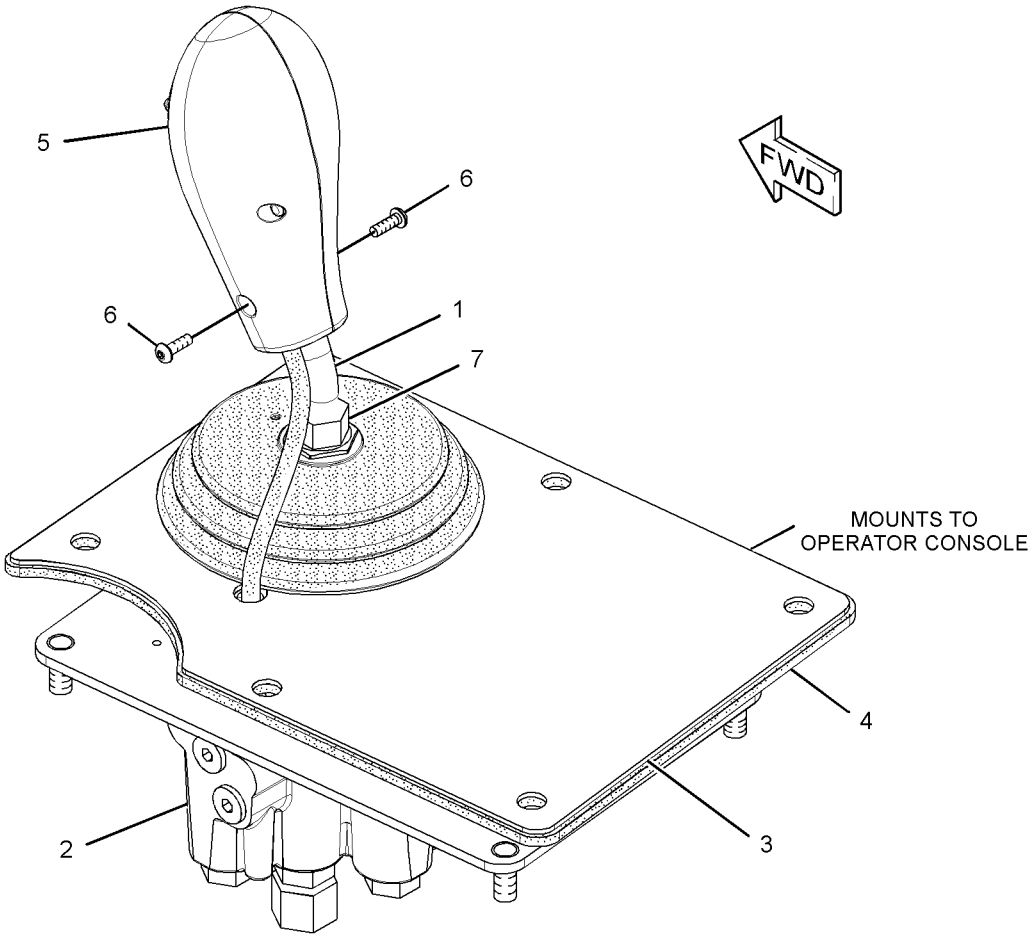

GRAPHIC #1 **<END>** g01366643

287-2061 VALVE GP-PILOT—JOYSTICK, 2-FUNCTION

S/N: BYD1-UP

PART OF 220-1506 CONTROL GP-PILOT OPERATED HYD

AN ATTACHMENT

SMCS-5059 **i02712132**

NOTE	REF NO	GRAPHIC REF	PART NUMBER	QTY	PART NAME 1 2 3 4 5 6 (PRODUCT LEVEL)	SEE PAGE
	1	1	**149-4359**	1	ROD-CONTROL	
Y	2	1	**201-3359**	1	VALVE GP-PILOT (JOYSTICK, 2-FUNCTION)	657
	3	1	**259-1159**	1	PLATE	
	4	1	**270-7612**	1	SEAL	
	5	1	**287-0524**	1	CONTROL GP-HANDLE (DIRECTION, DOWNSHIFT SWITCHES)	
		1	**186-3735**	6	PIN-CONNECTOR (16-GA TO 18-GA)	
M	6	1	**150-1293**	2	SCREW-BUTTON HEAD (M4X0.7X12-MM)	
M	7	1	**8T-4244**	1	NUT (M12X1.75-THD)	

M-METRIC PART
Y-SEPARATE ILLUSTRATION

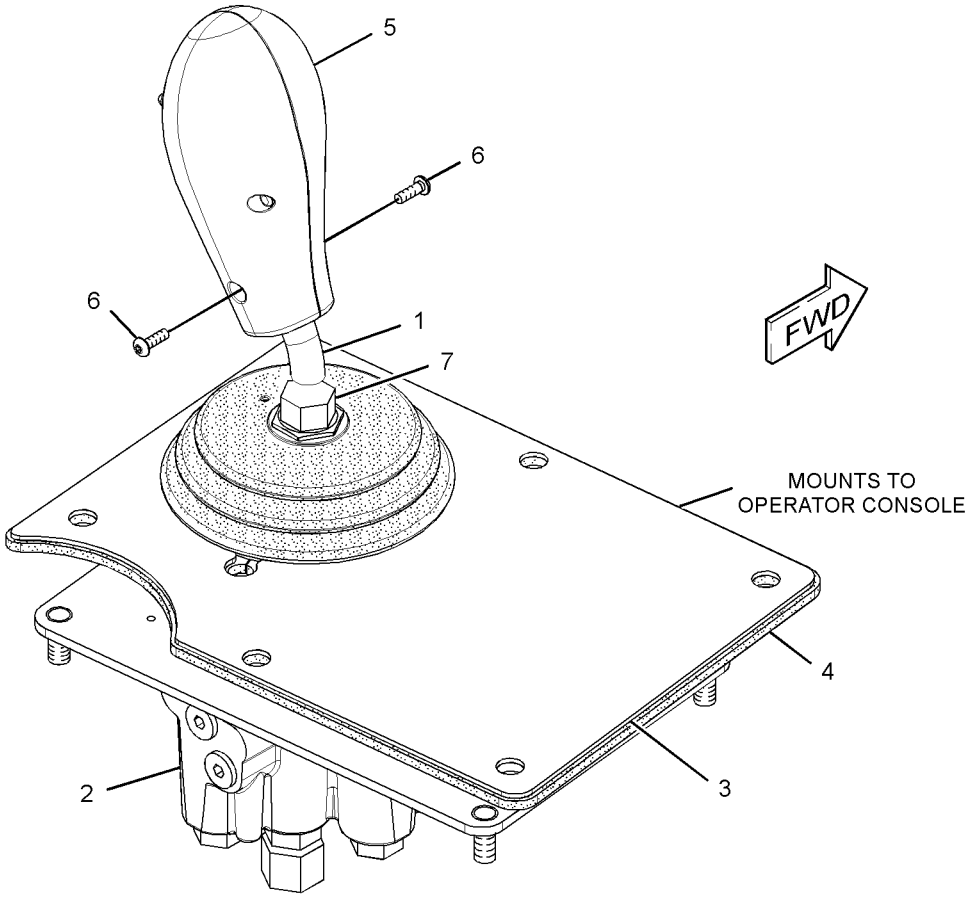

GRAPHIC #1 **<END>** g01366629

HYDRAULIC SYSTEM

287-2062 VALVE GP-PILOT–JOYSTICK, 3-FUNCTION

S/N: BYD1-UP

PART OF 220-1509 CONTROL GP-PILOT OPERATED HYD, 241-1049 CONVERSION AR-HYDRAULIC AN ATTACHMENT

SMCS-5059 **i02712402**

NOTE	REF NO	GRAPHIC REF	PART NUMBER	QTY	PART NAME 1 2 3 4 5 6 (PRODUCT LEVEL)	SEE PAGE
	1	1	**114-3937**	1	ROD	
	2	1	**124-4401**	1	KNOB	
	3	1	**149-4359**	1	ROD-CONTROL (JOYSTICK)	
Y	4	1	**201-3361**	1	VALVE GP-PILOT (JOYSTICK, 3-FUNCTION)	661
	5	1	**259-1160**	1	PLATE	
	6	1	**270-7612**	1	SEAL	
	7	1	**287-0524**	1	CONTROL GP-HANDLE (DIRECTION, DOWNSHIFT SWITCHES)	
		1	**186-3735**	6	PIN-CONNECTOR (16-GA TO 18-GA)	
M	8	1	**150-1293**	2	SCREW-BUTTON HEAD (M4X0.7X12-MM)	
M	9	1	**8T-4244**	2	NUT (M12X1.75-THD)	

M-METRIC PART
Y-SEPARATE ILLUSTRATION

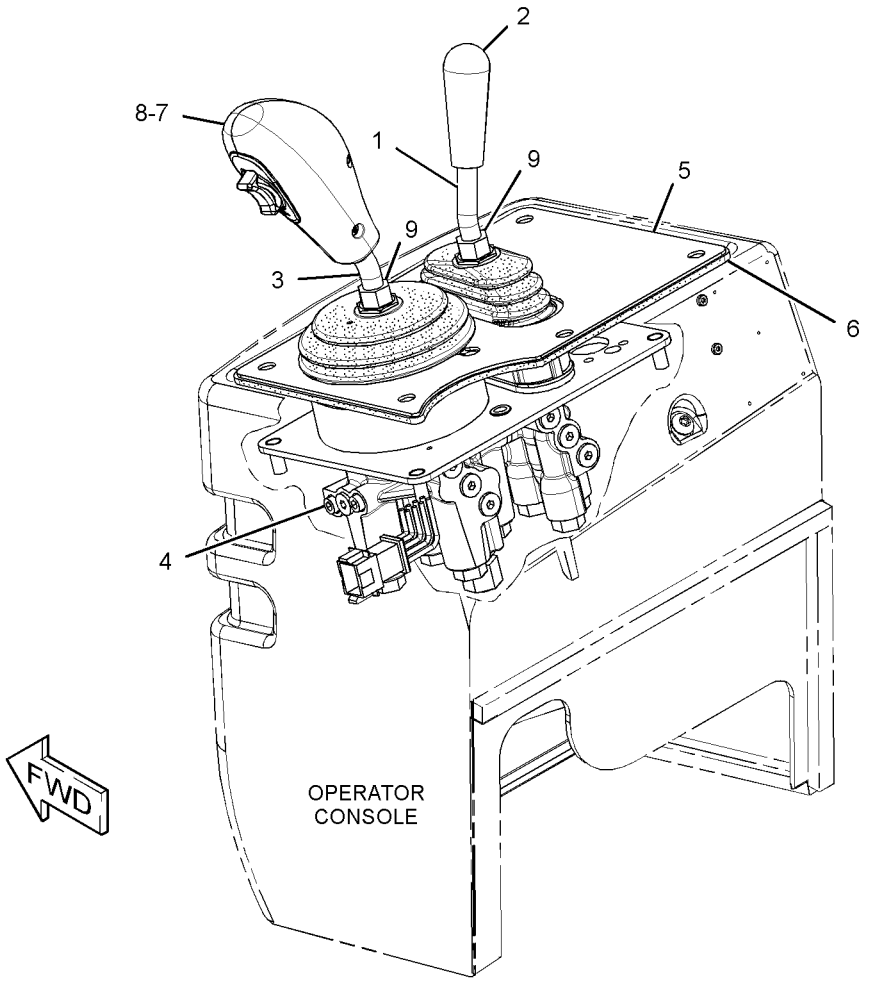

GRAPHIC #1 **<END>** g01366647

287-2065 VALVE GP-PILOT–2-FUNCTION

S/N: BYD1-UP

PART OF 220-1505 CONTROL GP-PILOT OPERATED HYD

AN ATTACHMENT

SMCS-5059 **i02712681**

NOTE	REF NO	GRAPHIC REF	PART NUMBER	QTY	PART NAME 1 2 3 4 5 6 (PRODUCT LEVEL)	SEE PAGE
	1	1	**114-3940**	1	ROD	
	2	1	**124-4401**	1	KNOB	
	3	1	**124-6913**	1	ROD	
	4	1	**133-8597**	1	HANDLE AS (PILOT OPERATED HYDRAULIC)	
		1	**5I-3762**	1	KNOB	
		1	**186-3735**	2	PIN-CONNECTOR (16-GA TO 18-GA)	
Y	5	1	**201-3360**	1	VALVE GP-PILOT (2-FUNCTION)	659
	6	1	**259-1163**	1	PLATE	
	7	1	**270-7611**	1	SEAL	
M	8	1	**150-1293**	1	SCREW-BUTTON HEAD (M4X0.7X12-MM)	
	9	1	**1H-4393**	1	LOCKWASHER	
M	10	1	**8T-4244**	2	NUT (M12X1.75-THD)	

M-METRIC PART
Y-SEPARATE ILLUSTRATION

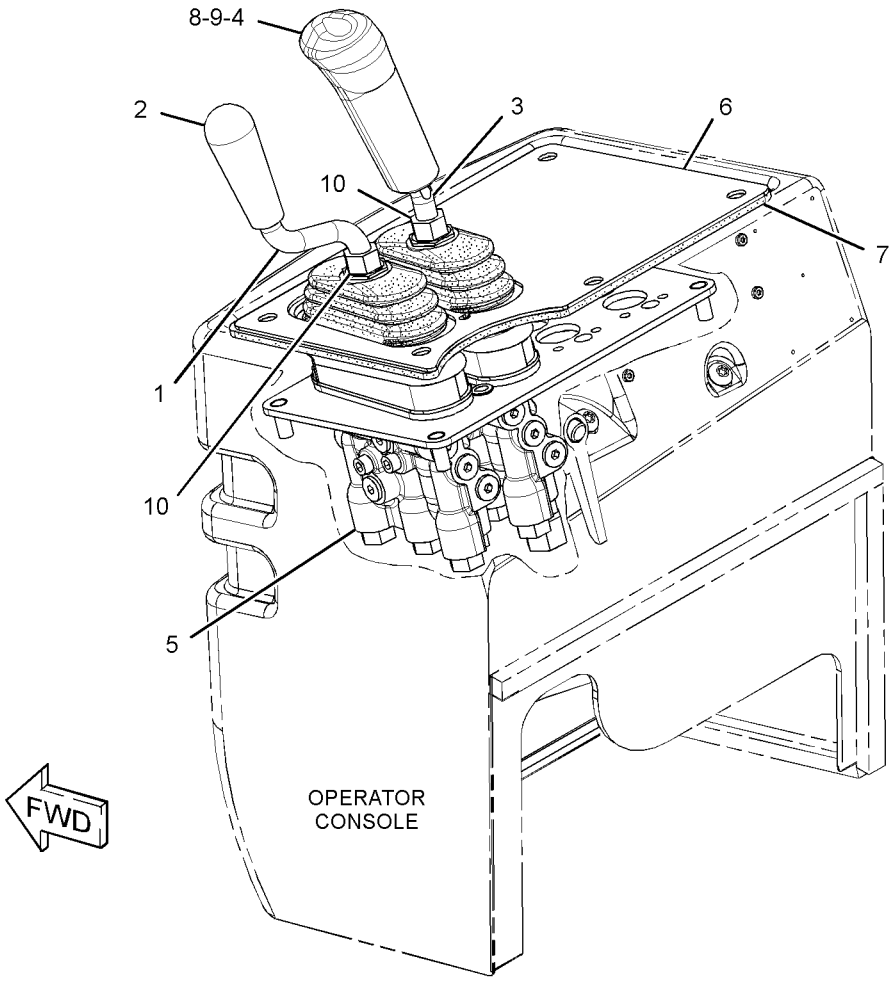

GRAPHIC #1

<END>

g01366689

HYDRAULIC SYSTEM

202-2558 VALVE GP-PILOT CARTRIDGE

S/N: BYD1-UP
PART OF 201-3361 VALVE GP-PILOT
AN ATTACHMENT

SMCS-5059 **i01719821**

NOTE	REF NO	GRAPHIC REF	PART NUMBER	QTY	PART NAME 1 2 3 4 5 6 (PRODUCT LEVEL)	SEE PAGE
	1	1	**116-4527**	1	ORIFICE	
	2	1	**136-9304**	1	ADAPTER	
	3	1	**146-6316**	2	RETAINER	
	4	1	**146-6318**	1	PLUNGER	
	5	1	**146-6319**	1	RETAINER	
	6	1	**153-8924**	1	SPOOL	
	7	1	**153-8925**	1	STOP	
	8	1	**153-8926**	1	SPRING	
	9	1	**153-8929**	1	CAGE	
	10	1	**201-4276**	1	SPRING	
	11	1	**157-2152**	1	SPRING	
	12	1	**2H-3429**	1	RING-RETAINING	
	13	1	**3K-0360**	1	SEAL-O-RING	
	14	1	**4K-2039**	1	SEAL-O-RING	
	15	1	**6M-5062**	1	SEAL-O-RING	
	16	1	**7I-6601**	1	SEAL-O-RING	
	17	1	**7J-0204**	1	SEAL-O-RING	

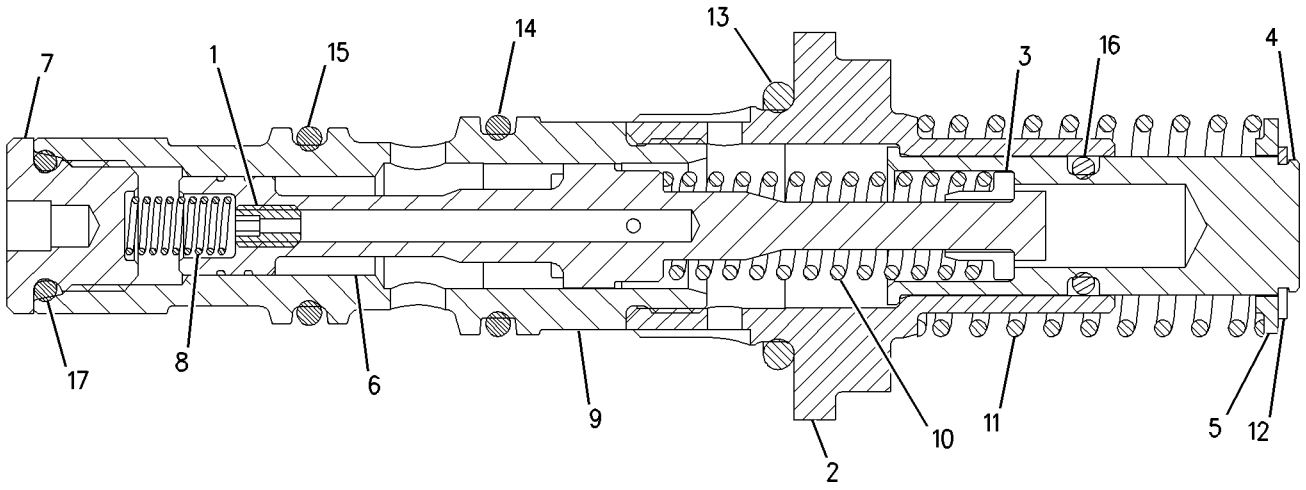

GRAPHIC #1 **<END>** g00849284

184-9975 VALVE GP-PRESSURE REDUCING

S/N: BYD1-UP

PART OF 185-5209 VALVE GP-PRESSURE REDUCING

AN ATTACHMENT

SMCS-5117 **i01293564**

NOTE	REF NO	GRAPHIC REF	PART NUMBER	QTY	PART NAME 1 2 3 4 5 6 (PRODUCT LEVEL)	SEE PAGE
	1	1	**185-2327**	2	RING-BACKUP	
	2	1	**033-6027**	1	SEAL-O-RING	
	3	1	**033-6043**	1	SEAL-O-RING	
	4	1	**6V-5758**	1	SEAL-O-RING	
	5	1	**6V-6924**	2	RING-BACKUP	

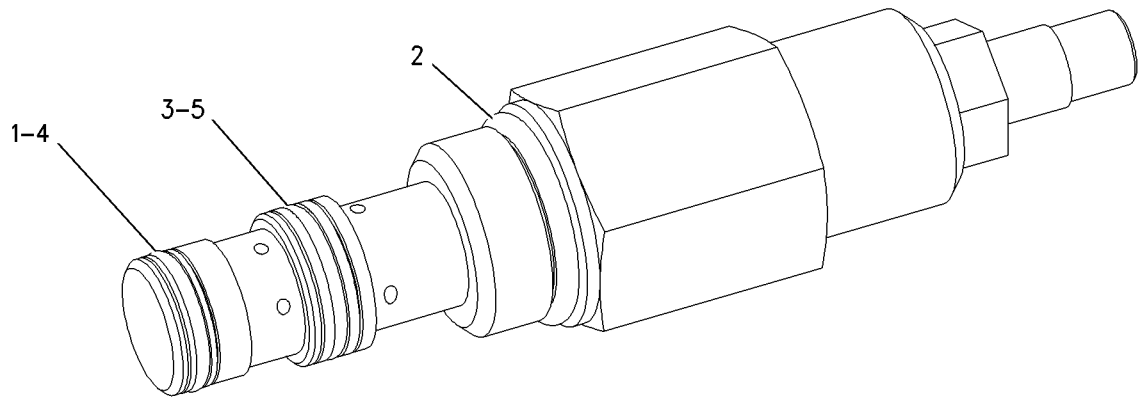

GRAPHIC #1 **<END>** g00685787

HYDRAULIC SYSTEM

185-5209 VALVE GP-PRESSURE REDUCING

S/N: BYD1-UP

PART OF 203-5924, 203-5925 LINES GP-PILOT

AN ATTACHMENT

SMCS-5117 **i01293572**

NOTE	REF NO	GRAPHIC REF	PART NUMBER	QTY	PART NAME 1 2 3 4 5 6 (PRODUCT LEVEL)	SEE PAGE
	1	1	**119-8397**	1	VALVE GP-CHECK	
		1	**9N-1756**	1	SEAL-O-RING	
		1	**033-5853**	1	SEAL-O-RING	
		1	**126-5985**	1	RING-BACKUP	
Y	2	1	**184-9975**	1	VALVE GP-PRESSURE REDUCING	679

Y-SEPARATE ILLUSTRATION

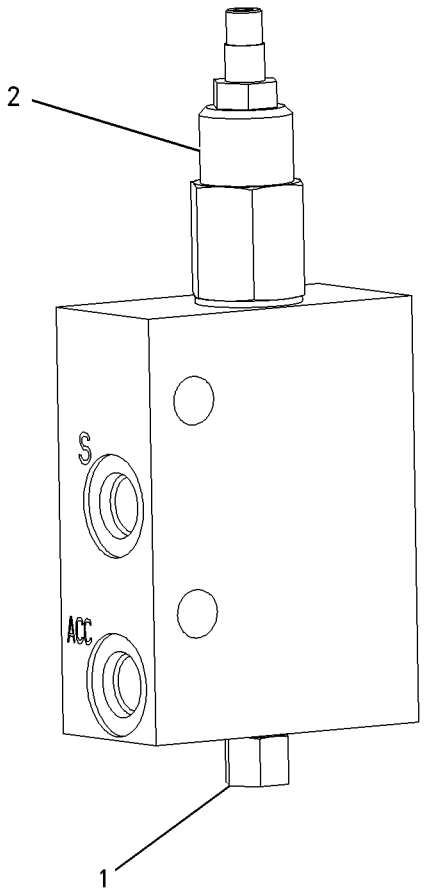

GRAPHIC #1 **<END>** g00685796

193-1665 VALVE GP-PRESSURE REDUCING

S/N: FTD1-UP

PART OF 283-9380 MANIFOLD GP-VALVE

AN ATTACHMENT

SMCS-5117 **i02261509**

NOTE	REF NO	GRAPHIC REF	PART NUMBER	QTY	PART NAME 1 2 3 4 5 6 (PRODUCT LEVEL)	SEE PAGE
	1	1	**193-1664**	1	VALVE GP-CONTROL	
	2	1	**3J-1907**	2	SEAL-O-RING	
	3	1	**4J-5268**	1	SEAL-O-RING	
	4	1	**4J-5351**	1	SEAL-O-RING	
	5	1	**4T-5072**	1	RING-BACKUP	
	6	1	**5J-2974**	1	SEAL-O-RING	
	7	1	**5P-6719**	1	PLUG	
	8	1	**9T-8761**	1	RING-BACKUP	
	9	1	**9T-9963**	1	RING-BACKUP	

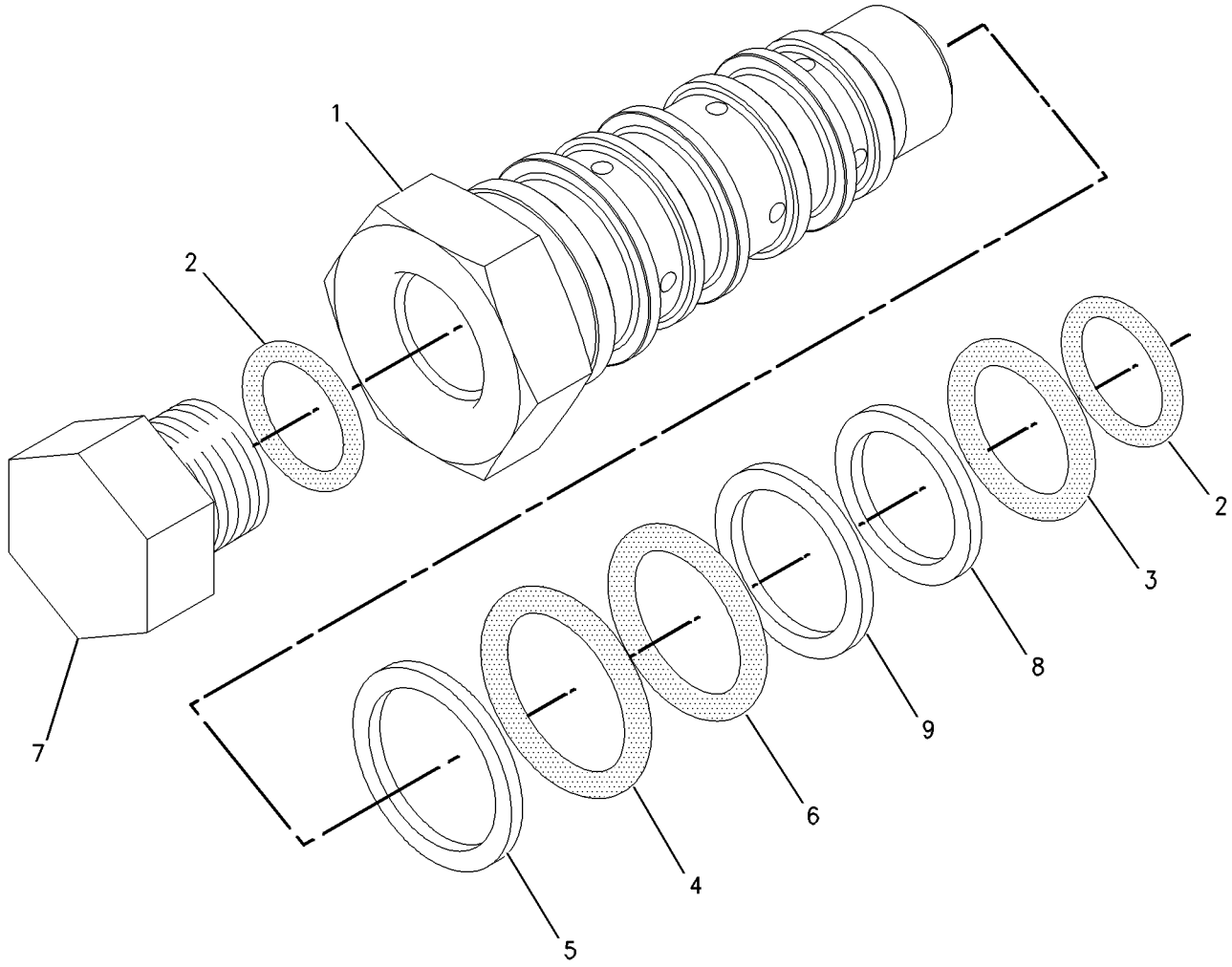

GRAPHIC #1 **<END>** g00763618

130-6235 VALVE GP-PUMP CONTROL–PRESSURE, FLOW COMPENSATOR–STEERING, PILOT

S/N: BYD1-UP

PART OF 120-0140 PUMP GP-PISTON

SMCS-5455 **i00524301**

NOTE	REF NO	GRAPHIC REF	PART NUMBER	QTY	PART NAME 1 2 3 4 5 6 (PRODUCT LEVEL)	SEE PAGE
	1	1	**3J-6021**	3	PLUG	
	2	1	**9T-7062**	1	BODY	
	3	1	**9T-3816**	1	SPOOL	
	4	1	**9T-3815**	1	SEAT	
	5	1	**9T-3814**	1	SPRING	
	6	1	**5L-4758**	1	SEAL-O-RING	
	7	1	**9T-3813**	1	PLUG	
	8	1	**9S-8003**	1	PLUG	
	9	1	**1J-9671**	1	SEAL-O-RING	
	10	1	**8T-7931**	1	SETSCREW	
	11	1	**9T-3812**	1	SEAT	
	12	1	**7L-8316**	1	SETSCREW-SOCKET (10-32X2.54-IN)	
	13	1	**130-3922**	1	SPRING-MARGIN	
	14	1	**9T-3810**	1	SEAT	
	15	1	**9T-3809**	1	SPOOL	
	16	1	**3E-4354**	1	BALL	
	17	1	**6E-0231**	1	SEAT-CHECK VALVE	
	18	1	**2S-9600**	1	DOWEL	
	19	1	**9S-8002**	1	PLUG-O-RING	
	20	1	**3J-7354**	1	SEAL-O-RING	

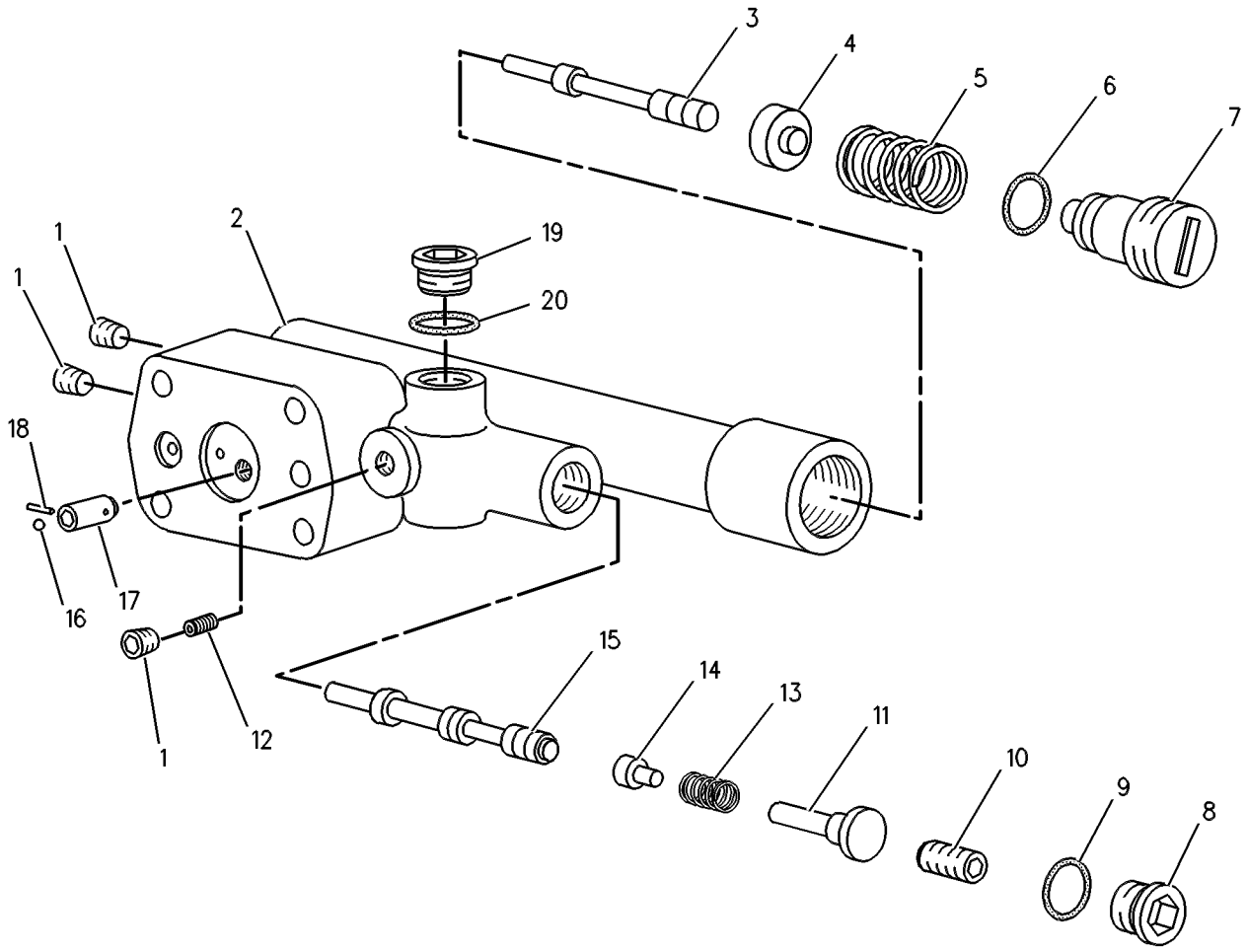

GRAPHIC #1 **<END>** g00131718

HYDRAULIC SYSTEM

131-8350 VALVE GP-PURGE

S/N: FTD1-UP
PART OF 283-9380 MANIFOLD GP-VALVE
AN ATTACHMENT

SMCS-5051 **i02261083**

NOTE	REF NO	GRAPHIC REF	PART NUMBER	QTY	PART NAME 1 2 3 4 5 6 (PRODUCT LEVEL)	SEE PAGE
	1	1	**109-1144**	1	VALVE	
	2	1	**130-5770**	1	SLEEVE	

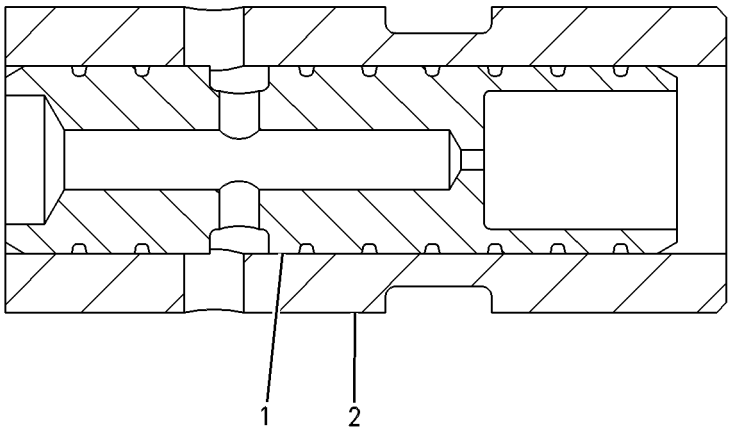

GRAPHIC #1 **<END>** g00087876

233-2549 VALVE GP-QUICK COUPLER

S/N: BYD1-UP; FTD1-UP
PART OF 290-7205, 296-6814, 296-6815 LINES GP-COUPLER
AN ATTACHMENT

SMCS-5491 **i02602900**

NOTE	REF NO	GRAPHIC REF	PART NUMBER	QTY	PART NAME 1 2 3 4 5 6 (PRODUCT LEVEL)	SEE PAGE
	1	1	**249-7859**	2	VALVE GP-SHUTTLE (QUICK COUPLER)	
J	2	1	**249-7863**	1	VALVE GP-SOLENOID (24-VOLT) (QUICK COUPLER)	
		1	**250-6148**	2	COIL AS (24-VOLT)	
	3	1	**261-7997**	1	WIRE AS	
					AVAILABLE REPAIR KIT(S):	
J			**106-3108**	1	KIT-SEAL (QUICK COUPLER VALVE)	

J-KIT MARKED J AVAILABLE FOR PART MARKED J

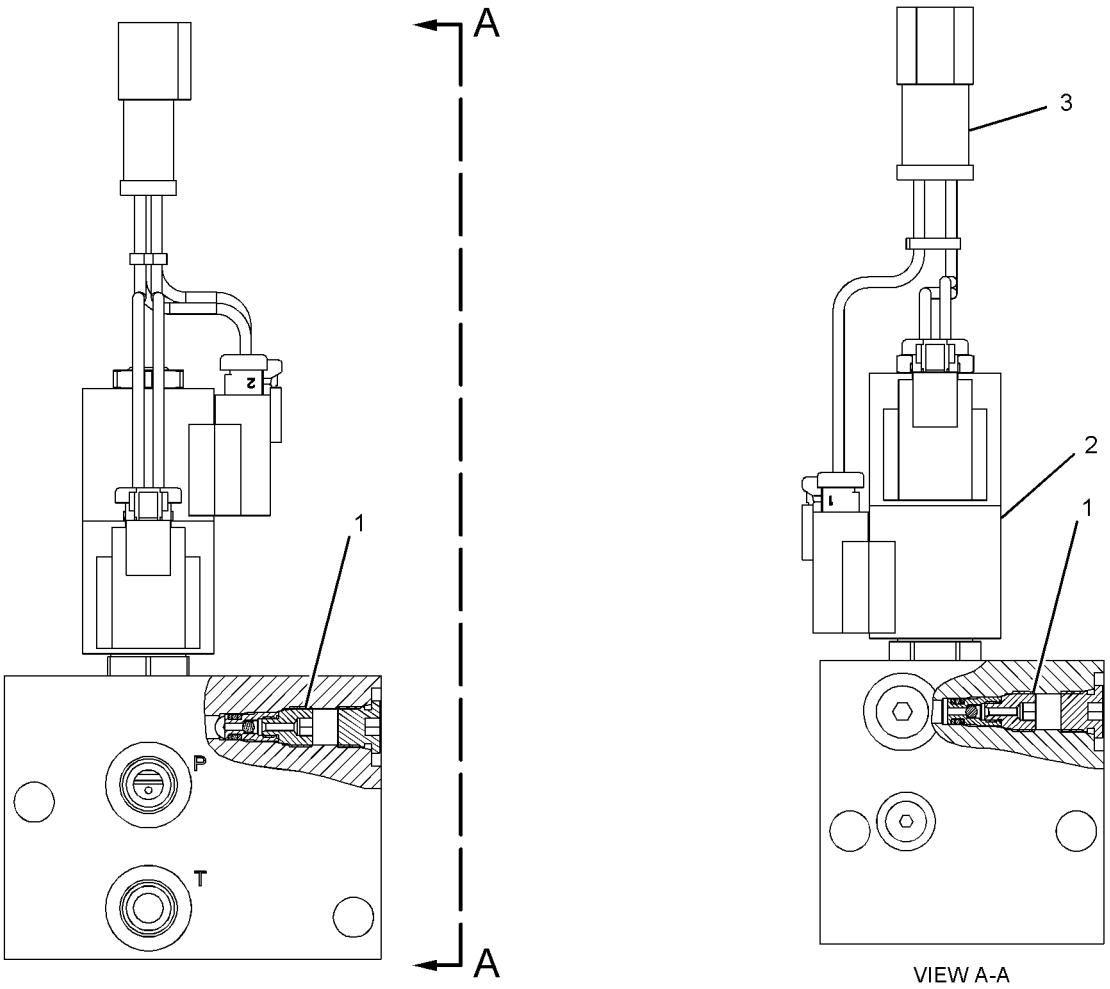

GRAPHIC #1 **<END>** g01108279

108-6428 VALVE GP-RELIEF

S/N: BYD1-UP
PART OF 133-4234, 133-4235 VALVE GP-MAIN CONTROL
AN ATTACHMENT

SMCS-5069, 5117 **i00525503**

NOTE	REF NO	GRAPHIC REF	PART NUMBER	QTY	PART NAME 1 2 3 4 5 6 (PRODUCT LEVEL)	SEE PAGE
	1	1	**6E-1835**	1	RETAINER AS	
	2	1	**9X-6395**	1	NUT (3/4-16-THD)	
	3	1	**3K-0360**	2	SEAL-O-RING	
	4	1	**8T-4224**	1	WASHER-HARD (8.8X16X2-MM THK)	
	5	1	**1U-4659**	1	BODY-VALVE	
	6	1	**4T-4942**	1	SPRING	
	7	1	**7J-9933**	1	SEAL-O-RING	
	8	1	**4T-7571**	1	PLATE	
	9	1	**6J-6439**	1	VALVE-POPPET	

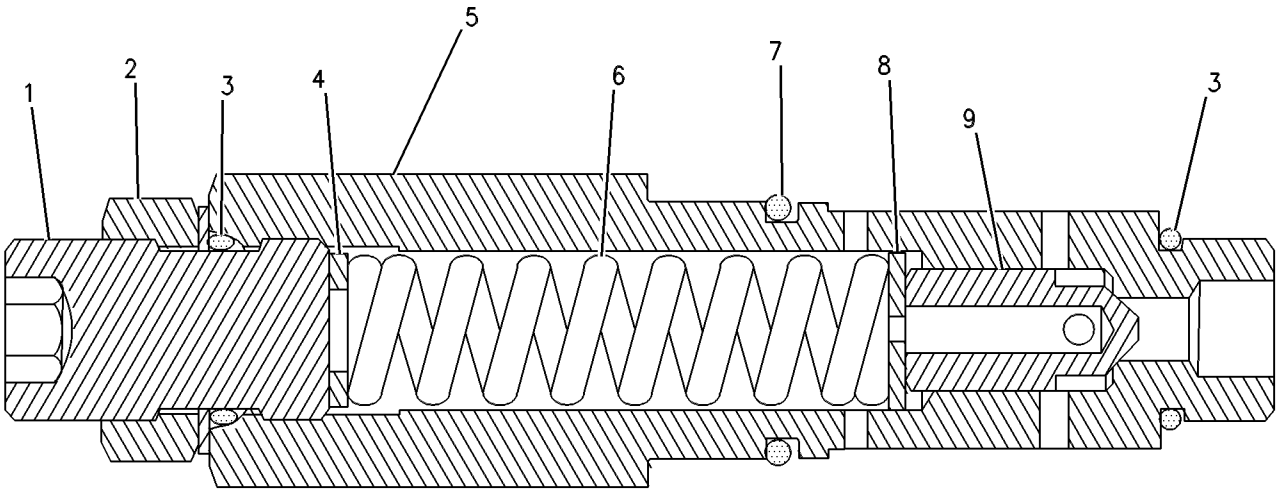

GRAPHIC #1 **<END>** g00260683

186-0905 VALVE GP-RELIEF–LINE

S/N: BYD1-UP

PART OF 133-4235 VALVE GP-MAIN CONTROL

AN ATTACHMENT

SMCS-5069, 5117 **i01988923**

NOTE	REF NO	GRAPHIC REF	PART NUMBER	QTY	PART NAME 1 2 3 4 5 6 (PRODUCT LEVEL)	SEE PAGE
	1	1	**202-0042**	1	NUT (3/8-24-THD)	
	2	1	**033-5879**	2	SEAL-O-RING	
	3	1	**186-2488**	1	RING-BACKUP	
	4	1	**186-2487**	1	RING-BACKUP	
	5	1	**033-6027**	2	SEAL-O-RING	
	6	1	**9N-1756**	1	SEAL-O-RING	
					AVAILABLE REPAIR KIT(S):	
			151-4003	1	KIT-SERVICE	
					(INCLUDES SPRINGS, SEALS, & RINGS)	

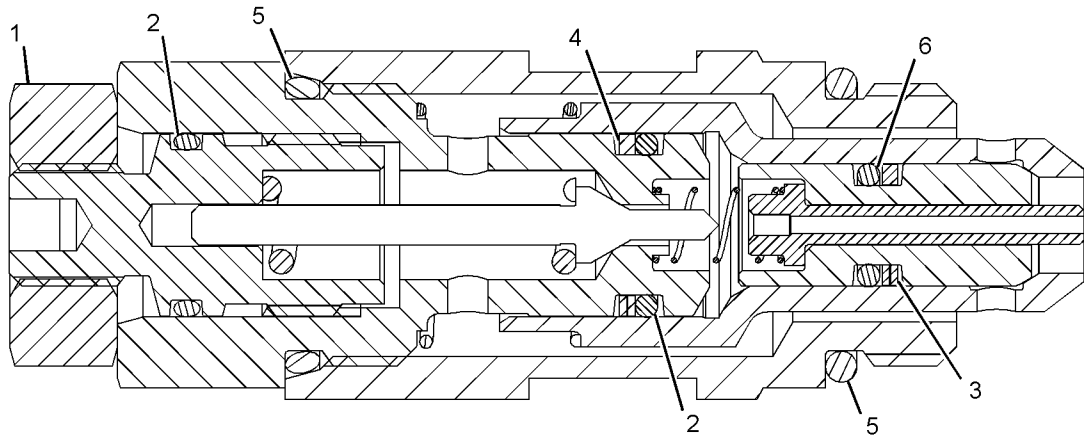

GRAPHIC #1 **<END>** g01047315

HYDRAULIC SYSTEM

186-0913 VALVE GP-RELIEF–LINE

S/N: BYD1-UP

PART OF 133-4234, 133-4235 VALVE GP-MAIN CONTROL

AN ATTACHMENT

SMCS-5069, 5117 **i02028411**

NOTE	REF NO	GRAPHIC REF	PART NUMBER	QTY	PART NAME 1 2 3 4 5 6 (PRODUCT LEVEL)	SEE PAGE
	1	1	**186-2488**	1	RING-BACKUP	
	2	1	**033-5879**	2	SEAL-O-RING	
	3	1	**202-0042**	1	NUT (3/8-24-THD)	
	4	1	**186-2487**	1	RING-BACKUP	
	5	1	**033-6027**	2	SEAL-O-RING	
	6	1	**9N-1756**	1	SEAL-O-RING	
					AVAILABLE REPAIR KIT(S):	
			151-4003	1	KIT-SERVICE	
					(INCLUDES SPRINGS, SEALS, & RINGS)	

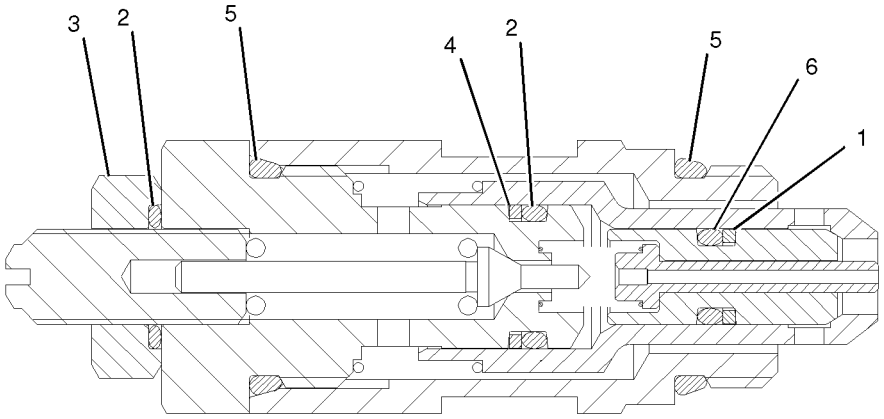

GRAPHIC #1 **<END>** g01033432

251-9918 VALVE GP-RELIEF–LINE

S/N: FTD1-UP

PART OF 238-4832, 240-9590, 254-5630, 311-8271, 311-8273, 311-8279 VALVE GP-CONTROL AN ATTACHMENT

SMCS-5069, 5117 **i02262420**

NOTE	REF NO	GRAPHIC REF	PART NUMBER	QTY	PART NAME 1 2 3 4 5 6 (PRODUCT LEVEL)	SEE PAGE
	1	1	**030-0167**	1	RING-BACKUP	
	2	1	**8L-2779**	1	SEAL-O-RING	
	3	1	**033-6036**	2	SEAL-O-RING	
	4	1	**3P-0647**	1	SEAL-O-RING	
	5	1	**9J-0707**	2	RING-BACKUP	
	6	1	**2P-2975**	1	SEAL-O-RING	
	7	1	**033-5879**	1	SEAL-O-RING	
	8	1	**9J-0705**	1	RING-BACKUP	

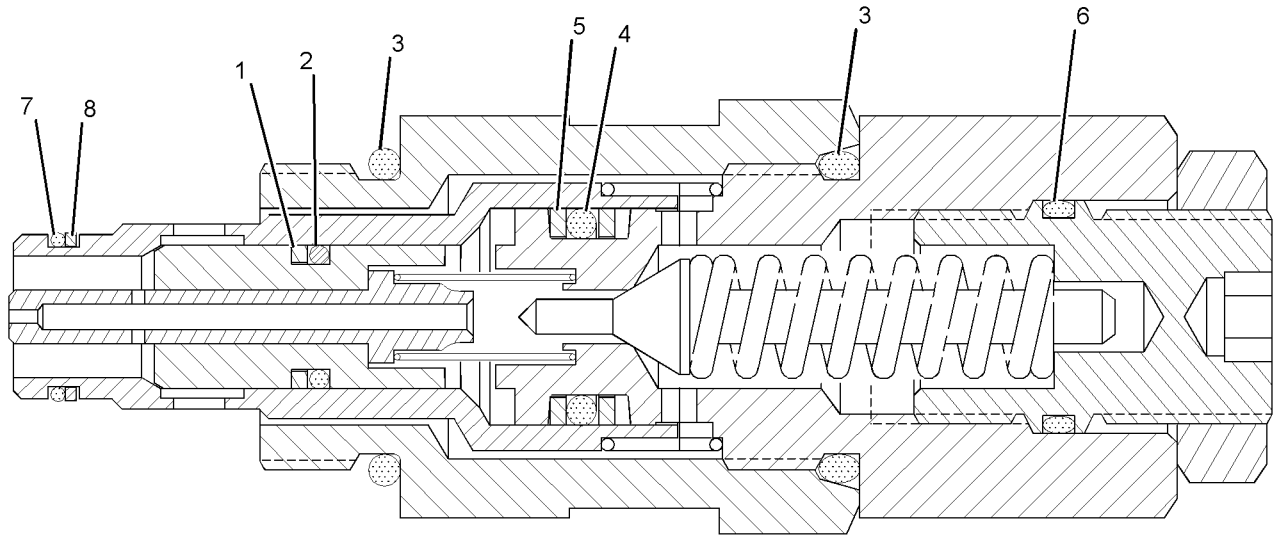

GRAPHIC #1 **<END>** g01115479

297-1209 VALVE GP-RIDE CONTROL

S/N: BYD1-UP

PART OF 218-3673 LINES GP-RIDE CONTROL

AN ATTACHMENT

SMCS-5004, 5054, 5066 **i02795525**

NOTE	REF NO	GRAPHIC REF	PART NUMBER	QTY	PART NAME 1 2 3 4 5 6 (PRODUCT LEVEL)	SEE PAGE
	1	1	**160-0269**	1	ORIFICE AS	
		1	**4J-7533**	1	SEAL-O-RING	
H	2	1	**190-8308**	1	CARTRIDGE AS	
	3	1	*300-2315*	1	MANIFOLD AS-HYDRAULIC	
		1	**219-1790**	3	PLUG AS	
					(EACH INCLUDES)	
		1	**4J-7533**	1	SEAL-O-RING	
	4	1	**190-8314**	1	SPOOL-VALVE	
Y	5	1	**201-0950**	1	VALVE GP-SOLENOID (RIDE CONTROL)	697
J	6	1	**206-3632**	1	VALVE-CHECK (RIDE CONTROL)	
	7	1	**3J-1907**	4	SEAL-O-RING	
	8	1	**9S-4191**	1	PLUG-O-RING	
	9	1	**9S-8004**	3	PLUG-O-RING	
					AVAILABLE REPAIR KIT(S):	
H			**193-5958**	1	KIT-SEAL (CARTRIDGE)	
					(INCLUDES RINGS & SEALS)	
J			**143-5446**	1	KIT-SEAL (VALVE)	
					(INCLUDES RINGS & SEALS)	
			297-9016	1	KIT-CHECK VALVE (VALVE)	
					(INCLUDES VALVE BALLS, VALVE SEATS, RINGS, SPRING, SPRING GUIDE & SEAT W/ORFICE)	

H-KIT MARKED H SERVICES PART MARKED H
J-KIT MARKED J SERVICES PART MARKED J
Y-SEPARATE ILLUSTRATION

297-1209 VALVE GP-RIDE CONTROL *(contd.)* **i02795525**

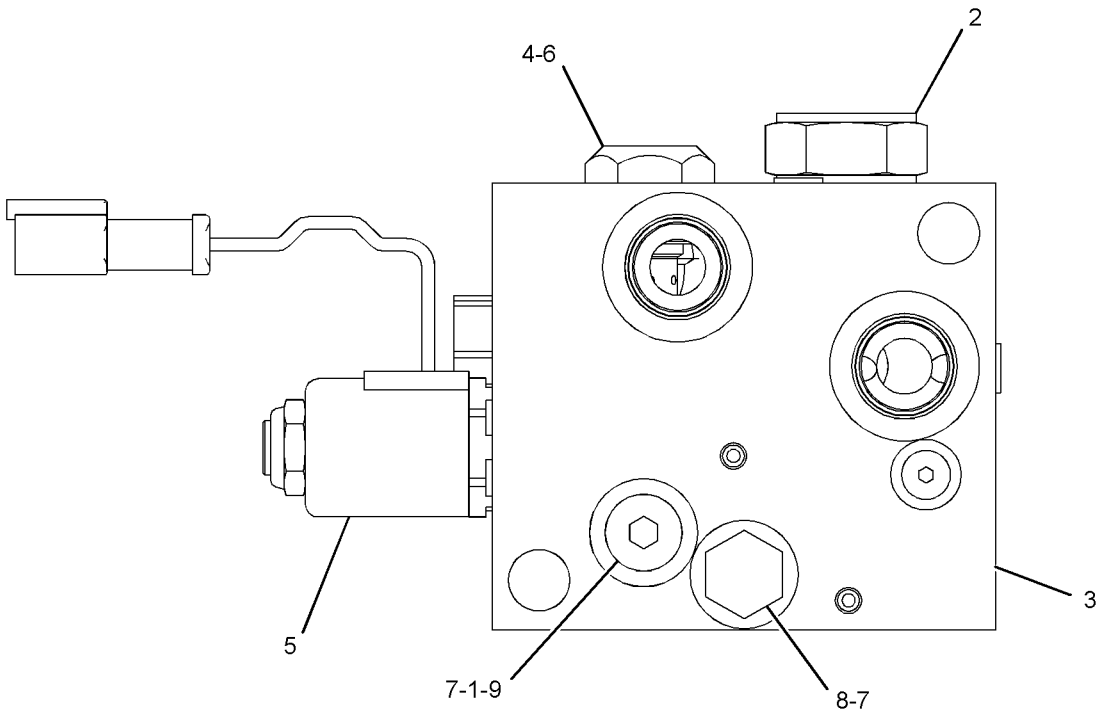

GRAPHIC #1 **<END>** g01333506

225-1057 VALVE GP-SHUTOFF–HYDRAULIC LOCKOUT

S/N: BYD1-UP

PART OF 220-1505, 220-1506, 220-1509 CONTROL GP-PILOT OPERATED HYD

AN ATTACHMENT

SMCS-5059, 5130 **i02847561**

NOTE	REF NO	GRAPHIC REF	PART NUMBER	QTY	PART NAME 1 2 3 4 5 6 (PRODUCT LEVEL)	SEE PAGE
	1	1	**6V-1178**	1	PLUG-BUTTON	
C	2	1	**091-0079**	1	PLUG	
	3	1	**226-2095**	1	FILM (BLACK)	
Y	4	1	**233-7133**	1	VALVE & MTG GP-SOLENOID	623
C	5	1	*148-8378*	2	ELBOW AS	
					(EACH INCLUDES)	
		1	**3J-1907**	1	SEAL-O-RING	
		1	**6V-8397**	1	SEAL-O-RING	
		1	**6V-8724**	1	ELBOW	
C	6	1	*148-8435*	1	TEE AS	
		1	**3J-1907**	1	SEAL-O-RING	
		1	**6V-8397**	2	SEAL-O-RING	
		1	**6V-8781**	1	TEE-FACE SEAL	
C	7	1	**298-7736**	2	COLLAR	
M	8	1	**2Y-5829**	2	NUT (M10X1.5-THD)	
	9	1	**6V-5839**	4	WASHER (11X21X2.5-MM THK)	
C	10	1	**6V-9829**	1	CAP AS	
CM	11	1	**8T-0643**	2	BOLT (M10X1.5X80-MM)	

C-CHANGE FROM PREVIOUS TYPE
M-METRIC PART
Y-SEPARATE ILLUSTRATION

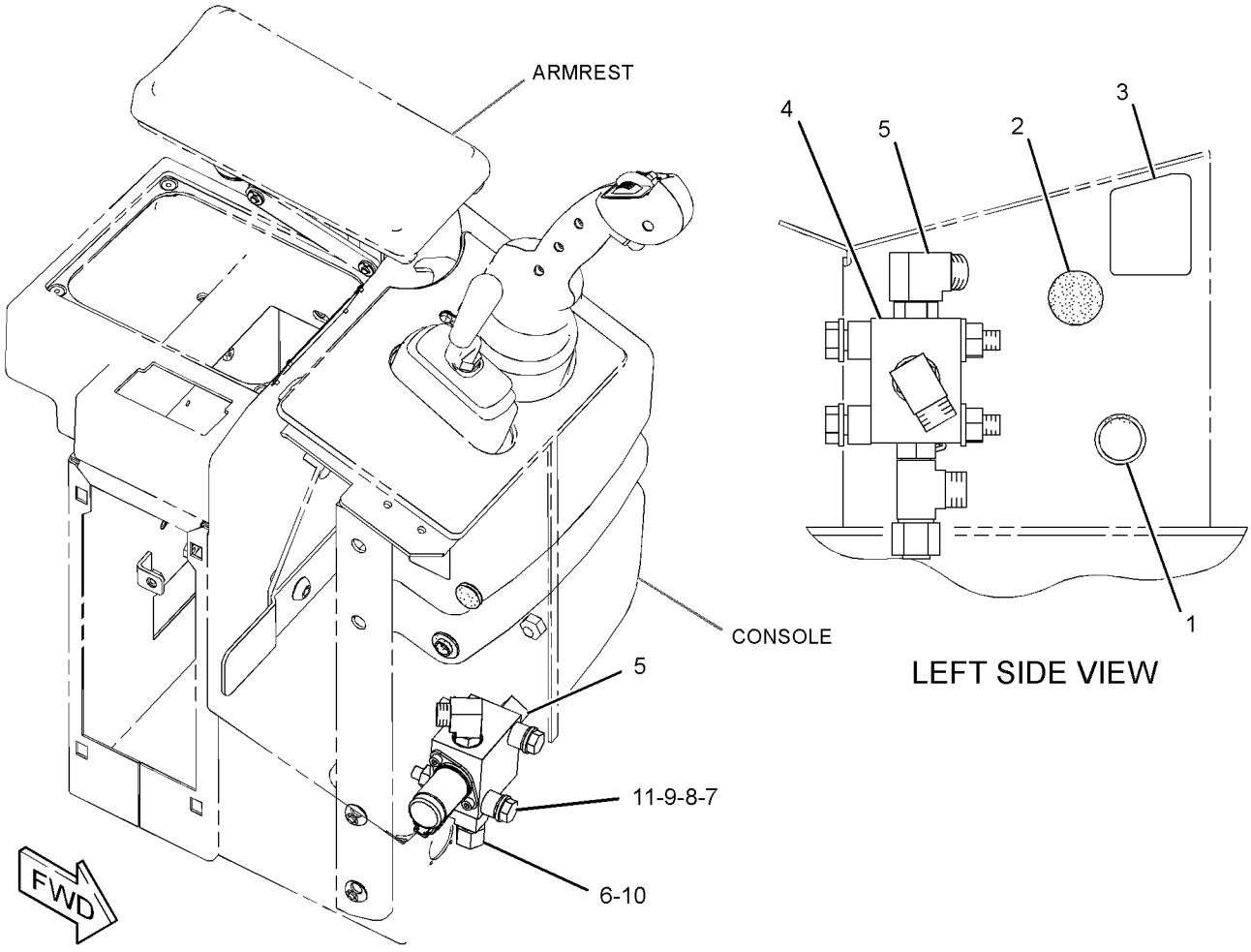

GRAPHIC #1 **<END>** g01335852

HYDRAULIC SYSTEM

141-1481 VALVE GP-SHUTTLE

S/N: BYD1-UP
PART OF 218-3673 LINES GP-RIDE CONTROL
AN ATTACHMENT

SMCS-5079 **i02567341**

NOTE	REF NO	GRAPHIC REF	PART NUMBER	QTY	PART NAME 1 2 3 4 5 6 (PRODUCT LEVEL)	SEE PAGE
Y	1	1	**125-3657**	1	VALVE GP-SHUTTLE	431

Y-SEPARATE ILLUSTRATION

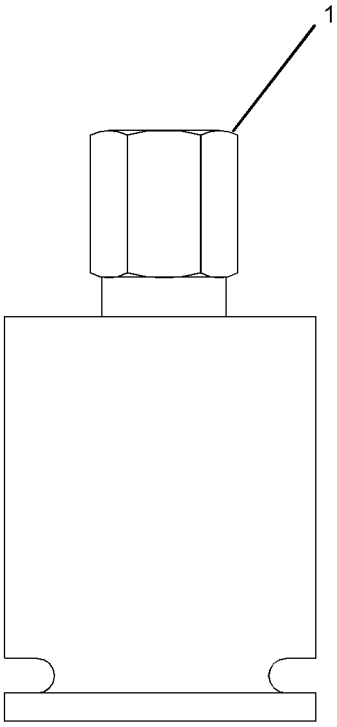

GRAPHIC #1 **<END>** g01286121

260-8590 VALVE GP-SHUTTLE

S/N: FTD1-UP

PART OF 283-9380 MANIFOLD GP-VALVE, 238-4832, 240-9590, 254-5630, 294-9504, 311-8271, 311-8273, 311-8279 VALVE GP-CONTROL

AN ATTACHMENT

SMCS-5079 **i02262427**

NOTE	REF NO	GRAPHIC REF	PART NUMBER	QTY	PART NAME 1 2 3 4 5 6 (PRODUCT LEVEL)	SEE PAGE
J	1	1	**3J-7354**	1	SEAL-O-RING	
J	2	1	**9N-1756**	1	SEAL-O-RING	
J	3	1	**3H-0442**	1	SEAL-O-RING	
					AVAILABLE REPAIR KIT(S):	
J			**240-7356**	1	KIT-SEAL (SHUTTLE VALVE)	
					(INCLUDES BACKUP RINGS & PARTS MARKED J)	

J-KIT MARKED J SERVICES PARTS MARKED J

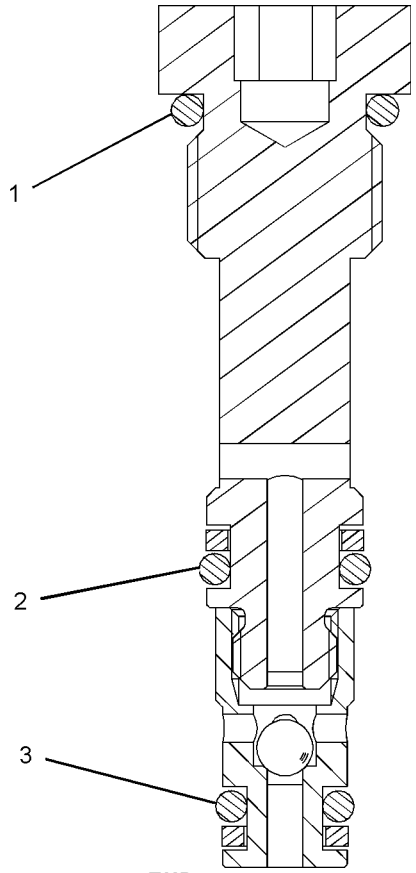

GRAPHIC #1 **<END>** g01018080

HYDRAULIC SYSTEM

189-2100 VALVE GP-SOLENOID

S/N: BYD1-UP

PART OF 289-6394 MOTOR GP-GEAR

AN ATTACHMENT

SMCS-5132, 5479 **i01753712**

NOTE	REF NO	GRAPHIC REF	PART NUMBER	QTY	PART NAME 1 2 3 4 5 6 (PRODUCT LEVEL)	SEE PAGE
	1	1	**8C-9987**	1	WASHER (8.3X28X2.5-MM THK)	
	2	1	**111-0343**	1	LOCKNUT (5/16-18-THD)	
	3	1	**189-0189**	1	COIL AS	
		1	**1S-9593**	2	STRAP-CABLE	
		1	**102-8802**	1	KIT-RECEPTACLE (2-PIN)	
					(KIT SERVICES RECEPTACLE AS AND WEDGE)	
		1	**186-3735**	2	PIN-CONNECTOR (16-GA TO 18-GA)	
					AVAILABLE REPAIR KIT(S):	
			6T-7054	1	KIT-SEAL	

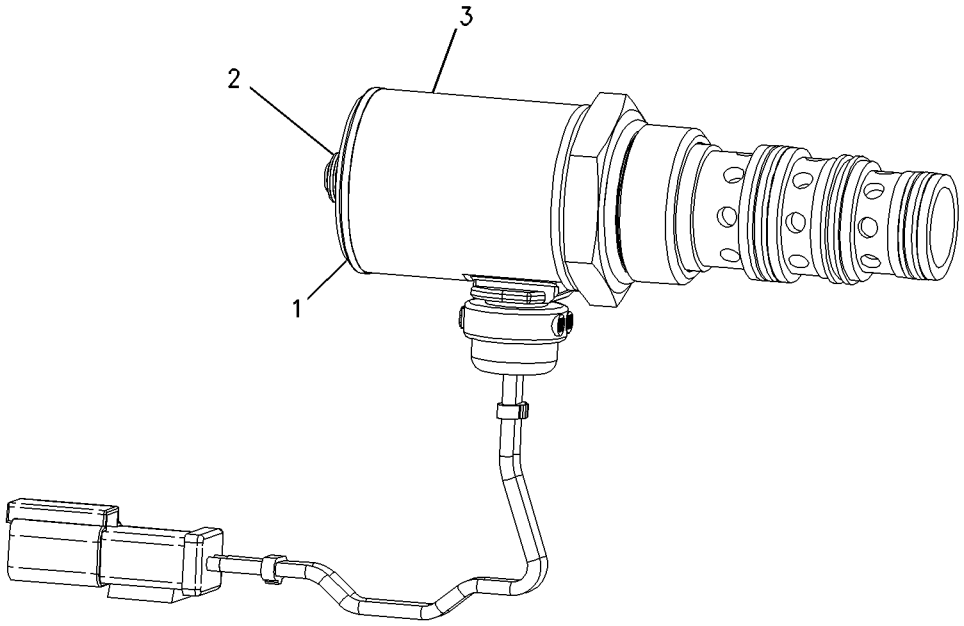

GRAPHIC #1 **<END>** g00897061

201-0950 VALVE GP-SOLENOID

S/N: BYD1-UP
PART OF 297-1209 VALVE GP-RIDE CONTROL
AN ATTACHMENT

SMCS-5132, 5479 **i02602996**

NOTE	REF NO	GRAPHIC REF	PART NUMBER	QTY	PART NAME 1 2 3 4 5 6 (PRODUCT LEVEL)	SEE PAGE
	1	1	**122-1133**	1	COIL AS (24-VOLT)	
		1	**1S-9593**	2	STRAP-CABLE	
		1	**186-3735**	2	PIN-CONNECTOR (16-GA TO 18-GA)	
		1	**102-8802**	1	KIT-RECEPTACLE (2-PIN)	
					(KIT SERVICES RECEPTACLE AS AND WEDGE)	
	2	1	**156-5970**	1	NUT (1/2-20-THD)	
	3	1	**171-8772**	1	VALVE AS-SOLENOID	
		1	**156-5970**	1	NUT (1/2-20-THD)	
					AVAILABLE REPAIR KIT(S):	
			195-7430	1	KIT-SEAL (SOLENOID VALVE) (SOLENOID VALVE)	

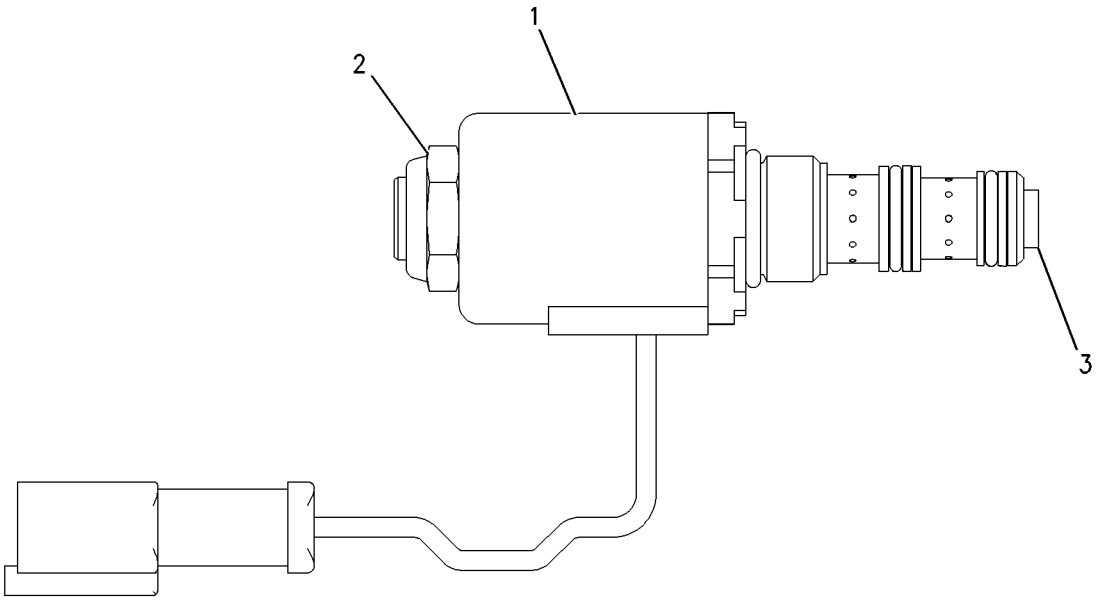

GRAPHIC #1 **<END>** g00888488

HYDRAULIC SYSTEM

211-2092 VALVE GP-SOLENOID

S/N: BYD1-UP
24-VOLT
PART OF 289-6393, 289-6394 MOTOR GP-GEAR
AN ATTACHMENT

SMCS-5132, 5479 **i02348941**

NOTE	REF NO	GRAPHIC REF	PART NUMBER	QTY	PART NAME 1 2 3 4 5 6 (PRODUCT LEVEL)	SEE PAGE
	1	1	**123-3132**	1	RING-BACKUP	
	2	1	**8L-2779**	1	SEAL-O-RING	
	3	1	**230-0913**	1	COIL AS	
	4	1	**033-6028**	1	SEAL-O-RING	

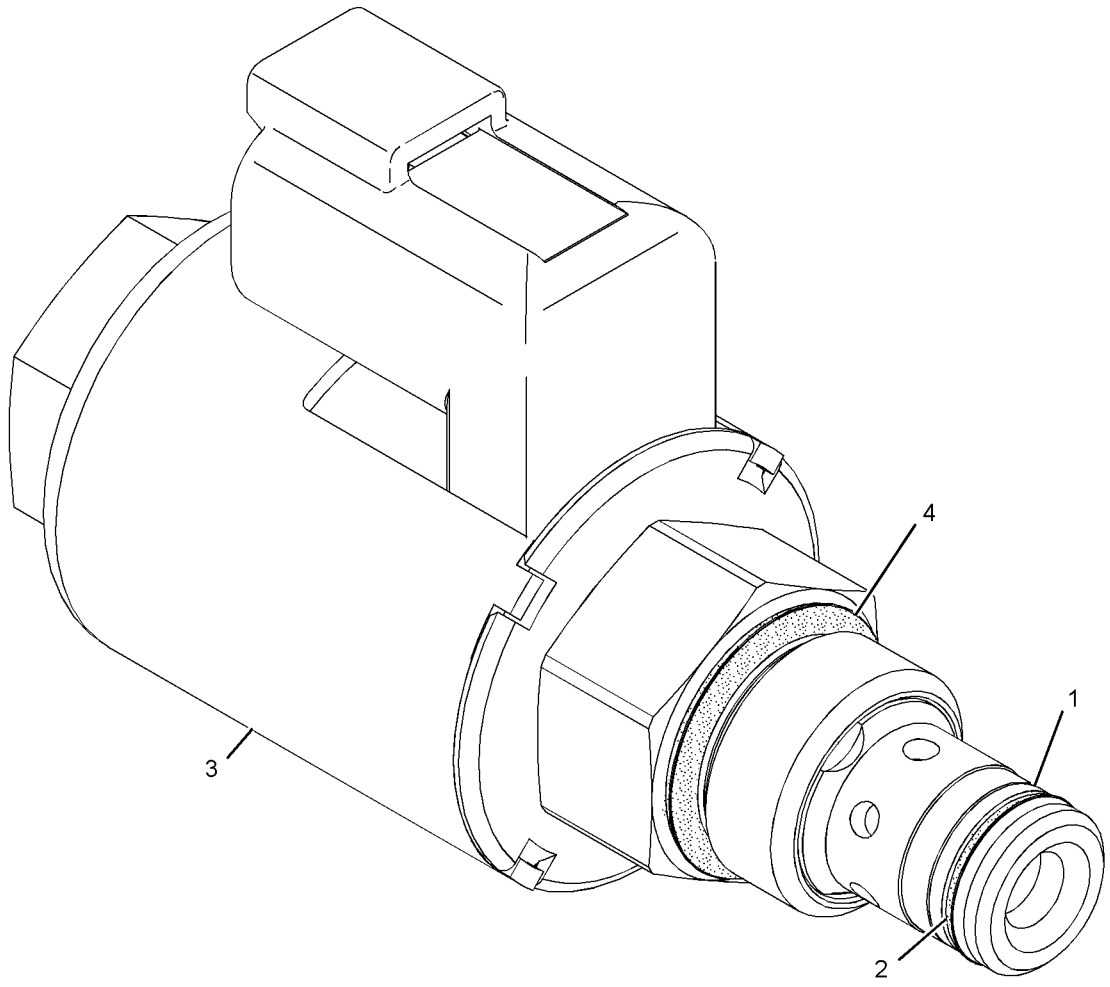

GRAPHIC #1 **<END>** g01181806

HYDRAULIC SYSTEM

225-0300 VALVE GP-SOLENOID

S/N: FTD1-UP

PART OF 283-9380 MANIFOLD GP-VALVE

AN ATTACHMENT

SMCS-5132, 5479 **i02602998**

NOTE	REF NO	GRAPHIC REF	PART NUMBER	QTY	PART NAME 1 2 3 4 5 6 (PRODUCT LEVEL)	SEE PAGE
	1	1	**212-0061**	1	FLANGE	
					AVAILABLE REPAIR KIT(S):	
			200-2371	1	KIT-SEAL (SOLENOID VALVE)	
					(INCLUDES SEAL O-RINGS)	

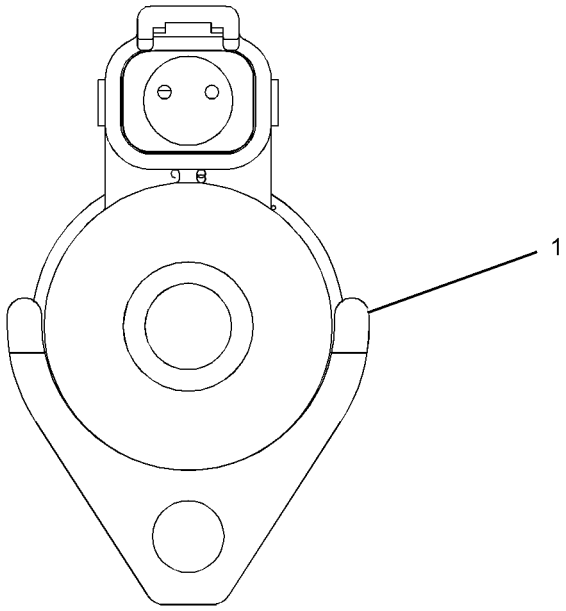

GRAPHIC #1 **<END>** g01113783

HYDRAULIC SYSTEM

235-4605 VALVE GP-SOLENOID

S/N: FTD1-UP

PART OF 243-0651, 262-9706 VALVE & MTG GP-SOLENOID

AN ATTACHMENT

SMCS-5132, 5479 **i02276550**

NOTE	REF NO	GRAPHIC REF	PART NUMBER	QTY	PART NAME 1 2 3 4 5 6 (PRODUCT LEVEL)	SEE PAGE
Z	1	1		1	CARTRIDGE AS	
Z	2	1		1	COIL AS	
Z	3	1		1	CARTRIDGE AS-VALVE	
Z	4	1		1	WASHER-SPRING	
	5	1	**033-6043**	1	SEAL-O-RING	
	6	1	**6V-4589**	1	SEAL-O-RING	
	7	1	**8L-2746**	1	SEAL-O-RING	

Z-NOT SERVICED SEPARATELY

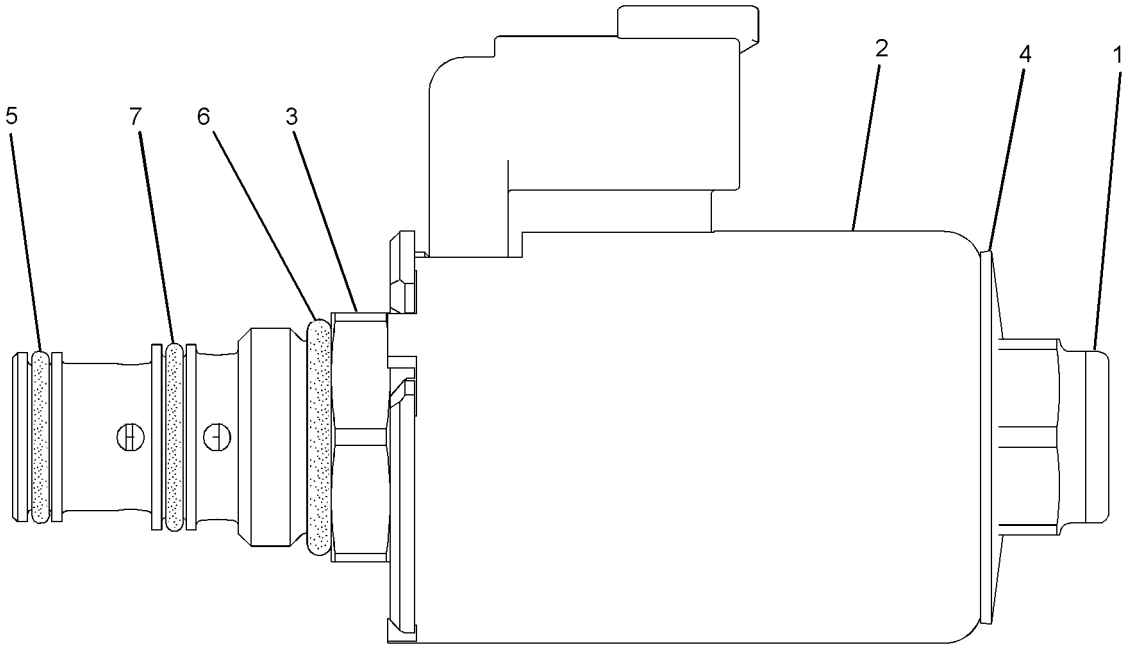

GRAPHIC #1 **<END>** g01022105

235-7301 ARM & BEARING AS-LIFT

S/N: FTD1-UP
PART OF 235-7300 CONTROL GP-WORK TOOL
AN ATTACHMENT

SMCS-6118, 6119, 7069 **i02640099**

NOTE	REF NO	GRAPHIC REF	PART NUMBER	QTY	PART NAME 1 2 3 4 5 6 (PRODUCT LEVEL)	SEE PAGE
	1	1	**4T-0370**	4	BEARING-SLEEVE	
	2	1	**4V-4453**	4	BEARING-SLEEVE	
	3	1	*235-7307*	1	PLATE AS	
M		1	**8T-3612**	2	NUT-WELD (M8X1.25-THD)	
M	4	1	**8Y-4489**	7	BOSS (M10X1.5-THD)	
	5	1	**9C-6809**	4	BLOCK (M10X1.5-THD)	
M	6	1	**9R-2672**	8	BOSS (M10X1.5X20-MM)	

M-METRIC PART

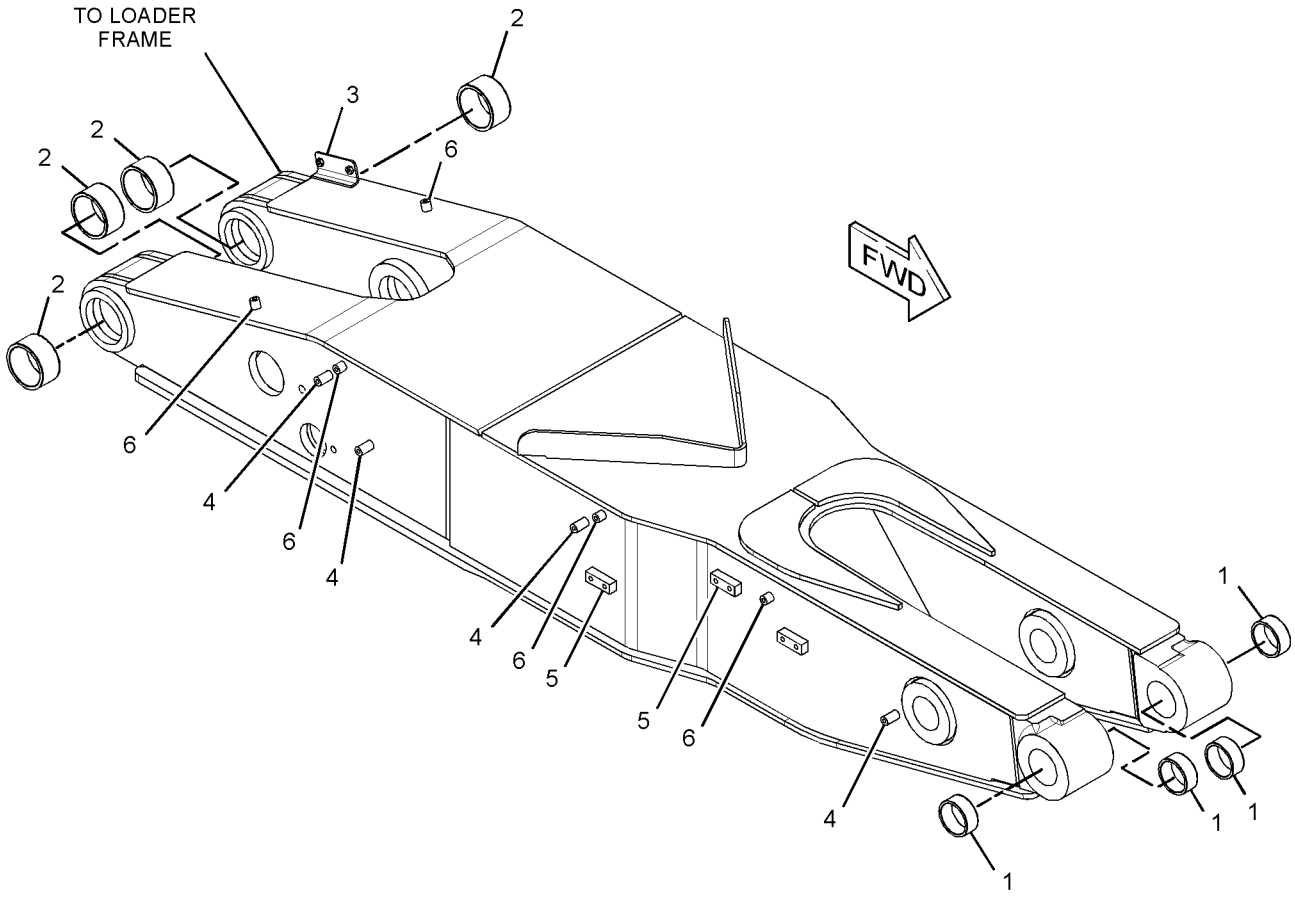

GRAPHIC #1 **<END>** g01338256

IMPLEMENTS

113-3706 CONTROL GP-BUCKET

S/N: BYD1-UP

PART OF 289-8871 CHASSIS AR

SMCS-6107 **i02829760**

NOTE	REF NO	GRAPHIC REF	PART NUMBER	QTY	PART NAME 1 2 3 4 5 6 (PRODUCT LEVEL)	SEE PAGE
	1	2	**7K-9216**	2	SEAL-LIP TYPE	
B	2	1	**176-0623**	6	WASHER (78X160X1.6-MM THK)	
B	3	1	**176-0624**	10	WASHER (78X160X3-MM THK)	
	4	2	**174-4217**	2	PIN AS	
B	5	1	**176-0626**	8	WASHER (67.5X120X3-MM THK)	
B	6	1	**176-0625**	4	WASHER (67.5X120X2-MM THK)	
	7	2	**174-4252**	1	LEVER AS	
	7A	2	**4V-2879**	2	BEARING-SLEEVE	
	8	1	**9C-7907**	2	SPACER (21.5X28X14-MM THK)	
	9	2	**113-3797**	1	LINK AS	
	9A	2	**4V-2883**	2	BEARING-SLEEVE	
	10	1	**118-0860**	2	PIN AS	
	11	1	**118-0869**	2	PIN AS	
	12	1	**122-6378**	3	PIN AS	
M	13	2	**8T-4780**	1	BOLT (M20X2.5X30-MM)	
	14	2	**128-0285**	1	PIN AS	
	15	2	**128-0294**	1	PIN AS	
	16	2	**177-1452**	1	WASHER-HARD (22X60X6-MM THK)	
	17	1	**3E-9411**	2	WASHER-HARD (17.5X38X6-MM THK)	
	18	1,2	**3B-8489**	8	FITTING-GREASE	
	19	1	**3B-8491**	4	FITTING-GREASE (EXTENDED)	
	20	1	**7K-9205**	12	SEAL-LIP TYPE	
	21	2	**7K-9208**	6	SEAL-LIP TYPE	
	22	1	**7K-9209**	6	SEAL-LIP TYPE	
	23	1,2	**7X-0618**	10	WASHER-HARD (13.5X40X5-MM THK)	
M	24	1	**8T-4193**	2	BOLT (M16X2X50-MM)	
M	25	1,2	**8T-4192**	10	BOLT (M12X1.75X25-MM)	
	26	1	**113-3715**	1	ARM AS-LIFT	
	26A	1	**9C-6809**	2	BLOCK (M10X1.5-THD)	
	26B	1	**7P-3454**	2	BEARING-SLEEVE	
	26C	1	**1V-9148**	2	BEARING-SLEEVE	
	26D	1	**118-1008**	2	BEARING	
	27	1	**122-6393**	2	PIN AS	

B-USE AS REQUIRED
M-METRIC PART

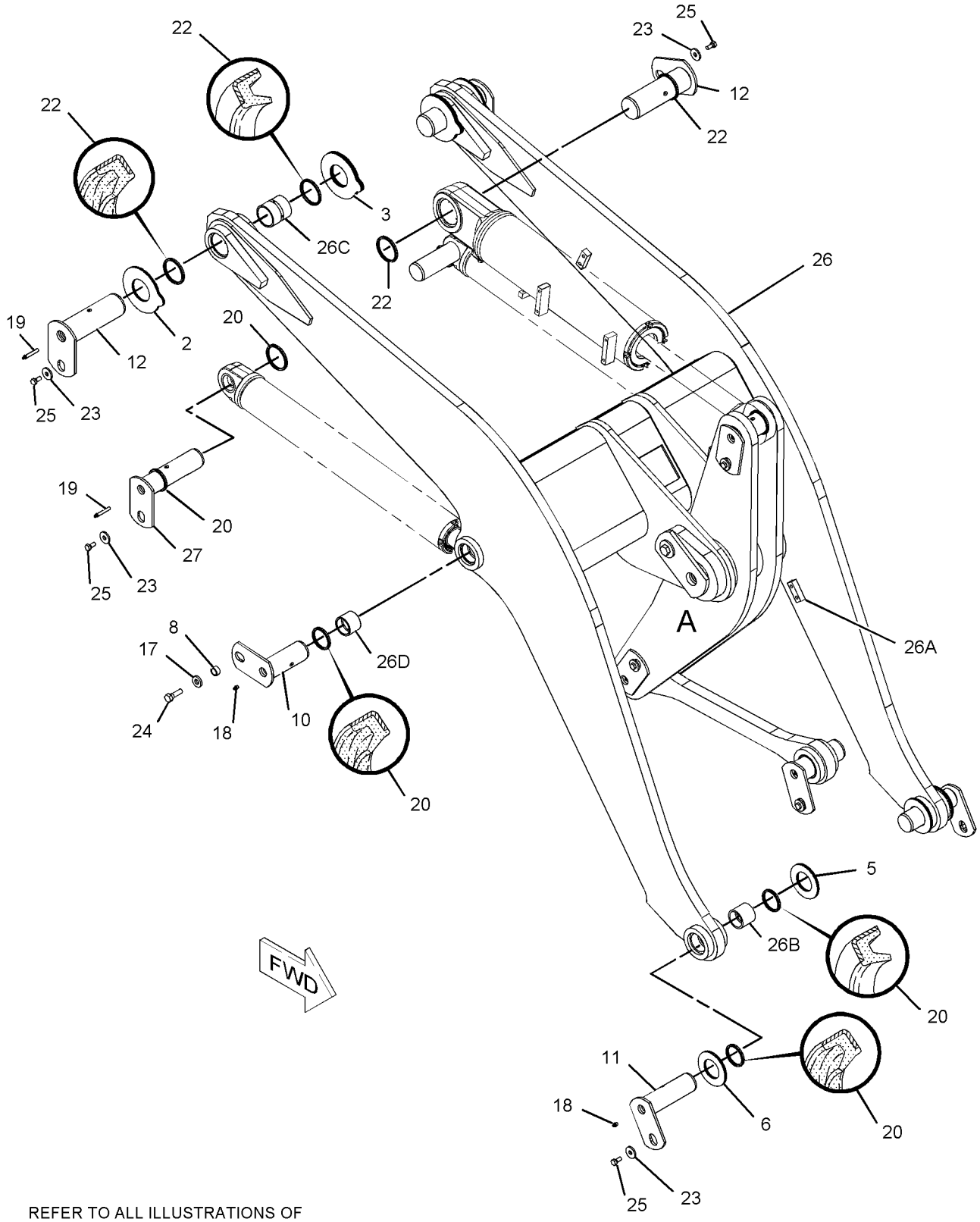

REFER TO ALL ILLUSTRATIONS OF
THIS GROUP FOR AUXILIARY VIEWS

GRAPHIC #1 g01122690

113-3706 **CONTROL GP-BUCKET** *(contd.)* **i02829760**

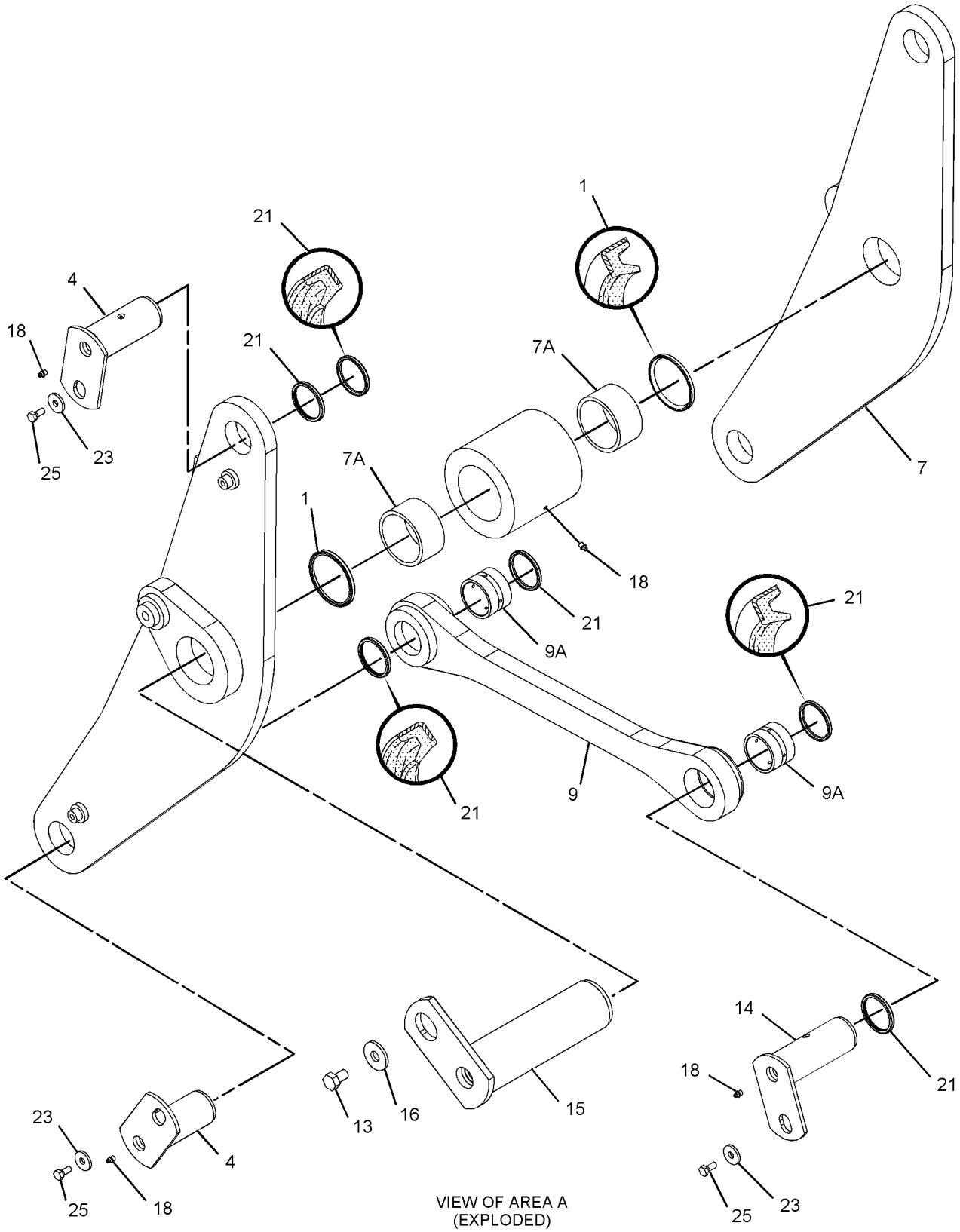

VIEW OF AREA A
(EXPLODED)

GRAPHIC #2 **<END>** g01122961

235-7300 CONTROL GP-WORK TOOL—STANDARD LIFT MACHINES

S/N: FTD1-UP
PART OF 303-2046 LINES GP-COUPLER
AN ATTACHMENT

SMCS-6116, 6117, 6119, 6700 **i02615840**

NOTE	REF NO	GRAPHIC REF	PART NUMBER	QTY	PART NAME 1 2 3 4 5 6 (PRODUCT LEVEL)	SEE PAGE
	1	1	**107-9976**	4	SEAL-O-RING	
	2	1	**146-7990**	1	PIN AS	
	3	1	**146-8000**	1	PIN AS	
	4	1	**146-8010**	1	PIN AS	
	5	1	**146-8013**	1	PIN AS	
	6	1	**177-1452**	2	WASHER-HARD (22X60X6-MM THK)	
B	7	1	**194-7109**	4	SHIM (1-MM THK)	
B	8	1	**194-7110**	2	SHIM (0.5-MM THK)	
B	9	1	**194-7111**	4	SHIM (4-MM THK)	
	10	1	**194-7112**	4	SHIM (2-MM THK)	
Y	11	1	**235-7301**	1	ARM & BEARING AS-LIFT	701
	12	1	**235-7340**	1	LEVER & BEARING AS (TILT, REAR)	
	12A	1	**4V-2879**	2	BEARING-SLEEVE	
	13	1	**235-7346**	1	LINK & BEARING AS (TILT, REAR)	
	13A	1	**1V-8242**	1	BEARING-SLEEVE	
	13B	1	**3V-2333**	1	BEARING-SLEEVE	
	14	1	**235-7350**	1	LEVER & BEARING AS (TILT, FRONT)	
	14A	1	**4V-8639**	2	BEARING-SLEEVE	
	15	1	**235-7353**	1	LINK & BEARING AS (TILT, FRONT)	
	15A	1	**4V-8639**	2	BEARING-SLEEVE	
	15B	1	**4V-8674**	1	BEARING-SLEEVE	
	16	1	**235-7390**	1	PIN AS	
	17	1	**235-7391**	2	PIN AS	
	18	1	**235-7392**	2	PIN AS	
	19	1	**235-7393**	2	PIN AS	
	20	1	**235-7396**	1	PIN AS	
	21	1	**3B-8489**	5	FITTING-GREASE	
	22	1	**3B-8491**	3	FITTING-GREASE (EXTENDED)	
	23	1	**3E-9411**	2	WASHER-HARD (17.5X38X6-MM THK)	
	24	1	**7K-9208**	4	SEAL-LIP TYPE	
	25	1	**7K-9209**	16	SEAL-LIP TYPE	
	26	1	**7K-9212**	10	SEAL-LIP TYPE	
	27	1	**7K-9216**	2	SEAL-LIP TYPE	
	28	1	**7X-0618**	7	WASHER-HARD (13.5X40X5-MM THK)	
M	29	1	**7X-2553**	2	BOLT (M16X2X40-MM)	
M	30	1	**8T-4137**	2	BOLT (M10X1.5X20-MM)	
M	31	1	**8T-4183**	1	BOLT (M12X1.75X40-MM)	
M	32	1	**8T-4192**	6	BOLT (M12X1.75X25-MM)	
	33	1	**8T-4226**	2	WASHER-PLATED (10.5X45X3-MM THK)	
M	34	1	**8T-6430**	2	BOLT (M20X2.5X50-MM)	
	35	1	**9C-7907**	4	SPACER (21.5X28X14-MM THK)	

B-USE AS REQUIRED
M-METRIC PART
Y-SEPARATE ILLUSTRATION

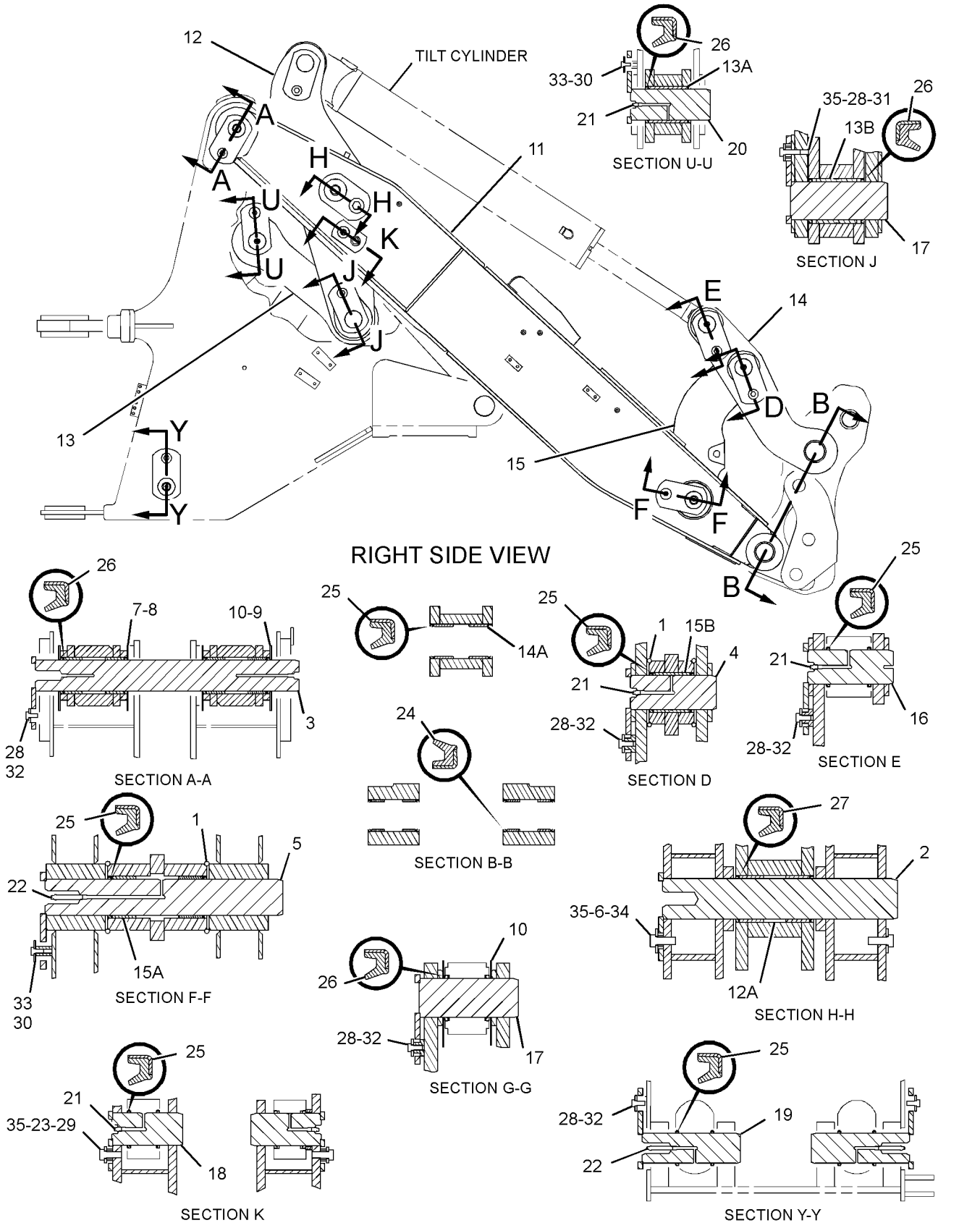

GRAPHIC #1 **<END>** g01321148

235-7500 CONTROL GP-WORK TOOL—HIGH LIFT MACHINES

S/N: FTD1-UP

PART OF 303-2047 LINKAGE AR-FRONT

AN ATTACHMENT

SMCS-6116, 6117, 6119, 6700 **i02501168**

NOTE	REF NO	GRAPHIC REF	PART NUMBER	QTY	PART NAME 1 2 3 4 5 6 (PRODUCT LEVEL)	SEE PAGE
	1	1	**107-9976**	4	SEAL-O-RING	
	2	1	**146-7990**	1	PIN AS	
	3	1	**146-8000**	1	PIN AS	
	4	1	**146-8010**	1	PIN AS	
	5	1	**146-8013**	1	PIN AS	
	6	1	**174-3734**	2	FILM (HIGH LIFT)	
	7	1	**177-1452**	2	WASHER-HARD (22X60X6-MM THK)	
B	8	1	**194-7109**	4	SHIM (1-MM THK)	
B	9	1	**194-7110**	2	SHIM (0.5-MM THK)	
	10	1	**194-7111**	2	SHIM (4-MM THK)	
	11	1	**194-7112**	4	SHIM (2-MM THK)	
	12	1	**235-7340**	1	LEVER & BEARING AS (TILT, REAR)	
		1	**4V-2879**	2	BEARING-SLEEVE	
	13	1	**235-7346**	1	LINK & BEARING AS (TILT, REAR)	
		1	**1V-8242**	1	BEARING-SLEEVE	
		1	**3V-2333**	1	BEARING-SLEEVE	
	14	1	**235-7353**	1	LINK & BEARING AS (TILT, FRONT)	
		1	**4V-8639**	2	BEARING-SLEEVE	
		1	**4V-8674**	1	BEARING-SLEEVE	
	15	1	**257-1660**	1	LEVER & BEARING AS (TILT, FRONT)	
		1	**4V-8639**	2	BEARING-SLEEVE	
	16	1	**235-7361**	1	ARM & BEARING AS-LIFT	
		1	**4T-0370**	4	BEARING-SLEEVE	
		1	**4V-4453**	4	BEARING-SLEEVE	
M		1	**8Y-4489**	7	BOSS (M10X1.5-THD)	
		1	**9C-6809**	4	BLOCK (M10X1.5-THD)	
M		1	**9R-2672**	10	BOSS (M10X1.5X20-MM)	
	17	1	**235-7390**	1	PIN AS	
	18	1	**235-7391**	2	PIN AS	
	19	1	**235-7392**	2	PIN AS	
	20	1	**235-7393**	2	PIN AS	
	21	1	**235-7396**	1	PIN AS	
	22	1	**3B-8489**	5	FITTING-GREASE	
	23	1	**3B-8491**	3	FITTING-GREASE (EXTENDED)	
	24	1	**3E-9411**	2	WASHER-HARD (17.5X38X6-MM THK)	
	25	1	**7K-9208**	4	SEAL-LIP TYPE	
	26	1	**7K-9209**	16	SEAL-LIP TYPE	
	27	1	**7K-9212**	10	SEAL-LIP TYPE	
	28	1	**7K-9216**	2	SEAL-LIP TYPE	
	29	1	**7X-0618**	7	WASHER-HARD (13.5X40X5-MM THK)	
M	30	1	**7X-2553**	2	BOLT (M16X2X40-MM)	
M	31	1	**8T-4137**	2	BOLT (M10X1.5X20-MM)	
M	32	1	**8T-4183**	1	BOLT (M12X1.75X40-MM)	
M	33	1	**8T-4192**	6	BOLT (M12X1.75X25-MM)	
	34	1	**8T-4226**	2	WASHER-PLATED (10.5X45X3-MM THK)	
M	35	1	**8T-6430**	2	BOLT (M20X2.5X50-MM)	
	36	1	**9C-7907**	4	SPACER (21.5X28X14-MM THK)	

B-USE AS REQUIRED
M-METRIC PART

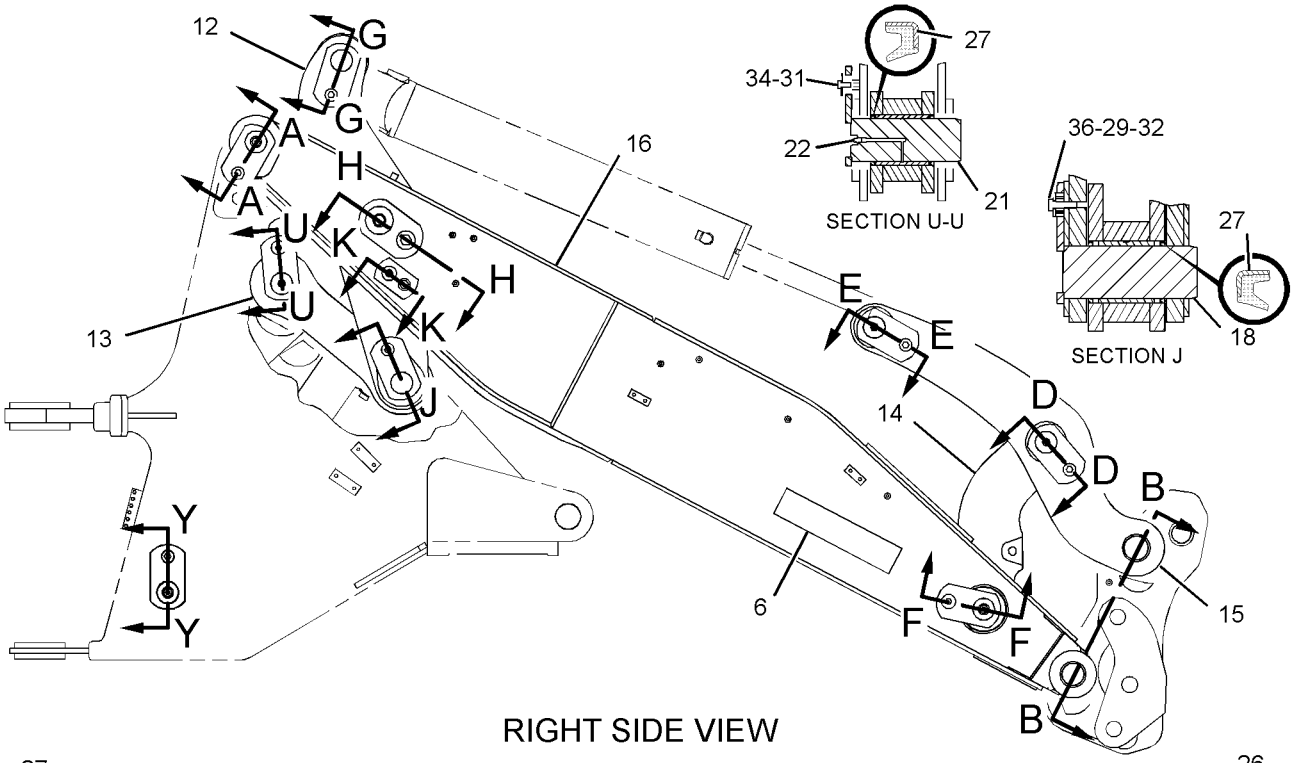

RIGHT SIDE VIEW

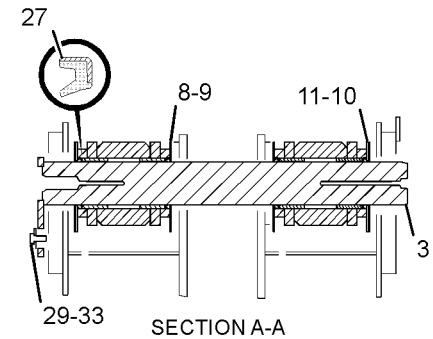

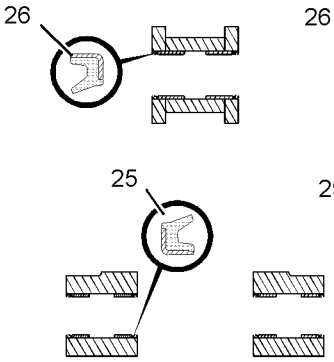

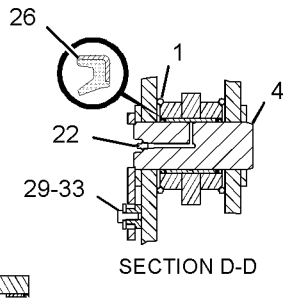

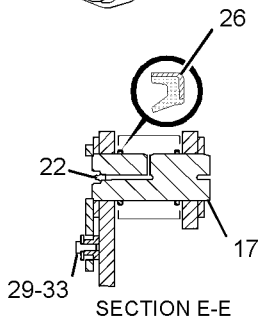

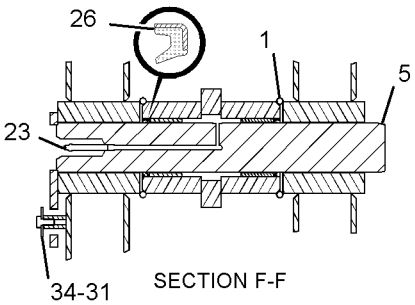

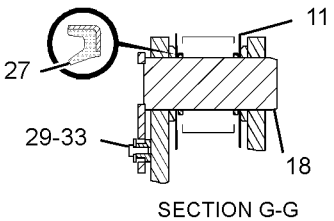

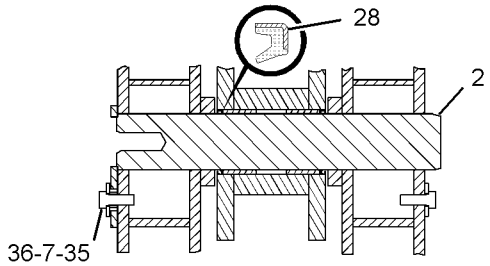

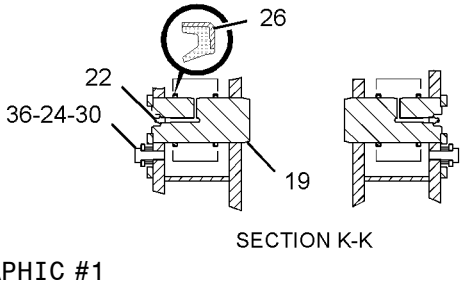

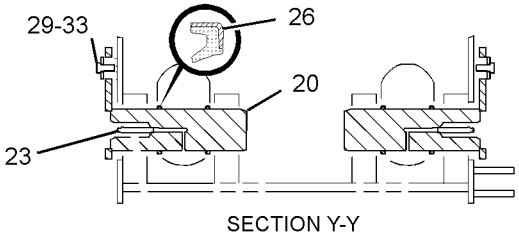

GRAPHIC #1 **<END>** g01251698

303-2047 LINKAGE AR-FRONT—HIGH LIFT MACHINES

S/N: FTD1-UP

CANNOT BE USED WITH 303-2046 LINES GP-COUPLER

AN ATTACHMENT

SMCS-6107 **i02726042**

NOTE	PART NUMBER	QTY	PART NAME 1 2 3 4 5 6 (PRODUCT LEVEL)	SEE PAGE
Y	*235-7500*	1	CONTROL GP-WORK TOOL (HIGH LIFT MACHINES)	707
Y	*296-6815*	1	LINES GP-COUPLER (HIGH LIFT MACHINES)	520

Y-SEPARATE ILLUSTRATION

<END>

WORK TOOLS

116-9713 ADAPTER GP-TIP

S/N: BYD1-UP; FTD1-UP

PART OF 292-9188 BUCKET AR-MULTIPURPOSE

AN ATTACHMENT

SMCS-6803 **i00728531**

NOTE	PART NUMBER	QTY	PART NAME 1 2 3 4 5 6 (PRODUCT LEVEL)	SEE PAGE
	6I-9250	1	ADAPTER-LH	
	6I-9251	1	ADAPTER-RH	
	1U-0257	6	ADAPTER-STRAP	
	4J-9058	2	BOLT-PLOW (1-8X3.25 IN)	
	4F-4042	2	BOLT-PLOW	
	8J-2928	12	BOLT-PLOW	
	8J-2933	12	NUT (1-8 THD)	
	2J-3507	4	NUT-FULL (1-8 THD)	

<END>

WORK TOOLS

229-9714 ARM GP-MATERIAL HANDLING

S/N: BYD1-UP; FTD1-UP
AN ATTACHMENT

SMCS-6542 **i02603000**

NOTE	REF NO	GRAPHIC REF	PART NUMBER	QTY	PART NAME 1 2 3 4 5 6 (PRODUCT LEVEL)	SEE PAGE
	1	1	**6W-5652**	1	EXTENSION AS	
	2	1	**6W-5656**	1	EXTENSION AS	
	3	1	**6W-5678**	1	RETAINER AS	
		1	**6W-5677**	1	ROD	
	4	1	**6W-5679**	1	RETAINER AS	
		1	**6W-5677**	1	ROD	
	5	1	**8D-3791**	2	PIN	
	6	1	**9V-2714**	1	HOOK	
	7	1	**9V-2715**	1	SHACKLE AS	
	8	1	**7X-0371**	1	BOLT (3/4-10X3.75-IN)	
	9	1	**8T-4896**	2	WASHER-HARD (10.2X18.5X2.5-MM THK)	
	10	1	**229-9715**	1	BASE AS	
	11	1	**233-2944**	2	FILM-RATING (LOAD)	
	12	1	**1K-6870**	1	LOCKNUT (3/4-10-THD)	
	13	1	**5G-2373**	2	PIN	
	14	1	**5M-3062**	2	BOLT (3/8-16X0.75-IN)	

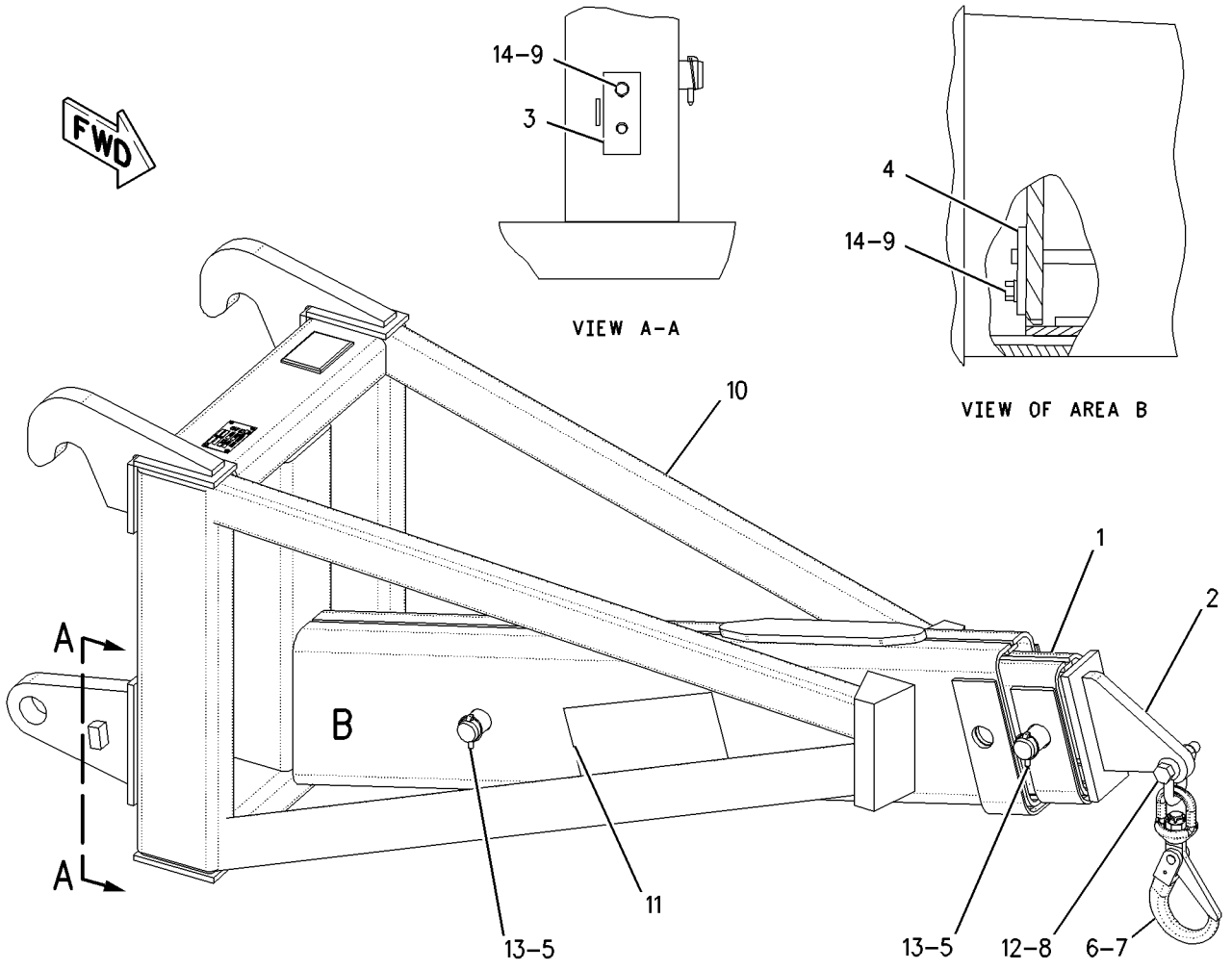

GRAPHIC #1 **<END>** g00977652

WORK TOOLS

252-6909 BUCKET AR-GENERAL PURPOSE

S/N: FTD1-UP

AN ATTACHMENT

SMCS-6101 **i02165418**

NOTE	REF NO	GRAPHIC REF	PART NUMBER	QTY	PART NAME 1 2 3 4 5 6 (PRODUCT LEVEL)	SEE PAGE
	1	1	**143-4973**	1	PLATE AS	
Y	2	1	*148-7900*	1	MOUNTING GP-BUCKET	777
Y	3	1	**252-6910**	1	BUCKET GP-GENERAL PURPOSE	747
	4	1	**8T-4121**	6	WASHER-HARD (11X21X2.5-MM THK)	
M	5	1	**8T-4136**	6	BOLT (M10X1.5X25-MM)	

M-METRIC PART
Y-SEPARATE ILLUSTRATION

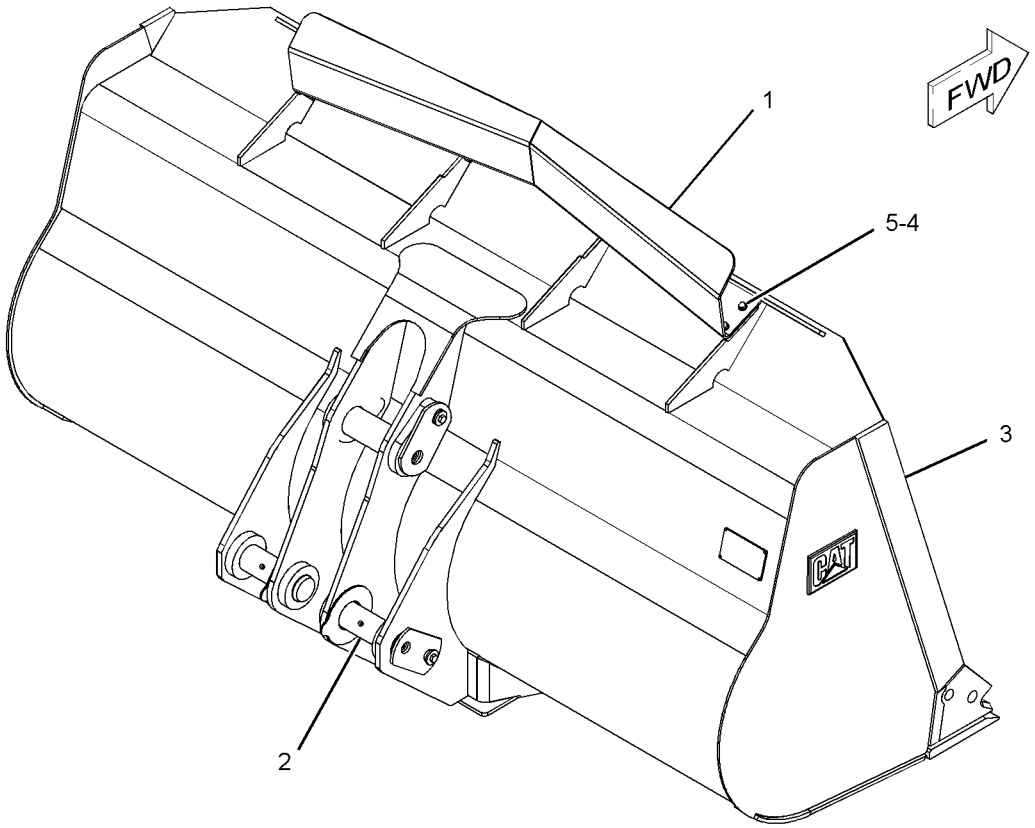

GRAPHIC #1 **<END>** g01119525

256-8882 BUCKET AR-GENERAL PURPOSE–QUICK COUPLER

S/N: FTD1-UP
AN ATTACHMENT

SMCS-6101 **i02277395**

NOTE	REF NO	GRAPHIC REF	PART NUMBER	QTY	PART NAME 1 2 3 4 5 6 (PRODUCT LEVEL)	SEE PAGE
	1	1	**143-4973**	1	PLATE AS	
Y	2	1	**224-0759**	1	BUCKET GP-GENERAL PURPOSE (QUICK COUPLER)	740
	3	1	**8T-4121**	6	WASHER-HARD (11X21X2.5-MM THK)	
M	4	1	**8T-4136**	6	BOLT (M10X1.5X25-MM)	

M-METRIC PART
Y-SEPARATE ILLUSTRATION

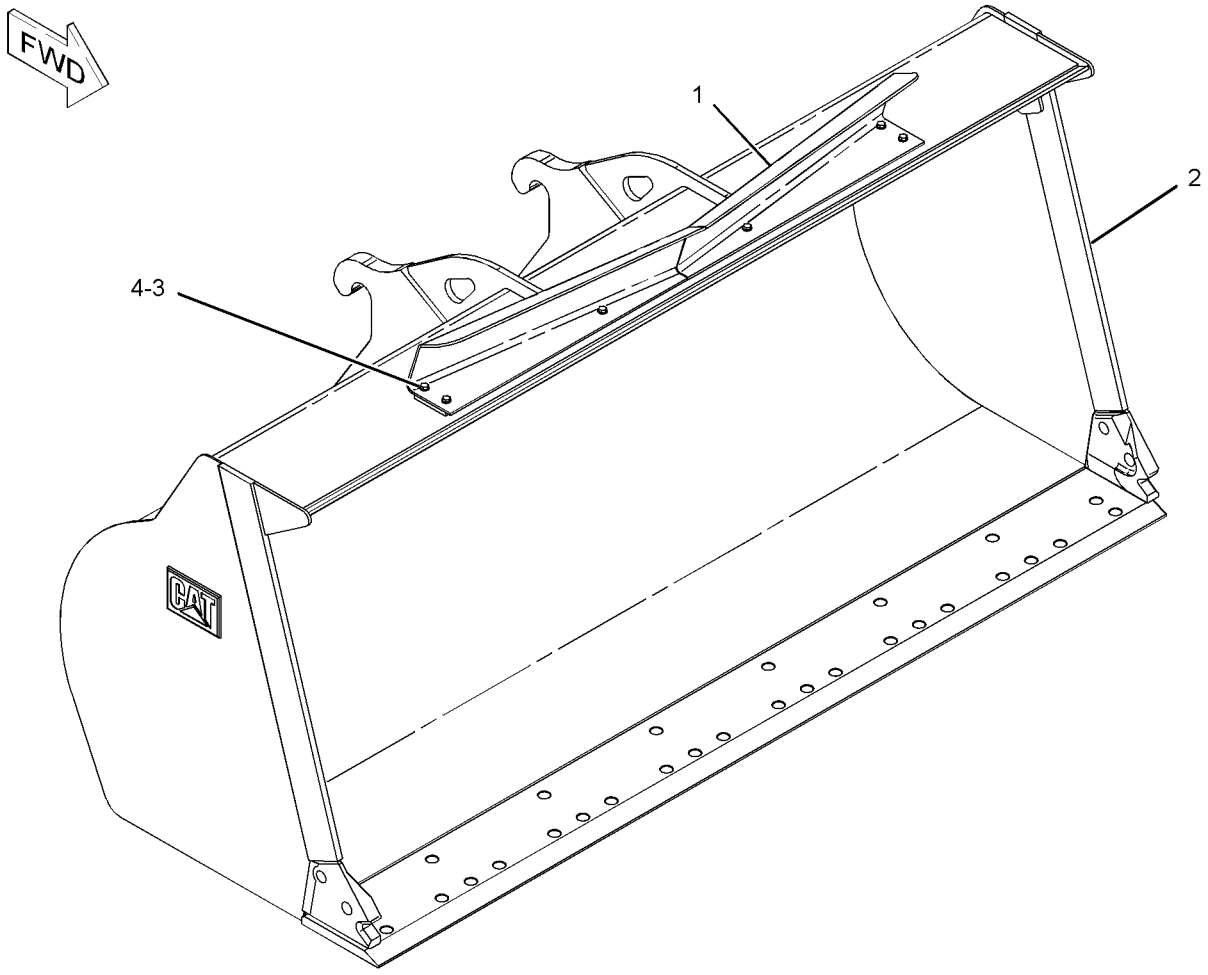

GRAPHIC #1 **<END>** g01116227

256-8889 BUCKET AR-GENERAL PURPOSE–QUICK COUPLER

S/N: FTD1-UP

AN ATTACHMENT

SMCS-6101 **i02277474**

NOTE	REF NO	GRAPHIC REF	PART NUMBER	QTY	PART NAME 1 2 3 4 5 6 (PRODUCT LEVEL)	SEE PAGE
	1	1	**143-4973**	1	PLATE AS	
Y	2	1	**256-8890**	1	BUCKET GP-GENERAL PURPOSE (QUICK COUPLER)	749
	3	1	**8T-4121**	6	WASHER-HARD (11X21X2.5-MM THK)	
M	4	1	**8T-4136**	6	BOLT (M10X1.5X25-MM)	

M-METRIC PART
Y-SEPARATE ILLUSTRATION

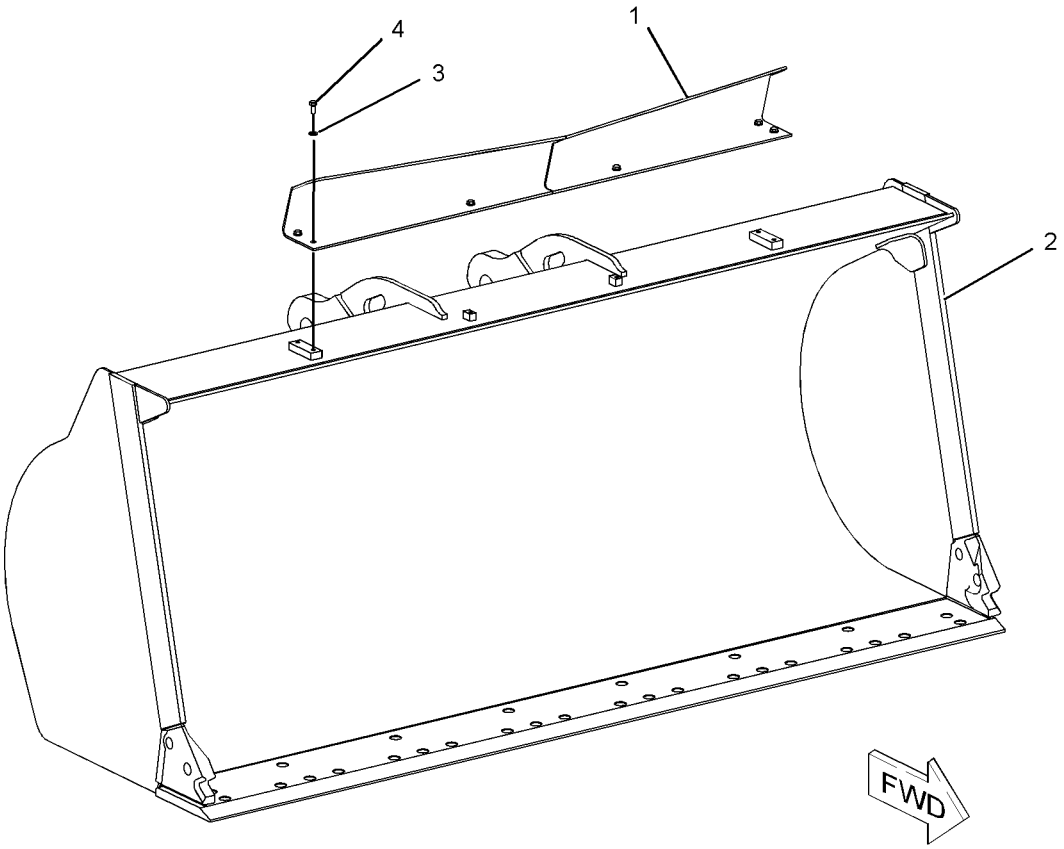

GRAPHIC #1 **<END>** g01091307

WORK TOOLS

256-8898 BUCKET AR-GENERAL PURPOSE

S/N: FTD1-UP
AN ATTACHMENT

SMCS-6101 **i02277313**

NOTE	REF NO	GRAPHIC REF	PART NUMBER	QTY	PART NAME 1 2 3 4 5 6 (PRODUCT LEVEL)	SEE PAGE
	1	1	**143-4973**	1	PLATE AS	
Y	2	1	*148-7900*	1	MOUNTING GP-BUCKET	777
Y	3	1	**256-8899**	1	BUCKET GP-GENERAL PURPOSE	750
	4	1	**8T-4121**	6	WASHER-HARD (11X21X2.5-MM THK)	
M	5	1	**8T-4136**	6	BOLT (M10X1.5X25-MM)	

M-METRIC PART
Y-SEPARATE ILLUSTRATION

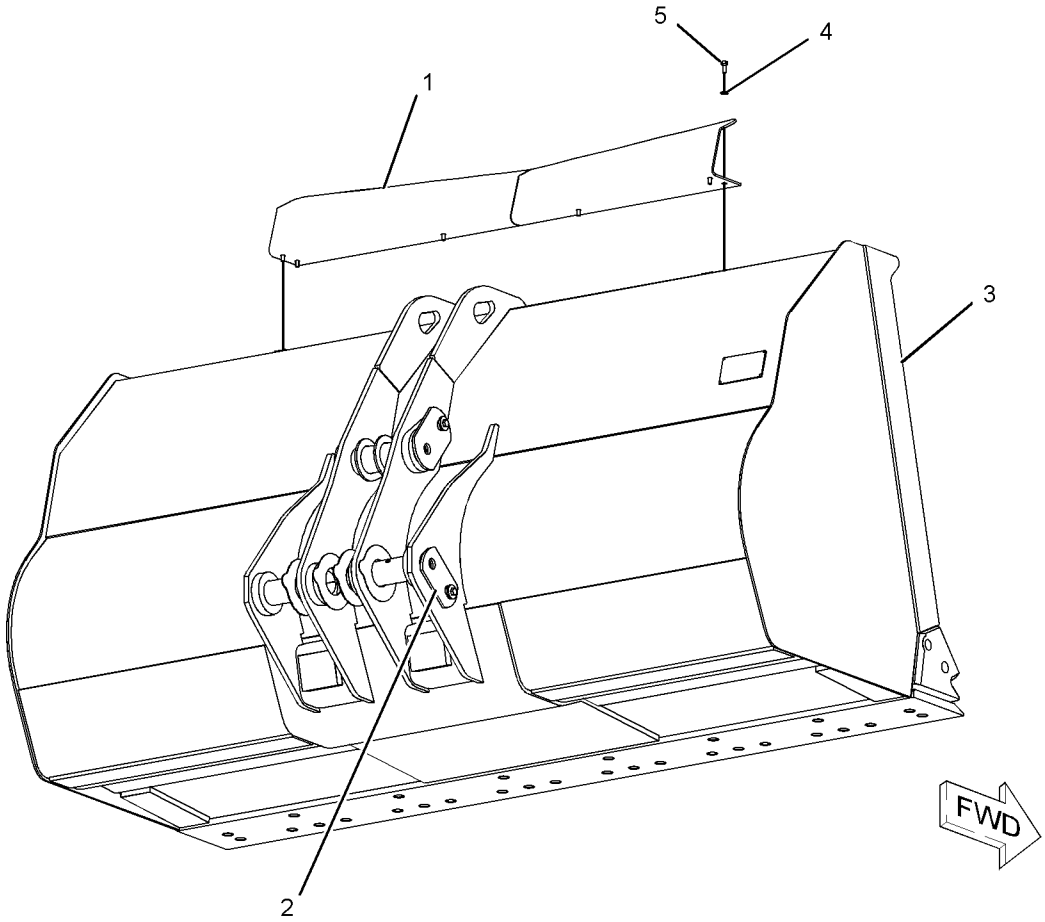

GRAPHIC #1 **<END>** g01115346

256-8911 BUCKET AR-GENERAL PURPOSE

S/N: FTD1-UP
AN ATTACHMENT

SMCS-6101 **i02277244**

NOTE	REF NO	GRAPHIC REF	PART NUMBER	QTY	PART NAME 1 2 3 4 5 6 (PRODUCT LEVEL)	SEE PAGE
	1	1	**143-4973**	1	PLATE AS	
Y	2	1	*148-7900*	1	MOUNTING GP-BUCKET	777
Y	3	1	**256-8912**	1	BUCKET GP-GENERAL PURPOSE	751
	4	1	**8T-4121**	6	WASHER-HARD (11X21X2.5-MM THK)	
M	5	1	**8T-4136**	6	BOLT (M10X1.5X25-MM)	

M-METRIC PART
Y-SEPARATE ILLUSTRATION

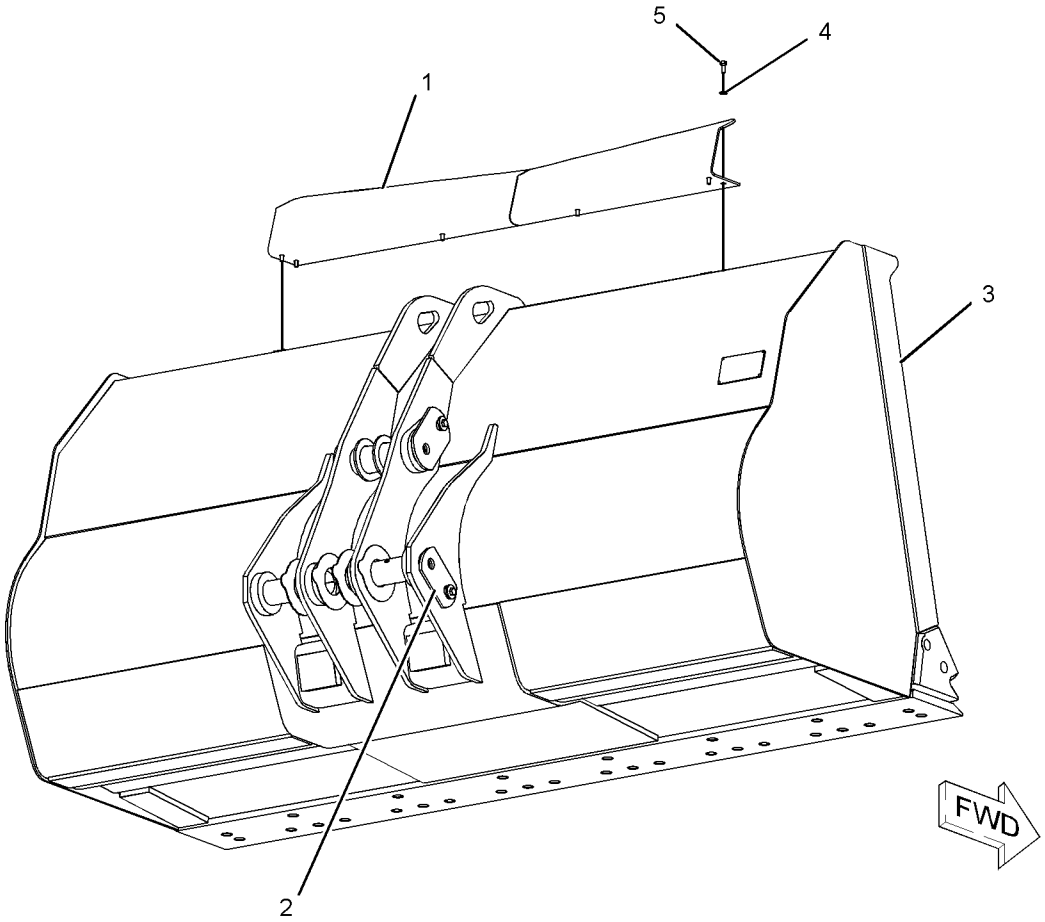

GRAPHIC #1 **<END>** g01115346

WORK TOOLS

252-6903 BUCKET AR-LIGHT MATERIAL

S/N: FTD1-UP
2.8-CU M (3.6-CU YD) CAPACITY
AN ATTACHMENT

SMCS-6103 **i02145438**

NOTE	REF NO	GRAPHIC REF	PART NUMBER	QTY	PART NAME 1 2 3 4 5 6 (PRODUCT LEVEL)	SEE PAGE
	1	1	**143-4973**	1	PLATE AS	
Y	2	1	*148-7900*	1	MOUNTING GP-BUCKET	777
Y	3	1	*252-6904*	1	BUCKET GP-LIGHT MATERIAL	755
	4	1	**8T-4121**	6	WASHER-HARD (11X21X2.5-MM THK)	
M	5	1	**8T-4136**	6	BOLT (M10X1.5X25-MM)	

M-METRIC PART
Y-SEPARATE ILLUSTRATION

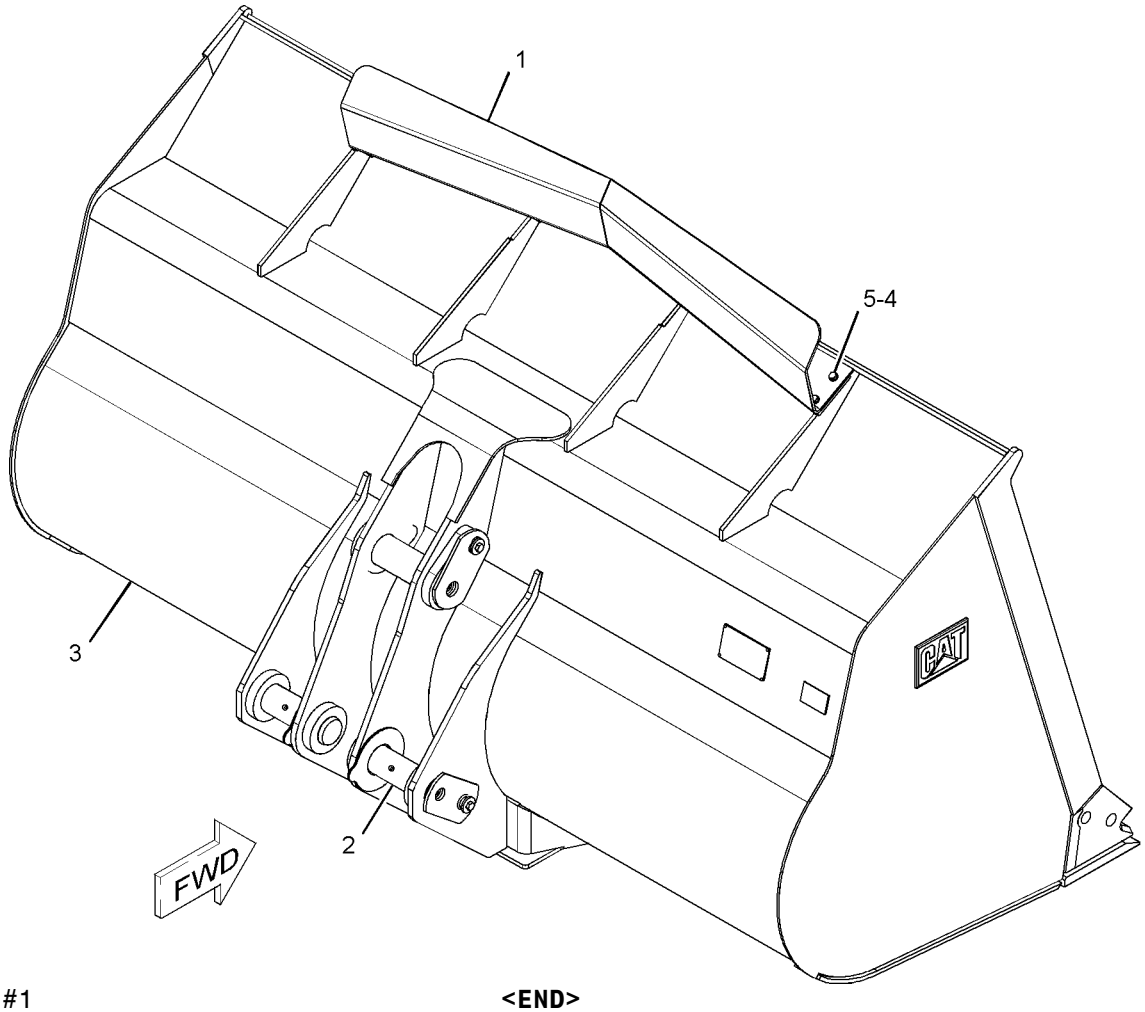

GRAPHIC #1 **<END>** g01092819

292-9188 BUCKET AR-MULTIPURPOSE—QUICK COUPLER

S/N: FTD1-UP

AN ATTACHMENT

SMCS-6104 **i02742879**

NOTE	REF NO	GRAPHIC REF	PART NUMBER	QTY	PART NAME 1 2 3 4 5 6 (PRODUCT LEVEL)	SEE PAGE
Y	1	1	*9W-8142*	1	TIP GP-LONG	780
Y	2	1	*116-9713*	1	ADAPTER GP-TIP	710
Y	3	1	**292-9190**	1	BUCKET AR-MULTIPURPOSE (QUICK COUPLER)	720

Y-SEPARATE ILLUSTRATION

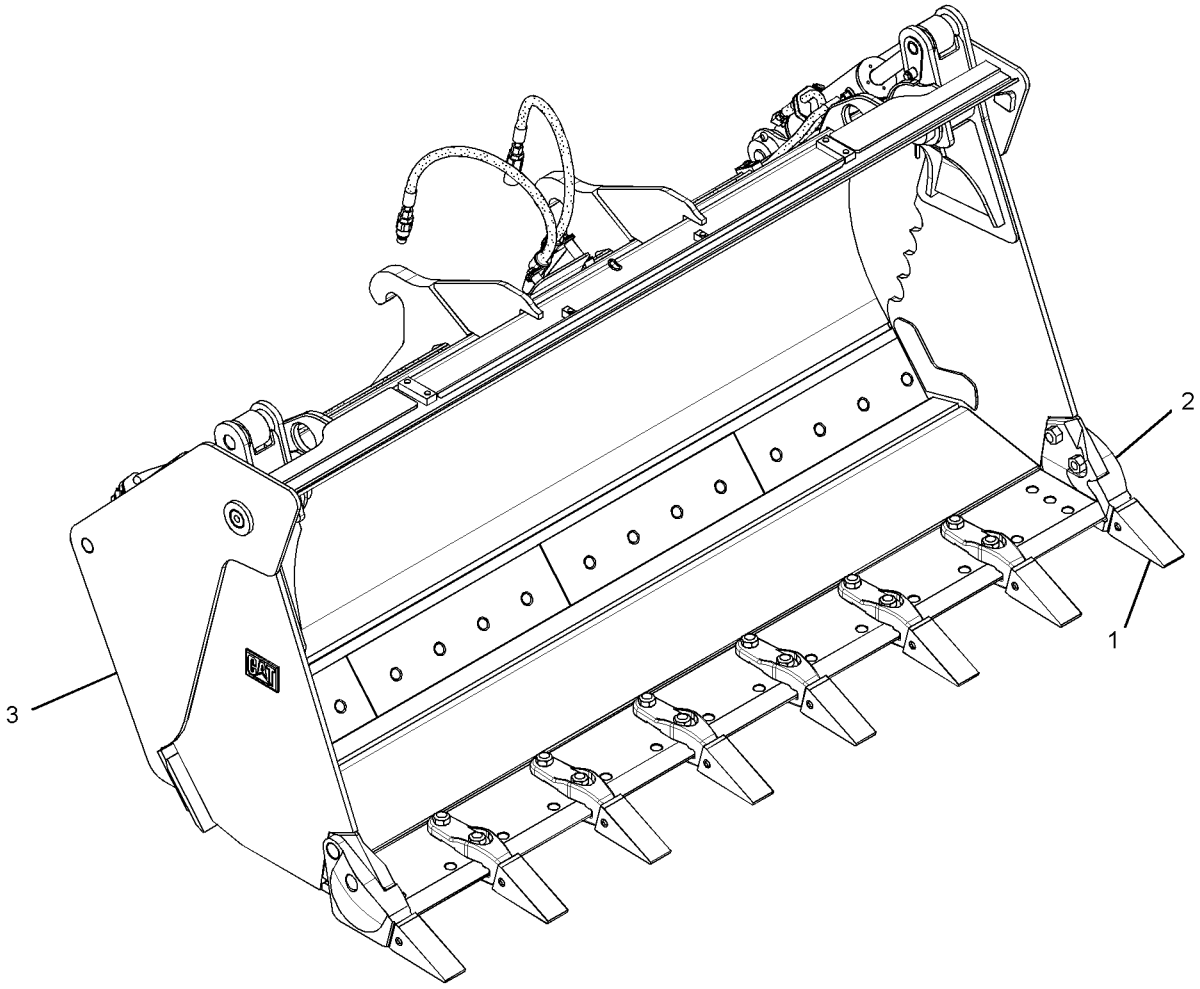

GRAPHIC #1 **<END>** g01397697

292-9189 BUCKET AR-MULTIPURPOSE–QUICK COUPLER

S/N: FTD1-UP

AN ATTACHMENT

SMCS-6104 **i02743269**

NOTE	REF NO	GRAPHIC REF	PART NUMBER	QTY	PART NAME 1 2 3 4 5 6 (PRODUCT LEVEL)	SEE PAGE
Y	1	1	*8E-4566*	1	EDGE GP-CUTTING	771
Y	2	1	**292-9190**	1	BUCKET AR-MULTIPURPOSE (QUICK COUPLER)	720

Y-SEPARATE ILLUSTRATION

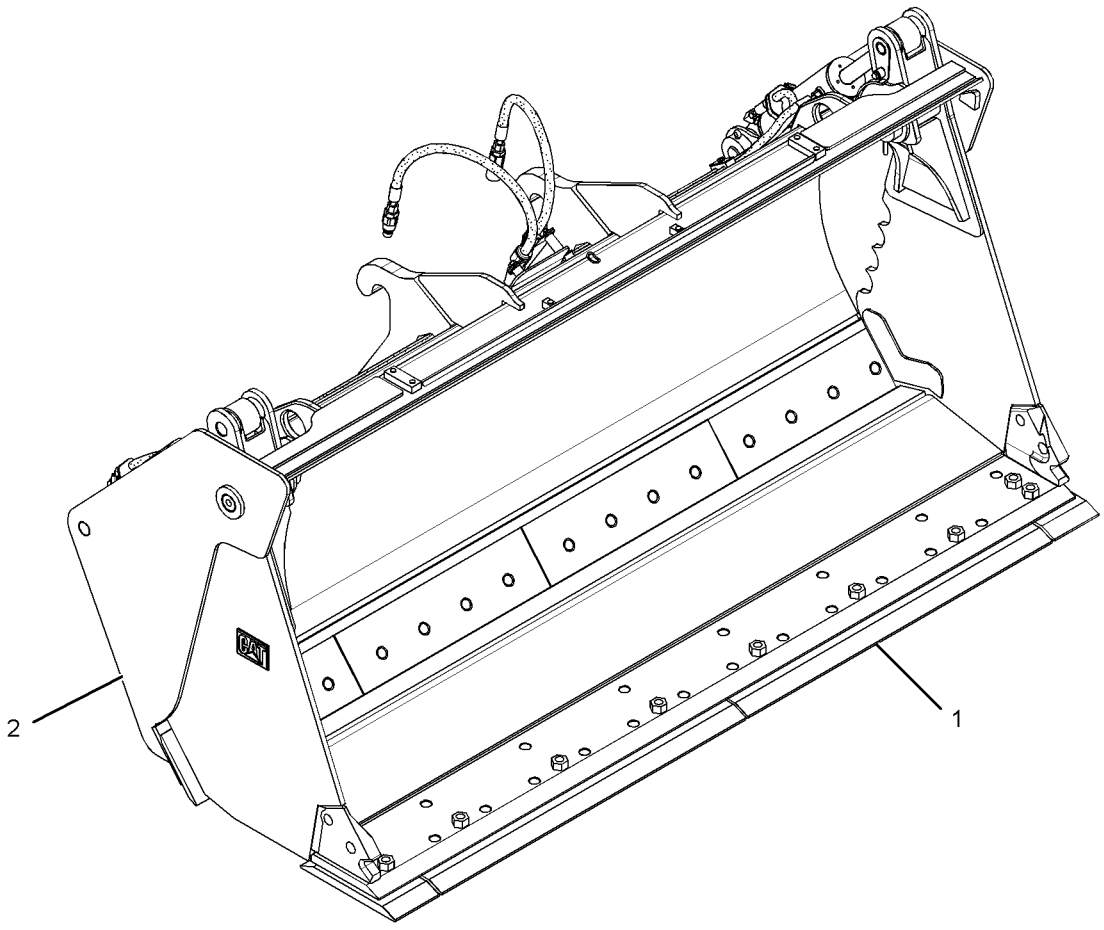

GRAPHIC #1 **<END>** g01397673

WORK TOOLS

292-9190 BUCKET AR-MULTIPURPOSE—QUICK COUPLER

S/N: FTD1-UP

PART OF 292-9188, 292-9189 BUCKET AR-MULTIPURPOSE

AN ATTACHMENT

SMCS-6104 **i02742985**

NOTE	REF NO	GRAPHIC REF	PART NUMBER	QTY	PART NAME 1 2 3 4 5 6 (PRODUCT LEVEL)	SEE PAGE
Y	1	1	**268-1322**	2	CYLINDER GP-MULTIPURPOSE BUKT	492
Y	2	1	*281-1595*	1	LINES GP-BUCKET	508
Y	3	1	*292-9191*	1	BUCKET GP-MULTIPURPOSE (QUICK COUPLER)	756

Y-SEPARATE ILLUSTRATION

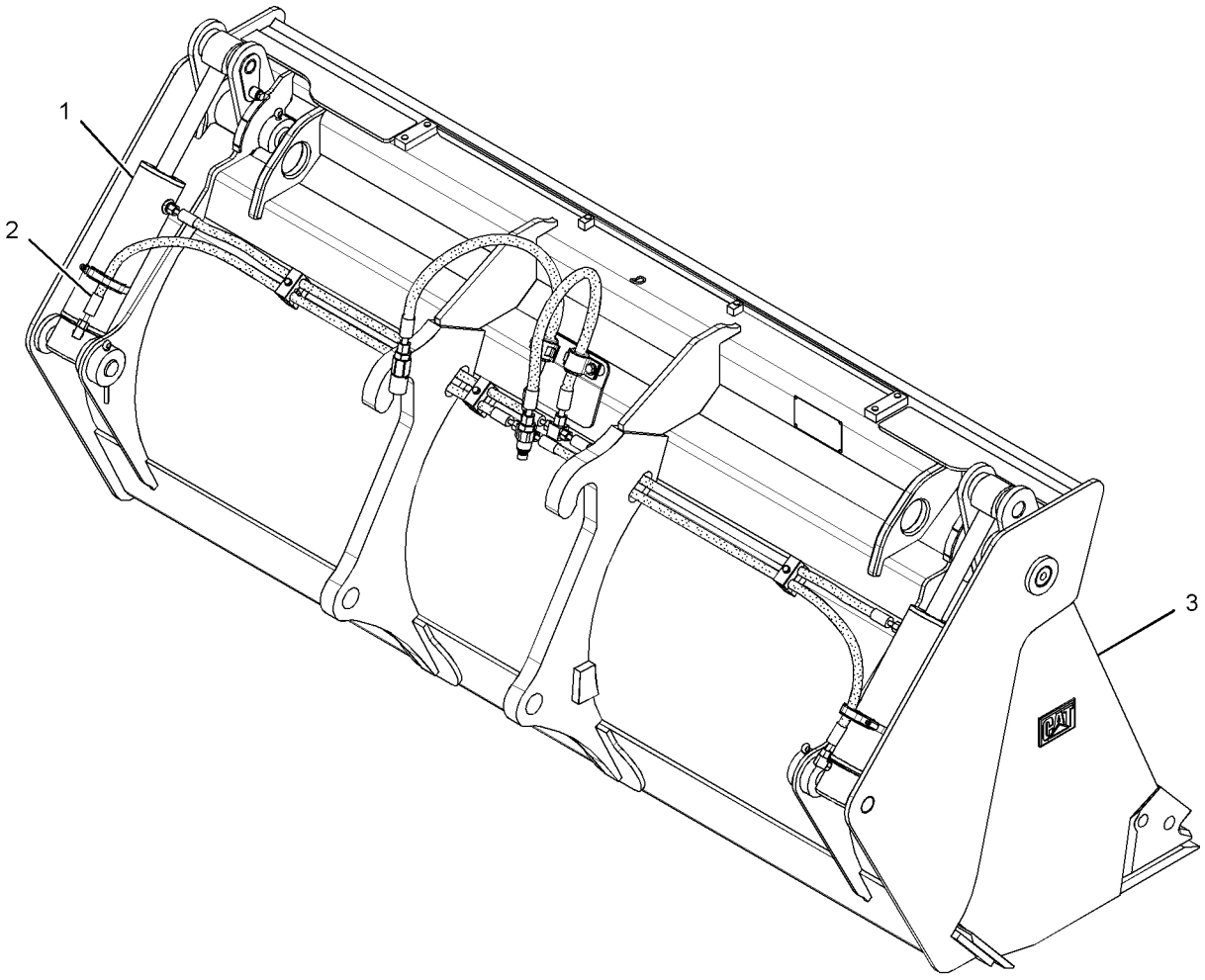

GRAPHIC #1 **<END>** g01397683

WORK TOOLS

119-1799 BUCKET AS-GENERAL PURPOSE

S/N: BYD1-UP
1.9CU M
AN ATTACHMENT

SMCS-6101 **i01091105**

NOTE	REF NO	GRAPHIC REF	PART NUMBER	QTY	PART NAME 1 2 3 4 5 6 (PRODUCT LEVEL)	SEE PAGE
	1	1	**4E-0659**	1	EDGE-CUTTING	
	2	1	**8P-9770**	2	PLATE	
	3	1	**9V-4484**	4	PLATE	
	4	1	**119-1802**	1	HINGE AS (OUTER LH)	
	5	1	**119-1803**	1	HINGE AS (INNER LH)	
	6	1	**119-1804**	1	HINGE AS (INNER RH)	
	7	1	**119-1805**	1	HINGE AS (OUTER RH)	
	8	1	**119-1806**	1	HINGE AS (CENTER RH)	
	9	1	**119-1807**	1	HINGE AS (CENTER LH)	

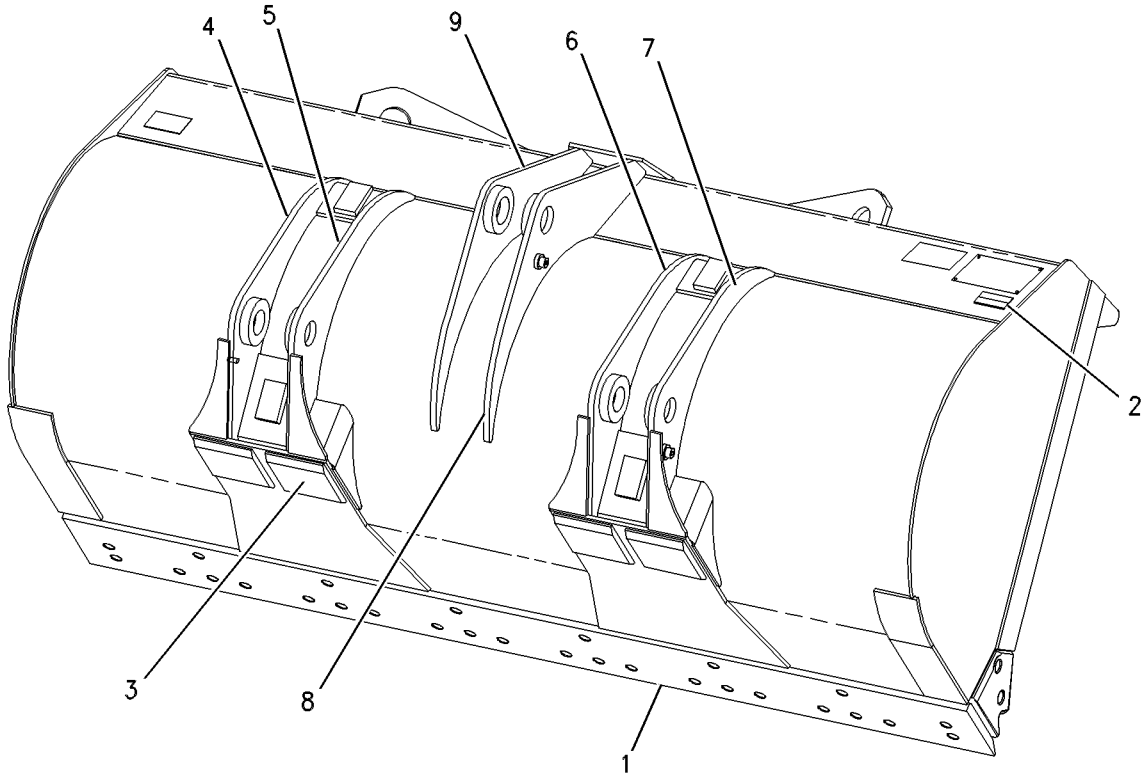

GRAPHIC #1 **<END>** g00573176

WORK TOOLS

119-1800 BUCKET AS-GENERAL PURPOSE

S/N: BYD1-UP
2.2CU M (2.9CU YD)
AN ATTACHMENT

SMCS-6101 **i01158245**

NOTE	REF NO	GRAPHIC REF	PART NUMBER	QTY	PART NAME 1 2 3 4 5 6 (PRODUCT LEVEL)	SEE PAGE
	1	1	**4E-0659**	1	EDGE-CUTTING	
	2	1	**8P-9770**	2	PLATE	
	3	1	**9V-4484**	4	PLATE	
	4	1	**119-1802**	1	HINGE AS (OUTER LH)	
	5	1	**119-1803**	1	HINGE AS (INNER LH)	
	6	1	**119-1804**	1	HINGE AS (INNER RH)	
	7	1	**119-1805**	1	HINGE AS (OUTER RH)	
	8	1	**119-1806**	1	HINGE AS (CENTER RH)	
	9	1	**119-1807**	1	HINGE AS (CENTER LH)	
	10	1	**4E-0685**	2	BAR	

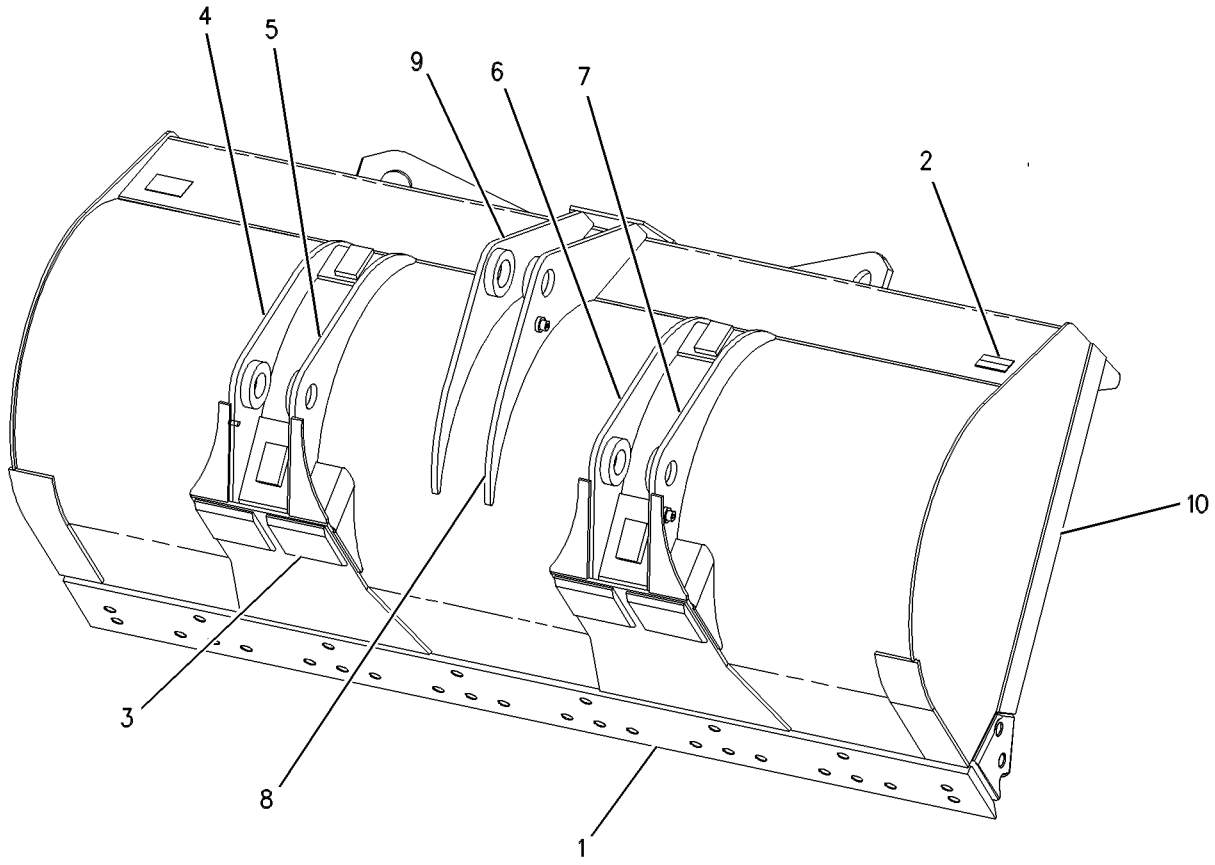

GRAPHIC #1 **<END>** g00615995

WORK TOOLS

240-5766 BUCKET AS-GENERAL PURPOSE—QUICK COUPLER

S/N: FTD1-UP
1.9-CU M (2.49-CU YD)
PART OF 240-5765 BUCKET GP-GENERAL PURPOSE
AN ATTACHMENT

SMCS-6101 **i02236120**

NOTE	REF NO	GRAPHIC REF	PART NUMBER	QTY	PART NAME 1 2 3 4 5 6 (PRODUCT LEVEL)	SEE PAGE
	1	1	**4E-0659**	1	EDGE-CUTTING	
	2	1	*240-5771*	1	PLATE AS	
		1	**6I-8310**	1	CORNER (LH)	
	3	1	*240-6769*	1	PLATE	
		1	**6I-8311**	1	CORNER (RH)	

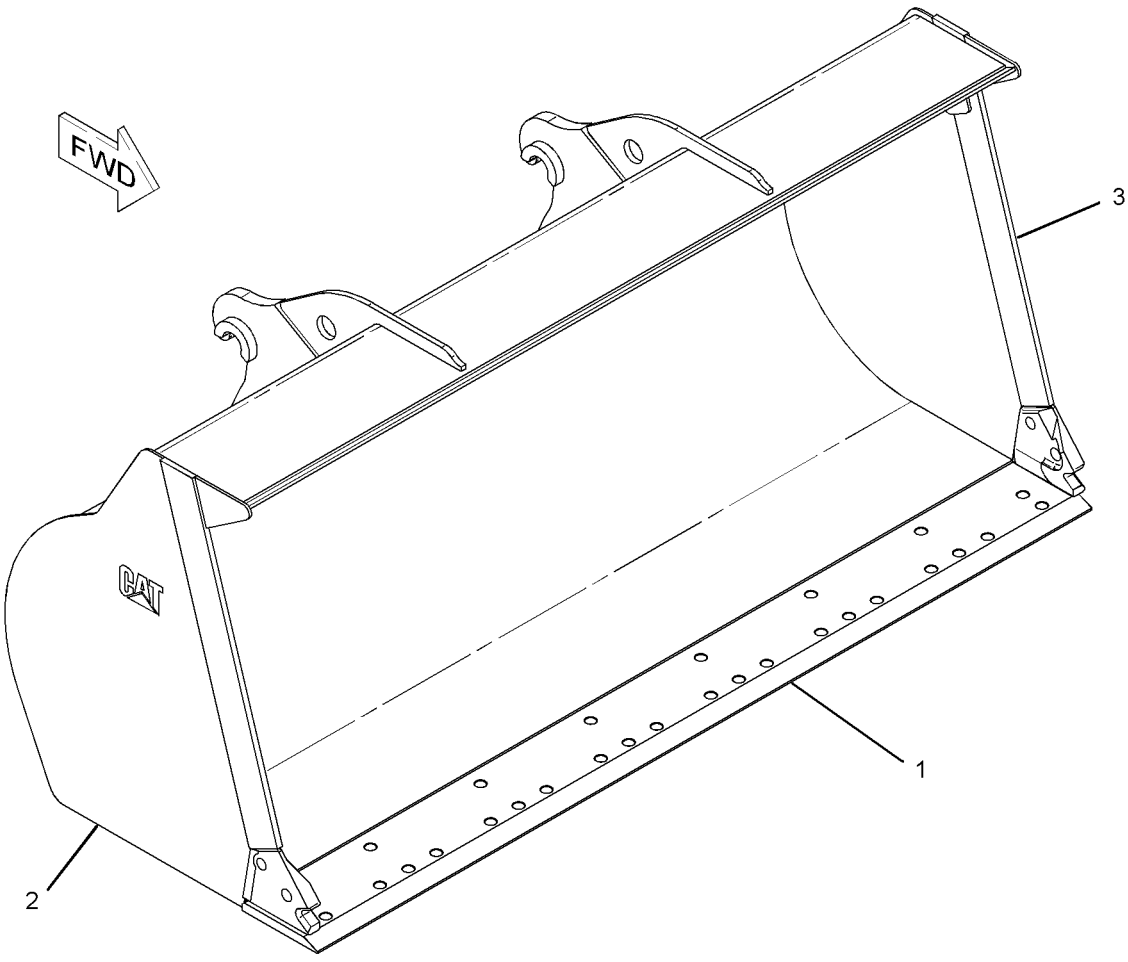

GRAPHIC #1 **<END>** g01135656

241-0936 BUCKET AS-GENERAL PURPOSE—QUICK COUPLER

S/N: FTD1-UP
2524-MM (99.4-IN) WIDE X 2.1-CU M (2.8-CU YD) CAPACITY
PART OF 241-0935 BUCKET GP-GENERAL PURPOSE
AN ATTACHMENT

SMCS-6101 **i02166028**

NOTE	REF NO	GRAPHIC REF	PART NUMBER	QTY	PART NAME 1 2 3 4 5 6 (PRODUCT LEVEL)	SEE PAGE
	1	1	**137-4234**	1	PLATE-IDENTIFICATION (WORK TOOL)	
	2	1	**168-8389**	4	TACK-FASTENER	
Y	3	1	*241-0937*	1	BUCKET AS-GENERAL PURPOSE	725

Y-SEPARATE ILLUSTRATION

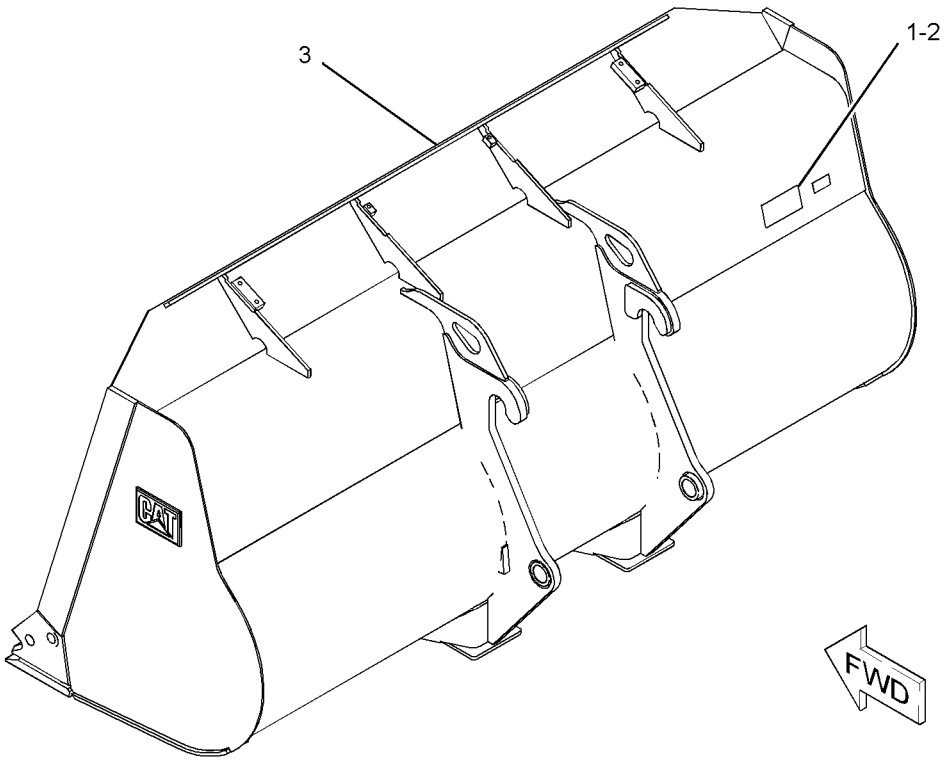

GRAPHIC #1 **<END>** g01143319

241-0937 BUCKET AS-GENERAL PURPOSE—QUICK COUPLER

S/N: FTD1-UP

2524-MM (99.4-IN) WIDE X 2.1-CU M (2.3-CU YD) CAPACITY

PART OF 241-0936 BUCKET AS-GENERAL PURPOSE

AN ATTACHMENT

SMCS-6101 **i02165962**

NOTE	REF NO	GRAPHIC REF	PART NUMBER	QTY	PART NAME 1 2 3 4 5 6 (PRODUCT LEVEL)	SEE PAGE
	1	1	**4E-0659**	1	EDGE-CUTTING	
	2	1	**9V-9480**	2	PLATE	
	3	1	**092-1136**	2	BOSS (M10X1.5-THD)	
	4	1	**9T-3598**	2	BOSS (M10X1.5-THD)	
	5	1	*154-8410*	1	PLATE AS (RH)	
	5A	1	**2C-9259**	1	PLATE-IDENTIFICATION (CAT)	
	5B	1	**6I-8311**	1	CORNER (RH)	
	6	1	*154-8411*	1	PLATE AS (LH)	
	6A	1	**2C-9259**	1	PLATE-IDENTIFICATION (CAT)	
	6B	1	**6I-8310**	1	CORNER (LH)	
	7	1	**164-4021**	2	PLATE	
	8	1	**164-9316**	2	PLATE	

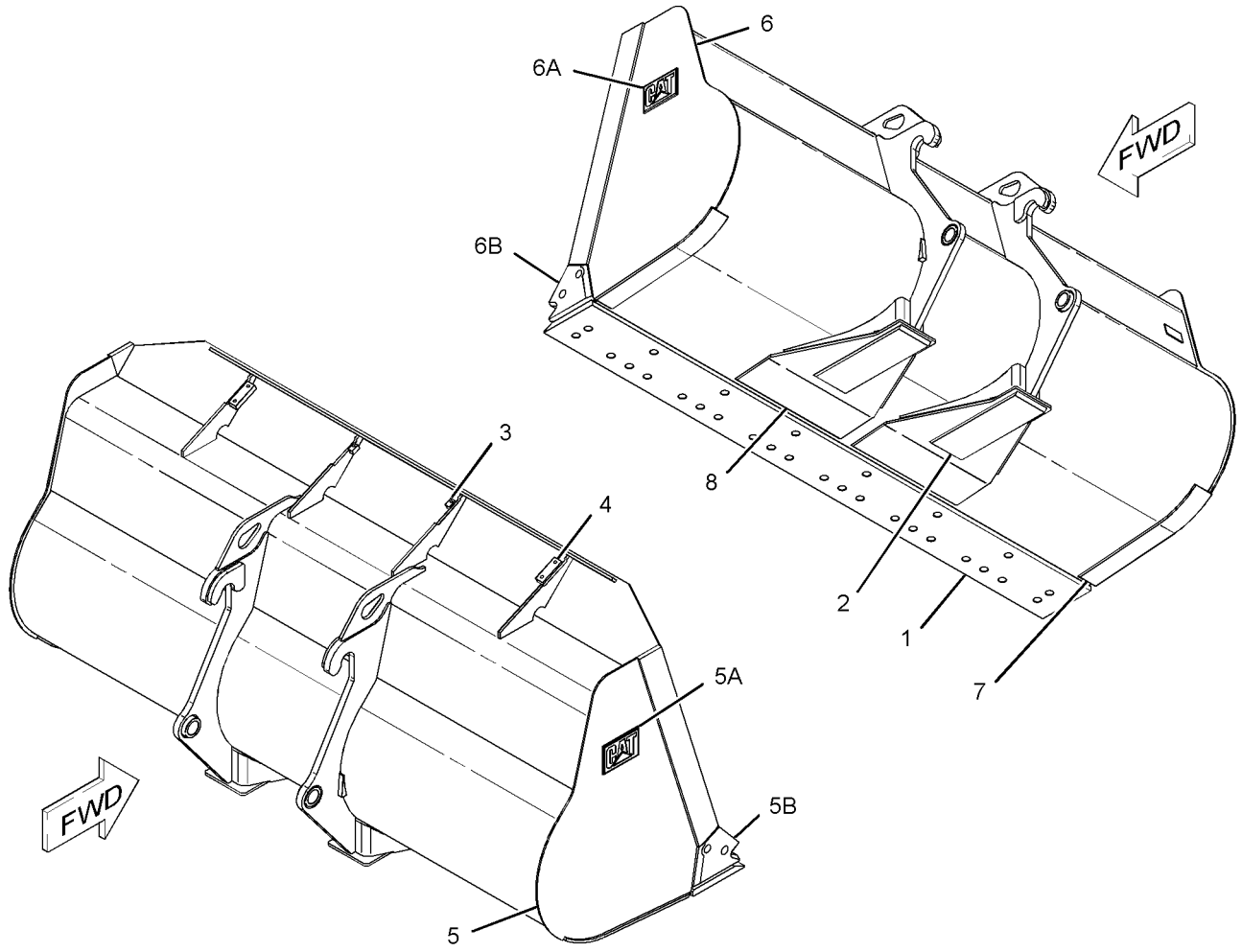

GRAPHIC #1 **<END>** g01143134

250-7860 BUCKET AS-GENERAL PURPOSE—QUICK COUPLER

S/N: FTD1-UP
2.2-CU M (2.4-CU YD) CAPACITY
PART OF 251-9878 BUCKET GP-GENERAL PURPOSE
AN ATTACHMENT

SMCS-6101 **i02279101**

NOTE	REF NO	GRAPHIC REF	PART NUMBER	QTY	PART NAME 1 2 3 4 5 6 (PRODUCT LEVEL)	SEE PAGE
	1	1	**111-9758**	1	PLATE	
	2	1	**143-4353**	1	EDGE-CUTTING	
	3	1	*252-6120*	1	PLATE AS (RH)	
	3A	1	**6I-8311**	1	CORNER (RH)	
	4	1	*252-6123*	1	PLATE AS (LH)	
	4A	1	**6I-8310**	1	CORNER (LH)	
	5	1	**252-6131**	2	PLATE	
	6	1	**252-6132**	1	PLATE	

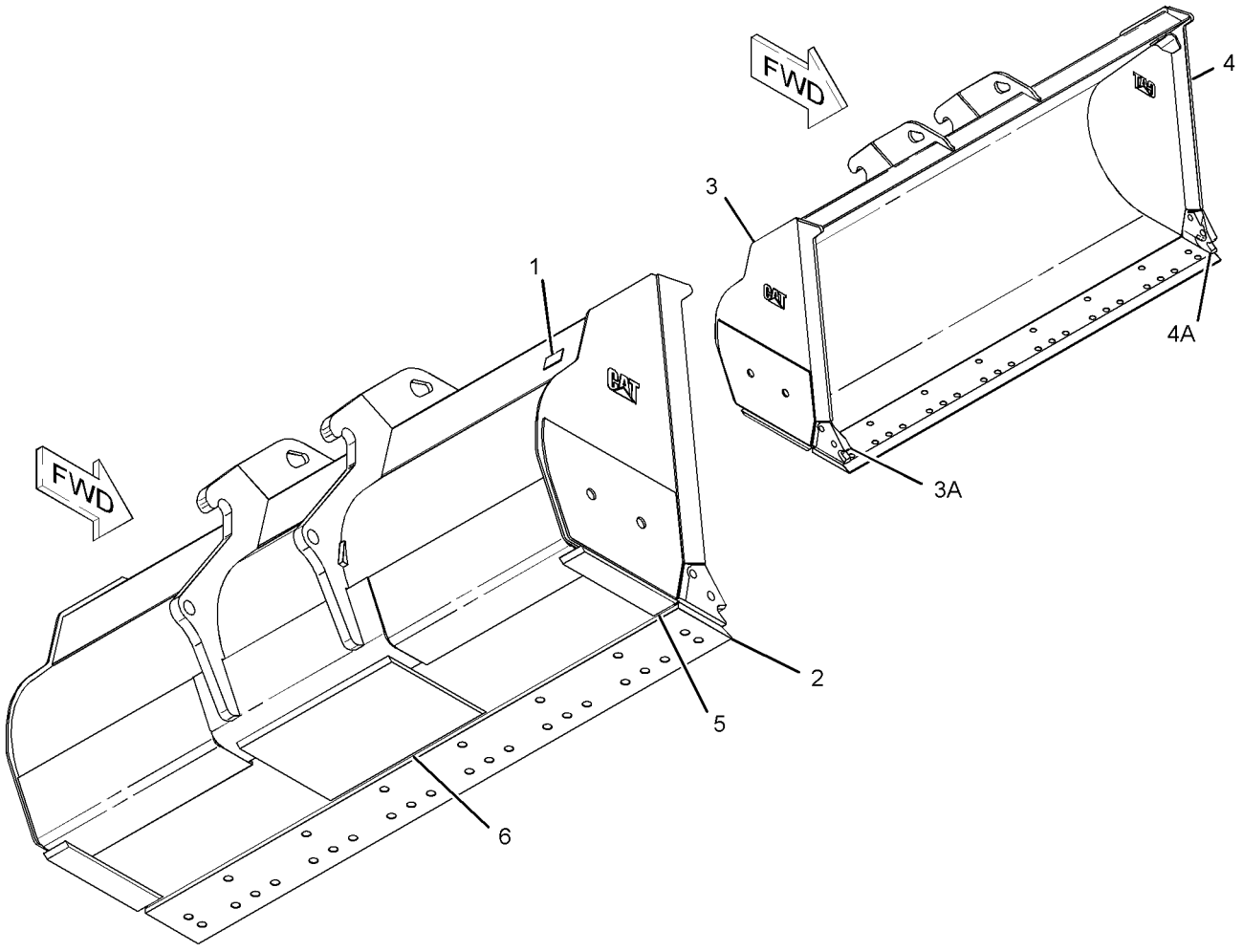

GRAPHIC #1 **<END>** g01141604

250-7861 BUCKET AS-GENERAL PURPOSE

S/N: FTD1-UP
2.4-CU M (2.6-CU YD) CAPACITY
PART OF 270-7440 BUCKET GP-GENERAL PURPOSE
AN ATTACHMENT

SMCS-6101 **i02279098**

NOTE	REF NO	GRAPHIC REF	PART NUMBER	QTY	PART NAME 1 2 3 4 5 6 (PRODUCT LEVEL)	SEE PAGE
	1	1	**111-9758**	1	PLATE	
	2	1	**143-4353**	1	EDGE-CUTTING	
	3	1	**250-9100**	1	HINGE AS (TILT, RH)	
	4	1	**250-9102**	1	HINGE AS (TILT, LH)	
	5	1	**250-9103**	1	HINGE AS (LIFT, OUTER, LH)	
	6	1	**250-9105**	1	HINGE AS (LIFT, OUTER, RH)	
	7	1	*250-9109*	1	PLATE AS (RH)	
	7A	1	**6I-8311**	1	CORNER (RH)	
	8	1	*250-9113*	1	PLATE AS (LH)	
	8A	1	**6I-8310**	1	CORNER (LH)	
	9	1	**250-9115**	2	PLATE	
	10	1	**250-9116**	1	PLATE	

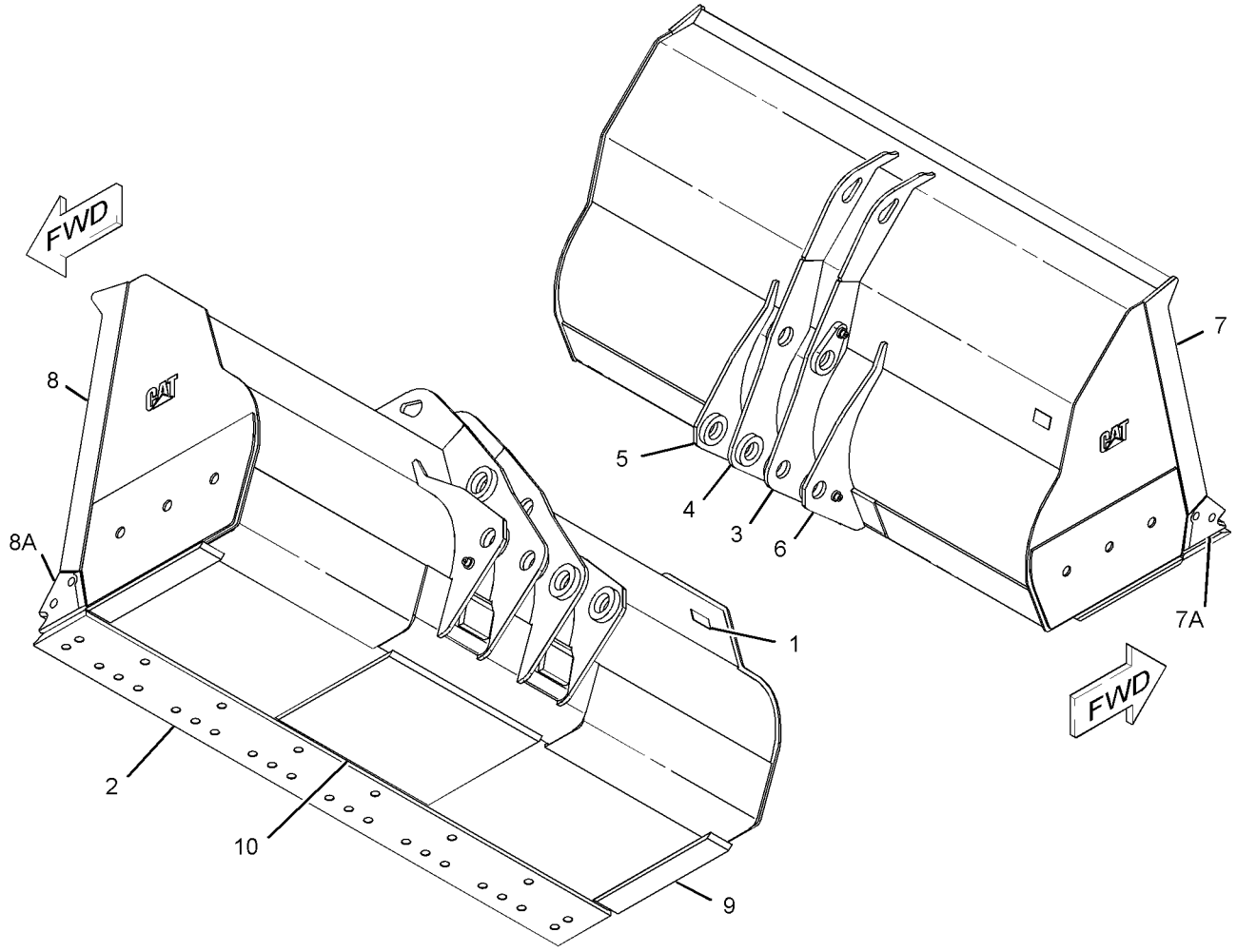

GRAPHIC #1 **<END>** g01144714

WORK TOOLS

252-6911 BUCKET AS-GENERAL PURPOSE

S/N: FTD1-UP
2524-MM (99.4-IN) WIDE X 2.1-CU M (2.73-CU YD) CAPACITY
PART OF 252-6910 BUCKET GP-GENERAL PURPOSE
AN ATTACHMENT

SMCS-6101 **i02288201**

NOTE	REF NO	GRAPHIC REF	PART NUMBER	QTY	PART NAME 1 2 3 4 5 6 (PRODUCT LEVEL)	SEE PAGE
	1	1	**4E-0659**	1	EDGE-CUTTING	
	2	1	**9V-9480**	2	PLATE	
	3	1	**092-1136**	2	BOSS (M10X1.5-THD)	
	4	1	**9T-3598**	2	BOSS (M10X1.5-THD)	
	5	1	**145-5201**	1	HINGE AS (TILT, RH)	
	6	1	**145-5202**	1	HINGE AS (TILT, LH)	
	7	1	*154-8410*	1	PLATE AS (RH)	
		1	**2C-9259**	1	PLATE-IDENTIFICATION (CAT)	
		1	**6I-8311**	1	CORNER (RH)	
	8	1	*154-8411*	1	PLATE AS (LH)	
		1	**2C-9259**	1	PLATE-IDENTIFICATION (CAT)	
		1	**6I-8310**	1	CORNER (LH)	
	9	1	**164-4021**	2	PLATE	
	10	1	**164-4022**	1	HINGE AS (LIFT, OUTER, RH)	
	11	1	**164-4024**	1	HINGE AS (LIFT, OUTER, LH)	
	12	1	**164-9316**	2	PLATE	

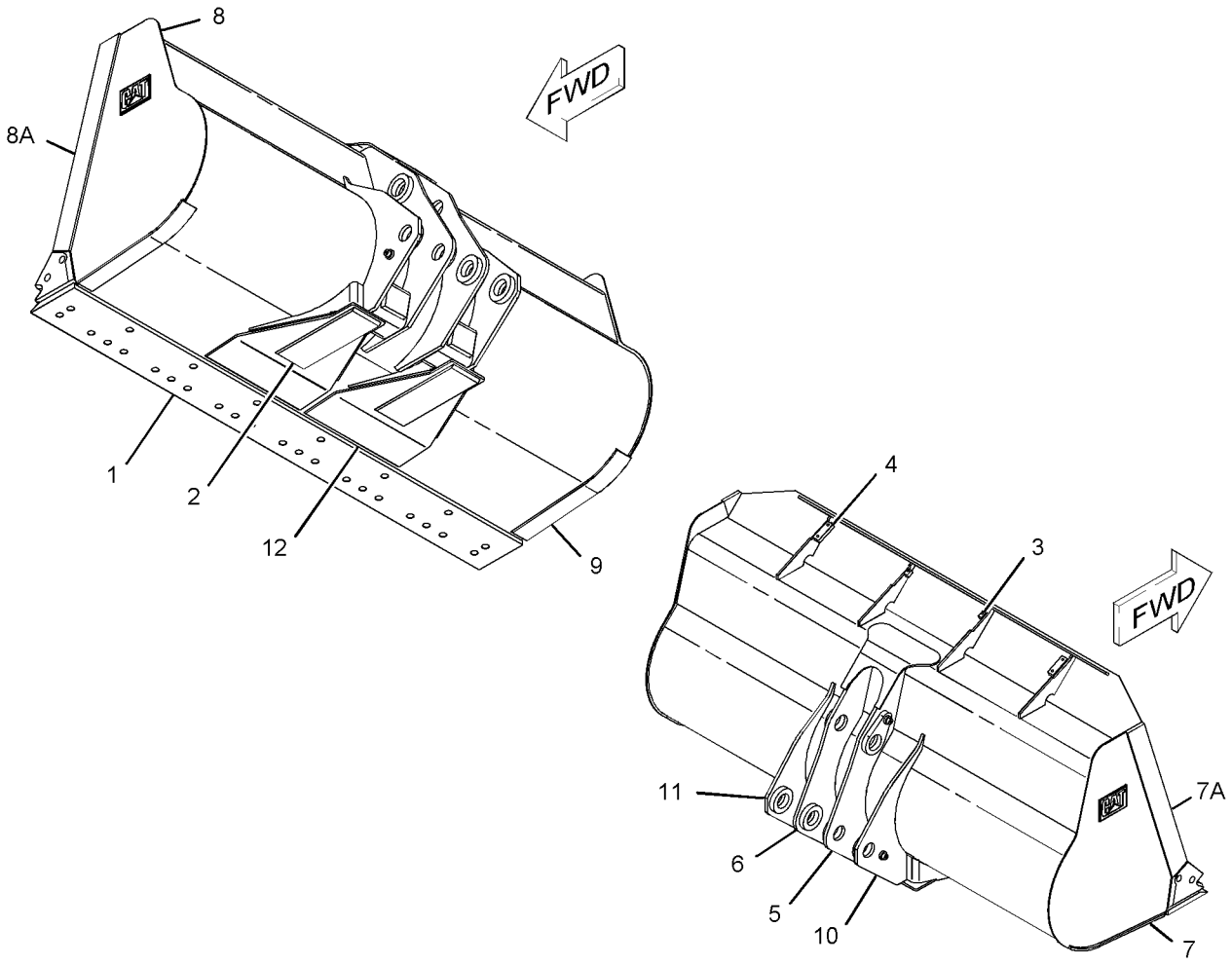

GRAPHIC #1 **<END>** g01142275

256-8864 BUCKET AS-GENERAL PURPOSE–QUICK COUPLER

S/N: FTD1-UP
2524-MM (99.4-IN) WIDE X 2.5-CU M (3.3-CU YD) CAPACITY
PART OF 256-8863 BUCKET GP-GENERAL PURPOSE
AN ATTACHMENT

SMCS-6101 **i02281239**

NOTE	REF NO	GRAPHIC REF	PART NUMBER	QTY	PART NAME 1 2 3 4 5 6 (PRODUCT LEVEL)	SEE PAGE
	1	1	**137-4234**	1	PLATE-IDENTIFICATION (WORK TOOL)	
	2	1	**168-8389**	4	TACK-FASTENER	
Y	3	1	*256-8865*	1	BUCKET AS-GENERAL PURPOSE (QUICK COUPLER)	730

Y-SEPARATE ILLUSTRATION

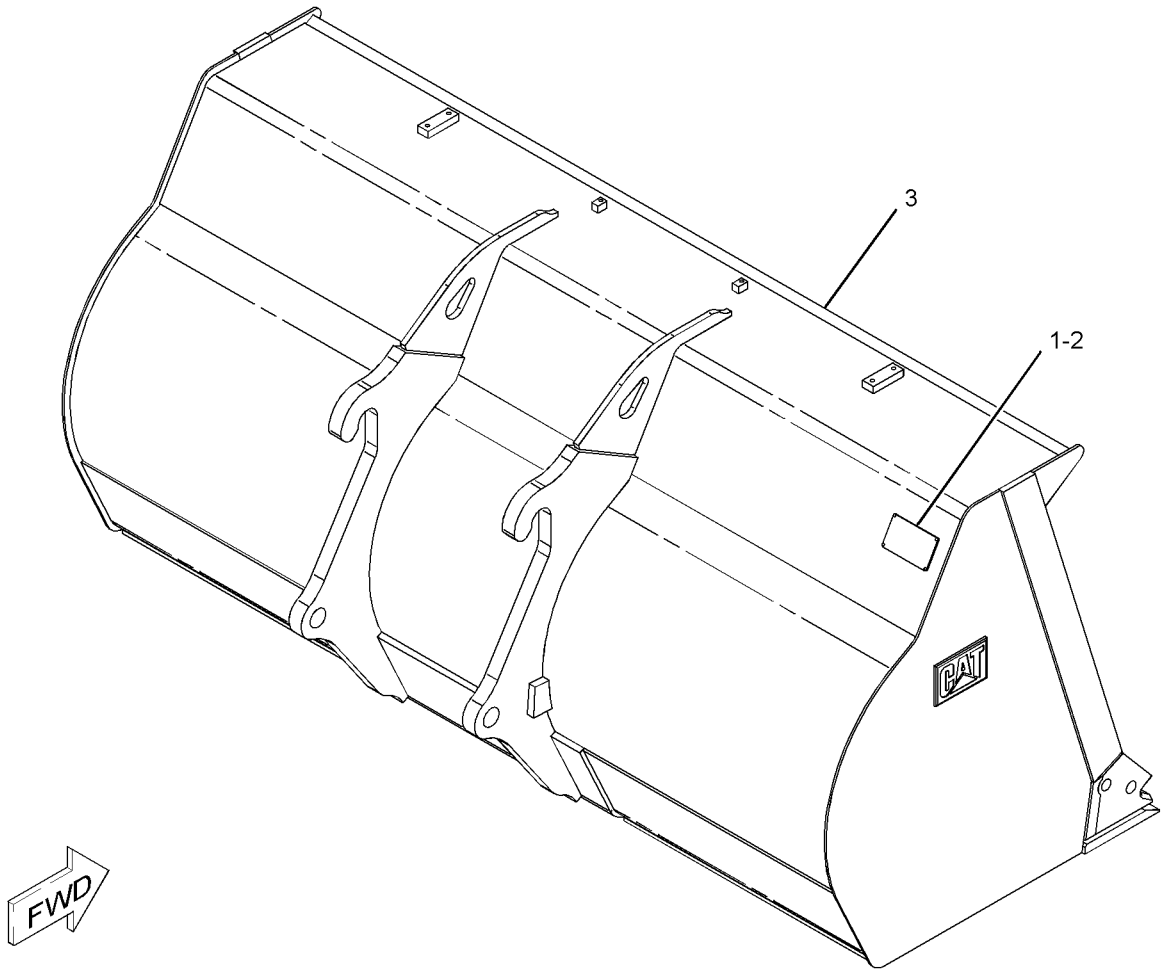

GRAPHIC #1 **<END>** g01116628

256-8865 BUCKET AS-GENERAL PURPOSE—QUICK COUPLER

S/N: FTD1-UP
2524-MM (99.4-IN) WIDE X 2.5-CU M (3.3-CU YD) CAPACITY
PART OF 256-8864 BUCKET AS-GENERAL PURPOSE
AN ATTACHMENT

SMCS-6101 **i02281314**

NOTE	REF NO	GRAPHIC REF	PART NUMBER	QTY	PART NAME 1 2 3 4 5 6 (PRODUCT LEVEL)	SEE PAGE
	1	1	**4E-0659**	1	EDGE-CUTTING	
	2	1	**092-1136**	2	BOSS (M10X1.5-THD)	
	3	1	*256-8869*	1	PLATE AS	
	3A	1	**2C-9259**	1	PLATE-IDENTIFICATION (CAT)	
	3B	1	**6I-8310**	1	CORNER (LH)	
	4	1	*256-8870*	1	PLATE AS	
	4A	1	**2C-9259**	1	PLATE-IDENTIFICATION (CAT)	
	4B	1	**6I-8311**	1	CORNER (RH)	
	5	1	**9T-3598**	2	BOSS (M10X1.5-THD)	

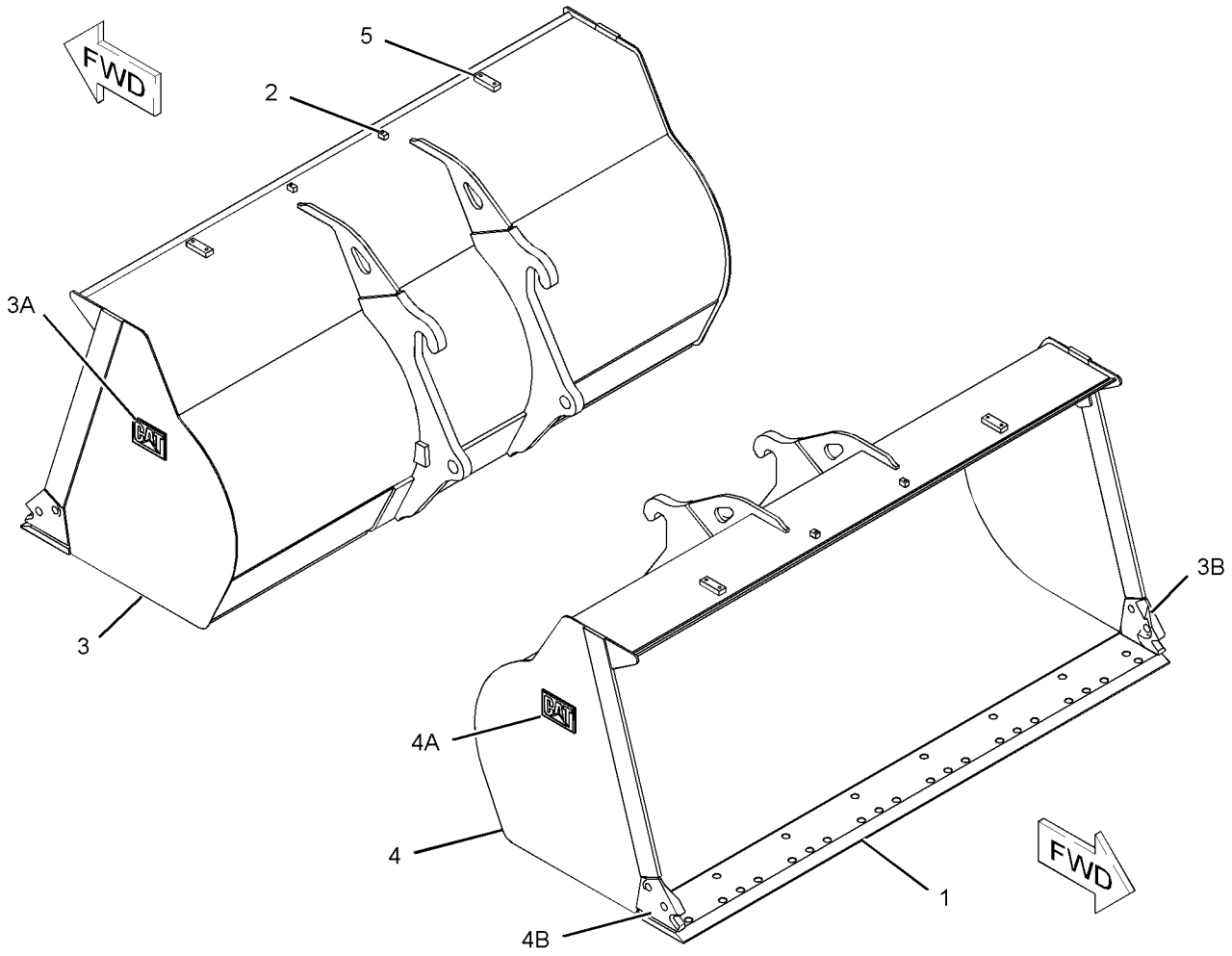

GRAPHIC #1 **<END>** g01142023

256-8891 BUCKET AS-GENERAL PURPOSE—QUICK COUPLER

S/N: FTD1-UP
2524-MM (99.4-IN) WIDE X 2.1-CU M (2.7-CU YD) CAPACITY
PART OF 256-8890 BUCKET GP-GENERAL PURPOSE
AN ATTACHMENT

SMCS-6101 **i02281580**

NOTE	REF NO	GRAPHIC REF	PART NUMBER	QTY	PART NAME 1 2 3 4 5 6 (PRODUCT LEVEL)	SEE PAGE
	1	1	**4E-0659**	1	EDGE-CUTTING	
	2	1	**092-1136**	2	BOSS (M10X1.5-THD)	
	3	1	*256-8895*	1	PLATE AS (RH)	
	3A	1	**2C-9259**	1	PLATE-IDENTIFICATION (CAT)	
	3B	1	**6I-8310**	1	CORNER (LH)	
	4	1	*256-8896*	1	PLATE AS (LH)	
	4A	1	**2C-9259**	1	PLATE-IDENTIFICATION (CAT)	
	4B	1	**6I-8311**	1	CORNER (RH)	
	5	1	**9T-3598**	2	BOSS (M10X1.5-THD)	

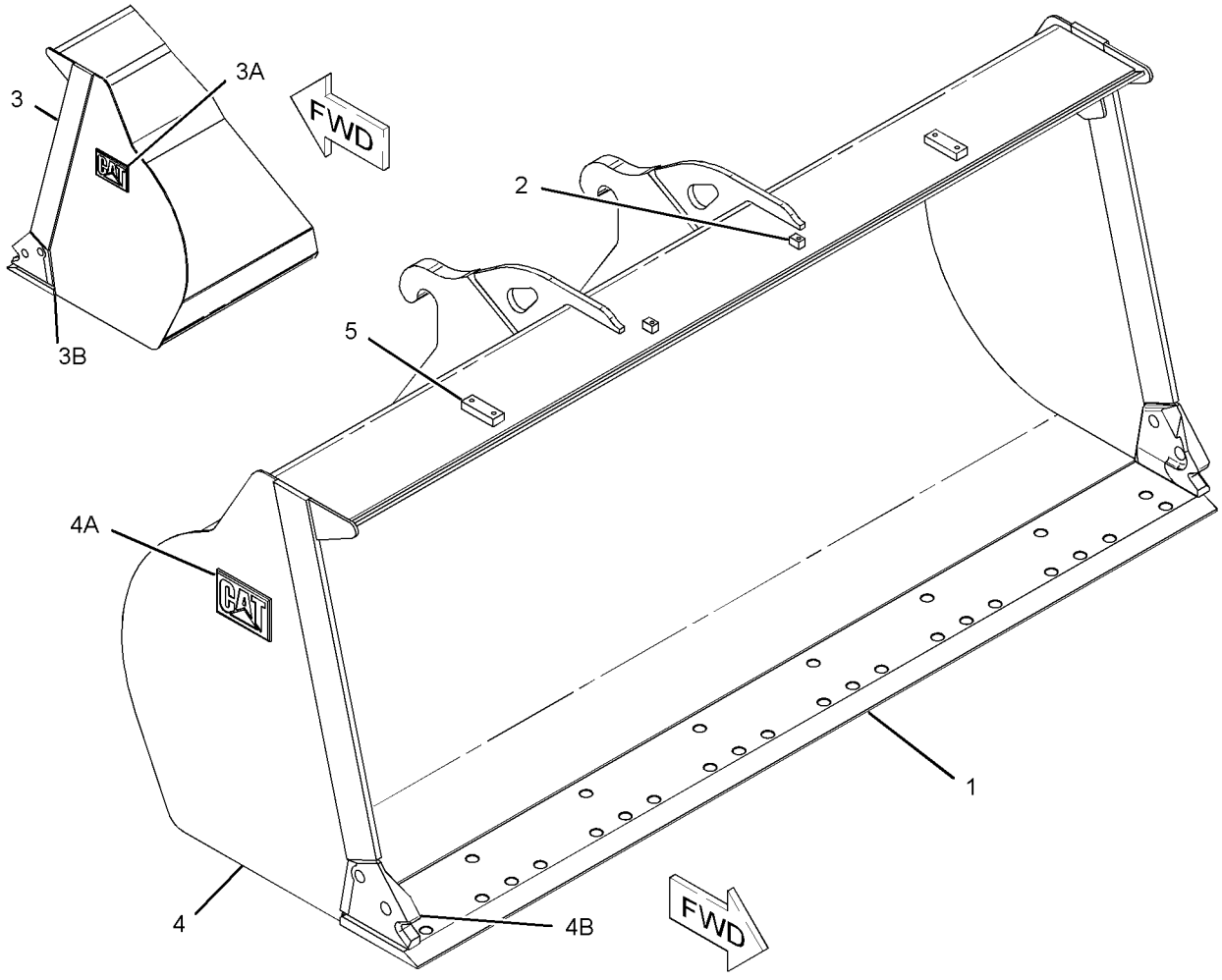

GRAPHIC #1 **<END>** g01142519

256-8900 BUCKET AS-GENERAL PURPOSE

S/N: FTD1-UP
2524-MM (99.4-IN) WIDE X 2.3-CU M (3-CU YD) CAPACITY
PART OF 256-8899 BUCKET GP-GENERAL PURPOSE
AN ATTACHMENT

SMCS-6101 **i02280224**

NOTE	REF NO	GRAPHIC REF	PART NUMBER	QTY	PART NAME 1 2 3 4 5 6 (PRODUCT LEVEL)	SEE PAGE
	1	1	**4E-0659**	1	EDGE-CUTTING	
	2	1	**092-1136**	2	BOSS (M10X1.5-THD)	
	3	1	**9T-3598**	2	BOSS (M10X1.5-THD)	

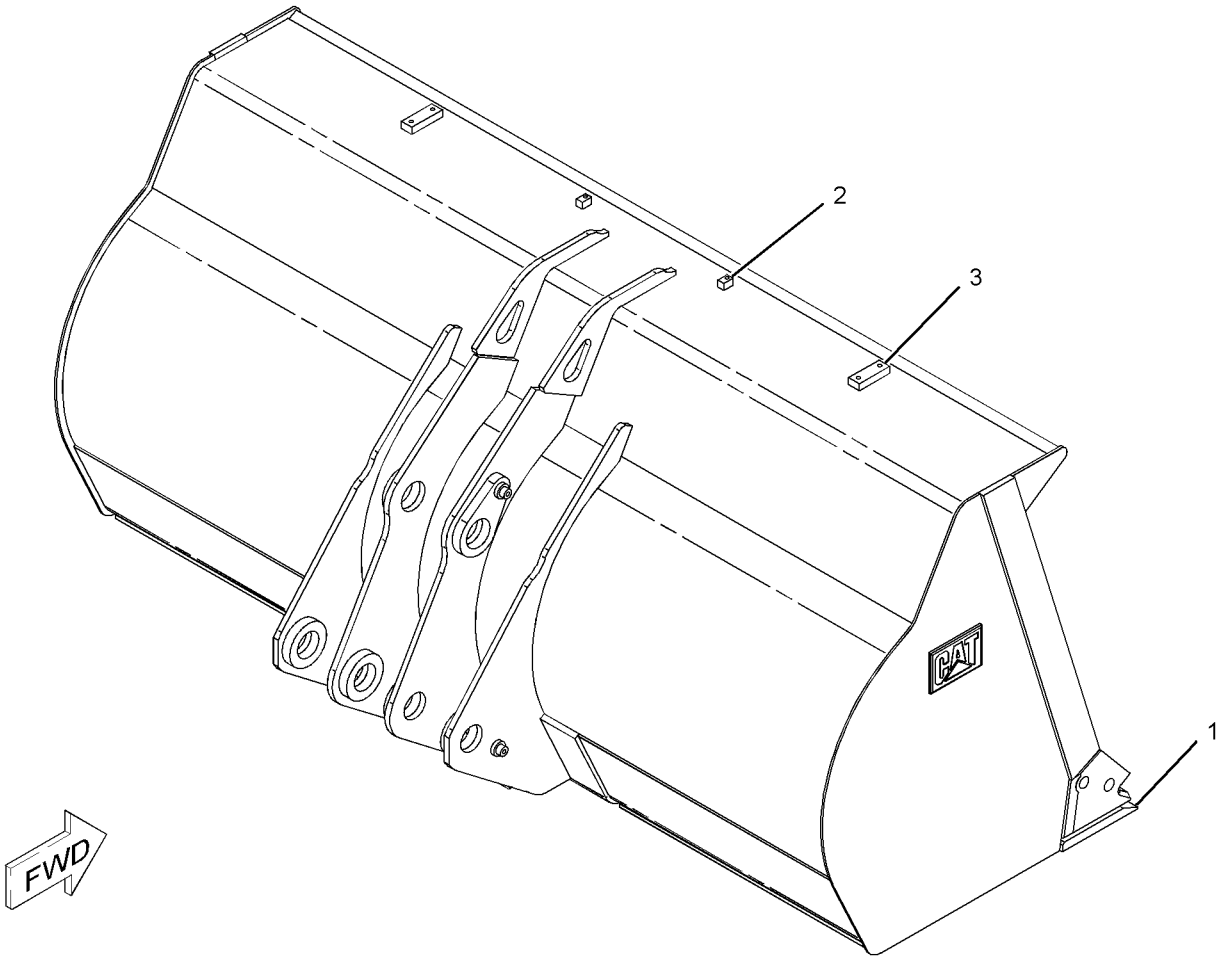

GRAPHIC #1 **<END>** g01141728

256-8913 BUCKET AS-GENERAL PURPOSE

S/N: FTD1-UP
2524-MM (99.4-IN) WIDE X 2.5-CU M (3.3-CU YD) CAPACITY
PART OF 256-8912 BUCKET GP-GENERAL PURPOSE
AN ATTACHMENT

SMCS-6101 **i02281583**

NOTE	REF NO	GRAPHIC REF	PART NUMBER	QTY	PART NAME 1 2 3 4 5 6 (PRODUCT LEVEL)	SEE PAGE
	1	1	**4E-0659**	1	EDGE-CUTTING	
	2	1	**092-1136**	2	BOSS (M10X1.5-THD)	
	3	1	*256-8869*	1	PLATE AS	
	3A	1	**2C-9259**	1	PLATE-IDENTIFICATION (CAT)	
	3B	1	**6I-8310**	1	CORNER (LH)	
	4	1	*256-8870*	1	PLATE AS	
	4A	1	**2C-9259**	1	PLATE-IDENTIFICATION (CAT)	
	4B	1	**6I-8311**	1	CORNER (RH)	
	5	1	**9T-3598**	2	BOSS (M10X1.5-THD)	

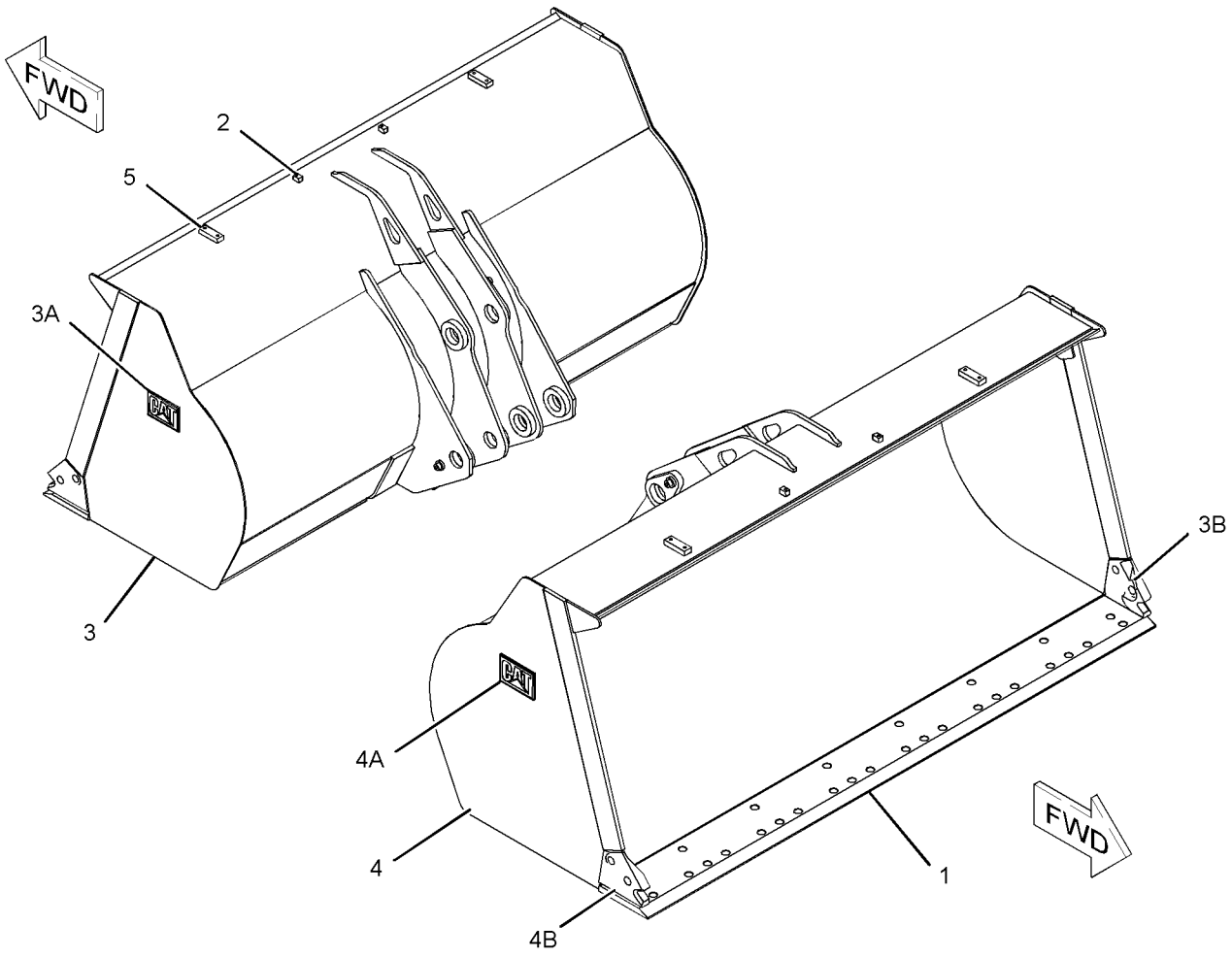

GRAPHIC #1 **<END>** g01142022

WORK TOOLS

171-8138 BUCKET AS-LIGHT MATERIAL

S/N: BYD1-UP
2594-MM (102.1-IN) WIDE X 2.2-CU M (2.9-CU YD) CAPACITY
PART OF 120-0162 BUCKET GP-LIGHT MATERIAL
AN ATTACHMENT

SMCS-6103 **i02283753**

NOTE	REF NO	GRAPHIC REF	PART NUMBER	QTY	PART NAME 1 2 3 4 5 6 (PRODUCT LEVEL)	SEE PAGE
	1	1	**4E-2482**	1	EDGE AS-CUTTING	
		1	**1U-1254**	8	ADAPTER	
		1	**4E-2483**	1	EDGE-CUTTING	
	2	1	**120-0163**	1	HINGE AS (LIFT, OUTER, LH)	
	3	1	**120-0164**	1	HINGE AS (LIFT, INNER, LH)	
	4	1	**120-0165**	1	HINGE AS (LIFT, INNER, RH)	
	5	1	**120-0166**	1	HINGE AS (LIFT, OUTER, RH)	
	6	1	**120-0167**	1	HINGE AS (TILT, RH)	
	7	1	**120-0168**	1	HINGE AS (TILT, LH)	
	8	1	**120-0172**	2	PLATE	
	9	1	**120-0173**	4	PLATE	
	10	1	**120-0175**	1	PLATE	
	11	1	**120-0179**	2	PLATE	
	12	1	*132-6759*	1	PLATE AS (RH)	
	12A	1	**2C-9259**	1	PLATE-IDENTIFICATION (CAT)	
	12B	1	**4V-8285**	1	CORNER (RH)	
	13	1	*132-6760*	1	PLATE AS (LH)	
	13A	1	**2C-9259**	1	PLATE-IDENTIFICATION (CAT)	
	13B	1	**4V-8286**	1	CORNER (LH)	

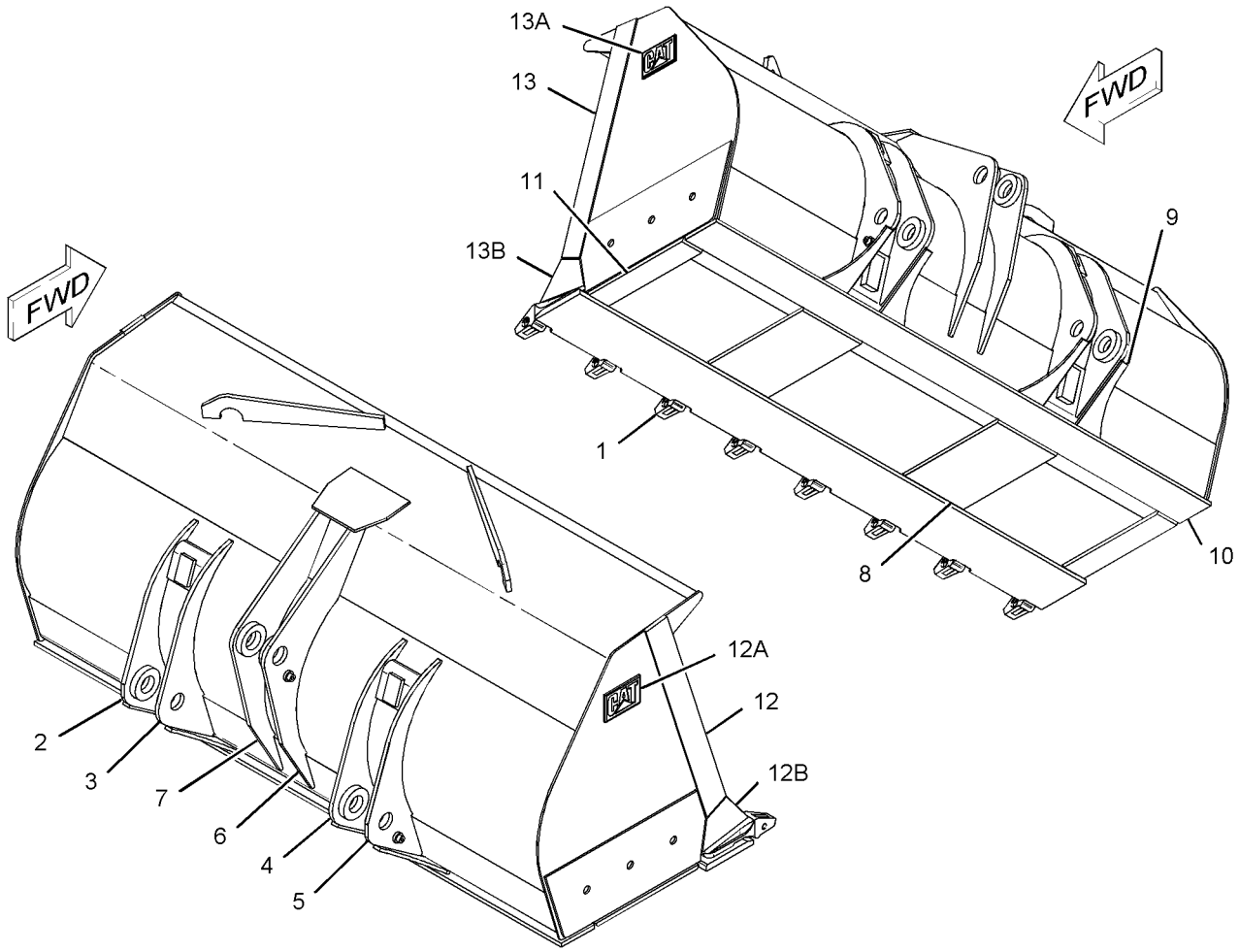

GRAPHIC #1 **<END>** g01144687

252-6905 BUCKET AS-LIGHT MATERIAL

S/N: FTD1-UP
2532-MM (99.8-IN) WIDE 2.8-CU M (3.6-CU YD) CAPACITY
PART OF 252-6904 BUCKET GP-LIGHT MATERIAL
AN ATTACHMENT

SMCS-6103 **i02279930**

NOTE	REF NO	GRAPHIC REF	PART NUMBER	QTY	PART NAME 1 2 3 4 5 6 (PRODUCT LEVEL)	SEE PAGE
	1	1	**4E-0659**	1	EDGE-CUTTING	
	2	1	**9V-9480**	2	PLATE	
	3	1	**092-1136**	2	BOSS (M10X1.5-THD)	
	4	1	**145-5201**	1	HINGE AS (TILT, RH)	
	5	1	**145-5202**	1	HINGE AS (TILT, LH)	
	6	1	**162-7790**	4	PLATE	
	7	1	**164-4022**	1	HINGE AS (LIFT, OUTER, RH)	
	8	1	**164-4024**	1	HINGE AS (LIFT, OUTER, LH)	
	9	1	**164-9316**	2	PLATE	
	10	1	**174-4726**	2	PLATE	
	11	1	**9T-3598**	2	BOSS (M10X1.5-THD)	

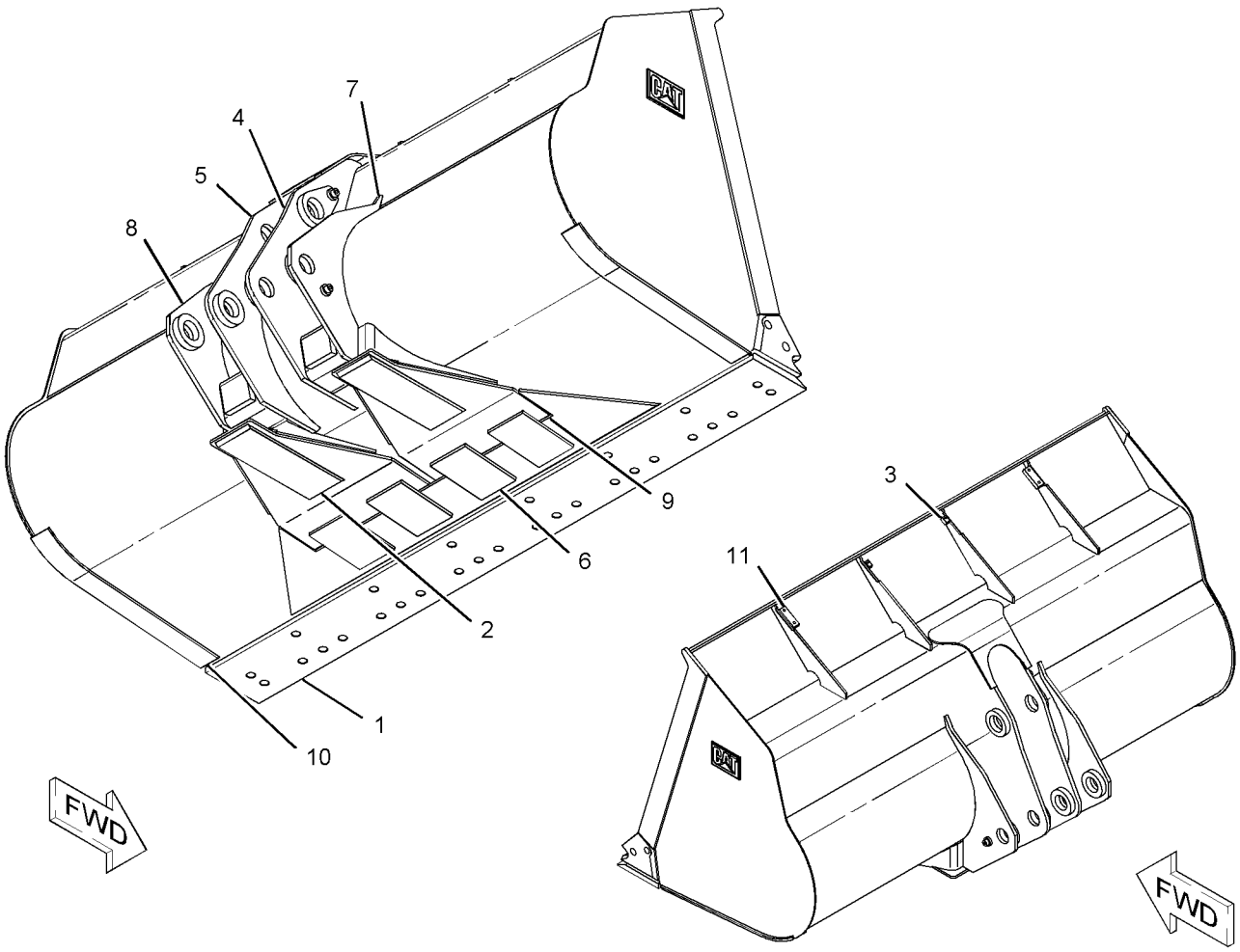

GRAPHIC #1 **<END>** g01141732

WORK TOOLS

250-7862 BUCKET AS-PENETRATION—QUICK COUPLER

S/N: FTD1-UP
2.3-CU M (2.5-CU YD) CAPACITY
PART OF 251-9880 BUCKET GP-PENETRATION
AN ATTACHMENT

SMCS-6131 **i02279099**

NOTE	REF NO	GRAPHIC REF	PART NUMBER	QTY	PART NAME 1 2 3 4 5 6 (PRODUCT LEVEL)	SEE PAGE
	1	1	**4E-2482**	1	EDGE AS-CUTTING	
		1	**1U-1254**	8	ADAPTER	
		1	**4E-2483**	1	EDGE-CUTTING	
	2	1	**111-9758**	1	PLATE	
	3	1	**250-9115**	2	PLATE	
	4	1	**250-9116**	1	PLATE	
	5	1	*250-9189*	1	PLATE AS	
	5A	1	**4V-8285**	1	CORNER (RH)	
	6	1	*250-9190*	1	PLATE AS	
	6A	1	**4V-8286**	1	CORNER (LH)	
	7	1	**250-9191**	1	PLATE	

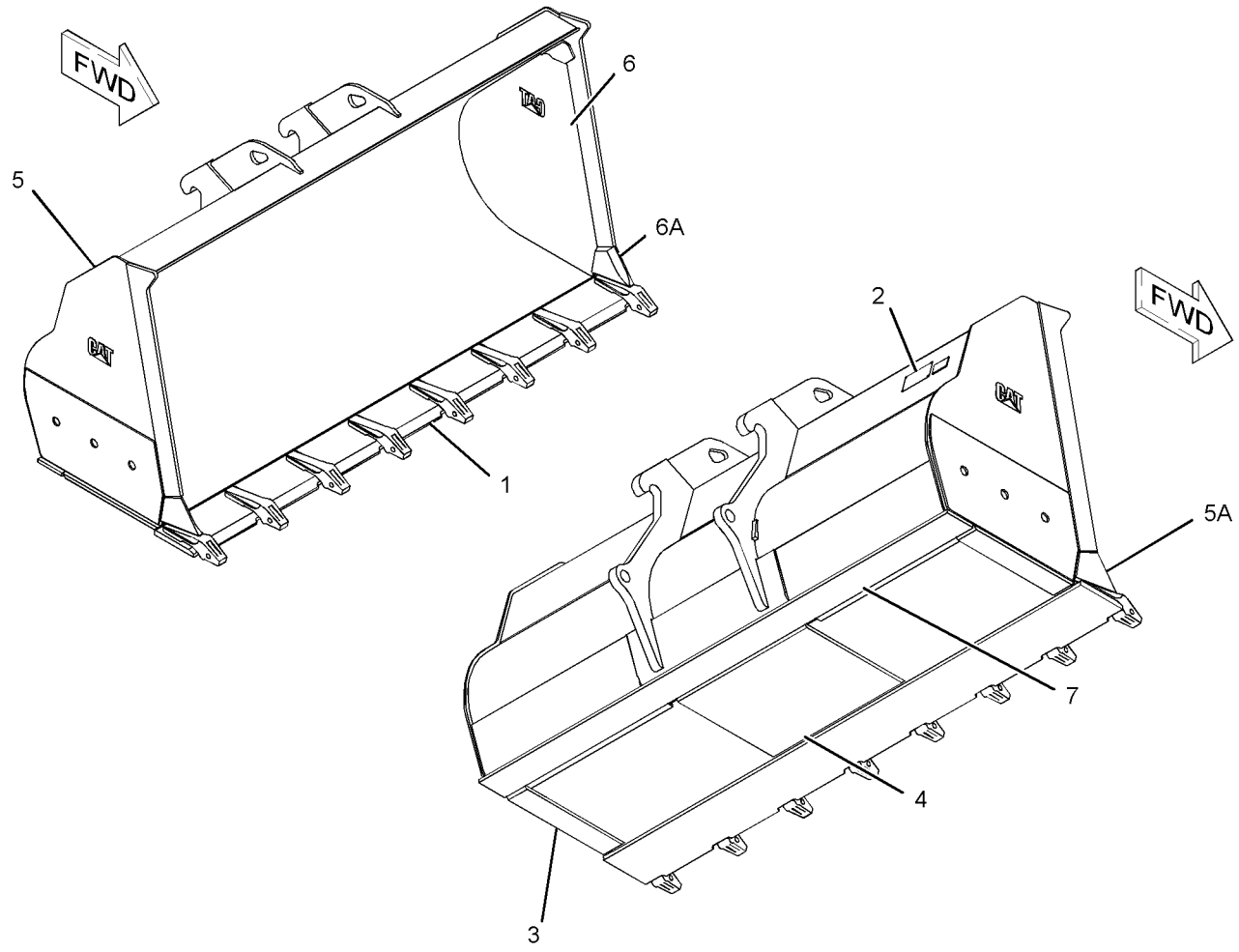

GRAPHIC #1 **<END>** g01141826

250-7863 BUCKET AS-PENETRATION—QUICK COUPLER

S/N: FTD1-UP
2.3-CU M (2.5-CU YD) CAPACITY
PART OF 270-7439 BUCKET GP-PENETRATION
AN ATTACHMENT

SMCS-6131 **i02279100**

NOTE	REF NO	GRAPHIC REF	PART NUMBER	QTY	PART NAME 1 2 3 4 5 6 (PRODUCT LEVEL)	SEE PAGE
	1	1	**4E-2482**	1	EDGE AS-CUTTING	
		1	**1U-1254**	8	ADAPTER	
		1	**4E-2483**	1	EDGE-CUTTING	
	2	1	**111-9758**	1	PLATE	
	3	1	**250-9100**	1	HINGE AS (TILT, RH)	
	4	1	**250-9102**	1	HINGE AS (TILT, LH)	
	5	1	**250-9103**	1	HINGE AS (LIFT, OUTER, LH)	
	6	1	**250-9105**	1	HINGE AS (LIFT, OUTER, RH)	
	7	1	**250-9115**	2	PLATE	
	8	1	**250-9116**	1	PLATE	
	9	1	*250-9189*	1	PLATE AS	
	9A	1	**4V-8285**	1	CORNER (RH)	
	10	1	*250-9190*	1	PLATE AS	
	10A	1	**4V-8286**	1	CORNER (LH)	
	11	1	**250-9191**	1	PLATE	

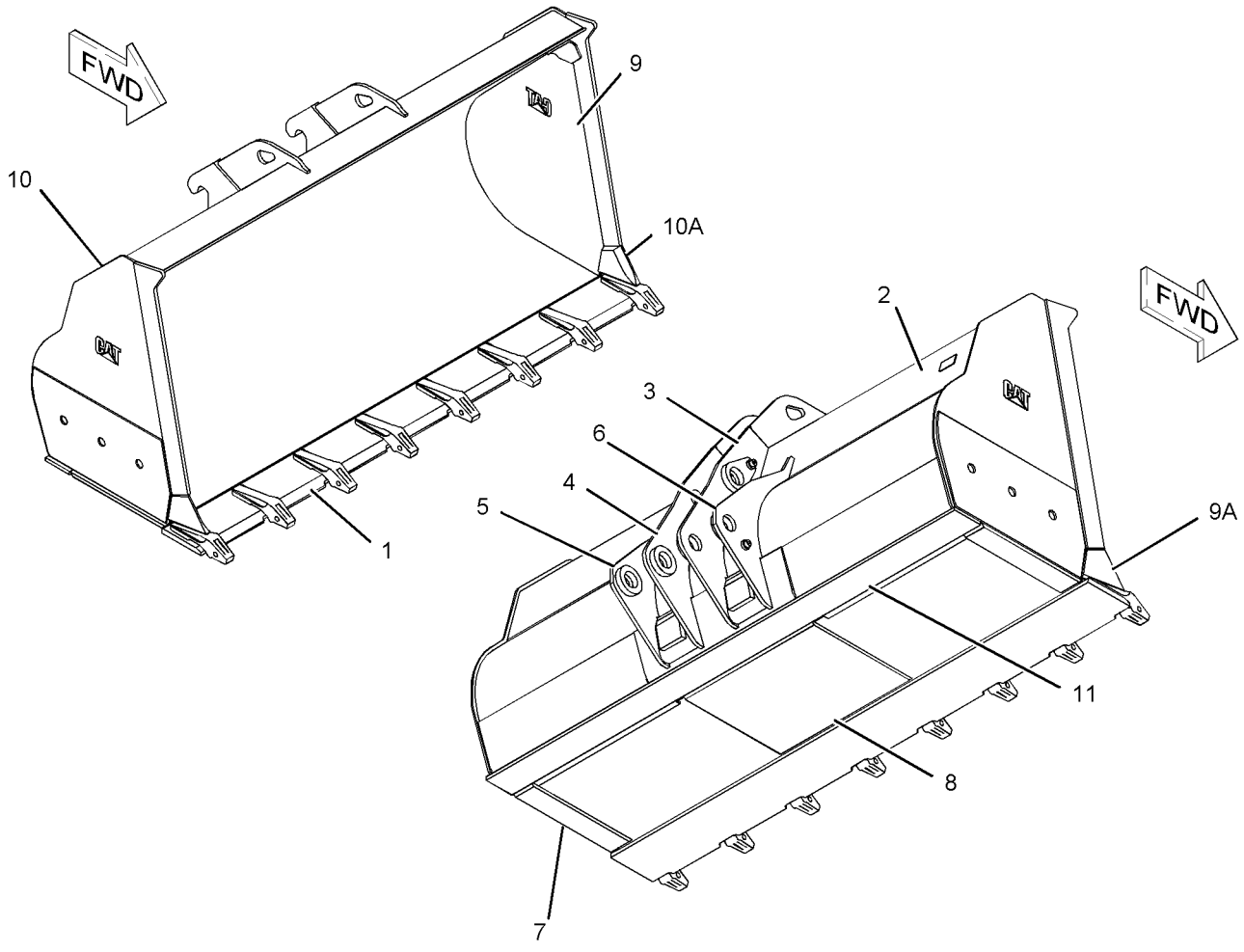

GRAPHIC #1 **<END>** g01141834

WORK TOOLS

251-9879 BUCKET AS-PENETRATION

S/N: FTD1-UP
AN ATTACHMENT

SMCS-6131 **i02356383**

NOTE	REF NO	GRAPHIC REF	PART NUMBER	QTY	PART NAME 1 2 3 4 5 6 (PRODUCT LEVEL)	SEE PAGE
Y	1	1	*148-7900*	1	MOUNTING GP-BUCKET	777
Y	2	1	**270-7439**	1	BUCKET GP-PENETRATION	759

Y-SEPARATE ILLUSTRATION

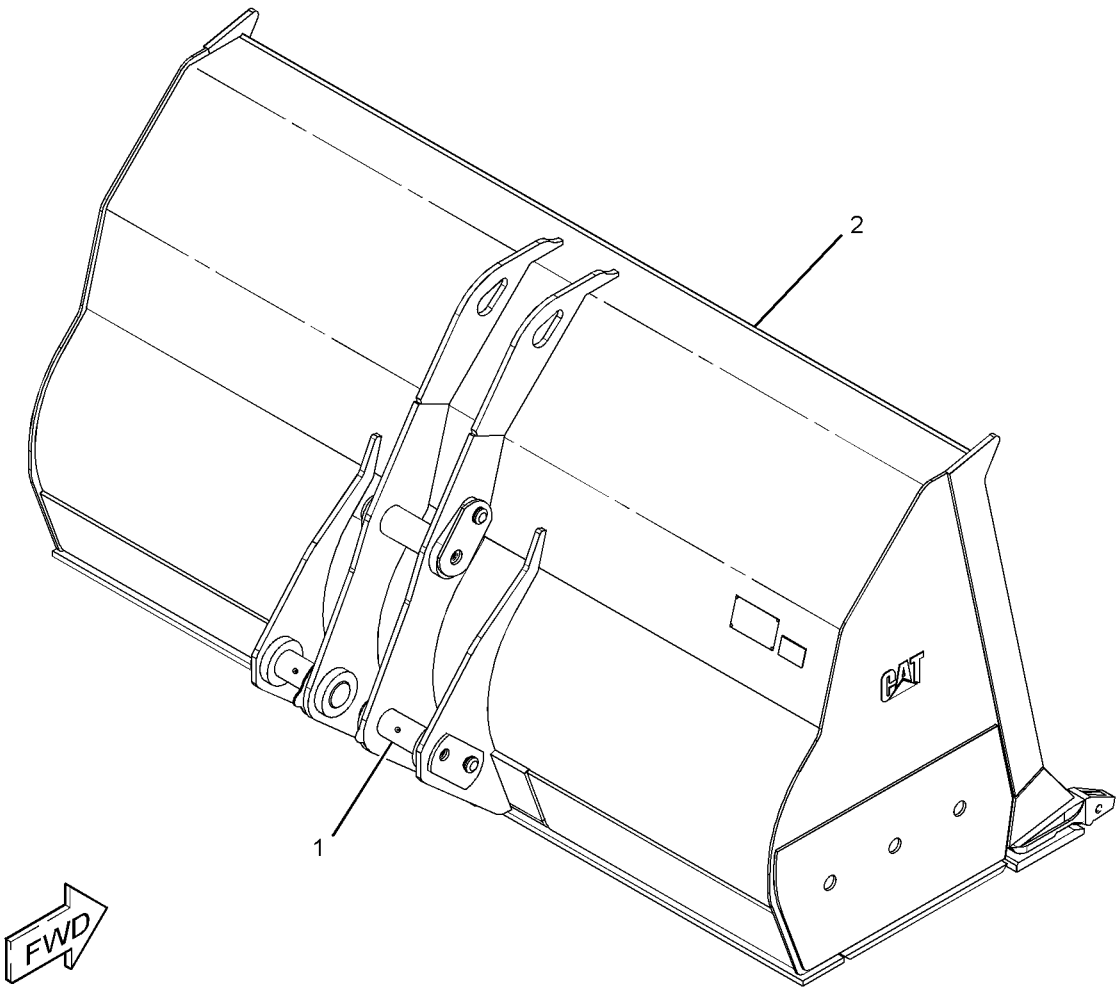

GRAPHIC #1 **<END>** g01181754

224-0759 BUCKET GP-GENERAL PURPOSE—QUICK COUPLER

S/N: FTD1-UP
2524-MM (99.4-IN) WIDE X 2.3-CU M (3-CU YD) CAPACITY
PART OF 256-8882 BUCKET AR-GENERAL PURPOSE
AN ATTACHMENT

SMCS-6101 **i01898116**

NOTE	REF NO	GRAPHIC REF	PART NUMBER	QTY	PART NAME 1 2 3 4 5 6 (PRODUCT LEVEL)	SEE PAGE
	1	1	*223-9734*	1	BUCKET AS-GENERAL PURPOSE	
	1A	1	**4E-0659**	1	EDGE-CUTTING	
	3	1	**6I-8310**	1	CORNER (LH)	
	4	1	**6I-8311**	1	CORNER (RH)	

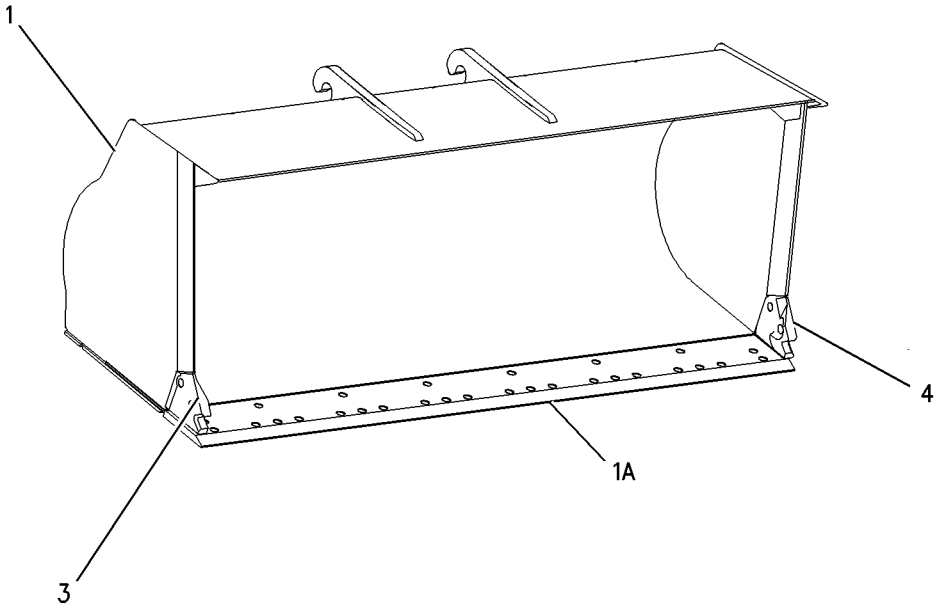

GRAPHIC #1 **<END>** g00936103

WORK TOOLS

239-7002 BUCKET GP-GENERAL PURPOSE—QUICK COUPLER

S/N: FTD1-UP
2.3-CU M (3-CU YD) CAPACITY
AN ATTACHMENT

SMCS-6101 **i02142424**

NOTE	REF NO	GRAPHIC REF	PART NUMBER	QTY	PART NAME 1 2 3 4 5 6 (PRODUCT LEVEL)	SEE PAGE
	1	1	**143-4973**	1	PLATE AS	
	2	1	**241-0918**	1	BUCKET AS-GENERAL PURPOSE (QUICK COUPLER)	
		1	**4E-0659**	1	EDGE-CUTTING	
		1	**9T-3598**	2	BOSS (M10X1.5-THD)	
		1	**092-1136**	2	BOSS (M10X1.5-THD)	
		1	**111-9758**	1	PLATE	
	3	1	**8T-4121**	6	WASHER-HARD (11X21X2.5-MM THK)	
M	4	1	**8T-4136**	6	BOLT (M10X1.5X25-MM)	

M-METRIC PART

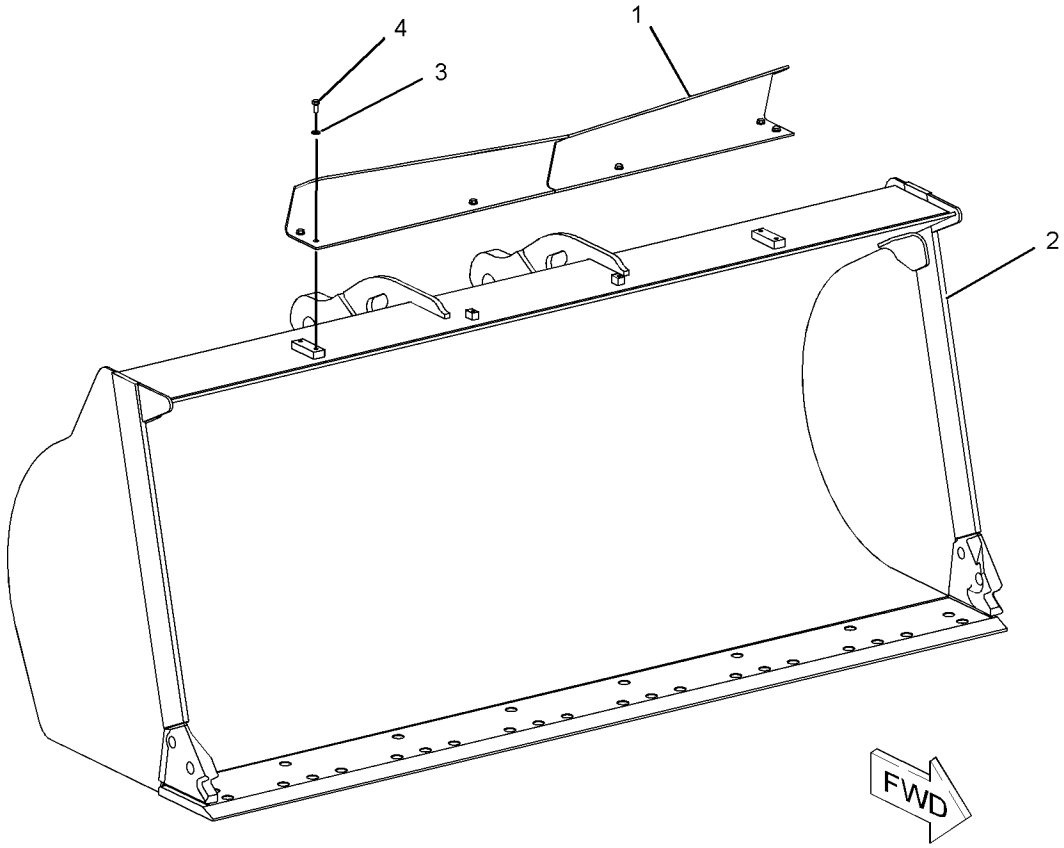

GRAPHIC #1 **<END>** g01091307

WORK TOOLS

239-7004 BUCKET GP-GENERAL PURPOSE

S/N: FTD1-UP
2.3-CU M (3-CU YD) CAPACITY
AN ATTACHMENT

SMCS-6101 **i02145329**

NOTE	REF NO	GRAPHIC REF	PART NUMBER	QTY	PART NAME 1 2 3 4 5 6 (PRODUCT LEVEL)	SEE PAGE
	1	1	**143-4973**	1	PLATE AS	
Y	2	1	*148-7900*	1	MOUNTING GP-BUCKET	777
	3	1	*243-2452*	1	BUCKET AS-GENERAL PURPOSE	
		1	**168-8389**	4	TACK-FASTENER	
		1	**4E-0659**	1	EDGE-CUTTING	
		1	**9T-3598**	2	BOSS (M10X1.5-THD)	
		1	**092-1136**	2	BOSS (M10X1.5-THD)	
		1	**111-9758**	1	PLATE	
	4	1	**8T-4121**	6	WASHER-HARD (11X21X2.5-MM THK)	
M	5	1	**8T-4136**	6	BOLT (M10X1.5X25-MM)	

M-METRIC PART
Y-SEPARATE ILLUSTRATION

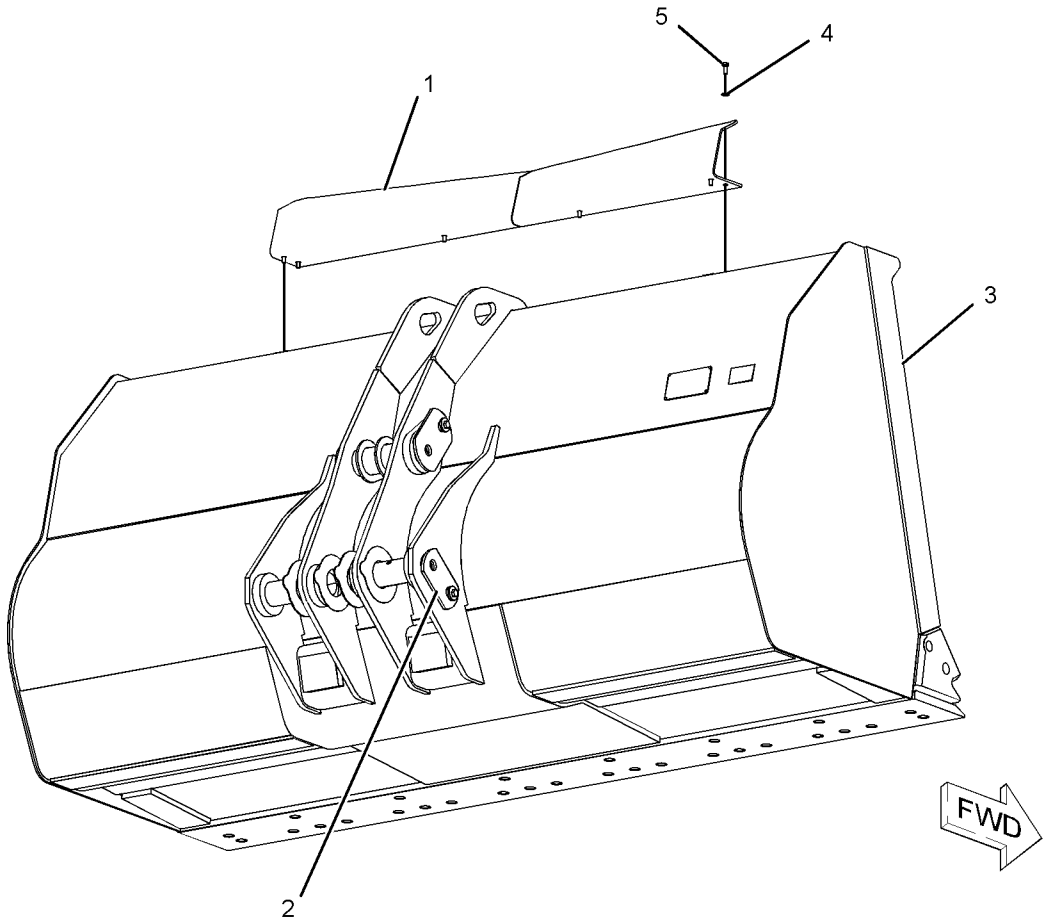

GRAPHIC #1 **<END>** g01089149

240-5765 BUCKET GP-GENERAL PURPOSE–QUICK COUPLER

S/N: FTD1-UP
AN ATTACHMENT

SMCS-6101 **i02236126**

NOTE	REF NO	GRAPHIC REF	PART NUMBER	QTY	PART NAME 1 2 3 4 5 6 (PRODUCT LEVEL)	SEE PAGE
	1	1	**137-4234**	1	PLATE-IDENTIFICATION (WORK TOOL)	
	2	1	**168-8389**	4	TACK-FASTENER	
Y	3	1	*240-5766*	1	BUCKET AS-GENERAL PURPOSE (QUICK COUPLER)	723

Y-SEPARATE ILLUSTRATION

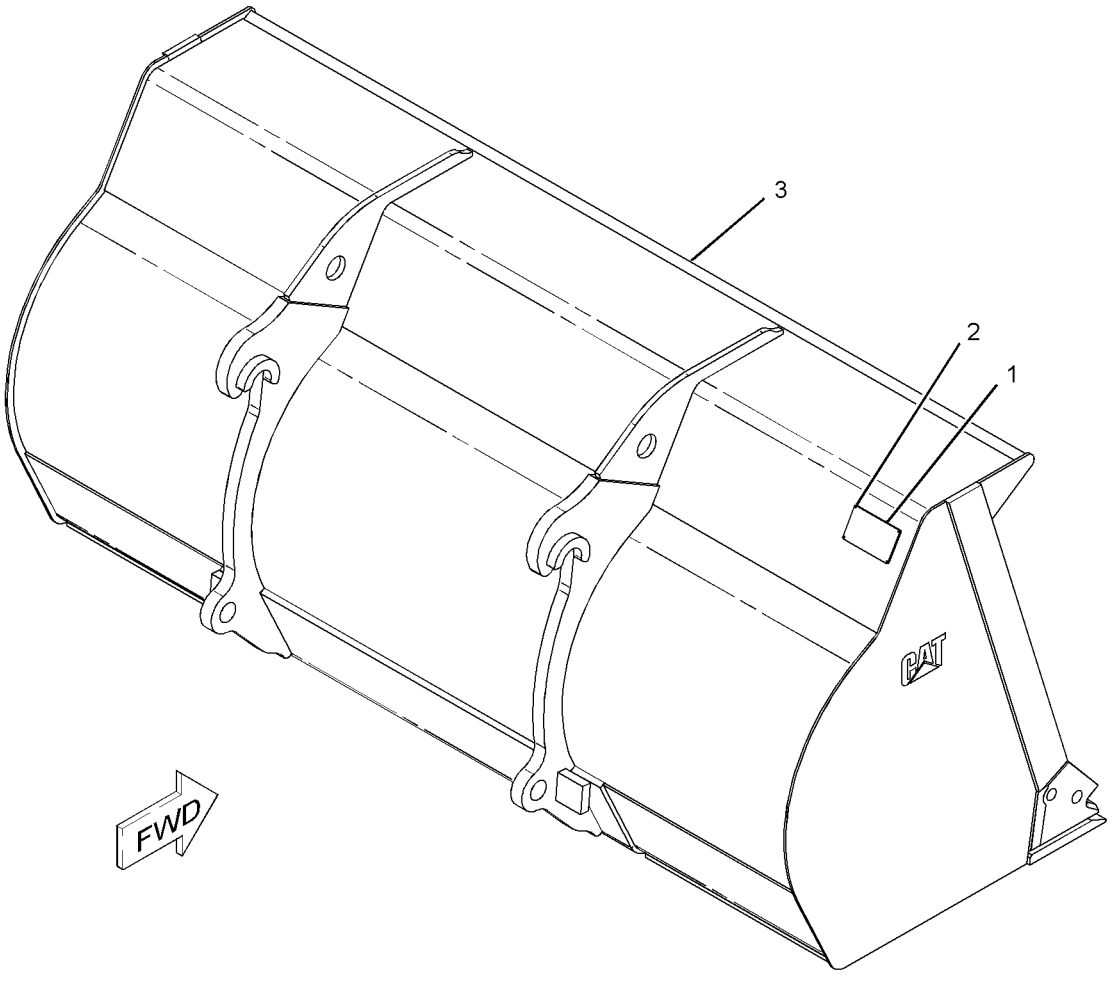

GRAPHIC #1 **<END>** g01135673

241-0935 BUCKET GP-GENERAL PURPOSE–QUICK COUPLER

S/N: FTD1-UP
2.1-CU M (2.7-CU YD) CAPACITY
AN ATTACHMENT

SMCS-6101 **i02166010**

NOTE	REF NO	GRAPHIC REF	PART NUMBER	QTY	PART NAME 1 2 3 4 5 6 (PRODUCT LEVEL)	SEE PAGE
	1	1	**143-4973**	1	PLATE AS	
Y	2	1	*241-0936*	1	BUCKET AS-GENERAL PURPOSE (QUICK COUPLER)	724
	3	1	**8T-4121**	6	WASHER-HARD (11X21X2.5-MM THK)	
M	4	1	**8T-4136**	6	BOLT (M10X1.5X25-MM)	

M-METRIC PART
Y-SEPARATE ILLUSTRATION

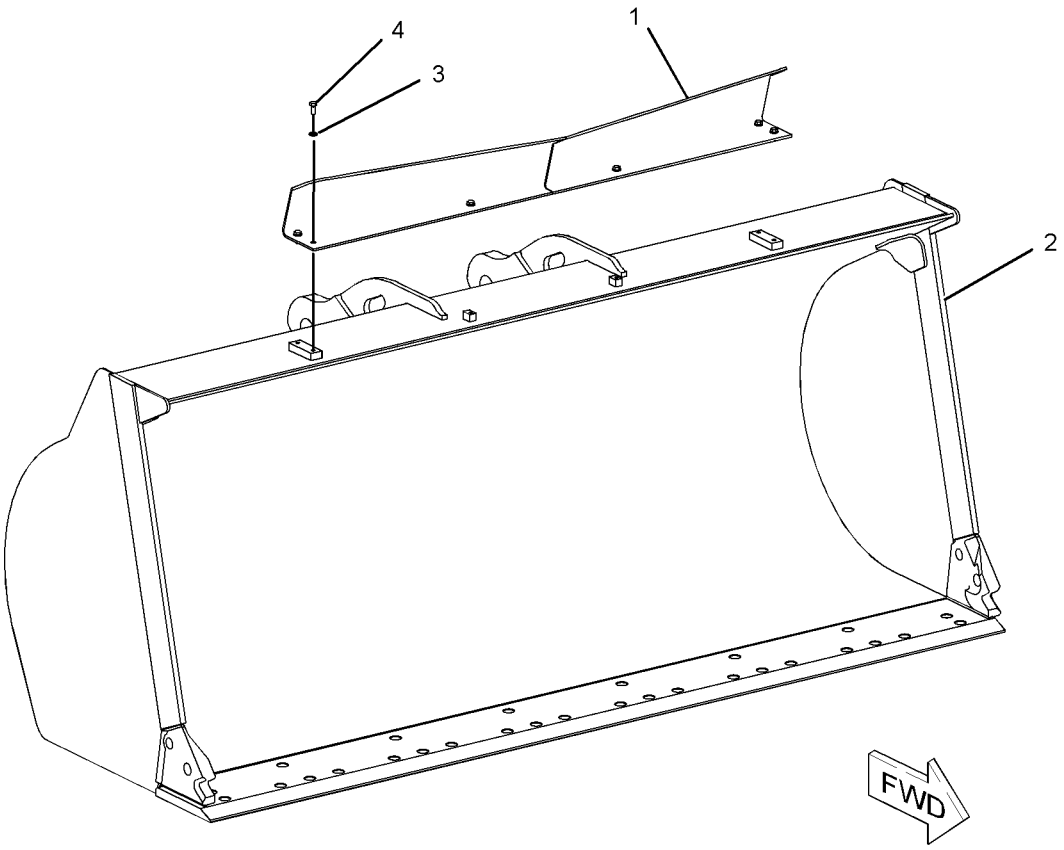

GRAPHIC #1 **<END>** g01103335

WORK TOOLS

251-6600 BUCKET GP-GENERAL PURPOSE

S/N: FTD1-UP
AN ATTACHMENT

SMCS-6101 **i02356381**

NOTE	REF NO	GRAPHIC REF	PART NUMBER	QTY	PART NAME 1 2 3 4 5 6 (PRODUCT LEVEL)	SEE PAGE
	1	1	**143-4973**	1	PLATE AS	
Y	2	1	*148-7900*	1	MOUNTING GP-BUCKET	777
Y	3	1	**270-7440**	1	BUCKET GP-GENERAL PURPOSE	752
	4	1	**8T-4121**	6	WASHER-HARD (11X21X2.5-MM THK)	
M	5	1	**8T-4136**	6	BOLT (M10X1.5X25-MM)	

M-METRIC PART
Y-SEPARATE ILLUSTRATION

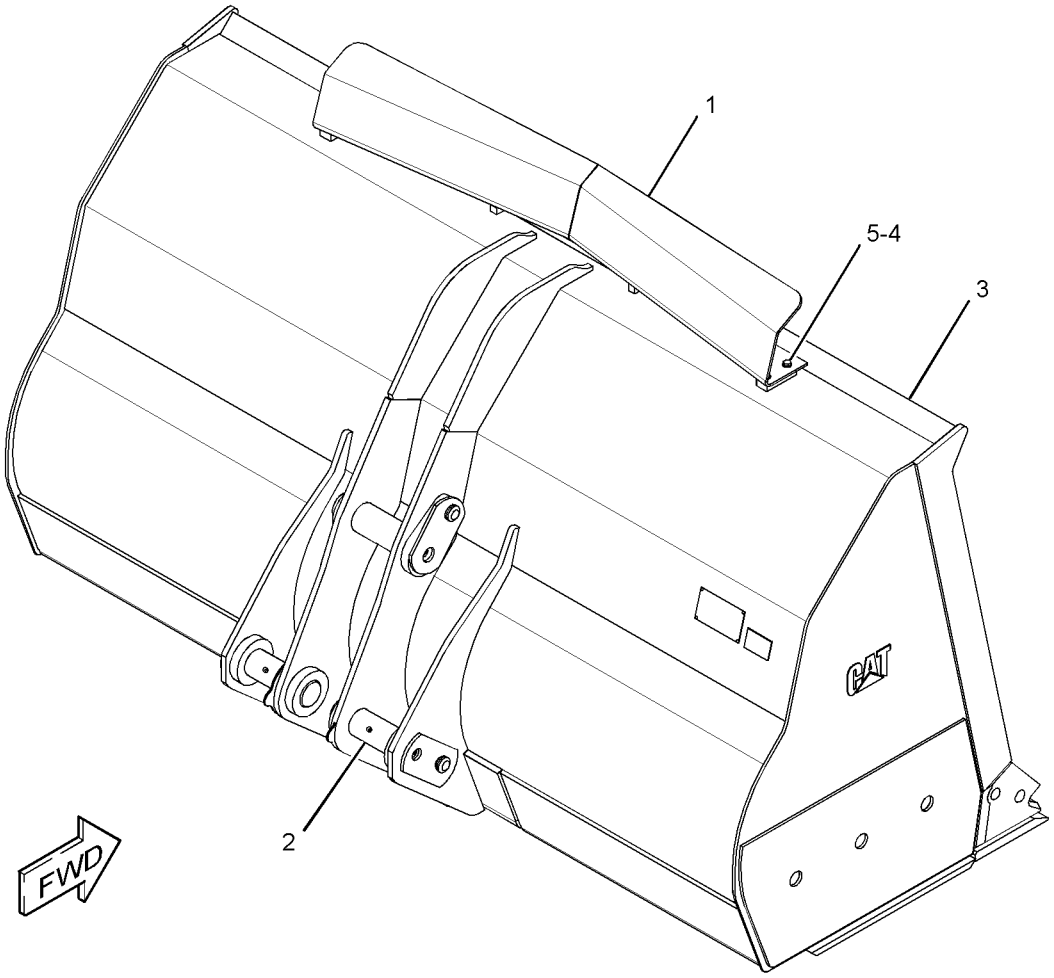

GRAPHIC #1 **<END>** g01294308

251-9878 BUCKET GP-GENERAL PURPOSE–QUICK COUPLER

S/N: FTD1-UP

AN ATTACHMENT

SMCS-6101 **i02278904**

NOTE	REF NO	GRAPHIC REF	PART NUMBER	QTY	PART NAME 1 2 3 4 5 6 (PRODUCT LEVEL)	SEE PAGE
	1	1	**137-4234**	1	PLATE-IDENTIFICATION (WORK TOOL)	
	2	1	**168-8389**	4	TACK-FASTENER	
Y	3	1	*250-7860*	1	BUCKET AS-GENERAL PURPOSE (QUICK COUPLER)	726

Y-SEPARATE ILLUSTRATION

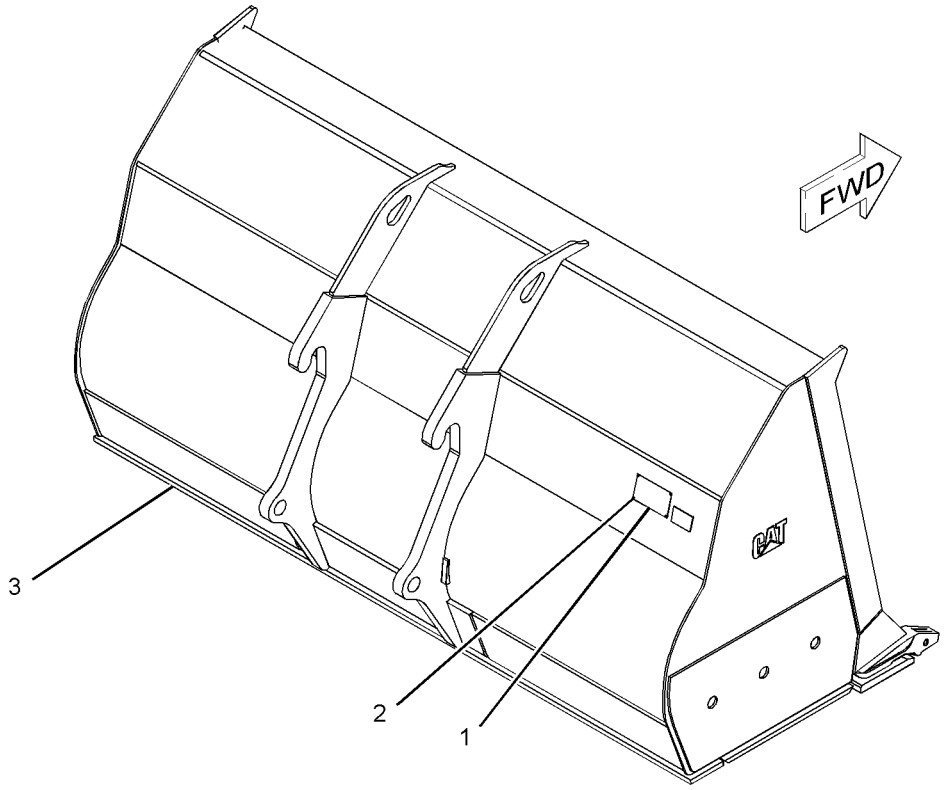

GRAPHIC #1 **<END>** g01141829

WORK TOOLS

252-6910 BUCKET GP-GENERAL PURPOSE

S/N: FTD1-UP

PART OF 252-6909 BUCKET AR-GENERAL PURPOSE

AN ATTACHMENT

SMCS-6101 **i02165435**

NOTE	REF NO	GRAPHIC REF	PART NUMBER	QTY	PART NAME 1 2 3 4 5 6 (PRODUCT LEVEL)	SEE PAGE
	1	1	**137-4234**	1	PLATE-IDENTIFICATION (WORK TOOL)	
	2	1	**168-8389**	4	TACK-FASTENER	
Y	3	1	*252-6911*	1	BUCKET AS-GENERAL PURPOSE	728

Y-SEPARATE ILLUSTRATION

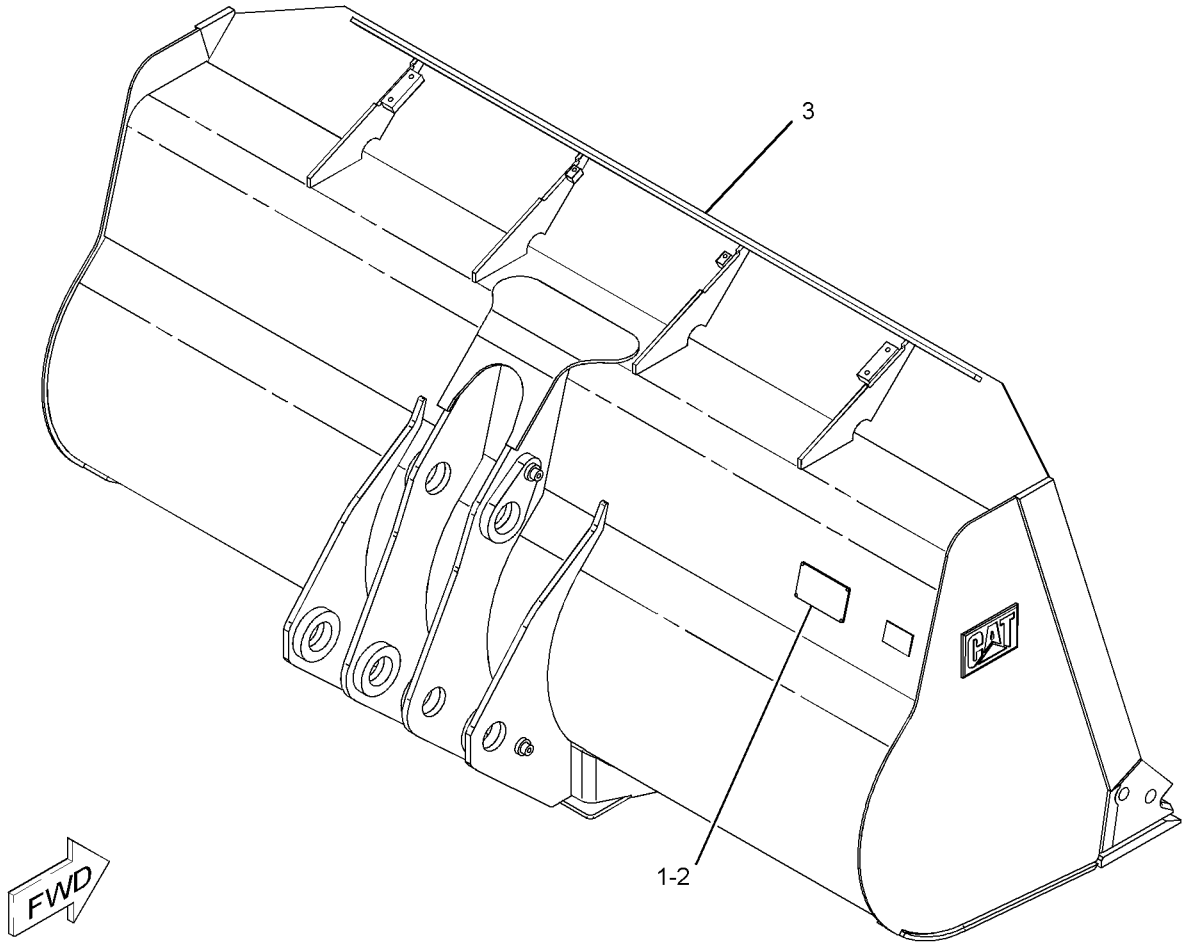

GRAPHIC #1 **<END>** g01119405

256-8863 BUCKET GP-GENERAL PURPOSE—QUICK COUPLER

S/N: FTD1-UP

AN ATTACHMENT

SMCS-6101 **i02281225**

NOTE	REF NO	GRAPHIC REF	PART NUMBER	QTY	PART NAME 1 2 3 4 5 6 (PRODUCT LEVEL)	SEE PAGE
	1	1	**143-4973**	1	PLATE AS	
Y	2	1	**256-8864**	1	BUCKET AS-GENERAL PURPOSE (QUICK COUPLER)	729
	3	1	**8T-4121**	6	WASHER-HARD (11X21X2.5-MM THK)	
M	4	1	**8T-4136**	6	BOLT (M10X1.5X25-MM)	

M-METRIC PART
Y-SEPARATE ILLUSTRATION

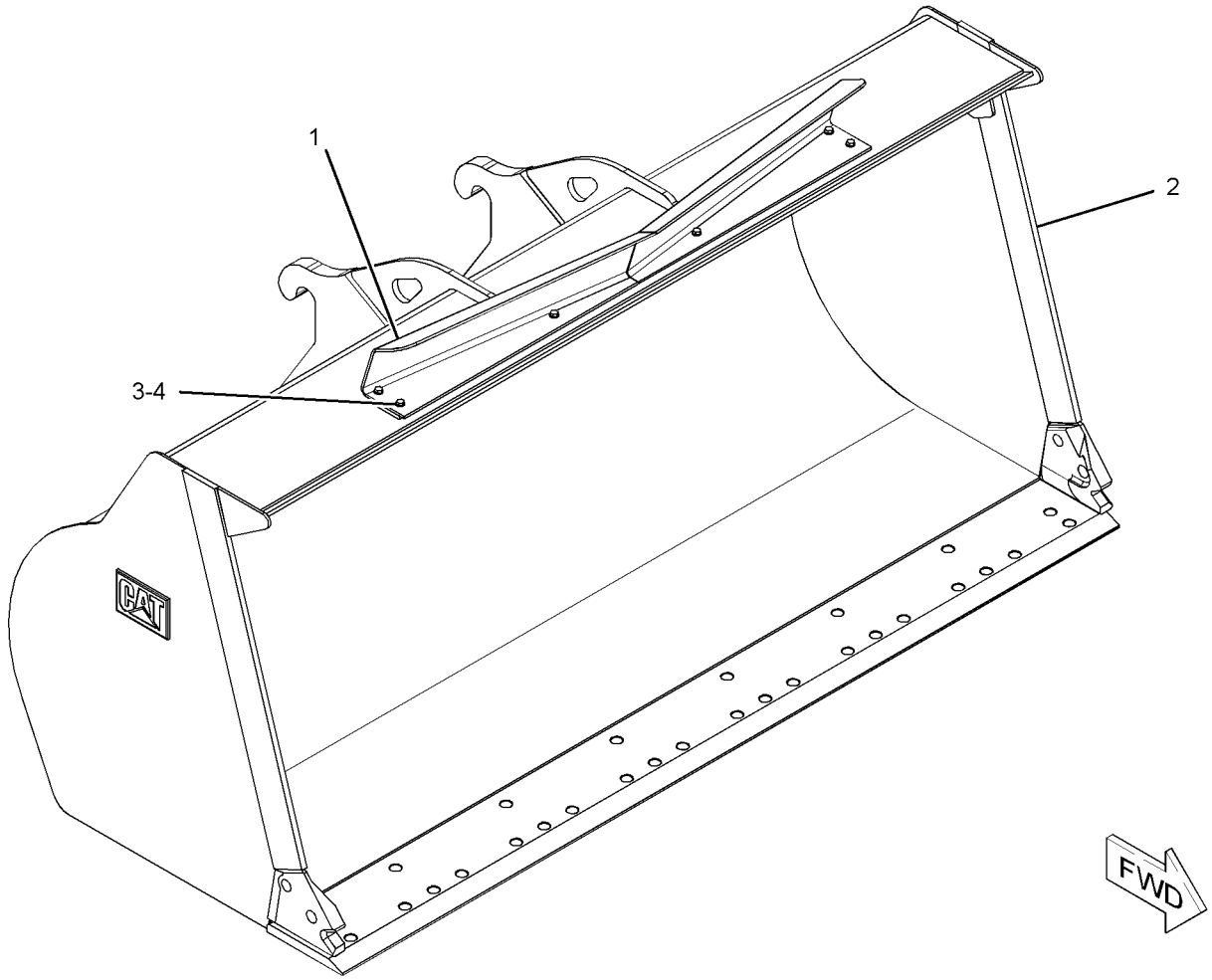

GRAPHIC #1 **<END>** g01116214

256-8890 BUCKET GP-GENERAL PURPOSE—QUICK COUPLER

S/N: FTD1-UP

PART OF 256-8889 BUCKET AR-GENERAL PURPOSE

AN ATTACHMENT

SMCS-6101 **i02277472**

NOTE	REF NO	GRAPHIC REF	PART NUMBER	QTY	PART NAME 1 2 3 4 5 6 (PRODUCT LEVEL)	SEE PAGE
	1	1	**137-4234**	1	PLATE-IDENTIFICATION (WORK TOOL)	
	2	1	**168-8389**	4	TACK-FASTENER	
Y	3	1	*256-8891*	1	BUCKET AS-GENERAL PURPOSE	731

Y-SEPARATE ILLUSTRATION

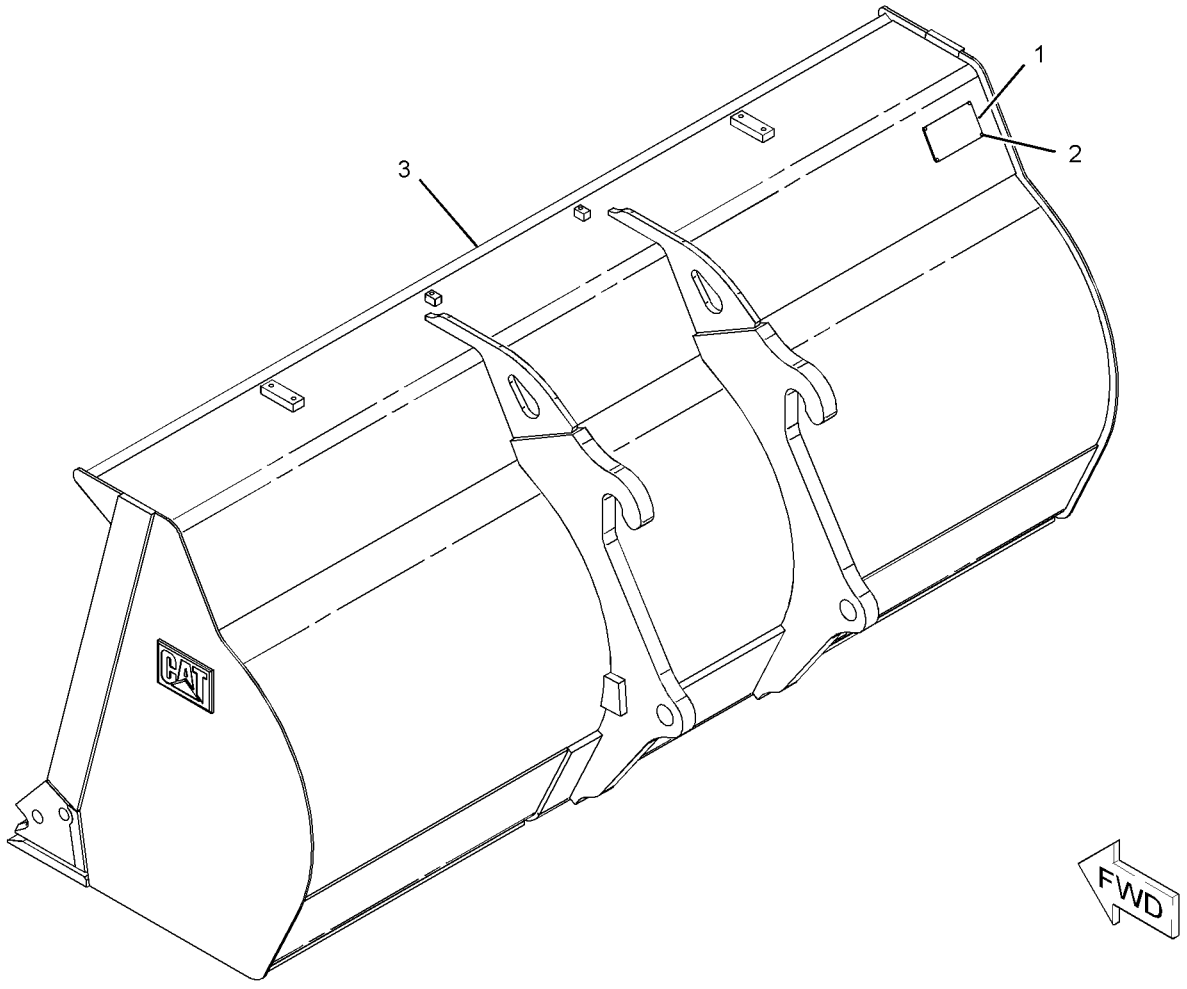

GRAPHIC #1 **<END>** g01116237

WORK TOOLS

256-8899 BUCKET GP-GENERAL PURPOSE

S/N: FTD1-UP

PART OF 256-8898 BUCKET AR-GENERAL PURPOSE

AN ATTACHMENT

SMCS-6101 **i02277352**

NOTE	REF NO	GRAPHIC REF	PART NUMBER	QTY	PART NAME 1 2 3 4 5 6 (PRODUCT LEVEL)	SEE PAGE
	1	1	**137-4234**	1	PLATE-IDENTIFICATION (WORK TOOL)	
	2	1	**168-8389**	4	TACK-FASTENER	
Y	3	1	*256-8900*	1	BUCKET AS-GENERAL PURPOSE	732

Y-SEPARATE ILLUSTRATION

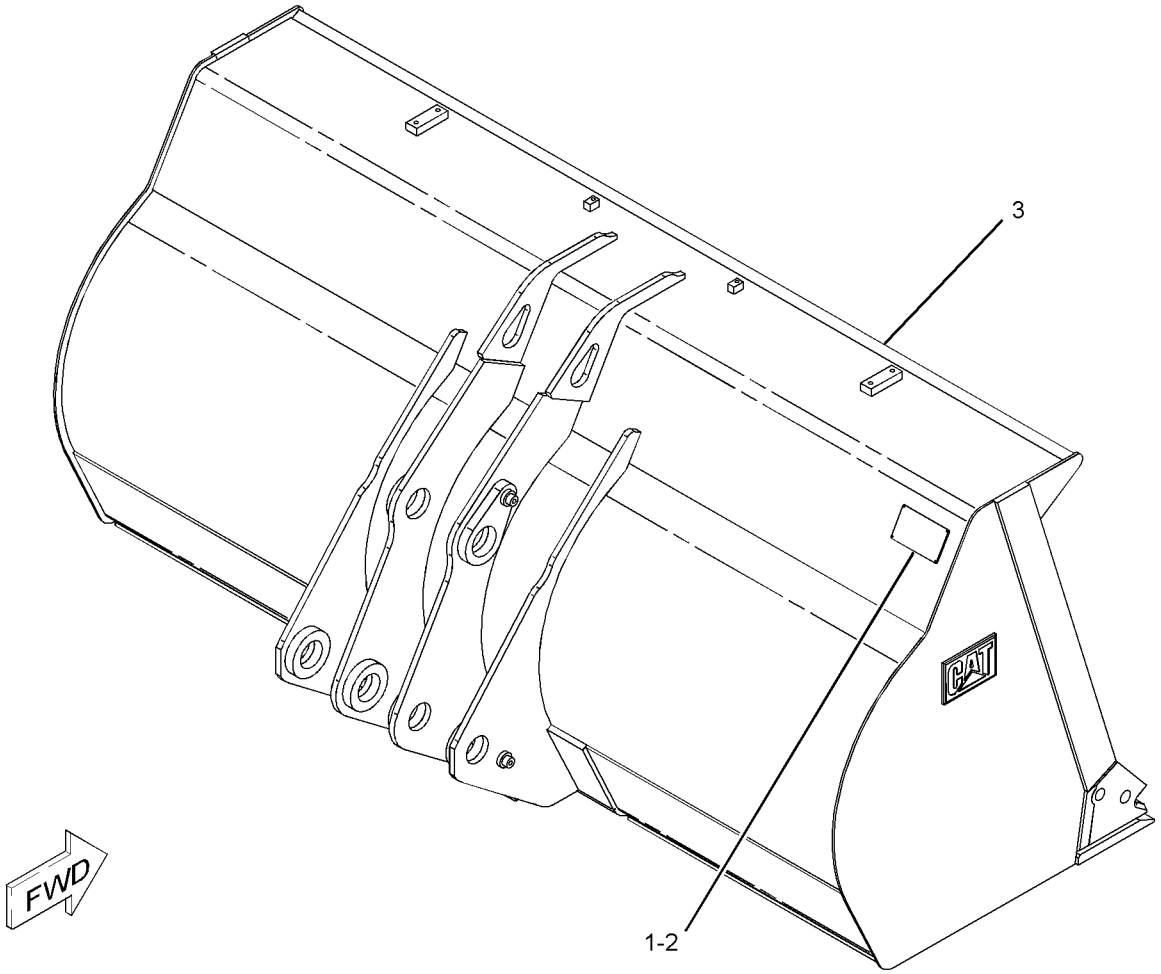

GRAPHIC #1 **<END>** g01117378

WORK TOOLS

256-8912 BUCKET GP-GENERAL PURPOSE

S/N: FTD1-UP

PART OF 256-8911 BUCKET AR-GENERAL PURPOSE

AN ATTACHMENT

SMCS-6101 **i02277261**

NOTE	REF NO	GRAPHIC REF	PART NUMBER	QTY	PART NAME 1 2 3 4 5 6 (PRODUCT LEVEL)	SEE PAGE
	1	1	**137-4234**	1	PLATE-IDENTIFICATION (WORK TOOL)	
	2	1	**168-8389**	4	TACK-FASTENER	
Y	3	1	*256-8913*	1	BUCKET AS-GENERAL PURPOSE	733

Y-SEPARATE ILLUSTRATION

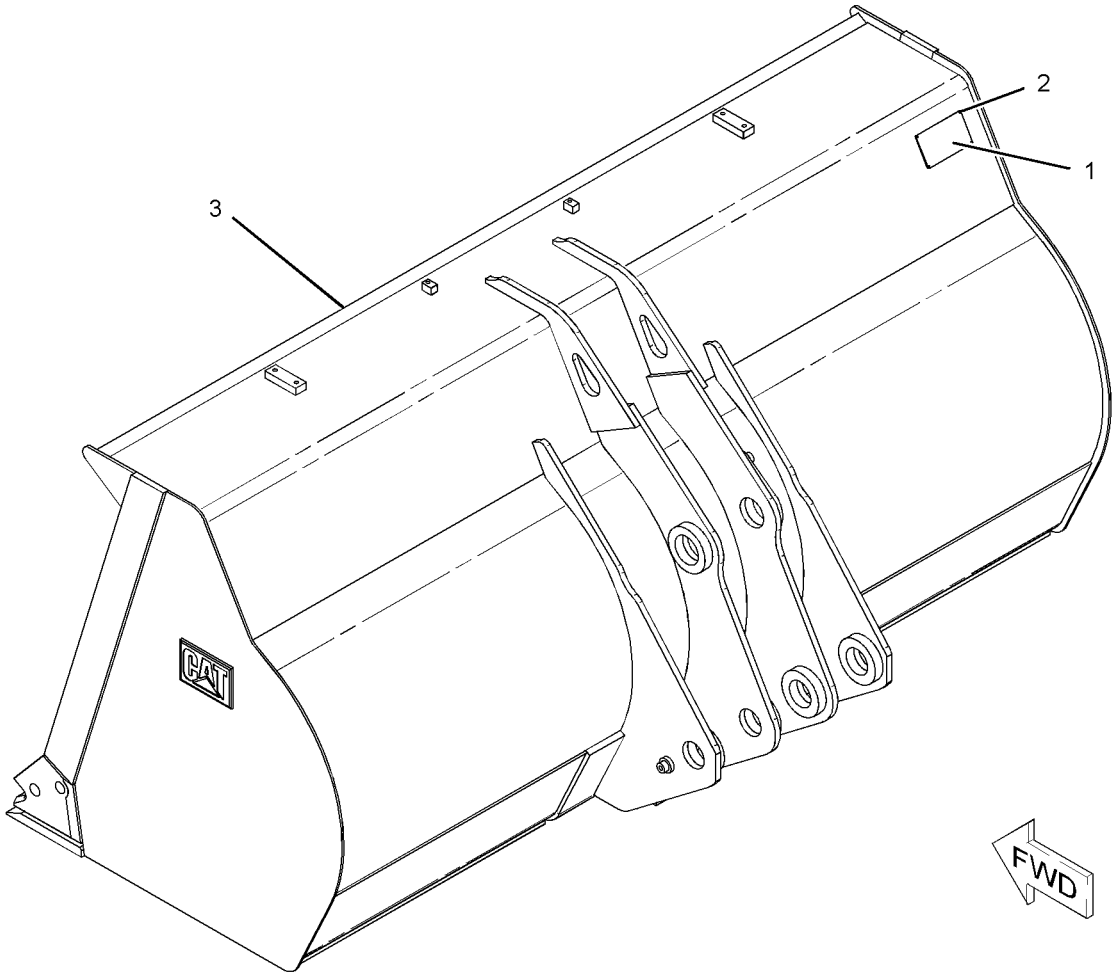

GRAPHIC #1 **<END>** g01141745

WORK TOOLS

270-7440 BUCKET GP-GENERAL PURPOSE

S/N: FTD1-UP

PART OF 251-6600 BUCKET GP-GENERAL PURPOSE

AN ATTACHMENT

SMCS-6101 **i02356411**

NOTE	REF NO	GRAPHIC REF	PART NUMBER	QTY	PART NAME 1 2 3 4 5 6 (PRODUCT LEVEL)	SEE PAGE
	1	1	**137-4234**	1	PLATE-IDENTIFICATION (WORK TOOL)	
	2	1	**168-8389**	4	TACK-FASTENER	
Y	3	1	*250-7861*	1	BUCKET AS-GENERAL PURPOSE	727

Y-SEPARATE ILLUSTRATION

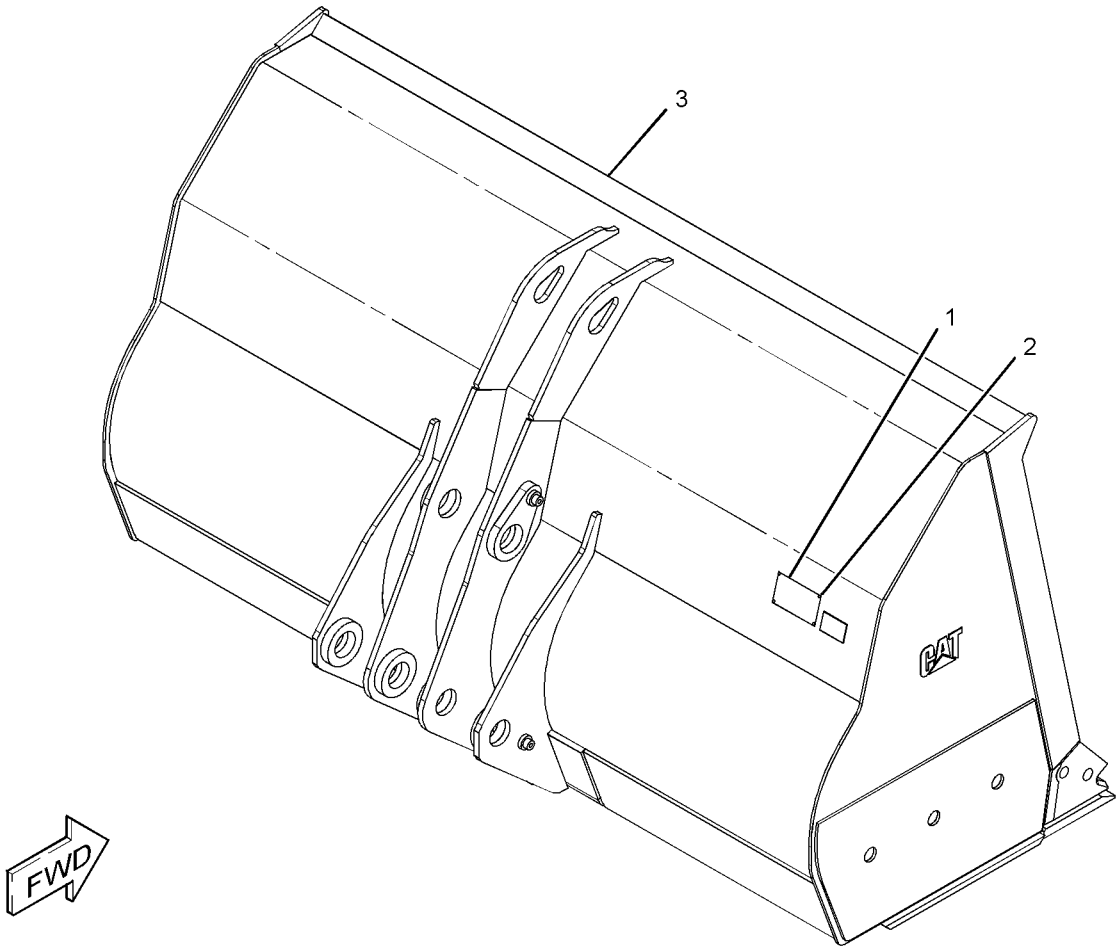

GRAPHIC #1 **<END>** g01181762

WORK TOOLS

120-0162 BUCKET GP-LIGHT MATERIAL

S/N: BYD1-UP
AN ATTACHMENT

SMCS-6103 **i02410260**

NOTE	REF NO	GRAPHIC REF	PART NUMBER	QTY	PART NAME 1 2 3 4 5 6 (PRODUCT LEVEL)	SEE PAGE
Y	1	1	*171-8138*	1	BUCKET AS-LIGHT MATERIAL	734

Y-SEPARATE ILLUSTRATION

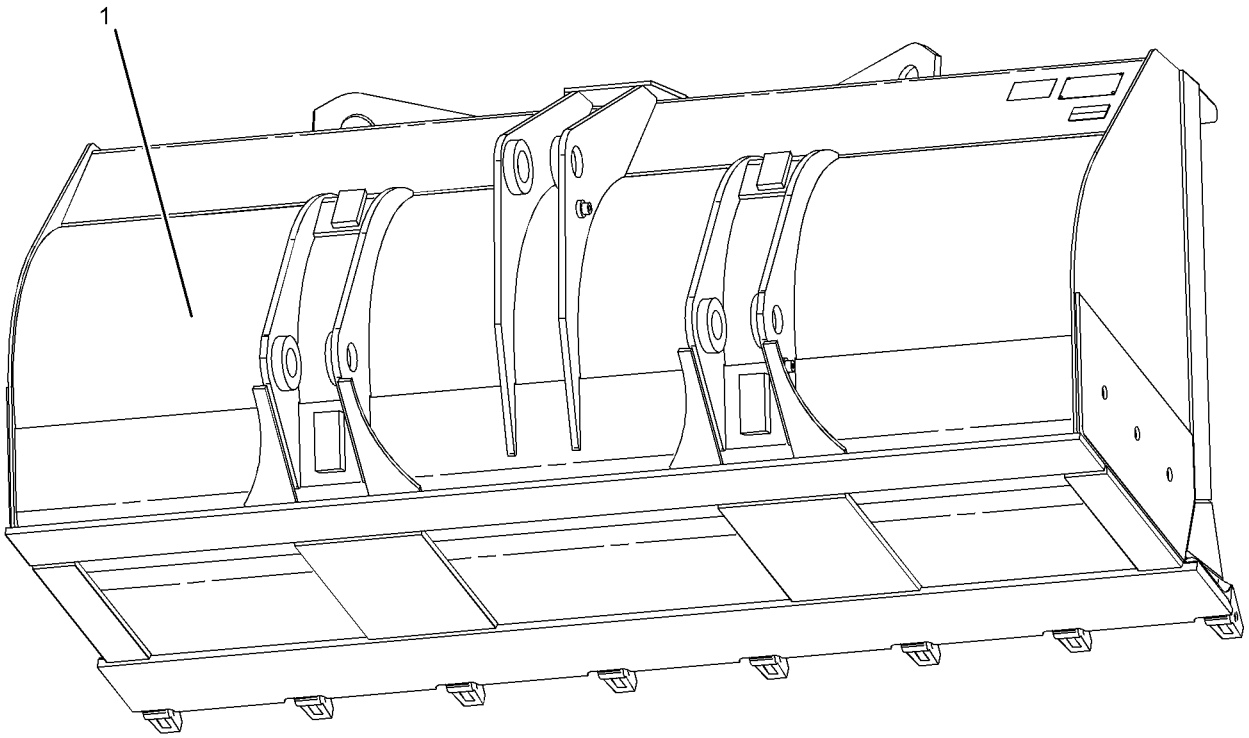

GRAPHIC #1 **<END>** g01204530

241-0916 BUCKET GP-LIGHT MATERIAL—QUICK COUPLER

S/N: FTD1-UP
3.1-CU M (4-CU YD) CAPACITY
AN ATTACHMENT

SMCS-6103 **i02142429**

NOTE	REF NO	GRAPHIC REF	PART NUMBER	QTY	PART NAME 1 2 3 4 5 6 (PRODUCT LEVEL)	SEE PAGE
	1	1	**143-4973**	1	PLATE AS	
	2	1	*241-0920*	1	BUCKET AS-LIGHT MATERIAL (QUICK COUPLER)	
		1	**4E-0659**	1	EDGE-CUTTING	
		1	**9T-3598**	2	BOSS (M10X1.5-THD)	
		1	**9V-9480**	2	PLATE	
		1	**092-1136**	2	BOSS (M10X1.5-THD)	
		1	**111-9758**	1	PLATE	
		1	**164-9316**	2	PLATE	
	3	1	**8T-4121**	6	WASHER-HARD (11X21X2.5-MM THK)	
M	4	1	**8T-4136**	6	BOLT (M10X1.5X25-MM)	

M-METRIC PART

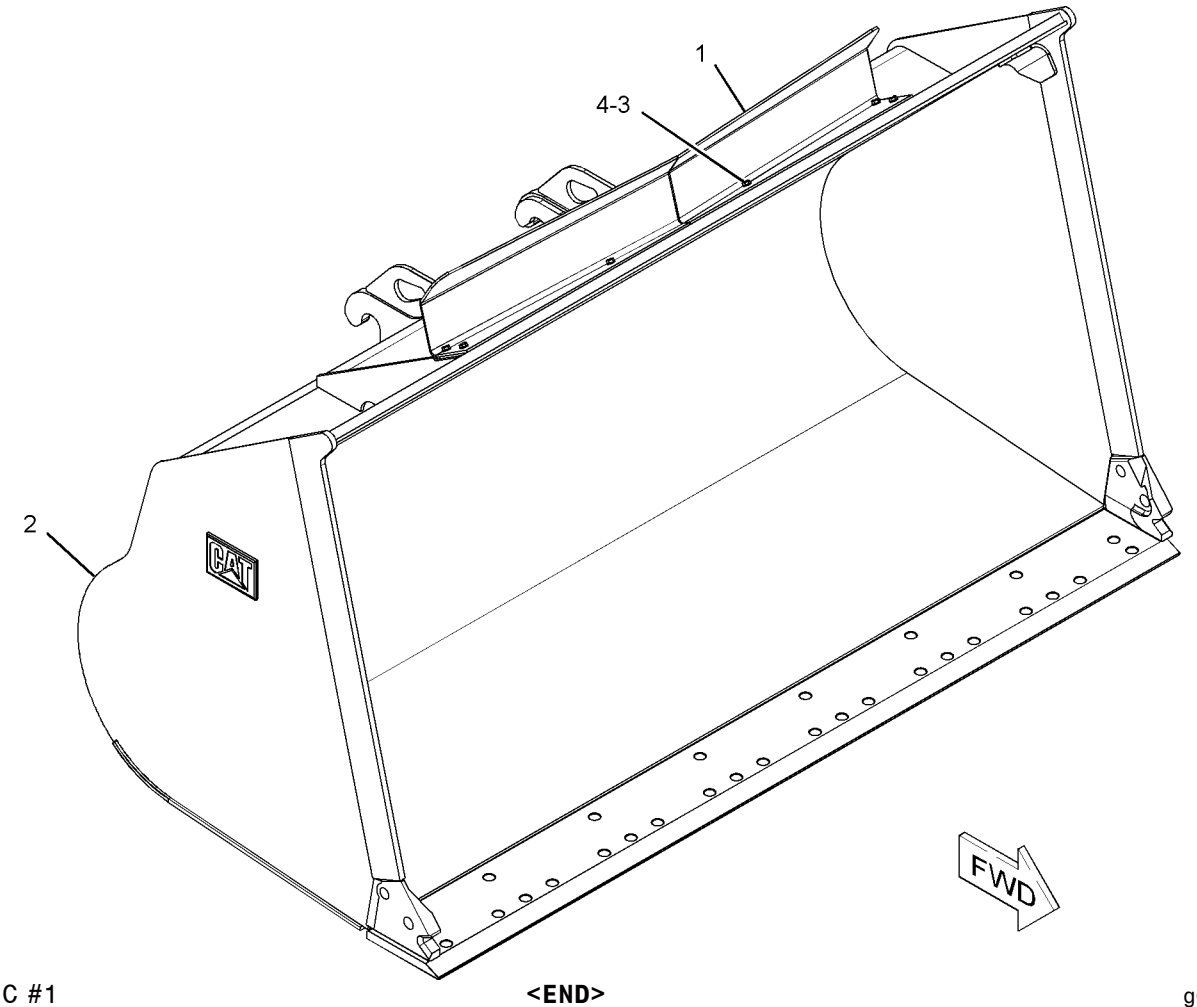

GRAPHIC #1 **<END>** g01092397

WORK TOOLS

252-6904 BUCKET GP-LIGHT MATERIAL

S/N: FTD1-UP

PART OF 252-6903 BUCKET AR-LIGHT MATERIAL

AN ATTACHMENT

SMCS-6103 **i02600567**

NOTE	REF NO	GRAPHIC REF	PART NUMBER	QTY	PART NAME 1 2 3 4 5 6 (PRODUCT LEVEL)	SEE PAGE
	1	1	**137-4234**	1	PLATE-IDENTIFICATION (WORK TOOL)	
	2	1	**168-8389**	4	TACK-FASTENER	
Y	3	1	*252-6905*	1	BUCKET AS-LIGHT MATERIAL	736

Y-SEPARATE ILLUSTRATION

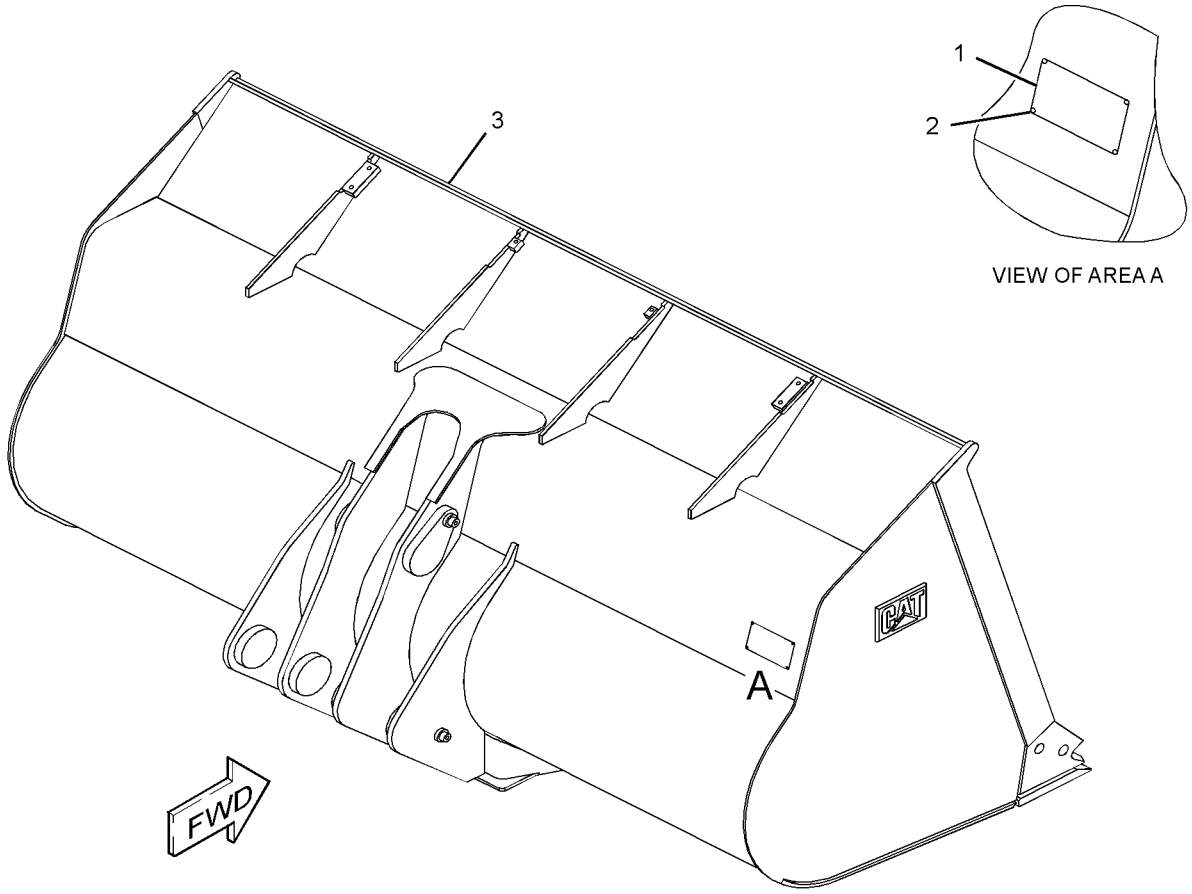

GRAPHIC #1 **<END>** g01301966

292-9191 BUCKET GP-MULTIPURPOSE—QUICK COUPLER

S/N: FTD1-UP

PART OF 292-9190 BUCKET AR-MULTIPURPOSE

AN ATTACHMENT

SMCS-6104 **i02743012**

NOTE	REF NO	GRAPHIC REF	PART NUMBER	QTY	PART NAME 1 2 3 4 5 6 (PRODUCT LEVEL)	SEE PAGE
	1	1	**4T-2972**	2	EDGE-CUTTING	
	2	1	**6Q-2204**	2	PIN-PIVOT	
	3	1	**6V-1506**	2	FITTING-GREASE	
	4	1	**8A-8580**	2	EDGE-CUTTING	
	5	1	**137-4234**	1	PLATE-IDENTIFICATION (WORK TOOL)	
	6	1	**168-8389**	4	TACK-FASTENER	
	7	1	**193-5914**	6	PLUG	
	8	1	**238-0347**	2	PIN AS	
	9	1	**282-6928**	2	PIN	
	10	1	**282-6935**	2	SPACER	
	11	1	**292-9192**	1	BULLDOZER AS	
	12	1	**292-9193**	1	PLATE AS-BUCKET	
	12A	1	**161-4130**	2	PLATE-IDENTIFICATION (CAT)	
	13	1	**096-1820**	4	PIN-COTTER	
	14	1	**4F-3654**	16	BOLT-PLOW (5/8-11X2-IN)	
	15	1	**4K-0367**	16	NUT-FULL (5/8-11-THD)	
	16	1	**8T-4121**	2	WASHER-HARD (11X21X2.5-MM THK)	
M	17	1	**8T-4182**	2	BOLT (M10X1.5X45-MM)	

M-METRIC PART

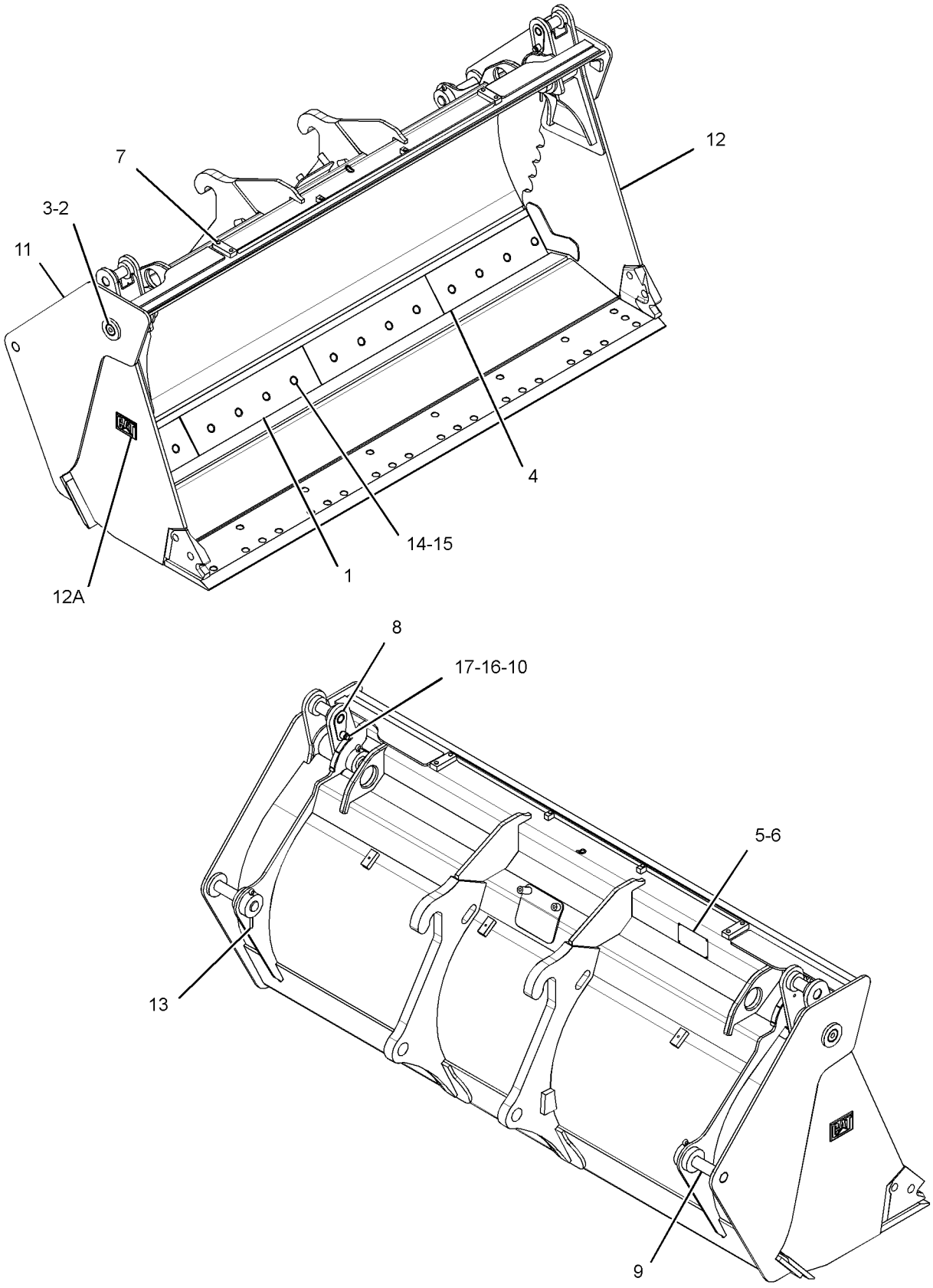

GRAPHIC #1 **<END>** g01400382

251-9880 BUCKET GP-PENETRATION—QUICK COUPLER

S/N: FTD1-UP

AN ATTACHMENT

SMCS-6131 **i02278938**

NOTE	REF NO	GRAPHIC REF	PART NUMBER	QTY	PART NAME 1 2 3 4 5 6 (PRODUCT LEVEL)	SEE PAGE
	1	1	**137-4234**	1	PLATE-IDENTIFICATION (WORK TOOL)	
	2	1	**168-8389**	4	TACK-FASTENER	
Y	3	1	*250-7862*	1	BUCKET AS-PENETRATION (QUICK COUPLER)	737

Y-SEPARATE ILLUSTRATION

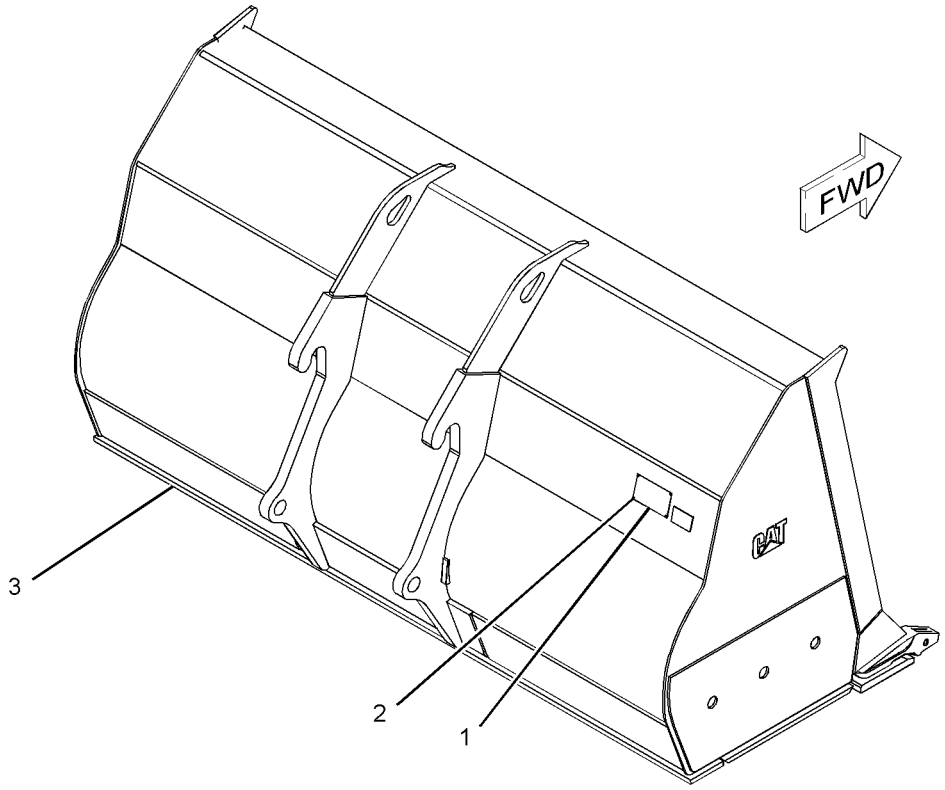

GRAPHIC #1 **<END>** g01141829

WORK TOOLS

270-7439 BUCKET GP-PENETRATION

S/N: FTD1-UP

PART OF 251-9879 BUCKET AS-PENETRATION

AN ATTACHMENT

SMCS-6131 **i02356397**

NOTE	REF NO	GRAPHIC REF	PART NUMBER	QTY	PART NAME 1 2 3 4 5 6 (PRODUCT LEVEL)	SEE PAGE
	1	1	**137-4234**	1	PLATE-IDENTIFICATION (WORK TOOL)	
	2	1	**168-8389**	4	TACK-FASTENER	
Y	3	1	*250-7863*	1	BUCKET AS-PENETRATION (QUICK COUPLER)	738

Y-SEPARATE ILLUSTRATION

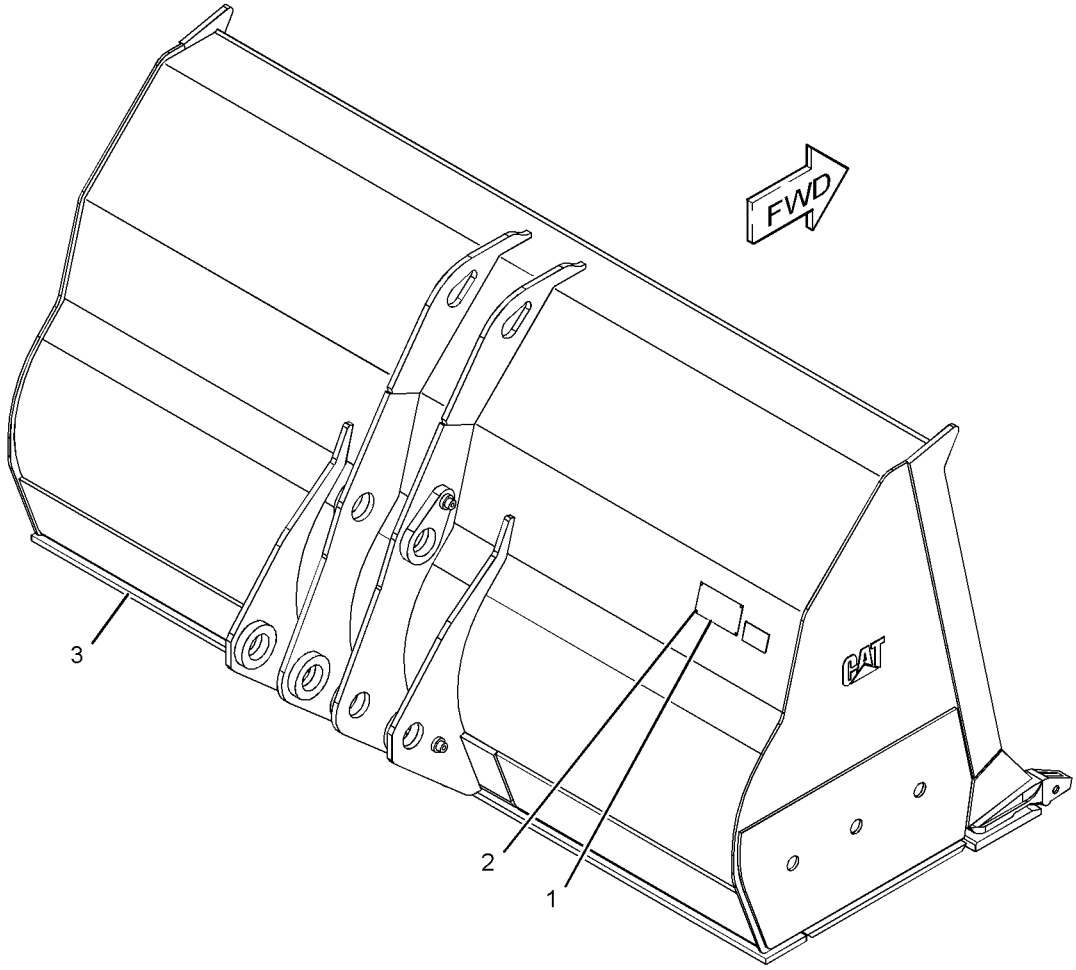

GRAPHIC #1 **<END>** g01181723

WORK TOOLS

6W-8832 CARRIAGE AS-FORK—QUICK COUPLER

S/N: BYD1-UP; FTD1-UP

AN ATTACHMENT

SMCS-6402 **i02312696**

NOTE	REF NO	GRAPHIC REF	PART NUMBER	QTY	PART NAME 1 2 3 4 5 6 (PRODUCT LEVEL)	SEE PAGE
	1	1	**9V-9077**	1	PLATE	

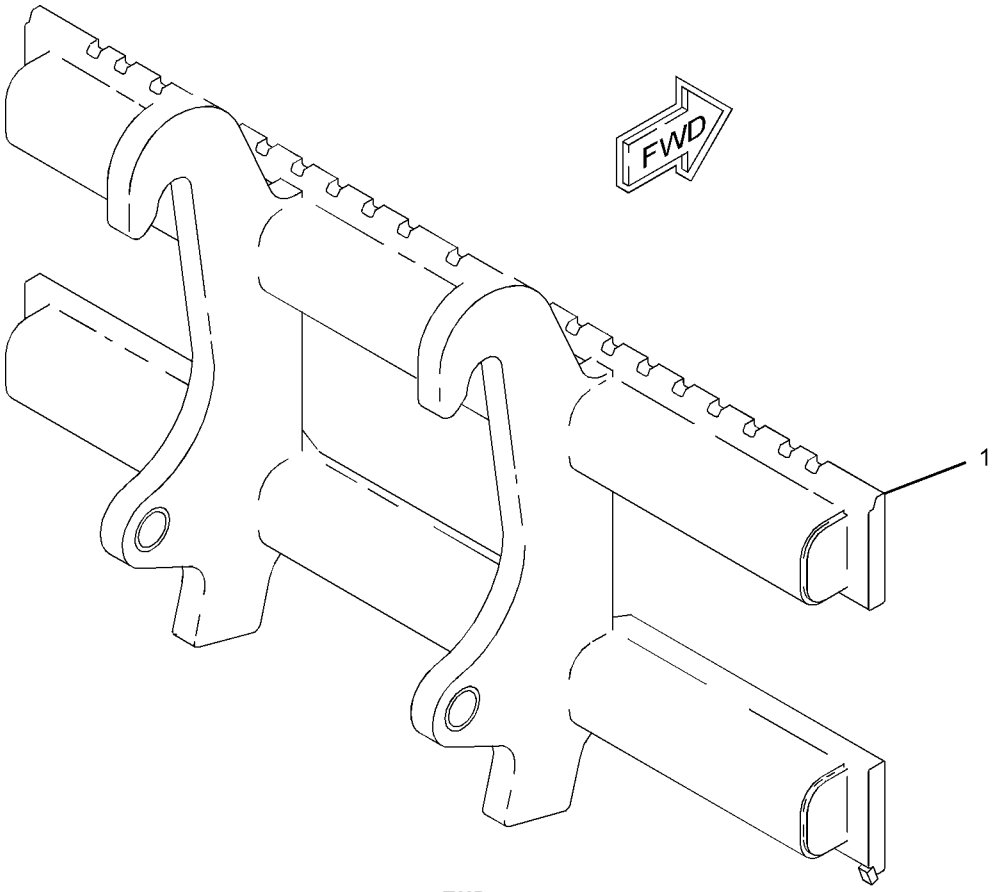

GRAPHIC #1 **<END>** g01109941

WORK TOOLS

257-6113 CARRIAGE GP-FORK

S/N: BYD1-UP; FTD1-UP
AN ATTACHMENT

SMCS-6402 **i02277526**

NOTE	REF NO	GRAPHIC REF	PART NUMBER	QTY	PART NAME 1 2 3 4 5 6 (PRODUCT LEVEL)	SEE PAGE
	1	1	**157-4835**	1	PLATE-INSTRUCTION	
	2	1	**168-8389**	4	TACK-FASTENER	
	3	1	*257-6111*	1	CARRIAGE AS-FORK	

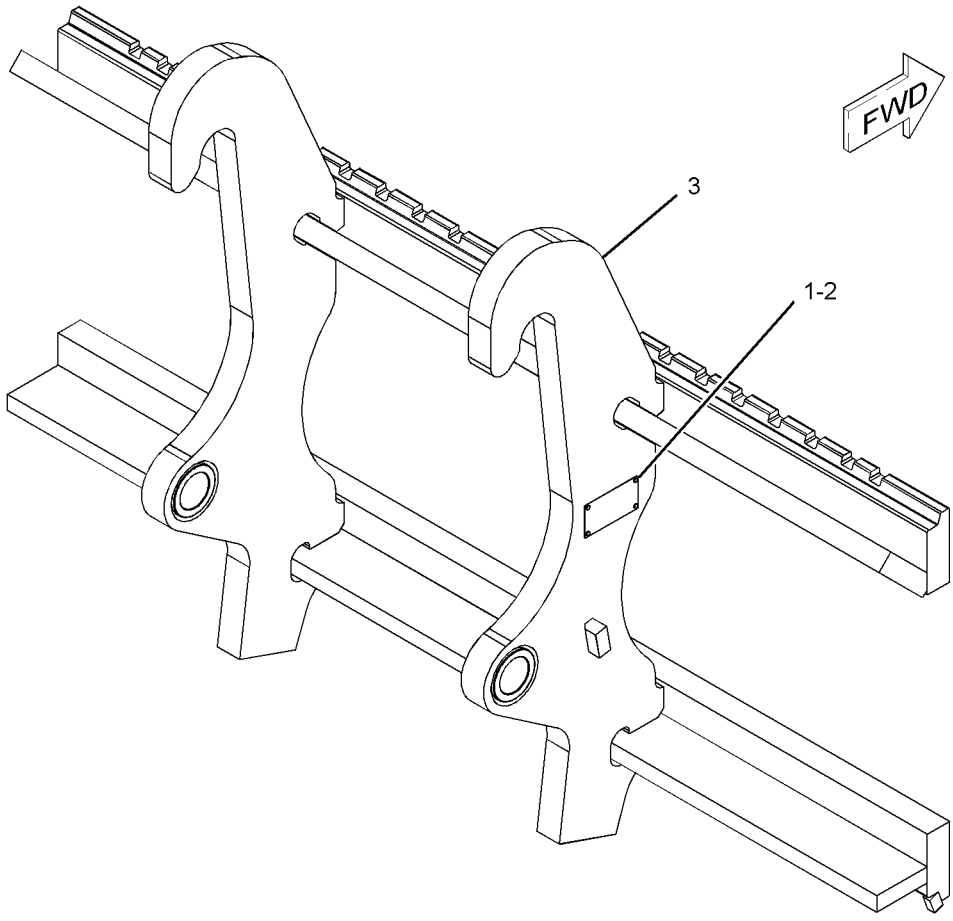

GRAPHIC #1 **<END>** g01140789

WORK TOOLS

294-9437 COUPLER AR-QUICK

S/N: BYD1-UP
CANNOT BE USED WITH 294-9438 COUPLER AR
AN ATTACHMENT

SMCS-6129 **i02736021**

NOTE	PART NUMBER	QTY	PART NAME 1 2 3 4 5 6 (PRODUCT LEVEL)	SEE PAGE
Y	*223-6352*	1	COUPLER GP-QUICK	763
Y	*196-1979*	1	CYLINDER & MTG GP-COUPLER	487
Y	*290-7205*	1	LINES GP-COUPLER	514

Y-SEPARATE ILLUSTRATION

<END>

303-2048 COUPLER AR-QUICK

S/N: FTD1-UP
AN ATTACHMENT

SMCS-6129 **i02726233**

NOTE	PART NUMBER	QTY	PART NAME 1 2 3 4 5 6 (PRODUCT LEVEL)	SEE PAGE
Y	*235-7400*	1	COUPLER GP-QUICK (STANDARD)	764
Y	*148-7827*	1	CYLINDER & MTG GP-COUPLER	485
Y	*297-2470*	1	LINES GP-COUPLER (STANDARD)	522

Y-SEPARATE ILLUSTRATION

<END>

303-2049 COUPLER AR-QUICK—WIDE

S/N: FTD1-UP
AN ATTACHMENT

SMCS-6129 **i02738350**

NOTE	PART NUMBER	QTY	PART NAME 1 2 3 4 5 6 (PRODUCT LEVEL)	SEE PAGE
Y	*235-7450*	1	COUPLER GP-QUICK (WIDE)	766
Y	*176-0720*	1	CYLINDER & MTG GP-COUPLER (WIDE)	486
Y	*297-2471*	1	LINES GP-COUPLER (STANDARD LIFT MACHINES, WIDE)	524

Y-SEPARATE ILLUSTRATION

<END>

WORK TOOLS

223-6352 COUPLER GP-QUICK

S/N: BYD1-UP

PART OF 294-9437 COUPLER AR-QUICK

AN ATTACHMENT

SMCS-6129 **i01882000**

NOTE	REF NO	GRAPHIC REF	PART NUMBER	QTY	PART NAME 1 2 3 4 5 6 (PRODUCT LEVEL)	SEE PAGE
M	1	1	**8T-4908**	5	BOLT (M8X1.25X25MM)	
	2	1	**223-6353**	1	FRAME AS-COUPLER	
	3	1	**237-2327**	1	COVER AS	
	4	1	**8T-4224**	5	WASHER-HARD (8.8X16X2MM THK)	

M-METRIC PART

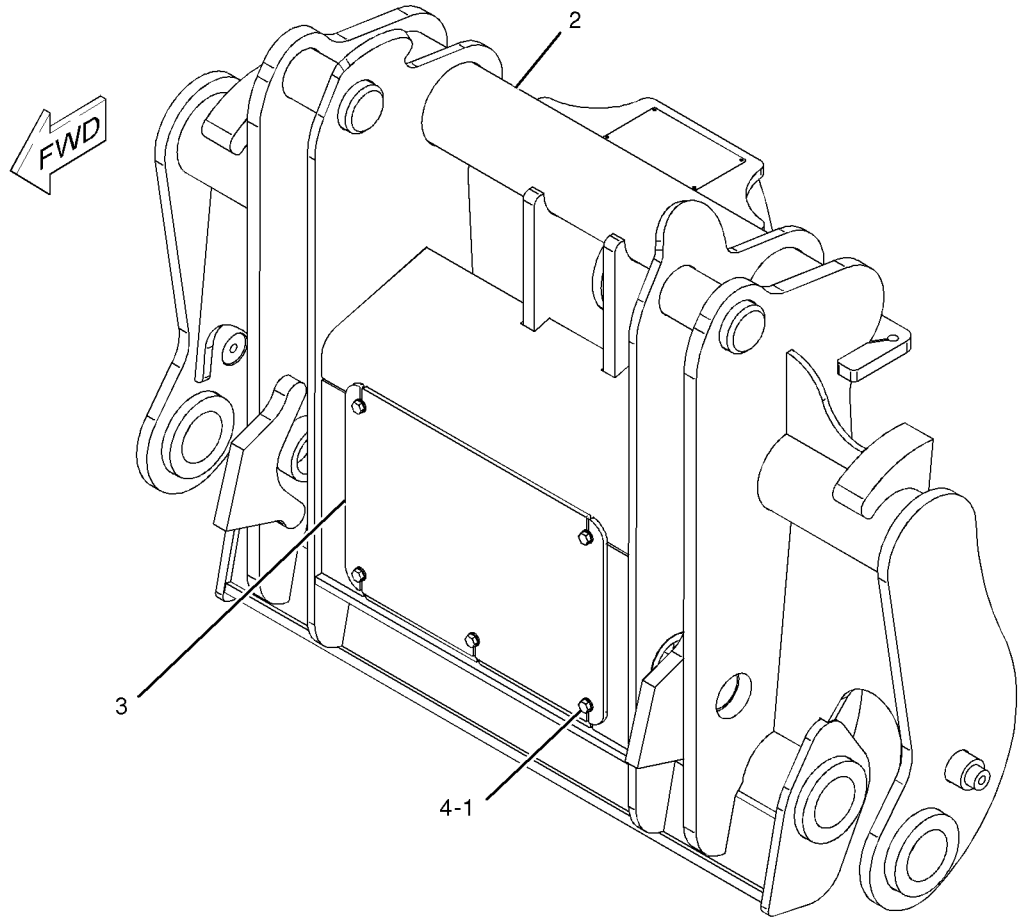

GRAPHIC #1 **<END>** g01028416

WORK TOOLS

235-7400 COUPLER GP-QUICK–STANDARD

S/N: FTD1-UP

PART OF 303-2048 COUPLER AR-QUICK

AN ATTACHMENT

SMCS-6129 **i02480154**

NOTE	REF NO	GRAPHIC REF	PART NUMBER	QTY	PART NAME 1 2 3 4 5 6 (PRODUCT LEVEL)	SEE PAGE
	1	1	**132-2419**	2	PIN AS	
	2	1	**132-2427**	1	PIN AS	
	3	1	**132-2435**	1	PLATE	
	4	1	**132-2441**	1	PLATE AS	
	5	1	**146-7986**	2	SHIM (3.18-MM THK)	
	6	1	**146-7987**	2	SHIM (6.35-MM THK)	
	7	1	**176-0623**	2	WASHER (78X160X1.6-MM THK)	
	8	1	**176-0624**	2	WASHER (78X160X3-MM THK)	
	9	1	**235-7401**	1	COUPLER AS	
	10	1	**280-9714**	1	PLATE-IDENTIFICATION	
	11	1	**3B-8489**	1	FITTING-GREASE	
	12	1	**3B-8491**	2	FITTING-GREASE (EXTENDED)	
	13	1	**5P-4116**	8	WASHER-HARD (8.8X20.5X2-MM THK)	
	14	1	**7X-0618**	2	WASHER-HARD (13.5X40X5-MM THK)	
M	15	1	**8T-4908**	8	BOLT (M8X1.25X25-MM)	
M	16	1	**8T-4956**	2	BOLT (M12X1.75X35-MM)	
	17	1	**9H-5604**	1	RING-RETAINING	

M-METRIC PART

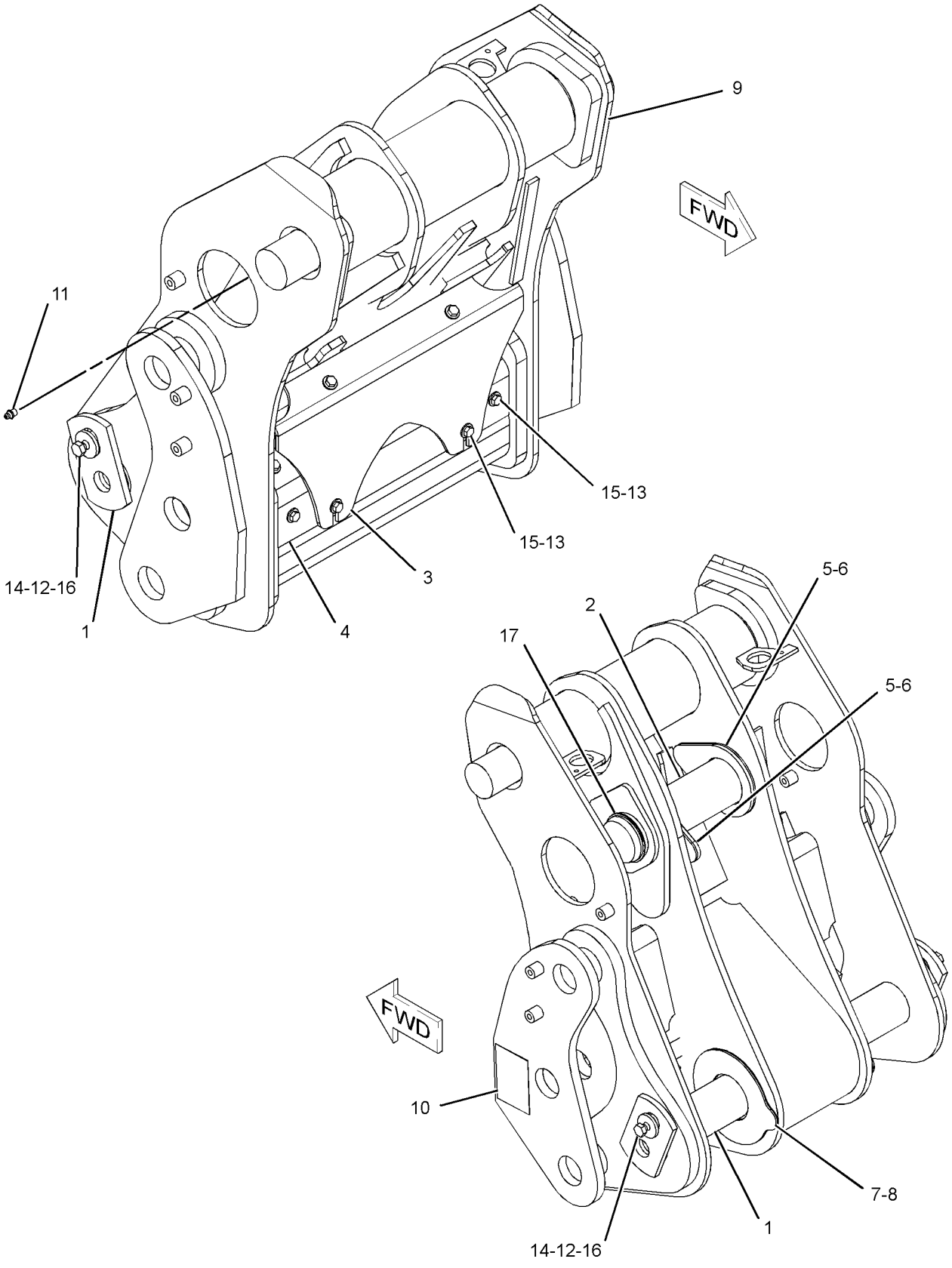

GRAPHIC #1 **<END>** g01298660

WORK TOOLS

235-7450 COUPLER GP-QUICK–WIDE

S/N: FTD1-UP

PART OF 303-2049 COUPLER AR-QUICK

AN ATTACHMENT

SMCS-6129 **i02808494**

NOTE	REF NO	GRAPHIC REF	PART NUMBER	QTY	PART NAME 1 2 3 4 5 6 (PRODUCT LEVEL)	SEE PAGE
	1	1	**8T-4224**	6	WASHER-HARD (8.8X16X2-MM THK)	
	3	1	**132-2419**	2	PIN AS	
	4	1	**132-2427**	1	PIN AS	
	5	1	**280-9714**	1	PLATE-IDENTIFICATION	
B	6	1	**146-7986**	2	SHIM (3.18-MM THK)	
B	7	1	**146-7987**	2	SHIM (6.35-MM THK)	
	8	1	**235-7451**	1	COUPLER AS	
C	9	1	**264-4330**	1	COVER AS	
	10	1	**235-7471**	1	PLATE	
	11	1	**3B-8489**	1	FITTING-GREASE (HYDRAULIC)	
	12	1	**3B-8491**	2	FITTING-GREASE (EXTENDED) (STRAIGHT)	
	13	1	**5P-4116**	2	WASHER-HARD (8.8X20.5X2-MM THK)	
	14	1	**7X-0618**	2	WASHER-HARD (13.5X40X5-MM THK)	
M	15	1	**8T-4908**	4	BOLT (M8X1.25X25-MM)	
M	16	1	**8T-4956**	2	BOLT (M12X1.75X35-MM)	
M	17	1	**8T-7547**	4	BOLT (M8X1.25X30-MM)	
	18	1	**9H-5604**	1	RING-RETAINING	

B-USE AS REQUIRED
C-CHANGE FROM PREVIOUS TYPE
M-METRIC PART

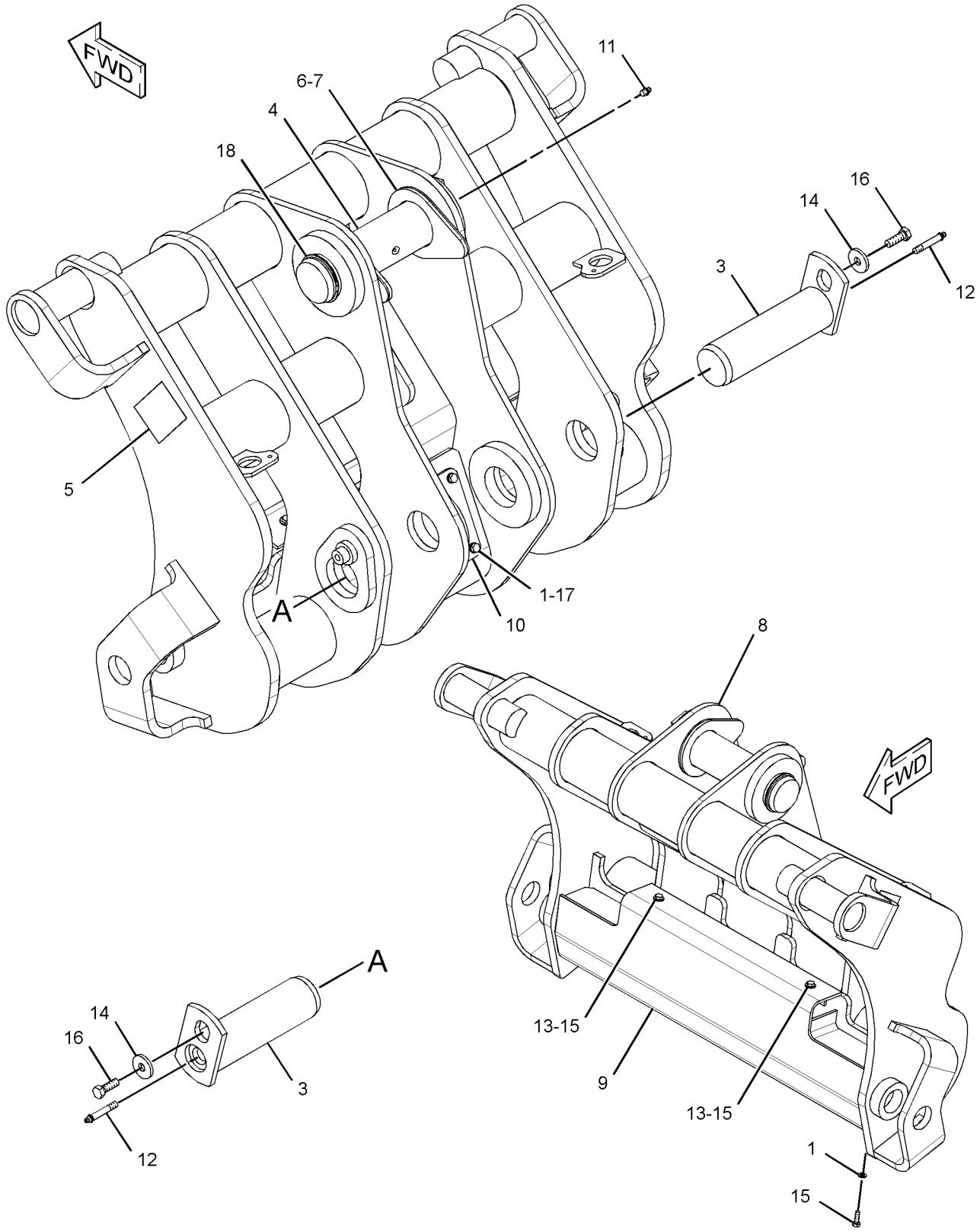

GRAPHIC #1 **<END>** g01404903

WORK TOOLS

304-1061 COUPLER GP-QUICK–STANDARD

S/N: FTD1-UP

FOR USE WITH T962 & TT289, 296-6812 LINES GP-COUPLER, T296 & TT289, 296-6813 LINES GP-COUPLER, TT142 & TT291, 296-6814 LINES GP-COUPLER, TT142 & TT291, 296-6815 LINES GP-COUPLER

AN ATTACHMENT

SMCS-6129 **i02738418**

NOTE	REF NO	GRAPHIC REF	PART NUMBER	QTY	PART NAME 1 2 3 4 5 6 (PRODUCT LEVEL)	SEE PAGE
	1	2	**6W-5761**	2	PIN	
	2	1,2	**132-2419**	2	PIN AS	
	3	2	**132-2427**	1	PIN AS	
	4	1	**132-2435**	1	PLATE	
	5	1	**132-2441**	1	PLATE AS	
	6	2	**146-7986**	2	SHIM (3.18-MM THK)	
	7	2	**146-7987**	2	SHIM (6.35-MM THK)	
	8	2	**152-5717**	1	CAP-DUST	
	9	2	**152-5718**	1	CAP-DUST	
	10	2	**176-0623**	2	WASHER (78X160X1.6-MM THK)	
	11	2	**176-0624**	2	WASHER (78X160X3-MM THK)	
Y	12	2	**190-3085**	1	CYLINDER GP-COUPLER	488
I	13	2	**214-5389**	1	HOSE AS	
I	14	2	**214-5390**	1	HOSE AS	
	15	1	**235-7401**	1	COUPLER AS	
M		1	**9R-2672**	4	BOSS (M10X1.5X20-MM)	
	16	2	**241-6189**	1	FITTING AS (QUICK DISCONNECT, MALE)	
	17	2	**241-6190**	1	FITTING AS (QUICK DISCONNECT, FEMALE)	
I	18	1,2	**261-7854**	2	HOSE AS	
	19	1,2	**261-7855**	2	TUBE AS	
					(EACH INCLUDES)	
		1,2	**6V-8726**	1	CONNECTOR	
		1,2	**9X-6579**	1	NUT-ORIFICE (7/16-12-THD)	
	20	2	**280-9714**	1	PLATE-IDENTIFICATION	
I	21	1	**297-2778**	1	HOSE AS	
I	22	2	**297-2779**	1	HOSE AS	
	23	2	*148-8325*	3	CONNECTOR AS	
					(EACH INCLUDES)	
		2	**3J-1907**	1	SEAL-O-RING	
		2	**3J-1907**	1	SEAL-O-RING	
		2	**4J-5477**	1	SEAL-O-RING	
		2	**4J-5477**	1	SEAL-O-RING	
		2	**6V-8641**	1	CONNECTOR	
		2	**6V-8641**	1	CONNECTOR	
	24	2	*148-8351*	1	ELBOW AS	
		2	**4J-5477**	1	SEAL-O-RING	
		2	**6V-9849**	1	ELBOW	
	25	2	*148-8368*	1	ELBOW AS	
		2	**3J-1907**	1	SEAL-O-RING	
		2	**4J-5477**	1	SEAL-O-RING	
		2	**6V-8627**	1	ELBOW	
	26	2	*150-5968*	2	TEE AS	
					(EACH INCLUDES)	
		2	**4J-5477**	2	SEAL-O-RING	
		2	**6V-9835**	1	TEE-SWIVEL	
	27	2	**3B-8489**	1	FITTING-GREASE (HYDRAULIC)	
	28	1,2	**3B-8491**	2	FITTING-GREASE (EXTENDED)	
M	29	2	**5C-2890**	2	NUT (M6X1-THD)	
M	30	2	**5C-9553**	2	BOLT (M6X1X16-MM)	
	31	1,2	**5K-9090**	4	SEAL-O-RING	
	32	1	**5P-4116**	8	WASHER-HARD (8.8X20.5X2-MM THK)	
	33	1,2	**5P-7462**	2	CLIP (SLOT)	
	34	1,2	**5P-7463**	2	CLIP (TAB)	

304-1061 **COUPLER GP-QUICK** *(contd.)* **i02738418**

NOTE	REF NO	GRAPHIC REF	PART NUMBER	QTY	PART NAME 1 2 3 4 5 6 (PRODUCT LEVEL)	SEE PAGE
	35	1,2	**6V-0683**	2	GROMMET	
	36	2	**6V-9172**	2	NUT (1-7/16-12-THD)	
	37	2	**6W-5760**	2	DOWEL	
	38	1,2	**7X-0618**	2	WASHER-HARD (13.5X40X5-MM THK)	
	39	1,2	**7X-7729**	6	WASHER (11X25X3-MM THK)	
	40	2	**8M-2771**	2	CLIP	
	41	1,2	**8T-1889**	2	CLIP (SLOT)	
	42	1,2	**8T-1890**	2	CLIP (TAB)	
	43	1,2	**8T-1893**	4	CLIP (SLOT)	
	44	1,2	**8T-1894**	4	CLIP (TAB)	
M	45	1,2	**8T-4137**	6	BOLT (M10X1.5X20-MM)	
	46	2	**8T-4205**	4	WASHER-HARD (7.2X14.5X2-MM THK)	
	47	1,2	**8T-4223**	2	WASHER-HARD (13.5X25.5X3-MM THK)	
M	48	1	**8T-4908**	8	BOLT (M8X1.25X25-MM)	
M	49	1,2	**8T-4956**	2	BOLT (M12X1.75X35-MM)	
	50	2	**9H-5604**	1	RING-RETAINING	

I-REFER TO HYDRAULIC INFORMATION SYSTEM
M-METRIC PART
Y-SEPARATE ILLUSTRATION

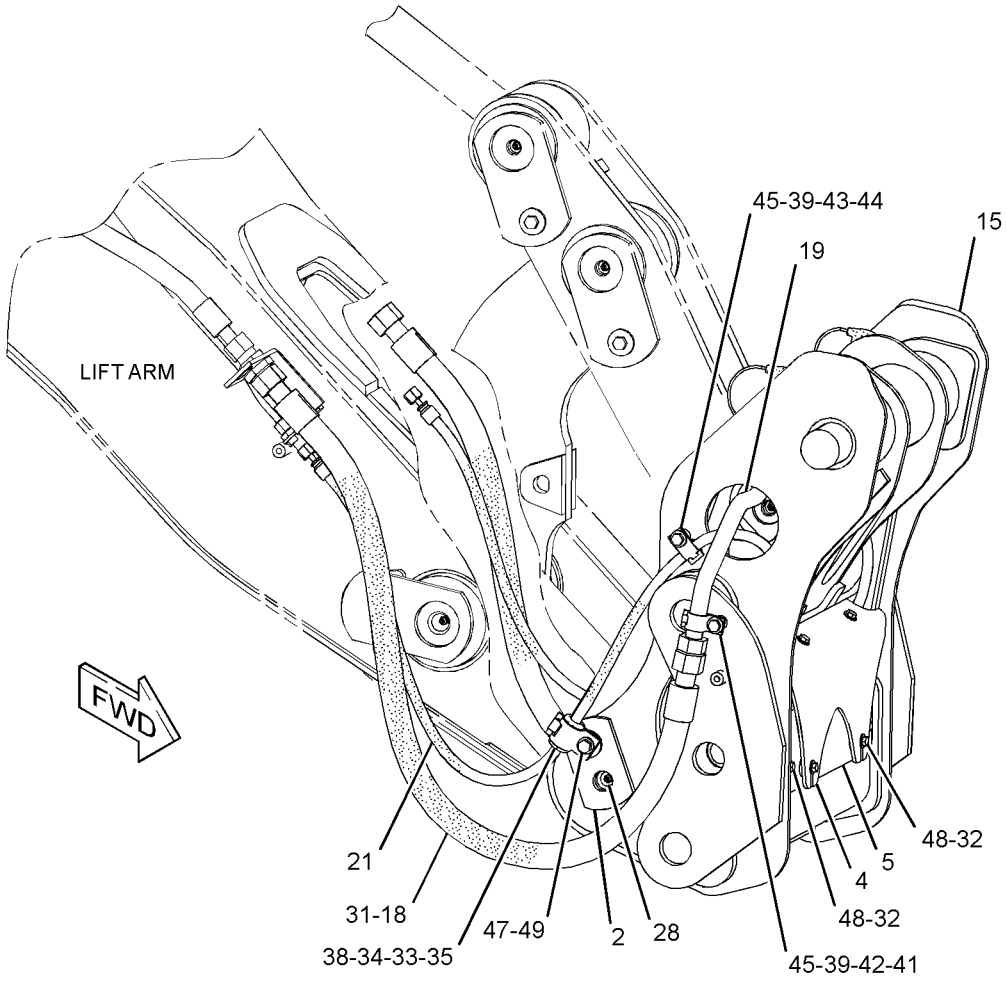

GRAPHIC #1 g01401367

304-1061 **COUPLER GP-QUICK** *(contd.)* **i02738418**

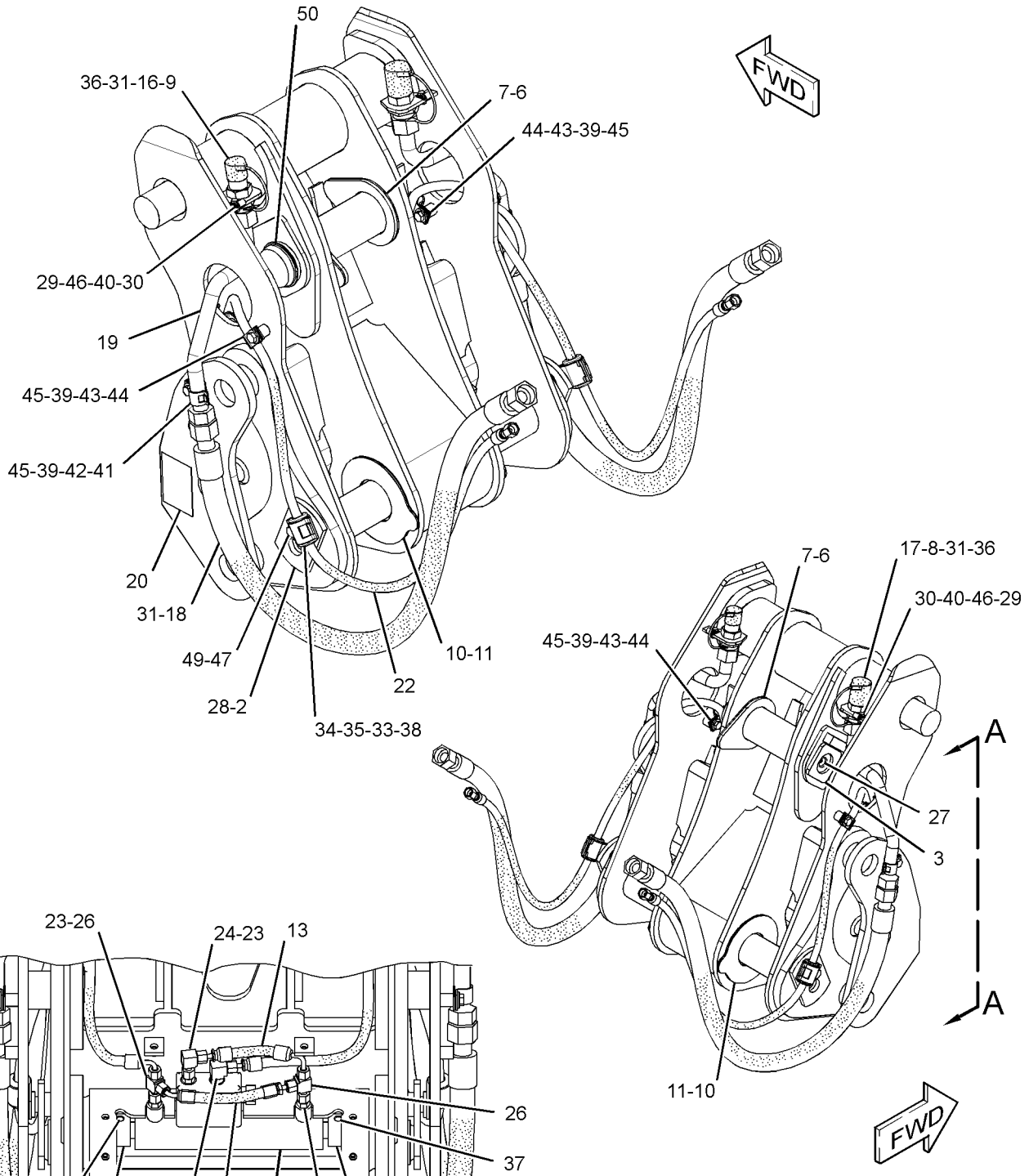

VIEW A-A
(PLATES REMOVED FOR CLARITY)

GRAPHIC #2 **<END>** g01401368

WORK TOOLS

8E-4566 EDGE GP-CUTTING

S/N: BYD1-UP; FTD1-UP
PART OF 292-9189 BUCKET AR-MULTIPURPOSE
AN ATTACHMENT

SMCS-6801 **i00532494**

NOTE	PART NUMBER	QTY	PART NAME 1 2 3 4 5 6 (PRODUCT LEVEL)	SEE PAGE
	1J-5607	10	BOLT-PLOW	
	8E-4567	2	EDGE-CUTTING	
	4T-8091	2	EDGE-END	
	2J-3507	10	NUT-FULL (1-8 THD)	

<END>

144-3422 EDGE GP-CUTTING

S/N: BYD1-UP; FTD1-UP
AN ATTACHMENT

SMCS-6801 **i01865483**

NOTE	PART NUMBER	QTY	PART NAME 1 2 3 4 5 6 (PRODUCT LEVEL)	SEE PAGE
	1J-5607	10	BOLT-PLOW (1-8X2.75 IN)	
	145-9904	2	EDGE-CUTTING	
	4T-8091	2	EDGE-END	
	2J-3507	10	NUT-FULL (1-8 THD)	

<END>

WORK TOOLS

251-5418 EDGE GP-CUTTING—RUBBER

S/N: FTD1-UP

AN ATTACHMENT

SMCS-6801 **i02349347**

NOTE	REF NO	GRAPHIC REF	PART NUMBER	QTY	PART NAME 1 2 3 4 5 6 (PRODUCT LEVEL)	SEE PAGE
	1	1	**251-5417**	1	EDGE-CUTTING	
	2	1	**2J-3507**	8	NUT-FULL (1-8-THD)	
	3	1	**3B-4516**	8	LOCKWASHER	
	4	1	**4J-9208**	8	BOLT-PLOW (1-8X3.5-IN)	

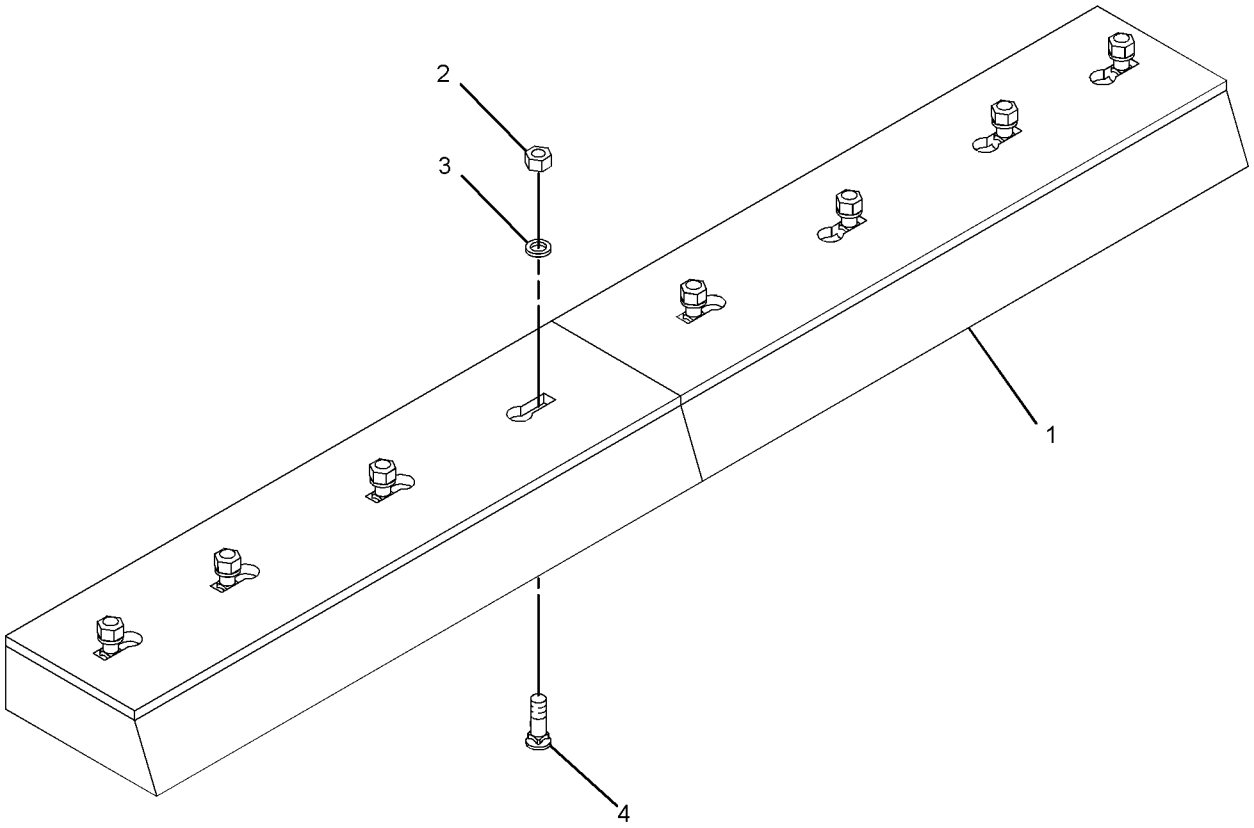

GRAPHIC #1 **<END>** g01174130

WORK TOOLS

8E-4568 EDGE GP-SEGMENT

S/N: BYD1-UP; FTD1-UP
AN ATTACHMENT

SMCS-6818 **i00527563**

NOTE	PART NUMBER	QTY	PART NAME 1 2 3 4 5 6 (PRODUCT LEVEL)	SEE PAGE
	1J-5607	14	BOLT-PLOW	
	8E-4569	7	EDGE-SEGMENT	
	2J-3507	14	NUT-FULL (1-8 THD)	

<END>

6W-8900 FORK GP-PALLET

S/N: BYD1-UP; FTD1-UP
1200-MM (47-IN)
AN ATTACHMENT

SMCS-6405 **i02595638**

NOTE	PART NUMBER	QTY	PART NAME 1 2 3 4 5 6 (PRODUCT LEVEL)	SEE PAGE
	091-1637	1	SERVICE GP-FORK POSITIONER	
	091-1665	1	LEVER	
	091-1664	1	PIN	
	8T-0255	1	PIN-SPRING	
	091-1667	1	SPRING	
	091-1745	1	WASHER (16.6X24X1.2-MM THK)	

<END>

6W-8933 FORK GP-PALLET

S/N: BYD1-UP; FTD1-UP
1050-MM (41-IN)
AN ATTACHMENT

SMCS-6405 **i02595640**

NOTE	PART NUMBER	QTY	PART NAME 1 2 3 4 5 6 (PRODUCT LEVEL)	SEE PAGE
	091-1637	1	SERVICE GP-FORK POSITIONER	
	091-1665	1	LEVER	
	091-1664	1	PIN	
	8T-0255	1	PIN-SPRING	
	091-1667	1	SPRING	
	091-1745	1	WASHER (16.6X24X1.2-MM THK)	

<END>

6W-8935 FORK GP-PALLET

S/N: BYD1-UP; FTD1-UP
1350 MM (53-IN)
AN ATTACHMENT

SMCS-6405 **i01213343**

NOTE	PART NUMBER	QTY	PART NAME 1 2 3 4 5 6 (PRODUCT LEVEL)	SEE PAGE
	091-1637	1	SERVICE GP-FORK POSITIONER	
	8T-0255	1	PIN-SPRING	
	091-1745	1	WASHER (1.2MM THK)	

<END>

WORK TOOLS

6W-9739 FORK GP-PALLET

S/N: BYD1-UP; FTD1-UP
1350-MM (53-IN)
AN ATTACHMENT

SMCS-6405 **i01127617**

NOTE	PART NUMBER	QTY	PART NAME 1 2 3 4 5 6 (PRODUCT LEVEL)	SEE PAGE
	091-1637	1	SERVICE GP-FORK POSITIONER	
	091-1665	1	LEVER	
	091-1664	1	PIN	
	8T-0255	1	PIN-SPRING	
	091-1667	1	SPRING	
	091-1745	1	WASHER (1.2MM THK)	

<END>

WORK TOOLS

241-0921 FORK GP-PALLET–RH

S/N: BYD1-UP; FTD1-UP

AN ATTACHMENT

SMCS-6405 **i02276363**

NOTE	REF NO	GRAPHIC REF	PART NUMBER	QTY	PART NAME 1 2 3 4 5 6 (PRODUCT LEVEL)	SEE PAGE
	1	1	**091-1637**	1	SERVICE GP-FORK POSITIONER	
		1	**8T-0255**	1	PIN-SPRING	
		1	**091-1664**	1	PIN	
		1	**091-1665**	1	LEVER	
		1	**091-1667**	1	SPRING	
		1	**091-1745**	1	WASHER (16.6X24X1.2-MM THK)	

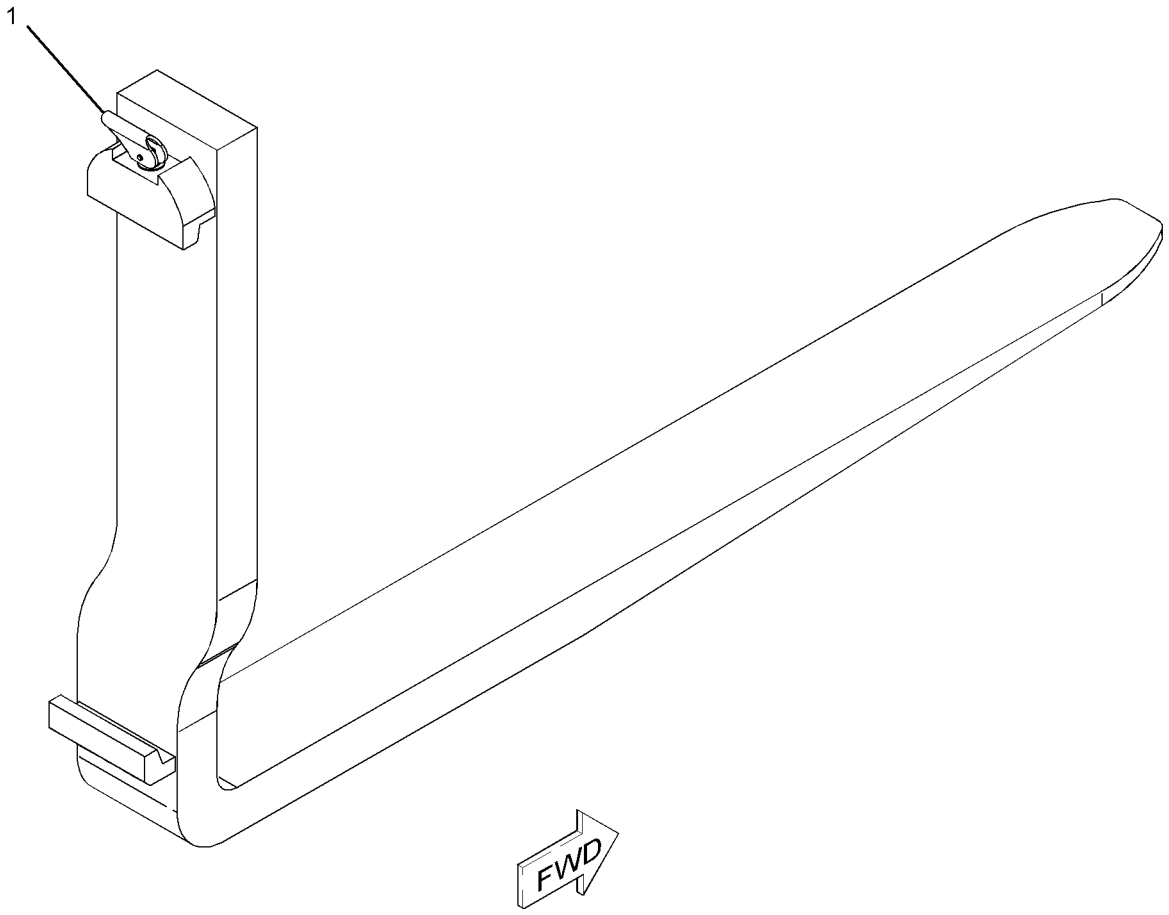

GRAPHIC #1 **<END>** g01116793

WORK TOOLS

241-0922 FORK GP-PALLET–LH

S/N: BYD1-UP; FTD1-UP

AN ATTACHMENT

SMCS-6405 **i02276395**

NOTE	REF NO	GRAPHIC REF	PART NUMBER	QTY	PART NAME 1 2 3 4 5 6 (PRODUCT LEVEL)	SEE PAGE
	1	1	**091-1637**	1	SERVICE GP-FORK POSITIONER	
		1	**8T-0255**	1	PIN-SPRING	
		1	**091-1664**	1	PIN	
		1	**091-1665**	1	LEVER	
		1	**091-1667**	1	SPRING	
		1	**091-1745**	1	WASHER (16.6X24X1.2-MM THK)	

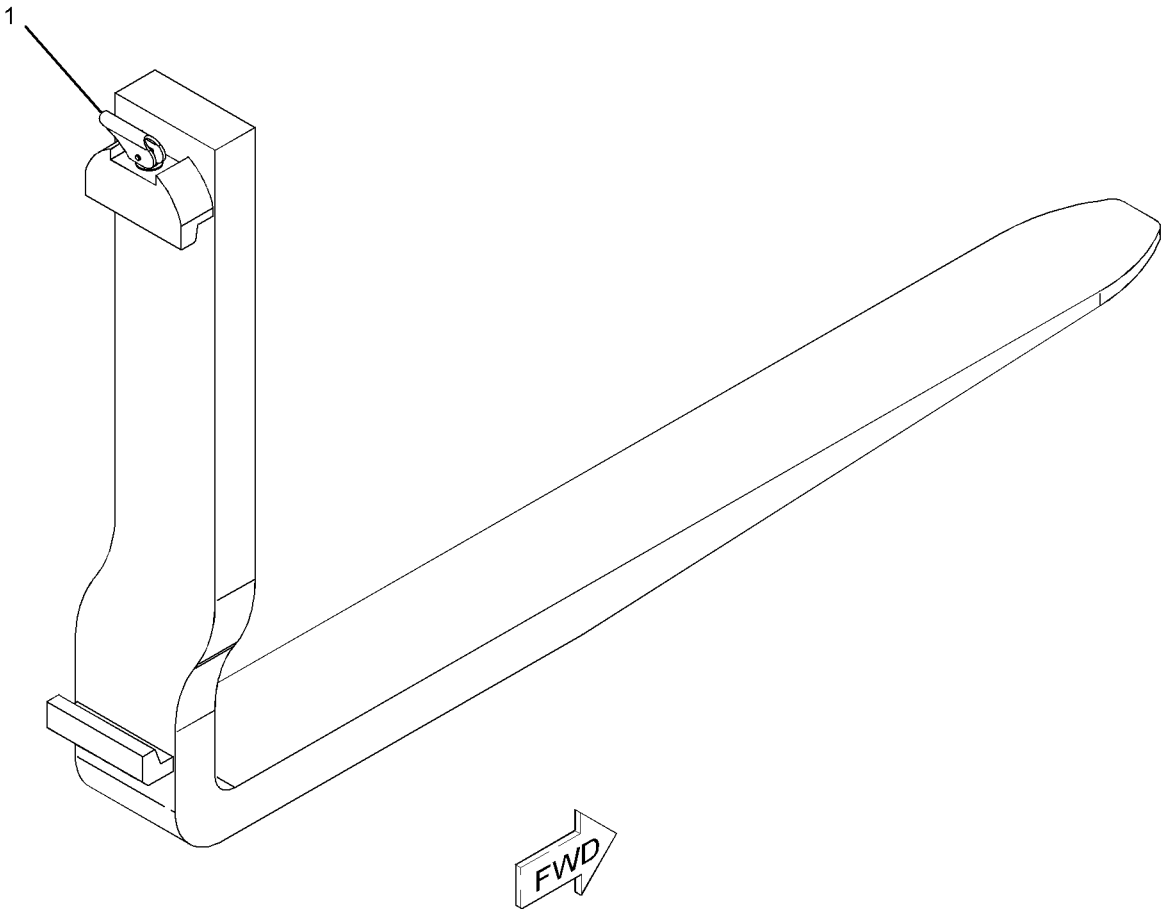

GRAPHIC #1 **<END>** g01116797

148-7900 MOUNTING GP-BUCKET

S/N: FTD1-UP

PART OF 252-6909, 256-8898, 256-8911 BUCKET AR-GENERAL PURPOSE, 252-6903 BUCKET AR-LIGHT MATERIAL, 251-9879 BUCKET AS-PENETRATION, 239-7004, 251-6600 BUCKET GP-GENERAL PURPOSE AN ATTACHMENT

SMCS-6101, 6102, 6103, 6131, 6523 **i01833346**

NOTE	REF NO	GRAPHIC REF	PART NUMBER	QTY	PART NAME 1 2 3 4 5 6 (PRODUCT LEVEL)	SEE PAGE
	1	1	**3B-8489**	1	FITTING-GREASE	
	2	1	**3B-8491**	2	FITTING-GREASE (EXTENDED)	
B	3	1	**176-0623**	2	WASHER (78X160X1.6-MM THK)	
B	4	1	**176-0624**	2	WASHER (78X160X3-MM THK)	
B	5	1	**146-7986**	2	SHIM (3.18-MM THK)	
B	6	1	**146-7987**	2	SHIM (6.35-MM THK)	
	7	1	**146-8003**	2	PIN AS	
	8	1	**146-8006**	1	PIN AS	
	9	1	**7X-0618**	3	WASHER-HARD (13.5X40X5-MM THK)	
M	10	1	**8T-4192**	3	BOLT (M12X1.75X25-MM)	

B-USE AS REQUIRED
M-METRIC PART

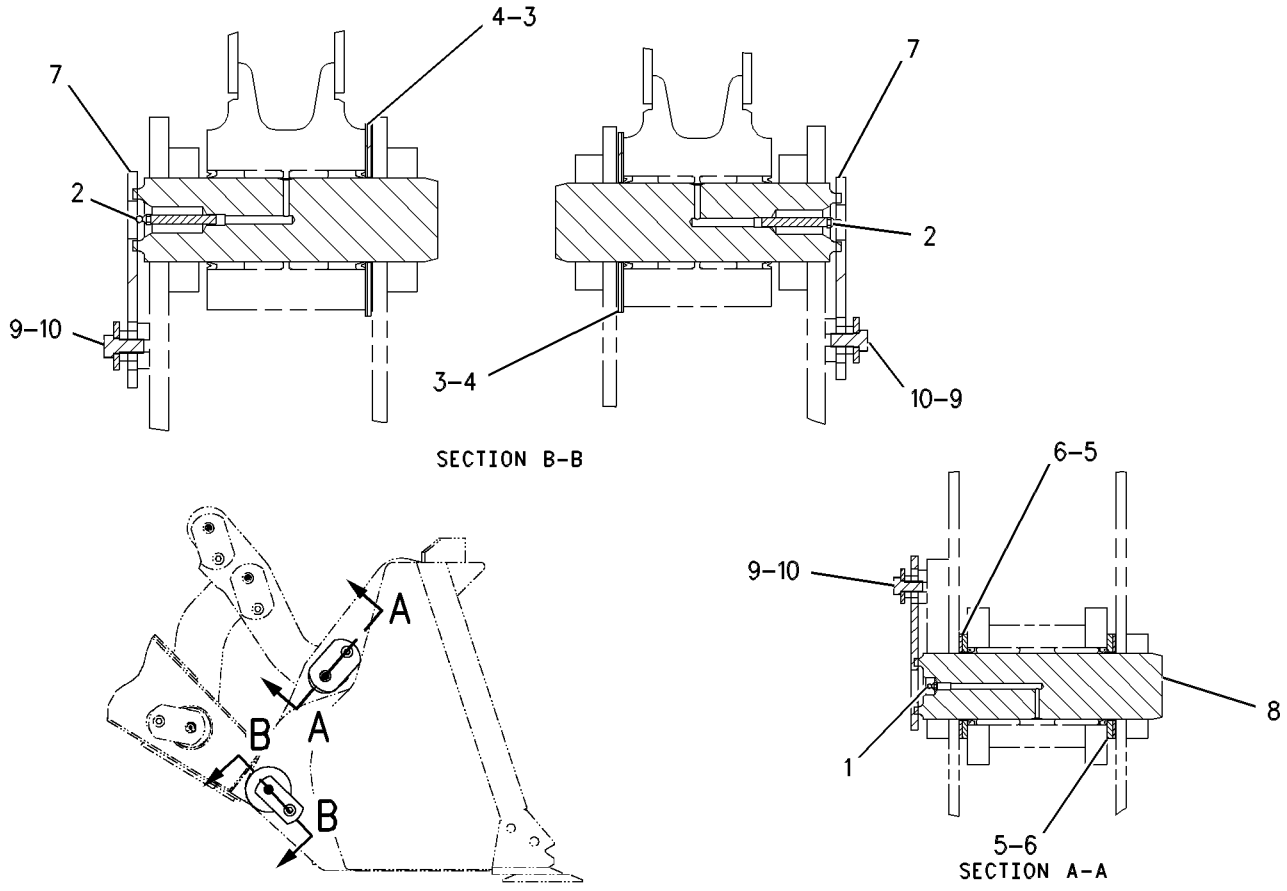

GRAPHIC #1 **<END>** g00605231

178-0470 PROTECTOR GP-LINKAGE

S/N: FTD1-UP

CANNOT BE USED WITH 148-7900—PAGE 777, 294-9437—PAGE 762

AN ATTACHMENT

SMCS-5063 **i01169469**

NOTE	REF NO	GRAPHIC REF	PART NUMBER	QTY	PART NAME 1 2 3 4 5 6 (PRODUCT LEVEL)	SEE PAGE
	1	1	**3B-8491**	2	FITTING-GREASE (EXTENDED)	
	2	1	**146-8003**	2	PIN AS	
	3	1	**146-8006**	1	PIN AS	
	4	1	**178-0465**	1	SUPPORT AS	
	5	1	**3B-8489**	1	FITTING-GREASE	
	6	1	**7X-0618**	3	WASHER-HARD (13.5X40X5-MM THK)	
M	7	1	**8T-4192**	3	BOLT (M12X1.75X25-MM)	

M-METRIC PART

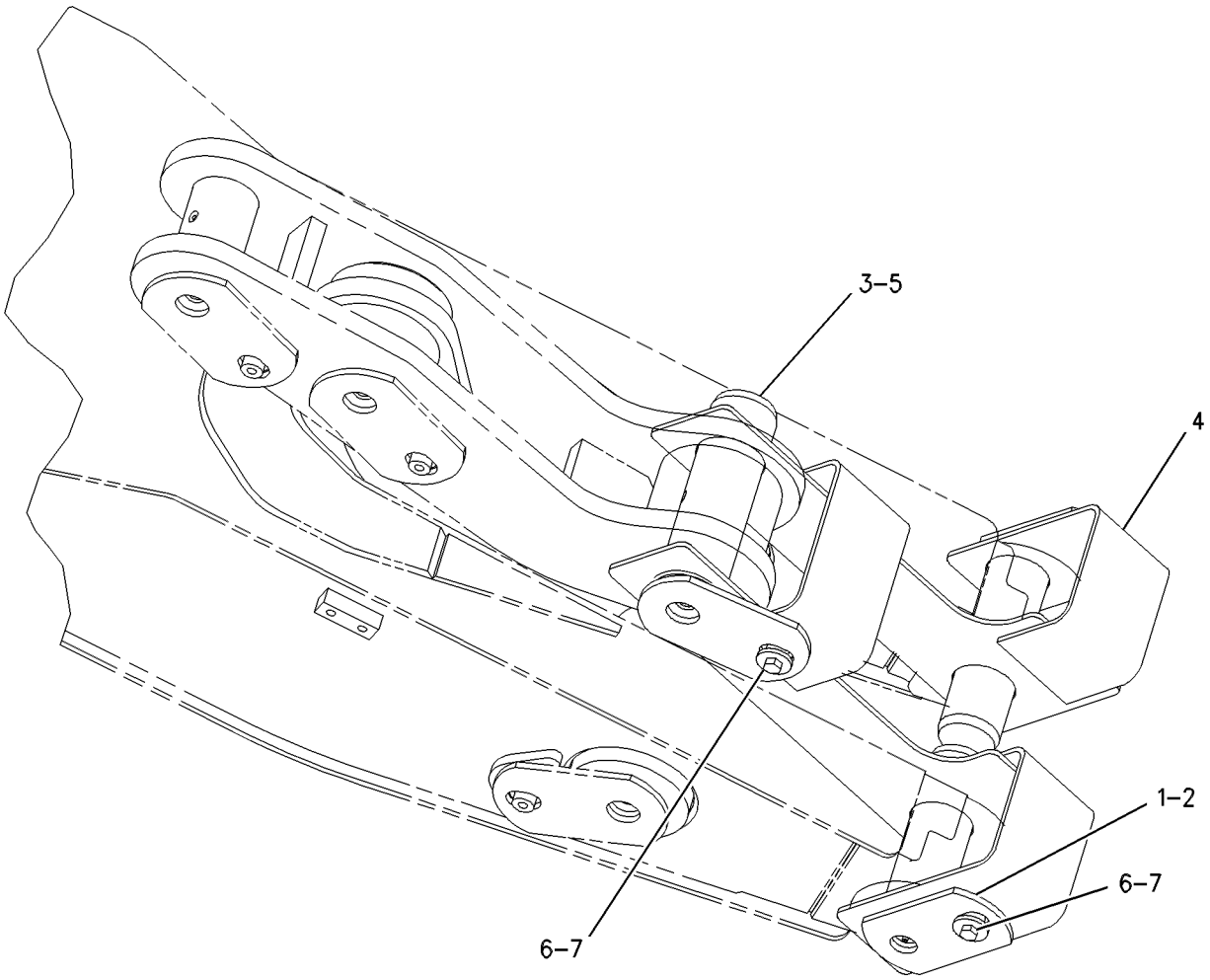

GRAPHIC #1 **<END>** g00636761

WORK TOOLS

9J-3169 TIP GP-LONG

S/N: BYD1-UP; FTD1-UP
PART OF 9W-8142 TIP GP-LONG
AN ATTACHMENT

SMCS-6805 **i01669223**

NOTE	REF NO	GRAPHIC REF	PART NUMBER	QTY	PART NAME 1 2 3 4 5 6 (PRODUCT LEVEL)	SEE PAGE
	1	1	**132-4763**	1	PIN-G.E.T.	
		1	**149-5733**	1	RETAINER AS-G.E.T.	
C	2	1	**1U-3252**	1	TIP-LONG	

C-CHANGE FROM PREVIOUS TYPE

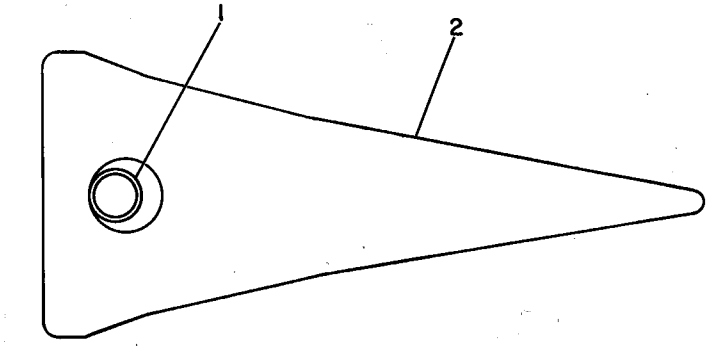

GRAPHIC #1 **<END>** g00115584

WORK TOOLS

9W-8142 TIP GP-LONG

S/N: BYD1-UP; FTD1-UP
PART OF 292-9188 BUCKET AR-MULTIPURPOSE
AN ATTACHMENT

SMCS-6805 **i00533404**

NOTE	PART NUMBER	QTY	PART NAME 1 2 3 4 5 6 (PRODUCT LEVEL)	SEE PAGE
Y	*9J-3169*	8	TIP GP-LONG	779

Y-SEPARATE ILLUSTRATION

<END>

9J-3178 TIP GP-SHORT

S/N: BYD1-UP; FTD1-UP
PART OF 9W-8143 TIP GP-SHORT
AN ATTACHMENT

SMCS-6805 **i01669221**

NOTE	REF NO	GRAPHIC REF	PART NUMBER	QTY	PART NAME 1 2 3 4 5 6 (PRODUCT LEVEL)	SEE PAGE
	1	1	**132-4763**	1	PIN-G.E.T.	
		1	**149-5733**	1	RETAINER AS-G.E.T.	
C	2	1	**1U-3251**	1	TIP-SHORT	

C-CHANGE FROM PREVIOUS TYPE

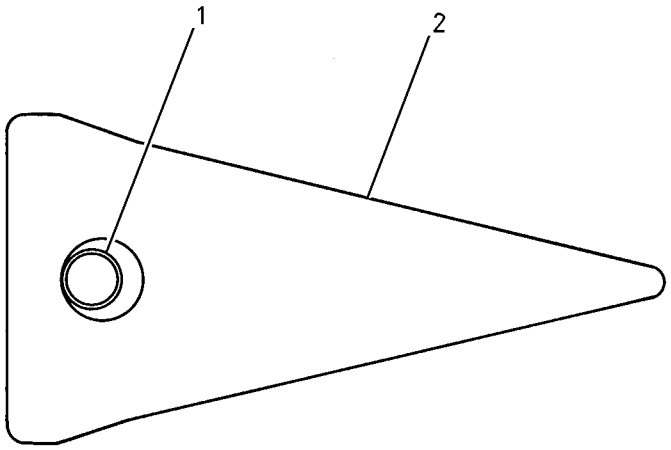

GRAPHIC #1 **<END>** g00704305

WORK TOOLS

9W-8143 TIP GP-SHORT

S/N: BYD1-UP; FTD1-UP

AN ATTACHMENT

SMCS-6805 **i00533396**

NOTE	PART NUMBER	QTY	PART NAME 1 2 3 4 5 6 (PRODUCT LEVEL)	SEE PAGE
Y	*9J-3178*	8	TIP GP-SHORT	781

Y-SEPARATE ILLUSTRATION

<END>

OPERATOR STATION

173-1028 ADJUSTER GP-SEAT

S/N: BYD1-UP; FTD1-UP
PART OF 178-0603 SEAT GP
AN ATTACHMENT

SMCS-7321 **i02003284**

NOTE	REF NO	GRAPHIC REF	PART NUMBER	QTY	PART NAME 1 2 3 4 5 6 (PRODUCT LEVEL)	SEE PAGE
	1	1	**4V-8256**	4	SPRING	
	2	1	**117-4492**	1	ROD	
	3	1	**136-1544**	1	LATCH AS-LH	
	4	1	**156-5545**	1	LATCH AS-RH	
	5	1	**164-4531**	1	ROD	
	6	1	**170-1112**	1	PLATE AS	
	7	1	**170-1114**	1	HANDLE (SLIDE ADJUSTMENT)	
	8	1	**170-1115**	1	HANDLE (TILT ADJUSTMENT)	
	9	1	**132-0338**	2	WASHER-PLASTIC (13X31.7X.8-MM THK)	
	10	1	**2K-4973**	2	LOCKNUT (3/8-16-THD)	
	11	1	**7X-0608**	2	WASHER-HARD (10.2X16X2-MM THK)	

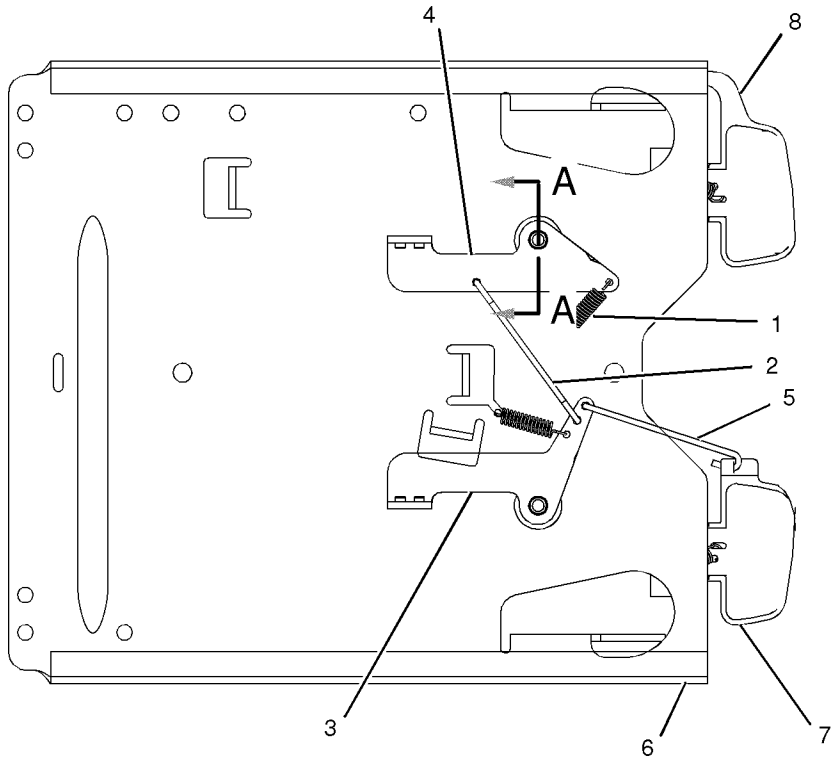

BOTTOM VIEW

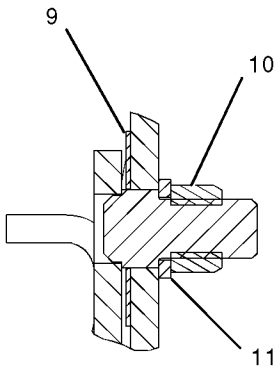

SECTION A-A

GRAPHIC #1 **<END>** g01040300

OPERATOR STATION

237-3970 AIR COMPRESSOR GP-SEAT

S/N: BYD1-UP; FTD1-UP
PART OF 191-2933 SUSPENSION GP-SEAT
AN ATTACHMENT

SMCS-731S, 7324 **i02012093**

NOTE	REF NO	GRAPHIC REF	PART NUMBER	QTY	PART NAME 1 2 3 4 5 6 (PRODUCT LEVEL)	SEE PAGE
					(NO SERVICED PARTS)	

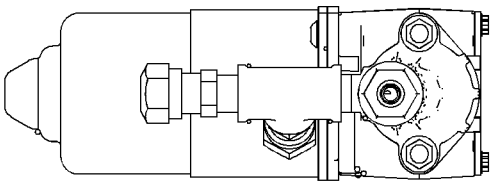

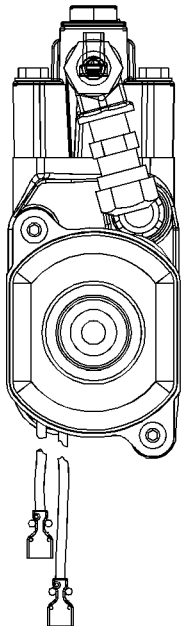

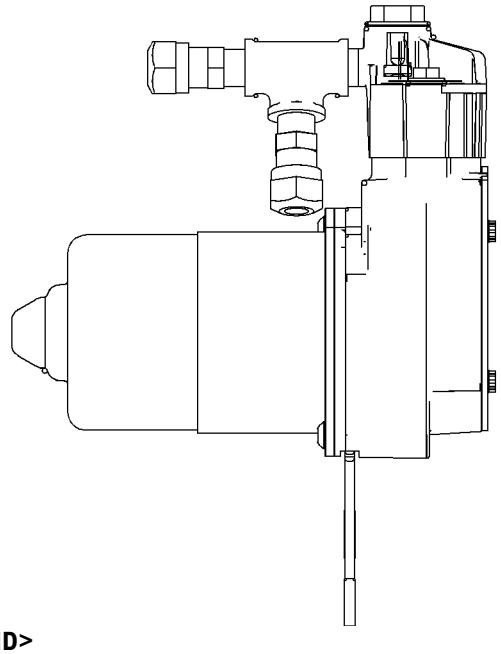

GRAPHIC #1 **<END>** g01040577

284-0506 AIR CONDITIONER & MOUNTING GP–

WITH CABLE CONTROL

S/N: BYD1-UP

PART OF 304-9255 PLATFORM AR

AN ATTACHMENT

SMCS-7320 **i02861427**

NOTE	REF NO	GRAPHIC REF	PART NUMBER	QTY	PART NAME 1 2 3 4 5 6 (PRODUCT LEVEL)	SEE PAGE
D	1	1	**5P-5643**		SEAL (0.8-M EACH)	
	2	1	**118-7259**	1	GASKET	
	3	1	**156-4449**	1	CABLE AS (HEATER TEMPERATURE CONTROL)	
		1	**2H-3920**	2	LOCKWASHER	
		1	**6V-8369**	1	NUT (7/16-28-THD)	
		1	**143-8874**	1	BOOT	
	4	1	**236-2295**	2	TUBE AS	
	5	1	**236-4233**	1	SWITCH AS-ROCKER (AIR CONDITIONER, HEATER CONT)	
C	6	1	**280-2710**	1	CIRCUIT BREAKER AS (20-AMPERE) (HOOD TILT ACTUATOR)	
CY	7	1	*306-8142*	1	AIR CONDITIONER GP	786
	8	1	**7X-0579**	11	WASHER-HARD (8.8X25.5X2-MM THK)	
M	9	1	**8T-4908**	11	BOLT (M8X1.25X25-MM)	

C-CHANGE FROM PREVIOUS TYPE
D-ORDER BY THE METER
M-METRIC PART
Y-SEPARATE ILLUSTRATION

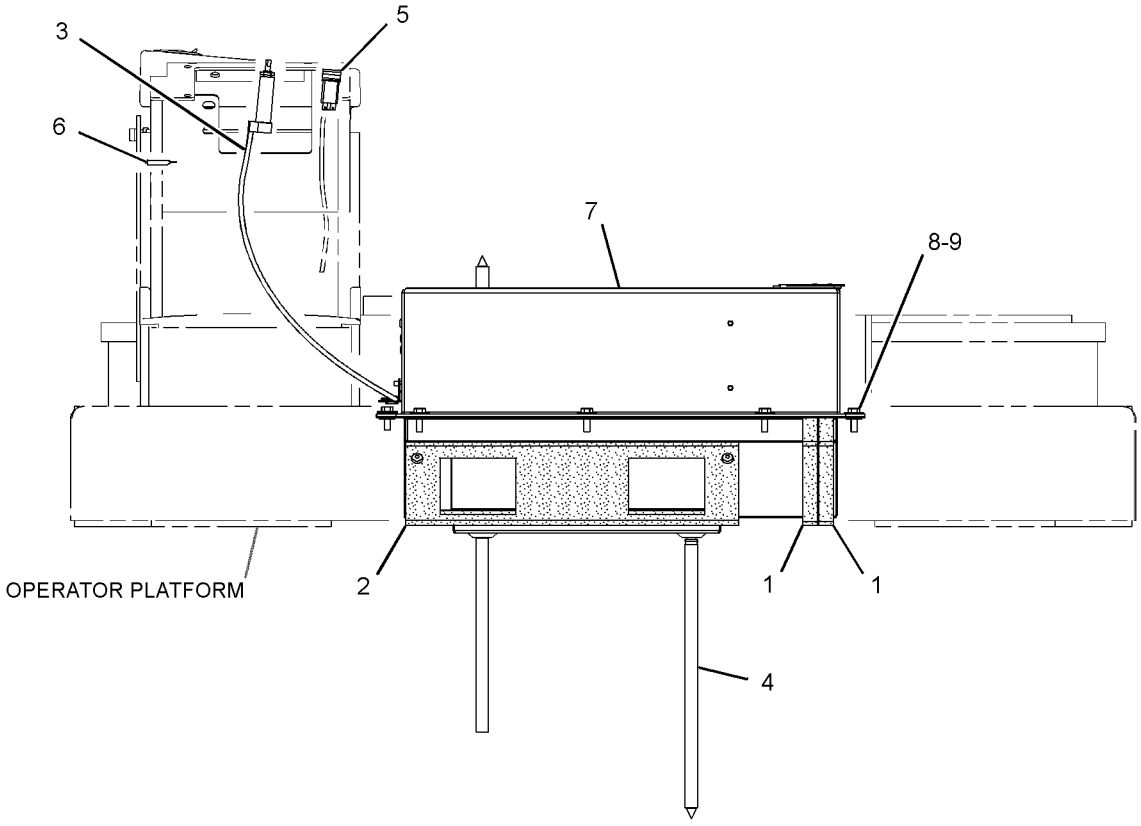

FRONT VIEW

GRAPHIC #1 **<END>** g01389726

OPERATOR STATION

306-8142 AIR CONDITIONER GP

S/N: BYD1-UP

PART OF 284-0506 AIR CONDITIONER & MOUNTING GP

AN ATTACHMENT

SMCS-7320 **i02861435**

NOTE	REF NO	GRAPHIC REF	PART NUMBER	QTY	PART NAME 1 2 3 4 5 6 (PRODUCT LEVEL)	SEE PAGE
	1	1	**3E-1841**	1	LEVER (HEATER TEMPERATURE CONTROL)	
	2	1	**6T-6708**	2	WASHER (7X28.6X4.1-MM THK)	
	3	1	**7F-2050**	1	LOCKNUT (3/4-16-THD)	
	4	1	**8Y-5737**	1	CLAMP	
	5	1	**9G-1950**	1	RESISTOR (CAB FAN SPEED)	
	6	1	**9X-2185**	4	SCREW (8-15X11.11-MM)	
	7	1	**9X-2488**	6	CLAMP-HOSE	
	8	1	**102-0341**	1	CLIP	
	9	1	**114-3140**	1	GROMMET	
	10	1	**118-5044**	1	HARNESS AS-HEATER & AIR COND	
	11	1	**124-8495**	1	VALVE AS-WATER (AIR CONDITIONER)	
	12	1	**151-0894**	1	COVER AS	
	13	1	**183-7528**	1	COIL AS-HEATER	
	14	1	**255-9138**	1	BRACKET AS	
M		1	**9X-2032**	8	NUT-WELD (M4X0.7-THD)	
	15	1	**275-6706**	1	MOTOR AS-BLOWER (24-VOLT, A/C, HEATER)	
	16	1	**283-2456**	1	COIL AS-EVAPORATOR	
	17	1	**309-8618**	1	CASE AS	
	18	1	**3S-2093**	3	STRAP-CABLE	
	19	1	**037-4426**	1	RETAINER	
	20	1	**124-8494**	2	GASKET	
M	21	1	**129-3178**	2	LOCKNUT (M6X1-THD)	
M	22	1	**141-9784**	1	BOLT (M6X1X190-MM)	
	23	1	**1P-6522**	1	GROMMET	
	24	1	**2H-3922**	1	LOCKWASHER	
	25	1	**2H-3923**	1	LOCKWASHER	
	26	1	**3B-4501**	2	LOCKWASHER	
	27	1	**3E-5464**	1	SWITCH AS-TEMPERATURE (AIR CONDITIONER)	
M	28	1	**5C-9553**	8	BOLT (M6X1X16-MM)	
	29	1	**6V-1668**	2	WASHER (6.5X29.1X3-MM THK)	
M	30	1	**6V-5210**	8	SCREW-MACHINE (M4X0.7X10-MM)	
	31	1	**7F-2060**	1	LOCKNUT (7/8-14-THD)	
M	32	1	**8C-8457**	1	SCREW-MACHINE (M5X0.8X14-MM)	
	33	1	**8T-4205**	11	WASHER-HARD (7.2X14.5X2-MM THK)	
	34	1	**8T-6631**	2	SCREW-MACHINE (8-32X0.5-IN)	
M	35	1	**9X-2044**	1	SCREW-TRUSS HEAD (M6X1X16-MM)	
E	36	1	**136-1953**		HOSE (23-CM)	
E	36A	1	**136-1953**		HOSE (18-CM)	
E	36B	1	**136-1953**		HOSE (15-CM)	
D	37	1	**5P-7070**		INSULATION-STRIP (0.65-M EACH)	
D	38	1	**5P-5643**		SEAL (0.36-M)	
D	39	1	**8T-5372**		SEAL (0.14-M)	
D	39A	1	**8T-5372**		SEAL (0.12-M EACH)	
D	40	1	**6V-1392**		SEAL (0.6-M)	
D	40A	1	**6V-1392**		SEAL (0.2-M EACH)	
	41	1	**153-6932**	1	GASKET	

D-ORDER BY THE METER
E-ORDER BY THE CENTIMETER
M-METRIC PART

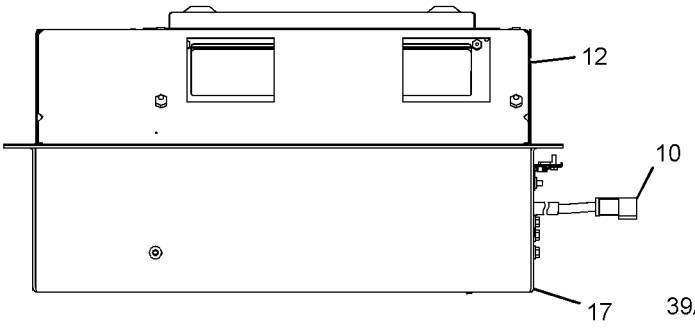

FRONT VIEW

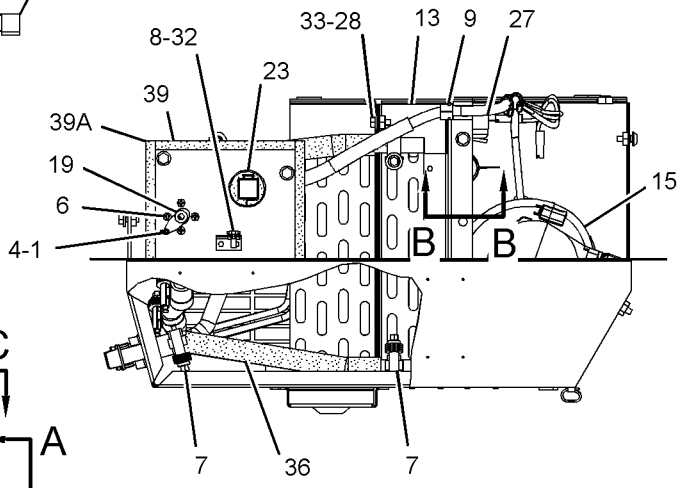

VIEW A-A
(COVER REMOVED)

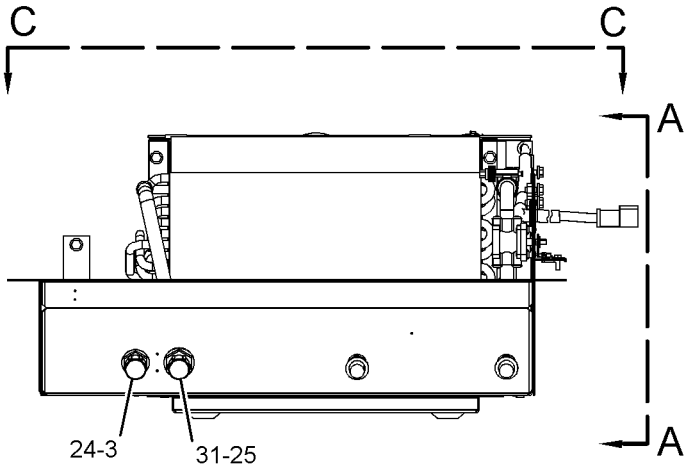

REAR VIEW
(COVER AND COIL GASKET REMOVED)

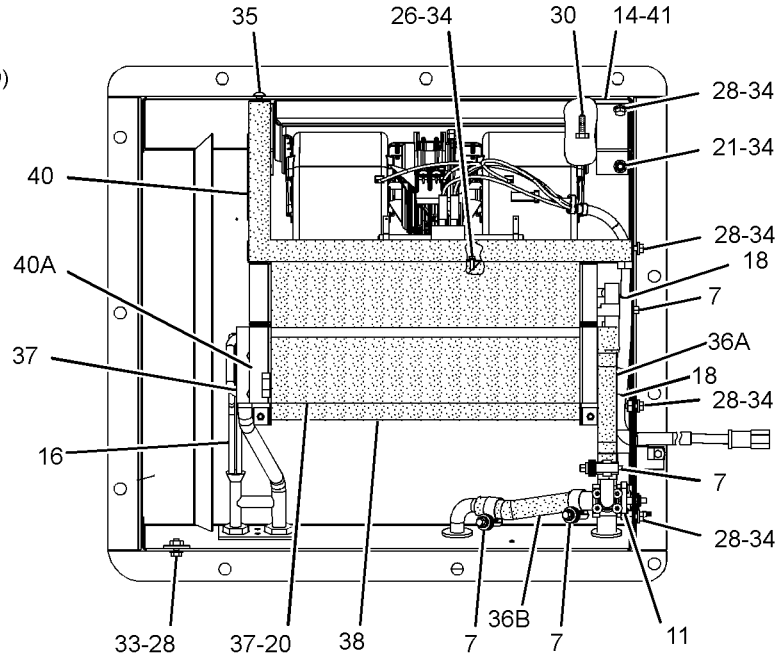

VIEW C-C
(COVER REMOVED)

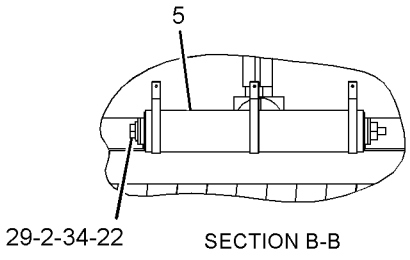

SECTION B-B

GRAPHIC #1 **<END>** g01443173

OPERATOR STATION

307-0205 ARM GP-WINDOW WIPER

S/N: BYD1-UP; FTD1-UP
PART OF 107-4628 WIPER GP-WINDOW
AN ATTACHMENT

SMCS-7305 **i02837890**

NOTE	REF NO	GRAPHIC REF	PART NUMBER	QTY	PART NAME 1 2 3 4 5 6 (PRODUCT LEVEL)	SEE PAGE
	1	1	**136-3188**	3	CLIP	
	2	1	**136-3195**	1	NOZZLE AS-WASHER	
M	3	1	**191-8921**	2	BOLT-SOCKET HEAD (M6X1X25-MM)	
	4	1	**227-7392**	2	WASHER (6.3X10.3X0.4-MM THK)	
M	5	1	**6V-8225**	2	NUT (M6X1-THD)	
E	6	1	**194-5171**		HOSE (75-CM)	

E-ORDER BY THE CENTIMETER
M-METRIC PART

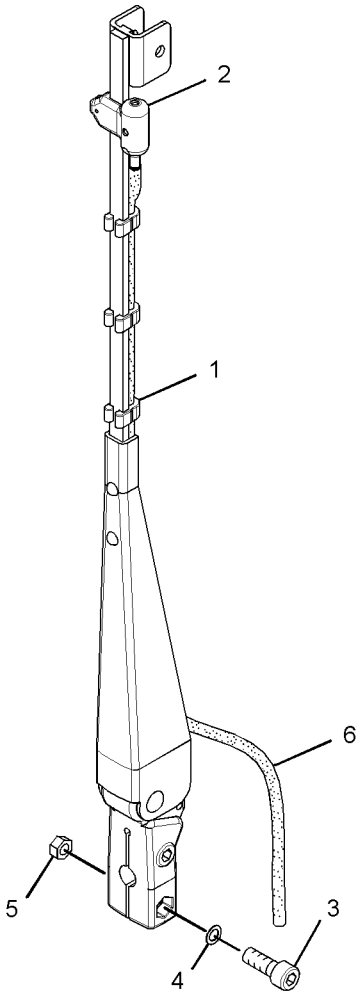

GRAPHIC #1

<END>

g01401957

OPERATOR STATION

8Y-4200 ARMREST GP–RH

S/N: BYD1-UP; FTD1-UP
PART OF 8Y-6977 SEAT GP-SUSPENSION
AN ATTACHMENT

SMCS-7307, 7312 **i02021390**

NOTE	REF NO	GRAPHIC REF	PART NUMBER	QTY	PART NAME 1 2 3 4 5 6 (PRODUCT LEVEL)	SEE PAGE
Y	1	1	**8Y-5904**	1	ARMREST GP	790
	2	1	**8Y-5897**	1	BRACKET AS	
	3	1	**9X-8873**	1	BOLT (1/2-13X2.25-IN)	
	4	1	**1K-6872**	1	LOCKNUT (1/2-13-THD)	
	5	1	**7X-0456**	1	BOLT (7/16-14X4.5-IN)	
	6	1	**0S-1594**	1	BOLT (3/8-16X1-IN)	
	7	1	**5V-1498**	1	LOCKNUT (3/8-16 THD)	
	8	1	**2M-0849**	1	WASHER-HARD (13.5X25.5X5-MM THK)	

Y-SEPARATE ILLUSTRATION

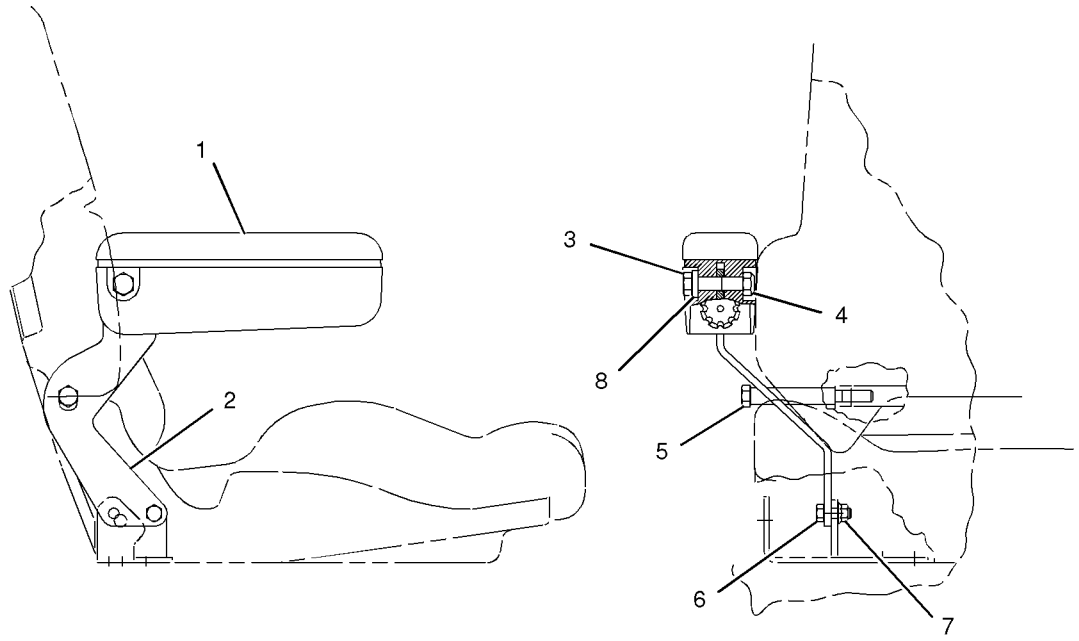

GRAPHIC #1 **<END>** g01043828

OPERATOR STATION

8Y-5904 ARMREST GP

S/N: BYD1-UP; FTD1-UP

PART OF 162-8447, 162-8448, 8Y-4200, 8Y-6000 ARMREST GP

AN ATTACHMENT

SMCS-7307, 7312 **i02603042**

NOTE	REF NO	GRAPHIC REF	PART NUMBER	QTY	PART NAME 1 2 3 4 5 6 (PRODUCT LEVEL)	SEE PAGE
	1	1	**8Y-5906**	1	BASE-ARMREST	
L	2	1	**8S-7803**	1	RING-RETAINING	
J	3	1	**6V-2687**	4	SCREW-PAN HEAD (10-24X1-IN)	
L	4	1	**8T-8641**	1	WASHER (M9.8X16X0.8-MM THK)	
L	5	1	**3E-4312**	1	NUT-SQUARE (3/8-16-THD)	
					AVAILABLE REPAIR KIT(S):	
J			**8Y-5988**	1	KIT-CUSHION (ARMREST)	
L			**8Y-6028**	1	KIT-ADJUSTER (ARMREST)	

J-KIT MARKED J INCLUDES PART MARKED J
L-KIT MARKED L INCLUDES PARTS MARKED L

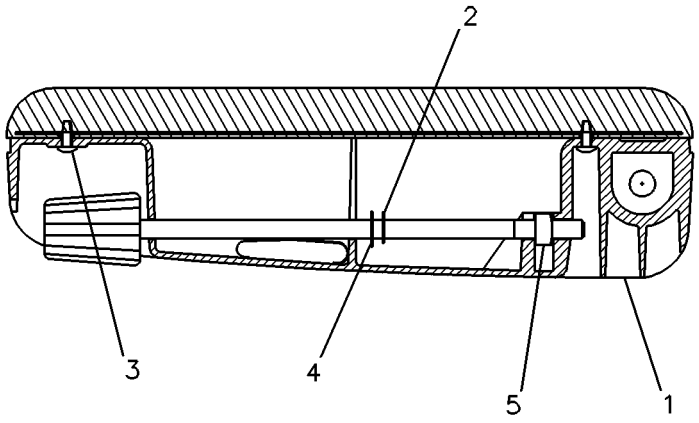

GRAPHIC #1 **<END>** g00083048

8Y-6000 ARMREST GP–LH

S/N: BYD1-UP; FTD1-UP
PART OF 8Y-6977 SEAT GP-SUSPENSION
AN ATTACHMENT

SMCS-7307, 7312 **i01167188**

NOTE	REF NO	GRAPHIC REF	PART NUMBER	QTY	PART NAME 1 2 3 4 5 6 (PRODUCT LEVEL)	SEE PAGE
Y	1	1	**8Y-5904**	1	ARMREST GP	790
	2	1	**8Y-5898**	1	BRACKET AS	
	3	1	**9X-8873**	1	BOLT (1/2-13X2.25-IN)	
	4	1	**1K-6872**	1	LOCKNUT (1/2-13-THD)	
	5	1	**7X-0456**	1	BOLT (7/16-14X4.5-IN)	
	6	1	**0S-1594**	1	BOLT (3/8-16X1-IN)	
	7	1	**5V-1498**	1	LOCKNUT (3/8-16 THD)	
	8	1	**2M-0849**	1	WASHER-HARD (13.5X25.5X5-MM THK)	

Y-SEPARATE ILLUSTRATION

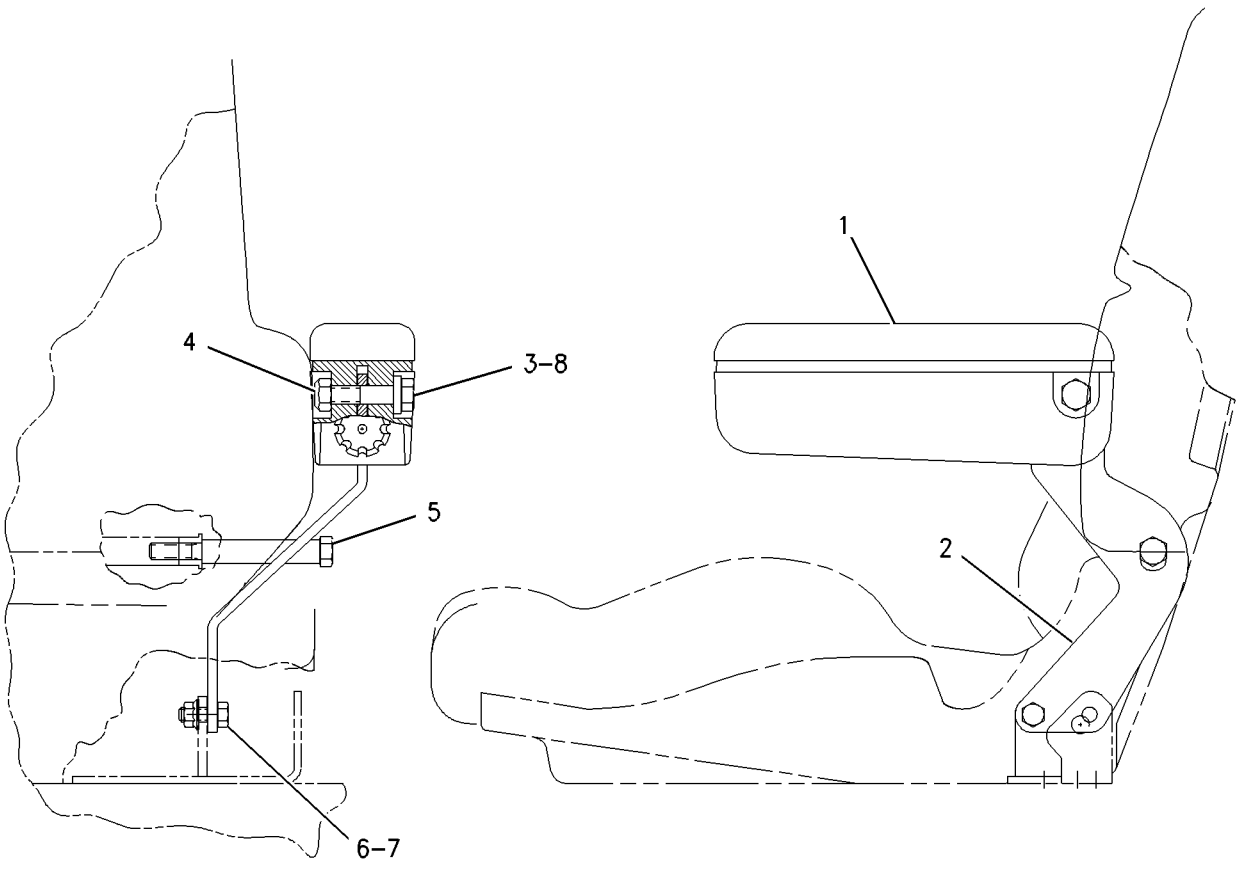

GRAPHIC #1 **<END>** g00631012

OPERATOR STATION

162-8447 ARMREST GP–LH

S/N: BYD1-UP; FTD1-UP
PART OF 178-7914 SEAT GP
AN ATTACHMENT

SMCS-7307, 7312 **i02003246**

NOTE	REF NO	GRAPHIC REF	PART NUMBER	QTY	PART NAME 1 2 3 4 5 6 (PRODUCT LEVEL)	SEE PAGE
Y	1	1	**8Y-5904**	1	ARMREST GP	790
	2	1	**143-1288**	1	LOCKNUT-FLANGE (3/8-16 THD)	
	3	1	**163-1149**	1	BRACKET AS	
	4	1	**1K-6872**	1	LOCKNUT (1/2-13-THD)	
	5	1	**4L-6454**	1	BOLT (3/8-16X1-IN)	
	6	1	**5P-8245**	1	WASHER-HARD (13.5X25.5X3-MM THK)	
	7	1	**9X-8873**	1	BOLT (1/2-13X2.25-IN)	

Y-SEPARATE ILLUSTRATION

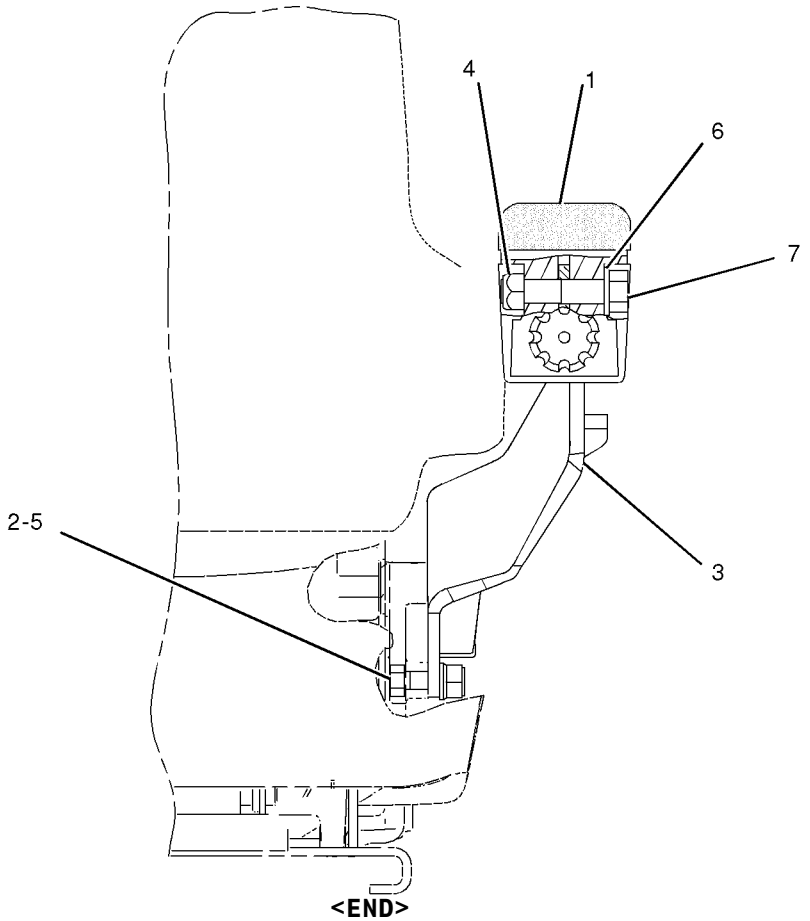

GRAPHIC #1 **<END>** g01040321

OPERATOR STATION

162-8448 ARMREST GP–RH

S/N: BYD1-UP; FTD1-UP
PART OF 178-7914 SEAT GP
AN ATTACHMENT

SMCS-7307, 7312 **i02003247**

NOTE	REF NO	GRAPHIC REF	PART NUMBER	QTY	PART NAME 1 2 3 4 5 6 (PRODUCT LEVEL)	SEE PAGE
Y	1	1	**8Y-5904**	1	ARMREST GP	790
	2	1	**143-1288**	1	LOCKNUT-FLANGE (3/8-16 THD)	
	3	1	**163-1148**	1	BRACKET AS	
	4	1	**1K-6872**	1	LOCKNUT (1/2-13-THD)	
	5	1	**4L-6454**	1	BOLT (3/8-16X1-IN)	
	6	1	**5P-8245**	1	WASHER-HARD (13.5X25.5X3-MM THK)	
	7	1	**9X-8873**	1	BOLT (1/2-13X2.25-IN)	

Y-SEPARATE ILLUSTRATION

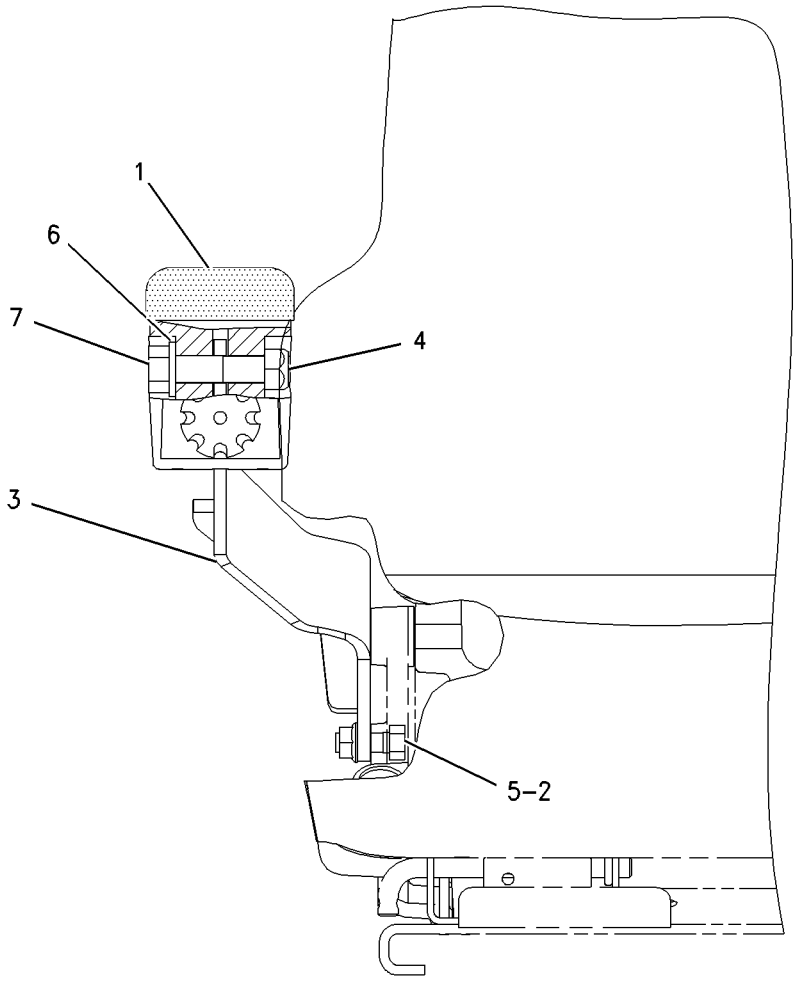

GRAPHIC #1 **<END>** g00801340

OPERATOR STATION

190-4405 CAB AR-ENCLOSED ROPS

S/N: BYD1-UP; FTD1-UP
PART OF 290-8505, 290-8522 CAB AR-ENCLOSED ROPS
AN ATTACHMENT

SMCS-7301 **i02364828**

NOTE	PART NUMBER	QTY	PART NAME 1 2 3 4 5 6 (PRODUCT LEVEL)	SEE PAGE
Y	*168-7000*	1	CONTROL GP-PARKING BRAKE (HANDLE)	413
Y	*190-4635*	1	CONTROL GP-STEERING	825
Y	*190-4690*	1	CONTROL GP-TRANSMISSION	827
Y	*207-5948*	1	DEFROSTER GP-CAB	830
Y	*107-4630*	1	DUCT GP-CAB AIR	846
Y	*119-4769*	1	FILTER GP-CAB AIR	848
Y	*241-8564*	1	LINER GP-CAB (UPPER)	869
Y	*190-4700*	1	PEDAL GP-GOVERNOR	906
Y	*107-6133*	1	SWITCH GP-WIPER (INTERMITTENT)	186
Y	*107-4628*	1	WIPER GP-WINDOW	955
	118-0626	1	FILM-WINDOW (FRONT)	

Y-SEPARATE ILLUSTRATION

<END>

290-8503 CAB AR-ENCLOSED ROPS—FIXED WINDOWS

S/N: BYD1-UP; FTD1-UP
PART OF 290-8505 CAB AR-ENCLOSED ROPS
AN ATTACHMENT

SMCS-7301 **i02807485**

NOTE	PART NUMBER	QTY	PART NAME 1 2 3 4 5 6 (PRODUCT LEVEL)	SEE PAGE
Y	*290-8489*	1	DOOR GP-CAB (FIXED WINDOWS)	832
Y	*290-8181*	1	LIGHTING GP-FLOOD (CAB FRONT, REAR)	157
Y	*290-8501*	1	ROPS GP-ENCLOSED	916

Y-SEPARATE ILLUSTRATION

<END>

290-8505 CAB AR-ENCLOSED ROPS—FIXED WINDOWS

S/N: BYD1-UP; FTD1-UP
PART OF 290-8508 OPERATOR AR-ENCLOSED ROPS
AN ATTACHMENT

SMCS-7301 **i02807480**

NOTE	PART NUMBER	QTY	PART NAME 1 2 3 4 5 6 (PRODUCT LEVEL)	SEE PAGE
Y	*290-8503*	1	CAB AR-ENCLOSED ROPS (FIXED WINDOWS)	794
Y	*190-4405*	1	CAB AR-ENCLOSED ROPS	794

Y-SEPARATE ILLUSTRATION

<END>

290-8515 CAB AR-ENCLOSED ROPS—FIXED WINDOWS

S/N: BYD1-UP
PART OF 308-2275 CAB AR-ENCLOSED ROPS
AN ATTACHMENT

SMCS-7301 **i02781058**

NOTE	PART NUMBER	QTY	PART NAME 1 2 3 4 5 6 (PRODUCT LEVEL)	SEE PAGE
Y	*290-8508*	1	OPERATOR AR-ENCLOSED ROPS	889
Y	*190-4666*	1	SKIRT GP-CAB	942
Y-SEPARATE ILLUSTRATION				

<END>

290-8522 CAB AR-ENCLOSED ROPS

S/N: BYD1-UP; FTD1-UP
PART OF 290-8525 OPERATOR AR-ENCLOSED ROPS
AN ATTACHMENT

SMCS-7301 **i02793258**

NOTE	PART NUMBER	QTY	PART NAME 1 2 3 4 5 6 (PRODUCT LEVEL)	SEE PAGE
Y	*290-8520*	1	CAB GP-ENCLOSED ROPS	800
Y	*190-4405*	1	CAB AR-ENCLOSED ROPS	794
Y-SEPARATE ILLUSTRATION				

<END>

290-8530 CAB AR-ENCLOSED ROPS—SLIDING WINDOWS

S/N: FTD1-UP
PART OF 308-2279, 308-2280 CAB AR-ENCLOSED ROPS
AN ATTACHMENT

SMCS-7301 **i02813929**

NOTE	PART NUMBER	QTY	PART NAME 1 2 3 4 5 6 (PRODUCT LEVEL)	SEE PAGE
Y	*290-8525*	1	OPERATOR AR-ENCLOSED ROPS (SLIDING WINDOWS) (SLIDING WINDOWS)	889
Y	*235-6876*	1	SKIRT GP-CAB	945
Y-SEPARATE ILLUSTRATION				

<END>

290-8748 CAB AR-ENCLOSED ROPS—SLIDING WINDOWS

S/N: BYD1-UP
PART OF 308-2276 CAB AR-ENCLOSED ROPS
AN ATTACHMENT

SMCS-7301 **i02853807**

NOTE	PART NUMBER	QTY	PART NAME 1 2 3 4 5 6 (PRODUCT LEVEL)	SEE PAGE
Y	*290-8525*	1	OPERATOR AR-ENCLOSED ROPS (SLIDING WINDOWS)	889
Y	*190-4666*	1	SKIRT GP-CAB	942
Y-SEPARATE ILLUSTRATION				

<END>

304-9538 CAB AR-ENCLOSED ROPS—FIXED WINDOWS

S/N: FTD1-UP

PART OF 308-2278 CAB AR-ENCLOSED ROPS

CANNOT BE USED WITH 290-8189 CANOPY AR-OPEN ROPS, 290-8530 CAB AR-ENCLOSED ROPS

AN ATTACHMENT

SMCS-7301 **i02813911**

NOTE	PART NUMBER	QTY	PART NAME 1 2 3 4 5 6 (PRODUCT LEVEL)	SEE PAGE
Y	*290-8508*	1	OPERATOR AR-ENCLOSED ROPS	889
Y	*235-6876*	1	SKIRT GP-CAB	945

Y-SEPARATE ILLUSTRATION

<END>

308-2275 CAB AR-ENCLOSED ROPS

S/N: BYD1-UP

CANNOT BE USED WITH 308-2276—PAGE 796

AN ATTACHMENT

SMCS-7301 **i02813774**

NOTE	PART NUMBER	QTY	PART NAME 1 2 3 4 5 6 (PRODUCT LEVEL)	SEE PAGE
Y	*290-8515*	1	CAB AR-ENCLOSED ROPS	795
Y	*225-4329*	1	INSTALLATION GP-RADIO	868
Y	*254-7771*	1	MIRROR GP-REAR VIEW (EXTERIOR)	883
Y	*107-4641*	1	VISOR GP-CAB	951

Y-SEPARATE ILLUSTRATION

<END>

308-2276 CAB AR-ENCLOSED ROPS

S/N: BYD1-UP

CANNOT BE USED WITH 308-2275—PAGE 796

AN ATTACHMENT

SMCS-7301 **i02853813**

NOTE	PART NUMBER	QTY	PART NAME 1 2 3 4 5 6 (PRODUCT LEVEL)	SEE PAGE
Y	*290-8748*	1	CAB AR-ENCLOSED ROPS	795
Y	*225-4329*	1	INSTALLATION GP-RADIO	868
Y	*115-1558*	1	LIGHTING GP-AUXILIARY (CAB FRONT)	155
Y	*290-8749*	1	MIRROR GP (EXTERIOR, HEATED)	875
Y	**118-7250**	1	SCREEN GP-SUN	919
Y	*107-4641*	1	VISOR GP-CAB	951

Y-SEPARATE ILLUSTRATION

<END>

OPERATOR STATION

308-2278 CAB AR-ENCLOSED ROPS

S/N: FTD1-UP

CANNOT BE USED WITH 308-2277—PAGE 800, 308-2279—PAGE 797, 308-2280—PAGE 797, 308-1933—PAGE 909

AN ATTACHMENT

SMCS-7301 **i02884190**

NOTE	PART NUMBER	QTY	PART NAME 1 2 3 4 5 6 (PRODUCT LEVEL)	SEE PAGE
Y	*304-9538*	1	CAB AR-ENCLOSED ROPS (FIXED WINDOWS)	796
Y	*225-4329*	1	INSTALLATION GP-RADIO	868
Y	*254-7771*	1	MIRROR GP-REAR VIEW (EXTERIOR)	883
Y	*107-4641*	1	VISOR GP-CAB	951
Y-SEPARATE ILLUSTRATION				

<END>

308-2279 CAB AR-ENCLOSED ROPS

S/N: FTD1-UP

CANNOT BE USED WITH 308-2277—PAGE 800, 308-2280—PAGE 797

AN ATTACHMENT

SMCS-7301 **i02853670**

NOTE	PART NUMBER	QTY	PART NAME 1 2 3 4 5 6 (PRODUCT LEVEL)	SEE PAGE
Y	*290-8530*	1	CAB AR-ENCLOSED ROPS	795
Y	*225-4329*	1	INSTALLATION GP-RADIO	868
Y	*115-1558*	1	LIGHTING GP-AUXILIARY (CAB FRONT)	155
Y	*290-8749*	1	MIRROR GP (EXTERIOR, HEATED)	875
Y	**118-7250**	1	SCREEN GP-SUN	919
Y	*107-4641*	1	VISOR GP-CAB	951
Y-SEPARATE ILLUSTRATION				

<END>

308-2280 CAB AR-ENCLOSED ROPS—JAPANESE MARKET ONLY

S/N: FTD1-UP

CANNOT BE USED WITH 308-2279—PAGE 797, 308-2277—PAGE 800

AN ATTACHMENT

SMCS-7301 **i02813932**

NOTE	PART NUMBER	QTY	PART NAME 1 2 3 4 5 6 (PRODUCT LEVEL)	SEE PAGE
Y	*290-8530*	1	CAB AR-ENCLOSED ROPS	795
Y	*124-2482*	1	INSTALLATION GP-RADIO	866
Y	*254-7771*	1	MIRROR GP-REAR VIEW (EXTERIOR)	883
Y	*107-4641*	1	VISOR GP-CAB	951
Y-SEPARATE ILLUSTRATION				

<END>

OPERATOR STATION

290-8499 CAB GP-ENCLOSED ROPS

S/N: BYD1-UP; FTD1-UP
PART OF 290-8501 ROPS GP-ENCLOSED
AN ATTACHMENT

SMCS-7301 **i02793288**

NOTE	REF NO	GRAPHIC REF	PART NUMBER	QTY	PART NAME 1 2 3 4 5 6 (PRODUCT LEVEL)	SEE PAGE
	1	1	**8Y-6377**	2	STRIKER	
	2	1	**107-6144**	1	GLASS-FRONT (LH)	
	3	1	**107-6145**	1	GLASS-FRONT (CENTER)	
	4	1	**107-6146**	1	GLASS-REAR (LH)	
	5	1	**108-4311**	2	SCREW-MACHINE (3/8-16X0.75-IN)	
	6	1	**111-0177**	1	GLASS-FRONT (RH)	
	7	1	**111-0178**	1	GLASS-REAR (RH)	
	8	1	**111-0204**	1	PLATE AS (LH)	
	9	1	**111-0209**	1	PLATE AS (RH)	
	10	1	**161-8042**	1	GLASS AS-REAR	
	11	1	**161-9645**	2	STRIKER AS	
	12	1	**198-3393**	4	INSERT	
	13	1	**290-8497**	1	CAB AS	
	14	1	**5P-4116**	4	WASHER-HARD (8.8X20.5X2-MM THK)	
	15	1	**8T-4121**	12	WASHER-HARD (11X21X2.5-MM THK)	
M	16	1	**8T-4137**	4	BOLT (M10X1.5X20-MM)	
M	17	1	**8T-4189**	16	BOLT (M8X1.25X20-MM)	
	18	1	**8T-4224**	12	WASHER-HARD (8.8X16X2-MM THK)	
M	19	1	**9X-2041**	8	SCREW-TRUSS HEAD (M10X1.5X20-MM)	

M-METRIC PART

290-8499 CAB GP-ENCLOSED ROPS *(contd.)* i02793288

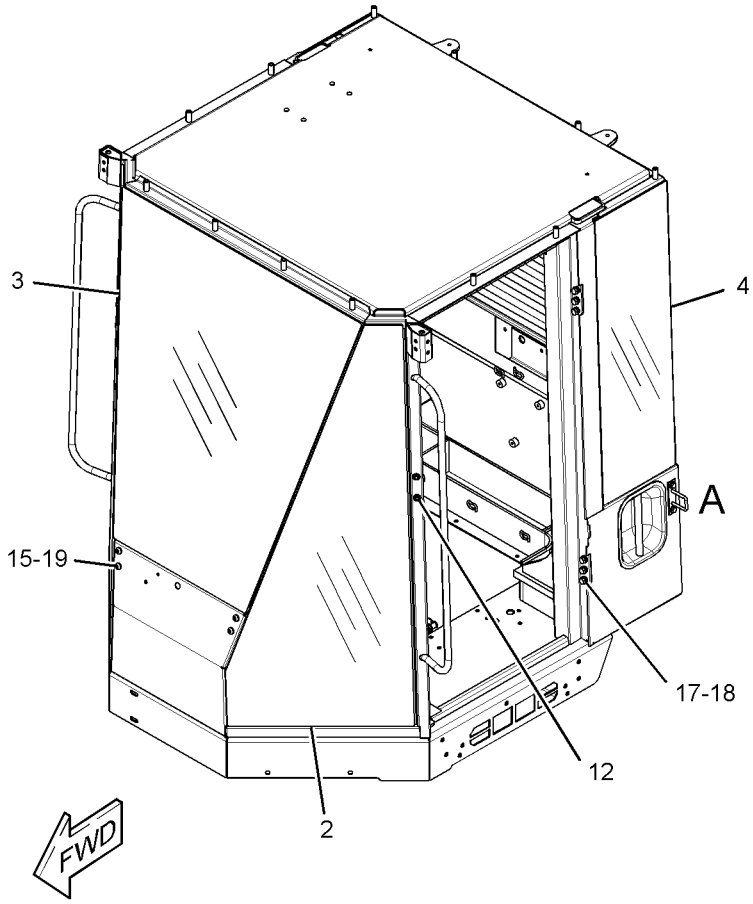

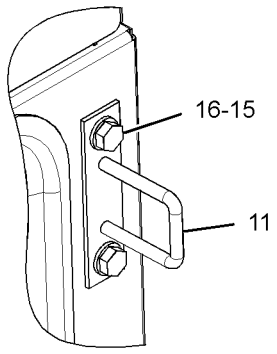

VIEW OF AREA A

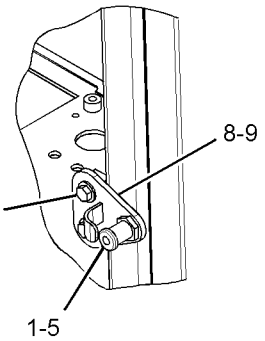

VIEW OF AREA B

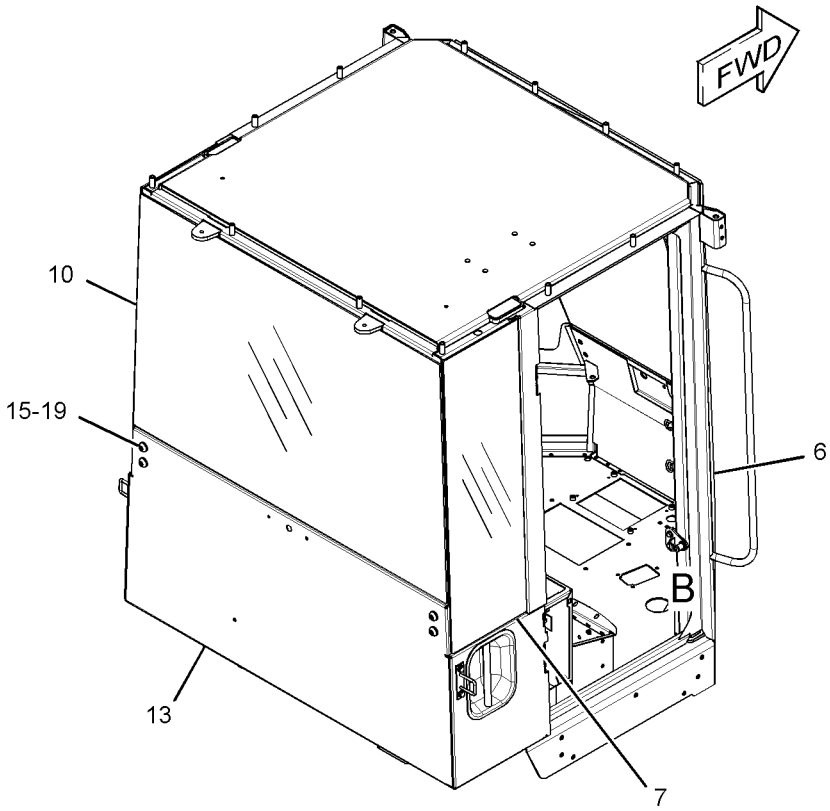

GRAPHIC #1 **<END>** g01407648

OPERATOR STATION

290-8520 CAB GP-ENCLOSED ROPS

S/N: BYD1-UP; FTD1-UP
PART OF 290-8522 CAB AR-ENCLOSED ROPS
AN ATTACHMENT

SMCS-7301 **i02793268**

NOTE	PART NUMBER	QTY	PART NAME 1 2 3 4 5 6 (PRODUCT LEVEL)	SEE PAGE
Y	*290-8494*	1	DOOR GP-CAB (SLIDING WINDOWS)	839
Y	*290-8181*	1	LIGHTING GP-FLOOD (CAB FRONT, REAR)	157
Y	*290-8501*	1	ROPS GP-ENCLOSED	916

Y-SEPARATE ILLUSTRATION

<END>

290-8182 CANOPY AR-OPEN ROPS

S/N: FTD1-UP
PART OF 290-8186 OPERATOR AR-OPEN ROPS
AN ATTACHMENT

SMCS-7302, 7323 **i02781062**

NOTE	PART NUMBER	QTY	PART NAME 1 2 3 4 5 6 (PRODUCT LEVEL)	SEE PAGE
Y	*190-4406*	1	CANOPY GP-OPEN ROPS	804
Y	*290-8179*	1	CANOPY GP-OPEN ROPS	804

Y-SEPARATE ILLUSTRATION

<END>

290-8483 CANOPY AR-OPEN ROPS

S/N: FTD1-UP
PART OF 308-2277 CANOPY AR-OPEN ROPS
AN ATTACHMENT

SMCS-7302, 7323 **i02813919**

NOTE	PART NUMBER	QTY	PART NAME 1 2 3 4 5 6 (PRODUCT LEVEL)	SEE PAGE
Y	*259-4137*	1	ALTERNATOR GP-CHARGING (NON A/C)	127
Y	*290-8186*	1	OPERATOR AR-OPEN ROPS	889
Y	*235-6875*	1	SKIRT GP-CAB (OPEN ROPS)	943

Y-SEPARATE ILLUSTRATION

<END>

308-2277 CANOPY AR-OPEN ROPS

S/N: FTD1-UP
CANNOT BE USED WITH 308-2279—PAGE 797, 308-2280—PAGE 797
AN ATTACHMENT

SMCS-7302, 7323 **i02813915**

NOTE	PART NUMBER	QTY	PART NAME 1 2 3 4 5 6 (PRODUCT LEVEL)	SEE PAGE
Y	*290-8483*	1	CANOPY AR-OPEN ROPS	800
Y	*254-7771*	1	MIRROR GP-REAR VIEW (EXTERIOR)	883

Y-SEPARATE ILLUSTRATION

<END>

OPERATOR STATION

304-9256 CANOPY AR-SOFT

S/N: BYD1-UP

CANNOT BE USED WITH 290-8508—PAGE 889, 290-8525—PAGE 889, 304-9255—PAGE 908 AN ATTACHMENT

SMCS-7302 **i02813781**

NOTE	PART NUMBER	QTY	PART NAME 1 2 3 4 5 6 (PRODUCT LEVEL)	SEE PAGE
Y	*119-9755*	1	CANOPY GP-FOPS	802
Y	*133-8496*	1	CANOPY GP-FOPS	803
Y	*168-7000*	1	CONTROL GP-PARKING BRAKE (HANDLE)	413
Y	*190-4635*	1	CONTROL GP-STEERING	825
Y	*190-4690*	1	CONTROL GP-TRANSMISSION	827
Y	*118-0809*	1	DASH GP	829
Y	*290-8488*	1	FLOOR GP	849
Y	*119-9758*	1	LIGHTING GP-FLOOD (CANOPY FRONT)	156
Y	*119-9757*	1	MIRROR GP-REAR VIEW (EXTERIOR)	878
Y	*156-4271*	1	MOUNTING GP-CAB	887
Y	*290-8169*	1	PANEL GP-INSTRUMENT (FRONT)	895
Y	*290-8171*	1	PANEL GP-INSTRUMENT (ENCLOSED ROPS)	897
Y	*198-8964*	1	PANEL GP-TOP (HEATER)	408
Y	*190-4700*	1	PEDAL GP-GOVERNOR	906
Y	*119-9818*	1	PLATFORM GP	911
Y	*190-4665*	1	SKIRT GP-CAB	941
Y	*118-0808*	1	SUPPORT GP-SEAT	946
Y	*289-8903*	1	WIRING GP-CAB (ENCLOSED ROPS)	189

Y-SEPARATE ILLUSTRATION

<END>

OPERATOR STATION

119-9755 CANOPY GP-FOPS

S/N: BYD1-UP
PART OF 304-9256 CANOPY AR-SOFT
AN ATTACHMENT

SMCS-7302, 7323 **i02034263**

NOTE	REF NO	GRAPHIC REF	PART NUMBER	QTY	PART NAME 1 2 3 4 5 6 (PRODUCT LEVEL)	SEE PAGE
	1	1	**119-9763**	1	POST AS	
		1	**7T-1099**	3	LINK	
	2	1	**119-9764**	1	POST AS	
		1	**7T-1099**	3	LINK	
	3	1	**119-9765**	1	BRACKET AS	
	4	1	**119-9766**	1	BRACKET AS	
M	5	1	**8T-4136**	16	BOLT (M10X1.5X25-MM)	
	6	1	**8T-4121**	16	WASHER-HARD (11X21X2.5-MM THK)	
M	7	1	**8T-4139**	6	BOLT (M12X1.75X30-MM)	
	8	1	**9T-4223**	6	WASHER	
	9	1	**4Y-4796**	1	CHANNEL AS	
	10	1	**4Y-4790**	2	TUBE AS	

M-METRIC PART

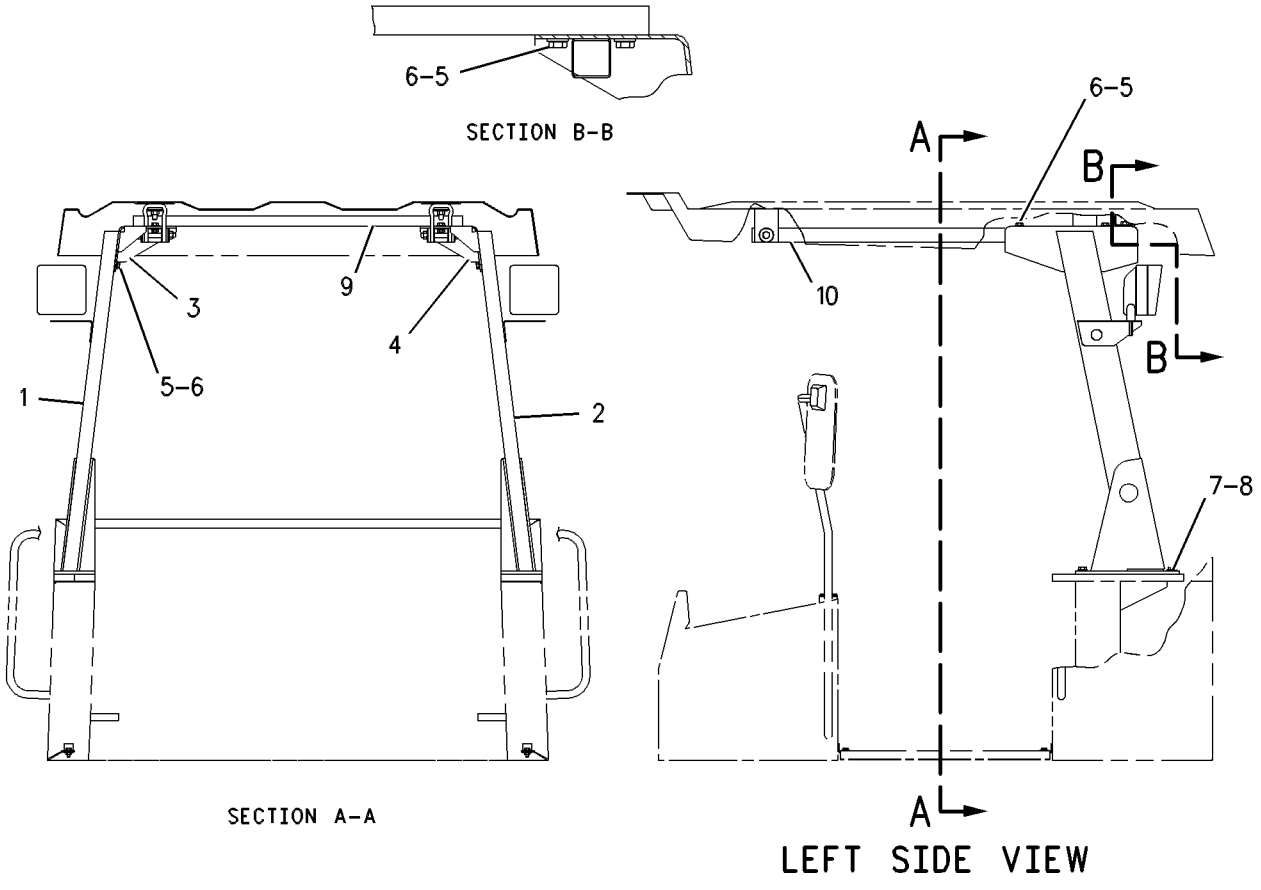

GRAPHIC #1 **<END>** g00541741

OPERATOR STATION

133-8496 CANOPY GP-FOPS

S/N: BYD1-UP
PART OF 304-9256 CANOPY AR-SOFT
AN ATTACHMENT

SMCS-7302, 7323 **i02038784**

NOTE	REF NO	GRAPHIC REF	PART NUMBER	QTY	PART NAME 1 2 3 4 5 6 (PRODUCT LEVEL)	SEE PAGE
	1	1	**4Y-4327**	1	ROOF	
M	2	1	**8T-4176**	4	BOLT (M12X1.75X90-MM)	
	3	1	**4Y-3046**	12	WASHER (13.5X38X3-MM THK)	
	4	1	**4Y-3048**	12	SPACER (13.5X40X6-MM THK)	
M	5	1	**8T-4244**	8	NUT (M12X1.75-THD)	
	6	1	**4Y-3630**	4	STRAP	

M-METRIC PART

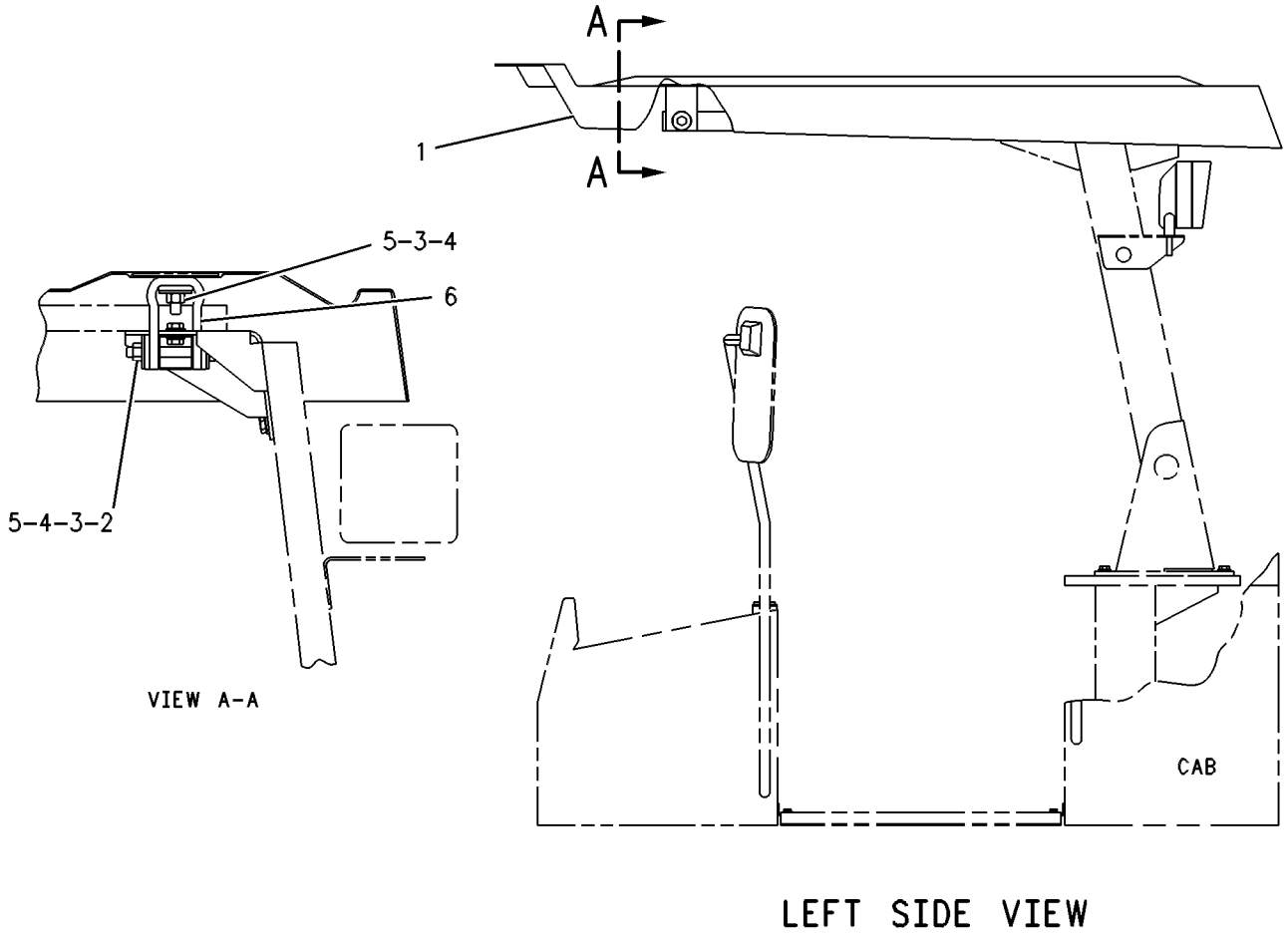

LEFT SIDE VIEW

GRAPHIC #1 **<END>** g00131752

OPERATOR STATION

190-4406 CANOPY GP-OPEN ROPS

S/N: FTD1-UP
PART OF 290-8182 CANOPY AR-OPEN ROPS
AN ATTACHMENT

SMCS-7323 **i02580339**

NOTE	PART NUMBER	QTY	PART NAME 1 2 3 4 5 6 (PRODUCT LEVEL)	SEE PAGE
Y	*168-7000*	1	CONTROL GP-PARKING BRAKE (HANDLE)	413
Y	*190-4635*	1	CONTROL GP-STEERING	825
Y	*190-4690*	1	CONTROL GP-TRANSMISSION	827
Y	*118-0809*	1	DASH GP	829
Y	*190-4700*	1	PEDAL GP-GOVERNOR	906
Y	*118-0808*	1	SUPPORT GP-SEAT	946

Y-SEPARATE ILLUSTRATION

<END>

290-8179 CANOPY GP-OPEN ROPS

S/N: FTD1-UP
PART OF 290-8182 CANOPY AR-OPEN ROPS
AN ATTACHMENT

SMCS-7323 **i02832796**

NOTE	PART NUMBER	QTY	PART NAME 1 2 3 4 5 6 (PRODUCT LEVEL)	SEE PAGE
Y	*313-4572*	1	LIGHTING GP-FLOOD (CANOPY FRONT, REAR)	159
Y	*290-8177*	1	ROPS GP-OPEN	917

Y-SEPARATE ILLUSTRATION

<END>

OPERATOR STATION

183-5106 COMPRESSOR GP-REFRIGERANT

S/N: BYD1-UP

PART OF 262-0858 COMPRESSOR GP-REFRIGERANT

AN ATTACHMENT

SMCS-1802 **i02820039**

NOTE	REF NO	GRAPHIC REF	PART NUMBER	QTY	PART NAME 1 2 3 4 5 6 (PRODUCT LEVEL)	SEE PAGE
	1	1	**102-8802**	1	KIT-RECEPTACLE (2-PIN)	
					(INCLUDES RECEPTACLE AS & WEDGE)	
	2	1	**114-3469**	1	VALVE GP-RELIEF (REFRIGERANT COMPRESSOR)	
		1	**9X-7378**	1	SEAL-O-RING	
	3	1	**7T-4532**	1	PLUG AS	
	4	1	**9X-7385**	2	SEAL-O-RING	

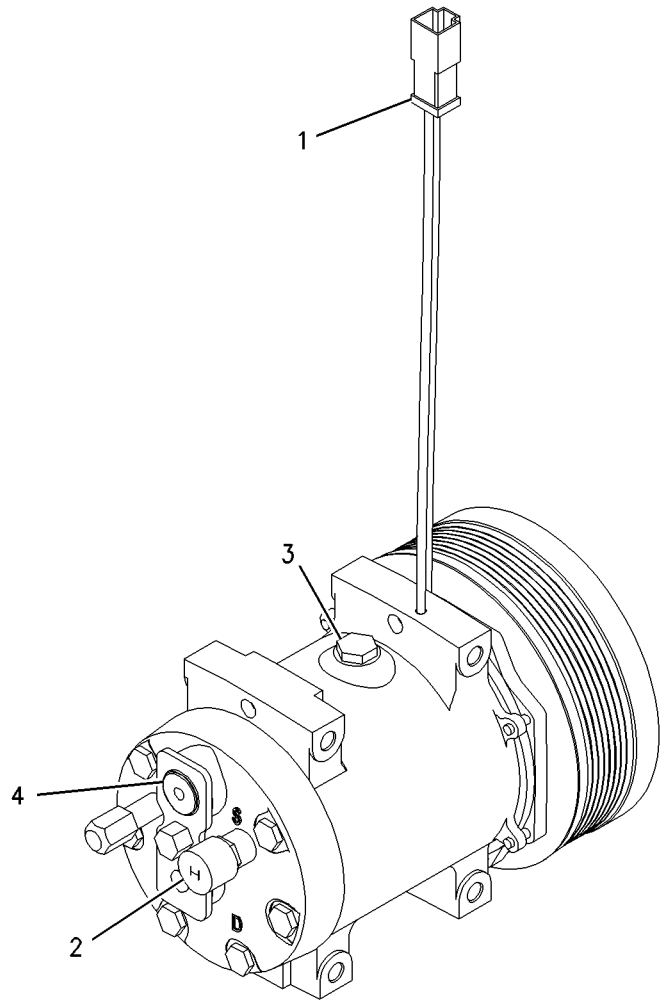

GRAPHIC #1 **<END>** g00781120

OPERATOR STATION

262-0858 COMPRESSOR GP-REFRIGERANT

S/N: BYD1-UP
PART OF 304-9255 PLATFORM AR
AN ATTACHMENT

SMCS-1802 **i02807304**

NOTE	REF NO	GRAPHIC REF	PART NUMBER	QTY	PART NAME 1 2 3 4 5 6 (PRODUCT LEVEL)	SEE PAGE
Y	1	1	**183-5106**	1	COMPRESSOR GP-REFRIGERANT (AIR CONDITIONER)	805
	2	1	**262-0849**	1	BRACKET	
	3	1	**3E-4356**	2	WASHER-HARD (17.5X30X6-MM THK)	
	4	1	**5P-4116**	4	WASHER-HARD (8.8X20.5X2-MM THK)	
M	5	1	**7X-2538**	4	BOLT (M8X1.25X100-MM)	
	6	1	**8T-4121**	1	WASHER-HARD (11X21X2.5-MM THK)	
M	7	1	**8T-4779**	2	BOLT (M16X2X35-MM)	
M	8	1	**8T-6466**	1	BOLT (M10X1.5X60-MM)	

M-METRIC PART
Y-SEPARATE ILLUSTRATION

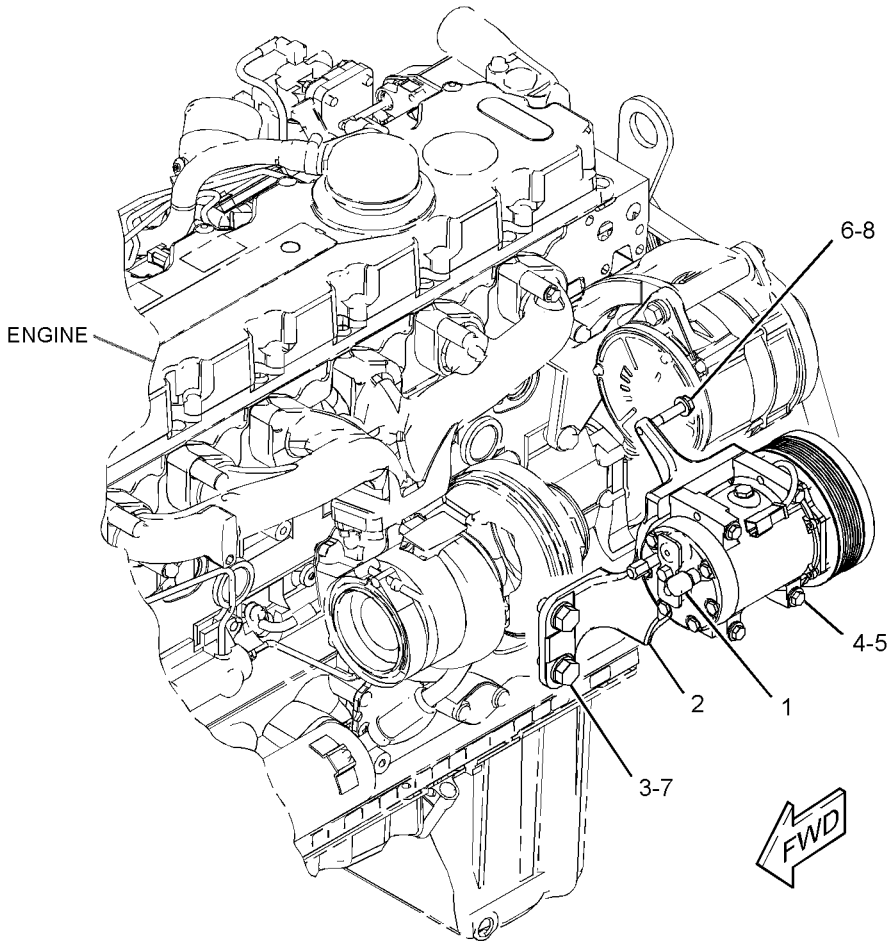

GRAPHIC #1 **<END>** g01391046

OPERATOR STATION

202-0363 CONDENSER & MTG GP-REFRIGERANT

S/N: BYD1-UP

PART OF 203-5937 CONDENSER & MTG GP-REFRIGERANT

AN ATTACHMENT

SMCS-1805 **i01750375**

NOTE	REF NO	GRAPHIC REF	PART NUMBER	QTY	PART NAME 1 2 3 4 5 6 (PRODUCT LEVEL)	SEE PAGE
Y	1	1	**199-7041**	1	CONDENSER GP-REFRIGERANT	809
	2	1	**205-6025**	1	BRACKET	
	3	1	**205-6026**	1	BRACKET	
	4	1	**205-6027**	1	BRACKET	
	5	1	**205-6028**	1	BRACKET	
M	6	1	**8T-4189**	10	BOLT (M8X1.25X20MM)	
	7	1	**8T-4224**	10	WASHER-HARD (8.8X16X2MM THK)	

M-METRIC PART
Y-SEPARATE ILLUSTRATION

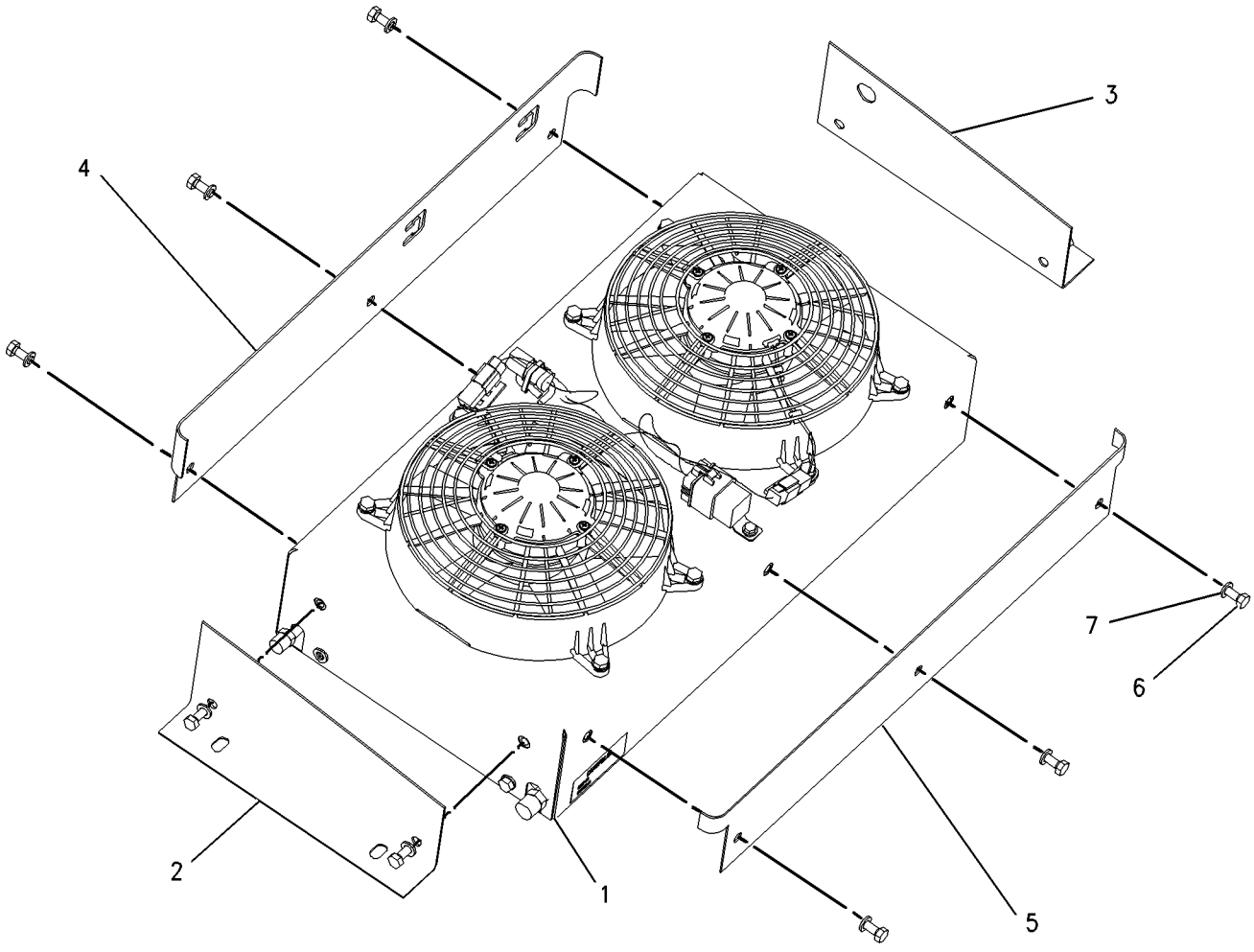

GRAPHIC #1 **<END>** g00895692

OPERATOR STATION

203-5937 CONDENSER & MTG GP-REFRIGERANT

S/N: BYD1-UP
PART OF 304-9255 PLATFORM AR
AN ATTACHMENT

SMCS-1805 **i01750332**

NOTE	REF NO	GRAPHIC REF	PART NUMBER	QTY	PART NAME 1 2 3 4 5 6 (PRODUCT LEVEL)	SEE PAGE
Y	1	1	*202-0363*	1	CONDENSER & MTG GP-REFRIGERANT	807
	2	1	**205-6024**	2	BRACKET AS	
					(EACH INCLUDES)	
M		1	**8T-3490**	4	NUT-WELD (M10X1.5-THD)	
	3	1	**8T-4121**	8	WASHER-HARD (11X21X2.5-MM THK)	
M	4	1	**8T-4195**	8	BOLT (M10X1.5X30-MM)	
BE	5	1	**112-9736**		SEAL (193CM)	

B-USE AS REQUIRED
E-ORDER BY THE CENTIMETER
M-METRIC PART
Y-SEPARATE ILLUSTRATION

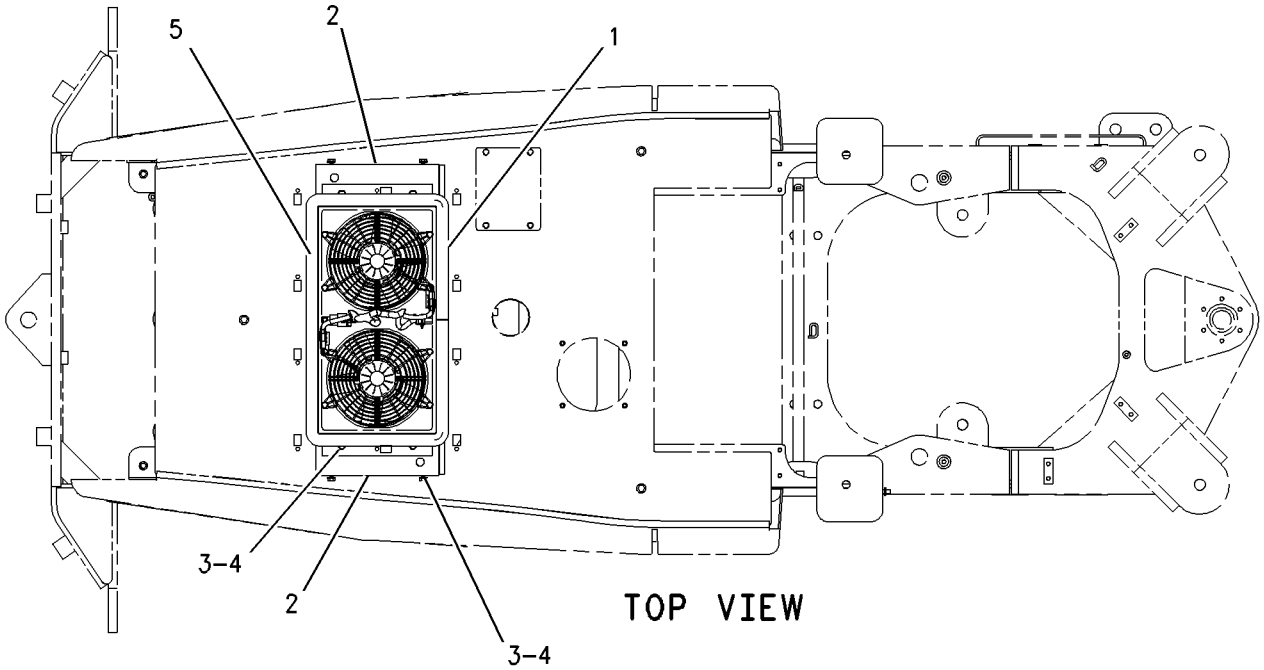

GRAPHIC #1 **<END>** g00919510

OPERATOR STATION

199-7041 CONDENSER GP-REFRIGERANT

S/N: BYD1-UP

PART OF 202-0363 CONDENSER & MTG GP-REFRIGERANT

AN ATTACHMENT

SMCS-1805 **i02854397**

NOTE	REF NO	GRAPHIC REF	PART NUMBER	QTY	PART NAME 1 2 3 4 5 6 (PRODUCT LEVEL)	SEE PAGE
	1	1	**3E-5239**	1	RELAY AS (24-VOLT) (CONDENSER)	
	2	1	**3S-2093**	5	STRAP-CABLE	
	3	1	**8C-3756**	1	FILM-IDENTIFICATION (GROUP NUMBER)	
	4	1	**304-3715**	2	FAN AS-CONDENSER (24-VOLT, 5-BLADE)	
	5	1	**169-7435**	1	HARNESS AS-HEATER & AIR COND (CONDENSER FANS)	
	6	1	**199-7042**	1	CASE AS	
M		1	**6V-9632**	1	NUT-WELD (M6X1-THD)	
		1	**7T-1099**	1	LINK	
M		1	**8T-3612**	21	NUT-WELD (M8X1.25-THD)	
	7	1	**199-7043**	1	COIL AS-CONDENSER	
	8	1	**4P-7581**	2	CLIP	
M	9	1	**5C-9553**	1	BOLT (M6X1X16-MM)	
M	10	1	**8T-4200**	4	BOLT (M8X1.25X16-MM)	
	11	1	**8T-4205**	1	WASHER-HARD (7.2X14.5X2-MM THK)	
	12	1	**8T-4224**	12	WASHER-HARD (8.8X16X2-MM THK)	
M	13	1	**8T-5093**	8	BOLT-LOCKING (M8X1.25X25-MM)	

M-METRIC PART

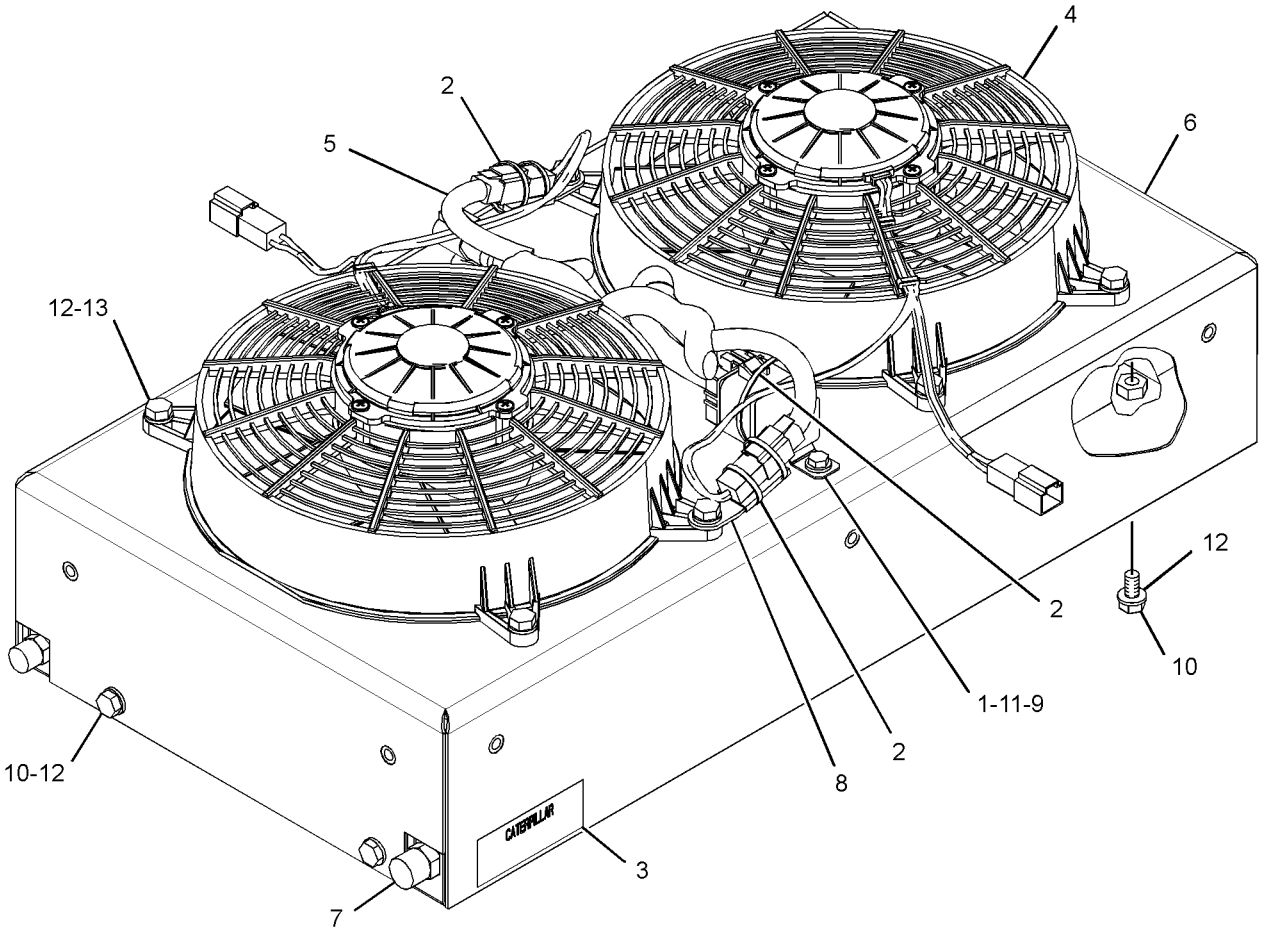

GRAPHIC #1 **<END>** g01424010

OPERATOR STATION

291-3750 CONSOLE GP-OPERATOR

S/N: BYD1-UP; FTD1-UP

PART OF 290-8508, 290-8525 OPERATOR AR-ENCLOSED ROPS, 290-8186 OPERATOR AR-OPEN ROPS

AN ATTACHMENT

SMCS-5258 **i02876946**

NOTE	REF NO	GRAPHIC REF	PART NUMBER	QTY	PART NAME 1 2 3 4 5 6 (PRODUCT LEVEL)	SEE PAGE
M	1	1	**9X-2045**	8	SCREW-TRUSS HEAD (M6X1X20-MM)	
	2	1	**4E-1062**	1	CUSHION AS-ARMREST	
	3	1	**187-2082**	1	LEVER-CONTROL (ARMREST ADJUSTMENT)	
	4	1	**259-1155**	1	COVER AS	
	5	1	**291-3748**	1	SUPPORT (ARMREST)	
	6	1	**291-3749**	1	BRACKET AS	
	7	1	**103-2006**	4	SCREW-PAN HEAD (6-19X0.37-IN)	
M	8	1	**6V-7357**	3	BOLT (M6X1X25-MM)	
	9	1	**8T-4205**	3	WASHER-HARD (7.2X14.5X2-MM THK)	
M	10	1	**9X-2041**	2	SCREW-TRUSS HEAD (M10X1.5X20-MM)	
M	11	1	**9X-2043**	2	SCREW-TRUSS HEAD (M6X1X14-MM)	
E	12	1	**3E-3892**		SEAL (18-CM EACH)	
E	12A	1	**3E-3892**		SEAL (20.4-CM EACH)	
E	12B	1	**3E-3892**		SEAL (29.8-CM)	
	13	1	**114-6658**	6	WASHER (6.5X17X1-MM THK)	
	14	1	**8T-4121**	2	WASHER-HARD (11X21X2.5-MM THK)	

E-ORDER BY THE CENTIMETER
M-METRIC PART

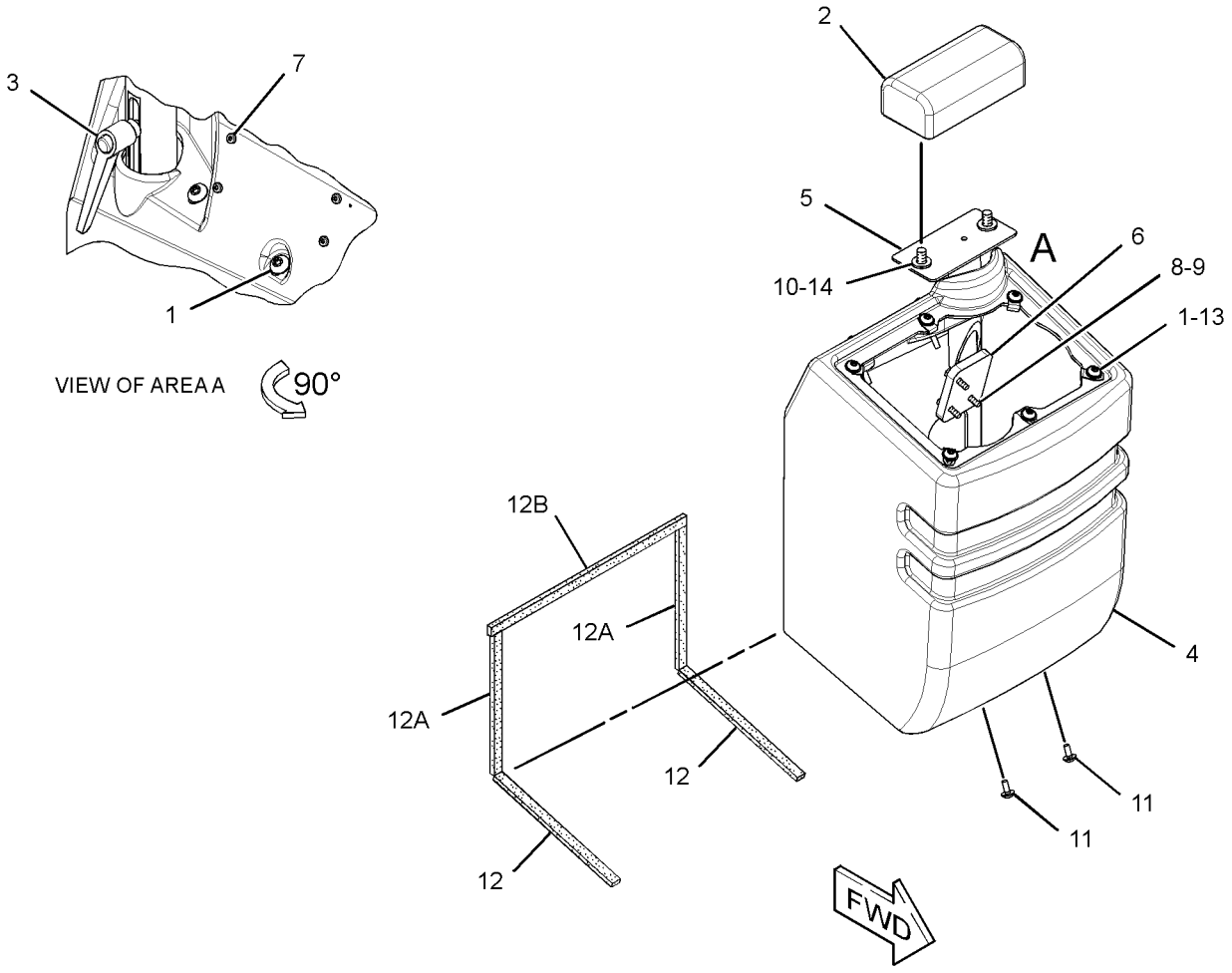

GRAPHIC #1 **<END>** g01413452

266-3439 CONTROL GP-HANDLE–
FNR, THIRD FUNCTION, PROPORTIONAL FLOW
S/N: FTD1-UP
PART OF 287-2051, 287-2053 VALVE GP-PILOT
AN ATTACHMENT

SMCS-5063, 5705 **i02596130**

NOTE	REF NO	GRAPHIC REF	PART NUMBER	QTY	PART NAME 1 2 3 4 5 6 (PRODUCT LEVEL)	SEE PAGE
	1	1	**271-2089**	1	HANDLE GP-MODULAR (DIR, DNSFT, FLOW CONT SWITCHES)	
	1A	1	**271-2099**	1	SHROUD	
	1B	1	**151-9274**	1	KIT-RECEPTACLE (4-PIN)	
	1C	1	**151-9275**	1	KIT-RECEPTACLE (6-PIN)	
					(EACH RECEPTACLE KIT INCLUDES RECEPTACLE AS & WEDGE)	
	1D	1	**186-3735**	10	PIN-CONNECTOR (16-GA TO 18-GA)	
	2	1	**231-4262**	1	ADAPTER (RH)	

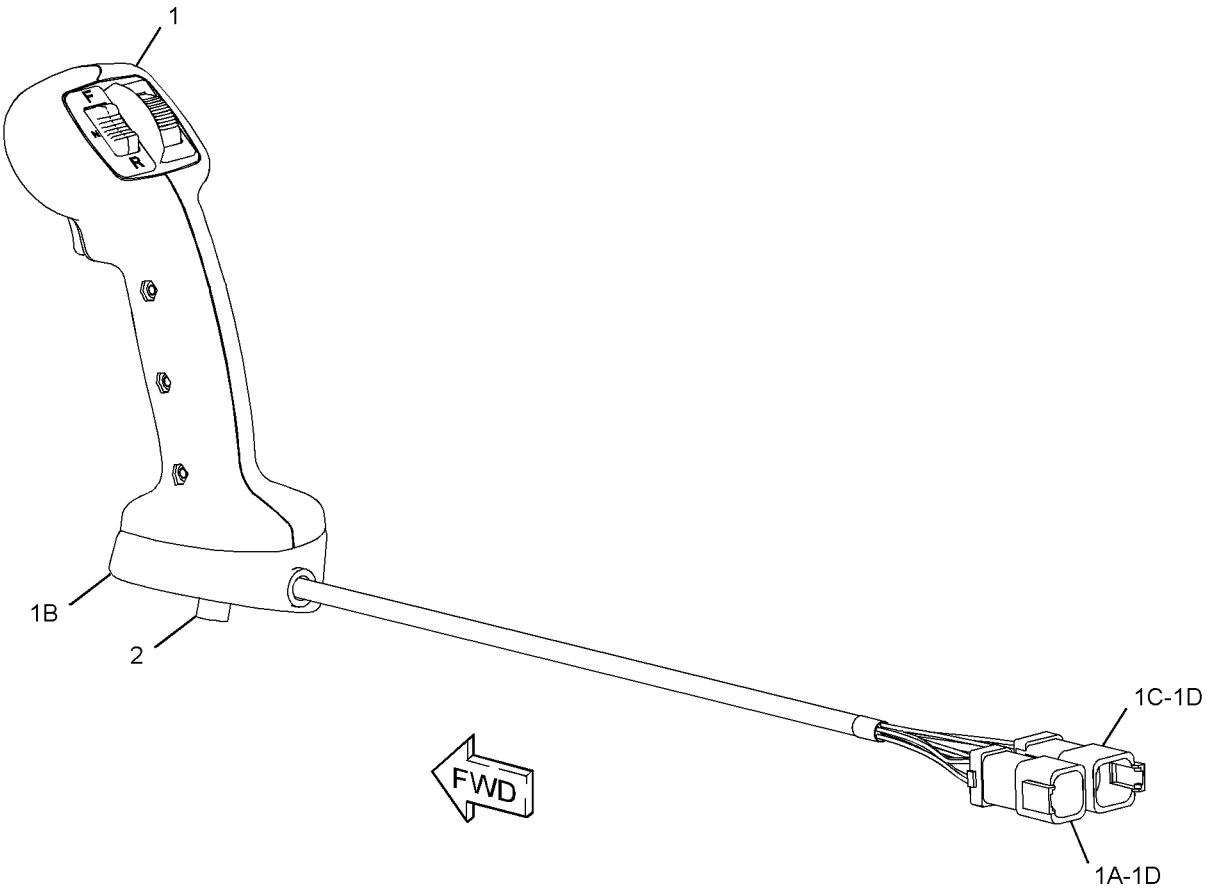

GRAPHIC #1 **<END>** g01291913

247-0841 CONTROL GP-JOYSTICK–4-FUNCTION, AUXILIARY

S/N: FTD1-UP

PART OF 242-0096 CONTROL GP-PILOT OPERATED HYD

AN ATTACHMENT

SMCS-5063, 5705 **i02588750**

NOTE	REF NO	GRAPHIC REF	PART NUMBER	QTY	PART NAME 1 2 3 4 5 6 (PRODUCT LEVEL)	SEE PAGE
	1	1	**260-3025**	1	CONTROL GP-HANDLE (JOYSTICK, AUXILIARY FUNCTIONS)	
		1	**102-8801**	1	KIT-RECEPTACLE (12-PIN)	
					(INCLUDES RECEPTACLE AS & WEDGE)	
	2	1	**173-0703**	1	BOOT	
	3	1	**151-4522**	1	KIT-LEVER (JOYSTICK)	
					(INCLUDES NUT, LEVER & PIN-SPRING)	
Y	4	1	**260-3024**	1	VALVE GP-PILOT (AUXILIARY)	670

Y-SEPARATE ILLUSTRATION

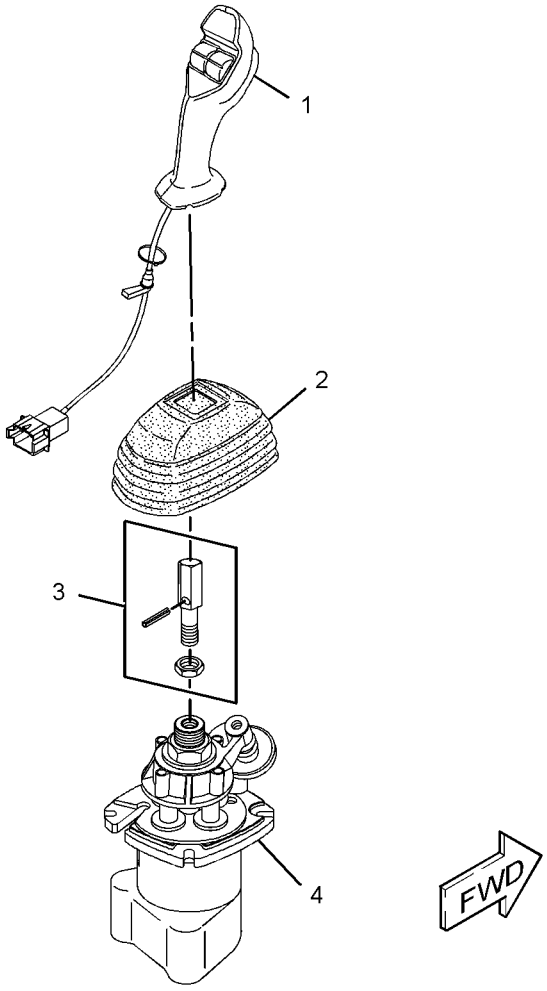

GRAPHIC #1

<END>

g01296159

266-7545 CONTROL GP-JOYSTICK–
FNR, 3-FUNCTION, WITH PROPORTIONAL FLOW CONTROL
S/N: FTD1-UP

PART OF 241-0943 HYDRAULIC AR-3 VALVE, 241-0944 HYDRAULIC AR-4 VALVE AN ATTACHMENT

SMCS-5063, 5705 **i02719744**

NOTE	REF NO	GRAPHIC REF	PART NUMBER	QTY	PART NAME 1 2 3 4 5 6 (PRODUCT LEVEL)	SEE PAGE
	1	1	**7K-1181**	1	STRAP-CABLE	
	2	1	**110-6109**	1	KNOB-CONTROL (FLOW CONTROL SWITCH)	
	3	1	**265-7952**	1	POTENTIOMETER AS (PROPORTIONAL FLOW CONTROL)	
		1	**3J-4818**	1	LOCKWASHER	
		1	**248-2821**	1	NUT-SPECIAL (1/2-28-THD)	
E		1	**9X-1813**		SLEEVE (40-CM)	
		1	**186-3735**	3	PIN-CONNECTOR (16-GA TO 18-GA)	
		1	**102-8803**	1	KIT-RECEPTACLE (3-PIN)	
					(INCLUDES RECEPTACLE AS & WEDGE)	
	4	1	**266-8945**	1	SWITCH AS-ROCKER (AUXILIARY FLOW CONTROL) (24-VOLT)	
		1	**111-7899**	1	GASKET	
	5	1	**273-5018**	1	PLATE-INSTRUCTION (PROPORTIONAL FLOW CONTROL)	
	6	1	**103-2006**	4	SCREW-PAN HEAD (6-19X0.37-IN)	
	7	1	**7X-0599**	1	WASHER-HARD (13X20X2-MM THK)	

E-ORDER BY THE CENTIMETER

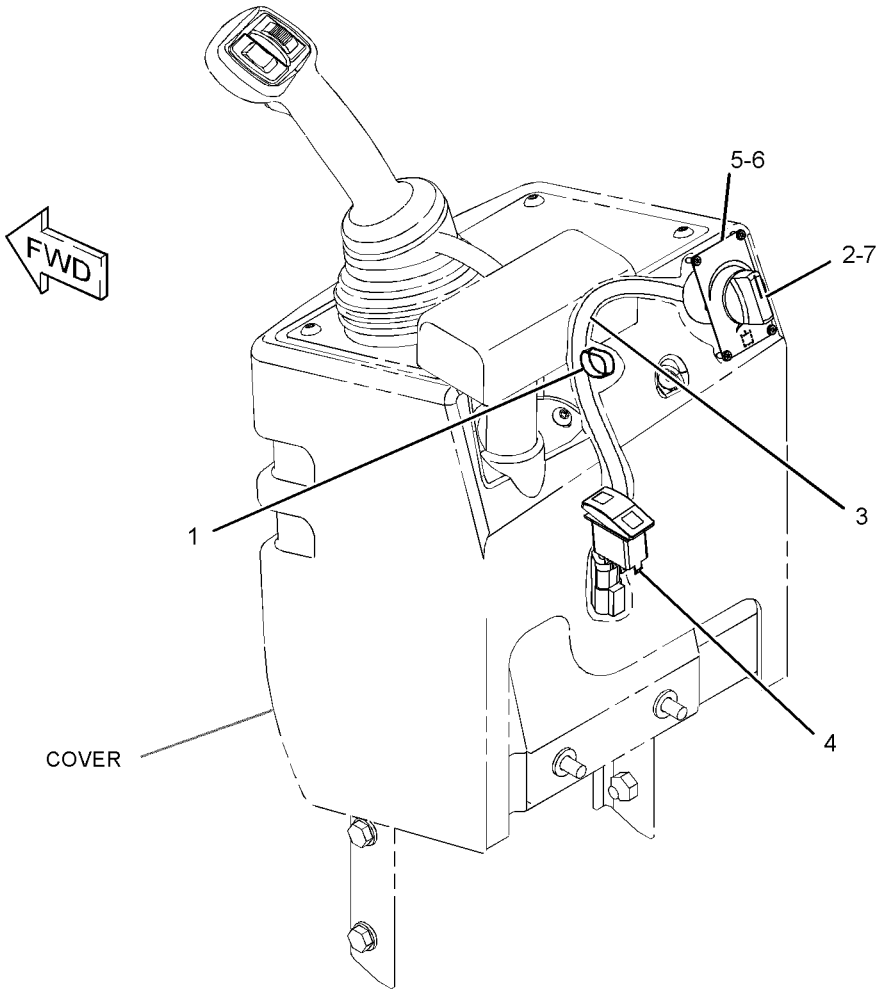

GRAPHIC #1 **<END>** g01365929

OPERATOR STATION

220-1505 CONTROL GP-PILOT OPERATED HYD–2-FUNCTION

S/N: BYD1-UP

PART OF 203-5927 HYDRAULIC AR-2 VALVE

AN ATTACHMENT

SMCS-5063 **i02853826**

NOTE	REF NO	GRAPHIC REF	PART NUMBER	QTY	PART NAME 1 2 3 4 5 6 (PRODUCT LEVEL)	SEE PAGE
	1	1	**8T-8737**	4	PLUG-SEAL	
	2	1	**141-9191**	1	PLATE-INSTRUCTION (BUCKET CONTROLS)	
	3	1	**223-4717**	1	BRACKET	
Y	4	1	*225-1057*	1	VALVE GP-SHUTOFF (HYDRAULIC LOCKOUT)	692
C	5	1	**262-1388**	1	SUPPORT AS	
M		1	**6V-9632**	6	NUT-WELD (M6X1-THD)	
		1	**7T-1099**	2	LINK	
M		1	**8T-3490**	4	NUT-WELD (M10X1.5-THD)	
Y	6	1	*287-2065*	1	VALVE GP-PILOT (2-FUNCTION)	677
	7	1	**102-8805**	1	KIT-RECEPTACLE (6-PIN)	
					(INCLUDES RECEPTACLE AS & WEDGE)	
M	9	1	**5C-7261**	4	NUT (M8X1.25-THD)	
	10	1	**6V-5839**	2	WASHER (11X21X2.5-MM THK)	
	11	1	**8T-4121**	2	WASHER-HARD (11X21X2.5-MM THK)	
M	12	1	**8T-4137**	2	BOLT (M10X1.5X20-MM)	
	13	1	**8T-4224**	4	WASHER-HARD (8.8X16X2-MM THK)	
M	14	1	**9X-2040**	2	SCREW-TRUSS HEAD (M10X1.5X25-MM)	
M	15	1	**9X-2041**	2	SCREW-TRUSS HEAD (M10X1.5X20-MM)	

C-CHANGE FROM PREVIOUS TYPE
M-METRIC PART
Y-SEPARATE ILLUSTRATION

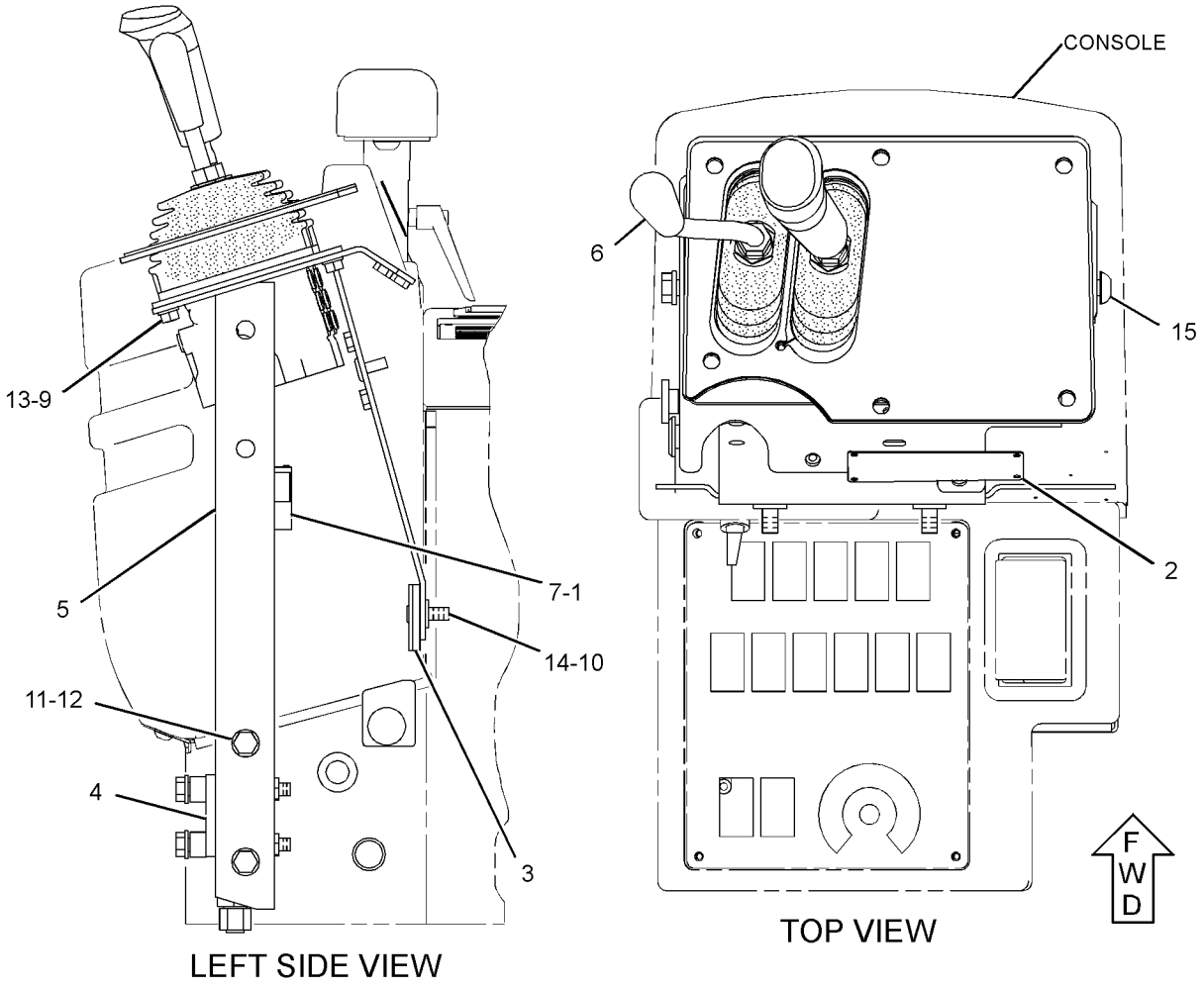

GRAPHIC #1 **<END>** g01379473

OPERATOR STATION

220-1506 CONTROL GP-PILOT OPERATED HYD–
JOYSTICK, 2-FUNCTION
S/N: BYD1-UP
PART OF 202-0421 HYDRAULIC AR-2 VALVE
AN ATTACHMENT

SMCS-5063 **i02853828**

NOTE	REF NO	GRAPHIC REF	PART NUMBER	QTY	PART NAME 1 2 3 4 5 6 (PRODUCT LEVEL)	SEE PAGE
	1	1	**141-9193**	1	PLATE-INSTRUMENT	
	2	1	**223-4717**	1	BRACKET	
Y	3	1	**225-1057**	1	VALVE GP-SHUTOFF (HYDRAULIC LOCKOUT)	692
	4	1	**262-1388**	1	SUPPORT AS (PILOT OPERATED HYDRAULIC)	
M		1	**6V-9632**	6	NUT-WELD (M6X1-THD)	
		1	**7T-1099**	2	LINK	
M		1	**8T-3490**	4	NUT-WELD (M10X1.5-THD)	
CY	5	1	*287-2061*	1	VALVE GP-PILOT (JOYSTICK, 2-FUNCTION)	675
C	6	1	**102-8805**	1	KIT-RECEPTACLE (6-PIN)	
					(INCLUDES RECEPTACLE AS & WEDGE)	
M	8	1	**5C-7261**	4	NUT (M8X1.25-THD)	
	9	1	**6V-5839**	2	WASHER (11X21X2.5-MM THK)	
	10	1	**8T-4121**	2	WASHER-HARD (11X21X2.5-MM THK)	
M	11	1	**8T-4137**	2	BOLT (M10X1.5X20-MM)	
	12	1	**8T-4224**	4	WASHER-HARD (8.8X16X2-MM THK)	
M	13	1	**9X-2040**	2	SCREW-TRUSS HEAD (M10X1.5X25-MM)	
M	14	1	**9X-2041**	2	SCREW-TRUSS HEAD (M10X1.5X20-MM)	

C-CHANGE FROM PREVIOUS TYPE
M-METRIC PART
Y-SEPARATE ILLUSTRATION

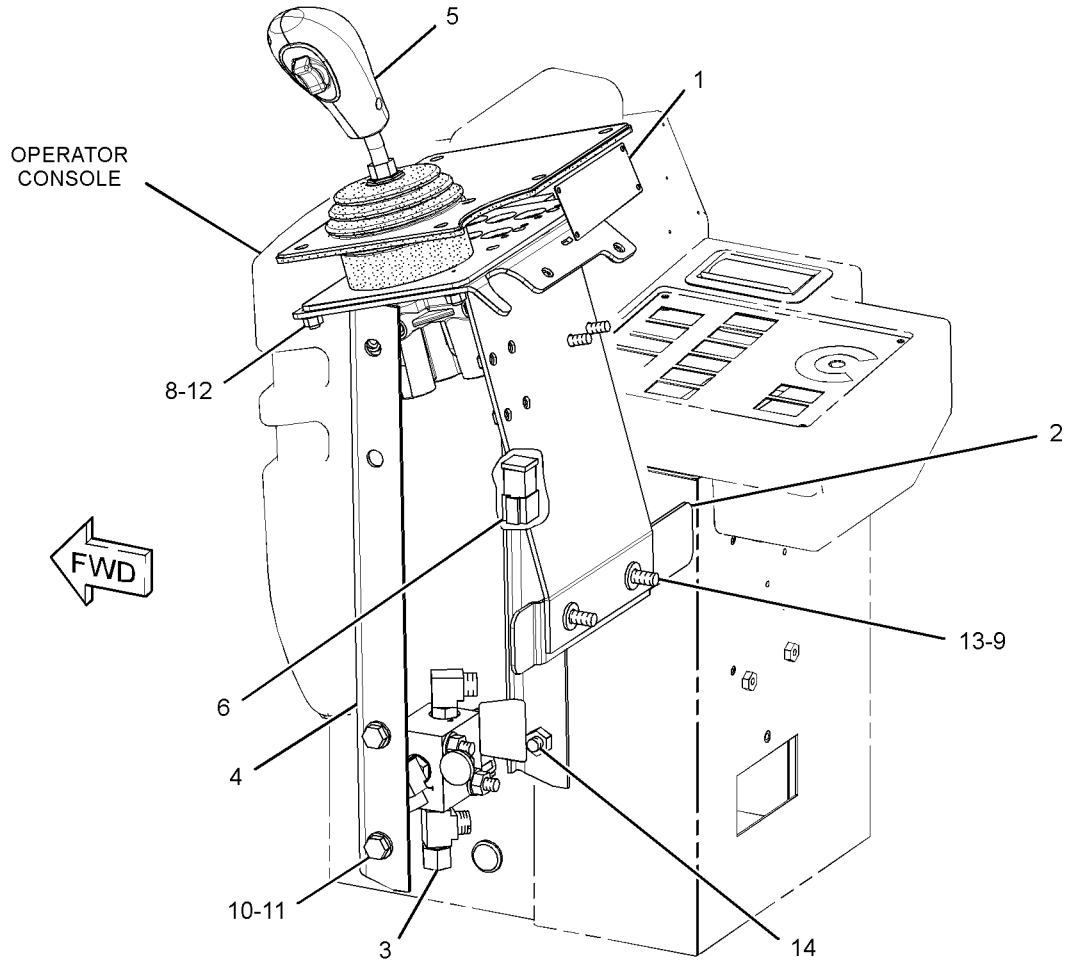

GRAPHIC #1 **<END>** g01379504

OPERATOR STATION

220-1509 CONTROL GP-PILOT OPERATED HYD–
JOYSTICK, 3-FUNCTION
S/N: BYD1-UP
PART OF 202-0423 HYDRAULIC AR-3 VALVE
AN ATTACHMENT

SMCS-5063 **i02712401**

NOTE	REF NO	GRAPHIC REF	PART NUMBER	QTY	PART NAME 1 2 3 4 5 6 (PRODUCT LEVEL)	SEE PAGE
	1	1	**141-9193**	1	PLATE-INSTRUMENT	
	2	1	**223-4717**	1	BRACKET	
Y	3	1	*225-1057*	1	VALVE GP-SHUTOFF (HYDRAULIC LOCKOUT)	692
	4	1	**262-1388**	1	SUPPORT AS (PILOT OPERATED HYDRAULIC)	
M		1	**6V-9632**	6	NUT-WELD (M6X1-THD)	
		1	**7T-1099**	2	LINK	
M		1	**8T-3490**	4	NUT-WELD (M10X1.5-THD)	
CY	5	1	*287-2062*	1	VALVE GP-PILOT (JOYSTICK, 3-FUNCTION) (JOYSTICK, 3-FUNCTION)	676
C	6	1	**102-8805**	1	KIT-RECEPTACLE (6-PIN)	
					(INCLUDES RECEPTACLE AS & WEDGE)	
M	8	1	**5C-7261**	4	NUT (M8X1.25-THD)	
	9	1	**6V-5839**	2	WASHER (11X21X2.5-MM THK)	
	10	1	**8T-4121**	2	WASHER-HARD (11X21X2.5-MM THK)	
M	11	1	**8T-4137**	2	BOLT (M10X1.5X20-MM)	
	12	1	**8T-4224**	4	WASHER-HARD (8.8X16X2-MM THK)	
M	13	1	**9X-2040**	2	SCREW-TRUSS HEAD (M10X1.5X25-MM)	
M	14	1	**9X-2041**	2	SCREW-TRUSS HEAD (M10X1.5X20-MM)	

C-CHANGE FROM PREVIOUS TYPE
M-METRIC PART
Y-SEPARATE ILLUSTRATION

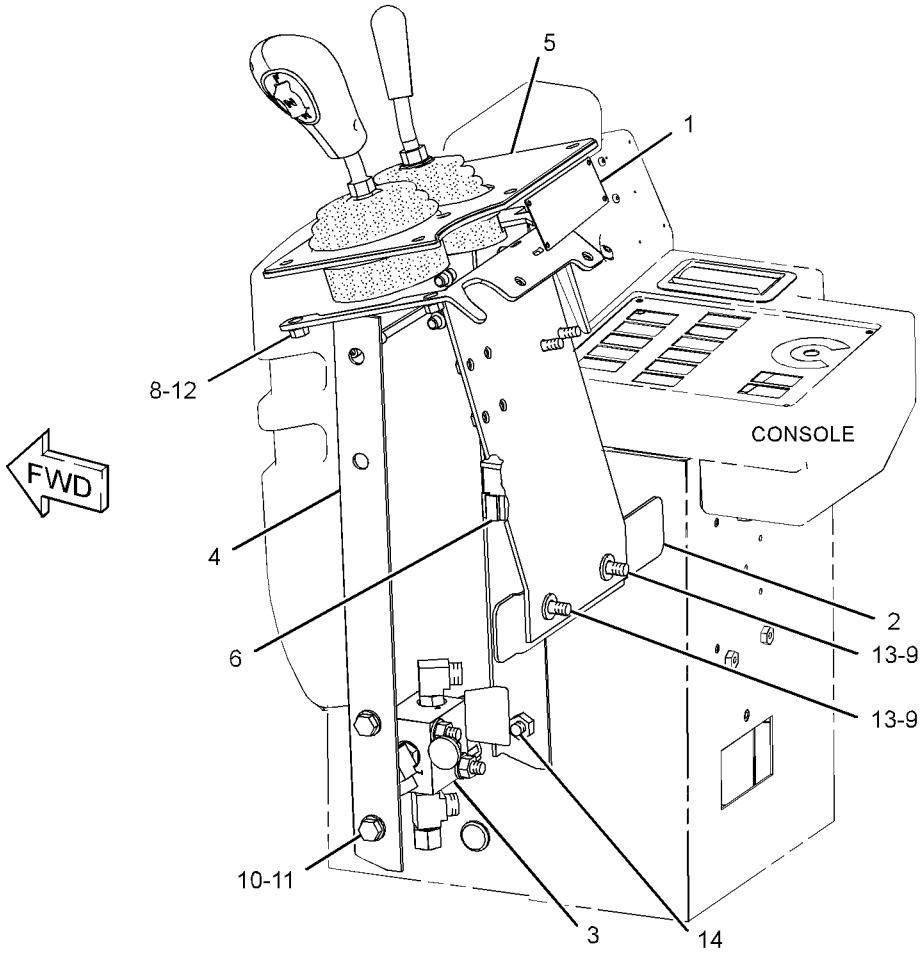

GRAPHIC #1 **<END>** g01376436

OPERATOR STATION

235-6853 CONTROL GP-PILOT OPERATED HYD–

JOYSTICK, 2-FUNCTION

S/N: FTD1-UP

PART OF 240-9452 HYDRAULIC AR-2 VALVE

AN ATTACHMENT

SMCS-5063 **i02853831**

NOTE	REF NO	GRAPHIC REF	PART NUMBER	QTY	PART NAME 1 2 3 4 5 6 (PRODUCT LEVEL)	SEE PAGE
	1	1	**179-6397**	1	PLATE-INSTRUCTION (IMPLEMENT WITH JOYSTICK)	
	2	1	**223-4717**	1	BRACKET	
	3	1	**262-1388**	1	SUPPORT AS	
CY	4	1	*287-2058*	1	VALVE GP-PILOT (JOYSTICK, 2-FUNCTION)	674
C	5	1	**102-8805**	1	KIT-RECEPTACLE (6-PIN)	
					(INCLUDES RECEPTACLE AS & WEDGE)	
M	7	1	**5C-7261**	4	NUT (M8X1.25-THD)	
	8	1	**6V-5839**	2	WASHER (11X21X2.5-MM THK)	
	9	1	**8T-4121**	2	WASHER-HARD (11X21X2.5-MM THK)	
M	10	1	**8T-4137**	2	BOLT (M10X1.5X20-MM)	
	11	1	**8T-4224**	4	WASHER-HARD (8.8X16X2-MM THK)	
M	12	1	**9X-2040**	2	SCREW-TRUSS HEAD (M10X1.5X25-MM)	
M	13	1	**9X-2041**	2	SCREW-TRUSS HEAD (M10X1.5X20-MM)	

C-CHANGE FROM PREVIOUS TYPE
M-METRIC PART
Y-SEPARATE ILLUSTRATION

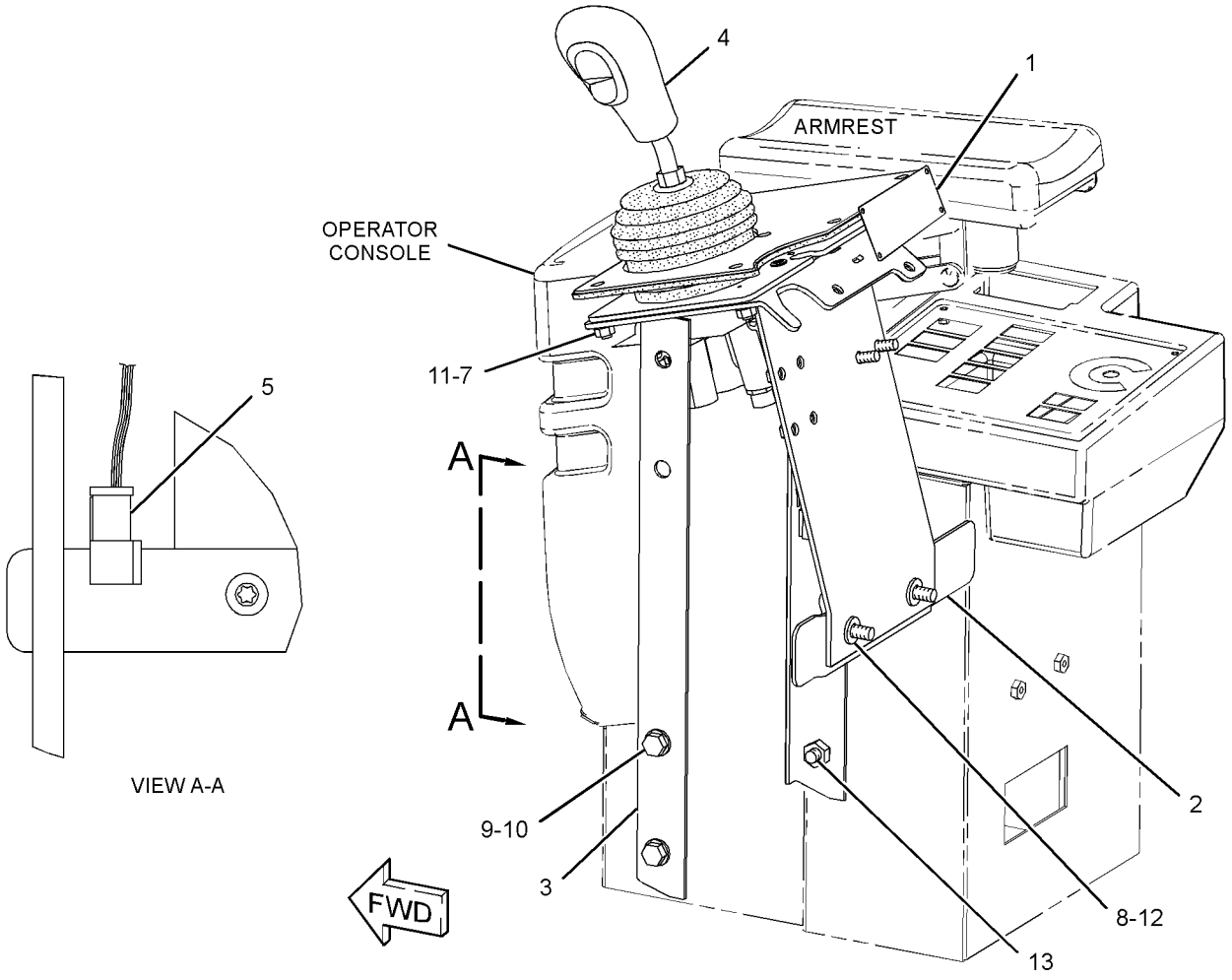

GRAPHIC #1 **<END>** g01394221

OPERATOR STATION

235-6860 CONTROL GP-PILOT OPERATED HYD–
JOYSTICK, 4-FUNCTION
S/N: FTD1-UP
PART OF 240-9454 HYDRAULIC AR-4 VALVE
AN ATTACHMENT

SMCS-5063 **i02707146**

NOTE	REF NO	GRAPHIC REF	PART NUMBER	QTY	PART NAME 1 2 3 4 5 6 (PRODUCT LEVEL)	SEE PAGE
	1	1	**179-6396**	1	PLATE-INSTRUCTION (IMPLEMENT WITH JOYSTICK)	
	2	1	**223-4717**	1	BRACKET	
	3	1	**262-1388**	1	SUPPORT AS	
M		1	**6V-9632**	6	NUT-WELD (M6X1-THD)	
		1	**7T-1099**	2	LINK	
M		1	**8T-3490**	4	NUT-WELD (M10X1.5-THD)	
CY	4	1	*287-2064*	1	VALVE GP-PILOT (JOYSTICK, 4-FUNCTION)	329
C	5	1	**102-8805**	1	KIT-RECEPTACLE (6-PIN)	
					INCLUDES RECEPTACLE AS & WEDGE	
M	7	1	**5C-7261**	4	NUT (M8X1.25-THD)	
	8	1	**6V-5839**	2	WASHER (11X21X2.5-MM THK)	
	9	1	**8T-4121**	2	WASHER-HARD (11X21X2.5-MM THK)	
M	10	1	**8T-4137**	2	BOLT (M10X1.5X20-MM)	
	11	1	**8T-4224**	4	WASHER-HARD (8.8X16X2-MM THK)	
M	12	1	**9X-2040**	2	SCREW-TRUSS HEAD (M10X1.5X25-MM)	
M	13	1	**9X-2041**	2	SCREW-TRUSS HEAD (M10X1.5X20-MM)	

C-CHANGE FROM PREVIOUS TYPE
M-METRIC PART
Y-SEPARATE ILLUSTRATION

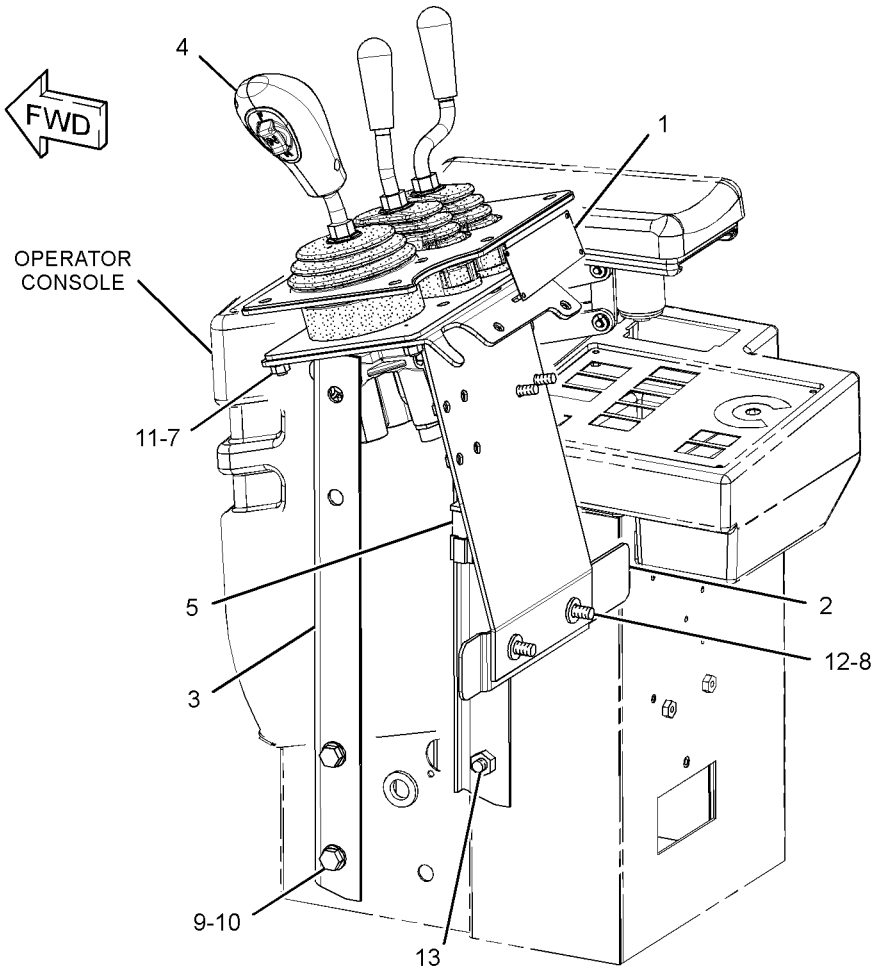

GRAPHIC #1 **<END>** g01366234

OPERATOR STATION

242-0096 CONTROL GP-PILOT OPERATED HYD–
JOYSTICK, 4-FUNCTION
S/N: FTD1-UP
PART OF 242-0100 HYDRAULIC AR-6 VALVE
AN ATTACHMENT

SMCS-5063 **i02853832**

NOTE	REF NO	GRAPHIC REF	PART NUMBER	QTY	PART NAME 1 2 3 4 5 6 (PRODUCT LEVEL)	SEE PAGE
	1	1	**262-1388**	1	SUPPORT AS	
	2	1	**223-4717**	1	BRACKET	
Y	3	1	**247-0841**	1	CONTROL GP-JOYSTICK (4-FUNCTION, AUXILIARY)	812
	6	1	**253-1222**	1	PLATE-INSTRUCTION (HYDRAULIC CONTROLS)	
M	8	1	**5C-7261**	4	NUT (M8X1.25-THD)	
	9	1	**8T-4121**	2	WASHER-HARD (11X21X2.5-MM THK)	
M	10	1	**8T-4137**	2	BOLT (M10X1.5X20-MM)	
M	11	1	**8T-4138**	3	BOLT (M6X1X20-MM)	
	12	1	**8T-4205**	3	WASHER-HARD (7.2X14.5X2-MM THK)	
	13	1	**8T-4224**	4	WASHER-HARD (8.8X16X2-MM THK)	
M	14	1	**9X-2040**	2	SCREW-TRUSS HEAD (M10X1.5X25-MM)	
M	15	1	**9X-2041**	2	SCREW-TRUSS HEAD (M10X1.5X20-MM)	
	16	1	**6V-5839**	2	WASHER (11X21X2.5-MM THK)	
C	17	1	**102-8805**	1	KIT-RECEPTACLE (6-PIN) (INCLUDES RECEPTACLE AS & WEDGE)	
CY	18	1	*287-2056*	1	VALVE GP-PILOT (JOYSTICK, 2-FUNCTION)	673

C-CHANGE FROM PREVIOUS TYPE
M-METRIC PART
Y-SEPARATE ILLUSTRATION

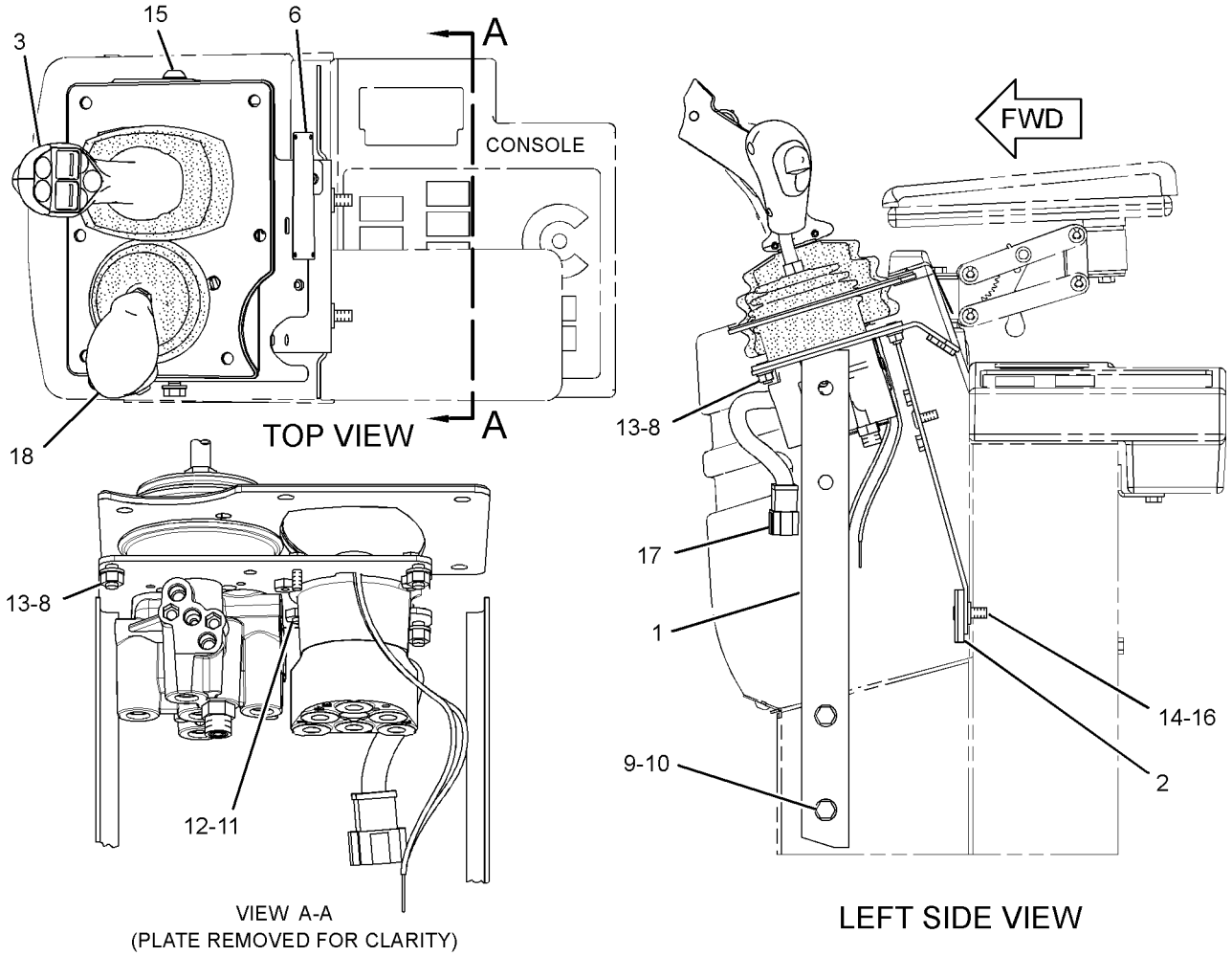

GRAPHIC #1 **<END>** g01410879

263-5810 CONTROL GP-PILOT OPERATED HYD–
JOYSTICK, 3-FUNCTION
S/N: FTD1-UP

PART OF 241-0943 HYDRAULIC AR-3 VALVE

AN ATTACHMENT

SMCS-5063 **i02732291**

NOTE	REF NO	GRAPHIC REF	PART NUMBER	QTY	PART NAME 1 2 3 4 5 6 (PRODUCT LEVEL)	SEE PAGE
Y	1	1	*287-2053*	1	VALVE GP-PILOT (JOYSTICK, 3-FUNCTION)	672
	2	1	**223-4717**	1	BRACKET	
	4	1	**262-1388**	1	SUPPORT AS	
M		1	**6V-9632**	6	NUT-WELD (M6X1-THD)	
		1	**7T-1099**	2	LINK	
M		1	**8T-3490**	4	NUT-WELD (M10X1.5-THD)	
	5	1	**267-3438**	1	PLATE-INSTRUCTION (OPERATOR CONTROLS, READ OMM)	
	7	1	**3E-4352**	4	WASHER-HARD (8.8X20.5X2.5-MM THK)	
	8	1	**6V-5839**	2	WASHER (11X21X2.5-MM THK)	
M	9	1	**7X-2536**	4	BOLT (M8X1.25X14-MM)	
	10	1	**8T-4121**	2	WASHER-HARD (11X21X2.5-MM THK)	
M	11	1	**8T-4137**	2	BOLT (M10X1.5X20-MM)	
M	12	1	**9R-2160**	4	BOSS (M8X1.25X25-MM)	
M	13	1	**9X-2040**	2	SCREW-TRUSS HEAD (M10X1.5X25-MM)	
M	14	1	**9X-2041**	2	SCREW-TRUSS HEAD (M10X1.5X20-MM)	

M-METRIC PART
Y-SEPARATE ILLUSTRATION

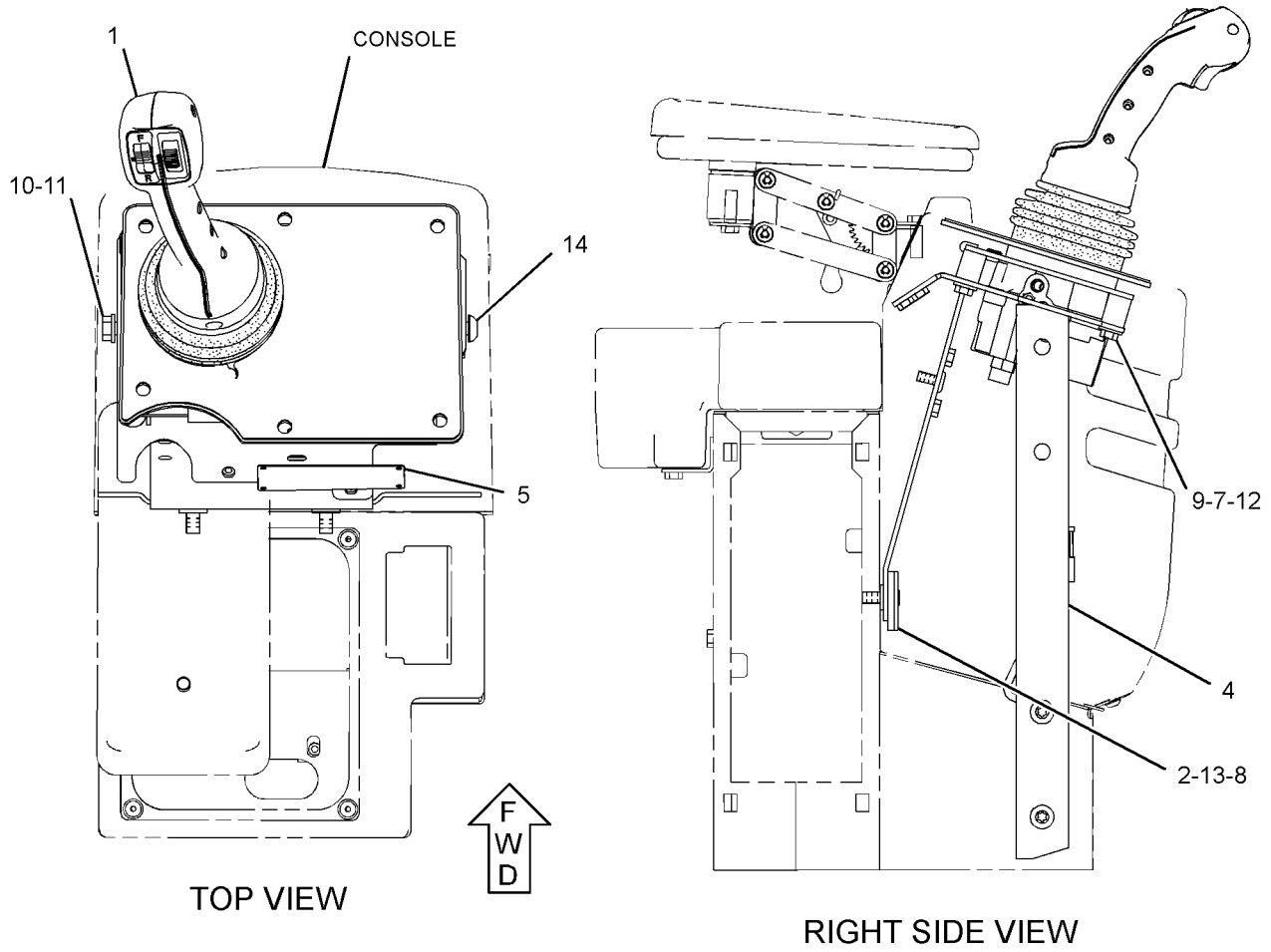

GRAPHIC #1 **<END>** g01393150

OPERATOR STATION

263-5812 CONTROL GP-PILOT OPERATED HYD–
JOYSTICK, 4-FUNCTION
S/N: FTD1-UP
PART OF 241-0944 HYDRAULIC AR-4 VALVE
AN ATTACHMENT

SMCS-5063 **i02733462**

NOTE	REF NO	GRAPHIC REF	PART NUMBER	QTY	PART NAME 1 2 3 4 5 6 (PRODUCT LEVEL)	SEE PAGE
	1	1	**6V-5839**	2	WASHER (11X21X2.5-MM THK)	
Y	3	1	*287-2051*	1	VALVE GP-PILOT (JOYSTICK, 3-FUNCTION)	671
	4	1	**223-4717**	1	BRACKET	
	6	1	**262-1388**	1	SUPPORT AS	
M		1	**6V-9632**	6	NUT-WELD (M6X1-THD)	
M		1	**8T-3490**	4	NUT-WELD (M10X1.5-THD)	
	7	1	**267-3439**	1	PLATE-INSTRUCTION	
	8	1	**3E-4352**	4	WASHER-HARD (8.8X20.5X2.5-MM THK)	
M	9	1	**7X-2536**	4	BOLT (M8X1.25X14-MM)	
	10	1	**8T-4121**	2	WASHER-HARD (11X21X2.5-MM THK)	
M	11	1	**8T-4137**	2	BOLT (M10X1.5X20-MM)	
M	13	1	**9X-2040**	2	SCREW-TRUSS HEAD (M10X1.5X25-MM)	
M	14	1	**9X-2041**	2	SCREW-TRUSS HEAD (M10X1.5X20-MM)	
M	15	1	**9R-2160**	4	BOSS (M8X1.25X25-MM)	

M-METRIC PART
Y-SEPARATE ILLUSTRATION

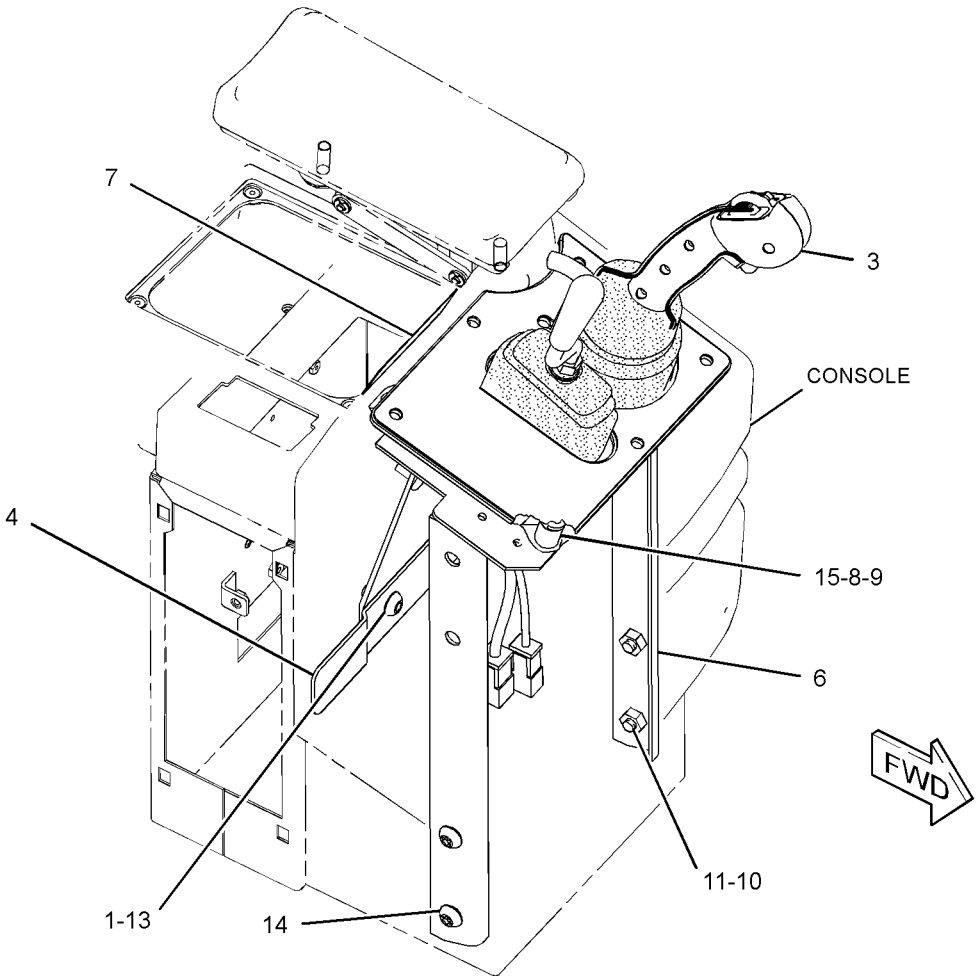

GRAPHIC #1 **<END>** g01397116

OPERATOR STATION

190-4635 CONTROL GP-STEERING

S/N: BYD1-UP; FTD1-UP

PART OF 190-4405 CAB AR-ENCLOSED ROPS, 304-9256 CANOPY AR-SOFT, 190-4406 CANOPY GP-OPEN ROPS, 304-9255, 308-1933 PLATFORM AR AN ATTACHMENT

SMCS-4304, 4309, 4310, 4338 **i02831672**

NOTE	REF NO	GRAPHIC REF	PART NUMBER	QTY	PART NAME 1 2 3 4 5 6 (PRODUCT LEVEL)	SEE PAGE
	1	1	**2T-3360**	1	BUTTON AS-HORN	
	2	1	**8R-2918**	1	KNOB AS	
	3	1	**9D-7924**	4	MOUNTING	
	4	1	**107-6007**	1	SUPPORT AS	
		1	**107-6011**	1	PLATE AS	
	5	1	**107-6141**	1	COVER	
	6	1	**111-7874**	1	SEAL	
	7	1	**111-7878**	1	COVER	
	8	1	**129-3270**	1	STEERING WHEEL AS	
	9	1	**134-4735**	1	PLATE AS	
Y	10	1	**280-6837**	1	STEERING COLUMN GP-ADJUSTABLE	461
	11	1	**5P-4116**	5	WASHER-HARD (8.8X20.5X2-MM THK)	
	12	1	**7X-0603**	4	WASHER-HARD (9.9X35X2.5-MM THK)	
M	13	1	**8T-4189**	5	BOLT (M8X1.25X20-MM)	
M	14	1	**8T-4191**	5	BOLT (M10X1.5X16-MM)	
M	15	1	**8T-6869**	4	BOLT (M8X1.25X60-MM)	
M	16	1	**8T-8894**	4	BOLT-SOCKET HEAD (M10X1.5X20-MM)	
M	17	1	**9X-2042**	4	SCREW-TRUSS HEAD (M6X1X12-MM)	
M	18	1	**9X-2045**	2	SCREW-TRUSS HEAD (M6X1X20-MM)	

M-METRIC PART
Y-SEPARATE ILLUSTRATION

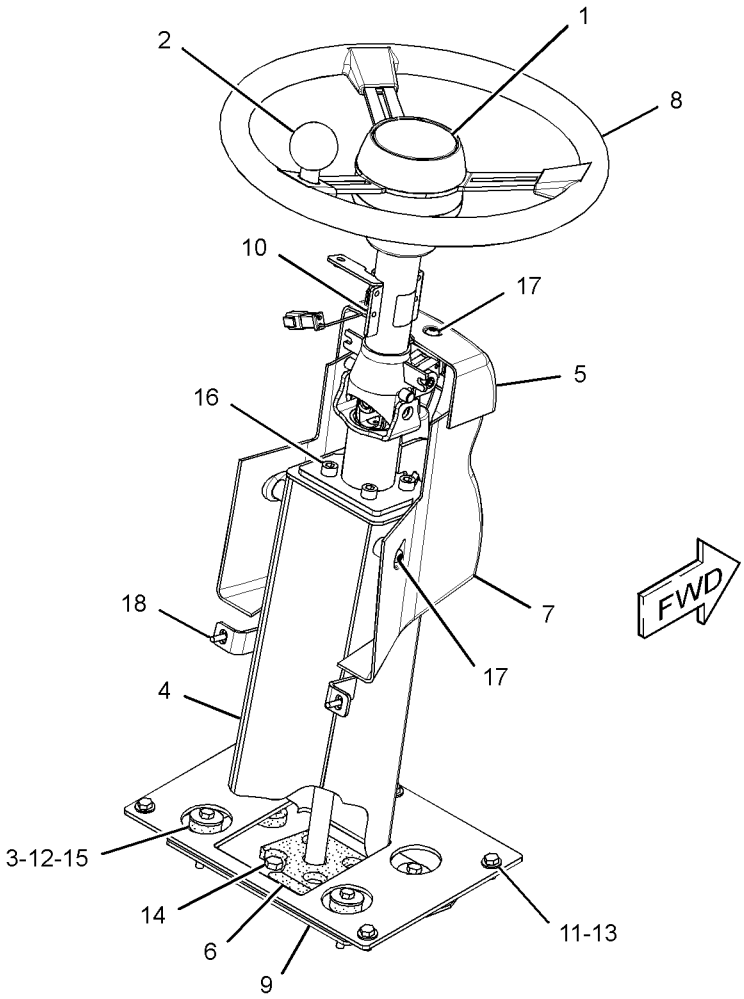

GRAPHIC #1 **<END>** g01414868

190-4690 CONTROL GP-TRANSMISSION

S/N: BYD1-UP; FTD1-UP

PART OF 190-4405 CAB AR-ENCLOSED ROPS, 304-9256 CANOPY AR-SOFT, 190-4406 CANOPY GP-OPEN ROPS, 304-9255, 308-1933 PLATFORM AR AN ATTACHMENT

SMCS-3065, 3168 **i02853835**

NOTE	REF NO	GRAPHIC REF	PART NUMBER	QTY	PART NAME 1 2 3 4 5 6 (PRODUCT LEVEL)	SEE PAGE
	1	1	**6I-1418**	4	SPACER (8.2X12.7X28.7-MM THK)	
	2	1	**8T-9655**	8	MOUNT-ISOLATION	
B	3	1	**101-9161**	1	WIRE AS	
M	4	1	**134-1374**	4	BOLT-SOCKET HEAD (M5X0.8X20-MM)	
CY	5	1	**299-5841**	1	CONTROL GP-TRANSMISSION	828
	6	1	**216-9069**	2	BRACKET AS	
					(EACH INCLUDES)	
M		1	**6V-9632**	1	NUT-WELD (M6X1-THD)	
	7	1	**217-0956**	1	COVER	
R	8	1	**262-1408**	1	CONTROL GP-UNPROGRAMMED (POWER TRAIN)	
M	9	1	**5C-9553**	2	BOLT (M6X1X16-MM)	
M	10	1	**7X-0818**	4	BOLT (M8X1.25X45-MM)	
	11	1	**9X-8256**	2	WASHER (6.6X12X2-MM THK)	

B-USE AS REQUIRED
C-CHANGE FROM PREVIOUS TYPE
M-METRIC PART
R-REMFG PART MAY BE AVAILABLE
Y-SEPARATE ILLUSTRATION

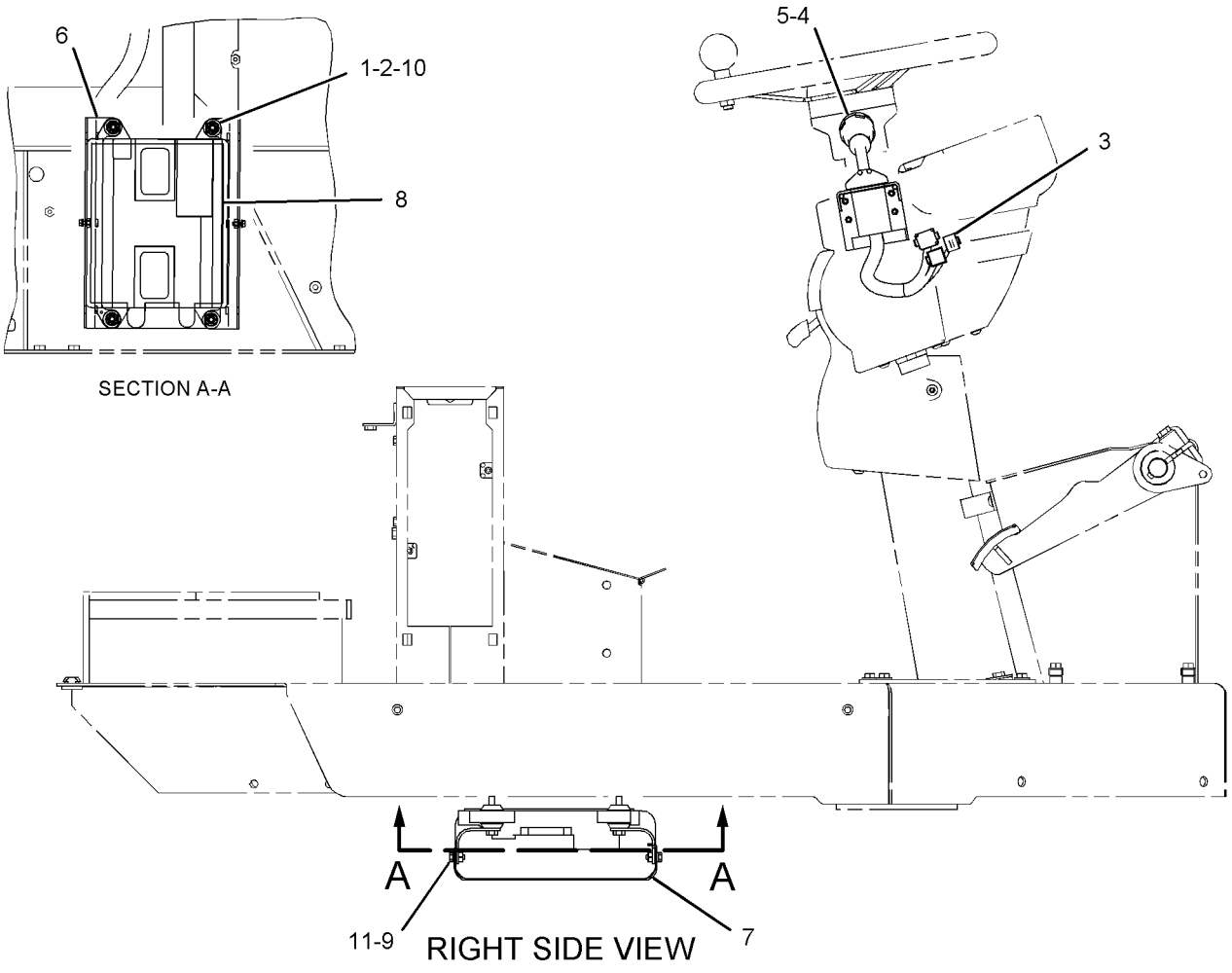

GRAPHIC #1 **<END>** g01143784

OPERATOR STATION

299-5841 CONTROL GP-TRANSMISSION

S/N: BYD1-UP; FTD1-UP
PART OF 190-4690 CONTROL GP-TRANSMISSION
AN ATTACHMENT

SMCS-3065, 3168 **i02754664**

NOTE	REF NO	GRAPHIC REF	PART NUMBER	QTY	PART NAME 1 2 3 4 5 6 (PRODUCT LEVEL)	SEE PAGE
	1	1	**102-8805**	1	KIT-RECEPTACLE (6-PIN)	
					(INCLUDES RECEPTACLE AS & WEDGE)	
	2	1	**155-2265**	1	KIT-CONNECTING PLUG (8-PIN)	
	3	1	**155-2271**	2	KIT-CONNECTING PLUG (4-PIN)	
					(EACH PLUG KIT INCLUDES PLUG AS, WEDGE & INTERFACE SEAL)	
	5	1	**186-3736**	12	SOCKET-CONNECTOR (16-GA TO 18-GA)	
	7	1	**9G-3695**	2	PLUG	
	8	1	**186-3735**	4	PIN-CONNECTOR (16-GA TO 18-GA)	

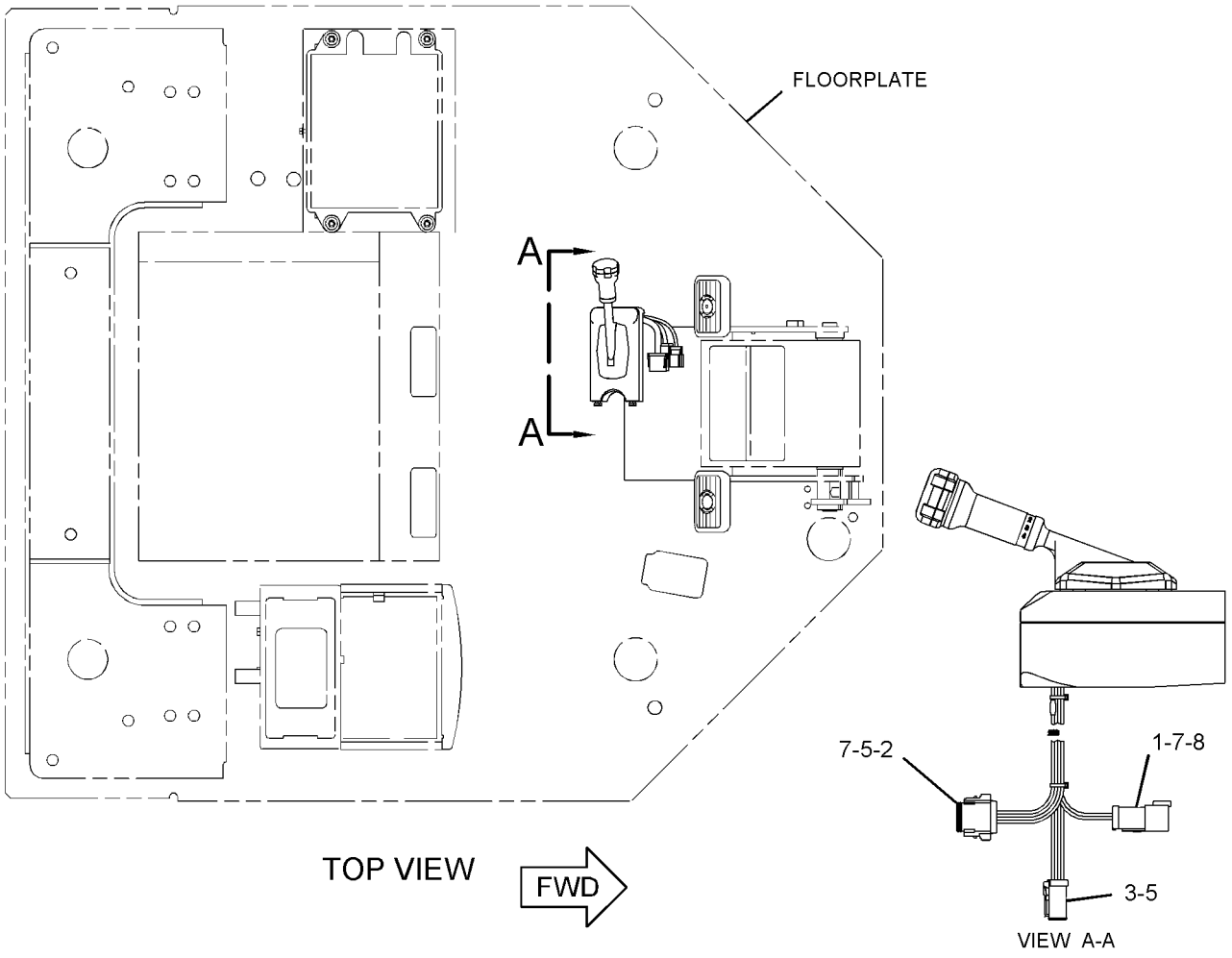

GRAPHIC #1 **<END>** g01379901

OPERATOR STATION

118-0809 DASH GP

S/N: BYD1-UP; FTD1-UP
PART OF 304-9256 CANOPY AR-SOFT, 190-4406 CANOPY GP-OPEN ROPS
AN ATTACHMENT

SMCS-7314 **i01094306**

NOTE	REF NO	GRAPHIC REF	PART NUMBER	QTY	PART NAME 1 2 3 4 5 6 (PRODUCT LEVEL)	SEE PAGE
C	1	1	**166-9287**	1	DASH AS	
M	2	1	**8T-4908**	4	BOLT (M8X1.25X25MM)	
	3	1	**5P-4116**	4	WASHER (2MM THK)	

C-CHANGE FROM PREVIOUS TYPE
M-METRIC PART

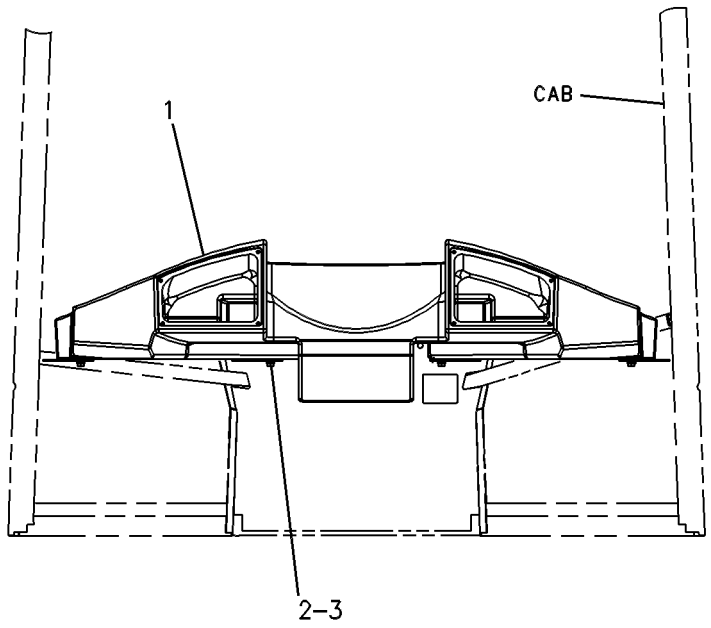

REAR VIEW

GRAPHIC #1 **<END>** g00250924

OPERATOR STATION

207-5948 DEFROSTER GP-CAB

S/N: BYD1-UP; FTD1-UP
PART OF 190-4405 CAB AR-ENCLOSED ROPS
AN ATTACHMENT

SMCS-7304, 7316 **i01826040**

NOTE	REF NO	GRAPHIC REF	PART NUMBER	QTY	PART NAME 1 2 3 4 5 6 (PRODUCT LEVEL)	SEE PAGE
	1	1	**3E-5239**	1	RELAY AS (24-VOLT)	
	2	1	**204-8799**	1	SWITCH AS-ROCKER (DEFROSTER)	
		1	**111-7899**	1	GASKET	
	3	1	**8T-4205**	1	WASHER-HARD (7.2X14.5X2-MM THK)	
M	4	1	**9X-2042**	1	SCREW-TRUSS HEAD (M6X1X12-MM)	

M-METRIC PART

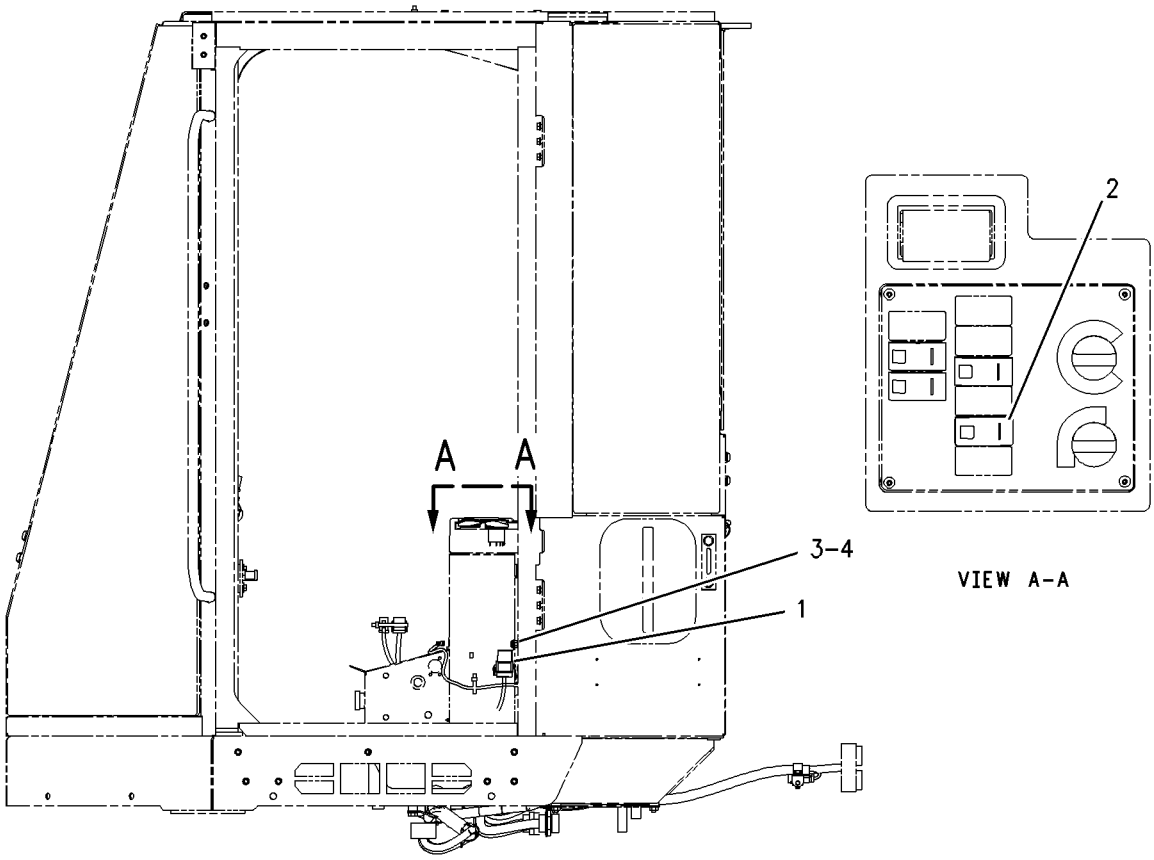

LEFT SIDE VIEW

GRAPHIC #1 **<END>** g00917880

OPERATOR STATION

290-0662 DISPLAY GP-CAMERA

S/N: BYD1-UP; FTD1-UP
PART OF 320-9968 CAMERA AR
AN ATTACHMENT

SMCS-7347 **i02895616**

NOTE	REF NO	GRAPHIC REF	PART NUMBER	QTY	PART NAME 1 2 3 4 5 6 (PRODUCT LEVEL)	SEE PAGE
	1	1	**249-9076**	7	CLIP	
	2	1	**261-3224**	1	MODULE GP-DISPLAY (WORK AREA VISUAL SYSTEM)	
		1	**8T-8737**	1	PLUG-SEAL	
		1	**102-8805**	1	KIT-RECEPTACLE (6-PIN)	
					(INCLUDES RECEPTACLE AS & WEDGE)	
		1	**186-3735**	5	PIN-CONNECTOR (16-GA TO 18-GA)	
		1	**280-2691**	1	CABLE AS	
	3	1	**290-0661**	1	HARNESS AS-MONITOR	

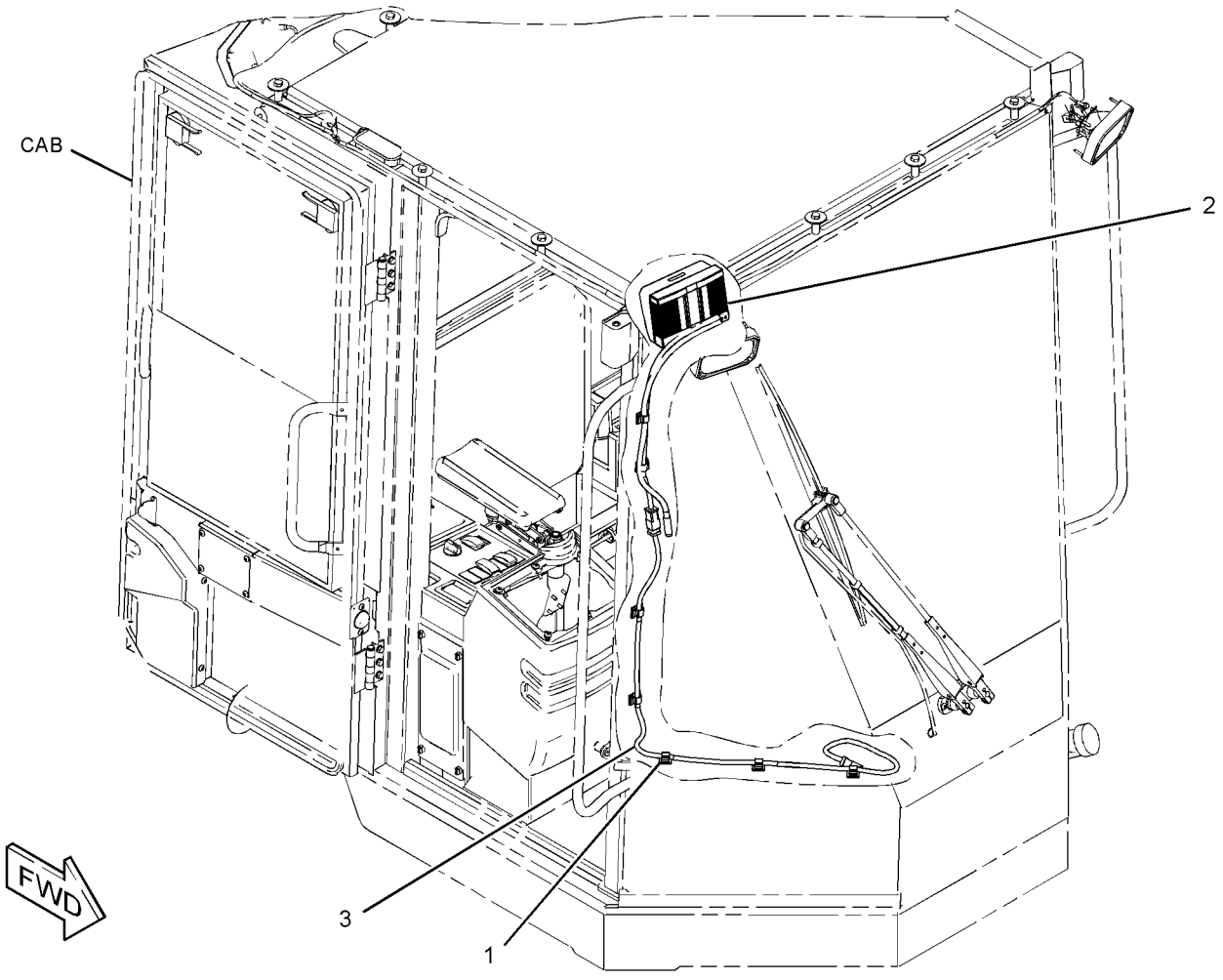

GRAPHIC #1 **<END>** g01392062

OPERATOR STATION

290-8489 DOOR GP-CAB

S/N: BYD1-UP; FTD1-UP
PART OF 290-8503 CAB AR-ENCLOSED ROPS
AN ATTACHMENT

SMCS-7308 **i02807490**

NOTE	PART NUMBER	QTY	PART NAME 1 2 3 4 5 6 (PRODUCT LEVEL)	SEE PAGE
Y	**290-8490**	1	DOOR GP-CAB (FIXED WINDOW, RH)	833
Y	**290-8491**	1	DOOR GP-CAB (FIXED WINDOW, LH)	835

Y-SEPARATE ILLUSTRATION

<END>

OPERATOR STATION

290-8490 DOOR GP-CAB—FIXED WINDOW, RH

S/N: BYD1-UP; FTD1-UP
PART OF 290-8489 DOOR GP-CAB
AN ATTACHMENT

SMCS-7308 **i02807510**

NOTE	REF NO	GRAPHIC REF	PART NUMBER	QTY	PART NAME 1 2 3 4 5 6 (PRODUCT LEVEL)	SEE PAGE
	1	1	**3T-5201**	1	BEARING	
	2	1	**4E-1384**	1	BUMPER-CONICAL	
	3	1	**7W-2108**	1	SPRING-BYPASS VALVE	
	4	1	**8T-4742**	1	END-YOKE ROD	
	9	1	**141-8580**	1	RING-RETAINING	
	10	1	**161-9640**	1	COVER	
	11	1	**161-9641**	1	PLATE	
	12	1	**161-9642**	1	ROD AS	
	13	1	**161-9647**	1	PLATE	
	14	1	**162-2189**	1	GLASS-CAB (DOOR)	
	15	1	**168-2458**	1	LATCH AS	
	16	1	**169-3995**	1	SEAL	
	17	1	**178-2593**	1	BUMPER	
J	18	1	**252-1862**	1	HANDLE AS (PULL)	
	19	1	**252-1863**	1	GASKET	
	20	1	**254-1127**	1	PLATE	
	21	1	**269-2890**	1	CLEVIS	
	22	1	**269-2892**	1	PIN	
	23	1	**269-2893**	1	CLIP	
Y	24	1	**290-8492**	1	DOOR GP-CAB (RH) (RH)	837
	25	1	**292-2870**	1	LATCH AS (RH)	
	26	1	**292-3255**	1	COVER	
M	27	1	**5C-2890**	1	NUT (M6X1-THD)	
M	28	1	**5C-7261**	2	NUT (M8X1.25-THD)	
	29	1	**5P-4116**	1	WASHER-HARD (8.8X20.5X2-MM THK)	
M	30	1	**8T-4138**	3	BOLT (M6X1X20-MM)	
M	31	1	**8T-4181**	3	BOLT (M6X1X20-MM)	
	32	1	**8T-4205**	5	WASHER-HARD (7.2X14.5X2-MM THK)	
M	33	1	**8T-4971**	4	BOLT (M6X1X30-MM)	
M	34	1	**9X-2042**	11	SCREW-TRUSS HEAD (M6X1X12-MM)	
E	35	1	**3E-3805**		SEAL (420-CM)	

E-ORDER BY THE CENTIMETER
J-REQUIRES CORPORATE KEY
M-METRIC PART
Y-SEPARATE ILLUSTRATION

290-8490 DOOR GP-CAB *(contd.)* i02807510

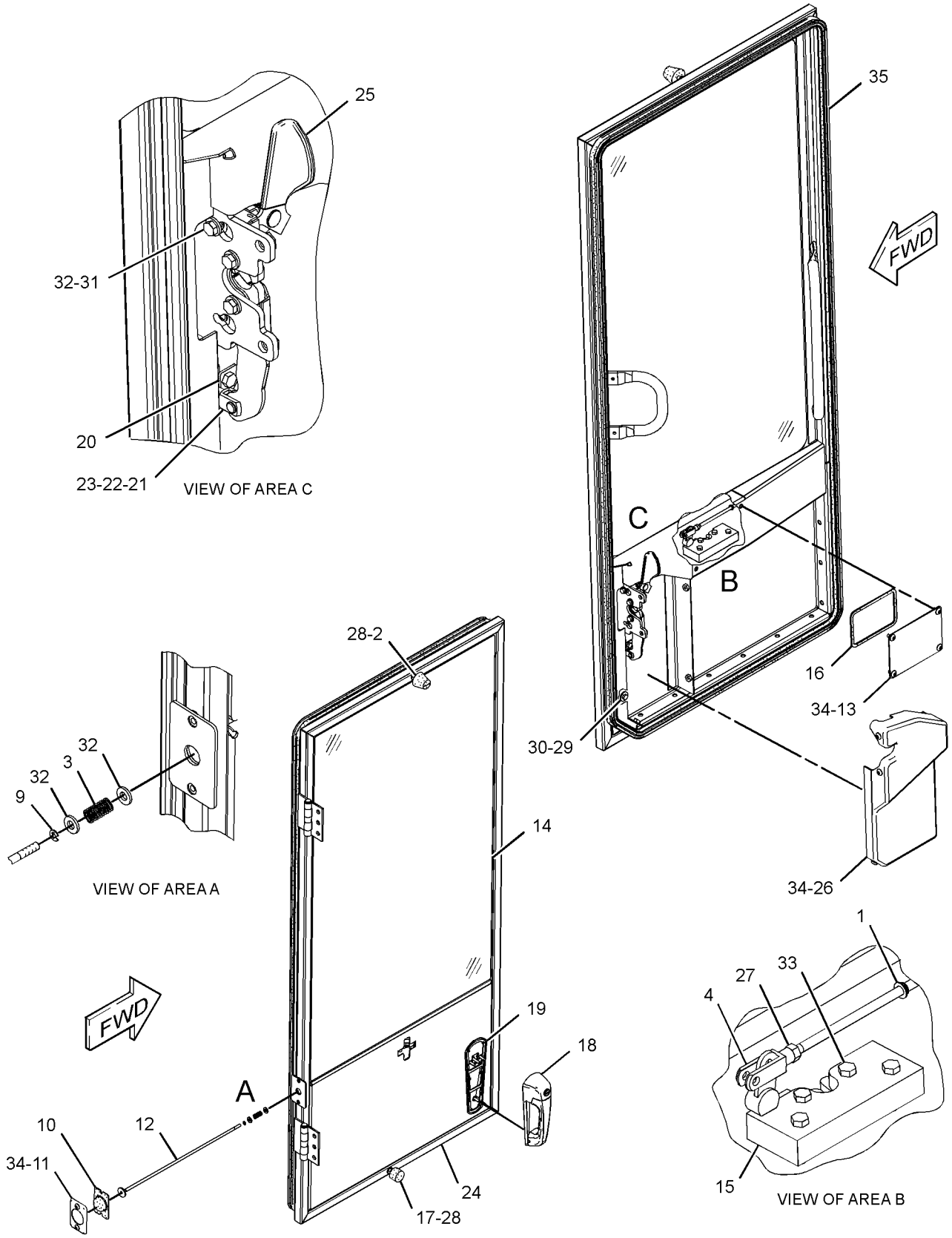

GRAPHIC #1 **<END>** g01406025

OPERATOR STATION

290-8491 DOOR GP-CAB—FIXED WINDOW, LH

S/N: BYD1-UP; FTD1-UP
PART OF 290-8489 DOOR GP-CAB
AN ATTACHMENT

SMCS-7308 **i02807507**

NOTE	REF NO	GRAPHIC REF	PART NUMBER	QTY	PART NAME 1 2 3 4 5 6 (PRODUCT LEVEL)	SEE PAGE
E	1	1	**3E-3805**		SEAL (420-CM)	
	2	1	**3T-5201**	1	BEARING	
	3	1	**4E-1384**	1	BUMPER-CONICAL	
	4	1	**7W-2108**	1	SPRING-BYPASS VALVE	
	5	1	**8T-4742**	1	END-YOKE ROD	
	10	1	**141-8580**	1	RING-RETAINING	
	11	1	**161-9640**	1	COVER	
	12	1	**161-9641**	1	PLATE	
	13	1	**161-9642**	1	ROD AS	
	14	1	**161-9647**	1	PLATE	
	15	1	**162-2189**	1	GLASS-CAB (DOOR)	
	16	1	**168-2457**	1	LATCH AS-DOOR	
	17	1	**169-3995**	1	SEAL	
	18	1	**178-2593**	1	BUMPER	
J	19	1	**252-1862**	1	HANDLE AS (PULL)	
	20	1	**252-1863**	1	GASKET	
	21	1	**254-1127**	1	PLATE	
	22	1	**269-2890**	1	CLEVIS	
	23	1	**269-2892**	1	PIN	
	24	1	**269-2893**	1	CLIP	
Y	25	1	**290-8493**	1	DOOR GP-CAB (LH)	838
	26	1	**292-2869**	1	LATCH AS (LH)	
	27	1	**292-3254**	1	COVER (LH)	
M	28	1	**5C-2890**	1	NUT (M6X1-THD)	
M	29	1	**5C-7261**	2	NUT (M8X1.25-THD)	
	30	1	**5P-4116**	1	WASHER-HARD (8.8X20.5X2-MM THK)	
M	31	1	**8T-4138**	3	BOLT (M6X1X20-MM)	
M	32	1	**8T-4181**	3	BOLT (M6X1X20-MM)	
	33	1	**8T-4205**	5	WASHER-HARD (7.2X14.5X2-MM THK)	
M	34	1	**8T-4971**	4	BOLT (M6X1X30-MM)	
M	35	1	**9X-2042**	11	SCREW-TRUSS HEAD (M6X1X12-MM)	

E-ORDER BY THE CENTIMETER
J-REQUIRES COPORATE KEY
M-METRIC PART
Y-SEPARATE ILLUSTRATION

290-8491 DOOR GP-CAB *(contd.)*

i02807507

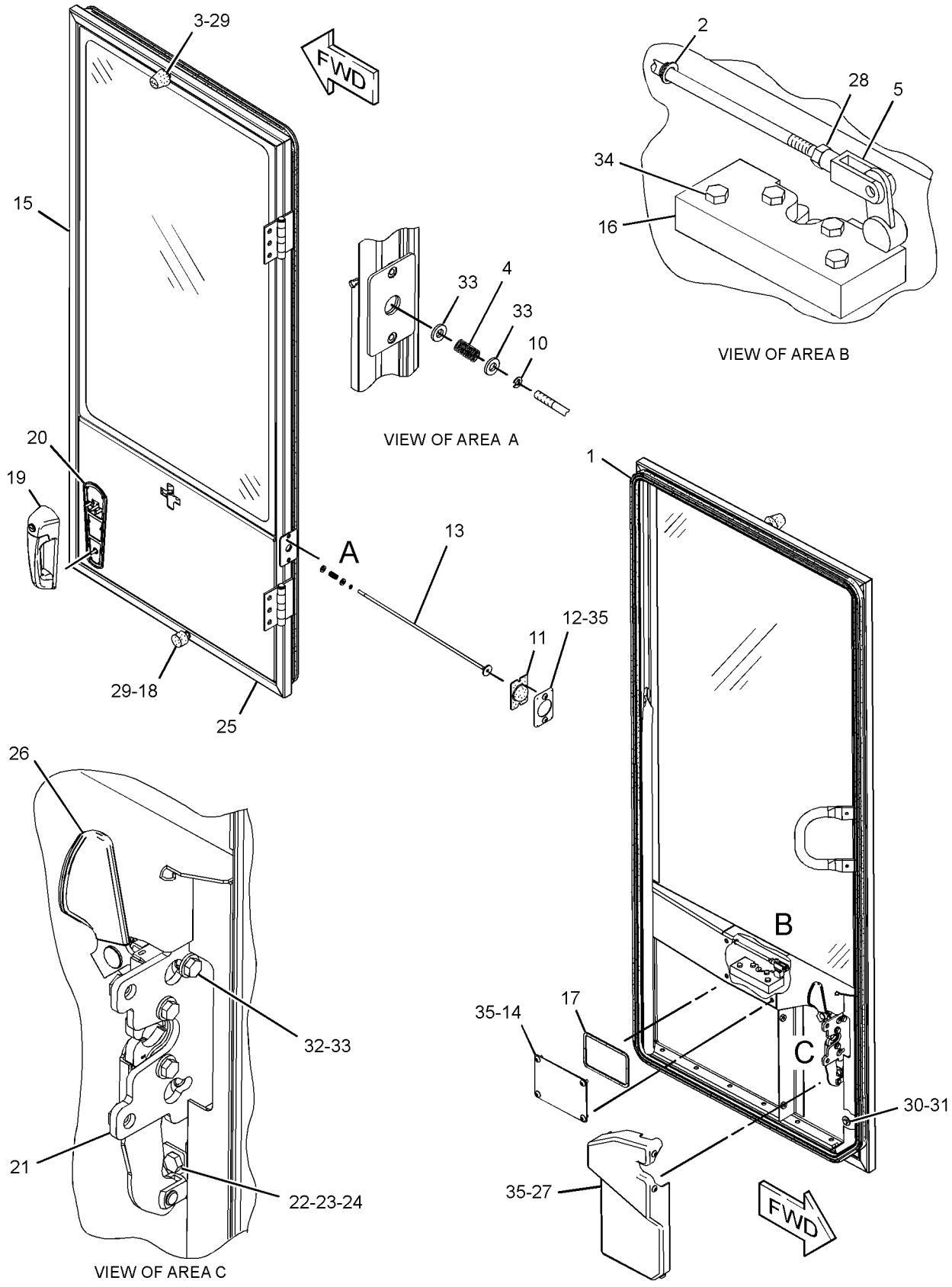

GRAPHIC #1

<END>

g01406027

OPERATOR STATION

290-8492 DOOR GP-CAB—RH

S/N: BYD1-UP; FTD1-UP
PART OF 290-8490, 290-8495 DOOR GP-CAB
AN ATTACHMENT

SMCS-7308 **i02809102**

NOTE	REF NO	GRAPHIC REF	PART NUMBER	QTY	PART NAME 1 2 3 4 5 6 (PRODUCT LEVEL)	SEE PAGE
	1	1	**107-6104**	2	INSERT	
	2	1	**107-6120**	1	PLATE AS	
M		1	**159-9539**	2	NUT-WELD (M6X1-THD)	
	3	1	**111-0201**	1	HANDHOLD	
	4	1	**115-1552**	1	HANDLE-PULL	
	5	1	**120-6125**	1	PLATE AS	
	6	1	**161-9639**	1	PLATE AS	
M		1	**159-9539**	2	NUT-WELD (M6X1-THD)	
	7	1	**164-4557**	1	BRACKET AS	
	8	1	**231-0299**	1	SHEET AS	
M		1	**159-9539**	4	NUT-WELD (M6X1-THD)	
	9	1	**286-9592**	2	HINGE AS	
					(EACH INCLUDES)	
		1	**096-2323**	1	RING-RETAINING (EXTERNAL)	
	10	1	*291-9251*	1	PLATE AS	
M		1	**159-9539**	2	NUT-WELD (M6X1-THD)	
BD	11	1	**6V-0352**		SEAL (0.3-M)	

B-USE AS REQUIRED
D-ORDER BY THE METER
M-METRIC PART

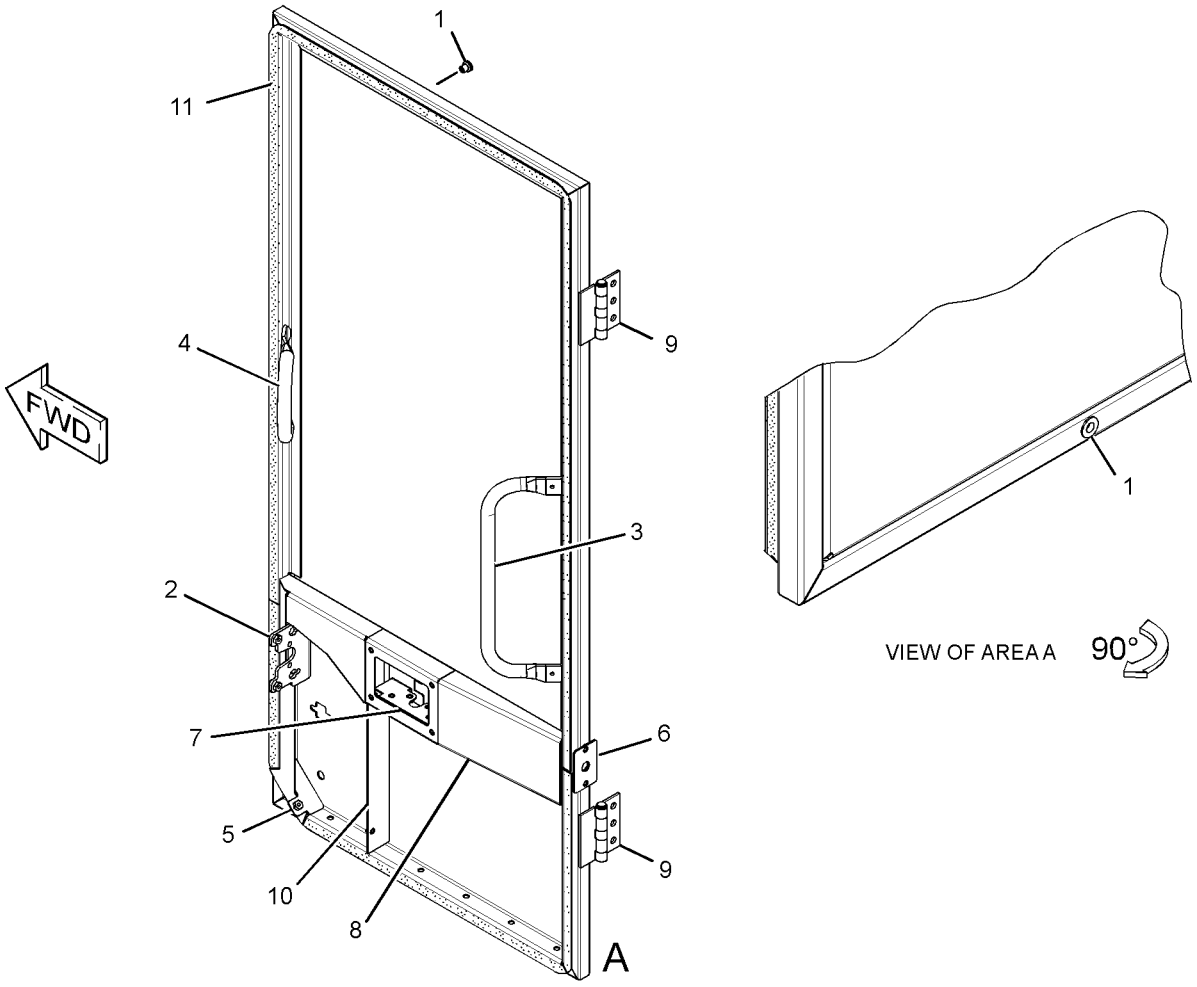

GRAPHIC #1 **<END>** g01406029

OPERATOR STATION

290-8493 DOOR GP-CAB—LH

S/N: BYD1-UP; FTD1-UP
PART OF 290-8491, 290-8496 DOOR GP-CAB
AN ATTACHMENT

SMCS-7308 **i02809103**

NOTE	REF NO	GRAPHIC REF	PART NUMBER	QTY	PART NAME 1 2 3 4 5 6 (PRODUCT LEVEL)	SEE PAGE
	1	1	**107-6104**	2	INSERT	
	2	1	**107-6120**	1	PLATE AS	
M		1	**159-9539**	2	NUT-WELD (M6X1-THD)	
	3	1	**111-0200**	1	HANDRAIL (GRAB)	
	4	1	**115-1552**	1	HANDLE-PULL	
	5	1	**161-9639**	1	PLATE AS	
M		1	**159-9539**	2	NUT-WELD (M6X1-THD)	
	6	1	**286-9593**	2	HINGE AS	
					(EACH INCLUDES)	
		1	**096-2323**	1	RING-RETAINING (EXTERNAL)	
	7	1	*291-9252*	1	PLATE AS (DOOR)	
M		1	**159-9539**	2	NUT-WELD (M6X1-THD)	
BD	8	1	**6V-0352**		SEAL (0.3-M)	

B-USE AS REQUIRED
D-ORDER BY THE METER
M-METRIC PART

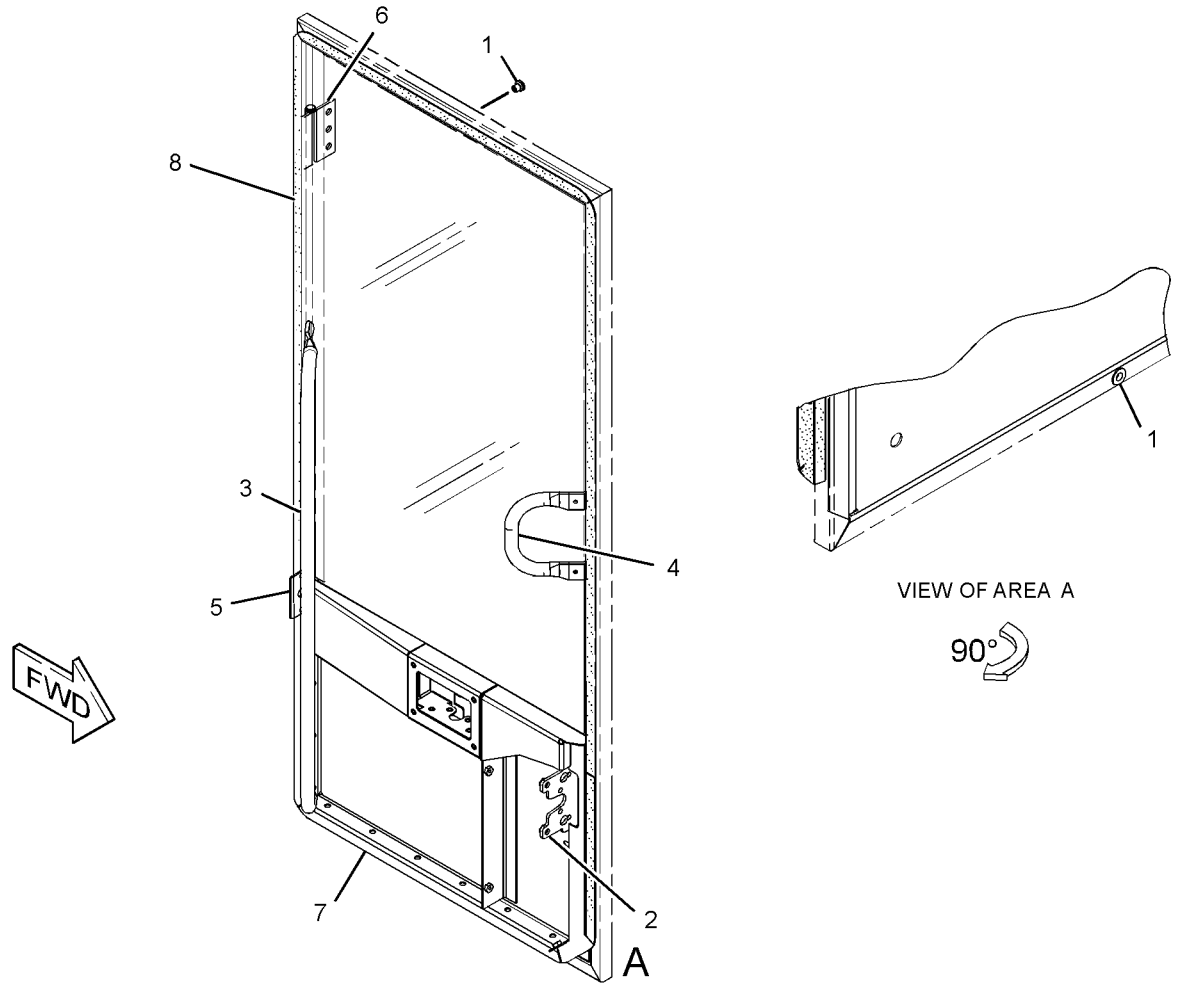

GRAPHIC #1 **<END>** g01406032

OPERATOR STATION

290-8494 DOOR GP-CAB

S/N: BYD1-UP; FTD1-UP
PART OF 290-8520 CAB GP-ENCLOSED ROPS
AN ATTACHMENT

SMCS-7308 **i02793292**

NOTE	PART NUMBER	QTY	PART NAME 1 2 3 4 5 6 (PRODUCT LEVEL)	SEE PAGE
Y	**290-8495**	1	DOOR GP-CAB (SLIDING WINDOW, RH)	840
Y	**290-8496**	1	DOOR GP-CAB (SLIDING WINDOW, LH)	843

Y-SEPARATE ILLUSTRATION

<END>

OPERATOR STATION

290-8495 DOOR GP-CAB—SLIDING WINDOW, RH

S/N: BYD1-UP; FTD1-UP
PART OF 290-8494 DOOR GP-CAB
AN ATTACHMENT

SMCS-7308 **i02793312**

NOTE	REF NO	GRAPHIC REF	PART NUMBER	QTY	PART NAME 1 2 3 4 5 6 (PRODUCT LEVEL)	SEE PAGE
E	1	2	**3E-3805**		SEAL (420-CM)	
	2	2	**3T-5201**	1	BEARING	
	3	1	**4E-1384**	1	BUMPER-CONICAL	
	4	1	**7W-2108**	1	SPRING-BYPASS VALVE	
	5	2	**8T-4742**	1	END-YOKE ROD	
	10	1	**141-8580**	1	RING-RETAINING	
	11	1	**161-9640**	1	COVER	
	12	1	**161-9641**	1	PLATE	
	13	1	**161-9642**	1	ROD AS	
	14	2	**161-9647**	1	PLATE	
	15	2	**168-2458**	1	LATCH AS	
	16	2	**169-3995**	1	SEAL	
	17	1	**178-2593**	1	BUMPER	
Y	18	1	**180-2535**	1	WINDOW GP-DOOR (CAB)	954
J	19	2	**252-1862**	1	HANDLE AS	
		2	**5P-8500**	1	KEY (CAB)	
	20	2	**252-1863**	1	GASKET	
	21	2	**254-1127**	1	PLATE	
	22	2	**269-2890**	1	CLEVIS	
	23	2	**269-2892**	1	PIN	
	24	2	**269-2893**	1	CLIP	
Y	25	1	**290-8492**	1	DOOR GP-CAB (RH)	837
	26	2	**292-2870**	1	LATCH AS (RH)	
	27	2	**292-3255**	1	COVER (RH)	
M	28	2	**5C-2890**	1	NUT (M6X1-THD)	
M	29	1	**5C-7261**	2	NUT (M8X1.25-THD)	
	30	2	**5P-4116**	1	WASHER-HARD (8.8X20.5X2-MM THK)	
M	31	2	**8T-4138**	3	BOLT (M6X1X20-MM)	
M	32	2	**8T-4181**	3	BOLT (M6X1X20-MM)	
	33	1,2	**8T-4205**	5	WASHER-HARD (7.2X14.5X2-MM THK)	
M	34	2	**8T-4971**	4	BOLT (M6X1X30-MM)	
M	35	1,2	**9X-2042**	11	SCREW-TRUSS HEAD (M6X1X12-MM)	

E-ORDER BY THE CENTIMETER
J-REQUIRES CORPORATE KEY
M-METRIC PART
Y-SEPARATE ILLUSTRATION

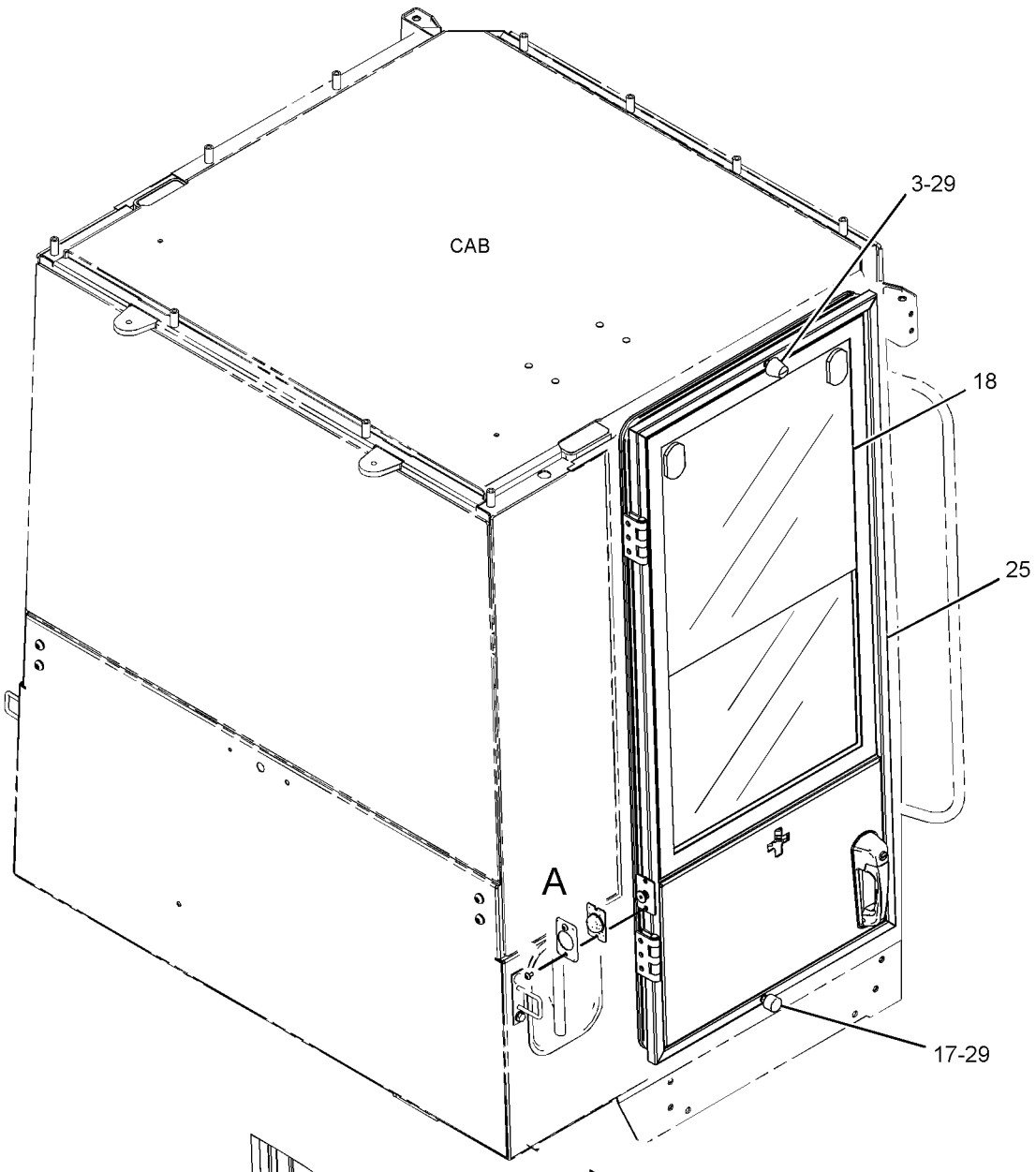

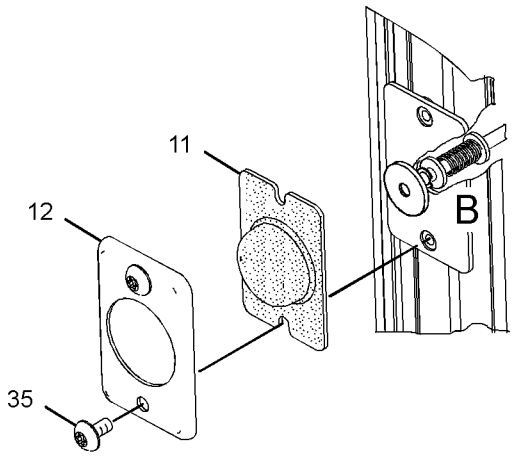

VIEW OF AREA A

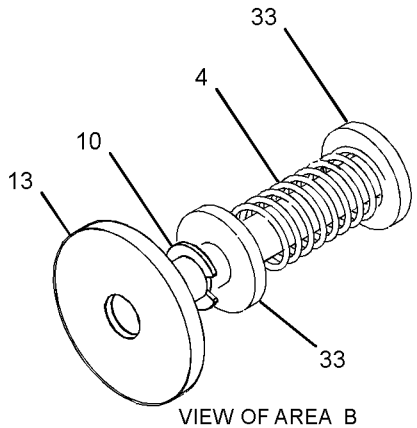

VIEW OF AREA B

GRAPHIC #1

g01413651

290-8495 DOOR GP-CAB *(contd.)* **i02793312**

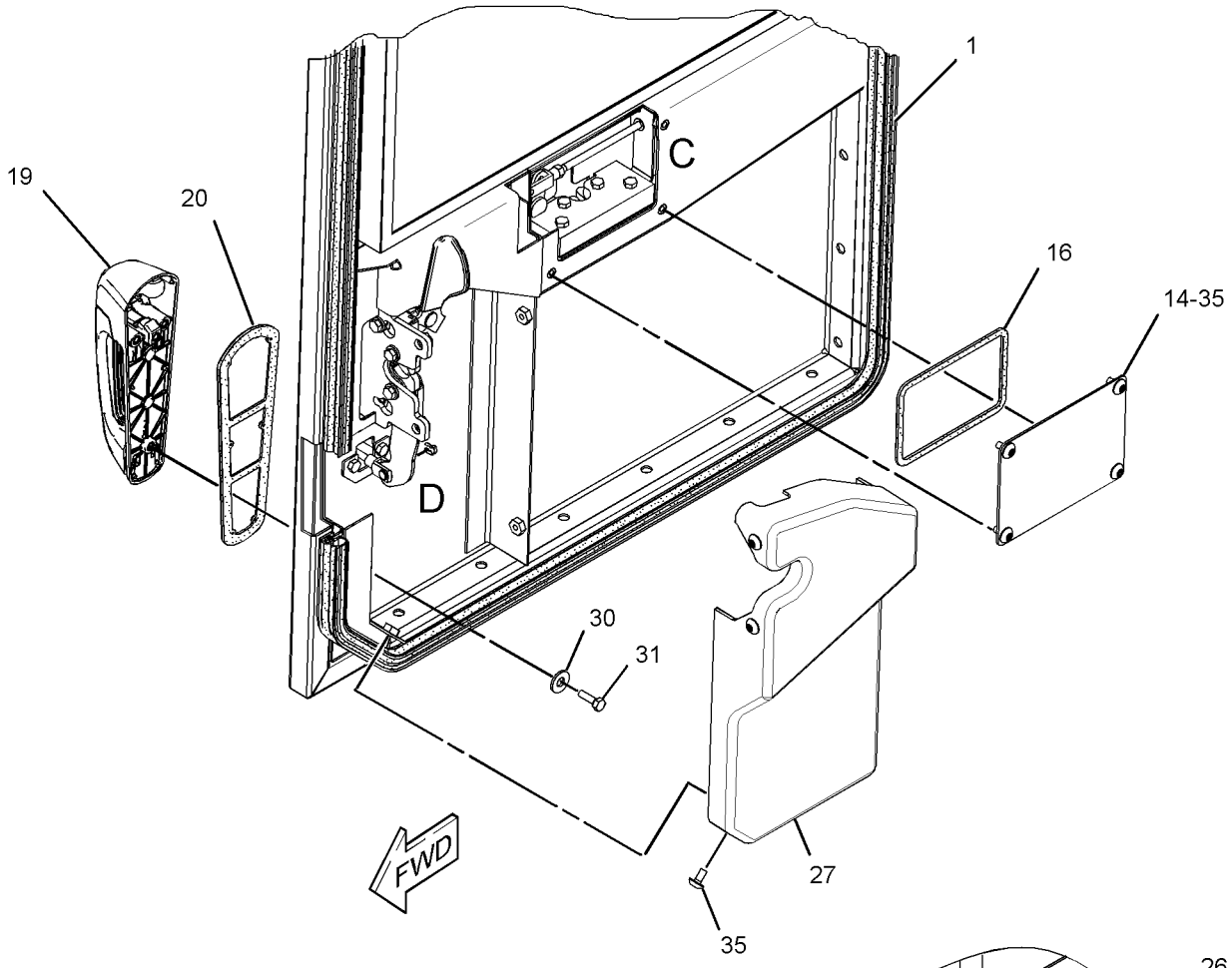

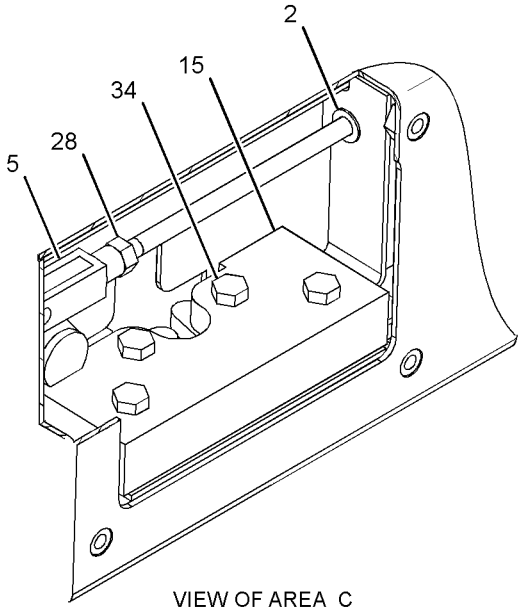

VIEW OF AREA C

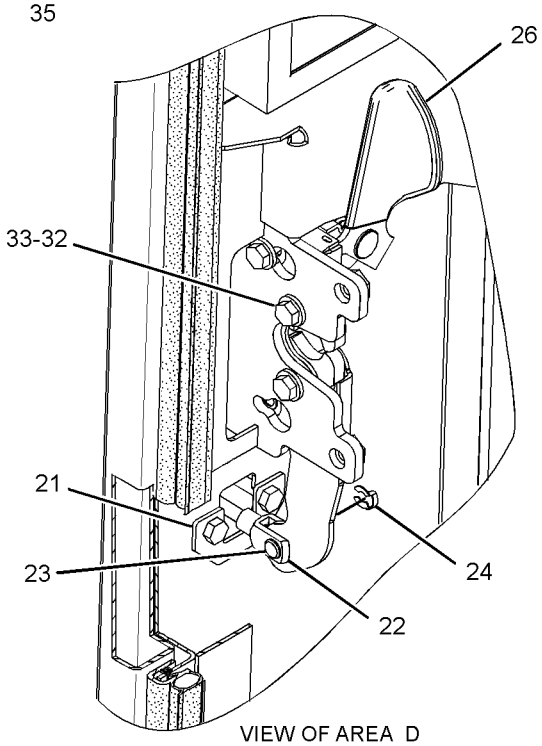

VIEW OF AREA D

GRAPHIC #2 **<END>** g01413436

OPERATOR STATION

290-8496 DOOR GP-CAB—SLIDING WINDOW, LH

S/N: BYD1-UP; FTD1-UP
PART OF 290-8494 DOOR GP-CAB
AN ATTACHMENT

SMCS-7308 **i02793311**

NOTE	REF NO	GRAPHIC REF	PART NUMBER	QTY	PART NAME 1 2 3 4 5 6 (PRODUCT LEVEL)	SEE PAGE
E	1	1	**3E-3805**		SEAL (420-CM)	
	2	1	**3T-5201**	1	BEARING	
	3	2	**4E-1384**	1	BUMPER-CONICAL	
	4	2	**7W-2108**	1	SPRING-BYPASS VALVE	
	5	1	**8T-4742**	1	END-YOKE ROD	
	10	2	**141-8580**	1	RING-RETAINING	
	11	2	**161-9640**	1	COVER	
	12	2	**161-9641**	1	PLATE	
	13	2	**161-9642**	1	ROD AS	
	14	1	**161-9647**	1	PLATE	
	15	1	**168-2457**	1	LATCH AS-DOOR	
	16	1	**169-3995**	1	SEAL	
	17	2	**178-2593**	1	BUMPER	
Y	18	2	**180-2535**	1	WINDOW GP-DOOR (CAB)	954
J	19	2	**252-1862**	1	HANDLE AS	
		2	**5P-8500**	1	KEY	
	20	2	**252-1863**	1	GASKET	
	21	1	**254-1127**	1	PLATE	
	22	1	**269-2890**	1	CLEVIS	
	23	1	**269-2892**	1	PIN	
	24	1	**269-2893**	1	CLIP	
Y	25	2	**290-8493**	1	DOOR GP-CAB (LH)	838
	26	1	**292-2869**	1	LATCH AS	
	27	1	**292-3254**	1	COVER	
M	28	1	**5C-2890**	1	NUT (M6X1-THD)	
M	29	2	**5C-7261**	2	NUT (M8X1.25-THD)	
	30	1	**5P-4116**	1	WASHER-HARD (8.8X20.5X2-MM THK)	
M	31	1	**8T-4138**	3	BOLT (M6X1X20-MM)	
M	32	1	**8T-4181**	3	BOLT (M6X1X20-MM)	
	33	1,2	**8T-4205**	5	WASHER-HARD (7.2X14.5X2-MM THK)	
M	34	1	**8T-4971**	4	BOLT (M6X1X30-MM)	
M	35	1,2	**9X-2042**	11	SCREW-TRUSS HEAD (M6X1X12-MM)	

E-ORDER BY THE CENTIMETER
J-REQUIRES CORPORATE KEY
M-METRIC PART
Y-SEPARATE ILLUSTRATION

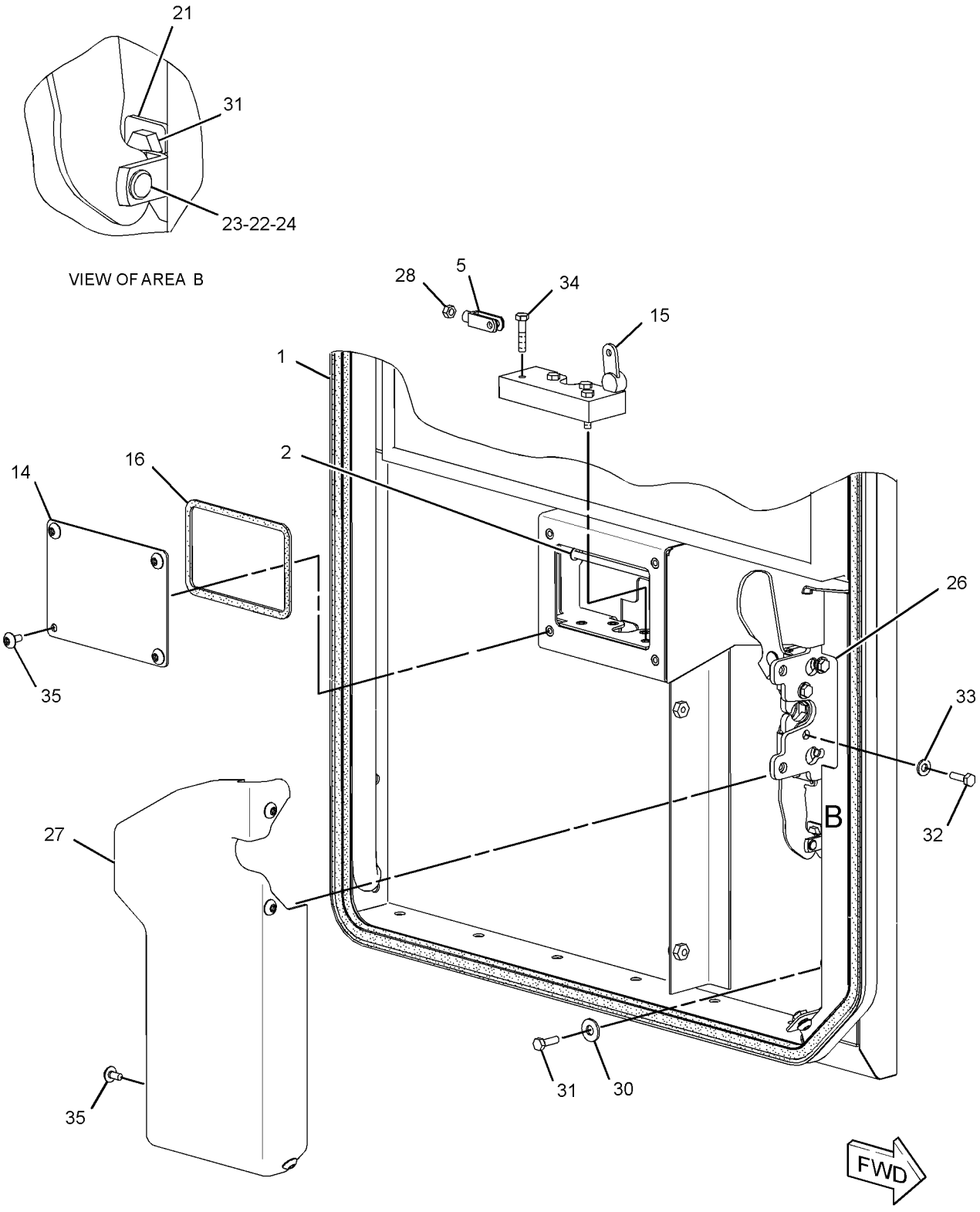

GRAPHIC #1 g01413652

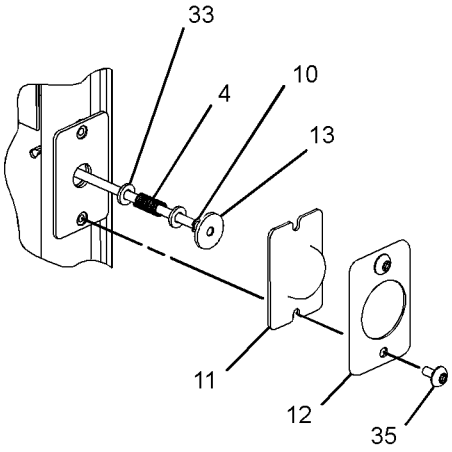

VIEW OF AREA A
(EXPLODED)

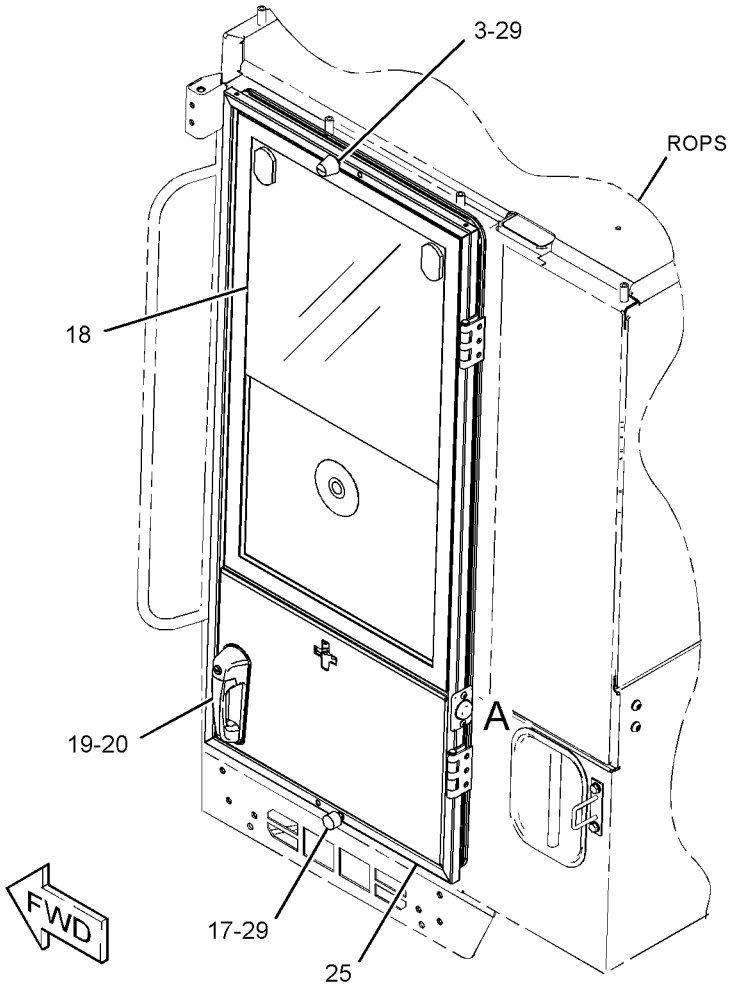

GRAPHIC #2

<END>

g01413890

OPERATOR STATION

107-4630 DUCT GP-CAB AIR

S/N: BYD1-UP; FTD1-UP
PART OF 190-4405 CAB AR-ENCLOSED ROPS, 304-9255, 308-1933 PLATFORM AR
AN ATTACHMENT

SMCS-734D **i02034264**

NOTE	REF NO	GRAPHIC REF	PART NUMBER	QTY	PART NAME 1 2 3 4 5 6 (PRODUCT LEVEL)	SEE PAGE
D	1	1	**5P-5927**		SEAL (3.2M)	
	2	1	**8Y-6388**	2	LOUVER AS-VENT	
	3	1	**104-2091**	12	SCREW-FLAT HEAD (NO 6X0.5-IN)	
	4	1	**166-9286**	1	DUCT AS	
	5	1	**107-6079**	1	DUCT	
	6	1	**161-7620**	12	SCREW-PAN HEAD	
	7	1	**5P-4116**	4	WASHER-HARD (8.8X20.5X2-MM THK)	
M	8	1	**8T-4908**	4	BOLT (M8X1.25X25-MM)	
	9	1	**151-5715**	4	LOUVER AS-VENT	
	10	1	**8Y-6391**	2	LOUVER AS-VENT	
	11	1	**148-3626**	8	SCREW-FLAT HEAD (NO 6X3/4-IN)	

D-ORDER BY THE METER
M-METRIC PART

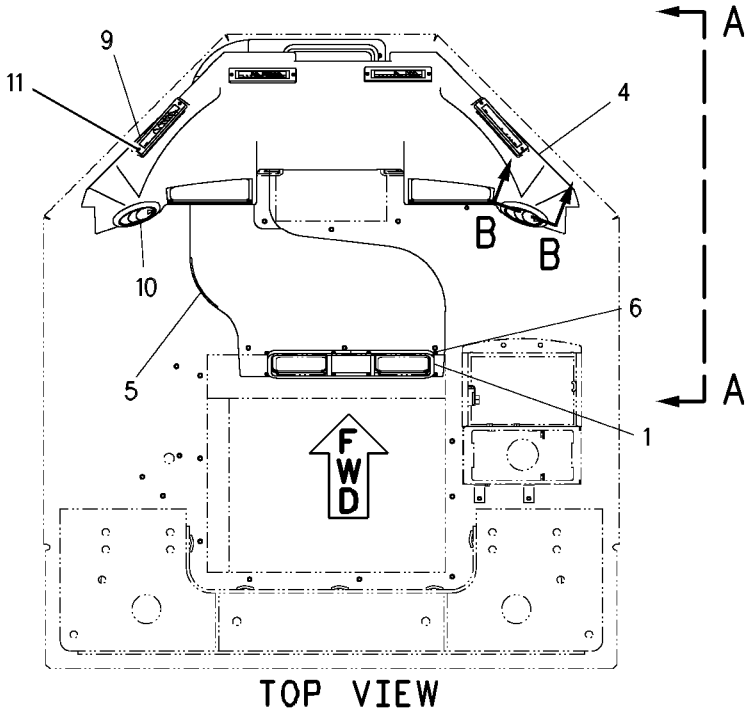

TOP VIEW

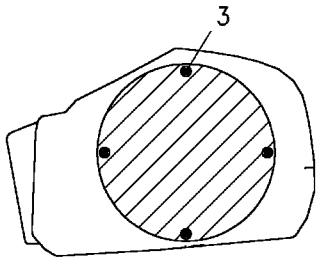

SECTION B-B

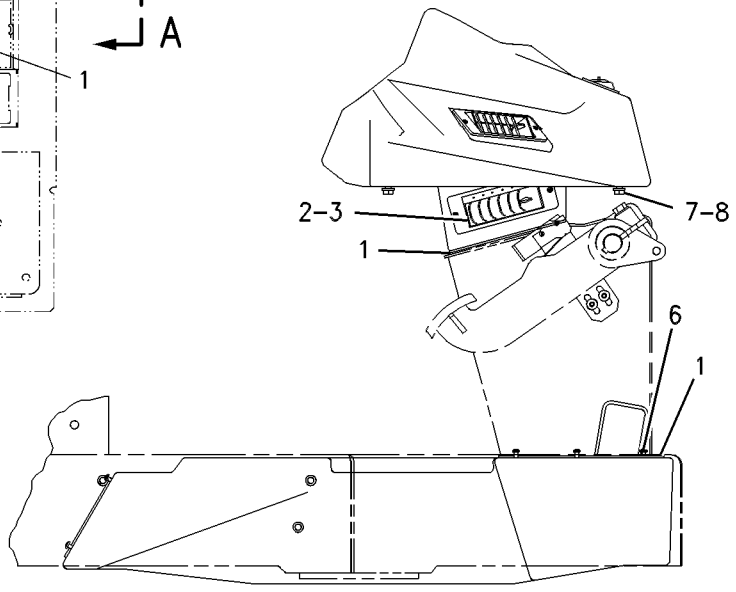

VIEW A-A

GRAPHIC #1 **<END>** g00623383

8Y-6883 EXTENSION GP-BACKREST—CLOTH

S/N: BYD1-UP; FTD1-UP
PART OF 8Y-6977 SEAT GP-SUSPENSION
AN ATTACHMENT

SMCS-7312 **i02853720**

NOTE	REF NO	GRAPHIC REF	PART NUMBER	QTY	PART NAME 1 2 3 4 5 6 (PRODUCT LEVEL)	SEE PAGE
L	1	1	**8Y-5947**	2	FASTENER	
	2	1	**8Y-5877**	1	PAN AS-EXTENSION	
					AVAILABLE REPAIR KIT(S):	
L			**119-7130**	1	KIT-CUSHION (BACKREST)	
					(INCLUDES CUSHION AS)	

L-KIT MARKED L INCLUDES PART MARKED L

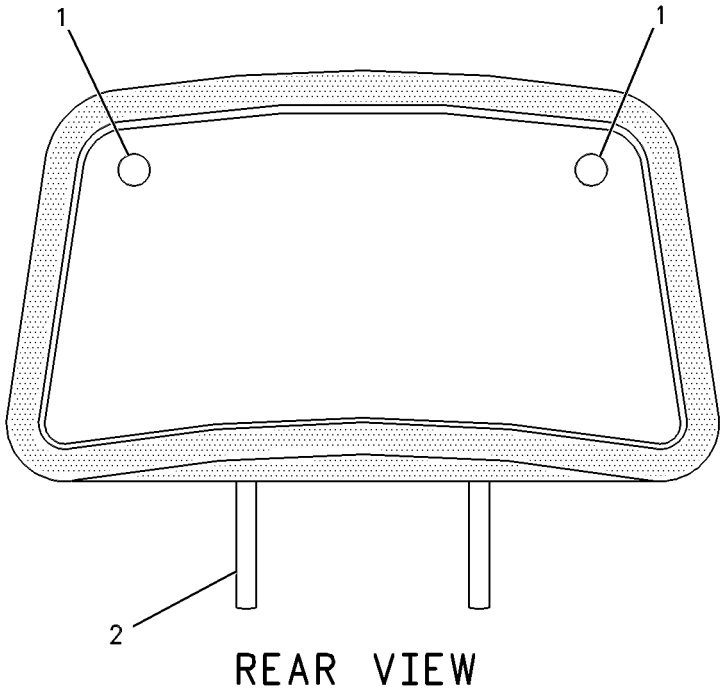

REAR VIEW

GRAPHIC #1 **<END>** g00086580

OPERATOR STATION

119-4769 FILTER GP-CAB AIR

S/N: BYD1-UP; FTD1-UP

PART OF 190-4405 CAB AR-ENCLOSED ROPS, 304-9255, 308-1933 PLATFORM AR

AN ATTACHMENT

SMCS-7342 **i02603062**

NOTE	REF NO	GRAPHIC REF	PART NUMBER	QTY	PART NAME 1 2 3 4 5 6 (PRODUCT LEVEL)	SEE PAGE
	1	1	**111-8738**	1	FILTER (CAB AIR)	
	2	1	**180-7487**	1	FILTER (CAB AIR)	
	3	1	**114-3944**	1	COVER	
	4	1	**116-7856**	4	KNOB-CONTROL	
	5	1	**127-8613**	1	GASKET (CAB FILTER)	
	6	1	**180-7486**	1	COVER AS	

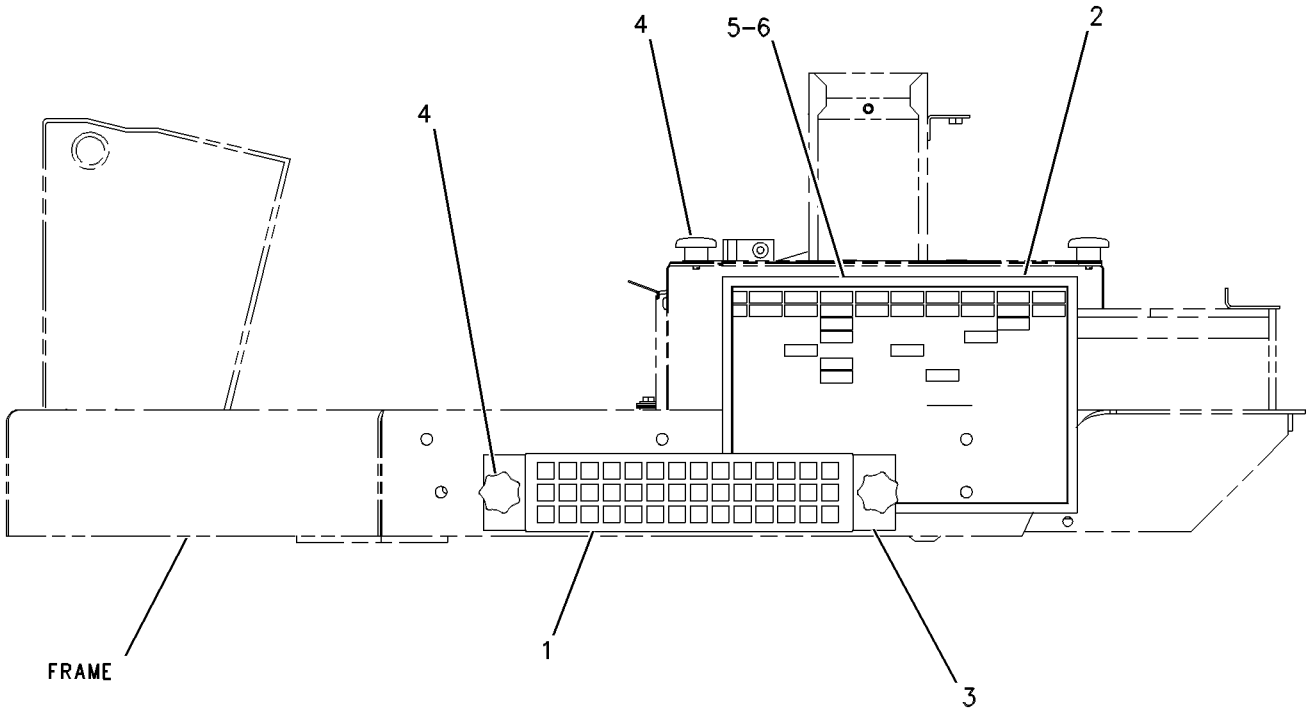

LEFT SIDE VIEW

GRAPHIC #1 **<END>** g00661567

OPERATOR STATION

290-8488 FLOOR GP

S/N: BYD1-UP; FTD1-UP
PART OF 304-9256 CANOPY AR-SOFT, 290-8508, 290-8525 OPERATOR AR-ENCLOSED ROPS, 304-9255, 308-1933 PLATFORM AR
AN ATTACHMENT

SMCS-7301 **i02876949**

NOTE	REF NO	GRAPHIC REF	PART NUMBER	QTY	PART NAME 1 2 3 4 5 6 (PRODUCT LEVEL)	SEE PAGE
	1	1	**4E-2161**	1	STRAP	
D	2	1	**5P-5637**		SEAL (0.8-M)	
	3	1	*8C-3426*	1	LOCK GP-CYLINDER	
		1	**226-0294**	1	LOCK AS	
		1	**226-0341**	1	CAM	
	4	1	**8N-9033**	2	PLUG	
	5	1	**8T-3995**	5	NUT (M6X1-THD)	
	6	1	**111-7881**	1	COVER AS	
	7	1	**115-1561**	1	COVER	
	8	1	**125-7043**	1	BOX AS	
	9	1	**125-7045**	1	COVER AS	
	10	1	**125-7046**	1	PLATE AS	
	11	1	**127-6510**	2	COVER	
	12	1	**136-2109**	1	COVER AS	
		1	**4S-8264**	3	RIVET-POP	
		1	**9R-2620**	1	PLUG	
		1	**120-0596**	1	BRACKET	
		1	**124-9015**	1	KIT-BRUSH SEAL	
		1	**128-0899**	4	RIVET	
	13	1	**291-4043**	1	FLOOR MAT	
	14	1	**291-4982**	1	INSULATION AS	
	15	1	**291-9962**	1	MAT-PROTECTIVE	
M	16	1	**5C-2890**	2	NUT (M6X1-THD)	
M	17	1	**8T-4189**	3	BOLT (M8X1.25X20-MM)	
M	18	1	**8T-4200**	2	BOLT (M8X1.25X16-MM)	
	19	1	**8T-4205**	2	WASHER-HARD (7.2X14.5X2-MM THK)	
	20	1	**8T-4224**	5	WASHER-HARD (8.8X16X2-MM THK)	
	21	1	**9X-2038**	1	WASHER (7X19X2-MM THK)	
M	22	1	**9X-2043**	2	SCREW-TRUSS HEAD (M6X1X14-MM)	
M	23	1	**9X-2045**	7	SCREW-TRUSS HEAD (M6X1X20-MM)	

D-ORDER BY THE METER
M-METRIC PART

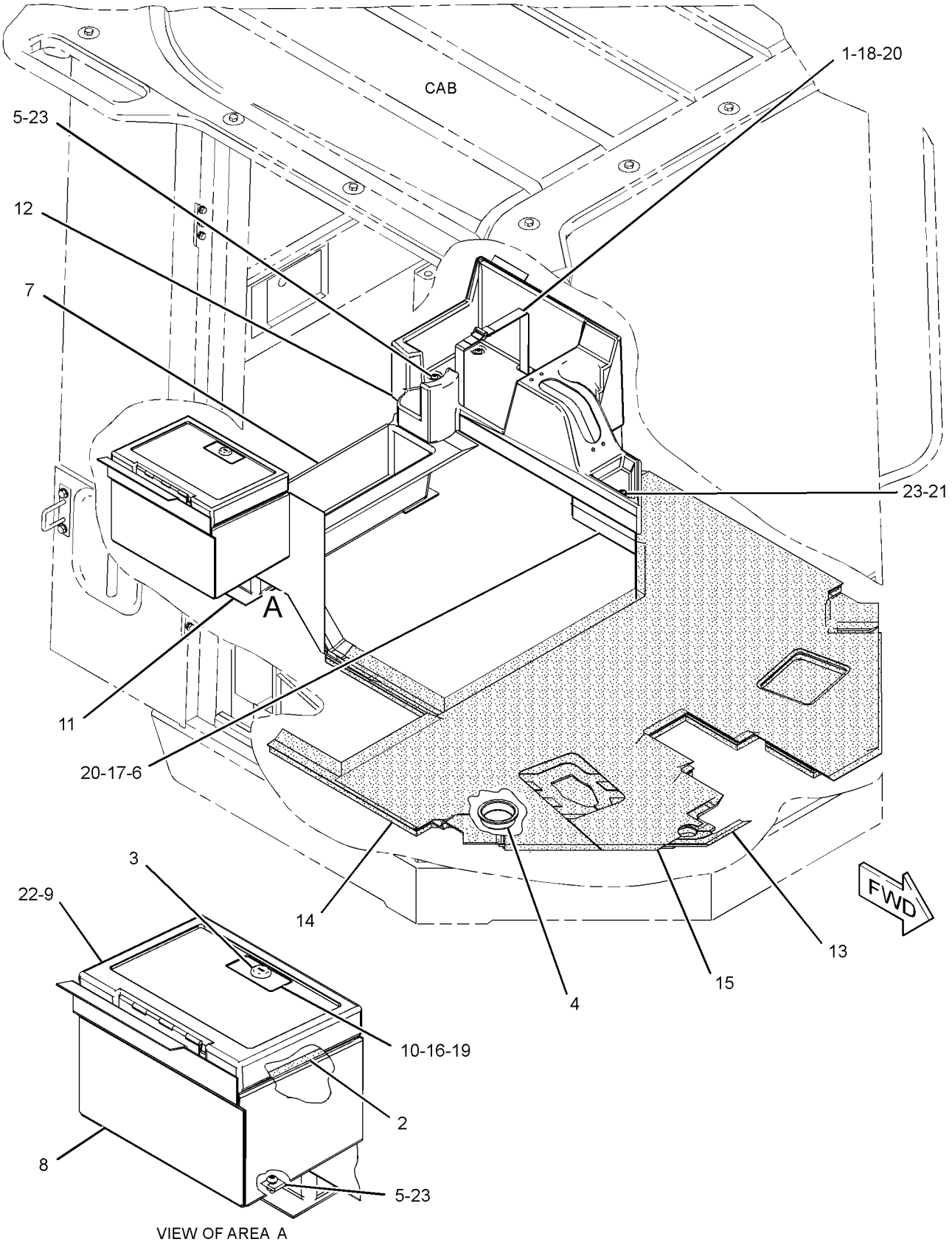

VIEW OF AREA A

GRAPHIC #1 **<END>** g01398697

OPERATOR STATION

290-8486 FLOOR MAT GP

S/N: FTD1-UP
PART OF 290-8186 OPERATOR AR-OPEN ROPS
AN ATTACHMENT

SMCS-726M **i02876950**

NOTE	REF NO	GRAPHIC REF	PART NUMBER	QTY	PART NAME 1 2 3 4 5 6 (PRODUCT LEVEL)	SEE PAGE
	1	1	**4E-2161**	1	STRAP	
	2	1	*8C-3426*	1	LOCK GP-CYLINDER	
		1	**226-0341**	1	CAM	
		1	**226-0294**	1	LOCK AS	
	3	1	**8T-3995**	5	NUT (M6X1-THD)	
	4	1	**111-7881**	1	COVER AS	
	5	1	**125-7043**	1	BOX AS	
	6	1	**125-7045**	1	COVER AS	
	7	1	**125-7046**	1	PLATE AS	
	8	1	**126-1034**	1	LINER AS-CAB	
	9	1	**126-1035**	1	PLATE AS	
	10	1	**126-1036**	1	PLATE AS	
	11	1	**126-1367**	1	INSULATION	
	12	1	**127-7457**	1	INSULATION	
	13	1	**136-2109**	1	COVER AS	
		1	**4S-8264**	3	RIVET-POP	
		1	**9R-2620**	1	PLUG	
		1	**120-0596**	1	BRACKET	
		1	**124-9015**	1	KIT-BRUSH SEAL	
					(INCLUDES BRUSH & FRAME)	
		1	**128-0899**	4	RIVET	
	14	1	**291-4043**	1	FLOOR MAT	
	15	1	**291-4982**	1	INSULATION AS	
	16	1	**9X-2038**	1	WASHER (7X19X2-MM THK)	
M	17	1	**5C-2890**	2	NUT (M6X1-THD)	
M	18	1	**8T-4189**	3	BOLT (M8X1.25X20-MM)	
M	19	1	**8T-4200**	2	BOLT (M8X1.25X16-MM)	
	20	1	**8T-4205**	2	WASHER-HARD (7.2X14.5X2-MM THK)	
	21	1	**8T-4224**	5	WASHER-HARD (8.8X16X2-MM THK)	
	22	1	**9D-3769**	1	GROMMET	
M	23	1	**9X-2043**	6	SCREW-TRUSS HEAD (M6X1X14-MM)	
M	24	1	**9X-2045**	9	SCREW-TRUSS HEAD (M6X1X20-MM)	
D	25	1	**5P-5637**		SEAL (0.8-M)	

D-ORDER BY THE METER
M-METRIC PART

290-8486 **FLOOR MAT GP** *(contd.)* **i02876950**

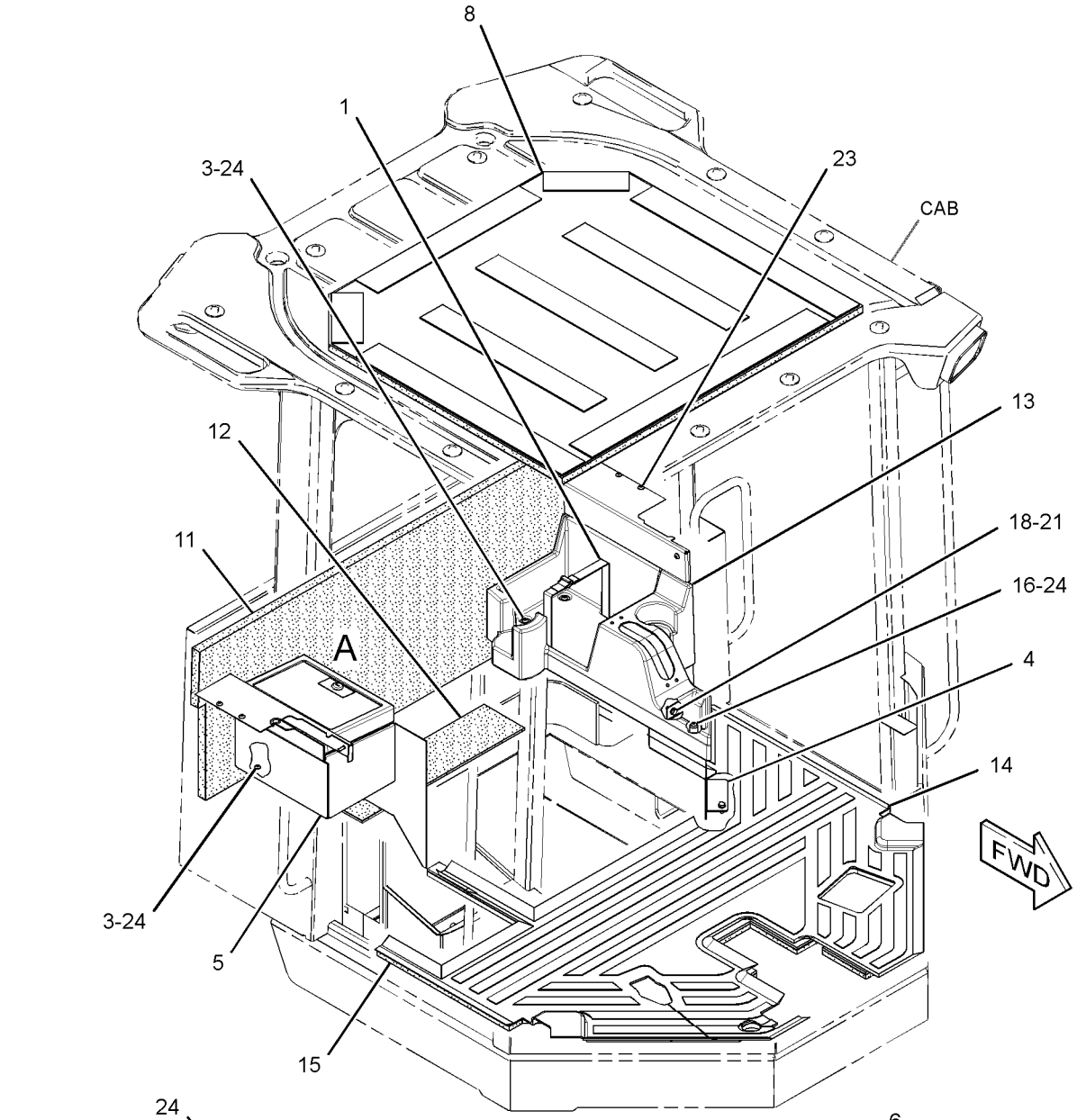

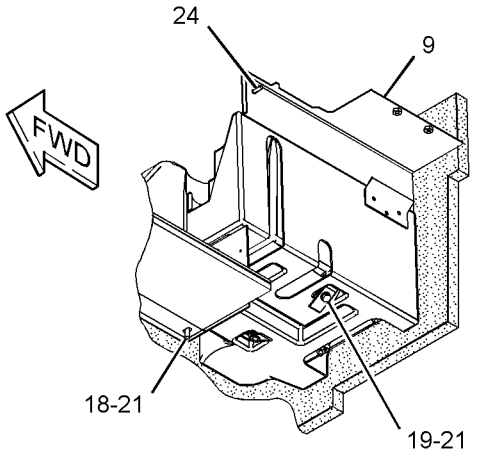

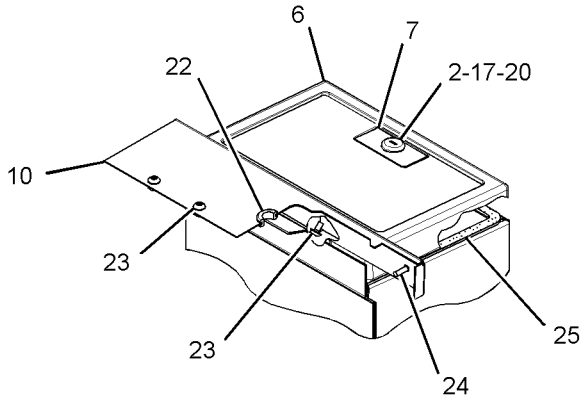

VIEW OF AREA A

GRAPHIC #1 **<END>** g01391327

OPERATOR STATION

215-1132 GUARD GP-VANDALISM

S/N: BYD1-UP; FTD1-UP
AN ATTACHMENT

SMCS-7315 **i02270970**

NOTE	REF NO	GRAPHIC REF	PART NUMBER	QTY	PART NAME 1 2 3 4 5 6 (PRODUCT LEVEL)	SEE PAGE
	1	1	**246-2641**	4	PADLOCK GP	
					(EACH INCLUDES)	
		1	**5P-8500**	1	KEY	
					(WITH PLASTIC OVERMOLD)	
					-OR-	
		1	**199-6309**	1	KEY (CORPORATE)	
					(OPTIONAL SERVICE REPLACEMENT)(PLAIN KEY WITHOUT PLASTIC OVERMOLD)	
	2	1	**136-6980**	1	PLATE AS	
	3	1	**136-6982**	1	PLATE	
	4	1	**136-6984**	1	PLATE	
	5	1	**145-1135**	2	PLATE	
	6	1	**145-1136**	1	PLATE	
	7	1	**145-1140**	1	PLATE	
	8	1	**145-5607**	1	PLATE AS	
	9	1	**218-5003**	1	PLATE	
	10	1	**218-5004**	1	PLATE AS	
	11	1	**218-5005**	1	PLATE AS	
M	12	1	**123-0708**	4	SCREW-HEX SOCKET (M4X0.7X30-MM)	

M-METRIC PART

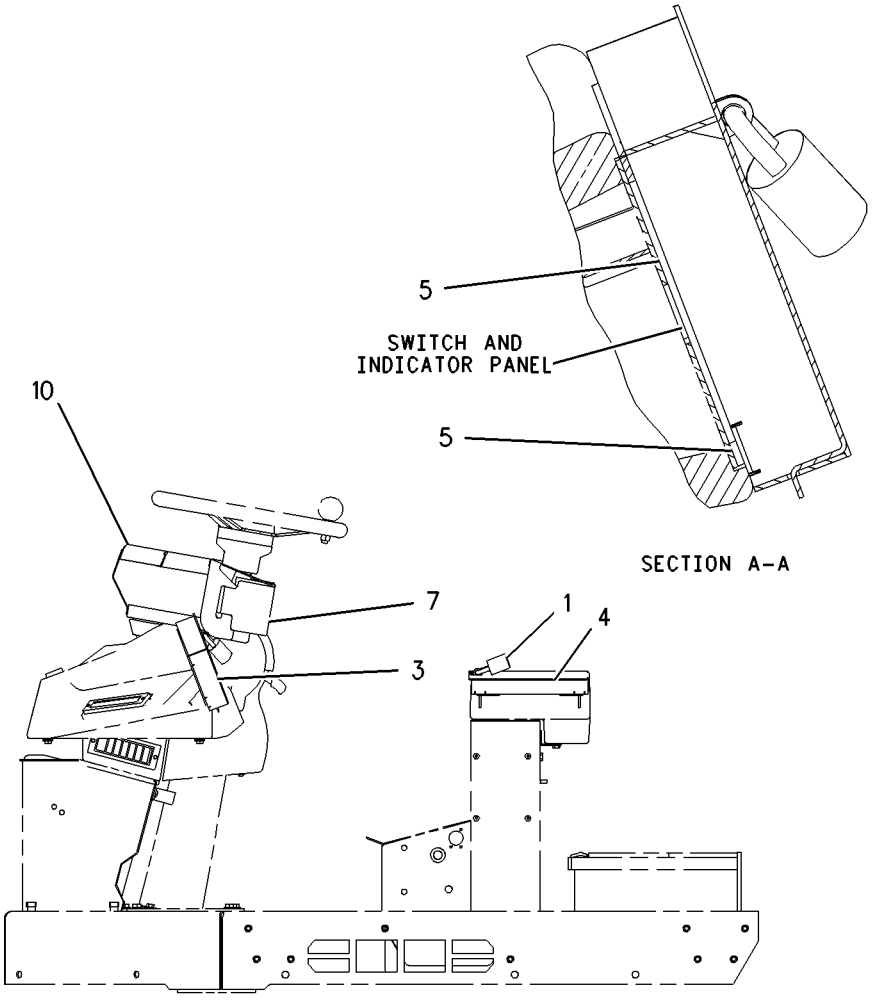

LEFT SIDE VIEW

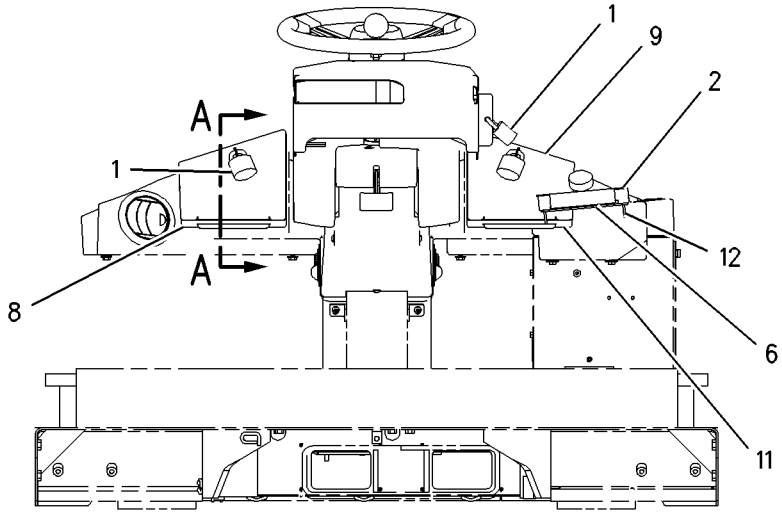

REAR VIEW

GRAPHIC #1 **<END>** g00874477

OPERATOR STATION

175-6750 GUARD GP-WINDOW

S/N: BYD1-UP; FTD1-UP
FIELD INSTALLED
AN ATTACHMENT

SMCS-7165, 7182, 7310 **i01452823**

NOTE	PART NUMBER	QTY	PART NAME 1 2 3 4 5 6 (PRODUCT LEVEL)	SEE PAGE
Y	*175-6760*	1	GUARD GP-WINDOW	856

Y-SEPARATE ILLUSTRATION

<END>

OPERATOR STATION

175-6760 GUARD GP-WINDOW

S/N: BYD1-UP; FTD1-UP
PART OF 175-6750 GUARD GP-WINDOW, 289-9000, 290-7175, 290-7176, 290-7179, 290-7182, 294-9497 WASTE HANDLING AR
AN ATTACHMENT

SMCS-7165, 7182, 7310 **i02338042**

NOTE	REF NO	GRAPHIC REF	PART NUMBER	QTY	PART NAME 1 2 3 4 5 6 (PRODUCT LEVEL)	SEE PAGE
	1	1	**2G-9524**	2	LATCH	
	2	1	**4E-1384**	4	BUMPER-CONICAL	
	3	1	**175-6746**	1	SCREEN AS	
	4	1	**175-6749**	2	PLATE	
	5	1	**175-6754**	1	SCREEN AS	
	6	1	**175-6759**	1	SCREEN AS	
M	7	1	**5C-7261**	4	NUT (M8X1.25-THD)	
M	8	1	**8T-4138**	4	BOLT (M6X1X20-MM)	
	9	1	**6C-3679**	8	RIVET-POP	
M	10	1	**6V-9189**	4	LOCKNUT (M8X1.25-THD)	
B	11	1	**8T-4121**	8	WASHER-HARD (11X21X2.5-MM THK)	
	12	1	**8T-4224**	12	WASHER-HARD (8.8X16X2-MM THK)	
M	13	1	**8T-7547**	8	BOLT (M8X1.25X30-MM)	
M	14	1	**9X-2040**	4	SCREW-TRUSS HEAD (M10X1.5X25-MM)	
	15	1	**9X-8256**	4	WASHER (6.6X12X2-MM THK)	

B-USE AS REQUIRED
M-METRIC PART

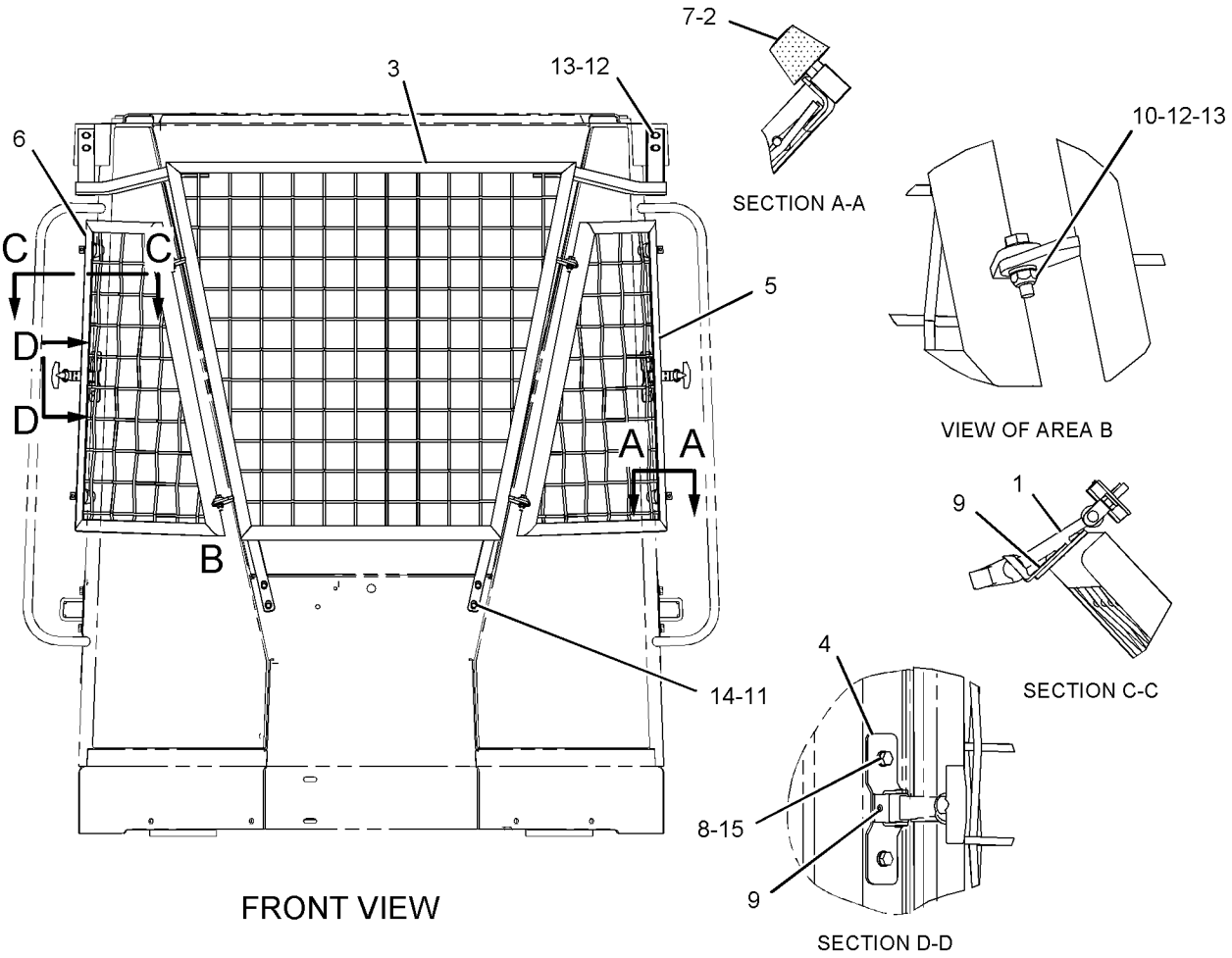

GRAPHIC #1 **<END>** g01090006

OPERATOR STATION

239-8103 HEATER & MTG GP-CAB

S/N: BYD1-UP; FTD1-UP
WITH CABLE CONTROL
PART OF 290-8750 HEATER AR-CAB
AN ATTACHMENT

SMCS-7304 **i02861229**

NOTE	REF NO	GRAPHIC REF	PART NUMBER	QTY	PART NAME 1 2 3 4 5 6 (PRODUCT LEVEL)	SEE PAGE
	1		**5P-5643**		SEAL (2-M)	
	2		**118-7259**	1	GASKET	
	3		**156-4449**	1	CABLE AS (HEATER TEMPERATURE CONTROL)	
	4		**236-4238**	1	SWITCH AS-ROCKER (HEATER CONTROL)	
	5		**280-2710**	1	CIRCUIT BREAKER AS (20-AMPERE)	
Y	6		**306-8141**	1	HEATER GP-CAB	859
	7		**7X-0579**	11	WASHER-HARD (8.8X25.5X2-MM THK)	
M	8		**8T-4908**	11	BOLT (M8X1.25X25-MM)	

M-METRIC PART
Y-SEPARATE ILLUSTRATION

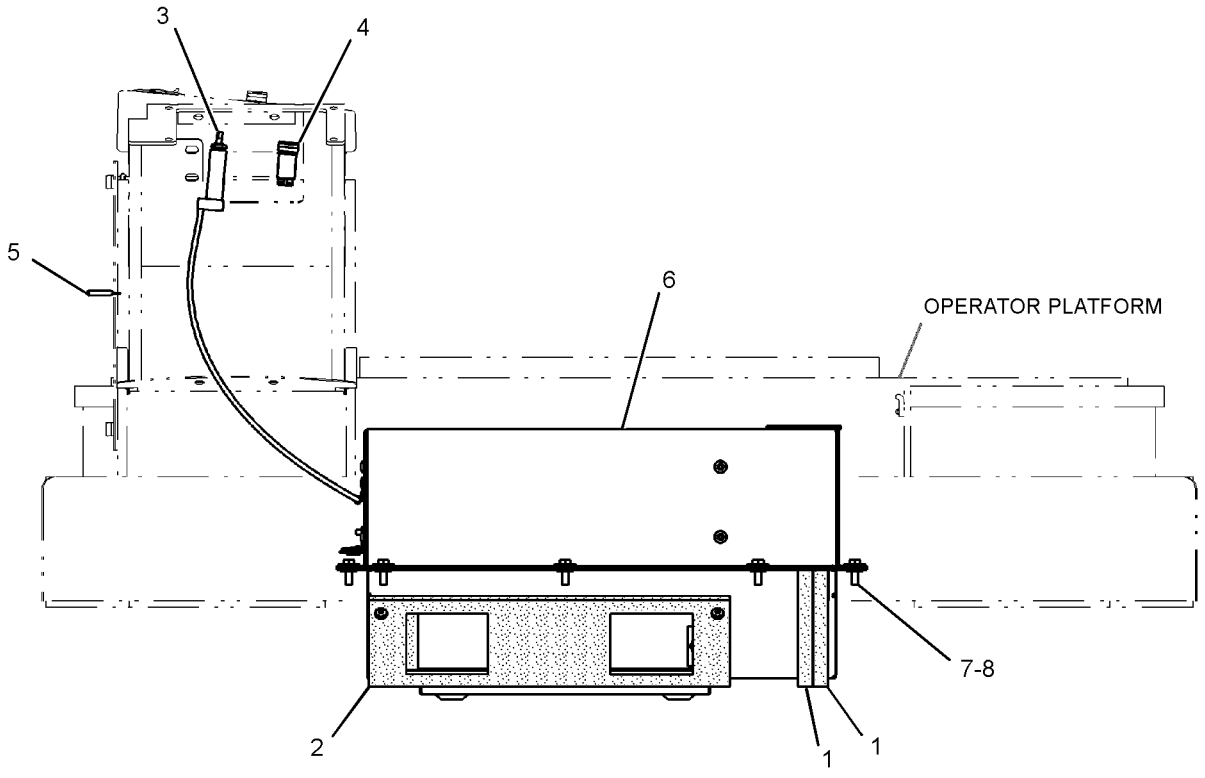

FRONT VIEW

GRAPHIC #1 **<END>** g01425796

OPERATOR STATION

290-8750 HEATER AR-CAB

S/N: BYD1-UP; FTD1-UP
FOR USE WITH 259-4137—PAGE 127
AN ATTACHMENT

SMCS-7304 **i02811309**

NOTE	PART NUMBER	QTY	PART NAME 1 2 3 4 5 6 (PRODUCT LEVEL)	SEE PAGE
Y	*259-4137*	1	ALTERNATOR GP-CHARGING	127
Y	*239-8103*	1	HEATER & MTG GP-CAB (WITH CABLE CONTROL)	857
Y	*290-8753*	1	LINES GP-CAB HEATER	873
Y	*198-8964*	1	PANEL GP-TOP (HEATER)	408

Y-SEPARATE ILLUSTRATION

<END>

OPERATOR STATION

306-8141 HEATER GP-CAB

S/N: BYD1-UP; FTD1-UP
PART OF 239-8103 HEATER & MTG GP-CAB
AN ATTACHMENT

SMCS-7304 **i02813013**

NOTE	REF NO	GRAPHIC REF	PART NUMBER	QTY	PART NAME 1 2 3 4 5 6 (PRODUCT LEVEL)	SEE PAGE
	1	1	**3E-1841**	1	LEVER	
	2	1	**6T-6708**	2	WASHER (7X28.6X4.1-MM THK)	
	3	1	**8Y-5737**	1	CLAMP	
	4	1	**9G-1950**	1	RESISTOR	
	5	1	**9X-2185**	4	SCREW (8-15X11.11-MM)	
	6	1	**102-0341**	1	CLIP	
	7	1	**114-3140**	1	GROMMET	
	8	1	**124-8495**	1	VALVE AS-WATER	
	9	1	**151-0894**	1	COVER AS	
	10	1	**183-7528**	1	COIL AS-HEATER	
	11	1	**255-9138**	1	BRACKET AS	
M		1	**9X-2032**	8	NUT-WELD (M4X0.7-THD)	
	12	1	**275-6706**	1	MOTOR AS-BLOWER (24-VOLT, A/C, HEATER)	
	13	1	**309-8677**	1	CASE AS	
	14	1	**3S-2093**	3	STRAP-CABLE	
	15	1	**037-4426**	1	RETAINER	
	16	1	**124-8494**	1	GASKET	
M	17	1	**129-3178**	2	LOCKNUT (M6X1-THD)	
M	18	1	**141-9784**	1	BOLT (M6X1X190-MM)	
	19	1	**1P-6522**	1	GROMMET	
M	20	1	**5C-9553**	4	BOLT (M6X1X16-MM)	
	21	1	**6V-1668**	2	WASHER (6.5X29.1X3-MM THK)	
M	22	1	**6V-5210**	8	SCREW-MACHINE (M4X0.7X10-MM)	
M	23	1	**8C-8457**	1	SCREW-MACHINE (M5X0.8X14-MM)	
M	24	1	**8T-4171**	2	BOLT (M6X1X12-MM)	
	25	1	**8T-4205**	9	WASHER-HARD (7.2X14.5X2-MM THK)	
M	26	1	**9X-2044**	1	SCREW-TRUSS HEAD (M6X1X16-MM)	
	27	1	**9X-2488**	6	CLAMP-HOSE	
D	28	1	**6V-1392**		SEAL (0.8-M)	
D	29	1	**8T-5372**		SEAL (0.13-M EACH)	
D	29A	1	**8T-5372**		SEAL (0.15-M)	
E	30	1	**136-1953**		HOSE (17.8-CM)	
E	30A	1	**136-1953**		HOSE (23-CM)	
E	30B	1	**136-1953**		HOSE (15.2-CM)	

D-ORDER BY THE METER
E-ORDER BY THE CENTIMETER
M-METRIC PART

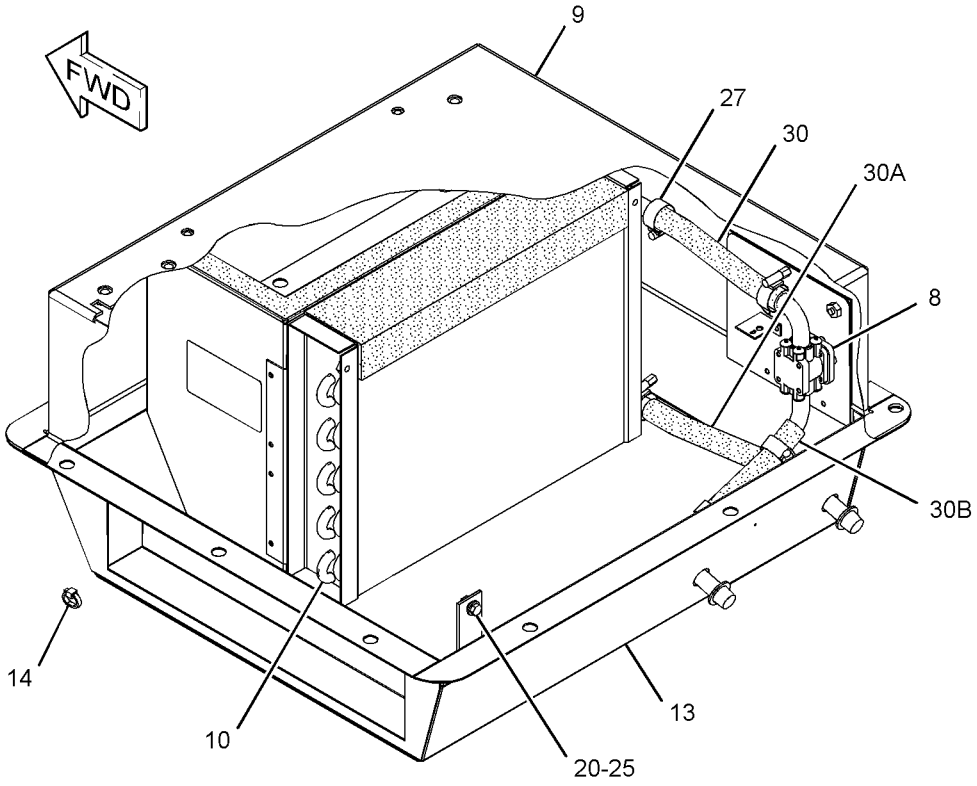

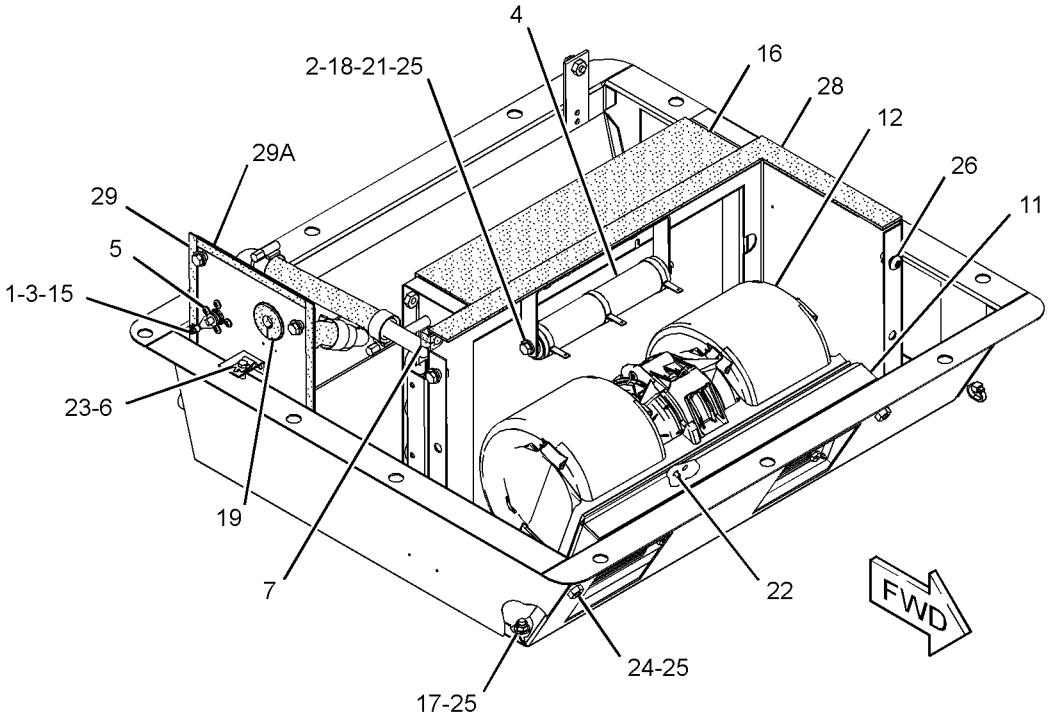

(COVER REMOVED FOR CLARITY)

GRAPHIC #1 **<END>** g01405960

OPERATOR STATION

108-4582 HOUSING GP-SEAT SUSPENSION

S/N: BYD1-UP; FTD1-UP
PART OF 108-4082 SUSPENSION GP-SEAT
AN ATTACHMENT

SMCS-7321, 7324 **i02853722**

NOTE	REF NO	GRAPHIC REF	PART NUMBER	QTY	PART NAME 1 2 3 4 5 6 (PRODUCT LEVEL)	SEE PAGE
	1	1	**161-5967**	1	SHAFT	
	2	1	**8Y-6066**	1	SPRING	
	3	1	**8Y-6069**	1	ADJUSTER AS	
	4	1	**8Y-6068**	1	NUT (3/8X16-THD)	
	5	1	**8Y-6029**	1	HOUSING AS-UPPER	
	6	1	**8Y-6047**	2	PIN	
	7	1	**2M-7819**	4	RING-RETAINING	
	8	1	**8Y-6041**	1	ARM AS	
	9	1	**8Y-6045**	1	CAM	
	10	1	**8Y-6046**	1	PIN	
	11	1	**8S-7803**	4	RING-RETAINING	
	12	1	**131-4242**	1	BOLT (3/8-16X5.18-IN)	
	13	1	**7M-7219**	1	BEARING-THRUST	
		1	**4N-2927**	2	RACE-THRUST BEARING	
	14	1	**3D-2975**	2	RING-RETAINING	
	15	1	**095-0878**	1	PIN-SPRING	
	16	1	**9X-8918**	3	SCREW-FLAT HEAD (8-32X0.5-IN)	
	17	1	**5P-8445**	4	RING-RETAINING	
	18	1	**4B-5059**	6	WASHER (15X29.5X2.5-MM THK)	
	19	1	**8Y-6060**	2	ROLLER	
	20	1	**1Y-7927**	1	PIN	
	21	1	**7V-5191**	2	SPACER (28X10X7.1-MM THK)	
	22	1	**5D-4822**	2	RING-RETAINING	
	23	1	**8Y-6062**	1	LINK-ACTUATOR	
	24	1	**8Y-6063**	1	LINK-ACTUATOR	
	25	1	**5V-0770**	2	BOLT-CARRIAGE (1/4-20X0.74-IN)	
		1	**2D-6235**	2	LOCKNUT (1/4-20-THD)	
	26	1	**8Y-6064**	2	ROLLER-SLIDER	
	27	1	**131-5167**	1	KNOB AS-ADJUSTMENT	
	28	1	**8Y-6067**	1	SPACER (10.54-MM THK)	
	29	1	**8L-8413**	2	STRAP-CABLE	
LZ	30	1		1	KNOB-HEIGHT	
LZ	31	1		1	KNOB-HEIGHT	
JZ	32	1		3	BUMPER	
PZ	33	1		2	BUSHING-GUIDE	
PZ	34	1		2	SPRING	
PZ	35	1		2	ROD	
PZ	36	1		2	SPACER	
QZ	37	1		2	SPRING	
QZ	38	1		2	BUSHING	
SZ	39	1		1	PIN	
SZ	40	1		1	FOLLOWER-CAM	
TZ	41	1		1	GUIDE	
TZ	42	1		1	TAPE-INDICATOR	
UZ	43	1		1	FOLLOWER-CAM	
UZ	44	1		1	PIN	
VZ	45	1		1	ROLLER AS	
VZ	46	1		2	ROLLER AS	
					AVAILABLE REPAIR KIT(S):	
J			**100-5179**	1	KIT-BUMPER (WEIGHT ADJUSTMENT)	
L			**8Y-5945**	1	KIT-SUSPENSION KNOB (HEIGHT ADJUSTMENT)	
P			**8Y-6860**	1	KIT-SPRING (HEIGHT ADJUSTMENT)	
Q			**8Y-6859**	1	KIT-SPRING	
S			**108-4086**	1	KIT-FOLLOWER	

108-4582 **HOUSING GP-SEAT SUSPENSION** *(contd.)* **i02853722**

NOTE	REF NO	GRAPHIC REF	PART NUMBER	QTY	PART NAME 1 2 3 4 5 6 (PRODUCT LEVEL)	SEE PAGE
T			**100-3224**	1	KIT-INDICATOR (WEIGHT ADJUSTMENT)	
U			**108-4087**	1	KIT-FOLLOWER	
V			**108-4103**	1	KIT-BEARING	

J-KIT MARKED J INCLUDES PART MARKED J
L-KIT MARKED L INCLUDES PARTS MARKED L
P-KIT MARKED P INCLUDES PARTS MARKED P
Q-KIT MARKED Q INCLUDES PARTS MARKED Q
S-KIT MARKED S INCLUDES PARTS MARKED S
T-KIT MARKED T INCLUDES PARTS MARKED T
U-KIT MARKED U INCLUDES PARTS MARKED U
V-KIT MARKED V INCLUDES PARTS MARKED V
Z-NOT SERVICED SEPARATELY

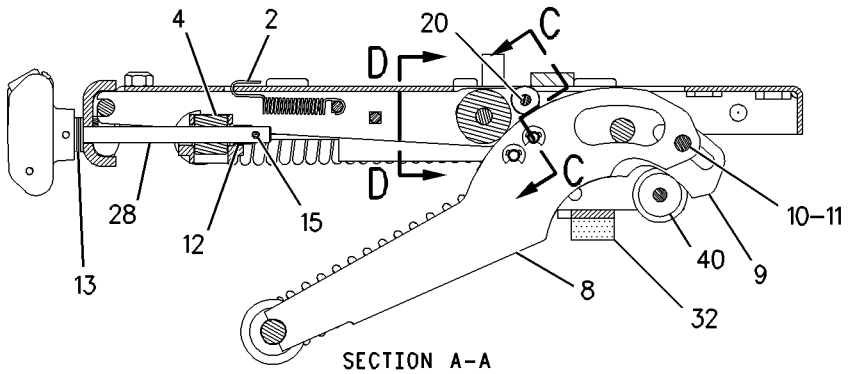

SECTION A-A

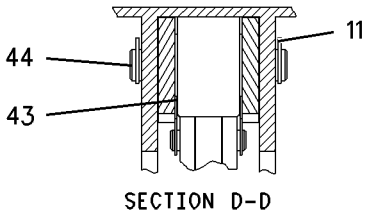

SECTION D-D

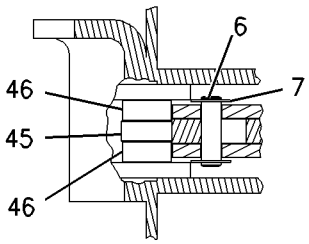

SECTION C-C

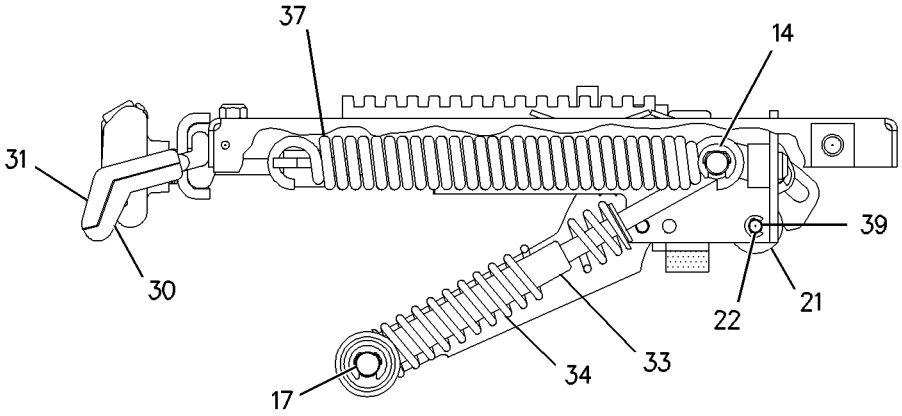

VIEW B-B

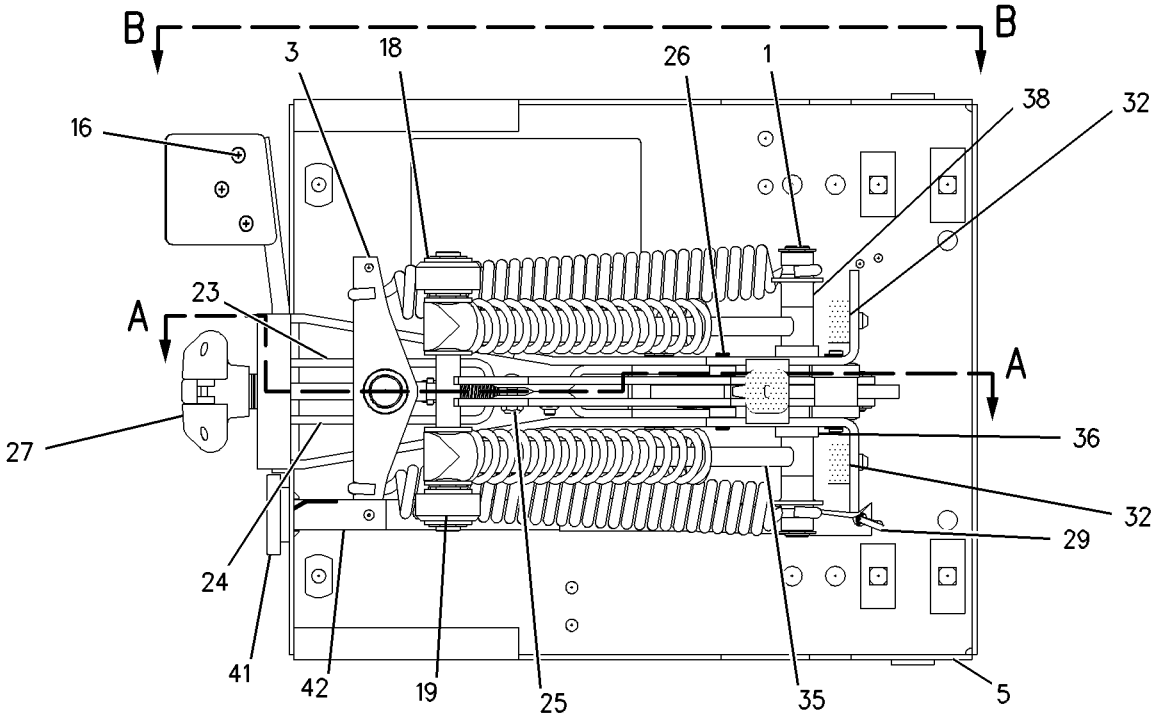

BOTTOM VIEW

GRAPHIC #1 **<END>** g00828846

OPERATOR STATION

107-4645 INSTALLATION GP-RADIO

S/N: BYD1-UP; FTD1-UP
12-VOLT
PART OF 225-4329 INSTALLATION GP-RADIO
AN ATTACHMENT

SMCS-7338 **i02560145**

NOTE	REF NO	GRAPHIC REF	PART NUMBER	QTY	PART NAME 1 2 3 4 5 6 (PRODUCT LEVEL)	SEE PAGE
	1	1	**4E-1411**	1	BUSHING-TERMINAL	
	2	1	**8C-6440**	8	SCREW-PAN HEAD (10-16X0.5-IN)	
M	3	1	**9X-2042**	4	SCREW-TRUSS HEAD (M6X1X12-MM)	
	4	1	**168-8772**	2	SPEAKER AS-RADIO	
	5	1	**174-6491**	1	HARNESS AS-RADIO (SPEAKERS)	
		1	**102-8803**	1	KIT-RECEPTACLE (3-PIN)	
					(INCLUDES RECEPTACLE AS & WEDGE)	
		1	**8L-8413**	14	STRAP-CABLE	
E		1	**125-7875**		TUBE-HEAT SHRINK (7.44-MM DIA) (5-CM)	
		1	**097-7234**	2	TERMINAL	
		1	**155-2265**	1	KIT-CONNECTING PLUG (8-PIN)	
					(INCLUDES PLUG AS, WEDGE & INTERFACE SEAL)	
	6	1	**114-3953**	1	BRACKET AS	
	7	1	**114-3954**	1	COVER	
	8	1	**9U-8263**	1	COVER	
	9	1	**5P-4115**	4	WASHER-HARD (7.2X19X2-MM THK)	
	10	1	**5P-8524**	4	GROMMET	
	11	1	**7K-1181**	4	STRAP-CABLE	
M	12	1	**8T-4134**	4	NUT (M6X1-THD)	
	13	1	**9X-8256**	8	WASHER (6.6X12X2-MM THK)	

E-ORDER BY THE CENTIMETER
M-METRIC PART

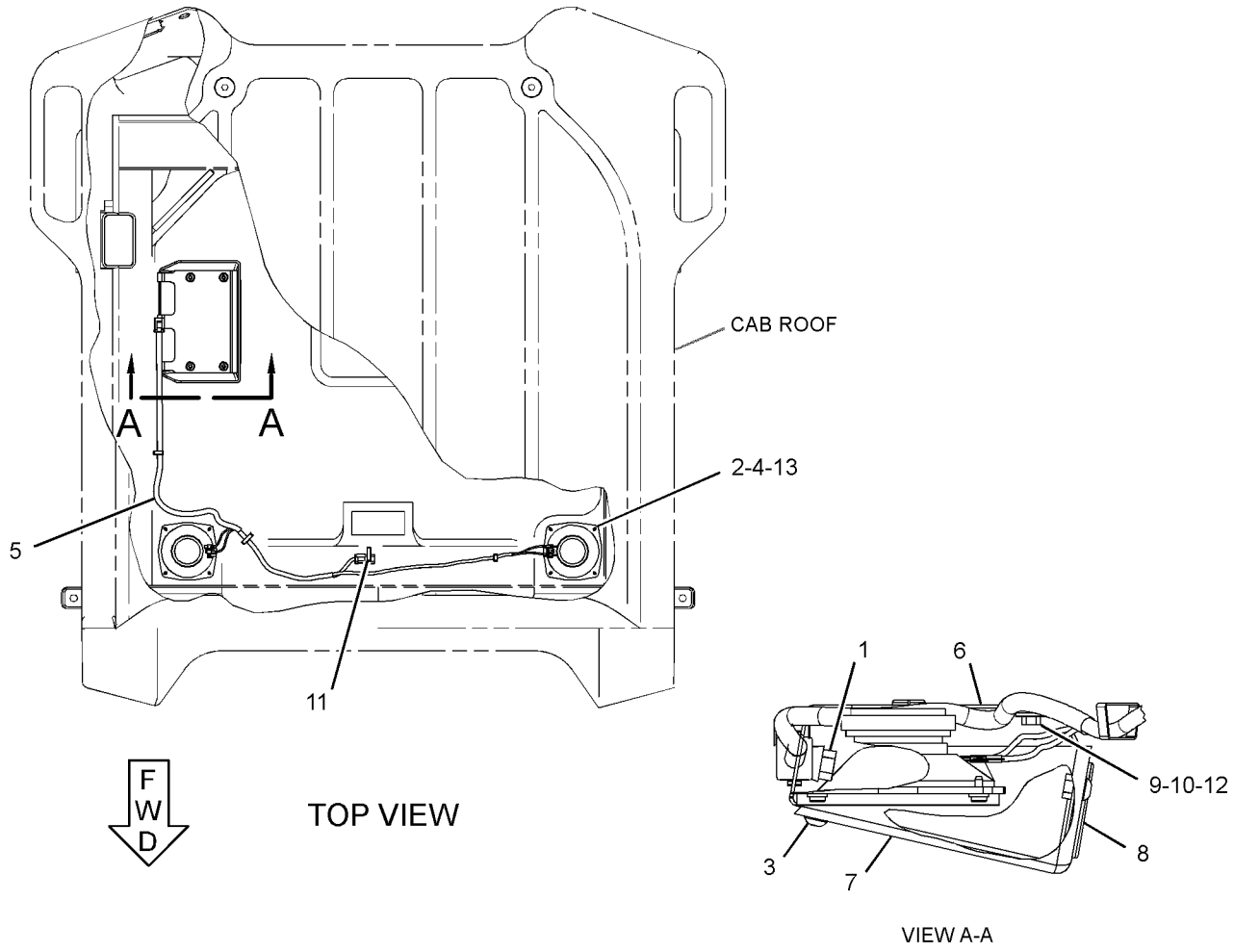

GRAPHIC #1 **<END>** g01282327

OPERATOR STATION

124-2482 INSTALLATION GP-RADIO

S/N: FTD1-UP
24-VOLT
PART OF 308-2280 CAB AR-ENCLOSED ROPS
AN ATTACHMENT

SMCS-7338 **i02603068**

NOTE	REF NO	GRAPHIC REF	PART NUMBER	QTY	PART NAME 1 2 3 4 5 6 (PRODUCT LEVEL)	SEE PAGE
M	1	1	**8T-0286**	6	BOLT (M5X0.8X8-MM)	
	2	1	**114-3954**	1	COVER	
	3	1	**117-3274**	1	PLUG AS-CONNECTOR (6-PIN, JUMPER)	
	4	1	**124-4324**	1	BRACKET AS	
	5	1	**124-5314**	1	HARNESS AS-RADIO	
		1	**102-8806**	1	KIT-RECEPTACLE (8-PIN)	
C	6	1	**168-8772**	2	SPEAKER AS-RADIO	
C	7	1	**174-6491**	1	HARNESS AS-RADIO (SPEAKERS)	
		1	**155-2265**	1	KIT-CONNECTING PLUG (8-PIN)	
		1	**102-8803**	1	KIT-RECEPTACLE (3-PIN)	
	8	1	**5P-4115**	4	WASHER-HARD (7.2X19X2-MM THK)	
	9	1	**5P-8524**	4	GROMMET	
	10		**7K-1181**	4	STRAP-CABLE	
	11	1	**8C-6440**	8	SCREW-PAN HEAD (10-16X0.5-IN)	
M	12	1	**8T-4134**	4	NUT (M6X1-THD)	
M	13	1	**9X-2042**	4	SCREW-TRUSS HEAD (M6X1X12-MM)	

C-CHANGE FROM PREVIOUS TYPE
M-METRIC PART

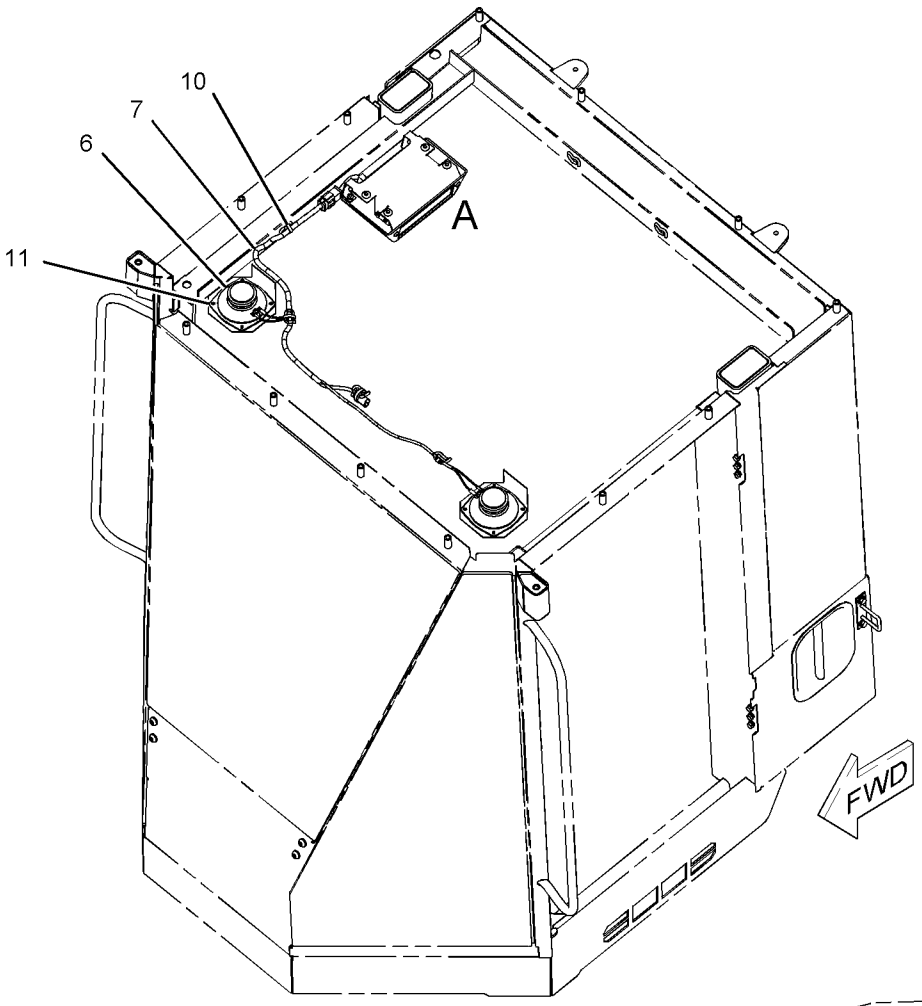

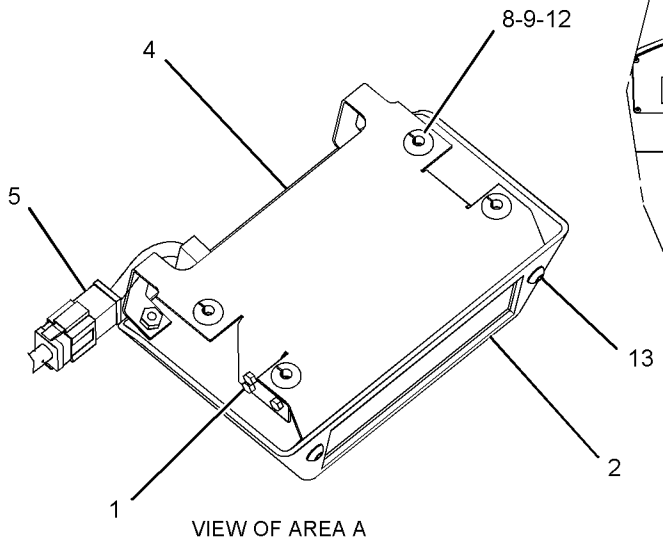

VIEW OF AREA A

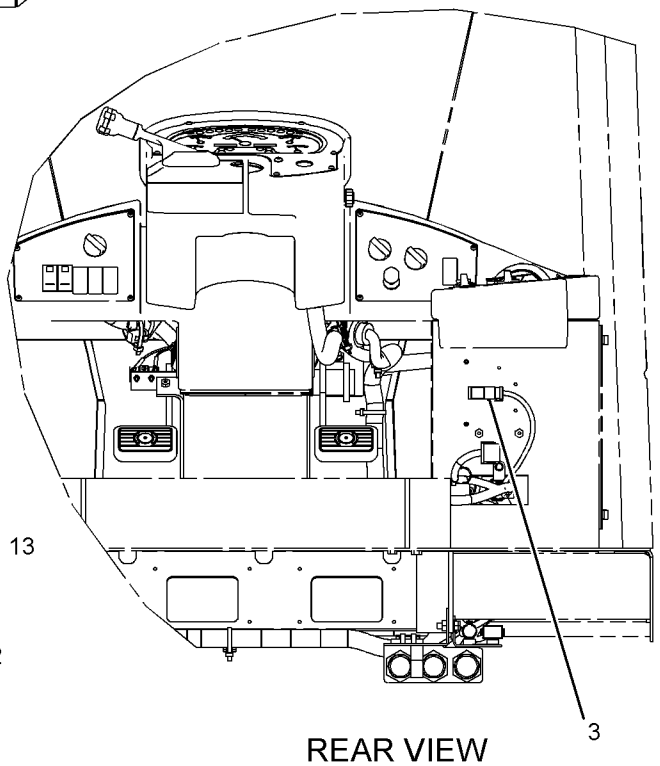

REAR VIEW

GRAPHIC #1 **<END>** g01011859

225-4329 INSTALLATION GP-RADIO

S/N: BYD1-UP; FTD1-UP
12-VOLT
PART OF 308-2275, 308-2276, 308-2278, 308-2279 CAB AR-ENCLOSED ROPS
CANNOT BE USED WITH 207-5947—PAGE 136, 107-4645—PAGE 864
AN ATTACHMENT

SMCS-7338 **i01821159**

NOTE	PART NUMBER	QTY	PART NAME 1 2 3 4 5 6 (PRODUCT LEVEL)	SEE PAGE
Y	*207-5947*	1	CONVERTER GP-ELECTRICAL	136
Y	*107-4645*	1	INSTALLATION GP-RADIO	864

Y-SEPARATE ILLUSTRATION

<END>

270-3217 INSTALLATION GP-RADIO

S/N: BYD1-UP; FTD1-UP
AN ATTACHMENT

SMCS-7338 **i02425444**

NOTE	PART NUMBER	QTY	PART NAME 1 2 3 4 5 6 (PRODUCT LEVEL)	SEE PAGE
	270-3216	1	ENVELOPE	
	200-5728	1	HARNESS AS-RADIO	
	160-3518	1	KIT-RECEPTACLE (8-PIN)	
			(INCLUDES RECEPTACLE AS & WEDGE)	
	172-8037	1	CONNECTOR (RADIO)	
	172-8039	1	TERMINAL (RADIO)	
	262-2781	1	RADIO	
	6K-0806	1	STRAP-CABLE	

<END>

OPERATOR STATION

241-8564 LINER GP-CAB—UPPER

S/N: BYD1-UP; FTD1-UP
PART OF 190-4405 CAB AR-ENCLOSED ROPS
AN ATTACHMENT

SMCS-7329 **i02808495**

NOTE	REF NO	GRAPHIC REF	PART NUMBER	QTY	PART NAME 1 2 3 4 5 6 (PRODUCT LEVEL)	SEE PAGE
	1	1	**6V-8928**	1	HOOK-COAT	
Y	2	1	**107-6032**	1	LAMP GP-DOME (24-VOLT)	147
	3	1	**145-5307**	1	PLATE	
	4	1	**180-5098**	1	INSULATION	
C	5	1	**261-6778**	1	HEADLINER	
	6	1	**240-2563**	1	COVER	
C	7	1	**240-2564**	1	COVER AS (RH)	
E		1	**121-0192**		FASTENER-HOOK (60-CM)	
E		1	**129-1854**		FASTENER-LOOP (60-CM)	
C	8	1	**240-2565**	1	COVER AS (LH)	
E		1	**121-0192**		FASTENER-HOOK (60-CM)	
E		1	**129-1854**		FASTENER-LOOP (60-CM)	
M	9	1	**6V-8490**	4	BOLT (M6X1X25-MM)	
M	10	1	**9X-2045**	1	SCREW-TRUSS HEAD (M6X1X20-MM)	
C	11	1	**270-7618**	1	COVER AS	
C	12	1	**272-3190**	1	COVER AS	

C-CHANGE FROM PREVIOUS TYPE
E-ORDER BY THE CENTIMETER
M-METRIC PART
Y-SEPARATE ILLUSTRATION

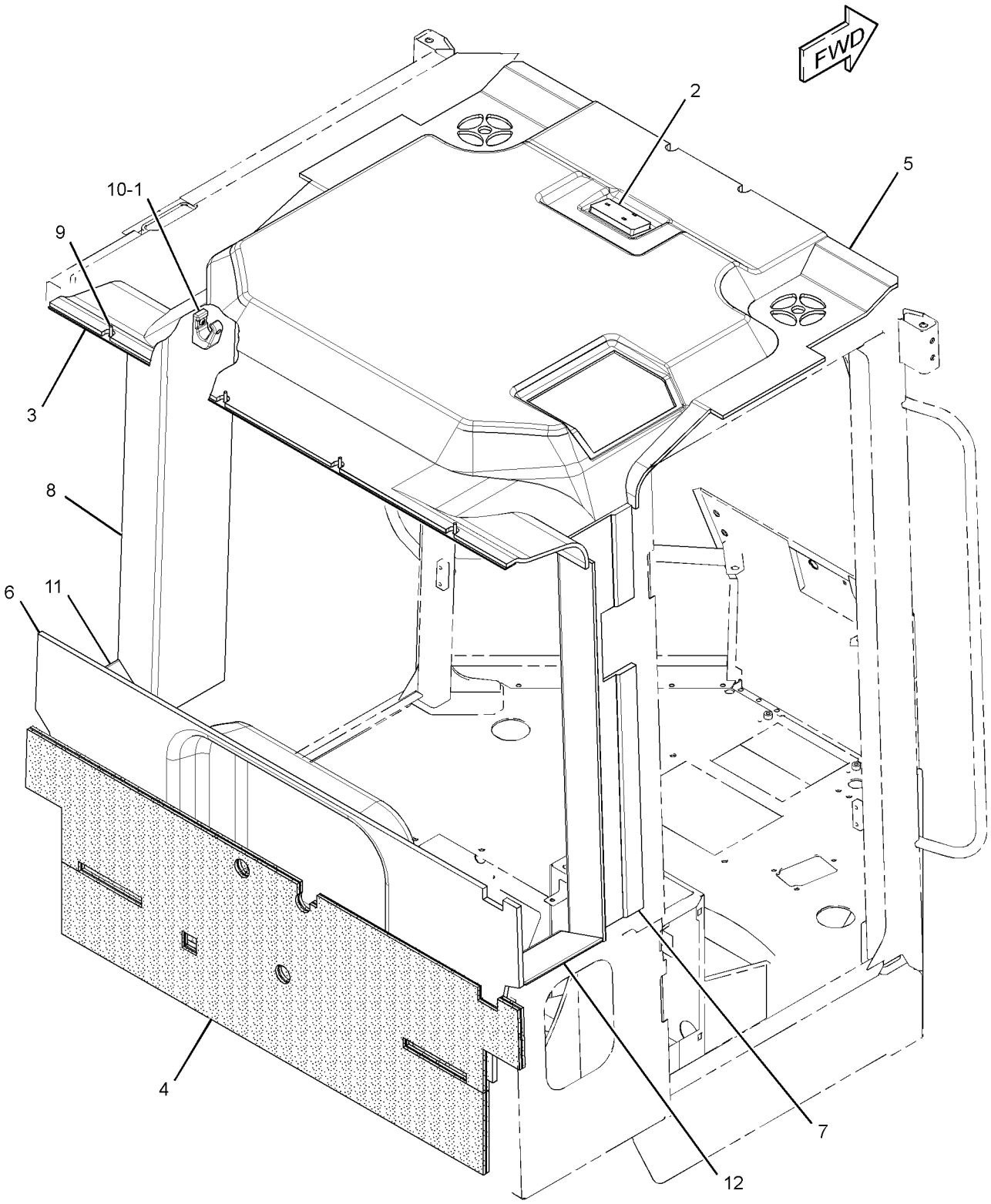

GRAPHIC #1 **<END>** g01404902

OPERATOR STATION

290-8752 LINES GP-AIR CONDITIONER

S/N: BYD1-UP
PART OF 304-9255 PLATFORM AR
AN ATTACHMENT

SMCS-1808 **i02879463**

NOTE	REF NO	GRAPHIC REF	PART NUMBER	QTY	PART NAME 1 2 3 4 5 6 (PRODUCT LEVEL)	SEE PAGE
	1	1	**3S-2093**	4	STRAP-CABLE	
	2	1	**105-9411**	1	SUPPORT	
	3	1	**106-8704**	1	SUPPRESSOR AS-ARC	
	4	1	**200-6345**	4	MOUNT (DUAL SWIVEL)	
	5	1	**204-2281**	8	STRAP-TIE	
	6	1	**217-7742**	1	GROMMET	
	7	1	**236-6923**	1	SWITCH AS-PRESSURE (REFRIGERANT)	
	8	1	**257-3227**	1	RECEIVER DRYER AS (REFRIGERANT)	
		1	**189-1707**	1	ORIFICE AS-AIR CONDITIONER	
	9	1	**274-5909**	1	ACCUMULATOR-REFRIGERANT	
	10	1	**284-8306**	1	BRACKET AS	
	11	1	**291-2576**	1	TUBE AS	
	12	1	**292-2522**	1	TUBE AS	
I	13	1	**292-3592**	1	HOSE AS	
I	14	1	**292-3593**	1	HOSE AS	
I	15	1	**294-0976**	1	HOSE AS	
I	16	1	**299-9123**	1	HOSE AS	
I	17	1	**303-5190**	1	HOSE AS	
	18	1	**109-1633**	1	CLIP (SLOT)	
	19	1	**109-1634**	1	CLIP (TAB)	
	20	1	**1M-4543**	1	GROMMET	
	21	1	**4S-1962**	2	CLIP	
	22	1	**5P-7648**	1	GROMMET	
	23	1	**7X-7729**	2	WASHER (11X25X3-MM THK)	
	24	1	**7X-7910**	1	CLIP	
	25	1	**7X-7911**	1	CLIP	
	26	1	**8M-2773**	1	CLIP	
	27	1	**8T-4121**	6	WASHER-HARD (11X21X2.5-MM THK)	
M	28	1	**8T-4133**	1	NUT (M10X1.5-THD)	
M	29	1	**8T-4136**	2	BOLT (M10X1.5X25-MM)	
M	30	1	**8T-4137**	5	BOLT (M10X1.5X20-MM)	
M	31	1	**8T-4185**	1	BOLT (M10X1.5X50-MM)	
	32	1	**8T-4223**	2	WASHER-HARD (13.5X25.5X3-MM THK)	
M	33	1	**8T-4956**	2	BOLT (M12X1.75X35-MM)	
	34	1	**9D-3768**	1	GROMMET	
	35	1	**9M-8406**	4	CLIP	
	36	1	**9X-7378**	1	SEAL-O-RING	
	37	1	**9X-7380**	2	SEAL-O-RING	
	38	1	**9X-7381**	4	SEAL-O-RING	
	39	1	**9X-7382**	2	SEAL-O-RING	
	40	1	**9X-7383**	2	SEAL-O-RING	
	41	1	**163-9324**	1	PLATE-INSTRUCTION (AIR CONDITIONER)	

I-REFER TO HYDRAULIC INFORMATION SYSTEM
M-METRIC PART

290-8752 **LINES GP-AIR CONDITIONER** *(contd.)* **i02879463**

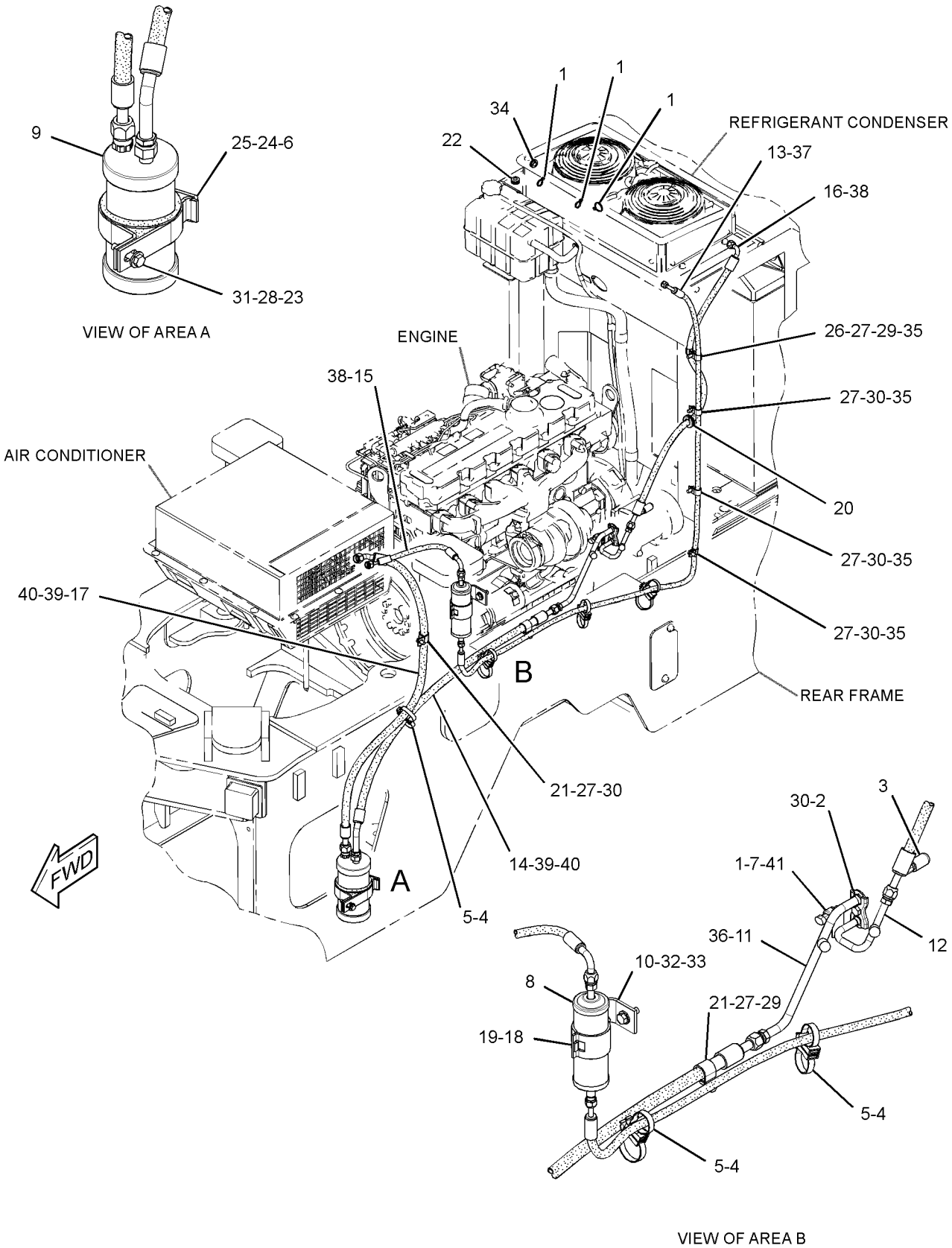

GRAPHIC #1 **<END>** g01442535

OPERATOR STATION

290-8753 LINES GP-CAB HEATER

S/N: BYD1-UP; FTD1-UP
PART OF 290-8750 HEATER AR-CAB, 304-9255 PLATFORM AR
AN ATTACHMENT

SMCS-7304 **i02808079**

NOTE	REF NO	GRAPHIC REF	PART NUMBER	QTY	PART NAME 1 2 3 4 5 6 (PRODUCT LEVEL)	SEE PAGE
	1	1	**5D-1026**	4	CLAMP-HOSE	
E	2	1	**5P-0767**		HOSE (422-CM)	
E	3	1	**7I-1024**		GUARD (HOSE) (20-CM)	
	4	1	**7K-1181**	2	STRAP-CABLE	
	5	1	**9M-4814**	1	CONNECTOR-HOSE	
	6	1	**9X-3959**	1	ELBOW	
	7	1	**301-0361**	1	BRACKET AS	
	8	1	**205-8125**	1	CLIP	
	9	1	**6D-1641**	3	CLIP	
	10	1	**8T-4121**	2	WASHER-HARD (11X21X2.5-MM THK)	
M	11	1	**8T-4137**	2	BOLT (M10X1.5X20-MM)	
M	12	1	**8T-4139**	1	BOLT (M12X1.75X30-MM)	
	13	1	**8T-4223**	1	WASHER-HARD (13.5X25.5X3-MM THK)	

E-ORDER BY THE CENTIMETER
M-METRIC PART

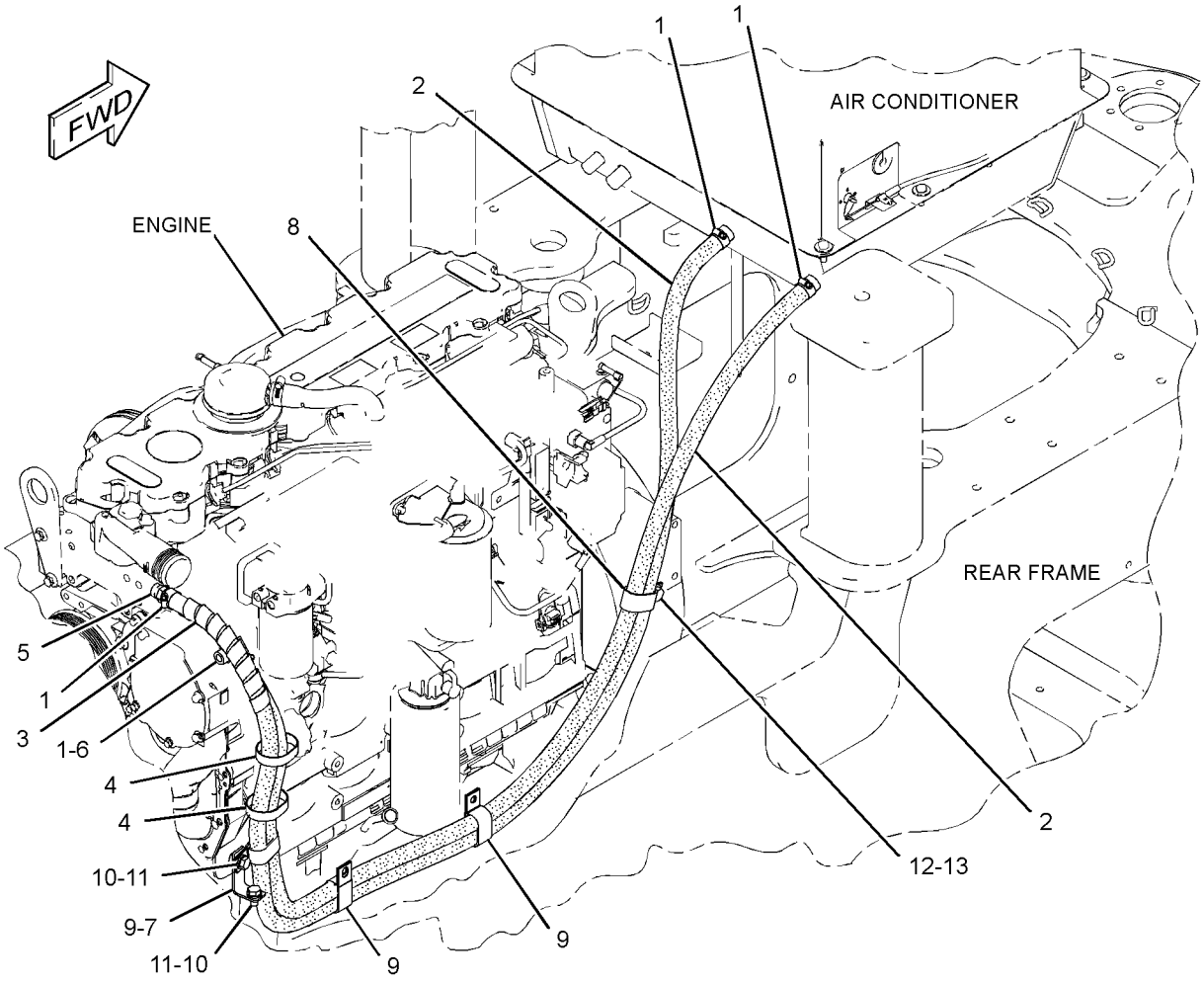

GRAPHIC #1 **<END>** g01405390

OPERATOR STATION

6V-1970 LITERATURE GP

S/N: BYD1-UP; FTD1-UP

PART OF 289-8871, 289-8891, 290-6498 CHASSIS AR

SMCS-7300, 7400 **i02036003**

NOTE	PART NUMBER	QTY	PART NAME 1 2 3 4 5 6 (PRODUCT LEVEL)	SEE PAGE
	7F-3400	1	BAG-POLYETHYLENE	
	5P-8500	2	KEY	
	5P-7958	1	SLEEVE-CABLE SPLICE	

<END>

OPERATOR STATION

290-8749 MIRROR GP

S/N: BYD1-UP; FTD1-UP
PART OF 308-2276, 308-2279 CAB AR-ENCLOSED ROPS
AN ATTACHMENT

SMCS-7319 **i02813767**

NOTE	REF NO	GRAPHIC REF	PART NUMBER	QTY	PART NAME 1 2 3 4 5 6 (PRODUCT LEVEL)	SEE PAGE
	1	1	**7K-1181**	6	STRAP-CABLE	
	2	1	**264-1527**	2	MIRROR AS	
					(EACH INCLUDES)	
		1	**102-8802**	1	KIT-RECEPTACLE (2-PIN)	
		1	**186-3735**	2	PIN-CONNECTOR (16-GA TO 18-GA)	
	3	1	**269-2163**	1	BRACKET AS (RH)	
	4	1	**269-2164**	1	BRACKET AS (LH)	
	5	1	**290-0660**	2	WIRE AS	
	6	1	**4P-7581**	2	CLIP	
BM	7	1	**5C-2890**	2	NUT (M6X1-THD)	
M	8	1	**5C-7261**	2	NUT (M8X1.25-THD)	
B	9	1	**8T-4205**	2	WASHER-HARD (7.2X14.5X2-MM THK)	
	10	1	**8T-4224**	6	WASHER-HARD (8.8X16X2-MM THK)	
M	11	1	**8T-4908**	4	BOLT (M8X1.25X25-MM)	

B-USE AS REQUIRED
M-METRIC PART

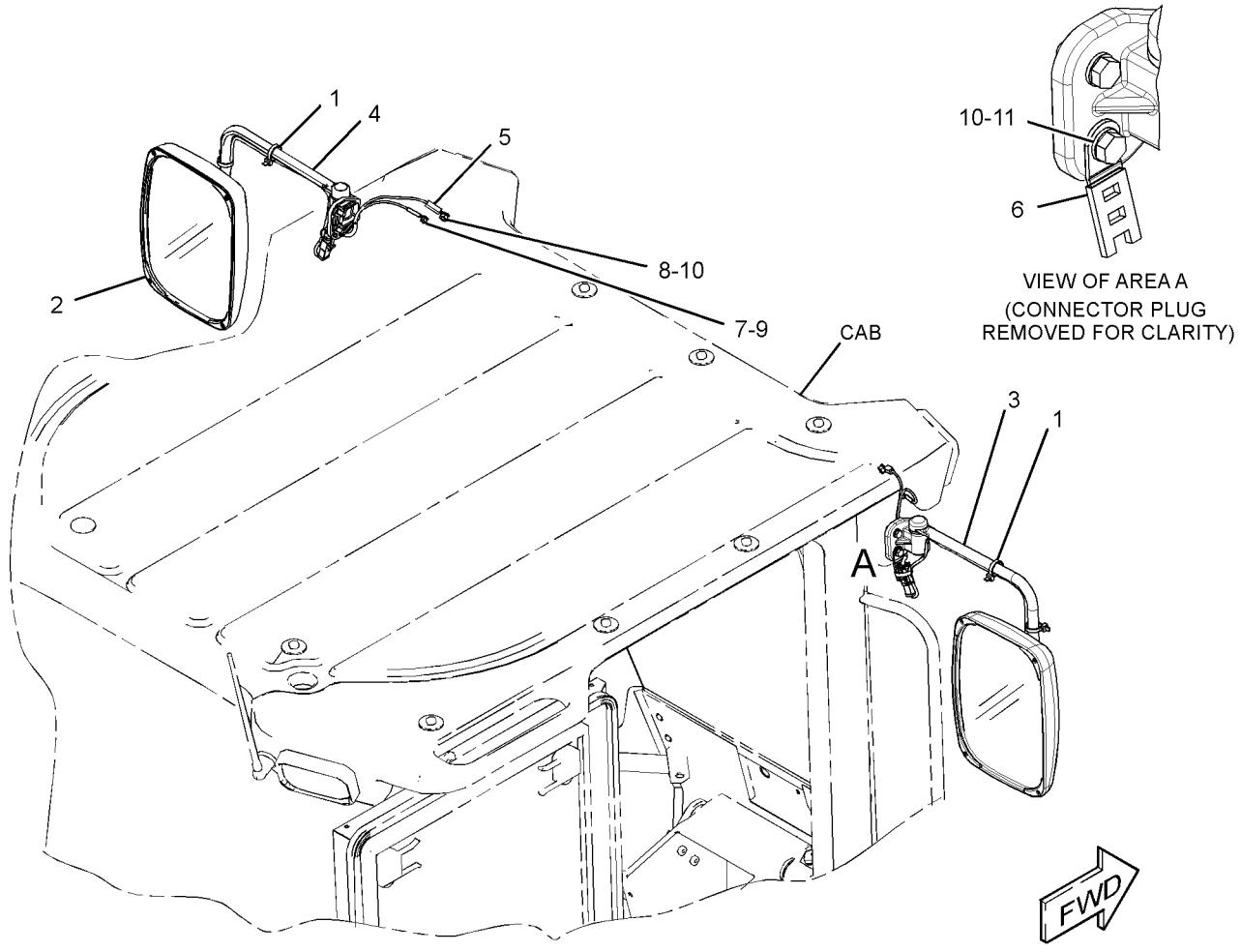

GRAPHIC #1 **<END>** g01404419

107-4642 MIRROR GP-REAR VIEW—EXTERIOR

S/N: BYD1-UP; FTD1-UP

AN ATTACHMENT

SMCS-7319 **i01155961**

NOTE	REF NO	GRAPHIC REF	PART NUMBER	QTY	PART NAME 1 2 3 4 5 6 (PRODUCT LEVEL)	SEE PAGE
	1	1	**150-6582**	2	MIRROR AS	
	2	1	**123-6621**	1	BRACKET AS (LH)	
	3	1	**123-6622**	1	BRACKET AS (RH)	
M	4	1	**8T-4189**	4	BOLT (M8X1.25X20-MM)	
	5	1	**8T-4224**	4	WASHER-HARD (8.8X16X2-MM THK)	

M-METRIC PART

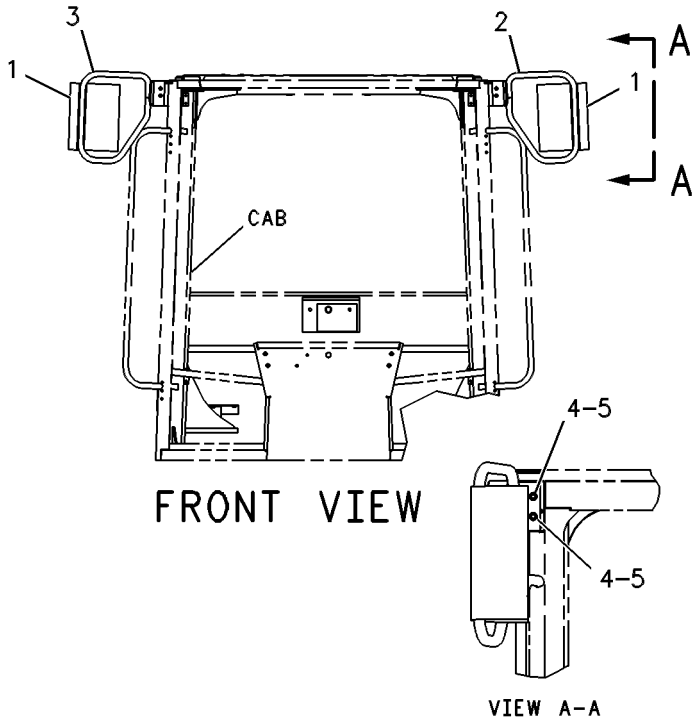

GRAPHIC #1 **<END>** g00131410

OPERATOR STATION

107-4643 MIRROR GP-REAR VIEW–INTERIOR

S/N: BYD1-UP; FTD1-UP
AN ATTACHMENT

SMCS-7319 **i02865234**

NOTE	REF NO	GRAPHIC REF	PART NUMBER	QTY	PART NAME 1 2 3 4 5 6 (PRODUCT LEVEL)	SEE PAGE
	1	1	**5P-6872**	2	MIRROR AS (INTERIOR, FRONT)	
	2	1	**114-3956**	2	PLATE	
M	3	1	**5C-9553**	4	BOLT (M6X1X16-MM)	
	4	1	**8T-4205**	4	WASHER-HARD (7.2X14.5X2-MM THK)	
	5	1	**3K-6060**	2	LOCKNUT (3/8-16-THD)	
	6	1	**235-4546**	2	NUT-JAM (3/8-16-THD)	
F			**9X-8256**	4	WASHER (6.6X12X2-MM THK)	
FM			**5C-2890**	2	NUT (M6X1-THD)	
FM			**5C-9553**	2	BOLT (M6X1X16-MM)	

F-NOT SHOWN
M-METRIC PART

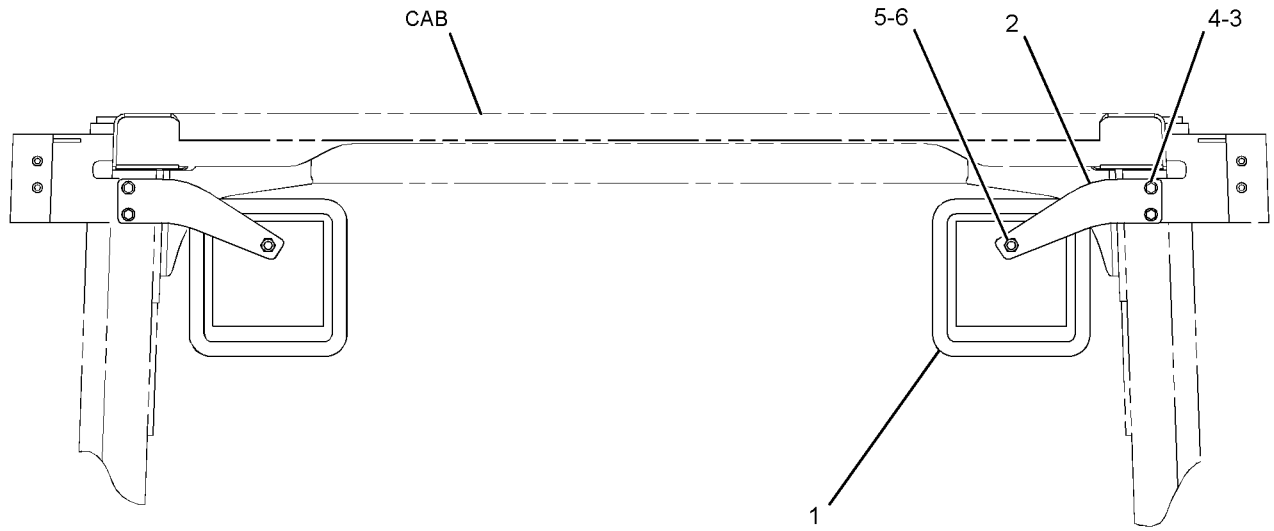

FRONT VIEW

GRAPHIC #1 **<END>** g01427257

OPERATOR STATION

119-9757 MIRROR GP-REAR VIEW—EXTERIOR

S/N: BYD1-UP
PART OF 304-9256 CANOPY AR-SOFT
AN ATTACHMENT

SMCS-7319 **i00533833**

NOTE	REF NO	GRAPHIC REF	PART NUMBER	QTY	PART NAME 1 2 3 4 5 6 (PRODUCT LEVEL)	SEE PAGE
	1	1	**4Y-3306**	2	MIRROR-REAR VIEW	
	2	1	**119-9770**	1	STAY AS-RH	
	3	1	**119-9771**	1	STAY AS-LH	
M	4	1	**8T-4137**	4	BOLT (M10X1.5X20-MM)	
	5	1	**8T-4121**	4	WASHER-HARD (11X21X2.5-MM THK)	

M-METRIC PART

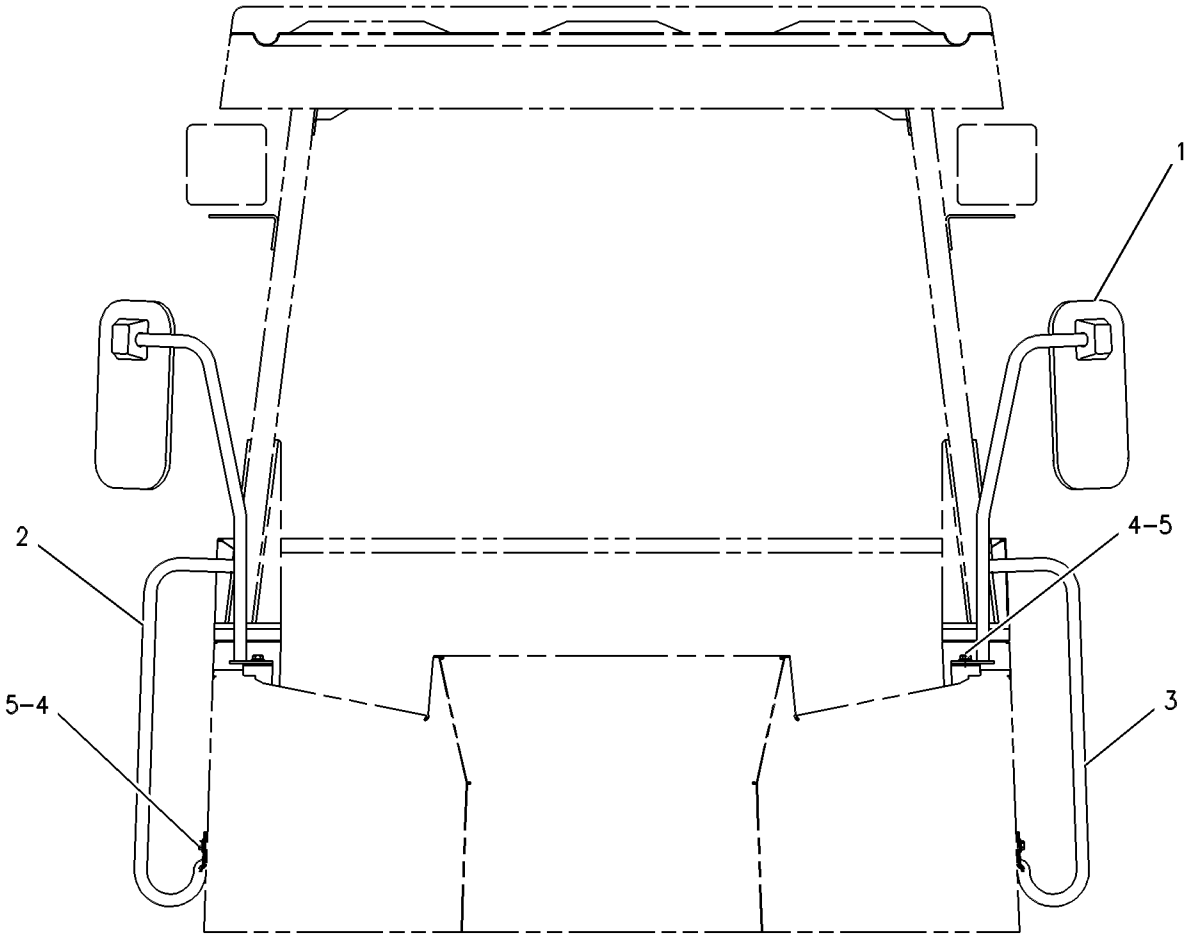

FRONT VIEW

GRAPHIC #1 **<END>** g00261088

160-6171 MIRROR GP-REAR VIEW–EXTERIOR

S/N: BYD1-UP; FTD1-UP
AN ATTACHMENT

SMCS-7319 **i00911801**

NOTE	REF NO	GRAPHIC REF	PART NUMBER	QTY	PART NAME 1 2 3 4 5 6 (PRODUCT LEVEL)	SEE PAGE
	1	1	**123-6620**	2	MIRROR AS	
	2	1	**123-6621**	1	BRACKET AS (LH)	
	3	1	**123-6622**	1	BRACKET AS (RH)	
M	4	1	**8T-4189**	4	BOLT (M8X1.25X20-MM)	
	5	1	**8T-4224**	4	WASHER-HARD (8.8X16X2-MM THK)	

M-METRIC PART

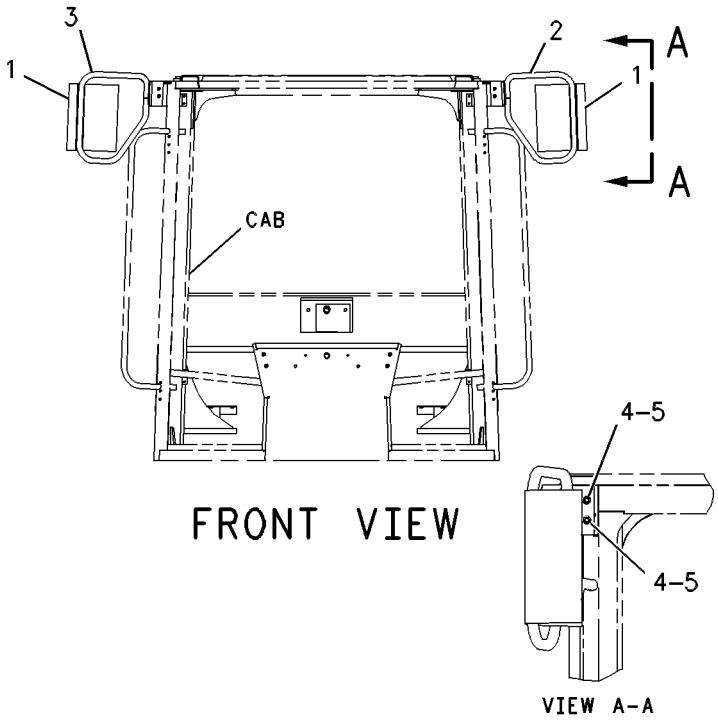

FRONT VIEW

VIEW A-A

GRAPHIC #1 **<END>** g00465632

OPERATOR STATION

237-0068 MIRROR GP-REAR VIEW—EXTERIOR, LH

S/N: BYD1-UP; FTD1-UP
PART OF 242-1239 MIRROR GP-REAR VIEW
AN ATTACHMENT

SMCS-7319 **i02005472**

NOTE	REF NO	GRAPHIC REF	PART NUMBER	QTY	PART NAME 1 2 3 4 5 6 (PRODUCT LEVEL)	SEE PAGE
	1	1	**168-7089**	1	TUBE AS	
	2	1	**6C-1496**	1	MIRROR	
	3	1	**8T-1889**	2	CLIP (SLOT)	
	4	1	**8T-1890**	2	CLIP (TAB)	
	5	1	**8T-4121**	4	WASHER-HARD (11X21X2.5-MM THK)	
M	6	1	**8T-4133**	2	NUT (M10X1.5-THD)	
M	7	1	**8T-4195**	2	BOLT (M10X1.5X30-MM)	
	8	1	**8T-4224**	4	WASHER-HARD (8.8X16X2-MM THK)	
M	9	1	**8T-4908**	4	BOLT (M8X1.25X25-MM)	

M-METRIC PART

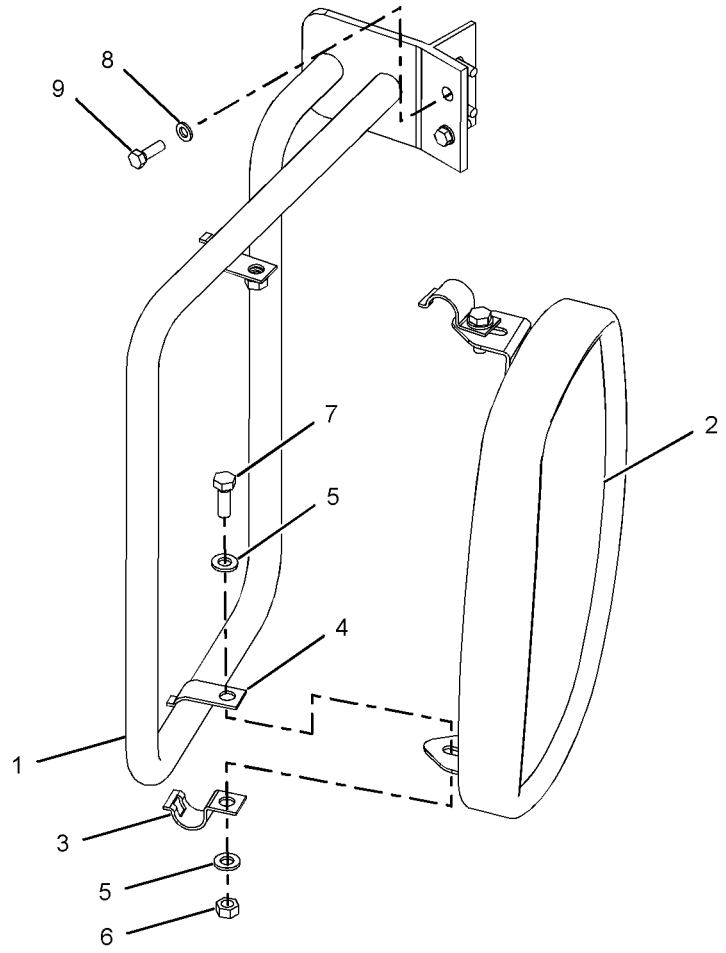

GRAPHIC #1 **<END>** g01040289

239-2198 MIRROR GP-REAR VIEW–EXTERIOR, RH

S/N: BYD1-UP; FTD1-UP
PART OF 242-1239 MIRROR GP-REAR VIEW
AN ATTACHMENT

SMCS-7319 **i02005473**

NOTE	REF NO	GRAPHIC REF	PART NUMBER	QTY	PART NAME 1 2 3 4 5 6 (PRODUCT LEVEL)	SEE PAGE
	1	1	**168-7090**	1	TUBE AS	
	2	1	**6C-1496**	1	MIRROR	
	3	1	**8T-1889**	2	CLIP (SLOT)	
	4	1	**8T-1890**	2	CLIP (TAB)	
	5	1	**8T-4121**	4	WASHER-HARD (11X21X2.5-MM THK)	
M	6	1	**8T-4133**	2	NUT (M10X1.5-THD)	
M	7	1	**8T-4195**	2	BOLT (M10X1.5X30-MM)	
	8	1	**8T-4224**	4	WASHER-HARD (8.8X16X2-MM THK)	
M	9	1	**8T-4908**	4	BOLT (M8X1.25X25-MM)	

M-METRIC PART

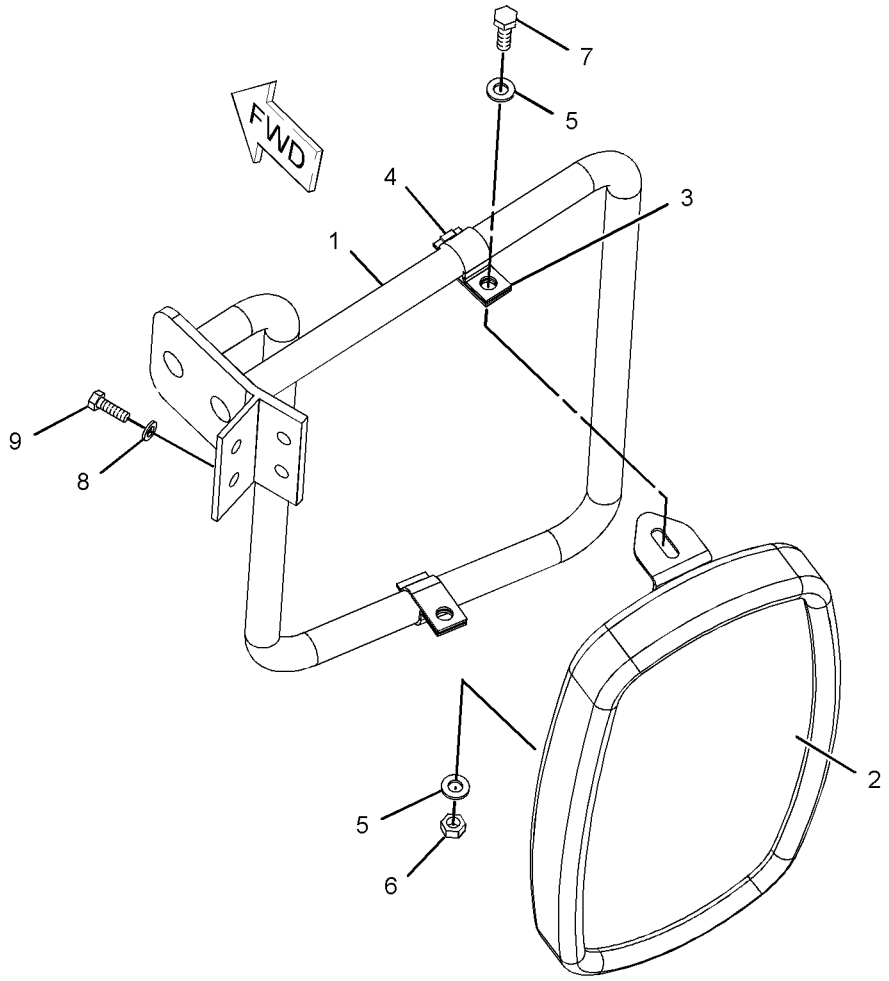

GRAPHIC #1 **<END>** g01039774

OPERATOR STATION

242-1239 MIRROR GP-REAR VIEW—EXTERIOR

S/N: BYD1-UP; FTD1-UP

CANNOT BE USED WITH 160-6171—PAGE 879, 290-8749—PAGE 875

AN ATTACHMENT

SMCS-7319 **i02065459**

NOTE	PART NUMBER	QTY	PART NAME 1 2 3 4 5 6 (PRODUCT LEVEL)	SEE PAGE
Y	**237-0068**	1	MIRROR GP-REAR VIEW (EXTERIOR, LH)	880
Y	**239-2198**	1	MIRROR GP-REAR VIEW (EXTERIOR, RH)	881

Y-SEPARATE ILLUSTRATION

<END>

OPERATOR STATION

254-7771 MIRROR GP-REAR VIEW—EXTERIOR

S/N: BYD1-UP; FTD1-UP
PART OF 308-2275, 308-2278, 308-2280 CAB AR-ENCLOSED ROPS, 308-2277 CANOPY
AR-OPEN ROPS
AN ATTACHMENT

SMCS-7319 **i02808553**

NOTE	REF NO	GRAPHIC REF	PART NUMBER	QTY	PART NAME 1 2 3 4 5 6 (PRODUCT LEVEL)	SEE PAGE
	1	1	**185-3874**	2	MIRROR AS	
	2	1	**269-2163**	1	BRACKET AS (RH)	
	3	1	**269-2164**	1	BRACKET AS (LH)	
	4	1	**8T-4224**	4	WASHER-HARD (8.8X16X2-MM THK)	
M	5	1	**8T-4908**	4	BOLT (M8X1.25X25-MM)	

M-METRIC PART

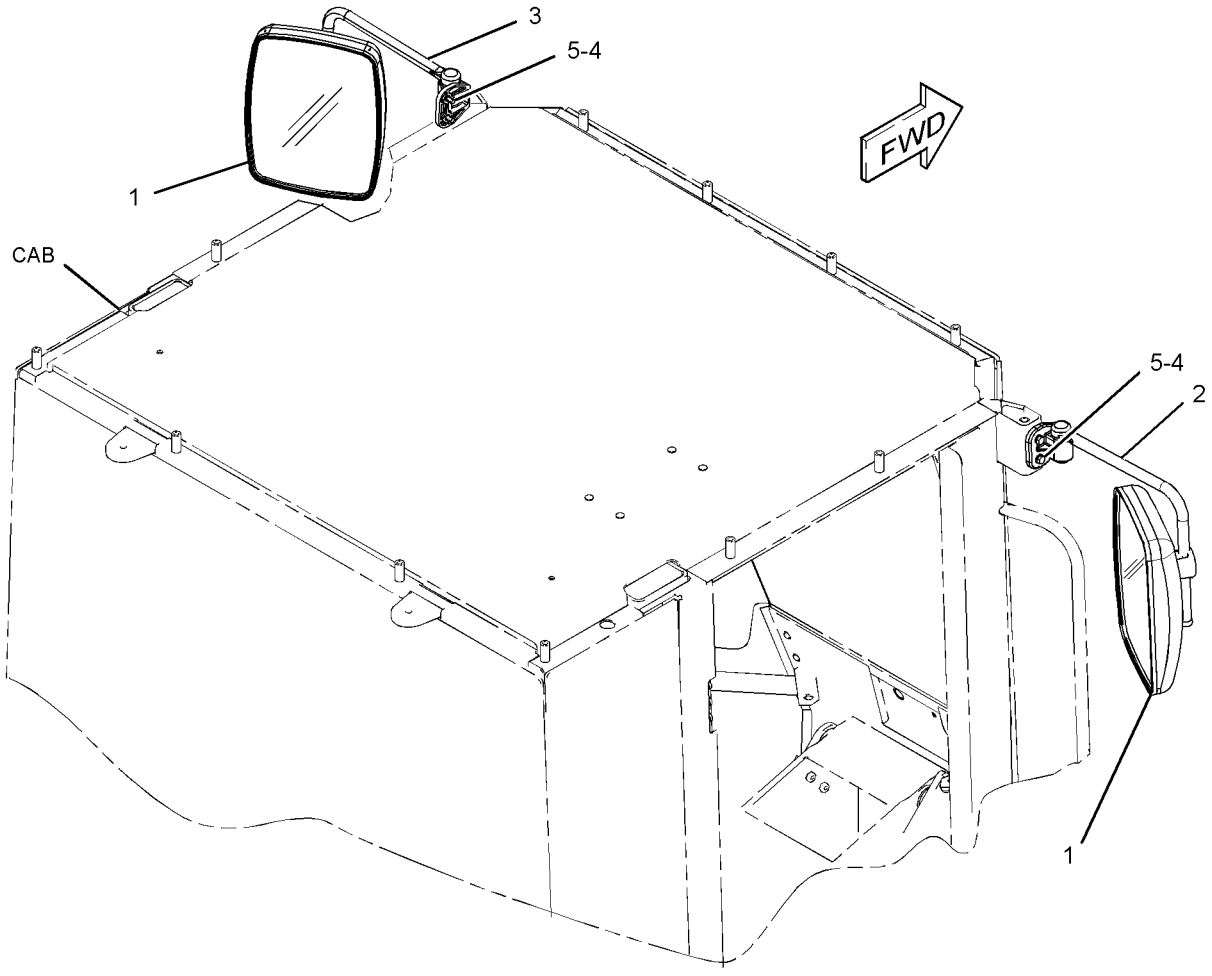

GRAPHIC #1 **<END>** g01402776

OPERATOR STATION

260-3183 MIRROR GP-REAR VIEW–INTERIOR, LH

S/N: BYD1-UP; FTD1-UP
PART OF 302-8662 CAMERA AR
AN ATTACHMENT

SMCS-7319 **i02865556**

NOTE	REF NO	GRAPHIC REF	PART NUMBER	QTY	PART NAME 1 2 3 4 5 6 (PRODUCT LEVEL)	SEE PAGE
	1	1	**5P-6872**	1	MIRROR AS (INTERIOR, FRONT)	
	1A	1	**3K-6060**	1	LOCKNUT (3/8-16-THD)	
	2	1	**114-3956**	1	PLATE	
M	3	1	**8T-4138**	2	BOLT (M6X1X20-MM)	
	4	1	**8T-4205**	2	WASHER-HARD (7.2X14.5X2-MM THK)	
	5	1	**235-4546**	1	NUT-JAM (3/8-16-THD)	
M	6	1	**5C-2890**	2	NUT (M6X1-THD)	
M	7	1	**5C-9553**	2	BOLT (M6X1X16-MM)	
	8	1	**9X-8256**	4	WASHER (6.6X12X2-MM THK)	

M-METRIC PART

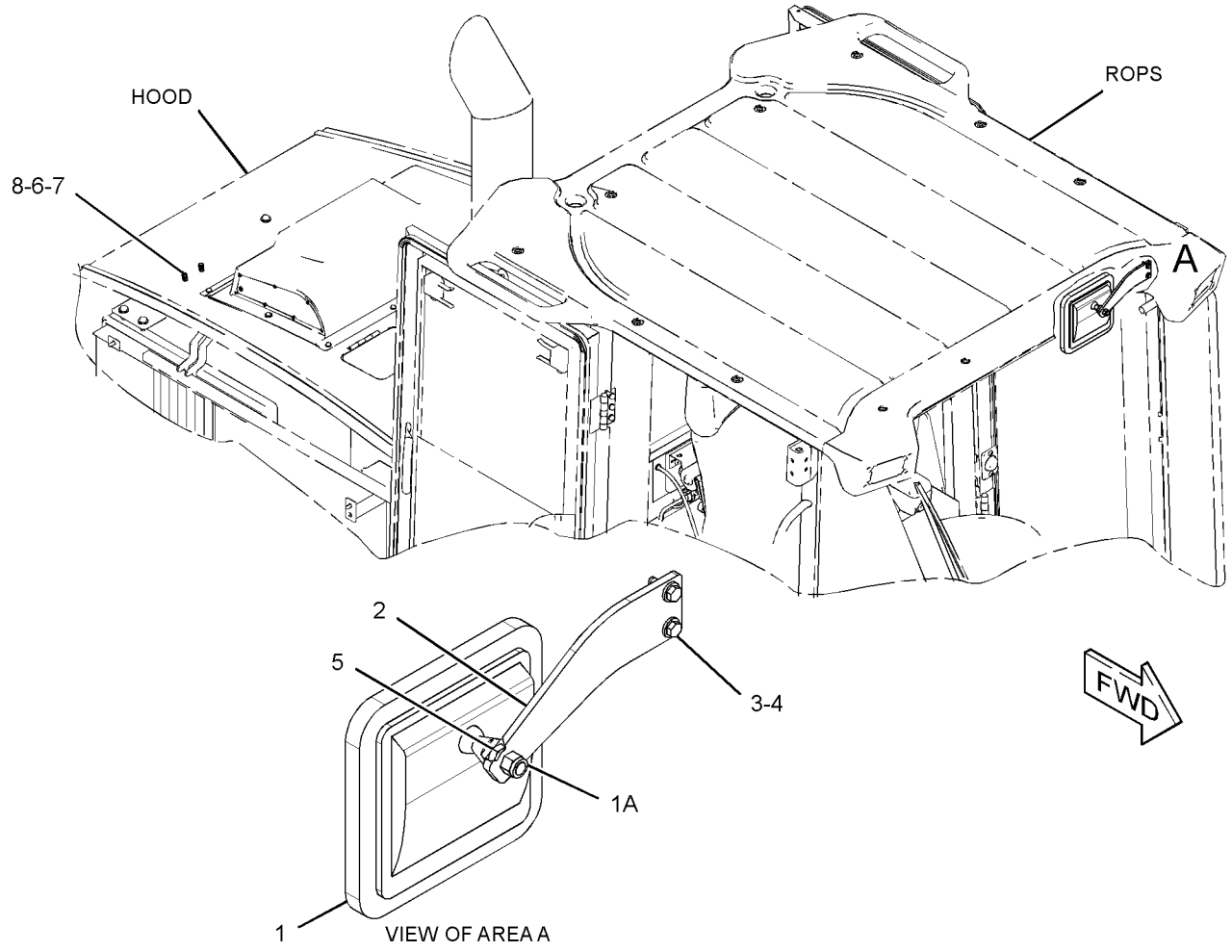

GRAPHIC #1 **<END>** g01440533

OPERATOR STATION

290-7208 MIRROR GP-REAR VIEW

S/N: BYD1-UP; FTD1-UP
CANNOT BE USED WITH 107-4643—PAGE 877
AN ATTACHMENT

SMCS-7319 **i02810687**

NOTE	REF NO	GRAPHIC REF	PART NUMBER	QTY	PART NAME 1 2 3 4 5 6 (PRODUCT LEVEL)	SEE PAGE
	1	1	**5P-6872**	2	MIRROR AS (INTERIOR, FRONT)	
					(EACH INCLUDES)	
		1	**3K-6060**	1	LOCKNUT (3/8-16-THD)	
	2	1	**114-3956**	2	PLATE	
	3	1	**220-4049**	1	ARM AS	
	4	1	**220-4050**	1	MIRROR (EXTERIOR, REAR)	
M	5	1	**5C-9553**	6	BOLT (M6X1X16-MM)	
	6	1	**8T-4205**	8	WASHER-HARD (7.2X14.5X2-MM THK)	

M-METRIC PART

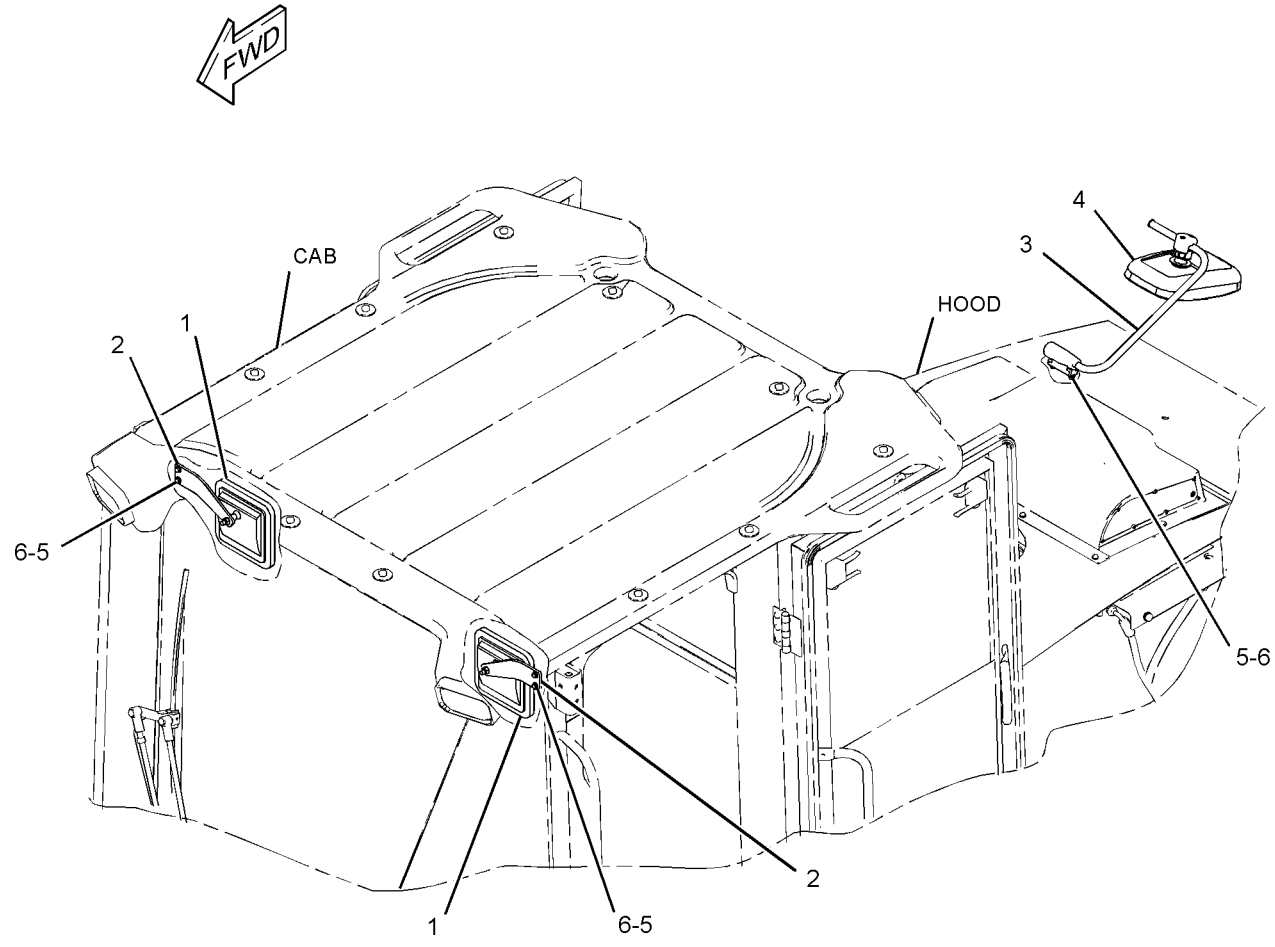

GRAPHIC #1 **<END>** g01404886

OPERATOR STATION

320-9967 MIRROR GP-REAR VIEW

S/N: BYD1-UP; FTD1-UP
PART OF 320-9968 CAMERA AR
FOR USE WITH REAR VIEW CAMERA, 320-9968—PAGE 133
AN ATTACHMENT

SMCS-7319 **i02879494**

NOTE	REF NO	GRAPHIC REF	PART NUMBER	QTY	PART NAME 1 2 3 4 5 6 (PRODUCT LEVEL)	SEE PAGE
	1	1	**5P-6872**	1	MIRROR AS (INTERIOR, FRONT)	
	1A	1	**3K-6060**	1	LOCKNUT (3/8-16-THD)	
	2	1	**114-3956**	1	PLATE	
	3	1	**220-4049**	1	ARM AS	
	4	1	**220-4050**	1	MIRROR (EXTERIOR, REAR)	
	5	1	**235-4546**	1	NUT-JAM (3/8-16-THD)	
M	6	1	**5C-9553**	2	BOLT (M6X1X16-MM)	
M	7	1	**8T-4138**	2	BOLT (M6X1X20-MM)	
	8	1	**8T-4205**	6	WASHER-HARD (7.2X14.5X2-MM THK)	

M-METRIC PART

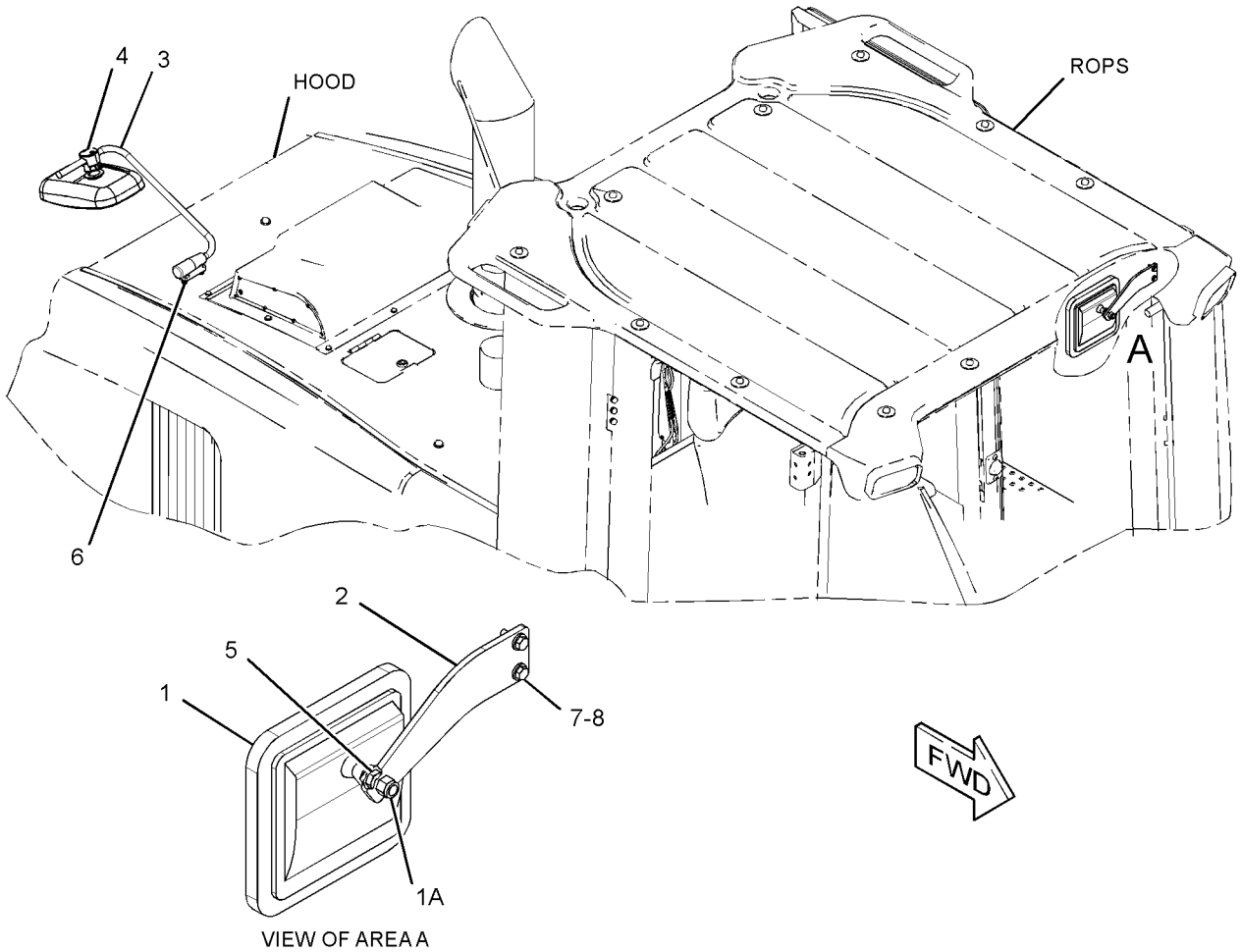

VIEW OF AREA A

GRAPHIC #1 **<END>** g01441098

OPERATOR STATION

156-4271 MOUNTING GP-CAB

S/N: BYD1-UP; FTD1-UP

PART OF 304-9256 CANOPY AR-SOFT, 290-8508, 290-8525 OPERATOR AR-ENCLOSED ROPS, 290-8186 OPERATOR AR-OPEN ROPS, 304-9255, 308-1933 PLATFORM AR AN ATTACHMENT

SMCS-7301 **i01223607**

NOTE	REF NO	GRAPHIC REF	PART NUMBER	QTY	PART NAME 1 2 3 4 5 6 (PRODUCT LEVEL)	SEE PAGE
	1	1	**6Y-2525**	4	SLEEVE	
	2	1	**8Y-7119**	4	WASHER (12-MM THK)	
	3	1	**9W-9940**	4	MOUNT AS	
M	4	1	**7X-2567**	4	BOLT (M24X3X160-MM)	
M	5	1	**8T-4001**	2	NUT (M24X3-THD)	
	6	1	**8T-4167**	6	WASHER-HARD (26X44X4-MM THK)	

M-METRIC PART

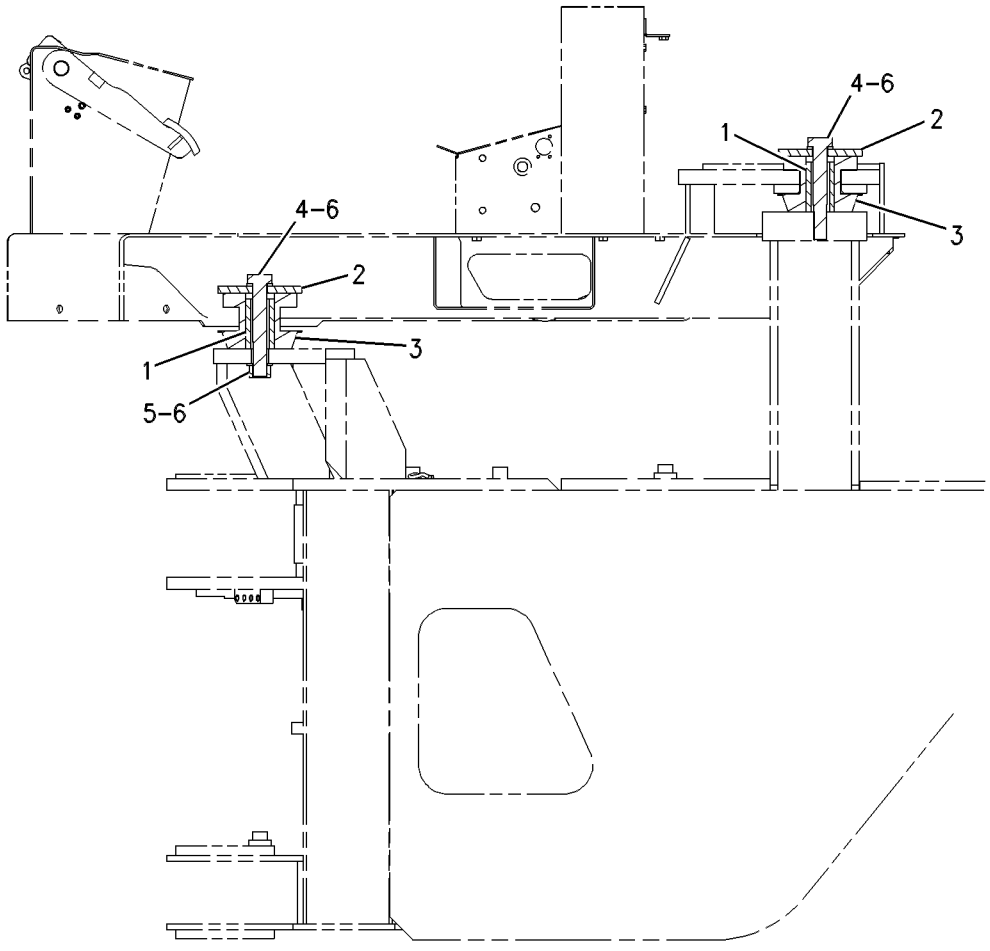

LEFT SIDE VIEW

GRAPHIC #1 **<END>** g00659685

OPERATOR STATION

256-7267 MOUNTING GP-DISPLAY—REAR VIEW

S/N: BYD1-UP; FTD1-UP

PART OF 302-8662, 320-9968 CAMERA AR

AN ATTACHMENT

SMCS-7347, 7490, 7540 **i02613281**

NOTE	REF NO	GRAPHIC REF	PART NUMBER	QTY	PART NAME 1 2 3 4 5 6 (PRODUCT LEVEL)	SEE PAGE
	1	1	*259-4400*	1	MOUNTING GP-DISPLAY	
	1A	1	**259-4397**	1	CLAMP GP	
	1B	1	**259-4398**	1	BALL	
	1C	1	**259-4399**	1	BASE	
	2	1	**260-3162**	1	PLATE	
M	3	1	**8T-0288**	4	BOLT (M5X0.8X12-MM)	
	4	1	**8T-0328**	4	WASHER-HARD (5.5X10X1-MM THK)	
M	5	1	**8T-4138**	2	BOLT (M6X1X20-MM)	
	6	1	**8T-4205**	2	WASHER-HARD (7.2X14.5X2-MM THK)	

M-METRIC PART

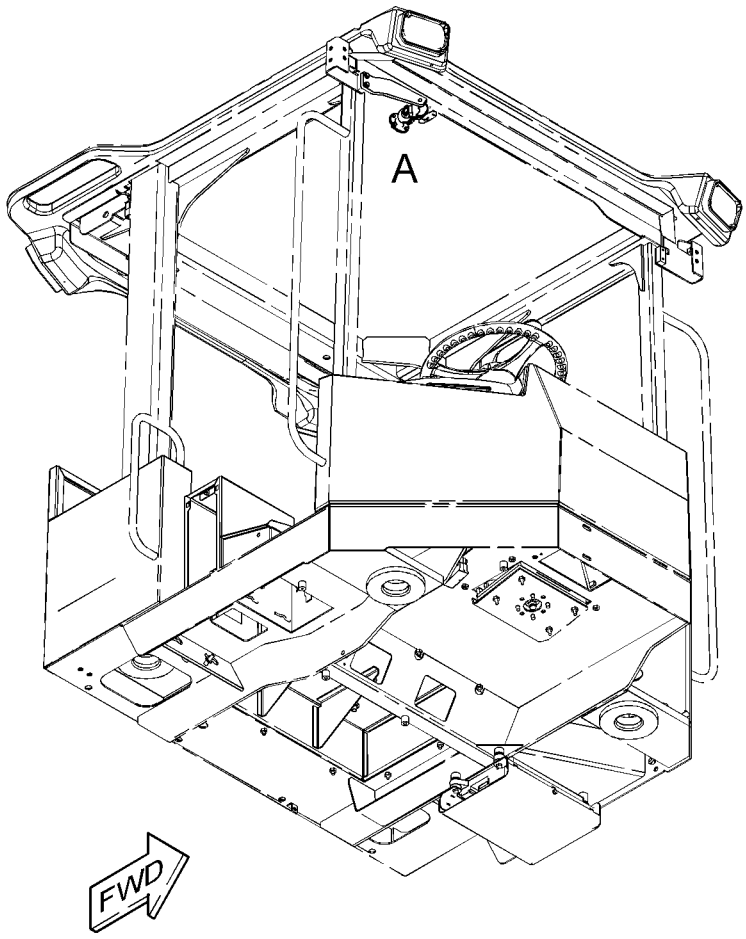

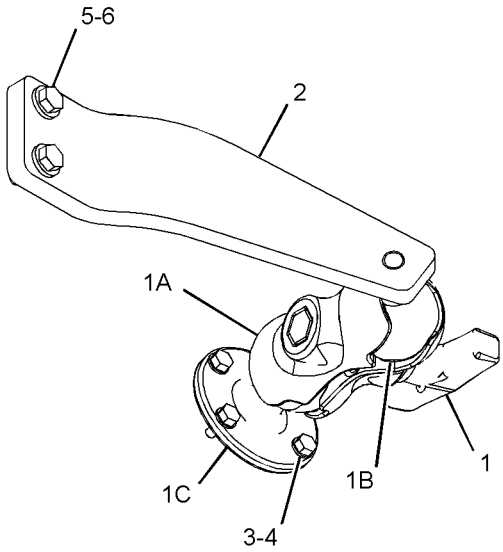

VIEW OF AREA A

GRAPHIC #1 **<END>** g01186860

OPERATOR STATION

290-8508 OPERATOR AR-ENCLOSED ROPS

S/N: BYD1-UP; FTD1-UP
PART OF 290-8515, 304-9538 CAB AR-ENCLOSED ROPS
AN ATTACHMENT

SMCS-7301 **i02807470**

NOTE	PART NUMBER	QTY	PART NAME 1 2 3 4 5 6 (PRODUCT LEVEL)	SEE PAGE
Y	*290-8505*	1	CAB AR-ENCLOSED ROPS (FIXED WINDOWS)	794
Y	*291-3750*	1	CONSOLE GP-OPERATOR	810
Y	*290-8488*	1	FLOOR GP	849
Y	*156-4271*	1	MOUNTING GP-CAB	887
Y	*290-8169*	1	PANEL GP-INSTRUMENT (FRONT)	895
Y	*290-8171*	1	PANEL GP-INSTRUMENT (ENCLOSED ROPS)	897
Y	*131-1236*	1	WASHER GP-WINDOW	952
Y	*289-8903*	1	WIRING GP-CAB (ENCLOSED ROPS)	189

Y-SEPARATE ILLUSTRATION

<END>

290-8525 OPERATOR AR-ENCLOSED ROPS—SLIDING WINDOWS

S/N: BYD1-UP; FTD1-UP
PART OF 290-8530, 290-8748 CAB AR-ENCLOSED ROPS
AN ATTACHMENT

SMCS-7301 **i02793167**

NOTE	PART NUMBER	QTY	PART NAME 1 2 3 4 5 6 (PRODUCT LEVEL)	SEE PAGE
Y	*290-8522*	1	CAB AR-ENCLOSED ROPS (SLIDING WINDOWS)	795
Y	*291-3750*	1	CONSOLE GP-OPERATOR	810
Y	*290-8488*	1	FLOOR GP	849
Y	*156-4271*	1	MOUNTING GP-CAB	887
Y	*290-8169*	1	PANEL GP-INSTRUMENT (FRONT)	895
Y	*290-8171*	1	PANEL GP-INSTRUMENT (ENCLOSED ROPS)	897
Y	*131-1236*	1	WASHER GP-WINDOW	952
Y	*289-8903*	1	WIRING GP-CAB (ENCLOSED ROPS)	189

Y-SEPARATE ILLUSTRATION

<END>

290-8186 OPERATOR AR-OPEN ROPS

S/N: FTD1-UP
PART OF 290-8483 CANOPY AR-OPEN ROPS
AN ATTACHMENT

SMCS-7323 **i02793127**

NOTE	PART NUMBER	QTY	PART NAME 1 2 3 4 5 6 (PRODUCT LEVEL)	SEE PAGE
Y	*290-8182*	1	CANOPY AR-OPEN ROPS	800
Y	*291-3750*	1	CONSOLE GP-OPERATOR	810
Y	*290-8486*	1	FLOOR MAT GP	851
Y	*156-4271*	1	MOUNTING GP-CAB	887
Y	*290-8169*	1	PANEL GP-INSTRUMENT (FRONT)	895
Y	*290-8174*	1	PANEL GP-INSTRUMENT (OPEN ROPS) (OROPS)	901
Y	*198-8964*	1	PANEL GP-TOP (HEATER)	408
Y	*289-8904*	1	WIRING GP-CAB (OPEN ROPS)	191

Y-SEPARATE ILLUSTRATION

<END>

OPERATOR STATION

108-8421 PAN GP-BACKREST

S/N: BYD1-UP; FTD1-UP
PART OF 8Y-6882 SEAT GP
AN ATTACHMENT

SMCS-7312 **i02034274**

NOTE	REF NO	GRAPHIC REF	PART NUMBER	QTY	PART NAME 1 2 3 4 5 6 (PRODUCT LEVEL)	SEE PAGE
	1	1	*8Y-6002*	1	PAN AS	
	2	1	**8Y-6006**	1	LID AS	
	3	1	**8Y-6010**	1	LANYARD	
	4	1	**4S-8287**	8	RIVET-POP	
	5	1	**8Y-5972**	1	LATCH	
	6	1	**108-8423**	1	SHAFT AS-LUMBAR	
	7	1	**3E-4336**	1	STUD-BALL	
	8	1	**3E-4335**	1	CLIP	
	9	1	**2F-7306**	1	SCREW-MACHINE (6-32X0.25-IN)	
	10	1	**8F-1462**	1	WASHER-PLATED	
E	11	1	**3E-6575**		SEAL (76CM)	
	12	1	**108-8424**	1	PAN-LUMBAR	
	13	1	**8Y-5903**	2	CAM	
	14	1	**3E-4362**	2	PIN-SPRING	
	15	1	**9M-5733**	2	RIVET-POP	

E-ORDER BY THE CENTIMETER

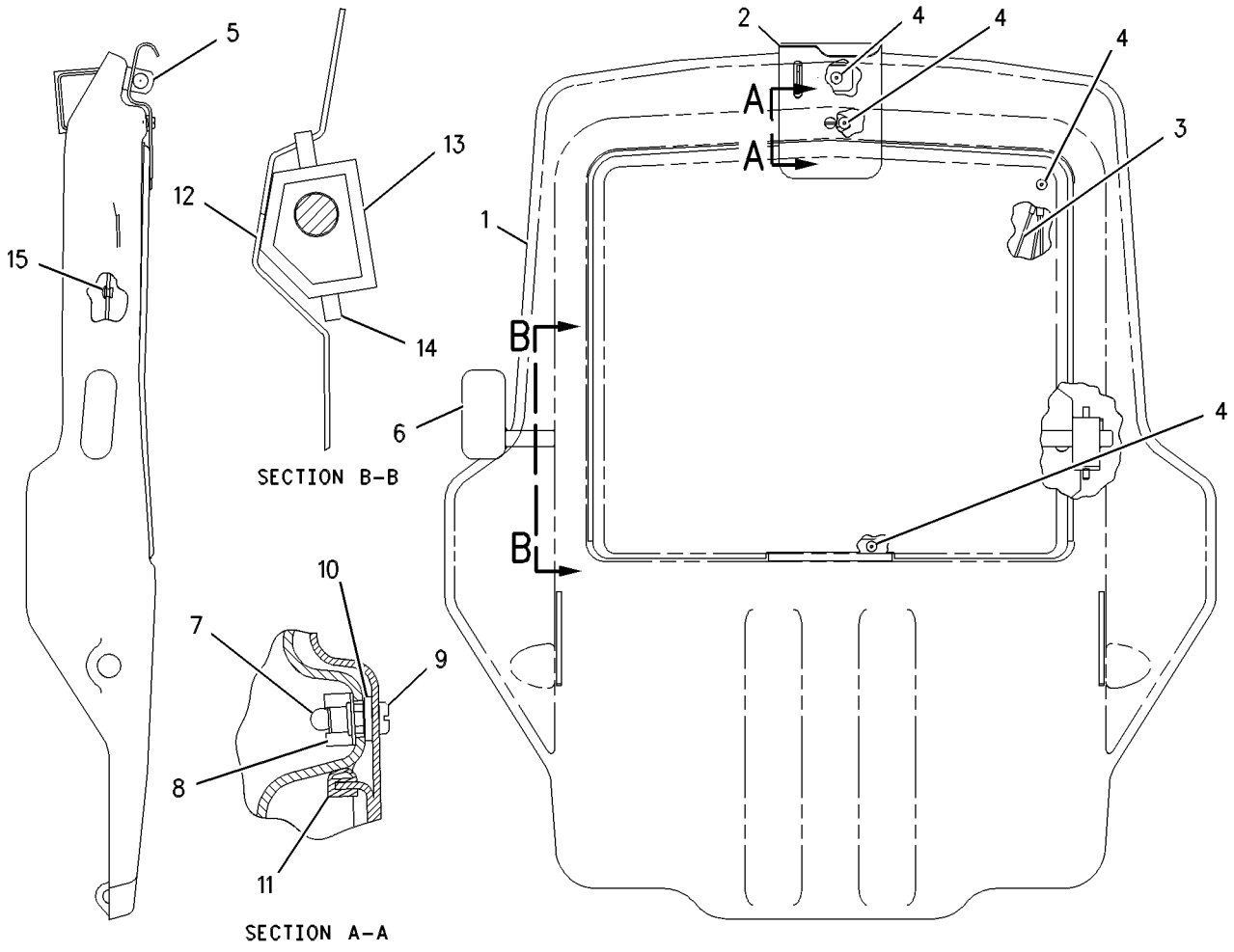

GRAPHIC #1 **<END>** g00658994

OPERATOR STATION

292-6402 PAN GP-BACKREST

S/N: BYD1-UP; FTD1-UP
PART OF 292-9237 PAN GP-BACKREST
AN ATTACHMENT

SMCS-7312 **i02837318**

NOTE	REF NO	GRAPHIC REF	PART NUMBER	QTY	PART NAME 1 2 3 4 5 6 (PRODUCT LEVEL)	SEE PAGE
	1	1	**4K-9429**	8	RIVET-POP	
	2	1	**5P-7957**	1	LANYARD	
	3	1	**136-1543**	1	PLATE AS-LUMBAR	
	4	1	**173-2052**	1	RETAINER	
	5	1	**178-7907**	1	HOLDER	
	6	1	**261-5694**	1	PAN AS-BACKREST	

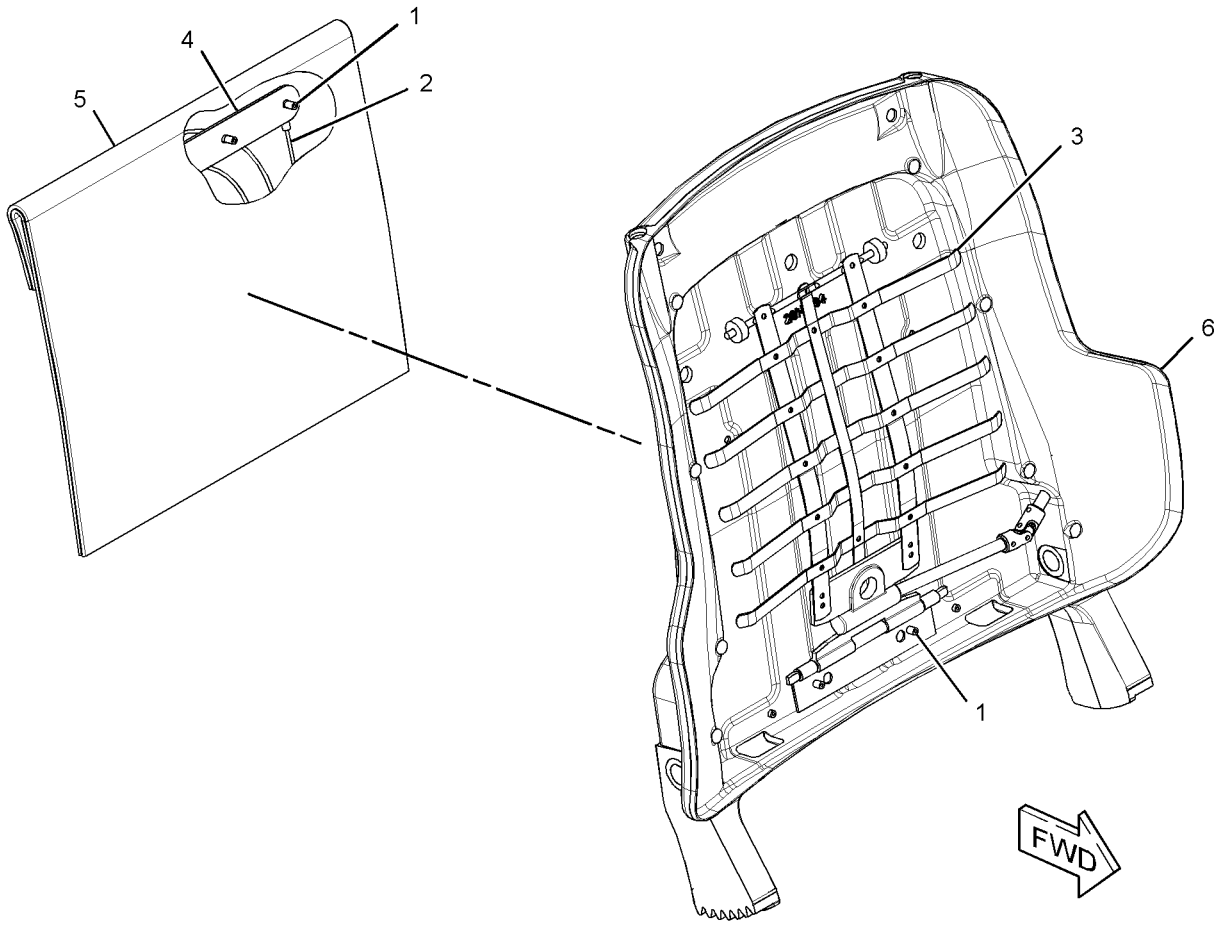

GRAPHIC #1 **<END>** g01304232

OPERATOR STATION

292-9237 PAN GP-BACKREST

S/N: BYD1-UP; FTD1-UP
PART OF 178-0603 SEAT GP
AN ATTACHMENT

SMCS-7312 **i02817839**

NOTE	REF NO	GRAPHIC REF	PART NUMBER	QTY	PART NAME 1 2 3 4 5 6 (PRODUCT LEVEL)	SEE PAGE
	1	1	**164-4883**	1	KNOB-LUMBAR	
	2	1	**250-4628**	3	PLUG	
	3	1	**292-6097**	1	CUSHION AS-BACK	
Y	4	1	*292-6402*	1	PAN GP-BACKREST (CLOTH)	891
	5	1	**5P-0537**	2	WASHER-HARD (7.2X14.5X2-MM THK)	
	6	1	**6V-8969**	2	SCREW-BUTTON HEAD (1/4-20X0.5-IN)	
	7	1	**8T-7566**	1	PIN-SPRING	

Y-SEPARATE ILLUSTRATION

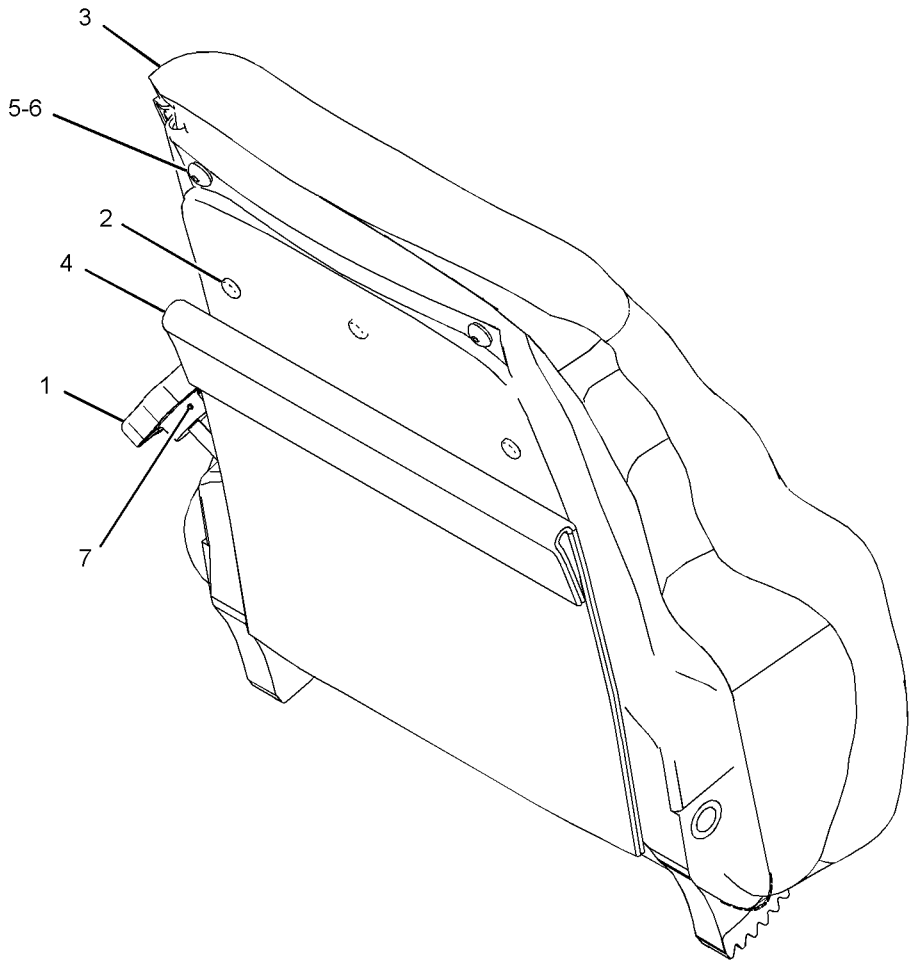

GRAPHIC #1 **<END>** g01336870

OPERATOR STATION

8Y-5992 PAN GP-SEAT

S/N: BYD1-UP; FTD1-UP
PART OF 8Y-6882 SEAT GP
AN ATTACHMENT

SMCS-7312 **i02853786**

NOTE	REF NO	GRAPHIC REF	PART NUMBER	QTY	PART NAME 1 2 3 4 5 6 (PRODUCT LEVEL)	SEE PAGE
	1	1	**8Y-5892**	1	PAN AS-SEAT	
JL	2	1	**3K-4897**	4	PIN-SPRING	
N	3	1	**9M-5733**	1	RIVET-POP	
N	4	1	**6V-2456**	2	RING-RETAINING	
JZ	5	1		1	ROD AS	
JLZ	6	1		2	SPRING	
LZ	7	1		1	ROD AS	
LZ	8	1		1	BUSHING	
NZ	9	1		1	BRACKET	
NZ	10	1		1	CABLE AS	
NZ	11	1		1	PIN	
NZ	12	1		1	ADJUSTER AS	
					AVAILABLE REPAIR KIT(S):	
J			**8Y-5995**	1	KIT-SEAT TILT	
					(INCLUDES BUSHING & LOCKPIN)	
L			**8Y-5998**	1	KIT-BACK TILT (SEAT)	
					(INCLUDES BUSHING)	
N			**8Y-5999**	1	KIT-ADJUSTER (SEAT)	

J-KIT MARKED J INCLUDES PARTS MARKED J
L-KIT MARKED L INCLUDES PARTS MARKED L
N-KIT MARKED N INCLUDES PARTS MARKED N
Z-NOT SERVICED SEPARATELY

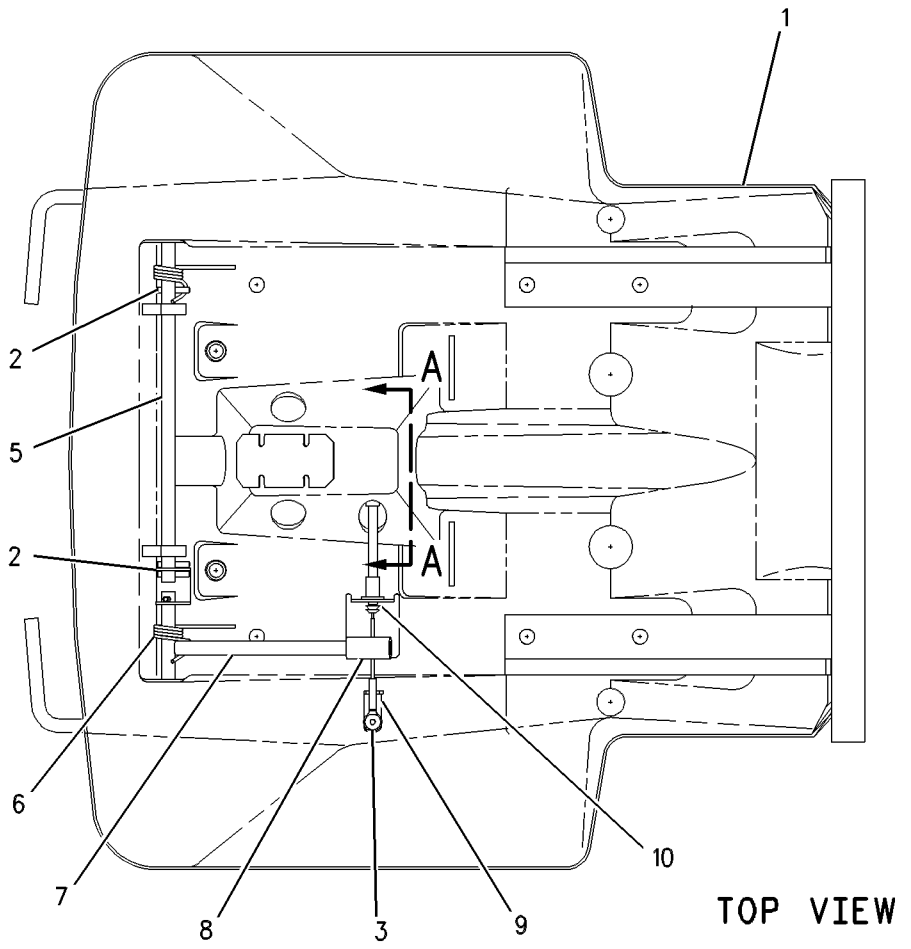

TOP VIEW

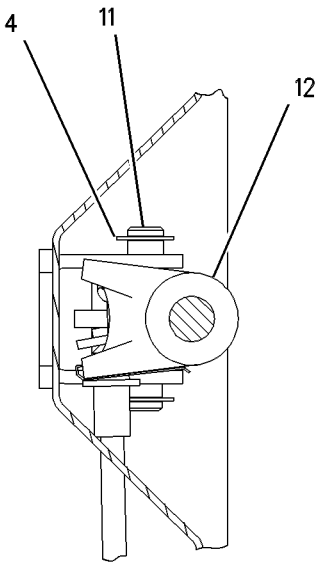

SECTION A-A

GRAPHIC #1 **<END>** g00315615

OPERATOR STATION

290-8169 PANEL GP-INSTRUMENT

S/N: BYD1-UP; FTD1-UP

PART OF 304-9256 CANOPY AR-SOFT, 290-8508, 290-8525 OPERATOR AR-ENCLOSED ROPS, 290-8186 OPERATOR AR-OPEN ROPS, 304-9255, 308-1933 PLATFORM AR

AN ATTACHMENT

SMCS-7451 **i02876954**

NOTE	REF NO	GRAPHIC REF	PART NUMBER	QTY	PART NAME 1 2 3 4 5 6 (PRODUCT LEVEL)	SEE PAGE
	1	1	**110-7887**	1	SWITCH AS-START (KEY) (ENGINE)	
		1	**7T-6799**	1	NUT-MOUNTING (1-32-THD)	
		1	**102-8804**	1	KIT-RECEPTACLE (4-PIN)	
					(INCLUDES RECEPTACLE AS & WEDGE)	
		1	**186-3735**	4	PIN-CONNECTOR (16-GA TO 18-GA)	
	2	1	**129-7184**	1	FILM-INSTRUCTION (ENGINE START)	
B	3	1	**184-5293**	1	PLUG	
	4	1	**185-5629**	1	PLATE AS	
	5	1	**190-4563**	1	PLATE AS	
M		1	**6V-9632**	2	NUT-WELD (M6X1-THD)	
	6	1	**222-0574**	1	FILM (INSTRUMENT PANEL COVER)	
	7	1	**270-9442**	1	SCREW-TRUSS HEAD (M6X1X20-MM)	
	8	1	**291-0639**	1	PLATE AS	
M		1	**9X-2032**	8	NUT-WELD (M4X0.7-THD)	
	9	1	**291-0640**	1	HOUSING AS-GAUGE	
	10	1	**313-2157**	1	MODULE GP-DISPLAY (GAUGE CLUSTER)	
M	11	1	**129-3178**	2	LOCKNUT (M6X1-THD)	
	12	1	**204-6101**	6	WASHER-HARD (5.3X10X1-MM THK)	
M	13	1	**5C-2890**	2	NUT (M6X1-THD)	
M	14	1	**5C-8312**	4	NUT (M4X0.7-THD)	
M	15	1	**6V-8490**	2	BOLT (M6X1X25-MM)	
	16	1	**213-7315**	12	SCREW-TRUSS HEAD (M4X0.7X25-MM)	
	17	1	**8C-9987**	2	WASHER (8.3X28X2.5-MM THK)	
	18	1	**8T-4205**	4	WASHER-HARD (7.2X14.5X2-MM THK)	
M	19	1	**9X-1046**	6	SCREW (M4X0.7X18-MM)	
	20	1	**9X-2038**	1	WASHER (7X19X2-MM THK)	
M	21	1	**9X-2045**	2	SCREW-TRUSS HEAD (M6X1X20-MM)	

B-USE AS REQUIRED
M-METRIC PART

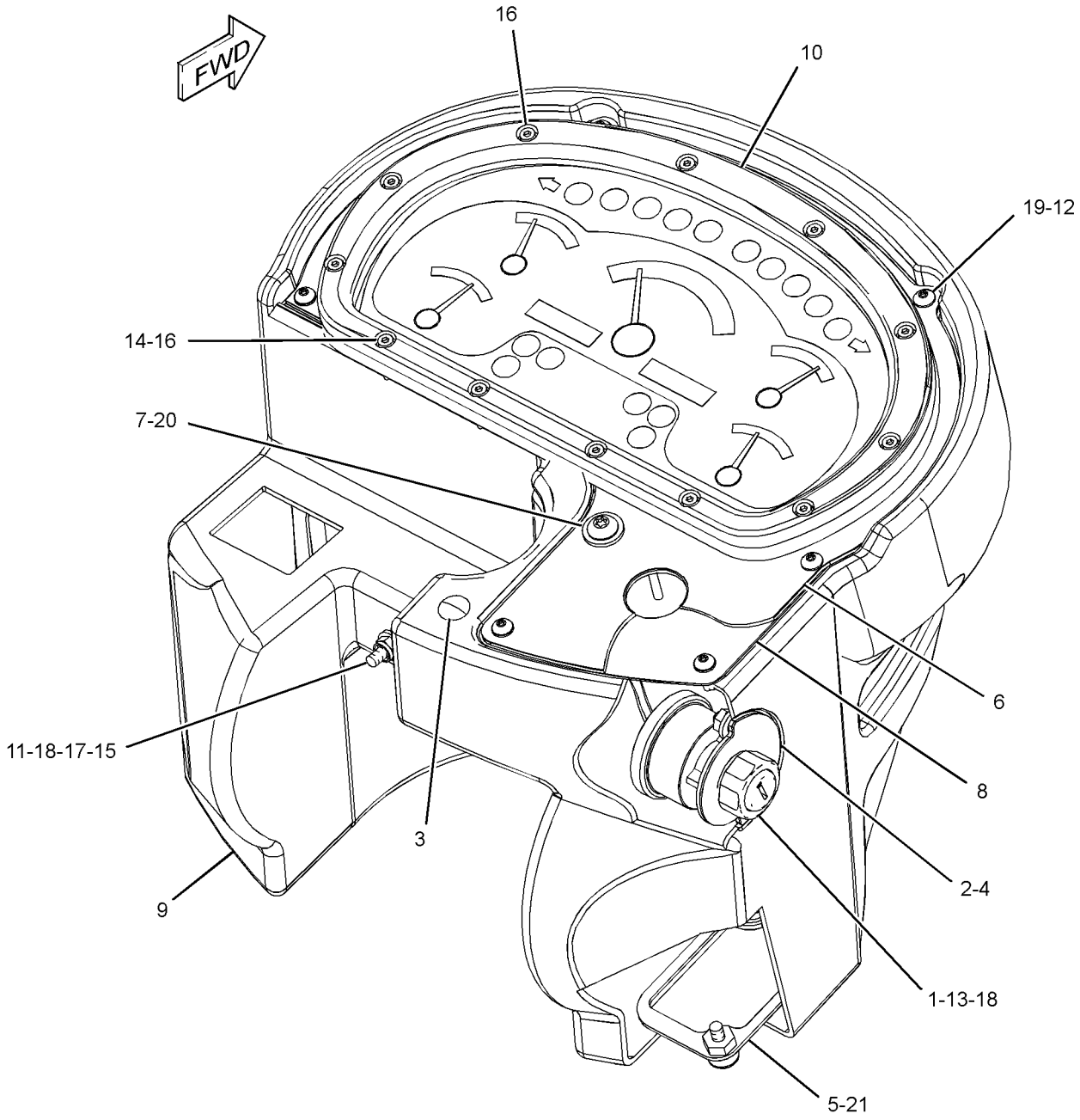

GRAPHIC #1 **<END>** g01414984

OPERATOR STATION

290-8171 PANEL GP-INSTRUMENT–ENCLOSED ROPS

S/N: BYD1-UP; FTD1-UP
PART OF 304-9256 CANOPY AR-SOFT, 290-8508, 290-8525 OPERATOR AR-ENCLOSED ROPS, 304-9255, 308-1933 PLATFORM AR
AN ATTACHMENT

SMCS-7451 **i02854120**

NOTE	REF NO	GRAPHIC REF	PART NUMBER	QTY	PART NAME 1 2 3 4 5 6 (PRODUCT LEVEL)	SEE PAGE
D	1	1	**8T-3425**		CHANNEL-TRIM (0.1-M)	
	2	2	**154-5629**	1	ASHTRAY AS	
B	3	2	**2G-5298**	1	WIRE AS	
	4	2	**3E-5239**	1	RELAY AS (24-VOLT) (FRONT FLOODLIGHTS)	
	5	2	**6Y-6584**	1	STRAP AS-GROUND	
	6	1,2	**7K-1181**	48	STRAP-CABLE	
	7	1	**105-8034**	1	SWITCH AS-LIMIT (BRAKE PEDAL)	
	8	2	**107-6013**	1	SEAL	
	9	2	**107-6021**	1	HOUSING AS	
	10	2	**110-6109**	1	KNOB-CONTROL (TEMPERATURE CONTROL)	
	11	2	**114-3951**	1	PLATE	
	12	2	**115-1748**	1	LAMP (24-VOLT, 3-WATT)	
	13	2	**116-7471**	1	PULLER-MINIFUSE	
	14	2	**117-3787**	4	KNOB	
	15	2	**117-3788**	4	RECEPTACLE	
	16	2	**117-3789**	4	RETAINER	
	17	1	**118-7362**	1	GROMMET-SPLIT	
	18	2	**148-5689**	1	GROMMET-SPLIT	
	19	2	**158-5089**	1	RELAY AS (24-VOLT) (ALARM)	
B	20	2	**165-0311**	7	PLUG	
	21	1	**180-9900**	1	CAP AS	
		1	**5P-7958**	1	SLEEVE-CABLE SPLICE	
		1	**8C-6354**	1	CAP-RECEPTACLE	
		1	**179-9392**	1	LANYARD	
	22	2	**195-0916**	1	SWITCH AS-ROCKER (THROTTLE LOCK SET, RESUME)	
		2	**111-7899**	1	GASKET	
	23	2	**195-0917**	1	SWITCH AS-ROCKER (THROTTLE LOCK ON, OFF)	
	24	2	**195-0921**	1	SWITCH AS-ROCKER (KICKOUT ON, OFF)	
		2	**111-7899**	1	GASKET	
	25	1	**200-6345**	1	MOUNT (DUAL SWIVEL)	
	26	1	**203-9007**	1	NUT (M1.5X18-THD)	
	27	1	**206-1345**	2	STRAP-CABLE	
	28	2	**211-0052**	3	NUT (11/16-18-THD)	
	29	2	**226-2951**	1	BRACKET AS	
	30	2	**226-3378**	1	PLATE AS	
M		2	**8T-3490**	2	NUT-WELD (M10X1.5-THD)	
M		2	**9R-2160**	1	BOSS (M8X1.25X25-MM)	
	31	2	**236-4232**	1	PLATE AS	
	32	2	**236-4234**	1	SWITCH AS-ROCKER (BLOWER FAN SPEED)	
	33	1	**238-4864**	1	BRACKET AS	
M		1	**159-9539**	1	NUT-WELD (M6X1-THD)	
Y	34	2	**241-8368**	1	SWITCH GP-MAGNETIC (24-VOLT) (MAIN RELAY)	184
	35	1	**245-9088**	1	BUMPER	
	36	2	**252-4575**	1	FILM-CONTROLS (CONSOLE, RH)	
	37	2	**266-7620**	1	SWITCH AS-ROCKER (HYDRAULIC LOCKOUT)	
		2	**111-7899**	1	GASKET	
	38	1	**270-2679**	1	LOCKWASHER	
	39	1	**289-9171**	1	HARNESS AS-CAB	
	40	2	**293-6135**	1	COVER	
	41	2	**295-2665**	1	FILM-FUSE/RELAY (IDENTIFICATION)	
	42	1	**302-2182**	1	BRACKET	
	43	2	**170-9360**	1	GROMMET	
	44	2	**204-6101**	4	WASHER-HARD (5.3X10X1-MM THK)	
	45	2	**4B-4863**	1	WASHER (4.7X11X1.2-MM THK)	

290-8171 **PANEL GP-INSTRUMENT** *(contd.)* **i02854120**

NOTE	REF NO	GRAPHIC REF	PART NUMBER	QTY	PART NAME 1 2 3 4 5 6 (PRODUCT LEVEL)	SEE PAGE
	46	1	**4P-7581**	1	CLIP	
	47	1,2	**4P-8134**	4	CLIP	
M	48	1	**5C-2890**	1	NUT (M6X1-THD)	
M	49	1	**5C-9553**	1	BOLT (M6X1X16-MM)	
	50	2	**5P-4115**	4	WASHER-HARD (7.2X19X2-MM THK)	
	51	1	**5P-4116**	1	WASHER-HARD (8.8X20.5X2-MM THK)	
M	52	2	**6V-8837**	1	BOLT (M6X1X16-MM)	
	53	1,2	**8T-4121**	6	WASHER-HARD (11X21X2.5-MM THK)	
M	54	2	**8T-4133**	2	NUT (M10X1.5-THD)	
M	55	1	**8T-4137**	2	BOLT (M10X1.5X20-MM)	
M	56	1	**8T-4189**	3	BOLT (M8X1.25X20-MM)	
M	57	2	**8T-4195**	2	BOLT (M10X1.5X30-MM)	
M	58	1	**8T-4199**	2	BOLT (M8X1.25X12-MM)	
	59	1,2	**8T-4205**	6	WASHER-HARD (7.2X14.5X2-MM THK)	
	60	1	**8T-4224**	4	WASHER-HARD (8.8X16X2-MM THK)	
M	61	2	**8T-9405**	1	BOLT-SOCKET HEAD (M4X0.7X16-MM)	
M	62	2	**9X-1046**	4	SCREW (M4X0.7X18-MM)	
M	63	2	**9X-2042**	5	SCREW-TRUSS HEAD (M6X1X12-MM)	
M	64	2	**9X-2044**	2	SCREW-TRUSS HEAD (M6X1X16-MM)	
M	65	2	**9X-2045**	2	SCREW-TRUSS HEAD (M6X1X20-MM)	
E	66	2	**103-2543**		SEAL (3-CM)	

B-USE AS REQUIRED
D-ORDER BY THE METER
E-ORDER BY THE CENTIMETER
M-METRIC PART
Y-SEPARATE ILLUSTRATION

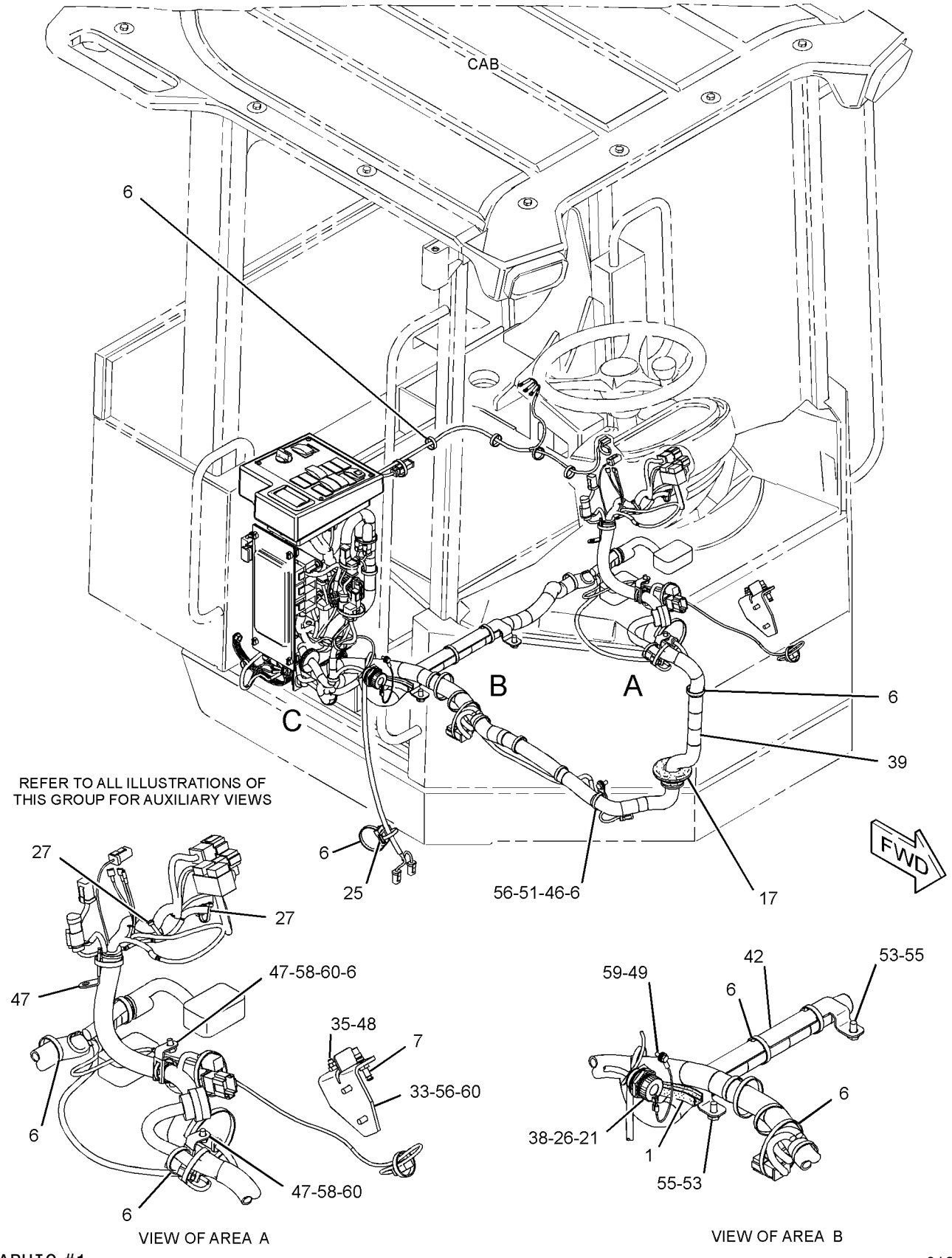

GRAPHIC #1

g01399002

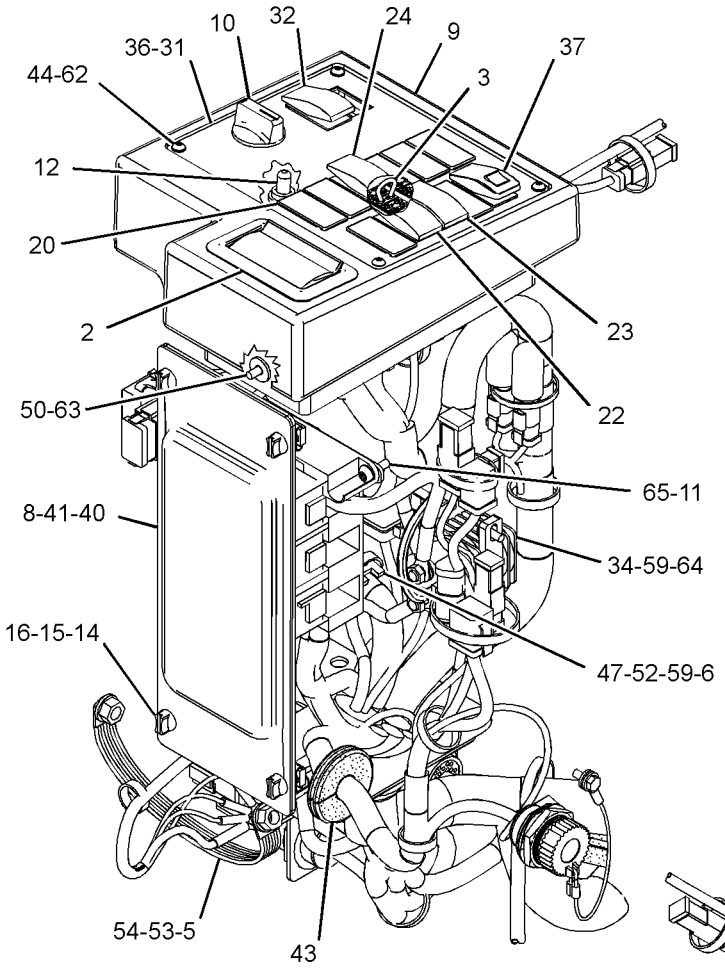

VIEW OF AREA C

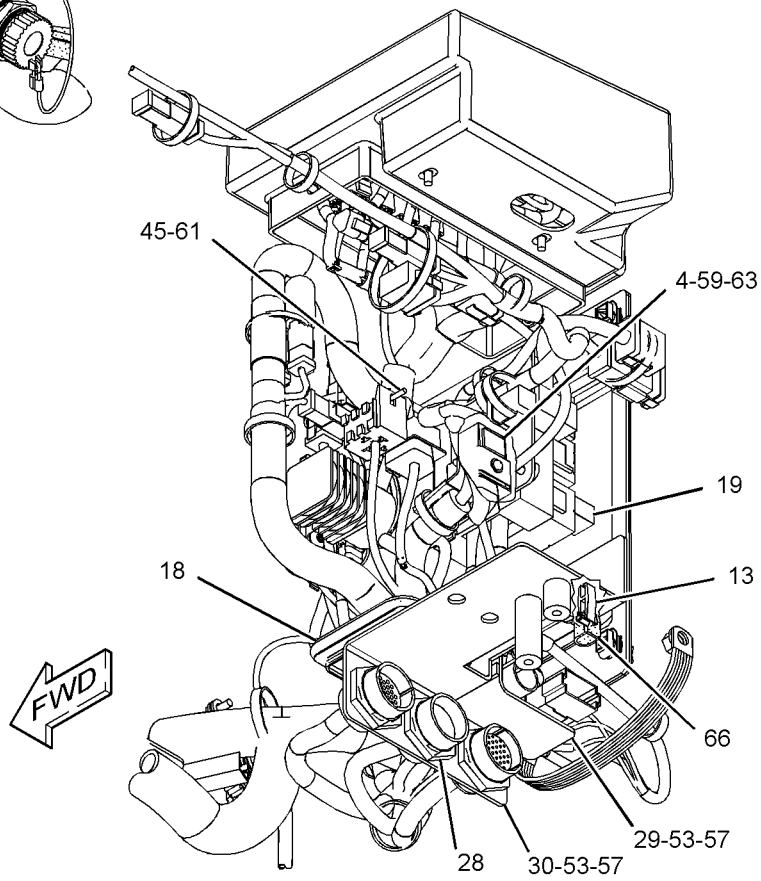

GRAPHIC #2

<END>

g01399003

OPERATOR STATION

290-8174 PANEL GP-INSTRUMENT–OPEN ROPS

S/N: FTD1-UP

PART OF 290-8186 OPERATOR AR-OPEN ROPS

AN ATTACHMENT

SMCS-7451 **i02853801**

NOTE	REF NO	GRAPHIC REF	PART NUMBER	QTY	PART NAME 1 2 3 4 5 6 (PRODUCT LEVEL)	SEE PAGE
E	1	2	**126-8472**		SEAL (14-CM)	
D	2	2	**8T-3425**		CHANNEL-TRIM (10-M)	
	3	2	**154-5629**	1	ASHTRAY AS	
B	4	2	**2G-5298**	1	WIRE AS	
	5	2	**3E-5239**	1	RELAY AS (24-VOLT) (FRONT FLOODLIGHTS)	
	6	2	**6Y-6584**	1	STRAP AS-GROUND	
	7	1	**105-8034**	1	SWITCH AS-LIMIT (BRAKE PEDAL)	
	8	2	**107-6013**	1	SEAL	
	9	2	**107-6021**	1	HOUSING AS	
	10	2	**116-7471**	1	PULLER-MINIFUSE	
	11	2	**117-3787**	4	KNOB	
	12	2	**117-3788**	4	RECEPTACLE (CLIP)	
	13	2	**117-3789**	4	RETAINER (STUD)	
	14	1	**118-7362**	1	GROMMET-SPLIT	
	15	2	**135-2602**	1	FILM-CONTROLS (FUSE, RELAY PANEL)	
	16	2	**148-5689**	1	GROMMET-SPLIT	
	17	2	**158-5089**	1	RELAY AS (24-VOLT) (ALARM)	
	18	2	**160-6520**	1	PLATE	
B	19	2	**165-0311**	7	PLUG	
	20	1	**180-9900**	1	CAP AS	
		1	**5P-7958**	1	SLEEVE-CABLE SPLICE	
		1	**8C-6354**	1	CAP-RECEPTACLE	
		1	**179-9392**	1	LANYARD	
	21	2	**195-0916**	1	SWITCH AS-ROCKER (THROTTLE LOCK SET, RESUME)	
		2	**111-7899**	1	GASKET	
	22	2	**195-0917**	1	SWITCH AS-ROCKER (THROTTLE LOCK ON, OFF)	
	23	2	**195-0921**	1	SWITCH AS-ROCKER (KICKOUT ON, OFF)	
		2	**111-7899**	1	GASKET	
	24	2	**200-6345**	1	MOUNT (DUAL SWIVEL)	
	25	1	**203-9007**	1	NUT (M1.5X18-THD)	
	26	1	**206-1345**	2	STRAP-CABLE	
	27	2	**211-0052**	3	NUT (11/16-18-THD)	
	28	2	**226-2951**	1	BRACKET AS	
		2	**121-1029**	2	CLIP	
	29	2	**226-3378**	1	PLATE AS	
M		1	**8T-3490**	2	NUT-WELD (M10X1.5-THD)	
M			**9R-2160**	1	BOSS (M8X1.25X25-MM)	
	30	2	**236-4232**	1	PLATE AS	
	31	1	**238-4864**	1	BRACKET AS	
M		1	**159-9539**	1	NUT-WELD (M6X1-THD)	
Y	32	2	**241-8368**	1	SWITCH GP-MAGNETIC (24-VOLT) (MAIN RELAY)	184
	33	1	**245-9088**	1	BUMPER	
	34	2	**266-7620**	1	SWITCH AS-ROCKER (HYDRAULIC LOCKOUT)	
		2	**111-7899**	1	GASKET	
	35	1	**270-2679**	1	LOCKWASHER	
	36	1	**289-9171**	1	HARNESS AS-CAB	
	37	2	**293-6135**	1	COVER	
	38	2	**295-2665**	1	FILM-FUSE/RELAY	
	39	2	**302-2182**	1	BRACKET	
	40	1	**7K-1181**	48	STRAP-CABLE	
	41	2	**170-9360**	1	GROMMET	
	42	2	**204-6101**	4	WASHER-HARD (5.3X10X1-MM THK)	
	43	2	**4B-4863**	1	WASHER (4.7X11X1.2-MM THK)	
	44	1	**4P-7581**	1	CLIP (LADDER)	
	45	1,2	**4P-8134**	4	CLIP (LADDER)	

290-8174 **PANEL GP-INSTRUMENT** *(contd.)* **i02853801**

NOTE	REF NO	GRAPHIC REF	PART NUMBER	QTY	PART NAME 1 2 3 4 5 6 (PRODUCT LEVEL)	SEE PAGE
M	46	1	**5C-2890**	1	NUT (M6X1-THD)	
M	47	1	**5C-9553**	1	BOLT (M6X1X16-MM)	
	48	2	**5P-4115**	4	WASHER-HARD (7.2X19X2-MM THK)	
	49	1	**5P-4116**	1	WASHER-HARD (8.8X20.5X2-MM THK)	
M	50	2	**6V-8837**	1	BOLT (M6X1X16-MM)	
	51	2	**8T-4121**	6	WASHER-HARD (11X21X2.5-MM THK)	
M	52	2	**8T-4133**	2	NUT (M10X1.5-THD)	
M	53	2	**8T-4137**	2	BOLT (M10X1.5X20-MM)	
M	54	1	**8T-4189**	3	BOLT (M8X1.25X20-MM)	
M	55	2	**8T-4195**	2	BOLT (M10X1.5X30-MM)	
M	56	1	**8T-4199**	2	BOLT (M8X1.25X12-MM)	
	57	1,2	**8T-4205**	6	WASHER-HARD (7.2X14.5X2-MM THK)	
	58	1	**8T-4224**	4	WASHER-HARD (8.8X16X2-MM THK)	
M	59	2	**8T-9405**	1	BOLT-SOCKET HEAD (M4X0.7X16-MM)	
M	60	2	**9X-1046**	4	SCREW (M4X0.7X18-MM)	
M	61	2	**9X-2042**	5	SCREW-TRUSS HEAD (M6X1X12-MM)	
M	62	2	**9X-2044**	2	SCREW-TRUSS HEAD (M6X1X16-MM)	
M	63	2	**9X-2045**	2	SCREW-TRUSS HEAD (M6X1X20-MM)	
E	64	2	**103-2543**		SEAL (3-CM)	

B-USE AS REQUIRED
D-ORDER BY THE METER
E-ORDER BY THE CENTIMETER
M-METRIC PART
Y-SEPARATE ILLUSTRATION

REFER TO ALL ILLUSTRATIONS OF
THIS GROUP FOR AUXILIARY VIEWS

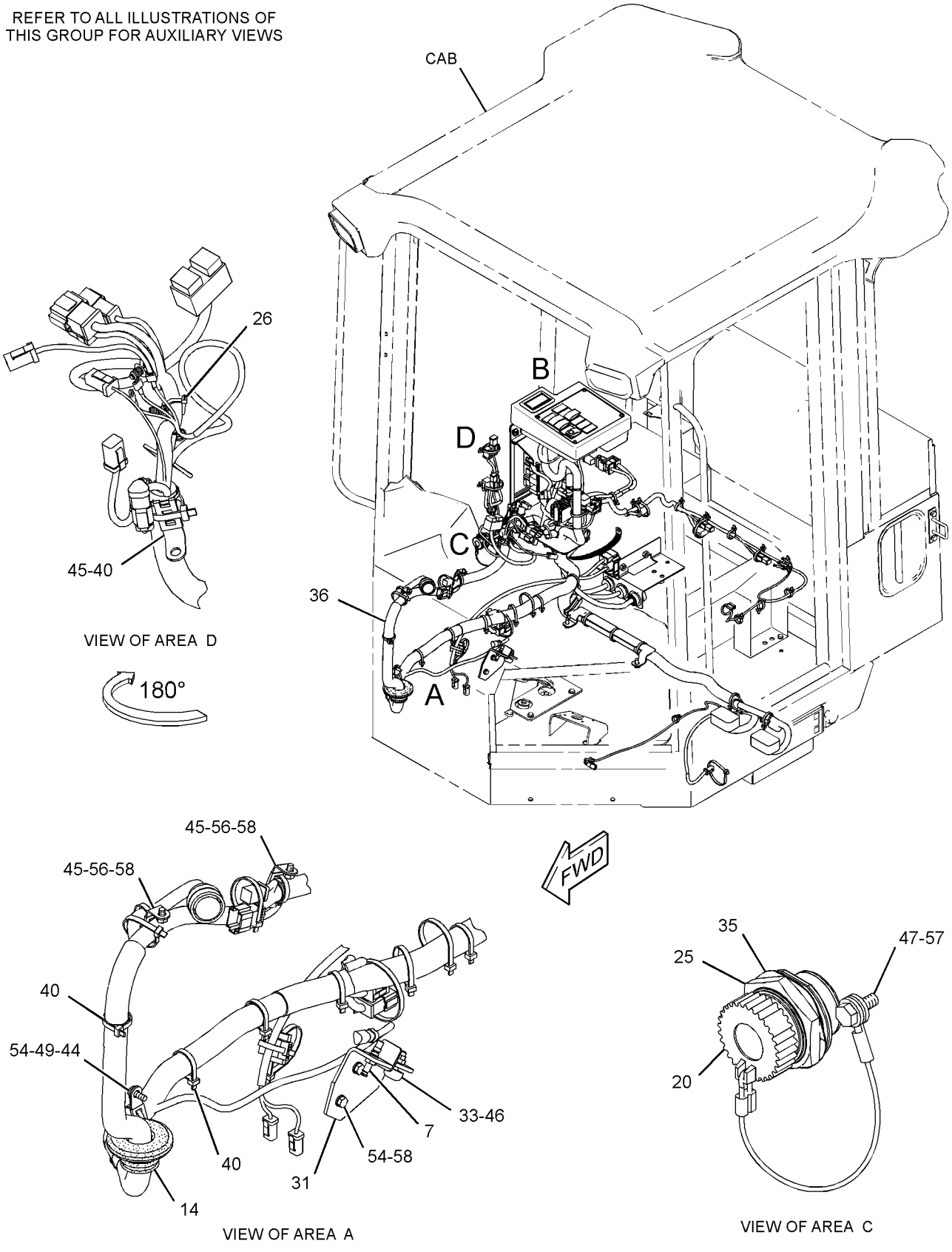

GRAPHIC #1

g01414907

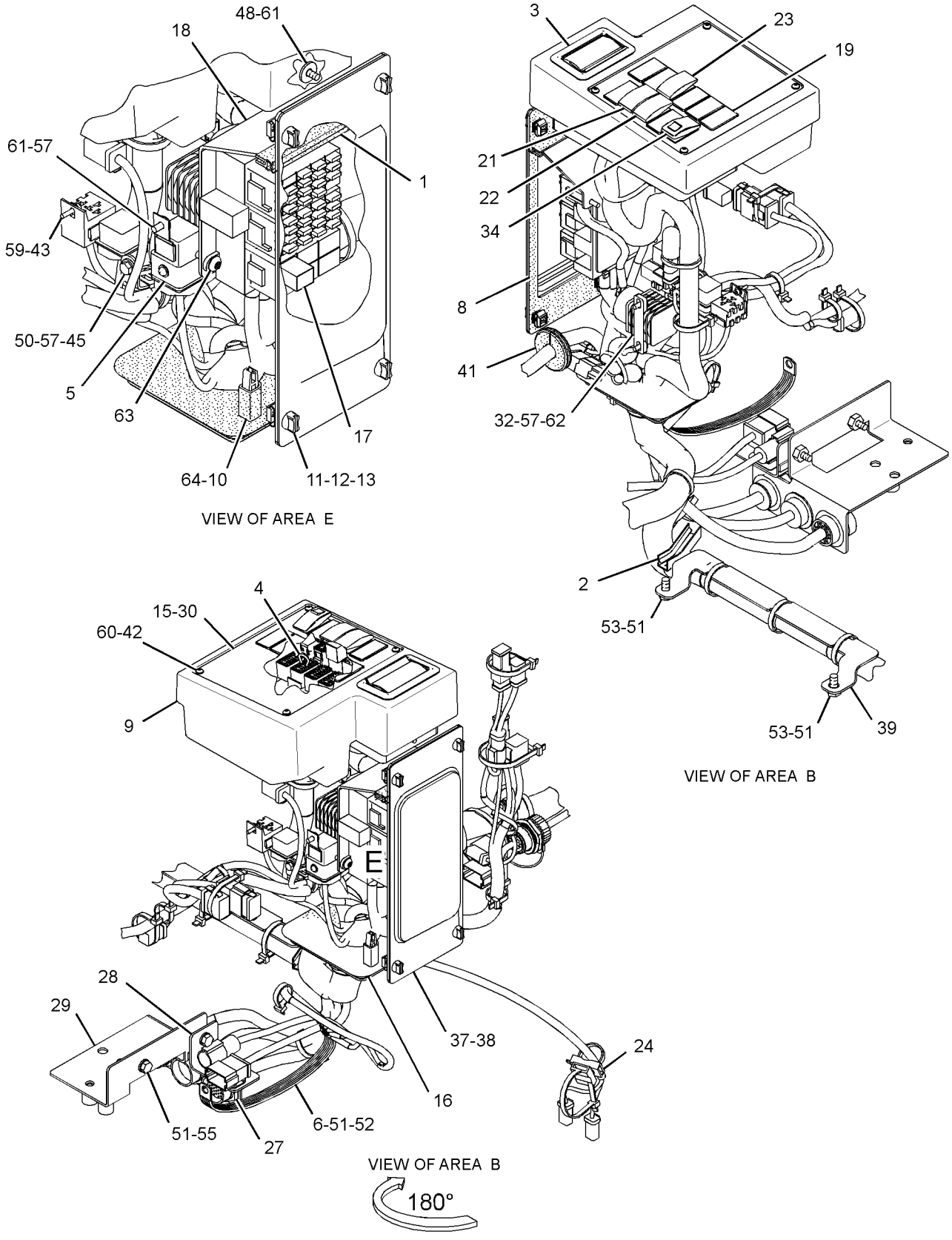

GRAPHIC #2 **<END>** g01414908

OPERATOR STATION

174-9730 PEDAL GP-BRAKE

S/N: BYD1-UP; FTD1-UP
PART OF 219-2849, 309-0846 PLATFORM GP-OPERATOR, 290-8501 ROPS GP-ENCLOSED, 290-8177 ROPS GP-OPEN
AN ATTACHMENT

SMCS-4269, 4290 **i01487453**

NOTE	REF NO	GRAPHIC REF	PART NUMBER	QTY	PART NAME 1 2 3 4 5 6 (PRODUCT LEVEL)	SEE PAGE
	1	1	**1B-8723**	1	KEY-WOODRUFF	
	2	1	**6K-8088**	4	BEARING-ROLLER	
	3	1	**8E-8300**	2	DISC-THRUST	
	4	1	**8R-6904**	2	TREAD-RUBBER	
	5	1	**107-6056**	1	PEDAL AS-LH	
	6	1	**111-0132**	1	PEDAL AS-RH	
	7	1	**174-9725**	1	SUPPORT AS	
	8	1	**8T-4121**	1	WASHER-HARD (11X21X2.5-MM THK)	
M	9	1	**8T-4185**	1	BOLT (M10X1.5X50-MM)	

M-METRIC PART

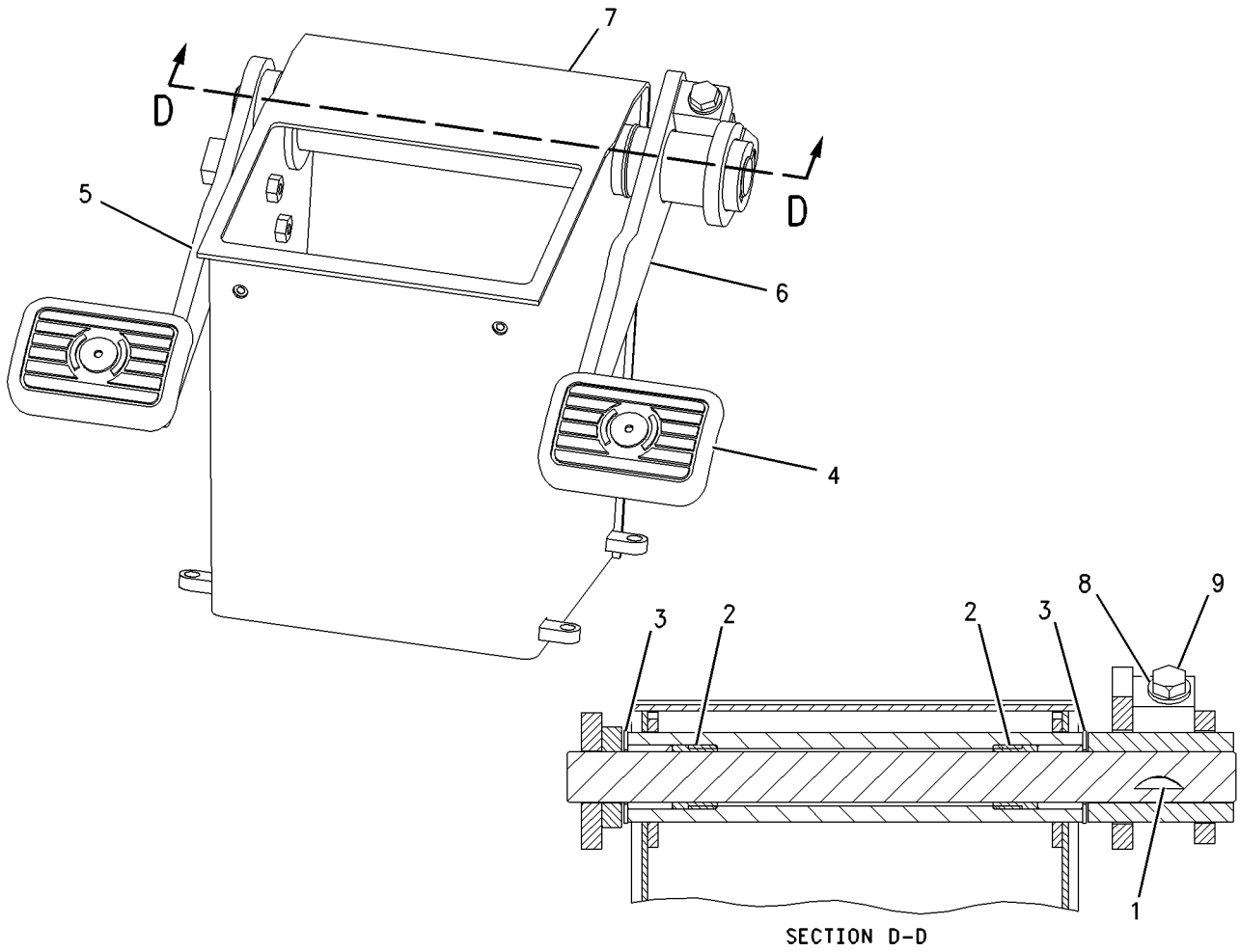

GRAPHIC #1 **<END>** g00773035

OPERATOR STATION

190-4700 PEDAL GP-GOVERNOR

S/N: BYD1-UP; FTD1-UP
PART OF 190-4405 CAB AR-ENCLOSED ROPS, 304-9256 CANOPY AR-SOFT, 190-4406 CANOPY GP-OPEN ROPS, 304-9255, 308-1933 PLATFORM AR AN ATTACHMENT

SMCS-1276 **i02360233**

NOTE	REF NO	GRAPHIC REF	PART NUMBER	QTY	PART NAME 1 2 3 4 5 6 (PRODUCT LEVEL)	SEE PAGE
Y	1	1	**190-4701**	1	PEDAL GP-GOVERNOR	907
M	2	1	**9X-2045**	3	SCREW-TRUSS HEAD (M6X1X20-MM)	

M-METRIC PART
Y-SEPARATE ILLUSTRATION

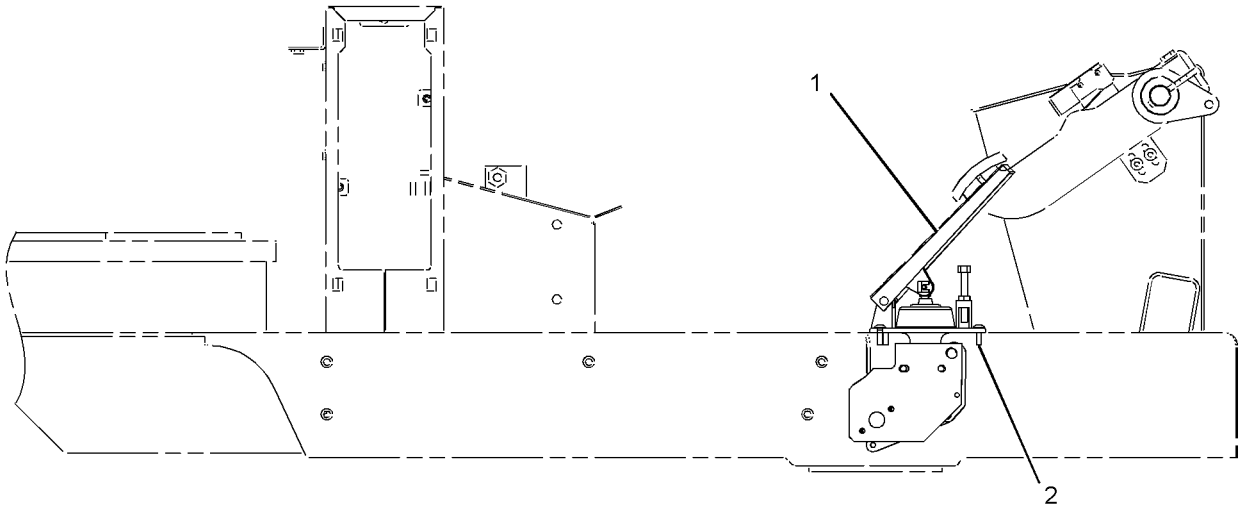

RIGHT SIDE VIEW

GRAPHIC #1 **<END>** g01177028

OPERATOR STATION

190-4701 PEDAL GP-GOVERNOR

S/N: BYD1-UP; FTD1-UP
PART OF 190-4700 PEDAL GP-GOVERNOR
AN ATTACHMENT

SMCS-1276 **i02847594**

NOTE	REF NO	GRAPHIC REF	PART NUMBER	QTY	PART NAME 1 2 3 4 5 6 (PRODUCT LEVEL)	SEE PAGE
M	1	1	**3C-4922**	1	BOLT (M8X1.25X60-MM)	
Y	2	1	**160-2443**	1	SENSOR GP-POSITION (ROTARY) (THROTTLE CONTROL)	174
M	3	1	**3C-3364**	1	NUT-HALF (M8X1.25-THD)	

M-METRIC PART
Y-SEPARATE ILLUSTRATION

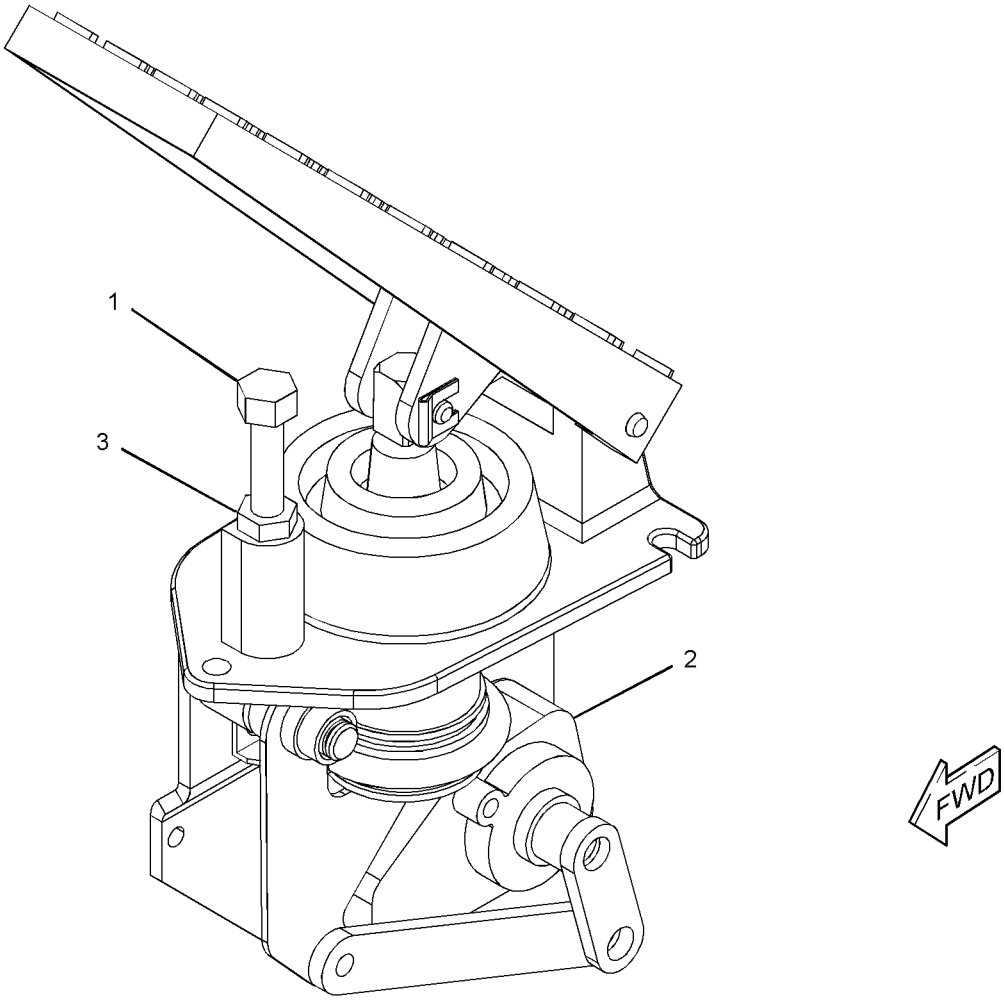

GRAPHIC #1 **<END>** g01185687

OPERATOR STATION

304-9255 PLATFORM AR

S/N: BYD1-UP

CANNOT BE USED WITH 304-9256 CANOPY AR-SOFT, 290-8508 OPERATOR AR, 290-8525 OPERATOR AR

AN ATTACHMENT

SMCS-7253 **i02831625**

NOTE	PART NUMBER	QTY	PART NAME 1 2 3 4 5 6 (PRODUCT LEVEL)	SEE PAGE
Y	*284-0506*	1	AIR CONDITIONER & MOUNTING GP (WITH CABLE CONTROL)	785
Y	*262-0858*	1	COMPRESSOR GP-REFRIGERANT	806
Y	*203-5937*	1	CONDENSER & MTG GP-REFRIGERANT	808
Y	*168-7000*	1	CONTROL GP-PARKING BRAKE (HANDLE)	413
Y	*190-4635*	1	CONTROL GP-STEERING	825
Y	*190-4690*	1	CONTROL GP-TRANSMISSION	827
Y	*107-4630*	1	DUCT GP-CAB AIR	846
Y	*119-4769*	1	FILTER GP-CAB AIR	848
Y	*290-8488*	1	FLOOR GP	849
Y	*290-8752*	1	LINES GP-AIR CONDITIONER	871
Y	*290-8753*	1	LINES GP-CAB HEATER	873
Y	*156-4271*	1	MOUNTING GP-CAB	887
Y	*290-8169*	1	PANEL GP-INSTRUMENT (FRONT)	895
Y	*290-8171*	1	PANEL GP-INSTRUMENT (ENCLOSED ROPS)	897
Y	*198-8965*	1	PANEL GP-TOP (AIR CONDITIONER)	410
Y	*190-4700*	1	PEDAL GP-GOVERNOR	906
Y	*219-2849*	1	PLATFORM GP-OPERATOR	912
Y	*190-4666*	1	SKIRT GP-CAB	942
Y	*131-1236*	1	WASHER GP-WINDOW	952
Y	*289-8903*	1	WIRING GP-CAB (ENCLOSED ROPS)	189
M	**8T-6430**	2	BOLT (M20X2.5X50-MM)	
M	**8T-4131**	2	NUT (M20X2.5-THD)	
	119-9759	1	PLATFORM AS	
	7T-1099	2	LINK	
	8T-4123	4	WASHER (22X35X3.5-MM THK)	

M-METRIC PART
Y-SEPARATE ILLUSTRATION

<END>

OPERATOR STATION

308-1933 PLATFORM AR

S/N: FTD1-UP

CANNOT BE USED WITH 308-2277—PAGE 800, 308-2279—PAGE 797, 308-2280—PAGE 797, 308-2278—PAGE 797

AN ATTACHMENT

SMCS-7253 **i02879419**

NOTE	PART NUMBER	QTY	PART NAME 1 2 3 4 5 6 (PRODUCT LEVEL)	SEE PAGE
Y	*168-7000*	1	CONTROL GP-PARKING BRAKE (HANDLE)	413
Y	*190-4635*	1	CONTROL GP-STEERING	825
Y	*190-4690*	1	CONTROL GP-TRANSMISSION	827
Y	*193-3808*	1	CONVERSION AR-AIR CLEANER	91
Y	*107-4630*	1	DUCT GP-CAB AIR	846
Y	*119-4769*	1	FILTER GP-CAB AIR	848
Y	*290-8488*	1	FLOOR GP	849
Y	*156-4271*	1	MOUNTING GP-CAB	887
Y	*290-8169*	1	PANEL GP-INSTRUMENT (FRONT)	895
Y	*290-8171*	1	PANEL GP-INSTRUMENT (ENCLOSED ROPS)	897
Y	*190-4700*	1	PEDAL GP-GOVERNOR	906
Y	*309-0846*	1	PLATFORM GP-OPERATOR	913
Y	*235-6876*	1	SKIRT GP-CAB	945
Y	*107-6133*	1	SWITCH GP-WIPER (INTERMITTENT)	186
Y	*131-1236*	1	WASHER GP-WINDOW	952
Y	*289-8903*	1	WIRING GP-CAB (ENCLOSED ROPS)	189
	119-9759	1	PLATFORM AS	
	7T-1099	2	LINK	
M	**8T-6430**	2	BOLT (M20X2.5X50-MM)	
M	**8T-4131**	2	NUT (M20X2.5-THD)	
	8T-4123	4	WASHER (22X35X3.5-MM THK)	

M-METRIC PART
Y-SEPARATE ILLUSTRATION

<END>

OPERATOR STATION

119-9756 PLATFORM GP

S/N: BYD1-UP
PART OF 119-9818 PLATFORM GP
AN ATTACHMENT

SMCS-7253 **i00719333**

NOTE	REF NO	GRAPHIC REF	PART NUMBER	QTY	PART NAME 1 2 3 4 5 6 (PRODUCT LEVEL)	SEE PAGE
	1	1	**119-9759**	1	PLATFORM AS	
		1	**7T-1099**	1	LINK	
	2	1	**119-9760**	1	PLATFORM AS	
		1	**7T-1099**	5	LINK	
	3	1	**119-9762**	2	STRIP	
M	4	1	**8T-4189**	4	BOLT (M8X1.25X20-MM)	
	5	1	**5P-4116**	4	WASHER-HARD (8.8X20.5X2-MM THK)	
M	6	1	**8T-6430**	8	BOLT (M20X2.5X50-MM)	
	7	1	**8T-4123**	10	WASHER (22X35X3.5-MM THK)	
M	8	1	**8T-4131**	2	NUT (M20X2.5-THD)	

M-METRIC PART

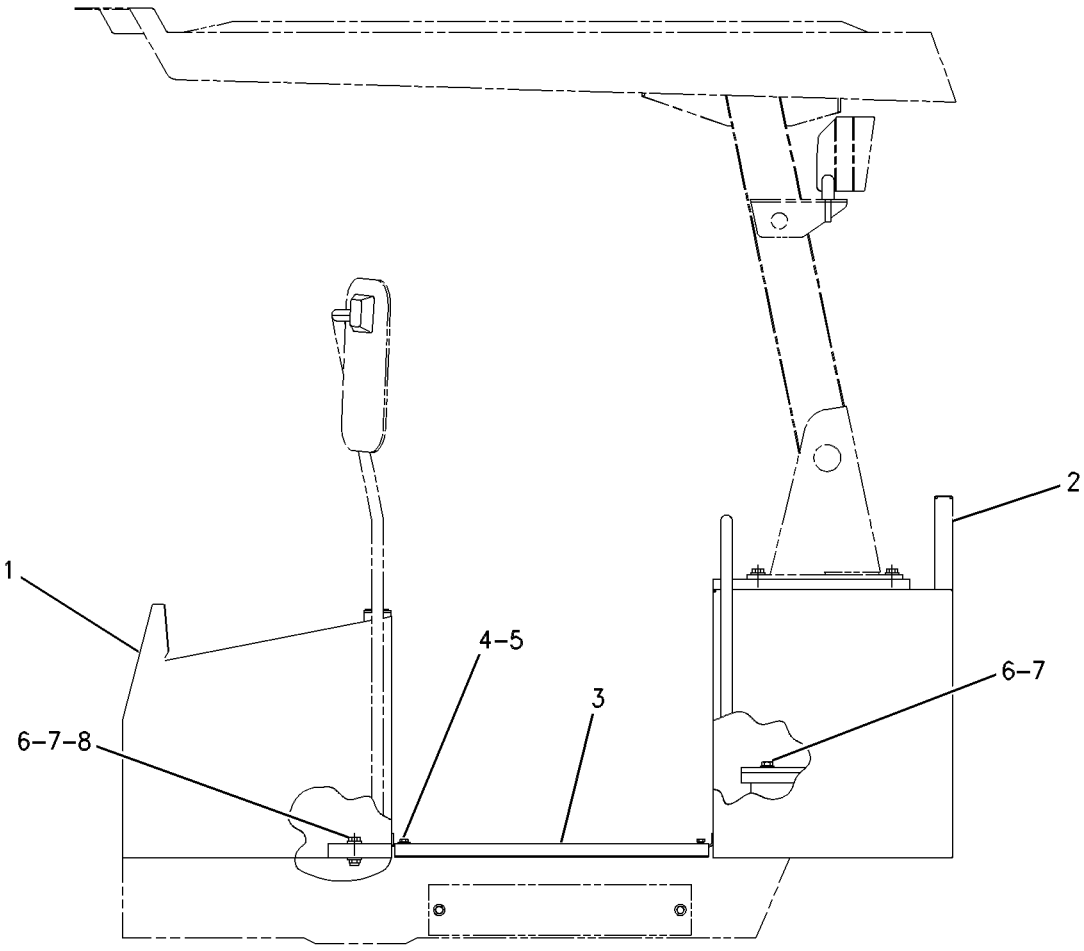

LEFT SIDE VIEW

GRAPHIC #1 **<END>** g00311609

OPERATOR STATION

119-9818 PLATFORM GP

S/N: BYD1-UP
PART OF 304-9256 CANOPY AR-SOFT
AN ATTACHMENT

SMCS-7253 **i01838128**

NOTE	REF NO	GRAPHIC REF	PART NUMBER	QTY	PART NAME 1 2 3 4 5 6 (PRODUCT LEVEL)	SEE PAGE
Y	1	1	*119-9756*	1	PLATFORM GP	910
Y	2	1	*219-2849*	1	PLATFORM GP-OPERATOR	912
M	3	1	**8T-4137**	2	BOLT (M10X1.5X20-MM)	
	4	1	**8T-4121**	2	WASHER-HARD (11X21X2.5-MM THK)	
	5	1	**118-7255**	1	COVER	
M	6	1	**8T-4131**	2	NUT (M20X2.5-THD)	
D	7	1	**5P-5943**		SEAL (3.2M)	
	8	1	**8T-4123**	10	WASHER (22X35X3.5-MM THK)	
M	9	1	**7X-2563**	8	BOLT (M20X2.5X60-MM)	

D-ORDER BY THE METER
M-METRIC PART
Y-SEPARATE ILLUSTRATION

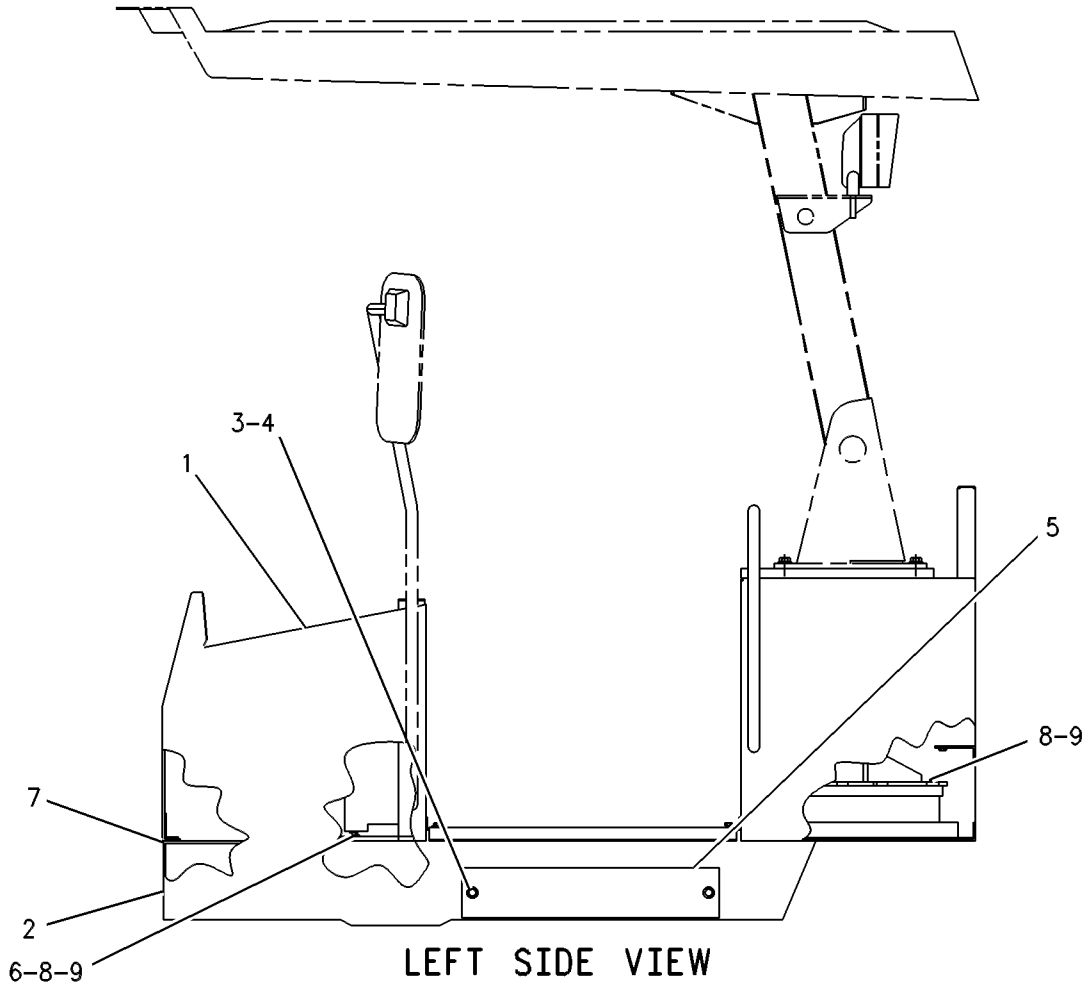

LEFT SIDE VIEW

GRAPHIC #1 **<END>** g00261222

OPERATOR STATION

219-2849 PLATFORM GP-OPERATOR

S/N: BYD1-UP
WITH BRAKE PEDALS
PART OF 304-9255 PLATFORM AR, 119-9818 PLATFORM GP
AN ATTACHMENT

SMCS-7253 **i01786810**

NOTE	REF NO	GRAPHIC REF	PART NUMBER	QTY	PART NAME 1 2 3 4 5 6 (PRODUCT LEVEL)	SEE PAGE
Y	1	1	*174-9730*	1	PEDAL GP-BRAKE	905
	2	1	**219-2850**	1	FLOORPLATE AS	
		1	**5G-8871**	8	BOSS (M6X1-THD)	
		1	**7T-1099**	22	LINK	
		1	**9G-9155**	2	CLIP	
M		1	**9R-2672**	12	BOSS (M10X1.5X20-MM)	
M	3	1	**8T-4189**	4	BOLT (M8X1.25X20-MM)	
	4	1	**8T-4224**	4	WASHER-HARD (8.8X16X2-MM THK)	

M-METRIC PART
Y-SEPARATE ILLUSTRATION

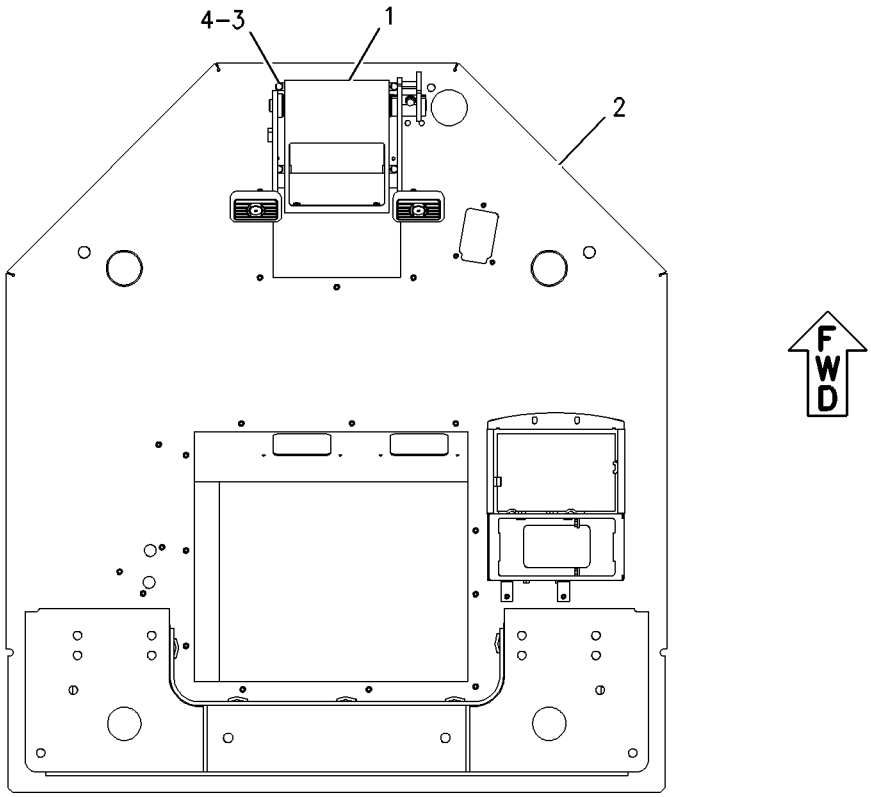

TOP VIEW

GRAPHIC #1 **<END>** g00923886

OPERATOR STATION

309-0846 PLATFORM GP-OPERATOR

S/N: FTD1-UP
PART OF 308-1933 PLATFORM AR
AN ATTACHMENT

SMCS-7253 **i02875150**

NOTE	REF NO	GRAPHIC REF	PART NUMBER	QTY	PART NAME 1 2 3 4 5 6 (PRODUCT LEVEL)	SEE PAGE
Y	1	1	*174-9730*	1	PEDAL GP-BRAKE	905
	2	1	**309-0847**	1	FLOORPLATE AS	
M	3	1	**8T-4189**	4	BOLT (M8X1.25X20-MM)	
	4	1	**8T-4224**	4	WASHER-HARD (8.8X16X2-MM THK)	

M-METRIC PART
Y-SEPARATE ILLUSTRATION

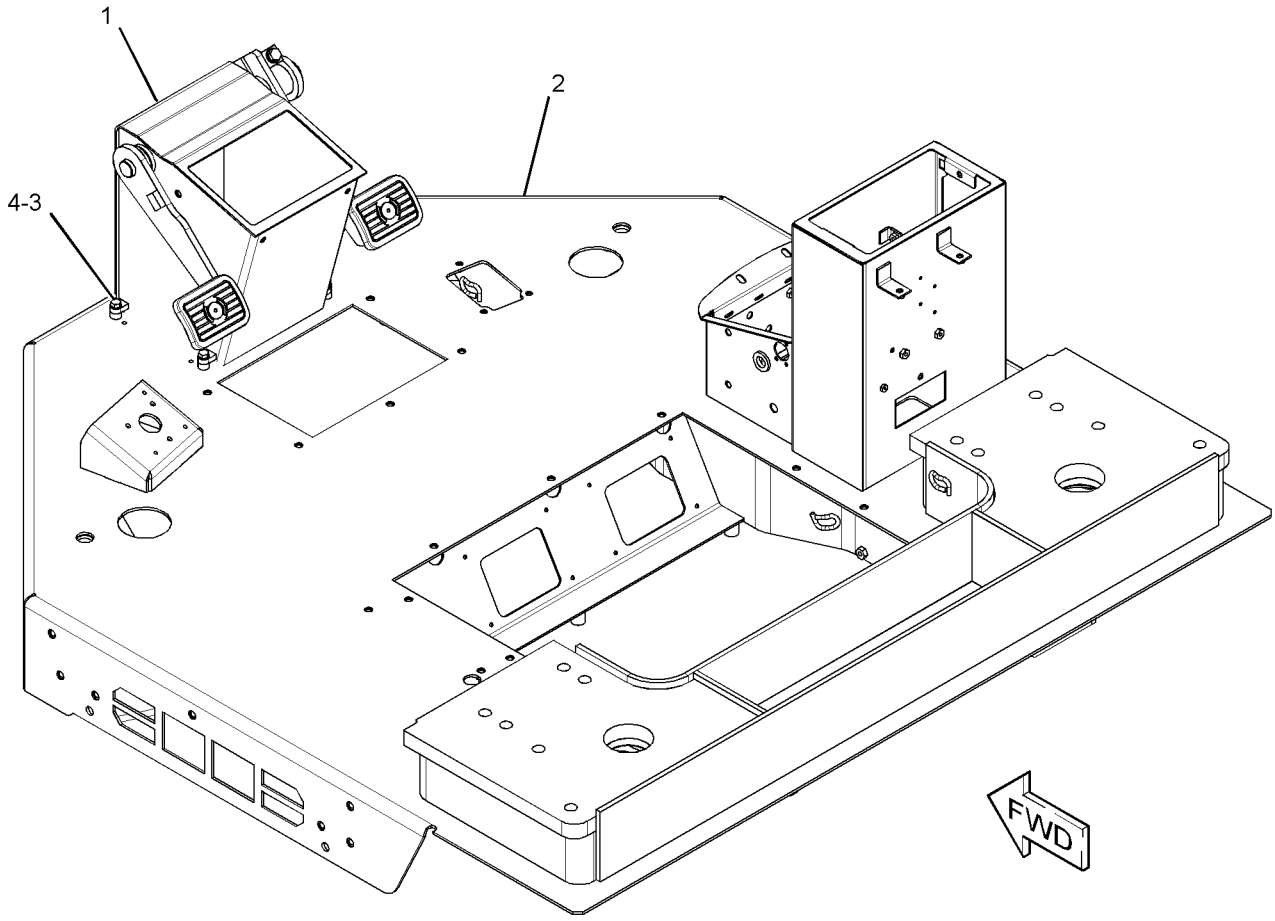

GRAPHIC #1 **<END>** g01434852

OPERATOR STATION

263-9088 RADIO GP-COMMUNICATION

S/N: BYD1-UP

PART OF 273-4068 INSTALLATION AR-COMMUNICATION

AN ATTACHMENT

SMCS-733T **i02752127**

NOTE	PART NUMBER	QTY	PART NAME 1 2 3 4 5 6 (PRODUCT LEVEL)	SEE PAGE
	293-8340	1	SOFTWARE GP-COMMUNICATION (PRODUCT LINK 121SR)	

<END>

210-2270 RECLINER GP-SEAT

S/N: BYD1-UP; FTD1-UP
PART OF 178-0603 SEAT GP
AN ATTACHMENT

SMCS-7312 **i02003287**

NOTE	REF NO	GRAPHIC REF	PART NUMBER	QTY	PART NAME 1 2 3 4 5 6 (PRODUCT LEVEL)	SEE PAGE
	1	1	**177-1862**	1	BRACKET	
	2	1	**210-2262**	1	BRACKET AS	
	3	1	**210-2263**	1	BRACKET AS	
	4	1	**210-2266**	1	GEAR-LOCK (14-TEETH) (14 TEETH)	
	5	1	**210-2268**	1	SHAFT AS	
	6	1	**217-7933**	1	LATCH	
	7	1	**236-5197**	1	SPRING	
	8	1	**031-0214**	1	BOLT-LOCKING (1/4-20X0.5-IN)	
	9	1	**101-2867**	1	WASHER-HARD (7.2X25X2-MM THK)	
	10	1	**4M-6425**	1	BOLT (5/16-18X1-IN)	
	11	1	**5M-2894**	1	WASHER-HARD (10.2X18.5X2.5-MM THK)	
	12	1	**5S-7383**	1	BOLT (3/8-16X1.75-IN)	
	13	1	**8T-4224**	1	WASHER-HARD (8.8X16X2-MM THK)	

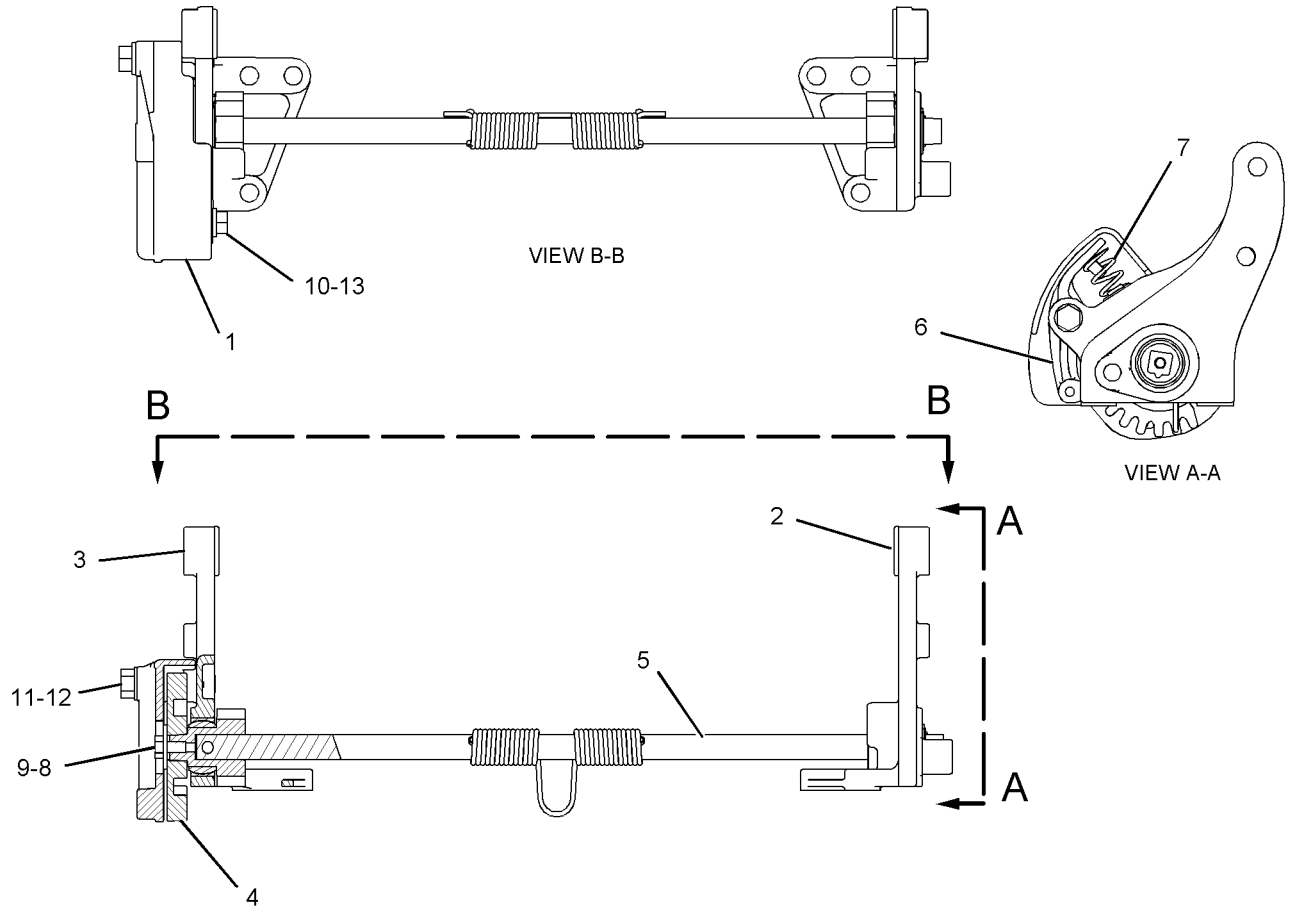

GRAPHIC #1 **<END>** g01040293

OPERATOR STATION

290-8501 ROPS GP-ENCLOSED

S/N: BYD1-UP; FTD1-UP

PART OF 290-8503 CAB AR-ENCLOSED ROPS, 290-8520 CAB GP-ENCLOSED ROPS AN ATTACHMENT

SMCS-7301 **i02793284**

NOTE	REF NO	GRAPHIC REF	PART NUMBER	QTY	PART NAME 1 2 3 4 5 6 (PRODUCT LEVEL)	SEE PAGE
	1	1	**091-0079**	8	PLUG	
Y	2	1	*174-9730*	1	PEDAL GP-BRAKE	905
Y	3	1	**290-8499**	1	CAB GP-ENCLOSED ROPS (ENCLOSED)	798
M	4	1	**8T-4189**	4	BOLT (M8X1.25X20-MM)	
	5	1	**8T-4224**	4	WASHER-HARD (8.8X16X2-MM THK)	

M-METRIC PART
Y-SEPARATE ILLUSTRATION

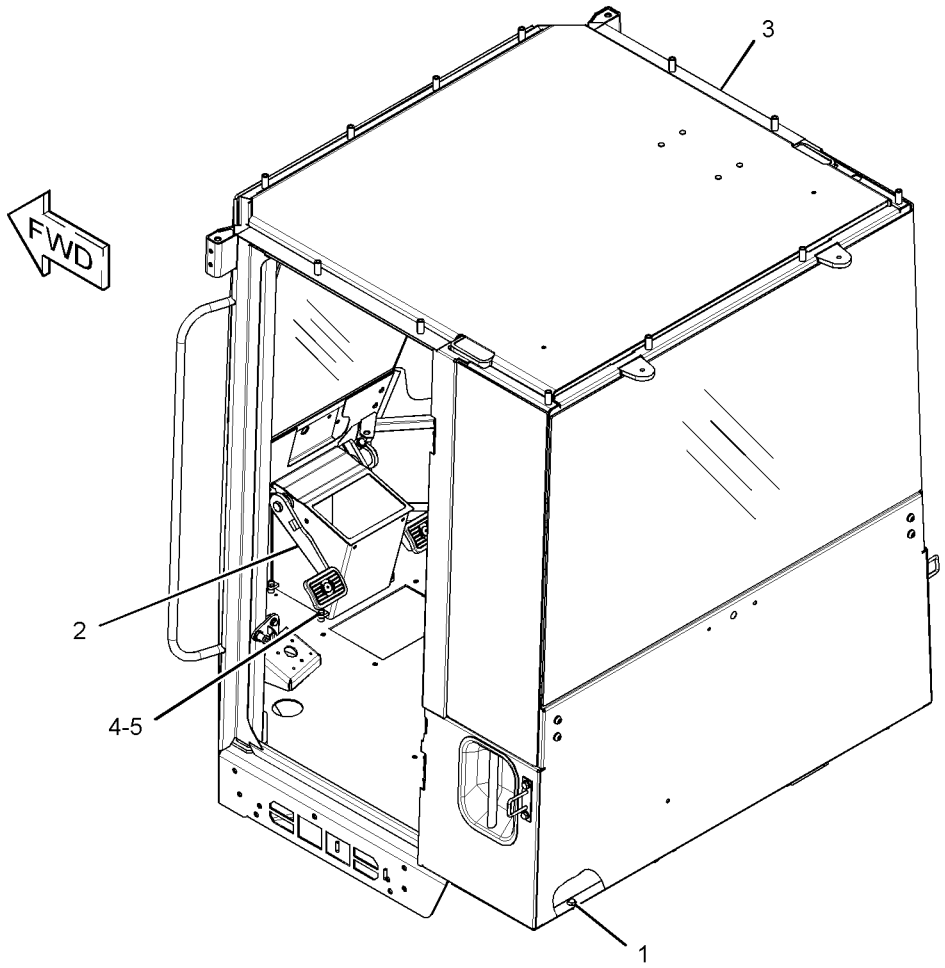

GRAPHIC #1 **<END>** g01394987

OPERATOR STATION

290-8177 ROPS GP-OPEN

S/N: FTD1-UP

PART OF 290-8179 CANOPY GP-OPEN ROPS

AN ATTACHMENT

SMCS-7323 **i02807444**

NOTE	REF NO	GRAPHIC REF	PART NUMBER	QTY	PART NAME 1 2 3 4 5 6 (PRODUCT LEVEL)	SEE PAGE
	1	1	**118-7255**	1	COVER	
Y	2	1	*174-9730*	1	PEDAL GP-BRAKE	905
	3	1	**290-8175**	1	CANOPY AS	
		1	**7T-1099**	8	LINK	
M		1	**8T-3734**	12	BOSS-WELD (M10X1.5X40-MM)	
	4	1	**8T-4121**	2	WASHER-HARD (11X21X2.5-MM THK)	
M	5	1	**8T-4137**	2	BOLT (M10X1.5X20-MM)	
M	6	1	**8T-4189**	4	BOLT (M8X1.25X20-MM)	
	7	1	**8T-4224**	4	WASHER-HARD (8.8X16X2-MM THK)	

M-METRIC PART
Y-SEPARATE ILLUSTRATION

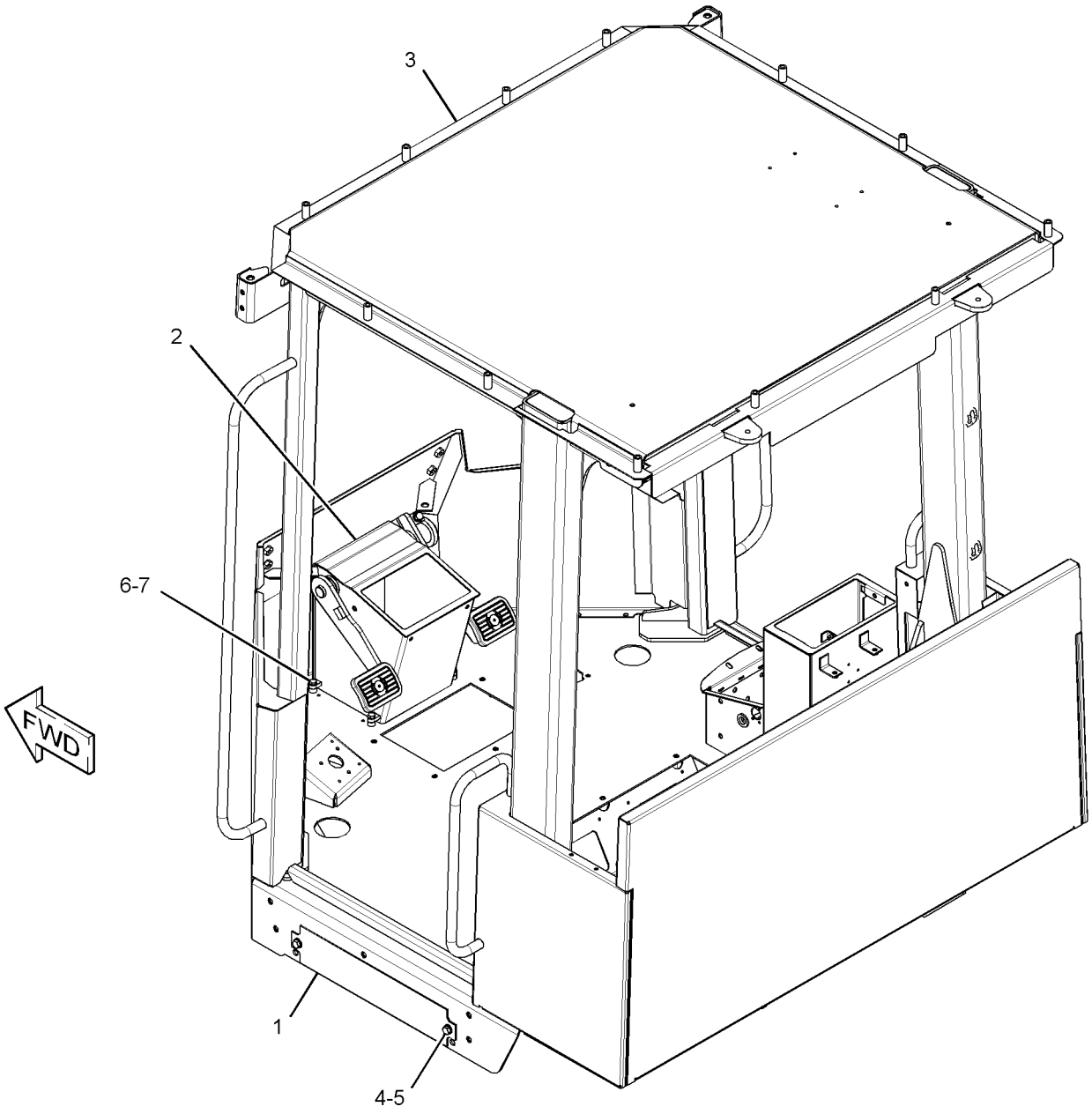

GRAPHIC #1 **<END>** g01391747

OPERATOR STATION

118-7250 SCREEN GP-SUN

S/N: BYD1-UP; FTD1-UP
PART OF 308-2276, 308-2279 CAB AR-ENCLOSED ROPS
AN ATTACHMENT

SMCS-7165 **i01679748**

NOTE	REF NO	GRAPHIC REF	PART NUMBER	QTY	PART NAME 1 2 3 4 5 6 (PRODUCT LEVEL)	SEE PAGE
F			**119-2073**	2	HOOK-RETAINER	

F-NOT SHOWN

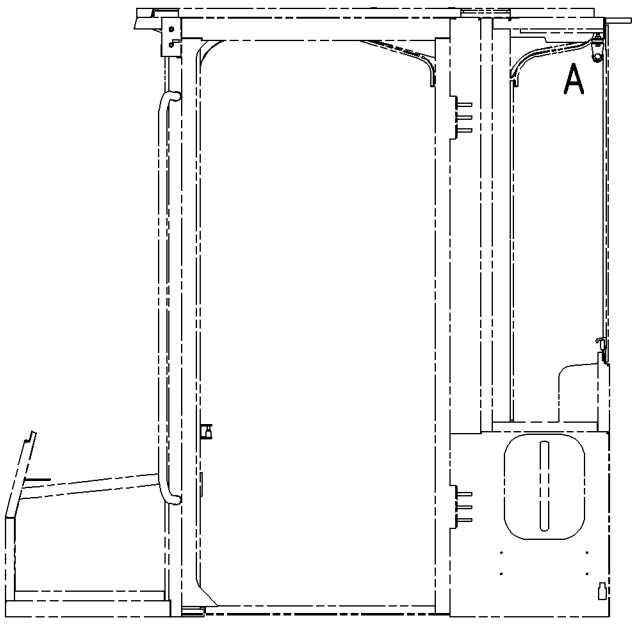

LEFT SIDE VIEW

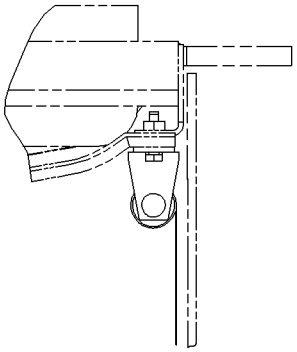

VIEW OF AREA A

GRAPHIC #1 **<END>** g00869480

OPERATOR STATION

107-5978 SEAT & MOUNTING GP

S/N: BYD1-UP; FTD1-UP

CANNOT BE USED WITH 226-1842–PAGE 934, 226-1843–PAGE 935, 226-1845–PAGE 921, 239-5814–PAGE 923

AN ATTACHMENT

SMCS-7312 **i00523603**

NOTE	REF NO	GRAPHIC REF	PART NUMBER	QTY	PART NAME 1 2 3 4 5 6 (PRODUCT LEVEL)	SEE PAGE
Y	1	1	**8Y-6977**	1	SEAT GP-SUSPENSION (CLOTH, LUMBAR)	932
M	2	1	**113-9232**	2	BOLT (8X1.25X30-MM)	
	3	1	**8T-4121**	4	WASHER-HARD (11X21X2.5-MM THK)	
M	4	1	**9X-2125**	4	BOLT-LOCKING (M10X1.5X25-MM)	

M-METRIC PART
Y-SEPARATE ILLUSTRATION

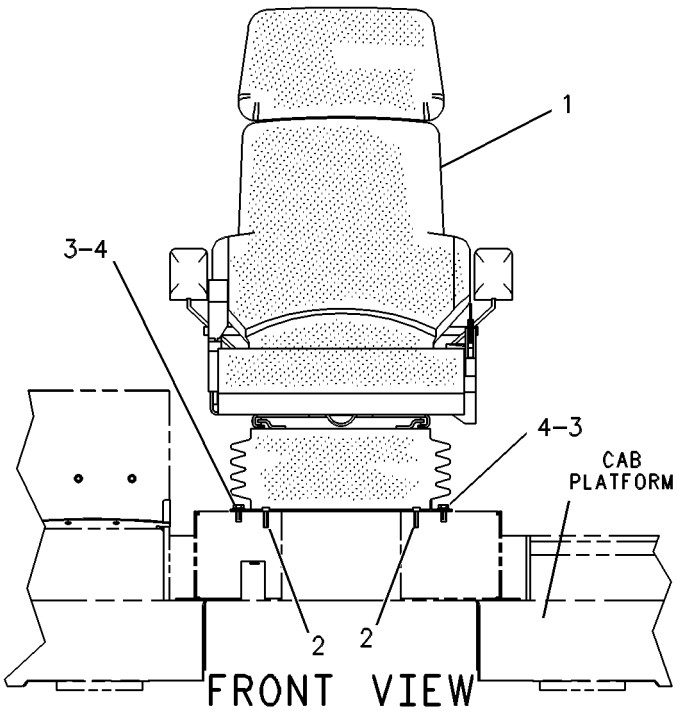

GRAPHIC #1 **<END>** g00131404

226-1845 SEAT & MOUNTING GP

S/N: BYD1-UP; FTD1-UP

CANNOT BE USED WITH 107-5978—PAGE 920, 239-5814—PAGE 923, 226-1842—PAGE 934, 226-1843—PAGE 935

AN ATTACHMENT

SMCS-7312 **i02294993**

NOTE	REF NO	GRAPHIC REF	PART NUMBER	QTY	PART NAME 1 2 3 4 5 6 (PRODUCT LEVEL)	SEE PAGE
Y	1	1	**3E-6328**	1	ALARM GP (24-VOLT) (ACTION)	124
	2	1	**3S-2093**	7	STRAP-CABLE	
	3	1	**180-4049**	1	BRACKET	
	4	1	**237-3857**	1	HARNESS AS-CONTROL (SEAT)	
		1	**102-8802**	1	KIT-RECEPTACLE (2-PIN)	
					(EACH INCLUDES RECEPTACLE AS & WEDGE)	
		1	**155-2270**	1	KIT-CONNECTING PLUG (2-PIN)	
		1	**155-2260**	1	KIT-CONNECTING PLUG (3-PIN)	
					(EACH PLUG KIT INCLUDES PLUG AS, WEDGE & INTERFACE SEAL)	
M	5	1	**113-9232**	4	BOLT (8X1.25X30-MM)	
	6	1	**118-7236**	1	PLATE	
CY	7	1	**233-7389**	1	SEAT GP-SUSPENSION (CLOTH, HEATED)	939
	8	1	**8T-4121**	2	WASHER-HARD (11X21X2.5-MM THK)	
M	9	1	**8T-4133**	1	NUT (M10X1.5-THD)	
M	10	1	**8T-4137**	1	BOLT (M10X1.5X20-MM)	
M	11	1	**9X-2041**	4	SCREW-TRUSS HEAD (M10X1.5X20-MM)	
	12	1	**8T-4224**	4	WASHER-HARD (8.8X16X2-MM THK)	

C-CHANGE FROM PREVIOUS TYPE
M-METRIC PART
Y-SEPARATE ILLUSTRATION

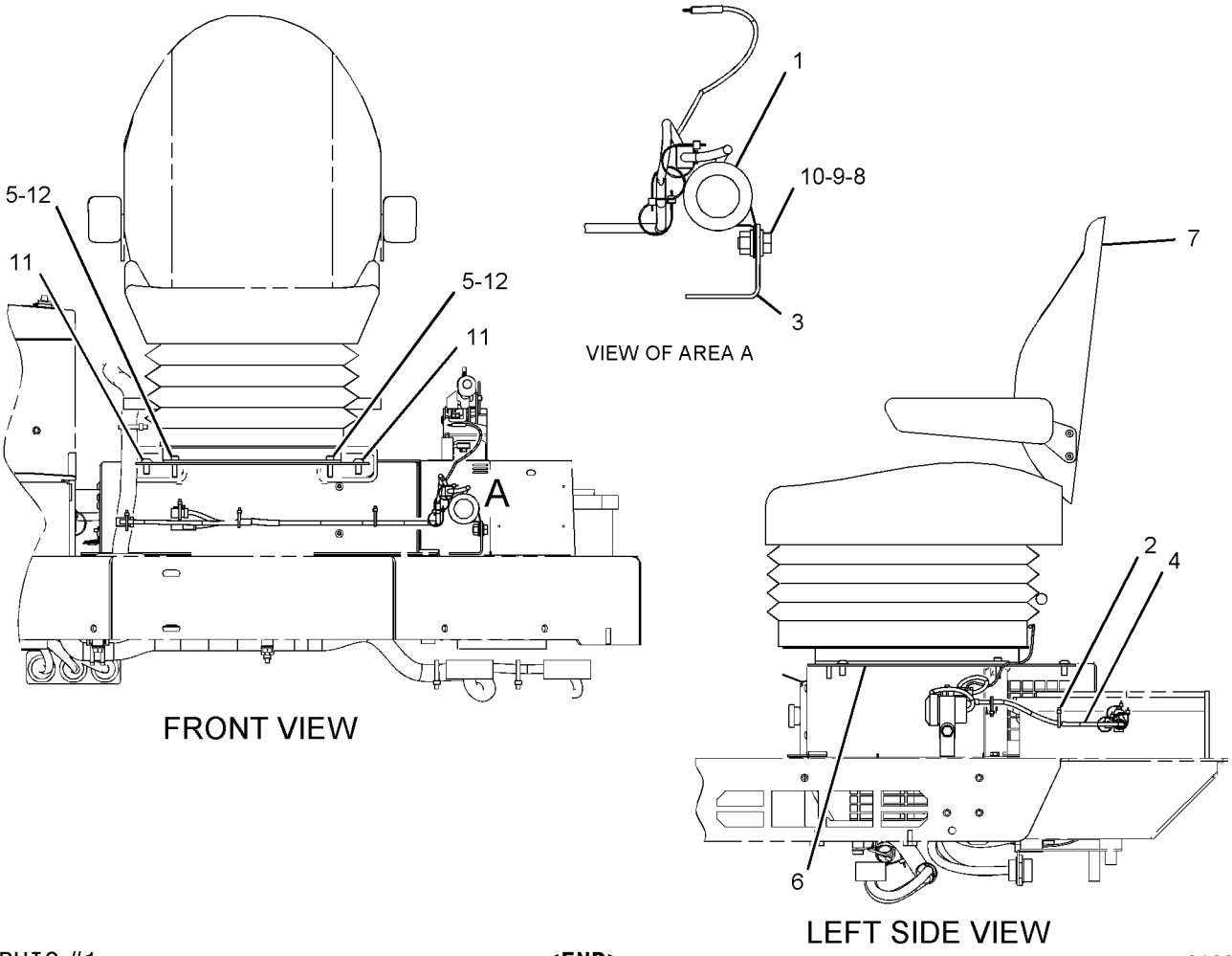

GRAPHIC #1 **<END>** g01091591

239-5814 SEAT & MOUNTING GP

S/N: BYD1-UP; FTD1-UP

CANNOT BE USED WITH 226-1842—PAGE 934, 226-1843—PAGE 935, 107-5978—PAGE 920, 226-1845—PAGE 921

AN ATTACHMENT

SMCS-7312 **i02603170**

NOTE	REF NO	GRAPHIC REF	PART NUMBER	QTY	PART NAME 1 2 3 4 5 6 (PRODUCT LEVEL)	SEE PAGE
	1	1	**177-4937**	1	SPACER (11.7X19.8X20.3-MM THK)	
Y	2	1	**219-8096**	1	SEAT GP-SUSPENSION (CLOTH, AIR)	933
	3	1	**222-0345**	1	SEAT BELT GP (RETRACTABLE)	
	4	1	**0T-0244**	1	BOLT (7/16-20X1.25-IN)	
M	5	1	**113-9232**	2	BOLT (8X1.25X30-MM)	
	6	1	**205-6388**	1	BOLT (7/16-20X1.75-IN)	
	7	1	**8T-4121**	4	WASHER-HARD (11X21X2.5-MM THK)	
M	8	1	**9X-2125**	4	BOLT-LOCKING (M10X1.5X25-MM)	

M-METRIC PART
Y-SEPARATE ILLUSTRATION

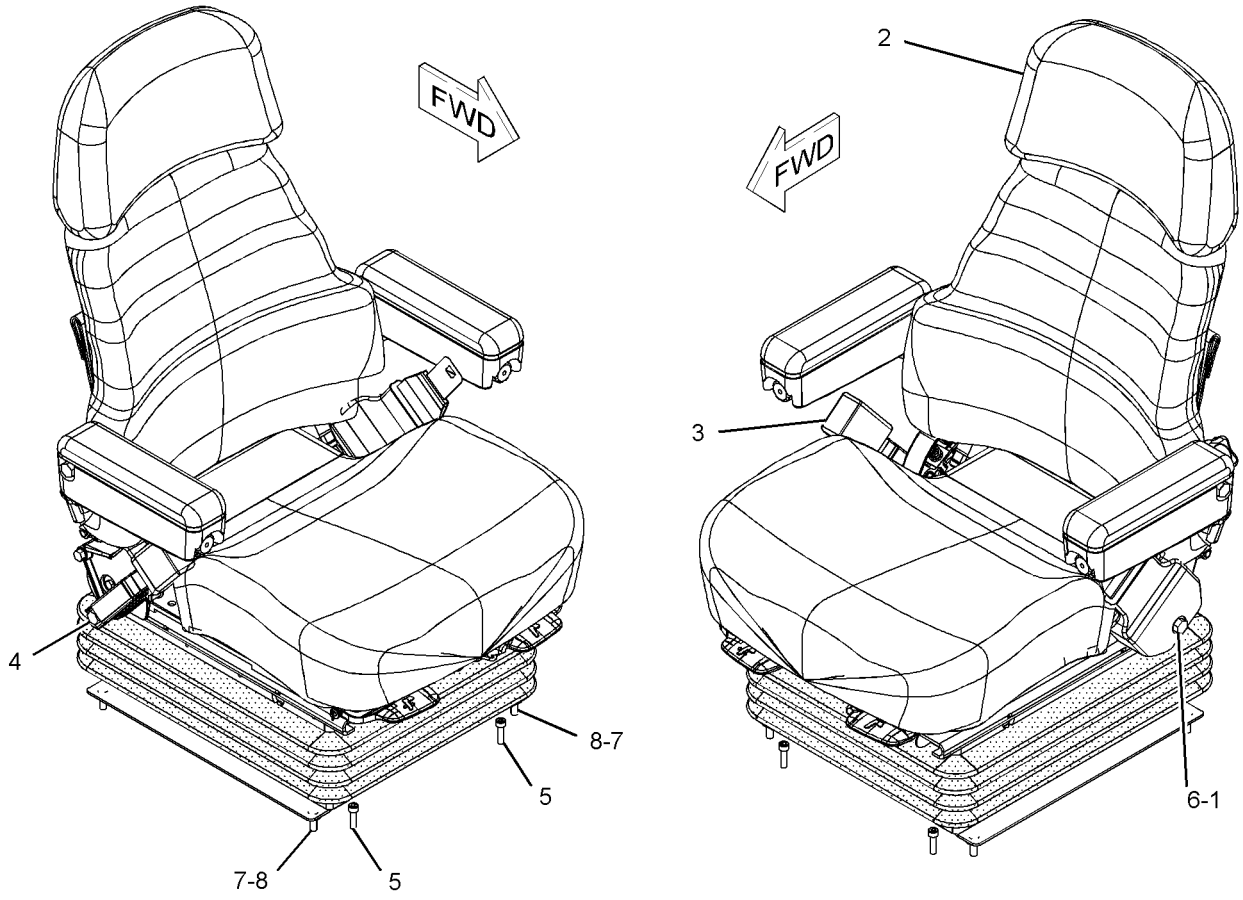

GRAPHIC #1 **<END>** g01124990

OPERATOR STATION

156-1148 SEAT BELT GP

S/N: BYD1-UP; FTD1-UP
72.6-MM (3-IN)
PART OF 8Y-6977 SEAT GP-SUSPENSION
AN ATTACHMENT

SMCS-7327 **i01224999**

NOTE	REF NO	GRAPHIC REF	PART NUMBER	QTY	PART NAME 1 2 3 4 5 6 (PRODUCT LEVEL)	SEE PAGE
	1	1	**8Y-5953**	1	BOLT (7/16-20X1.5-IN)	
	2	1	**8T-5360**	1	WASHER (12X22.5X2.5-MM THK)	
	3	1	**1A-4350**	1	BOLT (7/16-20X1.75-IN)	
	4	1	**4D-6432**	1	LOCKNUT (7/16-20-THD)	

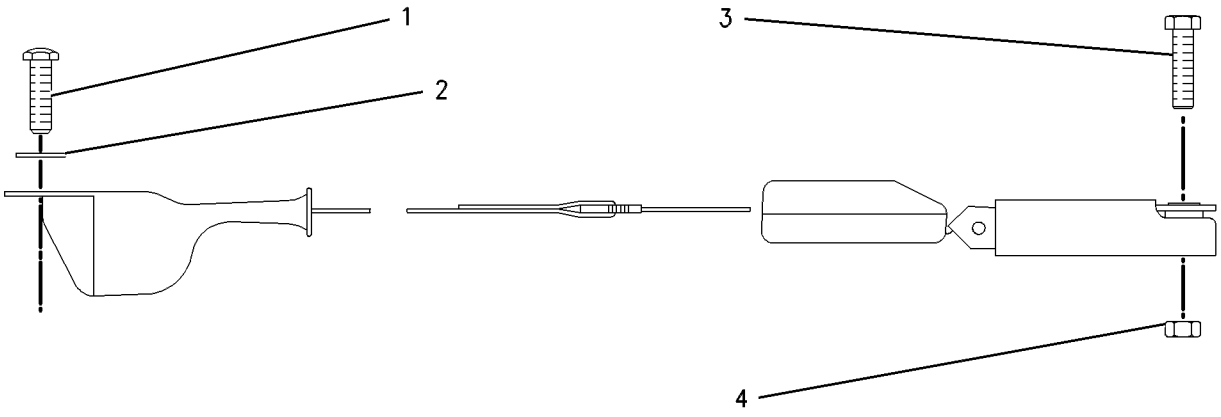

GRAPHIC #1 **<END>** g00465110

OPERATOR STATION

223-7936 SEAT BELT GP–2-IN

S/N: BYD1-UP; FTD1-UP
AN ATTACHMENT

SMCS-7327 **i02271395**

NOTE	REF NO	GRAPHIC REF	PART NUMBER	QTY	PART NAME 1 2 3 4 5 6 (PRODUCT LEVEL)	SEE PAGE
	1	1	**261-7651**	1	SPACER (12X20X4-MM THK)	
	2	1	**8S-4726**	1	BOLT (7/16-20X3-IN)	
	3	1	**8T-5360**	2	WASHER (12X22.5X2.5-MM THK)	
	4	1	**8T-9381**	1	BOLT (7/16-20X1-IN)	

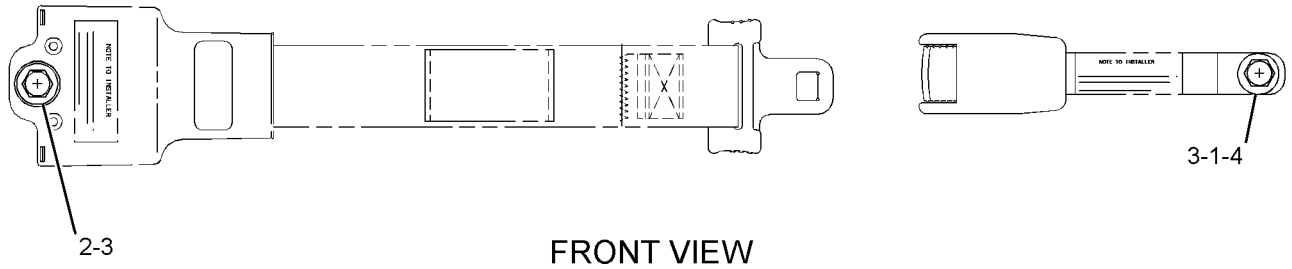

FRONT VIEW

GRAPHIC #1 **<END>** g01138847

OPERATOR STATION

223-7937 SEAT BELT GP–3-IN

S/N: BYD1-UP; FTD1-UP
AN ATTACHMENT

SMCS-7327 **i02271403**

NOTE	REF NO	GRAPHIC REF	PART NUMBER	QTY	PART NAME 1 2 3 4 5 6 (PRODUCT LEVEL)	SEE PAGE
	1	1	**261-7651**	1	SPACER (12X20X4-MM THK)	
	2	1	**8S-4726**	1	BOLT (7/16-20X3-IN)	
	3	1	**8T-5360**	2	WASHER (12X22.5X2.5-MM THK)	
	4	1	**8T-9381**	1	BOLT (7/16-20X1-IN)	

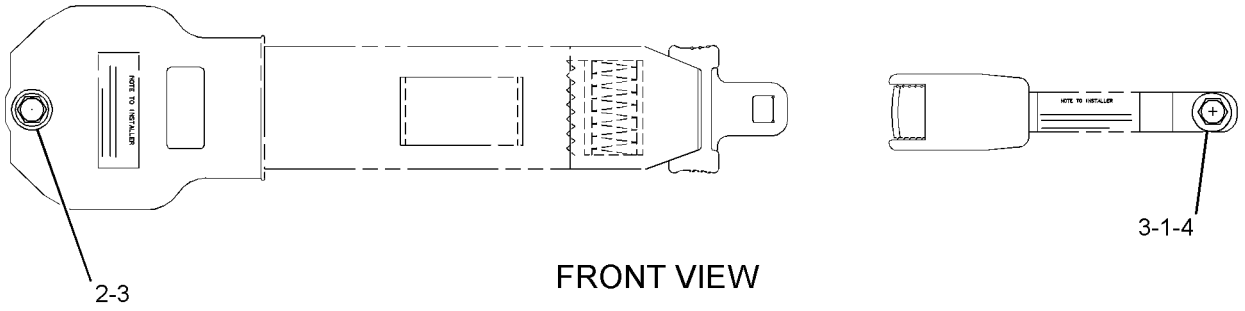

FRONT VIEW

GRAPHIC #1 **<END>** g01138838

OPERATOR STATION

8Y-6882 SEAT GP–CLOTH, LUMBAR

S/N: BYD1-UP; FTD1-UP
PART OF 8Y-6977 SEAT GP-SUSPENSION
AN ATTACHMENT

SMCS-7312 **i02853836**

NOTE	REF NO	GRAPHIC REF	PART NUMBER	QTY	PART NAME 1 2 3 4 5 6 (PRODUCT LEVEL)	SEE PAGE
Y	1	1	**108-8421**	1	PAN GP-BACKREST	890
Y	2	1	*8Y-5992*	1	PAN GP-SEAT	893
	3	1	**113-0899**	10	SCREW-FLAT HEAD (6-20X0.5-IN)	
	4	1	**119-7127**	1	CUSHION AS (BACK)	
N	5	1	*119-7126*	1	CUSHION AS (SEAT)	
L	6	1	*112-4580*	1	KNOB-SEAT TILT	
	7	1	**8Y-5929**	1	PLATE AS-SLIDE	
	8	1	**8Y-5930**	1	BAR AS	
	9	1	**8Y-5931**	1	BAR AS	
	10	1	**8S-7803**	2	RING-RETAINING	
	11	1	**8Y-5932**	1	LATCH AS	
	12	1	**8Y-5936**	1	SPRING	
	13	1	**095-0878**	1	PIN-SPRING	
L	14	1	*112-4582*	1	KNOB-SLIDE (UPPER)	
L	15	1	*112-4583*	1	KNOB-SLIDE (LOWER)	
L	16	1	*112-4578*	1	KNOB-BACK TILT	
	17	1	**8Y-5937**	1	BRACKET AS (RH)	
	18	1	**8Y-5938**	1	BRACKET AS (LH)	
	19	1	**7U-4898**	6	SCREW (3/8-16X0.75-IN)	
	20	1	**2K-4973**	6	LOCKNUT (3/8-16-THD)	
	21	1	**8Y-5979**	1	PIN	
	22	1	**6V-2456**	2	RING-RETAINING	
L	23	1	*112-4579*	1	KNOB-BACK TILT	
L	24	1	*112-4581*	1	KNOB-SEAT TILT	
	25	1	**8Y-5947**	4	FASTENER	
	26	1	**8Y-6833**	1	SPRING (LH)	
	27	1	**8Y-6834**	1	SPRING (RH)	
	28	1	**1C-0569**	2	BOLT (5/16-18X0.5-IN)	
	29	1	**2B-2695**	4	BOLT (5/16-18X0.875-IN)	
J	30	1	*8Y-5878*	1	PAN AS	
	31	1	**8Y-5928**	2	SPRING	
	32	1	**8Y-5981**	2	BUSHING-BACKREST	
	33	1	**7B-7525**	2	BOLT-SOCKET HEAD (7/16-14X1.25-IN)	
	34	1	**8Y-6051**	2	SPACER (11.19X14.21X14.24-MM THK)	
	35	1	**9L-7469**	2	LOCK PIN	
P	36	1	**061-8803**	4	SHIM (1.52-MM THK)	
					AVAILABLE REPAIR KIT(S):	
J			**8Y-6933**	1	KIT-TILT PAN (SEAT)	
L			**112-4577**	1	KIT-SEAT KNOB (SUSPENSION)	
N			**119-7141**	1	KIT-SEAT CUSHION (CLOTH)	

J-PARTS MARKED 'J' SERVICED BY KIT MARKED 'J'
L-PARTS MARKED 'L' SERVICED BY KIT MARKED 'L'
N-PARTS MARKED 'N' SERVICED BY KIT MARKED 'N'
P-USE AS REQUIRED TO LOCATE BAR AS
Y-SEPARATE ILLUSTRATION

8Y-6882 SEAT GP *(contd.)* **i02853836**

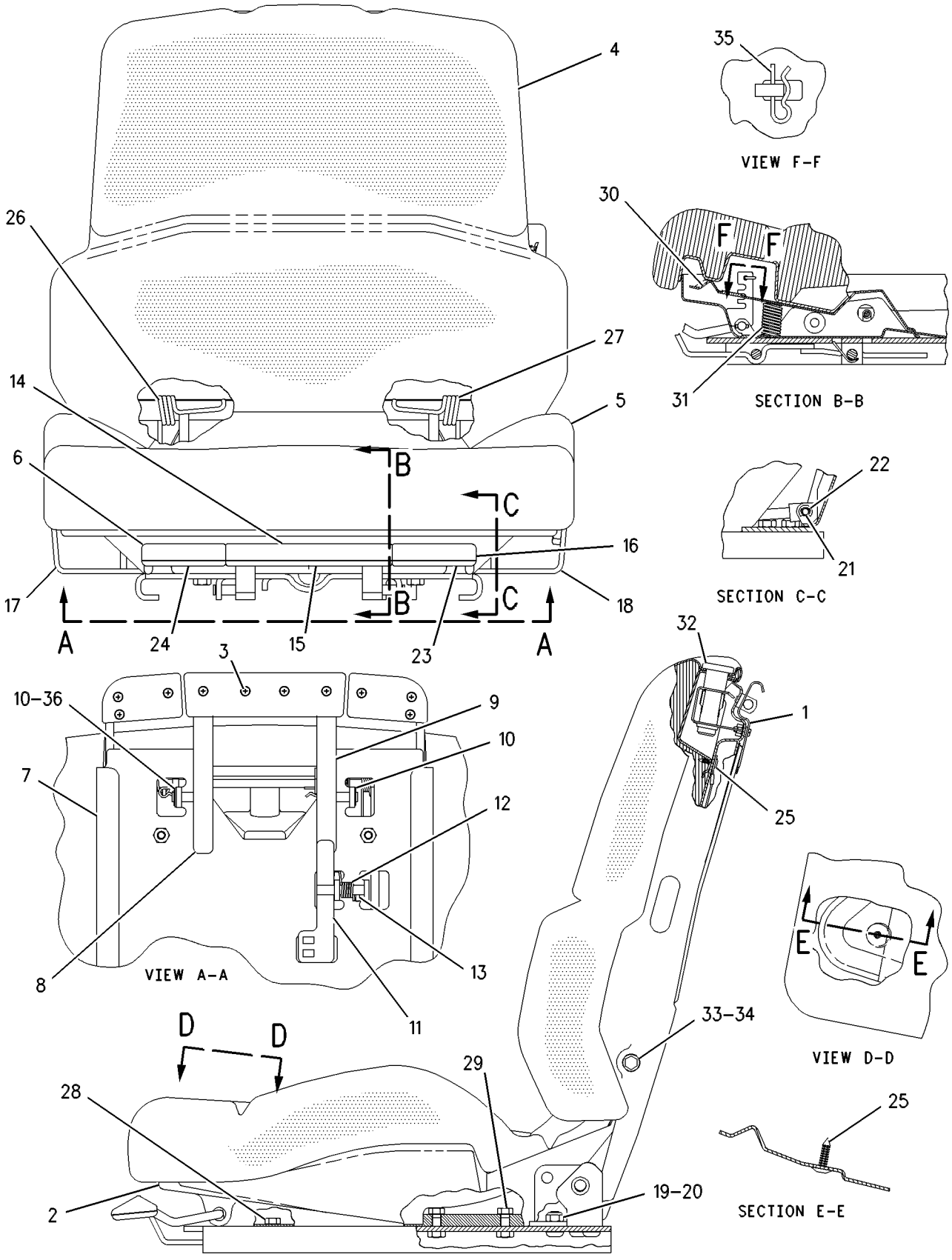

GRAPHIC #1 **<END>** g00659038

OPERATOR STATION

178-0603 SEAT GP–CLOTH

S/N: BYD1-UP; FTD1-UP
PART OF 178-7914 SEAT GP
AN ATTACHMENT

SMCS-7312 **i02748975**

NOTE	REF NO	GRAPHIC REF	PART NUMBER	QTY	PART NAME 1 2 3 4 5 6 (PRODUCT LEVEL)	SEE PAGE
	1	1	**218-0861**	1	PAN AS	
		1	**8T-9082**	5	RIVET-POP	
		1	**217-9049**	1	CUSHION AS	
	2	1	**143-1288**	8	LOCKNUT-FLANGE (3/8-16-THD)	
	3	1	**171-1230**	6	SCREW-BUTTON HEAD (3/8-16X1-IN)	
	4	1	**171-6682**	1	BAR	
	5	1	**172-2416**	2	PIN	
Y	6	1	*173-1028*	1	ADJUSTER GP-SEAT	783
	7	1	**177-1863**	2	BOLT-PIVOT (3/8-16X2.89-IN)	
Y	8	1	*210-2270*	1	RECLINER GP-SEAT	915
CY	9	1	*292-9237*	1	PAN GP-BACKREST (CLOTH)	892
	10	1	**184-2298**	1	ROD	
	11	1	**184-2299**	4	WASHER (7X25.4X2.54-MM THK)	
	12	1	**095-0843**	2	PIN-COTTER	
	13	1	**5V-1496**	2	RETAINER	
	14	1	**6V-7646**	2	WASHER-HARD (7.2X25X2-MM THK)	
	15	1	**8T-0328**	1	WASHER-HARD (5.5X10X1-MM THK)	
	16	1	**8T-4205**	1	WASHER-HARD (7.2X14.5X2-MM THK)	
C	17	1	**294-5042**	2	SPACER (11.1X19.5X9.67-MM THK)	

C-CHANGE FROM PREVIOUS TYPE
Y-SEPARATE ILLUSTRATION

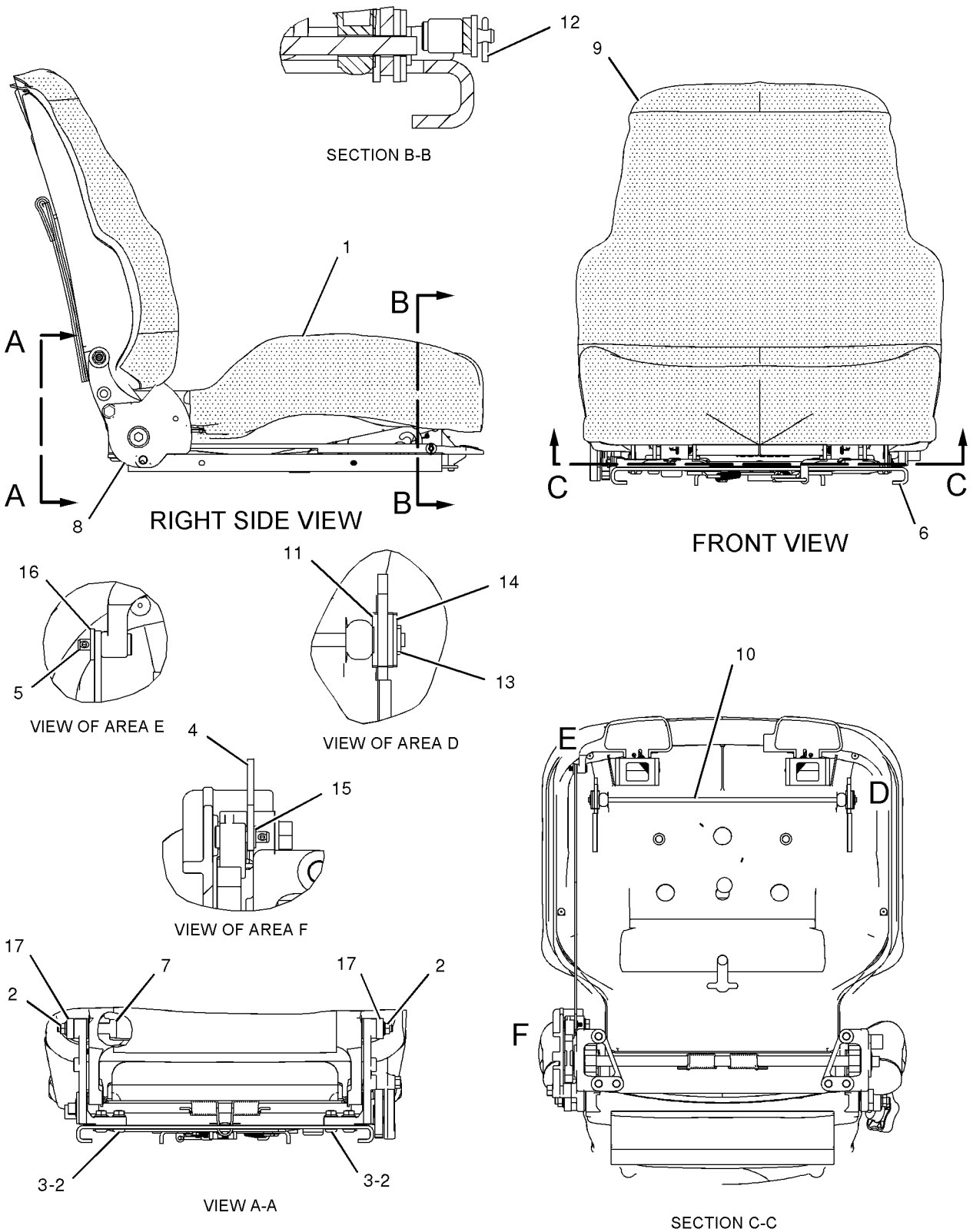

GRAPHIC #1 **<END>** g01023456

178-7914 SEAT GP–CLOTH

S/N: BYD1-UP; FTD1-UP
PART OF 219-8096 SEAT GP-SUSPENSION
AN ATTACHMENT

SMCS-7312 **i02310922**

NOTE	REF NO	GRAPHIC REF	PART NUMBER	QTY	PART NAME 1 2 3 4 5 6 (PRODUCT LEVEL)	SEE PAGE
	1	1	**229-1494**	1	EXTENSION GP-BACKREST (CLOTH)	
Y	2	1	**162-8447**	1	ARMREST GP (LH)	792
Y	3	1	**162-8448**	1	ARMREST GP (RH)	793
Y	4	1	**178-0603**	1	SEAT GP (CLOTH)	929

Y-SEPARATE ILLUSTRATION

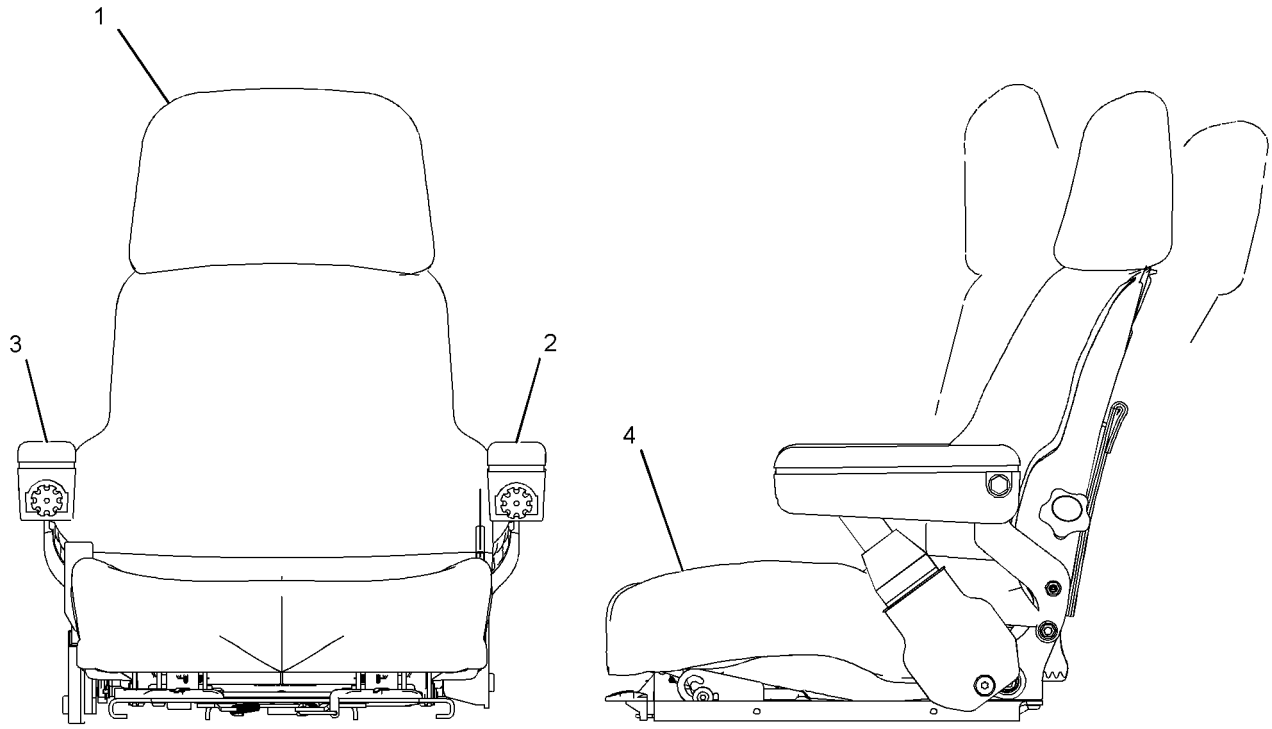

FRONT VIEW

LEFT SIDE VIEW

GRAPHIC #1

<END>

g01084632

OPERATOR STATION

8Y-6977 SEAT GP-SUSPENSION–CLOTH, LUMBAR

S/N: BYD1-UP; FTD1-UP

PART OF 107-5978 SEAT & MOUNTING GP

AN ATTACHMENT

SMCS-7324, 7336 **i02853847**

NOTE	REF NO	GRAPHIC REF	PART NUMBER	QTY	PART NAME 1 2 3 4 5 6 (PRODUCT LEVEL)	SEE PAGE
Y	1	1	**8Y-6883**	1	EXTENSION GP-BACKREST (CLOTH)	847
Y	2	1	**8Y-6882**	1	SEAT GP (CLOTH, LUMBAR)	927
Y	3	1	**8Y-6000**	1	ARMREST GP (LH)	791
Y	4	1	**8Y-4200**	1	ARMREST GP (RH)	789
Y	5	1	**108-4082**	1	SUSPENSION GP-SEAT	947
CY	6	1	**156-1148**	1	SEAT BELT GP	924
J	7	1	**4F-4879**	1	BOLT (3/8-16X0.5-IN)	
					AVAILABLE REPAIR KIT(S):	
J			**149-4745**	1	KIT-SLIDER BLOCK (SUSPENSION SEAT)	

C-CHANGE FROM PREVIOUS TYPE
J-KIT MARKED J INCLUDES PART MARKED J
Y-SEPARATE ILLUSTRATION

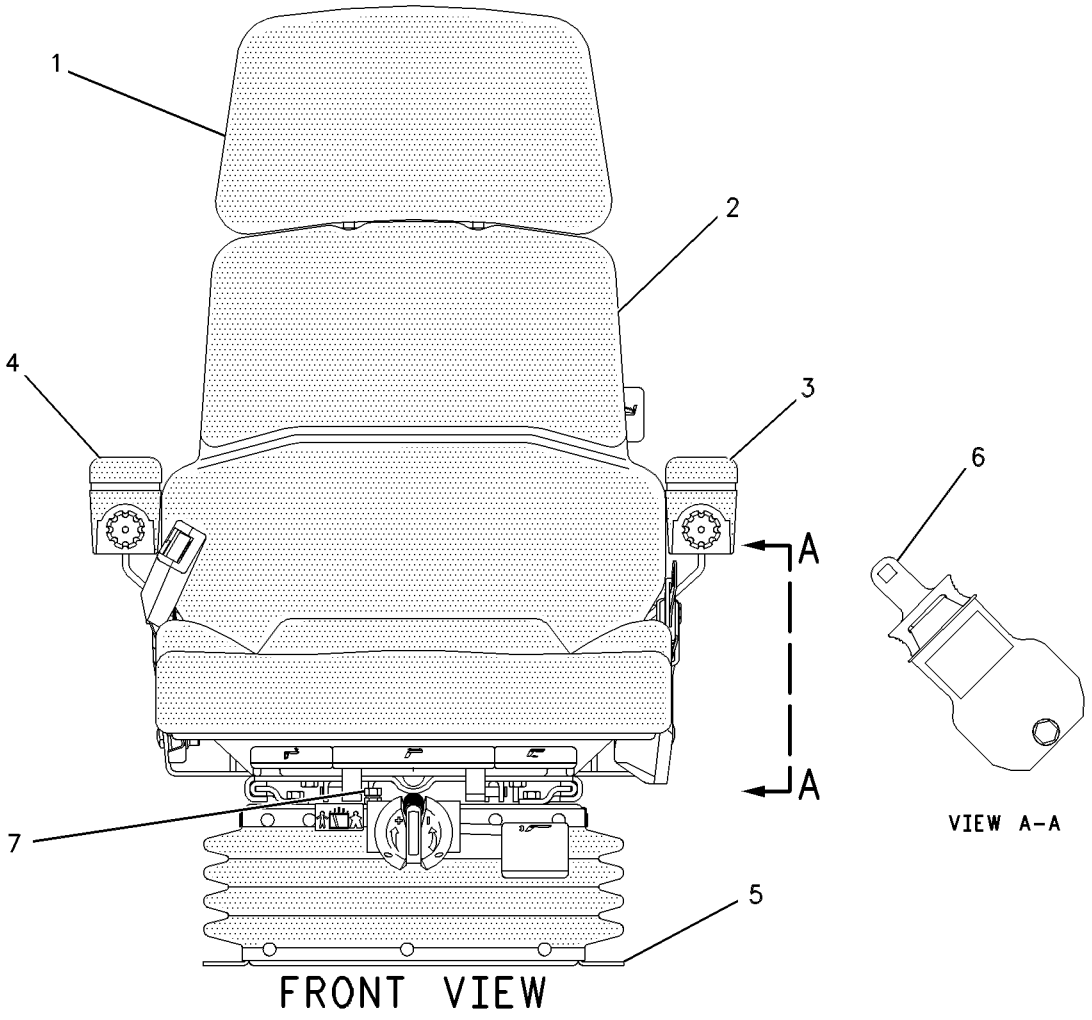

GRAPHIC #1 **<END>** g00460334

OPERATOR STATION

219-8096 SEAT GP-SUSPENSION—CLOTH, AIR

S/N: BYD1-UP; FTD1-UP
PART OF 239-5814 SEAT & MOUNTING GP
AN ATTACHMENT

SMCS-7324, 7336 **i02853859**

NOTE	REF NO	GRAPHIC REF	PART NUMBER	QTY	PART NAME 1 2 3 4 5 6 (PRODUCT LEVEL)	SEE PAGE
JZ	1	1		4	BLOCK-SLIDER	
J	2	1	**173-5787**	4	SETSCREW (1/4-20-THD)	
Y	3	1	**178-7914**	1	SEAT GP (CLOTH)	931
Y	4	1	**191-2933**	1	SUSPENSION GP-SEAT (AIR)	949
J	5	1	**203-7703**	2	WASHER-HARD (10.2X22.22X2.38-MM THK)	
J	6	1	**4F-4879**	1	BOLT (3/8-16X0.5-IN)	
					AVAILABLE REPAIR KIT(S):	
J			**173-7035**	1	KIT-SLIDER BLOCK (SUSPENSION SEAT)	

J-KIT MARKED J INCLUDES PARTS MARKED J
Y-SEPARATE ILLUSTRATION
Z-NOT SERVICED SEPARATELY

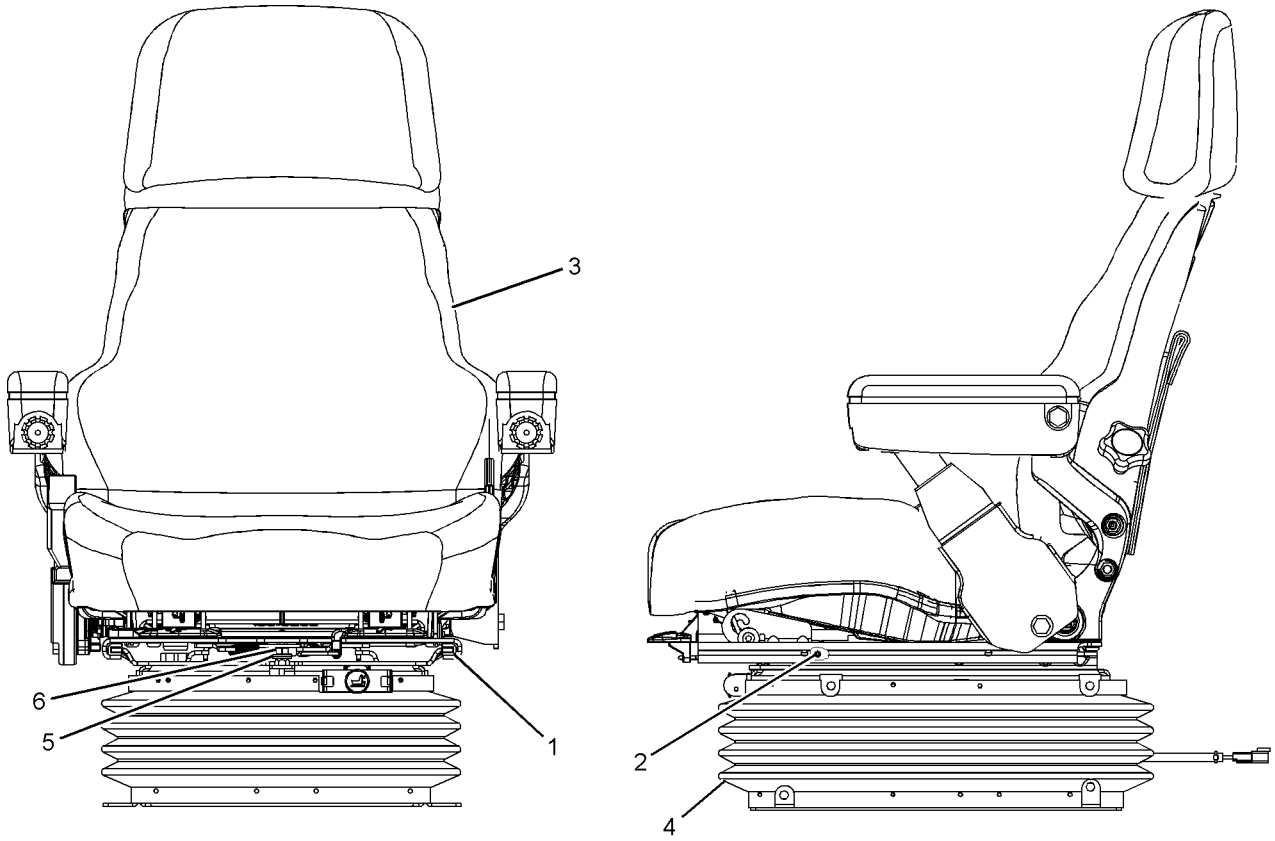

GRAPHIC #1 **<END>** g01021091

226-1842 SEAT GP-SUSPENSION–CLOTH

S/N: BYD1-UP; FTD1-UP

CANNOT BE USED WITH 239-5814–PAGE 923, 107-5978–PAGE 920, 226-1843–PAGE 935, 226-1845–PAGE 921

AN ATTACHMENT

SMCS-7324, 7336 **i02196190**

NOTE	REF NO	GRAPHIC REF	PART NUMBER	QTY	PART NAME 1 2 3 4 5 6 (PRODUCT LEVEL)	SEE PAGE
CY	1	1	**233-7388**	1	SEAT GP-SUSPENSION (CLOTH)	937
M	2	1	**113-9232**	4	BOLT (8X1.25X30-MM)	
	3	1	**118-7236**	1	PLATE	
	4	1	**8T-4224**	4	WASHER-HARD (8.8X16X2-MM THK)	
M	5	1	**9X-2041**	4	SCREW-TRUSS HEAD (M10X1.5X20-MM)	

C-CHANGE FROM PREVIOUS TYPE
M-METRIC PART
Y-SEPARATE ILLUSTRATION

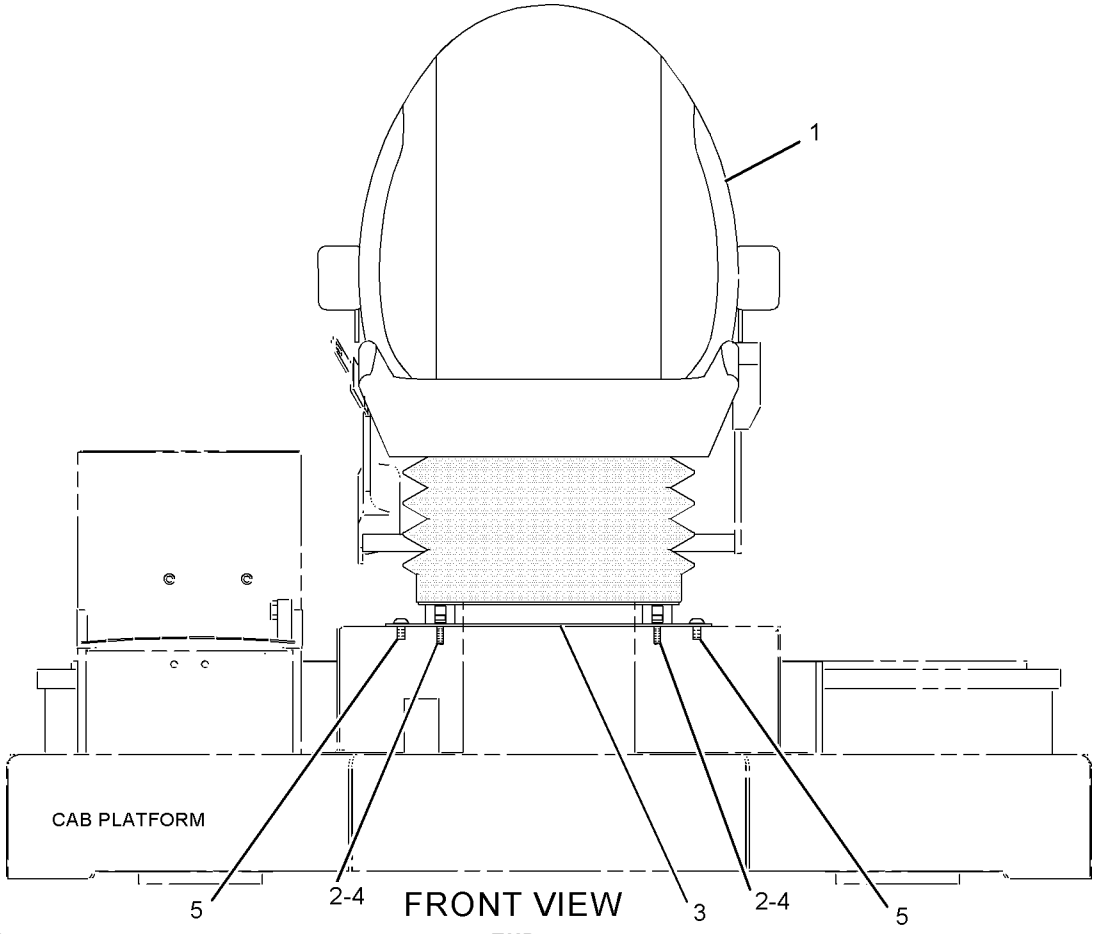

GRAPHIC #1

<END>

g01091309

226-1843 SEAT GP-SUSPENSION—VINYL

S/N: BYD1-UP; FTD1-UP

CANNOT BE USED WITH 239-5814—PAGE 923, 107-5978—PAGE 920, 226-1845—PAGE 921, 226-1842—PAGE 934

AN ATTACHMENT

SMCS-7324, 7336 **i02196191**

NOTE	REF NO	GRAPHIC REF	PART NUMBER	QTY	PART NAME 1 2 3 4 5 6 (PRODUCT LEVEL)	SEE PAGE
CY	1	1	**233-7387**	1	SEAT GP-SUSPENSION (VINYL)	936
M	2	1	**113-9232**	4	BOLT (8X1.25X30-MM)	
	3	1	**118-7236**	1	PLATE	
	4	1	**8T-4224**	4	WASHER-HARD (8.8X16X2-MM THK)	
M	5	1	**9X-2041**	4	SCREW-TRUSS HEAD (M10X1.5X20-MM)	

C-CHANGE FROM PREVIOUS TYPE
M-METRIC PART
Y-SEPARATE ILLUSTRATION

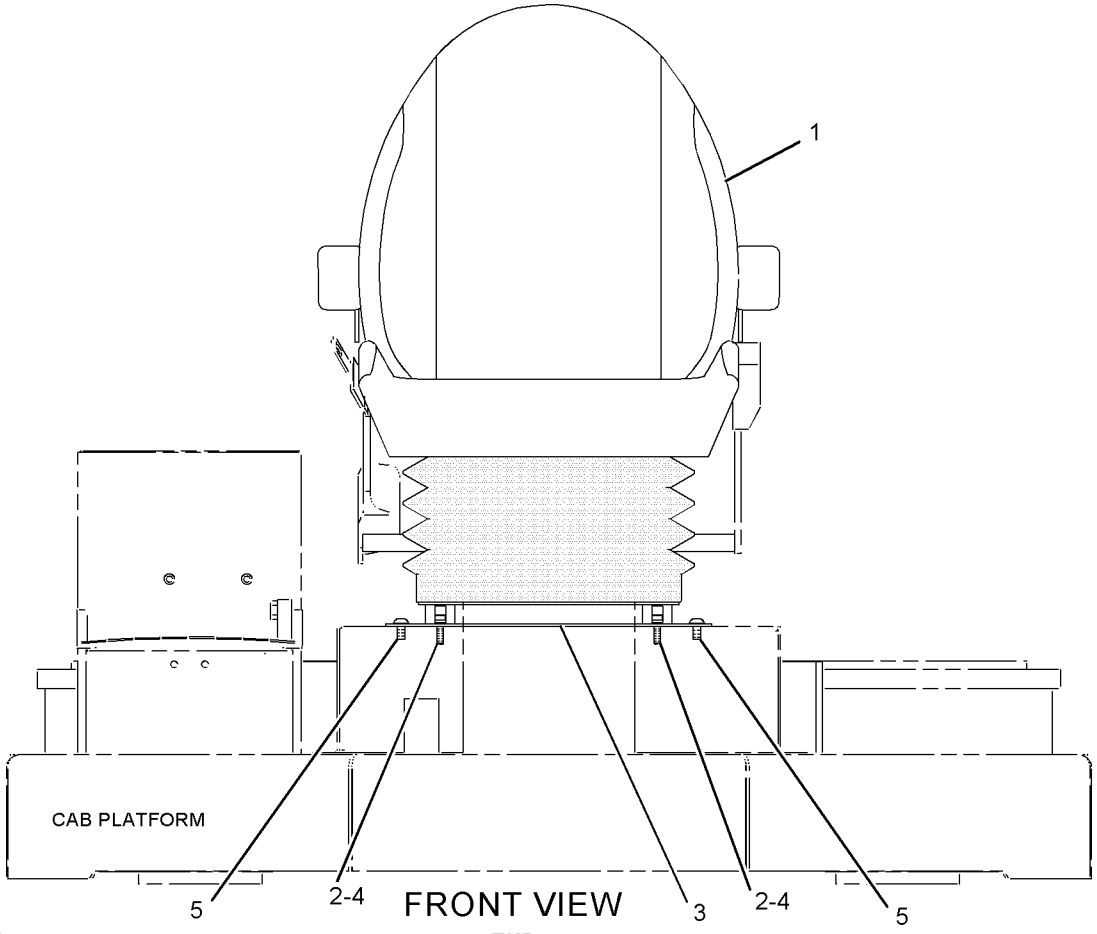

GRAPHIC #1

<END>

g01091309

OPERATOR STATION

233-7387 SEAT GP-SUSPENSION–VINYL

S/N: BYD1-UP; FTD1-UP
PART OF 226-1843 SEAT GP-SUSPENSION
AN ATTACHMENT

SMCS-7324, 7336 **i02603179**

NOTE	REF NO	GRAPHIC REF	PART NUMBER	QTY	PART NAME 1 2 3 4 5 6 (PRODUCT LEVEL)	SEE PAGE
	1	1	**110-5056**	1	KIT-SEAT (BACK)	
	2	1	**110-5059**	1	KIT-SEAT (BOTTOM)	
	3	1	**155-4957**	1	KIT-COVER (BACK)	
					(INCLUDES TRIM BARS, HOG RINGS & BACK COVER)	
	4	1	**156-1685**	1	KIT-COVER (BOTTOM)	
					(INCLUDES POUCH WIRE, CLIPS & SEAT COVER)	
	5	1	**202-4732**	1	KIT-FRAME (SEAT)	
	6	1	**202-4736**	1	KIT-DAMPER (SEAT)	
	7	1	**202-4738**	1	KIT-SUSPENSION (SEAT)	
	8	1	**202-4739**	1	KIT-STOP (SUSPENSION SEAT)	
					(INCLUDES UPSTOPS & BUMPSTOP)	
	9	1	**204-1126**	1	KIT-PLATE (SEAT)	
	10	1	**213-4574**	1	KIT-BOOT (SUSPENSION SEAT)	
	11	1	**213-4576**	1	KIT-RIDE CONTROL (SUSPENSION SEAT)	
	12	1	**213-4579**	1	KIT-WEIGHT ADJUSTER (SUSPENSION SEAT)	
	13	1	**242-8764**	1	SUPPORT (RH)	
	14	1	**242-8765**	1	SUPPORT (LH)	
	15	1	**250-6011**	1	KIT-STRAP (SEAT)	
	16	1	**250-6012**	1	KIT-SLIDE RAIL (SEAT)	
	17	1	**250-6013**	1	KIT-LEVER (SEAT)	

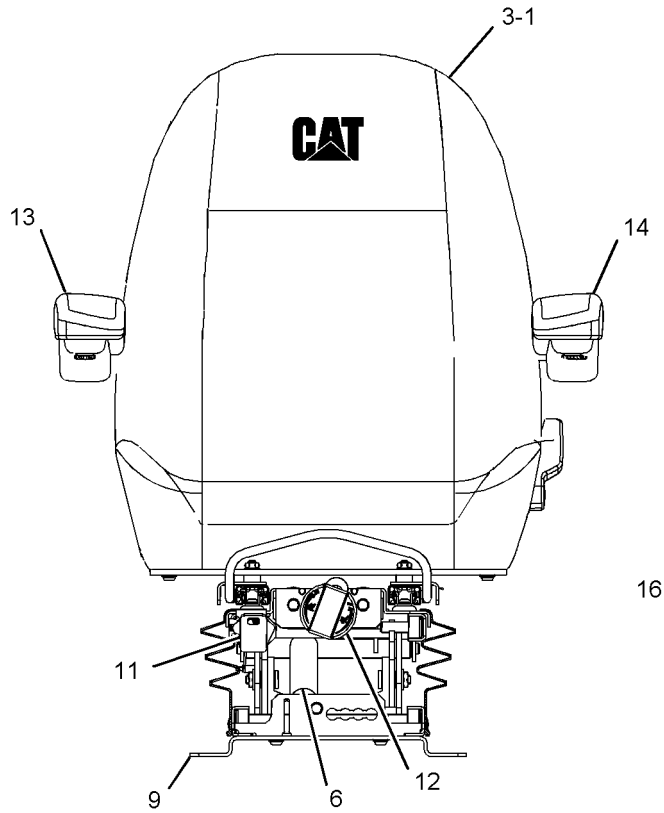

FRONT VIEW

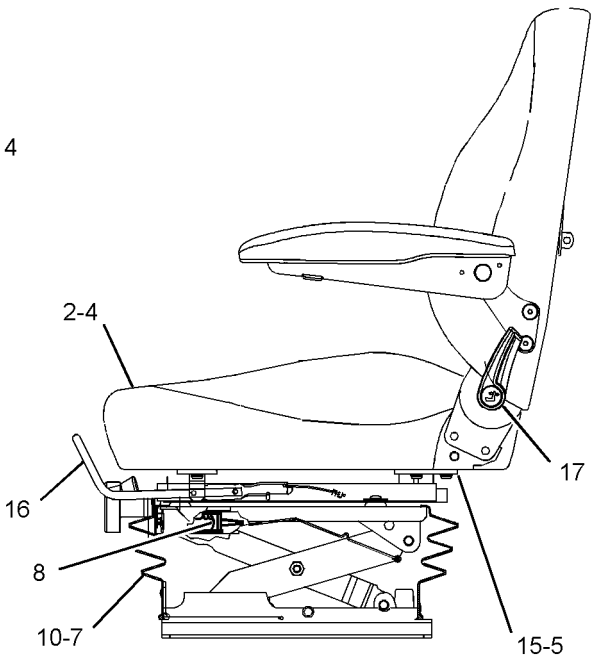

LEFT SIDE VIEW

GRAPHIC #1 **<END>** g01097869

OPERATOR STATION

233-7388 SEAT GP-SUSPENSION—CLOTH

S/N: BYD1-UP; FTD1-UP

PART OF 226-1842 SEAT GP-SUSPENSION

AN ATTACHMENT

SMCS-7324, 7336 **i02603181**

NOTE	REF NO	GRAPHIC REF	PART NUMBER	QTY	PART NAME 1 2 3 4 5 6 (PRODUCT LEVEL)	SEE PAGE
	1	1	**110-5056**	1	KIT-SEAT (BACK)	
	2	1	**110-5059**	1	KIT-SEAT (BOTTOM)	
	3	1	**156-1686**	1	KIT-COVER (SEAT)	
					(INCLUDES WIRE,D-CLIPS & SEAT COVER)	
	4	1	**156-1687**	1	KIT-COVER (BACK)	
					(INCLUDES TRIM BARS,HOG RINGS & BACK COVER)	
	5	1	**202-4732**	1	KIT-FRAME (SEAT)	
					(INCLUDES STOP CLIPS,HEADREST GUIDES,SCREWS & SEAT FRAME)	
	6	1	**202-4736**	1	KIT-DAMPER (SEAT)	
					(INCLUDES DAMPER,SPACERS,PINS,WASHERS & NUT)	
	7	1	**202-4738**	7	KIT-SUSPENSION (SEAT)	
					(INCLUDES SUSPENSION AS)	
	8	1	**202-4739**	1	KIT-STOP (SUSPENSION SEAT)	
					(INCLUDES UPSTOPS AND BUMPSTOP)	
	9	1	**204-1126**	1	KIT-PLATE (SEAT)	
					(INCLUDES PLATE,SCREWS & WASHERS)	
	10	1	**213-4574**	1	KIT-BOOT (SUSPENSION SEAT)	
	11	1	**213-4576**	1	KIT-RIDE CONTROL (SUSPENSION SEAT)	
	12	1	**213-4579**	1	KIT-WEIGHT ADJUSTER (SUSPENSION SEAT)	
	13	1	**242-8764**	1	SUPPORT (RH)	
	14	1	**242-8765**	1	SUPPORT (LH)	
	15	1	**250-6011**	1	KIT-STRAP (SEAT)	
	16	1	**250-6012**	1	KIT-SLIDE RAIL (SEAT)	
	17	1	**250-6013**	1	KIT-LEVER (SEAT)	

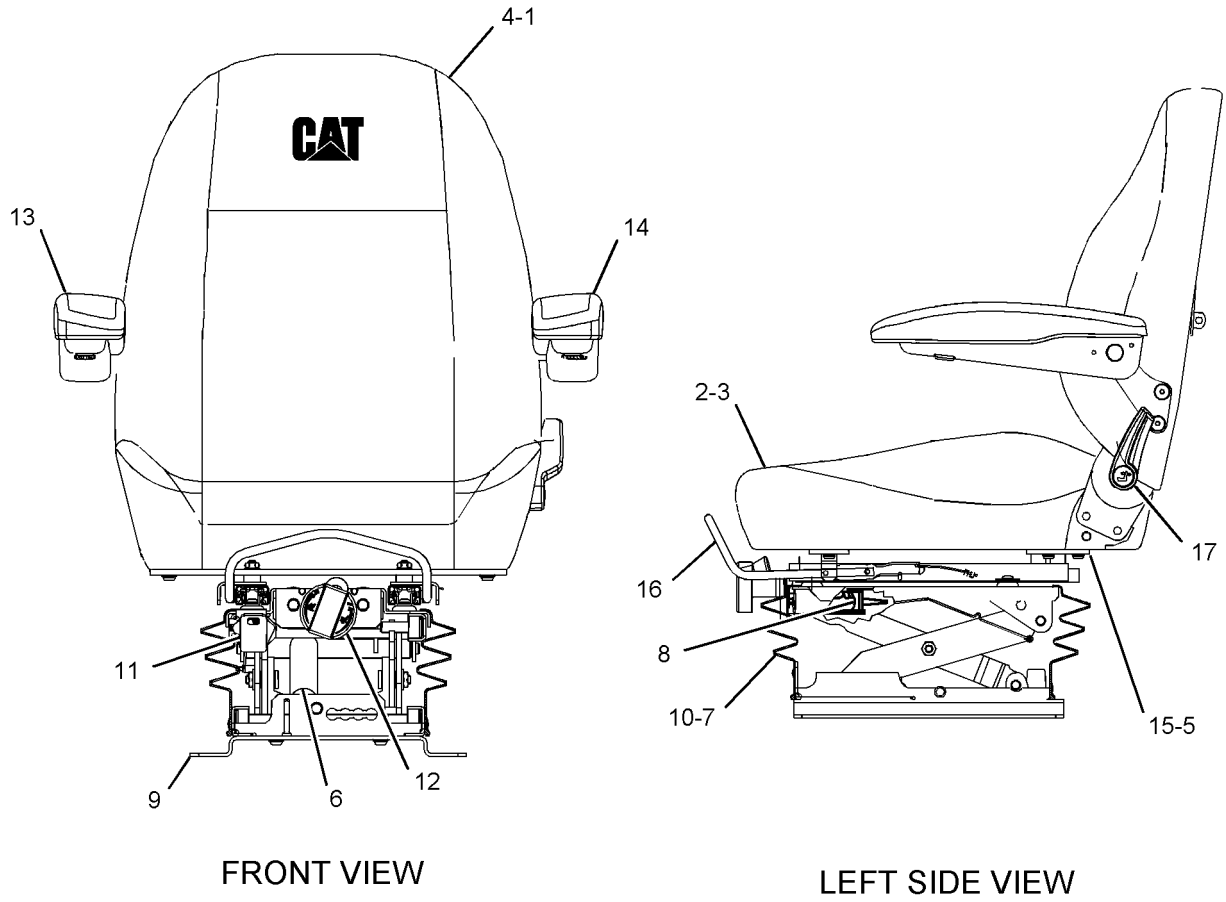

FRONT VIEW

LEFT SIDE VIEW

GRAPHIC #1 **<END>** g01097915

OPERATOR STATION

233-7389 SEAT GP-SUSPENSION—CLOTH, HEATED

S/N: BYD1-UP; FTD1-UP

PART OF 226-1845 SEAT & MOUNTING GP

AN ATTACHMENT

SMCS-7324, 7336 **i02603182**

NOTE	REF NO	GRAPHIC REF	PART NUMBER	QTY	PART NAME 1 2 3 4 5 6 (PRODUCT LEVEL)	SEE PAGE
	1	1	**109-6680**	1	KIT-SWITCH (SEAT SENSOR)	
		1	**102-8803**	1	KIT-RECEPTACLE (3-PIN)	
					(INCLUDES RECEPTACLE AS & WEDGE)	
		1	**186-3735**	3	PIN-CONNECTOR (16-GA TO 18-GA)	
	2	1	**109-6681**	1	KIT-HEATER (SEAT)	
		1	**186-3735**	2	PIN-CONNECTOR (16-GA TO 18-GA)	
		1	**102-8802**	1	KIT-RECEPTACLE (2-PIN)	
					(INCLUDES RECEPTACLE AS & WEDGE)	
	3	1	**110-5056**	1	KIT-SEAT (BACK)	
	4	1	**110-5059**	1	KIT-SEAT (BOTTOM)	
	5	1	**156-1686**	1	KIT-COVER (SEAT)	
	6	1	**156-1687**	1	KIT-COVER (BACK)	
	7	1	**202-4732**	1	KIT-FRAME (SEAT)	
	8	1	**202-4736**	1	KIT-DAMPER (SEAT)	
	9	1	**202-4738**	1	KIT-SUSPENSION (SEAT)	
	10	1	**202-4739**	1	KIT-STOP (SUSPENSION SEAT)	
					(INCLUDES UPSTOPS & BUMPSTOP)	
	11	1	**204-1126**	1	KIT-PLATE (SEAT)	
	12	1	**213-4574**	1	KIT-BOOT (SUSPENSION SEAT)	
	13	1	**213-4576**	1	KIT-RIDE CONTROL (SUSPENSION SEAT)	
	14	1	**213-4579**	1	KIT-WEIGHT ADJUSTER (SUSPENSION SEAT)	
	15	1	**242-8764**	1	SUPPORT (RH)	
	16	1	**242-8765**	1	SUPPORT (LH)	
	17	1	**250-6011**	1	KIT-STRAP (SEAT)	
	18	1	**250-6012**	1	KIT-SLIDE RAIL (SEAT)	
	19	1	**250-6013**	1	KIT-LEVER (SEAT)	

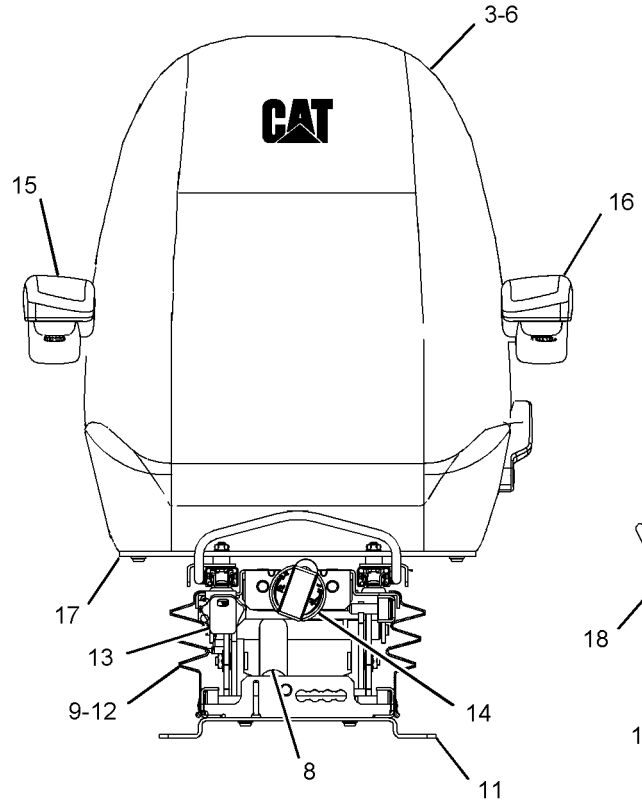

FRONT VIEW

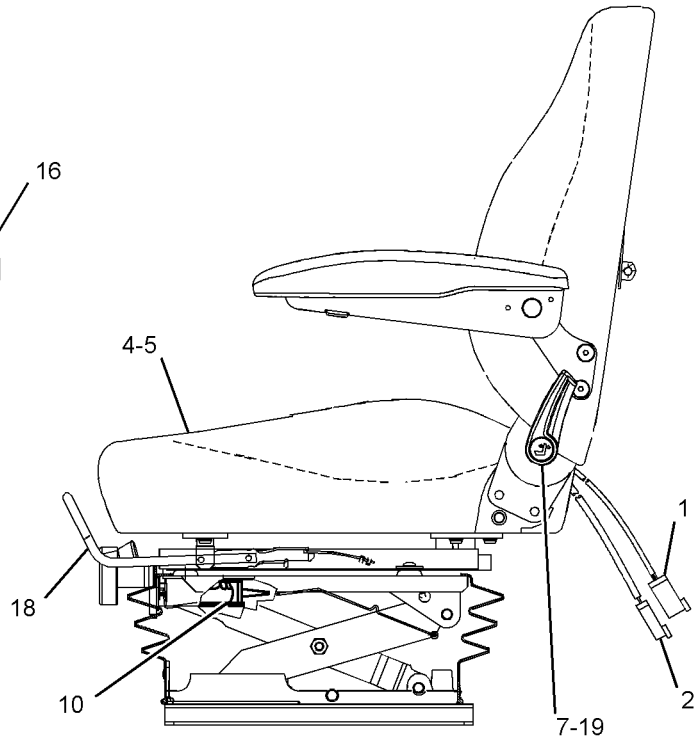

LEFT SIDE VIEW

GRAPHIC #1 **<END>** g01097931

OPERATOR STATION

190-4665 SKIRT GP-CAB

S/N: BYD1-UP
OROPS
PART OF 304-9256 CANOPY AR-SOFT
AN ATTACHMENT

SMCS-7301 **i01743627**

NOTE	REF NO	GRAPHIC REF	PART NUMBER	QTY	PART NAME 1 2 3 4 5 6 (PRODUCT LEVEL)	SEE PAGE
	1	1	**128-0783**	1	SHEET AS	
	2	1	**128-0785**	1	SHEET AS	
	3	1	**129-0335**	1	SHEET AS	
	4	1	**133-6562**	1	SHEET AS	
	5	1	**133-6563**	1	SHEET AS	
	6	1	**133-6564**	1	SHEET AS	
	7	1	**8T-4121**	22	WASHER-HARD (11X21X2.5-MM THK)	
M	8	1	**8T-4137**	22	BOLT (M10X1.5X20-MM)	

M-METRIC PART

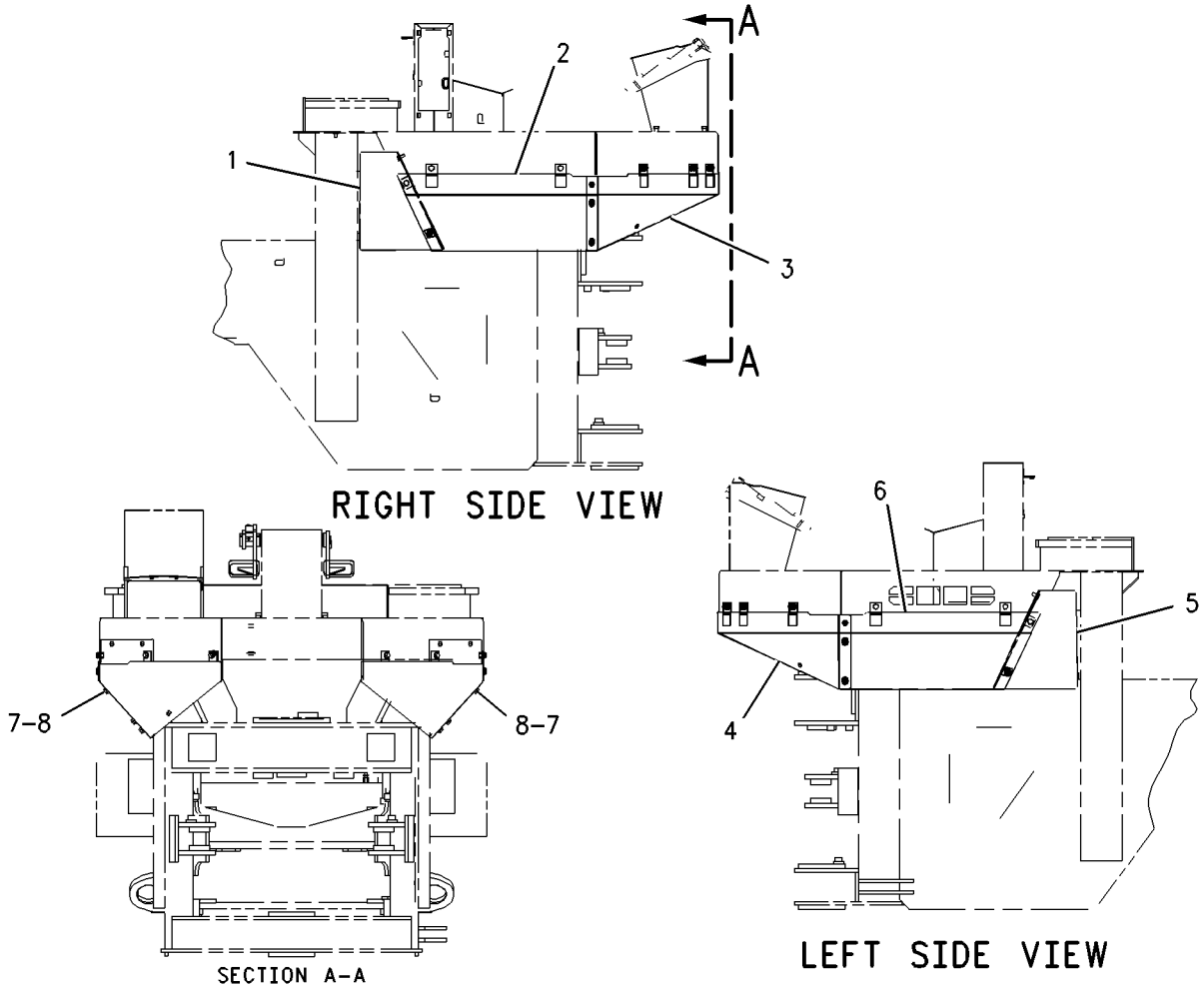

GRAPHIC #1 **<END>** g00893138

OPERATOR STATION

190-4666 SKIRT GP-CAB

S/N: BYD1-UP
EROPS
PART OF 290-8515, 290-8748 CAB AR-ENCLOSED ROPS, 304-9255 PLATFORM AR
AN ATTACHMENT

SMCS-7301 **i01785811**

NOTE	REF NO	GRAPHIC REF	PART NUMBER	QTY	PART NAME 1 2 3 4 5 6 (PRODUCT LEVEL)	SEE PAGE
	1	1	**128-0782**	1	SHEET AS	
M		1	**8T-3490**	2	NUT-WELD (M10X1.5 THD)	
	2	1	**128-0783**	1	SHEET AS	
M		1	**8T-3490**	2	NUT-WELD (M10X1.5 THD)	
	3	1	**128-0784**	1	SHEET AS	
M		1	**8T-3490**	2	NUT-WELD (M10X1.5 THD)	
	4	1	**128-0785**	1	SHEET AS	
	5	1	**129-0334**	1	SHEET AS	
M		1	**8T-3490**	1	NUT-WELD (M10X1.5 THD)	
	6	1	**129-0335**	1	SHEET AS	
M		1	**8T-3490**	3	NUT-WELD (M10X1.5 THD)	
	7	1	**132-3543**	1	STRAP AS	
M		1	**8T-3490**	2	NUT-WELD (M10X1.5 THD)	
	8	1	**8T-4121**	24	WASHER-HARD (11X21X2.5-MM THK)	
M	9	1	**8T-4137**	24	BOLT (M10X1.5X20-MM)	

M-METRIC PART

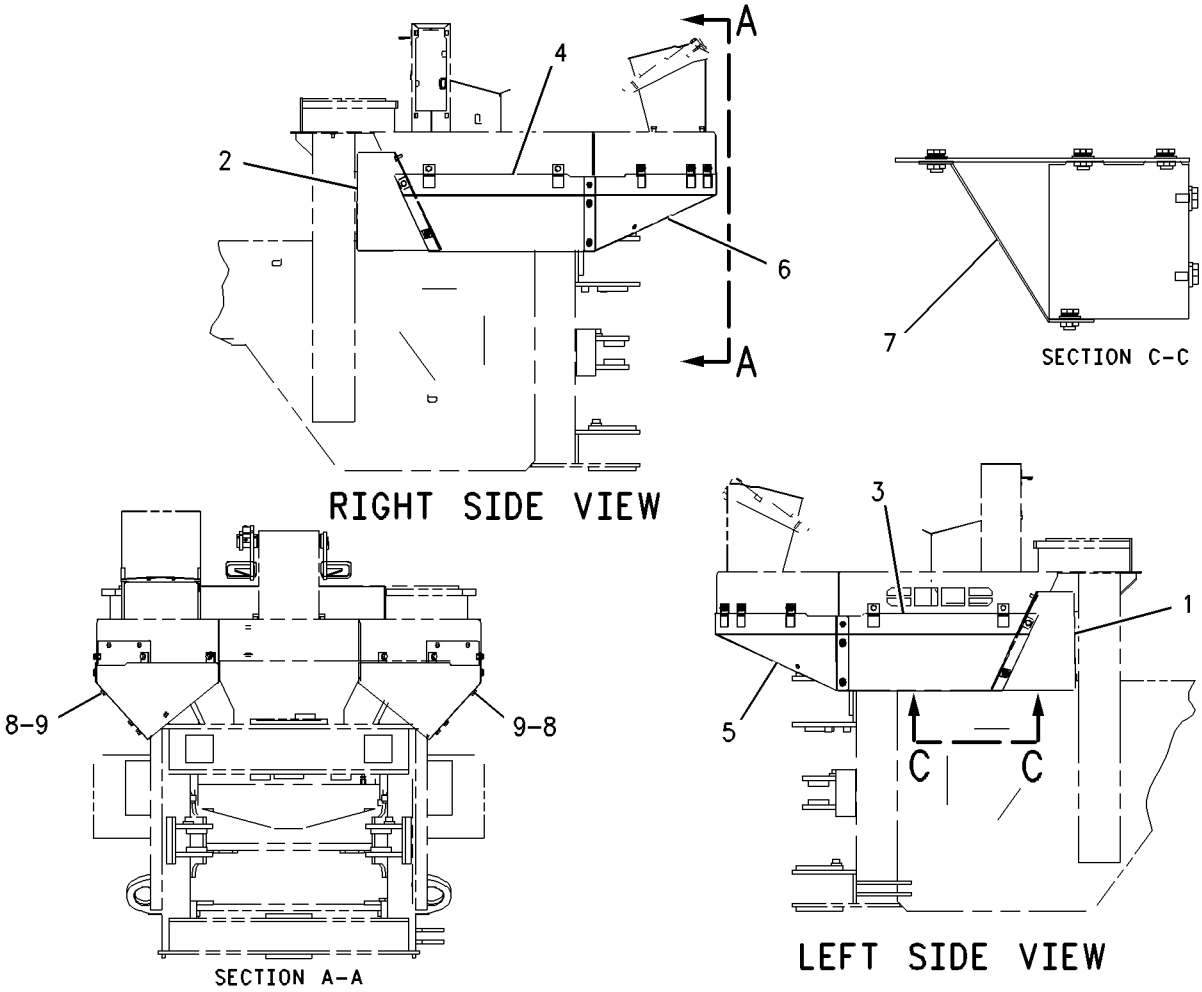

GRAPHIC #1 **<END>** g00912404

OPERATOR STATION

235-6875 SKIRT GP-CAB–OPEN ROPS

S/N: FTD1-UP

PART OF 290-8483 CANOPY AR-OPEN ROPS

AN ATTACHMENT

SMCS-7301 **i02271986**

NOTE	REF NO	GRAPHIC REF	PART NUMBER	QTY	PART NAME 1 2 3 4 5 6 (PRODUCT LEVEL)	SEE PAGE
	1	1	**238-2866**	1	SHEET AS	
M		1	**8T-3490**	3	NUT-WELD (M10X1.5 THD)	
	2	1	**238-2867**	1	SHEET AS	
M		1	**8T-3490**	2	NUT-WELD (M10X1.5 THD)	
	3	1	**238-2868**	1	SHEET AS	
M		1	**8T-3490**	3	NUT-WELD (M10X1.5 THD)	
	4	1	**238-2869**	1	SHEET AS	
M		1	**8T-3490**	3	NUT-WELD (M10X1.5 THD)	
	5	1	**238-2870**	1	SHEET AS	
M		1	**8T-3490**	2	NUT-WELD (M10X1.5 THD)	
	6	1	**238-2871**	1	SHEET AS	
M		1	**8T-3490**	2	NUT-WELD (M10X1.5 THD)	
B	7	1	**3V-5349**	2	PLUG-BUTTON	
	8	1	**8T-4121**	23	WASHER-HARD (11X21X2.5-MM THK)	
M	9	1	**8T-4137**	23	BOLT (M10X1.5X20-MM)	

B-USE AS REQUIRED
M-METRIC PART

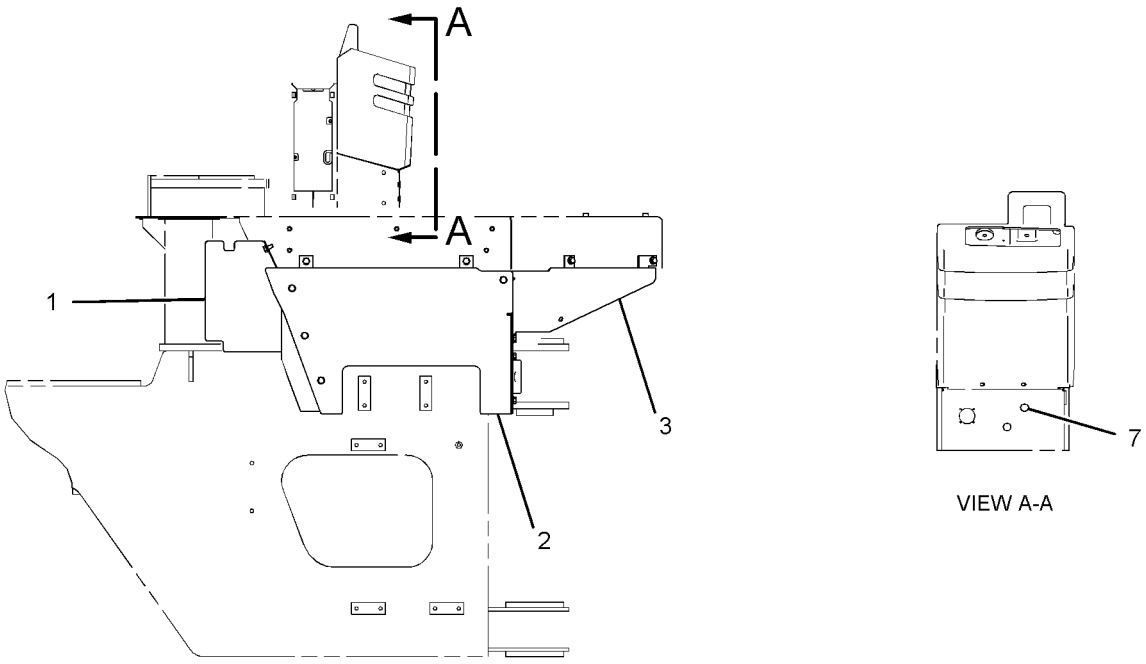

RIGHT SIDE VIEW

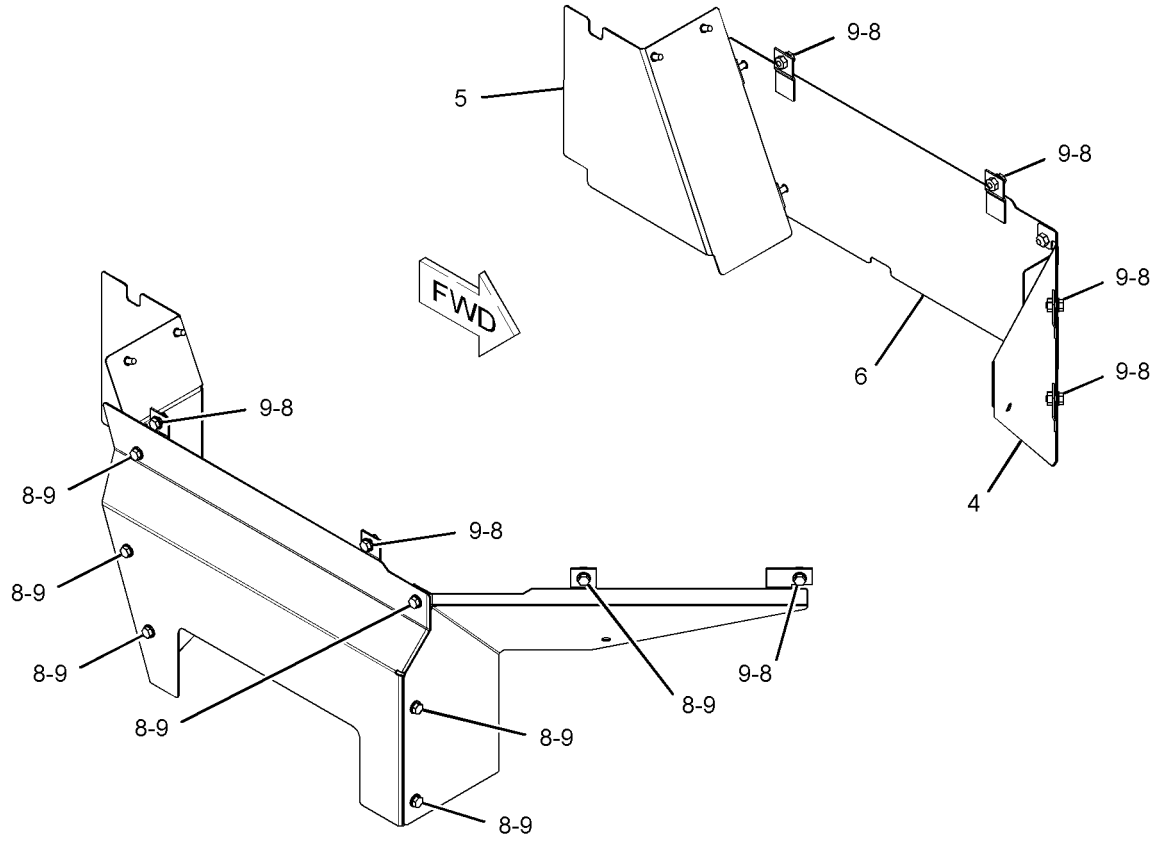

GRAPHIC #1 **<END>** g01116359

OPERATOR STATION

235-6876 SKIRT GP-CAB–ENCLOSED ROPS

S/N: FTD1-UP

PART OF 290-8530, 304-9538 CAB AR-ENCLOSED ROPS, 308-1933 PLATFORM AR AN ATTACHMENT

SMCS-7301 **i02271988**

NOTE	REF NO	GRAPHIC REF	PART NUMBER	QTY	PART NAME 1 2 3 4 5 6 (PRODUCT LEVEL)	SEE PAGE
	1	1	**238-2866**	1	SHEET AS	
M		1	**8T-3490**	3	NUT-WELD (M10X1.5-THD)	
	2	1	**238-2867**	1	SHEET AS	
M		1	**8T-3490**	2	NUT-WELD (M10X1.5-THD)	
	3	1	**238-2868**	1	SHEET AS	
M		1	**8T-3490**	3	NUT-WELD (M10X1.5-THD)	
	4	1	**238-2869**	1	SHEET AS	
M		1	**8T-3490**	3	NUT-WELD (M10X1.5-THD)	
	5	1	**238-2870**	1	SHEET AS	
M		1	**8T-3490**	2	NUT-WELD (M10X1.5-THD)	
	6	1	**238-2872**	1	SHEET AS	
M		1	**8T-3490**	2	NUT-WELD (M10X1.5-THD)	
B	7	1	**3V-5349**	2	PLUG-BUTTON	
	8	1	**8T-4121**	23	WASHER-HARD (11X21X2.5-MM THK)	
M	9	1	**8T-4137**	23	BOLT (M10X1.5X20-MM)	

B-USE AS REQUIRED
M-METRIC PART

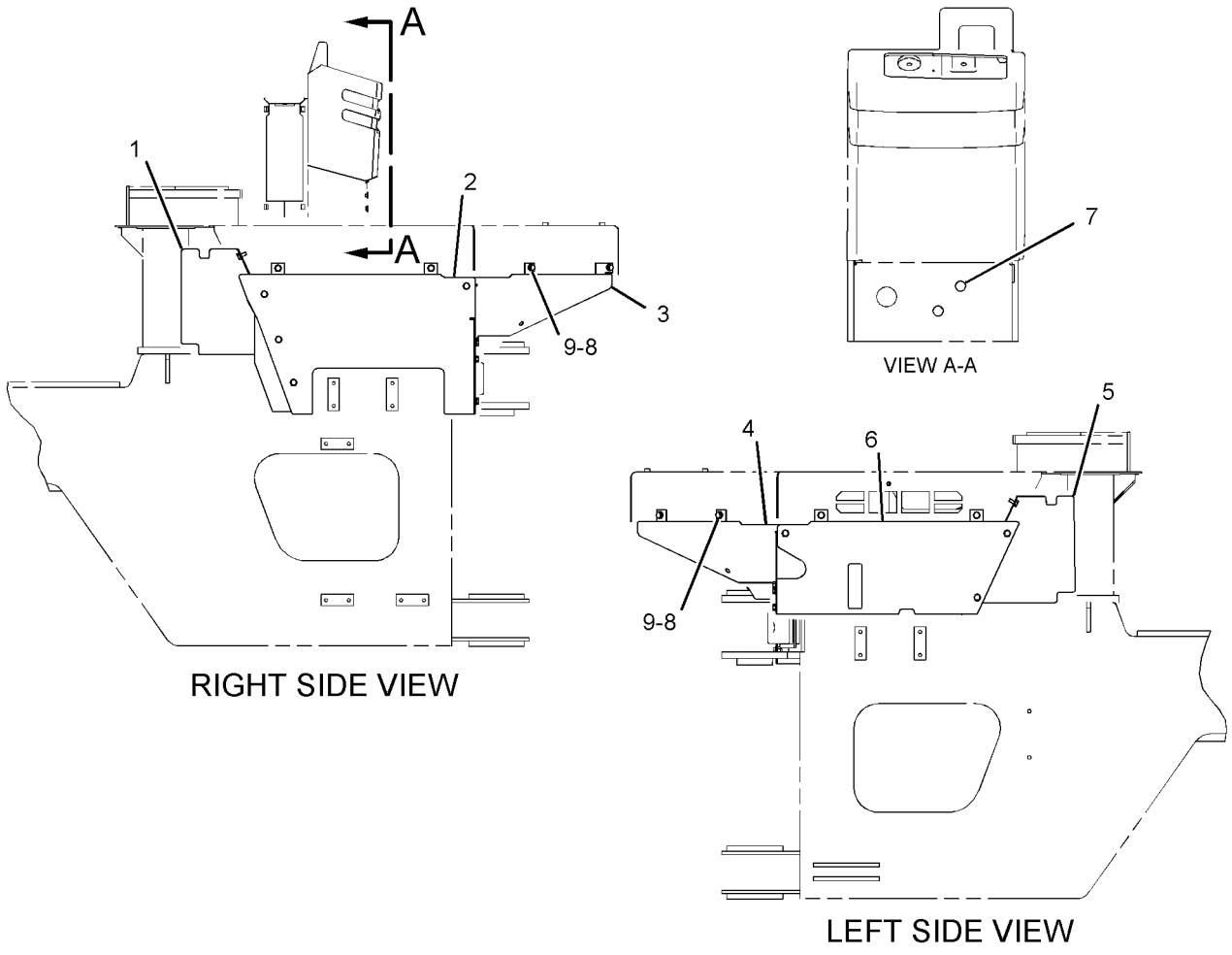

GRAPHIC #1 **<END>** g01116220

OPERATOR STATION

118-0808 SUPPORT GP-SEAT

S/N: BYD1-UP; FTD1-UP
PART OF 304-9256 CANOPY AR-SOFT, 190-4406 CANOPY GP-OPEN ROPS
AN ATTACHMENT

SMCS-7321 **i00526880**

NOTE	REF NO	GRAPHIC REF	PART NUMBER	QTY	PART NAME 1 2 3 4 5 6 (PRODUCT LEVEL)	SEE PAGE
	1	1	**119-8310**	1	COVER AS	
M		1	**8T-3490**	2	NUT-WELD (M10X1.5-THD)	
M		1	**8T-3612**	2	NUT-WELD (M8X1.25-THD)	
	2	1	**7X-0579**	11	WASHER-HARD (8.8X25.5X2-MM THK)	
M	3	1	**8T-4908**	11	BOLT (M8X1.25X25-MM)	

M-METRIC PART

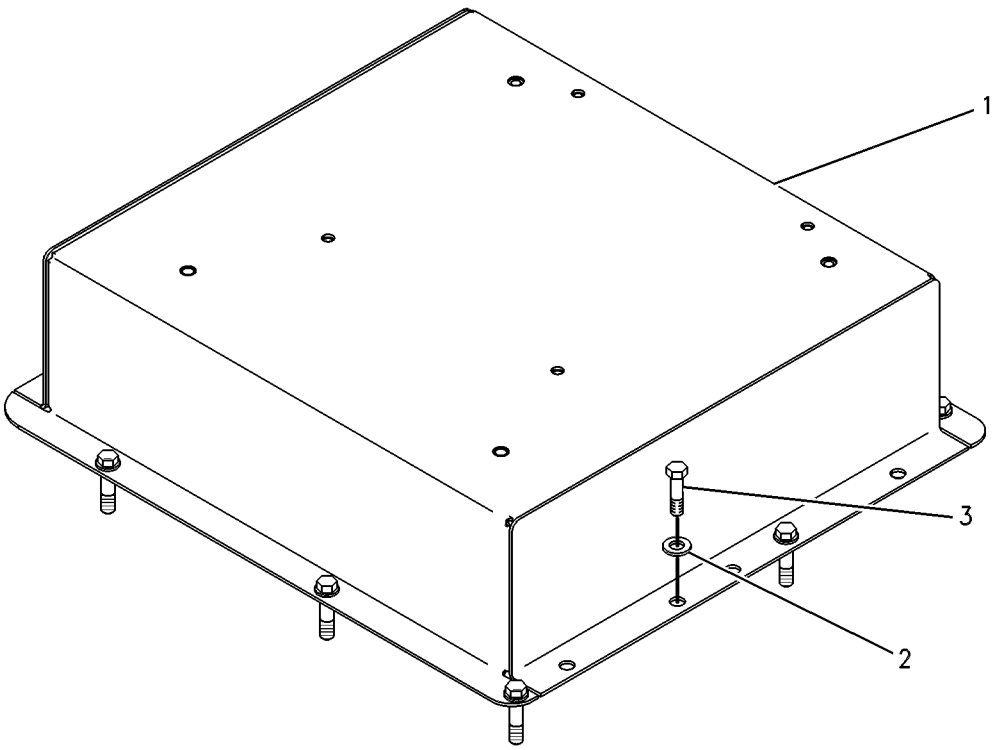

GRAPHIC #1 **<END>** g00131738

OPERATOR STATION

108-4082 SUSPENSION GP-SEAT

S/N: BYD1-UP; FTD1-UP
PART OF 8Y-6977 SEAT GP-SUSPENSION
AN ATTACHMENT

SMCS-7324 **i02853868**

NOTE	REF NO	GRAPHIC REF	PART NUMBER	QTY	PART NAME 1 2 3 4 5 6 (PRODUCT LEVEL)	SEE PAGE
	1	1	**8Y-6022**	1	PLATE-SLIDE	
	2	1	**8Y-6023**	1	PLATE-SLIDE	
	3	1	**5M-3062**	2	BOLT (3/8-16X0.75-IN)	
	4	1	**5P-1075**	4	WASHER-HARD (10.2X22.5X3-MM THK)	
	5	1	**2K-4973**	6	LOCKNUT (3/8-16-THD)	
	6	1	**1D-4677**	4	BOLT-ROUND HEAD (3/8-16X1-IN)	
	7	1	**8Y-6014**	1	HOUSING AS-LOWER	
	8	1	**8Y-6012**	1	ARM AS-SUSPENSION	
J	9	1	**101-0003**	23	FASTENER	
Y	10	1	**108-4582**	1	HOUSING GP-SEAT SUSPENSION	861
J	11	1	**108-4878**	3	NUT-PUSH	
	12	1	**8Y-5965**	1	ABSORBER AS-SHOCK	
	13	1	**5V-1497**	1	RETAINER	
	14	1	**4V-7884**	2	BEARING	
	15	1	**4V-8577**	4	BEARING	
	16	1	**8Y-6024**	2	SHAFT AS	
J	17	1	**111-5042**	3	FASTENER	
	18	1	**145-0326**	1	FILM-INSTRUCTION (SEAT ADJUSTMENT)	
					AVAILABLE REPAIR KIT(S):	
			101-4194	1	KIT-TETHER (SUSPENSION SEAT)	
					(INCLUDES 2 BELTS)	
			101-4195	1	KIT-SUSPENSION ROLLER (SUSPENSION SEAT)	
					(INCLUDES 4 ROLLERS)	
J			**8Y-5944**	1	KIT-SUSPENSION BOOT (SEAT)	
					(INCLUDES BOOT, 2 RETAINERS)	

J-KIT MARKED J INCLUDES PART(S) MARKED J
Y-SEPARATE ILLUSTRATION

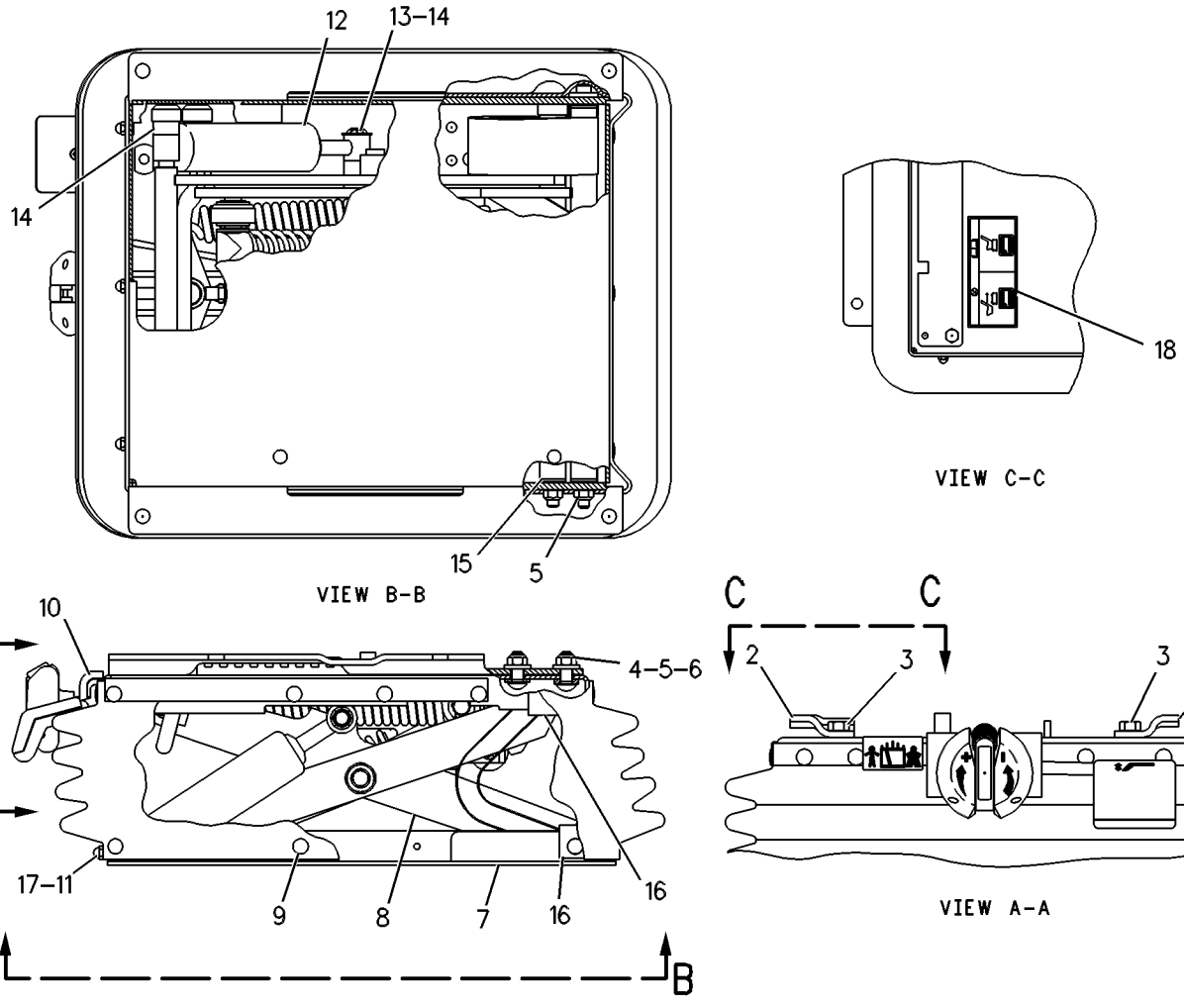

GRAPHIC #1 **<END>** g00424533

OPERATOR STATION

191-2933 SUSPENSION GP-SEAT–AIR

S/N: BYD1-UP; FTD1-UP
PART OF 219-8096 SEAT GP-SUSPENSION
AN ATTACHMENT

SMCS-7324 **i02002720**

NOTE	REF NO	GRAPHIC REF	PART NUMBER	QTY	PART NAME 1 2 3 4 5 6 (PRODUCT LEVEL)	SEE PAGE
	1	1	**3P-9900**	5	WASHER (10.5X30X3-MM THK)	
	2	1	**4B-4278**	2	WASHER (10.2X20.5X1.6-MM THK)	
	3	1	**4V-8577**	12	BEARING	
	4	1	**8L-8413**	1	STRAP-CABLE	
	5	1	**145-0326**	1	FILM-INSTRUCTION (SEAT ADJUSTMENT)	
	6	1	**164-1234**	1	PLATE	
	7	1	**164-1270**	33	FASTENER	
	8	1	**169-7380**	1	BOLT-SOCKET HEAD (3/8-16X0.375-IN)	
	9	1	**186-5107**	2	SCREW-DRIVE (NO 8X1.25-IN)	
	10	1	**192-7752**	4	SHAFT AS	
	11	1	**192-7755**	1	HOUSING AS	
	12	1	**192-7760**	1	SHAFT	
	13	1	**192-7767**	1	SCISSORS AS	
	14	1	**192-7783**	1	TOGGLE AS	
	15	1	**192-7787**	1	TOGGLE AS	
	16	1	**192-7790**	1	HOUSING AS	
	17	1	**192-7795**	1	BOOT	
	18	1	**192-7805**	1	HARNESS AS-VALVE (SEAT AIR COMPRESSOR)	
		1	**102-8802**	1	KIT-RECEPTACLE (2-PIN)	
	19	1	**192-7810**	1	SPRING AS-AIR	
		1	**5P-4423**	1	ELBOW	
		1	**163-1135**	1	SPRING	
	20	1	**192-7812**	1	BOLT-SHOULDER (3/8-16X2-IN)	
	21	1	**192-7820**	3	BUMPER	
	22	1	**192-7822**	1	SHAFT	
	23	1	**237-3943**	1	BRACKET	
Y	24	1	**237-3970**	1	AIR COMPRESSOR GP-SEAT	784
	25	1	**1H-8296**	1	SCREW-MACHINE (3/8-16X0.52-IN)	
	26	1	**2K-4973**	8	LOCKNUT (3/8-16-THD)	
	27	1	**3J-4818**	1	LOCKWASHER	
M	28	1	**5C-2890**	3	NUT (M6X1-THD)	
	29	1	**8T-9371**	1	BOLT (3/8-16X0.5-IN)	
E	30	1	**211-5358**		CONDUIT-FLEXIBLE (100CM)	
D	31	1	**5P-6010**		TUBE (1M)	
					AVAILABLE REPAIR KIT(S):	
			192-7799	1	KIT-AIR VALVE (SUSPENSION SEAT)	
					(INCLUDES KNOB AS, NUT, VALVE, LOCKWASHER AND FITTING)	
			192-7848	1	KIT-SHOCK ABSORBER (SUSPENSION SEAT)	
					(INCLUDES LOCKNUT, LOCKWASHER, SHOCK ABSORBER, BEARING, WASHER, AND BOLTS)	
			211-9294	1	KIT-TETHER (SUSPENSION SEAT)	

D-ORDER BY THE METER
E-ORDER BY THE CENTIMETER
M-METRIC PART
Y-SEPARATE ILLUSTRATION

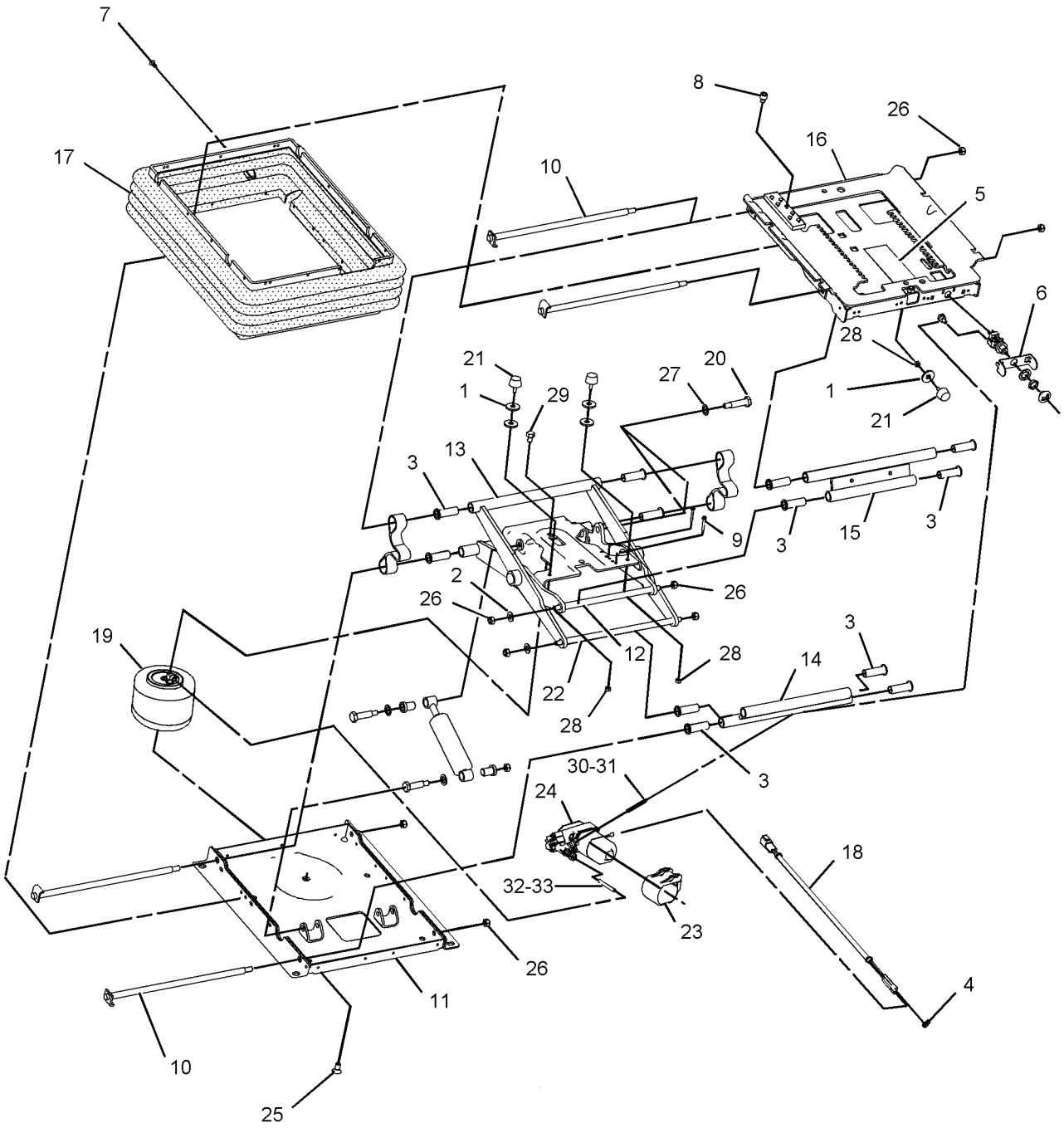

GRAPHIC #1 **<END>** g01011847

OPERATOR STATION

107-4641 VISOR GP-CAB

S/N: BYD1-UP; FTD1-UP

PART OF 308-2275, 308-2276, 308-2278, 308-2279, 308-2280 CAB AR-ENCLOSED ROPS AN ATTACHMENT

SMCS-7301 **i00523513**

NOTE	REF NO	GRAPHIC REF	PART NUMBER	QTY	PART NAME 1 2 3 4 5 6 (PRODUCT LEVEL)	SEE PAGE
	1	1	**9R-3203**	2	PLATE	
	2	1	**9R-3204**	1	PLATE AS	
M		1	**6V-9632**	2	NUT-WELD (M6X1-THD)	
	3	1	**9R-3205**	1	VISOR AS	
M	4	1	**9X-2042**	2	SCREW-TRUSS HEAD (M6X1X12-MM)	
M	5	1	**9X-2045**	2	SCREW-TRUSS HEAD (M6X1X20-MM)	

M-METRIC PART

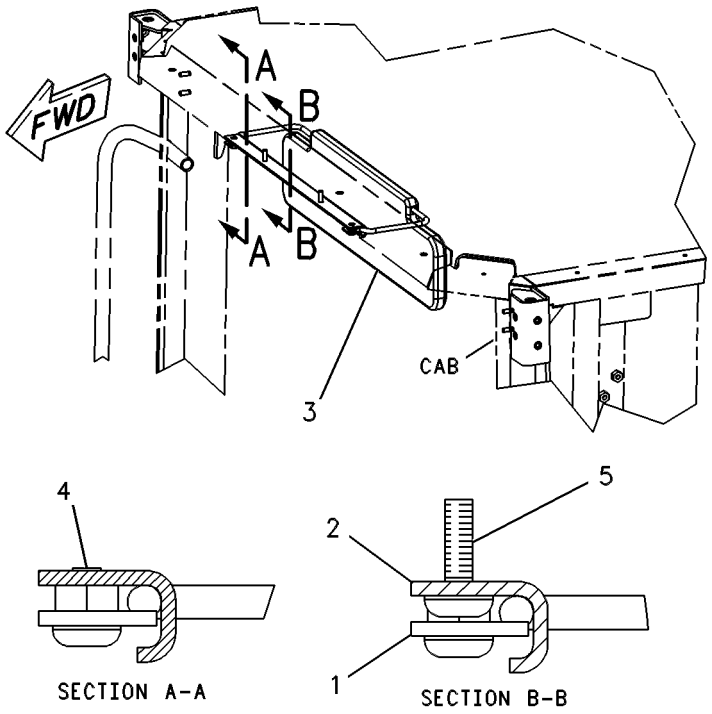

GRAPHIC #1 **<END>** g00131409

OPERATOR STATION

131-1236 WASHER GP-WINDOW

S/N: BYD1-UP; FTD1-UP
PART OF 290-8508, 290-8525 OPERATOR AR-ENCLOSED ROPS, 304-9255, 308-1933
PLATFORM AR
AN ATTACHMENT

SMCS-7306 **i02829758**

NOTE	REF NO	GRAPHIC REF	PART NUMBER	QTY	PART NAME 1 2 3 4 5 6 (PRODUCT LEVEL)	SEE PAGE
	1	1	**4E-7316**	1	STRAP AS	
M		1	**8T-3612**	2	NUT-WELD (M8X1.25-THD)	
	2	1	**131-1237**	1	BRACKET AS	
M		1	**8T-3490**	2	NUT-WELD (M10X1.5-THD)	
	3	1	**131-1238**	1	BRACKET AS	
Y	4	1	**152-2764**	1	WASHER GP-WINDOW	953
	5	1	**3S-2093**	3	STRAP-CABLE	
	6	1	**8T-4121**	4	WASHER-HARD (11X21X2.5-MM THK)	
M	7	1	**8T-4137**	4	BOLT (M10X1.5X20-MM)	
M	8	1	**8T-4189**	2	BOLT (M8X1.25X20-MM)	
	9	1	**8T-4224**	2	WASHER-HARD (8.8X16X2-MM THK)	
E	10	1	**144-0195**		HOSE (142-CM))	
E	11	1	**144-0195**		HOSE (127-CM))	

E-ORDER BY THE CENTIMETER
M-METRIC PART
Y-SEPARATE ILLUSTRATION

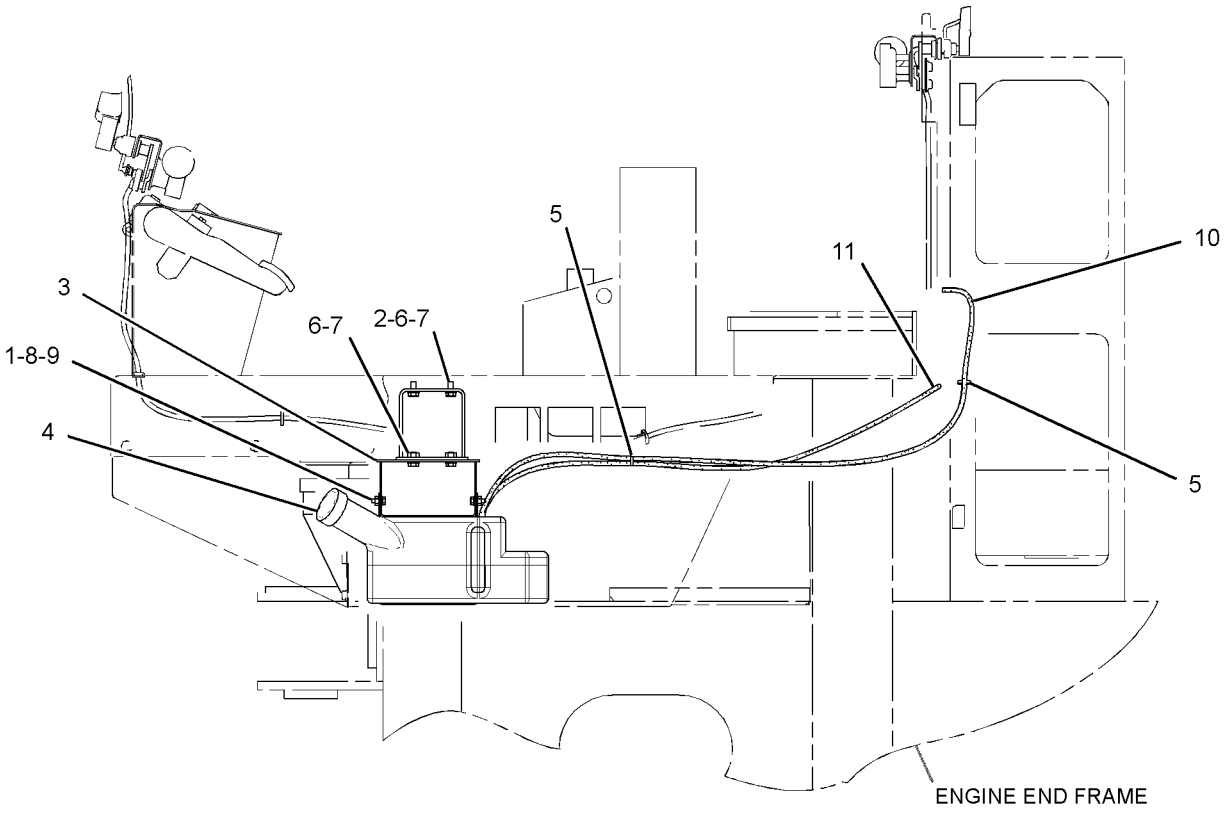

LEFT SIDE VIEW

GRAPHIC #1 **<END>** g01296475

OPERATOR STATION

152-2764 WASHER GP-WINDOW

S/N: BYD1-UP; FTD1-UP
PART OF 131-1236 WASHER GP-WINDOW
AN ATTACHMENT

SMCS-7306 **i02603188**

NOTE	REF NO	GRAPHIC REF	PART NUMBER	QTY	PART NAME 1 2 3 4 5 6 (PRODUCT LEVEL)	SEE PAGE
	1	1	**152-2763**	1	RESERVOIR	
	2	1	**8E-8292**	1	CAP-VENTED (WINDOW WASHER)	
	3	1	**7T-8890**	2	PUMP AS-WASHER	
	4	1	**8T-5914**	2	GROMMET	
	5	1	**8T-5913**	2	SCREEN-FILTER (WINDOW WASHER)	

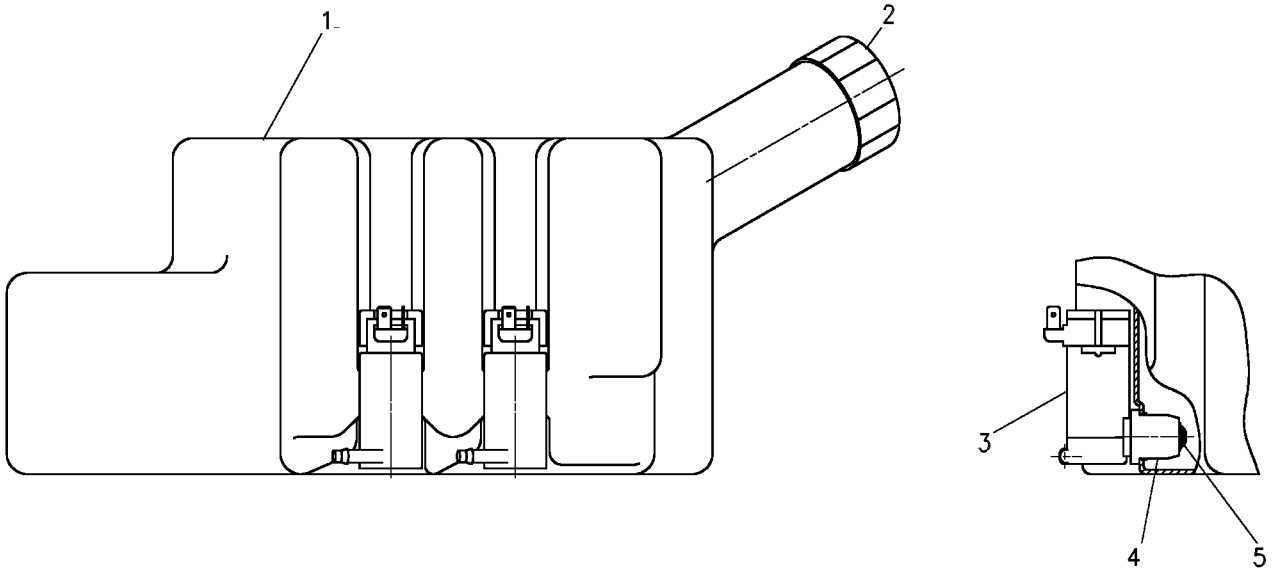

GRAPHIC #1 **<END>** g00511360

OPERATOR STATION

180-2535 WINDOW GP-DOOR

S/N: BYD1-UP; FTD1-UP
PART OF 290-8495, 290-8496 DOOR GP-CAB
AN ATTACHMENT

SMCS-7310 **i01988760**

NOTE	REF NO	GRAPHIC REF	PART NUMBER	QTY	PART NAME 1 2 3 4 5 6 (PRODUCT LEVEL)	SEE PAGE
	1	1	**144-1569**	1	STOP	
	2	1	**187-5122**	1	FRAME	
	3	1	**187-5123**	1	RAIL	
	4	1	**187-5124**	1	GLASS-SLIDING	
	5	1	**187-5125**	1	GLASS-FIXED	
	6	1	**187-5126**	1	RAIL AS	
	7	1	**187-5127**	1	CATCH AS (LH)	
		1	**150-8015**	1	GASKET	
	8	1	**187-5128**	1	CATCH AS (RH)	
		1	**150-8015**	1	GASKET	
M	9	1	**8T-0306**	6	SCREW-MACHINE (M5X0.8X10-MM)	
D	10	1	**9X-2532**	1	SEAL (0.1M)	
E	11	1	**137-2170**		SEAL (250CM)	

D-ORDER BY THE METER
E-ORDER BY THE CENTIMETER
M-METRIC PART

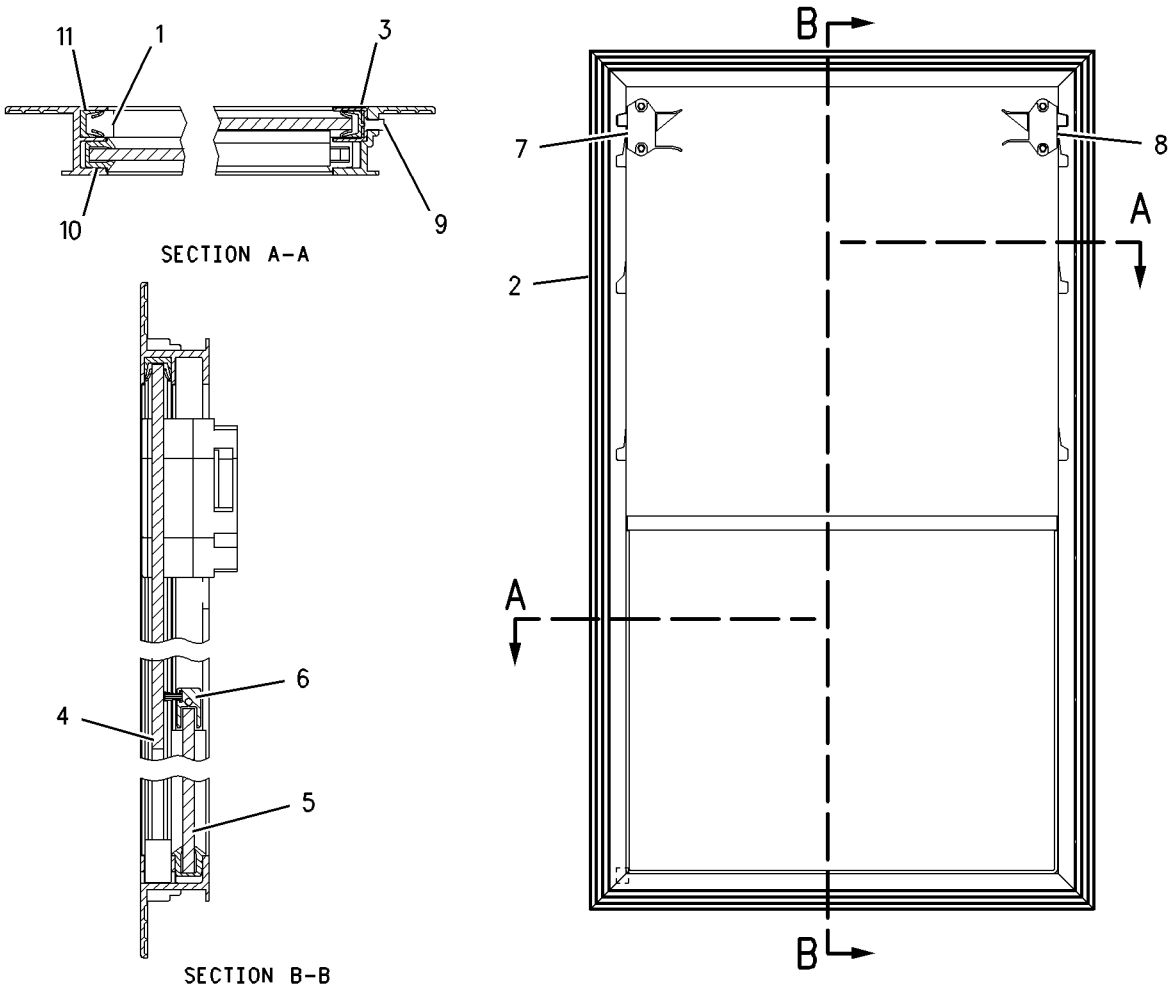

GRAPHIC #1 **<END>** g00762052

OPERATOR STATION

107-4628 WIPER GP-WINDOW

S/N: BYD1-UP; FTD1-UP
PART OF 190-4405 CAB AR-ENCLOSED ROPS
AN ATTACHMENT

SMCS-7305 **i02831683**

NOTE	REF NO	GRAPHIC REF	PART NUMBER	QTY	PART NAME 1 2 3 4 5 6 (PRODUCT LEVEL)	SEE PAGE
C	1	1	**6V-6543**	1	BLADE AS-WIPER (503-MM) (REAR)	
	2	1	**6V-6210**	1	GASKET-SHAFT	
	3	1	**6V-7419**	1	BLADE AS-WIPER (700-MM) (FRONT)	
	4	1	**8T-5400**	4	CONNECTOR AS	
C	5	1	**9R-2596**	2	PLATE	
	6	1	**155-5779**	1	WIPER PIVOT AS	
CY	7	1	**307-0205**	1	ARM GP-WINDOW WIPER	788
	8	1	**214-7636**	1	WIPER GP-WINDOW (FRONT)	
M		1	**6V-8225**	4	NUT (M6X1-THD)	
		1	**136-3188**	3	CLIP	
		1	**136-3190**	1	NOZZLE AS-WASHER	
M		1	**191-8921**	4	BOLT-SOCKET HEAD (M6X1X25-MM)	
		1	**227-7392**	4	WASHER (6.3X10.3X0.4-MM THK)	
	9	1	**155-5783**	1	MOTOR GP-WINDOW WIPER (24-VOLT) (FRONT)	
		1	**186-3735**	5	PIN-CONNECTOR (16-GA TO 18-GA)	
		1	**8T-8737**	1	PLUG-SEAL	
		1	**102-8805**	1	KIT-RECEPTACLE (6-PIN)	
					(INCLUDES RECEPTACLE AS & WEDGE)	
	10	1	**155-5784**	1	MOTOR GP-WINDOW WIPER (24-VOLT) (REAR)	
		1	**186-3735**	5	PIN-CONNECTOR (16-GA TO 18-GA)	
		1	**8T-8737**	1	PLUG-SEAL	
		1	**102-8805**	1	KIT-RECEPTACLE (6-PIN)	
					(INCLUDES RECEPTACLE AS & WEDGE)	
	11	1	**3S-2093**	7	STRAP-CABLE	
	12	1	**4M-7470**	1	GROMMET	
M	13	1	**9X-2045**	2	SCREW-TRUSS HEAD (M6X1X20-MM)	
E	14	1	**144-0195**		HOSE (267-CM)	
E	15	1	**144-0195**		HOSE (7-CM)	

C-CHANGE FROM PREVIOUS TYPE
E-ORDER BY THE CENTIMETER
M-METRIC PART
Y-SEPARATE ILLUSTRATION

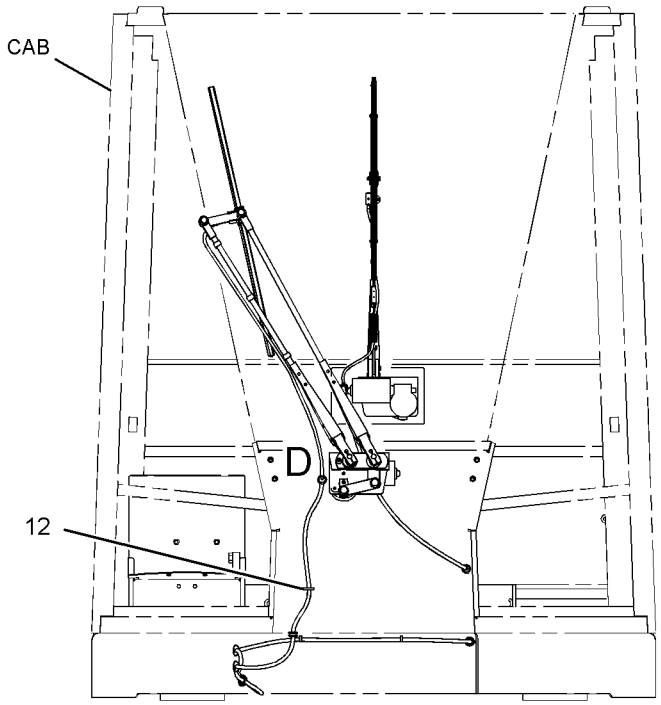

FRONT VIEW

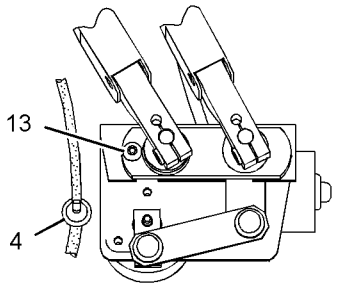

VIEW OF AREA D

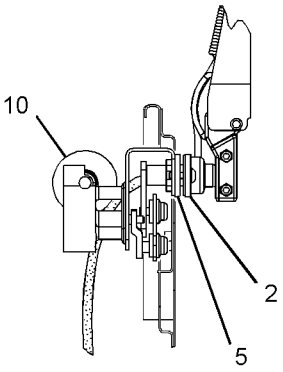

VIEW OF AREA A

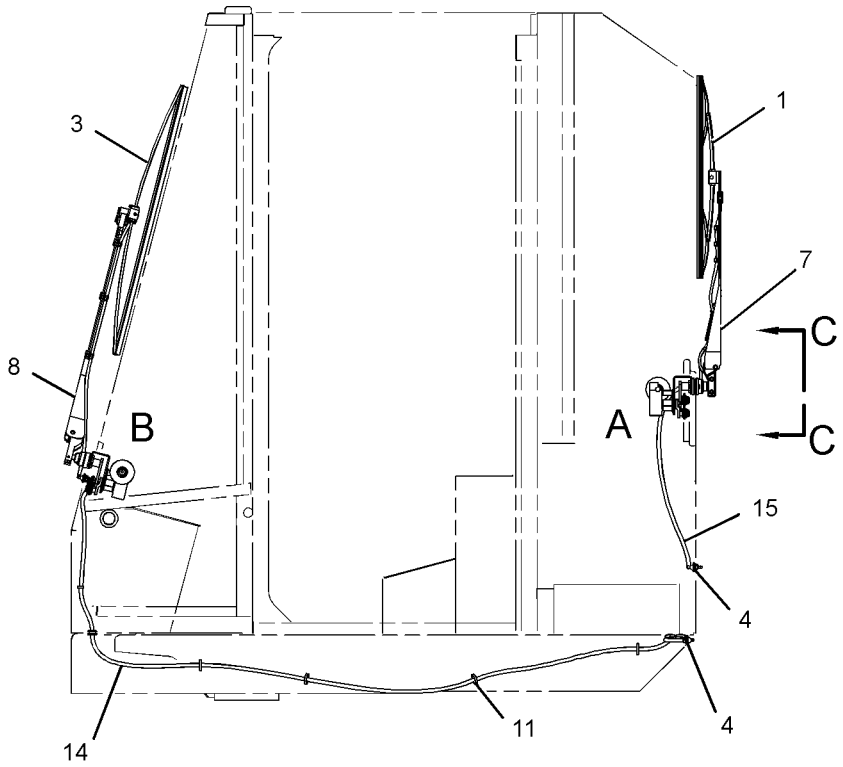

LEFT SIDE VIEW

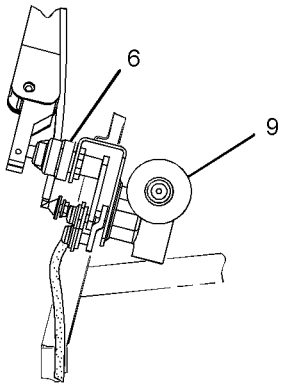

VIEW OF AREA B

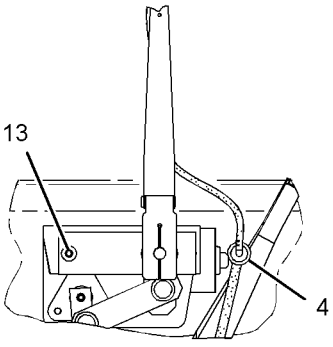

VIEW C-C

GRAPHIC #1 **<END>** g01414299

SERVICE EQUIPMENT AND SUPPLIES

114-9342 CHOCK GP-WHEEL

S/N: BYD1-UP; FTD1-UP
AN ATTACHMENT

SMCS-7000 **i02284092**

NOTE	PART NUMBER	QTY	PART NAME 1 2 3 4 5 6 (PRODUCT LEVEL)	SEE PAGE
			(NO SERVICED PARTS)	

<END>

SERVICE EQUIPMENT AND SUPPLIES

219-2423 FILM GP—GERMAN ROADING

S/N: BYD1-UP; FTD1-UP
WITH ELECTRONIC SPEED CONTROL
AN ATTACHMENT

SMCS-7405, 7557 **i01809749**

NOTE	REF NO	GRAPHIC REF	PART NUMBER	QTY	PART NAME 1 2 3 4 5 6 (PRODUCT LEVEL)	SEE PAGE
	1	1	**106-0827**	3	FILM-IDENTIFICATION (20-KM/H)	

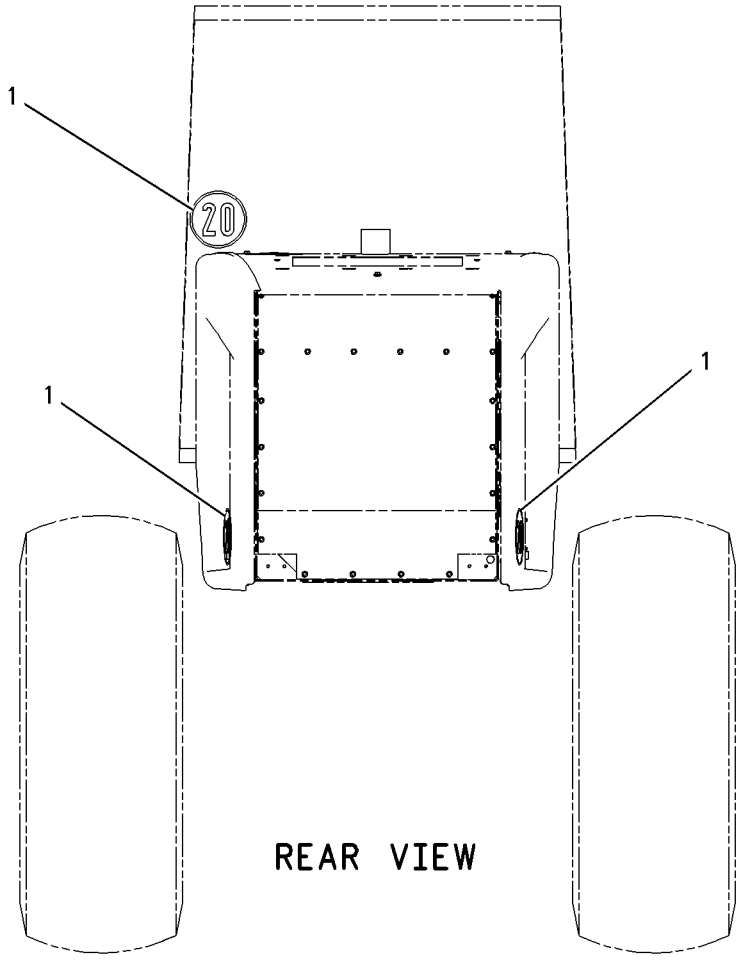

GRAPHIC #1 **<END>** g00926000

SERVICE EQUIPMENT AND SUPPLIES

290-6487 FILM GP

S/N: FTD1-UP

PART OF 308-3668 CONVERSION AR-CERTIFICATION

AN ATTACHMENT

SMCS-7405, 7557 **i02811291**

NOTE	PART NUMBER	QTY	PART NAME 1 2 3 4 5 6 (PRODUCT LEVEL)	SEE PAGE
	220-0198	1	FILM (REGIST)	
			(UNDER PIN PLATE ON LH SIDE ON NON-ENGINE END FRAME)	
	146-6747	2	FILM-INFORMATION (24-VOLT)	
			(ON THE INSIDE OF THE BATTERY BOX ON THE FRONT SIDE PLATE NEAR THE TOP)	
	224-9855	1	FILM-INSTRUCTION (START AID, READ OMM, INTL)	
			(ON BRACKET ON RH B-POST INSIDE OF CAB)	
	276-2604	1	FILM-INSTRUCTION (BELT ROUTING)	
			(20MM CENTERED ABOVE MACHINE LEFT REMOVABLE ENGINE ACCESS PANEL ON REAR COOLING STRUCTURE)	
	219-0302	1	FILM-WARNING (NO WELD, NO DRILL, READ OMM)	
			(ON LH B-POST INSIDE OF CAB, FLUSH WITH THE TOP OF CONSOLE)	
	224-8946	1	FILM-WARNING (NO ETHER SPRAY/AIR INTK, INTL)	
			(ON BRACKET ON RH B-POST INSIDE OF CAB)	
	225-0312	2	FILM-WARNING (JUMP START, READ OMM, INTL)	
			(ON THE INSIDE OF THE BATTERY BOX ON THE FRONT SIDE PLATE NEAR THE TOP)	
	225-4257	1	FILM-WARNING (HOT FLUID UNDER PRESS, INTL)	
			(ON THE UNDERSIDE OF THE SHUNT TANK ACCESS DOOR)	
	239-4234	1	FILM-WARNING (QUICK COUPLER, READ OMM, INTL)	
			(ON BRACKET ON RH B-POST INSIDE OF CAB)	
	240-7957	1	FILM-WARNING (DO NOT OPERATE, READ OMM, INTL)	
			(ON BRACKET ON RH B-POST INSIDE OF CAB)	
	298-5074	1	FILM-WARNING (FIRE HAZARD, READ OMM)	
			(HALF-WAY UP LH A-POST INSIDE OF CAB)	
	302-4390	1	FILM-WARNING (CRUSH HAZARD, FASTEN SEAT BELT)	
			(ON RH A-POST INSIDE OF CAB, FLUSH WITH TOP OF STEERING WHEEL)	
	305-4467	1	FILM-WARNING (HIGH PRESSURE, READ MANUAL)	
			(ONE FILM VERTICALLY ON FRONT STRUCTURE ON RH SIDE OF MACHINE ADJACENT TO THE BRAKE ACCUMMULATORS)	
	2S-2981	1	TAG-WARNING (STEERING FRAME LOCK)	
			(ATTACH TO STEERING WHEEL)	

<END>

SERVICE EQUIPMENT AND SUPPLIES

293-4931 FILM GP

S/N: BYD1-UP

PART OF 312-4576 PLATE & FILM GP

SMCS-7405, 7557 **i02801219**

NOTE	REF NO	GRAPHIC REF	PART NUMBER	QTY	PART NAME 1 2 3 4 5 6 (PRODUCT LEVEL)	SEE PAGE
	1	1	**293-4926**	1	FILM-STRIPE (928H, CAT, RH)	
	2	1	**293-4919**	2	FILM-STRIPE (FILLER, HOOD)	
	3	1	**293-4925**	1	FILM-STRIPE (928H, CAT, LH)	
	4	1	**9X-2447**	1	FILM-INFORMATION (CATERPILLAR)	
	5	1	**253-0861**	2	FILM-INFORMATION (CAT POWER, ACERT TECHNOLOGY) (FRONT, RH, LH)	

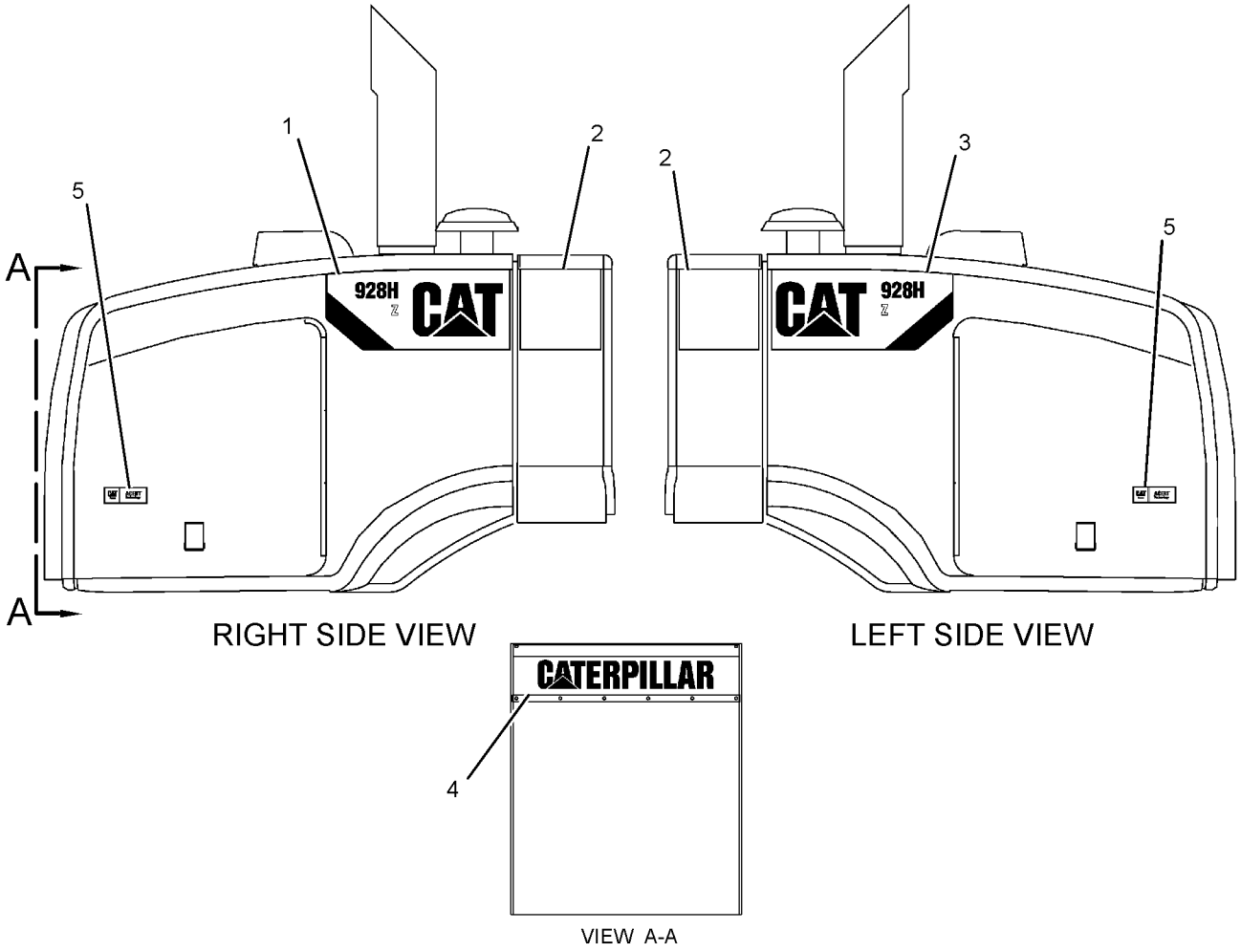

GRAPHIC #1 **<END>** g01400811

SERVICE EQUIPMENT AND SUPPLIES

293-4932 FILM GP

S/N: FTD1-UP

PART OF 312-4577 PLATE & FILM GP

SMCS-7405, 7557 **i02808114**

NOTE	REF NO	GRAPHIC REF	PART NUMBER	QTY	PART NAME 1 2 3 4 5 6 (PRODUCT LEVEL)	SEE PAGE
	1	1	**293-4927**	1	FILM-STRIPE (930H, CAT, LH)	
	2	1	**293-4919**	2	FILM-STRIPE (FILLER, HOOD)	
	3	1	**293-4928**	1	FILM-STRIPE (930H, CAT, RH)	
	4	1	**118-0626**	1	FILM-WINDOW (FRONT)	
	5	1	**9X-2447**	1	FILM-INFORMATION (CATERPILLAR)	
	6	1	**253-0861**	2	FILM-INFORMATION (CAT POWER, ACERT TECHNOLOGY)	

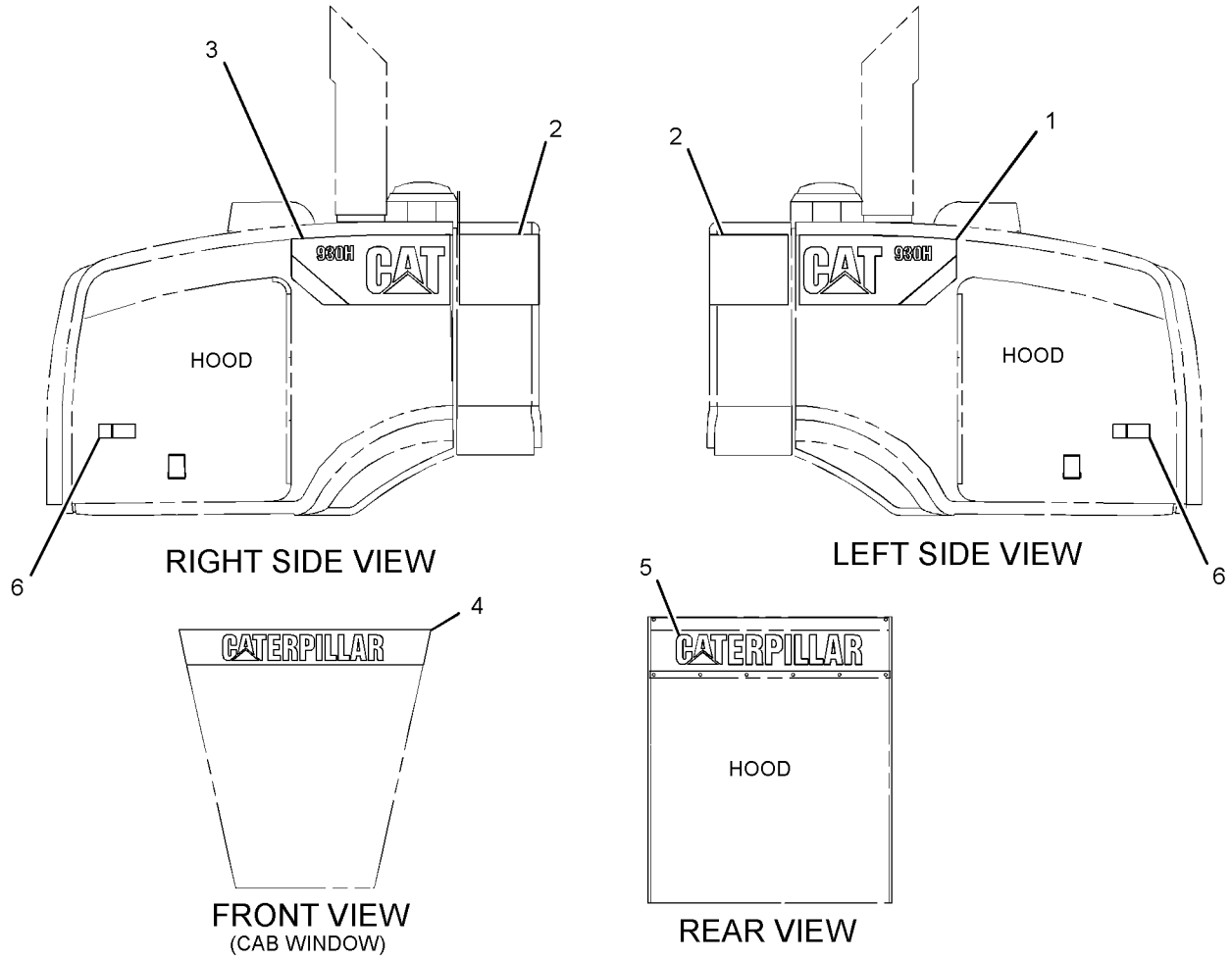

GRAPHIC #1 **<END>** g01402799

290-6492 FILM GP-INTERNATIONAL

S/N: BYD1-UP

PART OF 308-3658, 308-3661, 308-3664 CONVERSION AR-CERTIFICATION

AN ATTACHMENT

SMCS-7405, 7557 **i02801437**

NOTE	PART NUMBER	QTY	PART NAME 1 2 3 4 5 6 (PRODUCT LEVEL)	SEE PAGE
	297-5493	1	FILM-CERTIFICATION (OPS, READ OMM)	
			(ON LH B-POST INSIDE OF CAB, FLUSH WITH TOP OF CONSOLE)	
	302-0623	1	FILM-CERTIFICATION (OPS, READ OMM)	
			(ON LH A-POST INSIDE OF CAB, FLUSH WITH TOP OF CONSOLE)	
	159-3590	1	FILM-IDENTIFICATION (WATER SEPARATOR)	
			(DIRECTLY TO THE RIGHT OF THE FUEL WATER SEPERATOR BOWL ON REAR COOLING STRUCTURE)	
	146-6747	2	FILM-INFORMATION (24-VOLT)	
			(ON THE INSIDE OF THE BATTERY BOX ON THE FRONT SIDE PLATE NEAR TOP)	
	224-9855	1	FILM-INSTRUCTION (START AID, READ OMM, INTL)	
			(ON BRACKET ON RH B-POST INSIDE OF CAB)	
	276-2604	1	FILM-INSTRUCTION (BELT ROUTING)	
			(20MM CENTERED ABOVE MACHINE LEFT REMOVABLE ENGINE ACCESS PANEL ON REAR COOLING STRUCTURE)	
	219-0302	1	FILM-WARNING (NO WELD, NO DRILL, READ OMM)	
			(ON LH B-POST INSIDE OF CAB, FLUSH WITH PARKING BRAKE CONSOLE)	
	224-8946	1	FILM-WARNING (NO ETHER SPRAY/AIR INTK, INTL)	
			(ONE FILM ON RH SIDE OF ENGINE COMPARTMENTHOOD NEAR PRE-AIRCLEANER,ORIENT TO BE READ WHILE ON RH SIDE PLATFORM)	
	225-0312	2	FILM-WARNING (JUMP START, READ OMM, INTL)	
			(ON THE INSIDE OF THE BATTERY BOX ON THE FRONT SIDE PLATE NEAR TOP)	
	225-4257	1	FILM-WARNING (HOT FLUID UNDER PRESS, INTL)	
			(ON UNDERSIDE OF THE SHUNT TANK ACCESS DOOR, ORIENT TO BE READ FROM LH SIDE OF MACHINE)	
	226-1240	2	FILM-WARNING (CRUSH HAZARD, STAY BACK, INTL)	
			(5MM ABOVE BOTTOM EDGE OF BACK PLATE OF CAB & CENTER BETWEEN FRONT CAB SKIRT MOUNTING BOLTS)	
	226-1274	1	FILM-WARNING (CRUSH HAZARD, READ OMM, INTL)	
			(30MM UP FROM THE ARTICULATION LOCK PLATE AND 150MM FROM FRONT OF ENGINE END FRAME)	
	239-4234	1	FILM-WARNING (QUICK COUPLER, READ OMM, INTL)	
			(ON BRACKET ON RH B-POST INSIDE OF CAB)	
	240-7957	1	FILM-WARNING (DO NOT OPERATE, READ OMM, INTL)	
			(ON BRACKET ON RH B-POST INSIDE OF CAB)	
	302-4390	1	FILM-WARNING (CRUSH HAZARD, FASTEN SEAT BELT)	
			(ON RH A-POST INSIDE OF CAB, FLUSH WITH TOP OF STEERING WHEEL)	
	305-4467	1	FILM-WARNING (HIGH PRESSURE, READ MANUAL)	
			(ONE FILM VERTICALLY ON FRONT STRUCTURE ON RH SIDE OF MACHINE ADJACENT TO THE BRAKE ACCUMMULATORS)	

<END>

312-4576 PLATE & FILM GP

S/N: BYD1-UP

PART OF 289-8871 CHASSIS AR

SMCS-7405, 7557 **i02876956**

NOTE	PART NUMBER	QTY	PART NAME 1 2 3 4 5 6 (PRODUCT LEVEL)	SEE PAGE
Y	~~*293-4931*~~	~~1~~	~~FILM GP~~	~~960~~

312-4576 **PLATE & FILM GP** *(contd.)* **i02876956**

NOTE	PART NUMBER	QTY	PART NAME 1 2 3 4 5 6 (PRODUCT LEVEL)	SEE PAGE
	239-6989	1	PLATE-SERIAL NUMBER (MACHINE)	
			(ON THE LH SIDE OF THE NON-ENGINE END FRAME (OUTSIDE)	
			PLACE (175-MM) FROM TOP OF BOTTOM HITCH PLATE & WITHIN (50-MM) OF VERTICAL EDGE OF TOWER)	
			(FOR CONCEALED PIN LOCATION REFER TO CHART LOCATION (CONCEALED PIN))	
	225-4150	1	PLATE-SERVICE INFORMATION (MACHINE)	
			(TO BE ADHERED TO COMBO PIN PLATE)	
B	**193-5913**	8	PLUG	
B	**193-5914**	39	PLUG	
B	**193-5918**	4	PLUG	
	220-5566	1	FILM (GREASE POINT)	
			(BESIDE GREASE BLOCK ON ENGINE END FRAME)	
	220-5568	1	FILM (GREASE POINT)	
			(ON GREASE BLOCK ON NON-ENGINE END FRAME)	
	220-5572	1	FILM (GREASE)	
			(ON LEFT FRONT CAB SKIRT, AS CLOSE TO BEND AS POSSIBLE WITHOUT CROSSING BEND & CENTERED VERTICALLY)	
	300-9915	2	FILM-IDENTIFICATION (HYDRAULIC OIL)	
			(ONE FILM ON TOP OF HYDRAULIC TANK, CENTERED ON SIGHT GAUGE.ORIENT TO BE READ FROM LH SIDE OF MACHINE)	
			(ONE FILM ON RH SIDE OF CAB TO THE LEFT OF THE REAR GRAB HANDLE & 25-MM DOWN FROM DOOR LATCH GRAB)	
	134-7258	1	FILM-INFORMATION (EXTENDED LIFE COOLANT,READ OMM)	
			(ON UNDERSIDE OF THE SHUNT TANK ACCESS DOOR. ORIENT TO BE READ FROM LH SIDE OF MACHINE)	
	7X-3229	4	FILM-INSTRUCTION (LIFT EYE, TIE-DOWN LOCATION)	
			(ABOVE EACH TIE DOWN EYE. CENTERED ON THE HOLE ON THE ENGINE END FRAME,OR COUNTER WEIGHT (IF FITTED),	
			& ADJACENT TO EACH EYE TOWARD THE INSIDE OF THE NON-ENGINE END FRAME)	
	220-5574	1	FILM-INSTRUCTION (RADIATOR DOORS)	
			(ON FAN GUARD BELOW THE LATCH. POSITION SO THAT IT IS COVERED WHEN THE SERVICE DOOR IS CLOSED)	
	309-6899	1	FILM-INSTRUCTION (BATTERY)	
			(IN CENTER OF FRONT GLASS, VISIBLE FROM SEATED POSITION IN CAB.	
			FOR OROPS CAB,PLACE ON LH B-POST, AT EYE LEVEL OF OPERATION FROM SEATED POSITION IN CAB)	
	312-7713	1	FILM-INSTRUCTION (DOOR, READ OMM)	
			(ON RH ENGINE ACCESS FOLD DOWN PANEL	
			PLACE FILM ON INSIDE OF PANEL 25-MM FROM SIDE OF PANEL & 75-MM DOWN FROM THE TOP)	
	236-7230	1	TAG-WARNING (STEERING FRAME LOCK)	
			(ATTACH TO THE STEERING WHEEL)	

B-USE AS REQUIRED
Y-SEPARATE ILLUSTRATION

<END>

SERVICE EQUIPMENT AND SUPPLIES

312-4577 PLATE & FILM GP—INTERNATIONAL

S/N: FTD1-UP

PART OF 289-8891, 290-6498 CHASSIS AR

SMCS-7405, 7557 **i02879554**

NOTE	PART NUMBER	QTY	PART NAME 1 2 3 4 5 6 (PRODUCT LEVEL)	SEE PAGE
Y	*293-4932*	1	FILM GP	961
	239-6989	1	PLATE-SERIAL NUMBER (MACHINE)	
			(ON LH SIDE OF NON-ENGINE END FRAME (OUTSIDE). PLACE (175-MM) FROM TOP OF BOTTOM HITCH PLATE & WITHIN (50-MM) OF	
			VERTICAL EDGE OF TOWER)	
	225-4150	1	PLATE-SERVICE INFORMATION (MACHINE)	
			(ADHERE TO COMBO PIN PLATE)	
B	**193-5913**	8	PLUG (PROTECTION)	
B	**193-5914**	47	PLUG (PROTECTION)	
B	**193-5918**	4	PLUG (PROTECTION)	
	253-0864	1	FILM-IDENTIFICATION (1, 2, GREASE POINT)	
			(ON GREASE BLOCK ON ENGINE END FRAME)	
	253-0865	1	FILM-IDENTIFICATION (3, 4, GREASE POINT)	
			(ON GREASE BLOCK ON ENGINE END FRAME)	
	300-9915	2	FILM-IDENTIFICATION (HYDRAULIC OIL)	
			(ONE FILM ON TOP OF HYDRAULIC TANK, CENTERED ON SIGHT GAUGE. ORIENT TO BE READ FROM RH SIDE OF MACHINE. OTHER FILM ON	
			RH SIDE OF CAB TO LEFT OF REAR GRAB HANDLE & 25-MM DOWN FROM DOOR LATCH GRAB)	
	134-7258	1	FILM-INFORMATION (EXTENDED LIFE COOLANT,READ OMM)	
			(ON UNDERSIDE OF SHUNT TANK ACCESS DOOR. ORIENT TO BE READ FROM RH SIDE OF MACHINE)	
	7X-3229	4	FILM-INSTRUCTION (LIFT EYE, TIE-DOWN LOCATION)	
			(ABOVE EACH TIE DOWN EYE. CENTERED ON HOLE ON ENGINE END FRAME, OR COUNTER WEIGHT (IF FITTED), & ADJACENT TO EACH EYE	
			TOWARD INSIDE OF NON-ENGINE END FRAME)	
	179-3609	1	FILM-INSTRUCTION (REMOTE GREASE POINTS)	
			(ON LEFT FRONT CAB SKIRT, AS CLOSE TO BEND AS POSSIBLE WITHOUT CROSSING BEND & CENTERED VERTICALLY. FILM-INSTRUCTION	
			DIRECTLY BELOW FILM-GREASE)	
	179-3612	1	FILM-INSTRUCTION (REMOTE GREASE POINT LOCATIONS)	
			(NEXT TO GREASE BLOCK IN HITCH AREA ON NON ENGINE END FRAME)	
	220-5573	1	FILM-INSTRUCTION (REMOTE GREASE POINTS)	
			(ON LEFT FRONT CAB SKIRT, AS CLOSE TO BEND AS POSSIBLE WITHOUT CROSSING BEND & CENTERED VERTICALLY. FILM-INSTRUCTION	
			DIRECTLY BELOW FILM-GREASE)	
	220-5574	1	FILM-INSTRUCTION (RADIATOR DOORS)	
			(ON FAN GUARD BELOW LATCH, POSITION SO THAT IT IS COVERED WHEN SERVICE DOOR IS CLOSED)	
	309-6899	1	FILM-INSTRUCTION (BATTERY)	
			(PLACE IN CENTER OF FRONT GLASS, VISIBLE FROM SEATED POSITION IN CAB. FOR OROPS CAB, PLACE ON LH B-POST, AT EYE LEVEL	
			OF OPERATOR FROM SEATED POSITION IN CAB)	
	312-7713	1	FILM-INSTRUCTION (DOOR, READ OMM)	
			(ON RH ENGINE ACCESS FOLD DOWN PANEL. PLACE FILM ON INSIDE OF PANEL 25-MM FROM SIDE OF PANEL & 75-MM DOWN FROM TOP)	

312-4577 **PLATE & FILM GP** *(contd.)* **i02879554**

NOTE	PART NUMBER	QTY	PART NAME 1 2 3 4 5 6 (PRODUCT LEVEL)	SEE PAGE
	236-7230	1	TAG-WARNING (STEERING FRAME LOCK)	
			(ATTACH TO STEERING WHEEL)	

B-USE AS REQUIRED
Y-SEPARATE ILLUSTRATION

<END>

MEMORANDA

PART NUMBER INDEX

Part	Page
0	
0S-1594	789
	791
0T-0244	923
1	
1A-2209	457
1A-4350	924
1B-2578	183
1B-3057	128
	130
1B-3978	218
	221
	268
	270
1B-3980	268
	270
1B-8723	905
1B-8736	16
	27
	28
	44
1C-0569	927
1D-4677	947
1G-8878	256
1H-3244	125
	151
	173
1H-4393	161
	163
	165
	167
	677
1H-5728	437
1H-6227	604
	605
1H-8296	949
1H-9696	297
	299
1J-0708	494
1J-5607	771
	773
1J-9671	411
	478
	586
	606
	682
1K-6853	312
1K-6870	711
1K-6872	789
	791
	792
	793
1K-7990	259
	261
	263
1K-7991	259
	261
	263
1K-8061	278
	280
1M-4543	201
1M-6119	128
	130
1M-6120	128
	130
1M-6718	465
	467
	468
	469
	471
	473
1P-0810	130
1P-3703	547
	557
	586
	630
	632
	634
	637
	639
	641
	644
1P-3708	543
	574
1P-3934	265
1P-3935	265
1P-4576	252
	254
1P-4582	543
	547
	574
1P-4584	543
	547
	574
1P-6522	786
	859
1P-6872	611
1R-0770	123
1S-0396	284
1S-7251	128
	130
1S-9593	696
	697
1T-0936	586
	630
	632
	634
	637
	639
	641
	644
1U-0257	710
1U-1254	734
	737
	738
1U-3251	781
1U-3252	779
1U-4659	686
1U-7684	1
	2
	405
1U-8846	218
	221
	274
1V-2772	268
	412
1V-8242	705
	707
1V-9148	702
1V-9409	133
1W-9509	323
1Y-7927	861
2	
2B-0858	29
	32
	34
	53
2B-2695	927
2C-9259	725
	728
	730
	731
	733
	734
2D-0598	218
	221
2D-2507	303
2D-2508	303
2D-2509	303
2D-2628	305
	333
2D-2629	305
	333
2D-2630	305
	333
2D-2631	305
	333
2D-2633	305
	333
2D-6235	861
2F-7306	890
2G-5298	897
	901
2G-6595	303
2G-8096	143
2G-8767	128
	130
2G-9524	856
2H-1142	613
2H-3429	465
	467
	468
	469
	470
	471
	472
	473
	474
	475
	678
2H-3920	186
	785
2H-3922	182
	786
2H-3923	786
2H-3927	259
	261
	263
	265
2H-9524	198
2J-0564	494
2J-3507	710
	771
	772
	773
2J-3961	489
2J-6232	259
	261
	263
2J-6233	259
	261
	263
2J-7550	297
	299
2K-4821	125
2K-4973	783
	927
	947
	949
2K-5957	266
	267
2K-9295	259
	261
	263
2L-0043	247
2L-6726	330
2M-0849	789
	791
2M-2570	590
	591
2M-7819	861
2M-8191	613
2M-9780	102
	122
	283
	431
	439
	443
	444
	446
	476
	484
	510
	547
	550
	553
	555
	564
	568
	573
	577
	578
	582
	609
	611
	646
	648

► **PRIMARY REFERENCE**

PART NUMBER INDEX

Part	Page
2N-3477	413
2N-7006	218
	221
2N-7007	218
	221
2P-1279	515
	553
	555
2P-1293	527
2P-2975	689
2P-4173	38
2P-8104	179
2Q-5979	300
	▶301
2Q-5980	▶302
	309
2S-1382	330
2S-2981	959
2S-3440	20
	23
	26
2S-4078	283
	542
	543
	547
	550
	564
	568
	572
	573
	574
2S-4663	331
2S-5835	331
2S-9600	682
2T-3360	825
2W-1141	218
	221
	224
	226
	228
	230
	232
	234
2W-1776	630
	632
	634
	637
	639
	641
	644
2Y-5829	536
	692

3

Part	Page
3B-0551	272
	274
	276
	278
	280
3B-4124	259
	261
	263
3B-4501	786
3B-4516	772
3B-4610	414
	416
3B-4617	418
	420
3B-6552	400
	401
3B-7734	400
	401
3B-8488	312
3B-8489	311
	313
	387
	400
	401
	492
	702
	705
	707
	764
	766
	768
	777
	778
3B-8491	702
	705
	707
	764
	766
	768
	777
	778
3C-3364	907
3C-4922	907
3D-2824	238
	252
	254
	282
	283
	284
	439
	443
	444
	446
	454
	508
	543
	547
	550
	553
	555
	557
	573
	580
	585
	620
	628
	646
	648
3D-2891	224
	226
	228
	230
	234
3D-2975	861
3D-8317	331
3D-8358	224
	226
	228
	230
	234
3E-1841	786
	859
3E-2332	420
3E-2338	272
	274
	276
	278
	280
3E-3365	124
	334
3E-3371	174
	175
3E-3389	186
	602
3E-3805	833
	835
	840
	843
3E-3892	810
3E-4312	790
3E-4335	890
3E-4336	890
3E-4352	823
	824
3E-4354	472
	474
	475
	682
3E-4356	47
	806
3E-4362	890
3E-5153	179
3E-5154	179
3E-5239	809
	830
	897
	901
3E-5464	786
3E-6328	▶124
	161
	163
	165
	167
	921
3E-6575	890
3E-6600	376
	671
	672
3E-6748	609
3E-6908	385
3E-7690	282
3E-7843	▶135
	504
	506
3E-7844	▶134
	504
	506
3E-8016	603
3E-8320	128
	130
3E-9411	702
	705
	707
3F-5792	481
3F-6166	400
3F-9556	125
3G-1209	636
3G-1820	481
3G-5285	493
3G-6659	400
3G-6660	400
	401
3H-0442	695
3H-7180	599
3H-8538	413
3J-1907	218
	221
	252
	254
	256
	283
	284
	288
	290
	321
	322
	326
	331
	336
	418
	420
	423
	426
	429
	438
	439
	440
	450
	452
	454
	455
	463
	482
	492
	497
	508
	514
	517
	520
	522
	524
	533
	536
	538
	540
	542
	543
	547
	550
	557
	560
	564
	565
	568

▶ PRIMARY REFERENCE

PART NUMBER INDEX

Part	Page	Part	Page	Part	Page	Part	Page
	569		653	3P-0647	689	4B-9784	476
	572		654	3P-5903	515	4B-9880	331
	573		655	3P-5904	515	4D-1326	183
	574		657	3P-7898	298	4D-4431	434
	577		659	3P-8680	609		436
	582		661	3P-9847	565	4D-6432	924
	585		664		569	4D-7388	80
	586		666	3P-9900	949		284
	620		668	3S-2093	80		290
	621		682		102		548
	657		695		141		550
	659	3K-0360	38		142	4D-7735	423
	661		195		161		426
	664		283		193		429
	666		331		195		515
	668		334		201	4D-8123	400
	681		438		423	4D-9986	141
	690		439		786		142
	692		440		809	4E-0659	721
	768		443		859		722
3J-3679	586		444		871		723
3J-4818	536		446		921		725
	813		454		952		728
	949		465		955		730
3J-6021	682		467	3S-6049	128		731
3J-7354	38		468		130		732
	256		469	3S-6050	128		733
	276		470		130		736
	282		471	3S-6162	491		740
	288		472	3S-8665	195		741
	326		473	3S-9703	443		742
	418		474		446		754
	420		475	3T-2094	296	4E-0685	722
	423		542	3T-5201	833	4E-1062	810
	426		543		835	4E-1357	314
	429		547		840	4E-1384	833
	438		564		843		835
	439		565	3T-8236	586		840
	440		569	3V-2333	705		843
	443		572		707		856
	444		573	3V-4791	136	4E-1411	864
	446		574	3V-5349	943	4E-1639	272
	454		577		945	4E-2161	849
	455		578				851
	463		582			4E-2482	734
	478		586				737
	497		600				738
	543		601	4B-0418	80	4E-2483	734
	553		611	4B-3665	297		737
	555		620		299		738
	573		627	4B-4158	639	4E-2673	604
	582		629		641	4E-3644	259
	586		678		653		261
	590		686	4B-4274	360		263
	611	3K-4897	893		557	4E-3896	259
	629	3K-6060	877		560		261
	630		884	4B-4278	949		263
	632		885	4B-4863	88	4E-3897	259
	634		886		340		261
	637	3K-7056	268		341		263
	639		412		897	4E-4031	259
	641	3K-7057	268		901		261
	644		412	4B-5059	861		263
	651	3K-9520	80	4B-5324	413	4E-4305	259
	652	3L-8187	413	4B-8774	96		261

► **PRIMARY REFERENCE**

PART NUMBER INDEX

Part	Page
	263
4E-4307	261
	263
4E-4524	432
4E-5984	310
4E-5985	310
4E-6104	241
4E-7316	952
4E-7540	423
	426
	429
	564
	568
4F-2294	184
4F-3654	756
4F-4042	710
4F-4879	932
	933
4F-8824	268
	270
4F-9029	236
4H-3001	348
4I-0899	438
4I-9521	582
4I-9522	560
4I-9523	538
4I-9524	540
4I-9525	582
4I-9526	560
4I-9527	538
4I-9528	540
4J-0520	543
	574
	582
4J-0523	248
	250
4J-0527	543
	548
	574
4J-3745	491
4J-4630	493
4J-5267	252
	254
	557
	560
4J-5268	681
4J-5351	681
4J-5477	282
	283
	438
	439
	440
	443
	444
	446
	450
	452
	454
	455
	514
	515
	517
	520
	522
	524
	533
	536
	538
	540
	542
	543
	550
	553
	555
	560
	572
	573
	582
	590
	620
	768
4J-7533	586
	630
	632
	634
	637
	639
	641
	644
	690
4J-9058	710
4J-9208	772
4J-9220	491
4J-9221	493
4J-9225	434
	436
	437
4J-9535	586
	630
	632
	634
	637
	639
	641
	644
4K-0173	272
	276
4K-0367	756
4K-1388	630
	632
	634
	637
	639
	641
	644
4K-2039	465
	467
	468
	469
	470
	471
	472
	473
	474
	475
	678
4K-4879	301
	304
	305
4K-4881	302
	306
	307
	308
4K-7464	387
4K-7502	42
4K-9429	891
4L-6454	792
	793
4L-6499	183
4L-7249	265
4L-7711	276
4M-0189	491
4M-1677	217
4M-2381	331
4M-5905	331
4M-6425	915
4M-7470	955
4N-2927	861
4P-7429	429
4P-7581	189
	191
	195
	198
	200
	201
	203
	334
	444
	504
	506
	515
	543
	574
	621
	809
	875
	898
	901
4P-8134	189
	191
	195
	198
	201
	204
	206
	284
	288
	898
	901
4S-1962	871
4S-5879	218
	221
4S-8264	849
	851
4S-8287	890
4T-0370	701
	707
4T-2972	756
4T-3148	646
	648
4T-4942	686
4T-5072	681
4T-6780	434
	436
	437
4T-7571	686
4T-8091	771
4T-9905	476
4V-0611	508
	557
4V-0612	508
	557
4V-2879	702
	705
	707
4V-2883	702
4V-4453	701
	707
4V-7884	947
4V-8256	783
4V-8285	734
	737
	738
4V-8286	734
	737
	738
4V-8520	494
4V-8577	947
	949
4V-8629	489
4V-8639	705
	707
4V-8674	494
	705
	707
4V-9798	482
	533
	569
4V-9799	482
	533
	569
4W-7356	593
	594
	607
4Y-3046	803
4Y-3048	803
4Y-3306	878
4Y-3307	341
4Y-3630	803
4Y-4327	803
4Y-4790	802
4Y-4796	802
5	
5A-3604	110
	323
	326
	603
	659
	661
	666
5C-2890	140
	151
	155
	157
	159
	161
	163

PART NUMBER INDEX

Part	Page	Part	Page	Part	Page	Part	Page
	165		895	5K-4778	102	5P-1076	74
	167	5C-8315	340	5K-5338	102		288
	173		341		423		356
	195	5C-9553	121		426		385
	323		512	5K-8451	102	5P-1442	102
	326		513	5K-9090	283	5P-1505	102
	389		768		284	5P-1506	81
	395		786		290	5P-1717	88
	512		809		494		508
	513		827		512	5P-1935	548
	596		859		513	5P-2304	218
	597		877		527		221
	598		884		529	5P-2861	268
	599		885		531		270
	659		886		533	5P-3723	272
	661		898		538		274
	666		902		542		276
	768	5D-1026	26		543		278
	833		38		547		280
	835		80		550	5P-3860	560
	840		873		557	5P-3863	218
	843	5D-4822	861		560		221
	849	5D-9629	74		564	5P-4115	358
	851	5F-3999	493		568		359
	875	5F-8000	586		572		360
	877		630		573		389
	884		632		574		504
	895		634		580		506
	898		637		582		864
	902		639		768		866
	949		641	5L-4753	247		898
5C-7261	80		644	5L-4758	236		902
	88	5F-9144	609		682	5P-4116	80
	157	5G-2373	711	5L-7200	161		88
	159	5G-6973	418		163		128
	167		420		165		130
	173	5G-7820	504		167		176
	177		506	5M-2894	915		195
	195	5G-8871	912	5M-3062	711		201
	389	5H-1039	278		947		356
	414		280	5M-4987	296		423
	416	5H-3252	296		298		426
	423		298	5M-6213	122		429
	426	5H-3701	272	5M-6214	278		504
	429		274		280		506
	440		276	5P-0076	609		616
	444		278	5P-0537	892		764
	814		280	5P-0599	91		766
	816	5H-6005	218	5P-0713	218		768
	818		221		221		798
	820	5I-3762	677	5P-0743	38		806
	821	5I-3978	578		542		825
	822	5I-4376	542		547		829
	833		572		572		833
	835	5J-2974	258	5P-0746	204		835
	840		294		206		840
	843		681	5P-0747	128		843
	856	5J-3886	336		130		846
	875	5J-4986	491	5P-0760	204		898
5C-8312	161	5J-4987	489		206		902
	163	5J-4989	494	5P-0761	128		910
	165	5J-5731	493		130	5P-4362	290
	167	5J-7010	434	5P-0767	873	5P-4423	949
	340		436	5P-1075	577	5P-4484	272
	341		437		947		274

► **PRIMARY REFERENCE**

PART NUMBER INDEX

Part	Page
	276
	278
	280
5P-5148	482
	564
	568
5P-5291	278
	280
5P-5397	336
5P-5630	177
5P-5637	389
	849
	851
5P-5639	157
	159
5P-5643	338
	785
	786
	857
5P-5649	395
5P-5677	145
5P-5755	81
5P-5774	159
5P-5927	846
5P-5943	911
5P-6010	949
5P-6038	189
	191
5P-6264	201
5P-6718	38
5P-6719	681
5P-6872	877
	884
	885
	886
5P-6887	80
5P-7070	786
5P-7211	74
	81
5P-7462	522
	524
	768
5P-7463	522
	524
	768
5P-7464	444
	446
	508
5P-7465	444
	446
	508
5P-7466	527
5P-7467	527
5P-7468	248
	250
	284
	379
	550
	565
	569
	580
	582
5P-7469	248
	250
	284
	379
	550
	565
	569
	580
	582
5P-7648	871
5P-7684	218
	221
5P-7814	38
5P-7957	891
5P-7958	874
	897
	901
5P-8112	527
5P-8244	606
5P-8245	42
	240
	268
	270
	278
	280
	590
	591
	792
	793
5P-8247	125
	272
	274
	276
	278
	280
5P-8347	336
5P-8438	156
5P-8444	284
	379
	551
	565
	569
	580
	582
5P-8445	861
5P-8500	248
	250
	615
	840
	843
	853
	874
5P-8502	248
5P-8524	864
	866
5P-8837	403
	404
5P-9212	408
5P-9297	288
	414
	416
	517
	520
5R-0939	557
5R-0940	557
5S-7349	125
5S-7383	915
5T-6374	443
5T-9771	401
5T-9772	400
5T-9986	508
5V-0770	861
5V-1274	241
5V-1496	929
5V-1497	947
5V-1498	789
	791
5V-4410	418
	420
5V-4998	403
5V-4999	403
	404
5V-8780	74
	446
	401
	400
	508
	861
	241
	929
	947
	789
	791
	418
	420
	403
	403
	404
	74
6A-5591	218
	221
6C-1496	880
	881
6C-1834	389
6C-3246	315
	316
6C-3247	316
	319
6C-3679	856
6C-3681	389
6C-5304	272
6C-7366	315
	316
6C-7367	317
	318
6C-7581	340
	341
6D-0337	301
	304
	305
	▶333
6D-0443	305
	333
6D-1641	873
6D-3479	102
	128
	131
	515
6D-4244	189
	191
6D-4246	288
	423
	429
	574
	578
6D-5801	123
6D-7690	272
	274
	276
	278
	280
6D-7889	110
6D-9157	494
6E-0231	682
6E-0381	627
6E-1835	686
6E-1979	481
6E-2314	493
6E-2943	607
6E-3008	646
	648
6E-4940	434
	436
6E-5066	586
6E-5431	646
	648
6E-5434	646
	648
6E-5436	646
	648
6E-5437	646
	648
6E-5438	646
	648
6E-5439	646
	648
6E-5440	646
	648
6E-5457	646
	648
6E-5643	646
	648
6E-6473	613
6E-6477	▶481
	613
6E-6480	613
6E-6481	609
6E-6488	481
6E-6490	481
6E-6491	481
6E-6492	481
6E-6493	481
6E-6494	481
6F-2956	259
	261
	263
	265
	272
	274
	276
	278
	280
6F-3930	303
6F-4855	628
6F-7045	182
6G-0233	418
	420
6G-2256	128
	130
6G-2263	128
	130
6G-4195	413
6G-9933	400
	401
6I-0217	20
	23
	26
	44
	65

6

▶ PRIMARY REFERENCE

PART NUMBER INDEX

Part	Page	Part	Page	Part	Page	Part	Page
	71		234		859		551
	78	6I-8531	311	6T-6969	102	6V-1970	1
	96	6I-8860	387	6T-7054	696		2
	111	6I-9250	710	6U-5219	577		3
	116	6I-9251	710	6V-0347	259		▶874
6I-0254	65	6I-9804	330		261	6V-2317	334
	78	6I-9805	330		263	6V-2383	400
	111	6I-9806	218		265	6V-2394	228
	116		221		272		232
6I-0260	49		▶330		274	6V-2456	893
	71	6J-2245	611		276		927
	104	6J-2680	543		278	6V-2687	790
	107		548		280	6V-2689	600
	111		574	6V-0352	837		601
	116	6J-3134	586		838		664
6I-0289	49		630	6V-0425	542		666
6I-0423	43		632	6V-0484	290		668
6I-0455	71		634		331	6V-2722	504
6I-0456	111		637		336	6V-3213	433
	116		639	6V-0545	248	6V-3265	515
6I-0563	96		641		250	6V-3668	268
6I-0593	104		644	6V-0683	522		270
	107	6J-6439	686		524	6V-3821	334
6I-0631	43	6J-7854	613		769	6V-3822	334
6I-0645	44	6J-7855	611	6V-0852	218	6V-3940	331
	94	6J-9996	599		221	6V-3965	218
6I-0650	44	6K-0806	167		252		221
6I-0654	46		380		254		252
	104		381		282		254
	107		382		290		283
6I-0817	96		868		331		290
6I-0847	43	6K-4185	387		336		322
6I-0917	20	6K-4186	387		418		331
6I-1090	68	6K-4191	387		420		336
6I-1418	827	6K-6075	278		438		418
6I-1497	49		280		454		420
6I-4374	65	6K-6307	218		542		440
	111		221		547		547
	116	6K-8088	905		564		564
6I-4681	49	6K-8180	167		568		568
6I-4793	71	6K-8987	292		572		572
	111		293		582	6V-4249	47
	116	6M-5062	465	6V-0894	636		297
6I-8310	723		467	6V-1178	542		299
	725		468		572	6V-4429	278
	726		469		692		280
	727		470	6V-1194	387	6V-4589	700
	728		471	6V-1249	444	6V-5142	431
	730		472		446	6V-5210	786
	731		473		508		859
	733		474	6V-1363	88	6V-5217	218
	740		475	6V-1392	786		221
6I-8311	723		678		859		334
	725	6N-1604	141	6V-1506	756	6V-5218	331
	726		142	6V-1625	438		334
	727	6N-6984	80	6V-1668	786	6V-5221	336
	728	6Q-2204	756		859	6V-5223	334
	730	6S-6646	413	6V-1720	221	6V-5230	218
	731	6S-8620	102	6V-1820	218		221
	733	6T-3631	185		221	6V-5653	102
	740	6T-3632	185		297	6V-5683	247
6I-8390	224	6T-3633	185		299	6V-5696	268
	226	6T-5598	195	6V-1889	284		270
	230	6T-6593	228		440	6V-5758	679
	232	6T-6708	786		444	6V-5839	47

▶ **PRIMARY REFERENCE**

PART NUMBER INDEX

Part	Page
	218
	221
	246
	334
	536
	692
	814
	816
	818
	820
	821
	822
	823
	824
6V-5842	218
	221
	296
	298
6V-6210	955
6V-6317	218
	221
	297
	299
6V-6543	955
6V-6635	169
	170
6V-6924	679
6V-7238	38
	542
	547
	572
6V-7357	157
	159
	358
	359
	360
	810
6V-7359	560
6V-7419	955
6V-7644	360
6V-7646	929
6V-7728	195
6V-7743	340
	341
6V-7744	504
	565
	569
6V-7981	296
	298
6V-8189	125
6V-8197	278
	280
6V-8210	265
6V-8212	246
6V-8218	321
6V-8225	788
	955
6V-8227	461
6V-8237	437
6V-8369	186
	785
6V-8373	413
6V-8378	183
6V-8397	282
	283
6V-8398	283
	288
	326
	418
	420
	423
	426
	429
	440
	443
	446
	455
	463
	482
	508
	514
	517
	520
	524
	533
	543
	557
	560
	564
	565
	568
	569
	572
	573
	577
	578
	582
	586
	620
	621
6V-8400	282
	283
	543
	550
	572
	573
	574
6V-8490	869
	895
6V-8558	542
6V-8565	542
6V-8625	283
	439
	454
	577
6V-8626	283
	553
	555
6V-8627	439
	450
	452
	455
	514
	517
	520
	522
	524
	533
	620
	768
6V-8628	439
	444
	446
	455
6V-8632	443
	446
	620
6V-8633	439
	443
	508
6V-8635	290
	527
	533
	538
	557
	560
	582
6V-8636	288
	326
	418
	420
	423
	426
	463
	482
	514
	557
	560
	564
	568
	573
	577
	620
	657
	659
	661
	664
	666
	668
6V-8637	252
	254
	439
	454
	557
6V-8638	444
	446
	564
	568
	577
6V-8639	439
	443
	446
	454
	582
6V-8640	484
	577
6V-8641	283
	439
	450
	452
	454
	514
	517
	520
	522
	524
	533
	536
	538
	540
	542
	550
	560
	573
	582
	768
6V-8642	484
6V-8647	282
	443
	446
	553
	555
	582
	590
6V-8675	268
	270
6V-8713	555
	620
6V-8714	283
	550
6V-8721	439
	444
	582
6V-8722	578
6V-8723	564
	569
6V-8724	288
	418
	420

► **PRIMARY REFERENCE**

PART NUMBER INDEX

Part	Page	Part	Page	Part	Page	Part	Page
	423		569		816	6V-9836	423
	426		620		818		426
	429	6V-9002	577		821		429
	508		582		823		514
	560	6V-9003	283		824		533
	565		550		827		578
	569	6V-9004	254		895	6V-9837	283
	578		439		951		439
	692		444	6V-9672	340		444
6V-8726	768		543		341		446
6V-8727	542		547	6V-9746	252		455
6V-8736	524		573		254		514
6V-8758	414	6V-9005	533		282		565
	416		538		283		569
6V-8774	557		543		438		578
6V-8775	283		573		439		621
	439	6V-9007	252		444	6V-9839	557
	444		254		446		621
6V-8776	578	6V-9008	580		452	6V-9842	283
6V-8781	288	6V-9009	283		454		439
	423		550		455		455
	426	6V-9032	573		484	6V-9843	426
	429	6V-9161	429		491		573
	692	6V-9168	517		527	6V-9846	547
6V-8782	565		520		543	6V-9849	450
	569	6V-9169	540		547		514
	578	6V-9170	284		550		517
6V-8785	283		510		557		520
6V-8795	387		530		560		522
6V-8801	171		532		573		524
	577		551		574		550
6V-8837	898		553		577		553
	902		555		621		555
6V-8928	869	6V-9172	284	6V-9807	288		768
6V-8939	510		290	6V-9828	440	6V-9850	288
	543		512	6V-9829	440		423
	573		513		455		426
	578		529		517		573
6V-8941	517		531		520		620
	520		533		544	6V-9851	565
6V-8942	446		538		558		569
	547		560		574		577
6V-8943	621		582		692		621
6V-8969	892		769	6V-9830	544	6V-9852	555
6V-8979	553	6V-9175	547		548		621
	555	6V-9189	504		565	6V-9853	439
6V-8982	553		557		569		455
	555		856		574	6V-9854	290
6V-8984	283	6V-9200	288	6V-9831	510	6V-9855	573
	533		423		560	6V-9873	439
	538		426	6V-9832	284		455
	582		429		527		543
6V-8989	510	6V-9350	283		544		547
6V-8991	290		550		551		573
6V-8993	514	6V-9632	143		557	6V-9874	438
6V-8994	517		200		574	6V-9875	542
	520		340		621		547
6V-8996	510		397	6V-9833	284		564
6V-8997	527		454		529		568
6V-8998	290		504		531		572
6V-9000	543		506	6V-9835	515	6V-9876	543
	573		577		522		573
6V-9001	288		668		524	6W-5652	711
	560		809		533	6W-5656	711
	565		814		768	6W-5677	711

► **PRIMARY REFERENCE**

PART NUMBER INDEX

Part	Page
6W-5678	711
6W-5679	711
6W-5760	47
	485
	486
	487
	769
6W-5761	485
	487
	768
6W-8246	387
6W-8832	▶760
6W-8900	▶773
6W-8933	▶773
6W-8935	▶773
6W-9739	▶774
6Y-0584	218
	221
6Y-0869	238
6Y-0928	224
	234
6Y-1300	224
	226
	230
	234
6Y-2525	887
6Y-4464	296
	298
6Y-4465	296
6Y-4618	297
6Y-4890	224
	234
6Y-4997	296
	298
6Y-5010	296
	298
6Y-5027	228
	232
6Y-5631	224
	226
	228
	230
	232
	234
6Y-6584	897
	901
6Y-6712	▶296
	297
6Y-6952	224
6Y-7818	224
	226
	228
	230
	232
	234
6Y-7922	228
	232
6Y-7968	224
	226
	228
	230
	232
	234
6Y-8069	266
	267
6Y-8157	224
	226
	228
	230
	232
	234
6Y-8265	228
	232
6Y-8514	228
	232
6Y-9016	218
	221
6Y-9017	218
	221
7B-1251	198
7B-3028	331
	657
7B-7525	927
7C-0351	39
	49
7C-1281	26
7C-4616	44
7C-6467	418
	420
7D-5252	303
7D-6922	413
7F-2050	786
7F-2060	786
7F-3400	874
7F-6998	580
7F-8268	218
	221
7G-5220	268
	270
7G-5984	560
7G-5985	560
7G-5986	560
7I-1024	102
	873
7I-3972	423
	426
	429
7I-6601	467
	468
	471
	472
	473
	474
	475
	678
7J-0204	465
	467
	468
	469
	470
	471
	472
	473
	474
	475
	678
7J-1908	620
7J-9108	283
	284
	443
	446
	484
	510
	530
	532
	547
	550
	553
	555
	560
	573
	578
	621
7J-9709	491
7J-9933	686
7K-0394	387
7K-1181	2
	80
	128
	130
	143
	156
	163
	165
	167
	188
	189
	191
	195
	198
	200
	201
	203
	204
	206
	282
	290
	334
	340
	341
	378
	379
	400
	401
	418
	420
	423
	427
	429
	443
	482
	504
	506
	510
	514
	517
	520
	536
	542
	550
	555
	564
	568
	572
	620
	670
	813
	864
	866
	873
	875
	897
	901
7K-3971	565
	569
7K-3972	565
	569
7K-3974	565
	569
7K-3975	565
	569
7K-9205	702
7K-9208	702
	705
	707
7K-9209	702
	705
	707
7K-9212	705
	707
7K-9216	702
	705
	707
7L-0688	609
7L-8316	682
7M-7219	861
7M-8485	218
	221
	272
	274
	276
	278
	280
	282
	283
	284
	290
	527
	533
	538
	540
	543
	550
	557
	560
	564
	568
	573
	574
	580
	582
	630
	632
	634
	637
	639

7

▶ PRIMARY REFERENCE

PART NUMBER INDEX

Part	Page
	641
	644
7N-0718	128
	130
	►182
7N-4247	91
7N-5274	128
	130
7N-9801	187
7P-3454	702
7S-3916	533
	538
7S-3919	533
	538
7S-4408	181
7T-1099	362
	363
	365
	369
	372
	385
	802
	809
	814
	816
	818
	821
	823
	908
	909
	910
	912
	917
7T-2703	218
	221
7T-4532	805
7T-6087	179
7T-6090	179
7T-6496	238
7T-6799	895
7T-8332	80
	615
7T-8890	953
7T-9258	443
	446
7T-9752	609
7T-9753	609
7T-9754	609
7T-9755	609
7T-9831	609
7U-4898	927
7V-2885	2
	3
	►403
7V-5191	861
7V-5626	504
	506
7V-5628	504
	506
7W-2108	833
	835
	840
	843
7W-2632	111
	116
7W-3447	383
7W-4540	178
7W-7381	420
7X-0371	711
7X-0456	789
	791
7X-0474	218
	221
7X-0515	284
7X-0578	383
7X-0579	785
	857
	946
7X-0599	813
7X-0603	825
7X-0606	290
	560
	583
7X-0608	171
	195
	783
7X-0618	387
	432
	433
	702
	705
	707
	764
	766
	769
	777
	778
7X-0620	183
7X-0818	827
7X-0873	452
7X-2459	418
	420
7X-2464	290
7X-2465	292
	293
	344
	345
	346
7X-2495	224
	226
	230
	232
	234
7X-2533	74
7X-2534	200
	440
	450
	452
	455
	504
	506
	578
	583
7X-2535	389
7X-2536	823
	824
7X-2538	806
7X-2540	389
7X-2543	515
	533
	565
	569
7X-2544	565
	569
7X-2549	543
	574
7X-2553	705
	707
7X-2554	47
7X-2558	284
7X-2560	284
7X-2563	911
7X-2567	292
	887
7X-3229	963
	964
7X-3393	84
	85
7X-4776	586
7X-7729	6
	7
	60
	61
	74
	80
	88
	92
	95
	127
	248
	250
	284
	288
	339
	354
	355
	356
	358
	359
	360
	368
	371
	375
	384
	389
	393
	397
	406
	407
	423
	426
	429
	440
	444
	496
	506
	513
	515
	517
	520
	522
	527
	543
	548
	551
7X-7910	871
7X-7911	871
7X-7958	80
	290
7X-8549	497
	557
	574
	578
	580
	595
	615
	621
	769
	871
	871
	871
	871
	80
	290
	497
	756
	400
	401
	482
	564
	568
	481
	284
	551
	557
	560
	543
	574
	583
	360
	282
	550
	849
	851
	69
	38
	256
	497
	252
	254
	497
	81
	102
	809
	224
	226
	228
	230
	232
	234
	224
	226
	228
	230
	232
	234
	127
	88
	38
	542
	547
	572

8

► **PRIMARY REFERENCE**

PART NUMBER INDEX

Part	Page
8C-5607	143
8C-5608	143
8C-6160	414
	416
8C-6354	897
	901
8C-6440	864
	866
8C-6712	582
8C-7110	611
8C-8451	143
	358
	359
8C-8457	786
	859
8C-8478	47
8C-8989	440
	455
	540
	565
	569
8C-9200	494
8C-9778	179
8C-9987	696
	895
8D-2707	305
	333
8D-3791	711
8D-9671	201
8E-1118	157
8E-1143	331
8E-3416	228
	232
8E-4566	719
	▶771
8E-4567	771
8E-4568	▶773
8E-4569	773
8E-5556	224
	226
	230
	234
8E-5707	224
	226
	228
	230
	232
	234
8E-5726	224
	226
	230
	234
8E-5727	224
	226
	230
	234
8E-6115	228
	232
8E-6117	228
	232
8E-6120	228
	232
8E-6558	228
	232
8E-7841	334
8E-8292	953
8E-8296	418
	420
8E-8300	905
8E-8313	224
	226
	228
	230
	232
8E-8317	228
	232
8E-9968	296
8F-0212	646
	648
8F-1434	179
	183
8F-1462	890
8F-5535	491
8F-6437	80
	615
8F-8733	494
8F-9206	609
8F-9516	272
	274
	276
	278
	280
8H-5303	182
8H-5306	182
8H-7521	218
	221
8I-6603	355
8J-0112	434
	436
	437
8J-0426	218
	221
8J-1717	494
8J-2413	636
8J-2928	710
8J-2933	710
8J-4455	179
8J-6273	593
	594
8J-6875	438
	454
	▶476
8J-8308	609
8K-1433	413
8L-2746	224
	226
	228
	230
	234
	700
8L-2777	611
8L-2779	646
	648
	689
	698
8L-2786	326
	463
	602
	664
	666
	668
8L-4070	179
8L-8413	130
	145
	620
	861
	864
	949
8M-2770	284
	551
8M-2771	512
	513
	769
8M-2773	284
	423
	426
	429
	561
	871
8M-5251	334
8M-5253	331
8N-0869	128
	130
8N-1725	128
	130
8N-9033	849
8P-8540	181
8P-9770	721
	722
8Q-4333	302
8R-0512	272
	274
	276
	278
	280
8R-0721	514
8R-0768	128
	130
8R-1703	240
	241
8R-1705	240
	241
8R-2022	312
8R-2189	272
	274
	278
	280
8R-2198	213
8R-2200	213
	214
	215
	216
	217
8R-2201	213
8R-2202	213
	214
	215
	216
	217
8R-2211	240
	241
8R-2212	240
8R-2532	272
	274
	276
8R-2584	278
	280
8R-2918	825
8R-3223	307
8R-3695	574
8R-3809	272
	274
	276
	278
	280
8R-5174	446
8R-5280	314
8R-5825	303
8R-6904	905
8R-7091	387
8R-7092	387
8R-7833	240
8R-7834	240
8R-8121	259
8R-8847	383
8S-0768	336
8S-0948	102
	284
8S-3020	128
	130
8S-4726	925
	926
8S-7803	790
	861
	927
8S-9129	218
	221
8S-9130	218
	221
8T-0099	240
8T-0106	240
8T-0154	542
	547
	572
8T-0164	536
8T-0198	564
	568
8T-0255	773
	774
	775
	776
8T-0267	463
	602
8T-0272	607
8T-0286	866
8T-0288	888
8T-0306	954
8T-0328	888
	929
8T-0336	272
	274
	276
	278
	280
8T-0337	148
8T-0363	343
	346

▶ **PRIMARY REFERENCE**

PART NUMBER INDEX

Part	Page	Part	Page	Part	Page	Part	Page
	347		214		851		529
8T-0372	259		215	8T-4001	374		531
	261		216		887		533
	263		217	8T-4121	19		538
	265	8T-3282	434		47		540
	311		436		74		543
8T-0375	272	8T-3293	268		80		548
	274		270		93		551
	276	8T-3425	595		95		553
	278		897		102		558
	280		901		121		561
8T-0389	418	8T-3444	508		128		565
	420	8T-3490	6		131		568
8T-0404	553		7		156		574
8T-0643	536		80		161		580
	692		102		163		583
8T-0785	489		128		165		588
	491		130		167		592
	493		195		178		595
8T-0788	524		198		179		604
8T-1012	557		248		189		615
8T-1120	543		252		191		618
	574		282		195		619
8T-1138	323		290		198		621
	596		362		200		712
	597		363		201		713
8T-1158	586		365		204		714
8T-1482	343		369		206		715
	344		372		248		716
	345		375		250		717
	346		385		252		741
	347		397		254		742
8T-1742	224		407		284		744
	226		408		288		745
	230		510		290		748
	234		514		338		754
8T-1887	341		517		341		756
8T-1888	341		527		363		798
8T-1889	513		547		364		802
	527		550		367		806
	529		577		368		808
	531		580		371		810
	580		620		376		814
	583		808		387		816
	769		814		395		818
	880		816		408		820
	881		818		414		821
8T-1890	513		821		416		822
	527		823		418		823
	529		824		420		824
	531		897		423		856
	580		901		426		871
	583		942		429		873
	769		943		440		878
	880		945		444		880
	881		946		446		881
8T-1893	522		952		455		898
	769	8T-3597	282		496		902
8T-1894	522	8T-3611	573		504		905
	769	8T-3612	701		506		911
8T-1899	561		809		510		917
8T-1900	561		946		515		920
8T-2397	659		952		517		921
8T-2883	446	8T-3734	917		520		923
8T-2925	213	8T-3995	849		527		941

► **PRIMARY REFERENCE**

PART NUMBER INDEX

Part	Page
	942
	943
	945
	952
8T-4122	80
	310
8T-4123	908
	909
	910
	911
8T-4127	360
8T-4131	47
	908
	909
	910
	911
8T-4133	19
	80
	95
	121
	128
	131
	149
	156
	161
	167
	179
	189
	191
	195
	204
	206
	284
	338
	341
	375
	389
	418
	420
	423
	426
	429
	440
	455
	515
	561
	565
	568
	583
	588
	592
	871
	880
	881
	898
	902
	921
8T-4134	864
	866
8T-4136	6
	7
	74
	80
	93
	95
	102
	127
	128
	131
	163
	165
	167
	195
	204
	206
	248
	284
	288
	290
	338
	339
	341
	354
	356
	376
	397
	414
	416
	423
	426
	429
	440
	444
	455
	496
	504
	506
	510
	515
	517
	520
	527
	529
	531
	533
	538
	540
	543
	548
	551
	553
	561
	565
	568
	574
	578
	604
	615
	712
	713
	714
	715
	716
	717
	741
	742
	744
	745
	748
	754
	802
	871
8T-4137	74
	80
	121
	128
	131
	157
	159
	195
	198
	200
	201
	252
	254
	284
	288
	360
	368
	371
	389
	393
	406
	407
	408
	414
	416
	418
	420
	440
	455
	496
	504
	506
	510
	513
	517
	520
	522
	551
	558
	595
	615
	705
	707
	769
	798
	814
	816
	818
	820
	821
	822
	823
	824
	871
	873
	878
	898
	902
	911
	917
	921
	941
	942
	943
	945
	952
8T-4138	143
	195
	340
	341
	389
	395
	408
	410
	822
	833
	835
	840
	843
	856
	884
	886
	888
8T-4139	288
	508
	543
	548
	574
	802
	873
8T-4140	310
8T-4157	74
8T-4158	74
8T-4167	292
	293
	294
	374
	887
8T-4170	47
8T-4171	195
	204
	206
	859
8T-4172	127
	387
	444
	446
8T-4176	803
8T-4178	290
8T-4179	343
	344
	345
	346
	347
8T-4181	833
	835
	840
	843
8T-4182	80
	440
	444
	548
	558
	756
8T-4183	47
	433
	543
	574

► **PRIMARY REFERENCE**

PART NUMBER INDEX

Part	Page
	605
	705
	707
8T-4184	127
	510
	561
8T-4185	95
	178
	548
	871
	905
8T-4186	19
	47
	80
	284
	355
	358
	359
	375
	397
	440
	455
	504
	515
	527
	551
	615
	618
	619
8T-4189	19
	73
	80
	84
	85
	143
	155
	195
	237
	389
	413
	504
	506
	798
	807
	825
	849
	851
	876
	879
	898
	902
	910
	912
	913
	916
	917
	952
8T-4191	200
	201
	825
8T-4192	195
	387
	414
	416
	432
	450
	452
	543
	574
	595
	702
	705
	707
	777
	778
8T-4193	80
	702
8T-4194	80
	143
	387
	544
	548
	574
8T-4195	6
	7
	60
	61
	74
	80
	88
	92
	102
	127
	128
	131
	161
	167
	250
	252
	284
	360
	363
	364
	367
	375
	383
	384
	389
	393
	395
	397
	423
	426
	429
	440
	444
	515
	529
	530
	531
	532
	533
	538
	544
	551
	561
	564
	568
	574
	580
	583
	595
	621
	808
	880
	881
	898
	902
8T-4196	80
	95
	127
	195
	248
	250
	252
	254
	284
	368
	371
	375
	395
	418
	420
	423
	504
	544
	548
	551
	558
	561
	574
	583
	588
	592
	604
	621
8T-4198	198
	517
	520
	578
8T-4199	189
	191
	898
	902
8T-4200	80
	84
	85
	110
	141
	142
	177
	188
	377
	389
	504
	809
	849
	851
8T-4205	74
	121
	125
	157
	159
	161
	163
	165
	167
	173
	195
	204
	206
	340
	341
	360
	389
	395
	408
	450
	452
	512
	513
	769
	786
	809
	810
	822
	830
	833
	835
	840
	843
	849
	851
	859
	875
	877
	884
	885
	886
	888
	895
	898
	902
	929
8T-4222	80
	95
	338
	397
8T-4223	47
	80
	127
	195
	284
	314
	343
	344
	345
	346
	347
	383
	387
	414
	416
	424
	429
	432
	450
	452
	508
	510

► **PRIMARY REFERENCE**

PART NUMBER INDEX

Part	Page	Part	Page	Part	Page	Part	Page
	522		851		846		910
	524		856		857	8T-6431	418
	544		875		875		420
	548		876		880	8T-6466	128
	561		879		881		131
	574		880		883		288
	595		881		946		375
	615		883	8T-4910	356		564
	769		898		615		568
	871		902	8T-4956	284		806
	873		912		314	8T-6631	786
8T-4224	19		913		383	8T-6663	283
	73		915		604	8T-6684	580
	81		916		764	8T-6685	564
	84		917		766		568
	85		921		769	8T-6703	77
	125		934		871		248
	141		935	8T-4971	833		250
	142		952		835	8T-6868	432
	143	8T-4226	81		840	8T-6869	102
	155		157		843		356
	157		159	8T-4984	77		504
	159		705		542		508
	167		707		572		558
	173	8T-4244	74	8T-4985	93		825
	177		329	8T-5005	393	8T-6870	167
	188		356		424		506
	189		510		426		603
	191		615		429		646
	195		671		515		648
	237		673		558	8T-6876	439
	272		674		574		454
	274		675	8T-5041	387		543
	276		676		548		573
	278		677	8T-5089	609	8T-6912	167
	280		803	8T-5093	272		616
	377	8T-4742	833		274	8T-7338	47
	389		835		276	8T-7352	102
	413		840		278	8T-7529	252
	424		843		280	8T-7547	81
	426	8T-4779	806		809		88
	429	8T-4780	702	8T-5353	238		195
	440	8T-4896	457		296		766
	444		711		298		856
	504	8T-4908	157	8T-5360	924	8T-7566	892
	506		159		925	8T-7931	682
	508		176		926	8T-7963	128
	558		189	8T-5372	786		131
	603		191		859	8T-7971	604
	616		201	8T-5379	294		605
	646		237	8T-5400	955	8T-8390	489
	648		356	8T-5436	544	8T-8641	790
	686		389		574	8T-8729	134
	763		424		618		175
	766		426		619		463
	798		429	8T-5439	47	8T-8730	135
	807		440	8T-5452	218	8T-8737	133
	809		444		221		186
	814		616	8T-5913	953		463
	816		763	8T-5914	953		602
	818		764	8T-6412	167		657
	820		766	8T-6430	705		664
	821		769		707		668
	822		785		908		814
	849		829		909		831

► **PRIMARY REFERENCE**

PART NUMBER INDEX

Part	Page
	955
8T-8799	195
8T-8827	130
	195
	204
	206
8T-8886	174
8T-8894	825
8T-8899	543
	574
8T-8901	282
	550
8T-8902	282
	572
8T-9082	929
8T-9085	218
	221
8T-9357	38
8T-9371	949
8T-9381	925
	926
8T-9386	283
8T-9405	670
	898
	902
8T-9655	102
	827
8U-5943	650
8V-1412	313
8V-7315	311
	312
	313
8V-7623	268
	270
8W-4342	400
8W-9576	302
	307
8X-0674	47
8X-1147	564
	568
8X-9925	306
8Y-0711	252
	254
8Y-4200	▶789
	932
8Y-4489	365
	369
	372
	385
	701
	707
8Y-5737	786
	859
8Y-5877	847
8Y-5878	927
8Y-5892	893
8Y-5897	789
8Y-5898	791
8Y-5903	890
8Y-5904	789
	▶790
	791
	792
	793
8Y-5906	790
8Y-5928	927
8Y-5929	927
8Y-5930	927
8Y-5931	927
8Y-5932	927
8Y-5936	927
8Y-5937	927
8Y-5938	927
8Y-5944	947
8Y-5945	861
8Y-5947	847
	927
8Y-5953	924
8Y-5965	947
8Y-5972	890
8Y-5979	927
8Y-5981	927
8Y-5988	790
8Y-5992	▶893
	927
8Y-5995	893
8Y-5998	893
8Y-5999	893
8Y-6000	▶791
	932
8Y-6002	890
8Y-6006	890
8Y-6010	890
8Y-6012	947
8Y-6014	947
8Y-6022	947
8Y-6023	947
8Y-6024	947
8Y-6028	790
8Y-6029	861
8Y-6041	861
8Y-6045	861
8Y-6046	861
8Y-6047	861
8Y-6051	927
8Y-6060	861
8Y-6062	861
8Y-6063	861
8Y-6064	861
8Y-6066	861
8Y-6067	861
8Y-6068	861
8Y-6069	861
8Y-6364	248
8Y-6377	798
8Y-6388	846
8Y-6391	846
8Y-6833	927
8Y-6834	927
8Y-6859	861
8Y-6860	861
8Y-6882	▶927
	932
8Y-6883	▶847
	932
8Y-6933	927
8Y-6977	920
	▶932
8Y-7023	369
	372
8Y-7047	387
8Y-7119	887
8Y-8387	423
	426
	429
	564
	568
8Y-8388	424
	427
	429
	564
	568
9B-7233	161
	163
	165
	167
9C-5040	240
	241
9C-5048	278
	280
9C-5049	278
	280
9C-5344	284
	551
9C-6041	272
	274
	276
	278
	280
9C-6460	557
9C-6461	557
9C-6783	557
9C-6809	362
	363
	369
	372
	385
	701
	702
	707
9C-7862	369
	372
9C-7907	433
	702
	705
	707
9C-8990	508
9C-9458	252
9D-1535	432
	433
9D-3768	871
9D-3769	167
	851
9D-7924	825
9F-2247	94
	609
9F-5644	173
	182
	195
9G-1950	786
	859
9G-3695	461
	828
9G-5127	218
	221
9G-5311	272
	274
	276
	278
	280
9G-8909	128
	130
9G-9155	912
9G-9809	130
9H-1129	278
	280
9H-2258	387
9H-5604	764
	766
	769
9J-0705	689
9J-0707	628
	689
9J-3169	▶779
	780
9J-3178	▶781
	782
9K-7951	303
9L-6074	358
	359
9L-6770	125
9L-7469	927
9L-9068	334
	336
9M-1974	331
	334
	336
9M-2110	331
9M-4335	213
	214
	215
	216
9M-4814	873
9M-4972	284
	551
9M-5733	890
	893
9M-8406	871
9N-0869	102
9N-1756	680
	687
	688
	695
9N-4354	224
	226
	228
	230
	234
9N-4365	224
	226
	228
	230
	234
9R-1004	530
	532
	540

9

▶ **PRIMARY REFERENCE**

PART NUMBER INDEX

Part	Page
9R-1005	530
	532
	540
9R-1499	161
	167
9R-2160	823
	824
	897
	901
9R-2404	161
	163
	165
	167
9R-2596	955
9R-2620	849
	851
9R-2672	362
	363
	365
	369
	372
	385
	620
	701
	707
	768
	912
9R-2807	418
	420
9R-3067	418
	420
9R-3203	951
9R-3204	951
9R-3205	951
9R-3884	574
9R-4688	443
	446
9R-4750	143
9R-5878	47
9R-7803	510
9R-7941	157
	159
9R-7942	152
	170
9R-7958	152
9R-7980	157
	159
9R-8870	508
9R-9110	413
9R-9111	413
9R-9572	560
9R-9901	167
9S-2011	609
9S-2437	123
9S-4181	218
	221
	543
	574
9S-4182	586
9S-4183	446
9S-4185	574
	586
9S-4190	609
	646
	648
9S-4191	218
	221
	321
	326
	517
	520
	573
	574
	621
	659
	661
	666
	690
9S-8001	586
	630
	632
	634
	637
	639
	641
	644
9S-8002	123
	276
	326
	463
	586
	629
	630
	632
	634
	637
	639
	641
	644
	651
	652
	653
	654
	655
	657
	659
	661
	664
	666
	668
	682
9S-8003	586
	682
9S-8004	331
	492
	585
	586
	690
9S-8005	331
	629
9S-8006	102
9S-8008	238
	585
9T-1013	438
	443
	577
9T-1636	609
9T-1710	609
9T-1752	609
9T-2000	609
9T-2001	609
9T-2002	609
9T-2003	609
9T-2011	609
9T-2014	609
9T-2015	609
9T-2017	609
9T-2031	609
	▶614
9T-2168	609
9T-2171	609
9T-2172	609
9T-2173	609
9T-2231	609
9T-2232	609
9T-2457	434
	436
9T-3598	362
	363
	365
	369
	372
	725
	728
	730
	731
	732
	733
	736
	741
	742
	754
9T-3809	682
9T-3810	682
9T-3812	682
9T-3813	682
9T-3814	682
9T-3815	682
9T-3816	682
9T-3857	614
9T-3858	614
9T-3859	614
9T-3860	614
9T-3861	614
9T-3862	614
9T-3863	614
9T-3864	614
9T-3867	609
9T-3868	614
9T-4057	650
9T-4223	802
9T-5042	481
9T-5087	481
9T-5112	481
9T-6672	434
	436
9T-7062	682
9T-7266	646
	648
9T-7634	▶626
	646
	648
9T-8761	681
9T-9963	681
9U-0710	414
	416
9U-2743	259
	261
	263
9U-2744	259
	261
	263
9U-3226	508
9U-3409	259
	261
	263
	265
9U-3668	311
9U-8263	864
9U-8669	331
9U-8875	224
	226
	228
	230
	232
	234
9U-9551	268
	270
9U-9797	228
9V-1203	278
	280
9V-2412	259
	261
	263
	265
	311
9V-2714	711
9V-2715	711
9V-4484	721
	722
9V-6343	387
9V-9077	760
9V-9480	725
	728
	736
	754
9W-0335	189
	191
9W-0718	224
	226
	228
	230
	232
	234
9W-0852	186
9W-1454	218
	221
9W-3008	508
9W-6068	238
9W-6466	228
	232
9W-6582	47
9W-6584	47
9W-6904	224
	226
	228
	230
	232
	234
9W-6912	224

▶ **PRIMARY REFERENCE**

PART NUMBER INDEX

Part	Page
	234
9W-6922	228
	232
9W-6927	228
	232
9W-7159	218
	221
9W-7764	224
	234
9W-7765	228
	232
9W-7783	630
	637
	644
9W-8013	224
9W-8142	718
	▶780
9W-8143	▶782
9W-9371	224
	226
	228
	230
	232
	234
9W-9372	224
	226
	228
	230
	232
	234
9W-9399	228
	232
9W-9436	228
	232
9W-9662	224
	234
9W-9718	224
	226
	228
	230
	232
	234
9W-9930	47
9W-9940	887
9X-0261	418
9X-1046	136
	895
	898
	902
9X-1275	179
9X-1278	179
9X-1279	179
9X-1280	179
9X-1282	179
9X-1283	179
9X-1284	179
9X-1285	179
9X-1386	175
9X-1439	▶148
	156
9X-1813	334
	418
	420
	438
	443
	813
9X-2032	88
	786
	859
	895
9X-2038	348
	849
	851
	895
9X-2040	814
	816
	818
	820
	821
	822
	823
	824
	856
9X-2041	798
	810
	814
	816
	818
	820
	821
	822
	823
	824
	921
	934
	935
9X-2042	825
	830
	833
	835
	840
	843
	864
	866
	898
	902
	951
9X-2043	810
	849
	851
9X-2044	786
	859
	898
	902
9X-2045	161
	163
	165
	167
	181
	348
	810
	825
	849
	851
	869
	895
	898
	902
	906
	951
	955
9X-2065	418
	420
9X-2125	920
	923
9X-2133	81
9X-2185	786
	859
9X-2201	93
9X-2297	440
	455
9X-2299	389
9X-2384	504
9X-2447	960
	961
9X-2488	786
	859
9X-2532	954
9X-2621	259
	261
	263
9X-2622	259
	261
	263
9X-3404	133
9X-3455	148
9X-3463	148
	149
	157
	159
9X-3959	873
9X-3965	80
9X-4174	148
9X-4243	148
9X-4244	148
	149
9X-4492	151
9X-4493	151
9X-4609	218
	221
9X-5617	134
	135
9X-6165	143
9X-6395	686
9X-6491	259
	261
	263
9X-6493	272
9X-6579	768
9X-6580	446
	517
	520
	548
9X-6581	510
	542
	572
	578
9X-6772	141
	142
9X-7264	493
9X-7378	805
	871
9X-7380	871
9X-7381	871
9X-7382	871
9X-7383	871
9X-7385	805
9X-7849	152
9X-8139	152
9X-8256	136
	143
	163
	165
	195
	440
	455
	578
	583
	827
	856
	864
	877
	884
9X-8408	540
9X-8482	86
	87
9X-8699	389
9X-8873	789
	791
	792
	793
9X-8887	613
9X-8918	861
9Y-8315	95
9Y-9380	603
9Y-9381	96
9Z-8537	▶314
0	
002-0639	401
002-0754	611
002-3455	609
004-1683	614
005-0469	218
	221
005-0471	266
	267
005-8593	609
009-3101	74
	358
	359
030-0167	689
030-9613	411
031-0214	915
031-1348	611
031-5644	143
032-8047	96
033-5853	680
033-5879	687
	688
	689
033-6027	626
	679
	687
	688
033-6028	609
	646
	648

▶ **PRIMARY REFERENCE**

PART NUMBER INDEX

Part	Page
	698
033-6036	689
033-6043	679
	700
033-7687	42
033-9139	323
	326
	659
	661
	666
035-8014	96
037-4426	786
	859
039-8557	47
053-0189	80
061-6712	272
	274
	276
	278
	280
061-8803	927
061-9457	481
067-6043	29
067-6179	44
069-2535	411
	480
069-2536	411
081-5645	547
082-2817	212
085-7356	254
086-2369	607
087-0991	590
	591
090-1740	504
091-0079	542
	692
	916
091-0081	80
091-1637	773
	774
	775
	776
091-1664	773
	774
	775
	776
091-1665	773
	774
	775
	776
091-1667	773
	774
	775
	776
091-1745	773
	774
	775
	776
092-1136	365
	369
	372
	385
	725
	728
	730
	731
	732
	733
	736
	741
	742
	754
095-0673	272
	274
	276
	278
	280
095-0843	929
095-0878	861
	927
095-1207	671
	672
095-1751	431
	636
096-0194	458
096-1820	756
096-2323	837
	838
096-2617	179
096-5968	623
097-7234	864
099-3095	593
	594
	607
1	
100-3224	862
100-3685	179
100-3751	44
100-4230	609
100-4231	609
100-4830	17
	44
	96
100-4838	140
100-4841	20
	23
	26
	29
100-5179	861
101-0003	947
101-2867	915
101-3895	26
	44
	111
	116
101-4194	947
101-4195	947
101-9161	827
102-0341	786
	859
102-1957	43
102-2131	306
102-4176	128
	130
102-8801	812
102-8802	124
	145
102-8803	134
	145
	151
	174
	175
	185
	334
	418
	420
	438
	443
	504
	506
	813
	864
	866
	939
102-8804	145
	895
102-8805	133
	506
	814
	816
	818
	820
	821
	822
	828
	831
	955
102-8806	186
	326
	463
	504
	602
	657
	661
	664
	666
	668
	866
103-0280	338
	393
	395
103-1066	20
	23
103-1847	510
103-2006	810
	813
103-2543	898
	151
	187
	188
	191
	282
	334
	461
	620
	696
	697
	805
	875
	921
	939
	949
104-6754	243
	245
104-8621	426
104-9054	510
105-2151	609
105-4775	268
	270
105-4776	268
	270
105-8034	897
	901
105-9411	871
106-0827	958
106-1017	489
106-3108	477
	685
106-4835	315
106-4837	316
	319
106-7799	247
106-8704	555
	871
106-8916	104
	107
107-2348	96
107-3114	334
107-4628	794
	▶955
107-4630	794
	▶846
	908
	909
107-4641	796
	797
	▶951
107-4642	▶876
107-4643	▶877
107-4645	▶864
	868
107-5978	▶920
107-6007	825
107-6011	825
107-6013	897
	901
107-6021	897
	901
107-6032	▶147
	869
107-6056	905
107-6079	846
103-5687	70
103-5796	368
	371
104-2091	846
104-3173	564
	568
104-4980	533
104-6739	243
	245
104-6740	243
	245
104-6741	243
104-6742	243
	245

▶ **PRIMARY REFERENCE**

PART NUMBER INDEX

Part	Page
107-6104	837
	838
107-6120	837
	838
107-6133	▶186
	794
	909
107-6141	825
107-6144	798
107-6145	798
107-6146	798
107-7491	626
107-9976	705
	707
108-1029	▶152
	169
108-1786	340
108-4082	932
	▶947
108-4086	861
108-4087	862
108-4103	862
108-4311	798
108-4582	▶861
	947
108-4878	947
108-6428	646
	648
	▶686
108-8421	▶890
	927
108-8423	890
108-8424	890
109-1144	684
109-1633	871
109-1634	871
109-4727	224
	226
	230
	234
109-4728	224
	228
	232
	234
109-4730	226
109-5194	520
109-5351	93
109-5368	517
	520
109-5369	553
109-5502	265
109-6680	939
109-6681	939
109-7041	157
	159
109-8895	212
109-8981	157
110-2023	369
	372
110-5056	936
	937
	939
110-5059	936
	937
	939
110-6109	189
	536
	813
	897
110-6349	454
	542
	572
	582
110-7628	387
110-7849	493
	494
110-7886	186
110-7887	895
111-0132	905
111-0177	798
111-0178	798
111-0200	838
111-0201	837
111-0204	798
111-0209	798
111-0343	696
111-0859	40
111-5042	947
111-6940	423
	426
	429
111-7874	825
111-7878	825
111-7881	849
	851
111-7899	163
	169
	189
	191
	450
	452
	506
	555
	813
	830
	897
	901
111-8222	17
111-8738	848
111-9050	268
111-9758	726
	727
	737
	738
	741
	742
	754
112-0885	368
	371
112-1817	557
	▶656
112-2628	438
	454
112-4577	927
112-4578	927
112-4579	927
112-4580	927
112-4581	927
112-4582	927
112-4583	927
112-5219	147
112-5345	74
112-5965	533
112-6174	186
112-7167	1
	2
	3
	▶133
112-9736	808
112-9861	656
113-0899	927
113-1504	65
113-3632	590
	591
113-3652	498
	▶504
113-3682	564
	568
113-3706	1
	▶702
113-3715	702
113-3783	1
	▶404
113-3784	404
113-3785	1
	▶363
113-3790	1
	2
	3
	▶387
113-3791	387
113-3793	387
113-3794	387
113-3797	702
113-3853	362
113-3854	362
113-3885	362
113-3900	▶362
	363
113-6402	248
113-7543	42
113-8129	78
113-9232	920
	921
	923
	934
	935
114-1071	228
	232
114-3140	786
	859
114-3469	805
114-3937	329
	676
114-3940	329
	671
	677
114-3944	848
114-3951	897
114-3953	864
114-3954	864
	866
114-3956	877
	884
	885
	886
114-6604	157
	159
114-6658	810
114-9342	▶957
115-1552	837
	838
115-1558	▶155
	796
	797
115-1559	155
115-1561	849
115-1748	189
	191
	897
115-4550	331
115-5327	213
	214
	215
	216
	217
115-8427	438
	454
116-4527	465
	467
	468
	469
	470
	471
	472
	473
	474
	475
	678
116-4858	268
	270
116-4870	224
	226
	230
	234
116-4883	266
116-4884	226
116-4885	224
116-6952	557
116-7471	897
	901
116-7711	213
116-7712	213
116-7713	213
116-7856	848
116-9713	▶710
	718
117-1385	110
117-1911	481
117-2311	136
117-3255	450
	452
117-3274	866
117-3319	272
117-3787	897
	901
117-3788	897
	901
117-3789	897
	901

▶ **PRIMARY REFERENCE**

PART NUMBER INDEX

Part	Page
117-3915	▶171
	457
117-4492	783
117-7798	418
	420
117-7799	418
	420
117-7836	▶300
	314
	315
	317
117-7837	▶300
	314
	315
	316
	317
	318
	319
117-7839	300
	▶303
117-7840	300
	▶304
118-0626	794
	961
118-0808	801
	804
	▶946
118-0809	801
	804
	▶829
118-0849	▶248
	294
118-0850	248
	250
118-0860	702
118-0861	498
	▶557
118-0862	498
	▶580
118-0869	702
118-0880	1
	▶292
118-0885	504
118-0887	504
118-0899	1
	▶432
118-0911	444
118-0939	564
	568
118-0955	363
118-0970	564
	568
118-0973	547
118-0982	580
118-0985	580
118-0996	527
118-0997	527
118-1008	702
118-1030	564
	568
118-1041	406
118-1042	406
118-1043	406
118-1045	564
118-1050	406
118-1051	406
	407
118-1054	406
	407
118-1055	406
	407
118-1056	406
	407
118-1057	406
118-1059	406
118-1061	406
	407
118-1062	406
118-1063	406
118-1083	498
	▶604
118-1087	499
	▶618
118-1094	482
	500
	▶527
118-1095	500
	▶619
118-1121	▶378
118-4918	▶224
	320
118-4921	▶226
	320
118-5044	786
118-5597	204
	206
118-7236	921
	934
	935
118-7250	796
	797
	▶919
118-7255	911
	917
118-7259	785
	857
118-7362	897
	901
118-8105	▶493
	498
118-8106	493
118-8110	493
118-8596	▶300
	314
	316
	317
	319
119-0781	157
119-1060	▶489
	498
119-1062	489
119-1063	489
119-1799	▶721
119-1800	▶722
119-1802	721
	722
119-1803	721
	722
119-1804	721
	722
119-1805	721
	722
119-1806	721
	722
119-1807	721
	722
119-2073	919
119-3662	620
119-4769	794
	▶848
	908
	909
119-5841	300
	▶305
	319
119-7126	927
119-7127	927
119-7130	847
119-7141	927
119-7698	604
	▶613
119-8310	946
119-8397	680
119-9755	801
	▶802
119-9756	▶910
	911
119-9757	801
	▶878
119-9758	▶156
	801
119-9759	908
	909
	910
119-9760	910
119-9762	910
119-9763	802
119-9764	802
119-9765	802
119-9766	802
119-9770	878
119-9771	878
119-9810	156
119-9818	801
	▶911
120-0140	▶609
	613
120-0145	613
120-0146	613
120-0162	▶753
120-0163	734
120-0164	734
120-0165	734
120-0166	734
120-0167	734
120-0168	734
120-0172	734
120-0173	734
120-0175	734
120-0179	734
120-0596	849
	851
120-4481	266
	267
120-4482	224
	226
	230
	234
120-4483	297
	299
120-6125	837
120-6679	489
121-0192	869
121-0883	43
121-1029	901
121-7897	345
	347
121-8917	▶297
	320
122-1133	697
122-6177	557
122-6210	557
122-6211	557
122-6213	557
122-6214	557
122-6215	557
122-6216	557
122-6218	557
122-6220	557
122-6246	74
122-6268	378
122-6378	702
122-6393	702
122-6453	248
	250
122-6455	248
122-6493	504
122-6511	580
122-8352	257
122-8353	257
	258
	294
123-0708	853
123-2899	70
123-3132	698
123-4065	483
123-6620	879
123-6621	876
	879
123-6622	876
	879
123-9056	268
	270
124-0506	20
	23
124-2456	358
	359
124-2482	797
	▶866
124-3536	51
	52
124-3815	44
	104
	107
	111
	116
124-4324	866
124-4401	329
	671

▶ PRIMARY REFERENCE

PART NUMBER INDEX

Part	Page
	676
	677
124-4844	577
124-5314	866
124-5638	136
124-6913	677
124-8335	321
124-8494	786
	859
124-8495	786
	859
124-9015	849
	851
125-0373	432
	▶434
125-0374	432
	▶436
125-0375	434
125-0376	436
125-2086	389
125-3657	▶431
	694
125-7043	849
	851
125-7045	849
	851
125-7046	849
	851
125-7874	145
	504
125-7875	620
	864
125-7876	128
	130
125-8232	203
126-0747	290
	▶321
126-0748	321
126-1034	851
126-1035	851
126-1036	851
126-1367	851
126-1818	497
126-5985	680
126-6872	620
126-8472	901
127-6510	849
127-7457	851
127-8613	848
128-0164	426
128-0168	418
	420
128-0169	418
	420
128-0219	278
	280
128-0285	702
128-0294	702
128-0298	▶379
128-0782	942
128-0783	941
	942
128-0784	942
128-0785	941
	942
128-0899	849
	851
128-5164	319
128-5436	▶306
	308
128-5443	▶314
128-5450	317
128-7625	283
	550
128-7954	369
	372
129-0334	942
129-0335	941
	942
129-0336	169
	170
129-1854	869
129-1884	305
	▶307
129-3178	358
	359
	786
	859
	895
129-3270	825
129-5096	127
129-7184	895
129-8087	195
129-8732	224
	226
	228
	230
	234
129-8734	▶257
	294
130-1676	646
	648
130-1916	389
130-3922	682
130-5300	334
130-5770	684
130-6235	609
	▶682
130-9811	334
130-9888	65
130-9984	282
	438
	443
	550
	553
131-0715	607
131-1236	889
	908
	909
	▶952
131-1237	952
131-1238	952
131-2639	596
	597
131-3540	389
131-4242	861
131-5167	861
131-8350	586
	▶684
132-0338	783
132-0988	418
	420
132-0994	418
	420
132-2419	764
	766
	768
132-2427	764
	766
	768
132-2435	764
	768
132-2441	764
	768
132-2471	2
	3
	▶293
132-2553	433
132-2558	368
	371
132-2694	506
132-3543	942
132-4763	779
	781
132-5789	201
	334
132-6759	734
132-6760	734
132-7551	195
132-9623	228
	232
133-1011	44
133-3235	161
	163
	165
	167
133-3260	80
133-4234	618
	▶646
133-4235	482
	619
	▶648
133-4297	218
	221
	268
	270
133-4826	443
	446
133-6562	941
133-6563	941
133-6564	941
133-7675	418
	420
133-8305	240
133-8496	801
	▶803
133-8597	677
133-8773	489
133-9469	96
133-9625	340
	341
134-0404	256
134-0673	418
	420
134-0797	314
134-1374	827
134-2252	▶175
	336
134-4531	527
134-4735	825
134-5214	397
134-5215	397
134-7258	963
	964
134-9569	161
	163
	165
	167
135-2602	901
135-2779	438
135-3327	195
135-5935	593
	594
135-7902	547
135-7940	616
136-1543	891
136-1544	783
136-1953	786
	859
136-2109	849
	851
136-2218	167
136-3188	788
	955
136-3190	955
136-3195	788
136-4560	583
136-4593	246
136-4595	246
136-4794	504
	506
136-6980	853
136-6982	853
136-6984	853
136-7728	389
136-9289	326
	▶463
136-9291	664
136-9292	323
	326
	659
	661
	666
136-9297	326
	463
	600
	601
	664
	666
	668
136-9298	326
	463
	600
	601
	664
	666
	668
136-9301	467
136-9304	467
	468

▶ **PRIMARY REFERENCE**

PART NUMBER INDEX

Part	Page	Part	Page	Part	Page	Part	Page
	471		463		727		▶467
	472		657	143-4973	712	145-8711	463
	473		661		713		▶468
	474		664		714	145-8983	550
	475		666		715	145-9904	771
	678		668		716	146-0083	358
137-0266	463	141-4892	278		717		359
	▶465		280		741	146-0084	358
137-2170	954	141-5151	467		742		359
137-4234	724		471		744	146-0085	360
	729	141-6821	247		745	146-0089	359
	743	141-7481	323		748	146-0090	358
	746		326		754	146-0098	358
	747		463	143-5446	690		359
	749		596	143-7899	250	146-3337	323
	750		597	143-8874	785		596
	751		598	144-0195	952		597
	752		657		955	146-3514	323
	755		661	144-0367	93	146-6274	▶247
	756		664		542		320
	758		666		547	146-6275	247
	759		668		572	146-6277	247
137-6727	248	141-8580	833	144-1569	954	146-6280	218
	250		835	144-3422	▶771		221
138-1645	213		840	144-6969	514	146-6315	323
	214		843	144-8521	418		596
	215	141-8589	96		420		597
	216	141-8615	▶246	145-0326	947		598
	217		320		949		599
138-6791	504	141-9191	814	145-1135	853	146-6316	465
138-8484	355	141-9193	816	145-1136	853		467
138-8485	355		818	145-1140	853		468
139-4189	323	141-9236	326	145-1144	322		469
	326		463	145-2237	438		470
	596		657		454		471
	597		659		572		472
	598		661	145-2322	323		473
140-3668	170		664	145-2334	326		474
140-9024	564		666		600		475
	568		668		602		678
140-9251	▶411	141-9784	786		666	146-6317	323
	423		859	145-5201	728		596
	426	142-0038	290		736		597
	429	142-2651	326	145-5202	728		598
140-9293	167		463		736		599
140-9295	353		600	145-5256	▶323	146-6318	465
	▶354		601		326		467
140-9296	354		664	145-5307	869		468
140-9312	385		666	145-5607	853		471
140-9926	661	142-3955	486	145-6929	▶151		472
	666	142-5789	157		161		473
141-1095	326		159		163		474
	661	142-5862	226		165		475
	666		230		167		678
141-1481	577	142-5914	224	145-8428	326	146-6319	465
	▶694		234		463		467
141-1556	326	142-5925	228		600		468
	600	142-7568	437		601		469
	602	142-8937	616		602		470
	666	143-1288	792		664		471
141-2032	326		793		666		472
	600		929		668		473
	602	143-3193	414	145-8707	465		474
	666		416		468		475
141-4852	326	143-4353	726	145-8710	323		678

▶ PRIMARY REFERENCE

PART NUMBER INDEX

Part	Page
146-6747	959
	962
146-7453	290
146-7986	764
	766
	768
	777
146-7987	764
	766
	768
	777
146-7990	705
	707
146-8000	705
	707
146-8003	777
	778
146-8006	777
	778
146-8010	705
	707
146-8013	705
	707
146-8477	323
	326
	659
	661
	666
146-8478	326
	463
	657
	661
	664
	666
	668
146-8479	323
	326
	596
	597
	598
	661
	666
	668
146-8981	323
	326
	659
	661
	666
147-2038	323
147-2355	351
	352
147-3114	326
147-3322	326
	463
	▶599
	657
	661
	664
	666
	668
147-5071	▶294
	300
147-5484	300
	▶314
147-5553	96
148-1928	218
	221
148-2557	632
	634
	637
	639
	641
	644
148-3626	846
148-5689	897
	901
148-7785	577
148-7827	▶485
	762
148-7860	506
148-7871	433
148-7900	712
	715
	716
	717
	739
	742
	745
	▶777
148-7901	167
148-7922	326
	600
	602
	666
148-8316	282
	443
	446
	553
	555
	582
148-8317	282
	550
148-8321	482
	564
	568
148-8322	577
148-8323	542
	547
	564
	568
	572
148-8324	438
148-8325	283
	438
	450
	452
	454
	514
	517
	520
	522
	533
	536
	538
	540
	542
	550
	560
	572
	582
148-8327	252
	254
	439
	454
	557
148-8328	439
	443
	508
148-8330	564
	568
148-8334	542
	573
148-8335	290
	527
	533
	538
	557
	560
	582
148-8336	288
	418
	420
	423
	426
	482
	514
	542
	557
	560
	564
	568
	573
	577
	620
148-8340	439
	443
	446
	454
	582
148-8341	555
	620
148-8342	443
	446
	620
148-8345	443
	446
	564
	568
148-8347	252
	254
148-8351	450
	514
	517
	520
	522
	524
	550
	553
	555
	768
148-8352	290
148-8353	288
	560
	564
	568
148-8354	577
	582
148-8355	533
	538
	542
	573
148-8356	283
	550
148-8357	580
148-8361	288
	423
	426
	429
148-8362	580
148-8363	543
	573
148-8364	283
	439
	454
	577
148-8365	439
	454
	543
	573
148-8367	288
	423
	426
	573
	620
148-8368	439
	450
	452
	454
	514
	517
	520
	522
	524
	533
	620
	768
148-8369	439
	444
	446
	455
148-8370	565
	569
	577
	620
148-8372	439
	444
	582
148-8373	282
	550
148-8374	564
	569
148-8378	288
	418
	420
	423
	426
	429

▶ **PRIMARY REFERENCE**

PART NUMBER INDEX

Part	Page	Part	Page	Part	Page	Part	Page
	508		692	150-3065	290		439
	560	148-8436	283	150-3182	438		444
	565		439		443		543
	569		444	150-4033	547		547
	577	148-8437	557	150-4036	444		573
	692	148-8439	557	150-4043	439	153-6241	439
148-8382	553	148-8441	543		455		455
148-8384	553		573		543		540
	555	148-8443	418		547		565
148-8385	543		420		573		569
	573	148-8444	283	150-4048	578	153-6243	543
148-8387	543		439	150-4050	524		573
	573		444	150-4052	514	153-6248	283
148-8390	283		446	150-4086	560	153-6252	540
	553		455	150-5968	515	153-6267	533
	555		514		522	153-6932	786
148-8392	439		565		524	153-8303	450
	455		569		533		452
148-8393	555		578		768	153-8924	467
	621		621	150-6564	▶18		468
148-8407	321	148-8448	283		60		471
	517		439		61		472
	520		455	150-6566	60		473
	543	148-8449	557		61		474
	544		621		▶406		475
	573	148-8455	527	150-6576	18		678
	574	148-8458	288	150-6577	18	153-8925	465
	621	148-8467	517	150-6579	18		467
148-8408	446	148-9359	586	150-6582	876		468
148-8411	544		625	150-8015	954		469
	574		630	150-8050	128		470
	586		632	150-8982	508		471
	621		634	151-0894	786		472
148-8414	621		637		859		473
148-8416	510		639	151-4003	687		474
	543		641		688		475
	573		644	151-4522	812		678
	578	149-0777	461	151-4841	128	153-8926	465
148-8417	517	149-2500	393		130		467
	520		395	151-5145	497		468
148-8418	446	149-4359	329	151-5715	846		469
	547		674	151-6142	208		470
148-8421	446		675		▶240		471
148-8424	282		676	151-7214	443		472
	542	149-4569	557	151-9274	811		473
	572	149-4745	932	151-9275	811		474
148-8428	565	149-5452	517	151-9826	547		475
	569		520	152-2763	953		678
	578	149-5470	326	152-2764	952	153-8929	467
148-8430	452		463		▶953		468
148-8431	283		600	152-5372	395		471
148-8433	423		601	152-5717	512		472
	426		664		513		473
	429		666		530		474
	514		668		532		475
	533	149-5733	779		768		678
	578		781	152-5718	512	153-8941	323
	621	150-1293	329		513	153-8945	599
148-8434	426		673		530	153-8946	596
	543		674		532		597
	573		675		768	153-8947	326
148-8435	288		676	153-2318	438		463
	423		677		454		657
	426	150-3033	536	153-6230	283		661
	429	150-3060	508	153-6237	254		664

▶ **PRIMARY REFERENCE**

PART NUMBER INDEX

Part	Page	Part	Page	Part	Page	Part	Page
	666		572	160-2443	▶174		601
	668	156-4271	801		907		602
153-8952	326		▶887	160-2444	174		664
	463		889	160-3518	868		666
	600		908	160-6066	514		668
	601		909	160-6171	▶879	163-5775	208
	664	156-4449	785	160-6298	602		▶213
	666		857	160-6520	901	163-5776	213
	668	156-5545	783	160-8499	606		214
153-9706	397	156-5970	697	161-4130	756		215
154-2302	397	157-0670	38	161-5967	861		216
154-4911	167	157-2152	465	161-6149	431		217
154-5508	▶300		470	161-6154	627	163-6408	413
	318		471	161-6161	431	163-6412	413
154-5629	897		473	161-7620	846	163-7233	213
	901		474	161-8042	798		214
154-7279	510		678	161-9639	837		215
154-8410	725	157-2153	468		838		216
	728		469	161-9640	833		217
154-8411	725		472		835	163-7234	213
	728		475		840		214
155-0576	111	157-4835	761		843		215
	116	157-6144	326	161-9641	833		216
155-2026	290	157-6155	326		835		217
155-2255	620	158-3049	282		840	163-9324	871
155-2260	135	158-3412	510		843	164-1234	949
	145	158-5089	163	161-9642	833	164-1270	949
	334		165		835	164-2108	322
	504		203		840	164-3485	542
	921		204		843		572
155-2265	145		206	161-9645	798	164-3873	423
	828		555	161-9647	833		426
	864		897		835		429
	866		901		840	164-4021	725
155-2270	145	158-9956	586		843		728
	184		▶627	162-0177	586	164-4022	728
	334	159-2829	93	162-2189	833		736
	340	159-3590	962		835	164-4024	728
	504	159-3781	596	162-7790	736		736
	620		597	162-8264	547	164-4111	482
	921		598	162-8447	▶792	164-4180	543
155-2271	145		599		931		574
	828	159-5255	38	162-8448	▶793	164-4225	440
155-3503	578	159-7446	208		931		455
155-3504	283		▶243	163-1135	949	164-4227	254
	550	159-7457	243	163-1148	793	164-4531	783
155-3624	586		245	163-1149	792	164-4557	837
155-4957	936	159-7458	243	163-1201	198	164-4883	892
155-5779	955		245		200	164-5509	157
155-5783	955	159-8049	128	163-4345	358	164-5567	252
155-5784	955		130	163-4347	360		254
155-6344	290	159-9539	837	163-4348	360		283
156-1148	▶924		838	163-4363	167		290
	932		897	163-4370	167		418
156-1685	936		901	163-4373	167		440
156-1686	937	160-0269	690	163-4376	167		543
	939	160-0496	411	163-4377	167		547
156-1687	937	160-0526	20	163-4636	▶600		564
	939		23		661		568
156-1771	517	160-0750	659	163-4637	▶601		572
156-4130	423	160-2243	382		657	164-5577	283
	426		401	163-4639	323		533
	429	160-2248	379	163-5512	326		538
	542		380		463		582
	547		381		600	164-5578	547

▶ **PRIMARY REFERENCE**

PART NUMBER INDEX

Part	Page
164-5619	102
164-5641	283
	550
164-6860	283
	550
164-6874	254
164-7556	149
164-9316	725
	728
	736
	754
164-9640	438
	454
	542
	572
164-9869	440
	455
165-0311	189
	191
	897
	901
165-0312	189
	191
165-2273	542
	547
	572
165-5970	102
	▶185
165-6365	420
166-2087	88
166-9286	846
166-9287	829
167-2186	434
	436
	437
167-2201	489
	491
	493
167-2207	494
167-2294	434
	436
	437
167-2312	489
	491
	493
167-2317	494
167-9524	322
168-1877	657
168-1878	661
168-1968	620
168-2457	835
	843
168-2458	833
	840
168-6503	▶469
	657
	661
168-6504	▶470
	657
	659
	661
168-7000	▶413
	794
	801
	804
	908
	909
168-7089	880
168-7090	881
168-8389	724
	729
	742
	743
	746
	747
	749
	750
	751
	752
	755
	756
	758
	759
	761
168-8772	864
	866
169-0419	564
	568
169-1616	431
	636
169-1617	431
169-2969	491
169-3995	833
	835
	840
	843
169-5862	582
169-6714	457
169-7380	949
169-7404	553
	555
169-7409	510
169-7435	809
169-8352	218
	221
170-0048	213
170-0108	213
	214
	215
	216
	217
170-0493	480
170-0503	480
170-1112	783
170-1114	783
170-1115	783
170-3793	204
	206
170-4698	213
	214
	215
	216
	217
170-5678	520
170-8513	463
	▶471
170-9360	897
	901
171-1230	929
171-4055	472
171-5349	334
171-6031	167
171-6032	167
171-6682	929
171-6723	543
	574
171-7198	308
171-7199	308
171-8138	▶734
	753
171-8689	308
171-8772	697
172-0223	463
	▶472
172-2416	929
172-5277	282
	550
172-7966	331
172-7968	331
172-8037	868
172-8039	868
172-8591	389
	408
	410
172-9862	393
	395
173-0064	290
173-0703	812
173-1028	▶783
	929
173-2052	891
173-3993	586
	630
	632
	634
	637
	639
	641
	644
173-4032	582
	▶629
173-5787	933
173-6923	340
	341
173-7035	933
173-7061	629
173-7062	629
173-7223	418
173-7225	423
	429
173-9682	489
173-9685	434
	436
173-9779	437
174-3734	707
174-4217	702
174-4246	74
174-4252	702
174-4647	236
174-4650	236
174-4726	736
174-6491	864
	866
174-6899	317
174-7449	331
174-9570	123
174-9725	905
174-9730	▶905
	912
	913
	916
	917
175-6746	856
175-6749	856
175-6750	▶855
175-6754	856
175-6759	856
175-6760	6
	7
	8
	855
	▶856
175-7310	280
175-7895	434
	436
	437
175-7902	491
175-7903	489
175-9436	▶602
	659
175-9440	659
175-9443	326
	▶596
	659
175-9444	▶597
	659
176-0118	308
176-0210	594
176-0623	702
	764
	768
	777
176-0624	702
	764
	768
	777
176-0625	702
176-0626	702
176-0720	▶486
	762
176-1705	308
176-1706	▶308
	309
176-1707	308
176-2435	339
176-3141	36
	37
176-7807	514
176-9644	489
177-0018	▶218
	320
177-0019	218
	221
	▶238
177-0026	▶331
	336
177-1061	290
177-1452	702
	705

▶ PRIMARY REFERENCE

PART NUMBER INDEX

Part	Page	Part	Page	Part	Page	Part	Page
	707	180-8996	343	185-2653	125		813
177-1862	915		346	185-2654	125		828
177-1863	929		347	185-2655	125		831
177-2215	450	180-8997	343	185-2658	125		875
	452		346	185-2765	555		895
	542		347	185-2766	189		939
	572	180-9853	317		191		955
177-4937	923	180-9872	488	185-2768	204	186-3736	184
177-9853	198	180-9900	897		206		828
178-0465	778		901	185-3159	20	186-4382	489
178-0470	▶778	183-5106	▶805		23	186-4415	413
178-0603	▶929		806	185-3874	883	186-4942	304
	931	183-7263	276	185-5209	564		▶308
178-2593	833		586		568	186-4943	301
	835		630		▶680		▶309
	840		632	185-5629	895	186-5107	949
	843		634	185-6596	434	187-1979	650
178-3586	198		637	185-7708	646	187-2082	810
178-3720	485		639		648	187-2868	88
178-3893	485		641	185-9336	514	187-3662	504
	488		644	185-9562	560	187-5122	954
178-7877	326		651	186-0815	74	187-5123	954
	596		652		172	187-5124	954
	598		653	186-0817	74	187-5125	954
	599		654		172	187-5126	954
178-7907	891		655		410	187-5127	954
178-7914	▶931		668	186-0905	648	187-5128	954
	933	183-7528	786		▶687	188-0938	514
179-0006	▶183		859	186-0913	646	188-0982	486
	204	183-8597	334		648	189-0189	696
	206	184-2298	929		▶688	189-0942	397
179-3609	964	184-2299	929	186-2487	687	189-1707	871
179-3612	964	184-5293	895		688	189-2100	591
179-4324	360	184-5296	499	186-2488	687		▶696
179-6396	821		500		688	189-3158	203
179-6397	820		501	186-3735	124	190-0642	127
179-7071	41	184-9975	▶679		133	190-2888	▶266
179-7400	123		680		145		320
179-9392	897	185-0884	29		151	190-2911	266
	901	185-1016	▶84		174		267
180-2535	840		86		185	190-2914	▶228
	843	185-1017	80		186		320
	▶954	185-1023	76		187	190-2915	▶268
180-3730	122		77		282		320
180-4049	921	185-1027	84		329	190-3085	487
180-4686	121		85		334		▶488
180-5098	869	185-1028	▶237		418		768
180-6567	555		282		420	190-3611	488
180-7486	848	185-1030	76		438	190-4405	794
180-7487	848	185-1036	80		443		795
180-7502	218	185-1039	237		461	190-4406	800
180-8807	▶188	185-1045	15		600		▶804
180-8852	334		▶73		601	190-4559	189
180-8860	204	185-1046	73		602		191
	206	185-1047	102		664	190-4563	895
180-8871	128	185-1922	282		666	190-4635	794
	130	185-2327	679		668		801
180-8874	128	185-2638	125		673		804
	130	185-2639	125		674		▶825
180-8984	▶343	185-2644	125		675		908
180-8992	344	185-2645	125		676		909
	345	185-2647	125		677	190-4665	801
180-8993	344	185-2648	125		696		▶941
	345	185-2650	125		697	190-4666	795
180-8994	346	185-2651	125		811		908

▶ **PRIMARY REFERENCE**

PART NUMBER INDEX

Part	Page
	▶942
190-4690	794
	801
	804
	▶827
	908
	909
190-4700	794
	801
	804
	▶906
	908
	909
190-4701	906
	▶907
190-8308	690
190-8314	690
190-8986	314
190-9821	510
191-1782	102
191-2226	313
191-2933	933
	▶949
191-3028	465
	469
	470
191-3029	465
	469
	470
191-8920	326
	600
	601
	664
	666
	668
191-8921	788
	955
191-9182	80
191-9184	80
191-9188	408
191-9192	80
191-9783	560
192-2684	438
	454
192-7625	514
	517
	520
192-7752	949
192-7755	949
192-7760	949
192-7767	949
192-7783	949
192-7787	949
192-7790	949
192-7795	949
192-7799	949
192-7805	949
192-7810	949
192-7812	949
192-7820	949
192-7822	949
192-7848	949
193-1664	681
193-1665	586
	▶681
193-2200	272
	274
	276
	278
	280
193-3808	▶91
	909
193-4640	311
	312
193-5913	963
	964
193-5914	756
	963
	964
193-5915	344
	345
193-5918	963
	964
193-5958	690
193-8334	530
	532
193-8335	530
	532
193-8638	216
	217
193-9056	189
	191
194-0711	91
194-1651	299
194-4120	514
194-4121	198
194-5171	788
194-7109	705
	707
194-7110	705
	707
194-7111	705
	707
194-7112	705
	707
194-8111	198
194-8112	198
194-8113	198
194-8114	198
195-0916	897
	901
195-0917	897
	901
195-0921	897
	901
195-0922	506
195-0925	169
	170
195-0926	163
	165
	167
195-6086	288
195-6525	508
195-6526	508
195-7430	697
196-1185	334
196-1979	▶487
	762
196-9560	524
196-9994	524
197-1597	377
197-8820	▶125
	127
198-3393	798
198-5389	145
198-8064	524
198-8214	565
	569
198-8933	389
198-8942	389
198-8943	389
198-8944	389
198-8945	349
	352
198-8946	349
	351
198-8954	389
198-8955	389
198-8956	410
198-8957	408
198-8961	389
198-8964	▶408
	801
	858
	889
198-8965	▶410
	908
199-0652	236
199-0676	236
199-1361	491
199-1363	491
199-3108	43
199-3109	43
199-3778	607
199-6309	250
	853
199-7041	807
	▶809
199-7042	809
199-7043	809
199-7891	125
199-8436	125
199-9252	111
	116
199-9267	69
	111
	116
199-9751	32
	34
	2
200-2042	320
	▶334
200-2043	334
	▶336
200-2044	336
200-2045	238
200-2371	699
200-5728	868
200-6345	80
	195
	198
	200
200-7742	482
	564
	569
201-0432	406
	407
201-0950	690
	▶697
201-1024	189
	191
201-1063	437
201-3316	336
201-3359	▶657
	675
201-3360	▶659
	677
201-3361	▶661
	676
201-4275	470
201-4276	469
	473
	678
201-5242	607
201-5555	161
	163
	165
	167
201-9459	181
201-9517	310
	▶312
202-0042	687
	688
202-0358	121
202-0360	121
202-0363	▶807
	808
202-0392	397
202-0393	397
202-0420	1
	2
	3
	▶339
202-0421	▶499
202-0423	▶500
202-0430	1

▶ PRIMARY REFERENCE

PART NUMBER INDEX

Part	Page
	2
	3
	▶418
	▶420
202-0671	656
202-0673	656
202-0674	656
202-1129	189
	191
202-1233	▶473
	657
	659
	661
202-1320	657
202-2558	661
	▶678
202-2564	▶598
	661
202-4338	294
	295
	▶310
202-4732	936
	937
	939
202-4736	936
	937
	939
202-4738	936
	937
	939
202-4739	936
	937
	939
202-6614	149
202-7857	74
202-8928	555
203-2756	259
203-2757	259
203-2758	259
	261
	263
203-2759	261
203-2761	▶208
	209
203-2762	208
	▶259
203-2763	208
	▶272
203-2764	259
	263
	265
203-2770	▶208
	210
203-3877	▶496
	498
	499
203-3894	▶252
	294
203-5852	217
203-5853	217
203-5924	499
	▶564
203-5925	500
	▶568
203-5927	▶499
203-5937	▶808
	908
203-7703	933
203-9007	897
	901
204-0358	189
204-0359	191
204-0775	181
204-0813	354
	355
204-1126	936
	937
	939
204-1370	121
204-2281	128
	130
	195
	282
	288
	423
	426
	429
	438
	443
	446
	450
	452
	454
	510
	517
	520
	542
	550
	553
	555
	560
	572
	578
	871
204-2593	228
204-2594	268
204-3540	310
	▶313
204-4148	607
204-4332	346
204-5107	1
	▶400
204-6101	189
	191
	895
	897
	901
204-8000	195
	440
	444
	446
	455
	543
	574
204-8799	830
205-0626	125
205-0826	145
205-1627	88
205-2214	74
205-3210	278
	280
205-3211	272
	274
205-3652	237
205-4285	136
205-4587	606
205-5469	423
205-6024	808
205-6025	807
205-6026	807
205-6027	807
205-6028	807
205-6298	181
205-6388	923
205-8125	873
205-8257	145
206-1345	201
	897
	901
206-2423	200
206-3632	690
206-4441	122
206-5162	145
206-5208	145
206-7384	577
206-7385	577
206-7386	577
206-8818	616
206-9546	616
207-5947	▶136
	868
207-5948	794
	▶830
207-6031	318
208-0011	360
208-0310	▶353
208-0792	593
208-0886	591
208-2293	593
208-2806	422
208-4982	▶353
208-4983	353
	▶360
208-4985	353
	▶355
208-7058	288
209-0787	547
209-3149	496
	▶497
209-4578	93
209-5502	17
209-5503	17
209-8712	6
	7
	8
	▶384
209-8713	384
209-9219	31
210-2262	915
210-2263	915
210-2266	915
210-2268	915
210-2270	▶915
	929
211-0052	189
	191
	897
	901
211-2092	590
	591
	▶698
211-5358	949
211-8851	438
	454
211-9294	949
212-0061	699
212-1302	▶664
	672
	674
212-1305	▶666
	671
212-1307	▶326
	329
212-3657	102
	▶123
212-3863	80
212-4648	443
	446
212-4650	443
	446
212-4652	252
212-4653	547
212-4656	▶446
	460
212-4961	475
212-4962	326
	▶474
	664
	666
	668
212-4963	326
	▶475
	664
	666
	668
212-7770	547
213-1793	482
	568
213-4574	936
	937
	939
213-4576	936
	937
	939
213-4579	936
	937
	939
213-6219	577
213-7315	895
213-9100	188
214-0095	290
214-0620	385
214-1542	438
	443
214-3279	547
214-4768	268
	412
214-4769	268
214-5389	514
	522

▶ **PRIMARY REFERENCE**

PART NUMBER INDEX

Part	Page	Part	Page	Part	Page	Part	Page
	768	218-0404	145	220-5572	963	225-3801	389
214-5390	514	218-0861	929	220-5573	964	225-4150	963
	522	218-2440	383	220-5574	963		964
	768	218-2792	88		964	225-4257	959
214-7458	76	218-3171	214	220-7925	208		962
214-7636	955		215		209	225-4287	84
214-8917	423		216		211		85
	426		217		212	225-4329	796
	429	218-3172	214	220-8678	123		797
214-9348	438		215	221-0839	356		▶868
	454		216	221-0840	356	225-5439	51
214-9563	354		217	221-0845	356		52
	355	218-3173	214	221-9211	422	225-7738	78
214-9564	354		216	221-9221	422	225-7944	71
	355	218-3174	214	221-9774	557	225-8019	78
215-1132	▶853		215	222-0345	923	225-8524	111
215-2643	358		216	222-0574	895		116
215-2644	359		217	222-7058	393	225-8839	27
215-2645	▶358	218-3673	482		395		28
	360		▶577	222-8652	90	225-8858	29
215-2646	▶359	218-5003	853	222-9020	90	225-9499	422
	360	218-5004	853	222-9021	90	225-9611	586
215-4012	93	218-5005	853	223-2223	443	226-0294	389
215-8058	272	218-6535	620		446		849
	274	218-8836	▶169	223-4717	814		851
	276	219-0302	959		816	226-0339	389
	278		962		818	226-0341	849
	280	219-0669	102		820		851
215-8125	259	219-1790	690		821	226-0347	577
	261	219-2418	6		822	226-0443	127
	263		7		823	226-1186	353
	265		60		824		▶356
215-9509	104		61	223-6352	762	226-1240	962
	107	219-2423	▶958		▶763	226-1274	962
216-4983	93	219-2425	4	223-6353	763	226-1842	▶934
216-5338	▶322		▶340	223-7936	▶925	226-1843	▶935
	336	219-2849	908	223-7937	▶926	226-1845	▶921
216-6945	76		911	223-9698	▶480	226-2095	542
216-6946	76		▶912		577		572
216-7790	128	219-2850	912	223-9734	740		692
	130	219-3314	282	224-0672	577	226-2869	252
216-8581	54	219-6314	145	224-0759	713		254
216-8634	44	219-6910	359		▶740		▶256
216-9069	827	219-6911	358	224-2263	90	226-2951	897
216-9633	69	219-8096	923	224-5132	478		901
216-9752	104		▶933	224-5152	478	226-3378	897
	107	220-0198	959		479		901
	111	220-0691	408	224-7830	577	226-3681	143
	116	220-1241	47	224-8946	959	226-3865	564
217-0099	111	220-1505	499		962		568
	116		▶814	224-9855	959	226-5951	514
217-0956	827	220-1506	499		962	226-5952	514
217-3680	241		▶816	225-0300	586	226-5964	▶314
217-4154	461	220-1509	500		▶699	226-7264	514
217-4155	461		▶818	225-0312	959	226-7265	514
217-5293	438	220-2657	607		962	226-7657	514
217-7742	871	220-2680	593	225-1057	▶692	226-7658	514
217-7933	915	220-2681	594		814	226-8202	434
217-8339	123	220-3681	212		816		436
217-9039	111	220-4049	885		818		437
	194		886	225-3281	489	226-8766	44
217-9049	929	220-4050	885		491	226-8767	44
218-0001	423		886		493	227-0067	514
	426	220-5566	963	225-3283	494	227-0113	514
	429	220-5568	963	225-3800	389	227-0179	514

▶ PRIMARY REFERENCE

PART NUMBER INDEX

Part	Page	Part	Page	Part	Page	Part	Page
227-1185	585	232-0681	▶319		210	235-6877	▶380
227-1186	636	232-1115	104	234-4255	▶209	235-6879	▶381
227-1189	650		107		210	235-6880	▶382
227-1199	585		195	234-4325	▶149	235-6916	501
227-3989	527	232-1322	29		155		502
227-3990	527		32	234-7730	149		503
227-5347	493		34	234-7731	149		▶529
227-7392	788	232-1374	102	234-8803	▶298	235-6917	502
	955	232-1376	102		299		503
227-7474	533	232-3149	111	234-8806	298		▶530
228-0712	181		116	234-8808	298	235-6923	501
228-4710	356	232-3666	44	234-8852	▶267		503
228-7100	110	232-3751	71		320		▶531
228-7696	389	232-3861	69	234-8853	230	235-6924	503
229-1494	931	232-7596	29	234-8854	▶230		▶532
229-2939	496	232-7597	29		320	235-6941	2
229-2940	290	232-7599	29	234-8855	267		3
229-3481	375	233-2549	514	234-8857	▶232		▶595
229-3489	375		517		320	235-6955	▶353
229-4953	▶315		520	234-8858	232	235-7195	2
229-4954	▶315		▶685	234-8859	▶270		3
229-4955	▶315	233-2944	711		320		▶433
229-4956	▶315	233-6973	422	234-8860	270	235-7200	2
229-4957	▶316	233-7126	623	234-8861	▶234		▶364
229-4958	▶316	233-7133	288		320	235-7201	364
229-4959	▶316		▶623	234-8862	234		▶365
229-4960	▶316		692	234-8863	232	235-7300	526
229-4961	▶317	233-7387	935	234-8867	▶299		▶705
229-4962	▶317		▶936		320	235-7301	▶701
229-4969	▶317	233-7388	934	235-1845	195		705
229-4970	▶317		▶937	235-4546	877	235-7307	701
229-9714	▶711	233-7389	921		884	235-7340	705
229-9715	711		▶939		886		707
229-9841	375	234-1885	510	235-4605	624	235-7346	705
229-9940	393	234-1890	510		625		707
230-0902	514	234-2007	374		▶700	235-7350	705
	527	234-2667	15	235-5762	155	235-7353	705
230-0913	698		▶178	235-5811	208		707
230-1233	514	234-3030	94		212	235-7361	707
	527	234-3063	104		▶241	235-7390	705
230-1340	143		107	235-6807	▶254		707
230-1341	143	234-4173	611		294	235-7391	705
230-1346	393	234-4243	274		295		707
230-1514	393	234-4244	278	235-6820	2	235-7392	705
230-1542	393		280		3		707
230-1544	393	234-4245	274		▶506	235-7393	705
230-2507	422		276	235-6823	▶491		707
230-3048	393		278		498	235-7396	705
230-3222	393		280		499		707
230-3223	393	234-4246	208	235-6824	▶494	235-7400	762
230-3739	458		209		498		▶764
230-5771	438		▶274		499	235-7401	764
	443	234-4247	212	235-6830	498		768
230-8989	111		▶278		499	235-7450	762
	116	234-4248	211		▶605		▶766
230-9678	▶318		▶280	235-6853	500	235-7451	766
231-0299	837	234-4249	208		▶820	235-7471	766
231-2995	360		209	235-6860	501	235-7500	▶707
231-2996	360		▶214		▶821		709
231-2997	360	234-4251	214	235-6875	800	235-8810	280
231-4262	811		215		▶943	235-8811	280
231-6042	374		216	235-6876	795	235-9631	274
231-7994	198		217		796		276
231-7995	198	234-4252	217		909		278
232-0679	▶319	234-4253	▶208		▶945	235-9832	491

▶ **PRIMARY REFERENCE**

PART NUMBER INDEX

Part	Page	Part	Page	Part	Page	Part	Page
236-0483	274	238-5081	102	240-5765	▶743	241-6190	512
	276	238-6658	▶85	240-5766	▶723		513
	278		87		743		768
236-0931	209	238-8028	116	240-5771	723	241-6481	542
	211	238-8292	96	240-5843	506		572
	212	238-9593	310	240-6016	630	241-6486	582
	▶245		▶311		632	241-6487	582
236-2295	785	238-9594	311		634	241-6755	282
236-2541	232	239-0717	6		637	241-6995	437
236-4232	897		7		639	241-6997	437
	901		8		641	241-8368	▶184
236-4233	785		▶375		644		195
236-4234	897	239-1134	177	240-6017	630		897
236-4238	857		▶187		632		901
236-4545	177	239-2198	▶881		634	241-8564	794
236-5197	915		882		637		▶869
236-6717	123	239-3322	74		639	242-0081	582
236-6923	871	239-4234	959		641	242-0092	▶498
236-7230	963		962		644	242-0093	498
	965	239-5607	221	240-6769	723		▶536
236-7493	261	239-5608	▶221	240-6832	637	242-0096	503
	263		320		644		▶822
236-7495	211	239-5814	▶923	240-7356	695	242-0098	503
	212	239-6989	963	240-7957	959		▶620
	▶261		964		962	242-0100	503
236-7496	208	239-7002	▶741	240-8660	651	242-0117	620
	209	239-7004	▶742		654		▶650
	▶263	239-7396	▶86	240-8661	652	242-0180	438
236-8013	177	239-7397	▶87	240-8662	653		454
237-0068	▶880	239-8103	▶857		655	242-0181	542
	882		858	240-9137	457		572
237-0120	339	239-9512	595		▶458	242-0265	542
237-0292	605	240-0180	282	240-9450	506		572
	▶611	240-1725	586	240-9451	364	242-0435	494
237-2327	763	240-1863	630		367	242-0436	494
237-3857	921		632	240-9452	▶500	242-0439	494
237-3943	949		634	240-9454	▶501	242-0443	494
237-3970	▶784		637		502	242-0575	542
	949		639	240-9590	▶632		572
237-9271	433		641		652	242-0968	542
	▶437		644		653		572
238-0120	110	240-1865	630	240-9592	639	242-1239	▶882
238-0347	756		632	241-0916	▶754	242-1830	245
238-2656	500		634	241-0918	741	242-5078	510
	502		637	241-0920	754	242-5079	529
	▶533		639	241-0921	▶775	242-5080	510
238-2866	943		641	241-0922	▶776	242-5276	510
	945		644	241-0935	▶744	242-5284	510
238-2867	943	240-1866	630	241-0936	▶724	242-5285	510
	945		632		744	242-5286	510
238-2868	943		634	241-0937	724	242-5287	510
	945		637		▶725	242-5441	179
238-2869	943		639	241-0943	▶500	242-5442	179
	945		641		501	242-5443	179
238-2870	943		644	241-0944	▶502	242-5444	179
	945	240-1867	630		503	242-5445	179
238-2871	943		632	241-1049	▶482	242-8159	121
238-2872	945		634	241-2826	318	242-8764	936
238-4832	▶630		637	241-2827	▶318		937
	651		639	241-4291	111		939
	652		641		116	242-8765	936
	653		644	241-6172	290		937
238-4864	897	240-2563	869	241-6189	512		939
	901	240-2564	869		513	242-8872	542
238-5014	145	240-2565	869		768		572

▶ PRIMARY REFERENCE

PART NUMBER INDEX

Part	Page
242-9594	542
	572
242-9597	542
	572
242-9754	582
242-9977	517
	520
243-0515	▶250
	294
	295
243-0516	▶145
243-0517	145
243-0530	395
243-0532	395
243-0536	401
243-0537	401
243-0541	60
	61
	▶407
243-0542	395
243-0544	407
243-0651	536
	▶624
243-0652	624
243-0686	290
243-2452	742
243-3224	510
243-3772	254
243-4167	536
243-4168	536
243-4171	450
	452
243-4398	▶478
	542
	572
243-4914	529
243-4955	530
243-5130	530
243-5193	530
	532
243-5250	529
	531
243-5251	529
	531
243-6221	560
243-6521	560
243-6525	540
244-0727	542
	572
244-0735	620
244-1122	512
244-1123	620
244-1434	560
244-2643	517
	520
244-5086	517
	520
244-6621	595
244-6645	582
244-6646	582
244-7133	531
244-7134	531
244-7177	540
244-7178	540
244-8945	503
244-9503	532
244-9504	532
245-1441	620
245-1442	620
245-1443	620
245-4856	498
	499
	▶582
245-4858	501
	503
	▶538
245-4861	501
	502
	503
	▶540
245-4885	560
245-4886	560
245-8145	200
245-9088	897
	901
246-2228	200
246-2230	200
246-2641	250
	615
	853
247-0841	▶812
	822
247-2971	586
247-4502	462
	▶477
247-4503	450
	452
	▶462
247-5571	530
	532
247-5902	620
247-6019	110
248-1066	110
248-1159	611
248-1348	611
248-1353	611
248-2821	536
	813
248-5238	560
248-5239	560
248-5415	▶512
248-5416	▶513
248-6326	560
249-1054	438
	454
249-7859	685
249-7863	685
249-9076	133
	831
250-0393	▶479
	564
	568
250-0779	163
	165
250-1466	443
250-1845	214
	215
250-4628	892
250-6011	936
250-6012	936
	937
250-6013	936
	937
	939
250-6148	477
	685
250-6606	318
250-6612	▶318
250-7860	▶726
	746
250-7861	▶727
	752
250-7862	▶737
	758
250-7863	▶738
	759
250-8083	668
250-8085	▶668
	673
250-8115	189
	191
250-8330	623
250-9100	727
	738
250-9102	727
	738
250-9103	727
	738
250-9105	727
	738
250-9109	727
250-9113	727
250-9115	727
	737
	738
250-9116	727
	737
	738
250-9189	737
	738
250-9190	737
	738
250-9191	737
	738
251-0907	438
	443
251-3227	80
251-3250	536
251-3251	536
251-4160	193
251-4319	450
	452
251-4336	44
251-4389	450
	452
251-4686	586
251-5417	772
251-5418	▶772
251-5644	407
251-5645	407
251-6600	▶745
251-8248	193
251-8336	49
251-9615	438
	443
251-9878	▶746
251-9879	▶739
251-9880	▶758
251-9918	630
	632
	634
	639
	641
	644
	▶689
251-9968	206
252-0302	620
252-0303	542
	572
252-1862	833
	835
	840
	843
252-1863	833
	835
	840
	843
252-2363	533
252-2364	533
252-2375	564
	568
252-4575	897
252-5065	636
252-5596	407
252-6120	726
252-6123	726
252-6131	726
252-6132	726
252-6841	483
252-6903	▶717
252-6904	717
	▶755
252-6905	▶736
	755
252-6909	▶712
252-6910	712
	▶747
252-6911	▶728
	747
252-7922	236
252-7923	236
252-7930	242
252-7931	242
252-7932	242
252-7933	242
252-7934	242
252-7935	242
252-7936	242
252-7939	209
	▶242
252-7945	242
252-7949	276
252-7964	438
	454
252-8037	209
	▶236

▶ **PRIMARY REFERENCE**

PART NUMBER INDEX

Part	Page
252-8054	461
252-8442	209
	▶265
252-8449	209
	▶276
252-8646	673
252-8958	200
253-0861	960
	961
253-0864	964
253-0865	964
253-1222	822
253-1995	503
253-8295	616
254-1127	833
	835
	840
	843
254-3349	577
254-3956	276
254-3963	215
254-4461	577
254-5048	236
254-5059	236
254-5630	▶634
	653
254-5968	443
254-7771	796
	797
	800
	▶883
255-0639	577
255-0759	616
255-3623	▶318
255-4692	88
255-9138	786
	859
256-6803	143
256-6804	143
256-7265	133
	▶172
256-7266	172
256-7267	133
	▶888
256-7269	133
	▶193
256-7271	74
256-7516	345
	347
256-7517	345
	347
256-8863	▶748
256-8864	▶729
	748
256-8865	729
	▶730
256-8869	730
	733
256-8870	730
	733
256-8882	▶713
256-8889	▶714
256-8890	714
	▶749
256-8891	▶731
	749
256-8895	731
256-8896	731
256-8898	▶715
256-8899	715
	▶750
256-8900	▶732
	750
256-8911	▶716
256-8912	716
	▶751
256-8913	▶733
	751
257-0468	636
257-1600	2
	3
	▶368
257-1601	368
	▶369
257-1604	▶344
257-1605	344
	345
257-1610	3
	▶367
257-1611	367
257-1615	368
	371
257-1620	1
	▶371
257-1621	371
	▶372
257-1626	▶345
257-1627	▶346
257-1628	▶347
257-1660	707
257-1712	▶209
	210
257-3227	871
257-6111	761
257-6113	▶761
257-6549	15
	▶38
257-7723	585
257-8471	459
	460
258-2829	616
258-6404	582
258-6939	276
258-6945	209
	▶215
258-7159	438
	454
258-8338	265
259-0374	54
259-0509	465
	469
	470
259-0558	282
259-0608	265
259-1151	673
259-1155	810
259-1157	673
259-1159	672
	674
	675
259-1160	671
	676
259-1161	329
259-1163	677
259-1456	278
	280
259-3125	265
259-4137	▶127
	800
	858
259-4397	888
259-4398	888
259-4399	888
259-4400	888
259-4727	265
259-7014	265
260-1555	141
260-1556	142
260-1566	141
260-1569	142
260-3014	670
260-3015	650
260-3016	▶585
	650
260-3017	650
260-3018	▶636
	650
260-3024	▶670
	812
260-3025	812
260-3126	265
260-3162	888
260-3183	133
	▶884
260-3718	111
	116
260-3719	111
	116
260-3939	111
	116
260-5542	194
260-6150	582
260-6163	529
	531
260-6171	423
	429
260-8590	586
	630
	632
	634
	637
	639
	641
	644
	▶695
261-0013	560
261-0431	611
261-0434	611
261-0437	611
261-0438	611
261-0442	560
261-3224	133
	831
261-4173	611
261-5694	891
261-5762	572
261-6778	869
261-7651	395
	925
	926
261-7854	513
	768
261-7855	513
	768
261-7997	685
262-0318	504
262-0849	806
262-0858	▶806
	908
262-1388	814
	816
	818
	820
	821
	822
	823
	824
262-1408	827
262-1421	▶138
	143
262-2781	868
262-5653	616
262-5654	615
	▶616
262-5656	542
	572
262-5657	547
262-5659	542
	572
262-5661	290
262-5663	290
262-5666	282
262-5667	438
	443
262-5690	438
	443
262-5693	288
262-5694	282
	550
262-5695	282
	550
262-7562	127
262-9705	625
262-9706	533
	▶625
263-5474	438
263-5810	500
	▶823
263-5812	502
	▶824
263-8475	454
263-8476	438
263-8948	143
263-9088	143
	▶914
264-0153	▶319
264-0155	319
264-0437	510
264-1131	510
264-1527	875

▶ PRIMARY REFERENCE

PART NUMBER INDEX

Part	Page	Part	Page	Part	Page	Part	Page
264-3704	568		843	275-9883	39	276-8133	32
264-3705	564	269-2893	833		49		34
264-4297	195		835	275-9884	49	276-8134	36
264-4330	766		840	275-9888	49		37
264-7734	506		843	275-9889	49	276-8135	12
264-9652	276	269-3311	195	275-9891	49		▶36
265-7952	813	269-8325	67	276-0142	49	276-8398	▶110
265-8125	116	270-0350	▶628	276-2604	959		111
266-2589	636		630		962		116
266-3439	671		637	276-3810	177	276-9200	56
	672		644	276-3905	99	276-9201	56
	▶811	270-2615	607	276-5434	637	276-9206	56
266-7545	500	270-2616	607		644	276-9207	56
	502	270-2679	897	276-5436	177	276-9227	58
	▶813		901	276-5600	29		62
266-7620	897	270-3216	868	276-5601	29	276-9229	12
	901	270-3217	▶868	276-5602	29		▶62
266-8945	813	270-5320	123	276-5603	29	276-9230	56
267-2680	173	270-7439	739	276-5604	29	277-0009	16
	195		▶759	276-5605	29	277-0029	12
267-2744	195	270-7440	745	276-6596	177		▶16
267-2746	195		▶752	276-6597	177	277-0118	43
267-2809	151	270-7610	671	276-7387	27	277-1973	12
267-3438	823		672		28		14
267-3439	824	270-7611	677	276-7388	27		▶65
267-5203	651	270-7612	329		28	277-1974	65
	652		674	276-7389	27	277-1975	65
	653		675		28	277-2500	71
	654		676	276-7390	27	277-2537	71
	655	270-7618	869		28	277-2538	71
267-7283	127	270-9442	895	276-7391	27	277-2912	12
267-7377	▶212	271-1450	492		28		14
267-7378	211	271-1529	492	276-7392	12		▶67
	▶212	271-2089	811		▶27	277-2923	78
267-7380	211	271-2099	811	276-7393	27	277-2925	78
267-7417	212	271-6452	504		28	277-2939	12
	▶216	271-9385	99	276-7394	27		14
267-7418	211	272-3190	869		28		▶78
	▶217	272-9800	152	276-7475	51	277-3012	44
268-1322	▶492	273-4068	▶143		52	277-3013	44
	720	273-5018	813	276-7476	51	277-3014	12
268-1520	284	273-5711	64		52		14
268-1521	284	274-1639	101	276-7478	51		▶44
268-1601	438		111		52	277-4223	17
	454	274-1929	12	276-7479	51	277-4224	12
268-1604	510		14		52		14
268-1640	547		▶55	276-7481	51		▶17
268-1641	547	274-1930	55		52	277-4262	12
268-4698	138	274-1931	55	276-7483	51		14
268-4699	138	274-1932	55		52		▶68
268-6677	111	274-1933	55	276-7491	12	277-4302	94
	116	274-1934	55		▶52	277-4407	140
268-6678	111	274-1935	55	276-8115	▶32	277-4408	140
	116	274-5909	871		36	277-4409	140
269-2163	875	274-7513	583	276-8116	32	277-4410	12
	883	274-7514	583		34		14
269-2164	875	274-7579	583	276-8117	32		▶140
	883	274-9186	583		34	277-4694	12
269-2890	833	274-9872	173	276-8122	32		14
	835		195	276-8123	32		▶69
	840	275-2428	140		34	277-5007	12
	843	275-5768	538	276-8124	32		14
269-2892	833	275-5769	582		34		▶53
	835	275-6706	786	276-8132	32	277-5030	20
	840		859		34		23

▶ **PRIMARY REFERENCE**

PART NUMBER INDEX

Part	Page
277-5031	20
	23
	26
277-5064	20
	23
	26
277-5065	20
	23
	26
277-5067	20
	23
	26
277-5094	20
	23
	26
277-5096	20
	23
	26
277-5307	56
277-6165	104
	107
277-6990	12
	14
277-8241	577
277-9463	96
277-9602	96
277-9603	96
277-9605	96
277-9938	96
277-9939	96
277-9940	96
277-9941	96
278-0015	96
278-0016	96
278-0017	96
278-0310	96
278-0311	96
278-0314	104
	107
278-0315	104
	107
278-0361	96
278-3242	78
278-4138	104
	107
	112
	117
278-4693	20
	23
278-4694	20
	23
278-4695	20
	23
278-5111	56
278-5112	56
278-5113	56
278-5125	16
278-5126	16
278-5128	94
278-5168	111
	116
278-5170	111
	116
278-5180	111
	116
278-5201	111
	116
278-5202	111
	116
278-5203	111
	116
278-5209	117
	194
278-5210	117
	194
278-5225	111
	116
278-5226	111
	116
278-5227	116
278-5228	116
278-5272	111
	116
278-5273	111
	116
278-5307	111
	116
278-5308	116
278-5309	116
278-5927	20
	23
279-9361	96
279-9651	46
279-9652	46
279-9653	12
	14
	▶46
280-1291	94
280-1383	49
280-1394	12
	14
	▶99
	▶100
280-1889	111
	116
280-1890	111
	116
280-1891	111
	116
280-1911	▶56
	58
	62
280-1912	56
280-1913	56
280-1914	56
280-1996	500
	▶651
280-1997	500
	▶652
280-1998	501
	502
	503
	▶653
280-2023	26
280-2050	12
	▶64
280-2280	533
	538
280-2281	533
	538
280-2424	95
280-2691	133
	831
280-2710	785
	857
280-6837	▶461
	825
280-9178	517
	520
280-9714	764
	766
	768
281-1595	▶508
	720
281-4782	595
281-6331	43
281-6332	12
	14
	▶43
281-7038	71
281-7039	71
281-7040	71
281-8744	70
281-8745	70
281-8746	70
281-8747	70
281-8748	12
	14
	▶70
281-9106	104
281-9115	104
282-3233	116
282-6928	756
282-6935	756
282-6945	459
	460
282-9861	44
283-2456	786
283-3307	320
283-4558	12
	14
	▶71
283-4559	71
283-7724	533
	538
283-7725	533
	538
283-8385	397
283-9380	▶586
	651
	652
	653
	654
	655
283-9971	270
	▶412
283-9972	412
284-0506	▶785
	908
284-1026	40
284-2200	395
284-6993	438
	454
284-8306	871
284-8491	397
284-8497	397
284-8504	397
284-9491	90
285-0824	93
285-1975	20
	23
	26
285-3197	96
286-0014	26
286-0015	26
286-0037	▶319
286-3594	189
	191
286-3683	111
	116
286-4696	91
286-7834	12
	14
	▶42
286-7847	49
286-7851	96
286-8817	49
286-9592	837
286-9593	838
287-0524	329
	673
	674
	675
	676
287-2051	▶671
	824
287-2053	▶672
	823
287-2056	▶673
	822
287-2058	▶674
	820
287-2061	▶675
	816
287-2062	482
	▶676
	818
287-2064	▶329
	821
287-2065	▶677
	814
287-6838	111
	116
287-6839	111
	116
287-6849	104
287-6853	104
	107
287-7430	78
287-7637	101
287-8597	43
288-3716	637
288-4162	603
	▶606
288-4166	282
288-6985	96
288-7985	12
	14
	▶94
289-2363	20

▶ PRIMARY REFERENCE

PART NUMBER INDEX

Part	Page
289-3232	15
	▶95
289-3233	95
289-3234	95
289-3235	95
289-3261	49
289-3268	12
	14
	▶49
289-3322	15
	▶88
289-3326	88
289-3327	88
289-3533	15
	▶93
289-3534	93
289-3536	93
289-3537	93
289-3740	88
	▶90
289-6393	▶590
	592
289-6394	588
	▶591
289-8336	40
289-8794	74
289-8802	3
	4
	▶137
289-8806	498
	▶542
289-8816	3
	▶423
289-8835	4
	▶294
289-8843	4
	▶498
289-8845	3
	▶294
289-8863	3
	▶498
289-8870	▶3
289-8871	▶1
	3
289-8883	4
	▶499
289-8884	3
	4
	▶15
289-8890	▶4
289-8891	▶2
	4
289-8895	4
	▶295
289-8899	▶4
289-8900	349
289-8901	498
	499
	▶615
289-8902	1
	2
	3
	▶195
289-8903	▶189
	801
	889
	908
	909
289-8904	▶191
	889
289-8906	▶170
289-8910	▶438
	459
	460
289-8911	1
	2
	3
	▶121
289-8912	1
	2
	3
	▶389
289-8913	1
	2
	3
	▶397
289-8918	211
	212
	▶550
289-8919	498
	499
	▶603
289-8922	211
	▶282
289-8923	1
	2
	3
	▶290
289-8924	499
	▶572
289-8926	1
	▶426
289-8927	2
	▶429
289-8929	210
	▶288
289-8930	2
	3
	▶414
289-8932	▶443
	459
289-8933	▶4
289-8935	498
	▶547
289-8938	15
	▶102
289-8947	▶60
289-8948	▶60
289-8950	▶61
289-8951	▶61
289-8957	1
	▶198
289-8958	2
	3
	▶200
289-8959	1
	2
	3
	▶201
289-8960	1
	2
	3
	▶349
289-8961	▶350
289-8962	589
	▶592
289-8963	▶589
289-8964	▶588
	589
289-8965	▶589
289-8966	▶459
289-8968	▶459
289-8969	▶459
289-8970	▶460
289-8975	▶209
289-8976	▶210
289-8977	2
	3
	▶401
289-8978	▶210
289-8981	▶210
	295
289-8987	▶211
289-8990	▶211
289-8993	▶212
289-9000	▶6
289-9166	195
289-9167	157
	159
289-9168	189
289-9169	201
289-9171	897
	901
289-9172	191
289-9175	198
289-9176	200
289-9430	49
289-9620	615
289-9621	615
290-0637	15
	▶47
290-0643	47
290-0644	47
290-0659	189
	191
290-0660	875
290-0661	133
	831
290-0662	133
	▶831
290-2719	294
	▶320
290-2720	294
	295
	▶320
290-3910	111
	116
290-3911	111
	116
290-3912	111
	116
290-3913	111
	116
290-3914	111
	116
290-3915	112
	117
290-3916	112
	117
290-3931	121
	▶122
290-4068	389
290-4073	389
290-4074	80
	▶385
290-4432	▶176
290-4734	615
290-5735	104
	107
290-5825	418
	420
290-6403	76
	77
290-6404	77
290-6405	76
290-6406	▶76
	211
290-6407	▶77
	211
	212
290-6476	498
	499
	▶560
290-6481	▶482
290-6487	5
	▶959
290-6492	4
	5
	▶962
290-6498	▶3
	4
290-7175	▶6
290-7176	▶7
290-7179	▶7
290-7182	▶8
290-7196	▶450
	460
290-7197	▶181
	210
290-7198	1
	2
	3
	▶74
290-7199	74
290-7200	▶553
	589
290-7201	▶555
	589
290-7202	1
	2
	3
	▶405
290-7203	▶128
	459
	460
290-7205	▶514
	762
290-7208	▶885
290-7213	6
	7

▶ **PRIMARY REFERENCE**

PART NUMBER INDEX

Part	Page
290-7218	▶452
	459
290-7219	▶204
	459
290-7220	▶206
	459
	460
290-7222	▶161
290-7228	▶167
290-7230	▶454
	459
	460
290-7895	47
290-7896	47
290-8169	801
	889
	▶895
	908
	909
290-8171	801
	889
	▶897
	908
	909
290-8174	889
	▶901
290-8175	917
290-8177	804
	▶917
290-8179	800
	▶804
290-8181	▶157
	794
	800
290-8182	▶800
	889
290-8186	800
	▶889
290-8483	▶800
290-8486	▶851
	889
290-8488	801
	▶849
	889
	908
	909
290-8489	794
	▶832
290-8490	832
	▶833
290-8491	832
	▶835
290-8492	833
	▶837
	840
290-8493	835
	▶838
	843
290-8494	800
	▶839
290-8495	839
	▶840
290-8496	839
	▶843
290-8497	798
290-8499	▶798
	916
290-8501	794
	800
	▶916
290-8503	794
290-8505	▶794
	889
290-8508	795
	796
	▶889
290-8515	▶795
	796
290-8520	795
	▶800
290-8522	▶795
	889
290-8525	795
	▶889
290-8530	▶795
	797
290-8748	▶795
	796
290-8749	796
	797
	▶875
290-8750	▶858
290-8752	▶871
	908
290-8753	858
	▶873
	908
290-8781	176
	▶177
291-0638	189
	191
291-0639	895
291-0640	895
291-2513	12
	14
	▶39
291-2515	12
	14
	▶40
291-2576	871
291-3748	810
291-3749	810
291-3750	▶810
	889
291-3834	493
291-4043	849
	851
291-4982	849
	851
291-5006	350
	▶351
291-5008	389
291-5010	350
	▶352
291-5986	181
291-6008	189
	191
291-6621	80
291-6623	80
291-6629	80
291-9121	189
	191
291-9251	837
291-9252	838
291-9943	102
291-9962	849
292-0239	80
292-0240	80
292-0241	80
292-0509	157
	159
292-0848	112
	117
292-0886	31
292-1086	389
292-2354	195
292-2358	195
292-2522	871
292-2559	389
292-2869	835
	843
292-2870	833
	840
292-3254	835
	843
292-3255	833
	840
292-3592	871
292-3593	871
292-3790	▶101
	112
	117
292-5305	10
	▶12
292-5554	137
	▶139
292-5606	203
292-5856	12
	14
	▶31
292-5857	14
	▶51
292-5859	14
	▶28
292-5860	14
	▶37
292-5865	14
	▶58
292-6097	892
292-6402	▶891
	892
292-7124	288
292-8113	80
292-9188	▶718
292-9189	▶719
292-9190	718
	719
	▶720
292-9191	720
	▶756
292-9192	756
292-9193	756
292-9237	▶892
	929
292-9687	282
292-9688	282
	550
292-9698	282
	550
292-9881	140
293-0249	110
293-1874	44
293-1880	194
293-2239	80
	▶483
293-2240	483
	▶484
293-2462	553
293-2463	553
293-2464	555
293-2468	438
	454
293-2469	438
	443
293-2470	438
	443
	▶457
293-2840	414
	416
293-2841	414
	416
293-3032	80
293-4050	▶141
293-4052	▶142
293-4919	960
	961
293-4925	960
293-4926	960
293-4927	961
293-4928	961
293-4931	▶960
	962
293-4932	▶961
	964
293-5221	6
	7
	60
	61
293-5222	6
	7
	60
	61
293-5283	128
	130
293-5284	128
	130
293-5449	593
	594
293-5532	128
	130
293-5828	290
293-6135	897
	901
293-6577	560
293-6603	282
293-8068	104
	107
293-8069	104
293-8340	914
293-9795	102

▶ PRIMARY REFERENCE

PART NUMBER INDEX

Part	Page
293-9901	112
	117
294-0506	383
294-0507	6
	7
	60
	61
	▶383
294-0565	80
294-0932	542
	572
294-0976	871
294-2016	418
	420
294-2017	418
	420
294-2018	418
	420
294-5042	929
294-5393	14
	▶20
	▶23
294-5408	20
	23
294-9434	▶460
294-9436	▶210
294-9437	▶762
294-9441	▶460
294-9448	1
	▶416
294-9493	6
	7
	8
	▶374
294-9497	▶8
294-9504	▶637
	651
	652
	653
	654
	655
295-0128	288
295-0447	163
	165
295-0580	6
	7
295-0912	94
295-1007	19
295-1011	60
	61
	▶422
295-1012	422
295-1013	422
295-1014	422
295-1015	422
295-1016	60
	61
	▶338
295-1017	338
295-1018	60
	61
	▶392
295-1019	422
295-1020	422
295-1021	422
295-1022	422
295-1024	60
	61
	▶393
295-1028	393
	395
295-1029	19
295-1030	19
295-1033	60
	61
	▶395
295-1034	▶19
	60
	61
295-1035	395
295-1037	392
295-1038	389
295-1042	20
	23
295-1466	282
295-1467	282
295-1468	282
295-1711	44
295-1813	195
295-1915	560
295-2665	897
	901
295-2982	540
295-4212	422
295-4213	422
295-4214	422
295-4215	422
295-4218	422
295-4219	393
295-4220	392
295-4221	349
	351
	392
295-4222	349
	351
	392
295-4223	349
	351
295-4224	392
295-4662	107
295-4670	104
	107
295-4690	517
	520
295-4691	517
	520
295-4753	540
295-4831	533
	538
295-6661	32
	34
295-7795	130
296-2927	533
	538
296-2928	533
	538
296-4322	385
296-5673	288
296-6031	593
	594
296-6706	284
296-6719	459
	460
296-6814	▶517
	526
296-6815	▶520
	709
297-1209	577
	▶690
297-1861	577
297-2470	▶522
	762
297-2471	▶524
	762
297-2778	522
	768
297-2779	522
	768
297-2788	524
297-2789	524
297-4717	423
	429
297-4888	282
	550
297-5184	14
	▶41
297-5493	962
297-6381	288
297-8966	195
297-9016	690
298-3586	517
298-3587	517
298-3588	520
298-3589	520
298-3809	517
	520
298-4547	26
298-4549	26
298-4550	20
	23
	26
298-5074	959
298-6161	163
	165
	167
298-7736	536
	692
299-3920	12
	14
299-3939	591
	▶593
299-3940	590
	▶594
299-3941	606
	▶607
299-3949	12
	14
	▶54
299-3953	12
	14
	▶194
299-3954	12
	14
	▶96
299-5499	282
299-5511	32
	34
299-5841	827
	▶828
299-7621	181
299-7996	616
299-7997	616
299-7998	616
299-8229	100
299-9123	871
299-9124	128
	130
3	
300-1246	288
300-1271	195
300-1301	616
300-1645	161
300-1724	385
300-1962	6
	7
	8
	▶376
300-2315	690
300-2940	112
	117
300-3174	80
300-3907	20
	23
300-4148	550
300-4459	282
300-5441	401
300-5443	401
300-6868	178
	▶179
300-8840	282
300-8841	102
300-9097	423
	426
	429
300-9098	542
	572
300-9099	454
300-9103	547
300-9104	542
	572
300-9622	423
	426
	429
300-9623	423
	426
	429
300-9915	963
	964
301-0361	873
301-3360	11
	▶13
301-3361	9
	▶14
301-4350	181
301-4353	209
	210
	▶348

▶ **PRIMARY REFERENCE**

PART NUMBER INDEX

Part	Page
301-4354	348
301-4355	348
301-4852	102
301-5754	389
301-9714	▶9
301-9715	▶10
301-9746	▶11
302-0406	▶150
	161
302-0408	▶150
	161
302-0409	154
302-0411	154
302-0412	153
	163
	165
302-0413	153
	163
	165
302-0623	962
302-1885	▶130
	459
	460
302-2182	897
	901
302-4285	389
302-4390	959
	962
302-5195	92
302-6378	550
302-7818	20
	23
302-7833	163
	165
302-7834	167
302-7839	165
302-7840	7
	8
	▶377
302-8662	▶133
303-2038	▶502
303-2040	▶503
303-2042	▶501
303-2043	▶501
303-2044	▶502
303-2045	▶503
303-2046	▶526
303-2047	▶709
303-2048	▶762
303-2049	▶762
303-2116	96
303-4112	▶153
303-4113	▶154
303-5190	871
303-9272	395
303-9273	395
304-0292	12
	14
	▶111
	▶116
304-1061	▶768
304-3715	809
304-3885	122
304-5735	282
304-5736	282
	550
304-5866	594
304-9255	▶908
304-9256	▶801
304-9464	▶258
	294
	295
304-9538	▶796
	797
305-4467	959
	962
305-6157	104
305-6471	107
306-2337	65
306-5432	104
	107
306-6845	▶29
	31
306-8141	857
	▶859
306-8142	785
	▶786
307-0205	▶788
	955
307-0479	5
	▶341
307-3181	542
	572
307-9843	78
308-1477	143
308-1933	▶909
308-2275	▶796
308-2276	▶796
308-2277	▶800
308-2278	▶797
308-2279	▶797
308-2280	▶797
308-3458	121
308-3658	▶4
308-3661	▶5
308-3664	▶5
308-3668	▶5
308-5075	195
308-7480	100
308-8426	111
308-9075	12
	14
	▶104
	▶107
308-9076	104
	107
308-9077	104
308-9078	104
308-9079	104
	107
309-0846	909
	▶913
309-0847	913
309-0857	107
309-1620	▶173
	195
309-6663	▶34
	37
309-6664	20
	23
	26
309-6678	34
309-6899	963
	964
309-8006	111
309-8618	786
309-8677	859
309-9822	6
	7
	8
310-1917	376
	377
310-1943	4
310-5423	6
	7
	8
310-6793	▶163
310-7918	111
310-9262	236
311-1180	107
311-1666	107
311-1684	107
311-1723	80
311-1952	107
311-2236	15
	▶92
311-2237	92
311-2239	92
311-2825	26
311-3858	111
311-4518	▶165
311-6342	111
311-8271	▶639
	655
311-8273	▶641
	655
311-8279	▶644
	654
	655
311-8473	341
311-8557	461
312-0806	93
312-3084	20
	23
312-4106	282
	550
312-4545	68
312-4576	1
	▶962
312-4577	2
	3
	▶964
312-4696	282
	550
312-7713	963
	964
312-8309	▶203
	482
312-8743	93
312-8744	93
313-2157	895
313-4553	122
313-4572	▶159
	804
313-5495	204
	206
314-7513	128
314-7670	290
314-9832	204
	206
315-0180	128
	130
315-9810	96
316-1961	461
317-1044	15
	▶80
317-2284	161
	167
317-2717	26
317-3064	26
317-6905	500
	▶654
317-6909	502
	503
	▶655
318-1726	26
318-8038	26
318-8102	395
319-9405	139
319-9406	139
320-6551	26
320-6564	12
	▶26
320-9967	133
	▶886
320-9968	▶133
321-2383	65

▶ **PRIMARY REFERENCE**



© 2007 Caterpillar
All Rights Reserved

Printed in U.S.A.