41K11287 930 WHEEL LOADER Identificación de Piezas
Número de publicación SEBP1052-01 Fecha de publicación 1984/12/01 Fecha de actualización 1994/09/05

JANEIRO 1084

1210 2P6201 CAMSHAFT GROUP

RUTHZIL TRATOR COMERCIAL DE PEÇAS LTDA 11 97083-6812 ROLANDO CITRANGULO

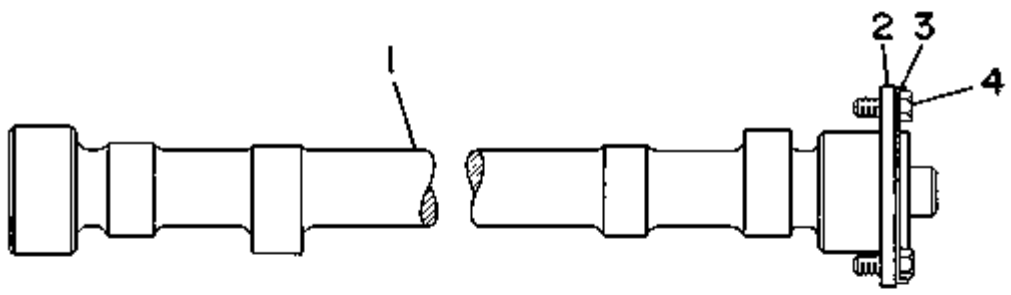

Nota	Ref	Numero	Cant	Nombre De Pieza
		2P-6201	1	CAMSHAFT GP-SINGLE
C	1	8N-4111	1	CAMSHAFT
	2	7S-2204	1	WASHER-THRUST
	3	8S-1491	1	LOCK
	4	0S-0509	2	BOLT
C				CHANGE FROM PREVIOUS TYPE

1220 5S6425 BALANCER GROUP

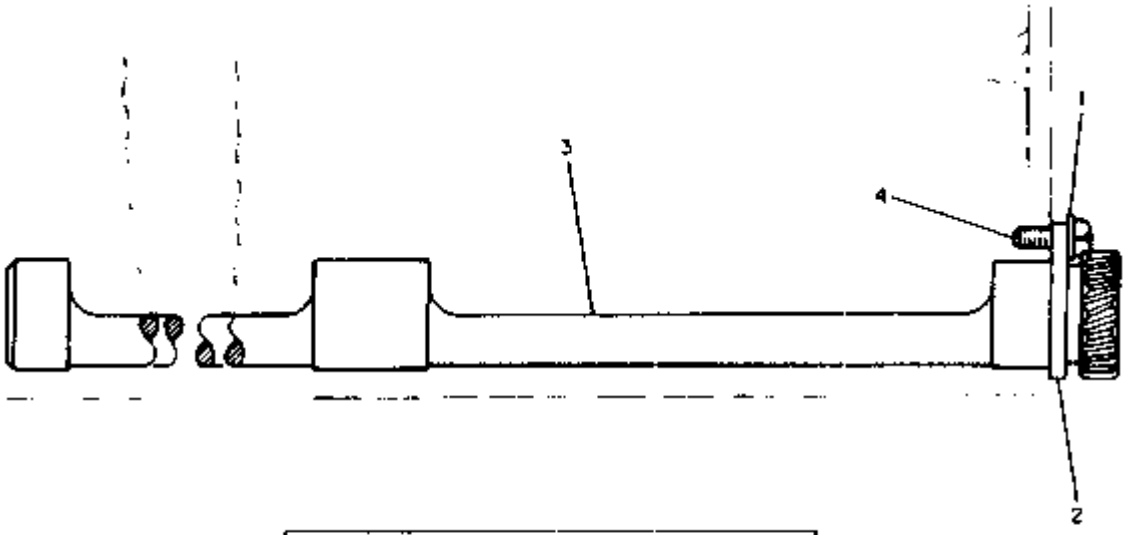

NOTE	REF NO	PART NUMBER	QTY	DESCRIPTION
C	1	5M2894	4	WASHER
	2	4S6417	2	PLATE
C	3	4N7977	1	SHAFT ASSEM (R.H.)
C		4N7978	1	SHAFT ASSEM (L.H.) (20 TEETH)
	4	S1594	4	BOLT
		1N8354	2	LOCK
				-OR-
C		308535	4	BOLT

C INDICATES CHANGE

309021

Nota	Ref	Numero	Cant	Nombre De Pieza
		5S-6425	1	BALANCER GP
C	1	5M-2894	4	WASHER
	2	4S-6417	2	PLATE
C	3	4N-7977	1	SHAFT ASSEM. (R.H.)
C		4N-7978	1	SHAFT ASSEM. (L.H.) (20 TEETH)
	4	0S-1594	4	BOLT
		1N-8354	2	LOCK
				-OR-
C		030-8535	4	BOLT
C				INDICATES CHANGE

1225 4N4028 CONNECTING ROD AND PISTON GROUP--4 Required
Engine Serial No. 78P18799 to 78P51949 inclusive

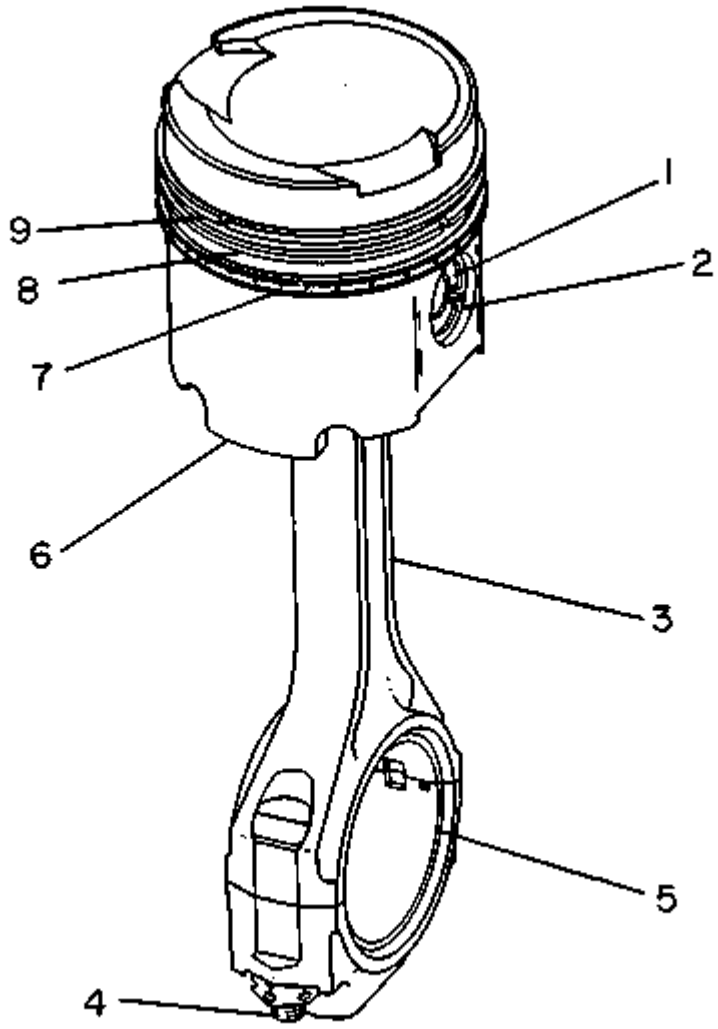

Nota	Ref	Numero	Cant	Nombre De Pieza
		4N-4028	1	PISTON & ROD GP
C	1	7N-9804	1	PIN-PISTON
	2	9H-4015	2	RETAINER-PIN
C	3	6N-8061	1	ROD AS-CONNECTION
		7S-9347	1	BEARING
	4	1P-9956	2	BOLT-CONNECTING ROD
		5S-6348	2	NUT-SPECIAL
	5	7M-7821	1	BEARING-CONNECTING ROD (STANDARD)
		2S-0502	1	BEARING-.254MM US (.010IN)UNDERSIZE
		2S-0503	1	BEARING-.508MM US (.020IN)UNDERSIZE
		7M-7826	1	BEARING-.762MM US (.030IN)UNDERSIZE
C	6	8N-3181	1	PISTON GP
	7	9S-7788	1	RING-PISTON (OIL)
	8	5S-6750	1	RING-INTERMEDIATE
	9	7S-8378	1	RING-PISTON TOP
		7S-9404	1	RING GP-PISTON
				(INCL COMPLETE SET
				OF RINGS FOR ONE
				PISTON)
C				CHANGE FROM PREVIOUS TYPE

1202 4N7692 CRANKSHAFT ASSEMBLY--Field Installation

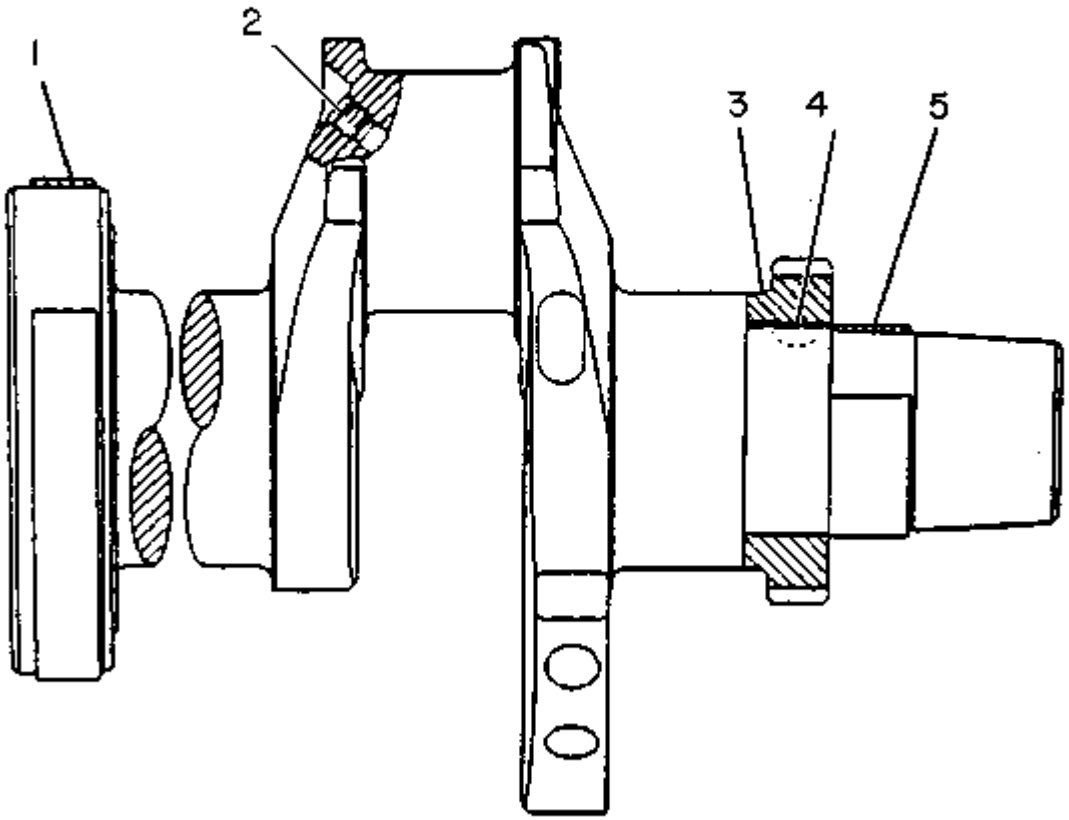

Nota	Ref	Numero	Cant	Nombre De Pieza
		4N-7692	1	CRANKSHAFT AS
	1	2P-3858	1	SLEEVE-WEAR
	2	9F-2247	4	PLUG
C	3	7N-4525	1	GEAR-CRANKSHAFT
				(40 TEETH)
	4	5H-2671	1	KEY-WOODRUFF
	5	2P-3859	1	SLEEVE-WEAR
C				CHANGE FROM PREVIOUS TYPE

1202 2P6218 CRANKSHAFT GROUP
Engine Serial No. 78P25806 to 78P29149 inclusive. For Field Replacement of 4N7695 Crankshaft Assembly order 4N7692 shown on Page 18

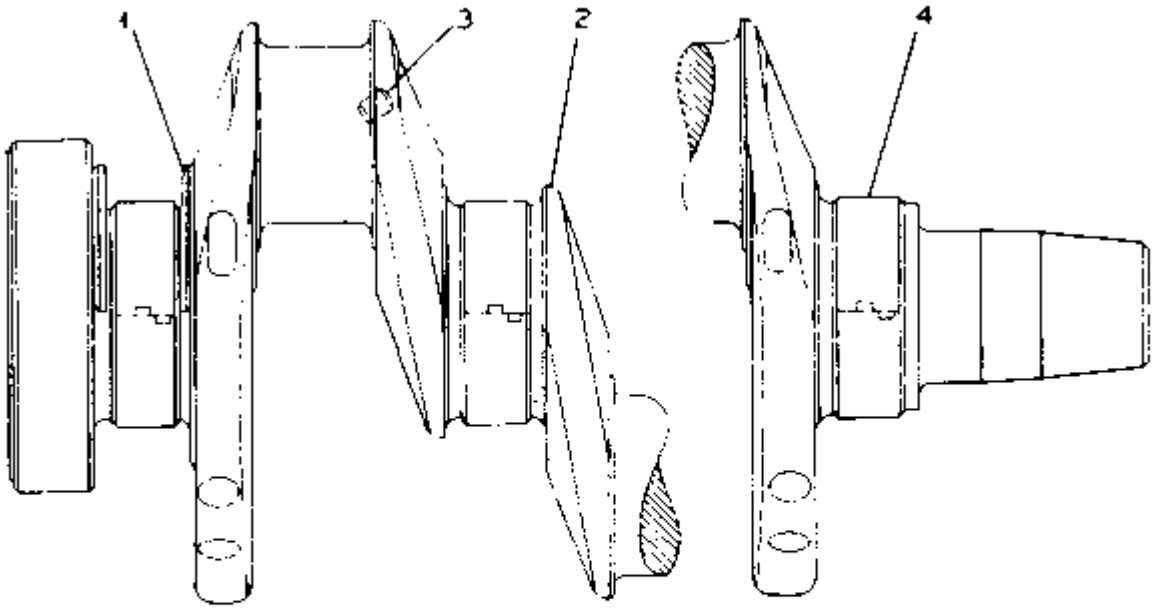

REF NO	PART NUMBER	DESCRIPTION	QTY
1	2P716	PLATE	2
2	4N7695	CRANKSHAFT ASSEM.	1
3	9F2247	PLUG	4
4	3S9730	BEARING	5

155609

Nota	Ref	Numero	Cant	Nombre De Pieza
		2P-6218	1	CRANKSHAFT GP
	1	2P-0716	2	PLATE
	2	4N-7695	1	CRANKSHAFT ASSEM.
	3	9F-2247	4	PLUG
	4	3S-9730	5	BEARING

1202 6N8080 CRANKSHAFT GROUP
Engine Serial No. 78P45004-Up. 4N7695 Crankshaft Assembly is replaced by 4N7692 shown on Page 18

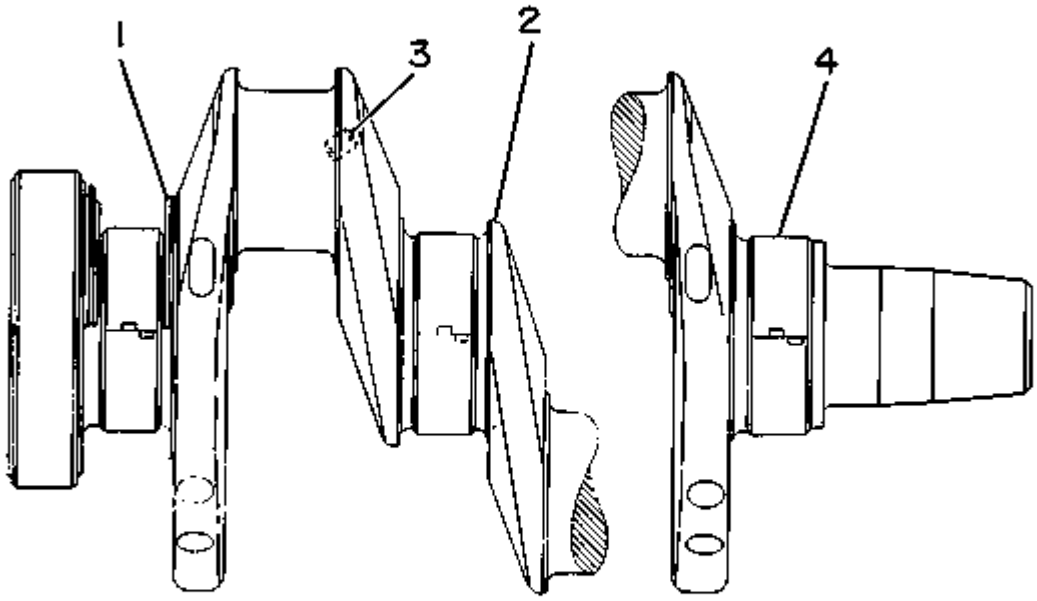

Nota	Ref	Numero	Cant	Nombre De Pieza
		6N-8080	1	CRANKSHAFT GP
	1	7N-9342	2	PLATE
	2	4N-7695	1	CRANKSHAFT ASSEM.
				(Includes)
	3	9F-2247	4	PLUG
	4	3S-9730	5	BEARING

2P6216 CRANKSHAFT GROUP--Type 2
Engine Serial No. 78P18799 to 78P25805 inclusive. For Field Replacement of 2P6214 Crankshaft Assembly order 4N7692 plus 1--5S6296, 1--9S3111 and 1--9S3038 Seals

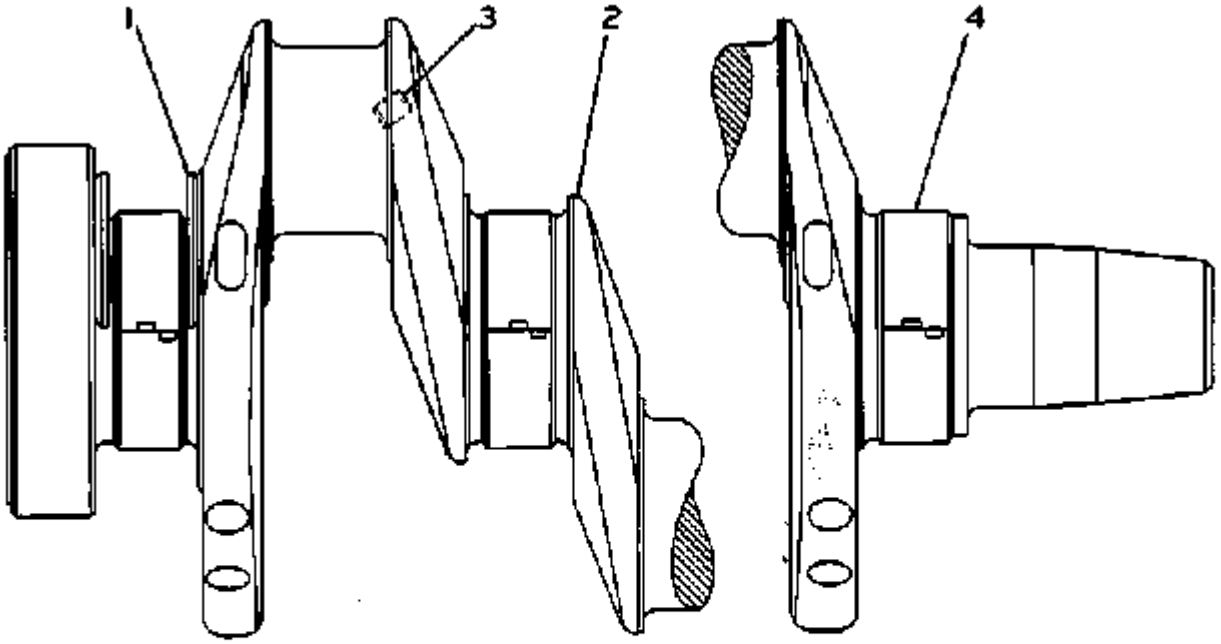

	REF. NO.	PART NUMBER	DESCRIPTION	QTY
C	1	6N8940	PLATE	2
	2	2P6214	CRANKSHAFT ASSEM.	1
	3	9F2247	PLUG	4
	4	3S9730	BEARING	5

C INDICATES CHANGE

162586

Nota	Ref	Numero	Cant	Nombre De Pieza
		2P-6216	1	CRANKSHAFT GROUP
C	1	6N-8940	2	PLATE
	2	2P-6214	1	CRANKSHAFT ASSEM.
	3	9F-2247	4	PLUG
	4	3S-9730	5	BEARING
				INDICATES CHANGE

2P6216 CRANKSHAFT GROUP--Type 1
Engine Serial No. 78P18799 to 78P25805 inclusive. For Field Replacement of 2P6214 Crankshaft Assembly order 4N7692 plus 1--5S6296, 1--9S3111 and 1--9S3038 Seals

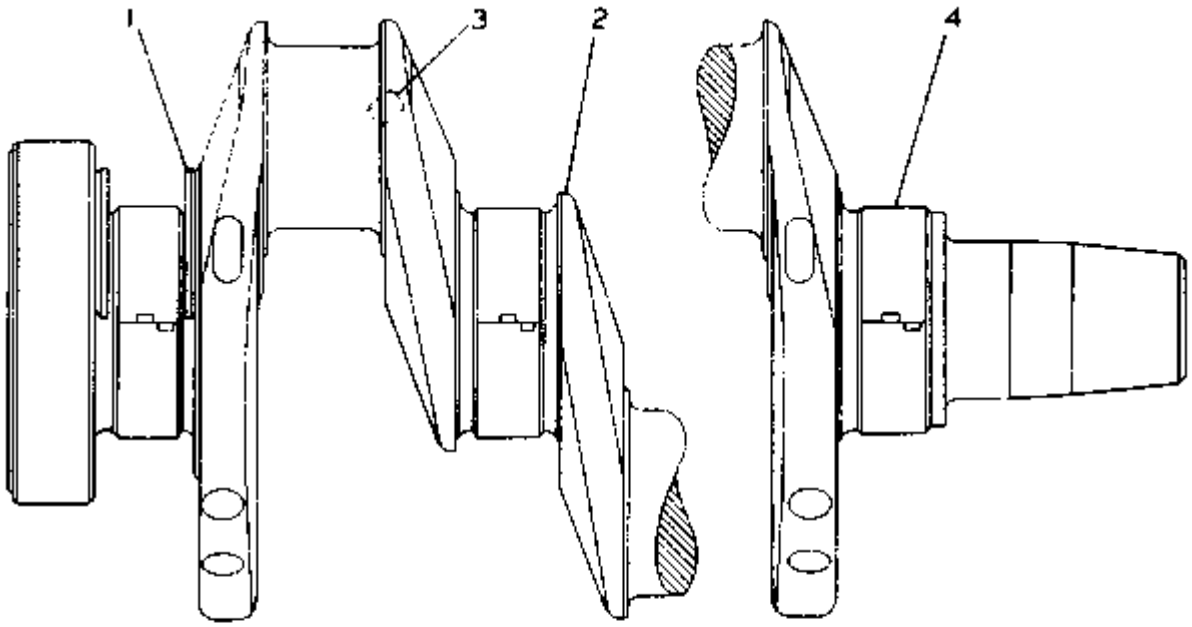

REF. NO.	PART NUMBER	DESCRIPTION	QTY
1	2P716	PLATE	2
2	2P6214	CRANKSHAFT ASSEM.	1
3	9F2247	PLUG	4
4	3S9730	BEARING	5

117586

Nota	Ref	Numero	Cant	Nombre De Pieza
		2P-6216	1	CRANKSHAFT GROUP
	1	2P-0716	2	PLATE
	2	2P-6214	1	CRANKSHAFT ASSEM.
	3	9F-2247	4	PLUG
	4	3S-9730	5	BEARING

1202 2P8598 CRANKSHAFT HUB GROUP

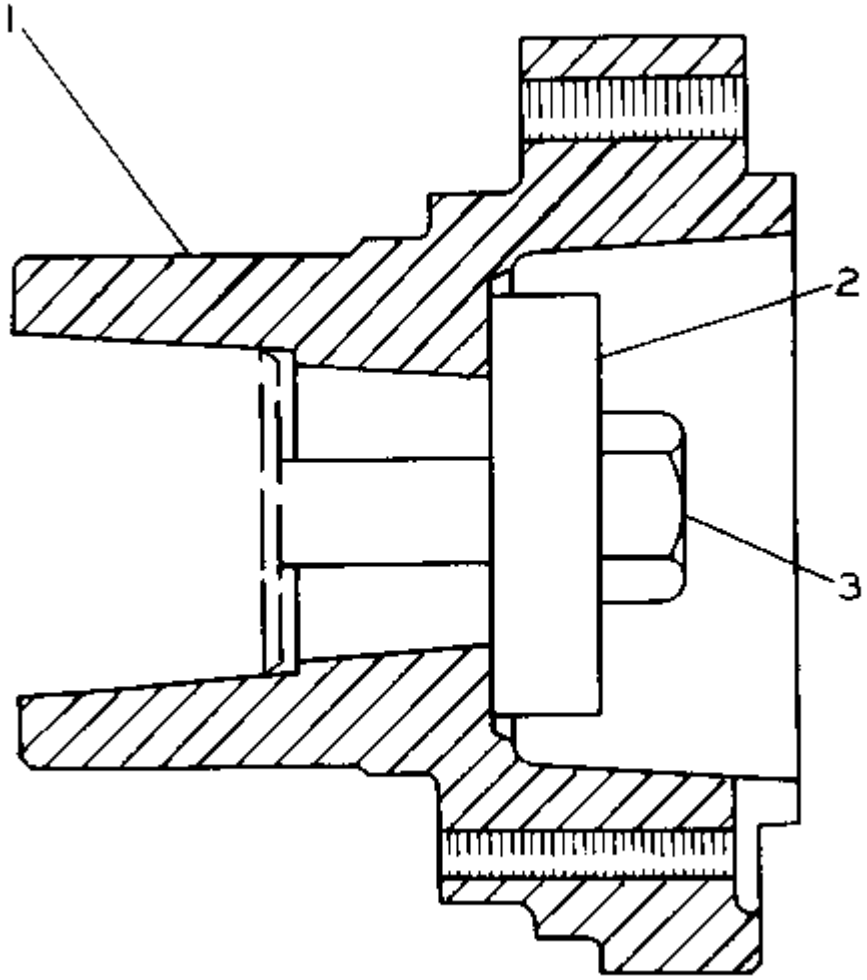

Nota	Ref	Numero	Cant	Nombre De Pieza
		2P-8598	1	HUB GP-CRANKSHAFT
	1	2P-1818	1	HUB
	2	7B-5163	1	BOLT
	3	5S-9948	1	WASHER

1205 7N2879 CRANKSHAFT PULLEY GROUP
Engine Serial No. 78P40900-Up
Note: 7M4705 Vee Belt Set, consisting of 2 belts, is used

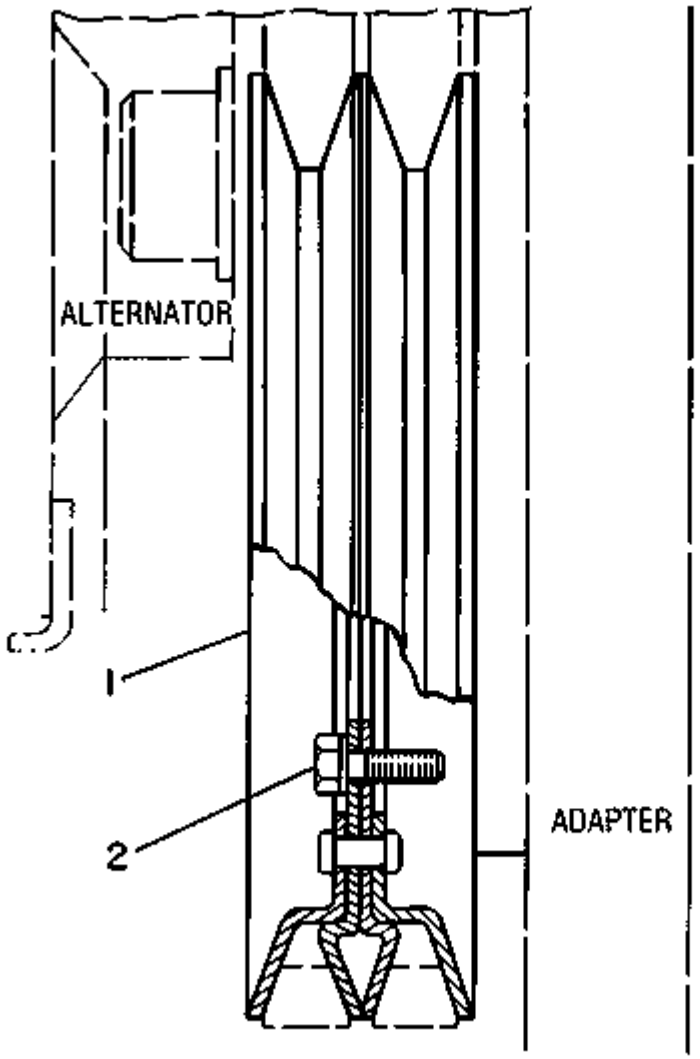

Nota	Ref	Numero	Cant	Nombre De Pieza
		7N-2879	1	PULLEY GP-CRANKSHAFT
	1	7N-1152	1	PULLEY-FAN
	2	0S-1594	6	BOLT
		5M-2894	6	WASHER

1160 2P6223 CRANKSHAFT SEAL GROUP
Engine Serial No. 78P18799 to 78P22209 inclusive

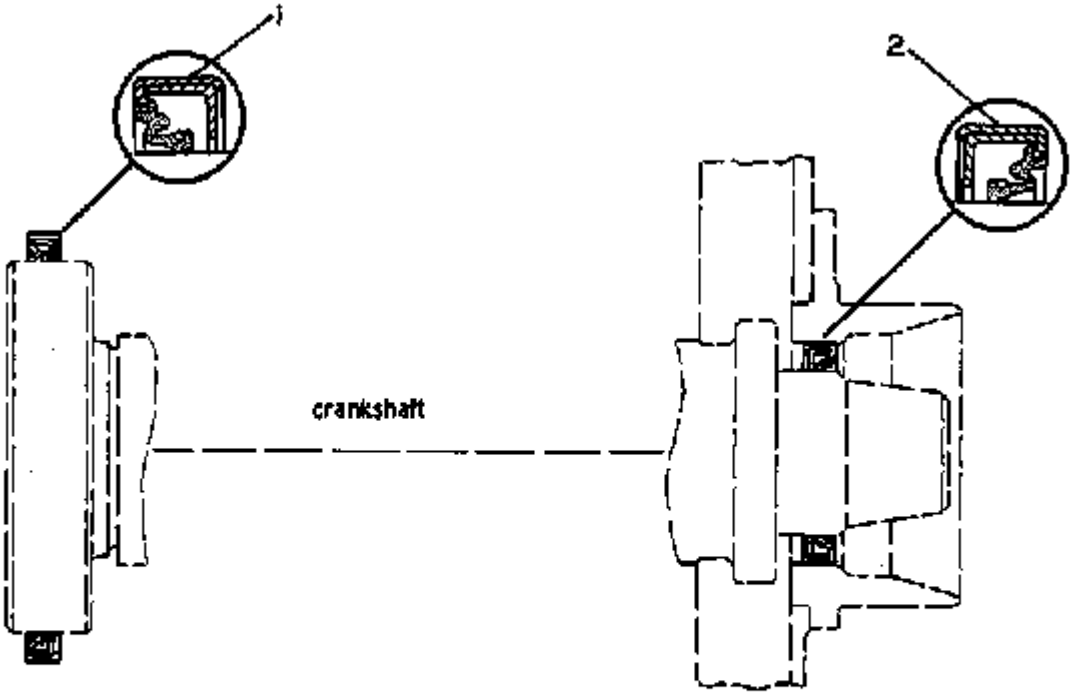

REF. NO.	PART NUMBER	DESCRIPTION	QTY
1	5S9022	SEAL	1
2	5S9021	SEAL	1

117077

Nota	Ref	Numero	Cant	Nombre De Pieza
		2P-6223	1	SEAL GP-CRANKSHAFT
	1	5S-9022	1	SEAL
	2	5S-9021	1	SEAL

1160 2P6224 CRANKSHAFT SEAL GROUP
Engine Serial No. 78P22210-Up

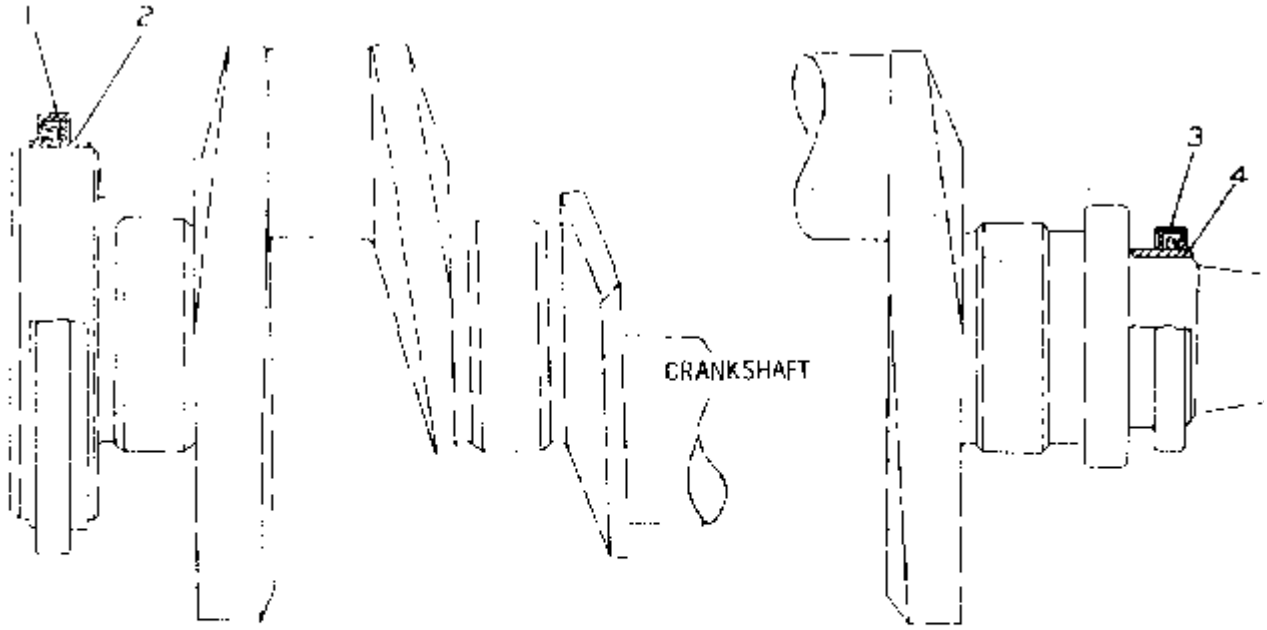

	REF. NO.	PART NUMBER	DESCRIPTION	QTY
C		1N3216	SEAL GROUP	1
	1		(Includes)	
		9S3111	SEAL	1
	2	2P3858	SLEEVE	1

C INDICATES CHANGE

3	5S6296	SEAL	1
4	2P3859	SLEEVE	1

228583

Nota	Ref	Numero	Cant	Nombre De Pieza
		2P-6224	1	SEAL GP-CRANKSHAFT
C	1	1N-3216	1	SEAL GROUP
				(Includes)
		9S-3111	1	SEAL
	2	2P-3858	1	SLEEVE
	3	5S-6296	1	SEAL
	4	2P-3859	1	SLEEVE
C				INDICATES CHANGE

2P8774 CYLINDER BLOCK ASSEMBLY
Engine Serial No. 78P18799 to 78P45003 inclusive
Part of 2P6540 Cylinder Block Group shown on Page 16

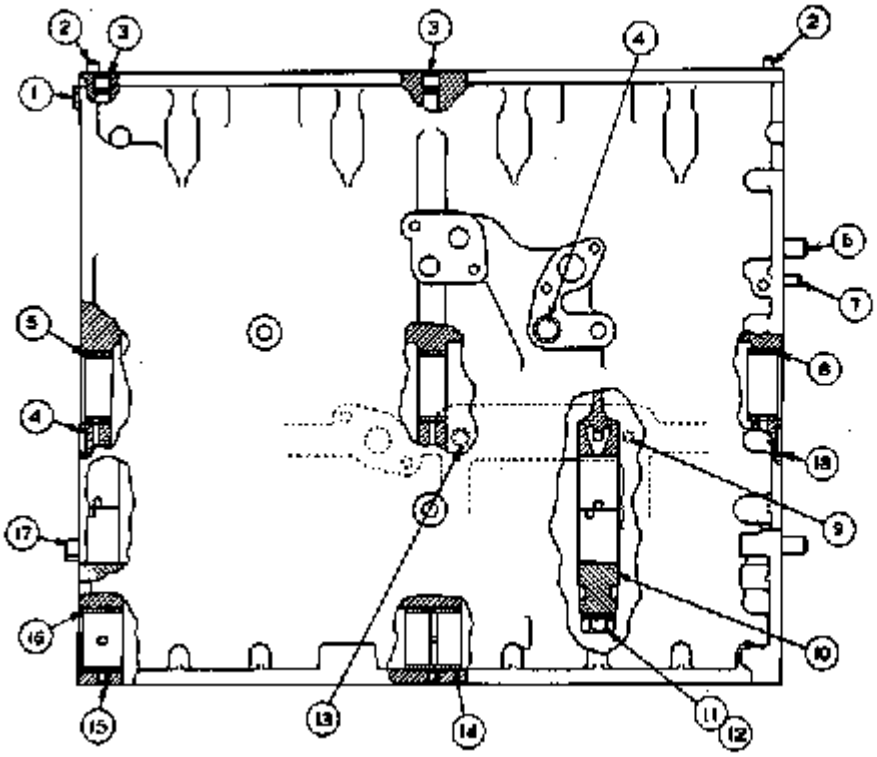

REF. NO.	PART NUMBER	DESCRIPTION	QTY
1	5M6215	PLUG	1
2	8B1112	DOWEL	2
3	5B7652	DOWEL	2
C 4	4B5187	PLUG	1
5	7M4046	BEARING	2
6	8B6749	DOWEL	2
7	5S8462	STUD	1
8	9M5477	BEARING	1
9	1H974	DOWEL	1
10	1P2717	BEARING CAP	5
11	7S3824	BOLT	10
12	2S5658	WASHER	10
13	8S835	DOWEL	1
14	5S6620	BEARING	2
15	4B9782	BALL	5
16	5S6419	BEARING	4
17	2A1748	DOWEL	2
18	4B5187	PLUG--29.01 mm O.D. 1.145 in. 1 inch dia.	2
		-OR-	
C	4B3938	PLUG--28.95 mm O.D. 1.14 in. 1 inch dia.	2

C INDICATES CHANGE

214988

Nota	Ref	Numero	Cant	Nombre De Pieza
		2P-8774	1	CYLINDER BLOCK AS
	1	5M-6213	1	PLUG
	2	8B-1312	2	DOWEL
	3	5B-7652	2	DOWEL
C	4	4B-5387	1	PLUG
	5	7M-4046	2	BEARING
	6	8B-6349	2	DOWEL
	7	5S-8462	1	STUD
	8	9M-5477	1	BEARING
	9	1H-0974	1	DOWEL
	10	1P-2717	5	BEARING CAP
	11	7S-3224	10	BOLT
	12	2S-5658	10	WASHER
	13	8S-0835	1	DOWEL
	14	5S-6420	2	BEARING
	15	4B-9782	5	BALL
	16	5S-6419	4	BEARING
	17	2A-3798	2	DOWEL
	18	4B-5387	2	PLUG 24.01 mm(.945 in.) hole dia.
				-OR-
C		4B-3938	2	PLUG 28.95 mm(1.14 in.) hole dia.
C				INDICATES CHANGE

1201 6N8127 CYLINDER BLOCK ASSEMBLY
Engine Serial No. 78P45004-Up
Part of 7N8014 Cylinder Block Group shown on Page 16A

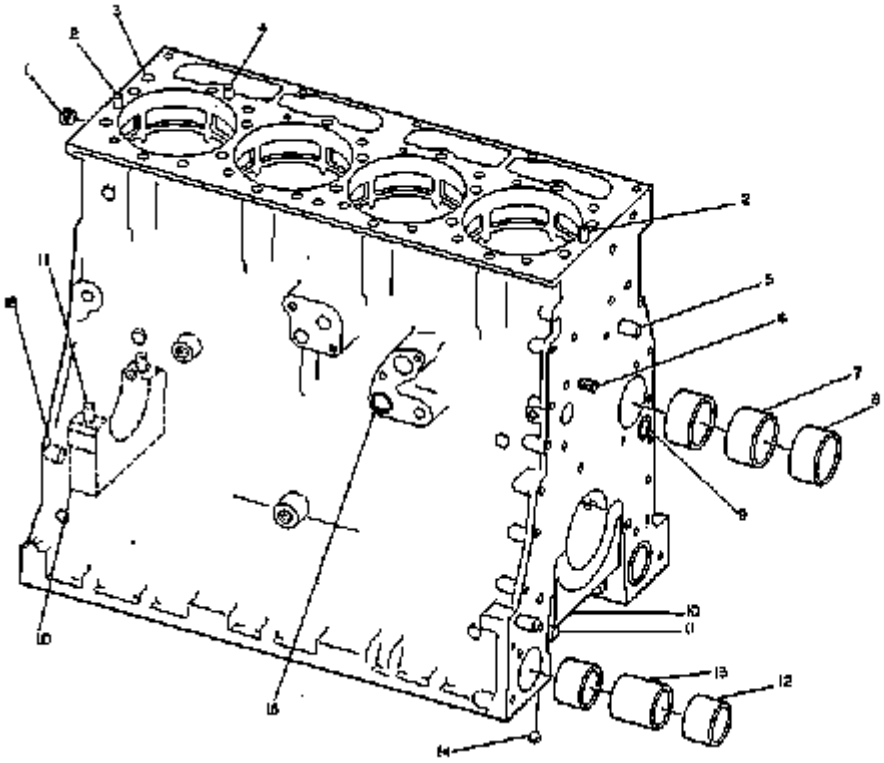

ITEM NO.	PART NUMBER	DESCRIPTION	QTY
1	2B858	PLUG	1
2	8K1207	DOWEL	2
3	5B7682	DOWEL	2
4	1S9540	DOWEL	1
5	6B0349	DOWEL	2
6	9S8402	STUD	1
7	7M4844	BEARING	2
C 8	8M4110	BEARING	1
9	4B3934	PLUG	2
10	6N8003	CAP	5
11	7S3274	BOLT	10
	2S5658	WASHER	10
12	5S6419	BEARING	4
13	5S6420	BEARING	2
14	4B9782	BALL	5
15	4B9587	PLUG	1
16	2A3798	DOWEL	2

C INDICATES CHANGE

287964

Nota	Ref	Numero	Cant	Nombre De Pieza
		6N-8127	1	CYLINDER BLOCK GP
	1	2B-0858	1	PLUG
	2	8K-1207	2	DOWEL
	3	5B-7652	2	DOWEL
	4	1S-9540	1	DOWEL
	5	8B-6349	2	DOWEL
	6	5S-8462	1	STUD
	7	7M-4046	2	BEARING
C	8	8N-4110	1	BEARING
	9	4B-3938	2	PLUG
	10	6N-8003	5	CAP
	11	7S-3224	10	BOLT
		2S-5658	10	WASHER
	12	5S-6419	4	BEARING
	13	5S-6420	2	BEARING
	14	4B-9782	5	BALL
	15	4B-5387	1	PLUG
	16	2A-3798	2	DOWEL
C				INDICATES CHANGE

1216 7N6552 CYLINDER BLOCK ASSEMBLY
Engine Serial No. 78P57460-Up
Part of 7N8014 Cylinder Block Group shown on Page 16A-1. For Field Replacement order 1N3574 shown on Page 16A-3

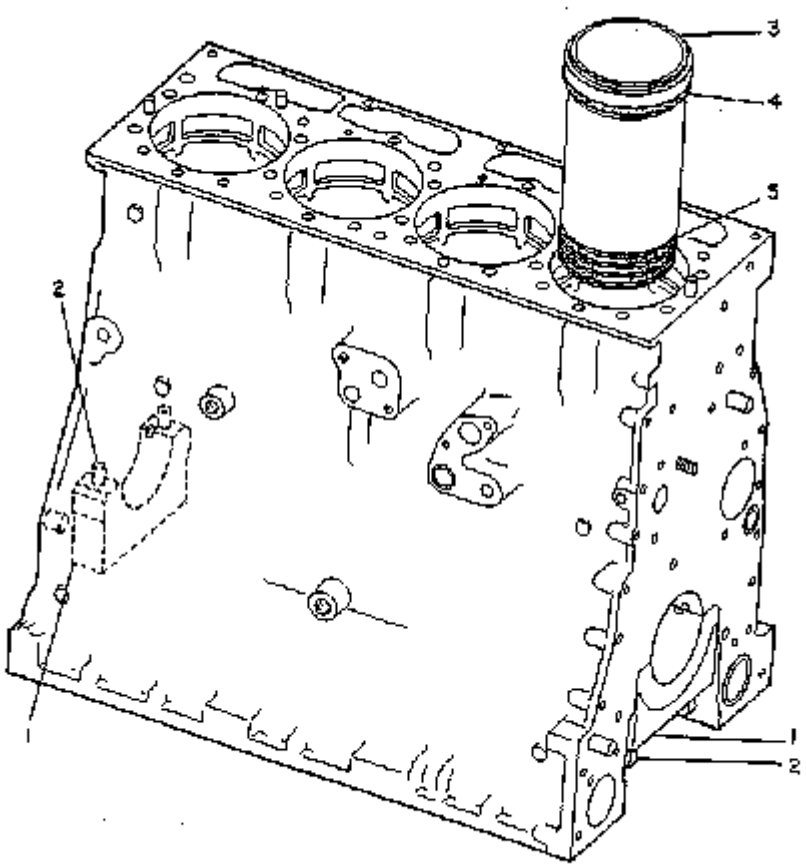

Nota	Ref	Numero	Cant	Nombre De Pieza
		7N-6552	1	CYLINDER BLOCK AS
	1	6N-8003	5	CAP-CRANKSHAFT BEARING
	2	7S-3224	10	BOLT
		2S-5658	10	WASHER-HARD
	3	2P-8889	4	LINER-CYLINDER
	4	2W-6134	4	BAND-FILLER
	5	5S-6670	12	SEAL-O-RING

2P6495 CYLINDER BLOCK COVER GROUP
Engine Serial No. 78P18799 to 78P45003 inclusive

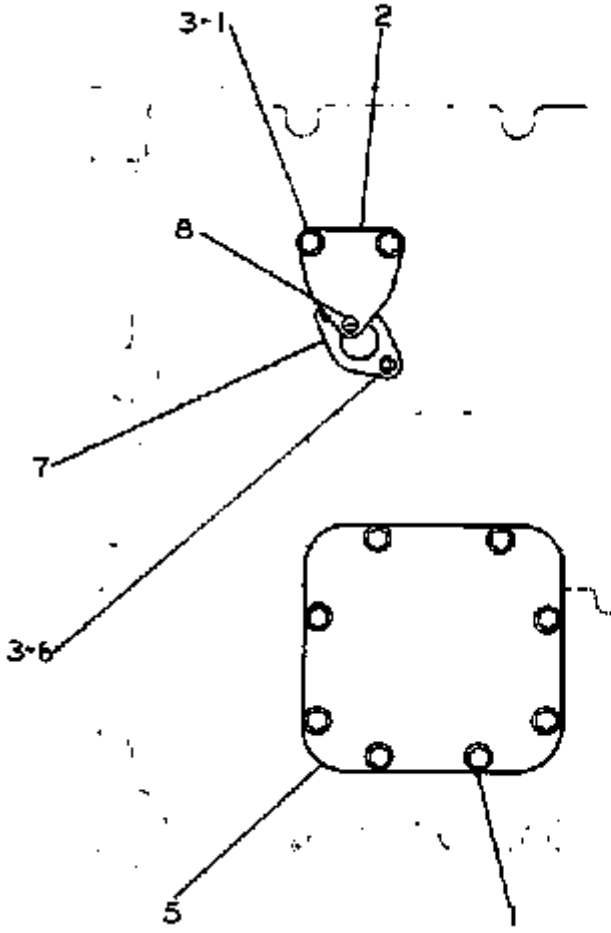

	REF. NO.	PART NUMBER	DESCRIPTION	QTY
C	1	LI351	BOLT	10
C	2	8L8662	COVER	1
		5S8055	GASKET	1
C	3	5M2894	WASHER	12
	4	2A3798	DOWEL	2
	5	8S876	COVER	1
		8S877	GASKET	1
C	6	1A2029	BOLT	2
	7	5M1903	COVER	1
		4M2250	GASKET	1
C	8	8M3267	SCREW	1
	9	4B5387	PLUG---2.40 cm(.945 in.) diameter	
			-OR-	
C		4B3938	PLUG--2.89 cm(1.138 in.) diameter	

C INDICATES CHANGE

215147

Nota	Ref	Numero	Cant	Nombre De Pieza
		2P-6495	1	COVER GP
C	1	0L-1351	10	BOLT
C	2	8L-8662	1	COVER
		5S-8055	1	GASKET
C	3	5M-2894	12	WASHER
	4	2A-3798	2	DOWEL
	5	8S-0876	1	COVER
		8S-0877	1	GASKET
C	6	1A-2029	2	BOLT
	7	5M-1903	1	COVER
		4M-2250	1	GASKET
C	8	8M-3267	1	SCREW
	9	4B-5387		PLUG 2.40 cm(.945 in.) diameter
				-OR-
C		4B-3938		PLUG 2.89 cm(1.138 in.) diameter
C				INDICATES CHANGE

1201 7N1088 CYLINDER BLOCK COVER GROUP
Engine Serial No. 78P45004-Up

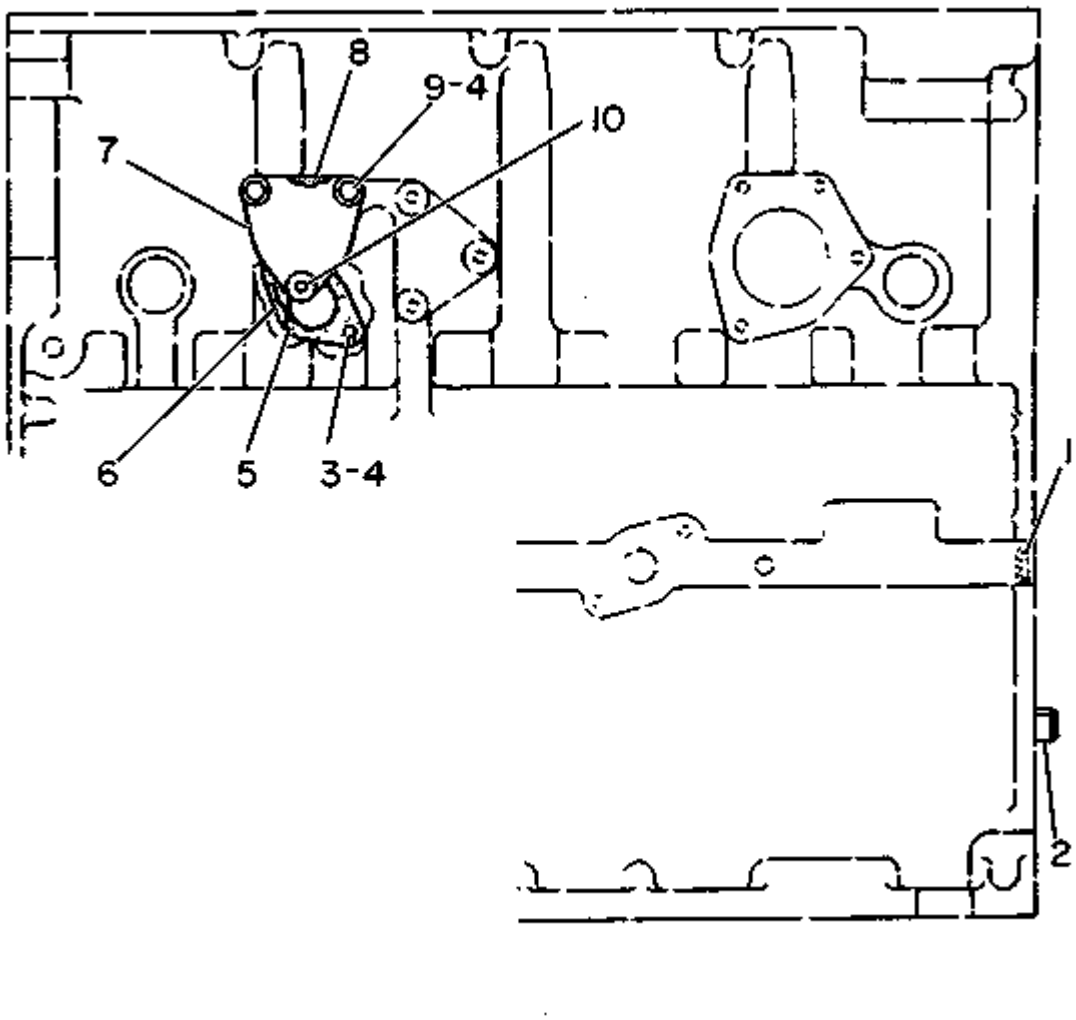

Nota	Ref	Numero	Cant	Nombre De Pieza
		7N-1088	1	COVER GP-CYLINDER BLOCK
	1	4B-3938	1	PLUG-CUP
	2	2A-3798	2	DOWEL
	3	1A-2029	2	BOLT
	4	5M-2894	4	WASHER
	5	4M-2250	1	GASKET
	6	5M-1903	1	COVER
	7	8L-8662	1	COVER
	8	5S-8055	1	GASKET
	9	0L-1351	2	BOLT
	10	8M-3267	1	SCREW-HEX SOCKET

1201 2P6540 CYLINDER BLOCK GROUP
Engine Serial No. 78P18799 to 78P45003 inclusive
2P8774 Cylinder Block parts are shown on Page 17

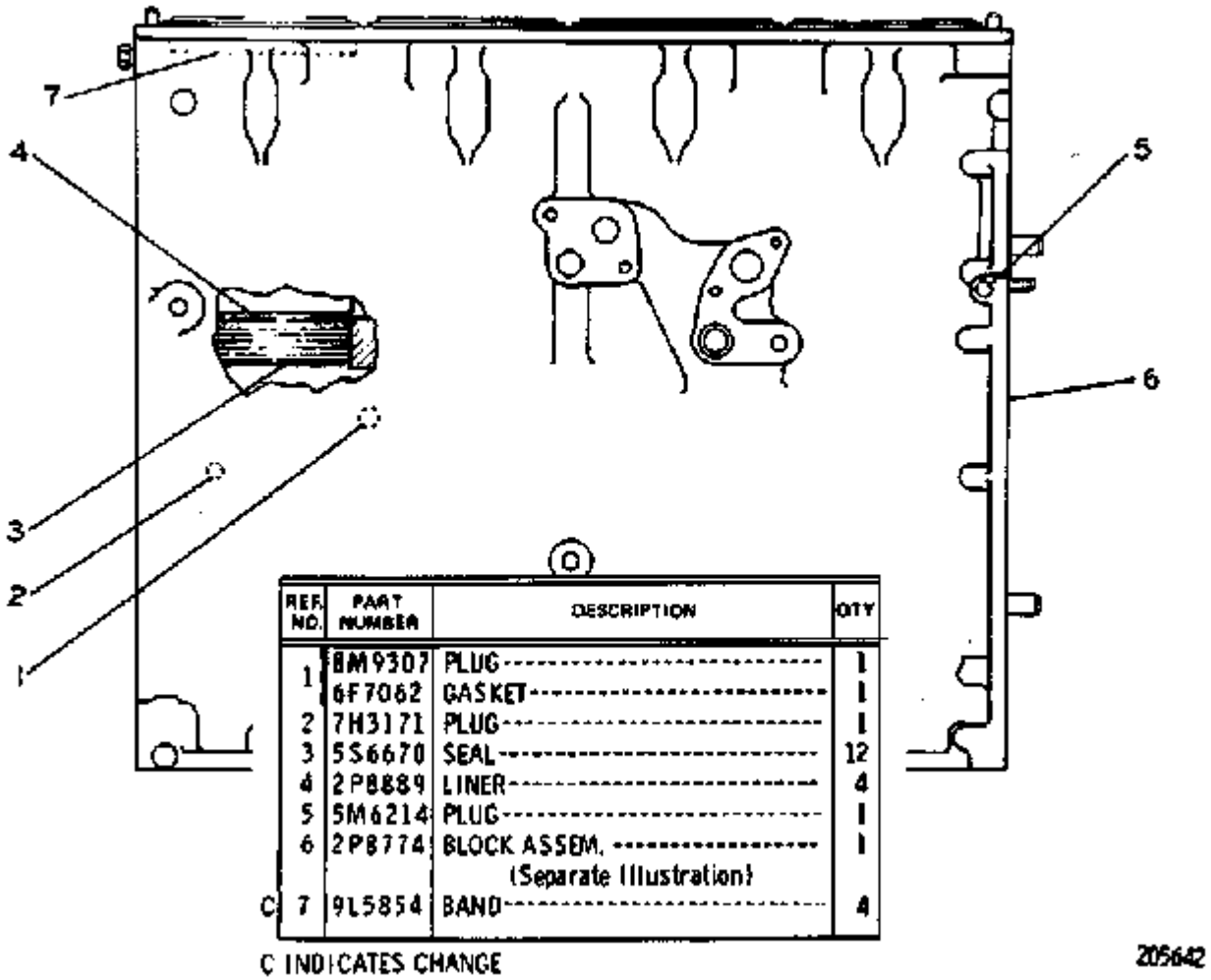

	REF. NO.	PART NUMBER	DESCRIPTION	QTY
	1	8M9307	PLUG	1
		6F7062	GASKET	1
	2	7H3171	PLUG	1
	3	5S6670	SEAL	12
	4	2P8889	LINER	4
	5	5M6214	PLUG	1
	6	2P8774	BLOCK ASSEM. (Separate Illustration)	1
C	7	9L5854	BAND	4

C INDICATES CHANGE

Nota	Ref	Numero	Cant	Nombre De Pieza
		2P-6540	1	CYLINDER BLOCK GP
	1	8M-9307	1	PLUG
		6F-7062	1	GASKET
	2	7H-3171	1	PLUG
	3	5S-6670	12	SEAL
	4	2P-8889	4	LINER
	5	5M-6214	1	PLUG
RY	6	2P-8774	1	BLOCK ASSEM.
				(Separate Illustration)
C	7	9L-5854	4	BAND
R				REMFG PART MAY BE AVAILABLE
Y				SEPARATE ILLUSTRATION
C				INDICATES CHANGE

1201 7N8014 CYLINDER BLOCK GROUP
Engine Serial No. 78P57460-Up
7N6552 Cylinder Block parts are shown on Page 16A-2

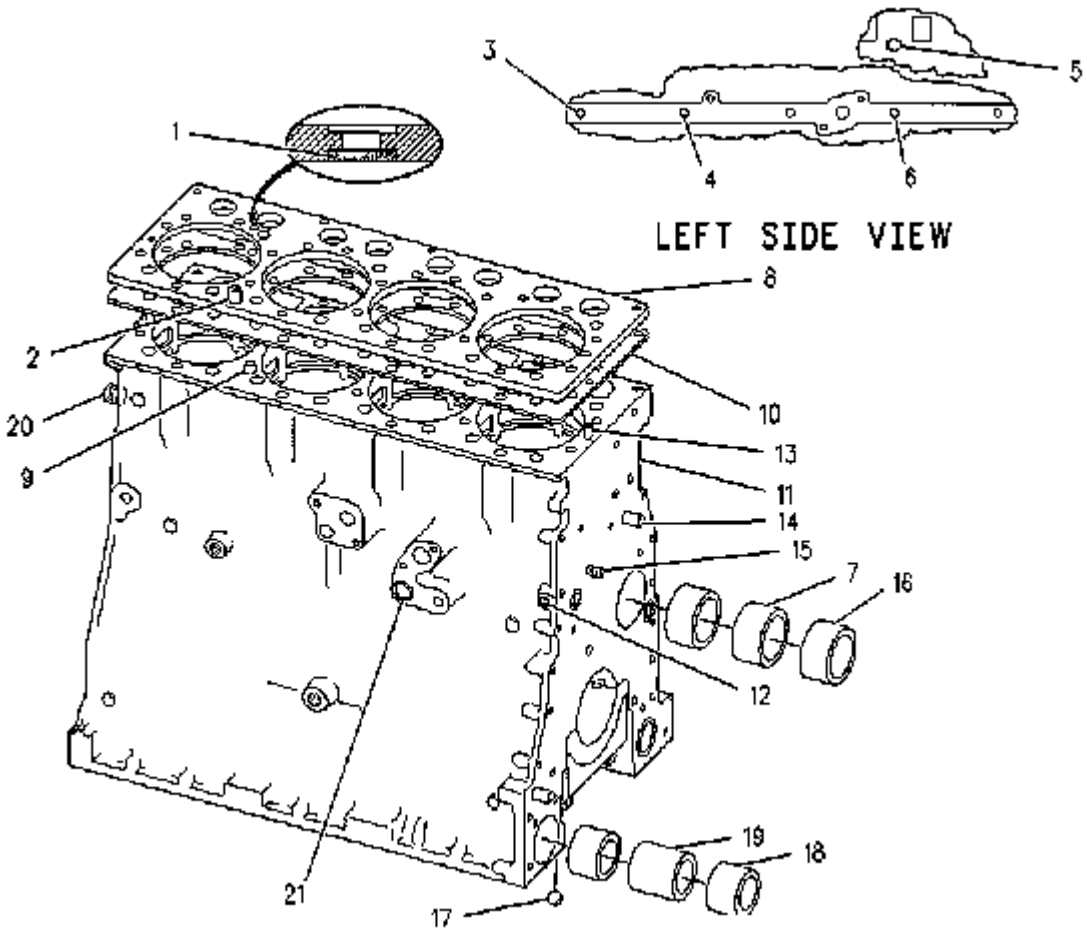

Nota	Ref	Numero	Cant	Nombre De Pieza
		7N-8014	1	CYLINDER BLOCK GP
	1	3S-5496	1	SEAL
	2	1S-9540	1	DOWEL
	3	7H-3171	1	PLUG
	4	3J-5389	2	PLUG
	5	8M-9307	1	PLUG
		6F-7062	1	WASHER
	6	5M-6213	2	PLUG
	7	7M-4046	2	BEARING
	8	7N-8021	1	PLATE
	9	5B-7652	2	DOWEL
	10	7N-8020	1	GASKET
CY	11	7N-6552	1	BLOCK ASSEM.
				(Separate Illustration)
	12	5M-6214	1	PLUG
	13	8K-1207	2	DOWEL
	14	8B-6349	2	DOWEL
	15	5S-8462	1	STUD
	16	8N-4110	1	BEARING
	17	4B-9782	5	BALL
	18	5S-6419	4	BEARING
	19	5S-6420	2	BEARING
	20	2B-0858	1	PLUG
	21	4B-5387	1	PLUG
C				INDICATES CHANGE
Y				SEPARATE ILLUSTRATION

1201 7N8014 CYLINDER BLOCK GROUP
Engine Serial No. 78P45004 to 78P57459 inclusive
6N8127 Block parts are shown on Page 17A

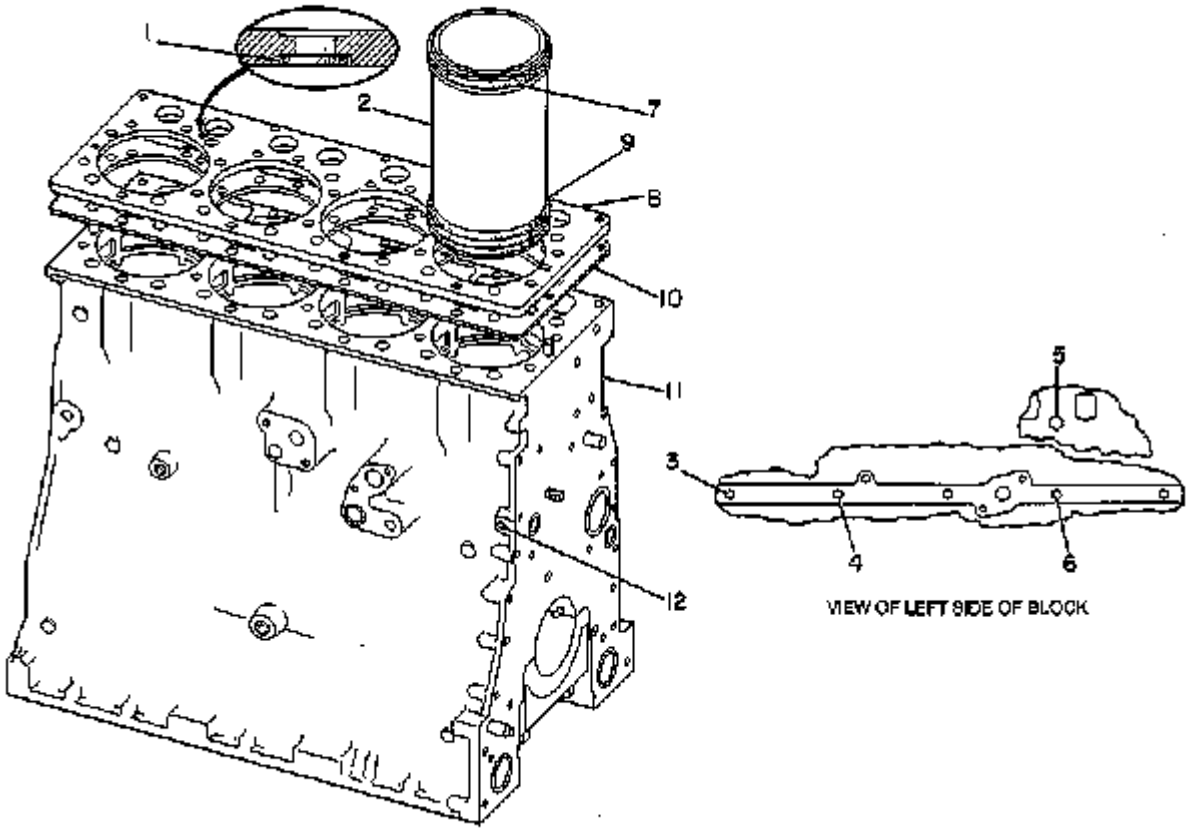

Nota	Ref	Numero	Cant	Nombre De Pieza
		7N-8014	1	CYLINDER BLOCK GP
	1	3S-5496	1	SEAL-O-RING
	2	2P-8889	4	LINER-CYLINDER
	3	7H-3171	1	PLUG-PIPE
	4	3J-5389	2	PLUG
	5	8M-9307	1	PLUG-DRAIN
		6F-7062	1	WASHER
	6	5M-6213	2	PLUG
C	7	9L-5854	4	BAND-FILLER
	8	7N-8021	1	PLATE-BLOCK
	9	5S-6670	12	SEAL-O-RING
	10	7N-8020	1	GASKET-PLATE
Y	11	6N-8127	1	CYLINDER BLOCK GP
	12	5M-6214	1	PLUG-PIPE
C				CHANGE FROM PREVIOUS TYPE
Y				SEPARATE ILLUSTRATION

1201 1N3574 CYLINDER BLOCK GROUP--Type 1
Engine Serial No. 78P57460-Up
Provides Field Replacement for 7N6552 Cylinder Block Assembly shown on Page 16A-2

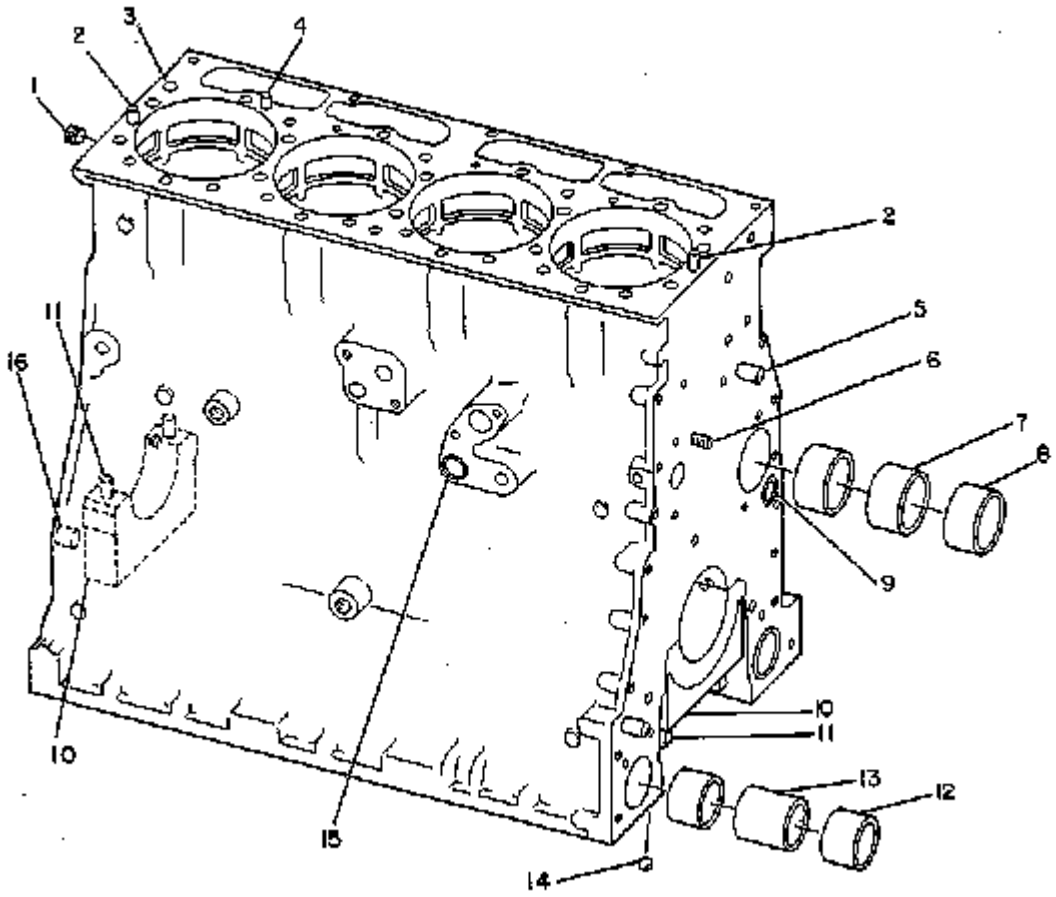

Nota	Ref	Numero	Cant	Nombre De Pieza
		1N-3574	1	CYLINDER BLOCK GP
	1	2B-0858	1	PLUG-PIPE
	2	8K-1207	2	PIN-DOWEL
	3	5B-7652	2	DOWEL
	4	1S-9540	1	DOWEL
	5	8B-6349	2	DOWEL
	6	5S-8462	1	STUD
	7	7M-4046	2	BEARING-SLEEVE
	8	8N-4110	1	BEARING-SLEEVE
	9	4B-3938	2	PLUG-CUP
	10	6N-8003	5	CAP-CRANKSHAFT BEARING
	11	7S-3224	10	BOLT
		2S-5658	10	WASHER-HARD
	12	5S-6419	4	BEARING-SLEEVE
	13	5S-6420	2	BEARING-SLEEVE
	14	4B-9782	5	BALL
	15	4B-5387	1	PLUG-CUP
	16	2A-3798	2	DOWEL

6N8875 CYLINDER HEAD ASSEMBLY
Engine Serial No. 78P33563 to 78P45003 inclusive
Part of 2P6274 Cylinder Head Group shown on Pages 22A & 22B

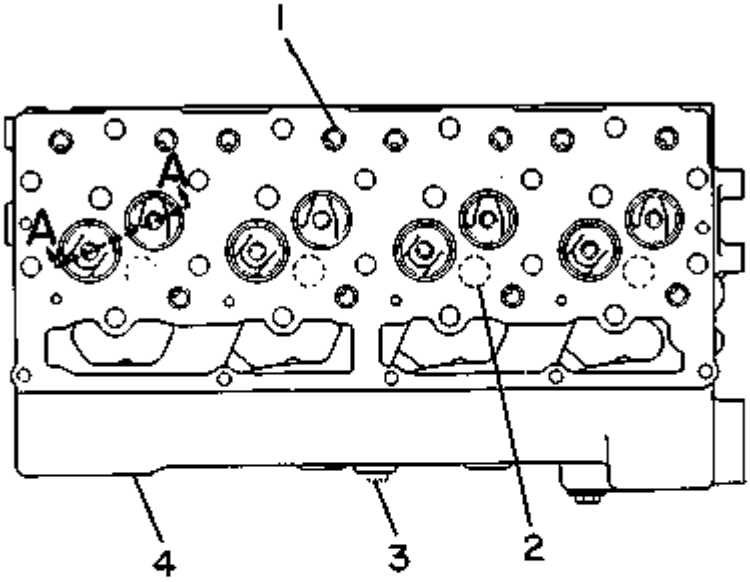

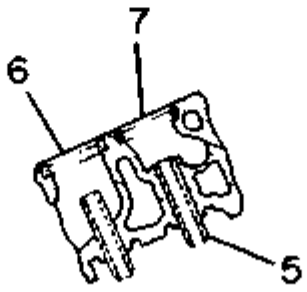

SECTION A-A

Nota	Ref	Numero	Cant	Nombre De Pieza
		6N-8875	1	CYLINDER HEAD AS
	1	1S-3062	12	DIRECTOR-WATER
	2	3B-0623	4	PLUG-CUP
	3	2B-0858	3	PLUG-PIPE
	4	3S-8313	4	PLUG-CUP
	5	2P-1262	8	GUIDE-VALVE
	6	5S-7218	4	INSERT-VALVE SEAT (INTAKE)
	7	1P-6837	4	INSERT-VALVE SEAT (EXHAUST)

1100 8N1188 CYLINDER HEAD ASSEMBLY
Engine Serial No. 78P45004-Up
Part of 7N8534 and 1W3078 Cylinder Head Group shown on Pages 22C, 22D and 22E

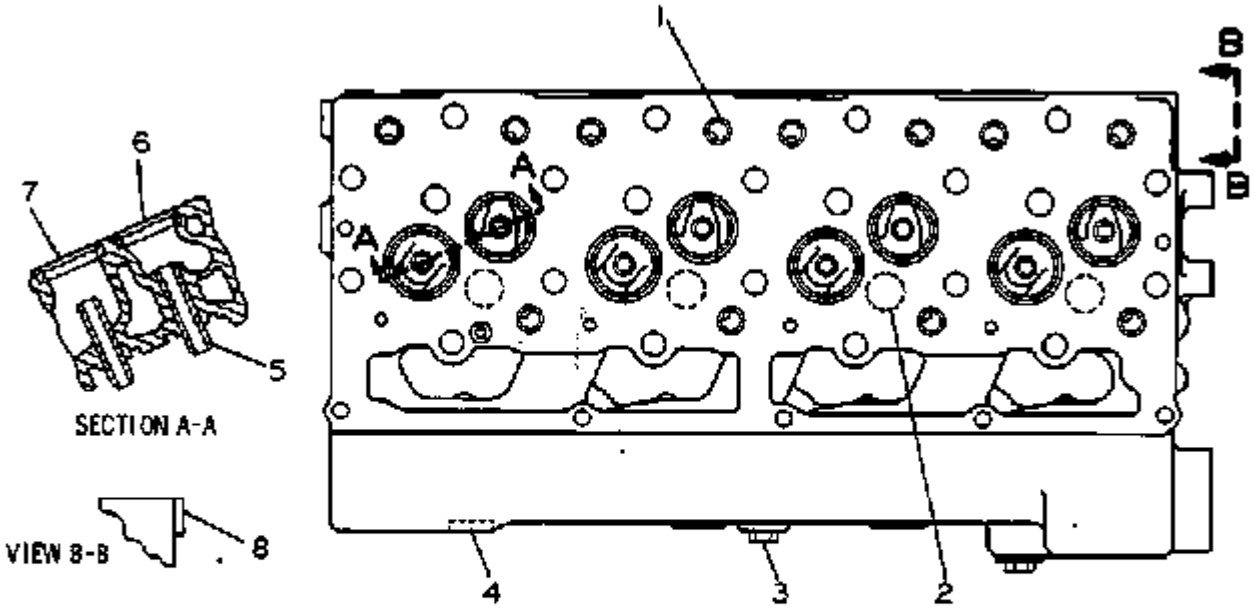

REF. NO.	PART NUMBER	DESCRIPTION	QTY
1	1S3062	DIRECTOR	12
2	3B623	PLUG	4
3	2B858	PLUG	3
4	3S8313	PLUG	4
5	2P1262	GUIDE	8
6	5S7221	INSERT------(exhaust)----------	4
7	7N4448	INSERT------(intake)----------	4
8	7N2597	SPACER----------	1

224991

Nota	Ref	Numero	Cant	Nombre De Pieza
		8N-1188	1	CYLINDER HEAD GP
	1	1S-3062	12	DIRECTOR
	2	3B-0623	4	PLUG
	3	2B-0858	3	PLUG
	4	3S-8313	4	PLUG
	5	2P-1262	8	GUIDE
	6	5S-7221	4	INSERT (exhaust)
	7	7N-4448	4	INSERT (intake)
	8	7N-2597	1	SPACER

1100 2P6544 CYLINDER HEAD FASTENER GROUP
Engine Serial No. 78P18799 to 78P45003 inclusive

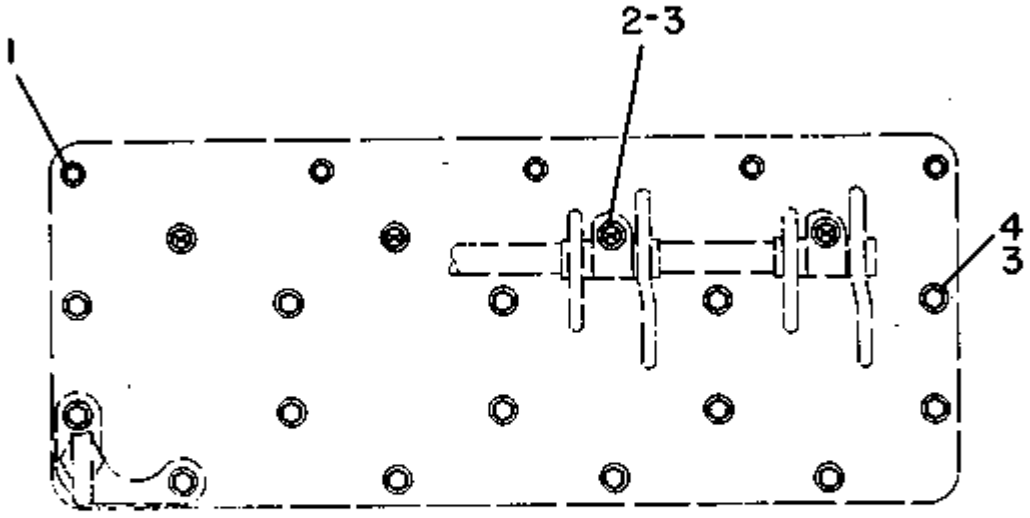

Nota	Ref	Numero	Cant	Nombre De Pieza
		2P-6544	1	FASTENER GP-CYLINDER HEAD
	1	1A-5183	5	BOLT (3/8-16X4.75IN)
		5B-3850	5	WASHER
				-OR-
C		1A-5964	5	BOLT (3/8-16X4.5IN)
	2	1B-7709	4	BOLT (5/8-11X8IN)
	3	2S-0736	18	WASHER-HARD
	4	1D-4595	14	BOLT (5/8-11X6IN)
C				CHANGE FROM PREVIOUS TYPE

1100 2P6274 CYLINDER HEAD GROUP
Engine Serial No. 78P18799 to 78P33562 inclusive
4N7444 Cylinder Head parts are shown on Page 23

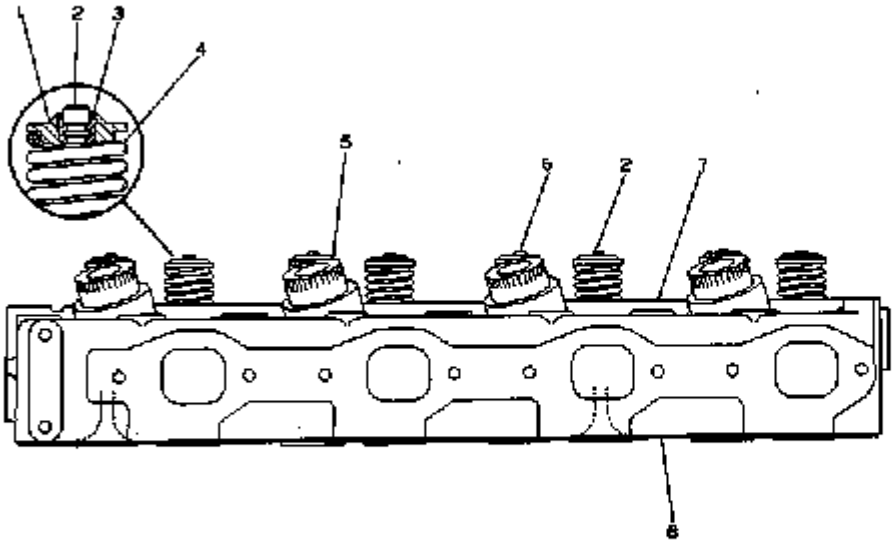

REF NO.	PART NUMBER	DESCRIPTION	QTY
1	555912	RETAINER	8
C 2	556449	VALVE (exhaust)	4
3	2A4429	LOCK	16
4	757144	SPRING	8
	556795	CHAMBER ASSEM.	4
	753206	SEAL	4
C 5	5M2667	GASKET—2.938 mm(.164 in.) thick	4
C	558959	GASKET—5.664 mm(.223 in.) thick	4
C	559068	GASKET—6.299 mm(.248 in.) thick	4
C 6	556452	VALVE (intake)	4
7	4N7444	HEAD ASSEM.	1
		(Separate Illustration)	
8	556277	GASKET	1

C INDICATES CHANGE 897186

Nota	Ref	Numero	Cant	Nombre De Pieza
		2P-6274	1	CYLINDER HEAD GP
	1	5S-5912	8	RETAINER
	2	5S-6449	4	VALVE (exhaust)
	3	2A-4429	16	LOCK
	4	7S-7144	8	SPRING
	5	5S-6795	4	CHAMBER ASSEM.
		7S-3206	4	SEAL
		5M-2667	4	GASKET 2.928 mm(.194 in.) thick
		2S-8959	4	GASKET 5.664 mm(.223 in.) thick
		2S-8960	4	GASKET 6.299 mm(.248 in.) thick
	6	5S-6452	4	VALVE (intake)
Y	7	4N-7444	1	HEAD ASSEM.
				(Separate Illustration)
	8	5S-6277	1	GASKET
				Separate Illustration

1304 2P1785 OIL PUMP GROUP
Engine Serial No. 78P18799 to 58039, 58604 and 78P58605 inclusive
Part of 2P1784 Oil Pump Group shown on Page 33

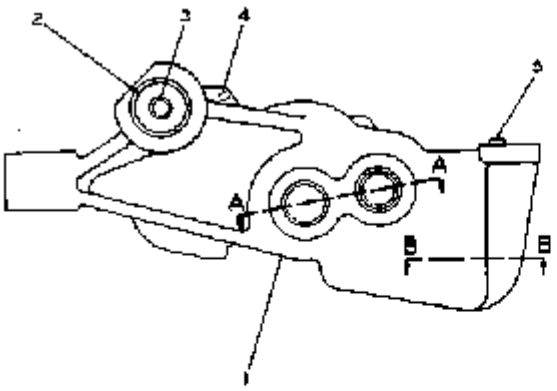

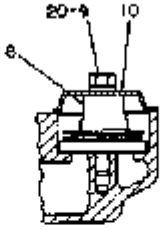

SECTION B-B

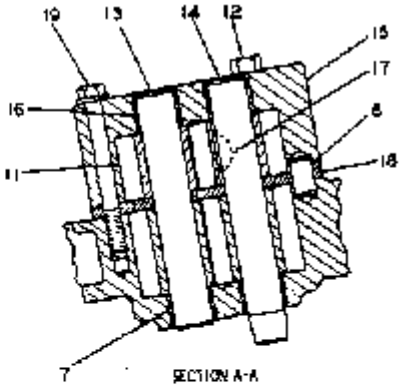

SECTION A-A

REF. NO.	PART NUMBER	DESCRIPTION	QTY
1	2P085	BODY ASSEM.	1
2	2P1140	SHAFT ASSEM.	1
3	6F7172	DOWEL	1
4	4B4880	BALL	1
5	1F1006	DOWEL	1
6	1M3735	DOWEL	2
7	856511	BEARING	2

	REF. NO.	PART NUMBER	DESCRIPTION	QTY
C	8	4M8365	VALVE ASSEM.	1
C	9	2B2694	BOLT	1
	10	4M3732	COVER	1
C	11	6M1036	GEAR (6 Teeth)	2
C	12	T65	BOLT	2
C	13	854495	SHAFT ASSEM.	1
	14	2P6245	SHAFT ASSEM.	1

	REF. NO.	PART NUMBER	DESCRIPTION	QTY
	15	4N4055	BODY ASSEM.	1
	16	856511	BEARING	2
	17	8M8709	KEY	1
	18	2P1781	SPACER	1
C	19	2M8409	BOLT	1
C		5M2894	WASHER	1
C	20	9M1974	WASHER	1

C INDICATES CHANGE

217769

Nota	Ref	Numero	Cant	Nombre De Pieza
		2P-1785	1	PUMP GP-ENGINE OIL
	1	2P-0685	1	BODY AS-OIL PUMP
	2	2P-1170	1	SHAFT AS-GEAR
	3	6F-7172	1	PIN-DOWEL
	4	4B-9880	1	BALL
	5	1F-1006	1	DOWEL
	6	1M-3735	2	DOWEL
	7	8S-6511	2	BEARING-SLEEVE
C	8	4N-8385	1	VALVE AS-RELIEF
C	9	2B-2694	1	BOLT
	10	4N-3732	1	COVER-VALVE
C	11	6N-1036	2	GEAR-OIL PUMP (8 TEETH)
C	12	0T-0065	2	BOLT
C	13	8S-0493	1	SHAFT AS-PUMP
	14	2P-6245	1	SHAFT AS-PUMP
	15	4N-4055	1	BODY AS-PUMP
	16	8S-6511	2	BEARING-SLEEVE
	17	1B-8709	1	KEY-WOODRUFF
	18	2P-1781	1	SPACER-OIL PUMP
C	19	2M-3403	1	BOLT
C		5M-2894	1	WASHER
C	20	9M-1974	1	WASHER
C				CHANGE FROM PREVIOUS TYPE

1304 2P1785 OIL PUMP GROUP
Engine Serial No. 78P58040 to 58603 and 78P58606-Up
Part of 2P1784 Oil Pump Group shown on Page 33

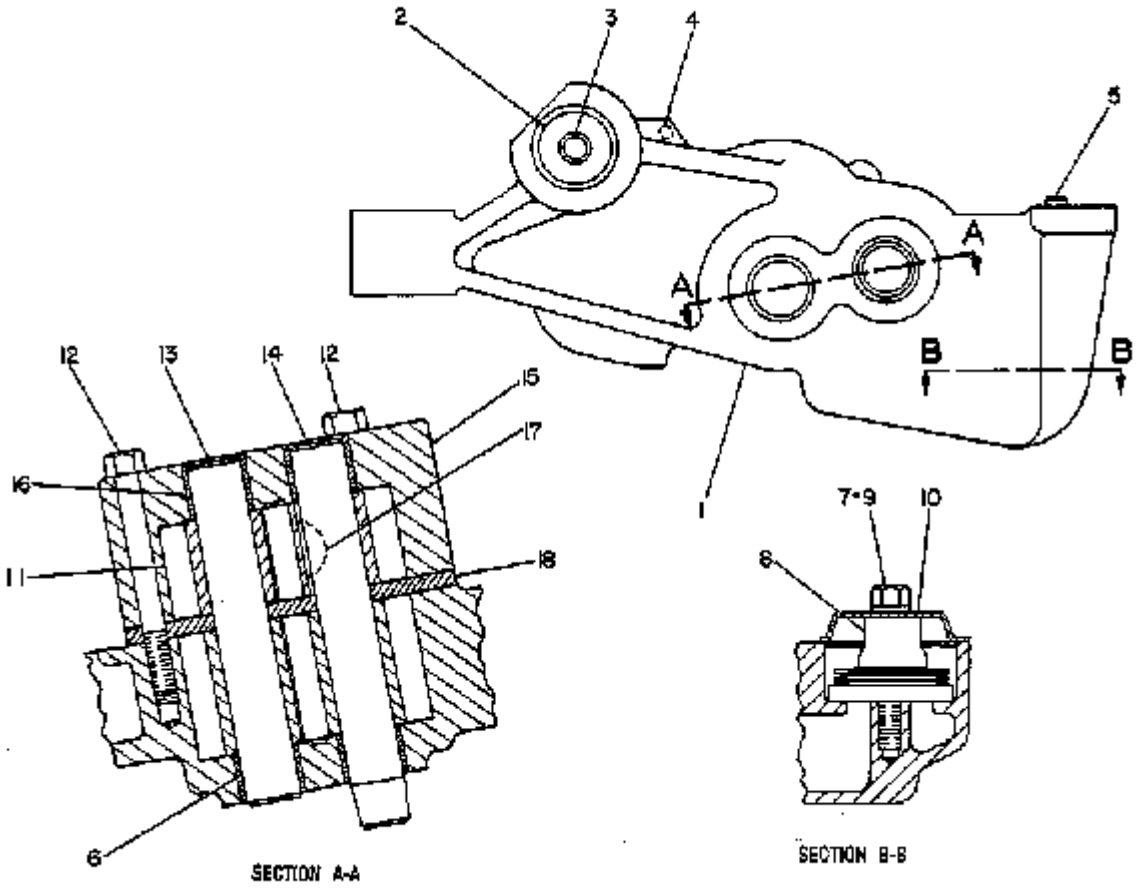

Nota	Ref	Numero	Cant	Nombre De Pieza
		2P-1785	1	PUMP GP-ENGINE OIL
C	1	8N-8636	1	BODY AS-OIL PUMP
	2	2P-1170	1	SHAFT AS-GEAR
	3	6F-7172	1	PIN-DOWEL
	4	4B-9880	1	BALL
	5	1F-1006	1	DOWEL
	6	8S-6511	2	BEARING-SLEEVE
	7	9M-1974	1	WASHER
	8	4N-8385	1	VALVE AS-RELIEF
	9	2B-2694	1	BOLT
	10	4N-3732	1	COVER-VALVE
	11	6N-1036	2	GEAR-OIL PUMP (8 TEETH)
C	12	0T-0065	2	BOLT
	13	8S-0493	1	SHAFT AS-PUMP
	14	2P-6245	1	SHAFT AS-PUMP
	15	4N-4055	1	BODY AS-PUMP
	16	8S-6511	2	BEARING-SLEEVE
	17	1B-8709	1	KEY-WOODRUFF
	18	2P-1781	1	SPACER-OIL PUMP
C				CHANGE FROM PREVIOUS TYPE

1356 1N3080 BLOWER FAN AND GUARD GROUP
Serial No. 41K10203-Up

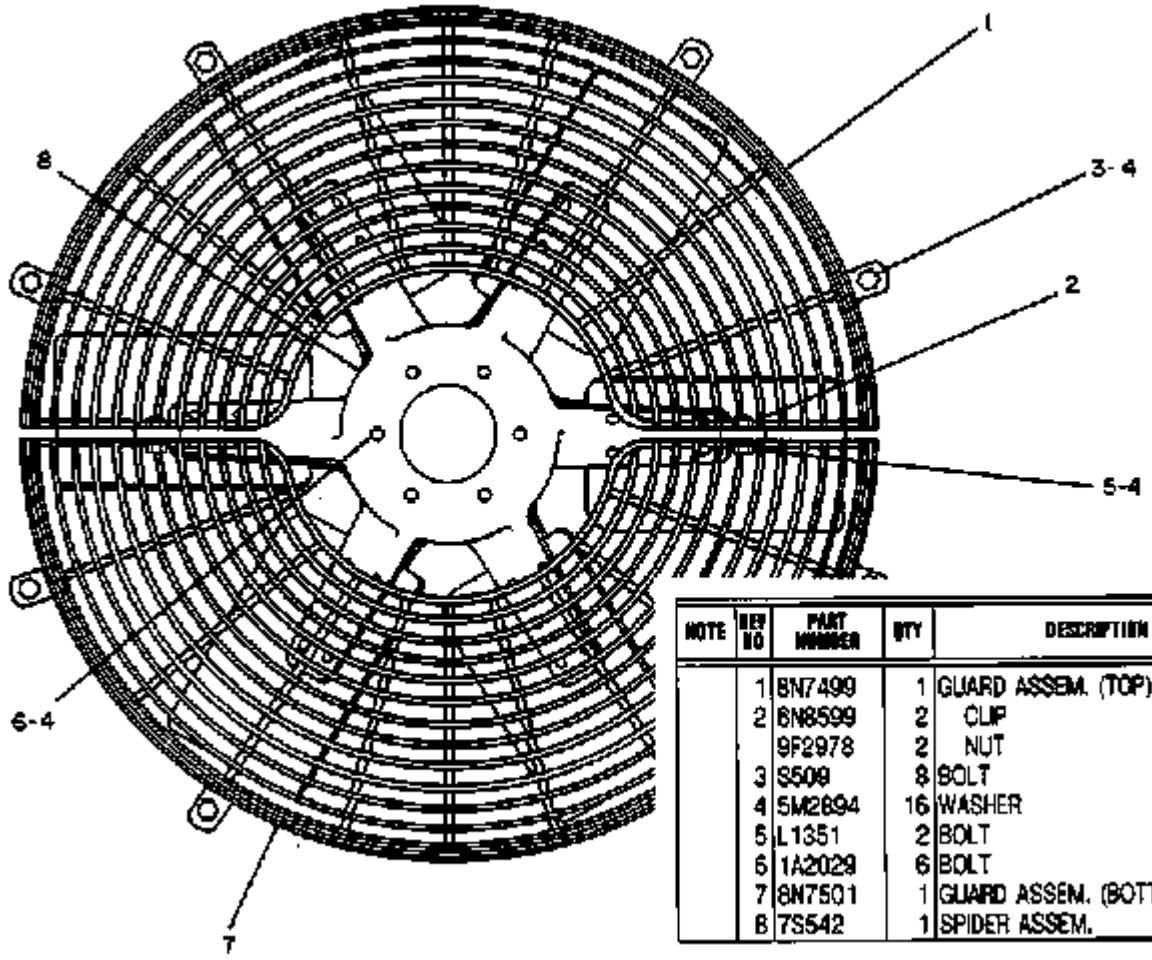

NOTE	REF NO	PART NUMBER	QTY	DESCRIPTION
	1	8N7499	1	GUARD ASSEM. (TOP)
	2	6N8599	2	CLIP
		9F2978	2	NUT
	3	S509	8	BOLT
	4	5M2694	16	WASHER
	5	L1351	2	BOLT
	6	1A2029	6	BOLT
	7	8N7501	1	GUARD ASSEM. (BOTTOM)
	8	7S542	1	SPIDER ASSEM.

307111

Nota	Ref	Numero	Cant	Nombre De Pieza
		1N-3080	1	FAN GP-BLOWER
	1	8N-7499	1	GUARD ASSEM. (TOP)
	2	6N-8599	2	CLIP
		9F-2978	2	NUT
	3	0S-0509	8	BOLT
	4	5M-2894	16	WASHER
	5	0L-1351	2	BOLT
	6	1A-2029	6	BOLT
	7	8N-7501	1	GUARD ASSEM. (BOTTOM)
	8	7S-0542	1	SPIDER ASSEM.

1378 2P6215 ENGINE OIL COOLER GROUP

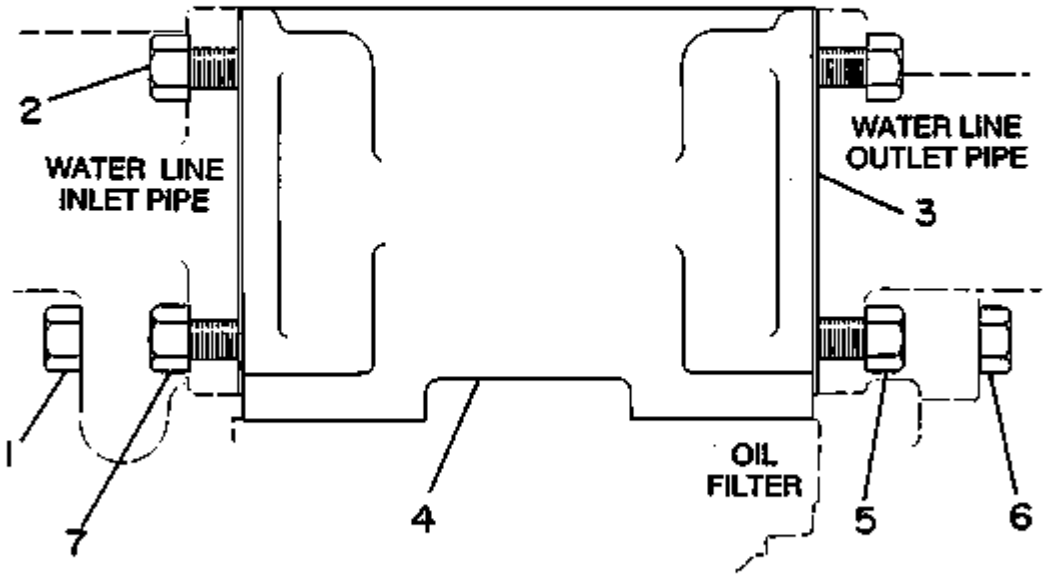

Nota	Ref	Numero	Cant	Nombre De Pieza
		2P-6215	1	COOLER GP-ENGINE OIL
	1	0L-2070	1	BOLT
	2	1A-2029	6	BOLT
	3	5S-6051	2	GASKET
R	4	7N-0165	1	CORE AS-OIL COOLER
	5	2P-3202	1	BOLT-WASHER HEAD 2.85CM(1.125IN)LG
				-OR-
		1T-0765	1	BOLT 2.54CM(1IN)LG
B	6	0L-1143	1	BOLT
C	7	0S-1591	1	BOLT
C		5M-2894	1	WASHER

B	USE AS REQUIRED
C	CHANGE FROM PREVIOUS TYPE
R	REMFG PART MAY BE AVAILABLE

1359 2P7831 FAN DRIVE GROUP
Serial No. 41K10741-Up

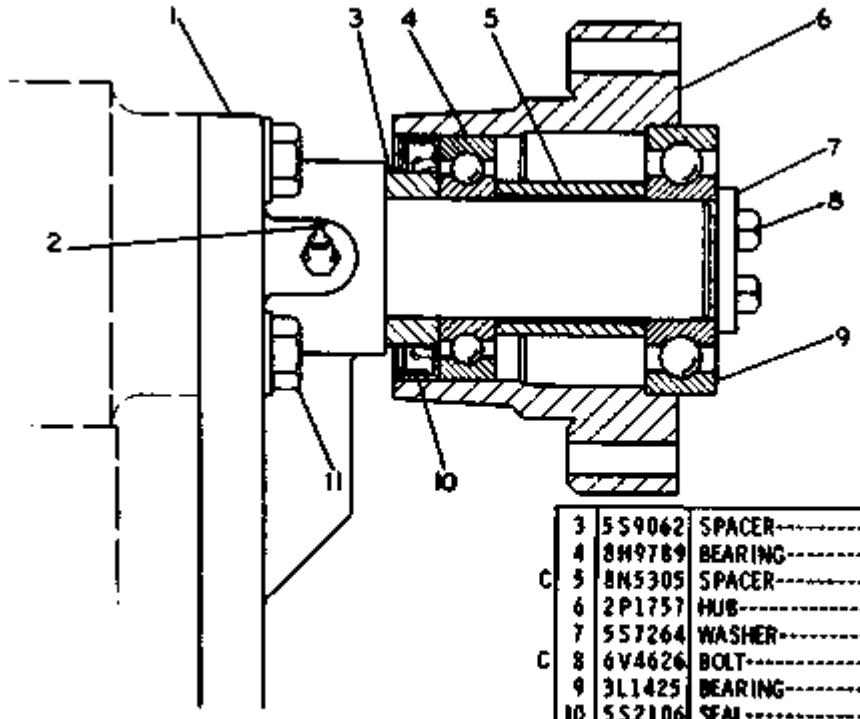

REF. NO.	PART NUMBER	DESCRIPTION	QTY
1	1P9945	BRACKET ASSEM.	1
2	3B8485	FITTING	1

	3	5S9062	SPACER	1
	4	8N9789	BEARING	1
C	5	8N5305	SPACER	1
	6	2P1757	HUB	1
	7	5S7264	WASHER	1
C	8	6V4626	BOLT	2
	9	3L1425	BEARING	1
	10	5S2106	SEAL	1
	11	5S1567	BOLT	4
		2M849	WASHER	4

C INDICATES CHANGE 234092

Nota	Ref	Numero	Cant	Nombre De Pieza
		2P-7831	1	DRIVE GP-FAN
	1	1P-9945	1	BRACKET ASSEM.
	2	3B-8485	1	FITTING
	3	5S-9062	1	SPACER
	4	8H-9789	1	BEARING
C	5	8N-5305	1	SPACER
	6	2P-1757	1	HUB
	7	5S-7264	1	WASHER
C	8	6V-4626	2	BOLT
	9	3L-1425	1	BEARING
	10	5S-2106	1	SEAL
	11	0S-1587	4	BOLT
		2M-0849	4	WASHER
C				INDICATES CHANGE

1355 2P8165 HOUSING AND REGULATOR GROUP
Serial No. 41K8778 to 41K8799, 8801 to 8830, 8832 to 8838, 8840, 8841, 8843 to 8856, 8858 to 8863 and 41K8865-Up

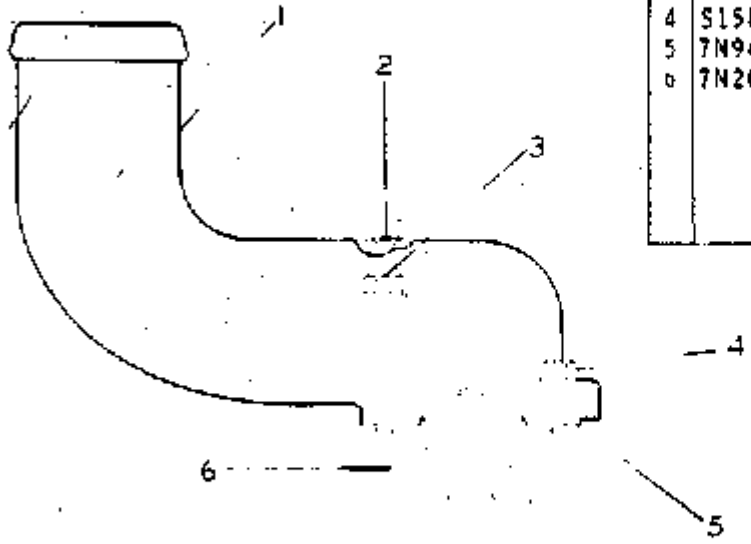

	REF NO.	PART NUMBER	DESCRIPTION	QTY
C	1	8N488	ELBOW	1
	2	L1352	BOLT	1
	3	T573	BOLT	1
	4	S1588	BOLT	2
	5	7N944	GASKET	1
	6	7N208	REGULATOR	1

CYLINDER HEAD

C INDICATES CHANGE

173971

Nota	Ref	Numero	Cant	Nombre De Pieza
		2P-8165	1	HOUSING & REGULATOR GP
C	1	8N-0488	1	ELBOW
	2	0L-1352	1	BOLT
	3	0T-0573	1	BOLT
	4	0S-1588	2	BOLT
	5	7N-0944	1	GASKET
	6	7N-0208	1	REGULATOR
C				INDICATES CHANGE

2P3773 JACKET WATER HEATER GROUP
AN ATTACHMENT

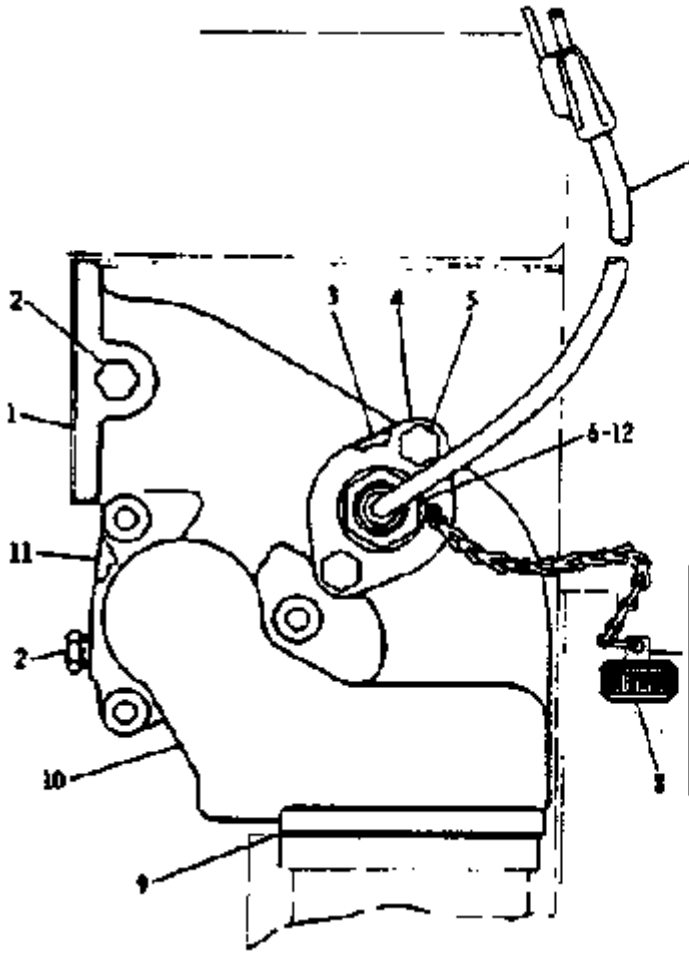

REF. NO.	PART NUMBER	DESCRIPTION	QTY
1	5S6051	GASKET	1
2	3J5390	PLUG----(Use as Required)	2
3	2P2426	GASKET	1
4	2P2500	FLANGE	1
5	L1351	BOLT	2
	3B4506	LOCKWASHER	2
6	2P2428	PRE-HEATER ASSEM.	1
	2P7341	ELEMENT ASSEM.	1
7	2P7342	CORD ASSEM.	1
	2R1980	NUT	1
8	2P2425	CAP ASSEM.	1
9	2M4108	GASKET	1
10	2P3772	BONNET	1
11	1M9390	GASKET	1
12	3S9637	WASHER	2

Nota	Ref	Numero	Cant	Nombre De Pieza
		2P-3773	1	JACKET WATER HEATER GROUP
	1	5S-6051	1	GASKET
	2	3J-5390	2	PLUG (Use as Required)
	3	2P-2426	1	GASKET
	4	2P-2500	1	FLANGE
	5	0L-1351	2	BOLT
		3B-4506	2	LOCKWASHER
	6	2P-2428	1	PRE-HEATER ASSEM.
		2P-7341	1	ELEMENT ASSEM.
	7	2P-7342	1	CORD ASSEM.
		2R-1980	1	NUT
	8	2P-2425	1	CAP ASSEM.
	9	2M-4108	1	GASKET
	10	2P-3772	1	BONNET
	11	1M-9390	1	GASKET
	12	3S-9637	2	WASHER

1383 4N3586 JACKET WATER HEATER GROUP--Type 1
AN ATTACHMENT

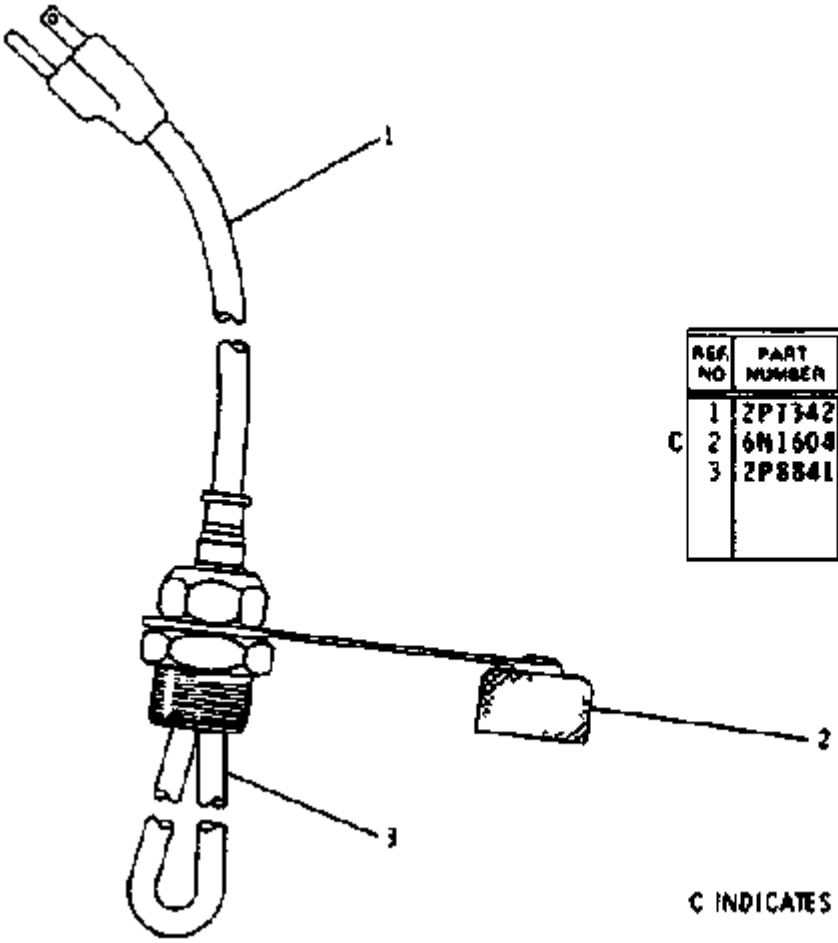

	REF NO	PART NUMBER	DESCRIPTION	QTY
	1	2P7342	CORD ASSEM.	1
C	2	6N1604	CAP ASSEM.	1
	3	2P8841	ELEMENT ASSEM.	1

C INDICATES CHANGE

205356

Nota	Ref	Numero	Cant	Nombre De Pieza
		4N-3586	1	HEATER GP-JACKET WATER
	1	2P-7342	1	CORD ASSEM.
C	2	6N-1604	1	CAP ASSEM.
	3	2P-8841	1	ELEMENT ASSEM.
C				INDICATES CHANGE

1383 4N3586 JACKET WATER HEATER GROUP--Type 2
AN ATTACHMENT

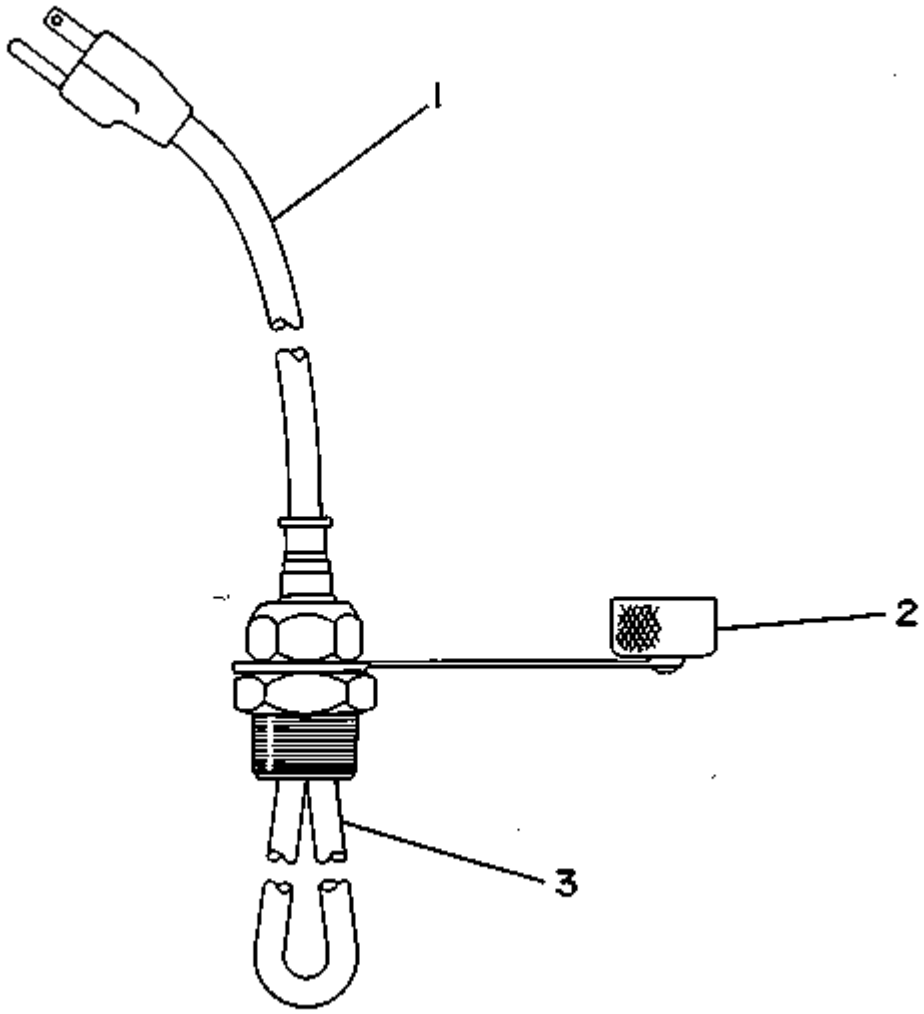

Nota	Ref	Numero	Cant	Nombre De Pieza
		4N-3586	1	HEATER GP-JACKET WATER
C	1	9N-5253	1	CORD AS-HEATER
	2	6N-1604	1	CAP AS-DUST
C	3	9G-6657	1	ELEMENT AS (120V/1250W)
C				CHANGE FROM PREVIOUS TYPE

1382 1N3599 PROTECTION COVER GROUP--Radiator Cap
AN ATTACHMENT

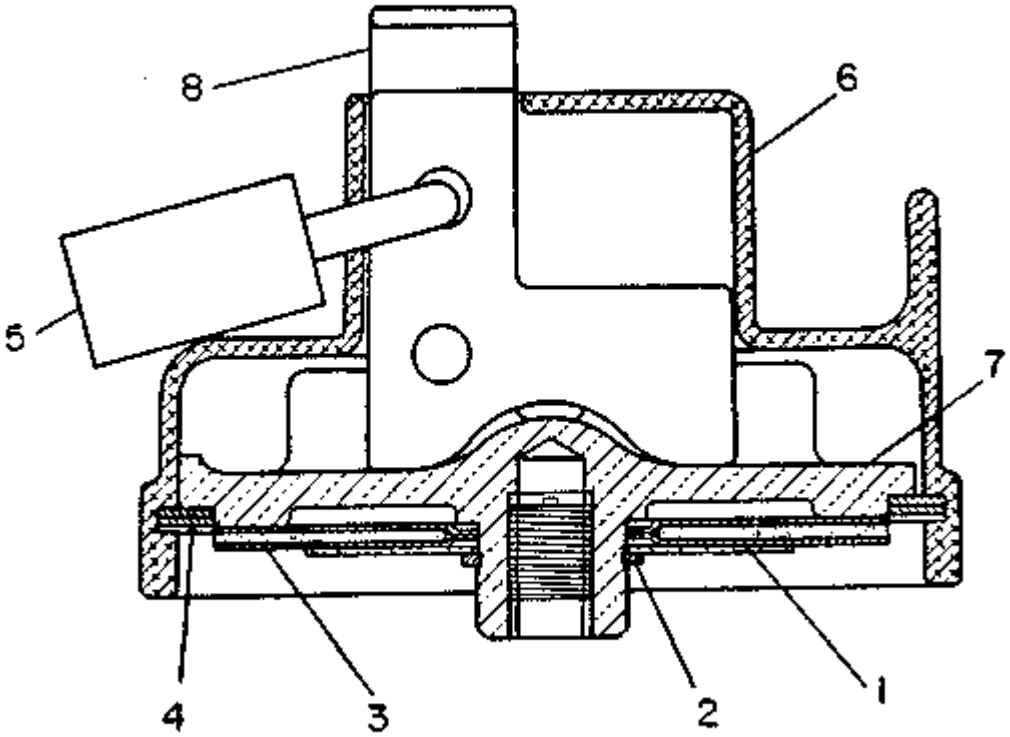

Nota	Ref	Numero	Cant	Nombre De Pieza
		1N-3599	1	COVER GP-PROTECTION
	1	2S-2846	1	RETAINER-GASKET
	2	9S-9979	1	RING-RETAINER
	3	2P-3230	1	GASKET
	4	1M-8649	1	RING-RETAINING
	5	5P-8502	1	PADLOCK GP
A		5P-8500	2	KEY
A		6V-5874	1	COVER (PADLOCK)
	6	7N-2957	1	COVER-RADIATOR CAP
	7	7N-5565	1	CAP-RADIATOR
	8	2S-6097	1	TANG
A				NOT PART OF THIS GROUP

1382 2S6096 PROTECTION COVER GROUP--Radiator Cap
Replaced by 1N3599 Protection Cover Group shown on Page 43B
AN ATTACHMENT

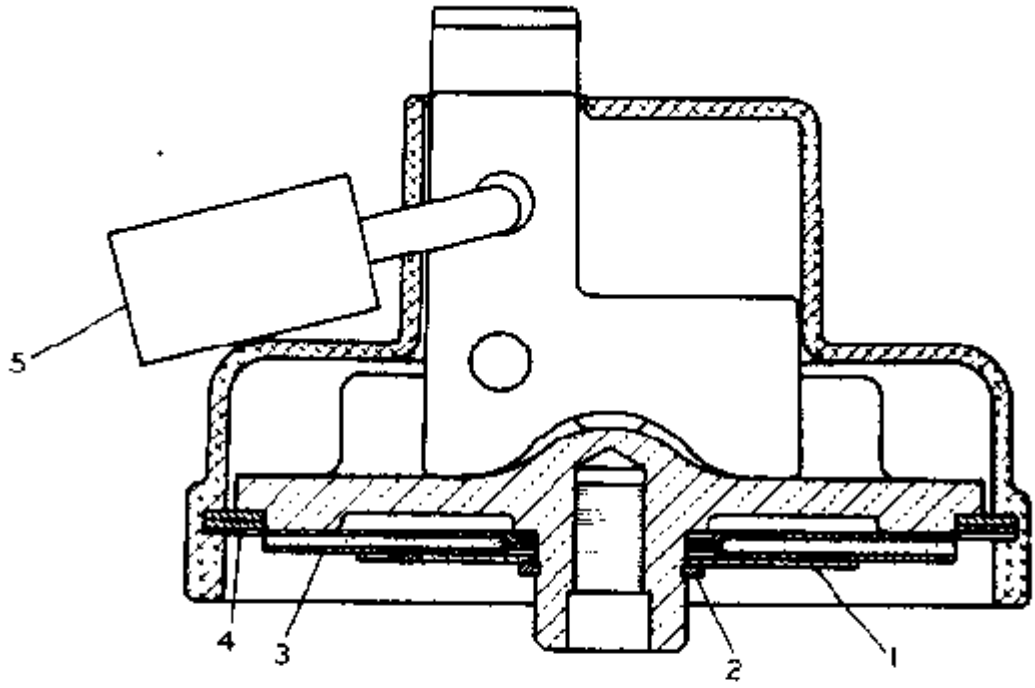

	REF NO	PART NUMBER	DESCRIPTION	QTY
	1	2S2846	RETAINER	1
	2	9S9979	RING	1
C	3	2P3230	GASKET	1

C INDICATES CHANGE

	4	1M8649	RING	1
	5	8S7949	PADLOCK GROUP (Includes)	1
♣		8M439	KEY	2

♣ NOT PART OF 2S6096 COVER GROUP

202315

Nota	Ref	Numero	Cant	Nombre De Pieza
		2S-6096	1	COVER GP-PROTECTION
	1	2S-2846	1	RETAINER
	2	9S-9979	1	RING
C	3	2P-3230	1	GASKET
	4	1M-8649	1	RING
	5	8S-7949	1	PADLOCK GROUP
				(Includes)
H		8M-0439	2	KEY
C				INDICATES CHANGE
H				NOT PART OF 2S6096 COVER GROUP

1353 4N5786 RADIATOR GROUP--Rear View - Part 1 of 2

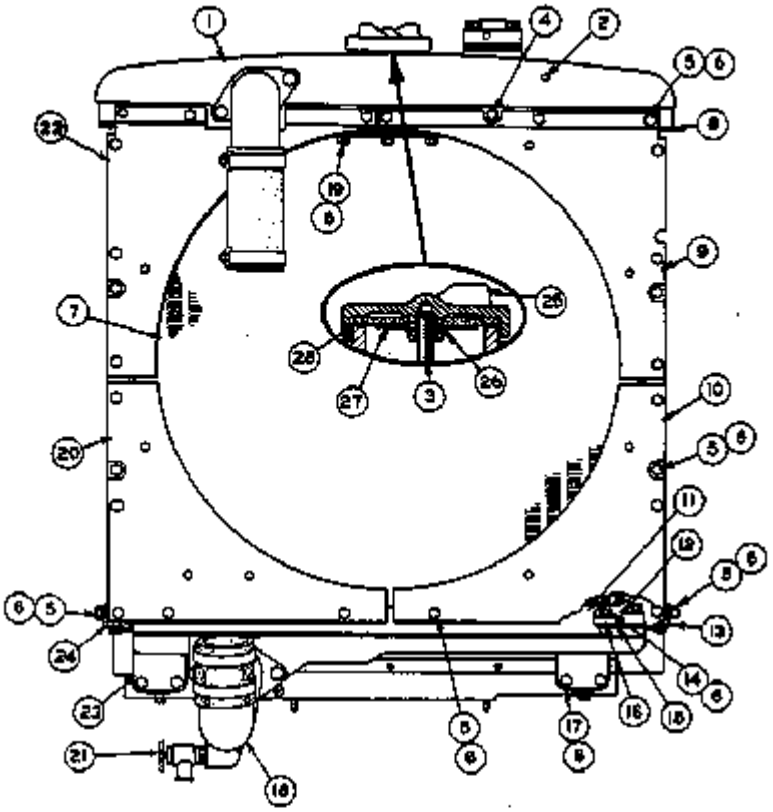

REF NO.	PART NUMBER	DESCRIPTION	QTY
1	1S2034	TANK	1
2	9M6214	PLUG	1
3	1S286	STUD	1
4	2B7558	CORK	1
5	5509	BOLT	20
6	3K4506	LOCKWASHER	20
7	7S1085	CORE ASSEM.	1
C 8	6N4989	GASKET	1
9	7S7723	SHIELD ASSEM. -(Upper R.H.)-	1
	9F2978	NUT	2
10	7S7725	SHIELD ASSEM. -(Lower R.H.)-	1
	9F2978	NUT	2
11	7S7174	BAFFLE ASSEM.	1
12	1M7827	STRIP	2
△ 13	7S7167	BAFFLE ASSEM. -(Lower R.H.)-	1
14	5198S	BOLT	22
C 15	6N4916	GASKET	1
16	1M7858	STRIP	2
17	7F1866	BOLT	4
18	4N4357	ELBOW	1
19	1A2029	BOLT	26
20	7S7726	SHIELD ASSEM. -(Lower L.H.)-	1
	9F2978	NUT	3
21	8F6151	COCK	1
22	7S7724	SHIELD ASSEM. -(Upper L.H.)-	1
	9F2978	NUT	2
C 23	2P8613	TANK	1
24	7S7168	BAFFLE ASSEM. -(Lower L.H.)-	1
25	7S7809	CAP ASSEM.	1
	7S7807	INSERT	1
26	9S9979	RING	1
27	8S2846	RETAINER	1
28	2P3280	GASKET	1

C INDICATES CHANGE

287730

Nota	Ref	Numero	Cant	Nombre De Pieza
		4N-5786	1	RADIATOR GP
	1	1S-2036	1	TANK
	2	5M-6214	1	PLUG
	3	1S-0286	1	STUD
	4	2B-7558	1	CORK
	5	0S-0509	18	BOLT
	6	3B-4506	70	LOCKWASHER
	7	7S-1085	1	CORE ASSEM.
C	8	6N-4985	1	GASKET
	9	7S-7723	1	SHIELD ASSEM. (upper R.H.)
		9F-2978	2	NUT (weld)
	10	7S-7725	1	SHIELD ASSEM. (lower R.H.)
		9F-2978	2	NUT (weld)
	11	7S-7174	1	BAFFLE ASSEM.
	12	1M-7827	2	STRIP
	13	7S-7167	1	BAFFLE ASSEM. (lower R.H.)
	14	0S-1588	22	BOLT
C	15	6N-4986	1	GASKET
	16	1M-7838	2	STRIP
	17	7F-1866	4	BOLT
	18	4N-4357	1	ELBOW
	19	1A-2029	26	BOLT
	20	7S-7726	1	SHIELD ASSEM. (lower L.H.)
		9F-2978	3	NUT (weld)
	21	8F-8151	1	COCK
	22	7S-7724	1	SHIELD ASSEM. (upper L.H.)
		9F-2978	2	NUT (weld)
C	23	2P-8613	1	TANK
	24	7S-7168	1	BAFFLE ASSEM. (lower L.H.)
	25	7S-7809	1	CAP ASSEM.

		7S-7807	1	INSERT
	26	9S-9979	1	RING
	27	2S-2846	1	RETAINER
	28	2P-3230	1	GASKET

C INDICATES CHANGE

1353 4N5786 RADIATOR GROUP--Side View--Part 2 of 2

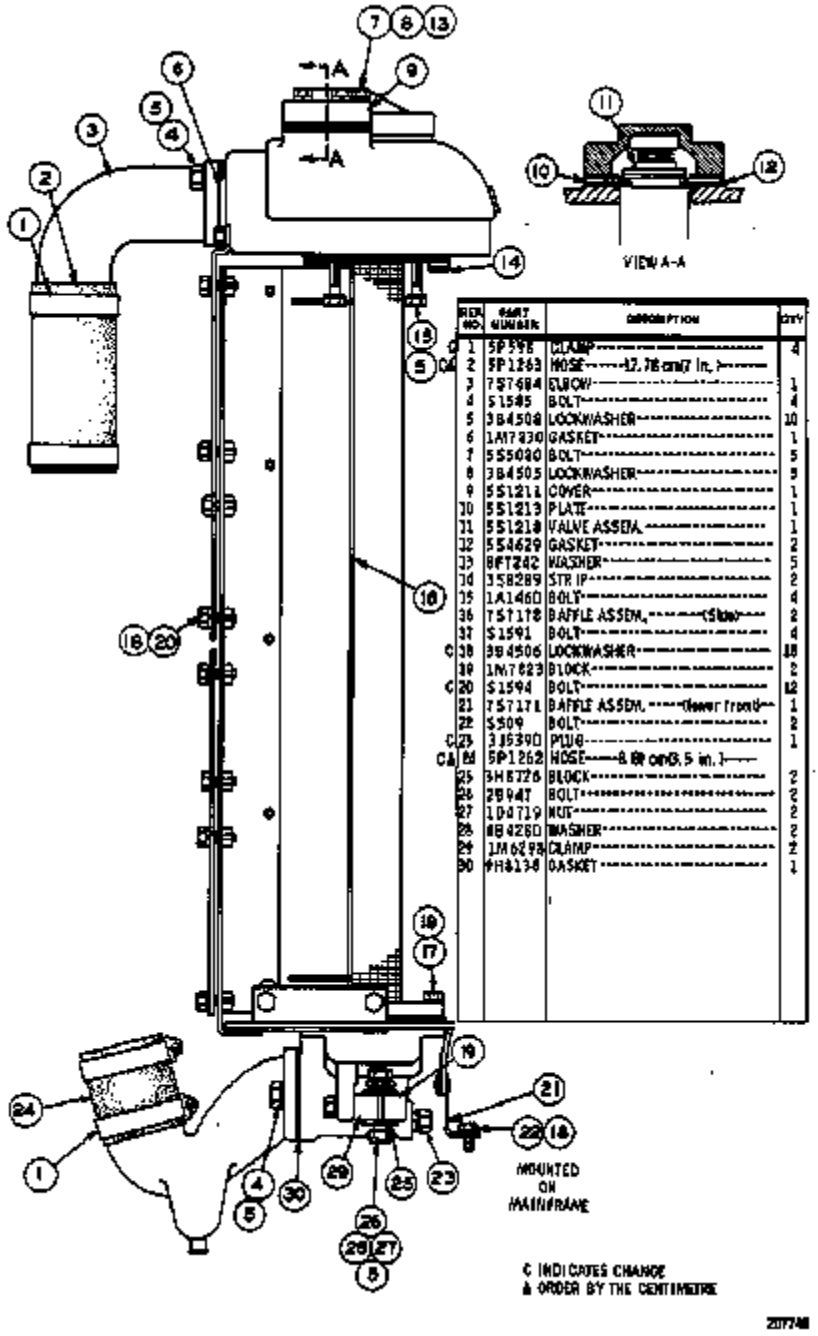

REF NO.	PART NUMBER	DESCRIPTION	QTY
	5P598	CLAMP	4
2	5P1263	HOSE (12.7 cm/7 in.)	
3	7S7684	ELBOW	1
4	S1585	BOLT	4
5	3B4508	LOCKWASHER	10
6	1M7830	GASKET	1
7	S55030	BOLT	5
8	3B4505	LOCKWASHER	5
9	5S1211	COVER	1
10	5S1213	PLATE	1
11	5S1218	VALVE ASSEM.	1
12	5S4629	GASKET	2
13	BFT242	WASHER	5
14	3S8289	STRIP	2
15	1A1460	BOLT	4
16	7S7178	BAFFLE ASSEM. (Side)	2
17	S1591	BOLT	4
C 18	3B4506	LOCKWASHER	18
19	1M7823	BLOCK	2
C 20	S1594	BOLT	12
21	7S7171	BAFFLE ASSEM. (lower front)	1
22	S509	BOLT	2
C 23	3J5390	PLUG	1
CA 24	5P1262	HOSE (8 OR ONE 5 in.)	
25	3H8726	BLOCK	2
26	2B94T	BOLT	2
27	1D4719	NUT	2
28	8B4260	WASHER	2
29	1M6298	CLAMP	2
30	9H8136	GASKET	1

Nota	Ref	Numero	Cant	Nombre De Pieza
		4N-5786	1	RADIATOR GP
C	1	5P-0598	4	CLAMP
CH	2	5P-1263		HOSE 17.78 cm(7 in.)
	3	7S-7684	1	ELBOW
	4	0S-1585	4	BOLT
	5	3B-4508	10	LOCKWASHER
	6	1M-7830	1	GASKET
	7	5S-5080	5	BOLT
	8	3B-4505	5	LOCKWASHER
	9	5S-1211	1	COVER
	10	5S-1213	1	PLATE
	11	5S-1218	1	VALVE ASSEM.
	12	5S-4629	2	GASKET
	13	8F-7242	5	WASHER
	14	3S-8289	2	STRIP
	15	1A-1460	4	BOLT
	16	7S-7178	2	BAFFLE ASSEM. (Side)
	17	0S-1591	4	BOLT
C	18	3B-4506	18	LOCKWASHER
	19	1M-7823	2	BLOCK
C	20	0S-1594	12	BOLT
	21	7S-7171	1	BAFFLE ASSEM. (lower front)
	22	0S-0509	2	BOLT
C	23	3J-5390	1	PLUG
CH	24	5P-1262		HOSE 8.89 cm(3.5 in.)
	25	3H-8726	2	BLOCK
	26	2B-0947	2	BOLT
	27	1D-4719	2	NUT
	28	4B-4280	2	WASHER
	29	1M-6298	2	CLAMP

	30	9H-8136	1	GASKET

C	INDICATES CHANGE
H	ORDER BY THE CENTIMETRE

1380 2P6188 WATER LINES GROUP
Engine Serial No. 78P18799 to 78P40899 & 78P41839 to 78P47693 inclusive

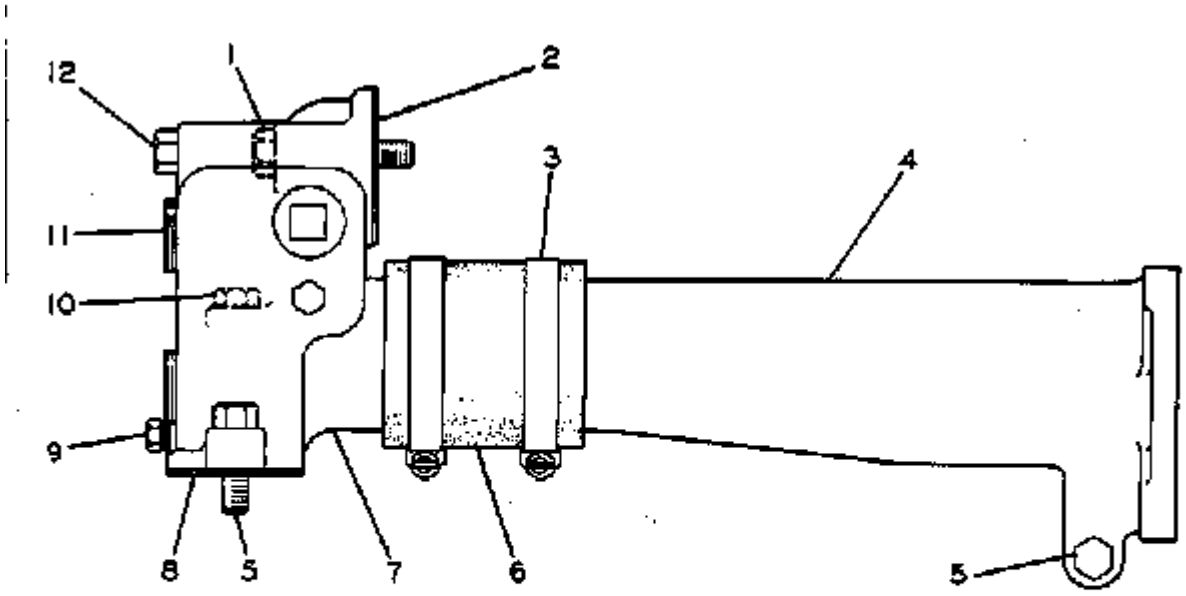

	REF NO.	PART NUMBER	DESCRIPTION	QTY
C	1	T65	BOLT	1
	2	2P6132	GASKET	1
C	3	5P4868	CLAMP	2
	4	2P2511	PIPE	1
C	5	S1588	BOLT	2
C &	6	5P1260	HOSE----------7.62 cm(3 in.)	
C	7	2P6117	ELBOW	1
	8	2P406	GASKET	1
	9	5M6213	PLUG	2
C	10	S1619	BOLT	1
	11	185174	PLUG	3
C	12	S1590	BOLT	1

C INDICATES CHANGE

& ORDER BY THE CENTIMETER

226547

Nota	Ref	Numero	Cant	Nombre De Pieza
		2P-6188	1	LINES GP-WATER
C	1	0T-0065	1	BOLT
	2	2P-6132	1	GASKET
C	3	5P-4868	2	CLAMP
	4	2P-2511	1	PIPE
C	5	0S-1588	2	BOLT
CE	6	5P-1260		HOSE 7.62 cm(3 in.)
C	7	2P-6117	1	ELBOW
	8	2P-0406	1	GASKET
	9	5M-6213	2	PLUG
C	10	0S-1619	1	BOLT
	11	1B-5174	3	PLUG
C	12	0S-1590	1	BOLT
C				INDICATES CHANGE
E				ORDER BY THE CENTIMETER

1380 7N7211 WATER LINES GROUP
Engine Serial No. 78P40900 to 78P41838 inclusive

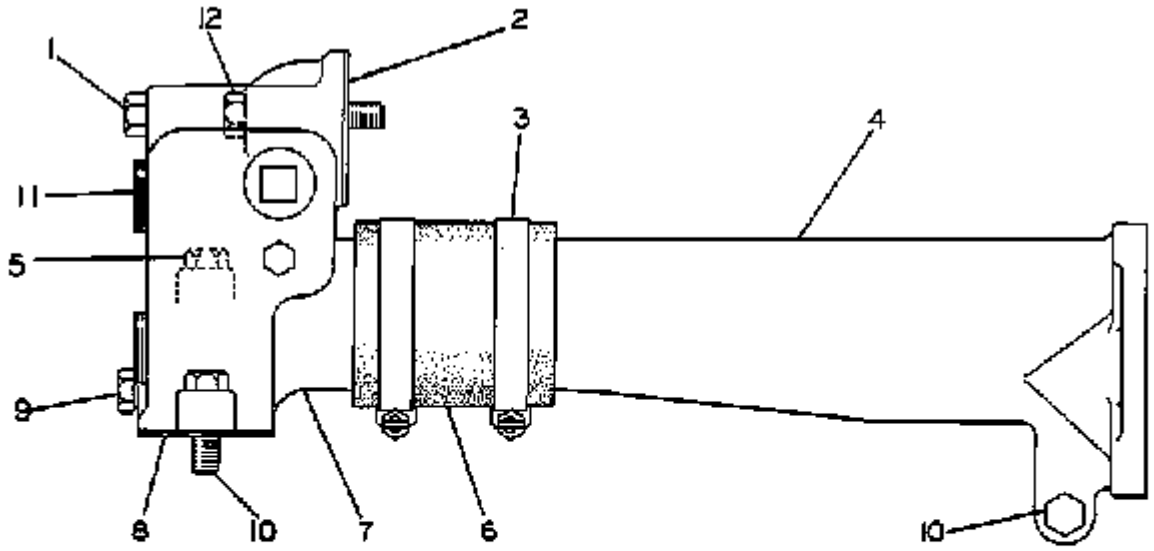

	REF. NO.	PART NUMBER	DESCRIPTION	QTY.
	1	T65	BOLT	1
	2	2P6132	GASKET	1
	3	5P4868	CLAMP	2
	4	2P2511	PIPE	1
C	5	S1619	BOLT--76.2 mm(3 in.)long	1
♣	6	5P1260	HOSE-------7.62 cm(3 in.)	
C	7	2P6117	ELBOW	1
C	8	2P406	GASKET	1
	9	5M6213	PLUG	2
C	10	S1568	BOLT--31.7 mm(1.25 in.)long	2
	11	185174	PLUG	3
	12	S1590	BOLT	1

C INDICATES CHANGE

♣ ORDER BY THE CENTIMETER

176119

Nota	Ref	Numero	Cant	Nombre De Pieza
		7N-7211	1	LINES GP-WATER
	1	0T-0065	1	BOLT
	2	2P-6132	1	GASKET
	3	5P-4868	2	CLAMP
	4	2P-2511	1	PIPE
C	5	0S-1619	1	BOLT 76.2 mm(3 in.)long
E	6	5P-1260		HOSE 7.62 cm(3 in.)
C	7	2P-6117	1	ELBOW
C	8	2P-0406	1	GASKET
	9	5M-6213	2	PLUG
C	10	0S-1588	2	BOLT 31.7 mm(1.25 in.)long
	11	1B-5174	3	PLUG
	12	0S-1590	1	BOLT
C				INDICATES CHANGE
E				ORDER BY THE CENTIMETER

1361 2P661 WATER PUMP GROUP
Engine Serial No. 78P18799 to 78P29111 inclusive

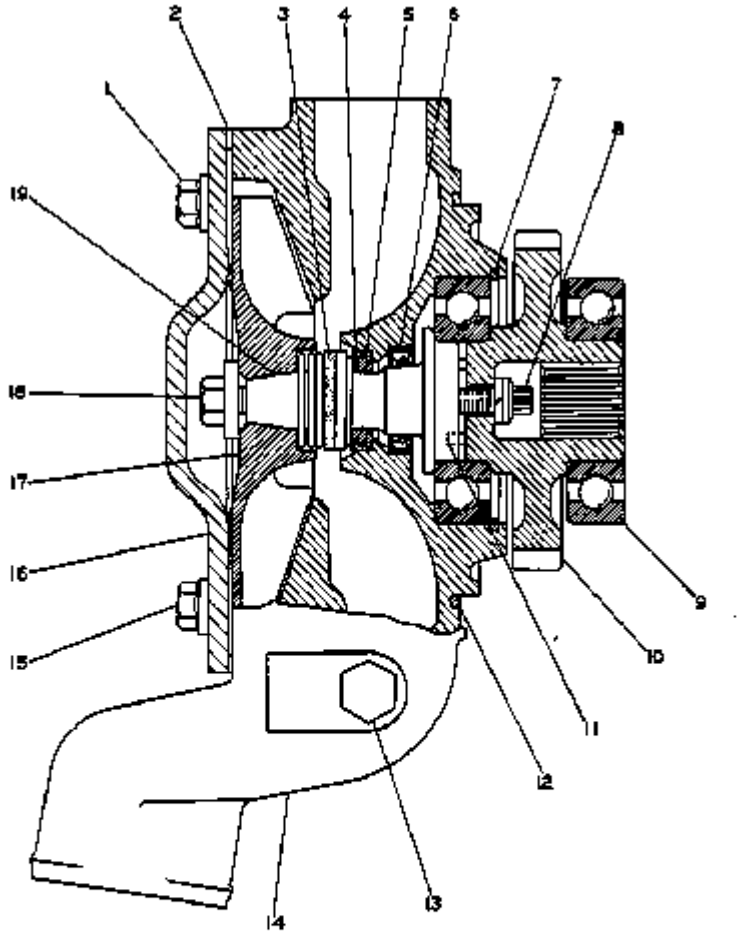

C 6N9604-REBUILD KIT----------1
(Consists of parts marked &)

REF. NO.	PART NUMBER	DESCRIPTION	QTY
	2P5200	BOLT----------	2
	2P405	GASKET----------	1
C	4N6556	SEAL ASSEM, ----------	1
	8S7762	RING----------	1
	8S8821	SEAL----------	1
	8H9520	SEAL----------	1
&	1K6985	RETAINER----------	1
&	9P76	BOLT----------	1
&	3B4506	LOCKWASHER----------	1
&	6H3957	BEARING----------	2
	2P659	GEAR ASSEM, ----(40 teeth)----------	1
	2C5893	PIN----------	2
	5F3106	SEAL----------	1
&	5M6213	PLUG----------	1
	2P671	HOUSING----------	1
	2P7597	BOLT----------0.59 cm(¼ in.) long,	2
		-OR-	
	8S9191	BOLT----------0.16 cm(⅛ in.) long	2
	5M2894	WASHER----------	2
	2P404	COVER----------	1
&	1P9952	IMPELLER----------	1
&	4L6454	BOLT----------	1
&	9M6527	WASHER----------	1
&	1P9929	SHAFT----------	1

C INDICATES CHANGE 209424

Nota	Ref	Numero	Cant	Nombre De Pieza
		2P-0661	1	PUMP GP-WATER
	1	2P-3200	2	BOLT
	2	2P-0405	1	GASKET
C	3	4N-6556	1	SEAL ASSEM.
	4	8S-7762	1	RING
	5	8S-8821	1	SEAL
	6	8H-9520	1	SEAL
H	7	1K-6985	1	RETAINER
CH	8	5P-0076	1	BOLT
H		3B-4506	1	LOCKWASHER
H	9	6H-3957	2	BEARING
	10	2P-0659	1	GEAR ASSEM. (40 teeth)
	11	2L-5893	2	PIN
C		6N-9604	1	REBUILD KIT
				(Consists of parts marked h)
	12	5F-3106	1	SEAL
H	13	5M-6213	1	PLUG
	14	2P-0671	1	HOUSING
	15	2P-7557	2	BOLT 9.53 cm(3.75 in.) long
				-OR-
		8S-9191	2	BOLT 10.16 cm(4 in.) long
		5M-2894	2	WASHER
	16	2P-0404	1	COVER
H	17	1P-9952	1	IMPELLER
H	18	4L-6454	1	BOLT
H		9M-6527	1	WASHER
H	19	1P-9929	1	SHAFT
C				INDICATES CHANGE

1361 7N5908 WATER PUMP GROUP
Engine Serial No. 78P41835 to 78P41838 and 78P47694 to 78P60468 inclusive

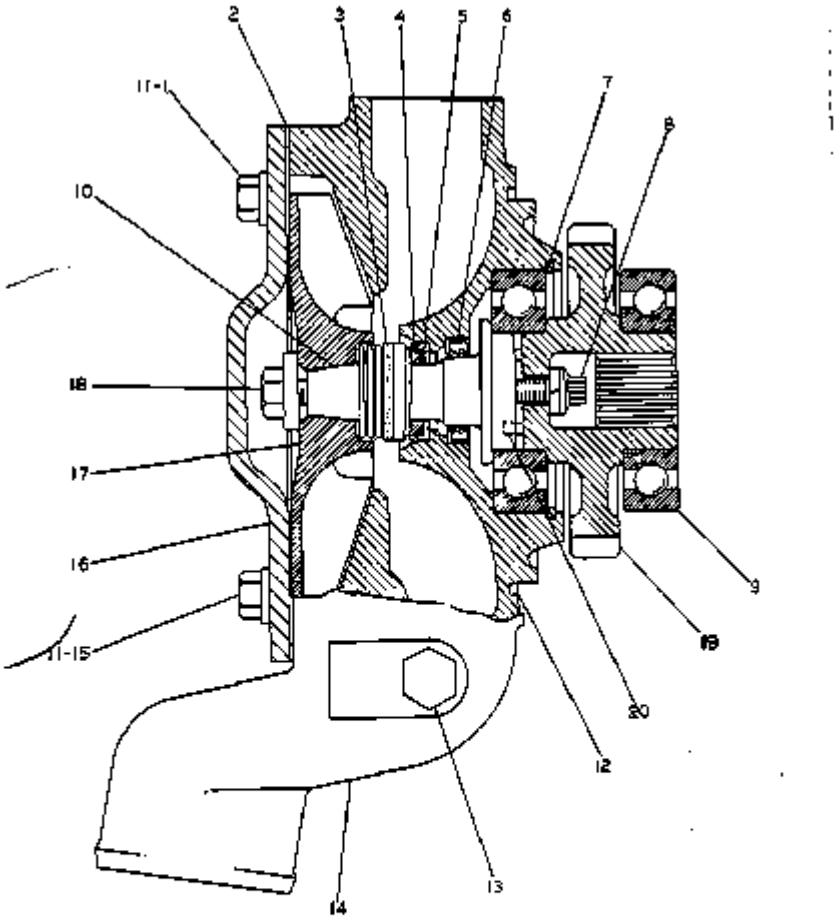

1W7052 -REBUILD KIT---------- 1
(Consists of Parts Marked A)

	REF NO.	PART NUMBER	DESCRIPTION	QTY
	1	L1391	BOLT	2
C	2	8N5928	GASKET	1
	3	6N9312	SEAL ASSEM.	1
	4	857762	RING	1
	5	8S8821	SEAL	1
	6	8H9520	SEAL	1
A	7	1K6985	RING	1
A	8	5P76	BOLT	1
C A		5M2894	WASHER	1
A	9	6K3957	BEARING	2
C A	10	7N5899	SHAFT	1
	11	5M2894	WASHER	4
	12	5F3106	SEAL	1
	13	9M6215	PLUG	1
C	14	1W4619	HOUSING	1
C	15	T55	BOLT	2
C	16	8N5929	COVER	1
C A	17	7N5910	IMPELLER	1
A	18	4L6454	BOLT	1
A		9M6527	WASHER	1
C	19	7N5189	GEAR ASSEM. (40 teeth) (Included)	1
	20	2L5893	PIN	2

C INDICATES CHANGE

233926

Nota	Ref	Numero	Cant	Nombre De Pieza
		7N-5908	1	PUMP GP-WATER
	1	0L-1351	2	BOLT
C	2	8N-5928	1	GASKET
	3	6N-9312	1	SEAL ASSEM.
	4	8S-7762	1	RING
	5	8S-8821	1	SEAL
	6	8H-9520	1	SEAL
H	7	1K-6985	1	RING
H	8	5P-0076	1	BOLT
CH		5M-2894	1	WASHER
H	9	6H-3957	2	BEARING
CH	10	7N-5899	1	SHAFT
	11	5M-2894	4	WASHER
	12	5F-3106	1	SEAL
	13	5M-6213	1	PLUG
C	14	1W-4619	1	HOUSING
C	15	0T-0055	2	BOLT
C	16	8N-5929	1	COVER
CH	17	7N-5910	1	IMPELLER
H	18	4L-6454	1	BOLT
H		9M-6527	1	WASHER
C	19	7N-5189	1	GEAR ASSEM. (40 teeth)
				(Includes)
	20	2L-5893	2	PIN
		1W-7052	1	REBUILD KIT
				(Consists of Parts Marked H)
C				INDICATES CHANGE

1273 5V4035 FUEL TANK AND LINES GROUP
Serial No. 41K10842 to 41K11575 inclusive

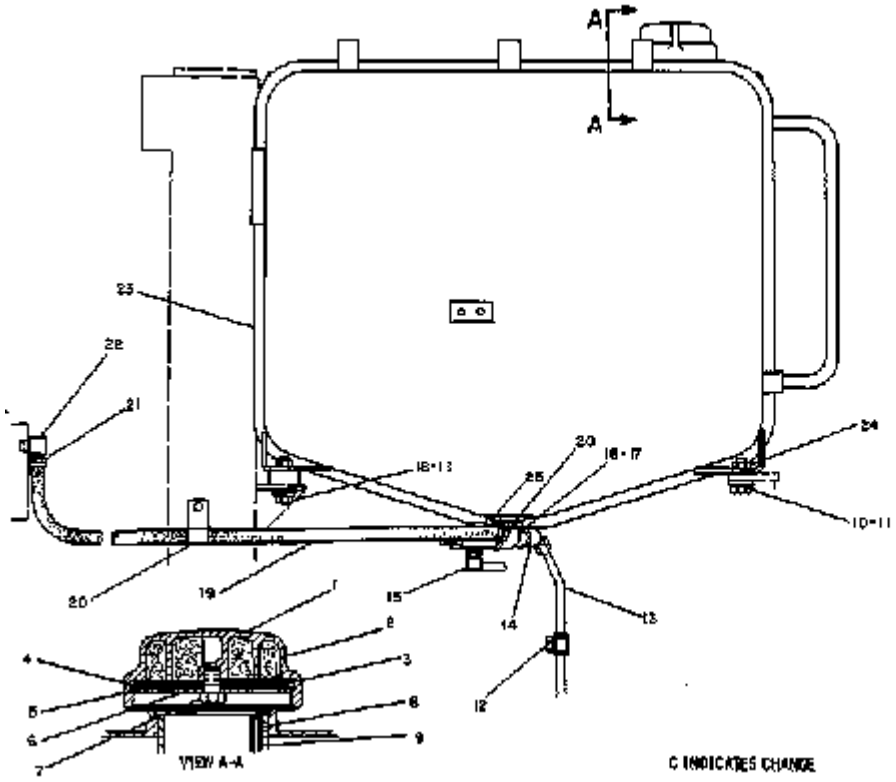

REF. NO.	PART NUMBER	DESCRIPTION	QTY.
	4B5441	CAP ASSEM. (Includes)	1
1	4B5389	CAP	1
2	4B5409	ELEMENT	2
3	4B5429	GASKET	1
4	3F4134	BAFFLE	1
5	2A1763	GASKET	1
6	4A528	WASHER	1
7	9H8389	BOLT	1
8	5V4665	PLUNGER	1
9	9P7121	STRAINER	1
10	53585	BOLT	3
C 11	8B9725	BOSS	6
	5509	BOLT	1
12	5P1075	NUT	1
	1D4717	WASHER	1
	8B6127	CLIP	1
C 13	8V9169	TUBE ASSEM.	1
C 14	16498	ELBOW	1
15	5P7486	VALVE	2
16	7J8611	ELBOW	2
17	3P1823	ADAPTER	2
18	1A1460	BOLT	3
19	5P1520	HOSE—125 cm (49 in.)	
20	4S1936	CLIP	2
21	1V3546	COUPLING	2
22	7L6939	ELBOW	2
	5V3704	TANK ASSEM. (Includes)	1
24	9F2978	NUT	5
24	1F748	NUT	6
25	51820	BOLT	1
25	5P8245	WASHER	1

& ORDER BY THE CENTIMETER 181454

Nota	Ref	Numero	Cant	Nombre De Pieza
		5V-4035	1	TANK GP-FUEL
	1	4B-5441	1	CAP ASSEM.
				(Includes)
		4B-5389	1	CAP
	2	4B-5949	2	ELEMENT
	3	4B-5423	1	GASKET
	4	3F-4134	1	BAFFLE
	5	2A-1763	1	GASKET
	6	4A-0528	1	WASHER
	7	3H-8389	1	BOLT
	8	5V-4645	1	PLUNGER
	9	9P-7121	1	STRAINER
	10	0S-1585	3	BOLT
C	11	8B-9725	6	BOSS
	12	0S-0509	1	BOLT
		5P-1075	1	NUT
		1D-4717	1	WASHER
		8B-6127	1	CLIP
C	13	8V-5169	1	TUBE ASSEM.
C	14	001-6498	1	ELBOW
	15	5P-7486	2	VALVE
	16	7J-8611	2	ELBOW
	17	3P-1823	2	ADAPTER
	18	1A-1460	3	BOLT
	19	5P-1520		HOSE 125 cm(49 in.)
	20	4S-1936	2	CLIP
	21	1V-3546	2	COUPLING
	22	1L-6939	2	ELBOW
	23	5V-3704	1	TANK ASSEM.
				(Includes)

		9F-2978	5	NUT
	24	1F-0748	6	NUT
	25	0S-1620	1	BOLT
		5P-8245	1	WASHER

C	INDICATES CHANGE

6N283 GOVERNOR AND FUEL INJECTION PUMP GROUP
Engine Serial No. 78P18799 to 78P30066 inclusive. 6N509 Torque Control and 6N243 Governor and Fuel Injection Pump parts are shown on Pages 57, 58 and 59

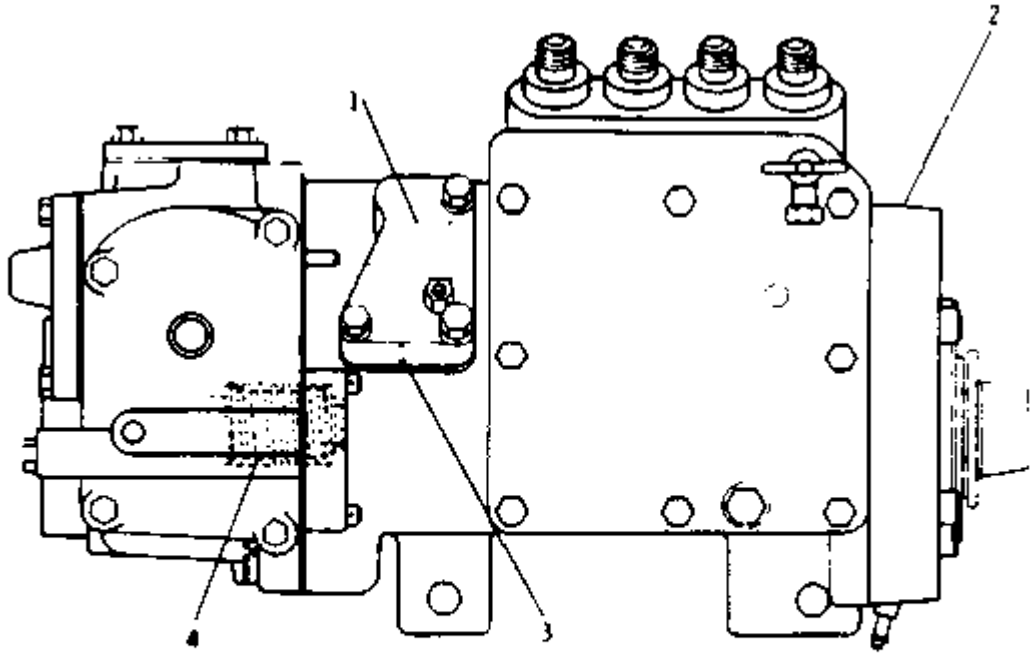

	REF NO	PART NUMBER	DESCRIPTION	QTY
C	1	6N509	TORQUE CONTROL	1
C	2	6N243	GOVERNOR & FUEL INJECTION PUMP (Separate Illustration)	1
	3	4N443	PIN	1
	4	4N4227	SPRING	1

C INDICATES CHANGE

152418

Nota	Ref	Numero	Cant	Nombre De Pieza
		6N-0283	1	GOVERNOR AND FUEL INJECTION PUMP GROUP
C	1	6N-0509	1	TORQUE CONTROL
CY	2	6N-0243	1	GOVERNOR & FUEL INJECTION PUMP
				(Separate Illustration)
	3	4N-0443	1	PIN
	4	4N-4227	1	SPRING
C				INDICATES CHANGE
Y				SEPARATE ILLUSTRATION

1286 6N1505 GOVERNOR AND FUEL INJECTION PUMP GROUP
Engine Serial No. 78P30067-Up
Part of 7N9 Governor and Fuel Injection Pump Group shown on Page 53B
4N1834 Governor and Fuel Injection Pump parts are shown on Pages 60 through 63D-8

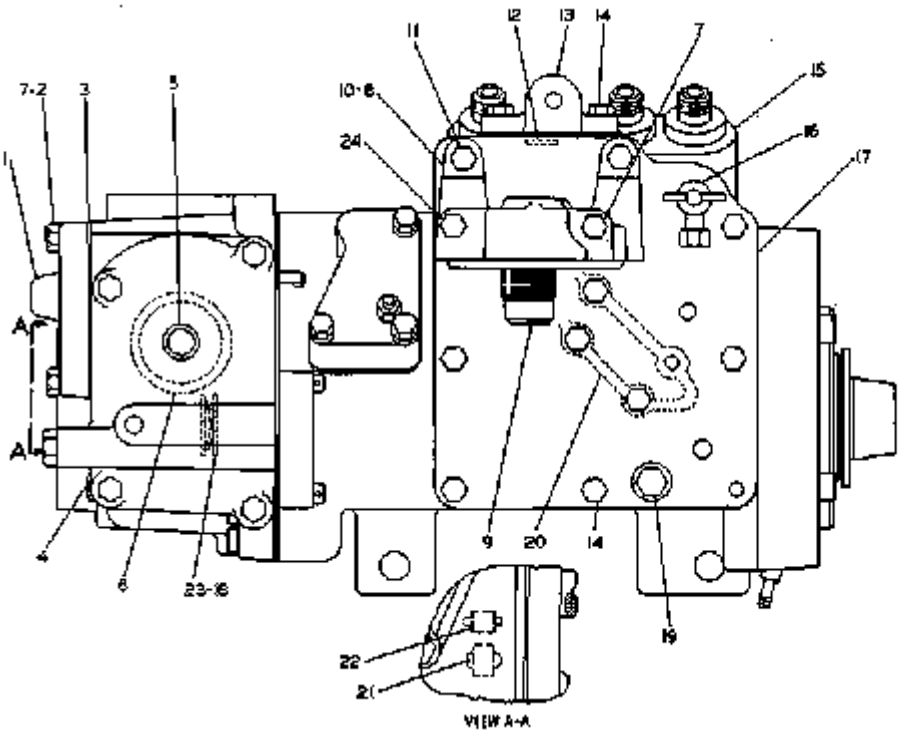

REF. NO.	PART NUMBER	DESCRIPTION	QTY.
1	4K53	COVER	1
2	91616	BOLT—2.54cm(1 In.)long	1
3	4N154	GASKET	1
4	954191	PLUG	1
	3J1907	SEAL	1
5	4N4328	SHAFT ASSEM.	1
6	4N4365	SPRING	1
7	894710	BOLT—10.16cm(4 In.)long	3
8	4N5490	BASE ASSEM. (Includes)	1
9	954167	STUD	1
C 10	6N2843	GASKET	1
11	9F6580	BOLT	2
12	4N9396	DISC	1
13	4N7578	ELBOW	1
	4N1937	GASKET	1
14	91615	BOLT	11
C 15	4N3834	GOVERNOR AND FUEL PUMP (Separate Illustration)	1
C 16	7N450	VALVE ASSEM.	1
17	4N4350	COVER	1
	8N9056	GASKET	1
C 18	6N2956	WASHER—(spring)	1
19	954180	PLUG	1
	4J7939	SEAL	1
C 20	6N2810	CHANNEL	1
	4N4431	GASKET	1
21	4N8179	PIN	1
22	4N444	SPACER	2
23	6N2957	WASHER	2
O 24	894710	BOLT—10.16cm(4 In.)long	1
		- OR -	
	9F7022	BOLT—3.81cm(1.5 In.)long	1

C INDICATES CHANGE 232072

Nota	Ref	Numero	Cant	Nombre De Pieza
		6N-1505	1	GOV & FUEL INJ PUMP GP
	1	4N-0053	1	COVER
	2	0S-1616	1	BOLT 2.54cm(1 in.)long
	3	4N-0159	1	GASKET
	4	9S-4191	1	PLUG
		3J-1907	1	SEAL
	5	4N-4320	1	SHAFT ASSEM.
	6	4N-4366	1	SPRING
	7	8S-4710	3	BOLT 10.16cm(4 in.)long
	8	4N-5490	1	BASE ASSEM.
				(Includes)
	9	9S-4167	1	STUD
C	10	6N-2843	1	GASKET
	11	9F-6580	2	BOLT
	12	4N-9336	1	DISC
	13	4N-7572	1	ELBOW
		4N-9337	1	GASKET
	14	0S-1615	11	BOLT
CY	15	4N-1834	1	GOVERNOR AND FUEL PUMP
C	16	7N-0450	1	VALVE ASSEM.
	17	4N-4350	1	COVER
		4N-9056	1	GASKET
C	18	6N-2956	1	WASHER (spring)
	19	9S-4180	1	PLUG
		4J-7533	1	SEAL
C	20	6N-2810	1	CHANNEL
		4N-4431	1	GASKET
	21	4N-8179	1	PIN
	22	4N-0444	2	SPACER
	23	6N-2957	2	WASHER

C	24	8S-4710	1	BOLT 10.16cm(4 in.)long
				- OR -
		9F-7022	1	BOLT 3.81cm(1.5 in.)long

C	INDICATES CHANGE
Y	SEPARATE ILLUSTRATION

1286 6N5356 GOVERNOR AND FUEL INJECTION PUMP GROUP--Part 1 of 4--Type 1
Part of 4N6115 Governor and Fuel Injection Pump Group shown on Page 54B

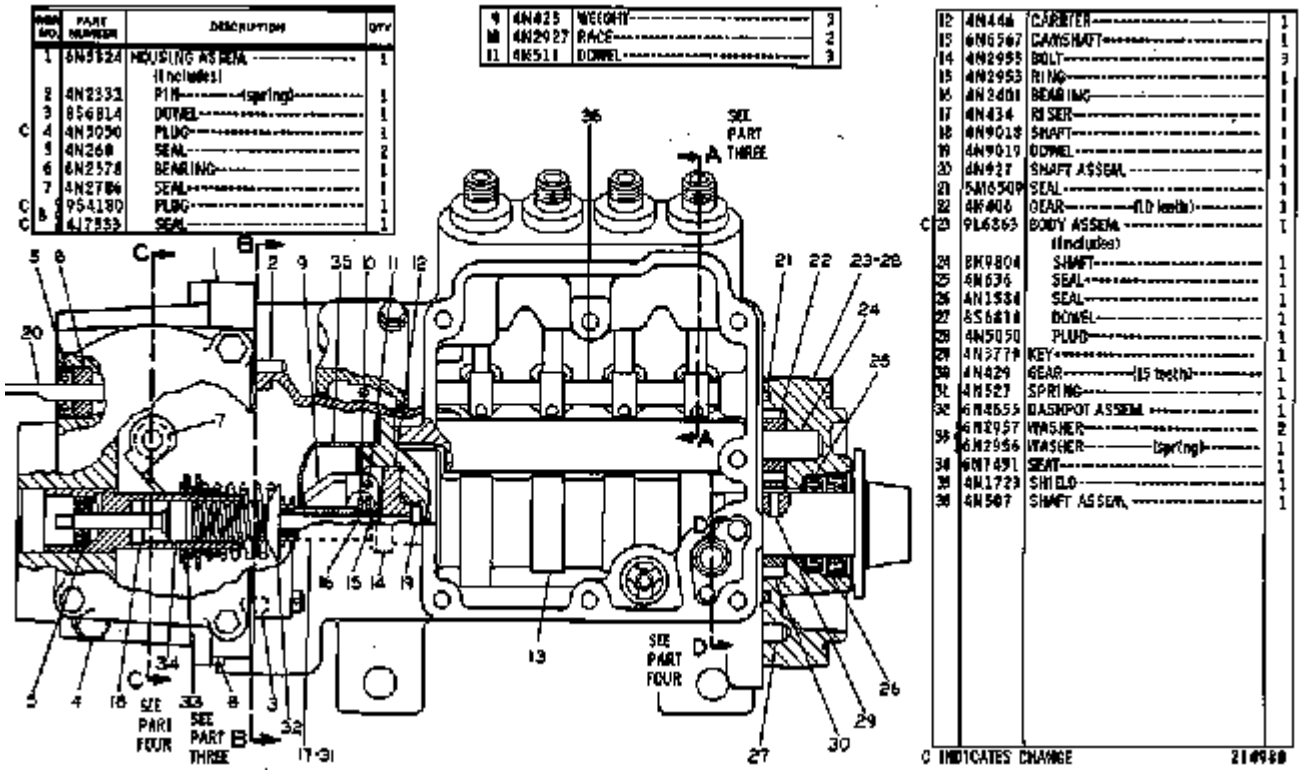

1	6N5524	HOUSING ASSEM. (Includes)	1
2	4N2333	PIN (spring)	1
3	8S6814	DOWEL	1
C 4	4N3050	PLUG	1
5	4N268	SEAL	2
6	6N2578	BEARING	1
7	4N2786	SEAL	1
C 8	9S4180	PLUG	1
C 9	4N7853	SEAL	1
9	4N425	WEIGHT	3
10	4N2927	RACE	3
11	4N6511	DOWEL	3
12	4N446	CARRIER	1
13	6N6567	CAMSHAFT	1
14	4N2955	BOLT	3
15	4N2953	RING	1
16	4N2401	BEARING	1
17	4N434	RISER	1
18	4N9018	SHAFT	1
19	4N9019	DOWEL	1
20	4N927	SHAFT ASSEM.	1
21	5M6509	SEAL	1
22	4N408	GEAR (10 teeth)	1
C 23	9L6363	BODY ASSEM. (Includes)	1
24	8K9804	SHAFT	1
25	4N636	SEAL	1
26	4N1584	SEAL	1
27	8S6818	DOWEL	1
28	4N5050	PLUG	1
29	4N3779	KEY	1
30	4N429	GEAR (15 teeth)	1
31	4N527	SPRING	1
32	6N4655	DASHPOT ASSEM.	1
33	6N2957	WASHER	2
34	6N2956	WASHER (spring)	1
35	6N7491	SEAT	1
36	4N1723	SHIELD	1
37	4N507	SHAFT ASSEM.	1

C INDICATES CHANGE 210988

Nota	Ref	Numero	Cant	Nombre De Pieza
		6N-5356	1	GOV & FUEL INJ PUMP GP
	1	6N-5324	1	HOUSING ASSEM.
				(Includes)
	2	4N-2333	1	PIN (spring)
	3	8S-6814	1	DOWEL
C	4	4N-5050	1	PLUG
	5	4N-0260	2	SEAL
	6	6N-2578	1	BEARING
	7	4N-2786	1	SEAL
C	8	9S-4180	1	PLUG
C		4J-7533	1	SEAL
	9	4N-0425	3	WEIGHT
	10	4N-2927	2	RACE
	11	4N-0511	3	DOWEL
	12	4N-0446	1	CARRIER
	13	6N-6567	1	CAMSHAFT
	14	4N-2955	3	BOLT
	15	4N-2953	1	RING
	16	4N-2401	1	BEARING
	17	4N-0434	1	RISER
	18	4N-9018	1	SHAFT
	19	4N-9019	1	DOWEL
	20	4N-0927	1	SHAFT ASSEM.
	21	5M-6509	1	SEAL
	22	4N-0406	1	GEAR (10 teeth)
C	23	9L-6863	1	BODY ASSEM.
				(Includes)
	24	8H-9804	1	SHAFT
	25	4N-0636	1	SEAL
	26	4N-1584	1	SEAL

	27	8S-6814	1	DOWEL
	28	4N-5050	1	PLUG
	29	4N-3779	1	KEY
	30	4N-0429	1	GEAR (15 teeth)
	31	4N-0527	1	SPRING
	32	6N-4655	1	DASHPOT ASSEM.
	33	6N-2957	2	WASHER
		6N-2956	1	WASHER (spring)
	34	6N-7451	1	SEAT
	35	4N-1723	1	SHIELD
	36	4N-0507	1	SHAFT ASSEM.

C	INDICATES CHANGE

1286 6N5356 GOVERNOR AND FUEL INJECTION PUMP GROUP--Part 1 of 4--Type 2
Part of 4N6115 Governor and Fuel Injection Pump Group shown on Page 54B

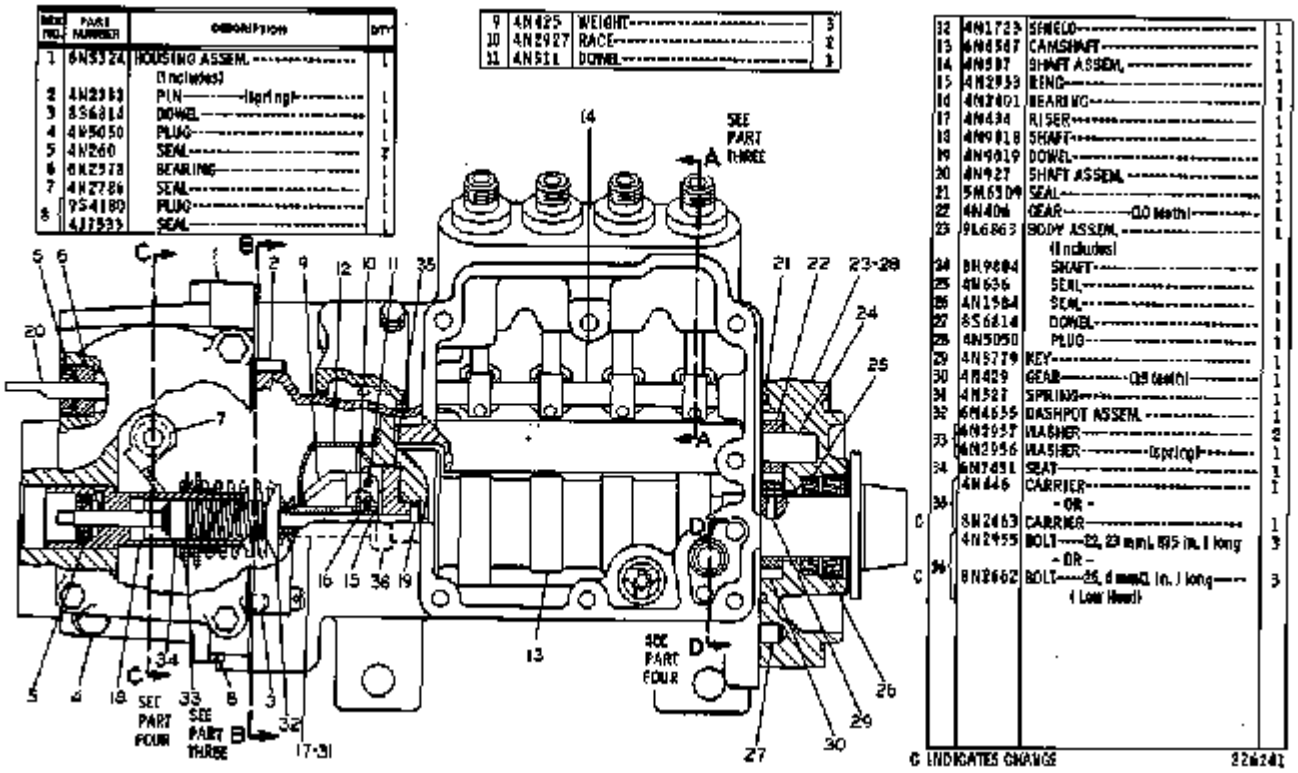

Nota	Ref	Numero	Cant	Nombre De Pieza
		6N-5356	1	GOV & FUEL INJ PUMP GP
	1	6N-5324	1	HOUSING ASSEM.
				(Includes)
	2	4N-2333	1	PIN (spring)
	3	8S-6814	1	DOWEL
	4	4N-5050	1	PLUG
	5	4N-0260	2	SEAL
	6	6N-2578	1	BEARING
	7	4N-2786	1	SEAL
	8	9S-4180	1	PLUG
		4J-7533	1	SEAL
	9	4N-0425	3	WEIGHT
	10	4N-2927	2	RACE
	11	4N-0511	3	DOWEL
	12	4N-1723	1	SHIELD
	13	6N-6567	1	CAMSHAFT
	14	4N-0507	1	SHAFT ASSEM.
	15	4N-2953	1	RING
	16	4N-2401	1	BEARING
	17	4N-0434	1	RISER
	18	4N-9018	1	SHAFT
	19	4N-9019	1	DOWEL
	20	4N-0927	1	SHAFT ASSEM.
	21	5M-6509	1	SEAL
	22	4N-0406	1	GEAR (10 teeth)
	23	9L-6863	1	BODY ASSEM.
				(Includes)
	24	8H-9804	1	SHAFT
	25	4N-0636	1	SEAL
	26	4N-1584	1	SEAL

	27	8S-6814	1	DOWEL
	28	4N-5050	1	PLUG
	29	4N-3779	1	KEY
	30	4N-0429	1	GEAR (15 teeth)
	31	4N-0527	1	SPRING
	32	6N-4655	1	DASHPOT ASSEM.
	33	6N-2957	2	WASHER
		6N-2956	1	WASHER (spring)
	34	6N-7451	1	SEAT
	35	4N-0446	1	CARRIER
				- OR -
	C	8N-2663	1	CARRIER
	36	4N-2955	3	BOLT- 22.23 mm(.875 in.) long
				- OR -
C		8N-2662	3	BOLT- 25.4 mm(1 in.) long (Low Head)

C	INDICATES CHANGE

1286 4N1834 GOVERNOR AND FUEL INJECTION PUMP GROUP--Part 2 of 4--Type 1
Part of 6N2477 and 6N243 Governor and Fuel Injection Pump Groups shown on Pages 55, 56, 58 and 59

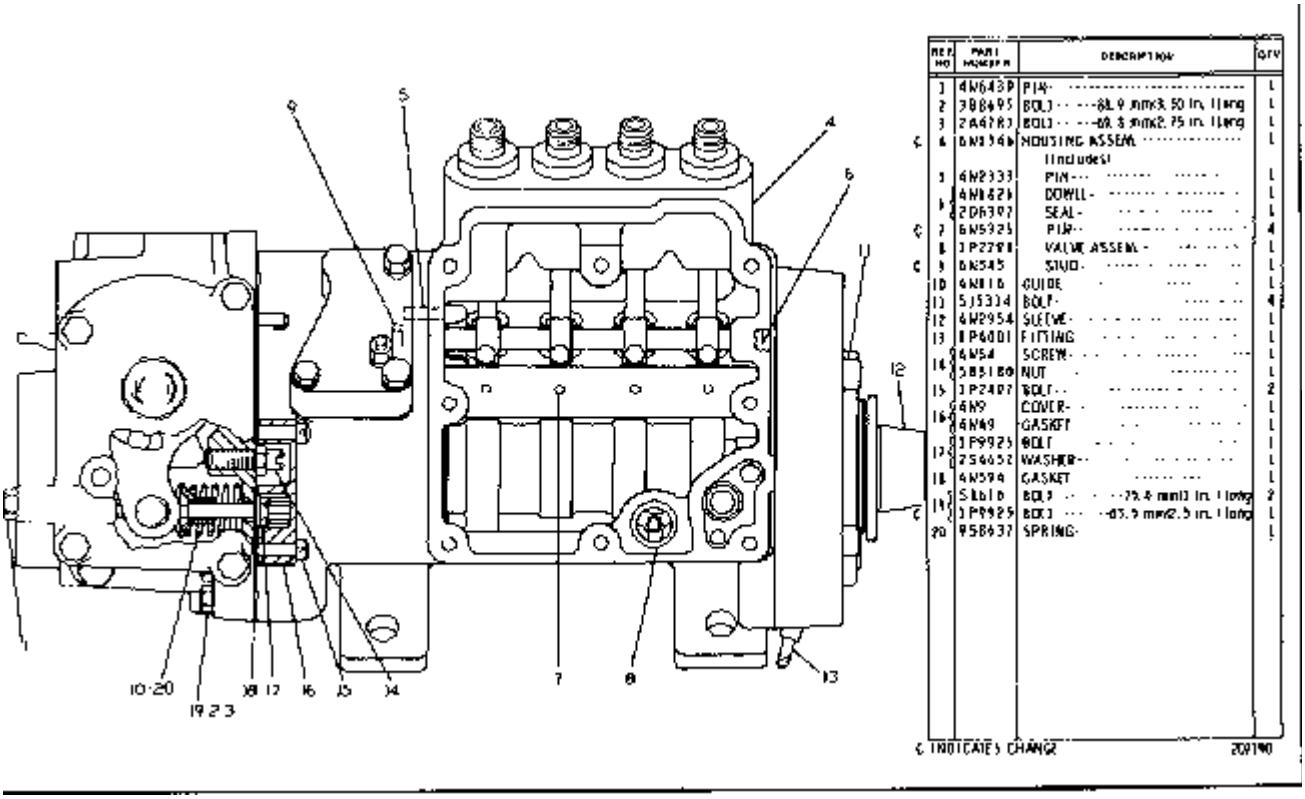

REF. NO.	PART NUMBER	DESCRIPTION	QTY.
1	4N6439	PIN	1
2	9B8495	BOLT	1
3	2N4783	BOLT	1
C 4	6N3346	HOUSING ASSEM. (Includes)	1
5	4N2333	PIN	1
6	4N1629	DOWEL	1
7	2D6397	SEAL	1
C 7	6N5925	PIN	4
8	1P2798	VALVE ASSEM.	1
C 9	6N545	STUD	1
10	4N810	GUIDE	1
11	5J5334	BOLT	4
12	6N2954	SLEEVE	1
13	8P6001	FITTING	1
14	6N54	SCREW	1
	5B5180	NUT	1
15	1P2407	BOLT	2
16	6N9	COVER	1
	6N49	GASKET	1
17	1P9925	BOLT	1
	2S4052	WASHER	1
18	4N594	GASKET	1
19	5B610	BOLT	2
	1P9929	BOLT	1
20	9S8937	SPRING	1

C INDICATES CHANGE 20190

Nota	Ref	Numero	Cant	Nombre De Pieza
		4N-1834	1	GOV & FUEL INJ PUMP GP
	1	4N-6430	1	PIN
	2	3B-8695	1	BOLT 88.9 mm(3.50 in.) long
	3	2A-4781	1	BOLT 69.8 mm(2.75 in.) long
C	4	6N-1346	1	HOUSING ASSEM.
				(Includes)
	5	4N-2333	1	PIN
	6	4N-1826	1	DOWEL
		2D-6392	1	SEAL
C	7	6N-5325	4	PIN
	8	1P-2298	1	VALVE ASSEM.
C	9	6N-0343	1	STUD
	10	4N-0116	1	GUIDE
	11	5J-5314	4	BOLT
	12	4N-2954	1	SLEEVE
	13	1P-4001	1	FITTING
	14	4N-0054	1	SCREW
		5B-3180	1	NUT
	15	1P-2497	2	BOLT
	16	4N-0009	1	COVER
		4N-0049	1	GASKET
	17	1P-9925	1	BOLT
		2S-4652	1	WASHER
	18	4N-0594	1	GASKET
	19	0S-1616	2	BOLT 25.4 mm(1 in.) long
C		1P-9925	1	BOLT 63.5 mm(2.5 in.) long
	20	9S-8632	1	SPRING
				INDICATES CHANGE

1286 4N1834 GOVERNOR AND FUEL INJECTION PUMP GROUP--Part 3 of 4--Type 4
Part of 6N2477, 6N243 and 6N1505 Governor and Fuel Injection Pump Groups
shown on Pages 55, 56, 58, 59 and 59B

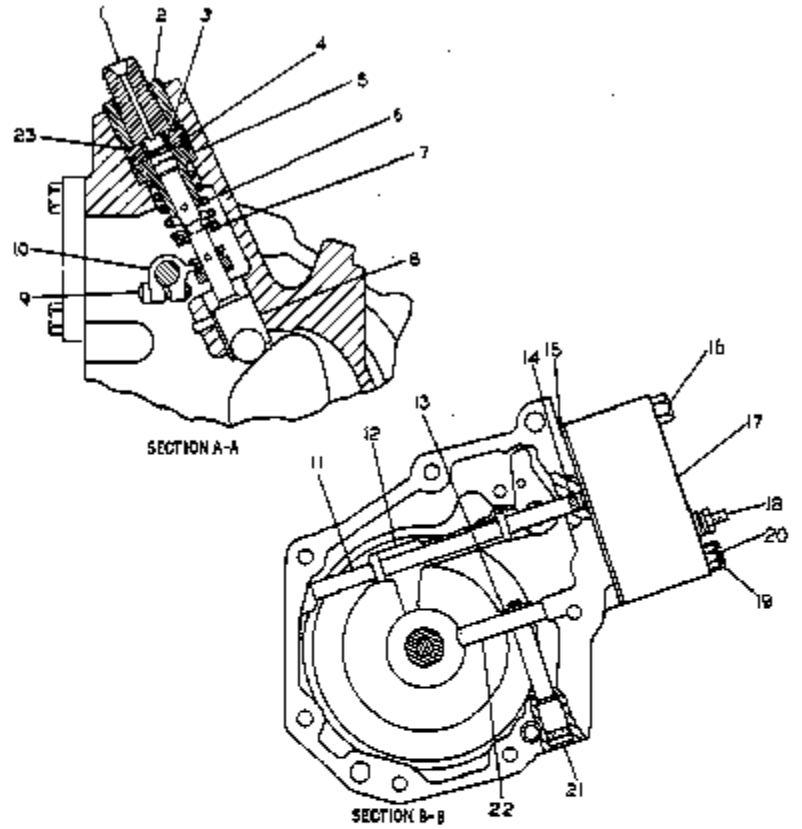

	ABL NO.	PART NUMBER	DESCRIPTION	QTY.
	1	4N209	BONNET	4
	2	4N218	BUSHING	4
	3	9B1920	VALVE	4
		9L9424	SPRING	4
	4	4N224	RING	4
	5	4N1765	PLUNGER & BARREL ASSEM.	4
C	6	9N5862	SPRING	4
	7	4N2728	WASHER	4
C	8	8N1317	LIFTER	4
		4N2685	ROLLER	4
	9	2N2658	SCREW	4
	10	4N1763	LEVER	4
	11	4N528	SHAFT	1
	12	4N2677	LEVER ASSEM.	1
	13	2M7819	RING	1
	14	9N442	SEAL	1
	15	4N508	GASKET	1

	16	2M5471	BOLT	1
	17	4N1591	COVER ASSEM.	1
			(Includes)	
		6N411	COVER	1
		6N412	MACHINE SCREW	1
		4B2042	NUT	1
	18	9B4501	LOCKWASHER	1
		1P7326	WASHER--1, 32 mm, 06 in, thick	1
		8F1326	WASHER--, 82 mm, 082 in. thick	1
	19	2P3200	BOLT	1
		1J9671	SEAL	1
	20	2M5471	BOLT	1
	21	4N523	DOWEL	1
		2D6392	SEAL	1
	22	4N445	LEVER	1
C	23	6F6672	SEAL	4

C INDICATES CHANGE 228525

Nota	Ref	Numero	Cant	Nombre De Pieza
		4N-1834	1	GOV & FUEL INJ PUMP GP
	1	4N-0209	4	BONNET
	2	4N-0218	4	BUSHING
	3	9B-1320	4	VALVE
		9L-9424	4	SPRING
	4	4N-0224	4	RING
	5	4N-1765	4	PLUNGER AND BARREL ASSEM.
C	6	9N-5862	4	SPRING
	7	4N-2728	4	WASHER
C	8	8N-1317	4	LIFTER
		4N-2685	4	ROLLER
	9	2N-2658	4	SCREW
	10	4N-1763	4	LEVER
	11	4N-0528	1	SHAFT
	12	4N-2677	1	LEVER ASSEM.
	13	2M-7819	1	RING
	14	3H-0442	1	SEAL
	15	4N-0508	1	GASKET
	16	2M-5471	1	BOLT
	17	4N-1591	1	COVER ASSEM.
				(Includes)
		6N-0411	1	COVER
	18	6N-0412	1	MACHINE SCREW
		4B-2042	1	NUT
		3B-4501	1	LOCKWASHER
		1P-7326	1	WASHER -1.52 mm(.06 in.)thick
		8F-1326	1	WASHER- .82 mm(.032 in.)thick
	19	2P-3200	1	BOLT
		1J-9671	1	SEAL
	20	2M-5471	1	BOLT

	21	4N-0523	1	DOWEL
		2D-6392	1	SEAL
	22	4N-0445	1	LEVER
C	23	6F-6672	4	SEAL

C	INDICATES CHANGE

1286 6N5356 GOVERNOR AND FUEL INJECTION PUMP GROUP--Part 4 of 4--Type 1
Part of 4N6115 Governor and Fuel Injection Pump Group shown on Page 54B

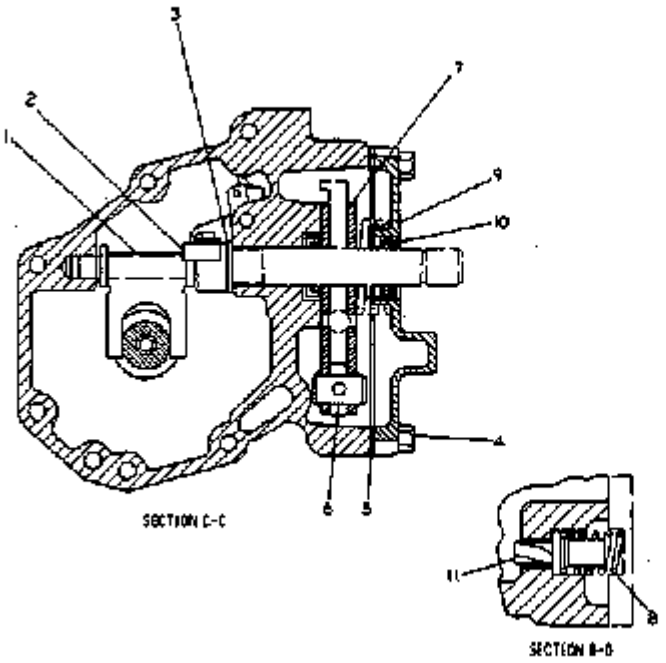

ITEM NO.	PART NUMBER	DESCRIPTION	QTY
1	4N1881	LEVER	1
	4N448	LEVER ASSEM.	1
2		(Includes)	
	9L8571	DOWEL	1
3	8F5368	WASHER	1
4	51616	BOLT	4
5	4N487	GASKET	1
6	9S8601	PIN	1
7	6N5482	PLATE	2
8	4N605	SPRING	1
9	4N687	COVER ASSEM.	1
		(Includes)	
10	4N2786	SEAL	1
11	4N1767	VALVE	1

160293

Nota	Ref	Numero	Cant	Nombre De Pieza
		6N-5356	1	GOV & FUEL INJ PUMP GP
	1	4N-1881	1	LEVER
	2	4N-0448	1	LEVER ASSEM.
				(Includes)
		9L-8571	1	DOWEL
	3	8F-5368	1	WASHER
	4	0S-1616	4	BOLT
	5	4N-0402	1	GASKET
	6	9S-8601	1	PIN
	7	6N-5482	2	PLATE
	8	4N-0605	1	SPRING
	9	4N-0687	1	COVER ASSEM.
				(Includes)
	10	4N-2786	1	SEAL
	11	4N-1767	1	VALVE

1286 4N1834 GOVERNOR AND FUEL INJECTION PUMP GROUP--Part 4 of 4--Type 4
Part of 6N2477, 6N243 & 6N1505 Governor & Fuel Injection Pump Groups shown on Pages 55, 56, 58, 59 & 59B

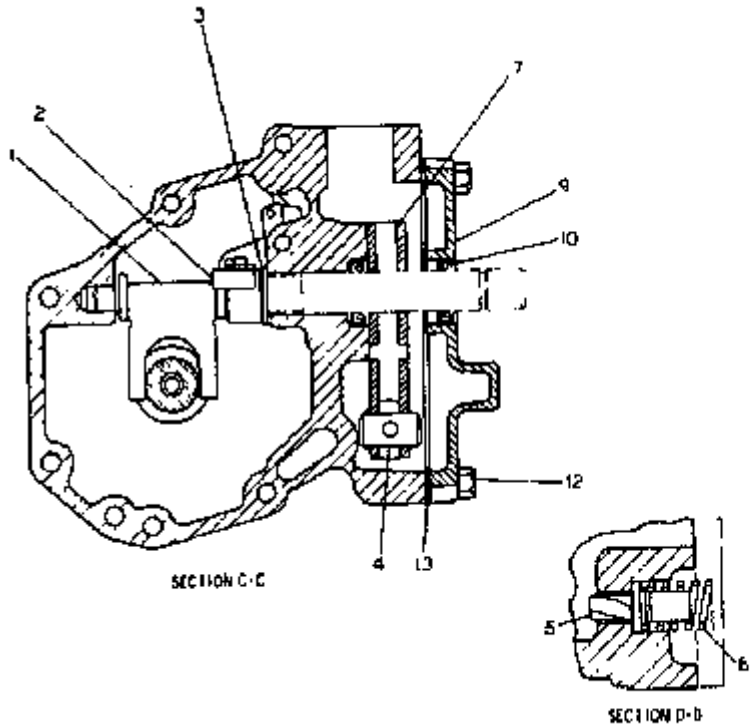

REF NO	PART NUMBER	DESCRIPTION	QTY
1	4N1881	LEVER	1
	4N448	LEVER ASSEM.	1
2		(Includes)	
	9L8571	DOWEL	1
3	8F5368	WASHER	1
4	9S8401	PIN	1
5	4N1767	VALVE	1
6	4N605	SPRING	1
7	6N5482	PLATE	2
9	4N887	COVER ASSEM.	1
		(Includes)	
10	4N2786	SEAL	1
12	5161B	BOLT	4
13	4N402	GASKET	1

219550

Nota	Ref	Numero	Cant	Nombre De Pieza
		4N-1834	1	GOV & FUEL INJ PUMP GP
	1	4N-1881	1	LEVER
	2	4N-0448	1	LEVER ASSEM.
				(Includes)
		9L-8571	1	DOWEL
	3	8F-5368	1	WASHER
	4	9S-8601	1	PIN
	5	4N-1767	1	VALVE
	6	4N-0605	1	SPRING
	7	6N-5482	2	PLATE
	9	4N-0687	1	COVER ASSEM.
				(Includes)
	10	4N-2786	1	SEAL
	12	0S-1616	4	BOLT
	13	4N-0402	1	GASKET

1286 6N243 GOVERNOR AND FUEL INJECTION PUMP GROUP--Type 1
Engine Serial No. 78P18799 to 78P30066 inclusive. Part of 6N283 Governor and Fuel Injection Pump Group
shown on Page 53. 4N1834 Governor and Fuel Injection Pump parts are shown on Pages 60 through 63D

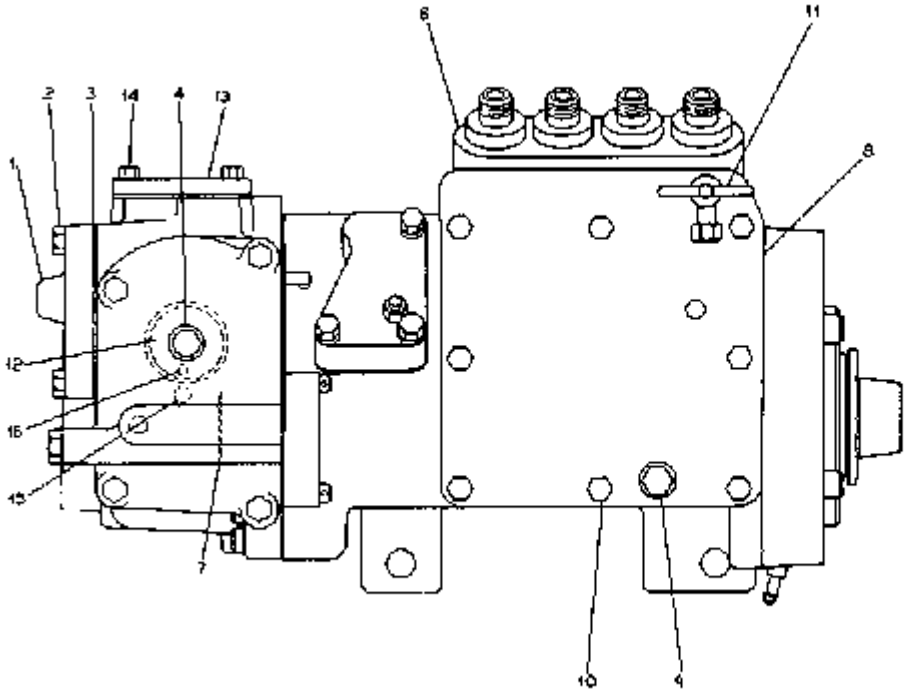

REF NO	PART NUMBER	DESCRIPTION	QTY
1	4N93	COVER	1
2	5L0816	BOLT (1 in. long)	1
	8S4 10	BOLT (4 in. long)	2
3	4N1 9	GASKET	1
4	4N4 28	SHAFT ASSEM.	1
6	Not Serv	GOVERNOR AND FUEL PUMP (Separate Illustration)	1
7	9L5418	WASHER	1
8	4N9338	COVER	1
	4N9056	GASKET	1
9	9S4180	PLUG	1
	4J7533	SEAL	1
10	5L0815	BOLT	4
11	6D238	VALVE ASSEM.	1
12	4N4386	SPRING	1
13	6N742	COVER	1
	4N405	GASKET	1
14	2A762	BOLT	2
15	4N8179	PIN	1
16	4N484	SPACER	2

30L371

Nota	Ref	Numero	Cant	Nombre De Pieza
		6N-0243	1	GOV & FUEL INJ PUMP GP
	1	4N-0053	1	COVER
	2	0S-1616	1	BOLT (1 in. long)
		8S-4710	2	BOLT (4 in. long)
	3	4N-0159	1	GASKET
	4	4N-4320	1	SHAFT ASSEM.
Y	6	NOTSERV	1	GOVERNOR AND FUEL PUMP
				(Separate Illustration)
	7	9L-5914	1	WASHER
	8	4N-9338	1	COVER
		4N-9056	1	GASKET
	9	9S-4180	1	PLUG
		4J-7533	1	SEAL
	10	0S-1615	8	BOLT
	11	6D-0238	1	VALVE ASSEM.
	12	4N-4366	1	SPRING
	13	6N-0242	1	COVER
		4N-0403	1	GASKET
	14	2A-0762	2	BOLT
	15	4N-8179	1	PIN
	16	4N-0444	2	SPACER
				Separate Illustration

1286 4N6115 GOVERNOR AND FUEL INJECTION PUMP GROUP--Type 2
Part of 4N6116 Governor and Fuel Injection Pump Group listed on Page 54A
6N581 Control and 6N5356 Pump parts are shown on Pages 57 and 63E through 63M

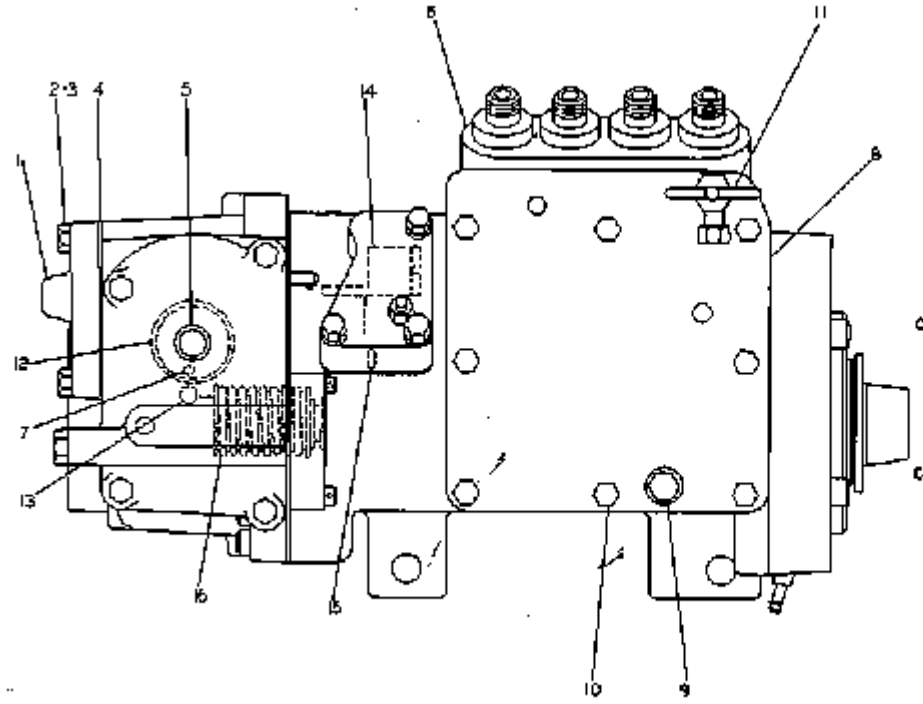

REF. NO.	PART NUMBER	DESCRIPTION	QTY
1	8M59	COVER	1
2	S1616	BOLT--2.54 cm(1 in.) long	1
3	8S4710	BOLT--30.16 cm(1 in.) long	3
4	4M859	GASKET	1
5	4N4320	SHAFT ASSEM.	1
6	4N9356	GOVERNOR AND FUEL PUMP (Separate Illustration)	1
7	4N6614	SPACER	2
8	7N2057	COVER	1
	4N9056	GASKET	1
9	9S6188	PLUG	1
	4J7935	SEAL	1
10	S1615	BOLT	2
11	7N650	VALVE ASSEM.	1
12	4N4366	SPRING	1
13	4N3479	PIN	1
14	6N581	TORQUE CONTROL GROUP (Separate Illustration)	1
15	4N443	PIN	1
16	4N4229	SPRING	1

C INDICATES CHANGE 232983

Nota	Ref	Numero	Cant	Nombre De Pieza
		4N-6115	1	GOV & FUEL INJ PUMP GP
	1	4N-0053	1	COVER
	2	0S-1616	1	BOLT- 2.54 cm(1 in.) long
	3	8S-4710	2	BOLT -10.16 cm(4 in.) long
	4	4N-0159	1	GASKET
	5	4N-4320	1	SHAFT ASSEM.
Y	6	6N-5356	1	GOVERNOR AND FUEL PUMP
				(Separate Illustration)
	7	4N-0444	2	SPACER
C	8	7N-2057	1	COVER
		4N-9056	1	GASKET
	9	9S-4180	1	PLUG
		4J-7533	1	SEAL
	10	0S-1615	8	BOLT
	11	7N-0450	1	VALVE ASSEM.
	12	4N-4366	1	SPRING
	13	4N-8179	1	PIN
CY	14	6N-0581	1	TORQUE CONTROL GROUP
				(Separate Illustration)
	15	4N-0443	1	PIN
	16	4N-4225	1	SPRING
C				INDICATES CHANGE
Y				SEPARATE ILLUSTRATION

1265 1V3550 GOVERNOR CONTROL GROUP--Side View

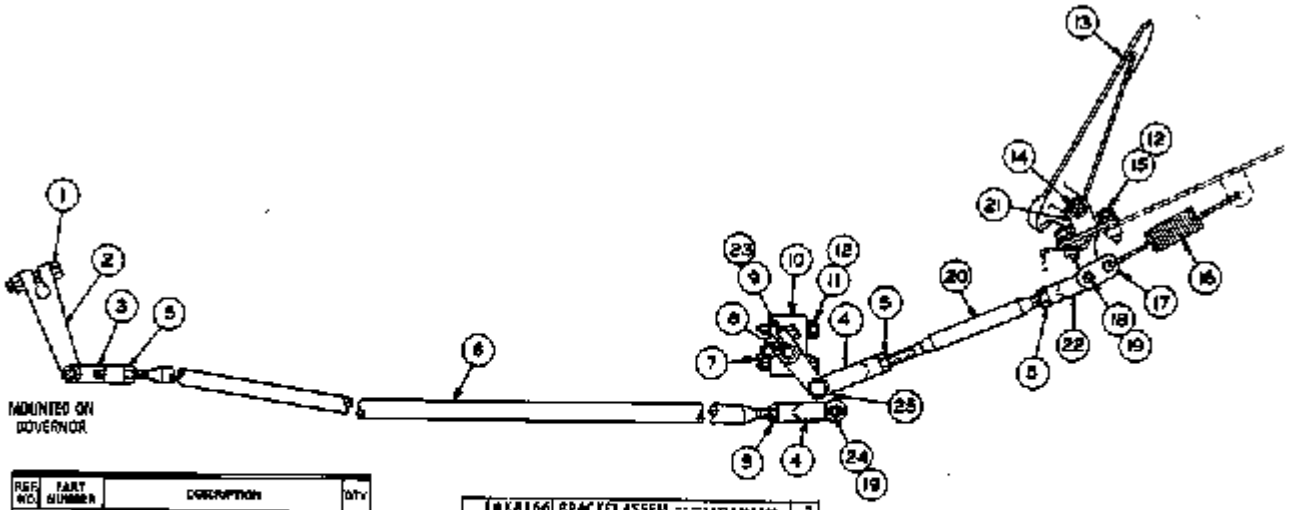

REF NO.	PART NUMBER	DESCRIPTION	QTY
1	1A9579	BOLT	1
	1D4716	NUT	1
2	4K9528	LEVER	1
3	2K40D	YOKE END	1
4	1A9252	ROD END	2
5	589079	NUT	4
6	LV3547	ROD	1
7	5L591	BOLT	2
	1D4717	NUT	2
8	6K8164	SHAFT	1
9	4D8924	LEVER	1

REF NO.	PART NUMBER	DESCRIPTION	QTY
	6K8166	BRACKET ASSEM.	2
		(Each Includes)	
	402619	BEARING	1
11	L2078	BOLT	4
12	384506	LOCKWASHER	4
13	3D674	PEDAL	1
14	482906	PIN	1
	7F9727	BUSHING	1
15	L1391	BOLT	1
16	5K5697	SPRING	1
17	4D5155	LINK	1
18	3K8280	PIN	1

REF NO.	PART NUMBER	DESCRIPTION	QTY
19	384615	COTTER PIN	4
20	1M9179	ROD	1
21	7F9726	BRACKET	2
22	1M1341	END	3
23	184704	KEY	2
24	18476	PIN	3
25	412634	LEVER	1

207742

Nota	Ref	Numero	Cant	Nombre De Pieza
		1V-3550	1	CONTROL GP-GOVERNOR
	1	1A-9579	1	BOLT
		1D-4716	1	NUT
	2	9K-9328	1	LEVER
	3	2K-0400	1	YOKE END
	4	1A-9252	2	ROD END
	5	5B-9079	4	NUT
	6	1V-3547	1	ROD
	7	0S-1591	2	BOLT
		1D-4717	2	NUT
	8	6K-8164	1	SHAFT
C	9	4D-8924	1	LEVER
	10	6K-8166	2	BRACKET ASSEM.
				(Each Includes)
		4D-2619	1	BEARING
	11	0L-2070	4	BOLT
	12	3B-4506	8	LOCKWASHER
	13	3D-0674	1	PEDAL
	14	4B-2906	1	PIN
		7F-9777	1	BUSHING
	15	0L-1351	4	BOLT
	16	5K-5697	1	SPRING
	17	4D-5155	1	LINK
	18	3K-8280	1	PIN
	19	3B-4615	4	COTTER PIN
	20	1M-9175	1	ROD
	21	7F-9776	2	BRACKET
	22	1M-1341	1	END
	23	1B-8704	2	KEY
	24	1B-0676	3	PIN

C	25	4J-2684	1	LEVER

1286 4N4510 GOVERNOR COVER GROUP
Engine Serial No. 78P18799 to 78P55517 inclusive

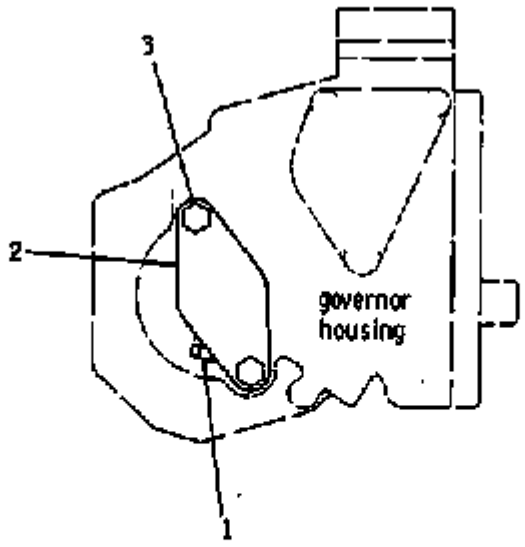

REF. NO.	PART NUMBER	DESCRIPTION	QTY
1	257905	PLUG	1
2	4N4508	COVER	1
	4N4509	GASKET	1
3	S1615	BOLT	2

144197

Nota	Ref	Numero	Cant	Nombre De Pieza
		4N-4510	1	COVER GP-GOVERNOR
	1	2S-7905	1	PLUG
	2	4N-4508	1	COVER
		4N-4509	1	GASKET
	3	0S-1615	2	BOLT

1286 4N4510 GOVERNOR COVER GROUP
Engine Serial No. 78P55518-Up

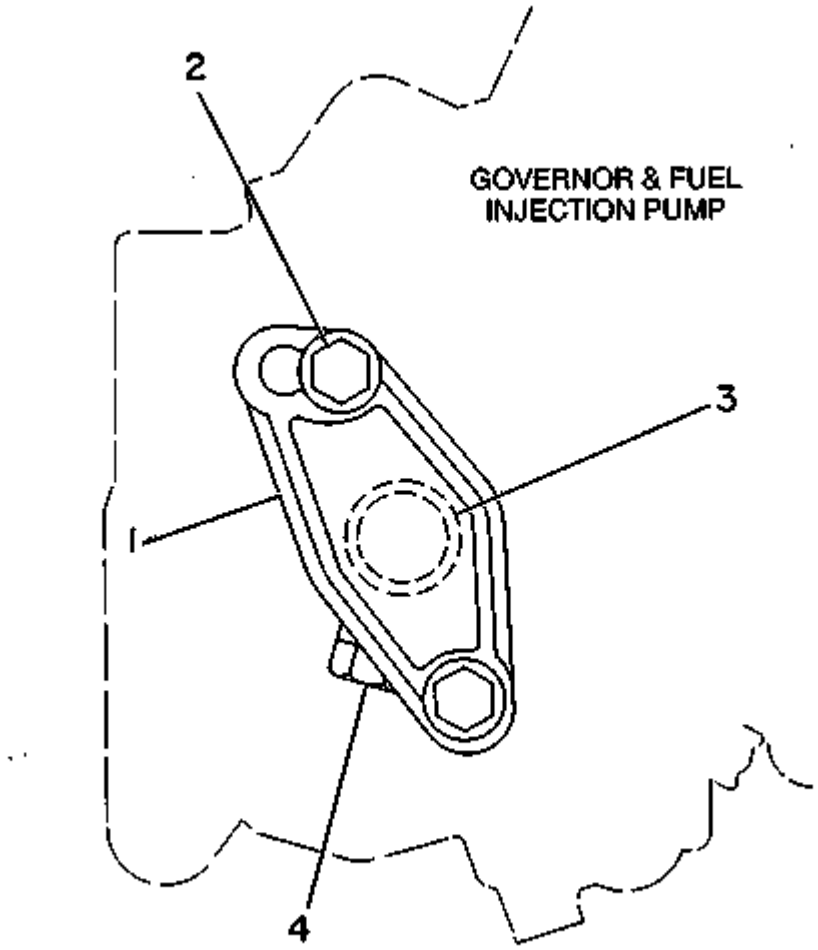

Nota	Ref	Numero	Cant	Nombre De Pieza
		4N-4510	1	COVER GP-GOVERNOR
C	1	8N-8082	1	COVER
	2	0S-1615	2	BOLT
C		5P-0537	2	WASHER
C	3	4M-8303	1	SEAL-O-RING
	4	2S-7905	1	PLUG-PIPE
C				CHANGE FROM PREVIOUS TYPE

1260 8H4681 PRIMARY FUEL FILTER GROUP--Type 2
Part of 8N3569 and 9N5458 Fuel Pump Groups shown on Pages 64D and 65A-1

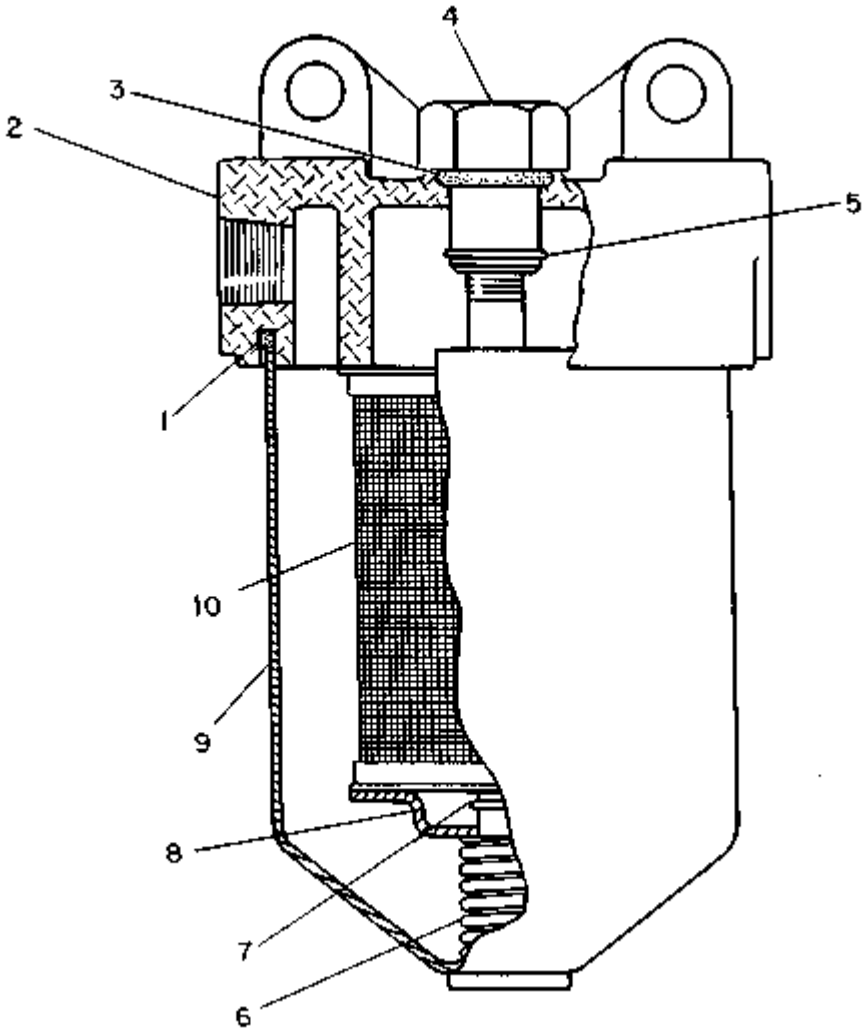

Nota	Ref	Numero	Cant	Nombre De Pieza
		8H-4681	1	FILTER GP-PRIMARY FUEL
	1	8H-2778	1	GASKET
C	2	1N-3583	1	BASE-FUEL FILTER
C	3	2J-0157	1	SEAL-O-RING
C	4	7N-1628	1	NUT
	5	1L-3769	1	RING-RETAINING
	6	7S-9323	1	SPRING
	7	2H-3429	1	RING-RETAINING
	8	7H-9678	1	RETAINER-ELEMENT
	9	8H-2810	1	CASE AS-FILTER
	10	9M-2341	1	ELEMENT AS (WASHABLE)
C				CHANGE FROM PREVIOUS TYPE

4277 4V5414 AIR OVER HYDRAULIC CYLINDER GROUP
Serial No. 41K11282 to 41K11411 inclusive. Part of 4V6974 Air and Brake Control Group shown on Pages 132C & 132H

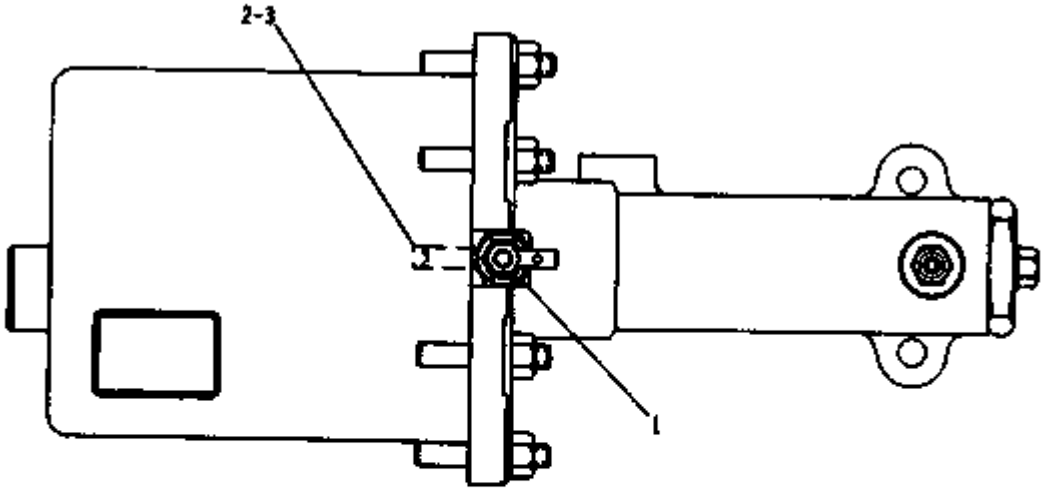

NOTE	REF NO	PART NUMBER	QTY	DESCRIPTION
	1	8V7195	1	SWITCH ASSEM.
	2	7V5646	1	SEAL
	3	7V5645	1	ROD

		4V5415	1	THE FOLLOWING REPAIR KIT IS AVAILABLE: KIT (PRESSURE CONVERTER) (INCLUDES FELTS, RINGS, SEALS, SPRING & CUP)

* 305941

Nota	Ref	Numero	Cant	Nombre De Pieza
		4V-5414	1	CYLINDER GP-AIR OVER HYD
	1	8V-7195	1	SWITCH ASSEM.
	2	7V-5646	1	SEAL
	3	7V-5645	1	ROD
				THE FOLLOWING REPAIR KIT IS AVAILABLE:
		4V-5415	1	KIT (PRESSURE CONVERTER)
				(INCLUDES FELTS, RINGS, SEALS, SPRING & CUP)

5066 7J9969 BASIC VALVE GROUP
Part of 7J9976 Diverter Valve Group shown on Page 145

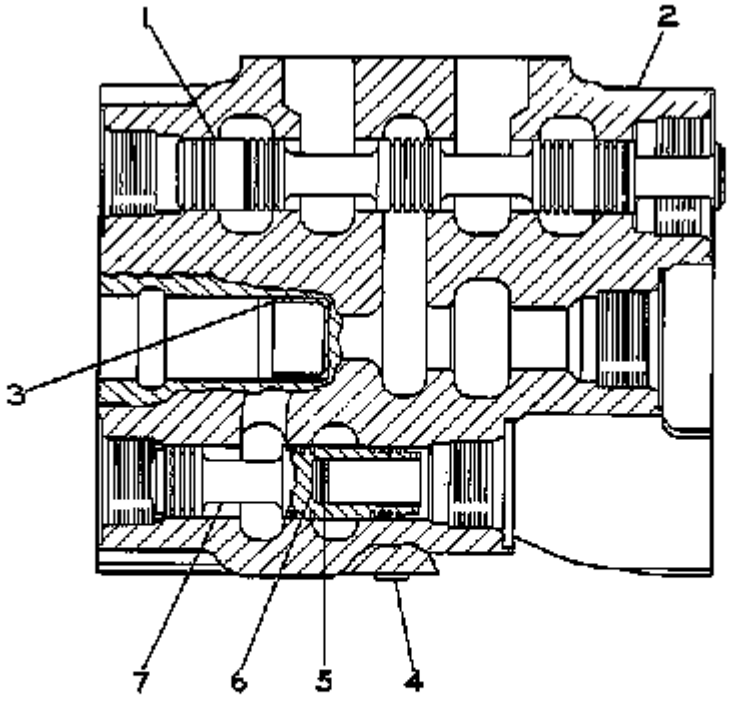

REF. NO.	PART NUMBER	DESCRIPTION	QTY
1	Not Serv	STEM	1
2	Not Serv	BODY	1
3	7J9972	ORIFICE	1
4	9S8001	PLUG	3
	4J7533	SEAL	3
5	5J1036	SHIM (.031" Thick)	4
6	6J3993	SHIM (.010" Thick)	1
7	Not Serv	STEM	1

134434

Nota	Ref	Numero	Cant	Nombre De Pieza
		7J-9969	1	VALVE GP
	1	NOTSERV	1	STEM
	2	NOTSERV	1	BODY
	3	7J-9972	1	ORIFICE
	4	9S-8001	3	PLUG
		4J-7533	3	SEAL
	5	5J-1036	4	SHIM (.031" Thick)
	6	6J-3993	1	SHIM (.010" Thick)
	7	NOTSERV	1	STEM

4307 8J505 BASIC VALVE GROUP--Type 1
Part of 8J430 Steering Valve Group shown on Page 141

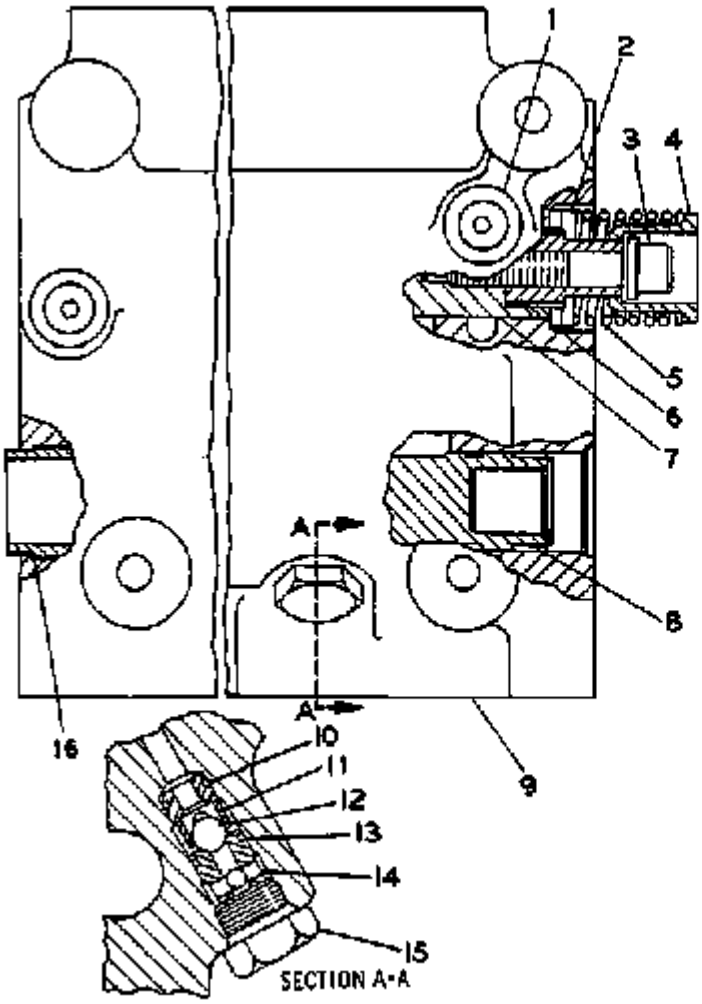

REF. NO.	PART NUMBER	DESCRIPTION	QTY
1	9S8001	PLUG	5
	4J7533	SEAL	5
2	6J6506	SPACER	1
3	7S6701	SCREW	1
	3B4505	LOCKWASHER	1
	8F7242	WASHER	1
4	7J4321	RETAINER	1
5	7J736	SPRING	1
6	6J6518	RETAINER	1
	6J6517	SHIM-----(.005" Thick)	1
	6J6516	SHIM-----(.030" Thick)	4
7	Not Serv	STEM	1
8	Not Serv	VALVE	1
	5S7018	SPACER	10
9	Not Serv	BODY	1
10	LJ9671	SEAL	1
11	7J8066	SEAT	1
12	4B9782	BALL	1
13	3J1907	SEAL	1
14	8J507	SEAT	1
15	9S4185	PLUG	1
	3K360	SEAL	1
16	6J6508	SPACER	1

134758

Nota	Ref	Numero	Cant	Nombre De Pieza
		8J-0505	1	VALVE GP
	1	9S-8001	5	PLUG
		4J-7533	5	SEAL
	2	6J-6506	1	SPACER
	3	7S-6701	1	SCREW
		3B-4505	1	LOCKWASHER
		8F-7242	1	WASHER
	4	7J-4321	1	RETAINER
	5	7J-0736	1	SPRING
	6	6J-6518	1	RETAINER
		6J-6517	1	SHIM (.005" Thick)
		6J-6516	4	SHIM (.010" Thick)
	7	NOTSERV	1	STEM
	8	NOTSERV	1	VALVE
		5S-7018	10	SPACER
	9	NOTSERV	1	BODY
	10	1J-9671	1	SEAL
	11	7J-8066	1	SEAT
	12	4B-9782	1	BALL
	13	3J-1907	1	SEAL
	14	8J-0507	1	SEAT
	15	9S-4185	1	PLUG
		3K-0360	1	SEAL
	16	6J-6508	1	SPACER

4307 8J505 BASIC VALVE GROUP--Type 2
Part of 8J430 Steering Valve Group shown on Page 141

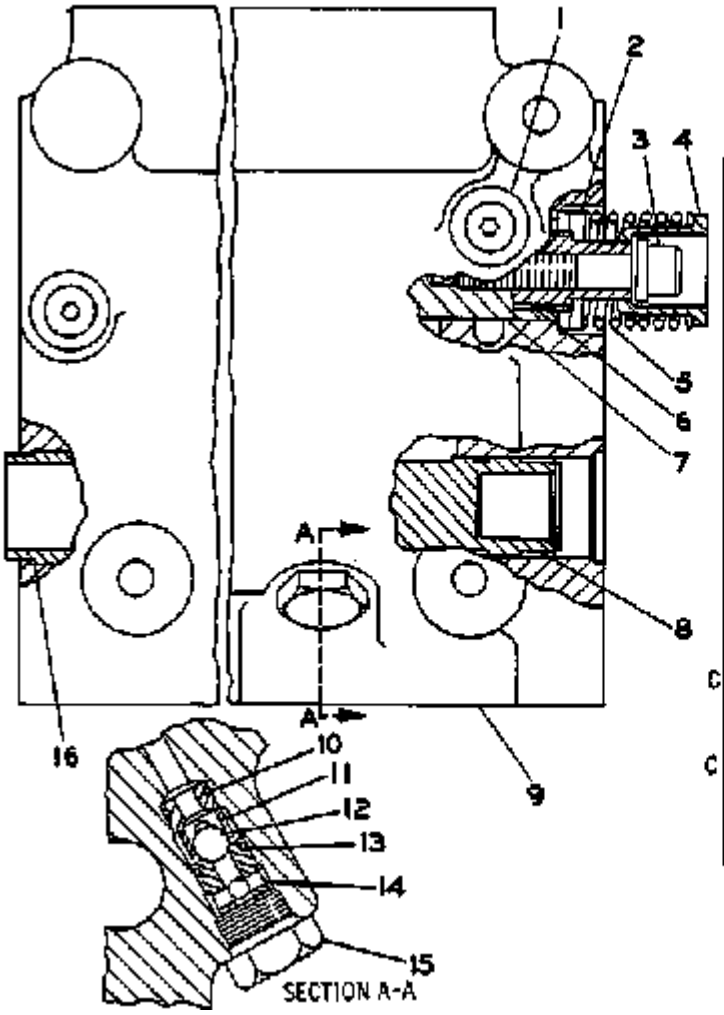

REF. NO.	PART NUMBER	DESCRIPTION	QTY
1	9S8001	PLUG	5
	4J7533	SEAL	5
2	6J6506	SPACER	1
3	7S6701	SCREW	1
	3B4505	LOCKWASHER	1
	8F7242	WASHER	1
4	7J4321	RETAINER	1
5	7J736	SPRING	1
6	6J6518	RETAINER	1
	6J6517	SHIM (.005" Thick)	1
	6J6516	SHIM (.010" Thick)	4
7	Not Serv	STEM	1
8	Not Serv	VALVE	1
	5S7018	SPACER	10
9	Not Serv	BODY	1
10	1J9671	SEAL	1
C 11	4T317	SEAT	1
12	4B9782	BALL	1
13	3J1907	SEAL	1
C 14	4T318	SEAT	1
15	9S4185	PLUG	1
	3K360	SEAL	1
16	6J6508	SPACER	1

C INDICATES CHANGE

181293

Nota	Ref	Numero	Cant	Nombre De Pieza
		8J-0505	1	VALVE GP
	1	9S-8001	5	PLUG
		4J-7533	5	SEAL
	2	6J-6506	1	SPACER
	3	7S-6701	1	SCREW
		3B-4505	1	LOCKWASHER
		8F-7242	1	WASHER
	4	7J-4321	1	RETAINER
	5	7J-0736	1	SPRING
	6	6J-6518	1	RETAINER
		6J-6517	1	SHIM (.005" Thick)
		6J-6516	4	SHIM (.010" Thick)
	7	NOTSERV	1	STEM
	8	NOTSERV	1	VALVE
		5S-7018	10	SPACER
	9	NOTSERV	1	BODY
	10	1J-9671	1	SEAL
C	11	4T-0317	1	SEAT
	12	4B-9782	1	BALL
	13	3J-1907	1	SEAL
C	14	4T-0318	1	SEAT
	15	9S-4185	1	PLUG
		3K-0360	1	SEAL
	16	6J-6508	1	SPACER
C				INDICATES CHANGE

6K7261 BRAKE CHAMBER ASSEMBLY
Part of Brake Chamber, Horn, Horn Valve and Lines shown on Pages 132 and 132E

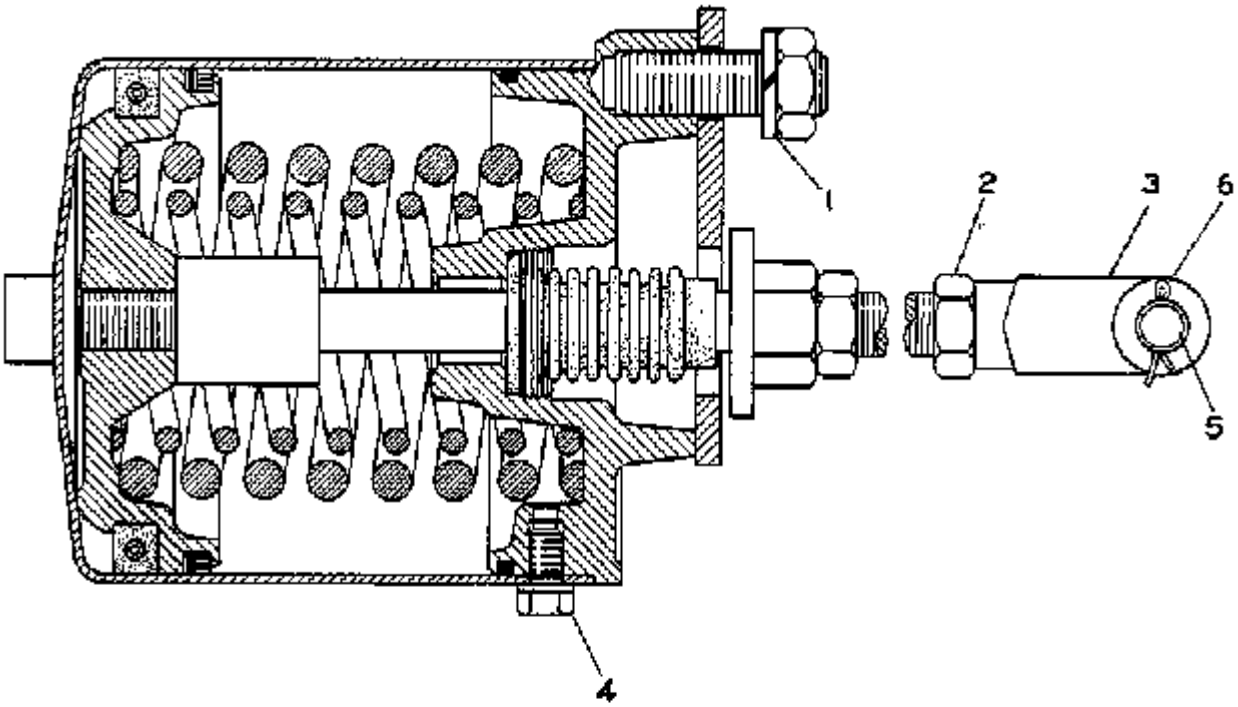

	REF NO.	PART NUMBER	DESCRIPTION	QTY
	1	3B4510	LOCKWASHER	2
	2	9S1354	NUT	4
C	3	5K292	ROD END	1
	4	2H3755	NUT	8
		3F9556	WASHER	8
	5	4K1540	PIN	1
	6	3B4617	COTTER PIN	1
			THE FOLLOWING REPAIR KIT IS AVAILABLE:	
		7K8209	KIT (Brake Repair) (Consists of Boot, Boot Strap, Ring, Retainer and Cup)	1

C INDICATES CHANGE

202103

Nota	Ref	Numero	Cant	Nombre De Pieza
		6K-7261	1	CHAMBER AS-BRAKE
	1	3B-4510	2	LOCKWASHER
	2	9S-1354	4	NUT
	3	5K-0292	1	ROD END
	4	2H-3755	3	NUT
		3F-9556	3	WASHER
	5	4K-1540	1	PIN
	6	3B-4617	1	COTTER PIN
				THE FOLLOWING REPAIR KIT IS AVAILABLE
		7K-8209	1	KIT (Brake Repair)
				(Consists of Boot Boot Strap, Ring, RETAINER AND CUP)

2R617 BRAKE FOOT CONTROL VALVE ASSEMBLY
Part of Brake Pedals, Valves and Lines shown on Pages 129 and 132B
4D2287 Valve parts are shown on Page 134

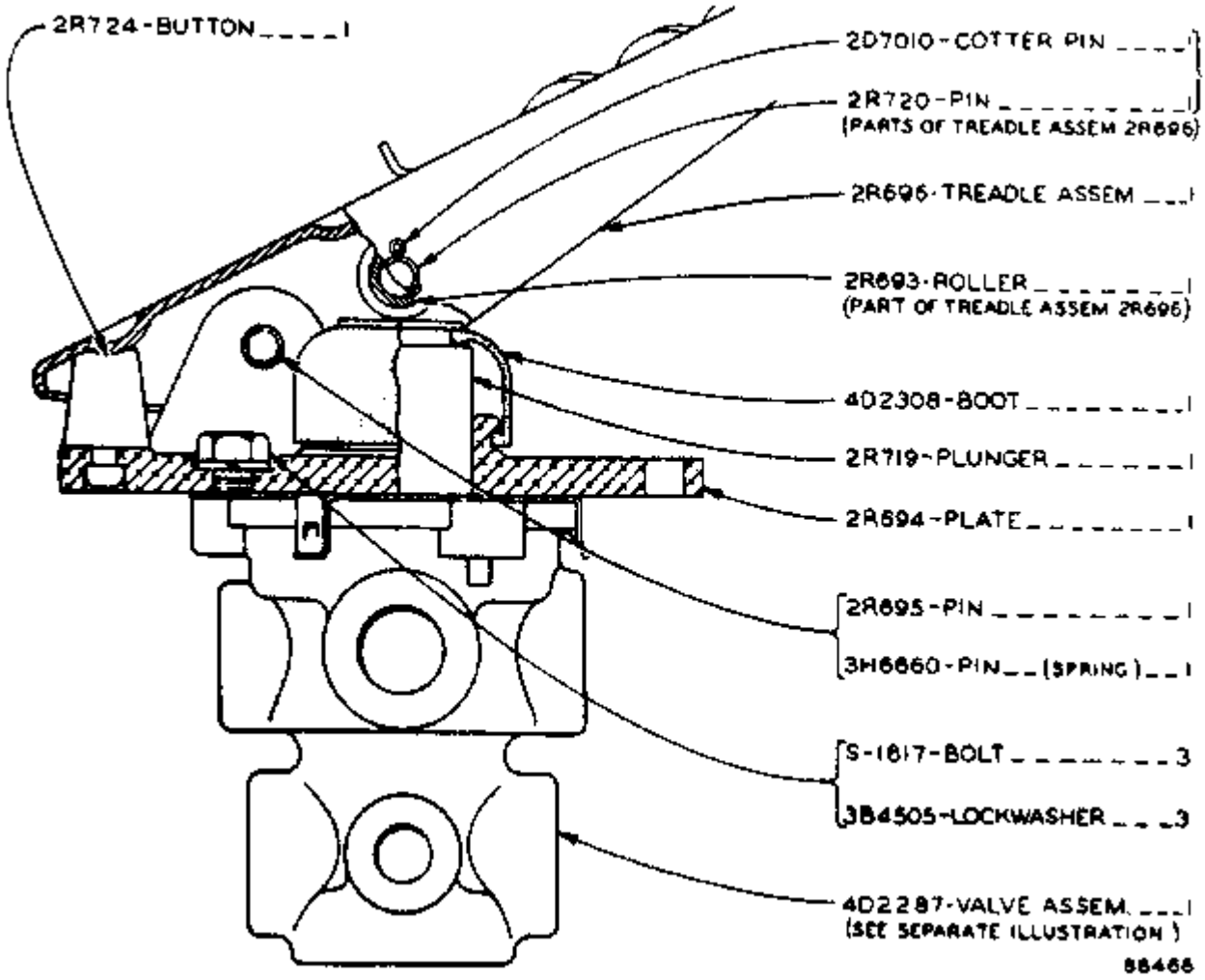

Nota	Ref	Numero	Cant	Nombre De Pieza
		2R-0617	1	VALVE AS-BRAKE FOOT CONTROL
		2R-0724	1	BUTTON
		2D-7010	1	COTTER PIN
		2R-0720	1	PIN
				(PARTS OF TREADLE ASSEM. 2R696)
		2R-0696	1	TREADLE ASSEM.
		2R-0693	1	ROLLER
				(PART OF TREADLE ASSEM. 2R696)
		4D-2308	1	BOOT
		2R-0719	1	PLUNGER
		2R-0694	1	PLATE
		2R-0695	1	PIN
		3H-6660	1	PIN (SPRING)
		0S-1617	3	BOLT
		3B-4505	3	LOCKWASHER
Y		4D-2287	1	VALVE ASSEM.
				(SEE SEPARATE ILLUSTRATION)
Y				SEPARATE ILLUSTRATION

4281 9V1541 CHECK VALVE GROUP
Part of 4K9714 Double Check Valve Group listed on Page 133

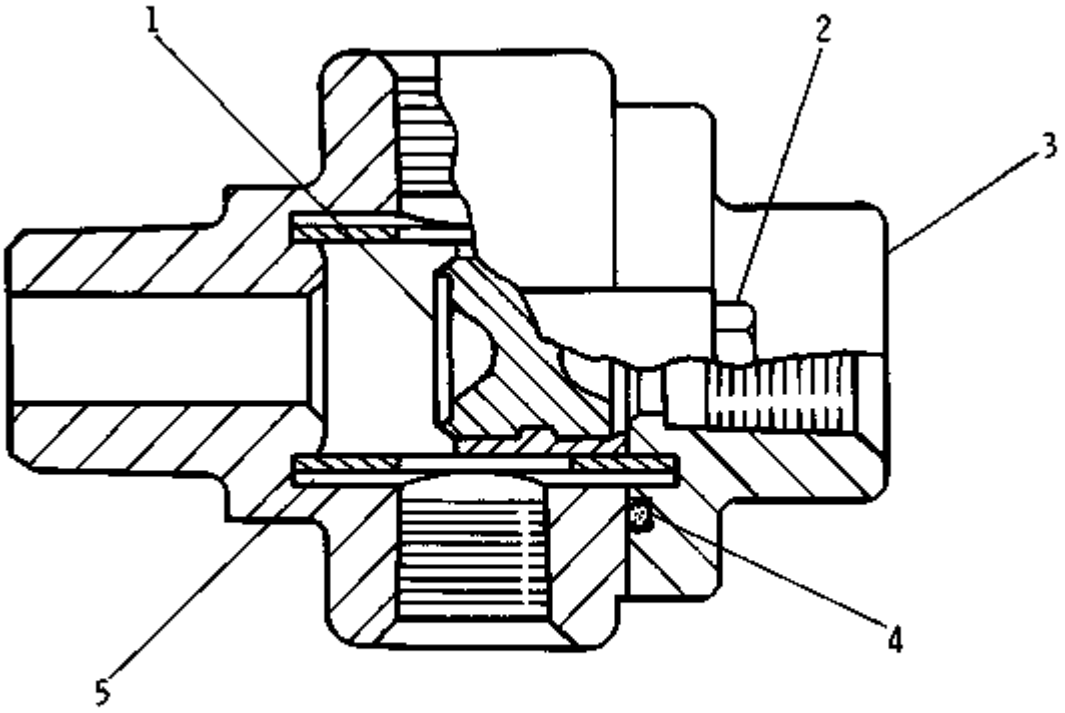

Nota	Ref	Numero	Cant	Nombre De Pieza
		9V-1541	1	VALVE GP-CHECK
	1	3D-4869	1	SHUTTLE
	2	4M-5281	2	BOLT
		4D-3365	1	WASHER
	3	2R-9614	1	CAP
	4	3D-4245	1	SEAL-O-RING
	5	2R-1532	1	GUIDE-SHUTTLE

4281 9V476 CHECK VALVE GROUP
Part of 4K9714 Double Check Valve Group listed on Page 133

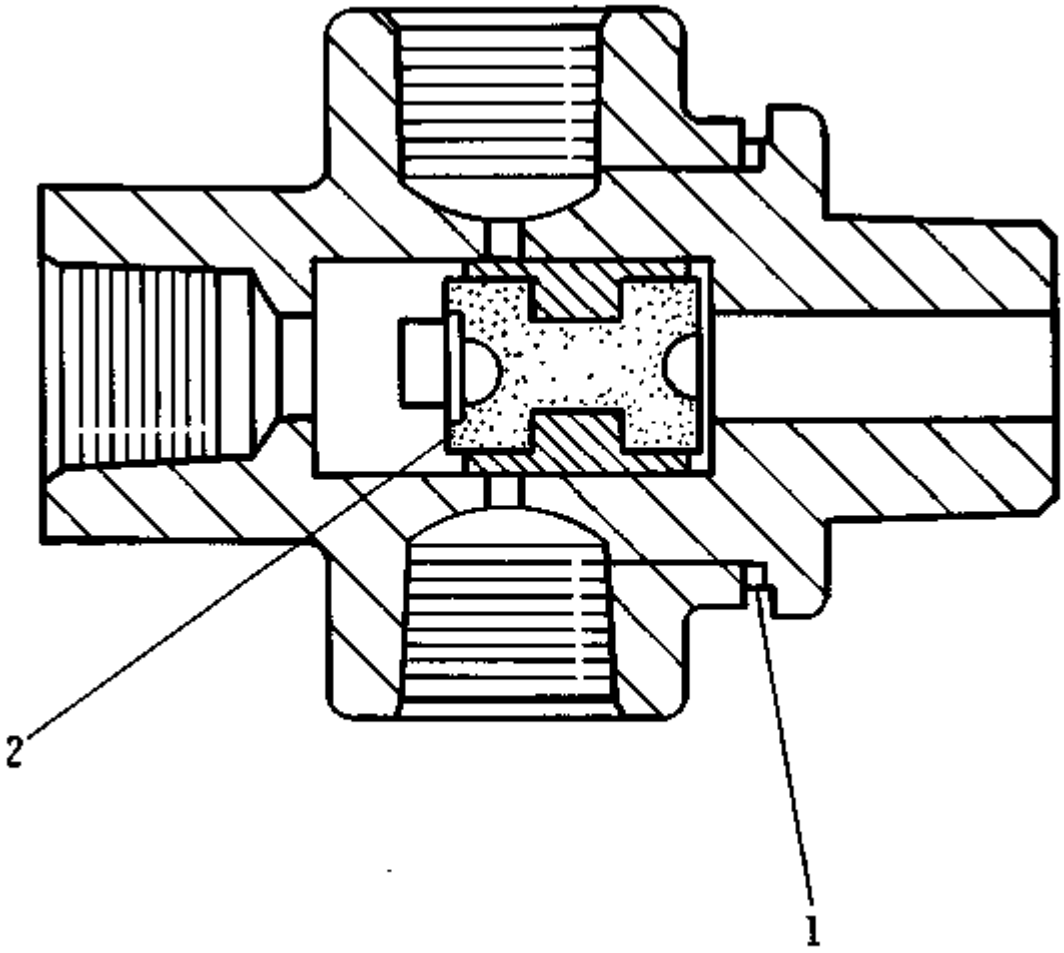

Nota	Ref	Numero	Cant	Nombre De Pieza
		9V-0476	1	VALVE GP-CHECK
	1	5K-1063	1	GASKET
	2	5K-1065	1	RETAINER & SEAT AS

5066 7J9976 DIVERTER VALVE GROUP
Part of 7K8667 Supplemental Steering Group shown on Page 144
7J9969 Valve parts are shown on Page 146

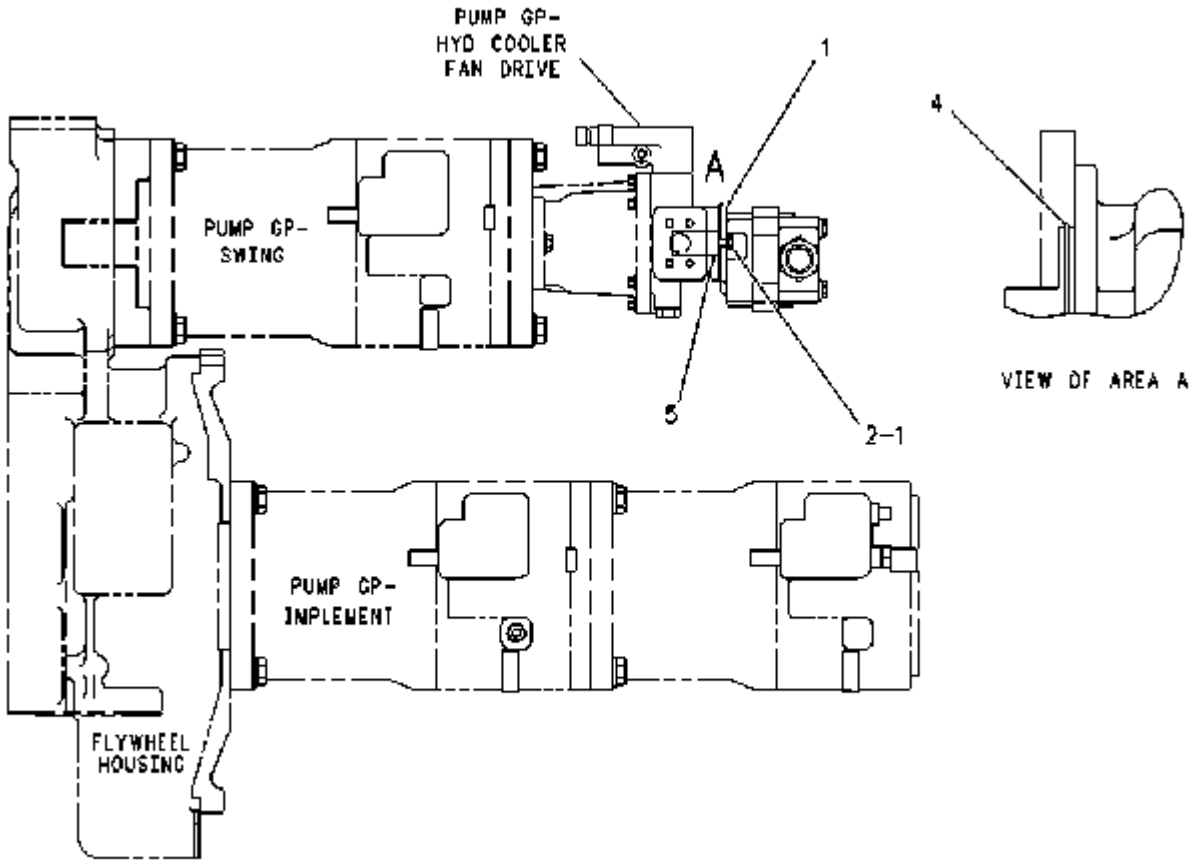

Nota	Ref	Numero	Cant	Nombre De Pieza
		7J-9976	1	VALVE GP-DIVERTER
Y	1	7J-9969	1	VALVE GROUP
				(See Separate Illustration)
	2	4J-4210	4	RETAINER
	3	7J-9970	1	RETAINER
	4	2S-4078	1	SEAL
	5	7S-8491	1	SPRING
	6	9S-9334	2	PLUG
	7	7M-8485	2	SEAL
	8	1L-4418	2	SPRING
	9	7J-9971	2	VALVE
	10	9S-8009	5	PLUG
		4K-1388	5	SEAL
	11	6D-1601	1	SPRING
	12	7B-3028	1	SCREW
	13	7J-9974	1	PLATE
Y				SEPARATE ILLUSTRATION

4275 4K9714 DOUBLE CHECK VALVE ASSEMBLY
Part of Brake Pedals, Valves and Lines shown on Pages 129 and 132B

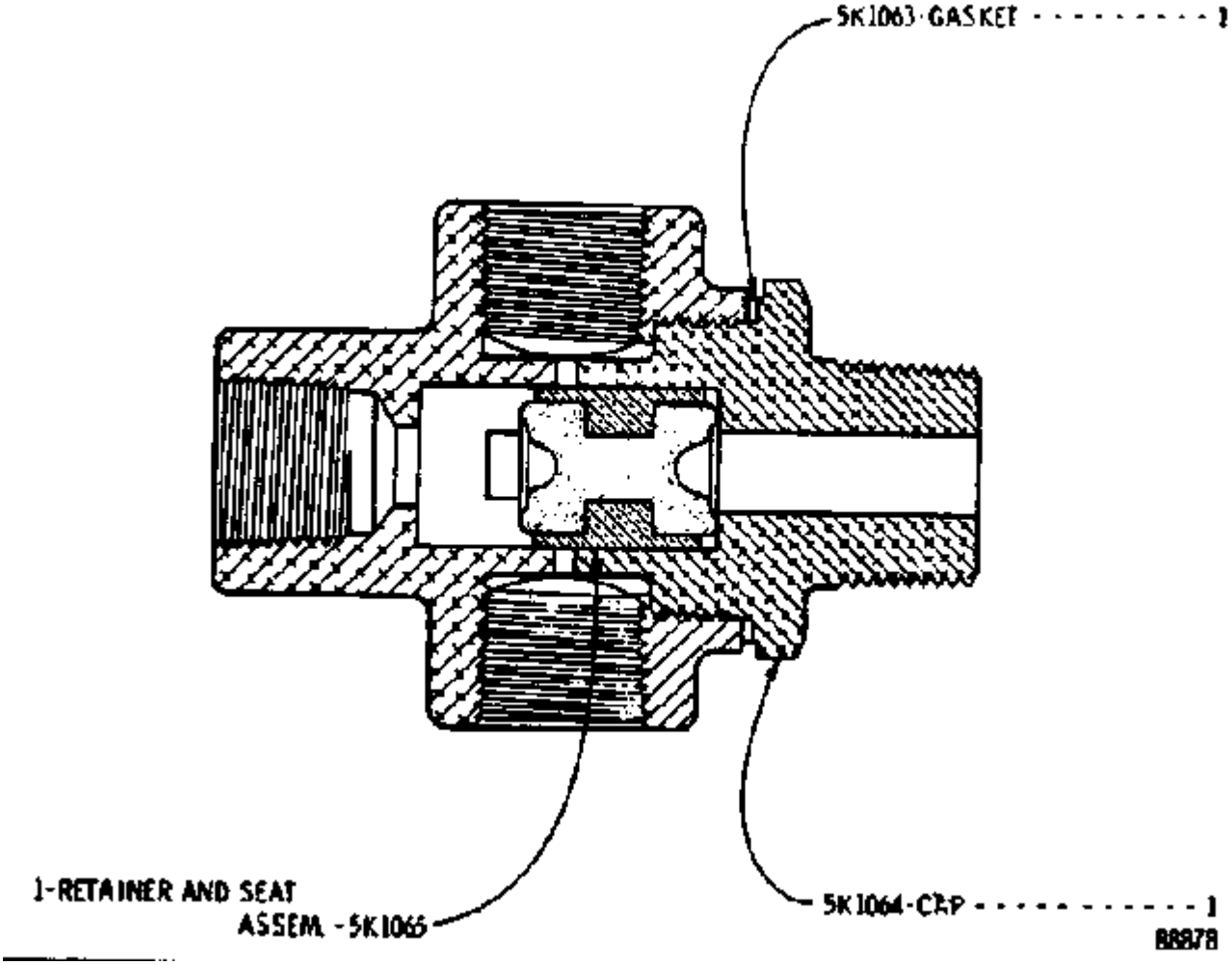

Nota	Ref	Numero	Cant	Nombre De Pieza
		4K-9714	1	VALVE GP-CHECK
		5K-1065	1	RETAINER AND SEAT ASSEM.
		5K-1063	1	GASKET
		5K-1064	1	CAP

4324 8J1568 GEAR PUMP GROUP
Serial No. 41K5315-Up
Part of 7K8667 & 8V9391 Supplemental Steering shown on Pages 144 & 144A
AN ATTACHMENT

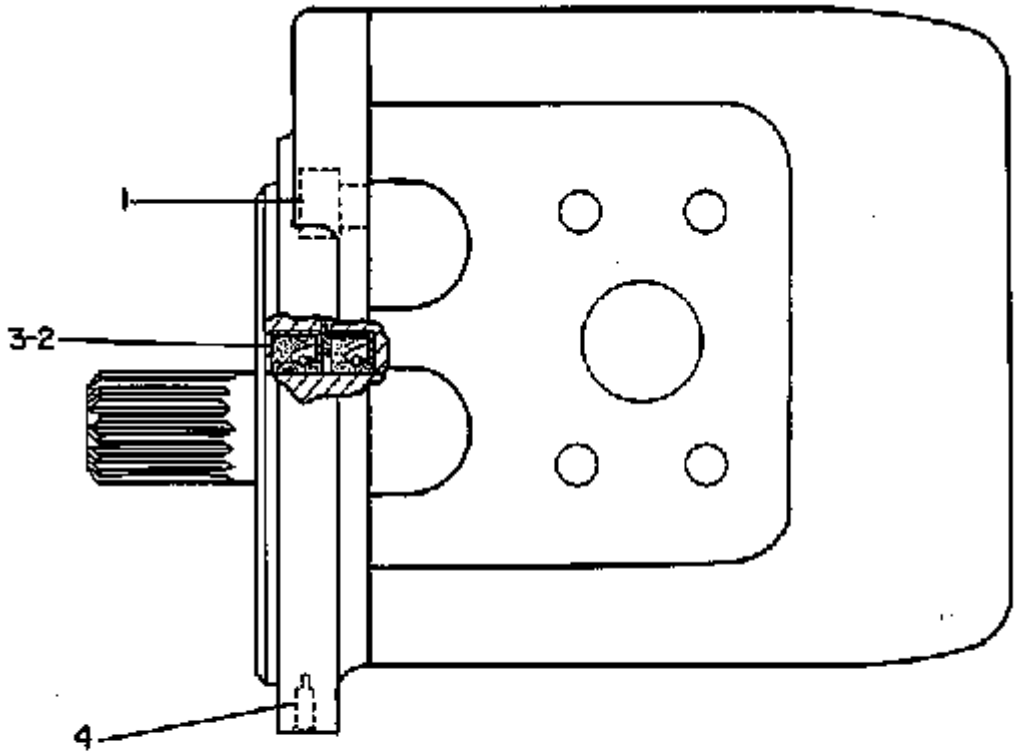

REF. NO.	PART NUMBER	DESCRIPTION	QTY.
1	5L4183	BOLT	8
2	2D9359	SEAL	2
3	1U3129	SPACER	1
4	1U3130	PLUG	1
		THE FOLLOWING REPAIR KIT IS AVAILABLE:	
	1U3131	KIT	1

181758

Nota	Ref	Numero	Cant	Nombre De Pieza
		8J-1568	1	PUMP GP-GEAR
	1	5L-4183	8	BOLT
	2	2D-9359	2	SEAL
	3	1U-3129	1	SPACER
	4	1U-3130	1	PLUG
				THE FOLLOWING REPAIR KIT IS AVAILABLE:
		1U-3131	1	KIT

7402 3D9943 HORN VALVE ASSEMBLY
Part of Brake Chamber, Horn, Horn Valve and Lines shown on Pages 132 and 132E

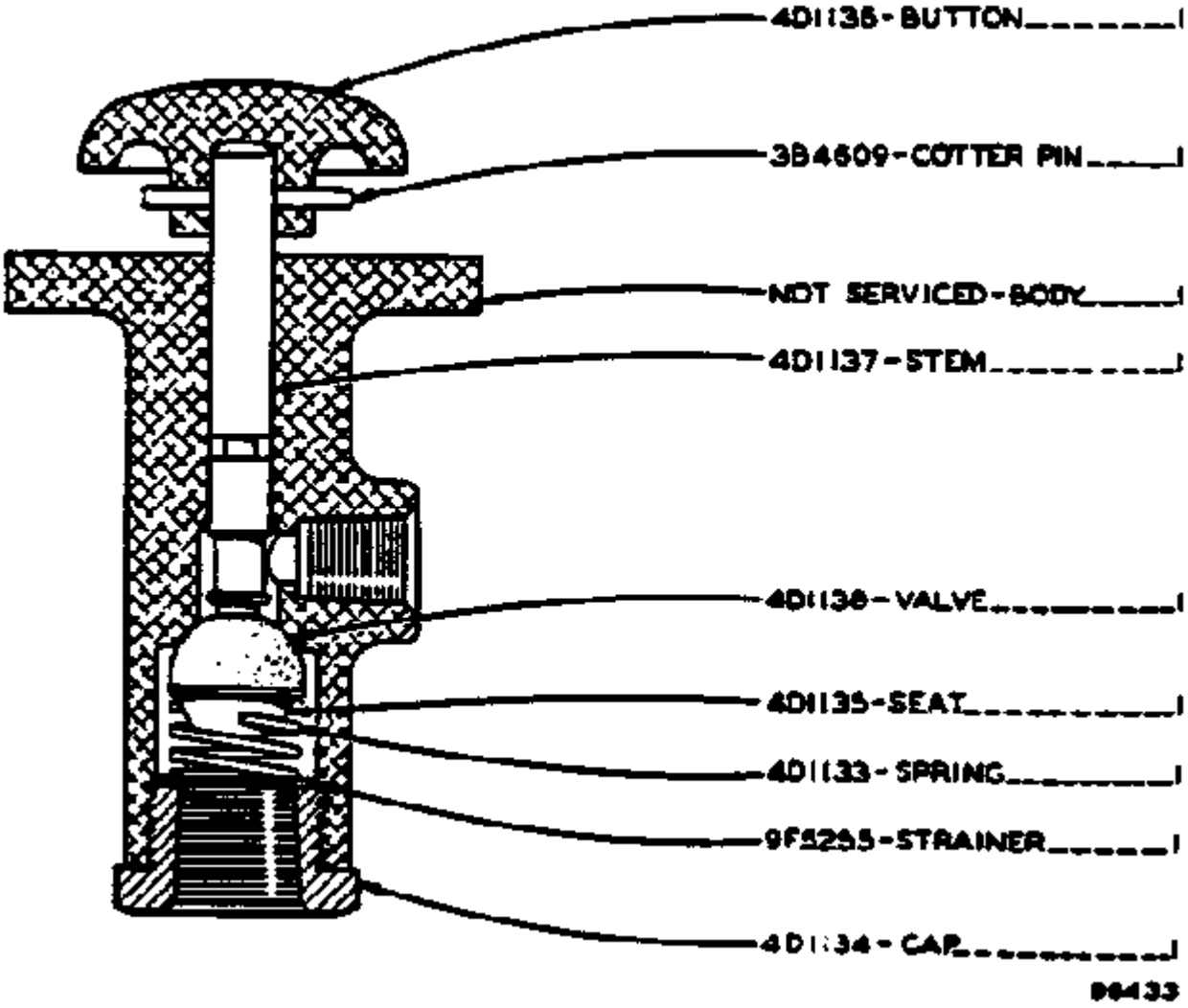

Nota	Ref	Numero	Cant	Nombre De Pieza
		3D-9943	1	VALVE AS-HORN
		4D-1136	1	BUTTON
		3B-4609	1	COTTER PIN
		NOTSERVICED	1	BODY
		4D-1137	1	STEM
		4D-1138	1	VALVE
		4D-1135	1	SEAT
		4D-1133	1	SPRING
		9F-5255	1	STRAINER
		4D-1134	1	CAP

4312 3G7387 METERING PUMP GROUP
Serial No. 41K9052-Up
Part of 4V3496 and 5V3009 Steering Control Groups shown on
Pages 139A & 139C

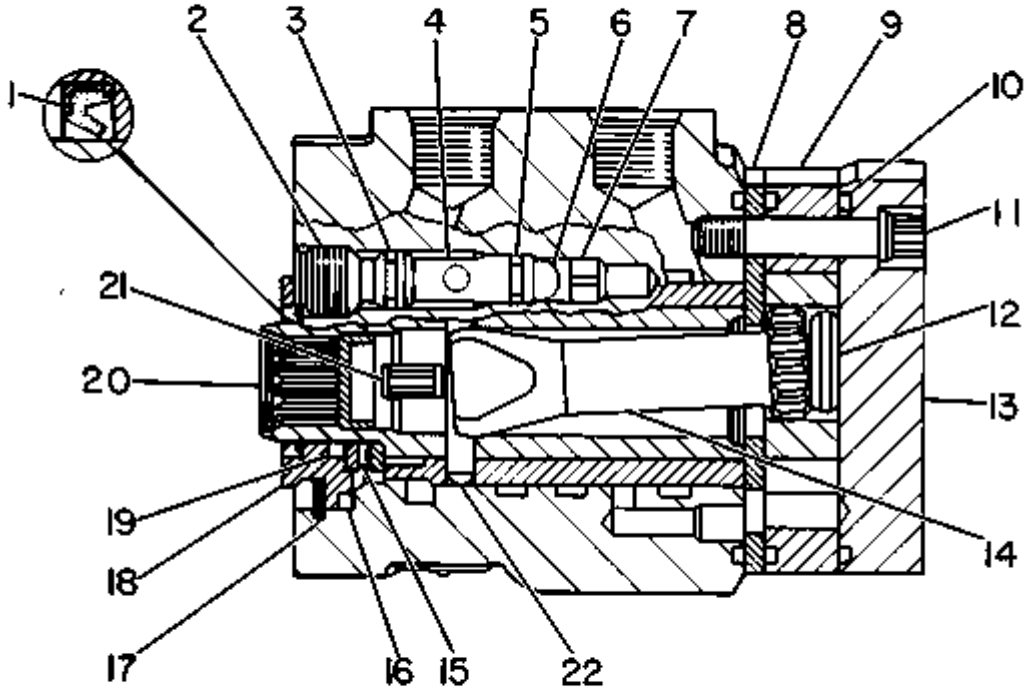

Nota	Ref	Numero	Cant	Nombre De Pieza
		3G-7387	1	PUMP GP-METERING
	1	8F-5340	1	SEAL-LIP TYPE
	2	3G-6906	1	SCREW
	3	1H-1023	1	SEAL-O-RING
	4	3G-6907	1	SEAT
	5	5F-9144	1	SEAL-O-RING
	6	6S-7827	1	BALL
	7	6S-7826	1	RETAINER-BALL
	8	3G-6905	1	SPACER
	9	3G-8996	1	GEROTOR AS
	10	9J-5686	3	SEAL-O-RING
	11	7J-6835	7	BOLT-12 POINT HEAD
	12	3G-4461	1	SPACER
	13	3G-6889	1	CAP
	14	7J-6839	1	DRIVE-CONTROL END
	15	3G-6891	2	RACE
		5L-1100	1	BEARING-THRUST
	16	7F-8267	1	SEAL-O-RING
	17	9J-5442	1	RING
	18	9J-8076	1	BUSHING
	19	7J-6833	1	SEAL
	20	3G-6892	1	BODY AS
	21	7J-8010	6	SPRING-CENTERING
	22	7J-8009	1	PIN

4330 8J508 NEUTRALIZER VALVE GROUP
Part of 8J430 Steering Valve Group shown on Page 141

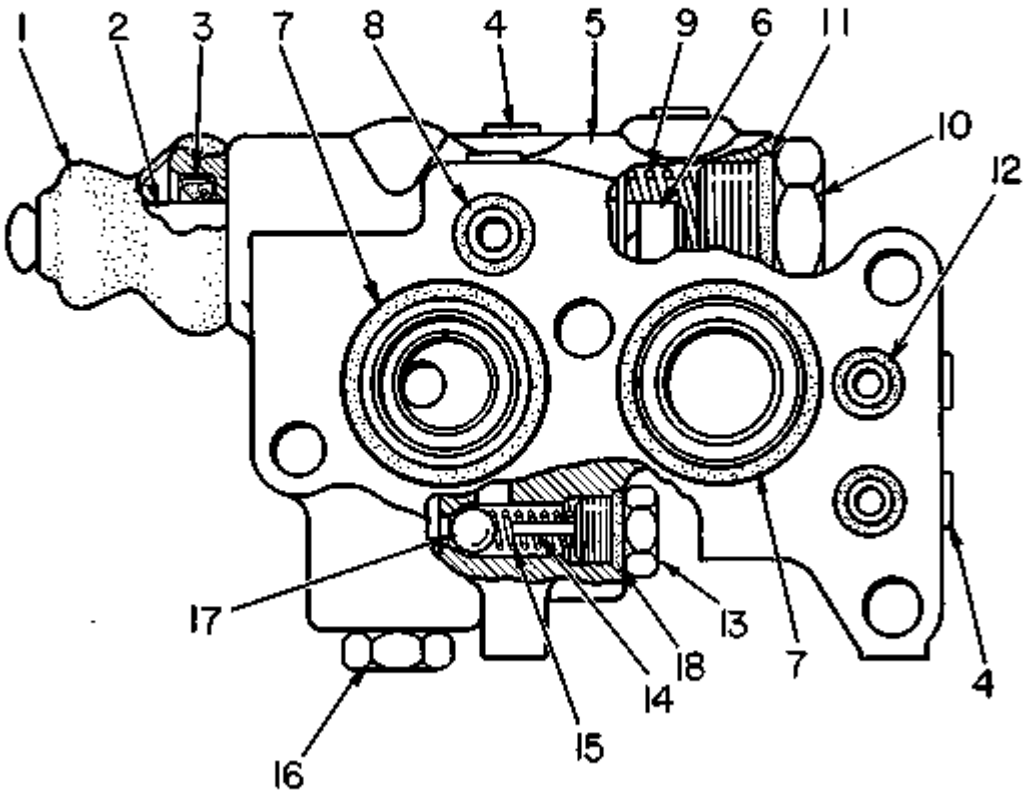

Nota	Ref	Numero	Cant	Nombre De Pieza
		8J-0508	1	VALVE GP-NEUTRALIZER
	1	6J-4568	1	BOOT
		8J-0509	1	VALVE GP
Z	2		1	STEM
	3	6J-4569	1	SEAL-LIP TYPE
	4	9S-8001	5	PLUG-O-RING
		4J-7533	5	SEAL-O-RING
Z	5		1	BODY
	6	6J-4608	1	BOLT-SOCKET HEAD
		3B-4505	1	LOCKWASHER
		8J-3534	1	WASHER
	7	4J-0520	2	SEAL
	8	4J-9535	1	SEAL
	9	5F-9035	1	SPRING
	10	6J-4693	1	PLUG-O-RING SPL
	11	3D-2824	1	SEAL-O-RING
	12	4J-5309	4	SEAL-O-RING
		9S-6155	1	PLUG AS-O-RING
	13	6J-4694	1	PLUG-O-RING SPECIAL
	14	4H-8380	1	PIN-SPRING
	15	1H-0516	1	SPRING
	16	9S-4185	1	PLUG-O-RING
		3K-0360	1	SEAL-O-RING
	17	4B-9782	1	BALL
	18	1J-9671	1	SEAL-O-RING
Z				NOT SERVICED SEPARATELY

4307 6J6218 NEUTRALIZER VALVE GROUP--Type 1
Part of 8J430 Steering Valve Group shown on Page 141

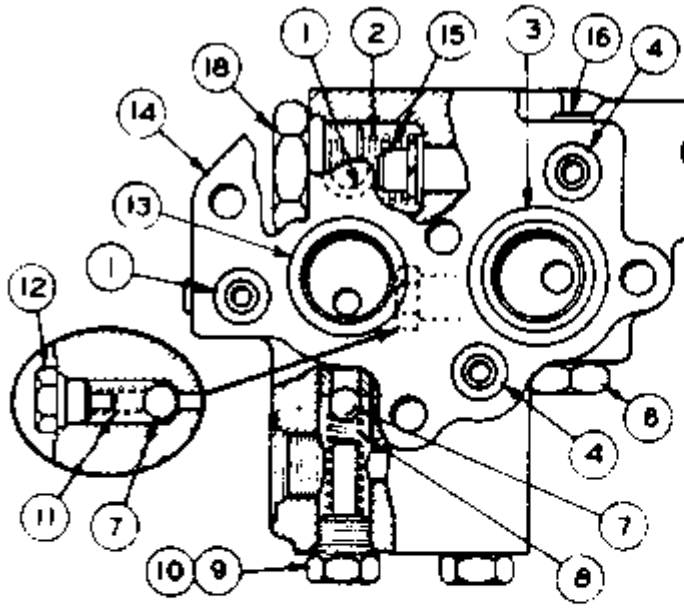

REF NO.	PART NUMBER	DESCRIPTION	QTY.
1	4J5309	SEAL	3
2	5F9035	SPRING	1
3	4J520	SEAL	1
4	4J9535	SEAL	2
5	6J4568	BOOT	1
6	954185	PLUG	1
	3K360	SEAL	1
7	4B9782	BALL	3
8	9H2367	SPRING	2
C 9	956154	PLUG ASSEM.	2
10	3J1907	SEAL	2
11	1H516	SPRING	1
C 12	956155	PLUG ASSEM.	1
C	1J9671	SEAL	1
13	4F8946	SEAL	1
14	6J6217	BODY GROUP	1
		(Includes)	
	6J4608	BOLT	1
15	3B4505	LOCKWASHER	1
	1A6240	WASHER	1
	5J9286	PLUG	5
16 C	4J7533	SEAL	5
17	6J4569	SEAL	1
18	6J4693	PLUG	1
	3D2824	SEAL	1

C INDICATES CHANGE

165039

Nota	Ref	Numero	Cant	Nombre De Pieza
		6J-6218	1	VALVE GP
	1	4J-5309	3	SEAL
	2	5F-9035	1	SPRING
	3	4J-0520	1	SEAL
	4	4J-9535	2	SEAL
	5	6J-4568	1	BOOT
C	6	9S-4185	1	PLUG
		3K-0360	1	SEAL
	7	4B-9782	3	BALL
	8	9H-2367	2	SPRING
C	9	9S-6154	2	PLUG ASSEM.
	10	3J-1907	2	SEAL
	11	1H-0516	1	SPRING
C	12	9S-6155	1	PLUG ASSEM.
C		1J-9671	1	SEAL
	13	4F-8946	1	SEAL
	14	6J-6217	1	BODY GROUP
				(Includes)
	15	6J-4608	1	BOLT
		3B-4505	1	LOCKWASHER
		1A-6240	1	WASHER
	16	5J-9286	5	PLUG
C		4J-7533	5	SEAL
	17	6J-4569	1	SEAL
	18	6J-4693	1	PLUG
		3D-2824	1	SEAL
C				INDICATES CHANGE

4307 6J6218 NEUTRALIZER VALVE GROUP--Type 2
Part of 8J430 Steering Valve Group shown on Page 141

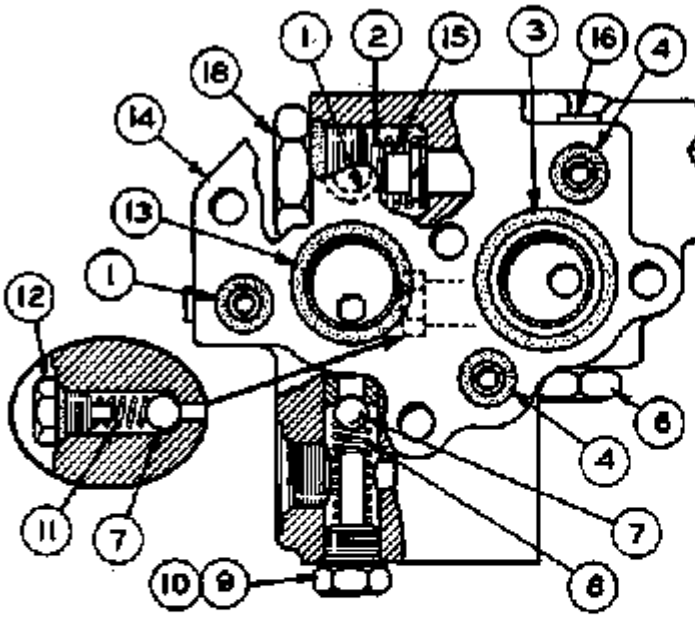

REF NO.	PART NUMBER	DESCRIPTION	QTY
1	4J5309	SEAL	3
2	5F9035	SPRING	1
3	4J520	SEAL	1
4	4J9535	SEAL	2
5	6J4568	BODY	1
6	9S4185	PLUG	1
	3K360	SEAL	1
C 7	4B9782	BALL	2
C 8	9H2367	SPRING	1
C 9	9S6154	PLUG ASSEM.	1
C 10	3J1907	SEAL	1
11	1H516	SPRING	1
12	9S6155	PLUG ASSEM.	1
	1J9671	SEAL	1
13	4F8946	SEAL	1
14	6J6217	BODY GROUP	1
		(Includes)	
	6J4608	BOLT	1
15	3B4505	LOCKWASHER	1
	1A6240	WASHER	1
	5J9286	PLUG	5
C 16	4J7533	SEAL	5
C 17	8J8553	SEAL	1
18	6J4693	PLUG	1
	3D2824	SEAL	1

C INDICATES CHANGE 165040

Nota	Ref	Numero	Cant	Nombre De Pieza
		6J-6218	1	VALVE GP
	1	4J-5309	3	SEAL
	2	5F-9035	1	SPRING
	3	4J-0520	1	SEAL
	4	4J-9535	2	SEAL
	5	6J-4568	1	BOOT
	6	9S-4185	1	PLUG
		3K-0360	1	SEAL
C	7	4B-9782	2	BALL
C	8	9H-2367	1	SPRING
C	9	9S-6154	1	PLUG ASSEM.
C	10	3J-1907	1	SEAL
	11	1H-0516	1	SPRING
	12	9S-6155	1	PLUG ASSEM.
		1J-9671	1	SEAL
	13	4F-8946	1	SEAL
	14	6J-6217	1	BODY GROUP
				(Includes)
	15	6J-4608	1	BOLT
		3B-4505	1	LOCKWASHER
		1A-6240	1	WASHER
	16	5J-9286	5	PLUG
C		4J-7533	5	SEAL
C	17	8J-8553	1	SEAL
	18	6J-4693	1	PLUG
		3D-2824	1	SEAL
C				INDICATES CHANGE

4265 7K2738 PARK AND EMERGENCY VALVE ASSEMBLY
Part of Brake Chamber, Horn, Horn Valve and Lines shown on Pages 132 and 132E

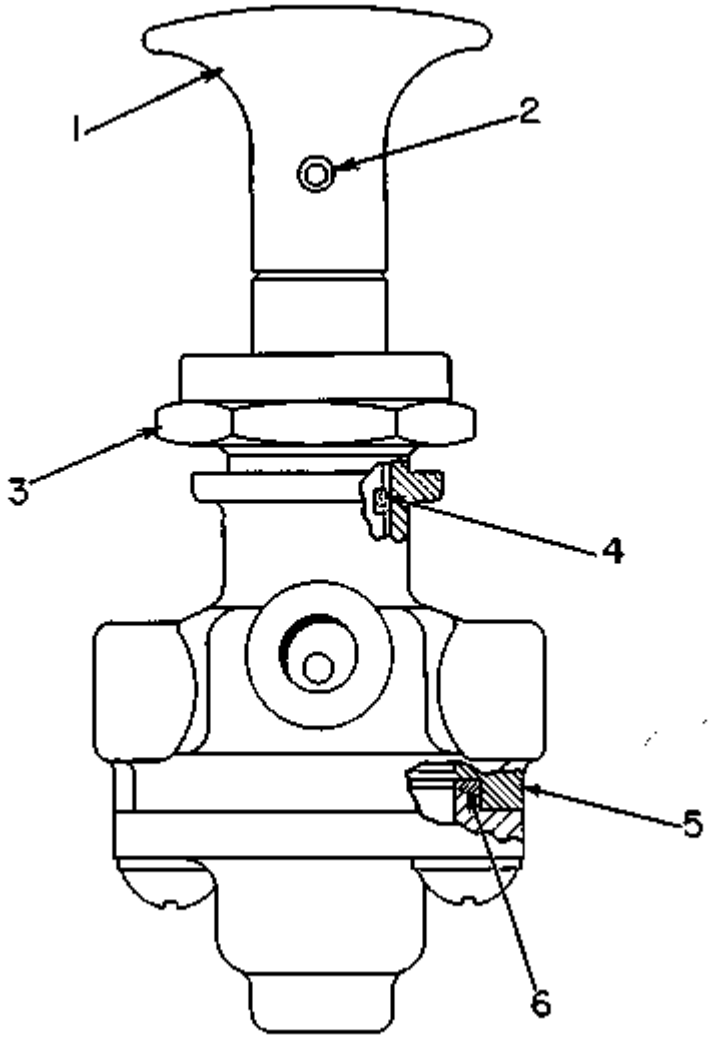

Nota	Ref	Numero	Cant	Nombre De Pieza
		7K-2738	1	VALVE AS-PARK & SECONDARY
	1	5K-6083	1	KNOB
	2	2D-6403	1	PIN-SPRING
	3	8K-6474	1	NUT AS-SEALING
	4	4K-2039	1	SEAL-O-RING
Z	5		1	VALVE AS
	6	5K-6077	1	RING-SEALING
Z				NOT SERVICED SEPARATELY

4307 8J441 SELECTOR VALVE GROUP
Part of 8J430 Steering Valve Group shown on Page 141

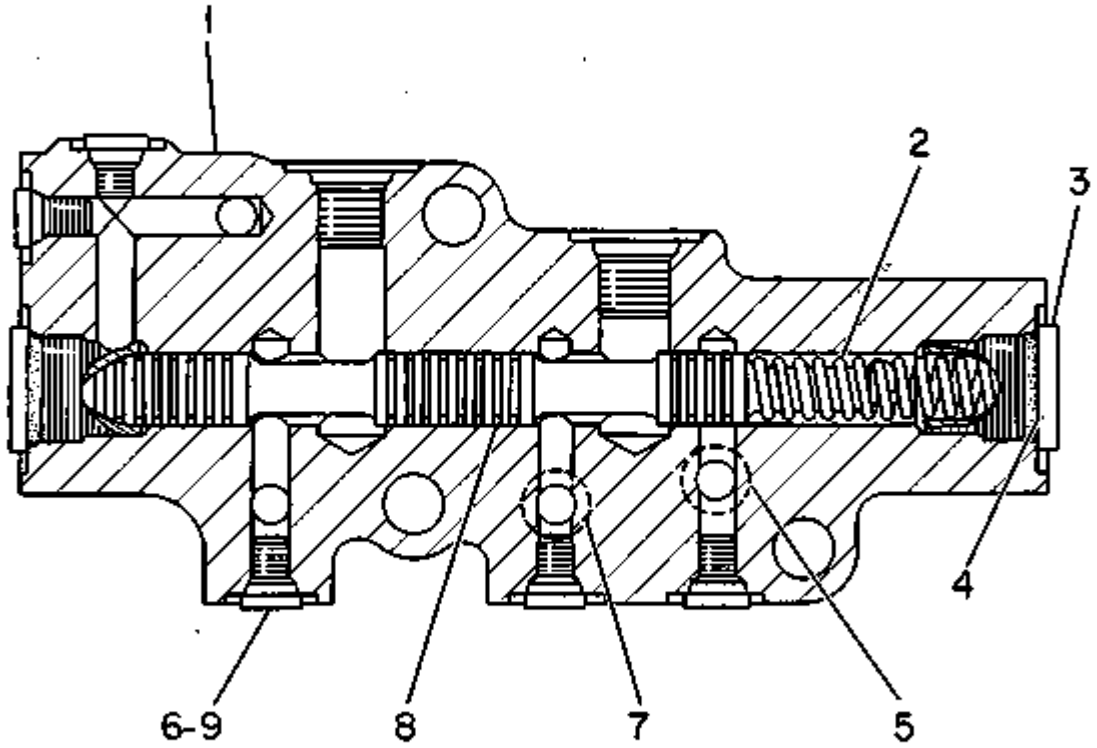

Nota	Ref	Numero	Cant	Nombre De Pieza
		8J-0441	1	VALVE GP-SELECTOR
Z	1		1	BODY
	2	8J-0438	1	SPRING
	3	9S-8005	2	PLUG-O-RING
	4	3K-0360	2	SEAL-O-RING
	5	4J-5309	4	SEAL-O-RING
	6	4J-7533	5	SEAL-O-RING
	7	4J-9535	3	SEAL
Z	8		1	STEM
	9	9S-8001	5	PLUG-O-RING
Z				NOT SERVICED SEPARATELY

41K11287 930 WHEEL LOADER Identificación de Piezas
Número de publicación SEBP1052-01 Fecha de publicación 1984/12/01 Fecha de actualización 1994/09/05

5V3009 STEERING CONTROL GROUP--Part 1 of 2
Serial No. 41K10160 to 41K12134 inclusive
3G7387 Pump parts are shown on Page 140A

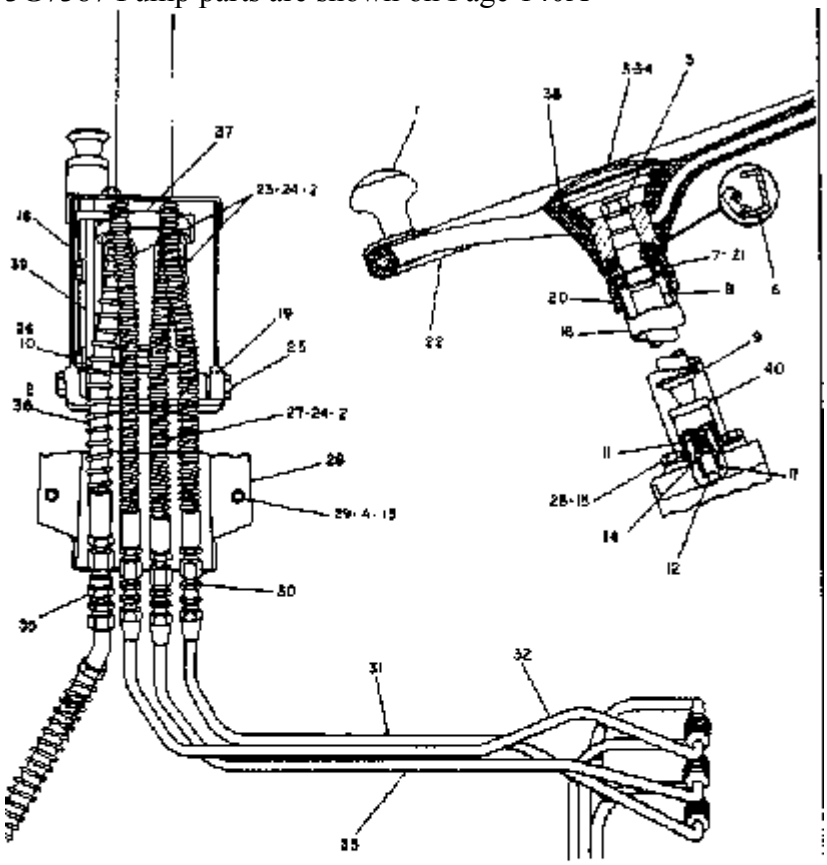

REF. NO.	PART NUMBER	DESCRIPTION	QTY.
1	2K9096	SPINNER ASSEM.	1
2	3K340	SEAL	4
3	4D874	COVER	1
4	9P1075	WASHER	4
5	1D5120	NUT	1
6	9M7432	SEAL	1
7	6K8161	BEARING	1
8	6K6771	SHAFT	1
9	9R6164	KNOB	1
10	6L1351	BOLT	2
11	L955	SPRING	1
12	8V2835	PIN ASSEM.	1
	6H3956	PIN	1
13	4B4276	WASHER	4
14	1A7615	WASHER	1
15	9B1919	BOLT	4
16	1V7503	TUBE ASSEM.	1
17	7H818	BUSHING	1
18	4V2837	COVER	1
19	5K2294	BEARING	2
20	6K8170	NUT	1

21	6K8162	RING	2
22	3K5461	WHEEL	1
23	7K525	HOSE ASSEM., -42, 62 cm(18, 75 in.	2
24	3D8188	CONNECTOR	3
25	7W5547	BOLT	2
26	5M2894	WASHER	6
27	7K4915	HOSE ASSEM. -42.87 cm(16.88 in.)	1
28	6K6769	COVER	1
29	S509	BOLT	4
30A	2P1278	UNION	4
	2P1279	LOCKNUT	6
31	7K4800	TUBE ASSEM.	1
32	7K4807	TUBE ASSEM.	1
33	7K4809	TUBE ASSEM.	1
34	2H9458	GASKET	1
35	2P1281	UNION	1
	7F2050	LOCKNUT	1
36	7K2683	HOSE ASSEM. -42, 87 cm(16, 88 in.	1
	8M505	CONNECTOR	1
37	3G7387	PUMP ASSEM.	1
		(Separate Illustration)	
38	5F5442	SCREW	4
39	4V2838	BRACKET	1
40	2V2776	NUT	1

177866

Nota	Ref	Numero	Cant	Nombre De Pieza
		5V-3009	1	CONTROL GP-STEERING
	1	2K-9096	1	SPINNER ASSEM.
	2	3K-0360	4	SEAL
	3	4D-0874	1	COVER
	4	5P-1075	4	WASHER
	5	1D-5120	1	NUT
	6	9M-7432	1	SEAL
	7	6K-8161	1	BEARING
	8	6K-6771	1	SHAFT
	9	9K-6764	1	KNOB
	10	0L-1351	2	BOLT
	11	0L-0955	1	SPRING
	12	4V-2835	1	PIN ASSEM.
		6H-3956	1	PIN
	13	4B-4278	4	WASHER
	14	1A-7615	1	WASHER
	15	3B-1915	4	BOLT
	16	1V-7303	1	TUBE ASSEM.
	17	7H-0818	1	BUSHING
	18	4V-2837	1	COVER
	19	5K-2294	2	BEARING
	20	6K-6770	1	NUT
	21	6K-8162	2	RING
	22	3K-5461	1	WHEEL
	23	7K-0525	2	HOSE ASSEM. 47.62 cm(18.75 in.)
	24	030-8188	3	CONNECTOR
	25	7V-5547	2	BOLT
	26	5M-2894	6	WASHER
	27	7K-4013	1	HOSE ASSEM. 42.87 cm(16.88 in.)
	28	6K-6769	1	COVER

	29	0S-0509	4	BOLT
	30	2P-1278	6	UNION
		2P-1279	6	LOCKNUT
	31	7K-4000	1	TUBE ASSEM.
	32	7K-4007	1	TUBE ASSEM.
	33	7K-4009	1	TUBE ASSEM.
	34	2H-9458	1	GASKET
	35	2P-1281	1	UNION
		7F-2050	1	LOCKNUT
	36	7K-2683	1	HOSE ASSEM. 42.87 cm(16.88 in.)
		8M-0505	1	CONNECTOR
Y	37	3G-7387	1	PUMP ASSEM.
				(Separate Illustration)
	38	5F-5442	4	SCREW
	39	4V-2838	1	BRACKET
	40	2V-2776	1	NUT

Y	SEPARATE ILLUSTRATION

5076 3G3445 HYDRAULIC TANK AND VALVE GROUP--Part 1 of 3
Serial No. 41K10160-Up
3G2315 Valve parts are shown on Page 169B

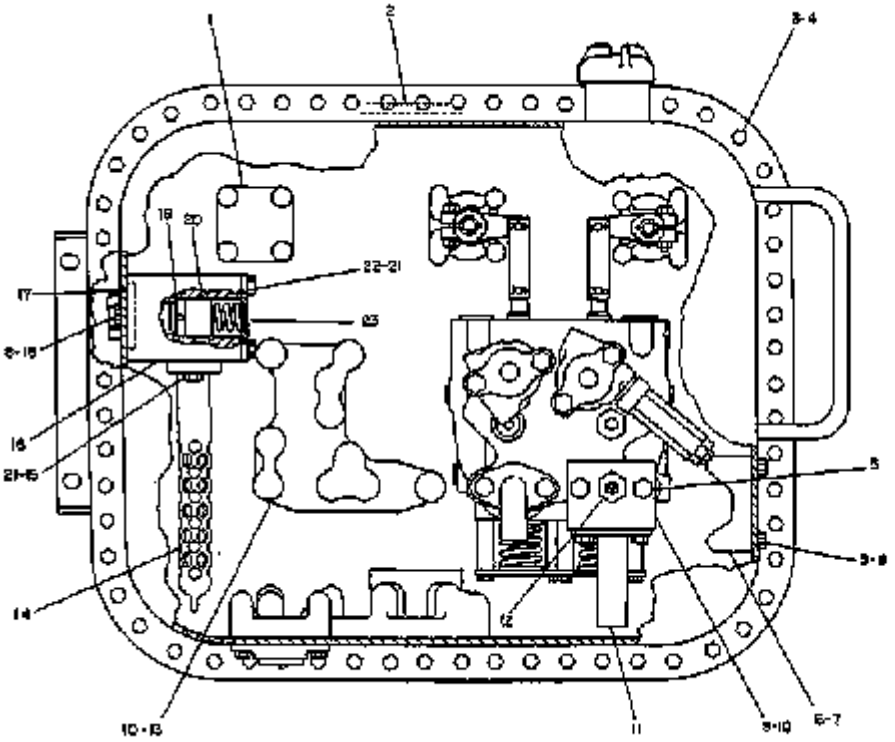

FIG. NO.	PART NUMBER	DESCRIPTION	QTY.
	7J2852	COVER	1
1	4J8425	GASKET	1
A	9 P9114	SEALANT--2,8ml(9,48 fl.oz.)	
3	51594	BOLT	64
C 4	2K4973	NUT	51
5	51623	BOLT	2
6	3G3972	BLOCK	1
	1H9696	SEAL	1
7	9S4191	PLUG	1
	3J1987	SEAL	1
8	5M6005	SEAL	4
9	8J5449	BODY	1
10	4J8997	SEAL--38,27mm(1,10 in.)	5
11	9J1935	TUBE ASSEM.	1
12	3G2315	VALVE GROUP	1
		(Separate Illustration)	
13	3G9818	COVER	1
	6F6672	SEAL--17,12mm(,674 in.)	10
14	1U1981	TUBE ASSEM.	1
15	2J3118	BOLT	2
16	1U1739	FLANGE	1
17	1N5728	SEAL	1
18	580P	BOLT	2
19	1U1979	VALVE	1
C 20	1J8960	SPRING	1
21	5M2894	WASHER	4
22	3D8938	BOLT	2
23	1U1978	COVER	1

C INDICATES CHANGE

A ORDER BY THE METER

177191

Nota	Ref	Numero	Cant	Nombre De Pieza
		3G-3445	1	TANK & VALVE GP
	1	7J-2852	1	COVER
		4J-8425	1	GASKET
H		5P-9119		SEALANT 2.5m(98.42 in.)
	3	0S-1594	64	BOLT
C	4	2K-4973	51	NUT
	5	0S-1623	2	BOLT
	6	3G-3972	1	BLOCK
		1H-9696	1	SEAL
	7	9S-4191	1	PLUG
		3J-1907	1	SEAL
	8	5H-6005	4	SEAL
	9	8J-5449	1	BODY
	10	4J-8997	5	SEAL 28.17mm(1.10 in.)
	11	9J-1985	1	TUBE ASSEM.
Y	12	3G-2315	1	VALVE GROUP
				(Separate Illustration)
	13	3G-9818	1	COVER
		6F-6672	10	SEAL 17.12mm(.674 in.)
	14	1U-1981	1	TUBE ASSEM.
	15	2J-3118	2	BOLT
	16	1U-1733	1	FLANGE
	17	1H-5728	1	SEAL
	18	0S-0509	2	BOLT
	19	1U-1979	1	VALVE
C	20	1J-8960	1	SPRING
	21	5M-2894	4	WASHER
	22	030-8535	2	BOLT
	23	1U-1978	1	COVER

C	INDICATES CHANGE
Y	SEPARATE ILLUSTRATION
H	ORDER BY THE METER

5076 3G9129 HYDRAULIC TANK AND VALVE GROUP--Part 1 of 3--Type 1
Serial No. 41K10160-Up
Part of 5V3674 and 5V4722 Hydraulic Arrangements listed on Page 158. 3G9019 Valve parts are shown on Page 168E. AN ATTACHMENT

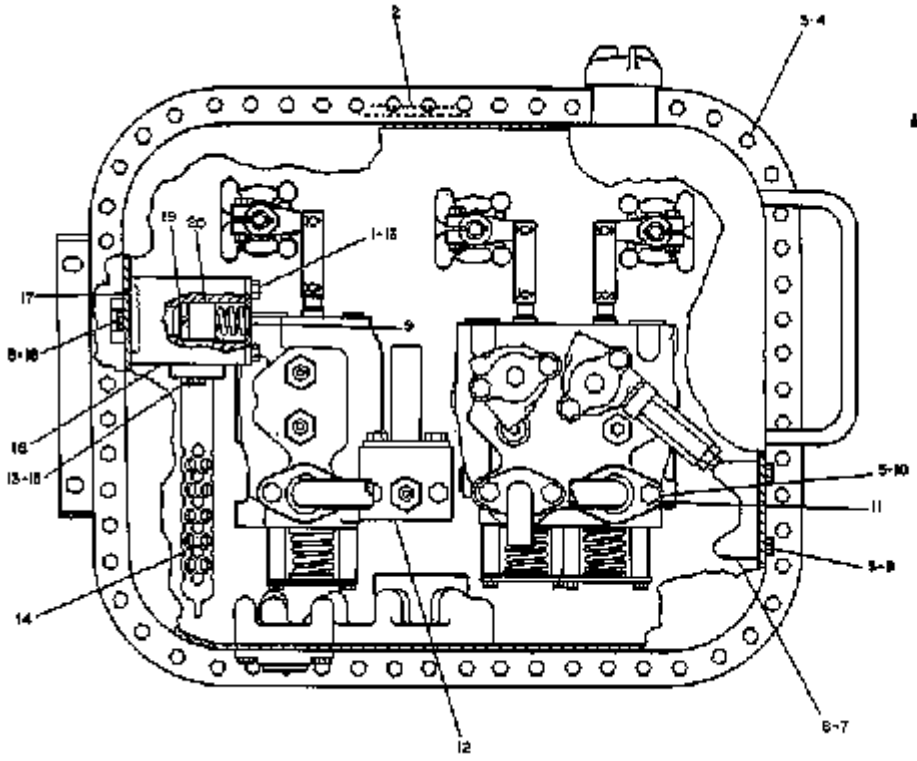

REF NO.	PART NUMBER	DESCRIPTION	QTY
1	9U8535	BOLT	2
A 2	5P9119	SEALANT—2.5m(98.42 in.)	
3	S1594	BOLT	64
4	1B5955	NUT	51
5	9U0223	BOLT	4
	5P8245	WASHER	4
6	3G3972	BLOCK	1
	1M9696	SEAL	1
7	9S4191	PLUG	1
	3J1907	SEAL	1
8	5M6003	SEAL	4
9	1U1978	COVER	1
10	1P3703	SEAL	2
11	3G9104	TUBE ASSEM.	1
12	3G9019	VALVE GROUP (Separate Illustration)	1
13	5M2894	WASHER	4
14	1U1981	TUBE ASSEM.	1
15	2J9116	BOLT	2
16	1U1733	FLANGE	1
17	1M5728	SEAL	1
18	S509	BOLT	2
19	1U1979	VALVE	1
20	2J5345	SPRING	1

A ORDER BY THE METER

177897

Nota	Ref	Numero	Cant	Nombre De Pieza
		3G-9129	1	TANK & VALVE GP-HYDRAULIC
	1	030-8535	2	BOLT
H	2	5P-9119		SEALANT 2.5m(98.42 in.)
	3	0S-1594	64	BOLT
	4	1B-5355	51	NUT
	5	031-0223	4	BOLT
		5P-8245	4	WASHER
	6	3G-3972	1	BLOCK
		1H-9696	1	SEAL
	7	9S-4191	1	PLUG
		3J-1907	1	SEAL
	8	5H-6005	4	SEAL
	9	1U-1978	1	COVER
	10	1P-3703	2	SEAL
	11	3G-9104	1	TUBE ASSEM.
Y	12	3G-9019	1	VALVE GROUP
				(Separate Illustration)
	13	5M-2894	4	WASHER
	14	1U-1981	1	TUBE ASSEM.
	15	2J-3118	2	BOLT
	16	1U-1733	1	FLANGE
	17	1H-5728	1	SEAL
	18	0S-0509	2	BOLT
	19	1U-1979	1	VALVE
	20	2J-5845	1	SPRING
H				ORDER BY THE METER
Y				SEPARATE ILLUSTRATION

5076 3G9129 HYDRAULIC TANK AND VALVE GROUP--Part 1 of 3--Type 2
Serial No. 41K10160-Up
Part of 5V3674 and 5V4722 Hydraulic Arrangements listed on Page 158. 3G9019 Valve parts are shown on Page 168E
AN ATTACHMENT

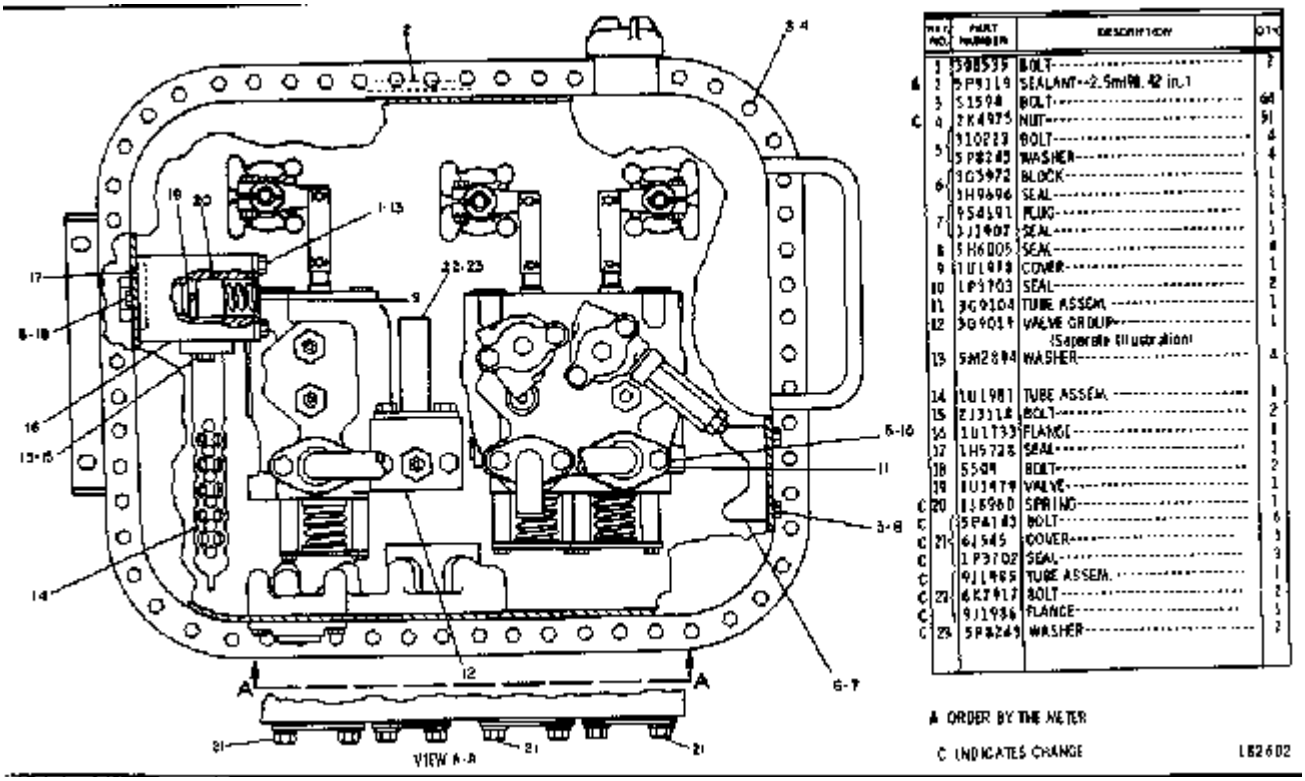

Nota	Ref	Numero	Cant	Nombre De Pieza
		3G-9129	1	TANK & VALVE GP-HYDRAULIC
	1	030-8535	2	BOLT
H	2	5P-9119		SEALANT 2.5m(98.42 in.)
	3	0S-1594	64	BOLT
C	4	2K-4973	51	NUT
	5	031-0223	4	BOLT
		5P-8245	4	WASHER
	6	3G-3972	1	BLOCK
		1H-9696	1	SEAL
	7	9S-4191	1	PLUG
		3J-1907	1	SEAL
	8	5H-6005	4	SEAL
	9	1U-1978	1	COVER
	10	1P-3703	2	SEAL
	11	3G-9104	1	TUBE ASSEM.
Y	12	3G-9019	1	VALVE GROUP
				(Separate Illustration)
	13	5M-2894	4	WASHER
	14	1U-1981	1	TUBE ASSEM.
	15	2J-3118	2	BOLT
	16	1U-1733	1	FLANGE
	17	1H-5728	1	SEAL
	18	0S-0509	2	BOLT
	19	1U-1979	1	VALVE
C	20	1J-8960	1	SPRING
C	21	5P-4143	6	BOLT
C		6J-0545	3	COVER
C		1P-3702	3	SEAL
C	22	9J-1985	1	TUBE ASSEM.
C		6K-7917	2	BOLT

C		9J-1986	1	FLANGE
C	23	5P-8245	2	WASHER

H	ORDER BY THE METER
Y	SEPARATE ILLUSTRATION
C	INDICATES CHANGE

5076 3G3445 HYDRAULIC TANK AND VALVE GROUP--Part 2 of 3
Serial No. 41K10160-Up
3G8683 Valve parts are shown on Page 168D

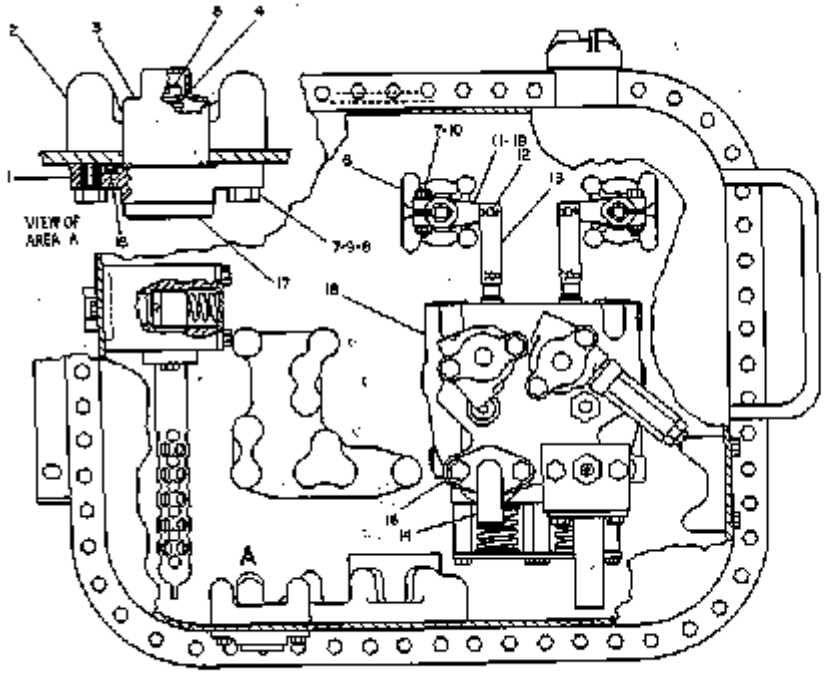

REF NO.	PART NUMBER	DESCRIPTION	QTY.
1	818782	BODY	1
2	3G2810	RETAINER	1
3	LU2827	GUIDE	1
4	7B3099	SPRING	1
5	4J8783	VALVE	1
6	509022	HOUSING	1
	7E7983	BEARING	2
	514407	SEAL	1
	4J8425	GASKET	2
7	51573	BOLT	4
8	5M6005	SEAL	2
9	5M2804	WASHER	2
10	4J8265	NUT	2
11	3D6915	LEVER	2
	3G9102	SHAFT	2
	7J8704	WASHER	2
12	1J8384	PIN	4
	3B4615	COTTER	4
13	3G9126	LINK	4
14	3G9131	TUBE ASSEM.	1
	5F1678	SEAL	1
15	510225	BOLT	2
	5P8245	WASHER	2
16	3G8683	VALVE GROUP (Separate Illustration)	3
17	917091	PLUG	1
	5M2027	SEAL	1
18	5F9000	SEAL	1
19	1B8706	KEY	2

177827

Nota	Ref	Numero	Cant	Nombre De Pieza
		3G-3445	1	TANK & VALVE GP
	1	8J-8782	1	BODY
	2	3G-2816	1	RETAINER
	3	1U-2827	1	GUIDE
	4	7B-3039	1	SPRING
	5	8J-8783	1	VALVE
	6	3G-9022	1	HOUSING
		7F-7983	2	BEARING
		3J-4407	1	SEAL
		4J-8425	2	GASKET
	7	0S-1571	4	BOLT
	8	5H-6005	2	SEAL
	9	5M-2894	2	WASHER
	10	4J-8265	2	NUT
	11	3D-6915	2	LEVER
		3G-9102	2	SHAFT
		7J-8744	2	WASHER
	12	1J-4384	4	PIN
		3B-4615	4	COTTER
	13	3G-9126	4	LINK
	14	3G-9131	1	TUBE ASSEM.
		5F-1678	1	SEAL
	15	031-0223	2	BOLT
		5P-8245	2	WASHER
Y	16	3G-8683	1	VALVE GROUP
				(Separate Illustration)
	17	9J-7031	1	PLUG
		5M-2057	1	SEAL
	18	5F-8000	1	SEAL
	19	1B-8706	2	KEY

Y	SEPARATE ILLUSTRATION

5076 3G9129 HYDRAULIC TANK AND VALVE GROUP--Part 2 of 3--Type 1
Serial No. 41K10160-Up
Part of 5V3674 and 5V4722 Hydraulic Arrangements listed on Page 158. 3G8683 Valve parts are shown on Page 168D
AN ATTACHMENT

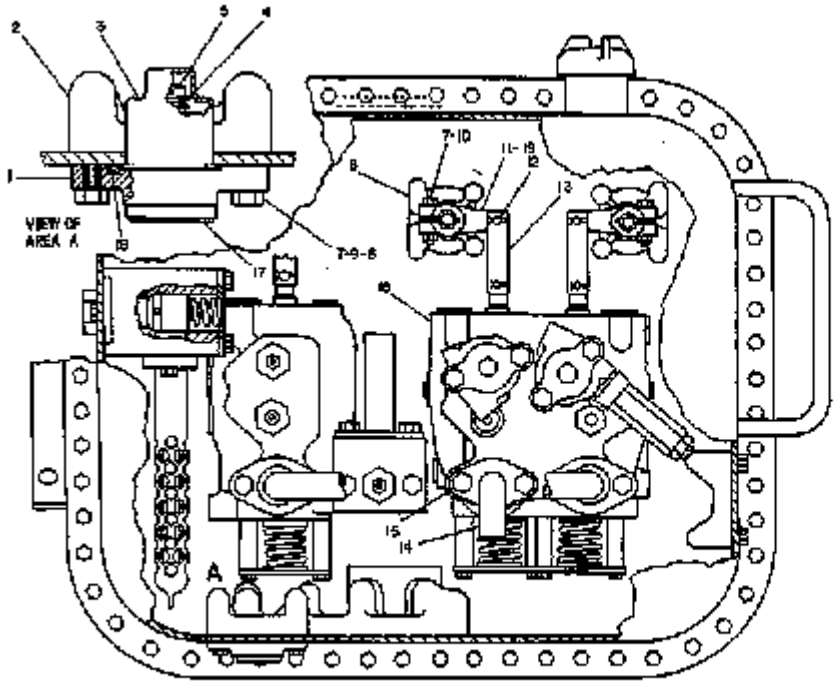

REF NO.	PART NUMBER	DESCRIPTION	QTY
1	8J8782	BODY	1
2	3G2816	RETAINER	1
3	1U2827	GUIDE	1
4	7B3099	SPRING	1
5	8J8783	VALVE	1
6	3G9022	HOUSING	3
	7S7985	BEARING	6
	3J4407	SEAL	3
	4J8025	GASKET	3
7	S1571	BOLT	3
8	5H5005	SEAL	2
9	5M2694	WASHER	2
10	4J8265	NUT	3
11	3D6915	LEVER	3
	3G9102	SHAFT	3
	7J2746	WASHER	3
12	1J4384	PIN	6
	2B4615	COTTER	6
13	3G9124	LINK	6
14	3G9151	TUBE ASSEM.	1
	5F1478	SEAL	1
15	3J0223	BOLT	2
	5F8245	WASHER	2
16	9G8683	VALVE GROUP	1
		(Separate Illustration)	
17	9J7031	PLUG	1
	5M2057	SEAL	1
18	5F8000	SEAL	1
19	1B3706	KEY	3

177898

Nota	Ref	Numero	Cant	Nombre De Pieza
		3G-9129	1	TANK & VALVE GP-HYDRAULIC
	1	8J-8782	1	BODY
	2	3G-2816	1	RETAINER
	3	1U-2827	1	GUIDE
	4	7B-3039	1	SPRING
	5	8J-8783	1	VALVE
	6	3G-9022	3	HOUSING
		7F-7983	6	BEARING
		3J-4407	3	SEAL
		4J-8425	3	GASKET
	7	0S-1571	5	BOLT
	8	5H-6005	2	SEAL
	9	5M-2894	2	WASHER
	10	4J-8265	3	NUT
	11	3D-6915	3	LEVER
		3G-9102	3	SHAFT
		7J-8744	3	WASHER
	12	1J-4384	6	PIN
		3B-4615	6	COTTER
	13	3G-9126	6	LINK
	14	3G-9131	1	TUBE ASSEM.
		5F-1678	1	SEAL
	15	031-0223	2	BOLT
		5P-8245	2	WASHER
Y	16	3G-8683	1	VALVE GROUP
				(Separate Illustration)
	17	9J-7031	1	PLUG
		5M-2057	1	SEAL
	18	5F-8000	1	SEAL
	19	1B-8706	3	KEY

Y	SEPARATE ILLUSTRATION

5076 3G9129 HYDRAULIC TANK AND VALVE GROUP--Part 2 of 3--Type 2
Serial No. 41K10160-Up. Part of 5V3674 and 5V4722 Hydraulic Arrangements listed on Page 158
3G8683 Valve parts are shown on Page 168D. AN ATTACHMENT

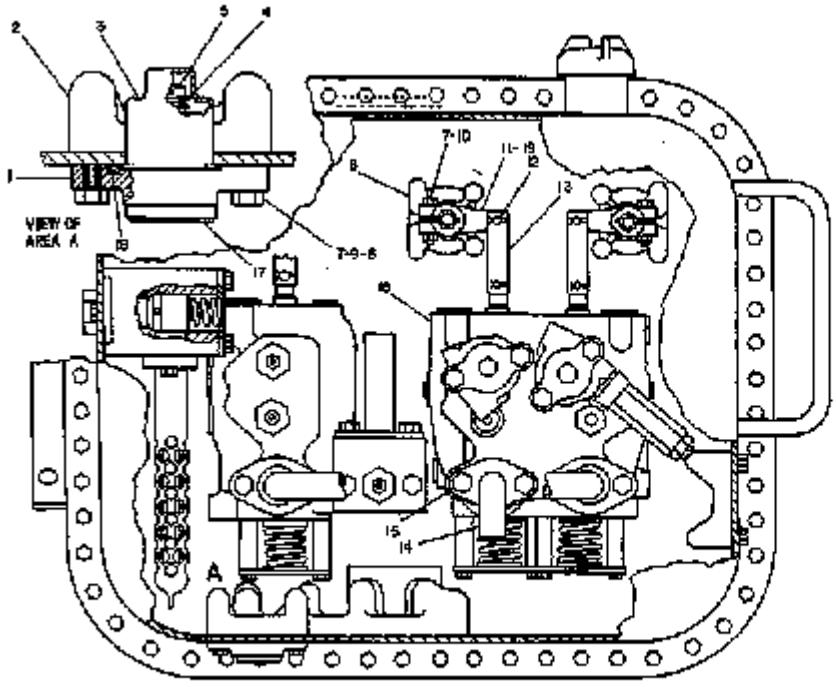

REF NO.	PART NUMBER	DESCRIPTION	QTY.
1	8J8782	BODY	1
2	3G2816	RETAINER	1
3	1U2327	GUIDE	1
4	7B3039	SPRING	1
5	8J8783	VALVE	1
6	3G9022	HOUSING	3
	7S7985	BEARING	6
	3J4407	SEAL	3
	4J8025	GASKET	3
7	9T571	BOLT	3
8	5H5005	SEAL	2
9	5M2894	WASHER	2
10	4J8265	NUT	3
11	3G6915	LEVER	3
	3G9102	SHAFT	3
	7J2746	WASHER	3
12	1J4384	PIN	6
	2B4615	COTTER	6
13	3G9124	LINK	6
14	3G9151	TUBE ASSEM.	1
	5F1478	SEAL	1
15	3L8223	BOLT	2
	5P8245	WASHER	2
16	8J8683	VALVE GROUP	1
		(Separate Illustration)	
17	9J7031	PLUG	1
	5M2057	SEAL	1
18	5F8000	SEAL	1
19	1J8706	KEY	3

177898

Nota	Ref	Numero	Cant	Nombre De Pieza
		3G-9129	1	TANK & VALVE GP-HYDRAULIC
	1	8J-8782	1	BODY
	2	3G-2816	1	RETAINER
	3	1U-2827	1	GUIDE
	4	7B-3039	1	SPRING
	5	8J-8783	1	VALVE
	6	3G-9022	3	HOUSING
		7F-7983	6	BEARING
		3J-4407	3	SEAL
		4J-8425	3	GASKET
	7	0S-1571	5	BOLT
	8	5H-6005	2	SEAL
	9	5M-2894	2	WASHER
	10	4J-8265	3	NUT
	11	3D-6915	3	LEVER
		3G-9102	3	SHAFT
		7J-8744	3	WASHER
	12	1J-4384	6	PIN
		3B-4615	6	COTTER
	13	3G-9126	6	LINK
	14	3G-9131	1	TUBE ASSEM.
		5F-1678	1	SEAL
	15	031-0223	2	BOLT
		5P-8245	2	WASHER
Y	16	3G-8683	1	VALVE GROUP
				(Separate Illustration)
	17	9J-7031	1	PLUG
		5M-2057	1	SEAL
	18	5F-8000	1	SEAL
	19	1B-8706	3	KEY

Y	SEPARATE ILLUSTRATION

5076 3G3445 HYDRAULIC TANK AND VALVE GROUP--Part 3 of 3
Serial No. 41K10160-Up

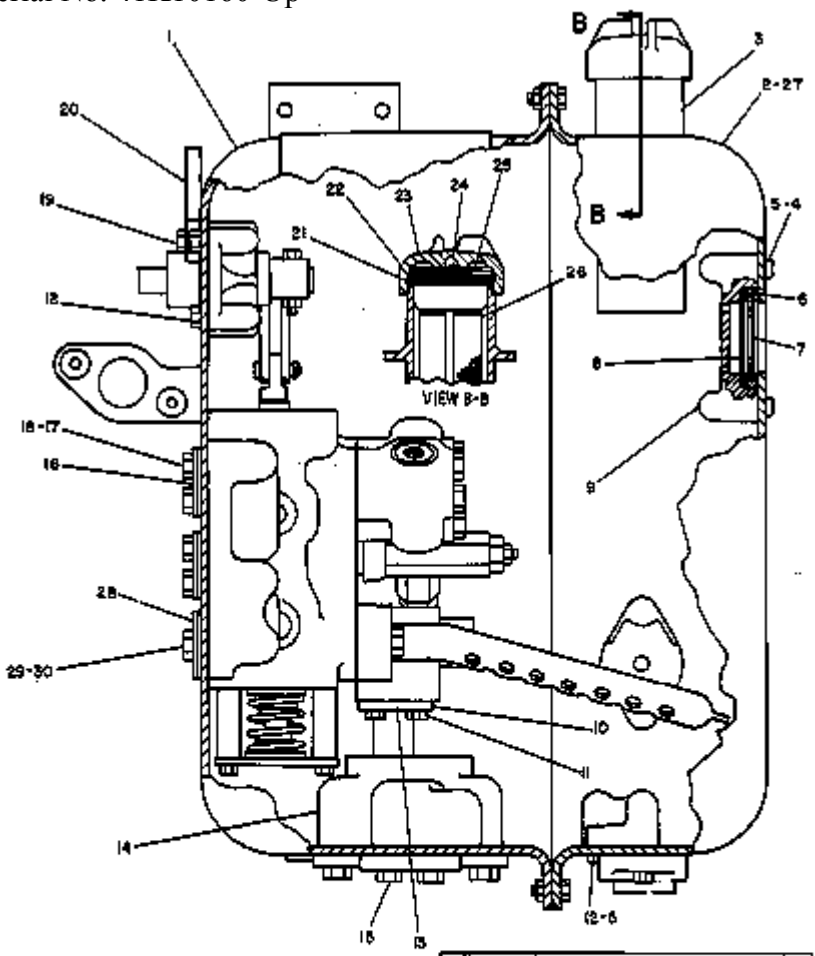

REF NO.	PART NUMBER	DESCRIPTION	QTY
1	3G9079	TANK ASSEM.	1
2	3G9031	COVER ASSEM.	1
		(Includes)	
	7D4593	GRAB IRON	1
3	9J648	FILLER	1
4	952017	SCREW	2
5	9H6009	SEAL	5
6	4J8251	GROMMET	1
C 7	438252	GLASS	1
8	3G5980	PLATE	1
9	3G2692	RETAINER	1
10	9J1935	FLANGE	1
11	6K7917	BOLT	2
12	61594	BOLT	11
13	9H2068	COVER	1
	4F7952	SEAL	1
14	3G9113	BLOCK	1
15	T772	BOLT	4
	8F9206	SEAL	4
16	6F3227	COVER	4
	7F4782	GASKET	4
17	7B3239	BOLT	10
C 18	5P4149	BOLT	2
19	9B1915	BOLT	4
20	3G9099	PLATE — 157.62 mm (6.20 in.)	1
	3G9101	PLATE — 125.38 mm (4.93 in.)	1
21	3G961	GASKET	1
22	9H6454	GASKET	1
23	7H1447	CAP	1
24	7B6368	BALL	2
25	6H9199	PLATE	2
26	9J3047	STRAINER	1
27	3G9125	BAR	1
C 28	6J545	COVER	1
C	1P3702	SEAL	1
C 29	5P4143	BOLT	2
C 30	5P8245	WASHER	6

C INDICATES CHANGE

307036

Nota	Ref	Numero	Cant	Nombre De Pieza
		3G-3445	1	TANK & VALVE GP
	1	3G-9079	1	TANK ASSEM.
	2	3G-9031	1	COVER ASSEM.
				(Includes)
		7D-4533	1	GRAB IRON
	3	9J-0648	1	FILLER
	4	035-2017	2	SCREW
	5	5H-6005	5	SEAL
	6	4J-8251	1	GROMMET
C	7	4J-8252	1	GLASS
	8	3G-5980	1	PLATE
	9	3G-2692	1	RETAINER
	10	9J-1986	1	FLANGE
	11	6K-7917	2	BOLT
	12	0S-1594	11	BOLT
	13	5H-2068	1	COVER
		4F-7952	1	SEAL
	14	3G-9115	1	BLOCK
	15	0T-0772	4	BOLT
		8F-9206	4	SEAL
	16	6F-3227	4	COVER
		7F-4782	4	GASKET
	17	7B-3235	10	BOLT
C	18	5P-4143	2	BOLT
	19	3B-1915	4	BOLT
	20	3G-9099	1	PLATE 157.62mm(6.20 in.)
		3G-9101	1	PLATE 125.38 mm(4.93 in.)
	21	3G-0361	1	GASKET
	22	9H-6454	1	GASKET
	23	7H-1447	1	CAP

	24	7B-6368	1	BALL
	25	6H-5139	1	PLATE
	26	9J-3047	1	STRAINER
	27	3G-9125	1	BAR
C	28	6J-0545	1	COVER
C		1P-3702	1	SEAL
C	29	5P-4143	2	BOLT
C	30	5P-8245	4	WASHER

C	INDICATES CHANGE

5076 3G9129 HYDRAULIC TANK AND VALVE GROUP--Part 3 of 3--Type 1
Serial No. 41K10160-Up
Part of 5V3674 and 5V4722 Hydraulic Arrangements listed on Page 158
AN ATTACHMENT

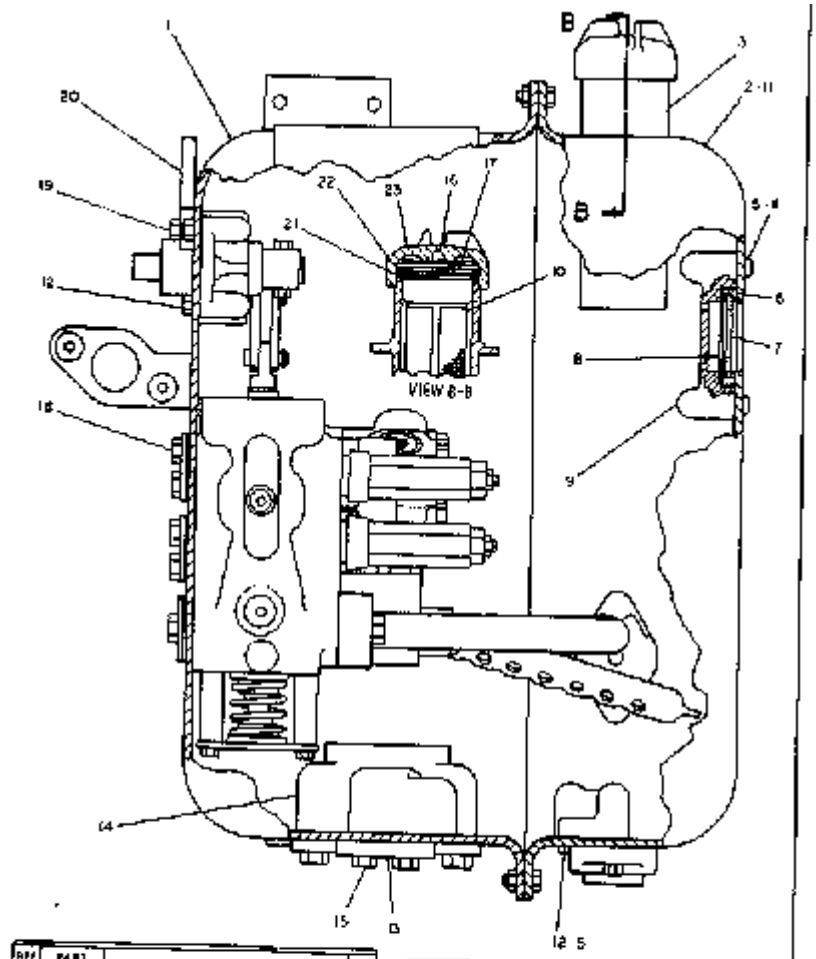

REF NO	PART NUMBER	DESCRIPTION	QTY.
1	3G9107	TANK ASSEM.	1
	3G9103	COVER ASSEM.	1
2		(Includes)	
	7B8533	GRAB IRON	1
3	9J848	FILLER	1
4	352017	SCREW	12
5	9H6005	SEAL	5
6	4J8251	GROMMET	1
7	4J8252	GLASS	1
8	5G9080	PLATE	1
9	3G7692	RETAINER	1
10	9J3042	STRAINER	1
11	5G9125	BAR	1
12	5B594	BOLT	11
13	5H2066	COVER	1
14	4K7958	SEAL	1
15	3G9115	BLOCK	1

15	1T772	BOLT	4
	8G9206	SEAL	4
16	7B6368	BALL	1
17	6N5139	PLATE	1
18	5J821	BOLT--25.4mm(1 in.)long	4
19	3B1915	BOLT	4
20	3G9099	PLATE--197.62mm(6.20 in.)	1
	3G9101	PLATE--125.38 mm(4.93 in.)	1
21	3G361	GASKET	3
22	9H6454	GASKET	1
23	7H1447	CAP	1

177849

Nota	Ref	Numero	Cant	Nombre De Pieza
		3G-9129	1	TANK & VALVE GP-HYDRAULIC
	1	3G-9079	1	TANK ASSEM.
	2	3G-9031	1	COVER ASSEM.
				(Includes)
		7D-4533	1	GRAB IRON
	3	9J-0648	1	FILLER
	4	035-2017	2	SCREW
	5	5H-6005	5	SEAL
	6	4J-8251	1	GROMMET
	7	4J-8252	1	GLASS
	8	3G-5980	1	PLATE
	9	3G-2692	1	RETAINER
	10	9J-3047	1	STRAINER
	11	3G-9125	1	BAR
	12	0S-1594	11	BOLT
	13	5H-2068	1	COVER
		4F-7952	1	SEAL
	14	3G-9115	1	BLOCK
	15	0T-0772	4	BOLT
		8F-9206	4	SEAL
	16	7B-6368	1	BALL
	17	6H-5139	1	PLATE
	18	0S-1621	4	BOLT 25.4mm(1 in.)long
	19	3B-1915	4	BOLT
	20	3G-9099	1	PLATE 157.62mm(6.20 in.)
		3G-9101	1	PLATE 125.38 mm(4.93 in.)
	21	3G-0361	1	GASKET
	22	9H-6454	1	GASKET
	23	7H-1447	1	CAP

7K5166 INDICATOR GROUP
Part of 9K6717 Multi-Purpose Bucket Arrangement listed on Page 208

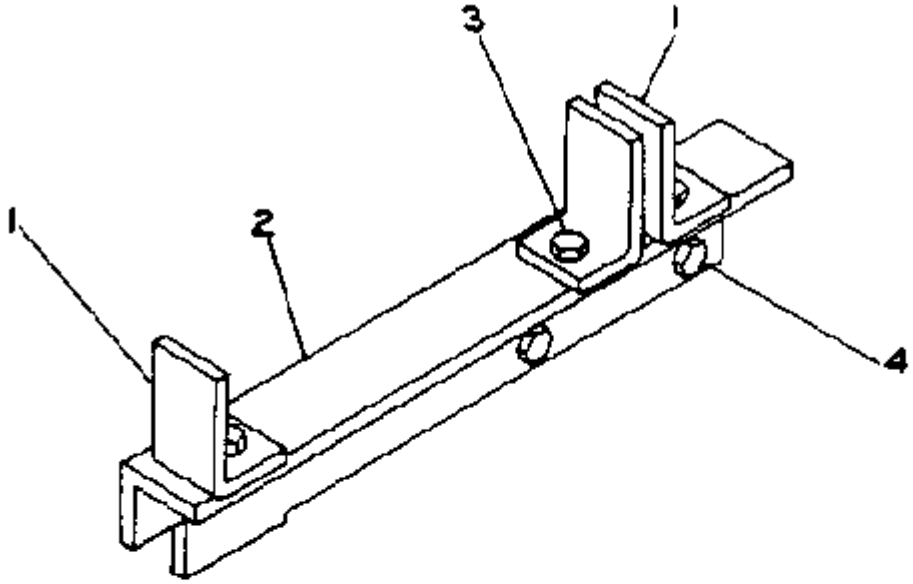

REF. NO.	PART NUMBER	DESCRIPTION	QTY
1	7K5164	ANGLE	3
2	7K5165	ANGLE	1
	4F7957	BOLT	3
3	5K9214	NUT	3
	4B4276	WASHER	3
	1A2029	BOLT	2
4	1D4717	NUT	2
	3B4506	LOCKWASHER	2

130627

Nota	Ref	Numero	Cant	Nombre De Pieza
		7K-5166	1	INDICATOR GROUP
	1	7K-5164	3	ANGLE
	2	7K-5165	1	ANGLE
	3	4F-7957	3	BOLT
		5K-9214	3	NUT
		4B-4276	3	WASHER
	4	1A-2029	2	BOLT
		1D-4717	2	NUT
		3B-4506	2	LOCKWASHER

5102 3G5471 LIFT CYLINDER GROUP (Chg. 0-3)--114.3 mm (4.5 in.) Bore x 855.6 mm (34 in.) Stroke
Serial No. 41K10256-Up

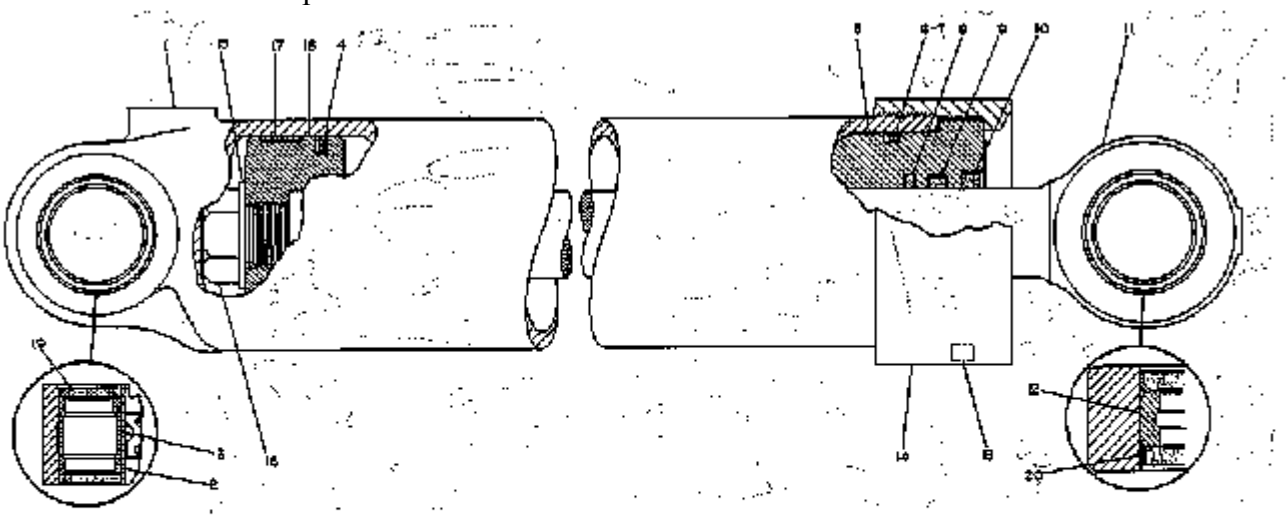

ITEM NO.	PART NUMBER	DESCRIPTION	QTY.
1	3G5471	CYLINDER ASSEM. (Includes)	1
2	6J2242	BEARING	2
3	7J9865	SPACER	1
4	5J4986	SEAL ASSEM.	1
5	8J5551	HEAD	1
6	2H5928	SEAL	1
7	1K7099	RING	1
8	5J3614	SEAL	1
9	5J8225	SEAL	1
10	4J3513	SEAL	1
11	3G5467	ROD ASSEM.	1
12	7J9699	BEARING	1
13	6J5912	SCREW	1
14	7U3677	CROWN	1
15	4K684	WASHER	2
16	7J8287	BOLT	1
17	4J5745	RING	1
18	8J5549	PISTON	1
A 19	7K9205	SEAL	2
A 20	7K9204	SEAL	2

A NOT PART OF 3G5471 CYLINDER GROUP

177853

Nota	Ref	Numero	Cant	Nombre De Pieza
		3G-5471	1	CYLINDER GP-LIFT
R	1	3G-5470	1	CYLINDER ASSEM.
				(Includes)
	2	6J-2242	2	BEARING
	3	7J-9865	1	SPACER
	4	5J-4986	1	SEAL ASSEM.
	5	8J-5551	1	HEAD
	6	2H-3928	1	SEAL
	7	1K-7095	1	RING
	8	5J-3616	1	SEAL
	9	5J-8225	1	SEAL
	10	4J-3515	1	SEAL
R	11	3G-5467	1	ROD ASSEM.
	12	7J-9699	1	BEARING
	13	8J-5912	1	SCREW
	14	1U-3877	1	CROWN
	15	4K-0684	2	WASHER
	16	7J-8287	1	BOLT
	17	4J-3745	1	RING
	18	8J-5549	1	PISTON
H	19	7K-9205	2	SEAL
H	20	7K-9204	2	SEAL
H				NOT PART OF 3G5471 CYLINDER GROUP
R				REMFG PART MAY BE AVAILABLE

5057 4V5427 LIFT CYLINDER LINES GROUP--As Viewed from L.H. Side of Machine--Part 2 of 2
Serial No. 41K10256-Up

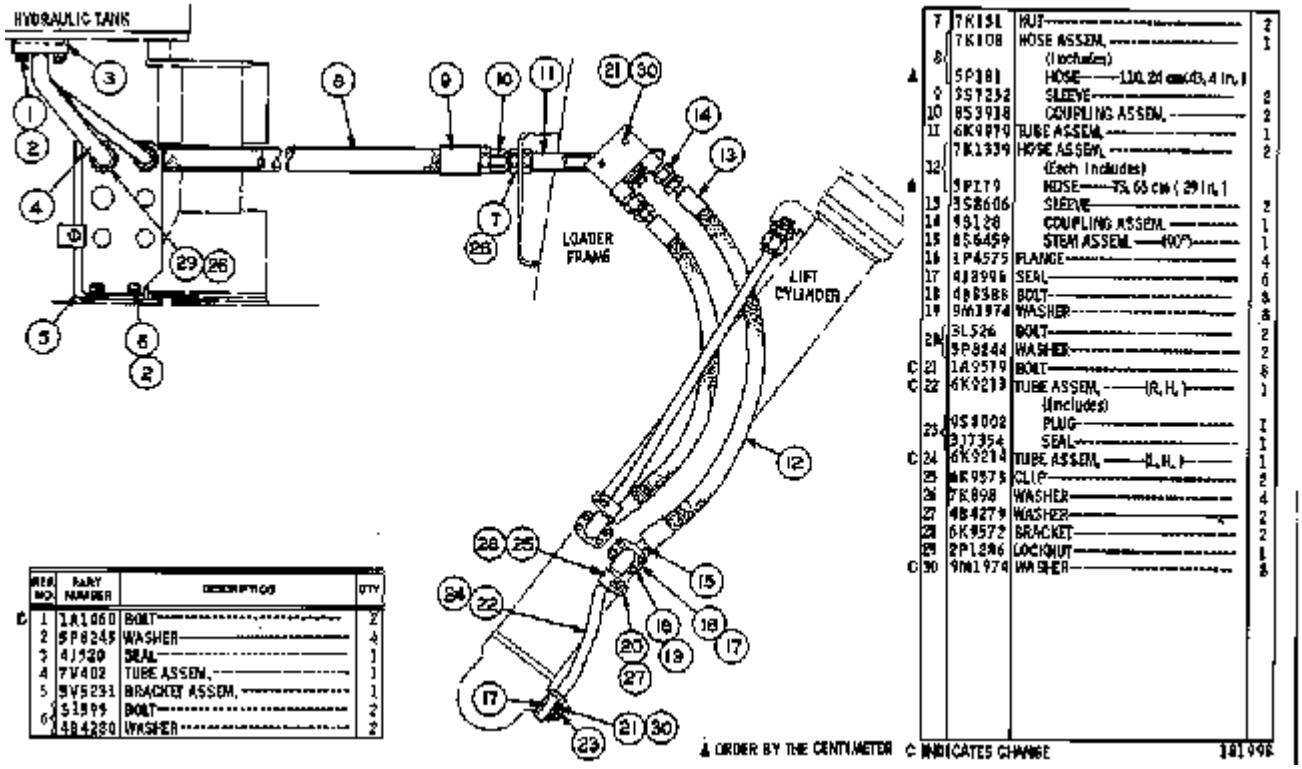

REF NO.	PART NUMBER	DESCRIPTION	QTY
C 1	1A1060	BOLT	2
2	5P8245	WASHER	4
3	4J1520	SEAL	1
4	7V402	TUBE ASSEM.	1
5	9V5231	BRACKET ASSEM.	1
6	5J999	BOLT	2
	4B4280	WASHER	2

REF NO.	PART NUMBER	DESCRIPTION	QTY
7	7K151	NUT	2
8	7K108	HOSE ASSEM. (Includes)	1
A	5P181	HOSE — 110.24 cm (43.4 In.)	
9	3S7252	SLEEVE	2
10	8S3938	COUPLING ASSEM.	2
11	6K9979	TUBE ASSEM.	1
12	7K1339	HOSE ASSEM. (Each Includes)	2
A	5P179	HOSE — 73.66 cm (29 In.)	
13	3S8606	SLEEVE	2
14	9S128	COUPLING ASSEM.	1
15	8S6459	STEM ASSEM. — (90°)	1
16	1P4575	FLANGE	4
17	4J8996	SEAL	6
18	4B8388	BOLT	8
19	9M1974	WASHER	8
20	3L526	BOLT	2
	5P8244	WASHER	2
C 21	1A9579	BOLT	8
C 22	6K9213	TUBE ASSEM. — (R. H.) (Includes)	1
23	9S8002	PLUG	1
	2J7354	SEAL	1
C 24	6K9214	TUBE ASSEM. — (L. H.)	1
25	8K9575	CLIP	2
26	7K898	WASHER	4
27	4B4279	WASHER	2
28	6K9572	BRACKET	2
29	2P1286	LOCKNUT	1
C 30	9M1974	WASHER	8

▲ ORDER BY THE CENTIMETER C INDICATES CHANGE 181998

Nota	Ref	Numero	Cant	Nombre De Pieza
		4V-5427	1	LINES GP-LIFT CYLINDER
C	1	1A-1460	2	BOLT
	2	5P-8245	4	WASHER
	3	4J-0520	1	SEAL
	4	7V-0402	1	TUBE ASSEM.
	5	5V-5231	1	BRACKET ASSEM.
	6	0S-1595	2	BOLT
		4B-4280	2	WASHER
	7	7K-0131	2	NUT
	8	7K-0108	1	HOSE ASSEM.
				(Includes)
H		5P-0181		HOSE 110.24 cm(43.4 in.)
	9	3S-7252	2	SLEEVE
	10	8S-3918	2	COUPLING ASSEM.
	11	6K-9979	1	TUBE ASSEM.
	12	7K-1339	2	HOSE ASSEM.
				(Each Includes)
H		5P-0179		HOSE 73.66 cm (29 in.)
	13	3S-8606	2	SLEEVE
	14	9S-0128	1	COUPLING ASSEM.
	15	8S-6459	1	STEM ASSEM. (90 degrees)
	16	1P-4575	4	FLANGE
	17	4J-8996	6	SEAL
	18	4B-3388	8	BOLT
	19	9M-1974	8	WASHER
	20	3L-0526	2	BOLT
		5P-8244	2	WASHER
C	21	1A-9579	8	BOLT
C	22	6K-9213	1	TUBE ASSEM. (R.H.)
				(Includes)

	23	9S-8002	1	PLUG
		3J-7354	1	SEAL
C	24	6K-9214	1	TUBE ASSEM. (L.H.)
	25	6K-9573	2	CLIP
	26	7K-0898	4	WASHER
	27	4B-4279	2	WASHER
	28	6K-9572	2	BRACKET
	29	2P-1286	1	LOCKNUT
C	30	9M-1974	8	WASHER

C	INDICATES CHANGE
H	ORDER BY THE CENTIMETER

5057 4V5427 LIFT CYLINDER LINES GROUP--As Viewed from R.H. Side of Machine--Part 1 of 2
Serial No. 41K10256-Up

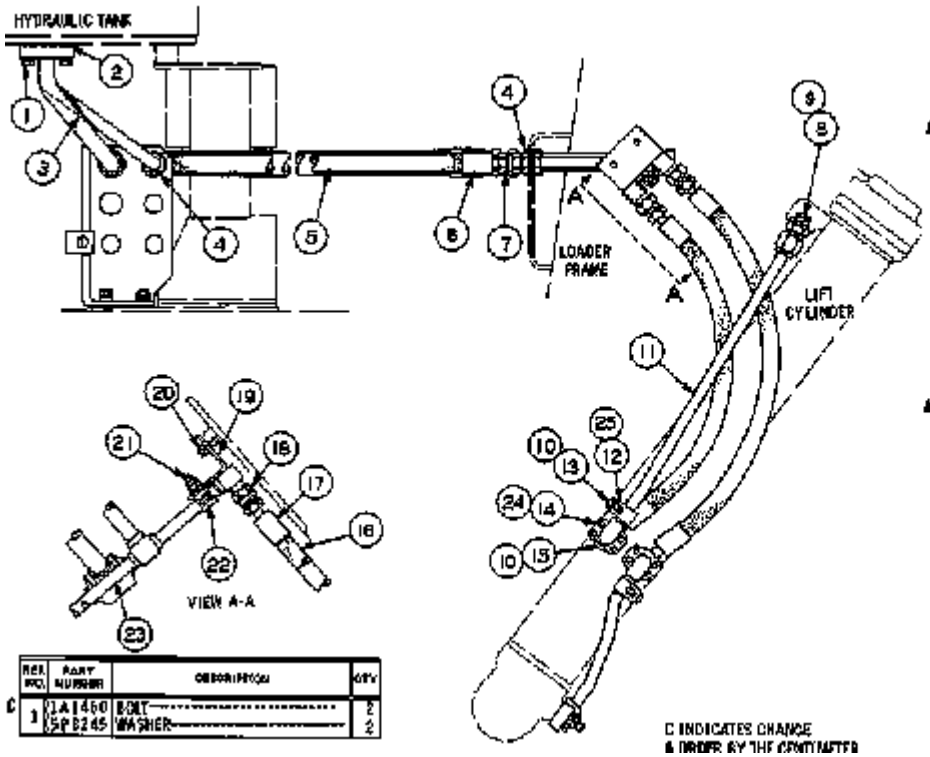

REF NO.	PART NUMBER	DESCRIPTION	QTY
C 1	1A1460	BOLT	2
	5P8245	WASHER	2

2	4J520	SEAL	1
3	7V4108	TUBE ASSEM.	1
4	6K8420	NUT	2
	7K897	WASHER	4
5	7K107	HOSE ASSEM.	1
		(Includes)	
A	5P180	HOSE 97.54 cm (38.4 in.)	
6	357165	SLEEVE	2
7	8S3759	COUPLING ASSEM.	2
8	2R6276	CONNECTOR	2
9	3D2824	SEAL	2
10	6J4279	WASHER	2
11	4V7288	TUBE ASSEM. (R.H.)	1
	4V7289	TUBE ASSEM. (L.H.)	1
12	6K9573	CLIP	2
13	3L526	BOLT	2
	5P8244	WASHER	2
14	4B3388	BOLT	8
15	1P4575	FLANGE	4
16	7K1938	HOSE ASSEM.	2
		(Each Includes)	
A	5P179	HOSE 62.23 cm (24.5 in.)	1
	8S6459	STEM ASSEM. (90°)	1
17	3S8606	SLEEVE	2
18	9S128	COUPLING ASSEM.	1
19	6K9124	BRACKET	2
	1S1594	BOLT	4
20	5M2894	WASHER (large)	4
	4B4278	WASHER (small)	4
	1A1460	BOLT	2
21	2H3788	NUT	2
	4B4280	WASHER	2
22	6K9729	CLAMP	4
23	6K9978	TUBE ASSEM.	1
24	9M1974	WASHER	8
25	6K9572	BRACKET	2

181997

Nota	Ref	Numero	Cant	Nombre De Pieza
		4V-5427	1	LINES GP-LIFT CYLINDER
C	1	1A-1460	2	BOLT
		5P-8245	2	WASHER
	2	4J-0520	1	SEAL
	3	7V-0408	1	TUBE ASSEM.
	4	6K-8420	2	NUT
		7K-0897	4	WASHER
	5	7K-0107	1	HOSE ASSEM.
				(Includes)
H		5P-0180		HOSE 97.54 cm(38.4 in.)
	6	3S-7166	2	SLEEVE
	7	8S-3759	2	COUPLING ASSEM.
	8	2R-6276	2	CONNECTOR
	9	3D-2824	2	SEAL
	10	4B-4279	2	WASHER
	11	4V-7288	1	TUBE ASSEM. (R.H.)
		4V-7289	1	TUBE ASSEM. (L.H.)
	12	6K-9573	2	CLIP
	13	3L-0526	2	BOLT
		5P-8244	2	WASHER
	14	4B-3388	8	BOLT
	15	1P-4575	4	FLANGE
	16	7K-1338	2	HOSE ASSEM.
				(Each Includes)
H		5P-0179	1	HOSE 62.23 cm(24.5 in.)
		8S-6459	1	STEM ASSEM. (90 degrees)
	17	3S-8606	2	SLEEVE
	18	9S-0128	1	COUPLING ASSEM.
	19	6K-9114	2	BRACKET
	20	0S-1594	4	BOLT

		5M-2894	4	WASHER (large)
		4B-4278	4	WASHER (small)
	21	1A-1460	2	BOLT
		2H-3788	2	NUT
		4B-4280	2	WASHER
	22	6K-9725	4	CLAMP
	23	6K-9978	1	TUBE ASSEM.
	24	9M-1974	8	WASHER
	25	6K-9572	2	BRACKET

C	INDICATES CHANGE
H	ORDER BY THE CENTIMETER

4258 5V9151 MASTER CYLINDER ASSEMBLY
Serial No. 41K9502-Up. Part of 6K9900 & 5V4772 Bucket Positioner and Indicator and 6K7705, 5V4775 Kickout Groups shown on Pages 201B, 201D, 201F, 202A & 202B

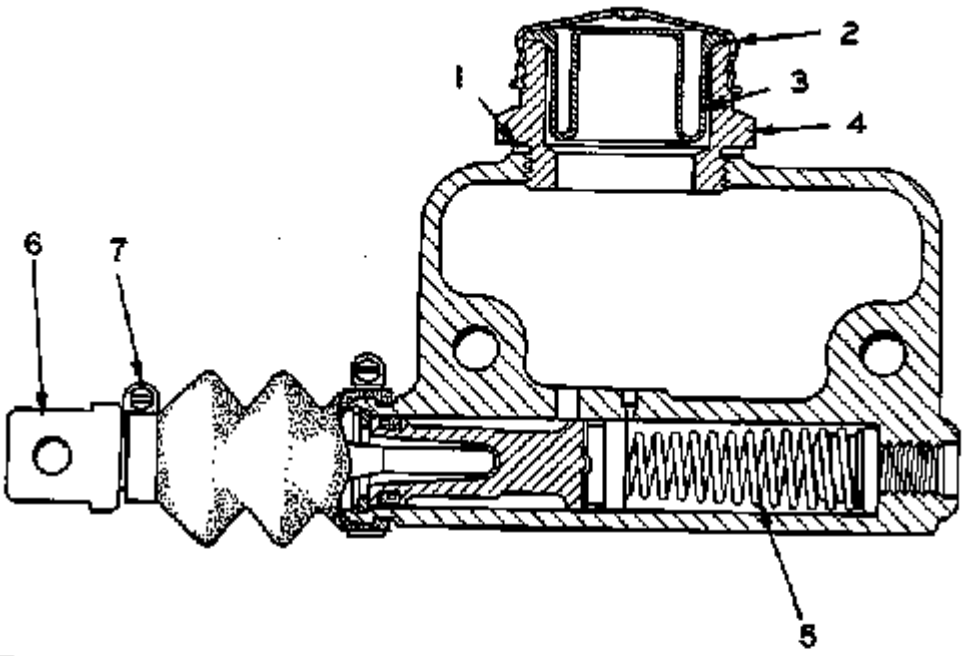

REF NO.	PART NUMBER	DESCRIPTION	QTY.
1	7K3104	GASKET	1
2	7K3102	CAP	1
3	7K3106	DIAPHRAGM	1
4	7K3105	ADAPTER	1
5	7K7347	SPRING & RETAINER ASSEM.	1
6	7K3103	ROD ASSEM.	1
7	5V9155	CLAMP	2

THE FOLLOWING REPAIR KIT IS AVAILABLE:

5V9152	KIT----------(Master Cylinder)---- (Includes clamp, boot, lockwire, cup, plate, piston assem., valve and seat assem.)	1

176546

Nota	Ref	Numero	Cant	Nombre De Pieza
		5V-9151	1	CYLINDER AS-MASTER
	1	7K-3104	1	GASKET
	2	7K-3102	1	CAP
	3	7K-3106	1	DIAPHRAGM
	4	7K-3105	1	ADAPTER
	5	7K-7347	1	SPRING & RETAINER ASSEM.
	6	7K-3103	1	ROD ASSEM.
	7	5V-9155	2	CLAMP
				THE FOLLOWING REPAIR KIT IS AVAILABLE:
		5V-9152	1	KIT (Master Cylinder)

(Includes clamp, boot, lockwire, cup, plate, piston assem., valve and seat assem.)

5V4228 OIL COOLER LINES GROUP
Serial No. 41K10160 to 41K11535 inclusive
9J1212 Oil Filter parts are shown on Page 190B

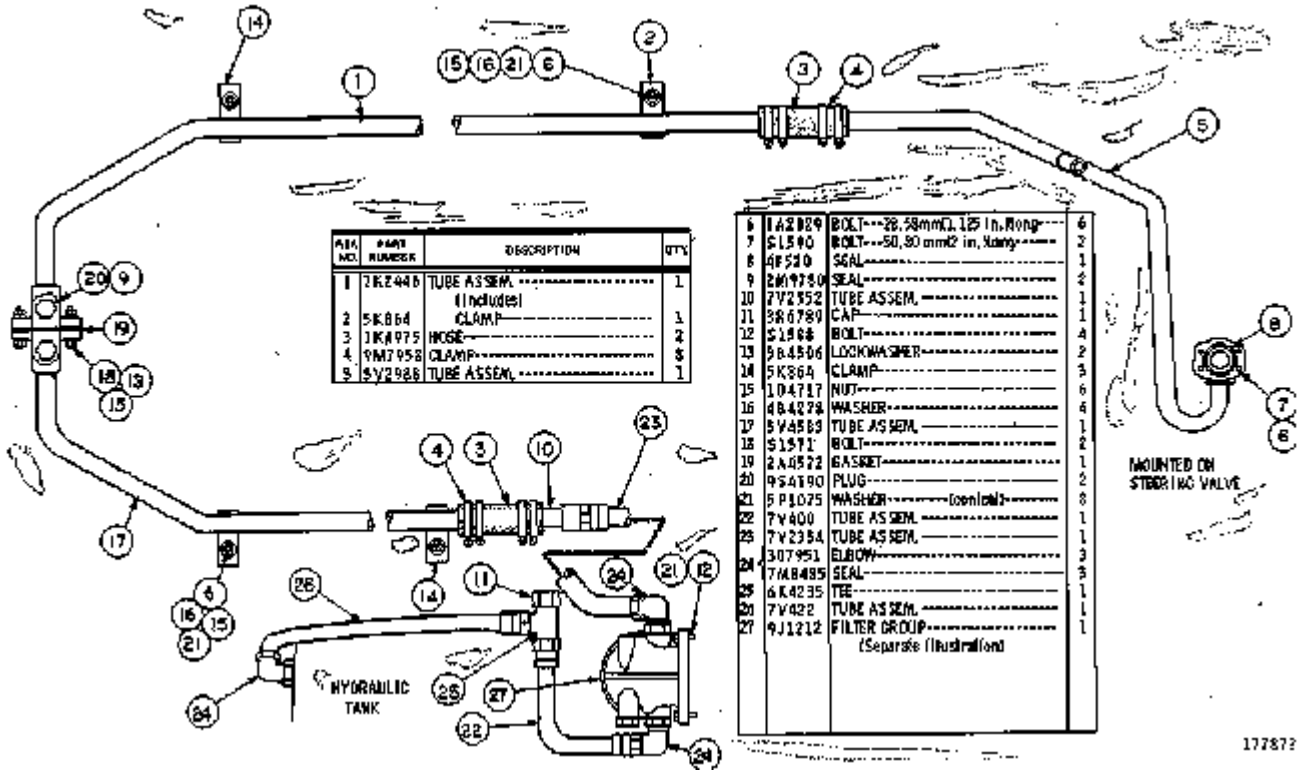

REF. NO.	PART NUMBER	DESCRIPTION	QTY.
1	2K2446	TUBE ASSEM. (Includes)	1
2	5K864	CLAMP	1
3	1K4975	HOSE	2
4	9M7958	CLAMP	3
5	5V2986	TUBE ASSEM.	1

6	1A2089	BOLT---28.58mm(1.125 in.)Long	6
7	5L540	BOLT---50.80 mm(2 in.)Long	2
8	4F520	SEAL	1
9	2M9780	SEAL	2
10	7V2352	TUBE ASSEM.	1
11	3R6789	CAP	1
12	5L988	BOLT	4
13	5B4506	LOCKWASHER	2
14	5K864	CLAMP	3
15	1D4717	NUT	6
16	4B4278	WASHER	4
17	5V4589	TUBE ASSEM.	1
18	5L571	BOLT	2
19	2A0572	GASKET	1
20	9S4190	PLUG	2
21	5P1075	WASHER (contains)	8
22	7V400	TUBE ASSEM.	1
23	7V2354	TUBE ASSEM.	1
24	307951	ELBOW	3
24	7M8485	SEAL	3
25	6K4235	TEE	1
26	7V422	TUBE ASSEM.	1
27	9J1212	FILTER GROUP (Separate Illustration)	1

Nota	Ref	Numero	Cant	Nombre De Pieza
		5V-4228	1	LINES GP-OIL COOLER
	1	7K-2446	1	TUBE ASSEM.
				(Includes)
	2	5K-0864	1	CLAMP
	3	7K-4975	2	HOSE
	4	9M-7958	8	CLAMP
	5	5V-2988	1	TUBE ASSEM.
	6	1A-2029	6	BOLT 28.58mm(1.125 in.)long
	7	0S-1590	2	BOLT 50.80 mm(2 in.)long
	8	4F-0520	1	SEAL
	9	2M-9780	2	SEAL
	10	7V-2352	1	TUBE ASSEM.
	11	3R-6789	1	CAP
	12	0S-1588	4	BOLT
	13	3B-4506	2	LOCKWASHER
	14	5K-0864	3	CLAMP
	15	1D-4717	6	NUT
	16	4B-4278	4	WASHER
	17	5V-4583	1	TUBE ASSEM.
	18	0S-1571	2	BOLT
	19	2A-4572	1	GASKET
	20	9S-4190	2	PLUG
	21	5P-1075	8	WASHER (conical)
	22	7V-0400	1	TUBE ASSEM.
	23	7V-2354	1	TUBE ASSEM.
	24	030-7951	3	ELBOW
		7M-8485	3	SEAL
	25	6K-4235	1	TEE
	26	7V-0422	1	TUBE ASSEM.
Y	27	9J-1212	1	FILTER GROUP

	(Separate Illustration)
Y	SEPARATE ILLUSTRATION

5068 9J1212 OIL FILTER GROUP
Serial No. 41K10160-Up
Part of 5V4228 Oil Cooler Lines Group shown on Page 190A

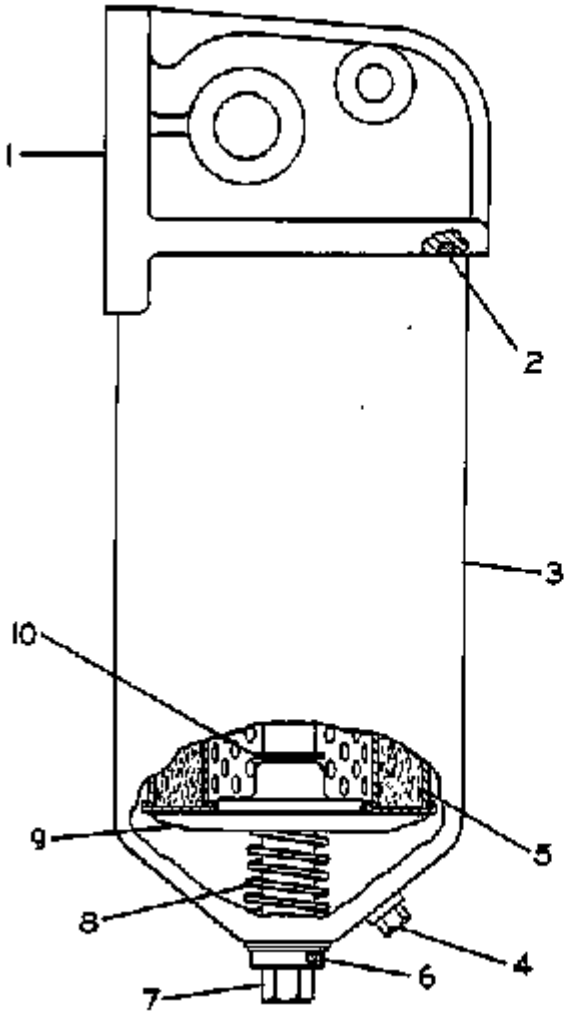

	REF. NO.	PART NUMBER	DESCRIPTION	QTY
	1	9J1304	BASE ASSEM.	1
C	2	3G2276	GASKET	1
	3	9J1305	BODY ASSEM.	1
	4	9J1308	PLUG	1
		1F1569	WASHER	1
	5	9M9740	ELEMENT ASSEM.	1
			-OR-	
C▲		3G3467	ELEMENT ASSEM. (Fire Resistant Fluid)	1
	6	4J5267	SEAL	1
	7	9J1306	BOLT ASSEM.	1
C	8	4M8184	SPRING	1
	9	9J1307	RETAINER	1
	10	2J6356	RING	1

C INDICATES CHANGE
▲ NOT PART OF 9J1212 OIL FILTER GROUP 216630

Nota	Ref	Numero	Cant	Nombre De Pieza
		9J-1212	1	FILTER GP-OIL
	1	9J-1304	1	BASE ASSEM.
C	2	3G-2276	1	GASKET
	3	9J-1305	1	BODY ASSEM.
	4	9J-1308	1	PLUG
		1F-1569	1	WASHER
	5	9M-9740	1	ELEMENT ASSEM.
				-OR-
CA		3G-3467	1	ELEMENT ASSEM.
				(Fire Resistant Fluid)
	6	4J-5267	1	SEAL
	7	9J-1306	1	BOLT ASSEM.
C	8	4M-8184	1	SPRING
	9	9J-1307	1	RETAINER
	10	2J-6356	1	RING
A				NOT PART OF THIS GROUP
C				INDICATES CHANGE

3G9020 RELIEF VALVE GROUP--Direct Operated
Serial No. 41K10160-Up
Part of 3G8683 and 3G9019 Control Valve Groups shown on Pages
168D & 168E

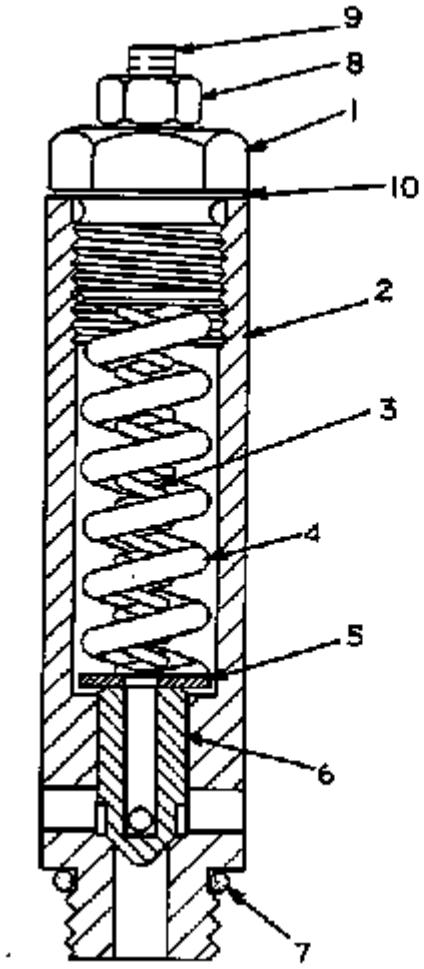

NOTE	REF NO	PART NUMBER	QTY	DESCRIPTION
	1	9J457	1	PLUG
	2	9J467	1	BODY
	3	5J9104	1	SPRING
	4	5J9103	1	SPRING
	5	7M1396	2	WASHER
	6	6J6439	1	VALVE
	7	2M9780	1	SEAL
	8	182578	1	NUT
	9	222511	1	SETSCREW
C	10	5J9101	4	SHIM

C INDICATES CHANGE

307316

Nota	Ref	Numero	Cant	Nombre De Pieza
		3G-9020	1	VALVE GP-RELIEF
	1	9J-0457	1	PLUG
	2	9J-0467	1	BODY-RELIEF VALVE
	3	5J-9104	1	SPRING
	4	5J-9103	1	SPRING
	5	7M-1396	2	SPACER
	6	6J-6439	1	VALVE
	7	2M-9780	1	SEAL-O-RING
	8	1B-2578	1	NUT
	9	022-2511	1	SCREW
C	10	5J-9101	4	SHIM
C				CHANGE FROM PREVIOUS TYPE

5069 3G2315 RELIEF VALVE GROUP--Pilot Operated
Serial No. 41K6553-Up
Part of 3G3445 Hydraulic Tank and Valve and 6J9991 Main Control Valve
Groups shown on Pages 161A & 168C

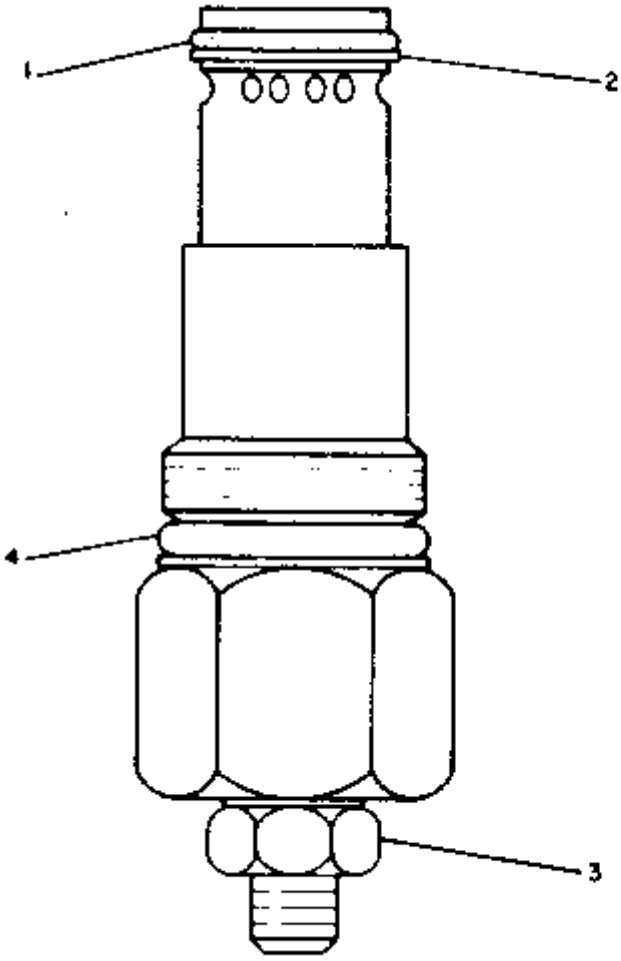

REF NO	PART NUMBER	DESCRIPTION	QTY.
1	8L2746	SEAL	1
2	9J6367	RING	1
3	3G3726	NUT	1
4	617539	SEAL	1

226212

Nota	Ref	Numero	Cant	Nombre De Pieza
		3G-2315	1	VALVE GP-PITCH RELIEF
	1	8L-2746	1	SEAL
	2	9J-6367	1	RING
	3	3G-3726	1	NUT
	4	061-7539	1	SEAL

5112 6K7701 SLAVE CYLINDER ASSEMBLY
Part of 6K9900 & 5V4772 Bucket Positioner and Indicator and 6K7705 & 5V4775 Kickout Groups shown on Pages 200, 201A, 201C, 201E, 202, 202A, 202B & 202C

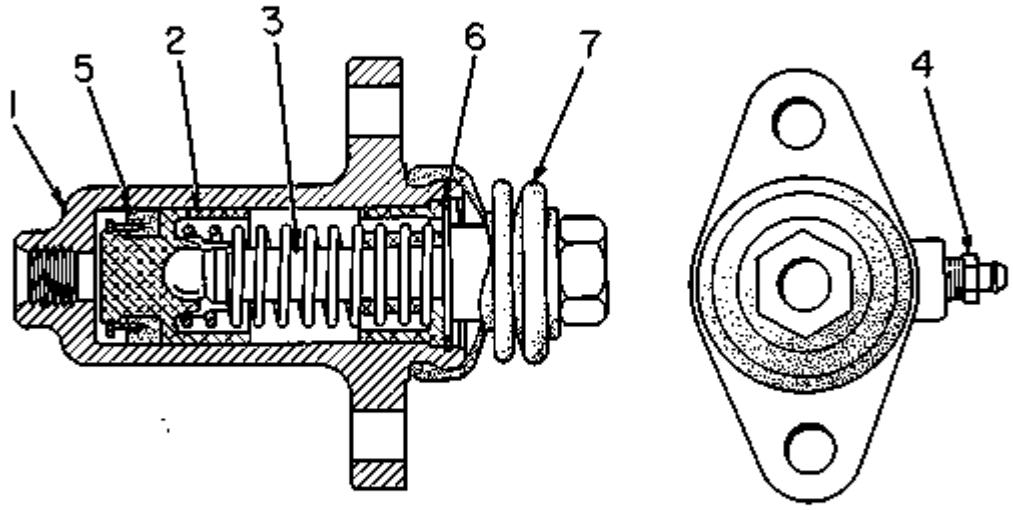

Nota	Ref	Numero	Cant	Nombre De Pieza
		6K-7701	1	CYLINDER AS
Z	1		1	CYLINDER
	2	1J-9561	1	PISTON AS
	3	7K-4433	1	ROD & SPRING AS
	4	9F-2167	1	SCREW-BLEEDER
				THE FOLLOWING REPAIR
				KIT IS AVAILABLE:
		7K-4434	1	KIT-CYLINDER
Z	5		1	CUP-PISTON
Z	6		1	RING-RETAINING
Z	7		1	BOOT
Z				NOT SERVICED SEPARATELY

5104 7J9729 TILT CYLINDER GROUP (7K9405 N/S) (Chg. 0-3)--R.H.--4.25" Bore x 17.25" Stroke

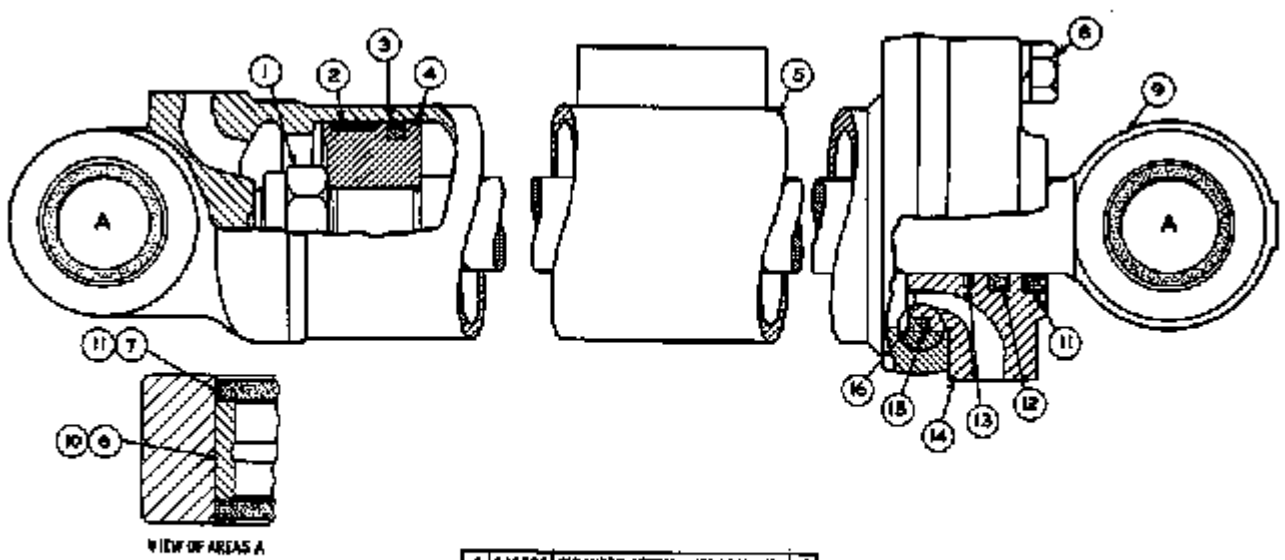

REF NO.	PART NUMBER	DESCRIPTION	QTY
1	2J8930	NUT	1
2	6J1264	RING	1
3	5J7854	SEAL ASSEM.	1
4	6J5692	PISTON	1

REF NO.	PART NUMBER	DESCRIPTION	QTY
5	7J9725	CYLINDER ASSEM. -(RIGHT Hand)-	1
6	7J9682	BEARING	1
7	5P93	SEAL	4
8	104609	BOLT	4
	5B4512	LOCKWASHER	4
9	7J9721	ROD ASSEM.	1
10	7J9682	BEARING	1
11	1K6981	SEAL	1

C INDICATES CHANGE

REF NO.	PART NUMBER	DESCRIPTION	QTY
12	5J8200	SEAL	1
13	6J5911	SEAL	1
14	6J5812	HEAD	1
15	5J7865	RING	1
16	1M6227	SEAL	1

& NOT PART OF 7J9729 CYLINDER GROUP 203462

Nota	Ref	Numero	Cant	Nombre De Pieza
		7J-9729	1	CYLINDER GP-TILT
	1	2J-3950	1	NUT-SELF LOCKING
	2	6J-7264	1	RING-WEAR
	3	5J-7854	1	SEAL AS
R	5	7J-9727	1	CYL AS-HYD
	6	7J-9682	1	BEARING-SLEEVE
AC	7	5P-0093	4	SEAL-LIP TYPE
	8	1D-4609	4	BOLT
		3B-4512	4	LOCKWASHER
R	9	7J-9722	1	ROD AS-PISTON
	10	7J-9682	1	BEARING-SLEEVE
	11	1K-6981	1	SEAL-LIP TYPE
	12	5J-8200	1	SEAL-U-CUP
	13	6J-6917	1	SEAL-RING
	14	6J-5812	1	HEAD
	15	5J-7865	1	RING-BACK-UP
	16	1H-6227	1	SEAL-O-RING
A				NOT PART OF THIS GROUP
C				CHANGE FROM PREVIOUS TYPE
R				REMFG PART MAY BE AVAILABLE

41K11287 930 WHEEL LOADER Identificación de Piezas
Número de publicación SEBP1052-01 Fecha de publicación 1984/12/01 Fecha de actualización 1994/09/05

3156 6K7684 TRANSMISSION CONTROL GROUP
Serial No. 41K10764 to 41K11481 inclusive

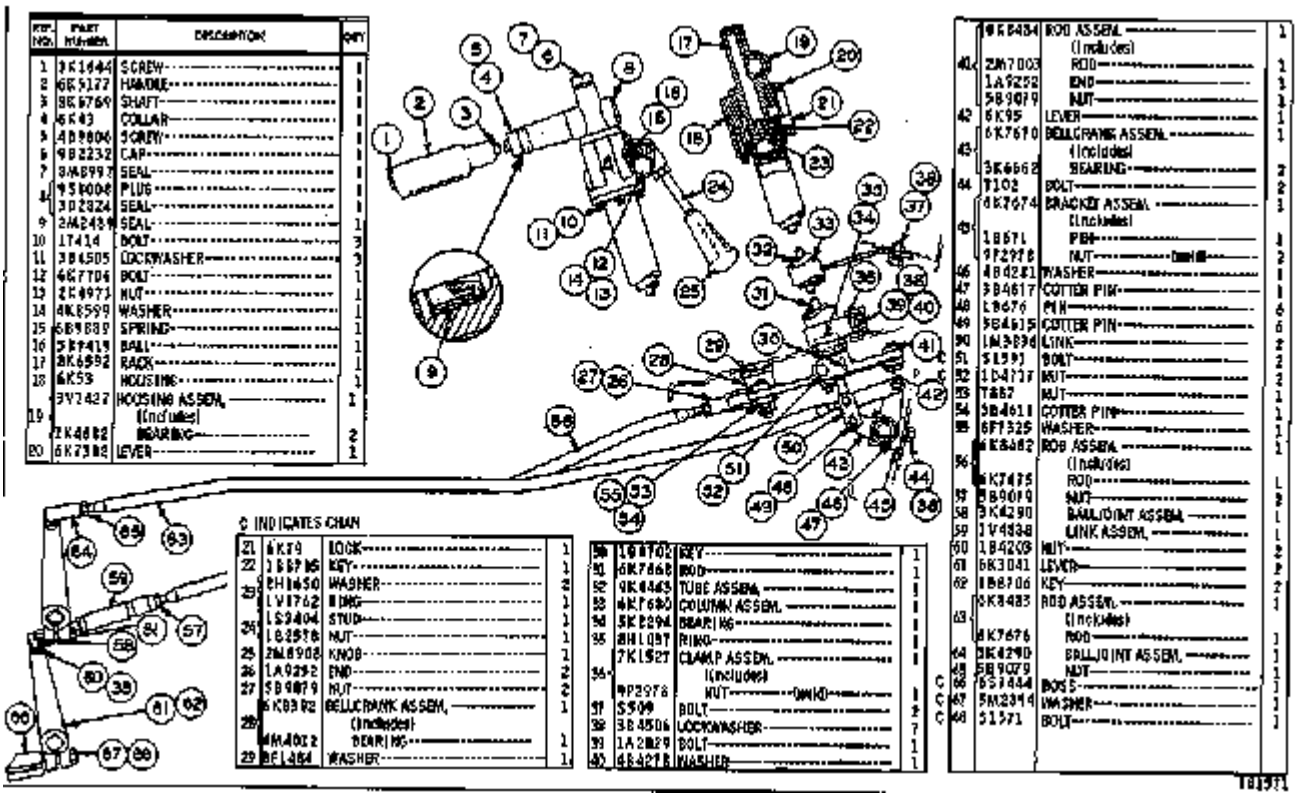

REF. NO.	PART NUMBER	DESCRIPTION	QTY
1	3K1644	SCREW	1
2	6K5177	HANDLE	1
3	8K6769	SHAFT	1
4	6K43	COLLAR	1
5	4B9806	SCREW	1
6	9B2232	CAP	1
7	3M8997	SEAL	1
8	9S8008	PLUG	1
9	3D2824	SEAL	1
10	2M2439	SEAL	1
11	1T414	BOLT	3
12	3B4505	LOCKWASHER	3
13	6K7706	BOLT	1
14	2K4973	NUT	1
15	4K8599	WASHER	1
16	6B9889	SPRING	1
17	5B7419	BALL	1
18	8K6992	RACK	1
19	6K53	HOUSING	1
	3V2427	HOUSING ASSEM.	1
		(Includes)	
	2K4882	BEARING	2
20	6K7382	LEVER	1

REF. NO.	PART NUMBER	DESCRIPTION	QTY
	9K8484	ROD ASSEM.	1
		(Includes)	
40	2M7003	ROD	1
	1A9252	END	1
	5B9079	NUT	1
42	6K95	LEVER	1
43	6K7690	BELLCRANK ASSEM.	1
		(Includes)	
	3K6662	BEARING	2
44	T102	BOLT	2
45	6K7674	BRACKET ASSEM.	1
		(Includes)	
	1B671	PIN	1
	9F2978	NUT	2
46	4B8281	WASHER	1
47	3B4617	COTTER PIN	1
48	L8676	PIN	6
49	5B4615	COTTER PIN	6
50	1M3896	LINK	2
51	S1591	BOLT	2
52	1D4717	NUT	2
53	T882	NUT	1
54	5B4611	COTTER PIN	1
55	6F7325	WASHER	1
56	9K8482	ROD ASSEM.	1
		(Includes)	
	6K7475	ROD	1
57	5B9079	NUT	2
58	9K4290	BALL JOINT ASSEM.	1
59	1V4838	LINK ASSEM.	1
60	1B4209	NUT	2
61	6K3041	LEVER	1
62	1B8706	KEY	2
63	9K8483	ROD ASSEM.	1
		(Includes)	
	6K7676	ROD	1
64	9K4290	BALL JOINT ASSEM.	1
65	5B9079	NUT	1
66	8S1444	BOLT	1
67	5M2394	WASHER	1
68	S1571	BOLT	1

C INDICATES CHAN

21	6K79	LOCK	1
22	1B8P85	KEY	1
23	2H1450	WASHER	2
	LV1762	RING	1
	LS2404	STUD	1
24	1B8578	NUT	1
25	2M8908	KNOB	1
26	1A9252	END	2
27	5B9079	NUT	2
	6K8982	BELLCRANK ASSEM.	1
28		(Includes)	
	4M4012	BEARING	1
29	8E1484	WASHER	1

30	1B8702	KEY	1
31	6K7668	ROD	1
32	9K4443	TUBE ASSEM.	1
33	6K7680	COLUMN ASSEM.	1
34	5K8294	BEARING	1
35	2H1097	RING	1
36	7K1527	CLAMP ASSEM.	1
		(Includes)	
	9F2978	NUT	1
37	S509	BOLT	2
38	3B4506	LOCKWASHER	7
39	1A2829	BOLT	1
40	4B4278	WASHER	1

Nota	Ref	Numero	Cant	Nombre De Pieza
		6K-7684	1	CONTROL GP-TRANSMISSION
	1	3K-1644	1	SCREW
	2	6K-5177	1	HANDLE
	3	8K-6769	1	SHAFT
	4	6K-0043	1	COLLAR
	5	4B-9806	1	SCREW
	6	9B-2232	1	CAP
	7	8M-8997	1	SEAL
	8	9S-8008	1	PLUG
		3D-2824	1	SEAL
	9	2M-2489	1	SEAL
	10	1T-0414	3	BOLT
	11	3B-4505	3	LOCKWASHER
	12	6K-7706	1	BOLT
	13	2K-4973	1	NUT
	14	4K-8599	1	WASHER
	15	6B-9889	1	SPRING
	16	5B-9419	1	BALL
	17	8K-6592	1	RACK
	18	6K-0053	1	HOUSING
	19	3V-7427	1	HOUSING ASSEM.
				(Includes)
		1K-4682	2	BEARING
	20	6K-7382	1	LEVER
	21	6K-0079	1	LOCK
	22	1B-8705	1	KEY
	23	2H-1650	2	WASHER
		1V-1762	1	RING
	24	1S-3404	1	STUD
		1B-2578	1	NUT

25	2M-8908	1	KNOB
26	1A-9252	2	END
27	5B-9079	2	NUT
28	6K-8392	1	BELLCRANK ASSEM.
			(Includes)
	4M-4012	1	BEARING
29	8F-1484	1	WASHER
30	1B-8702	1	KEY
31	6K-7668	1	ROD
32	9K-4443	1	TUBE ASSEM.
33	6K-7680	1	COLUMN ASSEM.
34	5K-2294	1	BEARING
35	8H-1037	1	RING
36	7K-1527	1	CLAMP ASSEM.
			(Includes)
	9F-2978	1	NUT (weld)
37	0S-0509	2	BOLT
38	3B-4506	7	LOCKWASHER
39	1A-2029	1	BOLT
40	4B-4278	1	WASHER
41	6K-8484	1	ROD ASSEM.
			(Includes)
	2M-7003	1	ROD
	1A-9252	1	END
	5B-9079	1	NUT
42	6K-0095	1	LEVER
43	6K-7670	1	BELLCRANK ASSEM.
			(Includes)
	3K-6662	2	BEARING
44	0T-0102	2	BOLT
45	6K-7674	1	BRACKET ASSEM.

				(Includes)
		1B-0671	1	PIN
		9F-2978	2	NUT (weld)
	46	4B-4281	1	WASHER
	47	3B-4617	1	COTTER PIN
	48	1B-0676	6	PIN
	49	3B-4615	6	COTTER PIN
	50	1M-3836	2	LINK
C	51	0S-1591	2	BOLT
C	52	1D-4717	2	NUT
	53	0T-0887	1	NUT
	54	3B-4611	1	COTTER PIN
	55	8F-7325	1	WASHER
	56	6K-8482	1	ROD ASSEM.
				(Includes)
		6K-7675	1	ROD
	57	5B-9079	2	NUT
	58	3K-4290	1	BALLJOINT ASSEM.
	59	1V-4838	1	LINK ASSEM.
	60	1B-4203	2	NUT
	61	6K-3041	2	LEVER
	62	1B-8706	2	KEY
	63	6K-8483	1	ROD ASSEM.
				(Includes)
		6K-7676	1	ROD
	64	3K-4290	1	BALLJOINT ASSEM.
	65	5B-9079	1	NUT
C	66	6S-7444	1	BOSS
C	67	5M-2894	1	WASHER
C	68	0S-1571	1	BOLT

C	INDICATES CHANGE

4051 4V6531 FINAL DRIVE AND WHEEL GROUP--4 Required
Serial No. 41K8438-Up

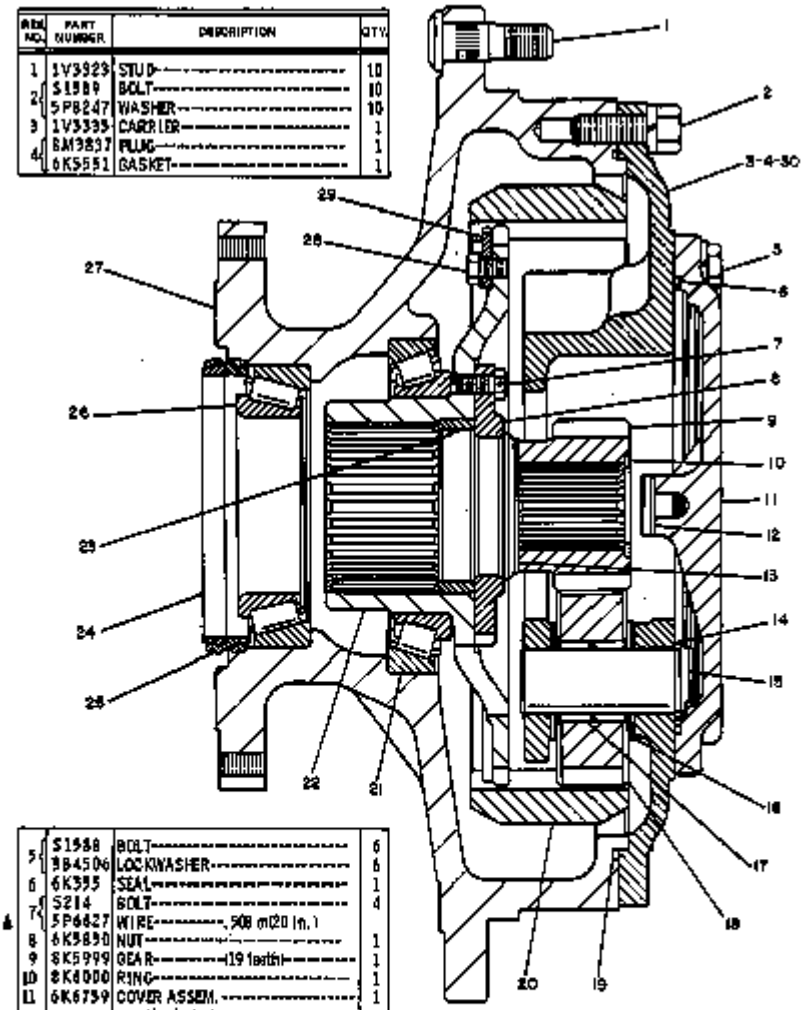

REF NO.	PART NUMBER	DESCRIPTION	QTY.
1	1V3923	STUD	10
2	S1589	BOLT	10
	5P8247	WASHER	10
3	1V3335	CARRIER	1
4	BM3837	PLUG	1
	6K5551	GASKET	1
5	S1588	BOLT	6
	9B4506	LOCKWASHER	6
6	6K355	SEAL	1
7	S214	BOLT	4
	5P6627	WIRE .508 m(20 in.)	A
8	6K5830	NUT	1
9	8K5999	GEAR (191 teeth)	1
10	8K6000	RING	1
11	6K6759	COVER ASSEM. (Includes)	1
12	2D604	BUTTON	1
13	8K5705	WASHER	1
14	5K926	RING	3
15	2V1074	SHAFT	3
16	7K1699	WASHER (steel)	6
	7K1701	WASHER (bronze)	6
17	5M2054	ROLLER ASSEM.	6
18	8K7110	GEAR (124 teeth)	3
19	6K357	SEAL	1
20	8K7112	GEAR (48 teeth)	1
21	5P2526	CUP	1
	2K5065	CONE	1
22	7K7432	HUB ASSEM. (Includes)	1
23	2K9463	BUSHING	1
24	5K5288	SEAL GROUP (Includes)	1
25	5K5129	RING	2
26	6K5275	CONE	1
	6B5225	CUP	1
27	4V4574	WHEEL	1
28	T102	BOLT	8
	dH4209	LOCK	4
29	2K9249	PLATE	4
30	2B7557	CORK	2

A ORDER BY THE METER

223795

Nota	Ref	Numero	Cant	Nombre De Pieza
		4V-6531	1	WHEEL & FINAL DRIVE GP
	1	1V-3323	10	STUD
	2	0S-1589	10	BOLT
		5P-8247	10	WASHER
	3	1V-3335	1	CARRIER
	4	8M-3837	1	PLUG
		6K-5551	1	GASKET
	5	0S-1588	6	BOLT
		3B-4506	6	LOCKWASHER
	6	6K-0355	1	SEAL
	7	0S-0214	4	BOLT
H		5P-6627		WIRE .508 m(20 in.)
	8	6K-5830	1	NUT
	9	8K-5999	1	GEAR (19 teeth)
	10	8K-6000	1	RING
	11	6K-6759	1	COVER ASSEM.
				(Includes)
	12	2D-0604	1	BUTTON
	13	8K-5705	1	WASHER
	14	5K-0926	3	RING
	15	2V-1074	3	SHAFT
	16	7K-1699	6	WASHER (steel)
		7K-1701	6	WASHER (bronze)
	17	5M-2054	6	ROLLER ASSEM.
	18	3K-7110	3	GEAR (24 teeth)
	19	6K-0357	1	SEAL
	20	3K-7112	1	GEAR (68 teeth)
	21	5P-2526	1	CUP
		2K-5065	1	CONE
	22	7K-7432	1	HUB ASSEM.

				(Includes)
	23	2K-9463	1	BUSHING
R	24	5K-5288	1	SEAL GROUP
				(Includes)
	25	5K-5129	2	RING
	26	6K-8275	1	CONE
		6B-3223	1	CUP
	27	4V-4574	1	WHEEL
	28	0T-0102	8	BOLT
		6H-4209	4	LOCK
	29	2K-9249	4	PLATE
	30	2B-7557	2	CORK

H	ORDER BY THE METER
R	REMFG PART MAY BE AVAILABLE

4307 8J441 SELECTOR VALVE GROUP
Part of 8J430 Steering Valve Group shown on Page 141

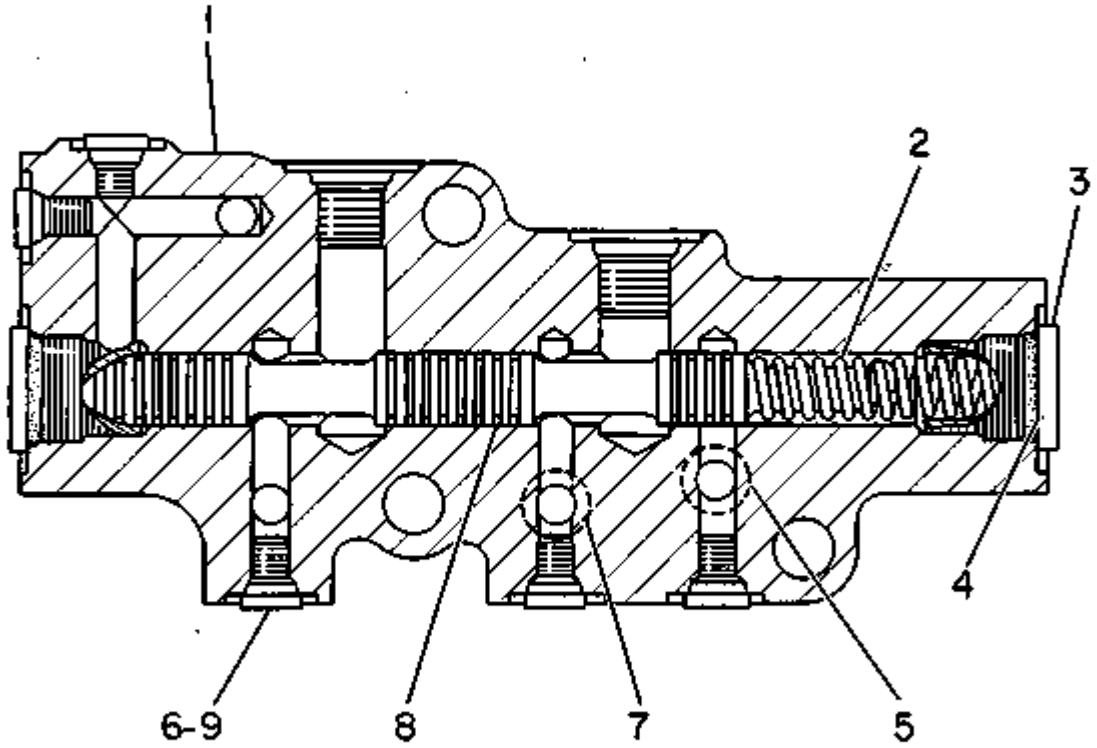

Nota	Ref	Numero	Cant	Nombre De Pieza
		8J-0441	1	VALVE GP-SELECTOR
Z	1		1	BODY
	2	8J-0438	1	SPRING
	3	9S-8005	2	PLUG-O-RING
	4	3K-0360	2	SEAL-O-RING
	5	4J-5309	4	SEAL-O-RING
	6	4J-7533	5	SEAL-O-RING
	7	4J-9535	3	SEAL
Z	8		1	STEM
	9	9S-8001	5	PLUG-O-RING
Z				NOT SERVICED SEPARATELY

4303 7J9838 STEERING CYLINDER GROUP (7K9429 N/S)--(Change 2)--3.00" Bore x 14.30" Stroke
2 Required

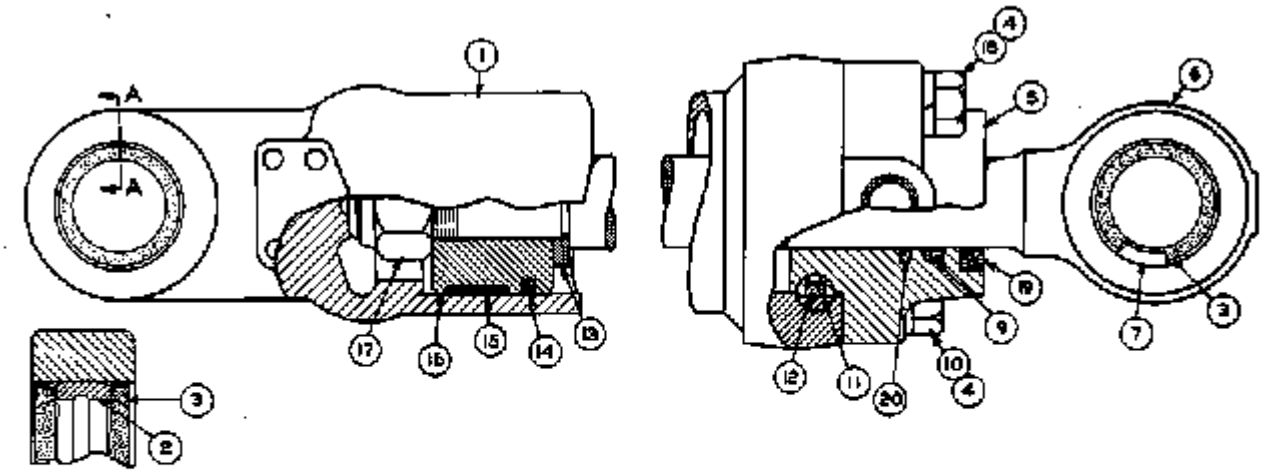

REF NO	PART NUMBER	DESCRIPTION	QTY
1	7J9839	CYLINDER ASSEM. (Includes)	1
2	7J9842	BEARING	1
B 3	5P91	SEAL	4
B 4	9B6510	LOCKWASHER	4
C 5	9J496	HEAD	1
6	7J9843	ROD ASSEM. (Includes)	1
7	7J9842	BEARING	1
9	9J8190	SEAL	1
10	8S9092	BOLT	2
11	6J5791	RING	1
12	9N8848	SEAL	1
13	6J5737	WASHER	1
14	6J1972	SEAL ASSEM.	1
15	6J5733	RING	1
16	6J5736	PISTON	1
17	6J5730	NUT	1
18	81623	BOLT	2
19	4J8979	SEAL	1
20	6J9733	SEAL	1

B NOT PART OF 7J9838 CYLINDER GROUP C INDICATES CHANGE

204815

Nota	Ref	Numero	Cant	Nombre De Pieza
		7J-9838	1	CYLINDER GP-STEERING
R	1	7J-9839	1	CYLINDER AS-HYDRAULIC
	2	7J-9842	1	BEARING-SLEEVE
A	3	5P-0091	4	SEAL-LIP TYPE
	4	3B-4510	4	LOCKWASHER
C	5	9J-0496	1	HEAD
R	6	7J-9843	1	ROD AS-PISTON
	7	7J-9842	1	BEARING-SLEEVE
	9	5J-8150	1	SEAL-U-CUP
	10	8S-9092	2	BOLT
	11	6J-5731	1	RING-BACK-UP
	12	5H-8848	1	SEAL-O-RING
	13	6J-5737	1	WASHER
	14	6J-1972	1	SEAL AS
	15	6J-5733	1	RING-WEAR
	16	6J-5736	1	PISTON
	17	6J-5736	1	PISTON
	18	0S-1625	2	BOLT
	19	4J-8979	1	SEAL-LIP TYPE
	20	6J-9733	1	SEAL-RING

A	NOT PART OF THIS GROUP
C	CHANGE FROM PREVIOUS TYPE
R	REMFG PART MAY BE AVAILABLE

1326 2P6491 OIL LEVEL GAUGE GROUP

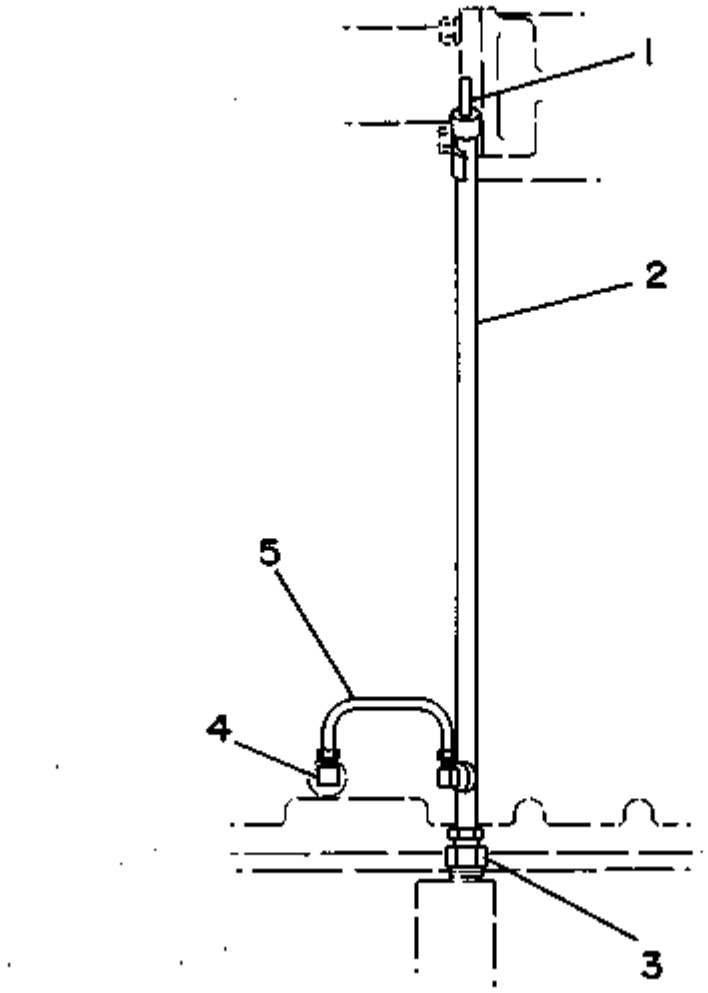

Nota	Ref	Numero	Cant	Nombre De Pieza
		2P-6491	1	GAUGE GP-OIL LEVEL (DIPSTICK)
	1	5S-8115	1	GAUGE AS-LEVEL
	2	2P-2547	1	TUBE AS-GUIDE
	3	8S-1326	1	CONNECTOR AS-SPECIAL
		8F-8998	1	NUT-FITTING
	4	5K-9243	2	ELBOW-FLARED
	5	2P-2697	1	TUBE AS-AIR VENT

1302 7N4824 OIL PAN FASTENER GROUP
Engine Serial No. 78P61649-Up

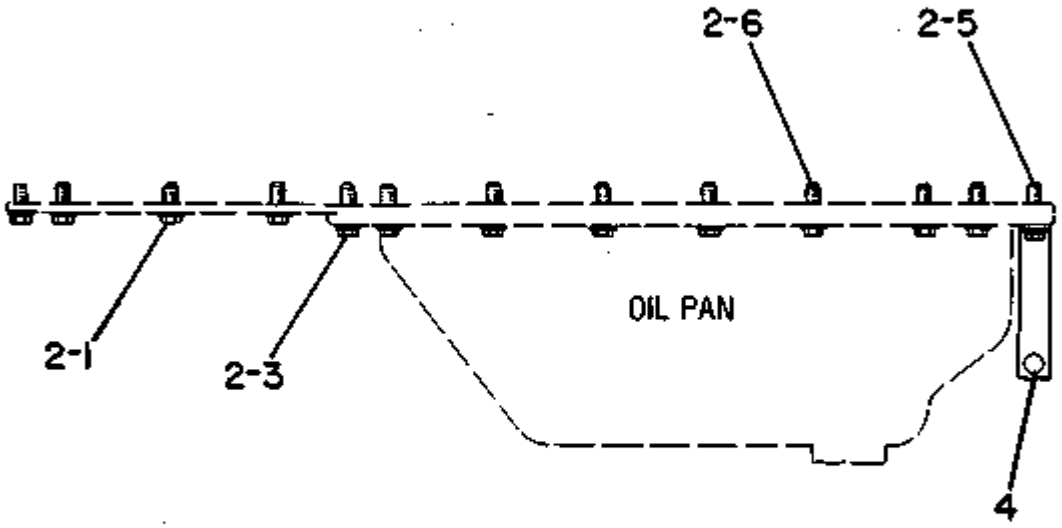

Nota	Ref	Numero	Cant	Nombre De Pieza
		7N-4824	1	FASTENER GP-OIL PAN
	1	0L-1351	11	BOLT
	2	5M-2894	36	WASHER
	3	1A-2029	5	BOLT
	4	8N-3294	1	BRACKET
	5	3B-1915	2	BOLT
	6	0S-1588	16	BOLT

1302 2P6175 OIL PAN GROUP

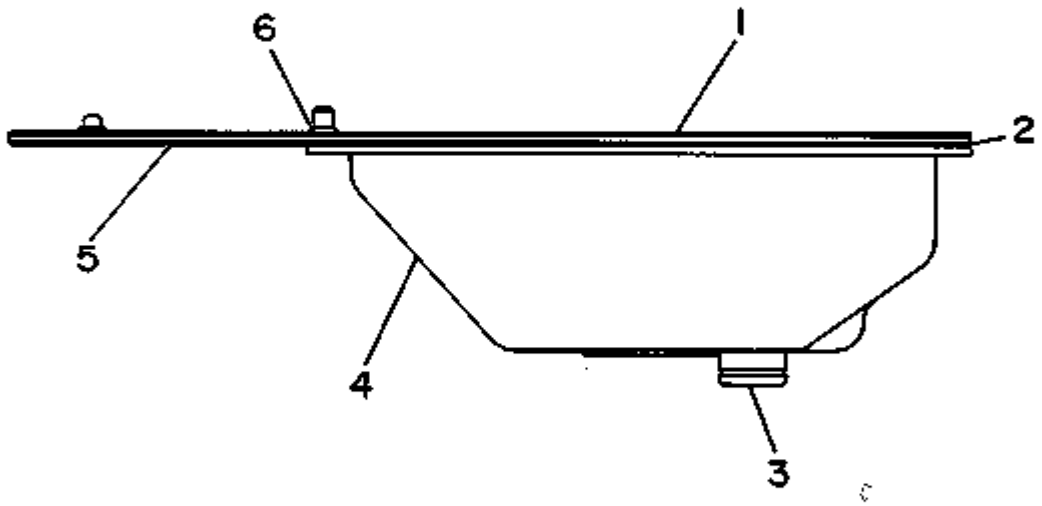

Nota	Ref	Numero	Cant	Nombre De Pieza
		2P-6175	1	PAN GP-OIL
	1	5S-6045	1	GASKET
	2	8S-1963	1	GASKET
	3	4B-2363	1	PLUG
		6F-4868	1	GASKET
	4	8S-8234	1	PAN ASSEM.
	5	2P-2351	1	PLATE ASSEM.
	6	6J-2237	5	BOSS

41K11287 930 WHEEL LOADER Identificación de Piezas
Número de publicación SEBP1052-01 Fecha de publicación 1984/12/01 Fecha de actualización 1994/09/05

2P8605 PULLEY GROUP
Engine Serial No. 78P18799 to 78P23326 inclusive

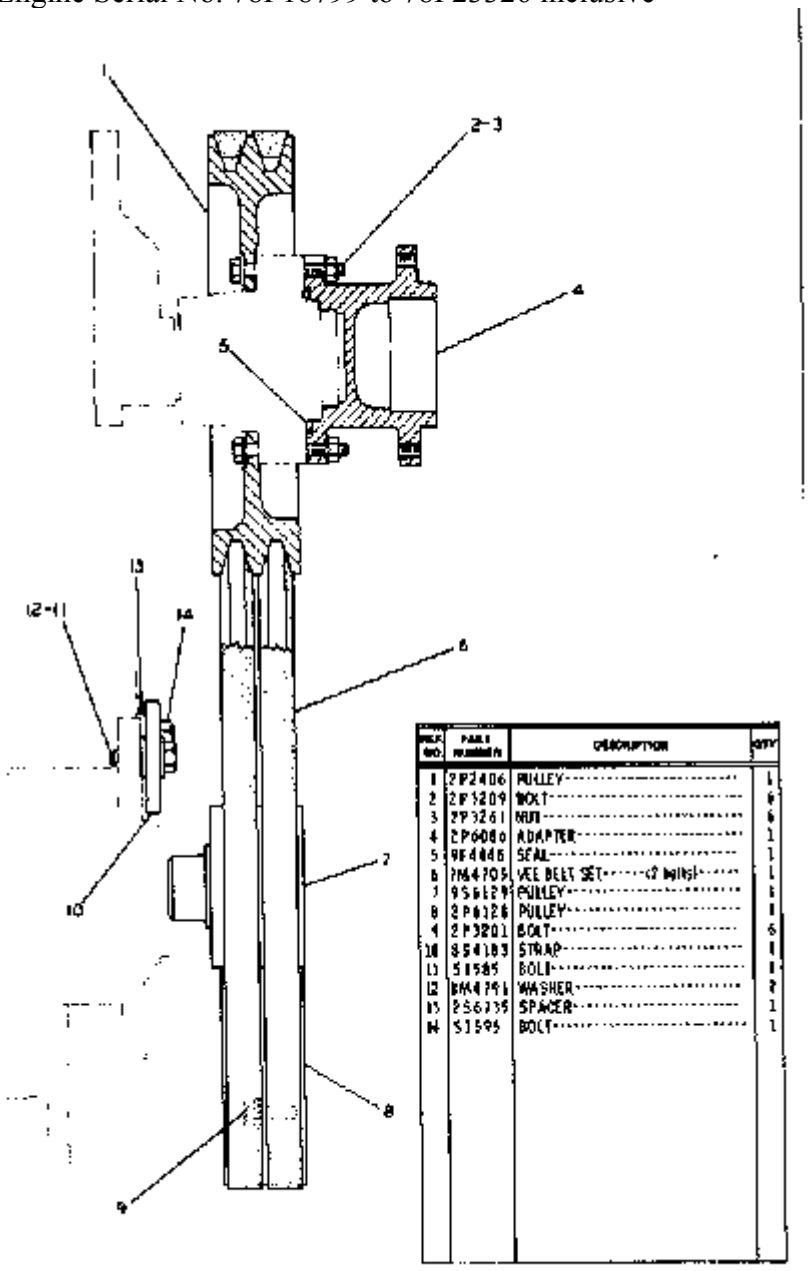

ITEM NO.	PART NUMBER	DESCRIPTION	QTY
1	2P2406	PULLEY	1
2	2P1209	BOLT	6
3	2P3261	NUT	6
4	2P6080	ADAPTER	1
5	9F4046	SEAL	1
6	7M4705	V-BELT SET (2 belts)	1
7	9S6129	PULLEY	1
8	2P6126	PULLEY	1
9	2P3201	BOLT	6
10	8S4183	STRAP	1
11	5I585	BOLT	1
12	8M4791	WASHER	2
13	8S6735	SPACER	1
14	5I595	BOLT	1

L17174

Nota	Ref	Numero	Cant	Nombre De Pieza
		2P-8605	1	PULLEY GP
	1	2P-2406	1	PULLEY
	2	2P-3209	6	BOLT
	3	2P-3261	6	NUT
	4	2P-6086	1	ADAPTER
	5	9F-4446	1	SEAL
	6	7M-4705	1	VEE BELT SET (2 belts)
	7	9S-6129	1	PULLEY
	8	2P-6128	1	PULLEY
	9	2P-3201	6	BOLT
	10	8S-4183	1	STRAP
	11	0S-1585	1	BOLT
	12	8M-4791	2	WASHER
	13	2S-6735	1	SPACER
	14	0S-1595	1	BOLT

41K11287 930 WHEEL LOADER Identificación de Piezas
Número de publicación SEBP1052-01 Fecha de publicación 1984/12/01 Fecha de actualización 1994/09/05

2P8605 PULLEY GROUP
Engine Serial No. 78P23327 to 78P24258 inclusive

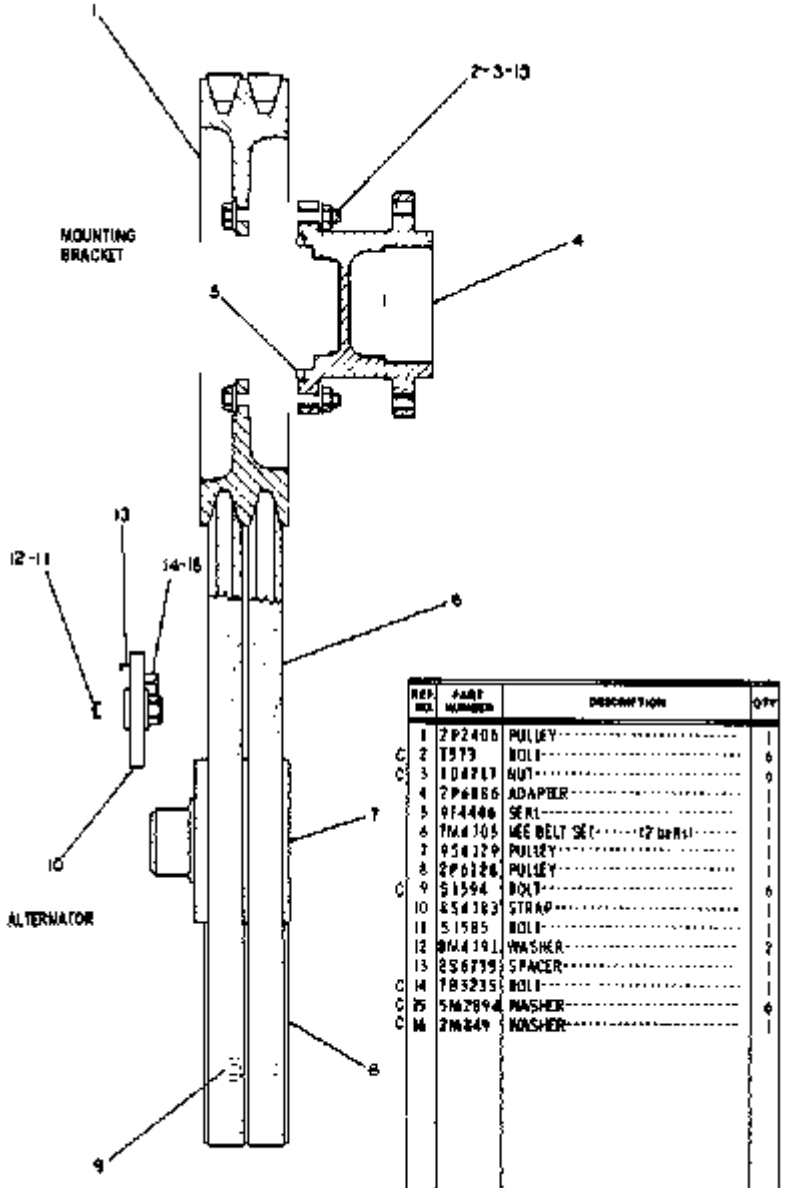

REP. NO.	PART NUMBER	DESCRIPTION	QTY
1	2P2406	PULLEY	1
C 2	T573	BOLT	6
C 3	1D4787	NUT	9
4	2P6886	ADAPTER	1
5	9F4446	SEAL	1
6	7M4305	V-BELT SET (2 belts)	1
7	9S4329	PULLEY	1
8	2P0826	PULLEY	1
C 9	S1594	BOLT	6
10	6S4383	STRAP	1
11	S1585	BOLT	1
12	8M4391	WASHER	2
13	2S6779	SPACER	1
C 14	7B3235	BOLT	1
C 15	5M2894	WASHER	6
C 16	2M849	WASHER	1

C INDICATES CHANGE 201736

Nota	Ref	Numero	Cant	Nombre De Pieza
		2P-8605	1	PULLEY GP
	1	2P-2406	1	PULLEY
C	2	0T-0573	6	BOLT
C	3	1D-4717	6	NUT
	4	2P-6086	1	ADAPTER
	5	9F-4446	1	SEAL
	6	7M-4705	1	VEE BELT SET (2 belts)
	7	9S-6129	1	PULLEY
	8	2P-6128	1	PULLEY
C	9	0S-1594	6	BOLT
	10	8S-4183	1	STRAP
	11	0S-1585	1	BOLT
	12	8M-4791	2	WASHER
	13	2S-6735	1	SPACER
C	14	7B-3235	1	BOLT
C	15	5M-2894	6	WASHER
C	16	2M-0849	1	WASHER
C				INDICATES CHANGE

2P7755 SUPPORT GROUP
Engine Serial No. 78P18799 to 78P37956 inclusive

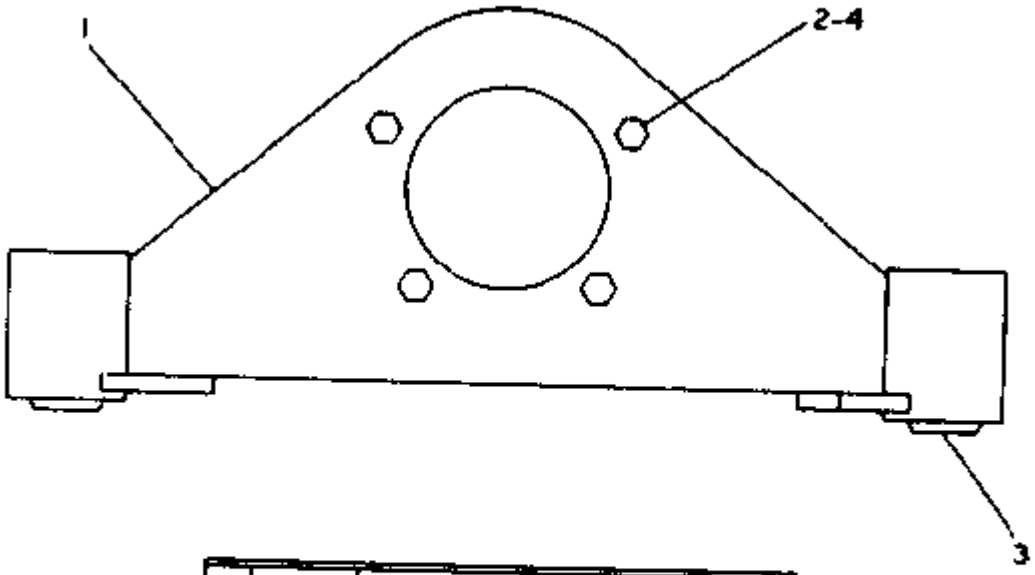

	REF. NO.	PART NUMBER	DESCRIPTION	QTY.
	1	2P1480	SUPPORT ASSEM.	1
C	2	S1585	BOLT	4
	3	7S7043	BUSHING	2
C	4	2M849	WASHER	4

C INDICATES CHANGE

169674

Nota	Ref	Numero	Cant	Nombre De Pieza
		2P-7755	1	SUPPORT GP-ENGINE
	1	2P-1480	1	SUPPORT ASSEM.
C	2	0S-1585	4	BOLT
	3	7S-7043	2	BUSHING
C	4	2M-0849	4	WASHER
C				INDICATES CHANGE

1154 2P6246 TRUNNION GROUP
Engine Serial No. 78P18799 to 78P37956 inclusive

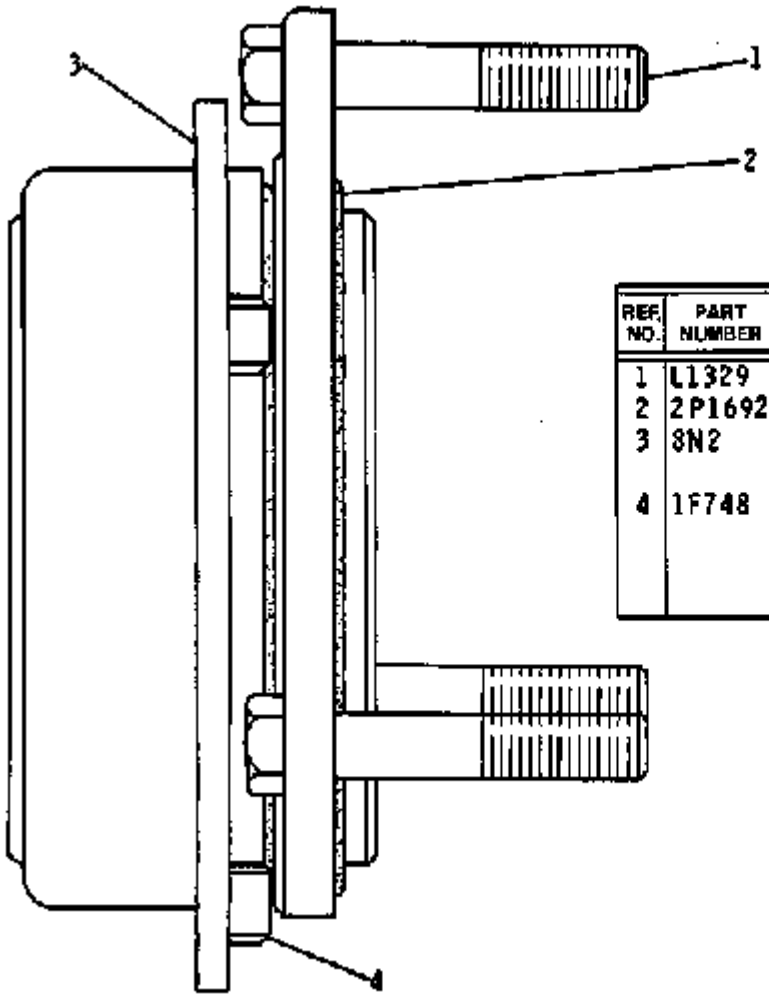

REF. NO.	PART NUMBER	DESCRIPTION	QTY.
1	L1329	BOLT	3
2	2P1692	SEAL	1
3	8N2	TRUNNION ASSEM. (Includes)	1
4	1F748	NUT	4

226146

Nota	Ref	Numero	Cant	Nombre De Pieza
		2P-6246	1	TRUNNION GP-ENGINE
	1	0L-1329	3	BOLT
	2	2P-1692	1	SEAL
	3	8N-0002	1	TRUNNION ASSEM.
				(Includes)
	4	1F-0748	4	NUT

1102 2P6524 VALVE MECHANISM GROUP
Engine Serial No. 78P18799 to 78P45003 inclusive

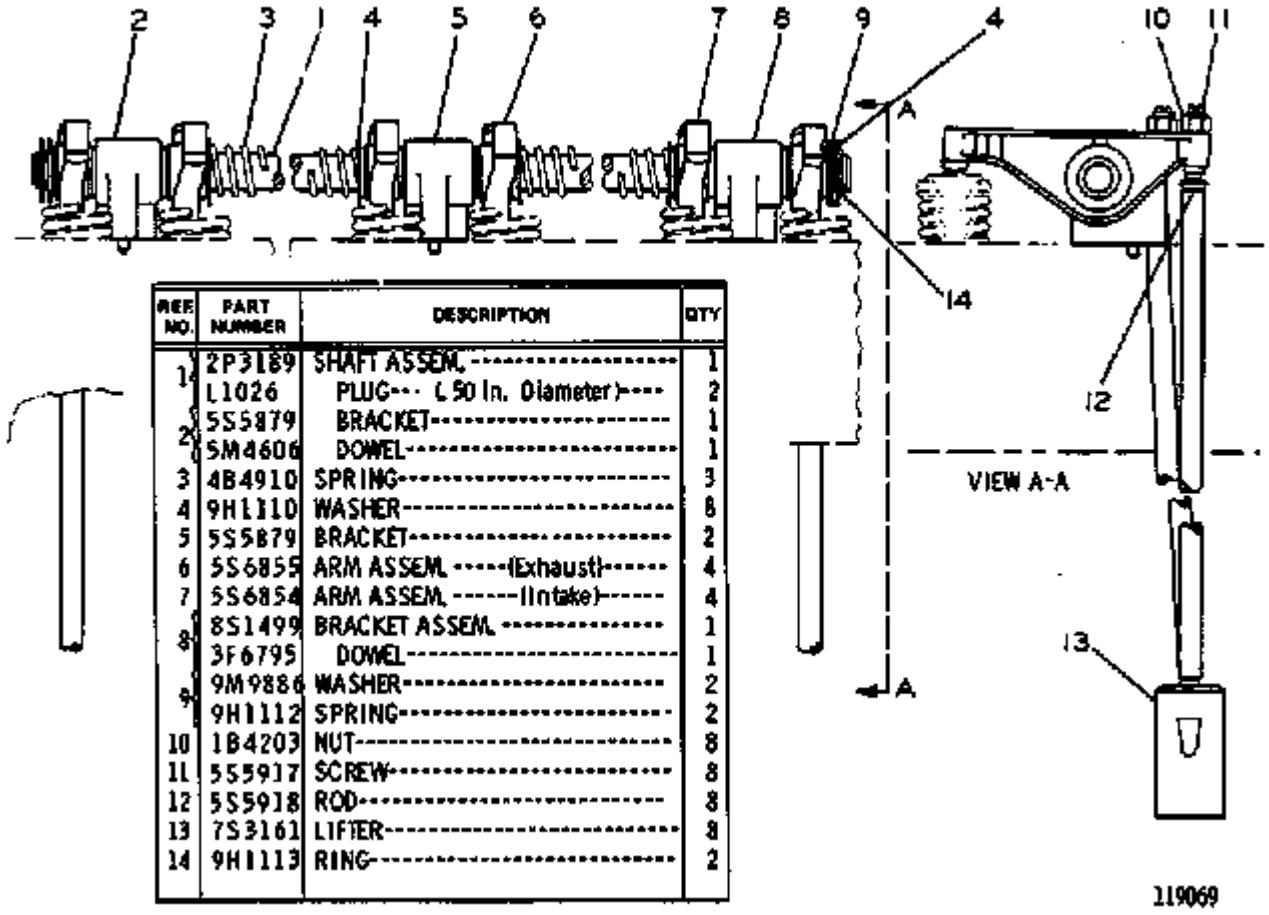

REF NO.	PART NUMBER	DESCRIPTION	QTY
1	2P3189	SHAFT ASSEM.	1
	L1026	PLUG (.50 In. Diameter)	2
2	5S5879	BRACKET	1
	5M4606	DOWEL	1
3	4B4910	SPRING	3
4	9H1110	WASHER	8
5	5S5879	BRACKET	2
6	5S6855	ARM ASSEM. (Exhaust)	4
7	5S6854	ARM ASSEM. (Intake)	4
8	8S1499	BRACKET ASSEM.	1
	3F6795	DOWEL	1
9	9M9886	WASHER	2
	9H1112	SPRING	2
10	1B4203	NUT	8
11	5S5917	SCREW	8
12	5S5918	ROD	8
13	7S3161	LIFTER	8
14	9H1113	RING	2

Nota	Ref	Numero	Cant	Nombre De Pieza
		2P-6524	1	VALVE-MECHANISM GP
	1	2P-3189	1	SHAFT ASSEM.
		0L-1026	2	PLUG (.50 in. Diameter)
	2	5S-5879	1	BRACKET
		5M-4606	1	DOWEL
	3	4B-4910	3	SPRING
	4	9H-1110	8	WASHER
	5	5S-5879	2	BRACKET
	6	5S-6855	4	ARM ASSEM. (Exhaust)
	7	5S-6854	4	ARM ASSEM. (Intake)
	8	8S-1499	1	BRACKET ASSEM.
		3F-6795	1	DOWEL
	9	9M-9886	2	WASHER
		9H-1112	2	SPRING
	10	1B-4203	8	NUT
	11	5S-5917	8	SCREW
	12	5S-5918	8	ROD
	13	7S-3161	8	LIFTER
	14	9H-1113	2	RING

1102 7N8024 VALVE MECHANISM GROUP
Engine Serial No. 78P45004 to 78P50618 inclusive

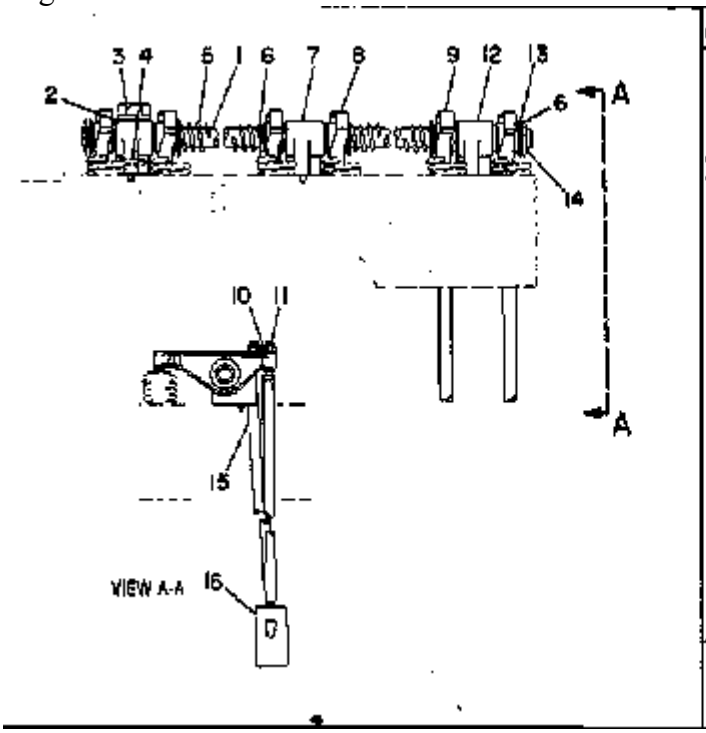

NOTE	REF NO	PART NUMBER	QTY	PART NAME
	1	7N8023	1	SHAFT AS-ROCKER
		0L1026	2	PLUG-CUP
	2	7N8015	1	BRACKET-ROCKER ARM SHAFT
		6M4806	1	DOWEL
C	3	187709	1	BOLT
C		250736	1	WASHER-HARD
	4	5P5598	1	SEAL-O-RING
	5	484910	3	SPRING
	6	9H1110	8	WASHER
	7	555879	2	BRACKET-SHAFT
	8	556855	4	ARM AS-ROCKER (EXHAUST)
	9	556854	4	ARM AS-ROCKER (INTAKE)
	10	184203	8	NUT-FULL
	11	555917	8	SCREW-ROCKER ADJUSTING
	12	851499	1	BRACKET AS-SHAFT
		1L5072	1	DOWEL
B	13	9M9886	2	WASHER
		9H1112	2	SPRING
	14	9H1113	2	RING-RETAINER
	15	555918	8	ROD-VALVE PUSH
	16	753161	8	LIFTER-VALVE

B-USE AS REQUIRED
C-CHANGE FROM PREVIOUS TYPE

B- 227837

Nota	Ref	Numero	Cant	Nombre De Pieza
		7N-8024	1	VALVE MECHANISM GP
	1	7N-8023	1	SHAFT AS-ROCKER
		0L-1026	2	PLUG-CUP
	2	7N-8015	1	BRACKET-ROCKER ARM SHAFT
		5M-4606	1	DOWEL
C	3	1B-7709	1	BOLT
C		2S-0736	1	WASHER-HARD
	4	5P-5598	1	SEAL-O-RING
	5	4B-4910	3	SPRING
	6	9H-1110	8	WASHER
	7	5S-5879	2	BRACKET-SHAFT
	8	5S-6855	4	ARM AS-ROCKER (EXHAUST)
	9	5S-6854	4	ARM AS-ROCKER (INTAKE)
	10	1B-4203	8	NUT-FULL
	11	5S-5917	8	SCREW-ROCKER ADJUSTING
	12	8S-1499	1	BRACKET AS-SHAFT
		1L-5072	1	DOWEL
B	13	9M-9886	2	WASHER
		9H-1112	2	SPRING
	14	9H-1113	2	RING-RETAINER
	15	5S-5918	8	ROD-VALVE PUSH
	16	7S-3161	8	LIFTER-VALVE
B				USE AS REQUIRED
C				CHANGE FROM PREVIOUS TYPE

1317 4N3325 FUMES DISPOSAL GROUP--Breather

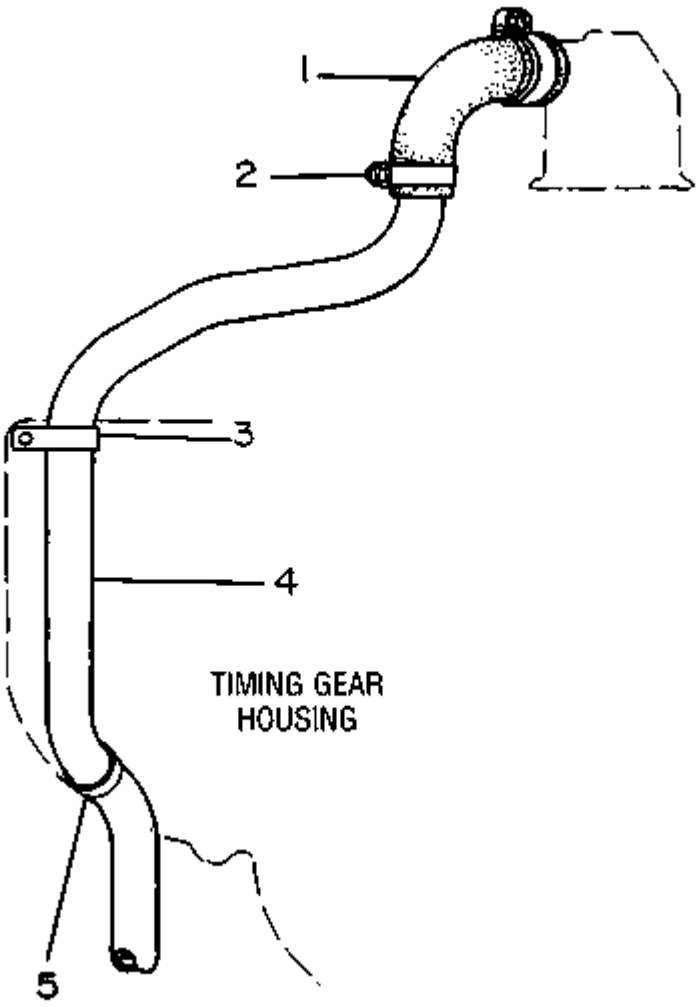

Nota	Ref	Numero	Cant	Nombre De Pieza
		4N-3325	1	FUMES DISPOSAL GP
	1	4N-3326	1	HOSE
C	2	9M-2904	2	CLAMP-HOSE
C	3	8M-8788	1	CLIP
	4	4N-3328	1	TUBE-DISPOSAL
C	5	0T-0386	1	CLIP (SMALL)
C		6N-1369	1	CLIP (LARGE)
C		0L-1351	1	BOLT
C		1D-4717	1	NUT
C		5M-2894	2	WASHER
C				CHANGE FROM PREVIOUS TYPE

1318 2P6475 OIL FILTER GROUP
Engine Serial No. 78P18799 to 78P56556 inclusive

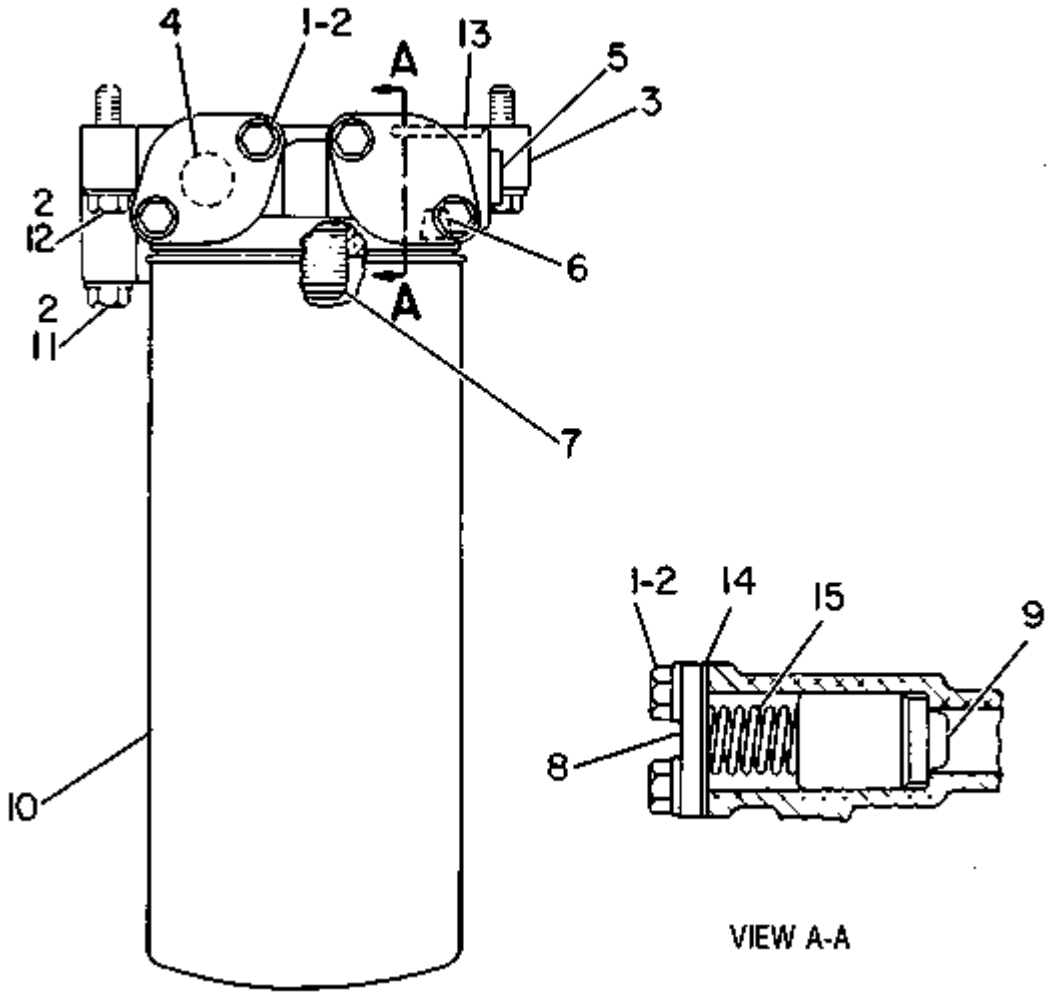

Nota	Ref	Numero	Cant	Nombre De Pieza
		2P-6475	1	FILTER GP-ENGINE OIL
	1	0S-1618	4	BOLT
	2	9M-1974	8	WASHER
	3	1P-6448	1	BASE AS-OIL FILTER
	4	1B-5174	3	PLUG-PIPE 1.91CM(.75IN)THK
	5	3L-1850	1	PLUG-PIPE 1.27CM(.5IN)THK
	6	7H-3171	1	PLUG-PIPE
	7	2P-2537	1	STUD-HOLLOW
	8	6B-0830	2	COVER
	9	1P-1367	2	PLUNGER
	10	2P-4004	1	FILTER AS-OIL
	11	1D-4540	1	BOLT 6.99CM(2.75IN)LG
	12	1A-9579	3	BOLT 3.81CM(1.5IN)LG
	13	8M-4432	2	SEAL-O-RING
	14	4N-8207	2	GASKET
	15	8M-3182	2	SPRING

1307 2P6512 OIL LINES GROUP
Engine Serial No. 78P40900 to 78P54106 inclusive

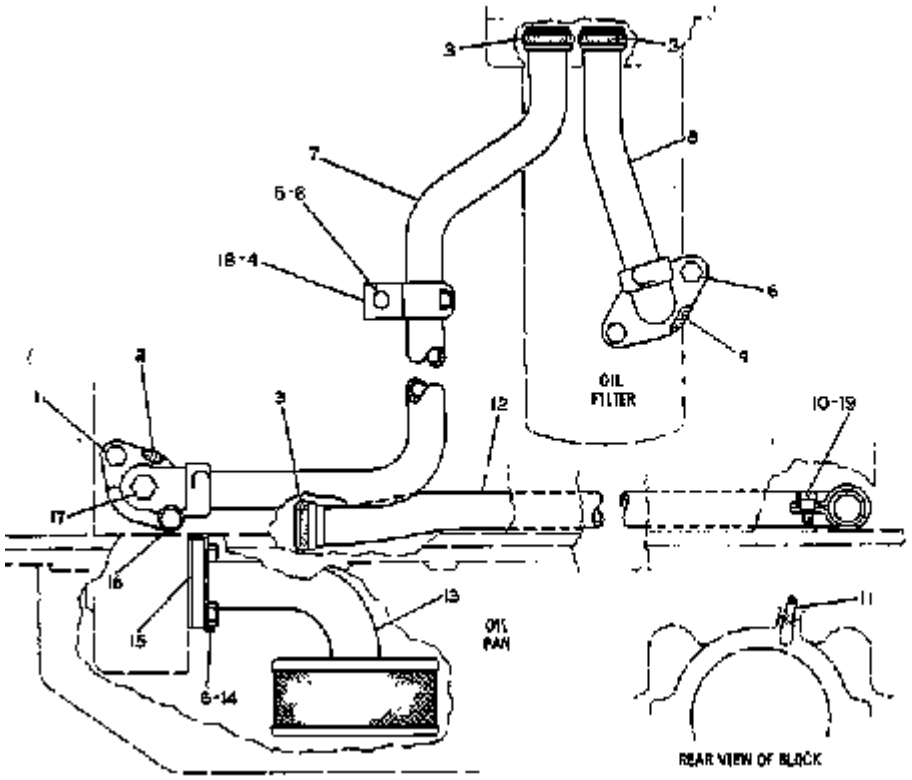

REF. NO.	PART NUMBER	DESCRIPTION	QTY.
1	1A2029	BOLT	1
2	2M5407	GASKET	1
3	9M4849	SEAL	5
4	7S3919	CLIP (slab)	1
C 5	9L9132	WASHER	1
C 6	S1594	BOLT	5
C 7	2P2511	TUBE ASSEM.	1
8	2P2468	TUBE ASSEM.	1
9	7F7590	GASKET	1
10	L364	LOCK	1
11	2S3941	ORIFICE	4
12	2P744	TUBE ASSEM.	1
13	2P1776	BELL ASSEM.	1
14	8S8874	LOCK	1
15	8M904	GASKET	1
C 16	L2070	BOLT	1
C 17	5M6213	PLUG	1
C 18	7S5916	CLIP (slab)	1
19	1102	BOLT (plain)	1
		-OR-	
C	4F29	BOLT (drilled head)	1

C INDICATES CHANGE

L72343

Nota	Ref	Numero	Cant	Nombre De Pieza
		2P-6512	1	LINES GP-ENGINE OIL
	1	1A-2029	1	BOLT
	2	2M-5407	1	GASKET
	3	9M-4849	3	SEAL
	4	7S-3919	1	CLIP (slot)
C	5	9L-9132	1	WASHER
C	6	0S-1594	5	BOLT
C	7	2P-2519	1	TUBE ASSEM.
	8	2P-2460	1	TUBE ASSEM.
	9	7F-7590	1	GASKET
	10	0L-0364	1	LOCK
	11	2S-1541	4	ORIFICE
	12	2P-0744	1	TUBE ASSEM.
	13	2P-1776	1	BELL ASSEM.
	14	8S-8874	1	LOCK
	15	8M-0904	1	GASKET
C	16	0L-2070	1	BOLT
C	17	5M-6213	1	PLUG
C	18	7S-3916	1	CLIP (tab)
	19	0T-0102	1	BOLT (plain)
				-OR-
C		4F-0029	1	BOLT (drilled head)
C				INDICATES CHANGE

1304 2P1784 OIL PUMP GROUP
2P1785 Oil Pump parts are shown on Page 34

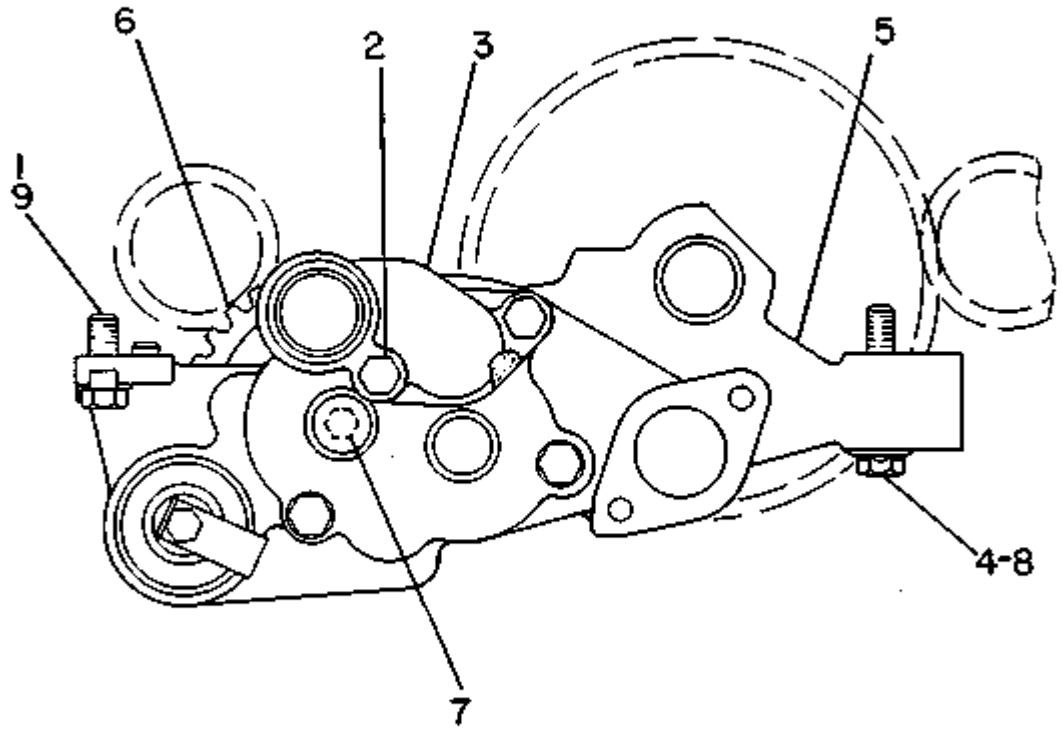

Nota	Ref	Numero	Cant	Nombre De Pieza
		2P-1784	1	PUMP GP-ENGINE OIL
	1	8M-7587	2	LOCK-NUT
	2	2P-3210	1	BOLT-WASHER HEAD
				-OR-
C		0S-1619	1	BOLT (STD HEX HEAD)
	3	4N-5353	1	ELBOW-LINE
		2P-8746	1	GASKET
	4	2P-3206	3	BOLT-WASHER HEAD
				-OR-
		0S-1590	3	BOLT (STD HEX HEAD)
YR	5	2P-1785	1	PUMP GP-ENGINE OIL
C	6	8S-0497	1	GEAR-OIL PUMP INPUT (40 TEETH)
C		8M-5599	1	KEY-SPECIAL WOODRUFF
C	7	0S-1590	1	BOLT
C		1P-7346	1	WASHER
C	8	5M-2894	2	WASHER
	9	1A-2029	2	BOLT 28.5MM(1.25IN)LONG
				-OR-
C		3B-1915	2	BOLT 34.9MM(1.375IN)LONG
C				CHANGE FROM PREVIOUS TYPE
R				REMFG PART MAY BE AVAILABLE
Y				SEPARATE ILLUSTRATION

1803 2P8712 AIR COMPRESSOR GROUP
Engine Serial No. 78P18799 to 78P44921 inclusive
2P8709 Air Compressor parts are shown on Page 51

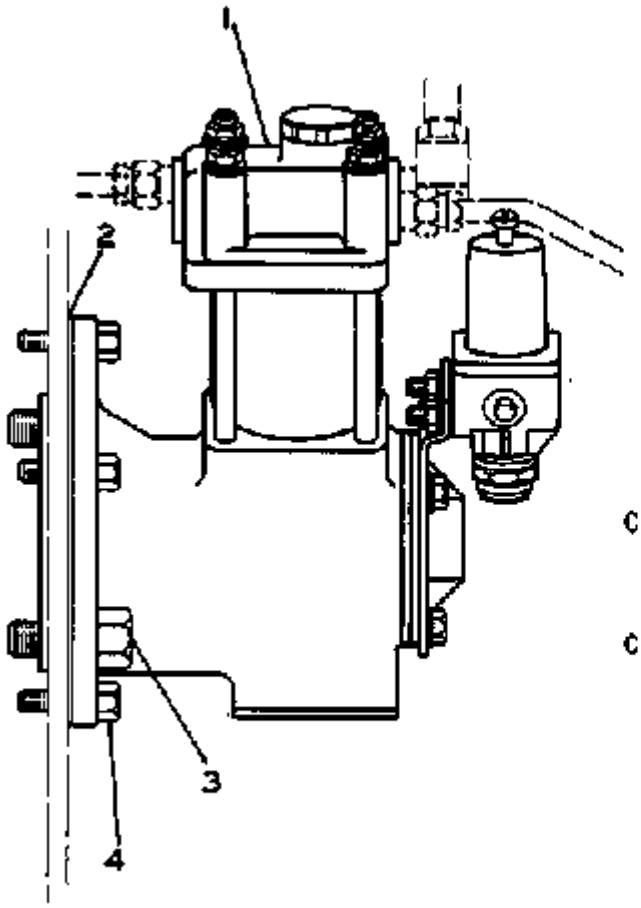

	REF. NO.	PART NUMBER	DESCRIPTION	QTY
	1	2P8709	COMPRESSOR GROUP (Separate Illustration)	1
	2	2P220	GASKET	1
	3	1A1135	BOLT-5.08 cm (2 in.) long	2
		4D3704	WASHER	2
			-OR-	
C		S1589	BOLT-4.46 cm (1.75 in.) long	2
	4	S1591	BOLT-3.81 cm (1.5 in.) long	3
		5M2894	WASHER	3
			-OR-	
C		3B1915	BOLT-3.49 cm (1.375 in.) long	3

C INDICATES CHANGE

222683

Nota	Ref	Numero	Cant	Nombre De Pieza
		2P-8712	1	AIR COMPRESSOR GP
Y	1	2P-8709	1	COMPRESSOR GROUP
				(Separate Illustration)
	2	2P-0220	1	GASKET
	3	1A-1135	2	BOLT 5.08 cm(2 in.) long
		4D-3704	2	WASHER
				-OR-
C		0S-1589	2	BOLT 4.46 cm(1.75 in.)long
	4	0S-1591	3	BOLT 3.81 cm(1.5 in.)long
		5M-2894	3	WASHER
				-OR-
C		3B-1915	3	BOLT 3.49 cm(1.375 in.)long
C				INDICATES CHANGE
Y				SEPARATE ILLUSTRATION

1803 2P8709 AIR COMPRESSOR GROUP
Engine Serial No. 78P18799 to 78P44921 inclusive
Part of 2P8712 Air Compressor Group shown on Page 50

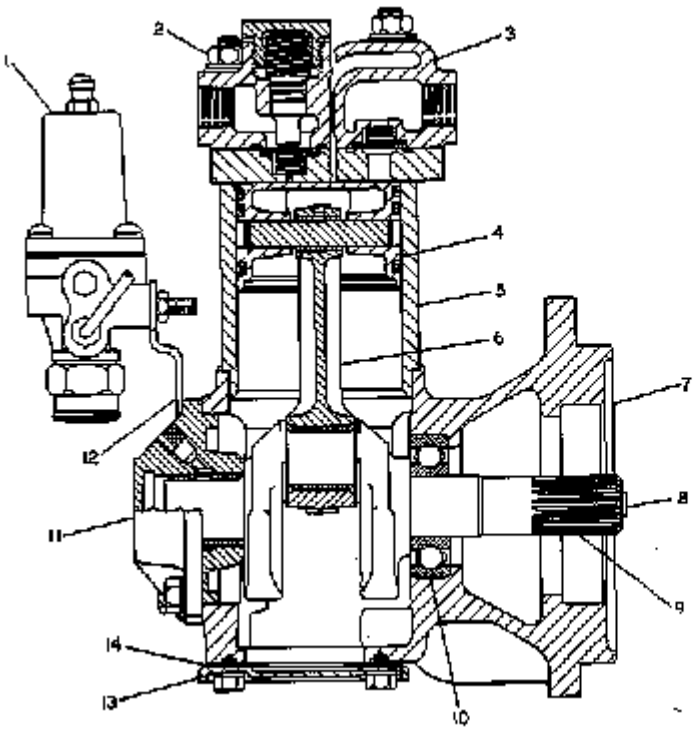

	PART NO.	DESCRIPTION	QTY
	2P8721	GOVERNOR ASSEM.	1
	184203	NUT	4
C	7N9833	HEAD ASSEM.	1
	8A7252	PISTON ASSEM.	1
C	8A2351	LINER	1
C	8A2246	ROD ASSEM.	1
	2P7849	CRANKCASE	1
C	9G2241	PLUG	1
	2P7850	CRANKSHAFT	1
	2F5721	BEARING	1
	1P9486	COVER ASSEM.	1
	2P7848	BRACKET	1
	4N9224	COVER	1
	4N5225	GASKET	1
		THE FOLLOWING REPAIR KITS ARE AVAILABLE:	
	8A2250	KIT----(Includes 8 Piston Rings)**	1
	8A2305	KIT----Governor--Major Repair** (Includes Diaphragms, Followers, Valve, Guide, Plunger, "O" Ring, Grease, Spring, & Hardware)	1
C	7N2834	KIT----(Compressor--Major Repair) (Includes Valves, Bearings, Gasket & Hardware)	1
	1P6056	KIT----(Unloader Valve) (Includes Cap, Clip, Washer Spring, Plunger, & "O" Ring)	1
	4N4027	KIT----Governor Lines* (Includes Elbow Assem., Pipe, Fitting & Washer)	1

C INDICATES CHANGE 226838

Nota	Ref	Numero	Cant	Nombre De Pieza
		2P-8709	1	AIR COMPRESSOR GP
	1	2P-8721	1	GOVERNOR ASSEM.
	2	1B-4203	4	NUT
C	3	7N-2833	1	HEAD ASSEM.
	4	8A-2252	1	PISTON ASSEM.
C	5	8A-2251	1	LINER
C	6	8A-2248	1	ROD ASSEM.
	7	2P-7849	1	CRANKCASE
C	8	9F-2247	1	PLUG
	9	2P-7850	1	CRANKSHAFT
	10	2F-5721	1	BEARING
	11	1P-5480	1	COVER ASSEM
	12	2P-7848	1	BRACKET
	13	4N-5224	1	COVER
	14	4N-5225	1	GASKET
				THE FOLLOWING REPAIR KITS ARE AVAILABLE:
		8A-2250	1	KIT (Includes 5 Piston Rings)
		8A-2305	1	KIT (Governor--Major Repair)
				(Includes Diaphragms, Followers, VALVE, GUIDE, PLUNGER, "O" RING, GREASE, SPR
C		7N-2834	1	KIT (Compressor--Major Repair)
				(Includes Valves, Bearings, Gasket & HARDWARE)
		1P-6059	1	KIT (Unloader Valve)
				(Includes Cap, Clip, Washer SPRING, PLUNGER, & "O" RING)
		4N-4027	1	KIT (Governor Lines)
				(Includes Elbow Assem., Pipe, FITTING & WASHER)
C				INDICATES CHANGE

1803 7N3796 AIR COMPRESSOR LINES GROUP
Engine Serial No. 78P60567 to 78P61975 inclusive

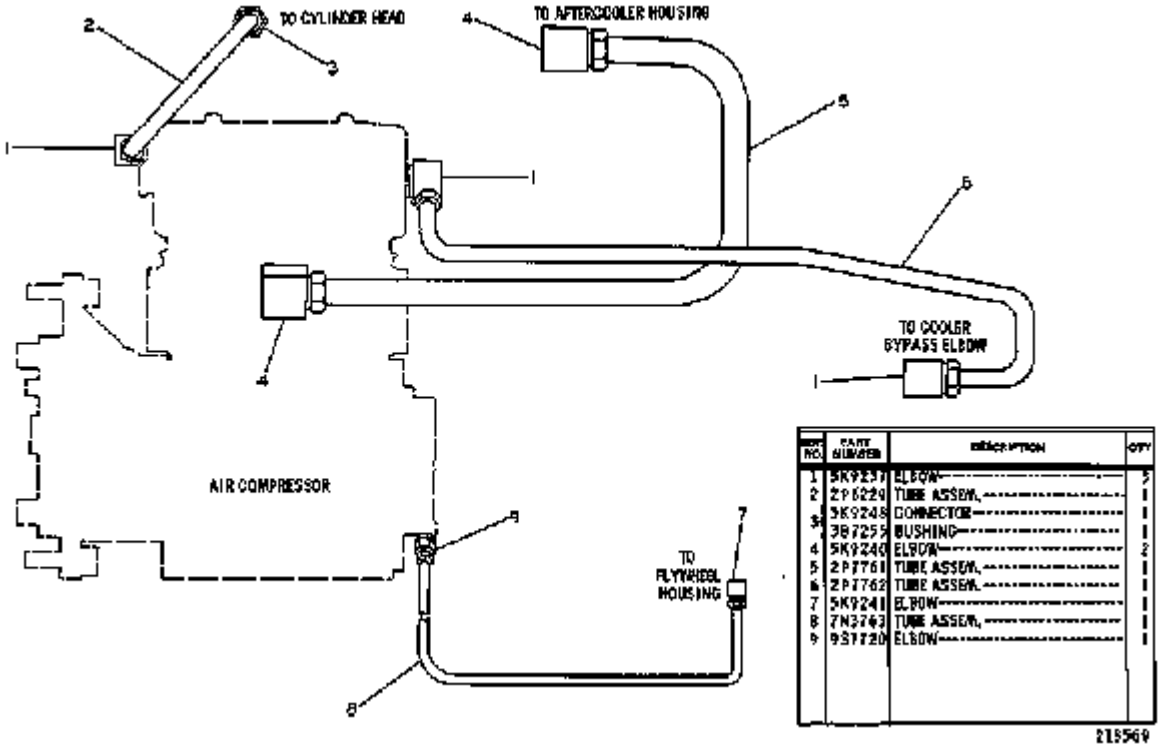

ITEM NO.	PART NUMBER	DESCRIPTION	QTY
1	5K9237	ELBOW	5
2	2P6229	TUBE ASSEM.	1
3	5K9248	CONNECTOR	1
	3B7255	BUSHING	1
4	5K9240	ELBOW	2
5	2P7761	TUBE ASSEM.	1
6	2P7762	TUBE ASSEM.	1
7	5K9241	ELBOW	1
8	7N3763	TUBE ASSEM.	1
9	9S7720	ELBOW	1

Nota	Ref	Numero	Cant	Nombre De Pieza
		7N-3796	1	LINES GP-COMPRESSOR
	1	5K-9237	3	ELBOW
	2	2P-6229	1	TUBE ASSEM.
	3	5K-9248	1	CONNECTOR
		3B-7255	1	BUSHING
	4	5K-9240	2	ELBOW
	5	2P-7761	1	TUBE ASSEM.
	6	2P-7762	1	TUBE ASSEM.
	7	5K-9241	1	ELBOW
	8	7N-3763	1	TUBE ASSEM.
	9	9S-7720	1	ELBOW

1059 2P6570 EXHAUST MANIFOLD GROUP

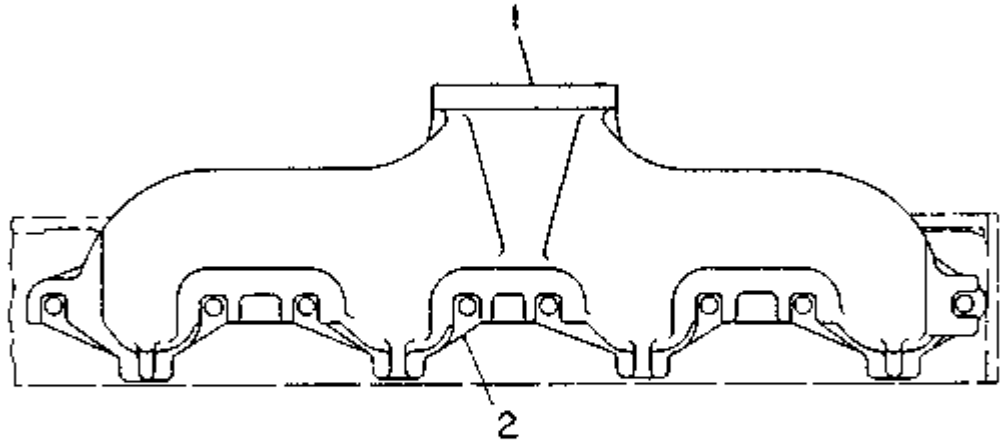

Nota	Ref	Numero	Cant	Nombre De Pieza
		2P-6570	1	MANIFOLD GP-EXHAUST
	1	9S-2356	1	MANIFOLD-EXHAUST
	2	8S-8258	4	GASKET

1061 1W3320 EXHAUST PIPE GROUP
Serial No. 41K10160-Up
Part of 8V557 Sound Suppression Arrangement listed on Page 233B
AN ATTACHMENT

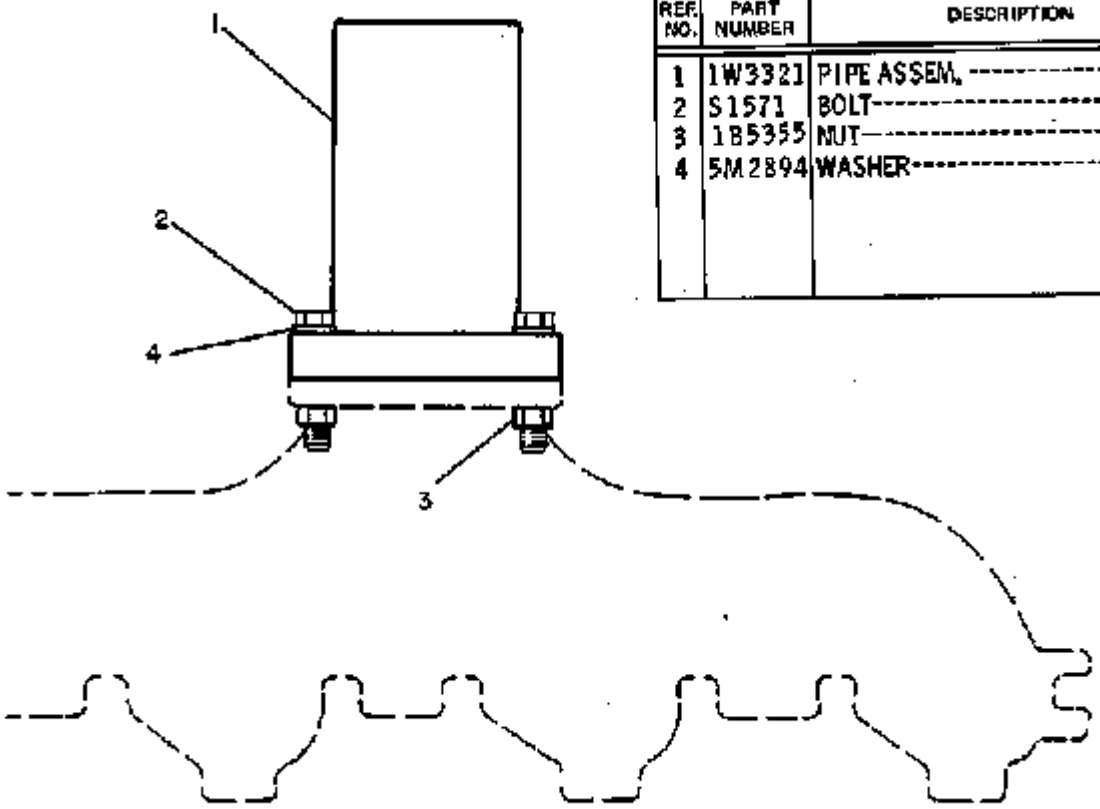

REF. NO.	PART NUMBER	DESCRIPTION	QTY.
1	1W3321	PIPE ASSEM.	1
2	S1571	BOLT	4
3	1B5355	NUT	4
4	5M2894	WASHER	4

181455

Nota	Ref	Numero	Cant	Nombre De Pieza
		1W-3320	1	PIPE GP-EXHAUST
	1	1W-3321	1	PIPE ASSEM.
	2	0S-1571	4	BOLT
	3	1B-5355	4	NUT
	4	5M-2894	4	WASHER

1062 1W3313 MUFFLER GROUP
Serial No. 41K10160-Up
Part of 8V557 Sound Suppression Arrangement listed on Page 233B
AN ATTACHMENT

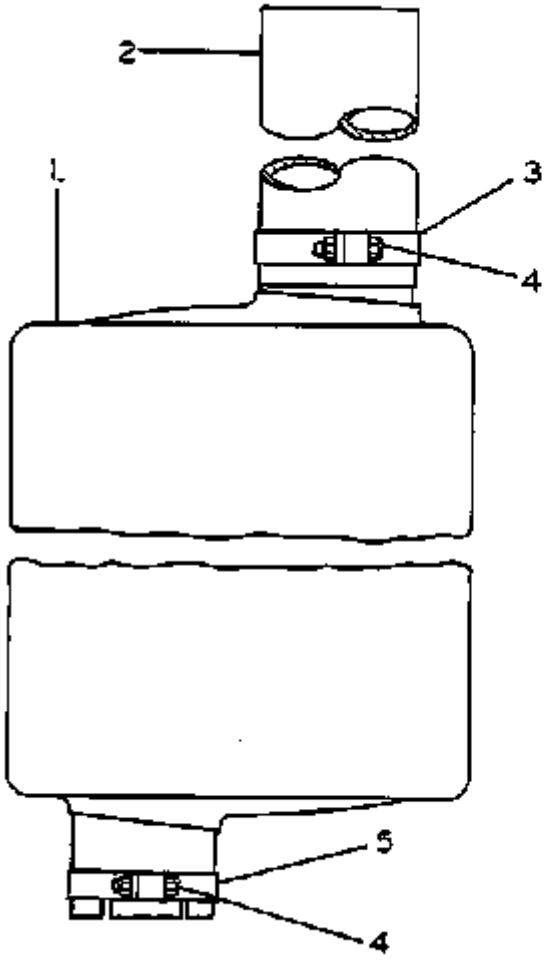

REF. NO.	PART NUMBER	DESCRIPTION	QTY
1	1W777	MUFFLER ASSEM.	1
2	1P9554	PIPE (Exhaust)	1
3	5S580	CLAMP	1
4	S1591	BOLT	2
	1B5355	NUT	2
5	2F5152	CLAMP	1

181457

Nota	Ref	Numero	Cant	Nombre De Pieza
		1W-3313	1	MUFFLER GP
	1	1W-0777	1	MUFFLER ASSEM.
	2	1P-9554	1	PIPE (Exhaust)
	3	5S-0580	1	CLAMP
	4	0S-1591	2	BOLT
		1B-5355	2	NUT
	5	2F-5152	1	CLAMP

1062 1W3315 MUFFLER MOUNTING GROUP--Type 2
Serial No. 41K10160-Up
Part of 8V557 Sound Suppression Arrangement listed on Page 233B
8N2182 Disposal parts are shown on Page 48A-4. AN ATTACHMENT

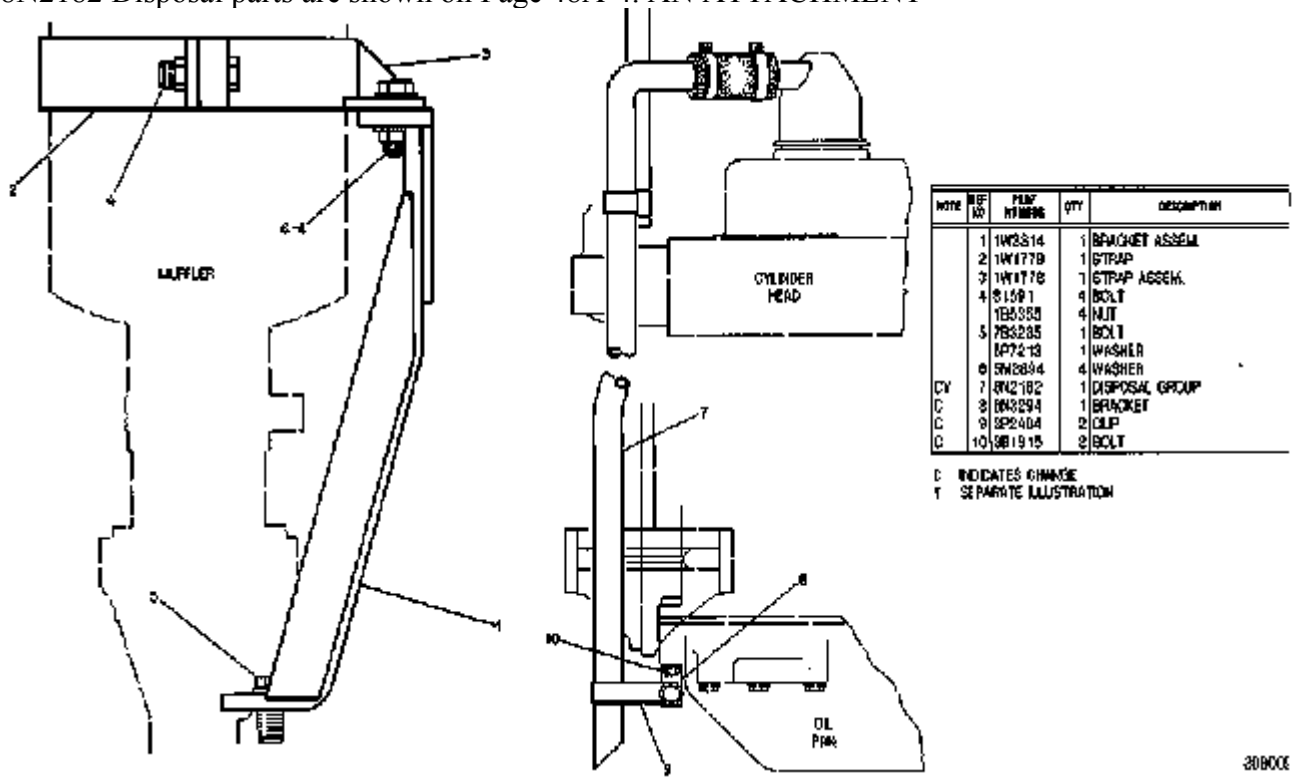

NOTE	REF NO	PART NUMBER	QTY	DESCRIPTION
	1	1W3814	1	BRACKET ASSEM.
	2	1W1779	1	STRAP
	3	1W1778	1	STRAP ASSEM.
	4	8159T	4	BOLT
		1B5385	4	NUT
	5	7B5285	1	BOLT
		8P7213	1	WASHER
	6	5W2894	4	WASHER
CV	7	8N2182	1	DISPOSAL GROUP
C	8	8N3294	1	BRACKET
C	9	9P2404	2	CLIP
C	10	9B1915	2	BOLT

C INDICATES CHANGE
T SEPARATE ILLUSTRATION

30B00

Nota	Ref	Numero	Cant	Nombre De Pieza
		1W-3315	1	MOUNTING GP-MUFFLER
	1	1W-3314	1	BRACKET ASSEM.
	2	1W-1779	1	STRAP
	3	1W-1778	1	STRAP ASSEM.
	4	0S-1591	4	BOLT
		1B-5355	4	NUT
	5	7B-3235	1	BOLT
		5P-7213	1	WASHER
	6	5M-2894	4	WASHER
CY	7	8N-2182	1	DISPOSAL GROUP
C	8	8N-3294	1	BRACKET
C	9	3P-2404	2	CLIP
C	10	3B-1915	2	BOLT
C				INDICATES CHANGE
Y				SEPARATE ILLUSTRATION

1261 1P2299 FUEL FILTER GROUP
Engine Serial No. 78P30067-Up

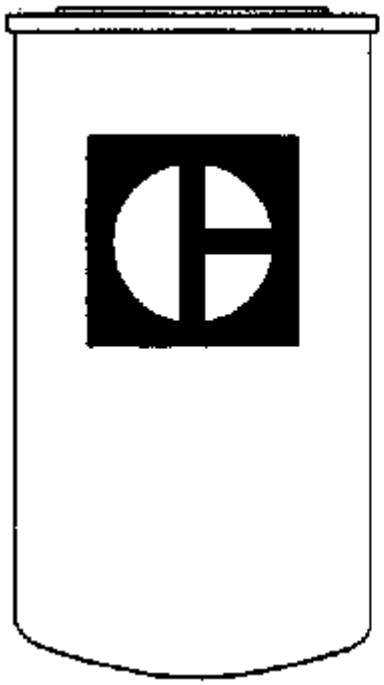

NOTE	REF NO.	PART NUMBER	QTY	PART NAME
				NO SERVICEABLE PARTS

8-208065

Nota	Ref	Numero	Cant	Nombre De Pieza

41K11287 930 WHEEL LOADER Identificación de Piezas
Número de publicación SEBP1052-01 Fecha de publicación 1984/12/01 Fecha de actualización 1994/09/05

4N3374 FUEL INJECTION LINES GROUP
Engine Serial No. 78P27209 to 78P30066 inclusive

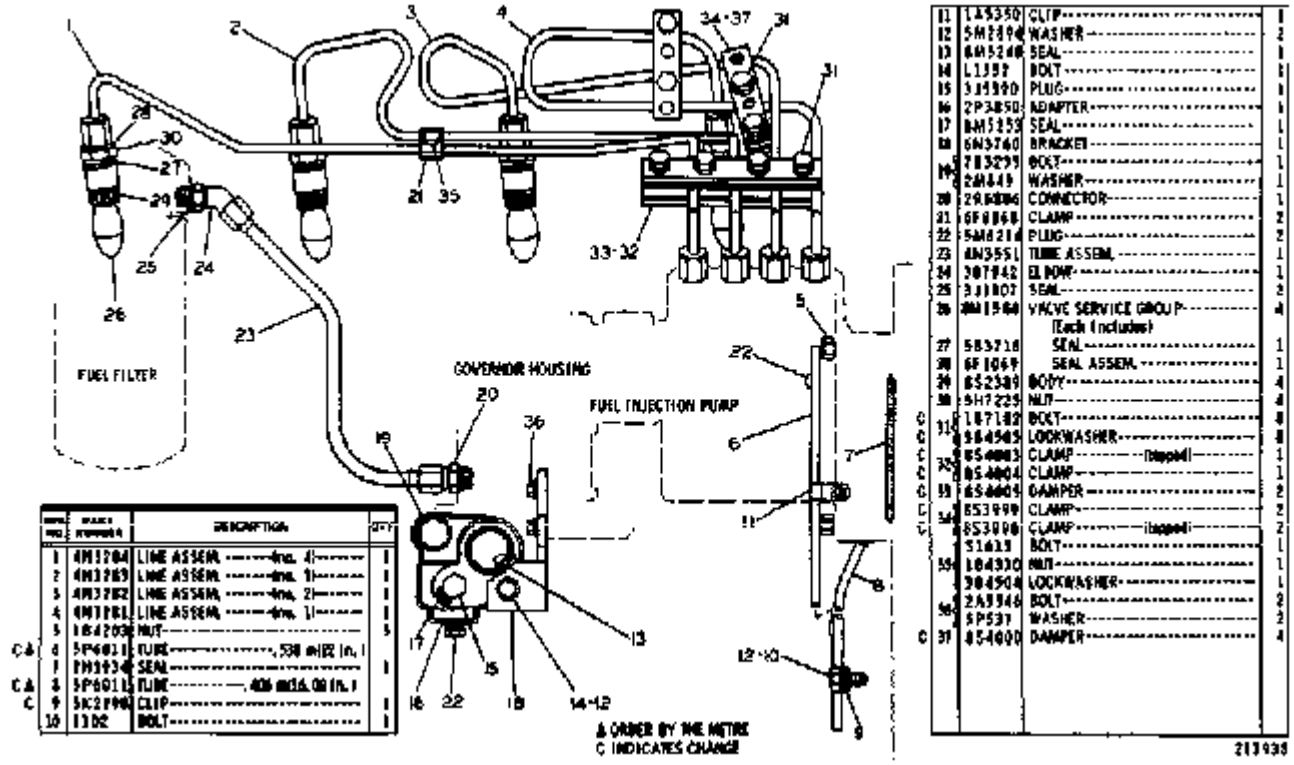

Nota	Ref	Numero	Cant	Nombre De Pieza
		4N-3374	1	FUEL INJECTION LINES GROUP
	1	4N-3284	1	LINE ASSEM. (no. 4)
	2	4N-3283	1	LINE ASSEM. (no. 3)
	3	4N-3282	1	LINE ASSEM. (no. 2)
	4	4N-3281	1	LINE ASSEM. (no. 1)
	5	1B-4203	3	NUT
CD	6	5P-6011		TUBE- .538 m(22 in.)
	7	2H-3934	1	SEAL
CD	8	5P-6011		TUBE- .406 m(16.00 in.)
C	9	5K-2298	1	CLIP
	10	0T-0102	1	BOLT
	11	1A-5350	1	CLIP
	12	5M-2894	2	WASHER
	13	8M-5248	1	SEAL
	14	0L-1352	1	BOLT
	15	3J-5390	1	PLUG
	16	2P-3850	1	ADAPTER
	17	8M-5253	1	SEAL
	18	6N-3760	1	BRACKET
	19	7B-3235	1	BOLT
		2M-0849	1	WASHER
	20	2R-6806	1	CONNECTOR
	21	6F-8868	2	CLAMP
	22	5M-6214	2	PLUG
	23	4N-3551	1	TUBE ASSEM.
	24	030-7942	1	ELBOW
	25	3J-1907	2	SEAL
	26	8M-1584	4	VALVE SERVICE GROUP
				(Each Includes)
	27	5B-3718	1	SEAL

	28	6F-1069	1	SEAL ASSEM.
	29	8S-2389	4	BODY
	30	5H-7225	4	NUT
C	31	1B-7182	8	BOLT
	C	3B-4505	8	LOCKWASHER
C	32	8S-4003	1	CLAMP (tapped)
C		8S-4004	1	CLAMP
C	33	8S-4005	2	DAMPER
C	34	8S-3999	2	CLAMP
C		8S-3998	2	CLAMP (tapped)
	35	0S-1615	1	BOLT
		1B-4330	1	NUT
		3B-4504	1	LOCKWASHER
	36	2A-5546	2	BOLT
		5P-0537	2	WASHER
C	37	8S-4000	4	DAMPER

C	INDICATES CHANGE
D	ORDERS BY THE METRE

1252 8N9615 FUEL INJECTION LINES GROUP
Engine Serial No. 78P52955-Up
Part of 7N3460 Fuel Injection Lines Group shown on Page 64C-2

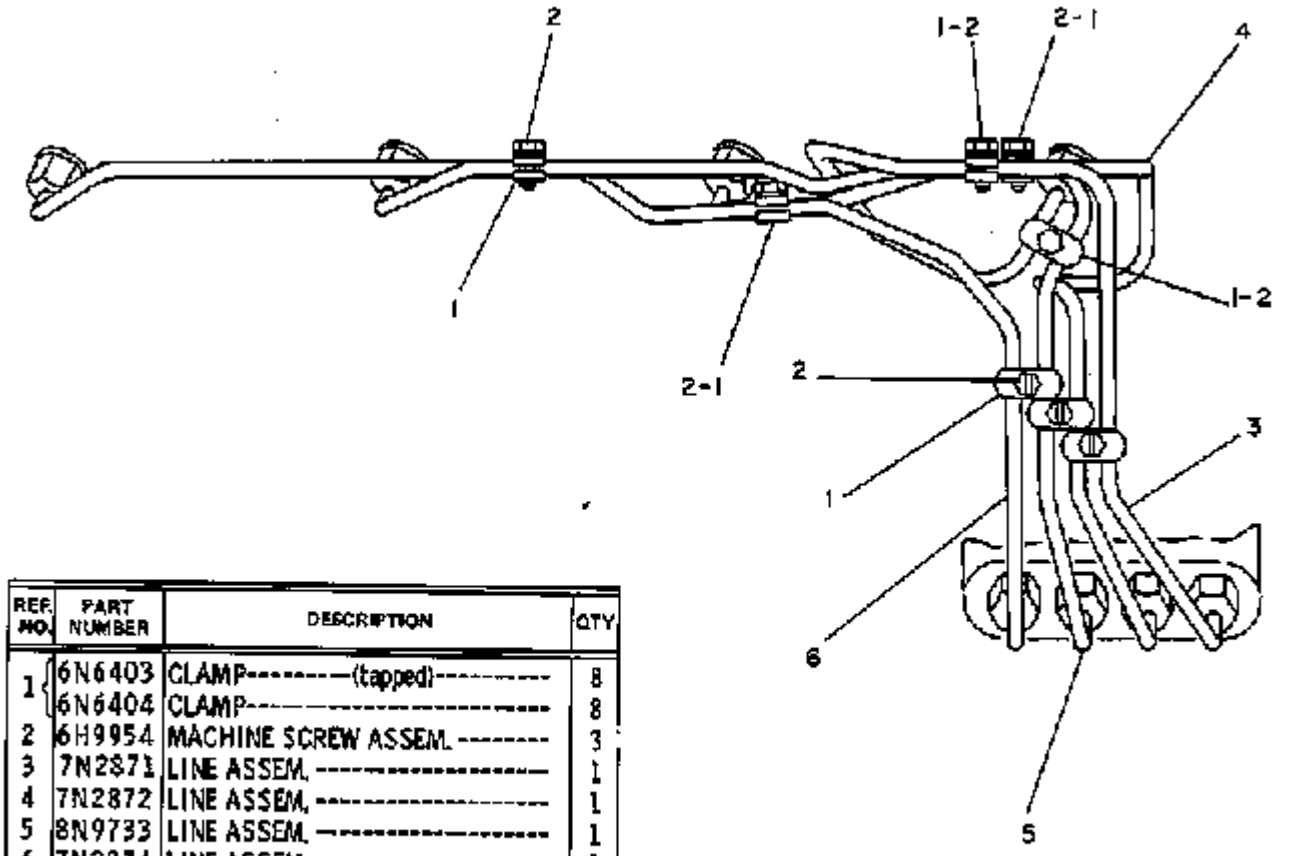

REF. NO.	PART NUMBER	DESCRIPTION	QTY
1	6N6403	CLAMP--------(tapped)----------	8
	6N6404	CLAMP----------	8
2	6H9954	MACHINE SCREW ASSEM. --------	3
3	7N2871	LINE ASSEM. ----------	1
4	7N2872	LINE ASSEM. ----------	1
5	8N9733	LINE ASSEM. ----------	1
6	7N2874	LINE ASSEM. ----------	1

I76968

Nota	Ref	Numero	Cant	Nombre De Pieza
		8N-9615	1	LINES GP-FUEL INJECTION
	1	6N-6403	8	CLAMP (tapped)
		6N-6404	8	CLAMP
	2	6H-9954	3	MACHINE SCREW ASSEM.
	3	7N-2871	1	LINE ASSEM.
	4	7N-2872	1	LINE ASSEM.
	5	8N-9733	1	LINE ASSEM.
	6	7N-2874	1	LINE ASSEM.

1256 9N5458 FUEL PUMP GROUP--Boost--12 Volt--Field Installation
Provides positive pressure to the sleeve metering fuel system components on the suction side of the fuel transfer pump

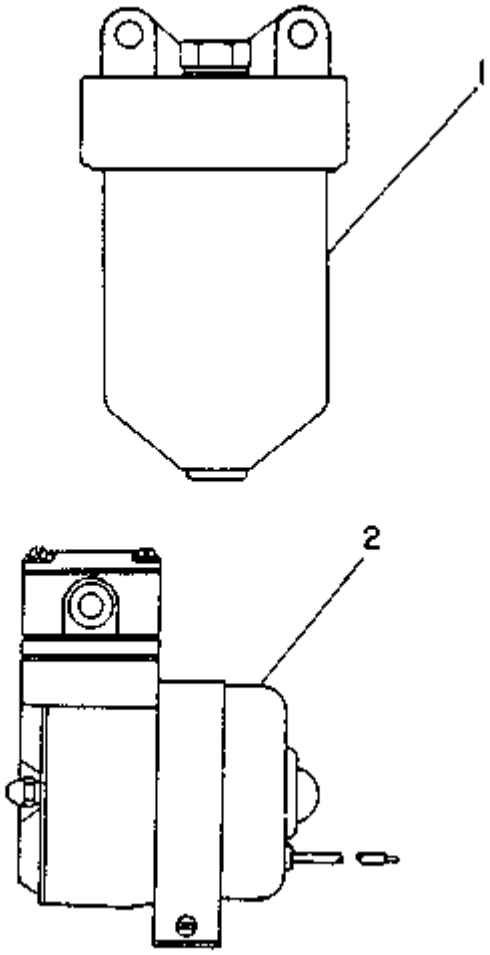

Nota	Ref	Numero	Cant	Nombre De Pieza
		9N-5458	1	PUMP GP-FUEL
Y	1	8H-4681	1	FILTER GP-PRIMARY FUEL
	2	9N-5459	1	PUMP AS-FUEL
Y				SEPARATE ILLUSTRATION

4209 1V7251 DEMOUNTABLE RIM GROUP--4 Required
FOR USE WITH 17.50 X 25 TRACTION TREAD OR ROCK
TREAD TUBELESS TIRES

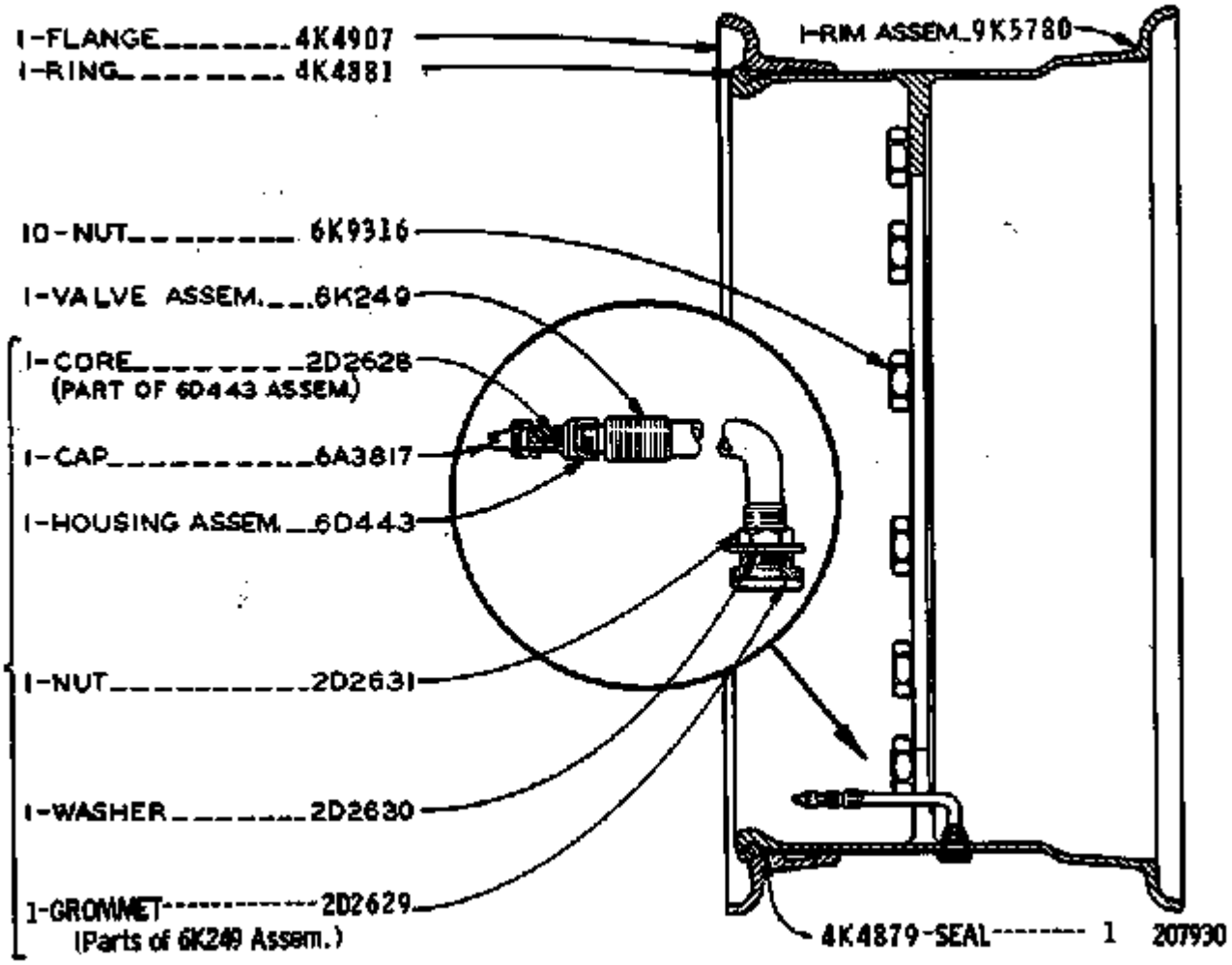

Nota	Ref	Numero	Cant	Nombre De Pieza
		1V-7251	1	RIM GP-DEMOUNTABLE
		4K-4907	1	FLANGE
		4K-4881	1	RING
		6K-9316	10	NUT
		6K-0249	1	VALVE ASSEM.
		2D-2628	1	CORE
				(PART OF 6D443 ASSEM)
		6A-3817	1	CAP
		6D-0443	1	HOUSING ASSEM.
		2D-2631	1	NUT
		2D-2630	1	WASHER
		2D-2629	1	GROMMET
				(Parts of 6K249 Assem.)
		9K-5780	1	RIM ASSEM.
		4K-4879	1	SEAL

41K11287 930 WHEEL LOADER Identificación de Piezas
Número de publicación SEBP1052-01 Fecha de publicación 1984/12/01 Fecha de actualización 1994/09/05

3253 6K5781 DRIVE SHAFT GROUP
Serial No. 41K5614-Up

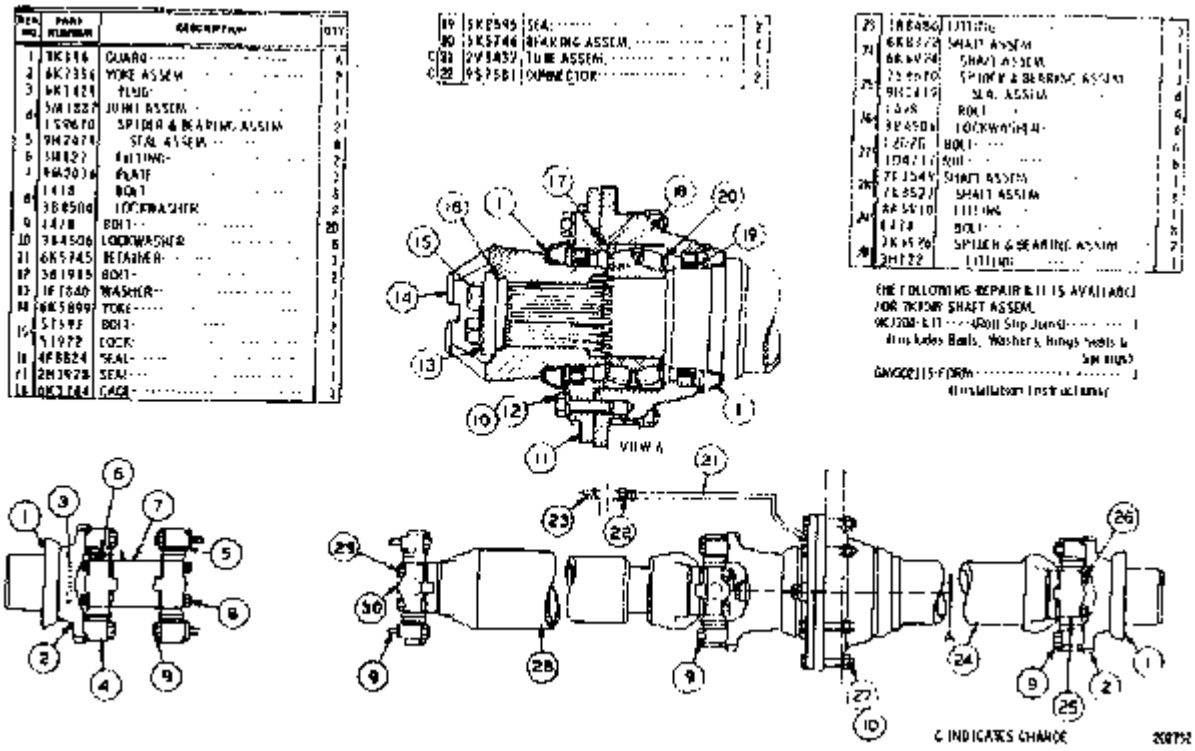

Nota	Ref	Numero	Cant	Nombre De Pieza
		6K-5781	1	DRIVE SHAFT GP
	1	3K-0196	4	GUARD
	2	6K-7356	2	YOKE ASSEM.
	3	6K-1429	1	PLUG
	4	5M-7882	1	JOINT ASSEM.
		1S-9670	2	SPIDER & BEARING ASSEM.
	5	9H-2479	4	SEAL ASSEM.
	6	3H-0122	2	FITTING
	7	9M-2036	1	PLATE
	8	0L-0478	8	BOLT
		3B-4506	8	LOCKWASHER
	9	0L-0478	20	BOLT
	10	3B-4506	8	LOCKWASHER
	11	6K-5745	1	RETAINER
	12	3B-1915	2	BOLT
	13	1F-7840	1	WASHER
	14	6K-5899	1	YOKE
	15	0S-1593	2	BOLT
		0S-1922	1	LOCK
	16	4F-8824	1	SEAL
	17	2H-3928	1	SEAL
	18	6K-5744	1	CAGE
	19	5K-2595	2	SEAL
	20	6K-5746	1	BEARING ASSEM.
C	21	2V-3437	1	TUBE ASSEM.
C	22	9S-7581	2	CONNECTOR
	23	3B-8486	1	FITTING
	24	6K-8372	1	SHAFT ASSEM.
		6K-6924	1	SHAFT ASSEM.
	25	1S-9670	1	SPIDER & BEARING ASSEM.

	9H-2479	4	SEAL ASSEM.
26	0L-0478	4	BOLT
	3B-4506	4	LOCKWASHER
27	0L-2070	6	BOLT
	1D-4717	6	NUT
28	7K-1549	1	SHAFT ASSEM.
	7K-3527	1	SHAFT ASSEM.
29	8K-5910	1	FITTING
	0L-0478	8	BOLT
30	7K-3526	2	SPIDER & BEARING ASSEM.
	3H-0122	1	FITTING
			THE FOLLOWING REPAIR KIT IS AVAILABLE FOR 7K1549 SHAFT ASSEM.:
	9K-7204	1	KIT (Roll Slip Joint)
			(Includes Balls, Washers, Rings Seals & Springs)

C INDICATES CHANGE

3280 8K6001 FRONT DIFFERENTIAL AND CARRIER GROUP
Serial No. 41K6240-Up
9K8944 Differential parts are shown on Page 116

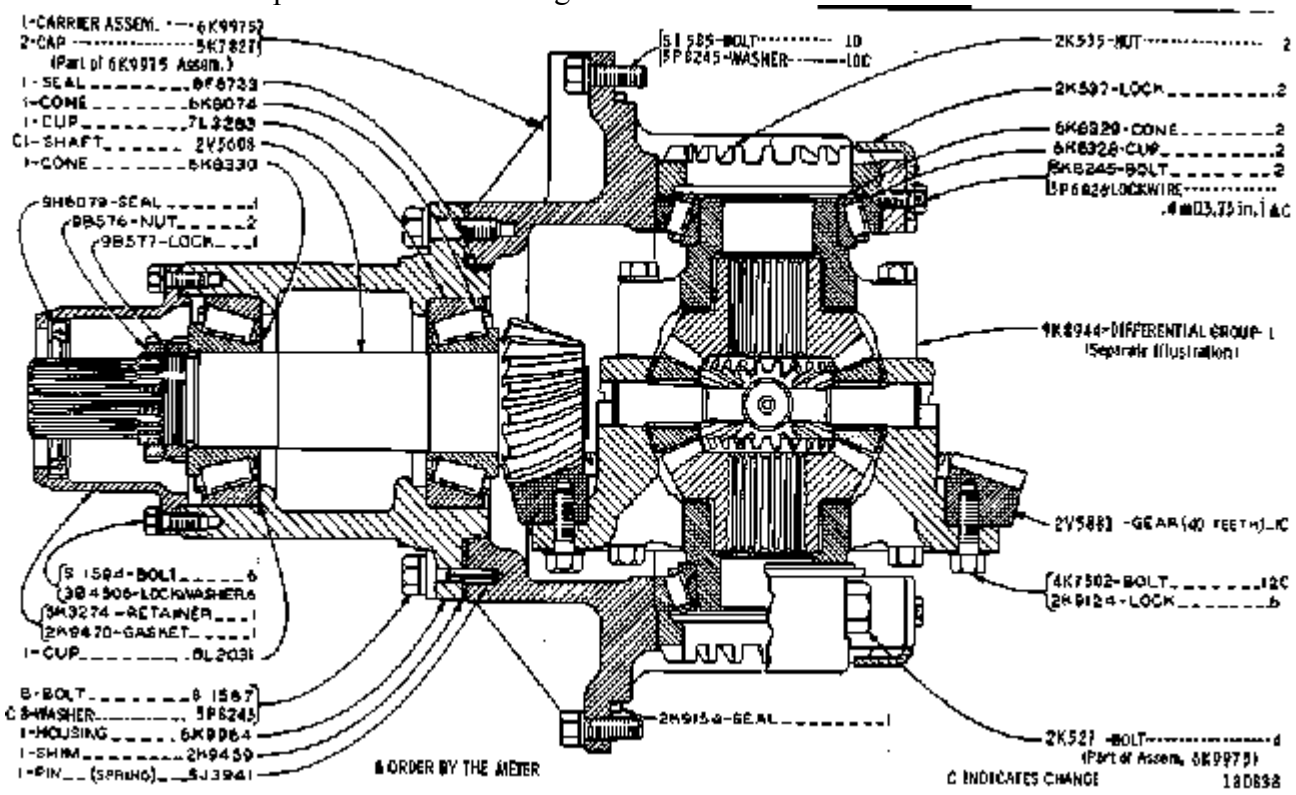

Nota	Ref	Numero	Cant	Nombre De Pieza
		8K-6001	1	DIFFERENTIAL & BEVEL GEAR GP
		6K-9975	1	CARRIER ASSEM.
		5K-7827	2	CAP
				(Part of 6K9975 Assem.)
		8F-8733	1	SEAL
		6K-8074	1	CONE
		7L-3283	1	CUP
C		2V-5608	1	SHAFT
		6K-8330	1	CONE
		9H-6079	1	SEAL
		9B-0576	2	NUT
		9B-0577	1	LOCK
		0S-1594	6	BOLT
		3B-4506	6	LOCKWASHER
		5K-3274	1	RETAINER
		2K-9470	1	GASKET
		5L-2031	1	CUP
		0S-1587	8	BOLT
C		5P-8245	8	WASHER
		6K-9964	1	HOUSING
		2K-9459	1	SHIM
		5J-3941	1	PIN (SPRING)
		0S-1585	10	BOLT
C		5P-8245	10	WASHER
		2K-9154	1	SEAL
		2K-0535	2	NUT
		2K-0537	2	LOCK
		6K-8329	2	CONE
		6K-8328	2	CUP
		5K-8245	2	BOLT

CH	5P-6026		LOCKWIRE .4 m(15.75 in.)
Y	9K-8944	1	DIFFERENTIAL GROUP
			(Separate Illustration)
C	2V-5881	1	GEAR (40 TEETH)
C	4K-7502	12	BOLT
	2K-9124	6	LOCK
	2K-0527	4	BOLT
			(Part of Assem. 6K9975)

H	ORDER BY THE METER
Y	SEPARATE ILLUSTRATION
C	INDICATES CHANGE

3160 7S7008 PLANETARY TRANSMISSION GROUP--Part 1 of 2
Transmission Serial No. 3EA867-Up
Part of 7S7006 Power Shift Transmission Arrangement shown on Page 99E

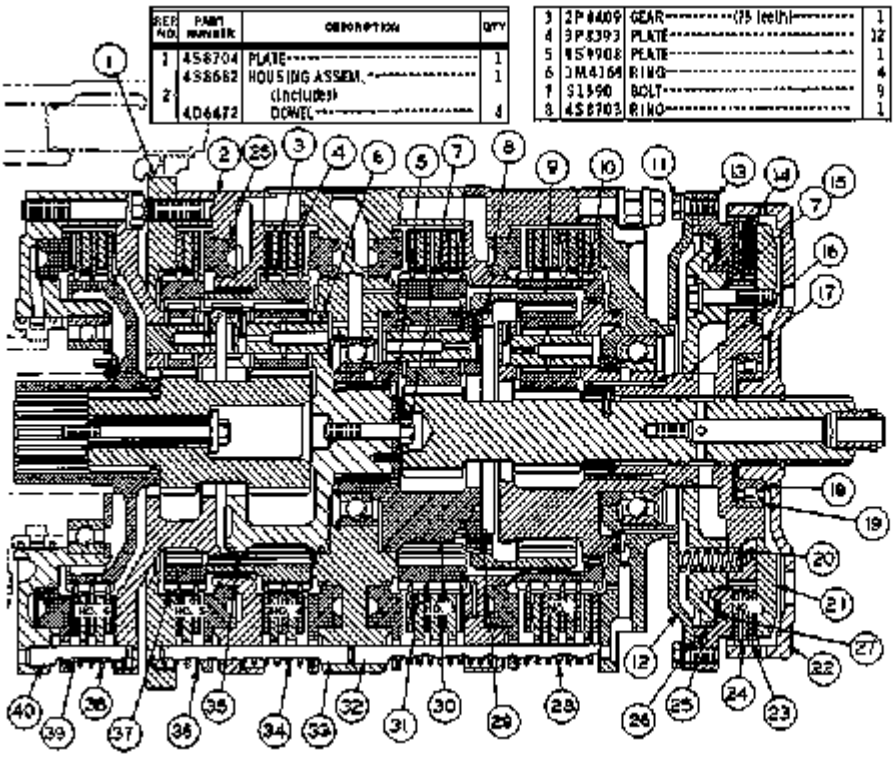

REF NO.	PART NUMBER	DESCRIPTION	QTY
1	4S8704	PLATE	1
2	4S8682	HOUSING ASSEM. (Includes)	1
	4D6472	DOWEL	4
3	2P8409	GEAR (75 teeth)	1
4	3P8393	PLATE	12
5	9S9908	PLATE	1
6	3M4168	RING	4
7	S1590	BOLT	9
8	4S8703	RING	1
9	5S884	GEAR (24 teeth)	1
10	3S8801	GEAR (28 teeth)	1
11	L1351	BOLT	12
	5S3618	LOCK	6
12	8S6187	PISTON	1
13	8S3587	PISTON	1
14	4S5816	RING	1
15	5M8894	WASHER	8
16	8M5252	SEAL	1
17	9S2831	HUB	1
18	2H3517	INNER RACE & ROLLER ASSEM.	1
19	1T295	OUTER RACE	1
20	4S5364	SPRING	10
21	8S6189	PLATE	1
22	8S3359	COUPLING	1
23	8P8681	DISC ASSEM.	2
24	4S8691	PLATE	1
25	8S5371	RING	6
26	9M5548	SEAL	1
27	8S3352	MANIFOLD	1
28	4M5016	SPRING	20
29	9S3109	PIN	14
30	5S889	CARRIER ASSEM. (Includes)	1
	9M2001	DOWEL	1
31	9S1006	GEAR (47 teeth)	1
32	3K8511	PIN	5
33	4M1642	PIN	5
34	9M5537	SPRING	10
35	2P4410	RING	1
36	4M9542	SPRING	10
37	4S8715	GEAR (45 teeth)	1
38	7S8593	SPRING	10
39	2P2916	PIN	10
40	1M3151	PIN	5

23D345

Nota	Ref	Numero	Cant	Nombre De Pieza
		7S-7008	1	PLANETARY GP
	1	4S-8704	1	PLATE
	2	4S-8682	1	HOUSING ASSEM.
				(Includes)
		4D-6472	4	DOWEL
	3	2P-4409	1	GEAR (75 teeth)
R	4	3P-8393	12	PLATE
	5	9S-9908	1	PLATE
	6	1M-4169	4	RING
	7	0S-1590	9	BOLT
	8	4S-8703	1	RING
	9	5S-0884	1	GEAR (74 teeth)
R	10	3S-8007	1	GEAR (81 teeth)
	11	0L-1351	12	BOLT
		5S-3618	6	LOCK
	12	8S-6187	1	PISTON
	13	8S-3557	1	PISTON
	14	4S-5816	1	RING
	15	5M-2894	8	WASHER
	16	8M-5252	1	SEAL
	17	9S-2837	1	HUB
	18	2H-3517	1	INNER RACE & ROLLER ASSEM.
	19	1T-0295	1	OUTER RACE
	20	4S-5854	10	SPRING
	21	8S-6189	1	PLATE
	22	8S-3559	1	COUPLING
	23	8P-8681	2	DISC ASSEM.
	24	4S-5891	1	PLATE
	25	8S-3371	6	RING
	26	9H-5548	1	SEAL

	27	8S-3552	1	MANIFOLD
	28	4M-5016	20	SPRING
	29	3S-8109	14	PIN
	30	5S-0889	1	CARRIER ASSEM.
				(Includes)
		9M-2001	1	DOWEL
R	31	3S-7996	1	GEAR (77 teeth)
	32	3K-2511	5	PIN
	33	4M-1641	5	PIN
	34	9H-5537	10	SPRING
	35	2P-4410	1	RING
	36	4M-9592	10	SPRING
	37	4S-8713	1	GEAR (75 teeth)
	38	7S-8553	10	SPRING
	39	2P-7916	10	PIN
	40	1M-3151	5	PIN

R	REMFG PART MAY BE AVAILABLE

3160 7S7008 PLANETARY TRANSMISSION GROUP--Part 2 of 2
Transmission Serial No. 3EA867-Up
Part of 7S7006 Power Shift Transmission Arrangement shown on Page 99E

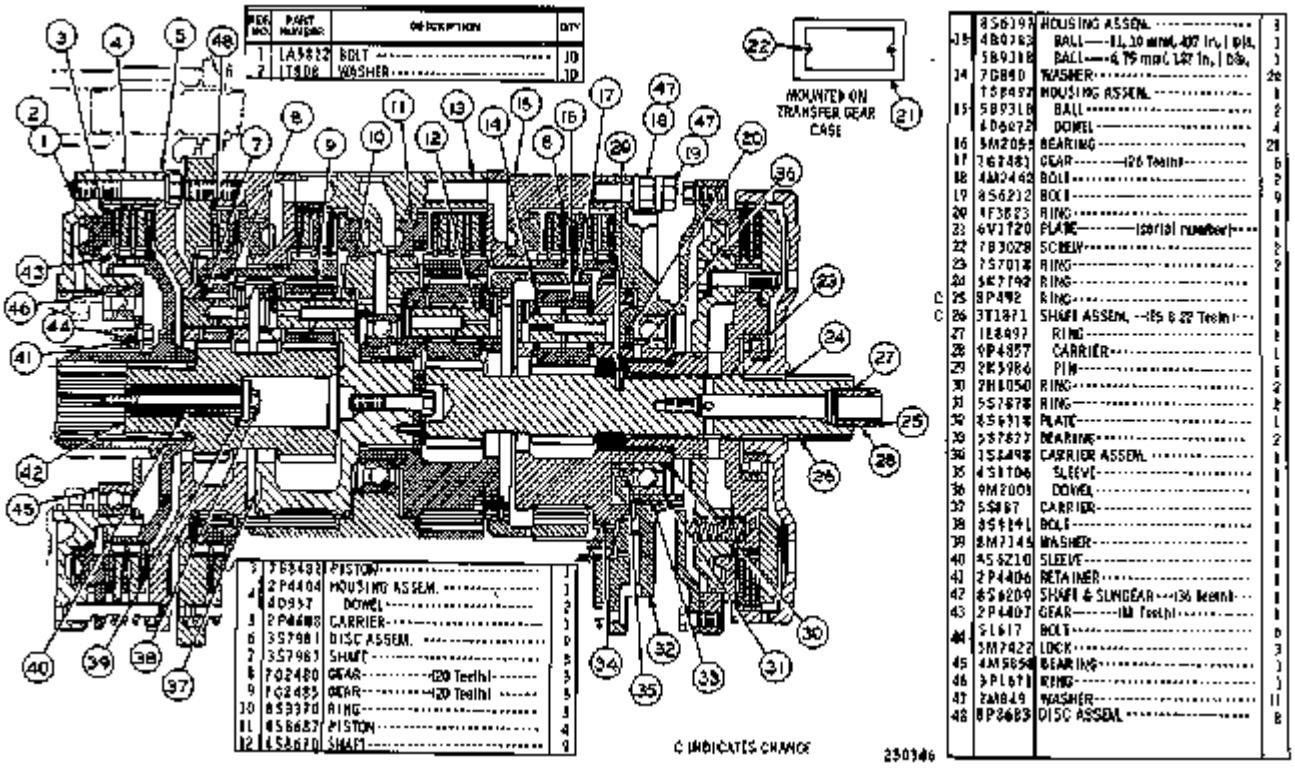

Nota	Ref	Numero	Cant	Nombre De Pieza
		7S-7008	1	PLANETARY GP
	1	1A-5822	10	BOLT
	2	1T-0808	10	WASHER
	3	7S-8482	1	PISTON
	4	2P-4404	1	HOUSING ASSEM.
		4D-0537	2	DOWEL
	5	2P-4408	1	CARRIER
	6	3S-7981	9	DISC ASSEM.
R	7	3S-7987	3	SHAFT
	8	7G-2480	3	GEAR (20 Teeth)
	9	7G-2485	3	GEAR (20 Teeth)
	10	8S-3370	5	RING
	11	4S-8687	4	PISTON
	12	4S-8670	9	SHAFT
	13	8S-6197	1	HOUSING ASSEM.
		4B-9783	1	BALL 11.10 mm(.437 in.) Dia.
		5B-9318	1	BALL 4.75 mm(.187 in.) Dia.
	14	7G-0890	24	WASHER
	15	7S-8497	1	HOUSING ASSEM.
		5B-9318	2	BALL
		4D-6472	4	DOWEL
	16	5M-2055	21	BEARING
	17	7G-2481	6	GEAR (26 Teeth)
	18	4M-2442	2	BOLT
	19	8S-6212	9	BOLT
	20	9F-3823	1	RING
	21	6V-1720	1	PLATE (serial number)
	22	7B-3028	2	SCREW
	23	7S-7018	2	RING
	24	5K-7792	1	RING

C	25	8P-0492	1	RING
C	26	3T-1871	1	SHAFT ASSEM. (25 & 22 Teeth)
	27	1L-8497	1	RING
	28	9P-4857	1	CARRIER
	29	2K-5986	1	PIN
	30	2H-8050	2	RING
	31	5S-7878	2	RING
	32	8S-6318	1	PLATE
	33	5S-7877	2	BEARING
	34	7S-8498	1	CARRIER ASSEM.
	35	4S-8706	1	SLEEVE
	36	9M-2001	1	DOWEL
	37	5S-0887	1	CARRIER
	38	8S-9191	1	BOLT
	39	8M-7145	1	WASHER
	40	8S-6210	1	SLEEVE
	41	2P-4406	1	RETAINER
	42	8S-6209	1	SHAFT & SUNGEAR (36 Teeth)
	43	2P-4407	1	GEAR (81 Teeth)
	44	0S-1617	6	BOLT
		5M-7422	3	LOCK
	45	4M-5858	1	BEARING
	46	3P-1671	1	RING
	47	2M-0849	11	WASHER
	48	8P-8683	8	DISC ASSEM.

C	INDICATES CHANGE
R	REMFG PART MAY BE AVAILABLE

3280 8K6004 REAR DIFFERENTIAL AND CARRIER GROUP
Serial No. 41K6240 to 41K12111 inclusive. 9K8944 Differential parts are shown on Page 116

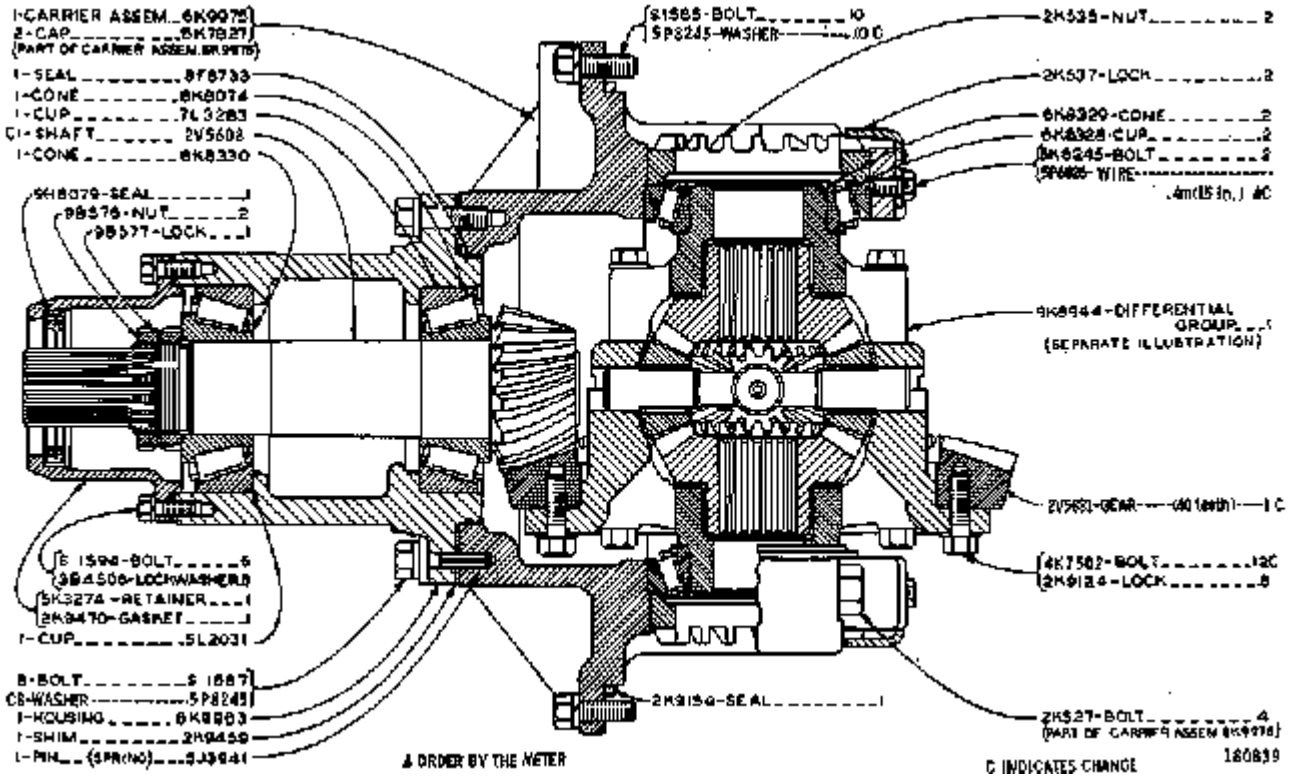

Nota	Ref	Numero	Cant	Nombre De Pieza
		8K-6004	1	DIFFERENTIAL & BEVEL GEAR GP
		6K-9975	1	CARRIER ASSEM.
		5K-7827	2	CAP
				(PART OF CARRIER ASSEM. 6K9975)
		8F-8733	1	SEAL
		6K-8074	1	CONE
		7L-3283	1	CUP
C		2V-5608	1	SHAFT
		6K-8330	1	CONE
		9H-6079	1	SEAL
		9B-0576	2	NUT
		9B-0577	1	LOCK
		0S-1594	6	BOLT
		3B-4506	6	LOCKWASHER
		5K-3274	1	RETAINER
		2K-9470	1	GASKET
		5L-2031	1	CUP
		0S-1587	8	BOLT
C		5P-8245	8	WASHER
		6K-9963	1	HOUSING
		2K-9459	1	SHIM
		5J-3941	1	PIN (SPRING)
		0S-1585	10	BOLT
C		5P-8245	10	WASHER
		2K-9154	1	SEAL
		2K-0535	2	NUT
		2K-0537	2	LOCK
		6K-8329	2	CONE
		6K-8328	2	CUP
		5K-8245	2	BOLT

HC	5P-6026		WIRE .4m(15 in.)
Y	9K-8944	1	DIFFERENTIAL GROUP
			(SEPARATE ILLUSTRATION)
C	2V-5881	1	GEAR (40 teeth)
C	4K-7502	12	BOLT
	2K-9124	6	LOCK
	2K-0527	4	BOLT
			(PART OF CARRIER ASSEM. 6K9975)

H	ORDER BY THE METER
Y	SEPARATE ILLUSTRATION
C	INDICATES CHANGE

3103 6K7022 TORQUE CONVERTER COOLER LINES GROUP

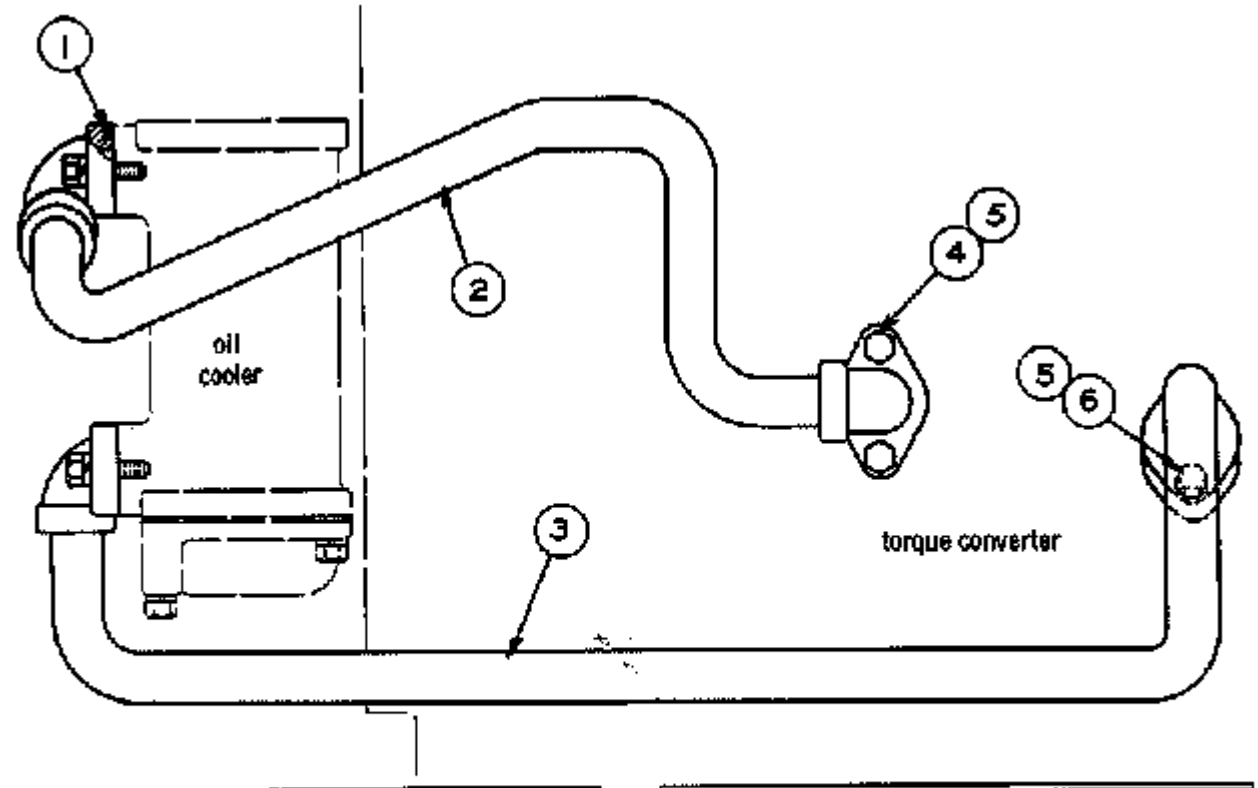

REF. NO.	PART NUMBER	DESCRIPTION	QTY
1	4F7391	SEAL	4
2	6K6569	TUBE ASSEM.	1
3	6K7014	TUBE ASSEM.	1

REF. NO.	PART NUMBER	DESCRIPTION	QTY
4	S1588	BOLT	6
5	3B4506	LOCKWASHER	8
6	S1571	BOLT	2

105510

Nota	Ref	Numero	Cant	Nombre De Pieza
		6K-7022	1	LINES GP-TORQUE CONV COOLER
	1	4F-7391	4	SEAL
	2	6K-6569	1	TUBE ASSEM.
	3	6K-7014	1	TUBE ASSEM.
	4	0S-1588	6	BOLT
	5	3B-4506	8	LOCKWASHER
	6	0S-1571	2	BOLT

3101 1T865 TORQUE CONVERTER GROUP
Serial No. 41K6799-Up and Torque Converter Serial No. 44T11413-Up
Part of 7S8608 Torque Converter Group shown on Pages 100 and 101

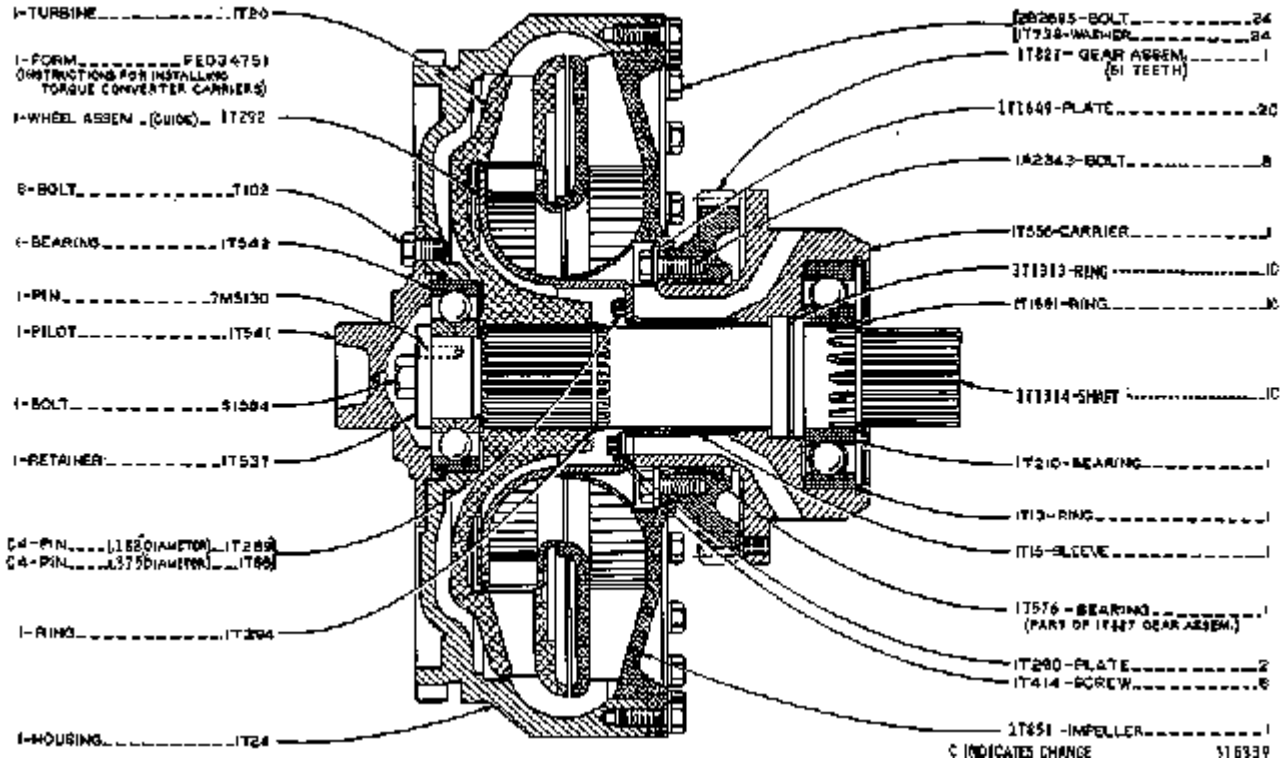

Nota	Ref	Numero	Cant	Nombre De Pieza
		1T-0865	1	TORQUE CONVERTER GP
		1T-0020	1	TURBINE
		1T-0292	1	WHEEL ASSEM. (GUIDE)
		0T-0102	6	BOLT
		1T-0542	1	BEARING
		7M-5130	1	PIN
		1T-0541	1	PILOT
		0S-1584	1	BOLT
		1T-0537	1	RETAINER
C		1T-0289	4	PIN (.188"DIAMETER)
C		1T-0068	4	PIN (.375"DIAMETER)
		1T-0294	1	RING
		1T-0024	1	HOUSING
		2B-2695	24	BOLT
		1T-0738	24	WASHER
		1T-0827	1	GEAR ASSEM.
				(51 TEETH)
C		1T-1649	2	PLATE
		1A-2343	8	BOLT
		1T-0555	1	CARRIER
C		1T-1313	1	RING
C		1T-1561	1	RING
C		1T-1314	1	SHAFT
		1T-0210	1	BEARING
		1T-0013	1	RING
		1T-0015	1	SLEEVE
		1T-0576	1	BEARING
				(PART OF 1T827 GEAR ASSEM.)
		1T-0290	2	PLATE
		1T-0414	6	SCREW

	1T-0851	1	IMPELLER

C			INDICATES CHANGE

41K11287 930 WHEEL LOADER Identificación de Piezas
Número de publicación SEBP1052-01 Fecha de publicación 1984/12/01 Fecha de actualización 1994/09/05

3156 6K7684 TRANSMISSION CONTROL GROUP
Serial No. 41K10764 to 41K11481 inclusive

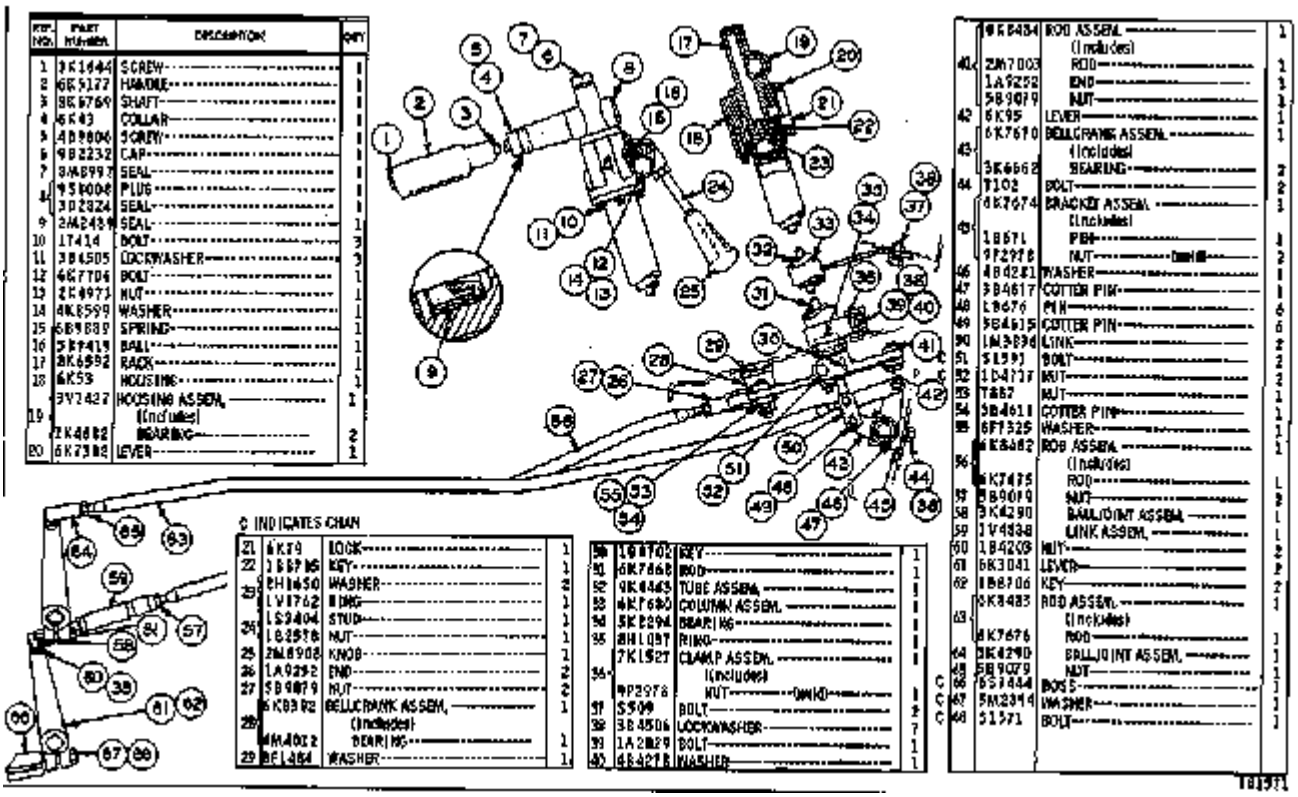

REF. NO.	PART NUMBER	DESCRIPTION	QTY
1	3K1644	SCREW	1
2	6K5177	HANDLE	1
3	8K6769	SHAFT	1
4	6K43	COLLAR	1
5	4B9806	SCREW	1
6	9B2232	CAP	1
7	3M8997	SEAL	1
8	9S8008	PLUG	1
9	3D2824	SEAL	1
10	2M2439	SEAL	1
11	1T414	BOLT	3
12	3B4505	LOCKWASHER	3
13	6K7706	BOLT	1
14	2K4973	NUT	1
15	4K8599	WASHER	1
16	6B9889	SPRING	1
17	5B7419	BALL	1
18	8K6992	RACK	1
19	6K53	HOUSING	1
	3V2427	HOUSING ASSEM.	1
		(Includes)	
	2K4882	BEARING	2
20	6K7382	LEVER	1

REF. NO.	PART NUMBER	DESCRIPTION	QTY
	9K8484	ROD ASSEM.	1
		(Includes)	
40	2M7003	ROD	1
	1A9252	END	1
	5B9079	NUT	1
42	6K95	LEVER	1
43	6K7690	BELLCRANK ASSEM.	1
		(Includes)	
	3K6662	BEARING	2
44	T102	BOLT	2
45	6K7674	BRACKET ASSEM.	1
		(Includes)	
	1B671	PIN	1
	9F2978	NUT	2
46	4B8281	WASHER	1
47	3B4617	COTTER PIN	1
48	L8676	PIN	6
49	5B4615	COTTER PIN	6
50	1M3896	LINK	2
51	S1591	BOLT	2
52	1D4717	NUT	2
53	T882	NUT	1
54	5B4611	COTTER PIN	1
55	6F7325	WASHER	1
56	9K8482	ROD ASSEM.	1
		(Includes)	
	6K7475	ROD	1
57	5B9079	NUT	2
58	9K4290	BALL JOINT ASSEM.	1
59	1V4838	LINK ASSEM.	1
60	1B4209	NUT	2
61	6K3041	LEVER	1
62	1B8706	KEY	2
63	9K8483	ROD ASSEM.	1
		(Includes)	
	6K7676	ROD	1
64	9K4290	BALL JOINT ASSEM.	1
65	5B9079	NUT	1
66	8S1444	BOLT	1
67	5M2394	WASHER	1
68	S1571	BOLT	1

C INDICATES CHAN

21	6K79	LOCK	1
22	1B8P85	KEY	1
23	2H1450	WASHER	2
	LV1762	RING	1
	LS2404	STUD	1
24	1B8578	NUT	1
25	2M8908	KNOB	1
26	1A9252	END	2
27	5B9079	NUT	2
	6K8982	BELLCRANK ASSEM.	1
28		(Includes)	
	4M4012	BEARING	1
29	8E1484	WASHER	1

30	1B8702	KEY	1
31	6K7668	ROD	1
32	9K4443	TUBE ASSEM.	1
33	6K7680	COLUMN ASSEM.	1
34	5K8294	BEARING	1
35	2H1097	RING	1
36	7K1527	CLAMP ASSEM.	1
		(Includes)	
	9F2978	NUT	1
37	S509	BOLT	2
38	3B4506	LOCKWASHER	7
39	1A2829	BOLT	1
40	4B4278	WASHER	1

Nota	Ref	Numero	Cant	Nombre De Pieza
		6K-7684	1	CONTROL GP-TRANSMISSION
	1	3K-1644	1	SCREW
	2	6K-5177	1	HANDLE
	3	8K-6769	1	SHAFT
	4	6K-0043	1	COLLAR
	5	4B-9806	1	SCREW
	6	9B-2232	1	CAP
	7	8M-8997	1	SEAL
	8	9S-8008	1	PLUG
		3D-2824	1	SEAL
	9	2M-2489	1	SEAL
	10	1T-0414	3	BOLT
	11	3B-4505	3	LOCKWASHER
	12	6K-7706	1	BOLT
	13	2K-4973	1	NUT
	14	4K-8599	1	WASHER
	15	6B-9889	1	SPRING
	16	5B-9419	1	BALL
	17	8K-6592	1	RACK
	18	6K-0053	1	HOUSING
	19	3V-7427	1	HOUSING ASSEM.
				(Includes)
		1K-4682	2	BEARING
	20	6K-7382	1	LEVER
	21	6K-0079	1	LOCK
	22	1B-8705	1	KEY
	23	2H-1650	2	WASHER
		1V-1762	1	RING
	24	1S-3404	1	STUD
		1B-2578	1	NUT

25	2M-8908	1	KNOB
26	1A-9252	2	END
27	5B-9079	2	NUT
28	6K-8392	1	BELLCRANK ASSEM.
			(Includes)
	4M-4012	1	BEARING
29	8F-1484	1	WASHER
30	1B-8702	1	KEY
31	6K-7668	1	ROD
32	9K-4443	1	TUBE ASSEM.
33	6K-7680	1	COLUMN ASSEM.
34	5K-2294	1	BEARING
35	8H-1037	1	RING
36	7K-1527	1	CLAMP ASSEM.
			(Includes)
	9F-2978	1	NUT (weld)
37	0S-0509	2	BOLT
38	3B-4506	7	LOCKWASHER
39	1A-2029	1	BOLT
40	4B-4278	1	WASHER
41	6K-8484	1	ROD ASSEM.
			(Includes)
	2M-7003	1	ROD
	1A-9252	1	END
	5B-9079	1	NUT
42	6K-0095	1	LEVER
43	6K-7670	1	BELLCRANK ASSEM.
			(Includes)
	3K-6662	2	BEARING
44	0T-0102	2	BOLT
45	6K-7674	1	BRACKET ASSEM.

				(Includes)
		1B-0671	1	PIN
		9F-2978	2	NUT (weld)
	46	4B-4281	1	WASHER
	47	3B-4617	1	COTTER PIN
	48	1B-0676	6	PIN
	49	3B-4615	6	COTTER PIN
	50	1M-3836	2	LINK
C	51	0S-1591	2	BOLT
C	52	1D-4717	2	NUT
	53	0T-0887	1	NUT
	54	3B-4611	1	COTTER PIN
	55	8F-7325	1	WASHER
	56	6K-8482	1	ROD ASSEM.
				(Includes)
		6K-7675	1	ROD
	57	5B-9079	2	NUT
	58	3K-4290	1	BALLJOINT ASSEM.
	59	1V-4838	1	LINK ASSEM.
	60	1B-4203	2	NUT
	61	6K-3041	2	LEVER
	62	1B-8706	2	KEY
	63	6K-8483	1	ROD ASSEM.
				(Includes)
		6K-7676	1	ROD
	64	3K-4290	1	BALLJOINT ASSEM.
	65	5B-9079	1	NUT
C	66	6S-7444	1	BOSS
C	67	5M-2894	1	WASHER
C	68	0S-1571	1	BOLT

C	INDICATES CHANGE

4265 4V6974 AIR AND BRAKE CONTROL GROUP--Brake Pedals, Valves & Lines--Part 2 of 5 Serial No. 41K11282 to 41K11411 inclusive. 4K9714 and 2R617 Valve parts are shown on Page 133

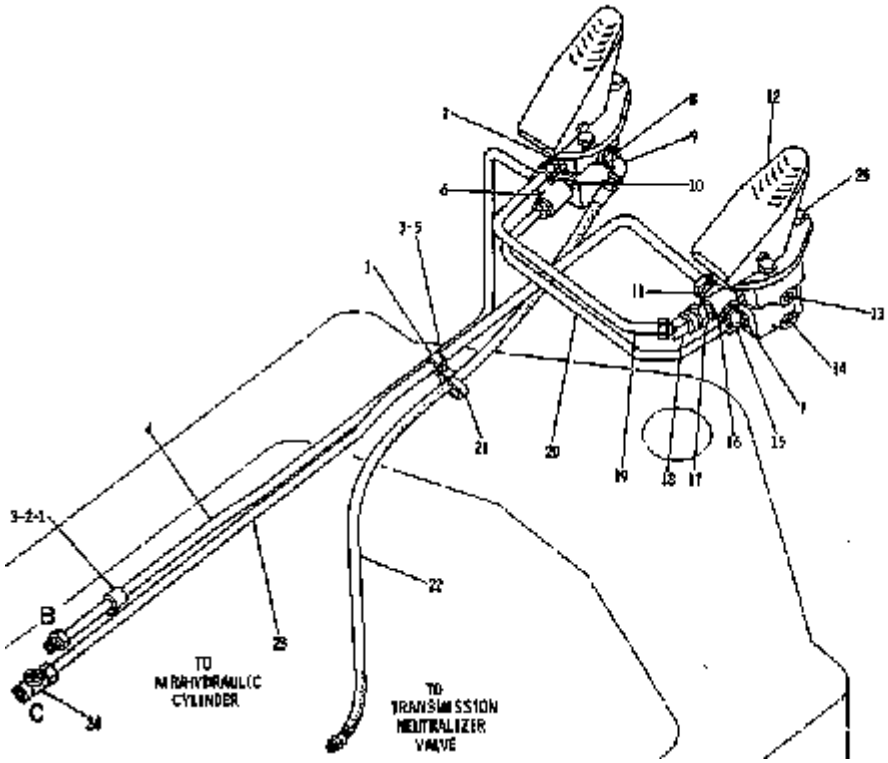

REF. NO.	PART NUMBER	DESCRIPTION	QTY.
1	4B418	CLIP	2
2	104717	NUT	1
3	3B4506	LOCKWASHER	2
4	6K6801	TUBE ASSEM.	1
5	5589	BOLT	1
6	6K8214	FITTING	1
7	5K9265	FITTING	2
8	6B5972	BUSHING	1
9	3B6553	ELBOW	1
10	3B7255	BUSHING	1
11	5K9236	FITTING	1
12	2R617	VALVE ASSEM.	2
		(Separate Illustration)	
13	3C1850	PLUG	2
14	7H3171	PLUG	2
15	3B6552	ELBOW	1
16	3B7721	BUSHING	1
17	4K9714	VALVE ASSEM.	1
		(Separate Illustration)	
17	6K6825	VALVE ASSEM.	1
18	6K6826	FITTING	1
19	6K8120	TUBE ASSEM.	1
20	6K8116	TUBE ASSEM.	1
21	4K6177	CLIP	1
22	6K8231	HOSE ASSEM. -----48 in. long-----	1
23	4V6865	TUBE ASSEM.	1
24	7K2543	TEE	1
25	2B2695	BOLT	6
	104716	NUT	6
	3B4505	LOCKWASHER	6

225798

Nota	Ref	Numero	Cant	Nombre De Pieza
		4V-6974	1	CONTROL GP-BRAKE & AIR
	1	4B-0418	2	CLIP
	2	1D-4717	1	NUT
	3	3B-4506	2	LOCKWASHER
	4	6K-6801	1	TUBE ASSEM.
	5	0S-0509	1	BOLT
	6	6K-8214	1	FITTING
	7	5K-9245	2	FITTING
	8	6B-5072	1	BUSHING
	9	3B-6553	1	ELBOW
	10	3B-7255	1	BUSHING
	11	5K-9238	1	FITTING
Y	12	2R-0617	2	VALVE ASSEM.
				(Separate Illustration)
	13	3L-1850	7	PLUG
	14	7H-3171	2	PLUG
	15	3B-6552	1	ELBOW
		3B-7721	1	BUSHING
Y	16	4K-9714	1	VALVE ASSEM.
				(Separate Illustration)
	17	6K-6825	1	VALVE ASSEM.
	18	6K-6826	1	FITTING
	19	6K-8120	1	TUBE ASSEM.
	20	6K-8118	1	TUBE ASSEM.
	21	4K-6177	1	CLIP
	22	6K-8231	1	HOSE ASSEM. (42 in. long)
	23	4V-6865	1	TUBE ASSEM.
	24	7K-2543	1	TEE
	25	2B-2695	6	BOLT
		1D-4716	6	NUT

	3B-4505	6	LOCKWASHER

Y			SEPARATE ILLUSTRATION

7402 6K6822 AIR HORN ASSEMBLY
Part of Brake Chamber, Horn, Horn Valve and Lines shown on Pages 132 and 132E

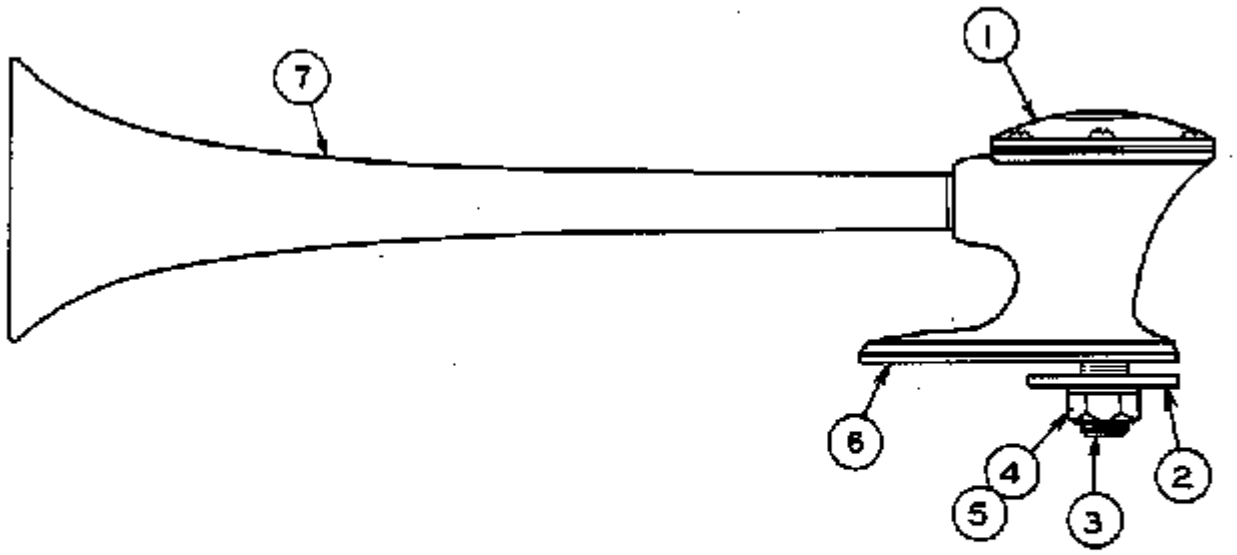

REF NO.	PART NUMBER	DESCRIPTION	QTY
1	Not Serv	HORN ASSEM.	1
2	4B5275	WASHER	1
3	5D6996	ADAPTER	1
4	9S1354	NUT	1
5	6F253	LOCKWASHER	1
6	5D6997	PAD	1
7	5D6994	PROJECTOR	1

114784

Nota	Ref	Numero	Cant	Nombre De Pieza
		6K-6822	1	HORN AS-AIR
	1	NOTSERV	1	HORN ASSEM.
	2	4B-5275	1	WASHER
	3	5D-6996	1	ADAPTER
	4	9S-1354	1	NUT
	5	6F-0253	1	LOCKWASHER
	6	5D-6997	1	PAD
	7	5D-6994	1	PROJECTOR

4307 8J430 STEERING VALVE GROUP
Part of 7K2946 Steering Control Group shown on Page 139. 6J6218, 8J505, 8J508 and 8J441 Valve parts are shown on Pages 142, 142A and 143

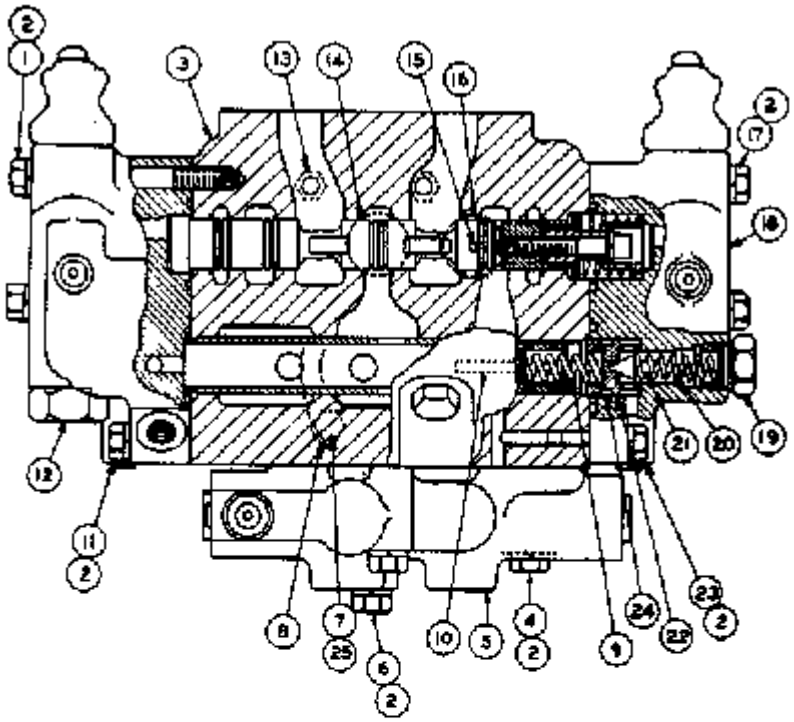

REF. NO.	PART NUMBER	DESCRIPTION	QTY
1	765	BOLT	2
C 2	7B4506	LOCKWASHER	11
3	8J505	VALVE GROUP (Basic) (Separate Illustration)	1
4	2M7954	BOLT	2
5	8J441	VALVE GROUP (Selector) (Separate Illustration)	1
6	7573	BOLT	1
7	5J588	BOLT	4
C 8	1P4577	FLANGE	2
9	7J678	SPRING	1
C 10	9J834	PIN	1
11	5J971	BOLT	2
12	6J6218	VALVE GROUP (Neutralizer) (Separate Illustration)	1
13	9S4162	PLUG	2
	3J7334	SEAL	2
14	9S8008	PLUG	1
	2M9780	SEAL	1
15	7B3028	SCREW	1
16	6J1726	PLATE	1
17	5J419	BOLT	2
18	8J508	VALVE GROUP (Neutralizer) (Separate Illustration)	1
	9S4137	PLUG	1
	3K360	SEAL	1
19	3M2549	SHIM .040 in. (1.06mm) thick	6
C	3J7470	SHIM .048 in. (1.22mm) thick	3
20	2J6089	SPRING	1
C	9J8224	VALVE GROUP (Includes)	1
21		VALVE	1
	8J8497	SEAT	1
22	7J7090	BOLT	2
23	5B1915	SEAL	1
24	4J5140	WASHER	1
C 25	4B4278		1

C INDICATES CHANGE

207882

Nota	Ref	Numero	Cant	Nombre De Pieza
		8J-0430	1	VALVE GP-STEERING
	1	0T-0065	2	BOLT
C	2	3B-4506	11	LOCKWASHER
Y	3	8J-0505	1	VALVE GROUP (Basic)
				(Separate Illustration)
	4	7H-7954	2	BOLT
Y	5	8J-0441	1	VALVE GROUP (Selector)
				(Separate Illustration)
	6	0T-0573	1	BOLT
	7	0S-1588	4	BOLT
C	8	1P-4577	2	FLANGE
	9	7J-0678	1	SPRING
C	10	9J-0834	1	PIN
	11	0S-1571	2	BOLT
Y	12	6J-6218	1	VALVE GROUP (Neutralizer)
				(Separate Illustration)
	13	9S-4182	2	PLUG
		3J-7354	2	SEAL
	14	9S-8006	1	PLUG
		2M-9780	1	SEAL
	15	7B-3028	1	SCREW
	16	8J-1726	1	PLATE
	17	0S-1619	2	BOLT
Y	18	8J-0508	1	VALVE GROUP (neutralizer)
				(Separate Illustration)
	19	9S-4187	1	PLUG
		3K-0360	1	SEAL
		3H-2549	6	SHIM .010 in. (.26mm) thick
C		3J-7470	3	SHIM .048 in. (1.22mm) thick
	20	2J-6089	1	SPRING

C	21	9J-8224	1	VALVE GROUP
				(Includes)
		1J-8497	1	VALVE
	22	7J-7090	1	SEAT
	23	3B-1915	2	BOLT
	24	4J-5140	1	SEAL
C	25	4B-4278	4	WASHER

C	INDICATES CHANGE
Y	SEPARATE ILLUSTRATION

5055 9J5055 BASIC VANE PUMP GROUP
Serial No. 41K10062-Up
Part of 7K1822 Hydraulic Pump and Lines Group shown on Page 188
3G2746 and 3G7658 Cartridge Groups are shown on Pages 189B & 189D

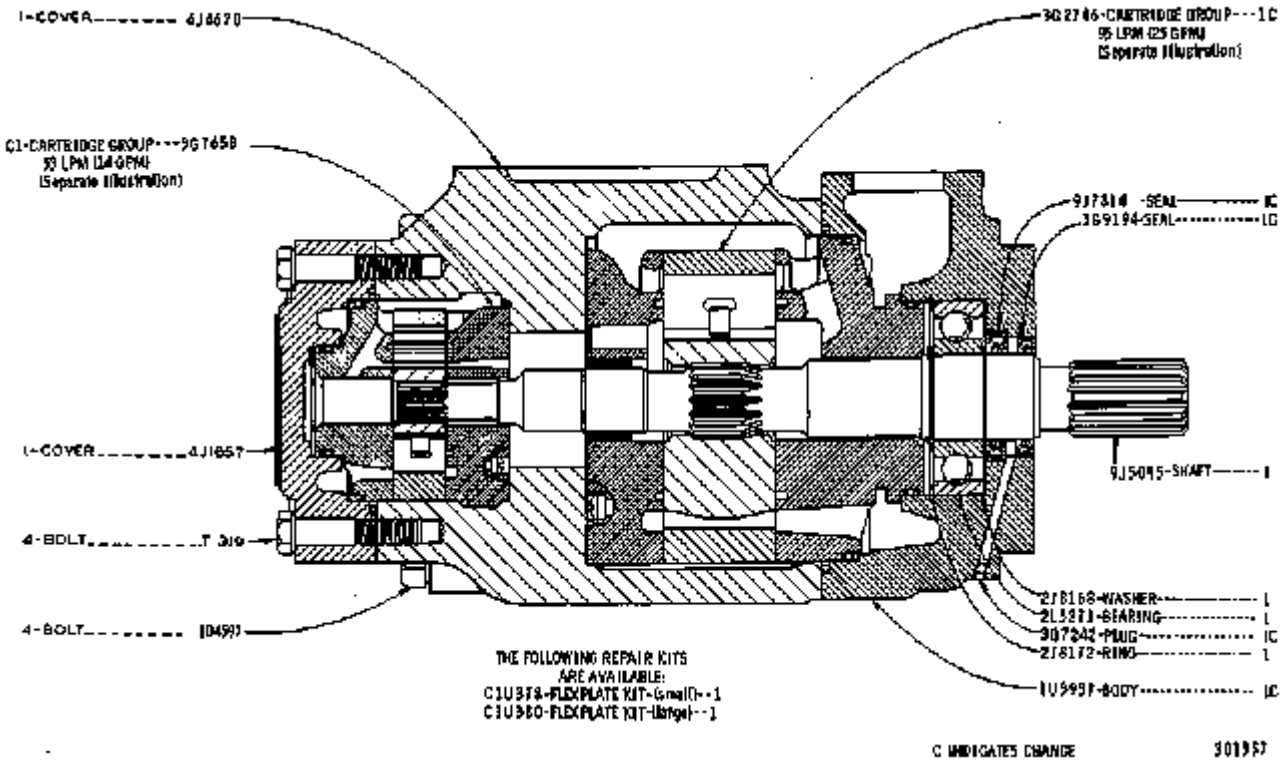

Nota	Ref	Numero	Cant	Nombre De Pieza
		9J-5055	1	PUMP GP-VANE
		4J-4670	1	COVER
RYC		3G-7658	1	CARTRIDGE GROUP
				53 LPM (14 GPM)
				(Separate Illustration)
		4J-1657	1	COVER
		0T-0319	4	BOLT
		1D-4597	4	BOLT
RYC		3G-2746	1	CARTRIDGE GROUP
				95 LPM (25 GPM)
				(Separate Illustration)
C		9J-7814	1	SEAL
C		3G-9194	1	SEAL
		9J-5095	1	SHAFT
		2J-8168	1	WASHER
		2L-5271	1	BEARING
C		3G-7242	1	PLUG
		2J-8172	1	RING
C		1U-3937	1	BODY
				THE FOLLOWING REPAIR KITS ARE AVAILABLE:
C		1U-0378	1	FLEXPLATE KIT (small)
C		1U-0380	1	FLEXPLATE KIT (large)
R				REMFG PART MAY BE AVAILABLE
Y				SEPARATE ILLUSTRATION
C				INDICATES CHANGE

5112 5V4772 BUCKET POSITIONER AND INDICATOR GROUP--Part 1 of 2
Serial No. 41K10160-Up
6K7701 Cylinder parts are shown on Page 203

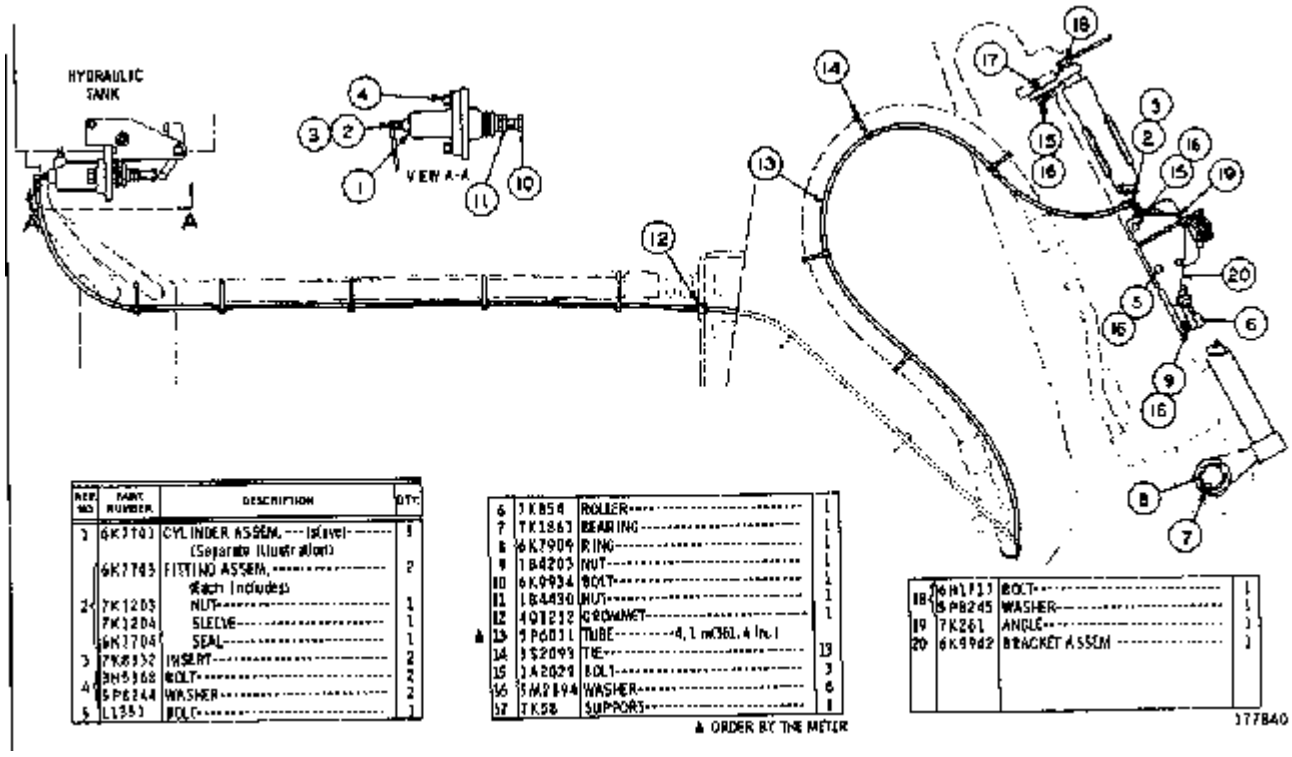

REF NO	PART NUMBER	DESCRIPTION	QTY
1	6K3703	CYLINDER ASSEM. ---(Swivel- (Separate Illustration)	1
	6K7705	FITTING ASSEM. (Each Includes)	2
2	7K1203	NUT	1
	7K1204	SLEEVE	1
	6K3704	SEAL	1
3	7K8932	INSERT	2
4	3H5368	BOLT	2
	5P8244	WASHER	2
5	L1351	BOLT	1
6	1K854	ROLLER	1
7	7K1863	BEARING	1
8	6K7904	RING	1
9	1B4203	NUT	1
10	6K0934	BOLT	1
11	1B4490	NUT	1
12	4N1212	GROMMET	1
13	9P6011	TUBE ---4.1 m(361.4 in.)	13
14	3S2099	TIE	3
15	1A2029	BOLT	6
16	5M2894	WASHER	8
17	7K58	SUPPORT	1
18	6N1713	BOLT	1
	5P8245	WASHER	1
19	7K261	ANGLE	1
20	6K9962	BRACKET ASSEM	1

▲ ORDER BY THE METER

177840

Nota	Ref	Numero	Cant	Nombre De Pieza
		5V-4772	1	POSITIONER GP
Y	1	6K-7701	1	CYLINDER ASSEM. (slave)
				(Separate Illustration)
	2	6K-7703	2	FITTING ASSEM.
				(Each Includes)
		7K-1203	1	NUT
		7K-1204	1	SLEEVE
		6K-7704	1	SEAL
	3	7K-8332	2	INSERT
	4	3H-5368	2	BOLT
		5P-8244	2	WASHER
	5	0L-1351	1	BOLT
	6	7K-0854	1	ROLLER
	7	7K-1861	1	BEARING
	8	6K-7909	1	RING
	9	1B-4203	1	NUT
	10	6K-9934	1	BOLT
	11	1B-4430	1	NUT
	12	4D-1212	1	GROMMET
H	13	5P-6011		TUBE 4.1 m(161.4 in.)
	14	3S-2093	13	TIE
	15	1A-2029	3	BOLT
	16	5M-2894	6	WASHER
	17	7K-0058	1	SUPPORT
	18	6H-1717	1	BOLT
		5P-8245	1	WASHER
	19	7K-0261	1	ANGLE
	20	6K-9942	1	BRACKET ASSEM.
H				ORDER BY THE METER

Y	SEPARATE ILLUSTRATION

3G7658 CARTRIDGE GROUP--Rear--201 L/min (53 GPM)--Counterclockwise
Serial No. 41K10062-Up. Part of 9J5055 Vane Pump Group shown on Page 189A
Provides Field Replacement for 3G2721 Cartridge Group shown on Page 189B

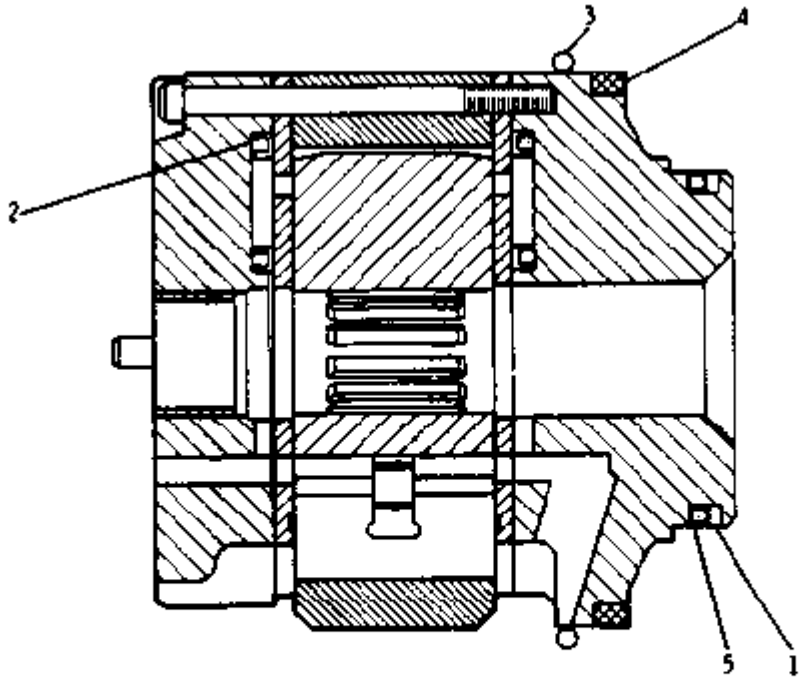

REF. NO.	PART NUMBER	DESCRIPTION	QTY
1	6V1557	RING	1
2	3G9199	SEAL	4
3	6V1196	SEAL	1
4	3G2716	RING	1
5	617540	SEAL	1

230173

Nota	Ref	Numero	Cant	Nombre De Pieza
		3G-7658	1	CARTRIDGE GP-REAR
	1	6V-1557	1	RING
	2	3G-9199	4	SEAL
	3	6V-1196	1	SEAL
	4	3G-2716	1	RING
	5	061-7540	1	SEAL

3G9019 CONTROL VALVE GROUP--Type 2
Serial No. 41K10160-Up. Part of 3G9129 Hydraulic Tank and Valve Group shown on Page 167A and 167E. 3G9020 Valve parts are shown on Page 169B. AN ATTACHMENT

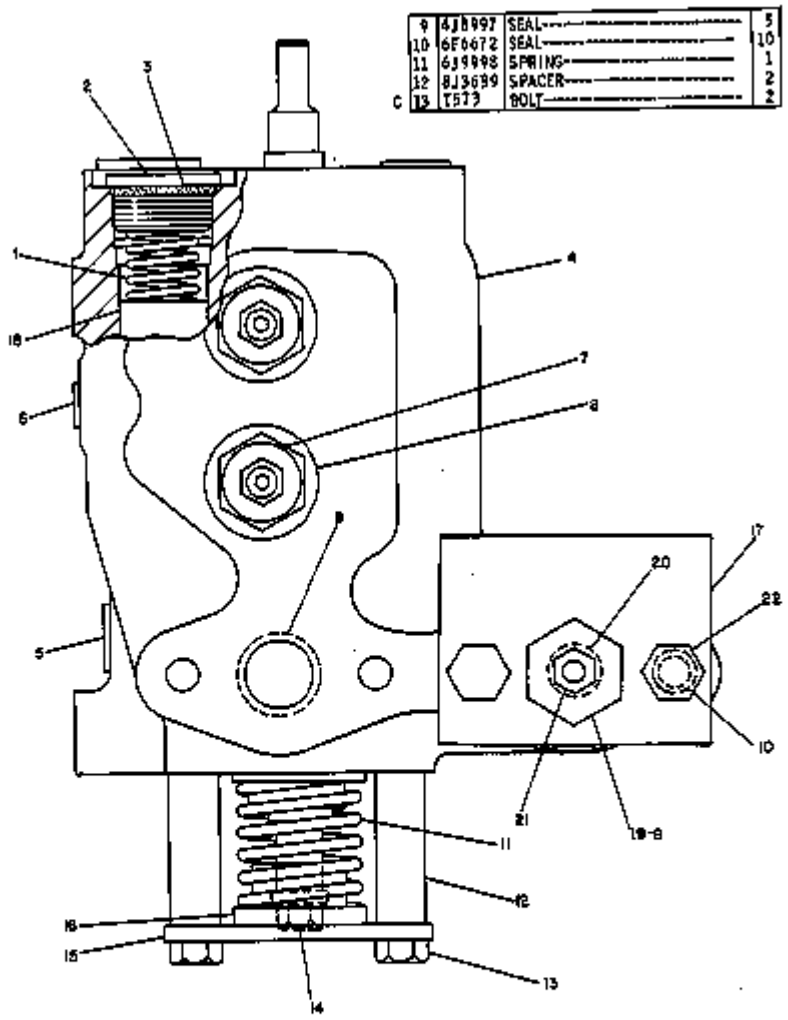

REF NO.	PART NUMBER	DESCRIPTION	QTY.
1	2A5885	SPRING	1
2	9S8009	PLUG	1
3	4K1388	SEAL	1
4	3G9017	VALVE GROUP	1
		(Includes)	
5	9S8005	PLUG	2
5	3K360	SEAL	2
6	9S8003	PLUG	1
6	1J9671	SEAL	1
7	3G9020	VALVE GROUP	2
		(Separate Illustration)	
8	6J5804	BAFFLE	2

C INDICATES CHANGE

C 14	5K9107	BOLT	1
	8F6809	WASHER	1
15	3G9021	PLATE	1
C 16	8J9088	SPACER	2
17	8J5449	BODY	1
18	8J9078	VALVE	1
19	3G2915	VALVE GROUP	1
		(Includes)	
	6J7539	SEAL	1
20	9J6967	RING	1
	8L2746	SEAL	1
21	5G3726	NUT	1
22	S1629	BOLT	2

182594

Nota	Ref	Numero	Cant	Nombre De Pieza
		3G-9019	1	VALVE GP-CONTROL
	1	2A-5885	1	SPRING
	2	9S-8009	1	PLUG
	3	4K-1388	1	SEAL
	4	3G-9017	1	VALVE GROUP
				(Includes)
	5	9S-8005	2	PLUG
		3K-0360	2	SEAL
	6	9S-8003	1	PLUG
		1J-9671	1	SEAL
Y	7	3G-9020	2	VALVE GROUP
				(Separate Illustration)
	8	6J-5804	2	BAFFLE
	9	4J-8997	5	SEAL
	10	6F-6672	10	SEAL
	11	6J-9998	1	SPRING
	12	8J-3639	2	SPACER
C	13	0T-0573	2	BOLT
C	14	5K-9107	1	BOLT
		8F-6809	1	WASHER
	15	3G-9021	1	PLATE
C	16	5J-9088	2	SPACER
	17	8J-5449	1	BODY
	18	5J-9078	1	VALVE
	19	3G-2315	1	VALVE GROUP
				(Includes)
		6I-7539	1	SEAL
	20	9J-6367	1	RING
		8L-2746	1	SEAL
	21	3G-3726	1	NUT

	22	0S-1623	2	BOLT

C	INDICATES CHANGE
Y	SEPARATE ILLUSTRATION

8J5670 CYLINDER GROUP (Change 0-2) (9K3158 N/S)--4" Bore x 18.60" Stroke
Part of 6K9240 Side Dump Bucket Arrangement listed on Page 208

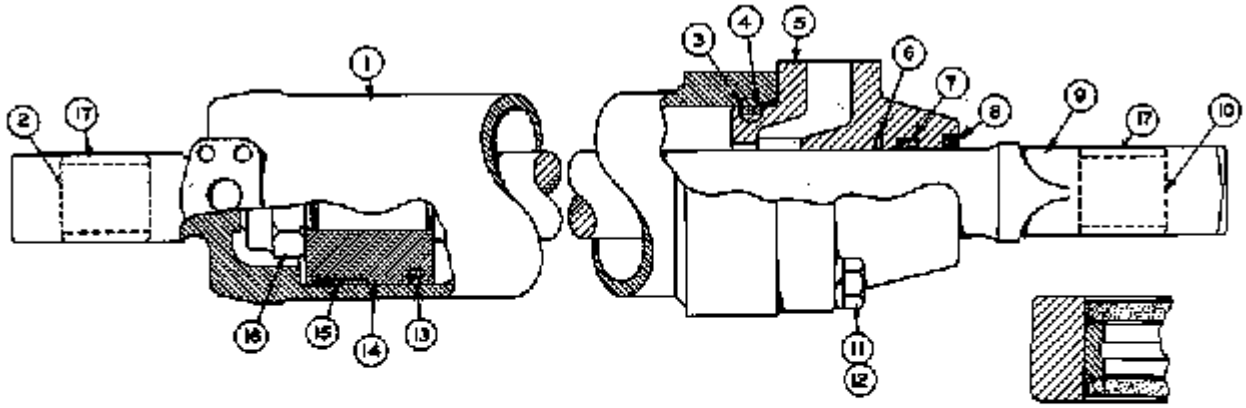

TYPICAL SEAL INSTALLATION

REF NO.	PART NUMBER	DESCRIPTION	QTY
1	8J5671	CYLINDER ASSEM (Includes)	1
2	7J9351	BEARING	1
3	1H8128	SEAL	1
4	2K6898	RING	1
5	6J9250	HEAD	1
6	6J6917	SEAL	1
7	5J8200	SEAL	1
8	1K6981	SEAL	1
9	8J5674	ROD ASSEM (Includes)	1
10	7J9351	BEARING	1
11	5J1025	BOLT	8
12	3B4510	LOCKWASHER	4
C 13	5J9482	SEAL ASSEM	1
14	8J9325	PISTON	1
15	1M1591	RING	1
16	2J3950	NUT	1
# 17	5P93	SEAL	4

NOT PART OF 8J5670 CYLINDER GROUP
C INDICATES CHANGE

156535

Nota	Ref	Numero	Cant	Nombre De Pieza
		8J-5670	1	CYLINDER GROUP
	1	8J-5671	1	CYLINDER ASSEM.
				(Includes)
	2	7J-9351	1	BEARING
	3	1H-8128	1	SEAL
	4	2K-6830	1	RING
	5	6J-9250	1	HEAD
	6	6J-6917	1	SEAL
	7	5J-8200	1	SEAL
	8	1K-6981	1	SEAL
	9	8J-5674	1	ROD ASSEM.
				(Includes)
	10	7J-9351	1	BEARING
	11	0S-1625	4	BOLT
	12	3B-4510	4	LOCKWASHER
C	13	5J-5402	1	SEAL ASSEM.
	14	3J-9325	1	PISTON
	15	1M-1571	1	RING
	16	2J-3950	1	NUT
H	17	5P-0093	4	SEAL
C				INDICATES CHANGE
H				NOT PART OF 8J5670 CYLINDER GR

2K6841 CYLINDER GROUP--4" Bore x 18.60" Stroke
Also part of 7K970 Top Clamp Arrangement listed on Page 214
Only separate parts serviced. When complete Group is required order 8J5697 plus 4--5P93 Seals

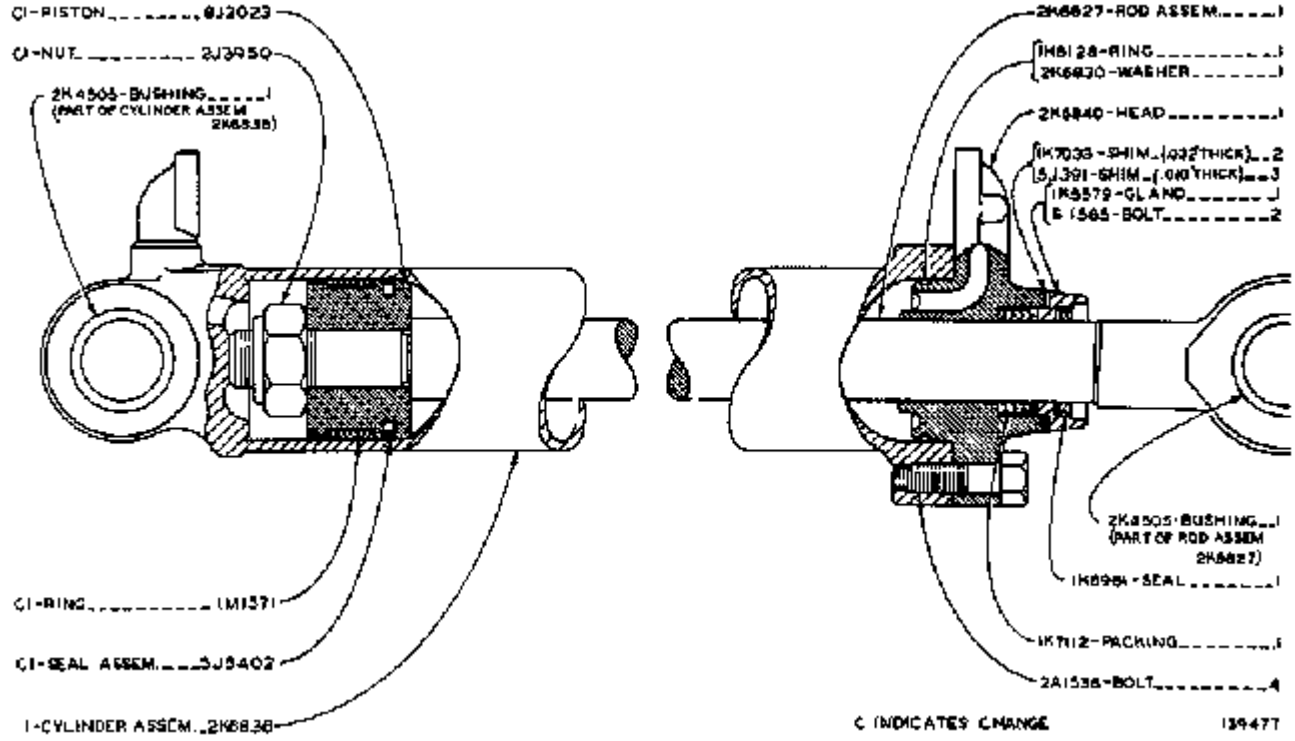

Nota	Ref	Numero	Cant	Nombre De Pieza
		2K-6841	1	CYLINDER GROUP
C		8J-2023	1	PISTON
C		2J-3950	1	NUT
		2K-4505	1	BUSHING
				(PART OF CYLINDER ASSEM. 2K6836)
C		1M-1571	1	RING
C		5J-5402	1	SEAL ASSEM.
		2K-6836	1	CYLINDER ASSEM.
		2K-6827	1	ROD ASSEM.
		1H-8128	1	RING
		2K-6830	1	WASHER
		2K-6840	1	HEAD
		1K-7033	2	SHIM (.032" THICK)
		5J-0391	3	SHIM (.010" THICK)
		1K-5579	1	GLAND
		0S-1585	2	BOLT
		2K-4505	1	BUSHING
				(PART OF ROD ASSEM. 2K6827)
		1K-6981	1	SEAL
		1K-7112	1	PACKING
		2A-1538	4	BOLT
C				INDICATES CHANGE

5063 5V3756 DOUBLE LEVER HAND CONTROL GROUP--Tilt and Lift
Serial No. 41K10160-Up

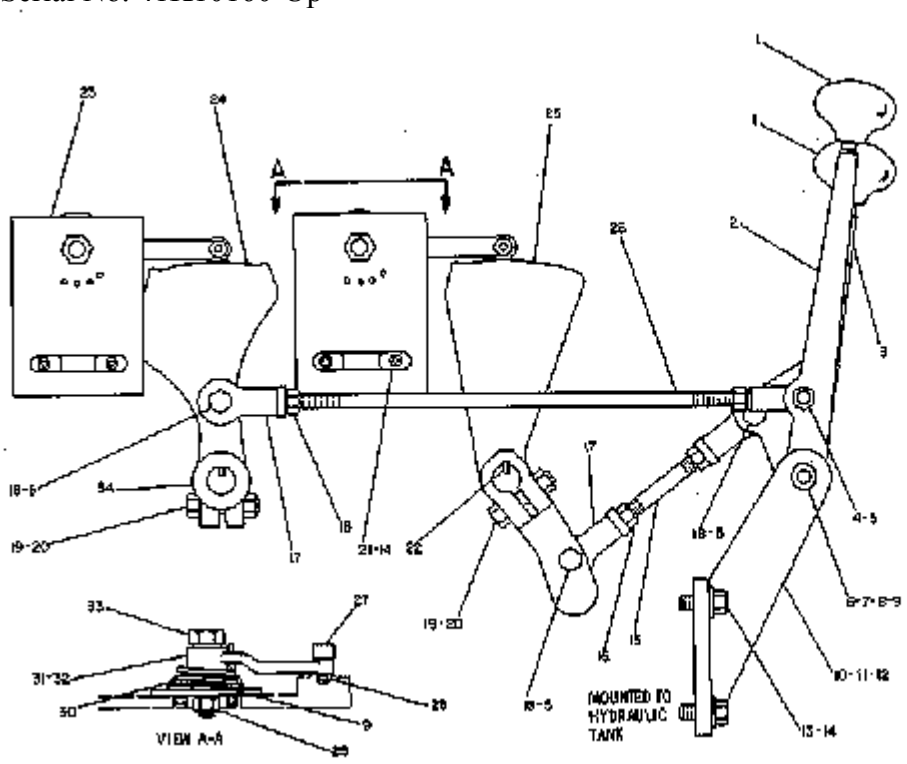

REF NO.	PART NUMBER	DESCRIPTION	QTY
1	L1770	HANDLE	2
2	5V3648	LEVER (Lift)	1
3	5V3652	LEVER (Tilt)	1
4	3K4290	BALL JOINT ASSEM.	1
5	2L6267	LOCKNUT	4
6	5V3685	SHAFT ASSEM.	1
7	5V3689	BEARING	4
8	5V3769	SPACER	1
C 9	5V3686	WASHER	8
10	5V3764	BRACKET ASSEM. (Includes)	1
	9F6445	NUT	1
C 11	4F7957	BOLT	1
12	4B4270	WASHER	1
13	L1351	BOLT	4
14	5M2894	WASHER	8
15	4L7551	ROD	1
16	1B4203	NUT	4
17	7V374	ROD END	3
18	T924	BOLT	3
19	6B991	BOLT	2
20	1D4217	NUT	2
21	5509	BOLT	4
22	1B8706	KEY	2
23	5V3757	PLATE	2
24	5V3653	LEVER	1
25	5V3694	LEVER	1
26	6L9952	ROD	1
27	1V9240	ROLLER	2
28	2L8058	LOCKNUT	2
29	9K568	LOCKNUT	2
30	5V3691	SPRING	2
31	5V8682	LEVER	2
32	5V1972	BEARING	4
33	5V1973	BOLT	2
C 34	4B4289	WASHER	1

C INDICATES CHANGE 180855

Nota	Ref	Numero	Cant	Nombre De Pieza
		5V-3756	1	CONTROL GP-HAND
	1	0L-1170	2	HANDLE
	2	5V-3648	1	LEVER (lift)
	3	5V-3652	1	LEVER (tilt)
	4	3K-4290	1	BALLJOINT ASSEM.
	5	2L-6267	4	LOCKNUT
	6	5V-3685	1	SHAFT ASSEM.
	7	5V-3689	4	BEARING
	8	5V-3763	1	SPACER
C	9	5V-3688	8	WASHER
	10	5V-3764	1	BRACKET ASSEM.
				(Includes)
		9F-6445	1	NUT
C	11	4F-7957	1	BOLT
	12	4B-4276	1	WASHER
	13	0L-1351	4	BOLT
	14	5M-2894	8	WASHER
	15	4L-7551	1	ROD
	16	1B-4203	4	NUT
	17	7V-0574	3	ROD END
	18	0T-0924	3	BOLT
	19	0S-1591	2	BOLT
	20	1D-4717	2	NUT
	21	0S-0509	4	BOLT
	22	1B-8706	2	KEY
	23	5V-3757	2	PLATE
	24	5V-3653	1	LEVER
	25	5V-3694	1	LEVER
	26	061-9352	1	ROD
	27	1V-9240	2	ROLLER

	28	2L-9038	2	LOCKNUT
	29	2K-0564	2	LOCKNUT
	30	5V-3691	2	SPRING
	31	5V-8682	2	LEVER
	32	3V-1972	4	BEARING
	33	3V-1973	2	BOLT
C	34	4B-4283	1	WASHER

C	INDICATES CHANGE

5057 5V5205 FRONT LINES GROUP--As Viewed from Right Hand Side of Machine
Serial No. 41K10160-Up
Part of 5V3674 and 5V4722 Hydraulic Arrangements listed on Page 158. AN ATTACHMENT

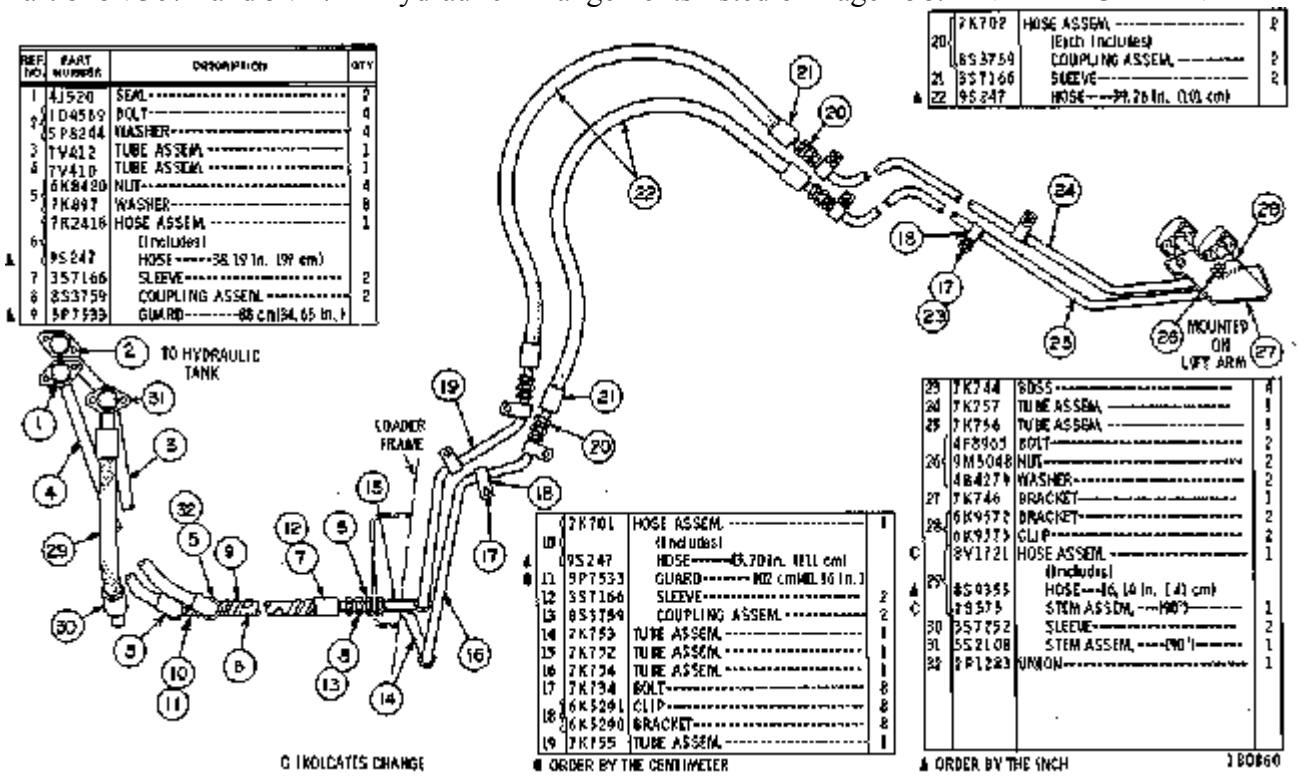

REF NO.	PART NUMBER	DESCRIPTION	QTY
1	4J5120	SEAL	2
2	1D4569	BOLT	4
	5P8244	WASHER	4
3	7V412	TUBE ASSEM.	1
4	7V410	TUBE ASSEM.	1
5	6K8420	NUT	8
	7K897	WASHER	8
	7K2418	HOSE ASSEM.	1
6		(Includes)	
A	9S247	HOSE ---38.19 In. (97 cm)	
7	3S7166	SLEEVE	2
8	8S3759	COUPLING ASSEM.	2
A 9	5P7533	GUARD ---88 cm(34.65 In.)	

20	7K702	HOSE ASSEM.	2
		(Each Includes)	
	8S3759	COUPLING ASSEM.	2
21	3S7166	SLEEVE	2
A 22	9S247	HOSE ---99.26 In. (100 cm)	

10	7K701	HOSE ASSEM.	1
		(Includes)	
	9S247	HOSE ---63.70 In. (161 cm)	
A 11	5P7533	GUARD ---102 cm(40.16 In.)	
12	3S7166	SLEEVE	2
13	8S3759	COUPLING ASSEM.	2
14	7K753	TUBE ASSEM.	1
15	7K752	TUBE ASSEM.	1
16	7K754	TUBE ASSEM.	1
17	7K734	BOLT	8
18	6K5291	CLIP	8
	6K5290	BRACKET	8
19	7K755	TUBE ASSEM.	1

23	7K744	BOSS	1
24	7K757	TUBE ASSEM.	1
25	7K756	TUBE ASSEM.	1
	4F8905	BOLT	2
26	9M5048	NUT	2
	4B427	WASHER	2
27	7K746	BRACKET	1
28	6K9572	BRACKET	2
	6K937	CLIP	2
C	8V1721	HOSE ASSEM.	1
		(Includes)	
A 29	8S0355	HOSE ---16.14 In. (41 cm)	
C	7S575	STEM ASSEM. ---(90°)	1
30	3S7752	SLEEVE	2
31	5S2108	STEM ASSEM. ---(90°)	1
32	9P1283	UNION	1

C 1 KILOCATTS CHANGE
● ORDER BY THE CENTIMETER
▲ ORDER BY THE INCH
1 BOB60

Nota	Ref	Numero	Cant	Nombre De Pieza
		5V-5205	1	LINES GP-FRONT
	1	4J-0520	2	SEAL
	2	1D-4569	4	BOLT
		5P-8244	4	WASHER
	3	7V-0412	1	TUBE ASSEM.
	4	7V-0410	1	TUBE ASSEM.
	5	6K-8420	4	NUT
		7K-0897	8	WASHER
	6	7K-2416	1	HOSE ASSEM.
				(Includes)
H		9S-0247		HOSE 38.19 in. (97 cm)
	7	3S-7166	2	SLEEVE
	8	8S-3759	2	COUPLING ASSEM.
H	9	5P-7533		GUARD 88 cm(34.65 in.)
	10	7K-0701	1	HOSE ASSEM.
				(Includes)
H		9S-0247		HOSE 43.70 in. (111 cm)
J	11	5P-7533		GUARD 102 cm(40.16 in.)
	12	3S-7166	2	SLEEVE
	13	8S-3759	2	COUPLING ASSEM.
	14	7K-0753	1	TUBE ASSEM.
	15	7K-0752	1	TUBE ASSEM.
	16	7K-0754	1	TUBE ASSEM.
	17	7K-0734	8	BOLT
	18	6K-5291	8	CLIP
		6K-5290	8	BRACKET
	19	7K-0755	1	TUBE ASSEM.
	20	7K-0702	2	HOSE ASSEM.
				(Each Includes)
		8S-3759	2	COUPLING ASSEM.

	21	3S-7166	2	SLEEVE
H	22	9S-0247		HOSE 39.76 in. (101 cm)
	23	7K-0744	4	BOSS
	24	7K-0757	1	TUBE ASSEM.
	25	7K-0756	1	TUBE ASSEM.
	26	4F-8965	2	BOLT
		9M-5048	2	NUT
		4B-4279	2	WASHER
	27	7K-0746	1	BRACKET
	28	6K-9572	2	BRACKET
		6K-9573	2	CLIP
C	29	8V-1721	1	HOSE ASSEM.
				(Includes)
H		8S-9355		HOSE 16.14 in. (41 cm)
C		7S-0575	1	STEM ASSEM. (90 degrees)
	30	3S-7252	2	SLEEVE
	31	5S-2108	1	STEM ASSEM. (90 degrees)
	32	2P-1283	1	UNION

C	INDICATES CHANGE
J	ORDER BY THE CENTIMETER
H	ORDER BY THE INCH

41K11287 930 WHEEL LOADER Identificación de Piezas
Número de publicación SEBP1052-01 Fecha de publicación 1984/12/01 Fecha de actualización 1994/09/05

5V4566 HYDRAULIC CONTROL GROUP--Type 1
Serial No. 41K10160-Up
Part of 5V4722 Hydraulic Arrangement listed on Page 158. AN ATTACHMENT

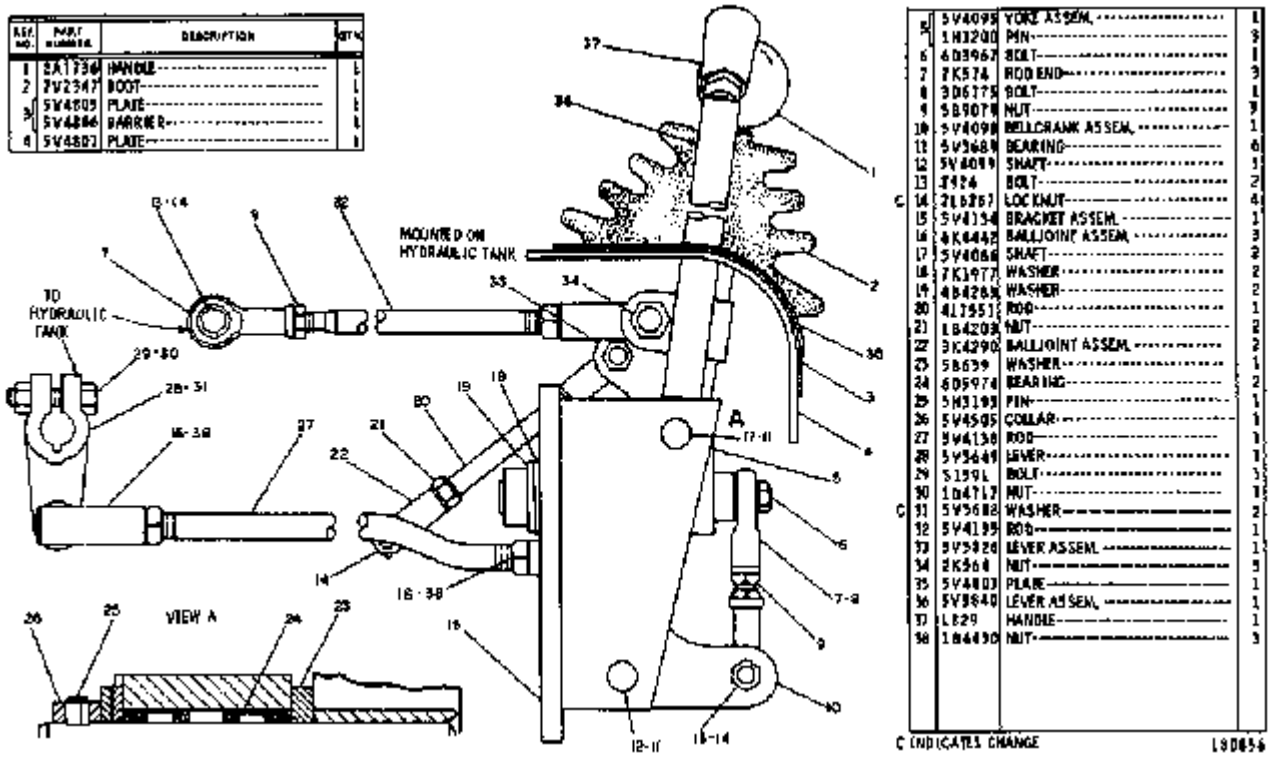

REF. NO.	PART NUMBER	DESCRIPTION	QTY.
1	8A1736	HANDLE	1
2	7V2347	BOOT	1
3	5V4805	PLATE	1
4	5V4806	BARRIER	1
5	5V4807	PLATE	1

REF. NO.	PART NUMBER	DESCRIPTION	QTY.
	5V4095	YOKE ASSEM.	1
	1H3200	PIN	3
6	6D3967	BOLT	1
7	7K574	ROD END	3
8	3D6175	BOLT	1
9	5B9078	NUT	3
10	5V4098	BELLCRANK ASSEM.	1
11	5V3688	BEARING	6
12	5V4099	SHAFT	1
13	3F24	BOLT	2
C 14	2L6267	LOCKNUT	4
15	5V4134	BRACKET ASSEM.	1
16	6K6442	BALLJOINT ASSEM.	3
17	5V4086	SHAFT	2
18	7K1977	WASHER	2
19	4B4288	WASHER	2
20	4L7551	ROD	1
21	1B4208	NUT	2
22	9K4290	BALLJOINT ASSEM.	2
23	5B639	WASHER	1
24	6D5974	BEARING	2
25	5H3193	PIN	1
26	5V4595	COLLAR	1
27	5V4138	ROD	1
28	5V3649	LEVER	1
29	5J39L	BOLT	3
30	1D4717	NUT	3
C 31	5V5688	WASHER	2
32	5V4139	ROD	1
33	5V5926	LEVER ASSEM.	1
34	2K564	NUT	5
35	5V4803	PLATE	1
36	5V3640	LEVER ASSEM.	1
37	L829	HANDLE	1
38	1B4490	NUT	3

C INDICATES CHANGE L80656

Nota	Ref	Numero	Cant	Nombre De Pieza
		5V-4566	1	CONTROL GP-HYDRAULIC
	1	2A-1736	1	HANDLE
	2	7V-2347	1	BOOT
	3	5V-4805	1	PLATE
		5V-4806	1	BARRIER
	4	5V-4807	1	PLATE
	5	5V-4095	1	YOKE ASSEM.
		1H-1200	3	PIN
	6	6D-3967	1	BOLT
	7	7K-0574	3	ROD END
	8	3D-6775	1	BOLT
	9	5B-9079	3	NUT
	10	5V-4098	1	BELLCRANK ASSEM.
	11	5V-3689	6	BEARING
	12	5V-4099	1	SHAFT
	13	0T-0924	2	BOLT
C	14	2L-6267	4	LOCKNUT
	15	5V-4134	1	BRACKET ASSEM.
	16	6K-4442	3	BALLJOINT ASSEM.
	17	5V-4086	2	SHAFT
	18	7K-1977	2	WASHER
	19	4B-4283	2	WASHER
	20	4L-7551	1	ROD
	21	1B-4203	2	NUT
	22	3K-4290	2	BALLJOINT ASSEM.
	23	5B-0639	1	WASHER
	24	6D-5974	2	BEARING
	25	5H-3193	1	PIN
	26	5V-4505	1	COLLAR
	27	5V-4136	1	ROD

	28	5V-3649	1	LEVER
	29	0S-1591	1	BOLT
	30	1D-4717	1	NUT
C	31	5V-3688	2	WASHER
	32	5V-4135	1	ROD
	33	5V-5826	1	LEVER ASSEM.
	34	2K-0564	3	NUT
	35	5V-4803	1	PLATE
	36	5V-5840	1	LEVER ASSEM.
	37	0L-0829	1	HANDLE
	38	1B-4430	3	NUT

C	INDICATES CHANGE

5V4566 HYDRAULIC CONTROL GROUP--Type 2
Serial No. 41K10160-Up
Part of 5V4722 Hydraulic Arrangement listed on Page 158
AN ATTACHMENT

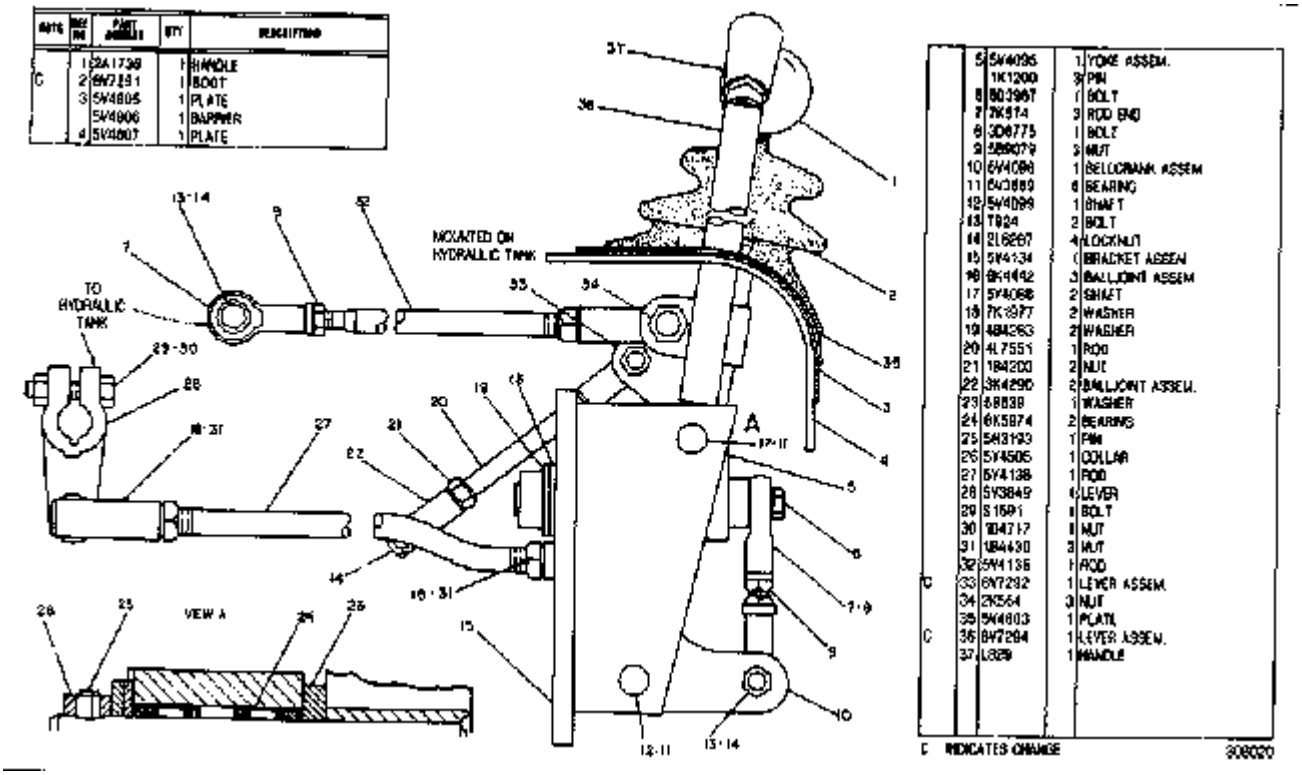

REF NO	PART NUMBER	QTY	DESCRIPTION
1	8A1739	1	HANDLE
C 2	6N7251	1	BOOT
3	5V4805	1	PLATE
	5V4806	1	BUMPER
4	5V4807	1	PLATE

REF NO	PART NUMBER	QTY	DESCRIPTION
5	5V4095	1	YOKE ASSEM.
	1K1200	3	PIN
6	8G2967	1	BOLT
7	7K514	3	ROD END
8	3D6775	1	BOLT
9	5B8079	3	NUT
10	6V4098	1	BELLCRANK ASSEM
11	6N3869	6	BEARING
12	5V4099	1	SHAFT
13	TB24	2	BOLT
14	2L6267	4	LOCKNUT
15	5V4134	1	BRACKET ASSEM
16	6K4442	3	BALLJOINT ASSEM
17	5V4088	2	SHAFT
18	7K1977	2	WASHER
19	4B4263	2	WASHER
20	4L7551	1	ROD
21	1B4200	2	NUT
22	3K4290	2	BALLJOINT ASSEM.
23	8B838	1	WASHER
24	6K5874	2	BEARING
25	5N3193	1	PIN
26	5V4505	1	COLLAR
27	5V4138	1	ROD
28	5V3849	1	LEVER
29	S1591	1	BOLT
30	1B4717	1	NUT
31	1B4430	3	NUT
32	5V4136	1	ROD
C 33	6N7292	1	LEVER ASSEM.
34	2K564	3	NUT
35	5V4803	1	PLATE
C 36	6N7294	1	LEVER ASSEM.
37	L829	1	HANDLE

C INDICATES CHANGE 308020

Nota	Ref	Numero	Cant	Nombre De Pieza
		5V-4566	1	CONTROL GP-HYDRAULIC
	1	2A-1736	1	HANDLE
C	2	8V-7291	1	BOOT
	3	5V-4805	1	PLATE
		5V-4806	1	BARRIER
	4	5V-4807	1	PLATE
	5	5V-4095	1	YOKE ASSEM.
		1H-1200	3	PIN
	6	6D-3967	1	BOLT
	7	7K-0574	3	ROD END
	8	3D-6775	1	BOLT
	9	5B-9079	3	NUT
	10	5V-4098	1	BELLCRANK ASSEM.
	11	5V-3689	6	BEARING
	12	5V-4099	1	SHAFT
	13	0T-0924	2	BOLT
	14	2L-6267	4	LOCKNUT
	15	5V-4134	1	BRACKET ASSEM.
	16	6K-4442	3	BALLJOINT ASSEM.
	17	5V-4086	2	SHAFT
	18	7K-1977	2	WASHER
	19	4B-4283	2	WASHER
	20	4L-7551	1	ROD
	21	1B-4203	2	NUT
	22	3K-4290	2	BALLJOINT ASSEM.
	23	5B-0639	1	WASHER
	24	6K-5974	2	BEARING
	25	5H-3193	1	PIN
	26	5V-4505	1	COLLAR
	27	5V-4136	1	ROD

	28	5V-3649	1	LEVER
	29	0S-1591	1	BOLT
	30	1D-4717	1	NUT
	31	1B-4430	3	NUT
	32	5V-4135	1	ROD
C	33	8V-7292	1	LEVER ASSEM.
	34	2K-0564	3	NUT
	35	5V-4803	1	PLATE
C	36	8V-7294	1	LEVER ASSEM.
	37	0L-0829	1	HANDLE

C	INDICATES CHANGE

5057 7K6868 HYDRAULIC LINES GROUP
Part of 9K6717 Multi-Purpose Bucket Arrangement listed on Page 208

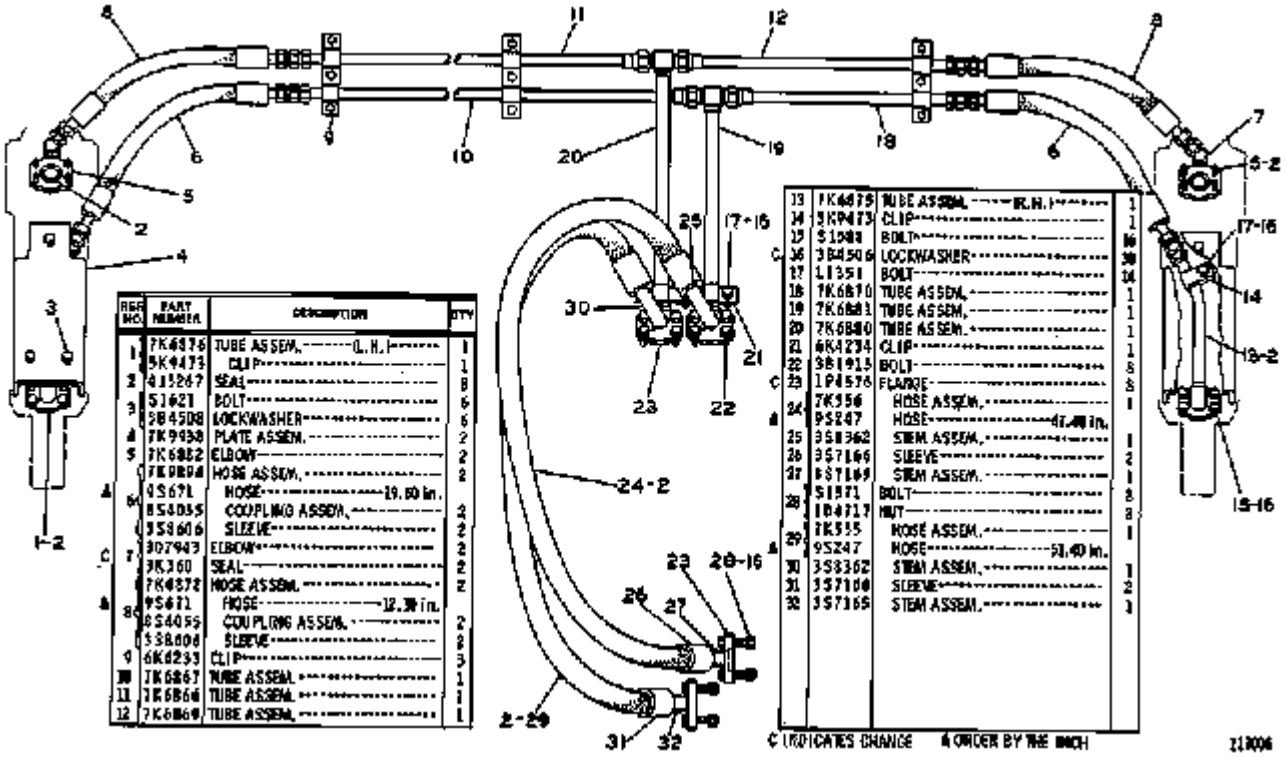

REF NO.	PART NUMBER	DESCRIPTION	QTY
1	7K6876	TUBE ASSEM., (L.H.)	1
	5K9473	CLIP	1
2	4J5267	SEAL	8
3	51621	BOLT	6
	5B4508	LOCKWASHER	6
4	7K9938	PLATE ASSEM.	2
5	7K6882	ELBOW	2
	7K0894	HOSE ASSEM.,	2
A	9S671	HOSE 19.60 in.	
6	8S4055	COUPLING ASSEM.,	4
	3S8606	SLEEVE	2
C 7	3D7943	ELBOW	2
	3K360	SEAL	2
	7K6872	HOSE ASSEM.,	2
A	9S671	HOSE 12.30 in.	
8	8S4055	COUPLING ASSEM.,	2
	3S8606	SLEEVE	2
9	6K6293	CLIP	3
10	7K6867	TUBE ASSEM.	1
11	7K6864	TUBE ASSEM.	1
12	7K6869	TUBE ASSEM.,	1

REF NO.	PART NUMBER	DESCRIPTION	QTY
13	7K6875	TUBE ASSEM., (R.H.)	1
14	5K9473	CLIP	1
15	51988	BOLT	16
C 16	3B4506	LOCKWASHER	16
17	51351	BOLT	14
18	7K6870	TUBE ASSEM.,	1
19	7K6881	TUBE ASSEM.,	1
20	7K6880	TUBE ASSEM.,	1
21	6K4234	CLIP	1
22	3B1915	BOLT	8
C 23	1P4576	FLANGE	8
24	7K556	HOSE ASSEM.,	1
A	9S247	HOSE 47.40 in.	
25	3S8362	STEM ASSEM.,	1
26	3S7166	SLEEVE	2
27	8S7169	STEM ASSEM.,	2
28	51971	BOLT	8
	1D4717	NUT	8
29	7K555	HOSE ASSEM.,	1
A	9S247	HOSE 51.40 in.	
30	3S8362	STEM ASSEM.,	1
31	3S7166	SLEEVE	2
32	3S7165	STEM ASSEM.,	1

C INDICATES CHANGE A ORDER BY THE INCH

I18006

Nota	Ref	Numero	Cant	Nombre De Pieza
		7K-6868	1	LINES GP-HYDRAULIC
	1	7K-6876	1	TUBE ASSEM. (L.H.)
		5K-9473	1	CLIP
	2	4J-5267	8	SEAL
	3	0S-1621	6	BOLT
		3B-4508	6	LOCKWASHER
	4	7K-9938	2	PLATE ASSEM.
	5	7K-6882	2	ELBOW
	6	7K-9894	2	HOSE ASSEM.
H		9S-0671		HOSE 19.60 in.
		8S-4055	2	COUPLING ASSEM.
		3S-8606	2	SLEEVE
C	7	030-7943	2	ELBOW
		3K-0360	2	SEAL
	8	7K-6872	2	HOSE ASSEM.
H		9S-0671		HOSE 12.30 in.
		8S-4055	2	COUPLING ASSEM.
		3S-8606	2	SLEEVE
	9	6K-4233	3	CLIP
	10	7K-6867	1	TUBE ASSEM.
	11	7K-6866	1	TUBE ASSEM.
	12	7K-6869	1	TUBE ASSEM.
	13	7K-6875	1	TUBE ASSEM. (R.H.)
	14	5K-9473	1	CLIP
	15	0S-1588	16	BOLT
C	16	3B-4506	30	LOCKWASHER
	17	0L-1351	14	BOLT
	18	7K-6870	1	TUBE ASSEM.
	19	7K-6881	1	TUBE ASSEM.
	20	7K-6880	1	TUBE ASSEM.

	21	6K-4234	1	CLIP
	22	3B-1915	8	BOLT
C	23	1P-4576	8	FLANGE
	24	7K-0556	1	HOSE ASSEM.
H		9S-0247		HOSE 47.40 in.
	25	3S-8362	1	STEM ASSEM.
	26	3S-7166	2	SLEEVE
	27	3S-7165	1	STEM ASSEM.
	28	0S-1571	8	BOLT
		1D-4717	8	NUT
	29	7K-0555	1	HOSE ASSEM.
H		9S-0247		HOSE 51.40 in.
	30	3S-8362	1	STEM ASSEM.
	31	3S-7166	2	SLEEVE
	32	3S-7165	1	STEM ASSEM.

C	INDICATES CHANGE
H	ORDER BY THE INCH

41K11287 930 WHEEL LOADER Identificación de Piezas
Número de publicación SEBP1052-01 Fecha de publicación 1984/12/01 Fecha de actualización 1994/09/05

7K964 HYDRAULIC LINES GROUP--Rear View

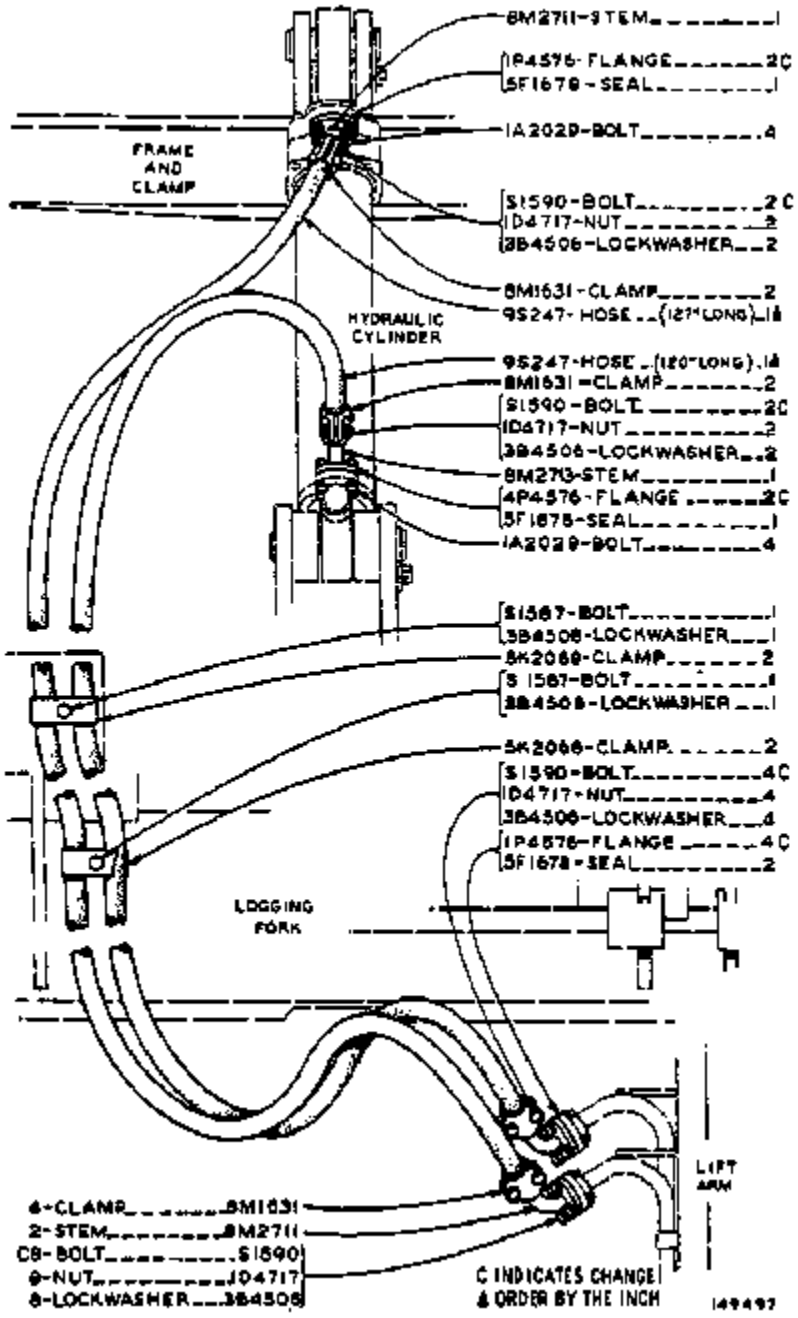

Nota	Ref	Numero	Cant	Nombre De Pieza
		7K-0964	1	HYDRAULIC LINES GROUP
		8M-2711	1	STEM
C		1P-4576	2	FLANGE
		5F-1678	1	SEAL
		1A-2029	4	BOLT
C		0S-1590	2	BOLT
		1D-4717	2	NUT
		3B-4506	2	LOCKWASHER
		8M-1631	2	CLAMP
H		9S-0247	1	HOSE (127" long)
H		9S-0247	1	HOSE (120" long)
		8M-1631	2	CLAMP
C		0S-1590	2	BOLT
		1D-4717	2	NUT
		3B-4506	2	LOCKWASHER
		8M-2713	1	STEM
C		4P-4576	2	FLANGE
		5F-1678	1	SEAL
		1A-2029	4	BOLT
		0S-1587	1	BOLT
		3B-4508	1	LOCKWASHER
		5K-2069	2	CLAMP
		0S-1587	1	BOLT
		3B-4508	1	LOCKWASHER
		5K-2068	2	CLAMP
C		0S-1590	4	BOLT
		1D-4717	4	NUT
		3B-4506	4	LOCKWASHER
C		1P-4576	4	FLANGE
		5F-1678	2	SEAL

	8M-1631	4	CLAMP
	8M-2711	2	STEM
C	0S-1590	8	BOLT
	1D-4717	8	NUT
	3B-4506	8	LOCKWASHER

C	INDICATES CHANGE
H	ORDER BY THE INCH

5055 5V4197 HYDRAULIC PUMP AND MOUNTING GROUP
Serial No. 41K10160-Up
9J5055 Pump parts are shown on Page 189A

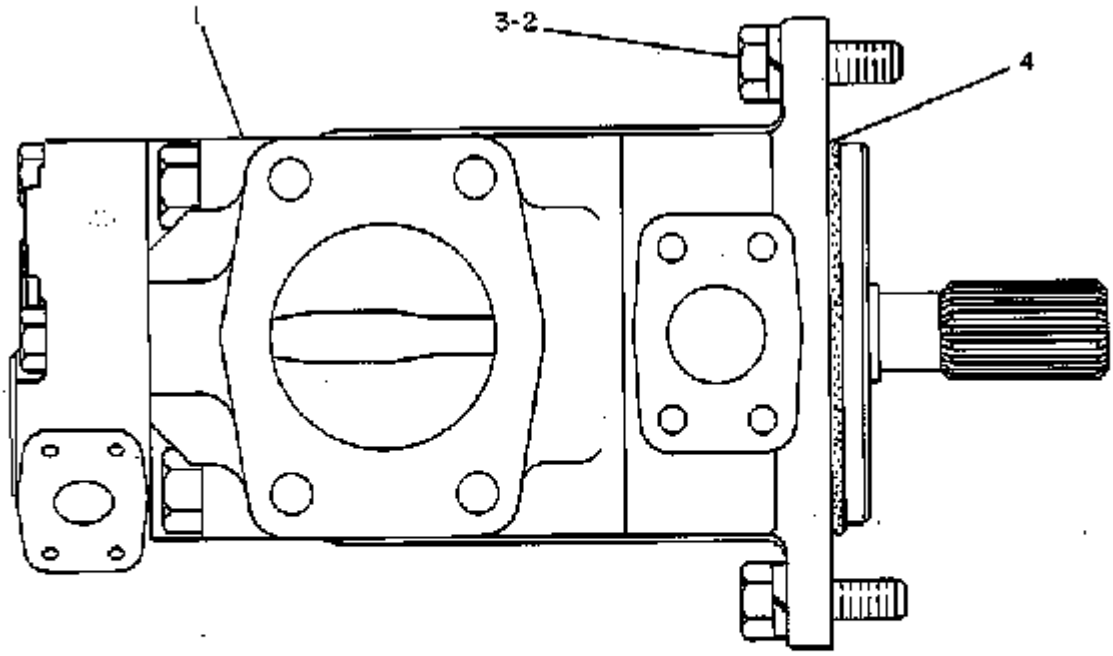

REF. NO.	PART NUMBER	DESCRIPTION	QTY.
1	9J5055	PUMP ASSEM.---------- (Separate Illustration)	1
2	1A1135	BOLT----------	2
3	3B4510	LOCKWASHER----------	2
4	5F3999	SEAL----------	1

177851

Nota	Ref	Numero	Cant	Nombre De Pieza
		5V-4197	1	PUMP & MOUNTING GP
Y	1	9J-5055	1	PUMP ASSEM.
				(Separate Illustration)
	2	1A-1135	2	BOLT
	3	3B-4510	2	LOCKWASHER
	4	5F-3999	1	SEAL
Y				SEPARATE ILLUSTRATION

5057 5V4643 TILT CYLINDER LINES GROUP--As Viewed from Right Hand Side of Machine--Part 2 of 2
Serial No. 41K10160-Up

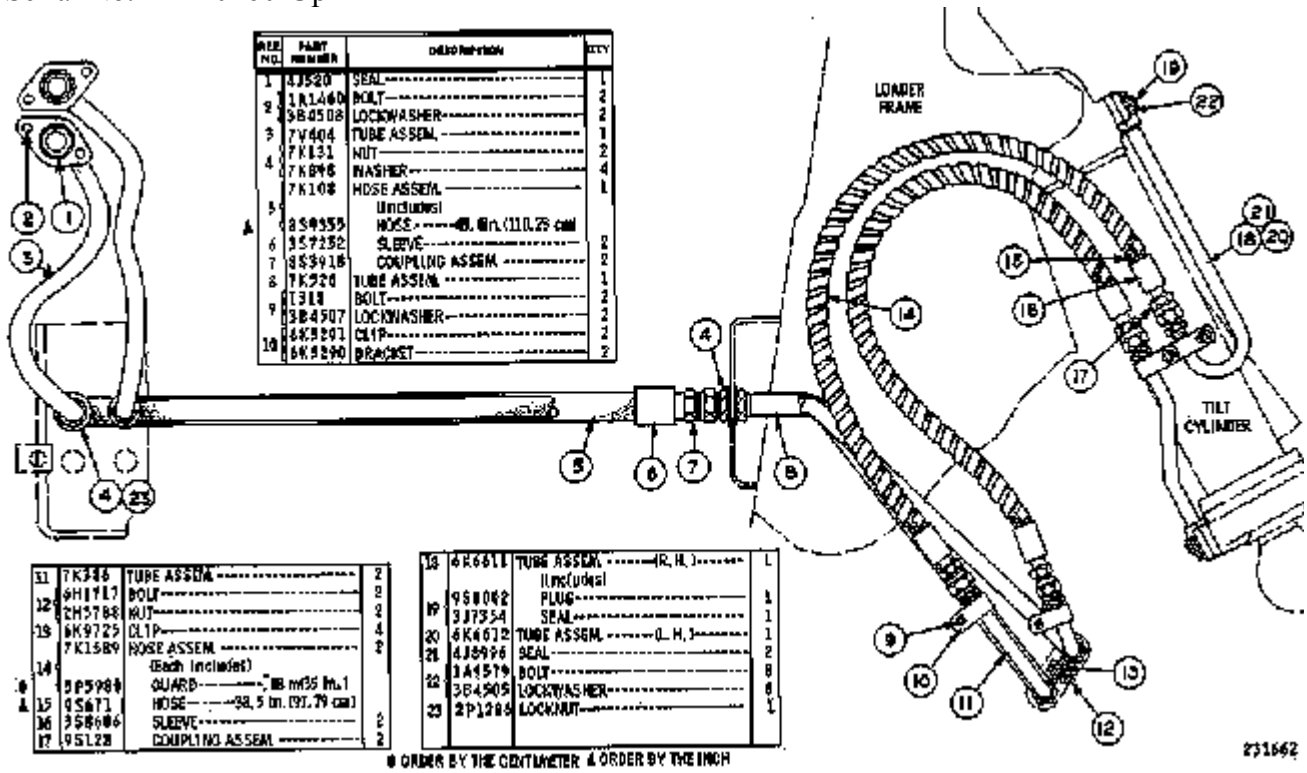

REF NO.	PART NUMBER	DESCRIPTION	QTY
1	43520	SEAL	1
2	1R1460	BOLT	2
	5B4508	LOCKWASHER	2
3	7V404	TUBE ASSEM.	1
4	7K131	NUT	2
	7K898	WASHER	4
	7K108	HOSE ASSEM.	1
5		(Includes)	
*	8S9955	HOSE - 48.0 in. (110.29 cm)	
6	9S7252	SLEEVE	2
7	8S3918	COUPLING ASSEM.	2
8	7K920	TUBE ASSEM.	1
9	1J18	BOLT	2
	3B4507	LOCKWASHER	2
	6K9291	CLIP	2
10	6K9290	BRACKET	2
11	7K946	TUBE ASSEM.	2
12	6H1717	BOLT	2
	2H5788	NUT	2
13	6K9725	CLIP	4
14	7K1589	HOSE ASSEM.	2
		(Each Includes)	
*	5P5988	GUARD - 18 mm (35 in.)	
&	9S671	HOSE - 38.5 in. (97.79 cm)	
16	9S8086	SLEEVE	2
17	9S128	COUPLING ASSEM.	2
18	6K6611	TUBE ASSEM. - (R. H.)	1
		(Includes)	
19	9S8062	PLUG	1
	3J7354	SEAL	1
20	6K6612	TUBE ASSEM. - (L. H.)	1
21	4J5996	SEAL	2
22	3A1579	BOLT	8
	3B4505	LOCKWASHER	8
23	2P1286	LOCKNUT	1

* ORDER BY THE CENTIMETER & ORDER BY THE INCH

Nota	Ref	Numero	Cant	Nombre De Pieza
		5V-4643	1	LINES GP-TILT CYLINDER
	1	4J-0520	1	SEAL
	2	1A-1460	2	BOLT
		3B-4508	2	LOCKWASHER
	3	7V-0404	1	TUBE ASSEM.
	4	7K-0131	2	NUT
		7K-0898	4	WASHER
	5	7K-0108	1	HOSE ASSEM.
				(Includes)
H		8S-9355		HOSE 43.4in. (110.23 cm)
	6	3S-7252	2	SLEEVE
	7	8S-3918	2	COUPLING ASSEM.
	8	7K-0526	1	TUBE ASSEM.
	9	0T-0318	2	BOLT
		3B-4507	2	LOCKWASHER
	10	6K-5291	2	CLIP
		6K-5290	2	BRACKET
	11	7K-0386	2	TUBE ASSEM.
	12	6H-1717	2	BOLT
		2H-3788	2	NUT
	13	6K-9725	4	CLIP
	14	7K-1589	2	HOSE ASSEM.
				(Each Includes)
J		5P-5980		GUARD .88 m(35 in.)
H	15	9S-0671		HOSE 38.5 in. (97.79 cm)
	16	3S-8606	2	SLEEVE
	17	9S-0128	2	COUPLING ASSEM.
	18	6K-6611	1	TUBE ASSEM. (R.H.)
				(Includes)
	19	9S-8002	1	PLUG

		3J-7354	1	SEAL
	20	6K-6612	1	TUBE ASSEM. (L.H.)
	21	4J-8996	2	SEAL
	22	1A-9579	8	BOLT
		3B-4505	8	LOCKWASHER
	23	2P-1286	1	LOCKNUT

H	ORDER BY THE INCH
J	ORDER BY THE CENTIMETER

6K7103 BUCKET AND SUPPORT GROUP

Part of 6K9240 Side Dump Bucket Arrangement listed on Page 208

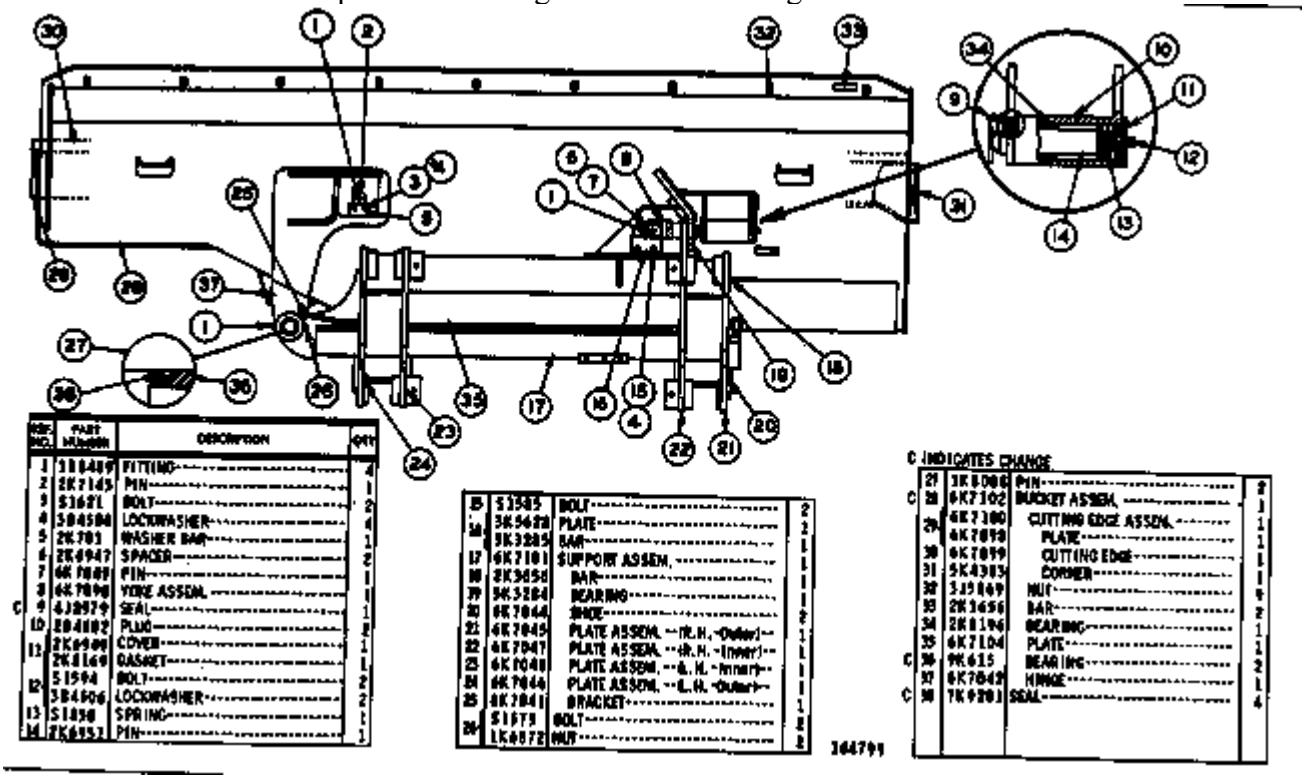

REF. NO.	PART NUMBER	DESCRIPTION	QTY
1	1B8489	FITTING	4
2	2K7145	PIN	1
3	51621	BOLT	2
4	5B4586	LOCKWASHER	4
5	2K781	WASHER BAR	1
6	2K4947	SPACER	2
7	4K7889	PIN	1
8	4K7898	YOKE ASSEM.	1
C 9	4J2979	SEAL	1
10	2B4882	PLUG	2
11	2K6900	COVER	1
12	2K8169	GASKET	1
	51594	BOLT	2
	5B4906	LOCKWASHER	2
13	51858	SPRING	2
14	2K6953	PIN	1

15	51585	BOLT	2
16	5K5628	PLATE	2
	5K3285	BAR	1
17	6K7101	SUPPORT ASSEM.	1
18	2K3658	BAR	1
19	5K5284	BEARING	2
20	6K7044	SHOE	1
21	6K7045	PLATE ASSEM. --R.H. -Outer-	1
22	6K7047	PLATE ASSEM. --R.H. -Inner-	1
23	6K7048	PLATE ASSEM. --L.H. -Inner-	1
24	6K7046	PLATE ASSEM. --L.H. -Outer-	1
25	6K7041	BRACKET	1
26	51573	BOLT	2
	LK6872	NUT	2

164791

C INDICATES CHANGE

27	3K8086	PIN	2
C 28	6K7102	BUCKET ASSEM.	1
29	6K7100	CUTTING EDGE ASSEM.	1
	4K7898	PLATE	1
30	6K7099	CUTTING EDGE	1
31	5K4983	CORNER	1
32	3J9869	NUT	6
33	2K1656	BAR	2
34	2K8196	BEARING	2
35	6K7104	PLATE	1
C 36	9K615	BEARING	2
37	6K7042	HINGE	1
C 38	7K9283	SEAL	4

Nota	Ref	Numero	Cant	Nombre De Pieza
		6K-7103	1	BUCKET AND SUPPORT GROUP
	1	3B-8489	4	FITTING
	2	2K-7145	1	PIN
	3	0S-1621	2	BOLT
	4	3B-4508	4	LOCKWASHER
	5	2K-0703	1	WASHER BAR
	6	2K-6947	2	SPACER
	7	6K-7049	1	PIN
	8	6K-7090	1	YOKE ASSEM.
C	9	4J-8979	1	SEAL
	10	2B-4602	2	PLUG
	11	2K-6949	1	COVER
		2K-8169	1	GASKET
	12	0S-1594	2	BOLT
		3B-4506	2	LOCKWASHER
	13	0S-1850	1	SPRING
	14	2K-6951	1	PIN
	15	0S-1585	2	BOLT
	16	3K-5628	1	PLATE
		5K-3285	1	BAR
	17	6K-7101	1	SUPPORT ASSEM.
	18	2K-3656	1	BAR
	19	5K-3284	1	BEARING
	20	6K-7044	2	SHOE
	21	6K-7045	1	PLATE ASSEM. (R.H.-Outer)
	22	6K-7047	1	PLATE ASSEM. (R.H.-Inner)
	23	6K-7048	1	PLATE ASSEM. (L.H.-Inner)
	24	6K-7046	1	PLATE ASSEM. (L.H.-Outer)
	25	6K-7041	1	BRACKET
	26	0S-1573	2	BOLT

		1K-6872	2	NUT
	27	3K-8008	2	PIN
C	28	6K-7102	1	BUCKET ASSEM.
	29	6K-7100	1	CUTTING EDGE ASSEM.
		6K-7098	1	PLATE
	30	6K-7099	1	CUTTING EDGE
	31	5K-4383	1	CORNER
	32	3J-5169	9	NUT
	33	2K-3656	2	BAR
	34	2K-8196	1	BEARING
	35	6K-7104	1	PLATE
C	36	9K-0615	2	BEARING
	37	6K-7042	1	HINGE
C	38	7K-9201	4	SEAL

C	INDICATES CHANGE

6107 7K9792 BUCKET CONTROL GROUP
Serial No. 41K7758-Up

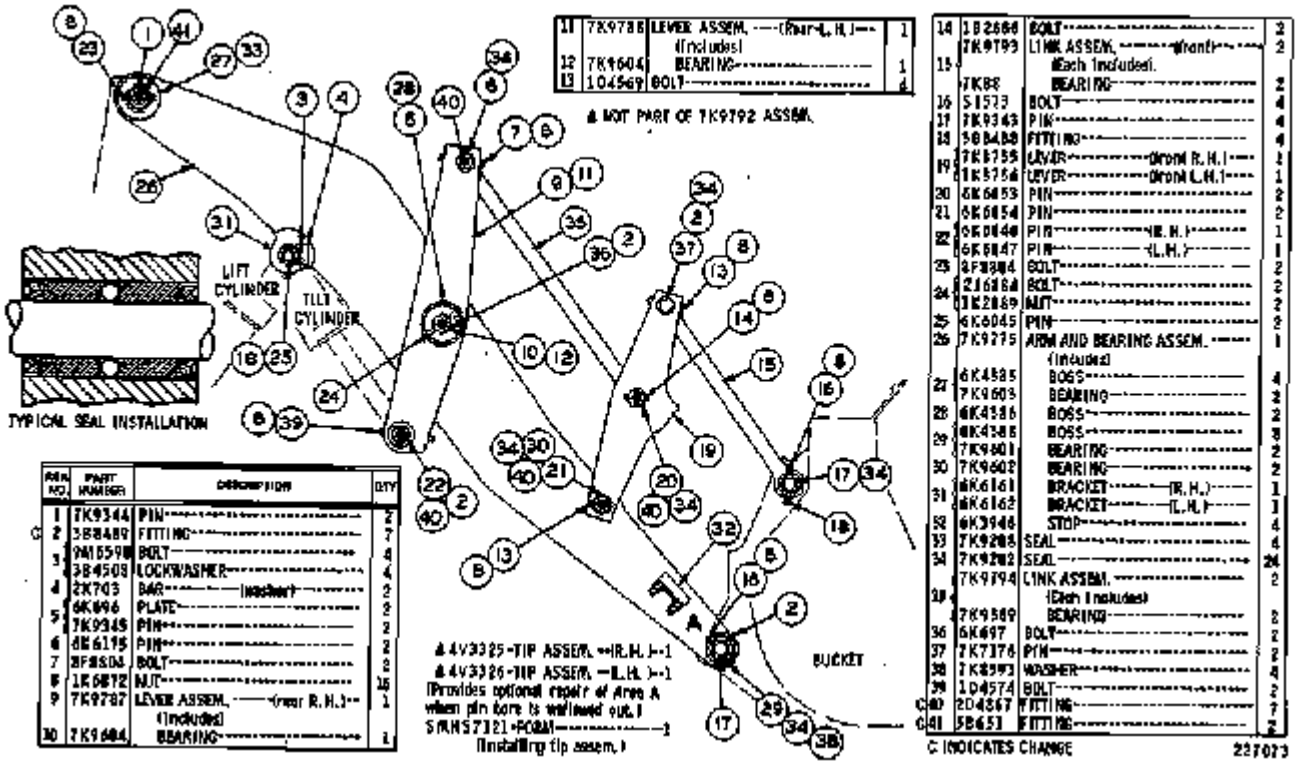

REF NO.	PART NUMBER	DESCRIPTION	QTY
1	7K9344	PIN	2
2	3B8489	FITTING	7
3	9M1559B	BOLT	6
	3B4503	LOCKWASHER	4
4	2K703	BAR (Washer)	2
5	6K696	PLATE	2
	7K9345	PIN	2
6	8E6195	PIN	2
7	9F8804	BOLT	2
8	1E6872	NUT	16
9	7K9787	LEVER ASSEM. (Rear R.H.) (Includes)	1
10	7K9684	BEARING	2
11	7K9788	LEVER ASSEM. (Rear L.H.) (Includes)	1
12	7K9604	BEARING	1
13	104569	BOLT	4

▲ NOT PART OF 7K9792 ASSEM.

▲ 4V3325-TIP ASSEM. (R.H.) -1
▲ 4V3326-TIP ASSEM. (L.H.) -1
(Provides optional repair of Area A when pin bore is reclaimed out.)
S/RNS7121-PCBM -1
(Installing tip assem.)

14	1B2686	BOLT	2
	7K9793	LINK ASSEM. (Front) (Each Includes: BEARING)	2
15	7K88		2
16	S1573	BOLT	4
17	7K9343	PIN	4
18	9B8488	FITTING	4
19	7K8755	LEVER (Front R.H.)	1
	7K8756	LEVER (Front L.H.)	1
20	6K6853	PIN	2
21	6K6854	PIN	2
22	6K6846	PIN (R.H.)	1
	6K6847	PIN (L.H.)	1
23	9F8804	BOLT	2
24	2A6868	BOLT	2
	1K2869	NUT	2
25	6K6845	PIN	2
26	7K9775	ARM AND BEARING ASSEM. (Includes)	1
27	6K4585	BOSS	4
	7K9603	BEARING	2
28	6K4586	BOSS	2
29	6K4588	BOSS	3
	7K9601	BEARING	2
30	7K9602	BEARING	2
31	6K6161	BRACKET (R.H.)	1
	6K6162	BRACKET (L.H.)	1
32	6K3948	STOP	4
33	7K9285	SEAL	4
34	7K9282	SEAL	24
	7K9794	LINK ASSEM. (Each Includes: BEARING)	2
	7K9589		2
36	6K697	BOLT	2
37	7K7376	PIN	2
38	7K8593	WASHER	4
39	1D4574	BOLT	2
C40	2D4367	FITTING	7
C41	5B651	FITTING	2

C INDICATES CHANGE

227073

Nota	Ref	Numero	Cant	Nombre De Pieza
		7K-9792	1	CONTROL GP-BUCKET
	1	7K-9344	2	PIN
C	2	3B-8489	7	FITTING
	3	9M-6590	4	BOLT
		3B-4508	4	LOCKWASHER
	4	2K-0703	2	BAR (washer)
	5	6K-0696	2	PLATE
		7K-9345	2	PIN
	6	6K-6175	2	PIN
	7	8F-8804	2	BOLT
	8	1K-6872	16	NUT
	9	7K-9787	1	LEVER ASSEM. (rear R.H.)
				(Includes)
	10	7K-9604	1	BEARING
	11	7K-9788	1	LEVER ASSEM. (Rear L.H.)
				(Includes)
	12	7K-9604	1	BEARING
	13	1D-4569	4	BOLT
	14	1B-2886	2	BOLT
	15	7K-9793	2	LINK ASSEM. (front)
				(Each Includes)
		7K-0088	2	BEARING
	16	0S-1573	4	BOLT
	17	7K-9343	4	PIN
	18	3B-8488	4	FITTING
	19	7K-3755	1	LEVER (front R.H.)
		7K-3756	1	LEVER (front L.H.)
	20	6K-6053	2	PIN
	21	6K-6054	2	PIN
	22	6K-6046	1	PIN (R.H.)

		6K-6047	1	PIN (L.H.)
	23	8F-8804	2	BOLT
	24	2J-6884	2	BOLT
		3K-2889	2	NUT
	25	6K-6045	2	PIN
	26	7K-9775	1	ARM AND BEARING ASSEM.
				(Includes)
	27	6K-4385	4	BOSS
		7K-9603	2	BEARING
	28	6K-4386	2	BOSS
	29	6K-4388	8	BOSS
		7K-9601	2	BEARING
	30	7K-9602	2	BEARING
	31	6K-6161	1	BRACKET (R.H.)
		6K-6162	1	BRACKET (L.H.)
	32	6K-3946	4	STOP
	33	7K-9208	4	SEAL
	34	7K-9202	24	SEAL
	35	7K-9794	2	LINK ASSEM.
				(Each Includes)
		7K-9589	2	BEARING
	36	6K-0697	2	BOLT
	37	7K-7176	2	PIN
	38	7K-8593	4	WASHER
	39	1D-4574	2	BOLT
C	40	2D-4867	7	FITTING
C	41	5B-0651	2	FITTING
HC		4V-3325	1	TIP ASSEM. (R.H.)
HC		4V-3326	1	TIP ASSEM. (L.H.)

C	INDICATES CHANGE

NOT PART OF 7K9792 ASSEM.

6101 5V4656 GENERAL PURPOSE BUCKET ASSEMBLY--1.53 Cubic Meters (2.00 Cubic Yards)--2413 mm (95 in.) Wide
Note: 1U1896 End Bit is available. AN ATTACHMENT

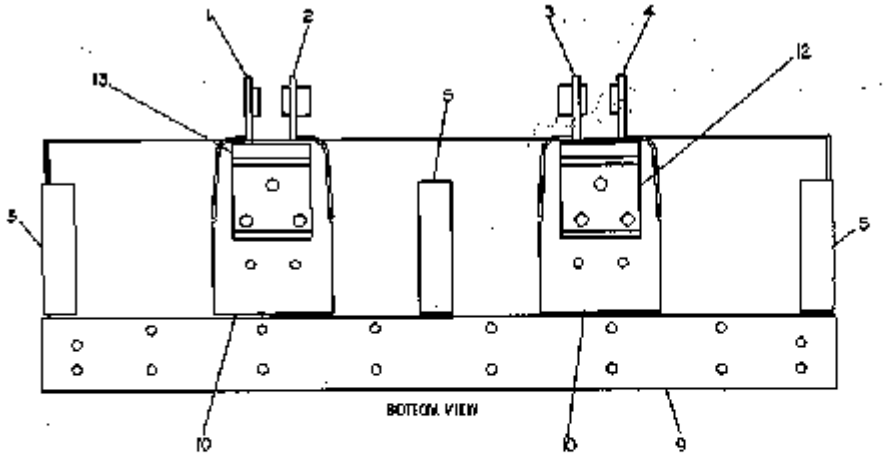

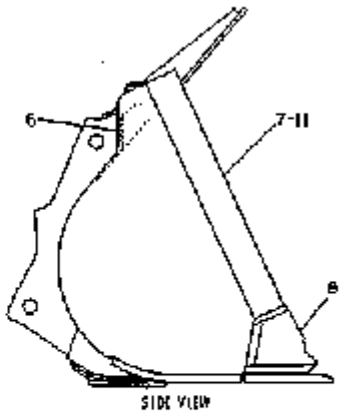

REF NO.	PART NUMBER	DESCRIPTION	QTY.
3	8K8983	HINGE ASSEM.---L.H.-Outer (Includes)	1
	2K4119	BOSS	1
4	8K8986	HINGE ASSEM.--L.H.-Inner (Includes)	1
	2K3592	BOSS	1
	2K4119	BOSS	2

	3	8K8985	HINGE ASSEM.--R.H.-Inner (Includes)	1
		2K3592	BOSS	1
		2K4119	BOSS	2
	4	8K8987	HINGE ASSEM.--R.H.-Outer (Includes)	1
		2K4119	BOSS	1
	5	8K8990	PLATE	1
C	6	8P9770	PLATE	1

1	1V6323	BAR--R.H.	1
8	4V1544	CORNER--(R.H.)	1
	4V1545	CORNER--L.H.	1
9	5V4661	CUTTING EDGE	1
10	8K8990	PLATE	2
11	8K8972	BAR--L.H.	1
12	8K8971	PLATE	2
13	8K8969	BAR	2

C INDICATES CHANGE 177950

Nota	Ref	Numero	Cant	Nombre De Pieza
		5V-4656	1	BUCKET AS-GENERAL PURPOSE
	1	8K-8988	1	HINGE ASSEM. (L.H.-Outer)
				(Includes)
		2K-4119	1	BOSS
	2	8K-8986	1	HINGE ASSEM. (L.H.-Inner)
				(Includes)
		2K-3592	1	BOSS
		2K-4119	2	BOSS
	3	8K-8985	1	HINGE ASSEM. (R.H.-Inner)
				(Includes)
		2K-3592	1	BOSS
		2K-4119	2	BOSS
	4	8K-8987	1	HINGE ASSEM.
				(Includes)
		2K-4119	1	BOSS
	5	8K-8996	3	PLATE
C	6	8P-9770	1	PLATE
	7	1V-6323	1	BAR (R.H.)
	8	4V-1544	1	CORNER (R.H.)
		4V-1545	1	CORNER (L.H.)
	9	5V-4661	1	CUTTING EDGE
	10	8K-8990	2	PLATE
	11	8K-8972	1	BAR (L.H.)
	12	8K-8971	2	PLATE
	13	8K-8969	2	BAR
C				INDICATES CHANGE

6104 9K6721 MULTI-PURPOSE BUCKET GROUP
Part of 9K6717 Multi-Purpose Bucket Arrangement listed on Page 208. AN ATTACHMENT

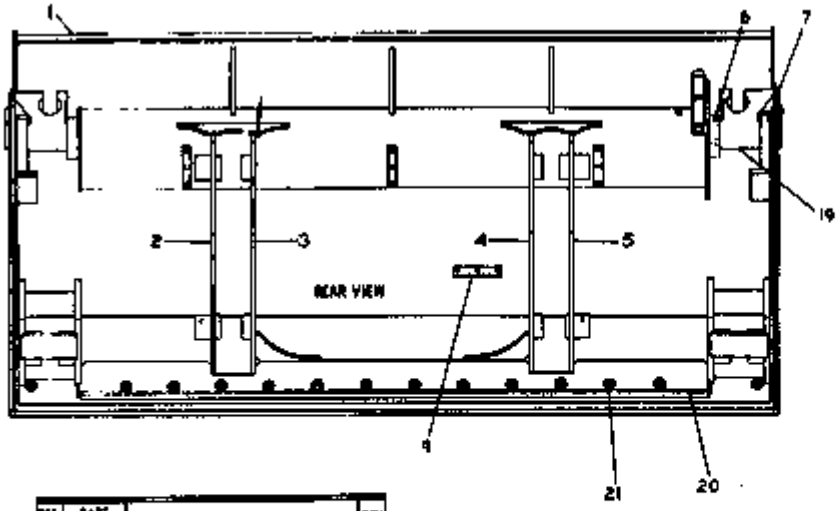

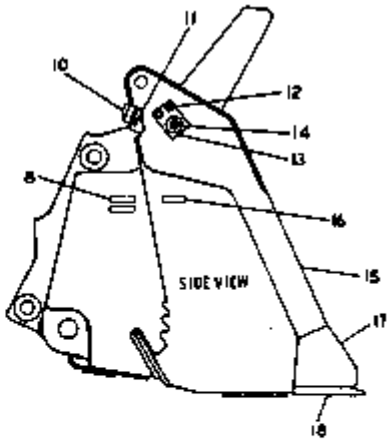

REF. NO.	PART NUMBER	DESCRIPTION	QTY
1	9K7656	BULLDOZER ASSEM.	1
2	7K6380	HINGE ASSEM., -R. H. Outer-	1
3	7K6382	HINGE ASSEM., -R. H. Inner-	1
4	7K6381	HINGE ASSEM., -R. H. Inner-	1
5	7K6379	HINGE ASSEM., -R. H. Outer-	1
6	9K759	BEARING	2
7	9K801	BEARING	2
8	2K3656	BAR	2
9	6K4138	BAR	1

REF. NO.	PART NUMBER	DESCRIPTION	QTY
10	6K9576	INDICATOR	1
11	3A2829	BOLT	2
	8B5271	WASHER	2
	3B4506	LOCKWASHER	2
12	8M1F11	BOLT	4
	3B4505	LOCKWASHER	4
13	6K3824	PIN ASSEM.	2
14	3B4809	FITTING	2

REF. NO.	PART NUMBER	DESCRIPTION	QTY
15	9K6739	BOWL ASSEM.	1
	9K5692	BAR	2
16	2K3656	BAR	1
17	8K6455	CORNER -R. H.-	1
	8K6456	CORNER -L. H.-	1
18	8K8161	CUTTING EDGE	1
19	7K322	HINGE	2
20	9K9705	CUTTING EDGE	1
21	4F3694	BOLT	15
	104726	NUT	15

11M08

Nota	Ref	Numero	Cant	Nombre De Pieza
		9K-6721	1	BUCKET GP-MULTI-PURPOSE
	1	9K-7656	1	BULLDOZER ASSEM.
	2	7K-6380	1	HINGE ASSEM. (L.H. Outer)
	3	7K-6382	1	HINGE ASSEM. (L.H. Inner)
	4	7K-6381	1	HINGE ASSEM. (R.H. Inner)
	5	7K-6379	1	HINGE ASSEM. (R.H. Outer)
	6	9K-0752	2	BEARING
	7	9K-0801	2	BEARING
	8	2K-3656	2	BAR
	9	6K-4138	1	BAR
	10	4K-9376	1	INDICATOR
	11	1A-2029	2	BOLT
		4B-5271	2	WASHER
		3B-4506	2	LOCKWASHER
	12	6H-1717	4	BOLT
		3B-4508	4	LOCKWASHER
	13	6K-3824	2	PIN ASSEM.
	14	3B-8489	2	FITTING
	15	9K-6729	1	BOWL ASSEM.
		9K-5697	2	BAR
	16	2K-3656	1	BAR
	17	8K-6455	1	CORNER (R.H.)
		8K-6456	1	CORNER (L.H.)
	18	8K-8161	1	CUTTING EDGE
	19	7K-0322	2	HINGE
	20	9K-5705	1	CUTTING EDGE
	21	4F-3654	15	BOLT
		1D-4720	15	NUT

8J6658 TOOTH GROUP--Long Tip--9 Required
FOR USE WITH 8K9767 AND 8K8989 GENERAL PURPOSE BUCKET ASSEMBLIES SHOWN ON PAGES 205 AND 206. 9J3169 Tip parts are shown on Page 213
AN ATTACHMENT

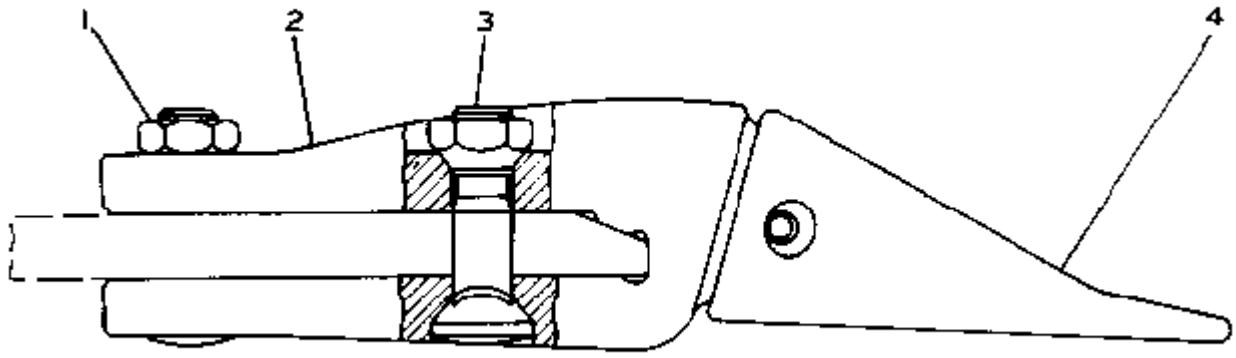

	REF. NO.	PART NUMBER	DESCRIPTION	QTY
	1	8J2933	NUT	2
C	2	8J6656	ADAPTER	1
	3	8J2928	BOLT	2
C	4	9J3169	TIP GROUP (Separate Illustration)	1

	GMG00832	FORM (Instructions for Installing Tooth Groups on Track Type and Wheel Type Loaders)	1

C INDICATES CHANGE

203893

Nota	Ref	Numero	Cant	Nombre De Pieza
		8J-6658	1	TOOTH GROUP
	1	8J-2933	2	NUT
C	2	8J-6656	1	ADAPTER
	3	8J-2928	2	BOLT
YC	4	9J-3169	1	TIP GROUP
				(Separate Illustration)
C				INDICATES CHANGE
Y				SEPARATE ILLUSTRATION

6822 3G4018 TOOTH GROUP--Short
9J3178--Page 214C. AN ATTACHMENT

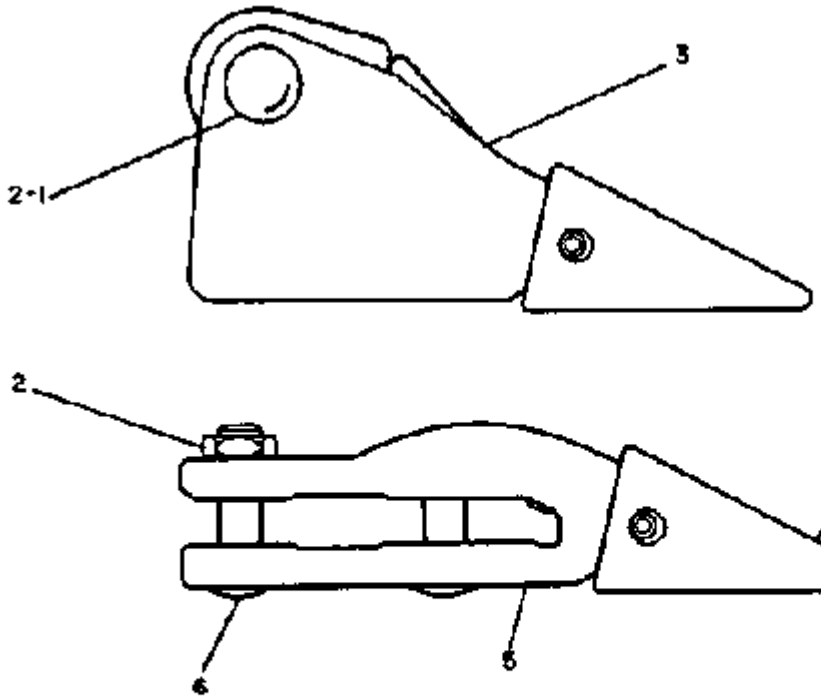

REF NO.	PART NUMBER	DESCRIPTION	QTY.
1	4J9858	BOLT	2
2	8J2933	NUT	14
3	3G4259	ADAPTER (R. H.)	1
	3G4258	ADAPTER (L. H.)	1
4	9J3178	TIP GROUP (Separate Illustration)	8
5	1U257	ADAPTER	6
6	812928	BOLT	12

226895

Nota	Ref	Numero	Cant	Nombre De Pieza
		3G-4018	1	TOOTH GP-SHORT
	1	4J-9058	2	BOLT-PLOW
	2	8J-2933	14	NUT
	3	3G-4259	1	ADAPTER-STRAP-RH
		3G-4258	1	ADAPTER-STRAP-LH
Y	4	9J-3178	8	TIP GP-SHORT
	5	1U-0257	6	ADAPTER-STRAP
	6	8J-2928	12	BOLT-PLOW
Y				SEPARATE ILLUSTRATION

9K6395 FRAME ASSEMBLY
FOR USE WHEN MACHINE IS EQUIPPED WITH REAR MOUNTED ATTACHMENTS
Part of 1V6646 Main Frame Assembly shown on Page 148. AN ATTACHMENT

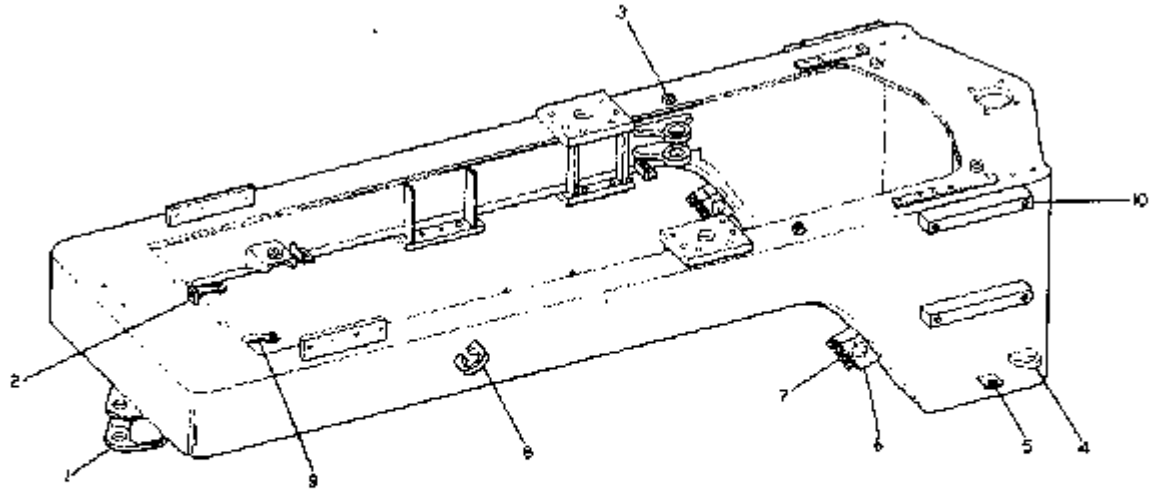

REF NO.	PART NUMBER	DESCRIPTION	QTY
1	9K5828	DRAWBAR ASSEM.	1
2	3D4164	LUG	1
3	1T6339	LUG	2
C 4	9K5059	BAR	1

5	9K6237	BAR	1
6	9K6940	BRACKET ASSEM.	2
		(Each Includes)	
7	1A5822	BOLT	4
	3B4508	LOCKWASHER	4
8	7K1503	EYE	2

9	9K7986	CLAMP ASSEM.	2
		(Each Includes)	
	9F2918	NUT	7
10	8K1781	BAR	1

C INDICATES CHANGE
152764

Nota	Ref	Numero	Cant	Nombre De Pieza
		9K-6395	1	FRAME ASSEMBLY
	1	6K-5828	1	DRAWBAR ASSEM.
	2	3D-4964	1	LUG
	3	1F-5339	2	LUG
C	4	9K-3035	1	BAR
	5	6K-6237	1	BAR
	6	6K-6940	2	BRACKET ASSEM.
				(Each Includes)
	7	1A-5822	4	BOLT
		3B-4508	4	LOCKWASHER
	8	7K-1583	2	EYE
	9	6K-7986	2	CLAMP ASSEM.
				(Each Includes)
		9F-2978	2	NUT
	10	8K-7741	4	BAR
C				INDICATES CHANGE

7051 9K6357 REAR FRAME GROUP--Part 1 of 2
Serial No. 41K5614 to 41K11841 inclusive

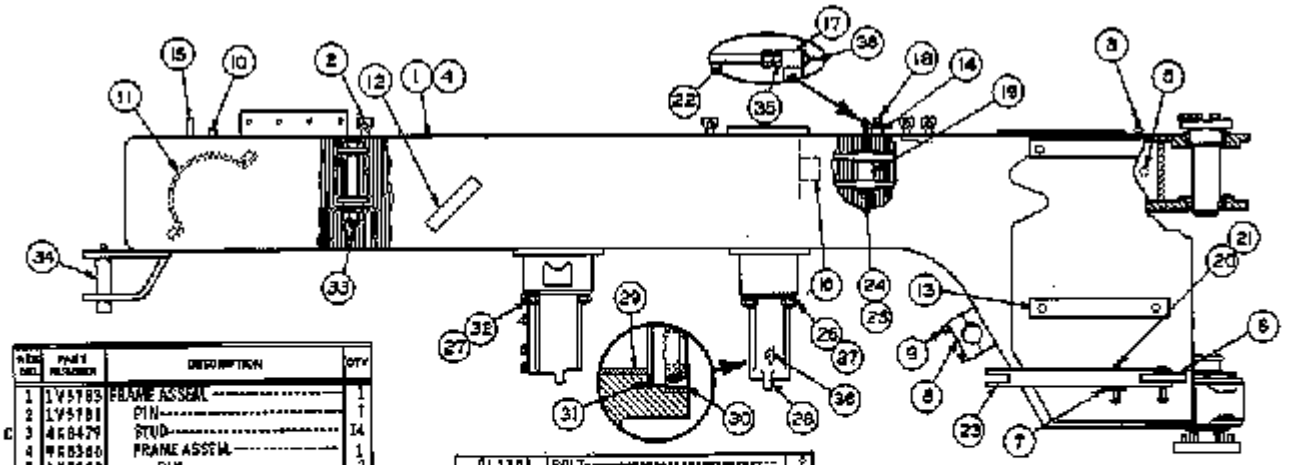

REF NO.	PART NUMBER	DESCRIPTION	QTY
1	1V5783	FRAME ASSEM.	1
2	1V5781	PIN	1
C 3	4K8479	STUD	14
4	9K8360	FRAME ASSEM.	1
5	1K7588	PIN	2
6	9K9035	BAR	1
7	6K6237	BAR	1
8	4K6940	BRACKET ASSEM.	2
	8K6936	CAP	1
9	1A5822	BOLT	8
	9P8245	WASHER	8
10	8F4987	LUG	3
11	6K7966	CLAMP ASSEM.	2
	9F2978	NUT	2
12	7K1533	LIFTING EYE	2
13	8K7741	BAR	4
14	8F5359	LUG	2
15	3D4964	LUG	1
16	511506	BLOCK	3
C 17	2V3850	CLIP ASSEM.	2

REF NO.	PART NUMBER	DESCRIPTION	QTY
	1L1371	BOLT	2
18	3B4508	LOCKWASHER	2
	4B4278	WASHER	2
19	4K6185	PIN	2
20	9K3036	PIN	2
21	3B4817	GUTTER PIN	2
C 22	2V3435	TUBE ASSEM.	2
23	9K3037	LINK	1
24	5L1587	BOLT	2
	9B4508	LOCKWASHER	2
25	7K6128	WASHER	2
26	1D4616	BOLT	4
27	2L3606	NUT	8
	3B4518	LOCKWASHER	8
28	6K6074	SUPPORT ASSEM. (Front)	1
29	1K8051	BEARING	1

REF NO.	PART NUMBER	DESCRIPTION	QTY
30	5K5093	SEAL	2
C 31	5V5374	RETAINING RING	1
32	6K1330	BOLT	4
	2B7218	BOLT	2
33	1B4539	NUT	2
	3B4516	LOCKWASHER	2
	2B3728	WASHER	4
34	6K5823	PIN ASSEM.	1
C 35	9B7541	CONNECTOR	4
36	3B6489	FITTING	3

C INDICATES CHANGE 181760

Nota	Ref	Numero	Cant	Nombre De Pieza
		9K-6357	1	FRAME GP-ENGINE END
	1	1V-5783	1	FRAME ASSEM.
	2	1V-5781	7	PIN
C	3	4K-8479	14	STUD
	4	9K-6366	1	FRAME ASSEM.
	5	1K-7588	2	PIN
	6	9K-3035	1	BAR
	7	6K-6237	1	BAR
	8	6K-6940	2	BRACKET ASSEM.
		6K-6938	1	CAP
	9	1A-5822	4	BOLT
		5P-8245	4	WASHER
	10	8F-4387	3	LUG
	11	6K-7986	2	CLAMP ASSEM.
		9F-2978	2	NUT
	12	7K-1583	2	LIFTING EYE
	13	8K-7741	4	BAR
	14	1F-5339	2	LUG
	15	3D-4964	1	LUG
	16	5J-1506	3	BLOCK
C	17	2V-3850	2	CLIP ASSEM.
	18	0L-1351	2	BOLT
		3B-4506	2	LOCKWASHER
		4B-4278	2	WASHER
	19	6K-6185	2	PIN
	20	9K-3036	2	PIN
	21	3B-4617	2	COTTER PIN
C	22	2V-3435	2	TUBE ASSEM.
	23	9K-3037	1	LINK
	24	0S-1587	2	BOLT

		3B-4508	2	LOCKWASHER
	25	7K-6128	2	WASHER
	26	1D-4616	4	BOLT
	27	2J-3506	8	NUT
		3B-4512	8	LOCKWASHER
	28	6K-6074	1	SUPPORT ASSEM. (front)
	29	1K-8051	1	BEARING
	30	3K-5093	2	SEAL
C	31	5V-7574	1	RETAINING RING
	32	6K-1330	4	BOLT
	33	2B-7218	2	BOLT
		1B-4333	2	NUT
		3B-4516	2	LOCKWASHER
		2S-3728	4	WASHER
	34	6K-5823	1	PIN ASSEM.
C	35	9S-7581	4	CONNECTOR
	36	3B-8489	3	FITTING

C	INDICATES CHANGE

7153 7K344 TRACTOR GUARD GROUP
AN ATTACHMENT

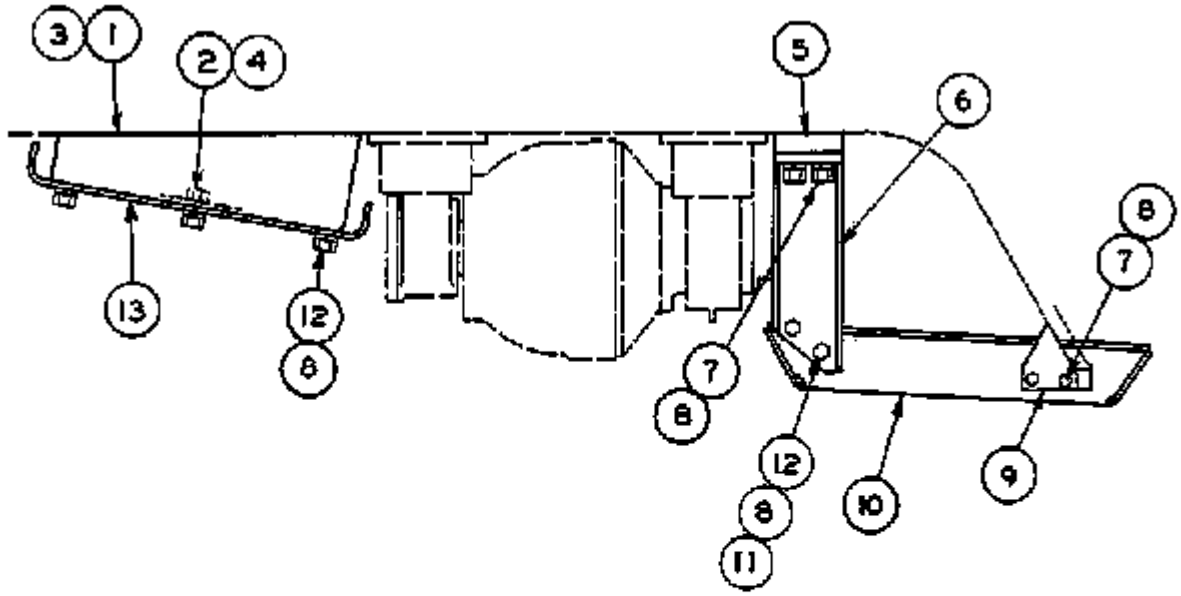

REF. NO.	PART NUMBER	DESCRIPTION	QTY
1	7K121	PLATE ASSEM. -------(R.H.)-----	1
2	3J5169	NUT----------(Weld)----------	3
3	7K122	PLATE ASSEM. -------(L.H.)-----	1
4	3J5169	NUT----------(Weld)----------	3
5	7K206	BLOCK----------	2
6	7K7213	CHANNEL ASSEM. -----(R.H.)-----	1
	7K7214	CHANNEL ASSEM. -----(L.H.)-----	1
7	8S9092	BOLT----------	8
8	3B4510	LOCKWASHER----------	18
9	7K214	BLOCK----------	2
10	7K7069	PLATE ASSEM. ----------	1
11	3J5169	NUT----------(Weld)----------	4
12	S1566	BOLT----------	10
13	7K125	PLATE ASSEM. ----------	1

135497

Nota	Ref	Numero	Cant	Nombre De Pieza
		7K-0344	1	GUARD GP-TRACTOR
	1	7K-0121	1	PLATE ASSEM. (R.H.)
	2	3J-5169	3	NUT (Weld)
	3	7K-0122	1	PLATE ASSEM. (L.H.)
	4	3J-5169	3	NUT (Weld)
	5	7K-0206	2	BLOCK
	6	7K-7213	1	CHANNEL ASSEM. (R.H.)
		7K-7214	1	CHANNEL ASSEM. (L.H.)
	7	8S-9092	8	BOLT
	8	3B-4510	18	LOCKWASHER
	9	7K-0214	2	BLOCK
	10	7K-7069	1	PLATE ASSEM.
	11	3J-5169	4	NUT (Weld)
	12	0S-1566	10	BOLT
	13	7K-0125	1	PLATE ASSEM.

1302 2P6186 OIL PAN FASTENER GROUP
Engine Serial No. 70P18799 to 78P61648 inclusive

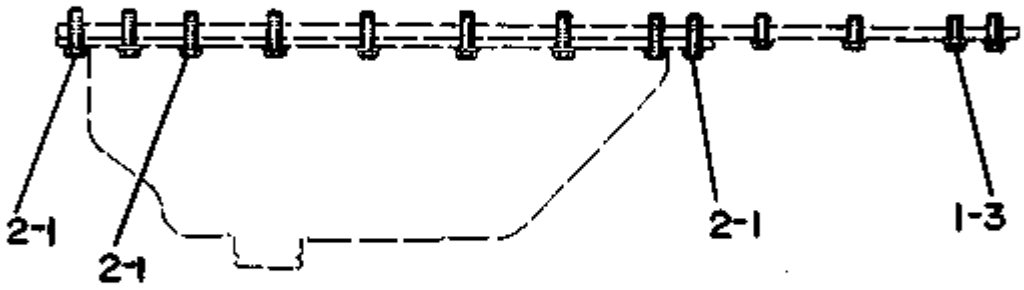

Nota	Ref	Numero	Cant	Nombre De Pieza
		2P-6186	1	FASTENER GP-OIL PAN
C	1	5M-2894	36	WASHER
C	2	1A-2029	24	BOLT
C	3	0L-1351	12	BOLT
C				CHANGE FROM PREVIOUS TYPE

1055 5M2734 PRESCREENER GROUP
For operations where there is a possibility of foreign material other than dust being drawn into the Air Cleaner. AN ATTACHMENT

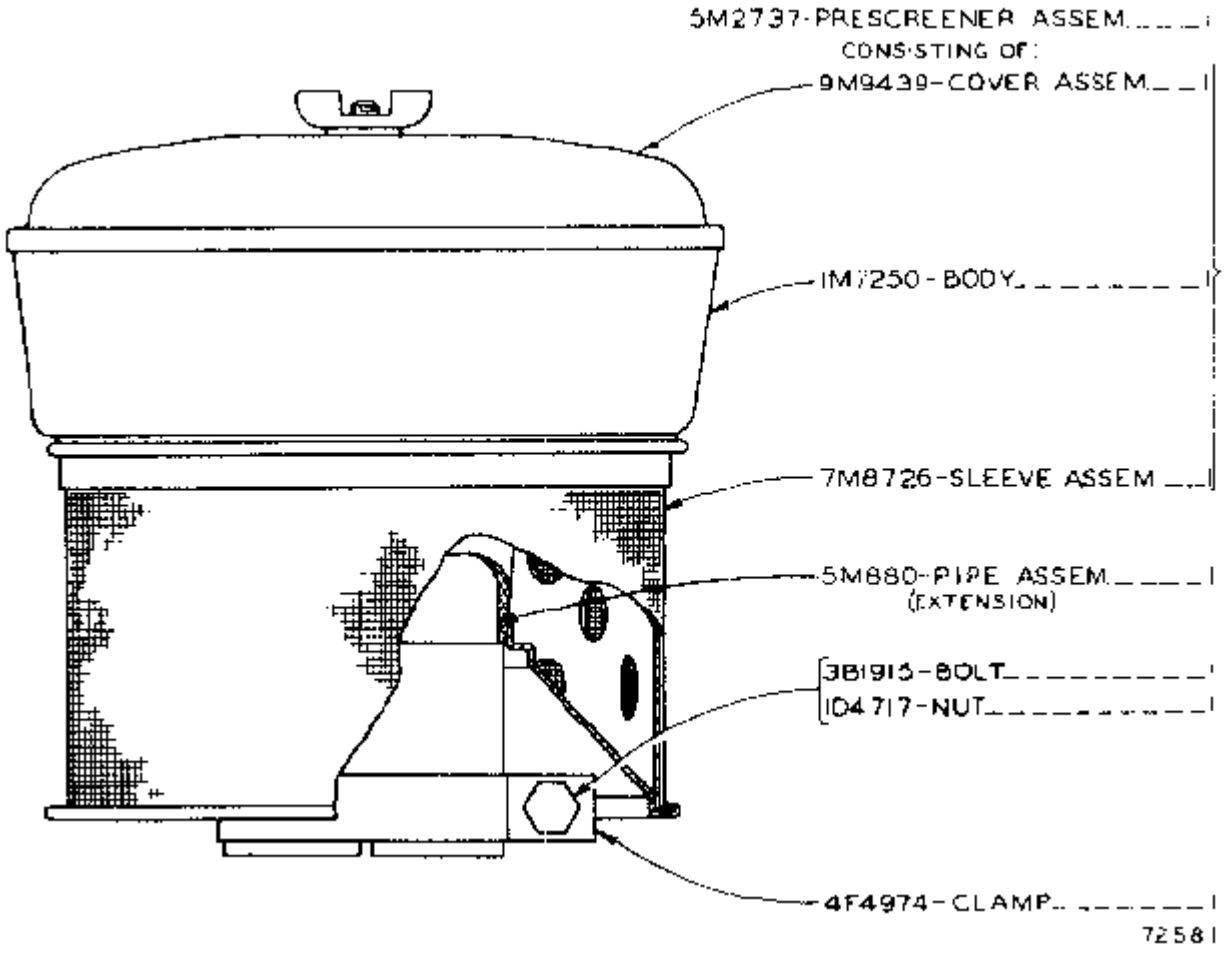

Nota	Ref	Numero	Cant	Nombre De Pieza
		5M-2734	1	PRESCREENER GP
		5M-2737	1	PRESCREENER ASSEM
		9M-9439	1	COVER ASSEM.
		1M-7250	1	BODY
		7M-8726	1	SLEEVE ASSEM.
		5M-0880	1	PIPE ASSEM. (EXTENSION)
		3B-1915	1	BOLT
		1D-4717	1	NUT
		4F-4974	1	CLAMP

2P8605 PULLEY GROUP
Engine Serial No. 78P24259 to 78P40899 inclusive
Note: 7M4705 Vee Belt Set, consisting of 2 belts, is used

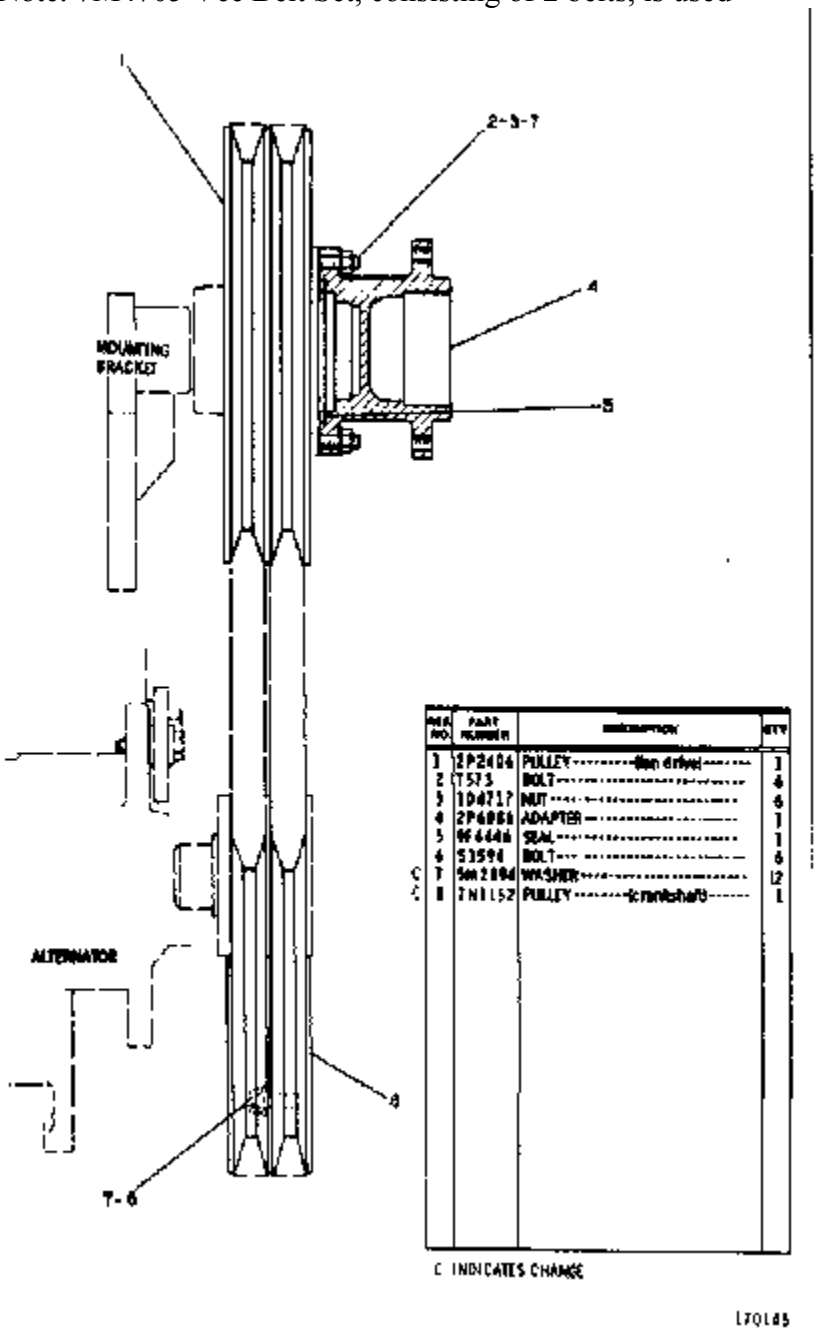

REF NO.	PART NUMBER	DESCRIPTION	QTY
1	2P2406	PULLEY ---------fan drive---------	1
2	1T573	BOLT ----------	6
3	1D4717	NUT ----------	6
4	2P6088	ADAPTER ----------	1
5	9G6446	SEAL ----------	1
6	5J3594	BOLT ----------	6
7	9M2894	WASHER ----------	12
8	7N1152	PULLEY ---------crankshaft---------	1

C INDICATES CHANGE

L7QL85

Nota	Ref	Numero	Cant	Nombre De Pieza
		2P-8605	1	PULLEY GP
	1	2P-2406	1	PULLEY (fan drive)
	2	0T-0573	6	BOLT
	3	1D-4717	6	NUT
	4	2P-6086	1	ADAPTER
	5	9F-4446	1	SEAL
	6	0S-1594	6	BOLT
C	7	5M-2894	12	WASHER
C	8	7N-1152	1	PULLEY (crankshaft)
C				INDICATES CHANGE

7N9597 SUPPORT GROUP
Engine Serial No. 78P46235-Up

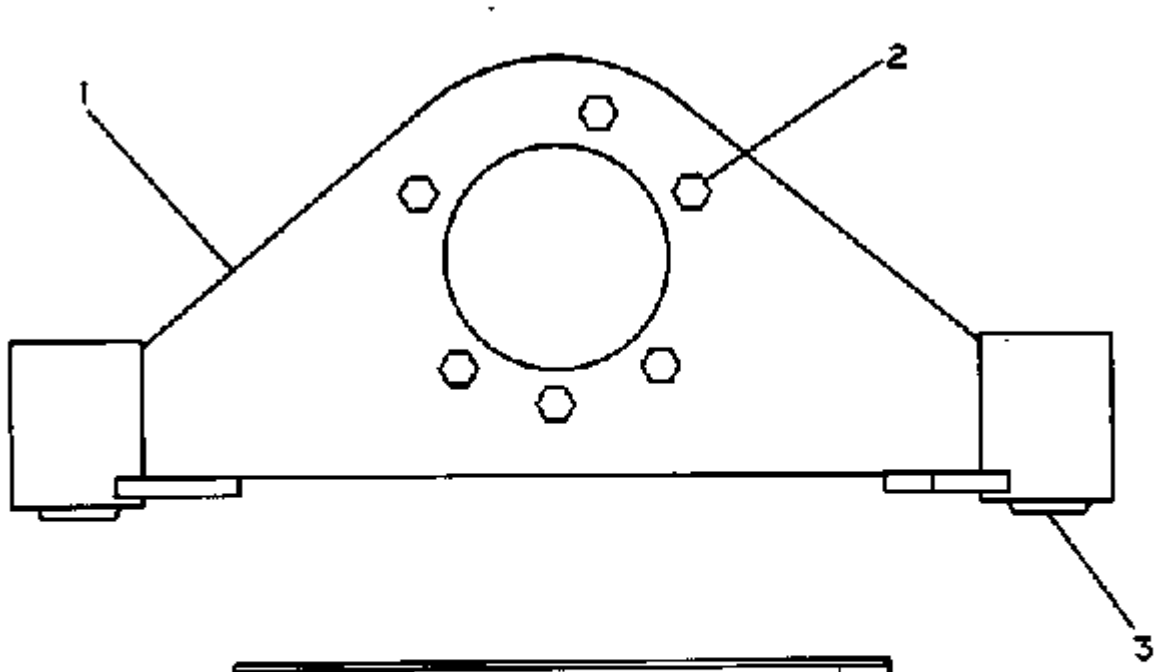

REF. NO.	PART NUMBER	DESCRIPTION	QTY
1	7N9598	SUPPORT ASSEM.	1
2	S1585	BOLT	6
	5P8245	WASHER	6
3	7S7043	BUSHING	2

222878

Nota	Ref	Numero	Cant	Nombre De Pieza
		7N-9597	1	SUPPORT GP-ENGINE
	1	7N-9598	1	SUPPORT ASSEM.
	2	0S-1585	6	BOLT
		5P-8245	6	WASHER
	3	7S-7043	2	BUSHING

1154 7N9589 TRUNNION GROUP
Engine Serial No. 78P46235-Up

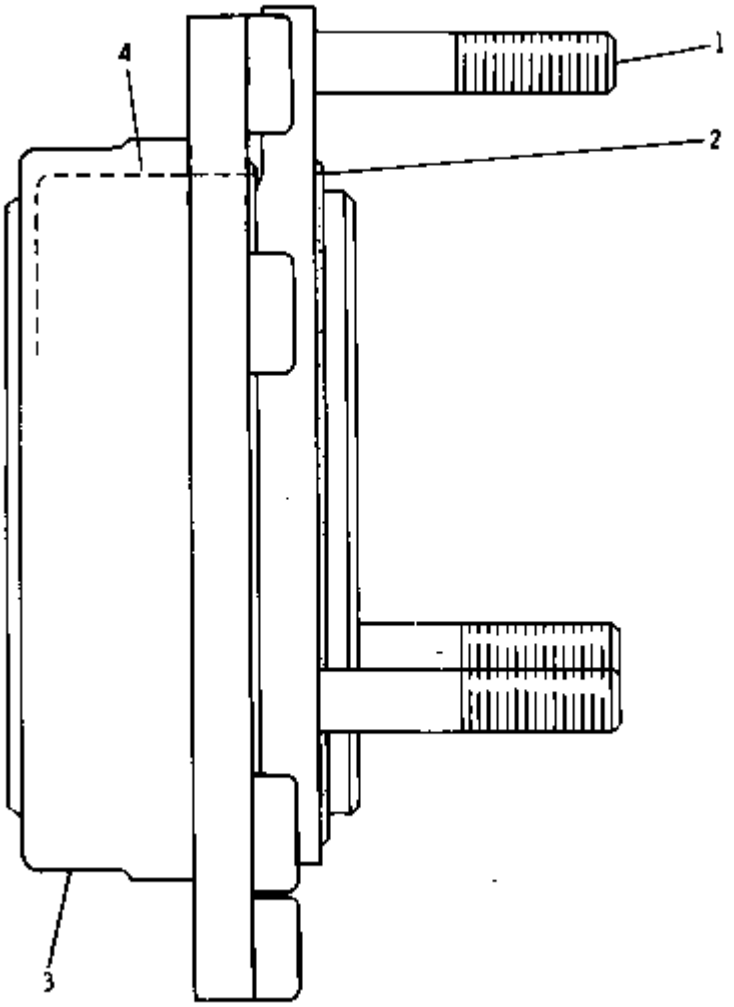

Nota	Ref	Numero	Cant	Nombre De Pieza
		7N-9589	1	TRUNNION GP-ENGINE
	1	0L-1329	3	BOLT
	2	2P-1692	1	SEAL
	3	7N-9590	1	TRUNNION ASSEM.
		8N-0081	1	TRUNNION
	4	2P-1487	1	RING

1107 2P6514 VALVE MECHANISM COVER GROUP

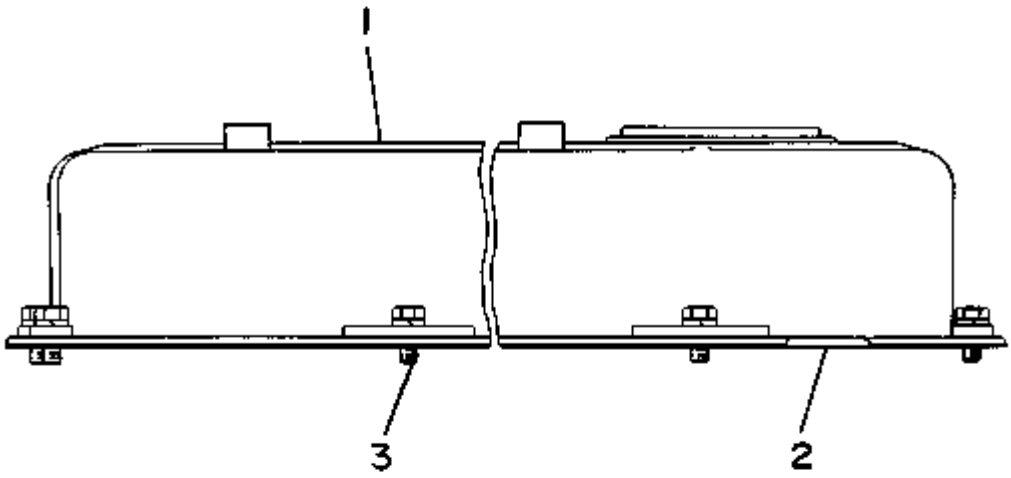

Nota	Ref	Numero	Cant	Nombre De Pieza
		2P-6514	1	COVER GP-VALVE MECHANISM
	1	2N-3871	1	COVER AS-HEAD
	2	8S-1606	1	GASKET-COVER
	3	0S-1617	11	BOLT
		3B-4505	11	LOCKWASHER

1102 7N8024 VALVE MECHANISM GROUP
Engine Serial No. 78P50619-Up

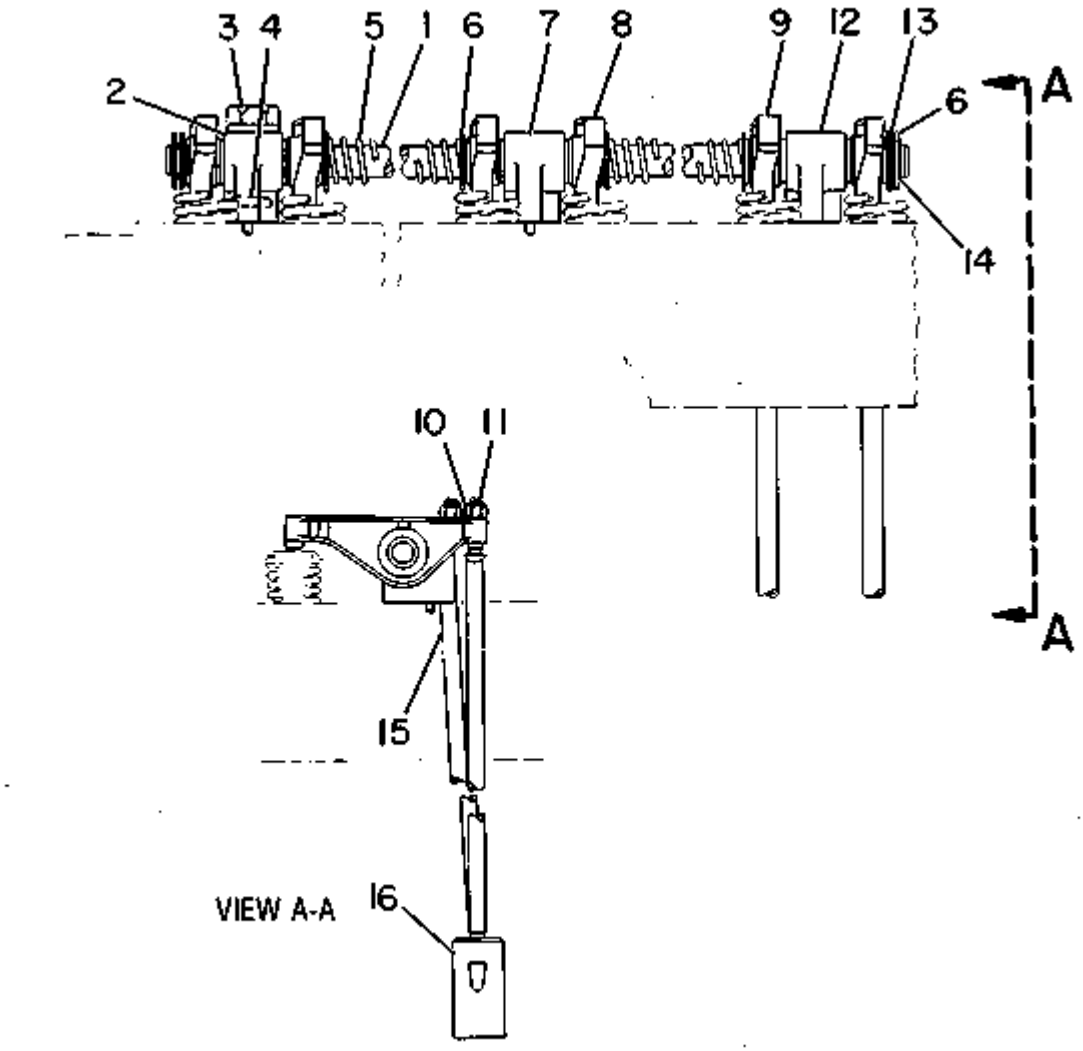

Nota	Ref	Numero	Cant	Nombre De Pieza
		7N-8024	1	VALVE MECHANISM GP
C	1	8N-3313	1	SHAFT ASSEM.
				(Includes)
		0L-1026	2	PLUG
	2	7N-8015	1	BRACKET
		5M-4606	1	DOWEL
	3	1B-7709	1	BOLT
		2S-0736	1	WASHER
	4	5P-5598	1	SEAL
	5	4B-4910	3	SPRING
	6	9H-1110	8	WASHER
	7	5S-5879	2	BRACKET
C	8	8N-3324	4	ARM ASSEM. (exhaust)
C	9	8N-3326	4	ARM ASSEM. (intake)
	10	1B-4203	8	NUT
	11	5S-5917	8	SCREW
	12	8S-1499	1	BRACKET ASSEM.
				(Includes)
		1L-5072	1	DOWEL
H	13	9M-9886	2	WASHER
		9H-1112	2	SPRING
	14	9H-1113	2	RING
	15	5S-5918	8	ROD
	16	7S-3161	8	LIFTER
C				INDICATES CHANGE
H				USE AS REQUIRED

1317 1P4244 BREATHER GROUP--Crankcase

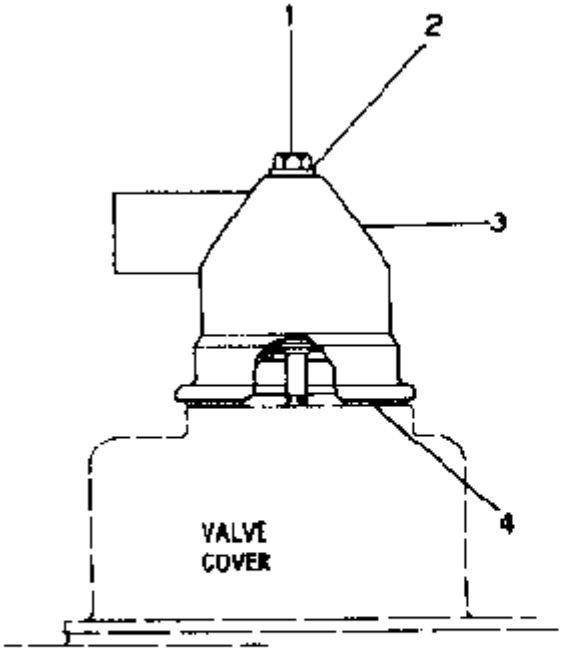

	REF. NO.	PART NUMBER	DESCRIPTION	QTY.
	1	3H3243	BOLT	1
	2	4K9890	WASHER	1
	3	8S248	BREATHER ASSEM.	1
C	4	4L9564	SEAL	1

C INDICATES CHANGE

227531

Nota	Ref	Numero	Cant	Nombre De Pieza
		1P-4244	1	BREATHER GP
	1	3H-3243	1	BOLT
	2	4K-9890	1	WASHER
	3	8S-0248	1	BREATHER ASSEM.
C	4	4L-9564	1	SEAL
C				INDICATES CHANGE

7315 5N8553 OIL FILLER AND PROTECTION COVER GROUP
AN ATTACHMENT

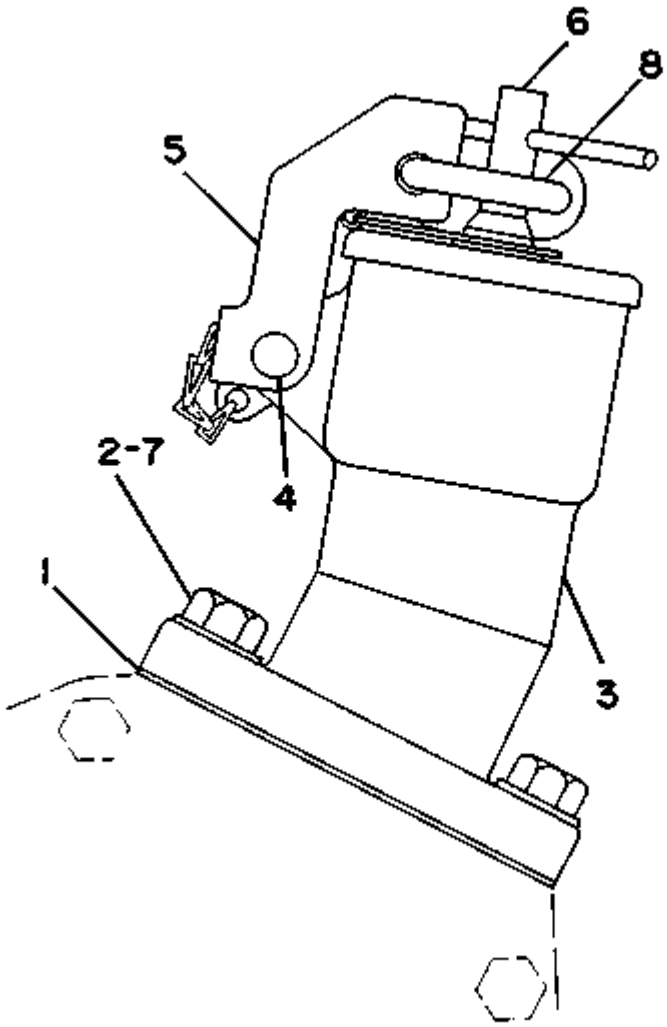

Nota	Ref	Numero	Cant	Nombre De Pieza
		5N-8553	1	PROTECTION GP-VANDALISM
	1	2P-2720	1	GASKET
	2	0S-1588	2	BOLT
	3	2P-2721	1	PIPE AS-OIL FILLER
		2P-2719	1	PIPE-OIL FILLER
	4	8S-4212	1	RIVET
	5	2P-2717	1	HASP-OIL FILLER
	6	6N-2985	1	CAP AS-FILLER
	7	5M-2894	2	WASHER
	8	5P-8502	1	PADLOCK GP
A		5P-8500	2	KEY
A				NOT PART OF THIS GROUP

1316 2P6854 OIL FILLER PROTECTION COVER GROUP
AN ATTACHMENT

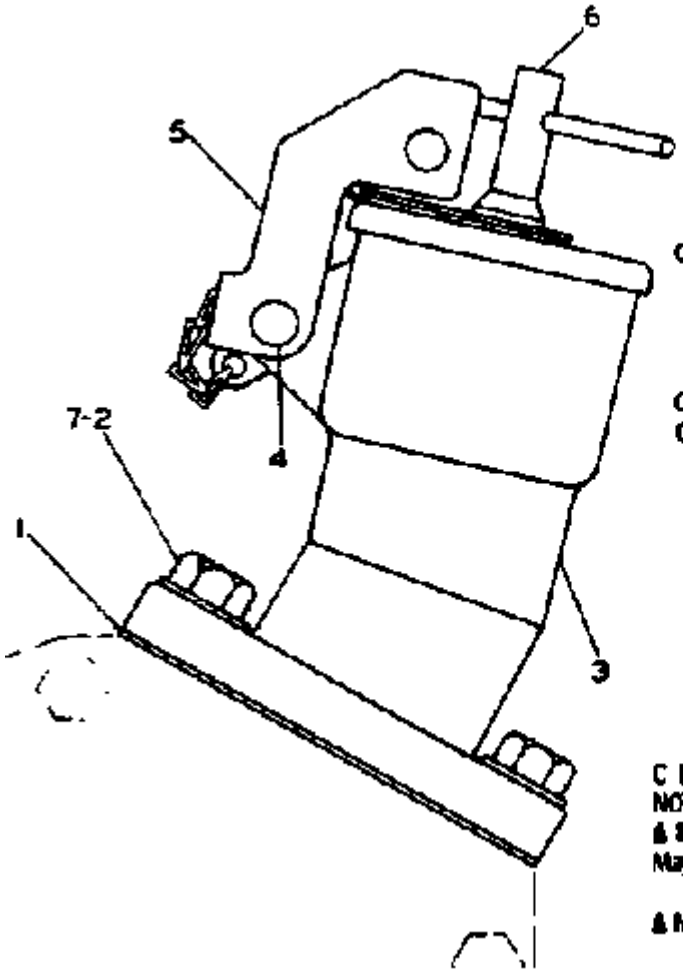

	REF. NO.	PART NUMBER	DESCRIPTION	QTY
	1	2P2720	GASKET	1
C	2	51588	BOLT	2
	3	2P2721	PIPE ASSEM.	1
		2P2719	PIPE	1
	4	8S4212	RIVET	1
	5	2P2717	HASP	1
C	6	6N2985	CAP ASSEM.	1
C	7	5M2894	WASHER	2

C INDICATES CHANGE
NOTE:
& 8S7940 PADLOCK GROUP (Includes 8M439 -KEY---2) May Be Obtained From Parts Department

& NOT PART OF 2P6854 OIL FILLER GROUP

212537

Nota	Ref	Numero	Cant	Nombre De Pieza
		2P-6854	1	FILLER GP-OIL
	1	2P-2720	1	GASKET
C	2	0S-1588	2	BOLT
	3	2P-2721	1	PIPE ASSEM.
		2P-2719	1	PIPE
	4	8S-4212	1	RIVET
	5	2P-2717	1	HASP
C	6	6N-2985	1	CAP ASSEM.
C	7	5M-2894	2	WASHER
H		8S-7949		PADLOCK GROUP
				(Includes)
		8M-0439	2	KEY
				(May Be Obtained From Parts Department
C				INDICATES CHANGE
H				NOT PART OF 2P6854 OIL FILLER

1318 2P6475 OIL FILTER GROUP
Engine Serial No. 78P56557-Up

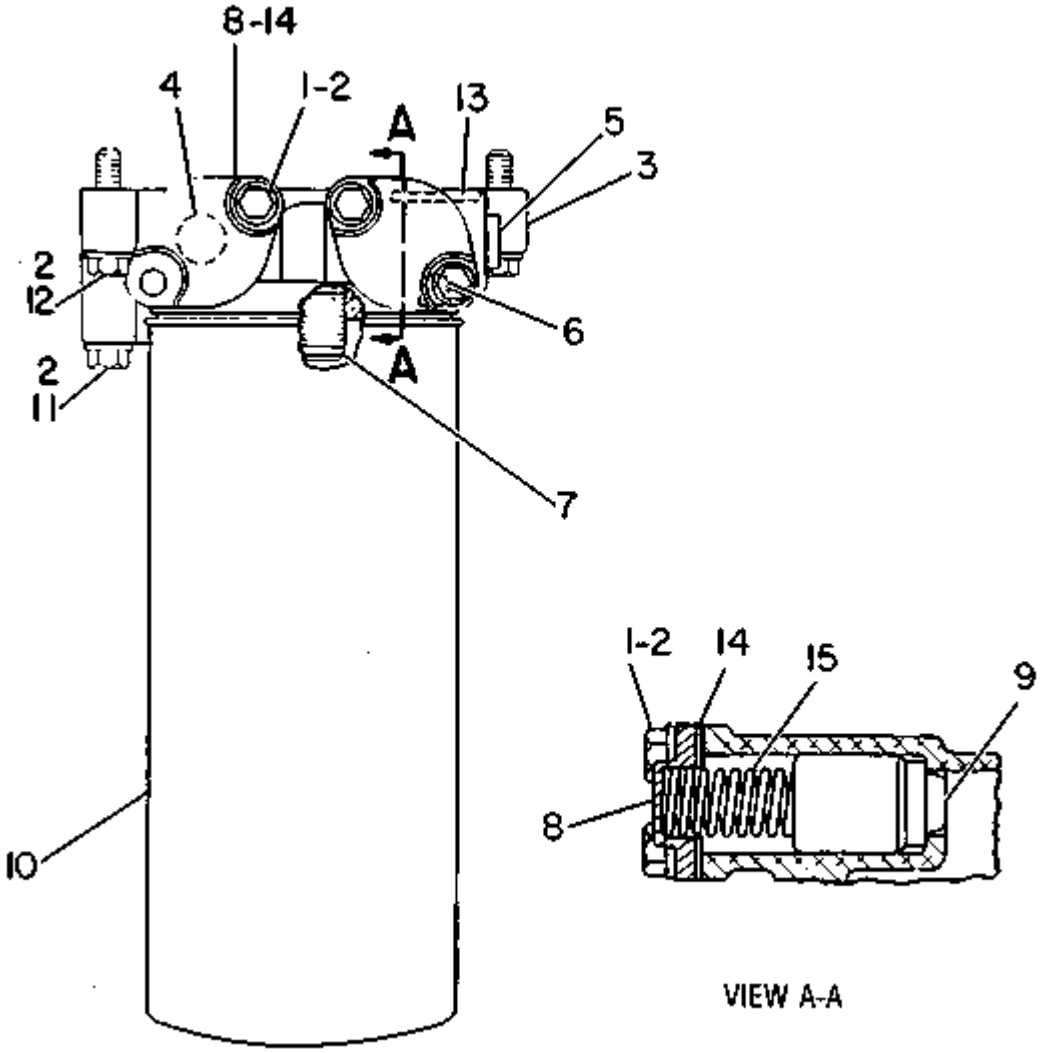

Nota	Ref	Numero	Cant	Nombre De Pieza
		2P-6475	1	FILTER GP-ENGINE OIL
	1	0S-1618	3	BOLT
	2	9M-1974	8	WASHER
	3	8N-6212	1	BASE AS-OIL FILTER
	4	2R-5657	3	PLUG (2.54 CM THK)
	5	2B-0858	1	PLUG-PIPE (1.27CM THK)
	6	7H-3171	1	PLUG-PIPE
	7	2P-2537	1	STUD-HOLLOW
C	8	8N-6986	2	COVER-VALVE
	9	1P-1367	2	PLUNGER
	10	2P-4004	1	FILTER AS-OIL
	11	1D-4540	1	BOLT (5/16-18X2.75IN)
	12	1B-9575	3	BOLT (5/16-18X1.75IN)
	13	8M-4432	2	SEAL-O-RING
C	14	8N-6985	2	GASKET
	15	8M-3182	2	SPRING
C				CHANGE FROM PREVIOUS TYPE

1307 2P6512 OIL LINES GROUP
Engine Serial No. 78P18799 to 78P40899 inclusive

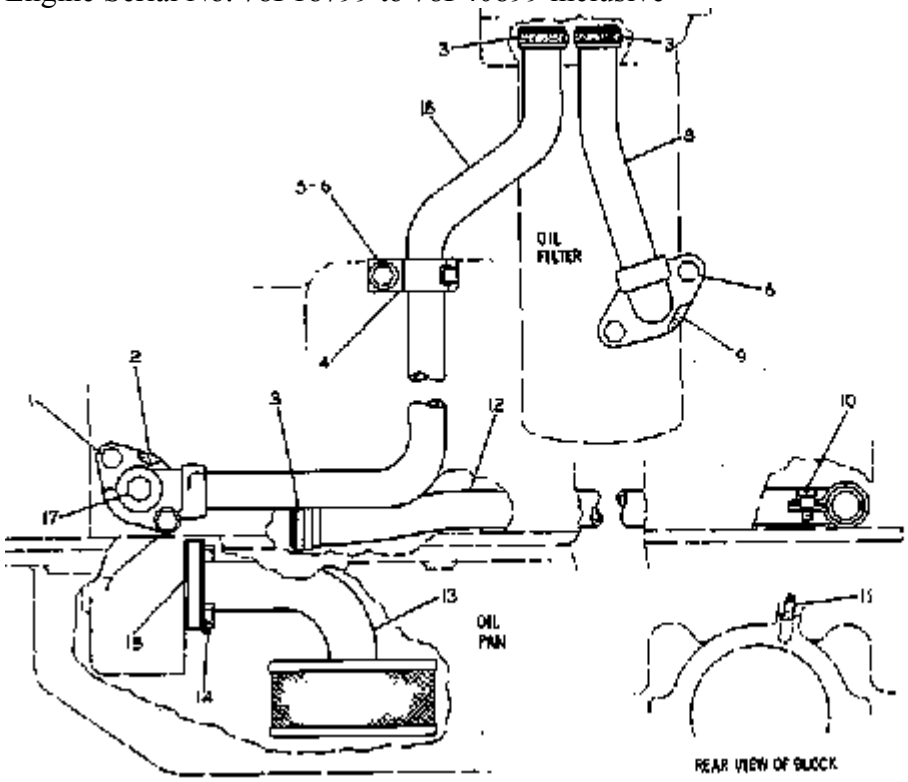

REF NO.	PART NUMBER	DESCRIPTION	QTY
1	2P3202	BOLT	1
2	2M5497	GASKET	1
C 3	9M4849	SEAL	3
4	7S3919	CLIP	1
	7S3916	CLIP (Tab)	1
5	4B4218	WASHER	3
6	2P3201	BOLT	5
7	2P3207	BOLT	1
8	2P2460	TUBE ASSEM.	1
9	7F7590	GASKET	1
10	T102	BOLT	1
	L364	LOCK	1
11	2S1541	ORIFICE	4
12	2P144	TUBE ASSEM.	1
13	2P1776	BELL ASSEM.	1
14	5L594	BOLT	2
	8S2874	LOCK	1
15	8M9904	GASKET	1
16	2P2519	TUBE ASSEM. (Includes PLUG)	1
C 17	9M6215		1

C INDICATES CHANGE

168737

Nota	Ref	Numero	Cant	Nombre De Pieza
		2P-6512	1	LINES GP-ENGINE OIL
	1	2P-3202	1	BOLT
	2	2M-5407	1	GASKET
C	3	9M-4849	3	SEAL
	4	7S-3919	1	CLIP
		7S-3916	1	CLIP (Tab)
	5	4B-4278	1	WASHER
	6	2P-3201	3	BOLT
	7	2P-3207	1	BOLT
	8	2P-2460	1	TUBE ASSEM.
	9	7F-7590	1	GASKET
	10	0T-0102	1	BOLT
		0L-0364	1	LOCK
	11	2S-1541	4	ORIFICE
	12	2P-0744	1	TUBE ASSEM.
	13	2P-1776	1	BELL ASSEM.
	14	0S-1594	2	BOLT
		8S-8874	1	LOCK
	15	8M-0904	1	GASKET
	16	2P-2519	1	TUBE ASSEM.
				(Includes)
C	17	5M-6213	1	PLUG
C				INDICATES CHANGE

1307 2P6512 OIL LINES GROUP
Engine Serial No. 78P54107 to 78P61285 inclusive

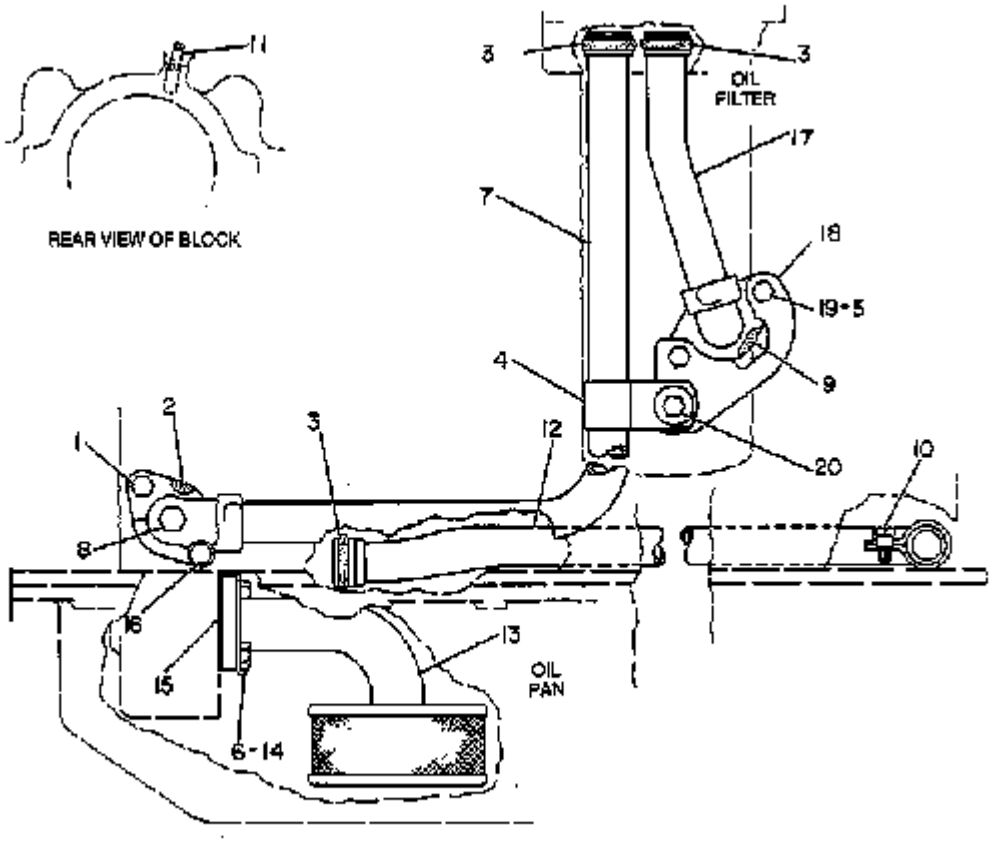

Nota	Ref	Numero	Cant	Nombre De Pieza
		2P-6512	1	LINES GP-ENGINE OIL
	1	1A-2029	1	BOLT
	2	2M-5407	1	GASKET
	3	9M-4849	3	SEAL-O-RING
C	4	8M-2769	1	CLIP
C	5	8D-5898	2	SPACER
C	6	0S-1594	2	BOLT
C	7	8N-7318	1	TUBE AS-INLET
	8	5M-6213	1	PLUG
	9	7F-7590	1	GASKET
	10	4F-0029	1	BOLT
		0L-0364	1	LOCK
	11	2S-1541	4	ORIFICE-JET
	12	2P-0744	1	TUBE AS-PUMP
	13	2P-1776	1	BELL AS-SUCTION
	14	8S-8874	1	LOCK-NUT
	15	8M-0904	1	GASKET
	16	0L-2070	1	BOLT
C	17	8N-7315	1	TUBE AS-OUTLET
C	18	8N-5739	1	BRACKET
C	19	0S-1571	2	BOLT
C		5M-2894	2	WASHER
C	20	0L-1351	1	BOLT
C		1D-4717	1	NUT
C		9L-9132	1	WASHER
C				CHANGE FROM PREVIOUS TYPE

1307 2P6512 OIL LINES GROUP
Engine Serial No. 78P61286-Up

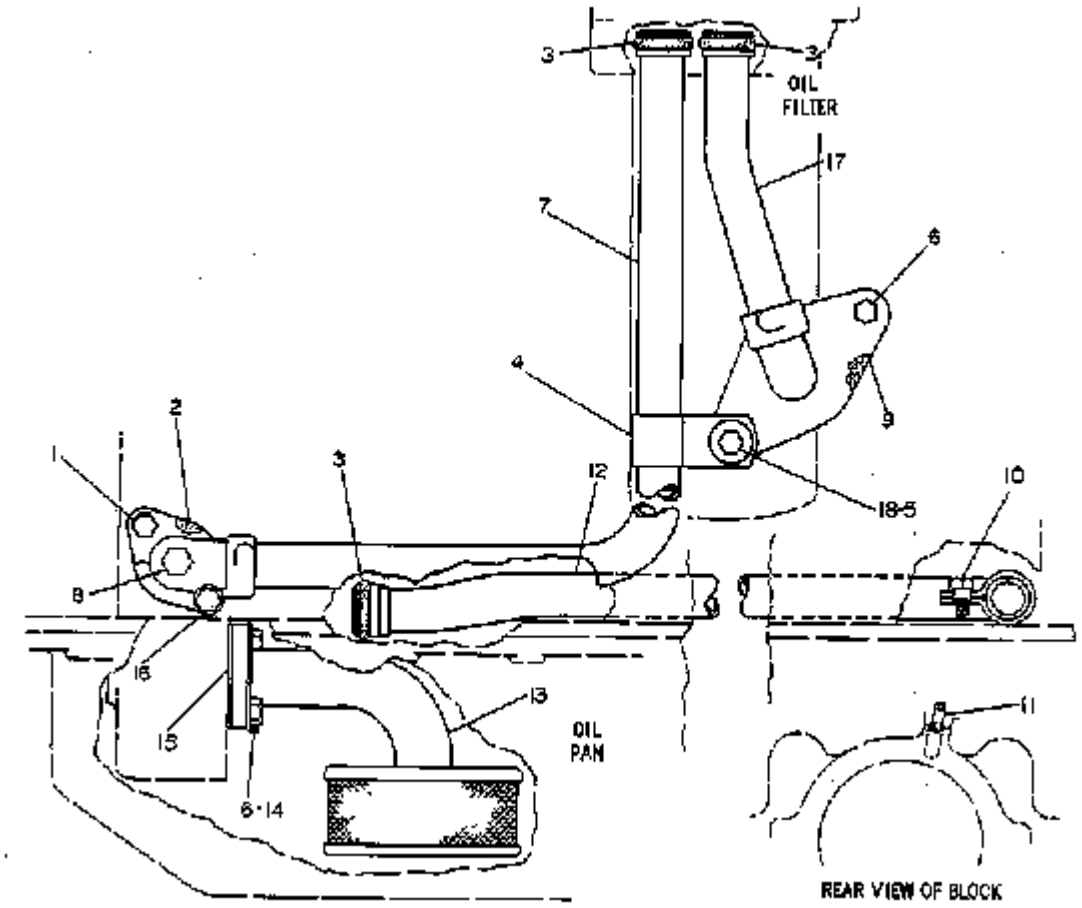

Nota	Ref	Numero	Cant	Nombre De Pieza
		2P-6512	1	LINES GP-ENGINE OIL
	1	1A-2029	1	BOLT
	2	2M-5407	1	GASKET
	3	9M-4849	3	SEAL
C	4	3P-2404	1	CLIP
C	5	1L-5081	2	SPACER
C	6	0S-1594	3	BOLT
	7	8N-7318	1	TUBE ASSEM.
				(Includes)
	8	5M-6213	1	PLUG
	9	7F-7590	1	GASKET
	10	4F-0029	1	BOLT
		0L-0364	1	LOCK
	11	2S-1541	4	ORIFICE
	12	2P-0744	1	TUBE ASSEM.
	13	2P-1776	1	BELL ASSEM.
	14	8S-8874	1	LOCK
	15	8M-0904	1	GASKET
	16	0L-2070	1	BOLT
	17	8N-7315	1	TUBE ASSEM.
	18	0S-1571	1	BOLT
		5M-2894	1	WASHER
C				INDICATES CHANGE

1361 7N5908 WATER PUMP GROUP
Engine Serial No. 78P61953-Up
2W8002 Pump parts are shown on Page 39H

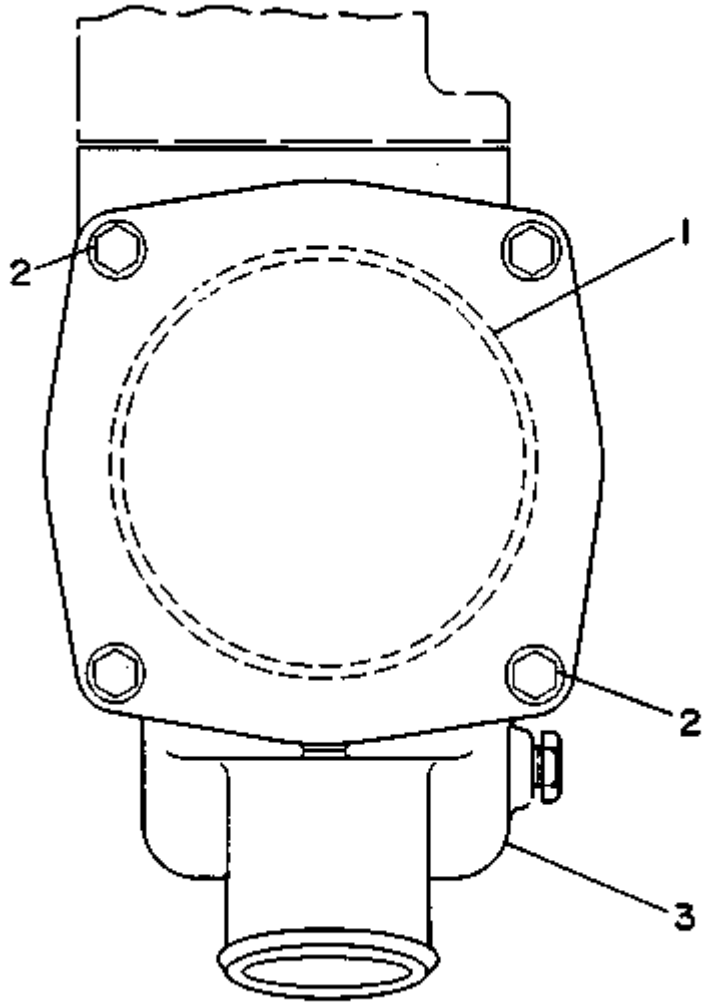

Nota	Ref	Numero	Cant	Nombre De Pieza
		7N-5908	1	PUMP GP-WATER
	1	5F-3106	1	SEAL-O-RING
	2	0T-0055	2	BOLT
		5M-2894	2	WASHER
CYR	3	2W-8002	1	PUMP GP-WATER

C	CHANGE FROM PREVIOUS TYPE
R	REMFG PART MAY BE AVAILABLE
Y	SEPARATE ILLUSTRATION

1051 8S4311 AIR CLEANER GROUP

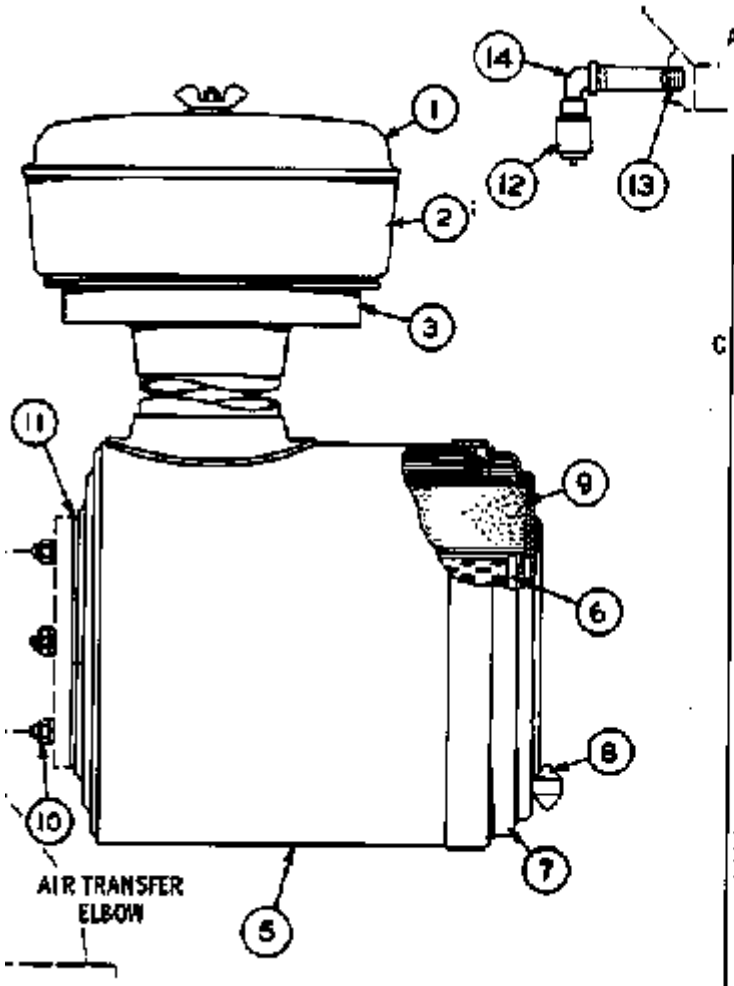

	REF. NO.	PART NUMBER	DESCRIPTION	QTY
		4M3310	PRECLEANER ASSEM.	1
	1		(Includes)	
		9M9439	COVER ASSEM.	1
	2	1M7250	BODY	1
C		4M8945	BASE ASSEM.	1
	3		(Includes)	
		1S5163	BOLT	1
	5	7S2513	AIR CLEANER ASSEM.	1
			(Includes)	
		2S1285	ELEMENT-----(secondary)-----	1
	6		(Includes)	
		4M1485	GASKET-----(inner)-----	1
		9M4894	CUP ASSEM.	1
	7		(Includes)	
		9M8511	GASKET	1
	8	9M3695	ROD ASSEM.	2
	9	4M8047	ELEMENT-----(primary)-----	1
	10	1D4717	NUT	6
		3B4506	LOCKWASHER	6
	11	4M1485	GASKET-----(outer)-----	1
	12	7S687	INDICATOR	1
	13	3B7734	NIPPLE	1
	14	3B8822	ELBOW	1

C INDICATES CHANGE 207758

Nota	Ref	Numero	Cant	Nombre De Pieza
		8S-4311	1	AIR CLEANER GP
	1	4M-0310	1	PRECLEANER ASSEM.
				(Includes)
		9M-9439	1	COVER ASSEM.
	2	1M-7250	1	BODY
C	3	4N-8945	1	BASE ASSEM.
				(Includes)
		1S-5163	1	BOLT
	5	7S-2513	1	AIR CLEANER ASSEM.
				(Includes)
	6	2S-1285	1	ELEMENT (secondary)
				(Includes)
		4M-1485	1	GASKET (inner)
	7	9M-4894	1	CUP ASSEM.
				(Includes)
		9M-8511	1	GASKET
	8	9M-3695	2	ROD ASSEM.
	9	4M-8047	1	ELEMENT (primary)
	10	1D-4717	6	NUT
		3B-4506	6	LOCKWASHER
	11	4M-1485	1	GASKET (outer)
	12	7S-0687	1	INDICATOR
	13	3B-7734	1	NIPPLE
	14	3B-8822	1	ELBOW
C				INDICATES CHANGE

1803 2P7796 AIR COMPRESSOR LINES GROUP
Engine Serial No. 78P18799 to 78P53141 inclusive

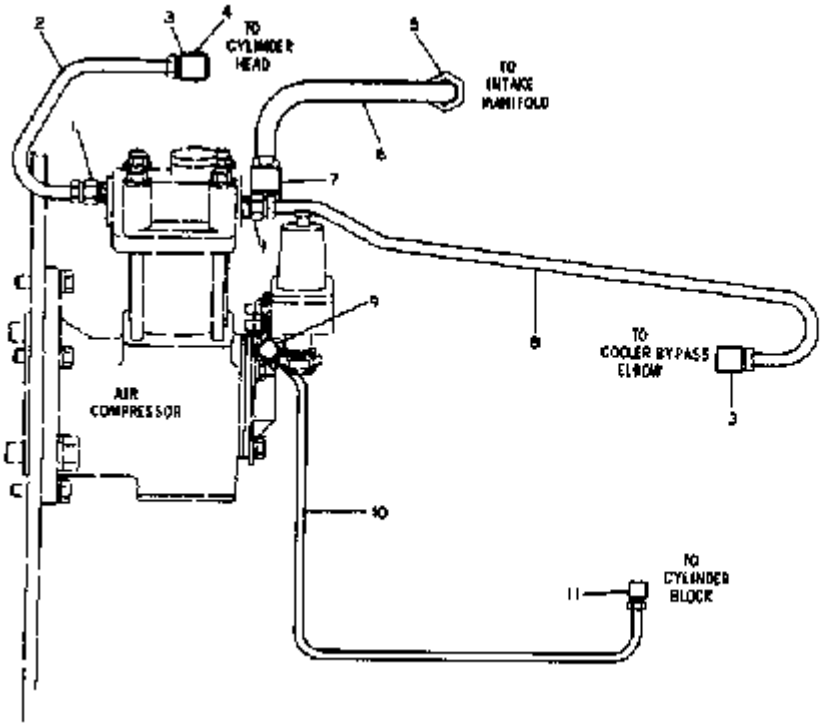

REF. NO.	PART NUMBER	DESCRIPTION	QTY
1	5K9248	CONNECTOR	2
2	2P6210	TUBE ASSEM.	1
3	5K9239	ELBOW	2
4	3B7265	BUSHING	1
5	6K8079	CONNECTOR	1
6	2P2698	TUBE ASSEM.	1
7	1P218	ELBOW	1
8	2P2706	TUBE ASSEM.	1
9	5K9243	ELBOW	1
C 10	6N3335	TUBE ASSEM.	1
11	5K9241	ELBOW	1

C INDICATES CHANGE

218039

Nota	Ref	Numero	Cant	Nombre De Pieza
		2P-7796	1	LINES GP-AIR COMPRESSOR
	1	5K-9248	2	CONNECTOR
	2	2P-6210	1	TUBE ASSEM.
	3	5K-9237	2	ELBOW
	4	3B-7255	1	BUSHING
	5	6K-8079	1	CONNECTOR
	6	2P-2698	1	TUBE ASSEM.
	7	1P-0210	1	ELBOW
	8	2P-2706	1	TUBE ASSEM.
	9	5K-9243	1	ELBOW
C	10	6N-8535	1	TUBE ASSEM.
	11	5K-9241	1	ELBOW
C				INDICATES CHANGE

2P6839 AIR LINES GROUP

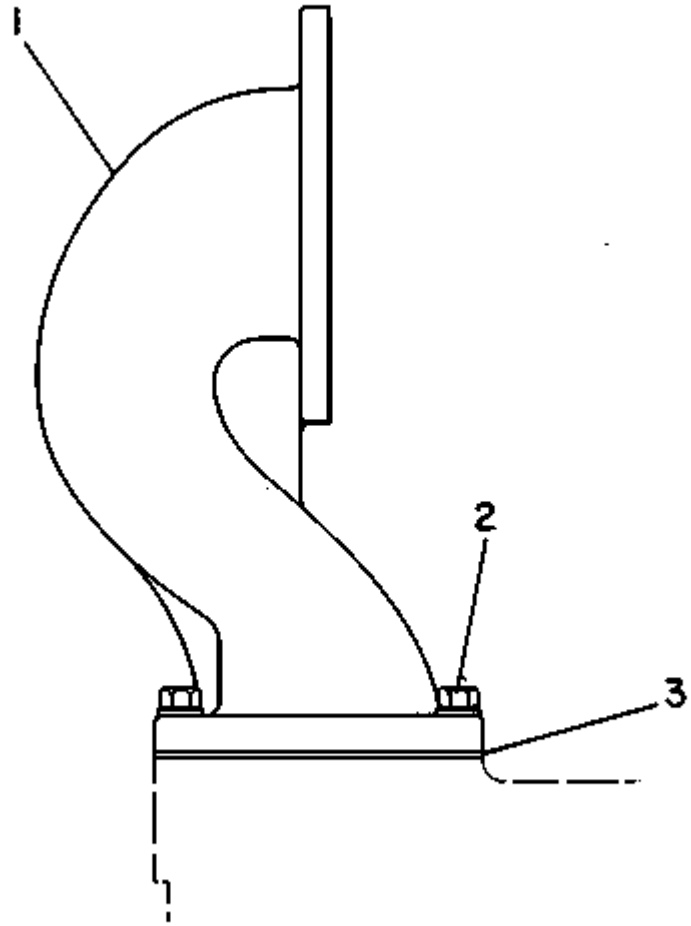

Nota	Ref	Numero	Cant	Nombre De Pieza
		2P-6839	1	LINES GP-AIR
	1	7S-7683	1	PIPE AS-AIR TRANSFER
		7M-1674	1	ELEMENT-FILTER
	2	2P-3202	4	BOLT-WASHER HEAD
	3	5S-6735	1	GASKET

1059 4N9585 EXHAUST MANIFOLD FASTENER GROUP

	REF NO.	PART NUMBER	DESCRIPTION	QTY
	1	1M7643	SPACER	1
	2	2M2488	STUD	2
		5M2894	WASHER	2
C	3	7S6719	STUD	6
	4	1B5355	NUT	8
	5	4N9587	SHIELD	4
	6	9M6527	WASHER	1
	7	1B4971	SPACER	1
	8	8M7145	WASHER	7

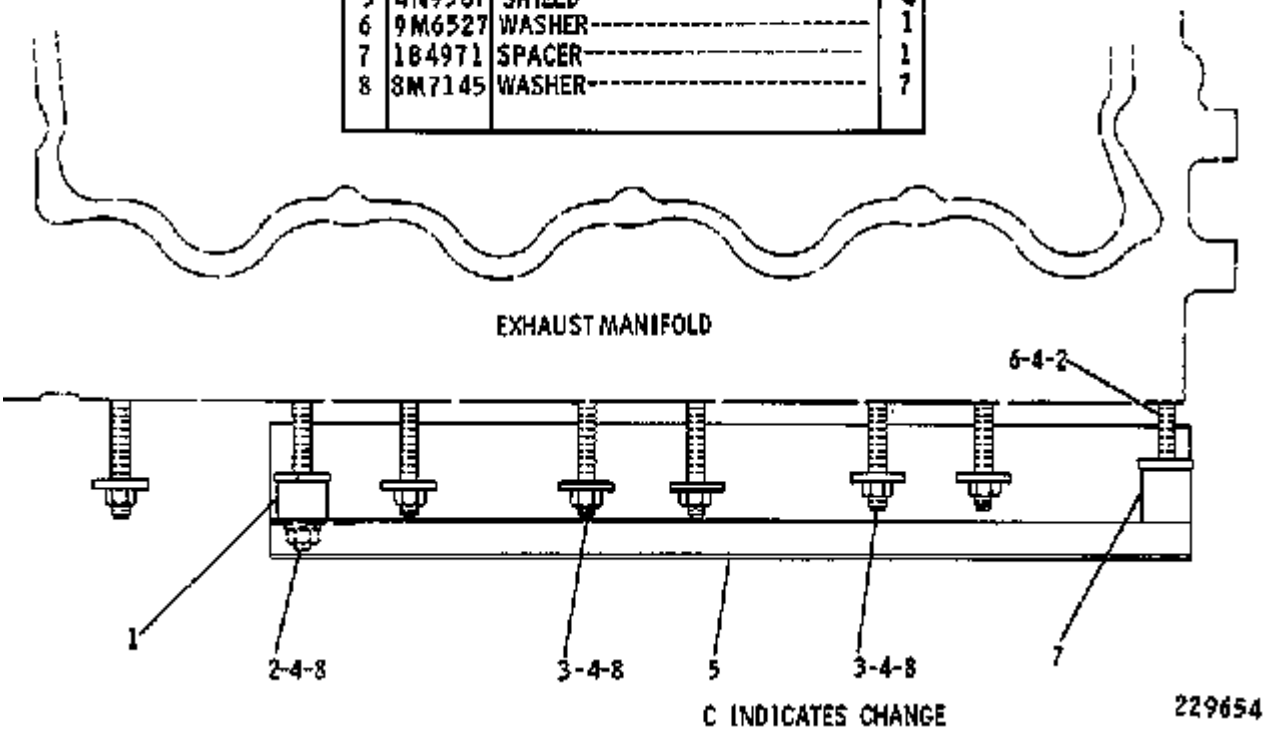

Nota	Ref	Numero	Cant	Nombre De Pieza
		4N-9585	1	FASTENER GP-EXHAUST MANIFOLD
	1	1M-7643	1	SPACER
	2	2M-2488	2	STUD
		5M-2894	2	WASHER
C	3	7S-6719	6	STUD
	4	1B-5355	8	NUT
	5	4N-9587	4	SHIELD
	6	9M-6527	1	WASHER
	7	1B-4971	1	SPACER
	8	8M-7145	7	WASHER
C				INDICATES CHANGE

1061 2P7349 EXHAUST PIPE GROUP

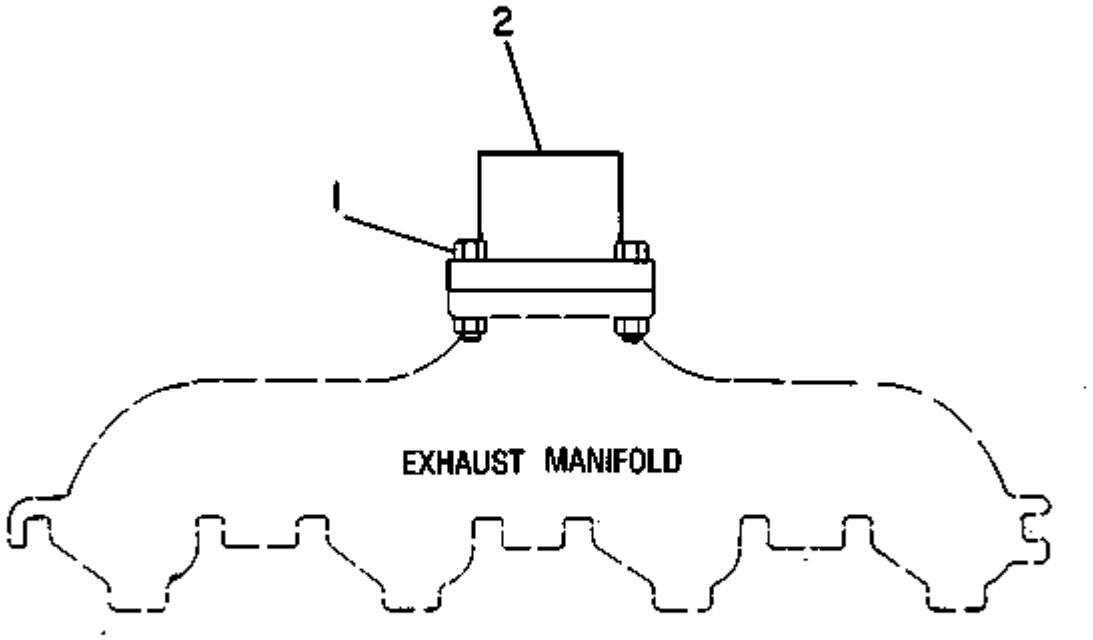

Nota	Ref	Numero	Cant	Nombre De Pieza
		2P-7349	1	PIPE GP-EXHAUST
	1	2P-3205	4	BOLT-WASHER HEAD
		1B-5355	4	NUT-FULL
	2	7S-6630	1	PIPE AS-EXHAUST

1061 4N8737 EXHAUST PIPE GROUP
Part of 1V3421 and 7V2951 Sound Suppression Arrangement listed on
Pages 233 and 233B. AN ATTACHMENT

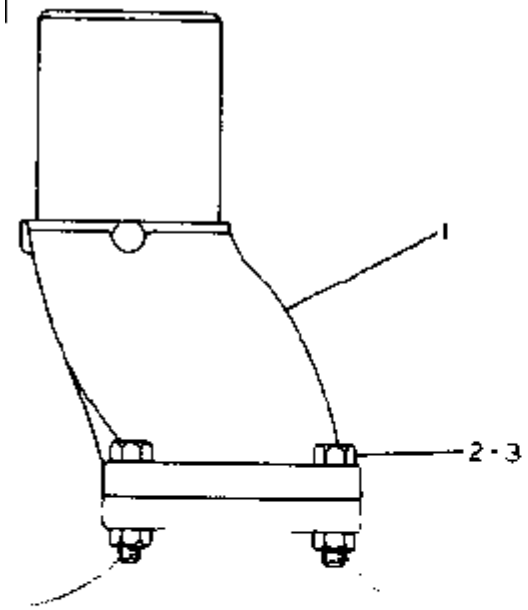

	REF. NO	PART NUMBER	DESCRIPTION	QTY
	1	2P5456	ELBOW	1
	2	2P3204	BOLT---3.81 mm(1.5 in.) long	4
			-OR-	
C	2	S1571	BOLT---44 mm(1.75 in.) long	4
	3	1B5355	NUT	4

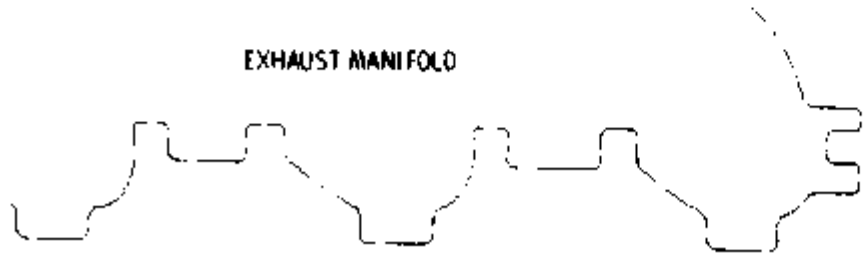

C INDICATES CHANGE

215384

Nota	Ref	Numero	Cant	Nombre De Pieza
		4N-8737	1	PIPE GP-EXHAUST
	1	2P-5456	1	ELBOW
	2	2P-3204	4	BOLT 3.81 mm(1.5 in.) long
				-OR-
C		0S-1571	4	BOLT 44 mm(1.75 in.) long
	3	1B-5355	4	NUT
C				INDICATES CHANGE

1062 5C3893 MUFFLER AND SUPPORT GROUP
Part of 1V3421 Sound Suppression Arrangement listed on Page 233
AN ATTACHMENT

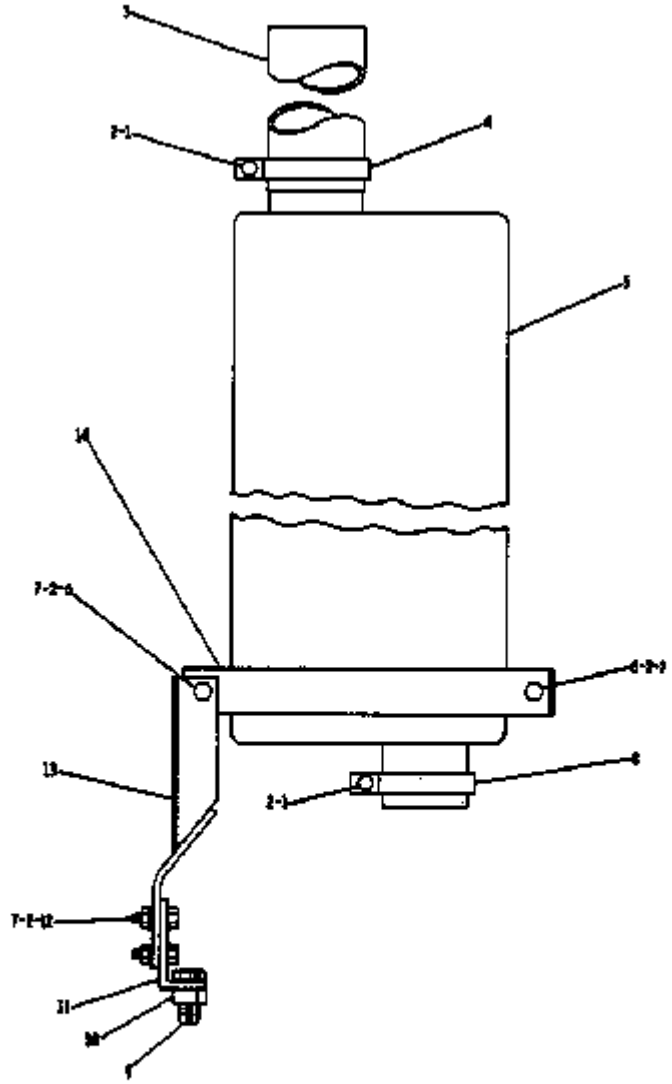

REF NO.	PART NUMBER	DESCRIPTION	QTY
1	5S1591	BOLT	2
2	2D4717	NUT	6
3	8S5120	PIPE	1
4	7S8739	CLAMP	1
5	2P6255	MUFFLER ASSEM.	1
6	1C2251	BOLT	2
	4B4278	WASHER	2
7	9B4506	LOCKWASHER	4
8	9H6684	CLAMP	1
9	5S1587	BOLT	2
	9B4508	LOCKWASHER	2
10	8F493	SPACER	2
11	5C3889	SUPPORT	1
12	5S1588	BOLT	2
13	5C3888	SUPPORT ASSEM.	1
14	5C3885	STRAP	2

151864

Nota	Ref	Numero	Cant	Nombre De Pieza
		5C-3893	1	MUFFLER GP
	1	0S-1591	2	BOLT
	2	1D-4717	6	NUT
	3	8S-5120	1	PIPE
	4	7S-8735	1	CLAMP
	5	2P-6255	1	MUFFLER ASSEM.
	6	1C-2251	2	BOLT
		4B-4278	2	WASHER
	7	3B-4506	4	LOCKWASHER
	8	3H-8604	1	CLAMP
	9	0S-1587	2	BOLT
		3B-4508	2	LOCKWASHER
	10	8F-0492	2	SPACER
	11	5C-3889	1	SUPPORT
	12	0S-1588	2	BOLT
	13	5C-3888	1	SUPPORT ASSEM.
	14	5C-3885	2	STRAP

1062 7S7736 MUFFLER GROUP

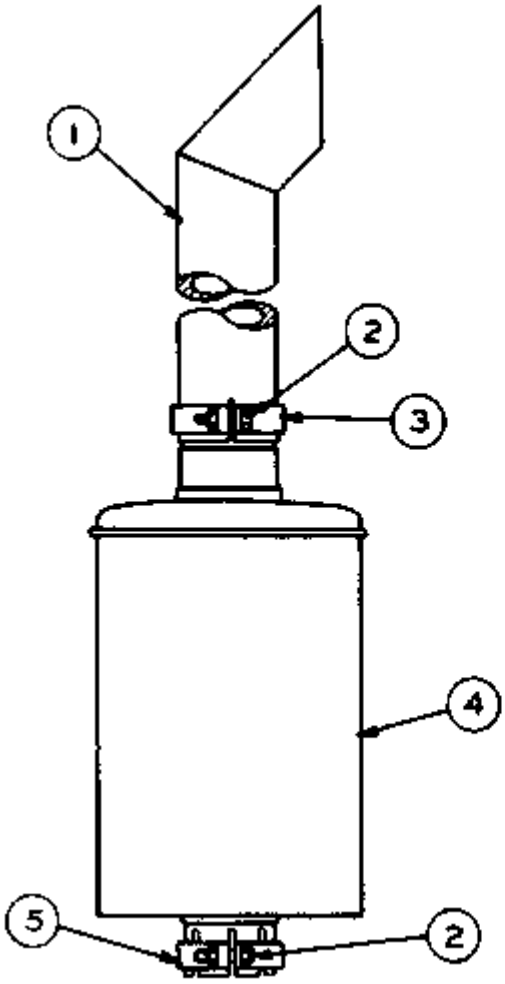

REF. NO.	PART NUMBER	DESCRIPTION	QTY
1	7S7681	PIPE	1
2	S1591	BOLT	2
	1B5355	NUT	2
3	5S580	CLAMP	1
4	3K3124	MUFFLER	1
5	2F5152	CLAMP	1

105474

Nota	Ref	Numero	Cant	Nombre De Pieza
		7S-7736	1	MUFFLER GP
	1	7S-7681	1	PIPE
	2	0S-1591	2	BOLT
		1B-5355	2	NUT
	3	5S-0580	1	CLAMP
	4	3K-3124	1	MUFFLER
	5	2F-5152	1	CLAMP

1062 1W3315 MUFFLER MOUNTING GROUP--Type 1
Serial No. 41K10160-Up
Part of 8V557 Sound Suppression Arrangement listed on Page 233B
AN ATTACHMENT

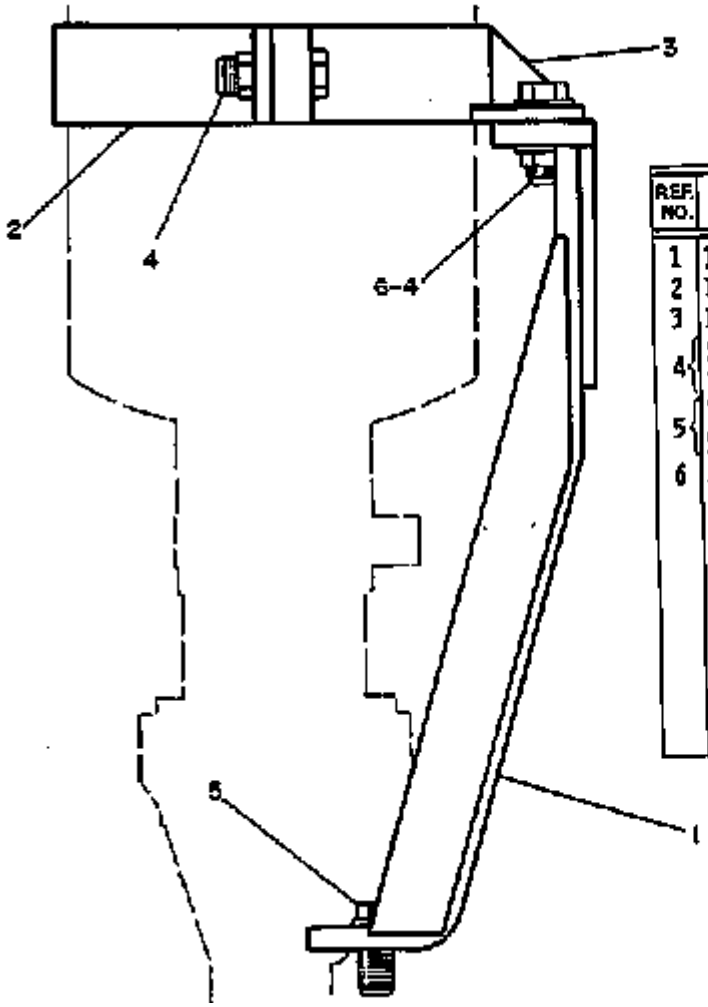

REF. NO.	PART NUMBER	DESCRIPTION	QTY.
1	1W3314	BRACKET ASSEM.	1
2	1W1779	STRAP	1
3	1W1778	STRAP ASSEM.	1
4	51591	BOLT	4
	1B5355	NUT	4
5	7B3235	BOLT	1
	5P7213	WASHER	1
6	5M2894	WASHER	4

Nota	Ref	Numero	Cant	Nombre De Pieza
		1W-3315	1	MOUNTING GP-MUFFLER
	1	1W-3314	1	BRACKET ASSEM.
	2	1W-1779	1	STRAP
	3	1W-1778	1	STRAP ASSEM.
	4	0S-1591	4	BOLT
		1B-5355	4	NUT
	5	7B-3235	1	BOLT
		5P-7213	1	WASHER
	6	5M-2894	4	WASHER

1274 7N3616 DRAIN LINES GROUP
Engine Serial No. 78P38695-Up

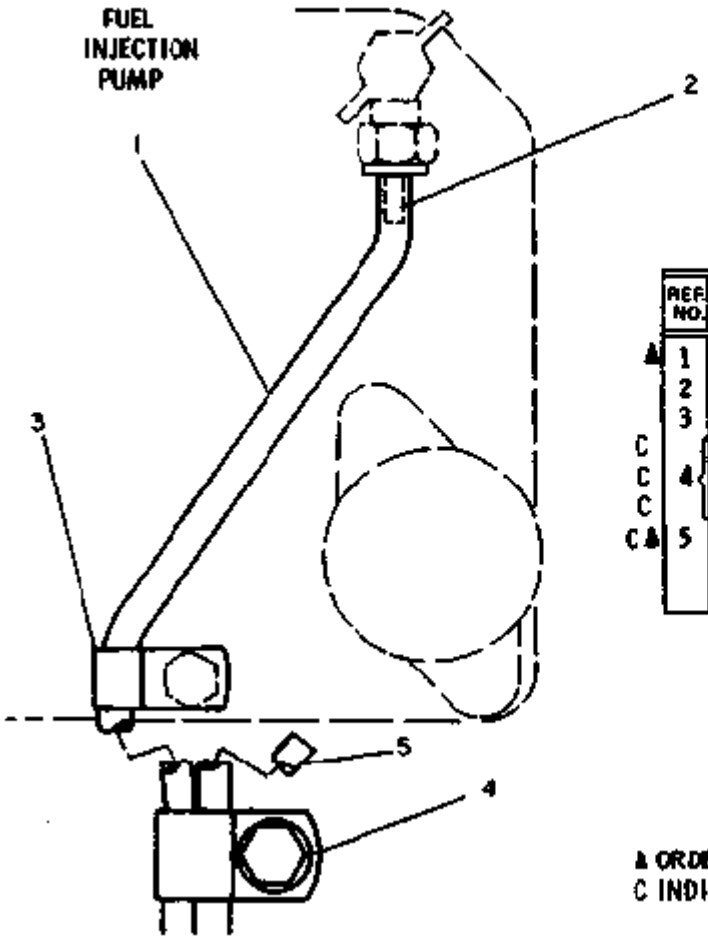

	REF. NO.	PART NUMBER	DESCRIPTION	QTY
A	1	5P6011	TUBE----------.6 m(23.62 in.)	
	2	7K8332	INSERT----------	1
	3	1A5350	CLIP----------	1
C		5K2298	CLIP----------	1
C	4	2H3755	BOLT----------	1
C		9M1974	WASHER----------	1
C A	5	5P6011	TUBE-----(Drain)---.4m(15.7 in.)	

A ORDER BY THE METER
C INDICATES CHANGE

181762

Nota	Ref	Numero	Cant	Nombre De Pieza
		7N-3616	1	LINES GP-DRAIN
H	1	5P-6011		TUBE .6 m(23.62 in.)
	2	7K-8332	1	INSERT
	3	1A-5350	1	CLIP
C	4	5K-2298	1	CLIP
C		2H-3755	1	BOLT
C		9M-1974	1	WASHER
CH	5	5P-6011		TUBE (Drain) .4m(15.7 in.)
C				INDICATES CHANGE
H				ORDER BY THE METER

1261 4N3303 FUEL FILTER GROUP
Engine Serial No. 78P18799 to 78P30066 inclusive

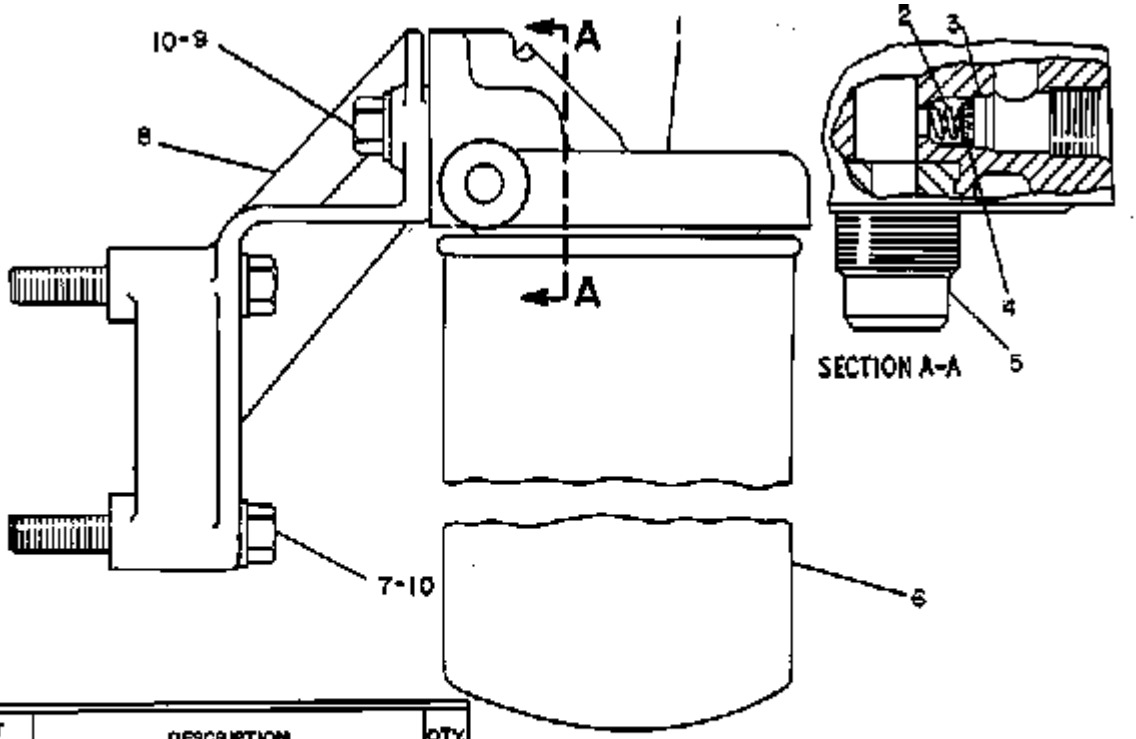

	REF NO.	PART NUMBER	DESCRIPTION	QTY.
C	1	4N3302	BASE ASSEM. ---------- (Includes)	1
	2	4N3296	SPRING----------	1
	3	4N3298	SEAT----------	1
	4	4N3297	DISK----------	1
	5	4N3294	INSERT----------	1
	6	1P2299	FILTER ASSEM. ----------	1
C	7	S1571	BOLT----------	2
C	8	1W6009	SUPPORT----------	1
	9	S1594	BOLT--------25.40 mm(1 in.) long	2
			- OR -	
C		1A2029	BOLT----29.97 mm(1.125 in.) long	2
C	10	5M2894	WASHER----------	4

C INDICATES CHANGE

180184

Nota	Ref	Numero	Cant	Nombre De Pieza
		4N-3303	1	FILTER GP-FUEL
C	1	4N-3302	1	BASE ASSEM.
				(Includes)
	2	4N-3296	1	SPRING
	3	4N-3298	1	SEAT
	4	4N-3297	1	DISK
	5	4N-3294	1	INSERT
	6	1P-2299	1	FILTER ASSEM.
C	7	0S-1571	2	BOLT
C	8	1W-6009	1	SUPPORT
	9	0S-1594	2	BOLT- 25.40 mm(1 in.) long
				- OR -
C		1A-2029	2	BOLT -29.97 mm(1.125 in.) long
C	10	5M-2894	4	WASHER
C				INDICATES CHANGE

1N4440 FUEL HEATER CHANGEOVER GROUP--Field Installation
Engine Serial No. 78P30067-Up
Provides heat to fuel before entering spin-on fuel filter

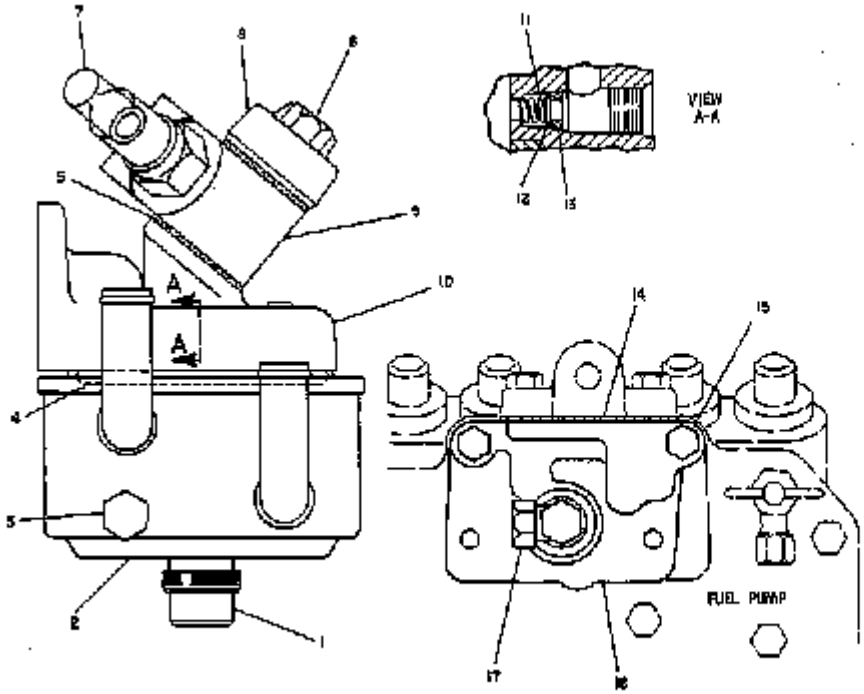

REF NO.	PART NUMBER	DESCRIPTION	QTY
1	8N2100	CONNECTOR	1
2	8N9455	HEATER ASSEM. (Includes)	1
3	5N6214	PLUG	1
4	8N2301	SEAL	1
5	1P436	GASKET	2
6	1D4539	BOLT (Large)	1
	1B2714	BOLT (Small)	1
7	8N9707	REGULATOR	1
	2N9780	SEAL	1
8	6N4414	COVER	1
9	8N9584	ADAPTER	1
10	8N9747	BASE ASSEM. (Includes)	1
	8N9580	INSERT	1
11	4N9246	SPRING	1
12	4N9297	DISK	1
13	4N9298	SEAT	1
14	4N9337	GASKET	1
15	9F6580	BOLT	2
16	1P1420	HOUSING	1
	6N2845	GASKET	1
17	307947	ELBOW	1
	3F1907	SEAL	1
	SEN37043	FORM--(Installation)	1

175792

Nota	Ref	Numero	Cant	Nombre De Pieza
		1N-4440	1	CHANGEOVER GP
	1	8N-2100	1	CONNECTOR
	2	8N-9455	1	HEATER ASSEM.
				(includes)
	3	5M-6214	1	PLUG
	4	8N-2301	1	SEAL
	5	1P-0436	2	GASKET
	6	1D-4539	1	BOLT (large)
		1B-2714	1	BOLT (small)
	7	8N-9707	1	REGULATOR
		2M-9780	1	SEAL
	8	6N-4414	1	COVER
	9	8N-9584	1	ADAPTER
	10	8N-9747	1	BASE ASSEM.
				(includes)
		8N-9800	1	INSERT
	11	4N-3296	1	SPRING
	12	4N-3297	1	DISK
	13	4N-3298	1	SEAT
	14	4N-9337	1	GASKET
	15	9F-6580	2	BOLT
	16	1P-1420	1	HOUSING
		6N-2843	1	GASKET
	17	030-7947	1	ELBOW
		3J-1907	1	SEAL

41K11287 930 WHEEL LOADER Identificación de Piezas
Número de publicación SEBP1052-01 Fecha de publicación 1984/12/01 Fecha de actualización 1994/09/05

4N3374 FUEL INJECTION LINES GROUP
Engine Serial No. 78P18799 to 78P27208 inclusive

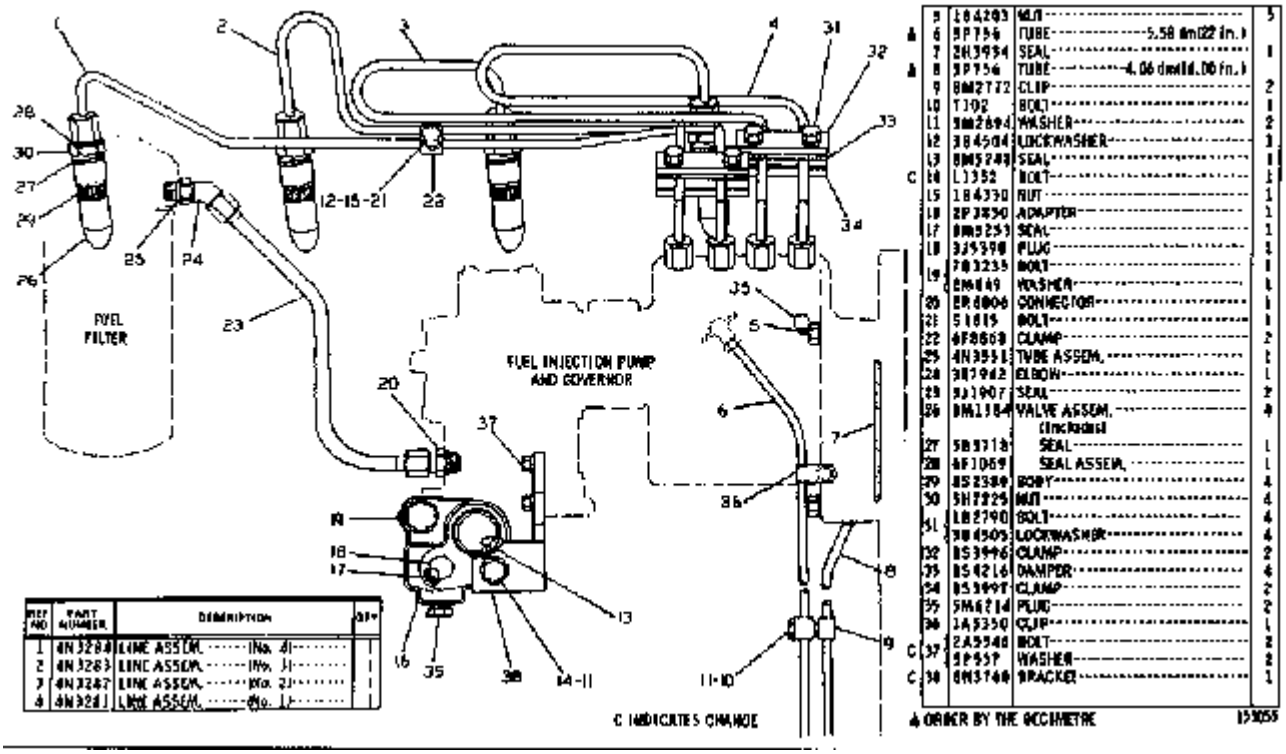

Nota	Ref	Numero	Cant	Nombre De Pieza
		4N-3374	1	FUEL INJECTION LINES GROUP
	1	4N-3284	1	LINE ASSEM. (No. 4)
	2	4N-3283	1	LINE ASSEM. (No. 3)
	3	4N-3282	1	LINE ASSEM. (No. 2)
	4	4N-3281	1	LINE ASSEM. (No. 1)
	5	1B-4203	3	NUT
H	6	5P-0756		TUBE 5.58 dm(22 in.)
	7	2H-3934	1	SEAL
H	8	5P-0756		TUBE 4.06 dm(16.00 in.)
	9	8M-2772	2	CLIP
	10	0T-0102	1	BOLT
	11	5M-2894	2	WASHER
	12	3B-4504	1	LOCKWASHER
	13	8M-5248	1	SEAL
C	14	0L-1352	1	BOLT
	15	1B-4330	1	NUT
	16	2P-3850	1	ADAPTER
	17	8M-5253	1	SEAL
	18	3J-5390	1	PLUG
	19	7B-3235	1	BOLT
		2M-0849	1	WASHER
	20	2R-6806	1	CONNECTOR
	21	0S-1615	1	BOLT
	22	6F-8868	2	CLAMP
	23	4N-3551	1	TUBE ASSEM.
	24	030-7942	1	ELBOW
	25	3J-1907	2	SEAL
	26	8M-1584	4	VALVE ASSEM.
				(Includes)
	27	5B-3718	1	SEAL

	28	6F-1069	1	SEAL ASSEM.
	29	8S-2389	4	BODY
	30	5H-7225	4	NUT
	31	1B-2790	4	BOLT
		3B-4505	4	LOCKWASHER
	32	8S-3996	2	CLAMP
	33	8S-4216	4	DAMPER
	34	8S-3997	2	CLAMP
	35	5M-6214	2	PLUG
	36	1A-5350	1	CLIP
C	37	2A-5546	2	BOLT
		5P-0537	2	WASHER
C	38	6N-3760	1	BRACKET

C	INDICATES CHANGE
H	ORDER BY THE DECIMETRE

1252 6N9913 FUEL INJECTION LINES GROUP
Engine Serial No. 78P30067 to 78P38694 inclusive

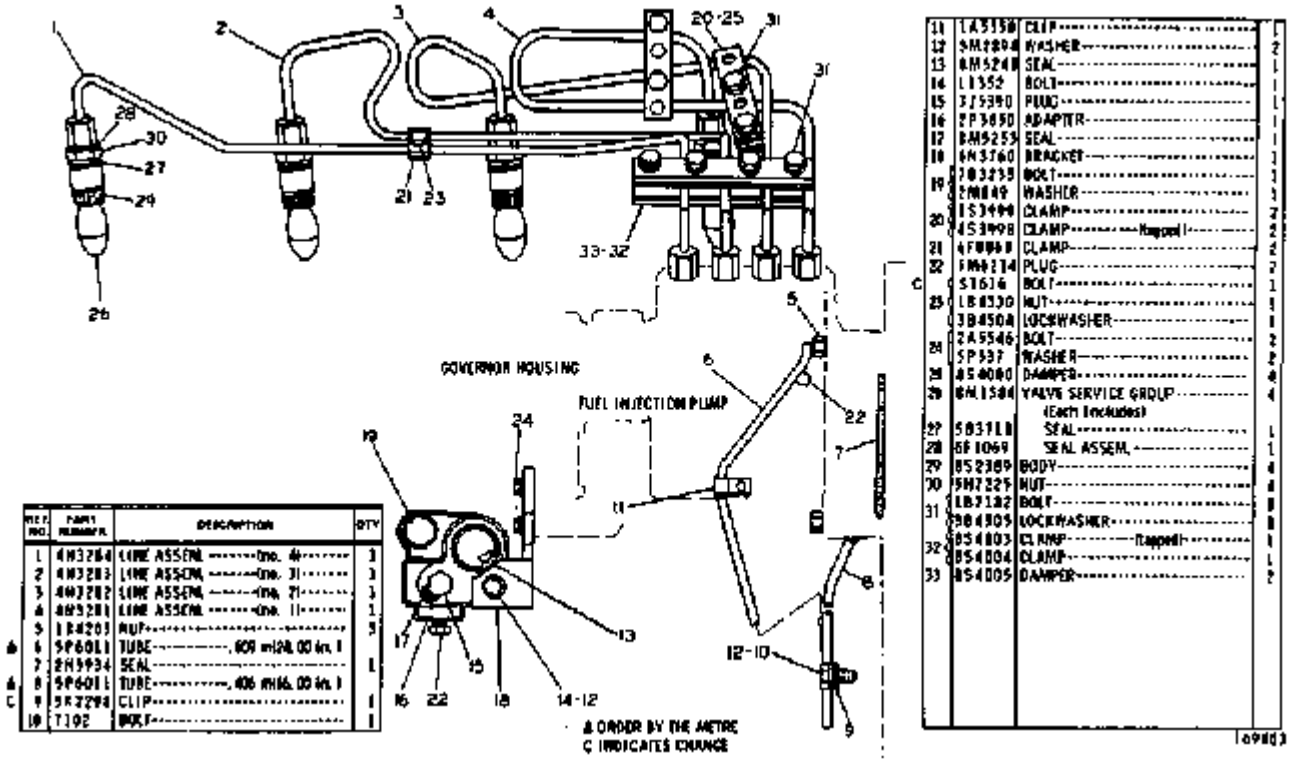

REF. NO.	PART NUMBER	DESCRIPTION	QTY
1	4N3284	LINE ASSEM. ------ (No. 4) ------	1
2	4N3283	LINE ASSEM. ------ (No. 3) ------	1
3	4N3282	LINE ASSEM. ------ (No. 2) ------	1
4	4N3281	LINE ASSEM. ------ (No. 1) ------	1
5	1R4203	NUT ------	5
△ 6	5P6011	TUBE ------ , 609 mm (24.00 in.)	1
7	2N3934	SEAL ------	1
△ 8	5P6011	TUBE ------ , 406 mm (16.00 in.)	1
C 9	5K2294	CLIP ------	1
10	7102	BOLT ------	1

REF. NO.	PART NUMBER	DESCRIPTION	QTY
11	1A5158	CLIP ------	1
12	9M2894	WASHER ------	2
13	8M5248	SEAL ------	1
14	1352	BOLT ------	1
15	3F5390	PLUG ------	1
16	2P3650	ADAPTER ------	1
17	8M5253	SEAL ------	1
18	6N3760	BRACKET ------	1
19	7B3235	BOLT ------	1
	9M849	WASHER ------	1
20	1S3494	CLAMP ------	2
	4S3998	CLAMP ------ (Keypart) ------	2
21	4F9969	CLAMP ------	2
22	9M9214	PLUG ------	2
	5T614	BOLT ------	1
23	1B8330	NUT ------	1
	3B4508	LOCKWASHER ------	1
24	2A5546	BOLT ------	2
	5P937	WASHER ------	2
25	8S4080	DAMPER ------	4
26	6N1584	VALVE SERVICE GROUP ------	4
		(Each Includes)	
27	5B3718	SEAL ------	1
28	6F1069	SEAL ASSEM. ------	1
29	8S2389	BODY ------	4
30	9M7225	NUT ------	4
31	1B7182	BOLT ------	8
	9B4505	LOCKWASHER ------	8
32	8S4803	CLAMP ------ (Keypart) ------	1
	8S4804	CLAMP ------	1
33	8S4005	DAMPER ------	2

Nota	Ref	Numero	Cant	Nombre De Pieza
		6N-9913	1	LINES GP-FUEL INJECTION
	1	4N-3284	1	LINE ASSEM. (no. 4)
	2	4N-3283	1	LINE ASSEM. (no. 3)
	3	4N-3282	1	LINE ASSEM. (no. 2)
	4	4N-3281	1	LINE ASSEM. (no. 1)
	5	1B-4203	3	NUT
H	6	5P-6011		TUBE .609 m(24.00 in.)
	7	2H-3934	1	SEAL
H	8	5P-6011		TUBE .406 m(16.00 in.)
C	9	5K-2298	1	CLIP
	10	0T-0102	1	BOLT
	11	1A-5350	1	CLIP
	12	5M-2894	2	WASHER
	13	8M-5248	1	SEAL
	14	0L-1352	1	BOLT
	15	3J-5390	1	PLUG
	16	2P-3850	1	ADAPTER
	17	8M-5253	1	SEAL
	18	6N-3760	1	BRACKET
	19	7B-3235	1	BOLT
		2M-0849	1	WASHER
	20	8S-3999	2	CLAMP
		8S-3998	2	CLAMP (tapped)
	21	6F-8868	2	CLAMP
	22	5M-6214	2	PLUG
C	23	0S-1616	1	BOLT
		1B-4330	1	NUT
		3B-4504	1	LOCKWASHER
	24	2A-5546	2	BOLT
		5P-0537	2	WASHER

	25	8S-4000	4	DAMPER
	26	8M-1584	4	VALVE SERVICE GROUP
				(Each Includes)
	27	5B-3718	1	SEAL
	28	6F-1069	1	SEAL ASSEM.
	29	8S-2389	4	BODY
	30	5H-7225	4	NUT
	31	1B-7182	8	BOLT
		3B-4505	8	LOCKWASHER
	32	8S-4003	1	CLAMP (tapped)
		8S-4004	1	CLAMP
	33	8S-4005	2	DAMPER

C	INDICATES CHANGE
H	ORDER BY THE METRE

1252 7N3460 FUEL INJECTION LINES GROUP
Engine Serial No. 78P38695 to 78P49431 inclusive

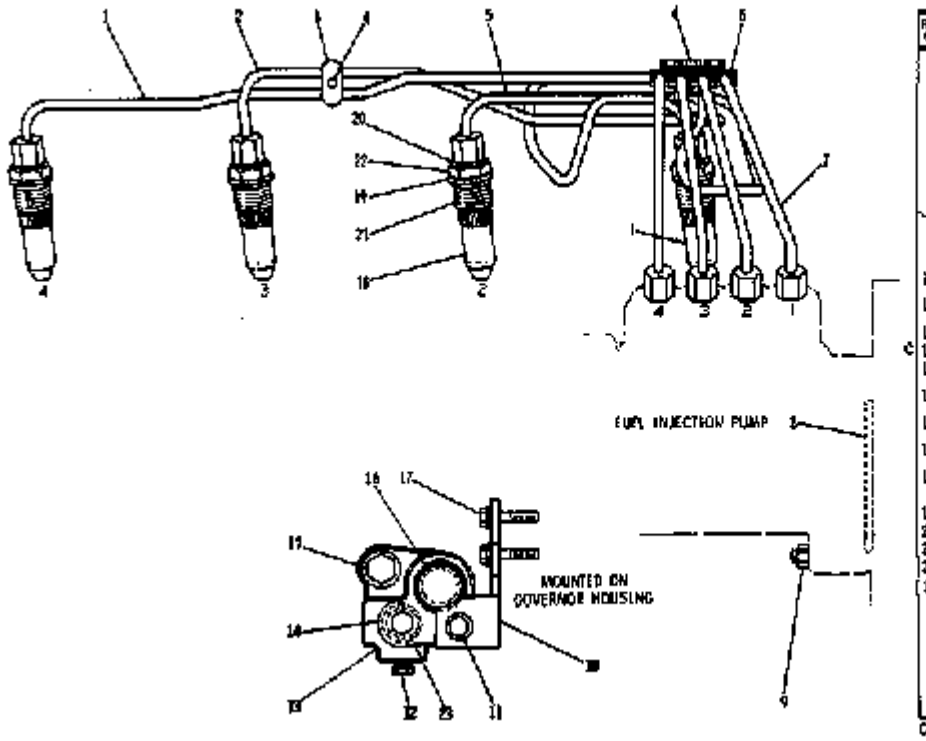

REF. NO.	PART NUMBER	DESCRIPTION	QTY
1	7N2874	LINE ASSEM. (Inc. 8)	1
2	7N2873	LINE ASSEM. (Inc. 3)	1
3	6N6403	CLAMP (Lapped)	2
	6N6404	CLAMP	2
4	51625	BOLT	8
	9B4504	LOCKWASHER	8
5	7N2872	LINE ASSEM. (Inc. 2)	1
6	6N5124	CLAMP (Lapped)	3
	6N5125	CLAMP	3
7	7N2871	LINE ASSEM. (Inc. 1)	1
8	2M3934	SEAL	1
9	1B4203	NUT	3
10	6N3760	BRACKET	1
L1	61392	BOLT	1
	5M2814	WASHER	1
L2	5M6214	PLUG	1
L3	2P8460	ADAPTER	1
L4	8M9293	SEAL	1
L5	7B3235	BOLT	1
	5P8245	WASHER	1
L6	8M9246	SEAL	1
L7	2A9546	BOLT	2
	5P937	WASHER	2
L8	8M1584	VALVE SERVICE GROUP (Each Includes)	4
19	5B3718	SEAL	1
20	6F1869	SEAL ASSEM.	1
21	8S2589	BODY	4
22	9M7225	NUT	4
25	3J5390	PLUG	1

C INDICATES CHANGE 219213

Nota	Ref	Numero	Cant	Nombre De Pieza
		7N-3460	1	LINES GP-FUEL INJECTION
	1	7N-2874	1	LINE ASSEM. (no. 4)
	2	7N-2873	1	LINE ASSEM. (no. 3)
	3	6N-6403	2	CLAMP (tapped)
		6N-6404	2	CLAMP
	4	0S-1615	8	BOLT
		3B-4504	8	LOCKWASHER
	5	7N-2872	1	LINE ASSEM. (no. 2)
	6	6N-5124	3	CLAMP (tapped)
		6N-5125	3	CLAMP
	7	7N-2871	1	LINE ASSEM. (no. 1)
	8	2H-3934	1	SEAL
	9	1B-4203	3	NUT
	10	6N-3760	1	BRACKET
	11	0L-1352	1	BOLT
		5M-2894	1	WASHER
	12	5M-6214	1	PLUG
C	13	2P-3850	1	ADAPTER
	14	8M-5253	1	SEAL
	15	7B-3235	1	BOLT
		5P-8245	1	WASHER
	16	8M-5248	1	SEAL
	17	2A-5546	2	BOLT
		5P-0537	2	WASHER
	18	8M-1584	4	VALVE SERVICE GROUP
				(Each Includes)
	19	5B-3718	1	SEAL
	20	6F-1069	1	SEAL ASSEM.
	21	8S-2389	4	BODY
	22	5H-7225	4	NUT

	23	3J-5390	1	PLUG

C	INDICATES CHANGE

1258 4N3287 FUEL PRIMING PUMP GROUP
Engine Serial No. 78P18799 to 78P30066 inclusive

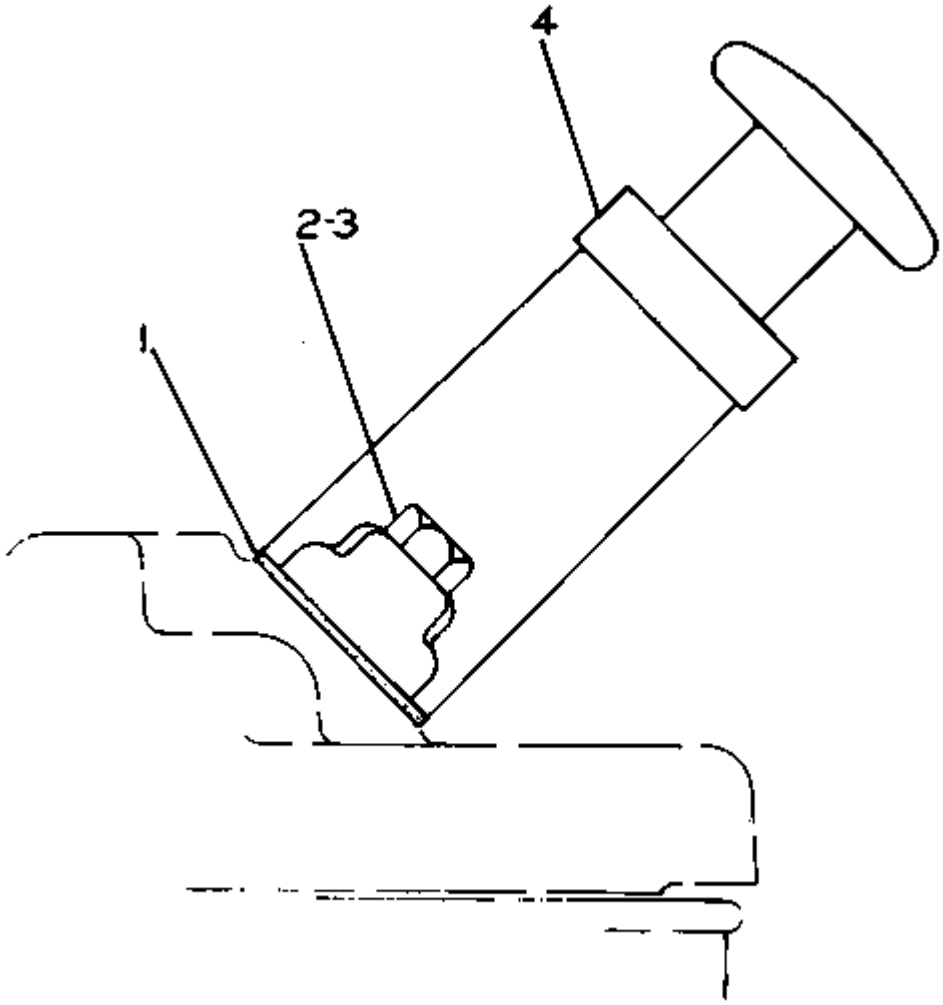

Nota	Ref	Numero	Cant	Nombre De Pieza
		4N-3287	1	PUMP GP-FUEL PRIMING
	1	1P-0436	1	GASKET
	2	4B-3388	1	BOLT (5/16-18X1.125IN)LG
				-OR-
C		1B-7182	1	BOLT (5/16-18X1.25IN)LG
C		9M-1974	1	WASHER (.313IN)DIA
	3	0S-1616	1	BOLT (1/4-20X1IN)LG
				-OR-
C		9F-6580	1	BOLT (1/4-20X1.125IN)LG
C		5P-0537	1	WASHER (.25IN)DIA
	4	4N-2511	1	PUMP AS-FUEL PRIMING
C				CHANGE FROM PREVIOUS TYPE

1258 4N9625 FUEL PRIMING PUMP GROUP
Engine Serial No. 78P30067-Up

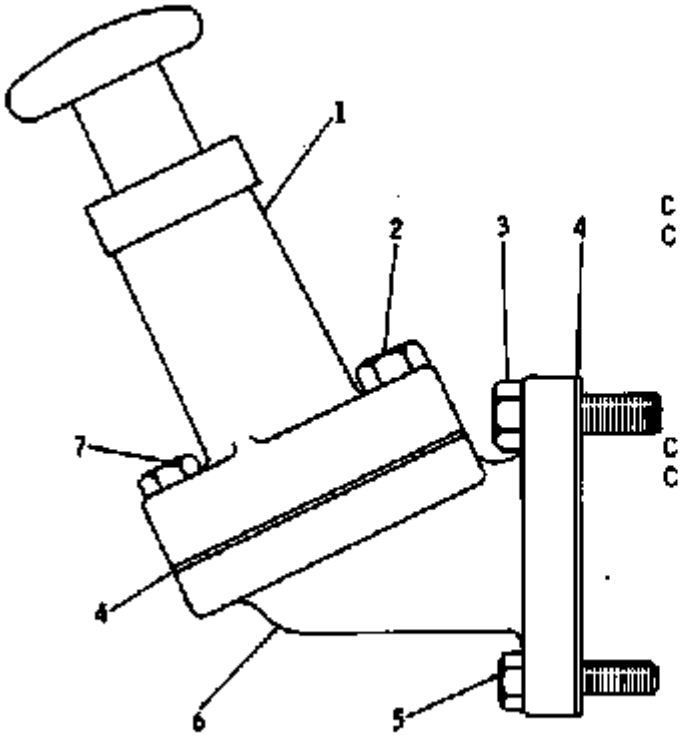

	REF NO.	PART NUMBER	DESCRIPTION	QTY
	1	4N2511	PUMP ASSEM.	1
	2	4B3388	BOLT--1.125 in. (2.86 cm) long	1
			-OR-	
C		1B7182	BOLT--1.25 in. (3.18 cm) long	1
C		5P537	WASHER	1
	3	1B2790	BOLT	1
	4	1P436	GASKET	2
	5	2A5546	BOLT	1
	6	4N9624	ADAPTER	1
	7	9F6580	BOLT--1.125 in. (2.86 cm) long	1
			-OR-	
C		7B2742	BOLT--1.25 in. (3.18 cm) long	1
C		9M1974	WASHER	1

C INDICATES CHANGE

205693

Nota	Ref	Numero	Cant	Nombre De Pieza
		4N-9625	1	PUMP GP-FUEL PRIMING
	1	4N-2511	1	PUMP ASSEM.
	2	4B-3388	1	BOLT 1.125 in. (2.86 cm) long
				-OR-
C		1B-7182	1	BOLT 1.25 in. (3.18 cm) long
C		5P-0537	1	WASHER
	3	1B-2790	1	BOLT
	4	1P-0436	2	GASKET
	5	2A-5546	1	BOLT
	6	4N-9624	1	ADAPTER
	7	9F-6580	1	BOLT 1.125 in. (2.86 cm) long
				-OR-
C		7B-2742	1	BOLT 1.25 in. (3.18 cm) long
C		9M-1974	1	WASHER
C				INDICATES CHANGE

7315 5G3612 PROTECTION CAP GROUP--Fuel Tank Cap
AN ATTACHMENT

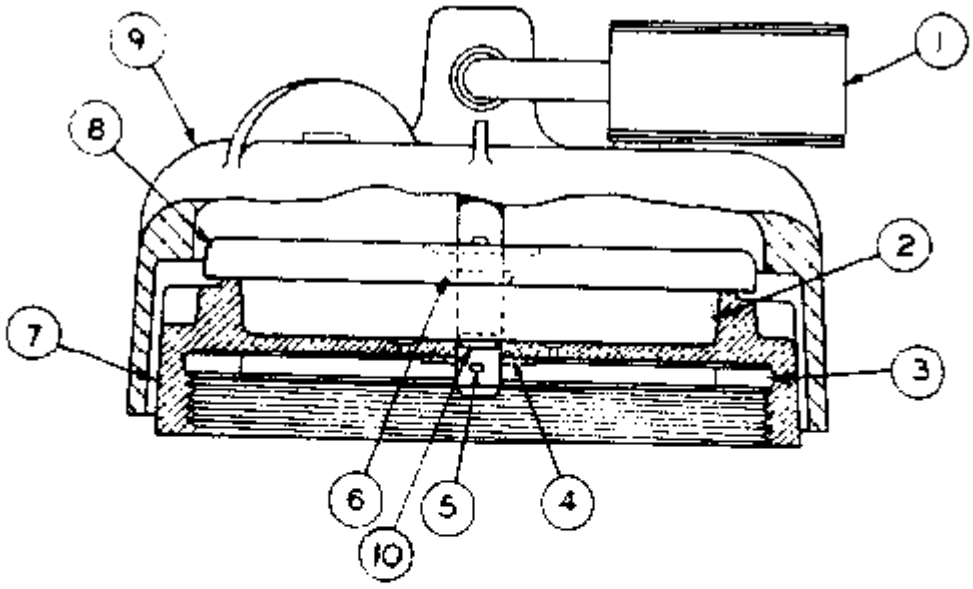

REF NO	PART NUMBER	DESCRIPTION	QTY
1	5P8502	PADLOCK GROUP	1
		(Includes)	
♣	5P8500	KEY	2
2	5S7657	FILTER	1
3	2A1763	GASKET	1
4	4J1105	SHIM	2
5	3B4615	COTTER PIN	2
6	5F9144	SEAL	1
7	1P8680	CAP	1
8	5S7646	LID	1
9	8P668	COVER ASSEM	1
10	8F9538	SEAL	1

♣ NOT PART OF 5G3612 CAP GROUP

234764

Nota	Ref	Numero	Cant	Nombre De Pieza
		5G-3612	1	CAP GP-PROTECTION
	1	5P-8502	1	PADLOCK GROUP
				(Includes)
H		5P-8500	2	KEY
	2	5S-7657	1	FILTER
	3	2A-1763	1	GASKET
	4	4J-1105	2	SHIM
	5	3B-4615	2	COTTER PIN
	6	5F-9144	1	SEAL
	7	1P-8680	1	CAP
	8	5S-7646	1	LID
	9	8P-0668	1	COVER ASSEM.
	10	8F-9538	1	SEAL
H				NOT PART OF 5G3612 CAP GROUP

1263 4V670 WATER SEPARATOR GROUP
Serial No. 41K10096-Up

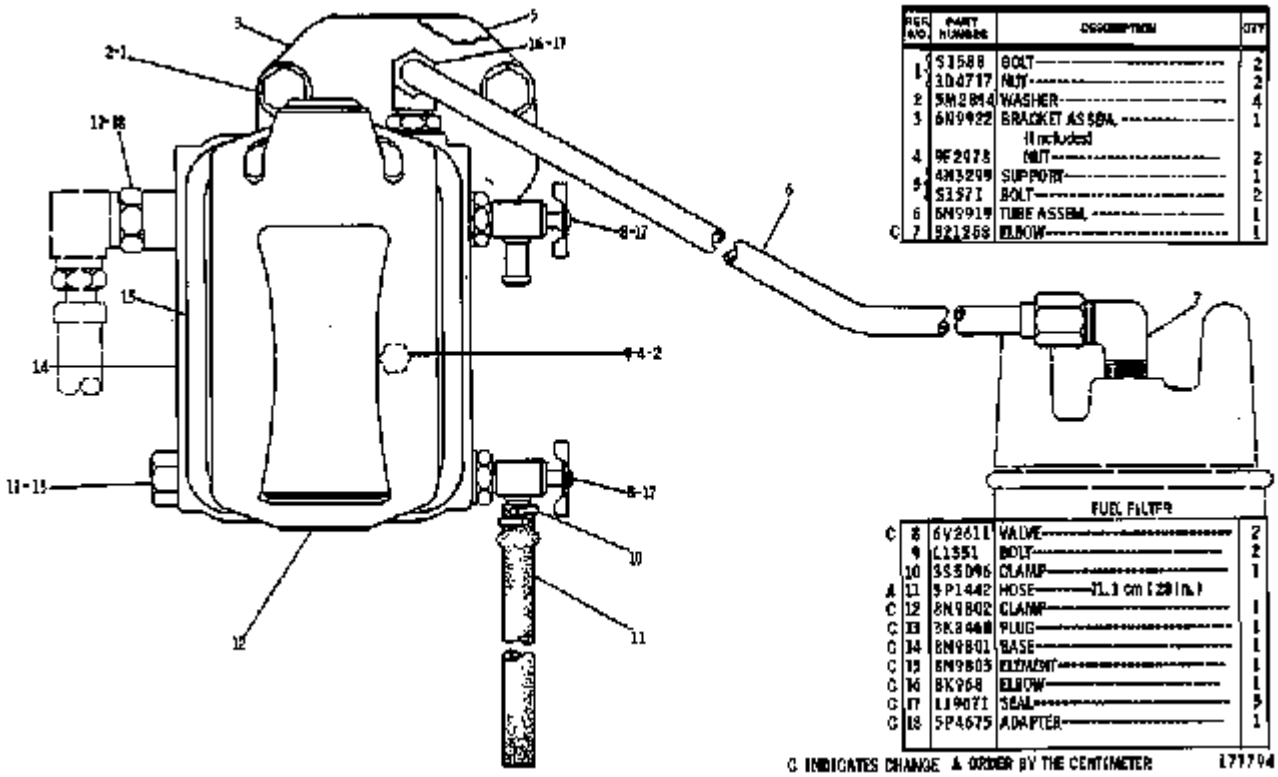

REF NO.	PART NUMBER	DESCRIPTION	QTY
1	5I1588	BOLT	2
	1D4717	NUT	2
2	5M2814	WASHER	4
3	6N9922	BRACKET AS&BA.	1
		(Included)	
4	9F2478	NUT	2
5	4N3299	SUPPORT	1
	5I171	BOLT	2
6	6N9919	TUBE ASSEM.	1
C 7	9Z1268	ELBOW	1

FUEL FILTER

C	8	6V2611	VALVE	2
	9	4L1351	BOLT	2
	10	5S5046	CLAMP	1
A	11	9P1442	HOSE	71.1 cm (28 in.)
C	12	8N9802	CLAMP	1
C	13	8K3448	PLUG	1
C	14	8N9801	BASE	1
C	15	8N9805	ELEMENT	1
C	16	8K968	ELBOW	1
C	17	4J9071	SEAL	5
C	18	5P4675	ADAPTER	1

C INDICATES CHANGE A ORDER BY THE CENTIMETER 177794

Nota	Ref	Numero	Cant	Nombre De Pieza
		4V-0670	1	SEPARATOR GP-WATER
	1	0S-1588	2	BOLT
		1D-4717	2	NUT
	2	5M-2894	4	WASHER
	3	6N-9922	1	BRACKET ASSEM.
				(Includes)
	4	9F-2978	2	NUT
	5	4N-3299	1	SUPPORT
		0S-1571	2	BOLT
	6	6N-9919	1	TUBE ASSEM.
C	7	032-1268	1	ELBOW
C	8	6V-2611	2	VALVE
	9	0L-1351	2	BOLT
	10	3S-5096	1	CLAMP
H	11	5P-1442		HOSE 71.1 cm (28 in.)
C	12	8N-9802	1	CLAMP
C	13	3K-8460	1	PLUG
C	14	8N-9801	1	BASE
C	15	8N-9803	1	ELEMENT
C	16	8K-0968	1	ELBOW
C	17	1J-9671	5	SEAL
C	18	5P-4675	1	ADAPTER
C				INDICATES CHANGE
H				ORDER BY THE CENTIMETER

4209 7V5211 DEMOUNTABLE RIM GROUP--4 Required
FOR USE WITH 14.00 X 24 TRACTION TREAD TUBELESS TIRES
AN ATTACHMENT

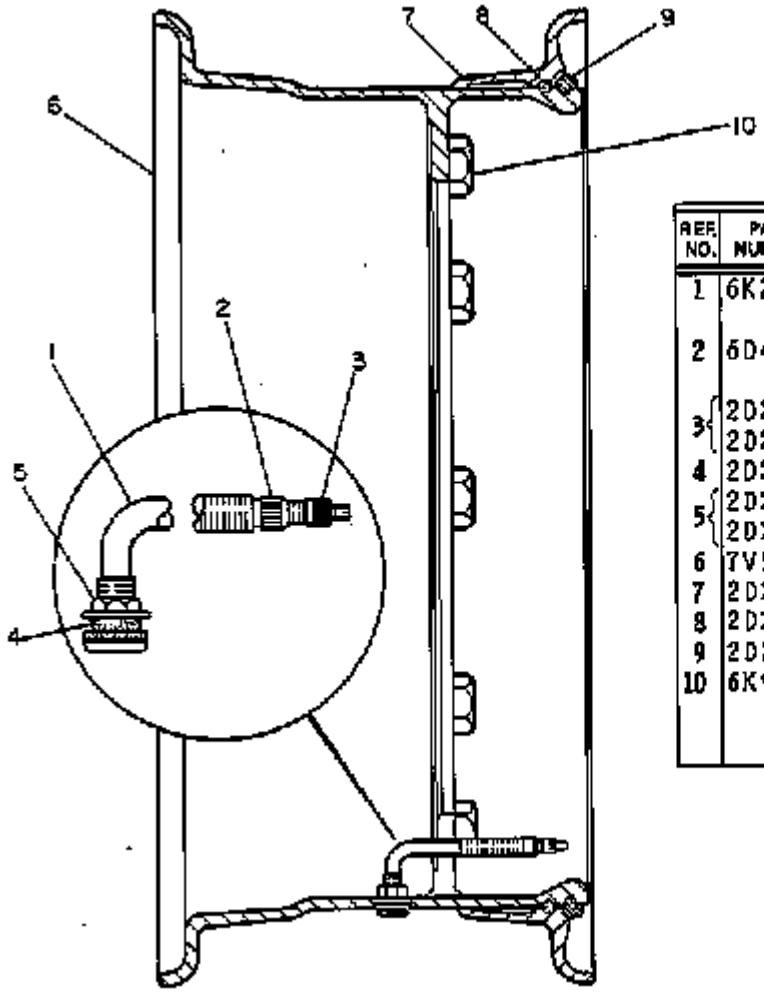

REF. NO.	PART NUMBER	DESCRIPTION	QTY.
1	6K249	VALVE ASSEM.	1
		(Includes)	
2	6D443	HOUSING ASSEM.	1
		(Includes)	
3	2D2633	CAP	1
	2D2628	CORE	1
4	2D2629	GROMMET	1
5	2D2631	NUT	1
	2D2630	WASHER	1
6	7V5210	RIM ASSEM.	1
7	2D2655	FLANGE	1
8	2D2565	SEAL	1
9	2D2654	RING	1
10	6K9316	NUT	10

175199

Nota	Ref	Numero	Cant	Nombre De Pieza
		7V-5211	1	RIM GP-DEMOUNTABLE
	1	6K-0249	1	VALVE ASSEM.
				(Includes)
	2	6D-0443	1	HOUSING ASSEM.
				(Includes)
	3	2D-2633	1	CAP
		2D-2628	1	CORE
	4	2D-2629	1	GROMMET
	5	2D-2631	1	NUT
		2D-2630	1	WASHER
	6	7V-5210	1	RIM ASSEM.
	7	2D-2655	1	FLANGE
	8	2D-2565	1	SEAL
	9	2D-2654	1	RING
	10	6K-9316	10	NUT

3258 9K8944 DIFFERENTIAL GROUP
Serial No. 41K5315 to 41K11485 inclusive. Part of 8K6004 Rear Differential and Carrier and 8K6001 Front Differential and Carrier Groups shown on Pages 117 and 118

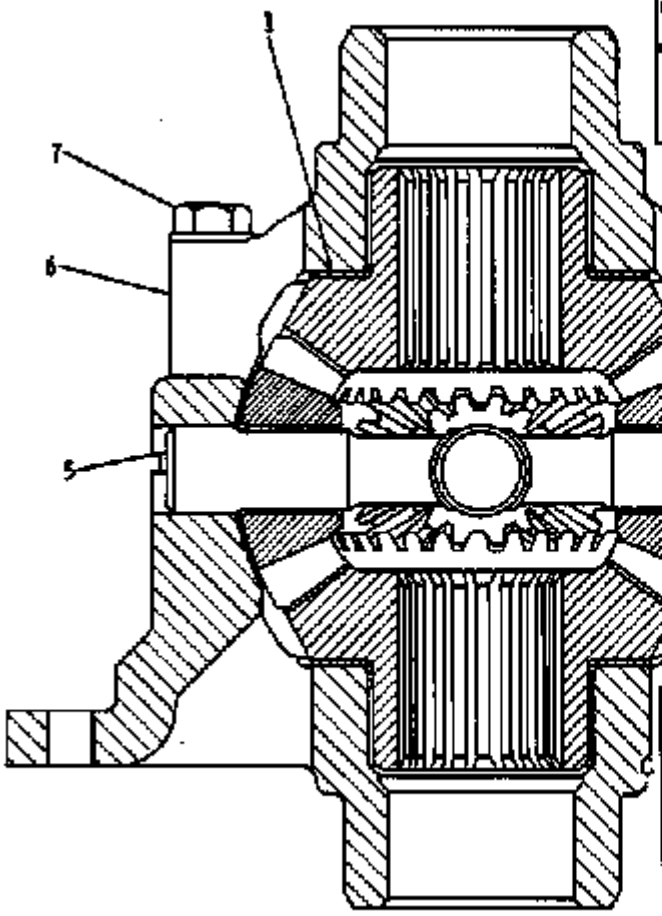

REF. NO.	PART NUMBER	DESCRIPTION	QTY
1	6K9468	WASHER	2
2	8K5991	GEAR--------(20 teeth)	2
3	2K9286	WASHER	4
4	2K8753	GEAR--------(11 teeth)	4
5	2K8797	SPIDER	1
C 6	1V5085	CASE ASSEM.	1
		(Includes)	
7	104566	BOLT	8
	2M849	WASHER	8

C INDICATES CHANGE

153181

Nota	Ref	Numero	Cant	Nombre De Pieza
		9K-8944	1	DIFFERENTIAL GP
	1	6K-9468	2	WASHER
	2	8K-5991	2	GEAR (20 teeth)
	3	2K-9286	4	WASHER
	4	2K-8753	4	GEAR (11 teeth)
	5	2K-8797	1	SPIDER
	6	1V-5085	1	CASE ASSEM.
				(Includes)
	7	1D-4566	8	BOLT
		2M-0849	8	WASHER

8K5992 DIFFERENTIAL GROUP--Torque Proportioning
FOR USE WITH FRONT AND REAR AXLE. 8K5994 Differential Group, consisting of:
2--8K5992 Differential Groups, is available. AN ATTACHMENT

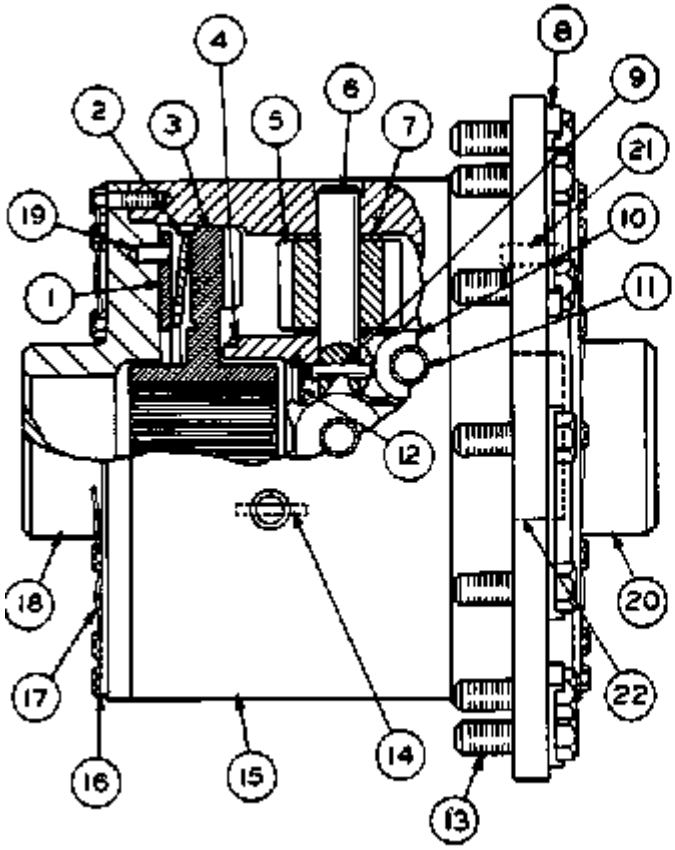

NOTE	REF NO	PART NUMBER	QTY	DESCRIPTION
	1	5K5612	2	DISC
	2	5K5608	2	SPRING
	3	8K5993	2	GEAR (28 TEETH)
	4	8F737	2	RING
	5	9K8560	4	PINION (6 TEETH-CENTER)
	6	5K5611	4	SHAFT (CENTER)
	7	9K9921	8	PLATE (WEAR)
	8	5K5610	6	LOCK
	9	6K1814	4	PIN
	10	9K8561	8	PINION (5 TEETH-OUTER)
	11	5K5706	8	SHAFT (OUTER)
	12	2D1523	1	RING
	13	4K7502	12	BOLT
	14	9K8318	8	PIN
C	15	9K8915	1	CASE
C	16	5H9707	24	BOLT
CD	17	5P6628		LOCKWIRE 2M(78.74IN.)
C	18	9K4916	1	COVER ASSEM.
	19	6K1984	2	DOWEL
	20	9K4910	1	COVER ASSEM.
	21	6K1984	1	DOWEL
	22	9K4909	1	BEARING
MF		7K8647	1	PLATE (INSTRUCTION)
MF		4B4158	4	SCREW

C INDICATES CHANGE
D ORDER BY THE METER
F NOT SHOWN
M-MOUNTED ON R.H. SIDE DASH

309193

Nota	Ref	Numero	Cant	Nombre De Pieza
		8K-5992	1	DIFFERENTIAL GP
	1	5K-5612	2	DISC
	2	5K-5608	2	SPRING
	3	8K-5993	2	GEAR (28 TEETH)
	4	8F-0737	2	RING-RETAINING
	5	9K-8560	4	PINION (6 TEETH-CENTER)
	6	5K-5611	4	SHAFT (CENTER)
	7	9K-9921	8	PLATE (WEAR)
	8	5K-5610	6	LOCK
	9	6K-1814	4	PIN
	10	9K-8561	8	PINION (5 TEETH-OUTER)
	11	5K-5706	8	SHAFT (OUTER)
	12	2D-1523	1	RING-RETAINING
	13	4K-7502	12	BOLT
	14	9K-8318	8	PIN
C	15	9K-8915	1	CASE
C	16	5H-9707	24	BOLT
CD	17	5P-6628		LOCKWIRE 2M(78.74IN.)
C	18	9K-4916	1	COVER AS
	19	6K-1984	2	DOWEL
	20	9K-4910	1	COVER AS
	21	6K-1984	1	DOWEL
	22	9K-4909	1	BEARING
MF		7K-8647	1	PLATE (INSTRUCTION)
MF		4B-4158	4	SCREW

C	CHANGE FROM PREVIOUS TYPE
D	ORDER BY THE METER
F	NOT SHOWN
M	METRIC PART

4051 4V6531 FINAL DRIVE AND WHEEL GROUP--4 Required
Serial No. 41K8438-Up

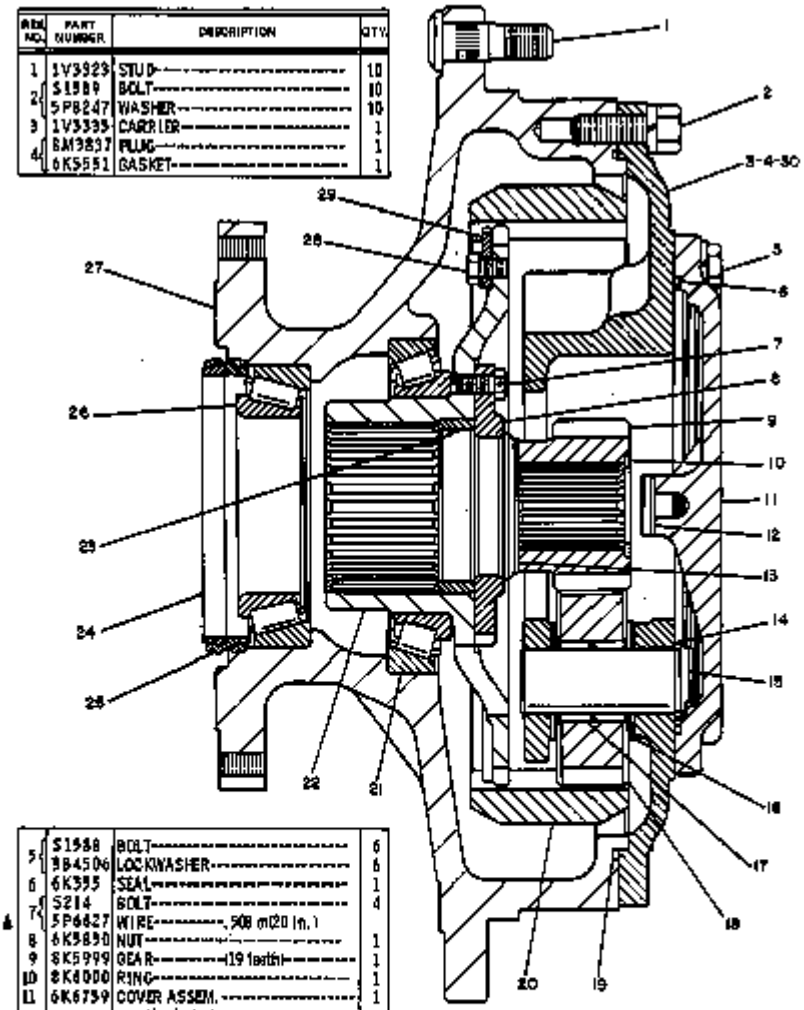

REF NO.	PART NUMBER	DESCRIPTION	QTY.
1	1V3923	STUD	10
2	S1589	BOLT	10
	5P8247	WASHER	10
3	1V3335	CARRIER	1
4	BM3837	PLUG	1
	6K5551	GASKET	1
5	S1588	BOLT	6
	9B4506	LOCKWASHER	6
6	6K355	SEAL	1
7	S214	BOLT	4
	5P6627	WIRE .508 m(20 in.)	A
8	6K5830	NUT	1
9	8K5999	GEAR (191 teeth)	1
10	8K6000	RING	1
11	6K6759	COVER ASSEM. (Includes)	1
12	2D604	BUTTON	1
13	8K5705	WASHER	1
14	5K926	RING	3
15	2V1074	SHAFT	3
16	7K1699	WASHER (steel)	6
	7K1701	WASHER (bronze)	6
17	5M2054	ROLLER ASSEM.	6
18	8K7110	GEAR (124 teeth)	3
19	6K357	SEAL	1
20	8K7112	GEAR (48 teeth)	1
21	5P2526	CUP	1
	2K5065	CONE	1
22	7K7432	HUB ASSEM. (Includes)	1
23	2K9463	BUSHING	1
24	5K5288	SEAL GROUP (Includes)	1
25	5K5129	RING	2
26	6K5275	CONE	1
	6B5225	CUP	1
27	4V4574	WHEEL	1
28	T102	BOLT	8
	dH4209	LOCK	4
29	2K9249	PLATE	4
30	2B7557	CORK	2

A ORDER BY THE METER

223795

Nota	Ref	Numero	Cant	Nombre De Pieza
		4V-6531	1	WHEEL & FINAL DRIVE GP
	1	1V-3323	10	STUD
	2	0S-1589	10	BOLT
		5P-8247	10	WASHER
	3	1V-3335	1	CARRIER
	4	8M-3837	1	PLUG
		6K-5551	1	GASKET
	5	0S-1588	6	BOLT
		3B-4506	6	LOCKWASHER
	6	6K-0355	1	SEAL
	7	0S-0214	4	BOLT
H		5P-6627		WIRE .508 m(20 in.)
	8	6K-5830	1	NUT
	9	8K-5999	1	GEAR (19 teeth)
	10	8K-6000	1	RING
	11	6K-6759	1	COVER ASSEM.
				(Includes)
	12	2D-0604	1	BUTTON
	13	8K-5705	1	WASHER
	14	5K-0926	3	RING
	15	2V-1074	3	SHAFT
	16	7K-1699	6	WASHER (steel)
		7K-1701	6	WASHER (bronze)
	17	5M-2054	6	ROLLER ASSEM.
	18	3K-7110	3	GEAR (24 teeth)
	19	6K-0357	1	SEAL
	20	3K-7112	1	GEAR (68 teeth)
	21	5P-2526	1	CUP
		2K-5065	1	CONE
	22	7K-7432	1	HUB ASSEM.

				(Includes)
	23	2K-9463	1	BUSHING
R	24	5K-5288	1	SEAL GROUP
				(Includes)
	25	5K-5129	2	RING
	26	6K-8275	1	CONE
		6B-3223	1	CUP
	27	4V-4574	1	WHEEL
	28	0T-0102	8	BOLT
		6H-4209	4	LOCK
	29	2K-9249	4	PLATE
	30	2B-7557	2	CORK

H	ORDER BY THE METER
R	REMFG PART MAY BE AVAILABLE

4004 4V6533 FRONT BRAKE AND AXLE GROUP
Serial No. 41K9173-Up
4V4893 Brake parts are shown on Page 122A

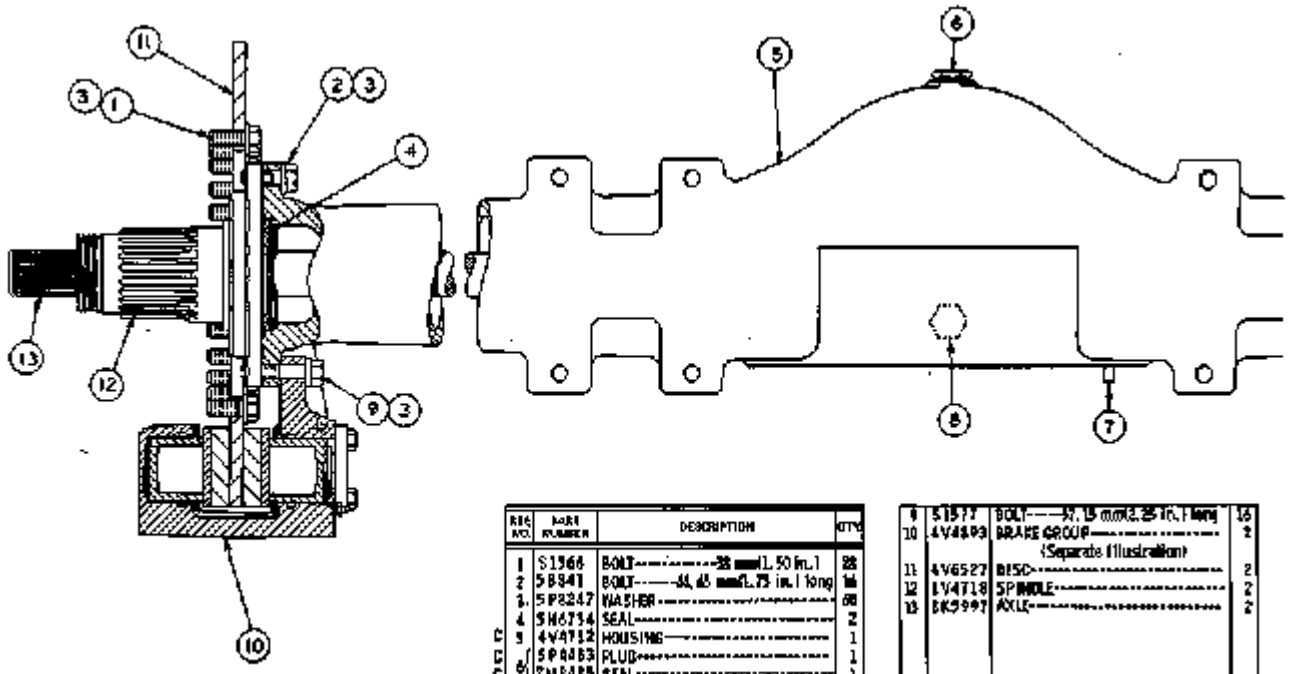

REF NO.	PART NUMBER	DESCRIPTION	QTY
1	S1566	BOLT	28
2	5B841	BOLT	16
3	5P8247	WASHER	68
4	5M6734	SEAL	2
5	4V4712	HOUSING	1
C 6	5P8483	PLUG	1
C 6	7M8485	SEAL	1
7	2L3650	PIN	1
C 8	5P4484	PLUG	1
C 8	7M8485	SEAL	1
9	S1577	BOLT	16
10	4V4893	BRAKE GROUP (Separate Illustration)	2
11	4V6527	DISC	2
12	1V4718	SPINDLE	2
13	8K5997	AXLE	2

C INDICATES CHANGE

174831

Nota	Ref	Numero	Cant	Nombre De Pieza
		4V-6533	1	BRAKE & AXLE GP-FRONT
	1	0S-1566	28	BOLT 38 mm(1.50 in.)
	2	5B-0841	16	BOLT 44.45 mm(1.75 in.) long
	3	5P-8247	60	WASHER
	4	5H-6734	2	SEAL
C	5	4V-4712	1	HOUSING
C	6	5P-4483	1	PLUG
C		7M-8485	1	SEAL
	7	2L-3650	1	PIN
C	8	5P-4484	1	PLUG
C		7M-8485	1	SEAL
	9	0S-1577	16	BOLT 57.15 mm(2.25 in.) long
Y	10	4V-4893	2	BRAKE GROUP
				(Separate Illustration)
	11	4V-6527	2	DISC
R	12	1V-4718	2	SPINDLE
	13	8K-5997	2	AXLE
R				REMFG PART MAY BE AVAILABLE
Y				SEPARATE ILLUSTRATION
C				INDICATES CHANGE

4256 4V4893 HYDRAULIC CALIPER SERVICE BRAKE GROUP
Serial No. 41K8438-Up
Part of 4V6532 and 4V6533 Brake and Axle Groups shown on Pages 119B and 120A

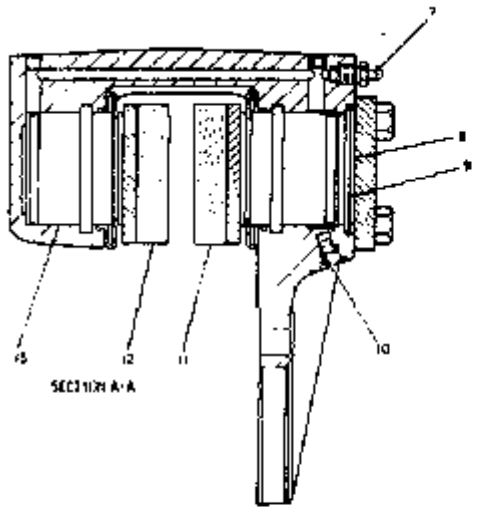

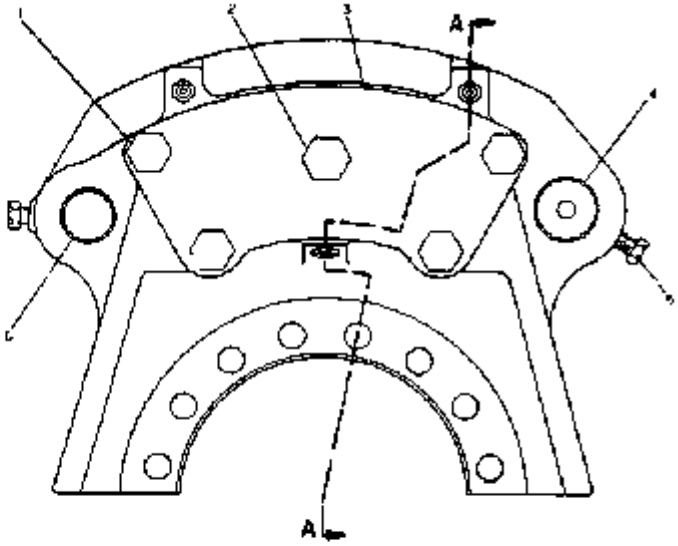

REF NO	PART NUMBER	DESCRIPTION	QTY
1	8S4732	BOLT	4
2	5B592	BOLT	1
3	5V1831	COVER	1
4	4V4851	PIN	2
5	3V197	BOLT	4
6	4V7227	PIN	2

7	7K4942	SCREW	2
8	4V4893	PLUG	2
9	4V4850	SEAL	2
10	5P8867	INSERT	1
11	8V8417	CARRIER	1
12	4V8416	CARRIER	1
13	4V8852	PISTON	4

THE FOLLOWING REPAIR KIT IS AVAILABLE:
4V6528 KIT-----Repair----- 1
(Includes packings and seals)
222451

Nota	Ref	Numero	Cant	Nombre De Pieza
		4V-4893	1	BRAKE GP-HYD CALIPER SERVICE
	1	8S-4732	4	BOLT
	2	0S-1592	1	BOLT
	3	5V-1311	1	COVER
	4	4V-4851	2	PIN
	5	3V-0197	4	BOLT
	6	4V-7277	2	PIN
	7	7K-4942	2	SCREW (bleed)
	8	4V-4853	2	PLUG
	9	4V-4850	2	SEAL
	10	5P-8867	1	INSERT
	11	4V-8417	1	CARRIER
	12	4V-8416	1	CARRIER
	13	4V-4852	4	PISTON
				(THE FOLLOWING REPAIR KIT IS AVAILABLE:
		4V-6525	1	KIT (repair)
				(Includes packings and boots)

7153 7K5636 PROTECTION COVER GROUP--Transmission Oil Cap
AN ATTACHMENT

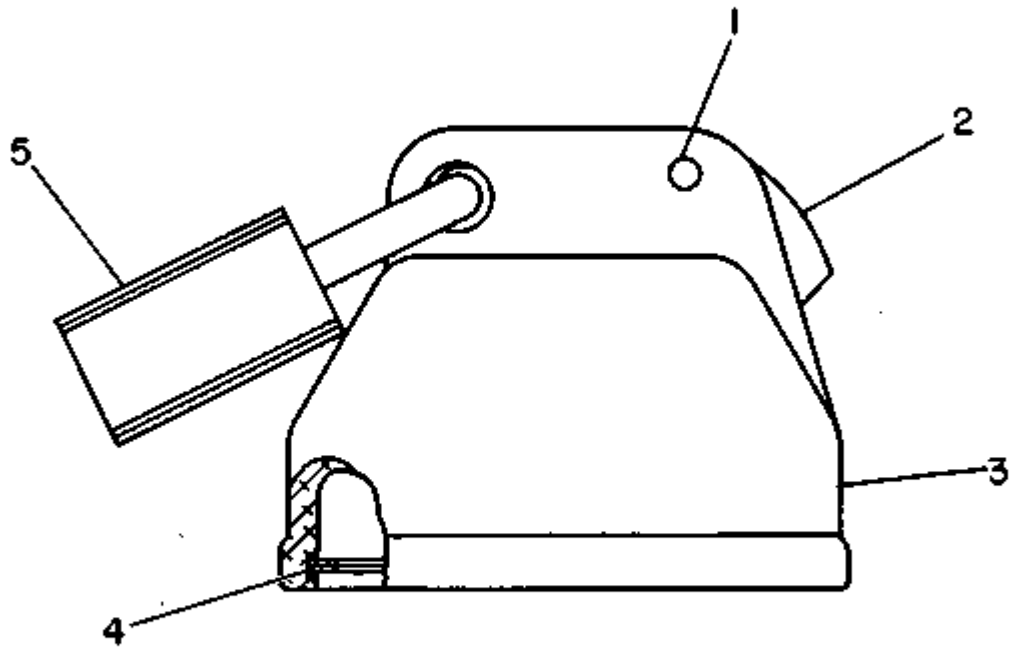

Nota	Ref	Numero	Cant	Nombre De Pieza
		7K-5636	1	COVER GP-PROTECTION
	1	1L-5072	1	DOWEL
	2	9M-7394	1	LEVER
	3	7K-5634	1	COVER
	4	2J-7761	1	RING-RETAINING
C	5	5P-8502	1	PADLOCK GP
A		5P-8500	2	KEY

A	NOT PART OF THIS GROUP
C	CHANGE FROM PREVIOUS TYPE

4004 4V6532 REAR BRAKE AND AXLE GROUP
Serial No. 41K9145-Up
4V4893 Brake parts are shown on Page 122A

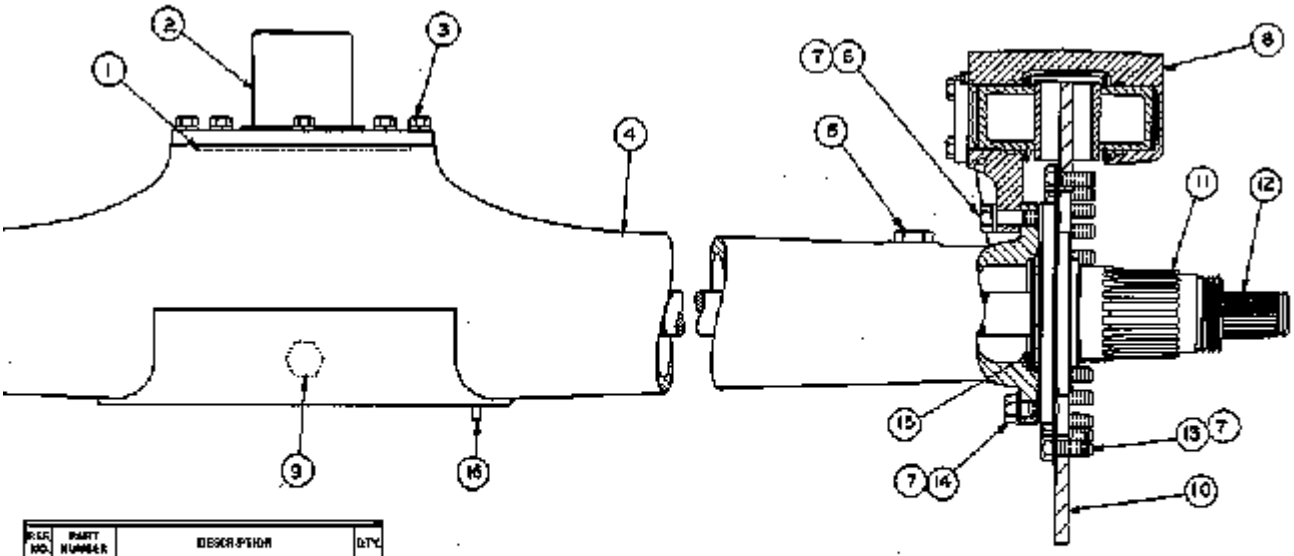

REF NO.	PART NUMBER	DESCRIPTION	QTY
1	2D1491	SEAL	1
2	7K7430	TRUNNION	1
3	S1585	BOLT	8
	5P8245	WASHER	8
C 4	4V4711	HOUSING	1
C 5	5P4485	PLUG	1
C	7M8485	SEAL	1
6	S1577	BOLT---52.15 mm/2.25 in. long	16
7	5P8242	WASHER	60

	#	4V4893	BRAKE GROUP (Separate Illustration)	2
C	9	5P4484	PLUG	1
C		7M8485	SEAL	1
	10	4V4927	DISC	2
	11	1V4718	SPINDLE	2
	12	8K3997	AXLE	2

C INDICATES CHANGE

13	5T1560	BOLT---38 mm/1.50 in. long	32
14	5B841	BOLT---44.45 mm/1.75 in. long	16
15	5M6734	SEAL	2
16	2L3650	PIN	1

232873

Nota	Ref	Numero	Cant	Nombre De Pieza
		4V-6532	1	BRAKE & AXLE GP-REAR
	1	2D-1691	1	SEAL
	2	7K-7430	1	TRUNNION
	3	0S-1585	8	BOLT
		5P-8245	8	WASHER
C	4	4V-4711	1	HOUSING
C	5	5P-4483	1	PLUG
C		7M-8485	1	SEAL
	6	0S-1577	16	BOLT 57.15 mm(2.25 in.) long
	7	5P-8247	60	WASHER
Y	8	4V-4893	2	BRAKE GROUP
				(Separate Illustration)
C	9	5P-4484	1	PLUG
C		7M-8485	1	SEAL
	10	4V-6527	2	DISC
R	11	1V-4718	2	SPINDLE
	12	8K-5997	2	AXLE
	13	0S-1566	28	BOLT 38 mm(1.50 in.)
	14	5B-0841	16	BOLT 44.45 mm(1.75 in.) long
	15	5H-6734	2	SEAL
	16	2L-3650	1	PIN
R				REMFG PART MAY BE AVAILABLE
Y				SEPARATE ILLUSTRATION
C				INDICATES CHANGE

3159 7S7005 TRANSFER GEAR GROUP--Part 1 of 2
Transmission Serial No. 3EA2017-Up. Part of 7S7006 Power Shift Transmission Arrangement shown on Pages 98, 99A, 99C & 99E. 1V2699 Brake parts are shown on Page 112

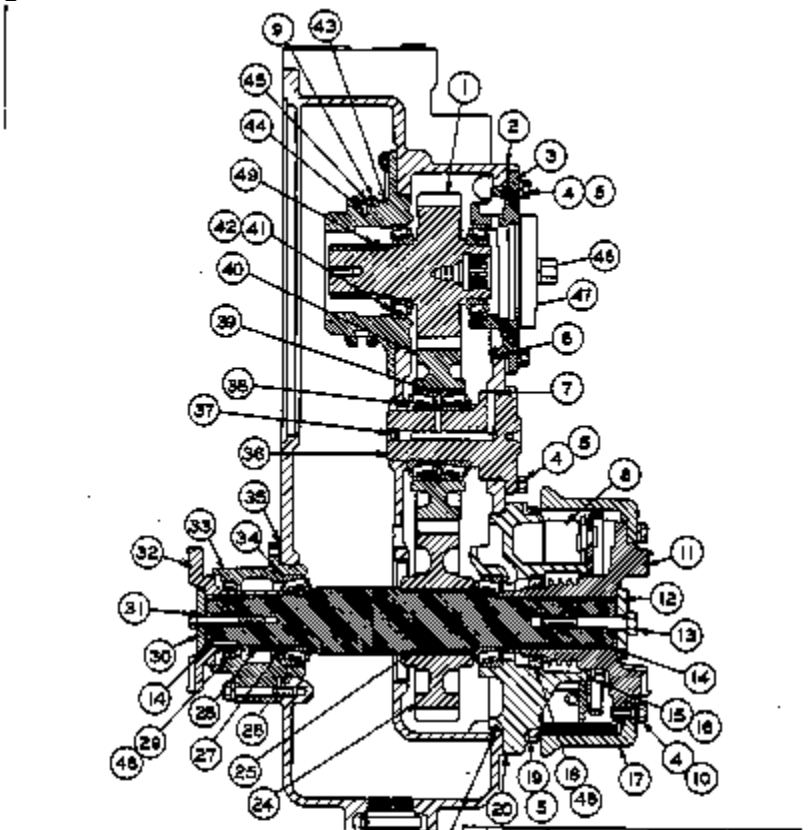

REF. NO.	PART NUMBER	DESCRIPTION	QTY
1	1P2383	GEAR--------(26 Teeth)--------	1
2	7S8613	SHIM PACK--------	1
3	LP2384	CAGE--------	1
4	LA2029	BOLT--------	16
5	3B4506	LOCKWASHER--------	20
6	6F4718	SEAL--------	1
7	2M3931	SEAL--------	1
8	1V2699	BRAKE GROUP--------	1
		(Separate Illustration)	
C 9	7Q2390	RING--------	2
10	5M2894	WASHER--------	6
11	3P3205	FLANGE--------	1
12	4S3824	RETAINER--------	1
13	L2313	BOLT--------	1
14	2M3927	SEAL--------	2
15	6H1717	BOLT--------	4
16	3B4508	LOCKWASHER--------	4
17	6K6907	DRUM--------	1
18	9H6079	SEAL--------	1
19	S1391	BOLT--------	8
20	7S8615	CAGE--------	1
21	2M340	SEAL--------	1
C 22	9P4483	PLUG--------	1
C 23	7M8483	SEAL--------	1
24	3P3209	GEAR--------(37 Teeth)--------	1
25	3P3206	SHAFT--------(Output)--------	1
26	4M189	SEAL--------	1
27	LB5980	CONE--------	2
28	8S6264	SPACER--------	1
29	4J2603	SEAL--------	1
30	9S4588	WASHER--------	1
31	L139	BOLT--------	1
32	5P3208	FLANGE--------	1
33	8S6261	CAGE--------	1
34	1B3978	CUP--------	1
35	8S6262	SHIM PACK--------	2
36	8S6193	SHAFT ASSEM.--------(Idler)--------	1
37	9S2173	PLUG--------	1
38	7S8576	BEARING ASSEM.--------	1
39	5K4068	RING--------	1
40	7S6988	GEAR--------(65 Teeth)--------	1
41	7K4566	CUP--------	2
42	7K4575	CONE--------	2
43	6P7714	CAGE ASSEM.--------	1
	8S527	PLUG--------	1
44	6B6845	PIN--------	1
45	6P7704	CARRIER--------	1
46	S1395	BOLT--------	12
	3B4508	LOCKWASHER--------	12
47	8P1498	COVER--------	1
	8M1280	GASKET--------	1
48	7M7260	LIQUID GASKET--------	1
49	8S6249	RING--------	1

C INDICATES CHANGE

181049

Nota	Ref	Numero	Cant	Nombre De Pieza
		7S-7005	1	GEAR GP-TRANSFER
	1	1P-2183	1	GEAR (28 teeth)
	2	7S-8613	1	SHIM PACK
	3	1P-2184	1	CAGE
	4	1A-2029	18	BOLT
	5	3B-4506	20	LOCKWASHER
	6	6F-4718	1	SEAL
	7	2H-3931	1	SEAL
Y	8	1V-2699	1	BRAKE GROUP
				(Separate Illustration)
C	9	7G-2830	2	RING
	10	5M-2894	6	WASHER
	11	3P-3205	1	FLANGE
	12	4S-5824	1	RETAINER
	13	0L-2315	1	BOLT
	14	2H-3927	2	SEAL
	15	6H-1717	4	BOLT
	16	3B-4508	4	LOCKWASHER
	17	6K-6907	1	DRUM
	18	9H-6079	1	SEAL
	19	0S-1591	8	BOLT
	20	7S-8615	1	CAGE
	21	2M-0340	1	SEAL
C	22	5P-4483	1	PLUG
C	23	7M-8485	1	SEAL
	24	3P-3209	1	GEAR (37 Teeth)
	25	3P-3206	1	SHAFT (Output)
	26	4M-0189	1	SEAL
	27	1B-3980	2	CONE
	28	8S-6264	1	SPACER

	29	4J-2683	1	SEAL
	30	3S-4388	1	WASHER
	31	0L-0139	1	BOLT
	32	3P-3208	1	FLANGE
	33	8S-6261	1	CAGE
	34	1B-3978	2	CUP
	35	8S-6262	1	SHIM PACK
	36	8S-6198	1	SHAFT ASSEM. (Idler)
	37	3S-2173	1	PLUG
	38	7S-8576	1	BEARING ASSEM.
	39	5K-4068	1	RING
	40	7S-6988	1	GEAR (36 Teeth)
	41	7H-4566	2	CUP
	42	7H-4573	2	CONE
	43	6P-7714	1	CAGE ASSEM.
		8S-0527	1	PLUG
	44	6B-6863	1	PIN
	45	6P-7704	1	CARRIER
	46	0S-1585	2	BOLT
		3B-4508	2	LOCKWASHER
	47	8P-1438	1	COVER
		8M-1280	1	GASKET
	48	7M-7260	1	LIQUID GASKET
	49	8S-6249	1	RING

C	INDICATES CHANGE
Y	SEPARATE ILLUSTRATION

3159 7S7005 TRANSFER GEAR GROUP--Part 2 of 2
Transmission Serial No. 3EA2017-Up. Part of 7S7006 Power Shift Transmission
Arrangement shown on Pages 98, 99A, 99C & 99E

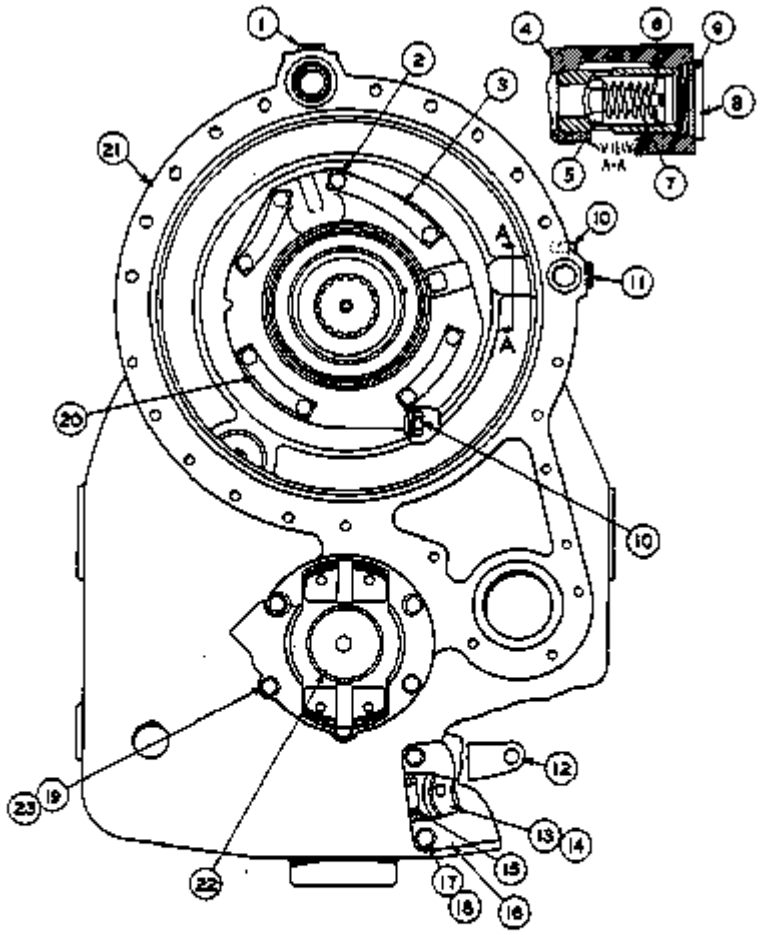

REF NO.	PART NUMBER	DESCRIPTION	QTY
1	9S8004	PLUG	1
	2M9730	SEAL	1
2	L1351	BOLT	8
3	2S607	LOCK	1
4	7S6567	VALVE GROUP (Includes)	1
5	5S9940	POPPET	1
6	5S907	PLUG	1
7	7B3059	SPRING	1
8	9S8010	PLUG	1
9	2S4079	SEAL	1
10	9S4191	PLUG	2
	3J1907	SEAL	2
11	9S8005	PLUG	1
	3K360	SEAL	1

REF NO.	PART NUMBER	DESCRIPTION	QTY
12	1Y2698	CAMSHAFT ASSEM.	1
13	8S9129	FILTER	1
14	8S9150	SCREEN	1
C 15	5S7781	GASKET	1
16	4H5440	COVER	1
17	1A2029	BOLT	4
18	3B4506	LOCKWASHER	7
19	1143	BOLT---2.50 in. (63.50 mm) long	3
	1A2029	BOLT---1.12 in. (28.44 mm) long	3
20	1S8066	LOCK	3
C 21	9S9293	CASE ASSEM. (Includes)	1
22	8S9186	PLUG	1
23	5M2894	WASHER	3

C INDICATES CHANGE

181044

Nota	Ref	Numero	Cant	Nombre De Pieza
		7S-7005	1	GEAR GP-TRANSFER
	1	9S-8006	1	PLUG
		2M-9780	1	SEAL
	2	0L-1351	8	BOLT
	3	2S-0607	1	LOCK
	4	7S-8567	1	VALVE GROUP
				(Includes)
	5	3S-9940	1	POPPET
	6	5S-0907	1	PLUG
	7	7B-3039	1	SPRING
	8	9S-8010	1	PLUG
	9	2S-4078	1	SEAL
	10	9S-4191	2	PLUG
		3J-1907	2	SEAL
	11	9S-8005	1	PLUG
		3K-0360	1	SEAL
	12	1V-2698	1	CAMSHAFT ASSEM.
	13	8S-9129	1	FILTER
	14	8S-9130	1	SCREEN
C	15	3S-7781	1	GASKET
	16	4H-5440	1	COVER
	17	1A-2029	4	BOLT
	18	3B-4506	7	LOCKWASHER
	19	0L-1143	3	BOLT 2.50 in. (63.50 mm) long
		1A-2029	3	BOLT 1.12 in. (28.44 mm) long
	20	3S-8066	3	LOCK
C	21	9G-9293	1	CASE ASSEM.
				(Includes)
	22	8S-9146	1	PLUG
	23	5M-2894	3	WASHER

C	INDICATES CHANGE

4265 4V6974 AIR AND BRAKE CONTROL GROUP--Air Tank, Valves and Lines--Part 1 of 5
Serial No. 41K11282 to 41K11411 inclusive

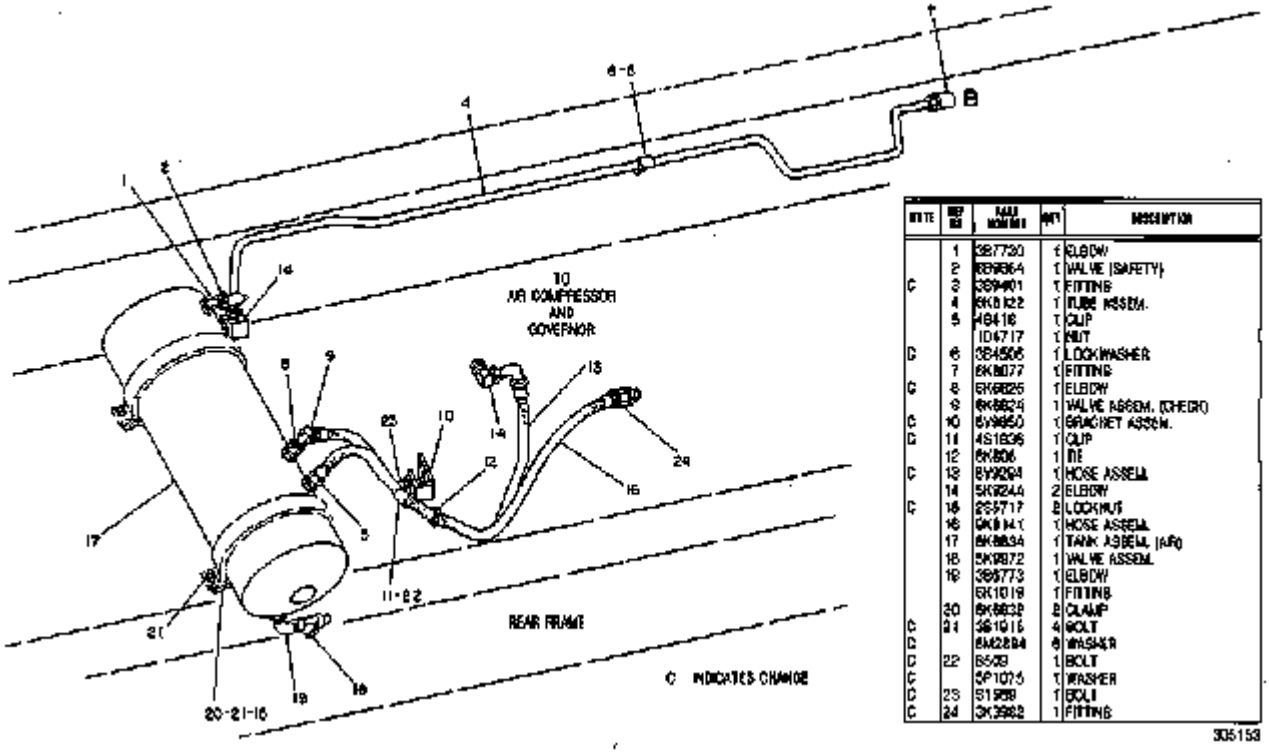

NOTE	REF NO	PART NUMBER	QTY	DESCRIPTION
	1	3B7730	1	ELBOW
	2	8B9864	1	VALVE (SAFETY)
C	3	3B9401	1	FITTING
	4	6K8122	1	TUBE ASSEM.
	5	4B416	1	CLIP
		1D6717	1	NUT
C	6	3B4506	1	LOCKWASHER
	7	6K8077	1	FITTING
C	8	6K6825	1	ELBOW
	9	6K6824	1	VALVE ASSEM. (CHECK)
C	10	6V9650	1	BRACKET ASSEM.
C	11	4S1836	1	CLIP
	12	6K806	1	TEE
C	13	6V9264	1	HOSE ASSEM.
	14	5K9244	2	ELBOW
C	15	2S5717	2	LOCKNUT
	16	6K8141	1	HOSE ASSEM.
	17	6K8834	1	TANK ASSEM. (AIR)
	18	5K9872	1	VALVE ASSEM.
	19	3B5773	1	ELBOW
		6K1019	1	FITTING
	20	6K6838	2	CLAMP
C	21	3B1915	4	BOLT
C		6M2884	8	WASHER
C	22	B503	1	BOLT
C		5P1075	1	WASHER
C	23	B1958	1	BOLT
C	24	3K3982	1	FITTING

305153

Nota	Ref	Numero	Cant	Nombre De Pieza
		4V-6974	1	CONTROL GP-BRAKE & AIR
	1	3B-7730	1	ELBOW
	2	6B-9664	1	VALVE (SAFETY)
C	3	3B-9401	1	FITTING
	4	6K-8122	1	TUBE AS
	5	4B-0418	1	CLIP
		1D-4717	1	NUT
C	6	3B-4506	1	LOCKWASHER
	7	6K-8077	1	UNION-FLARED
C	8	6K-6826	1	ELBOW
	9	6K-6824	1	VALVE AS-CHECK (CHECK)
C	10	8V-9650	1	BRACKET AS
C	11	4S-1936	1	CLIP
	12	6K-0806	1	STRAP-CABLE
C	13	8V-9294	1	HOSE AS
	14	5K-9244	2	ELBOW-FLARED
C	15	2S-5717	2	NUT-LOCK
	16	9K-8141	1	HOSE AS
	17	6K-6834	1	TANK AS (AIR)
	18	5K-9972	1	VALVE AS
	19	3B-6773	1	ELBOW
		6K-1019	1	NIPPLE-PIPE
	20	6K-6832	2	CLAMP
C	21	3B-1915	4	BOLT
C		5M-2894	6	WASHER
C	22	0S-0509	1	BOLT
C		5P-1075	1	WASHER-HARD
C	23	0S-1589	1	BOLT
C	24	3K-3982	1	FITTING

C	CHANGE FROM PREVIOUS TYPE

4265 4V6974 AIR AND BRAKE CONTROL GROUP--Brake Chamber, Horn, Horn Valve and Lines--Part 5 of 5
Serial No. 41K11282 to 41K11411 inclusive. 6K7261 Brake Chamber, 6K6822 Horn, 3D9943 & 7K2738 Valve parts are shown on Pages 136 and 137

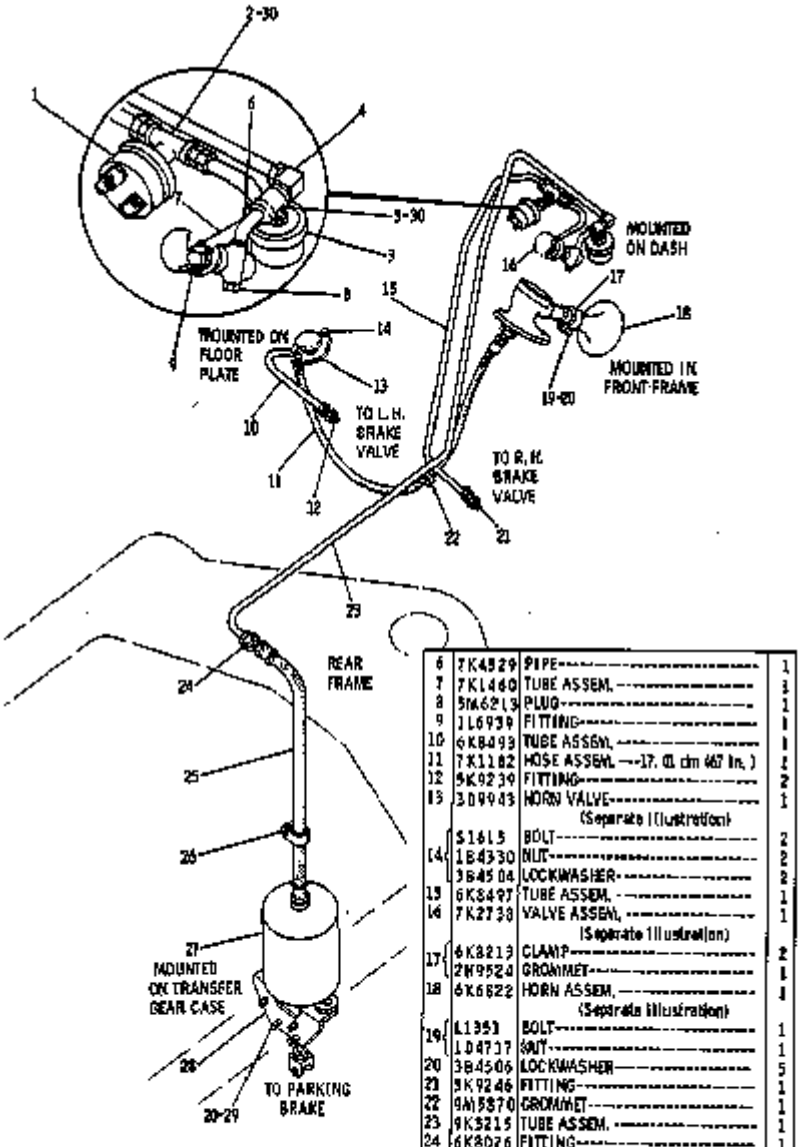

REF NO.	PART NUMBER	DESCRIPTION	QTY.
1	7N5986	SWITCH ASSEM. ---(pressure)----	1
2	9S7744	TEE----------	1
3	7N5985	SWITCH ASSEM. ---(pressure)----	1
4	5K9235	ELBOW----------	1
5	3B7762	TEE----------	1
6	7K4529	PIPE----------	1
7	7K1460	TUBE ASSEM. ----------	1
8	5M6213	PLUG----------	1
9	1L6939	FITTING----------	1
10	6K8493	TUBE ASSEM. ----------	1
11	7K1182	HOSE ASSEM. ---17.01 cm (67 in.)	1
12	9K9239	FITTING----------	2
13	3D9943	HORN VALVE----------	1
		(Separate Illustration)	
14	S1615	BOLT----------	2
	1B4330	NUT----------	2
	3B4504	LOCKWASHER----------	2
15	6K8497	TUBE ASSEM. ----------	1
16	7K2738	VALVE ASSEM. ----------	1
		(Separate Illustration)	
17	6K8213	CLAMP----------	2
	2N9524	GROMMET----------	1
18	6K6822	HORN ASSEM. ----------	1
		(Separate Illustration)	
19	L1351	BOLT----------	1
	1D4717	NUT----------	1
20	3B4506	LOCKWASHER----------	5
21	9K9246	FITTING----------	1
22	9N5870	GROMMET----------	1
23	9K9215	TUBE ASSEM. ----------	1
24	6K8026	FITTING----------	1
25	9S8146	HOSE ASSEM. ---6.73 cm (26.5 in.)	1
26	6K6355	CLIP----------	1
27	6K7261	BRAKE CHAMBER ASSEM. ----------	1
		(Separate Illustration)	
28	6K7238	PLATE ASSEM. ----------	1
29	S1594	BOLT----------	4
30	3B6768	BUSHING----------	2

223793

Nota	Ref	Numero	Cant	Nombre De Pieza
		4V-6974	1	CONTROL GP-BRAKE & AIR
	1	7N-5986	1	SWITCH ASSEM. (pressure)
	2	9S-7744	1	TEE
	3	7N-5985	1	SWITCH ASSEM. (pressure)
	4	5K-9235	1	ELBOW
	5	3B-7762	1	TEE
	6	7K-4529	1	PIPE
	7	7K-1460	1	TUBE ASSEM.
	8	5M-6213	1	PLUG
	9	1L-6939	1	FITTING
	10	6K-8493	1	TUBE ASSEM.
	11	7K-1182	1	HOSE ASSEM. 17.01 dm (67 in.)
	12	5K-9239	2	FITTING
Y	13	3D-9943	1	HORN VALVE
				(Separate Illustration)
	14	0S-1615	2	BOLT
		1B-4330	2	NUT
		3B-4504	2	LOCKWASHER
	15	6K-8497	1	TUBE ASSEM.
Y	16	7K-2738	1	VALVE ASSEM.
				(Separate Illustration)
	17	6K-8213	2	CLAMP
		2H-9524	1	GROMMET
Y	18	6K-6822	1	HORN ASSEM.
				(Separate Illustration)
	19	0L-1351	1	BOLT
		1D-4717	1	NUT
	20	3B-4506	5	LOCKWASHER
	21	5K-9246	1	FITTING
	22	9M-5870	1	GROMMET

	23	9K-3215	1	TUBE ASSEM.
	24	6K-8076	1	FITTING
	25	3S-8146	1	HOSE ASSEM. 6.73 dm (26.5 in.)
	26	6K-6355	1	CLIP
Y	27	6K-7261	1	BRAKE CHAMBER ASSEM.
				(Separate Illustration)
	28	6K-7238	1	PLATE ASSEM.
	29	0S-1594	4	BOLT
	30	3B-6768	2	BUSHING

Y	SEPARATE ILLUSTRATION

4265 4V6974 AIR AND BRAKE CONTROL GROUP--Front Brake Lines--Part 4 of 5
Serial No. 41K11282 to 41K11411 inclusive

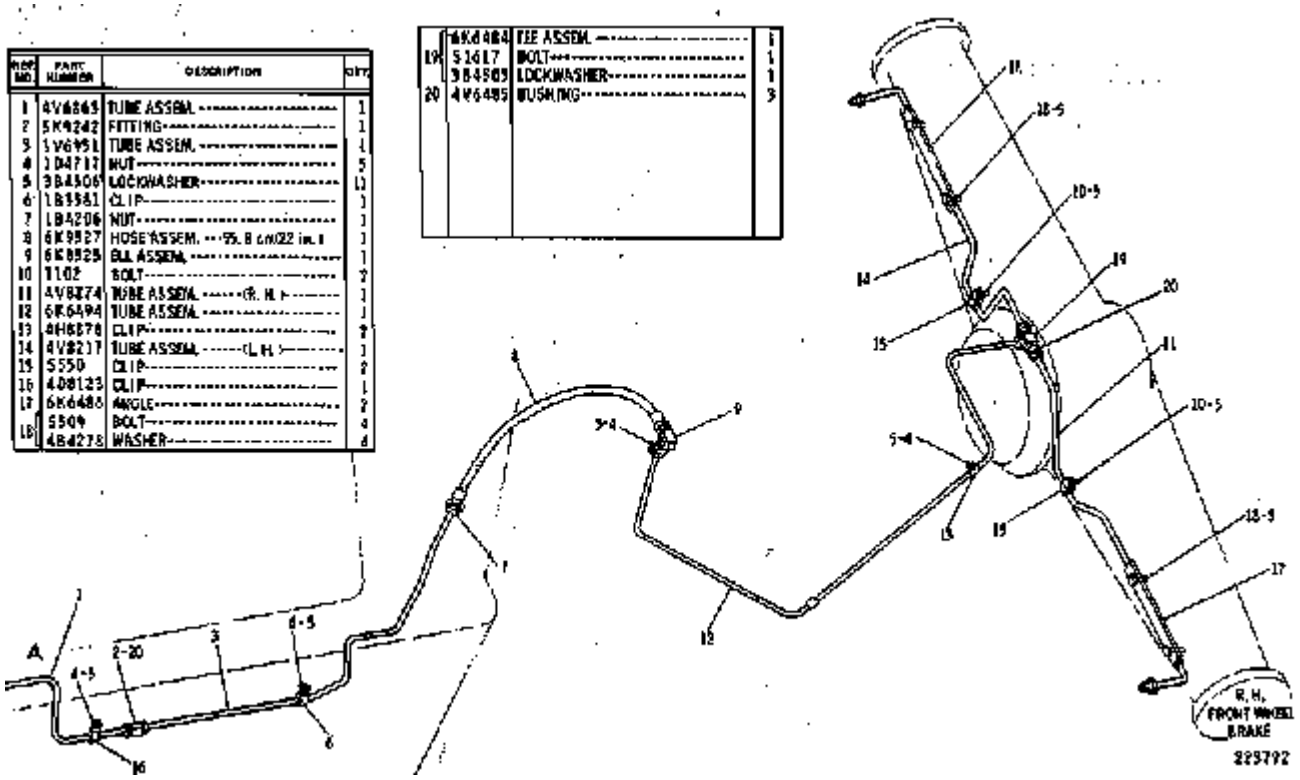

REF NO.	PART NUMBER	DESCRIPTION	QTY
1	4V6863	TUBE ASSEM.	1
2	5K9242	FITTING	1
3	1V6951	TUBE ASSEM.	1
4	1D4717	NUT	5
5	9B4506	LOCKWASHER	13
6	1B3581	CLIP	1
7	1B4206	NUT	1
8	6K9527	HOSE ASSEM.	1
9	6K8525	ELL ASSEM.	1
10	1102	BOLT	2
11	4V8274	TUBE ASSEM. (R. H.)	1
12	6K6494	TUBE ASSEM.	1
13	4H8578	CLIP	2
14	4V8217	TUBE ASSEM. (L. H.)	1
15	5550	CLIP	2
16	4D8123	CLIP	1
17	6K6486	ANGLE	2
18	5509	BOLT	4
	4B4278	WASHER	4
	6K6484	TEE ASSEM.	1
19	5161T	BOLT	1
	9B4503	LOCKWASHER	1
20	4V6485	BUSHING	3

Nota	Ref	Numero	Cant	Nombre De Pieza
		4V-6974	1	CONTROL GP-BRAKE & AIR
	1	4V-6863	1	TUBE ASSEM.
	2	5K-9242	1	FITTING
	3	1V-6951	1	TUBE ASSEM.
	4	1D-4717	5	NUT
	5	3B-4506	11	LOCKWASHER
	6	1B-3581	1	CLIP
	7	1B-4206	1	NUT
	8	6K-9527	1	HOSE ASSEM. 55.8 cm(22 in.)
	9	6K-8525	1	ELL ASSEM.
	10	0T-0102	2	BOLT
	11	4V-8274	1	TUBE ASSEM. (R.H.)
	12	6K-6494	1	TUBE ASSEM.
	13	4H-8878	2	CLIP
	14	4V-8217	1	TUBE ASSEM. (L.H.)
	15	0S-0550	2	CLIP
	16	4D-8123	1	CLIP
	17	6K-6486	2	ANGLE
	18	0S-0509	4	BOLT
		4B-4278	4	WASHER
	19	6K-6484	1	TEE ASSEM.
		0S-1617	1	BOLT
		3B-4505	1	LOCKWASHER
	20	4V-6485	3	BUSHING

4265 4V6974 AIR AND BRAKE CONTROL GROUP--Rear Brake Lines & Cylinders--Part 3 of 5
Serial No. 41K11282 to 41K11411 inclusive
4V5414 Cylinder parts are shown on Page 132R

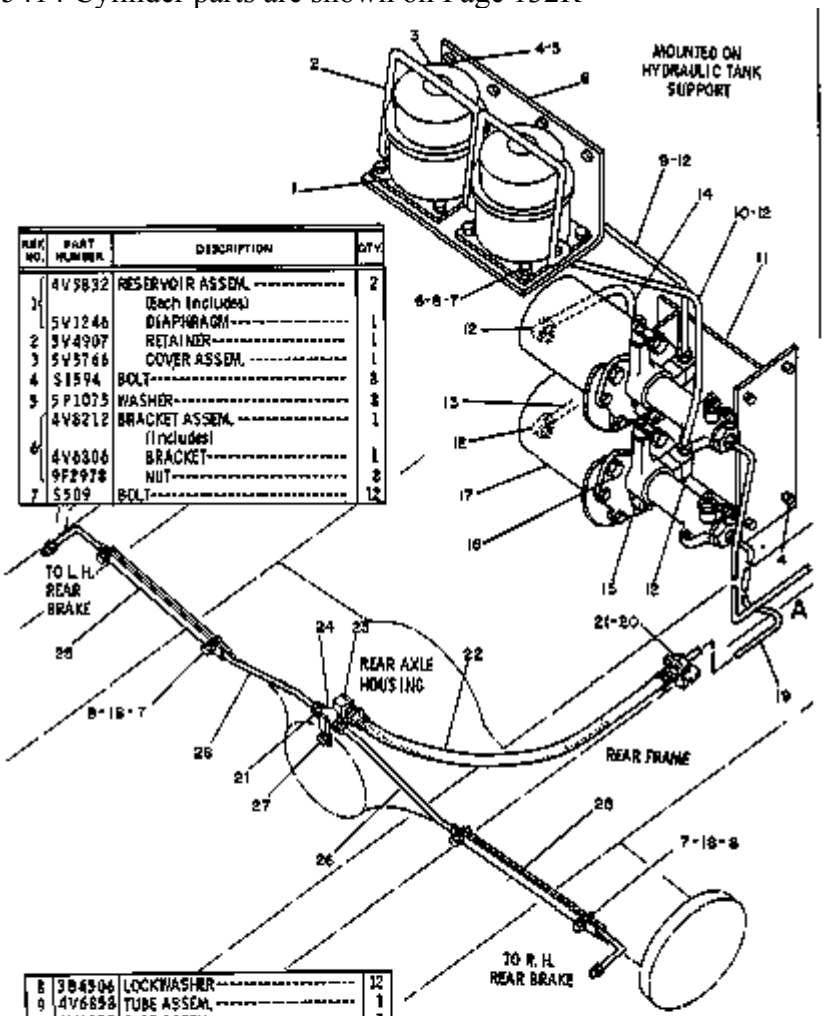

REF. NO.	PART NUMBER	DESCRIPTION	QTY.
1	4V5832	RESERVOIR ASSEM. (Each Includes)	2
	5V1246	DIAPHRAGM	1
2	5V4907	RETAINER	1
3	5V5766	COVER ASSEM.	1
4	S1594	BOLT	8
5	5P1075	WASHER	8
6	4V8212	BRACKET ASSEM. (Includes)	1
	4V6806	BRACKET	1
	9F2978	NUT	8
7	S509	BOLT	12

REF. NO.	PART NUMBER	DESCRIPTION	QTY.
8	3B4504	LOCKWASHER	12
9	4V6853	TUBE ASSEM.	1
10	4V6859	TUBE ASSEM.	1
C 11	7V1728	PLATE ASSEM.	1
12	5K9244	ELBOW	6
13	4V6860	TUBE ASSEM.	1
14	4V6861	TUBE ASSEM.	1
15	4H6112	BREATHER	2
	3B7722	BUSHING	2
16	S1595	BOLT	4
	5P8245	WASHER	4
Y 17	4V5414	CYLINDER GROUP	2
18	8B4278	WASHER	4
19	4V6862	TUBE ASSEM.	1
20	7B4206	NUT	1
	6B863	WASHER	1
21	4V6485	BUSHING	3
22	6K6827	HOSE ASSEM. --48.9 cm(17.3 in.)--	1

REF. NO.	PART NUMBER	DESCRIPTION	QTY.
23	5K9243	FITTING	1
24	6K6828	TEE ASSEM.	1
25	6K6831	ANGLE	2
26	4V8275	TUBE ASSEM.	1
27	51617	BOLT	1
	3B4505	LOCKWASHER	1
28	4V8276	TUBE ASSEM.	1
		THE FOLLOWING REPAIR KIT IS AVAILABLE:	
	4V9415	KIT---(Pressure Converter) (Includes felt, cup, spring, seals, valve, o-rings & retaining ring)	1

Y SEPARATE ILLUSTRATION
C INDICATES CHANGE
306174

Nota	Ref	Numero	Cant	Nombre De Pieza
		4V-6974	1	CONTROL GP-BRAKE & AIR
	1	4V-3832	2	RESERVOIR ASSEM.
				(Each Includes)
		5V-1246	1	DIAPHRAGM
	2	5V-4907	1	RETAINER
	3	5V-5766	1	COVER ASSEM.
	4	0S-1594	8	BOLT
	5	5P-1075	8	WASHER
	6	4V-8212	1	BRACKET ASSEM.
				(Includes)
		4V-6806	1	BRACKET
		9F-2978	8	NUT
	7	0S-0509	12	BOLT
	8	3B-4506	12	LOCKWASHER
	9	4V-6858	1	TUBE ASSEM.
	10	4V-6859	1	TUBE ASSEM.
C	11	7V-1728	1	PLATE ASSEM.
	12	5K-9244	6	ELBOW
	13	4V-6860	1	TUBE ASSEM.
	14	4V-6861	1	TUBE ASSEM.
	15	4H-6112	2	BREATHER
		3B-7722	2	BUSHING
	16	0S-1595	4	BOLT
		5P-8245	4	WASHER
Y	17	4V-5414	2	CYLINDER GROUP
	18	4B-4278	4	WASHER
	19	4V-6862	1	TUBE ASSEM.
	20	1B-4206	1	NUT
		6B-0863	1	WASHER
	21	4V-6485	3	BUSHING

	22	6K-6827	1	HOSE ASSEM. 43.9 cm(17.3 in.)
	23	5K-9243	1	FITTING
	24	6K-6828	1	TEE ASSEM.
	25	6K-6831	2	ANGLE
	26	4V-8275	1	TUBE ASSEM.
	27	0S-1617	1	BOLT
		3B-4505	1	LOCKWASHER
	28	4V-8276	1	TUBE ASSEM.
				THE FOLLOWING REPAIR KIT IS AVAILABLE:
		4V-5415	1	KIT (Pressure Converter)
				(Includes felt, cup, spring, SEALS, VALVE, O-RINGS & RETAINING RING)

C	INDICATES CHANGE
Y	SEPARATE ILLUSTRATION

41K11287 930 WHEEL LOADER Identificación de Piezas
Número de publicación SEBP1052-01 Fecha de publicación 1984/12/01 Fecha de actualización 1994/09/05

5V3009 STEERING CONTROL GROUP--Part 2 of 2
Serial No. 41K10160 to 41K12134 inclusive. 8J430 Valve parts are shown on Page 141

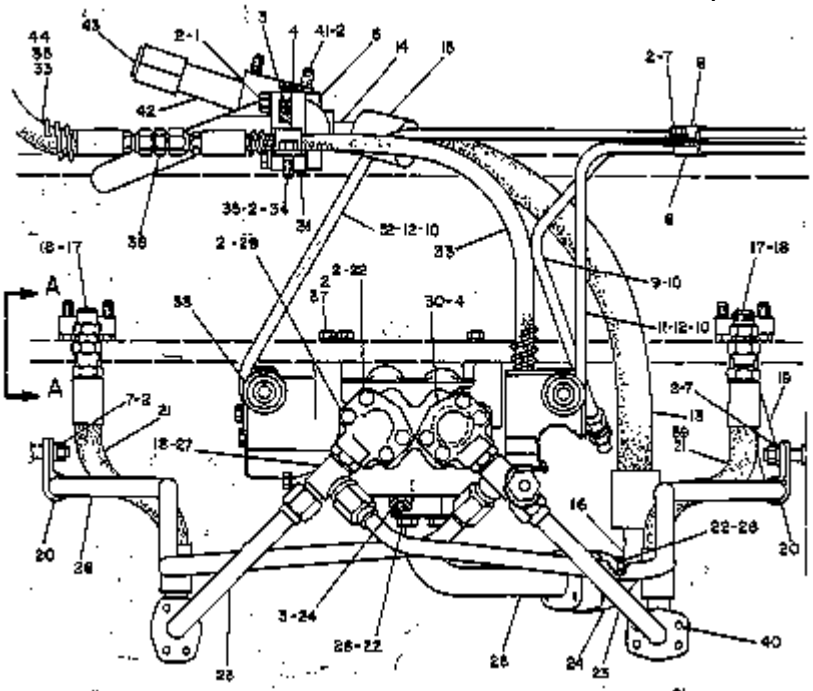

REF NO.	PART NUMBER	DESCRIPTION	QTY
1	5 1590	BOLT	4
2	5P3075	WASHER	23
3	4J520	SEAL	4
4	415267	SEAL	3
5	6K7496	FLANGE	2
6	2R1866	CLAMP	1
7	1D4717	NUT	3
8	9S1350	CLIP	1
9	5V2987	TUBE ASSEM.	1
	2R6806	CONNECTOR	1
10	5J1907	SEAL	3
11	8K7783	TUBE ASSEM.	1
12	3U7947	ELBOW	2
13	9K1524	HOSE ASSEM.	1
&	9S247	HOSE—19.61n. (50 cm)	
14	8S8111	STEM ASSEM. —(30°)—	1
15	3S7166	SLEEVE	2
16	5S6102	STEM ASSEM. —(90°)—	1
17	9M4584	ADAPTER	2
18	2M9780	SEAL	4
19	4V7986	TUBE ASSEM.	1
20	8F8513	CLIP	2
21	7K2839	HOSE ASSEM.	4
22	51588	BOLT	12
23	4V7987	TUBE ASSEM.	2
24	1P4577	FLANGE	4
25	9K1490	TUBE ASSEM.	1
26	9M2894	WASHER	8
27	3H4136	TEE	2
28	4V7988	TUBE ASSEM.	1
29	1C2251	BOLT	4
30	4V7985	ELBOW	2
31	4K6944	PLATE	1
32	8K7782	TUBE ASSEM.	1
33	2V5007	HOSE ASSEM.	2
	8M1505	CONNECTOR	1
	3K360	SEAL	1
34	51594	BOLT	1
35	5B7314	CLIP	2
36	3R2704	UNION	1
37	3B1915	BOLT	3
38	8J430	STEERING VALVE GROUP (Separate Illustration)	1
39	1P4574	FLANGE	3
	4J5140	SEAL	4
40	4B3388	BOLT	16
	9M1974	WASHER	16
41	51143	BOLT	4
42	5V5655	TUBE ASSEM.	1
43	9S9008	PLUG	1
	3D2824	SEAL	1
44	51615	BOLT	1
	1B4330	NUT	1
	3B4504	LOCKWASHER	1
	4B4276	WASHER	2
	3L2415	BOLT	2
	1B4205	NUT	2

& ORDER BY THE INCH ● NOT SHOWN-TO STEERING STOPS ON FRONT FRAME

177867

Nota	Ref	Numero	Cant	Nombre De Pieza
		5V-3009	1	CONTROL GP-STEERING
	1	0S-1590	4	BOLT
	2	5P-1075	23	WASHER
	3	4J-0520	4	SEAL
	4	4J-5267	3	SEAL
	5	6K-7496	2	FLANGE
	6	2R-1866	1	CLAMP
	7	1D-4717	3	NUT
	8	9S-1350	1	CLIP
	9	5V-2987	1	TUBE ASSEM.
		2R-6806	1	CONNECTOR
	10	3J-1907	3	SEAL
	11	8K-7783	1	TUBE ASSEM.
	12	030-7947	2	ELBOW
	13	9K-1524	1	HOSE ASSEM.
H		9S-0247		HOSE 19.6 in.(50 cm)
	14	8S-8111	1	STEM ASSEM. (30 degrees)
	15	3S-7166	2	SLEEVE
	16	5S-6102	1	STEM ASSEM. (90 degrees)
	17	9M-4584	2	ADAPTER
	18	2M-9780	4	SEAL
	19	4V-7986	1	TUBE ASSEM.
	20	8F-8513	2	CLIP
	21	7K-2839	4	HOSE ASSEM.
	22	0S-1588	12	BOLT
	23	4V-7987	2	TUBE ASSEM.
	24	1P-4577	4	FLANGE
	25	9K-1490	1	TUBE ASSEM.
	26	5M-2894	8	WASHER
	27	031-4136	2	TEE

	28	4V-7988	1	TUBE ASSEM.
	29	1C-2251	4	BOLT
	30	4V-7985	2	ELBOW
	31	4K-6544	1	PLATE
	32	8K-7782	1	TUBE ASSEM.
	33	2V-5007	2	HOSE ASSEM.
		8M-0505	1	CONNECTOR
		3K-0360	1	SEAL
	34	0S-1594	1	BOLT
	35	5B-7314	2	CLIP
	36	3R-2704	1	UNION
	37	3B-1915	3	BOLT
Y	38	8J-0430	1	STEERING VALVE GROUP
				(Separate Illustration)
	39	1P-4574	8	FLANGE
		4J-5140	4	SEAL
	40	4B-3388	16	BOLT
		9M-1974	16	WASHER
	41	0L-1143	4	BOLT
	42	5V-5655	1	TUBE ASSEM.
	43	9S-9008	1	PLUG
		3D-2824	1	SEAL
	44	0S-1615	1	BOLT
		1B-4330	1	NUT
		3B-4504	1	LOCKWASHER
		4B-4276	2	WASHER
J		3L-2415	2	BOLT
J		1B-4205	2	NUT

H	ORDER BY THE INCH
Y	SEPARATE ILLUSTRATION

NOT SHOWN-TO STEERING STOPS ON

4303 7J9838 STEERING CYLINDER GROUP (7K9429 N/S)--(Change 2)--3.00" Bore x 14.30" Stroke
2 Required

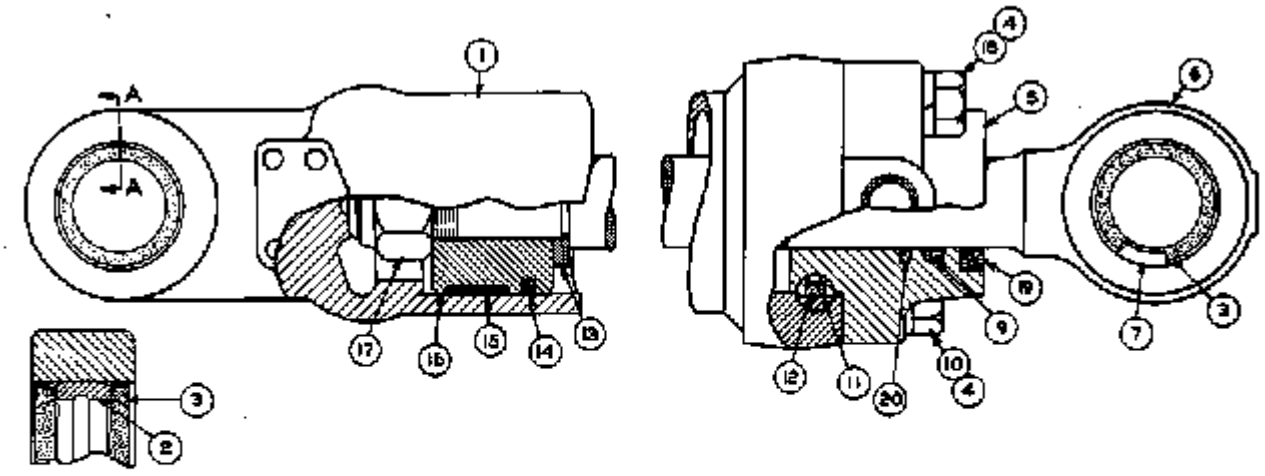

REF NO	PART NUMBER	DESCRIPTION	QTY
1	7J9839	CYLINDER ASSEM. (Includes)	1
2	7J9842	BEARING	1
B 3	5P91	SEAL	4
B 4	9B6510	LOCKWASHER	4
C 5	9J496	HEAD	1
6	7J9843	ROD ASSEM. (Includes)	1
7	7J9842	BEARING	1
9	9J8190	SEAL	1
10	8S9092	BOLT	2
11	6J5791	RING	1
12	9N8848	SEAL	1
13	6J5737	WASHER	1
14	6J1972	SEAL ASSEM.	1
15	6J5733	RING	1
16	6J5736	PISTON	1
17	6J5730	NUT	1
18	81623	BOLT	2
19	4J8979	SEAL	1
20	6J9733	SEAL	1

B NOT PART OF 7J9838 CYLINDER GROUP C INDICATES CHANGE

204815

Nota	Ref	Numero	Cant	Nombre De Pieza
		7J-9838	1	CYLINDER GP-STEERING
R	1	7J-9839	1	CYLINDER AS-HYDRAULIC
	2	7J-9842	1	BEARING-SLEEVE
A	3	5P-0091	4	SEAL-LIP TYPE
	4	3B-4510	4	LOCKWASHER
C	5	9J-0496	1	HEAD
R	6	7J-9843	1	ROD AS-PISTON
	7	7J-9842	1	BEARING-SLEEVE
	9	5J-8150	1	SEAL-U-CUP
	10	8S-9092	2	BOLT
	11	6J-5731	1	RING-BACK-UP
	12	5H-8848	1	SEAL-O-RING
	13	6J-5737	1	WASHER
	14	6J-1972	1	SEAL AS
	15	6J-5733	1	RING-WEAR
	16	6J-5736	1	PISTON
	17	6J-5736	1	PISTON
	18	0S-1625	2	BOLT
	19	4J-8979	1	SEAL-LIP TYPE
	20	6J-9733	1	SEAL-RING

A	NOT PART OF THIS GROUP
C	CHANGE FROM PREVIOUS TYPE
R	REMFG PART MAY BE AVAILABLE

41K11287 930 WHEEL LOADER Identificación de Piezas
Número de publicación SEBP1052-01 Fecha de publicación 1984/12/01 Fecha de actualización 1994/09/05

7V2942 SUPPLEMENTAL STEERING GROUP
Serial No. 41K10160 to 41K12134 inclusive
7J9976 Valve parts are shown on Page 145. AN ATTACHMENT

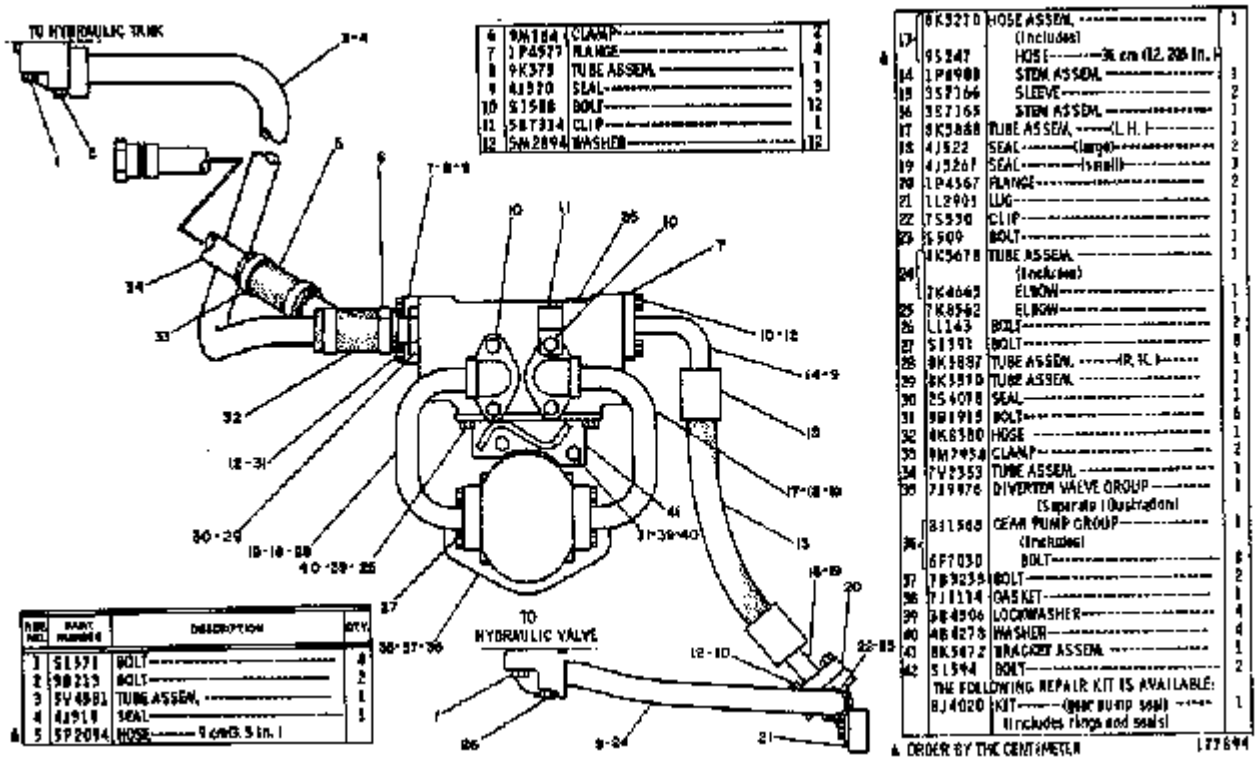

REF. NO.	PART NUMBER	DESCRIPTION	QTY.
1	5L571	BOLT	4
2	9B213	BOLT	2
3	5V4881	TUBE ASSEM.	1
4	4J918	SEAL	1
A 5	5P2094	HOSE (9 cm/3.5 in.)	
6	9M184	CLAMP	2
7	1P4977	FLANGE	4
8	9K379	TUBE ASSEM.	1
9	4J920	SEAL	3
10	9L588	BOLT	12
11	5B7314	CLIP	1
12	5M2894	WASHER	12
13	8K5270	HOSE ASSEM. (Includes)	1
A	9S247	HOSE (36 cm/12.206 in.)	
14	1P8988	STEM ASSEM.	1
15	9S7166	SLEEVE	2
16	9S7165	STEM ASSEM.	1
17	8K5868	TUBE ASSEM. (L.H.)	1
18	4J922	SEAL (Large)	2
19	4J5267	SEAL (Small)	3
20	1P4567	FLANGE	2
21	1L2903	LUG	1
22	7S530	CLIP	1
23	5L509	BOLT	1
24	8K5678	TUBE ASSEM. (Includes)	1
	7K4665	ELBOW	1
25	7K8562	ELBOW	1
26	1L143	BOLT	2
27	5L193	BOLT	8
28	8K5887	TUBE ASSEM. (R.H.)	1
29	8K5910	TUBE ASSEM.	1
30	8S4098	SEAL	1
31	9B1915	BOLT	6
32	8K8580	HOSE	1
33	9M2958	CLAMP	2
34	7V2353	TUBE ASSEM.	1
35	7J9976	DIVERTER VALVE GROUP (Separate Illustration)	1
36	8J1568	GEAR PUMP GROUP (Includes)	1
	6F7030	BOLT	8
37	7B9239	BOLT	2
38	7J1114	GASKET	1
39	9B4596	LOCKWASHER	4
40	4B4278	WASHER	4
41	8K5872	BRACKET ASSEM.	1
42	5L594	BOLT	2
		THE FOLLOWING REPAIR KIT IS AVAILABLE:	
	8J4020	KIT (gear pump seal) (Includes rings and seals)	1

A ORDER BY THE CENTIMETER 177694

Nota	Ref	Numero	Cant	Nombre De Pieza
		7V-2942	1	STEERING GP-SUPPLEMENTAL
	1	0S-1571	4	BOLT
	2	5B-0213	2	BOLT
	3	5V-4581	1	TUBE ASSEM.
	4	4J-0519	1	SEAL
H	5	5P-2094		HOSE 9 cm(3.5 in.)
	6	9M-0164	2	CLAMP
	7	1P-4577	4	FLANGE
	8	9K-0375	1	TUBE ASSEM.
	9	4J-0520	3	SEAL
	10	0S-1588	12	BOLT
	11	5B-7314	1	CLIP
	12	5M-2894	12	WASHER
	13	8K-5270	1	HOSE ASSEM.
				(Includes)
H		9S-0247		HOSE 31 cm (12.205 in.)
	14	1P-6908	1	STEM ASSEM.
	15	3S-7166	2	SLEEVE
	16	3S-7165	1	STEM ASSEM.
	17	8K-5888	1	TUBE ASSEM. (L.H.)
	18	4J-0522	2	SEAL (large)
	19	4J-5267	3	SEAL (small)
	20	1P-4567	2	FLANGE
	21	1L-2901	1	LUG
	22	7S-0530	1	CLIP
	23	0S-0509	1	BOLT
	24	8K-5678	1	TUBE ASSEM.
				(Includes)
		2K-4665	1	ELBOW
	25	7K-8562	1	ELBOW

	26	0L-1143	2	BOLT
	27	0S-1591	8	BOLT
	28	8K-5887	1	TUBE ASSEM. (R.H.)
	29	8K-5570	1	TUBE ASSEM.
	30	2S-4078	1	SEAL
	31	3B-1915	6	BOLT
	32	4K-8380	1	HOSE
	33	9M-7958	2	CLAMP
	34	7V-2353	1	TUBE ASSEM.
Y	35	7J-9976	1	DIVERTER VALVE GROUP
				(Separate Illustration)
	36	8J-1568	1	GEAR PUMP GROUP
				(Includes)
		6F-7030	8	BOLT
	37	7B-3235	2	BOLT
	38	7J-8114	1	GASKET
	39	3B-4506	4	LOCKWASHER
	40	4B-4278	4	WASHER
	41	8K-5672	1	BRACKET ASSEM.
	42	0S-1594	2	BOLT
				THE FOLLOWING REPAIR KIT IS AVAILABLE:
		8J-4020	1	KIT (gear pump seal)
				(Includes rings and seals)

H	ORDER BY THE CENTIMETER
Y	SEPARATE ILLUSTRATION

4265 4D2287 VALVE ASSEMBLY
Part of 2R617 Brake Foot Control Valve Assembly shown on Page 133

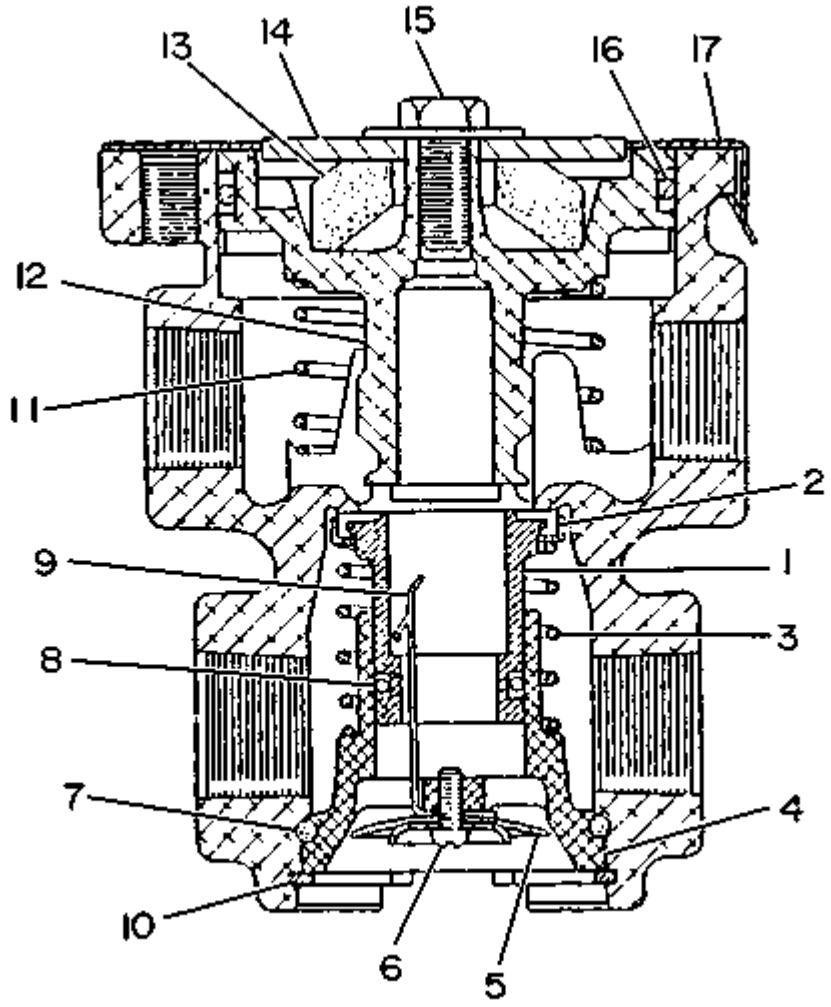

Nota	Ref	Numero	Cant	Nombre De Pieza
		4D-2287	1	VALVE AS
	1	4D-2289	1	VALVE AS
		4D-2295	1	VALVE
	2	1S-3612	1	RETAINER-VALVE
	3	4D-2298	1	SPRING
	4	5D-9702	1	SEAT
	5	4D-2292	1	DIAPHRAGM
	6	5D-8412	1	SCREW-ROUND HEAD
		4D-2293	1	WASHER
	7	5M-2057	1	SEAL-O-RING
	8	4D-2297	1	SEAL
	9	4D-2291	1	SPRING
	10	004-1683	1	RING-SNAP
	11	4D-2634	1	SPRING
	12	5D-0767	1	PISTON AS
	13	5D-0768	1	SPRING (RUBBER)
	14	4D-2302	1	SEAT
	15	031-0215	1	BOLT-SELF LOCKING
		4D-2303	1	WASHER
	16	7F-8268	1	SEAL-O-RING
	17	4D-2305	1	RETAINER

5112 5V4772 BUCKET POSITIONER AND INDICATOR GROUP--Part 2 of 2
Serial No. 41K10160-Up
5V9151 Cylinder parts are shown on Page 203B

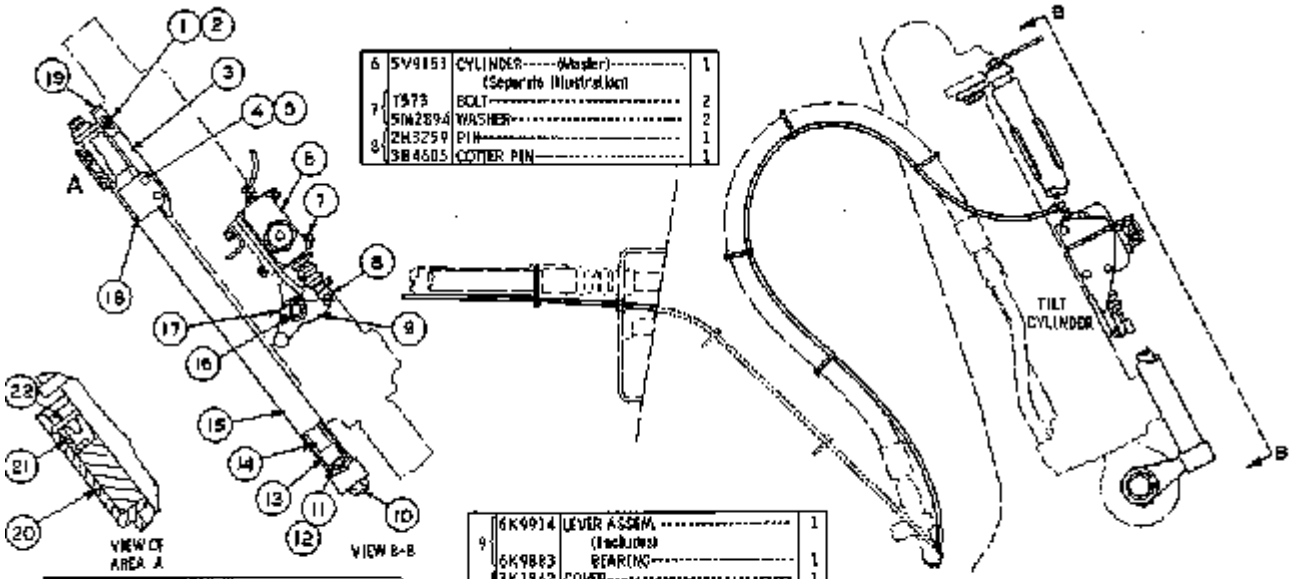

REF NO.	PART NUMBER	DESCRIPTION	QTY
1	2A762	BOLT	1
	5P937	WASHER	1
2	4B4276	WASHER	1
3	7K7123	CAM	1
4	S1618	BOLT	2
5	2R1018	NUT	2
6	5V9151	CYLINDER ----- (Master) ----- (Separate Illustration)	1
7	T573	BOLT	2
	5M2894	WASHER	2
8	2H3259	PIN	1
	3B4605	COTTER PIN	1
9	6K9914	LEVER ASSEM. (Includes)	1
	6K9883	BEARING	1
10	7K1862	COVER	1
	2H1142	RING	1
11	4K8977	NUT	1
12	1K502	WASHER	1
13	5V4125	BEARING	1
14	7K1871	SHAFT	1
15	5V1803	TUBE ASSEM.	1
16	2J6556	RING	1
17	7K383	LOCK	1
18	7K7122	CLAMP	2
19	4K4258	STRIP	1
20	5V1718	BEARING	1
21	7K1864	SEAL	1
C 22	8N7294	RETAINER	1

C INDICATES CHANGE 180837

Nota	Ref	Numero	Cant	Nombre De Pieza
		5V-4772	1	POSITIONER GP
	1	2A-0762	1	BOLT
		5P-0537	1	WASHER
	2	4B-4276	1	WASHER
	3	7K-7123	1	CAM
	4	0S-1618	2	BOLT
	5	2R-0504	2	NUT
Y	6	5V-9151	1	CYLINDER (Master)
				(Separate Illustration)
	7	0T-0573	2	BOLT
		5M-2894	2	WASHER
	8	2H-3259	1	PIN
		3B-4605	1	COTTER PIN
	9	6K-9914	1	LEVER ASSEM.
				(Includes)
		6K-9883	1	BEARING
	10	7K-1862	1	COVER
		2H-1142	1	RING
	11	4K-8977	1	NUT
	12	1K-0502	1	WASHER
	13	5V-4125	1	BEARING
	14	7K-1871	1	SHAFT
	15	5V-1803	1	TUBE ASSEM.
	16	2J-6356	1	RING
	17	7K-0383	1	LOCK
	18	7K-7122	2	CLAMP
	19	4K-4258	1	STRIP
	20	5V-1713	1	BEARING
	21	7K-1864	1	SEAL
C	22	8N-7294	1	RETAINER

C	INDICATES CHANGE
Y	SEPARATE ILLUSTRATION

5055 3G2746 CARTRIDGE GROUP
Serial No. 41K6751-Up
Part of 9J5055 Basic Vane Pump Group shown on Page 189A

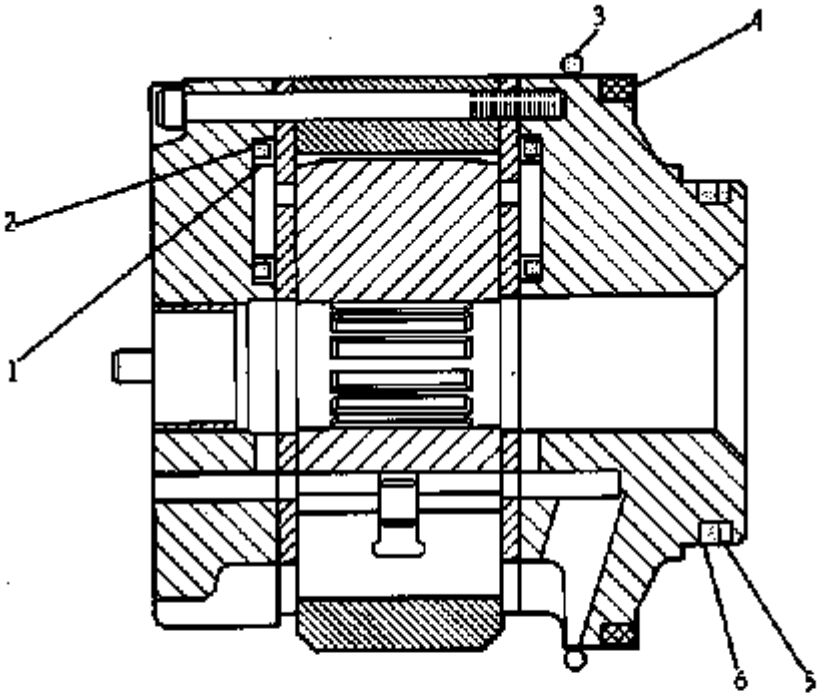

REF. NO.	PART NUMBER	DESCRIPTION	QTY
1	3G1264	RETAINER	4
2	3G1265	SEAL	4
3	2J8163	SEAL	1
4	3G1820	SEAL	1
5	4J9225	RING	1
6	1H5728	SEAL	1

214698

Nota	Ref	Numero	Cant	Nombre De Pieza
		3G-2746	1	CARTRIDGE GP
	1	3G-1264	4	RETAINER
	2	3G-1265	4	SEAL
	3	2J-8163	1	SEAL
	4	3G-1820	1	SEAL
	5	4J-9225	1	RING
	6	1H-5728	1	SEAL

3G8683 CONTROL VALVE GROUP
Serial No. 41K10160-Up. Part of 3G3445 and 3G9129 Hydraulic Tank and Valve Groups shown on Pages 161B & 167B. 3G9020 and 3G8678 Valve parts are shown on Pages 169B & 170A

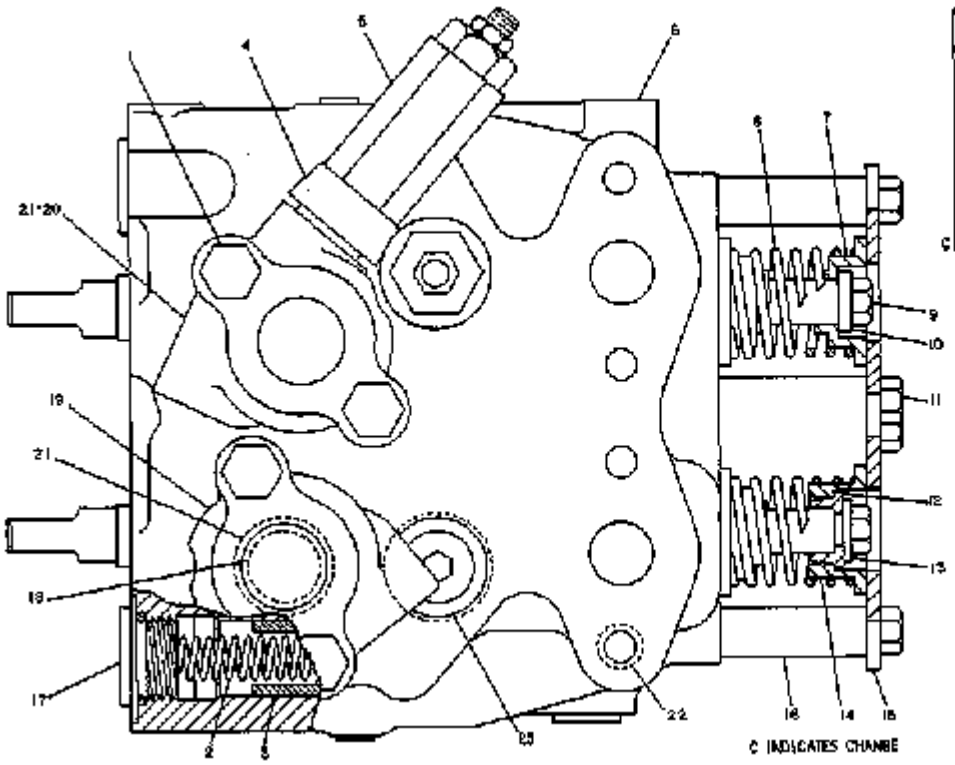

ITEM NO.	PART NUMBER	DESCRIPTION	QTY
1	1D4566	BOLT	4
2	2A5888	SPRING	2
3	8J4078	VALVE	2
4	6J5804	BAFFLE	2
5	3G9020	VALVE GROUP (Separate Illustration)	2
6	3G8678	VALVE GROUP (Separate Illustration)	1
7	6J9993	SPACER	2
8	6J9998	SPRING	2
9	5K9107	BOLT	2
10	8F6809	WASHER	1
11	7D9357	BOLT	4
12	5J9091	SPACER	1
13	T689	WASHER	1
14	5J9092	SPACER	1
15	3G9021	PLATE	2
16	8J3639	SPACER	4
17	9S8009	PLUG	2
	4K1388	SEAL	2
18	9J461	SPRING	2
	9J462	VALVE	2
19	9J7268	HOUSING	1
20	5G589	HOUSING	1
21	4F7952	SEAL	2
22	6F6673	SEAL	14
23	4J8997	SEAL	6

Nota	Ref	Numero	Cant	Nombre De Pieza
		3G-8683	1	VALVE GP-CONTROL
	1	1D-4566	4	BOLT
	2	2A-5885	2	SPRING
	3	5J-9078	2	VALVE
	4	6J-5804	2	BAFFLE
Y	5	3G-9020	2	VALVE GROUP
				(Separate Illustration)
Y	6	3G-8678	1	VALVE GROUP
				(Separate Illustration)
	7	6J-9993	3	SPACER
	8	6J-9998	2	SPRING
C	9	5K-9107	2	BOLT
	10	8F-6809	1	WASHER
	11	7D-9357	4	BOLT
	12	5J-9091	1	SPACER
	13	0T-0689	1	WASHER
	14	5J-9092	1	SPACER
	15	3G-9021	2	PLATE
	16	8J-3639	4	SPACER
	17	9S-8009	2	PLUG
		4K-1388	2	SEAL
	18	9J-0461	2	SPRING
		9J-0462	2	VALVE
	19	9J-7268	1	HOUSING
	20	3G-0589	1	HOUSING
	21	4F-7952	2	SEAL
	22	6F-6672	14	SEAL
	23	4J-8997	6	SEAL
C				INDICATES CHANGE

Y	SEPARATE ILLUSTRATION

3G9019 CONTROL VALVE GROUP--Type 1
Serial No. 41K10160-Up
Part of 3G9129 Hydraulic Tank and Valve Group shown on Pages 167A & 167E
3G9020 Valve parts are shown on Page 169B. AN ATTACHMENT

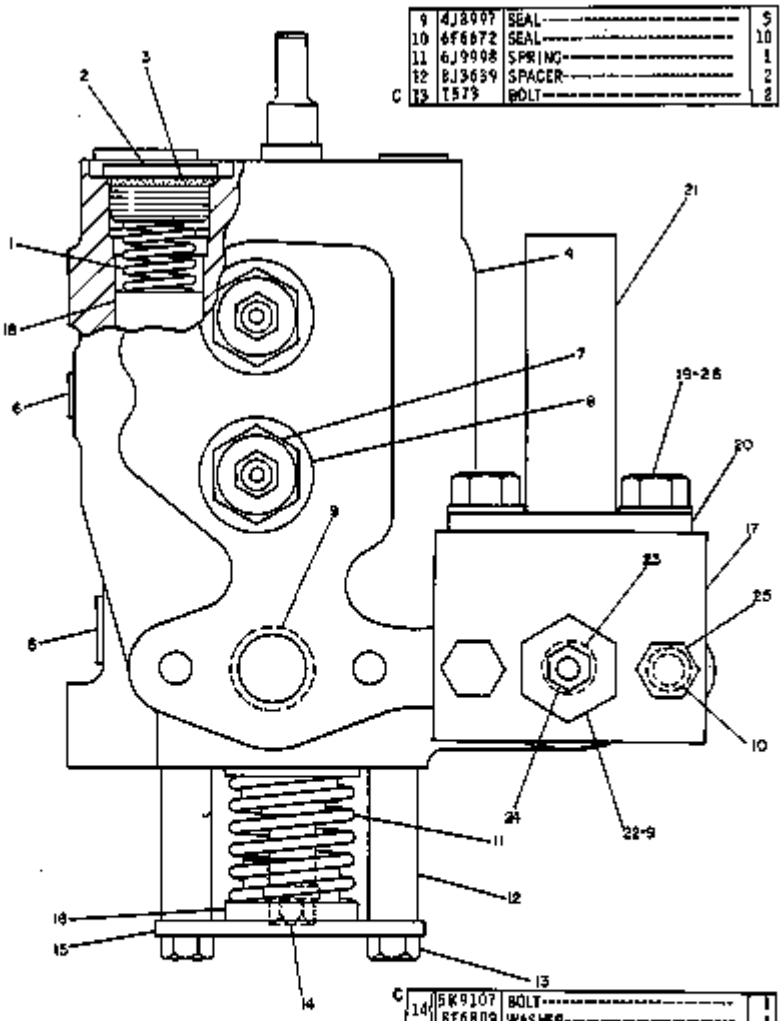

REF. NO.	PART NUMBER	DESCRIPTION	QTY
1	2A5825	SPRING	1
2	9S8009	PLUG	1
3	4K1388	SEAL	1
4	3G9017	VALVE GROUP	1
		(Includes)	
5	9S8005	PLUG	2
	3K360	SEAL	2
6	9S8003	PLUG	1
	1J9671	SEAL	1
7	3G9020	VALVE GROUP	2
		(Separate Illustration)	
8	6J5804	BAFFLE	2

REF. NO.	PART NUMBER	DESCRIPTION	QTY
9	4J8907	SEAL	5
10	6F6872	SEAL	10
11	6J9908	SPRING	1
12	8J3639	SPACER	2
C 13	T573	BOLT	8
C 14	5K9107	BOLT	1
	6F6809	WASHER	1
15	3G9021	PLATE	1
C 16	5J9088	SPACER	2
17	8J5449	BODY	1
18	9J9078	VALVE	1
C 19	6K7917	BOLT	2
20	9J1986	FLANGE	1
21	9J1985	TUBE ASSEM.	1
22	3G2315	VALVE GROUP	1
		(Includes)	
	6J7539	SEAL	1
23	9J6367	RING	1
	8L2746	SEAL	1
24	3G3726	NUT	1
25	S1623	BOLT	2
C 26	5P8245	WASHER	2

C INDICATES CHANGE

182995

Nota	Ref	Numero	Cant	Nombre De Pieza
		3G-9019	1	VALVE GP-CONTROL
	1	2A-5885	1	SPRING
	2	9S-8009	1	PLUG
	3	4K-1388	1	SEAL
	4	3G-9017	1	VALVE GROUP
				(Includes)
	5	9S-8005	2	PLUG
		3K-0360	2	SEAL
	6	9S-8003	1	PLUG
		1J-9671	1	SEAL
Y	7	3G-9020	2	VALVE GROUP
				(Separate Illustration)
	8	6J-5804	2	BAFFLE
C	14	5K-9107	1	BOLT
		8F-6809	1	WASHER
	15	3G-9021	1	PLATE
C	16	5J-9088	2	SPACER
	17	8J-5449	1	BODY
	18	5J-9078	1	VALVE
C	19	6K-7917	2	BOLT
	20	9J-1986	1	FLANGE
	21	9J-1985	1	TUBE ASSEM.
	22	3G-2315	1	VALVE GROUP
				(Includes)
		6I-7539	1	SEAL
	23	9J-6367	1	RING
		8L-2746	1	SEAL
	24	3G-3726	1	NUT
	25	0S-1623	2	BOLT
C	26	5P-8245	2	WASHER

C	INDICATES CHANGE
Y	SEPARATE ILLUSTRATION

3G9019 CONTROL VALVE GROUP--Type 3
Serial No. 41K10160-Up. Part of 3G9129 Hydraulic Tank and Valve Group shown on Page 167A. 3G9020 Valve parts are shown on Page 169B. AN ATTACHMENT

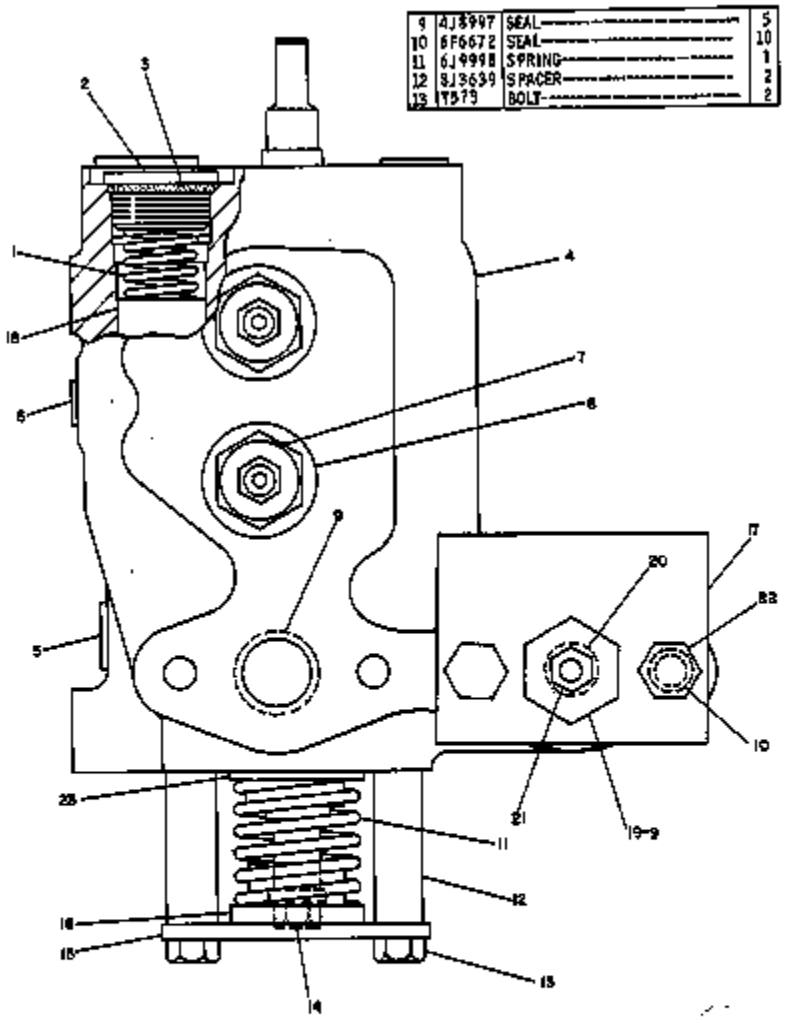

REF NO.	PART NUMBER	DESCRIPTION	QTY
1	2A5885	SPRING	1
2	9S8009	PLUG	1
3	4K1388	SEAL	1
4	3G9017	VALVE GROUP (Includes)	1
5	9S8005	PLUG	2
5A	3K360	SEAL	2
6	9S8003	PLUG	1
6A	1J9671	SEAL	1
7	3G9020	VALVE GROUP (Separate Illustration)	2
8	6J8804	BAFFLE	2

	REF NO.	PART NUMBER	DESCRIPTION	QTY
	14	5K9107	BOLT	1
		8F6809	WASHER	1
	15	3G9021	PLATE	1
C	16	5J9095	SPACER	1
	17	8J3449	BODY	1
	18	5J9078	VALVE	1
	19	3G2519	VALVE GROUP (Includes)	1
		6J7539	SEAL	1
	20	9J6367	RING	1
		8L2746	SEAL	1
	21	3G3726	NUT	1
	22	51623	BOLT	2
C	23	8J9597	SPACER	1

C INDICATES CHANGE

182594

Nota	Ref	Numero	Cant	Nombre De Pieza
		3G-9019	1	VALVE GP-CONTROL
	1	2A-5885	1	SPRING
	2	9S-8009	1	PLUG
	3	4K-1388	1	SEAL
	4	3G-9017	1	VALVE GROUP
				(Includes)
	5	9S-8005	2	PLUG
		3K-0360	2	SEAL
	6	9S-8003	1	PLUG
		1J-9671	1	SEAL
Y	7	3G-9020	2	VALVE GROUP
				(Separate Illustration)
	8	6J-5804	2	BAFFLE
	9	4J-8997	5	SEAL
	10	6F-6672	10	SEAL
	11	6J-9998	1	SPRING
	12	8J-3639	2	SPACER
	13	0T-0573	2	BOLT
	14	5K-9107	1	BOLT
		8F-6809	1	WASHER
	15	3G-9021	1	PLATE
C	16	5J-9095	1	SPACER
	17	8J-5449	1	BODY
	18	5J-9078	1	VALVE
	19	3G-2315	1	VALVE GROUP
				(Includes)
		6I-7539	1	SEAL
	20	9J-6367	1	RING
		8L-2746	1	SEAL
	21	3G-3726	1	NUT

	22	0S-1623	2	BOLT
C	23	8J-3557	1	SPACER

C	INDICATES CHANGE
Y	SEPARATE ILLUSTRATION

8J5663 CYLINDER GROUP (Change 0) (9K3157 N/S)--4" Bore x 10.12" Stroke
Part of 9K6717 Multi-Purpose Bucket Arrangement listed on Page 208

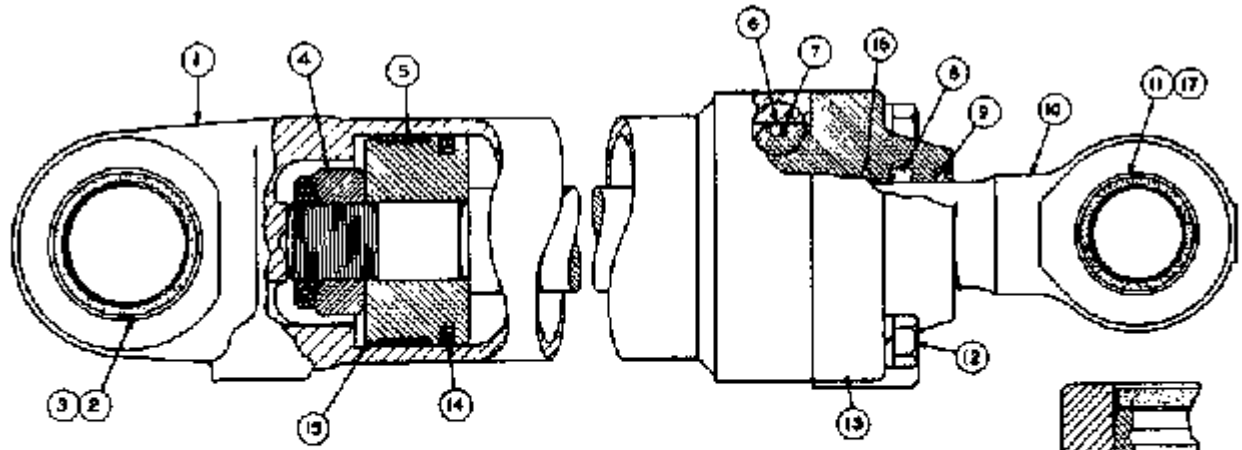

REF NO	PART NUMBER	DESCRIPTION	QTY
1	8J5664	CYLINDER ASSEM (Includes)	1
2	8J5667	BEARING	1
A 3	5P98	SEAL	2
4	2J3950	HUB	1
5	6J2797	RING	1
6	1H8128	SEAL	1
7	2K6818	RING	1
8	5J8200	SEAL	1
9	8K6981	SEAL	1
10	8J5668	ROD ASSEM (Includes)	1
11	2J1838	BEARING	1
12	5J625	BOLT	4
13	3B4951D	LOCKWASHER	4
14	7J6815	HEAD	1
15	5J9402	SEAL ASSEM	1
16	6J8798	PISTON	1
17	5P92	SEAL	2

A NOT PART OF 8J5663 CYLINDER GROUP

Nota	Ref	Numero	Cant	Nombre De Pieza
		8J-5663	1	CYLINDER GROUP
	1	8J-5664	1	CYLINDER ASSEM.
				(Includes)
	2	8J-5667	1	BEARING
H	3	5P-0094	2	SEAL
	4	2J-3950	1	NUT
	5	6J-2797	1	RING
	6	1H-8128	1	SEAL
	7	2K-6830	1	RING
	8	5J-8200	1	SEAL
	9	1K-6981	1	SEAL
R	10	8J-5668	1	ROD ASSEM.
				(Includes)
	11	7J-9688	1	BEARING
	12	0S-1625	4	BOLT
		3B-4510	4	LOCKWASHER
	13	7J-6475	1	HEAD
	14	5J-5402	1	SEAL ASSEM.
	15	6J-2798	1	PISTON
	16	6J-6917	1	SEAL
H	17	5P-0092	2	SEAL
H				NOT PART OF 8J5663 CYLINDER GR
R				REMFG PART MAY BE AVAILABLE

8J5697 CYLINDER GROUP--(Chg. 0)--(9K3164 N/S)--4" Bore x 18.625" Stroke
Also part of 7K970 Top Clamp Arrangement listed on Page 214

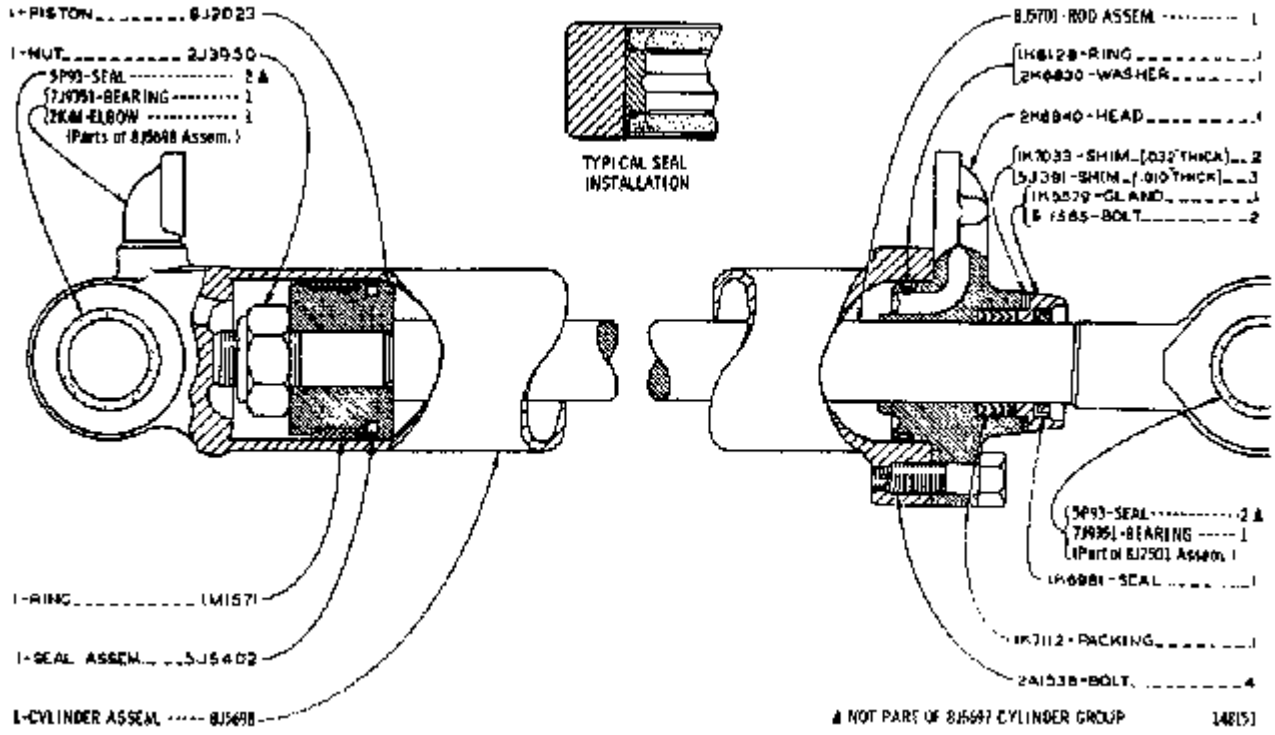

Nota	Ref	Numero	Cant	Nombre De Pieza
		8J-5697	1	CYLINDER GROUP
		8J-2023	1	PISTON
		2J-3950	1	NUT
H		5P-0093	2	SEAL
		7J-9351	1	BEARING
		2K-0044	1	ELBOW
				(Parts of 8J5698 Assem.)
		1M-1571	1	RING
		5J-5402	1	SEAL ASSEM.
		8J-5698	1	CYLINDER ASSEM.
		8J-5701	1	ROD ASSEM.
		1H-8128	1	RING
		2K-6830	1	WASHER
		2K-6840	1	HEAD
		1K-7033	2	SHIM (.032" THICK)
		5J-0391	3	SHIM (.010" THICK)
		1K-5579	1	GLAND
		0S-1585	2	BOLT
H		5P-0093	2	SEAL
		7J-9351	1	BEARING
				(Part of 8J7501 Assem.)
		1K-6981	1	SEAL
		1K-7112	1	PACKING
		2A-1538	4	BOLT
H				NOT PART OF 8J5697 CYLINDER GR

7J6789 CYLINDER GROUP--4" Bore x 10.10" Stroke--2 Required
Only separate parts serviced. When complete Group is required order 8J5663 Cylinder Group plus 2--5P93 Seal
and 2--5P94 Seal. Part of 9K6717 Multi-Purpose Bucket Arrangement listed on Page 208

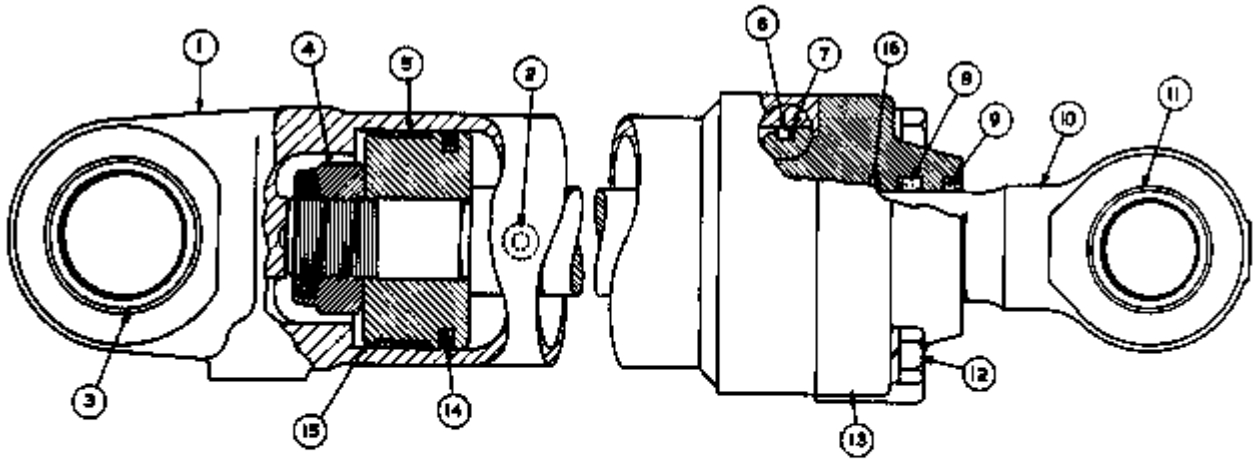

REF. NO.	PART NUMBER	DESCRIPTION	QTY
1	7J6676	CYLINDER ASSEM.	1
2	8F9834	LUG	8
3	2K4511	BEARING (Parts of 7J6676 Assem.)	6
4	2J3950	NUT	1
5	6J2797	RING	1
6	1H8128	SEAL	1
7	2K6830	RING	1
8	5J8200	SEAL	1

9	1K6981	SEAL	1
10	6J2801	ROD ASSEM.	1
11	7K4502	BUSHING (Part of 6J2801 Rod Assem.)	1
12	S L625	BOLT	4
	3B4510	LOCKWASHER	4
13	7J6479	HEAD	1
14	5J5402	SEAL ASSEM.	1
15	6J2798	PISTON	1
16	6J6917	SEAL	1

130624

Nota	Ref	Numero	Cant	Nombre De Pieza
		7J-6789	1	CYLINDER GROUP
	1	7J-6676	1	CYLINDER ASSEM.
	2	8F-9836	1	LUG
	3	2K-4511	1	BEARING
				(Parts of 7J6676 Assem.)
	4	2J-3950	1	NUT
	5	6J-2797	1	RING
	6	1H-8128	1	SEAL
	7	2K-6830	1	RING
	8	5J-8200	1	SEAL
	9	1K-6981	1	SEAL
	10	6J-2801	1	ROD ASSEM.
	11	2K-4502	1	BUSHING
				(Part of 6J2801 Rod Assem.)
	12	0S-1625	4	BOLT
		3B-4510	4	LOCKWASHER
	13	7J-6475	1	HEAD
	14	5J-5402	1	SEAL ASSEM.
	15	6J-2798	1	PISTON
	16	6J-6917	1	SEAL

6J5827 CYLINDER GROUP--4" Bore x 18.60" Stroke
Only separate parts serviced. When complete Group is required order 8J5670 plus 4--5P93 Seal shown on Page 187. Part of 6K9240 Side Dump Bucket Arrangement listed on Page 208

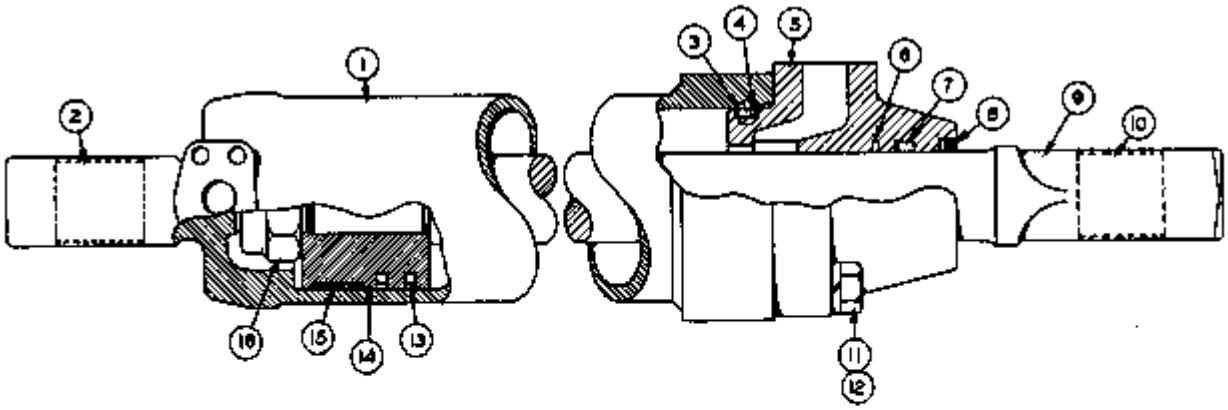

REF. NO.	PART NUMBER	DESCRIPTION	QTY
1	6J5820	CYLINDER ASSEM.	1
2	2K6505	BEARING	1
		(Part of 6J5820 Cylinder Assem.)	
3	1H8826	SEAL	1
4	2K6830	RING	1
5	6J9230	HEAD	1

REF. NO.	PART NUMBER	DESCRIPTION	QTY
6	6J6917	SEAL	1
7	5J8900	SEAL	1
8	1K6981	SEAL	1
9	6J5819	ROD ASSEM.	1
10	2K6505	BEARING	1
		(Part of 6J5819 Rod Assem.)	

REF. NO.	PART NUMBER	DESCRIPTION	QTY
11	5J1629	BOLT	4
12	3B4510	LOCKWASHER	4
13	5J5402	SEAL ASSEM.	2
14	3J9325	PISTON	1
15	8M1571	RING	1
16	2J3950	NUT	1

10954L

Nota	Ref	Numero	Cant	Nombre De Pieza
		6J-5827	1	CYLINDER GROUP
	1	6J-5820	1	CYLINDER ASSEM.
	2	2K-4505	1	BEARING
				(Part of 6J5820 Cylinder Assem.)
	3	1H-8128	1	SEAL
	4	2K-6830	1	RING
	5	6J-9250	1	HEAD
	6	6J-6917	1	SEAL
	7	5J-8200	1	SEAL
	8	1K-6981	1	SEAL
	9	6J-5819	1	ROD ASSEM.
	10	2K-4505	1	BEARING
				(Part of 6J5819 Rod Assem.)
	11	0S-1625	4	BOLT
	12	3B-4510	4	LOCKWASHER
	13	5J-5402	2	SEAL ASSEM.
	14	3J-9325	1	PISTON
	15	1M-1571	1	RING
	16	2J-3950	1	NUT

7K524 CYLINDER MOUNTING GROUP
Part of 9K6717 and 5V4655 Multi-Purpose Bucket Arrangements listed on Pages 208 & 208A. AN ATTACHMENT

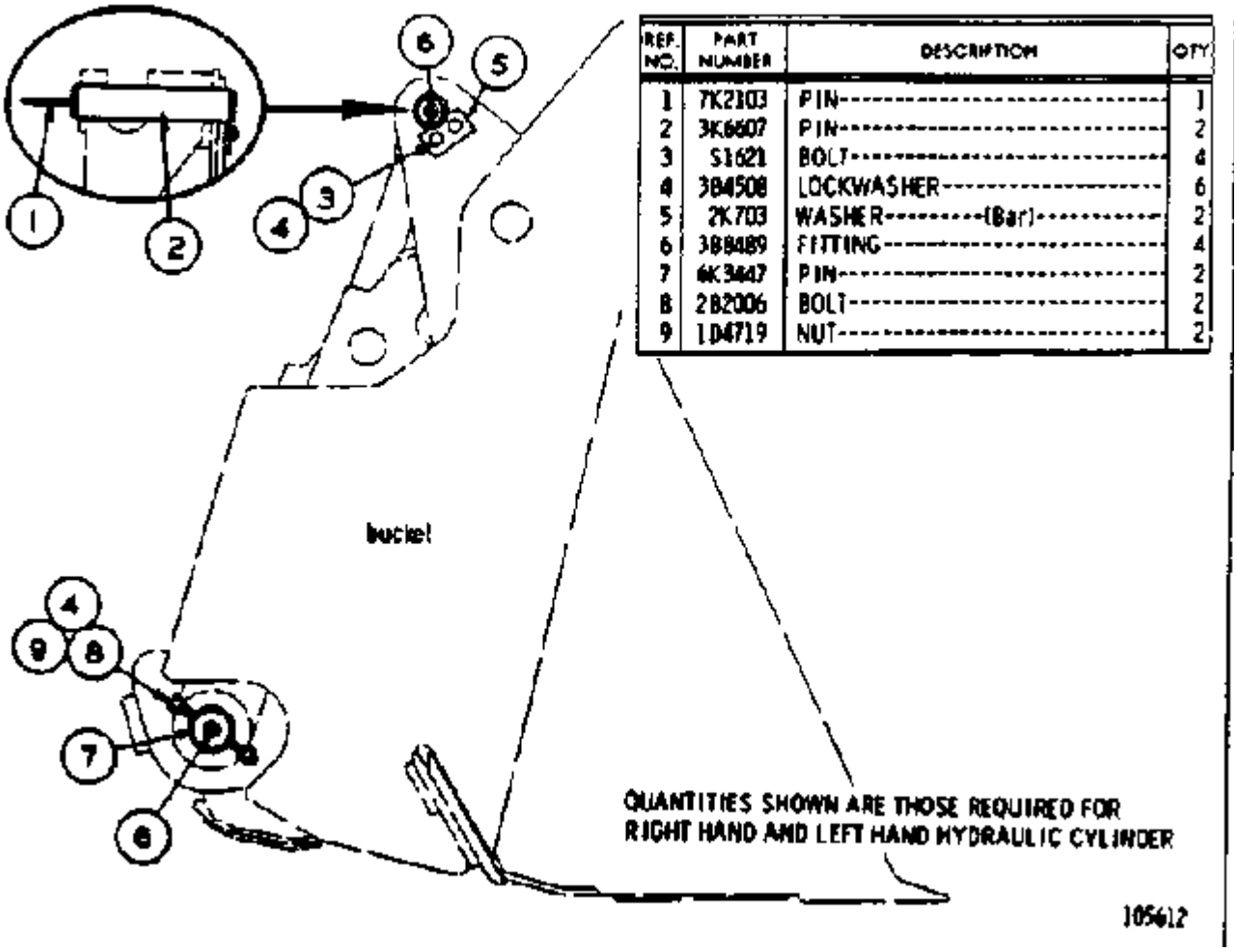

REF. NO.	PART NUMBER	DESCRIPTION	QTY
1	7K2103	PIN	1
2	3K6607	PIN	2
3	S1621	BOLT	4
4	384508	LOCKWASHER	6
5	2K703	WASHER (Bar)	2
6	388489	FITTING	4
7	6K3447	PIN	2
8	282006	BOLT	2
9	104719	NUT	2

Nota	Ref	Numero	Cant	Nombre De Pieza
		7K-0524	1	CYLINDER MOUNTING GROUP
	1	7K-2103	1	PIN
	2	3K-6607	2	PIN
	3	0S-1621	4	BOLT
	4	3B-4508	6	LOCKWASHER
	5	2K-0703	2	WASHER (Bar)
	6	3B-8489	4	FITTING
	7	6K-3447	2	PIN
	8	2B-2006	2	BOLT
	9	1D-4719	2	NUT

5063 5V3755 HAND CONTROL GROUP
Serial No. 41K10160-Up
Part of 5V3674 Hydraulic Arrangement listed on Page 158
AN ATTACHMENT

NOTE	REF NO	PART NUMBER	QTY	DESCRIPTION
	1	S1591	1	BOLT
		1D4717	1	NUT
	2	L1170	1	HANDLE
	3	5V3646	1	LEVER
	4	5V9320	1	COVER
	5	5V3689	2	BEARING
	6	4D4065	1	ROD END
	7	5P8879	1	BOLT
		2K564	1	LOCKNUT
	8	1B4205	1	NUT
	9	5V3759	1	ROD
	10	6K4442	1	BALLJOINT ASSEM.
	11	5V3649	1	LEVER
		1B3706	1	KEY
BCF		9S5616	1	FILM
BCF		9S5610	1	FILM

B USE AS REQUIRED
C INDICATES CHANGE
F NOT SHOWN

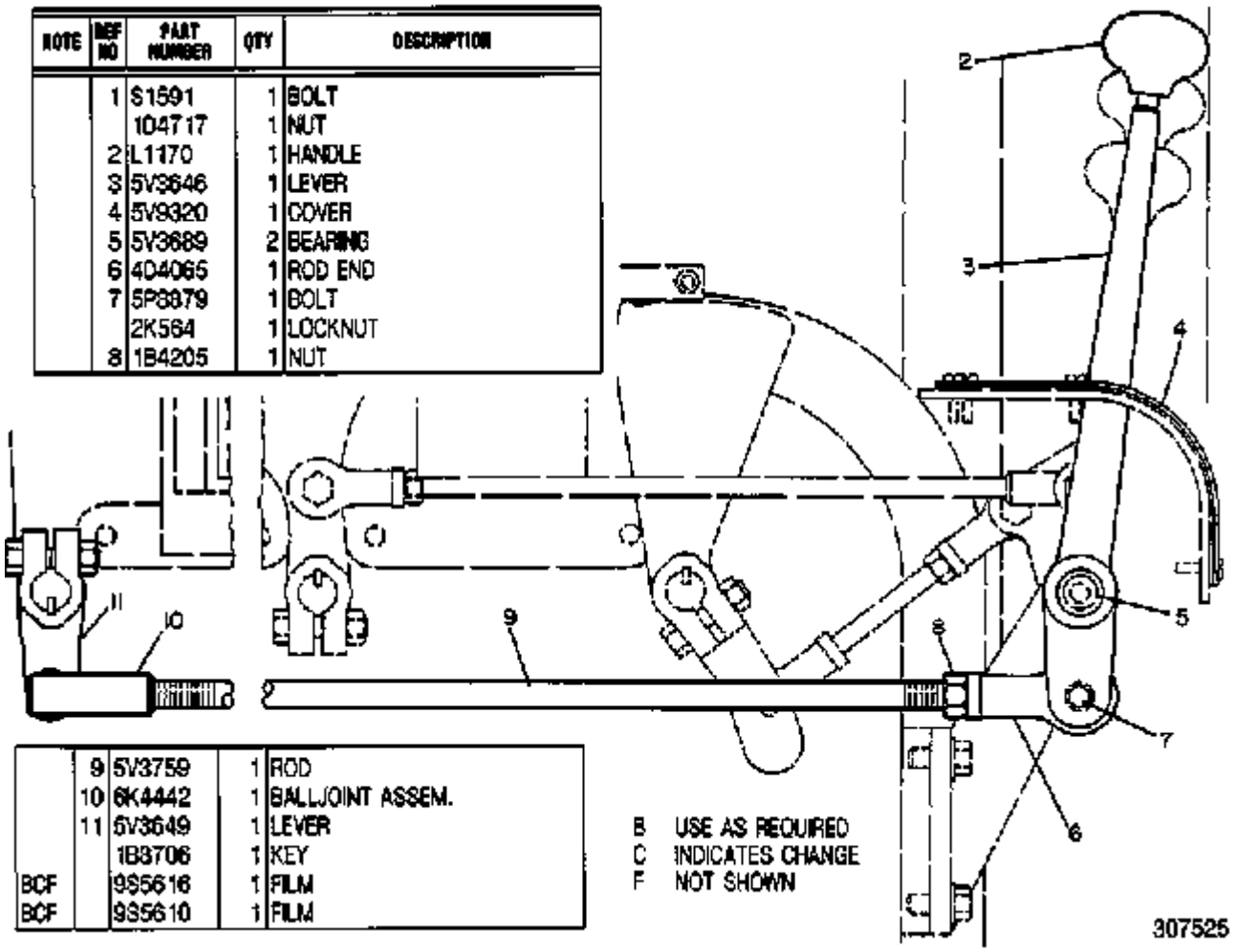

Nota	Ref	Numero	Cant	Nombre De Pieza
		5V-3755	1	CONTROL GP-HYDRAULIC HAND
	1	0S-1591	1	BOLT
		1D-4717	1	NUT
	2	0L-1170	1	HANDLE-LEVER
	3	5V-3646	1	LEVER
	4	5V-9320	1	COVER
	5	5V-3689	2	BEARING-FLANGED
	6	4D-4065	1	ROD END-BEARING
	7	5P-8879	1	BOLT-SELF LOCKING
		2K-0564	1	LOCKNUT
	8	1B-4205	1	NUT
	9	5V-3759	1	ROD
	10	6K-4442	1	JOINT AS-BALL
	11	5V-3649	1	LEVER
		1B-8706	1	KEY-WOODRUFF
BCF		9S-5616	1	FILM-INSTRUCTION
BCF		9S-5610	1	FILM-INSTRUCTION
B				USE AS REQUIRED
C				CHANGE FROM PREVIOUS TYPE
F				NOT SHOWN

41K11287 930 WHEEL LOADER Identificación de Piezas
Número de publicación SEBP1052-01 Fecha de publicación 1984/12/01 Fecha de actualización 1994/09/05

5V4775 HYDRAULIC KICKOUT GROUP
Serial No. 41K10563-Up
6K7701 and 5V9151 Cylinder parts are shown on Pages 203 and 203B

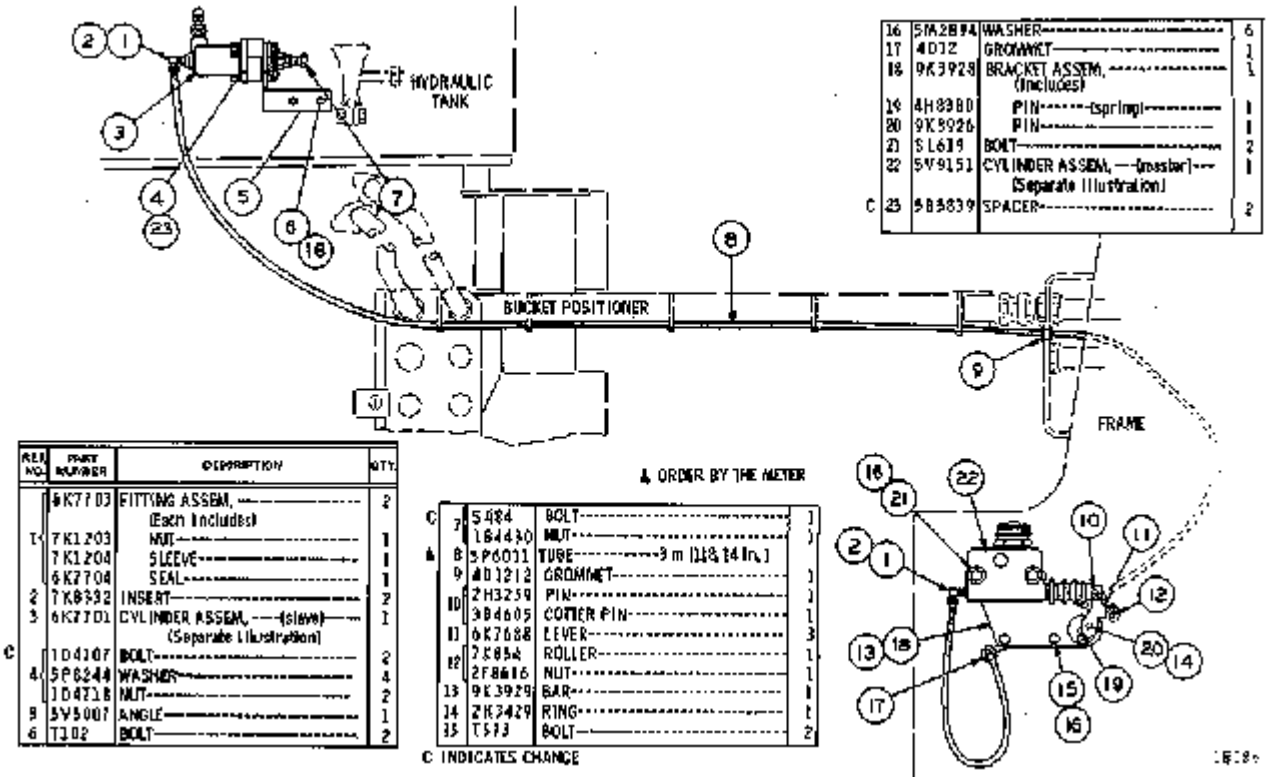

REF NO.	PART NUMBER	DESCRIPTION	QTY.
	6K7703	FITTING ASSEM. (Each Includes)	2
T	7K1203	NUT	1
	7K1204	SLEEVE	1
	6K7704	SEAL	1
2	7K8532	INSERT	2
3	6K7701	CYLINDER ASSEM. (slave) (Separate Illustration)	1
C	1D4107	BOLT	2
4	5P8244	WASHER	4
	1D4718	NUT	2
5	5V5007	ANGLE	1
6	T102	BOLT	2

REF NO.	PART NUMBER	DESCRIPTION	QTY.
C	7 5484	BOLT	1
	1B4430	NUT	1
A	8 5P6011	TUBE 9 m (11/8 34 In.)	1
	9 4D1212	GROMMET	1
10	2H3259	PIN	1
	3B4605	COTTER PIN	1
11	6K7688	LEVER	3
12	7X854	ROLLER	1
	2F8616	NUT	1
13	9K3929	BAR	1
14	2K3429	RING	1
15	T573	BOLT	2

A ORDER BY THE METER
C INDICATES CHANGE

REF NO.	PART NUMBER	DESCRIPTION	QTY.
16	5M2894	WASHER	6
17	4D12	GROMMET	1
18	9K3928	BRACKET ASSEM. (Includes)	1
19	4H8380	PIN (spring)	1
20	9K3926	PIN	1
21	5L619	BOLT	2
22	5V9151	CYLINDER ASSEM. (master) (Separate Illustration)	1
C 23	5B3839	SPACER	2

Nota	Ref	Numero	Cant	Nombre De Pieza
		5V-4775	1	KICKOUT GP-HYDRAULIC
	1	6K-7703	2	FITTING ASSEM.
				(Each Includes)
		7K-1203	1	NUT
		7K-1204	1	SLEEVE
		6K-7704	1	SEAL
	2	7K-8332	2	INSERT
Y	3	6K-7701	1	CYLINDER ASSEM. (slave)
				(Separate Illustration)
C	4	1D-4707	2	BOLT
		5P-8244	4	WASHER
		1D-4718	2	NUT
	5	5V-5007	1	ANGLE
	6	0T-0102	2	BOLT
C	7	0S-0484	1	BOLT
		1B-4430	1	NUT
H	8	5P-6011		TUBE 3 m (118.14 in.)
	9	4D-1212	1	GROMMET
	10	2H-3259	1	PIN
		3B-4605	1	COTTER PIN
	11	6K-7688	3	LEVER
	12	7K-0854	1	ROLLER
		2F-8616	1	NUT
	13	9K-3929	1	BAR
	14	2H-3429	1	RING
	15	0T-0573	2	BOLT
	16	5M-2894	6	WASHER
	17	4D-0012	1	GROMMET
	18	9K-3928	1	BRACKET ASSEM.
				(Includes)

	19	4H-8380	1	PIN (spring)
	20	9K-3926	1	PIN
	21	0S-1619	2	BOLT
Y	22	5V-9151	1	CYLINDER ASSEM. (master)
				(Separate Illustration)
C	23	5B-5839	2	SPACER

C	INDICATES CHANGE
H	ORDER BY THE METER
Y	SEPARATE ILLUSTRATION

5057 7K511 HYDRAULIC LINES GROUP--Rear View
Part of 6K9240 Side Dump Bucket Arrangement listed on Page 208

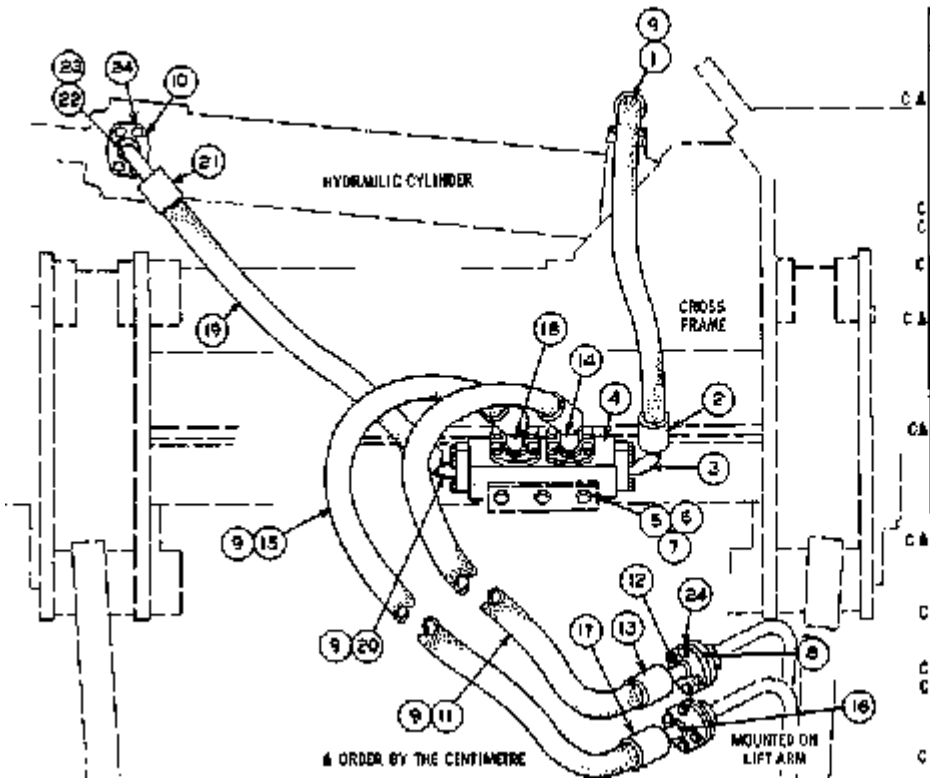

REF. NO.	PART NUMBER	DESCRIPTION	QTY
	7K508	HOSE ASSEM.	1
		(Includes)	
	5P180	HOSE---90.42 cm(35.6 in.)	
2	3S7164	SLEEVE	2
3	3S8363	STEM ASSEM. (90°)	2
4	2K7835	BLOCK	1
5	51619	BOLT	3
6	1D8711	NUT	3
7	3B4506	LOCKWASHER	3
8	1P4574	FLANGE	14
9	4J5267	SEAL	7
10	1P4527	FLANGE	2
	7K2130	HOSE ASSEM.	1
		(Includes)	
	5P180	HOSE---125.98 cm(49.6 in.)	
12	3S7165	STEM ASSEM. (straight)	1
13	3S7166	SLEEVE	2
14	3S8359	STEM ASSEM. (90°)	1
	7K2129	HOSE ASSEM.	1
		(Includes)	
	5P180	HOSE---134.62 cm(53 in.)	
16	3S1165	STEM ASSEM. (straight)	1
17	3S7166	SLEEVE	2
18	3S8359	STEM ASSEM. (90°)	1
	7K507	HOSE ASSEM.	1
		(Includes)	
	5P180	HOSE---80.01 cm(31.5 in.)	
20	3S8362	STEM ASSEM.	1
21	3S7166	SLEEVE	2
22	3S6102	STEM ASSEM. (90°)	1
23	4J528	SEAL	1
	1A2029	BOLT---2.86 cm(1.125 in.)	32
		-OR-	
	5S588	BOLT---3.18 cm(1.25 in.)	32
	4B4278	WASHER	32

C INDICATES CHANGE 215028

Nota	Ref	Numero	Cant	Nombre De Pieza
		7K-0511	1	LINES GP-HYDRAULIC
	1	7K-0508	1	HOSE ASSEM.
				(Includes)
CH		5P-0180		HOSE 90.42 cm(35.6 in.)
	2	3S-7166	2	SLEEVE
	3	3S-8363	2	STEM ASSEM. (90 degrees)
	4	2K-7835	1	BLOCK
	5	0S-1619	3	BOLT
	6	1D-4717	3	NUT
C	7	3B-4506	3	LOCKWASHER
C	8	1P-4576	14	FLANGE
	9	4J-5267	7	SEAL
C	10	1P-4577	2	FLANGE
	11	7K-2130	1	HOSE ASSEM.
				(Includes)
CH		5P-0180		HOSE 125.98 cm(49.6 in.)
	12	3S-7165	1	STEM ASSEM. (straight)
	13	3S-7166	2	SLEEVE
	14	3S-8359	1	STEM ASSEM. (30 degrees)
	15	7K-2129	1	HOSE ASSEM.
				(Includes)
CH		5P-0180		HOSE 134.62 cm(53 in.)
	16	3S-7165	1	STEM ASSEM. (straight)
	17	2S-7166	2	SLEEVE
	18	3S-8359	1	STEM ASSEM. (30 degrees)
	19	7K-0507	1	HOSE ASSEM.
				(Includes)
CH		5P-0180		HOSE 80.01 cm(31.5 in.)
	20	3S-8362	1	STEM ASSEM.
	21	3S-7166	2	SLEEVE

	22	5S-6102	1	STEM ASSEM. (90 degrees)
C	23	4J-0520	1	SEAL
	24	1A-2029	32	BOLT 2.86 cm(1.125 in.)
				-OR-
C		0S-1588	32	BOLT 3.18 cm(1.25 in.)
C		4B-4278	32	WASHER

C	INDICATES CHANGE
H	ORDER BY THE CENTIMETRE

5057 5V4189 HYDRAULIC OIL LINES GROUP
Serial No. 41K10160-Up

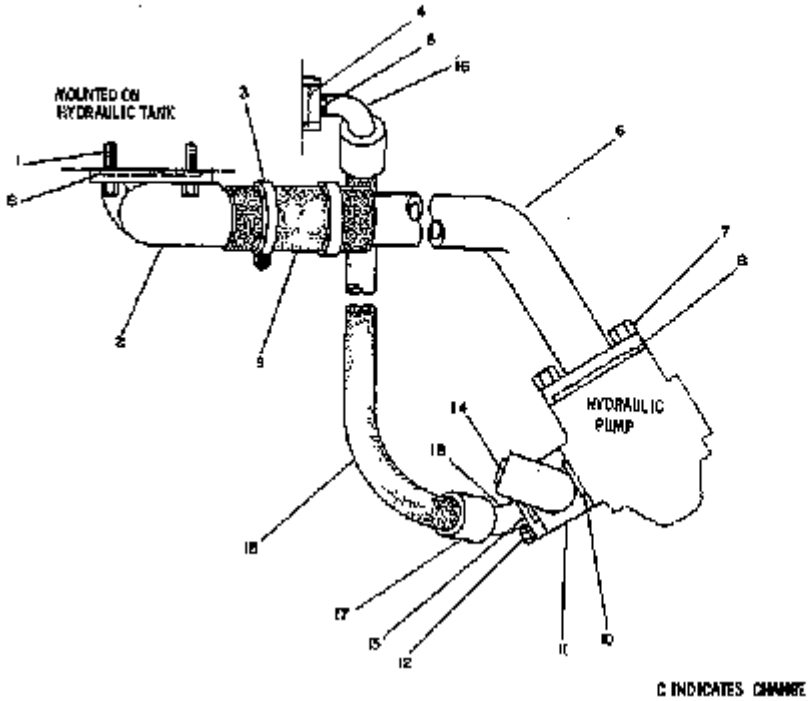

	REF NO.	PART NUMBER	DESCRIPTION	QTY
C	1	5T585	BOLT	4
	2	5V4120	ELBOW	1
C	3	5P597	CLAMP	2
C	4	4T520	SEAL	1
C	5	5T587	BOLT	2
	6	5V4253	ELBOW	1
	7	5T589	BOLT	4
C	8	2H5951	SEAL	2
	9	6K9094	BOLT	1
C	10	4T522	SEAL	2
	11	7K22	TEE	1
	12	8H5268	BOLT	4
		5P5244	WASHER	4
	13	1P4578	FLANGE	2
	14	9S8008	PLUG	1
		5D5824	SEAL	1
	15	8V1720	HOSE ASSEM. (Includes)	1
A		8S9355	HOSE 20 in. (51 cm)	
	16	3S2108	STEM ASSEM. (90°)	1
	17	9S7852	SLEEVE	2
	18	7S575	STEM ASSEM. (90°)	1

A ORDER BY THE INCH 300810

Nota	Ref	Numero	Cant	Nombre De Pieza
		5V-4189	1	LINES GP-HYDRAULIC OIL
C	1	0S-1585	4	BOLT
	2	5V-4120	1	ELBOW
C	3	5P-0597	2	CLAMP
C	4	4J-0520	1	SEAL
C	5	0S-1587	2	BOLT
	6	5V-4253	1	ELBOW
	7	0S-1589	4	BOLT
C	8	2H-3931	2	SEAL
	9	6K-9034	1	BOLT
C	10	4J-0522	2	SEAL
	11	7K-0022	1	TEE
	12	3H-5368	4	BOLT
		5P-8244	4	WASHER
	13	1P-4578	2	FLANGE
	14	9S-8008	1	PLUG
		3D-2824	1	SEAL
	15	8V-1720	1	HOSE ASSEM.
				(Includes)
H		8S-9355		HOSE 20 in.(51 cm)
	16	5S-2108	1	STEM ASSEM. (90 degrees)
	17	3S-7252	2	SLEEVE
	18	7S-0575	1	STEM ASSEM. (90 degrees)
C				INDICATES CHANGE
H				ORDER BY THE INCH

5104 7J9730 TILT CYLINDER GROUP (7K9406 N/S) (Chg. 0-3)--L.H.--4.25" Bore x 17.25" Stroke

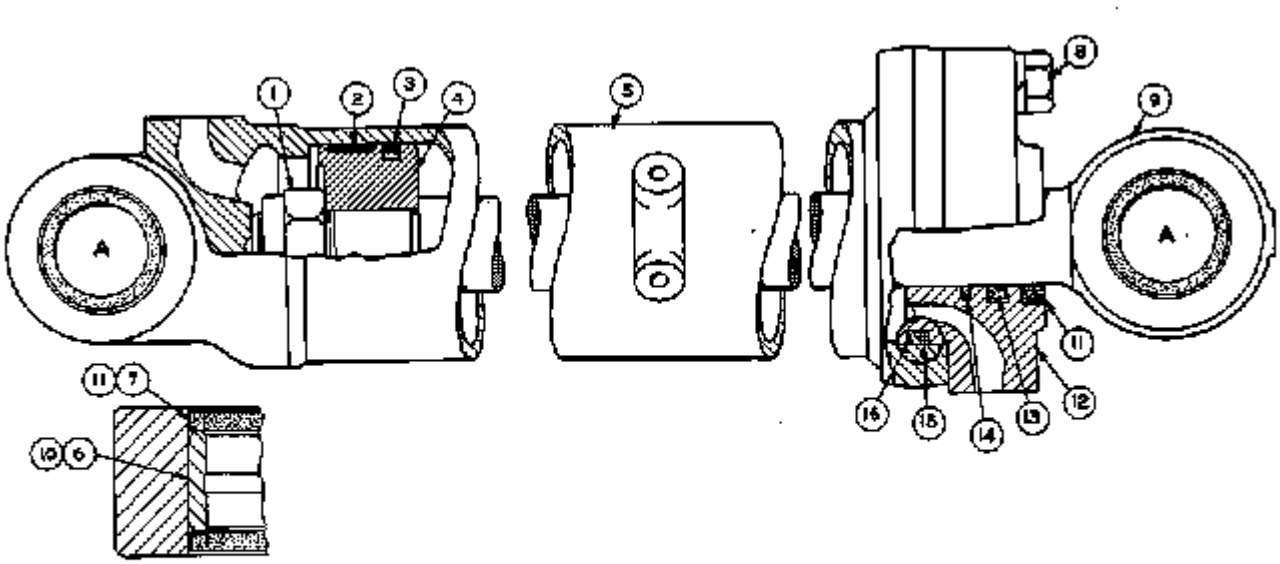

REF. NO.	PART NUMBER	DESCRIPTION	QTY
1	2J3950	NUT	1
2	6J7264	RING	1
3	5J1854	SEAL ASSEM.	1
4	6J5692	PISTON	1

	5	7J9726	CYLINDER ASSEM. —Cap End	1
	6	7J9682	BEARING	1
C	7	5P95	SEAL	4
	8	1B4469	BOLT	4
		3B4512	LOCKWASHER	4
	9	7J9721	ROD ASSEM.	1
	10	7J9682	BEARING	1
	11	1K6981	SEAL	1

C INDICATES CHANGE

12	6J3612	HEAD	1
13	5J5200	SEAL	1
14	6J6917	SEAL	1
15	5J7865	RING	1
16	1B6227	SEAL	1

& NOT PART OF 7J9730 CYLINDER GROUP

Nota	Ref	Numero	Cant	Nombre De Pieza
		7J-9730	1	CYLINDER GP-TILT
	1	2J-3950	1	NUT-SELF LOCKING
	2	6J-7264	1	RING-WEAR
	3	5J-7854	1	SEAL AS
	4	6J-5692	1	PISTON
R	5	7J-9728	1	CYL AS-HYD
	6	7J-9682	1	BEARING-SLEEVE
AC	7	5P-0093	4	SEAL-LIP TYPE
	8	1D-4609	4	BOLT
		3B-4512	4	LOCKWASHER
R	9	7J-9722	1	ROD AS-PISTON
	10	7J-9682	1	BEARING-SLEEVE
	11	1K-6981	1	SEAL-LIP TYPE
	12	6J-5812	1	HEAD
	13	5J-8200	1	SEAL-U-CUP
	14	6J-6917	1	SEAL-RING
	15	5J-7865	1	RING-BACK-UP
	16	1H-6227	1	SEAL-O-RING

A	NOT PART OF THIS GROUP
C	CHANGE FROM PREVIOUS TYPE
R	REMFG PART MAY BE AVAILABLE

5057 5V4643 TILT CYLINDER LINES GROUP--As Viewed from Right Hand Side of Machine--Part 1 of 2
Serial No. 41K10160-Up

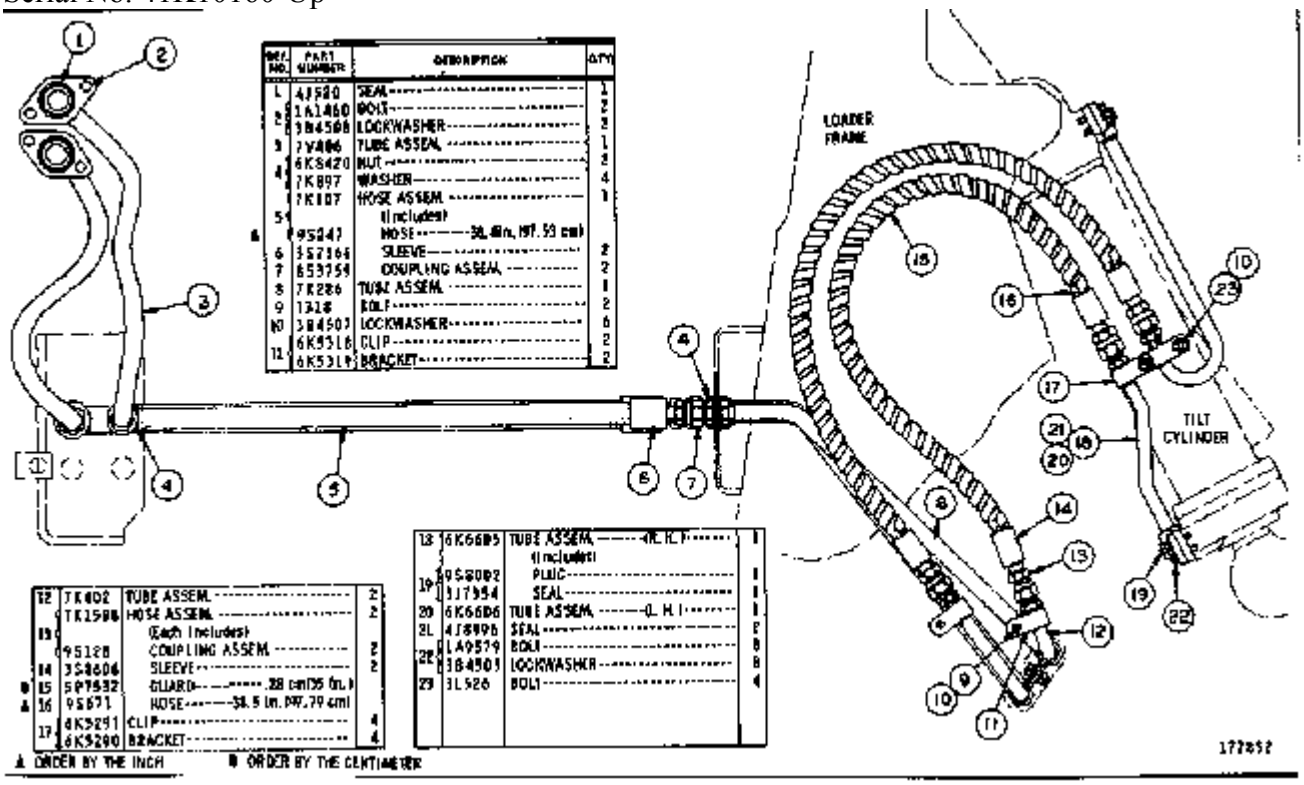

REF. NO.	PART NUMBER	DESCRIPTION	QTY
L	43520	SEAL	1
2	1A1460	BOLT	2
	3B4508	LOCKWASHER	2
3	7V486	TUBE ASSEM.	1
4	6K5420	NUT	2
	7K897	WASHER	4
	7K107	HOSE ASSEM.	1
5		(Includes)	
A	95247	HOSE	
6	3S7366	SLEEVE	2
7	8S3759	COUPLING ASSEM.	2
8	7K286	TUBE ASSEM.	1
9	1318	BOLT	2
10	3B4503	LOCKWASHER	6
11	6K5316	CLIP	2
12	6K5319	BRACKET	2
12	7K402	TUBE ASSEM.	2
	7K1598	HOSE ASSEM.	2
13		(Each Includes)	
	9S128	COUPLING ASSEM.	2
14	3S8606	SLEEVE	2
B 15	5P7532	GUARD	
A 16	9S671	HOSE	
17	6K5291	CLIP	4
	6K5290	BRACKET	4
18	6K6605	TUBE ASSEM.	1
		(Includes)	
19	9S8082	PLUG	1
	3J7954	SEAL	1
20	6K6606	TUBE ASSEM.	1
2L	4J8996	SEAL	2
22	1A9579	BOLT	8
	3B4503	LOCKWASHER	8
23	3L526	BOLT	4

A ORDER BY THE INCH B ORDER BY THE CENTIMETER

Nota	Ref	Numero	Cant	Nombre De Pieza
		5V-4643	1	LINES GP-TILT CYLINDER
	1	4J-0520	1	SEAL
	2	1A-1460	2	BOLT
		3B-4508	2	LOCKWASHER
	3	7V-0406	1	TUBE ASSEM.
	4	6K-8420	2	NUT
		7K-0897	4	WASHER
	5	7K-0107	1	HOSE ASSEM.
				(Includes)
H		9S-0247		HOSE 38.4in.(97.53 cm)
	6	3S-7166	2	SLEEVE
	7	8S-3759	2	COUPLING ASSEM.
	8	7K-0286	1	TUBE ASSEM.
	9	0T-0318	2	BOLT
	10	3B-4507	6	LOCKWASHER
	11	6K-5318	2	CLIP
		6K-5319	2	BRACKET
	12	7K-0402	2	TUBE ASSEM.
	13	7K-1588	2	HOSE ASSEM.
				(Each Includes)
		9S-0128	2	COUPLING ASSEM.
	14	3S-8606	2	SLEEVE
J	15	5P-7532		GUARD .88 cm(35 in.)
H	16	9S-0671		HOSE 38.5 in.(97.79 cm)
	17	6K-5291	4	CLIP
		6K-5290	4	BRACKET
	18	6K-6605	1	TUBE ASSEM. (R.H.)
				(Includes)
	19	9S-8002	1	PLUG
		3J-7354	1	SEAL

	20	6K-6606	1	TUBE ASSEM. (L.H.)
	21	4J-8996	2	SEAL
	22	1A-9579	8	BOLT
		3B-4505	8	LOCKWASHER
	23	3L-0526	4	BOLT

H	ORDER BY THE INCH
J	ORDER BY THE CENTIMETER

3G8678 VALVE GROUP
Serial No. 41K10160-Up
Part of 3G8683 Control Valve Group shown on Page 168D

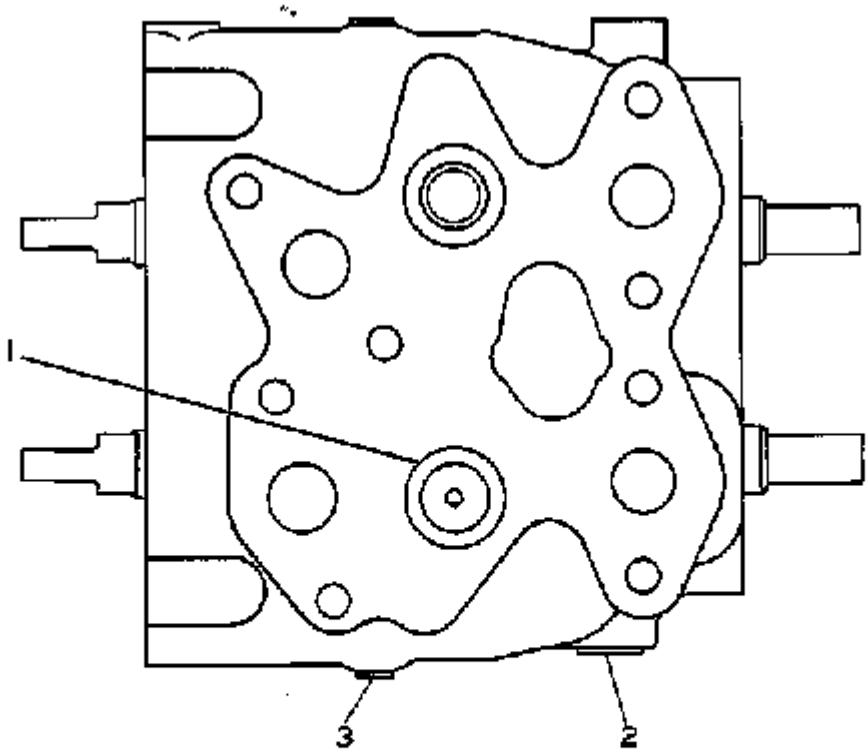

REF. NO.	PART NUMBER	DESCRIPTION	QTY
1	9S8006	PLUG	2
	2M9780	SEAL	2
2	9S8005	PLUG	3
	3K360	SEAL	3
3	9S8003	PLUG	2
	1J9671	SEAL	2

177830

Nota	Ref	Numero	Cant	Nombre De Pieza
		3G-8678	1	VALVE GP
	1	9S-8006	2	PLUG
		2M-9780	2	SEAL
	2	9S-8005	3	PLUG
		3K-0360	3	SEAL
	3	9S-8003	2	PLUG
		1J-9671	2	SEAL

41K11287 930 WHEEL LOADER Identificación de Piezas
Número de publicación SEBP1052-01 Fecha de publicación 1984/12/01 Fecha de actualización 1994/09/05

1U1463 CUTTING EDGE GROUP
Provides Bolt-On Cutting Edge. FOR USE WITH GENERAL PURPOSE BUCKET ASSEMBLIES AND 8K8161 CUTTING EDGE. AN ATTACHMENT

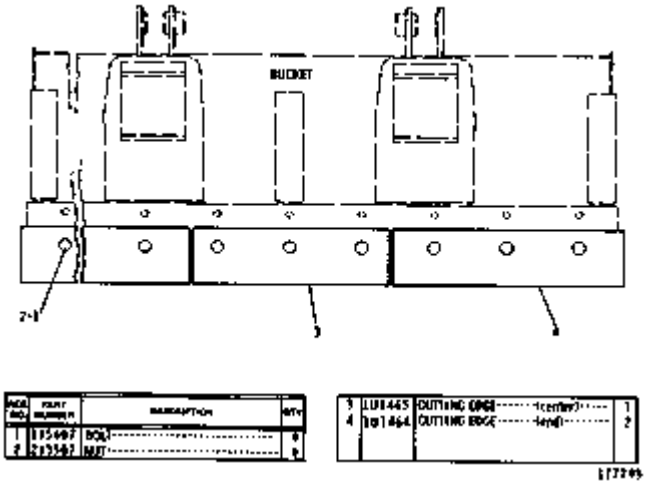

Nota	Ref	Numero	Cant	Nombre De Pieza
		1U-1463	1	CUTTING EDGE GROUP
	1	1J-5607	9	BOLT
	2	2J-3507	9	NUT
	3	1U-1465	1	CUTTING EDGE (center)
	4	1Y-1464	2	CUTTING EDGE (end)

5K7581 TOOTH GROUP--Short Tip

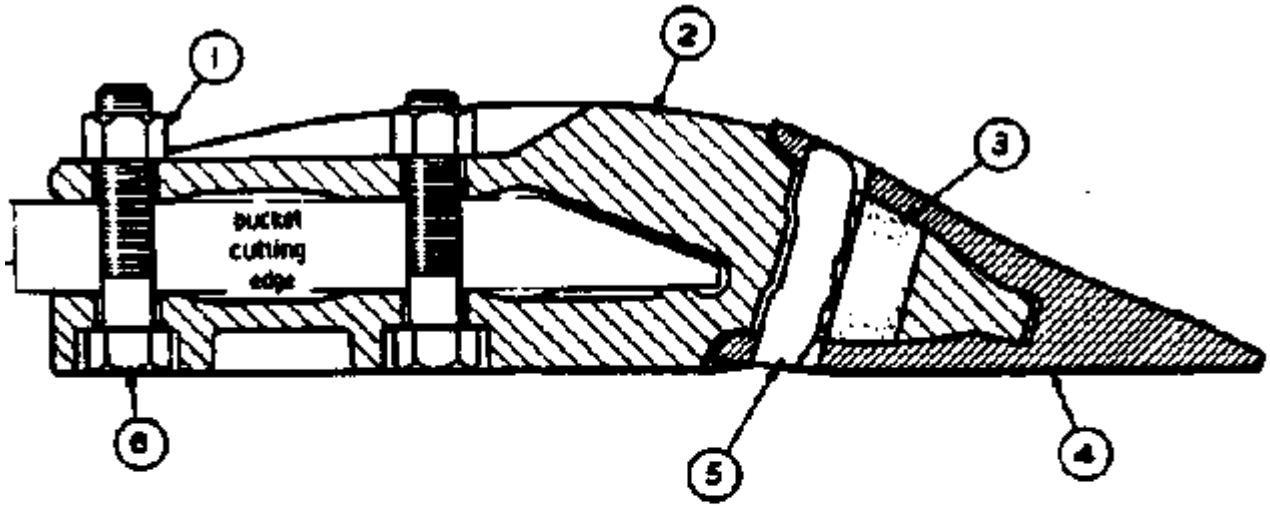

REF NO	PART NUMBER	DESCRIPTION	QTY
1	4K367	NUT	18
2	6K2563	ADAPTER	9
3	4K41	PLUG	9
4	5K2925	TIP	9

REF NO	PART NUMBER	DESCRIPTION	QTY
5	4K43	PIN	9
6	1A8537	BOLT	18
FE0348[illegible]-UM		FORM (Instructions for Installing Conical Type Bucket Teeth)	1

101423

Nota	Ref	Numero	Cant	Nombre De Pieza
		5K-7581	1	TOOTH GROUP
	1	4K-0367	18	NUT
	2	6K-2563	9	ADAPTER
	3	4K-0041	9	PLUG
	4	5K-2925	9	TIP
	5	4K-0043	9	PIN
	6	1A-8537	18	BOLT

7252 5V4036 FENDER GROUP--Front and Rear
Serial No. 41K10160-Up

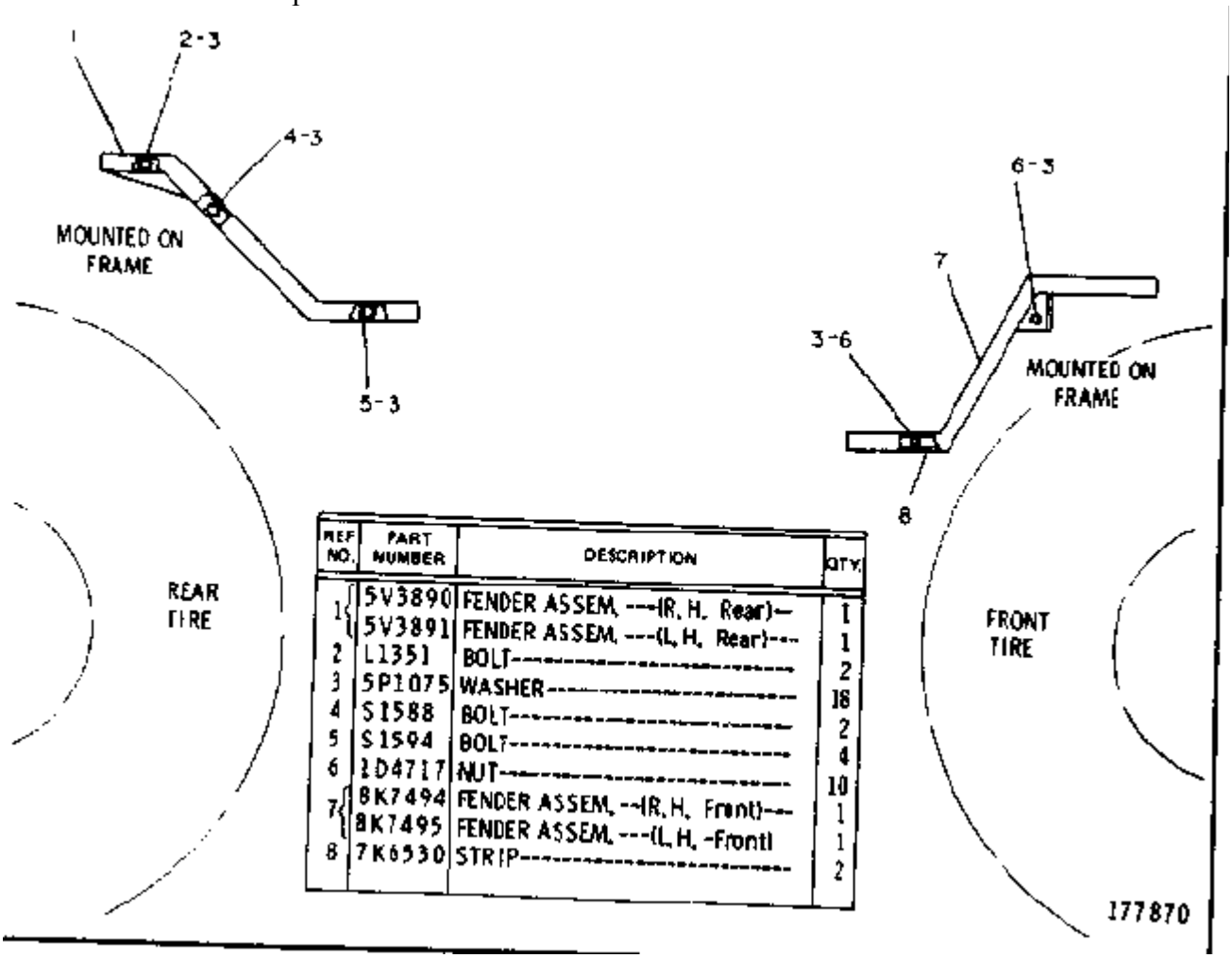

REF NO.	PART NUMBER	DESCRIPTION	QTY.
1	5V3890	FENDER ASSEM. ---(R. H. Rear)---	1
	5V3891	FENDER ASSEM. ---(L. H. Rear)---	1
2	L1351	BOLT----------	2
3	5P1075	WASHER----------	18
4	S1588	BOLT----------	2
5	S1594	BOLT----------	4
6	1D4717	NUT----------	10
7	8K7494	FENDER ASSEM. --(R. H. Front)---	1
	8K7495	FENDER ASSEM. ---(L. H. -Front)	1
8	7K6530	STRIP----------	2

Nota	Ref	Numero	Cant	Nombre De Pieza
		5V-4036	1	FENDER GP-REAR
	1	5V-3890	1	FENDER ASSEM. (R.H. Rear)
		5V-3891	1	FENDER ASSEM. (L.H. Rear)
	2	0L-1351	2	BOLT
	3	5P-1075	18	WASHER
	4	0S-1588	2	BOLT
	5	0S-1594	4	BOLT
	6	1D-4717	10	NUT
	7	8K-7494	1	FENDER ASSEM. (R.H. Front)
		8K-7495	1	FENDER ASSEM. (L.H.-Front)
	8	7K-6530	2	STRIP

7054 6K7755 FRONT FRAME GROUP

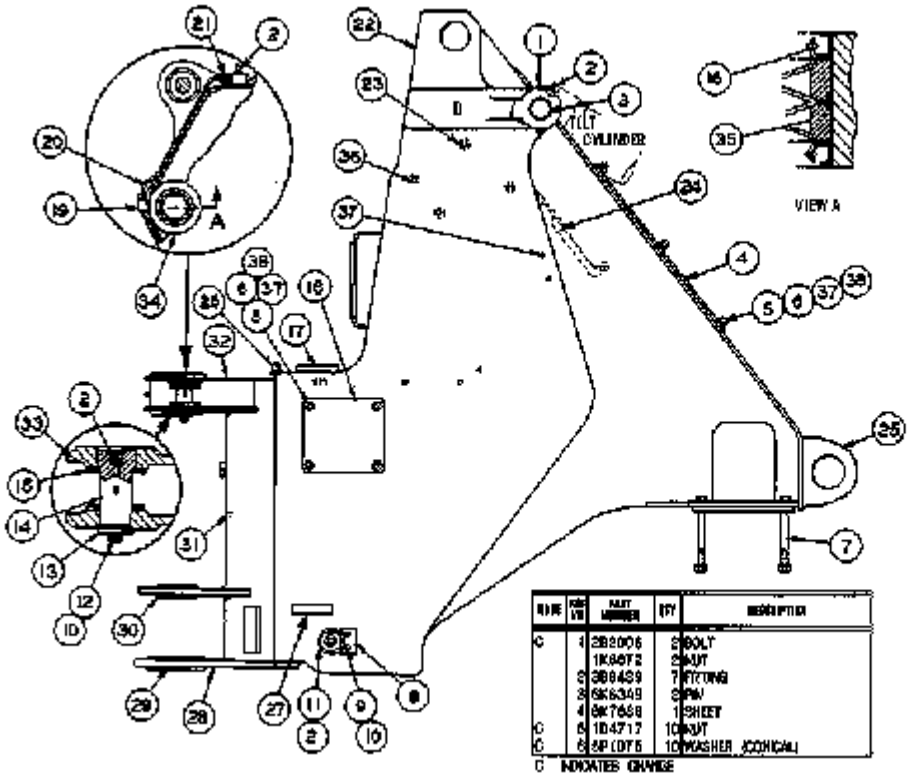

C	7	9G9889	8	BOLT
		4K367	8	NUT
		3B4010	8	LOCKWASHER
	3	2K703	2	BAR
C	9	9M6590	4	BOLT
	10	3B4506	6	LOCKWASHER
	11	9K5051	2	PIN
	12	B1687	2	BOLT
C	13	7K8126	2	WASHER
	14	9K6185	2	PIN
	15	3B4987	8	WASHER
C	16	4F6836	2	SEAL
	17	7K1978	1	PLUG
	18	6K7686	1	COVER
C	19	9G7607	1	ELBOW
C	20	8V3402	1	TUBE
C	21	9G7581	1	CONNECTOR
	22	6K7756	1	FRAME AS.
C	23	7K6986	1	BOSS
	24	6K6981	1	PLATE AS.
C	25	8V2783	2	EYE
C	26	4K8479	7	STUD
C	27	9K3085	1	BAR
	28	6K6970	1	HITCH AS. (LOWER)
	29	6K6941	1	BOSS
	30	6K6942	1	BOSS
	31	4K9237	1	LUG
C	32	6K6940	1	HITCH AS.
	33	6K6980	4	BOSS
	34	6K6479	1	BOSS
	35	6K4197	1	BEARING
C	36	7K2871	3	BOSS
C	37	5P1778	20	STUD
C	38	9F6609	10	WASHER

C	1	2B2006	2	BOLT
		1K6972	2	NUT
	2	3B6439	7	FITTING
	3	6K6349	2	PIN
	4	6K7658	1	SHEET
C	5	1D4717	10	NUT
C	6	5P1075	10	WASHER (CONICAL)

C INDICATES CHANGE

313888

Nota	Ref	Numero	Cant	Nombre De Pieza
		6K-7755	1	FRAME GP-LOADER
	1	2B-2006	2	BOLT
		1K-6872	2	LOCKNUT
	2	3B-8489	7	FITTING-GREASE
C	3	6K-6349	2	PIN
	4	6K-7888	1	SHEET
	5	1D-4717	10	NUT
	6	5P-1075	10	WASHER-HARD (CONICAL)
	7	9F-8689	8	BOLT
C		4K-0367	8	NUT
C		3B-4510	8	LOCKWASHER
C	8	2K-0703	2	BAR
	9	9M-6590	4	BOLT-12 POINT HEAD
	10	3B-4508	6	LOCKWASHER
	11	6K-6051	2	PIN
C	12	0S-1587	2	BOLT
	13	7K-6128	2	WASHER
	14	6K-6185	2	PIN-CYLINDER
	15	3B-4897	8	WASHER
C	16	4F-6888	2	SEAL
	17	7K-1878	1	PLUG
	18	6K-7686	1	COVER
C	19	9S-7697	1	ELBOW-FLARED
	20	2V-3442	1	TUBE
	21	9S-7581	1	CONNECTOR-FLARED
C	22	6K-7756	1	FRAME AS
C	23	7K-5986	1	BOSS
C	24	6K-9991	1	PLATE AS
	25	3V-2793	2	EYE
C	26	4K-8479	7	STUD-WELD

	27	9K-3035	1	BAR
C	28	6K-6370	1	HITCH AS (LOWER)
C	29	6K-6441	1	BOSS
C	30	6K-6442	1	BOSS
	31	4K-9237	1	LUG
	32	6K-6440	1	HITCH AS
	33	6K-6390	4	BOSS
	34	6K-6479	1	BOSS
C	35	6K-4197	1	BEARING
	36	7K-2271	3	BOSS
	37	5P-1778	20	STUD-WELD
	38	8F-6809	10	WASHER

C	CHANGE FROM PREVIOUS TYPE

7251 5V2961 HOOD AND GUARD GROUP--Part 1 of 3
Serial No. 41K10820-Up

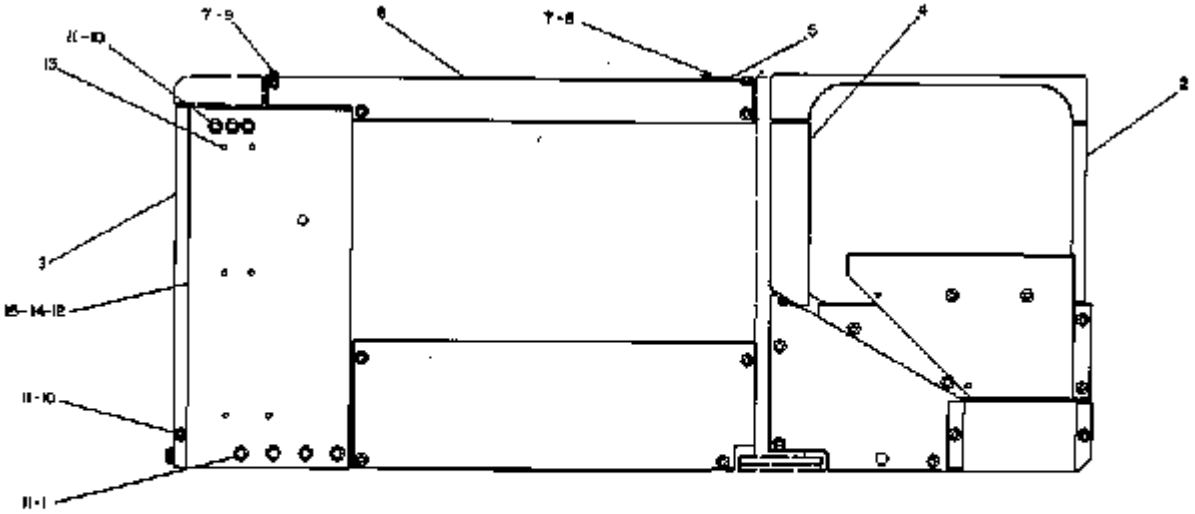

REF. NO.	PART NUMBER	DESCRIPTION	QTY.
1	5L1421	BOLT	8
2	5V1560	PANEL ASSEM.	1
3	6K6426	GUARD	1
4	5V1500	PANEL ASSEM.	1
5	5V4877	PLATE	1
6	1L1551	BOLT	7
7	5P1075	WASHER	14

REF. NO.	PART NUMBER	DESCRIPTION	QTY.
8	5V4857	HOOD ASSEM. (Includes)	1
	9F2978	NUT	2
9	5S89	BOLT	11
10	5J595	BOLT	9
11	5P1076	WASHER	11
12	6K6495	GUARD ASSEM. (R. H.) (Includes)	1
13	9F2978	NUT	6

REF. NO.	PART NUMBER	DESCRIPTION	QTY.
14	7K9635	GUARD ASSEM. (L. H.) (Includes)	1
	4K8479	STUD	2
	1F748	NUT	2
	9F2978	NUT	4
15	4D7978	BLOCK	2

300806

Nota	Ref	Numero	Cant	Nombre De Pieza
		5V-2961	1	HOOD & GUARD GP
	1	0S-1621	8	BOLT
	2	5V-1540	1	PANEL ASSEM.
	3	6K-6426	1	GUARD
	4	5V-1500	1	PANEL ASSEM.
	5	5V-4877	1	PLATE
	6	0L-1351	7	BOLT
	7	5P-1075	19	WASHER
	8	5V-4857	1	HOOD ASSEM.
				(Includes)
		9F-2978	2	NUT
	9	0S-0509	11	BOLT
	10	0S-1595	9	BOLT
	11	5P-1076	17	WASHER
	12	6K-6435	1	GUARD ASSEM. (R.H.)
				(Includes)
	13	9F-2978	6	NUT
	14	7K-9635	1	GUARD ASSEM. (L.H.)
				(Includes)
		4K-8479	2	STUD
		1F-0748	2	NUT 9.52m(.38 in.)
		9F-2978	4	NUT 6.35m(.25 in.)
	15	4D-7978	2	BLOCK

7051 9K6357 REAR FRAME GROUP--Part 2 of 2
Serial No. 41K5614 to 41K11841 inclusive

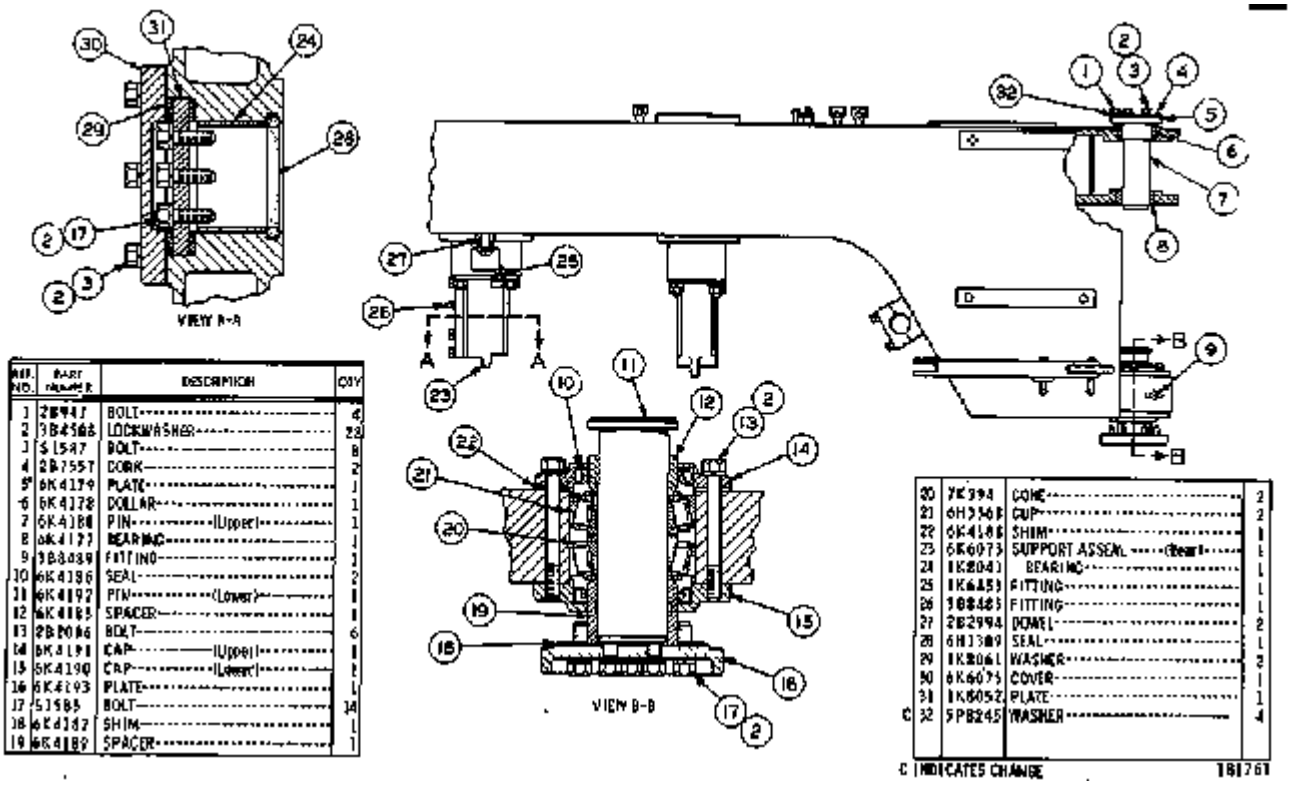

REF. NO.	PART NUMBER	DESCRIPTION	QTY
1	2B9947	BOLT	4
2	3B4568	LOCKWASHER	22
3	5I587	BOLT	8
4	2B7557	CORK	2
5*	6K4179	PLATE	1
6	6K4178	COLLAR	1
7	6K4180	PIN (Upper)	1
8	6K4177	BEARING	1
9	9B8039	FITTING	1
10	6K4196	SEAL	2
11	6K4197	PIN (Lower)	1
12	6K4185	SPACER	1
13	2B8046	BOLT	6
14	6K4191	CAP (Upper)	1
15	6K4190	CAP (Lower)	1
16	6K4193	PLATE	1
17	5I585	BOLT	14
18	6K4182	SHIM	1
19	6K4189	SPACER	1

REF. NO.	PART NUMBER	DESCRIPTION	QTY
20	7K394	CONE	2
21	6H3468	CUP	2
22	6K4186	SHIM	1
23	6K6073	SUPPORT ASSEAL (Gear)	1
24	1K2041	BEARING	1
25	1K6453	FITTING	1
26	9B8483	FITTING	1
27	2B2994	DOWEL	2
28	6H1389	SEAL	1
29	1K2061	WASHER	3
30	6K6075	COVER	1
31	1K6052	PLATE	1
C 32	5P8245	WASHER	4

C INDICATES CHANGE 181761

Nota	Ref	Numero	Cant	Nombre De Pieza
		9K-6357	1	FRAME GP-ENGINE END
	1	2B-0947	4	BOLT
	2	3B-4508	28	LOCKWASHER
	3	0S-1587	8	BOLT
	4	2B-7557	2	CORK
	5	6K-4179	1	PLATE
	6	6K-4178	1	COLLAR
	7	6K-4180	1	PIN (Upper)
	8	6K-4177	1	BEARING
	9	3B-8489	1	FITTING
	10	6K-4186	2	SEAL
	11	6K-4192	1	PIN (Lower)
	12	6K-4185	1	SPACER
	13	2B-2006	6	BOLT
	14	6K-4191	1	CAP (Upper)
	15	6K-4190	1	CAP (Lower)
	16	6K-4193	1	PLATE
	17	0S-1585	14	BOLT
	18	6K-4187	1	SHIM
	19	6K-4189	1	SPACER
	20	7K-0394	2	CONE
	21	6H-3568	2	CUP
	22	6K-4188	1	SHIM
	23	6K-6073	1	SUPPORT ASSEM. (Rear)
	24	1K-8041	1	BEARING
	25	1K-6853	1	FITTING
	26	3B-8485	1	FITTING
	27	2B-2994	2	DOWEL
	28	6H-1309	1	SEAL
	29	1K-8061	2	WASHER

	30	6K-6075	1	COVER
	31	1K-8052	1	PLATE
C	32	5P-8245	4	WASHER

C	INDICATES CHANGE

5K1616 SIDE COUNTERWEIGHT GROUP--336 kg (740 lbs.)
FOR USE WITH SIDE DUMP BUCKET OR MULTI-PURPOSE BUCKET
AN ATTACHMENT

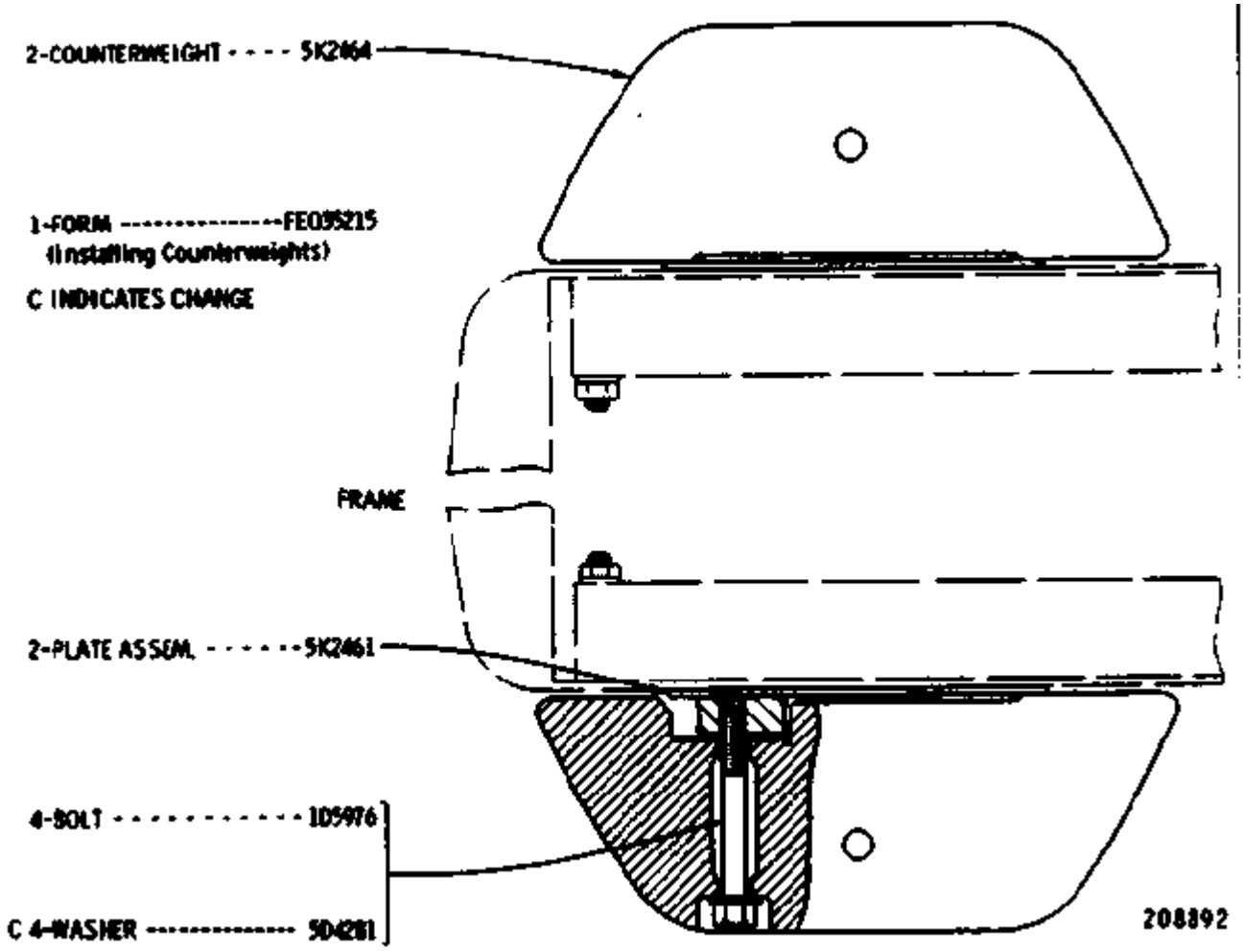

Nota	Ref	Numero	Cant	Nombre De Pieza
		5K-1616	1	SIDE COUNTERWEIGHT GROUP
		5K-2464	2	COUNTERWEIGHT
		5K-2461	2	PLATE ASSEM.
		1D-5976	4	BOLT
C		5D-4281	4	WASHER
C				INDICATES CHANGE

1100 2P6274 CYLINDER HEAD GROUP
Engine Serial No. 78P40900 to 78P45003 inclusive
6N8875 Cylinder Head parts are shown on Page 23B

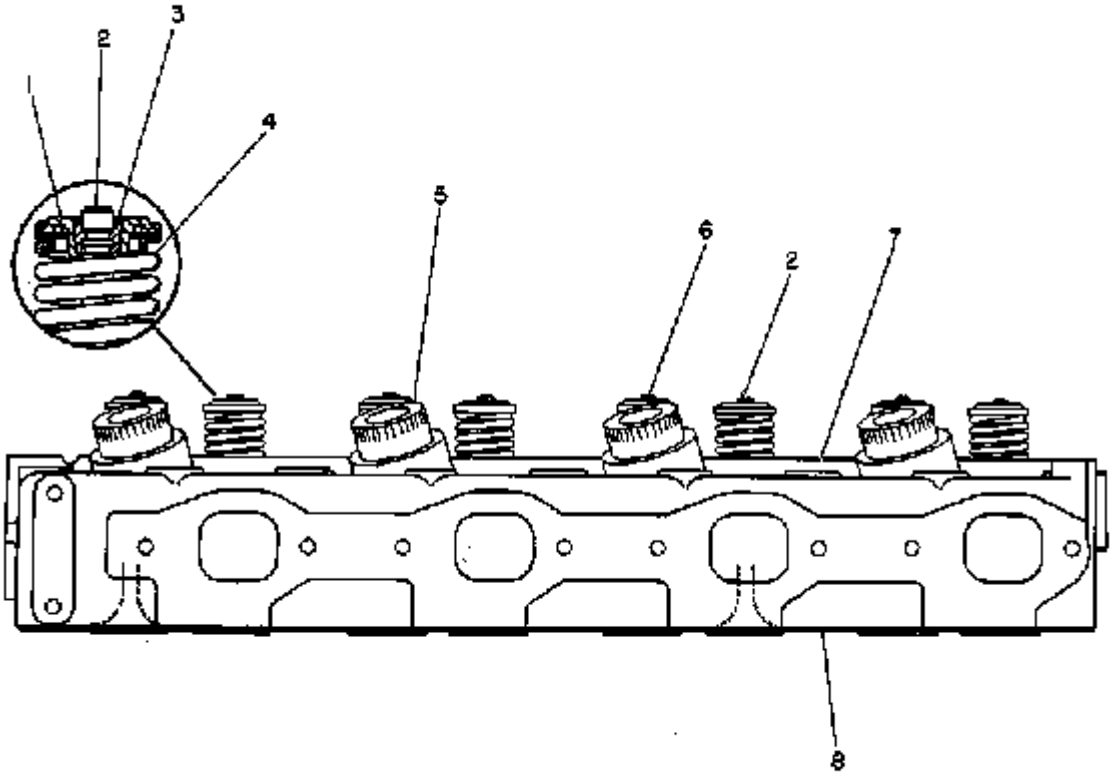

Nota	Ref	Numero	Cant	Nombre De Pieza
		2P-6274	1	CYLINDER HEAD GP
	1	5S-5874	8	ROTOCOIL AS
	2	5S-6449	4	VALVE-EXHAUST
	3	2A-4429	16	LOCK-RETAINER
	4	7S-7144	8	SPRING-VALVE
	5	5S-6795	4	CHAMBER AS
		7S-3206	4	SEAL-O-RING
		5M-2667	4	GASKET-CHAMBER 2.928MM(.194IN)THK
		2S-8959	4	GASKET-CHAMBER 5.664MM(.223IN)THK
		2S-8960	4	GASKET-CHAMBER 6.299MM(.248IN)THK
	6	5S-6452	4	VALVE-INLET
CRY	7	6N-8875	1	CYLINDER HEAD AS
C	8	7N-7386	1	GASKET

C	CHANGE FROM PREVIOUS TYPE
R	REMFG PART MAY BE AVAILABLE
Y	SEPARATE ILLUSTRATION

1100 7N8534 CYLINDER HEAD GROUP
Engine Serial No. 78P45004 to 78P53420 inclusive
8N1188 Cylinder Head parts are shown on Page 23B

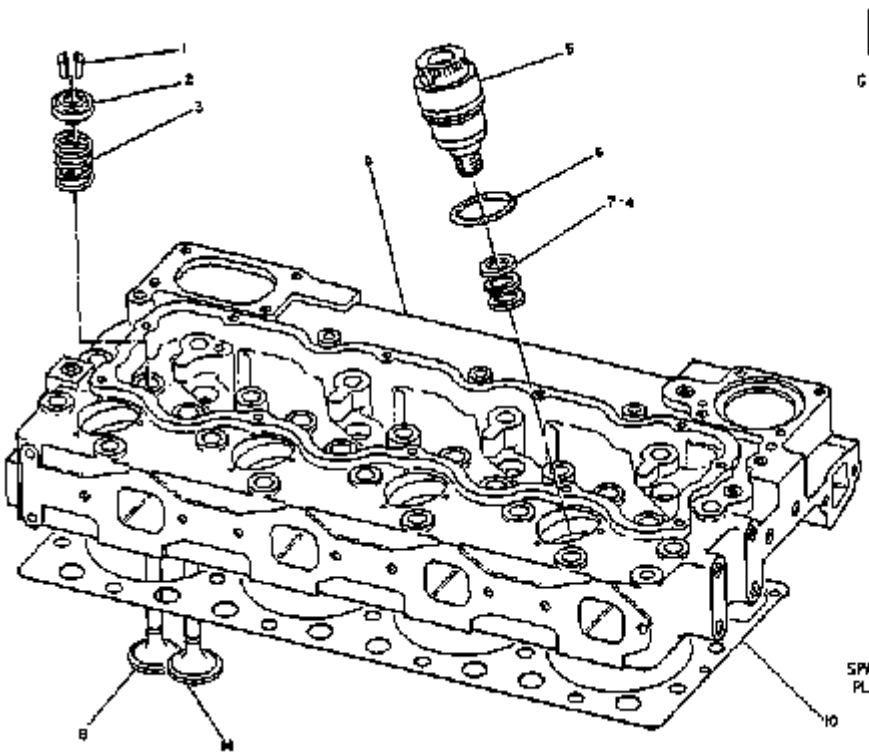

REF NO.	PART NUMBER	DESCRIPTION	QTY
1	2A4424	LOCK	16
C 2	355874	RECOIL ASSEM.	8
3	757144	SPRING	8
4	258959	BASKET	4
4A	258960	GASKET	4
5	556795	CHAMBER ASSEM.	4
6	753286	SEAL	4
7	5M2667	GASKET	4
8	556452	VALVE (Intake)	8
9	8N1188	HEAD ASSEM. (Separate Illustration)	1
10	7N8022	GASKET	1
11	355496	SEAL	1
12	7N8025	SEAL	12
13	7N8016	SEAL	4
14	556449	VALVE (Exhaust)	4

C INDICATES CHANGE

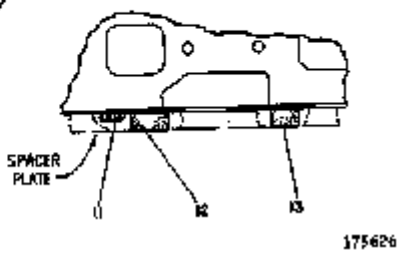

175626

Nota	Ref	Numero	Cant	Nombre De Pieza
		7N-8534	1	CYLINDER HEAD GP
	1	2A-4429	16	LOCK
C	2	5S-5874	8	RECOIL ASSEM.
	3	7S-7144	8	SPRING
	4	2S-8959	4	GASKET
		2S-8960	4	GASKET
	5	5S-6795	4	CHAMBER ASSEM.
	6	7S-3206	4	SEAL
	7	5M-2667	4	GASKET
	8	5S-6452	4	VALVE (intake)
RY	9	8N-1188	1	HEAD ASSEM.
				(Separate Illustration)
	10	7N-8022	1	GASKET
	11	3S-5496	1	SEAL
	12	7N-8025	12	SEAL
	13	7N-8018	4	SEAL
	14	5S-6449	4	VALVE (exhaust)
R				REMFG PART MAY BE AVAILABLE
Y				SEPARATE ILLUSTRATION
C				INDICATES CHANGE

1100 7N8534 CYLINDER HEAD GROUP
Engine Serial No. 78P53421 to 78P56416 inclusive
8N1188 Head parts are shown on Page 23B

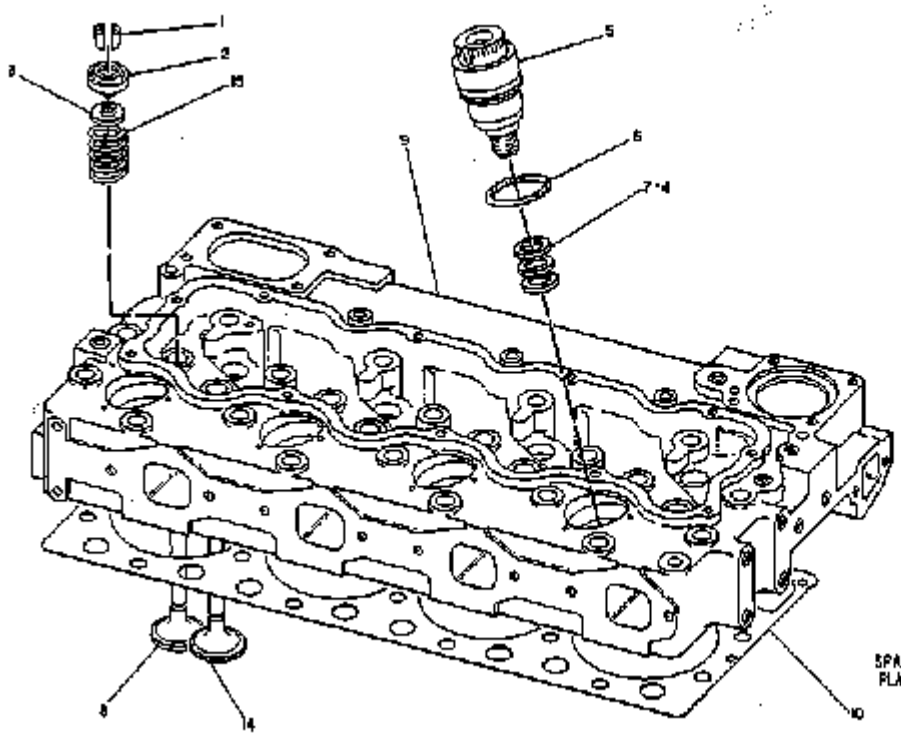

REF. NO.	PART NUMBER	DESCRIPTION	QTY.
1	2K4429	LOCK	16
C 2	8N7781	ROTOCOIL ASSEM. (Each Includes)	8
	8N7782	ROTOCOIL ASSEM.	1
3	8N7780	SHIELD	1
4	2S8959	GASKET	4
	2S8960	GASKET	4
5	5S6795	CHAMBER ASSEM.	4
6	7S3206	SEAL	4
7	5M2067	GASKET	4
8	5S6452	VALVE (Intake)	4
9	8N1188	HEAD ASSEM. (Separate Illustration)	1
10	7N8032	GASKET	1
11	3S5496	SEAL	1
12	7N8025	SEAL	12
13	7N8018	SEAL	4
14	5S6449	VALVE (Exhaust)	4
15	7S7144	SPRING	8

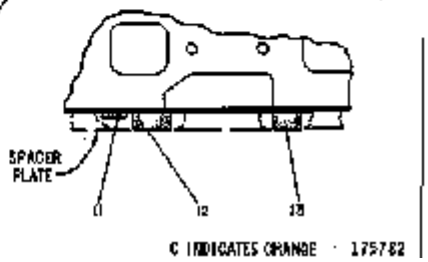

C INDICATES CHANGE · 175782

Nota	Ref	Numero	Cant	Nombre De Pieza
		7N-8534	1	CYLINDER HEAD GP
	1	2A-4429	16	LOCK
C	2	8N-7781	8	ROTOCOIL ASSEM.
				(Each Includes)
		8N-7782	1	ROTOCOIL ASSEM.
	3	8N-7780	1	SHIELD
	4	2S-8959	4	GASKET
		2S-8960	4	GASKET
	5	5S-6795	4	CHAMBER ASSEM.
	6	7S-3206	4	SEAL
	7	5M-2667	4	GASKET
	8	5S-6452	4	VALVE (intake)
RY	9	8N-1188	1	HEAD ASSEM.
				(Separate Illustration)
	10	7N-8022	1	GASKET
	11	3S-5496	1	SEAL
	12	7N-8025	12	SEAL
	13	7N-8018	4	SEAL
	14	5S-6449	4	VALVE (exhaust)
	15	7S-7144	8	SPRING
R				REMFG PART MAY BE AVAILABLE
Y				SEPARATE ILLUSTRATION
C				INDICATES CHANGE

1122 8N9696 ENGINE LIFTING GROUP
Engine Serial No. 78P57629 to 78P58037 inclusive

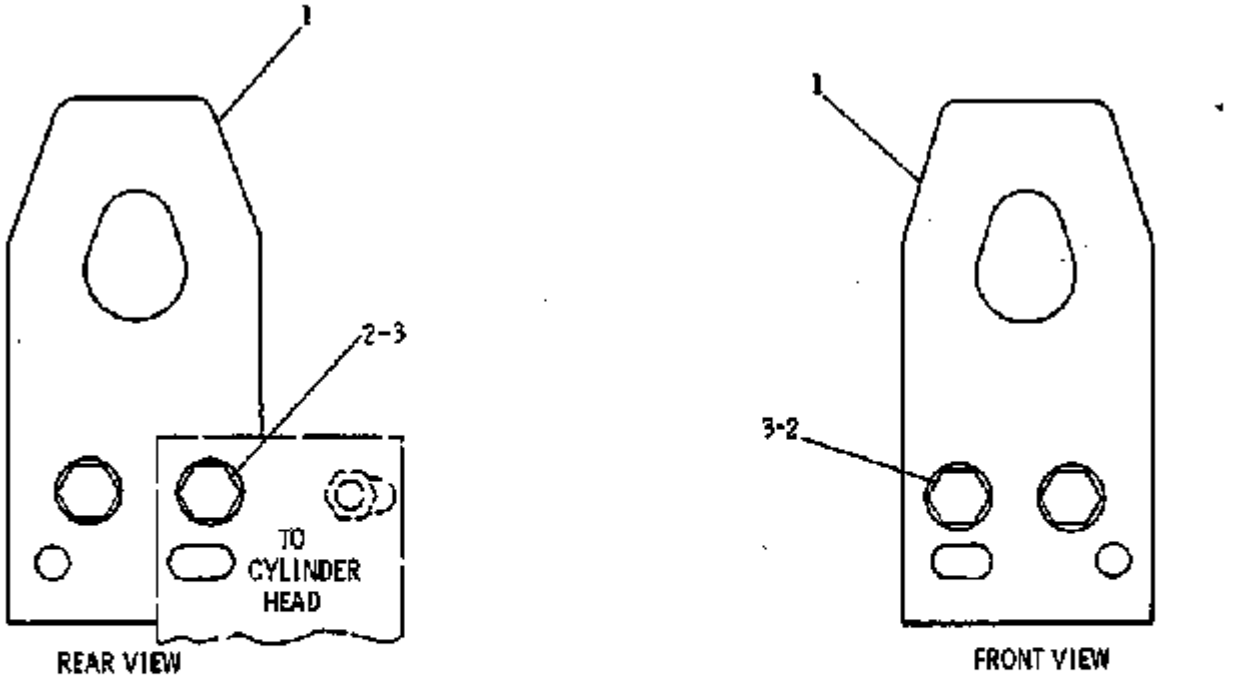

REF. NO.	PART NUMBER	DESCRIPTION	QTY.
1	6N7650	PLATE	2
▲ 2	4B3823	BOLT	4
▲ 3	5P8245	WASHER	4

▲ USE AS REQUIRED

231670

Nota	Ref	Numero	Cant	Nombre De Pieza
		8N-9696	1	LIFTING GP
	1	6N-7650	2	PLATE
H	2	4B-3823	4	BOLT
H	3	5P-8245	4	WASHER
H				USE AS REQUIRED

7315 6N1568 ENGINE OIL LEVEL GAUGE PROTECTION GROUP--Type 2
AN ATTACHMENT

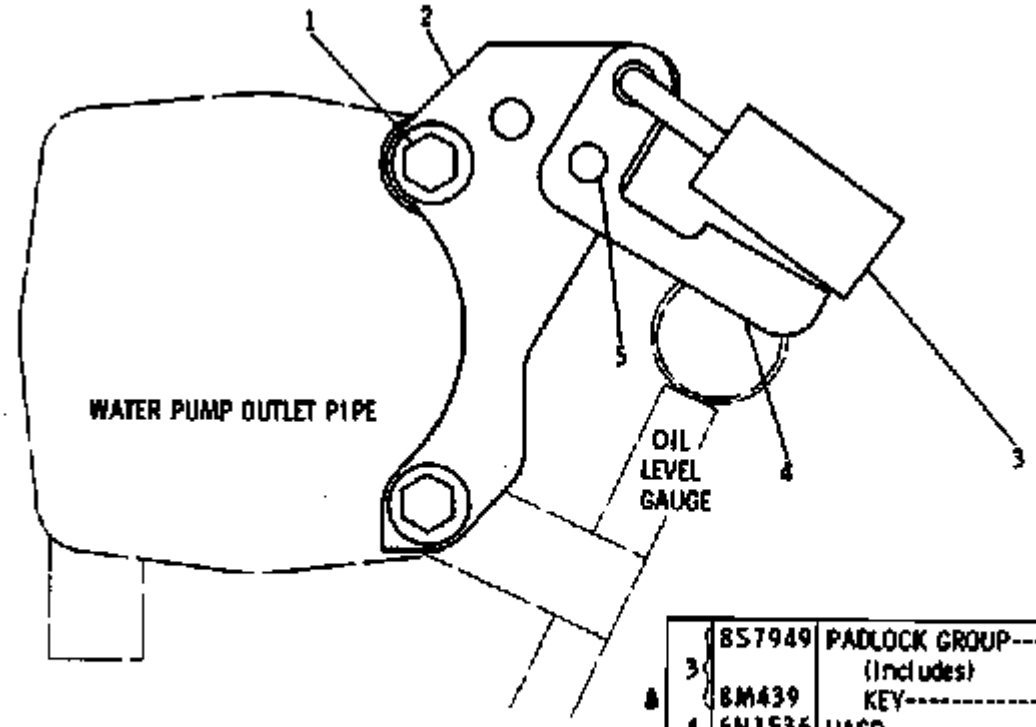

	REF NO.	PART NUMBER	DESCRIPTION	QTY
C	1	S1591	BOLT	2
		5M2894	WASHER	2
C	2	6N7325	BRACKET	1

	3	8S7949	PADLOCK GROUP (Includes)	1
A		8M439	KEY	2
	4	6N1536	HASP	1
	5	6N2011	RIVET	1
C		8H3526	WASHER	1

A NOT PART OF 6N1568 PROTECTION GROUP C INDICATES CHANGE 211204

Nota	Ref	Numero	Cant	Nombre De Pieza
		6N-1568	1	PROTECTION GP-VANDALISM
C	1	0S-1591	2	BOLT
		5M-2894	2	WASHER
C	2	6N-7325	1	BRACKET
	3	8S-7949	1	PADLOCK GROUP
				(Includes)
A		8M-0439	2	KEY
	4	6N-1536	1	HASP
	5	6N-2011	1	RIVET
C		8H-3526	1	WASHER
A				NOT PART OF THIS GROUP
C				INDICATES CHANGE

1359 7N2881 FAN PULLEY GROUP
Serial No. 41K7873 to 41K7884 and 41K7886-Up
Note: 7M4705 Vee Belt Set, consisting of 2 belts, is used

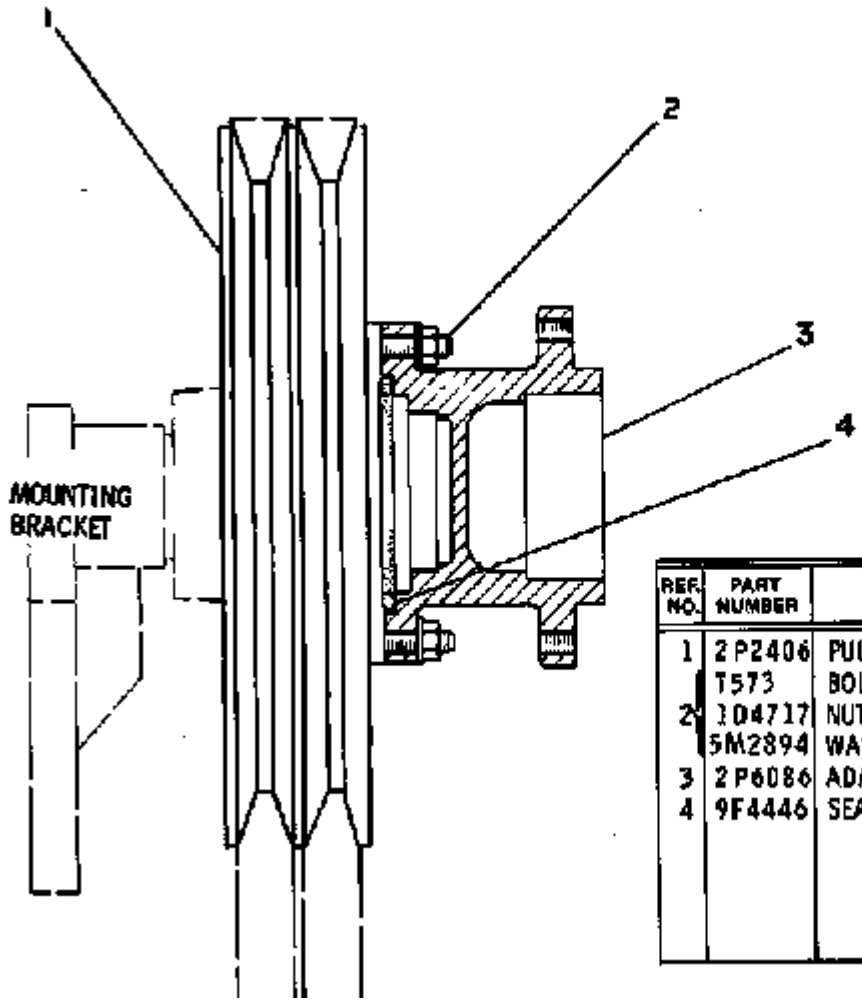

REF. NO.	PART NUMBER	DESCRIPTION	QTY
1	2P2406	PULLEY	1
	T573	BOLT	6
2	1D4717	NUT	6
	5M2894	WASHER	6
3	2P6086	ADAPTER	1
4	9F4446	SEAL	1

170146

Nota	Ref	Numero	Cant	Nombre De Pieza
		7N-2881	1	PULLEY GP-FAN
	1	2P-2406	1	PULLEY
	2	0T-0573	6	BOLT
		1D-4717	6	NUT
		5M-2894	6	WASHER
	3	2P-6086	1	ADAPTER
	4	9F-4446	1	SEAL

1156 7S7877 FLYWHEEL GROUP

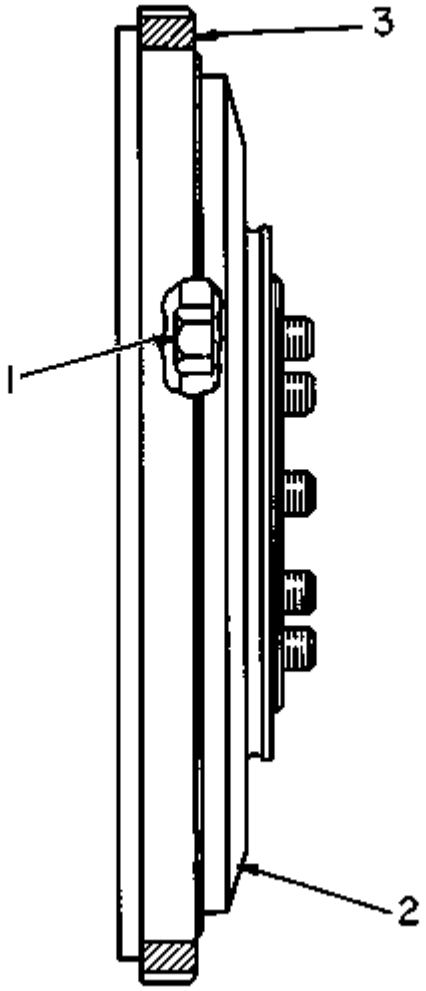

Nota	Ref	Numero	Cant	Nombre De Pieza
		7S-7877	1	FLYWHEEL GP
	1	2L-1701	9	BOLT
C	2	2P-4629	1	FLYWHEEL AS
C	3	7N-9145	1	GEAR (130 TEETH)
C				CHANGE FROM PREVIOUS TYPE

1157 2P6166 FLYWHEEL HOUSING GROUP
Engine Serial No. 78P18799 to 78P55274 inclusive

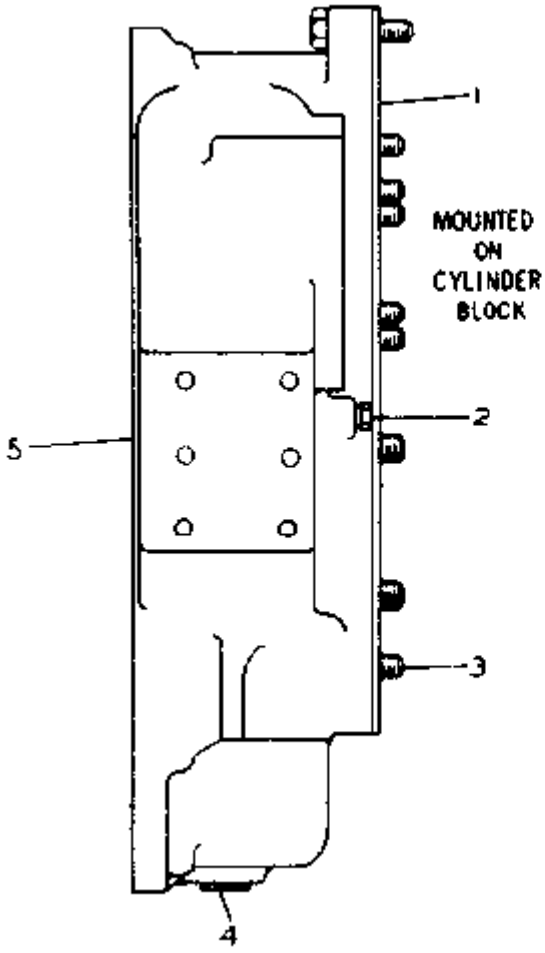

	REF. NO	PART NUMBER	DESCRIPTION	QTY
	1	9M5921	GASKET	1
	2	5M6213	PLUG	1
	3	S1587	BOLT	13
C	4	2B858	PLUG	1
C	5	6N2019	HOUSING	1

C INDICATES CHANGE

209653

Nota	Ref	Numero	Cant	Nombre De Pieza
		2P-6166	1	HOUSING GP-FLYWHEEL
	1	9H-5921	1	GASKET
	2	5M-6213	1	PLUG
	3	0S-1587	13	BOLT
C	4	2B-0858	1	PLUG
C	5	6N-2019	1	HOUSING
C				INDICATES CHANGE

1157 8N442 FLYWHEEL HOUSING GROUP
Engine Serial No. 78P55275-Up

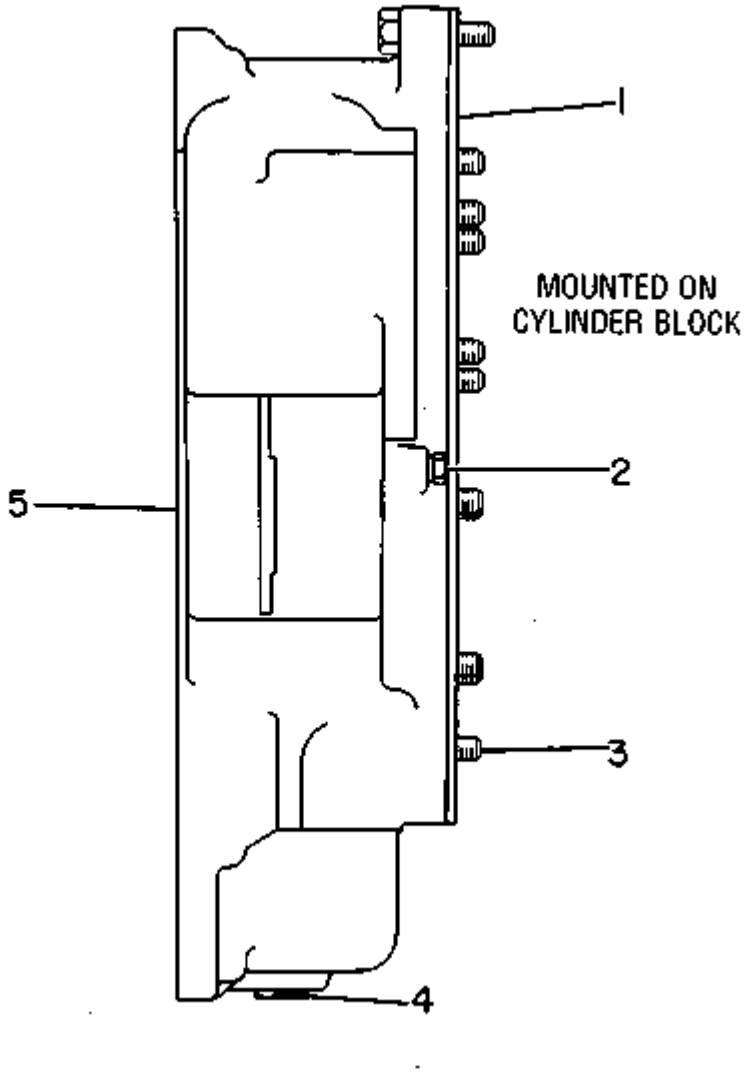

Nota	Ref	Numero	Cant	Nombre De Pieza
		8N-0442	1	HOUSING GP-FLYWHEEL
	1	9H-5921	1	GASKET-FLYWHEEL HOUSING
	2	5M-6213	1	PLUG
	3	0S-1587	13	BOLT
	4	2B-0858	1	PLUG-PIPE
	5	8N-0441	1	HOUSING-FLYWHEEL

1206 2P9642 FRONT GEAR GROUP--Timing
Engine Serial No. 78P18799 to 78P54755 inclusive

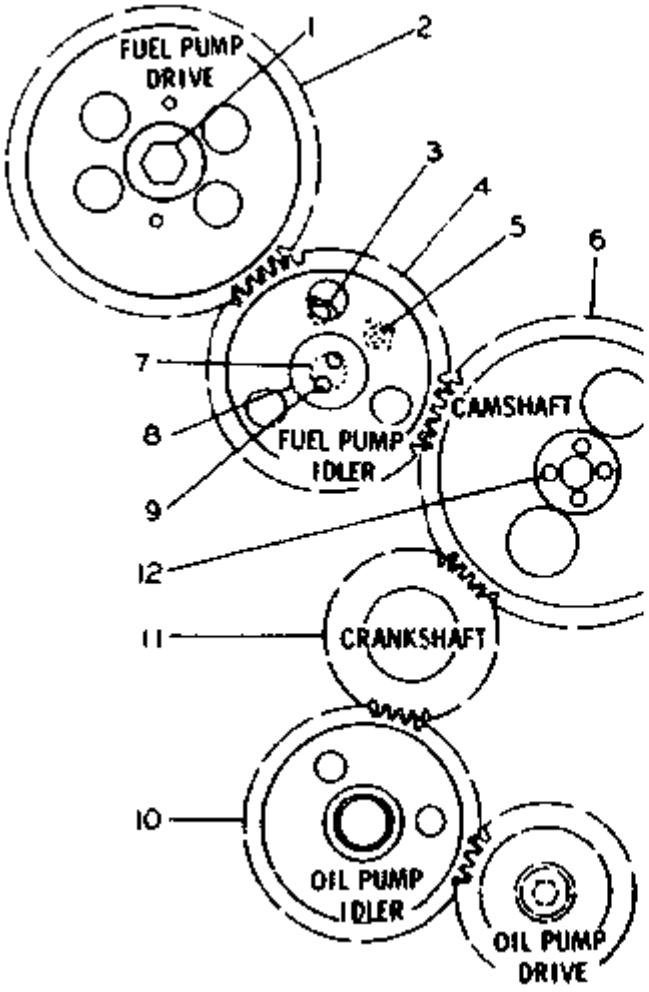

REF NO.	PART NUMBER	DESCRIPTION	QTY
1	S1603	BOLT	1
	4N3371	WASHER	1
2	4N3330	GEAR (80 Teeth)	1
3	L1351	BOLT	2
4	5S7660	GEAR ASSEM. (57 Teeth)	1
	5S7630	BEARING	1
5	SB9079	NUT	1
	5S7611	LOCK	1
6	5S3804	GEAR (80 Teeth)	1
7	5S7608	SHAFT	1
8	5S7612	PLATE	1
9	2H3755	BOLT	2
10	2P1172	GEAR ASSEM. (60 Teeth)	1
	2P1168	BEARING	1
11	4M9933	GEAR (40 Teeth)	1
	5H2671	KEY	1
12	S1748	BOLT	4

207194

Nota	Ref	Numero	Cant	Nombre De Pieza
		2P-9642	1	GEAR GP-FRONT TIMING
	1	0S-1603	1	BOLT
		4N-3371	1	WASHER
	2	4N-3330	1	GEAR-FUEL PUMP DRIVE (80 TEETH)
	3	0L-1351	2	BOLT
	4	5S-7660	1	GEAR AS (57 TEETH)
		5S-7630	1	BEARING-SLEEVE
	5	5B-9079	1	NUT-JAM
		5S-7611	1	LOCK-SHAFT
	6	5S-3804	1	GEAR-CAMSHAFT (80 TEETH)
	7	5S-7608	1	SHAFT-DRIVE IDLER
	8	5S-7612	1	PLATE-THRUST
	9	2H-3755	2	BOLT
	10	2P-1172	1	GEAR AS (60 TEETH)
		2P-1168	1	BEARING-SLEEVE
	11	4M-9933	1	GEAR-CRANKSHAFT (40 TEETH)
		5H-2671	1	KEY-WOODRUFF
	12	0S-1748	4	BOLT

1206 2P9642 FRONT GEAR GROUP--Timing
Engine Serial No. 78P54756 to 78P60566 inclusive

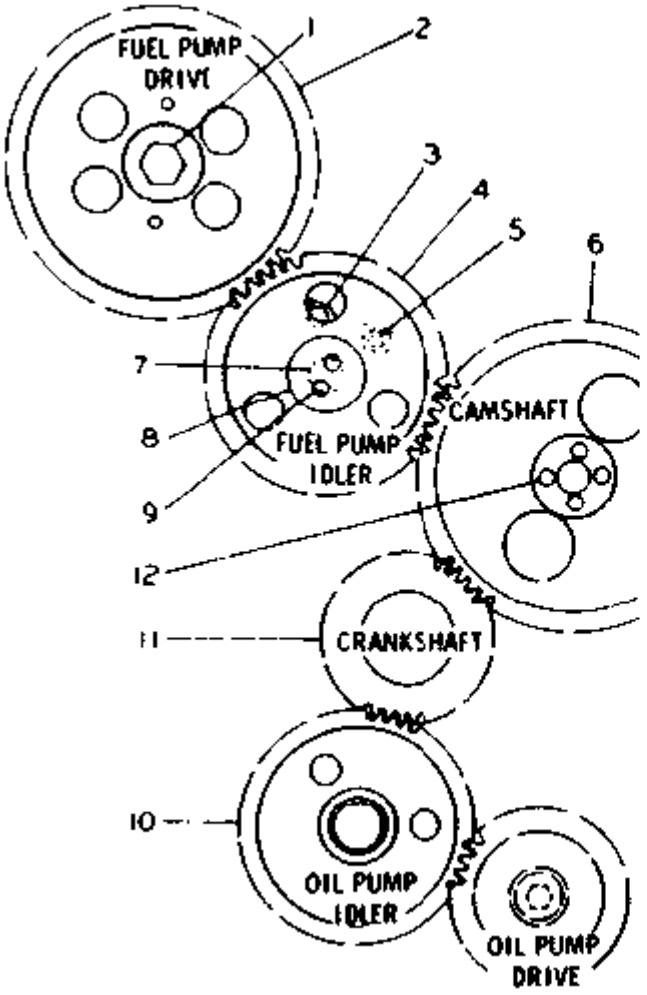

	REF. NO.	PART NUMBER	DESCRIPTION	QTY.
	1	S1603	BOLT	1
		4N3371	WASHER	1
C	2	7N3536	GEAR (80 teeth)	1
	3	L1351	BOLT	2
C	4	7N4791	GEAR ASSEM. (57 teeth) (Includes)	1
		5S7630	BEARING	1
	5	5B9079	NUT	1
		5S7611	LOCK	1
C	6	7N3515	GEAR (80 teeth)	1
C	7	8N4959	SHAFT	1
C	8	8N4960	PLATE	1
C	9	S1618	BOLT	2
C	10	7N4716	GEAR (60 teeth)	1
		2P1168	BEARING	1
C	11	7N4525	GEAR (40 teeth)	1
		5H2671	KEY	1
	12	S1748	BOLT	4

C INDICATES CHANGE

226714

Nota	Ref	Numero	Cant	Nombre De Pieza
		2P-9642	1	GEAR GP-FRONT TIMING
	1	0S-1603	1	BOLT
		4N-3371	1	WASHER
C	2	7N-3536	1	GEAR (80 teeth)
	3	0L-1351	2	BOLT
C	4	7N-4791	1	GEAR ASSEM. (57 teeth)
				(Includes)
		5S-7630	1	BEARING
	5	5B-9079	1	NUT
		5S-7611	1	LOCK
C	6	7N-3515	1	GEAR (80 teeth)
C	7	8N-4959	1	SHAFT
C	8	8N-4960	1	PLATE
C	9	0S-1618	2	BOLT
C	10	7N-4716	1	GEAR (60 teeth)
		2P-1168	1	BEARING
C	11	7N-4525	1	GEAR (40 teeth)
		5H-2671	1	KEY
	12	0S-1748	4	BOLT
C				INDICATES CHANGE

1206 2P9642 FRONT GEAR GROUP--Timing Gear
Engine Serial No. 78P60567-Up

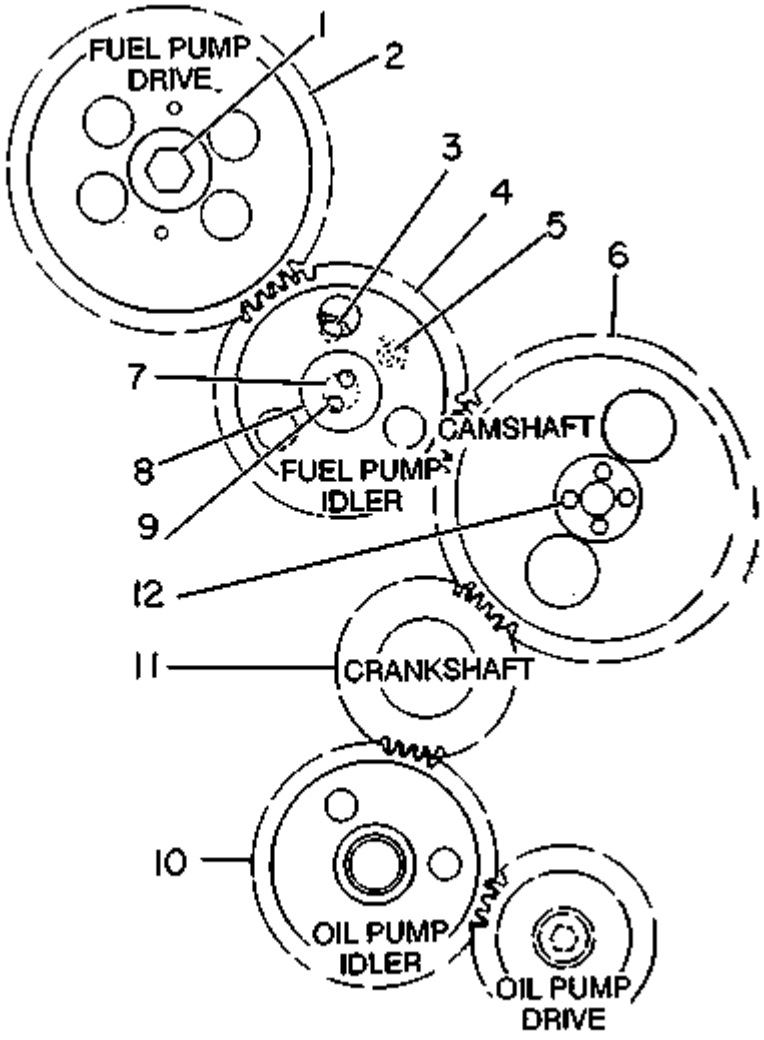

Nota	Ref	Numero	Cant	Nombre De Pieza
		2P-9642	1	GEAR GP-FRONT TIMING
	1	0S-1603	1	BOLT
		4N-3371	1	WASHER
	2	7N-3536	1	GEAR-FUEL PUMP DRIVE (80 TEETH)
	3	0L-1351	2	BOLT
	4	7N-4791	1	GEAR AS-FUEL PUMP IDLER (57 TEETH)
		5S-7630	1	BEARING-SLEEVE
	5	5B-9079	1	NUT-JAM
		5S-7611	1	LOCK-SHAFT
	6	1W-4402	1	GEAR-CAMSHAFT (80 TEETH)
	7	8N-4959	1	SHAFT-DRIVE IDLER
	8	8N-4960	1	PLATE-THRUST
	9	0S-1618	2	BOLT
	10	7N-4716	1	GEAR (60 TEETH)
		2P-1168	1	BEARING-SLEEVE
	11	1W-4405	1	GEAR-CRANKSHAFT (40 TEETH)
		5H-2671	1	KEY-WOODRUFF
	12	0S-1748	4	BOLT

1151 2P6529 FRONT HOUSING COVER GROUP--Timing Gear

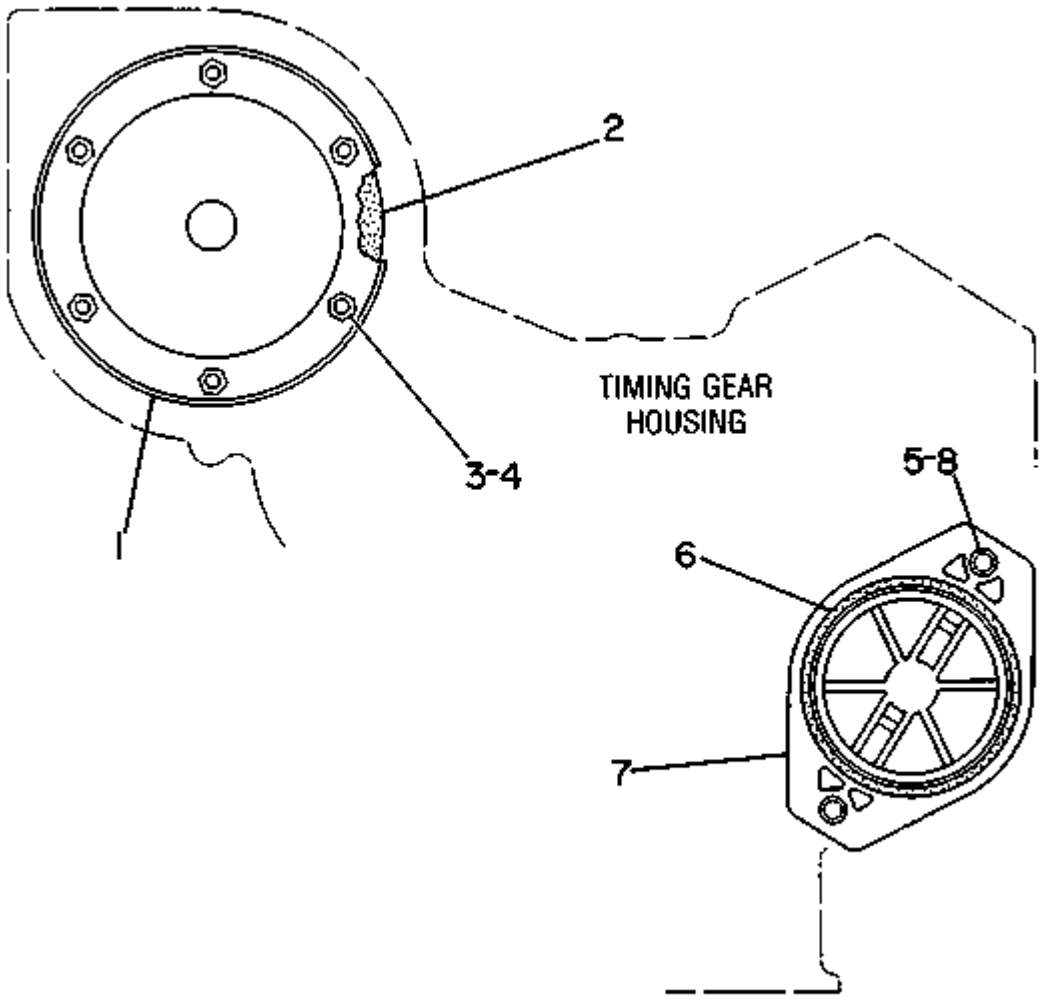

Nota	Ref	Numero	Cant	Nombre De Pieza
		2P-6529	1	COVER GP-FRONT HOUSING
	1	2P-8701	1	COVER-FRONT HOUSING
	2	6N-7887	1	GASKET-HOUSING COVER
	3	1B-4203	6	NUT-FULL
	4	5M-2894	6	WASHER
	5	0S-1566	2	BOLT
	6	5F-3106	1	SEAL-O-RING
C	7	7N-8374	1	COVER-DRIVE OPENING
C	8	5P-8247	2	WASHER-HARD
C				CHANGE FROM PREVIOUS TYPE

1151 2P6498 FRONT HOUSING FASTENER GROUP--Timing Gear
Engine Serial No. 78P18799 to 78P60566 inclusive

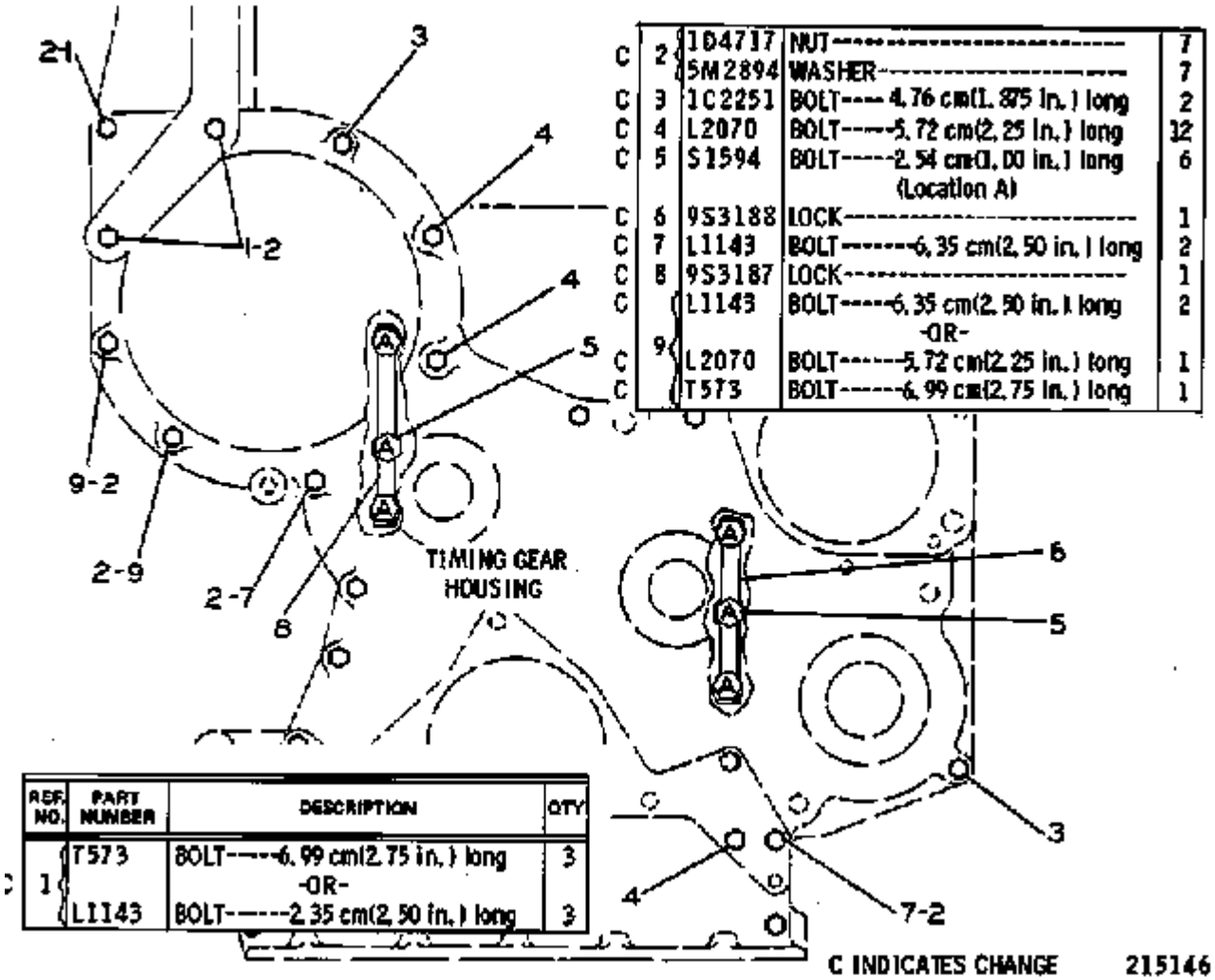

	REF. NO.	PART NUMBER	DESCRIPTION	QTY.
C	1	T573	BOLT----6.99 cm(2.75 in.) long	3
			-OR-	
		L1143	BOLT-----2.35 cm(2.50 in.) long	3

	REF. NO.	PART NUMBER	DESCRIPTION	QTY.
C	2	104717	NUT----------	7
		5M2894	WASHER----------	7
C	3	1C2251	BOLT---- 4.76 cm(1.875 in.) long	2
C	4	L2070	BOLT-----5.72 cm(2.25 in.) long	12
C	5	S1594	BOLT-----2.54 cm(1.00 in.) long (Location A)	6
C	6	9S3188	LOCK----------	1
C	7	L1143	BOLT-------6.35 cm(2.50 in.) long	2
C	8	9S3187	LOCK----------	1
C	9	L1143	BOLT-----6.35 cm(2.50 in.) long	2
			-OR-	
C		L2070	BOLT------5.72 cm(2.25 in.) long	1
C		T573	BOLT------6.99 cm(2.75 in.) long	1

Nota	Ref	Numero	Cant	Nombre De Pieza
		2P-6498	1	FASTENER GP-FRONT HOUSING
C	1	0T-0573	3	BOLT 6.99 cm(2.75 in.) long
				- OR -
C		0L-1143	3	BOLT 2.35 cm(2.50 in.) long
C	2	1D-4717	7	NUT
C		5M-2894	1	WASHER
C	3	1C-2251	2	BOLT 4.76 cm(1.875 in.) long
C	4	0L-2070	12	BOLT 5.72 cm(2.25 in.) long
C	5	0S-1594	6	BOLT 2.54 cm(1.00 in.) long
				(Location A)
C	6	9S-3188	1	LOCK
C	7	0L-1143	2	BOLT 6.35 cm(2.50 in.) long
C	8	9S-3187	1	LOCK
C	9	0L-1143	2	BOLT 6.35 cm(2.50 in.) long
				- OR -
C		0L-2070	1	BOLT 5.72 cm(2.25 in.) long
C		0T-0573	1	BOLT 6.99 cm(2.75 in.) long
C				INDICATES CHANGE

1151 2P6498 FRONT HOUSING FASTENER GROUP--Timing Gear
Engine Serial No. 78P60567-Up

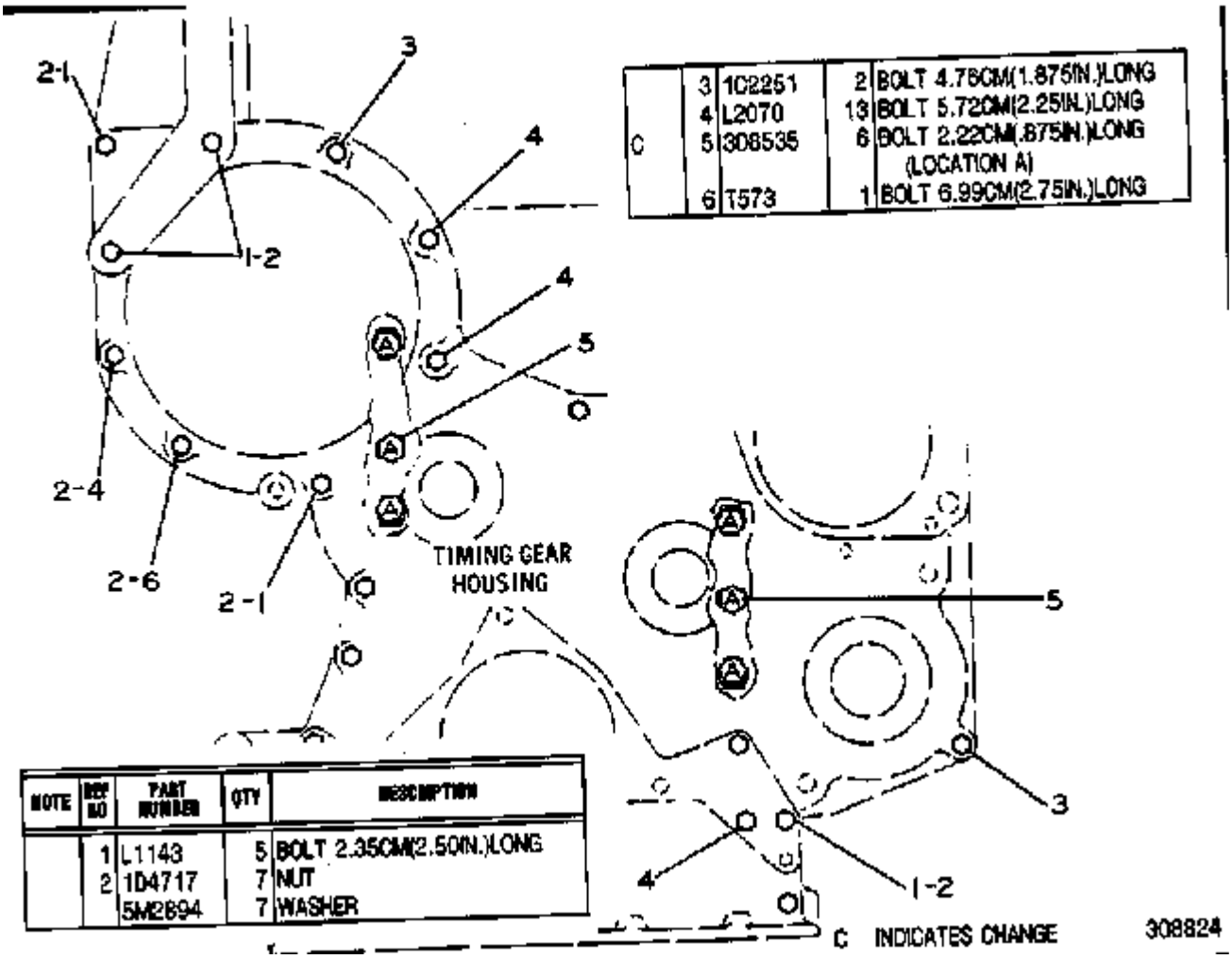

	3	1C2251	2	BOLT 4.76CM(1.875IN.)LONG
	4	L2070	13	BOLT 5.72CM(2.25IN.)LONG
C	5	308535	6	BOLT 2.22CM(.875IN.)LONG (LOCATION A)
	6	T573	1	BOLT 6.99CM(2.75IN.)LONG

NOTE	REF NO	PART NUMBER	QTY	DESCRIPTION
	1	L1143	5	BOLT 2.35CM(2.50IN.)LONG
	2	1D4717	7	NUT
		5M2694	7	WASHER

Nota	Ref	Numero	Cant	Nombre De Pieza
		2P-6498	1	FASTENER GP-FRONT HOUSING
	1	0L-1143	5	BOLT 2.35CM(2.50IN.)LONG
	2	1D-4717	7	NUT
		5M-2894	7	WASHER
	3	1C-2251	2	BOLT 4.76CM(1.875IN.)LONG
	4	0L-2070	13	BOLT 5.72CM(2.25IN.)LONG
C	5	030-8535	6	BOLT 2.22CM(.875IN.)LONG
				(LOCATION A)
	6	0T-0573	1	BOLT 6.99CM(2.75IN.)LONG
C				INDICATES CHANGE

1151 2P9641 FRONT HOUSING GROUP--Timing Gear
Engine Serial No. 78P18799 to 78P53510 inclusive

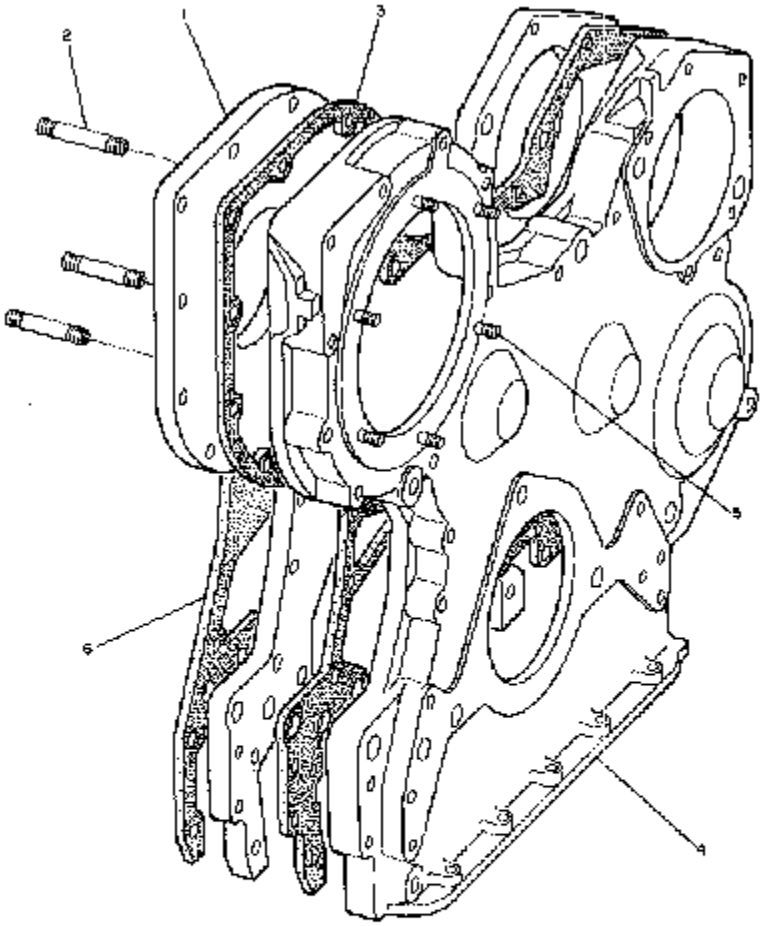

REF NO.	PART NUMBER	DESCRIPTION	QTY
1	6N9060	PLATE ASSEM.---------- (Includes)	1
2	4M8743	STUD----------	3
3	2P1274	GASKET----------	1
C 4	8N7711	HOUSING ASSEM.---------- (Includes)	1
5	2S42	STUD----------	6
6	2P1273	GASKET----------	1

C INDICATES CHANGE

228004

.

Nota	Ref	Numero	Cant	Nombre De Pieza
		2P-9641	1	HOUSING GP-FRONT
	1	6N-9060	1	PLATE ASSEM.
				(Includes)
	2	4M-8743	3	STUD
	3	2P-1274	1	GASKET
C	4	8N-7711	1	HOUSING ASSEM.
				(Includes)
	5	2S-0042	6	STUD
	6	2P-1273	1	GASKET
C				INDICATES CHANGE