CATERPILLAR®

SEBP4156-30
October 2008

VOLUME I
Pages 1-462

RUTHZIL TRATOR COMERCIAL DE PEÇAS LTDA 11 97083-6812 ROLANDO

Parts Manual

SIS

See “General Information” for New Parts Manual Features.

930G Wheel Loader

TWR1-Up (Machine)
CPT1-Up (Engine)
TPA1-Up (Transmission)

Powered By 3056E Engine
This Parts Manual is also available in .PDF Format on Compact Disc (CD-ROM)-Caterpillar Form NO. SERP4156

Product and Dealer Information

Note: For product identification plate locations, see the section “Product Identification Information” in the Operation and Maintenance Manual.

Delivery Date: _____

Product Information

Model: _____

Product Identification Number: _____

Engine Serial Number: _____

Transmission Serial Number: _____

Generator Serial Number: _____

Attachment Serial Numbers: _____

Attachment Information: _____

Customer Equipment Number: _____

Dealer Equipment Number: _____

Dealer Information

Name: _____ Branch: _____

Address: _____

_____

_____

	Dealer Contact	Phone Number	Hours
Sales:	_____	_____	_____
Parts:	_____	_____	_____
Service:	_____	_____	_____

MEMORANDA

TABLE OF CONTENTS

Name	Page
GENERAL INFORMATION	A5
REPAIR ALTERNATIVES	A8
SUPPLEMENTAL COOLANT ADDITIVES	A9
MAINTENANCE PARTS	A10
INDEX	A15
MACHINE ARRANGEMENT	1
CHASSIS AR	1
COMMON AR	1
WASTE HANDLING AR	2
ENGINE ARRANGEMENT	3
ENGINE AR	3
ENGINE AR-PRIMARY	4
INSTALLATION AR-ENGINE	6
BASIC ENGINE	7
CAMSHAFT GP	7
COVER GP-ENGINE	8
COVER GP-VALVE MECHANISM	9
CRANKSHAFT GP	13
CYLINDER BLOCK GP	17
CYLINDER HEAD GP	20
DRAIN GP-ENGINE OIL	22
FASTENER GP-CYLINDER HEAD	23
FLYWHEEL GP	24
GEAR GP-FRONT	25
GUARD GP-BELT	26
HOUSING GP-FLYWHEEL	28
HOUSING GP-FRONT	29
LIFTING GP-ENGINE	33
MOUNTING GP-ALTERNATOR	34
MOUNTING GP-ENGINE	35
MOUNTING GP-ENGINE & TMSN	36
MOUNTING GP-FAN DRIVE	38
PAN GP-OIL	39
PISTON & ROD GP	45
PLUG GP-CYLINDER BLOCK	47
PLUG GP-ENGINE	48
PULLEY GP-CRANKSHAFT	49
ROCKER ARM GP	50
VALVE MECHANISM GP	52
LUBRICATION SYSTEM	53
FILTER GP-ENGINE OIL	53
GAUGE GP-OIL LEVEL (DIPSTICK)	54
PUMP GP-ENGINE OIL	55
VALVE GP-FLUID SAMPLING	61
COOLING SYSTEM	62
CONNECTION GP-WATER	62
COOLER GP-FLTR BASE & ENG OIL	63
FAN GP-SUCTION	65
LINES GP-WATER	66
PUMP GP-WATER	68
RADIATOR & AFTERCOOLER GP	70
RADIATOR GP	89
AIR INLET AND EXHAUST SYSTEM	93
AIR CLEANER GP	93
ELBOW GP-AIR INLET	100
EXTENSION GP-EXHAUST	101
LINES GP-AFTERCOOLER AIR	102
MUFFLER GP	104
PRECLEANER GP	107
TURBOCHARGER GP	108
FUEL SYSTEM	110
BASE GP-FUEL FILTER	110
FILTER GP-FUEL	111
LINES GP-FUEL	112
PUMP GP-FUEL INJECTION	116
PUMP GP-FUEL TRANSFER	122
SEPARATOR GP-WATER	128
TANK & MTG GP-FUEL	129
ELECTRICAL AND STARTING SYSTEM	130
ALARM GP	130
ALTERNATOR GP-CHARGING	131
BATTERY & WIRING GP	139
BATTERY GP	141
CAMERA AR	141
CONTROL GP-COMMUNICATION	142
CONTROL GP-LIFT KICKOUT	143
CONTROL GP-POSITION	144
CONTROL GP-UNPROGRAMMED	145
CONVERTER GP-ELECTRICAL	146
ELECTRONICS AR-MACHINE	147
ELECTRONICS GP-COMMUNICATION	147
ELECTRONICS GP-MACHINE	147
HEATER GP-JACKET WATER	148
INSTALLATION GP-COMMUNICATION	150
INSTALLATION GP-SECURITY	152
LAMP GP-FLOOD	154
LAMP GP-HEAD & SIGNAL	155
LAMP GP-STOP & TAIL	159
LAMP GP-WARNING BEACON	160
LIGHTING AR-ROADING	161
LIGHTING GP-AUXILIARY	163
LIGHTING GP-FLOOD	164
LIGHTING GP-ROADING	168
LIGHTING GP-WARNING BEACON	172
MOTOR GP-ELECTRIC	174
MOUNTING GP-CAMERA	175
SENSOR GP-POSITION	176

TABLE OF CONTENTS

Name	Page
SENSOR GP-PRESSURE	177
SENSOR GP-SPEED	178
SENSOR GP-TEMPERATURE	180
STARTING AID GP	182
STARTING MOTOR GP-ELECTRIC	184
SWITCH GP-DISCONNECT	187
SWITCH GP-MAGNETIC	188
SWITCH GP-WIPER	194
WARNING GP-BACKUP	196
WIRING GP-ALTERNATOR	197
WIRING GP-CAB	198
WIRING GP-CAMERA	208
WIRING GP-COMMUNICATION	210
WIRING GP-ELECTRONIC CONTROL	212
WIRING GP-ENGINE	214
WIRING GP-FRONT	227
WIRING GP-REAR	229
WIRING GP-RIDE CONTROL	233
WIRING GP-SECONDARY STEERING	237
POWER TRAIN	239
AXLE AR-FIXED	239
AXLE AR-OSCILLATING	239
AXLE GP-OSCILLATING	242
BRAKE & PLANETARY GP	243
CASE & PARTS GP-TRANSMISSION	246
CLUTCH GP	249
COOLER GP-AXLE OIL	257
COVER GP-SHIPPING	258
COVER GP-TRANSMISSION	259
DIFFERENTIAL GP	261
DIFFERENTIAL GP-LIMITED SLIP	262
DRIVE GP-FLEXIBLE COUPLING	263
DRIVE GP-PUMP	264
FILLER GP-POWER TRAIN OIL	265
FILTER & LINES GP-TRANSMISSION	266
FILTER GP-OIL	268
GAUGE GP-SIGHT	269
GEAR GP-BEVEL & PINION	270
GEAR GP-INPUT TRANSFER	274
GEAR GP-OUTPUT TRANSFER	275
HOUSING GP-FIXED AXLE	279
HOUSING GP-OSCILLATING AXLE	281
LINES GP-AXLE OIL COOLER	285
LINES GP-TORQUE CONV COOLER	303
MOUNTING GP-AXLE	305
MOUNTING GP-RIM	306
POWER TRAIN AR	306
PUMP & MOTOR GP-AXLE OIL CLR	307
PUMP GP-TRANSMISSION	308
RIM AR	310
RIM AS	312
RIM GP-DEMOUNTABLE	313
SHAFT GP-DRIVE	319
SLIP JOINT GP	321
STOP GP-AXLE OSCILLATION	323
TIRE & RIM AR	323
TRANSMISSION AR	333
VALVE GP-BYPASS	334
VALVE GP-MODULATING	335
VALVE GP-RELIEF	336
VALVE GP-TIRE	339
VALVE GP-TRANSMISSION CONTROL	340
FRAME AND BODY	344
BOX GP-BATTERY	344
COUNTERWEIGHT GP	345
COVER GP-ACCESS	348
FENDER AR-ROADING	349
FENDER GP-FRONT	350
FENDER GP-REAR	355
FENDER GP-ROADING	357
FRAME GP-LOADER	360
FRAME GP-REAR	363
GUARD GP-CRANKCASE	366
GUARD GP-DRIVE SHAFT	367
GUARD GP-LIGHTING	368
GUARD GP-LINES	370
GUARD GP-POWER TRAIN	373
GUARD GP-RADIATOR	374
HITCH GP-ARTICULATING	378
HOOD & GUARD GP	380
LADDER GP	382
LINES GP-GREASE	384
LINK GP-STEERING FRAME LOCK	385
PANEL GP-ACCESS	386
PANEL GP-TOP	388
BRAKING SYSTEM	389
ACCUMULATOR GP-BRAKE	389
ACCUMULATOR GP-HYDRAULIC	390
BRAKE GP-PARKING	391
BRAKE GP	392
CONTROL GP-PARKING BRAKE	393
CONTROL GP-SERVICE BRAKE	395
LINES GP-SERVICE BRAKE	403
STEERING SYSTEM	412
CYLINDER & MTG GP-STEERING	412
CYLINDER GP-STEERING	413
LINES GP-SECONDARY STEERING	414
LINES GP-STEERING	439
PUMP & MOTOR GP	453
STEERING AR	454
STEERING AR-SECONDARY	454
STEERING COLUMN GP-ADJUSTABLE	456
VALVE & MTG GP-SOLENOID	459
VALVE GP-SHUTTLE	460

TABLE OF CONTENTS

Name	Page
VALVE GP-SOLENOID	461
HYDRAULIC SYSTEM	463
ACCUMULATOR GP-PILOT OIL	463
ACCUMULATOR GP-RIDE CONTROL	465
CONTROL & LINES GP-RIDE	467
CONTROL AR-RIDE	472
CONVERSION AR-LOAD CONTROL	472
CONVERSION GP-CONTROL VALVE	472
COOLER AR-HYD & TMSN OIL	472
COOLER GP-HYD & TMSN OIL	474
COOLER GP-HYD & XMSN OIL	478
COOLER GP-HYD & TMSN OIL	479
COOLER GP-HYDRAULIC OIL	480
CYLINDER & MTG GP-COUPLER	482
CYLINDER GP-COUPLER	484
CYLINDER GP-LIFT	485
CYLINDER GP-MULTIPURPOSE BUKT	486
CYLINDER GP-TILT	487
FILTER & MTG GP-HYDRAULIC	489
FILTER GP-OIL	490
GAUGE GP-SIGHT	491
HYDRAULIC AR	492
HYDRAULIC AR-2 VALVE	492
HYDRAULIC AR-3 VALVE	493
HYDRAULIC AR-4 VALVE	495
HYDRAULIC AR-6 VALVE	498
KICKOUT & POSITIONER GP	499
LINES GP-BUCKET	501
LINES GP-CONNECTING	503
LINES GP-COUPLER	512
LINES GP-FRONT	550
LINES GP-HYDRAULIC	581
LINES GP-HYDRAULIC FAN	603
LINES GP-LIFT CYLINDER	616
LINES GP-LOAD CONTROL VALVE	634
LINES GP-PILOT	642
LINES GP-TILT CYLINDER	662
MANIFOLD GP-CONTROL	674
MANIFOLD GP-VALVE	675
MOTOR & MTG GP-HYDRAULIC FAN	680
MOTOR AR-HYDRAULIC FAN	682
MOTOR GP-GEAR	683
MOUNTING GP-CONTROL VALVE	688
PIVOT GP-PILOT VALVE	691
PLATE GP-PILOT VALVE	696
PLUG GP-CONTROL VALVE	697
PUMP & MTG GP-BRAKE & HYD FAN	701
PUMP & MTG GP-IMPL & STEERING	703
PUMP GP-GEAR	704
PUMP GP-PISTON	709
TANK & MTG GP-HYDRAULIC	711
TANK GP-HYDRAULIC	716
VALVE & MTG GP-MAIN CONTROL	719
VALVE & MTG GP-SOLENOID	721
VALVE GP-CHECK	723
VALVE GP-COMBINATION	725
VALVE GP-CONTROL	726
VALVE GP-MAIN CONTROL	746
VALVE GP-PILOT	762
VALVE GP-PILOT CARTRIDGE	794
VALVE GP-PRESSURE REDUCING	797
VALVE GP-PURGE	798
VALVE GP-RELIEF	799
VALVE GP-RIDE CONTROL	801
VALVE GP-SHUTTLE	805
VALVE GP-SOLENOID	809
IMPLEMENTS	814
BRACKET GP-TRANSPORT	814
CONTROL GP-WORK TOOL	815
LINKAGE AR-FRONT	821
WORK TOOLS	822
ADAPTER GP-TIP	822
ARM GP-MATERIAL HANDLING	823
BUCKET AR-GENERAL PURPOSE	825
BUCKET AR-LIGHT MATERIAL	839
BUCKET AR-MULTIPURPOSE	844
BUCKET AS-GENERAL PURPOSE	848
BUCKET AS-LIGHT MATERIAL	867
BUCKET GP-GENERAL PURPOSE	871
BUCKET GP-LIGHT MATERIAL	882
BUCKET GP-MULTIPURPOSE	885
CARRIAGE AS-FORK	889
CARRIAGE GP-FORK	890
CORNER	891
COUPLER AR-QUICK	891
COUPLER GP-QUICK	893
EDGE GP-CUTTING	902
EDGE GP-SEGMENT	904
EDGE-CUTTING	905
FORK GP-PALLET	906
GUARD GP-BUCKET	912
MOUNTING GP-BUCKET	913
PROTECTOR GP-LINKAGE	914
TIP GP-LONG	915
TIP GP-SHORT	916
OPERATOR STATION	918
ACCUMULATOR GP-REFRIGERANT	918
ADJUSTER GP-SEAT	920
AIR COMPRESSOR GP-SEAT	921
AIR CONDITIONER & MOUNTING GP	922
AIR CONDITIONER AR	925
AIR CONDITIONER GP	928
ARM GP-WINDOW WIPER	938
ARMREST GP	940
CAB AR	947

TABLE OF CONTENTS

Name	Page
CAB AR-ENCLOSED ROPS	948
CAB GP-ENCLOSED ROPS	950
CANOPY AR-OPEN ROPS	952
CANOPY GP-OPEN ROPS	952
COMPRESSOR GP-REFRIGERANT	953
CONDENSER & MTG GP-REFRIGERANT	955
CONDENSER GP-REFRIGERANT	958
CONSOLE GP-OPERATOR	960
CONTROL GP-HANDLE	966
CONTROL GP-JOYSTICK	970
CONTROL GP-PILOT OPERATED HYD	974
CONTROL GP-STEERING	1004
CONTROL GP-TRANSMISSION	1015
DASH GP	1019
DEFROSTER GP-CAB	1020
DOOR GP-CAB	1021
DUCT GP-CAB AIR	1034
EXTENSION GP-BACKREST	1036
FILTER GP-CAB AIR	1037
GUARD GP-VANDALISM	1038
GUARD GP-WINDOW	1040
HEATER & MTG GP-CAB	1042
HEATER AR-CAB	1043
HEATER GP-CAB	1044
HOUSING GP-SEAT SUSPENSION	1046
INSTALLATION GP-RADIO	1049
LINER GP-CAB	1051
LINES GP-AIR CONDITIONER	1059
LINES GP-CAB HEATER	1064
LITERATURE GP	1065
MIRROR GP-REAR VIEW	1066
MOTOR GP-WINDOW WIPER	1069
MOUNTING GP-CAB	1071
MOUNTING GP-DISPLAY	1072
OPERATOR AR	1073
OPERATOR AR-ENCLOSED ROPS	1073
OPERATOR AR-OPEN ROPS	1075
OPERATOR GP	1076
PAN GP-BACKREST	1077
PAN GP-SEAT	1082
PANEL GP-INSTRUMENT	1084
PEDAL GP-BRAKE	1133
PEDAL GP-GOVERNOR	1134
RADIO GP	1136
RADIO GP-COMMUNICATION	1137
RECLINER GP-SEAT	1138
ROPS GP-ENCLOSED	1139
ROPS GP-OPEN	1141
SCREEN GP-SUN	1143
SEAT & MOUNTING GP	1144
SEAT BELT GP	1148
SEAT GP	1149
SEAT GP-SUSPENSION	1157
SKIRT GP-CAB	1163
SUPPORT GP-SEAT	1167
SUSPENSION GP-SEAT	1168
VISOR GP-CAB	1172
WASHER GP-WINDOW	1173
WINDOW GP-DOOR	1176
WIPER GP-WINDOW	1177
SERVICE EQUIPMENT AND SUPPLIES	1181
BOX GP-TOOL	1181
FILM GP	1182
PLATE & FILM GP	1183
PART NUMBER INDEX	B1

GENERAL INFORMATION

1. MACHINE IDENTIFICATION

Caterpillar machines are identified by Product Identification Numbers (PIN). Some components included in a machine may be identified by Serial Numbers (S/N). Typical components that will be serialized include engines, transmissions, bulldozers, and rippers. The machine and engine are further identified by arrangement numbers and in some cases modification numbers. These numbers are shown on the product identification plate(s) and on the master plate in the operator's compartment.

Caterpillar dealers need all of these numbers to determine accurate parts identification.

SIS *New Feature*

Effective First Quarter 2001 the Caterpillar Product Identification Number (PIN) changed from 8 to 17 characters. In an effort to provide uniform equipment identification, Caterpillar and other construction equipment manufacturers are moving to comply with the latest version of the product identification numbering standard. Non-road machine PINs are defined by ISO 10261. The new PIN format will apply to all Caterpillar machines and generator sets. The PIN plates and frame marking will display the 17 character PIN. The new format will look like the following:

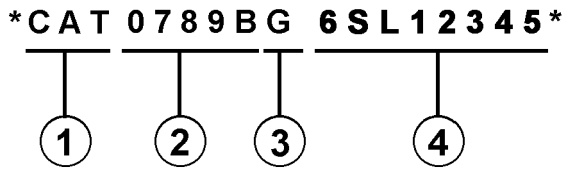

Where:

1. Caterpillar's World Manufacturing Code (characters 1-3)

2. Machine Descriptor (characters 4-8)

3. Check Character (character 9)

4. Machine Indicator Section (MIS) or Product Sequence Number (characters 10-17). These were previously referred to as the Serial Number.

Machines and generator sets produced before First Quarter 2001 will maintain their 8 character PIN format.

Components such as engines, transmissions, axles, etc. and work tools will continue to use an 8 character Serial Number (S/N).

2. ORDERING PARTS

⚠ WARNING

When replacement parts are required for this product Caterpillar recommends using Caterpillar replacement parts or parts with equivalent specifications including, but not limited to, physical dimensions, type, strength and material.

Failure to heed this warning can lead to premature failures, product damage, personal injury or death.

Quality Caterpillar replacement parts are available from Caterpillar dealers throughout the world. Their parts inventories are up to date and include all parts normally required to protect your investment in Caterpillar machines. Dealers may offer repair kits or remanufactured parts to allow selection of the most effective repair alternative for a particular situation. When ordering parts, your order should specify the quantity, part number, part name, and the serial number/product identification number of the machine for which the parts are needed.

3. PARTS MANUAL ORGANIZATION

Product information in this manual is presented as "information elements" that represent all of the components for the specific model. Engine Arrangement and Seat Group are examples of information elements. The information elements are organized alphabetically by part name and secondarily by part number within each major section of the manual.

4. TABLE OF CONTENTS

A table of contents (TOC) is found at the beginning of the manual. The TOC lists each section of the manual with a complete list of all information elements organized as they appear in the manual. Page numbers are provided for quick reference to detailed parts identification illustrations and serviceable consist lists.

5. MAINTENANCE PARTS INDEX

The Maintenance Parts Index, located near the beginning of the manual, references most frequently used maintenance part numbers, providing description, quantity, usage and page number. This information is organized alphabetically by part description.

6. INDEX

The index located near the front of the manual is an alphabetical listing of all information elements included in the manual. Page numbers are provided for quick reference to detailed parts identification illustrations and serviceable consist lists.

7. PART NUMBER INDEX

A numerical index listing all part numbers and the corresponding page number(s) appears at the back of the manual.

8. CAPTIONS

Captions located at the beginning of each information element identify the part number and part name along with additional descriptive information. PIN and S/N information found in each caption should be used to select correct information for a specific machine. Field replacement options, identification of optional attachment components, and where used ("part of") information is also provided.

The first line of a caption is shown in larger type font to indicate the beginning of an information element. Captions for additional pages that may be required to illustrate an information element will be shown in standard type font and will include the term *(contd.)* .

9. NON-SERVICED PARTS

In some instances it is necessary to display non-serviced parts that are a link to a lower level serviceable consist lists. These non-serviced part numbers are shown in *italic* type indicating that they are not available.

10. PARTS LIST REFERENCE NUMBERS

Numbers shown in the Ref No column correspond to numbers used in the associated graphic(s). An alphabetic suffix may be added to a reference number to identify lower level consist items. Numbers shown in the Graphic Ref column refer to the graphic number identifier displayed in the lower left corner of each illustration. The Graphic Ref number may be used in combination with the item Ref No to determine the correct part number. There may be intentional omission of a Ref No in a consist list as information is updated to reflect the latest serviceable part numbers.

11. INDENTED PART NAMES

When a part name is indented in a parts list, it is part of (included in) the group or assembly under which it is indented.

12. ILLUSTRATION REFERENCE LETTERS

When necessary, illustrations contain reference letters (A, B, C etc.) that are intended to track lines and harnesses from one point to another. They are also used to show where to reconnect illustrations that have been separated.

13. ABBREVIATIONS AND SYMBOLS

O.D. – Outside Diameter
I.D. – Inside Diameter
A – Not Part Of This Group
B – Use As Required
C – Change From Previous Type
D – Order By The Meter
E – Order By The Centimeter
F – Not Shown
G – Order By The Inch
I – Refer To Hydraulic Information System
M – Metric Part
R – Remfg Part May Be Available
Y – Separate Illustration
Z – Not Serviced Separately

SIS *New Feature*

14. DESCRIPTION OF TYPE CHANGES

Type - A type is defined as any configuration change that requires an additional Information Element for an Arrangement, Group, or Assembly. If serial number breaks for types are not available, a type # (Type 1, Type 2, etc.) will be displayed in the caption. These "type" changes are identified with a "C" note (change from previous type) in the Parts List. Only the "types" that apply to this Parts Manual will be included. Additional types may exist causing "C" notes to appear on an Information Element when no other types are shown.

15.<END>

This symbol indicates the end of an information element.

NOTE:

Continuing improvement and advancement of product design may cause changes to your machine which may not be included in this publication. Whenever a question arises regarding your caterpillar product or this publication, please consult your caterpillar dealer for the latest available information.

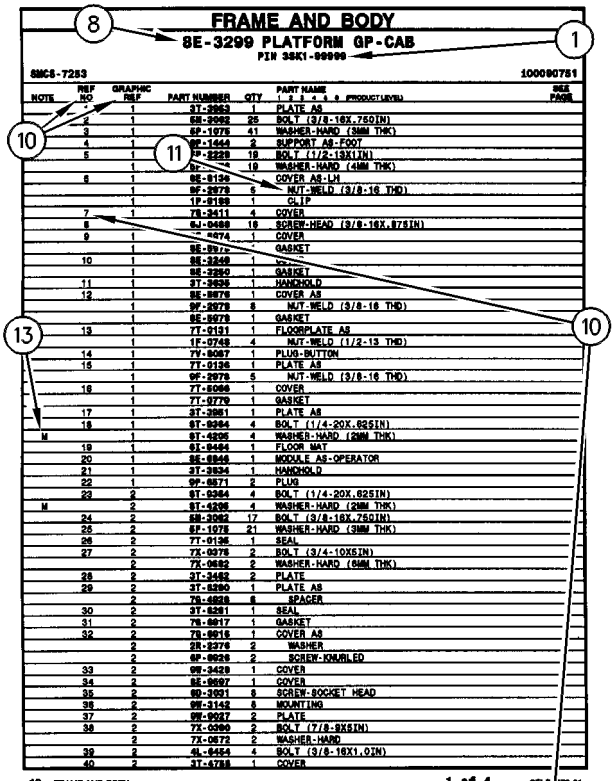
FRAME AND BODY
8E-3299 PLATFORM GP-CAB
PIN 3SK1-99999
SMCS-7253
100090751
NOTE REF NO GRAPHIC REF PART NUMBER QTY PART NAME SEE PAGE
1 1 3T-2953 1 PLATE AS
2 1 6E-2992 25 BOLT (3/8-16X.750IN)
3 1 6P-1076 41 WASHER-HARD (38MM THK)
4 1 9P-1444 2 SUPPORT AS-FOOT
5 1 7P-2229 19 BOLT (1/2-13X1IN)
1 19 WASHER-HARD (44MM THK)
6 1 8E-9136 COVER AS-LH
1 9F-2978 6 NUT-WELD (3/8-16 THD)
1 1P-0188 1 CLIP
7 1 7S-2411 4 COVER
8 9J-0498 18 SCREW-HEAD (3/8-16X.875IN)
9 1 1 COVER
1 GASKET
1 10
1 GASKET
11 1 3T-2638 1 HANDHOLD
12 1 8E-9979 1 COVER AS
1 9F-2978 8 NUT-WELD (3/8-16 THD)
1 GASKET
13 1 7T-0131 1 FLOORPLATE AS
1 1F-0748 4 NUT-WELD (1/2-13 THD)
14 1 7V-8067 1 PLUG-BUTTON
15 1 7T-0136 1 PLATE AS
1 9F-2978 5 NUT-WELD (3/8-16 THD)
16 1 7T-8066 1 COVER
1 7T-9779 1 GASKET
17 1 3T-3951 1 PLATE AS
18 1 6T-8264 4 BOLT (1/4-20X.625IN)
M 1 9T-4295 4 WASHER-HARD (20MM THK)
19 1 6L-8494 1 FLOOR MAT
20 1 8E-8846 1 MODULE AS-OPERATOR
21 1 3T-3934 1 HANDHOLD
22 1 9P-8571 2 PLUG
23 2 6T-8264 4 BOLT (1/4-20X.625IN)
M 2 9T-4295 4 WASHER-HARD (20MM THK)
24 2 6B-3062 17 BOLT (3/8-16X.750IN)
25 2 8P-1076 21 WASHER-HARD (38MM THK)
26 2 7T-0135 1 SEAL
27 2 7X-0975 2 BOLT (3/4-10X5IN)
2 7X-0682 2 WASHER-HARD (64MM THK)
28 2 3T-3452 2 PLATE
29 2 3T-8290 1 PLATE AS
2 7S-4828 8 SPACER
30 2 3T-8281 1 SEAL
31 2 7S-8817 1 GASKET
32 2 7S-9615 1 COVER AS
2 2R-3276 2 WASHER
2 6P-9926 2 SCREW-KNURLED
33 2 9W-3429 1 COVER
34 2 8E-9597 1 COVER
35 2 6D-3931 8 SCREW-SOCKET HEAD
36 2 9W-3142 8 MOUNTING
37 2 9W-9027 2 PLATE
38 2 7X-0990 2 BOLT (7/8-9X5IN)
2 7X-0672 2 WASHER-HARD
39 2 4L-8454 4 BOLT (3/8-16X1.0IN)
40 2 3T-4788 1 COVER
12 FRAME AND BODY
1 of 4
SELP4570-01

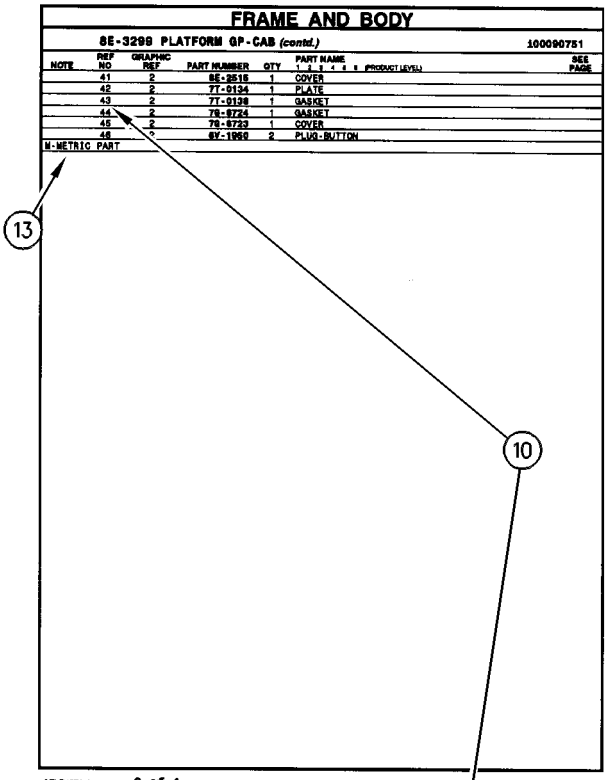
FRAME AND BODY
8E-3299 PLATFORM GP-CAB (contd.)
100090751
NOTE REF NO GRAPHIC REF PART NUMBER QTY PART NAME SEE PAGE
41 2 8E-2516 1 COVER
42 2 7T-0134 1 PLATE
43 2 7T-0138 1 GASKET
44 2 7S-9724 1 GASKET
45 2 7S-8723 1 COVER
46 2 6V-1950 2 PLUG-BUTTON
M-METRIC PART
SELP4570-01
2 of 4
FRAME AND BODY 13

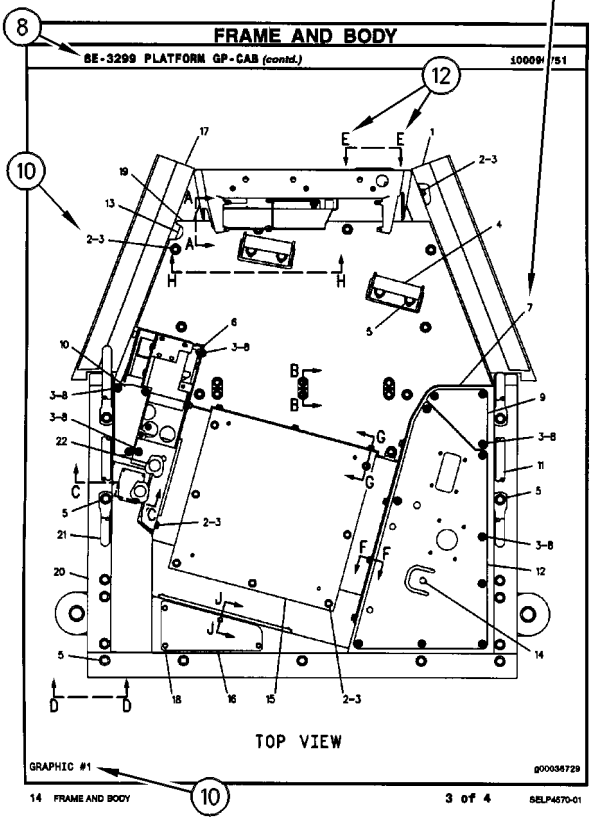
FRAME AND BODY
8E-3299 PLATFORM GP-CAB (contd.)
100090751
TOP VIEW
GRAPHIC #1
g00036729
14 FRAME AND BODY
3 of 4
SELP4570-01

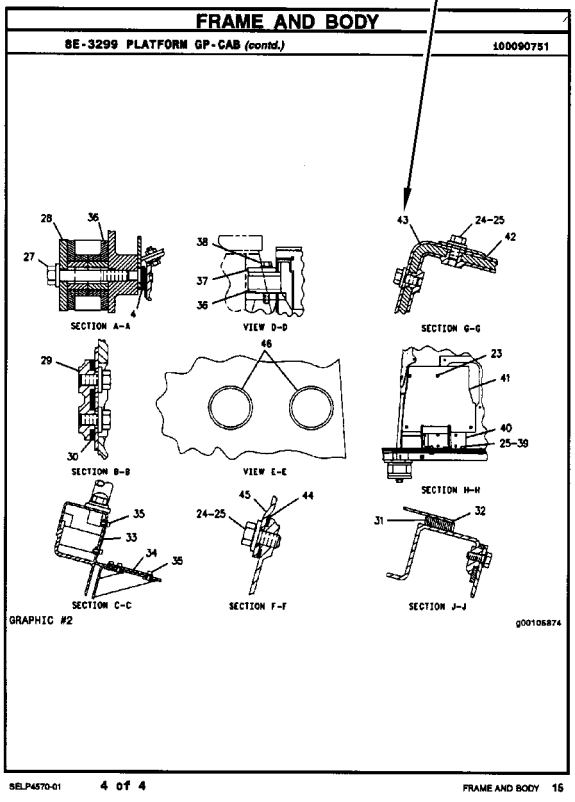
FRAME AND BODY
8E-3299 PLATFORM GP-CAB (contd.)
100090751
SECTION A-A
VIEW D-D
SECTION G-G
SECTION B-B
VIEW E-E
SECTION H-H
SECTION C-C
SECTION F-F
SECTION J-J
GRAPHIC #2
g00105874
SELP4570-01
4 of 4
FRAME AND BODY 15

REPAIR ALTERNATIVES

REMANUFACTURED COMPONENTS

As an option when making repairs consider Caterpillar Remanufactured Components. Components that are available through the Caterpillar Remanufactured Program are identified three ways in the parts book:

- with the letter R in the note field of the parts list
- with an R* at the beginning of the first line of the caption
- with an *R at the end of the first line of the caption

Typical components included in the Remanufacturing Program include:

ALTERNATORS
CONNECTING RODS
CRANKSHAFTS - UNDERSIZE
CRANKSHAFTS - UPGRADE TO NEW
CYLINDER HEADS
ELECTRONIC CONTROL MODULES (ECM)
ELECTRONIC SENSORS
FUEL INJECTORS
FUEL NOZZLES
FUEL PUMPS
GOVERNORS
OIL PUMPS
PISTONS
SHORT BLOCKS
STARTERS
TURBOCHARGERS - COMPLETE
TURBOCHARGER CARTRIDGES
WATER PUMPS

Caterpillar Remanufactured engines for many engine arrangements are also available.

SUPPLEMENTAL COOLANT ADDITIVES

CUSTOMER BENEFITS:

Protects against cavitation, foam, erosion, corrosion, and scale buildup in cooling systems.

- Provides measured coolant conditioner.

DESCRIPTION:

Additives deplete from the coolant with normal operation. For this reason, Supplemental Coolant Additives (SCA) must be added to all heavy duty coolants at regular intervals. In addition, when not using a fully formulated, pre-charged antifreeze, like Caterpillar's DEAC, an initial charge of SCA must be added to the cooling system. The amount of SCA added to the system is dependent on the capacity of the system.

The SCA for initial fill is provided as a liquid. SCA's for maintenance intervals are available in liquid form and as a spin-on element. (No Spin-on available for 3600 Family of Engines)

NOTE:

The amount of SCA added at initial fill is not the same as the amount added at maintenance intervals.

The coolant additive elements can be used with any ethylene or propylene glycol type antifreeze which meets ASTM D4985 or ASTM D5345 Specifications.

NOTE:

For use with standard heavy duty coolant only, not for use with Extended Life Coolant.

PARTS NEEDED:

Cooling System Capacity		Liquid SCA at Initial Fill	Liquid SCA at Maintenance*	Spin-on SCA Maintenance Element*
Liters	Gallons			
22-30	(6-8)	3P-2044 (1)	6V-3542 (1)	111-2370 (1)
30-38	(8-10)	3P-2044 (1) 6V-3542 (1)	111-2372 (1)	111-2369 (1)
38-49	(10-13)	3P-2044 (1) 8T-1589 (1)	111-2372 (1)	111-2369 (1)
49-64	(13-17)	3P-2044 (2)	8T-1589 (1)	9N-3368 (1)
64-83	(17-22)	3P-2044 (2) 8T-1589 (1)	111-2372 (1) 6V-3542 (1)	111-2371 (1)
83-114	(22-30)	3P-2044 (3) 8T-1589 (1)	3P-2044 (1)	9N-3718 (1)
114-163	(30-43)	3P-2044 (5)	3P-2044 (1) 6V-3542 (1)	111-2371 (2)
163-242	(43-64)	3P-2044 (8)	3P-2044 (2)	9N-3718 (2)

** Normal maintenance period is 250 hrs. See your Operation and Maintenance Manual for complete coolant maintenance instructions.*

( ) Indicates quantity required.

MAINTENANCE PARTS

DESCRIPTION	PART NUMBER	QTY	WHERE USED	PAGE
AIR INLET AND EXHAUST SYSTEM				
CAP-RAIN (AIR CLEANER)	166-2087	1	AIR CLEANER GP	93
		1	AIR CLEANER GP	94
FILTER ELEMENT AS-AIR (PRIMARY)	152-7217	1	AIR CLEANER GP	96
	222-9020	1	AIR CLEANER GP	99
FILTER ELEMENT AS-AIR (SECONDARY)	152-7219	1	AIR CLEANER GP	96
	222-9021	1	AIR CLEANER GP	99
BASIC ENGINE				
CAP-OIL FILLER (ENGINE)	130-9888	1	COVER GP-VALVE MECHANISM	9
		1	COVER GP-VALVE MECHANISM	11
FILTER ELEMENT-BREATHER (CLOSED CIRCUIT CRANKCASE)	229-3555	1	COVER GP-VALVE MECHANISM	9
		1	COVER GP-VALVE MECHANISM	11
GASKET (VALVE COVER)	216-9604	1	COVER GP-VALVE MECHANISM	9
		1	COVER GP-VALVE MECHANISM	11
PLUG-DRAIN (ENGINE OIL)	7C-0351	2	PAN GP-OIL	39
		2	PAN GP-OIL	41
		2	PAN GP-OIL	43
SEAL-O-RING (CRANKCASE BREATHER)	262-1046	1	COVER GP-VALVE MECHANISM	9
		1	COVER GP-VALVE MECHANISM	11
COOLING SYSTEM				
CAP AS-RADIATOR (COOLANT TANK)	227-4376	1	RADIATOR & AFTERCOOLER GP	70
		1	RADIATOR & AFTERCOOLER GP	73
		1	RADIATOR & AFTERCOOLER GP	77
		1	RADIATOR & AFTERCOOLER GP	81
		1	RADIATOR & AFTERCOOLER GP	85
GASKET-COVER	140-7506	1	PUMP GP-WATER	68
REGULATOR-WATER TEMPERATURE	216-9737	1	CONNECTION GP-WATER	62
SEAL (HOUSING, REGULATOR) (WATER TEMPERATURE)	141-6188	1	CONNECTION GP-WATER	62
ELECTRICAL AND STARTING SYSTEM				
BATTERY GP (12-VOLT, MAINTENANCE FREE, WET) (950-CCA)	115-2422	2	BATTERY GP	141
BELT-DRIVE	9X-8139	1	LAMP GP-WARNING BEACON	160
CIRCUIT BREAKER AS (15-AMPERE) (FLOODLIGHTS)	3T-2662	1	WIRING GP-ENGINE	214
		1	WIRING GP-ENGINE	219
		1	WIRING GP-ENGINE	223
CIRCUIT BREAKER AS (30-AMPERE) (AUXILIARY)	147-1773	1	WIRING GP-ENGINE	214
		1	WIRING GP-ENGINE	220
		1	WIRING GP-ENGINE	223
CIRCUIT BREAKER AS (60-AMPERE) (MAIN)	171-2208	1	WIRING GP-ENGINE	214
		1	WIRING GP-ENGINE	219
		1	WIRING GP-ENGINE	223
CIRCUIT BREAKER AS (90-AMPERE) (ALTERNATOR)	171-2211	1	WIRING GP-ENGINE	214

MAINTENANCE PARTS

DESCRIPTION	PART NUMBER	QTY	WHERE USED	PAGE
		1	WIRING GP-ENGINE	219
		1	WIRING GP-ENGINE	223
FLASHER AS (24-VOLT)	108-0358	1	LIGHTING GP-ROADING	168
		1	LIGHTING GP-ROADING	170
FUSE (20-AMPERE)	113-8492	1	WIRING GP-ENGINE	219
KEY (BATTERY DISCONNECT)	8H-5306	1	SWITCH GP-DISCONNECT	187
KEY AS-ELECTRONIC (SECURITY)	206-5162	2	INSTALLATION GP-SECURITY	152
LAMP (24-VOLT, 21-WATT)	242-0588	1	LAMP GP-HEAD & SIGNAL	157
		1	LAMP GP-HEAD & SIGNAL	158
	9X-4493	1	LAMP GP-STOP & TAIL	159
LAMP (24-VOLT, 21-WATT) (AMBER)	242-0588	1	LAMP GP-HEAD & SIGNAL	155
		1	LAMP GP-HEAD & SIGNAL	156
LAMP (24-VOLT, 3-WATT)	115-1748	2	WIRING GP-CAB	201
		2	WIRING GP-CAB	203
		2	WIRING GP-CAB	205
LAMP (24-VOLT, 3-WATT) (WEDGE BASE)	115-1748	4	WIRING GP-CAB	198
LAMP (24-VOLT, 5-WATT)	130-3515	1	LAMP GP-HEAD & SIGNAL	157
		1	LAMP GP-HEAD & SIGNAL	158
	9X-4492	1	LAMP GP-STOP & TAIL	159
LAMP (24-VOLT, 5-WATT) (CLEAR)	130-3515	1	LAMP GP-HEAD & SIGNAL	155
		1	LAMP GP-HEAD & SIGNAL	156
LAMP (24-VOLT, 70-WATT) (WARNING BEACON)	9X-7849	1	LAMP GP-WARNING BEACON	160
LAMP (24-VOLT, 75/70-WATT)	9X-3465	1	LAMP GP-HEAD & SIGNAL	157
		1	LAMP GP-HEAD & SIGNAL	158
LAMP (24-VOLT, 75/70-WATT) (CLEAR)	9X-3465	1	LAMP GP-HEAD & SIGNAL	155
		1	LAMP GP-HEAD & SIGNAL	156
LAMP-HALOGEN (24-VOLT, 65-WATT)	9X-3463	1	LAMP GP-FLOOD	154
		1	LIGHTING GP-FLOOD	164
		1	LIGHTING GP-FLOOD	166
LENS AS (HEADLIGHT)	228-6050	1	LAMP GP-HEAD & SIGNAL	157
		1	LAMP GP-HEAD & SIGNAL	158
V-BELT SET (INCLUDES 2-BELTS)	130-3216	1	ALTERNATOR GP-CHARGING	135
		1	ALTERNATOR GP-CHARGING	137
FUEL SYSTEM				
CAP AS-FILLER (FUEL)	142-8828	1	TANK & MTG GP-FUEL	129
FILTER ELEMENT AS-FUEL (WATER SEPARATOR)	131-1812	1	SEPARATOR GP-WATER	128
FILTER GP-FUEL	145-4501	1	BASE GP-FUEL FILTER	110
STRAINER-FUEL (FILLER NECK SCREEN)	180-3730	1	TANK & MTG GP-FUEL	129

MAINTENANCE PARTS

DESCRIPTION	PART NUMBER	QTY	WHERE USED	PAGE
HYDRAULIC SYSTEM				
BREATHER (HYDRAULIC OIL)	130-4634	1	TANK & MTG GP-HYDRAULIC	711
		1	TANK & MTG GP-HYDRAULIC	713
BREATHER (HYDRAULIC TANK)	258-2829	1	TANK GP-HYDRAULIC	717
CAP AS-FILLER (HYDRAULIC TANK)	142-8937	1	TANK GP-HYDRAULIC	716
		1	TANK GP-HYDRAULIC	717
FILTER-OIL (ULTRA HIGH EFFICIENCY) (HYDRAULIC)	126-1818	1	FILTER GP-OIL	490
GASKET	9Y-9380	1	PUMP & MTG GP-BRAKE & HYD FAN	701
GASKET (HYDRAULIC TANK)	206-9546	1	TANK GP-HYDRAULIC	716
		1	TANK GP-HYDRAULIC	717
KEY	5P-8500	1	TANK & MTG GP-HYDRAULIC	711
		1	TANK & MTG GP-HYDRAULIC	713
SCREEN	6E-5066	1	MANIFOLD GP-VALVE	676
		1	VALVE GP-MAIN CONTROL	746
		1	VALVE GP-MAIN CONTROL	748
		1	VALVE GP-MAIN CONTROL	750
SCREEN AS (PILOT OIL)	141-9236	1	VALVE GP-PILOT	765
		1	VALVE GP-PILOT	768
		1	VALVE GP-PILOT	770
		1	VALVE GP-PILOT	773
		1	VALVE GP-PILOT	775
		1	VALVE GP-PILOT	778
		1	VALVE GP-PILOT	781
SCREEN-SUCTION (HYDRAULIC FAN OIL)	231-0832	1	LINES GP-HYDRAULIC FAN	607
STRAINER (HYDRAULIC OIL)	206-8818	1	TANK GP-HYDRAULIC	716
		1	TANK GP-HYDRAULIC	717
STRAINER AS	140-9211	3	TANK GP-HYDRAULIC	717
STRAINER AS (HYDRAULIC OIL)	140-9211	3	TANK GP-HYDRAULIC	716
LUBRICATION SYSTEM				
FILTER AS-ENGINE OIL (STANDARD EFFICIENCY)	1R-0739	1	FILTER GP-ENGINE OIL	53

MAINTENANCE PARTS

DESCRIPTION	PART NUMBER	QTY	WHERE USED	PAGE
OPERATOR STATION				
BLADE AS-WIPER (500-MM) (REAR)	5C-8811	1	WIPER GP-WINDOW	1177
BLADE AS-WIPER (503-MM) (REAR)	6V-6543	1	WIPER GP-WINDOW	1179
BLADE AS-WIPER (700-MM) (FRONT)	6V-7419	1	WIPER GP-WINDOW	1177
		1	WIPER GP-WINDOW	1179
CAP-VENTED (WINDOW WASHER)	8E-8292	1	WASHER GP-WINDOW	1174
CIRCUIT BREAKER AS (20-AMPERE)	280-2710	1	CONDENSER & MTG GP-REFRIGERANT	957
CIRCUIT BREAKER AS (20-AMPERE) (AIR CONDITIONER)	280-2710	1	AIR CONDITIONER & MOUNTING GP	924
FILTER ELEMENT-CAB AIR	111-8738	1	FILTER GP-CAB AIR	1037
	180-7487	1	FILTER GP-CAB AIR	1037
FUSE (10-AMPERE)	113-8490	18	PANEL GP-INSTRUMENT	1086
		18	PANEL GP-INSTRUMENT	1093
		18	PANEL GP-INSTRUMENT	1097
		18	PANEL GP-INSTRUMENT	1101
		18	PANEL GP-INSTRUMENT	1111
		18	PANEL GP-INSTRUMENT	1114
		18	PANEL GP-INSTRUMENT	1117
		18	PANEL GP-INSTRUMENT	1121
FUSE (15-AMPERE)	113-8491	8	PANEL GP-INSTRUMENT	1086
		8	PANEL GP-INSTRUMENT	1093
		8	PANEL GP-INSTRUMENT	1097
		7	PANEL GP-INSTRUMENT	1102
		8	PANEL GP-INSTRUMENT	1111
		8	PANEL GP-INSTRUMENT	1114
		8	PANEL GP-INSTRUMENT	1117
		8	PANEL GP-INSTRUMENT	1121
FUSE (25-AMPERE)	113-8493	2	PANEL GP-INSTRUMENT	1086
		2	PANEL GP-INSTRUMENT	1111
FUSE (30-AMPERE)	124-3548	2	PANEL GP-INSTRUMENT	1093
		2	PANEL GP-INSTRUMENT	1097
		2	PANEL GP-INSTRUMENT	1102
		2	PANEL GP-INSTRUMENT	1114
		2	PANEL GP-INSTRUMENT	1117
		2	PANEL GP-INSTRUMENT	1121
KEY (LITERATURE COMPARTMENT)	5P-8500	2	LITERATURE GP	1065
LAMP (24-VOLT, 10-WATT)	259-1286	1	LINER GP-CAB	1055
		1	LINER GP-CAB	1057
LAMP (24-VOLT, 3-WATT)	115-1748	1	PANEL GP-INSTRUMENT	1086
		1	PANEL GP-INSTRUMENT	1089
		1	PANEL GP-INSTRUMENT	1092
		1	PANEL GP-INSTRUMENT	1096
		1	PANEL GP-INSTRUMENT	1101
		1	PANEL GP-INSTRUMENT	1106
RECEIVER-REFRIGERANT DRYER	257-3227	1	LINES GP-AIR CONDITIONER	1062
SCREEN-FILTER (WINDOW WASHER)	8T-5913	2	WASHER GP-WINDOW	1174
SEAT BELT GP (RETRACTABLE)	222-0345	1	SEAT & MOUNTING GP	1145
V-BELT	1W-2934	1	COMPRESSOR GP-REFRIGERANT	954

MAINTENANCE PARTS

DESCRIPTION	PART NUMBER	QTY	WHERE USED	PAGE
POWER TRAIN				
BREATHER (TRANSMISSION CASE)	9G-5127	1	CASE & PARTS GP-TRANSMISSION	246
CAP-FILL (POWER TRAIN OIL)	137-6727	1	FILLER GP-POWER TRAIN OIL	265
FILTER-MAGNETIC (TRANSMISSION)	8S-9129	1	CASE & PARTS GP-TRANSMISSION	246
FILTER-OIL (ADVANCED EFFICIENCY)	1G-8878	1	FILTER GP-OIL	268
PLUG-DRAIN (TRANSMISSION)	7T-2703	1	CASE & PARTS GP-TRANSMISSION	246
PLUG-MAGNETIC (AXLE HOUSING)	5P-4484	1	HOUSING GP-OSCILLATING AXLE	281
SCREEN AS (IN-LINE)	247-8298	1	LINES GP-AXLE OIL COOLER	291
		1	LINES GP-AXLE OIL COOLER	297
SCREEN AS (IN-LINE) (AXLE OIL)	247-8298	1	LINES GP-AXLE OIL COOLER	285
SCREEN-SUCTION	231-0832	1	LINES GP-AXLE OIL COOLER	285
SCREEN-SUCTION (TRANSMISSION)	8S-9130	1	CASE & PARTS GP-TRANSMISSION	246

INDEX

Name	Page
A	
ACCUMULATOR GP-BRAKE–CHARGED	389
ACCUMULATOR GP-HYDRAULIC–UNCHARGED–BRAKE	390
ACCUMULATOR GP-PILOT OIL–CHARGED	463
ACCUMULATOR GP-PILOT OIL–UNCHARGED	464
ACCUMULATOR GP-REFRIGERANT–WITH DESICCANT	918
	919
ACCUMULATOR GP-RIDE CONTROL–CHARGED	465
ACCUMULATOR GP-RIDE CONTROL–UNCHARGED	466
ACCUMULATOR-REFRIGERANT	1062
ADAPTER GP-TIP	822
ADJUSTER GP-SEAT	920
AFTERCOOLER AS	70
	73
	77
	81
	85
AIR CLEANER GP	96
	99
AIR CLEANER GP–WITH PRECLEANER	97
AIR CLEANER GP–WITH RAIN CAP	93
	94
AIR COMPRESSOR GP-SEAT	921
AIR CONDITIONER & MOUNTING GP–WITH CABLE CONTROL	922
	923
	924
AIR CONDITIONER AR	925
	926
AIR CONDITIONER GP	928
	931
	934
	936
ALARM GP (BACKUP)	196
ALARM GP–ACTION	130
ALTERNATOR GP-CHARGING	131
	133
	135
	137
ARM GP-MATERIAL HANDLING	823
	824
ARM GP-WINDOW WIPER	938
ARM GP-WINDOW WIPER (FRONT)	1177
	1179
ARM GP-WINDOW WIPER (REAR)	1179
ARM GP-WINDOW WIPER–REAR	939
ARMREST GP	941
	945
ARMREST GP–LH	942
	943
ARMREST GP–RH	940
	944
	946
AXLE AR-FIXED–FRONT, LIMITED SLIP DIFFERENTIAL–SINGLE DISC BRAKE	239
AXLE AR-FIXED–FRONT, STANDARD DIFFERENTIAL–SINGLE DISC BRAKE	239
AXLE AR-OSCILLATING	241
AXLE AR-OSCILLATING–REAR, LIMITED SLIP DIFFERENTIAL–DUAL DISC BRAKE	240
	241
	242
AXLE AR-OSCILLATING–REAR, LIMITED SLIP DIFFERENTIAL–SINGLE DISC BRAKE	240
AXLE AR-OSCILLATING–REAR, STANDARD DIFFERENTIAL–DUAL DISC BRAKE	239
	241
AXLE AR-OSCILLATING–REAR, STANDARD DIFFERENTIAL–SINGLE DISC BRAKE	240
AXLE GP-OSCILLATING–REAR, LIMITED SLIP DIFFERENTIAL–SINGLE DISC BRAKE	242
AXLE GP-OSCILLATING–REAR, STANDARD DIFFERENTIAL–SINGLE DISC BRAKE	242
AXLE OIL COOLER PUMP & MOTOR	307
B	
BASE GP-FUEL FILTER	110
BATTERY & WIRING GP	139
BATTERY GP	1
	141
BATTERY GP (12-VOLT, MAINTENANCE FREE, WET) (950-CCA)	141
BEARING GP-PILLOW BLOCK	320
BELT-DRIVE	160
BLADE AS-WIPER (500-MM) (REAR)	1177
BLADE AS-WIPER (503-MM) (REAR)	1179
BLADE AS-WIPER (700-MM) (FRONT)	1177
	1179
BLOWER GP-REFRIG CONDENSER	936
BOX GP-BATTERY	344
BOX GP-TOOL	1181
BRACKET GP-TRANSPORT	814
BRAKE & PLANETARY GP–DUAL DISC	244
	245

INDEX

Name	Page
BRAKE & PLANETARY GP–SINGLE DISC	243
BRAKE GP	392
BRAKE GP-PARKING	391
BREATHER (HYDRAULIC OIL)	711
	713
BREATHER (HYDRAULIC TANK)	717
BREATHER (TRANSMISSION CASE)	246
BUCKET AR-GENERAL PURPOSE	826
	828
	829
	835
	836
	837
	838
BUCKET AR-GENERAL PURPOSE–QUICK COUPLER	825
	827
	830
	831
	832
	833
	834
BUCKET AR-LIGHT MATERIAL	842
	843
BUCKET AR-LIGHT MATERIAL–QUICK COUPLER	839
	840
	841
BUCKET AR-MULTIPURPOSE–QUICK COUPLER	844
	845
	846
	847
BUCKET AS-GENERAL PURPOSE	852
	854
	857
	861
	862
	863
	865
BUCKET AS-GENERAL PURPOSE–QUICK COUPLER	848
	849
	850
	851
	855
	858
	859
	860
BUCKET AS-LIGHT MATERIAL	870
BUCKET AS-LIGHT MATERIAL–QUICK COUPLER	868
	869
BUCKET AS-LIGHT MATERIAL–QUICK COUPLER	867
BUCKET GP-GENERAL PURPOSE	873
	875
	877
	880
	881
BUCKET GP-GENERAL PURPOSE–QUICK COUPLER	871
	872
	874
	876
	878
	879
BUCKET GP-LIGHT MATERIAL	884
BUCKET GP-LIGHT MATERIAL–QUICK COUPLER	882
	883
BUCKET GP-MULTIPURPOSE–QUICK COUPLER	885
	887
	888
C	
CAB AR	947
CAB AR–WITH FIXED WINDOWS	947
CAB AR–WITH SLIDING GLASS	947
CAB AR-ENCLOSED ROPS	948
	949
CAB AR-ENCLOSED ROPS–WITH FIXED WINDOWS	948
CAB AR-ENCLOSED ROPS–WITH SLIDING WINDOWS	948
CAB GP-ENCLOSED ROPS	950
CAMERA AR–WORK AREA VISUAL SYSTEM	141
CAMERA GP (115-DEG, COLOR)	208
CAMSHAFT GP	7
CANOPY AR-OPEN ROPS	952
CANOPY GP-OPEN ROPS	952
CAP AS-FILLER (FUEL)	129
CAP AS-FILLER (HYDRAULIC TANK)	716
	717
CAP AS-RADIATOR (COOLANT TANK)	70
	73
	77
	81
	85
CAP-FILL (POWER TRAIN OIL)	265
CAP-OIL FILLER (ENGINE)	9
	11
CAP-RAIN (AIR CLEANER)	93
	94
CAP-VENTED (WINDOW WASHER)	1174
CARRIAGE AS-FORK–QUICK COUPLER	889
CARRIAGE GP-FORK	890
CASE & PARTS GP-TRANSMISSION	246

INDEX

Name	Page
CHASSIS AR	1
CIRCUIT BREAKER AS (15-AMPERE) (FLOODLIGHTS)	214, 219, 223
CIRCUIT BREAKER AS (20-AMPERE)	957
CIRCUIT BREAKER AS (20-AMPERE) (AIR CONDITIONER)	924
CIRCUIT BREAKER AS (30-AMPERE) (AUXILIARY)	214, 220, 223
CIRCUIT BREAKER AS (60-AMPERE) (MAIN)	214, 219, 223
CIRCUIT BREAKER AS (90-AMPERE) (ALTERNATOR)	214, 219, 223
CLUTCH GP–FIRST, THIRD	251, 253
CLUTCH GP– FORWARD HIGH, FORWARD LOW	249
CLUTCH GP–REVERSE, SECOND	255
COMMON AR	1
COMPRESSOR GP-REFRIGERANT	953, 954
CONDENSER & MTG GP-REFRIGERANT	955, 956, 957
CONDENSER GP-REFRIGERANT	958
CONNECTION GP-WATER	62
CONSOLE GP-OPERATOR	960, 961, 963, 965
CONTROL & LINES GP-RIDE	467, 469
CONTROL AR-RIDE	472
CONTROL GP-COMMUNICATION– PRODUCT LINK 201	142
CONTROL GP-ENGINE ELECTRONIC	116, 119
CONTROL GP-HANDLE (DIRECTION, DOWNSHIFT SWITCHES)	788, 789, 790, 791, 967, 972
CONTROL GP-HANDLE (JOYSTICK, AUXILIARY FUNCTIONS)	970
CONTROL GP-HANDLE– DIRECTION, DOWNSHIFT	966, 967
CONTROL GP-HANDLE–FNR, THIRD FUNCTION, PROPORTIONAL FLOW	968
CONTROL GP-JOYSTICK (4-FUNCTION, AUXILIARY)	998, 999
CONTROL GP-JOYSTICK– 2-FUNCTION, WITH FNR, DOWNSHIFT	971, 972
CONTROL GP-JOYSTICK– 4-FUNCTION, AUXILIARY	970
CONTROL GP-JOYSTICK–FNR, 3-FUNCTION, WITH PROPORTIONAL FLOW CONTROL	973
CONTROL GP-LIFT KICKOUT	143
CONTROL GP-PARKING BRAKE–CHASSIS	394
CONTROL GP-PARKING BRAKE–HANDLE	393
CONTROL GP-PILOT OPERATED HYD– 2-FUNCTION	985, 987
CONTROL GP-PILOT OPERATED HYD– 3-FUNCTION	989, 991
CONTROL GP-PILOT OPERATED HYD– 4-FUNCTION	993, 995, 997
CONTROL GP-PILOT OPERATED HYD– JOYSTICK, 2-FUNCTION	974, 975, 976
CONTROL GP-PILOT OPERATED HYD– JOYSTICK, 3-FUNCTION	977, 978, 980, 1002
CONTROL GP-PILOT OPERATED HYD– JOYSTICK, 4-FUNCTION	981, 982, 984, 1003
CONTROL GP-PILOT OPERATED HYD– JOYSTICK, 6-FUNCTION	998, 999, 1001
CONTROL GP-POSITION–WORK TOOL	144
CONTROL GP-SERVICE BRAKE	395, 397, 399, 401
CONTROL GP-STEERING	1004, 1006, 1009, 1011, 1013
CONTROL GP-TRANSMISSION	1015, 1016

INDEX

Name	Page
	1017
	1018
CONTROL GP-UNPROGRAMMED (POWER TRAIN)	1015
	1016
CONTROL GP-UNPROGRAMMED–PRODUCT LINK 201	145
CONTROL GP-VOLTAGE (24-VOLT) (LOAD PROTECTION)	116
	119
CONTROL GP-WORK TOOL–HIGH LIFT MACHINES	819
CONTROL GP-WORK TOOL–STANDARD LIFT MACHINES	815
	817
CONVERSION AR-LOAD CONTROL	472
CONVERSION GP-CONTROL VALVE–KIT, 3-FUNCTION	472
CONVERTER GP-ELECTRICAL	146
CONVERTER GP-ELECTRICAL (24-VOLT TO 12-VOLT)	146
COOLANT HEATER LINES	1064
COOLER AR-HYD & TMSN OIL–HEAVY-DUTY	473
COOLER AR-HYD & TMSN OIL–STANDARD	472
COOLER GP-AXLE OIL	257
COOLER GP-FLTR BASE & ENG OIL	63
COOLER GP-HYD & TMSN OIL–HEAVY-DUTY	474
	475
	476
COOLER GP-HYD & TMSN OIL–STANDARD	477
	479
COOLER GP-HYD & XMSN OIL–HEAVY-DUTY	478
COOLER GP-HYDRAULIC OIL–HEAVY DUTY	481
COOLER GP-HYDRAULIC OIL–HEAVY-DUTY	480
COOLER-ENGINE OIL	63
CORE AS-AXLE OIL COOLER	257
CORE AS-POWER TRAIN OIL COOLER	477
	478
CORNER	891
COUNTERWEIGHT GP	345
COUNTERWEIGHT GP–OPTIONAL	346
	347
COUPLER AR-QUICK–STANDARD	891
	892
COUPLER AR-QUICK–STANDARD LIFT MACHINES	892
COUPLER AR-QUICK–WIDE	891
	892
COUPLER GP-QUICK	893
	899
COUPLER GP-QUICK–WIDE	895
	897
COVER GP-ACCESS	348
COVER GP-ENGINE	8
COVER GP-SHIPPING–CORROSION PROTECTION	258
COVER GP-TRANSMISSION	259
COVER GP-VALVE MECHANISM	9
	11
CRANKSHAFT GP	13
	15
CYLINDER & MTG GP-COUPLER	482
CYLINDER & MTG GP-COUPLER–WIDE	483
CYLINDER & MTG GP-STEERING	412
CYLINDER BLOCK GP	17
	18
CYLINDER GP-COUPLER	483
	484
CYLINDER GP-LIFT	485
CYLINDER GP-MULTIPURPOSE BUKT	486
CYLINDER GP-STEERING	413
CYLINDER GP-TILT	487
CYLINDER HEAD GP	20
	21

D

DASH GP	1019
DEFROSTER GP-CAB	1020
DIFFERENTIAL GP–STANDARD	261
DIFFERENTIAL GP-LIMITED SLIP	262
DOOR GP-CAB (LH)	1030
	1032
DOOR GP-CAB (RH)	1025
	1027
DOOR GP-CAB–FIXED WINDOW, LH	1032
DOOR GP-CAB–FIXED WINDOW, RH	1027
DOOR GP-CAB–FIXED WINDOWS	1021
DOOR GP-CAB–RH	1022
DOOR GP-CAB–SLIDING WINDOW, LH	1030
DOOR GP-CAB–SLIDING WINDOW, RH	1025
DOOR GP-CAB–SLIDING WINDOWS	1021
DRAIN GP-ENGINE OIL	22
DRIVE GP-FLEXIBLE COUPLING	263
DRIVE GP-PUMP–TRANSMISSION	264
DUCT GP-CAB AIR	1034

E

EDGE GP-CUTTING	902
	903
EDGE GP-SEGMENT	904
EDGE-CUTTING	905
ELBOW GP	566
	568
	571
ELBOW GP-AIR INLET	100
ELECTRONICS AR-MACHINE	147

INDEX

Name	Page
ELECTRONICS GP-COMMUNICATION–PRODUCT LINK 300	147
ELECTRONICS GP-MACHINE	147
ENGINE AR	3
ENGINE AR-PRIMARY	4
	5
EXTENSION GP-BACKREST (CLOTH)	1155
	1156
EXTENSION GP-BACKREST–CLOTH	1036
EXTENSION GP-EXHAUST	101

F

FAN GP-SUCTION	65
FASTENER GP-CYLINDER HEAD	23
FENDER AR-ROADING	349
FENDER AR-ROADING–HEAVY-DUTY	349
FENDER GP-FRONT	350
	351
FENDER GP-FRONT–HEAVY-DUTY ROADING	354
FENDER GP-FRONT–ROADING	353
FENDER GP-REAR–ROADING, LH	355
FENDER GP-REAR–ROADING, RH	356
FENDER GP-ROADING	357
FENDER GP-ROADING–REAR	358
FILLER GP-POWER TRAIN OIL	265
FILM (BLACK)	566
	581
	642
	647
	652
	657
FILM (HIGH LIFT)	819
FILM (INSTRUMENT PANEL COVER)	1084
FILM (SWITCHES, RH CONSOLE)	1110
	1113
	1116
FILM (WASTE HANDLER)	2
FILM GP	1182
FILM-CONTROL (CONSOLE, RH)	1087
	1089
	1093
	1097
	1102
	1106
FILM-CONTROLS (FUSE, RELAY PANEL)	1128
FILM-FUSE PANEL	1086
	1089
	1092
	1096
	1101
	1110
	1113
	1116
	1120
	1124
FILM-IDENTIFICATION	958
FILM-IDENTIFICATION (CIRCUIT BREAKER)	214
	219
	223
FILM-IDENTIFICATION (FUSE PANEL)	1106
	1128
FILM-IDENTIFICATION (IGNITION SWITCH)	152
FILM-IDENTIFICATION (PANEL, RH)	198
FILM-INFORMATION (12-VOLT)	146
FILM-INFORMATION (24-VOLT)	1184
FILM-INFORMATION (ENGINE OIL)	54
FILM-INFORMATION (PRODUCT LINK)	142
FILM-INSTRUCTION (ENGINE START)	1084
FILM-INSTRUCTION (KICKOUT, POSITIONER CONTROL)	143
	144
FILM-INSTRUCTION (MACHINE SECURITY, CONSOLE)	152
FILM-INSTRUCTION (SEAT ADJUSTMENT)	1168
	1170
FILM-PANEL (LH)	198
	201
	203
	205
FILM-PANEL (RH)	201
	203
	205
FILM-RATING (LOAD)	824
FILM-WARNING (ACCUM, HIGH PRESS, READ OMM)	465
	466
FILM-WARNING (HIGH PRESSURE, READ OMM, INTL)	468
	469
	1185
FILM-WARNING (HIGH PRESSURE, READ OMM, U.S.)	468
	469
	1184
FILM-WARNING (HOT FLUID UNDER PRESSURE, U.S.)	1184
FILM-WARNING (NO WELD, NO DRILL, READ OMM)	1185
FILM-WARNING (PRODUCT LINK RADIO, INTL)	142
	150
FILM-WARNING (PRODUCT LINK RADIO, U.S.)	142
	150
	210
FILM-WINDOW (FRONT)	1073
FILTER & LINES GP-TRANSMISSION	266
FILTER & MTG GP-HYDRAULIC	489

INDEX

Name	Page
FILTER AS-ENGINE OIL (STANDARD EFFICIENCY)	53
FILTER BASE & ENG OIL COOLER	63
FILTER ELEMENT AS-AIR (PRIMARY)	96, 99
FILTER ELEMENT AS-AIR (SECONDARY)	96, 99
FILTER ELEMENT AS-FUEL (WATER SEPARATOR)	128
FILTER ELEMENT-BREATHER (CLOSED CIRCUIT CRANKCASE)	9, 11
FILTER ELEMENT-CAB AIR	1037
FILTER GP-CAB AIR	1037
FILTER GP-ENGINE OIL	53
FILTER GP-FUEL	110
FILTER GP-FUEL–SECONDARY	111
FILTER GP-OIL–HYDRAULIC	490
FILTER GP-OIL–POWER TRAIN	268
FILTER-MAGNETIC (TRANSMISSION)	246
FILTER-OIL (ADVANCED EFFICIENCY)	268
FILTER-OIL (ULTRA HIGH EFFICIENCY) (HYDRAULIC)	490
FLASHER AS (24-VOLT)	168, 170
FLOOR MAT	1051, 1053
FLYWHEEL GP	24
FORK GP-PALLET	907, 909
FORK GP-PALLET–LH	908, 911
FORK GP-PALLET–RH	906, 910
FRAME GP-LOADER	360, 361
FRAME GP-REAR	363, 364
FUSE (10-AMPERE)	1086, 1093, 1097, 1101, 1111, 1114, 1117, 1121
FUSE (15-AMPERE)	1086, 1093, 1097, 1102, 1111, 1114, 1117, 1121
FUSE (20-AMPERE)	219
FUSE (25-AMPERE)	1086, 1111
FUSE (30-AMPERE)	1093, 1097, 1102, 1114, 1117, 1121

G

Name	Page
GASKET	701
GASKET (HYDRAULIC TANK)	716, 717
GASKET (VALVE COVER)	9, 11
GASKET-COVER	68
GAUGE AS-OIL LEVEL (DIPSTICK)	279, 281, 283
GAUGE AS-OIL LEVEL (DIPSTICK) (ENGINE)	41, 43, 54
GAUGE GP-OIL LEVEL (DIPSTICK)–ENGINE	54
GAUGE GP-SIGHT–HYDRAULIC OIL LEVEL	491
GAUGE GP-SIGHT–POWER TRAIN OIL	269
GEAR GP-BEVEL & PINION–FRONT	272
GEAR GP-BEVEL & PINION–REAR	270
GEAR GP-FRONT	25
GEAR GP-INPUT TRANSFER	274
GEAR GP-OUTPUT TRANSFER	275, 277
GUARD GP-BELT	26, 27
GUARD GP-BUCKET–TOOTH TIP	912
GUARD GP-CRANKCASE	366
GUARD GP-DRIVE SHAFT–VERSALINK	367
GUARD GP-LIGHTING	368, 369
GUARD GP-LINES–COUPLER	372
GUARD GP-LINES–THIRD FUNCTION	370
GUARD GP-LINES–TILT	371
GUARD GP-POWER TRAIN	373
GUARD GP-RADIATOR	70, 73, 77, 81, 85, 374, 375
GUARD GP-RADIATOR–WASTE HANDLER	377
GUARD GP-VANDALISM	1038
GUARD GP-WINDOW	1040, 1041

INDEX

Name	Page
H	
HANDLE GP-MODULAR (DIR, DNSFT, FLOW CONT SWITCHES)	968
HARNESS AS-CAB (MAIN)	198, 201, 203, 205
HARNESS AS-CAB (SHELL)	198, 201, 203, 205
HARNESS AS-CONTROL (KICKOUT, POSITIONER)	499
HARNESS AS-CONTROL (MACHINE SECURITY)	152
HARNESS AS-CONTROL (PRODUCT LINK)	150, 151, 210
HARNESS AS-ENGINE	214, 219, 223
HARNESS AS-FRONT CHASSIS	227
HARNESS AS-HEATER & AIR COND	928, 931, 934, 936, 1044
HARNESS AS-HEATER & AIR COND (CONDENSER FANS)	958
HARNESS AS-LIGHTING	168, 170
HARNESS AS-LIGHTING (FLOODLIGHT)	164, 166
HARNESS AS-LIGHTING (LH)	168
HARNESS AS-LIGHTING (TURN SIGNAL)	161
HARNESS AS-PANEL (MAIN CAB)	1086, 1089, 1092, 1096, 1101, 1106, 1110, 1113, 1116, 1120, 1124, 1128
HARNESS AS-POWER	209
HARNESS AS-PUMP	219
HARNESS AS-RADIO	1137
HARNESS AS-RADIO (PRODUCT LINK)	150
HARNESS AS-RADIO (SPEAKERS)	1049
HARNESS AS-REAR CHASSIS	229, 231
HARNESS AS-RIDE CONTROL (PRESSURE SWITCH)	233, 235
HARNESS AS-RIDE CONTROL (SOLENOID VALVE)	233, 235
HARNESS AS-SOLENOID (FLOW CONTROL)	581, 583, 585, 587
HARNESS AS-SOLENOID (HYDRAULIC LOCKOUT)	642, 647, 652, 657
HARNESS AS-STEERING (PRIMARY PRESSURE SWITCH)	237
HARNESS AS-STEERING (SECONDARY)	237
HARNESS AS-VALVE (AUXILIARY)	719
HARNESS AS-VALVE (SEAT AIR COMPRESSOR)	1170
HEATER & MTG GP-CAB–WITH CABLE CONTROL	1042
HEATER AR-CAB	1043
HEATER GP-CAB	1044
HEATER GP-JACKET WATER	148, 149
HITCH GP-ARTICULATING	378
HOOD & GUARD GP	380
HOUSING GP-FIXED AXLE–FRONT	279
HOUSING GP-FLYWHEEL	28
HOUSING GP-FRONT	29, 31
HOUSING GP-OSCILLATING AXLE–REAR	281, 283
HOUSING GP-SEAT SUSPENSION	1046
HYDRAULIC AR	492
HYDRAULIC AR–3RD FUNCTION, CONTINUOUS FLOW	492
HYDRAULIC AR-2 VALVE–2-LEVER CONTROL	493
HYDRAULIC AR-2 VALVE–JOYSTICK CONTROL	492
HYDRAULIC AR-3 VALVE–1-LEVER, 3RD FUNCTION, PROPORTIONAL FLOW	494
HYDRAULIC AR-3 VALVE–1-LEVER, 3RD FUNCTION, PROPORTIONAL FLOW, HIGH LIFT MACHINES	495
HYDRAULIC AR-3 VALVE–1-LEVER, 3RD FUNCTION, PROPORTIONAL FLOW, STANDARD LIFT MACHINES	495
HYDRAULIC AR-3 VALVE–2-LEVER, HIGH LIFT MACHINES	494
HYDRAULIC AR-3 VALVE–2-LEVER, STANDARD LIFT MACHINES	494

INDEX

Name	Page
HYDRAULIC AR-3 VALVE–2-LEVER, WITH FNR	493
HYDRAULIC AR-3 VALVE–3-LEVER CONTROL	493
HYDRAULIC AR-4 VALVE–2-LEVER, 3RD FUNCTION, PROPORTIONAL FLOW	496
HYDRAULIC AR-4 VALVE–2-LEVER, 3RD FUNCTION, PROPORTIONAL FLOW, HIGH LIFT MACHINES	497
HYDRAULIC AR-4 VALVE–2-LEVER, 3RD FUNCTION, PROPORTIONAL FLOW, STANDARD LIFT MACHINES	497
HYDRAULIC AR-4 VALVE–3-LEVER, HIGH LIFT MACHINES	497
HYDRAULIC AR-4 VALVE–3-LEVER, STANDARD LIFT MACHINES	496
HYDRAULIC AR-4 VALVE–3-LEVER, WITH FNR	495
HYDRAULIC AR-4 VALVE–4-LEVER CONTROL	496
HYDRAULIC AR-6 VALVE–2-LEVER, WITH FNR	498
HYDRAULIC AR-6 VALVE–2-LEVER, WITH FNR, STANDARD LIFT MACHINES	498

I

INDICATOR AS-AIR FILTER CHANGE	93 94 97
INDICATOR GP-AIR FILTER CHANGE	94
INSTALLATION AR-ENGINE	6
INSTALLATION GP-COMMUNICATION–PRODUCT LINK 300	151
INSTALLATION GP-COMMUNICATION–PRODUCT LINK 321SR	150
INSTALLATION GP-RADIO	1049 1050
INSTALLATION GP-SECURITY	152

K

KEY	711 713
KEY (BATTERY DISCONNECT)	187
KEY (LITERATURE COMPARTMENT)	1065
KEY AS-ELECTRONIC (SECURITY)	152
KICKOUT & POSITIONER GP	499
KIT-ADJUSTER (SEAT PAN)	1082
KIT-BACK TILT (SEAT PAN)	1082
KIT-BEARING (SUSPENSION SEAT)	1047
KIT-BUMPER (WEIGHT ADJUSTMENT) (SUSPENSION SEAT)	1046
KIT-FOLLOWER (SUSPENSION SEAT)	1047
KIT-INDICATOR (WEIGHT ADJUSTMENT) (SUSPENSION SEAT)	1047
KIT-SEAL	461 465
KIT-SEAL (ACCUMULATOR)	389 390
KIT-SEAL (RELIEF VALVE)	799
KIT-SEAT TILT (SEAT PAN)	1082
KIT-SPRING (HEIGHT ADJUSTMENT) (SUSPENSION SEAT)	1047
KIT-SPRING (SUSPENSION SEAT)	1047
KIT-SUSPENSION KNOB (HEIGHT ADJUSTMENT) (SUSPENSION SEAT)	1046

L

LADDER GP	382
LAMP (24-VOLT, 10-WATT)	1055 1057
LAMP (24-VOLT, 21-WATT)	157 158 159
LAMP (24-VOLT, 21-WATT) (AMBER)	155 156
LAMP (24-VOLT, 3-WATT)	201 203 205 1086 1089 1092 1096 1101 1106
LAMP (24-VOLT, 3-WATT) (WEDGE BASE)	198
LAMP (24-VOLT, 5-WATT)	157 158 159
LAMP (24-VOLT, 5-WATT) (CLEAR)	155 156
LAMP (24-VOLT, 70-WATT) (WARNING BEACON)	160
LAMP (24-VOLT, 75/70-WATT)	157 158
LAMP (24-VOLT, 75/70-WATT) (CLEAR)	155 156
LAMP GP-DOME (24-VOLT)	1055 1057
LAMP GP-FLOOD	154
LAMP GP-FLOOD (24-VOLT)	164 166
LAMP GP-HEAD & SIGNAL–LH	156 158
LAMP GP-HEAD & SIGNAL–RH	155 157

INDEX

Name	Page
LAMP GP-STOP & TAIL	159
LAMP GP-WARNING BEACON–AMBER	160
LAMP-HALOGEN (24-VOLT, 65-WATT)	154
	164
	166
LENS AS (HEADLIGHT)	157
	158
LIFTING GP-ENGINE	33
LIGHTING AR-ROADING	161
LIGHTING AR-ROADING–DIPPED, LH	162
LIGHTING GP-AUXILIARY–CAB FRONT	163
LIGHTING GP-FLOOD–CAB	164
LIGHTING GP-FLOOD–CANOPY	166
LIGHTING GP-ROADING	168
	170
LIGHTING GP-WARNING BEACON	172
	173
LINER GP-CAB–LOWER	1051
	1053
LINER GP-CAB–UPPER	1055
	1057
LINES GP-AFTERCOOLER AIR	102
	103
LINES GP-AIR CONDITIONER	1059
	1062
LINES GP-AXLE OIL COOLER	285
	291
	297
LINES GP-BUCKET–MULTIPURPOSE	501
LINES GP-CAB HEATER	1064
LINES GP-CONNECTING–FIFTH, SIXTH FUNCTIONS, HIGH LIFT MACHINES	507
	510
LINES GP-CONNECTING–FIFTH, SIXTH FUNCTIONS, STANDARD LIFT MACHINES	503
	505
LINES GP-COUPLER–HIGH LIFT MACHINES	545
LINES GP-COUPLER–HIGH LIFT MACHINES, WIDE	533
	535
	538
LINES GP-COUPLER–STANDARD	527
	530
LINES GP-COUPLER–STANDARD LIFT MACHINES	542
	547
	549
LINES GP-COUPLER–THIRD FUNCTION, LOWER	540
	541
LINES GP-COUPLER–WIDE	512
	515
	518
	521
	524
LINES GP-FRONT–FOURTH FUNCTION	551
	553
	559
	561
LINES GP-FRONT–HIGH LIFT MACHINES, QUICK COUPLER READY	562
	564
LINES GP-FRONT–QUICK COUPLER READY	554
	556
LINES GP-FRONT–THIRD FUNCTION	550
	558
	577
	580
LINES GP-FRONT–THIRD FUNCTION, HIGH LIFT, STANDARD COUPLER	579
LINES GP-FRONT–THIRD FUNCTION, HIGH LIFT, WIDE COUPLER	578
LINES GP-FRONT–THIRD FUNCTION, PROPORTIONAL FLOW	566
	568
	571
LINES GP-FRONT–THIRD FUNCTION, SECONDARY	574
LINES GP-FRONT–THIRD FUNCTION, STANDARD LIFT, STANDARD COUPLER	576
LINES GP-FRONT–THIRD FUNCTION, STANDARD LIFT, WIDE COUPLER	575
LINES GP-FUEL	115
LINES GP-FUEL–WATER SEPARATOR	112
LINES GP-GREASE	384
LINES GP-HYDRAULIC–3, 4, 6-VALVE	589
	591
	593
	595
LINES GP-HYDRAULIC–4, 6-VALVE	597
	599
	601
LINES GP-HYDRAULIC FAN	607
	610
	613
LINES GP-HYDRAULIC FAN–MOTOR	603
LINES GP-HYDRAULIC FAN–REVERSING MOTOR	605
LINES GP-HYDRAULIC–THIRD FUNCTION, CONTINUOUS FLOW	581
	583
	585
	587
LINES GP-LIFT CYLINDER	616
	619
	622
	625
	628
	631
LINES GP-LOAD CONTROL VALVE	634

INDEX

Name	Page
	638
LINES GP-PILOT	642
	647
	652
	657
LINES GP-SECONDARY STEERING	414
	419
	424
	429
	434
LINES GP-SERVICE BRAKE	403
	406
	409
LINES GP-STEERING	439
	442
	445
	450
LINES GP-STEERING–QUICK STEER	448
LINES GP-TILT CYLINDER	662
	665
	668
	671
LINES GP-TORQUE CONV COOLER	303
LINES GP-WATER–RADIATOR	67
LINES GP-WATER–RADIATOR, WITH AXLE OIL COOLER	66
LINK GP-STEERING FRAME LOCK	385
LINKAGE AR-FRONT–HIGH LIFT MACHINES	821
LITERATURE GP	1
	1065
LOCK GP-CYLINDER	1051
	1053

M

MANIFOLD GP-CONTROL–QUICK COUPLER	674
MANIFOLD GP-VALVE–AUXILIARY, INLET	675
MANIFOLD GP-VALVE–INLET	676
	678
MIRROR GP-REAR VIEW–EXTERIOR	1066
MIRROR GP-REAR VIEW–INTERIOR	1067
MIRROR GP-REAR VIEW–INTERIOR, LH	1068
MODULE GP-DISPLAY (GAUGE CLUSTER)	1084
MODULE GP-DISPLAY (WAVES)	209
MODULE GP-INTERFACE (KEY)	152
MOTOR & MTG GP-HYDRAULIC FAN	680
MOTOR & MTG GP-HYDRAULIC FAN–REVERSING	681
MOTOR AR-HYDRAULIC FAN	682
MOTOR AR-HYDRAULIC FAN–REVERSING	682
MOTOR GP-ELECTRIC–SECONDARY STEERING	174
MOTOR GP-GEAR–HYDRAULIC FAN, STANDARD	683
	687
MOTOR GP-GEAR–REVERSING FAN	684
	685
MOTOR GP-WINDOW WIPER (24-VOLT) (FRONT)	1177
	1179
MOTOR GP-WINDOW WIPER (24-VOLT) (REAR)	1177
	1179
MOTOR GP-WINDOW WIPER (24-VOLT, 2-SPEED)	1070
MOTOR GP-WINDOW WIPER–FRONT	1069
MOTOR GP-WINDOW WIPER–REAR	1070
MOUNTING GP-ALTERNATOR	34
MOUNTING GP-AXLE	305
MOUNTING GP-BUCKET	913
MOUNTING GP-CAB	1071
MOUNTING GP-CAMERA–WORK AREA VISUAL SYSTEM	175
MOUNTING GP-CONTROL VALVE	688
	689
	690
MOUNTING GP-DISPLAY	1072
MOUNTING GP-DISPLAY–REAR VIEW	1072
MOUNTING GP-ENGINE	35
MOUNTING GP-ENGINE & TMSN	36
MOUNTING GP-FAN DRIVE	38
MOUNTING GP-RIM	306
MUFFLER GP	104
	105
	106

O

OPERATOR AR	1073
OPERATOR AR-ENCLOSED ROPS	1074
	1075
OPERATOR AR-ENCLOSED ROPS–WITH FIXED WINDOWS	1074
OPERATOR AR-ENCLOSED ROPS–WITH SLIDING WINDOWS	1073
OPERATOR AR-OPEN ROPS	1075
OPERATOR GP	1076
ORIFICE AS-AIR CONDITIONER	928
	936
	1062

P

PADLOCK GP	265
	711
	713
	715
	1038
PAN GP-BACKREST–CLOTH	1078

INDEX

Name	Page
	1081
PAN GP-BACKREST–LUMBAR	1077
	1079
	1080
PAN GP-OIL–ENGINE	39
	41
	43
PAN GP-SEAT	1082
PANEL GP-ACCESS–HOOD, CAB HEATER	386
PANEL GP-INSTRUMENT–GAUGE CLUSTER	1084
PANEL GP-INSTRUMENT–RELAYS, SWITCHES, WIRING	1086
	1089
	1092
	1096
	1101
	1106
	1110
	1113
	1116
	1120
	1124
	1128
PANEL GP-TOP–HOOD, AIR CONDITIONER	388
PEDAL GP-BRAKE	1133
PEDAL GP-GOVERNOR	1134
	1135
PISTON & ROD GP	45
	46
PIVOT GP-PILOT VALVE	693
	695
PIVOT GP-PILOT VALVE–LIFT	691
	694
PIVOT GP-PILOT VALVE–TILT	692
PLATE & FILM GP	1183
	1184
PLATE & FILM GP–INTERNATIONAL	1185
PLATE GP-AXLE IDENTIFICATION	239
	240
	241
	242
PLATE GP-PILOT VALVE–JOYSTICK	696
PLATE-IDENTIFICATION (WORK TOOL)	848
	850
	854
	858
	867
	877
	879
	880
	881
	884
	885
	888
PLATE-INSTRUCTION	890
PLATE-INSTRUCTION (AIR CONDITIONER)	1059
	1062
PLATE-SERIAL NUMBER (TRANSMISSION) (TRANSMISSION)	246
PLUG GP-CONTROL MANIFOLD	675
PLUG GP-CONTROL VALVE	697
	698
	699
	700
PLUG GP-CYLINDER BLOCK–OIL GALLERY	47
PLUG GP-ENGINE–TIMING CASE	48
PLUG-DRAIN (ENGINE OIL)	39
	41
	43
PLUG-DRAIN (TRANSMISSION)	246
PLUG-MAGNETIC (AXLE HOUSING)	281
POSITIONER GP-WORK TOOL	906
	907
	908
	909
POTENTIOMETER AS (PROPORTIONAL FLOW CONTROL)	973
POWER TRAIN AR	306
PRECLEANER GP	107
PROTECTOR GP-LINKAGE	914
PULLEY GP-CRANKSHAFT	49
PUMP & MOTOR GP–SECONDARY STEERING	453
PUMP & MOTOR GP-AXLE OIL CLR	307
PUMP & MTG GP-BRAKE & HYD FAN	701
	702
PUMP & MTG GP-IMPL & STEERING	703
PUMP GP-ENGINE OIL	55
	57
	59
PUMP GP-FUEL INJECTION	116
	119
PUMP GP-FUEL TRANSFER	122
	125
PUMP GP-GEAR (SECONDARY STEERING)	453
PUMP GP-GEAR–BRAKE, HYDRAULIC FAN	704
	706
	707
	708
PUMP GP-METERING (HMU, QUICK STEER)	454
	455
PUMP GP-PISTON–IMPLEMENT, STEERING, PILOT	709
PUMP GP-TRANSMISSION–1-SECTION GEAR	308
	309
PUMP GP-WATER	68

INDEX

Name	Page
R	
RADIATOR & AFTERCOOLER GP	70, 73, 77, 81, 85
RADIATOR GP	89, 91
RADIATOR GP–WASTE HANDLER	90, 92
RADIO GP (AM/FM/WB)	1137
RADIO GP–AM/FM/WB	1137
RADIO GP–AM/FM/WB/CD PLAYER	1136, 1137
RADIO GP-COMMUNICATION–PRODUCT LINK 121SR	1137
RECEIVER-REFRIGERANT DRYER	1062
RECLINER GP-SEAT	1138
REGULATOR AS-VOLTAGE (24-VOLT) (ALTERNATOR)	131, 133
REGULATOR-WATER TEMPERATURE	62
RELAY AS (24-VOLT)	1086, 1116, 1124, 1128
RELAY AS (24-VOLT) (BRAKE LIGHT)	1089, 1092, 1101, 1106, 1110, 1113, 1120
RELAY AS (24-VOLT) (BRAKE)	1096
RELAY AS (24-VOLT) (CONDENSER)	958
RELAY AS (24-VOLT) (DEFROSTER)	1020
RELAY AS (24-VOLT) (FUEL PUMP)	214, 219, 223
RELAY AS (24-VOLT) (HYDRAULIC FAN)	605
RELAY AS (24-VOLT) (RIDE CONTROL)	233, 235
RELAY AS (24-VOLT) (RIDE CONTROL, LOAD CHECK RELAY)	233, 235
RELAY AS (24-VOLT) (SECONDARY STEERING)	237
RELAY AS (24-VOLT) (STARTING AID)	214, 219, 223
RIM AR–1-PIECE	310
RIM AR–3-PIECE	310
RIM AR–3-PIECE, CENTER MOUNT	310, 311
RIM AS	312
RIM GP-DEMOUNTABLE–1-PIECE	314
RIM GP-DEMOUNTABLE–3-PIECE	315, 316, 317, 318
RIM GP-DEMOUNTABLE–3-PIECE, CENTER MOUNT	313
ROCKER ARM GP	50
ROPS GP-ENCLOSED	1139
ROPS GP-OPEN	1141
S	
SCREEN	676, 746, 748, 750
SCREEN AS (IN-LINE)	291, 297
SCREEN AS (IN-LINE) (AXLE OIL)	285
SCREEN AS (PILOT OIL)	765, 768, 770, 773, 775, 778, 781
SCREEN GP-SUN	1143
SCREEN-FILTER (WINDOW WASHER)	1174
SCREEN-SUCTION	285
SCREEN-SUCTION (HYDRAULIC FAN OIL)	607
SCREEN-SUCTION (TRANSMISSION)	246
SEAL (HOUSING, REGULATOR) (WATER TEMPERATURE)	62
SEAL GP-DUO-CONE	279, 281, 283
SEAL-O-RING (CRANKCASE BREATHER)	9, 11
SEAT & MOUNTING GP	1144, 1145
SEAT & MOUNTING GP–CLOTH	1146
SEAT & MOUNTING GP–VINYL	1147
SEAT BELT GP	1147, 1148
SEAT BELT GP (RETRACTABLE)	1145
SEAT GP	1155, 1156
SEAT GP–CLOTH	1151, 1153
SEAT GP–CLOTH, LUMBAR	1149
SEAT GP-SUSPENSION	1157
SEAT GP-SUSPENSION–CLOTH	1158, 1161

INDEX

Name	Page
SEAT GP-SUSPENSION–VINYL	1159
SENDER AS-FUEL LEVEL	229, 231
SENSOR GP-POSITION	176
SENSOR GP-POSITION (ROTARY) (THROTTLE)	1135
SENSOR GP-PRESSURE	177
SENSOR GP-PRESSURE (BOOST)	116, 119
SENSOR GP-PRESSURE (BRAKE OIL)	397
SENSOR GP-PRESSURE (ENGINE OIL)	116, 119
SENSOR GP-PRESSURE (SERVICE BRAKE OIL)	395, 399, 401
SENSOR GP-SPEED	178, 179
SENSOR GP-SPEED (TIMING)	116, 119
SENSOR GP-SPEED (TORQUE CONVERTER OUTPUT)	340
SENSOR GP-SPEED (TRANSMISSION OUTPUT 1)	340
SENSOR GP-SPEED (TRANSMISSION OUTPUT 2)	340
SENSOR GP-SPEED (XMSN INTERMEDIATE OUTPUT 1)	340
SENSOR GP-SPEED (XMSN INTERMEDIATE OUTPUT 2)	340
SENSOR GP-TEMPERATURE	180, 181
SENSOR GP-TEMPERATURE (AIR INLET)	116, 119
SENSOR GP-TEMPERATURE (ENGINE COOLANT)	116, 119
SENSOR GP-TEMPERATURE (HYDRAULIC OIL)	214, 219, 223
SENSOR GP-TEMPERATURE (TORQUE CONVERTER OIL)	340
SENSOR GP-TEMPERATURE (TRANSMISSION OIL)	342
SEPARATOR GP-WATER–PRIMARY FUEL FILTER	128
SERVICE GP-FORK POSITIONER	910, 911
SERVICE GP-MACHINE	147
SHAFT GP-DRIVE	319
SHAFT GP-DRIVE–FRONT	320
SKIRT GP-CAB	1166
SKIRT GP-CAB–ENCLOSED ROPS	1165
SKIRT GP-CAB–OPEN ROPS	1163
SLIP JOINT GP–CENTER	321
SLIP JOINT GP–REAR	322
SOFTWARE GP-COMMUNICATION (PRODUCT LINK 300)	147
SOFTWARE GP-COMMUNICATION (PRODUCT LINK)	142
SOFTWARE GP-MACHINE	147
SOFTWARE GP-MONITOR (PRODUCT LINK)	142
SPIDER & BEARING GP	320, 321, 322
SPRING AS-GAS	380
SPRING AS-GAS (STEERING COLUMN TILT)	456, 457, 458
STARTING AID GP–HEATER	182
STARTING AID GP–LINES	183
STARTING MOTOR GP-ELECTRIC	184, 185
STEERING AR	454
STEERING AR–QUICK STEER	454
STEERING AR-SECONDARY	454
STEERING AR-SECONDARY–QUICK STEER	455
STEERING COLUMN GP-ADJUSTABLE	456, 457, 458
STOP GP-AXLE OSCILLATION	323
STRAINER (HYDRAULIC OIL)	716, 717
STRAINER AS	717
STRAINER AS (HYDRAULIC OIL)	716
STRAINER-FUEL (FILLER NECK SCREEN)	129
STRAP-CABLE	634
SUN VISOR	1172
SUPPORT GP-SEAT	1167
SUSPENSION GP-SEAT–AIR	1170
SUSPENSION GP-SEAT–CONTOUR	1168
SWITCH AS (STARTER)	185
SWITCH AS-FLOW (VARIABLE FLOW CONTROL)	581, 583, 585, 587
SWITCH AS-LIMIT (BRAKE PEDAL)	1086, 1089, 1092, 1096, 1101, 1106, 1110, 1113, 1116, 1120, 1124, 1128

INDEX

Name	Page
SWITCH AS-LIMIT (PARKING BRAKE)	393
SWITCH AS-MAGNETIC (START RELAY)	191
SWITCH AS-PRESSURE (AXLE OIL)	285
	291
	297
SWITCH AS-PRESSURE (HYDRAULIC OIL FILTER BYPASS)	490
SWITCH AS-PRESSURE (POWER TRAIN OIL FILTER BYPASS)	268
SWITCH AS-PRESSURE (REFRIGERANT)	1059
	1062
SWITCH AS-PRESSURE (RIDE CONTROL DISABLE)	467
	469
SWITCH AS-PRESSURE (SECONDARY STEERING OIL)	414
	419
	424
	429
	434
SWITCH AS-ROCKER (AIR CONDITIONER ON, OFF)	926
SWITCH AS-ROCKER (AIR CONDITIONER, HEATER CONT)	922
	923
	924
	926
SWITCH AS-ROCKER (AUTOSHIFT CONTROL)	198
	201
	203
	205
SWITCH AS-ROCKER (AUXILIARY FLOW CONTROL) (24-VOLT)	973
SWITCH AS-ROCKER (BLOWER FAN SPEED)	1087
	1089
	1093
	1097
	1102
	1106
SWITCH AS-ROCKER (BUCKET, FORK SELECT)	499
SWITCH AS-ROCKER (HEATER CONTROL) (HEATER)	1042
SWITCH AS-ROCKER (HYDRAULIC LOCKOUT)	542
	1086
	1089
	1092
	1096
	1101
	1106
	1110
	1113
	1116
	1120
	1124
	1128
SWITCH AS-ROCKER (IMPLEMENT LOCKOUT)	530
	554
	556
	562
	564
SWITCH AS-ROCKER (KICKOUT ON, OFF)	1086
	1089
	1092
	1096
	1101
	1106
	1110
	1113
	1116
	1120
	1124
	1128
SWITCH AS-ROCKER (QUICK COUPLER PIN LOCK)	545
SWITCH AS-ROCKER (QUICK COUPLER)	512
	515
	518
	521
	524
	527
	533
	535
	538
SWITCH AS-ROCKER (QUICK STEER)	448
SWITCH AS-ROCKER (REVERSING FAN ON/OFF)	605
SWITCH AS-ROCKER (RIDE CONTROL)	233
	235
SWITCH AS-ROCKER (SECONDARY STEERING)	237
SWITCH AS-ROCKER (THROTTLE LOCK ON, OFF)	1086
	1089
	1092
	1096
	1101
	1106
	1110
	1113
	1116
	1120
	1124
	1128

INDEX

Name	Page
SWITCH AS-ROCKER (THROTTLE LOCK RESUME)	1086, 1089, 1092, 1096, 1101, 1106, 1110, 1113, 1116, 1120, 1124, 1128
SWITCH AS-ROCKER (WARNING BEACON)	172, 173
SWITCH AS-ROCKER (XMSN NEUTRALIZER OVERRIDE CONT)	198, 201, 203, 205
SWITCH AS-ROTARY (24-VOLT) (RUNNING LIGHTS)	198, 201, 203, 205
SWITCH AS-ROTARY (WIPER, WASHER) (REAR)	194
SWITCH AS-START (KEY)	1084
SWITCH GP-DISCONNECT–BATTERY	187
SWITCH GP-MAGNETIC	188, 190, 191
SWITCH GP-MAGNETIC (24-VOLT) (MAIN POWER)	1113, 1116, 1120, 1124, 1128
SWITCH GP-MAGNETIC (24-VOLT) (MAIN RELAY)	1089, 1092
SWITCH GP-MAGNETIC (24-VOLT) (STARTING RELAY)	214, 219, 223
SWITCH GP-MAGNETIC–MAIN RELAY	189, 193
SWITCH GP-MAGNETIC–SECONDARY STEERING RELAY	192
SWITCH GP-ROTARY (TURN SIGNAL, HAZARD)	168, 170
SWITCH GP-WIPER (24-VOLT, INTERMITTENT) (FRONT)	194
SWITCH GP-WIPER–INTERMITTENT	194
	195

T

TAG-IDENTIFICATION (EMERGENCY STOP)	224
TANK & MTG GP-FUEL	129
TANK & MTG GP-HYDRAULIC	711, 713, 715
TANK GP-COOLANT	70, 73, 77, 81, 85
TANK GP-HYDRAULIC	716, 717
TIP GP-LONG	915
TIP GP-SHORT	916, 917
TIRE & RIM AR	323, 324, 325, 326, 327, 328, 329, 330, 331, 332
TRANSMISSION AR	333
TURBOCHARGER GP	108

U

UNION GP	518, 521, 524, 533, 535, 538
UNIVERSAL JOINT GP	320

V

V-BELT	954
V-BELT SET (INCLUDES 2-BELTS)	135, 137
VALVE & MTG GP-MAIN CONTROL–2-FUNCTION, AUXILIARY	719
VALVE & MTG GP-SOLENOID–QUICK STEER	459
VALVE & MTG GP-SOLENOID–THIRD FUNCTION CONTINUOUS FLOW	721
VALVE & MTG GP-SOLENOID–THIRD FUNCTION, PROPORTIONAL FLOW	722
VALVE GP-ACCUMULATOR CHARGING	708

INDEX

Name	Page
VALVE GP-BRAKE CONTROL (SERVICE)	395, 397, 399, 401
VALVE GP-BYPASS–POWER TRAIN OIL COOLER	334
VALVE GP-CHECK	414, 419, 424, 429, 434, 450, 642, 647, 652, 657, 726, 728, 730, 737
VALVE GP-CHECK (PILOT OIL)	744
VALVE GP-CHECK (STEERING)	439, 442, 445
VALVE GP-CHECK–LOAD	724
VALVE GP-CHECK–PILOT OIL	723
VALVE GP-COMBINATION–TILT RELIEF	725
VALVE GP-CONTROL	797
VALVE GP-CONTROL–AUXILIARY	739, 741
VALVE GP-CONTROL–AUXILIARY; 5TH, 6TH FUNCTIONS	736
VALVE GP-CONTROL–AUXILIARY, THIRD FUNCTION	732
VALVE GP-CONTROL–AUXLIARY, FOURTH FUNCTION	734
VALVE GP-CONTROL–LIFT	730, 737
VALVE GP-CONTROL–TILT	726, 728, 744
VALVE GP-DIVERTER (TILT)	725
VALVE GP-FLOW CONTROL (AUXILIARY, INLET)	675
VALVE GP-FLUID SAMPLING–ENGINE OIL	61
VALVE GP-LOAD CONTROL (LIFT CYLINDER)	634, 638
VALVE GP-LOAD CONTROL (TILT CYLINDER)	634, 638
VALVE GP-MAIN CONTROL–2-FUNCTION	746, 753, 754, 759
VALVE GP-MAIN CONTROL–3-FUNCTION	748, 755, 756, 760
VALVE GP-MAIN CONTROL–4-FUNCTION	750, 757, 758, 761
VALVE GP-MAIN CONTROL–AUXILIARY; 5TH, 6TH FUNCTIONS	752
VALVE GP-MANUAL	616, 619, 622, 625
VALVE GP-MANUAL (LOWERING CONTROL)	628, 631
VALVE GP-MODULATING–TRANSMISSION CLUTCH	335
VALVE GP-PILOT (2-FUNCTION)	985, 987
VALVE GP-PILOT (JOYSTICK, 3-FUNCTION)	1002
VALVE GP-PILOT (JOYSTICK, 4-FUNCTION)	1003
VALVE GP-PILOT–2-FUNCTION	762, 765, 792
VALVE GP-PILOT–3-FUNCTION	770
VALVE GP-PILOT–4-FUNCTION	775, 793
VALVE GP-PILOT–AUXILIARY	783
VALVE GP-PILOT CARTRIDGE	794, 795, 796
VALVE GP-PILOT–JOYSTICK, 2-FUNCTION	768, 781, 788, 789
VALVE GP-PILOT–JOYSTICK, 3-FUNCTION	786, 787
VALVE GP-PILOT–JOYSTICK, 4-FUNCTION	773, 778, 784, 785, 790, 791
VALVE GP-PRESSURE REDUCING	676, 678, 746, 748, 750, 797
VALVE GP-PRIORITY (STEERING)	642, 647, 652, 657
VALVE GP-PURGE	798

INDEX

Name	Page
VALVE GP-RADIATOR DRAIN	89
	90
VALVE GP-RELIEF	436
	750
VALVE GP-RELIEF (AUXILIARY; 5TH, 6TH FUNCTIONS)	736
VALVE GP-RELIEF (MAIN)	676
	678
	746
	748
VALVE GP-RELIEF (MAKE-UP)	685
VALVE GP-RELIEF (SECONDARY STEERING)	414
	419
	424
	429
VALVE GP-RELIEF–LINE	800
VALVE GP-RELIEF–TILT	799
VALVE GP-RELIEF–TORQUE CONVERTER OUTLET	336
VALVE GP-RELIEF–TRANSMISSION HYDRAULIC CONTROL	337
VALVE GP-RIDE CONTROL	801
	803
VALVE GP-SHUTTLE	805
	806
	807
	808
VALVE GP-SHUTTLE–STEERING LINES	460
VALVE GP-SOLENOID	461
	809
	810
	811
	812
	813
VALVE GP-SOLENOID (24-VOLT) (DEMAND FAN)	685
	687
VALVE GP-SOLENOID (24-VOLT) (QUICK COUPLER)	674
VALVE GP-SOLENOID (BRAKE CHARGING, HYD FAN DVTR)	704
VALVE GP-SOLENOID (HYDRAULIC LOCKOUT)	676
	678
	746
	748
	750
VALVE GP-SOLENOID (RIDE CONTROL)	801
	803
VALVE GP-SOLENOID (THIRD FUNCTION CONTINUOUS FLOW)	721
VALVE GP-SOLENOID (THIRD FUNCTION)	722
VALVE GP-TIRE	339
VALVE GP-TRANSMISSION CONTROL	340
	342
VALVE MECHANISM GP	52
VISOR GP-CAB	1172

W

Name	Page
WARNING GP-BACKUP	196
WASHER GP-WINDOW	1173
	1174
	1175
WASTE HANDLING AR	2
WINDOW GP-DOOR–CAB	1176
WIPER GP-WINDOW	1177
	1179
WIRING GP-ALTERNATOR	197
WIRING GP-CAB–ENCLOSED ROPS	198
WIRING GP-CAB–OPEN ROPS	201
	203
	205
WIRING GP-CAMERA–CAB	209
WIRING GP-CAMERA–REAR CHASSIS	208
WIRING GP-COMMUNICATION–PRODUCT LINK 201	210
WIRING GP-ELECTRONIC CONTROL	212
WIRING GP-ENGINE	214
	219
	223
WIRING GP-FRONT	227
WIRING GP-REAR	229
	231
WIRING GP-RIDE CONTROL	233
	235
WIRING GP-SECONDARY STEERING	237

MEMORANDA

MACHINE ARRANGEMENT

235-7499 CHASSIS AR

S/N: TWR1-UP

PART OF 240-7966 COMMON AR

SMCS-7000 **i02189993**

NOTE	PART NUMBER	QTY	PART NAME 1 2 3 4 5 6 (PRODUCT LEVEL)	SEE PAGE
Y	*255-2359*	1	BATTERY & WIRING GP	139
Y	*132-2685*	1	BATTERY GP	141
Y	*202-0420*	1	BOX GP-BATTERY	344
Y	*202-0428*	1	BOX GP-TOOL	1181
Y	*235-6809*	1	CONTROL GP-PARKING BRAKE	394
Y	*202-0430*	1	CONTROL GP-SERVICE BRAKE	395
Y	*180-8983*	1	COUNTERWEIGHT GP	345
Y	*243-0546*	1	COVER GP-ACCESS	348
Y	*235-7195*	1	CYLINDER & MTG GP-STEERING	412
Y	*180-9740*	1	EXTENSION GP-EXHAUST	101
Y	*235-7200*	1	FRAME GP-LOADER	360
Y	*235-7250*	1	FRAME GP-REAR	363
Y	*202-7215*	1	GUARD GP-RADIATOR	375
Y	*113-3790*	1	HITCH GP-ARTICULATING	378
Y	*243-0545*	1	HOOD & GUARD GP	380
Y	*235-6820*	1	KICKOUT & POSITIONER GP	499
Y	*235-6940*	1	LADDER GP	382
Y	*184-1333*	1	LINES GP-FUEL (WATER SEPARATOR)	112
Y	*235-6892*	1	LINES GP-GREASE	384
Y	*235-6810*	1	LINES GP-SERVICE BRAKE	403
Y	*243-0675*	1	LINES GP-TORQUE CONV COOLER	303
Y	*7V-2885*	1	LINK GP-STEERING FRAME LOCK	385
Y	*6V-1970*	1	LITERATURE GP	1065
Y	*132-2471*	1	MOUNTING GP-AXLE	305
Y	*235-6941*	1	MOUNTING GP-CONTROL VALVE	688
Y	*235-6958*	1	PLATE & FILM GP (INTERNATIONAL)	1183
Y	*202-0354*	1	TANK & MTG GP-FUEL	129
Y	*180-8807*	1	WARNING GP-BACKUP	196
Y	*180-8801*	1	WIRING GP-ENGINE	214
Y	*235-6822*	1	WIRING GP-FRONT	227
Y	*180-8804*	1	WIRING GP-REAR	229

Y-SEPARATE ILLUSTRATION

<END>

240-7966 COMMON AR

S/N: TWR1-UP

SMCS-7000 **i02224672**

NOTE	PART NUMBER	QTY	PART NAME 1 2 3 4 5 6 (PRODUCT LEVEL)	SEE PAGE
Y	*235-6833*	1	LIGHTING GP-ROADING (HEAD, SIGNAL, STOP, TAIL)	168
Y	*235-7499*	1	CHASSIS AR	1
Y	*235-6845*	1	HYDRAULIC AR	492
Y	*242-9735*	1	INSTALLATION AR-ENGINE	6
Y	*235-6895*	1	POWER TRAIN AR	306
Y	*256-3786*	1	ENGINE AR	3
Y	**235-6835**	1	ELECTRONICS AR-MACHINE	147

Y-SEPARATE ILLUSTRATION

<END>

MACHINE ARRANGEMENT

241-6400 WASTE HANDLING AR

S/N: TWR1-UP

AN ATTACHMENT

SMCS-7000 **i02282820**

NOTE	PART NUMBER	QTY	PART NAME 1 2 3 4 5 6 (PRODUCT LEVEL)	SEE PAGE
Y	*213-9036*	1	GUARD GP-CRANKCASE	366
Y	*160-6320*	1	GUARD GP-DRIVE SHAFT (VERSALINK)	367
Y	*235-6951*	1	GUARD GP-LIGHTING	368
Y	*204-4338*	1	GUARD GP-POWER TRAIN	373
Y	*209-8712*	1	GUARD GP-RADIATOR (WASTE HANDLER)	377
Y	*175-6760*	1	GUARD GP-WINDOW	1041
	213-7253	1	FILM GP (WASTE HANDLER)	
	221-8455	2	FILM (WASTE HANDLER)	

Y-SEPARATE ILLUSTRATION

<END>

304-8117 WASTE HANDLING AR

S/N: TWR1-UP

AN ATTACHMENT

SMCS-7000 **i02748323**

NOTE	PART NUMBER	QTY	PART NAME 1 2 3 4 5 6 (PRODUCT LEVEL)	SEE PAGE
Y	*213-9036*	1	GUARD GP-CRANKCASE	366
Y	*160-6320*	1	GUARD GP-DRIVE SHAFT (VERSALINK)	367
Y	*300-1962*	1	GUARD GP-LIGHTING	369
Y	*204-4338*	1	GUARD GP-POWER TRAIN	373
Y	*209-8712*	1	GUARD GP-RADIATOR (WASTE HANDLER)	377
Y	*175-6760*	1	GUARD GP-WINDOW	1041
	213-7253	1	FILM GP (WASTE HANDLER)	
	221-8455	2	FILM (WASTE HANDLER)	

Y-SEPARATE ILLUSTRATION

<END>

ENGINE ARRANGEMENT

256-3786 ENGINE AR

S/N: TWR1-UP
PART OF 240-7966 COMMON AR
ALSO AN ATTACHMENT

SMCS-1000 **i02764558**

NOTE	PART NUMBER	QTY	PART NAME 1 2 3 4 5 6 (PRODUCT LEVEL)	SEE PAGE
Y	**254-2236**	1	ENGINE AR-PRIMARY	4
			—OR—	
Y	**295-9744**	1	ENGINE AR-PRIMARY	5
Y	**186-2347**	1	LINES GP-AFTERCOOLER AIR	102

Y-SEPARATE ILLUSTRATION

ENGINE ARRANGEMENT

254-2236 ENGINE AR-PRIMARY

S/N: CPT1-UP
97 BRAKE KW (130 BHP) AT 2300 RPM
PART OF 256-3786 ENGINE AR
ALSO AN ATTACHMENT

SMCS-1000 **i02565856**

NOTE	PART NUMBER	QTY	PART NAME 1 2 3 4 5 6 (PRODUCT LEVEL)	SEE PAGE
Y	*216-8620*	1	CAMSHAFT GP	7
Y	*228-7387*	1	CONNECTION GP-WATER	62
Y	*221-5285*	1	COOLER GP-FLTR BASE & ENG OIL	63
Y	*221-6858*	1	COVER GP-ENGINE	8
Y	*221-7115*	1	COVER GP-VALVE MECHANISM	9
Y	*216-8316*	1	CRANKSHAFT GP	13
Y	*216-8231*	1	CYLINDER BLOCK GP	17
Y	*216-8343*	1	CYLINDER HEAD GP	21
Y	*236-1042*	1	ELBOW GP-AIR INLET	100
Y	*228-7418*	1	FASTENER GP-CYLINDER HEAD	23
Y	*221-5290*	1	FILTER GP-ENGINE OIL	53
Y	*235-6347*	1	FILTER GP-FUEL	111
Y	*221-6990*	1	FLYWHEEL GP	24
Y	*217-1499*	1	GEAR GP-FRONT	25
Y	*235-9691*	1	HOUSING GP-FLYWHEEL	28
Y	*221-6835*	1	HOUSING GP-FRONT	29
Y	*221-6875*	1	LIFTING GP-ENGINE	33
Y	*233-2483*	1	LINES GP-FUEL	115
Y	*235-6343*	1	MOUNTING GP-ALTERNATOR	34
Y	*258-5462*	1	MOUNTING GP-ENGINE	35
Y	*170-3711*	1	MOUNTING GP-FAN DRIVE	38
Y	*221-2959*	1	PAN GP-OIL	39
			S/N: CPT1-18292	
Y	*235-4589*	1	PAN GP-OIL	41
			S/N: CPT18293-UP	
Y	*216-8324*	1	PISTON & ROD GP	45
Y	*239-1349*	1	PLUG GP-CYLINDER BLOCK (OIL GALLERY)	47
Y	*233-2765*	1	PLUG GP-ENGINE (TIMING CASE)	48
Y	*184-5483*	1	PULLEY GP-CRANKSHAFT	49
Y	*235-9692*	1	PUMP GP-ENGINE OIL	55
Y	*249-2897*	1	PUMP GP-FUEL INJECTION	119
Y	*219-2455*	1	PUMP GP-FUEL TRANSFER	122
Y	*221-5369*	1	PUMP GP-WATER	68
Y	*228-7461*	1	STARTING AID GP (HEATER)	182
Y	*235-6362*	1	STARTING AID GP (LINES)	183
Y	*235-9700*	1	TURBOCHARGER GP	108
Y	*235-9719*	1	VALVE GP-FLUID SAMPLING (ENGINE OIL)	61
Y	*216-8619*	1	VALVE MECHANISM GP	52
Y	*258-0807*	1	WIRING GP-ELECTRONIC CONTROL	212
	217-2211	1	CYLINDER BLOCK GP-SHORT	
	272-0517	1	ELECTRONICS GP-ENGINE RATINGS	
			AVAILABLE REPAIR KIT(S):	
	216-9612	1	KIT-GASKET (TOP)	
	216-9616	1	KIT-GASKET (BOTTOM)	

Y-SEPARATE ILLUSTRATION

ENGINE ARRANGEMENT

295-9744 ENGINE AR-PRIMARY

S/N: CPT1-UP
97 BRAKE KW (130 BHP) AT 2300 RPM
PART OF 256-3786 ENGINE AR
ALSO AN ATTACHMENT

SMCS-1000 **i02768391**

NOTE	PART NUMBER	QTY	PART NAME 1 2 3 4 5 6 (PRODUCT LEVEL)	SEE PAGE
Y	*216-8620*	1	CAMSHAFT GP	7
Y	*228-7387*	1	CONNECTION GP-WATER	62
Y	*221-5285*	1	COOLER GP-FLTR BASE & ENG OIL	63
Y	*221-6858*	1	COVER GP-ENGINE	8
Y	*221-7115*	1	COVER GP-VALVE MECHANISM	9
Y	*216-8316*	1	CRANKSHAFT GP	13
Y	*216-8231*	1	CYLINDER BLOCK GP	17
Y	*216-8343*	1	CYLINDER HEAD GP	21
Y	*236-1042*	1	ELBOW GP-AIR INLET	100
Y	*228-7418*	1	FASTENER GP-CYLINDER HEAD	23
Y	*221-5290*	1	FILTER GP-ENGINE OIL	53
Y	*235-6347*	1	FILTER GP-FUEL	111
Y	*221-6990*	1	FLYWHEEL GP	24
Y	*217-1499*	1	GEAR GP-FRONT	25
Y	*235-9691*	1	HOUSING GP-FLYWHEEL	28
Y	*221-6835*	1	HOUSING GP-FRONT	29
Y	*221-6875*	1	LIFTING GP-ENGINE	33
Y	*233-2483*	1	LINES GP-FUEL	115
Y	*235-6343*	1	MOUNTING GP-ALTERNATOR	34
Y	*258-5462*	1	MOUNTING GP-ENGINE	35
Y	*170-3711*	1	MOUNTING GP-FAN DRIVE	38
Y	*235-4589*	1	PAN GP-OIL	41
Y	*216-8324*	1	PISTON & ROD GP	45
Y	*239-1349*	1	PLUG GP-CYLINDER BLOCK (OIL GALLERY)	47
Y	*233-2765*	1	PLUG GP-ENGINE (TIMING CASE)	48
Y	*184-5483*	1	PULLEY GP-CRANKSHAFT	49
Y	*235-9692*	1	PUMP GP-ENGINE OIL	55
Y	*235-6331*	1	PUMP GP-FUEL INJECTION	116
Y	*219-2455*	1	PUMP GP-FUEL TRANSFER	122
Y	*221-5369*	1	PUMP GP-WATER	68
Y	*228-7461*	1	STARTING AID GP (HEATER)	182
Y	*235-6362*	1	STARTING AID GP (LINES)	183
Y	*235-9700*	1	TURBOCHARGER GP	108
Y	*235-9719*	1	VALVE GP-FLUID SAMPLING (ENGINE OIL)	61
Y	*216-8619*	1	VALVE MECHANISM GP	52
Y	*258-0807*	1	WIRING GP-ELECTRONIC CONTROL	212
	217-2211	1	CYLINDER BLOCK GP-SHORT	
	272-0517	1	ELECTRONICS GP-ENGINE RATINGS	
			AVAILABLE GASKET KIT(S):	
	197-6861	1	KIT-GASKET (BOTTOM)	
	216-9612	1	KIT-GASKET (TOP)	

Y-SEPARATE ILLUSTRATION

ENGINE ARRANGEMENT

242-9735 INSTALLATION AR-ENGINE

S/N: TWR1-UP

PART OF 240-7966 COMMON AR

SMCS-1000 **i02545631**

NOTE	PART NUMBER	QTY	PART NAME 1 2 3 4 5 6 (PRODUCT LEVEL)	SEE PAGE
Y	*186-2337*	1	DRAIN GP-ENGINE OIL	22
Y	*185-1045*	1	FAN GP-SUCTION	65
Y	*204-4343*	1	GAUGE GP-OIL LEVEL (DIPSTICK)	54
Y	*241-9085*	1	MOUNTING GP-ENGINE & TMSN	36
Y	*186-2344*	1	MUFFLER GP	104
			S/N: TWR1-786	
Y	*264-6819*	1	MUFFLER GP	105
			S/N: TWR787-UP	
Y	*267-5219*	1	RADIATOR & AFTERCOOLER GP	70
Y	*1G-9963*	1	STARTING MOTOR GP-ELECTRIC	184

Y-SEPARATE ILLUSTRATION

BASIC ENGINE

216-8620 CAMSHAFT GP

S/N: CPT1-UP

PART OF 254-2236, 295-9744 ENGINE AR-PRIMARY

ALSO AN ATTACHMENT

SMCS-1210, 1211, 1212 **i01801877**

NOTE	REF NO	GRAPHIC REF	PART NUMBER	QTY	PART NAME 1 2 3 4 5 6 (PRODUCT LEVEL)	SEE PAGE
	1	1	**154-8056**	1	CAMSHAFT	

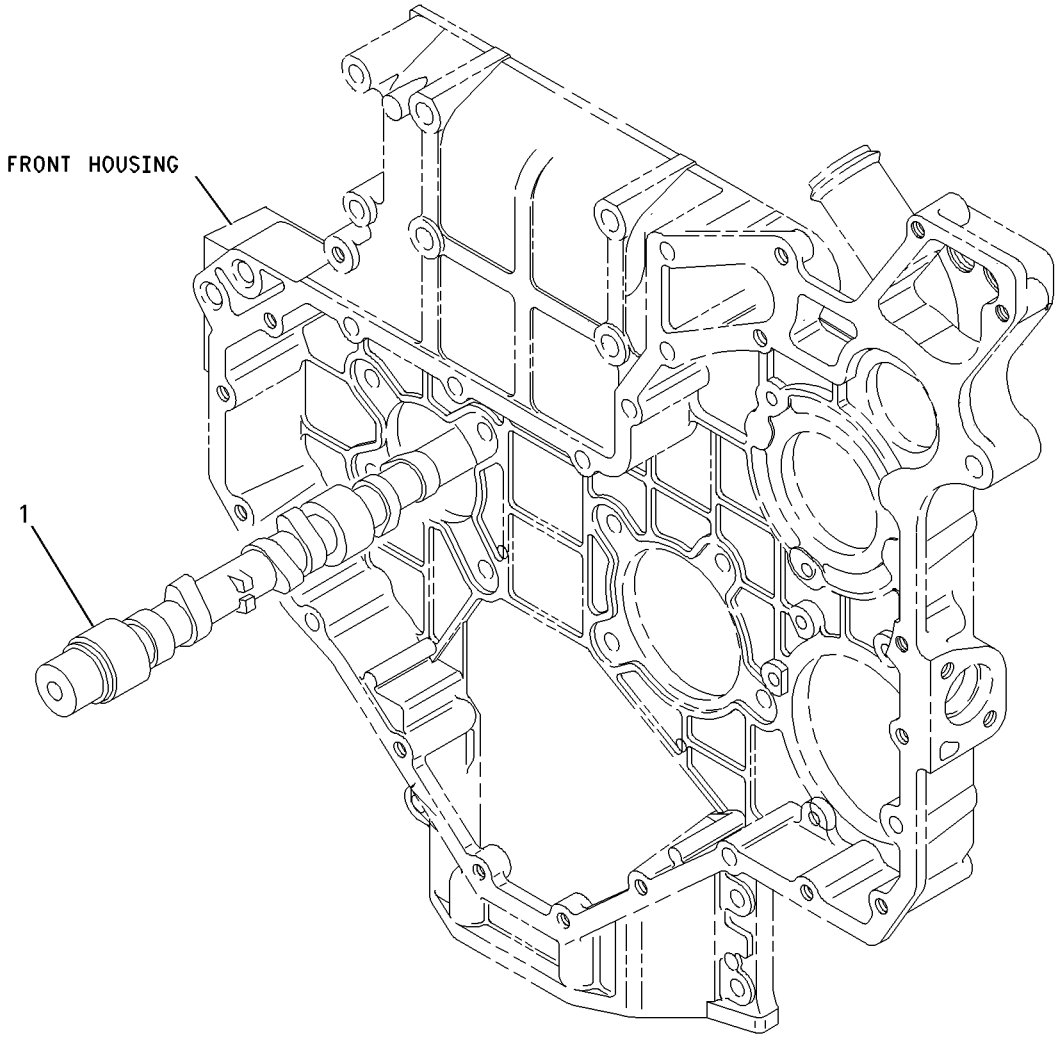

GRAPHIC #1 **<END>** g00922202

221-6858 COVER GP-ENGINE

S/N: CPT1-UP
AUXILIARY DRIVE
PART OF 254-2236, 295-9744 ENGINE AR-PRIMARY
ALSO AN ATTACHMENT

SMCS-1000 **i03345564**

NOTE	REF NO	GRAPHIC REF	PART NUMBER	QTY	PART NAME 1 2 3 4 5 6 (PRODUCT LEVEL)	SEE PAGE
	1	1	**2B-0858**	1	PLUG-PIPE	
M	2	1	**6I-0593**	1	BOLT (M10X1.5X30-MM)	
	3	1	**6I-0646**	1	BOLT (M10X1.5X14-MM)	
M	5	1	**100-4830**	1	BOLT (M10X1.5X20-MM)	
	6	1	**111-8222**	5	BOLT (M8X16-MM)	
	7	1	**329-7854**	1	PLATE AS	
	8	1	**329-7856**	1	SEAL-O-RING	
	9	1	**214-3203**	1	WASHER (SEALING)	

M-METRIC PART

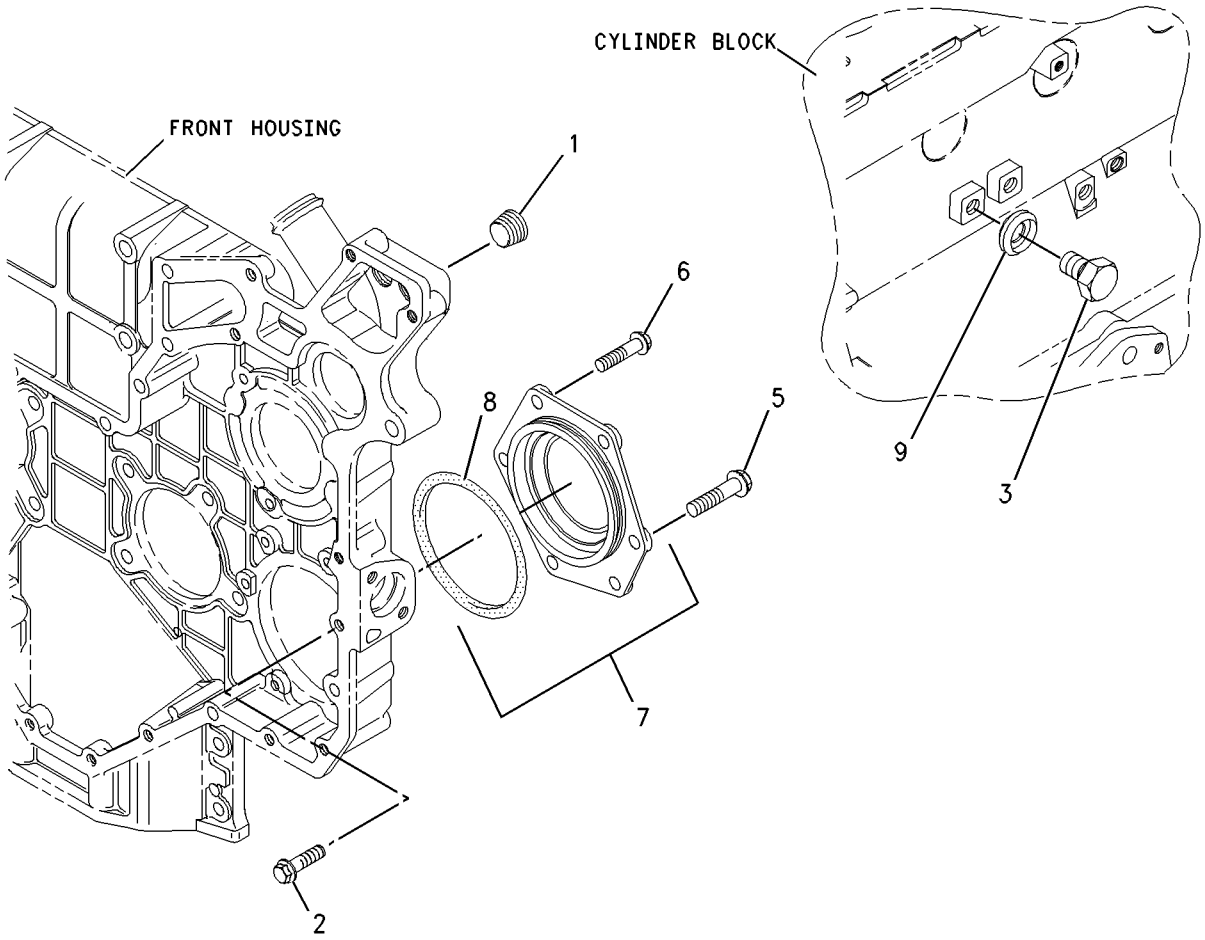

GRAPHIC #1 **<END>** g00905241

BASIC ENGINE

221-7115 COVER GP-VALVE MECHANISM

S/N: CPT1-10426

PART OF 254-2236 ENGINE AR-PRIMARY

SMCS-1107 **i02644065**

NOTE	REF NO	GRAPHIC REF	PART NUMBER	QTY	PART NAME 1 2 3 4 5 6 (PRODUCT LEVEL)	SEE PAGE
	1	1	**2S-3440**	2	CLAMP-HOSE	
	2	1	**5D-1026**	2	CLAMP-HOSE	
M	3	1	**6I-0217**	2	BOLT (M8X1.25X20-MM)	
	4	1	**6I-0456**	1	BOLT (M8X1.25X45-MM)	
	5	1	**6I-4374**	1	BOLT (M8X1.25X60-MM)	
	6	1	**100-4104**	1	GASKET	
	7	1	**112-7704**	2	BOLT	
	8	1	**160-6988**	1	FILLER AS-OIL	
	9	1	**113-1505**	1	SEAL-O-RING	
	10	1	**130-9888**	1	CAP-OIL FILLER (ENGINE)	
	11	1	**113-1504**	1	SEAL-O-RING	
	12	1	**216-9606**	1	COVER AS (VALVE)	
	12A	1	**229-3557**	1	SEAL-O-RING	
	13	1	**229-3558**	1	BOLT	
	14	1	**216-9600**	8	BOLT	
	15	1	**216-9602**	1	BREATHER AS (CRANKCASE)	
	16	1	**216-9604**	1	GASKET (VALVE COVER)	
C	17	1	**262-1044**	1	BREATHER AS (CRANKCASE)	
	17A	1	**229-3555**	1	FILTER ELEMENT-BREATHER (CLOSED CIRCUIT CRANKCASE)	
	17B	1	**262-1046**	1	SEAL-O-RING (CRANKCASE BREATHER)	
C	18	1	**262-1045**	1	BRACKET	
	19	1	**249-2826**	1	HOSE (FUMES DISPOSAL, UPPER)	
	20	1	**249-2827**	1	HOSE (FUMES DISPOSAL, LOWER)	
	21	1	**216-9618**	1	VALVE-CHECK (CRANKCASE BREATHER CHECK)	
C	22	1	**268-0876**	1	ELBOW	
C	23	1	**032-8048**	2	FERRULE	
C	24	1	**7W-2628**	2	NUT	
C	25	1	**7W-2634**	1	UNION	
	27	1	**219-1803**	1	TUBE	

C-CHANGE FROM PREVIOUS TYPE
M-METRIC PART

221-7115 **COVER GP-VALVE MECHANISM** *(contd.)* **i02644065**

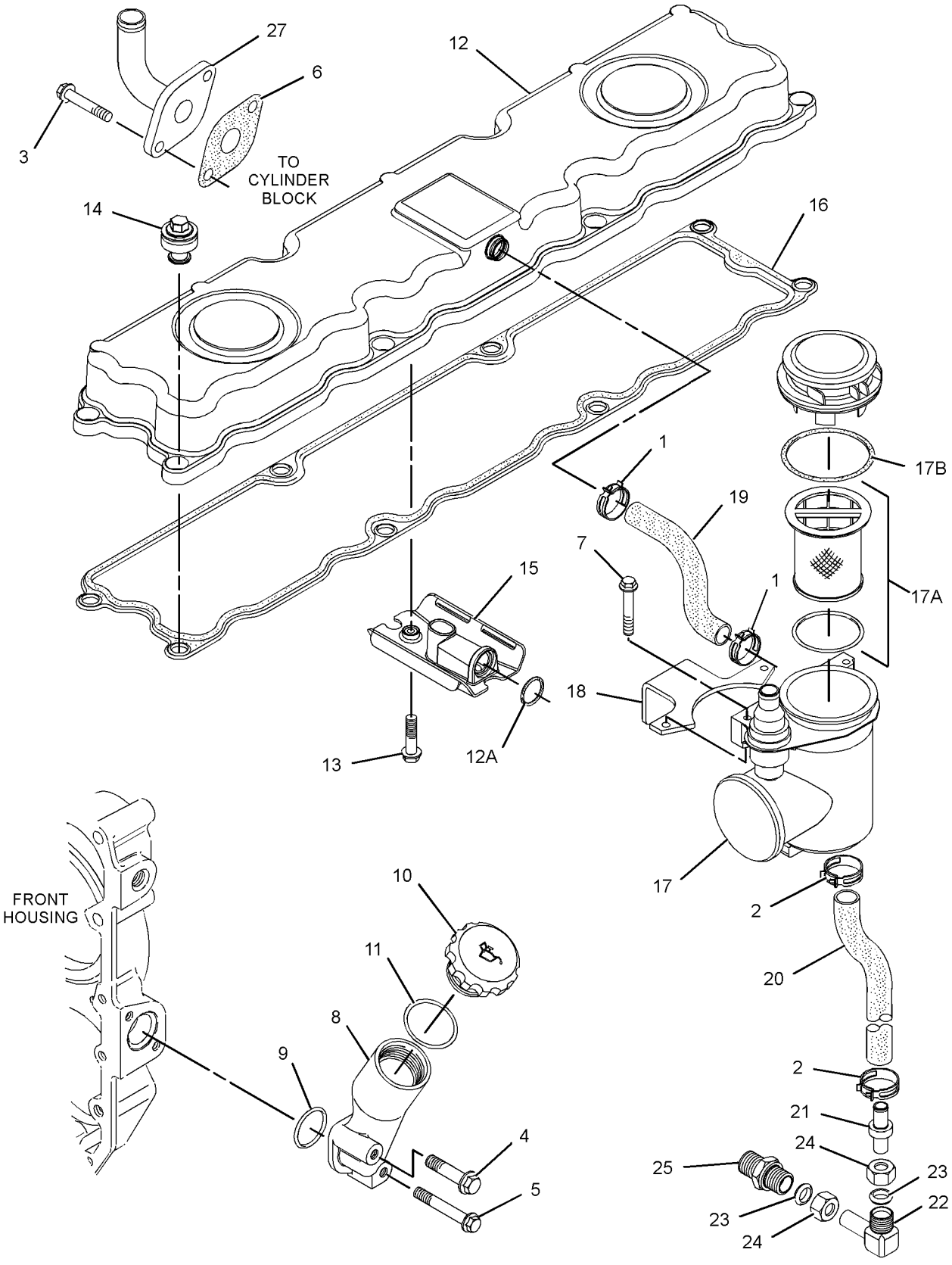

GRAPHIC #1 **<END>** g01179620

221-7115 COVER GP-VALVE MECHANISM

S/N: CPT1-UP

PART OF 254-2236, 295-9744 ENGINE AR-PRIMARY

ALSO AN ATTACHMENT

SMCS-1107 **i02638760**

NOTE	REF NO	GRAPHIC REF	PART NUMBER	QTY	PART NAME 1 2 3 4 5 6 (PRODUCT LEVEL)	SEE PAGE
	1	1	**2S-3440**	2	CLAMP-HOSE	
	2	1	**5D-1026**	2	CLAMP-HOSE	
M	3	1	**6I-0217**	2	BOLT (M8X1.25X20-MM)	
	4	1	**6I-0456**	1	BOLT (M8X1.25X45-MM)	
	5	1	**6I-4374**	1	BOLT (M8X1.25X60-MM)	
	6	1	**100-4104**	1	GASKET	
	7	1	**112-7704**	2	BOLT	
	8	1	**160-6988**	1	FILLER AS-OIL	
	9	1	**113-1505**	1	SEAL-O-RING	
	10	1	**130-9888**	1	CAP-OIL FILLER (ENGINE)	
	11	1	**113-1504**	1	SEAL-O-RING	
	12	1	**216-9606**	1	COVER AS (VALVE)	
	12A	1	**229-3557**	1	SEAL-O-RING	
	13	1	**229-3558**	1	BOLT	
	14	1	**216-9600**	8	BOLT	
	15	1	**216-9602**	1	BREATHER AS (CRANKCASE)	
	16	1	**216-9604**	1	GASKET (VALVE COVER)	
C	17	1	**262-1044**	1	BREATHER AS (CRANKCASE)	
	17A	1	**229-3555**	1	FILTER ELEMENT-BREATHER (CLOSED CIRCUIT CRANKCASE)	
	17B	1	**262-1046**	1	SEAL-O-RING (CRANKCASE BREATHER)	
C	18	1	**262-1045**	1	BRACKET	
	19	1	**249-2826**	1	HOSE (FUMES DISPOSAL, UPPER)	
	20	1	**249-2827**	1	HOSE (FUMES DISPOSAL, LOWER)	
	21	1	**216-9618**	1	VALVE-CHECK (CRANKCASE BREATHER CHECK)	
C	22	1	**268-0876**	1	ELBOW	
C	23	1	**032-8048**	2	FERRULE	
C	24	1	**7W-2628**	2	NUT	
C	25	1	**7W-2634**	1	UNION	
	27	1	**219-1803**	1	TUBE	

C-CHANGE FROM PREVIOUS TYPE
M-METRIC PART

221-7115 **COVER GP-VALVE MECHANISM** *(contd.)* **i02638760**

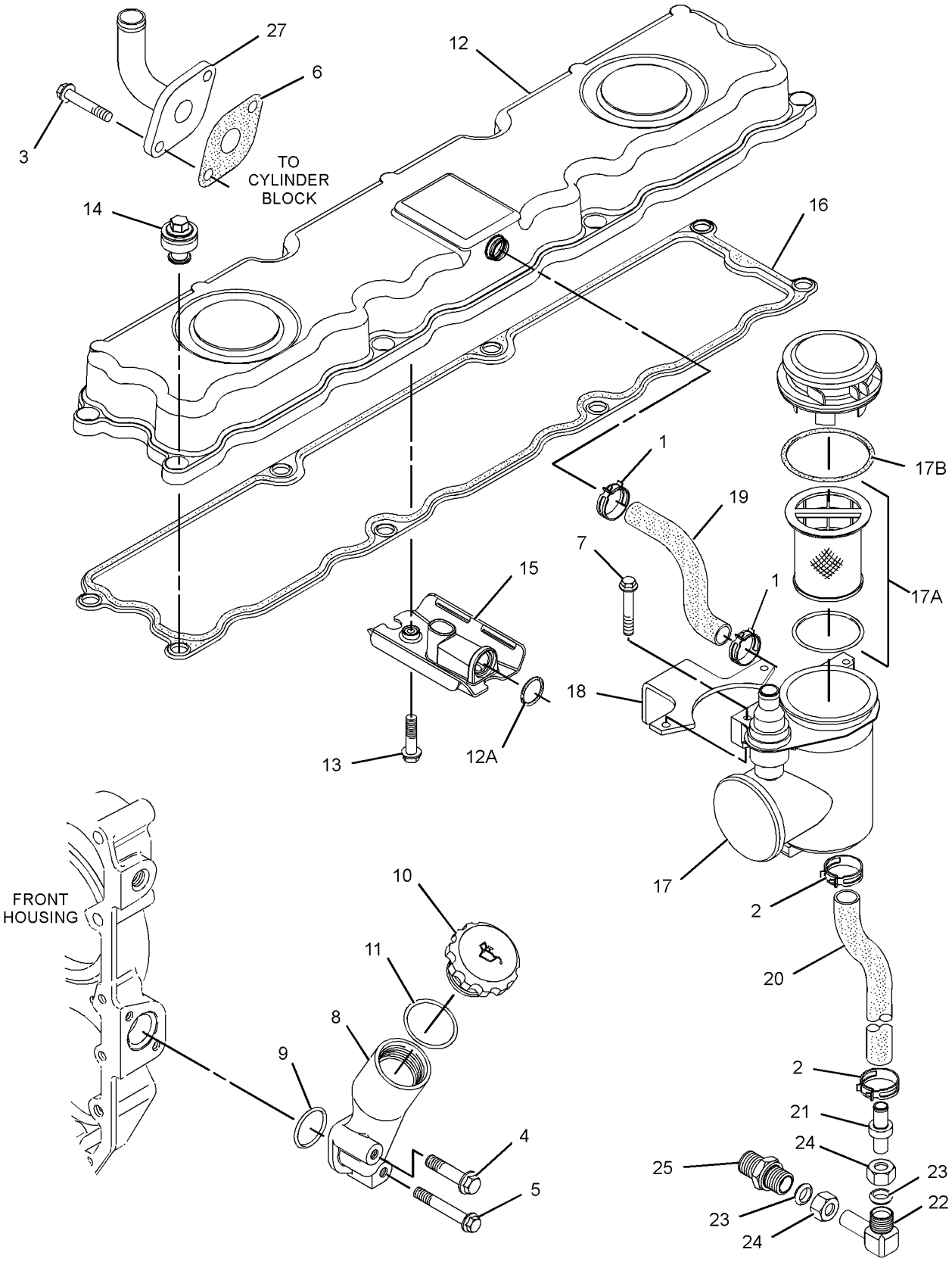

GRAPHIC #1 **<END>** g01179620

216-8316 CRANKSHAFT GP

S/N: CPT1-843

PART OF 254-2236 ENGINE AR-PRIMARY

SMCS-1202 **i02455832**

NOTE	REF NO	GRAPHIC REF	PART NUMBER	QTY	PART NAME 1 2 3 4 5 6 (PRODUCT LEVEL)	SEE PAGE
	1	1	**1B-8736**	1	KEY-WOODRUFF	
	2	1	**216-8314**	1	GEAR-CRANKSHAFT (34-TEETH)	
	3	1	**216-8315**	1	CRANKSHAFT GP	
	4	1	**7W-4589**	1	BEARING GP-MAIN (STANDARD)	
AB		1	**7W-4590**		BEARING GP-MAIN (0.25 US ID)	
AB		1	**7W-4591**		BEARING GP-MAIN (0.51 US ID)	
AB		1	**7W-4592**		BEARING GP-MAIN (0.76 US ID) (STANDARD)	
	5	1	**7W-4816**	1	BEARING SET-ROD	
AB		1	**7W-4817**		BEARING GP-CONNECTING ROD (0.25 US ID)	
AB		1	**7W-4818**		BEARING GP-CONNECTING ROD (0.51 US ID)	
AB		1	**7W-4819**		BEARING GP-CONNECTING ROD (0.76 US ID)	
	6	1	**032-9090**	2	WASHER-THRUST (STANDARD-UPPER)	
AB		1	**067-6873**		WASHER-THRUST (0.18-MM OS)	
	7	1	**032-9091**	2	WASHER-THRUST (STANDARD-LOWER)	
AB		1	**067-6874**		WASHER-THRUST (0.18-MM OS)	

A-NOT PART OF THIS GROUP
B-USE AS REQUIRED

216-8316 **CRANKSHAFT GP** *(contd.)* **i02455832**

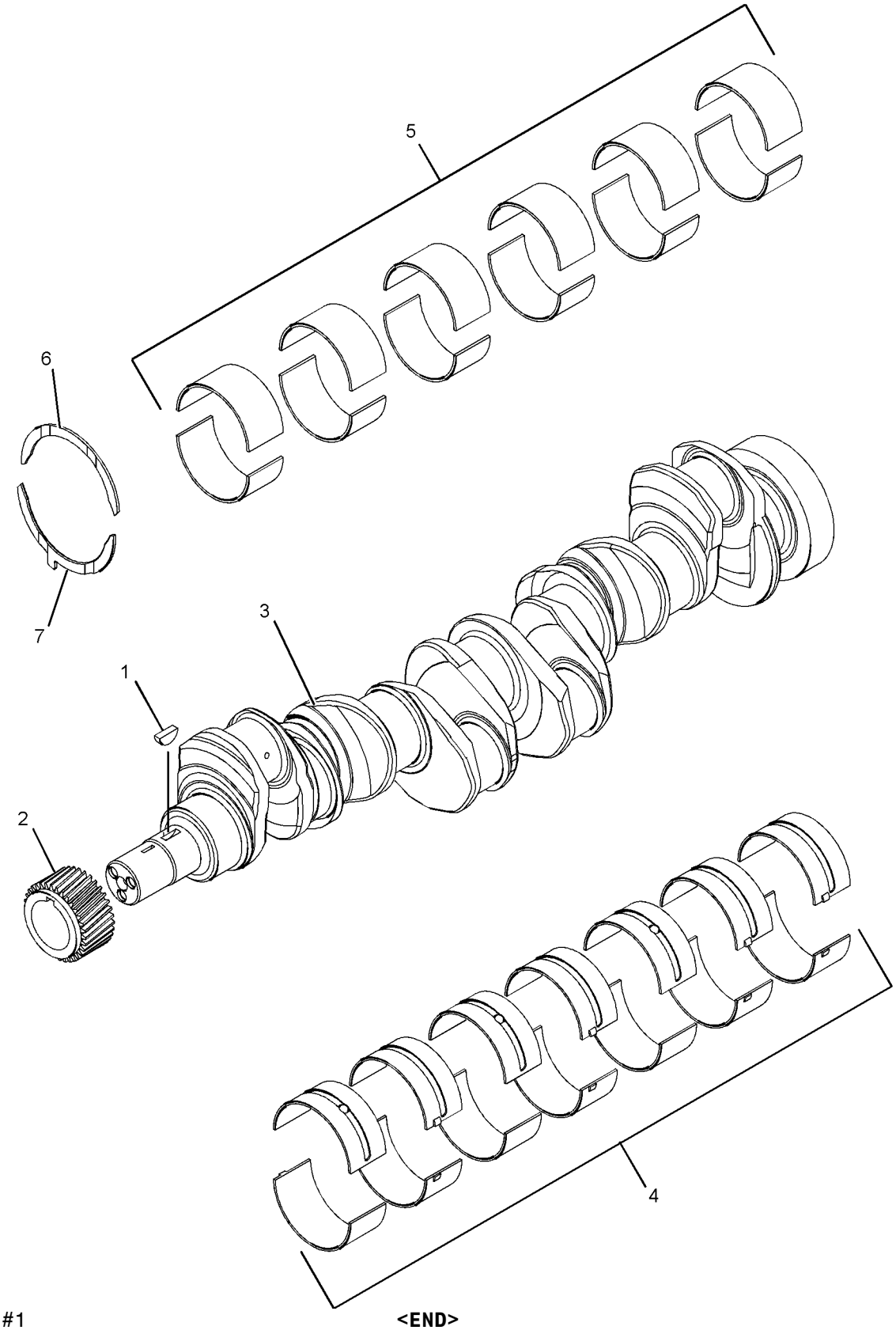

GRAPHIC #1 **<END>** g01064752

216-8316 CRANKSHAFT GP

S/N: CPT1-UP
PART OF 254-2236, 295-9744 ENGINE AR-PRIMARY
ALSO AN ATTACHMENT

SMCS-1202 **i02623777**

NOTE	REF NO	GRAPHIC REF	PART NUMBER	QTY	PART NAME 1 2 3 4 5 6 (PRODUCT LEVEL)	SEE PAGE
	1	1	**216-8314**	1	GEAR-CRANKSHAFT (34-TEETH)	
C	2	1	**240-8467**	1	CRANKSHAFT GP	
	3	1	**1B-8736**	1	KEY-WOODRUFF	
	4	1	**032-9090**	2	WASHER-THRUST (STANDARD-UPPER)	
AB		1	**067-6873**		WASHER-THRUST (0.18-MM OS)	
	5	1	**032-9091**	2	WASHER-THRUST (STANDARD-LOWER)	
AB		1	**067-6874**		WASHER-THRUST (0.18-MM OS)	
	6	1	**7W-4589**	1	BEARING GP-MAIN (STANDARD)	
AB		1	**7W-4590**		BEARING GP-MAIN (0.25 US ID)	
AB		1	**7W-4591**		BEARING GP-MAIN (0.51 US ID)	
AB		1	**7W-4592**		BEARING GP-MAIN (0.76 US ID) (STANDARD)	
	7	1	**236-4397**	1	BEARING SET-ROD	
	8	1	**225-8839**	1	DOWEL	
	9	1	**226-2036**	1	RING-TIMING	
	10	1	**6I-4716**	1	KEY	

A-NOT PART OF THIS GROUP
B-USE AS REQUIRED
C-CHANGE FROM PREVIOUS TYPE

216-8316 **CRANKSHAFT GP** *(contd.)* **i02623777**

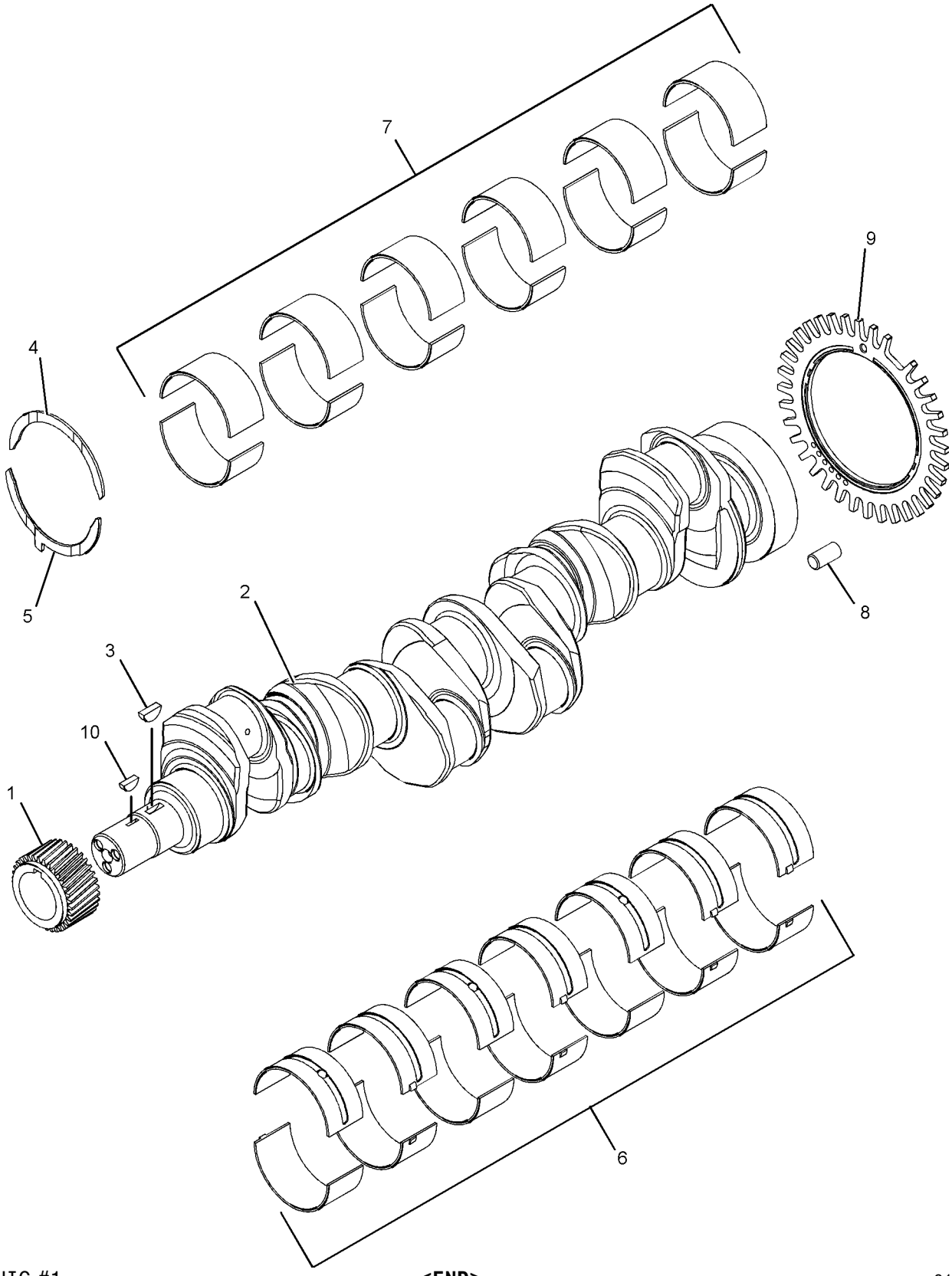

GRAPHIC #1 **<END>** g01064685

216-8231 CYLINDER BLOCK GP

S/N: CPT1-UP
PART OF 254-2236, 295-9744 ENGINE AR-PRIMARY
ALSO AN ATTACHMENT

SMCS-1201 **i01777340**

NOTE	REF NO	GRAPHIC REF	PART NUMBER	QTY	PART NAME 1 2 3 4 5 6 (PRODUCT LEVEL)	SEE PAGE
Y	1	1	**216-8235**	1	CYLINDER BLOCK GP	18
M	2	1	**209-9219**	10	BOLT (M8X1.25X16-MM)	
	3	1	**209-9218**	1	HOUSING AS	
	3A	1	**219-2512**	1	SLEEVE	

M-METRIC PART
Y-SEPARATE ILLUSTRATION

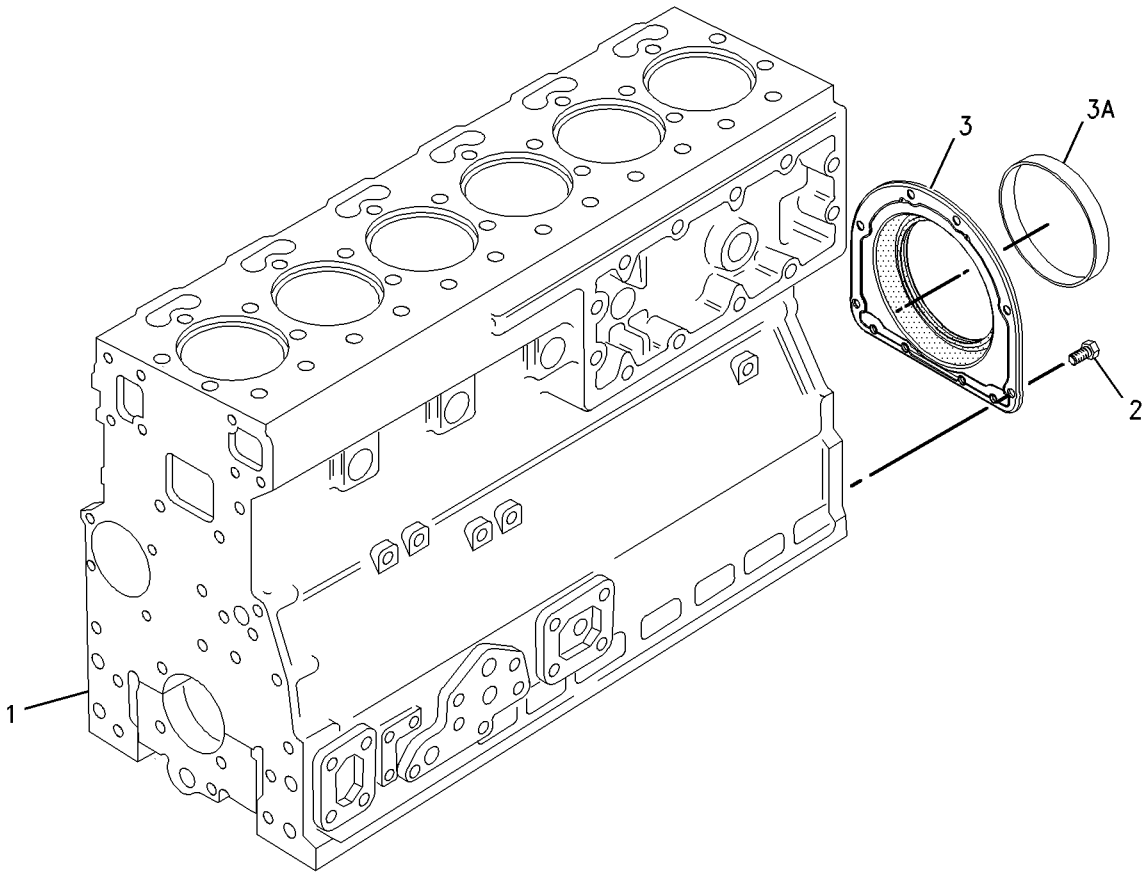

GRAPHIC #1 **<END>** g00830579

BASIC ENGINE

216-8235 CYLINDER BLOCK GP

S/N: CPT1-UP
PART OF 216-8231 CYLINDER BLOCK GP
ALSO AN ATTACHMENT

SMCS-1201 **i02667959**

NOTE	REF NO	GRAPHIC REF	PART NUMBER	QTY	PART NAME 1 2 3 4 5 6 (PRODUCT LEVEL)	SEE PAGE
	1	1	**1N-3762**	12	PLUG-CUP	
	2	1	**6I-1074**	6	VALVE AS (OIL JET)	
					(EACH INCLUDES)	
	3	1	**6I-0686**	1	SPRING	
	4	1	**6I-1075**	1	BALL	
	5	1	**6I-1076**	1	RETAINER	
	6	1	**6I-4354**	1	DOWEL	
	7	1	**302-4757**	1	PLUG	
	8	1	**9Y-5015**	1	PLUG-FREEZE	
	9	1	**035-8068**	14	BOLT (5/8-18X3.75-IN)	
	10	1	**036-5802**	1	BEARING	
	11	1	**067-6002**	14	DOWEL	
	12	1	**067-6805**	1	PLUG	
	13	1	**067-6808**	1	PLUG	
	14	1	**111-1815**	6	LINER	
	15	1	**231-3497**	1	SHAFT-IDLER	
	16	1	**148-3026**	6	JET AS-PISTON COOLING	
	17	1	**214-1668**	1	WASHER-SPECIAL	
	18	1	**215-2103**	6	PLUG	

216-8235 CYLINDER BLOCK GP *(contd.)* **i02667959**

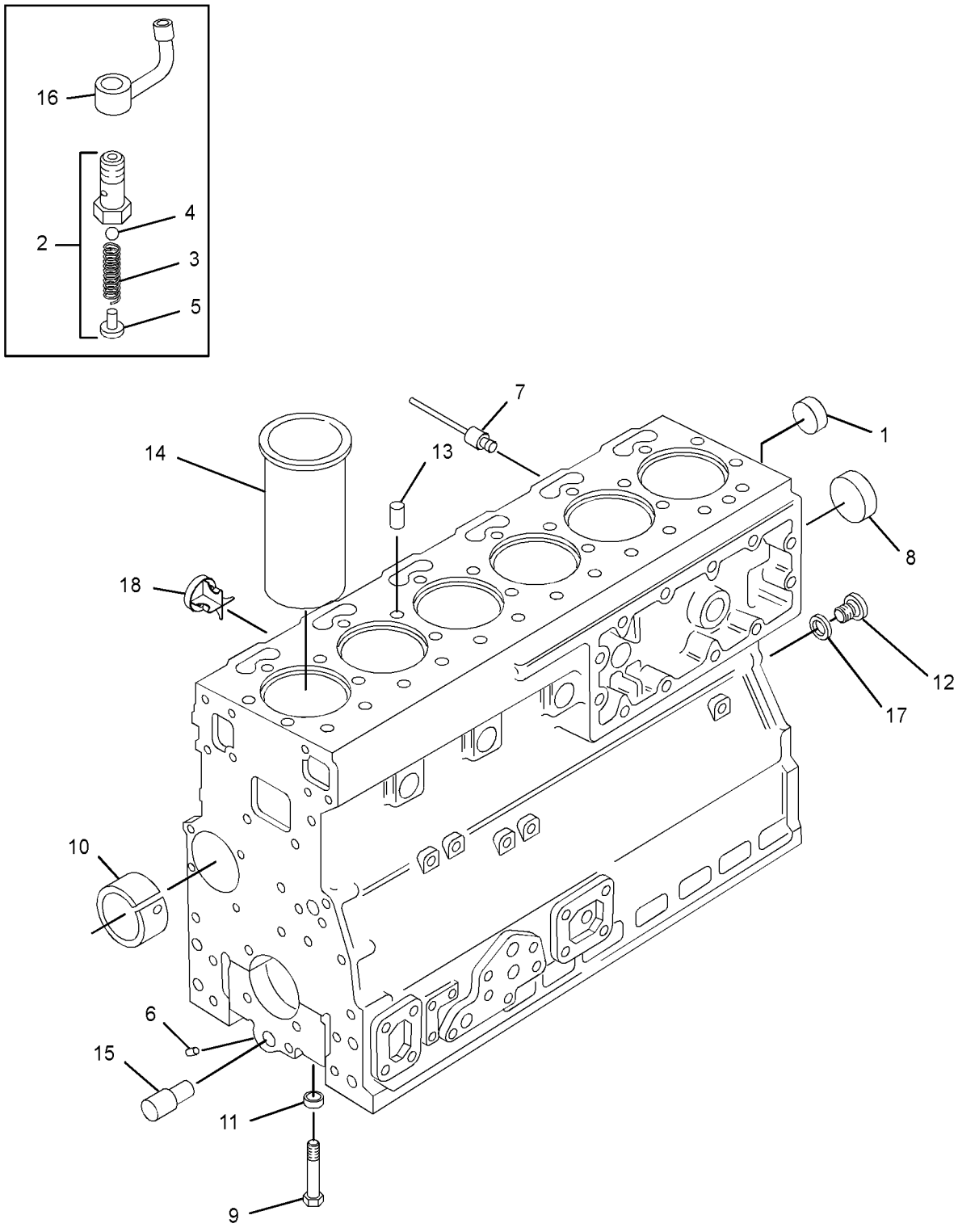

GRAPHIC #1 **<END>** g01352412

216-8335 CYLINDER HEAD GP

S/N: CPT1-UP
PART OF 216-8343 CYLINDER HEAD GP
ALSO AN ATTACHMENT

SMCS-1100 **i01834988**

NOTE	REF NO	GRAPHIC REF	PART NUMBER	QTY	PART NAME 1 2 3 4 5 6 (PRODUCT LEVEL)	SEE PAGE
	1	1	**1N-3762**	1	PLUG-CUP	
	2	1	**7M-7410**	6	PLUG-PIPE	
	3	1	**067-6043**	3	PLUG-SIDE	
	4	1	**138-2050**	6	VALVE-EXHAUST	
	5	1	**138-2060**	12	CAP	
	6	1	**145-6855**	6	VALVE-INLET	
	7	1	**145-6856**	6	SEAL (INLET)	
	8	1	**145-6858**	6	SEAL (EXHAUST)	
	9	1	**147-1979**	24	RETAINER-VALVE SPRING	
	10	1	**163-9256**	6	GUIDE-VALVE (EXHAUST)	
	11	1	**185-0882**	6	GUIDE-VALVE (INTAKE)	
	12	1	**206-4127**	12	SPRING-VALVE	
	13	1	**216-8332**	6	INSERT-VALVE (INLET)	
	14	1	**216-8333**	6	INSERT-VALVE (EXHAUST)	

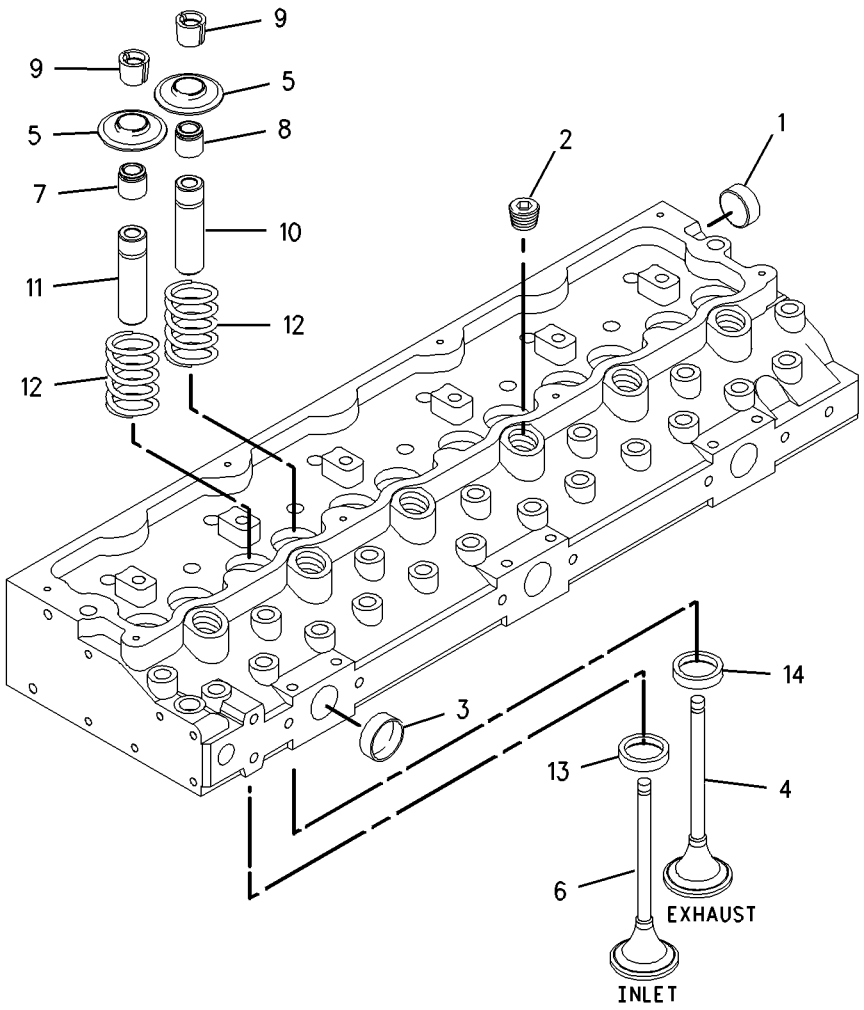

GRAPHIC #1 **<END>** g00860247

216-8343 CYLINDER HEAD GP

S/N: CPT1-UP
PART OF 254-2236, 295-9744 ENGINE AR-PRIMARY
ALSO AN ATTACHMENT

SMCS-1100 **i02054420**

NOTE	REF NO	GRAPHIC REF	PART NUMBER	QTY	PART NAME 1 2 3 4 5 6 (PRODUCT LEVEL)	SEE PAGE
	1	1	**7W-2518**	12	BOLT (1/2-20X3.63-IN)	
	2	1	**7W-2519**	18	BOLT (1/2-20X4.25-IN)	
	3	1	**7W-2520**	2	BOLT (1/2-20X5.09-IN)	
	4	1	**240-0205**	1	GASKET-CYLINDER HEAD	
	5	1	**161-9820**	2	PIN	
Y	6	1	**216-8335**	1	CYLINDER HEAD GP	20

Y-SEPARATE ILLUSTRATION

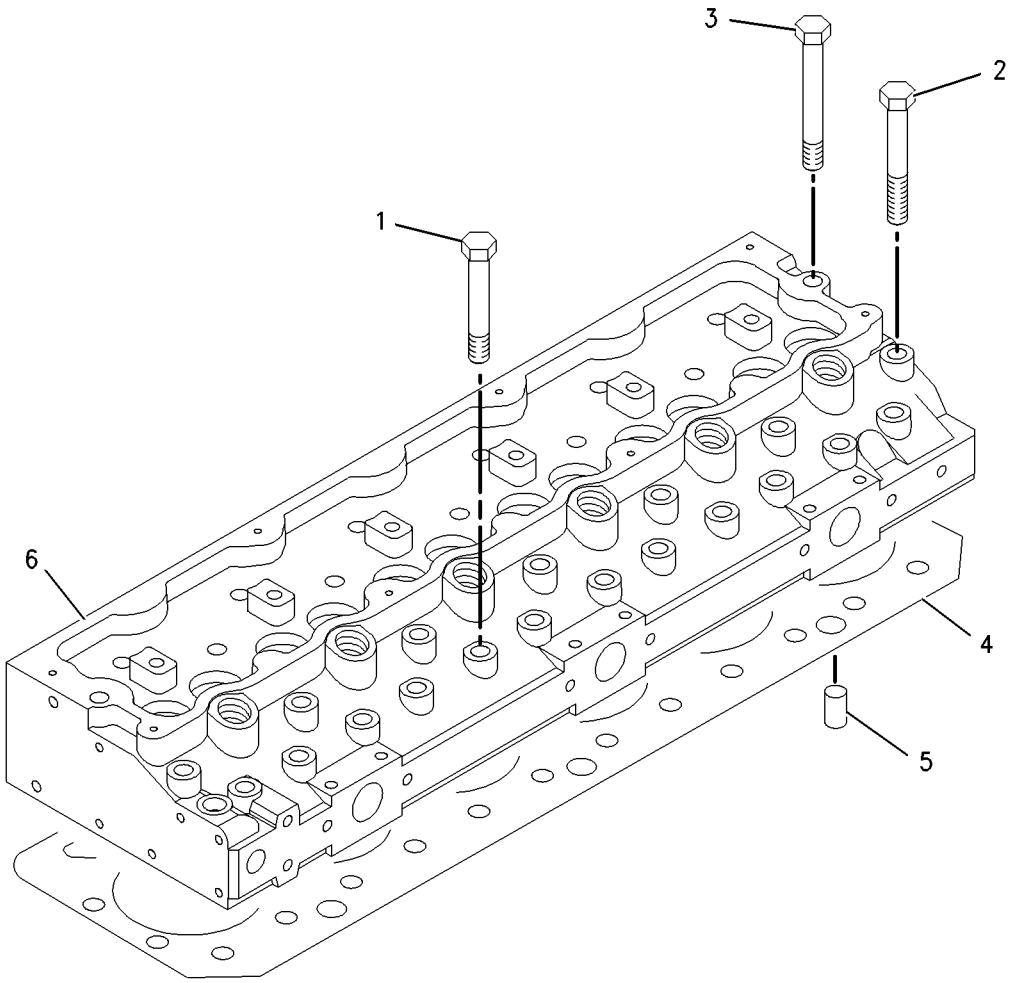

GRAPHIC #1 **<END>** g00889681

186-2337 DRAIN GP-ENGINE OIL

S/N: TWR1-UP

PART OF 242-9735 INSTALLATION AR-ENGINE

SMCS-1302 **i02578641**

NOTE	REF NO	GRAPHIC REF	PART NUMBER	QTY	PART NAME 1 2 3 4 5 6 (PRODUCT LEVEL)	SEE PAGE
	1	1	**2P-4173**	1	COCK-DRAIN (CYLINDER BLOCK OIL DRAIN)	
	2	1	**5D-1026**	1	CLAMP-HOSE	
	3	1	**6V-7238**	1	VALVE-SHUTOFF (ENGINE OIL DRAIN)	
	4	1	**8C-5225**	1	PLUG-SEAL (ENGINE OIL DRAIN LINE)	
	5	1	**159-5255**	1	ADAPTER	
	6	1	**3K-0360**	1	SEAL-O-RING	
	7	1	**5P-6718**	1	SEAL-O-RING	
E	8	1	**5P-0743**		HOSE (51-CM)	

E-ORDER BY THE CENTIMETER

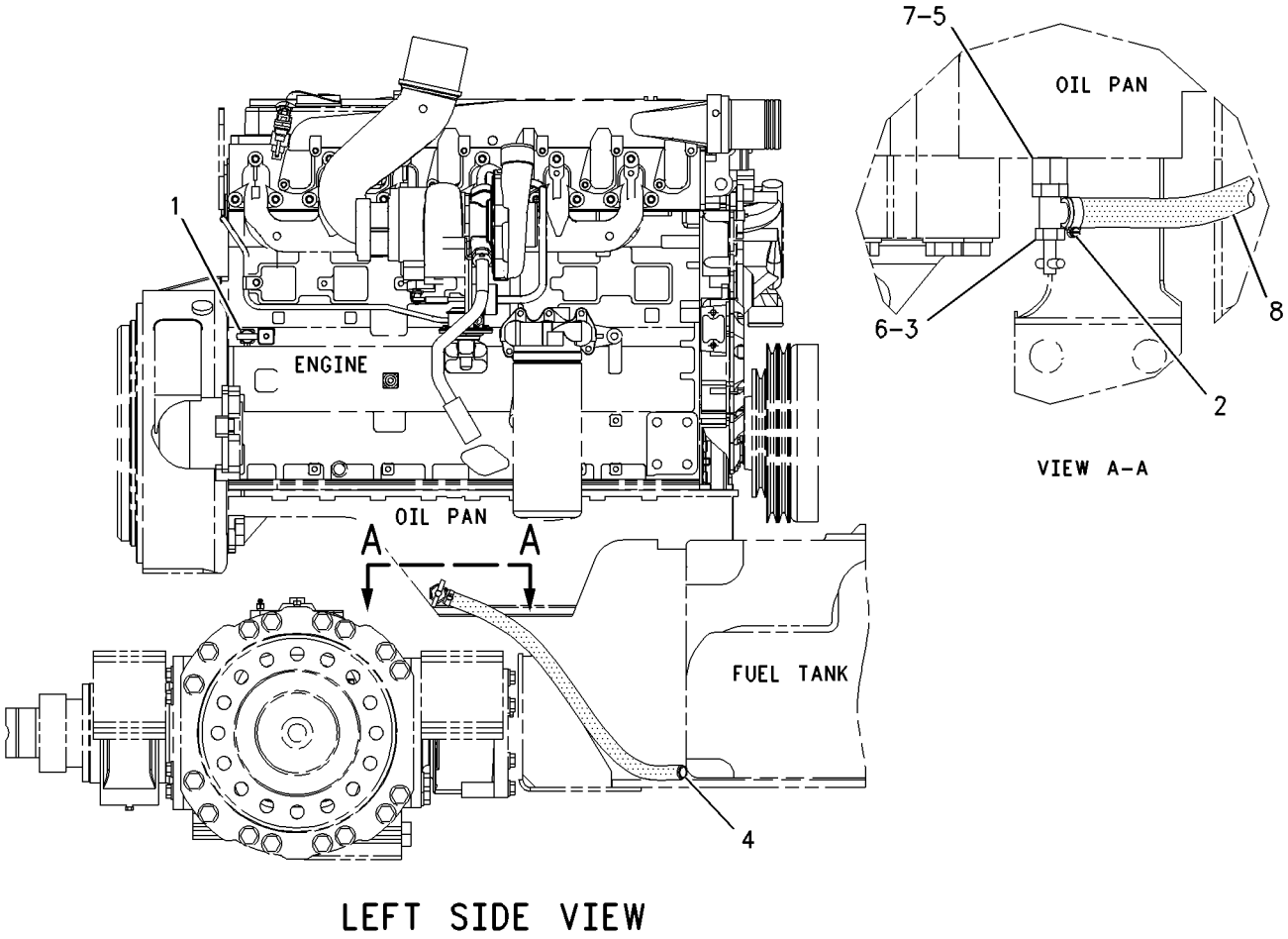

LEFT SIDE VIEW

GRAPHIC #1 **<END>** g00922918

228-7418 FASTENER GP-CYLINDER HEAD

S/N: CPT1-UP
REAR CYLINDER HEAD COVER PLATE
PART OF 254-2236, 295-9744 ENGINE AR-PRIMARY
ALSO AN ATTACHMENT

SMCS-1100 **i01827911**

NOTE	REF NO	GRAPHIC REF	PART NUMBER	QTY	PART NAME 1 2 3 4 5 6 (PRODUCT LEVEL)	SEE PAGE
M	1	1	**124-3815**	3	BOLT (M8X16X1.25-MM)	

M-METRIC PART

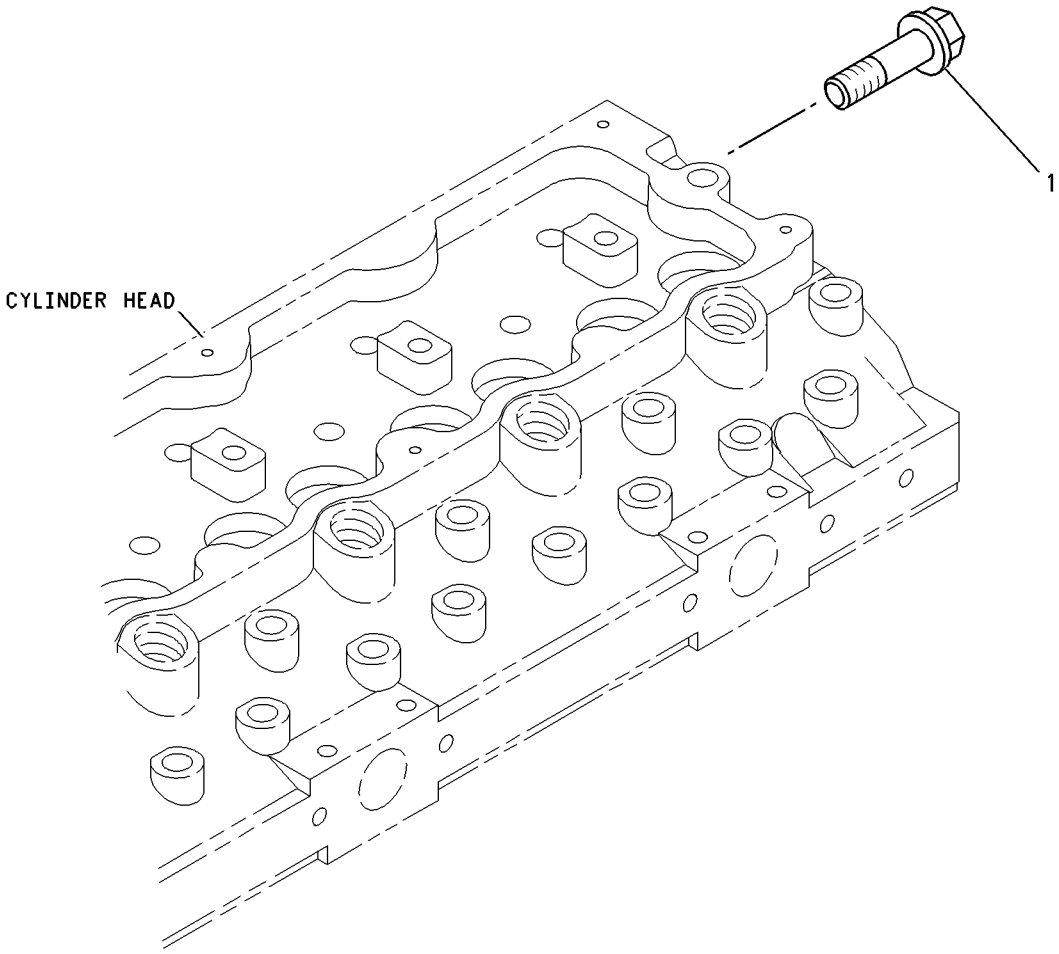

GRAPHIC #1 **<END>** g00932820

221-6990 FLYWHEEL GP

S/N: CPT1-UP
PART OF 254-2236, 295-9744 ENGINE AR-PRIMARY
ALSO AN ATTACHMENT

SMCS-1156 **i02578643**

NOTE	REF NO	GRAPHIC REF	PART NUMBER	QTY	PART NAME 1 2 3 4 5 6 (PRODUCT LEVEL)	SEE PAGE
	1	1	**113-7543**	1	FLYWHEEL AS	
	2	1	**033-7687**	1	RING-STARTING MOTOR (126-TEETH)	
C	3	1	**4K-7502**	10	BOLT (1/2-20X1.375-IN)	
C	4	1	**5P-8245**	10	WASHER-HARD (13.5X25.5X3-MM THK)	

C-CHANGE FROM PREVIOUS TYPE

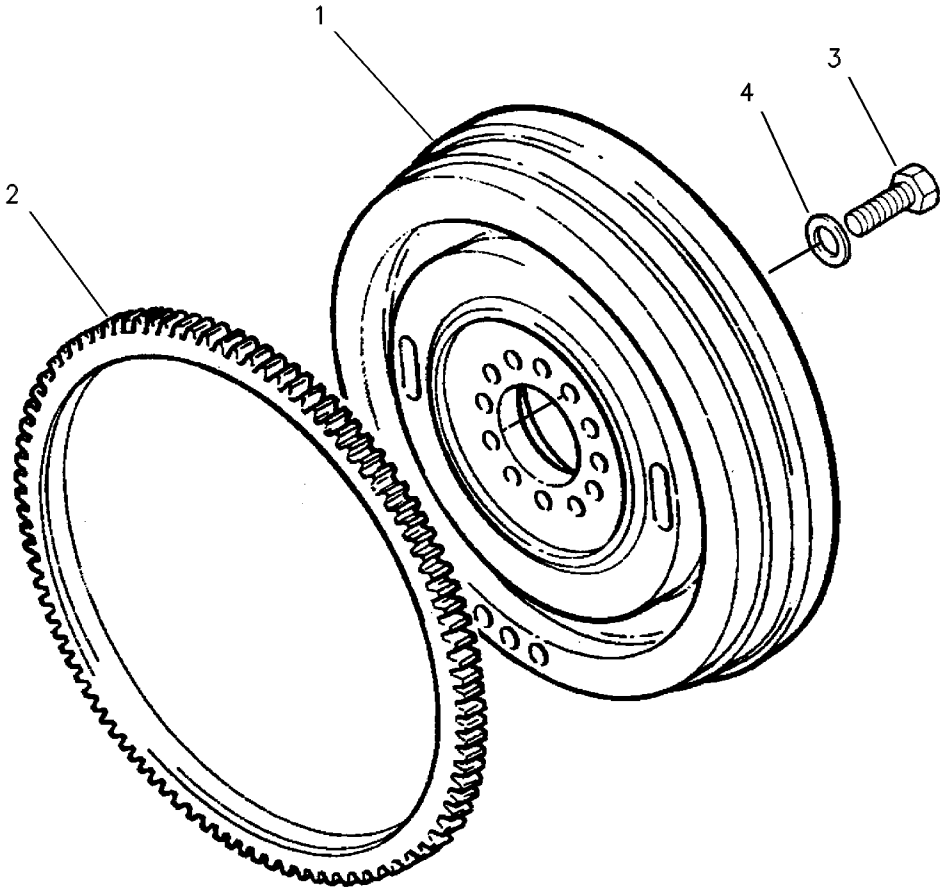

GRAPHIC #1 **<END>** g00241149

217-1499 GEAR GP-FRONT

S/N: CPT1-UP

PART OF 254-2236, 295-9744 ENGINE AR-PRIMARY

ALSO AN ATTACHMENT

SMCS-1151, 1162, 1206 **i03138180**

NOTE	REF NO	GRAPHIC REF	PART NUMBER	QTY	PART NAME 1 2 3 4 5 6 (PRODUCT LEVEL)	SEE PAGE
	1	1	**6I-0256**	1	WASHER	
	2	1	**067-6928**	1	CLIP	
	3	1	**216-8348**	1	GEAR AS-IDLER (31-TEETH)	
	4	1	**067-6927**	1	BUSHING-TERMINAL	

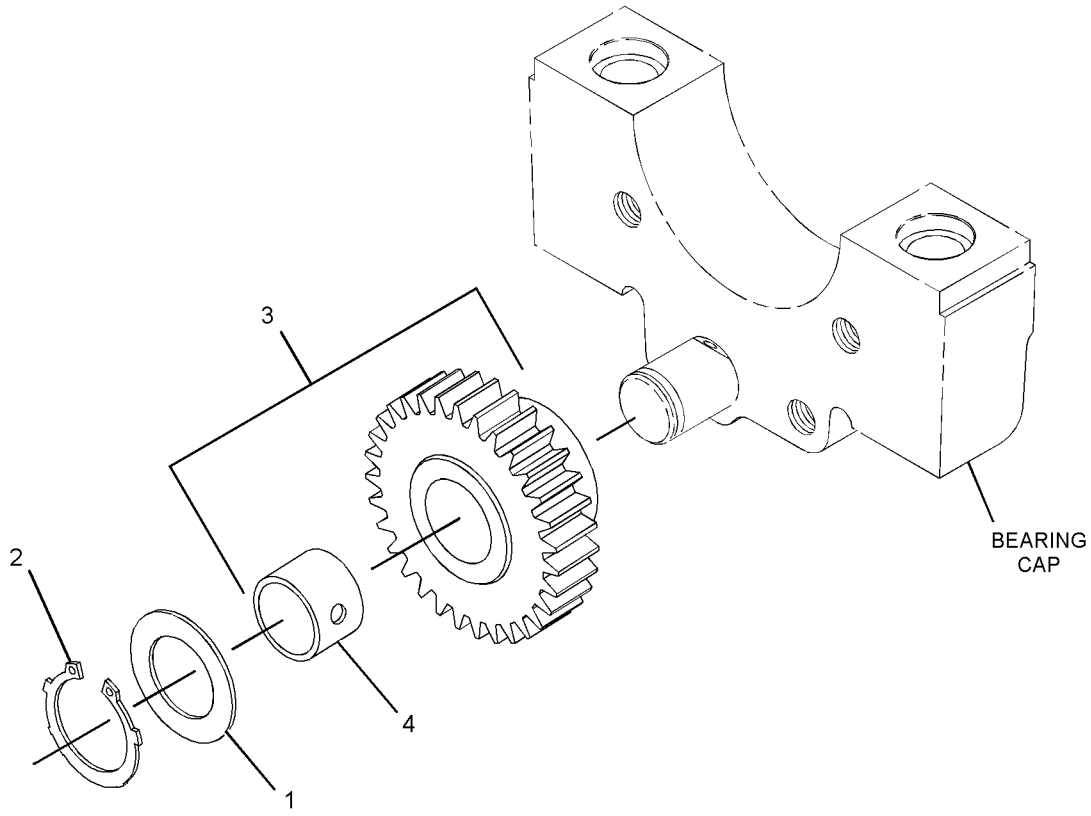

GRAPHIC #1 **<END>** g01384075

BASIC ENGINE

248-1443 GUARD GP-BELT

S/N: TWR1-UP
AN ATTACHMENT
TYPE 1

SMCS-7174 **i02224944**

NOTE	REF NO	GRAPHIC REF	PART NUMBER	QTY	PART NAME 1 2 3 4 5 6 (PRODUCT LEVEL)	SEE PAGE
	1	1	**169-5680**	1	COVER AS	
M	1A	1	**8T-3490**	2	NUT-WELD (M10X1.5-THD)	
	2	1	**209-7705**	1	GUARD	
	3	1	**5P-1076**	1	WASHER-HARD (13.5X30X4-MM THK)	
	4	1	**6V-8188**	1	NUT (1/2-13-THD)	
	5	1	**7X-0340**	1	BOLT (1/2-13X6.5-IN)	
	6	1	**8T-4121**	2	WASHER-HARD (11X21X2.5-MM THK)	
M	7	1	**8T-4195**	2	BOLT (M10X1.5X30-MM)	
	8	1	**8T-4223**	2	WASHER-HARD (13.5X25.5X3-MM THK)	
	9	1	**8T-4835**	1	BOLT (1/2-13X2-IN)	

M-METRIC PART

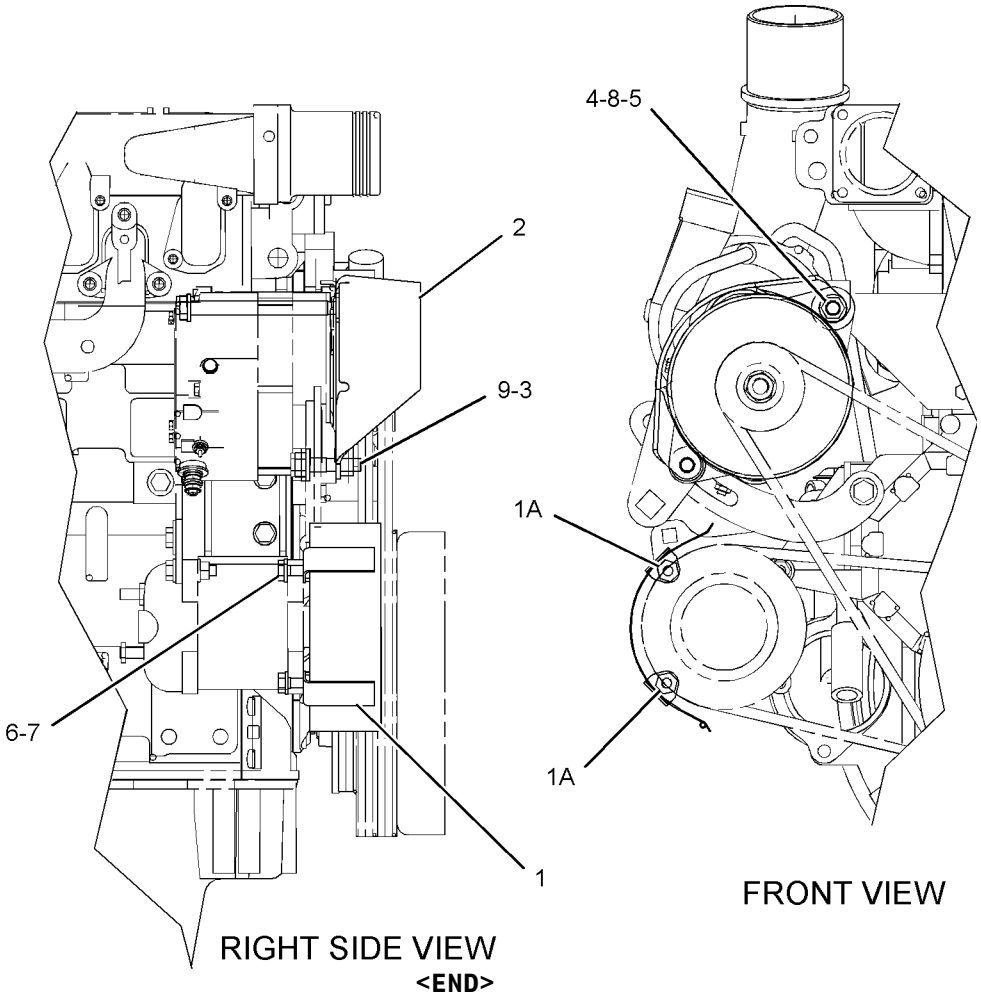

GRAPHIC #1

<END>

g01079264

248-1443 GUARD GP-BELT

S/N: TWR1-UP
AN ATTACHMENT
TYPE 2

SMCS-7174 **i03288240**

NOTE	REF NO	GRAPHIC REF	PART NUMBER	QTY	PART NAME 1 2 3 4 5 6 (PRODUCT LEVEL)	SEE PAGE
C	1	1	**333-9780**	1	COVER AS	
	2	1	**209-7705**	1	GUARD	
	3	1	**5P-1076**	1	WASHER-HARD (13.5X30X4-MM THK)	
	4	1	**6V-8188**	1	NUT (1/2-13-THD)	
	5	1	**7X-0340**	1	BOLT (1/2-13X6.5-IN)	
	6	1	**8T-4121**	2	WASHER-HARD (11X21X2.5-MM THK)	
M	7	1	**8T-4195**	2	BOLT (M10X1.5X30-MM)	
	8	1	**8T-4223**	2	WASHER-HARD (13.5X25.5X3-MM THK)	
	9	1	**8T-4835**	1	BOLT (1/2-13X2-IN)	

C-CHANGE FROM PREVIOUS TYPE
M-METRIC PART

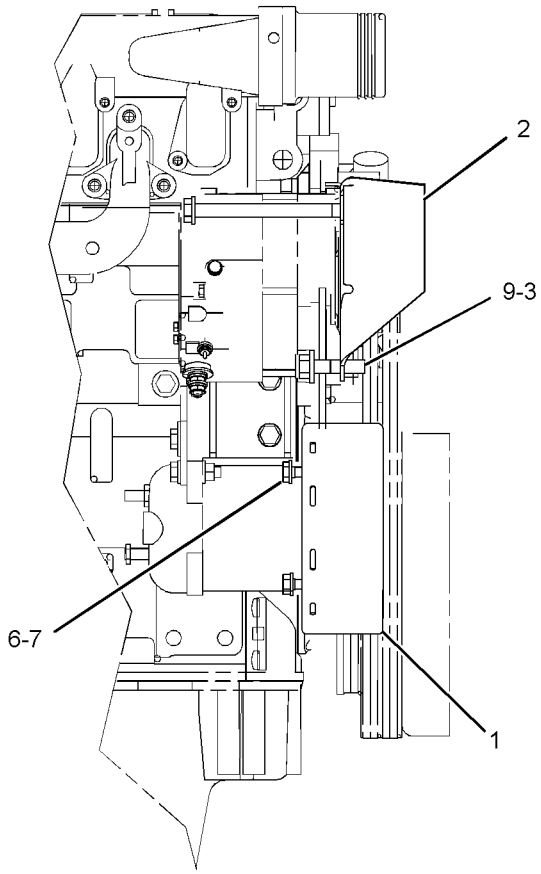

RIGHT SIDE VIEW OF ENGINE

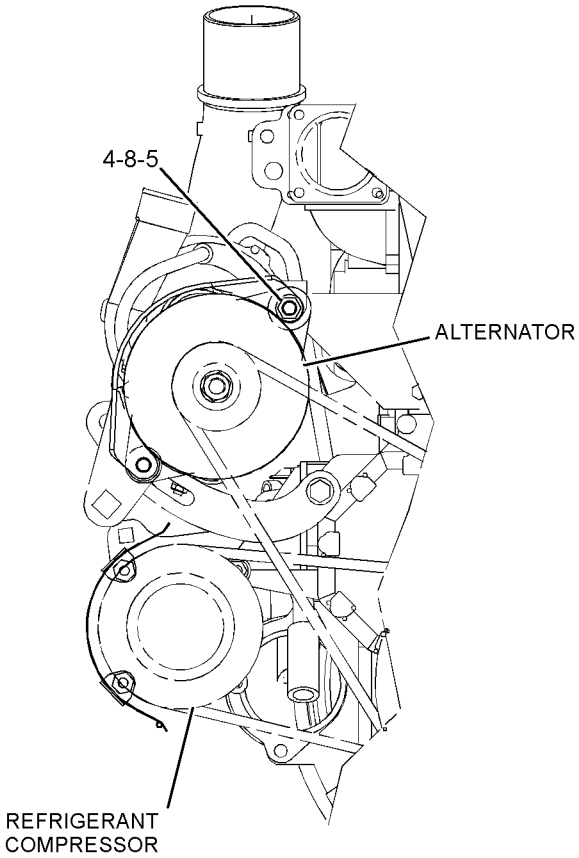

FRONT VIEW OF ENGINE

GRAPHIC #1 **<END>** g01691134

BASIC ENGINE

235-9691 HOUSING GP-FLYWHEEL

S/N: CPT1-UP
PART OF 254-2236, 295-9744 ENGINE AR-PRIMARY
ALSO AN ATTACHMENT

SMCS-1157 **i02538172**

NOTE	REF NO	GRAPHIC REF	PART NUMBER	QTY	PART NAME 1 2 3 4 5 6 (PRODUCT LEVEL)	SEE PAGE
M	1	1	**6I-0423**	2	BOLT (M12X1.75X30-MM)	
	2	1	**6I-0631**	2	BOLT (M6X1X12-MM)	
	3	1	**6I-0847**	1	PLUG	
	4	1	**6I-4200**	3	BOLT (M10X1.5X16-MM)	
	5	1	**7W-4642**	1	SHIELD-DUST	
	6	1	**287-8597**	2	DOWEL	
	7	1	**102-1957**	1	PLATE	
M	8	1	**121-0883**	6	BOLT (M10X1.5X30-MM)	
	9	1	**199-3108**	1	PLUG	
	10	1	**149-9176**	1	HOUSING-FLYWHEEL	
	11	1	**199-3109**	1	PLUG	

M-METRIC PART

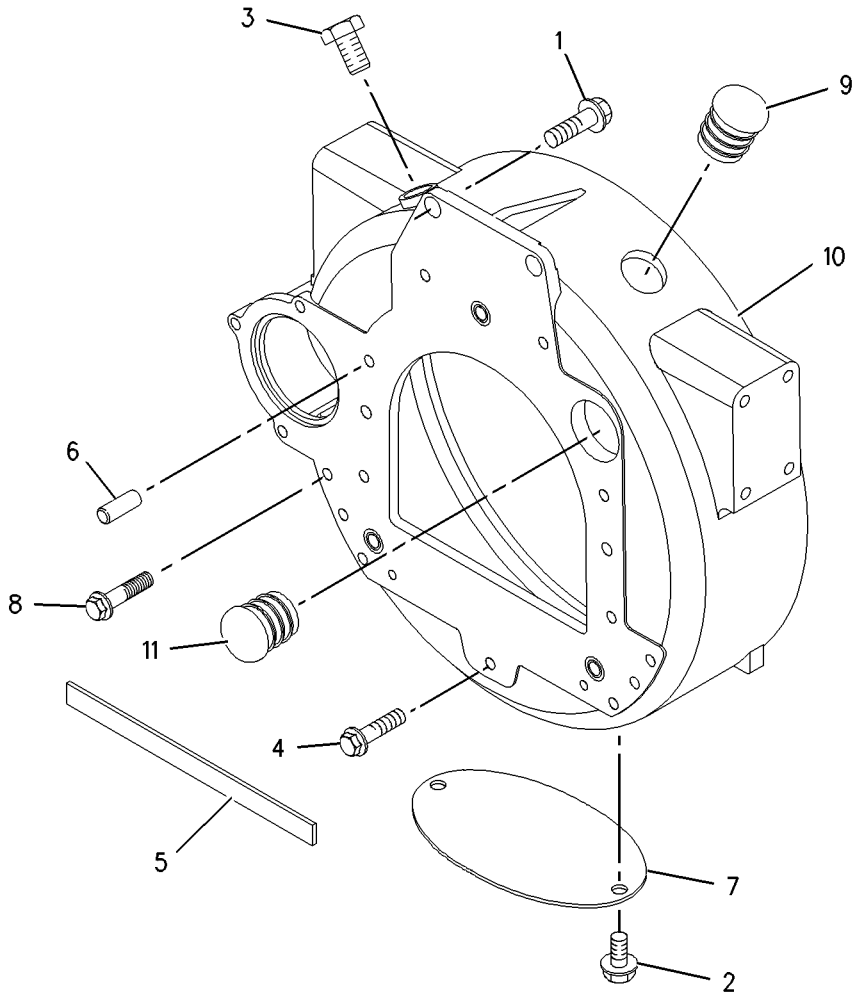

GRAPHIC #1 **<END>** g00993081

221-6835 HOUSING GP-FRONT

S/N: CPT1-6883
PART OF 254-2236 ENGINE AR-PRIMARY
ALSO AN ATTACHMENT

SMCS-1151, 1162, 1206 **i02742832**

NOTE	REF NO	GRAPHIC REF	PART NUMBER	QTY	PART NAME 1 2 3 4 5 6 (PRODUCT LEVEL)	SEE PAGE
	1	1	**1B-8736**	1	KEY-WOODRUFF	
M	2	1	**6I-0217**	1	BOLT (M8X1.25X20-MM)	
M	3	1	**6I-0254**	6	BOLT (M8X1.25X30-MM)	
M	4	1	**6I-0260**	1	BOLT (M8X1.25X25-MM)	
M	5	1	**6I-0645**	3	BOLT (M8X1.25X25-MM)	
	6	1	**6I-0789**	3	BOLT (M10X1.5X60-MM)	
	7	1	**6I-0839**	6	BOLT (M8X1.25X70-MM)	
	8	1	**6I-0846**	2	BOLT (M6X1X14-MM)	
	9	1	**7C-4616**	1	BOLT (M12X1.75X45-MM)	
	10	1	**133-1011**	1	WASHER	
	11	1	**067-6179**	1	DOWEL	
	12	1	**067-6897**	1	HUB-IDLER GEAR	
	13	1	**067-6900**	1	PLATE-RETAINING	
	14	1	**067-6178**	1	WASHER	
	15	1	**140-7443**	1	GASKET-COVER	
	16	1	**140-7444**	1	SHIELD	
	17	1	**140-7445**	1	DAMPER	
	18	1	**160-3510**	1	GASKET	
	19	1	**183-6317**	1	COVER AS-FRONT	
	20	1	**4W-5359**	1	SEAL-CRANKSHAFT	
	21	1	**167-2153**	1	SLEEVE-CRANKSHAFT	
	22	1	**216-8632**	1	HOUSING-FRONT	
	23	1	**251-4336**	1	GEAR AS-IDLER (73-TEETH)	
	25	1	**216-8634**	1	GEAR-CAMSHAFT (68-TEETH)	
					AVAILABLE REPAIR KIT(S):	
			252-8739	1	KIT-REPAIR (FRONT COVER, TIMING GEAR)	
					(INCLUDES FRONT SEAL, IDLER GEAR, HUB, PLATE, FRONT HOUSING COVER GASKET AND WATER PUMP GASKET)	

M-METRIC PART

221-6835 **HOUSING GP-FRONT** *(contd.)* **i02742832**

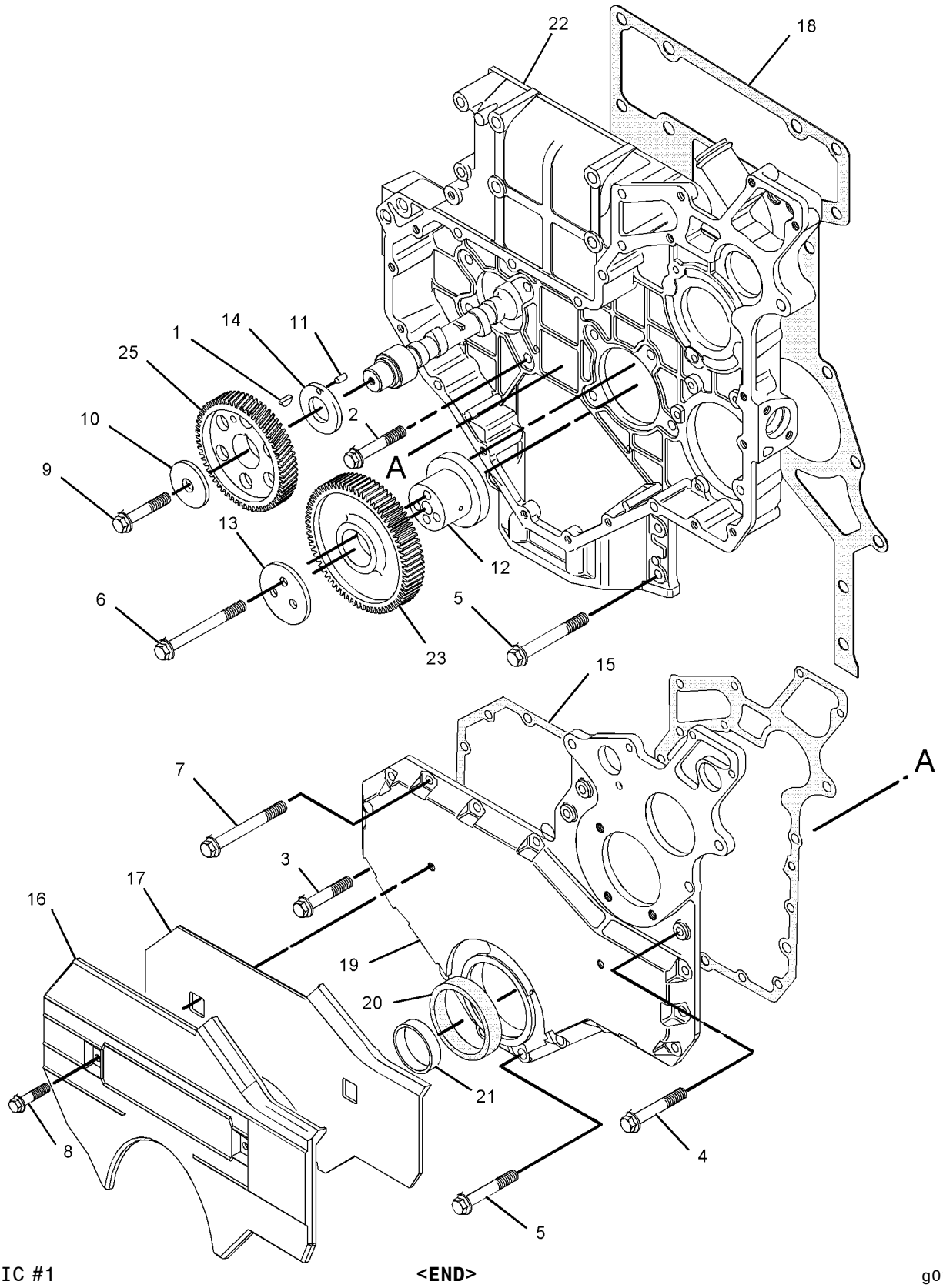

GRAPHIC #1 **<END>** g01053947

BASIC ENGINE

221-6835 HOUSING GP-FRONT

S/N: CPT1-UP

PART OF 254-2236, 295-9744 ENGINE AR-PRIMARY

ALSO AN ATTACHMENT

SMCS-1151, 1162, 1206 **i02918630**

NOTE	REF NO	GRAPHIC REF	PART NUMBER	QTY	PART NAME 1 2 3 4 5 6 (PRODUCT LEVEL)	SEE PAGE
	1	1	**1B-8736**	1	KEY-WOODRUFF	
M	2	1	**6I-0217**	1	BOLT (M8X1.25X20-MM)	
M	3	1	**6I-0254**	6	BOLT (M8X1.25X30-MM)	
M	4	1	**6I-0260**	5	BOLT (M8X1.25X25-MM)	
M	5	1	**6I-0650**	3	BOLT (M10X1.5X65-MM)	
	6	1	**6I-0839**	6	BOLT (M8X1.25X70-MM)	
	7	1	**6I-0846**	2	BOLT (M6X1X14-MM)	
	8	1	**7C-4616**	1	BOLT (M12X1.75X45-MM)	
	9	1	**067-6178**	1	WASHER	
	10	1	**067-6179**	1	DOWEL	
	11	1	**133-1011**	1	WASHER	
	12	1	**177-2391**	1	GASKET-COVER	
	13	1	**140-7444**	1	SHIELD	
	14	1	**140-7445**	1	DAMPER	
	15	1	**231-3486**	1	GASKET (HOUSING)	
	16	1	**291-8102**	1	PLATE-COVER	
	17	1	**216-8632**	1	HOUSING-FRONT	
	18	1	**216-8634**	1	GEAR-CAMSHAFT (68-TEETH)	
	19	1	**251-4336**	1	GEAR AS-IDLER (73-TEETH)	
	20	1	**295-1711**	1	PLATE-RETAINING	
	21	1	**324-0444**	1	HUB-IDLER GEAR	
	22	1	**288-0422**	1	SEAL-OIL	

M-METRIC PART

221-6835 **HOUSING GP-FRONT** *(contd.)* **i02918630**

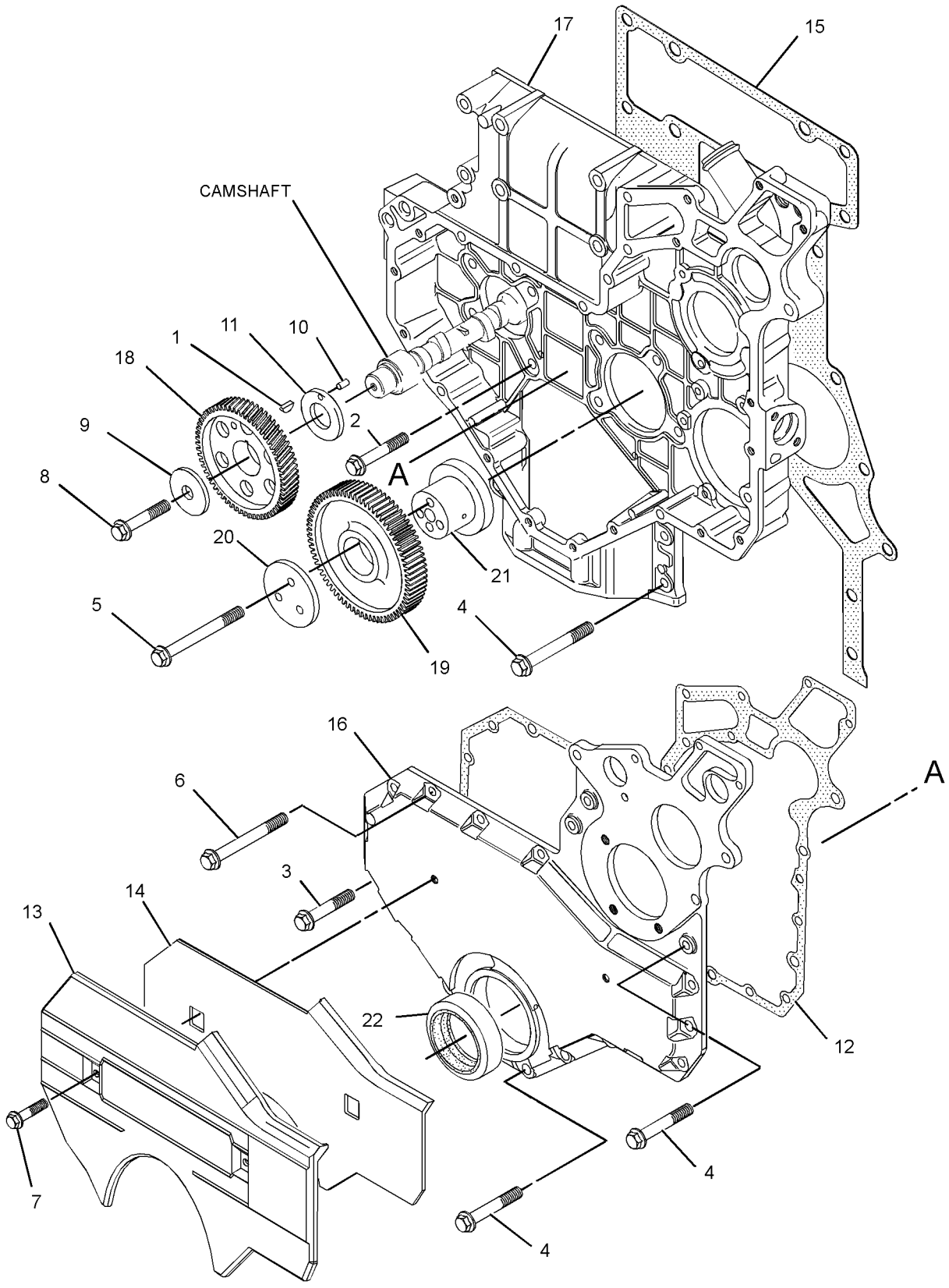

GRAPHIC #1 **<END>** g01291879

221-6875 LIFTING GP-ENGINE

S/N: CPT1-UP
PART OF 254-2236, 295-9744 ENGINE AR-PRIMARY
ALSO AN ATTACHMENT

SMCS-1122 **i01725113**

NOTE	REF NO	GRAPHIC REF	PART NUMBER	QTY	PART NAME 1 2 3 4 5 6 (PRODUCT LEVEL)	SEE PAGE
M	1	1	**6I-0654**	4	BOLT (M10X1.5X25-MM)	
	2	1	**221-6872**	2	PLATE	

M-METRIC PART

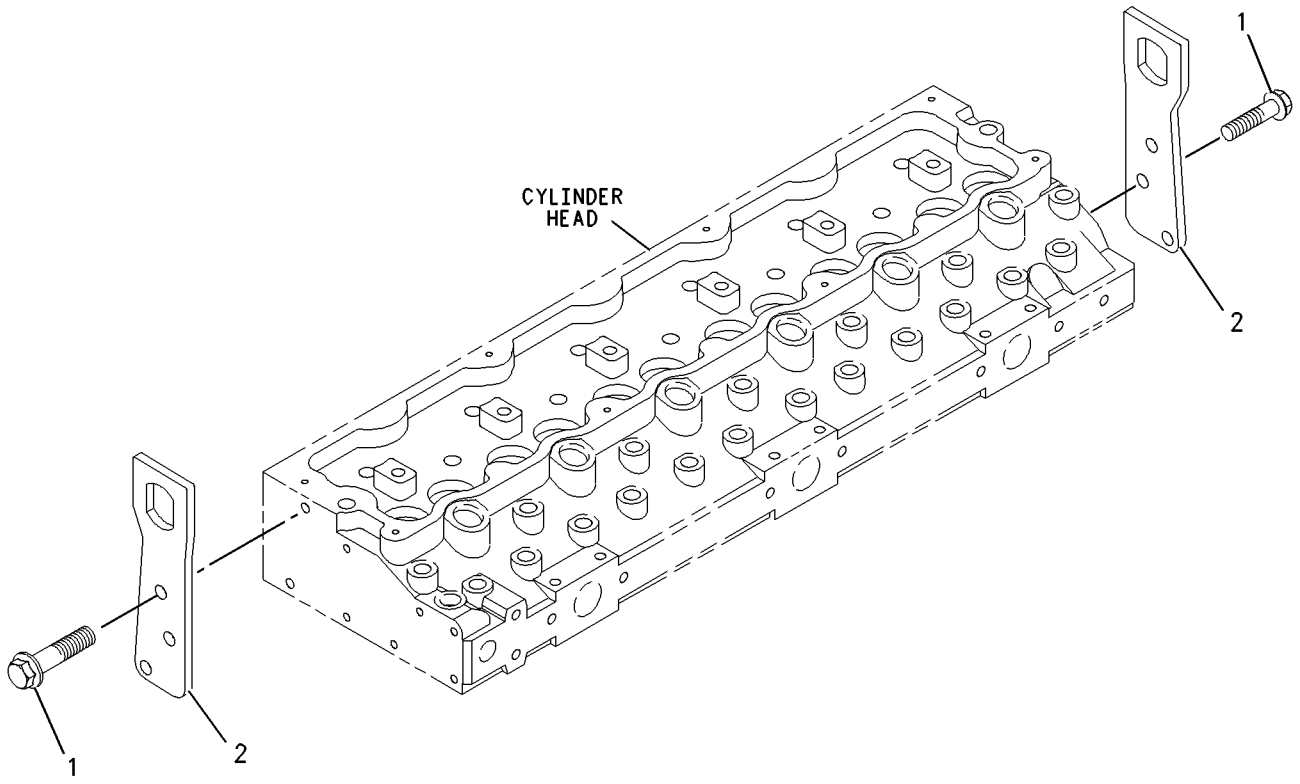

GRAPHIC #1 **<END>** g00889453

BASIC ENGINE

235-6343 MOUNTING GP-ALTERNATOR

S/N: CPT1-UP
PART OF 254-2236, 295-9744 ENGINE AR-PRIMARY
ALSO AN ATTACHMENT

SMCS-1154, 1405 **i01905862**

NOTE	REF NO	GRAPHIC REF	PART NUMBER	QTY	PART NAME 1 2 3 4 5 6 (PRODUCT LEVEL)	SEE PAGE
M	1	1	**6I-0254**	2	BOLT (M8X1.25X30-MM)	
	2	1	**6I-0839**	1	BOLT (M8X1.25X70-MM)	
	3	1	**6I-4374**	2	BOLT (M8X1.25X60-MM)	

M-METRIC PART

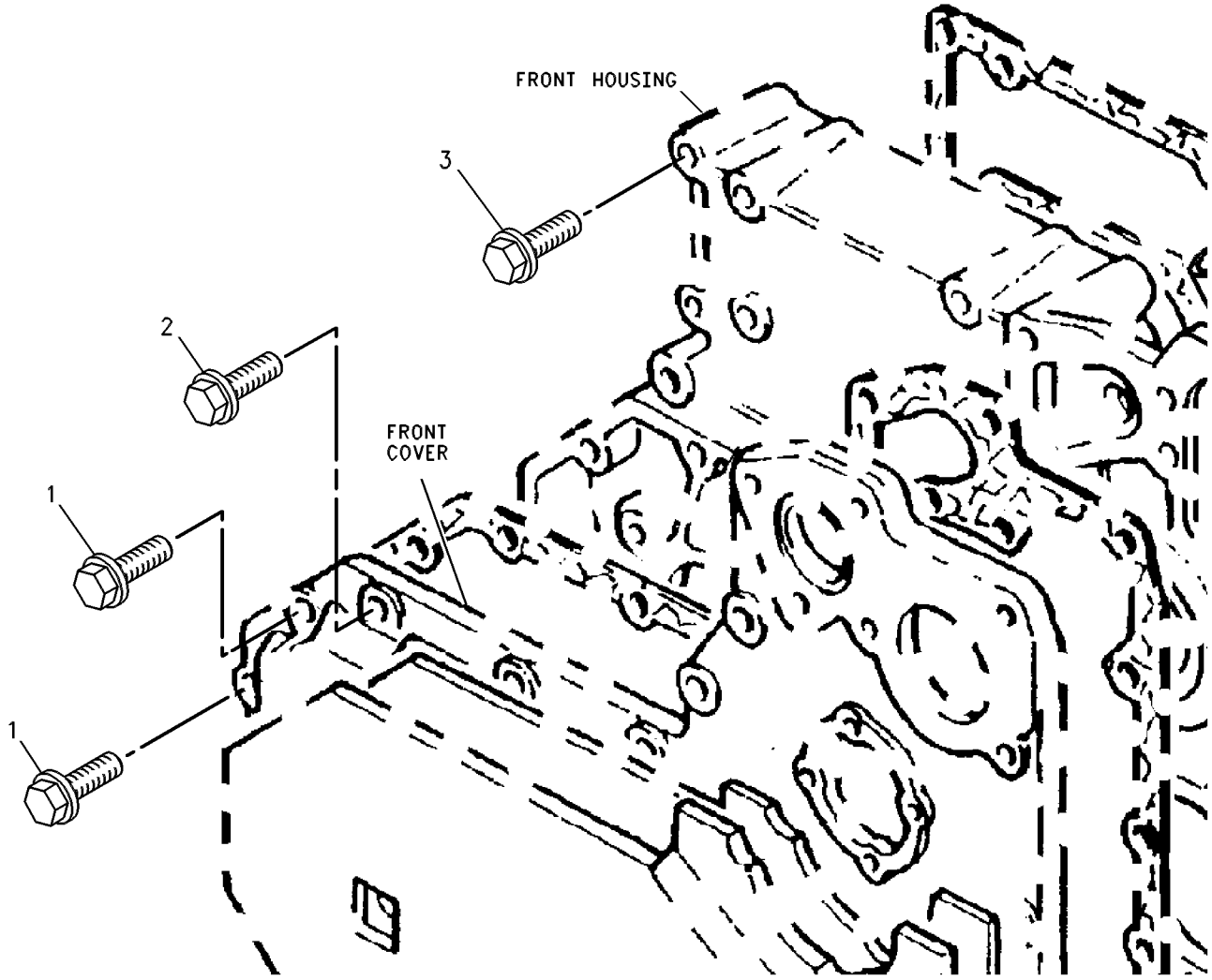

GRAPHIC #1 **<END>** g00612614

258-5462 MOUNTING GP-ENGINE

S/N: CPT1-UP
PART OF 254-2236, 295-9744 ENGINE AR-PRIMARY
ALSO AN ATTACHMENT

SMCS-1152, 1153, 1154 **i02545724**

NOTE	REF NO	GRAPHIC REF	PART NUMBER	QTY	PART NAME 1 2 3 4 5 6 (PRODUCT LEVEL)	SEE PAGE
	1	1	**6H-3616**	4	PLUG-PROTECTION	
	2	1	**101-2987**	6	PLUG	
	3	1	**259-0373**	5	PLUG AS	
					(EACH INCLUDES)	
	3A	1	**292-4110**	1	SEAL-O-RING	
	4	1	**113-7913**	3	STUD (M16X45-THD)	
	5	1	**171-1411**	4	STUD	

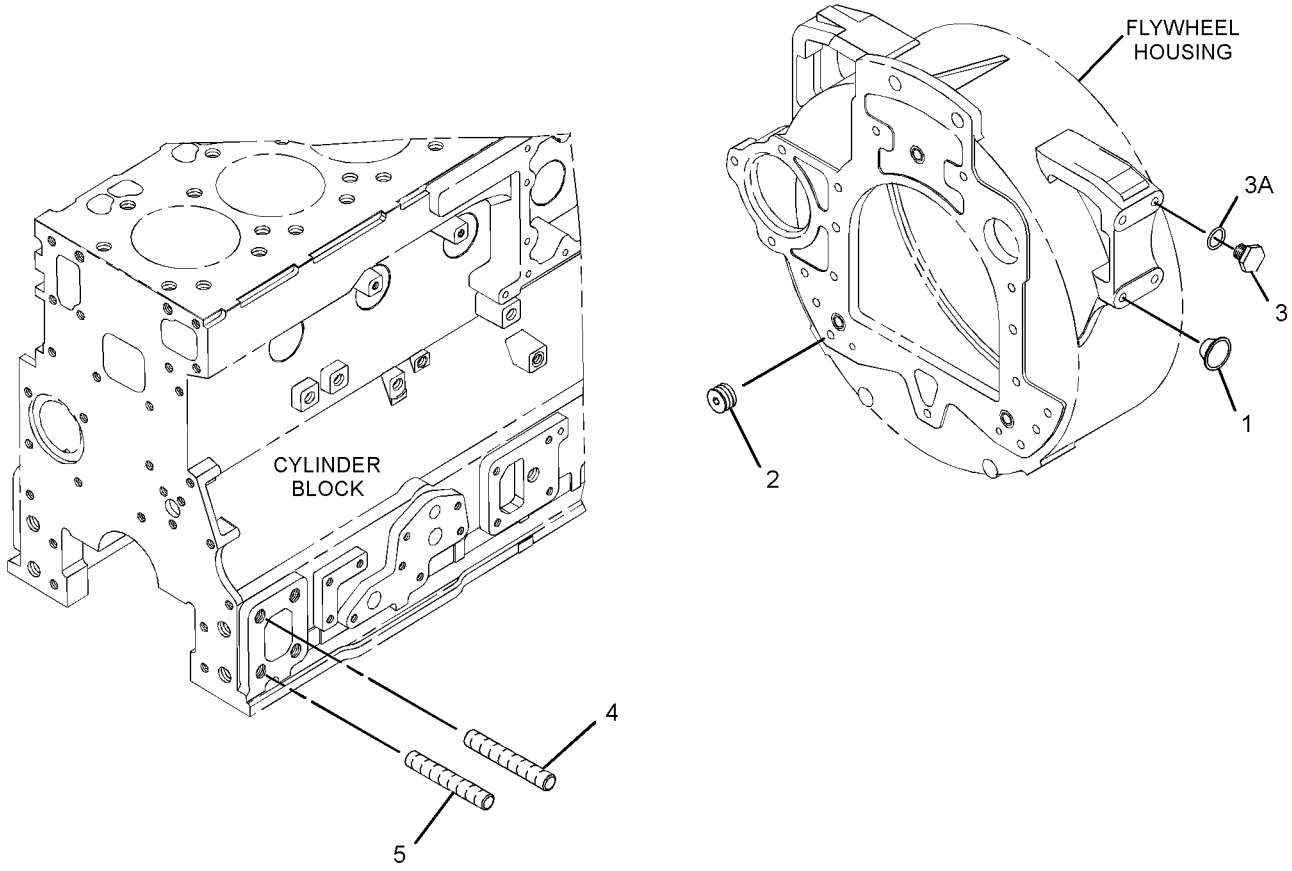

GRAPHIC #1 **<END>** g01345968

BASIC ENGINE

241-9085 MOUNTING GP-ENGINE & TMSN

S/N: TWR1-UP

PART OF 242-9735 INSTALLATION AR-ENGINE

SMCS-1152, 1154, 3082 **i02194002**

NOTE	REF NO	GRAPHIC REF	PART NUMBER	QTY	PART NAME 1 2 3 4 5 6 (PRODUCT LEVEL)	SEE PAGE
	1	1	**7X-2622**	2	WASHER (22X115X10-MM THK)	
M	2	1	**8T-4170**	2	BOLT (M20X2.5X150-MM)	
	3	1	**9W-9915**	2	MOUNT AS	
	4	1	**103-0280**	10	SPACER (13X20X7-MM THK)	
	5	1	**199-4152**	2	SUPPORT-ENGINE	
	6	1	**200-2739**	2	SLEEVE	
	7	1	**220-1241**	2	MOUNT AS	
	8	1	**241-9083**	1	SUPPORT AS (RH)	
	9	1	**241-9084**	1	SUPPORT AS (LH)	
M	10	1	**6V-4249**	8	BOLT (M10X1.5X50-MM)	
	11	1	**6V-5839**	8	WASHER (11X21X2.5-MM THK)	
	12	1	**7M-1201**	2	DOWEL	
	13	1	**7Y-1734**	2	WASHER (21.5X90X8-MM THK)	
M	14	1	**8C-8478**	2	BOLT (M20X2.5X140-MM)	
	15	1	**8T-4121**	12	WASHER-HARD (11X21X2.5-MM THK)	
	16	1	**8T-4122**	7	WASHER-HARD (17X32X3.5-MM THK)	
M	17	1	**8T-4131**	4	NUT (M20X2.5-THD)	
M	18	1	**8T-4132**	7	NUT (M16X2-THD)	
M	19	1	**8T-4183**	10	BOLT (M12X1.75X40-MM)	
M	20	1	**8T-4186**	12	BOLT (M10X1.5X40-MM)	
	21	1	**8T-4223**	10	WASHER-HARD (13.5X25.5X3-MM THK)	
	22	1	**8T-5439**	8	WASHER-HARD (21.5X45X6-MM THK)	
	23	1	**9R-5878**	4	WASHER (21.5X114X3-MM THK)	

M-METRIC PART

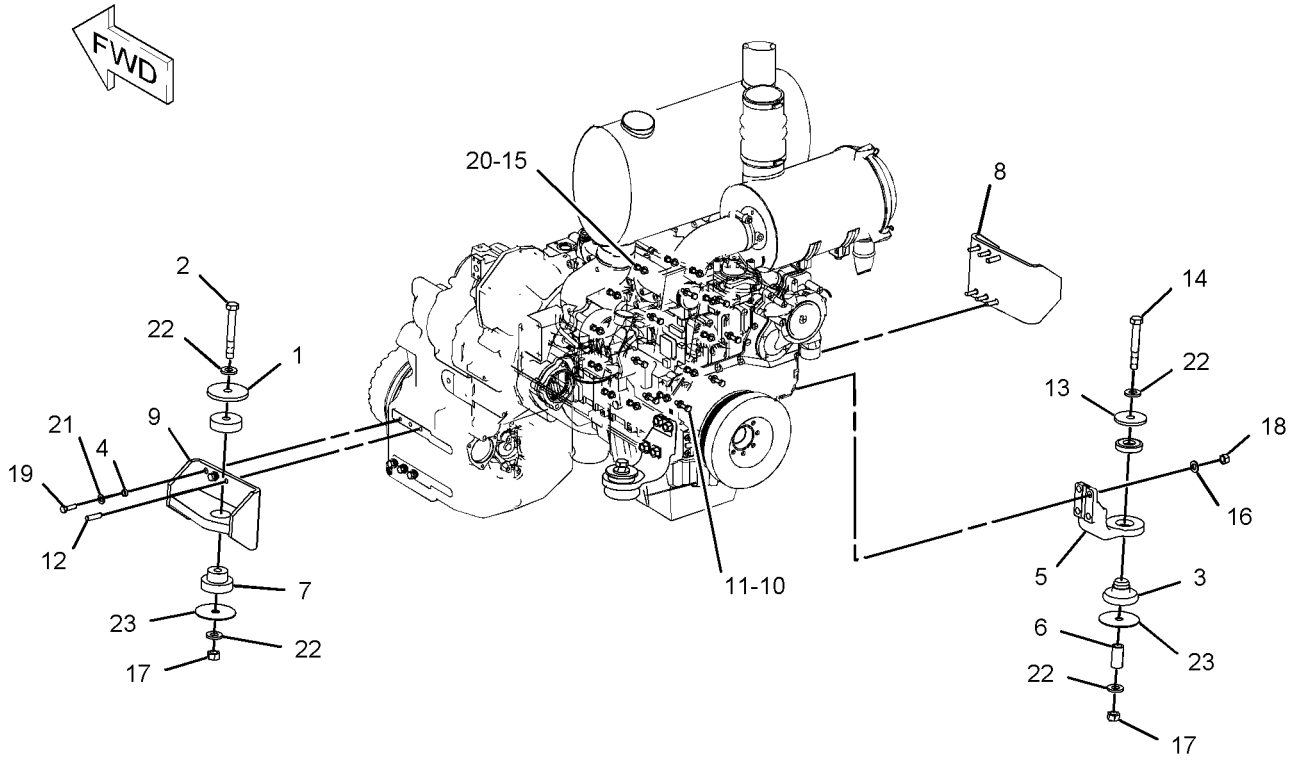

GRAPHIC #1 **<END>** g01109244

BASIC ENGINE

170-3711 MOUNTING GP-FAN DRIVE

S/N: CPT1-UP
PART OF 254-2236, 295-9744 ENGINE AR-PRIMARY
ALSO AN ATTACHMENT

SMCS-1359 **i03137649**

NOTE	REF NO	GRAPHIC REF	PART NUMBER	QTY	PART NAME 1 2 3 4 5 6 (PRODUCT LEVEL)	SEE PAGE
M	1	1	**6I-0650**	4	BOLT (M10X1.5X65-MM)	

M-METRIC PART

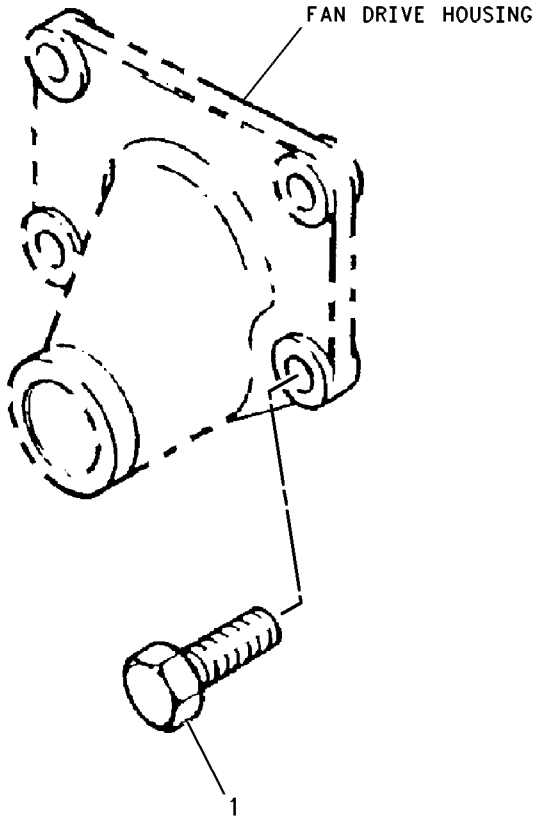

GRAPHIC #1 **<END>** g00607880

221-2959 PAN GP-OIL—ENGINE

S/N: CPT1-UP
PART OF 254-2236 ENGINE AR-PRIMARY
ALSO AN ATTACHMENT

SMCS-1302 **i02156949**

NOTE	REF NO	GRAPHIC REF	PART NUMBER	QTY	PART NAME 1 2 3 4 5 6 (PRODUCT LEVEL)	SEE PAGE
	1	1	**113-5280**	1	PAN AS-OIL	
	2	1	**7C-1224**	1	INSERT	
	3	1	**195-3761**	1	SPACER	
	4	1	**7C-0351**	2	PLUG-DRAIN (ENGINE OIL)	
	5	1	**5P-6718**	2	SEAL-O-RING (OIL DRAIN PLUG)	
	6	1	**6I-4709**	6	BOLT (M8X1.25X100-MM)	
M	7	1	**6I-0217**	22	BOLT (M8X1.25X20-MM)	
	8	1	**211-0067**	1	BRIDGE	
M	9	1	**6I-0363**	2	BOLT (M6X1X20-MM)	
	10	1	**6I-4710**	1	GASKET	
	11	1	**113-5281**	1	TUBE AS	
	12	1	**6I-4681**	1	GASKET	
M	13	1	**6I-0260**	2	BOLT (M8X1.25X25-MM)	
	14	1	**6I-0289**	1	PLUG	
	15	1	**6I-0572**	2	BOLT (M8X1.25X20-MM)	
	16	1	**113-5282**	1	BRACKET	
	17	1	**113-8130**	1	CLIP	
	19	1	**6I-0291**	2	NUT (M8X1.25-THD)	
M	20	1	**124-3815**	1	BOLT (M8X16X1.25-MM)	
	21	1	**113-8231**	1	SUPPORT	

M-METRIC PART

221-2959 **PAN GP-OIL** *(contd.)* **i02156949**

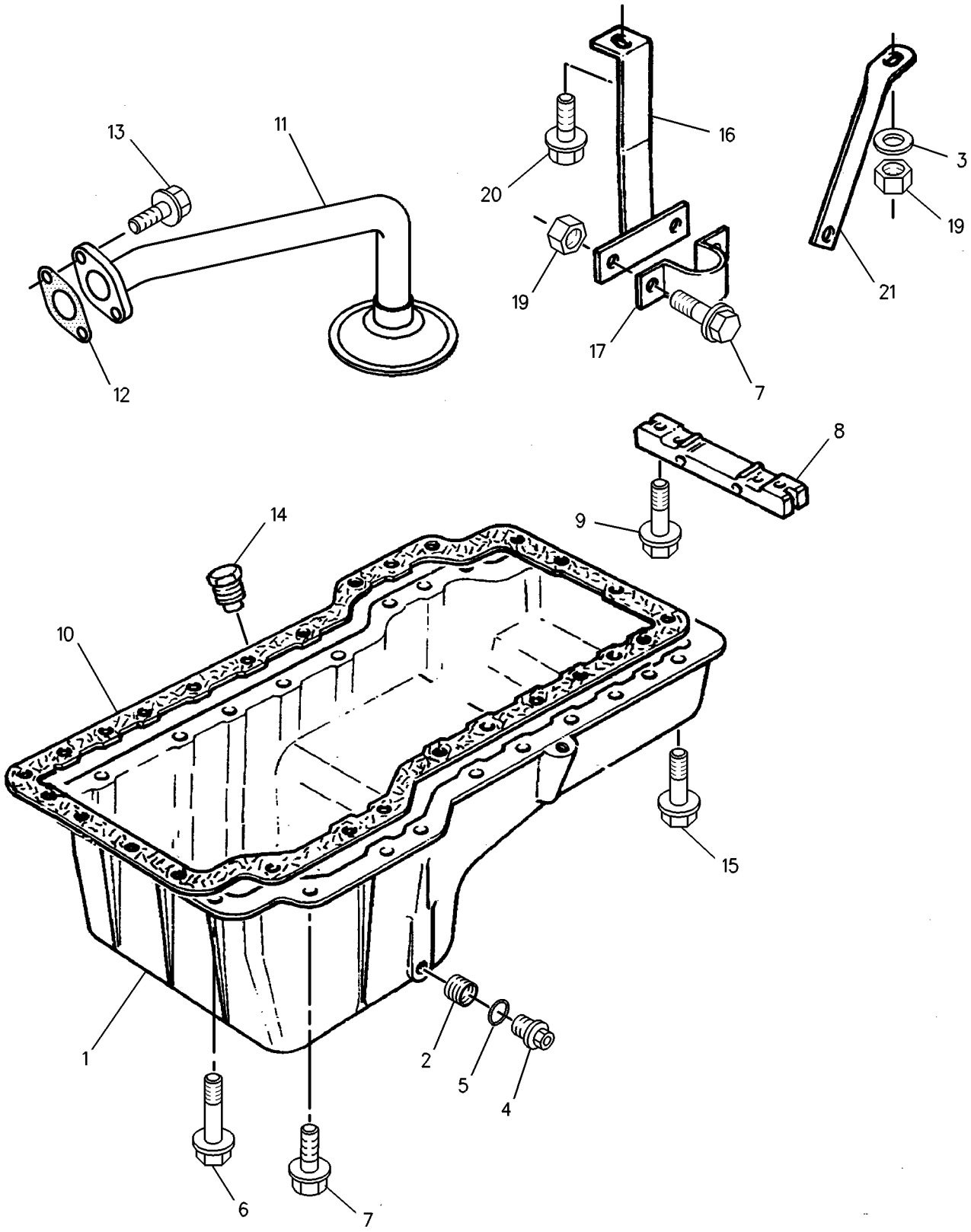

GRAPHIC #1 **<END>** g00886975

235-4589 PAN GP-OIL—ENGINE

S/N: CPT18293-UP
PART OF 254-2236 ENGINE AR-PRIMARY
ALSO AN ATTACHMENT

SMCS-1302 **i02740707**

NOTE	REF NO	GRAPHIC REF	PART NUMBER	QTY	PART NAME 1 2 3 4 5 6 (PRODUCT LEVEL)	SEE PAGE
	1	1	**4P-3838**	1	GAUGE AS-OIL LEVEL (DIPSTICK) (ENGINE)	
		1	**177-7845**	1	TUBE AS-ENGINE OIL	
	2	1	**275-9883**	2	SEAL	
M	3	1	**6I-0217**	22	BOLT (M8X1.25X20-MM)	
M	4	1	**6I-0260**	2	BOLT (M8X1.25X25-MM)	
	5	1	**6I-0289**	1	PLUG	
	6	1	**6I-0291**	2	NUT (M8X1.25-THD)	
M	7	1	**6I-0363**	2	BOLT (M6X1X20-MM)	
	8	1	**6I-0572**	2	BOLT (M8X1.25X20-MM)	
	9	1	**6I-1497**	1	SEAL	
	10	1	**6I-4681**	1	GASKET	
	11	1	**6I-4709**	6	BOLT (M8X1.25X100-MM)	
	12	1	**6I-4710**	1	GASKET	
	13	1	**7C-0351**	2	PLUG-DRAIN (ENGINE OIL)	
	14	1	**113-5280**	1	PAN AS-OIL	
	14A	1	**7C-1224**	1	INSERT	
	15	1	**113-5281**	1	TUBE AS	
C	16	1	**273-2998**	1	BRACKET	
	17	1	**113-8130**	1	CLIP	
M	19	1	**124-3815**	1	BOLT (M8X16X1.25-MM)	
	20	1	**124-7702**	1	TUBE AS	
	20A	1	**6I-4079**	1	NUT	
	22	1	**211-0067**	1	BRIDGE	

C-CHANGE FROM PREVIOUS TYPE
M-METRIC PART

235-4589 **PAN GP-OIL** *(contd.)* **i02740707**

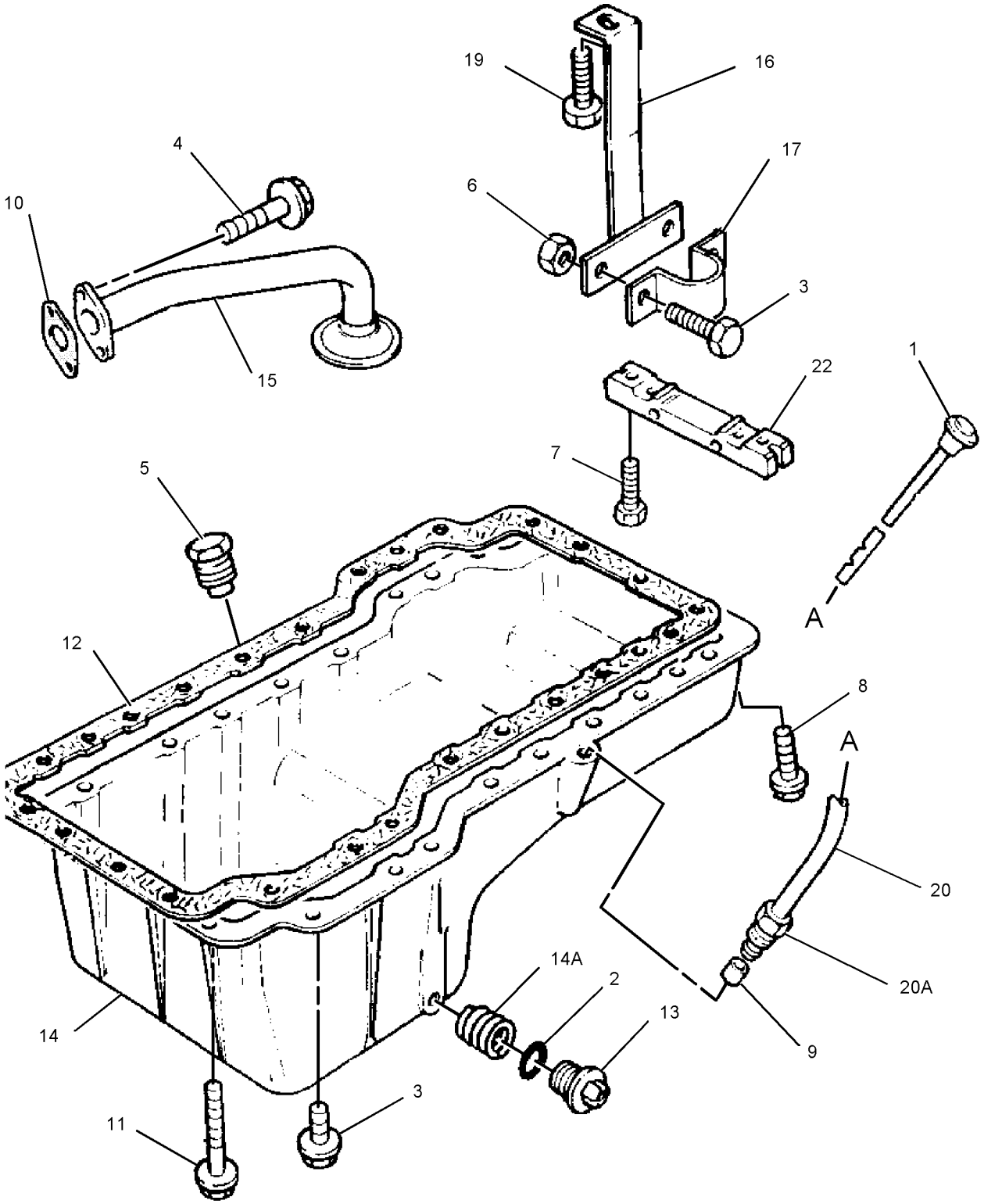

GRAPHIC #1 **<END>** g01075486

235-4589 PAN GP-OIL—ENGINE

S/N: CPT1-UP
PART OF 254-2236, 295-9744 ENGINE AR-PRIMARY
ALSO AN ATTACHMENT

SMCS-1302 **i03041695**

NOTE	REF NO	GRAPHIC REF	PART NUMBER	QTY	PART NAME 1 2 3 4 5 6 (PRODUCT LEVEL)	SEE PAGE
	1	1	**4P-3838**	1	GAUGE AS-OIL LEVEL (DIPSTICK) (ENGINE)	
	2	1	**275-9883**	2	SEAL	
M	3	1	**6I-0217**	22	BOLT (M8X1.25X20-MM)	
M	4	1	**6I-0260**	2	BOLT (M8X1.25X25-MM)	
	5	1	**6I-0289**	1	PLUG	
	6	1	**6I-0291**	2	NUT (M8X1.25-THD)	
M	7	1	**6I-0363**	2	BOLT (M6X1X20-MM)	
	8	1	**6I-0572**	2	BOLT (M8X1.25X20-MM)	
	9	1	**6I-1497**	1	SEAL	
	10	1	**6I-4681**	1	GASKET	
	11	1	**6I-4709**	6	BOLT (M8X1.25X100-MM)	
	12	1	**6I-4710**	1	GASKET	
	13	1	**7C-0351**	2	PLUG-DRAIN (ENGINE OIL)	
	14	1	**113-5280**	1	PAN AS-OIL	
	14A	1	**7C-1224**	1	INSERT	
	15	1	**321-5020**	1	TUBE AS-OIL SUCTION	
	16	1	**273-2998**	1	BRACKET	
	17	1	**113-8130**	1	CLIP	
M	19	1	**124-3815**	1	BOLT (M8X16X1.25-MM)	
	20	1	**124-7702**	1	TUBE AS	
	20A	1	**6I-4079**	1	NUT	
	21	1	**249-0207**	1	BRIDGE	

M-METRIC PART

235-4589 **PAN GP-OIL** *(contd.)* **i03041695**

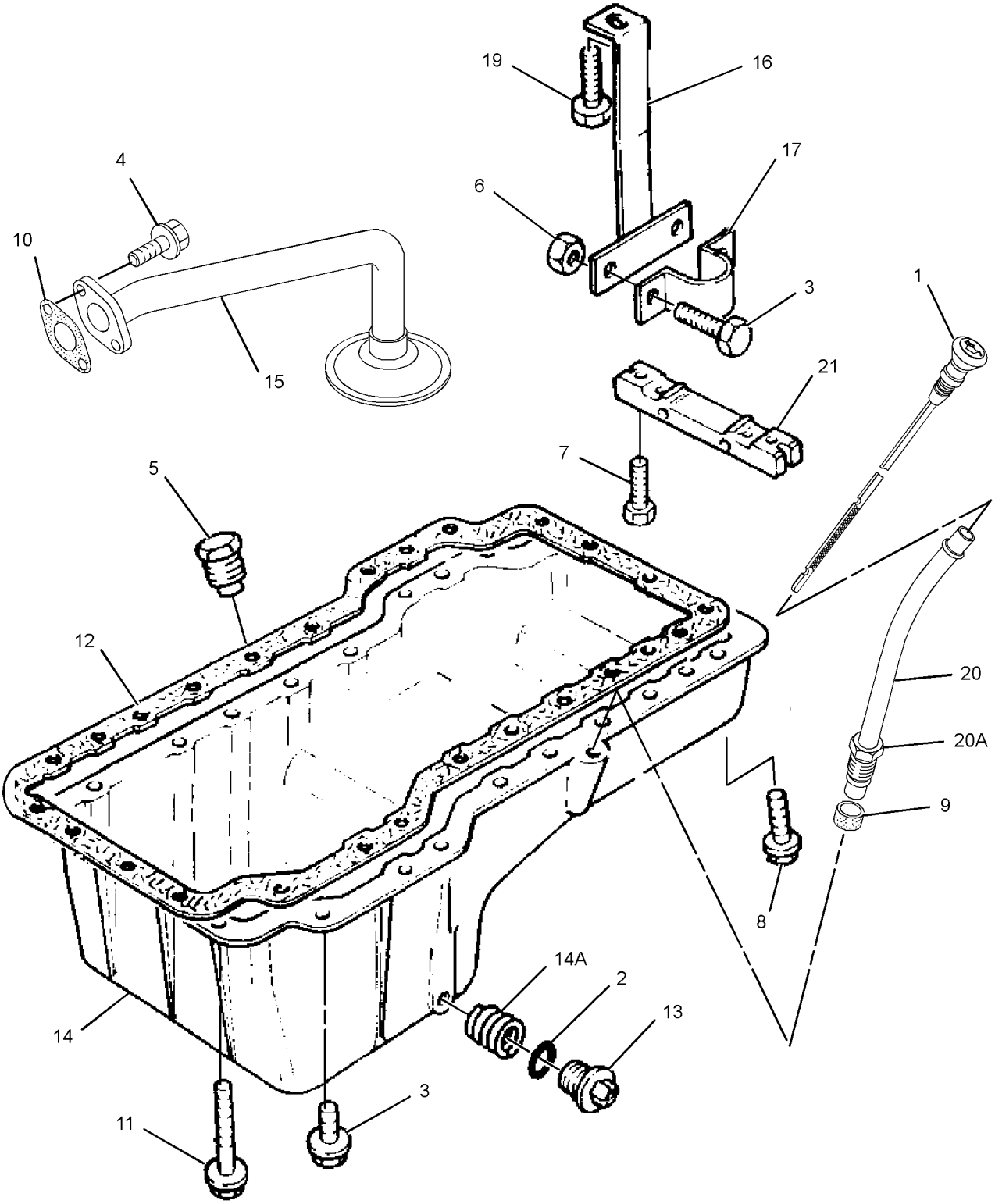

GRAPHIC #1 **<END>** g01627412

216-8324 PISTON & ROD GP

S/N: CPT1-843

PART OF 254-2236 ENGINE AR-PRIMARY

SMCS-1225 **i03127469**

NOTE	REF NO	GRAPHIC REF	PART NUMBER	QTY	PART NAME 1 2 3 4 5 6 (PRODUCT LEVEL)	SEE PAGE
	1	1	**216-8323**	6	PISTON AS	
					(EACH INCLUDES)	
		1	**124-3536**	2	RING-RETAINING	
	2	1	**217-1573**	1	KIT-PISTON RING	
J	3	1	**160-6493**	6	ROD AS (WHITE)	
					—OR—	
J		1	**160-6494**	6	ROD AS (GREEN)	
					—OR—	
J		1	**160-6495**	6	ROD AS (PURPLE)	
					—OR—	
J		1	**160-6496**	6	ROD AS (BLUE)	
					(EACH ROD AS INCLUDES)	
	4	1	**7W-2505**	2	NUT-CONNECTING ROD	
	5	1	**067-6883**	2	BOLT-ROD CAP	
	6	1	**138-2048**	1	BUSHING	
	7	1	**194-2466**	2	DOWEL	

J-ENSURE THAT THE CORRECT ROD LENGTH IS FITTED.

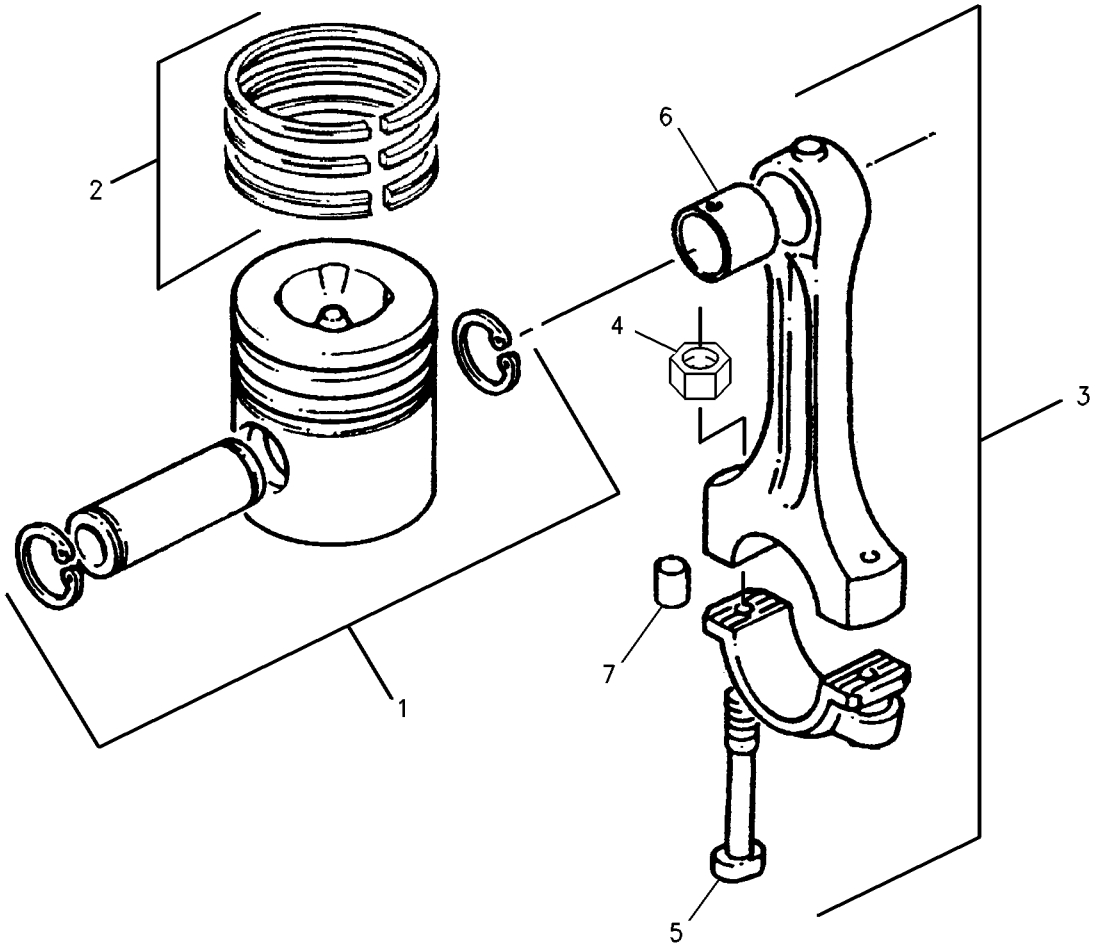

GRAPHIC #1 **<END>** g01004567

216-8324 PISTON & ROD GP

S/N: CPT1-UP
PART OF 254-2236, 295-9744 ENGINE AR-PRIMARY
ALSO AN ATTACHMENT

SMCS-1225 **i02093401**

NOTE	REF NO	GRAPHIC REF	PART NUMBER	QTY	PART NAME 1 2 3 4 5 6 (PRODUCT LEVEL)	SEE PAGE
	1	1	**216-8323**	6	PISTON AS	
					(EACH INCLUDES)	
	1A	1	**124-3536**	2	RING-RETAINING	
	1B	1	**217-1573**	1	KIT-PISTON RING	
CJ	2	1	**225-5454**	6	ROD AS-CONNECTING (LENGTH H)	
					—OR—	
CJ		1	**225-5441**	6	ROD AS-CONNECTING (LENGTH L)	
					(EACH ROD AS INCLUDES)	
	2A	1	**225-5438**	1	BUSHING	
	2B	1	**225-5439**	2	BOLT-SPECIAL (CONNECTING ROD)	

C-CHANGE FROM PREVIOUS TYPE
J-ENSURE THAT THE CORRECT ROD LENGTH IS FITTED.

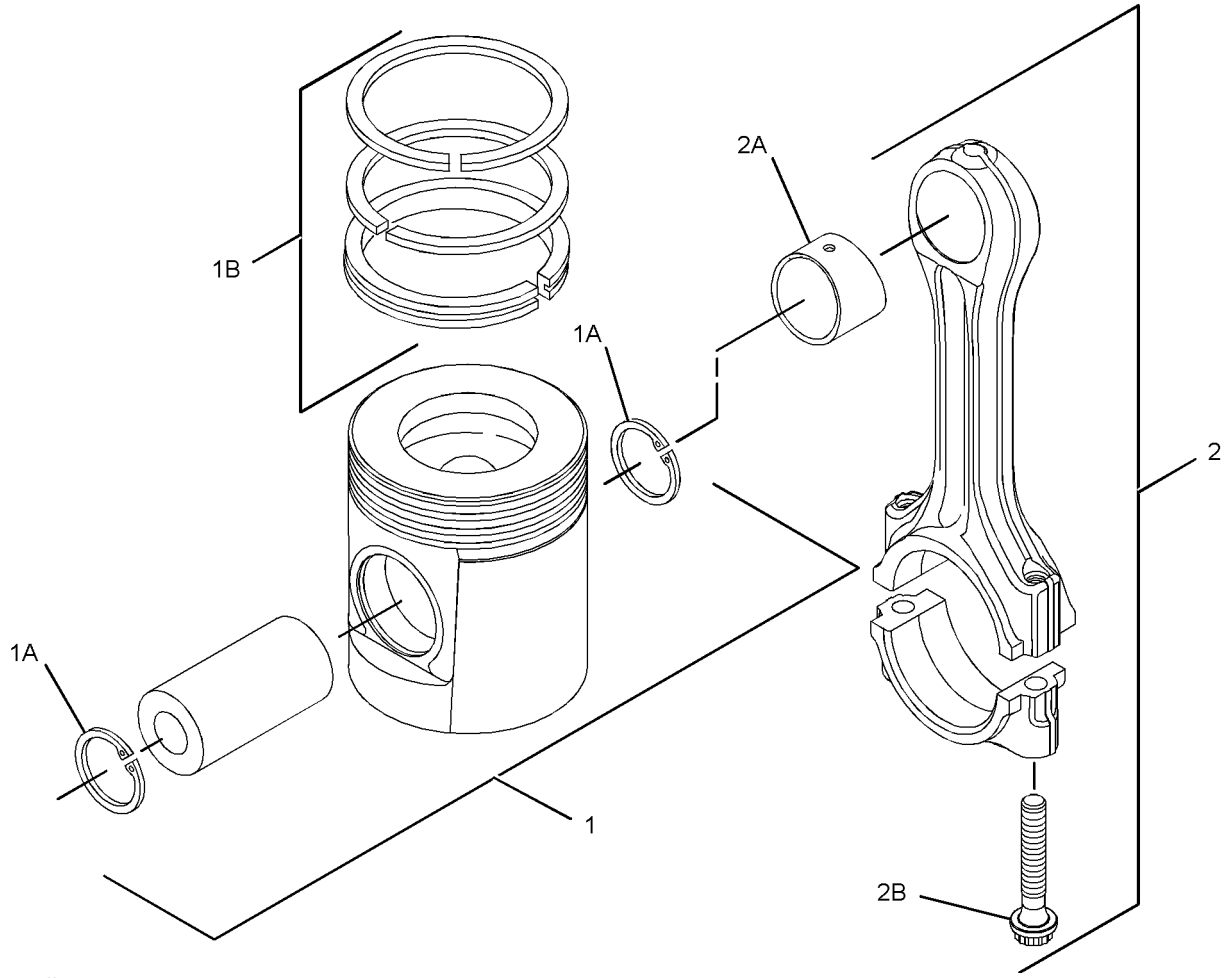

GRAPHIC #1 **<END>** g01053349

239-1349 PLUG GP-CYLINDER BLOCK–OIL GALLERY

S/N: CPT1-UP

PART OF 254-2236, 295-9744 ENGINE AR-PRIMARY

ALSO AN ATTACHMENT

SMCS-1201 **i01960717**

NOTE	REF NO	GRAPHIC REF	PART NUMBER	QTY	PART NAME 1 2 3 4 5 6 (PRODUCT LEVEL)	SEE PAGE
	1	1	**069-1124**	2	PLUG	

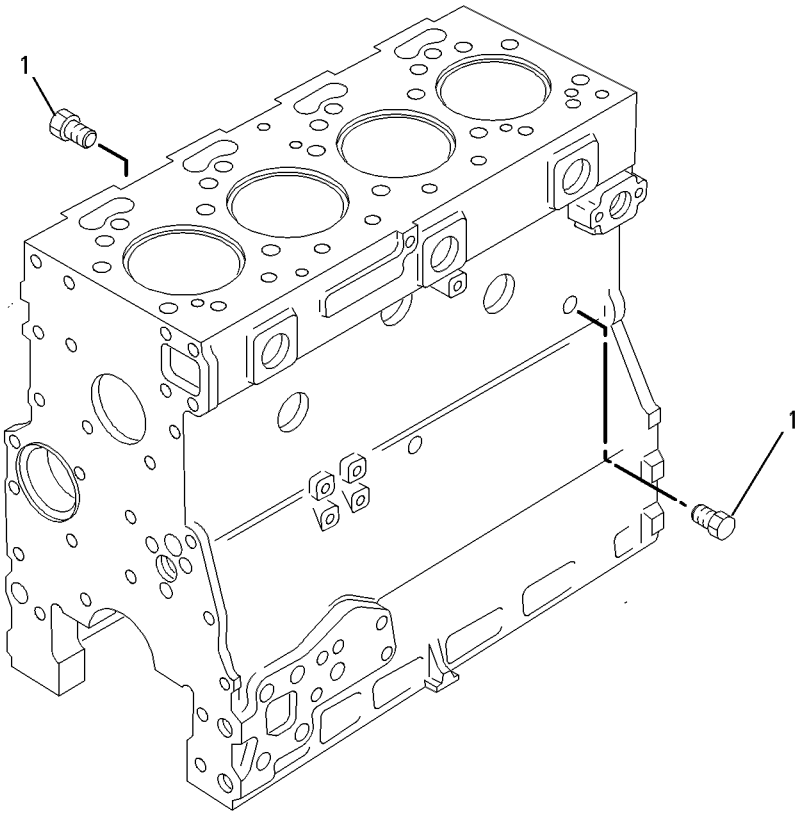

GRAPHIC #1 **<END>** g00517689

233-2765 PLUG GP-ENGINE—TIMING CASE

S/N: CPT1-UP

PART OF 254-2236, 295-9744 ENGINE AR-PRIMARY

ALSO AN ATTACHMENT

SMCS-1000 **i01880919**

NOTE	REF NO	GRAPHIC REF	PART NUMBER	QTY	PART NAME 1 2 3 4 5 6 (PRODUCT LEVEL)	SEE PAGE
	1	1	**2B-0858**	1	PLUG-PIPE	

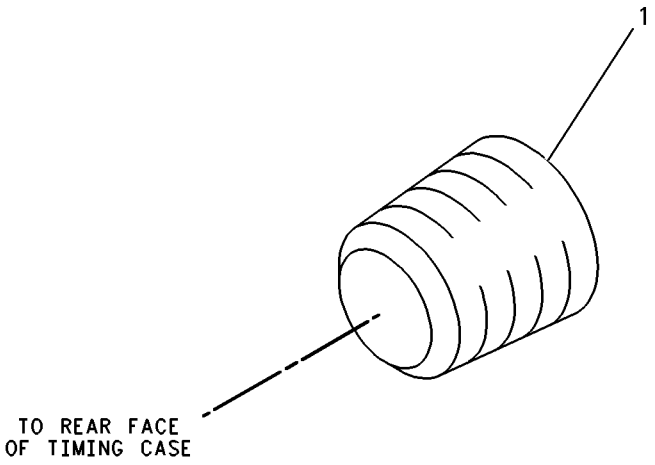

GRAPHIC #1 **<END>** g00927310

184-5483 PULLEY GP-CRANKSHAFT

S/N: CPT1-UP
PART OF 254-2236, 295-9744 ENGINE AR-PRIMARY
ALSO AN ATTACHMENT

SMCS-1205 **i02064197**

NOTE	REF NO	GRAPHIC REF	PART NUMBER	QTY	PART NAME 1 2 3 4 5 6 (PRODUCT LEVEL)	SEE PAGE
	1	1	**6I-4714**	1	SPACER	
	2	1	**6I-4716**	1	KEY	
	3	1	**7D-8048**	1	SEAL-O-RING	
	4	1	**7W-4632**	1	SET-TAPERED RING	
	5	1	**7W-4634**	3	BOLT (7/16-20X1.5-IN)	
	6	1	**7W-4635**	1	BLOCK-THRUST	
M	7	1	**102-9941**	8	BOLT (M12X1.75X25-MM)	
	8	1	**243-2249**	1	DAMPER	
	9	1	**184-5484**	1	PULLEY	

M-METRIC PART

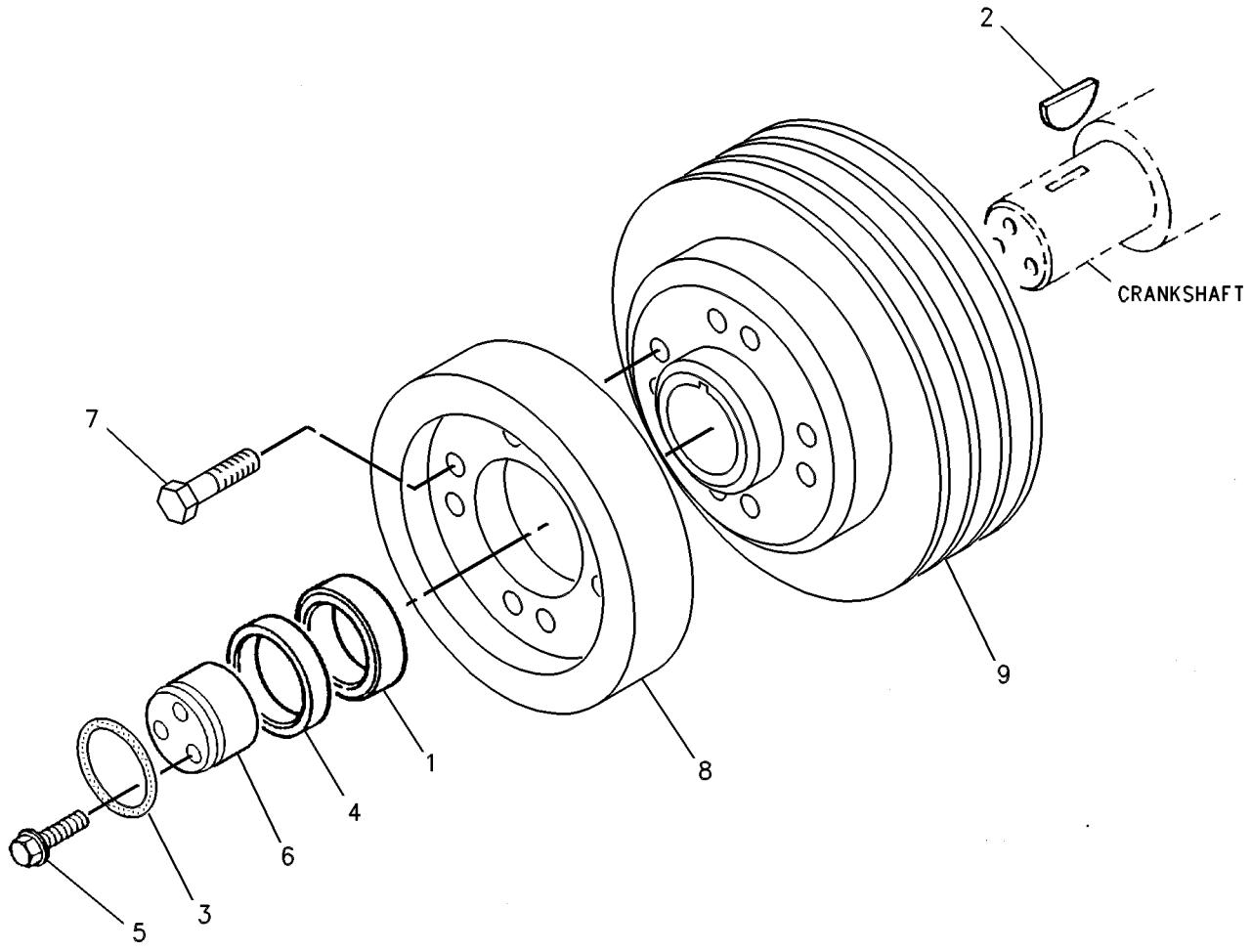

GRAPHIC #1 **<END>** g00646018

BASIC ENGINE

146-8956 ROCKER ARM GP

S/N: CPT1-UP

PART OF 216-8619 VALVE MECHANISM GP

ALSO AN ATTACHMENT

SMCS-1123 **i02280825**

NOTE	REF NO	GRAPHIC REF	PART NUMBER	QTY	PART NAME 1 2 3 4 5 6 (PRODUCT LEVEL)	SEE PAGE
	1	1	**6I-1206**	6	BRACKET-SHAFT	
	2	1	**6I-3717**	1	BOLT (NO 10X12.7-MM)	
	3	1	**6I-3718**	1	CONNECTION-FEED	
	4	1	**6V-8183**	12	NUT-FULL (3/8-24-THD)	
B	5	1	**195-7004**	2	SHIM	
	6	1	**006-8606**	2	RING-RETAINING	
	7	1	**067-6087**	4	SPRING-SHAFT	
	8	1	**067-6088**	2	SPRING-SHAFT	
	9	1	**185-1546**	8	SCREW	
	10	1	**138-2054**	2	WASHER	
	11	1	**209-0091**	6	LEVER AS (LH)	
					(EACH INCLUDES)	
	12	1	**139-5514**	1	BUSHING-LEVER	
	13	1	**209-0092**	6	LEVER AS (RH)	
					(EACH INCLUDES)	
	14	1	**139-5514**	1	BUSHING-LEVER	
	15	1	**146-8957**	1	SHAFT AS (ROCKER ARM)	
	16	1	**067-6083**	2	PLUG-SHAFT END	
	17	1	**129-3493**	1	OLIVE	

B-USE AS REQUIRED

146-8956 **ROCKER ARM GP** *(contd.)* **i02280825**

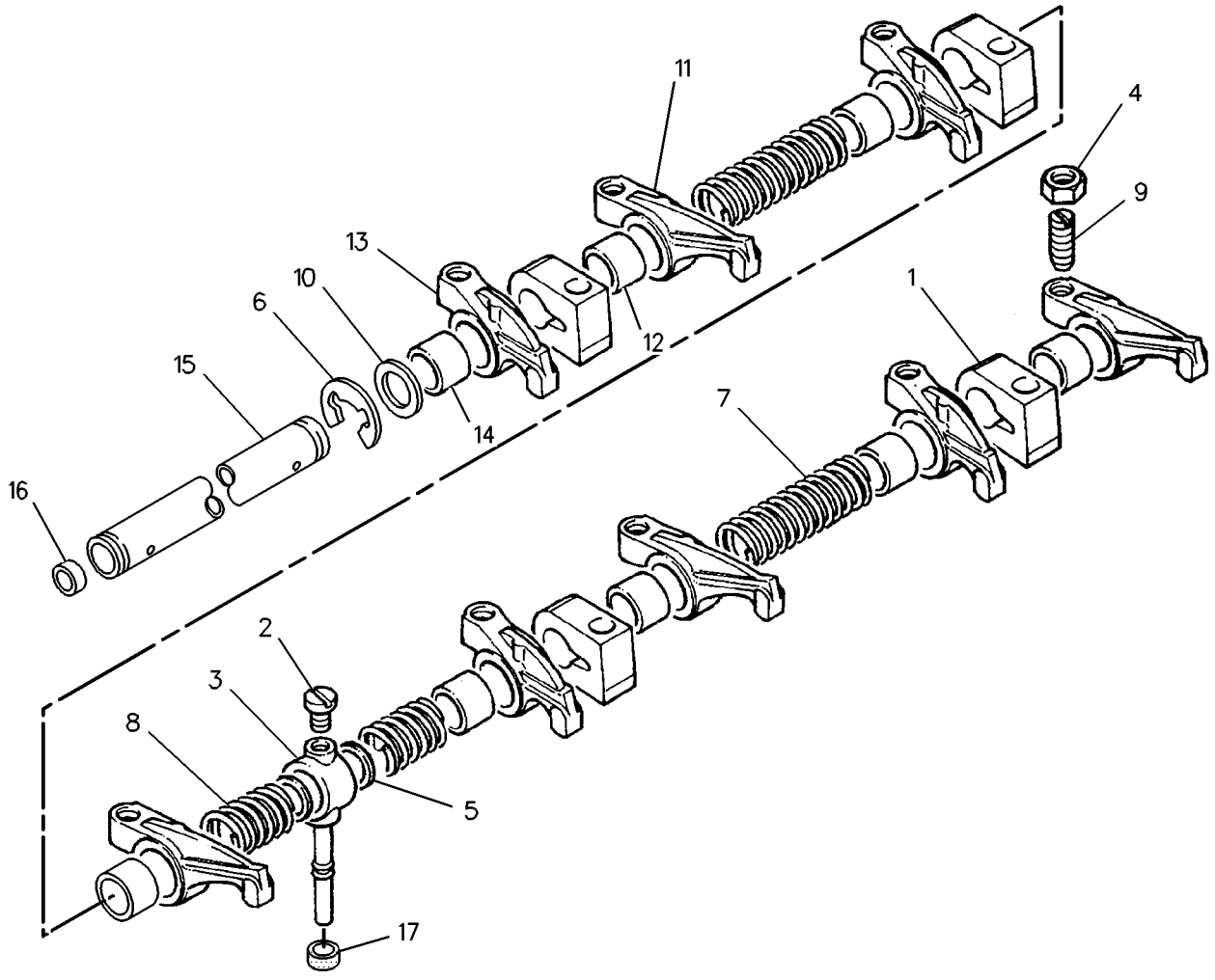

GRAPHIC #1 **<END>** g00735390

216-8619 VALVE MECHANISM GP

S/N: CPT1-UP

PART OF 254-2236, 295-9744 ENGINE AR-PRIMARY

ALSO AN ATTACHMENT

SMCS-1102, 1121, 1123 **i01725018**

NOTE	REF NO	GRAPHIC REF	PART NUMBER	QTY	PART NAME 1 2 3 4 5 6 (PRODUCT LEVEL)	SEE PAGE
	1	1	**6I-0235**	6	BOLT (M12X1.75X50MM)	
	2	1	**067-6095**	12	ROD	
	3	1	**138-2053**	12	TAPPET	
Y	4	1	**146-8956**	1	ROCKER ARM GP	50

Y-SEPARATE ILLUSTRATION

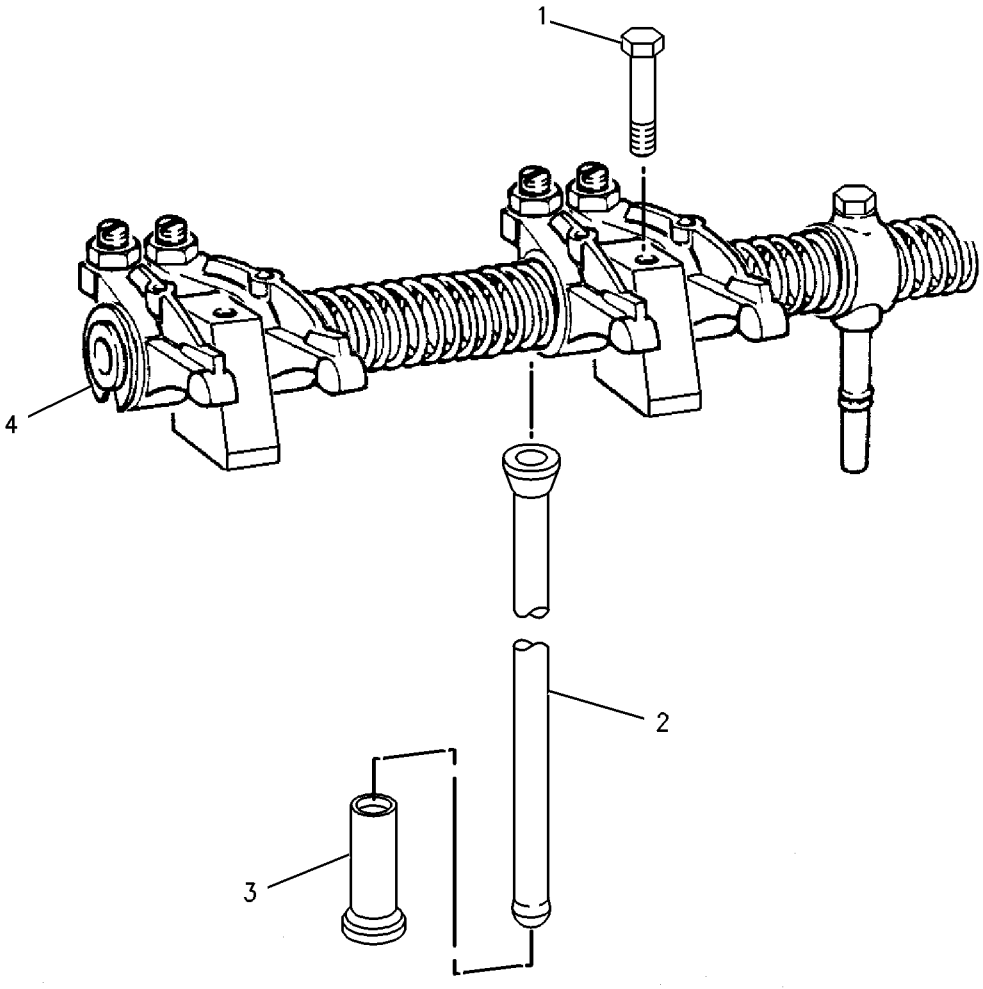

GRAPHIC #1 **<END>** g00887556

221-5290 FILTER GP-ENGINE OIL

S/N: CPT1-UP
PART OF 254-2236, 295-9744 ENGINE AR-PRIMARY
ALSO AN ATTACHMENT

SMCS-1306, 1308 **i01725106**

NOTE	REF NO	GRAPHIC REF	PART NUMBER	QTY	PART NAME 1 2 3 4 5 6 (PRODUCT LEVEL)	SEE PAGE
	1	1	**1R-0739**	1	FILTER AS-ENGINE OIL (STANDARD EFFICIENCY)	

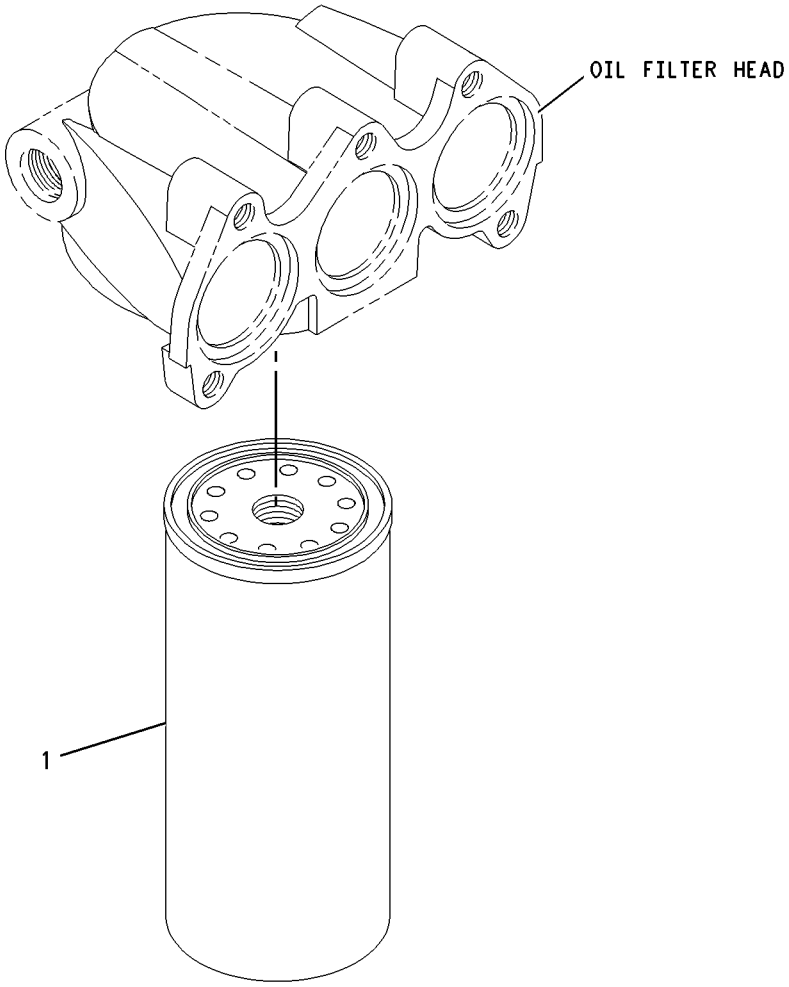

GRAPHIC #1 **<END>** g00887435

204-4343 GAUGE GP-OIL LEVEL (DIPSTICK)—ENGINE

S/N: TWR1-1171

PART OF 242-9735 INSTALLATION AR-ENGINE

SMCS-1326 **i02292878**

NOTE	REF NO	GRAPHIC REF	PART NUMBER	QTY	PART NAME 1 2 3 4 5 6 (PRODUCT LEVEL)	SEE PAGE
	1	1	**6I-1497**	1	SEAL	
	2	1	**166-3988**	1	GAUGE AS-OIL LEVEL (DIPSTICK) (ENGINE)	
	3	1	**166-3990**	1	FILM-INFORMATION (ENGINE OIL)	
	4	1	**236-0473**	1	BRACKET	
	5	1	**204-4344**	1	TUBE AS	
	5A	1	**6I-4079**	1	NUT	
	6	1	**7X-7729**	3	WASHER (11X25X3-MM THK)	
	7	1	**8S-8820**	1	CLIP	
M	8	1	**8T-4133**	1	NUT (M10X1.5-THD)	
M	9	1	**8T-4136**	2	BOLT (M10X1.5X25-MM)	

M-METRIC PART

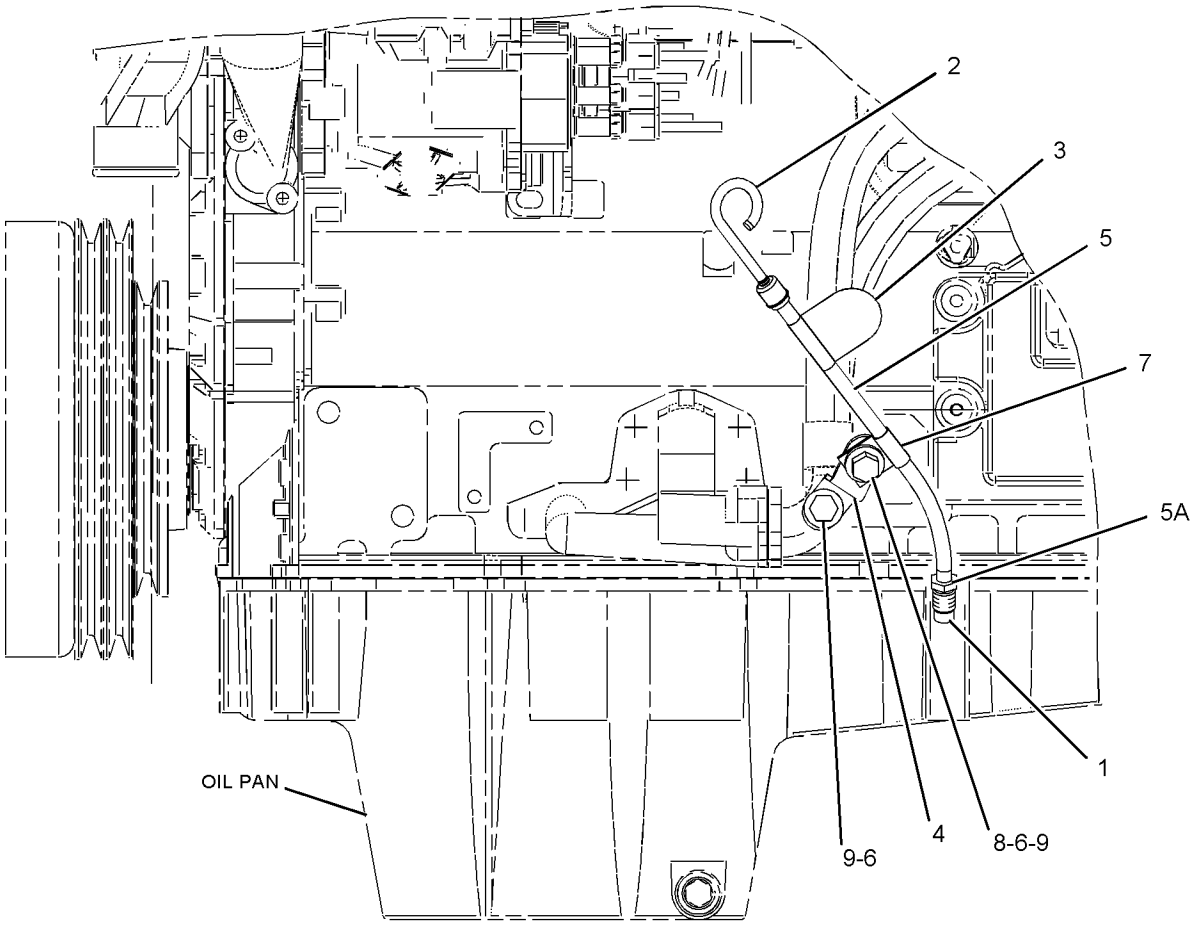

LEFT SIDE VIEW

GRAPHIC #1

<END>

g01058450

235-9692 PUMP GP-ENGINE OIL

S/N: CPT1-11282
PART OF 254-2236 ENGINE AR-PRIMARY
ALSO AN ATTACHMENT

SMCS-1304, 1315 **i01905858**

NOTE	REF NO	GRAPHIC REF	PART NUMBER	QTY	PART NAME 1 2 3 4 5 6 (PRODUCT LEVEL)	SEE PAGE
	1	1	**5C-1796**	1	GASKET	
M	2	1	**6I-0260**	6	BOLT (M8X1.25X25-MM)	
	3	1	**6I-0291**	1	NUT (M8X1.25-THD)	
	4	1	**6I-4374**	1	BOLT (M8X1.25X60-MM)	
	5	1	**067-6933**	1	GASKET	
	6	1	**106-8916**	2	BOLT (M6X16-MM)	
	7	1	**112-2370**	1	STUD	
	8	1	**112-7702**	1	HOUSING AS	
	9	1	**6I-0787**	1	RING-RETAINING	
	10	1	**7W-4648**	1	SEAT-SPRING	
	11	1	**7W-4650**	1	SPRING	
	12	1	**7W-4782**	1	PLUNGER	
	13	1	**112-7704**	2	BOLT	
M	14	1	**124-3815**	1	BOLT (M8X16X1.25-MM)	
	15	1	**183-6318**	1	TUBE AS	
	16	1	**189-5601**	1	SEAL-O-RING	
	17	1	**216-8625**	1	PUMP AS-ENGINE OIL	
	18	1	**220-6151**	1	TUBE-OIL	

M-METRIC PART

235-9692 **PUMP GP-ENGINE OIL** *(contd.)* **i01905858**

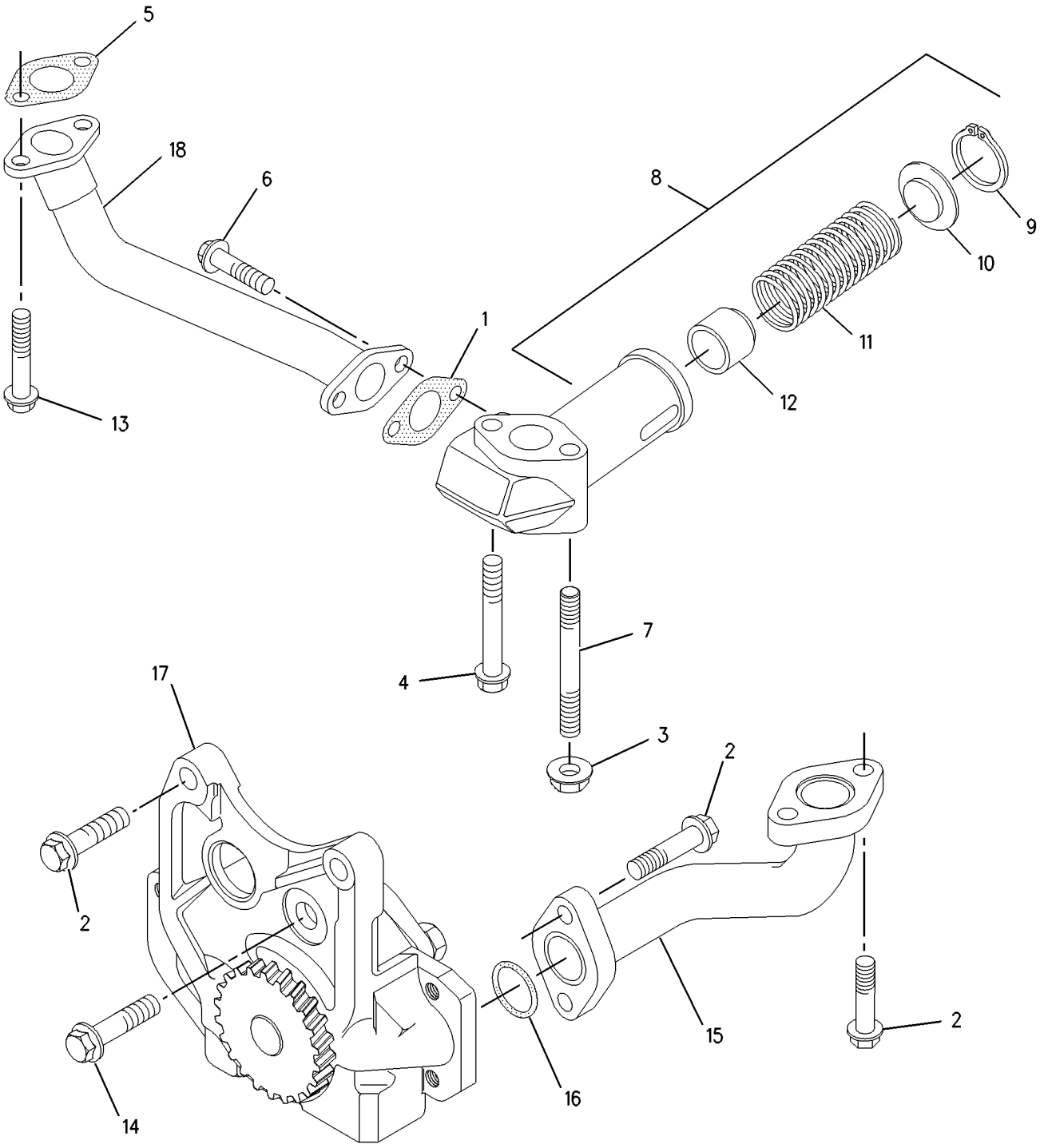

GRAPHIC #1 **<END>** g00889139

235-9692 PUMP GP-ENGINE OIL

S/N: CPT11283-12758
PART OF 254-2236 ENGINE AR-PRIMARY
ALSO AN ATTACHMENT

SMCS-1304, 1315 **i02216734**

NOTE	REF NO	GRAPHIC REF	PART NUMBER	QTY	PART NAME 1 2 3 4 5 6 (PRODUCT LEVEL)	SEE PAGE
	1	1	**5C-1796**	1	GASKET	
M	2	1	**6I-0260**	6	BOLT (M8X1.25X25-MM)	
	3	1	**6I-0291**	1	NUT (M8X1.25-THD)	
	4	1	**6I-4374**	1	BOLT (M8X1.25X60-MM)	
	5	1	**067-6933**	1	GASKET	
	7	1	**134-4139**	1	STUD	
	8	1	**112-7702**	1	HOUSING AS	
	9	1	**6I-0787**	1	RING-RETAINING	
	10	1	**7W-4648**	1	SEAT-SPRING	
	11	1	**7W-4650**	1	SPRING	
	12	1	**7W-4782**	1	PLUNGER	
C	13	1	**133-6106**	4	BOLT	
M	14	1	**124-3815**	1	BOLT (M8X16X1.25-MM)	
	15	1	**183-6318**	1	TUBE AS	
	16	1	**189-5601**	1	SEAL-O-RING	
	17	1	**216-8625**	1	PUMP AS-ENGINE OIL	
C	18	1	**257-7637**	1	TUBE-OIL	

C-CHANGE FROM PREVIOUS TYPE
M-METRIC PART

235-9692 **PUMP GP-ENGINE OIL** *(contd.)* **i02216734**

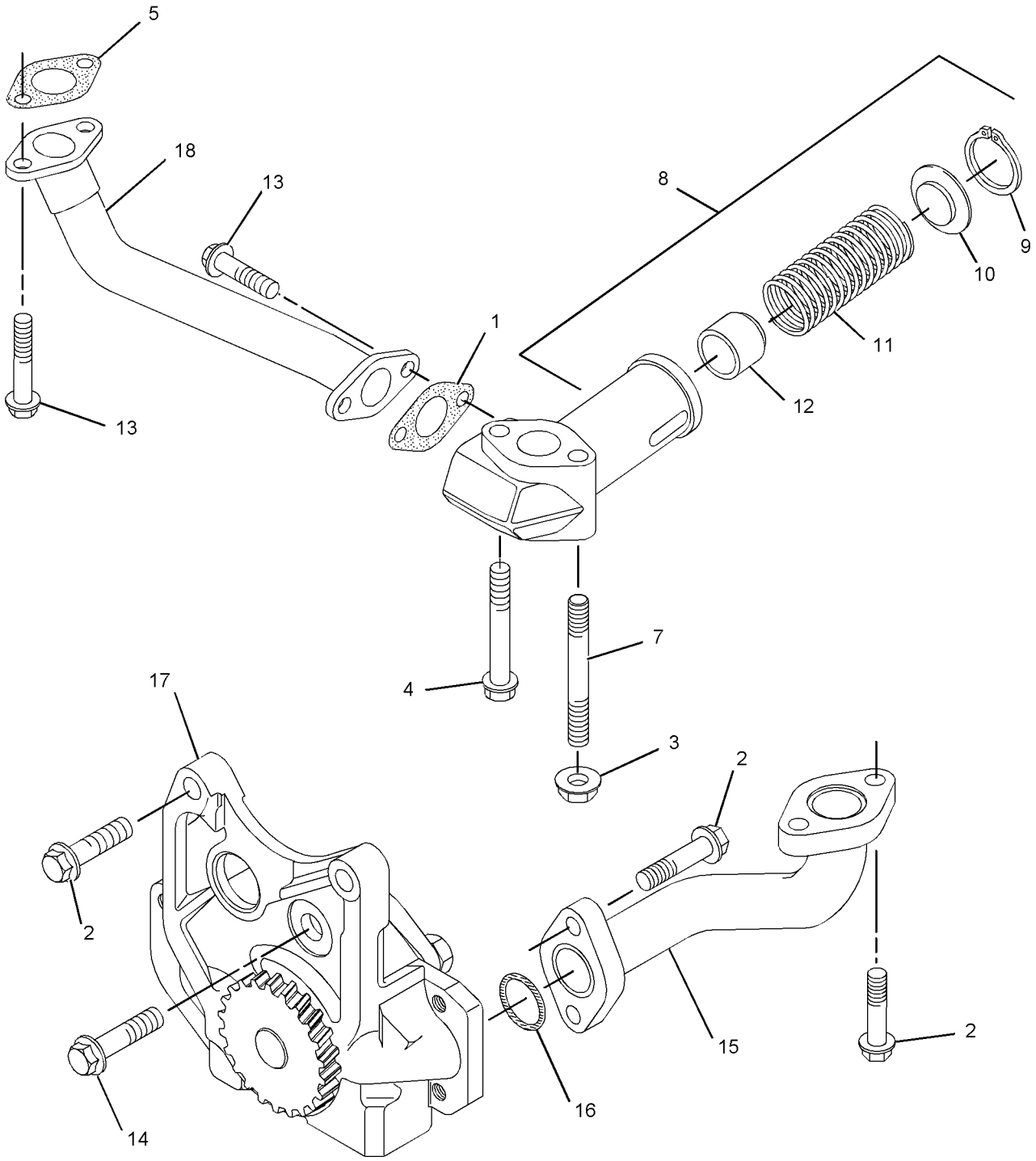

GRAPHIC #1 **<END>** g01120511

235-9692 PUMP GP-ENGINE OIL

S/N: CPT1-UP

PART OF 254-2236, 295-9744 ENGINE AR-PRIMARY

ALSO AN ATTACHMENT

SMCS-1304, 1315 **i02368740**

NOTE	REF NO	GRAPHIC REF	PART NUMBER	QTY	PART NAME 1 2 3 4 5 6 (PRODUCT LEVEL)	SEE PAGE
	1	1	**5C-1796**	1	GASKET	
M	2	1	**6I-0260**	6	BOLT (M8X1.25X25-MM)	
C	4	1	**6I-4374**	2	BOLT (M8X1.25X60-MM)	
	5	1	**067-6933**	1	GASKET	
	8	1	**112-7702**	1	HOUSING AS	
	9	1	**6I-0787**	1	RING-RETAINING	
	10	1	**7W-4648**	1	SEAT-SPRING	
	11	1	**7W-4650**	1	SPRING	
	12	1	**7W-4782**	1	PLUNGER	
C	13	1	**133-6106**	4	BOLT	
M	14	1	**124-3815**	1	BOLT (M8X16X1.25-MM)	
	15	1	**183-6318**	1	TUBE AS	
	16	1	**189-5601**	1	SEAL-O-RING	
	17	1	**216-8625**	1	PUMP AS-ENGINE OIL	
C	18	1	**257-7637**	1	TUBE-OIL	

C-CHANGE FROM PREVIOUS TYPE
M-METRIC PART

235-9692 **PUMP GP-ENGINE OIL** *(contd.)* **i02368740**

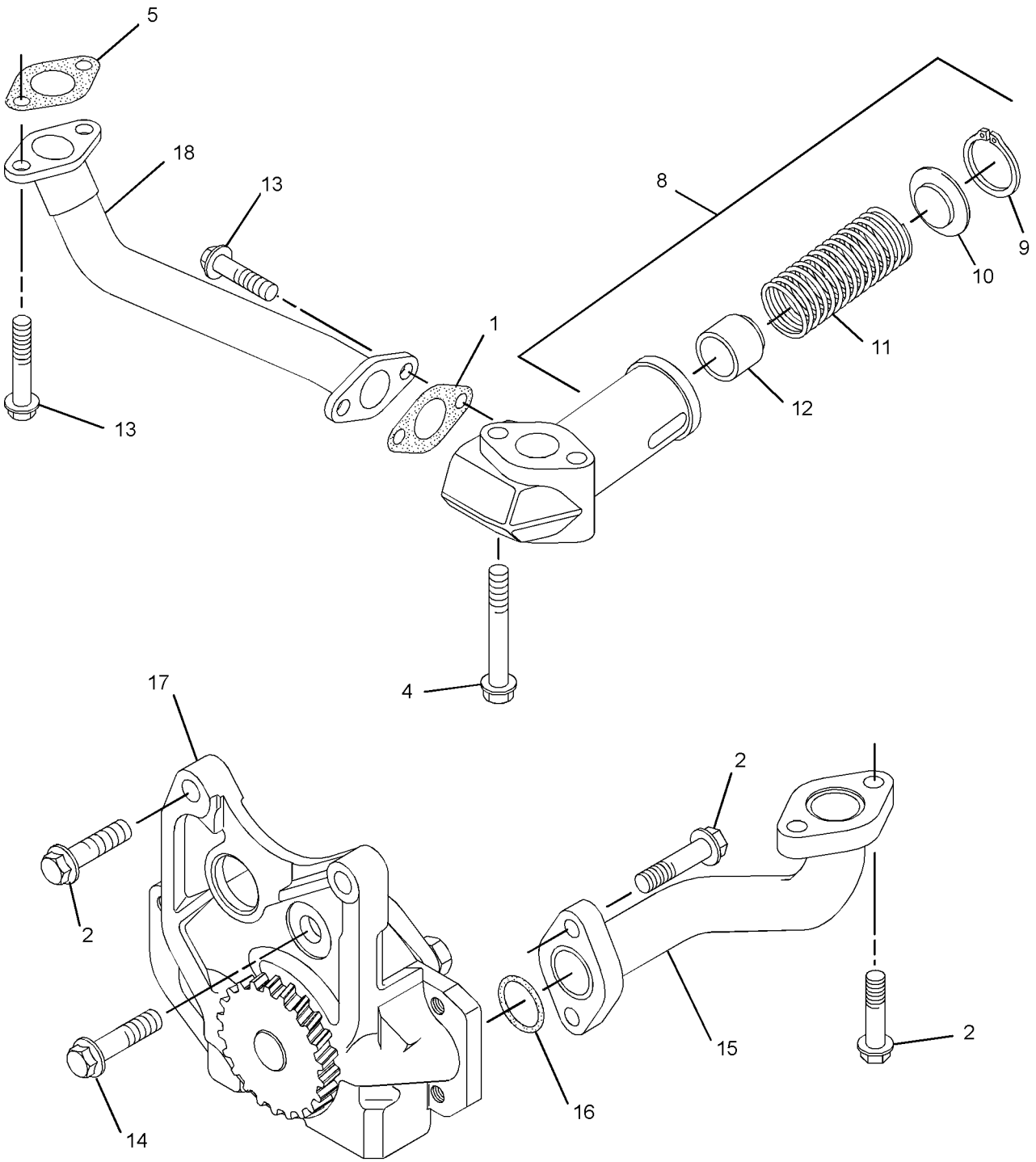

GRAPHIC #1 **<END>** g01179374

235-9719 VALVE GP-FLUID SAMPLING–ENGINE OIL

S/N: CPT1-UP

PART OF 254-2236, 295-9744 ENGINE AR-PRIMARY

ALSO AN ATTACHMENT

SMCS-7542 **i02472841**

NOTE	REF NO	GRAPHIC REF	PART NUMBER	QTY	PART NAME 1 2 3 4 5 6 (PRODUCT LEVEL)	SEE PAGE
	1	1	**8C-3445**	1	CAP-DUST (ENGINE OIL SAMPLING VALVE)	
	2	1	**035-8063**	1	PLUG	
	3	1	**159-8336**	1	VALVE-SAMPLING (ENGINE OIL)	

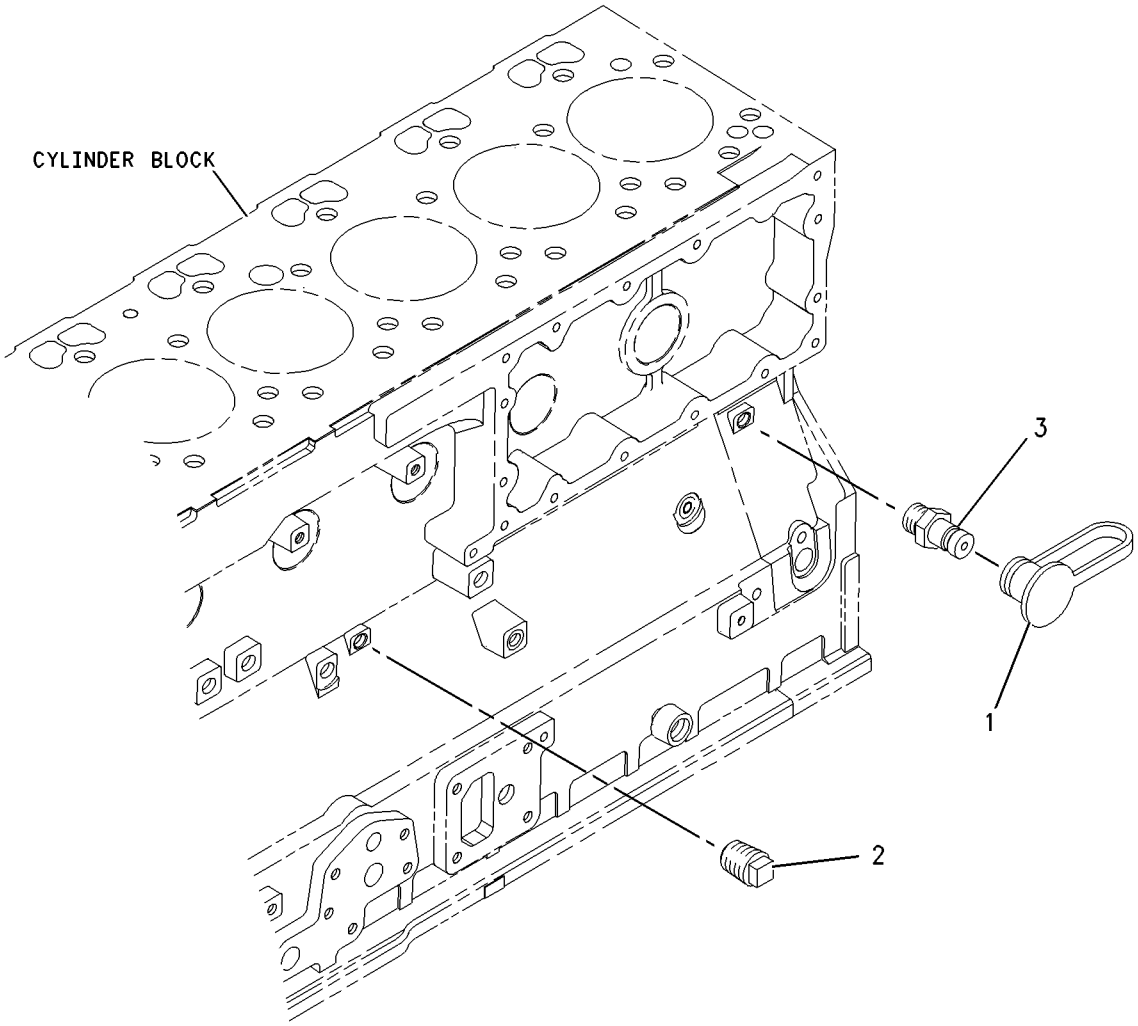

GRAPHIC #1 **<END>** g00992790

228-7387 CONNECTION GP-WATER

S/N: CPT1-UP
PART OF 254-2236, 295-9744 ENGINE AR-PRIMARY
ALSO AN ATTACHMENT

SMCS-1380 **i02455847**

NOTE	REF NO	GRAPHIC REF	PART NUMBER	QTY	PART NAME 1 2 3 4 5 6 (PRODUCT LEVEL)	SEE PAGE
M	1	1	**6I-0260**	2	BOLT (M8X1.25X25-MM)	
	2	1	**6I-4374**	2	BOLT (M8X1.25X60-MM)	
	3	1	**216-9743**	1	CONNECTION AS	
	3A	1	**140-7515**	1	SEAL-O-RING (WATER TEMPERATURE)	
	3B	1	**141-6188**	1	SEAL (HOUSING, REGULATOR) (WATER TEMPERATURE)	
	3C	1	**162-0236**	1	RING (WATER TEMPERATURE REGULATOR)	
	3D	1	**162-0237**	1	PLUG	
	3E	1	**216-9737**	1	REGULATOR-WATER TEMPERATURE	

M-METRIC PART

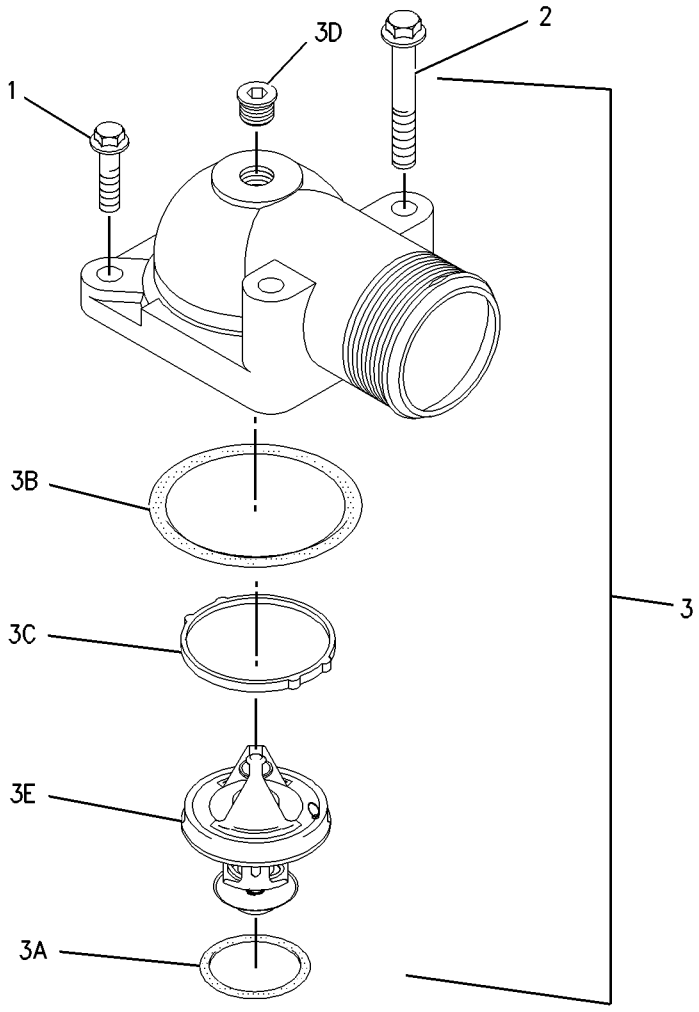

GRAPHIC #1 **<END>** g00932676

221-5285 COOLER GP-FLTR BASE & ENG OIL

S/N: CPT1-UP
PART OF 254-2236, 295-9744 ENGINE AR-PRIMARY
ALSO AN ATTACHMENT

SMCS-1306, 1378 **i02639115**

NOTE	REF NO	GRAPHIC REF	PART NUMBER	QTY	PART NAME 1 2 3 4 5 6 (PRODUCT LEVEL)	SEE PAGE
	1	1	**2M-9780**	1	SEAL-O-RING	
	2	1	**5F-9657**	3	SEAL-O-RING	
M	3	1	**5P-8196**	1	PLUG	
M	4	1	**6I-0260**	6	BOLT (M8X1.25X25-MM)	
	5	1	**6I-0291**	4	NUT (M8X1.25-THD)	
	6	1	**6I-4786**	1	GASKET	
	7	1	**7C-1493**	1	VALVE AS-BYPASS (OIL FILTER)	
	8	1	**7W-9028**	1	BASE AS-OIL FILTER	
	8A	1	**2P-2537**	1	STUD-HOLLOW	
	9	1	**9L-9188**	1	SPRING-VALVE	
M	10	1	**100-4461**	6	BOLT (M10X1.50X50-MM)	
M	11	1	**101-3895**	3	BOLT (M8X1.25X35-MM)	
M	12	1	**124-3815**	14	BOLT (M8X16X1.25-MM)	
M	13	1	**140-8783**	4	BOLT (M10X45-THD)	
J	14	1	**230-3776**	2	SEAL	
	15	1	**162-0761**	4	FLANGE	
J	16	1	**162-9754**	2	SEAL	
	17	1	**175-3915**	1	COOLER-ENGINE OIL	
	18	1	**216-9637**	1	HOUSING	
J	19	1	**216-9638**	1	GASKET (ENGINE OIL COOLER)	
	20	1	**231-8047**	1	HOSE AS	
J	21	1	**216-9643**	2	GASKET	
	22	1	**231-8048**	1	HOSE AS	
	22A	1	**166-8725**	1	CLIP	
	23	1	**220-7171**	1	ADAPTER-HOUSING	
	24	1	**221-5278**	1	HEAD AS	
	25	1	**219-1818**	1	CONNECTION	
	26	1	**221-4520**	1	GASKET	
	27	1	**246-3189**	1	BRACKET	
					AVAILABLE REPAIR KIT(S):	
J			**219-2172**	1	KIT-REPAIR (OIL COOLER)	

J-KIT MARKED J INCLUDES PARTS MARKED J
M-METRIC PART

221-5285 **COOLER GP-FLTR BASE & ENG OIL** *(contd.)* **i02639115**

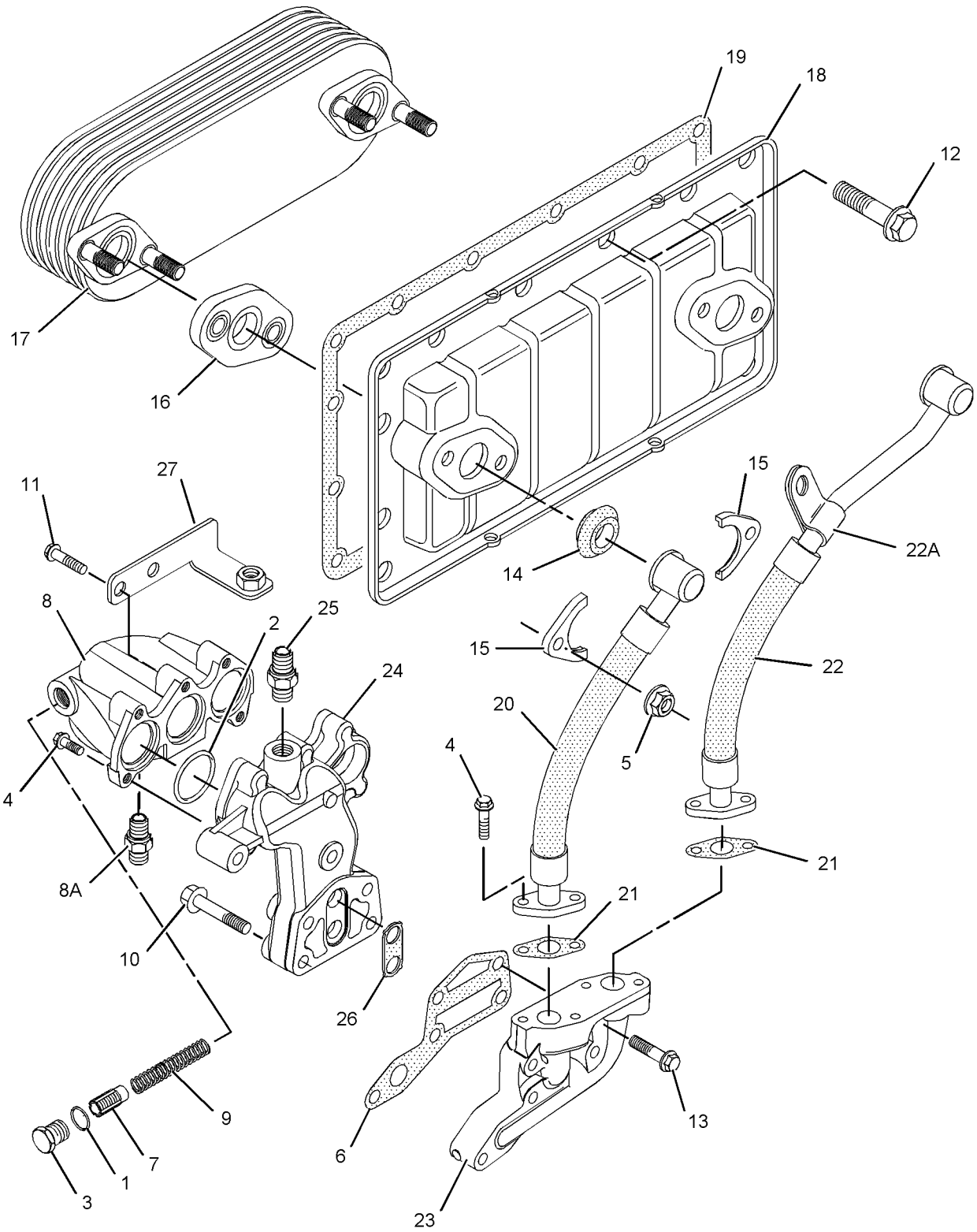

GRAPHIC #1

<END>

g01068741

COOLING SYSTEM

185-1045 FAN GP-SUCTION

S/N: TWR1-UP

PART OF 242-9735 INSTALLATION AR-ENGINE

SMCS-1356 **i01804747**

NOTE	REF NO	GRAPHIC REF	PART NUMBER	QTY	PART NAME 1 2 3 4 5 6 (PRODUCT LEVEL)	SEE PAGE
	1	1	**185-1046**	1	SPIDER AS-FAN	
M	2	1	**8T-4189**	4	BOLT (M8X1.25X20MM)	
	3	1	**8T-4224**	4	WASHER-HARD (8.8X16X2MM THK)	

M-METRIC PART

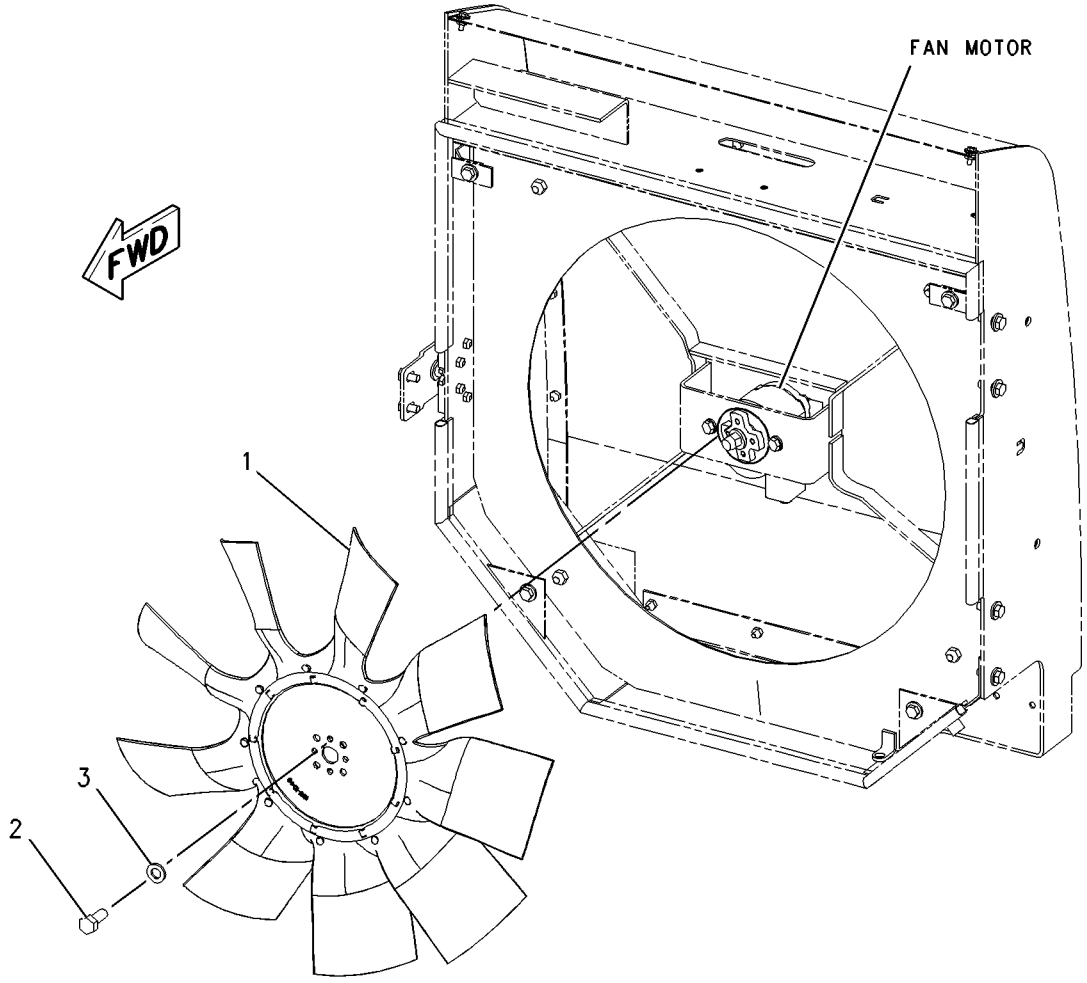

GRAPHIC #1 **<END>** g00923981

192-4360 LINES GP-WATER—RADIATOR, WITH AXLE OIL COOLER

S/N: TWR1-UP

PART OF 235-6848, 235-6850 AXLE AR-OSCILLATING AN ATTACHMENT

SMCS-1380 **i02097956**

NOTE	REF NO	GRAPHIC REF	PART NUMBER	QTY	PART NAME 1 2 3 4 5 6 (PRODUCT LEVEL)	SEE PAGE
	1	1	**185-1023**	1	HOSE	
	2	1	**185-1024**	1	HOSE	
	3	1	**185-1030**	1	HOSE	
	4	1	**185-1031**	1	HOSE	
	5	1	**215-4011**	3	CLAMP	
	6	1	**216-6944**	3	CLAMP	
	7	1	**216-6946**	2	CLAMP	

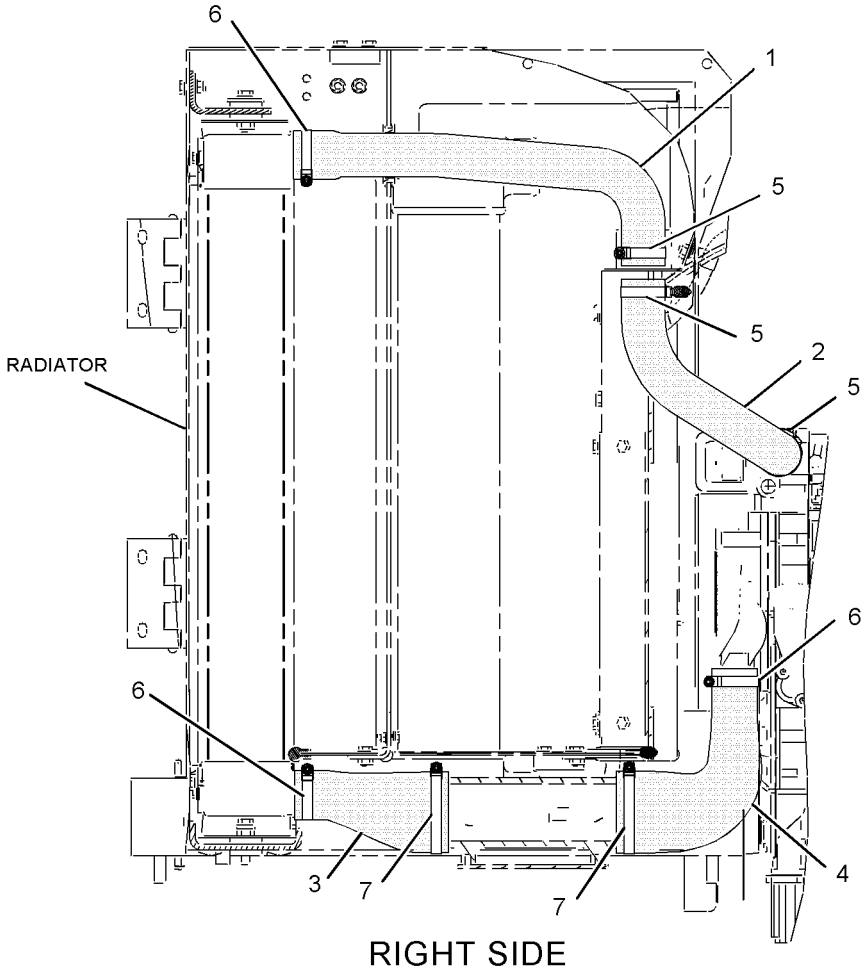

RIGHT SIDE VIEW

GRAPHIC #1 **<END>** g01070994

192-4367 LINES GP-WATER–RADIATOR

S/N: TWR1-UP

PART OF 235-6843, 235-6846 AXLE AR-OSCILLATING AN ATTACHMENT

SMCS-1380 **i02066271**

NOTE	REF NO	GRAPHIC REF	PART NUMBER	QTY	PART NAME 1 2 3 4 5 6 (PRODUCT LEVEL)	SEE PAGE
	1	1	**185-1021**	1	HOSE (LOWER)	
	2	1	**185-1023**	1	HOSE (UPPER)	
	3	1	**185-1024**	1	HOSE	
	4	1	**215-4011**	4	CLAMP	
	5	1	**216-6944**	2	CLAMP	

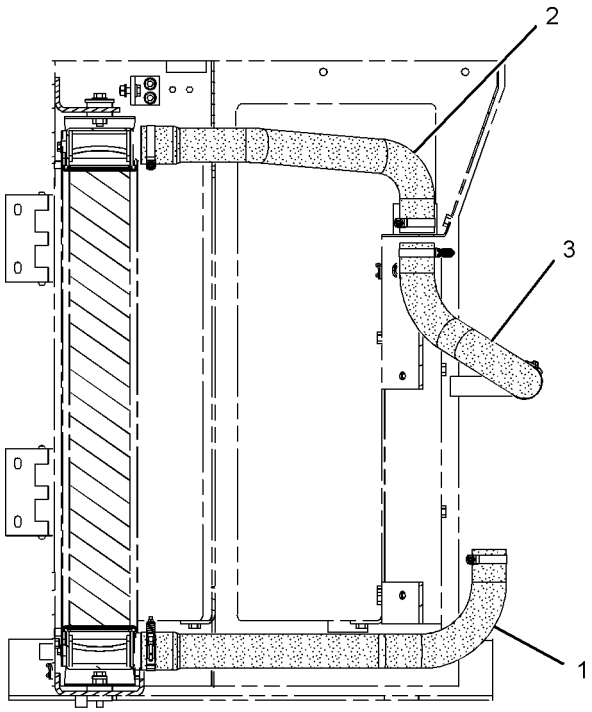

RIGHT SIDE VIEW

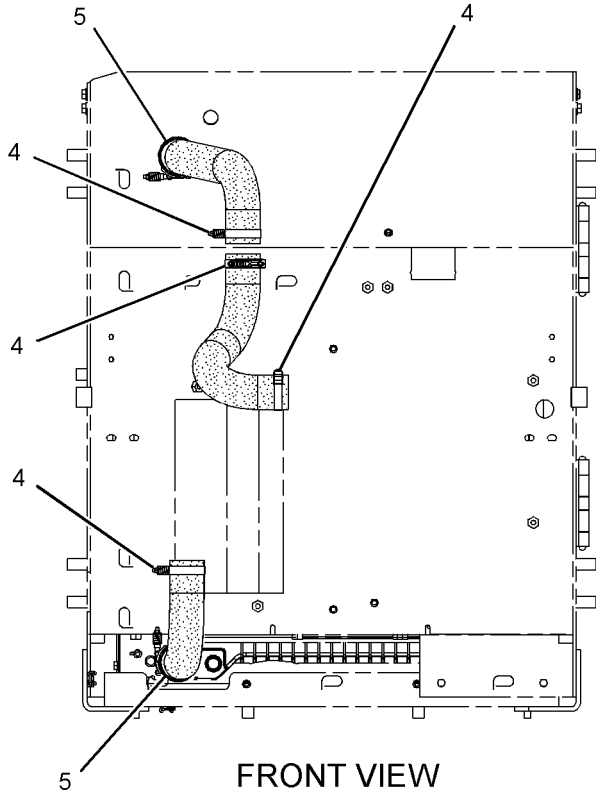

FRONT VIEW

GRAPHIC #1

<END>

g01013158

221-5369 PUMP GP-WATER

S/N: CPT1-UP

PART OF 254-2236, 295-9744 ENGINE AR-PRIMARY

ALSO AN ATTACHMENT

SMCS-1361 **i02786249**

NOTE	REF NO	GRAPHIC REF	PART NUMBER	QTY	PART NAME 1 2 3 4 5 6 (PRODUCT LEVEL)	SEE PAGE
	1	1	**6I-0456**	3	BOLT (M8X1.25X45-MM)	
M	2	1	**6I-0645**	3	BOLT (M8X1.25X25-MM)	
	3	1	**6I-4374**	3	BOLT (M8X1.25X60-MM)	
	4	1	**6I-4793**	1	BOLT (M8X1.25X50-MM)	
	5	1	**6I-0839**	2	BOLT (M8X1.25X70-MM)	
	6	1	**101-3771**	1	BOLT	
	7	1	**101-3805**	3	BOLT (M8X1.25X90-MM)	
	9	1	**140-7505**	1	COVER	
	10	1	**140-7506**	1	GASKET-COVER	
	11	1	**140-7512**	1	KIT-HOSE (WATER) (REGULATOR HOUSING)	
	11A	1	**2S-3440**	2	CLAMP-HOSE	
	12	1	**234-6862**	1	HOUSING AS	
	12A	1	**234-6861**	1	GASKET (HOUSING)	
	13	1	**234-6110**	1	PUMP GP-WATER	
	13A	1	**201-8745**	1	GASKET (WATER PUMP)	
					AVAILABLE REPAIR KIT(S):	
			234-0636	1	KIT-WATER PUMP	

M-METRIC PART

221-5369 **PUMP GP-WATER** *(contd.)* **i02786249**

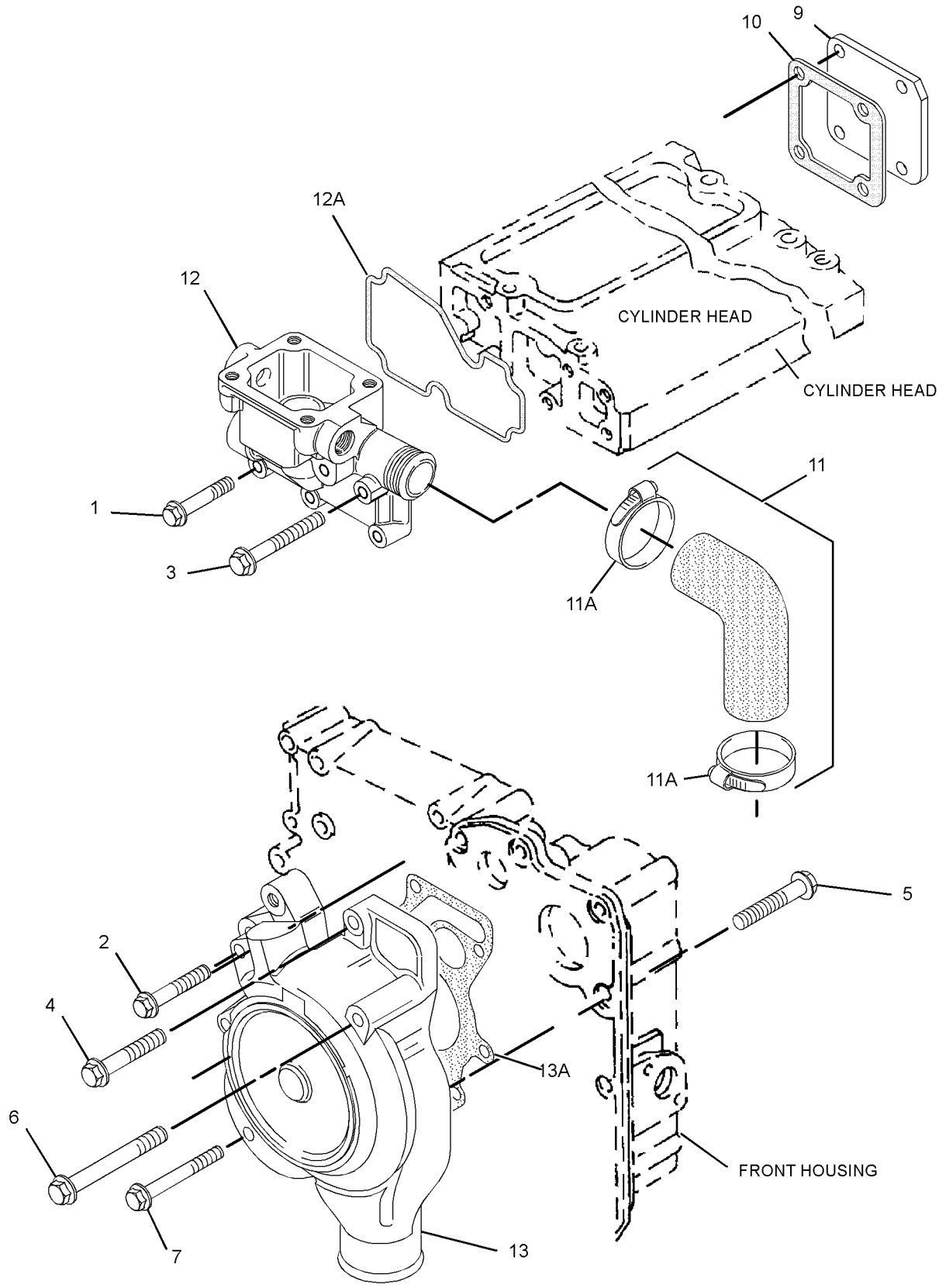

GRAPHIC #1 **<END>** g01398171

COOLING SYSTEM

267-5219 RADIATOR & AFTERCOOLER GP

S/N: TWR1-1219

PART OF 242-9735 INSTALLATION AR-ENGINE

SMCS-1063, 1353 **i02507084**

NOTE	REF NO	GRAPHIC REF	PART NUMBER	QTY	PART NAME 1 2 3 4 5 6 (PRODUCT LEVEL)	SEE PAGE
E	1	1,2	**8C-3681**		HOSE (311-CM)	
E	2	1	**8I-1362**		HOSE (172-CM)	
E	3	1	**9X-2133**		HOSE (96-CM)	
	6	1	**5P-4961**	2	CLAMP-HOSE	
	7	1,2	**6N-6984**	4	MOUNT-RUBBER	
	8	1	**7K-1181**	1	STRAP-CABLE	
	9	1	**7T-8332**	4	MOUNTING	
	10	1	**9M-7958**	2	CLAMP-HOSE	
	11	1	**127-5447**	6	SPACER (10.5X20X12-MM THK)	
	12	1	**185-1017**	1	AFTERCOOLER AS	
	13	1	**185-1036**	1	BRACKET	
	14	1	**185-1049**	1	PLATE	
	15	1	**191-9177**	1	GUARD GP-RADIATOR	
	16	1	**191-9182**	1	PLATE	
	17	2	**191-9184**	1	PLATE	
	18	1	**191-9192**	1	PLATE	
	19	1	**227-0104**	1	TANK GP-COOLANT	
	19A	1	**227-4376**	1	CAP AS-RADIATOR (COOLANT TANK)	
	20	1	**229-9286**	1	SEAL	
	21	1	**230-7246**	1	PLATE AS	
	22	1	**243-0689**	1	SEAL	
	23	2	**053-0189**	1	GROMMET	
	24	2	**1B-3057**	2	CLIP	
	25	1	**3K-9520**	1	GROMMET	
	26	2	**4D-7388**	2	CLIP	
M	27	2	**5C-7261**	4	NUT (M8X1.25-THD)	
	28	2	**5P-4116**	8	WASHER-HARD (8.8X20.5X2-MM THK)	
	29	2	**5P-6887**	1	GROMMET	
	30	1	**8F-6437**	2	WASHER (13.5X50.8X4.76-MM THK)	
	31	1,2	**8T-4121**	23	WASHER-HARD (11X21X2.5-MM THK)	
	32	1	**8T-4122**	4	WASHER-HARD (17X32X3.5-MM THK)	
M	33	1,2	**8T-4133**	10	NUT (M10X1.5-THD)	
M	34	1,2	**8T-4137**	15	BOLT (M10X1.5X20-MM)	
M	35	1	**8T-4182**	2	BOLT (M10X1.5X45-MM)	
M	36	1	**8T-4186**	6	BOLT (M10X1.5X40-MM)	
M	37	1	**8T-4193**	4	BOLT (M16X2X50-MM)	
M	38	1	**8T-4194**	2	BOLT (M12X1.75X50-MM)	
M	39	1	**8T-4195**	6	BOLT (M10X1.5X30-MM)	
M	40	2	**8T-4200**	4	BOLT (M8X1.25X16-MM)	
	41	1,2	**8T-4222**	18	WASHER-PLATED (11X32X2.5-MM THK)	
	42	1	**8T-4223**	2	WASHER-HARD (13.5X25.5X3-MM THK)	
	43	2	**8T-4224**	4	WASHER-HARD (8.8X16X2-MM THK)	
	44	1,2	**8T-4226**	4	WASHER-PLATED (10.5X45X3-MM THK)	
M	45	2	**8T-6466**	2	BOLT (M10X1.5X60-MM)	
M	46	2	**8T-7547**	4	BOLT (M8X1.25X30-MM)	
D	47	1	**5P-5755**		SEAL (3.05-M)	
D	48	1	**5P-5755**		SEAL (0.85-M)	
D	49	1	**5P-5755**		SEAL (2.26-M)	
D	50	1	**5P-5755**		SEAL (2.35-M)	
D	51	1	**5P-7211**		SEAL (0.78-M)	
D	52	1	**5P-7211**		SEAL (0.24-M)	
D	53	1	**5P-7211**		SEAL (0.07-M)	
D	54	1	**5P-7211**		SEAL (0.85-M)	

D-ORDER BY THE METER
E-ORDER BY THE CENTIMETER
M-METRIC PART

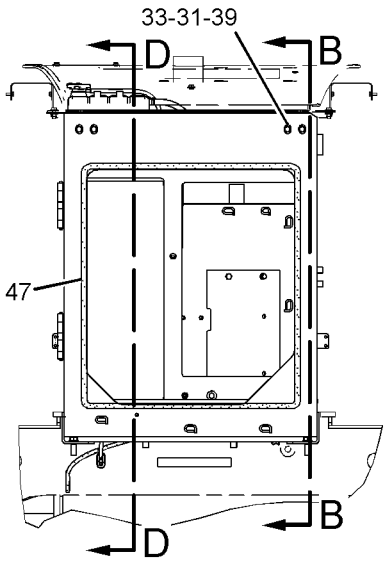

REAR VIEW

REFER TO ALL ILLUSTRATIONS OF THIS GROUP FOR AUXILIARY VIEWS

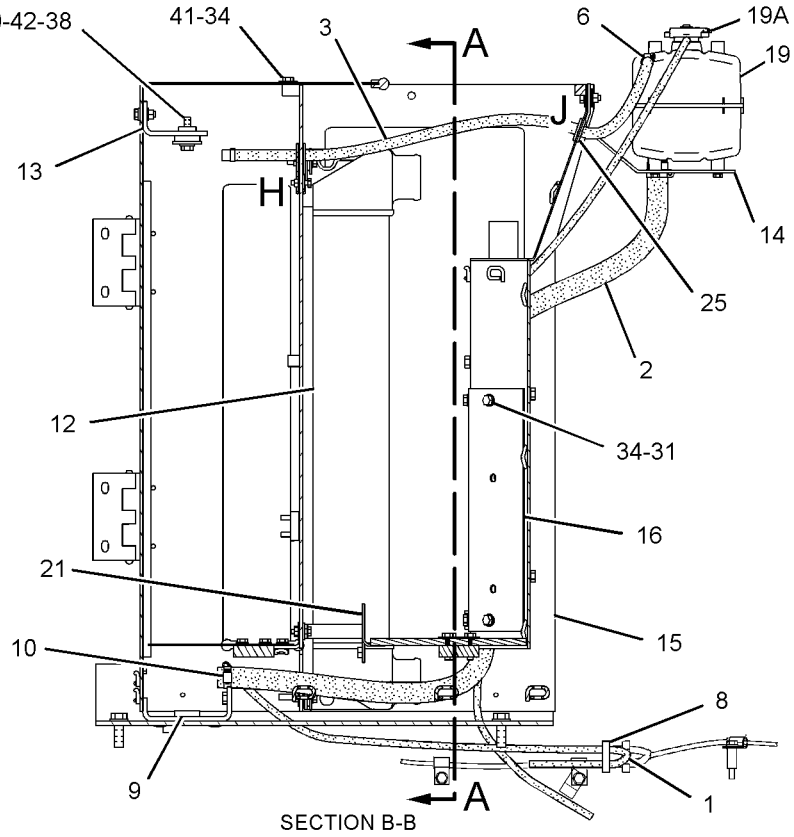

SECTION B-B

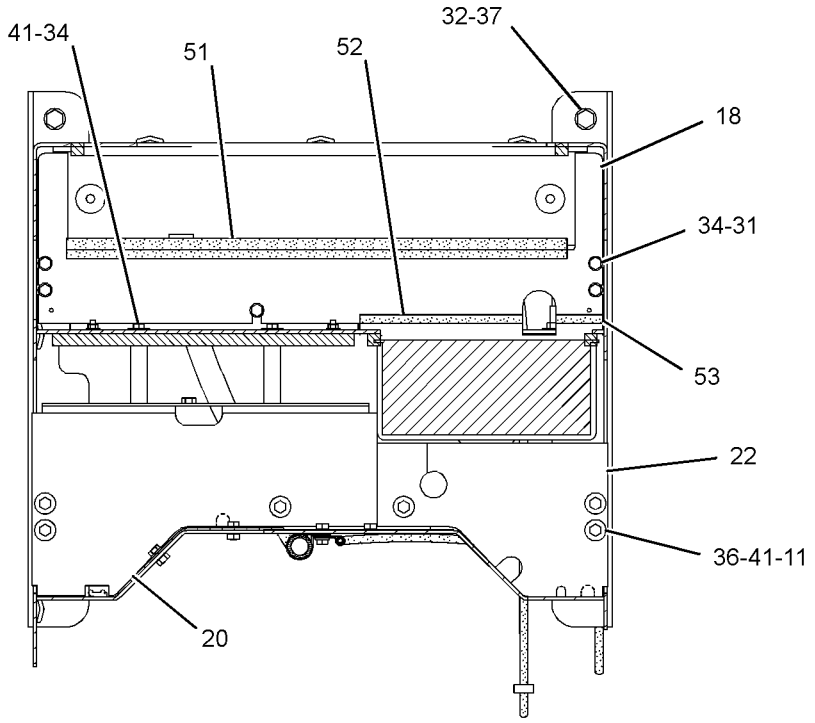

SECTION G-G

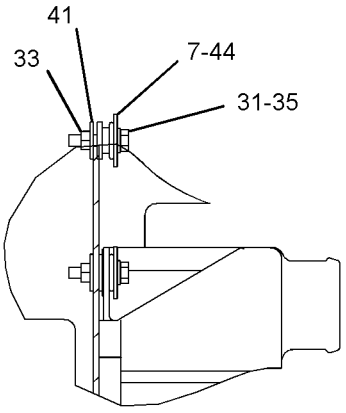

VIEW OF AREA H

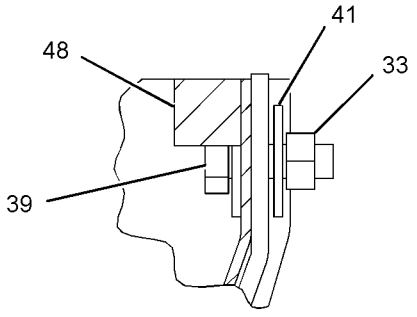

VIEW OF AREA J

GRAPHIC #1

g01283313

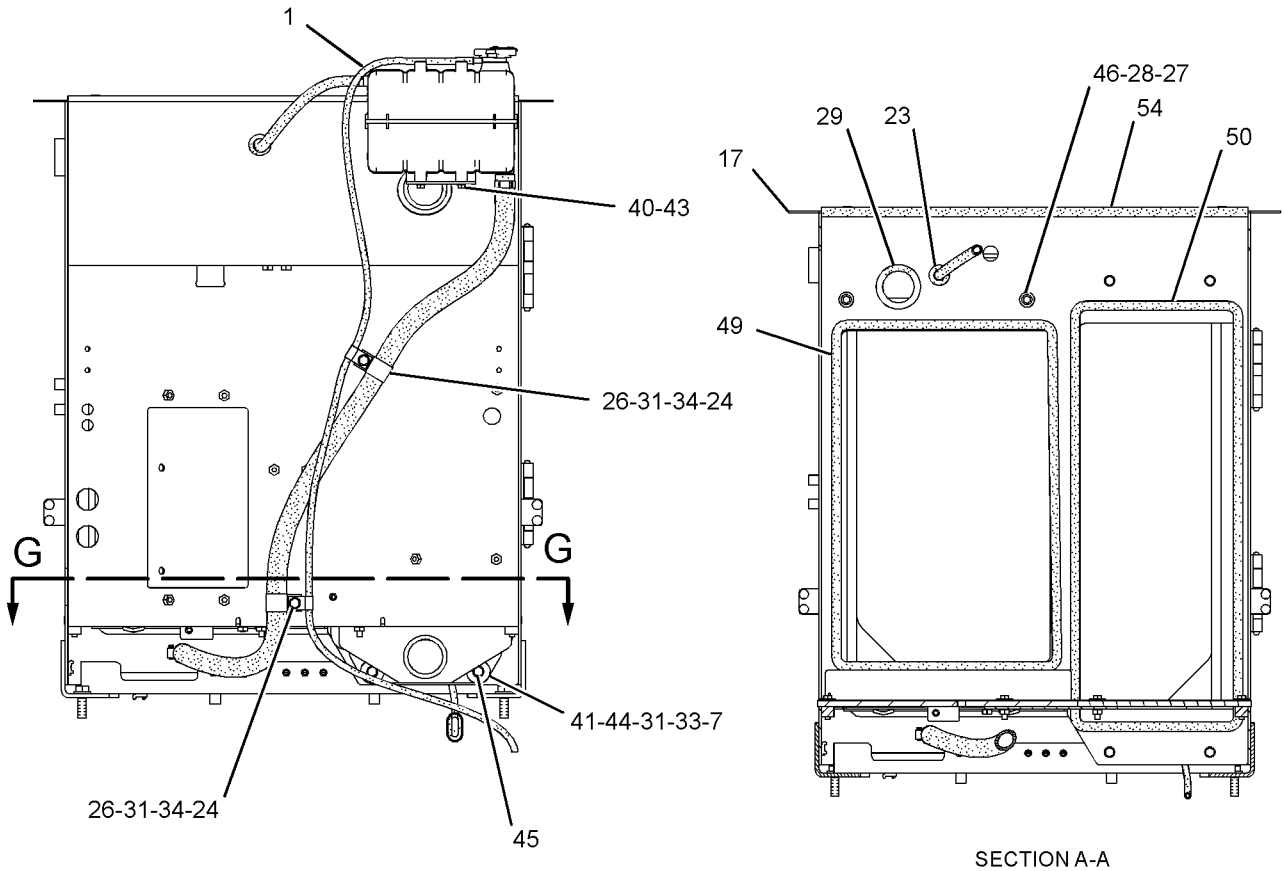

FRONT VIEW

SECTION A-A

REFER TO ALL ILLUSTRATIONS OF
THIS GROUP FOR AUXILIARY VIEWS

GRAPHIC #2

<END>

g01283315

COOLING SYSTEM

267-5219 RADIATOR & AFTERCOOLER GP

S/N: TWR1220-1357

PART OF 242-9735 INSTALLATION AR-ENGINE

SMCS-1063, 1353 **i02572639**

NOTE	REF NO	GRAPHIC REF	PART NUMBER	QTY	PART NAME 1 2 3 4 5 6 (PRODUCT LEVEL)	SEE PAGE
C	1	2	**5T-6374**	1	SPACER (10.5X20X40-MM THK)	
E	2	1	**8I-1362**		HOSE (172-CM)	
E	3	1	**9X-2133**		HOSE (96-CM)	
	6	1	**5P-4961**	2	CLAMP-HOSE	
	7	1,2	**6N-6984**	4	MOUNT-RUBBER	
	8	1	**7K-1181**	1	STRAP-CABLE	
	9	1	**7T-8332**	4	MOUNTING	
	10	1	**9M-7958**	2	CLAMP-HOSE	
	11	1	**127-5447**	6	SPACER (10.5X20X12-MM THK)	
	12	1	**185-1017**	1	AFTERCOOLER AS	
	13	1	**185-1036**	1	BRACKET	
	14	1	**185-1049**	1	PLATE	
	15	1	**191-9177**	1	GUARD GP-RADIATOR	
	16	1	**191-9182**	1	PLATE	
	17	2	**191-9184**	1	PLATE	
	18	1	**191-9192**	1	PLATE	
	19	1	**227-0104**	1	TANK GP-COOLANT	
	19A	1	**227-4376**	1	CAP AS-RADIATOR (COOLANT TANK)	
	20	1	**229-9286**	1	SEAL	
	21	1	**230-7246**	1	PLATE AS	
	22	1	**243-0689**	1	SEAL	
	23	2	**053-0189**	1	GROMMET	
	24	2	**1B-3057**	2	CLIP	
	25	1	**3K-9520**	1	GROMMET	
	26	2	**4D-7388**	2	CLIP	
M	27	2	**5C-7261**	4	NUT (M8X1.25-THD)	
	28	2	**5P-4116**	8	WASHER-HARD (8.8X20.5X2-MM THK)	
	29	2	**5P-6887**	1	GROMMET	
	30	1	**8F-6437**	2	WASHER (13.5X50.8X4.76-MM THK)	
	31	1,2	**8T-4121**	23	WASHER-HARD (11X21X2.5-MM THK)	
	32	1	**8T-4122**	4	WASHER-HARD (17X32X3.5-MM THK)	
M	33	1,2	**8T-4133**	10	NUT (M10X1.5-THD)	
CM	34	1,2	**8T-4137**	14	BOLT (M10X1.5X20-MM)	
CM	35	1,2	**8T-4182**	4	BOLT (M10X1.5X45-MM)	
M	36	1	**8T-4186**	6	BOLT (M10X1.5X40-MM)	
M	37	1	**8T-4193**	4	BOLT (M16X2X50-MM)	
M	38	1	**8T-4194**	2	BOLT (M12X1.75X50-MM)	
M	39	1	**8T-4195**	6	BOLT (M10X1.5X30-MM)	
M	40	2	**8T-4200**	4	BOLT (M8X1.25X16-MM)	
	41	1,2	**8T-4222**	18	WASHER-PLATED (11X32X2.5-MM THK)	
	42	1	**8T-4223**	2	WASHER-HARD (13.5X25.5X3-MM THK)	
	43	2	**8T-4224**	4	WASHER-HARD (8.8X16X2-MM THK)	
	44	1,2	**8T-4226**	4	WASHER-PLATED (10.5X45X3-MM THK)	
CM	45	2	**8T-4172**	1	BOLT (M10X1.5X80-MM)	
M	46	2	**8T-7547**	4	BOLT (M8X1.25X30-MM)	
D	47	1	**5P-5755**		SEAL (3.05-M)	
D	48	1	**5P-5755**		SEAL (0.85-M)	
D	49	2	**5P-5755**		SEAL (2.26-M)	
D	50	2	**5P-5755**		SEAL (2.35-M)	
D	51	1	**5P-7211**		SEAL (0.78-M)	
D	52	1	**5P-7211**		SEAL (0.24-M)	
D	53	1	**5P-7211**		SEAL (0.07-M)	
D	54	2	**5P-7211**		SEAL (0.85-M)	
E	55	2	**8C-3681**		HOSE (203-CM)	
E	56	1	**8C-3681**		HOSE (108-CM)	

267-5219 **RADIATOR & AFTERCOOLER GP** *(contd.)* **i02572639**

C-CHANGE FROM PREVIOUS TYPE
D-ORDER BY THE METER
E-ORDER BY THE CENTIMETER
M-METRIC PART

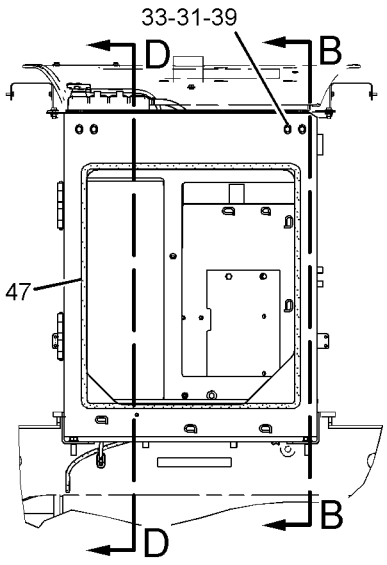

REAR VIEW

REFER TO ALL ILLUSTRATIONS OF THIS GROUP FOR AUXILIARY VIEWS

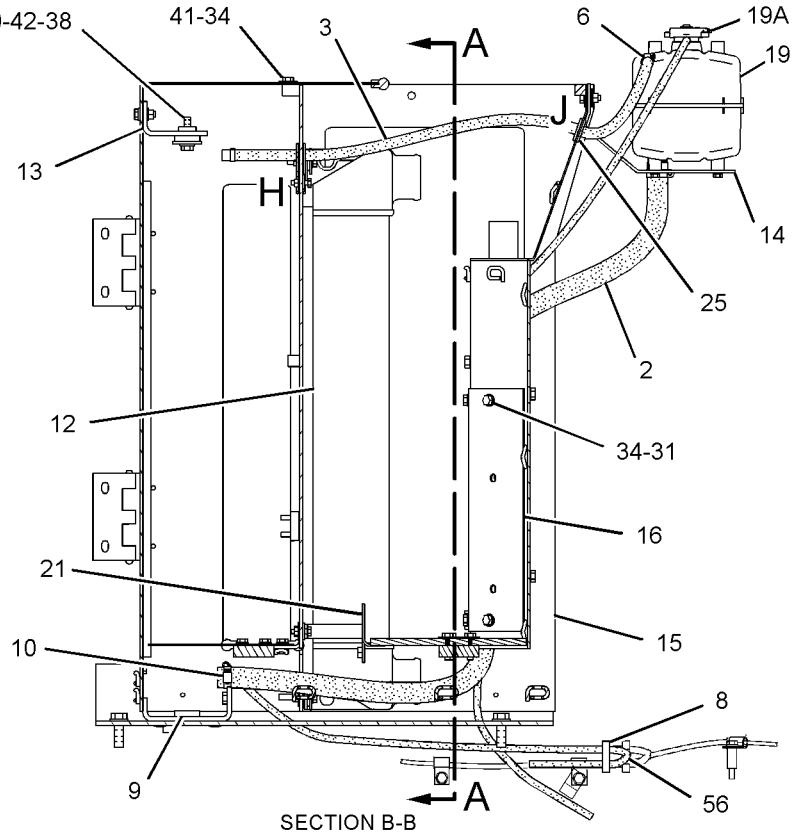

SECTION B-B

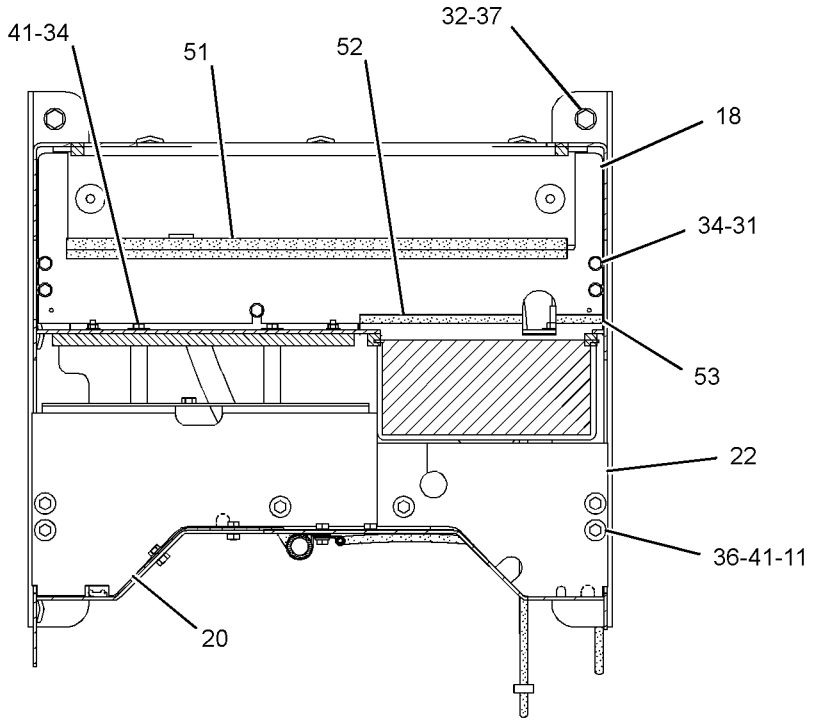

SECTION G-G

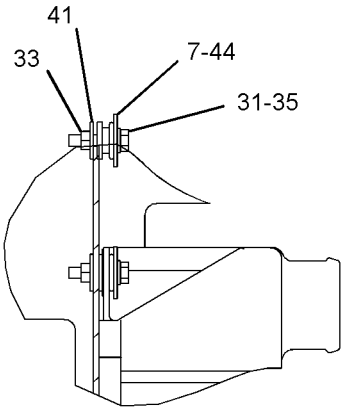

VIEW OF AREA H

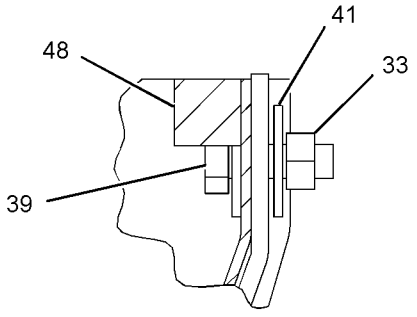

VIEW OF AREA J

GRAPHIC #1

g01284913

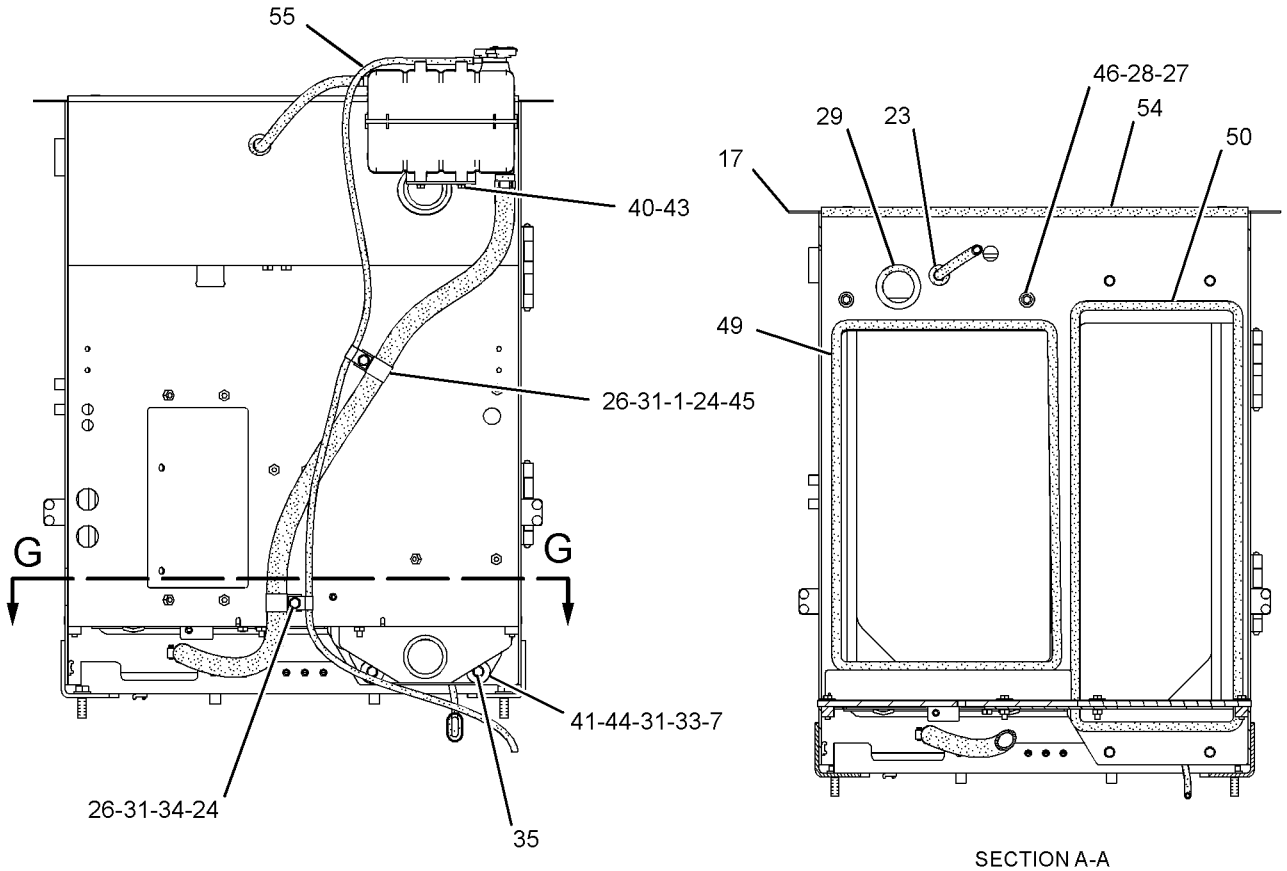

FRONT VIEW

SECTION A-A

REFER TO ALL ILLUSTRATIONS OF
THIS GROUP FOR AUXILIARY VIEWS

GRAPHIC #2

<END>

g01283921

COOLING SYSTEM

267-5219 RADIATOR & AFTERCOOLER GP

S/N: TWR1358-1804

PART OF 242-9735 INSTALLATION AR-ENGINE

SMCS-1063, 1353 **i02576491**

NOTE	REF NO	GRAPHIC REF	PART NUMBER	QTY	PART NAME 1 2 3 4 5 6 (PRODUCT LEVEL)	SEE PAGE
	1	1	**5T-6374**	1	SPACER (10.5X20X40-MM THK)	
E	2	1	**8I-1362**		HOSE (172-CM)	
E	3	1	**9X-2133**		HOSE (96-CM)	
C	4	1	**279-7128**	1	BRACKET	
CM	5	1	**8T-0389**	1	LOCKNUT (M10X1.5-THD)	
	6	1	**5P-4961**	2	CLAMP-HOSE	
	7	1	**6N-6984**	4	MOUNT-RUBBER	
	8	1	**7K-1181**	1	STRAP-CABLE	
	9	1	**7T-8332**	4	MOUNTING	
	10	1	**9M-7958**	2	CLAMP-HOSE	
	11	2	**127-5447**	6	SPACER (10.5X20X12-MM THK)	
	12	1	**185-1017**	1	AFTERCOOLER AS	
	13	1	**185-1036**	1	BRACKET	
	14	1	**185-1049**	1	PLATE	
	15	1	**191-9177**	1	GUARD GP-RADIATOR	
	16	1	**191-9182**	1	PLATE	
	17	2	**191-9184**	1	PLATE	
	18	2	**191-9192**	1	PLATE	
	19	1	**227-0104**	1	TANK GP-COOLANT	
	19A	1	**227-4376**	1	CAP AS-RADIATOR (COOLANT TANK)	
	20	2	**229-9286**	1	SEAL	
	21	1	**230-7246**	1	PLATE AS	
	22	2	**243-0689**	1	SEAL	
	23	2	**053-0189**	1	GROMMET	
	24	1	**1B-3057**	2	CLIP	
	25	1	**3K-9520**	1	GROMMET	
	26	1	**4D-7388**	2	CLIP	
M	27	2	**5C-7261**	4	NUT (M8X1.25-THD)	
	28	2	**5P-4116**	8	WASHER-HARD (8.8X20.5X2-MM THK)	
	29	2	**5P-6887**	1	GROMMET	
	30	1	**8F-6437**	2	WASHER (13.5X50.8X4.76-MM THK)	
C	31	1,2	**8T-4121**	24	WASHER-HARD (11X21X2.5-MM THK)	
	32	2	**8T-4122**	4	WASHER-HARD (17X32X3.5-MM THK)	
M	33	1	**8T-4133**	10	NUT (M10X1.5-THD)	
M	34	1,2	**8T-4137**	14	BOLT (M10X1.5X20-MM)	
M	35	1	**8T-4182**	4	BOLT (M10X1.5X45-MM)	
M	36	2	**8T-4186**	6	BOLT (M10X1.5X40-MM)	
M	37	2	**8T-4193**	4	BOLT (M16X2X50-MM)	
M	38	1	**8T-4194**	2	BOLT (M12X1.75X50-MM)	
M	39	1	**8T-4195**	6	BOLT (M10X1.5X30-MM)	
M	40	1	**8T-4200**	4	BOLT (M8X1.25X16-MM)	
	41	1,2	**8T-4222**	18	WASHER-PLATED (11X32X2.5-MM THK)	
	42	1	**8T-4223**	2	WASHER-HARD (13.5X25.5X3-MM THK)	
	43	1	**8T-4224**	4	WASHER-HARD (8.8X16X2-MM THK)	
	44	1	**8T-4226**	4	WASHER-PLATED (10.5X45X3-MM THK)	
M	45	1	**8T-4172**	1	BOLT (M10X1.5X80-MM)	
M	46	2	**8T-7547**	4	BOLT (M8X1.25X30-MM)	
D	47	1	**5P-5755**		SEAL (3.05-M)	
D	48	1	**5P-5755**		SEAL (0.85-M)	
D	49	2	**5P-5755**		SEAL (2.26-M)	
D	50	2	**5P-5755**		SEAL (2.35-M)	
D	51	2	**5P-7211**		SEAL (0.78-M)	
D	52	2	**5P-7211**		SEAL (0.24-M)	
D	53	2	**5P-7211**		SEAL (0.07-M)	
D	54	2	**5P-7211**		SEAL (0.85-M)	
E	55	1	**8C-3681**		HOSE (203-CM)	

267-5219 **RADIATOR & AFTERCOOLER GP** *(contd.)* **i02576491**

NOTE	REF NO	GRAPHIC REF	PART NUMBER	QTY	PART NAME 1 2 3 4 5 6 (PRODUCT LEVEL)	SEE PAGE
E	56	1	**8C-3681**		HOSE (108-CM)	

C-CHANGE FROM PREVIOUS TYPE
D-ORDER BY THE METER
E-ORDER BY THE CENTIMETER
M-METRIC PART

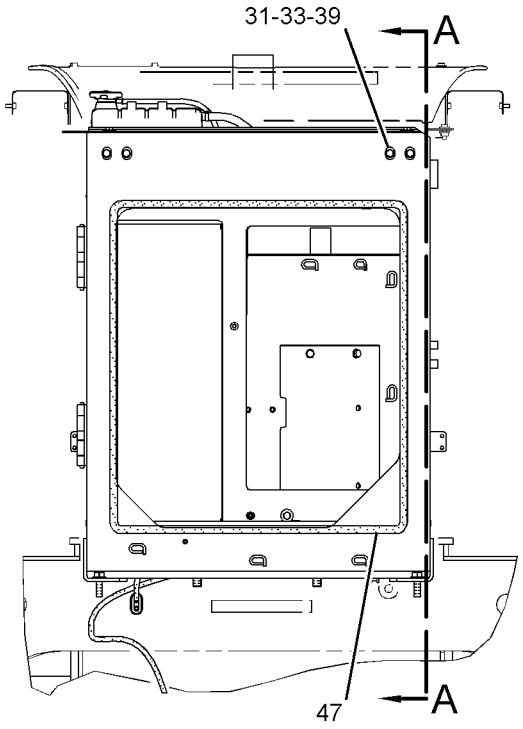

REAR VIEW

REFER TO ALL ILLUSTRATIONS OF THIS GROUP FOR AUXILIARY VIEWS

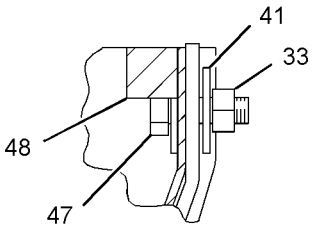

VIEW OF AREA B

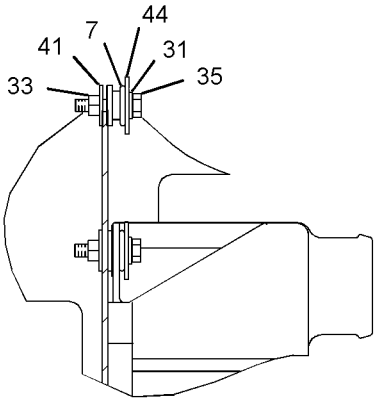

VIEW OF AREA C

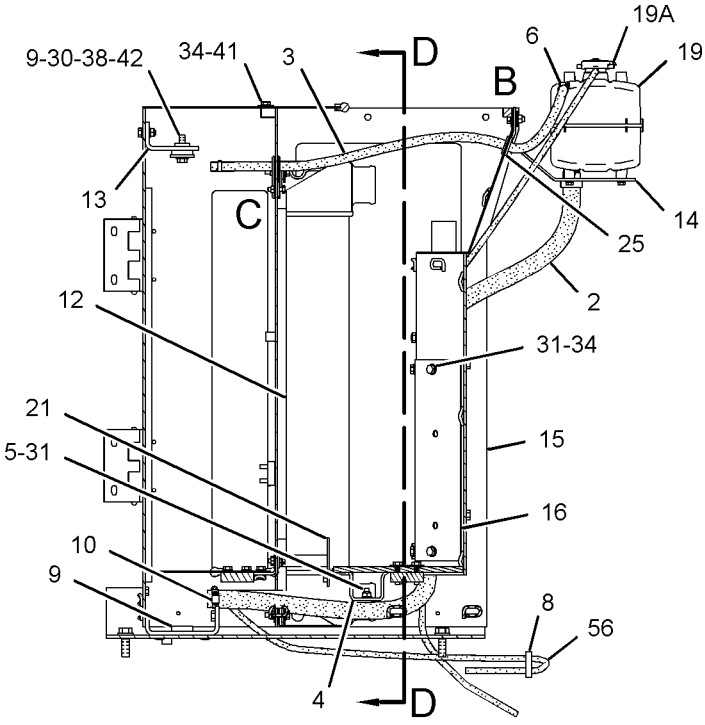

SECTION A-A

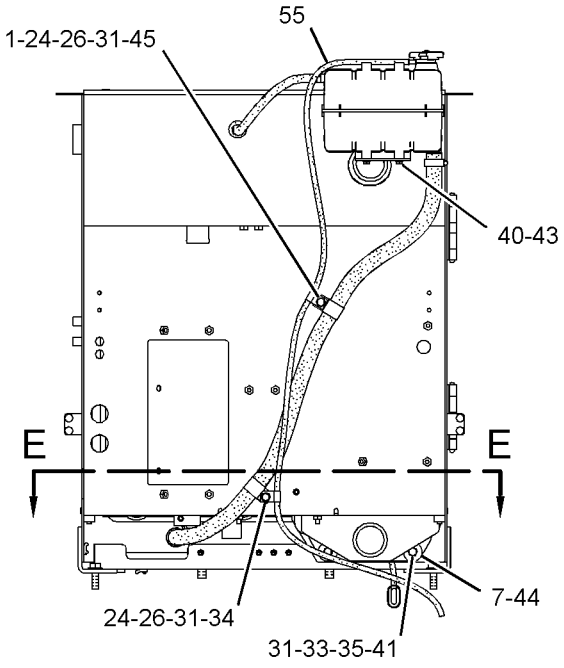

FRONT VIEW

GRAPHIC #1

g01292206

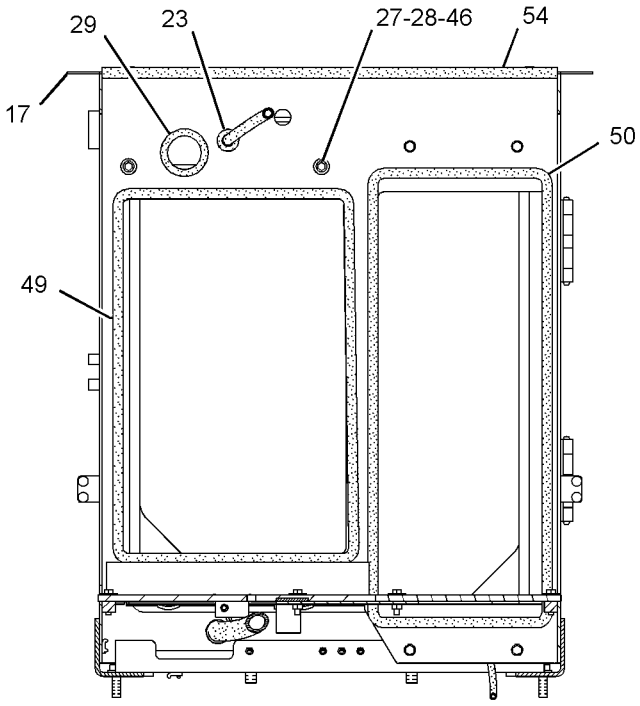

SECTION D-D

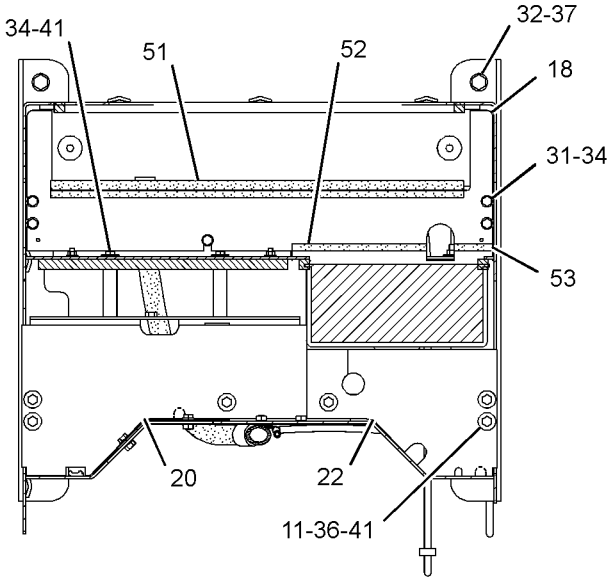

SECTION E-E

GRAPHIC #2 **<END>** g01292209

COOLING SYSTEM

267-5219 RADIATOR & AFTERCOOLER GP

S/N: TWR1805-2039

PART OF 242-9735 INSTALLATION AR-ENGINE

SMCS-1063, 1353 **i02580692**

NOTE	REF NO	GRAPHIC REF	PART NUMBER	QTY	PART NAME 1 2 3 4 5 6 (PRODUCT LEVEL)	SEE PAGE
C	1	1	**133-3260**	1	SPACER (11X19X10-MM THK)	
CE	2	1	**5P-1506**		HOSE (164-CM)	
E	3	1	**9X-2133**		HOSE (96-CM)	
	4	1	**279-7128**	1	BRACKET	
M	5	1	**8T-0389**	1	LOCKNUT (M10X1.5-THD)	
	6	1	**5P-4961**	2	CLAMP-HOSE	
	7	1	**6N-6984**	4	MOUNT-RUBBER	
	8	1	**7K-1181**	1	STRAP-CABLE	
	9	1	**7T-8332**	4	MOUNTING	
C	10	1	**7X-7958**	2	CLAMP-HOSE	
	11	2	**127-5447**	6	SPACER (10.5X20X12-MM THK)	
	12	1	**185-1017**	1	AFTERCOOLER AS	
	13	1	**185-1036**	1	BRACKET	
	14	1	**185-1049**	1	PLATE	
	15	1	**191-9177**	1	GUARD GP-RADIATOR	
	16	1	**191-9182**	1	PLATE	
	17	2	**191-9184**	1	PLATE	
	18	2	**191-9192**	1	PLATE	
	19	1	**227-0104**	1	TANK GP-COOLANT	
	19A	1	**227-4376**	1	CAP AS-RADIATOR (COOLANT TANK)	
	20	2	**229-9286**	1	SEAL	
	21	1	**230-7246**	1	PLATE AS	
	22	2	**243-0689**	1	SEAL	
	23	2	**053-0189**	1	GROMMET	
	24	1	**1B-3057**	2	CLIP	
	25	1	**3K-9520**	1	GROMMET	
	26	1	**4D-7388**	2	CLIP	
M	27	2	**5C-7261**	4	NUT (M8X1.25-THD)	
	28	2	**5P-4116**	8	WASHER-HARD (8.8X20.5X2-MM THK)	
	29	2	**5P-6887**	1	GROMMET	
	30	1	**8F-6437**	2	WASHER (13.5X50.8X4.76-MM THK)	
	31	1,2	**8T-4121**	24	WASHER-HARD (11X21X2.5-MM THK)	
	32	2	**8T-4122**	4	WASHER-HARD (17X32X3.5-MM THK)	
M	33	1	**8T-4133**	10	NUT (M10X1.5-THD)	
CM	34	1,2	**8T-4137**	13	BOLT (M10X1.5X20-MM)	
M	35	1	**8T-4182**	4	BOLT (M10X1.5X45-MM)	
M	36	2	**8T-4186**	6	BOLT (M10X1.5X40-MM)	
M	37	2	**8T-4193**	4	BOLT (M16X2X50-MM)	
M	38	1	**8T-4194**	2	BOLT (M12X1.75X50-MM)	
M	39	1	**8T-4195**	6	BOLT (M10X1.5X30-MM)	
M	40	1	**8T-4200**	4	BOLT (M8X1.25X16-MM)	
	41	1,2	**8T-4222**	18	WASHER-PLATED (11X32X2.5-MM THK)	
	42	1	**8T-4223**	2	WASHER-HARD (13.5X25.5X3-MM THK)	
	43	1	**8T-4224**	4	WASHER-HARD (8.8X16X2-MM THK)	
	44	1	**8T-4226**	4	WASHER-PLATED (10.5X45X3-MM THK)	
CM	45	1	**8T-4196**	1	BOLT (M10X1.5X35-MM)	
M	46	2	**8T-7547**	4	BOLT (M8X1.25X30-MM)	
D	47	1	**5P-5755**		SEAL (3.05-M)	
D	48	1	**5P-5755**		SEAL (0.85-M)	
D	49	2	**5P-5755**		SEAL (2.26-M)	
D	50	2	**5P-5755**		SEAL (2.35-M)	
D	51	2	**5P-7211**		SEAL (0.78-M)	
D	52	2	**5P-7211**		SEAL (0.24-M)	
D	53	2	**5P-7211**		SEAL (0.07-M)	
D	54	2	**5P-7211**		SEAL (0.85-M)	
E	55	1	**8C-3681**		HOSE (203-CM)	

267-5219 **RADIATOR & AFTERCOOLER GP** *(contd.)* **i02580692**

NOTE	REF NO	GRAPHIC REF	PART NUMBER	QTY	PART NAME 1 2 3 4 5 6 (PRODUCT LEVEL)	SEE PAGE
E	56	1	**8C-3681**		HOSE (108-CM)	
CM	57	1	**8T-4136**	1	BOLT (M10X1.5X25-MM)	

C-CHANGE FROM PREVIOUS TYPE
D-ORDER BY THE METER
E-ORDER BY THE CENTIMETER
M-METRIC PART

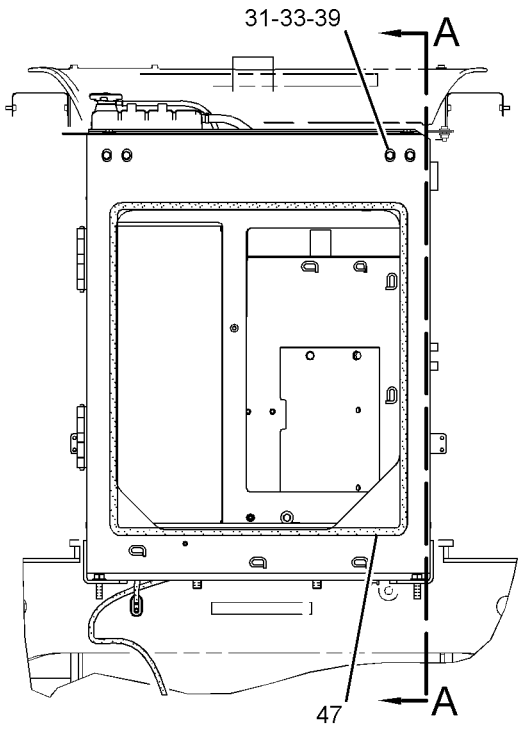

REAR VIEW

REFER TO ALL ILLUSTRATIONS OF THIS GROUP FOR AUXILIARY VIEWS

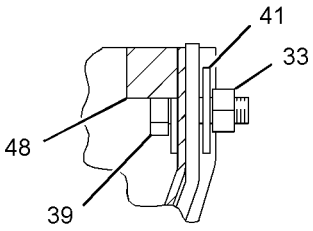

VIEW OF AREA B

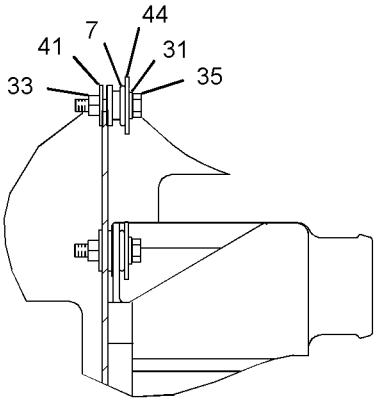

VIEW OF AREA C

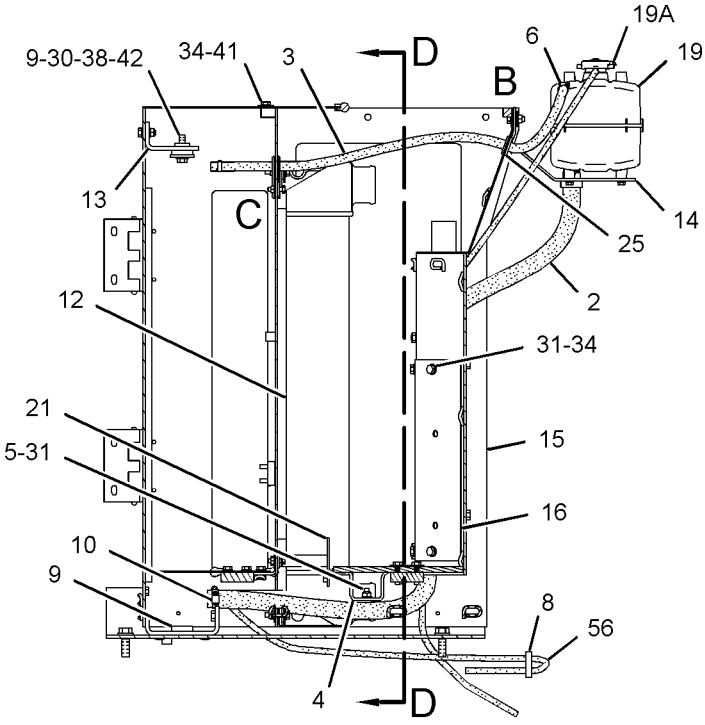

SECTION A-A

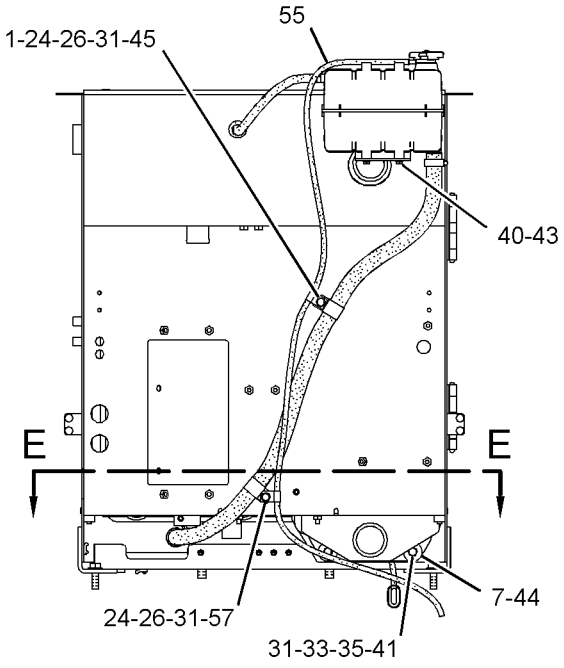

FRONT VIEW

GRAPHIC #1

g01296209

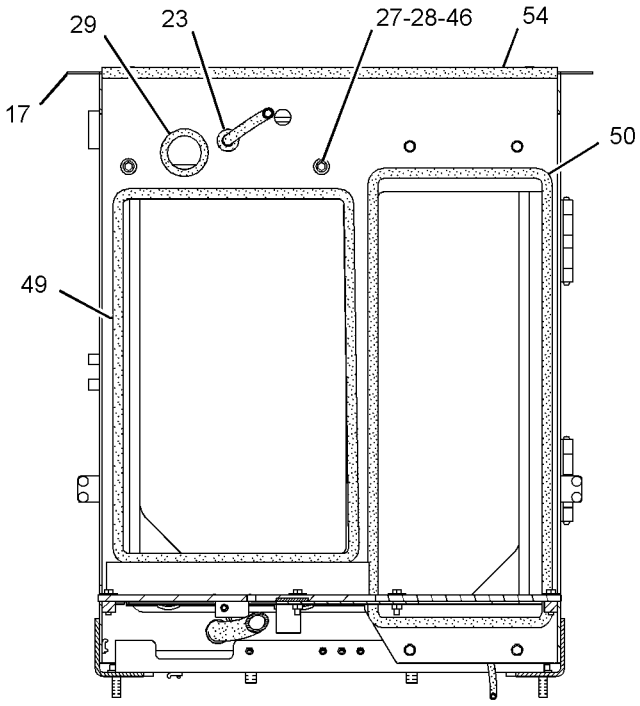

SECTION D-D

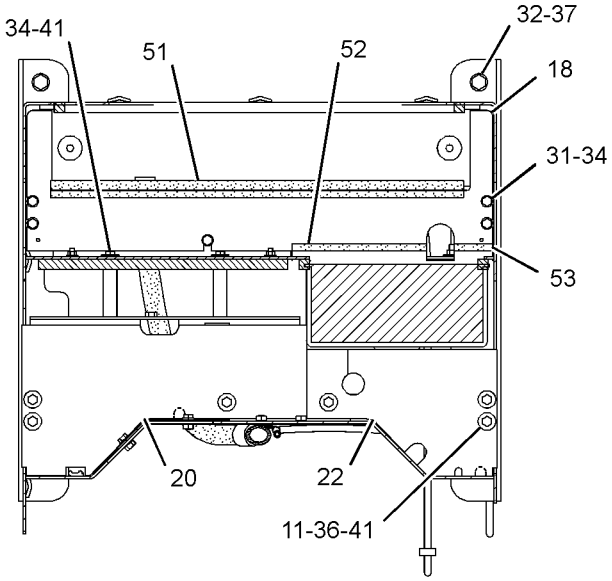

SECTION E-E

GRAPHIC #2 **<END>** g01292209

COOLING SYSTEM

267-5219 RADIATOR & AFTERCOOLER GP

S/N: TWR2040-UP

PART OF 242-9735 INSTALLATION AR-ENGINE

SMCS-1063, 1353 **i03230987**

NOTE	REF NO	GRAPHIC REF	PART NUMBER	QTY	PART NAME 1 2 3 4 5 6 (PRODUCT LEVEL)	SEE PAGE
	1	1	**133-3260**	1	SPACER (11X19X10-MM THK)	
E	2	1	**5P-1506**		HOSE (164-CM)	
E	3	1	**9X-2133**		HOSE (96-CM)	
	4	1	**279-7128**	1	BRACKET	
M	5	1	**8T-0389**	1	LOCKNUT (M10X1.5-THD)	
	6	1	**5P-4961**	2	CLAMP-HOSE	
	7	1	**6N-6984**	4	MOUNT-RUBBER	
	8	1	**7K-1181**	1	STRAP-CABLE	
	9	1	**7T-8332**	4	MOUNTING	
	10	1	**7X-7958**	2	CLAMP-HOSE	
	11	2	**127-5447**	6	SPACER (10.5X20X12-MM THK)	
	12	1	**185-1017**	1	AFTERCOOLER AS	
	13	1	**185-1036**	1	BRACKET	
	14	1	**185-1049**	1	PLATE	
Y	15	1	**191-9177**	1	GUARD GP-RADIATOR	374
	16	1	**191-9182**	1	PLATE	
	17	2	**191-9184**	1	PLATE	
	18	2	**191-9192**	1	PLATE	
	19	1	**227-0104**	1	TANK GP-COOLANT	
	19A	1	**227-4376**	1	CAP AS-RADIATOR (COOLANT TANK)	
	20	2	**229-9286**	1	SEAL	
	21	1	**230-7246**	1	PLATE AS	
M		1	**8T-3490**	1	NUT-WELD (M10X1.5-THD)	
	22	2	**243-0689**	1	SEAL	
	23	2	**053-0189**	1	GROMMET	
	24	1	**1B-3057**	2	CLIP (LOOP)	
	25	1	**3K-9520**	1	GROMMET	
	26	1	**4D-7388**	2	CLIP	
M	27	2	**5C-7261**	4	NUT (M8X1.25-THD)	
	28	2	**5P-4116**	8	WASHER-HARD (8.8X20.5X2-MM THK)	
	29	2	**5P-6887**	1	GROMMET	
	30	1	**8F-6437**	2	WASHER (13.5X50.8X4.76-MM THK)	
	31	1,2	**8T-4121**	24	WASHER-HARD (11X21X2.5-MM THK)	
	32	2	**8T-4122**	4	WASHER-HARD (17X32X3.5-MM THK)	
M	33	1	**8T-4133**	10	NUT (M10X1.5-THD)	
M	34	1,2	**8T-4137**	13	BOLT (M10X1.5X20-MM)	
M	35	1	**8T-4182**	4	BOLT (M10X1.5X45-MM)	
M	36	2	**8T-4186**	6	BOLT (M10X1.5X40-MM)	
M	37	2	**8T-4193**	4	BOLT (M16X2X50-MM)	
M	38	1	**8T-4194**	2	BOLT (M12X1.75X50-MM)	
M	39	1	**8T-4195**	6	BOLT (M10X1.5X30-MM)	
M	40	1	**8T-4200**	4	BOLT (M8X1.25X16-MM)	
	41	1,2	**8T-4222**	18	WASHER-PLATED (11X32X2.5-MM THK)	
	42	1	**8T-4223**	2	WASHER-HARD (13.5X25.5X3-MM THK)	
	43	1	**8T-4224**	4	WASHER-HARD (8.8X16X2-MM THK)	
	44	1	**8T-4226**	4	WASHER-PLATED (10.5X45X3-MM THK)	
M	45	1	**8T-4196**	1	BOLT (M10X1.5X35-MM)	
M	46	2	**8T-7547**	4	BOLT (M8X1.25X30-MM)	
D	47	1	**5P-5755**		SEAL (3.05-M)	
D	48	1	**5P-5755**		SEAL (0.85-M)	
D	49	2	**5P-5755**		SEAL (2.26-M)	
D	50	2	**5P-5755**		SEAL (2.35-M)	
D	51	2	**5P-7211**		SEAL (0.78-M)	
D	52	2	**5P-7211**		SEAL (0.24-M)	
D	53	2	**5P-7211**		SEAL (0.07-M)	
D	54	2	**5P-7211**		SEAL (0.85-M)	

267-5219 **RADIATOR & AFTERCOOLER GP** *(contd.)* **i03230987**

NOTE	REF NO	GRAPHIC REF	PART NUMBER	QTY	PART NAME 1 2 3 4 5 6 (PRODUCT LEVEL)	SEE PAGE
CE	55	1	**8C-3681**		HOSE (261-CM)	
E	56	1	**8C-3681**		HOSE (108-CM)	
M	57	1	**8T-4136**	1	BOLT (M10X1.5X25-MM)	
C	58	1	**6K-0806**	1	STRAP-CABLE	

C-CHANGE FROM PREVIOUS TYPE
D-ORDER BY THE METER
E-ORDER BY THE CENTIMETER
M-METRIC PART
Y-SEPARATE ILLUSTRATION

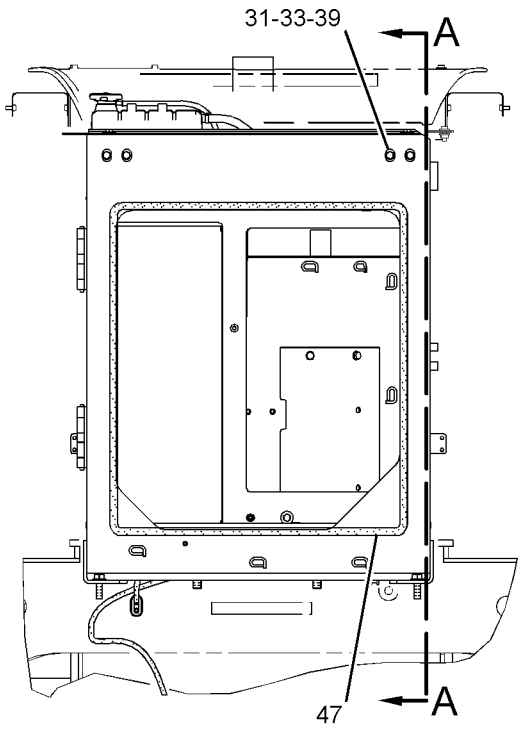

REAR VIEW

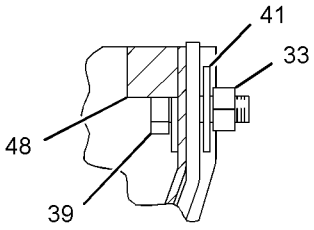

VIEW OF AREA B

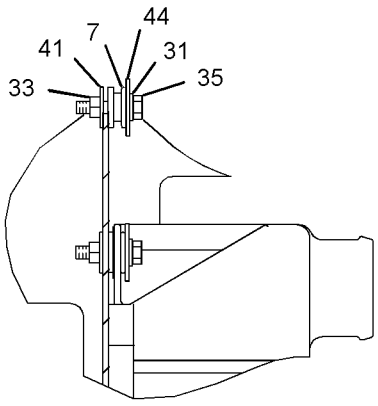

VIEW OF AREA C

REFER TO ALL ILLUSTRATIONS OF THIS GROUP FOR AUXILIARY VIEWS

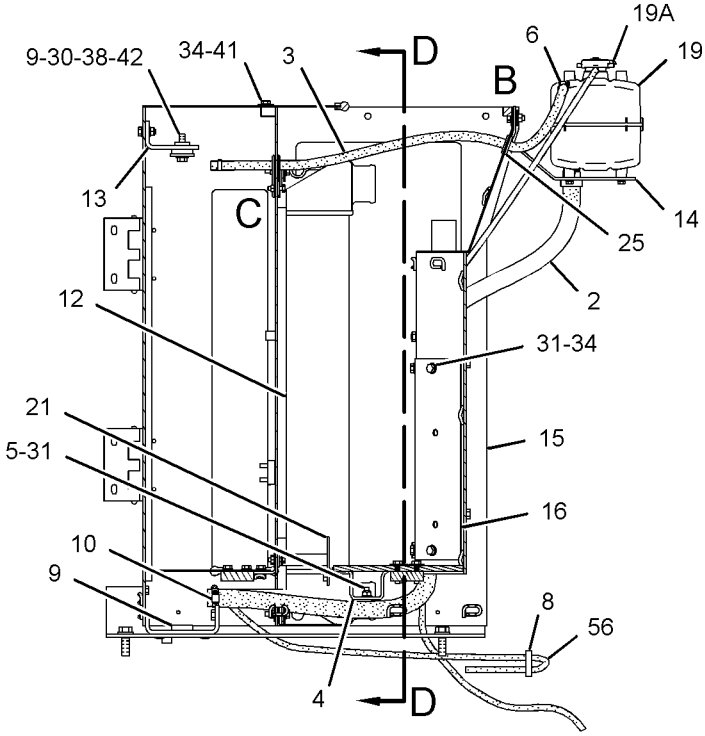

SECTION A-A

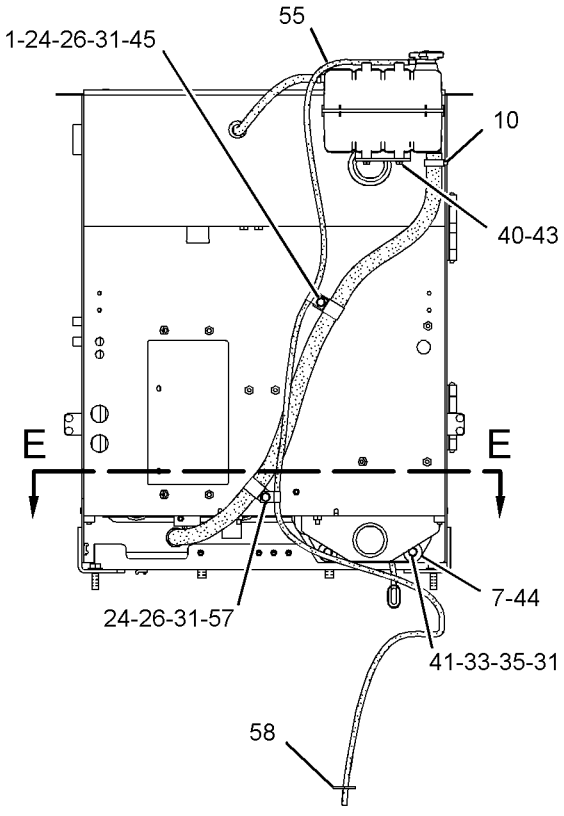

FRONT VIEW

GRAPHIC #1

g01298027

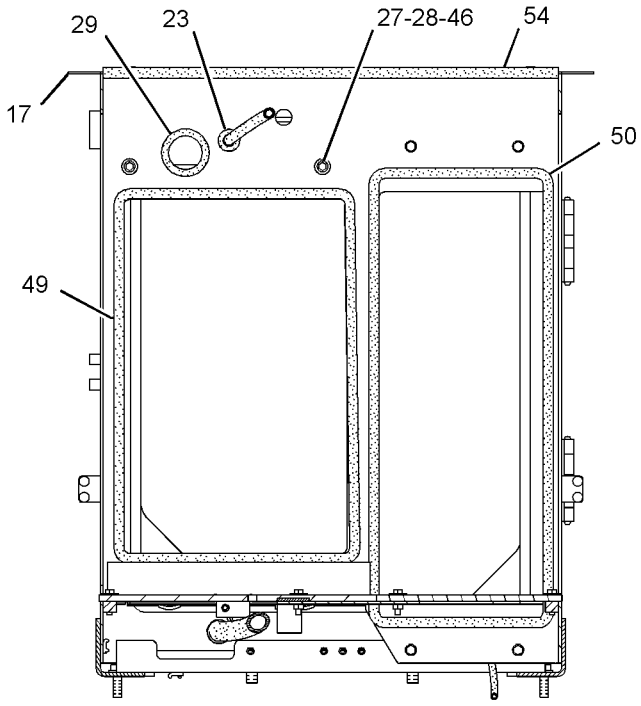

SECTION D-D

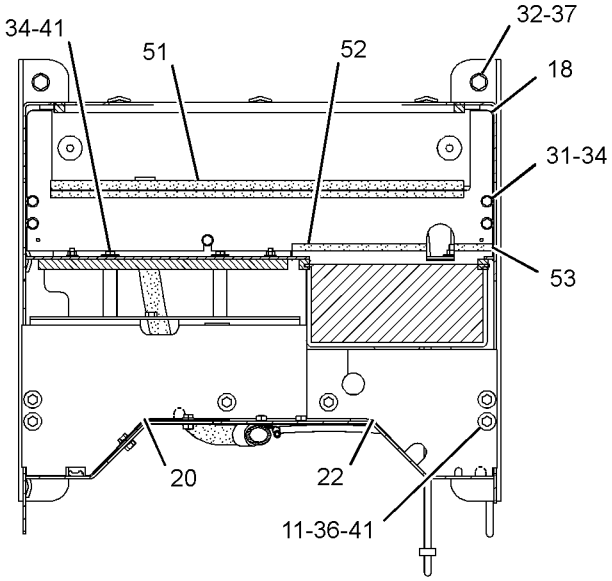

SECTION E-E

GRAPHIC #2 **<END>** g01298028

185-1016 RADIATOR GP

S/N: TWR1-UP
PART OF 239-7396 RADIATOR GP
AN ATTACHMENT

SMCS-1353 **i02679598**

NOTE	REF NO	GRAPHIC REF	PART NUMBER	QTY	PART NAME 1 2 3 4 5 6 (PRODUCT LEVEL)	SEE PAGE
	1	1	**185-1027**	4	BRACKET AS	
	2	1	**225-4287**	1	VALVE GP-RADIATOR DRAIN	
	3	1	**7X-3393**	8	WASHER-HARD (8.3X19X1.83-MM THK)	
M	4	1	**8T-4189**	8	BOLT (M8X1.25X20-MM)	
M	5	1	**8T-4200**	12	BOLT (M8X1.25X16-MM)	
	6	1	**8T-4224**	12	WASHER-HARD (8.8X16X2-MM THK)	

M-METRIC PART

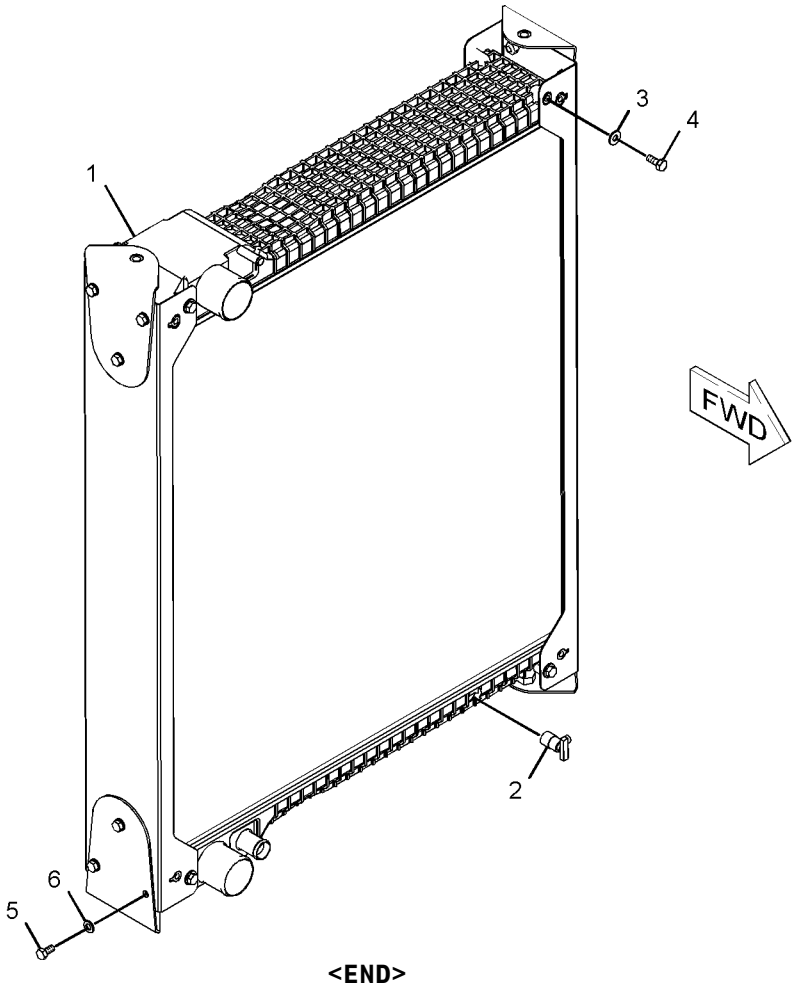

GRAPHIC #1 **<END>** g01013363

238-6658 RADIATOR GP—WASTE HANDLER

S/N: TWR1-UP
PART OF 239-7397 RADIATOR GP
AN ATTACHMENT

SMCS-1353 **i02066318**

NOTE	REF NO	GRAPHIC REF	PART NUMBER	QTY	PART NAME 1 2 3 4 5 6 (PRODUCT LEVEL)	SEE PAGE
	1	1	**185-1027**	4	BRACKET AS	
	2	1	**225-4287**	1	VALVE GP-RADIATOR DRAIN	
	3	1	**7X-3393**	8	WASHER-HARD (8.3X19X1.83-MM THK)	
M	4	1	**8T-4189**	8	BOLT (M8X1.25X20-MM)	
M	5	1	**8T-4200**	12	BOLT (M8X1.25X16-MM)	
	6	1	**8T-4224**	12	WASHER-HARD (8.8X16X2-MM THK)	

M-METRIC PART

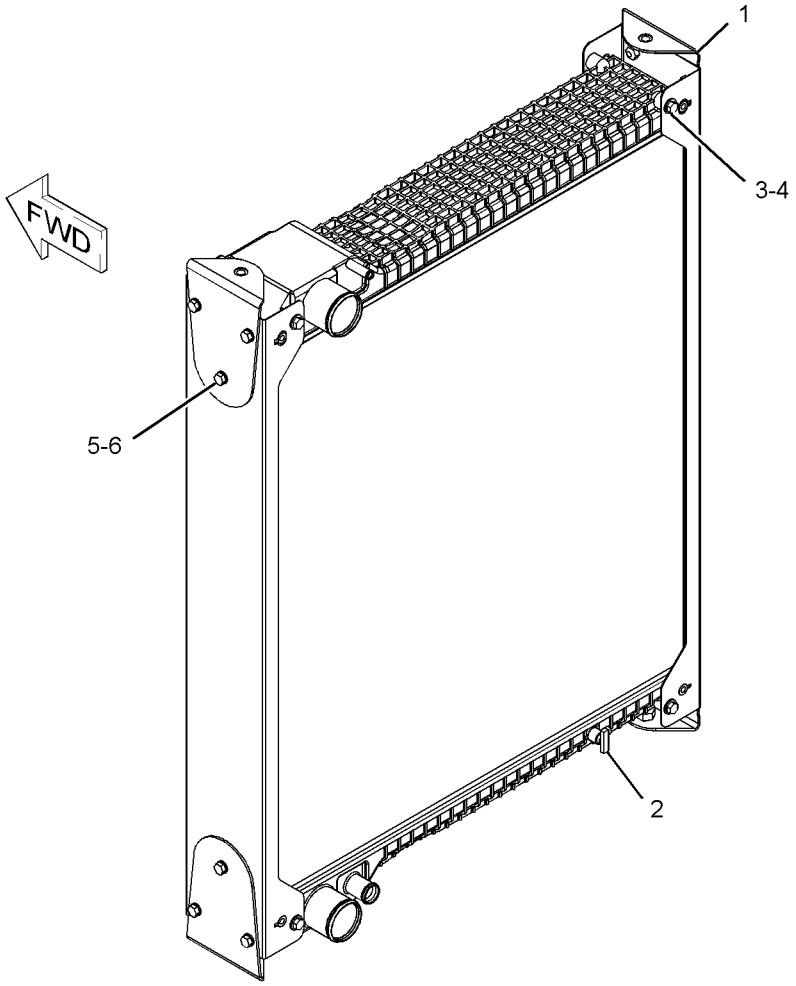

GRAPHIC #1 **<END>** g01079211

COOLING SYSTEM

239-7396 RADIATOR GP

S/N: TWR1-UP
AN ATTACHMENT

SMCS-1353 **i02056192**

NOTE	REF NO	GRAPHIC REF	PART NUMBER	QTY	PART NAME 1 2 3 4 5 6 (PRODUCT LEVEL)	SEE PAGE
Y	1	1	**185-1016**	1	RADIATOR GP	89
M	2	1	**9X-8482**	2	SETSCREW-SOCKET (M12X1.75X70-MM)	

M-METRIC PART
Y-SEPARATE ILLUSTRATION

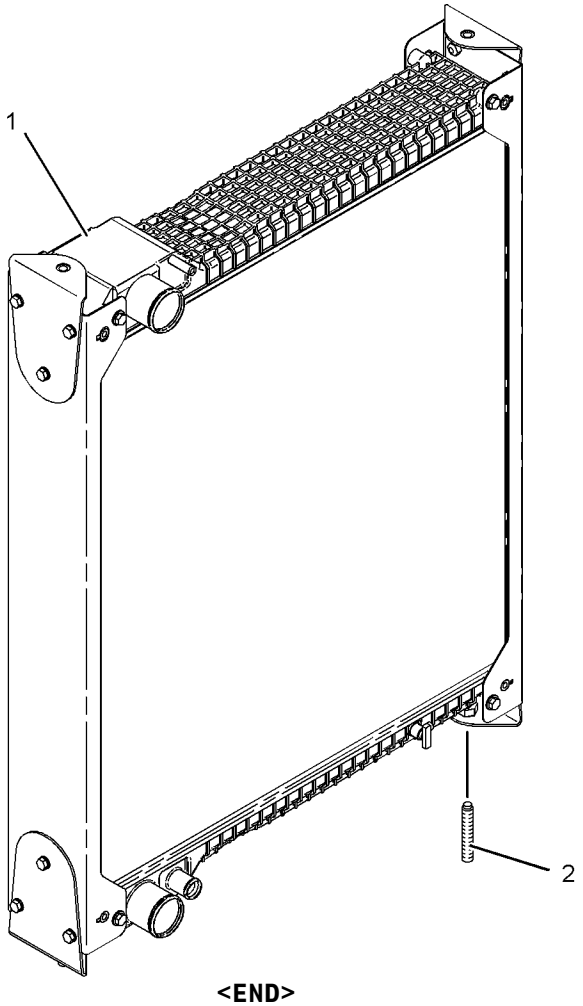

GRAPHIC #1 **<END>** g01087525

239-7397 RADIATOR GP—WASTE HANDLER

S/N: TWR1-UP

AN ATTACHMENT

SMCS-1353 **i02056250**

NOTE	REF NO	GRAPHIC REF	PART NUMBER	QTY	PART NAME 1 2 3 4 5 6 (PRODUCT LEVEL)	SEE PAGE
Y	1		**238-6658**	1	RADIATOR GP	90
M	2	1	**9X-8482**	2	SETSCREW-SOCKET (M12X1.75X70-MM)	

M-METRIC PART
Y-SEPARATE ILLUSTRATION

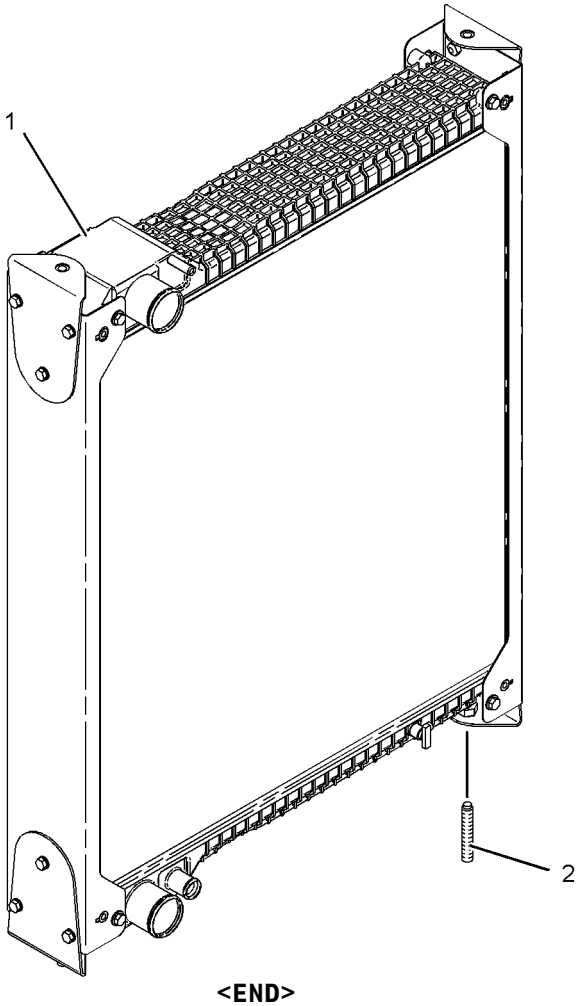

GRAPHIC #1 **<END>** g01087525

AIR INLET AND EXHAUST SYSTEM

186-2341 AIR CLEANER GP—WITH RAIN CAP

S/N: TWR1-786
AN ATTACHMENT

SMCS-1051, 1054 **i02578647**

NOTE	REF NO	GRAPHIC REF	PART NUMBER	QTY	PART NAME 1 2 3 4 5 6 (PRODUCT LEVEL)	SEE PAGE
D	1	1	**6V-1363**		HOSE (.9-M)	
	2	1	**166-2087**	1	CAP-RAIN (AIR CLEANER)	
	3	1	**4B-4863**	4	WASHER (4.7X11X1.2-MM THK)	
M	4	1	**8C-4982**	2	BOLT-SOCKET HEAD (M4X0.7X20-MM)	
	5	1	**123-0275**	1	CONNECTOR-FILTER	
	6	1	**159-3261**	1	HOSE	
Y	7	1	*199-8124*	1	AIR CLEANER GP	96
	8	1	*218-2792*	1	INDICATOR GP-AIR FILTER CHANGE	
		1	**187-2868**	1	INDICATOR AS-AIR FILTER CHANGE	
		1	**205-1627**	1	BRACKET	
M	9	1	**5C-8312**	2	NUT (M4X0.7-THD)	
	10	1	**5P-1717**	2	CLAMP-HOSE	
	11	1	**7D-1728**	2	CLIP	
	12	1	**7X-7729**	4	WASHER (11X25X3-MM THK)	
M	13	1	**8T-4136**	2	BOLT (M10X1.5X25-MM)	
M	14	1	**8T-4195**	2	BOLT (M10X1.5X30-MM)	

D-ORDER BY THE METER
M-METRIC PART
Y-SEPARATE ILLUSTRATION

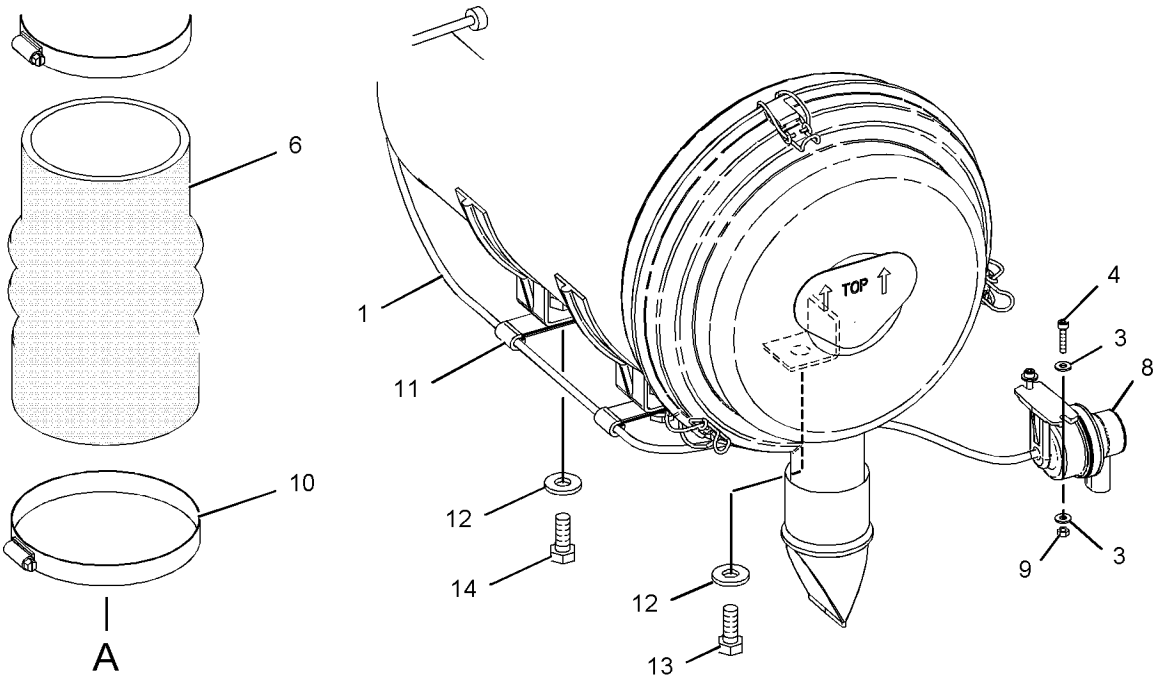

GRAPHIC #1 **<END>** g01093583

AIR INLET AND EXHAUST SYSTEM

186-2341 AIR CLEANER GP—WITH RAIN CAP

S/N: TWR787-UP
AN ATTACHMENT

SMCS-1051, 1054 **i02880565**

NOTE	REF NO	GRAPHIC REF	PART NUMBER	QTY	PART NAME 1 2 3 4 5 6 (PRODUCT LEVEL)	SEE PAGE
D	1	1	**6V-1363**		HOSE (0.9-M)	
	2	1	**166-2087**	1	CAP-RAIN (AIR CLEANER)	
	3	1	**5P-1717**	2	CLAMP-HOSE	
M	4	1	**8C-4982**	2	BOLT-SOCKET HEAD (M4X0.7X20-MM)	
	5	1	*218-2792*	1	INDICATOR GP-AIR FILTER CHANGE	
		1	**187-2868**	1	INDICATOR AS-AIR FILTER CHANGE	
		1	**205-1627**	1	BRACKET	
CY	6	1	**227-4321**	1	AIR CLEANER GP	99
C	7	1	**243-5057**	1	HOSE	
C	8	1	**255-4692**	1	CONNECTOR-FILTER	
	9	1	**4B-4863**	4	WASHER (4.7X11X1.2-MM THK)	
CM	10	1	**5C-7261**	2	NUT (M8X1.25-THD)	
M	11	1	**5C-8312**	2	NUT (M4X0.7-THD)	
C	12	1	**7D-1728**	1	CLIP	
CM	13	1	**7X-0818**	1	BOLT (M8X1.25X45-MM)	
C	14	1	**5P-4116**	4	WASHER-HARD (8.8X20.5X2-MM THK)	
CM	15	1	**8T-6912**	1	BOLT (M8X1.25X50-MM)	

C-CHANGE FROM PREVIOUS TYPE
D-ORDER BY THE METER
M-METRIC PART
Y-SEPARATE ILLUSTRATION

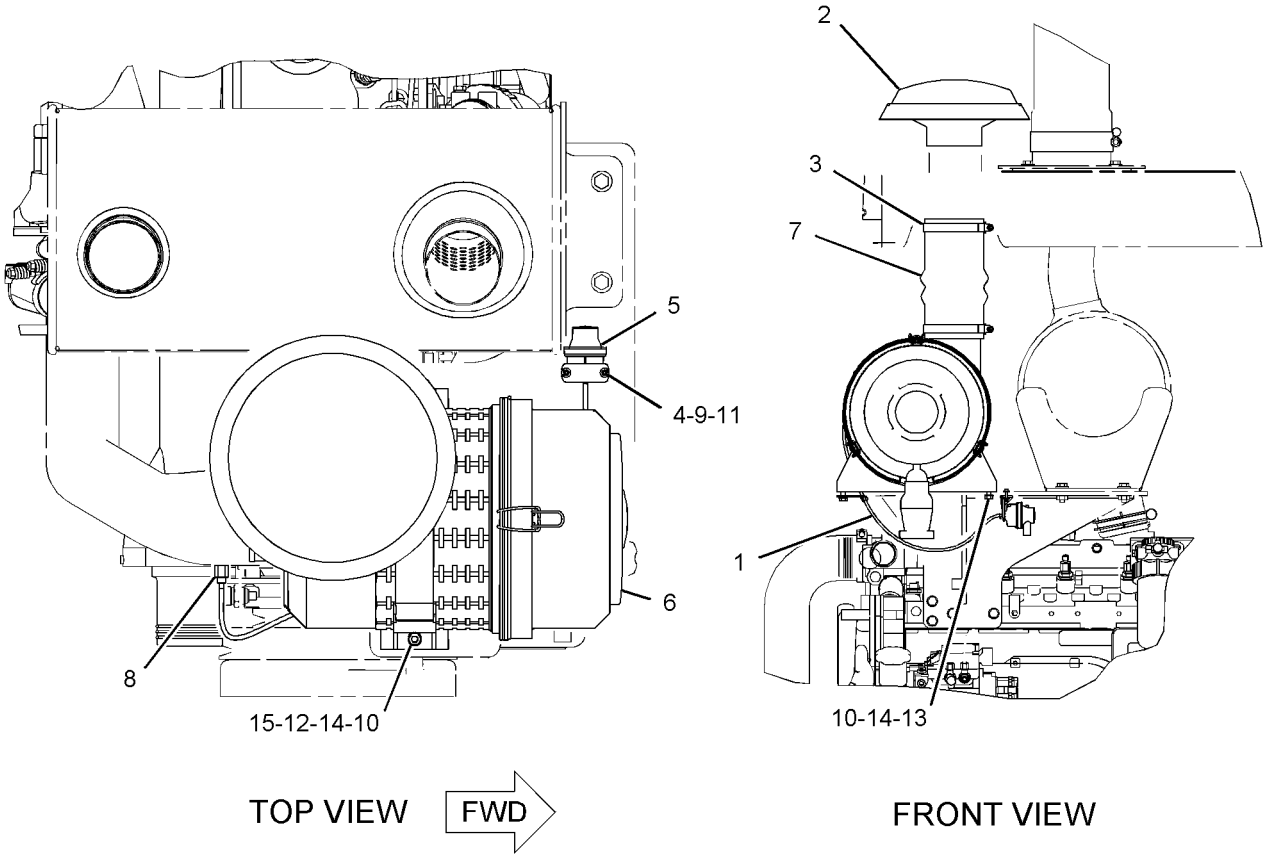

GRAPHIC #1 **<END>** g01110588

AIR INLET AND EXHAUST SYSTEM

199-8124 AIR CLEANER GP

S/N: TWR1-786
PART OF 186-2341 AIR CLEANER GP
AN ATTACHMENT

SMCS-1051, 1054 **i01741459**

NOTE	REF NO	GRAPHIC REF	PART NUMBER	QTY	PART NAME 1 2 3 4 5 6 (PRODUCT LEVEL)	SEE PAGE
	1	1	**131-8829**	1	VALVE-DUST (AIR CLEANER)	
	2	1	**152-7217**	1	FILTER ELEMENT AS-AIR (PRIMARY)	
	3	1	**152-7219**	1	FILTER ELEMENT AS-AIR (SECONDARY)	
	4	1	**152-7224**	1	COVER AS	

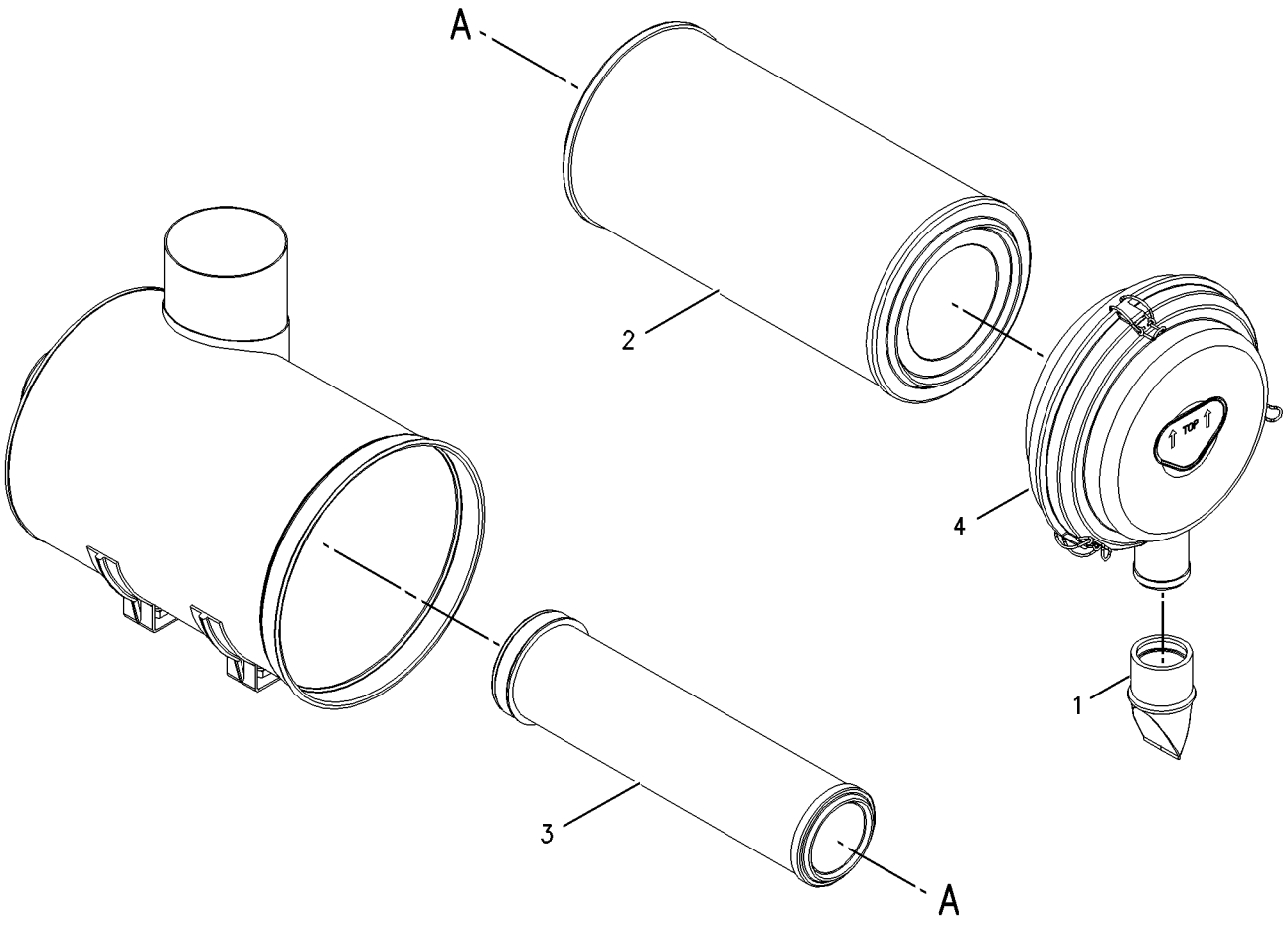

GRAPHIC #1 **<END>** g00898261

204-4329 AIR CLEANER GP—WITH PRECLEANER

S/N: TWR1-UP
AN ATTACHMENT

SMCS-1051, 1054 **i02862563**

NOTE	REF NO	GRAPHIC REF	PART NUMBER	QTY	PART NAME 1 2 3 4 5 6 (PRODUCT LEVEL)	SEE PAGE
D	1	1	**6V-1363**		HOSE (1-M)	
	2	1	**5P-1717**	2	CLAMP-HOSE	
M	3	1	**8C-4982**	2	BOLT-SOCKET HEAD (M4X0.7X20-MM)	
Y	4	1	**121-7746**	1	PRECLEANER GP	107
	5	1	*218-2792*	1	INDICATOR GP-AIR FILTER CHANGE	
		1	**187-2868**	1	INDICATOR AS-AIR FILTER CHANGE	
		1	**205-1627**	1	BRACKET	
CY	6	1	**227-4321**	1	AIR CLEANER GP	99
C	7	1	**243-5057**	1	HOSE	
C	8	1	**255-4692**	1	CONNECTOR-FILTER	
	9	1	**4B-4863**	4	WASHER (4.7X11X1.2-MM THK)	
CM	10	1	**5C-7261**	2	NUT (M8X1.25-THD)	
M	11	1	**5C-8312**	2	NUT (M4X0.7-THD)	
C	12	1	**7D-1728**	1	CLIP	
CM	13	1	**7X-0818**	1	BOLT (M8X1.25X45-MM)	
C	14	1	**5P-4116**	4	WASHER-HARD (8.8X20.5X2-MM THK)	
CM	15	1	**8T-6912**	1	BOLT (M8X1.25X50-MM)	

C-CHANGE FROM PREVIOUS TYPE
D-ORDER BY THE METER
M-METRIC PART
Y-SEPARATE ILLUSTRATION

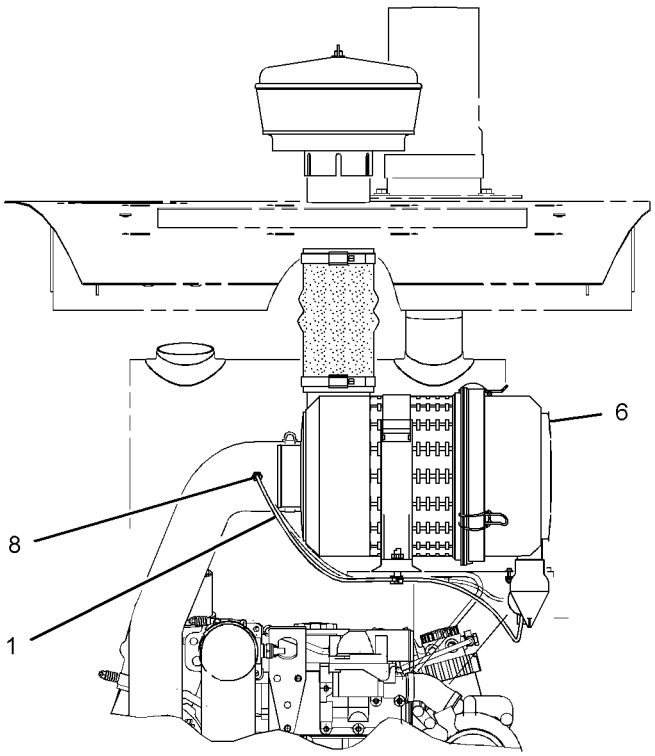

REAR VIEW

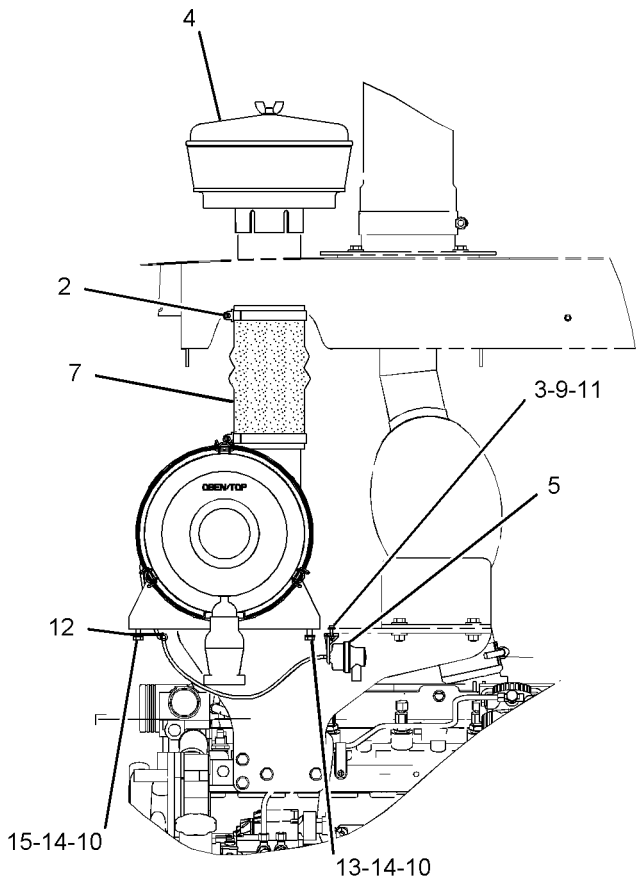

RIGHT SIDE VIEW

GRAPHIC #1 **<END>** g01111809

227-4321 AIR CLEANER GP

S/N: TWR1-UP
PART OF 186-2341, 204-4329 AIR CLEANER GP
AN ATTACHMENT

SMCS-1051, 1054 **i02906743**

NOTE	REF NO	GRAPHIC REF	PART NUMBER	QTY	PART NAME 1 2 3 4 5 6 (PRODUCT LEVEL)	SEE PAGE
	1	1	**222-9020**	1	FILTER ELEMENT AS-AIR (PRIMARY)	
	2	1	**222-9021**	1	FILTER ELEMENT AS-AIR (SECONDARY)	
	3	1	**282-8856**	1	COVER AS	
	4	1	**224-2263**	1	VALVE AS-AIR	
	5	1	**243-5054**	1	BRACKET	

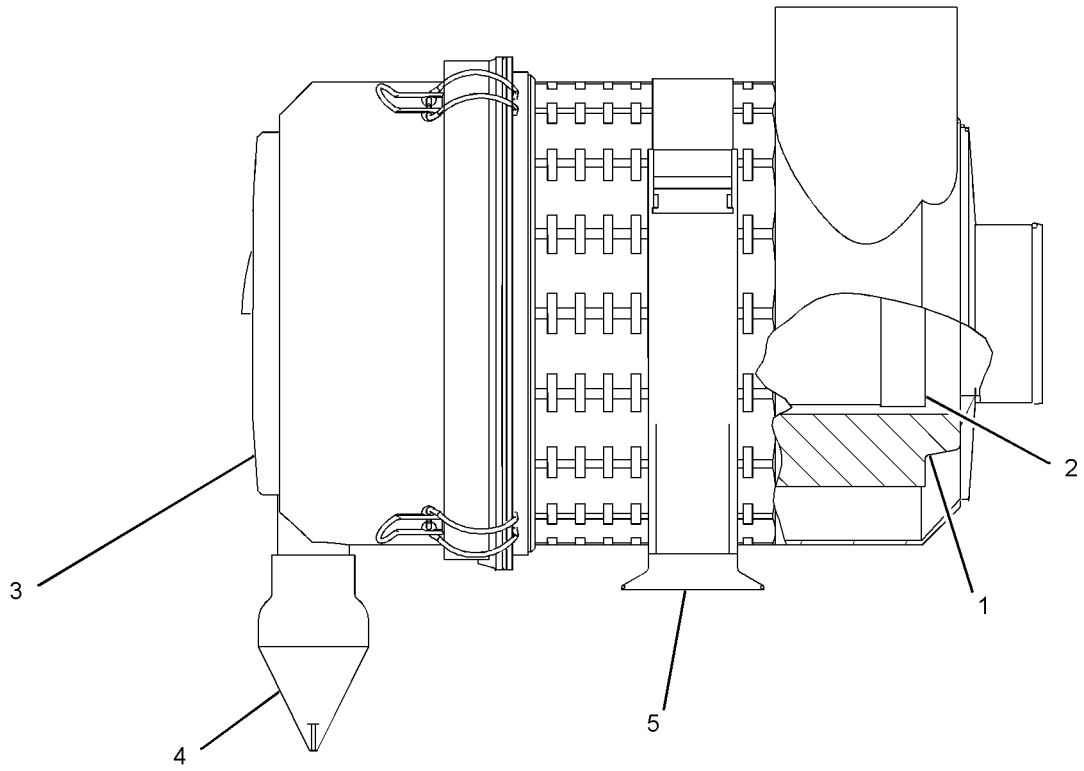

FRONT VIEW

GRAPHIC #1 **<END>** g01447959

236-1042 ELBOW GP-AIR INLET

S/N: CPT1-UP

PART OF 254-2236, 295-9744 ENGINE AR-PRIMARY

ALSO AN ATTACHMENT

SMCS-1087 **i01959139**

NOTE	REF NO	GRAPHIC REF	PART NUMBER	QTY	PART NAME 1 2 3 4 5 6 (PRODUCT LEVEL)	SEE PAGE
M	1	1	**6I-0260**	4	BOLT (M8X1.25X25-MM)	
	2	1	**217-0595**	1	CONNECTOR	
	3	1	**217-0596**	1	GASKET	

M-METRIC PART

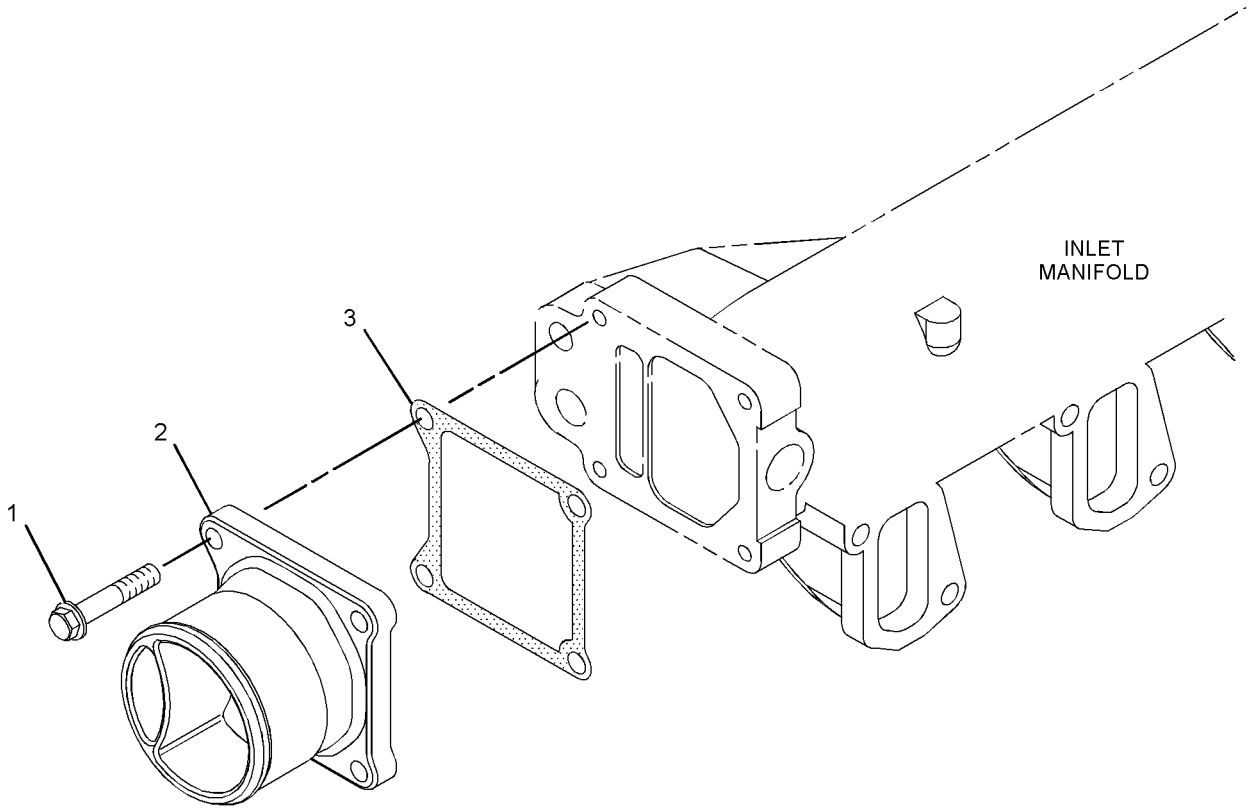

GRAPHIC #1 **<END>** g01018853

AIR INLET AND EXHAUST SYSTEM

180-9740 EXTENSION GP-EXHAUST

S/N: TWR1-UP

PART OF 235-7499 CHASSIS AR

SMCS-1061 **i02882846**

NOTE	REF NO	GRAPHIC REF	PART NUMBER	QTY	PART NAME 1 2 3 4 5 6 (PRODUCT LEVEL)	SEE PAGE
	1	1	**199-4284**	1	SUPPORT AS	
	2	1	**199-4297**	1	PLATE	
	3	1	**302-5195**	1	TUBE AS	
	4	1	**7X-7729**	4	WASHER (11X25X3-MM THK)	
M	5	1	**8T-4195**	4	BOLT (M10X1.5X30-MM)	

M-METRIC PART

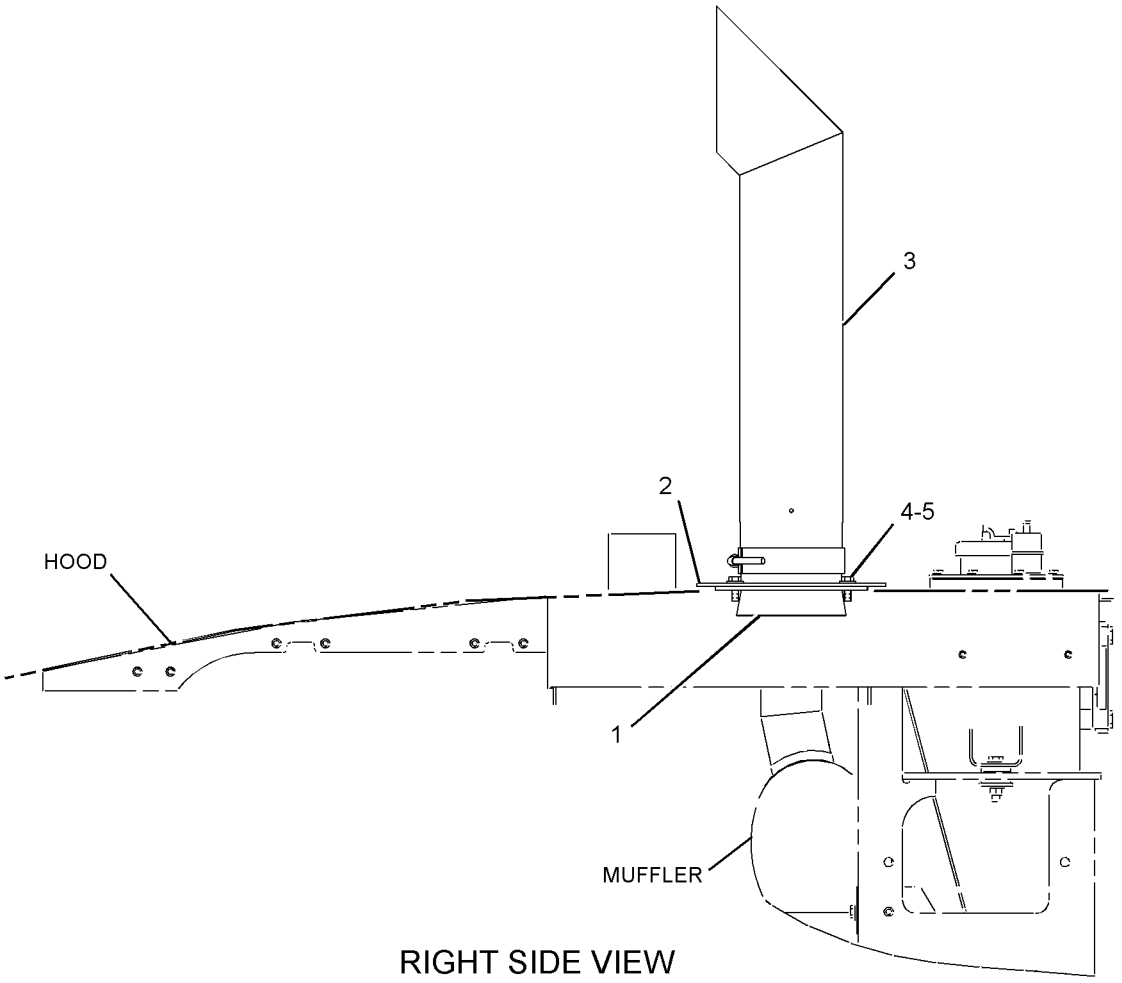

RIGHT SIDE VIEW

GRAPHIC #1 **<END>** g01431014

AIR INLET AND EXHAUST SYSTEM

186-2347 LINES GP-AFTERCOOLER AIR

S/N: TWR1-787
PART OF 256-3786 ENGINE AR
ALSO AN ATTACHMENT

SMCS-1063, 1071 **i02536777**

NOTE	REF NO	GRAPHIC REF	PART NUMBER	QTY	PART NAME 1 2 3 4 5 6 (PRODUCT LEVEL)	SEE PAGE
	1	1	**3E-7445**	2	CLAMP-HOSE	
	2	1	**144-0367**	1	CLAMP-HOSE	
	3	1	**8T-4986**	1	CLAMP-HOSE	
	4	1	**109-5351**	1	HOSE	
	5	1	**159-2829**	1	HOSE	
	6	1	**192-4352**	1	HOSE	
	7	1	**209-4578**	1	CLAMP	
	8	1	**209-4580**	2	CLAMP	
	9	1	**214-5514**	1	GROMMET	
	10	1	**214-5515**	1	TUBE	
	11	1	**215-4012**	1	CLAMP	
	12	1	**216-4983**	2	CLAMP	
	13	1	**223-4946**	1	HOSE	
	14	1	**200-0831**	1	HOSE AS	

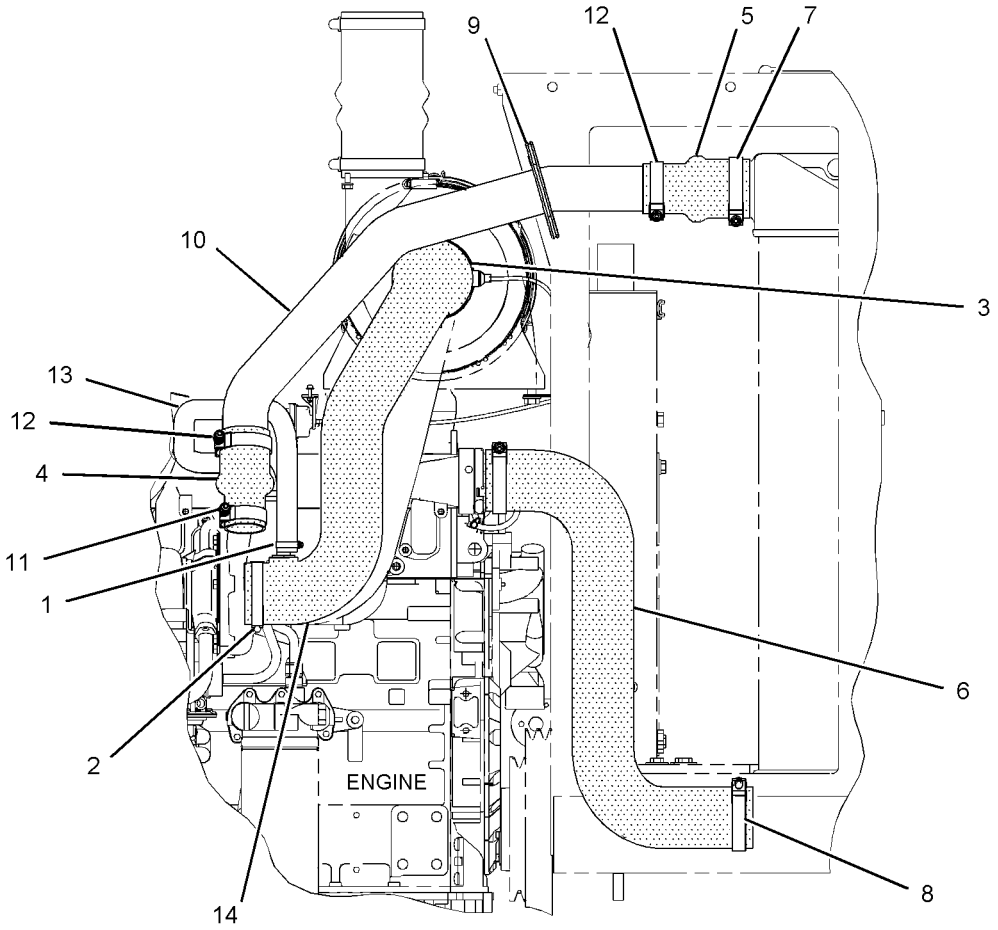

LEFT SIDE VIEW

GRAPHIC #1 **<END>** g01142282

AIR INLET AND EXHAUST SYSTEM

186-2347 LINES GP-AFTERCOOLER AIR

S/N: TWR788-UP
PART OF 256-3786 ENGINE AR
ALSO AN ATTACHMENT

SMCS-1063, 1071 **i02536769**

NOTE	REF NO	GRAPHIC REF	PART NUMBER	QTY	PART NAME 1 2 3 4 5 6 (PRODUCT LEVEL)	SEE PAGE
	1	1	**2S-3440**	2	CLAMP-HOSE	
	2	1	**144-0367**	1	CLAMP-HOSE	
	3	1	**8T-4986**	1	CLAMP-HOSE	
	4	1	**109-5351**	1	HOSE	
	5	1	**159-2829**	1	HOSE	
	6	1	**192-4352**	1	HOSE	
	7	1	**209-4578**	1	CLAMP	
	8	1	**209-4580**	2	CLAMP	
	9	1	**214-5514**	1	GROMMET	
	10	1	**214-5515**	1	TUBE	
	11	1	**215-4012**	1	CLAMP	
	12	1	**216-4983**	2	CLAMP	
	13	1	**223-4946**	1	HOSE	
	14	1	**243-5062**	1	HOSE AS	

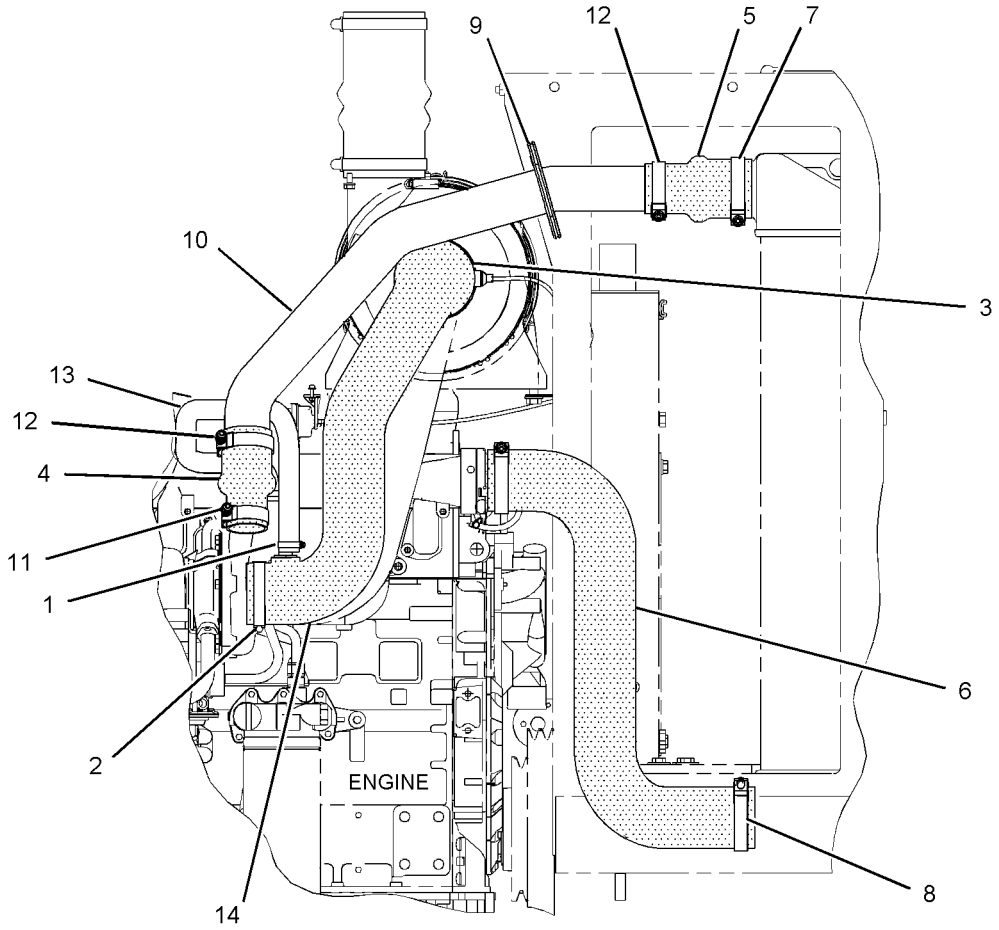

LEFT SIDE VIEW

GRAPHIC #1 **<END>** g01142282

AIR INLET AND EXHAUST SYSTEM

186-2344 MUFFLER GP

S/N: TWR1-786

PART OF 242-9735 INSTALLATION AR-ENGINE

SMCS-1062 **i01804753**

NOTE	REF NO	GRAPHIC REF	PART NUMBER	QTY	PART NAME 1 2 3 4 5 6 (PRODUCT LEVEL)	SEE PAGE
	1	1	**124-2528**	4	SPACER (11X20X10-MM THK)	
	2	1	**196-9441**	1	SUPPORT AS	
M	2A	1	**9R-2672**	1	BOSS (M10X1.5X20-MM)	
	3	1	**199-5067**	1	MUFFLER AS	
	3A	1	**9Y-8315**	1	CLAMP-PIPE	
	4	1	**7X-7729**	4	WASHER (11X25X3-MM THK)	
	5	1	**8T-4121**	4	WASHER-HARD (11X21X2.5-MM THK)	
M	6	1	**8T-4133**	2	NUT (M10X1.5-THD)	
M	7	1	**8T-4195**	2	BOLT (M10X1.5X30-MM)	
M	8	1	**8T-4196**	4	BOLT (M10X1.5X35-MM)	

M-METRIC PART

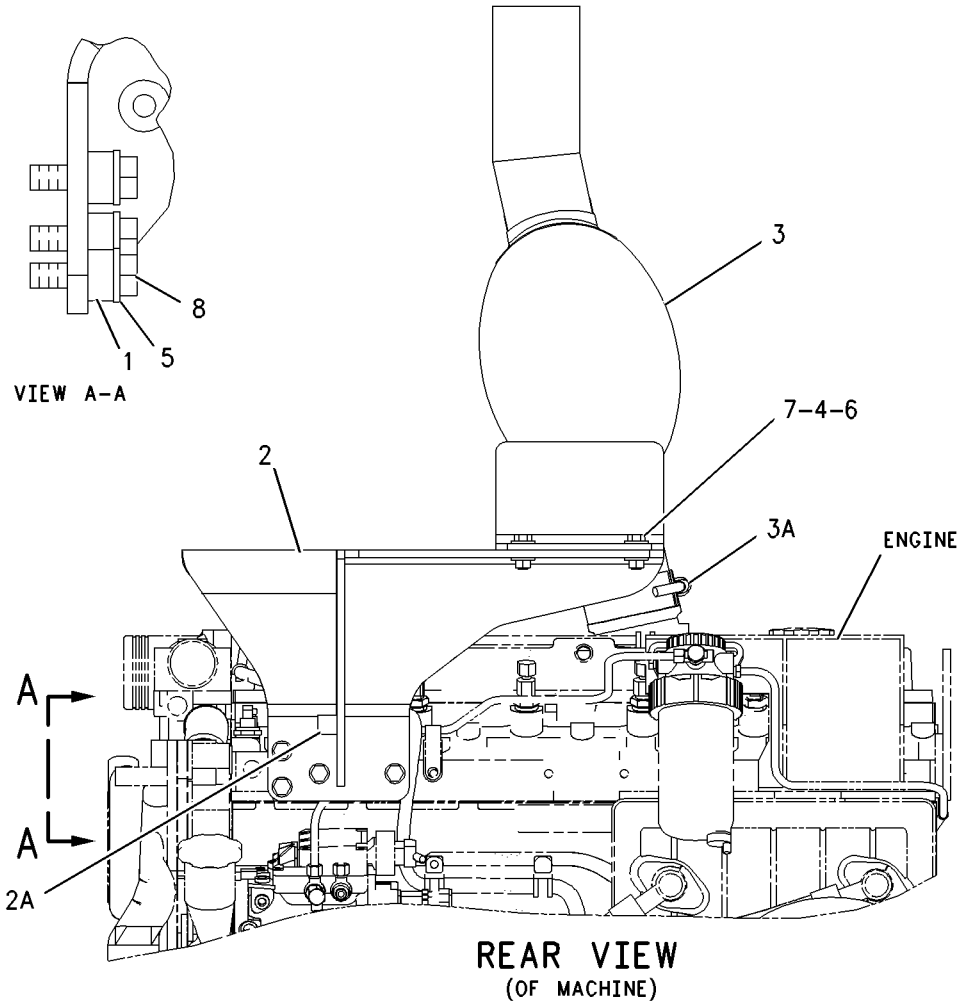

GRAPHIC #1 **<END>** g00924466

264-6819 MUFFLER GP

S/N: TWR787-UP
PART OF 242-9735 INSTALLATION AR-ENGINE
TYPE 1

SMCS-1062 **i02357280**

NOTE	REF NO	GRAPHIC REF	PART NUMBER	QTY	PART NAME 1 2 3 4 5 6 (PRODUCT LEVEL)	SEE PAGE
	1	1	**124-2528**	4	SPACER (11X20X10-MM THK)	
	2	1	**125-7484**	1	SPACER (11X25X36-MM THK)	
	3	1	**199-5067**	1	MUFFLER AS	
		1	**9Y-8315**	1	CLAMP-PIPE	
	4	1	**240-8159**	1	BRACKET AS	
M		1	**9R-2672**	1	BOSS (M10X1.5X20-MM)	
	5	1	**7X-7729**	4	WASHER (11X25X3-MM THK)	
	6	1	**8T-4121**	4	WASHER-HARD (11X21X2.5-MM THK)	
M	7	1	**8T-4133**	2	NUT (M10X1.5-THD)	
M	8	1	**8T-4195**	1	BOLT (M10X1.5X30-MM)	
M	9	1	**8T-4196**	4	BOLT (M10X1.5X35-MM)	
M	10	1	**8T-5005**	1	BOLT (M10X1.5X70-MM)	

M-METRIC PART

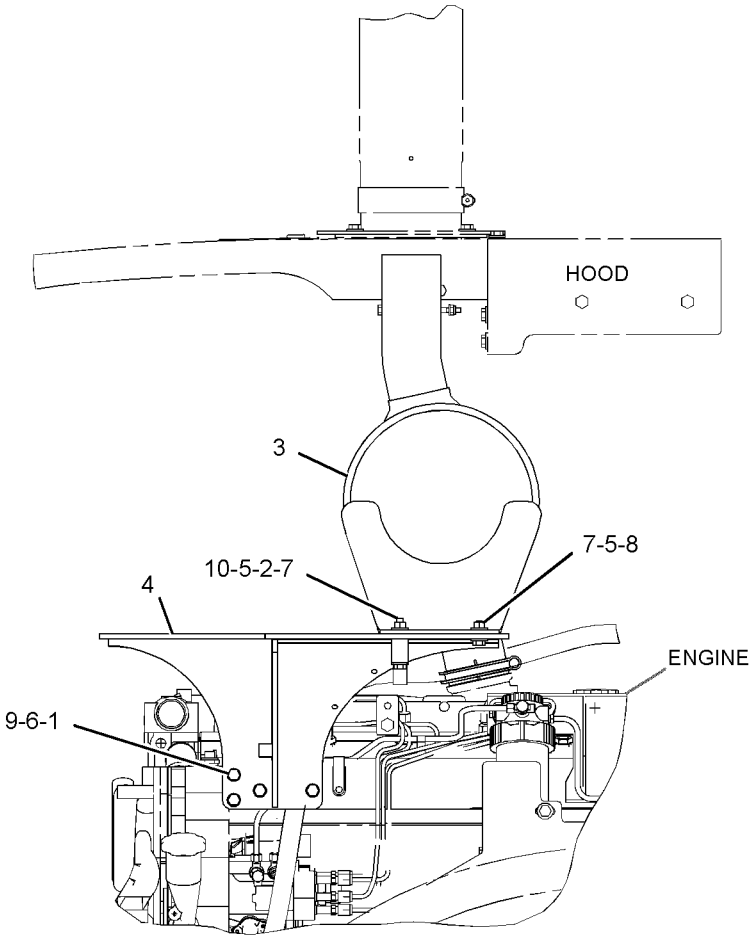

RIGHT SIDE VIEW

GRAPHIC #1

<END>

g01182531

AIR INLET AND EXHAUST SYSTEM

264-6819 MUFFLER GP

S/N: TWR787-UP
PART OF 242-9735 INSTALLATION AR-ENGINE
TYPE 2

SMCS-1062 **i02765603**

NOTE	REF NO	GRAPHIC REF	PART NUMBER	QTY	PART NAME 1 2 3 4 5 6 (PRODUCT LEVEL)	SEE PAGE
	1	1	**118-9901**	4	SPACER (12X20X10-MM THK)	
	2	1	**125-7484**	1	SPACER (11X25X36-MM THK)	
	3	1	**240-8159**	1	BRACKET AS	
M		1	**9R-2672**	1	BOSS (M10X1.5X20-MM)	
C	4	1	**252-7173**	1	MUFFLER AS	
		1	**255-2355**	1	CLAMP	
	5	1	**7X-7729**	4	WASHER (11X25X3-MM THK)	
	6	1	**8T-4121**	4	WASHER-HARD (11X21X2.5-MM THK)	
M	7	1	**8T-4133**	2	NUT (M10X1.5-THD)	
M	8	1	**8T-4195**	1	BOLT (M10X1.5X30-MM)	
M	9	1	**8T-4196**	4	BOLT (M10X1.5X35-MM)	
M	10	1	**8T-5005**	1	BOLT (M10X1.5X70-MM)	

C-CHANGE FROM PREVIOUS TYPE
M-METRIC PART

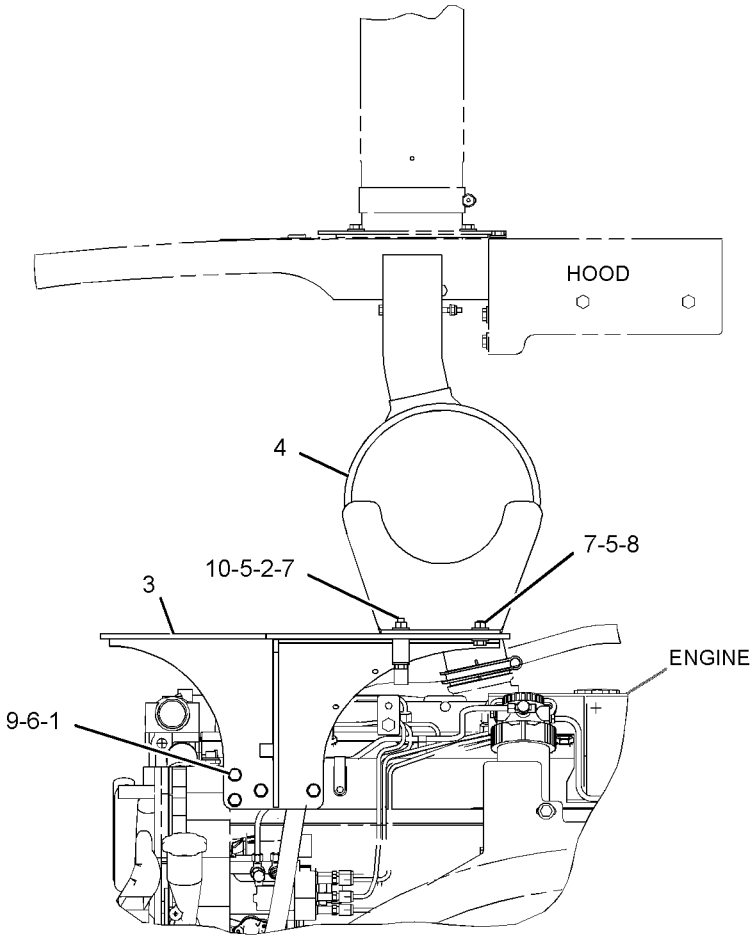

RIGHT SIDE VIEW

GRAPHIC #1

<END>

g01388014

121-7746 PRECLEANER GP

S/N: TWR1-UP

PART OF 204-4329 AIR CLEANER GP

FOR USE WITH AIR CLEANERS WITH 101.6-MM DIAMETER INLET. CANNOT BE USED WITH AIR CLEANER RAIN CAP

AN ATTACHMENT

SMCS-1055 **i01728182**

NOTE	REF NO	GRAPHIC REF	PART NUMBER	QTY	PART NAME 1 2 3 4 5 6 (PRODUCT LEVEL)	SEE PAGE
	1	1	**1M-7250**	1	BOWL	
	2	1	**9M-9439**	1	COVER AS	

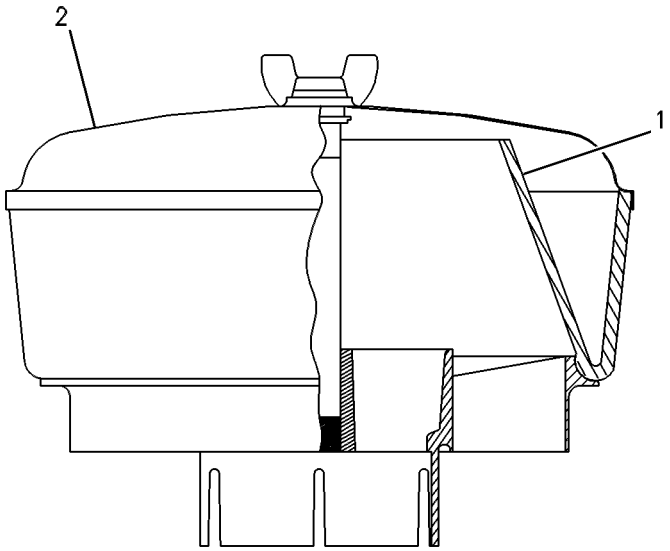

GRAPHIC #1 **<END>** g00130024

AIR INLET AND EXHAUST SYSTEM

235-9700 TURBOCHARGER GP

S/N: CPT1-UP

PART OF 254-2236, 295-9744 ENGINE AR-PRIMARY

ALSO AN ATTACHMENT

SMCS-1052, 1053 **i02348530**

NOTE	REF NO	GRAPHIC REF	PART NUMBER	QTY	PART NAME 1 2 3 4 5 6 (PRODUCT LEVEL)	SEE PAGE
	1	1	**5D-1026**	2	CLAMP-HOSE	
M	2	1	**6I-0217**	2	BOLT (M8X1.25X20-MM)	
	3	1	**6I-1132**	1	GASKET	
	4	1	**7W-2628**	1	NUT	
	5	1	**032-8048**	1	FERRULE	
	6	1	**100-4453**	2	STUD	
	7	1	**100-4454**	6	NUT	
	8	1	**100-4466**	1	GASKET	
M	9	1	**124-3815**	3	BOLT (M8X16X1.25-MM)	
	10	1	**6I-0563**	4	NUT (M10X1.15-THD)	
	11	1	**141-8589**	1	GASKET (TURBO)	
	12	1	**141-8597**	1	GASKET	
	13	1	**141-8599**	4	STUD	
	14	1	**141-9777**	1	HEAT SHIELD	
	15	1	**238-8292**	18	BOLT-FLANGE HEAD	
	16	1	**147-5553**	4	STUD	
	17	1	**160-0149**	1	HOSE (TURBO DRAIN)	
	18	1	**162-1504**	6	BOLT	
	19	1	**216-2892**	1	BOLT-SOCKET HEAD	
	20	1	**216-8690**	1	TUBE AS	
	21	1	**216-8699**	1	MANIFOLD-INLET	
	22	1	**216-8703**	2	GASKET-MANIFOLD	
	23	1	**216-8705**	6	BOLT	
	24	1	**216-8708**	1	MANIFOLD-EXHAUST	
	25	1	**216-8709**	1	MANIFOLD-EXHAUST	
	26	1	**216-8710**	1	MANIFOLD-EXHAUST	
	27	1	**216-8712**	2	GASKET-MANIFOLD	
	28	1	**221-6863**	1	TUBE AS	
	29	1	**221-6864**	1	ELBOW	
	30	1	**235-9694**	1	TURBOCHARGER GP	

M-METRIC PART

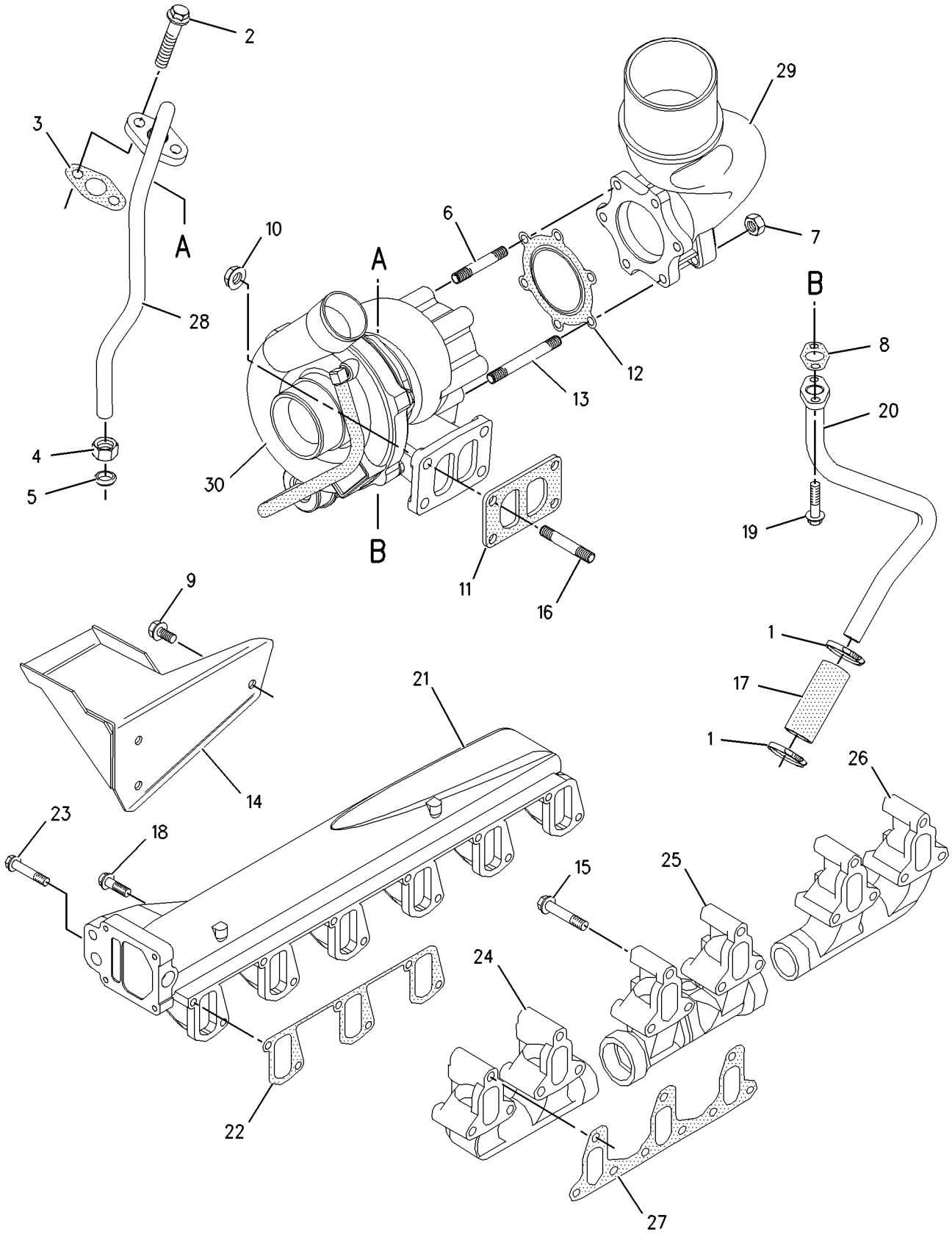

GRAPHIC #1 **<END>** g00993052

141-7844 BASE GP-FUEL FILTER

S/N: CPT1-UP
PART OF 235-6347 FILTER GP-FUEL
ALSO AN ATTACHMENT

SMCS-1262 **i02396377**

NOTE	REF NO	GRAPHIC REF	PART NUMBER	QTY	PART NAME 1 2 3 4 5 6 (PRODUCT LEVEL)	SEE PAGE
	1	1	**101-3739**	1	NUT	
	2	1	**101-3740**	1	CAP	
	3	1	**101-3741**	1	SEAL	
	4	1	**101-3742**	1	PLUG	
	5	1	**145-4501**	1	FILTER GP-FUEL	

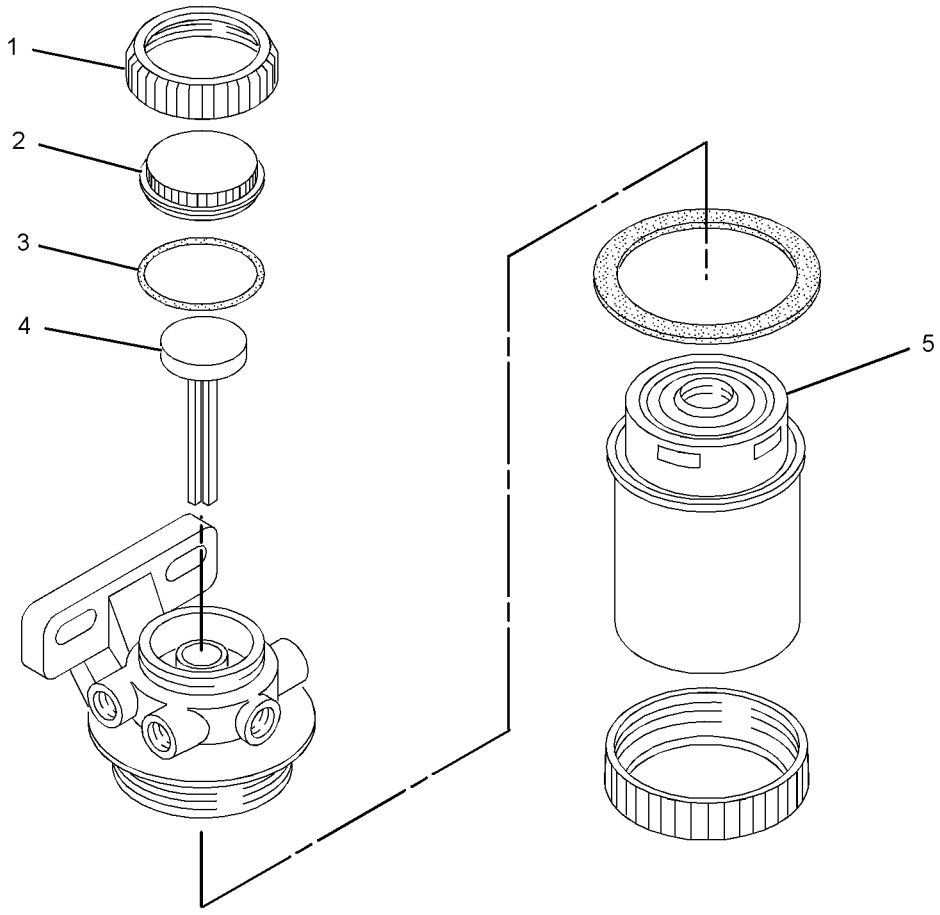

GRAPHIC #1 **<END>** g01198599

235-6347 FILTER GP-FUEL–SECONDARY

S/N: CPT1-UP

PART OF 254-2236, 295-9744 ENGINE AR-PRIMARY

ALSO AN ATTACHMENT

SMCS-1261 **i03091770**

NOTE	REF NO	GRAPHIC REF	PART NUMBER	QTY	PART NAME 1 2 3 4 5 6 (PRODUCT LEVEL)	SEE PAGE
Y	1	1	**141-7844**	1	BASE GP-FUEL FILTER	110

Y-SEPARATE ILLUSTRATION

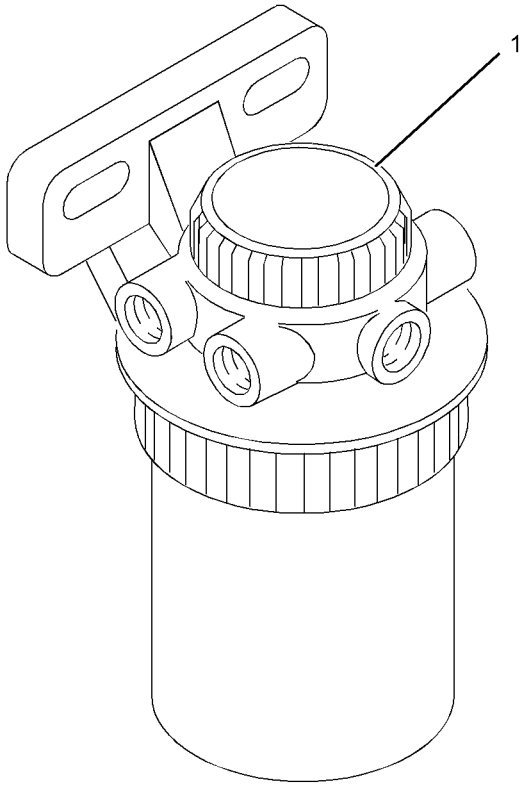

GRAPHIC #1 **<END>** g01198457

184-1333 LINES GP-FUEL–WATER SEPARATOR

S/N: TWR1-UP

PART OF 235-7499 CHASSIS AR

SMCS-1274 **i02702436**

NOTE	REF NO	GRAPHIC REF	PART NUMBER	QTY	PART NAME 1 2 3 4 5 6 (PRODUCT LEVEL)	SEE PAGE
	1	1,2	**1P-4278**	4	CLAMP-HOSE	
	2	1	**6G-2263**	2	SPACER (10.5X19X28.5-MM THK)	
	3	1	**032-8100**	2	WASHER (0.531X0.718X0.064-IN THK)	
	4	1	**033-7849**	2	PLUG	
	5	1	**067-6269**	2	FERRULE	
	6	1	**122-4873**	1	BRACKET AS	
M		1	**8T-3490**	1	NUT-WELD (M10X1.5-THD)	
	7	1	**152-0983**	2	TUBE AS	
	8	1	**219-8604**	1	PLATE AS	
M		1	**8T-3490**	1	NUT-WELD (M10X1.5-THD)	
	9	1	**220-1865**	1	BRACKET AS	
M		1	**8T-3490**	1	NUT-WELD (M10X1.5-THD)	
Y	10	1	**220-5557**	1	SEPARATOR GP-WATER	128
	11	1	**226-9424**	2	GROMMET	
	12	1	**4D-6466**	2	CLIP	
	13	1,2	**164-4225**	2	CLIP	
	14	1,2	**6D-3479**	2	CLIP	
	15	1	**7X-7729**	4	WASHER (11X25X3-MM THK)	
	16	1,2	**8T-4121**	4	WASHER-HARD (11X21X2.5-MM THK)	
M	17	1	**8T-4136**	1	BOLT (M10X1.5X25-MM)	
M	18	1,2	**8T-4137**	2	BOLT (M10X1.5X20-MM)	
M	19	1	**8T-4196**	3	BOLT (M10X1.5X35-MM)	
M	20	1	**8T-6466**	1	BOLT (M10X1.5X60-MM)	
E	21	1	**8C-3681**		HOSE (80-CM)	
E	22	1	**5P-1420**		HOSE (177-CM)	
E	23	2	**5P-1420**		HOSE (177.5-CM)	
E	24	1	**5P-1420**		HOSE (150-CM)	
M	25	1	**8T-4185**	1	BOLT (M10X1.5X50-MM)	
	26	1	**5P-4961**	2	CLAMP-HOSE	

E-ORDER BY THE CENTIMETER
M-METRIC PART
Y-SEPARATE ILLUSTRATION

184 - 1333 **LINES GP - FUEL** *(contd.)* **i02702436**

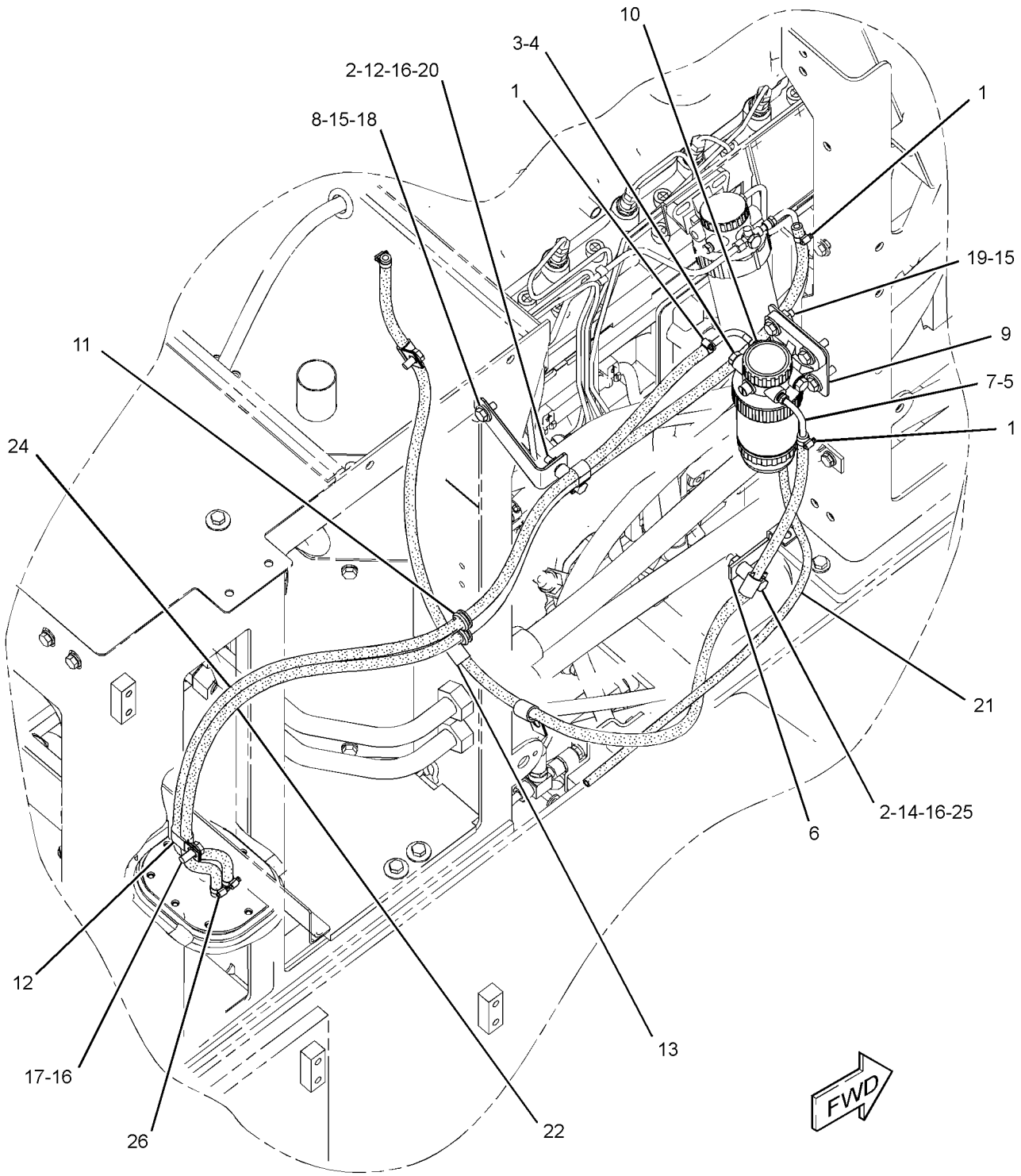

GRAPHIC #1 g01368297

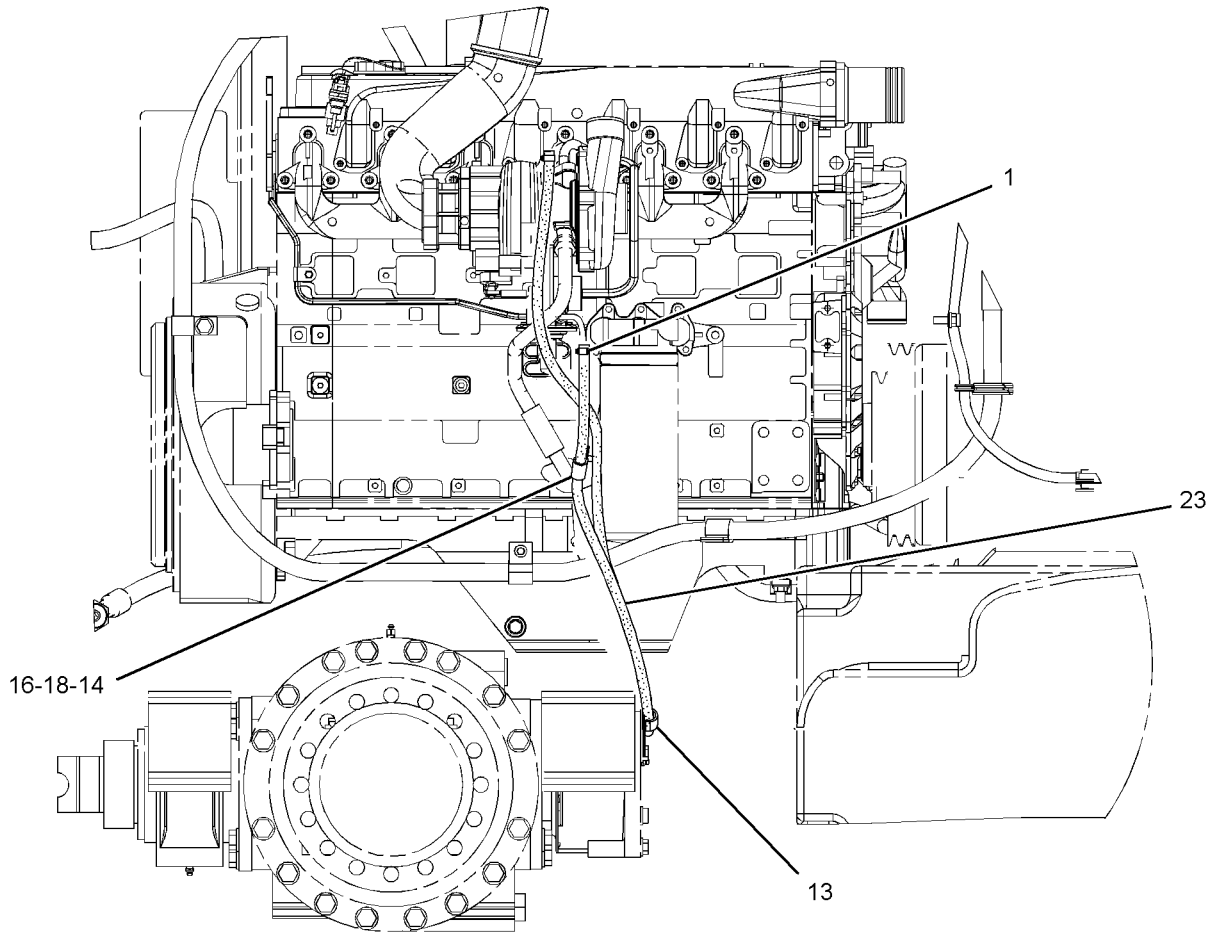

LEFT SIDE VIEW

GRAPHIC #2 **<END>** g01357135

FUEL SYSTEM

233-2483 LINES GP-FUEL

S/N: CPT1-UP
PART OF 254-2236, 295-9744 ENGINE AR-PRIMARY
ALSO AN ATTACHMENT

SMCS-1274 **i02599017**

NOTE	REF NO	GRAPHIC REF	PART NUMBER	QTY	PART NAME 1 2 3 4 5 6 (PRODUCT LEVEL)	SEE PAGE
	1	1	**5C-1777**	1	NUT	
	2	1	**067-6269**	1	FERRULE	
	3	1	**232-3368**	1	TUBE AS (DRAIN)	
	4	1	**233-2485**	1	LINE AS-FUEL	
	4A	1	**067-6268**	1	NUT-FUEL LINE (1/2-IN)	
	4B	1	**067-6269**	1	FERRULE (OLIVE-FUEL TUBE)	

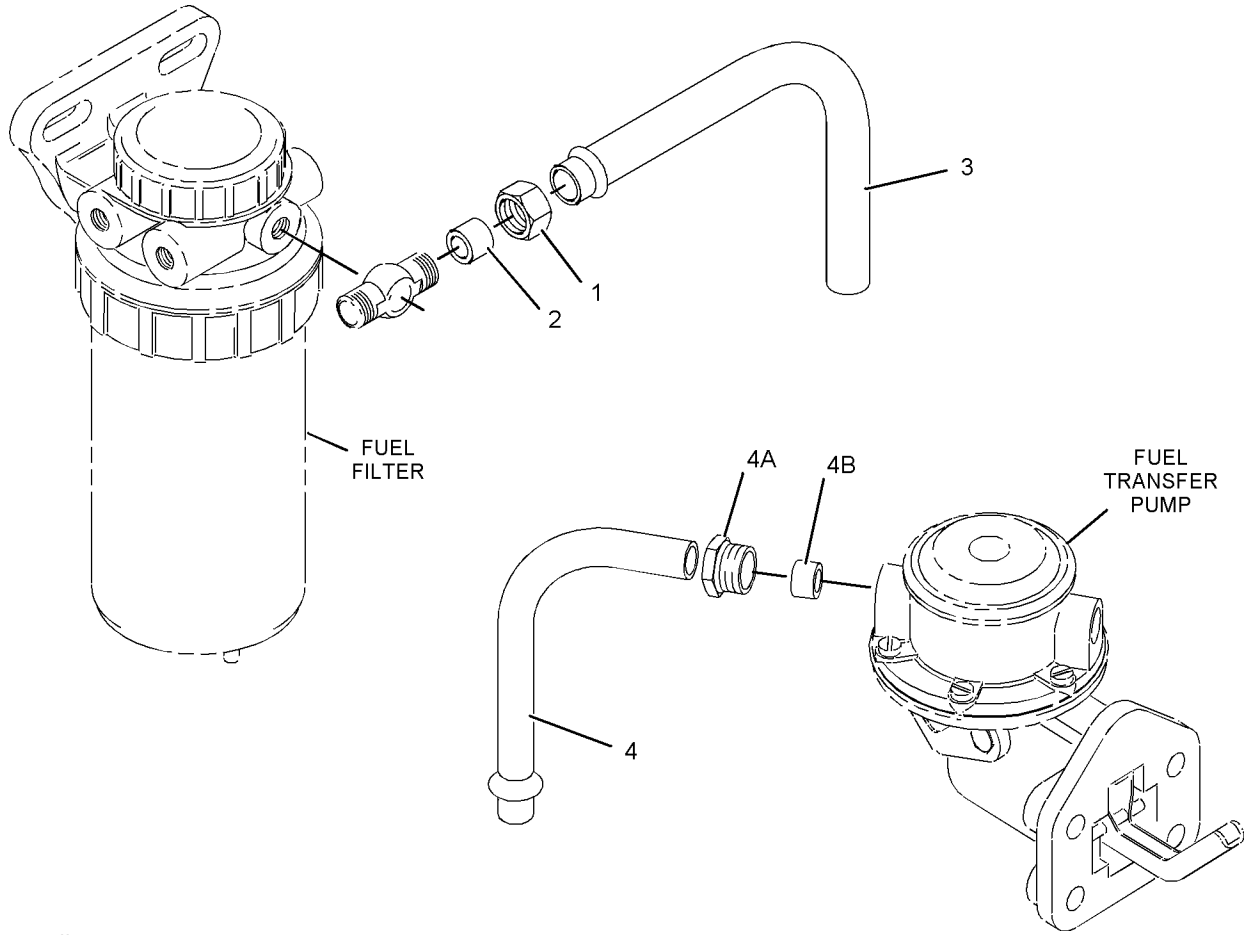

GRAPHIC #1 **<END>** g01053942

235-6331 PUMP GP-FUEL INJECTION

S/N: CPT1-UP
PART OF 295-9744 ENGINE AR-PRIMARY
ALSO AN ATTACHMENT

SMCS-1251, 1290 **i03232693**

NOTE	REF NO	GRAPHIC REF	PART NUMBER	QTY	PART NAME 1 2 3 4 5 6 (PRODUCT LEVEL)	SEE PAGE
	1	1	**4B-4277**	4	WASHER (8.8X17.5X1.6-MM THK)	
M	2	1	**6I-0217**	1	BOLT (M8X1.25X20-MM)	
	3	1	**6I-0291**	8	NUT (M8X1.25-THD)	
	4	2	**7M-7410**	1	PLUG-PIPE	
M	5	1	**100-4830**	1	BOLT (M10X1.5X20-MM)	
	6	1	**101-3877**	3	STUD	
	7	1	**103-1074**	1	STUD	
	8	1,2	**114-4363**	3	BOLT (M8X1.25X12-MM)	
	9	1	**124-3708**	3	CLIP	
	10	1	**332-7549**	1	SEAL-O-RING	
	11	1	**147-5551**	2	STUD	
	12	2	**149-2091**	1	SEAL-O-RING	
	13	1	**300-6714**	5	MOUNT	
	14	1	**162-9992**	3	CLIP	
	15	1	**140-8718**	6	WASHER	
	16	1	**179-7071**	4	BOLT (M8X1.25X20-MM)	
	17	2	**199-9252**	1	SEAL-O-RING	
	18	2	**199-9267**	1	SEAL-O-RING	
	19	2	**199-9751**	2	SEAL-O-RING	
	20	1	**270-5322**	1	CONTROL GP-VOLTAGE (24-VOLT) (LOAD PROTECTION)	
		1	**7T-0093**	4	PIN-CONNECTOR	
		1	**177-9653**	1	KIT-RECEPTACLE (4-PIN)	
					(INCLUDES RECEPTACLE AS AND WEDGE)	
		1	**1S-9593**	2	STRAP-CABLE	
	21	2	**268-4360**	1	SENSOR GP-TEMPERATURE (ENGINE COOLANT)	
	22	2	**268-4360**	1	SENSOR GP-TEMPERATURE (AIR INLET)	
	23	2	**216-3446**	1	SENSOR GP-SPEED (TIMING)	
	24	2	**274-6721**	1	SENSOR GP-PRESSURE (ENGINE OIL)	
	25	2	**274-6720**	1	SENSOR GP-PRESSURE (BOOST)	
	26	1	**216-9786**	6	INJECTOR AS-FUEL	
	27	1	**216-9790**	1	GEAR-FUEL PUMP (68-TEETH)	
	28	1	**216-9824**	1	PUMP GP-FUEL INJECTION	
	29	1	**216-9826**	1	TUBE AS (CYL NO.1)	
	30	1	**216-9828**	1	TUBE AS (CYL NO.2)	
	31	1	**216-9830**	1	TUBE AS (CYL NO.3)	
	32	1	**216-9831**	1	TUBE AS (CYL NO.4)	
	33	1	**216-9834**	1	TUBE AS (CYL NO.5)	
	34	1	**216-9835**	1	TUBE AS (CYL NO.6)	
	35	1	**217-0099**	7	SPACER (8.2X25X2-MM THK)	
	36	1	**217-0100**	4	SPACER	
	37	1	**221-1018**	1	CONTROL GP-ENGINE ELECTRONIC	
	38	1	**228-8943**	1	BRACKET	
	39	1	**228-8956**	1	BRACKET	
	40	1	**228-8960**	1	CLIP	
	41	1	**235-5917**	1	STUD	
	42	1	**235-6281**	1	TIE-CABLE	
					AVAILABLE REPAIR KIT(S):	
			278-8678		KIT-SENSOR (LUBRICATION OIL PRESSURE)	
			278-8682		KIT-SENSOR (AIR PRESSURE)	

M-METRIC PART

235-6331 **PUMP GP-FUEL INJECTION** *(contd.)* **i03232693**

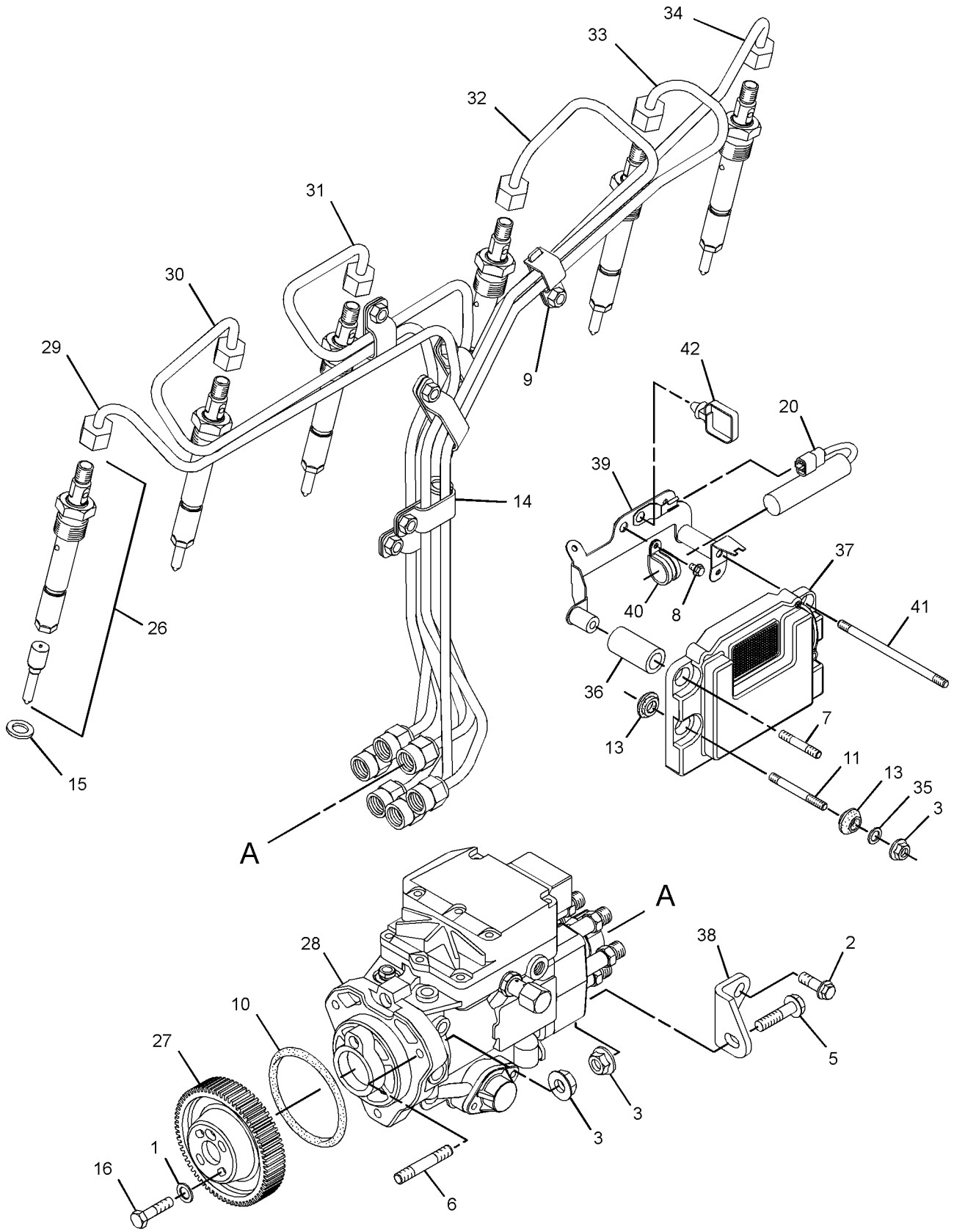

GRAPHIC #1 g01530741

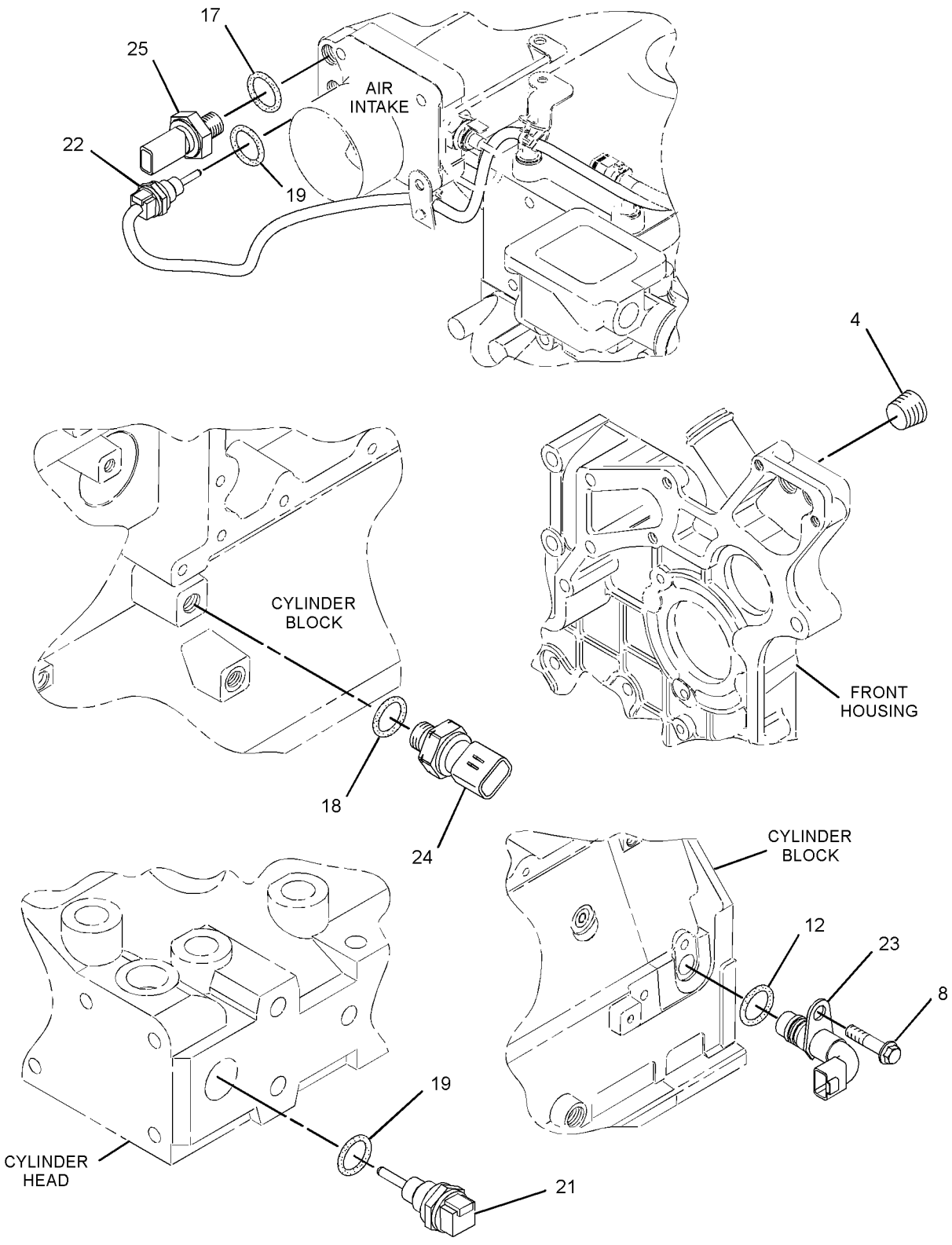

GRAPHIC #2 **<END>** g01530743

249-2897 PUMP GP-FUEL INJECTION

S/N: CPT1-UP
PART OF 254-2236 ENGINE AR-PRIMARY
ALSO AN ATTACHMENT

SMCS-1251, 1290 **i02626126**

NOTE	REF NO	GRAPHIC REF	PART NUMBER	QTY	PART NAME 1 2 3 4 5 6 (PRODUCT LEVEL)	SEE PAGE
	1	1	**4B-4277**	4	WASHER (8.8X17.5X1.6-MM THK)	
M	2	1	**6I-0217**	1	BOLT (M8X1.25X20-MM)	
	3	1	**6I-0291**	8	NUT (M8X1.25-THD)	
	4	2	**7M-7410**	1	PLUG-PIPE	
M	5	1	**100-4830**	1	BOLT (M10X1.5X20-MM)	
	6	1	**101-3877**	3	STUD	
	7	1	**103-1074**	1	STUD	
	8	1,2	**114-4363**	3	BOLT (M8X1.25X12-MM)	
	9	1	**124-3708**	3	CLIP	
	10	1	**145-8327**	1	SEAL-O-RING	
	11	1	**147-5551**	2	STUD	
	12	2	**149-2091**	1	SEAL-O-RING	
	13	1	**155-0576**	5	MOUNT-ISOLATION	
	14	1	**162-9992**	3	CLIP	
	15	1	**164-3207**	6	WASHER	
	16	1	**179-7071**	4	BOLT (M8X1.25X20-MM)	
	17	2	**199-9252**	1	SEAL-O-RING	
	18	2	**199-9267**	1	SEAL-O-RING	
	19	2	**199-9751**	2	SEAL-O-RING	
	20	1	**270-5322**	2	CONTROL GP-VOLTAGE (24-VOLT) (LOAD PROTECTION)	
					(EACH INCLUDES)	
			1S-9593	2	STRAP-CABLE	
			7T-0093	4	PIN-CONNECTOR	
			177-9653	1	KIT-RECEPTACLE (4-PIN)	
					(INCLUDES RECEPTACLE AS AND WEDGE)	
	21	2	**268-4360**	1	SENSOR GP-TEMPERATURE (ENGINE COOLANT)	
	22	2	**268-4360**	1	SENSOR GP-TEMPERATURE (AIR INLET)	
	23	2	**216-3446**	1	SENSOR GP-SPEED (TIMING)	
	24	2	**216-3448**	1	SENSOR GP-PRESSURE (ENGINE OIL)	
	25	2	**216-3450**	1	SENSOR GP-PRESSURE (BOOST)	
	26	1	**216-9786**	6	INJECTOR AS-FUEL	
	27	1	**216-9790**	1	GEAR-FUEL PUMP (68-TEETH)	
	28	1	**216-9824**	1	PUMP GP-FUEL INJECTION	
	29	1	**216-9826**	1	TUBE AS (CYL NO.1)	
	30	1	**216-9828**	1	TUBE AS (CYL NO.2)	
	31	1	**216-9830**	1	TUBE AS (CYL NO.3)	
	32	1	**216-9831**	1	TUBE AS (CYL NO.4)	
	33	1	**216-9834**	1	TUBE AS (CYL NO.5)	
	34	1	**216-9835**	1	TUBE AS (CYL NO.6)	
	35	1	**217-0099**	7	SPACER (8.2X25X2-MM THK)	
	36	1	**217-0100**	4	SPACER	
	37	1	**221-1018**	1	CONTROL GP-ENGINE ELECTRONIC	
	38	1	**228-8943**	1	BRACKET	
	39	1	**228-8956**	1	BRACKET	
	40	1	**228-8960**	1	CLIP	
	41	1	**235-5917**	1	STUD	
	42	1	**235-6281**	1	TIE-CABLE	

M-METRIC PART

249-2897 **PUMP GP-FUEL INJECTION** *(contd.)* **i02626126**

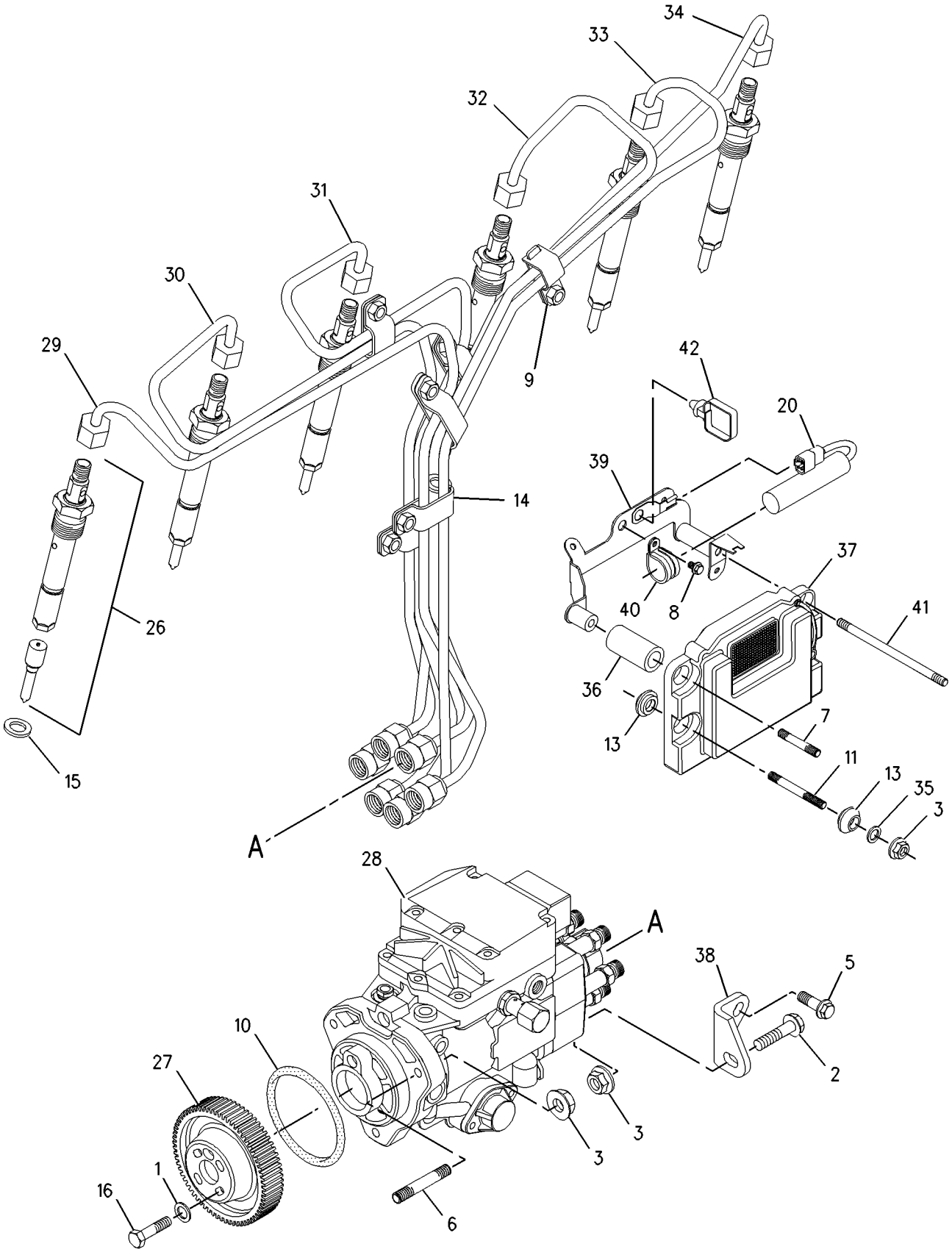

GRAPHIC #1 g00992919

249-2897 **PUMP GP-FUEL INJECTION** *(contd.)* **i02626126**

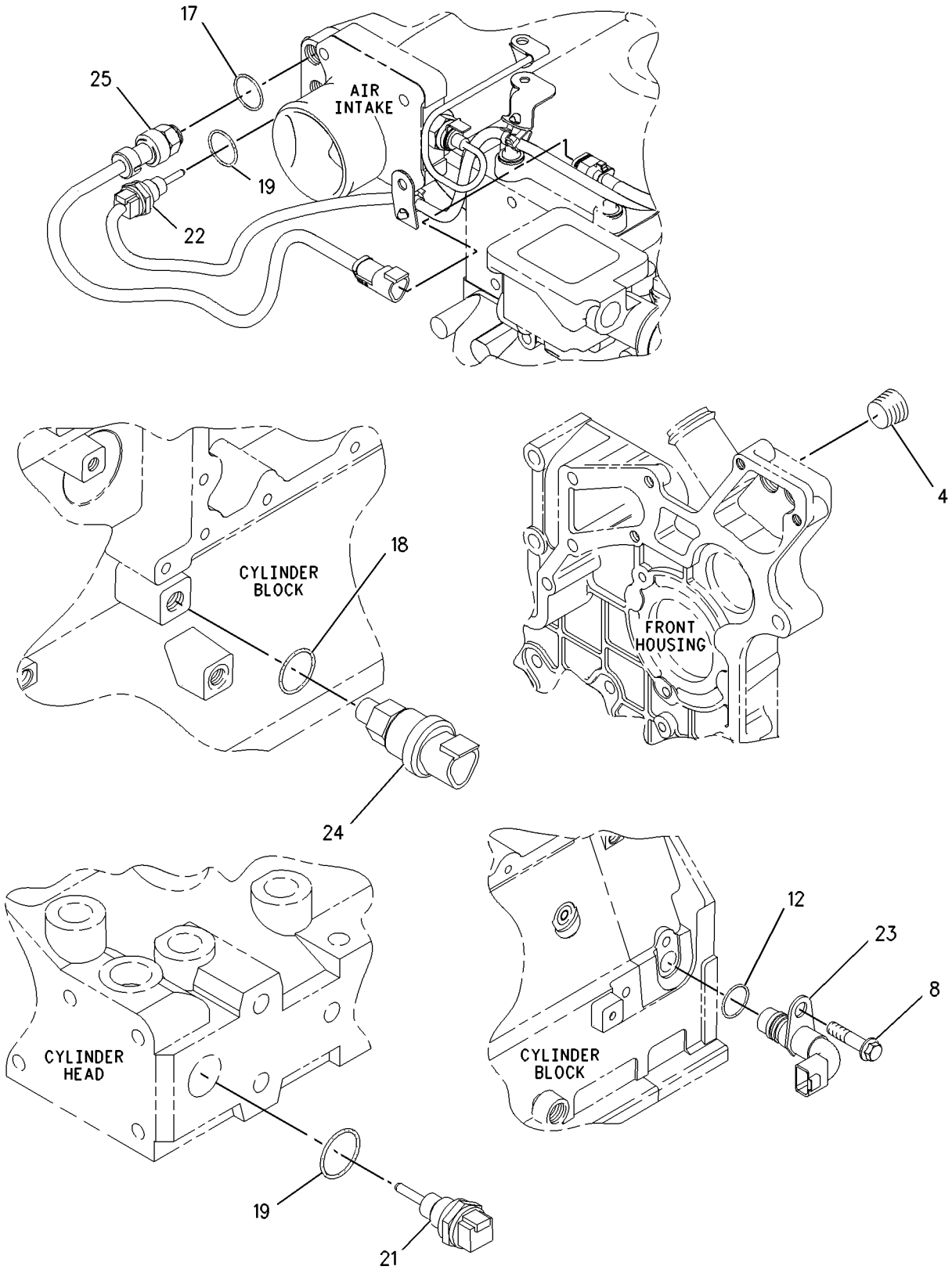

GRAPHIC #2 **<END>** g00992920

FUEL SYSTEM

219-2455 PUMP GP-FUEL TRANSFER

S/N: CPT1-4999

PART OF 254-2236 ENGINE AR-PRIMARY

SMCS-1256 **i03138292**

NOTE	REF NO	GRAPHIC REF	PART NUMBER	QTY	PART NAME 1 2 3 4 5 6 (PRODUCT LEVEL)	SEE PAGE
	1	1	**5C-1777**	5	NUT	
M	2	2	**6I-0217**	1	BOLT (M8X1.25X20-MM)	
M	3	2	**6I-0254**	4	BOLT (M8X1.25X30-MM)	
	4	1	**6I-1090**	1	BOLT (M8X1.25X40-MM)	
	5	2	**033-7849**	1	PLUG	
	6	1	**067-6269**	4	FERRULE	
M	7	2	**100-4830**	3	BOLT (M10X1.5X20-MM)	
	8	2	**101-3906**	1	BOLT	
	9	2	**101-3907**	2	WASHER	
	10	1	**101-7178**	1	BOLT (M10X55-THD)	
	11	2	**102-9988**	1	SPACER	
	12	1	**127-8162**	1	CLIP	
	13	2	**162-2000**	1	WASHER	
	14	2	**216-9043**	1	PUMP AS-FUEL TRANSFER	
	14A	2	**231-4457**	1	GASKET (FUEL PUMP)	
	15	2	**216-9053**	1	CONNECTOR	
	16	1	**216-9086**	1	SPACER (10.5X20X32-MM THK)	
	17	1	**216-9092**	1	CONNECTOR-SPECIAL (BANJO)	
	18	1	**216-9752**	4	WASHER	
	19	1	**217-0721**	1	BOLT-SPECIAL (BANJO)	
	20	1	**219-2443**	1	TUBE AS	
	20A	1	**102-9986**	1	CLIP	
	20B	1	**067-6268**	1	NUT-FUEL LINE (1/2-IN)	
	20C	1	**067-6269**	1	FERRULE	
	21	2	**219-2450**	1	BRACKET	
	22	1	**219-2451**	1	CONNECTOR-SPECIAL (BANJO)	
	23	1	**219-2452**	1	BALL	
	24	1	**219-2453**	1	TUBE AS	
	24A	1	**149-6117**	1	CLIP	
	25	2	**223-5418**	1	TUBE AS	
	25A	2	**067-6268**	2	NUT-FUEL LINE (1/2-IN)	
	25B	2	**067-6269**	2	FERRULE	
	25C	2	**102-9986**	1	CLIP	
	25D	2	**102-9987**	1	CLIP	

M-METRIC PART

219-2455 **PUMP GP-FUEL TRANSFER** *(contd.)* **i03138292**

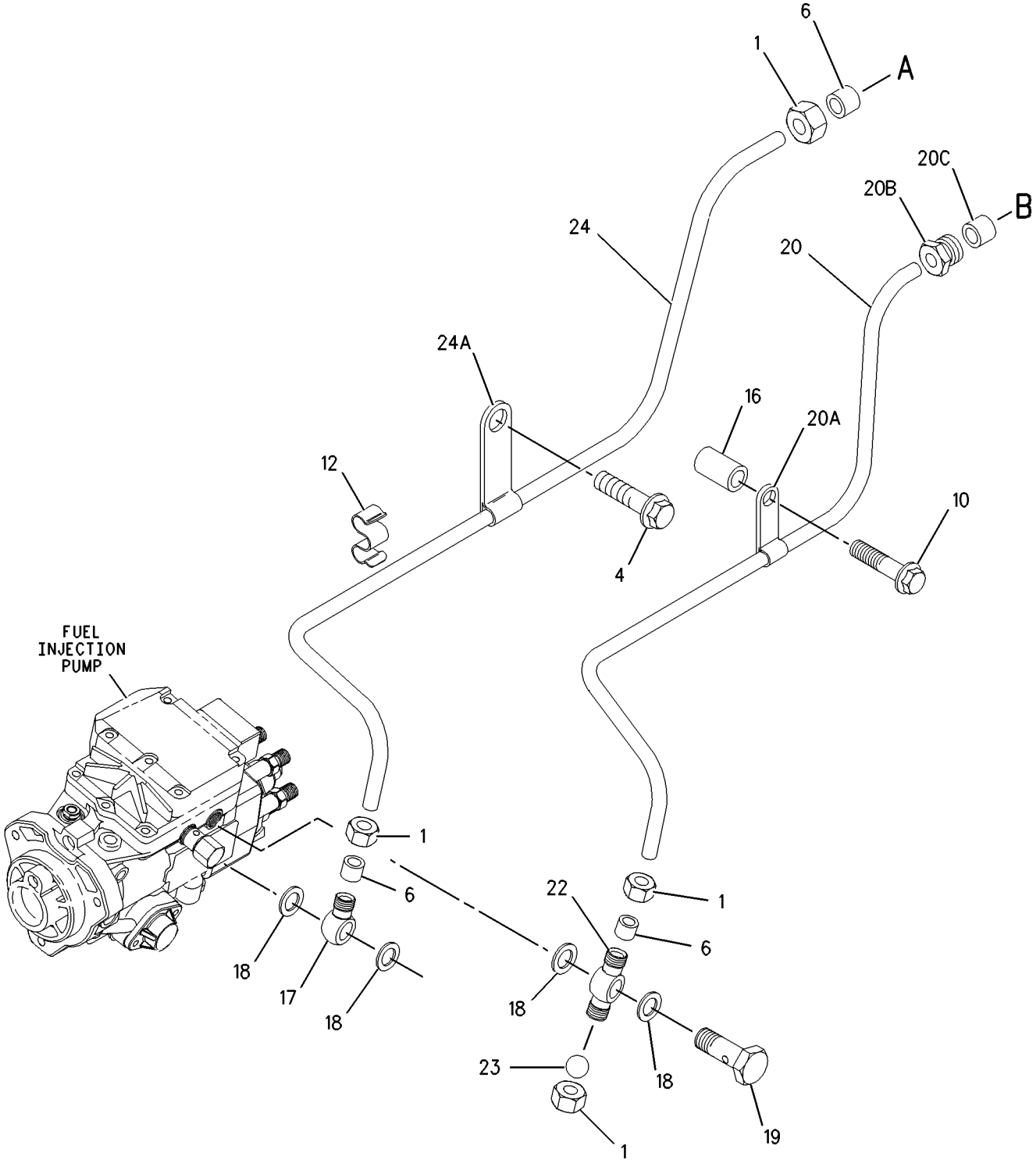

GRAPHIC #1 g01002647

219-2455 **PUMP GP-FUEL TRANSFER** *(contd.)* **i03138292**

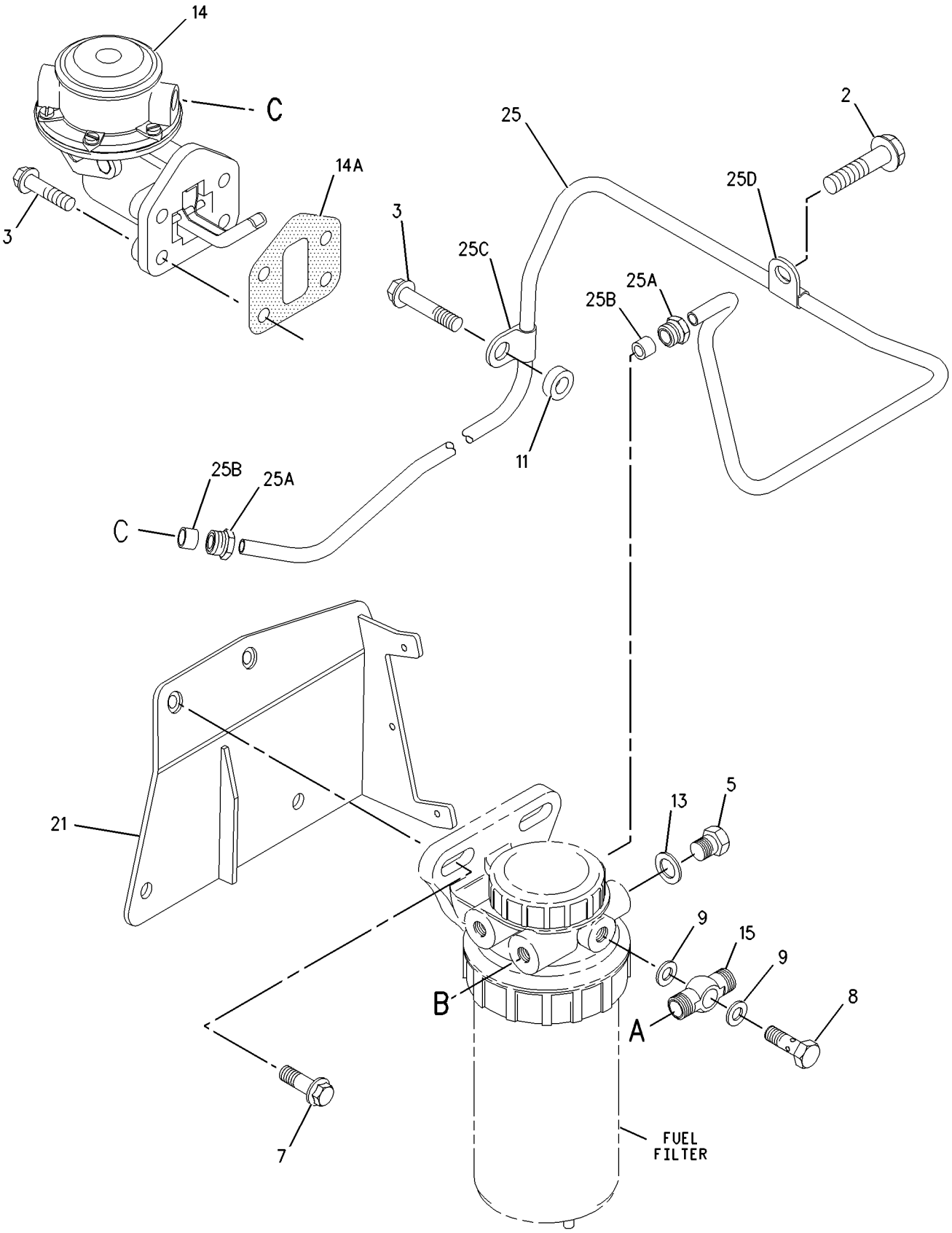

GRAPHIC #2 **<END>** g01002648

219-2455 PUMP GP-FUEL TRANSFER

S/N: CPT1-UP
PART OF 254-2236, 295-9744 ENGINE AR-PRIMARY
ALSO AN ATTACHMENT

SMCS-1256 **i03138385**

NOTE	REF NO	GRAPHIC REF	PART NUMBER	QTY	PART NAME 1 2 3 4 5 6 (PRODUCT LEVEL)	SEE PAGE
C	1	1	**5C-1777**	3	NUT	
M	2	2	**6I-0217**	1	BOLT (M8X1.25X20-MM)	
M	3	2	**6I-0254**	4	BOLT (M8X1.25X30-MM)	
	4	1	**6I-1090**	1	BOLT (M8X1.25X40-MM)	
	5	2	**033-7849**	1	PLUG	
C	6	1	**067-6269**	3	FERRULE	
M	7	2	**100-4830**	3	BOLT (M10X1.5X20-MM)	
	8	2	**101-3906**	1	BOLT	
	9	2	**101-3907**	2	WASHER	
	10	1	**101-7178**	1	BOLT (M10X55-THD)	
	11	2	**102-9988**	1	SPACER	
	12	1	**127-8162**	1	CLIP	
	13	2	**162-2000**	1	WASHER	
	14	2	**216-9043**	1	PUMP AS-FUEL TRANSFER	
	14A	2	**231-4457**	1	GASKET (FUEL PUMP)	
	15	2	**216-9053**	1	CONNECTOR	
	16	1	**216-9086**	1	SPACER (10.5X20X32-MM THK)	
	17	1	**216-9092**	2	CONNECTOR-SPECIAL (BANJO)	
	18	1	**216-9752**	4	WASHER	
	19	1	**217-0721**	1	BOLT-SPECIAL (BANJO)	
	20	1	**219-2443**	1	TUBE AS	
	20A	1	**102-9986**	1	CLIP	
	20B	1	**067-6268**	1	NUT-FUEL LINE (1/2-IN)	
	20C	1	**067-6269**	1	FERRULE	
	21	2	**219-2450**	1	BRACKET	
	24	1	**219-2453**	1	TUBE AS	
	24A	1	**149-6117**	1	CLIP	
	25	2	**223-5418**	1	TUBE AS	
	25A	2	**067-6268**	2	NUT-FUEL LINE (1/2-IN)	
	25B	2	**067-6269**	2	FERRULE	
	25C	2	**102-9986**	1	CLIP	
	25D	2	**102-9987**	1	CLIP	

C-CHANGE FROM PREVIOUS TYPE
M-METRIC PART

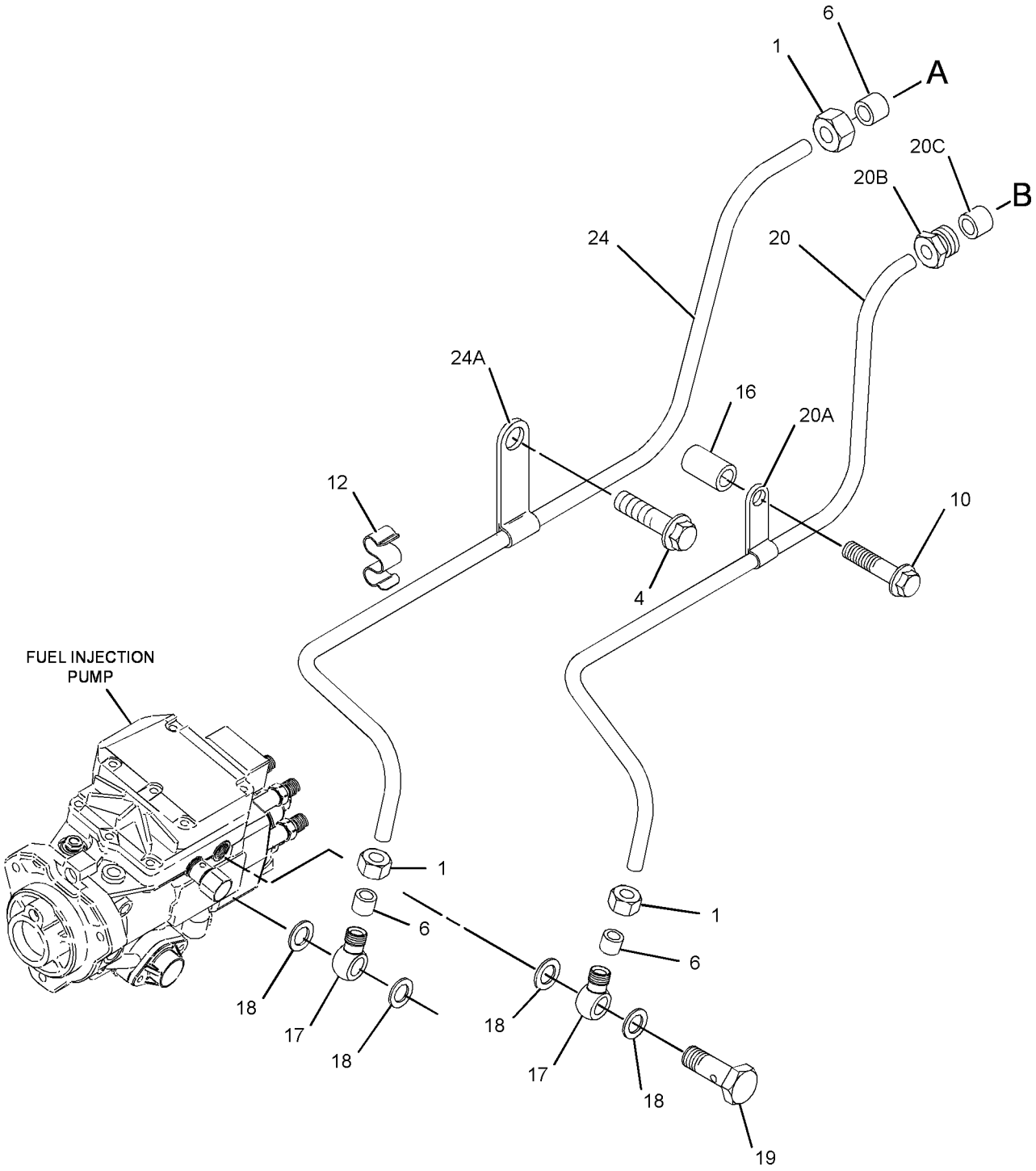

GRAPHIC #1 g01185344

219-2455 **PUMP GP-FUEL TRANSFER** *(contd.)* **i03138385**

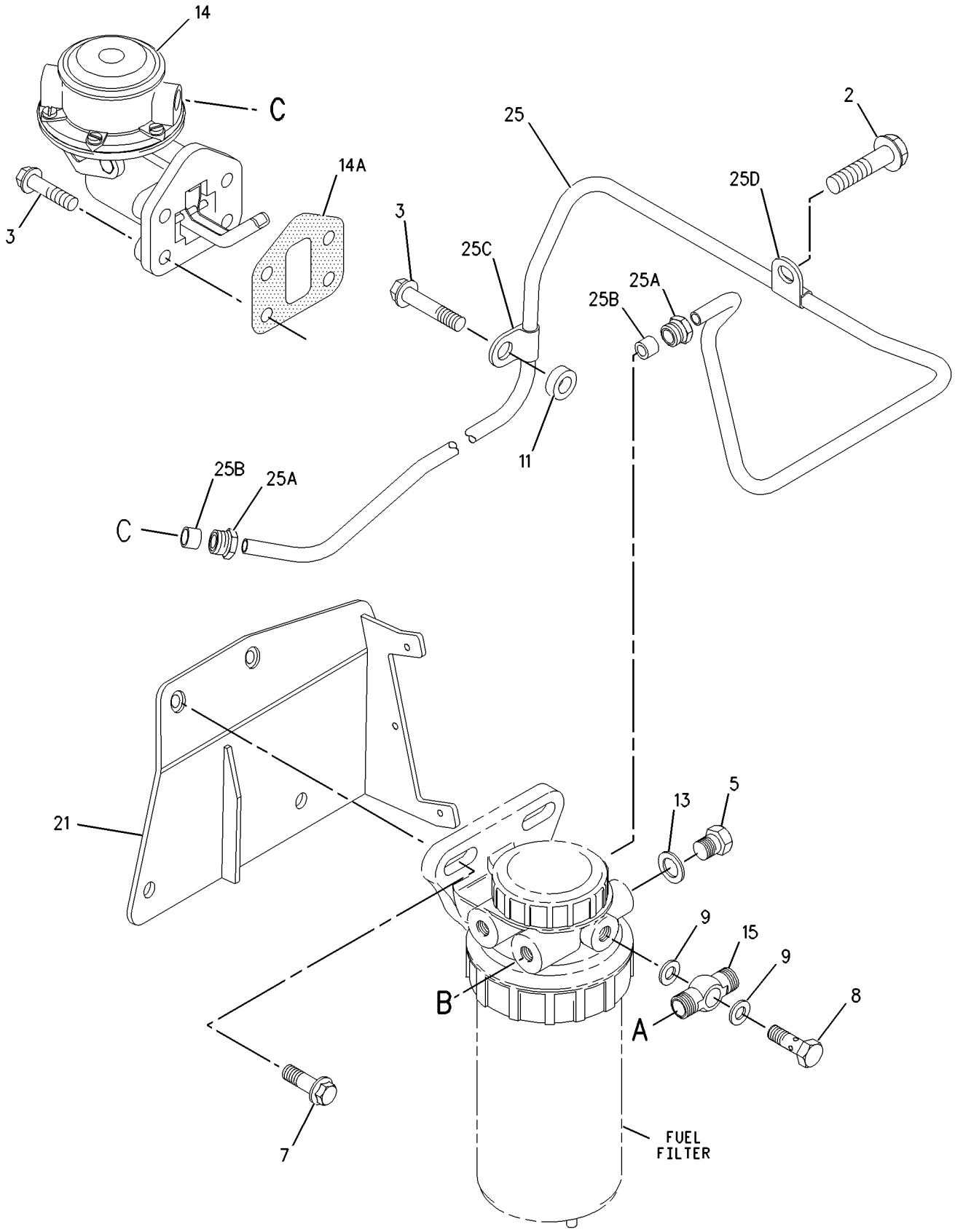

GRAPHIC #2 **<END>** g01002648

220-5557 SEPARATOR GP-WATER—PRIMARY FUEL FILTER

S/N: TWR1-UP
WITH BOWL
PART OF 184-1333 LINES GP-FUEL

SMCS-1263 **i01818393**

NOTE	REF NO	GRAPHIC REF	PART NUMBER	QTY	PART NAME 1 2 3 4 5 6 (PRODUCT LEVEL)	SEE PAGE
	1	1	**112-9401**	1	BOWL AS-WATER COLLECTION	
		1	**128-8614**	1	KIT-SEAL (WATER SEPARATOR)	
	2	1	**118-8118**	1	RING-RETAINING	
	3	1	**118-8119**	1	NUT	
	4	1	**121-4480**	1	KIT-WATER BASE (WATER SEPARATOR) (WATER SEPARATOR)	
					(INCLUDES NUT-CAP, CAP-HEADER, SEAL-CAP, PLUG-VOLUME, SEAL-O-RING, PLUG-VENT, SEAL-DUST & RING RETAINER)	
	5	1	**131-1812**	1	FILTER ELEMENT AS-FUEL (WATER SEPARATOR)	

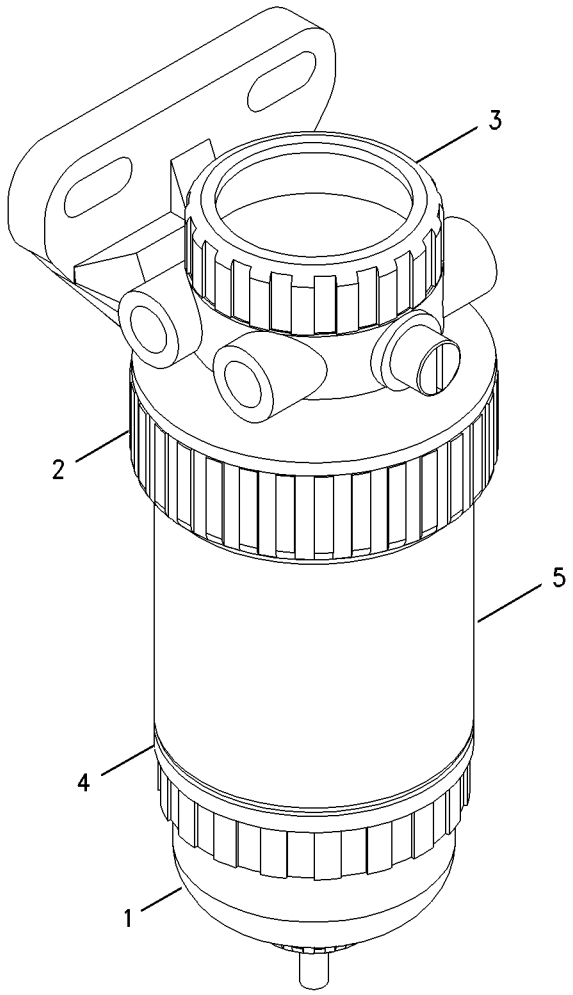

GRAPHIC #1 **<END>** g00916889

FUEL SYSTEM

202-0354 TANK & MTG GP-FUEL

S/N: TWR1-UP

PART OF 235-7499 CHASSIS AR

SMCS-1273 **i03110685**

NOTE	REF NO	GRAPHIC REF	PART NUMBER	QTY	PART NAME 1 2 3 4 5 6 (PRODUCT LEVEL)	SEE PAGE
	1	1	**202-0355**	1	TANK AS-FUEL	
		1	**142-8828**	1	CAP AS-FILLER (FUEL)	
		1	**180-3730**	1	STRAINER-FUEL (FILLER NECK SCREEN)	
		1	**206-4441**	1	ADAPTER-FUEL CAP	
	2	1	**202-0360**	2	STRAP AS	
					(EACH INCLUDES)	
		1	**202-0358**	1	STRAP	
M	3	1	**180-4686**	2	BOLT (M10X1.5X60-MM)	
	4	1	**8T-4121**	6	WASHER-HARD (11X21X2.5-MM THK)	
M	5	1	**8T-4133**	2	NUT (M10X1.5-THD)	
M	6	1	**8T-4137**	2	BOLT (M10X1.5X20-MM)	

M-METRIC PART

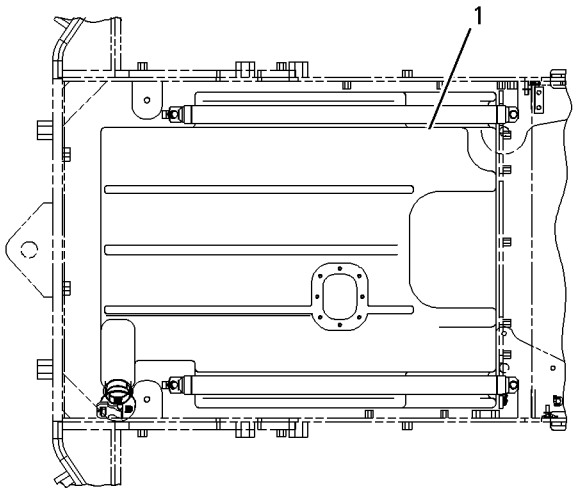

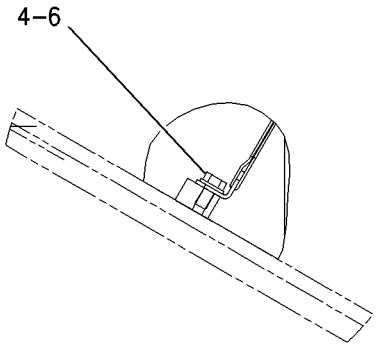

VIEW OF AREA A

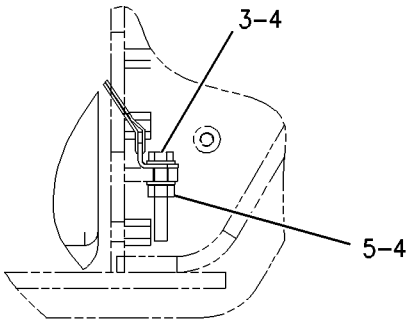

VIEW OF AREA B

GRAPHIC #1 **<END>** g00915489

3E-6328 ALARM GP–ACTION

S/N: TWR1-UP
24-VOLT
PART OF 235-6833 LIGHTING GP-ROADING
ALSO AN ATTACHMENT

SMCS-7400, 7402, 7407 **i02610072**

NOTE	REF NO	GRAPHIC REF	PART NUMBER	QTY	PART NAME 1 2 3 4 5 6 (PRODUCT LEVEL)	SEE PAGE
	1	1	**102-8802**	1	KIT-RECEPTACLE (2-PIN)	
					(INCLUDES RECEPTACLE AS & WEDGE)	
	2	1	**186-3735**	2	PIN-CONNECTOR (16-GA TO 18-GA)	
	3	1	**3E-3365**	1	WEDGE-RECEPTACLE LOCK (2-PIN)	

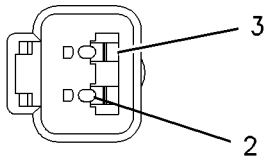

VIEW A–A

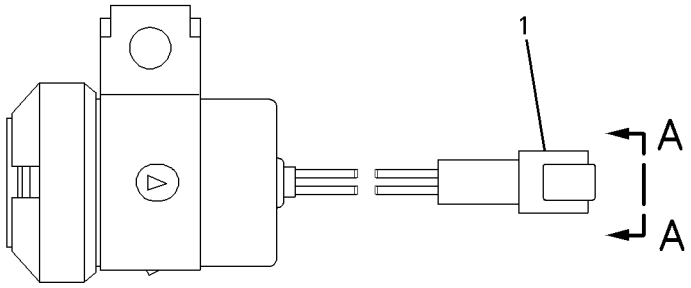

GRAPHIC #1 **<END>** g00826023

177-9953 ALTERNATOR GP-CHARGING*R

S/N: TWR1-UP
24-VOLT, 80-AMPERE
PART OF 254-1543 ALTERNATOR GP-CHARGING
AN ATTACHMENT

SMCS-1405 **i02643421**

NOTE	REF NO	GRAPHIC REF	PART NUMBER	QTY	PART NAME 1 2 3 4 5 6 (PRODUCT LEVEL)	SEE PAGE
	1	1	**185-2653**	1	FRAME	
	2	1	**5S-7349**	1	BOLT (1/4-20X0.5-IN)	
	3	1	**185-2639**	1	FAN AS (ALTERNATOR)	
	4	1	**1H-3244**	1	LOCKWASHER	
	5	1	**185-2645**	1	FRAME	
	6	1	**2K-4821**	1	LOCKNUT (5/8-18-THD)	
	7	1	**5P-8247**	1	WASHER-HARD (17X32X3.5-MM THK)	
	8	1	**185-2651**	1	COVER	
	9	1	**8T-4205**	1	WASHER-HARD (7.2X14.5X2-MM THK)	
	10	1	**185-2647**	1	GROMMET	
	11	1	**9L-6770**	1	CAP-DUST	
	12	1	**185-2643**	1	STATOR AS (ALTERNATOR)	
	13	1	**185-2638**	2	COLLAR	
	14	1	**185-2654**	1	PLATE	
	15	1	**185-2650**	1	ROTOR AS (ALTERNATOR)	
	16	1	**185-2644**	1	COIL AS	
	17	1	**185-2648**	1	REGULATOR AS-VOLTAGE (24-VOLT) (ALTERNATOR)	
J	18	1	**6V-8189**	1	NUT (5/16-18-THD)	
J	19	1	**8T-4224**	1	WASHER-HARD (8.8X16X2-MM THK)	
J	20	1	**3F-9556**	1	LOCKWASHER	
					AVAILABLE REPAIR KIT(S):	
J			**199-7891**	1	KIT-TERMINAL (ALTERNATOR)	
					(INCLUDES INSULATORS, WASHERS, NUT & STEP NUT)	
			185-2655	1	KIT-BEARING (ALTERNATOR)	
					(INCLUDES 3 BEARINGS)	
			199-8436	1	KIT-TERMINAL (ALTERNATOR)	
					(INCLUDES HOLDER AS, PLATE, INSULATOR, PIN, BOLT, GROMMET & NUT)	
			185-2658	1	KIT-HARDWARE (ALTERNATOR)	
					(INCLUDES BOLTS)	

J-KIT MARKED J SERVICES PARTS MARKED J

177-9953 ALTERNATOR GP-CHARGING *(contd.)* **i02643421**

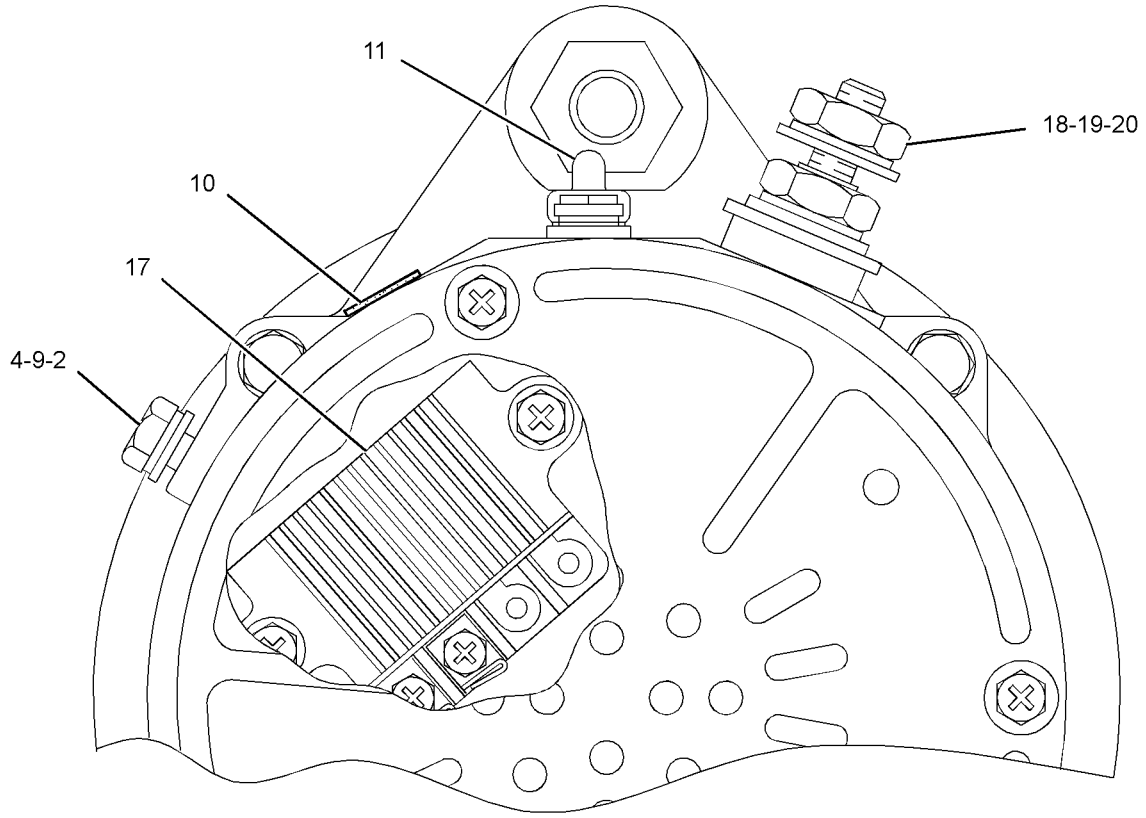

VIEW A-A

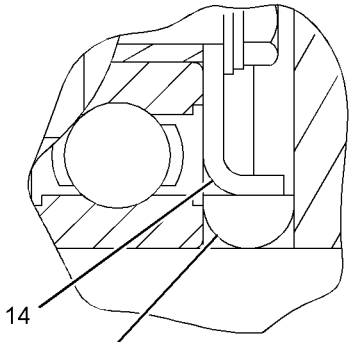

VIEW OF AREA B

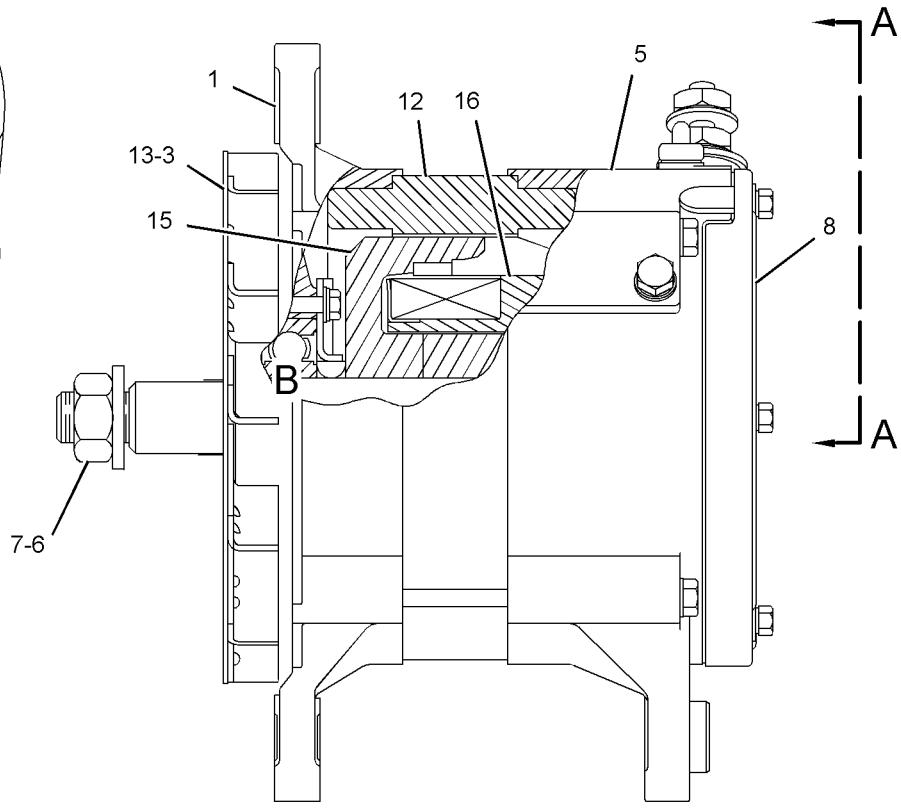

GRAPHIC #1

<END>

g01151601

197-8820 ALTERNATOR GP-CHARGING*R

S/N: TWR1-UP
24-VOLT, 95-AMPERE
PART OF 256-4715 ALTERNATOR GP-CHARGING
AN ATTACHMENT

SMCS-1405 **i02741069**

NOTE	REF NO	GRAPHIC REF	PART NUMBER	QTY	PART NAME 1 2 3 4 5 6 (PRODUCT LEVEL)	SEE PAGE
	1	1	**185-2653**	1	FRAME	
	2	1	**5S-7349**	1	BOLT (1/4-20X0.5-IN)	
	3	1	**185-2639**	1	FAN AS	
	4	1	**1H-3244**	1	LOCKWASHER	
	5	1	**185-2645**	1	FRAME	
	6	1	**2K-4821**	1	LOCKNUT (5/8-18-THD)	
	7	1	**5P-8247**	1	WASHER-HARD (17X32X3.5-MM THK)	
	8	1	**185-2651**	1	COVER	
	9	1	**8T-4205**	1	WASHER-HARD (7.2X14.5X2-MM THK)	
	10	1	**185-2647**	1	GROMMET	
	11	1	**9L-6770**	1	CAP-DUST	
	12	1	**205-0626**	1	STATOR AS-ALTERNATOR	
	13	1	**185-2638**	2	COLLAR	
	14	1	**185-2654**	1	PLATE	
	15	1	**185-2650**	1	ROTOR AS (ALTERNATOR)	
	16	1	**185-2644**	1	COIL AS	
	17	1	**185-2648**	1	REGULATOR AS-VOLTAGE (24-VOLT) (ALTERNATOR)	
	18	1	**6V-8189**	1	NUT (5/16-18-THD)	
	19	1	**8T-4224**	1	WASHER-HARD (8.8X16X2-MM THK)	
	20	1	**3F-9556**	1	LOCKWASHER	
					AVAILABLE REPAIR KIT(S):	
			185-2655	1	KIT-BEARING (ALTERNATOR)	
					(INCLUDES 2 BEARINGS)	
			199-8436	1	KIT-TERMINAL (ALTERNATOR)	
					(INCLUDES HOLDER AS, PLATE, INSULATOR, PIN, BOLTS, GROMMET & NUT)	
			199-7891	1	KIT-TERMINAL (ALTERNATOR)	
					(INCLUDES INSULATORS, WASHERS & NUTS)	
			185-2658	1	KIT-HARDWARE (ALTERNATOR)	
					(INCLUDES BOLTS)	

197-8820 **ALTERNATOR GP-CHARGING** *(contd.)* **i02741069**

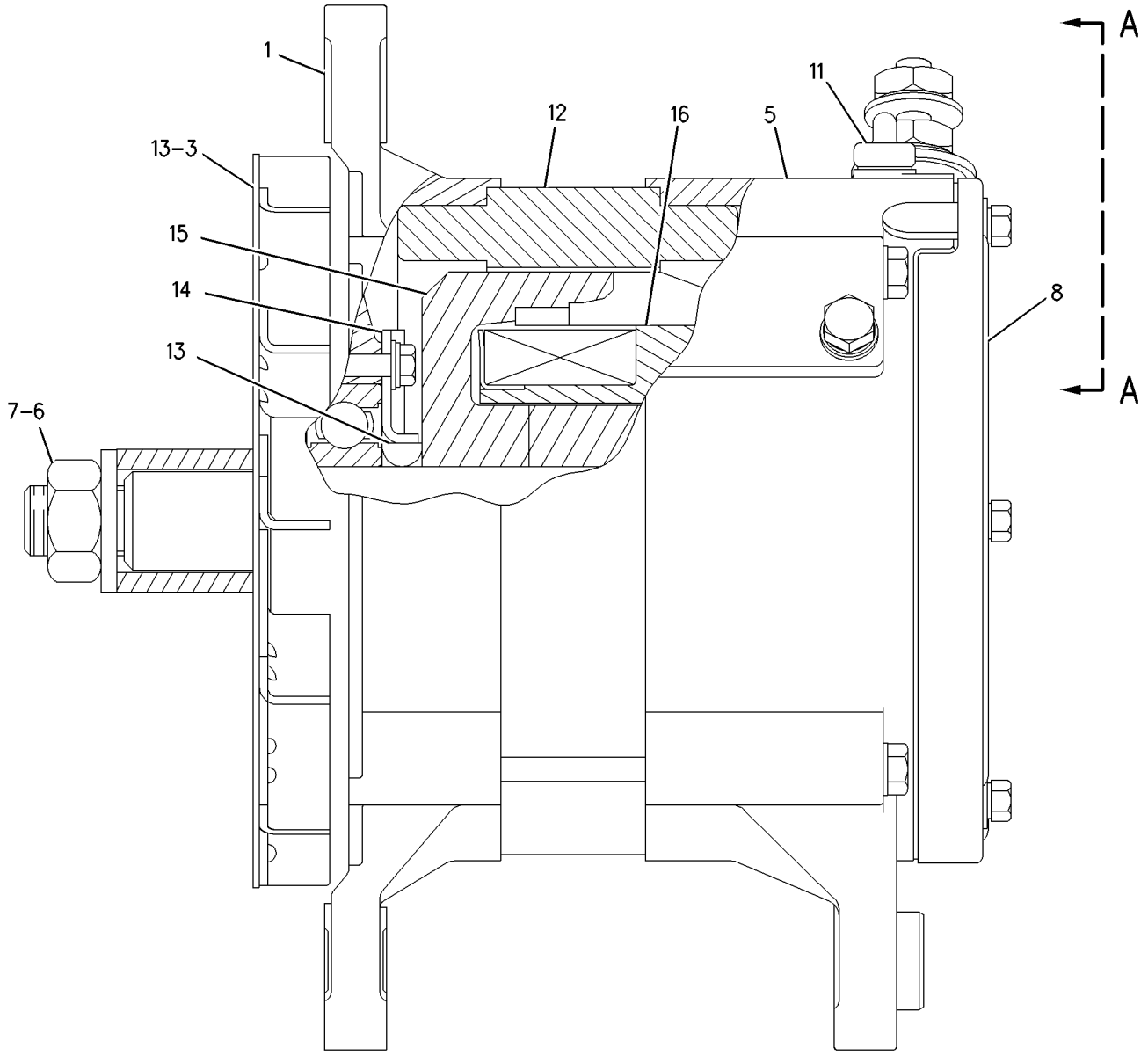

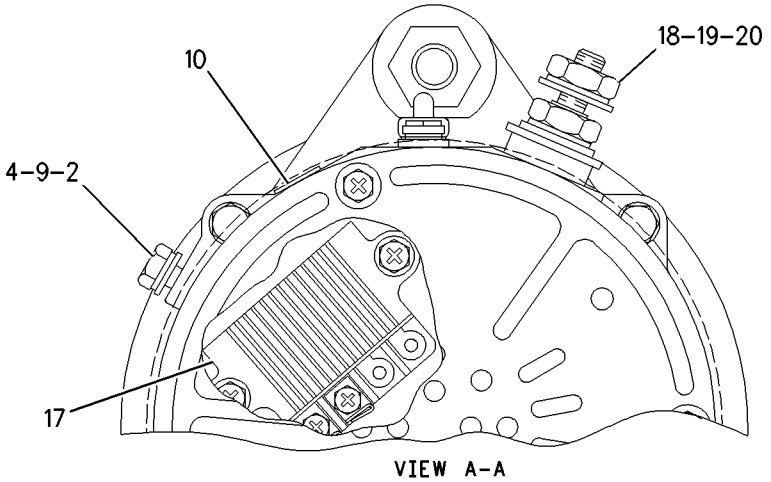

VIEW A-A

GRAPHIC #1 **<END>** g00873198

254-1543 ALTERNATOR GP-CHARGING

S/N: TWR1-UP
AN ATTACHMENT

SMCS-1405 **i02208411**

NOTE	REF NO	GRAPHIC REF	PART NUMBER	QTY	PART NAME 1 2 3 4 5 6 (PRODUCT LEVEL)	SEE PAGE
	1	1	**9L-6246**	1	PULLEY-ALTERNATOR (2-GROOVE)	
	2	1	**9S-1240**	1	BRACKET AS	
		1	**1F-0748**	1	NUT-WELD (1/2-13-THD)	
	3	1	**130-3216**	1	V-BELT SET (INCLUDES 2-BELTS)	
	4	1	**157-2393**	1	BRACKET AS	
		1	**7T-1099**	1	LINK	
	5	1	**158-2829**	1	STRAP	
YR	6	1	**177-9953**	1	ALTERNATOR GP-CHARGING (24-VOLT, 80-AMPERE)	131
	7	1	**212-8743**	1	BRACKET-ALTERNATOR	
Y	8	1	*252-4990*	1	WIRING GP-ALTERNATOR	197
	9	1	**5P-1076**	1	WASHER-HARD (13.5X30X4-MM THK)	
	10	1	**7X-0338**	1	BOLT (1/2-13X6-IN)	
	11	1	**7X-0599**	1	WASHER-HARD (13X20X2-MM THK)	
	12	1	**7X-7729**	1	WASHER (11X25X3-MM THK)	
	13	1	**8C-4436**	1	BOLT (1/2-13X1.375-IN)	
M	14	1	**8T-4136**	1	BOLT (M10X1.5X25-MM)	
M	15	1	**8T-4183**	1	BOLT (M12X1.75X40-MM)	
	16	1	**8T-4223**	2	WASHER-HARD (13.5X25.5X3-MM THK)	
	17	1	**8T-4224**	4	WASHER-HARD (8.8X16X2-MM THK)	
M	18	1	**8T-6870**	2	BOLT (M8X1.25X70-MM)	

M-METRIC PART
R-REMFG PART MAY BE AVAILABLE
Y-SEPARATE ILLUSTRATION

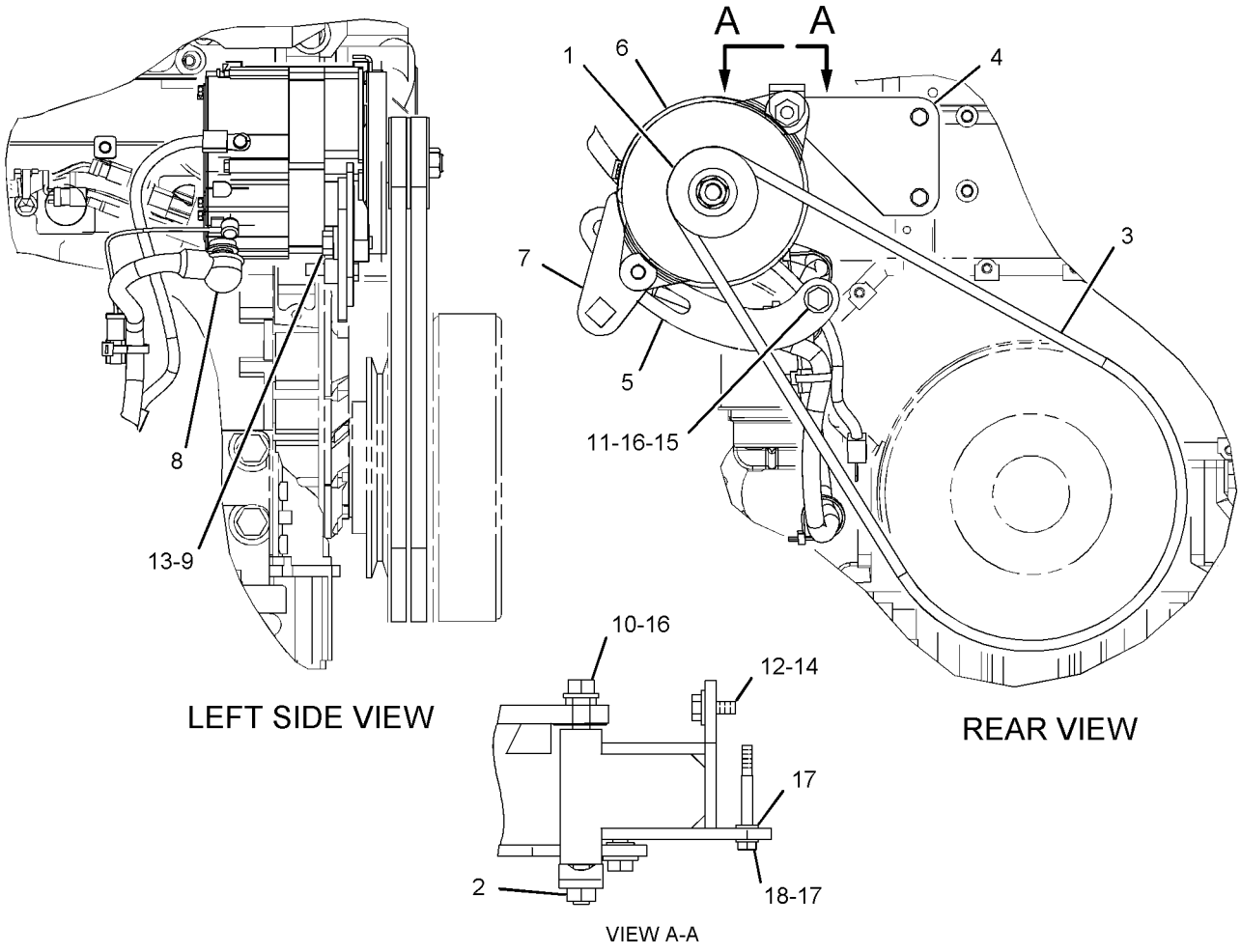

GRAPHIC #1 **<END>** g01115553

256-4715 ALTERNATOR GP-CHARGING

S/N: TWR1-UP
AN ATTACHMENT

SMCS-1405 **i02208405**

NOTE	REF NO	GRAPHIC REF	PART NUMBER	QTY	PART NAME 1 2 3 4 5 6 (PRODUCT LEVEL)	SEE PAGE
	1	1	**9L-6246**	1	PULLEY-ALTERNATOR (2-GROOVE)	
	2	1	**9S-1240**	1	BRACKET AS	
		1	**1F-0748**	1	NUT-WELD (1/2-13-THD)	
	3	1	**130-3216**	1	V-BELT SET (INCLUDES 2-BELTS)	
	4	1	**157-2393**	1	BRACKET AS	
		1	**7T-1099**	1	LINK	
	5	1	**158-2829**	1	STRAP	
YR	6	1	**197-8820**	1	ALTERNATOR GP-CHARGING (24-VOLT, 95-AMPERE)	133
	7	1	**212-8743**	1	BRACKET-ALTERNATOR	
Y	8	1	*252-4990*	1	WIRING GP-ALTERNATOR	197
	9	1	**5P-1076**	1	WASHER-HARD (13.5X30X4-MM THK)	
	10	1	**7X-0338**	1	BOLT (1/2-13X6-IN)	
	11	1	**7X-0599**	1	WASHER-HARD (13X20X2-MM THK)	
	12	1	**7X-7729**	1	WASHER (11X25X3-MM THK)	
	13	1	**8C-4436**	1	BOLT (1/2-13X1.375-IN)	
M	14	1	**8T-4136**	1	BOLT (M10X1.5X25-MM)	
M	15	1	**8T-4183**	1	BOLT (M12X1.75X40-MM)	
	16	1	**8T-4223**	2	WASHER-HARD (13.5X25.5X3-MM THK)	
	17	1	**8T-4224**	4	WASHER-HARD (8.8X16X2-MM THK)	
M	18	1	**8T-6870**	2	BOLT (M8X1.25X70-MM)	

M-METRIC PART
R-REMFG PART MAY BE AVAILABLE
Y-SEPARATE ILLUSTRATION

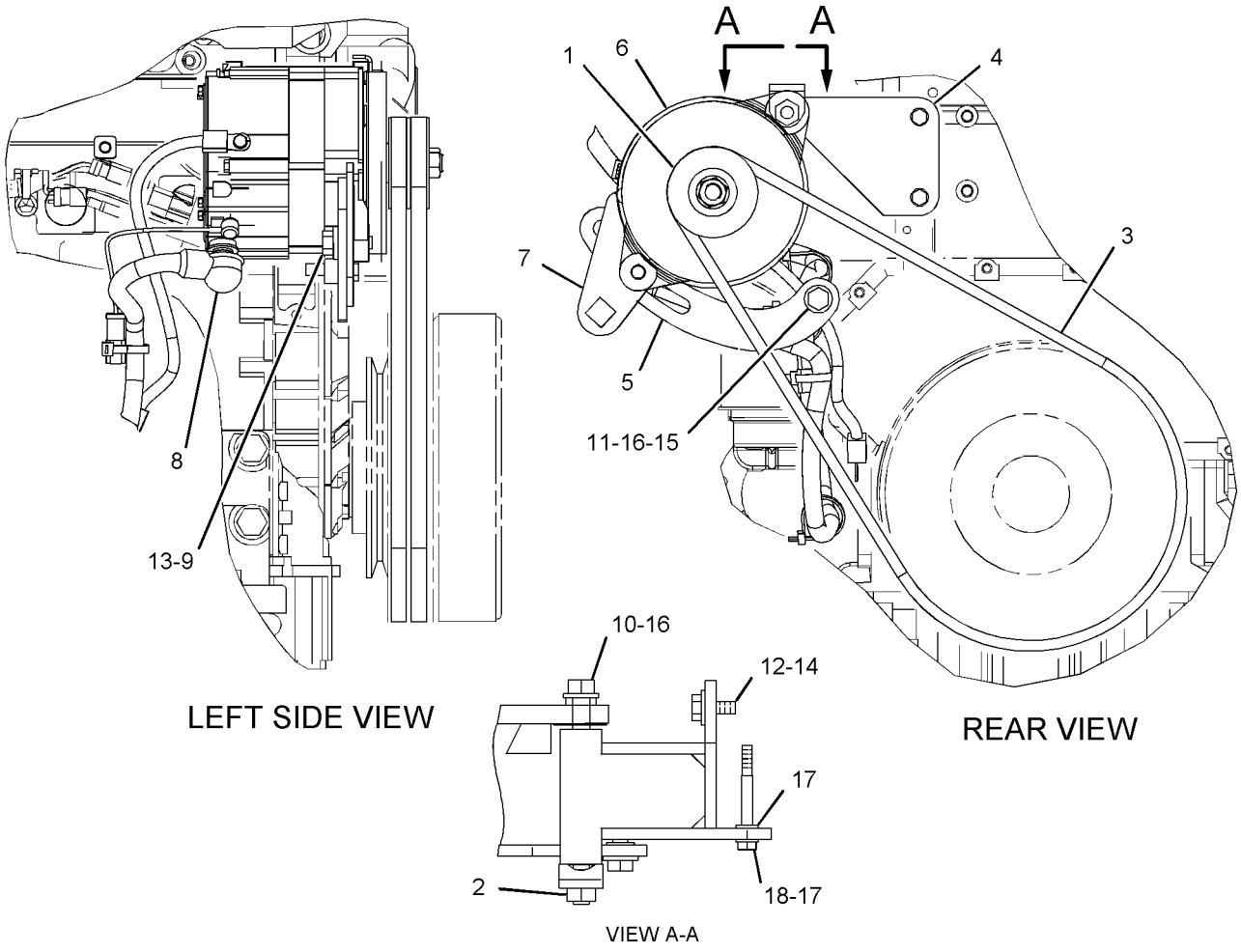

GRAPHIC #1 **<END>** g01115558

255-2359 BATTERY & WIRING GP

S/N: TWR1-UP

PART OF 235-7499 CHASSIS AR

SMCS-1401, 1402, 1408 **i03110688**

NOTE	REF NO	GRAPHIC REF	PART NUMBER	QTY	PART NAME 1 2 3 4 5 6 (PRODUCT LEVEL)	SEE PAGE
	1	1	**2G-8767**	2	WASHER (10.5X60X3-MM THK)	
	2	1	**3E-8320**	1	PLATE-INSTRUCTION (BATTERY)	
	3	1	**3W-6188**	1	BRACKET	
	4	1	**6G-2256**	2	CLAMP	
	5	1	**6G-2263**	2	SPACER (10.5X19X28.5-MM THK)	
Y	6	1	**7N-0718**	1	SWITCH GP-DISCONNECT (BATTERY, GROUND LEVEL)	187
	7	1	**8R-0768**	4	ROD-RETAINING	
	8	1	**091-0081**	1	SPACER (10.5X20X10-MM THK)	
	9	1	**102-4176**	2	HOLD-DOWN-BATTERY	
	10	1	**111-6940**	1	SPACER (13.1X15.9X36.5-MM THK)	
	11	1	**180-8871**	1	CABLE AS	
E		1	**5P-0761**		CABLE (00-GA, RED) (146-CM)	
		1	**7N-5274**	1	COVER-TERMINAL (BLACK)	
		1	**8N-1725**	1	COVER-TERMINAL (RED)	
		1	**9W-3459**	1	TERMINAL AS-BATTERY (NEGATIVE)	
		1	**9W-3460**	1	TERMINAL AS (POSITIVE)	
	12	1	**180-8873**	1	CABLE AS	
		1	**1S-7252**	1	TERMINAL-CABLE (00-GA, 3/8-IN BOLT)	
E		1	**5P-0747**		CABLE (00-GA, BLACK) (17-CM)	
		1	**8S-3020**	1	TERMINAL-CABLE (00-GA, 3/8-IN BOLT)	
	13	1	**180-8874**	1	CABLE AS	
		1	**1S-7251**	1	TERMINAL-CABLE (00-GA, 1/2-IN BOLT)	
E		1	**159-8050**		CABLE (00-GA, BLACK) (30-CM)	
		1	**8S-3020**	1	TERMINAL-CABLE (00-GA, 3/8-IN BOLT)	
		1	**9G-8909**	1	COVER-TERMINAL (BLACK)	
	14	1	**250-2335**	1	CABLE AS	
		1	**1S-7252**	1	TERMINAL-CABLE (00-GA, 3/8-IN BOLT)	
E		1	**5P-0747**		CABLE (00-GA, BLACK) (120-CM)	
		1	**7N-5274**	1	COVER-TERMINAL (BLACK)	
		1	**9G-8909**	1	COVER-TERMINAL (BLACK)	
		1	**9W-3459**	1	TERMINAL AS-BATTERY (NEGATIVE)	
	15	1	**129-8087**	3	SPACER (13.9X17.1X14-MM THK)	
	16	1	**226-6059**	1	CABLE AS	
		1	**3S-6049**	1	TERMINAL AS-BATTERY (POSITIVE)	
		1	**1S-7252**	1	TERMINAL-CABLE (00-GA, 3/8-IN BOLT)	
E		1	**5P-0761**		CABLE (00-GA, RED) (187-CM)	
		1	**8N-0869**	1	COVER-TERMINAL (RED)	
		1	**8N-1725**	1	COVER-TERMINAL (RED)	
	17	1	**5P-4116**	5	WASHER-HARD (8.8X20.5X2-MM THK)	
	18	1	**6D-3479**	9	CLIP	
	19	1	**8T-4121**	21	WASHER-HARD (11X21X2.5-MM THK)	
M	20	1	**8T-4133**	9	NUT (M10X1.5-THD)	
M	21	1	**8T-4136**	3	BOLT (M10X1.5X25-MM)	
M	22	1	**101-3129**	1	STUD (M10X1.5-THD)	
M	23	1	**8T-4185**	2	BOLT (M10X1.5X50-MM)	
M	24	1	**8T-6466**	4	BOLT (M10X1.5X60-MM)	
M	25	1	**8T-7547**	1	BOLT (M8X1.25X30-MM)	
M	26	1	**8T-7963**	4	LOCKNUT (M8X1.25-THD)	
	27	1	**1B-3057**	1	CLIP	
M	28	1	**8T-4186**	1	BOLT (M10X1.5X40-MM)	

E-ORDER BY THE CENTIMETER
M-METRIC PART
Y-SEPARATE ILLUSTRATION

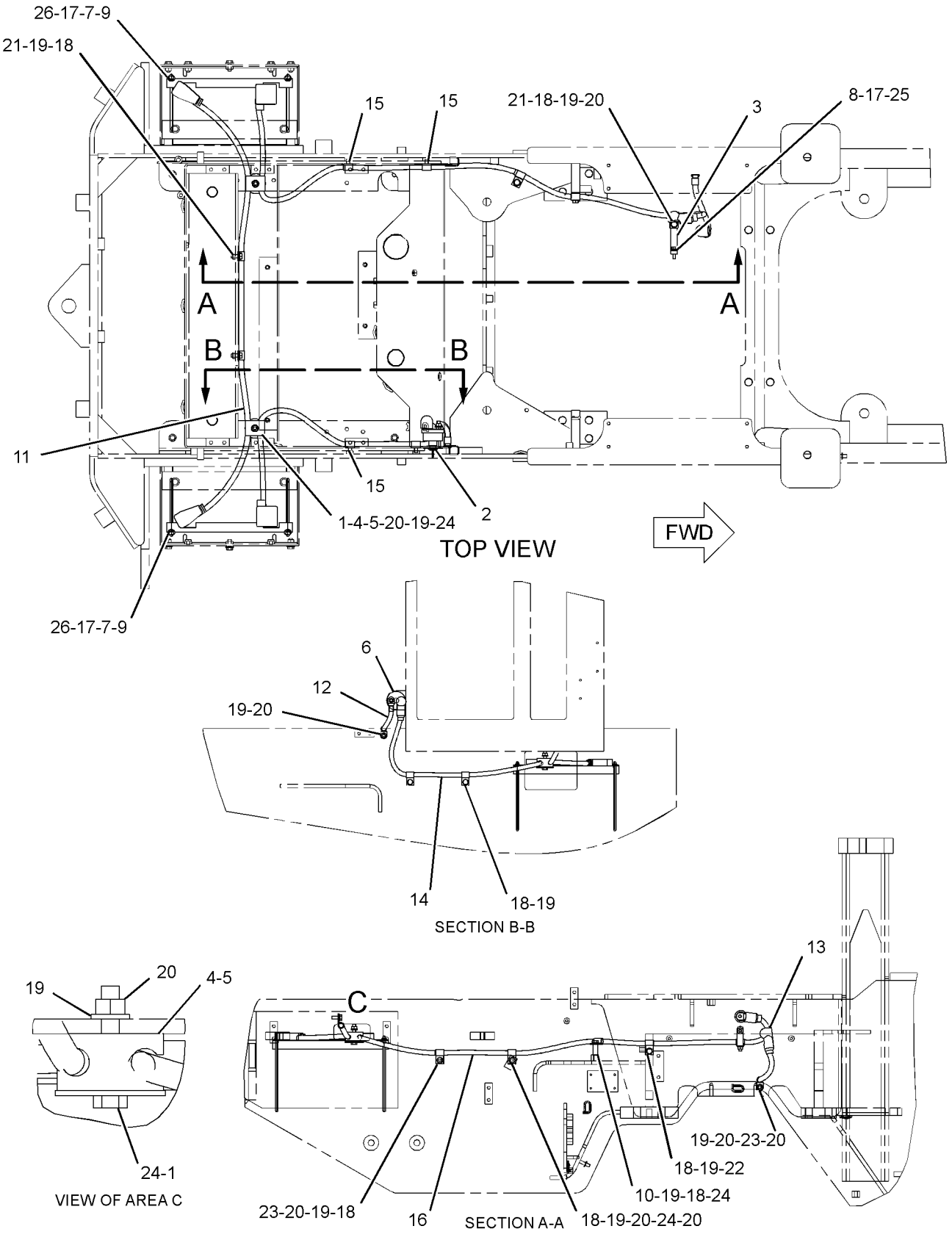

GRAPHIC #1 **<END>** g01184707

132-2685 BATTERY GP

S/N: TWR1-UP
PART OF 235-7499 CHASSIS AR

SMCS-1401 **i02582989**

NOTE	PART NUMBER	QTY	PART NAME 1 2 3 4 5 6 (PRODUCT LEVEL)	SEE PAGE
	115-2422	2	BATTERY GP (12-VOLT, MAINTENANCE FREE, WET) (950-CCA)	

<END>

256-7264 CAMERA AR—WORK AREA VISUAL SYSTEM

S/N: TWR1-UP
FOR USE WITH 107-4642—PAGE 1066
AN ATTACHMENT

SMCS-7348 **i02610078**

NOTE	PART NUMBER	QTY	PART NAME 1 2 3 4 5 6 (PRODUCT LEVEL)	SEE PAGE
Y	*260-3183*	1	MIRROR GP-REAR VIEW (INTERIOR, LH)	1068
Y	*256-7265*	1	MOUNTING GP-CAMERA (WORK AREA VISUAL SYSTEM)	175
Y	*256-7267*	1	MOUNTING GP-DISPLAY (WORK AREA VISUAL SYSTEM)	1072
Y	*256-7269*	1	WIRING GP-CAMERA (REAR CHASSIS)	208
Y	*256-7270*	1	WIRING GP-CAMERA (CAB)	209
	1V-9409	1	GROMMET	

Y-SEPARATE ILLUSTRATION

<END>

242-7205 CONTROL GP-COMMUNICATION–PRODUCT LINK 201

S/N: TWR1-UP

PART OF 189-4870 WIRING GP-COMMUNICATION

FIELD REPLACEMENT ORDER 273-5723–PAGE 150, 273-5725–PAGE 151

AN ATTACHMENT

SMCS-7610, 7620 **i02533958**

NOTE	REF NO	GRAPHIC REF	PART NUMBER	QTY	PART NAME 1 2 3 4 5 6 (PRODUCT LEVEL)	SEE PAGE
Y	1	1	*168-7314*	1	CONTROL GP-UNPROGRAMMED (PRODUCT LINK 201)	145
	3	1	**231-1403**	1	FILM-INFORMATION (PRODUCT LINK)	
	4	1	**254-9114**	1	SOFTWARE GP-COMMUNICATION (PRODUCT LINK)	
	5	1	**254-9115**	1	SOFTWARE GP-MONITOR (PRODUCT LINK)	
FJ			**230-1340**	1	FILM-WARNING (PRODUCT LINK RADIO, U.S.)	
FJ			**230-1341**	1	FILM-WARNING (PRODUCT LINK RADIO, INTL)	

F-NOT SHOWN
J-SHIPPED LOOSE IN PACKAGE
Y-SEPARATE ILLUSTRATION

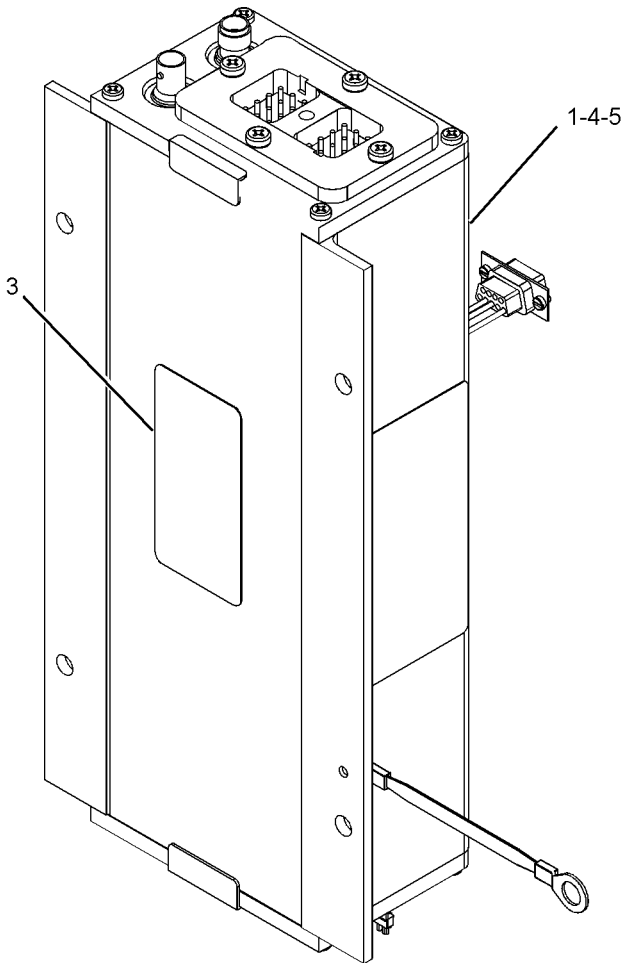

GRAPHIC #1

<END>

g01069139

3E-7844 CONTROL GP-LIFT KICKOUT

S/N: TWR1-UP

PART OF 235-6820 KICKOUT & POSITIONER GP

SMCS-5109 **i03110689**

NOTE	REF NO	GRAPHIC REF	PART NUMBER	QTY	PART NAME 1 2 3 4 5 6 (PRODUCT LEVEL)	SEE PAGE
	1	1	**9X-5617**	1	FILM-INSTRUCTION (KICKOUT, POSITIONER CONTROL)	
	2	1	**102-8803**	1	KIT-RECEPTACLE (3-PIN)	
					(INCLUDES RECEPTACLE AS & WEDGE)	
	3	1	**8T-8729**	3	PIN-CONNECTOR (16-GA TO 18-GA)	
	4	1	**3E-3371**	1	WEDGE-RECEPTACLE LOCK (3-PIN)	

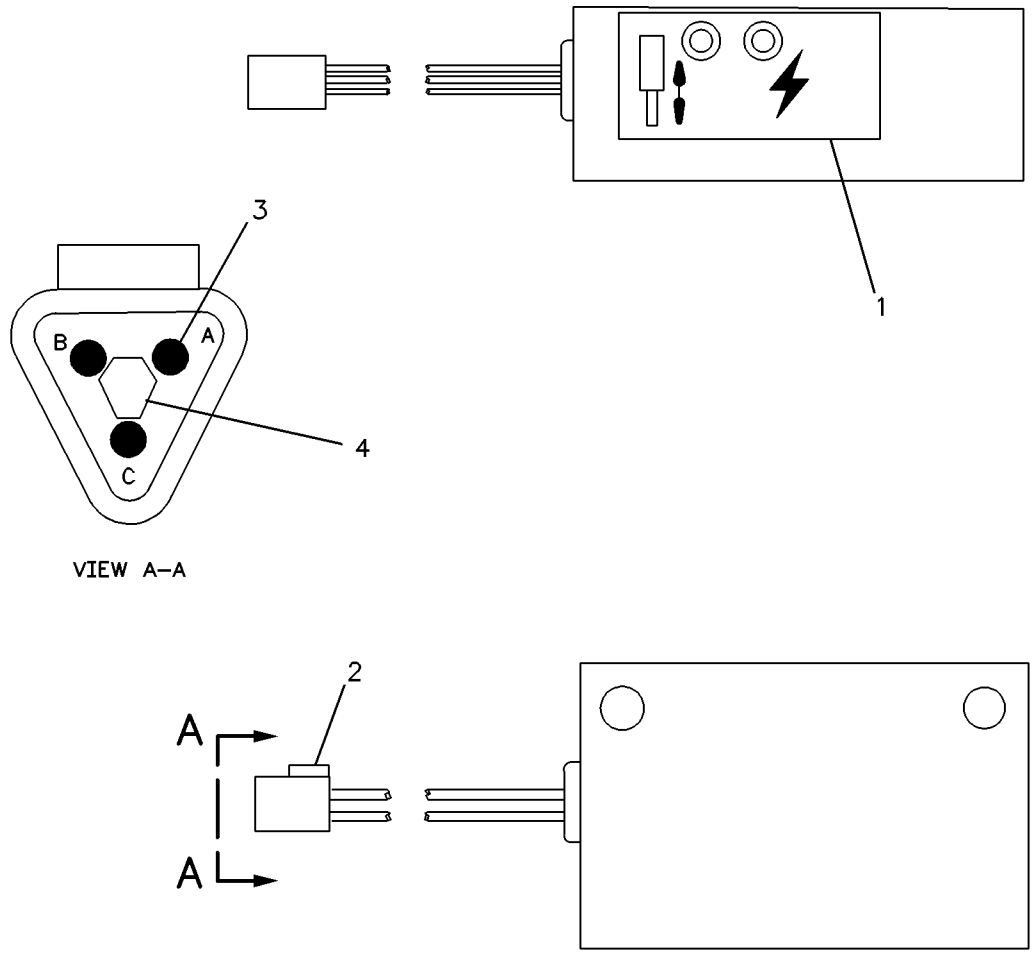

GRAPHIC #1 **<END>** g00119271

3E-7843 CONTROL GP-POSITION—WORK TOOL

S/N: TWR1-UP

PART OF 235-6820 KICKOUT & POSITIONER GP

SMCS-5112 **i03110690**

NOTE	REF NO	GRAPHIC REF	PART NUMBER	QTY	PART NAME 1 2 3 4 5 6 (PRODUCT LEVEL)	SEE PAGE
	1	1	**9X-5617**	1	FILM-INSTRUCTION (KICKOUT, POSITIONER CONTROL)	
	2	1	**8T-8730**	3	SOCKET-CONNECTOR (16-GA TO 18-GA)	
	3	1	**3E-3368**	1	WEDGE-PLUG LOCK (3-PIN)	
	4	1	**155-2260**	1	KIT-CONNECTING PLUG (3-PIN)	
					(INCLUDES PLUG AS, WEDGE & INTERFACE SEAL)	

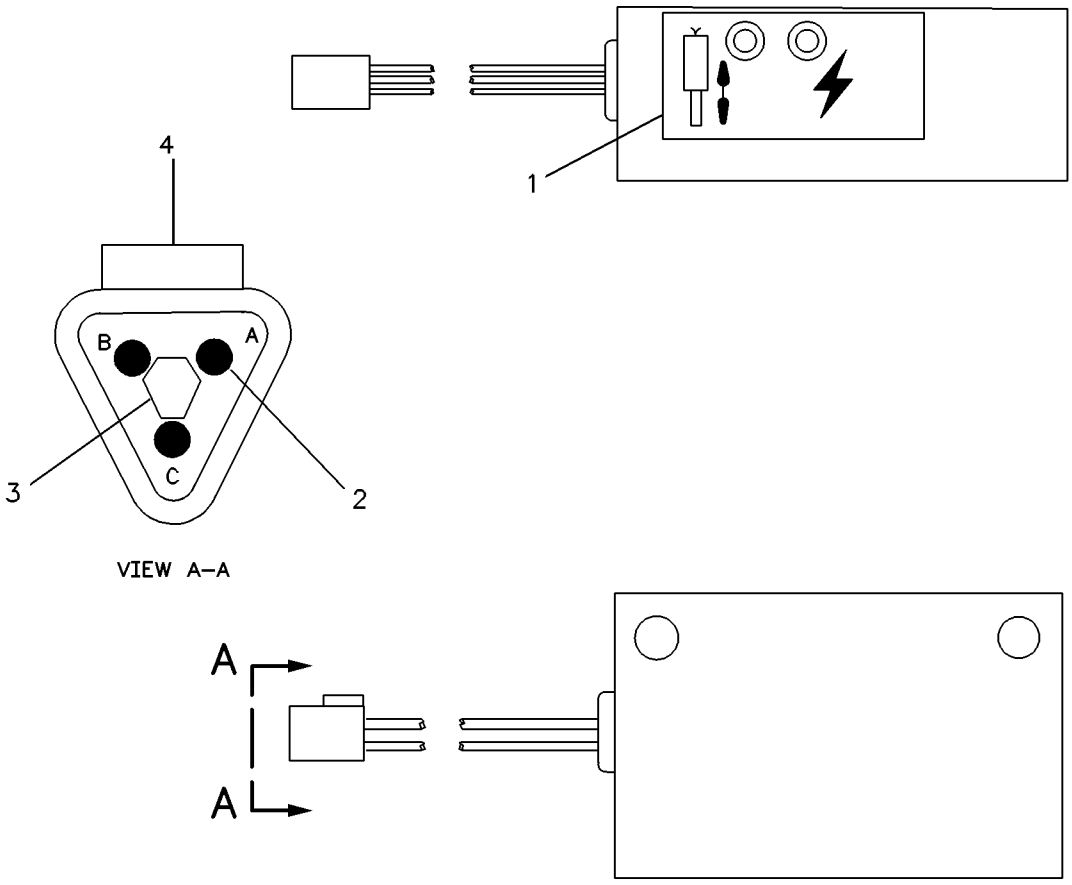

GRAPHIC #1 **<END>** g00119265

168-7314 CONTROL GP-UNPROGRAMMED–PRODUCT LINK 201

S/N: TWR1-UP

PART OF 242-7205 CONTROL GP-COMMUNICATION

AN ATTACHMENT

SMCS-7610 **i02098214**

NOTE	REF NO	GRAPHIC REF	PART NUMBER	QTY	PART NAME 1 2 3 4 5 6 (PRODUCT LEVEL)	SEE PAGE
	1	1	**7T-7370**	2	SEAL-SECURITY	
	2	1	**7X-6315**	1	STRAP AS-GROUND	
		1	**2L-8078**	1	TERMINAL (16-GA TO 14-GA)	
	3	1	**9X-1365**	1	SEAL-CONNECTOR	
	4	1	**178-3339**	4	SCREW (8-32X0.5-IN)	
	5	1	**3B-4501**	1	LOCKWASHER	
	6	1	**4D-0514**	1	PLUG-PIPE	
	7	1	**6V-6718**	1	SCREW-SELF-TAPPING (M8X32X6.35-MM)	
	8	1	**9X-6257**	8	SCREW-MACHINE (6-32X0.625-IN)	

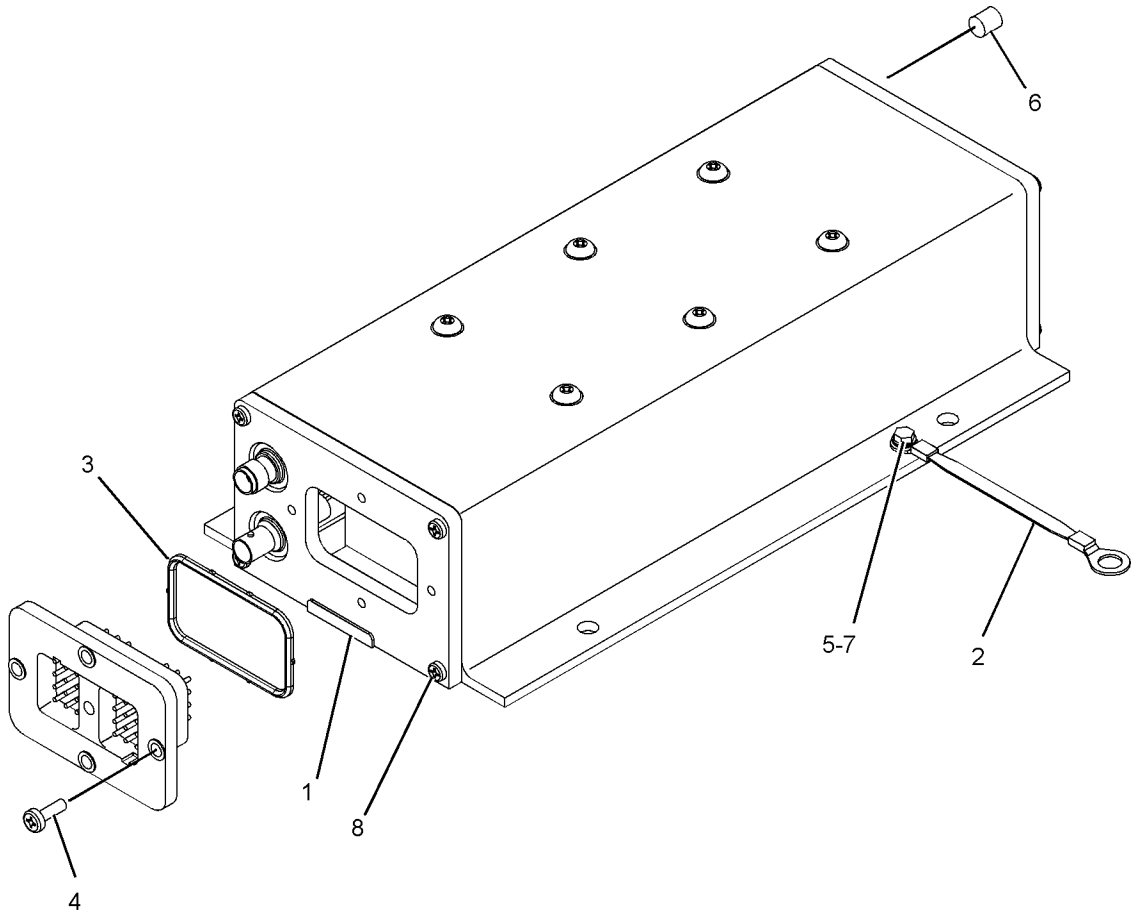

GRAPHIC #1 **<END>** g01015086

207-5947 CONVERTER GP-ELECTRICAL

S/N: TWR1-UP
24-VOLT TO 12-VOLT
PART OF 225-4329 INSTALLATION GP-RADIO
CANNOT BE USED WITH 225-4329—PAGE 1050
AN ATTACHMENT

SMCS-1421 **i02945049**

NOTE	REF NO	GRAPHIC REF	PART NUMBER	QTY	PART NAME 1 2 3 4 5 6 (PRODUCT LEVEL)	SEE PAGE
	1	1	**117-2311**	1	RECEPTACLE AS-POWER (12-VOLT)	
	2	1	**124-5638**	1	FILM-INFORMATION (12-VOLT)	
	3	1	**205-4285**	1	CONVERTER GP-ELECTRICAL (24-VOLT TO 12-VOLT)	
	4	1	**6K-8180**	1	GROMMET	
M	5	1	**9X-1046**	2	SCREW (M4X0.7X18-MM)	
	6	1	**9X-8256**	2	WASHER (6.6X12X2-MM THK)	

M-METRIC PART

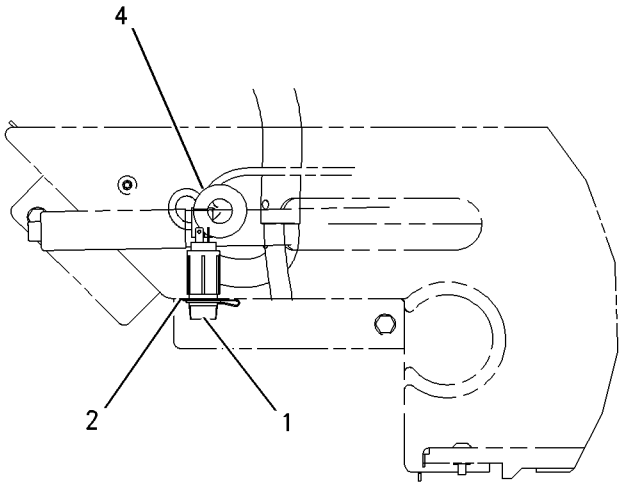

LEFT SIDE VIEW
(PARK BRAKE & COVER AS.)

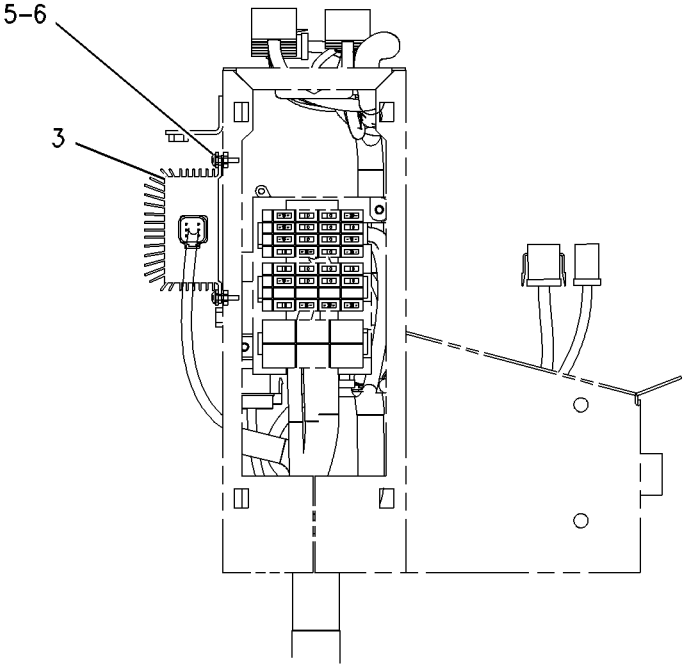

RIGHT SIDE VIEW
(FUSE BOX)

GRAPHIC #1 **<END>** g00895503

235-6835 ELECTRONICS AR-MACHINE

S/N: TWR1-UP

PART OF 240-7966 COMMON AR

SMCS-7610, 7620 **i02246005**

NOTE	PART NUMBER	QTY	PART NAME 1 2 3 4 5 6 (PRODUCT LEVEL)	SEE PAGE
Y	**245-7320**	1	ELECTRONICS GP-MACHINE	147
Y-SEPARATE ILLUSTRATION				

<END>

262-1421 ELECTRONICS GP-COMMUNICATION–

PRODUCT LINK 300

S/N: TWR1-UP

PART OF 273-5723, 273-5725 INSTALLATION GP-COMMUNICATION

SMCS-7606, 7610, 7620 **i03171663**

NOTE	PART NUMBER	QTY	PART NAME 1 2 3 4 5 6 (PRODUCT LEVEL)	SEE PAGE
	330-3409	1	SOFTWARE GP-COMMUNICATION (PRODUCT LINK 300)	
			-OR-	
	330-3410	1	SERVICE GP-COMMUNICATION (PRODUCT LINK 300)	
			(OPTIONAL SERVICE REPLACEMENT)(INCLUDES CONTROL GP & SOFTWARE)	
	7X-6315	1	STRAP AS-GROUND	
	126-7574	1	SCREW-PAN HEAD (8-32X9.52-MM)	
	134-4126	1	WASHER (4.52X8.28X0.76-MM THK)	

<END>

245-7320 ELECTRONICS GP-MACHINE

S/N: TWR1-UP

PART OF 235-6835 ELECTRONICS AR-MACHINE

SMCS-7610, 7620 **i02998803**

NOTE	PART NUMBER	QTY	PART NAME 1 2 3 4 5 6 (PRODUCT LEVEL)	SEE PAGE
	326-1155	1	SOFTWARE GP-MACHINE	
			-OR-	
	326-1156	1	SERVICE GP-MACHINE	
			(OPTIONAL SERVICE REPLACEMENT) (INCLUDES CONTROL GP & SOFTWARE GP)	

<END>

ELECTRICAL AND STARTING SYSTEM

107-1852 HEATER GP-JACKET WATER

S/N: TWR1-UP
120-VOLT, 1000-WATT
AN ATTACHMENT

SMCS-1383 **i02020862**

NOTE	REF NO	GRAPHIC REF	PART NUMBER	QTY	PART NAME 1 2 3 4 5 6 (PRODUCT LEVEL)	SEE PAGE
	1	1	**159-6108**	1	CORD AS-HEATER	
	2	1	**8M-5254**	1	SEAL-O-RING	

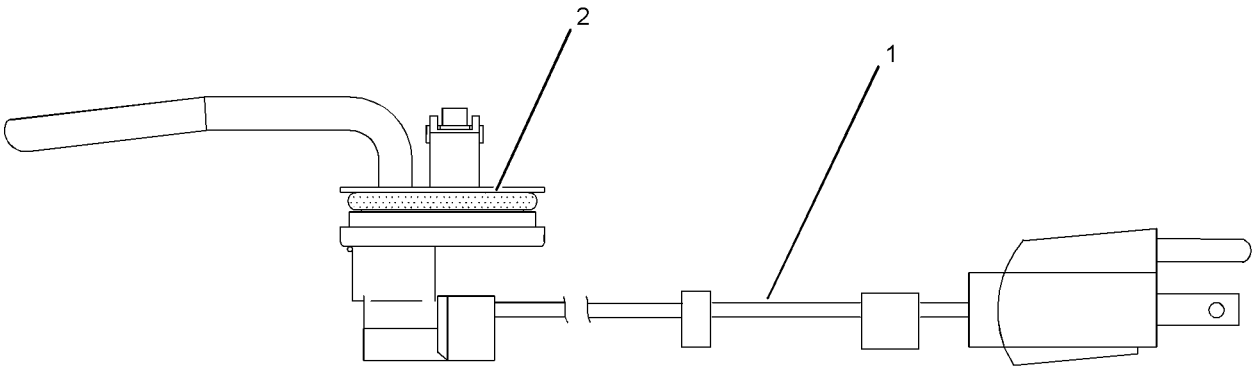

GRAPHIC #1 **<END>** g01045967

159-4995 HEATER GP-JACKET WATER

S/N: TWR1-UP
240-VOLT, 1000-WATT
AN ATTACHMENT

SMCS-1383 **i02113585**

NOTE	REF NO	GRAPHIC REF	PART NUMBER	QTY	PART NAME 1 2 3 4 5 6 (PRODUCT LEVEL)	SEE PAGE
	1	1	**8M-5254**	1	SEAL-O-RING	
	2	1	**159-4996**	1	CORD AS-HEATER	

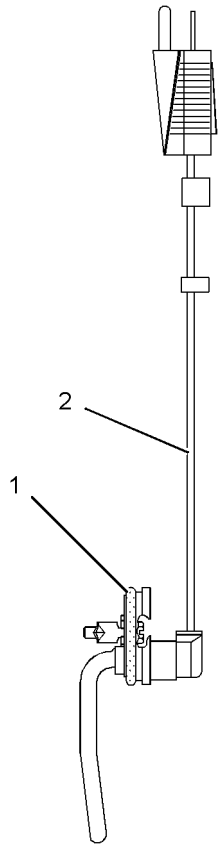

GRAPHIC #1

<END>

g01076774

273-5723 INSTALLATION GP-COMMUNICATION–

PRODUCT LINK 321SR

S/N: TWR1-UP

FIELD REPLACEMENT FOR 242-7205–PAGE 142. FOR USE WITH MACHINE PRODUCT LINK READY

SMCS-7606 **i02935034**

NOTE	PART NUMBER	QTY	PART NAME 1 2 3 4 5 6 (PRODUCT LEVEL)	SEE PAGE
Y	*262-1421*	1	ELECTRONICS GP-COMMUNICATION (PRODUCT LINK 300)	147
Y	**263-9088**	1	RADIO GP-COMMUNICATION (PRODUCT LINK 121SR)	1137
	256-6804	1	HARNESS AS-CONTROL (PRODUCT LINK)	
	256-6803	1	HARNESS AS-RADIO (PRODUCT LINK)	
	257-9363	1	HARNESS AS-RADIO (PRODUCT LINK)	
M	**6V-7357**	4	BOLT (M6X1X25-MM)	
M	**8C-8451**	4	BOLT (M6X1X40-MM)	
M	**9X-2546**	4	BOLT (M6X1X20-MM)	
	230-1340	1	FILM-WARNING (PRODUCT LINK RADIO, U.S.)	
	230-1341	1	FILM-WARNING (PRODUCT LINK RADIO, INTL)	
M	**129-3178**	8	LOCKNUT (M6X1-THD)	
	9X-9896	8	MOUNT (ISOLATION)	
	256-0501	2	PLATE	
	8C-5608	4	SPACER (6.5X9.5X25.4-MM THK)	
	7K-1181	15	STRAP-CABLE	
	9X-6165	8	WASHER (6.5X22X2.5-MM THK)	
	9X-8256	8	WASHER (6.6X12X2-MM THK)	

M-METRIC PART
Y-SEPARATE ILLUSTRATION

<END>

273-5725 INSTALLATION GP-COMMUNICATION–

PRODUCT LINK 300

S/N: TWR1-UP

FIELD REPLACEMENT FOR 242-7205–PAGE 142. FOR USE WITH MACHINE NOT PRODUCT LINK READY

SMCS-7606 **i02599073**

NOTE	PART NUMBER	QTY	PART NAME 1 2 3 4 5 6 (PRODUCT LEVEL)	SEE PAGE
Y	*262-1421*	1	ELECTRONICS GP-COMMUNICATION (PRODUCT LINK 300)	147
M	**8C-8451**	4	BOLT (M6X1X40-MM)	
M	**9X-2546**	4	BOLT (M6X1X20-MM)	
	256-6804	1	HARNESS AS-CONTROL (PRODUCT LINK)	
	102-8801	1	KIT-RECEPTACLE (12-PIN)	
			(INCLUDES RECEPTACLE AS & WEDGE)	
	9X-6772	2	STRAP-CABLE	
	155-2255	1	KIT-CONNECTING PLUG (12-PIN)	
	155-2270	1	KIT-CONNECTING PLUG (2-PIN)	
			(EACH KIT INCLUDES PLUG AS, WEDGE & INTERFACE SEAL)	
	160-7690	1	PLUG AS-CONNECTOR (70-PIN)	
	159-9322	1	SEAL-O-RING	
M	**129-3178**	4	LOCKNUT (M6X1-THD)	
	9X-9896	8	MOUNT (ISOLATION)	
	256-0501	2	PLATE	
	8C-5608	4	SPACER (6.5X9.5X25.4-MM THK)	
	7K-1181	5	STRAP-CABLE	
	9X-6165	8	WASHER (6.5X22X2.5-MM THK)	

M-METRIC PART
Y-SEPARATE ILLUSTRATION

<END>

243-0516 INSTALLATION GP-SECURITY

S/N: TWR1-UP

AN ATTACHMENT

SMCS-7631 **i02672657**

NOTE	REF NO	GRAPHIC REF	PART NUMBER	QTY	PART NAME 1 2 3 4 5 6 (PRODUCT LEVEL)	SEE PAGE
	1	1	**198-5389**	1	FILM-IDENTIFICATION (IGNITION SWITCH)	
	2	1	**205-0826**	1	FILM-INSTRUCTION (MACHINE SECURITY, CONSOLE)	
	3	1	**206-5162**	2	KEY AS-ELECTRONIC (SECURITY)	
	4	1	*206-5208*	1	COIL AS (EXCITER)	
		1	**102-8802**	1	KIT-RECEPTACLE (2-PIN)	
					(INCLUDES RECEPTACLE AS & WEDGE)	
		1	**205-8257**	1	COIL AS (EXCITER)	
D		1	**5P-5677**		WIRE (18-GA, BLACK) (0.4-M)	
		1	**186-3735**	2	PIN-CONNECTOR (16-GA TO 18-GA)	
	5	1	**218-0404**	1	MODULE GP-INTERFACE (KEY)	
	6	1	**219-6314**	2	KEY RING (IDENTIFICATION)	
	7	1	**243-0517**	1	HARNESS AS-CONTROL (MACHINE SECURITY)	
		1	**102-8802**	1	KIT-RECEPTACLE (2-PIN)	
		1	**102-8803**	1	KIT-RECEPTACLE (3-PIN)	
		1	**102-8804**	1	KIT-RECEPTACLE (4-PIN)	
					(EACH RECEPTACLE KIT INCLUDES RECEPTACLE AS & WEDGE)	
		1	**8L-8413**	21	STRAP-CABLE	
E		1	**125-7874**		TUBE-HEAT SHRINK (5.72-MM DIA) (20-CM)	
		1	**155-2265**	1	KIT-CONNECTING PLUG (8-PIN)	
		1	**155-2260**	1	KIT-CONNECTING PLUG (3-PIN)	
		1	**155-2270**	2	KIT-CONNECTING PLUG (2-PIN)	
		1	**155-2271**	1	KIT-CONNECTING PLUG (4-PIN)	
					(EACH PLUG KIT INCLUDES PLUG AS, WEDGE & INTERFACE SEAL)	
FJ			*238-5014*	1	CONFIGURATION-PREMIUM	

D-ORDER BY THE METER
E-ORDER BY THE CENTIMETER
F-NOT SHOWN
J-DLR INSTALL CONFIG:SEE IRM:EESO3-01

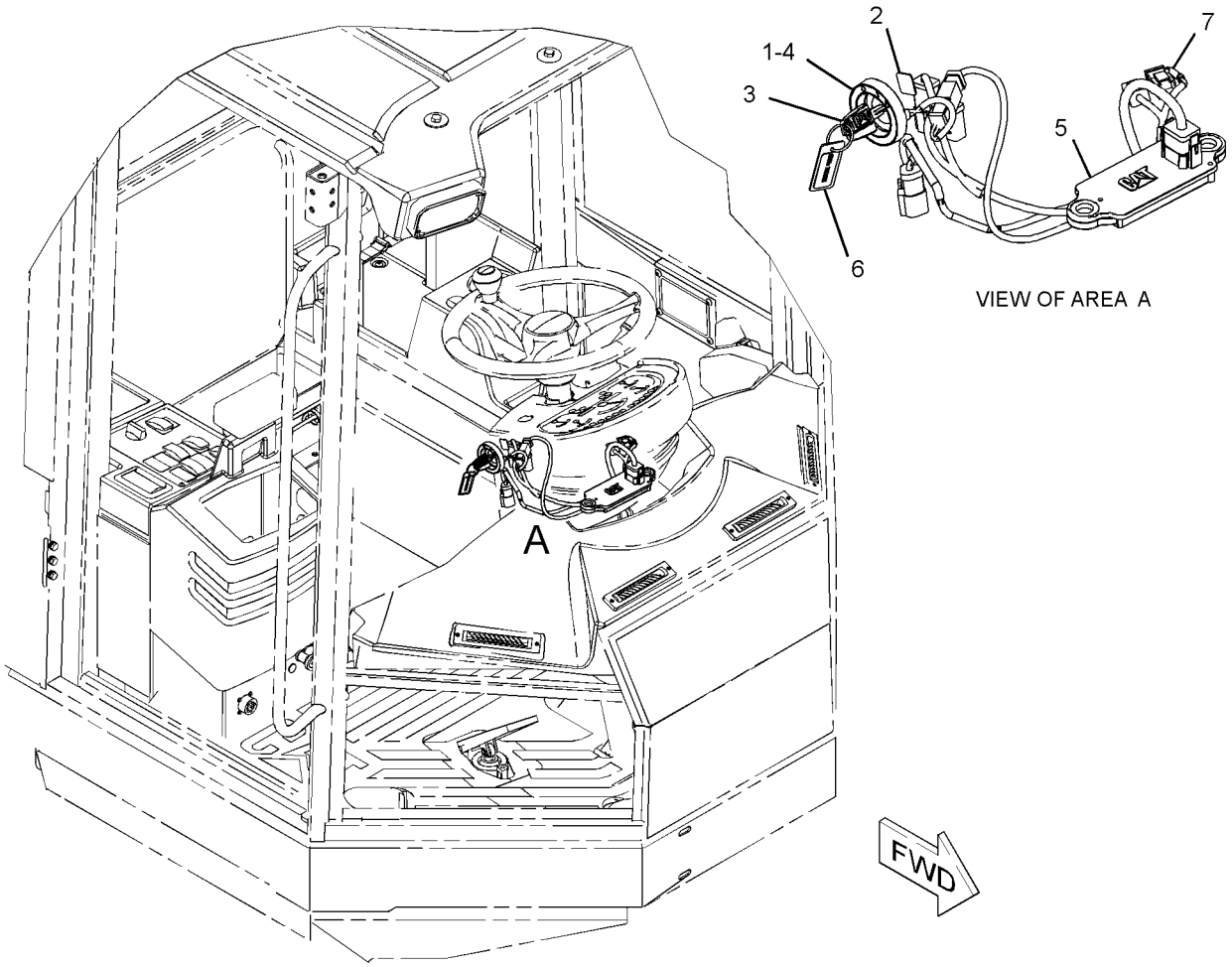

VIEW OF AREA A

GRAPHIC #1 **<END>** g01351427

234-4325 LAMP GP-FLOOD

S/N: TWR1-UP
24-VOLT
PART OF 115-1558 LIGHTING GP-AUXILIARY
AN ATTACHMENT

SMCS-1434 **i02890507**

NOTE	REF NO	GRAPHIC REF	PART NUMBER	QTY	PART NAME 1 2 3 4 5 6 (PRODUCT LEVEL)	SEE PAGE
	1	1	**9X-3463**	1	LAMP-HALOGEN (24-VOLT, 65-WATT)	
M	2	1	**8T-0389**	1	LOCKNUT (M10X1.5-THD)	
	3	1	**9X-4244**	2	SCREW-SPECIAL	
	4	1	**202-6614**	1	LENS AS (FLOODLIGHT)	
	5	1	**234-7730**	1	BODY AS	
	6	1	**164-7556**	1	BRACKET (LAMP RETAINING)	
	7	1	**234-7731**	1	BRACKET AS	
	8	1	**8T-4121**	1	WASHER-HARD (11X21X2.5-MM THK)	

M-METRIC PART

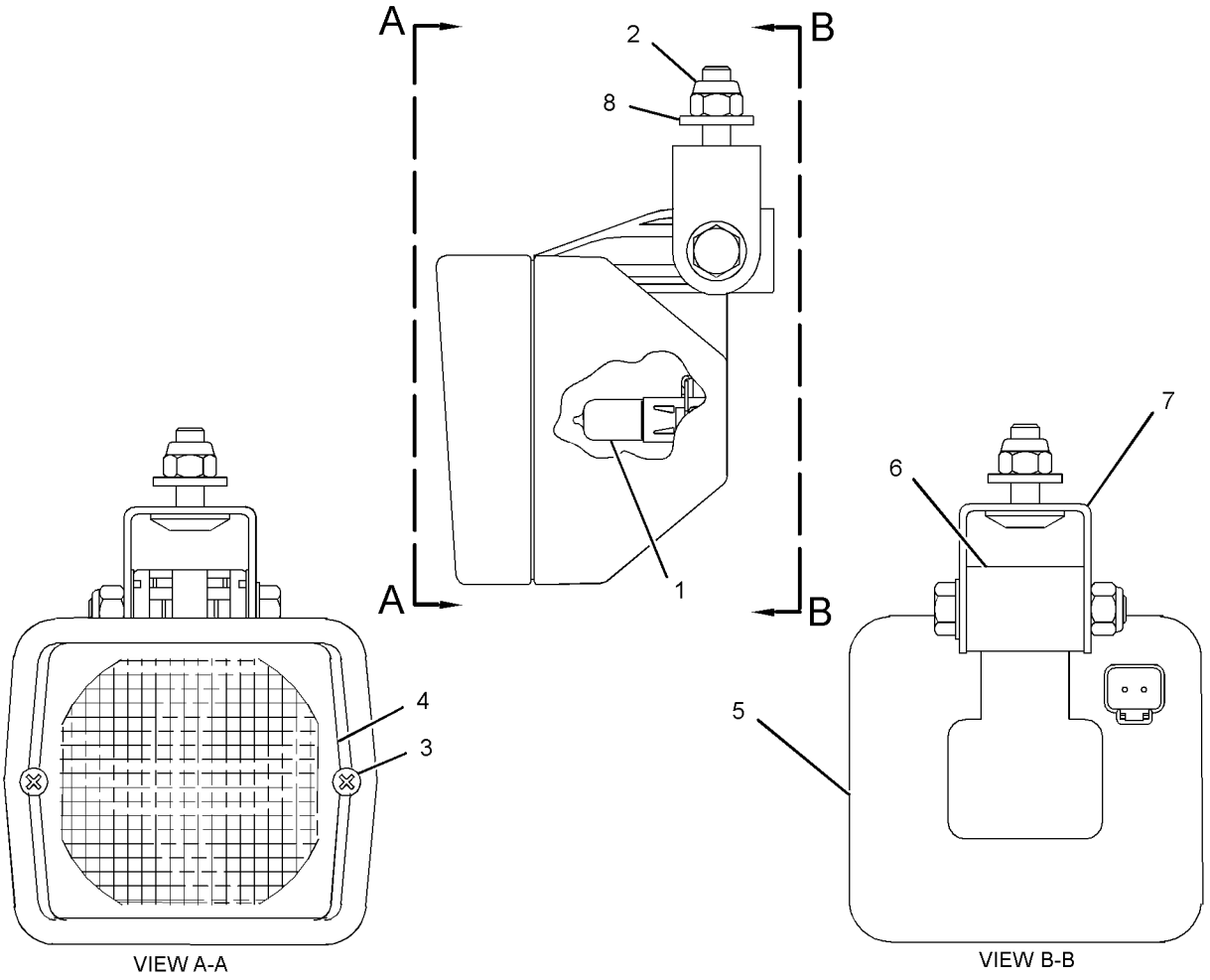

GRAPHIC #1 **<END>** g01246703

238-2797 LAMP GP-HEAD & SIGNAL–RH

S/N: TWR1-UP
24-VOLT
PART OF 235-6833 LIGHTING GP-ROADING
ALSO AN ATTACHMENT

SMCS-1429, 1430 **i02254218**

NOTE	REF NO	GRAPHIC REF	PART NUMBER	QTY	PART NAME 1 2 3 4 5 6 (PRODUCT LEVEL)	SEE PAGE
	1	1	**228-6053**	1	BODY AS	
	2	1	**228-6054**	1	BEZEL	
	3	1	**228-6051**	1	LENS AS (HEADLIGHT)	
	4	1	**228-6052**	1	LENS AS (TURN SIGNAL)	
	5	1	**228-6056**	6	SCREW (4-32X1.26-IN)	
	6	1	**9X-3465**	1	LAMP (24-VOLT, 75/70-WATT) (CLEAR)	
	7	1	**130-3515**	1	LAMP (24-VOLT, 5-WATT) (CLEAR)	
	8	1	**242-0588**	1	LAMP (24-VOLT, 21-WATT) (AMBER)	
M	9	1	**8T-0389**	1	LOCKNUT (M10X1.15-THD)	
	10	1	**100-3253**	1	SPACER (SPHERICAL)	
	11	1	**100-3254**	1	SPACER (SPHERICAL)	
	12	1	**100-3255**	1	WASHER (SPHERICAL)	
	13	1	**102-8805**	1	KIT-RECEPTACLE (6-PIN)	
					(INCLUDES RECEPTACLE AS & WEDGE)	
	14	1	**186-3735**	5	PIN-CONNECTOR (16-GA TO 18-GA)	
	15	1	**8T-8737**	1	PLUG-SEAL	

M-METRIC PART

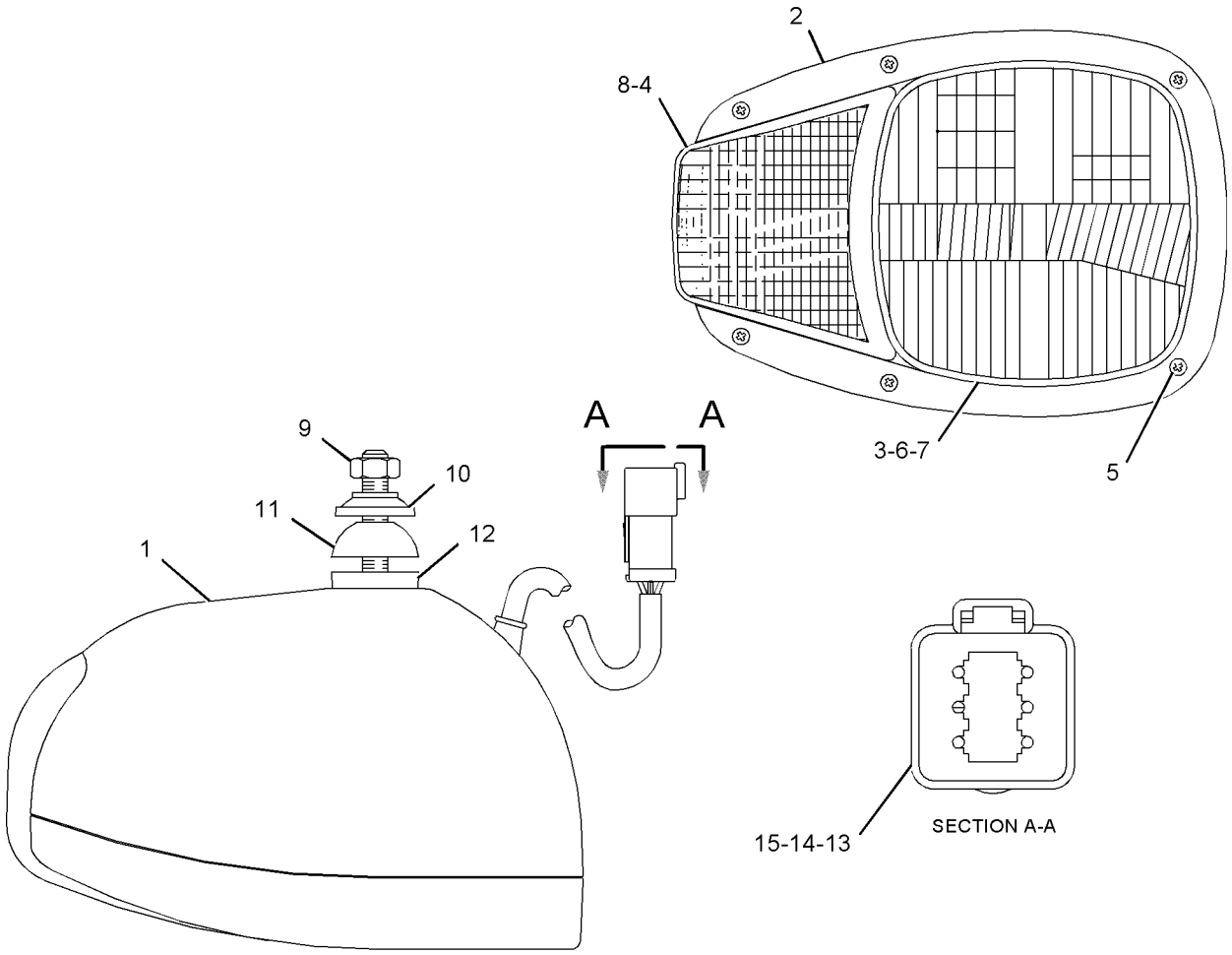

GRAPHIC #1 **<END>** g01106470

238-2798 LAMP GP-HEAD & SIGNAL–LH

S/N: TWR1-UP
24-VOLT
PART OF 235-6833 LIGHTING GP-ROADING
ALSO AN ATTACHMENT

SMCS-1429, 1430 **i02333915**

NOTE	REF NO	GRAPHIC REF	PART NUMBER	QTY	PART NAME 1 2 3 4 5 6 (PRODUCT LEVEL)	SEE PAGE
	1	1	**228-6053**	1	BODY AS	
	2	1	**228-6054**	1	BEZEL	
	3	1	**228-6051**	1	LENS AS (HEADLIGHT)	
	4	1	**228-6052**	1	LENS AS (TURN SIGNAL)	
	5	1	**228-6056**	6	SCREW (4-32X1.26-IN)	
	6	1	**9X-3465**	1	LAMP (24-VOLT, 75/70-WATT) (CLEAR)	
	7	1	**130-3515**	1	LAMP (24-VOLT, 5-WATT) (CLEAR)	
	8	1	**242-0588**	1	LAMP (24-VOLT, 21-WATT) (AMBER)	
M	9	1	**8T-0389**	1	LOCKNUT (M10X1.15-THD)	
	10	1	**100-3253**	1	SPACER (SPHERICAL)	
	11	1	**100-3254**	1	SPACER (SPHERICAL)	
	12	1	**100-3255**	1	WASHER (SPHERICAL)	
	13	1	**102-8805**	1	KIT-RECEPTACLE (6-PIN)	
					(INCLUDES RECEPTACE AS & WEDGE)	
	14	1	**186-3735**	5	PIN-CONNECTOR (16-GA TO 18-GA)	
	15	1	**8T-8737**	1	PLUG-SEAL	

M-METRIC PART

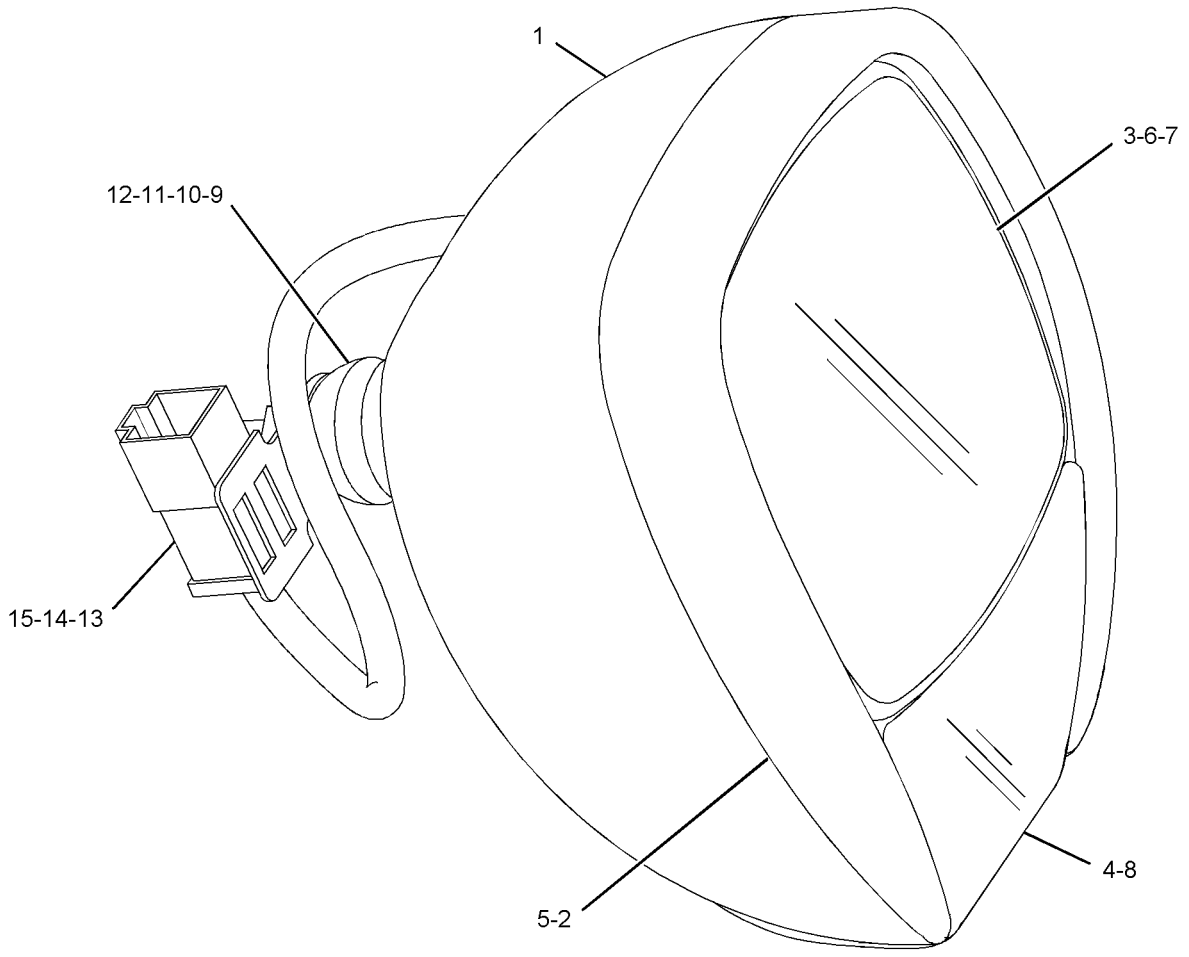

GRAPHIC #1 **<END>** g01110953

243-4274 LAMP GP-HEAD & SIGNAL–RH

S/N: TWR1-UP
24-VOLT
PART OF 243-4166 LIGHTING AR-ROADING
AN ATTACHMENT

SMCS-1429, 1430 **i02595447**

NOTE	REF NO	GRAPHIC REF	PART NUMBER	QTY	PART NAME 1 2 3 4 5 6 (PRODUCT LEVEL)	SEE PAGE
	1	1	**228-6053**	1	BODY AS	
	2	1	**228-6054**	1	BEZEL	
	3	1	**228-6050**	1	LENS AS (HEADLIGHT)	
	4	1	**228-6052**	1	LENS AS (TURN SIGNAL)	
	5	1	**228-6056**	6	SCREW (4-32X1.26-IN)	
	6	1	**9X-3465**	1	LAMP (24-VOLT, 75/70-WATT)	
	7	1	**130-3515**	1	LAMP (24-VOLT, 5-WATT)	
	8	1	**242-0588**	1	LAMP (24-VOLT, 21-WATT)	
M	9	1	**8T-0389**	1	LOCKNUT (M10X1.15-THD)	
	10	1	**100-3253**	1	SPACER (SPHERICAL)	
	11	1	**100-3254**	1	SPACER (SPHERICAL)	
	12	1	**100-3255**	1	WASHER (SPHERICAL)	
	13	1	**102-8805**	1	KIT-RECEPTACLE (6-PIN)	
					(INCLUDES RECEPTACLE AS & WEDGE)	
	14	1	**186-3735**	5	PIN-CONNECTOR (16-GA TO 18-GA)	
	15	1	**8T-8737**	1	PLUG-SEAL	

M-METRIC PART

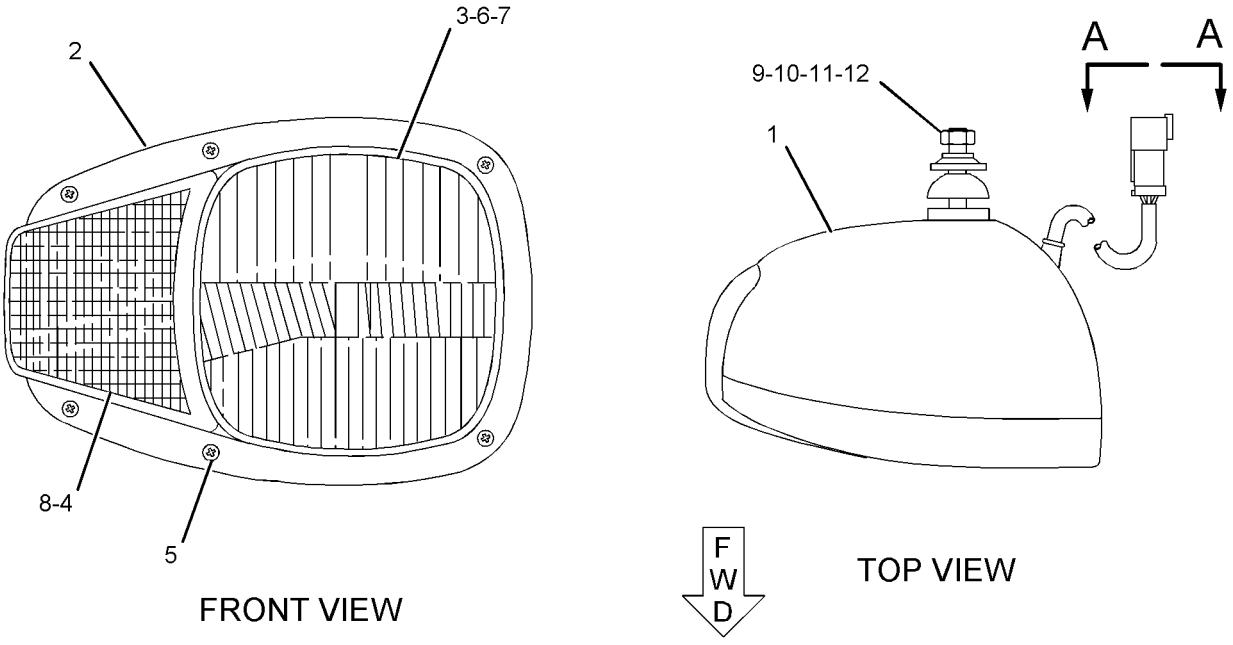

GRAPHIC #1 **<END>** g01141145

243-4275 LAMP GP-HEAD & SIGNAL–LH

S/N: TWR1-UP
24-VOLT
PART OF 243-4166 LIGHTING AR-ROADING
AN ATTACHMENT

SMCS-1429, 1430 **i02595448**

NOTE	REF NO	GRAPHIC REF	PART NUMBER	QTY	PART NAME 1 2 3 4 5 6 (PRODUCT LEVEL)	SEE PAGE
	1	1	**228-6053**	1	BODY AS	
	2	1	**228-6054**	1	BEZEL	
	3	1	**228-6050**	1	LENS AS (HEADLIGHT)	
	4	1	**228-6052**	1	LENS AS (TURN SIGNAL)	
	5	1	**228-6056**	6	SCREW (4-32X1.26-IN)	
	6	1	**9X-3465**	1	LAMP (24-VOLT, 75/70-WATT)	
	7	1	**130-3515**	1	LAMP (24-VOLT, 5-WATT)	
	8	1	**242-0588**	1	LAMP (24-VOLT, 21-WATT)	
M	9	1	**8T-0389**	1	LOCKNUT (M10X1.15-THD)	
	10	1	**100-3253**	1	SPACER (SPHERICAL)	
	11	1	**100-3254**	1	SPACER (SPHERICAL)	
	12	1	**100-3255**	1	WASHER (SPHERICAL)	
	13	1	**102-8805**	1	KIT-RECEPTACLE (6-PIN)	
					(INCLUDES RECEPTACLE AS & WEDGE)	
	14	1	**186-3735**	5	PIN-CONNECTOR (16-GA TO 18-GA)	
	15	1	**8T-8737**	1	PLUG-SEAL	

M-METRIC PART

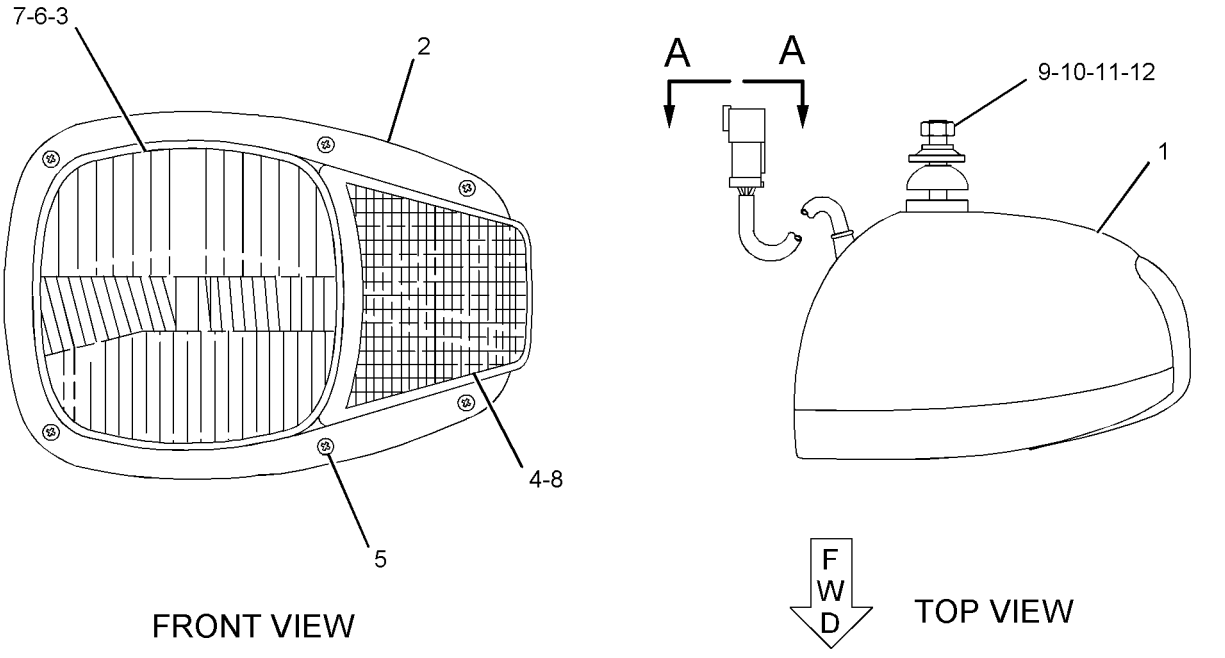

GRAPHIC #1 **<END>** g01141169

145-6929 LAMP GP-STOP & TAIL

S/N: TWR1-UP
24-VOLT
PART OF 235-6833 LIGHTING GP-ROADING
ALSO AN ATTACHMENT

SMCS-1432 **i02674871**

NOTE	REF NO	GRAPHIC REF	PART NUMBER	QTY	PART NAME 1 2 3 4 5 6 (PRODUCT LEVEL)	SEE PAGE
	1	1	**9X-4493**	1	LAMP (24-VOLT, 21-WATT)	
	2	1	**9X-4492**	1	LAMP (24-VOLT, 5-WATT)	
	3	1	**102-8802**	1	KIT-RECEPTACLE (2-PIN)	
					(INCLUDES RECEPTACLE AS & WEDGE)	
	4	1	**102-8803**	1	KIT-RECEPTACLE (3-PIN)	
					(INCLUDES RECEPTACLE AS & WEDGE)	
M	5	1	**5C-2890**	2	NUT (M6X1-THD)	
	6	1	**1H-3244**	2	LOCKWASHER	
	7	1	**186-3735**	5	PIN-CONNECTOR (16-GA TO 18-GA)	
	8	1	**267-2809**	1	LENS (STOP, TAIL, TURN)	

M-METRIC PART

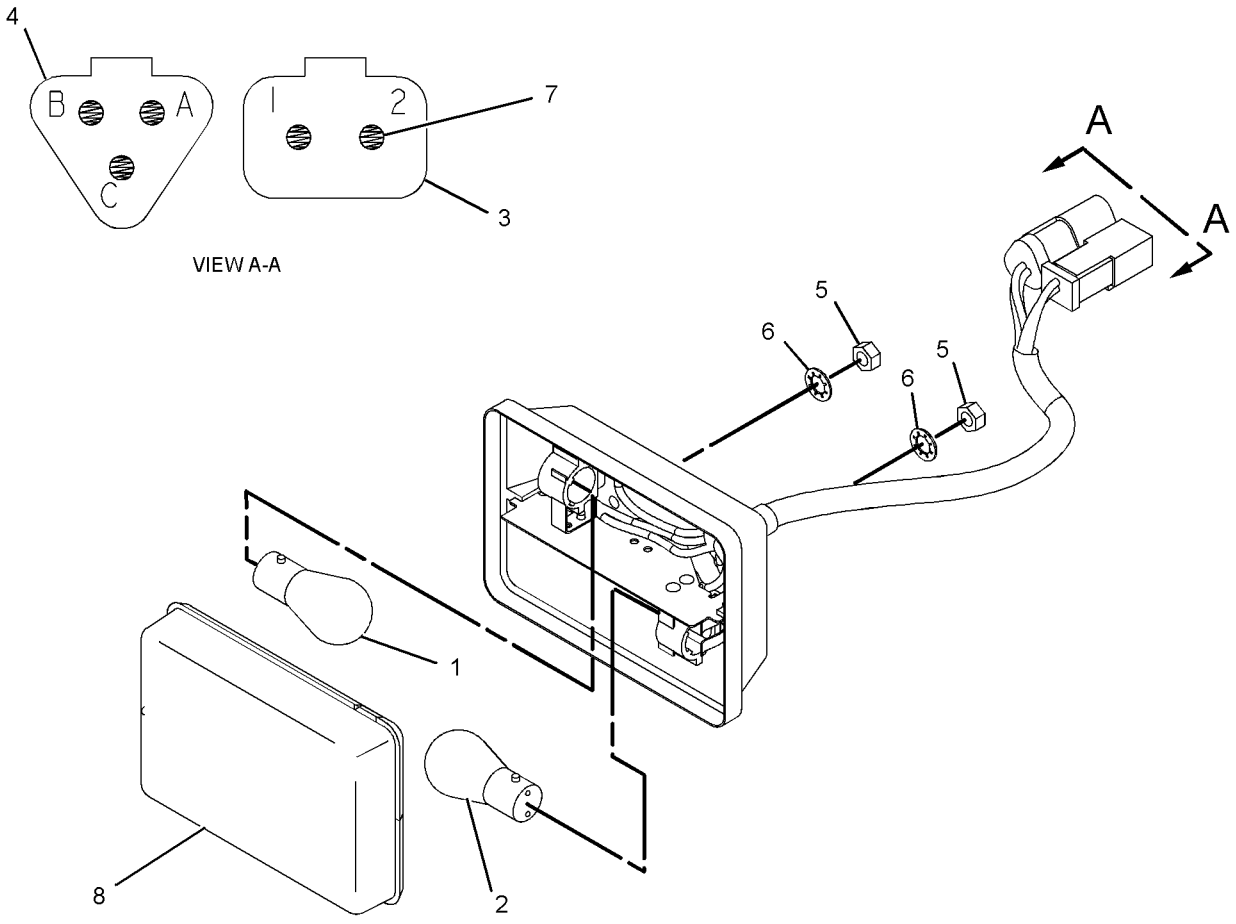

GRAPHIC #1 **<END>** g01344656

108-1029 LAMP GP-WARNING BEACON–AMBER

S/N: TWR1-UP
24-VOLT
PART OF 218-8836, 218-8837 LIGHTING GP-WARNING BEACON
AN ATTACHMENT

SMCS-1431 **i02909807**

NOTE	REF NO	GRAPHIC REF	PART NUMBER	QTY	PART NAME 1 2 3 4 5 6 (PRODUCT LEVEL)	SEE PAGE
	1	1	**272-9800**	1	LENS (AMBER)	
	2	1	**9X-7849**	1	LAMP (24-VOLT, 70-WATT) (WARNING BEACON)	
	3	1	**9X-8139**	1	BELT-DRIVE	
	4	1	**9R-7958**	1	CORD AS (WARNING BEACON)	
	4A	1	**9R-7942**	1	PLUG AS	

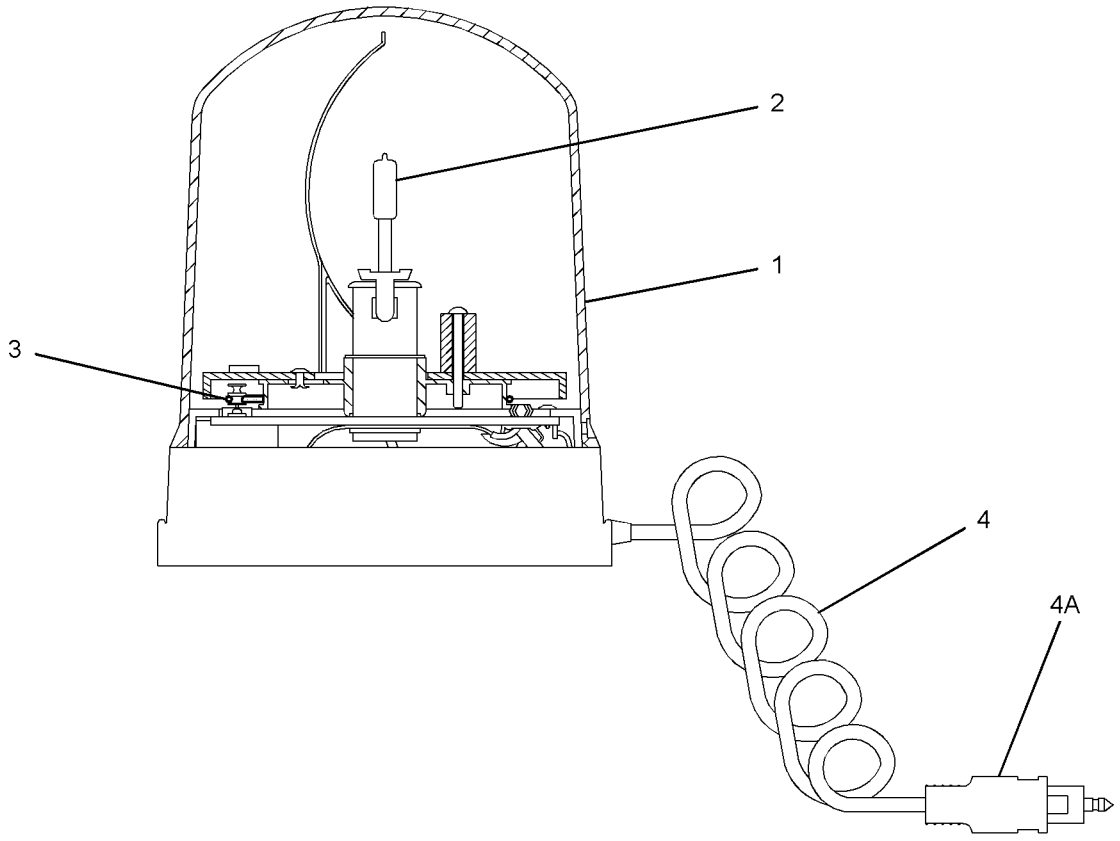

GRAPHIC #1 **<END>** g01251578

ELECTRICAL AND STARTING SYSTEM

235-6926 LIGHTING AR-ROADING

S/N: TWR1-UP
AN ATTACHMENT

SMCS-1429 **i02735770**

NOTE	PART NUMBER	QTY	PART NAME 1 2 3 4 5 6 (PRODUCT LEVEL)	SEE PAGE
Y	*202-0420*	1	BOX GP-BATTERY	344
Y	*235-6833*	1	LIGHTING GP-ROADING (HEAD, SIGNAL, STOP, TAIL)	168
	202-7479	1	HARNESS AS-LIGHTING (TURN SIGNAL)	

Y-SEPARATE ILLUSTRATION

<END>

243-4166 LIGHTING AR-ROADING—DIPPED, LH

S/N: TWR1-UP

AN ATTACHMENT

SMCS-1429 **i02224432**

NOTE	REF NO	GRAPHIC REF	PART NUMBER	QTY	PART NAME 1 2 3 4 5 6 (PRODUCT LEVEL)	SEE PAGE
Y	1	1	**243-4274**	1	LAMP GP-HEAD & SIGNAL (24-VOLT, RH)	157
Y	2	1	**243-4275**	1	LAMP GP-HEAD & SIGNAL (24-VOLT, LH)	158

Y-SEPARATE ILLUSTRATION

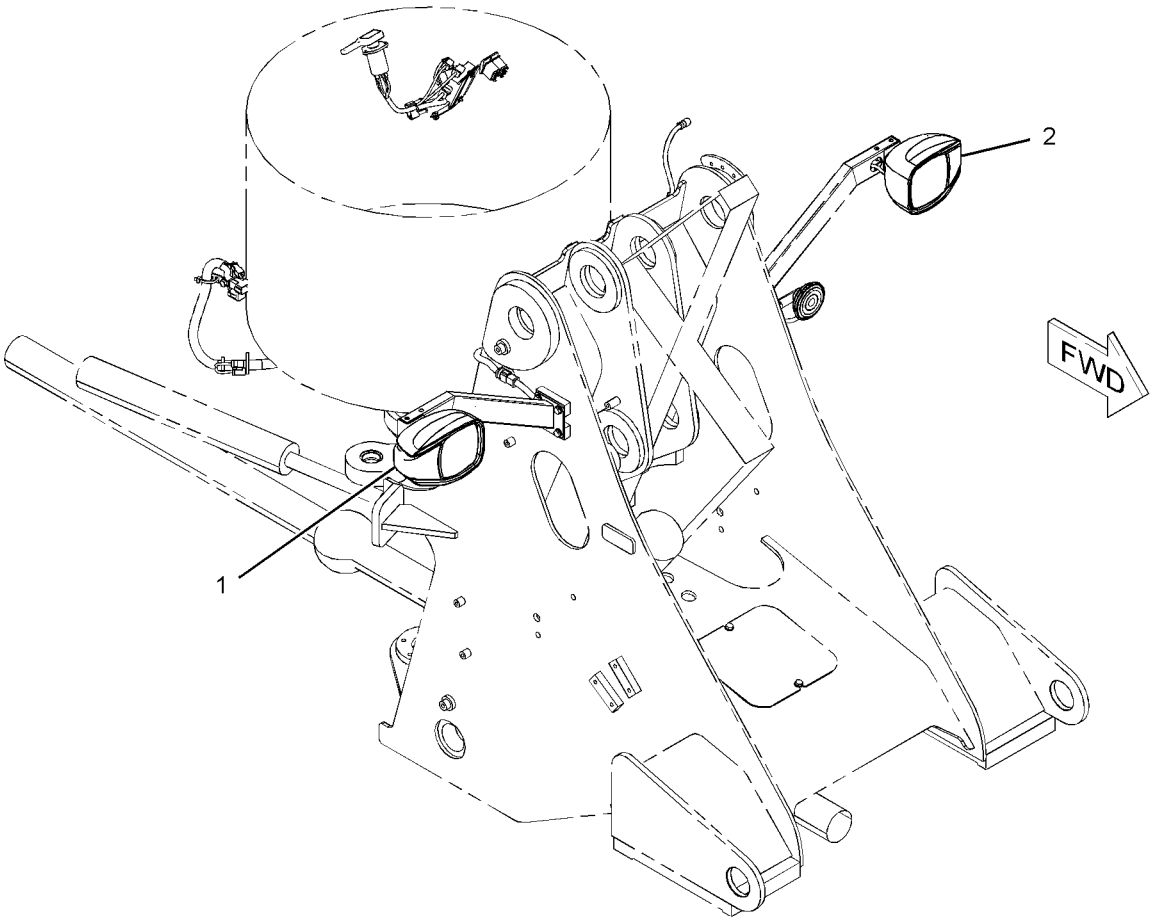

GRAPHIC #1 **<END>** g01115487

115-1558 LIGHTING GP-AUXILIARY—CAB FRONT

S/N: TWR1-UP
PART OF 294-2014 CAB AR-ENCLOSED ROPS
AN ATTACHMENT

SMCS-1429 **i02886367**

NOTE	REF NO	GRAPHIC REF	PART NUMBER	QTY	PART NAME 1 2 3 4 5 6 (PRODUCT LEVEL)	SEE PAGE
	1	1	**115-1559**	2	PLATE	
Y	2	1	**234-4325**	2	LAMP GP-FLOOD (24-VOLT)	154
	3	1	**235-5762**	2	WIRE AS	
M	4	1	**5C-2890**	4	NUT (M6X1-THD)	
M	5	1	**8T-4189**	4	BOLT (M8X1.25X20-MM)	
	6	1	**8T-4224**	4	WASHER-HARD (8.8X16X2-MM THK)	

M-METRIC PART
Y-SEPARATE ILLUSTRATION

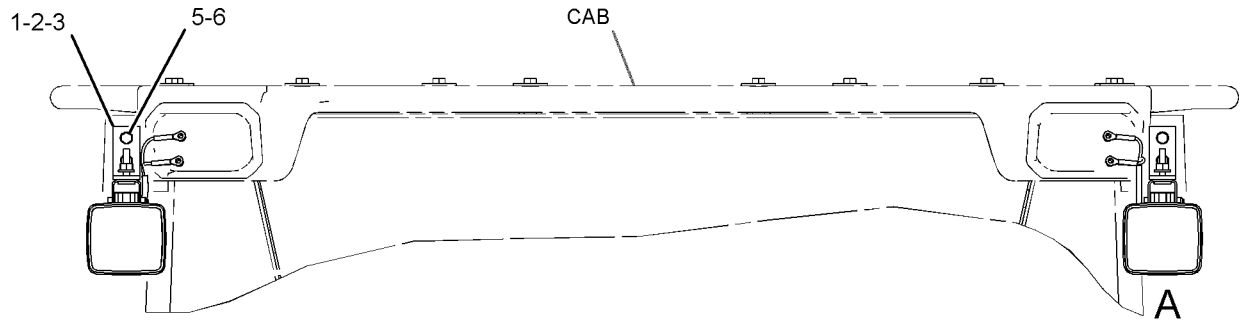

FRONT VIEW

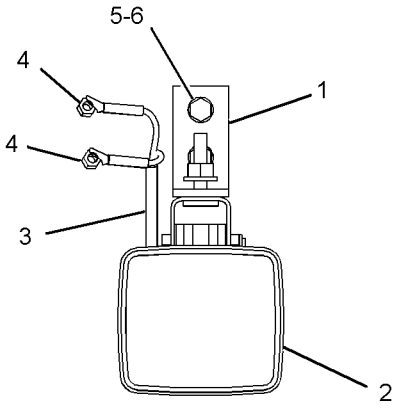

VIEW OF AREA A

GRAPHIC #1 **<END>** g01408481

117-9622 LIGHTING GP-FLOOD–CAB

S/N: TWR1-UP
PART OF 235-8095, 236-4594 CAB AR
AN ATTACHMENT

SMCS-1434 **i02595378**

NOTE	REF NO	GRAPHIC REF	PART NUMBER	QTY	PART NAME 1 2 3 4 5 6 (PRODUCT LEVEL)	SEE PAGE
	1	1	**8E-1118**	1	ANTENNA AS	
D	2	1	**5P-5639**	2	SEAL (0.32M EACH)	
	3	1	**109-7041**	4	LAMP GP-FLOOD (24-VOLT)	
					(EACH INCLUDES)	
		1	**9X-3463**	1	LAMP-HALOGEN (24-VOLT, 65-WATT)	
		1	**142-5789**	4	SCREW (M6.5X40-MM)	
	4	1	**109-8981**	1	CABLE AS-COAXIAL	
	5	1	**111-0157**	1	HARNESS AS-LIGHTING (FLOODLIGHT)	
		1	**102-8804**	1	KIT-RECEPTACLE (4-PIN)	
					(INCLUDES RECEPTACLE AS & WEDGE)	
	6	1	**114-6604**	16	NUT-SPEED	
	7	1	**119-0781**		ADHESIVE	
C	8	1	**164-5509**	1	BLOCK	
C	9	1	**180-5100**	1	ROOF	
	9A	1	**9R-7941**	1	SOCKET AS	
		1	**9R-7980**	1	COVER	
		1	**5P-5774**	1	PLUG	
M	10	1	**5C-2890**	4	NUT (M6X1-THD)	
M	11	1	**6V-7357**	4	BOLT (M6X1X25-MM)	
CM	12	1	**8T-4137**	12	BOLT (M10X1.5X20-MM)	
	13	1	**8T-4205**	8	WASHER-HARD (7.2X14.5X2-MM THK)	
C	14	1	**8T-4226**	12	WASHER-PLATED (10.5X45X3-MM THK)	
D	15	1	**5P-5639**		SEAL (0.51M)	
D	16	1	**5P-5639**	3	SEAL (0.27M EACH)	

C-CHANGE FROM PREVIOUS TYPE
D-ORDER BY THE METER
M-METRIC PART

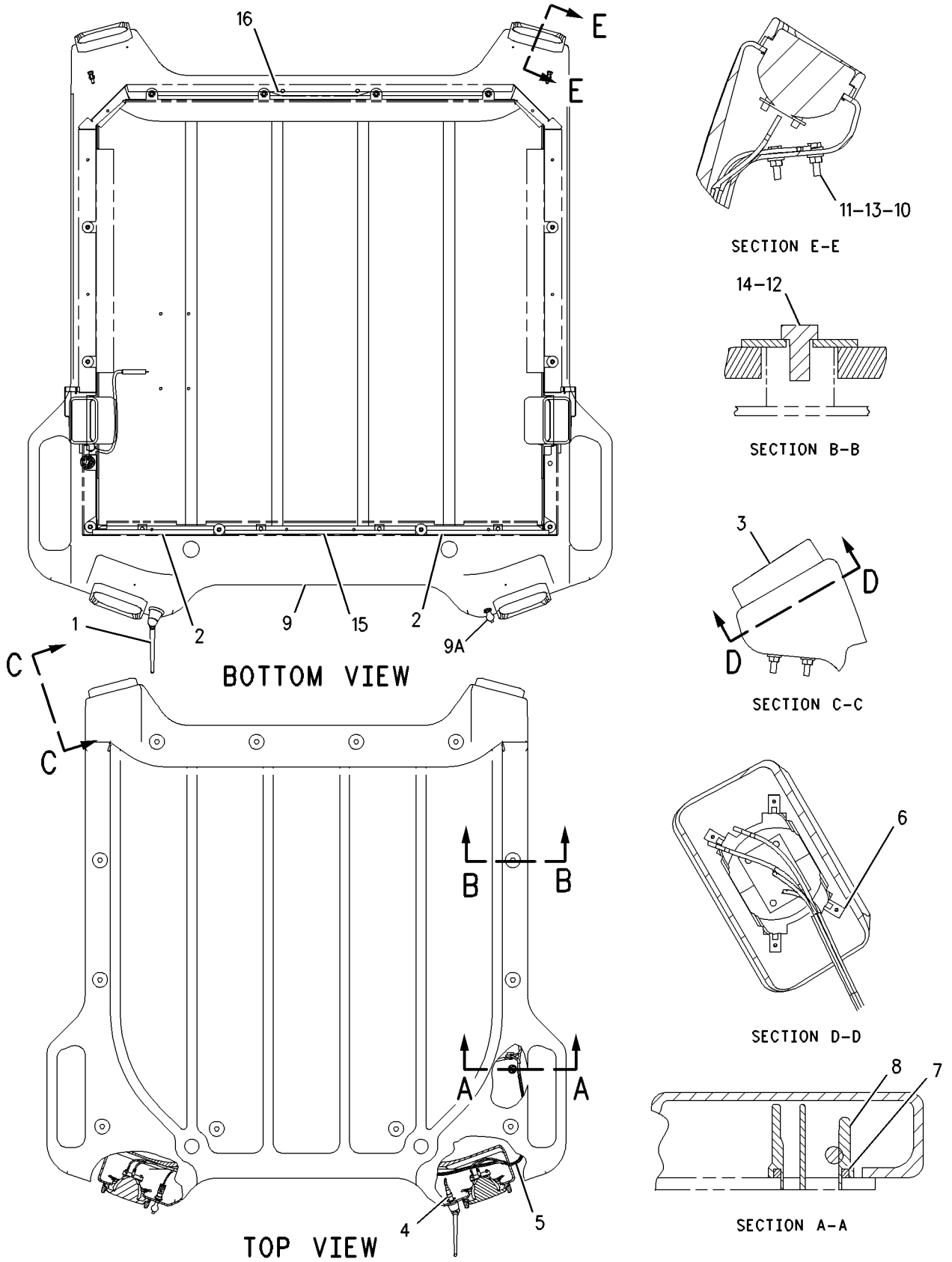

GRAPHIC #1 **<END>** g00786496

120-6668 LIGHTING GP-FLOOD–CANOPY

S/N: TWR1-UP
PART OF 240-7105 CANOPY GP-OPEN ROPS
AN ATTACHMENT

SMCS-1434 **i02595379**

NOTE	REF NO	GRAPHIC REF	PART NUMBER	QTY	PART NAME 1 2 3 4 5 6 (PRODUCT LEVEL)	SEE PAGE
	1	1	**5P-5774**	1	PLUG	
	2	1	**9R-7941**	1	SOCKET AS	
		1	**9R-7980**	1	COVER	
	3	1	**109-7041**	4	LAMP GP-FLOOD (24-VOLT)	
					(EACH INCLUDES)	
		1	**9X-3463**	1	LAMP-HALOGEN (24-VOLT, 65-WATT)	
		1	**142-5789**	4	SCREW (M6.5X40-MM)	
	4	1	**111-0157**	1	HARNESS AS-LIGHTING (FLOODLIGHT)	
		1	**102-8804**	1	KIT-RECEPTACLE (4-PIN)	
					(INCLUDES RECEPTACALE AS & WEDGE)	
	5	1	**114-6604**	16	NUT-SPEED	
	6	1	**180-5100**	1	ROOF	
M	7	1	**5C-2890**	4	NUT (M6X1-THD)	
M	8	1	**6V-7357**	4	BOLT (M6X1X25-MM)	
M	9	1	**8T-4137**	12	BOLT (M10X1.5X20-MM)	
	10	1	**8T-4205**	8	WASHER-HARD (7.2X14.5X2-MM THK)	
	11	1	**8T-4226**	12	WASHER-PLATED (10.5X45X3-MM THK)	
D	12	1	**5P-5639**		SEAL (0.51M)	
D	13	1	**5P-5639**	2	SEAL (0.32M)	
D	14	1	**5P-5639**	3	SEAL (0.27M)	

D-ORDER BY THE METER
M-METRIC PART

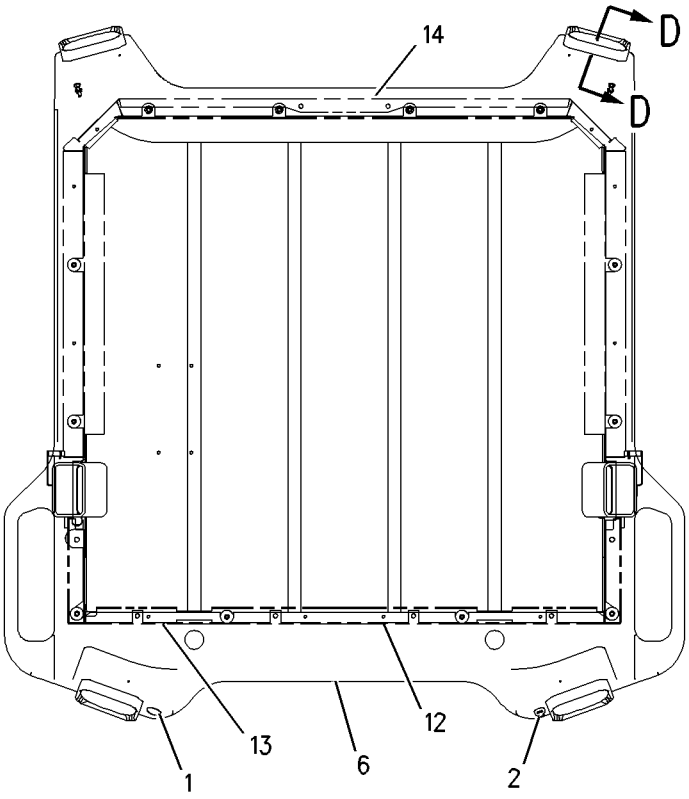

BOTTOM VIEW

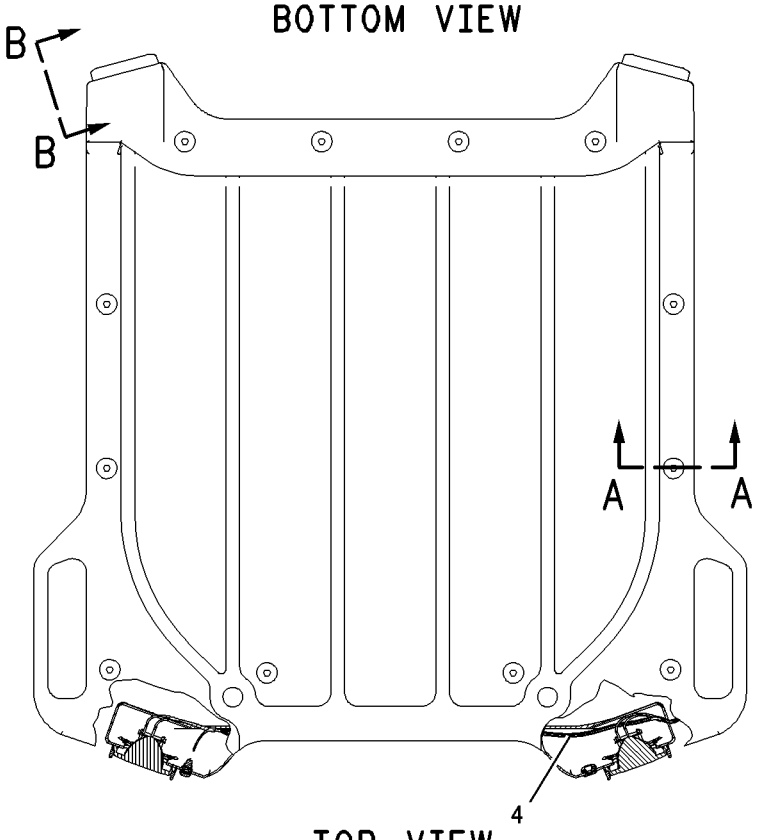

TOP VIEW

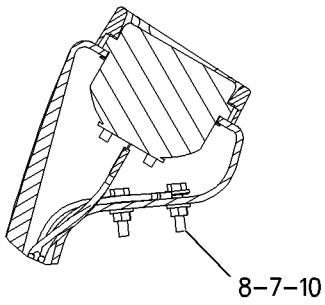

SECTION D-D

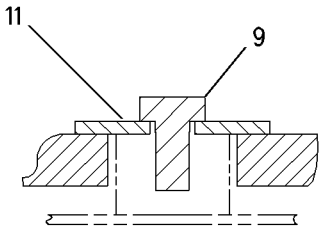

SECTION A-A

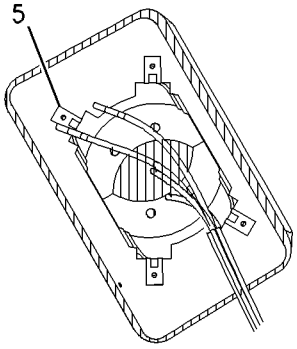

SECTION C-C

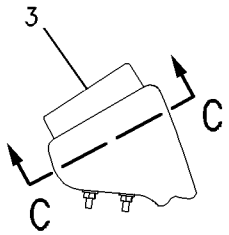

SECTION B-B

GRAPHIC #1 **<END>** g00838641

235-6833 LIGHTING GP-ROADING

S/N: TWR1-3111

PART OF 240-7966 COMMON AR, 235-6926 LIGHTING AR-ROADING

ALSO AN ATTACHMENT

SMCS-1429 **i02224460**

NOTE	REF NO	GRAPHIC REF	PART NUMBER	QTY	PART NAME 1 2 3 4 5 6 (PRODUCT LEVEL)	SEE PAGE
Y	1	1	**3E-6328**	1	ALARM GP (24-VOLT)	130
	2	1	**5V-2998**	1	PLATE	
	3	1	**9R-1499**	2	REFLECTOR	
	4	1	**9R-2404**	6	REFLECTOR-AMBER	
	5	1	**108-0358**	1	FLASHER AS (24-VOLT)	
Y	6	1	**145-6929**	2	LAMP GP-STOP & TAIL (24-VOLT)	159
	7	1	**173-3064**	1	SWITCH GP-ROTARY (TURN SIGNAL, HAZARD)	
		1	**5L-7200**	1	SCREW (8-32X0.375-IN)	
		1	**9B-7233**	1	LOCKWASHER	
	8	1	**235-6949**	2	BRACKET AS	
Y	9	1	**238-2797**	1	LAMP GP-HEAD & SIGNAL (24-VOLT, RH)	155
Y	10	1	**238-2798**	1	LAMP GP-HEAD & SIGNAL (24-VOLT, LH)	156
	11	1	**240-9459**	2	PLATE	
	12	1	**249-2895**	1	HARNESS AS-LIGHTING	
		1	**102-8805**	1	KIT-RECEPTACLE (6-PIN)	
					(INCLUDES RECEPTACLE AS & WEDGE)	
		1	**155-2274**	1	KIT-CONNECTING PLUG (6-PIN)	
					(INCLUDES PLUG AS, WEDGE & INTERFACE SEAL)	
	13	1	**249-2896**	1	HARNESS AS-LIGHTING (LH)	
		1	**102-8805**	1	KIT-RECEPTACLE (6-PIN)	
					(INCLUDES RECEPTACLE AS & WEDGE)	
		1	**155-2274**	1	KIT-CONNECTING PLUG (6-PIN)	
					(INCLUDES PLUG AS, WEDGE & INTERFACE SEAL)	
	14	1	**119-5026**	2	SCREW-PAN HEAD (10-16X0.63-IN)	
	15	1	**133-3235**	1	LEVER	
	16	1	**1H-4393**	3	LOCKWASHER	
M	17	1	**5C-2890**	1	NUT (M6X1-THD)	
M	18	1	**5C-8312**	3	NUT (M4X0.7-THD)	
	19	1	**8T-4121**	8	WASHER-HARD (11X21X2.5-MM THK)	
M	20	1	**8T-4136**	8	BOLT (M10X1.5X25-MM)	
M	21	1	**9X-2045**	1	SCREW-TRUSS HEAD (M6X1X20-MM)	
	22	1	**9X-8256**	1	WASHER (6.6X12X2-MM THK)	

M-METRIC PART
Y-SEPARATE ILLUSTRATION

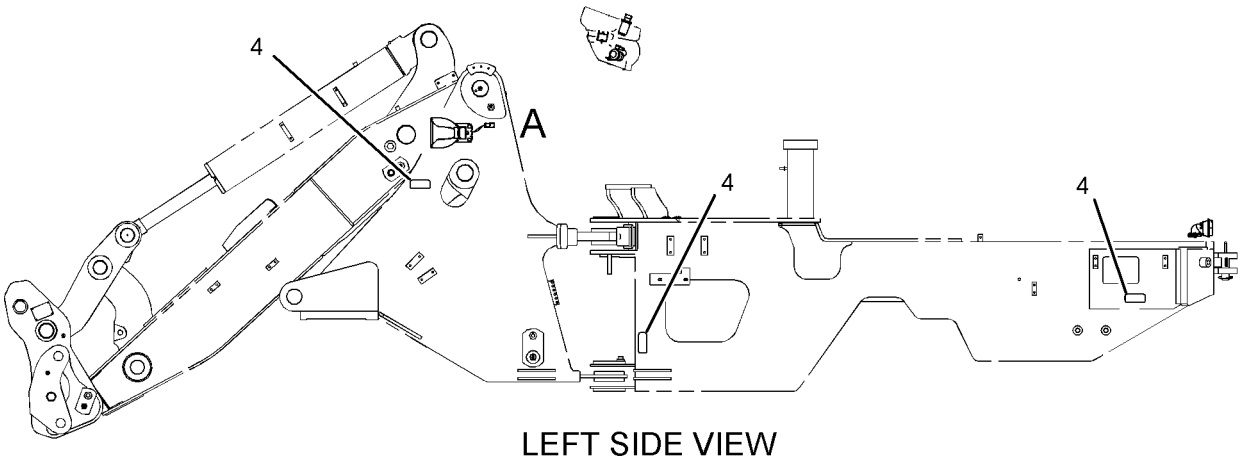

LEFT SIDE VIEW

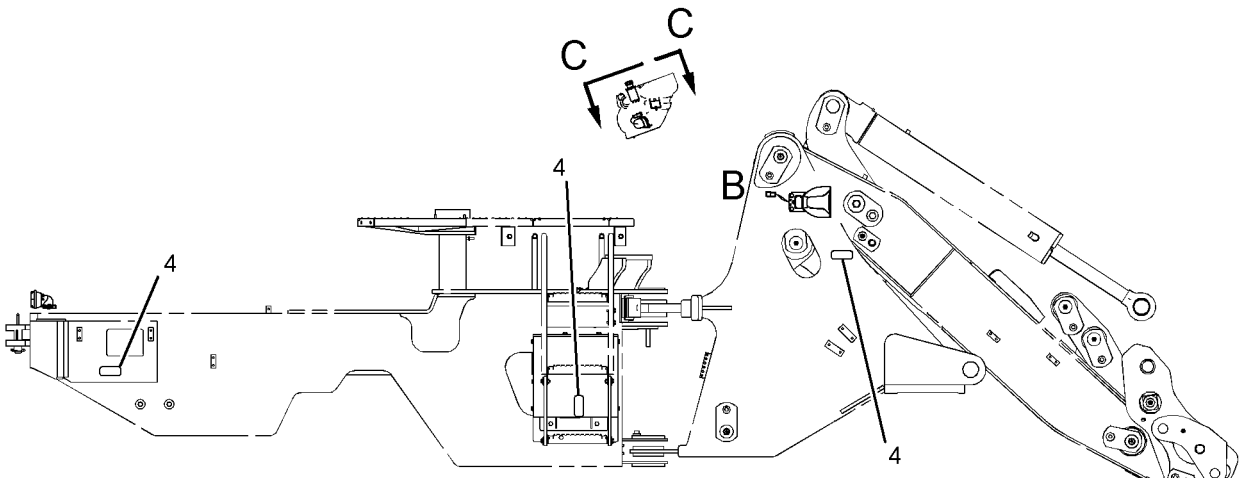

RIGHT SIDE VIEW

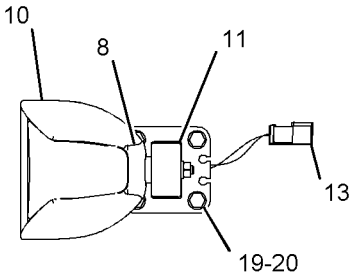

VIEW OF AREA A

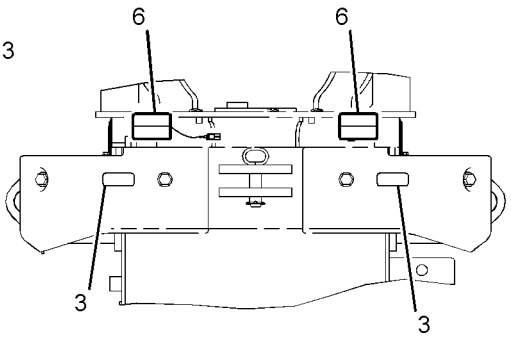

REAR VIEW

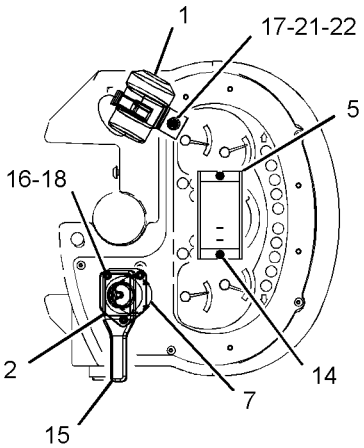

VIEW C-C

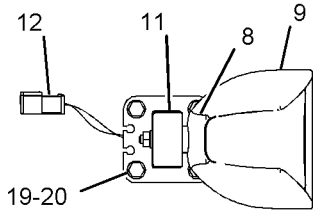

VIEW OF AREA B

GRAPHIC #1 **<END>** g01107714

ELECTRICAL AND STARTING SYSTEM

235-6833 LIGHTING GP-ROADING

S/N: TWR3112-UP

PART OF 240-7966 COMMON AR, 235-6926 LIGHTING AR-ROADING

ALSO AN ATTACHMENT

SMCS-1429 **i02747158**

NOTE	REF NO	GRAPHIC REF	PART NUMBER	QTY	PART NAME 1 2 3 4 5 6 (PRODUCT LEVEL)	SEE PAGE
Y	1	1	**3E-6328**	1	ALARM GP (24-VOLT)	130
	2	1	**5V-2998**	1	PLATE	
C	3	1	**7K-1181**	2	STRAP-CABLE	
	4	1	**9R-1499**	2	REFLECTOR	
	5	1	**9R-2404**	6	REFLECTOR-AMBER	
	6	1	**108-0358**	1	FLASHER AS (24-VOLT)	
Y	7	1	**145-6929**	2	LAMP GP-STOP & TAIL (24-VOLT)	159
	8	1	**173-3064**	1	SWITCH GP-ROTARY (TURN SIGNAL, HAZARD)	
		1	**5L-7200**	1	SCREW (8-32X0.375-IN)	
		1	**9B-7233**	1	LOCKWASHER	
C	9	1	**249-2895**	2	HARNESS AS-LIGHTING	
C	10	1	**298-6160**	2	BRACKET AS	
C	11	1	**302-0406**	1	LAMP GP-FLOOD	
C	12	1	**302-0408**	1	LAMP GP-FLOOD	
	13	1	**119-5026**	2	SCREW-PAN HEAD (10-16X0.63-IN)	
	14	1	**133-3235**	1	LEVER	
	15	1	**1H-4393**	3	LOCKWASHER	
M	16	1	**5C-2890**	1	NUT (M6X1-THD)	
M	17	1	**5C-8312**	3	NUT (M4X0.7-THD)	
	18	1	**8T-4121**	8	WASHER-HARD (11X21X2.5-MM THK)	
M	19	1	**8T-4136**	8	BOLT (M10X1.5X25-MM)	
C	20	1	**8T-4205**	5	WASHER-HARD (7.2X14.5X2-MM THK)	
M	21	1	**9X-2045**	1	SCREW-TRUSS HEAD (M6X1X20-MM)	

C-CHANGE FROM PREVIOUS TYPE
M-METRIC PART
Y-SEPARATE ILLUSTRATION

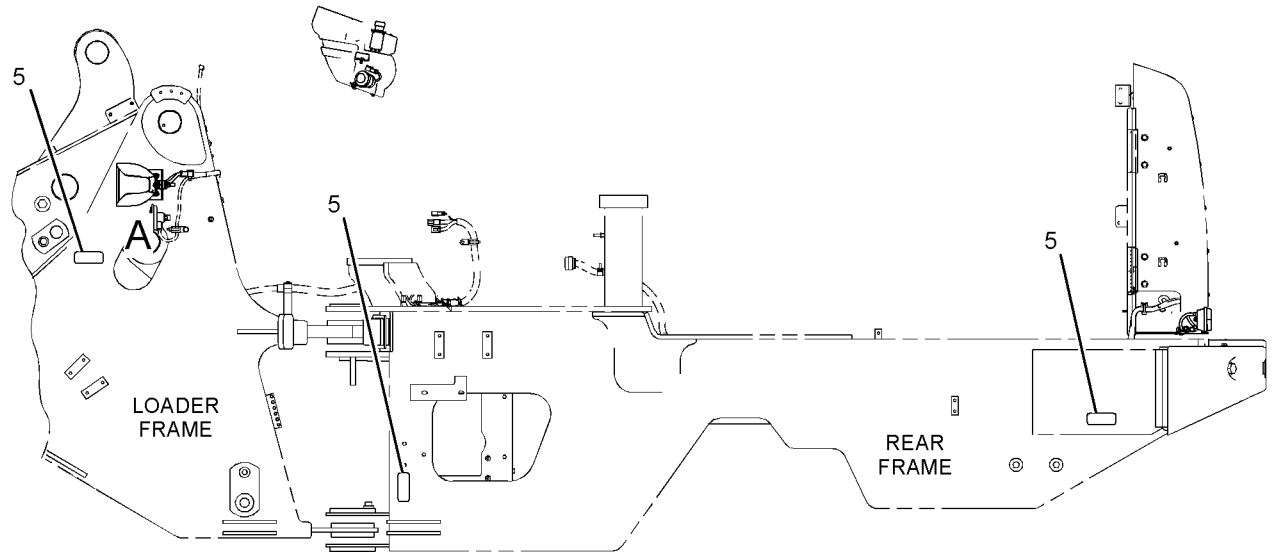

LEFT SIDE VIEW

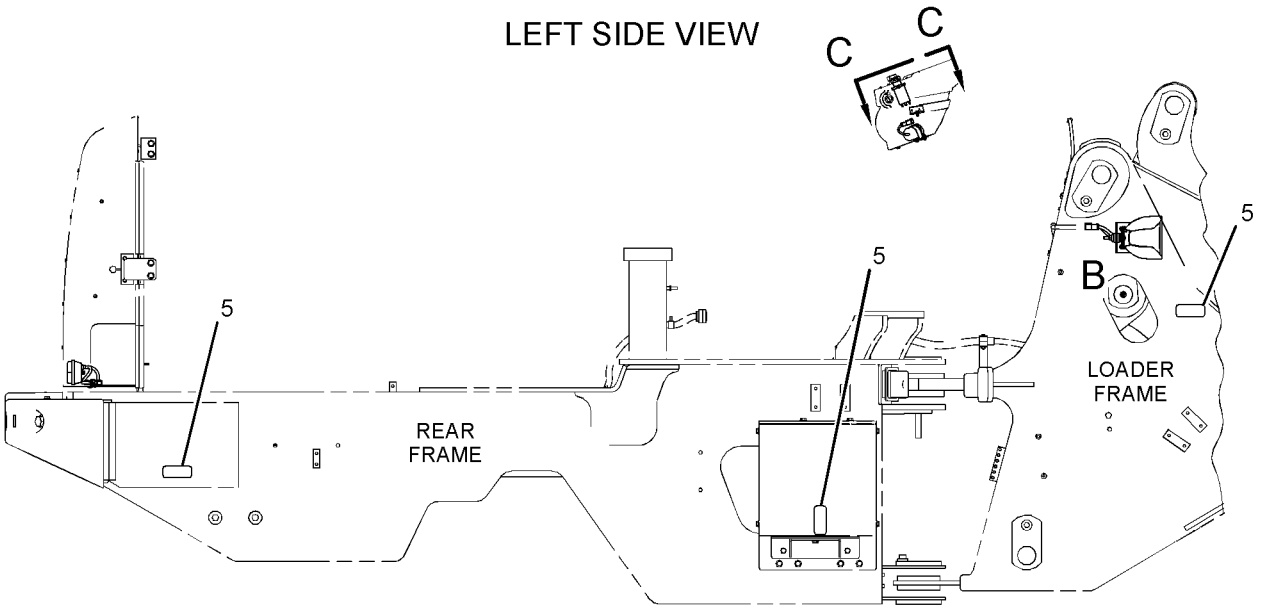

RIGHT SIDE VIEW

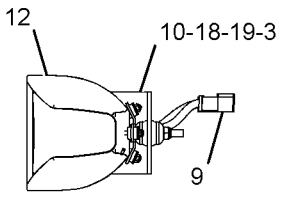

VIEW OF AREA A

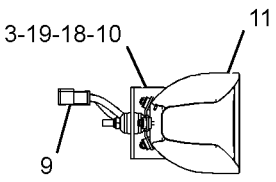

VIEW OF AREA B

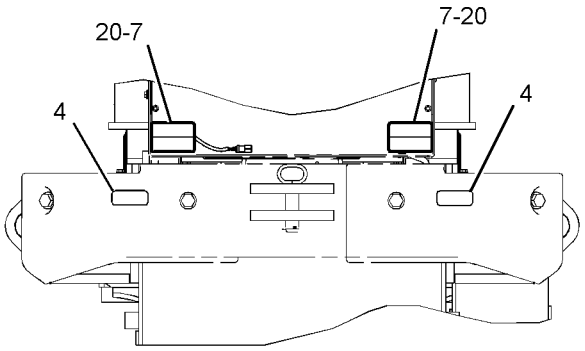

REAR VIEW

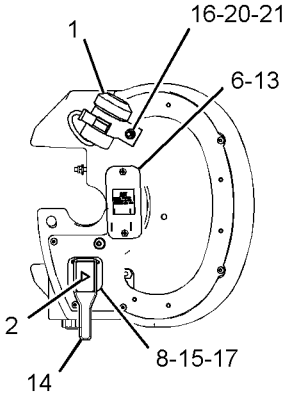

VIEW C-C

GRAPHIC #1

<END>

g01386135

ELECTRICAL AND STARTING SYSTEM

218-8836 LIGHTING GP-WARNING BEACON

S/N: TWR1-UP

AN ATTACHMENT

SMCS-1431 **i03166380**

NOTE	REF NO	GRAPHIC REF	PART NUMBER	QTY	PART NAME 1 2 3 4 5 6 (PRODUCT LEVEL)	SEE PAGE
Y	1	1	**108-1029**	1	LAMP GP-WARNING BEACON (24-VOLT)	160
	2	1	**129-0336**	1	PLATE	
	3	1	**195-0925**	1	SWITCH AS-ROCKER (WARNING BEACON)	
	4	1	**8C-6440**	4	SCREW-PAN HEAD (10-16X0.5-IN)	

Y-SEPARATE ILLUSTRATION

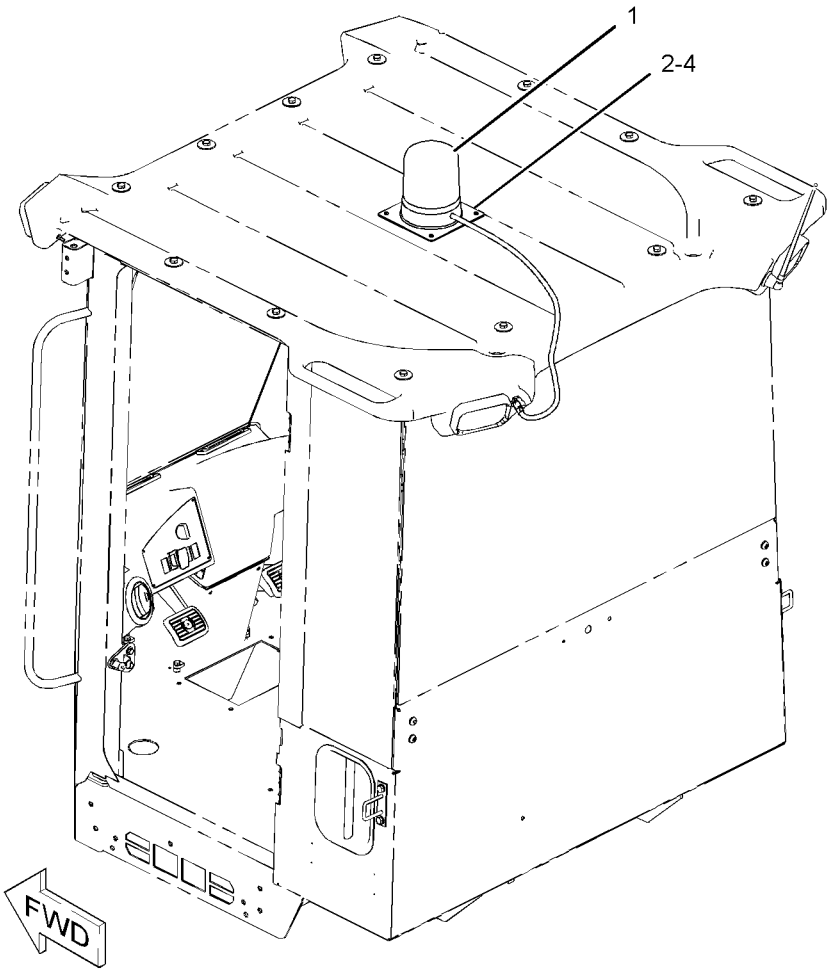

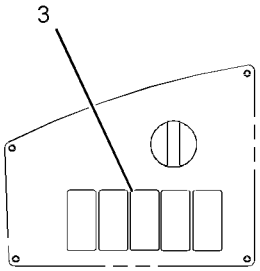

LH SWITCH PANEL
(924, 928, IT28G, 930G)

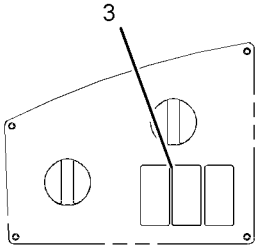

LH SWITCH PANEL
(938, IT38G11

GRAPHIC #1 **<END>** g01125022

218-8837 LIGHTING GP-WARNING BEACON

S/N: TWR1-UP
AN ATTACHMENT

SMCS-1431 **i02230413**

NOTE	REF NO	GRAPHIC REF	PART NUMBER	QTY	PART NAME 1 2 3 4 5 6 (PRODUCT LEVEL)	SEE PAGE
Y	1	1	**108-1029**	1	LAMP GP-WARNING BEACON (24-VOLT)	160
	2	1	**129-0337**	1	PLATE AS	
	3	1	**195-0925**	1	SWITCH AS-ROCKER (WARNING BEACON)	
		1	**111-7899**	1	GASKET	
	4	1	**6V-6635**	4	SCREW-PAN HEAD	

Y-SEPARATE ILLUSTRATION

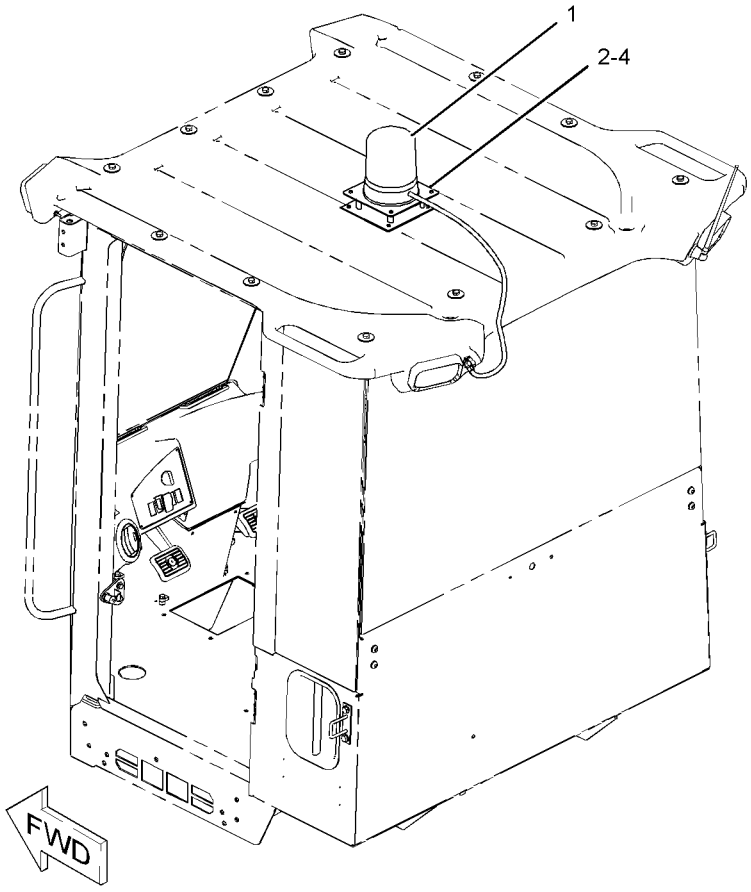

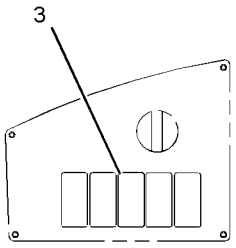

LH SWITCH PANEL
(924, 928, IT28G, 930G)

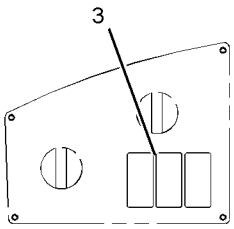

LH SWITCH PANEL
(938, IT38G11)

GRAPHIC #1 **<END>** g01125026

117-3915 MOTOR GP-ELECTRIC—SECONDARY STEERING

S/N: TWR1-UP
24-VOLT
PART OF 205-5266 PUMP & MOTOR GP
AN ATTACHMENT

SMCS-5703 **i01441397**

NOTE	REF NO	GRAPHIC REF	PART NUMBER	QTY	PART NAME 1 2 3 4 5 6 (PRODUCT LEVEL)	SEE PAGE
	1	1	**6V-8801**	2	NUT (3/8-16 THD)	
	2	1	**7X-0608**	2	WASHER-HARD (10.2X16X2-MM THK)	

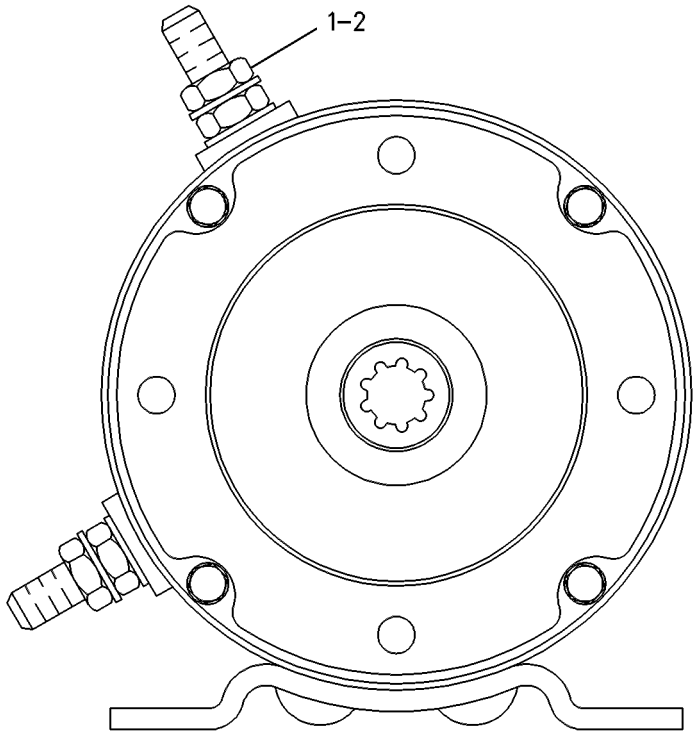

GRAPHIC #1 **<END>** g00085784

256-7265 MOUNTING GP-CAMERA–WORK AREA VISUAL SYSTEM

S/N: TWR1-UP
PART OF 256-7264 CAMERA AR
AN ATTACHMENT

SMCS-7348 **i02353617**

NOTE	REF NO	GRAPHIC REF	PART NUMBER	QTY	PART NAME 1 2 3 4 5 6 (PRODUCT LEVEL)	SEE PAGE
	1	1	**256-7266**	1	BRACKET AS	
M	2	1	**186-0815**	2	BOLT (M6X1X20-MM)	
	3	1	**186-0817**	2	WASHER-HARD (7X19X2-MM THK)	

M-METRIC PART

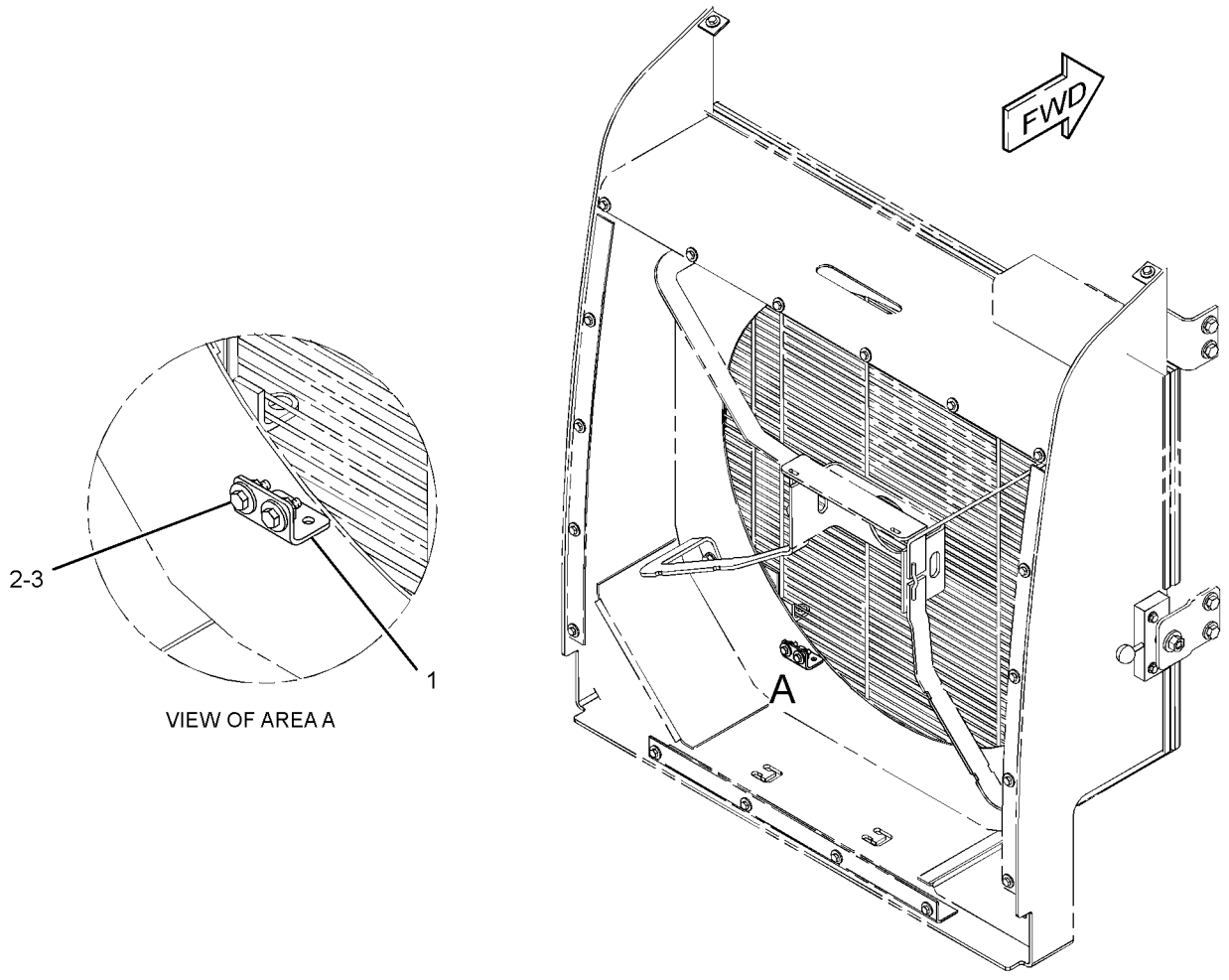

GRAPHIC #1 **<END>** g01181311

266-1467 SENSOR GP-POSITION

S/N: TWR1-UP
PART OF 310-1564 PEDAL GP-GOVERNOR
AN ATTACHMENT

SMCS-4269, 5702, 5736, 5737, 7494 **i02801598**

NOTE	REF NO	GRAPHIC REF	PART NUMBER	QTY	PART NAME 1 2 3 4 5 6 (PRODUCT LEVEL)	SEE PAGE
	1	1	**9X-3401**	3	PIN-CONNECTOR (16-GA TO 18-GA)	
					—OR—	
		1	**126-1767**	3	PIN-CONNECTOR (14-GA)	
	2	1	**102-8803**	1	KIT-RECEPTACLE (3-PIN)	
					(INCLUDES RECEPTACLE AS & WEDGE)	
	3	1	**3E-3371**	1	WEDGE-RECEPTACLE LOCK (3-PIN)	

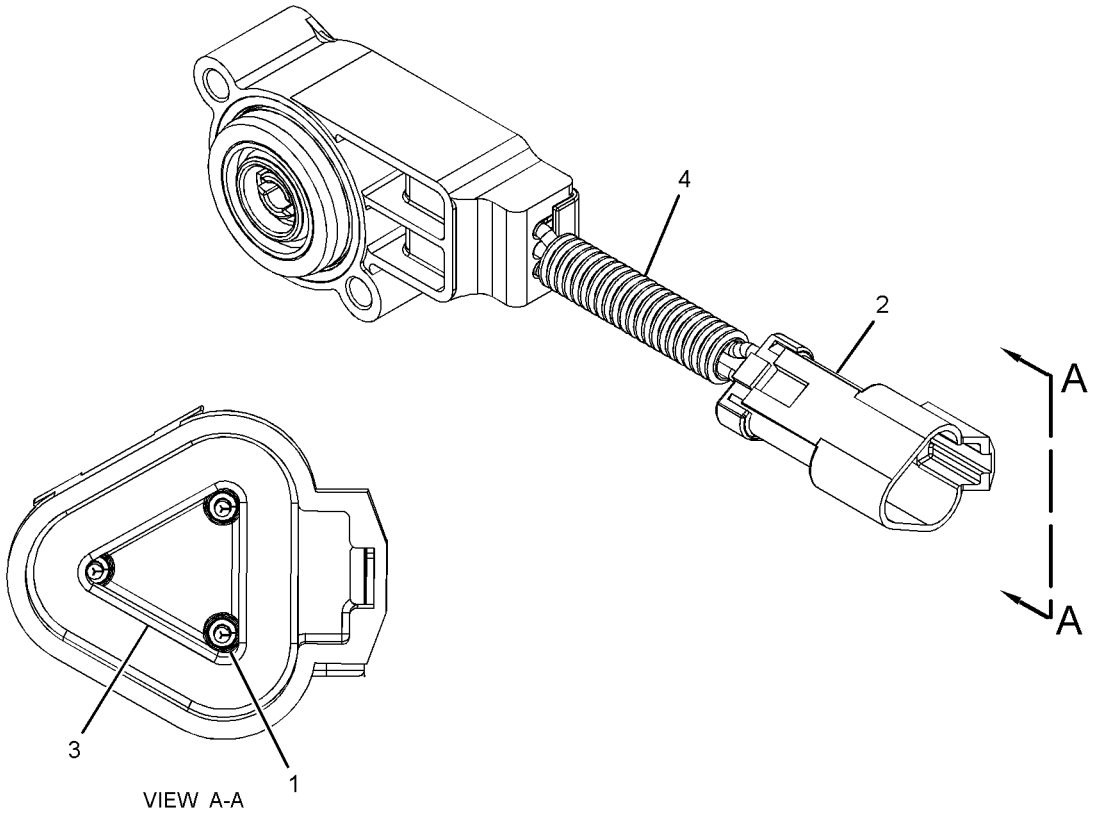

GRAPHIC #1 **<END>** g01400100

224-4536 SENSOR GP-PRESSURE

S/N: TWR1-UP

PART OF 205-3665, 262-2875 PUMP GP-GEAR

SMCS-1408, 1925, 7494 **i03300962**

NOTE	REF NO	GRAPHIC REF	PART NUMBER	QTY	PART NAME 1 2 3 4 5 6 (PRODUCT LEVEL)	SEE PAGE
E	1	1	**9X-1813**		SLEEVE (35-CM)	
	2	1	**155-2260**	1	KIT-CONNECTING PLUG (3-PIN)	
					(INCLUDES PLUG AS, WEDGES & INTERFACE SEAL)	
	3	1	**194-5226**	3	WIRE AS-HARNESS (16-GA TO 18-GA)	
					–OR–	
		1	**194-5227**	3	WIRE AS-HARNESS (14-GA WIRE)	
E-ORDER BY THE CENTIMETER						

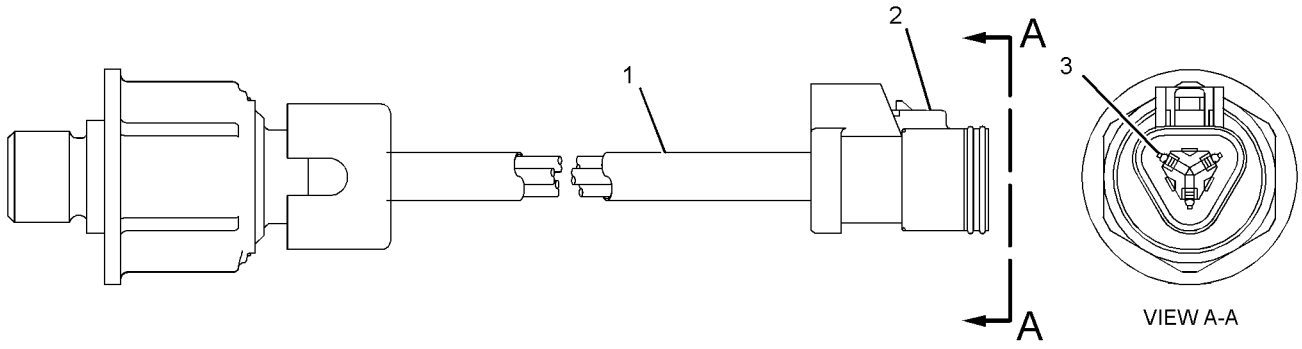

GRAPHIC #1 **<END>** g01684159

183-8597 SENSOR GP-SPEED

S/N: TPA1-UP

PART OF 200-2042 VALVE GP-TRANSMISSION CONTROL

SMCS-1907, 1912, 3175, 4803, 7493 **i02119253**

NOTE	REF NO	GRAPHIC REF	PART NUMBER	QTY	PART NAME 1 2 3 4 5 6 (PRODUCT LEVEL)	SEE PAGE
	1	1	**171-5349**	1	STRAP-MARKER	
	2	1	**102-8802**	1	KIT-RECEPTACLE (2-PIN)	
					(INCLUDES RECEPTACLE AS & WEDGE)	
	3	1	**186-3735**	2	PIN-CONNECTOR (16-GA TO 18-GA)	
	4	1	**3E-3365**	1	WEDGE-RECEPTACLE LOCK (2-PIN)	
BE	5	1	**9X-1813**		SLEEVE	

B-USE AS REQUIRED
E-ORDER BY THE CENTIMETER

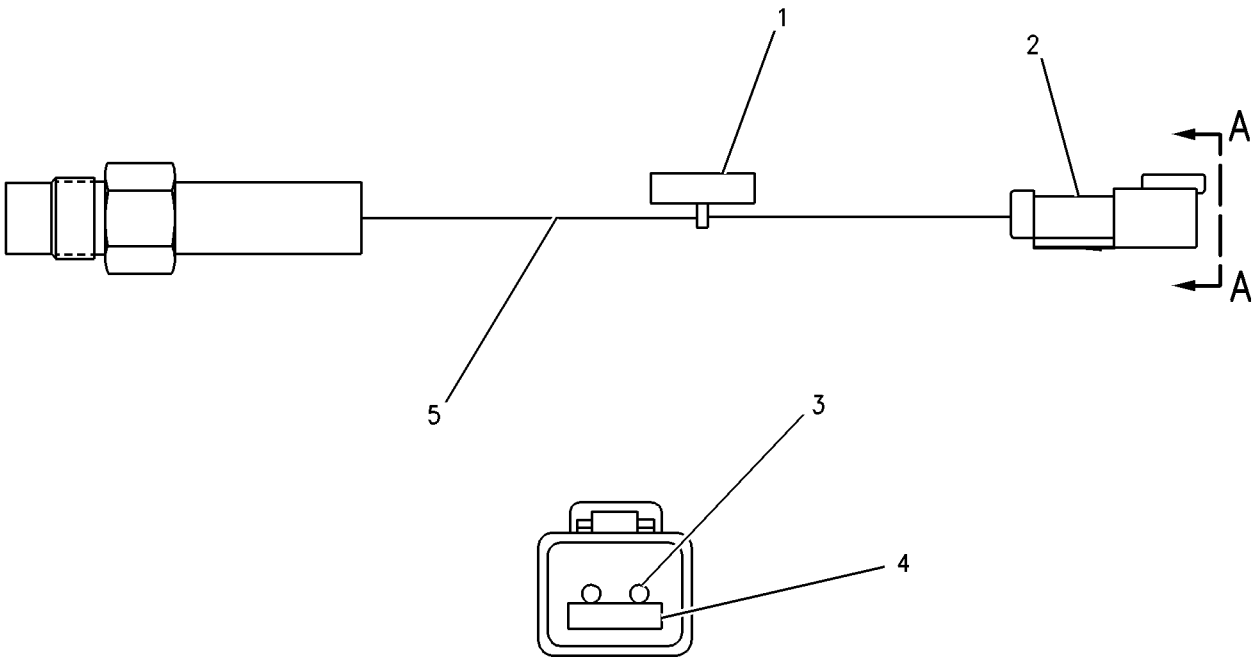

VIEW A-A

GRAPHIC #1 **<END>** g00680294

196-1185 SENSOR GP-SPEED

S/N: TPA1-UP

PART OF 200-2042 VALVE GP-TRANSMISSION CONTROL

SMCS-1907, 1912, 3175, 4803, 7493 **i03256770**

NOTE	REF NO	GRAPHIC REF	PART NUMBER	QTY	PART NAME 1 2 3 4 5 6 (PRODUCT LEVEL)	SEE PAGE
	1	1	**171-5349**	1	STRAP-MARKER	
	2	1	**102-8802**	1	KIT-RECEPTACLE (2-PIN)	
					(INCLUDES RECEPTACLE AS & WEDGE)	
	3	1	**186-3735**	2	PIN-CONNECTOR (16-GA TO 18-GA)	
	4	1	**3E-3365**	1	WEDGE-RECEPTACLE LOCK (2-PIN)	
BE	5	1	**9X-1813**		SLEEVE	

B-USE AS REQUIRED
E-ORDER BY THE CENTIMETER

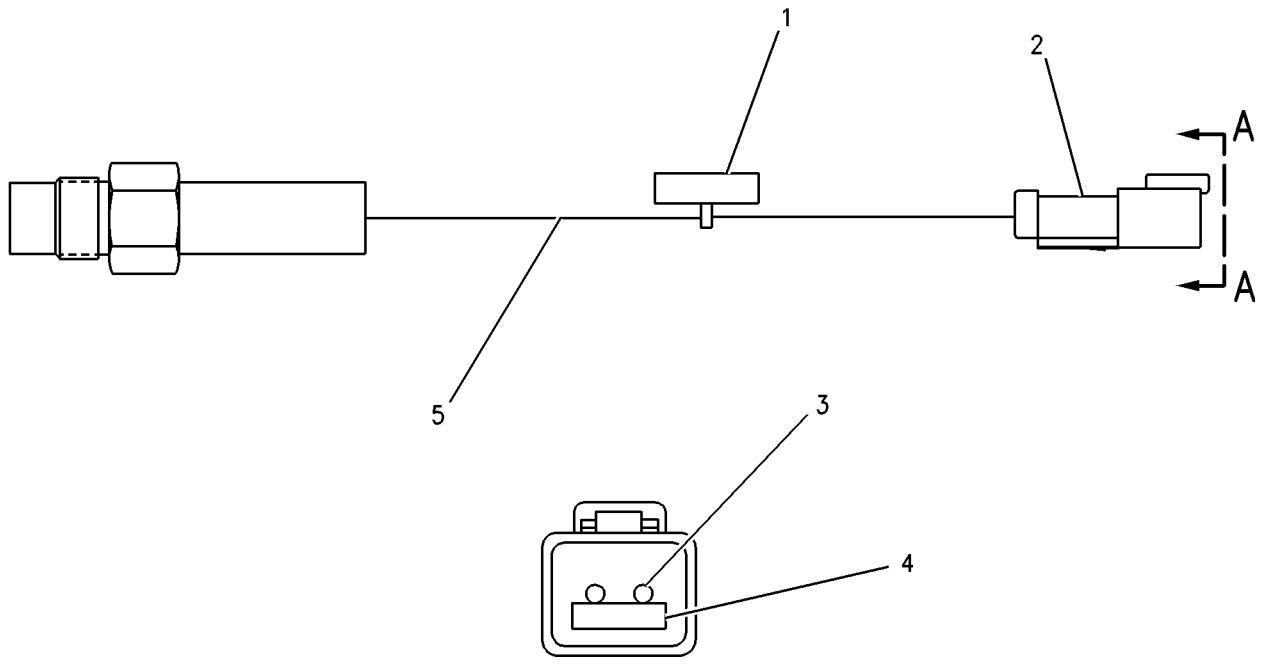

VIEW A-A

GRAPHIC #1 **<END>** g00680294

130-9811 SENSOR GP-TEMPERATURE

S/N: TPA1-UP; TWR1-UP

PART OF 200-2042 VALVE GP-TRANSMISSION CONTROL, 180-8801 WIRING GP-ENGINE

SMCS-1408, 1906, 1919, 1921, 1922, 1928, 1929, 301T, 3194, 429T, 509T

i02939798

NOTE	REF NO	GRAPHIC REF	PART NUMBER	QTY	PART NAME 1 2 3 4 5 6 (PRODUCT LEVEL)	SEE PAGE
	1	1	**137-6645**	1	PAD	

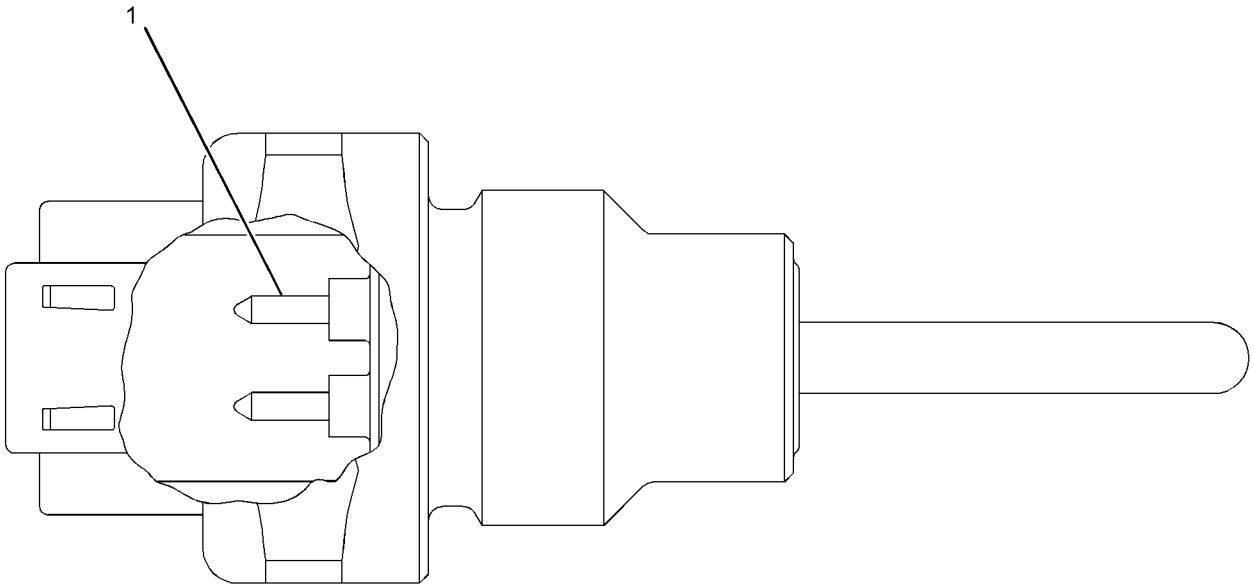

GRAPHIC #1

<END>

g01457428

134-2252 SENSOR GP-TEMPERATURE

S/N: TPA1-UP

PART OF 200-2043 VALVE GP-TRANSMISSION CONTROL

SMCS-1408, 1906, 1919, 1921, 1922, 1928, 1929, 301T, 3194, 429T, 509T

i02895310

NOTE	REF NO	GRAPHIC REF	PART NUMBER	QTY	PART NAME 1 2 3 4 5 6 (PRODUCT LEVEL)	SEE PAGE
	1	1	**3E-3371**	1	WEDGE-RECEPTACLE LOCK (3-PIN)	
BE	2	1	**9X-1386**		SLEEVE	
	3	1	**102-8803**	1	KIT-RECEPTACLE (3-PIN)	
					(INCLUDES RECEPTACLE AS & WEDGE)	
	4	1	**8T-8729**	3	PIN-CONNECTOR	

B-USE AS REQUIRED
E-ORDER BY THE CENTIMETER

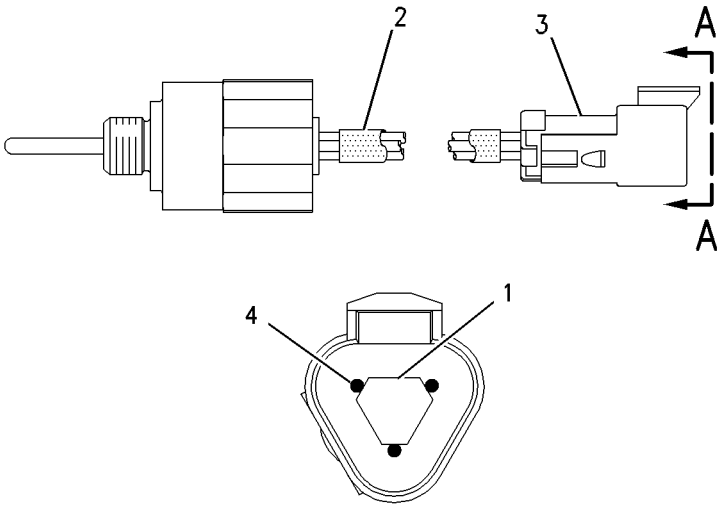

VIEW A–A

GRAPHIC #1

<END>

g00658816

228-7461 STARTING AID GP–HEATER

S/N: CPT1-UP
12-VOLT
PART OF 254-2236, 295-9744 ENGINE AR-PRIMARY
ALSO AN ATTACHMENT

SMCS-1090 **i02739831**

NOTE	REF NO	GRAPHIC REF	PART NUMBER	QTY	PART NAME 1 2 3 4 5 6 (PRODUCT LEVEL)	SEE PAGE
	1	1	**252-4460**	1	HEATER AS (AIR INLET)	
F		1	**246-3263**	1	LOCKWASHER	

F-NOT SHOWN

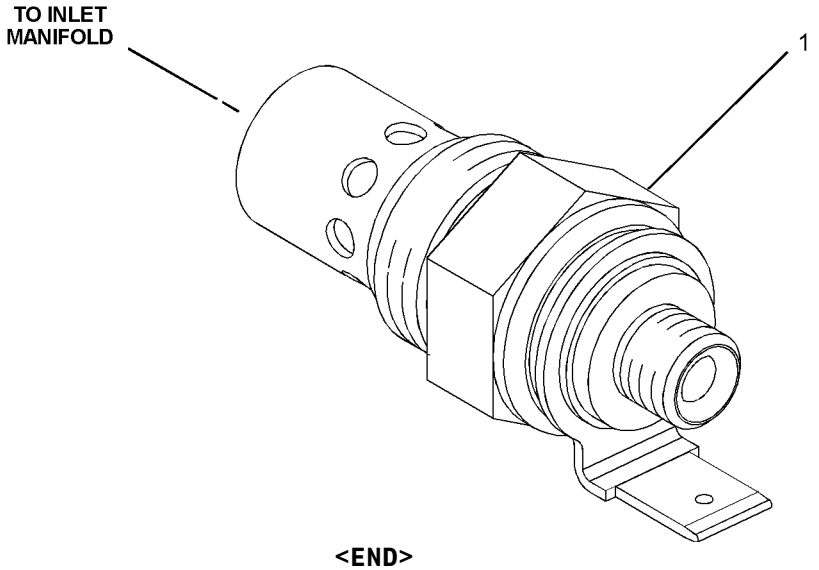

GRAPHIC #1 **<END>** g01082053

235-6362 STARTING AID GP–LINES

S/N: CPT1-UP
PART OF 254-2236, 295-9744 ENGINE AR-PRIMARY
ALSO AN ATTACHMENT

SMCS-1090 **i03196712**

NOTE	REF NO	GRAPHIC REF	PART NUMBER	QTY	PART NAME 1 2 3 4 5 6 (PRODUCT LEVEL)	SEE PAGE
	1	1	**067-6998**	1	NUT (3/8-24-THD)	
	2	1	**067-6999**	1	FERRULE	
	3	1	**114-4363**	2	BOLT (M8X1.25X12-MM)	
	4	1	**241-3358**	1	TUBE AS (HEATER)	
	4A	1	**101-3986**	3	CLIP	
	4B	1	**101-3983**	1	NUT (3/16)	
	4C	1	**101-3984**	1	FERRULE	
	5	1	**035-8055**	1	VALVE AS-CHECK (STARTING AID HEATER LINES)	
	6	1	**318-2365**	1	CLIP	
	7	1	**241-3359**	1	WASHER-SEALING (13.25X18.45X1.6-MM THK)	

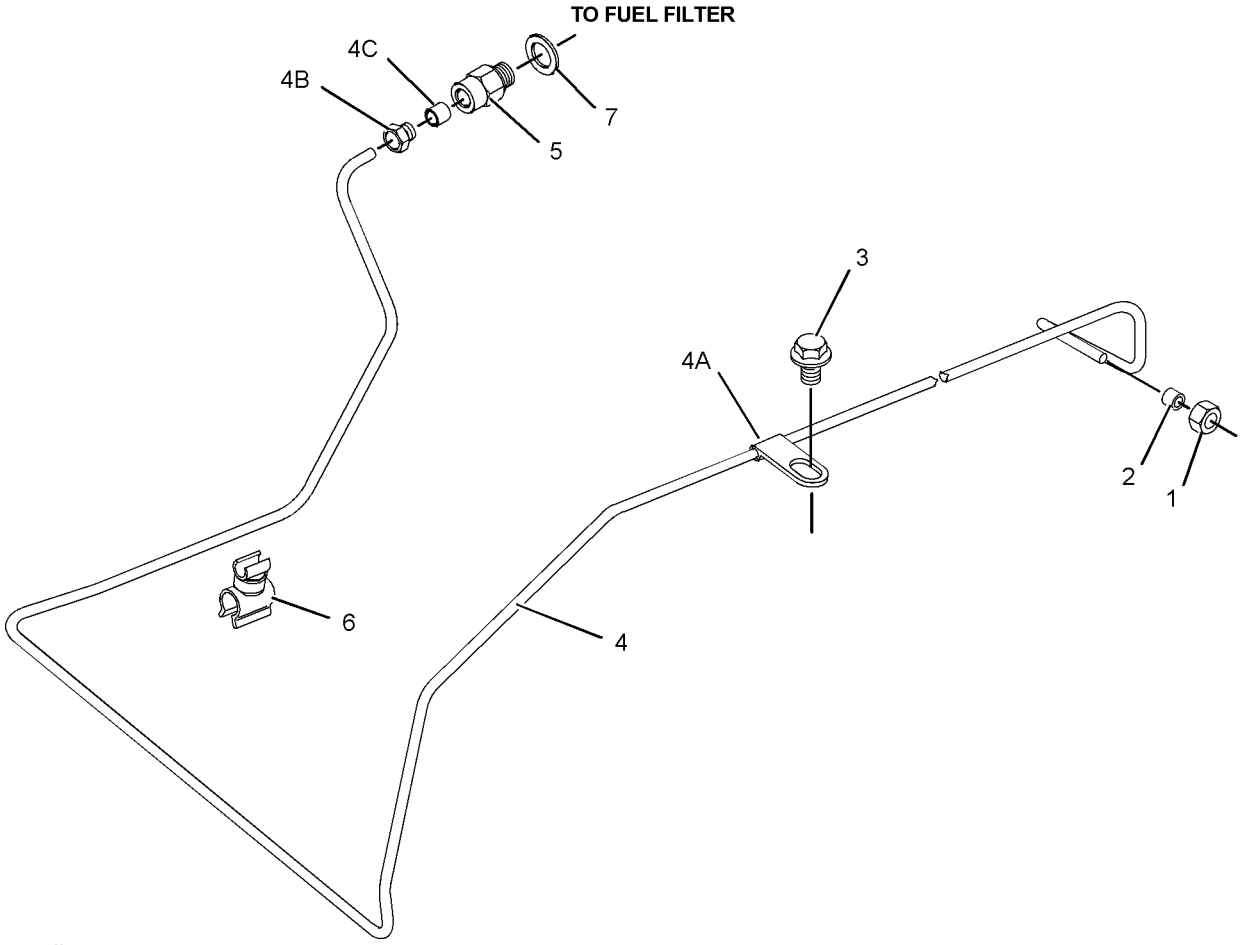

GRAPHIC #1 **<END>** g01084472

1G-9963 STARTING MOTOR GP-ELECTRIC

S/N: TWR1-UP

PART OF 242-9735 INSTALLATION AR-ENGINE

SMCS-1453 **i02908449**

NOTE	REF NO	GRAPHIC REF	PART NUMBER	QTY	PART NAME 1 2 3 4 5 6 (PRODUCT LEVEL)	SEE PAGE
	1	1	**113-8085**	1	RING	
YCR	2	1	**143-0541**	1	STARTING MOTOR GP-ELECTRIC (24-VOLT)	185
	3	1	**8T-4121**	3	WASHER-HARD (11X21X2.5-MM THK)	
M	4	1	**8T-4195**	3	BOLT (M10X1.5X30-MM)	

C-CHANGE FROM PREVIOUS TYPE
M-METRIC PART
R-REMFG PART MAY BE AVAILABLE
Y-SEPARATE ILLUSTRATION

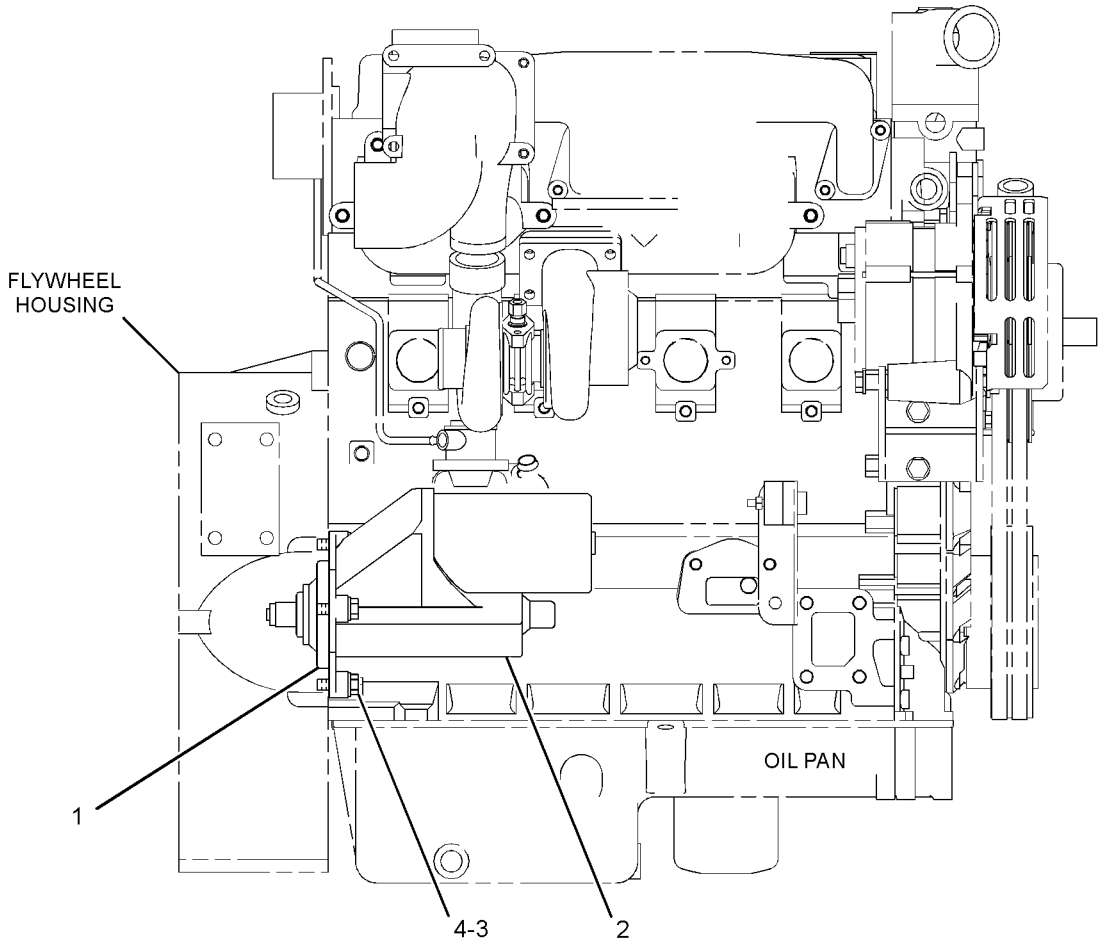

RIGHT SIDE VIEW OF ENGINE

GRAPHIC #1 **<END>** g01535613

143-0541 STARTING MOTOR GP-ELECTRIC*R

S/N: TWR1-UP

PART OF 1G-9963 STARTING MOTOR GP-ELECTRIC

SMCS-1453 **i01812113**

NOTE	REF NO	GRAPHIC REF	PART NUMBER	QTY	PART NAME 1 2 3 4 5 6 (PRODUCT LEVEL)	SEE PAGE
	1	1	**8C-9778**	1	PLUNGER AS	
	2	1	**8C-9783**	1	GASKET	
	3	1	**2P-8104**	1	BEARING	
	4	1	**7T-6092**	1	HOLDER AS-BRUSH	
M	5	1	**8T-4133**	2	NUT (M10X1.5-THD)	
	6	1	**7T-6088**	1	BEARING AS	
	7	1	**7T-6087**	1	WASHER	
	8	1	**7T-6093**	1	CLUTCH AS	
	9	1	**8J-4455**	1	BALL	
	10	1	**7T-6090**	1	SPRING	
	11	1	**8T-4121**	2	WASHER-HARD (11X21X2.5-MM THK)	
	12	1	**3E-5153**	1	COVER-STARTING MOTOR	
M	13	1	**9X-2036**	1	SCREW-PAN HEAD	
	14	1	**8F-1434**	1	LOCKWASHER	
	15	1	**100-6659**	1	SWITCH AS (STARTER)	
	16	1	**3E-6238**	1	ARMATURE AS	
	17	1	**3E-6237**	1	CASE AS-STARTING MOTOR	
	18	1	**100-4115**	1	HOUSING-STARTING MOTOR	
	19	1	**143-1344**	1	FRAME-STARTER	
	20	1	**100-3685**	1	CAP	
	21	1	**3E-5154**	1	BUSHING-STARTING MOTOR	
					AVAILABLE REPAIR KIT(S):	
			7T-6099	1	KIT-GEAR (STARTING MOTOR)	
					(INCLUDES RETAINER, PINION & ROLLERS)	
			8C-5457	1	KIT-CONTACT (STARTING MOTOR)	
					(INCLUDES NUT, WASHER, PLATE BUSHING & BOLT)	
			100-4112	1	KIT-CONTACT (STARTING MOTOR)	
					(INCLUDES NUT, WASHER, SEAL BUSHING, PLATE & BOLT)	
			146-6729	1	KIT-HARDWARE (STARTING MOTOR)	

M-METRIC PART

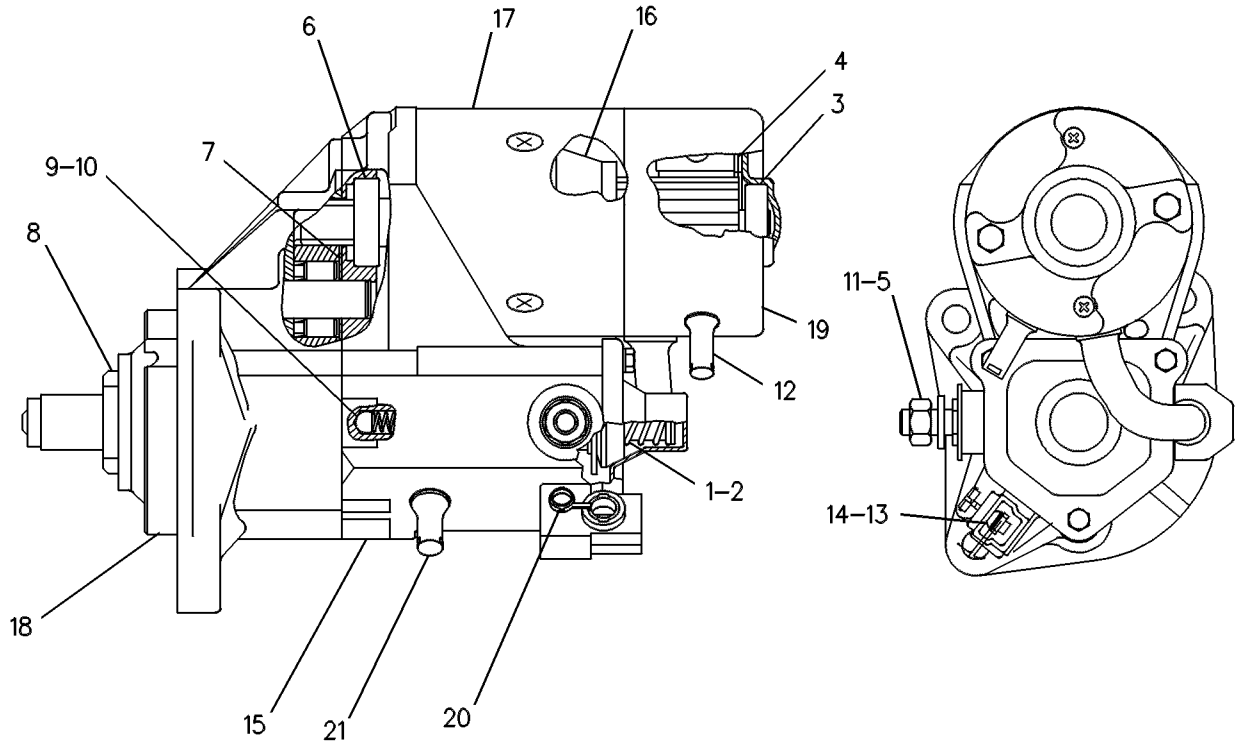

GRAPHIC #1 **<END>** g00131126

7N-0718 SWITCH GP-DISCONNECT–BATTERY

S/N: TWR1-UP
12-VOLT
PART OF 255-2359 BATTERY & WIRING GP

SMCS-1411 **i02459121**

NOTE	REF NO	GRAPHIC REF	PART NUMBER	QTY	PART NAME 1 2 3 4 5 6 (PRODUCT LEVEL)	SEE PAGE
	1	1	**8H-5306**	1	KEY (BATTERY DISCONNECT)	
	2	1	**8H-5303**	1	NUT (3/4-16-THD)	
	3	1	**2H-3922**	2	LOCKWASHER	
	4	1	**9F-5644**	2	LOCKWASHER	
	5	1	**6F-7045**	2	NUT-FULL (3/8-24-THD)	

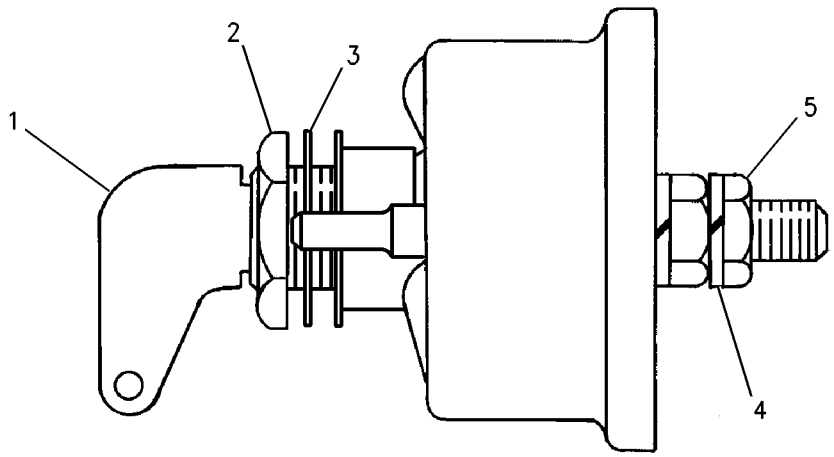

GRAPHIC #1 **<END>** g00715584

118-3534 SWITCH GP-MAGNETIC

S/N: TWR1-UP
24-VOLT
PART OF 180-8801 WIRING GP-ENGINE

SMCS-7499 **i02883861**

NOTE	PART NUMBER	QTY	PART NAME 1 2 3 4 5 6 (PRODUCT LEVEL)	SEE PAGE
Y	*175-2308*	1	SWITCH GP-MAGNETIC (24-VOLT) (START RELAY)	190
			—OR—	
Y	*175-2309*	1	SWITCH GP-MAGNETIC (24-VOLT) (START RELAY)	191

Y-SEPARATE ILLUSTRATION

<END>

167-0138 SWITCH GP-MAGNETIC–MAIN RELAY

S/N: TWR1-323
24-VOLT
PART OF 236-4229, 236-4230 PANEL GP-INSTRUMENT
FIELD REPLACEMENT ORDER 241-8368–PAGE 193
AN ATTACHMENT

SMCS-7499 **i02909853**

NOTE	REF NO	GRAPHIC REF	PART NUMBER	QTY	PART NAME 1 2 3 4 5 6 (PRODUCT LEVEL)	SEE PAGE
	1	1	**155-2270**	1	KIT-CONNECTING PLUG (2-PIN)	
					(INCLUDES PLUG AS, WEDGE & INTERFACE SEAL)	
	2	1	**4F-2294**	2	NUT-JAM (5/16-24-THD)	
	3	1	**186-3736**	2	SOCKET-CONNECTOR (16-GA TO 18-GA)	

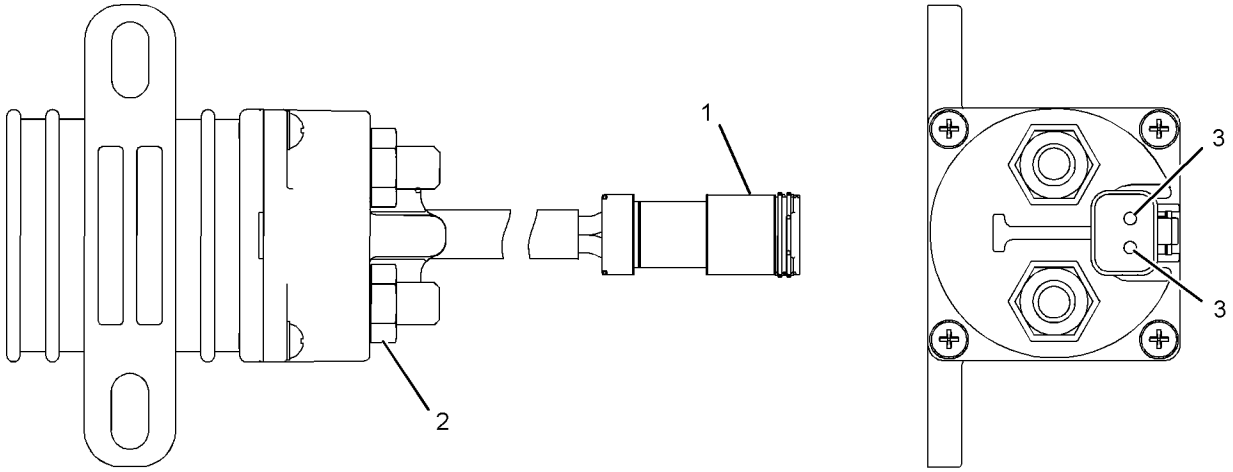

GRAPHIC #1 **<END>** g01079731

175-2308 SWITCH GP-MAGNETIC

S/N: TWR1-2797
24-VOLT
PART OF 118-3534 SWITCH GP-MAGNETIC

SMCS-7499 **i02939090**

NOTE	REF NO	GRAPHIC REF	PART NUMBER	QTY	PART NAME 1 2 3 4 5 6 (PRODUCT LEVEL)	SEE PAGE
	1	1	**102-8802**	1	KIT-RECEPTACLE (2-PIN)	
					(INCLUDES RECEPTACLE AS & WEDGE)	
	2	1	**186-3735**	2	PIN-CONNECTOR (16-GA TO 18-GA)	
	3	1	**1H-3338**	2	LOCKWASHER	
	4	1	**012-0380**	2	LOCKWASHER	
M	5	1	**5C-2890**	2	NUT (M6X1-THD)	
BE	6	1	**9X-1813**		SLEEVE	

B-USE AS REQUIRED
E-ORDER BY THE CENTIMETER
M-METRIC PART

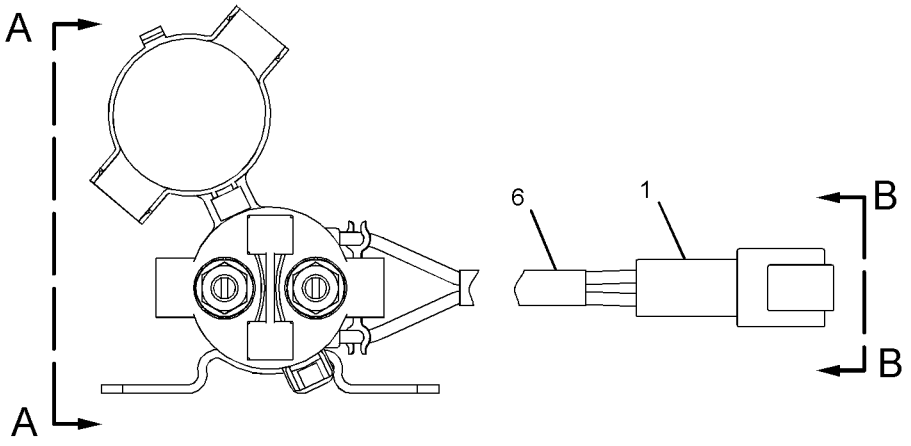

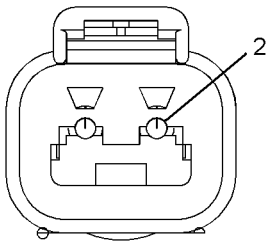

VIEW B-B

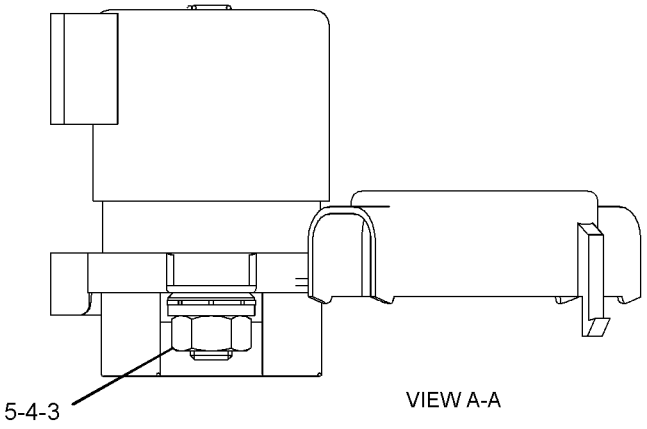

VIEW A-A

GRAPHIC #1 **<END>** g01266266

175-2309 SWITCH GP-MAGNETIC

S/N: TWR1-2797
24-VOLT
PART OF 118-3534 SWITCH GP-MAGNETIC

SMCS-7499 **i02939089**

NOTE	REF NO	GRAPHIC REF	PART NUMBER	QTY	PART NAME 1 2 3 4 5 6 (PRODUCT LEVEL)	SEE PAGE
	1	1	**117-9081**	1	SWITCH AS-MAGNETIC (START RELAY)	
	1A	1	**1H-3338**	2	LOCKWASHER	
M	1B	1	**5C-2890**	2	NUT (M6X1-THD)	
	1C	1	**012-0380**	2	LOCKWASHER	
	2	1	**102-8802**	1	KIT-RECEPTACLE (2-PIN)	
					(INCLUDES RECEPTACLE AS & WEDGE)	
	3	1	**186-3735**	2	PIN-CONNECTOR (16-GA TO 18-GA)	
BE	4	1	**9X-1813**		SLEEVE	

B-USE AS REQUIRED
E-ORDER BY THE CENTIMETER
M-METRIC PART

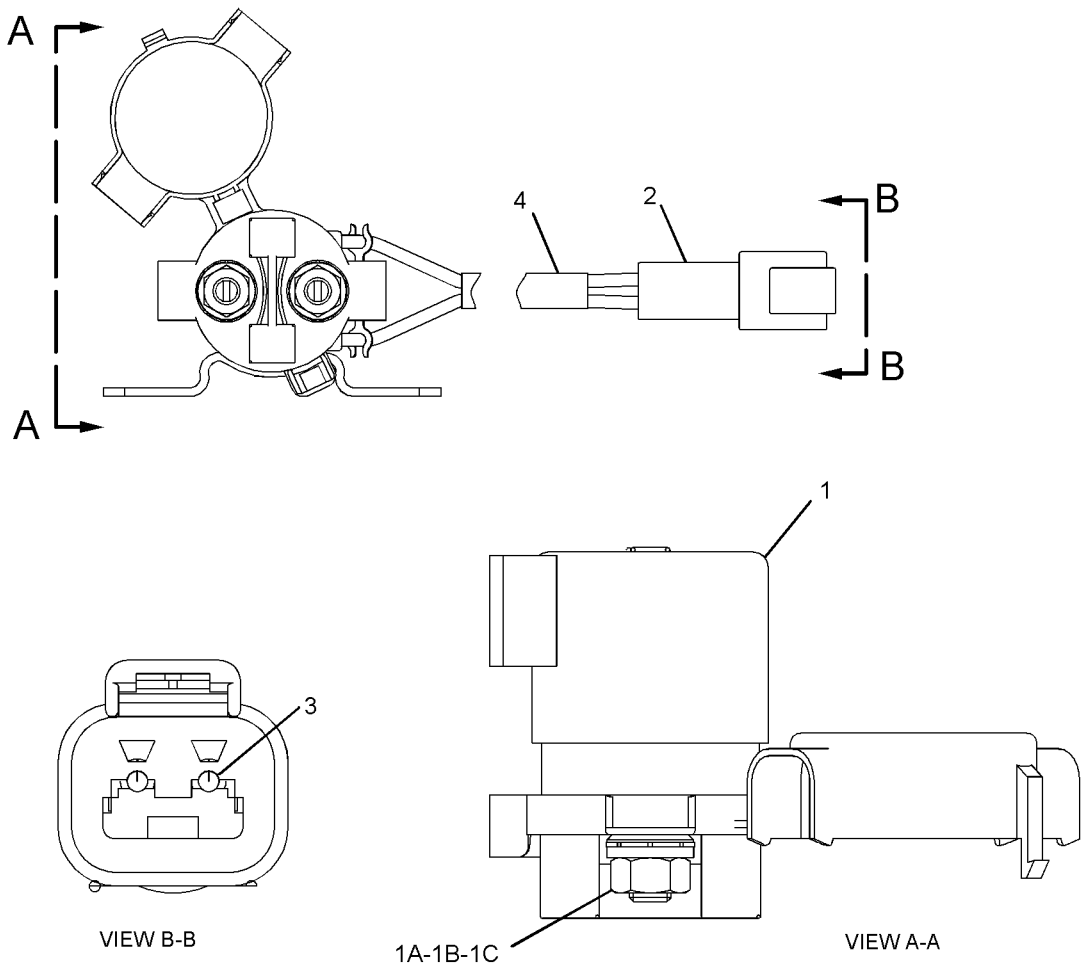

GRAPHIC #1 **<END>** g01266277

179-0006 SWITCH GP-MAGNETIC—SECONDARY STEERING RELAY

S/N: TWR1-UP
24-VOLT, 32-VOLT
PART OF 254-2271 WIRING GP-SECONDARY STEERING
AN ATTACHMENT

SMCS-7499 **i02605913**

NOTE	REF NO	GRAPHIC REF	PART NUMBER	QTY	PART NAME 1 2 3 4 5 6 (PRODUCT LEVEL)	SEE PAGE
	1	1	**7X-0620**	2	WASHER-HARD (5.5X13X1.6-MM THK)	
	2	1	**8F-1434**	2	LOCKWASHER	
	3	1	**6V-8378**	2	NUT (10-32-THD)	
	4	1	**4L-6499**	2	WASHER (0.38X0.88X0.06-IN THK)	
	5	1	**4D-1326**	2	LOCKWASHER	
	6	1	**1B-2578**	2	NUT (3/8-16-THD)	

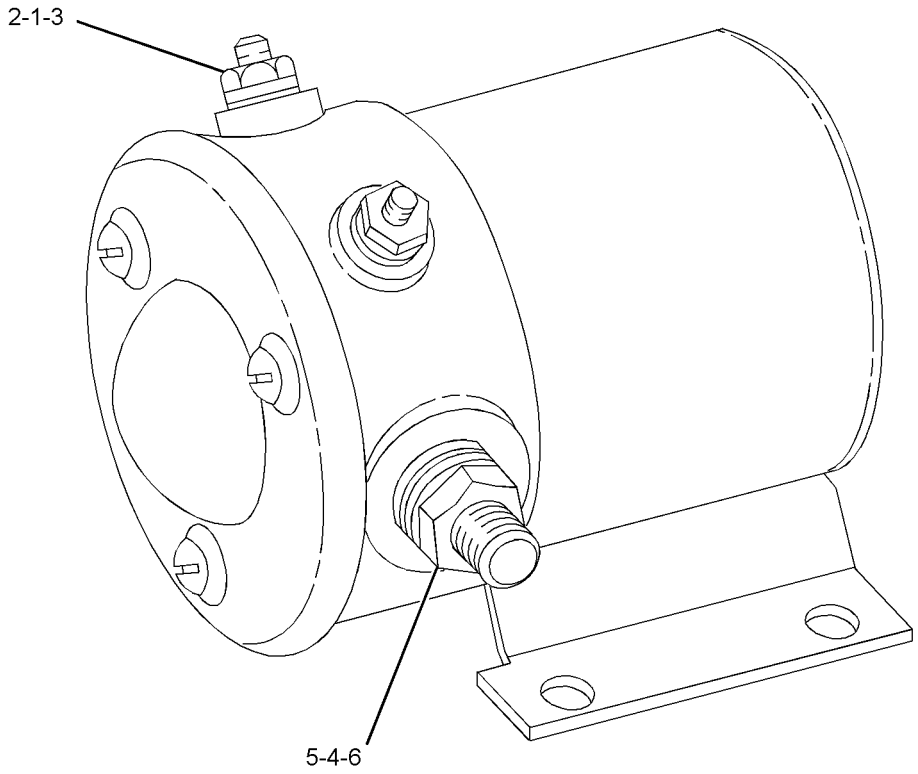

GRAPHIC #1 **<END>** g01132022

241-8368 SWITCH GP-MAGNETIC—MAIN RELAY

S/N: TWR324-UP
24-VOLT
PART OF 236-4229, 236-4230 PANEL GP-INSTRUMENT
FIELD REPLACEMENT FOR 167-0138—PAGE 189
AN ATTACHMENT

SMCS-7499 **i03345987**

NOTE	REF NO	GRAPHIC REF	PART NUMBER	QTY	PART NAME 1 2 3 4 5 6 (PRODUCT LEVEL)	SEE PAGE
	1	1	**155-2270**	1	KIT-CONNECTING PLUG (2-PIN)	
					(INCLUDES PLUG AS & WEDGE)	
	2	1	**4F-2294**	2	NUT-JAM (5/16-24-THD)	
	3	1	**186-3736**	2	SOCKET-CONNECTOR (16-GA TO 18-GA)	

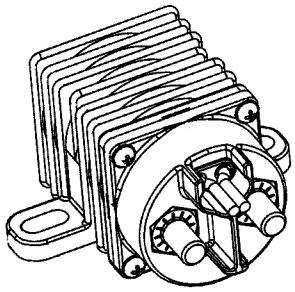

ISOMETRIC VIEW

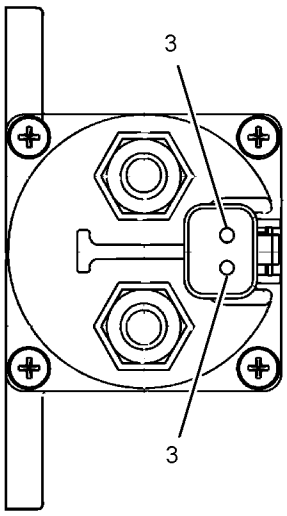

VIEW A-A

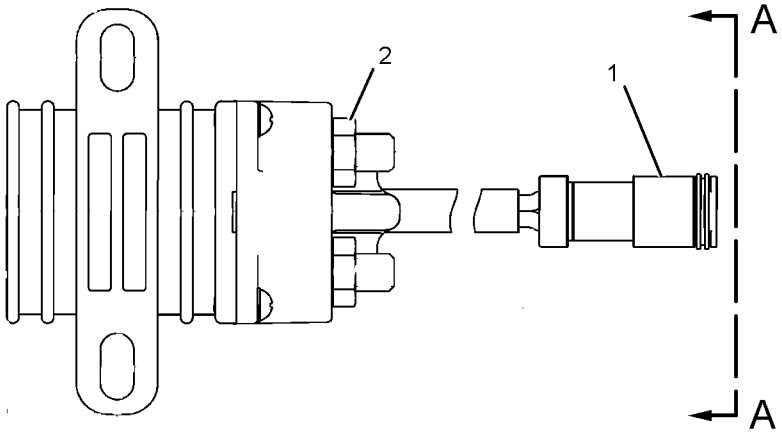

GRAPHIC #1 **<END>** g01077362

107-6133 SWITCH GP-WIPER–INTERMITTENT

S/N: TWR1-UP
PART OF 190-4405 OPERATOR AR
AN ATTACHMENT

SMCS-7332 **i03245011**

NOTE	REF NO	GRAPHIC REF	PART NUMBER	QTY	PART NAME 1 2 3 4 5 6 (PRODUCT LEVEL)	SEE PAGE
Y	1	1	**275-7741**	1	SWITCH GP-WIPER (24-VOLT, INTERMITTENT) (FRONT)	195
	2	1	**112-6174**	1	SWITCH AS-ROTARY (WIPER, WASHER) (REAR)	
	2A	1	**2H-3920**	1	LOCKWASHER	
	2B	1	**3E-3389**	1	WEDGE-RECEPTACLE LOCK	
	2C	1	**6V-8369**	1	NUT (7/16-28-THD)	
	2D	1	**186-3735**	6	PIN-CONNECTOR (16-GA TO 18-GA)	
	2E	1	**8T-8737**	2	PLUG-SEAL	
	2F	1	**102-8806**	1	KIT-RECEPTACLE (8-PIN)	
					(INCLUDES RECEPTACLE AS & WEDGE)	

Y-SEPARATE ILLUSTRATION

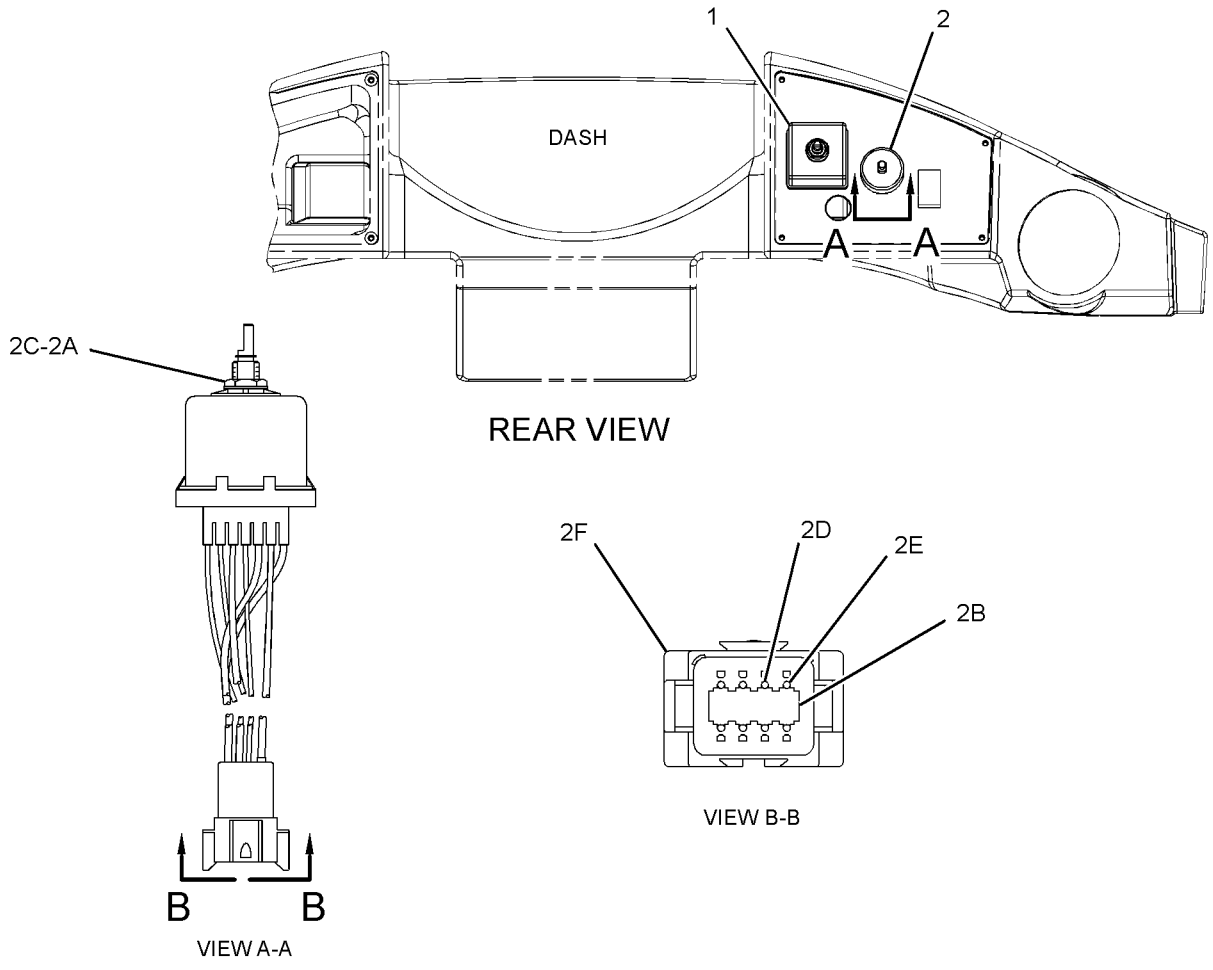

GRAPHIC #1 **<END>** g01646616

275-7741 SWITCH GP-WIPER–INTERMITTENT

S/N: TWR1-UP
24-VOLT
PART OF 107-6133 SWITCH GP-WIPER
AN ATTACHMENT

SMCS-7332 **i02895040**

NOTE	REF NO	GRAPHIC REF	PART NUMBER	QTY	PART NAME 1 2 3 4 5 6 (PRODUCT LEVEL)	SEE PAGE
	1	1	**6V-8369**	1	NUT (7/16-28-THD)	
	2	1	**2H-3920**	1	LOCKWASHER	
	3	1	**8T-8737**	2	PLUG-SEAL	
	4	1	**186-3735**	6	PIN-CONNECTOR (16-GA TO 18-GA)	
	5	1	**102-8806**	1	KIT-RECEPTACLE (8-PIN)	
					(INCLUDES RECEPTACLE AS & WEDGE)	

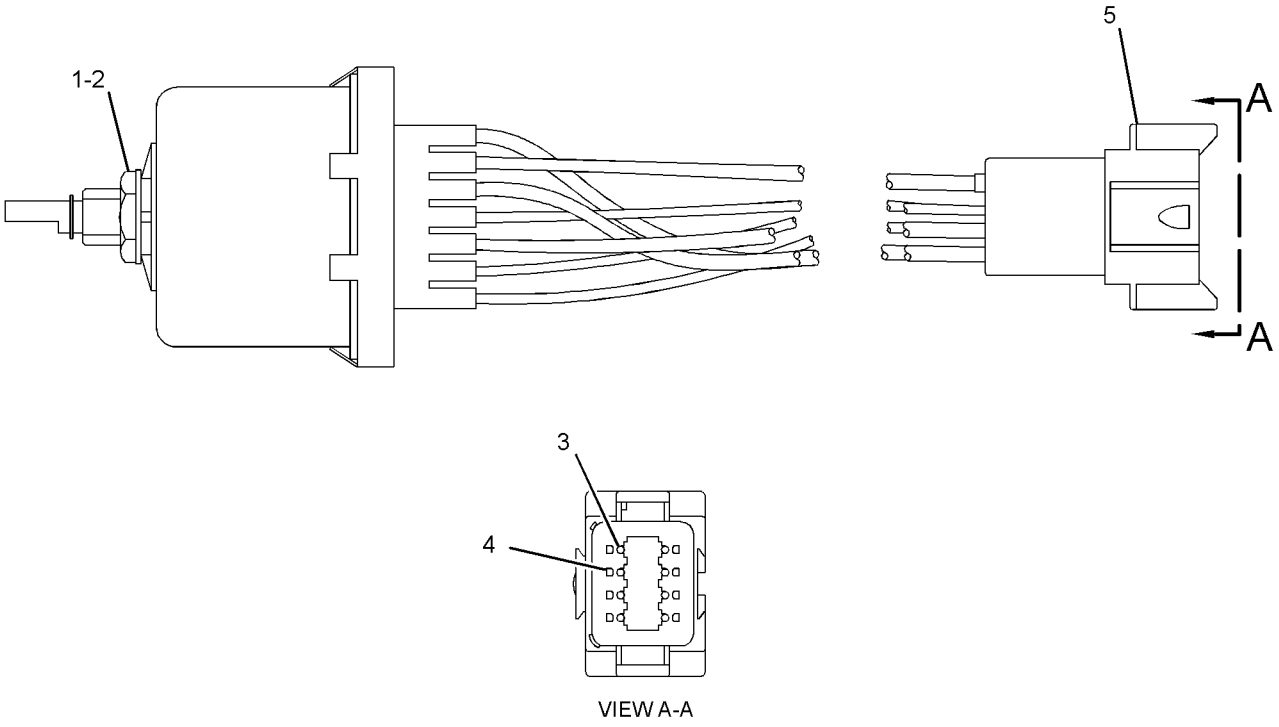

GRAPHIC #1 **<END>** g01445891

180-8807 WARNING GP-BACKUP

S/N: TWR1-UP

PART OF 235-7499 CHASSIS AR

SMCS-7406 **i03036737**

NOTE	REF NO	GRAPHIC REF	PART NUMBER	QTY	PART NAME 1 2 3 4 5 6 (PRODUCT LEVEL)	SEE PAGE
	1	1	**7K-1181**	2	STRAP-CABLE	
	2	1	**213-9100**	1	ALARM GP (BACKUP)	
D		1	**5P-5623**		WIRE-ELECTRICAL (16-GA, BLACK) (0.4-M)	
		1	**186-3735**	2	PIN-CONNECTOR (16-GA TO 18-GA)	
E		1	**9X-1813**		SLEEVE (31-CM)	
		1	**102-8802**	1	KIT-RECEPTACLE (2-PIN)	
					(INCLUDES RECEPTACLE AS & WEDGE)	
	3	1	**4P-8134**	1	CLIP	
M	4	1	**8T-4200**	2	BOLT (M8X1.25X16-MM)	
	5	1	**8T-4224**	2	WASHER-HARD (8.8X16X2-MM THK)	

D-ORDER BY THE METER
E-ORDER BY THE CENTIMETER
M-METRIC PART

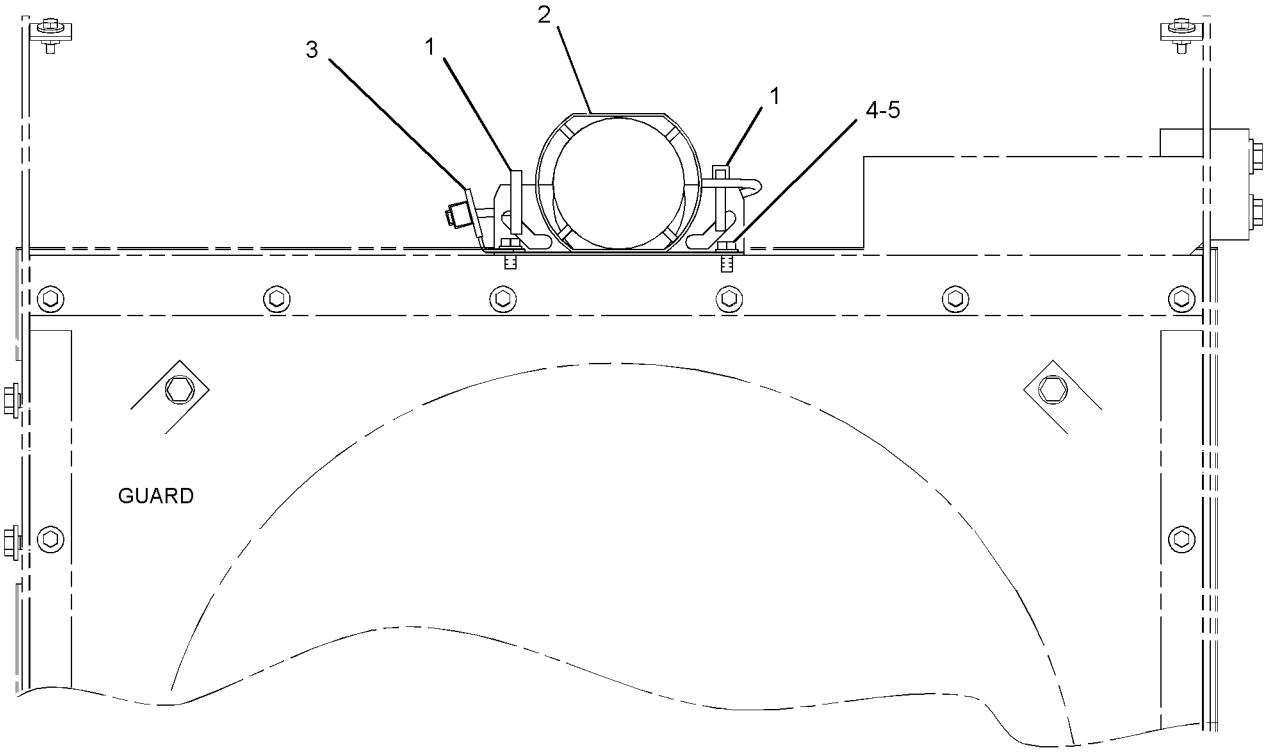

REAR VIEW

GRAPHIC #1 **<END>** g01577493

252-4990 WIRING GP-ALTERNATOR

S/N: TWR1-UP

PART OF 254-1543, 256-4715 ALTERNATOR GP-CHARGING

AN ATTACHMENT

SMCS-1405, 1408 **i02208409**

NOTE	REF NO	GRAPHIC REF	PART NUMBER	QTY	PART NAME 1 2 3 4 5 6 (PRODUCT LEVEL)	SEE PAGE
	1	1	**7K-1181**	7	STRAP-CABLE	
	2	1	**148-8298**	1	WIRE AS	
	3	1	**244-3339**	1	CABLE AS	
		1	**6T-5598**	1	TERMINAL-SOLDER (FOR 5/16-IN BOLT)	
		1	**8T-8827**	1	BOOT	
BE		1	**8C-3056**		CABLE (02-GA, RED)	
		1	**030-1712**	1	TERMINAL-RING (2-GA, 6.35-MM)	
	4	1	**251-6183**	1	WIRE AS	

B-USE AS REQUIRED
E-ORDER BY THE CENTIMETER

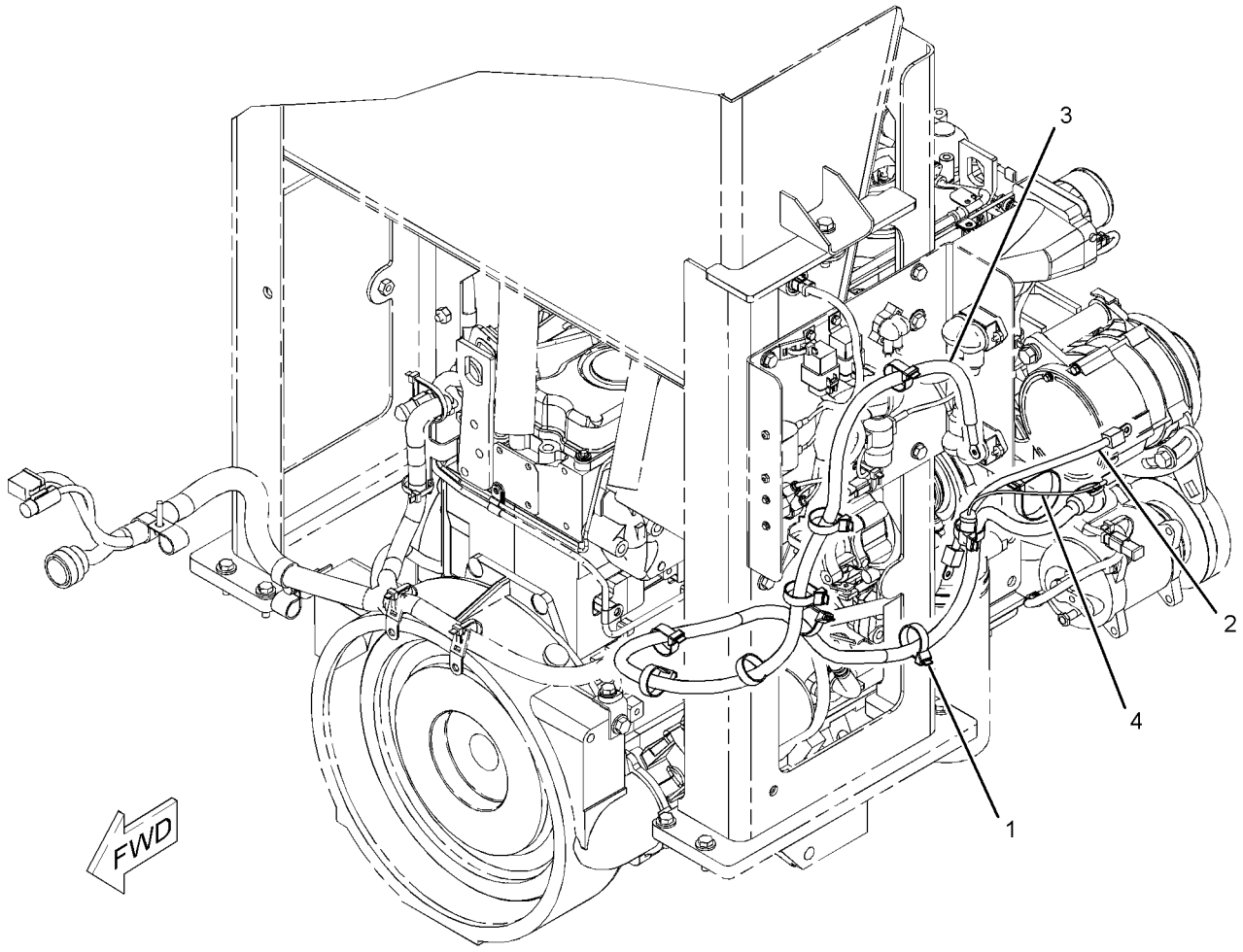

GRAPHIC #1 **<END>** g01120408

233-6562 WIRING GP-CAB–ENCLOSED ROPS

S/N: TWR1-UP

PART OF 235-8093, 235-8097, 304-0360, 304-0361 OPERATOR AR-ENCLOSED ROPS AN ATTACHMENT

SMCS-1408, 7301 **i02572102**

NOTE	REF NO	GRAPHIC REF	PART NUMBER	QTY	PART NAME 1 2 3 4 5 6 (PRODUCT LEVEL)	SEE PAGE
B	1	1	**7K-1181**	18	STRAP-CABLE	
	2	1	**108-3320**	1	SWITCH AS-ROTARY (24-VOLT) (RUNNING LIGHTS)	
		1	**3E-3389**	1	WEDGE-RECEPTACLE LOCK	
		1	**9W-0852**	8	PIN-CONNECTOR (14-GA)	
		1	**102-8806**	1	KIT-RECEPTACLE (8-PIN)	
					(INCLUDES RECEPTACLE AS & WEDGE)	
	3	1	**110-6109**	3	KNOB-CONTROL (CONTROL PANEL SWITCHES)	
	4	1	**115-1748**	4	LAMP (24-VOLT, 3-WATT) (WEDGE BASE)	
B	5	1	**165-0311**	4	PLUG	
	6	1	**172-2307**	1	HARNESS AS-CAB (SHELL)	
D		1	**6V-2689**		TUBE-HEAT SHRINK (6.35-MM DIA) (0.4-M)	
		1	**8L-8413**	28	STRAP-CABLE	
E		1	**119-3662**		TUBE-HEAT SHRINK (10.85-MM DIA) (7-CM)	
E		1	**125-7874**		TUBE-HEAT SHRINK (5.72-MM DIA) (5-CM)	
		1	**2L-8081**	1	TERMINAL (14-GA TO 16-GA)	
		1	**5P-2957**	2	TERMINAL	
		1	**102-8801**	1	KIT-RECEPTACLE (12-PIN)	
		1	**102-8802**	1	KIT-RECEPTACLE (2-PIN)	
		1	**102-8803**	1	KIT-RECEPTACLE (3-PIN)	
					(EACH RECEPTACLE KIT INCLUDES RECEPTACLE AS & WEDGE)	
		1	**155-2260**	1	KIT-CONNECTING PLUG (3-PIN)	
					(INCLUDES PLUG AS, WEDGES & INTERFACE SEAL)	
		1	**155-2270**	1	KIT-CONNECTING PLUG (2-PIN)	
		1	**155-2271**	1	KIT-CONNECTING PLUG (4-PIN)	
		1	**155-2274**	1	KIT-CONNECTING PLUG (6-PIN)	
					(EACH PLUG KIT INCLUDES PLUG AS, WEDGE, & INTERFACE SEAL)	
	7	1	**185-2766**	1	SWITCH AS-ROCKER (AUTOSHIFT CONTROL)	
C	8	1	**250-8115**	1	SWITCH AS-ROCKER (XMSN NEUTRALIZER OVERRIDE CONT)	
	9	1	**190-4558**	1	PLATE AS	
	10	1	**190-4559**	1	PLATE AS	
	11	1	**201-1024**	1	BRACKET	
	12	1	**204-0358**	1	FILM-IDENTIFICATION (PANEL, RH)	
	13	1	**211-0052**	1	NUT (11/16-18-THD)	
	14	1	**237-3856**	1	FILM-PANEL (LH)	
	15	1	**251-2368**	1	HARNESS AS-CAB (MAIN)	
		1	**8L-8413**	31	STRAP-CABLE	
		1	**5P-6271**	1	CONNECTOR AS	
		1	**091-2436**	29	TERMINAL-BLADE	
		1	**104-1995**	2	TERMINAL-BLADE	
		1	**110-0203**	1	CONNECTOR AS	
		1	**113-5184**	8	TERMINAL-RECEPTACLE	
E		1	**119-3662**		TUBE-HEAT SHRINK (10.85-MM DIA) (20-CM)	
		1	**122-4401**	5	TERMINAL	
E		1	**125-7874**		TUBE-HEAT SHRINK (5.72-MM DIA) (5-CM)	
E		1	**125-7875**		TUBE-HEAT SHRINK (7.44-MM DIA) (5-CM)	
B		1	**141-8061**		TAPE	
		1	**167-3692**	1	RECEPTACLE AS-CONNECTOR (31-PIN)	
		1	**102-8805**	1	KIT-RECEPTACLE (6-PIN)	
					(INCLUDES RECEPTACLE AS & WEDGE)	
		1	**155-2265**	3	KIT-CONNECTING PLUG (8-PIN)	
		1	**155-2274**	1	KIT-CONNECTING PLUG (6-PIN)	
					(EACH PLUG KIT INCLUDES PLUG AS, WEDGE, & INTERFACE SEAL)	

233-6562 **WIRING GP-CAB** ***(contd.)*** **i02572102**

NOTE	REF NO	GRAPHIC REF	PART NUMBER	QTY	PART NAME 1 2 3 4 5 6 (PRODUCT LEVEL)	SEE PAGE
	16	1	**4P-7581**	1	CLIP (LADDER)	
	17	1	**4P-8134**	1	CLIP (LADDER)	
	18	1	**6D-4244**	1	CLIP	
	19	1	**8T-4121**	1	WASHER-HARD (11X21X2.5-MM THK)	
M	20	1	**8T-4133**	1	NUT (M10X1.5-THD)	
M	21	1	**8T-4199**	2	BOLT (M8X1.25X12-MM)	
	22	1	**8T-4224**	3	WASHER-HARD (8.8X16X2-MM THK)	
M	23	1	**8T-4908**	1	BOLT (M8X1.25X25-MM)	
	24	1	**9W-0335**	1	LIGHTER AS-CIGAR (24-VOLT)	
M	25	1	**9X-1046**	8	SCREW (M4X0.7X18-MM)	
D	26	1	**5P-6038**		WRAP (SPIRAL) (0.2-M)	
	27	1	**204-6101**	8	WASHER-HARD (5.3X10X1-MM THK)	

B-USE AS REQUIRED
C-CHANGE FROM PREVIOUS TYPE
D-ORDER BY THE METER
E-ORDER BY THE CENTIMETER
M-METRIC PART

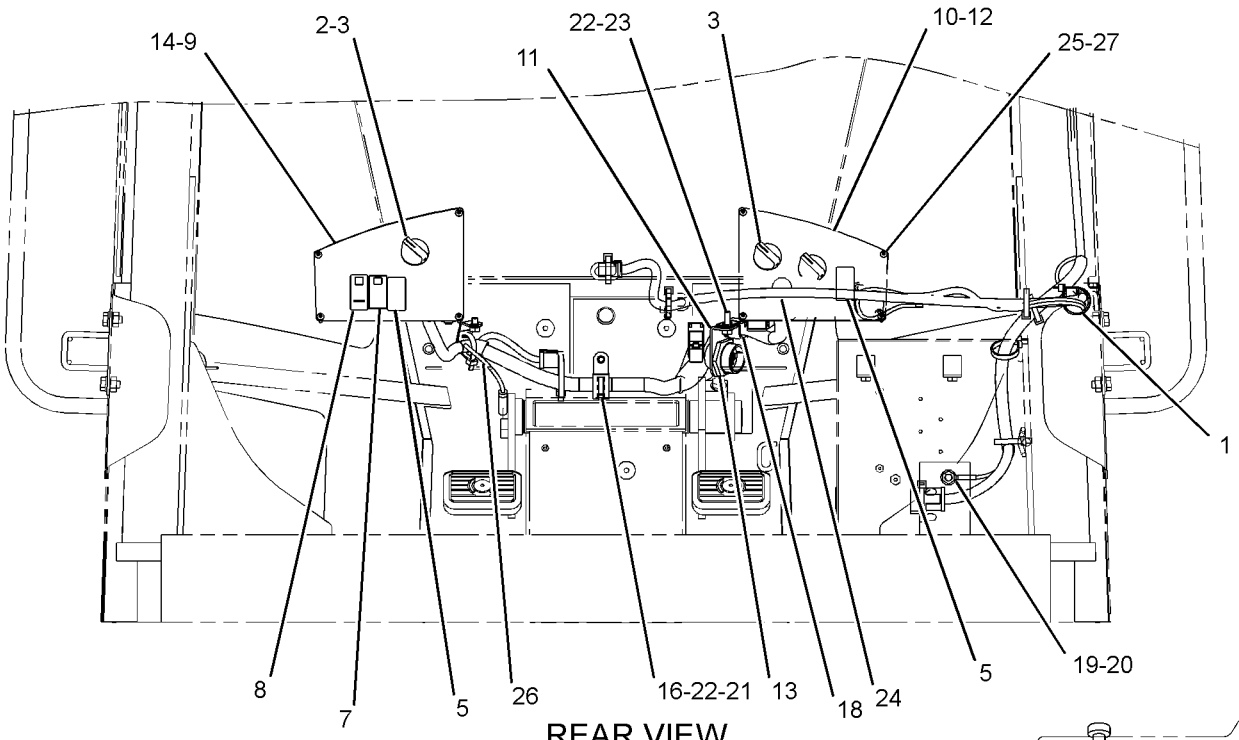

REAR VIEW

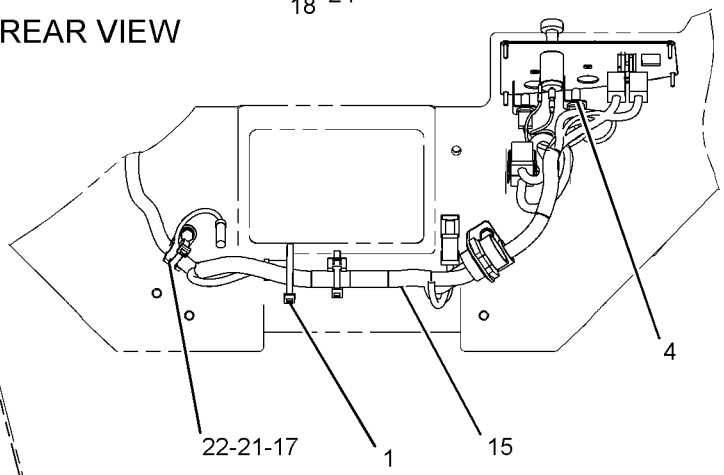

SECTION A-A

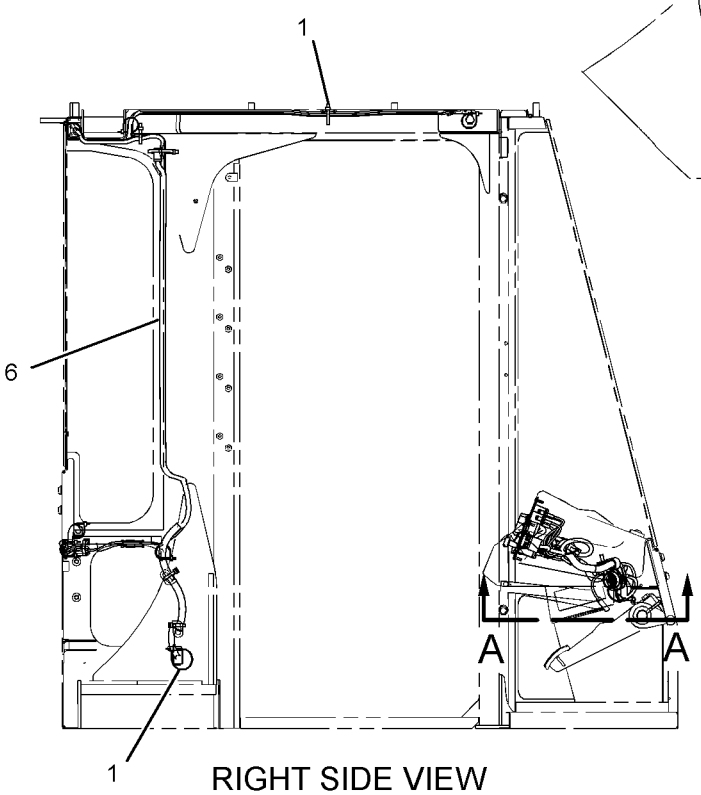

RIGHT SIDE VIEW

GRAPHIC #1 **<END>** g01294636

233-6563 WIRING GP-CAB–OPEN ROPS

S/N: TWR1-292
PART OF 240-7103 OPERATOR AR-OPEN ROPS
AN ATTACHMENT

SMCS-1408, 7301 **i02595394**

NOTE	REF NO	GRAPHIC REF	PART NUMBER	QTY	PART NAME 1 2 3 4 5 6 (PRODUCT LEVEL)	SEE PAGE
B	1	1	**7K-1181**	11	STRAP-CABLE	
	2	1	**108-3320**	1	SWITCH AS-ROTARY (24-VOLT) (RUNNING LIGHTS)	
		1	**3E-3389**	1	WEDGE-RECEPTACLE LOCK	
		1	**9W-0852**	8	PIN-CONNECTOR (14-GA)	
		1	**102-8806**	1	KIT-RECEPTACLE (8-PIN)	
					(INCLUDES RECEPTACLE AS & WEDGE)	
	3	1	**110-6109**	1	KNOB-CONTROL (LIGHT SWITCH)	
	4	1	**115-1748**	2	LAMP (24-VOLT, 3-WATT)	
B	5	1	**165-0311**	2	PLUG	
	6	1	**172-2309**	1	HARNESS AS-CAB (SHELL)	
		1	**8L-8413**	1	STRAP-CABLE	
		1	**102-8801**	1	KIT-RECEPTACLE (12-PIN)	
					(INCLUDES RECEPTACLE AS & WEDGE)	
		1	**155-2271**	1	KIT-CONNECTING PLUG (4-PIN)	
					(INCLUDES PLUG AS, WEDGE & INTERFACE SEAL)	
	7	1	**185-2766**	1	SWITCH AS-ROCKER (AUTOSHIFT CONTROL)	
		1	**111-7899**	1	GASKET	
	8	1	**185-2769**	1	SWITCH AS-ROCKER (XMSN NEUTRALIZER OVERRIDE CONT)	
		1	**111-7899**	1	GASKET	
	9	1	**190-4558**	1	PLATE AS	
	10	1	**190-4559**	1	PLATE AS	
	11	1	**201-1024**	1	BRACKET	
	12	1	**204-0359**	1	FILM-PANEL (RH)	
	13	1	**211-0052**	1	NUT (11/16-18-THD)	
	14	1	**237-3856**	1	FILM-PANEL (LH)	
	15	1	**251-2368**	1	HARNESS AS-CAB (MAIN)	
		1	**8L-8413**	31	STRAP-CABLE	
		1	**102-8805**	1	KIT-RECEPTACLE (6-PIN)	
					(INCLUDES RECEPTACLE AS & WEDGE)	
		1	**155-2265**	3	KIT-CONNECTING PLUG (8-PIN)	
		1	**155-2274**	2	KIT-CONNECTING PLUG (6-PIN)	
					(EACH PLUG KIT INCLUDES PLUG AS, WEDGE & INTERFACE SEAL)	
		1	**167-3692**	1	RECEPTACLE AS-CONNECTOR (31-PIN)	
	16	1	**4P-7581**	1	CLIP	
	17	1	**4P-8134**	1	CLIP	
	18	1	**6D-4244**	1	CLIP	
	19	1	**8T-4121**	1	WASHER-HARD (11X21X2.5-MM THK)	
M	20	1	**8T-4133**	1	NUT (M10X1.5-THD)	
M	21	1	**8T-4199**	2	BOLT (M8X1.25X12-MM)	
	22	1	**8T-4224**	3	WASHER-HARD (8.8X16X2-MM THK)	
M	23	1	**8T-4908**	1	BOLT (M8X1.25X25-MM)	
	24	1	**9W-0335**	1	LIGHTER AS-CIGAR (24-VOLT)	
M	25	1	**9X-1046**	8	SCREW (M4X0.7X18-MM)	
BD	26	1	**5P-6038**		WRAP (SPIRAL)	

B-USE AS REQUIRED
D-ORDER BY THE METER
M-METRIC PART

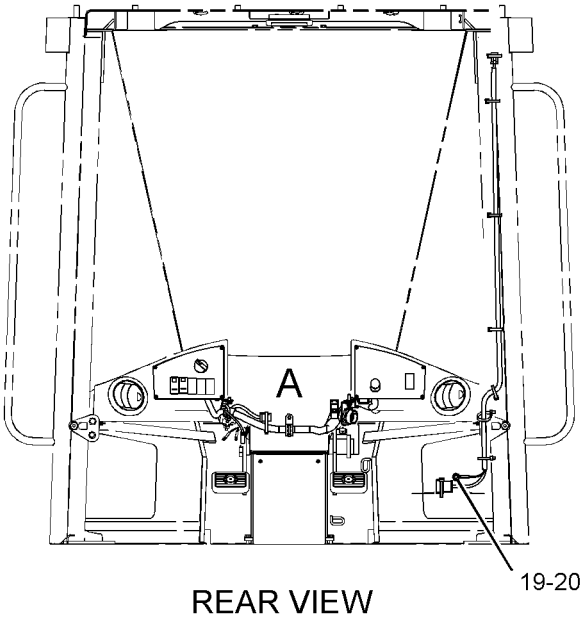

REAR VIEW

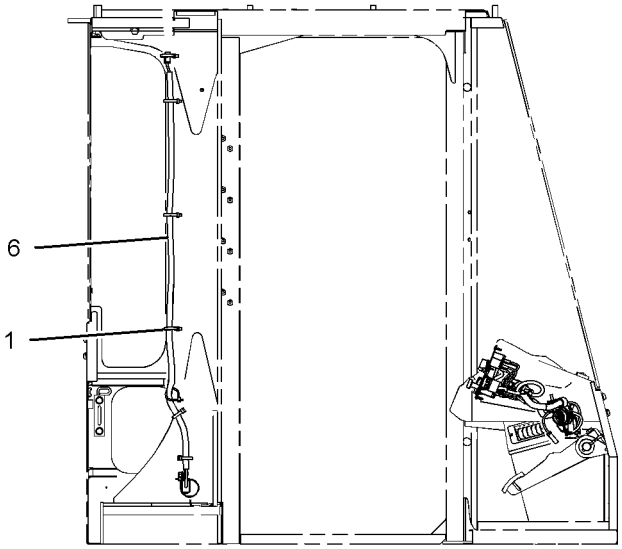

RIGHT SIDE VIEW

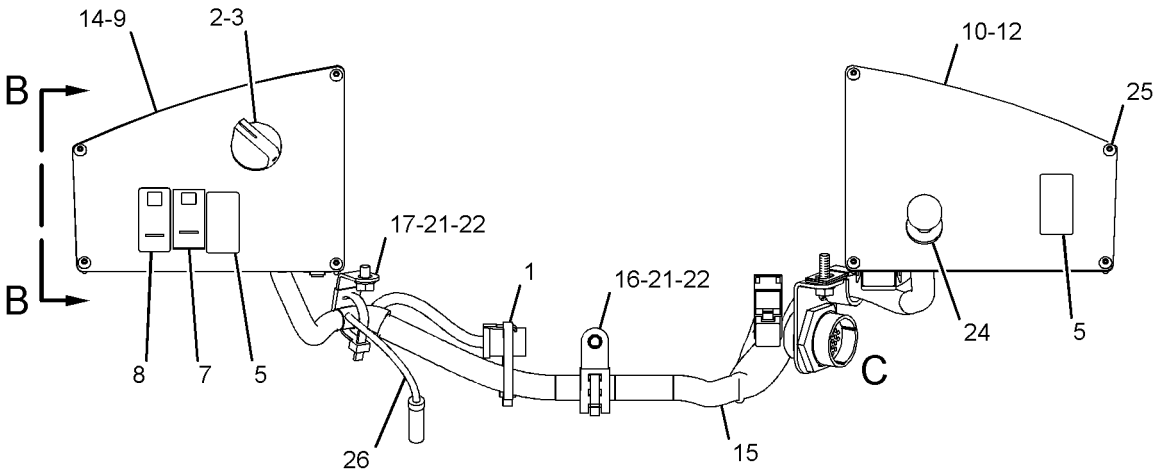

VIEW OF AREA A

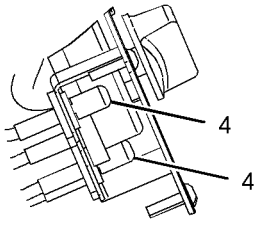

VIEW B-B

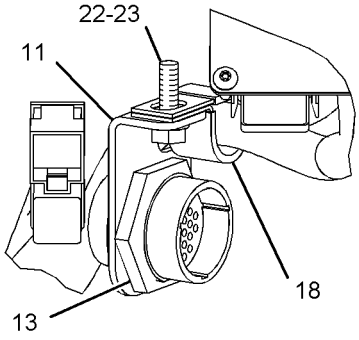

VIEW OF AREA C

GRAPHIC #1 **<END>** g01119558

233-6563 WIRING GP-CAB–OPEN ROPS

S/N: TWR293-2211
PART OF 240-7103 OPERATOR AR-OPEN ROPS
AN ATTACHMENT

SMCS-1408, 7301 **i02595393**

NOTE	REF NO	GRAPHIC REF	PART NUMBER	QTY	PART NAME 1 2 3 4 5 6 (PRODUCT LEVEL)	SEE PAGE
B	1	1	**7K-1181**	11	STRAP-CABLE	
	2	1	**108-3320**	1	SWITCH AS-ROTARY (24-VOLT) (RUNNING LIGHTS)	
		1	**3E-3389**	1	WEDGE-RECEPTACLE LOCK	
		1	**9W-0852**	8	PIN-CONNECTOR (14-GA)	
		1	**102-8806**	1	KIT-RECEPTACLE (8-PIN)	
					(INCLUDES RECEPTACLE AS & WEDGE)	
	3	1	**110-6109**	1	KNOB-CONTROL (LIGHT SWITCH)	
	4	1	**115-1748**	2	LAMP (24-VOLT, 3-WATT)	
B	5	1	**165-0311**	2	PLUG	
	6	1	**172-2309**	1	HARNESS AS-CAB (SHELL)	
		1	**8L-8413**	1	STRAP-CABLE	
		1	**102-8801**	1	KIT-RECEPTACLE (12-PIN)	
					(INCLUDES RECEPTACLE AS & WEDGE)	
		1	**155-2271**	1	KIT-CONNECTING PLUG (4-PIN)	
					(INCLUDES PLUG AS, WEDGE & INTERFACE SEAL)	
	7	1	**185-2766**	1	SWITCH AS-ROCKER (AUTOSHIFT CONTROL)	
		1	**111-7899**	1	GASKET	
C	8	1	**250-8115**	1	SWITCH AS-ROCKER (XMSN NEUTRALIZER OVERRIDE CONT)	
		1	**111-7899**	1	GASKET	
	9	1	**190-4558**	1	PLATE AS	
	10	1	**190-4559**	1	PLATE AS	
	11	1	**201-1024**	1	BRACKET	
	12	1	**204-0359**	1	FILM-PANEL (RH)	
	13	1	**211-0052**	1	NUT (11/16-18-THD)	
	14	1	**237-3856**	1	FILM-PANEL (LH)	
	15	1	**251-2368**	1	HARNESS AS-CAB (MAIN)	
		1	**8L-8413**	31	STRAP-CABLE	
		1	**102-8805**	1	KIT-RECEPTACLE (6-PIN)	
					(INCLUDES RECEPTACLE AS & WEDGE)	
		1	**155-2265**	3	KIT-CONNECTING PLUG (8-PIN)	
		1	**155-2274**	2	KIT-CONNECTING PLUG (6-PIN)	
					(EACH PLUG KIT INCLUDES PLUG AS, WEDGE & INTERFACE SEAL)	
		1	**167-3692**	1	RECEPTACLE AS-CONNECTOR (31-PIN)	
	16	1	**4P-7581**	1	CLIP	
	17	1	**4P-8134**	1	CLIP	
	18	1	**6D-4244**	1	CLIP	
	19	1	**8T-4121**	1	WASHER-HARD (11X21X2.5-MM THK)	
M	20	1	**8T-4133**	1	NUT (M10X1.5-THD)	
M	21	1	**8T-4199**	2	BOLT (M8X1.25X12-MM)	
	22	1	**8T-4224**	3	WASHER-HARD (8.8X16X2-MM THK)	
M	23	1	**8T-4908**	1	BOLT (M8X1.25X25-MM)	
	24	1	**9W-0335**	1	LIGHTER AS-CIGAR (24-VOLT)	
M	25	1	**9X-1046**	8	SCREW (M4X0.7X18-MM)	
BD	26	1	**5P-6038**		WRAP (SPIRAL)	

B-USE AS REQUIRED
C-CHANGE FROM PREVIOUS TYPE
D-ORDER BY THE METER
M-METRIC PART

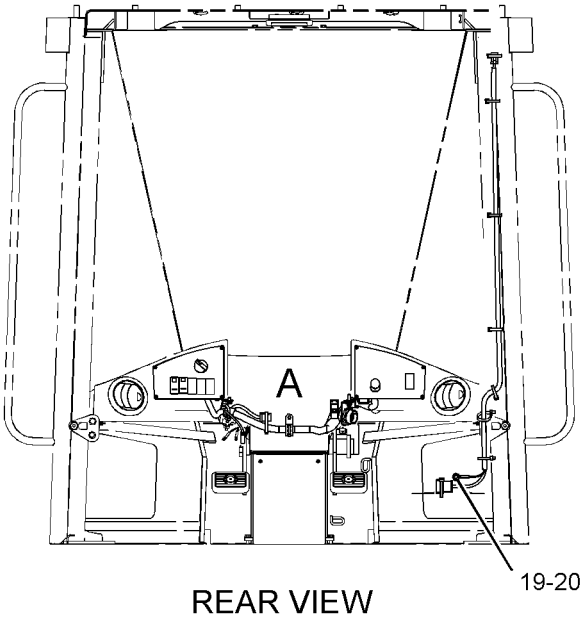

REAR VIEW

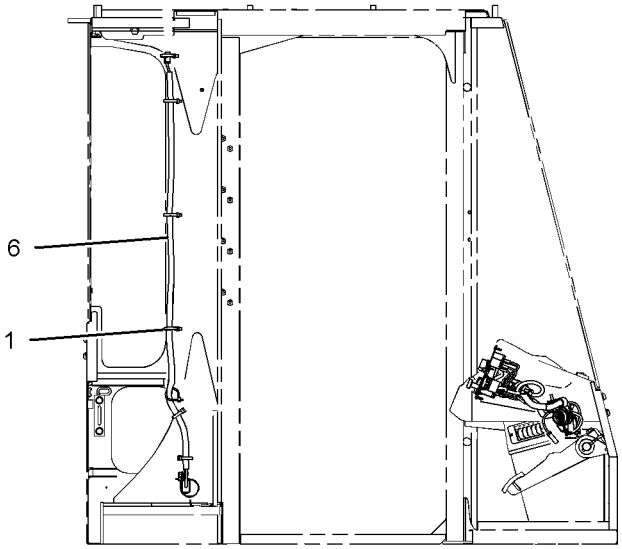

RIGHT SIDE VIEW

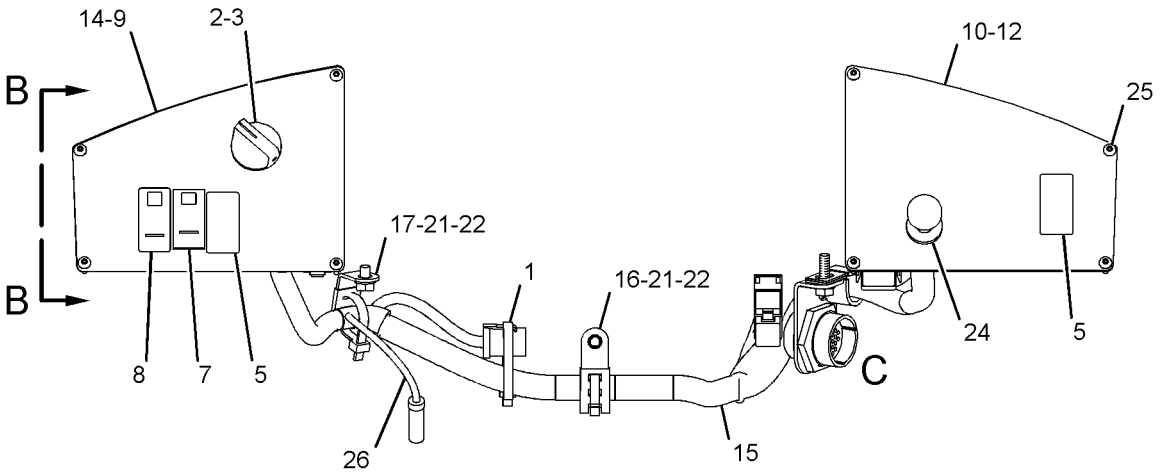

VIEW OF AREA A

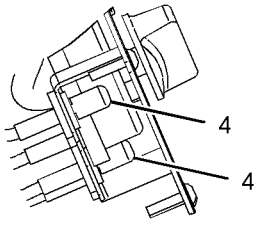

VIEW B-B

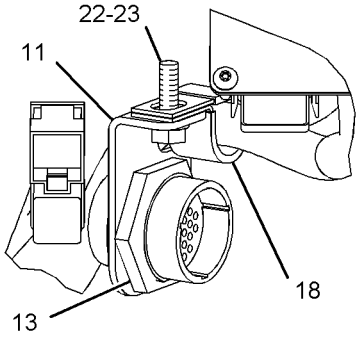

VIEW OF AREA C

GRAPHIC #1 **<END>** g01119558

233-6563 WIRING GP-CAB—OPEN ROPS

S/N: TWR2212-UP

PART OF 240-7103 OPERATOR AR-OPEN ROPS

AN ATTACHMENT

SMCS-1408, 7301 **i02595392**

NOTE	REF NO	GRAPHIC REF	PART NUMBER	QTY	PART NAME 1 2 3 4 5 6 (PRODUCT LEVEL)	SEE PAGE
B	1	1	**7K-1181**	11	STRAP-CABLE	
	2	1	**108-3320**	1	SWITCH AS-ROTARY (24-VOLT) (RUNNING LIGHTS)	
		1	**3E-3389**	1	WEDGE-RECEPTACLE LOCK	
		1	**9W-0852**	8	PIN-CONNECTOR (14-GA)	
		1	**102-8806**	1	KIT-RECEPTACLE (8-PIN)	
					(INCLUDES RECEPTACLE AS & WEDGE)	
	3	1	**110-6109**	1	KNOB-CONTROL (LIGHT SWITCH)	
	4	1	**115-1748**	2	LAMP (24-VOLT, 3-WATT)	
B	5	1	**165-0311**	2	PLUG	
	6	1	**172-2309**	1	HARNESS AS-CAB (SHELL)	
		1	**2L-8081**	1	TERMINAL (14-GA TO 16-GA)	
		1	**8L-8413**	1	STRAP-CABLE	
		1	**102-8801**	1	KIT-RECEPTACLE (12-PIN)	
					(INCLUDES RECEPTACLE AS & WEDGE)	
		1	**155-2271**	1	KIT-CONNECTING PLUG (4-PIN)	
					(INCLUDES PLUG AS, WEDGE & INTERFACE SEAL)	
	7	1	**185-2766**	1	SWITCH AS-ROCKER (AUTOSHIFT CONTROL)	
	8	1	**250-8115**	1	SWITCH AS-ROCKER (XMSN NEUTRALIZER OVERRIDE CONT)	
	9	1	**190-4558**	1	PLATE AS	
	10	1	**190-4559**	1	PLATE AS	
	11	1	**201-1024**	1	BRACKET	
	12	1	**204-0359**	1	FILM-PANEL (RH)	
	13	1	**211-0052**	1	NUT (11/16-18-THD)	
	14	1	**237-3856**	1	FILM-PANEL (LH)	
	15	1	**251-2368**	1	HARNESS AS-CAB (MAIN)	
		1	**5P-6271**	1	CONNECTOR AS	
		1	**091-2436**	29	TERMINAL-BLADE	
		1	**104-1995**	2	TERMINAL-BLADE	
		1	**110-0203**	1	CONNECTOR AS	
		1	**113-5183**	4	SOCKET-LAMP	
		1	**113-5184**	8	TERMINAL-RECEPTACLE	
E		1	**119-3662**		TUBE-HEAT SHRINK (10.85-MM DIA) (20-CM)	
		1	**122-4401**	5	TERMINAL	
E		1	**125-7874**		TUBE-HEAT SHRINK (5.72-MM DIA) (5-CM)	
E		1	**125-7875**		TUBE-HEAT SHRINK (7.44-MM DIA) (5-CM)	
B		1	**141-8061**		TAPE	
		1	**8L-8413**	31	STRAP-CABLE	
		1	**102-8805**	1	KIT-RECEPTACLE (6-PIN)	
					(INCLUDES RECEPTACLE AS & WEDGE)	
		1	**155-2265**	3	KIT-CONNECTING PLUG (8-PIN)	
		1	**155-2274**	2	KIT-CONNECTING PLUG (6-PIN)	
					(EACH PLUG KIT INCLUDES PLUG AS, WEDGE & INTERFACE SEAL)	
		1	**167-3692**	1	RECEPTACLE AS-CONNECTOR (31-PIN)	
	16	1	**4P-7581**	1	CLIP (LADDER)	
	17	1	**4P-8134**	1	CLIP (LADDER)	
	18	1	**6D-4244**	1	CLIP	
	19	1	**8T-4121**	1	WASHER-HARD (11X21X2.5-MM THK)	
M	20	1	**8T-4133**	1	NUT (M10X1.5-THD)	
M	21	1	**8T-4199**	2	BOLT (M8X1.25X12-MM)	
	22	1	**8T-4224**	3	WASHER-HARD (8.8X16X2-MM THK)	
M	23	1	**8T-4908**	1	BOLT (M8X1.25X25-MM)	
	24	1	**9W-0335**	1	LIGHTER AS-CIGAR (24-VOLT)	
M	25	1	**9X-1046**	8	SCREW (M4X0.7X18-MM)	

233-6563 **WIRING GP-CAB** ***(contd.)*** **i02595392**

NOTE	REF NO	GRAPHIC REF	PART NUMBER	QTY	PART NAME 1 2 3 4 5 6 (PRODUCT LEVEL)	SEE PAGE
D	26	1	**5P-6038**		WRAP (SPIRAL) (0.2-M)	
C	27	1	**204-6101**	8	WASHER-HARD (5.3X10X1-MM THK)	

B-USE AS REQUIRED
C-CHANGE FROM PREVIOUS TYPE
D-ORDER BY THE METER
E-ORDER BY THE CENTIMETER
M-METRIC PART

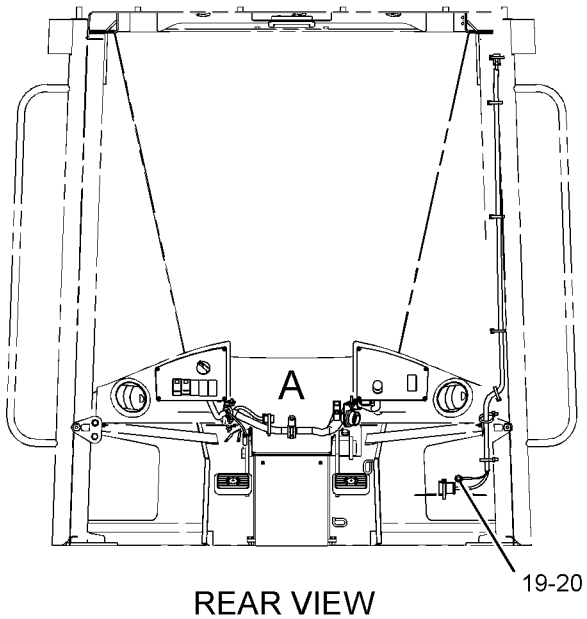

REAR VIEW

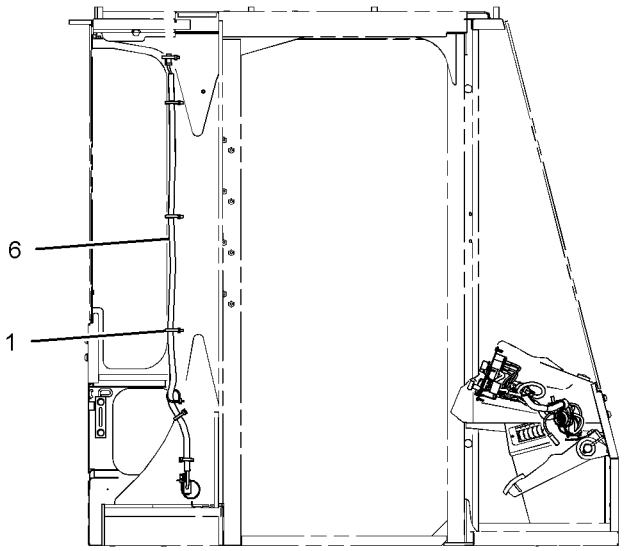

RIGHT SIDE VIEW

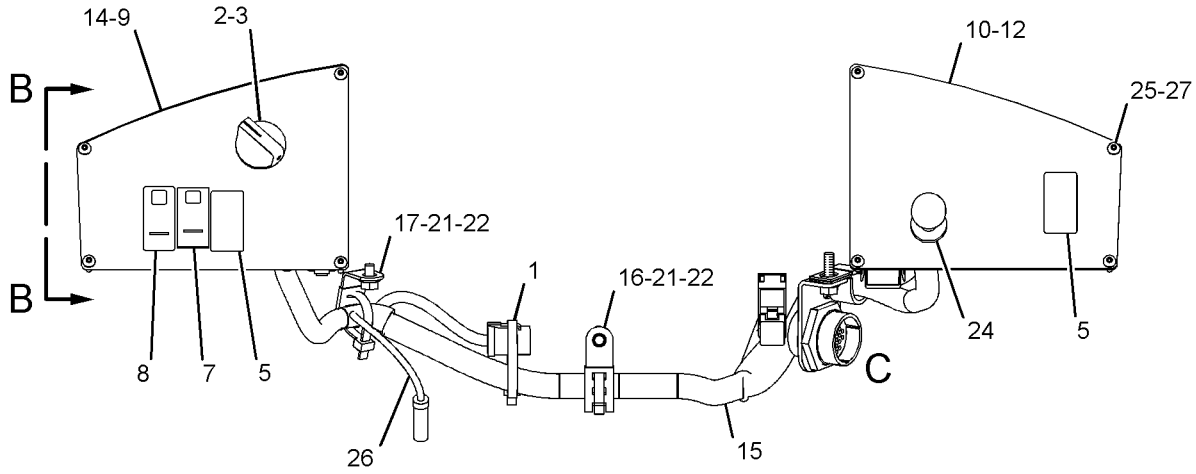

VIEW OF AREA A

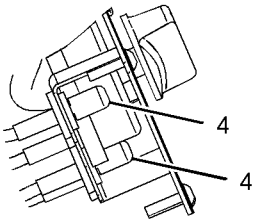

VIEW B-B

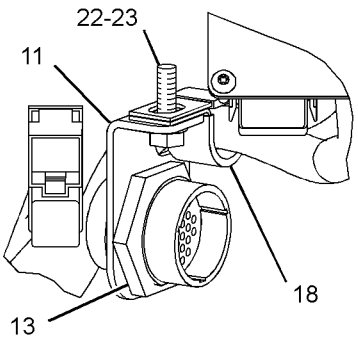

VIEW OF AREA C

GRAPHIC #1 **<END>** g01296921

256-7269 WIRING GP-CAMERA–REAR CHASSIS

S/N: TWR1-UP
PART OF 256-7264 CAMERA AR
AN ATTACHMENT

SMCS-1408, 7348 **i02353612**

NOTE	REF NO	GRAPHIC REF	PART NUMBER	QTY	PART NAME 1 2 3 4 5 6 (PRODUCT LEVEL)	SEE PAGE
	1	1	**251-4160**	1	CAMERA GP (115-DEG, COLOR)	
	2	1	**251-8248**	2	CABLE AS-COMMUNICATION (CAMERA)	
	3	1	**3S-2093**	25	STRAP-CABLE	

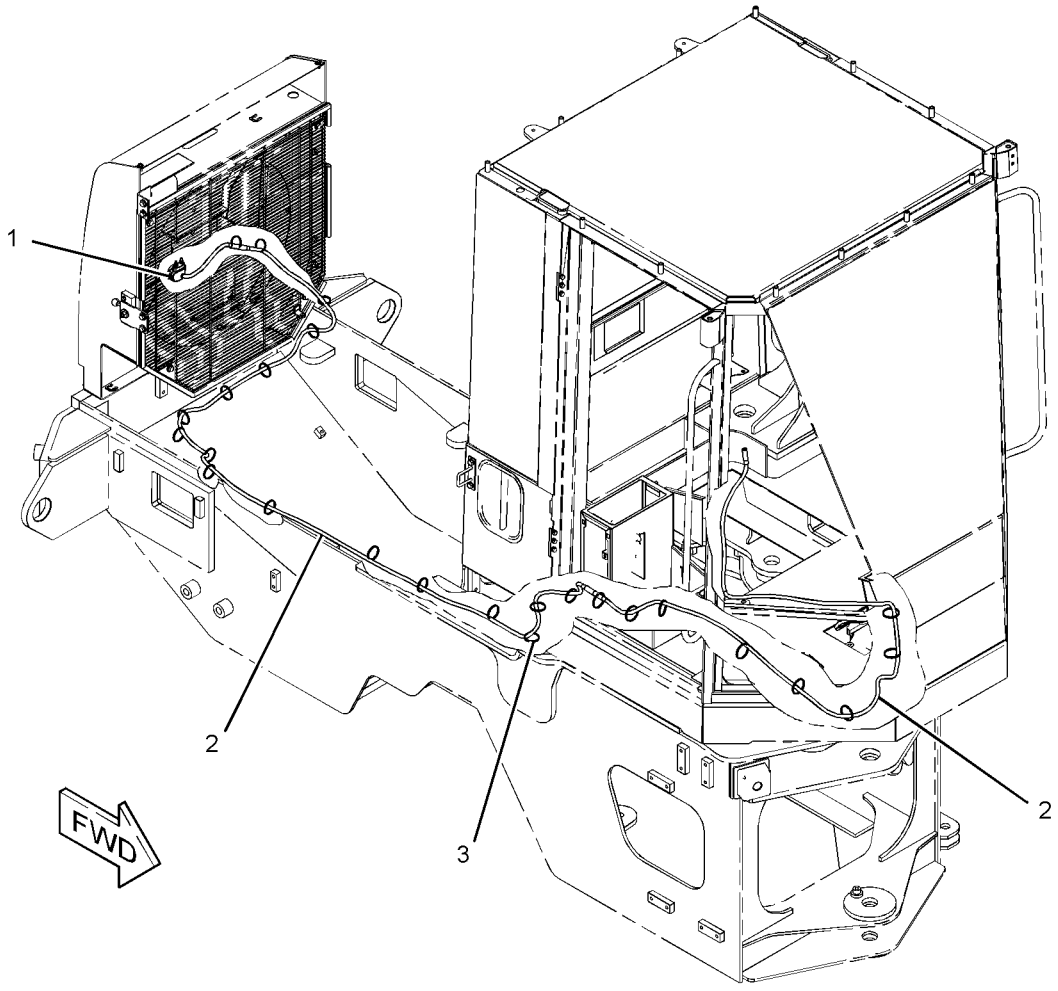

GRAPHIC #1 **<END>** g01181282

256-7270 WIRING GP-CAMERA–CAB

S/N: TWR1-UP
PART OF 256-7264 CAMERA AR
AN ATTACHMENT

SMCS-1408, 7348 **i02353623**

NOTE	REF NO	GRAPHIC REF	PART NUMBER	QTY	PART NAME 1 2 3 4 5 6 (PRODUCT LEVEL)	SEE PAGE
	1	1	**031-5644**	7	CLIP	
	2	1	**261-3224**	1	MODULE GP-DISPLAY (WAVES)	
		1	**8T-8737**	1	PLUG-SEAL	
		1	**102-8805**	1	KIT-RECEPTACLE (6-PIN)	
					(INCLUDES RECEPTACLE AS & WEDGE)	
		1	**186-3735**	5	PIN-CONNECTOR (16-GA TO 18-GA)	
	3	1	**263-4869**	1	HARNESS AS-POWER	
		1	**2L-8081**	1	TERMINAL (14-GA TO 16-GA)	
		1	**155-2274**	1	KIT-CONNECTING PLUG (6-PIN)	
					(INCLUDES PLUG AS, WEDGE & INTERFACE SEAL)	
		1	**102-8803**	1	KIT-RECEPTACLE (3-PIN)	
					(INCLUDES RECEPTACLE AS & WEDGE)	

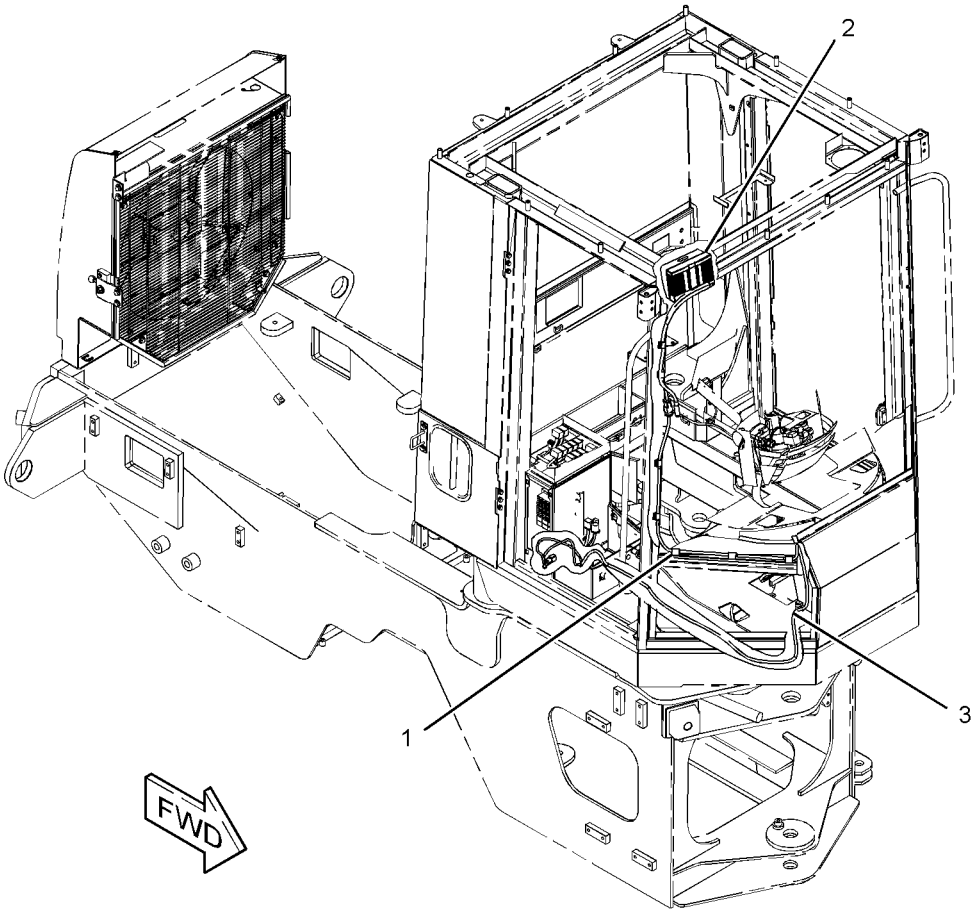

GRAPHIC #1 **<END>** g01181195

189-4870 WIRING GP-COMMUNICATION—PRODUCT LINK 201

S/N: TWR1-UP

AN ATTACHMENT

SMCS-1408, 7606 **i02595386**

NOTE	REF NO	GRAPHIC REF	PART NUMBER	QTY	PART NAME 1 2 3 4 5 6 (PRODUCT LEVEL)	SEE PAGE
	1	1	**7K-1181**	7	STRAP-CABLE	
	2	1	**9R-4750**	1	BOSS (19.76X20X28-MM THK)	
B	3	1	**031-5644**	6	CLIP	
	4	1	**190-4564**	1	PLATE AS	
		1	**2M-7077**	4	SPACER (0.406X0.62X0.37-IN THK)	
M		1	**6V-9632**	3	NUT-WELD (M6X1-THD)	
	5	1	**207-6796**	1	ANTENNA AS (FLEXIBLE)	
	6	1	**218-2439**	1	HARNESS AS-CONTROL (PRODUCT LINK)	
		1	**7X-6222**	1	PLUG AS-CONNECTOR (24-PIN)	
		1	**102-8805**	1	KIT-RECEPTACLE (6-PIN)	
		1	**102-8806**	1	KIT-RECEPTACLE (8-PIN)	
					(EACH RECEPTACLE KIT INCLUDES RECEPTACLE AS & WEDGE)	
		1	**155-2265**	1	KIT-CONNECTING PLUG (8-PIN)	
					(INCLUDES PLUG AS, WEDGE & INTERFACE SEAL)	
	7	1	**226-3681**	1	PLATE	
	8	1	**230-1340**	1	FILM-WARNING (PRODUCT LINK RADIO, U.S.)	
CY	9	1	**242-7205**	1	CONTROL GP-COMMUNICATION (PRODUCT LINK 201)	142
M	10	1	**8T-4138**	3	BOLT (M6X1X20-MM)	
M	11	1	**8T-4194**	1	BOLT (M12X1.75X50-MM)	
	12	1	**8T-4223**	1	WASHER-HARD (13.5X25.5X3-MM THK)	
M	13	1	**8T-4971**	4	BOLT (M6X1X30-MM)	
	14	1	**9X-8256**	7	WASHER (6.6X12X2-MM THK)	

B-USE AS REQUIRED
C-CHANGE FROM PREVIOUS TYPE
M-METRIC PART
Y-SEPARATE ILLUSTRATION

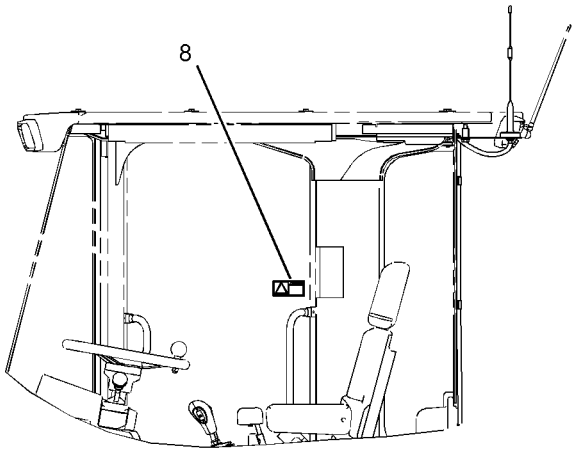

LEFT SIDE VIEW

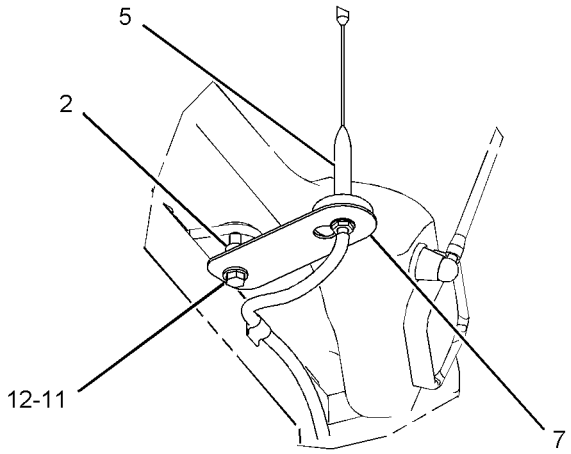

VIEW OF AREA A

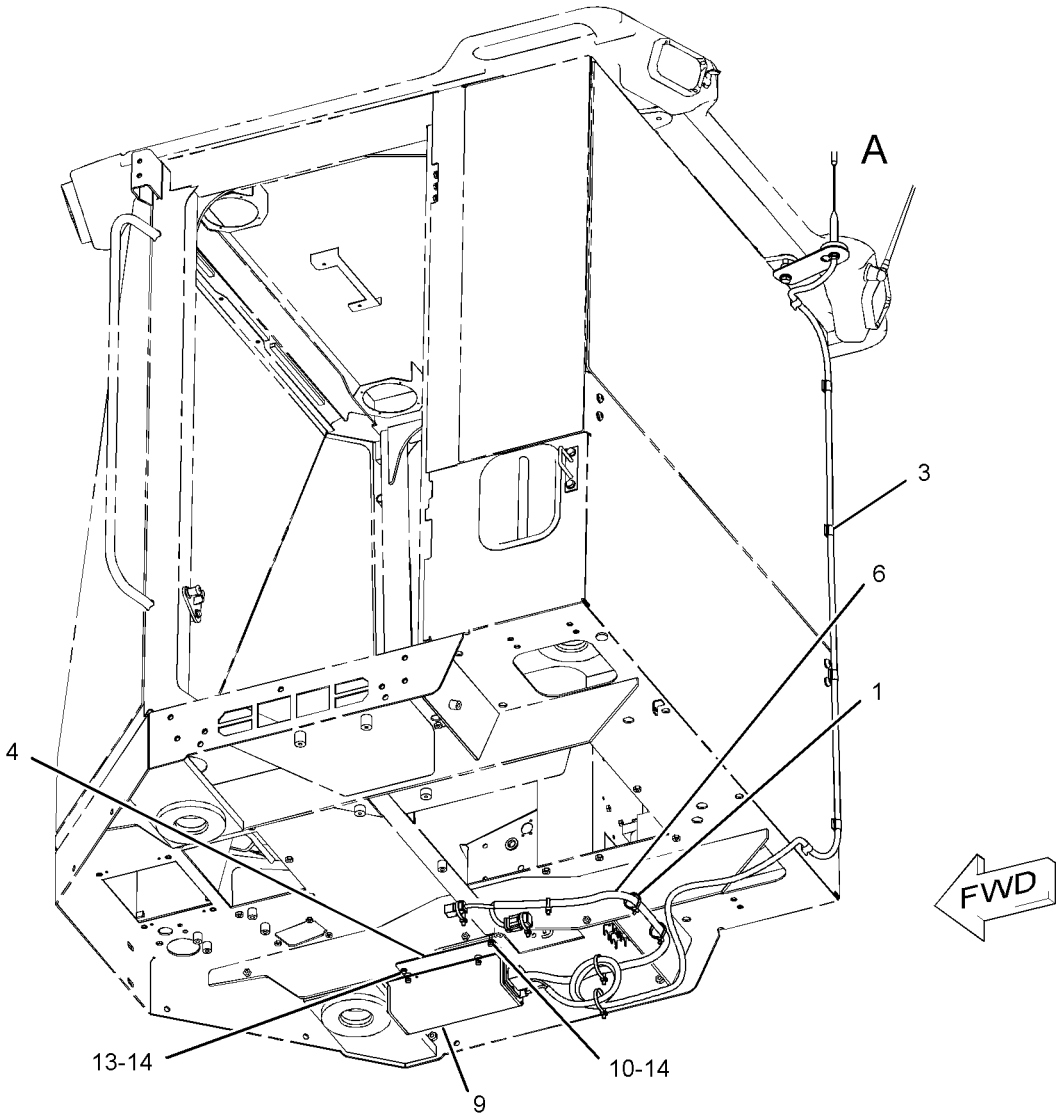

GRAPHIC #1

<END>

g01142977

258-0807 WIRING GP-ELECTRONIC CONTROL

S/N: CPT1-UP
PART OF 254-2236, 295-9744 ENGINE AR-PRIMARY
ALSO AN ATTACHMENT

SMCS-1408 **i03276358**

NOTE	REF NO	GRAPHIC REF	PART NUMBER	QTY	PART NAME 1 2 3 4 5 6 (PRODUCT LEVEL)	SEE PAGE
	1	1	**100-4458**	3	BOLT (M8X1.25X14-MM)	
	2	1	**114-4363**	1	BOLT (M8X1.25X12-MM)	
	3	1	**128-4249**	1	LOCKWASHER	
M	4	1	**140-8783**	1	BOLT (M10X45-THD)	
	5	1	**211-0052**	1	NUT (11/16-18-THD)	
	6	1	**216-9086**	1	SPACER (10.5X20X32-MM THK)	
	7	1	**217-8477**	4	CLIP	
	8	1	**217-9038**	3	BOLT (M4X0.7X14-MM)	
	10	1	**226-8778**	1	BRACKET	
	11	1	**226-8780**	1	BRACKET	
	12	1	**228-7477**	1	CLIP	
	13	1	**255-3454**	1	HARNESS AS-ENGINE (ELECTRONIC CONTROL MODULE)	
	14	1	**258-0806**	1	PLATE	

M-METRIC PART

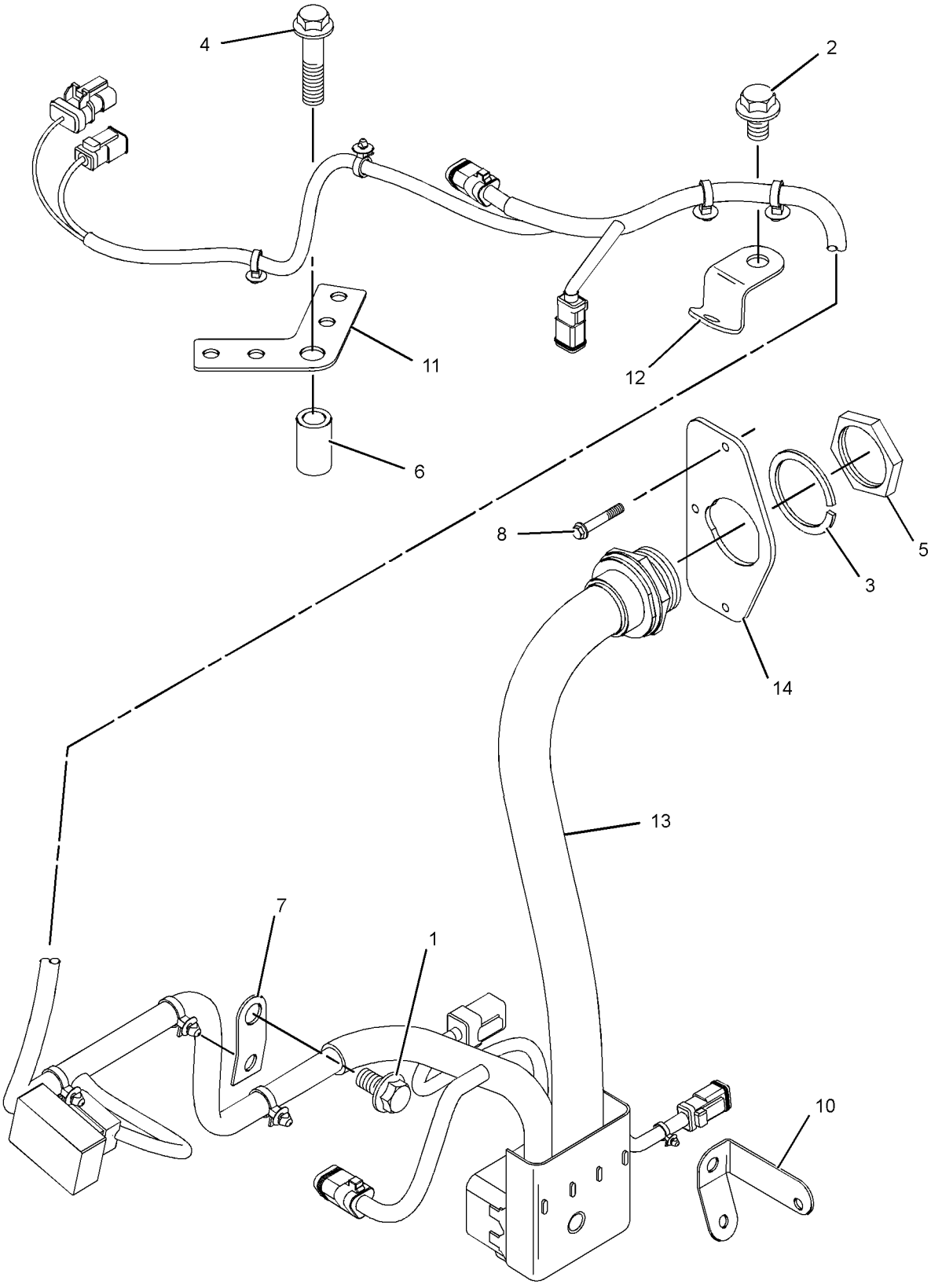

GRAPHIC #1 **<END>** g01361784

180-8801 WIRING GP-ENGINE

S/N: TWR1-2797

PART OF 235-7499 CHASSIS AR

SMCS-1403, 1408 **i03110541**

NOTE	REF NO	GRAPHIC REF	PART NUMBER	QTY	PART NAME 1 2 3 4 5 6 (PRODUCT LEVEL)	SEE PAGE
	1	1	**3E-5239**	1	RELAY AS (24-VOLT) (STARTING AID)	
	1A	1	**3E-5239**	1	RELAY AS (24-VOLT) (FUEL PUMP)	
	2	2	**3S-2093**	5	STRAP-CABLE	
	3	1	**3T-2662**	1	CIRCUIT BREAKER AS (15-AMPERE) (FLOODLIGHTS)	
		1	**6V-8376**	2	SCREW-MACHINE (8-32X0.25-IN)	
		1	**9B-7233**	2	LOCKWASHER	
	4	1,2,3	**7K-1181**	21	STRAP-CABLE	
	5	1	**7W-1251**	1	RESISTOR	
C	6	1	**8T-8827**	4	BOOT	
	7	1	**111-6940**	1	SPACER (13.1X15.9X36.5-MM THK)	
Y	8	1	**118-3534**	1	SWITCH GP-MAGNETIC (24-VOLT) (STARTING RELAY)	188
Y	9	1	**130-9811**	1	SENSOR GP-TEMPERATURE (HYDRAULIC OIL)	180
	10	1	**131-3201**	4	BOOT	
	11	2	**134-2540**	1	RECEPTACLE AS (3-PIN)	
	12	1,2	**135-3327**	2	PLATE AS	
					(EACH INCLUDES)	
M		1,2	**8T-3490**	1	NUT-WELD (M10X1.5-THD)	
	13	1	**143-9542**	1	FILM-IDENTIFICATION (CIRCUIT BREAKER)	
	14	1	**148-5318**	1	FILM-IDENTIFICATION (CIRCUIT BREAKER)	
	15	1	**171-2208**	1	CIRCUIT BREAKER AS (60-AMPERE) (MAIN)	
		1	**253-2111**	2	LOCKWASHER	
		1	**6V-8187**	2	NUT (1/4-28-THD)	
		1	**8T-4205**	2	WASHER-HARD (7.2X14.5X2-MM THK)	
	16	1	**171-2211**	1	CIRCUIT BREAKER AS (90-AMPERE) (ALTERNATOR)	
		1	**253-2111**	2	LOCKWASHER	
		1	**6V-8187**	2	NUT (1/4-28-THD)	
		1	**8T-4205**	2	WASHER-HARD (7.2X14.5X2-MM THK)	
C	17	1	**204-2281**	3	STRAP-TIE	
	18	1	**225-5224**	1	CABLE AS	
BE		1	**8C-3056**		CABLE (02-GA, RED)	
		1	**030-1712**	2	TERMINAL-RING (2-GA, 6.35-MM)	
	19	2	**226-5923**	1	BRACKET	
	20	1	**229-6257**	1	PLATE AS	
C	21	1	**236-4236**	1	HARNESS AS-ENGINE	
		1	**8L-8413**	5	STRAP-CABLE	
		1	**102-8802**	2	KIT-RECEPTACLE (2-PIN)	
		1	**102-8803**	1	KIT-RECEPTACLE (3-PIN)	
					(EACH RECEPTACLE KIT INCLUDES RECEPTACLE AS & WEDGE)	
		1	**155-2255**	1	KIT-CONNECTING PLUG (12-PIN)	
		1	**155-2270**	5	KIT-CONNECTING PLUG (2-PIN)	
		1	**155-2260**	1	KIT-CONNECTING PLUG (3-PIN)	
					(EACH PLUG KIT INCLUDES PLUG AS, WEDGE & INTERFACE SEAL)	
		1	**127-5483**	1	PLUG AS-CONNECTOR (1-PIN)	
		1	**197-7261**	1	PLUG AS-CONNECTOR	
		1	**167-3693**	1	PLUG AS-CONNECTOR (31-PIN)	
		1	**9X-1054**	2	PLUG AS-CONNECTOR (4-PIN)	
C	22	1	**251-6182**	1	WIRE AS	
	23	1	**096-6166**	2	WASHER-HARD (4.5X9X1-MM THK)	
	24	1	**147-1773**	1	CIRCUIT BREAKER AS (30-AMPERE) (AUXILIARY)	
		1	**6V-8378**	2	NUT (10-32-THD)	
		1	**8F-1434**	2	LOCKWASHER	
		1	**8T-0328**	2	WASHER-HARD (5.5X10X1-MM THK)	
C	25	1	**204-8000**	3	MOUNT (TIE WRAP)	
	26	1	**3K-0360**	1	SEAL-O-RING	

180-8801 **WIRING GP-ENGINE** ***(contd.)*** **i03110541**

NOTE	REF NO	GRAPHIC REF	PART NUMBER	QTY	PART NAME 1 2 3 4 5 6 (PRODUCT LEVEL)	SEE PAGE
	27	2,3	**3S-8665**	2	CLIP	
	28	1	**4B-4274**	4	WASHER (5.5X13X1.2-MM THK)	
	29	1	**4B-4863**	4	WASHER (4.7X11X1.2-MM THK)	
	30	1,2,3	**4P-7581**	10	CLIP	
	31	1,2,3	**4P-8134**	5	CLIP	
	32	1	**5P-4965**	4	SCREW-MACHINE (10-32X1-IN)	
	33	1	**6V-7345**	4	SCREW-MACHINE (8-32X0.875-IN)	
CM	34	1	**8T-0269**	1	BOLT-SOCKET HEAD (M6X1X20-MM)	
	35	1,2,3	**8T-4121**	11	WASHER-HARD (11X21X2.5-MM THK)	
M	36	1	**8T-4133**	1	NUT (M10X1.5-THD)	
M	37	1	**8T-4136**	4	BOLT (M10X1.5X25-MM)	
M	38	1	**8T-4137**	1	BOLT (M10X1.5X20-MM)	
M	39	1	**8T-4171**	4	BOLT (M6X1X12-MM)	
M	40	1	**8T-4186**	1	BOLT (M10X1.5X40-MM)	
M	41	2	**8T-4189**	1	BOLT (M8X1.25X20-MM)	
M	42	2,3	**8T-4191**	3	BOLT (M10X1.5X16-MM)	
M	43	1,2	**8T-4192**	2	BOLT (M12X1.75X25-MM)	
M	44	2	**8T-4195**	1	BOLT (M10X1.5X30-MM)	
M	45	1	**8T-4197**	1	BOLT (M8X1.25X40-MM)	
M	46	1,3	**8T-4200**	5	BOLT (M8X1.25X16-MM)	
C	47	1	**8T-4205**	1	WASHER-HARD (7.2X14.5X2-MM THK)	
	48	1,2	**8T-4223**	2	WASHER-HARD (13.5X25.5X3-MM THK)	
	49	1,2,3	**8T-4224**	8	WASHER-HARD (8.8X16X2-MM THK)	
M	50	1	**8T-6912**	1	BOLT (M8X1.25X50-MM)	
M	51	1	**8T-7852**	2	BOLT (M4X0.7X10-MM)	
	52	2,3	**9M-4972**	2	CLIP	
C	53	1	**9X-8256**	4	WASHER (6.6X12X2-MM THK)	

B-USE AS REQUIRED
C-CHANGE FROM PREVIOUS TYPE
E-ORDER BY THE CENTIMETER
M-METRIC PART
Y-SEPARATE ILLUSTRATION

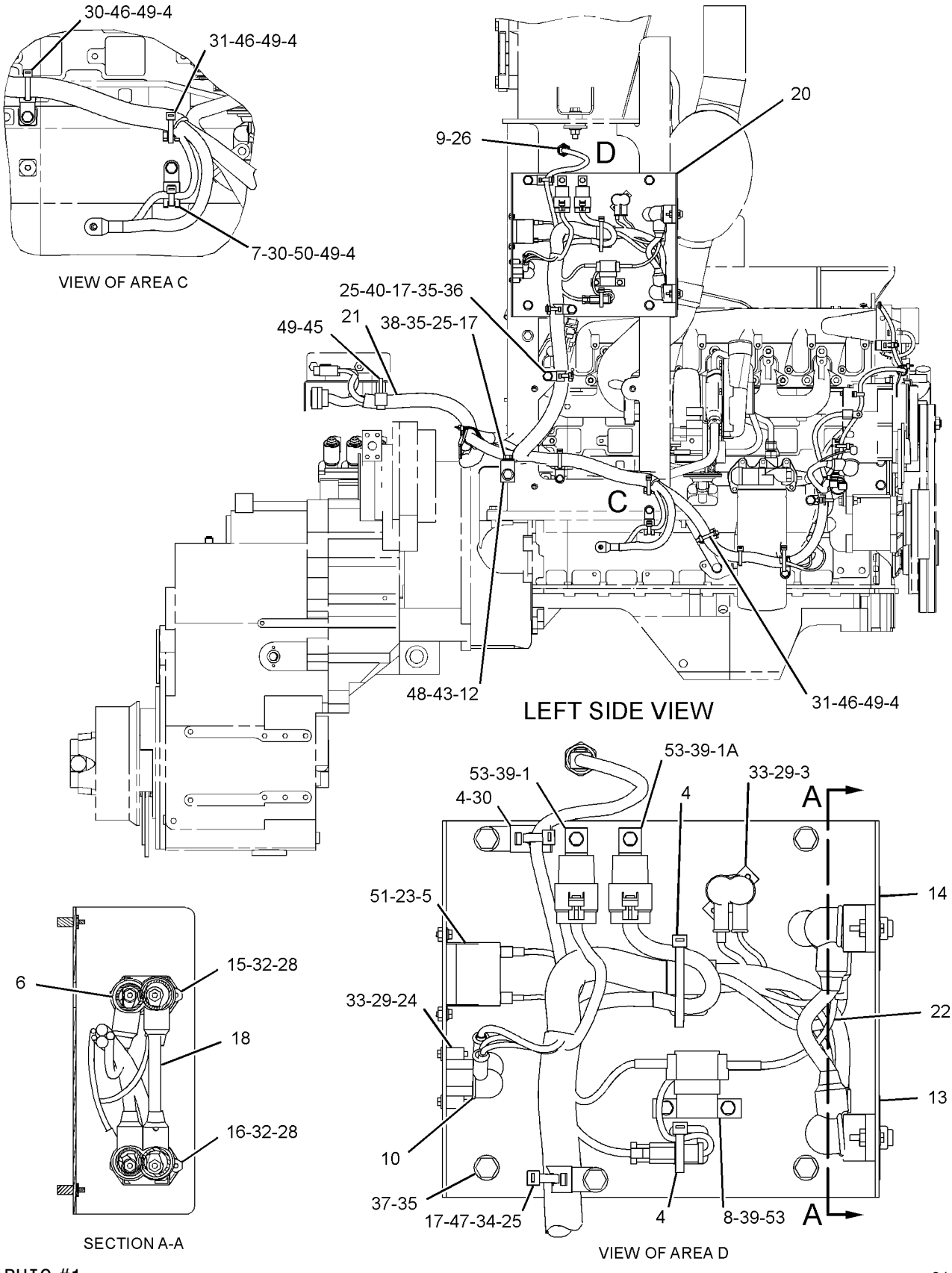

GRAPHIC #1 g01306547

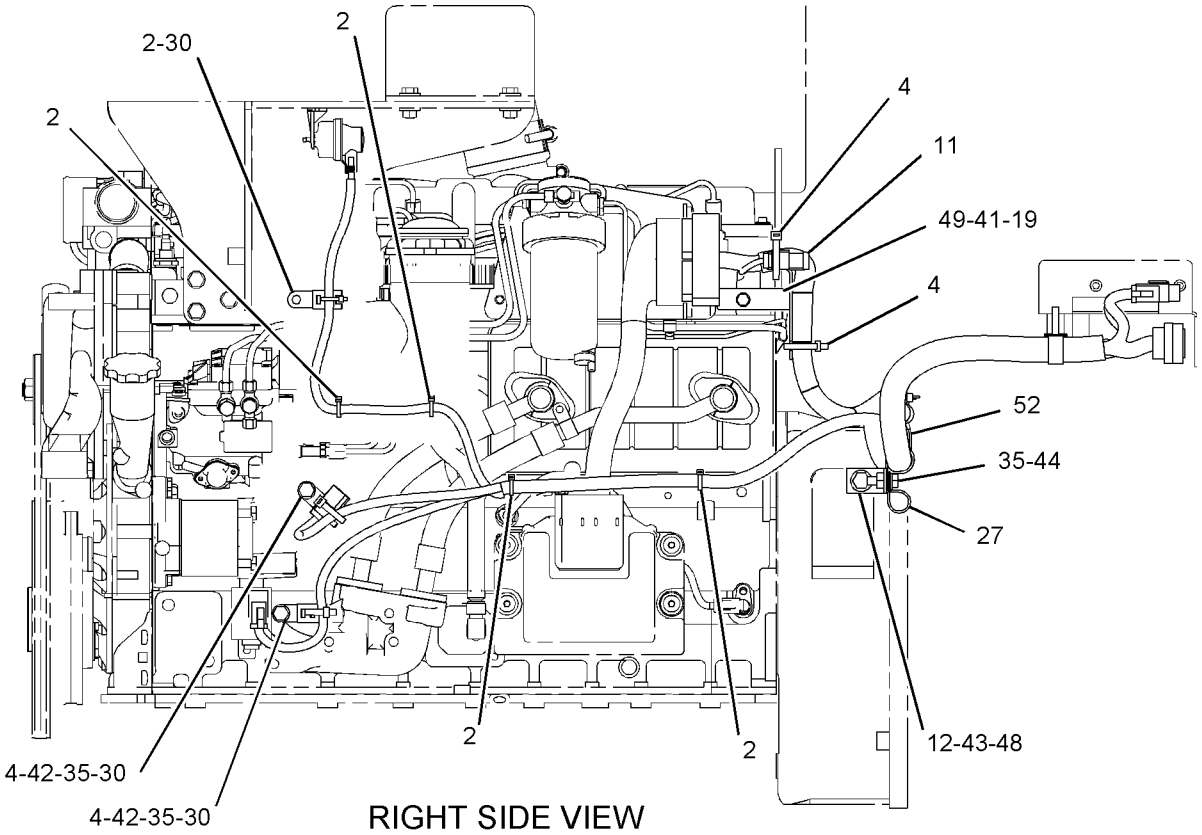

RIGHT SIDE VIEW

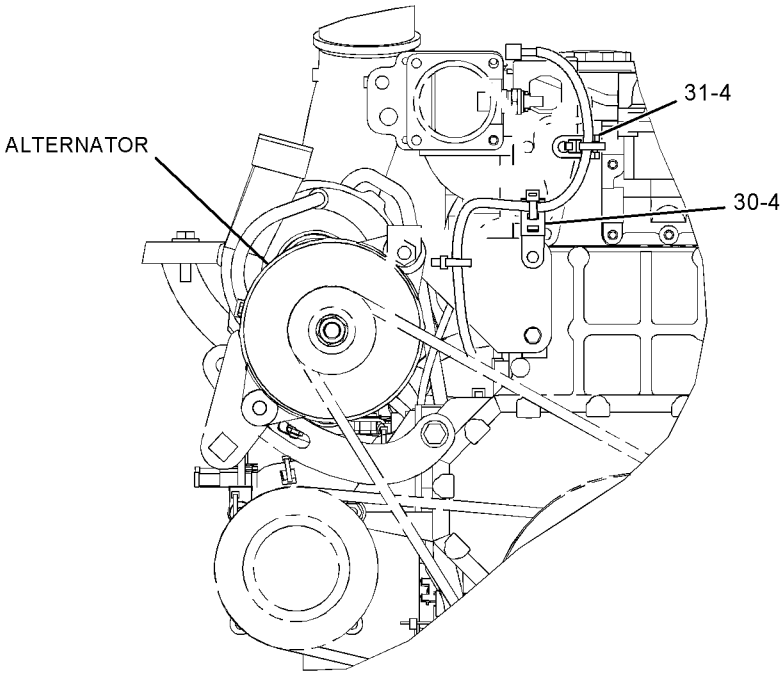

REAR VIEW

GRAPHIC #2

g01118041

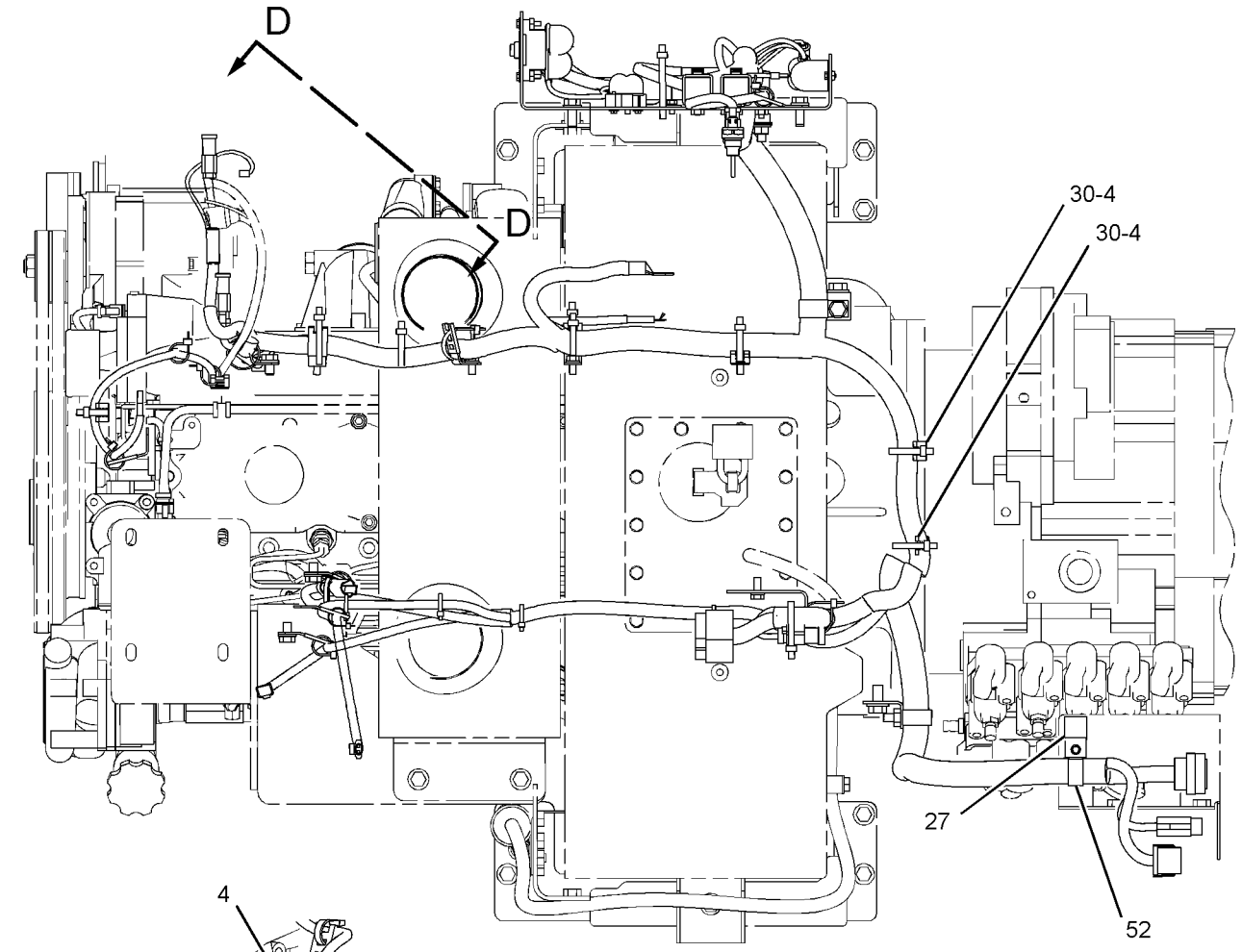

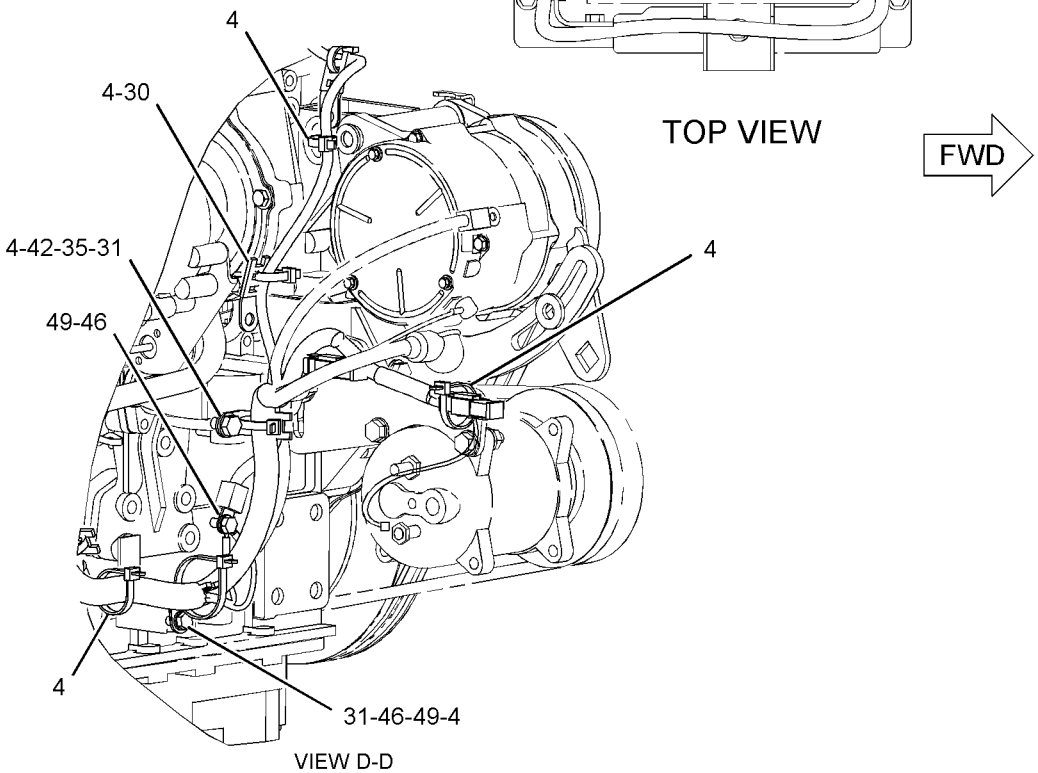

TOP VIEW

FWD

VIEW D-D

GRAPHIC #3 **<END>** g01118042

180-8801 WIRING GP-ENGINE

S/N: TWR2798-2811

PART OF 235-7499 CHASSIS AR

SMCS-1403, 1408 **i03110544**

NOTE	REF NO	GRAPHIC REF	PART NUMBER	QTY	PART NAME 1 2 3 4 5 6 (PRODUCT LEVEL)	SEE PAGE
	1	1	**3E-5239**	1	RELAY AS (24-VOLT) (STARTING AID)	
	2	1	**3E-5239**	1	RELAY AS (24-VOLT) (FUEL PUMP)	
	3	1	**3T-2662**	1	CIRCUIT BREAKER AS (15-AMPERE) (FLOODLIGHTS)	
		1	**6V-8376**	2	SCREW-MACHINE (8-32X0.25-IN)	
		1	**9B-7233**	2	LOCKWASHER	
	4	1,2	**7K-1181**	21	STRAP-CABLE	
	5	1	**7W-1251**	1	RESISTOR	
	6	1	**8T-8827**	4	BOOT	
	7	1	**111-6940**	1	SPACER (13.1X15.9X36.5-MM THK)	
Y	8	1	**118-3534**	1	SWITCH GP-MAGNETIC (24-VOLT) (STARTING RELAY)	188
Y	9	1	**130-9811**	1	SENSOR GP-TEMPERATURE (HYDRAULIC OIL)	180
	10	1	**131-3201**	4	BOOT	
	11	2	**134-2540**	1	RECEPTACLE AS (3-PIN)	
	12	2	**135-3327**	2	PLATE AS	
					(EACH INCLUDES)	
M		2	**8T-3490**	1	NUT-WELD (M10X1.5-THD)	
	13	1	**143-9542**	1	FILM-IDENTIFICATION (CIRCUIT BREAKER)	
	14	1	**148-5318**	1	FILM-IDENTIFICATION (CIRCUIT BREAKER)	
	15	1	**171-2208**	1	CIRCUIT BREAKER AS (60-AMPERE) (MAIN)	
		1	**253-2111**	2	LOCKWASHER	
		1	**6V-8187**	2	NUT (1/4-28-THD)	
		1	**8T-4205**	2	WASHER-HARD (7.2X14.5X2-MM THK)	
	16	1	**171-2211**	1	CIRCUIT BREAKER AS (90-AMPERE) (ALTERNATOR)	
		1	**253-2111**	2	LOCKWASHER	
		1	**6V-8187**	2	NUT (1/4-28-THD)	
		1	**8T-4205**	2	WASHER-HARD (7.2X14.5X2-MM THK)	
C	17	1,2	**204-2281**	6	STRAP-TIE	
	18	1	**225-5224**	1	CABLE AS	
C	19	2	**282-9931**	1	BRACKET	
	20	1	**229-6257**	1	PLATE AS	
M		1	**6V-9632**	6	NUT-WELD (M6X1-THD)	
M		1	**9X-2032**	2	NUT-WELD (M4X0.7-THD)	
	21	1	**236-4236**	1	HARNESS AS-ENGINE	
		1	**281-4546**	1	TERMINAL-BLADE	
E		1	**8C-3056**		CABLE (02-GA, RED) (164-CM)	
		1	**030-1712**	1	TERMINAL-RING (2-GA, 6.35-MM)	
		1	**9X-1056**	8	TERMINAL-RECEPTACLE	
		1	**100-6674**	4	SEAL-CONNECTOR (20-CM)	
E		1	**119-3662**		TUBE-HEAT SHRINK (10.85-MM DIA) (20-CM)	
		1	**124-5640**	2	TERMINAL-SOCKET	
E		1	**125-7874**		TUBE-HEAT SHRINK (5.72-MM DIA) (15-CM)	
E		1	**125-7875**		TUBE-HEAT SHRINK (7.44-MM DIA) (15-CM)	
E		1	**125-7876**		TUBE-HEAT SHRINK (17.78-MM DIA) (6-CM)	
		1	**2L-8065**	1	TERMINAL (10-GA TO 12-GA)	
		1	**9F-3965**	1	TERMINAL	
		1	**2L-8078**	2	TERMINAL (16-GA TO 14-GA)	
		1	**5P-5618**	1	TERMINAL-BLADE (10-GA TO 12-GA)	
		1	**180-7110**	1	RING (FOR 3/8-IN BOLT)	
		1	**197-7261**	1	PLUG AS-CONNECTOR	
		1	**304-1137**	1	HARNESS AS-PUMP	
		1	**113-8492**	1	FUSE (20-AMPERE)	
E		1	**125-7874**		TUBE-HEAT SHRINK (5.72-MM DIA) (10-CM)	
B		1	**141-8061**		TAPE	
		1	**155-2270**	1	KIT-CONNECTING PLUG (2-PIN)	
					(INCLUDES PLUG AS, WEDGE & INTERFACE SEAL)	
		1	**8L-8413**	5	STRAP-CABLE	

180-8801 **WIRING GP-ENGINE** ***(contd.)*** **i03110544**

NOTE	REF NO	GRAPHIC REF	PART NUMBER	QTY	PART NAME 1 2 3 4 5 6 (PRODUCT LEVEL)	SEE PAGE
		1	**102-8802**	3	KIT-RECEPTACLE (2-PIN)	
		1	**102-8803**	1	KIT-RECEPTACLE (3-PIN)	
					(EACH RECEPTACLE KIT INCLUDES RECEPTACLE AS & WEDGE)	
		1	**155-2255**	1	KIT-CONNECTING PLUG (12-PIN)	
		1	**155-2270**	5	KIT-CONNECTING PLUG (2-PIN)	
					(EACH PLUG KIT INCLUDES PLUG AS, WEDGE & INTERFACE SEAL)	
		1	**155-2260**	1	KIT-CONNECTING PLUG (3-PIN)	
					(INCLUDES PLUG AS, WEDGES & INTERFACE SEAL)	
		1	**127-5483**	1	PLUG AS-CONNECTOR (1-PIN)	
		1	**197-7261**	1	PLUG AS-CONNECTOR	
		1	**167-3693**	1	PLUG AS-CONNECTOR (31-PIN)	
		1	**9X-1054**	2	PLUG AS-CONNECTOR (4-PIN)	
	22	1	**251-6182**	1	WIRE AS	
	23	1	**096-6166**	2	WASHER-HARD (4.5X9X1-MM THK)	
	24	1	**147-1773**	1	CIRCUIT BREAKER AS (30-AMPERE) (AUXILIARY)	
		1	**6V-8378**	2	NUT (10-32-THD)	
		1	**8F-1434**	2	LOCKWASHER	
		1	**8T-0328**	2	WASHER-HARD (5.5X10X1-MM THK)	
	25	1,2	**204-8000**	3	MOUNT (TIE WRAP)	
	26	1	**3K-0360**	1	SEAL-O-RING	
C	27	1,2	**3S-8665**	3	CLIP	
	28	1	**4B-4274**	4	WASHER (5.5X13X1.2-MM THK)	
	29	1	**4B-4863**	4	WASHER (4.7X11X1.2-MM THK)	
C	30	1,2	**4P-7581**	9	CLIP (LADDER)	
	31	1,2	**4P-8134**	5	CLIP (LADDER)	
	32	1	**5P-4965**	4	SCREW-MACHINE (10-32X1-IN)	
	33	1	**6V-7345**	4	SCREW-MACHINE (8-32X0.875-IN)	
CM	34	1	**8T-4138**	1	BOLT (M6X1X20-MM)	
C	35	1,2	**8T-4121**	10	WASHER-HARD (11X21X2.5-MM THK)	
M	36	2	**8T-4133**	1	NUT (M10X1.5-THD)	
CM	37	1,2	**8T-4136**	5	BOLT (M10X1.5X25-MM)	
M	38	2	**8T-4137**	1	BOLT (M10X1.5X20-MM)	
M	39	1	**8T-4171**	4	BOLT (M6X1X12-MM)	
M	40	2	**8T-4186**	1	BOLT (M10X1.5X40-MM)	
M	41	2	**8T-4189**	1	BOLT (M8X1.25X20-MM)	
CM	42	1,2	**8T-4191**	2	BOLT (M10X1.5X16-MM)	
M	43	2	**8T-4192**	2	BOLT (M12X1.75X25-MM)	
BC	44	2	**116-6161**	1	CAP-CONNECTOR	
M	45	1	**8T-4197**	1	BOLT (M8X1.25X40-MM)	
M	46	1,2	**8T-4200**	5	BOLT (M8X1.25X16-MM)	
	47	1	**8T-4205**	1	WASHER-HARD (7.2X14.5X2-MM THK)	
	48	2	**8T-4223**	2	WASHER-HARD (13.5X25.5X3-MM THK)	
	49	1,2	**8T-4224**	8	WASHER-HARD (8.8X16X2-MM THK)	
M	50	1	**8T-6912**	1	BOLT (M8X1.25X50-MM)	
M	51	1	**8T-7852**	2	BOLT (M4X0.7X10-MM)	
C	52	1	**9M-4972**	1	CLIP	
	53	1	**9X-8256**	4	WASHER (6.6X12X2-MM THK)	
C	54	2	**102-8802**	1	KIT-RECEPTACLE (2-PIN)	
					(INCLUDES RECEPTACLE AS & WEDGE)	
C	55	1,2	**3S-2093**	3	STRAP-CABLE	
C	56	2	**8T-8737**	2	PLUG-SEAL	

B-USE AS REQUIRED
C-CHANGE FROM PREVIOUS TYPE
E-ORDER BY THE CENTIMETER
M-METRIC PART
Y-SEPARATE ILLUSTRATION

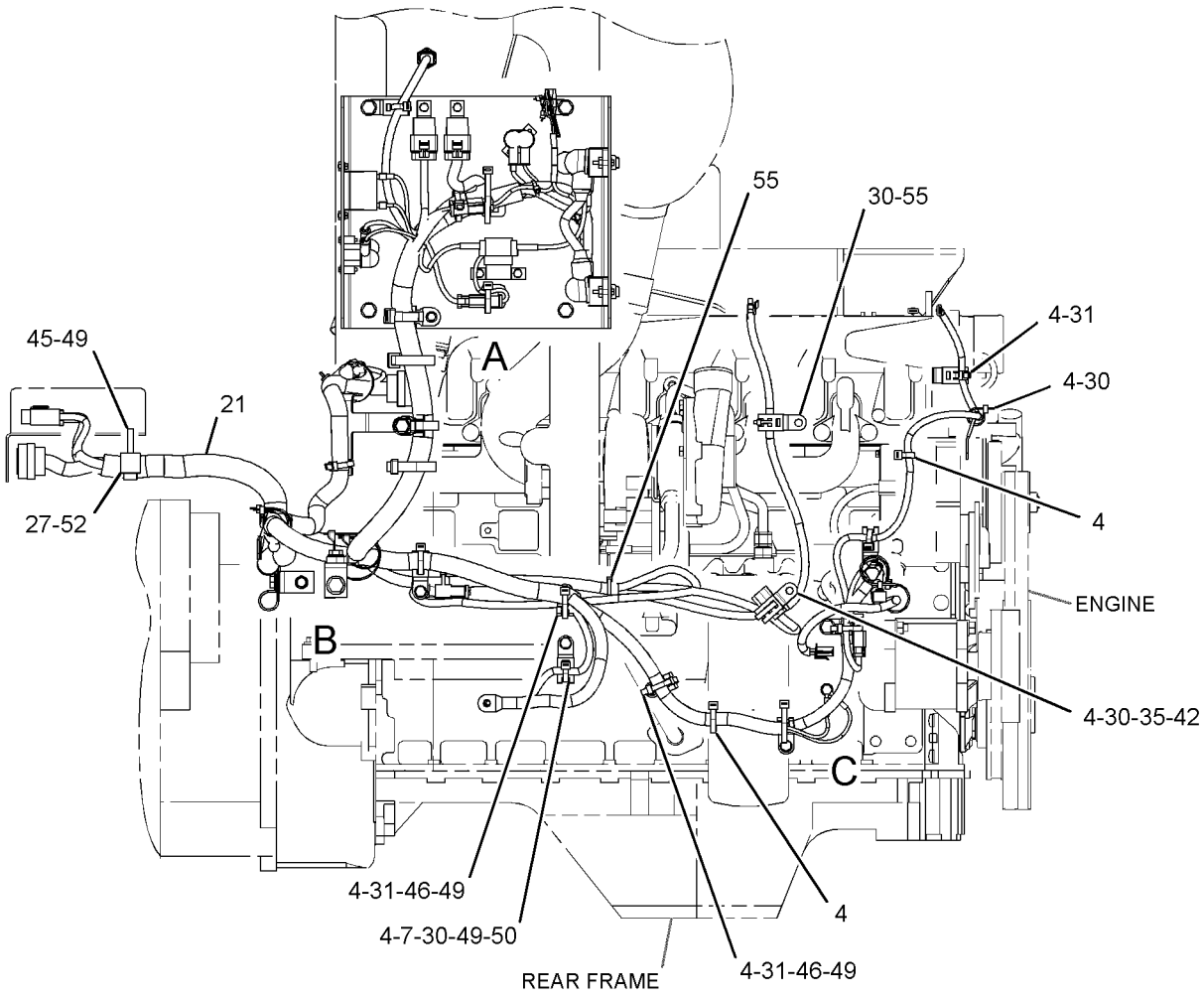

LEFT SIDE VIEW

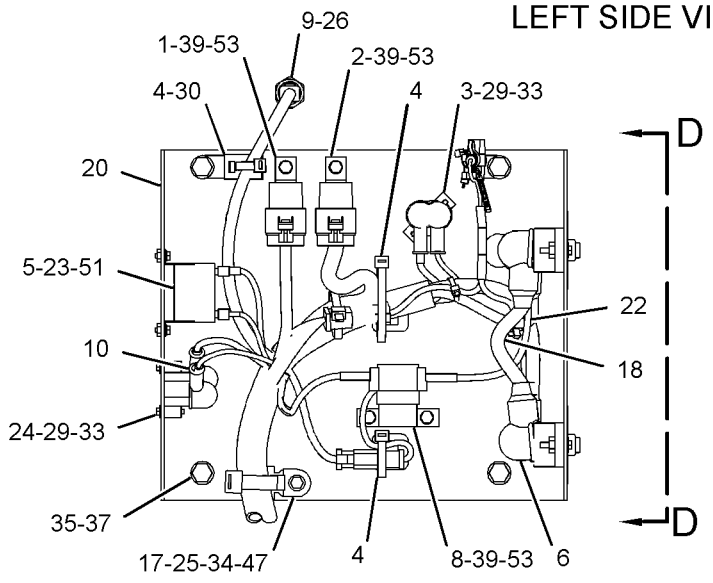

VIEW OF AREA A

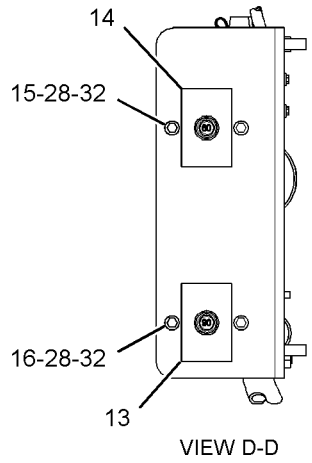

VIEW D-D

REFER TO ALL ILLUSTRATIONS OF THIS GROUP FOR AUXILIARY VIEWS

GRAPHIC #1

g01338312

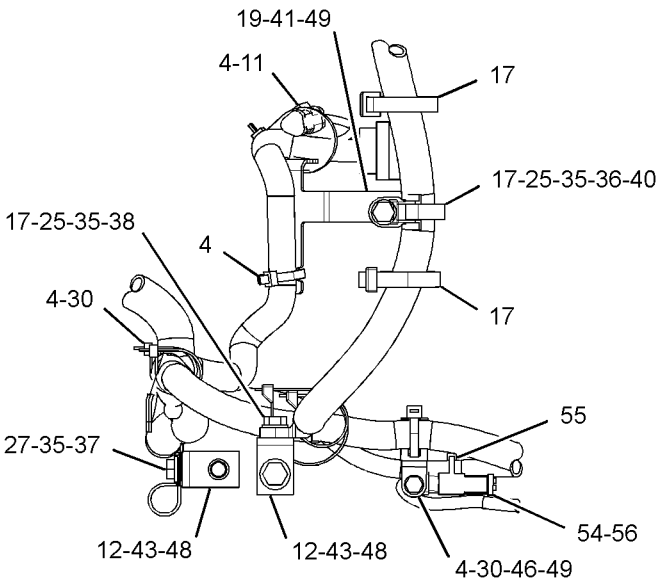

VIEW OF AREA B

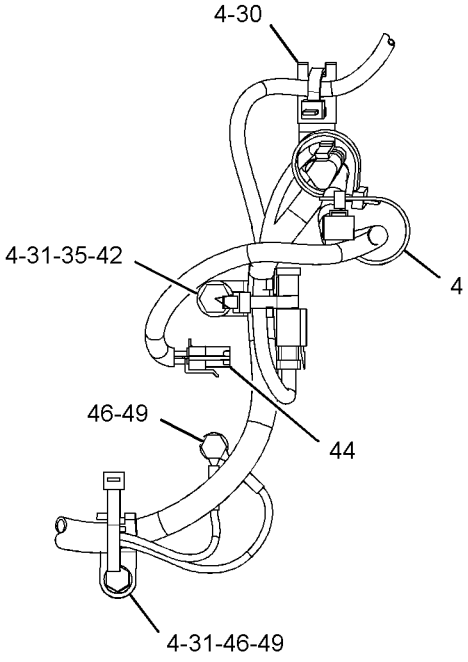

VIEW OF AREA C

GRAPHIC #2 **<END>** g01338316

180-8801 WIRING GP-ENGINE

S/N: TWR2812-UP

PART OF 235-7499 CHASSIS AR

SMCS-1403, 1408 **i03130093**

NOTE	REF NO	GRAPHIC REF	PART NUMBER	QTY	PART NAME 1 2 3 4 5 6 (PRODUCT LEVEL)	SEE PAGE
	1	1	**3E-5239**	1	RELAY AS (24-VOLT) (STARTING AID)	
	1A	1	**3E-5239**	1	RELAY AS (24-VOLT) (FUEL PUMP)	
	3	1	**3T-2662**	1	CIRCUIT BREAKER AS (15-AMPERE) (FLOODLIGHTS)	
		1	**6V-8376**	2	SCREW-MACHINE (8-32X0.25-IN)	
		1	**9B-7233**	2	LOCKWASHER	
C	4	1,2	**7K-1181**	22	STRAP-CABLE	
	5	1	**7W-1251**	1	RESISTOR	
	6	1	**8T-8799**	4	BOOT	
	7	1	**111-6940**	1	SPACER (13.1X15.9X36.5-MM THK)	
Y	8	1	**118-3534**	1	SWITCH GP-MAGNETIC (24-VOLT) (STARTING RELAY)	188
	9	1	**264-4297**	1	SENSOR GP-TEMPERATURE (HYDRAULIC OIL)	
		1	**137-6645**	1	PAD (CONNECTOR)	
	10	1	**131-3201**	4	BOOT	
	11	2	**134-2540**	1	RECEPTACLE AS (3-PIN)	
	12	2	**135-3327**	2	PLATE AS	
					(EACH INCLUDES)	
M		2	**8T-3490**	1	NUT-WELD (M10X1.5-THD)	
	13	1	**143-9542**	1	FILM-IDENTIFICATION (CIRCUIT BREAKER)	
	14	1	**148-5318**	1	FILM-IDENTIFICATION (CIRCUIT BREAKER)	
	15	1	**171-2208**	1	CIRCUIT BREAKER AS (60-AMPERE) (MAIN)	
		1	**253-2111**	2	LOCKWASHER	
		1	**6V-8187**	2	NUT (1/4-28-THD)	
		1	**8T-4205**	2	WASHER-HARD (7.2X14.5X2-MM THK)	
	16	1	**171-2211**	1	CIRCUIT BREAKER AS (90-AMPERE) (ALTERNATOR)	
		1	**253-2111**	2	LOCKWASHER	
		1	**6V-8187**	2	NUT (1/4-28-THD)	
		1	**8T-4205**	2	WASHER-HARD (7.2X14.5X2-MM THK)	
	17	1,2	**204-2281**	6	STRAP-TIE	
	18	1	**225-5224**	1	CABLE AS	
	19	2	**282-9931**	1	BRACKET	
	20	1	**229-6257**	1	PLATE AS	
M		1	**6V-9632**	6	NUT-WELD (M6X1-THD)	
M		1	**9X-2032**	2	NUT-WELD (M4X0.7-THD)	
	21	1	**236-4236**	1	HARNESS AS-ENGINE	
	22	1	**251-6182**	1	WIRE AS	
	23	1	**096-6166**	2	WASHER-HARD (4.5X9X1-MM THK)	
	24	1	**147-1773**	1	CIRCUIT BREAKER AS (30-AMPERE) (AUXILIARY)	
		1	**6V-8378**	2	NUT (10-32-THD)	
		1	**8F-1434**	2	LOCKWASHER	
		1	**8T-0328**	2	WASHER-HARD (5.5X10X1-MM THK)	
	25	1,2	**204-8000**	3	MOUNT (TIE WRAP)	
	26	1	**3K-0360**	1	SEAL-O-RING	
	27	1,2	**3S-8665**	3	CLIP	
	28	1	**4B-4274**	4	WASHER (5.5X13X1.2-MM THK)	
	29	1	**4B-4863**	4	WASHER (4.7X11X1.2-MM THK)	
	30	1,2	**4P-7581**	9	CLIP (LADDER)	
C	31	1,2	**4P-8134**	6	CLIP (LADDER)	
	32	1	**5P-4965**	4	SCREW-MACHINE (10-32X1-IN)	
	33	1	**6V-7345**	4	SCREW-MACHINE (8-32X0.875-IN)	
M	34	1	**8T-4138**	1	BOLT (M6X1X20-MM)	
C	35	1,2	**8T-4121**	11	WASHER-HARD (11X21X2.5-MM THK)	
M	36	2	**8T-4133**	1	NUT (M10X1.5-THD)	
M	37	1,2	**8T-4136**	5	BOLT (M10X1.5X25-MM)	
CM	38	2	**8T-4137**	2	BOLT (M10X1.5X20-MM)	
M	39	1	**8T-4171**	4	BOLT (M6X1X12-MM)	
M	40	2	**8T-4186**	1	BOLT (M10X1.5X40-MM)	

180-8801 **WIRING GP-ENGINE** ***(contd.)*** **i03130093**

NOTE	REF NO	GRAPHIC REF	PART NUMBER	QTY	PART NAME 1 2 3 4 5 6 (PRODUCT LEVEL)	SEE PAGE
C	41	2	**304-4008**	1	TAG-IDENTIFICATION (EMERGENCY STOP)	
M	42	1,2	**8T-4191**	2	BOLT (M10X1.5X16-MM)	
M	43	2	**8T-4192**	2	BOLT (M12X1.75X25-MM)	
B	44	2	**116-6161**	1	CAP-CONNECTOR	
M	45	1	**8T-4197**	1	BOLT (M8X1.25X40-MM)	
M	46	1,2	**8T-4200**	5	BOLT (M8X1.25X16-MM)	
	47	1	**8T-4205**	1	WASHER-HARD (7.2X14.5X2-MM THK)	
	48	2	**8T-4223**	2	WASHER-HARD (13.5X25.5X3-MM THK)	
C	49	1,2	**8T-4224**	7	WASHER-HARD (8.8X16X2-MM THK)	
M	50	1	**8T-6912**	1	BOLT (M8X1.25X50-MM)	
M	51	1	**8T-7852**	2	BOLT (M4X0.7X10-MM)	
	52	1	**9M-4972**	1	CLIP	
	53	1	**9X-8256**	4	WASHER (6.6X12X2-MM THK)	
	54	2	**102-8802**	1	KIT-RECEPTACLE (2-PIN)	
					(INCLUDES RECEPTACLE AS & WEDGE)	
C	55	1,2	**3S-2093**	13	STRAP-CABLE	
	56	2	**8T-8737**	2	PLUG-SEAL	

B-USE AS REQUIRED
C-CHANGE FROM PREVIOUS TYPE
M-METRIC PART
Y-SEPARATE ILLUSTRATION

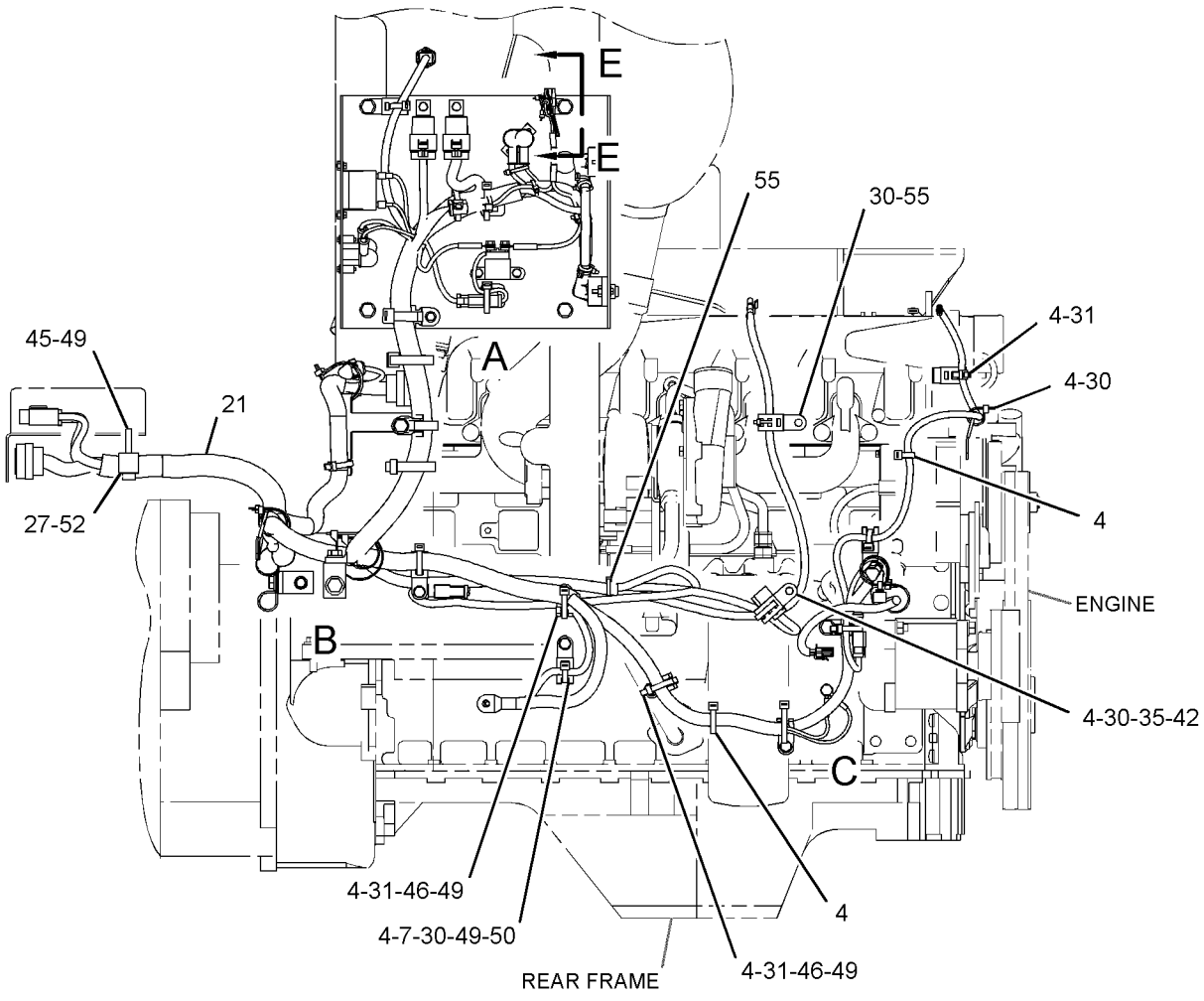

LEFT SIDE VIEW

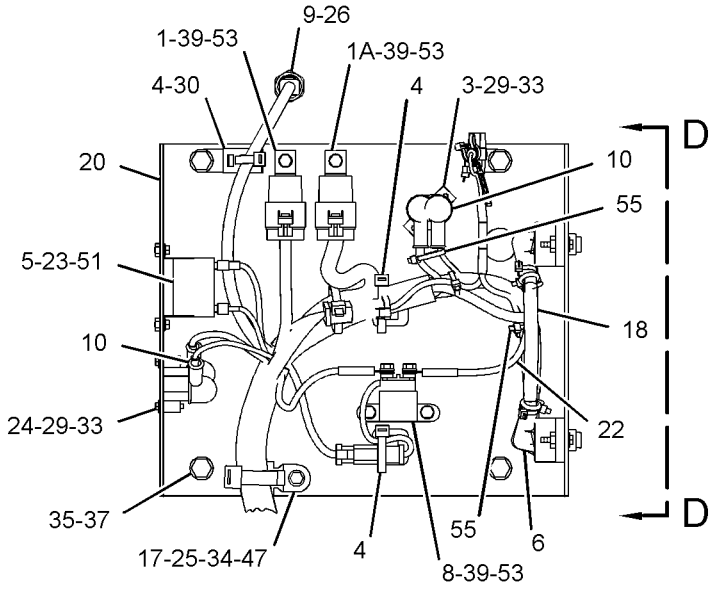

VIEW OF AREA A

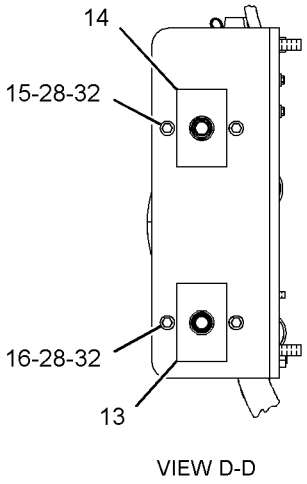

VIEW D-D

REFER TO ALL ILLUSTRATIONS OF THIS GROUP FOR AUXILIARY VIEWS

GRAPHIC #1

g01440932

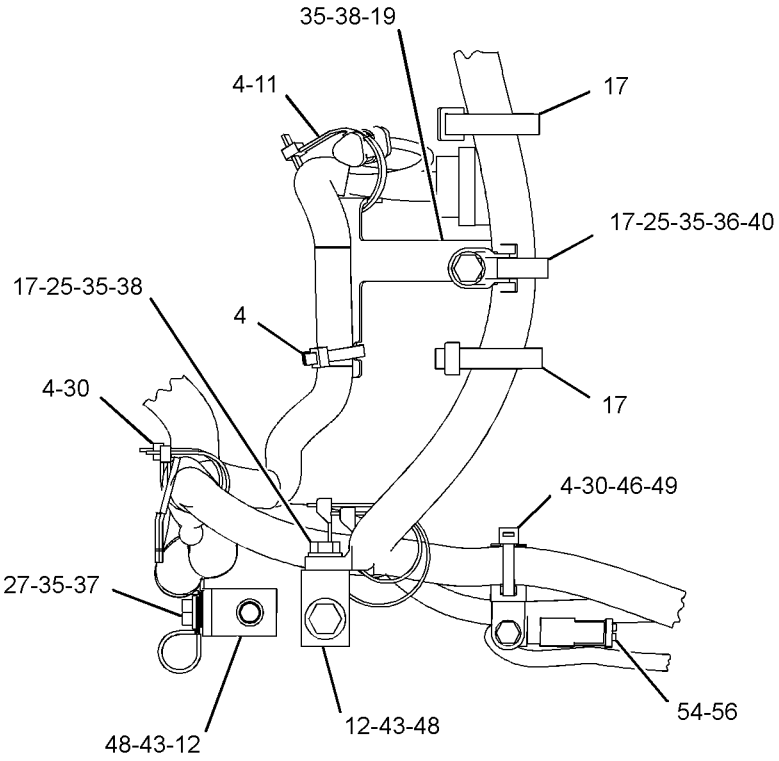

VIEW OF AREA B

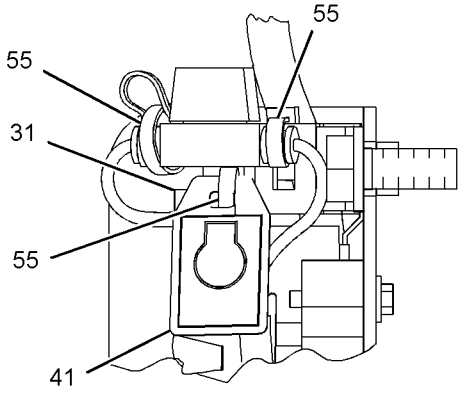

SECTION E-E

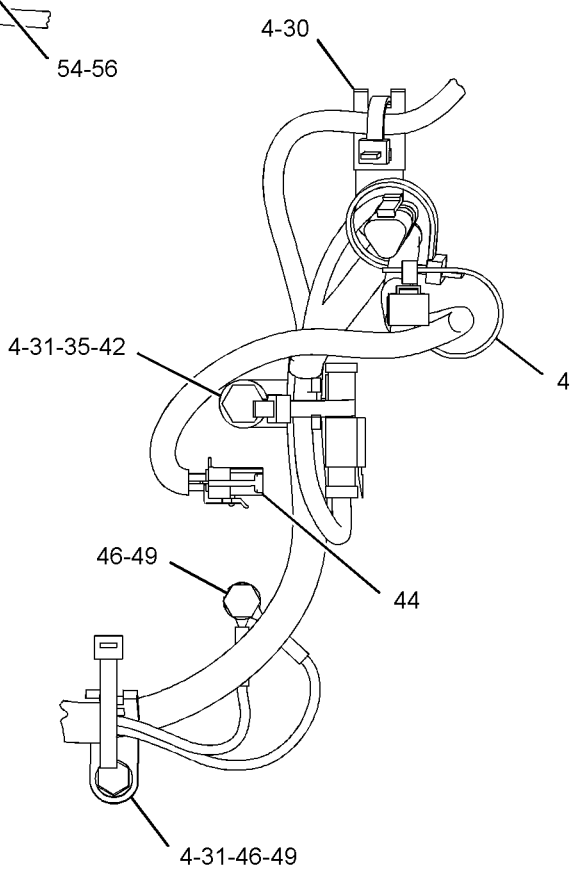

VIEW OF AREA C

GRAPHIC #2 **<END>** g01440934

235-6822 WIRING GP-FRONT

S/N: TWR1-UP

PART OF 235-7499 CHASSIS AR

SMCS-5734 **i02595399**

NOTE	REF NO	GRAPHIC REF	PART NUMBER	QTY	PART NAME 1 2 3 4 5 6 (PRODUCT LEVEL)	SEE PAGE
	1	1	**7K-1181**	20	STRAP-CABLE	
	2	1	**163-1201**	1	HORN AS (24-VOLT, LOW TONE)	
	3	1	**238-0077**	1	HARNESS AS-FRONT CHASSIS	
		1	**102-8802**	5	KIT-RECEPTACLE (2-PIN)	
		1	**102-8803**	2	KIT-RECEPTACLE (3-PIN)	
		1	**102-8804**	1	KIT-RECEPTACLE (4-PIN)	
		1	**102-8801**	1	KIT-RECEPTACLE (12-PIN)	
					(EACH RECEPTACLE KIT INCLUDES RECEPTACLE AS & WEDGE)	
		1	**155-2265**	5	KIT-CONNECTING PLUG (8-PIN)	
		1	**155-2270**	1	KIT-CONNECTING PLUG (2-PIN)	
		1	**155-2271**	1	KIT-CONNECTING PLUG (4-PIN)	
		1	**155-2274**	3	KIT-CONNECTING PLUG (6-PIN)	
					(EACH PLUG KIT INCLUDES PLUG AS, WEDGE & INTERFACE SEAL)	
		1	**155-2260**	3	KIT-CONNECTING PLUG (3-PIN)	
					(EACH PLUG KIT INCLUDES PLUG AS, WEDGE & INTERFACE SEAL)	
	4	1	**245-8145**	4	BLOCK	
	5	1	**246-2228**	1	PLATE AS	
M		1	**6V-9632**	2	NUT-WELD (M6X1-THD)	
	6	1	**246-2230**	1	BRACKET AS	
M		1	**6V-9632**	2	NUT-WELD (M6X1-THD)	
	7	1	**252-8958**	2	PLATE	
	8	1	**4P-7581**	3	CLIP	
M	9	1	**7X-2534**	4	BOLT (M6X1X50-MM)	
	10	1	**8T-4121**	8	WASHER-HARD (11X21X2.5-MM THK)	
M	11	1	**8T-4137**	7	BOLT (M10X1.5X20-MM)	
M	12	1	**8T-4191**	1	BOLT (M10X1.5X16-MM)	

M-METRIC PART

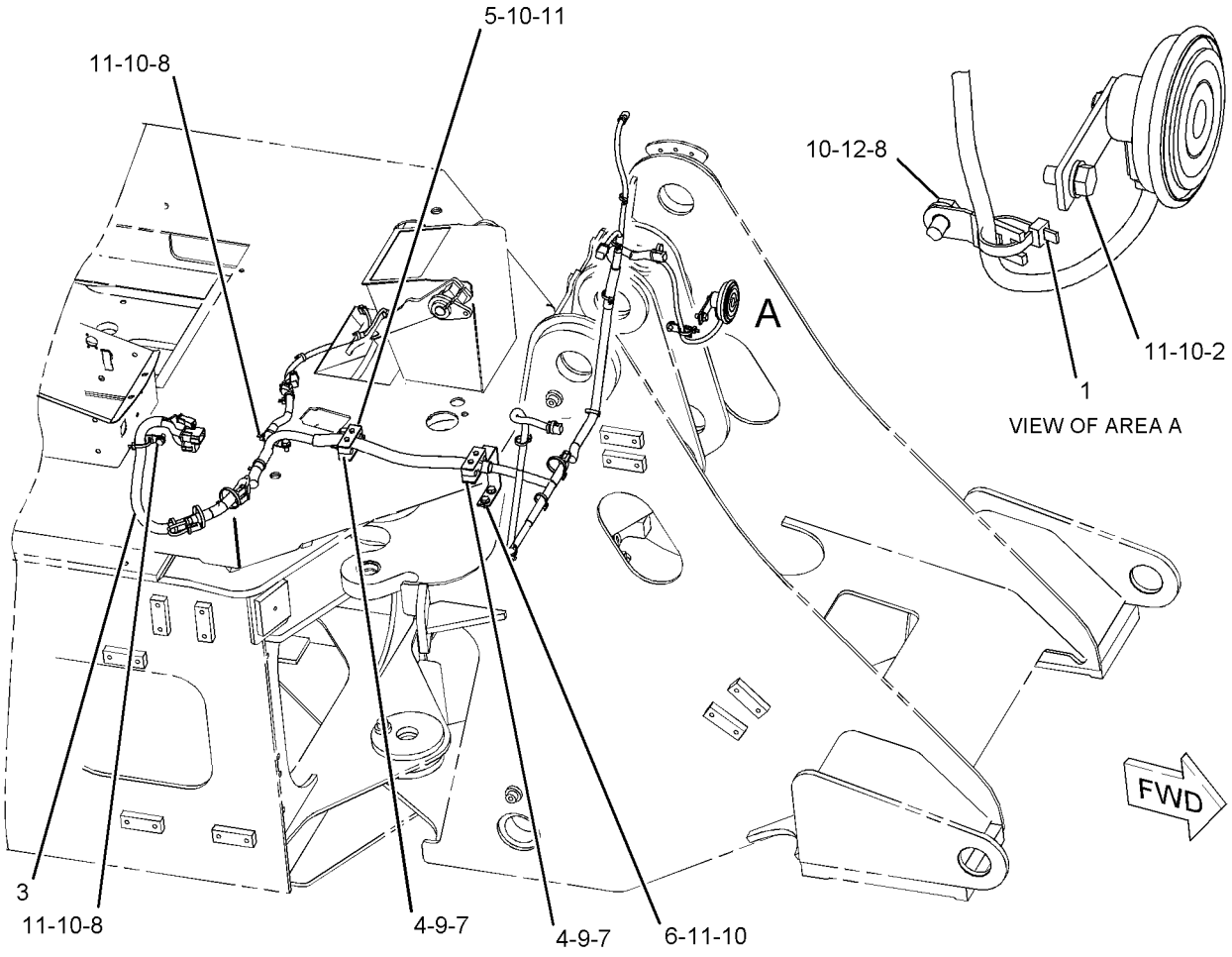

GRAPHIC #1 **<END>** g01137898

180-8804 WIRING GP-REAR

S/N: TWR1-1357

PART OF 235-7499 CHASSIS AR

SMCS-1408 **i01957594**

NOTE	REF NO	GRAPHIC REF	PART NUMBER	QTY	PART NAME 1 2 3 4 5 6 (PRODUCT LEVEL)	SEE PAGE
B	1	1	**7K-1181**	34	STRAP-CABLE	
	2	1	**204-1370**	1	GASKET	
	3	1	**224-9612**	1	HARNESS AS-REAR CHASSIS	
		1	**102-8802**	1	KIT-RECEPTACLE (2-PIN)	
		1	**102-8803**	1	KIT-RECEPTACLE (3-PIN)	
		1	**155-2260**	4	KIT-CONNECTING PLUG (3-PIN)	
		1	**155-2270**	11	KIT-CONNECTING PLUG (2-PIN)	
	4	1	**132-5789**	2	CLIP	
	5	1	**194-7265**	1	SENDER AS-FUEL LEVEL	
		1	**3E-3365**	1	WEDGE-RECEPTACLE LOCK (2-PIN)	
		1	**102-8802**	1	KIT-RECEPTACLE (2-PIN)	
		1	**186-3735**	2	PIN-CONNECTOR (16-GA TO 18-GA)	
	6	1	**4P-7581**	3	CLIP	
	7	1	**4P-8134**	3	CLIP	
M	8	1	**5C-9553**	8	BOLT (M6X1X16-MM)	
	9	1	**5P-6264**	4	GROMMET	
	10	1	**8D-9671**	1	CLIP	
	11	1	**8T-4121**	7	WASHER-HARD (11X21X2.5-MM THK)	
M	12	1	**8T-4137**	6	BOLT (M10X1.5X20-MM)	
M	13	1	**8T-4197**	1	BOLT (M8X1.25X40-MM)	
	14	1	**8T-4205**	8	WASHER-HARD (7.2X14.5X2-MM THK)	
F			**8T-4224**	1	WASHER-HARD (8.8X16X2-MM THK)	

B-USE AS REQUIRED
F-NOT SHOWN
M-METRIC PART

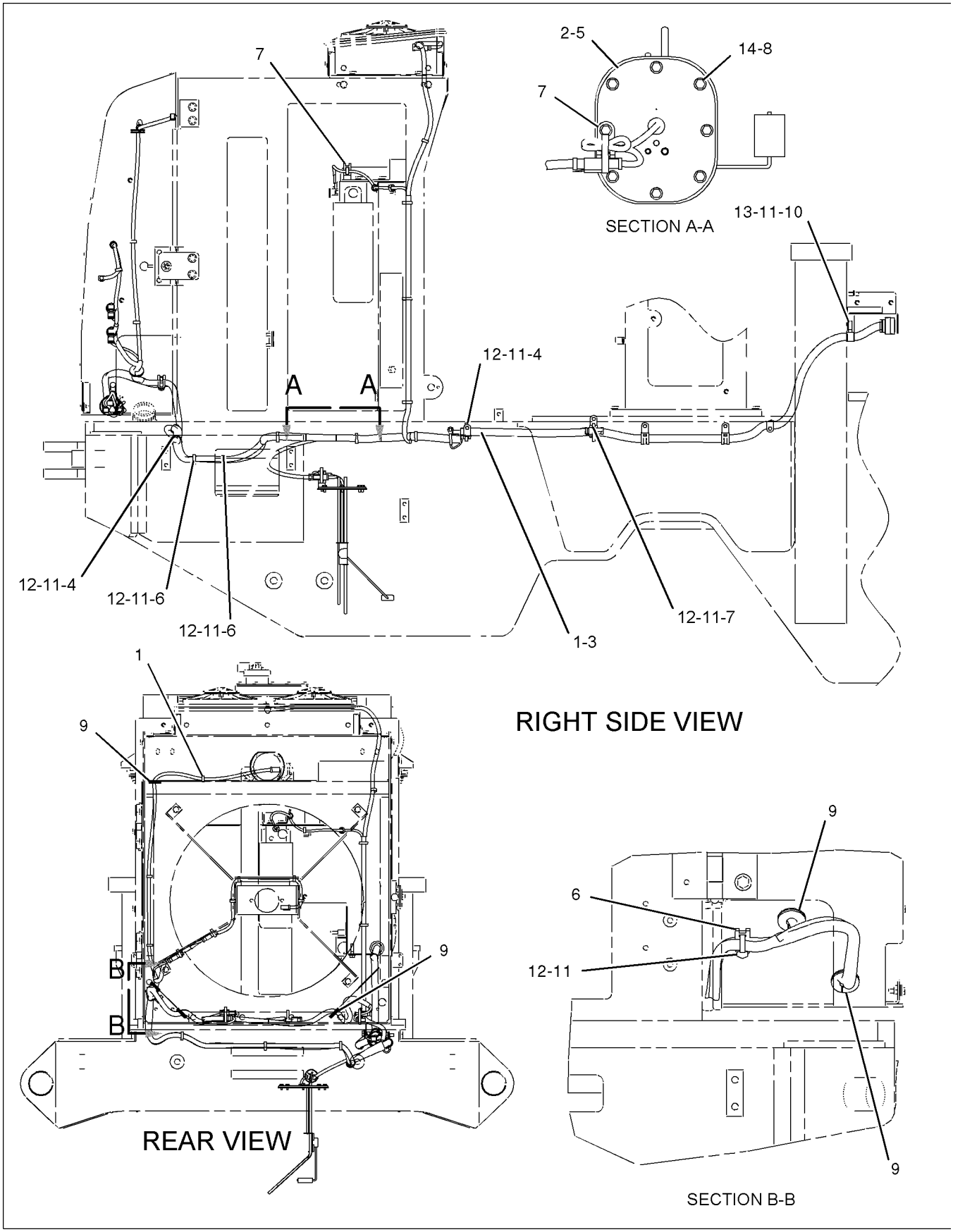

GRAPHIC #1 **<END>** g01017546

180-8804 WIRING GP-REAR

S/N: TWR1358-UP

PART OF 235-7499 CHASSIS AR

SMCS-1408 **i03120365**

NOTE	REF NO	GRAPHIC REF	PART NUMBER	QTY	PART NAME 1 2 3 4 5 6 (PRODUCT LEVEL)	SEE PAGE
C	1	1	**279-7127**	1	BRACKET	
C	2	1	**281-5619**	1	ROD	
B	3	1	**7K-1181**	34	STRAP-CABLE	
C	4	1	**195-1141**	3	SPACER (7.2X18X11-MM THK)	
	5	1	**204-1370**	1	GASKET	
	6	1	**224-9612**	1	HARNESS AS-REAR CHASSIS	
C	7	1	**132-5789**	2	CLIP	
C	8	1	**179-8235**	1	LOCK PIN	
	9	1	**313-4615**	1	SENDER AS-FUEL LEVEL	
		1	**102-8802**	1	KIT-RECEPTACLE (2-PIN)	
					(INCLUDES RECEPTACLE AS & WEDGE)	
		1	**186-3735**	2	PIN-CONNECTOR (16-GA TO 18-GA)	
C	10	1	**1B-0676**	1	PIN	
	11	1	**4P-7581**	3	CLIP	
	12	1	**4P-8134**	3	CLIP	
CM	13	1	**5C-9553**	5	BOLT (M6X1X16-MM)	
C	14	1	**5P-4116**	1	WASHER-HARD (8.8X20.5X2-MM THK)	
	15	1	**5P-6264**	4	GROMMET	
	16	1	**8D-9671**	1	CLIP	
C	17	1	**8T-4121**	5	WASHER-HARD (11X21X2.5-MM THK)	
CM	18	1	**8T-4133**	1	NUT (M10X1.5-THD)	
M	19	1	**8T-4137**	5	BOLT (M10X1.5X20-MM)	
	20	1	**8T-4205**	8	WASHER-HARD (7.2X14.5X2-MM THK)	
C	21	1	**8T-4815**	1	ROD END	
CM	22	1	**8T-4908**	1	BOLT (M8X1.25X25-MM)	
CM	23	1	**8T-4971**	3	BOLT (M6X1X30-MM)	

B-USE AS REQUIRED
C-CHANGE FROM PREVIOUS TYPE
M-METRIC PART

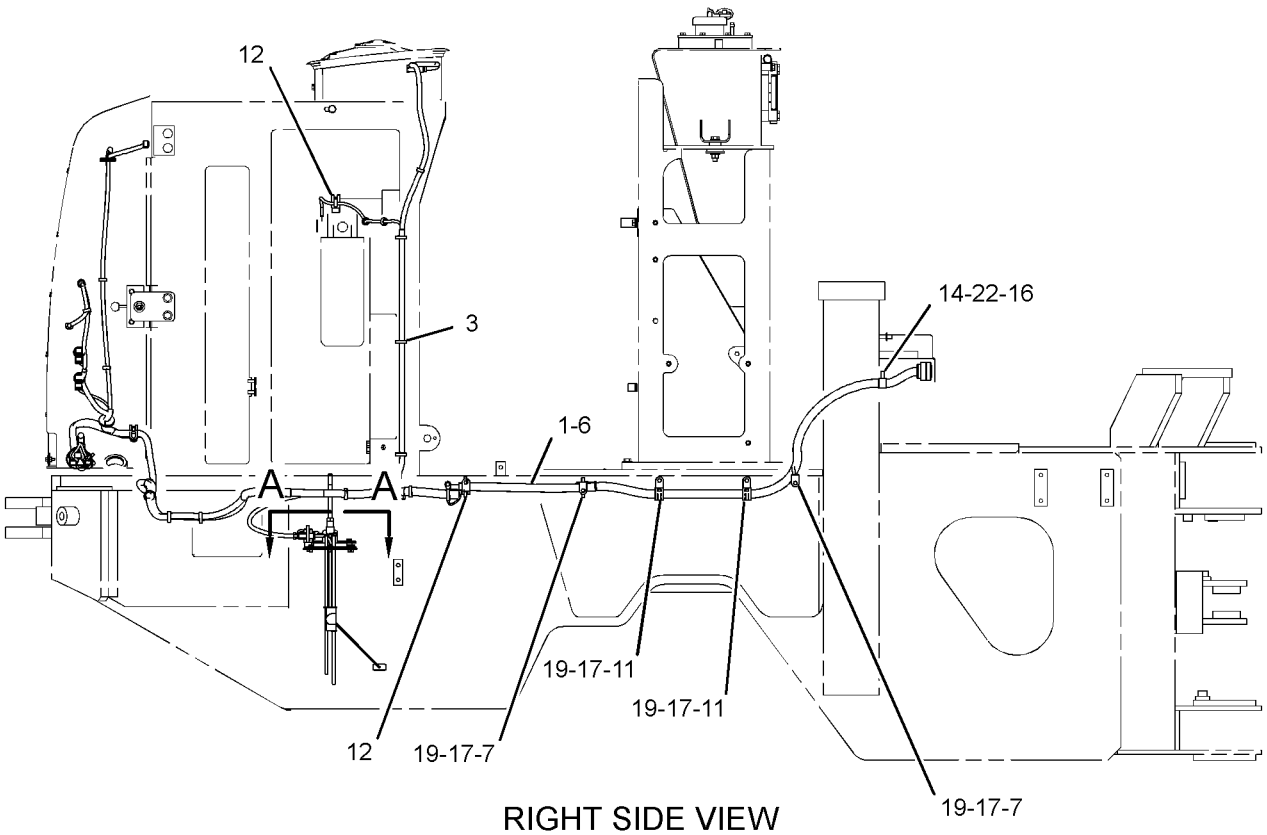

RIGHT SIDE VIEW

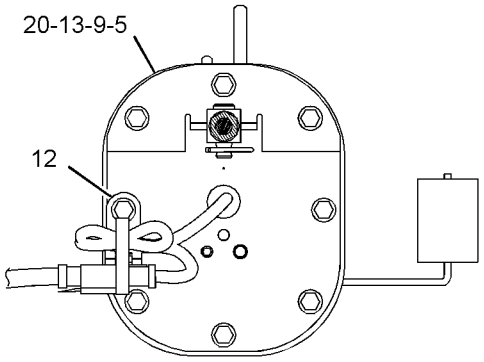

SECTION A-A

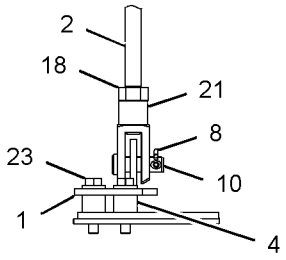

VIEW OF AREA B

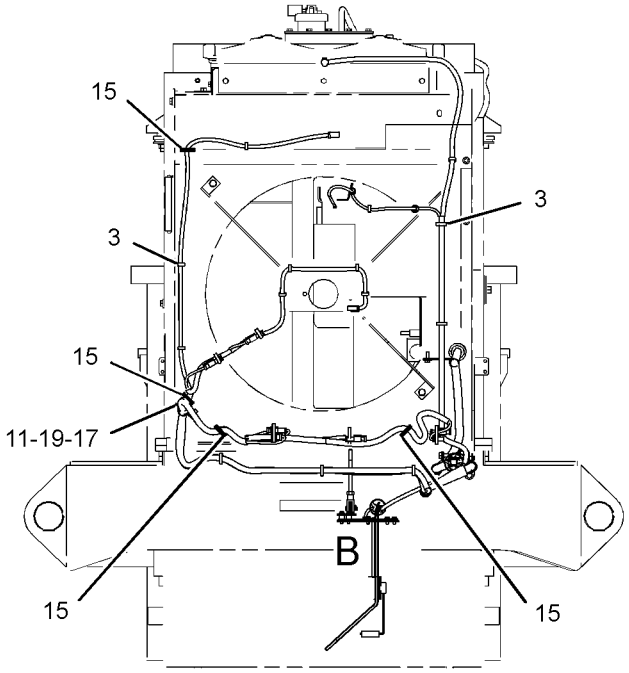

REAR VIEW

GRAPHIC #1 **<END>** g01263003

253-7792 WIRING GP-RIDE CONTROL

S/N: TWR1-2533
PART OF 241-5665 CONTROL AR-RIDE
AN ATTACHMENT

SMCS-5004, 5734 **i02595452**

NOTE	REF NO	GRAPHIC REF	PART NUMBER	QTY	PART NAME 1 2 3 4 5 6 (PRODUCT LEVEL)	SEE PAGE
	1	1	**3E-5239**	1	RELAY AS (24-VOLT) (RIDE CONTROL)	
	2	1	**7K-1181**	5	STRAP-CABLE	
	3	1	**106-8704**	1	SUPPRESSOR AS-ARC	
		1	**102-8802**	1	KIT-RECEPTACLE (2-PIN)	
					(INCLUDES RECEPTACLE AS & WEDGE)	
		1	**186-3735**	2	PIN-CONNECTOR (16-GA TO 18-GA)	
	4	1	**158-5089**	1	RELAY AS (24-VOLT) (RIDE CONTROL, LOAD CHECK RELAY)	
	5	1	**171-6029**	1	HARNESS AS-RIDE CONTROL (SOLENOID VALVE)	
		1	**102-8803**	1	KIT-RECEPTACLE (3-PIN)	
					(INCLUDES RECEPTACLE AS & WEDGE)	
		1	**155-2270**	1	KIT-CONNECTING PLUG (2-PIN)	
					(INCLUDES PLUG AS, WEDGE, & INTERFACE SEAL)	
		1	**9X-1054**	1	PLUG AS-CONNECTOR (4-PIN)	
	6	1	**185-2767**	1	SWITCH AS-ROCKER (RIDE CONTROL)	
		1	**111-7899**	1	GASKET	
	7	1	**217-6729**	1	HARNESS AS-RIDE CONTROL (PRESSURE SWITCH)	
		1	**102-8802**	1	KIT-RECEPTACLE (2-PIN)	
					(INCLUDES RECEPTACLE AS & WEDGE)	
		1	**155-2270**	1	KIT-CONNECTING PLUG (2-PIN)	
					(INCLUDES PLUG AS, WEDGE, & INTERFACE SEAL)	
	8	1	**4P-7581**	1	CLIP	
	9	1	**4P-8134**	1	CLIP	
M	10	1	**8T-4171**	1	BOLT (M6X1X12-MM)	
	11	1	**9X-6165**	1	WASHER (6.5X22X2.5-MM THK)	

M-METRIC PART

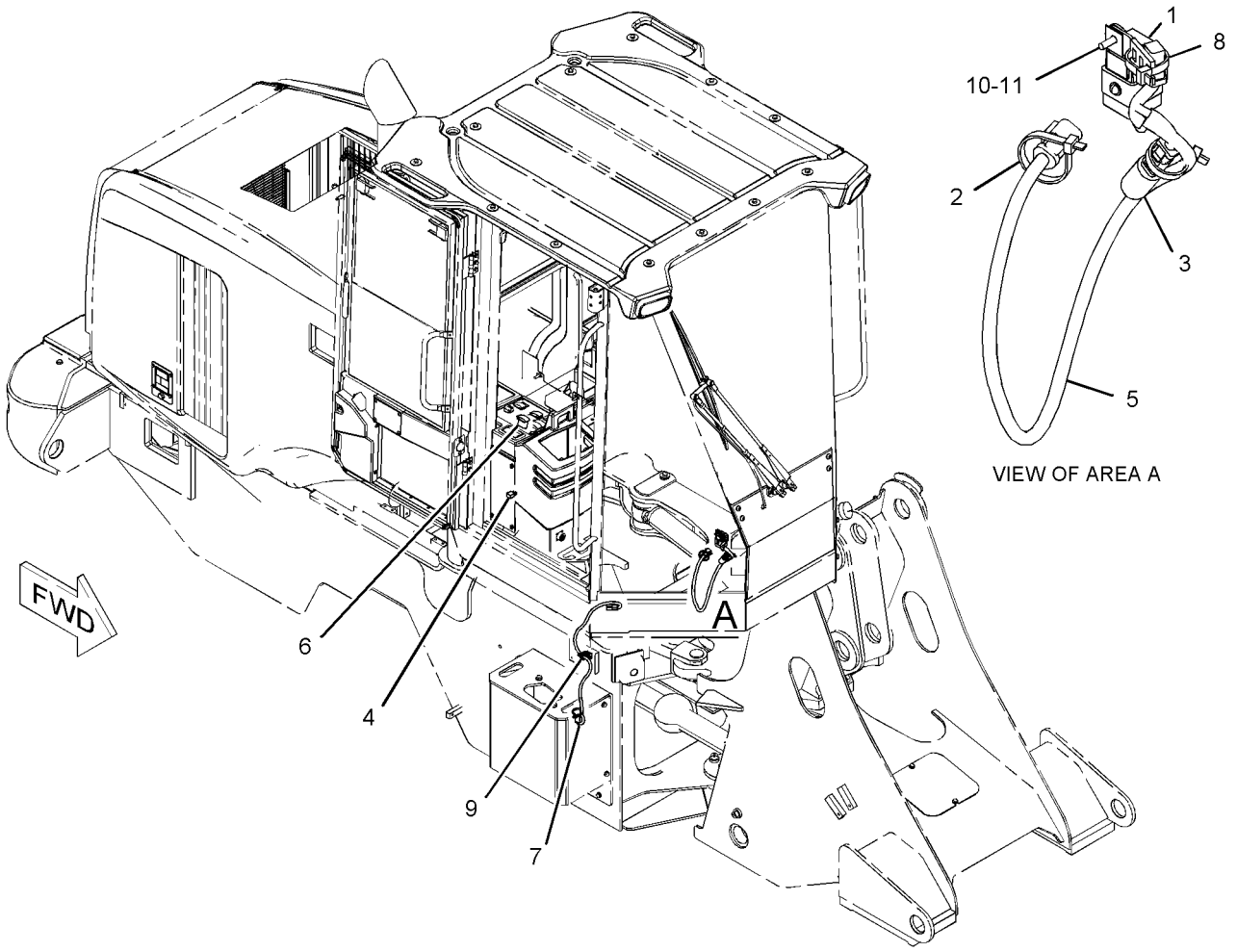

GRAPHIC #1 **<END>** g01114874

253-7792 WIRING GP-RIDE CONTROL

S/N: TWR2534-UP
PART OF 241-5665 CONTROL AR-RIDE
AN ATTACHMENT

SMCS-5004, 5734 **i02605816**

NOTE	REF NO	GRAPHIC REF	PART NUMBER	QTY	PART NAME 1 2 3 4 5 6 (PRODUCT LEVEL)	SEE PAGE
	1	1	**3E-5239**	1	RELAY AS (24-VOLT) (RIDE CONTROL)	
C	2	1	**7K-1181**	10	STRAP-CABLE	
	3	1	**106-8704**	1	SUPPRESSOR AS-ARC	
		1	**102-8802**	1	KIT-RECEPTACLE (2-PIN)	
					(INCLUDES RECEPTACLE AS & WEDGE)	
		1	**186-3735**	2	PIN-CONNECTOR (16-GA TO 18-GA)	
	4	1	**158-5089**	1	RELAY AS (24-VOLT) (RIDE CONTROL, LOAD CHECK RELAY)	
	5	1	**171-6029**	1	HARNESS AS-RIDE CONTROL (SOLENOID VALVE)	
		1	**102-8803**	1	KIT-RECEPTACLE (3-PIN)	
					(INCLUDES RECEPTACLE AS & WEDGE)	
		1	**155-2270**	1	KIT-CONNECTING PLUG (2-PIN)	
					(INCLUDES PLUG AS, WEDGE, & INTERFACE SEAL)	
		1	**9X-1054**	1	PLUG AS-CONNECTOR (4-PIN)	
		1	**9X-1056**	4	TERMINAL-RECEPTACLE	
E		1	**125-7874**		TUBE-HEAT SHRINK (5.72-MM DIA) (5-CM)	
E		1	**125-7875**		TUBE-HEAT SHRINK (7.44-MM DIA) (5-CM)	
	6	1	**185-2767**	1	SWITCH AS-ROCKER (RIDE CONTROL)	
		1	**111-7899**	1	GASKET	
	7	1	**217-6729**	1	HARNESS AS-RIDE CONTROL (PRESSURE SWITCH)	
		1	**102-8802**	1	KIT-RECEPTACLE (2-PIN)	
					(INCLUDES RECEPTACLE AS & WEDGE)	
		1	**155-2270**	1	KIT-CONNECTING PLUG (2-PIN)	
					(INCLUDES PLUG AS, WEDGE, & INTERFACE SEAL)	
	9	1	**4P-8134**	1	CLIP	
M	10	1	**8T-4171**	1	BOLT (M6X1X12-MM)	
	11	1	**9X-6165**	1	WASHER (6.5X22X2.5-MM THK)	

C-CHANGE FROM PREVIOUS TYPE
E-ORDER BY THE CENTIMETER
M-METRIC PART

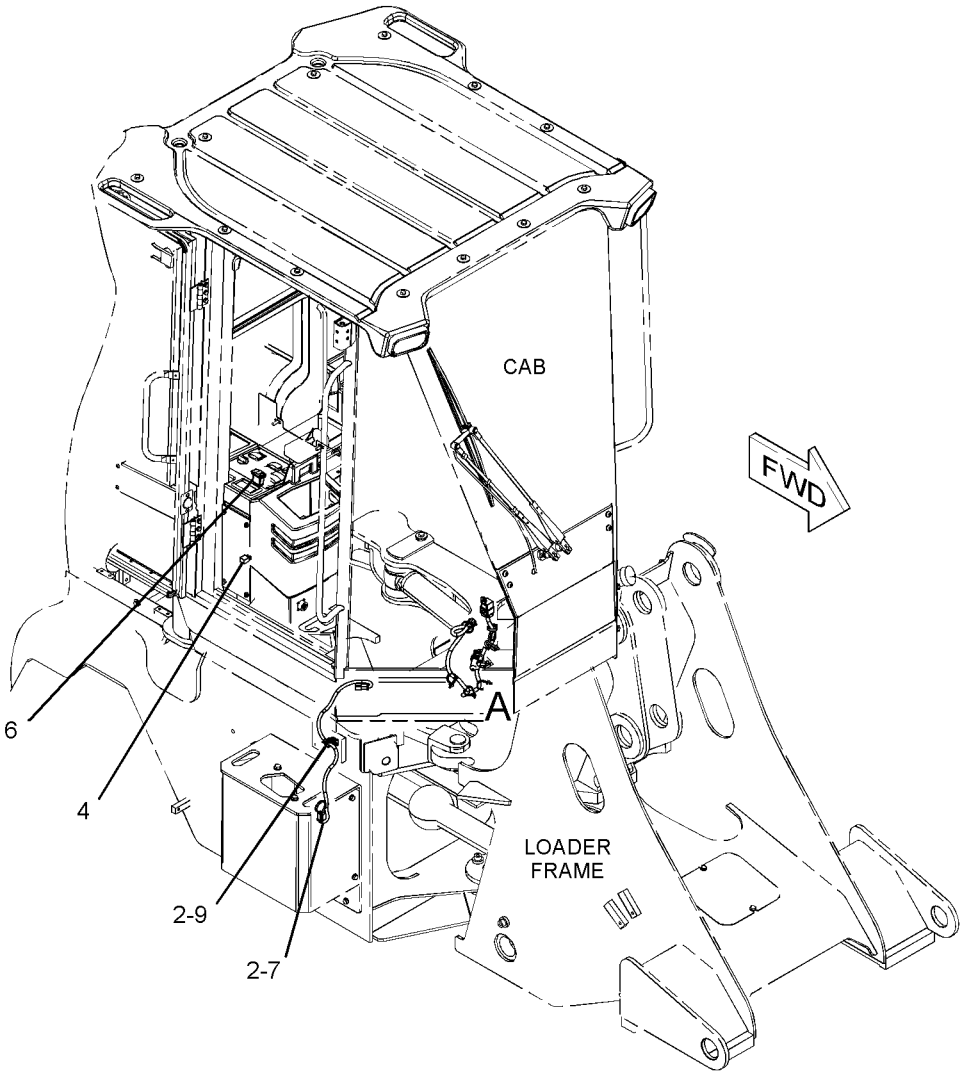

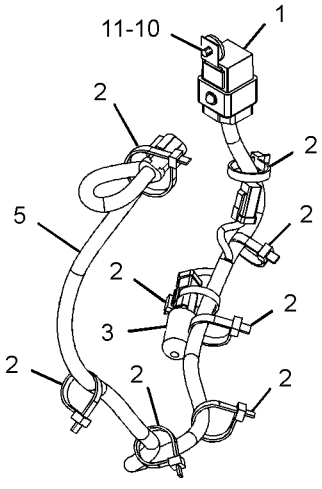

VIEW OF AREA A

GRAPHIC #1 **<END>** g01313748

254-2271 WIRING GP-SECONDARY STEERING

S/N: TWR1-UP
PART OF 235-6886, 241-5668 STEERING AR-SECONDARY
AN ATTACHMENT

SMCS-1408, 4334 **i02595453**

NOTE	REF NO	GRAPHIC REF	PART NUMBER	QTY	PART NAME 1 2 3 4 5 6 (PRODUCT LEVEL)	SEE PAGE
Y	1	1	**179-0006**	1	SWITCH GP-MAGNETIC (24-VOLT TO 32-VOLT) (SECONDARY STEERING RELAY)	192
	2	1	**3W-6188**	1	BRACKET	
	3	1	**7K-1181**	8	STRAP-CABLE	
	4	1	**8X-9618**	1	STRAP AS-GROUND	
	5	1	**9L-1566**	1	SUPPORT	
	6	1	**118-5597**	1	DIODE AS	
	7	1	**158-5089**	1	RELAY AS (24-VOLT) (SECONDARY STEERING)	
	8	1	**180-8860**	1	HARNESS AS-STEERING (SECONDARY)	
		1	**102-8803**	1	KIT-RECEPTACLE (3-PIN)	
					(INCLUDES RECEPTACLE AS & WEDGE)	
	9	1	**185-2768**	1	SWITCH AS-ROCKER (SECONDARY STEERING)	
	10	1	**208-9645**	1	CABLE AS	
E		1	**5P-0760**		CABLE (00-GA, RED) (70-CM)	
		1	**8T-8827**	1	BOOT	
		1	**030-1707**	2	TERMINAL-RING (FOR 3/8-IN BOLT)	
	11	1	**208-9646**	1	CABLE AS	
E		1	**5P-0760**		CABLE (00-GA, RED) (30-CM)	
		1	**8T-8827**	2	BOOT	
		1	**030-1707**	2	TERMINAL-RING (FOR 3/8-IN BOLT)	
	12	1	**251-9968**	1	HARNESS AS-STEERING (PRIMARY PRESSURE SWITCH)	
		1	**102-8803**	1	KIT-RECEPTACLE (3-PIN)	
					(INCLUDES RECEPTACLE AS & WEDGE)	
		1	**155-2260**	1	KIT-CONNECTING PLUG (3-PIN)	
					(INCLUDES PLUG AS, WEDGES & INTERFACE SEAL)	
	13	1	**8T-4205**	4	WASHER-HARD (7.2X14.5X2-MM THK)	
	14	1	**4P-8134**	1	CLIP	
	15	1	**5P-4116**	1	WASHER-HARD (8.8X20.5X2-MM THK)	
	16	1	**5P-9299**	3	CLIP	
	17	1	**8T-4121**	7	WASHER-HARD (11X21X2.5-MM THK)	
M	18	1	**8T-4133**	3	NUT (M10X1.5-THD)	
M	19	1	**8T-4136**	3	BOLT (M10X1.5X25-MM)	
M	20	1	**8T-4171**	4	BOLT (M6X1X12-MM)	
M	21	1	**8T-4189**	1	BOLT (M8X1.25X20-MM)	
M	22	1	**8T-4195**	1	BOLT (M10X1.5X30-MM)	

E-ORDER BY THE CENTIMETER
M-METRIC PART
Y-SEPARATE ILLUSTRATION

254-2271 **WIRING GP-SECONDARY STEERING** *(contd.)* **i02595453**

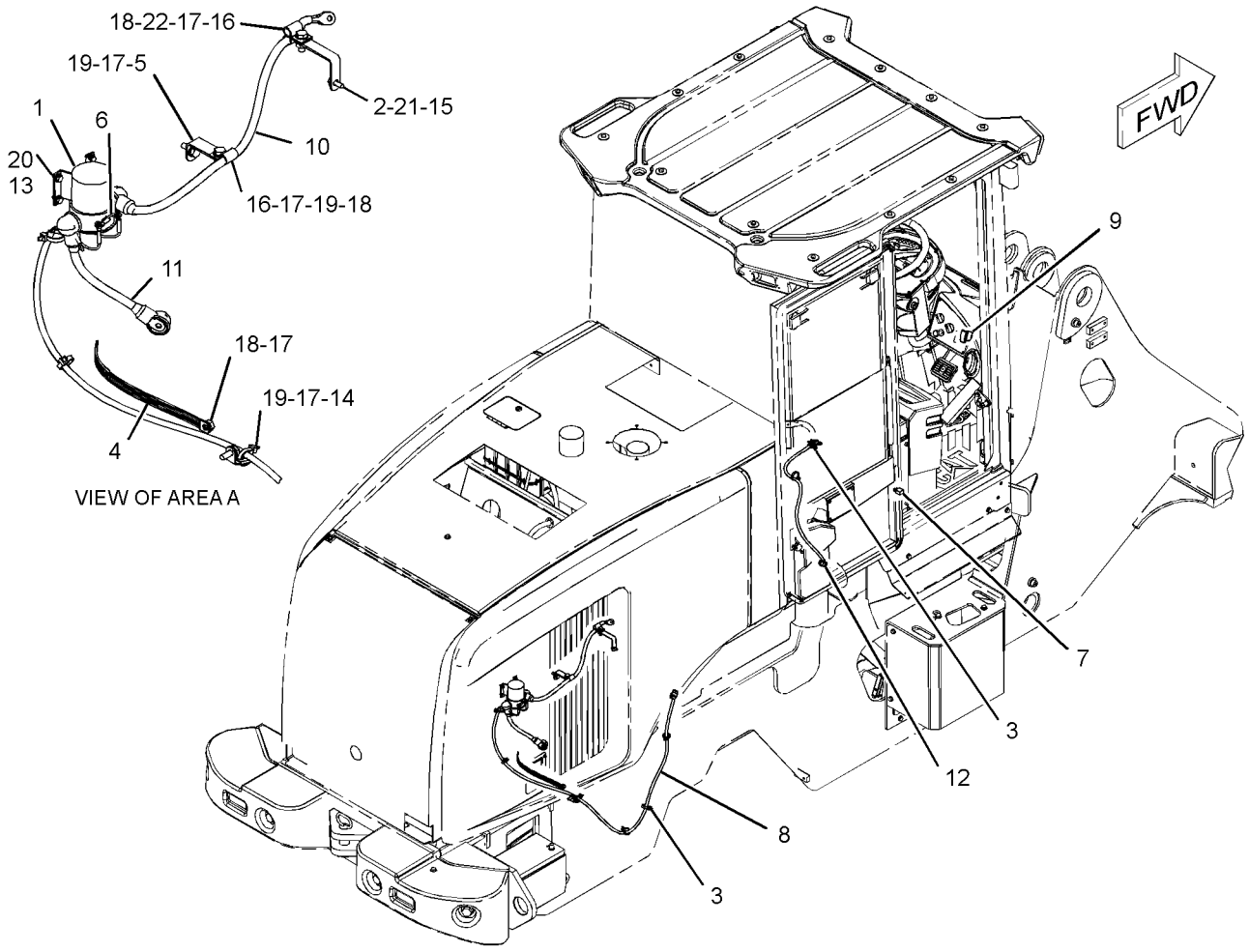

GRAPHIC #1 **<END>** g01293948

234-4253 AXLE AR-FIXED—FRONT, STANDARD DIFFERENTIAL—SINGLE DISC BRAKE

S/N: TWR1-UP

AN ATTACHMENT

SMCS-3013, 3278 **i02595395**

NOTE	PART NUMBER	QTY	PART NAME 1 2 3 4 5 6 (PRODUCT LEVEL)	SEE PAGE
Y	*234-4249*	2	BRAKE & PLANETARY GP (SINGLE DISC)	243
Y	**235-5811**	1	DIFFERENTIAL GP (STANDARD)	261
Y	*236-7496*	1	GEAR GP-BEVEL & PINION (FRONT)	272
Y	*234-4246*	1	HOUSING GP-FIXED AXLE (FRONT)	279
	220-7925	1	PLATE GP-AXLE IDENTIFICATION	

Y-SEPARATE ILLUSTRATION

<END>

234-4255 AXLE AR-FIXED—FRONT, LIMITED SLIP DIFFERENTIAL—SINGLE DISC BRAKE

S/N: TWR1-UP

AN ATTACHMENT

SMCS-3013, 3278 **i02595396**

NOTE	PART NUMBER	QTY	PART NAME 1 2 3 4 5 6 (PRODUCT LEVEL)	SEE PAGE
Y	*234-4249*	2	BRAKE & PLANETARY GP (SINGLE DISC)	243
Y	**236-0931**	1	DIFFERENTIAL GP-LIMITED SLIP	262
Y	*236-7496*	1	GEAR GP-BEVEL & PINION (FRONT)	272
Y	*234-4246*	1	HOUSING GP-FIXED AXLE (FRONT)	279
	220-7925	1	PLATE GP-AXLE IDENTIFICATION	

Y-SEPARATE ILLUSTRATION

<END>

234-4258 AXLE AR-OSCILLATING—REAR, STANDARD DIFFERENTIAL—DUAL DISC BRAKE

S/N: TWR1-UP

PART OF 235-6848 AXLE AR-OSCILLATING

AN ATTACHMENT

SMCS-3013, 3278 **i02595397**

NOTE	PART NUMBER	QTY	PART NAME 1 2 3 4 5 6 (PRODUCT LEVEL)	SEE PAGE
Y	*234-4250*	2	BRAKE & PLANETARY GP (DUAL DISC)	244
Y	**235-5811**	1	DIFFERENTIAL GP (STANDARD)	261
Y	*236-7495*	1	GEAR GP-BEVEL & PINION (REAR)	270
Y	*234-4248*	1	HOUSING GP-OSCILLATING AXLE (REAR)	283
	220-7925	1	PLATE GP-AXLE IDENTIFICATION	

Y-SEPARATE ILLUSTRATION

<END>

234-4264 AXLE AR-OSCILLATING–
REAR, LIMITED SLIP DIFFERENTIAL–DUAL DISC BRAKE
S/N: TWR1-2727
PART OF 235-6850 AXLE AR-OSCILLATING
AN ATTACHMENT

SMCS-3013, 3278 **i02595398**

NOTE	PART NUMBER	QTY	PART NAME 1 2 3 4 5 6 (PRODUCT LEVEL)	SEE PAGE
Y	*234-4250*	2	BRAKE & PLANETARY GP (DUAL DISC)	244
Y	**236-0931**	1	DIFFERENTIAL GP-LIMITED SLIP	262
Y	*236-7495*	1	GEAR GP-BEVEL & PINION (REAR)	270
Y	*234-4248*	1	HOUSING GP-OSCILLATING AXLE (REAR)	283
	220-7925	1	PLATE GP-AXLE IDENTIFICATION	
Y-SEPARATE ILLUSTRATION				

<END>

235-6843 AXLE AR-OSCILLATING–
REAR, STANDARD DIFFERENTIAL–SINGLE DISC BRAKE
S/N: TWR1-UP
AN ATTACHMENT

SMCS-3013, 3278 **i02590574**

NOTE	PART NUMBER	QTY	PART NAME 1 2 3 4 5 6 (PRODUCT LEVEL)	SEE PAGE
Y	*234-4254*	1	AXLE GP-OSCILLATING (REAR, STANDARD DIFFERENTIAL) (SINGLE DISC BRAKE)	242
Y	*262-5662*	1	LINES GP-HYDRAULIC FAN	610
Y	*192-4367*	1	LINES GP-WATER (RADIATOR)	67
Y-SEPARATE ILLUSTRATION				

<END>

235-6846 AXLE AR-OSCILLATING–
REAR, LIMITED SLIP DIFFERENTIAL–SINGLE DISC BRAKE
S/N: TWR1-2445
AN ATTACHMENT

SMCS-3013, 3278 **i02590576**

NOTE	PART NUMBER	QTY	PART NAME 1 2 3 4 5 6 (PRODUCT LEVEL)	SEE PAGE
Y	*234-4256*	1	AXLE GP-OSCILLATING (REAR, LIMITED SLIP DIFF) (SINGLE DISC BRAKE)	242
Y	*243-0680*	1	LINES GP-HYDRAULIC FAN	607
			S/N: TWR1-705	
Y	*262-5662*	1	LINES GP-HYDRAULIC FAN	610
Y	*192-4367*	1	LINES GP-WATER (RADIATOR)	67
Y-SEPARATE ILLUSTRATION				

<END>

235-6848 AXLE AR-OSCILLATING–
REAR, STANDARD DIFFERENTIAL–DUAL DISC BRAKE
S/N: TWR1-UP
AN ATTACHMENT

SMCS-3013, 3278 **i02668676**

NOTE	PART NUMBER	QTY	PART NAME 1 2 3 4 5 6 (PRODUCT LEVEL)	SEE PAGE
Y	*234-4258*	1	AXLE AR-OSCILLATING (REAR, STANDARD DIFFERENTIAL)	239
			–OR–	
Y	*267-7379*	1	AXLE AR-OSCILLATING (REAR, STANDARD DIFFERENTIAL)	241
Y	*262-5670*	1	LINES GP-AXLE OIL COOLER	291
Y	*192-4360*	1	LINES GP-WATER (RADIATOR, WITH AXLE OIL COOLER)	66
Y-SEPARATE ILLUSTRATION				

<END>

235-6850 AXLE AR-OSCILLATING–
REAR, LIMITED SLIP DIFFERENTIAL–DUAL DISC BRAKE
S/N: TWR1-UP
AN ATTACHMENT

SMCS-3013, 3278 **i02636565**

NOTE	PART NUMBER	QTY	PART NAME 1 2 3 4 5 6 (PRODUCT LEVEL)	SEE PAGE
Y	*234-4264*	1	AXLE AR-OSCILLATING (REAR, LIMITED SLIP DIFF)	240
			S/N: TWR1-2727	
Y	*267-7380*	1	AXLE AR-OSCILLATING (REAR, LIMITED SLIP DIFF)	242
			S/N: TWR2728-UP	
Y	*235-6847*	1	LINES GP-AXLE OIL COOLER	285
			S/N: TWR1-705	
Y	*262-5670*	1	LINES GP-AXLE OIL COOLER	291
			S/N: TWR706-UP	
Y	*192-4360*	1	LINES GP-WATER (RADIATOR, WITH AXLE OIL COOLER)	66
Y-SEPARATE ILLUSTRATION				

<END>

267-7379 AXLE AR-OSCILLATING
S/N: TWR706-UP
PART OF 235-6848 AXLE AR-OSCILLATING
AN ATTACHMENT

SMCS-3013, 3278 **i02668728**

NOTE	PART NUMBER	QTY	PART NAME 1 2 3 4 5 6 (PRODUCT LEVEL)	SEE PAGE
Y	*267-7418*	2	BRAKE & PLANETARY GP (DUAL DISC)	245
Y	**235-5811**	1	DIFFERENTIAL GP (STANDARD)	261
Y	*236-7495*	1	GEAR GP-BEVEL & PINION (REAR) (OSCILLATING AXLE)	270
Y	*234-4248*	1	HOUSING GP-OSCILLATING AXLE (REAR)	283
	220-7925	1	PLATE GP-AXLE IDENTIFICATION	
Y-SEPARATE ILLUSTRATION				

<END>

267-7380 AXLE AR-OSCILLATING–
REAR, LIMITED SLIP DIFFERENTIAL–DUAL DISC BRAKE
S/N: TWR2728-UP
PART OF 235-6850 AXLE AR-OSCILLATING
AN ATTACHMENT

SMCS-3013, 3278 **i02896540**

NOTE	PART NUMBER	QTY	PART NAME 1 2 3 4 5 6 (PRODUCT LEVEL)	SEE PAGE
Y	*267-7418*	2	BRAKE & PLANETARY GP (DUAL DISC)	245
Y	**236-0931**	1	DIFFERENTIAL GP-LIMITED SLIP	262
Y	*236-7495*	1	GEAR GP-BEVEL & PINION (REAR)	270
Y	*234-4248*	1	HOUSING GP-OSCILLATING AXLE (REAR)	283
	220-7925	1	PLATE GP-AXLE IDENTIFICATION	

Y-SEPARATE ILLUSTRATION

<END>

234-4254 AXLE GP-OSCILLATING–
REAR, STANDARD DIFFERENTIAL–SINGLE DISC BRAKE
S/N: TWR1-UP
PART OF 235-6843 AXLE AR-OSCILLATING
AN ATTACHMENT

SMCS-3278 **i02199912**

NOTE	PART NUMBER	QTY	PART NAME 1 2 3 4 5 6 (PRODUCT LEVEL)	SEE PAGE
Y	*234-4249*	2	BRAKE & PLANETARY GP (SINGLE DISC)	243
Y	**235-5811**	1	DIFFERENTIAL GP (STANDARD)	261
Y	*236-7495*	1	GEAR GP-BEVEL & PINION (REAR)	270
Y	*234-4247*	1	HOUSING GP-OSCILLATING AXLE (REAR)	281
	220-7925	1	PLATE GP-AXLE IDENTIFICATION	

Y-SEPARATE ILLUSTRATION

<END>

234-4256 AXLE GP-OSCILLATING–
REAR, LIMITED SLIP DIFFERENTIAL–SINGLE DISC BRAKE
S/N: TWR1-UP
PART OF 235-6846 AXLE AR-OSCILLATING
AN ATTACHMENT

SMCS-3278 **i02200017**

NOTE	PART NUMBER	QTY	PART NAME 1 2 3 4 5 6 (PRODUCT LEVEL)	SEE PAGE
Y	*234-4249*	1	BRAKE & PLANETARY GP (SINGLE DISC)	243
Y	**236-0931**	1	DIFFERENTIAL GP-LIMITED SLIP	262
Y	*236-7495*	1	GEAR GP-BEVEL & PINION (REAR)	270
Y	*234-4247*	1	HOUSING GP-OSCILLATING AXLE (REAR)	281
	220-7925	1	PLATE GP-AXLE IDENTIFICATION	

Y-SEPARATE ILLUSTRATION

<END>

234-4249 BRAKE & PLANETARY GP—SINGLE DISC

S/N: TWR1-UP

PART OF 234-4253, 234-4255 AXLE AR-FIXED, 234-4254, 234-4256 AXLE GP-OSCILLATING AN ATTACHMENT

SMCS-4011, 4255 **i02199520**

NOTE	REF NO	GRAPHIC REF	PART NUMBER	QTY	PART NAME 1 2 3 4 5 6 (PRODUCT LEVEL)	SEE PAGE
	1	1	**8R-2200**	3	SHAFT-PLANETARY	
	2	1	**8R-2202**	6	WASHER-THRUST	
	3	1	**163-5776**	1	PISTON	
	4	1	**163-7233**	1	SEAL-D-RING	
	5	1	**163-7234**	1	SEAL-D-RING	
	6	1	**170-0108**	3	SPRING	
	7	1	**170-4698**	1	PLATE-REACTION	
	8	1	**218-3171**	1	GEAR-RING (87-TEETH)	
	9	1	**218-3172**	3	GEAR-PLANETARY (33-TEETH)	
	10	1	**218-3173**	1	GEAR-SUN (18-TEETH)	
	11	1	**218-3174**	1	CARRIER-PLANETARY	
	12	1	**234-4251**	3	BEARING-SLEEVE	
	13	1	**250-1845**	1	DISC-FRICTION	
	14	1	**115-5327**	3	DOWEL	
	15	1	**138-1645**	3	PIN-SPRING	
	16	1	**8T-2925**	3	PIN-SPRING	
	17	1	**9M-4335**	3	DOWEL-REACTION	

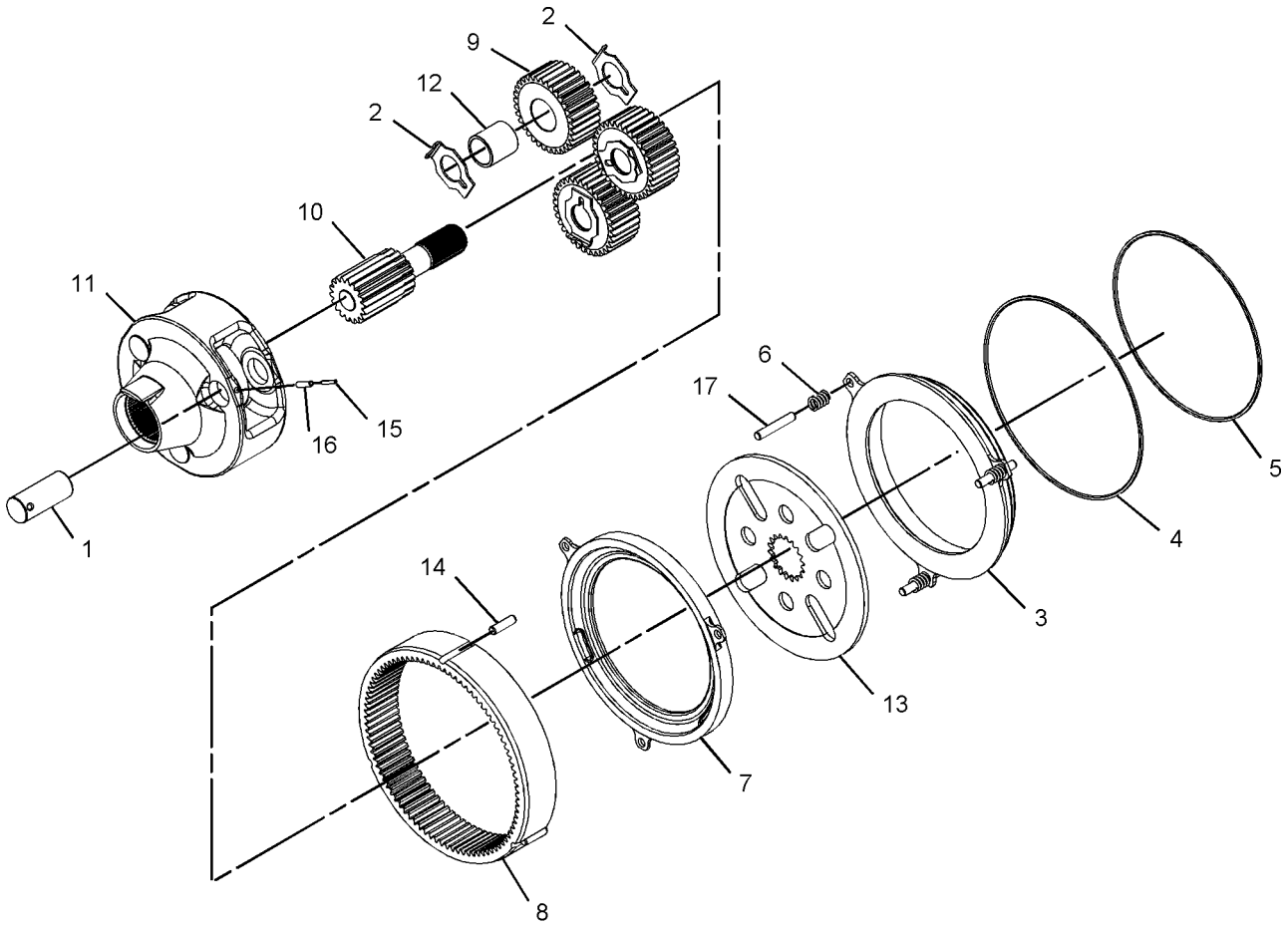

GRAPHIC #1 **<END>** g01112612

234-4250 BRAKE & PLANETARY GP—DUAL DISC

S/N: TWR1-UP

PART OF 234-4258, 234-4264 AXLE AR-OSCILLATING

AN ATTACHMENT

SMCS-4011, 4255 **i02200197**

NOTE	REF NO	GRAPHIC REF	PART NUMBER	QTY	PART NAME 1 2 3 4 5 6 (PRODUCT LEVEL)	SEE PAGE
	1	1	**8R-2200**	3	SHAFT-PLANETARY	
	2	1	**8R-2202**	6	WASHER-THRUST	
	3	1	**163-5776**	1	PISTON	
	4	1	**163-7233**	1	SEAL-D-RING	
	5	1	**163-7234**	1	SEAL-D-RING	
	6	1	**170-0108**	3	SPRING	
	7	1	**170-4698**	1	PLATE-REACTION	
	8	1	**203-5852**	1	PLATE	
	9	1	**203-5853**	3	SLEEVE	
	10	1	**218-3171**	1	GEAR-RING (87-TEETH)	
	11	1	**218-3172**	3	GEAR-PLANETARY (33-TEETH)	
	12	1	**218-3174**	1	CARRIER-PLANETARY	
	13	1	**234-4251**	3	BEARING-SLEEVE	
	14	1	**234-4252**	1	GEAR-SUN (18-TEETH)	
	15	1	**250-1845**	2	DISC-FRICTION	
	16	1	**115-5327**	3	DOWEL	
	17	1	**138-1645**	3	PIN-SPRING	
	18	1	**4M-1677**	3	DOWEL-REACTION	
	19	1	**8T-2925**	3	PIN-SPRING	

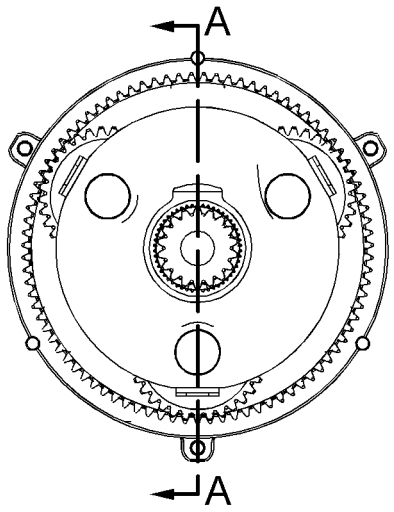

RIGHT SIDE VIEW

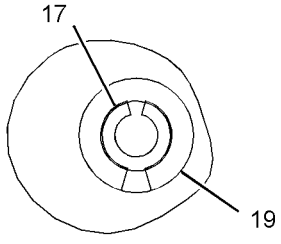

VIEW B-B

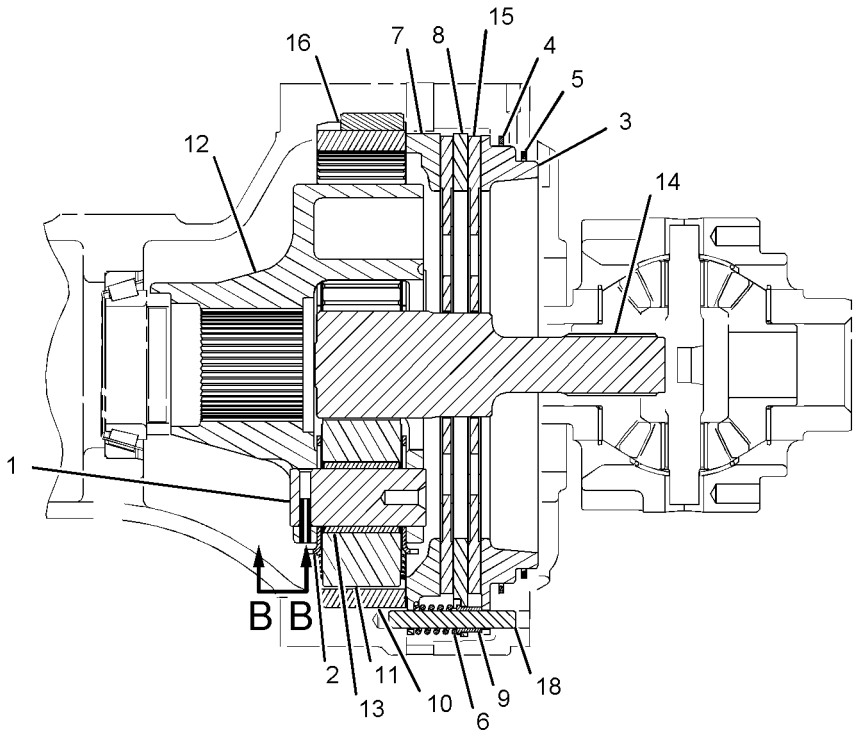

SECTION A-A

GRAPHIC #1 **<END>** g01112513

267-7418 BRAKE & PLANETARY GP—DUAL DISC

S/N: TWR706-UP

PART OF 267-7379, 267-7380 AXLE AR-OSCILLATING

AN ATTACHMENT

SMCS-4011, 4255 **i02636654**

NOTE	REF NO	GRAPHIC REF	PART NUMBER	QTY	PART NAME 1 2 3 4 5 6 (PRODUCT LEVEL)	SEE PAGE
	1	1	**8R-2200**	3	SHAFT-PLANETARY	
	2	1	**8R-2202**	6	WASHER-THRUST	
	3	1	**163-5776**	1	PISTON	
	4	1	**163-7233**	1	SEAL-D-RING	
	5	1	**163-7234**	1	SEAL-D-RING	
	6	1	**170-0108**	3	SPRING	
	7	1	**170-4698**	1	PLATE-REACTION	
	8	1	**203-5852**	1	PLATE	
	9	1	**203-5853**	3	SLEEVE	
	10	1	**218-3171**	1	GEAR-RING (87-TEETH)	
	11	1	**218-3172**	3	GEAR-PLANETARY (33-TEETH)	
	12	1	**218-3174**	1	CARRIER-PLANETARY	
	13	1	**234-4251**	3	BEARING-SLEEVE	
	14	1	**234-4252**	1	GEAR-SUN (18-TEETH)	
	15	1	**193-8638**	2	DISC-FRICTION	
	16	1	**115-5327**	3	DOWEL	
	17	1	**138-1645**	3	PIN-SPRING	
	18	1	**4M-1677**	3	DOWEL-REACTION	
	19	1	**8T-2925**	3	PIN-SPRING	

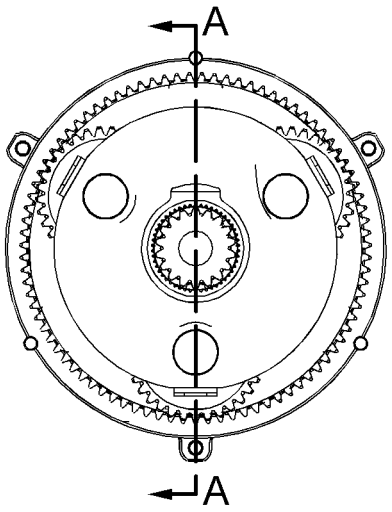

RIGHT SIDE VIEW

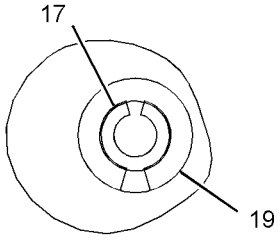

VIEW B-B

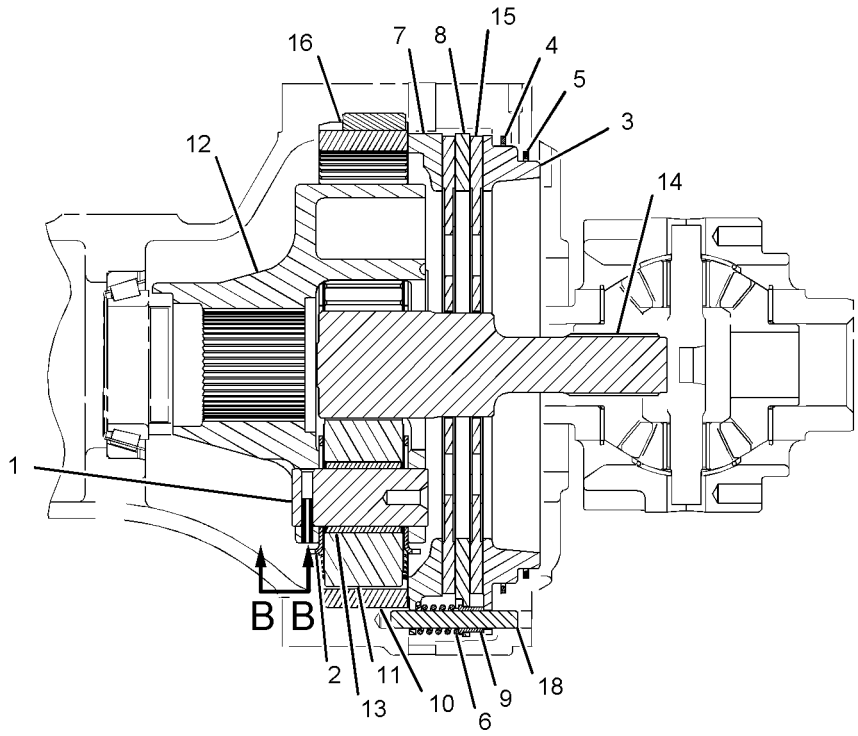

SECTION A-A

GRAPHIC #1 **<END>** g01112513

POWER TRAIN

239-5608 CASE & PARTS GP-TRANSMISSION

S/N: TPA1-UP

PART OF 234-8866 TRANSMISSION AR

SMCS-3064 **i02896353**

NOTE	REF NO	GRAPHIC REF	PART NUMBER	QTY	PART NAME 1 2 3 4 5 6 (PRODUCT LEVEL)	SEE PAGE
M	1	1	**6V-1820**	14	BOLT (M10X1.5X30-MM)	
	2	1	**6V-5839**	16	WASHER (11X21X2.5-MM THK)	
Y	3	1	**177-0019**	1	COVER GP-TRANSMISSION	259
B	4	1	**1U-8846**		SEALANT-GASKET	
	5	1	**239-5607**	1	CASE-TRANSMISSION	
	6	1	**9S-4181**	2	PLUG-O-RING	
	7	1	**9G-5127**	1	BREATHER (TRANSMISSION CASE)	
M	8	1	**7X-0474**	2	BOLT (M10X1.5X220-MM)	
M	9	1	**6V-6317**	3	BOLT (M10X1.5X20-MM)	
	10	1	**3J-1907**	4	SEAL-O-RING	
	11	1	**169-8352**	1	SHIELD AS	
M	12	1	**6A-5591**	4	BOLT (M12X1.75X25-MM)	
	13	1	**2N-7006**	1	COVER	
	14	1	**2N-7007**	1	GASKET	
M	15	1,2	**6V-5230**	13	BOLT (M10X1.5X60-MM)	
	16	1	**8J-0426**	1	PLUG	
	17	2	**305-2215**	1	SEAL-LIP TYPE	
	18	2	**6Y-0584**	1	RACE-ROLLER BEARING	
	19	2	**2W-1141**	4	BEARING-ROLLER	
	20	2	**5P-2304**	1	RACE & ROLLER AS	
	21	2	**005-0469**	2	CUP-BEARING	
	22	2	**5P-0713**	1	SEAL-LIP TYPE	
	23	2	**6Y-9017**	1	CAGE-BEARING	
	24	2	**8H-7521**	1	SEAL-O-RING	
	25	2	**2D-0598**	1	SEAL-O-RING	
	26	2	**9W-1454**	1	COVER	
	27	2	**5P-3863**	1	SEAL-O-RING	
M	28	2	**6V-5217**	3	BOLT (M8X1.25X20-MM)	
	29	2	**8S-9130**	1	SCREEN-SUCTION (TRANSMISSION)	
	30	2	**8S-9129**	1	FILTER-MAGNETIC (TRANSMISSION)	
M	31	1	**6V-5842**	8	BOLT (M10X1.5X40-MM)	
	32	1	**7T-2703**	1	PLUG-DRAIN (TRANSMISSION)	
	33	1	**7M-8485**	3	SEAL-O-RING	
M	34	1	**8T-9085**	1	BOLT (M10X1.5X150-MM)	
	35	2	**148-1928**	1	VALVE-RELIEF (TORQUE CONVERTER INLET)	
	36	2	**9X-4609**	1	SEAL-O-RING	
	37	1	**6V-1720**	1	PLATE-SERIAL NUMBER (TRANSMISSION) (TRANSMISSION)	
	38	1	**5H-6005**	4	SEAL-O-RING	
	39	2	**6Y-9016**	1	SHIM PACK (INCLUDES 12-SHIMS)	
	40	2	**1B-3978**	1	CUP-BEARING (TAPERED ROLLER)	
	41	1	**9W-7159**	2	SHIM PACK (INCLUDES 12-SHIMS)	
	42	1	**9S-4191**	2	PLUG-O-RING	
	43	1	**7F-8268**	1	SEAL-O-RING	
	44	1	**6V-3965**	2	FITTING (QUICK DISCONNECT)	
	45	1	**6V-0852**	2	CAP-DUST	
Y	46	2	**6I-9806**	1	VALVE GP-RELIEF (TORQUE CONVERTER OUTLET)	336
	47	2	**8T-5452**	2	SEAL-O-RING	
	48	2	**146-6280**	1	COVER	
	49	2	**4S-5879**	1	SEAL-O-RING	
	50	1	**5P-7684**	1	PLUG	
	51	1	**6K-6307**	1	SEAL-O-RING	

B-USE AS REQUIRED
M-METRIC PART
Y-SEPARATE ILLUSTRATION

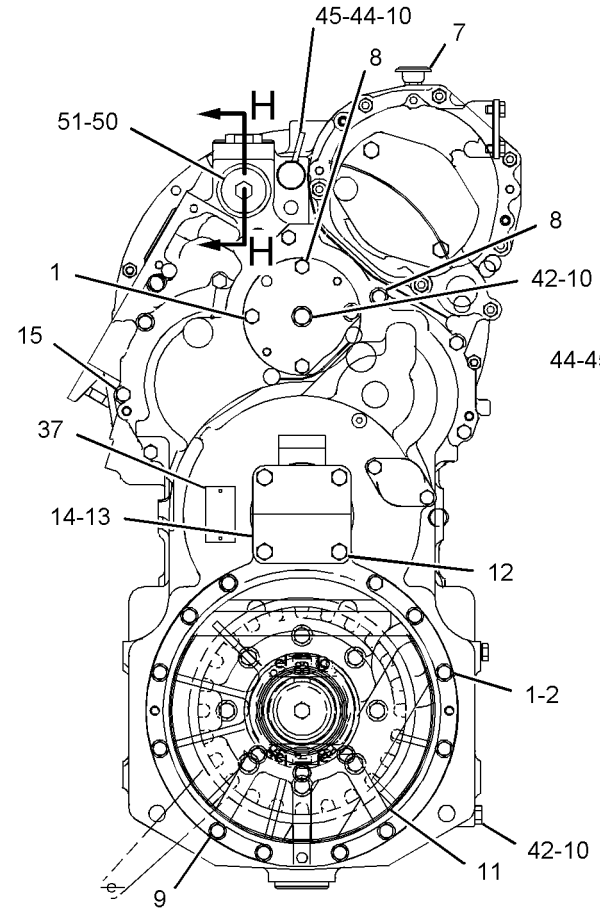

FRONT VIEW

REFER TO ALL ILLUSTRATIONS OF THIS GROUP FOR AUXILIARY VIEWS

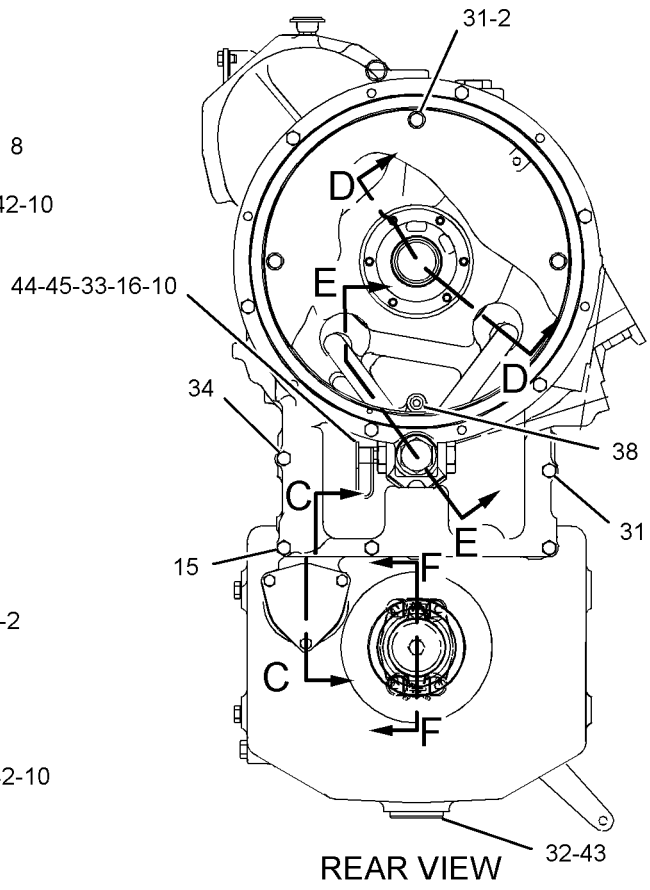

REAR VIEW

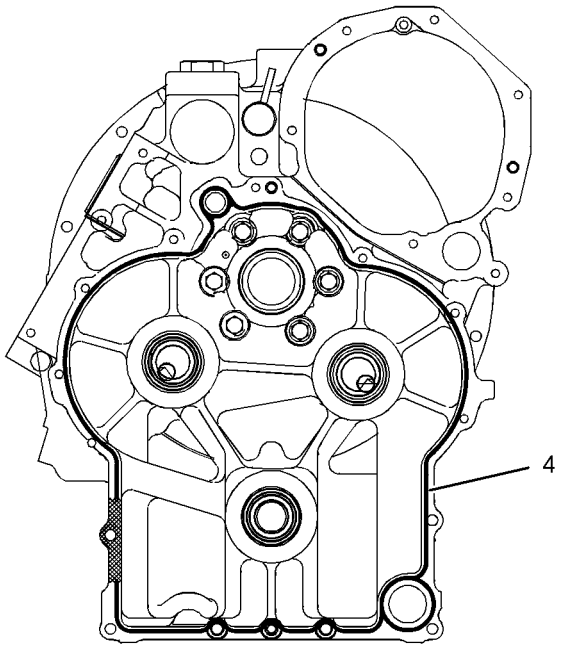

SECTION G-G

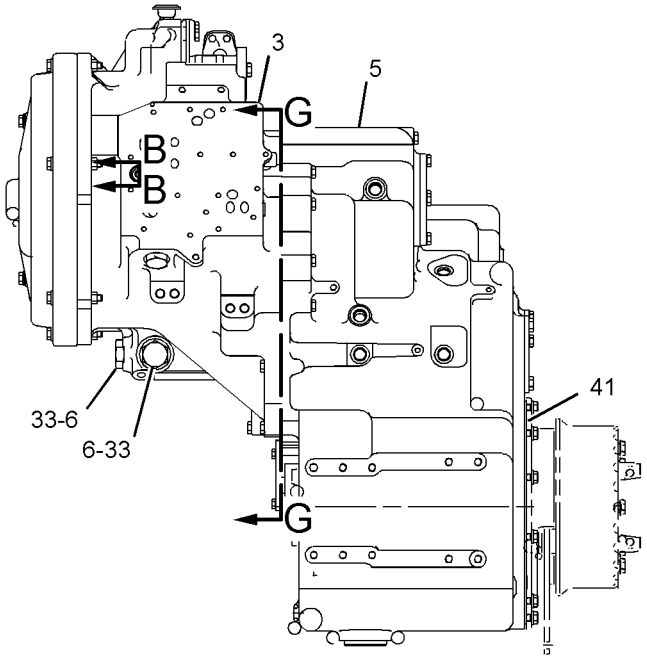

LEFT SIDE VIEW

GRAPHIC #1 g01110977

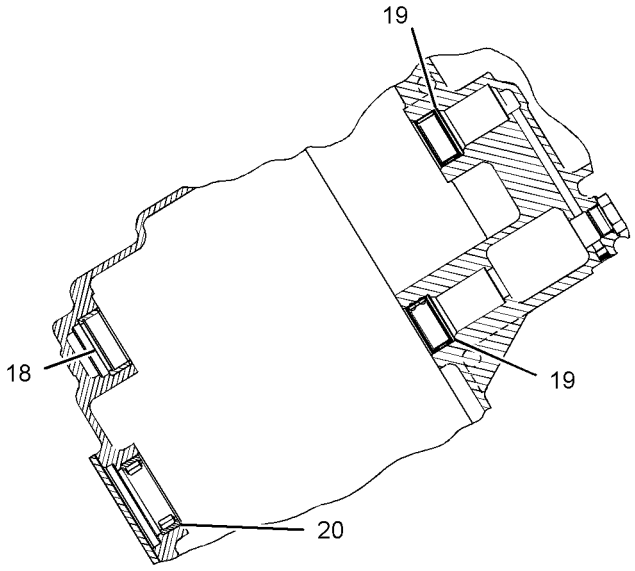

SECTION E-E

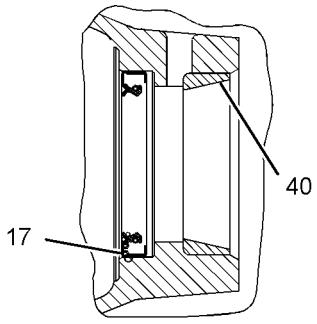

SECTION F-F

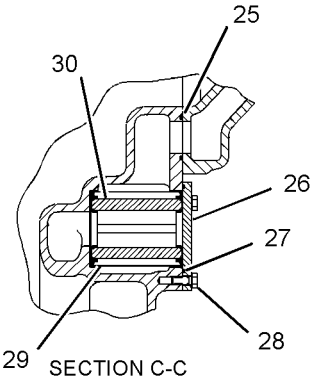

SECTION C-C

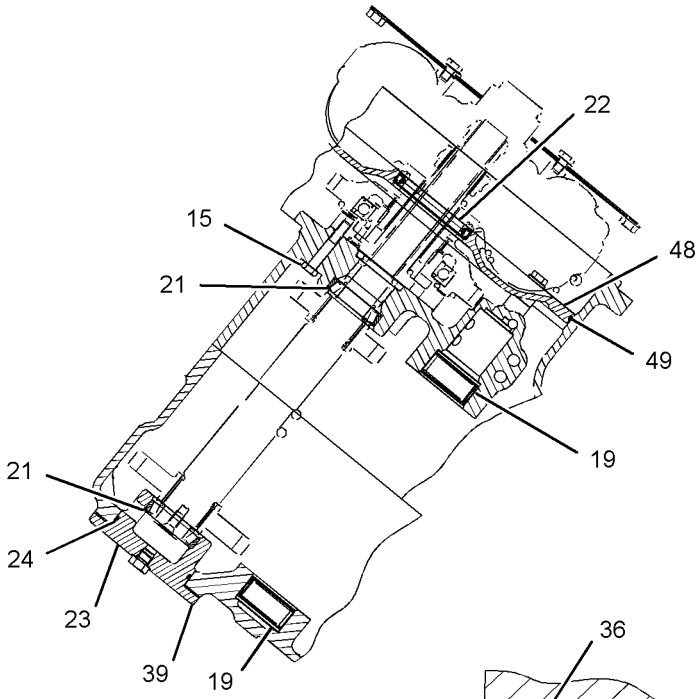

SECTION D-D

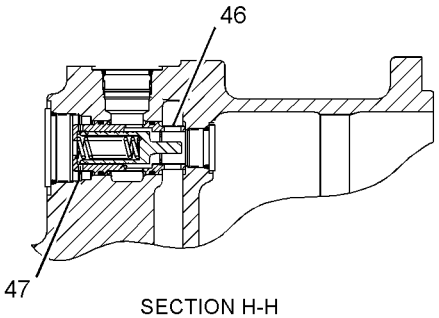

SECTION H-H

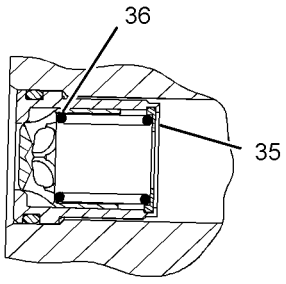

SECTION B-B

GRAPHIC #2 **<END>** g01110978

234-8854 CLUTCH GP—FORWARD HIGH, FORWARD LOW

S/N: TPA1-UP

PART OF 234-8866 TRANSMISSION AR

SMCS-3155 **i02478222**

NOTE	REF NO	GRAPHIC REF	PART NUMBER	QTY	PART NAME 1 2 3 4 5 6 (PRODUCT LEVEL)	SEE PAGE
	1	1	**6I-8390**	3	RING-SEAL	
	2	1	**142-5862**	1	SHAFT AS	
	3	1	**8C-3982**	2	RING-RETAINING	
	4	1	**120-4482**	1	GEAR (37-TEETH)	
	5	1	**8T-1742**	1	RING-RETAINING	
	6	1	**8E-5726**	1	PLATE-END	
	7	1	**6Y-1300**	6	DISC-FRICTION	
	8	1	**8E-5556**	6	PLATE-CLUTCH	
	9	1	**9W-9372**	2	RING-SEAL	
	10	1	**9W-9371**	2	RING-SEAL	
	11	1	**6Y-5631**	4	PLATE-CLUTCH	
	12	1	**6Y-7968**	4	DISC-FRICTION	
	13	1	**270-8670**	1	RING-RETAINING	
	14	1	**8E-5707**	1	PLATE-END	
	15	1	**8E-8313**	4	DISC-THRUST	
	16	1	**8C-3979**	1	RING-RETAINING	
	17	1	**234-8853**	1	GEAR AS	
		1	**2W-1141**	1	BEARING-ROLLER	
		1	**7X-2495**	1	RING-RETAINING	
	18	1	**9W-6904**	2	RING-RETAINING	
	19	1	**9W-9718**	1	RETAINER-SPRING	
	20	1	**6Y-7818**	2	SPRING	
	21	1	**6Y-8157**	1	PISTON	
	22	1	**116-4870**	1	PISTON	
	23	1	**8E-5727**	1	RETAINER-SPRING	
	24	1	**109-4727**	1	HUB AS	
		1	**2W-1141**	1	BEARING-ROLLER	
		1	**7X-2495**	1	RING-RETAINING	
	25	1	**9N-4354**	2	BODY-VALVE	
	26	1	**3D-2891**	2	BALL	
	27	1	**129-8732**	2	SPRING	
	28	1	**8L-2746**	2	SEAL-O-RING	
	29	1	**9N-4365**	2	RETAINER-SPRING	
	30	1	**3D-8358**	2	RING-RETAINING	

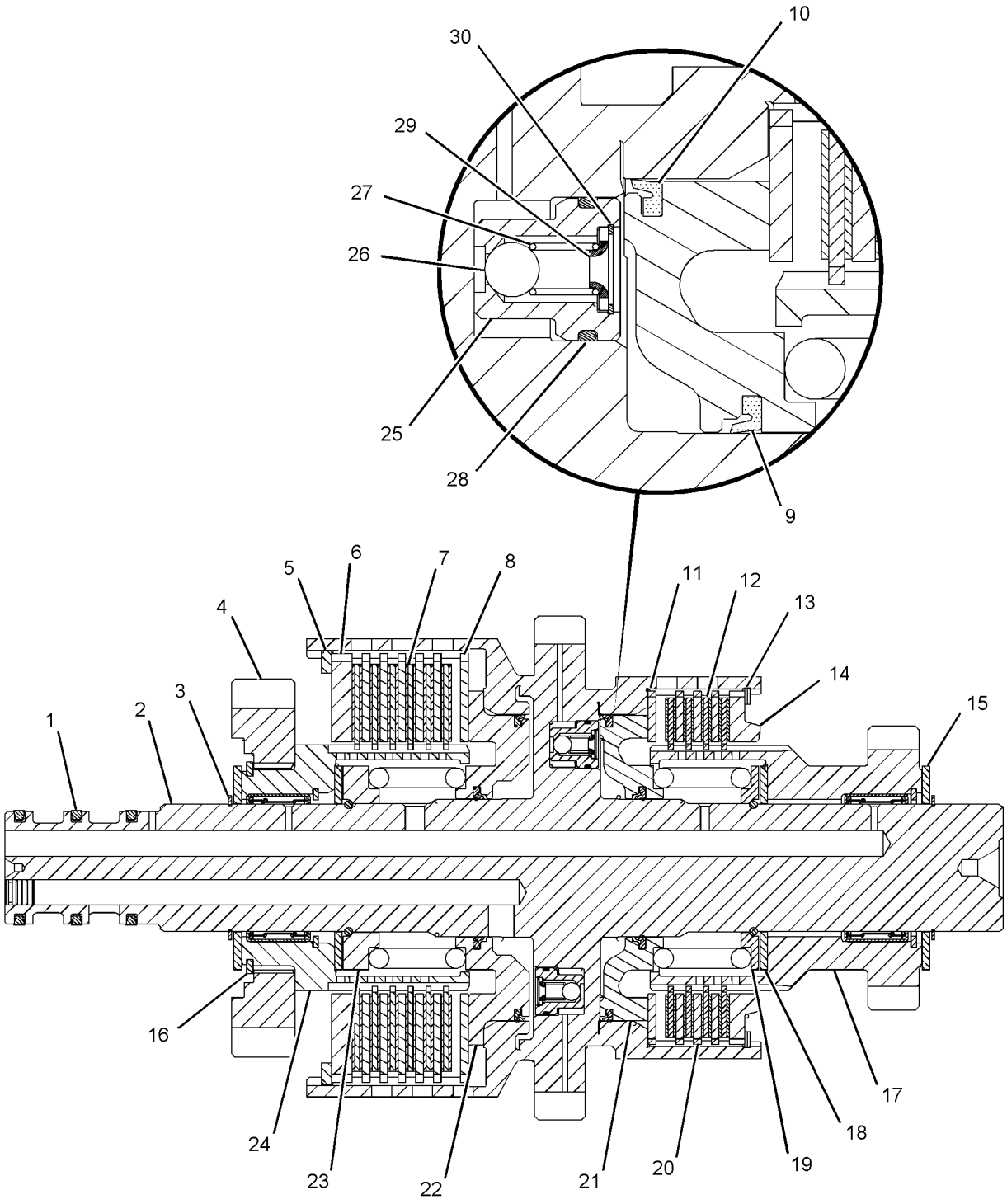

GRAPHIC #1 **<END>** g01108786

234-8857 CLUTCH GP—FIRST, THIRD

S/N: TPA1-UP

PART OF 234-8866 TRANSMISSION AR

TYPE 1

SMCS-3155 **i03084904**

NOTE	REF NO	GRAPHIC REF	PART NUMBER	QTY	PART NAME 1 2 3 4 5 6 (PRODUCT LEVEL)	SEE PAGE
	1	1	**6I-8390**	3	RING-SEAL	
	2	1	**8C-3982**	2	RING-RETAINING	
	3	1	**8C-3979**	1	RING-RETAINING	
	4	1	**9W-7765**	1	GEAR (40-TEETH)	
	5	1	**109-4728**	1	HUB AS	
		1	**2W-1141**	1	BEARING-ROLLER	
		1	**7X-2495**	1	RING-RETAINING	
	6	1	**9W-9718**	1	RETAINER-SPRING	
	7	1	**6Y-7818**	1	SPRING	
	8	1	**9W-9372**	1	RING-SEAL	
	9	1	**6Y-8157**	1	PISTON	
	10	1	**9W-9371**	1	RING-SEAL	
	11	1	**6Y-8265**	1	SEAL AS-BALANCE	
	12	1	**6Y-5027**	1	RING-RETAINING	
	13	1	**9W-6922**	1	WASHER-THRUST	
	14	1	**8E-6117**	1	GEAR (93-TEETH)	
	15	1	**234-8858**	1	GEAR (49-TEETH)	
	16	1	**9W-6466**	1	WASHER-THRUST	
	17	1	**8E-6558**	1	RACE-ROLLER BEARING	
	18	1	**234-8863**	1	SHAFT AS	
	19	1	**8E-8317**	2	DISC-THRUST	
	20	1	**6V-2394**	1	RING-RETAINING	
	21	1	**8E-6120**	1	HUB AS	
		1	**8E-3416**	1	BEARING-SLEEVE	
	22	1	**6Y-8514**	1	PLATE-END	
	23	1	**236-2541**	1	RING-RETAINING	
	24	1	**9W-6927**	2	RING-RETAINING	
	25	1	**6Y-7922**	9	DISC-FRICTION	
	26	1	**8E-6115**	9	PLATE-CLUTCH	
	27	1	**114-1071**	1	PISTON	
	28	1	**132-9623**	1	SPRING-WAVE	
	29	1	**6Y-5631**	5	PLATE-CLUTCH	
	30	1	**6Y-7968**	5	DISC-FRICTION	
	31	1	**270-8670**	1	RING-RETAINING	
	32	1	**8E-5707**	1	PLATE-END	
	33	1	**9W-6904**	1	RING-RETAINING	
	34	1	**8E-8313**	2	DISC-THRUST	
	35	1	**9W-9436**	1	RING-SEAL	
	36	1	**9W-9399**	1	RING-SEAL	

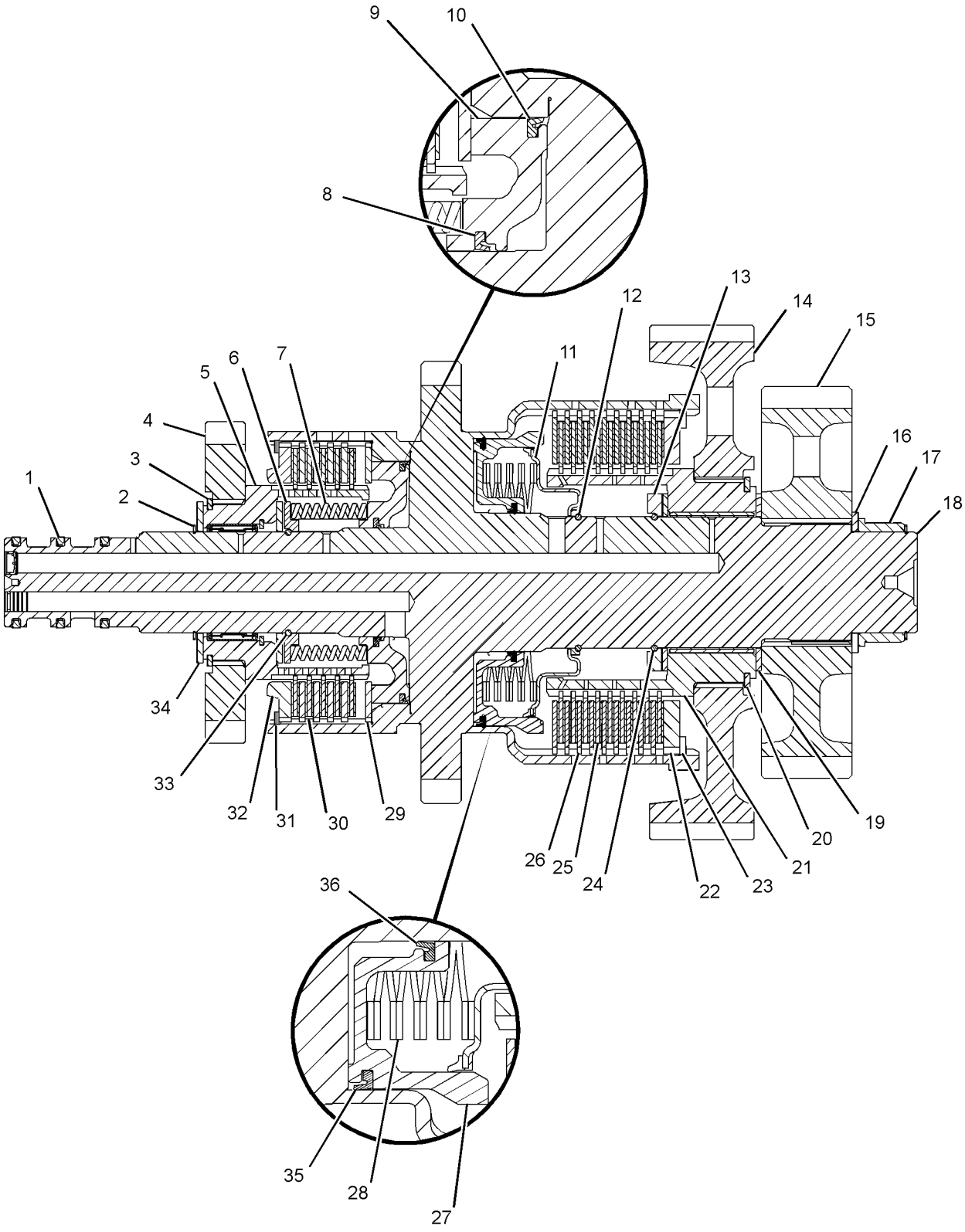

GRAPHIC #1 **<END>** g01567013

234-8857 CLUTCH GP—FIRST, THIRD

S/N: TPA1-UP

PART OF 234-8866 TRANSMISSION AR

TYPE 2

SMCS-3155 **i03084903**

NOTE	REF NO	GRAPHIC REF	PART NUMBER	QTY	PART NAME 1 2 3 4 5 6 (PRODUCT LEVEL)	SEE PAGE
	1	1	**6I-8390**	3	RING-SEAL	
	2	1	**8C-3982**	2	RING-RETAINING	
	3	1	**8C-3979**	1	RING-RETAINING	
	4	1	**9W-7765**	1	GEAR (40-TEETH)	
	5	1	**109-4728**	1	HUB AS	
		1	**2W-1141**	1	BEARING-ROLLER	
		1	**7X-2495**	1	RING-RETAINING	
	6	1	**9W-9718**	1	RETAINER-SPRING	
	7	1	**6Y-7818**	1	SPRING	
	8	1	**9W-9372**	1	RING-SEAL	
	9	1	**6Y-8157**	1	PISTON	
	10	1	**9W-9371**	1	RING-SEAL	
	11	1	**6Y-8265**	1	SEAL AS-BALANCE	
	12	1	**6Y-5027**	1	RING-RETAINING	
	13	1	**9W-6922**	1	WASHER-THRUST	
	14	1	**8E-6117**	1	GEAR (93-TEETH)	
	15	1	**234-8858**	1	GEAR (49-TEETH)	
	16	1	**9W-6466**	1	WASHER-THRUST	
	17	1	**8E-6558**	1	RACE-ROLLER BEARING	
C	18	1	**303-4214**	1	SHAFT AS	
	19	1	**8E-8317**	2	DISC-THRUST	
	20	1	**6V-2394**	1	RING-RETAINING	
	21	1	**8E-6120**	1	HUB AS	
		1	**8E-3416**	1	BEARING-SLEEVE	
	22	1	**6Y-8514**	1	PLATE-END	
	23	1	**236-2541**	1	RING-RETAINING	
	24	1	**9W-6927**	2	RING-RETAINING	
	25	1	**6Y-7922**	9	DISC-FRICTION	
	26	1	**8E-6115**	9	PLATE-CLUTCH	
	27	1	**114-1071**	1	PISTON	
	28	1	**132-9623**	1	SPRING-WAVE	
	29	1	**6Y-5631**	5	PLATE-CLUTCH	
	30	1	**6Y-7968**	5	DISC-FRICTION	
	31	1	**270-8670**	1	RING-RETAINING	
	32	1	**8E-5707**	1	PLATE-END	
	33	1	**9W-6904**	1	RING-RETAINING	
	34	1	**8E-8313**	2	DISC-THRUST	
	35	1	**9W-9436**	1	RING-SEAL	
	36	1	**9W-9399**	1	RING-SEAL	

C-CHANGE FROM PREVIOUS TYPE

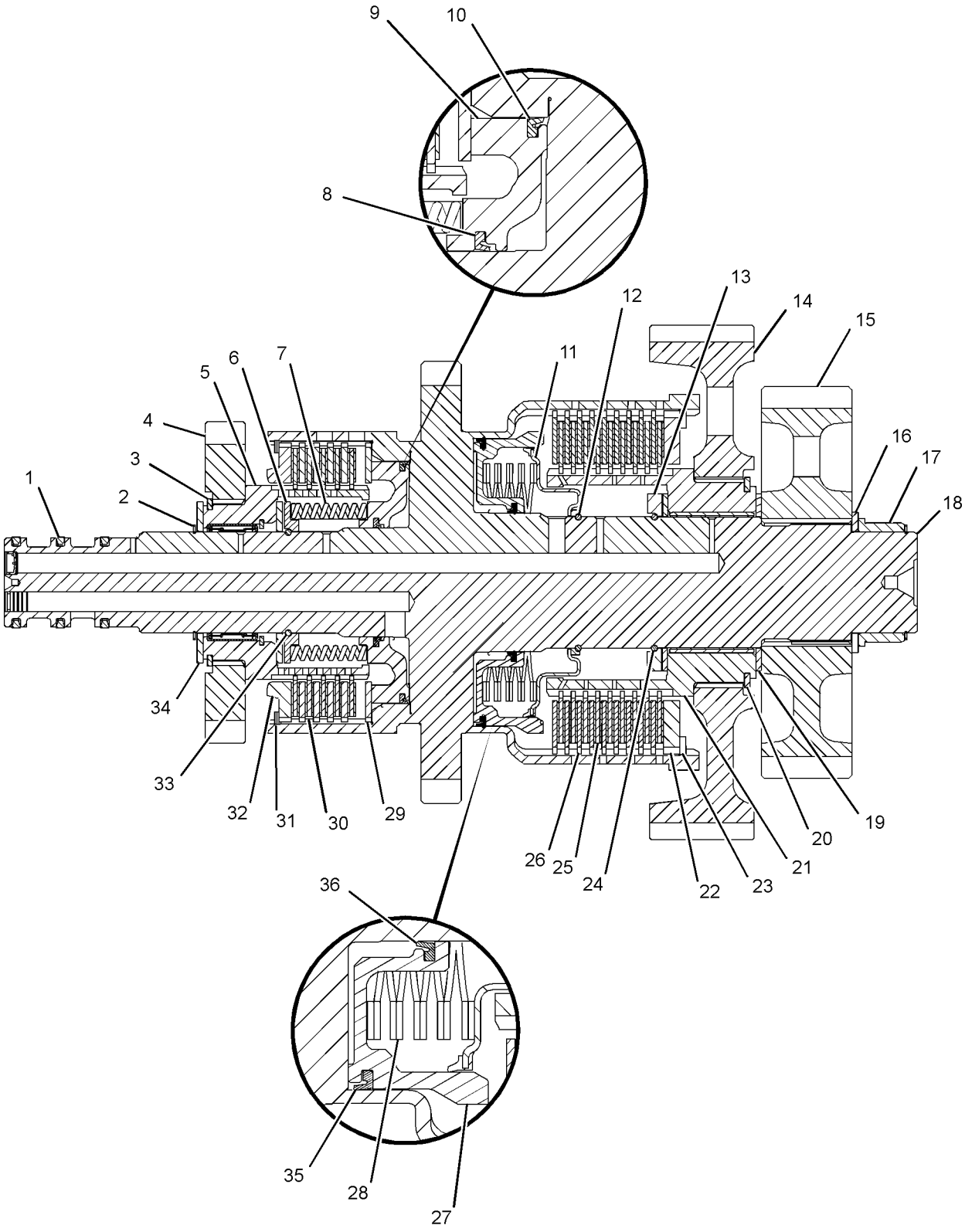

GRAPHIC #1 **<END>** g01567013

234-8861 CLUTCH GP–REVERSE, SECOND

S/N: TPA1-UP

PART OF 234-8866 TRANSMISSION AR

SMCS-3155 **i02478220**

NOTE	REF NO	GRAPHIC REF	PART NUMBER	QTY	PART NAME 1 2 3 4 5 6 (PRODUCT LEVEL)	SEE PAGE
	1	1	**6I-8390**	3	RING-SEAL	
	2	1	**142-5914**	1	SHAFT AS	
	3	1	**8C-3979**	2	RING-RETAINING	
	4	1	**120-4482**	1	GEAR (37-TEETH)	
	5	1	**8T-1742**	1	RING-RETAINING	
	6	1	**8E-5726**	1	PLATE-END	
	7	1	**6Y-1300**	6	DISC-FRICTION	
	8	1	**8E-5556**	6	PLATE-CLUTCH	
	9	1	**9W-9372**	2	RING-SEAL	
	10	1	**9W-9371**	2	RING-SEAL	
	11	1	**6Y-5631**	6	PLATE-CLUTCH	
	12	1	**6Y-7968**	6	DISC-FRICTION	
	13	1	**270-8670**	1	RING-RETAINING	
	14	1	**234-8862**	1	GEAR (34-TEETH)	
	15	1	**9W-6912**	1	SPACER-SPECIAL	
	16	1	**9W-7764**	1	GEAR (28-TEETH)	
	17	1	**6Y-0928**	1	SPACER (36X50X6.5-MM THK)	
	18	1	**6Y-4890**	1	BEARING	
	19	1	**9W-9662**	1	WASHER-THRUST	
	20	1	**109-4728**	1	HUB AS	
		1	**2W-1141**	1	BEARING-ROLLER	
		1	**7X-2495**	1	RING-RETAINING	
	21	1	**8E-5707**	1	PLATE-END	
	22	1	**9W-6904**	2	RING-RETAINING	
	23	1	**9W-9718**	1	RETAINER-SPRING	
	24	1	**6Y-7818**	2	SPRING	
	25	1	**6Y-8157**	1	PISTON	
	26	1	**116-4870**	1	PISTON	
	27	1	**8E-5727**	1	RETAINER-SPRING	
	28	1	**109-4727**	1	HUB AS	
		1	**2W-1141**	1	BEARING-ROLLER	
		1	**7X-2495**	1	RING-RETAINING	
	29	1	**8E-8313**	4	DISC-THRUST	
	30	1	**8C-3982**	1	RING-RETAINING	
	31	1	**9N-4354**	2	BODY-VALVE	
	32	1	**3D-2891**	2	BALL	
	33	1	**129-8732**	2	SPRING	
	34	1	**8L-2746**	2	SEAL-O-RING	
	35	1	**9N-4365**	2	RETAINER-SPRING	
	36	1	**3D-8358**	2	RING-RETAINING	

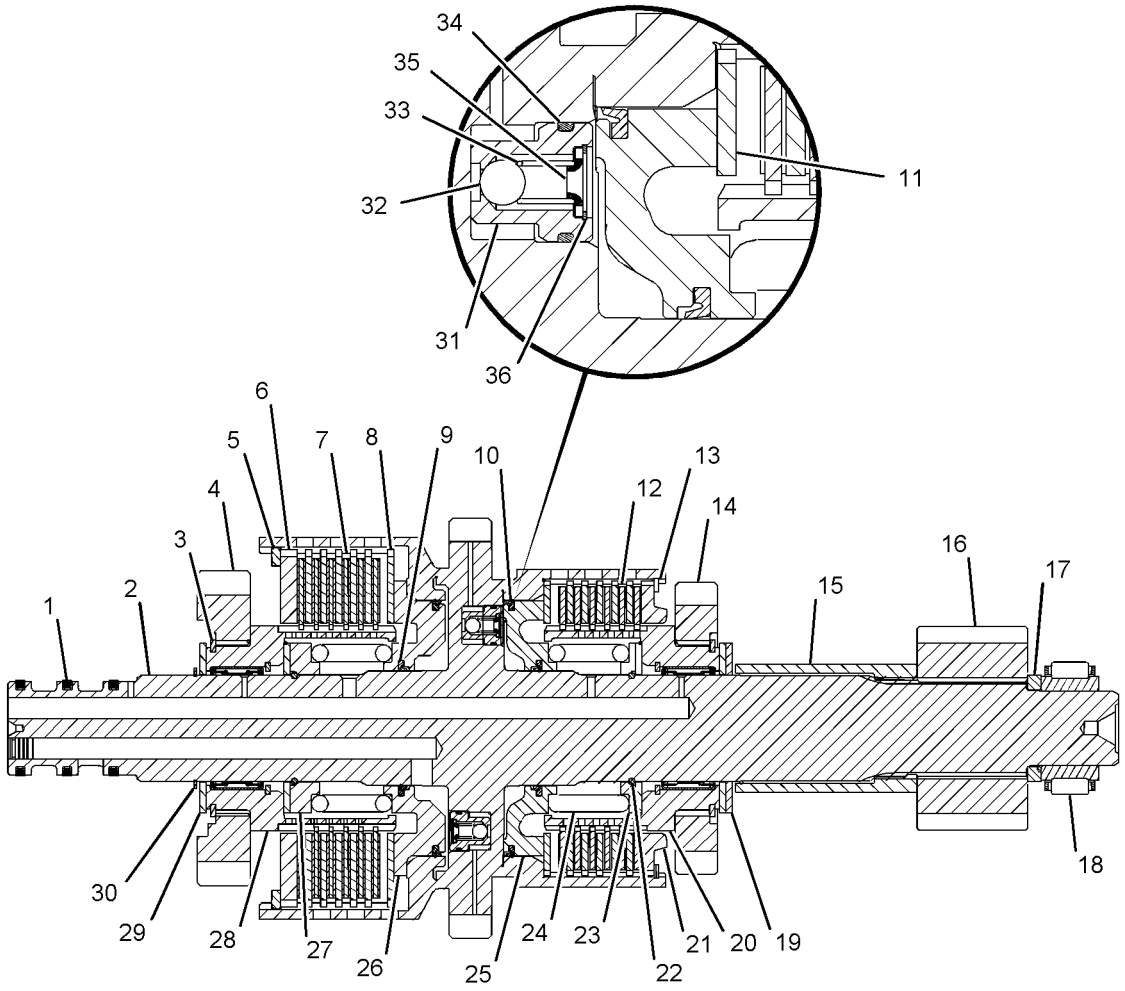

GRAPHIC #1 **<END>** g01109043

185-1028 COOLER GP-AXLE OIL

S/N: TWR1-UP

PART OF 235-6847, 262-5670 LINES GP-AXLE OIL COOLER AN ATTACHMENT

SMCS-1365 **i02595384**

NOTE	REF NO	GRAPHIC REF	PART NUMBER	QTY	PART NAME 1 2 3 4 5 6 (PRODUCT LEVEL)	SEE PAGE
	1	1	**185-1039**	1	BRACKET AS	
M		1	**8T-3612**	2	NUT-WELD (M8X1.25-THD)	
	2	1	**205-3652**	1	CORE AS-AXLE OIL COOLER	
M	3	1	**8T-4189**	2	BOLT (M8X1.25X20-MM)	
	4	1	**8T-4224**	4	WASHER-HARD (8.8X16X2-MM THK)	
M	5	1	**8T-4908**	2	BOLT (M8X1.25X25-MM)	

M-METRIC PART

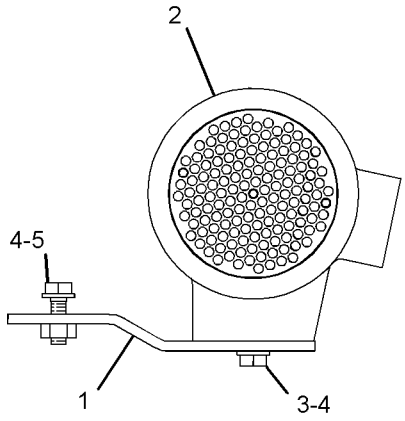

VIEW OF AREA A

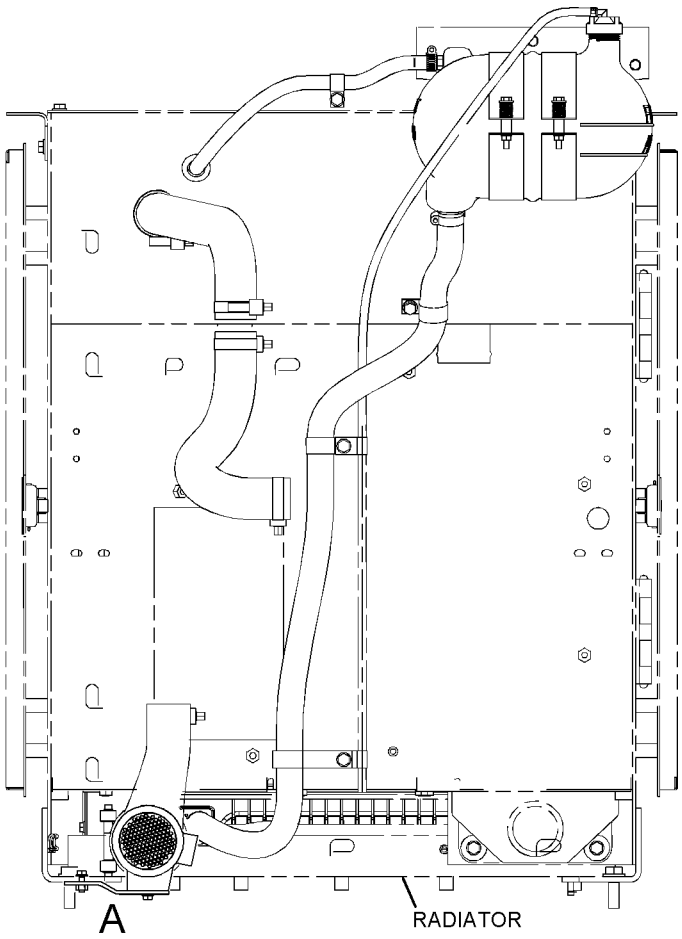

FRONT VIEW

GRAPHIC #1

<END>

g01088727

300-1961 COVER GP-SHIPPING—CORROSION PROTECTION

S/N: TWR1-UP

AN ATTACHMENT

SMCS-3064 **i02822455**

NOTE	PART NUMBER	QTY	PART NAME 1 2 3 4 5 6 (PRODUCT LEVEL)	SEE PAGE
	7K-1181	1	STRAP-CABLE	
	034-1432	1	STRAP-CABLE	
	225-7930	1	TAG-WARNING (CYLINDER COVERS)	

<END>

177-0019 COVER GP-TRANSMISSION

S/N: TPA1-UP

PART OF 239-5608 CASE & PARTS GP-TRANSMISSION

SMCS-3030 **i01799132**

NOTE	REF NO	GRAPHIC REF	PART NUMBER	QTY	PART NAME 1 2 3 4 5 6 (PRODUCT LEVEL)	SEE PAGE
	1	1	**200-2045**	1	COVER	
	2	1	**7T-6496**	2	PLUG	
	3	1	**6Y-0869**	4	PLUG	
	4	1	**8T-5353**	2	DOWEL	
	5	1	**9S-8008**	4	PLUG-O-RING	
	6	1	**3D-2824**	4	SEAL-O-RING	
	7	1	**9W-6068**	1	PLUG	

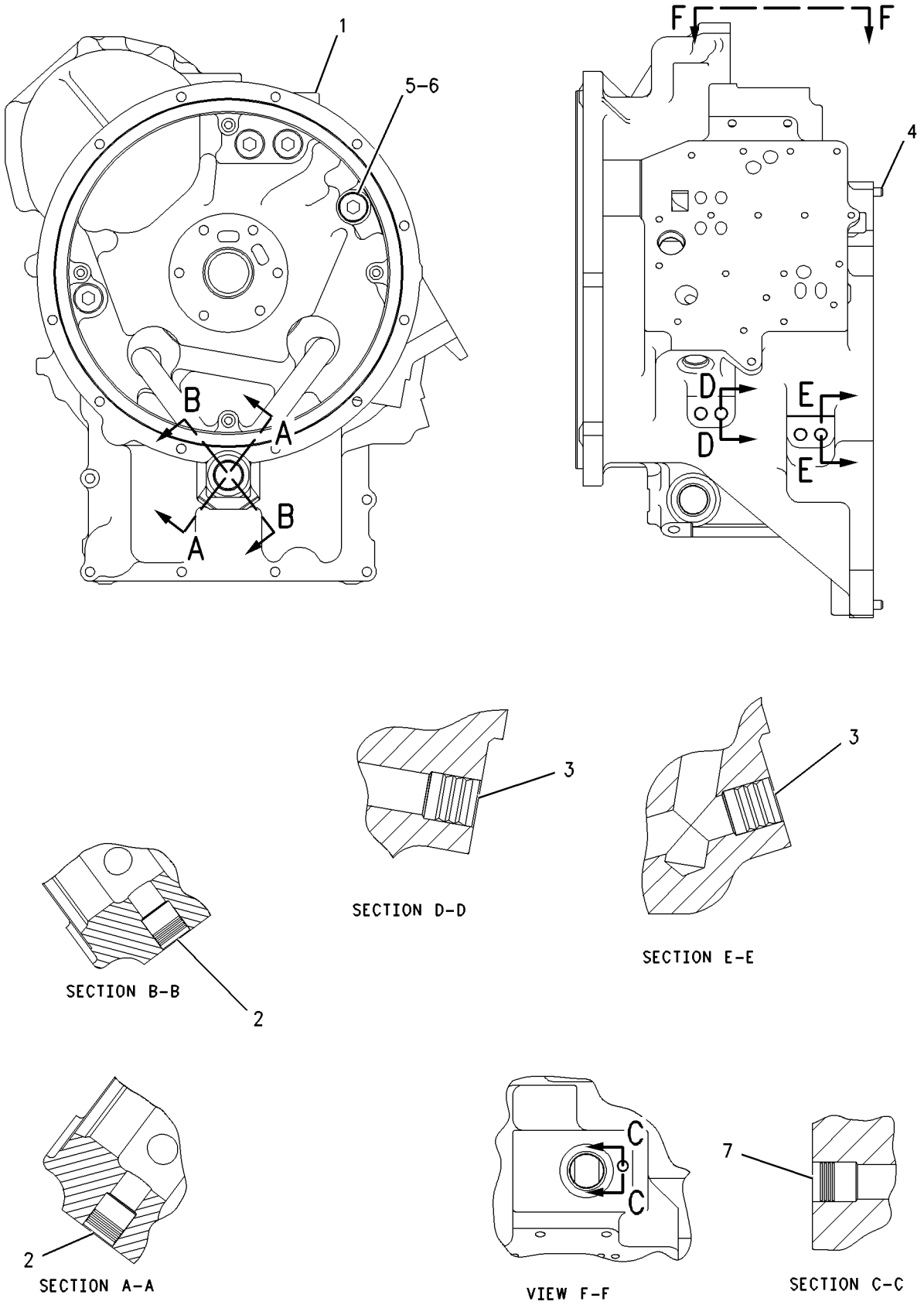

GRAPHIC #1 **<END>** g00921862

235-5811 DIFFERENTIAL GP–STANDARD

S/N: TWR1-UP

PART OF 234-4253 AXLE AR-FIXED, 234-4258, 267-7379 AXLE AR-OSCILLATING, 234-4254 AXLE GP-OSCILLATING

AN ATTACHMENT

SMCS-3258 **i02284081**

NOTE	REF NO	GRAPHIC REF	PART NUMBER	QTY	PART NAME 1 2 3 4 5 6 (PRODUCT LEVEL)	SEE PAGE
	1	1	**4E-6104**	1	CASE AS-DIFFERENTIAL	
	2	1	**5V-1274**	1	SPIDER	
	3	1	**8R-1703**	4	PINION-DIFFERENTIAL BEVEL (10-TEETH)	
	4	1	**8R-1705**	2	GEAR-DIFFERENTIAL BEVEL (16-TEETH)	
	5	1	**8R-2211**	4	BEARING-SLEEVE	
	6	1	**9C-5040**	2	WASHER-THRUST (64.5X110.5X3.05-MM THK)	
	7	1	**217-3680**	4	WASHER-THRUST	

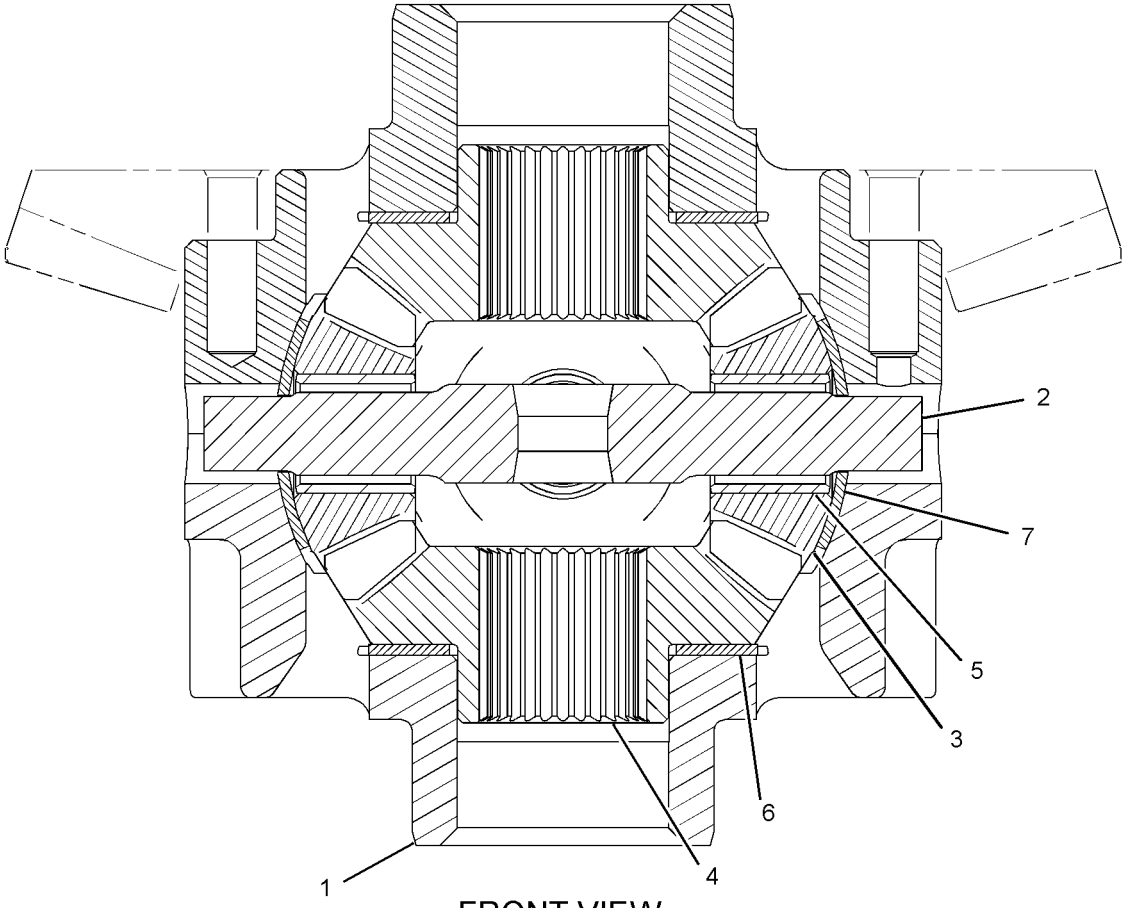

FRONT VIEW

GRAPHIC #1 **<END>** g01111589

236-0931 DIFFERENTIAL GP-LIMITED SLIP

S/N: TWR1-UP

PART OF 234-4255 AXLE AR-FIXED, 234-4264, 267-7380 AXLE AR-OSCILLATING, 234-4256 AXLE GP-OSCILLATING

AN ATTACHMENT

SMCS-3263 **i02274973**

NOTE	REF NO	GRAPHIC REF	PART NUMBER	QTY	PART NAME 1 2 3 4 5 6 (PRODUCT LEVEL)	SEE PAGE
	1	1	**104-6739**	2	GEAR-DIFFERENTIAL BEVEL (14-TEETH)	
	2	1	**104-6740**	4	PINION (9-TEETH)	
	3	1	**104-6742**	2	HOUSING-ACTUATOR	
	4	1	**104-6754**	2	WASHER-THRUST (48.5X65.28X3.96-MM THK)	
	5	1	**159-7457**	2	KIT-THIN DISC	
	6	1	**159-7458**	2	KIT-THICK DISC	
	7	1	**242-1830**	2	SHAFT-PINION	

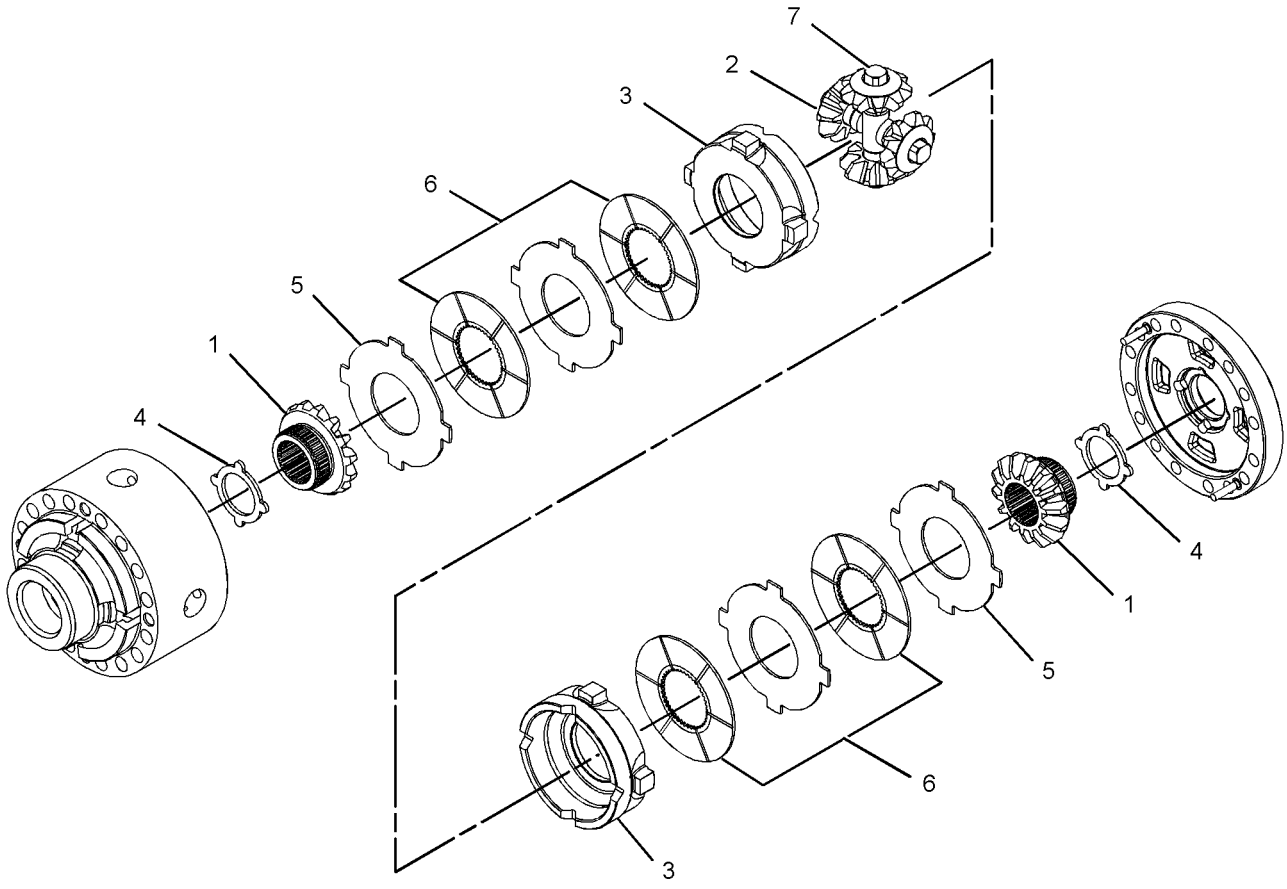

GRAPHIC #1 **<END>** g01139812

141-8615 DRIVE GP-FLEXIBLE COUPLING

S/N: TPA1-UP

PART OF 234-8866 TRANSMISSION AR

SMCS-3252 **i02599097**

NOTE	REF NO	GRAPHIC REF	PART NUMBER	QTY	PART NAME 1 2 3 4 5 6 (PRODUCT LEVEL)	SEE PAGE
	1	1	**136-4595**	1	PLATE AS	
M	2	1	**6V-8212**	6	BOLT (M10X1.5X16-MM)	
	3	1	**6V-5839**	6	WASHER (11X21X2.5-MM THK)	
	4	1	**136-4593**	1	PLATE	

M-METRIC PART

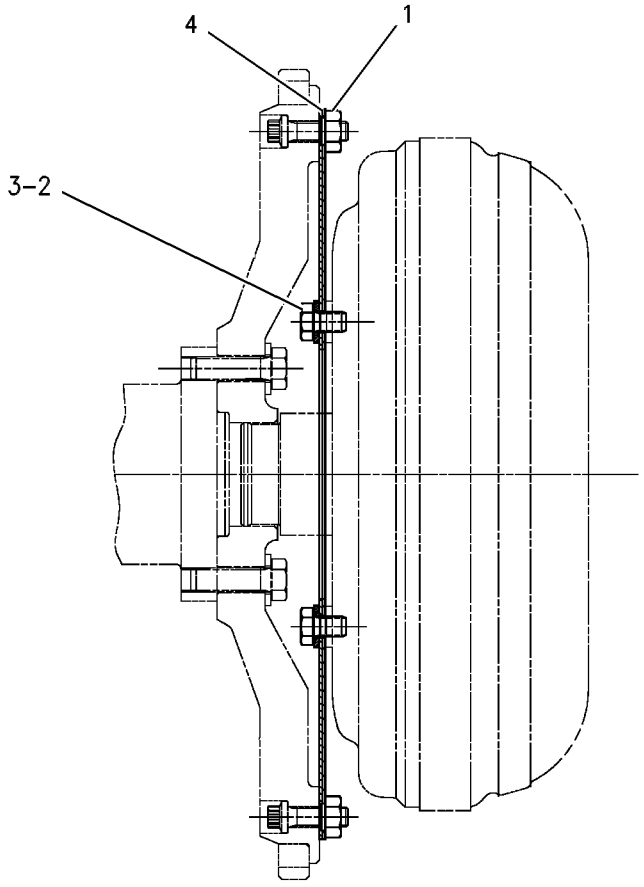

GRAPHIC #1 **<END>** g00572184

146-6274 DRIVE GP-PUMP—TRANSMISSION

S/N: TPA1-UP

PART OF 234-8866 TRANSMISSION AR

SMCS-3108 **i03202144**

NOTE	REF NO	GRAPHIC REF	PART NUMBER	QTY	PART NAME 1 2 3 4 5 6 (PRODUCT LEVEL)	SEE PAGE
	1	1	**262-1618**	4	BOLT-SOCKET HEAD (M6X1-THD)	
	2	1	**2L-0043**	1	RING-RETAINING	
	3	1	**146-6275**	1	SUPPORT AS-BEARING	
	3A	1	**8E-8425**	2	BEARING-SLEEVE	
	4	1	**141-6821**	1	GEAR-DRIVE (72-TEETH)	
	5	1	**263-5026**	1	SUPPORT-STATOR	
	6	1	**5L-4753**	1	RING-RETAINING	
	7	1	**106-7799**	1	BALL BEARING	

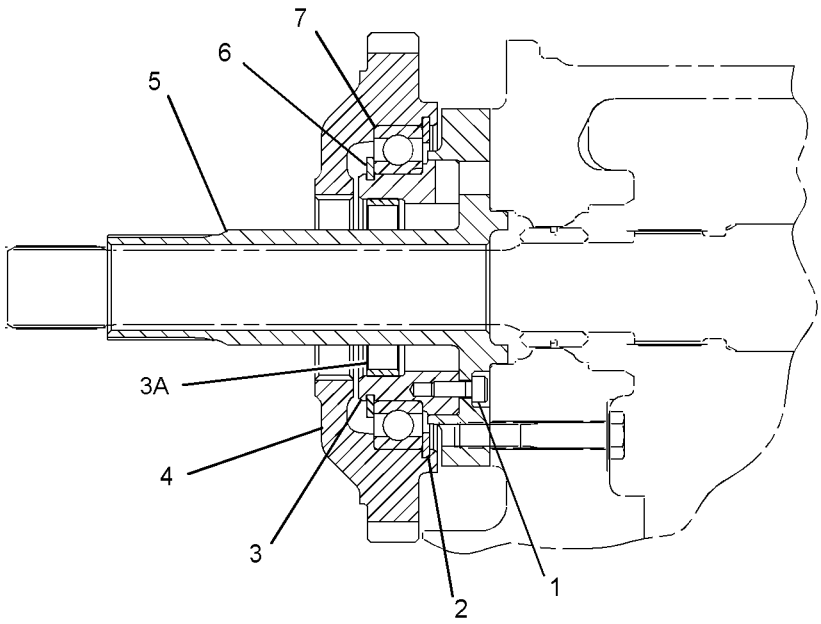

GRAPHIC #1 **<END>** g01634334

243-0515 FILLER GP-POWER TRAIN OIL

S/N: TWR1-UP

PART OF 235-6895 POWER TRAIN AR

SMCS-3005, 3081 **i02896829**

NOTE	REF NO	GRAPHIC REF	PART NUMBER	QTY	PART NAME 1 2 3 4 5 6 (PRODUCT LEVEL)	SEE PAGE
	1	1	**246-2641**	1	PADLOCK GP	
		1	**5P-8500**	1	KEY	
	2	1	**8T-6703**	2	CLAMP-HOSE	
	3	1	**118-0850**	1	TUBE AS	
	4	1	**122-6453**	1	TUBE GP	
	5	1	**137-6727**	1	CAP-FILL (POWER TRAIN OIL)	
	6	1	**143-7899**	1	HOSE	
	7	1	**4J-0523**	1	SEAL-O-RING	
	8	1	**5P-7468**	1	CLIP (SLOT)	
	9	1	**5P-7469**	1	CLIP (TAB)	
	10	1	**6V-0545**	1	GROMMET	
	11	1	**7X-7729**	1	WASHER (11X25X3-MM THK)	
	12	1	**8T-4121**	2	WASHER-HARD (11X21X2.5-MM THK)	
M	13	1	**8T-4195**	1	BOLT (M10X1.5X30-MM)	
M	14	1	**8T-4196**	2	BOLT (M10X1.5X35-MM)	

M-METRIC PART

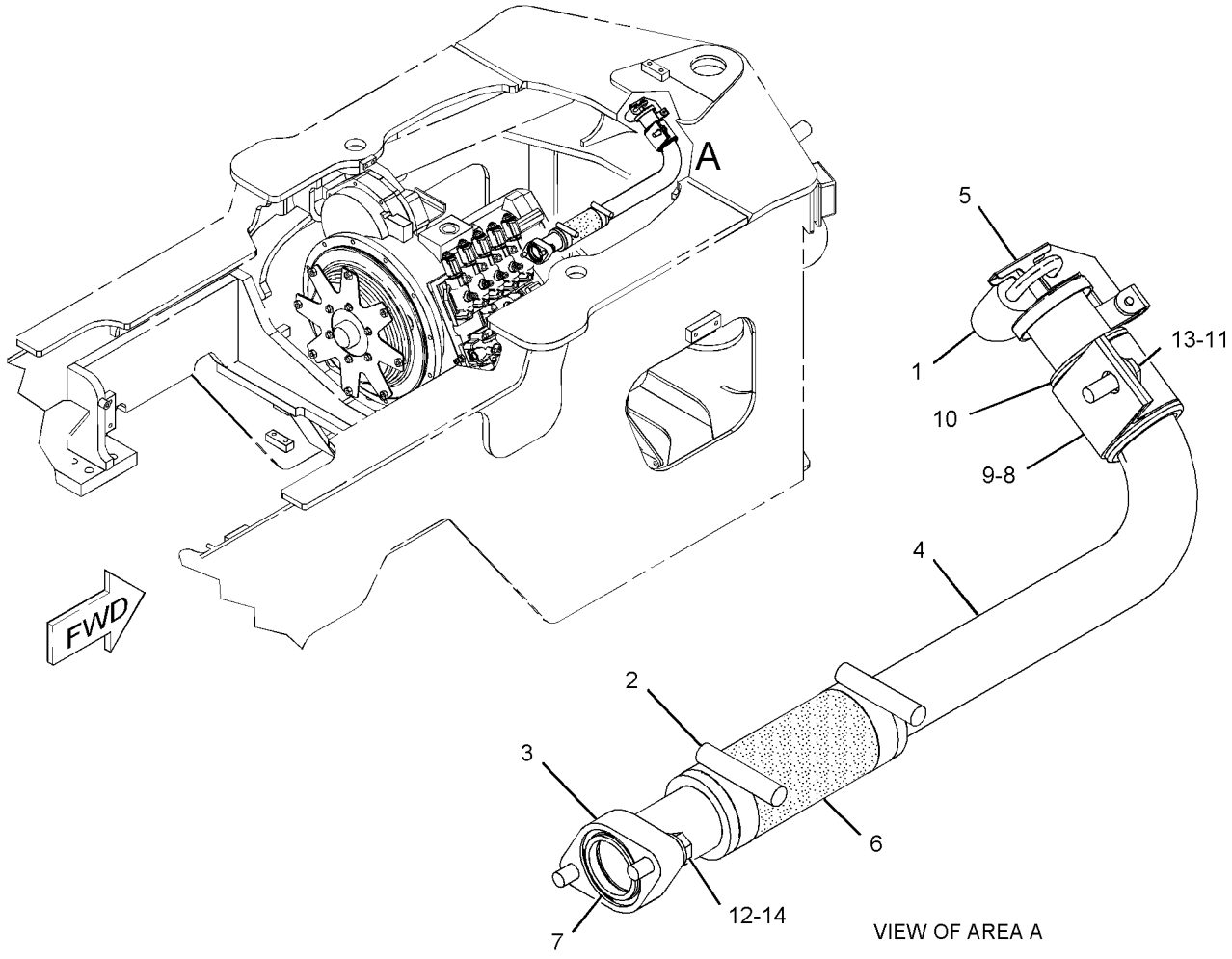

GRAPHIC #1 **<END>** g01108463

235-6807 FILTER & LINES GP-TRANSMISSION

S/N: TWR1-UP

PART OF 235-6895 POWER TRAIN AR

SMCS-3067, 3154 **i02896828**

NOTE	REF NO	GRAPHIC REF	PART NUMBER	QTY	PART NAME 1 2 3 4 5 6 (PRODUCT LEVEL)	SEE PAGE
I	1	1	**8Y-0711**	1	HOSE AS	
Y	2	1	**226-2869**	1	FILTER GP-OIL (POWER TRAIN)	268
I	3	1	**243-3772**	1	HOSE AS	
	4	1	*148-8327*	1	CONNECTOR AS	
		1	**3D-2824**	1	SEAL-O-RING	
		1	**6V-8637**	1	CONNECTOR	
		1	**6V-9746**	1	SEAL-O-RING	
	5	1	*148-8347*	1	ELBOW AS	
		1	**3D-2824**	1	SEAL-O-RING	
		1	**6V-9007**	1	ELBOW	
		1	**6V-9746**	1	SEAL-O-RING	
	6	1	*153-6237*	1	ELBOW AS	
		1	**3D-2824**	1	SEAL-O-RING	
		1	**6V-9004**	1	ELBOW	
		1	**6V-9746**	1	SEAL-O-RING	
	7	1	**1P-4576**	2	FLANGE-HALF	
	8	1	**4J-5267**	1	SEAL-O-RING	
	9	1	**8T-4121**	8	WASHER-HARD (11X21X2.5-MM THK)	
M	10	1	**8T-4137**	4	BOLT (M10X1.5X20-MM)	
	11	1	**6V-0852**	1	CAP-DUST (TRANSMISSION OIL)	
M	12	1	**8T-4196**	4	BOLT (M10X1.5X35-MM)	
	13	1	*164-5567*	1	COUPLER AS-QUICK DISCONNECT	
		1	**3J-1907**	1	SEAL-O-RING	
		1	**6V-3965**	1	FITTING (QUICK DISCONNECT)	
	14	1	**164-4227**	2	CLIP (LOOP)	
	15	1	*164-6874*	1	FITTING AS-ELBOW	
		1	**3J-1907**	1	SEAL-O-RING	
		1	**085-7356**	1	FITTING	
	16	1	**8C-3447**	1	CAP-DUST (TRANSMISSION OIL)	

I-REFER TO HYDRAULIC INFORMATION SYSTEM
M-METRIC PART
Y-SEPARATE ILLUSTRATION

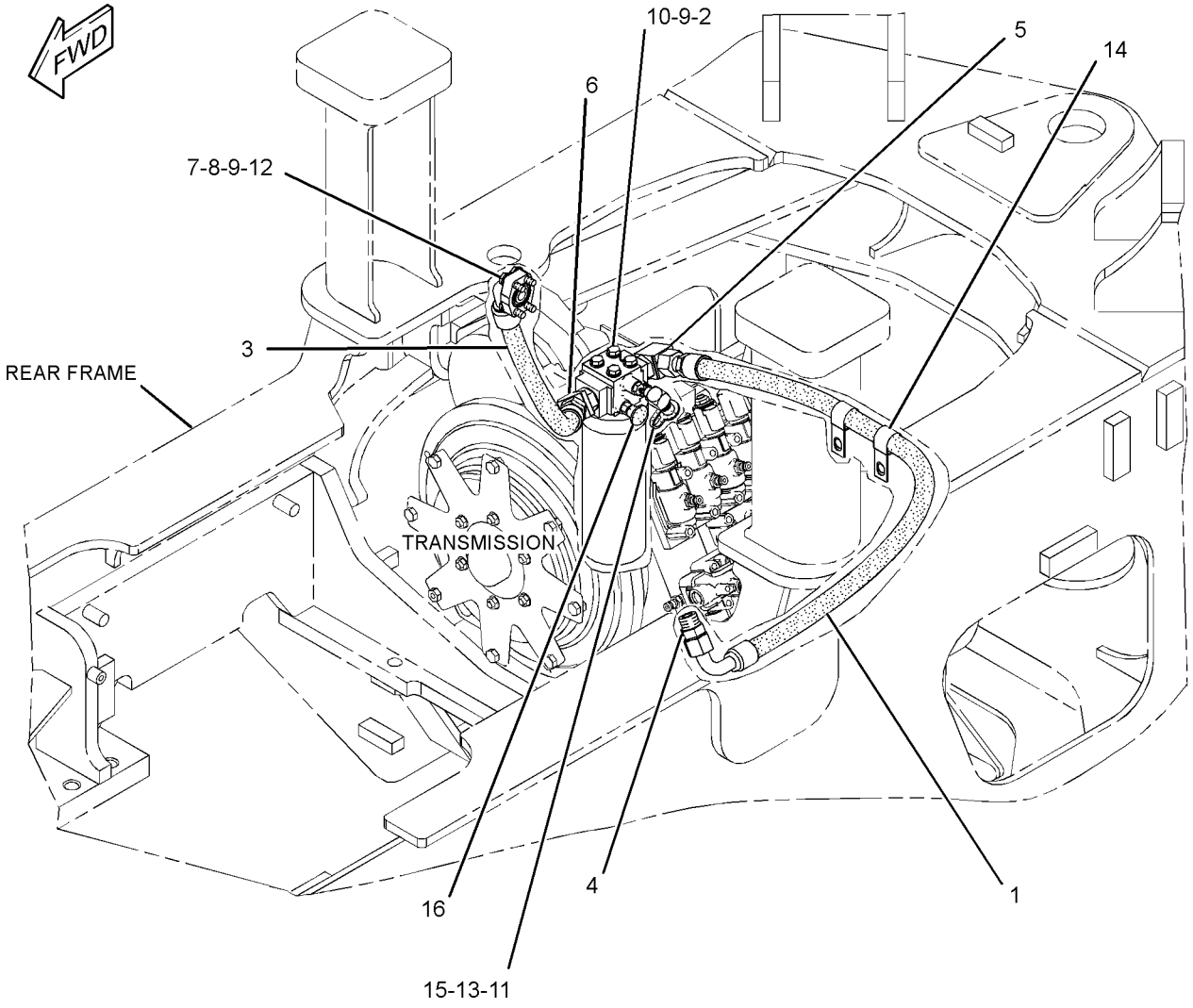

GRAPHIC #1 **<END>** g01343527

226-2869 FILTER GP-OIL—POWER TRAIN

S/N: TWR1-UP

PART OF 235-6807 FILTER & LINES GP-TRANSMISSION

SMCS-3004, 3067 **i02830796**

NOTE	REF NO	GRAPHIC REF	PART NUMBER	QTY	PART NAME 1 2 3 4 5 6 (PRODUCT LEVEL)	SEE PAGE
	1	1	**1G-8878**	1	FILTER-OIL (ADVANCED EFFICIENCY)	
	2	1	**134-0404**	1	SWITCH AS-PRESSURE (POWER TRAIN OIL FILTER BYPASS)	
	3	1	**3J-1907**	1	SEAL-O-RING	
	4	1	**3J-7354**	1	SEAL-O-RING	
	5	1	**8C-3446**	1	VALVE-FLUID SAMPLING (POWER TRAIN OIL)	

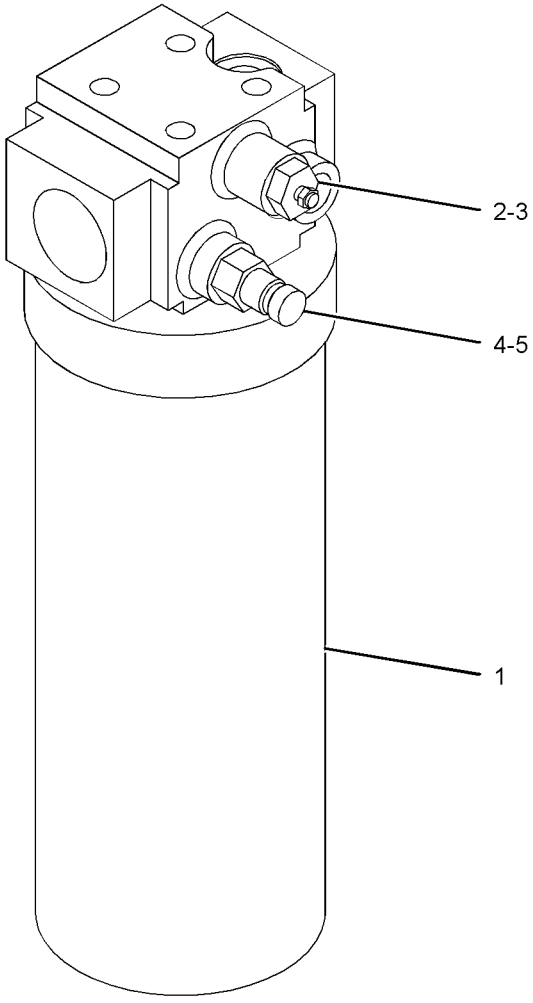

GRAPHIC #1

<END>

g01342808

129-8734 GAUGE GP-SIGHT–POWER TRAIN OIL

S/N: TWR1-UP

PART OF 235-6895 POWER TRAIN AR

SMCS-7479 **i02579005**

NOTE	REF NO	GRAPHIC REF	PART NUMBER	QTY	PART NAME 1 2 3 4 5 6 (PRODUCT LEVEL)	SEE PAGE
	1	1	**122-8353**	2	BOLT (M12X46.5-MM)	
	2	1	**122-8352**	4	SEAL-O-RING	

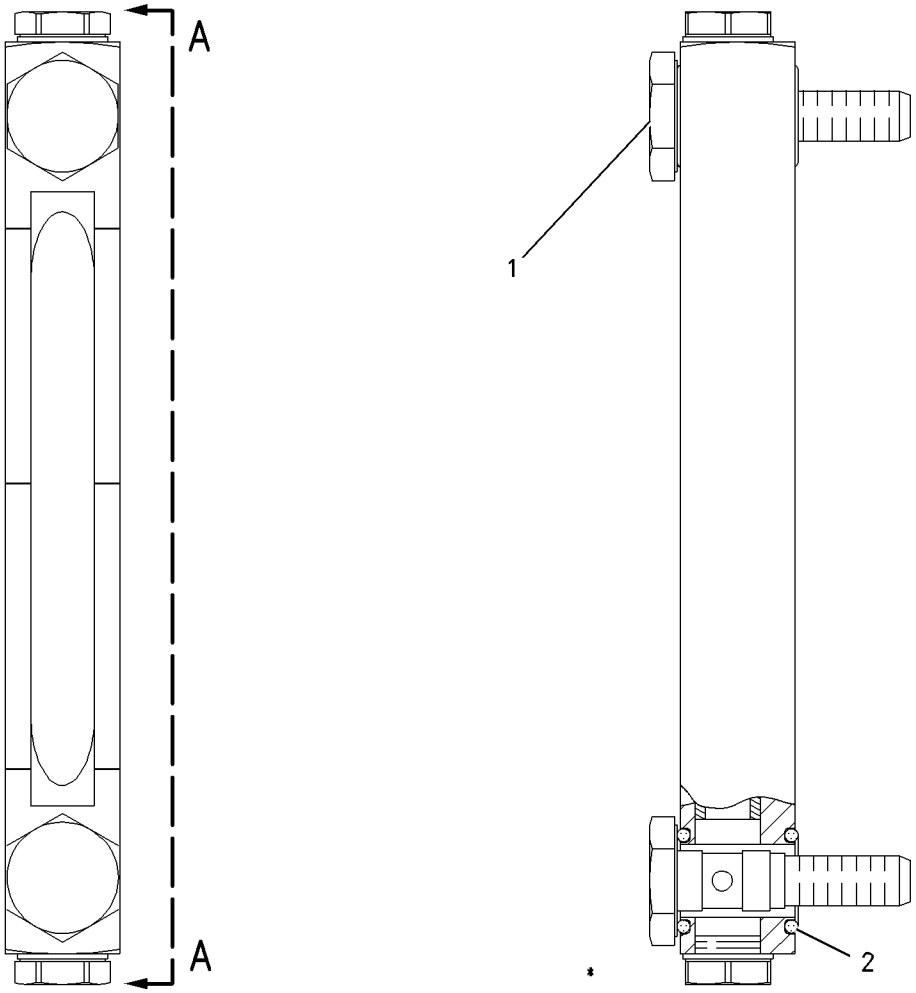

GRAPHIC #1 **<END>** g00937226

236-7495 GEAR GP-BEVEL & PINION—REAR

S/N: TWR1-UP

PART OF 234-4258, 234-4264, 267-7379, 267-7380 AXLE AR-OSCILLATING, 234-4254, 234-4256 AXLE GP-OSCILLATING

AN ATTACHMENT

SMCS-3254, 3256 **i02782207**

NOTE	REF NO	GRAPHIC REF	PART NUMBER	QTY	PART NAME 1 2 3 4 5 6 (PRODUCT LEVEL)	SEE PAGE
	1	1	**258-8338**	1	BEARING AS-TAPERED ROLLER	
	2	1	**2J-6232**	1	CUP-BEARING	
	3	1	**2J-6233**	1	CONE-BEARING	
	4	1	**2K-9295**	1	BEARING AS-TAPERED ROLLER	
	6	1	**6V-0347**	1	CONE-BEARING	
	7	1	**4E-3644**	1	NUT-ADJUSTMENT	
M	8	1	**4E-3896**	2	BOLT (M6X1X14-MM)	
	9	1	**4E-3897**	2	LOCK	
	10	1	**4E-4305**	1	NUT-ADJUSTMENT	
	11	1	**9U-2743**	1	SLEEVE AS	
		1	**3B-4124**	1	CUP-BEARING (TAPERED ROLLER)	
	12	1	**9U-2744**	1	SLEEVE AS	
		1	**4E-4307**	1	SLEEVE	
		1	**6F-2956**	1	CUP-BEARING	
	13	1	**9U-3409**	1	SHIM PACK (INCLUDES 20-SHIMS)	
	14	1	**9V-2412**	1	RETAINER	
	15	1	**203-2758**	1	SPACER (55.9X76X10.52-MM THK)	
	16	1	**203-2759**	1	YOKE AS	
		1	**215-8125**	1	GUARD	
	17	1	**236-7493**	1	SET-BEVEL GEAR	
	18	1	**2H-3927**	1	SEAL-O-RING	
	19	1	**4E-4031**	2	PIN	
M	20	1	**8T-0372**	1	BOLT (M12X1.75X90-MM)	
	21	1	**9X-2621**	4	PIN-SPRING	
	22	1	**9X-2622**	4	PIN-SPRING	
M	23	1	**9X-6491**	16	BOLT (M16X2X150-MM)	

M-METRIC PART

236 - 7495 **GEAR GP - BEVEL & PINION** *(contd.)* **i02782207**

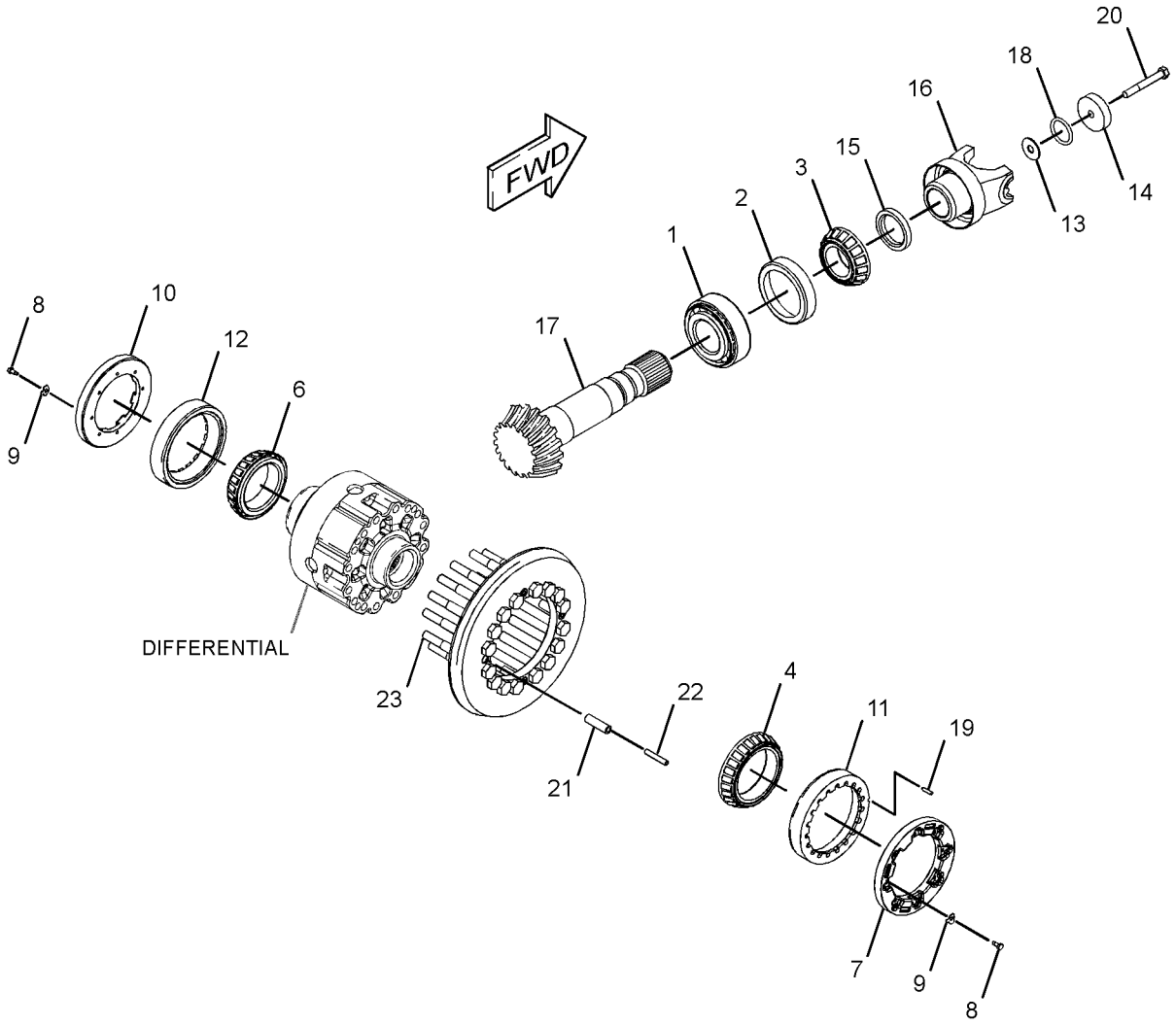

GRAPHIC #1 **<END>** g01390148

236-7496 GEAR GP-BEVEL & PINION—FRONT

S/N: TWR1-UP

PART OF 234-4253, 234-4255 AXLE AR-FIXED

AN ATTACHMENT

SMCS-3254, 3256 **i02599101**

NOTE	REF NO	GRAPHIC REF	PART NUMBER	QTY	PART NAME 1 2 3 4 5 6 (PRODUCT LEVEL)	SEE PAGE
	1	1	**1K-7991**	1	CUP-BEARING	
	2	1	**2J-6232**	1	CUP-BEARING	
	3	1	**2J-6233**	1	CONE-BEARING	
	4	1	**2K-9295**	1	BEARING AS-TAPERED ROLLER	
	5	1	**1K-7990**	1	CONE-BEARING	
	6	1	**6V-0347**	1	CONE-BEARING	
	7	1	**4E-3644**	1	NUT-ADJUSTMENT	
M	8	1	**4E-3896**	2	BOLT (M6X1X14-MM)	
	9	1	**4E-3897**	2	LOCK	
	10	1	**4E-4305**	1	NUT-ADJUSTMENT	
	11	1	**9U-2743**	1	SLEEVE AS	
		1	**3B-4124**	1	CUP-BEARING (TAPERED ROLLER)	
	12	1	**9U-2744**	1	SLEEVE AS	
		1	**4E-4307**	1	SLEEVE	
		1	**6F-2956**	1	CUP-BEARING	
	13	1	**9U-3409**	1	SHIM PACK (INCLUDES 20-SHIMS)	
	14	1	**9V-2412**	1	RETAINER	
	15	1	**203-2758**	1	SPACER (55.9X76X10.52-MM THK)	
	16	1	**203-2764**	1	YOKE AS	
		1	**215-8125**	1	GUARD	
	17	1	**236-7493**	1	SET-BEVEL GEAR	
	18	1	**2H-3927**	1	SEAL-O-RING	
	19	1	**4E-4031**	2	PIN	
M	20	1	**8T-0372**	1	BOLT (M12X1.75X90-MM)	
	21	1	**9X-2621**	4	PIN-SPRING	
	22	1	**9X-2622**	4	PIN-SPRING	
M	23	1	**9X-6491**	16	BOLT (M16X2X150-MM)	

M-METRIC PART

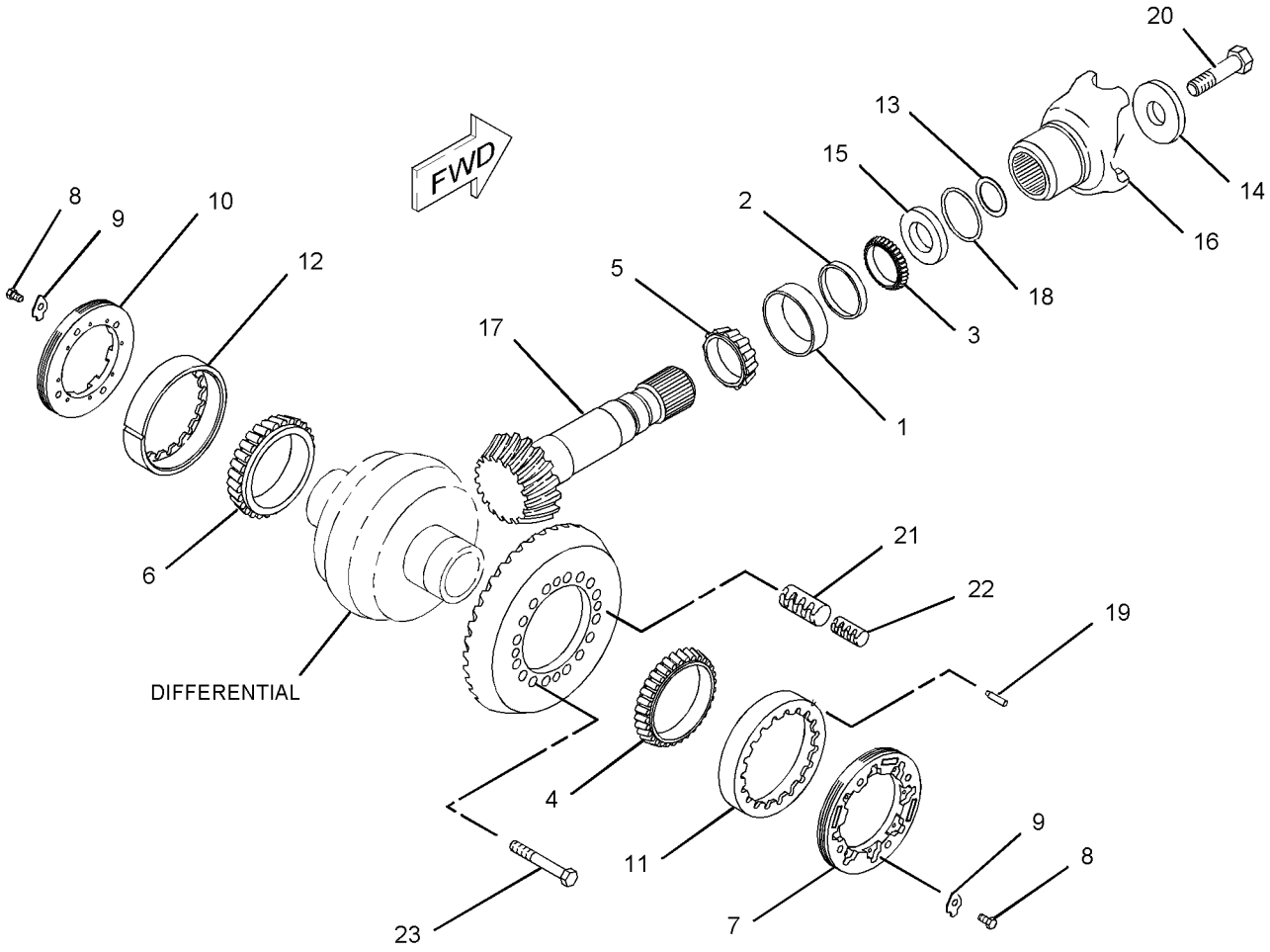

GRAPHIC #1 **<END>** g01112976

234-8852 GEAR GP-INPUT TRANSFER

S/N: TPA1-UP

PART OF 234-8866 TRANSMISSION AR

SMCS-3159 **i02194137**

NOTE	REF NO	GRAPHIC REF	PART NUMBER	QTY	PART NAME 1 2 3 4 5 6 (PRODUCT LEVEL)	SEE PAGE
	1	1	**190-2911**	1	SHAFT-INPUT	
	2	1	**6Y-8069**	1	CARRIER-SEAL	
	3	1	**2K-5957**	1	RING-SEALING	
	4	1	**120-4481**	1	GEAR (32-TEETH)	
	5	1	**234-8855**	1	GEAR (48-TEETH)	
	6	1	**005-0471**	2	CONE-BEARING	

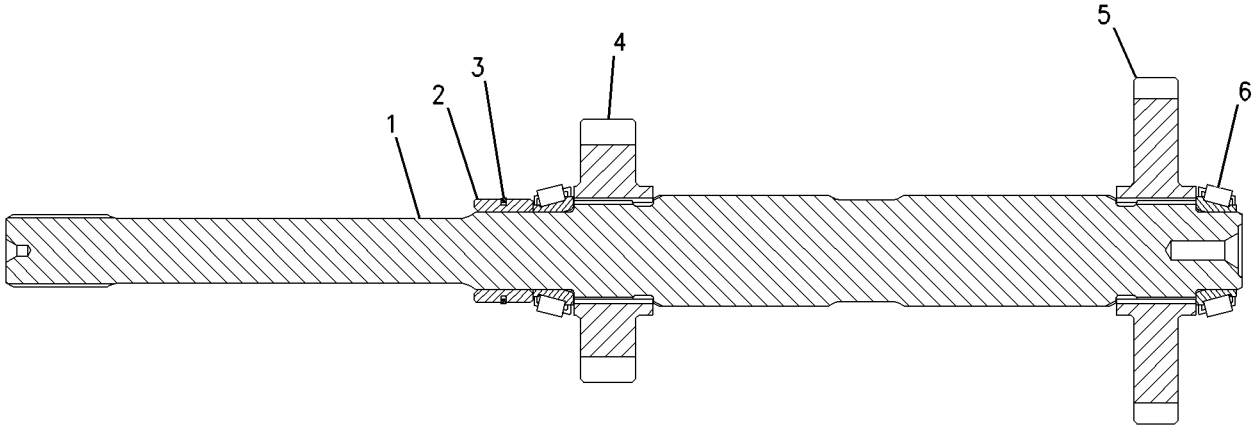

GRAPHIC #1 **<END>** g00819860

234-8859 GEAR GP-OUTPUT TRANSFER

S/N: TPA1-UP
PART OF 234-8866 TRANSMISSION AR
TYPE 1

SMCS-3075, 3159 **i02194150**

NOTE	REF NO	GRAPHIC REF	PART NUMBER	QTY	PART NAME 1 2 3 4 5 6 (PRODUCT LEVEL)	SEE PAGE
	1	1	**4F-8824**	2	SEAL-O-RING	
M	2	1	**6V-5696**	2	BOLT (M12X1.75X80-MM)	
	3	1	**7G-5220**	2	RETAINER	
	4	1	**1B-3978**	1	CUP-BEARING (TAPERED ROLLER)	
	5	1	**1B-3980**	2	CONE-BEARING (TAPERED ROLLER)	
	6	1	**234-8860**	1	GEAR (76-TEETH)	
	7	1	**8T-3293**	1	RING-RETAINING	
	8	1	**5P-2861**	1	SEAL-O-RING	
	9	1	**9U-9551**	1	CAGE-BEARING	
	10	1	**8V-7623**	1	DRUM-BRAKE	
Y	11	1	*214-4769*	1	BRAKE GP-PARKING	391
M	12	1	**6V-8675**	4	BOLT (M12X1.75X35-MM)	
	13	1	**105-4776**	1	YOKE-BRAKE FLANGE	
M	14	1	**6V-3668**	8	BOLT (M12X1.75X30-MM)	
	15	1	**5P-8245**	12	WASHER-HARD (13.5X25.5X3-MM THK)	
	16	1	**133-4297**	1	SEAL-LIP TYPE	
	17	1	**123-9056**	1	LEVER AS	
	18	1	**116-4858**	1	SHAFT	
	19	1	**105-4775**	1	YOKE-OUTPUT	

M-METRIC PART
Y-SEPARATE ILLUSTRATION

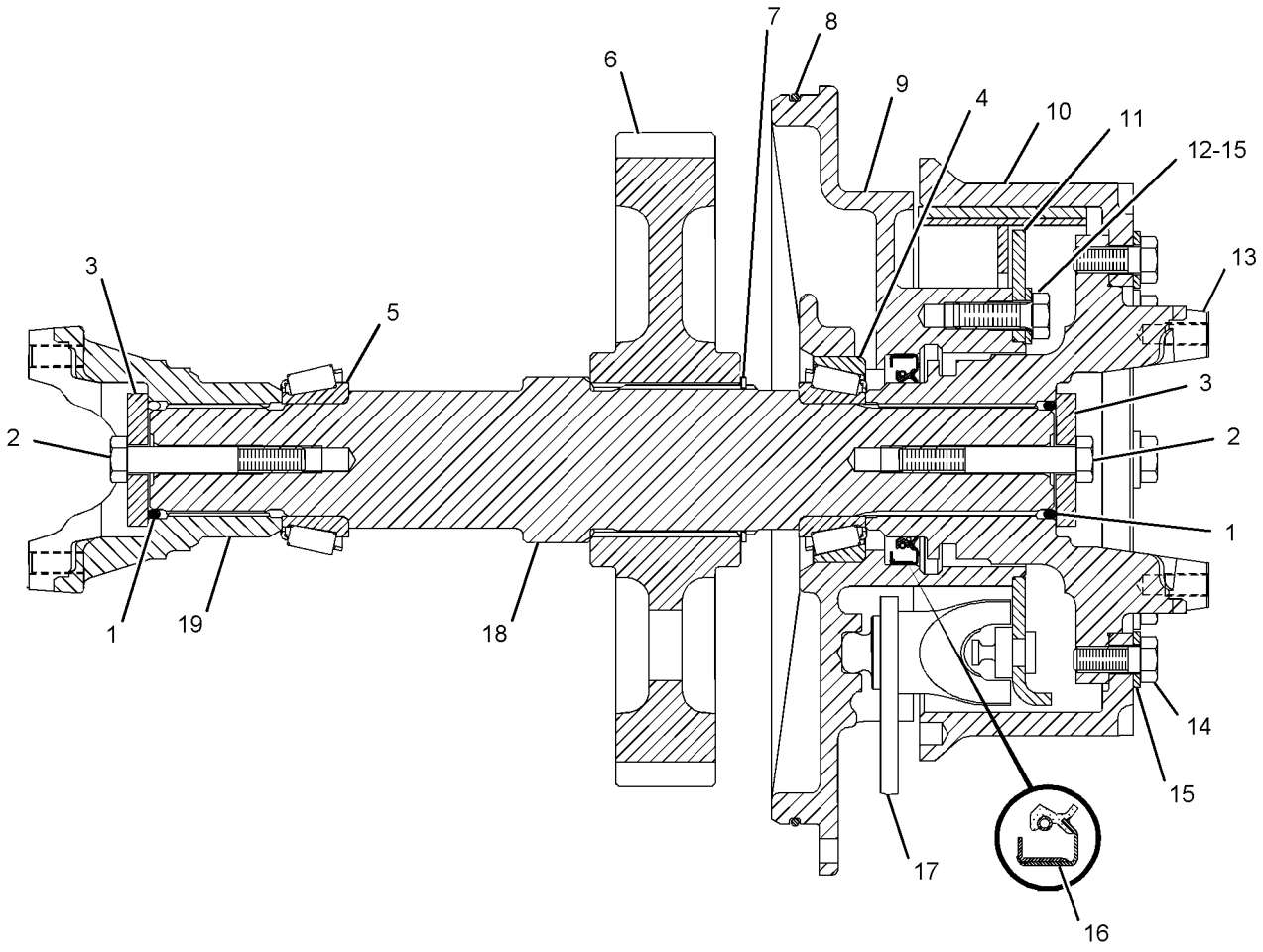

GRAPHIC #1 **<END>** g01108944

234-8859 GEAR GP-OUTPUT TRANSFER

S/N: TPA1-UP
PART OF 234-8866 TRANSMISSION AR
TYPE 2

SMCS-3075, 3159 **i02857622**

NOTE	REF NO	GRAPHIC REF	PART NUMBER	QTY	PART NAME 1 2 3 4 5 6 (PRODUCT LEVEL)	SEE PAGE
	1	1	**4F-8824**	2	SEAL-O-RING	
M	2	1	**6V-5696**	2	BOLT (M12X1.75X80-MM)	
	3	1	**7G-5220**	2	RETAINER	
	4	1	**1B-3978**	1	CUP-BEARING (TAPERED ROLLER)	
	5	1	**1B-3980**	2	CONE-BEARING (TAPERED ROLLER)	
	6	1	**234-8860**	1	GEAR (76-TEETH)	
	7	1	**8T-3293**	1	RING-RETAINING	
	8	1	**5P-2861**	1	SEAL-O-RING	
	9	1	**9U-9551**	1	CAGE-BEARING	
	10	1	**8V-7623**	1	DRUM-BRAKE	
CY	11	1	**283-9971**	1	BRAKE GP-PARKING	392
M	12	1	**6V-8675**	4	BOLT (M12X1.75X35-MM)	
	13	1	**105-4776**	1	YOKE-BRAKE FLANGE	
M	14	1	**6V-3668**	8	BOLT (M12X1.75X30-MM)	
	15	1	**5P-8245**	12	WASHER-HARD (13.5X25.5X3-MM THK)	
	16	1	**305-2215**	1	SEAL-LIP TYPE	
	17	1	**123-9056**	1	LEVER AS	
	18	1	**116-4858**	1	SHAFT	
	19	1	**105-4775**	1	YOKE-OUTPUT	

C-CHANGE FROM PREVIOUS TYPE
M-METRIC PART
Y-SEPARATE ILLUSTRATION

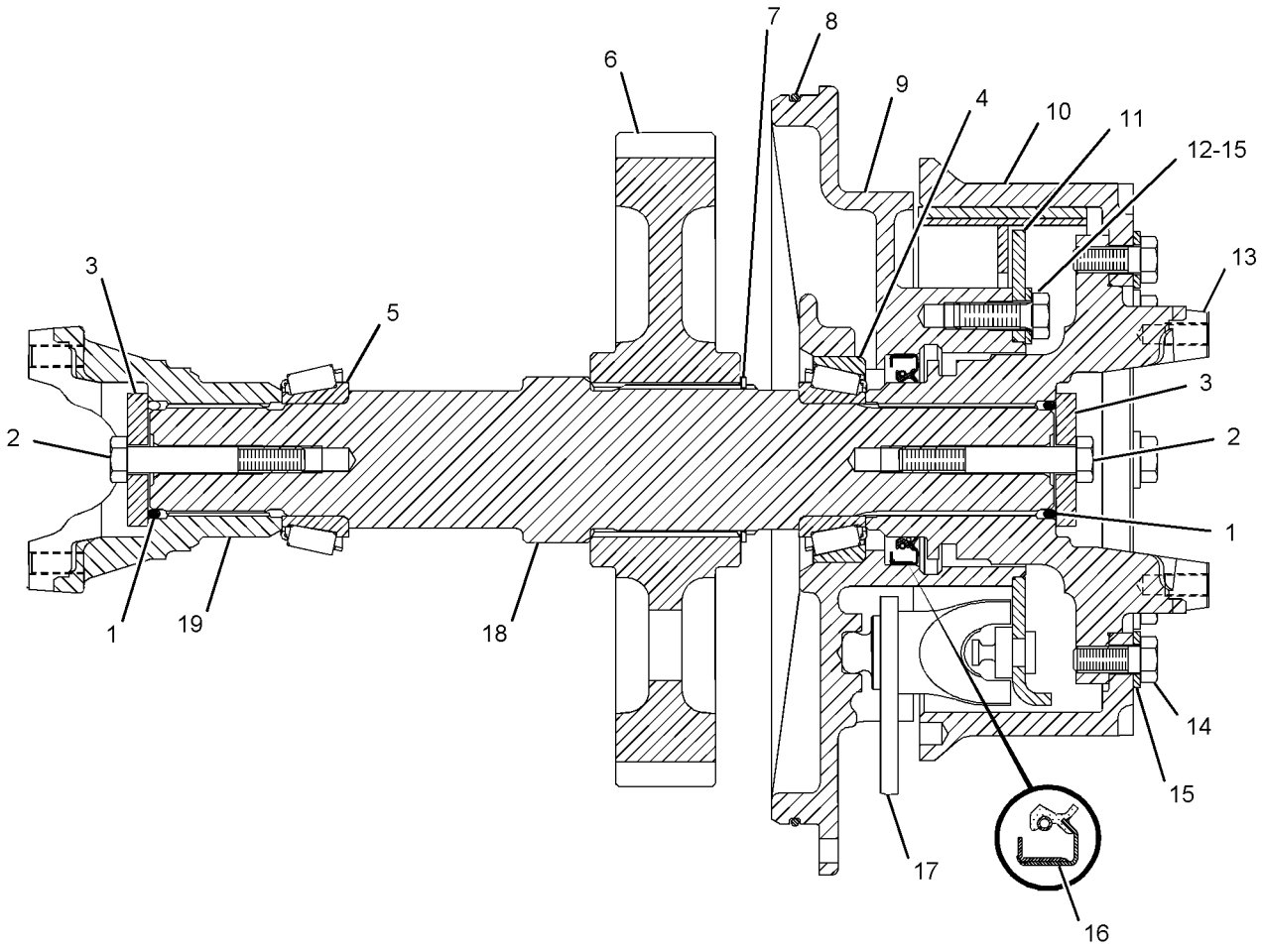

GRAPHIC #1 **<END>** g01108944

234-4246 HOUSING GP-FIXED AXLE—FRONT

S/N: TWR1-UP

PART OF 234-4253, 234-4255 AXLE AR-FIXED

AN ATTACHMENT

SMCS-3260 **i02832662**

NOTE	REF NO	GRAPHIC REF	PART NUMBER	QTY	PART NAME 1 2 3 4 5 6 (PRODUCT LEVEL)	SEE PAGE
	1	1	**5P-3723**	2	CONE-BEARING	
	2	1	**6D-7690**	2	CUP-BEARING	
	3	1	**6F-2956**	2	CUP-BEARING	
	4	1	**6V-0347**	2	CONE-BEARING	
	5	1	**5H-3701**	2	SCREW-PURGE (7/16-20-THD)	
	6	1	**5P-4484**	1	PLUG-MAGNETIC	
	7	1	**8R-0512**	1	GAUGE AS-OIL LEVEL (DIPSTICK)	
	8	1	**8R-2189**	1	HOUSING-PINION	
	9	1	**8R-2532**	2	NUT-BEARING (M85X2-THD)	
	10	1	**8R-3809**	1	SHIM PACK (INCLUDES 8-SHIMS)	
	11	1	**8T-0336**	1	FITTING-PRESSURE RELIEF	
	12	1	**9G-5311**	2	SEAL GP-DUO-CONE	
					(EACH INCLUDES)	
		1	**4K-0173**	2	RING-SEALING	
	13	1	**193-2200**	1	SEAL-LIP TYPE	
	14	1	**205-3211**	1	HOUSING AS-FIXED AXLE (CENTER)	
M		1	**095-0673**	3	BOLT-SOCKET HEAD (M12X1.75X60-MM)	
	15	1	**215-8058**	1	RETAINER-SEAL	
	16	1	**234-4243**	2	HOUSING-FIXED AXLE (OUTER)	
	17	1	**234-4245**	2	SHAFT-AXLE	
	18	1	**235-9631**	16	BOLT (M16X2X120-MM)	
	19	1	**236-0483**	16	BOLT (M16X2X190-MM)	
	20	1	**061-6712**	2	RING-RETAINING	
	21	1	**3B-0551**	1	PLUG-PIPE	
	22	1	**3E-2338**	2	PLUG-PIPE	
	23	1	**5P-8247**	40	WASHER-HARD (17X32X3.5-MM THK)	
	24	1	**7M-8485**	3	SEAL-O-RING	
	25	1	**8F-9516**	1	SEAL-O-RING	
M	26	1	**8T-0375**	8	BOLT (M16X2X45-MM)	
	27	1	**8T-4224**	6	WASHER-HARD (8.8X16X2-MM THK)	
M	28	1	**8T-5093**	6	BOLT-LOCKING (M8X1.25X25-MM)	
	29	1	**9C-6041**	3	DOWEL	
B	30	1	**1U-8846**		SEALANT-GASKET	

B-USE AS REQUIRED
M-METRIC PART

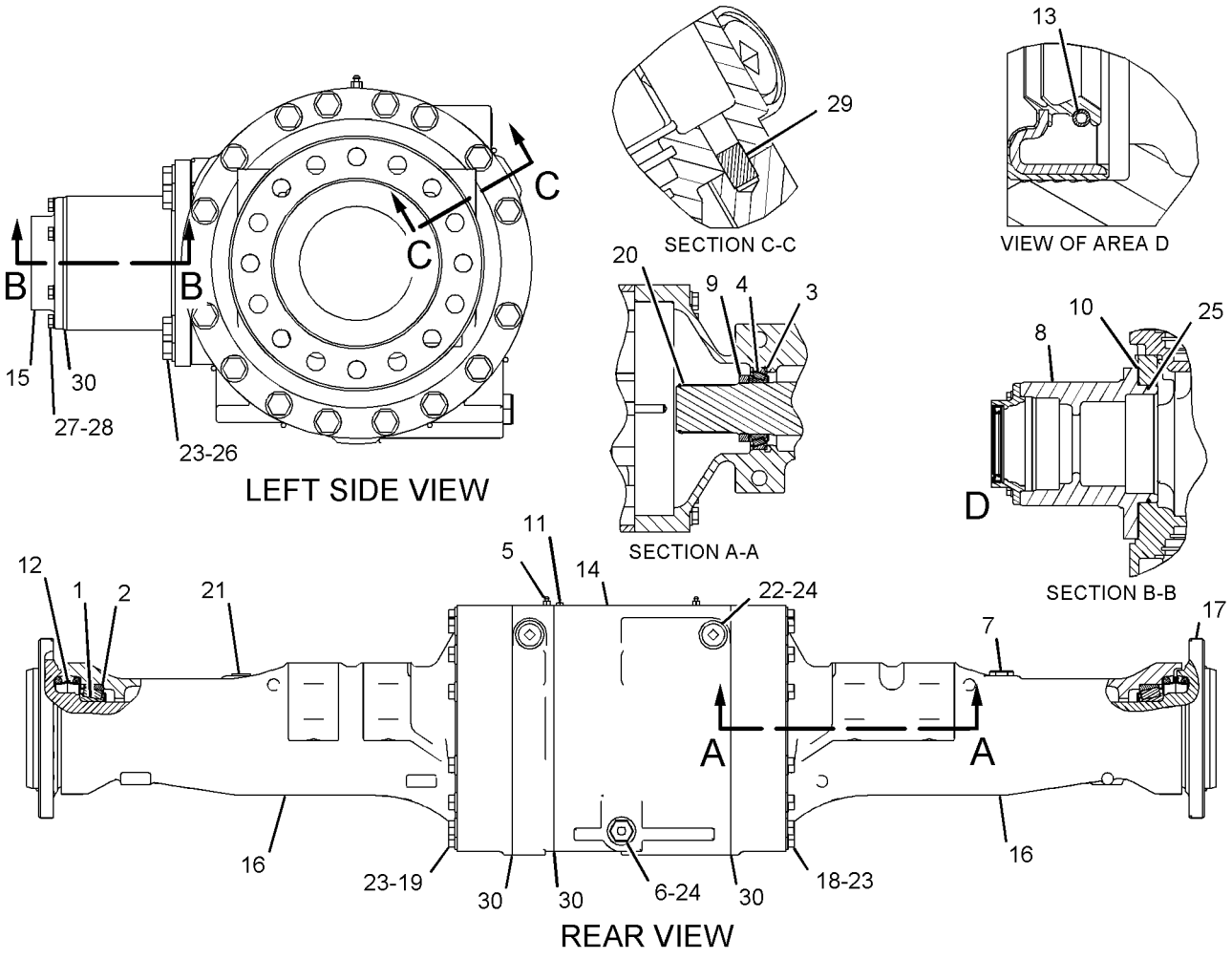

GRAPHIC #1 **<END>** g01111707

234-4247 HOUSING GP-OSCILLATING AXLE–REAR

S/N: TWR1-UP

PART OF 234-4254, 234-4256 AXLE GP-OSCILLATING

AN ATTACHMENT

SMCS-3260, 3268 **i03166460**

NOTE	REF NO	GRAPHIC REF	PART NUMBER	QTY	PART NAME 1 2 3 4 5 6 (PRODUCT LEVEL)	SEE PAGE
	1	1	**5P-3723**	2	CONE-BEARING	
	2	1	**6D-7690**	2	CUP-BEARING	
	3	1	**6F-2956**	2	CUP-BEARING	
	4	1	**6V-0347**	2	CONE-BEARING	
	5	1	**1K-8061**	2	WASHER-THRUST (4.03X5.72X0.265-IN THK)	
	6	1	**5H-3701**	2	SCREW-PURGE (7/16-20-THD)	
	7	1	**165-4929**	1	PLUG AS (STORAGE)	
		1	**5P-4484**	1	PLUG-MAGNETIC (AXLE HOUSING)	
		1	**7M-8485**	1	SEAL-O-RING	
	8	1	**6K-6075**	1	COVER	
	9	1	**8R-0512**	1	GAUGE AS-OIL LEVEL (DIPSTICK)	
	10	1	**8R-2189**	1	HOUSING-PINION	
	11	1	**8R-2532**	2	NUT-BEARING (M85X2-THD)	
	12	1	**8R-2584**	1	TRUNNION	
	13	1	**8R-3809**	1	SHIM PACK (INCLUDES 8-SHIMS)	
	14	1	**8T-0336**	2	FITTING-PRESSURE RELIEF	
	15	1	**9C-5048**	1	BEARING-SLEEVE	
	16	1	**9G-5311**	2	SEAL GP-DUO-CONE	
					(EACH INCLUDES)	
		1	**4K-0173**	2	RING-SEALING	
	17	1	**9H-1129**	2	SEAL-LIP TYPE	
	18	1	**9V-1203**	1	PLATE-THRUST	
	19	1	**128-0219**	1	SUPPORT-TRUNNION (FRONT)	
	20	1	**141-4892**	1	SUPPORT-TRUNNION (REAR)	
	21	1	**193-2200**	1	SEAL-LIP TYPE	
	22	1	**205-3210**	1	HOUSING AS-OSCILLATING AXLE (CENTER)	
M		1	**095-0673**	3	BOLT-SOCKET HEAD (M12X1.75X60-MM)	
	23	1	**215-8058**	1	RETAINER-SEAL	
	24	1	**234-4244**	2	HOUSING-OSCILLATING AXLE (OUTER)	
	25	1	**234-4245**	2	SHAFT-AXLE	
	26	1	**235-9631**	16	BOLT (M16X2X120-MM)	
	27	1	**236-0483**	16	BOLT (M16X2X190-MM)	
M	28	1	**259-1456**	6	BOLT (12X1.75X35-MM)	
	29	1	**061-6712**	2	RING-RETAINING	
	30	1	**3B-0551**	1	PLUG-PIPE	
	31	1	*148-8406*	2	PLUG AS	
					(EACH INCLUDES)	
		1	**7M-8485**	1	SEAL-O-RING	
		1	**9S-9334**	1	PLUG-O-RING	
	32	1	**5H-1039**	1	SEAL-O-RING	
	33	1	**5M-6214**	2	PLUG-PIPE	
	34	1	**5P-5291**	1	RING-RETAINING	
	35	1	**5P-8245**	12	WASHER-HARD (13.5X25.5X3-MM THK)	
	36	1	**5P-8247**	48	WASHER-HARD (17X32X3.5-MM THK)	
M	37	1	**6V-4429**	8	BOLT (M16X2X40-MM)	
M	38	1	**6V-8197**	6	BOLT (M12X1.75X40-MM)	
	40	1	**8F-9516**	1	SEAL-O-RING	
M	41	1	**8T-0375**	8	BOLT (M16X2X45-MM)	
	42	1	**8T-4224**	6	WASHER-HARD (8.8X16X2-MM THK)	
M	43	1	**8T-5093**	6	BOLT-LOCKING (M8X1.25X25-MM)	
	44	1	**9C-5049**	1	BEARING-SLEEVE	
	45	1	**9C-6041**	3	DOWEL	

M-METRIC PART

234-4247 **HOUSING GP-OSCILLATING AXLE** *(contd.)* **i03166460**

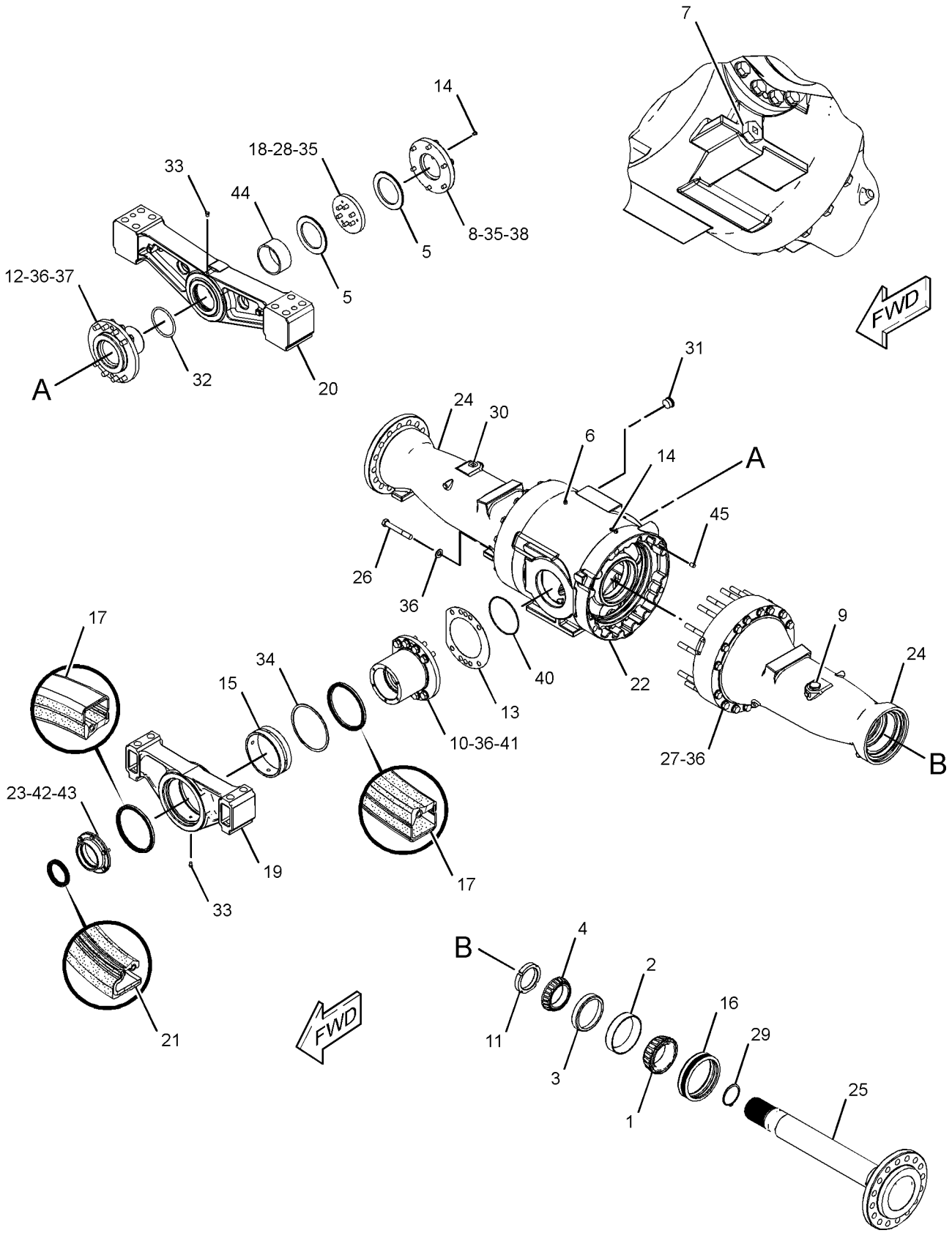

GRAPHIC #1 **<END>** g01624847

234-4248 HOUSING GP-OSCILLATING AXLE–REAR

S/N: TWR1-UP

PART OF 234-4258, 234-4264, 267-7379, 267-7380 AXLE AR-OSCILLATING AN ATTACHMENT

SMCS-3260, 3268 **i02833146**

NOTE	REF NO	GRAPHIC REF	PART NUMBER	QTY	PART NAME 1 2 3 4 5 6 (PRODUCT LEVEL)	SEE PAGE
	1	1	**5P-3723**	2	CONE-BEARING	
	2	1	**6D-7690**	2	CUP-BEARING	
	3	1	**6F-2956**	2	CUP-BEARING	
	4	1	**6V-0347**	2	CONE-BEARING	
	5	1	**1K-8061**	2	WASHER-THRUST (4.03X5.72X0.265-IN THK)	
	6	1	**5H-3701**	2	SCREW-PURGE (7/16-20-THD)	
	7	1	**5P-4484**	1	PLUG-MAGNETIC (AXLE HOUSING)	
	8	1	**6K-6075**	1	COVER	
	9	1	**8R-0512**	1	GAUGE AS-OIL LEVEL (DIPSTICK)	
	10	1	**8R-2189**	1	HOUSING-PINION	
	11	1	**8R-2532**	2	NUT-BEARING (M85X2-THD)	
	12	1	**8R-2584**	1	TRUNNION	
	13	1	**8R-3809**	1	SHIM PACK (INCLUDES 8-SHIMS)	
	14	1	**8T-0336**	2	FITTING-PRESSURE RELIEF	
	15	1	**9C-5048**	1	BEARING-SLEEVE	
	16	1	**9G-5311**	2	SEAL GP-DUO-CONE	
	17	1	**9H-1129**	2	SEAL-LIP TYPE	
	18	1	**9V-1203**	1	PLATE-THRUST	
	19	1	**128-0219**	1	SUPPORT-TRUNNION (FRONT)	
	20	1	**141-4892**	1	SUPPORT-TRUNNION (REAR)	
	21	1	**175-7310**	2	PLATE-SPACER	
	22	1	**193-2200**	1	SEAL-LIP TYPE	
	23	1	**205-3210**	1	HOUSING AS-OSCILLATING AXLE (CENTER)	
M		1	**095-0673**	3	BOLT-SOCKET HEAD (M12X1.75X60-MM)	
	24	1	**215-8058**	1	RETAINER-SEAL	
	25	1	**234-4244**	2	HOUSING-OSCILLATING AXLE (OUTER)	
	26	1	**234-4245**	2	SHAFT-AXLE	
M	27	1	**235-8810**	16	BOLT (M16X2X140-MM)	
M	28	1	**235-8811**	16	BOLT (M16X2X210-MM)	
M	29	1	**259-1456**	6	BOLT (12X1.75X35-MM)	
	30	1	**061-6712**	2	RING-RETAINING	
	31	1	**3B-0551**	1	PLUG-PIPE	
	32	1	**3E-2338**	2	PLUG-PIPE	
	33	1	**5H-1039**	1	SEAL-O-RING	
	34	1	**5M-6214**	2	PLUG-PIPE	
	35	1	**5P-5291**	1	RING-RETAINING	
	36	1	**5P-8245**	12	WASHER-HARD (13.5X25.5X3-MM THK)	
	37	1	**5P-8247**	48	WASHER-HARD (17X32X3.5-MM THK)	
M	38	1	**6V-4429**	8	BOLT (M16X2X40-MM)	
M	39	1	**6V-8197**	6	BOLT (M12X1.75X40-MM)	
	40	1	**7M-8485**	3	SEAL-O-RING	
	41	1	**8F-9516**	1	SEAL-O-RING	
M	42	1	**8T-0375**	8	BOLT (M16X2X45-MM)	
	43	1	**8T-4224**	6	WASHER-HARD (8.8X16X2-MM THK)	
M	44	1	**8T-5093**	6	BOLT-LOCKING (M8X1.25X25-MM)	
	45	1	**9C-5049**	1	BEARING-SLEEVE	
	46	1	**9C-6041**	3	DOWEL	
B	47	1	**1U-8846**		SEALANT-GASKET	

B-USE AS REQUIRED
M-METRIC PART

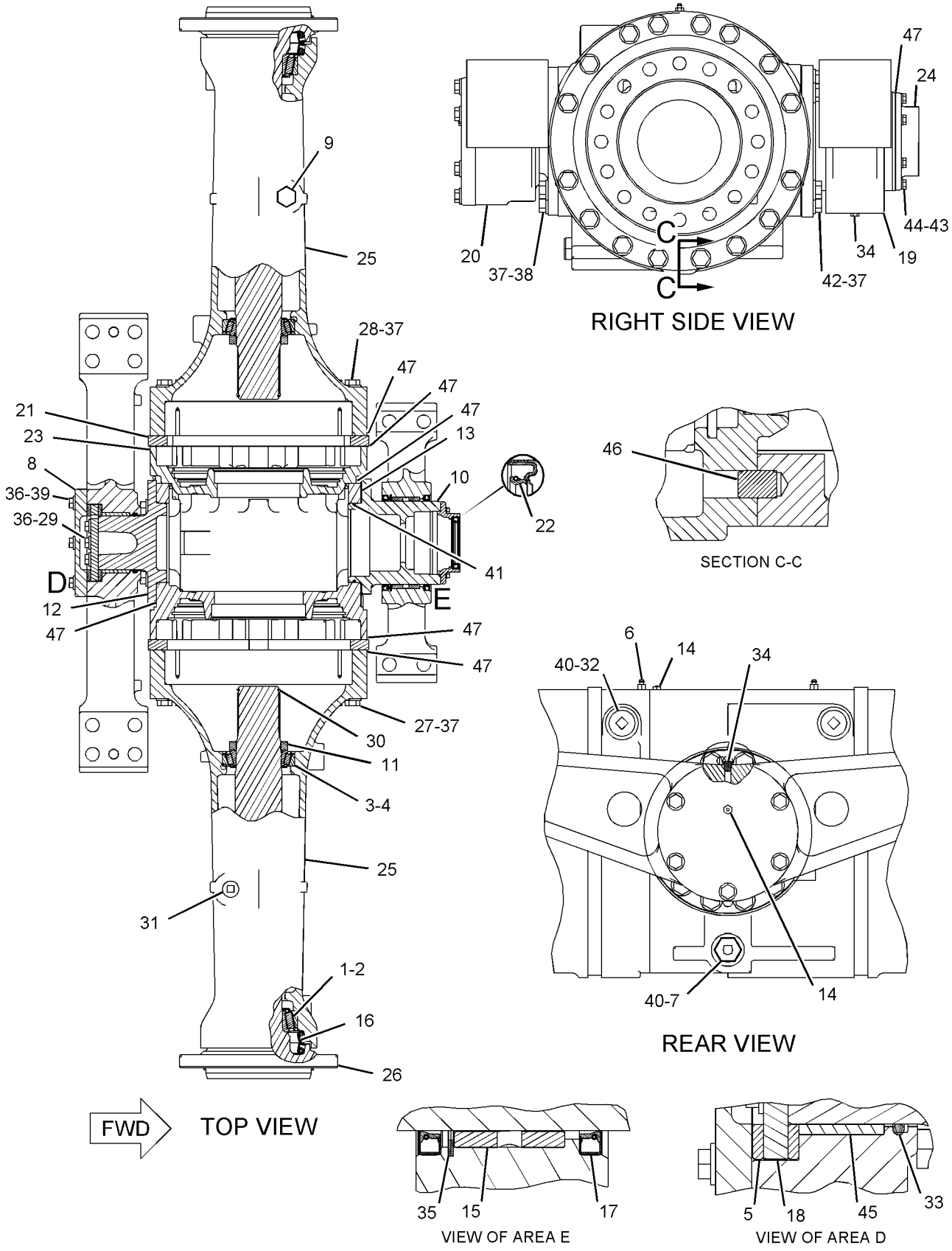

GRAPHIC #1

<END>

g01112480

235-6847 LINES GP-AXLE OIL COOLER

S/N: TWR1-705

PART OF 235-6848, 235-6850 AXLE AR-OSCILLATING

AN ATTACHMENT

SMCS-1365, 3016 **i02595401**

NOTE	REF NO	GRAPHIC REF	PART NUMBER	QTY	PART NAME 1 2 3 4 5 6 (PRODUCT LEVEL)	SEE PAGE
D	1	1	**6V-2495**		SEAL (0.1-M)	
	2	3	**3E-7690**	1	SWITCH AS-PRESSURE (AXLE OIL)	
		3	**186-3735**	2	PIN-CONNECTOR (16-GA TO 18-GA)	
		3	**102-8802**	1	KIT-RECEPTACLE (2-PIN)	
					(INCLUDES RECEPTACLE AS & WEDGE)	
	3	1	**5L-3244**	2	CLIP	
	4	3	**6V-0852**	1	CAP-DUST	
	5	1,2,3	**7K-1181**	4	STRAP-CABLE	
	6	1	**091-0081**	1	SPACER (10.5X20X10-MM THK)	
I	7	2	**102-2142**	1	HOSE AS	
I	8	2	**109-5080**	1	HOSE AS	
	9	2	**129-8087**	1	SPACER (13.9X17.1X14-MM THK)	
	10	3	*153-6248*	1	ADAPTER AS	
		3	**6V-8397**	1	SEAL-O-RING	
		3	**8T-6663**	1	ADAPTER-PORT	
	11	2	**163-4295**	1	PLATE AS	
	12	2	**175-4782**	1	BOSS	
Y	13	3	*185-1028*	1	COOLER GP-AXLE OIL	257
	14	2	*187-2120*	1	ELBOW AS	
		2	**4J-5477**	1	SEAL-O-RING	
		2	**8C-8408**	1	ELBOW	
I	15	2	**191-1863**	1	HOSE AS	
Y	16	2	**205-5268**	1	PUMP & MOTOR GP-AXLE OIL CLR	307
I	17	1	**212-5940**	1	HOSE AS	
I	18	2	**212-6056**	1	HOSE AS	
	19	3	**214-1042**	1	PLATE AS	
I	20	2	**215-3810**	1	HOSE AS	
	21	2	**216-3041**	1	BRACKET AS	
M		2	**8T-3490**	2	NUT-WELD (M10X1.5-THD)	
		2	**092-2467**	2	SPACER (10.5X2X45-MM THK)	
I	22	1	**216-3938**	1	HOSE AS	
I	23	1	**219-3311**	1	HOSE AS	
I	24	3	**219-3314**	1	HOSE AS	
I	25	2	**223-8276**	1	HOSE AS	
	26	1	**231-0832**	1	SCREEN-SUCTION	
I	27	1	**231-7692**	1	HOSE AS	
I	28	1	**231-7694**	1	HOSE AS	
	29	3	**240-0180**	2	PLATE	
	30	3	**241-6755**	1	PLATE AS	
	31	1	**247-8298**	1	SCREEN AS (IN-LINE) (AXLE OIL)	
I	32	2	**252-2362**	1	HOSE AS	
	33	3	*148-8306*	2	ADAPTER AS	
					(EACH INCLUDES)	
		3	**5P-5777**	1	ADAPTER-O-RING	
		3	**7M-8485**	1	SEAL-O-RING	
	34	2	*148-8316*	1	CONNECTOR AS	
		2	**3J-7354**	1	SEAL-O-RING	
		2	**4J-5477**	1	SEAL-O-RING	
		2	**6V-8647**	1	CONNECTOR	
	35	2	*148-8325*	1	CONNECTOR AS	
		2	**3J-1907**	1	SEAL-O-RING	
		2	**4J-5477**	1	SEAL-O-RING	
		2	**6V-8641**	1	CONNECTOR	
	36	1	*148-8327*	1	CONNECTOR AS	
		1	**3D-2824**	1	SEAL-O-RING	

235-6847 LINES GP-AXLE OIL COOLER *(contd.)* i02595401

NOTE	REF NO	GRAPHIC REF	PART NUMBER	QTY	PART NAME 1 2 3 4 5 6 (PRODUCT LEVEL)	SEE PAGE
		1	**6V-8637**	1	CONNECTOR	
		1	**6V-9746**	1	SEAL-O-RING	
	37	1	*148-8339*	1	CONNECTOR AS	
		1	**6V-8716**	1	CONNECTOR	
		1	**6V-9746**	1	SEAL-O-RING	
		1	**7M-8485**	1	SEAL-O-RING	
	38	3	*148-8358*	1	ELBOW AS	
		3	**2M-9780**	1	SEAL-O-RING	
		3	**6V-8398**	1	SEAL-O-RING	
		3	**6V-8624**	1	ELBOW	
	39	1	*148-8360*	2	ELBOW AS	
					(EACH INCLUDES)	
		1	**6V-9182**	1	ELBOW	
		1	**6V-9746**	1	SEAL-O-RING	
		1	**7M-8485**	1	SEAL-O-RING	
	40	2,3	*148-8364*	4	ELBOW AS	
					(EACH INCLUDES)	
		2,3	**3K-0360**	1	SEAL-O-RING	
		2,3	**6V-8398**	1	SEAL-O-RING	
		2,3	**6V-8625**	1	ELBOW	
	41	2	*148-8372*	2	ELBOW AS	
					(EACH INCLUDES)	
		2	**2M-9780**	1	SEAL-O-RING	
		2	**6V-8398**	1	SEAL-O-RING	
		2	**6V-8721**	1	ELBOW	
	42	2	*148-8388*	1	ELBOW AS	
		2	**2M-9780**	1	SEAL-O-RING	
		2	**6V-8629**	1	ELBOW	
		2	**6V-9746**	1	SEAL-O-RING	
	43	3	*148-8424*	1	TEE AS	
		3	**6V-8397**	1	SEAL-O-RING	
		3	**8T-8902**	1	TEE	
	44	3	*148-8436*	1	TEE AS	
		3	**3K-0360**	1	SEAL-O-RING	
		3	**6V-8398**	2	SEAL-O-RING	
		3	**6V-8775**	1	TEE-FACE SEAL	
	45	1	*148-8442*	1	TEE AS	
		1	**6V-9746**	2	SEAL-O-RING	
		1	**7M-8485**	1	SEAL-O-RING	
		1	**8T-1685**	1	TEE	
	46	2	*148-8444*	1	TEE AS-SWIVEL	
		2	**6V-8398**	2	SEAL-O-RING	
		2	**6V-9837**	1	TEE-SWIVEL	
	47	2	*148-8448*	1	FITTING AS	
		2	**4J-5477**	2	SEAL-O-RING	
		2	**6V-9842**	1	TEE-SWIVEL	
	48	1	*153-6237*	2	ELBOW AS	
					(EACH INCLUDES)	
		1	**3D-2824**	1	SEAL-O-RING	
		1	**6V-9004**	1	ELBOW	
		1	**6V-9746**	1	SEAL-O-RING	
	49	2	*153-6241*	1	ELBOW AS	
		2	**6V-8398**	1	SEAL-O-RING	
		2	**8C-8989**	1	ELBOW	
	50	3	*164-5567*	1	COUPLER AS-QUICK DISCONNECT	
		3	**3J-1907**	1	SEAL-O-RING	
		3	**6V-3965**	1	FITTING (QUICK DISCONNECT)	
	51	1,2,3	**204-8000**	3	MOUNT (TIE WRAP)	
I	52	1	**209-7801**	1	HOSE AS	

235-6847 **LINES GP-AXLE OIL COOLER** *(contd.)* **i02595401**

NOTE	REF NO	GRAPHIC REF	PART NUMBER	QTY	PART NAME 1 2 3 4 5 6 (PRODUCT LEVEL)	SEE PAGE
	53	3	**3J-1907**	1	SEAL-O-RING	
	54	2	**3P-2404**	1	CLIP	
	55	1	**4D-9517**	1	CLIP	
	56	2	**6D-3479**	1	CLIP	
	57	1,2	**6V-1889**	3	CLIP	
	58	1	**6V-9746**	1	SEAL-O-RING	
	59	3	**6V-9832**	1	CAP AS	
	60	3	**7X-0515**	4	WASHER-HARD (17X35X5-MM THK)	
M	61	2	**7X-2543**	2	BOLT (M10X1.5X120-MM)	
M	62	2	**7X-2549**	1	BOLT (M12X1.75X100-MM)	
M	63	3	**7X-2558**	2	BOLT (M16X2X150-MM)	
	64	1,2	**7X-7729**	4	WASHER (11X25X3-MM THK)	
M	65	3	**7X-2560**	2	BOLT (M16X2X220-MM)	
	66	1	**8M-2770**	1	CLIP	
	67	1,3	**8M-2773**	2	CLIP	
	68	3	**8S-0948**	1	CLIP	
	69	1,2,3	**8T-4121**	16	WASHER-HARD (11X21X2.5-MM THK)	
M	70	1,2	**8T-4133**	2	NUT (M10X1.5-THD)	
M	71	1,2,3	**8T-4136**	5	BOLT (M10X1.5X25-MM)	
M	72	3	**8T-4137**	2	BOLT (M10X1.5X20-MM)	
M	73	2	**8T-4186**	1	BOLT (M10X1.5X40-MM)	
M	74	1,2	**8T-4195**	3	BOLT (M10X1.5X30-MM)	
M	75	1	**8T-4196**	2	BOLT (M10X1.5X35-MM)	
	76	2,3	**8T-4223**	5	WASHER-HARD (13.5X25.5X3-MM THK)	
M	77	3	**8T-4956**	4	BOLT (M12X1.75X35-MM)	
M	78	2	**8T-5005**	2	BOLT (M10X1.5X70-MM)	
	79	2	**9X-8250**	1	CLIP	

D-ORDER BY THE METER
I-REFER TO HYDRAULIC INFORMATION SYSTEM
M-METRIC PART
Y-SEPARATE ILLUSTRATION

235-6847 LINES GP-AXLE OIL COOLER *(contd.)* i02595401

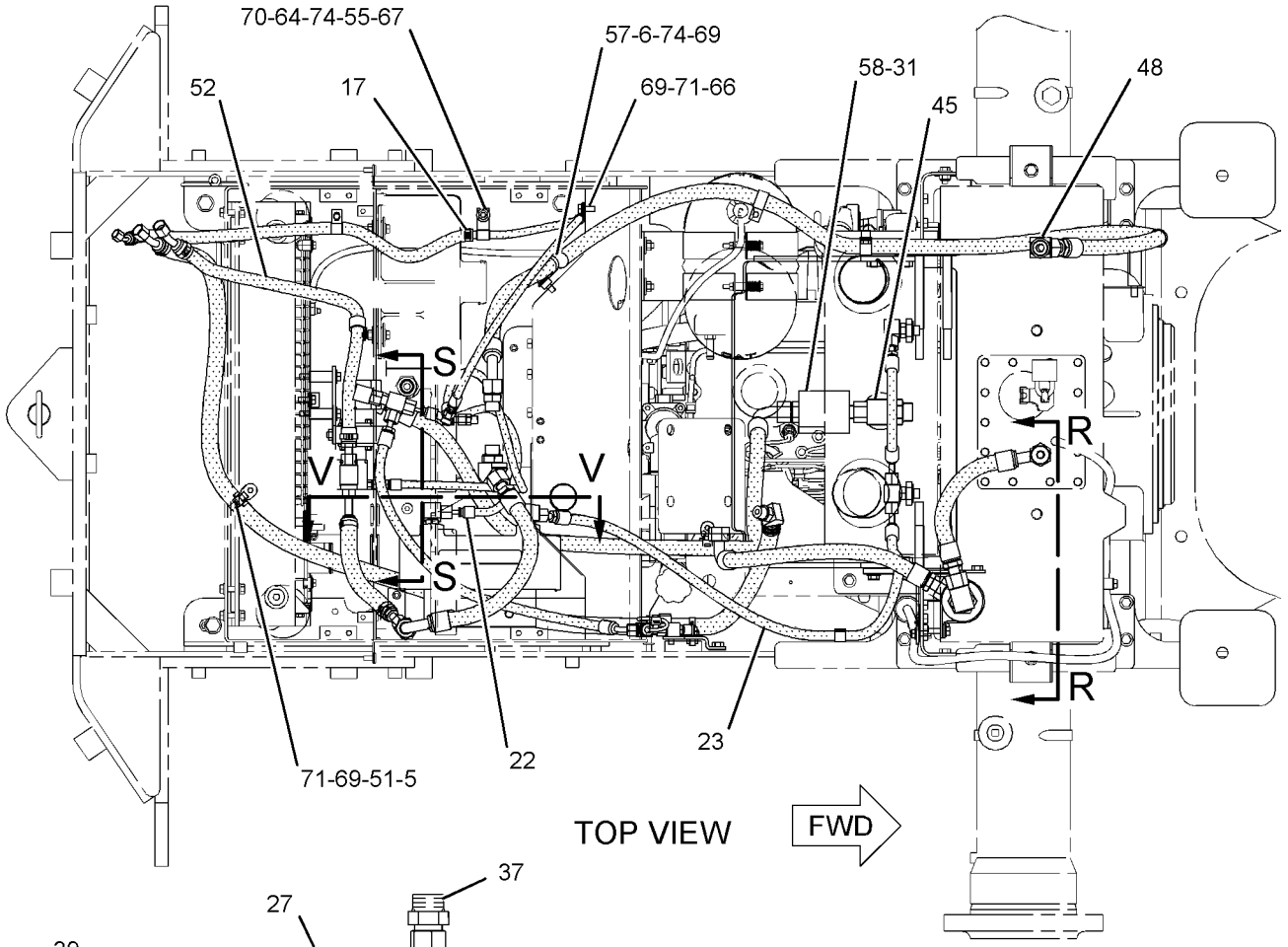

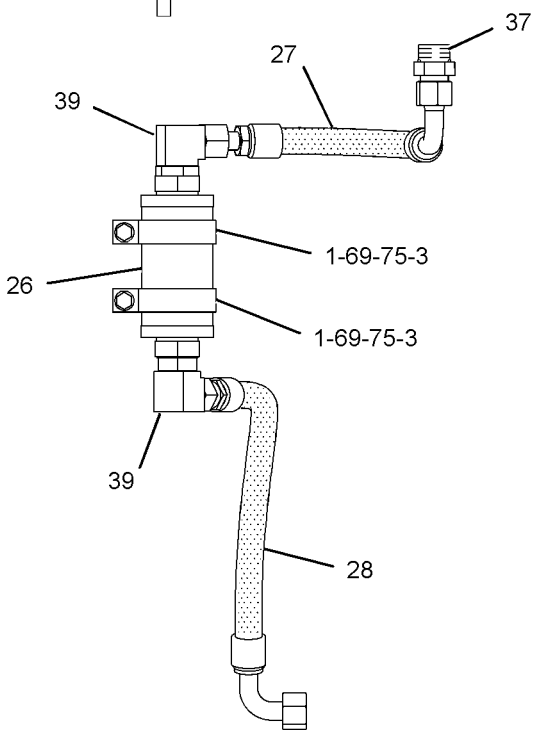

VIEW R-R

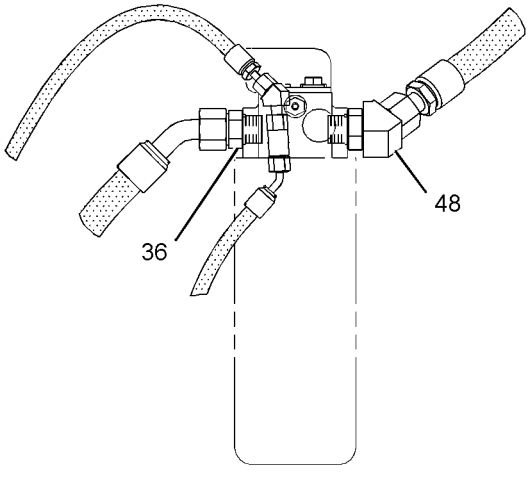

VIEW D-D

REFER TO ALL ILLUSTRATIONS OF THIS GROUP FOR AUXILIARY VIEWS

GRAPHIC #1

g01112237

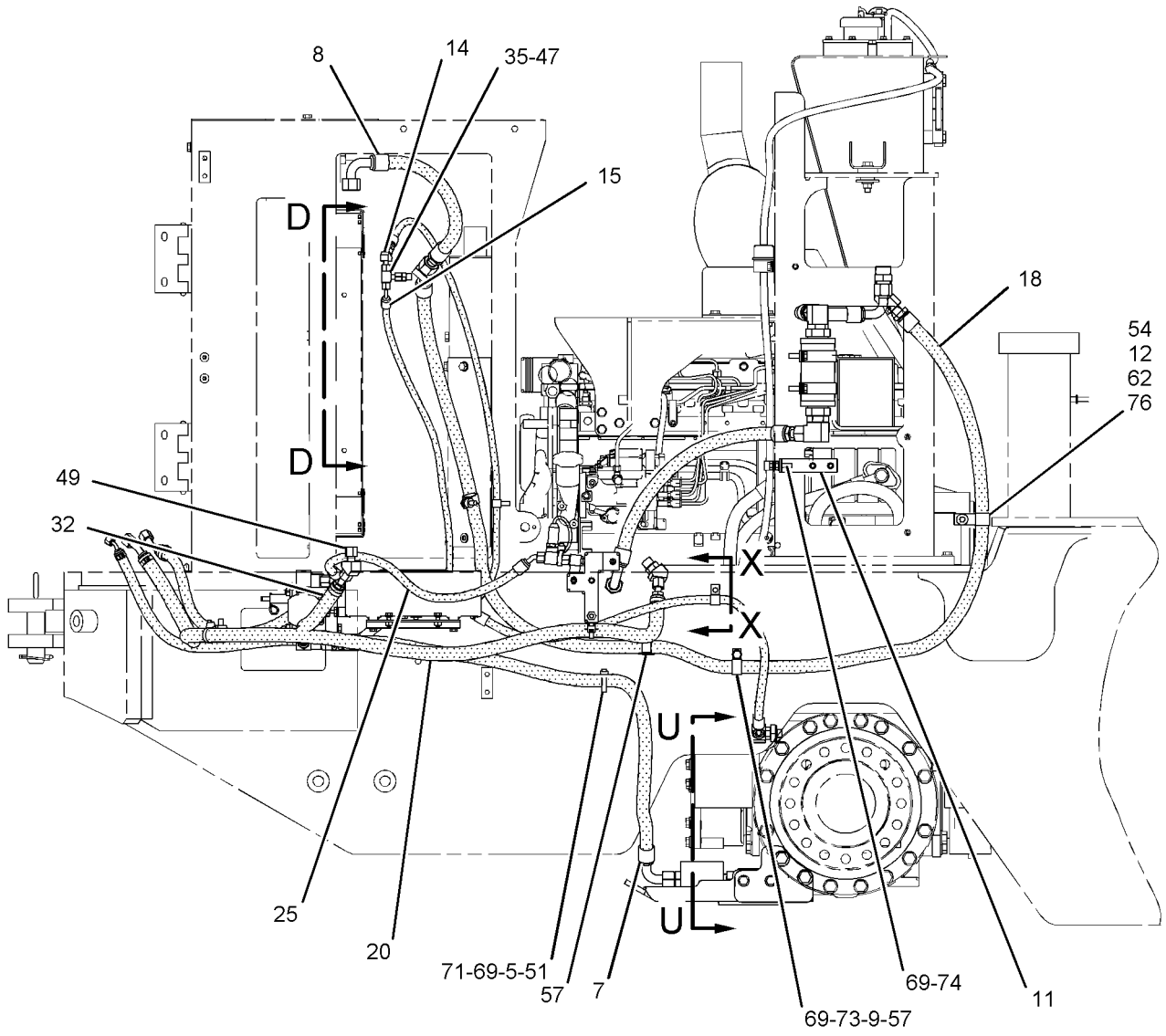

RIGHT SIDE VIEW

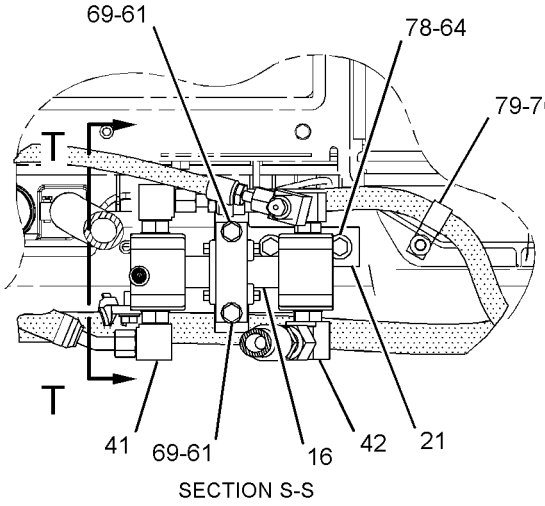

SECTION S-S

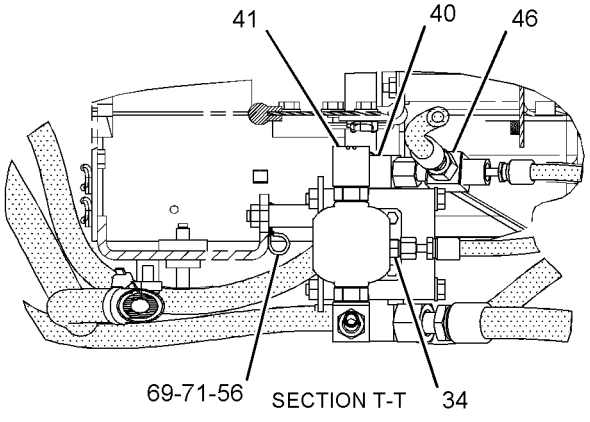

SECTION T-T

REFER TO ALL ILLUSTRATIONS OF THIS GROUP FOR AUXILIARY VIEWS

GRAPHIC #2

g01112239

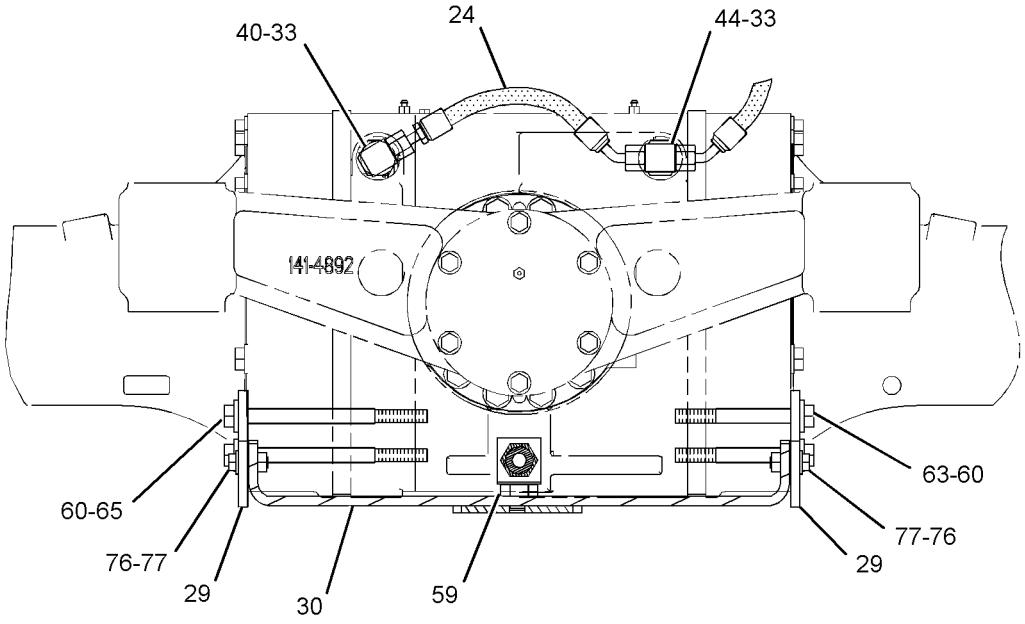

SECTION U-U

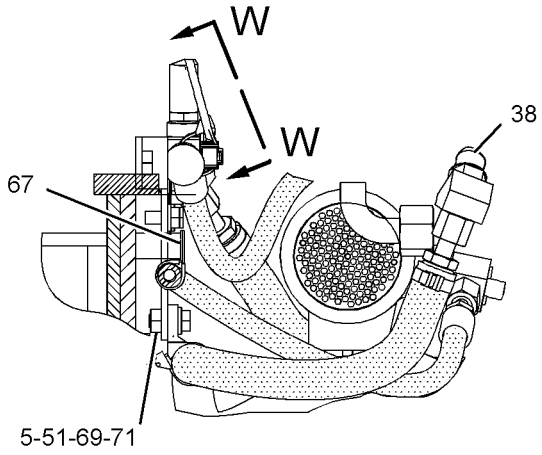

SECTION X-X

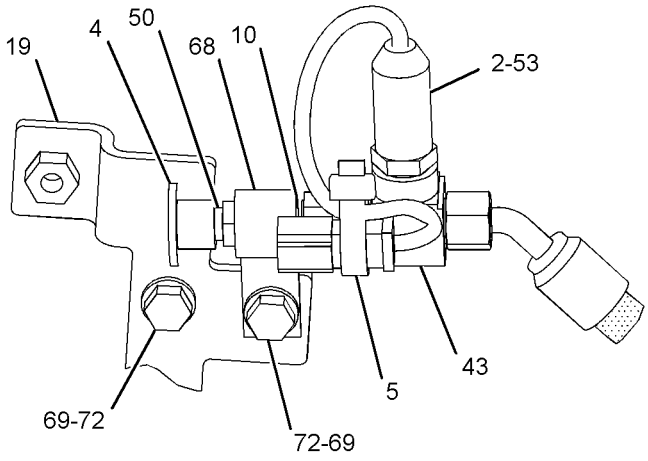

VIEW W-W

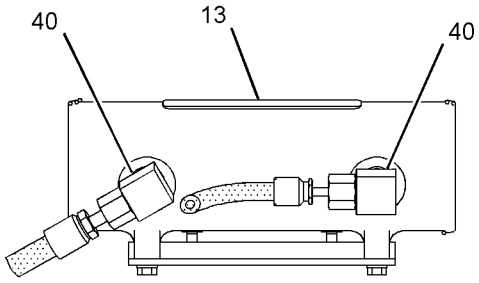

SECTION V-V

GRAPHIC #3 **<END>** g01112240

262-5670 LINES GP-AXLE OIL COOLER

S/N: TWR706-1730

PART OF 235-6848, 235-6850 AXLE AR-OSCILLATING AN ATTACHMENT

SMCS-1365, 3016 **i02610103**

NOTE	REF NO	GRAPHIC REF	PART NUMBER	QTY	PART NAME 1 2 3 4 5 6 (PRODUCT LEVEL)	SEE PAGE
	1	3	**3E-7690**	1	SWITCH AS-PRESSURE (AXLE OIL)	
		3	**102-8802**	1	KIT-RECEPTACLE (2-PIN)	
					(INCLUDES RECEPTACLE AS & WEDGE)	
	2	3	**6V-0852**	1	CAP-DUST	
	3	1,2,3	**7K-1181**	4	STRAP-CABLE	
	4	2	**091-0081**	1	SPACER (10.5X20X10-MM THK)	
I	5	2	**102-2142**	1	HOSE AS	
I	6	2	**108-4366**	1	HOSE AS	
I	7	1	**109-5080**	1	HOSE AS	
	8	2	**129-8087**	1	SPACER (13.9X17.1X14-MM THK)	
	9	3	*153-6248*	1	ADAPTER AS	
		3	**6V-8397**	1	SEAL-O-RING	
		3	**8T-6663**	1	ADAPTER-PORT	
	10	1	**163-4295**	1	PLATE AS	
	11	2	**175-4782**	1	BOSS	
Y	12	1	*185-1028*	1	COOLER GP-AXLE OIL	257
	13	3	*187-2120*	1	ELBOW AS	
		3	**4J-5477**	1	SEAL-O-RING	
		3	**8C-8408**	1	ELBOW	
I	14	2	**191-1863**	1	HOSE AS	
Y	15	3	**205-5268**	1	PUMP & MOTOR GP-AXLE OIL CLR	307
I	16	2	**212-5940**	1	HOSE AS	
I	17	2	**212-6056**	1	HOSE AS	
	18	3	**214-1042**	1	PLATE AS	
I	19	1	**215-3810**	1	HOSE AS	
	20	3	**216-3041**	1	BRACKET AS	
I	21	3	**216-3938**	1	HOSE AS	
I	22	1	**219-3311**	1	HOSE AS	
I	23	2	**219-3314**	1	HOSE AS	
I	24	1	**223-8276**	1	HOSE AS	
	25	2	**240-0180**	2	PLATE	
	26	2	**241-6755**	1	PLATE AS	
	27	2	**247-8298**	1	SCREEN AS (IN-LINE)	
I	28	3	**252-2362**	1	HOSE AS	
	29	2	*260-9172*	1	ELBOW AS	
		2	**6V-9746**	1	SEAL-O-RING	
		2	**7M-8485**	1	SEAL-O-RING	
		2	**202-1713**	1	ELBOW	
	30	2	*148-8306*	2	ADAPTER AS	
					(EACH INCLUDES)	
		2	**5P-5777**	1	ADAPTER-O-RING	
		2	**7M-8485**	1	SEAL-O-RING	
	31	3	*148-8316*	1	CONNECTOR AS	
		3	**3J-7354**	1	SEAL-O-RING	
		3	**4J-5477**	1	SEAL-O-RING	
		3	**6V-8647**	1	CONNECTOR	
	32	3	*148-8325*	1	CONNECTOR AS	
		3	**3J-1907**	1	SEAL-O-RING	
		3	**4J-5477**	1	SEAL-O-RING	
		3	**6V-8641**	1	CONNECTOR	
	33	3	*148-8327*	1	CONNECTOR AS	
		3	**3D-2824**	1	SEAL-O-RING	
		3	**6V-8637**	1	CONNECTOR	
		3	**6V-9746**	1	SEAL-O-RING	
	34	1	*148-8358*	1	ELBOW AS	

262-5670 LINES GP-AXLE OIL COOLER *(contd.)* i02610103

NOTE	REF NO	GRAPHIC REF	PART NUMBER	QTY	PART NAME 1 2 3 4 5 6 (PRODUCT LEVEL)	SEE PAGE
		1	**2M-9780**	1	SEAL-O-RING	
		1	**6V-8398**	1	SEAL-O-RING	
		1	**6V-8624**	1	ELBOW	
	35	2,3	*148-8364*	4	ELBOW AS	
					(EACH INCLUDES)	
		2,3	**3K-0360**	1	SEAL-O-RING	
		2,3	**6V-8398**	1	SEAL-O-RING	
		2,3	**6V-8625**	1	ELBOW	
	36	3	*148-8372*	2	ELBOW AS	
					(EACH INCLUDES)	
		3	**2M-9780**	1	SEAL-O-RING	
		3	**6V-8398**	1	SEAL-O-RING	
		3	**6V-8721**	1	ELBOW	
	37	3	*148-8388*	1	ELBOW AS	
		3	**2M-9780**	1	SEAL-O-RING	
		3	**6V-8629**	1	ELBOW	
		3	**6V-9746**	1	SEAL-O-RING	
	38	3	*148-8424*	1	TEE AS	
		3	**6V-8397**	1	SEAL-O-RING	
		3	**8T-8902**	1	TEE	
	39	2	*148-8436*	1	TEE AS	
		2	**3K-0360**	1	SEAL-O-RING	
		2	**6V-8398**	2	SEAL-O-RING	
		2	**6V-8775**	1	TEE-FACE SEAL	
	40	2	*148-8442*	1	TEE AS	
		2	**6V-9746**	2	SEAL-O-RING	
		2	**7M-8485**	1	SEAL-O-RING	
		2	**8T-1685**	1	TEE	
	41	3	*148-8444*	1	TEE AS-SWIVEL	
		3	**6V-8398**	2	SEAL-O-RING	
		3	**6V-9837**	1	TEE-SWIVEL	
	42	3	*148-8448*	1	FITTING AS	
		3	**4J-5477**	2	SEAL-O-RING	
		3	**6V-9842**	1	TEE-SWIVEL	
	43	1,2	*153-6237*	2	ELBOW AS	
					(EACH INCLUDES)	
		1,2	**3D-2824**	1	SEAL-O-RING	
		1,2	**6V-9004**	1	ELBOW	
		1,2	**6V-9746**	1	SEAL-O-RING	
	44	1	*153-6241*	1	ELBOW AS	
		1	**6V-8398**	1	SEAL-O-RING	
		1	**8C-8989**	1	ELBOW	
	45	3	*164-5567*	1	COUPLER AS-QUICK DISCONNECT	
		3	**3J-1907**	1	SEAL-O-RING	
		3	**6V-3965**	1	FITTING (QUICK DISCONNECT)	
	46	1,2	**204-8000**	3	MOUNT (TIE WRAP)	
I	47	2	**209-7801**	1	HOSE AS	
	48	3	**3J-1907**	1	SEAL-O-RING	
	49	2	**3P-2404**	1	CLIP	
	50	2	**4D-9517**	1	CLIP	
	51	3	**6D-3479**	1	CLIP	
	52	2	**6V-1889**	4	CLIP	
	53	2	**6V-9746**	1	SEAL-O-RING	
	54	2	**6V-9832**	1	CAP AS	
	55	2	**7X-0515**	4	WASHER-HARD (17X35X5-MM THK)	
M	56	3	**7X-2543**	2	BOLT (M10X1.5X120-MM)	
M	57	2	**7X-2549**	1	BOLT (M12X1.75X100-MM)	
M	58	2	**7X-2558**	2	BOLT (M16X2X150-MM)	
M	59	2	**7X-2560**	2	BOLT (M16X2X220-MM)	

262-5670 **LINES GP-AXLE OIL COOLER** *(contd.)* **i02610103**

NOTE	REF NO	GRAPHIC REF	PART NUMBER	QTY	PART NAME 1 2 3 4 5 6 (PRODUCT LEVEL)	SEE PAGE
	60	2,3	**7X-7729**	4	WASHER (11X25X3-MM THK)	
	61	2	**8M-2770**	1	CLIP	
	62	1,2	**8M-2773**	2	CLIP	
	63	3	**8S-0948**	1	CLIP	
	64	1,2,3	**8T-4121**	14	WASHER-HARD (11X21X2.5-MM THK)	
M	65	2,3	**8T-4133**	2	NUT (M10X1.5-THD)	
M	66	1,2,3	**8T-4136**	4	BOLT (M10X1.5X25-MM)	
M	67	2	**8T-4137**	2	BOLT (M10X1.5X20-MM)	
M	68	2	**8T-4186**	1	BOLT (M10X1.5X40-MM)	
M	69	1,2	**8T-4195**	4	BOLT (M10X1.5X30-MM)	
	70	2	**8T-4223**	5	WASHER-HARD (13.5X25.5X3-MM THK)	
M	71	2	**8T-4956**	4	BOLT (M12X1.75X35-MM)	
M	72	3	**8T-5005**	2	BOLT (M10X1.5X70-MM)	
	73	3	**9X-8250**	1	CLIP	

I-REFER TO HYDRAULIC INFORMATION SYSTEM
M-METRIC PART
Y-SEPARATE ILLUSTRATION

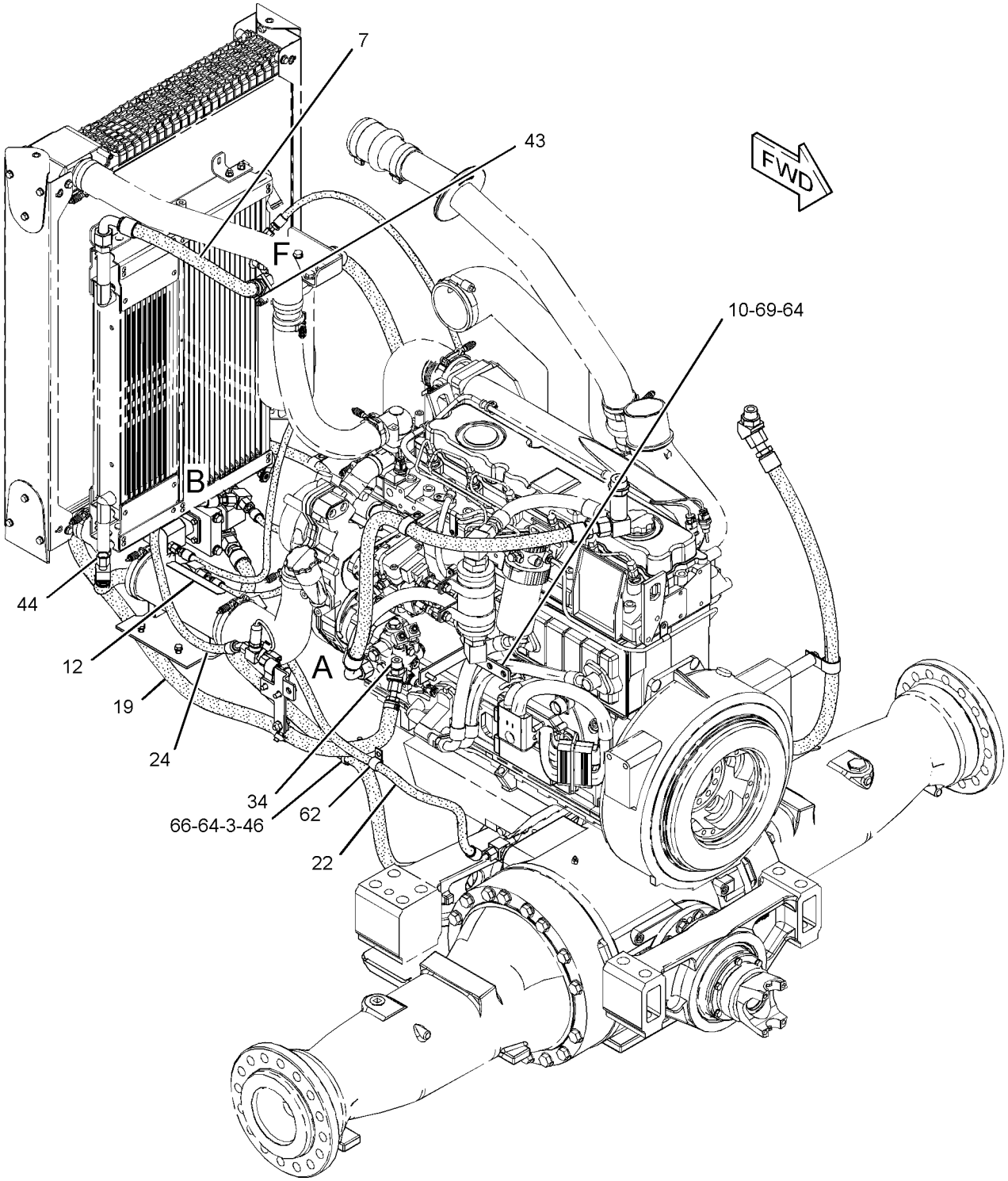

REFER TO ALL ILLUSTRATIONS OF
THIS GROUP FOR AUXILIARY VIEWS

GRAPHIC #1

g01182138

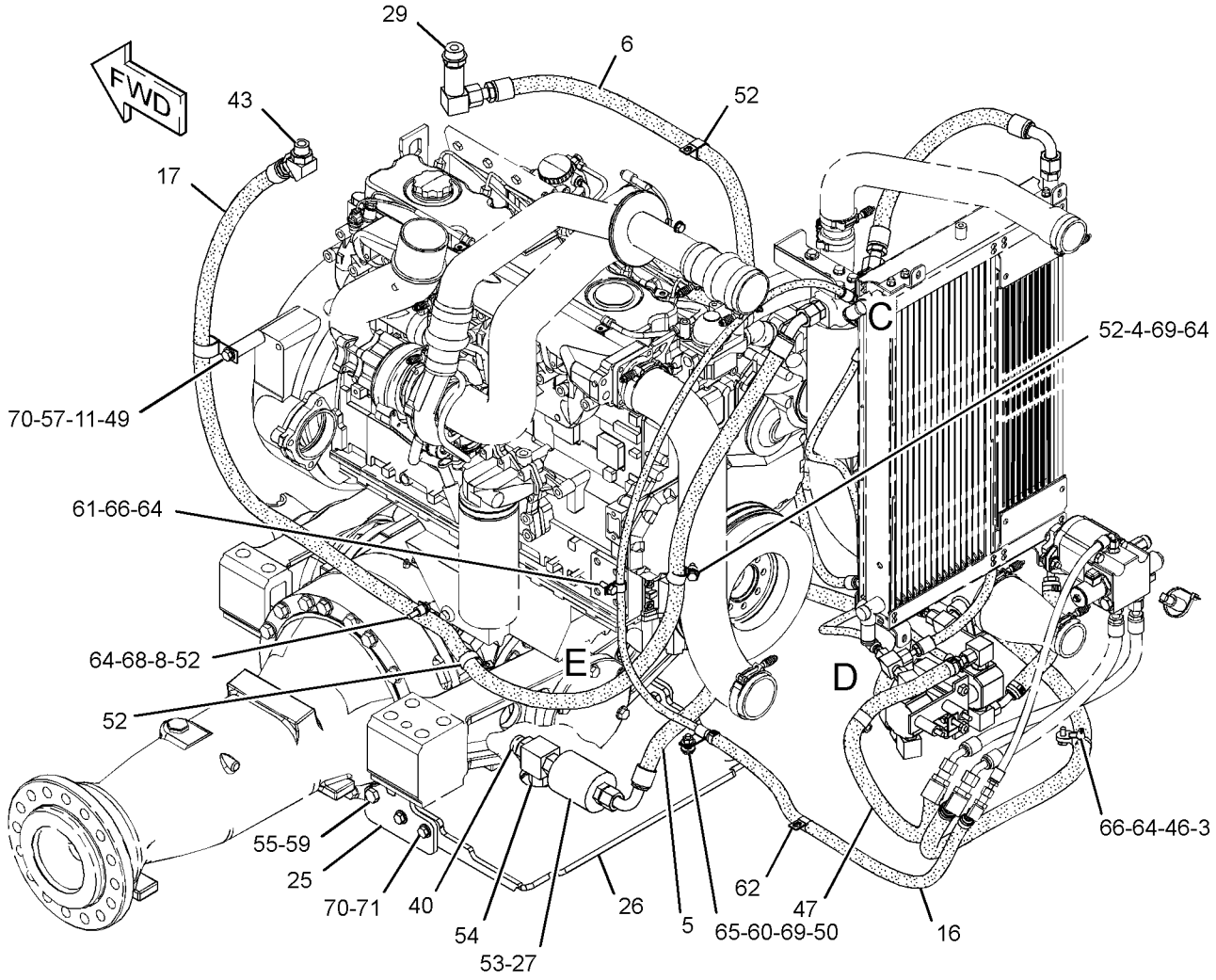

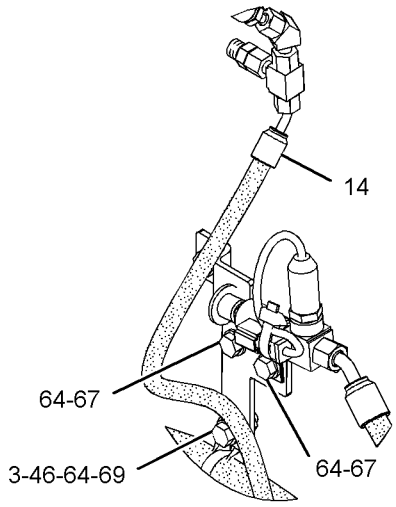

VIEW OF AREA C
(PHANTOM REMOVED FOR CLARITY)

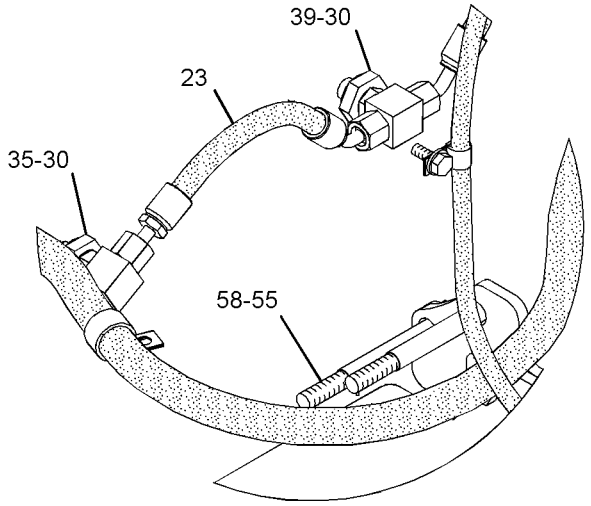

VIEW OF AREA E
(PHANTOM REMOVED FOR CLARITY)

GRAPHIC #2 g01182139

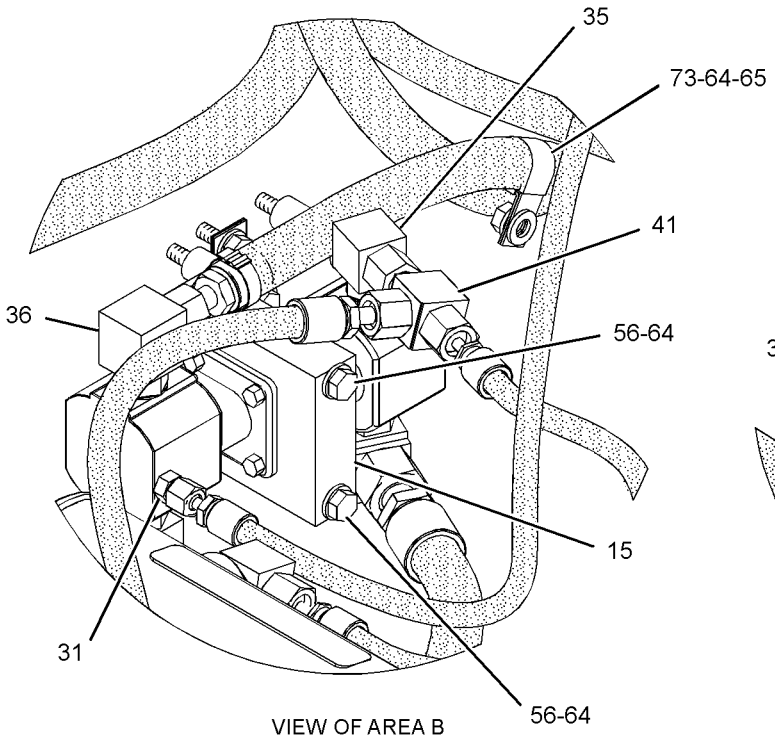

VIEW OF AREA B

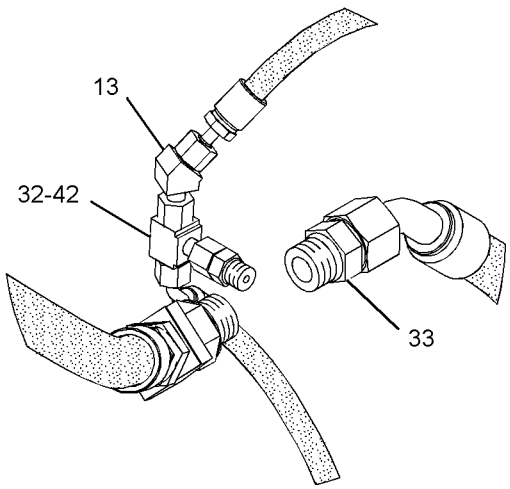

VIEW OF AREA F
(PHANTOM REMOVED FOR CLARITY)

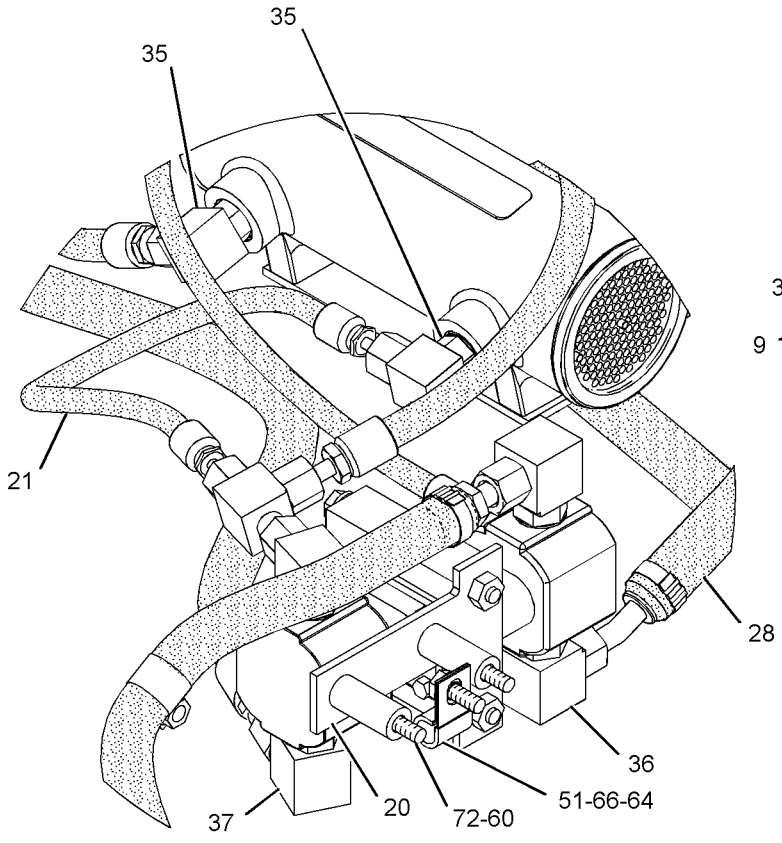

VIEW OF AREA D

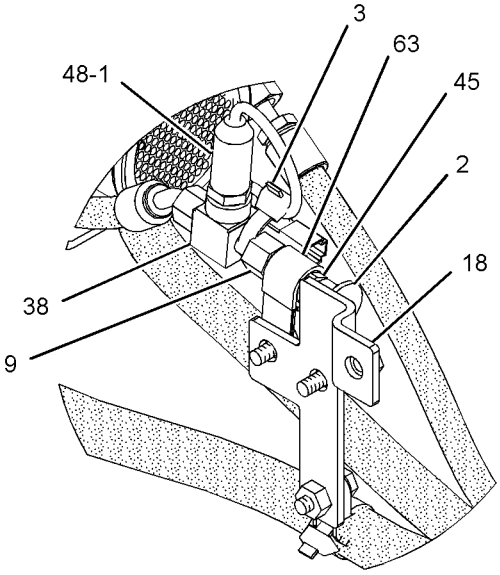

VIEW OF AREA A

GRAPHIC #3 **<END>** g01182140

262-5670 LINES GP-AXLE OIL COOLER

S/N: TWR1731-UP

PART OF 235-6848, 235-6850 AXLE AR-OSCILLATING AN ATTACHMENT

SMCS-1365, 3016 **i02595456**

NOTE	REF NO	GRAPHIC REF	PART NUMBER	QTY	PART NAME 1 2 3 4 5 6 (PRODUCT LEVEL)	SEE PAGE
	1	3	**3E-7690**	1	SWITCH AS-PRESSURE (AXLE OIL)	
		3	**102-8802**	1	KIT-RECEPTACLE (2-PIN)	
					(INCLUDES RECEPTACLE AS & WEDGE)	
	2	3	**6V-0852**	1	CAP-DUST	
	3	1,2,3	**7K-1181**	4	STRAP-CABLE	
	4	2	**091-0081**	1	SPACER (10.5X20X10-MM THK)	
I	5	2	**102-2142**	1	HOSE AS	
I	6	2	**108-4366**	1	HOSE AS	
I	7	1	**109-5080**	1	HOSE AS	
	8	3	**9X-8250**	1	CLIP	
	9	3	*153-6248*	1	ADAPTER AS	
		3	**6V-8397**	1	SEAL-O-RING	
		3	**8T-6663**	1	ADAPTER-PORT	
	10	1	**163-4295**	1	PLATE AS	
	11	2	**175-4782**	1	BOSS	
Y	12	1	*185-1028*	1	COOLER GP-AXLE OIL	257
	13	3	*187-2120*	1	ELBOW AS	
		3	**4J-5477**	1	SEAL-O-RING	
		3	**8C-8408**	1	ELBOW	
I	14	2	**191-1863**	1	HOSE AS	
Y	15	3	**205-5268**	1	PUMP & MOTOR GP-AXLE OIL CLR	307
I	16	2	**212-5940**	1	HOSE AS	
I	17	2	**212-6056**	1	HOSE AS	
	18	3	**214-1042**	1	PLATE AS	
I	19	1	**215-3810**	1	HOSE AS	
	20	3	**216-3041**	1	BRACKET AS	
I	21	3	**216-3938**	1	HOSE AS	
I	22	1	**219-3311**	1	HOSE AS	
I	23	2	**219-3314**	1	HOSE AS	
I	24	1	**223-8276**	1	HOSE AS	
	25	2	**240-0180**	2	PLATE	
	26	2	**241-6755**	1	PLATE AS	
	27	2	**247-8298**	1	SCREEN AS (IN-LINE)	
I	28	3	**252-2362**	1	HOSE AS	
	29	2	*260-9172*	1	ELBOW AS	
		2	**6V-9746**	1	SEAL-O-RING	
		2	**7M-8485**	1	SEAL-O-RING	
		2	**202-1713**	1	ELBOW	
C	30	2	*268-1521*	2	ADAPTER AS	
					(EACH INCLUDES)	
		2	**268-1520**	1	ADAPTER	
		2	**7M-8485**	1	SEAL-O-RING	
	31	3	*148-8316*	1	CONNECTOR AS	
		3	**3J-7354**	1	SEAL-O-RING	
		3	**4J-5477**	1	SEAL-O-RING	
		3	**6V-8647**	1	CONNECTOR	
	32	3	*148-8325*	1	CONNECTOR AS	
		3	**3J-1907**	1	SEAL-O-RING	
		3	**4J-5477**	1	SEAL-O-RING	
		3	**6V-8641**	1	CONNECTOR	
	33	3	*148-8327*	1	CONNECTOR AS	
		3	**3D-2824**	1	SEAL-O-RING	
		3	**6V-8637**	1	CONNECTOR	
		3	**6V-9746**	1	SEAL-O-RING	
	34	1	*148-8358*	1	ELBOW AS	

262-5670 LINES GP-AXLE OIL COOLER *(contd.)* i02595456

NOTE	REF NO	GRAPHIC REF	PART NUMBER	QTY	PART NAME 1 2 3 4 5 6 (PRODUCT LEVEL)	SEE PAGE
		1	**2M-9780**	1	SEAL-O-RING	
		1	**6V-8398**	1	SEAL-O-RING	
		1	**6V-8624**	1	ELBOW	
	35	2,3	*148-8364*	4	ELBOW AS	
					(EACH INCLUDES)	
		2,3	**3K-0360**	1	SEAL-O-RING	
		2,3	**6V-8398**	1	SEAL-O-RING	
		2,3	**6V-8625**	1	ELBOW	
	36	3	*148-8372*	2	ELBOW AS	
					(EACH INCLUDES)	
		3	**2M-9780**	1	SEAL-O-RING	
		3	**6V-8398**	1	SEAL-O-RING	
		3	**6V-8721**	1	ELBOW	
	37	3	*148-8388*	1	ELBOW AS	
		3	**2M-9780**	1	SEAL-O-RING	
		3	**6V-8629**	1	ELBOW	
		3	**6V-9746**	1	SEAL-O-RING	
	38	3	*148-8424*	1	TEE AS	
	39	2	*148-8436*	1	TEE AS	
	40	2	*148-8442*	1	TEE AS	
	41	3	*148-8444*	1	TEE AS-SWIVEL	
		3	**6V-8398**	2	SEAL-O-RING	
		3	**6V-9837**	1	TEE-SWIVEL	
	42	3	*148-8448*	1	FITTING AS	
		3	**4J-5477**	2	SEAL-O-RING	
		3	**6V-9842**	1	TEE-SWIVEL	
	43	1,2	*153-6237*	2	ELBOW AS	
					(EACH INCLUDES)	
		1,2	**3D-2824**	1	SEAL-O-RING	
		1,2	**6V-9004**	1	ELBOW	
		1,2	**6V-9746**	1	SEAL-O-RING	
	44	1	*153-6241*	1	ELBOW AS	
	45	3	*164-5567*	1	COUPLER AS-QUICK DISCONNECT	
		3	**3J-1907**	1	SEAL-O-RING	
		3	**6V-3965**	1	FITTING (QUICK DISCONNECT)	
	46	1,2	**204-8000**	3	MOUNT (TIE WRAP)	
I	47	2	**209-7801**	1	HOSE AS	
	48	3	**3J-1907**	1	SEAL-O-RING	
	49	2	**3P-2404**	1	CLIP	
	50	2	**4D-9517**	1	CLIP	
	51	3	**6D-3479**	1	CLIP	
	52	2	**6V-1889**	4	CLIP	
	53	2	**6V-9746**	1	SEAL-O-RING	
	54	2	**6V-9832**	1	CAP AS	
	55	2	**7X-0515**	4	WASHER-HARD (17X35X5-MM THK)	
M	56	3	**7X-2543**	2	BOLT (M10X1.5X120-MM)	
M	57	2	**7X-2549**	1	BOLT (M12X1.75X100-MM)	
M	58	2	**7X-2558**	2	BOLT (M16X2X150-MM)	
M	59	2	**7X-2560**	2	BOLT (M16X2X220-MM)	
	60	2,3	**7X-7729**	4	WASHER (11X25X3-MM THK)	
	61	2	**8M-2770**	1	CLIP	
	62	1,2	**8M-2773**	2	CLIP	
	63	3	**8S-0948**	1	CLIP	
	64	1,2,3	**8T-4121**	14	WASHER-HARD (11X21X2.5-MM THK)	
CM	65	2,3	**8T-4133**	3	NUT (M10X1.5-THD)	
M	66	1,2,3	**8T-4136**	4	BOLT (M10X1.5X25-MM)	
M	67	2	**8T-4137**	2	BOLT (M10X1.5X20-MM)	
M	68	3	**8T-5005**	2	BOLT (M10X1.5X70-MM)	
M	69	1,2	**8T-4195**	4	BOLT (M10X1.5X30-MM)	

262-5670 LINES GP-AXLE OIL COOLER *(contd.)* i02595456

NOTE	REF NO	GRAPHIC REF	PART NUMBER	QTY	PART NAME 1 2 3 4 5 6 (PRODUCT LEVEL)	SEE PAGE
	70	2	**8T-4223**	5	WASHER-HARD (13.5X25.5X3-MM THK)	
M	71	2	**8T-4956**	4	BOLT (M12X1.75X35-MM)	

C-CHANGE FROM PREVIOUS TYPE
I-REFER TO HYDRAULIC INFORMATION SYSTEM
M-METRIC PART
Y-SEPARATE ILLUSTRATION

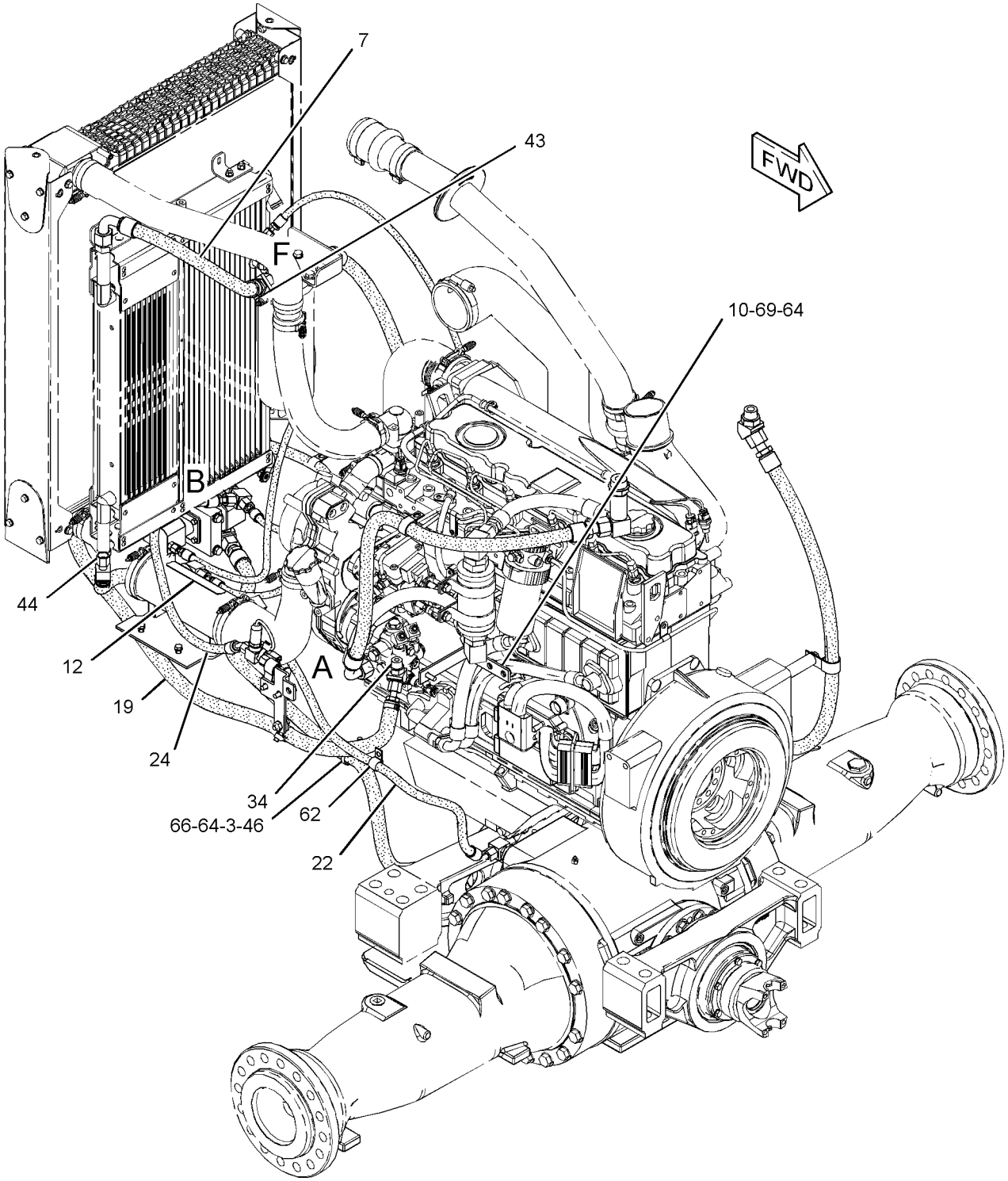

REFER TO ALL ILLUSTRATIONS OF
THIS GROUP FOR AUXILIARY VIEWS

GRAPHIC #1

g01182138

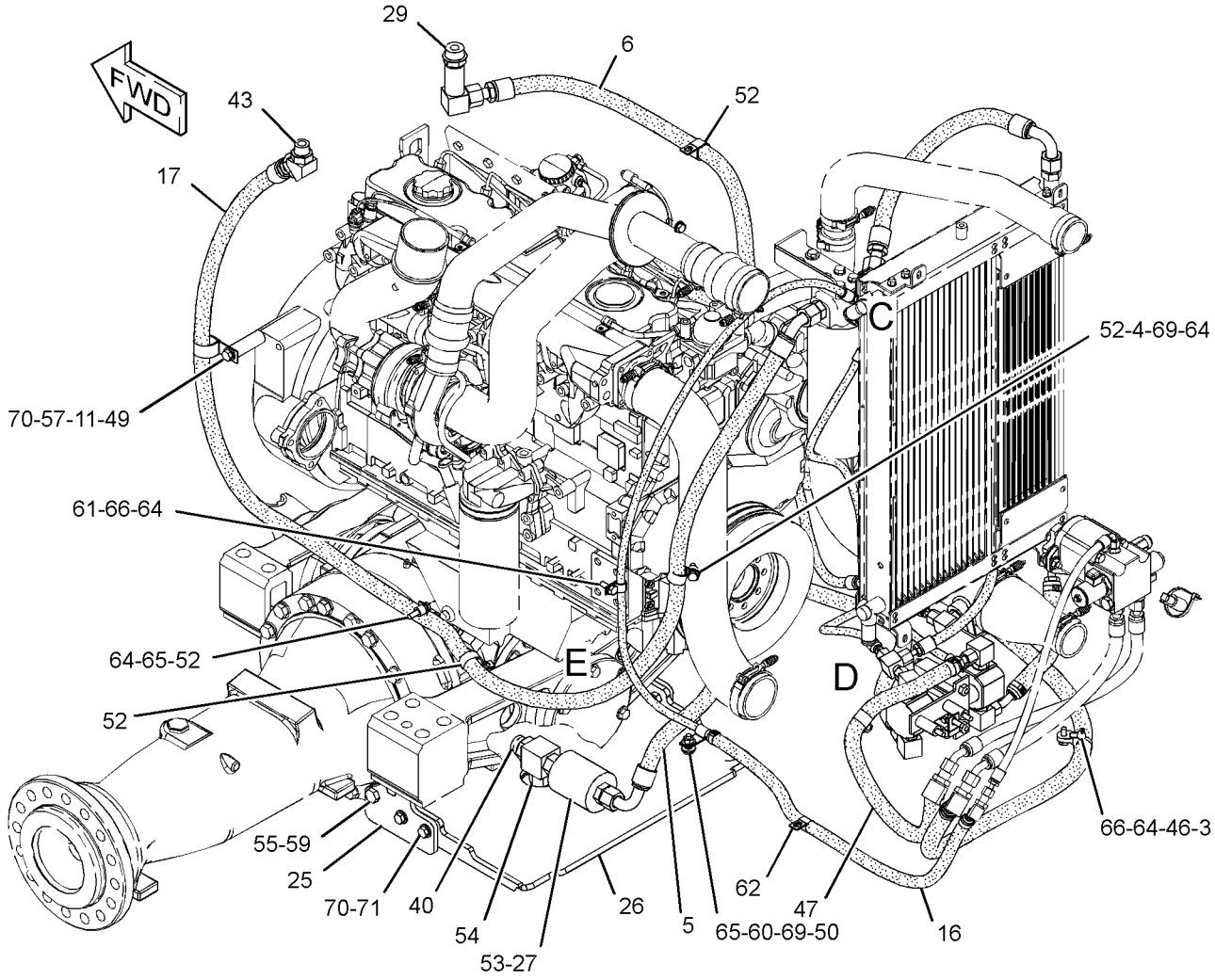

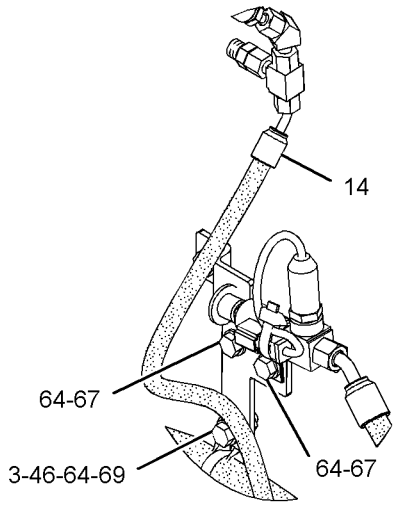

VIEW OF AREA C
(PHANTOM REMOVED FOR CLARITY)

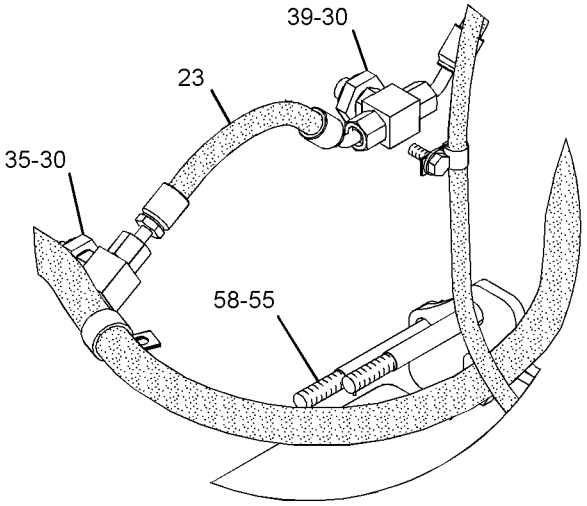

VIEW OF AREA E
(PHANTOM REMOVED FOR CLARITY)

GRAPHIC #2 g01289974

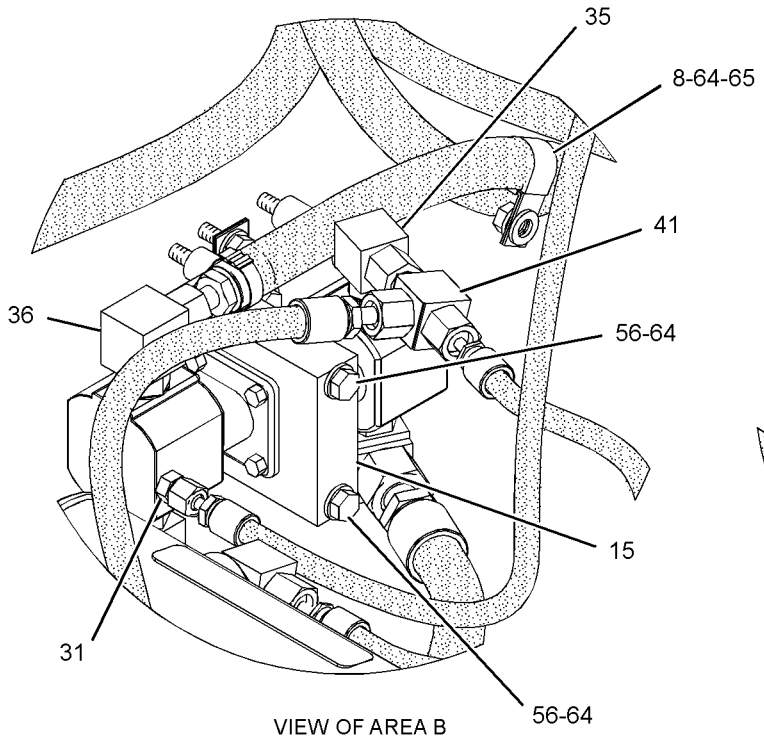

VIEW OF AREA B

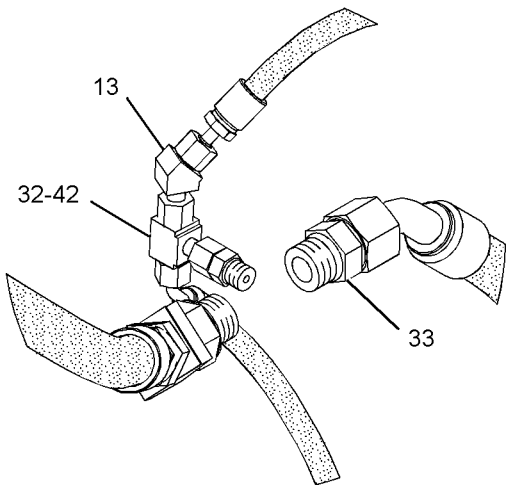

VIEW OF AREA F
(PHANTOM REMOVED FOR CLARITY)

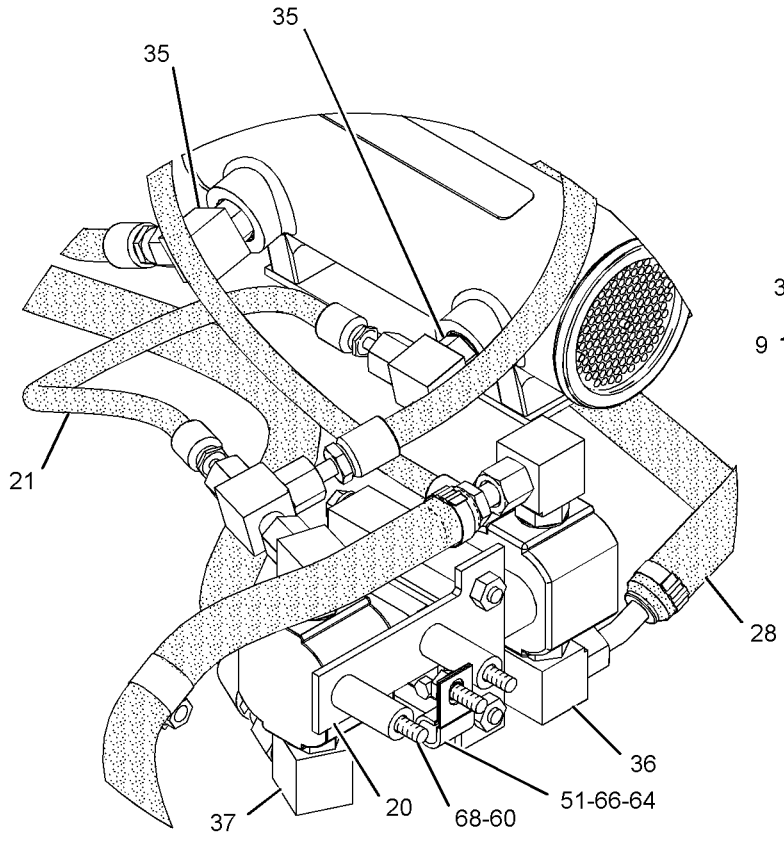

VIEW OF AREA D

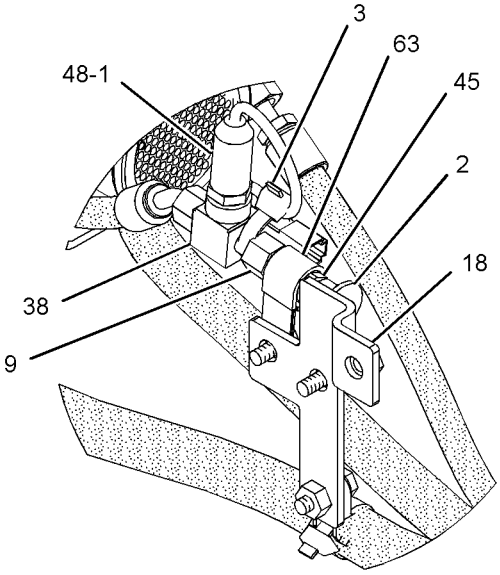

VIEW OF AREA A

GRAPHIC #3 **<END>** g01289975

243-0675 LINES GP-TORQUE CONV COOLER

S/N: TWR1-UP

PART OF 235-7499 CHASSIS AR

SMCS-1375, 3016 **i02459833**

NOTE	REF NO	GRAPHIC REF	PART NUMBER	QTY	PART NAME 1 2 3 4 5 6 (PRODUCT LEVEL)	SEE PAGE
	1	1	**5P-4362**	1	CONNECTOR	
	2	1	**6V-0852**	1	CAP-DUST	
	3	1	**7X-7958**	4	CLAMP-HOSE	
Y	4	1	**126-0747**	1	VALVE GP-BYPASS (POWER TRAIN OIL COOLER)	334
I	5	1	**208-2300**	1	HOSE AS	
I	6	1	**208-2301**	1	HOSE AS	
	7	1	**229-2935**	2	TUBE AS	
	8	1	**229-2940**	1	PLATE AS	
M		1	**8T-3490**	3	NUT-WELD (M10X1.5-THD)	
	9	1	**229-2941**	1	PLATE AS	
M		1	**8T-3490**	2	NUT-WELD (M10X1.5-THD)	
	10	1	*241-6172*	1	ELBOW AS	
		1	**7M-8485**	1	SEAL-O-RING	
		1	**173-0064**	1	ELBOW	
	11	1	**243-0686**	1	HOSE AS	
	12	1	*148-8335*	5	CONNECTOR AS	
					(EACH INCLUDES)	
		1	**5K-9090**	1	SEAL-O-RING	
		1	**6V-8635**	1	CONNECTOR	
		1	**7M-8485**	1	SEAL-O-RING	
	13	1	*150-3065*	1	ADAPTER AS	
		1	**3J-1907**	1	SEAL-O-RING	
		1	**6V-0484**	1	ADAPTER-O-RING	
	14	1	*164-5567*	1	COUPLER AS-QUICK DISCONNECT	
		1	**3J-1907**	1	SEAL-O-RING	
		1	**6V-3965**	1	FITTING (QUICK DISCONNECT)	
	15	1	**4D-7388**	2	CLIP	
	16	1	**5K-9090**	2	SEAL-O-RING	
	17	1	**6V-9172**	2	NUT (1-7/16-12-THD)	
	18	1	**7M-8485**	1	SEAL-O-RING	
	19	1	**8T-4121**	9	WASHER-HARD (11X21X2.5-MM THK)	
M	20	1	**8T-4136**	4	BOLT (M10X1.5X25-MM)	
M	21	1	**8T-4178**	3	BOLT (M10X1.5X90-MM)	
E	22	1	**146-7453**		HOSE (55-CM)	
M	23	1	**8T-4196**	2	BOLT (M10X1.5X35-MM)	

E-ORDER BY THE CENTIMETER
I-REFER TO HYDRAULIC INFORMATION SYSTEM
M-METRIC PART
Y-SEPARATE ILLUSTRATION

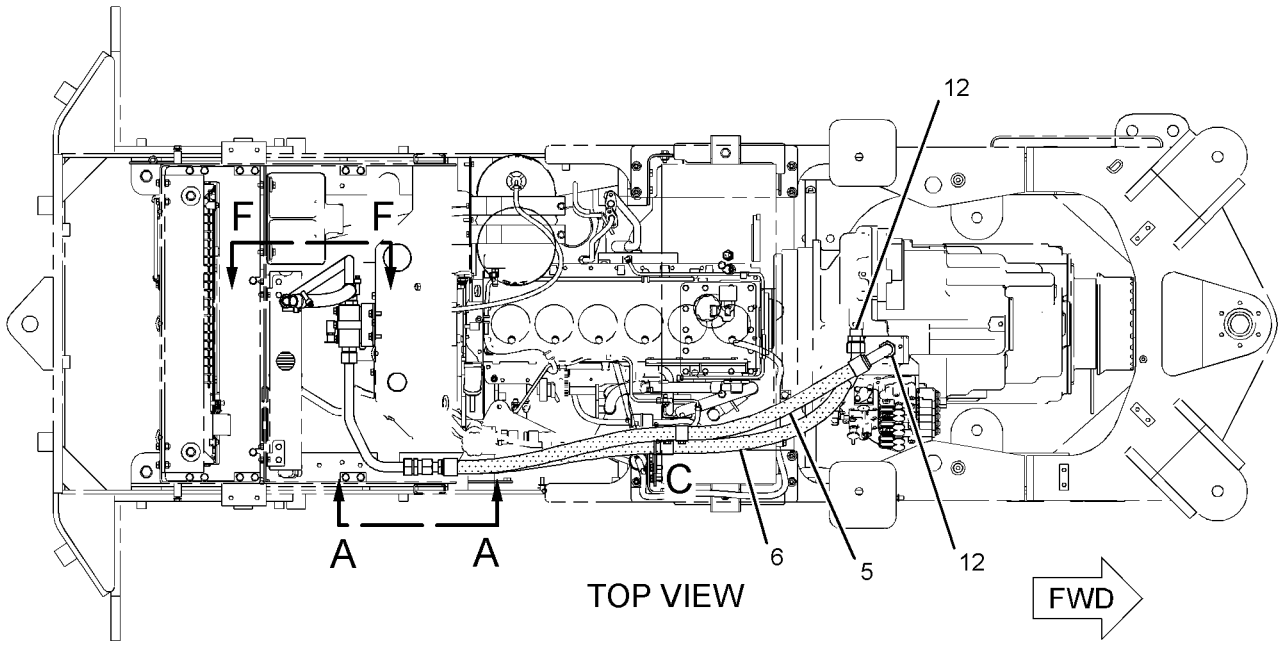

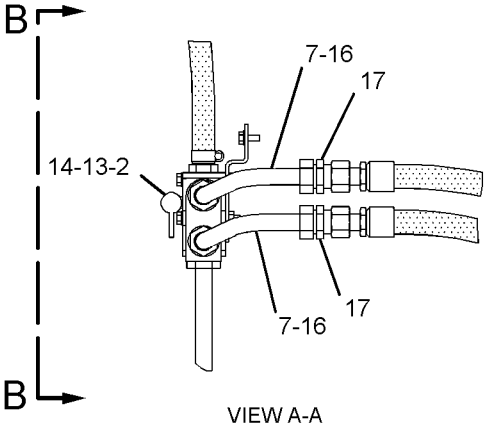

VIEW A-A

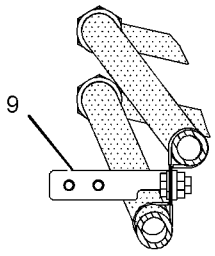

SECTION D-D

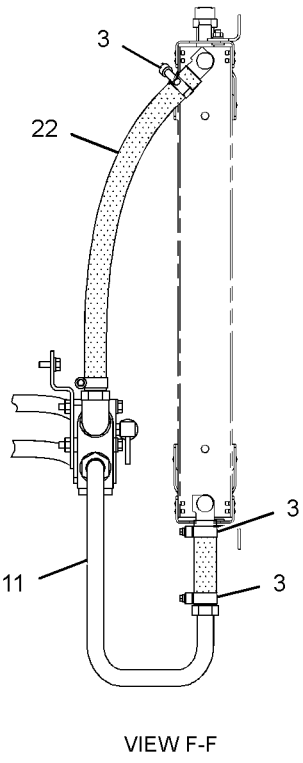

VIEW F-F

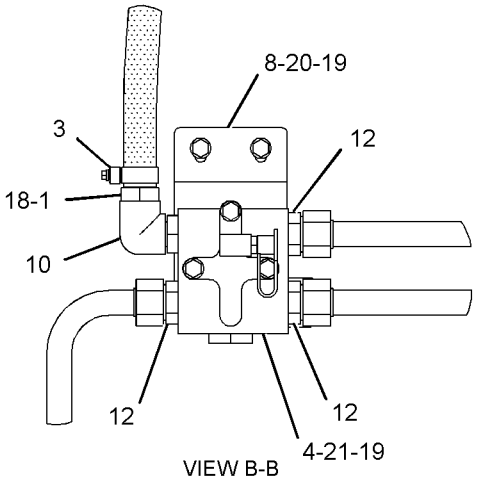

VIEW B-B

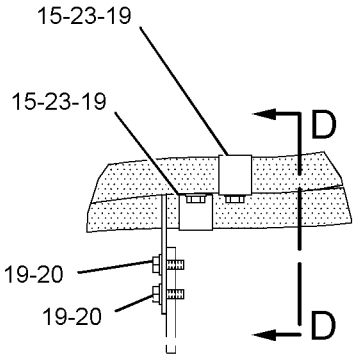

VIEW OF AREA C

GRAPHIC #1 **<END>** g01239234

132-2471 MOUNTING GP-AXLE

S/N: TWR1-UP

PART OF 235-7499 CHASSIS AR

SMCS-3268, 3278 **i02599629**

NOTE	REF NO	GRAPHIC REF	PART NUMBER	QTY	PART NAME 1 2 3 4 5 6 (PRODUCT LEVEL)	SEE PAGE
	1	1	**6K-8987**	2	DOWEL	
M	2	1	**7X-2465**	20	BOLT (M24X3X180-MM)	
	3	1	**8T-4167**	20	WASHER-HARD (26X44X4-MM THK)	

M-METRIC PART

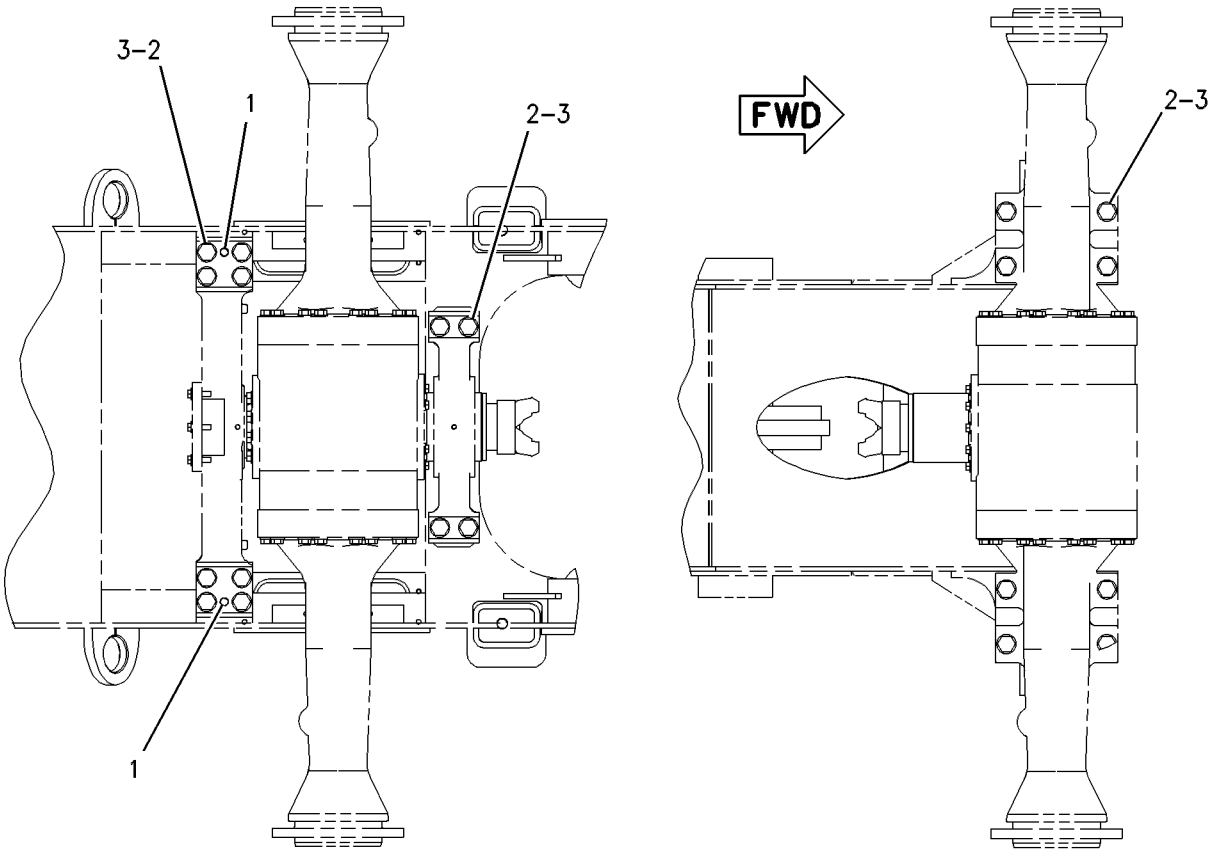

BOTTOM VIEW

GRAPHIC #1 **<END>** g00598901

147-5071 MOUNTING GP-RIM

S/N: TWR1-UP

PART OF 117-7836, 117-7837, 146-6783, 154-5508 RIM AR, 254-2399 TIRE & RIM AR

AN ATTACHMENT

SMCS-4202, 4209 **i02579135**

NOTE	PART NUMBER	QTY	PART NAME 1 2 3 4 5 6 (PRODUCT LEVEL)	SEE PAGE
JM	**8T-5379**	16	BOLT (M24X3X50-MM)	
J	**8T-4167**	16	WASHER-HARD (26X44X4-MM THK)	

J-QUANTITIES SHOWN ARE PER RIM
M-METRIC PART

<END>

235-6895 POWER TRAIN AR

S/N: TWR1-UP

PART OF 240-7966 COMMON AR

SMCS-3000, 4000 **i02194064**

NOTE	PART NUMBER	QTY	PART NAME 1 2 3 4 5 6 (PRODUCT LEVEL)	SEE PAGE
Y	*243-0515*	1	FILLER GP-POWER TRAIN OIL	265
Y	*235-6807*	1	FILTER & LINES GP-TRANSMISSION	266
Y	**129-8734**	1	GAUGE GP-SIGHT (POWER TRAIN OIL)	269
Y	*202-4338*	1	SHAFT GP-DRIVE	319
Y	*234-8866*	1	TRANSMISSION AR	333

Y-SEPARATE ILLUSTRATION

<END>

205-5268 PUMP & MOTOR GP-AXLE OIL CLR

S/N: TWR1-UP

PART OF 235-6847, 262-5670 LINES GP-AXLE OIL COOLER

AN ATTACHMENT

SMCS-5061, 506G, 5073 **i02595390**

NOTE	REF NO	GRAPHIC REF	PART NUMBER	QTY	PART NAME 1 2 3 4 5 6 (PRODUCT LEVEL)	SEE PAGE
	1	1	**232-3649**	1	KIT-PUMP	
					(INCLUDES PUMP, GASKETS & PLUGS)	
	2	1	**232-3650**	1	KIT-MOTOR	
					(INCLUDES MOTOR, GASKETS & PLUGS)	
	3	1	**232-3635**	2	KIT-COUPLING	
					(INCLUDES COUPLING AS & GASKETS)	
	4	1	**232-3677**	1	KIT-ADAPTER	
					(INCLUDES ADAPTOR & GASKETS)	
	5	1	**232-3678**	1	KIT-SEAL	
					(INCLUDES SEALS & GASKETS)	
	6	1	**235-2211**	4	KIT-HARDWARE	
					(INCLUDES BOLTS, NUTS & WASHERS)	

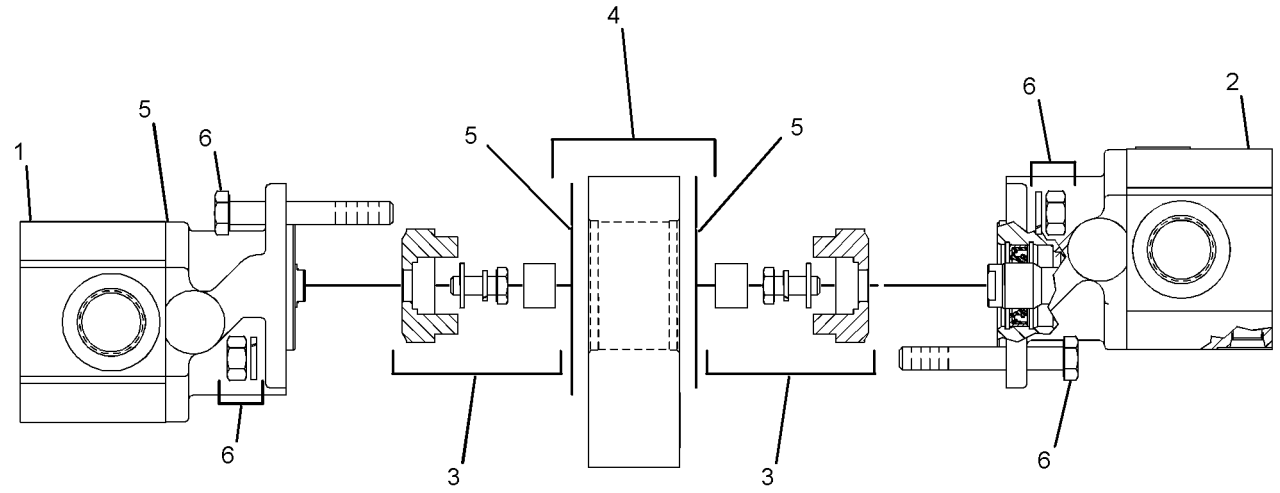

GRAPHIC #1 **<END>** g01112344

234-8803 PUMP GP-TRANSMISSION—1-SECTION GEAR

S/N: TPA1-UP

PART OF 234-8867 PUMP GP-TRANSMISSION

SMCS-3066 **i02194169**

NOTE	REF NO	GRAPHIC REF	PART NUMBER	QTY	PART NAME 1 2 3 4 5 6 (PRODUCT LEVEL)	SEE PAGE
	1	1	**234-8806**	1	BODY AS	
		1	**3P-7898**	2	BEARING-SLEEVE	
		1	**5M-4987**	2	DOWEL	
		1	**8T-5353**	2	DOWEL	
	2	1	**6Y-4997**	1	COVER AS	
		1	**3P-7898**	2	BEARING-SLEEVE	
	3	1	**6Y-4464**	1	GEAR AS-OIL PUMP (17-TEETH)	
	4	1	**234-8808**	1	GEAR (17-TEETH)	
	5	1	**5H-3252**	1	SEAL-O-RING	
M	6	1	**6V-7981**	5	BOLT (M10X1.5X70-MM)	
	7	1	**6Y-5010**	1	WASHER (10.16X19X0.84-MM THK)	
M	8	1	**6V-5842**	1	BOLT (M10X1.5X40-MM)	

M-METRIC PART

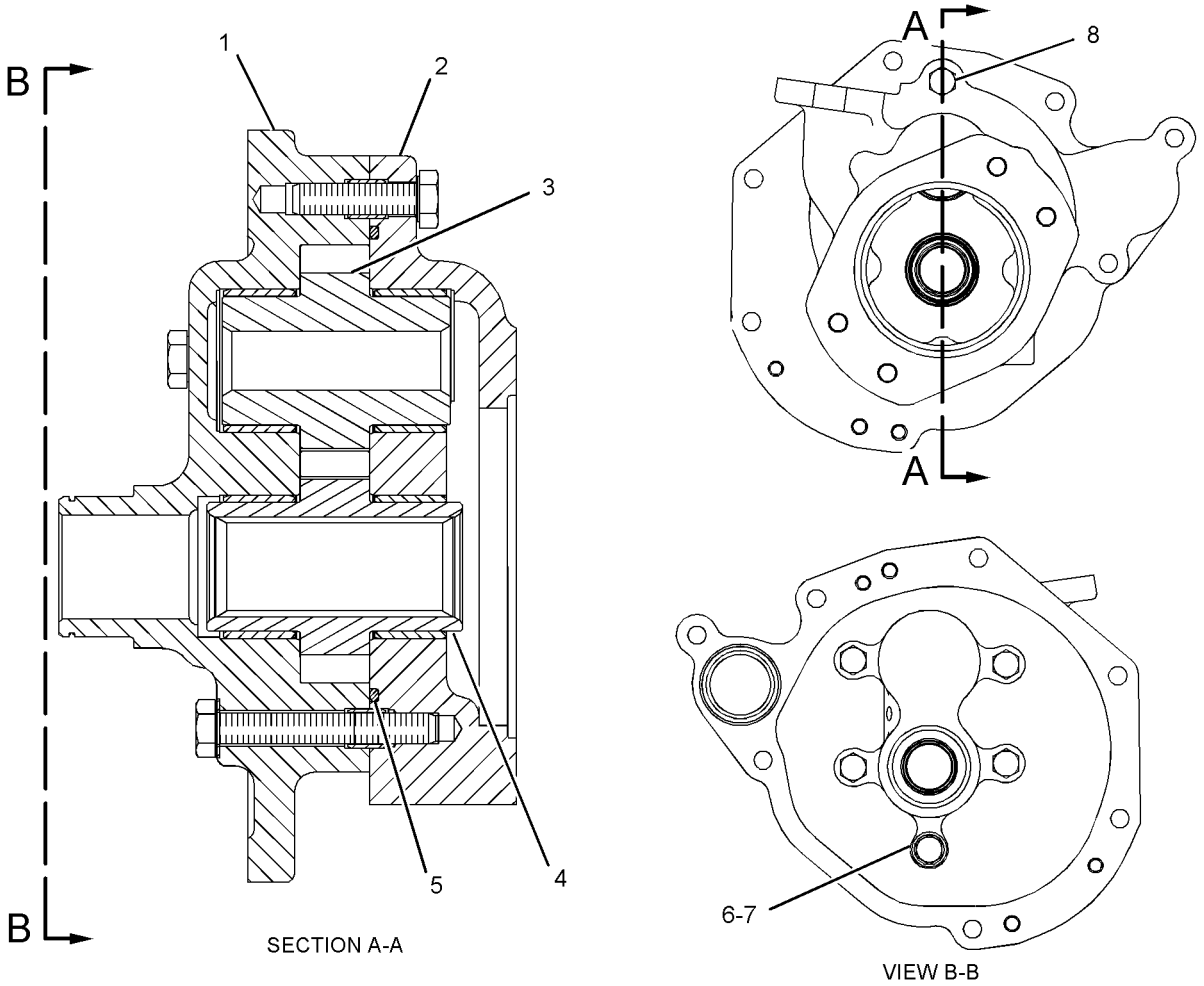

SECTION A-A

VIEW B-B

GRAPHIC #1 **<END>** g01108808

234-8867 PUMP GP-TRANSMISSION—1-SECTION GEAR

S/N: TPA1-UP

PART OF 234-8866 TRANSMISSION AR

SMCS-3066 **i02194161**

NOTE	REF NO	GRAPHIC REF	PART NUMBER	QTY	PART NAME 1 2 3 4 5 6 (PRODUCT LEVEL)	SEE PAGE
Y	1	1	**234-8803**	1	PUMP GP-TRANSMISSION (1-SECTION GEAR)	308
	2	1	**120-4483**	1	GEAR-DRIVE (68-TEETH)	
M	3	1	**6V-6317**	6	BOLT (M10X1.5X20-MM)	
	4	1	**2J-7550**	1	RING-RETAINING	
	5	1	**194-1651**	1	SHAFT	
	6	1	**4B-3665**	1	BALL BEARING	
	7	1	**1H-9696**	1	SEAL-O-RING	
M	8	1	**6V-4249**	2	BOLT (M10X1.5X50-MM)	
M	9	1	**6V-1820**	5	BOLT (M10X1.5X30-MM)	
B	10	1	**1U-8846**		SEALANT-GASKET	

B-USE AS REQUIRED
M-METRIC PART
Y-SEPARATE ILLUSTRATION

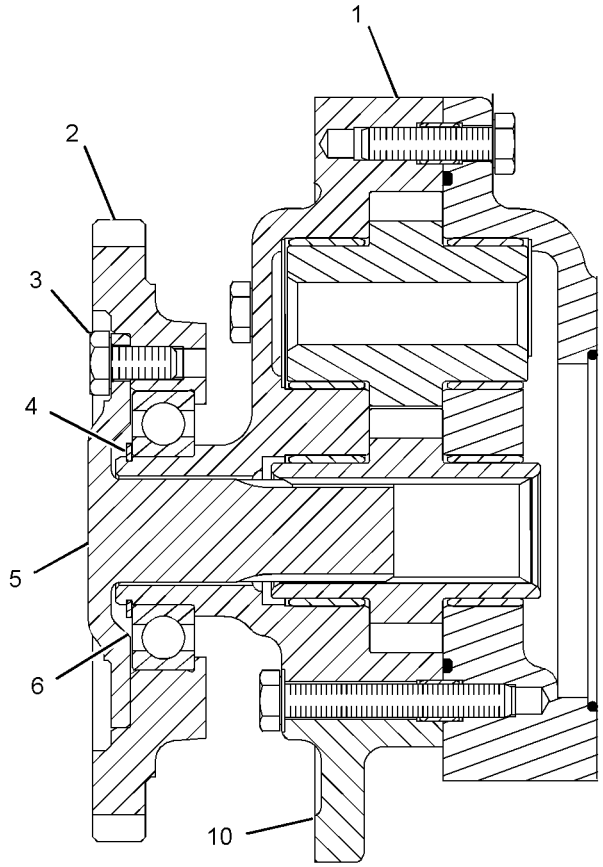

SECTION B-B

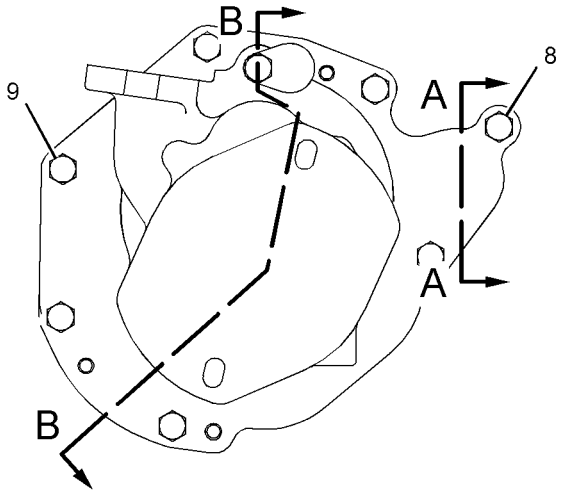

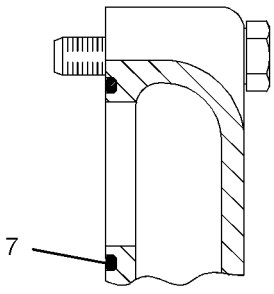

SECTION A-A

GRAPHIC #1 **<END>** g01108626

117-7836 RIM AR—1-PIECE

S/N: TWR1-UP
13.00 X 25
PART OF 229-4953, 229-4954, 229-4955, 229-4962, 230-9666, 230-9668, 230-9669, 270-8685, 270-8743, 273-9910, 277-5748, 286-9097 TIRE & RIM AR
AN ATTACHMENT

SMCS-4209 **i01232035**

NOTE	PART NUMBER	QTY	PART NAME 1 2 3 4 5 6 (PRODUCT LEVEL)	SEE PAGE
Y	*147-5071*	1	MOUNTING GP-RIM	306
Y	**117-7839**	4	RIM GP-DEMOUNTABLE	314

Y-SEPARATE ILLUSTRATION

<END>

117-7837 RIM AR—3-PIECE

S/N: TWR1-UP
14.00 X 25
PART OF 264-0153, 270-8746, 270-8748, 273-9911 TIRE & RIM AR
AN ATTACHMENT

SMCS-4209 **i02830852**

NOTE	PART NUMBER	QTY	PART NAME 1 2 3 4 5 6 (PRODUCT LEVEL)	SEE PAGE
Y	*147-5071*	1	MOUNTING GP-RIM	306
Y	*117-7840*	4	RIM GP-DEMOUNTABLE (3-PIECE)	315

Y-SEPARATE ILLUSTRATION

<END>

146-6783 RIM AR—3-PIECE, CENTER MOUNT

S/N: TWR1-UP
17.00 X 25
PART OF 190-9002, 230-9671, 230-9679, 282-3882 TIRE & RIM AR
AN ATTACHMENT

SMCS-4209 **i02830858**

NOTE	PART NUMBER	QTY	PART NAME 1 2 3 4 5 6 (PRODUCT LEVEL)	SEE PAGE
Y	*147-5071*	1	MOUNTING GP-RIM	306
Y	*2Q-5979*	4	RIM GP-DEMOUNTABLE (3-PIECE, CENTER MOUNT)	313

Y-SEPARATE ILLUSTRATION

<END>

154-5508 RIM AR—3-PIECE, CENTER MOUNT

S/N: TWR1-UP
17.00 X 25
PART OF 190-8987, 230-9672, 230-9673, 230-9674, 230-9675, 230-9676, 230-9677, 230-9678, 230-9681, 250-6612, 250-6614, 255-3621, 255-3623, 286-9096, 286-9098, 286-9099, 286-9100 TIRE & RIM AR
CANNOT BE USED WITH COSA ROADING ARRANGEMENTS
AN ATTACHMENT

SMCS-4209 **i02830867**

NOTE	PART NUMBER	QTY	PART NAME 1 2 3 4 5 6 (PRODUCT LEVEL)	SEE PAGE
Y	*147-5071*	1	MOUNTING GP-RIM	306
Y	*2Q-5979*	4	RIM GP-DEMOUNTABLE (3-PIECE, CENTER MOUNT)	313
Y	*147-5484*	1	STOP GP-AXLE OSCILLATION	323

Y-SEPARATE ILLUSTRATION

<END>

267-5296 RIM AS

S/N: TWR1-UP
PART OF 254-2399 TIRE & RIM AR
AN ATTACHMENT

SMCS-4209 **i02296146**

NOTE	REF NO	GRAPHIC REF	PART NUMBER	QTY	PART NAME 1 2 3 4 5 6 (PRODUCT LEVEL)	SEE PAGE
	1	1	**265-7591**	1	TIRE AS (59X9X20.5)	
	2	1	**267-5295**	1	RIM AS	
M	3	1	**8T-4001**	20	NUT (M24X3-THD)	
	4	1	**8T-4167**	40	WASHER-HARD (26X44X4-MM THK)	
M	5	1	**8T-5878**	20	BOLT (M24X3X80-MM)	

M-METRIC PART

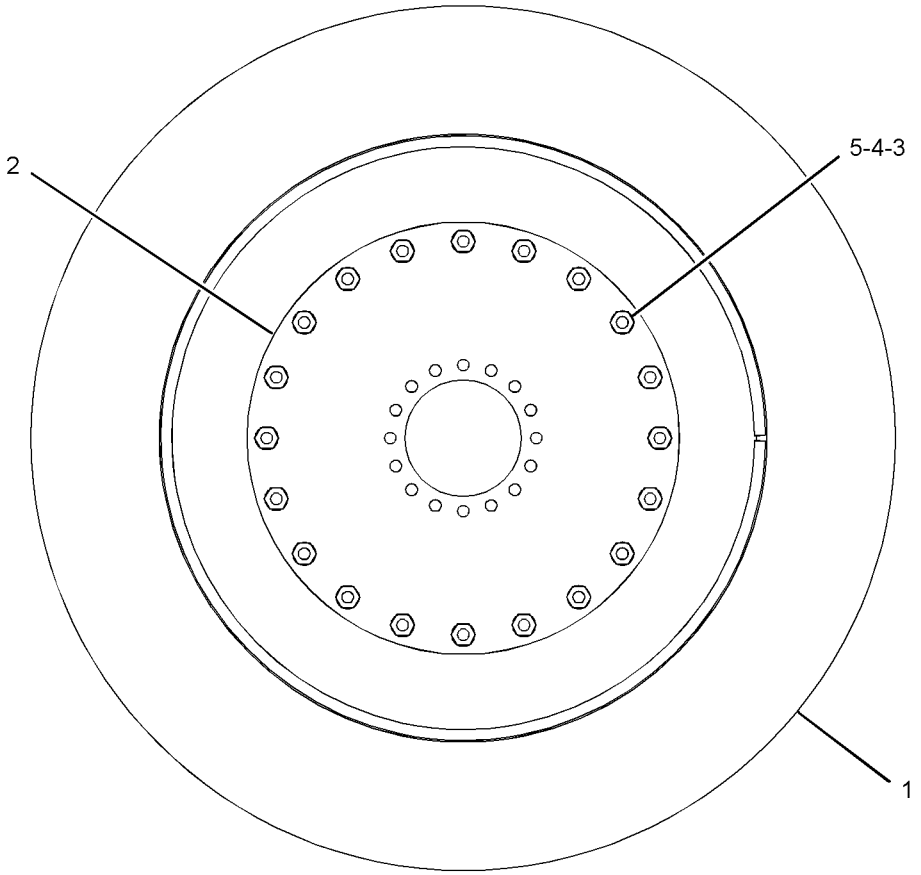

GRAPHIC #1 **<END>** g01169823

2Q-5979 RIM GP-DEMOUNTABLE–3-PIECE, CENTER MOUNT

S/N: TWR1-UP
17.00 X 25
PART OF 146-6783, 154-5508 RIM AR
AN ATTACHMENT

SMCS-4209 **i02830869**

NOTE	REF NO	GRAPHIC REF	PART NUMBER	QTY	PART NAME 1 2 3 4 5 6 (PRODUCT LEVEL)	SEE PAGE
CY	1	1	**186-4943**	1	RIM GP-DEMOUNTABLE (3-PIECE)	318
Y	2	1	**6D-0337**	1	VALVE GP-TIRE	339
	3	1	**4K-4879**	1	SEAL-O-RING	

C-CHANGE FROM PREVIOUS TYPE
Y-SEPARATE ILLUSTRATION

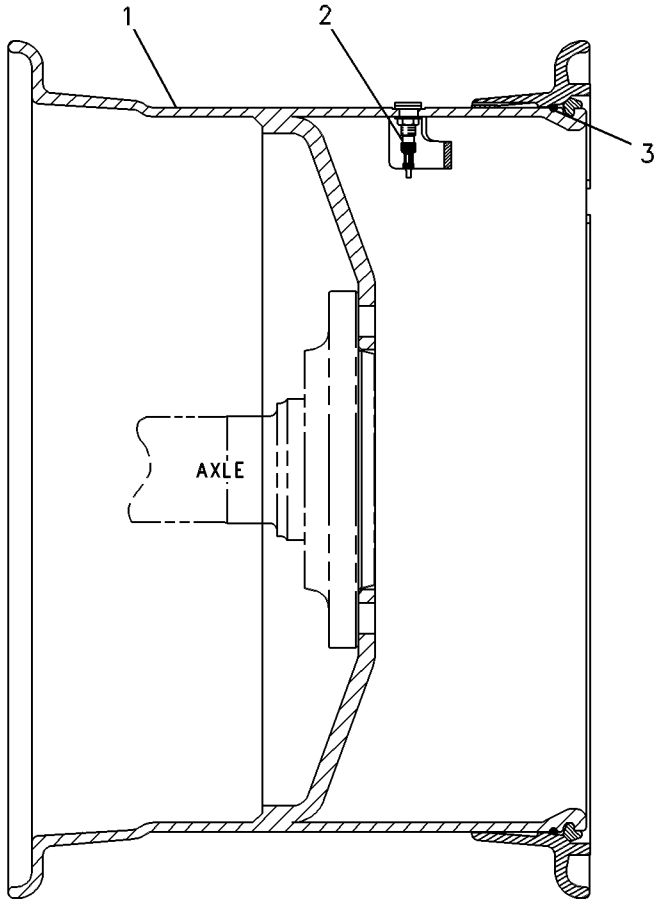

GRAPHIC #1 **<END>** g00278075

117-7839 RIM GP-DEMOUNTABLE–1-PIECE

S/N: TWR1-UP
13.00 X 25
PART OF 117-7836 RIM AR
AN ATTACHMENT

SMCS-4209 **i00350533**

NOTE	REF NO	GRAPHIC REF	PART NUMBER	QTY	PART NAME 1 2 3 4 5 6 (PRODUCT LEVEL)	SEE PAGE
	1	1	**8R-5825**	1	RIM AS	
	2	1	**2G-6595**	1	VALVE GP-TIRE	
		1	**6F-3930**	1	CORE-VALVE	
		1	**9K-7951**	1	CAP-VALVE	
		1	**7D-5252**	1	SPUD AS	
		1	**2D-2507**	1	SPUD	
		1	**2D-2508**	1	GROMMET	
		1	**2D-2509**	1	LOCKNUT	

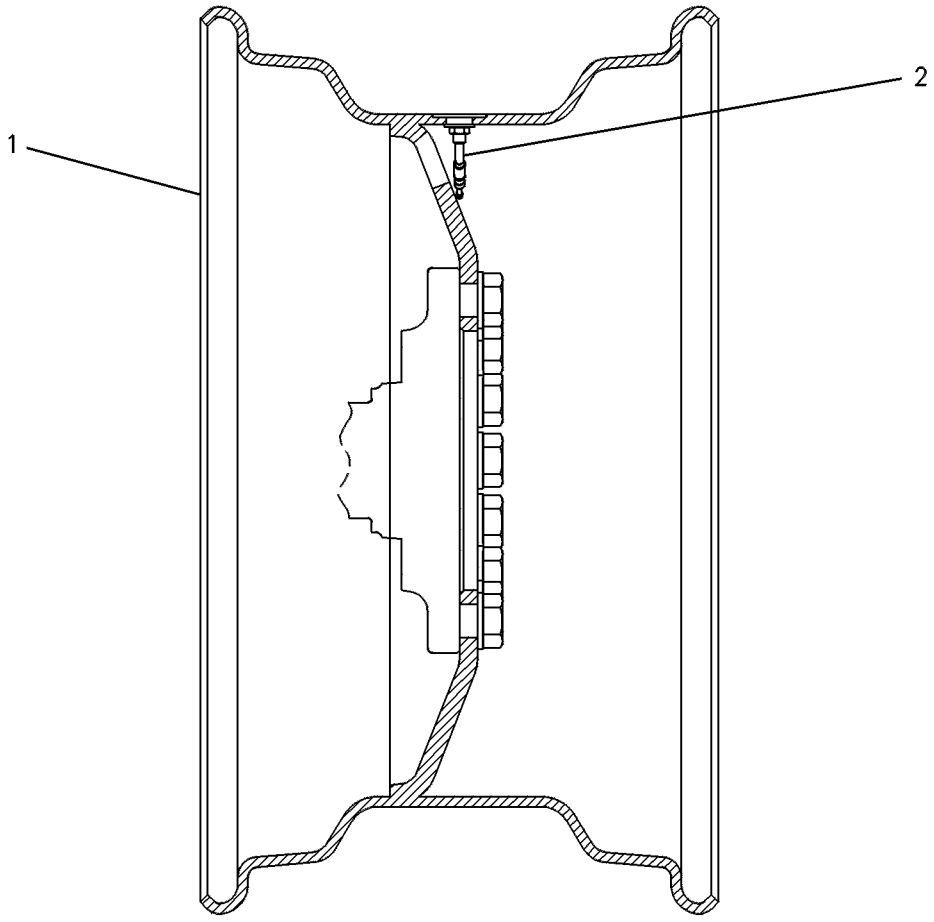

GRAPHIC #1 **<END>** g00129196

117-7840 RIM GP-DEMOUNTABLE–3-PIECE

S/N: TWR1-UP
14.00 X 25
PART OF 117-7837 RIM AR
AN ATTACHMENT

SMCS-4209 **i02830964**

NOTE	REF NO	GRAPHIC REF	PART NUMBER	QTY	PART NAME 1 2 3 4 5 6 (PRODUCT LEVEL)	SEE PAGE
Y	1	1	**186-4942**	1	RIM GP-DEMOUNTABLE (3-PIECE)	317
	2	1	**4K-4879**	1	SEAL-O-RING	
Y	3	1	**6D-0337**	1	VALVE GP-TIRE	339

Y-SEPARATE ILLUSTRATION

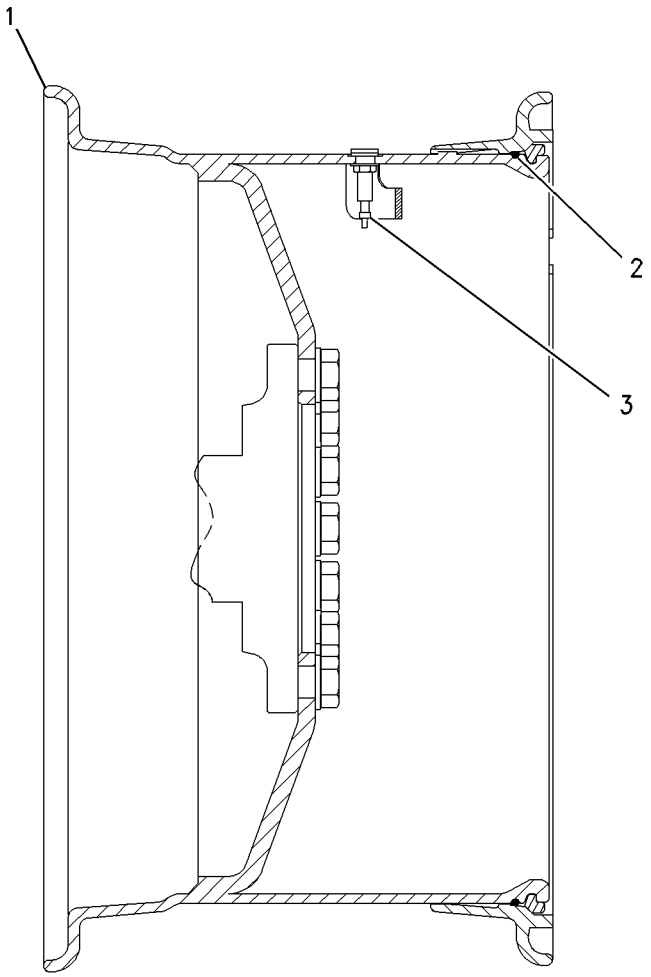

GRAPHIC #1 **<END>** g00702233

128-5436 RIM GP-DEMOUNTABLE–3-PIECE

S/N: TWR1-UP
14.00 X 25
PART OF 186-4942 RIM GP-DEMOUNTABLE
AN ATTACHMENT

SMCS-4209 **i01326198**

NOTE	REF NO	GRAPHIC REF	PART NUMBER	QTY	PART NAME 1 2 3 4 5 6 (PRODUCT LEVEL)	SEE PAGE
	1	1	**102-2131**	1	RIM AS	
	2	1	**8X-9925**	1	FLANGE	
	3	1	**4K-4881**	1	LOCKRING	

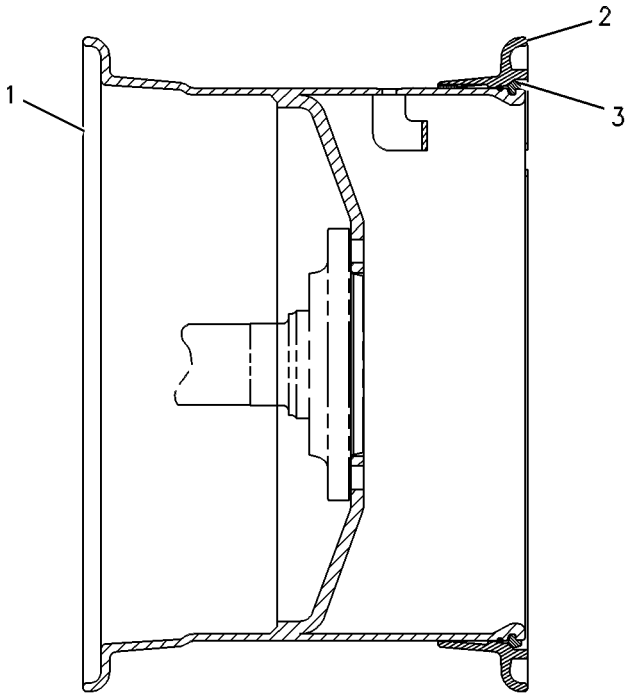

GRAPHIC #1 **<END>** g00276538

176-1705 RIM GP-DEMOUNTABLE–3-PIECE

S/N: TWR1-UP
14.00 X 25
PART OF 186-4942 RIM GP-DEMOUNTABLE
AN ATTACHMENT

SMCS-4209 **i01389191**

NOTE	PART NUMBER	QTY	PART NAME 1 2 3 4 5 6 (PRODUCT LEVEL)	SEE PAGE
	176-0118	1	DRIVER	
	171-7198	1	FLANGE AS	
	4K-4881	1	LOCK RING	
	171-7199	1	RIM AS	

<END>

176-1706 RIM GP-DEMOUNTABLE–3-PIECE

S/N: TWR1-UP
17.00 X 25
PART OF 186-4943 RIM GP-DEMOUNTABLE
FIELD REPLACEMENT ORDER 186-4943–PAGE 318
AN ATTACHMENT

SMCS-4209 **i02110566**

NOTE	PART NUMBER	QTY	PART NAME 1 2 3 4 5 6 (PRODUCT LEVEL)	SEE PAGE
	176-0118	1	DRIVER	
	171-8689	1	FLANGE AS	
	253-1691	1	RIM AS	
	4K-4881	1	RING-LOCK	

<END>

186-4942 RIM GP-DEMOUNTABLE–3-PIECE

S/N: TWR1-UP
14.00 X 25
PART OF 117-7840 RIM GP-DEMOUNTABLE
AN ATTACHMENT

SMCS-4209 **i02830969**

NOTE	PART NUMBER	QTY	PART NAME 1 2 3 4 5 6 (PRODUCT LEVEL)	SEE PAGE
Y	**128-5436**	1	RIM GP-DEMOUNTABLE (3-PIECE)	316
			–OR–	
Y	*176-1705*	1	RIM GP-DEMOUNTABLE (3-PIECE)	317

Y-SEPARATE ILLUSTRATION

<END>

186-4943 RIM GP-DEMOUNTABLE—3-PIECE

S/N: TWR1-UP
17.00 X 25
PART OF 2Q-5979 RIM GP-DEMOUNTABLE
FIELD REPLACEMENT FOR 176-1706—PAGE 317
AN ATTACHMENT

SMCS-4209 **i02830972**

NOTE	PART NUMBER	QTY	PART NAME 1 2 3 4 5 6 (PRODUCT LEVEL)	SEE PAGE
Y	*176-1706*	1	RIM GP-DEMOUNTABLE (3-PIECE)	317

Y-SEPARATE ILLUSTRATION

<END>

202-4338 SHAFT GP-DRIVE

S/N: TWR1-UP

PART OF 235-6895 POWER TRAIN AR

SMCS-3253 **i02087633**

NOTE	REF NO	GRAPHIC REF	PART NUMBER	QTY	PART NAME 1 2 3 4 5 6 (PRODUCT LEVEL)	SEE PAGE
	1	1	**4E-5984**	10	STRAP	
Y	2	1	**201-9517**	1	SLIP JOINT GP (CENTER)	321
CY	3	1	**238-9593**	1	SHAFT GP-DRIVE (FRONT)	320
Y	4	1	**204-3540**	1	SLIP JOINT GP (REAR)	322
M	5	1	**4E-5985**	20	BOLT-12 POINT HEAD (M10X1.25X20-MM)	
	6	1	**8T-4122**	2	WASHER-HARD (17X32X3.5-MM THK)	
M	7	1	**8T-4140**	2	BOLT (M16X2X60-MM)	

C-CHANGE FROM PREVIOUS TYPE
M-METRIC PART
Y-SEPARATE ILLUSTRATION

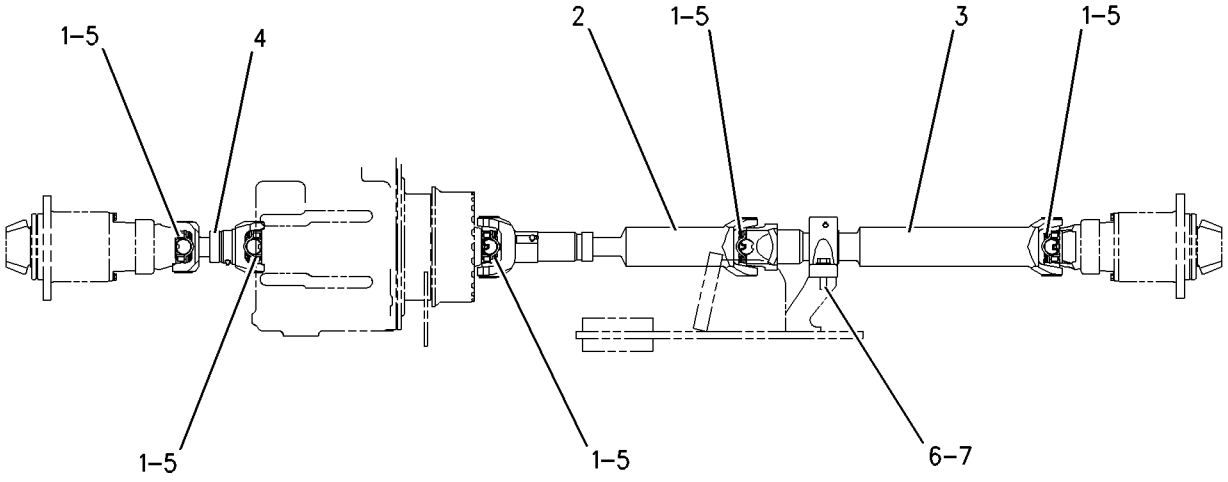

GRAPHIC #1 **<END>** g00920552

238-9593 SHAFT GP-DRIVE–FRONT

S/N: TWR1-UP

PART OF 202-4338 SHAFT GP-DRIVE

SMCS-3253 **i02834645**

NOTE	REF NO	GRAPHIC REF	PART NUMBER	QTY	PART NAME 1 2 3 4 5 6 (PRODUCT LEVEL)	SEE PAGE
	1	1	**6I-8531**	1	BEARING GP-PILLOW BLOCK	
		1	**3B-8489**	1	FITTING-GREASE	
	2	1	**9U-3668**	1	YOKE	
	3	1	**238-9594**	1	UNIVERSAL JOINT GP	
		1	**193-4640**	1	SPIDER & BEARING GP	
		1	**8V-7315**	4	RING	
M	4	1	**8T-0372**	1	BOLT (M12X1.75X90-MM)	
	5	1	**9V-2412**	1	RETAINER	

M-METRIC PART

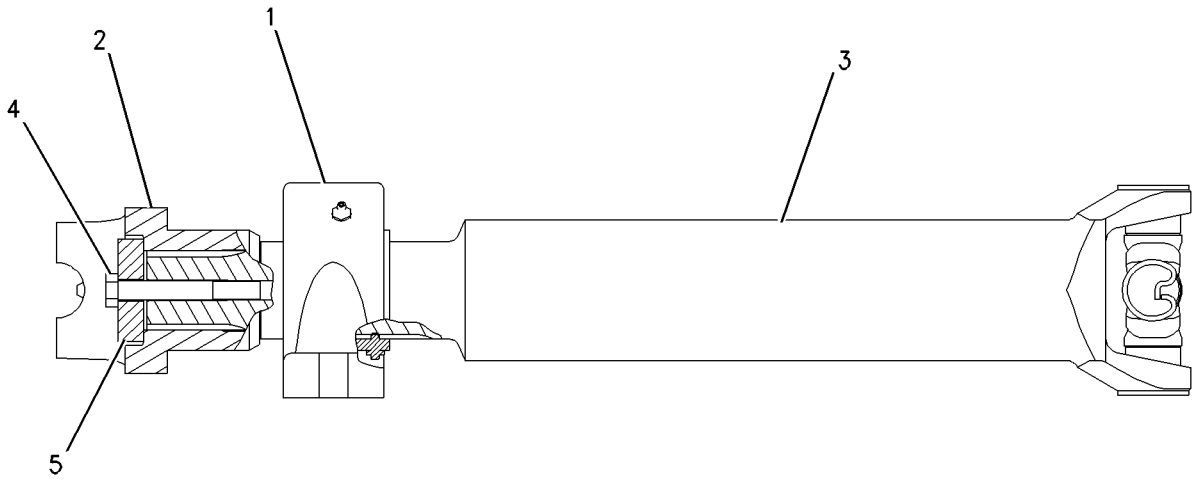

GRAPHIC #1 **<END>** g00920523

201-9517 SLIP JOINT GP–CENTER

S/N: TWR1-UP

PART OF 202-4338 SHAFT GP-DRIVE

SMCS-3251 **i02834647**

NOTE	REF NO	GRAPHIC REF	PART NUMBER	QTY	PART NAME 1 2 3 4 5 6 (PRODUCT LEVEL)	SEE PAGE
	1	1	**1K-6853**	1	FITTING	
	2	1	**3B-8488**	1	FITTING-GREASE (SLIP JOINT)	
	3	1	**8R-2022**	1	SEAL	
	4	1	**193-4640**	2	SPIDER & BEARING GP	
					(EACH INCLUDES)	
		1	**8V-7315**	4	RING	

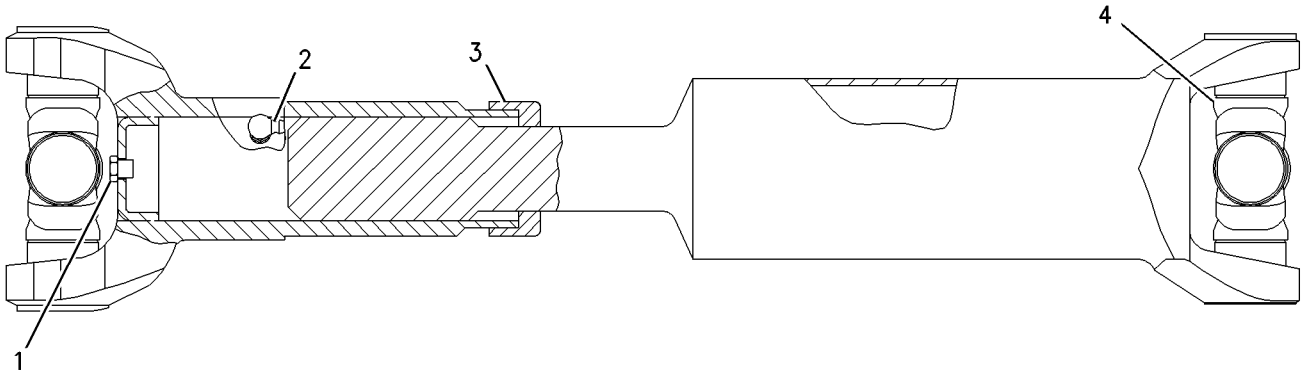

GRAPHIC #1 **<END>** g00914281

204-3540 SLIP JOINT GP–REAR

S/N: TWR1-UP

PART OF 202-4338 SHAFT GP-DRIVE

SMCS-3251 **i02834646**

NOTE	REF NO	GRAPHIC REF	PART NUMBER	QTY	PART NAME 1 2 3 4 5 6 (PRODUCT LEVEL)	SEE PAGE
	1	1	**3B-8489**	1	FITTING-GREASE (DRIVE SHAFT SPLINE)	
	2	1	**8V-1412**	1	RETAINER	
	3	1	**191-2226**	2	SPIDER & BEARING GP	
		1	**8V-7315**	4	RING	

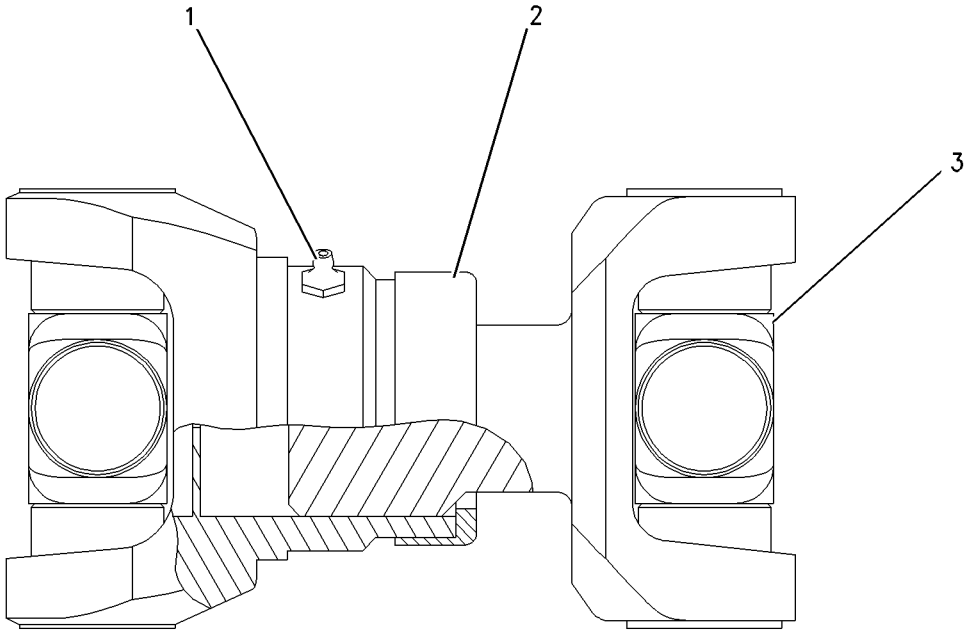

GRAPHIC #1 **<END>** g00920541

147-5484 STOP GP-AXLE OSCILLATION

S/N: TWR1-UP
PART OF 154-5508 RIM AR, 254-2399 TIRE & RIM AR
AN ATTACHMENT

SMCS-3259 **i01093369**

NOTE	PART NUMBER	QTY	PART NAME 1 2 3 4 5 6 (PRODUCT LEVEL)	SEE PAGE
	4E-1357	2	BLOCK	
M	**8T-4956**	4	BOLT (M12X1.75X35-MM)	
	8T-4223	4	WASHER-HARD (13.5X25.5X3-MM THK)	

M-METRIC PART

<END>

147-5576 STOP GP-AXLE OSCILLATION

S/N: TWR1-UP
PART OF 254-2399, 282-3882 TIRE & RIM AR
AN ATTACHMENT

SMCS-3259 **i01108097**

NOTE	PART NUMBER	QTY	PART NAME 1 2 3 4 5 6 (PRODUCT LEVEL)	SEE PAGE
	147-5577	2	BLOCK	
M	**8T-4956**	4	BOLT (M12X1.75X35-MM)	
	8T-4223	4	WASHER-HARD (13.5X25.5X3-MM THK)	

M-METRIC PART

<END>

190-8987 TIRE & RIM AR

S/N: TWR1-UP
20.5R25
AN ATTACHMENT

SMCS-4202 **i01834779**

NOTE	PART NUMBER	QTY	PART NAME 1 2 3 4 5 6 (PRODUCT LEVEL)	SEE PAGE
Y	*154-5508*	1	RIM AR	311
J	*190-8985*	4	TIRE (20.5-R25)	

J-PROCURE LOCALLY
Y-SEPARATE ILLUSTRATION

<END>

190-9002 TIRE & RIM AR

S/N: TWR1-UP
AN ATTACHMENT

SMCS-4202 **i02229922**

NOTE	PART NUMBER	QTY	PART NAME 1 2 3 4 5 6 (PRODUCT LEVEL)	SEE PAGE
Y	*146-6783*	1	RIM AR	310
	188-7675	4	TIRE (550/65-R25 L-2)	

Y-SEPARATE ILLUSTRATION

<END>

229-4953 TIRE & RIM AR

S/N: TWR1-UP
AN ATTACHMENT

SMCS-4202 **i02229855**

NOTE	PART NUMBER	QTY	PART NAME 1 2 3 4 5 6 (PRODUCT LEVEL)	SEE PAGE
Y	*117-7836*	1	RIM AR	310
	106-4835	4	TIRE (17.5-R25)	

Y-SEPARATE ILLUSTRATION

<END>

229-4954 TIRE & RIM AR

S/N: TWR1-UP
AN ATTACHMENT

SMCS-4202 **i02229874**

NOTE	PART NUMBER	QTY	PART NAME 1 2 3 4 5 6 (PRODUCT LEVEL)	SEE PAGE
Y	*117-7836*	1	RIM AR	310
	6C-3246	4	TIRE (17.5-R25)	

Y-SEPARATE ILLUSTRATION

<END>

229-4955 TIRE & RIM AR

S/N: TWR1-UP
AN ATTACHMENT

SMCS-4202 **i02830978**

NOTE	PART NUMBER	QTY	PART NAME 1 2 3 4 5 6 (PRODUCT LEVEL)	SEE PAGE
Y	*117-7836*	1	RIM AR (1-PIECE)	310
	6C-7366	4	TIRE (17.5-R25)	

Y-SEPARATE ILLUSTRATION

<END>

229-4962 TIRE & RIM AR

S/N: TWR1-UP
AN ATTACHMENT

SMCS-4202 **i02830984**

NOTE	PART NUMBER	QTY	PART NAME 1 2 3 4 5 6 (PRODUCT LEVEL)	SEE PAGE
Y	*117-7836*	1	RIM AR (1-PIECE)	310
	128-5450	4	TIRE (17.5-25)	

Y-SEPARATE ILLUSTRATION

<END>

230-9666 TIRE & RIM AR

S/N: TWR1-UP
AN ATTACHMENT

SMCS-4202 **i02830994**

NOTE	PART NUMBER	QTY	PART NAME 1 2 3 4 5 6 (PRODUCT LEVEL)	SEE PAGE
Y	*117-7836*	1	RIM AR (1-PIECE)	310
	128-5451	4	TIRE (17.5-25)	

Y-SEPARATE ILLUSTRATION

<END>

230-9668 TIRE & RIM AR

S/N: TWR1-UP
AN ATTACHMENT

SMCS-4202 **i02229910**

NOTE	PART NUMBER	QTY	PART NAME 1 2 3 4 5 6 (PRODUCT LEVEL)	SEE PAGE
Y	*117-7836*	1	RIM AR	310
	142-6183	4	TIRE (17.5-25)	

Y-SEPARATE ILLUSTRATION

<END>

230-9669 TIRE & RIM AR

S/N: TWR1-UP
AN ATTACHMENT

SMCS-4202 **i02229915**

NOTE	PART NUMBER	QTY	PART NAME 1 2 3 4 5 6 (PRODUCT LEVEL)	SEE PAGE
Y	*117-7836*	1	RIM AR	310
	142-6186	4	TIRE (17.5-25)	

Y-SEPARATE ILLUSTRATION

<END>

230-9671 TIRE & RIM AR

S/N: TWR1-UP
AN ATTACHMENT

SMCS-4202 **i02229916**

NOTE	PART NUMBER	QTY	PART NAME 1 2 3 4 5 6 (PRODUCT LEVEL)	SEE PAGE
Y	*146-6783*	1	RIM AR	310
	205-5409	4	TIRE (550/65-R25)	

Y-SEPARATE ILLUSTRATION

<END>

230-9672 TIRE & RIM AR

S/N: TWR1-UP
AN ATTACHMENT

SMCS-4202 **i02229920**

NOTE	PART NUMBER	QTY	PART NAME 1 2 3 4 5 6 (PRODUCT LEVEL)	SEE PAGE
Y	*154-5508*	1	RIM AR	311
	106-4837	4	TIRE (20.5-R25)	

Y-SEPARATE ILLUSTRATION

<END>

230-9673 TIRE & RIM AR

S/N: TWR1-UP
AN ATTACHMENT

SMCS-4202 **i02229937**

NOTE	PART NUMBER	QTY	PART NAME 1 2 3 4 5 6 (PRODUCT LEVEL)	SEE PAGE
Y	*154-5508*	1	RIM AR	311
	6C-3247	4	TIRE (20.5-R25)	

Y-SEPARATE ILLUSTRATION

<END>

230-9674 TIRE & RIM AR

S/N: TWR1-UP
AN ATTACHMENT

SMCS-4202 **i02229939**

NOTE	PART NUMBER	QTY	PART NAME 1 2 3 4 5 6 (PRODUCT LEVEL)	SEE PAGE
Y	*154-5508*	1	RIM AR	311
	128-5164	4	TIRE (20.5-25)	

Y-SEPARATE ILLUSTRATION

<END>

230-9675 TIRE & RIM AR

S/N: TWR1-UP
AN ATTACHMENT

SMCS-4202 **i02229942**

NOTE	PART NUMBER	QTY	PART NAME 1 2 3 4 5 6 (PRODUCT LEVEL)	SEE PAGE
Y	*154-5508*	1	RIM AR	311
	128-5167	4	TIRE (20.5-25)	

Y-SEPARATE ILLUSTRATION

<END>

230-9676 TIRE & RIM AR

S/N: TWR1-UP
AN ATTACHMENT

SMCS-4202 **i02229943**

NOTE	PART NUMBER	QTY	PART NAME 1 2 3 4 5 6 (PRODUCT LEVEL)	SEE PAGE
Y	*154-5508*	1	RIM AR	311
	128-5162	4	TIRE (20.5X25 12PR L-2)	

Y-SEPARATE ILLUSTRATION

<END>

230-9677 TIRE & RIM AR

S/N: TWR1-UP
AN ATTACHMENT

SMCS-4202 **i02229946**

NOTE	PART NUMBER	QTY	PART NAME 1 2 3 4 5 6 (PRODUCT LEVEL)	SEE PAGE
Y	*154-5508*	1	RIM AR	311
	128-5165	4	TIRE (20.5X25)	

Y-SEPARATE ILLUSTRATION

<END>

230-9678 TIRE & RIM AR

S/N: TWR1-UP
AN ATTACHMENT

SMCS-4202 **i02229949**

NOTE	PART NUMBER	QTY	PART NAME 1 2 3 4 5 6 (PRODUCT LEVEL)	SEE PAGE
Y	*154-5508*	1	RIM AR	311
	6C-7367	4	TIRE (20.5-R25)	

Y-SEPARATE ILLUSTRATION

<END>

230-9679 TIRE & RIM AR

S/N: TWR1-UP
(550/65-R25 GP-3D)
AN ATTACHMENT

SMCS-4202 **i02599842**

NOTE	PART NUMBER	QTY	PART NAME 1 2 3 4 5 6 (PRODUCT LEVEL)	SEE PAGE
Y	*146-6783*	1	RIM AR	310
	190-8992	4	TIRE (550/65-R25 GP-3D)	

Y-SEPARATE ILLUSTRATION

<END>

230-9681 TIRE & RIM AR

S/N: TWR1-UP
AN ATTACHMENT

SMCS-4202 **i01837556**

NOTE	PART NUMBER	QTY	PART NAME 1 2 3 4 5 6 (PRODUCT LEVEL)	SEE PAGE
Y	*154-5508*	1	RIM AR	311
	229-5039	4	TIRE	

Y-SEPARATE ILLUSTRATION

<END>

250-6612 TIRE & RIM AR

S/N: TWR1-UP
(600/65-R25)
AN ATTACHMENT

SMCS-4202 **i02600129**

NOTE	PART NUMBER	QTY	PART NAME 1 2 3 4 5 6 (PRODUCT LEVEL)	SEE PAGE
Y	*154-5508*	1	RIM AR	311
	250-6606	4	TIRE (600/65-R25) (600/65-R25)	

Y-SEPARATE ILLUSTRATION

<END>

250-6614 TIRE & RIM AR

S/N: TWR1-UP
(600/65R-25)
AN ATTACHMENT

SMCS-4202 **i02599661**

NOTE	PART NUMBER	QTY	PART NAME 1 2 3 4 5 6 (PRODUCT LEVEL)	SEE PAGE
Y	*154-5508*	1	RIM AR	311
	250-6608	4	TIRE (600/65-R25)	

Y-SEPARATE ILLUSTRATION

<END>

254-2399 TIRE & RIM AR

S/N: TWR1-UP
AN ATTACHMENT

SMCS-4202 **i02855931**

NOTE	PART NUMBER	QTY	PART NAME 1 2 3 4 5 6 (PRODUCT LEVEL)	SEE PAGE
Y	*147-5071*	1	MOUNTING GP-RIM	306
Y	*267-5296*	4	RIM AS	312
Y	*147-5484*	1	STOP GP-AXLE OSCILLATION	323
			—OR—	
Y	*147-5576*	1	STOP GP-AXLE OSCILLATION	323

Y-SEPARATE ILLUSTRATION

<END>

255-3621 TIRE & RIM AR

S/N: TWR1-UP
(20.5-R25)
AN ATTACHMENT

SMCS-4202 **i02831130**

NOTE	PART NUMBER	QTY	PART NAME 1 2 3 4 5 6 (PRODUCT LEVEL)	SEE PAGE
Y	*154-5508*	1	RIM AR (3-PIECE, CENTER MOUNT)	311
	255-3664	4	TIRE (20.5-R25)	

Y-SEPARATE ILLUSTRATION

<END>

255-3623 TIRE & RIM AR

S/N: TWR1-UP
(20.5-R25)
AN ATTACHMENT

SMCS-4202 **i02600136**

NOTE	PART NUMBER	QTY	PART NAME 1 2 3 4 5 6 (PRODUCT LEVEL)	SEE PAGE
Y	*154-5508*	1	RIM AR	311
	207-6031	4	TIRE (20.5-R25)	

Y-SEPARATE ILLUSTRATION

<END>

264-0153 TIRE & RIM AR

S/N: TWR1-UP
(17.5-R25)
AN ATTACHMENT

SMCS-4202 **i02600214**

NOTE	PART NUMBER	QTY	PART NAME 1 2 3 4 5 6 (PRODUCT LEVEL)	SEE PAGE
Y	*117-7837*	1	RIM AR	310
	264-0155	4	TIRE (17.5-R25)	

Y-SEPARATE ILLUSTRATION

<END>

270-8685 TIRE & RIM AR

S/N: TWR1-UP
AN ATTACHMENT

SMCS-4202 **i02707493**

NOTE	PART NUMBER	QTY	PART NAME 1 2 3 4 5 6 (PRODUCT LEVEL)	SEE PAGE
Y	*117-7836*	1	RIM AR (1-PIECE)	310
	270-9348	4	TIRE (17.5-R25)	

Y-SEPARATE ILLUSTRATION

<END>

270-8743 TIRE & RIM AR

S/N: TWR1-UP
AN ATTACHMENT

SMCS-4202 **i02707503**

NOTE	PART NUMBER	QTY	PART NAME 1 2 3 4 5 6 (PRODUCT LEVEL)	SEE PAGE
Y	*117-7836*	1	RIM AR (1-PIECE)	310
	270-9350	4	TIRE (17.5-R25)	

Y-SEPARATE ILLUSTRATION

<END>

270-8746 TIRE & RIM AR

S/N: TWR1-UP
AN ATTACHMENT

SMCS-4202 **i02707507**

NOTE	PART NUMBER	QTY	PART NAME 1 2 3 4 5 6 (PRODUCT LEVEL)	SEE PAGE
Y	*117-7837*	1	RIM AR (3-PIECE)	310
	270-9348	4	TIRE (17.5-R25)	

Y-SEPARATE ILLUSTRATION

<END>

270-8748 TIRE & RIM AR

S/N: TWR1-UP
AN ATTACHMENT

SMCS-4202 **i02707499**

NOTE	PART NUMBER	QTY	PART NAME 1 2 3 4 5 6 (PRODUCT LEVEL)	SEE PAGE
Y	*117-7837*	1	RIM AR (3-PIECE)	310
	270-9350	4	TIRE (17.5-R25)	

Y-SEPARATE ILLUSTRATION

<END>

273-9910 TIRE & RIM AR

S/N: TWR1-UP
(17.5-R25)
AN ATTACHMENT

SMCS-4202 **i02600216**

NOTE	PART NUMBER	QTY	PART NAME 1 2 3 4 5 6 (PRODUCT LEVEL)	SEE PAGE
Y	*117-7836*	1	RIM AR	310
	105-3249	4	TIRE (17.5-R25)	

Y-SEPARATE ILLUSTRATION

<END>

273-9911 TIRE & RIM AR

S/N: TWR1-UP
(17.5-R25)
AN ATTACHMENT

SMCS-4202 **i02600220**

NOTE	PART NUMBER	QTY	PART NAME 1 2 3 4 5 6 (PRODUCT LEVEL)	SEE PAGE
Y	*117-7837*	1	RIM AR	310
	105-3249	4	TIRE (17.5-R25)	

Y-SEPARATE ILLUSTRATION

<END>

277-5748 TIRE & RIM AR

S/N: TWR1-UP
(17.5-R25)
AN ATTACHMENT

SMCS-4202 **i02600228**

NOTE	PART NUMBER	QTY	PART NAME 1 2 3 4 5 6 (PRODUCT LEVEL)	SEE PAGE
Y	*117-7836*	1	RIM AR	310
	230-8267	1	SOFTWARE-CONFIGURATION (STANDARD)	
	241-2826	4	TIRE (17.5-R25)	

Y-SEPARATE ILLUSTRATION

<END>

282-3882 TIRE & RIM AR

S/N: TWR1-UP
(20.5-25)
AN ATTACHMENT

SMCS-4202 **i02831162**

NOTE	PART NUMBER	QTY	PART NAME 1 2 3 4 5 6 (PRODUCT LEVEL)	SEE PAGE
Y	*146-6783*	1	RIM AR (3-PIECE, CENTER MOUNT)	310
Y	*147-5576*	1	STOP GP-AXLE OSCILLATION	323
	128-5163	4	TIRE (20.5-25)	

Y-SEPARATE ILLUSTRATION

<END>

286-9096 TIRE & RIM AR

S/N: TWR1-UP
20.5-R25
AN ATTACHMENT

SMCS-4202 **i02559827**

NOTE	PART NUMBER	QTY	PART NAME 1 2 3 4 5 6 (PRODUCT LEVEL)	SEE PAGE
Y	*154-5508*	1	RIM AR	311

Y-SEPARATE ILLUSTRATION

<END>

286-9097 TIRE & RIM AR

S/N: TWR1-UP
(17.5-R25)
AN ATTACHMENT

SMCS-4202 **i02600385**

NOTE	PART NUMBER	QTY	PART NAME 1 2 3 4 5 6 (PRODUCT LEVEL)	SEE PAGE
Y	*117-7836*	1	RIM AR	310
	170-0432	4	TIRE (17.5-R25)	

Y-SEPARATE ILLUSTRATION

<END>

286-9098 TIRE & RIM AR

S/N: TWR1-UP
(20.5-25)
AN ATTACHMENT

SMCS-4202 **i02600392**

NOTE	PART NUMBER	QTY	PART NAME 1 2 3 4 5 6 (PRODUCT LEVEL)	SEE PAGE
Y	*154-5508*	1	RIM AR	311
	128-5163	4	TIRE (20.5-25)	

Y-SEPARATE ILLUSTRATION

<END>

286-9099 TIRE & RIM AR

S/N: TWR1-UP
AN ATTACHMENT

SMCS-4202 **i02668659**

NOTE	PART NUMBER	QTY	PART NAME 1 2 3 4 5 6 (PRODUCT LEVEL)	SEE PAGE
Y	*154-5508*	1	RIM AR	311
	245-9808	4	TIRE (20.5-R25)	

Y-SEPARATE ILLUSTRATION

<END>

286-9100 TIRE & RIM AR

S/N: TWR1-UP
AN ATTACHMENT

SMCS-4202 **i02765536**

NOTE	PART NUMBER	QTY	PART NAME 1 2 3 4 5 6 (PRODUCT LEVEL)	SEE PAGE
Y	*154-5508*	1	RIM AR	311
	286-9101	4	TIRE (20.5-25)	

Y-SEPARATE ILLUSTRATION

<END>

234-8866 TRANSMISSION AR

S/N: TPA1-UP

PART OF 235-6895 POWER TRAIN AR

SMCS-3030 **i02501166**

NOTE	REF NO	GRAPHIC REF	PART NUMBER	QTY	PART NAME 1 2 3 4 5 6 (PRODUCT LEVEL)	SEE PAGE
Y	1	1	*141-8615*	1	DRIVE GP-FLEXIBLE COUPLING	263
	2	1	**283-3307**	1	TORQUE CONVERTER AS	
Y	3	1	*146-6274*	1	DRIVE GP-PUMP (TRANSMISSION)	264
Y	4	1	*239-5608*	1	CASE & PARTS GP-TRANSMISSION	246
Y	5	1	*234-8852*	1	GEAR GP-INPUT TRANSFER	274
Y	6	1	*234-8854*	1	CLUTCH GP (FORWARD HIGH, FORWARD LOW)	249
Y	7	1	*234-8861*	1	CLUTCH GP (REVERSE, SECOND)	255
Y	8	1	*234-8857*	1	CLUTCH GP (FIRST, THIRD)	251
Y	9	1	*234-8859*	1	GEAR GP-OUTPUT TRANSFER	275
Y	10	1	*200-2042*	1	VALVE GP-TRANSMISSION CONTROL	340
Y	11	1	*234-8867*	1	PUMP GP-TRANSMISSION (1-SECTION GEAR)	309

Y-SEPARATE ILLUSTRATION

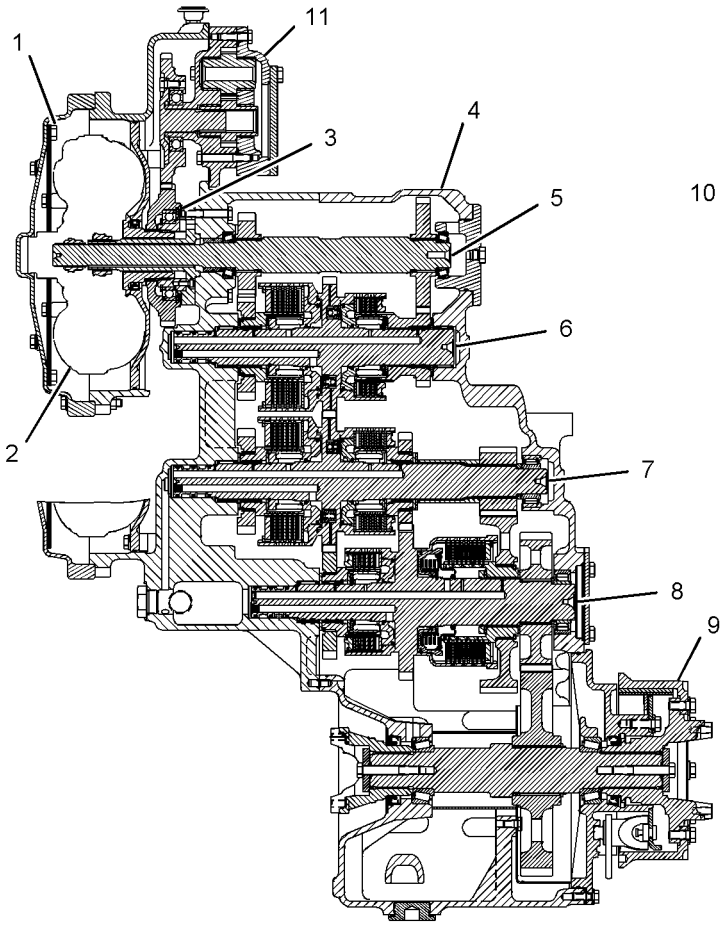

SECTION A-A

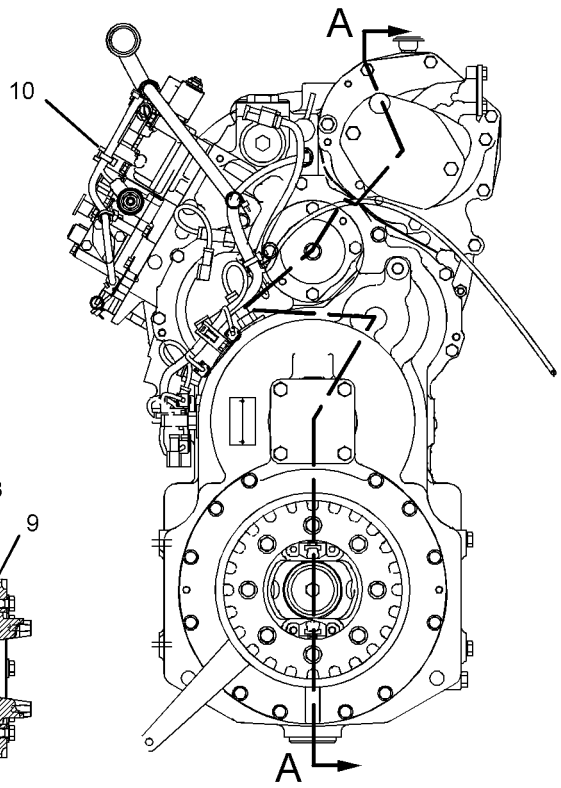

FRONT VIEW

GRAPHIC #1 **<END>** g01108945

126-0747 VALVE GP-BYPASS—POWER TRAIN OIL COOLER

S/N: TWR1-UP

PART OF 243-0675 LINES GP-TORQUE CONV COOLER

SMCS-3184 **i02022594**

NOTE	REF NO	GRAPHIC REF	PART NUMBER	QTY	PART NAME 1 2 3 4 5 6 (PRODUCT LEVEL)	SEE PAGE
	1	1	**124-8335**	1	VALVE AS-CONTROL	
	2	1	**126-0748**	1	BODY	
	3	1	*148-8407*	1	PLUG AS	
		1	**9S-4191**	1	PLUG-O-RING	
		1	**3J-1907**	1	SEAL-O-RING	
	4	1	**6V-8218**	1	SEAL-O-RING	

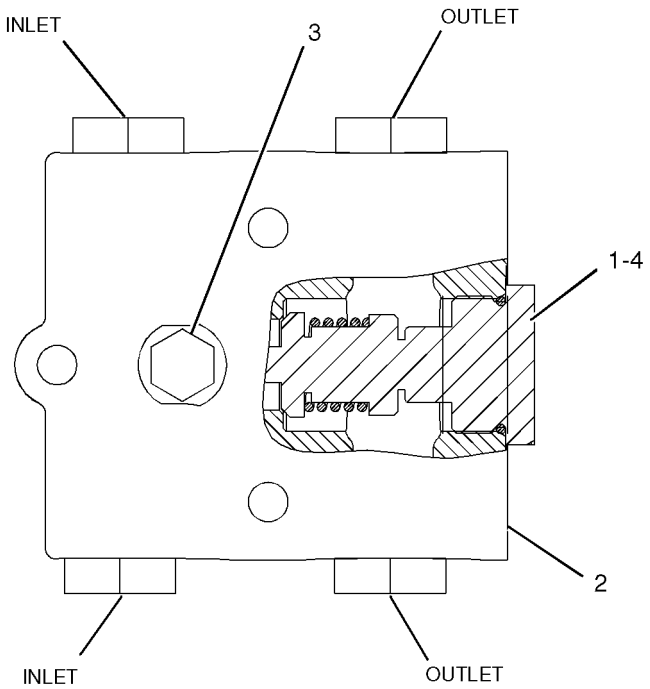

GRAPHIC #1 **<END>** g01044349

244-3114 VALVE GP-MODULATING–TRANSMISSION CLUTCH

S/N: TPA1-UP

24-VOLT

PART OF 200-2043 VALVE GP-TRANSMISSION CONTROL

SMCS-3139 **i03016650**

NOTE	REF NO	GRAPHIC REF	PART NUMBER	QTY	PART NAME 1 2 3 4 5 6 (PRODUCT LEVEL)	SEE PAGE
	1	1	**6V-3965**	1	FITTING (QUICK DISCONNECT)	
	2	1	**323-9531**	1	COIL AS	
	3	1	**3J-1907**	1	SEAL-O-RING	
	4	1	**164-2108**	1	WASHER (13.03X25.4X2.38-MM THK)	
	5	1	**167-9524**	1	NUT-SELF-LOCKING (1/2-28-THD)	
					PARTS SHOWN IN GRAPHIC(S) WITHOUT A REFERENCE NUMBER ARE NOT SERVICED SEPARATELY	

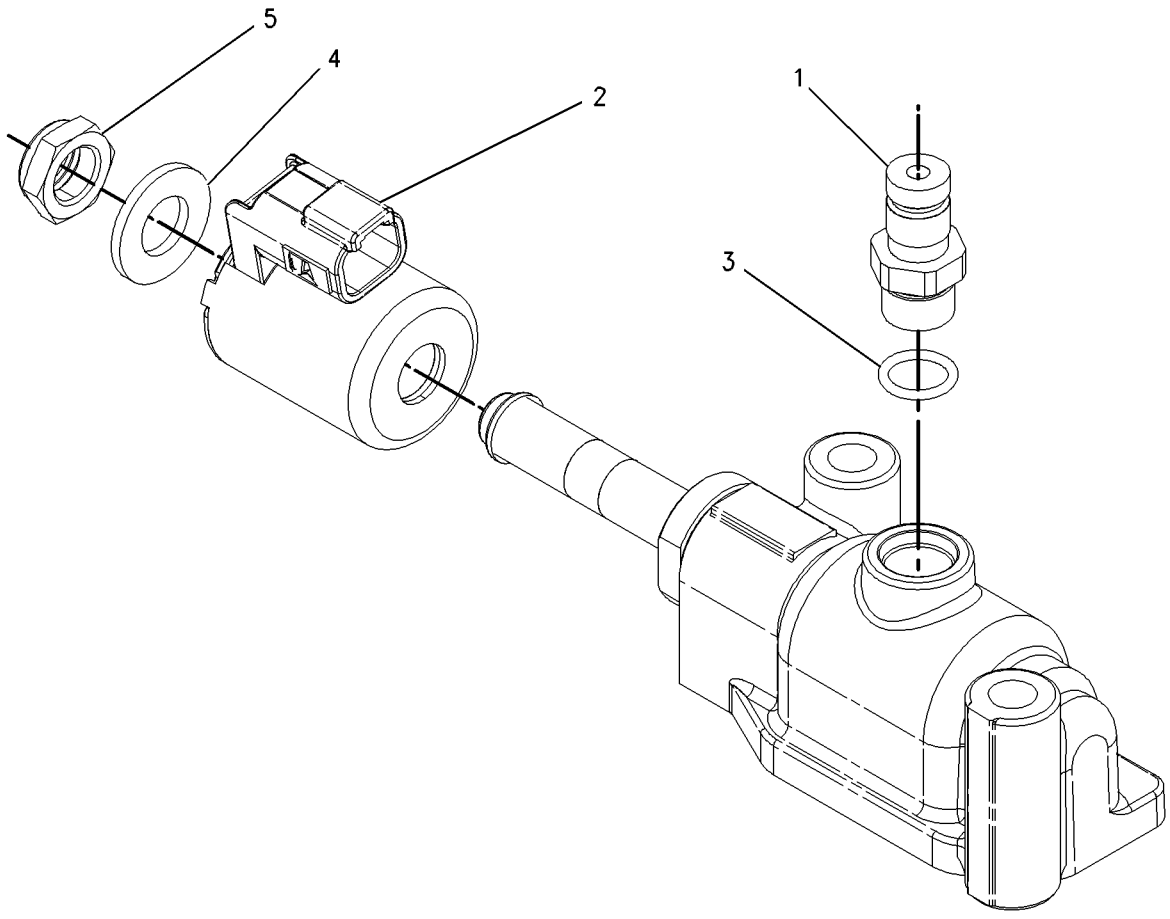

GRAPHIC #1 **<END>** g00919065

6I-9806 VALVE GP-RELIEF—TORQUE CONVERTER OUTLET

S/N: TPA1-UP

PART OF 239-5608 CASE & PARTS GP-TRANSMISSION

SMCS-3133, 3182, 3210, 3213 **i00349502**

NOTE	REF NO	GRAPHIC REF	PART NUMBER	QTY	PART NAME 1 2 3 4 5 6 (PRODUCT LEVEL)	SEE PAGE
	1	1	**6I-9805**	1	BODY	
	2	1	**2S-1382**	1	SPRING	
	3	1	**6I-9804**	1	SPOOL	
	4	1	**2L-6726**	1	RING-RETAINING	

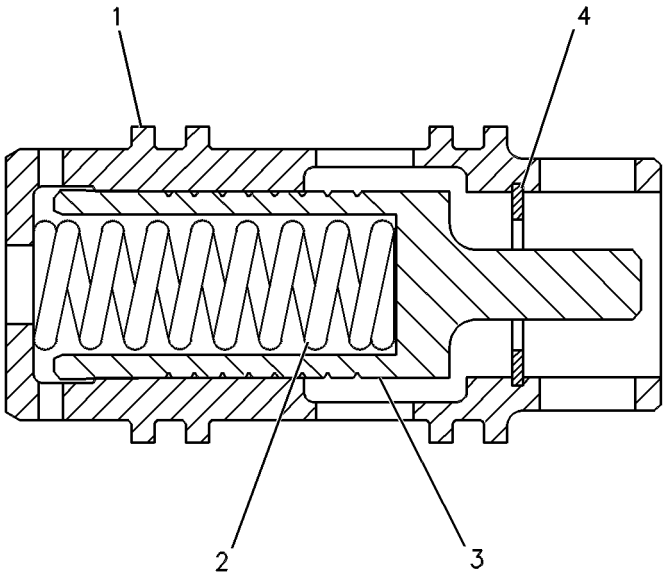

GRAPHIC #1 **<END>** g00128535

177-0026 VALVE GP-RELIEF—TRANSMISSION HYDRAULIC CONTROL

S/N: TPA1-UP

PART OF 200-2043 VALVE GP-TRANSMISSION CONTROL

SMCS-3133, 3182, 3210, 3213 **i02855833**

NOTE	REF NO	GRAPHIC REF	PART NUMBER	QTY	PART NAME 1 2 3 4 5 6 (PRODUCT LEVEL)	SEE PAGE
	1	1	**2S-4663**	1	SEAL-O-RING	
	2	1	**2S-5835**	1	PISTON-LOAD	
	3	1	**3J-1907**	2	SEAL-O-RING	
	4	1	**3K-0360**	1	SEAL-O-RING	
	5	1	**4M-5905**	1	SCREW-ADJUSTMENT (5/16-18X1-IN)	
	6	1	**6V-0852**	1	CAP-DUST	
	7	1	**6V-3965**	1	FITTING (QUICK DISCONNECT)	
	8	1	**7B-3028**	1	SCREW-DRIVE (NO 4X3/16-IN)	
	9	1	**8E-1143**	1	SLUG	
	10	1	**8M-5253**	1	SEAL-O-RING	
	11	1	**9M-2110**	1	COVER-ADJUSTMENT	
	12	1	**115-4550**	1	COVER	
	13	1	**172-7966**	1	BODY	
	14	1	**172-7968**	1	SPOOL AS	
		1	**3D-8317**	1	RING-RETAINING	
		1	**4B-9880**	1	BALL	
		1	**4M-2381**	1	SPRING	
		1	**9U-8669**	1	RETAINER	
	15	1	**174-7449**	1	SPRING	
	16	1	**241-6205**	1	PLUG	
	17	1	*164-6874*	1	FITTING AS-ELBOW	
		1	**3J-1907**	1	SEAL-O-RING	
		1	**085-7356**	1	FITTING	
M	18	1	**6V-3940**	2	BOLT (M8X1.25X25-MM)	
M	19	1	**6V-5218**	2	BOLT (M8X1.25X35-MM)	
	20	1	**9M-1974**	2	WASHER-HARD (8.8X16X2-MM THK)	
	21	1	**9S-8004**	1	PLUG-O-RING	

M-METRIC PART

177-0026 VALVE GP-RELIEF *(contd.)* **i02855833**

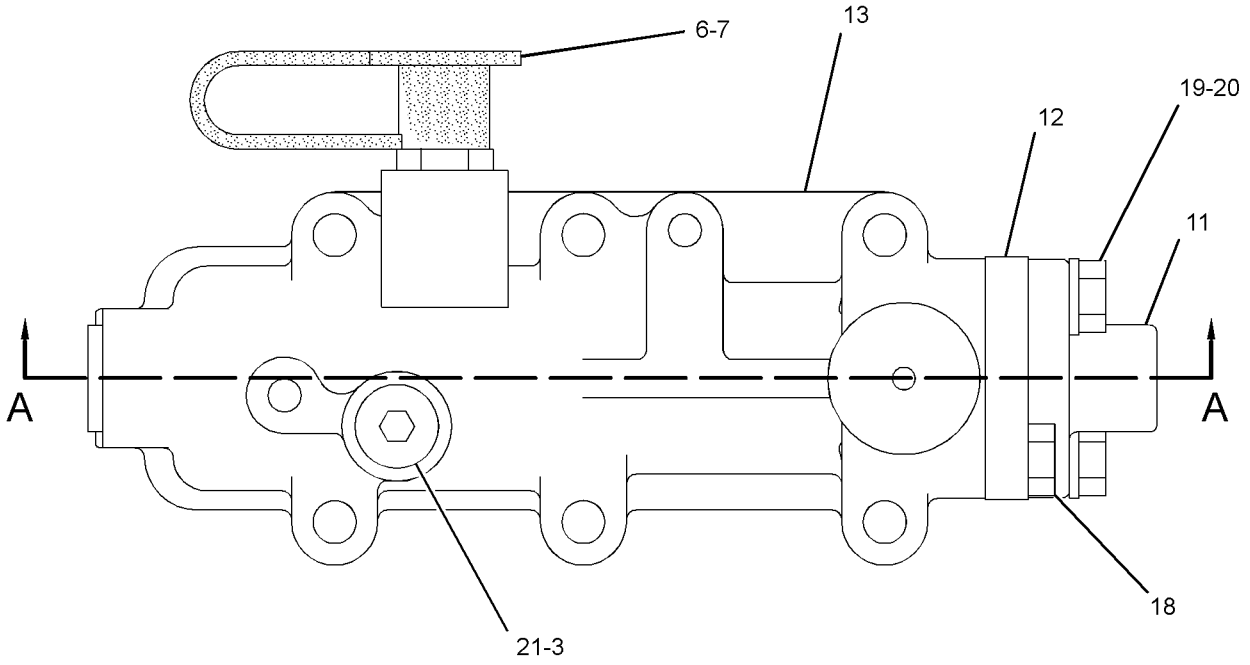

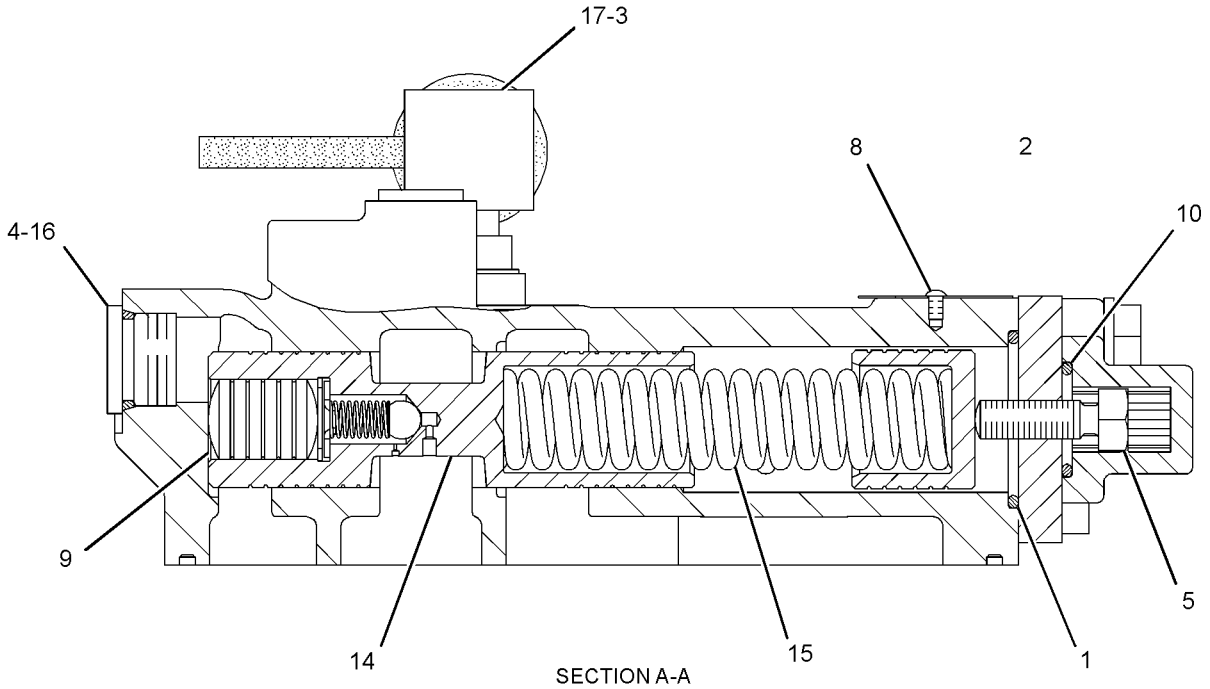

SECTION A-A

GRAPHIC #1 **<END>** g01431117

6D-0337 VALVE GP-TIRE

S/N: TWR1-UP

PART OF 117-7840, 2Q-5979 RIM GP-DEMOUNTABLE

AN ATTACHMENT

SMCS-4203 **i02126852**

NOTE	REF NO	GRAPHIC REF	PART NUMBER	QTY	PART NAME 1 2 3 4 5 6 (PRODUCT LEVEL)	SEE PAGE
	1	1	**6D-0443**	1	HOUSING AS-CORE	
	2	1	**2D-2628**	1	CORE-VALVE	
	3	1	**2D-2633**	1	CAP	
	4	1	**8D-2707**	1	SPUD AS	
	5	1	**2D-2629**	1	GROMMET	
	6	1	**2D-2630**	1	WASHER	
	7	1	**2D-2631**	1	NUT (0.482-26-THD)	

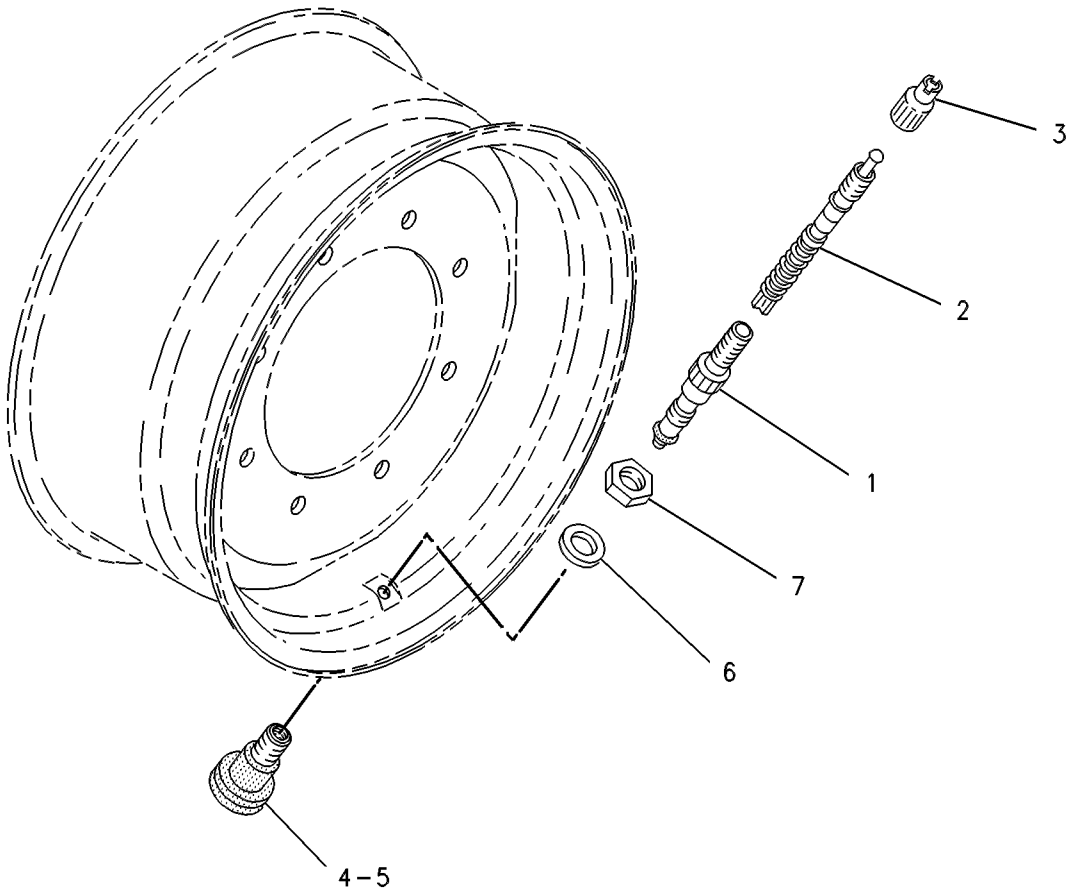

GRAPHIC #1 **<END>** g00121904

POWER TRAIN

200-2042 VALVE GP-TRANSMISSION CONTROL

S/N: TPA1-UP

PART OF 234-8866 TRANSMISSION AR

SMCS-3073, 3167 **i03276412**

NOTE	REF NO	GRAPHIC REF	PART NUMBER	QTY	PART NAME 1 2 3 4 5 6 (PRODUCT LEVEL)	SEE PAGE
C	1	1	**3S-2093**	17	STRAP-CABLE	
	2	1	**8E-7841**	2	CLIP AS-CONNECTING	
	3	1	**9L-9068**	2	DOWEL	
Y	4	1	**130-9811**	1	SENSOR GP-TEMPERATURE (TORQUE CONVERTER OIL)	180
C	5	1	**214-9059**	1	HARNESS AS-CONTROL (TRANSMISSION)	
		1	**102-8803**	1	KIT-RECEPTACLE (3-PIN)	
					(INCLUDES RECEPTACLE AS & WEDGE)	
		1	**155-2260**	2	KIT-CONNECTING PLUG (3-PIN)	
					(INCLUDES PLUG AS, WEDGES & INTERFACE SEAL)	
		1	**155-2270**	12	KIT-CONNECTING PLUG (2-PIN)	
					(INCLUDES PLUG AS, WEDGE & INTERFACE SEAL)	
Y	6	1	**200-2043**	1	VALVE GP-TRANSMISSION CONTROL	342
	7	1	**107-3114**	1	SEAL-O-RING	
	8	1	**130-5300**	2	CLIP	
	9	1	**132-5789**	8	CLIP	
Y	10	1	**183-8597**	1	SENSOR GP-SPEED (XMSN INTERMEDIATE OUTPUT 1)	178
Y	10A	1	**183-8597**	1	SENSOR GP-SPEED (XMSN INTERMEDIATE OUTPUT 2)	178
					(EACH SENSOR GR INCLUDES)	
		1	**102-8802**	1	KIT-RECEPTACLE (2-PIN)	
					(INCLUDES RECEPTACLE AS & WEDGE)	
		1	**3E-3365**	1	WEDGE-RECEPTACLE LOCK (2-PIN)	
		1	**186-3735**	2	PIN-CONNECTOR (16-GA TO 18-GA)	
BE		1	**9X-1813**		SLEEVE	
		1	**171-5349**	1	STRAP-MARKER	
Y	11	1	**196-1185**	1	SENSOR GP-SPEED (TRANSMISSION OUTPUT 1)	179
Y	11A	1	**196-1185**	1	SENSOR GP-SPEED (TRANSMISSION OUTPUT 2)	179
					(EACH SENSOR GP INCLUDES)	
		1	**102-8802**	1	KIT-RECEPTACLE (2-PIN)	
					(INCLUDES RECEPTACLE AS & WEDGE)	
		1	**3E-3365**	1	WEDGE-RECEPTACLE LOCK (2-PIN)	
		1	**186-3735**	2	PIN-CONNECTOR (16-GA TO 18-GA)	
BE		1	**9X-1813**		SLEEVE	
		1	**171-5349**	1	STRAP-MARKER	
	12	1	**3K-0360**	6	SEAL-O-RING	
C	13	1	**4P-7581**	3	CLIP	
CM	14	1	**6V-5215**	1	BOLT (M8X1.25X16-MM)	
CM	15	1	**6V-3821**	6	BOLT (M8X1.25X110-MM)	
M	16	1	**6V-3822**	1	BOLT (M10X1.5X35-MM)	
M	17	1	**6V-5217**	2	BOLT (M8X1.25X20-MM)	
CM	18	1	**6V-5218**	4	BOLT (M8X1.25X35-MM)	
CM	19	1	**6V-5223**	7	BOLT (M8X1.25X100-MM)	
	20	1	**6V-5839**	1	WASHER (11X21X2.5-MM THK)	
	21	1	**8M-5251**	5	SEAL-O-RING	
C	22	1	**9M-1974**	20	WASHER-HARD (8.8X16X2-MM THK)	
Y	23	1	**183-8597**	1	SENSOR GP-SPEED (TORQUE CONVERTER OUTPUT)	178
		1	**102-8802**	1	KIT-RECEPTACLE (2-PIN)	
					(INCLUDES RECEPTACLE AS & WEDGE)	
		1	**3E-3365**	1	WEDGE-RECEPTACLE LOCK (2-PIN)	
		1	**186-3735**	2	PIN-CONNECTOR (16-GA TO 18-GA)	
BE		1	**9X-1813**		SLEEVE	
		1	**171-5349**	1	STRAP-MARKER	

B-USE AS REQUIRED
C-CHANGE FROM PREVIOUS TYPE
E-ORDER BY THE CENTIMETER
M-METRIC PART
Y-SEPARATE ILLUSTRATION

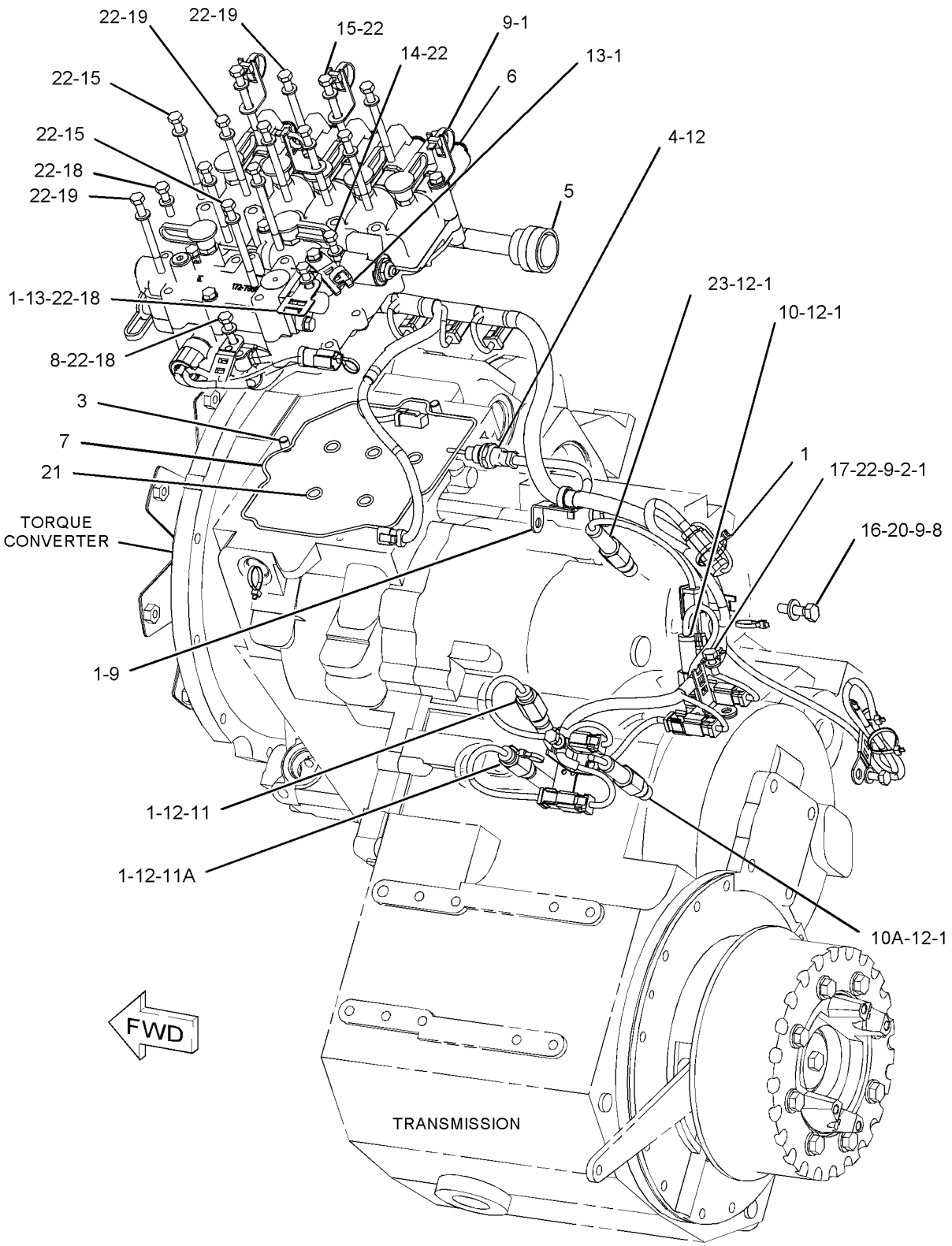

GRAPHIC #1

<END>

g01092762

200-2043 VALVE GP-TRANSMISSION CONTROL

S/N: TPA1-UP

PART OF 200-2042 VALVE GP-TRANSMISSION CONTROL

SMCS-3073, 3167 **i02857623**

NOTE	REF NO	GRAPHIC REF	PART NUMBER	QTY	PART NAME 1 2 3 4 5 6 (PRODUCT LEVEL)	SEE PAGE
	1	1	**9X-7725**	1	SEAL-O-RING	
	2	1	**6V-0852**	7	CAP-DUST	
	3	1	**6V-3965**	1	FITTING (QUICK DISCONNECT)	
	4	1	**8S-0768**	6	SEAL-O-RING	
	5	1	**9L-9068**	4	DOWEL	
Y	6	1	**177-0026**	1	VALVE GP-RELIEF (TRANSMISSION HYDRAULIC CONTROL)	337
	7	1	**201-3316**	1	MANIFOLD (TOP)	
	8	1	**200-2044**	1	MANIFOLD (BOTTOM)	
Y	9	1	**244-3114**	6	VALVE GP-MODULATING (24-VOLT) (TRANSMISSION CLUTCH)	335
Y	10	1	**134-2252**	1	SENSOR GP-TEMPERATURE (TRANSMISSION OIL)	181
C	11	1	**3J-1907**	3	SEAL-O-RING	
	12	1	**2P-1692**	1	SEAL-O-RING	
M	13	1	**6V-5222**	1	BOLT (M8X1.25X85-MM)	
CM	14	1	**5P-8347**	4	BOLT (M8X1.25X70-MM)	
	15	1	**9M-1974**	5	WASHER-HARD (8.8X16X2-MM THK)	
C	16	1	**6V-0484**	1	ADAPTER-O-RING	

C-CHANGE FROM PREVIOUS TYPE
M-METRIC PART
Y-SEPARATE ILLUSTRATION

200-2043 **VALVE GP-TRANSMISSION CONTROL** *(contd.)* **i02857623**

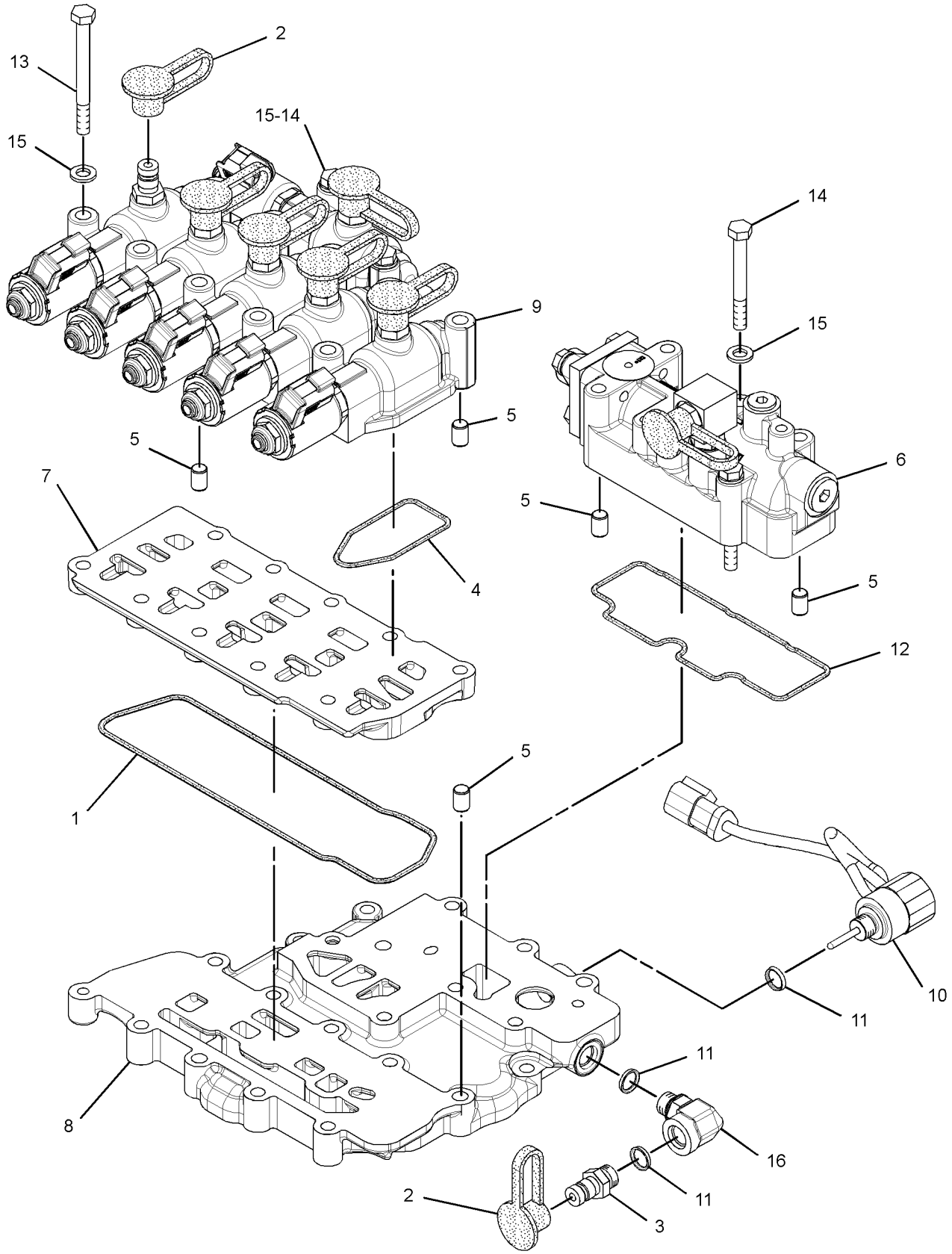

GRAPHIC #1 **<END>** g01524756

202-0420 BOX GP-BATTERY

S/N: TWR1-UP
PART OF 235-7499 CHASSIS AR, 235-6926 LIGHTING AR-ROADING
ALSO AN ATTACHMENT

SMCS-7257 **i02154994**

NOTE	REF NO	GRAPHIC REF	PART NUMBER	QTY	PART NAME 1 2 3 4 5 6 (PRODUCT LEVEL)	SEE PAGE
	1	1	**176-2435**	2	BOX AS	
	2	1	**237-0120**	2	COVER	
	3	1	**7X-7729**	16	WASHER (11X25X3-MM THK)	
M	4	1	**8T-4136**	16	BOLT (M10X1.5X25-MM)	

M-METRIC PART

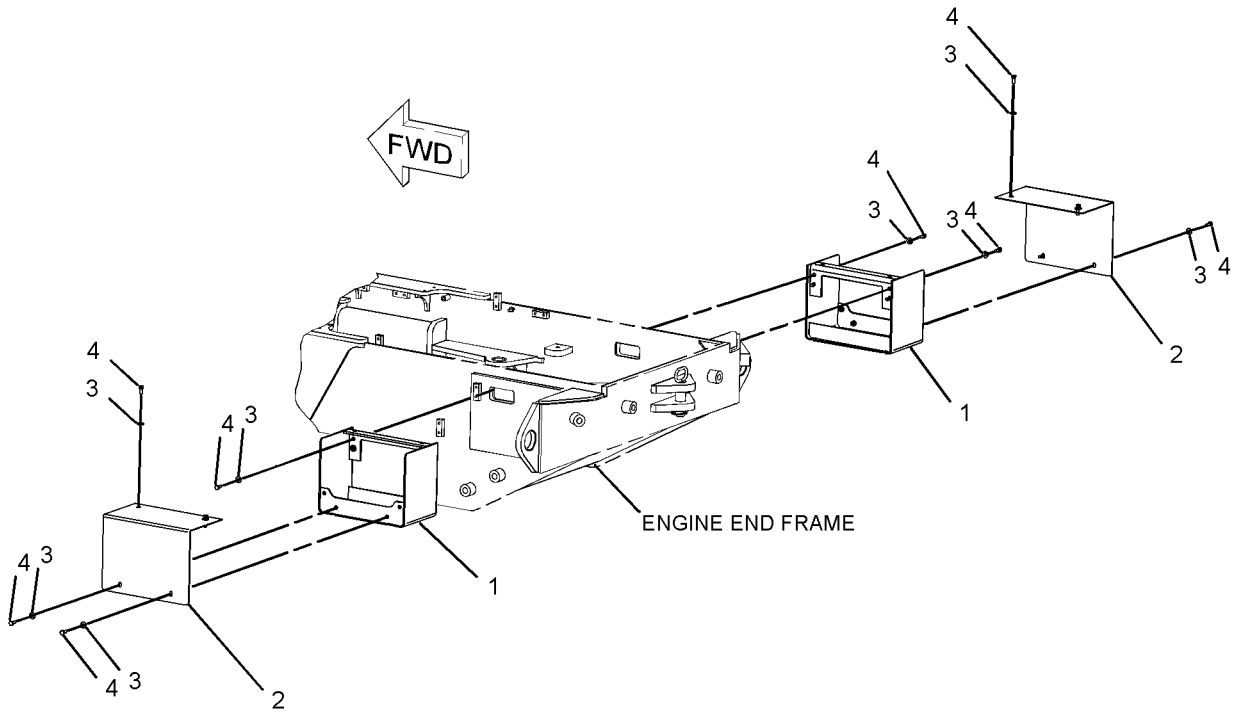

GRAPHIC #1 **<END>** g01065272

180-8983 COUNTERWEIGHT GP

S/N: TWR1-UP

PART OF 235-7499 CHASSIS AR

SMCS-7056 **i01912806**

NOTE	REF NO	GRAPHIC REF	PART NUMBER	QTY	PART NAME 1 2 3 4 5 6 (PRODUCT LEVEL)	SEE PAGE
	1	1	**180-8992**	1	COUNTERWEIGHT AS (RH)	
	2	1	**180-8993**	1	COUNTERWEIGHT AS (LH)	
M	3	1	**7X-2465**	4	BOLT (M24X3X180-MM)	
	4	1	**8T-1482**	4	WASHER-HARD (26X50X8-MM THK)	
M	5	1	**8T-4179**	2	BOLT (M12X1.75X20-MM)	
	6	1	**8T-4223**	2	WASHER-HARD (13.5X25.5X3-MM THK)	

M-METRIC PART

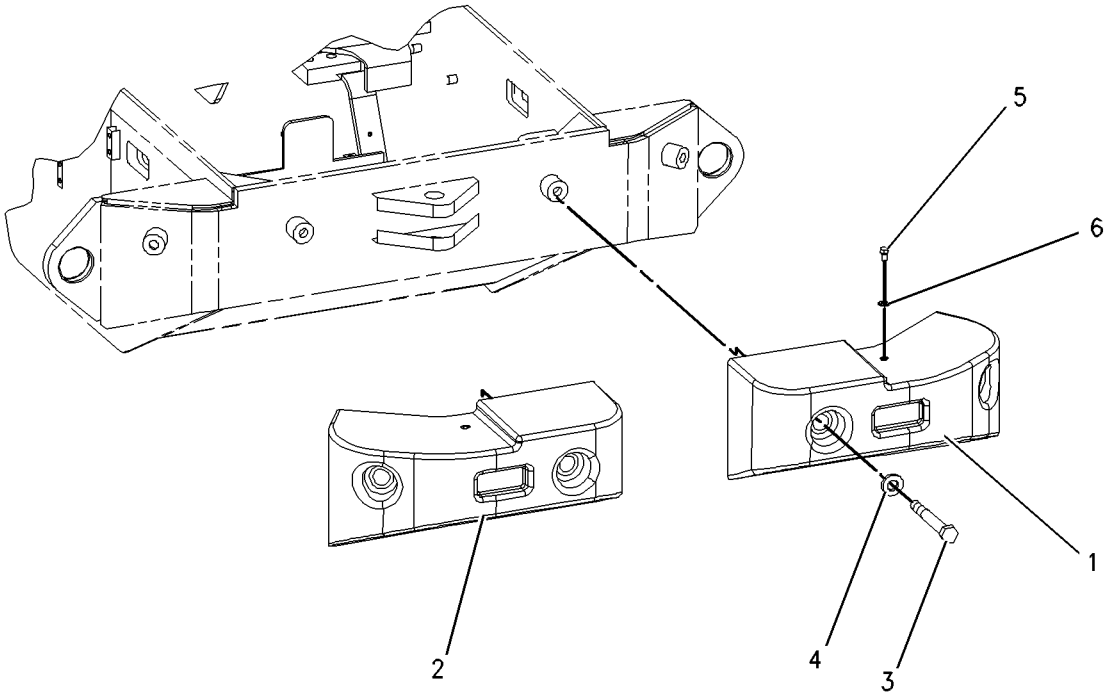

GRAPHIC #1 **<END>** g00920546

180-8986 COUNTERWEIGHT GP–OPTIONAL

S/N: TWR1-UP

AN ATTACHMENT

SMCS-7056 **i02230170**

NOTE	REF NO	GRAPHIC REF	PART NUMBER	QTY	PART NAME 1 2 3 4 5 6 (PRODUCT LEVEL)	SEE PAGE
	1	1	**180-8994**	1	COUNTERWEIGHT (RH)	
	2	1	**204-4332**	1	COUNTERWEIGHT (LH)	
M	3	1	**7X-2465**	4	BOLT (M24X3X180-MM)	
	4	1	**8T-1482**	4	WASHER-HARD (26X50X8-MM THK)	

M-METRIC PART

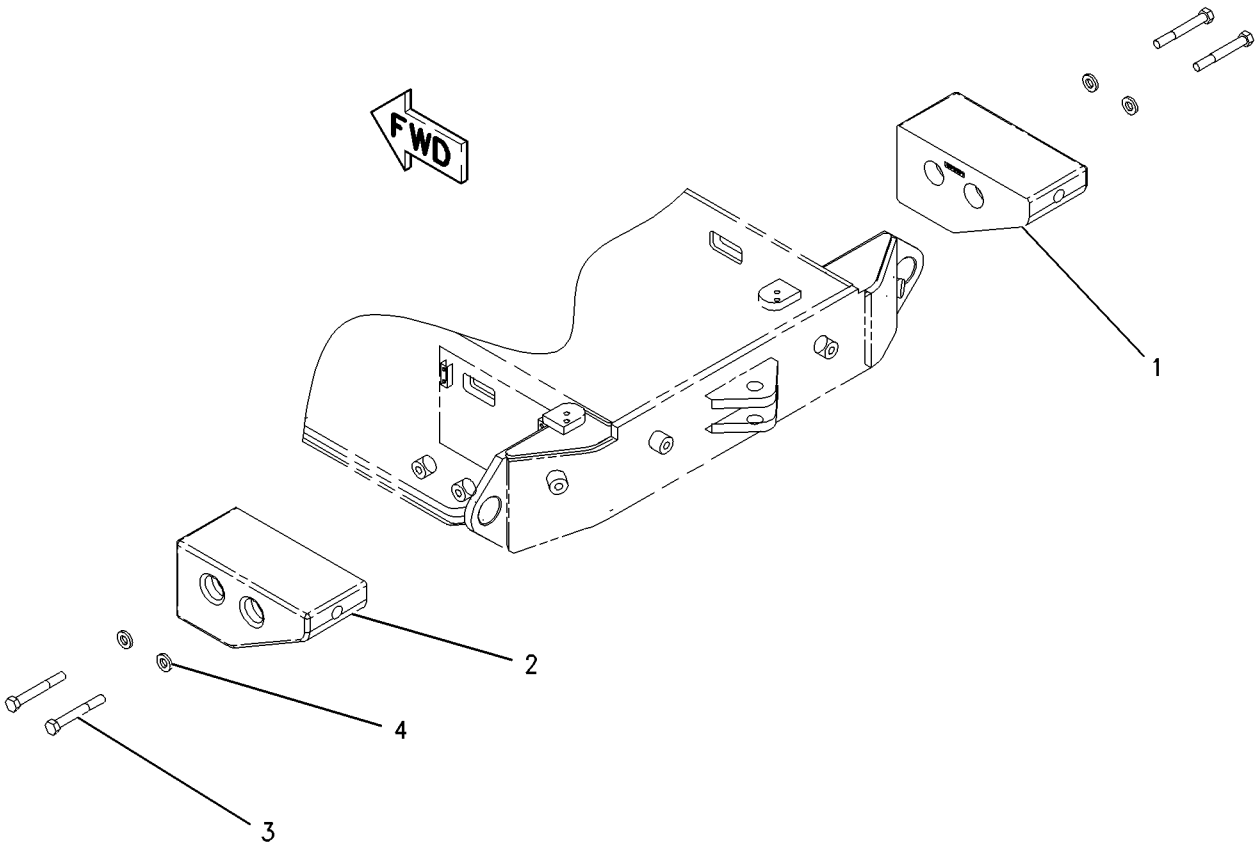

GRAPHIC #1 **<END>** g00921361

256-7518 COUNTERWEIGHT GP–OPTIONAL

S/N: TWR1-UP
AN ATTACHMENT

SMCS-7056 **i02208822**

NOTE	REF NO	GRAPHIC REF	PART NUMBER	QTY	PART NAME 1 2 3 4 5 6 (PRODUCT LEVEL)	SEE PAGE
	1	1	**8T-1482**	4	WASHER-HARD (26X50X8-MM THK)	
	2	1	**256-7516**	1	COUNTERWEIGHT (LH)	
	3	1	**256-7517**	1	COUNTERWEIGHT-RH	
M	4	1	**121-7897**	4	BOLT (M24X3X315-MM)	

M-METRIC PART

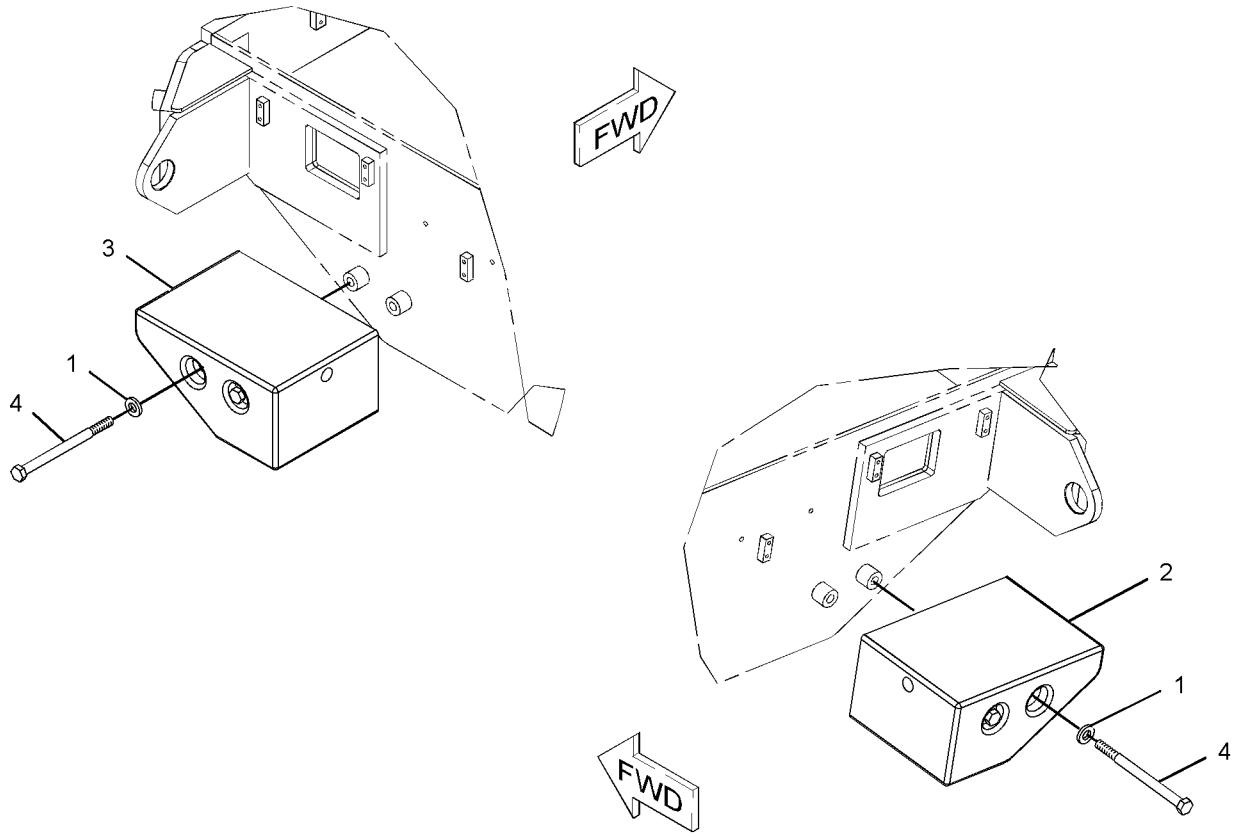

GRAPHIC #1 **<END>** g01118012

FRAME AND BODY

243-0546 COVER GP-ACCESS

S/N: TWR1-UP

PART OF 235-7499 CHASSIS AR

SMCS-726A **i02193646**

NOTE	REF NO	GRAPHIC REF	PART NUMBER	QTY	PART NAME 1 2 3 4 5 6 (PRODUCT LEVEL)	SEE PAGE
	1	1	**243-0547**	2	PLATE	
	2	1	**7X-7729**	8	WASHER (11X25X3-MM THK)	
M	3	1	**8T-4195**	8	BOLT (M10X1.5X30-MM)	

M-METRIC PART

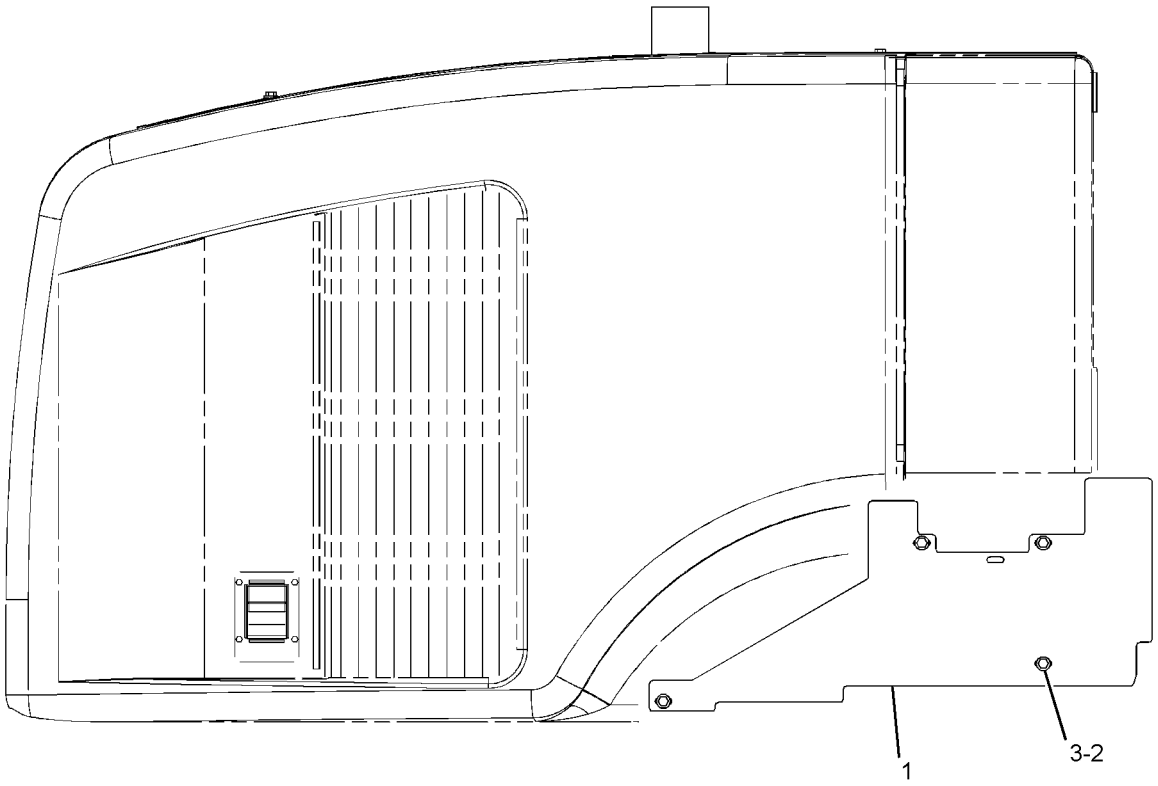

RIGHT SIDE VIEW

GRAPHIC #1 **<END>** g01108438

235-6897 FENDER AR-ROADING

S/N: TWR1-UP
AN ATTACHMENT

SMCS-7252 **i02274018**

NOTE	PART NUMBER	QTY	PART NAME 1 2 3 4 5 6 (PRODUCT LEVEL)	SEE PAGE
Y	*235-6896*	1	FENDER GP-FRONT (ROADING)	353
Y	*208-4983*	1	FENDER GP-ROADING (REAR)	358

Y-SEPARATE ILLUSTRATION

<END>

235-6955 FENDER AR-ROADING—HEAVY-DUTY

S/N: TWR1-UP
AN ATTACHMENT

SMCS-7252 **i02525006**

NOTE	PART NUMBER	QTY	PART NAME 1 2 3 4 5 6 (PRODUCT LEVEL)	SEE PAGE
Y	*235-6898*	1	FENDER GP-FRONT (HEAVY-DUTY ROADING)	354
			—OR—	
Y	*226-1186*	1	FENDER GP-FRONT	351
Y	*208-4983*	1	FENDER GP-ROADING (REAR)	358

Y-SEPARATE ILLUSTRATION

<END>

FRAME AND BODY

140-9295 FENDER GP-FRONT

S/N: TWR1-UP
PART OF 208-0310 FENDER GP-ROADING
AN ATTACHMENT

SMCS-7252 **i02939344**

NOTE	REF NO	GRAPHIC REF	PART NUMBER	QTY	PART NAME 1 2 3 4 5 6 (PRODUCT LEVEL)	SEE PAGE
	1	1	**140-9296**	2	BRACKET AS	
	2	1	**214-9563**	2	FENDER	
	3	1	**214-9564**	8	PLATE	
	4	1	**204-0813**	8	BOLT (M6X1X40-MM)	
	5	1	**7X-7729**	8	WASHER (11X25X3-MM THK)	
M	6	1	**8T-4136**	8	BOLT (M10X1.5X25-MM)	
	7	1	**8T-4205**	8	WASHER-HARD (7.2X14.5X2-MM THK)	

M-METRIC PART

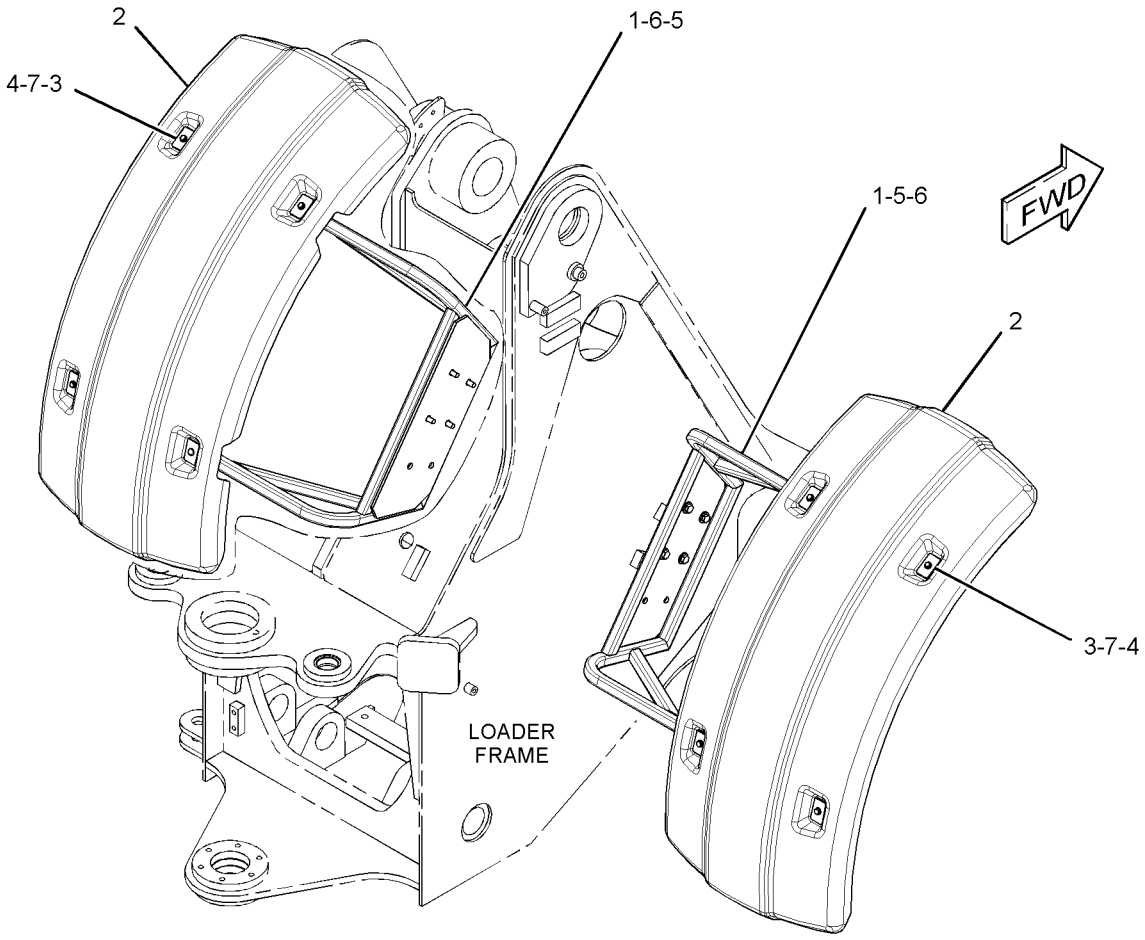

GRAPHIC #1 **<END>** g01471552

226-1186 FENDER GP-FRONT

S/N: TWR1-UP

PART OF 235-6955 FENDER AR-ROADING

AN ATTACHMENT

SMCS-7252 **i01804878**

NOTE	REF NO	GRAPHIC REF	PART NUMBER	QTY	PART NAME 1 2 3 4 5 6 (PRODUCT LEVEL)	SEE PAGE
	1	1	**221-0839**	2	PLATE AS	
	2	1	**221-0840**	2	BRACKET AS	
	3	1	**221-0845**	2	FENDER AS	
	4	1	**228-4710**	4	SPACER (14X30X20-MM THK)	
	5	1	**5P-1076**	8	WASHER-HARD (13.5X30X4-MM THK)	
	6	1	**5P-4116**	20	WASHER-HARD (8.8X20.5X2-MM THK)	
	7	1	**7X-7729**	8	WASHER (11X25X3-MM THK)	
M	8	1	**8T-4136**	8	BOLT (M10X1.5X25-MM)	
M	9	1	**8T-4244**	4	NUT (M12X1.75-THD)	
M	10	1	**8T-4908**	12	BOLT (M8X1.25X25-MM)	
M	11	1	**8T-4910**	4	BOLT (M12X1.75X60-MM)	
M	12	1	**8T-6869**	8	BOLT (M8X1.25X60-MM)	

M-METRIC PART

226-1186 **FENDER GP-FRONT** *(contd.)* **i01804878**

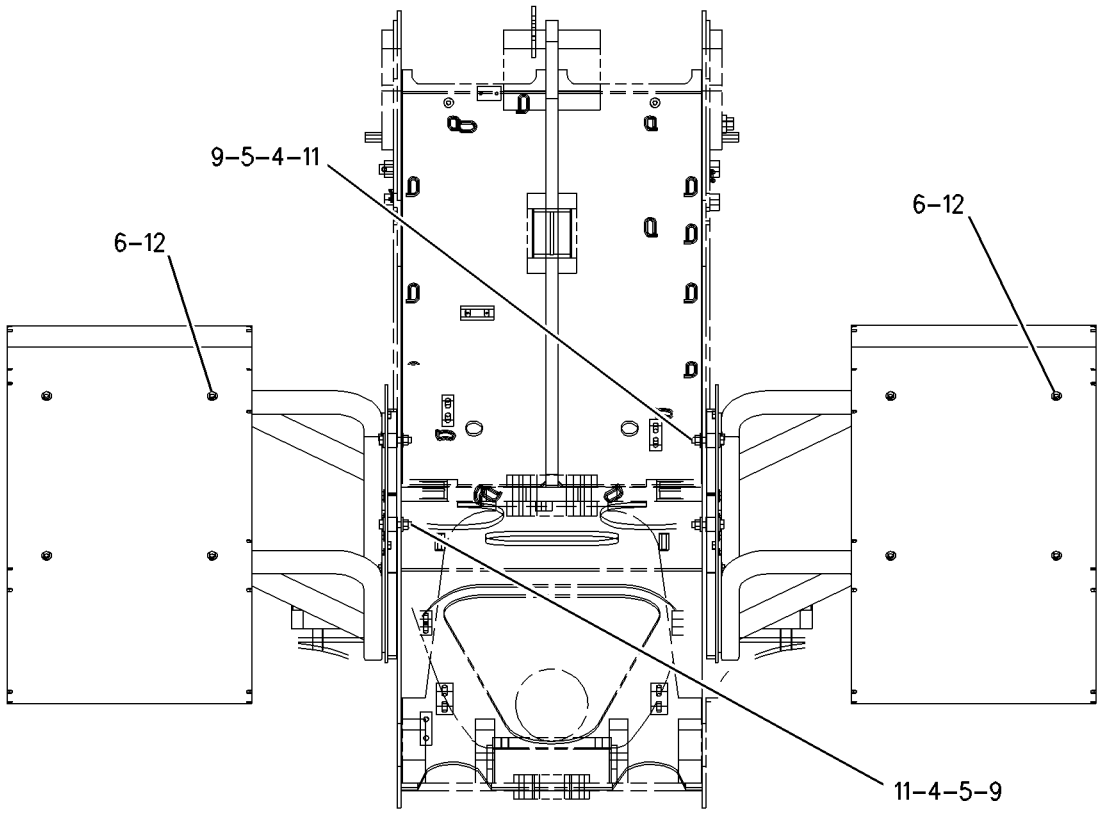

REAR VIEW

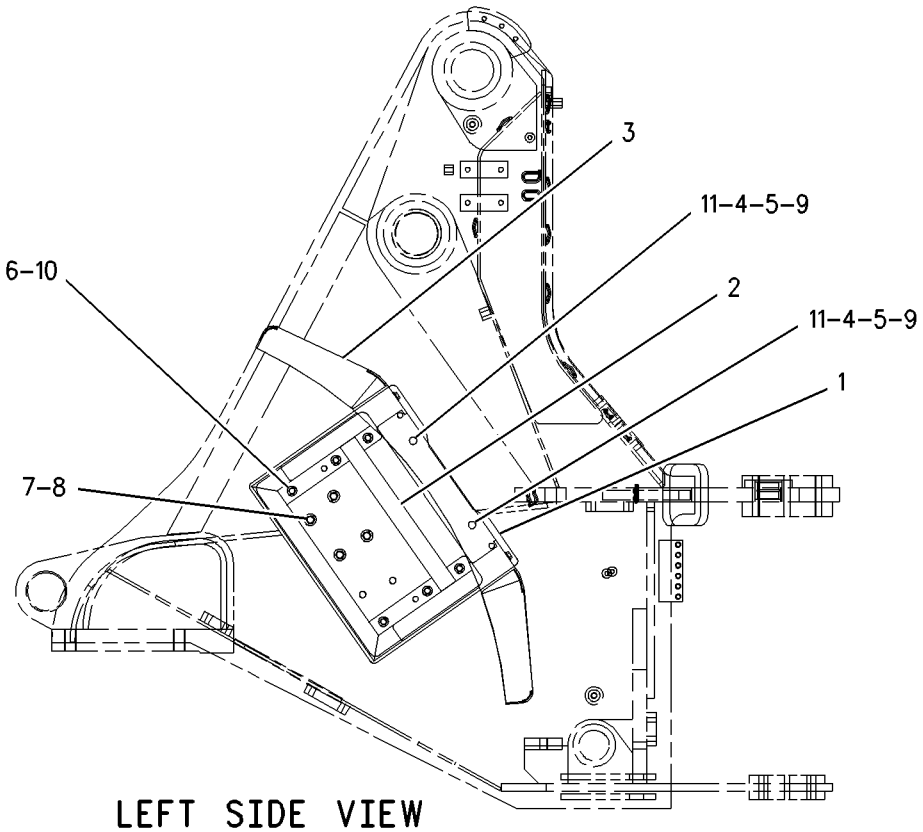

LEFT SIDE VIEW

GRAPHIC #1 **<END>** g00925523

235-6896 FENDER GP-FRONT–ROADING

S/N: TWR1-UP

PART OF 235-6897 FENDER AR-ROADING

AN ATTACHMENT

SMCS-7252 **i02281546**

NOTE	REF NO	GRAPHIC REF	PART NUMBER	QTY	PART NAME 1 2 3 4 5 6 (PRODUCT LEVEL)	SEE PAGE
	1	1	**214-9563**	2	FENDER	
	2	1	**214-9564**	8	PLATE	
	3	1	**238-2922**	2	BRACKET AS	
	4	1	**204-0813**	8	BOLT (M6X1X40-MM)	
	5	1	**7X-7729**	8	WASHER (11X25X3-MM THK)	
M	6	1	**8T-4136**	8	BOLT (M10X1.5X25-MM)	

M-METRIC PART

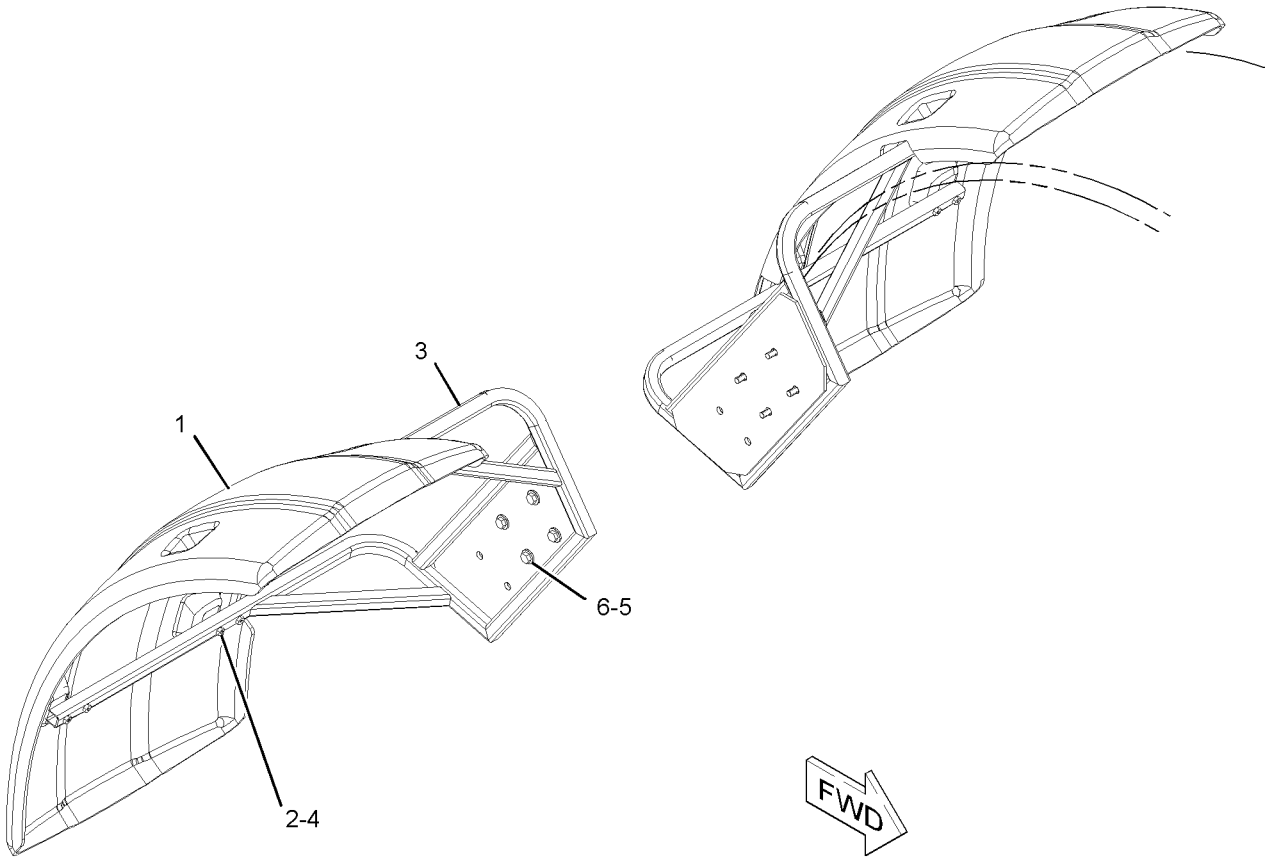

GRAPHIC #1 **<END>** g01114281

235-6898 FENDER GP-FRONT—HEAVY-DUTY ROADING

S/N: TWR1-UP

PART OF 235-6955 FENDER AR-ROADING

AN ATTACHMENT

SMCS-7252 **i02281919**

NOTE	REF NO	GRAPHIC REF	PART NUMBER	QTY	PART NAME 1 2 3 4 5 6 (PRODUCT LEVEL)	SEE PAGE
	1	1	**221-0839**	2	PLATE AS	
	2	1	**221-0845**	2	FENDER AS	
	3	1	**228-4710**	4	SPACER (14X30X20-MM THK)	
	4	1	**238-7794**	2	BRACKET AS	
	5	1	**5P-1076**	8	WASHER-HARD (13.5X30X4-MM THK)	
	6	1	**5P-4116**	20	WASHER-HARD (8.8X20.5X2-MM THK)	
	7	1	**7X-7729**	8	WASHER (11X25X3-MM THK)	
M	8	1	**8T-4136**	8	BOLT (M10X1.5X25-MM)	
M	9	1	**8T-4244**	4	NUT (M12X1.75-THD)	
M	10	1	**8T-4908**	12	BOLT (M8X1.25X25-MM)	
M	11	1	**8T-4910**	4	BOLT (M12X1.75X60-MM)	
M	12	1	**8T-6869**	8	BOLT (M8X1.25X60-MM)	

M-METRIC PART

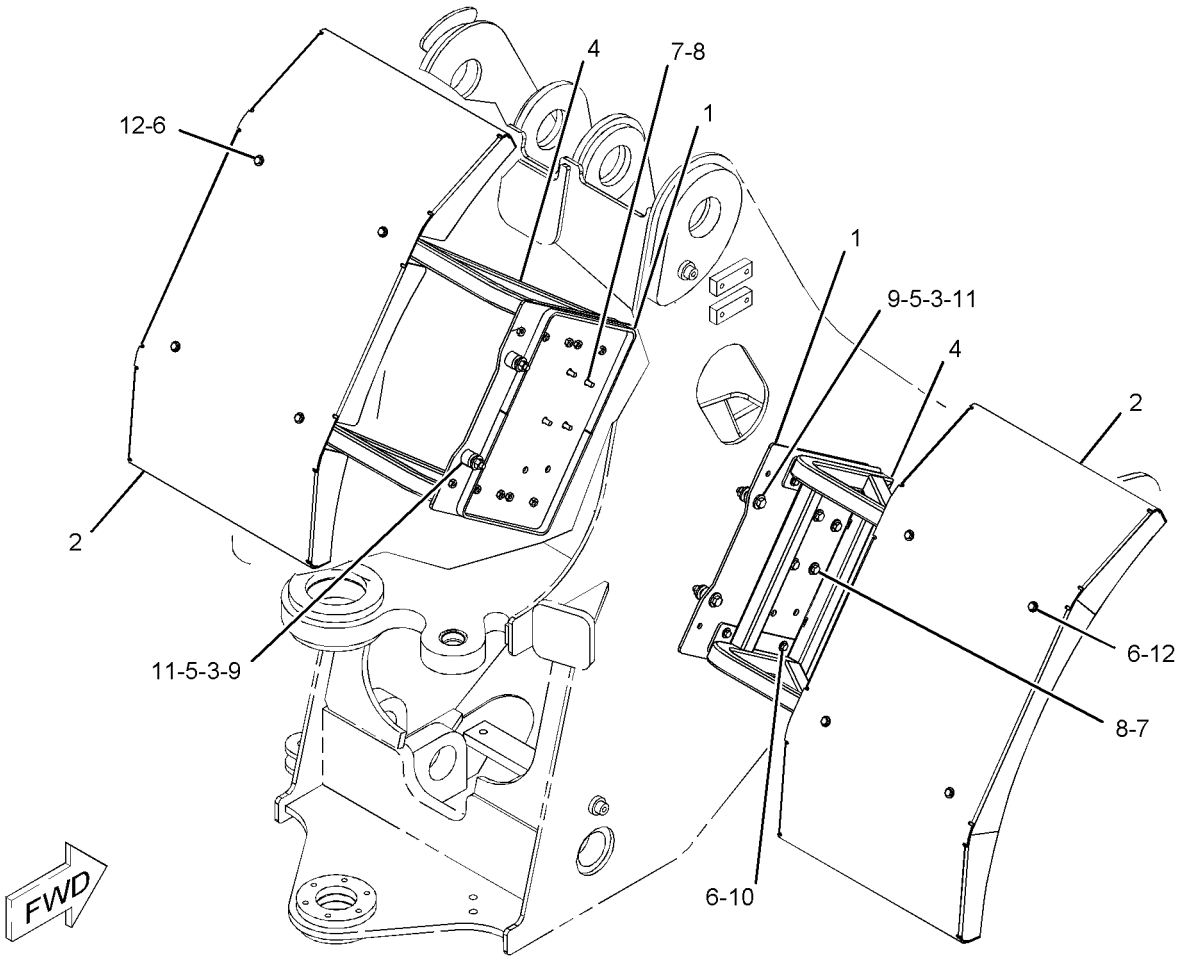

GRAPHIC #1 **<END>** g01114710

215-2645 FENDER GP-REAR–ROADING, LH

S/N: TWR1-UP
PART OF 208-4983 FENDER GP-ROADING
AN ATTACHMENT

SMCS-7252 **i01963881**

NOTE	REF NO	GRAPHIC REF	PART NUMBER	QTY	PART NAME 1 2 3 4 5 6 (PRODUCT LEVEL)	SEE PAGE
	1	1	**009-3101**	1	RING-RETAINING	
	2	1	**124-2456**	1	FILM-INSTRUCTION (NO STEP)	
	3	1	**146-0083**	1	PLATE	
	4	1	**146-0084**	1	ROD	
	5	1	**146-0090**	1	PIVOT AS-LH	
	6	1	**146-0098**	2	BUSHING	
	7	1	**163-4345**	1	DEFLECTOR	
	8	1	**215-2643**	1	BRACKET AS	
	9	1	**219-6911**	1	FENDER (LH)	
M	10	1	**129-3178**	3	LOCKNUT (M6X1 THD)	
	11	1	**5P-4115**	13	WASHER-HARD (7.2X19X2-MM THK)	
M	12	1	**6V-7357**	3	BOLT (M6X1X25-MM)	
	13	1	**7X-7729**	3	WASHER (11X25X3-MM THK)	
M	14	1	**8C-8451**	7	BOLT (M6X1X40-MM)	
M	15	1	**8T-4186**	3	BOLT (M10X1.5X40-MM)	
	16	1	**9L-6074**	1	GROMMET	

M-METRIC PART

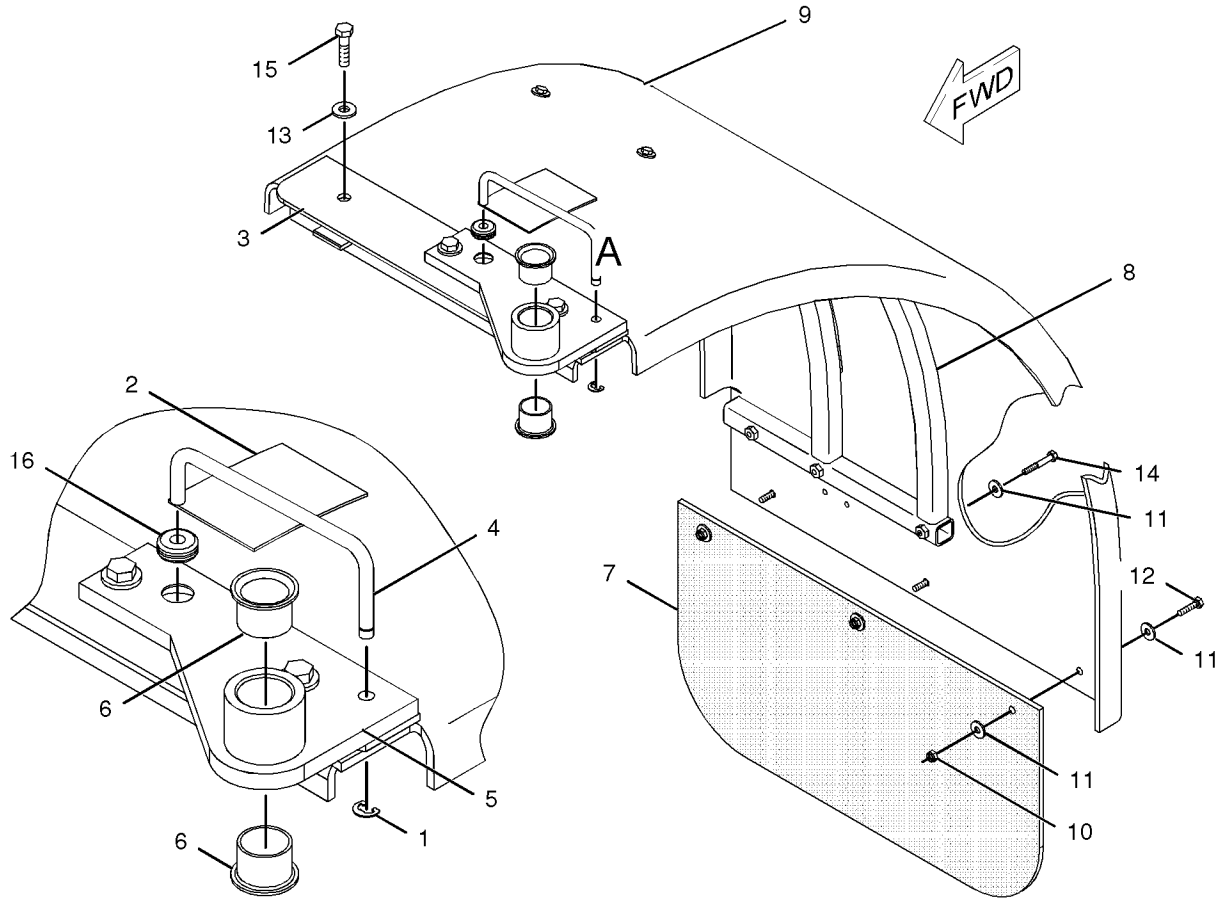

VIEW OF AREA A

GRAPHIC #1 **<END>** g01020239

215-2646 FENDER GP-REAR–ROADING, RH

S/N: TWR1-UP

PART OF 208-4983 FENDER GP-ROADING

AN ATTACHMENT

SMCS-7252 **i01754124**

NOTE	REF NO	GRAPHIC REF	PART NUMBER	QTY	PART NAME 1 2 3 4 5 6 (PRODUCT LEVEL)	SEE PAGE
	1	1	**009-3101**	1	RING-RETAINING	
	2	1	**124-2456**	1	FILM-INSTRUCTION (NO STEP)	
	3	1	**146-0083**	1	PLATE	
	4	1	**146-0084**	1	ROD	
	5	1	**146-0089**	1	PIVOT AS-RH	
	6	1	**146-0098**	2	BUSHING	
	7	1	**9L-6074**	1	GROMMET	
	8	1	**215-2644**	1	BRACKET AS	
	9	1	**219-6910**	1	FENDER	
M	10	1	**129-3178**	3	LOCKNUT (M6X1 THD)	
	11	1	**5P-4115**	13	WASHER-HARD (7.2X19X2-MM THK)	
M	12	1	**6V-7357**	3	BOLT (M6X1X25-MM)	
	13	1	**7X-7729**	3	WASHER (11X25X3-MM THK)	
M	14	1	**8C-8451**	7	BOLT (M6X1X40-MM)	
M	15	1	**8T-4186**	3	BOLT (M10X1.5X40-MM)	

M-METRIC PART

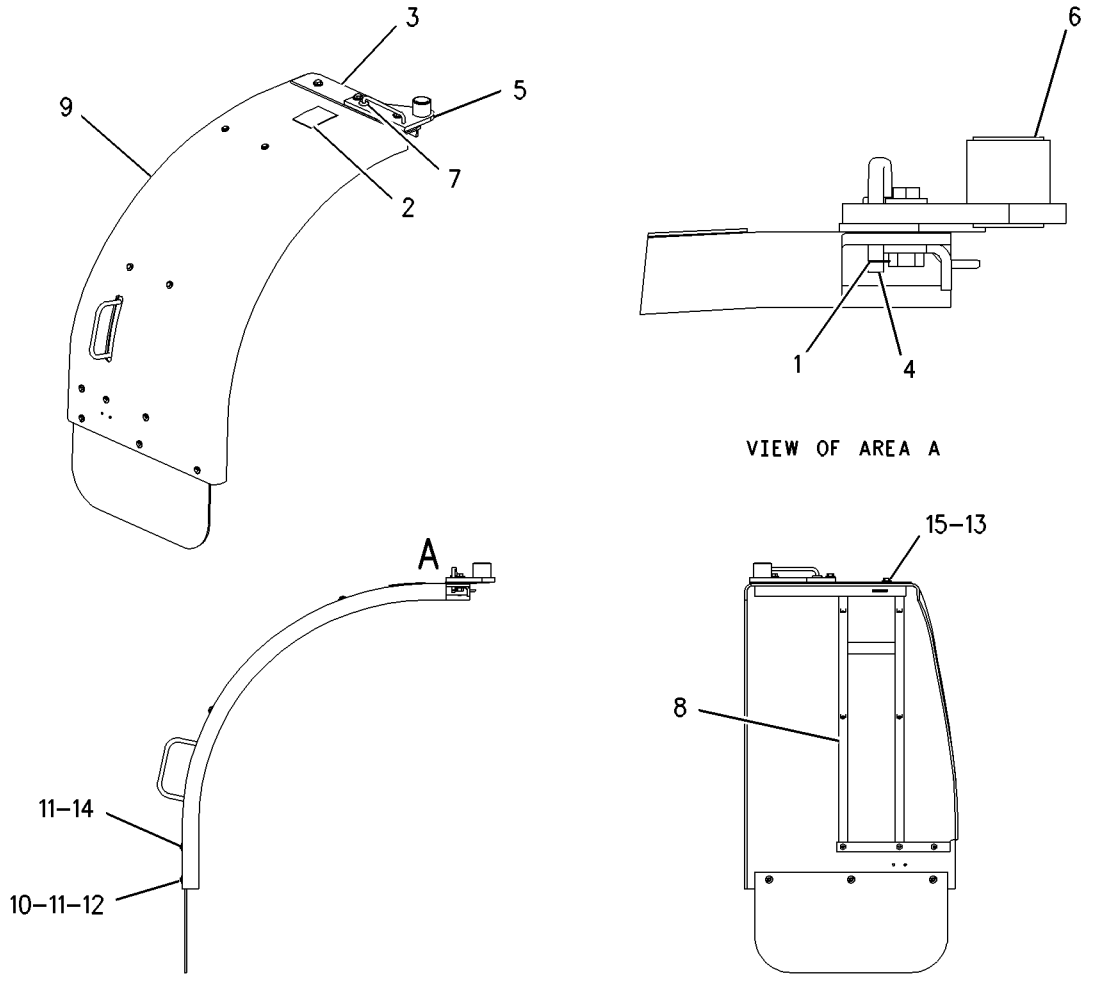

GRAPHIC #1 **<END>** g00897462

208-0310 FENDER GP-ROADING

S/N: TWR1-UP

CANNOT BE USED WITH 208-4982 FENDER GP, 208-4985 FENDER GP-FRONT, 209-3117 FENDER GP, 140-9295 FENDER GP-FRONT, 154-4914 FENDER GP-FRONT, 226-1186 FENDER GP-FRONT, 235-6955 FENDER AR-ROADING

AN ATTACHMENT

SMCS-7252 **i02779026**

NOTE	PART NUMBER	QTY	PART NAME 1 2 3 4 5 6 (PRODUCT LEVEL)	SEE PAGE
Y	*140-9295*	1	FENDER GP-FRONT	350
Y	*208-4983*	1	FENDER GP-ROADING (REAR)	358

Y-SEPARATE ILLUSTRATION

<END>

208-4983 FENDER GP-ROADING—REAR

S/N: TWR1-UP

PART OF 235-6897, 235-6955 FENDER AR-ROADING, 208-0310 FENDER GP-ROADING AN ATTACHMENT

SMCS-7252 **i01878241**

NOTE	REF NO	GRAPHIC REF	PART NUMBER	QTY	PART NAME 1 2 3 4 5 6 (PRODUCT LEVEL)	SEE PAGE
	1	1	**146-0085**	2	PIVOT AS	
	2	1	**163-4347**	2	GUIDE	
	3	1	**163-4348**	2	COVER	
M	4	1	**179-4324**	8	LOCKNUT (M5X0.8-THD)	
	5	1	**231-2997**	2	ROD	
	6	1	**231-2996**	1	PLATE (LH)	
	7	1	**8T-4205**	4	WASHER-HARD (7.2X14.5X2-MM THK)	
	8	1	**208-0011**	2	LATCH AS	
	9	1	**231-2995**	1	PLATE (RH)	
Y	10	1	**215-2645**	1	FENDER GP-REAR (ROADING, LH)	355
Y	11	1	**215-2646**	1	FENDER GP-REAR (ROADING, RH)	356
	12	1	**4B-4274**	16	WASHER (5.5X13X1.2-MM THK)	
	13	1	**5P-4115**	2	WASHER-HARD (7.2X19X2-MM THK)	
M	14	1	**6V-7357**	4	BOLT (M6X1X25-MM)	
	15	1	**6V-7644**	2	RING-RETAINING	
	16	1	**7X-7729**	8	WASHER (11X25X3-MM THK)	
M	17	1	**8C-3210**	2	BOLT (M6X1X16-MM)	
M	18	1	**8T-4127**	8	SCREW-MACHINE (M5X0.8X20-MM)	
M	19	1	**8T-4137**	4	BOLT (M10X1.5X20-MM)	
M	20	1	**8T-4195**	4	BOLT (M10X1.5X30-MM)	

M-METRIC PART
Y-SEPARATE ILLUSTRATION

208 - 4983 **FENDER GP - ROADING** *(contd.)* **i01878241**

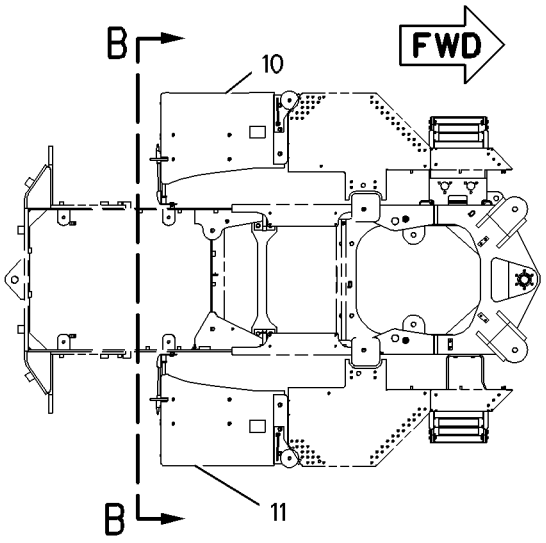

TOP VIEW

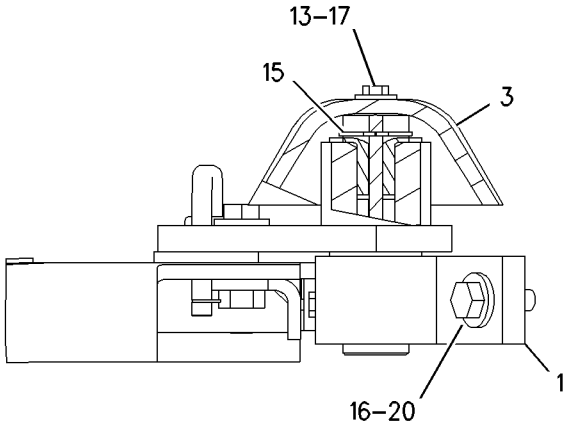

VIEW OF AREA A

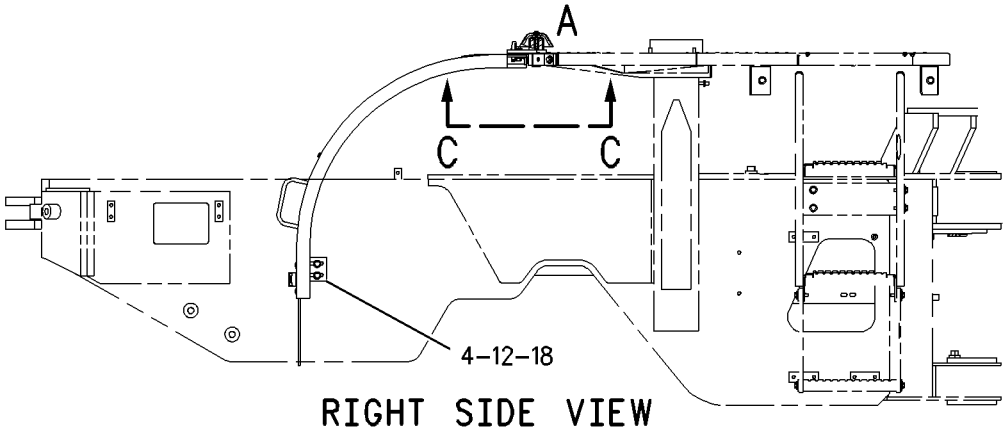

RIGHT SIDE VIEW

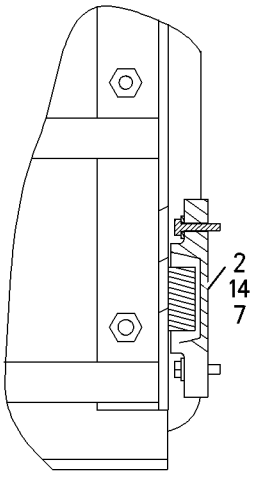

VIEW C-C

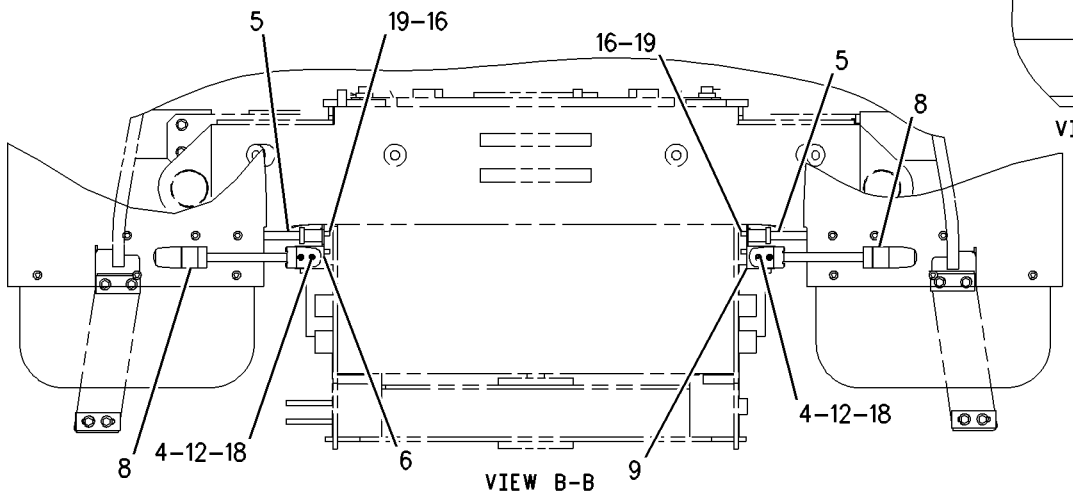

VIEW B-B

GRAPHIC #1 **<END>** g00960241

235-7200 FRAME GP-LOADER

S/N: TWR1-UP

PART OF 235-7499 CHASSIS AR

SMCS-7054 **i02459829**

NOTE	REF NO	GRAPHIC REF	PART NUMBER	QTY	PART NAME 1 2 3 4 5 6 (PRODUCT LEVEL)	SEE PAGE
Y	1	1	**235-7201**	1	FRAME GP-LOADER	361
	2	1	**240-9451**	1	PLATE	
	3	1	**8T-4121**	4	WASHER-HARD (11X21X2.5-MM THK)	
M	4	1	**8T-4195**	2	BOLT (M10X1.5X30-MM)	

M-METRIC PART
Y-SEPARATE ILLUSTRATION

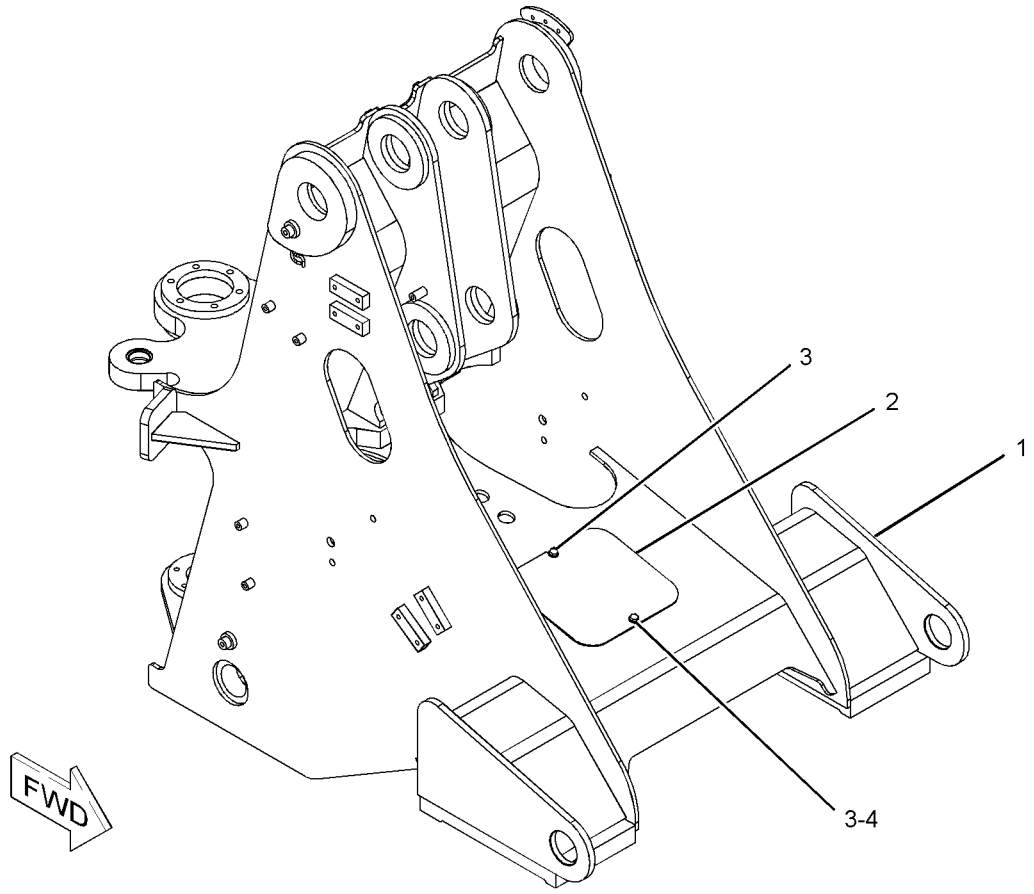

GRAPHIC #1 **<END>** g01239255

235-7201 FRAME GP-LOADER

S/N: TWR1-UP

PART OF 235-7200 FRAME GP-LOADER

SMCS-7054 **i02856232**

NOTE	REF NO	GRAPHIC REF	PART NUMBER	QTY	PART NAME 1 2 3 4 5 6 (PRODUCT LEVEL)	SEE PAGE
	1	1	**092-1136**	1	BOSS (M10X1.5-THD)	
	2	1	**7T-1099**	13	LINK	
M	3	1	**8T-3490**	6	NUT-WELD (M10X1.5-THD)	
M	4	1	**8Y-4489**	1	BOSS (M10X1.5-THD)	
M	5	1	**9R-2672**	14	BOSS (M10X1.5X20-MM)	
	6	1	**9T-3598**	10	BOSS (M10X1.5-THD)	
	7	1	**4K-4709**	2	BEARING-SLEEVE	
	8	1	*235-7202*	1	FRAME AS	
	8A	1	**4K-4709**	2	BEARING-SLEEVE	

M-METRIC PART

235-7201 FRAME GP-LOADER *(contd.)* **i02856232**

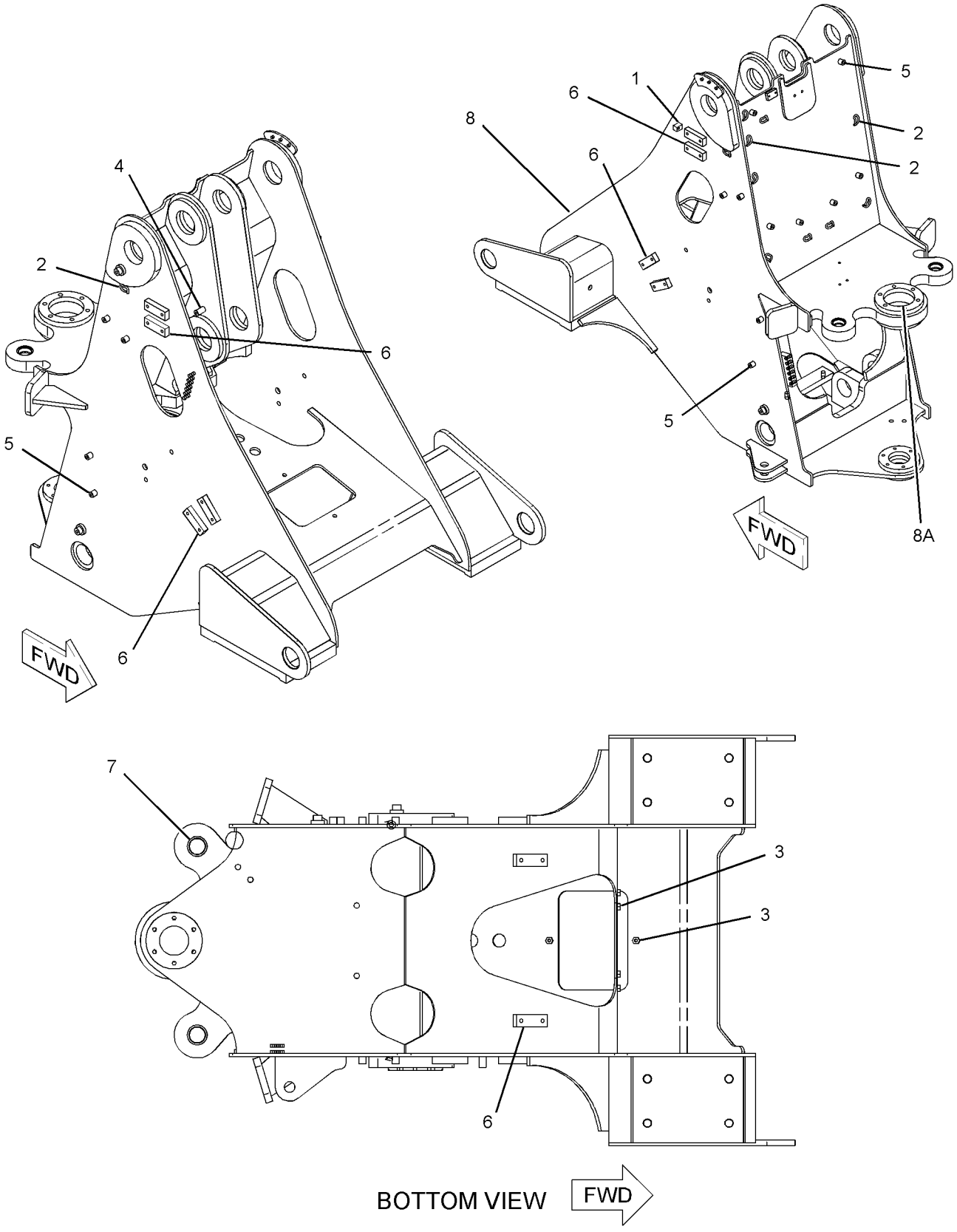

GRAPHIC #1

<END>

g01422676

235-7250 FRAME GP-REAR

S/N: TWR1-UP

PART OF 235-7499 CHASSIS AR

SMCS-7051 **i02193604**

NOTE	REF NO	GRAPHIC REF	PART NUMBER	QTY	PART NAME 1 2 3 4 5 6 (PRODUCT LEVEL)	SEE PAGE
	1	1	**103-5796**	1	PIN-KEEPER	
	2	1	**112-0885**	2	PAD AS-RESILIENT	
	3	1	**132-2558**	1	PIN AS	
Y	4	1	**235-7252**	1	FRAME GP-REAR	364
	5	1	**8T-4121**	2	WASHER-HARD (11X21X2.5-MM THK)	
M	6	1	**8T-4137**	2	BOLT (M10X1.5X20-MM)	

M-METRIC PART
Y-SEPARATE ILLUSTRATION

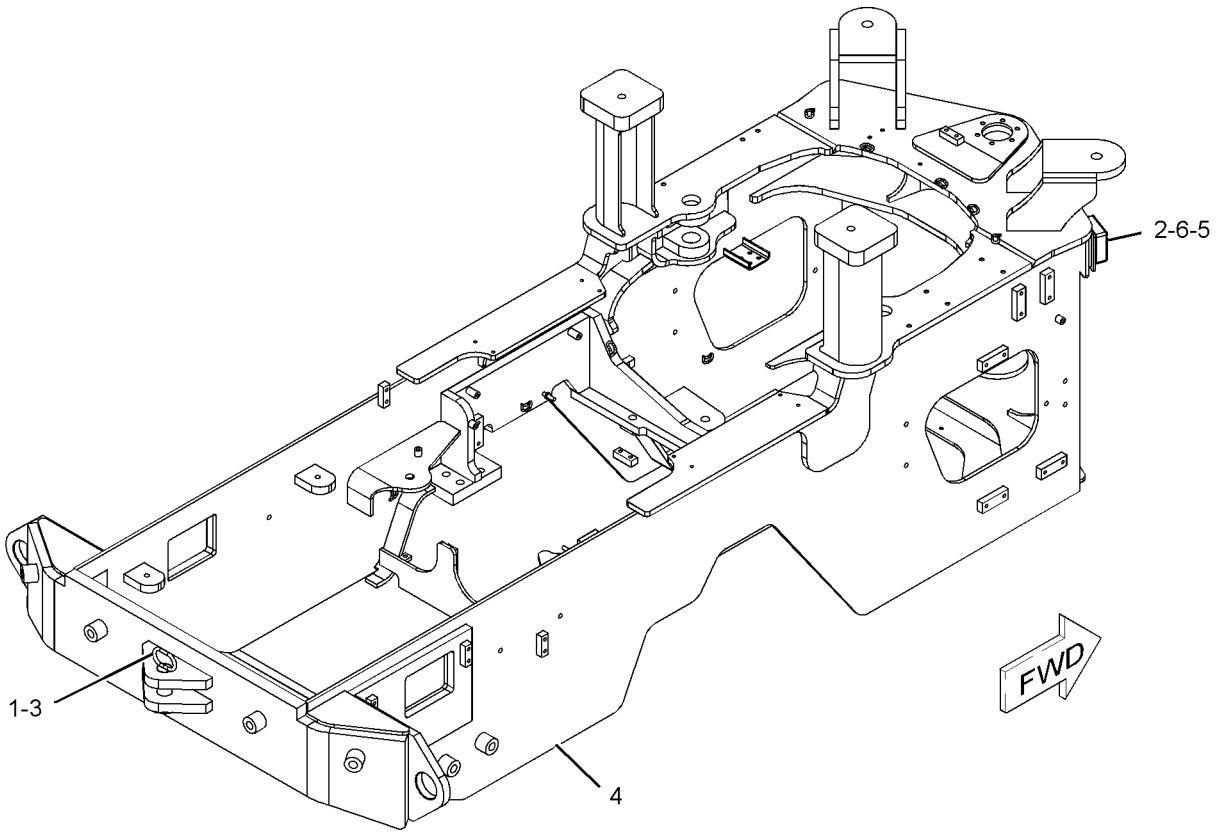

GRAPHIC #1 **<END>** g01109144

FRAME AND BODY

235-7252 FRAME GP-REAR

S/N: TWR1-UP

PART OF 235-7250 FRAME GP-REAR

SMCS-7051 **i02193624**

NOTE	REF NO	GRAPHIC REF	PART NUMBER	QTY	PART NAME 1 2 3 4 5 6 (PRODUCT LEVEL)	SEE PAGE
	1	1	**092-1136**	3	BOSS (M10X1.5-THD)	
	2	1	**128-7954**	2	BLOCK	
M	3	1	**110-2023**	4	STUD-WELD (M10X1.5X25-MM)	
	4	1	**7T-1099**	16	LINK	
M	5	1	**8T-3490**	4	NUT-WELD (M10X1.5-THD)	
M	6	1	**8Y-4489**	4	BOSS (M10X1.5-THD)	
	7	1	**9C-6809**	13	BLOCK (M10X1.5-THD)	
	8	1	**9C-7862**	4	BOSS (M24X3-THD)	
M	9	1	**9R-2672**	10	BOSS (M10X1.5X20-MM)	
	10	1	**9T-3598**	11	BOSS (M10X1.5-THD)	

M-METRIC PART

235-7252 FRAME GP-REAR *(contd.)* **i02193624**

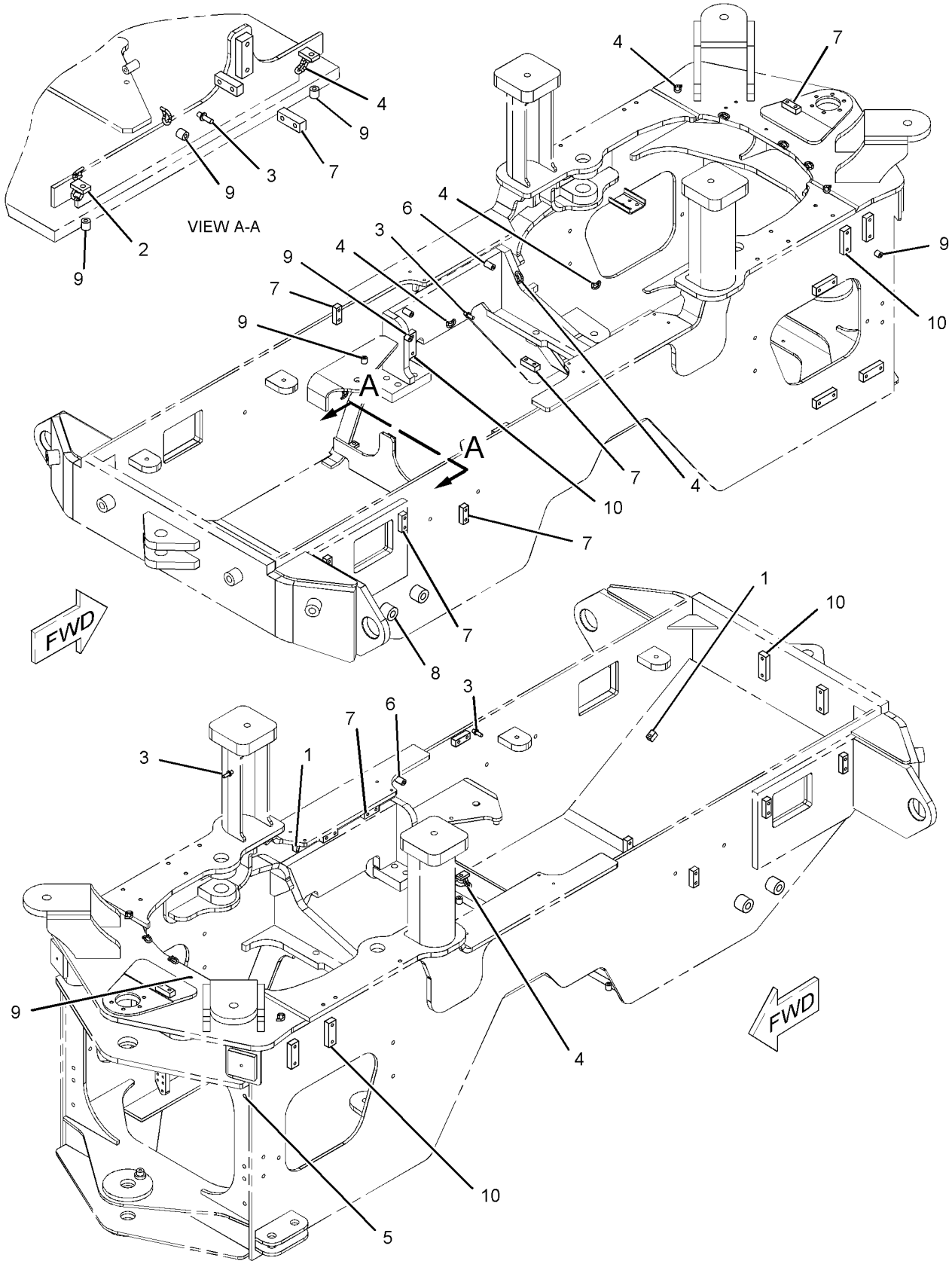

GRAPHIC #1 **<END>** g01111497

213-9036 GUARD GP-CRANKCASE

S/N: TWR1-UP
PART OF 241-6400, 304-8117 WASTE HANDLING AR
AN ATTACHMENT

SMCS-7151 **i01846360**

NOTE	REF NO	GRAPHIC REF	PART NUMBER	QTY	PART NAME 1 2 3 4 5 6 (PRODUCT LEVEL)	SEE PAGE
	1	1	**218-2833**	1	PLATE AS	
	2	1	**219-2418**	1	PLATE AS	
	3	1	**7X-7729**	4	WASHER (11X25X3MM THK)	
M	4	1	**8T-4195**	4	BOLT (M10X1.5X30MM)	

M-METRIC PART

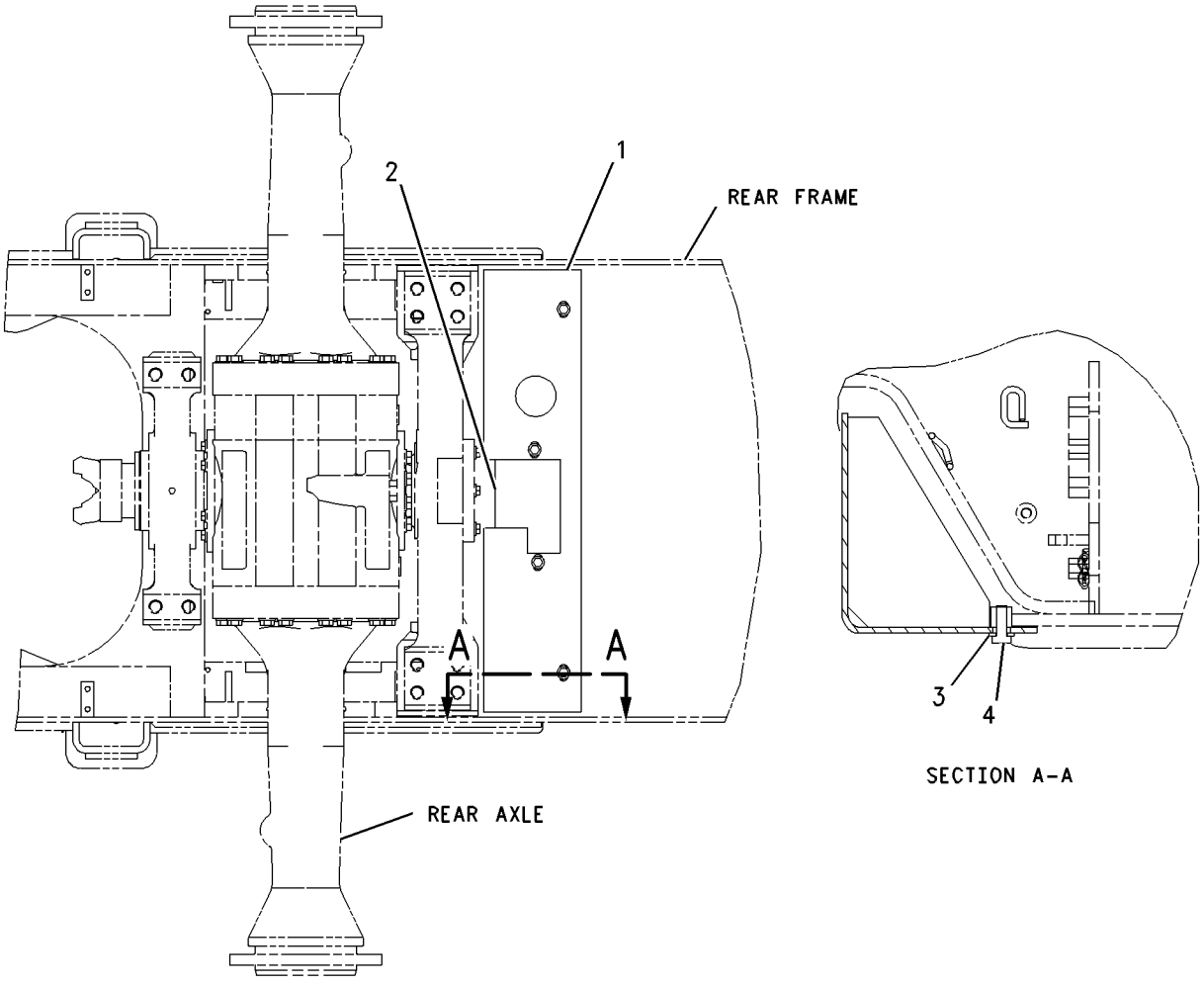

GRAPHIC #1 **<END>** g00940429

160-6320 GUARD GP-DRIVE SHAFT–VERSALINK

S/N: TWR1-UP
PART OF 241-6400, 304-8117 WASTE HANDLING AR
AN ATTACHMENT

SMCS-7153 **i01182672**

NOTE	REF NO	GRAPHIC REF	PART NUMBER	QTY	PART NAME 1 2 3 4 5 6 (PRODUCT LEVEL)	SEE PAGE
	1	1	**160-6319**	1	GUARD AS	
	2	1	**7X-7729**	4	WASHER (11X25X3-MM THK)	
M	3	1	**8T-4136**	4	BOLT (M10X1.5X25-MM)	

M-METRIC PART

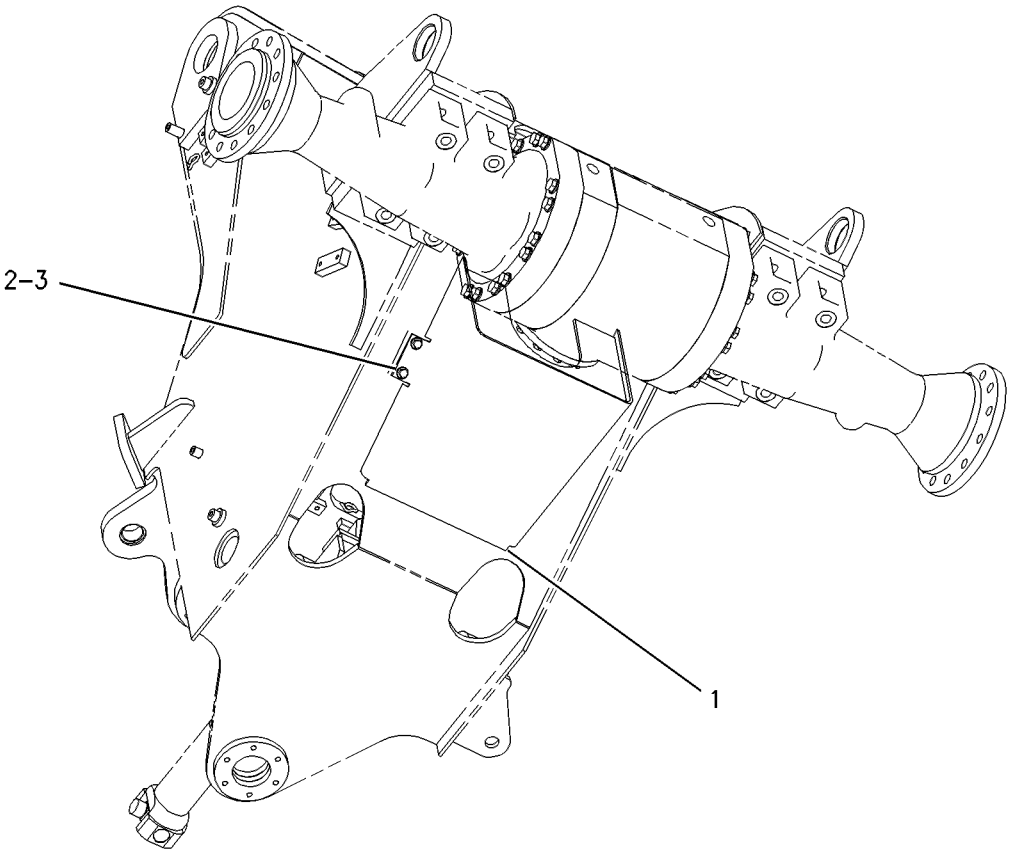

GRAPHIC #1 **<END>** g00636712

235-6951 GUARD GP-LIGHTING

S/N: TWR1-UP
PART OF 241-6400 WASTE HANDLING AR
AN ATTACHMENT

SMCS-715L **i02308222**

NOTE	REF NO	GRAPHIC REF	PART NUMBER	QTY	PART NAME 1 2 3 4 5 6 (PRODUCT LEVEL)	SEE PAGE
	1	1	**235-6950**	2	PLATE AS	
	2	1	**235-6954**	2	PLATE AS	
					(EACH INCLUDES)	
M		1	**6V-9632**	4	NUT-WELD (M6X1 THD)	
M	3	1	**131-3540**	4	LOCKNUT (M8X1.25 THD)	
M	4	1	**5C-9553**	8	BOLT (M6X1X16-MM)	
	5	1	**5P-4116**	8	WASHER-HARD (8.8X20.5X2-MM THK)	
M	6	1	**8T-4177**	4	BOLT (M8X1.25X90-MM)	
	7	1	**9X-8256**	8	WASHER (6.6X12X2-MM THK)	

M-METRIC PART

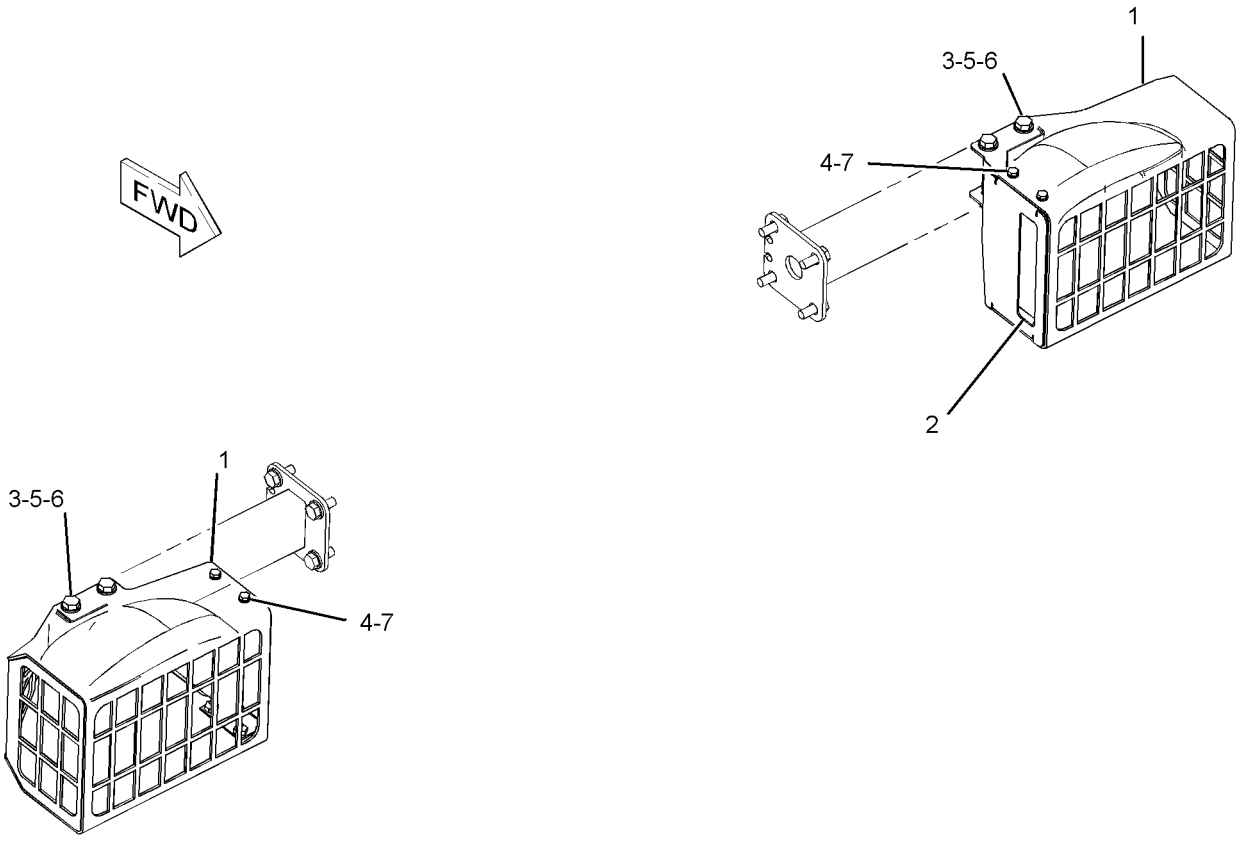

GRAPHIC #1 **<END>** g01143609

300-1962 GUARD GP-LIGHTING

S/N: TWR1-UP
PART OF 304-8117 WASTE HANDLING AR
AN ATTACHMENT

SMCS-715L **i02879459**

NOTE	REF NO	GRAPHIC REF	PART NUMBER	QTY	PART NAME 1 2 3 4 5 6 (PRODUCT LEVEL)	SEE PAGE
	1	1	**310-1917**	2	GUARD AS	
	2	1	**8T-4121**	4	WASHER-HARD (11X21X2.5-MM THK)	
M	3	1	**8T-4136**	4	BOLT (M10X1.5X25-MM)	
E	4	1	**3E-6600**		SEAL (27-CM)	

E-ORDER BY THE CENTIMETER
M-METRIC PART

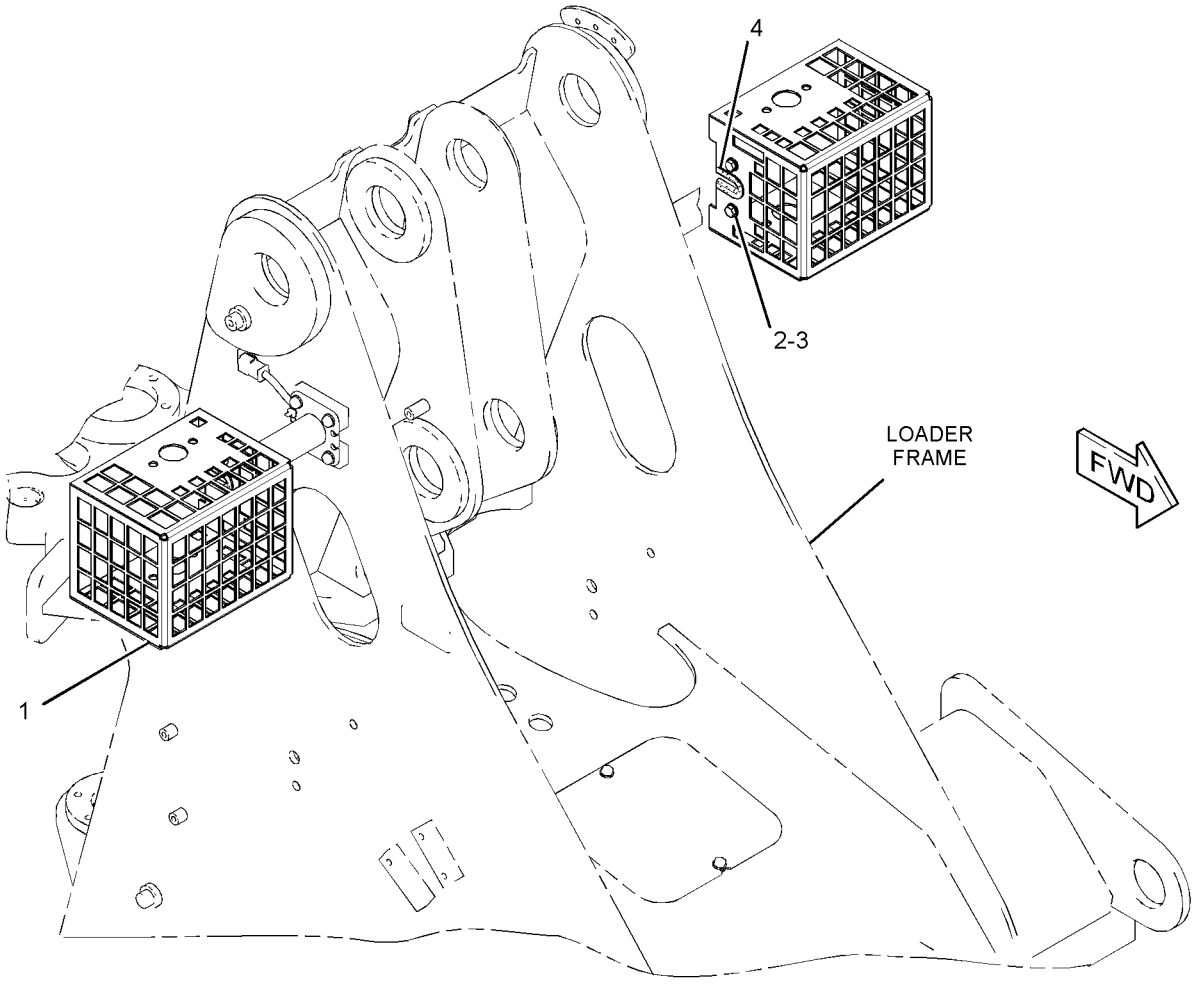

GRAPHIC #1 **<END>** g01441584

235-6877 GUARD GP-LINES—THIRD FUNCTION

S/N: TWR1-UP
AN ATTACHMENT

SMCS-7167 **i02203650**

NOTE	REF NO	GRAPHIC REF	PART NUMBER	QTY	PART NAME 1 2 3 4 5 6 (PRODUCT LEVEL)	SEE PAGE
	1	1	**6K-0806**	8	STRAP-CABLE	
BG	2	1	**160-2248**		SLEEVE-ABRASION	

B-USE AS REQUIRED
G-ORDER BY THE INCH

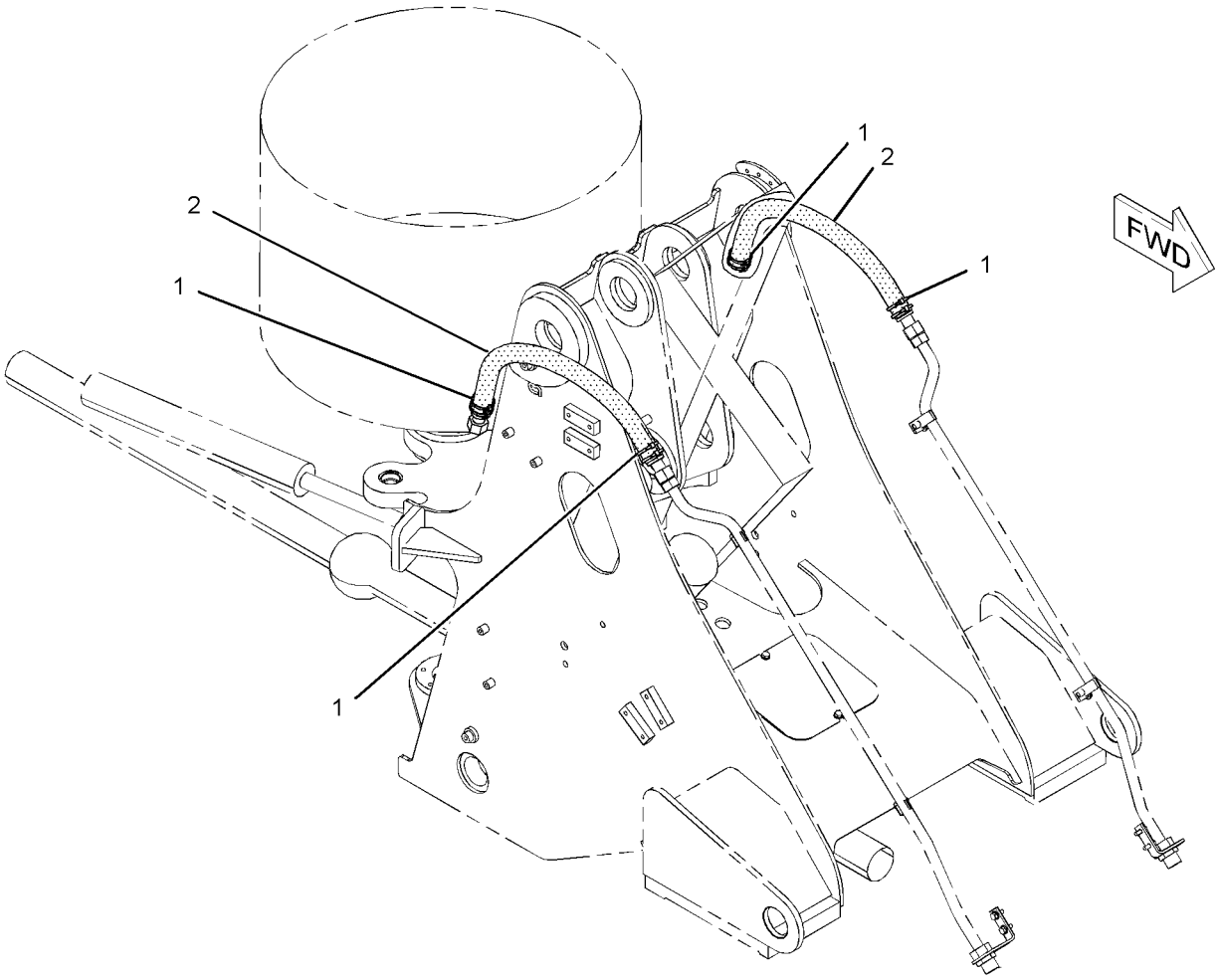

GRAPHIC #1 **<END>** g01115006

235-6879 GUARD GP-LINES–TILT

S/N: TWR1-UP
AN ATTACHMENT

SMCS-7167 **i02203649**

NOTE	REF NO	GRAPHIC REF	PART NUMBER	QTY	PART NAME 1 2 3 4 5 6 (PRODUCT LEVEL)	SEE PAGE
	1	1	**6K-0806**	8	STRAP-CABLE	
BG	2	1	**160-2248**		SLEEVE-ABRASION	

B-USE AS REQUIRED
G-ORDER BY THE INCH

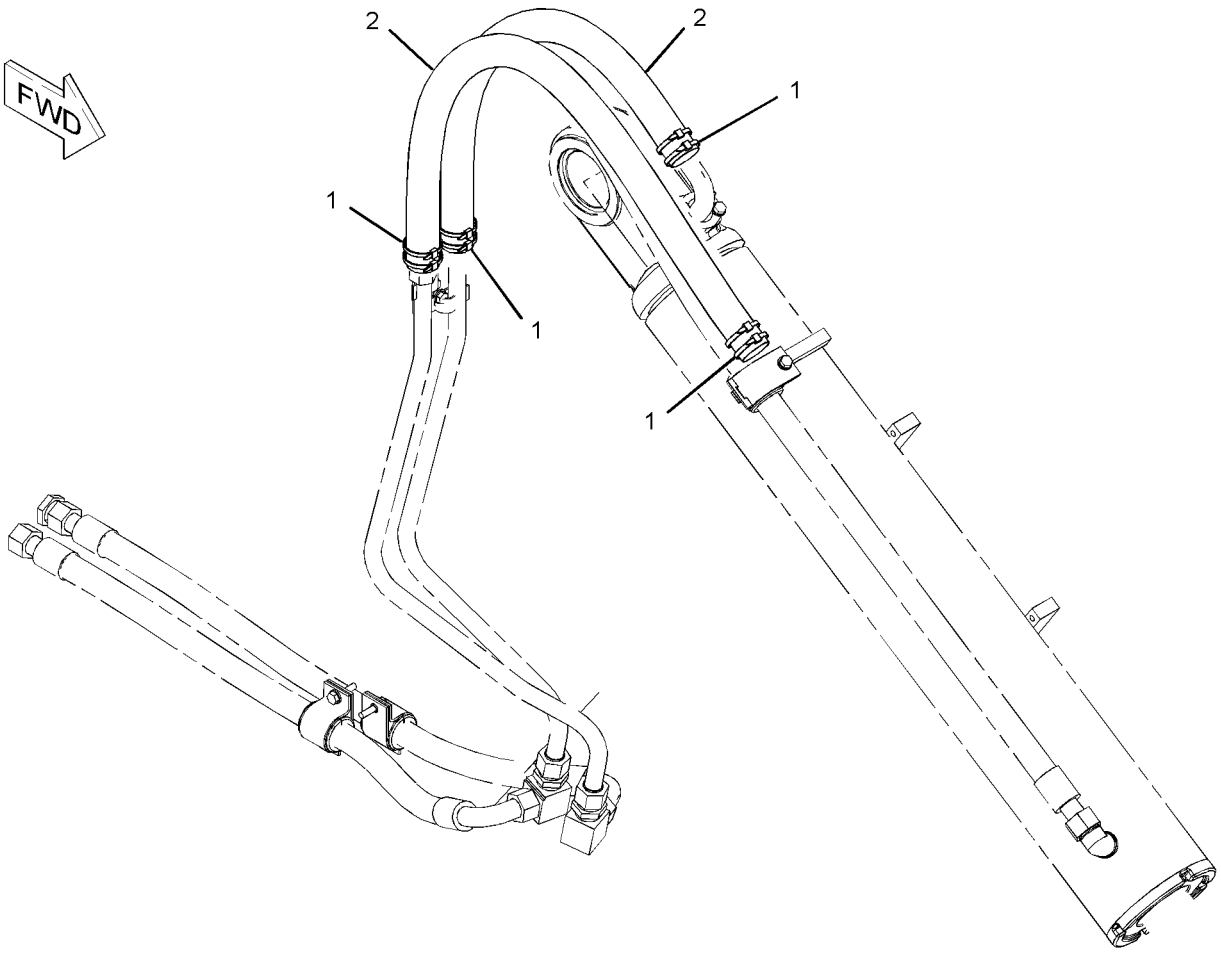

GRAPHIC #1 **<END>** g01114975

235-6880 GUARD GP-LINES—COUPLER

S/N: TWR1-UP
AN ATTACHMENT

SMCS-7167 **i02203648**

NOTE	REF NO	GRAPHIC REF	PART NUMBER	QTY	PART NAME 1 2 3 4 5 6 (PRODUCT LEVEL)	SEE PAGE
	1	1	**6K-0806**	8	STRAP-CABLE	
BG	2	1	**160-2243**		SLEEVE-ABRASION	

B-USE AS REQUIRED
G-ORDER BY THE INCH

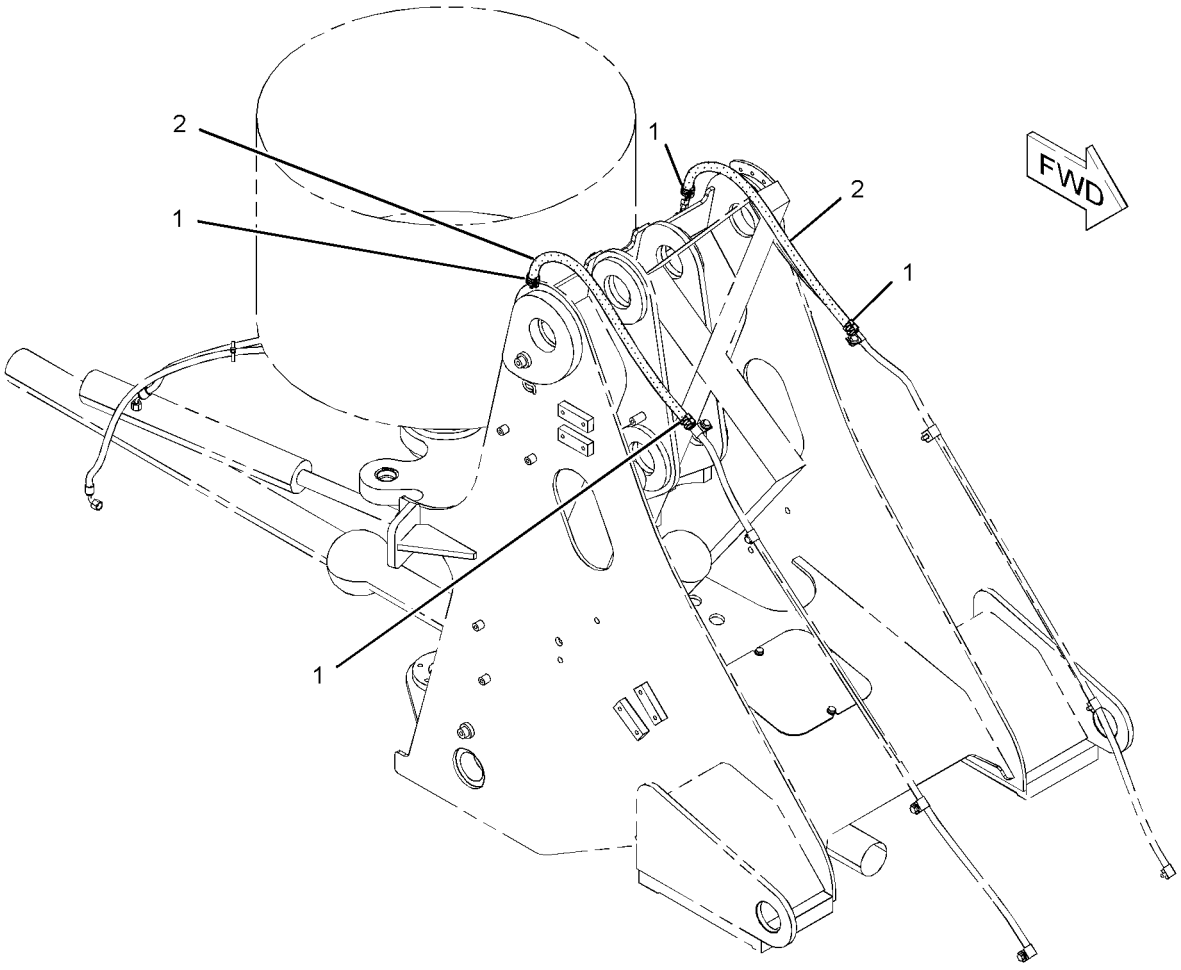

GRAPHIC #1 **<END>** g01115035

204-4338 GUARD GP-POWER TRAIN

S/N: TWR1-UP
PART OF 241-6400, 304-8117 WASTE HANDLING AR
AN ATTACHMENT

SMCS-7153 **i01758666**

NOTE	REF NO	GRAPHIC REF	PART NUMBER	QTY	PART NAME 1 2 3 4 5 6 (PRODUCT LEVEL)	SEE PAGE
	1	1	**7W-3447**	3	SPACER (10.2X19.05X10.2-MM THK)	
	2	1	**204-4339**	1	PLATE AS	
	3	1	**218-2440**	1	PLATE	
	4	1	**7X-0578**	3	WASHER-HARD (10.2X32X2.5-MM THK)	
	5	1	**8R-8847**	1	RETAINER-SPRING	
M	6	1	**8T-4195**	3	BOLT (M10X1.5X30-MM)	
	7	1	**8T-4223**	2	WASHER-HARD (13.5X25.5X3-MM THK)	
M	8	1	**8T-4956**	2	BOLT (M12X1.75X35-MM)	

M-METRIC PART

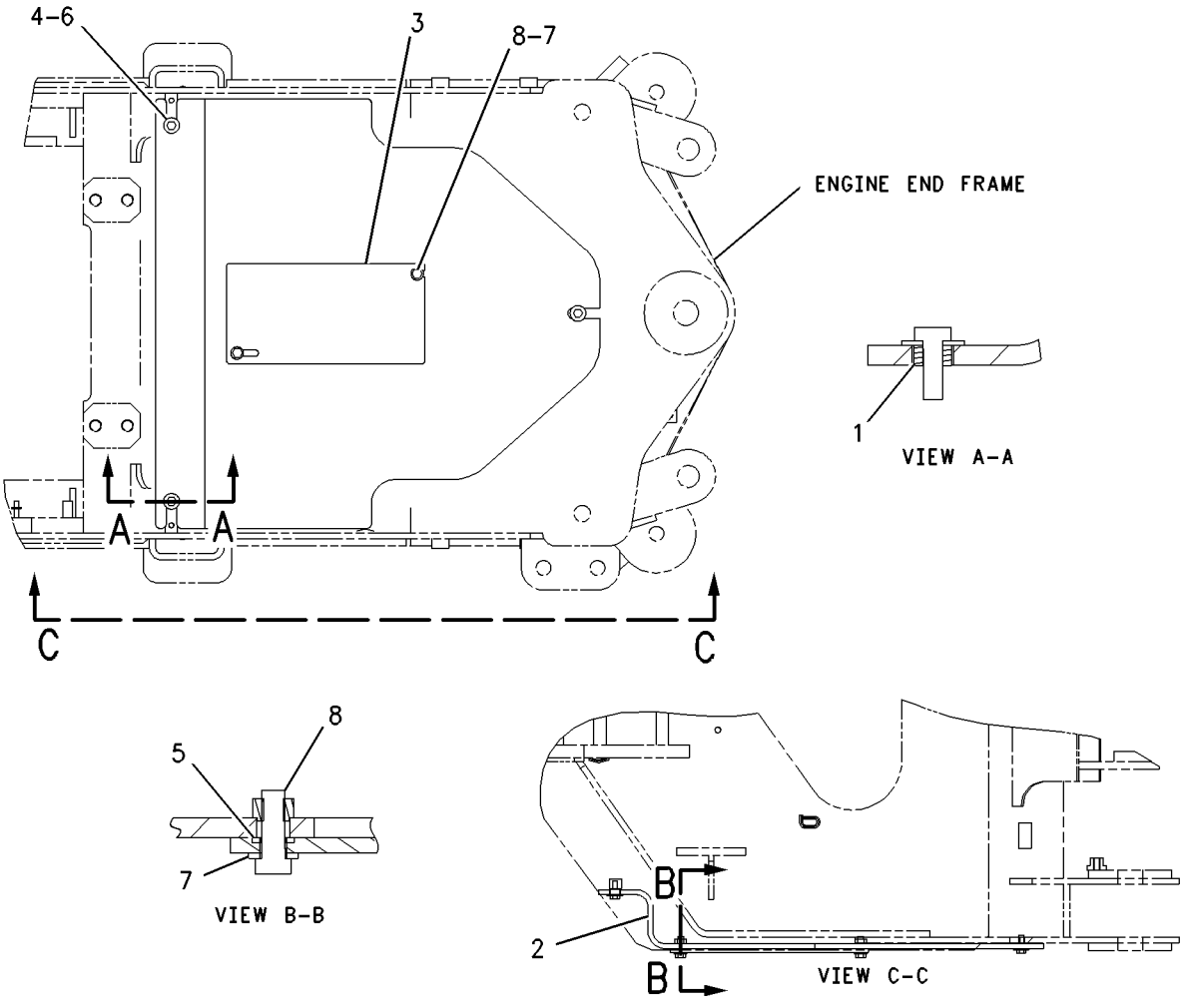

GRAPHIC #1 **<END>** g00900090

191-9177 GUARD GP-RADIATOR

S/N: TWR2040-UP

PART OF 267-5219 RADIATOR & AFTERCOOLER GP

SMCS-7155 **i03230841**

NOTE	REF NO	GRAPHIC REF	PART NUMBER	QTY	PART NAME 1 2 3 4 5 6 (PRODUCT LEVEL)	SEE PAGE
	1	1	**092-1136**	2	BOSS (M10X1.5-THD)	
	2	1	**140-9312**	2	HINGE AS	
	3	1	**7T-1099**	6	LINK	
M	4	1	**8T-3612**	1	NUT-WELD (M8X1.25-THD)	
	5	1	**9C-6809**	5	BLOCK (M10X1.5-THD)	
M	6	1	**9R-2672**	2	BOSS (M10X1.5X20-MM)	

M-METRIC PART

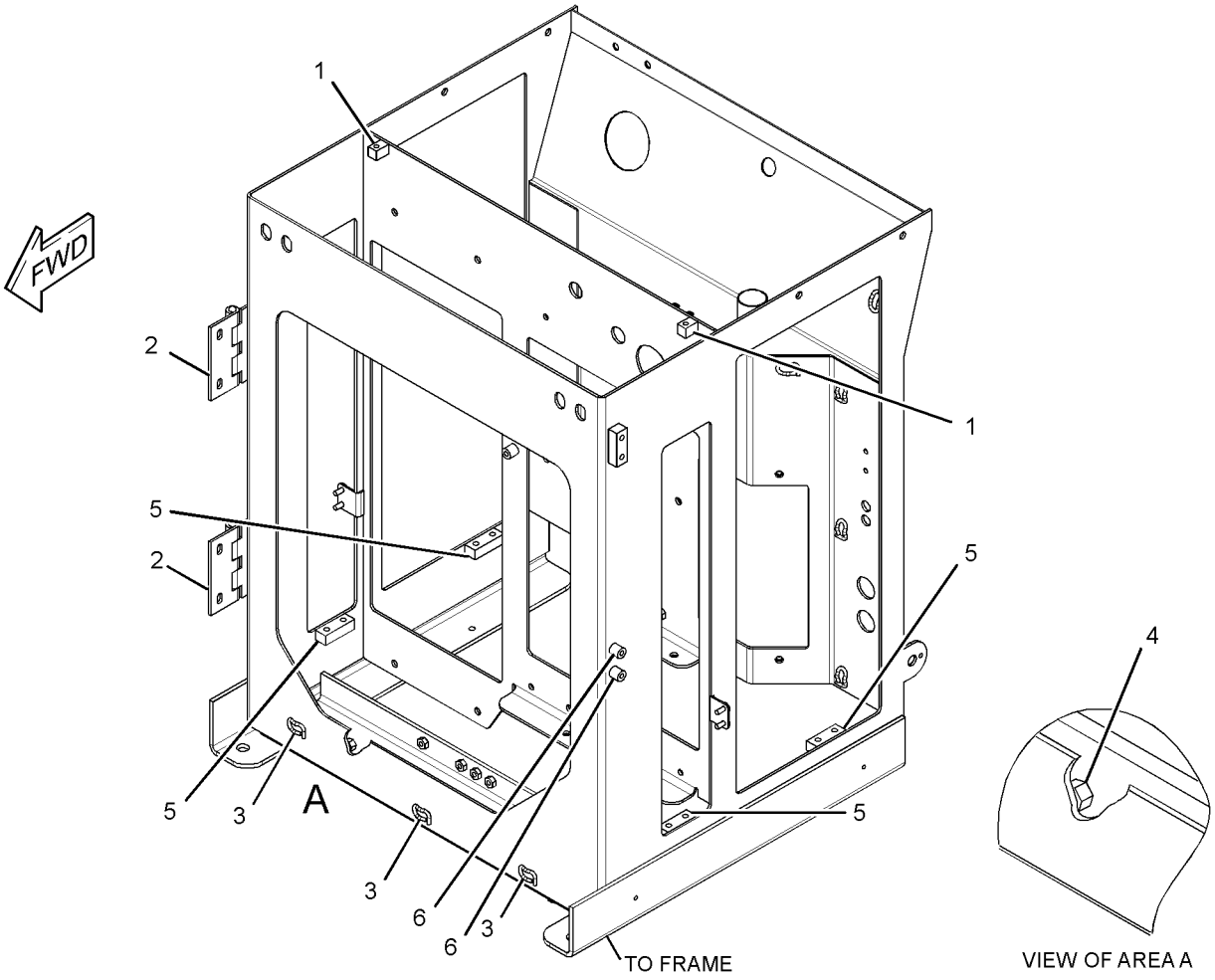

GRAPHIC #1 **<END>** g01353131

202-7215 GUARD GP-RADIATOR

S/N: TWR1-UP

PART OF 235-7499 CHASSIS AR

SMCS-7155 **i02679603**

NOTE	REF NO	GRAPHIC REF	PART NUMBER	QTY	PART NAME 1 2 3 4 5 6 (PRODUCT LEVEL)	SEE PAGE
	1	1	**5V-8780**	1	KNOB	
	2	1	**8T-4157**	1	STRIKER AS	
		1	**8T-4158**	1	WASHER-SPECIAL (CONICAL)	
	3	1	**112-5345**	1	LATCH AS-DOOR	
	4	1	**122-6246**	1	PLATE	
	5	1	**174-4246**	1	BRACKET	
	6	1	**202-7216**	1	GUARD AS	
	7	1	**202-7857**	1	MOUNT AS	
	8	1	**205-2214**	1	GRILL AS	
M	9	1	**186-0815**	20	BOLT (M6X1X20-MM)	
	10	1	**186-0817**	20	WASHER-HARD (7X19X2-MM THK)	
	11	1	**256-7271**	1	PLATE	
	12	1	**5P-1076**	1	WASHER-HARD (13.5X30X4-MM THK)	
M	13	1	**7X-2533**	4	BOLT (M6X1X35-MM)	
	14	1	**7X-7729**	12	WASHER (11X25X3-MM THK)	
	15	1	**8T-4121**	4	WASHER-HARD (11X21X2.5-MM THK)	
M	16	1	**8T-4136**	4	BOLT (M10X1.5X25-MM)	
M	17	1	**8T-4137**	8	BOLT (M10X1.5X20-MM)	
M	18	1	**8T-4195**	4	BOLT (M10X1.5X30-MM)	
	19	1	**8T-4205**	4	WASHER-HARD (7.2X14.5X2-MM THK)	
M	20	1	**8T-4244**	1	NUT (M12X1.75-THD)	
D	21	1	**5P-7211**		SEAL (2.7-M)	

D-ORDER BY THE METER
M-METRIC PART

202-7215 **GUARD GP-RADIATOR** *(contd.)* **i02679603**

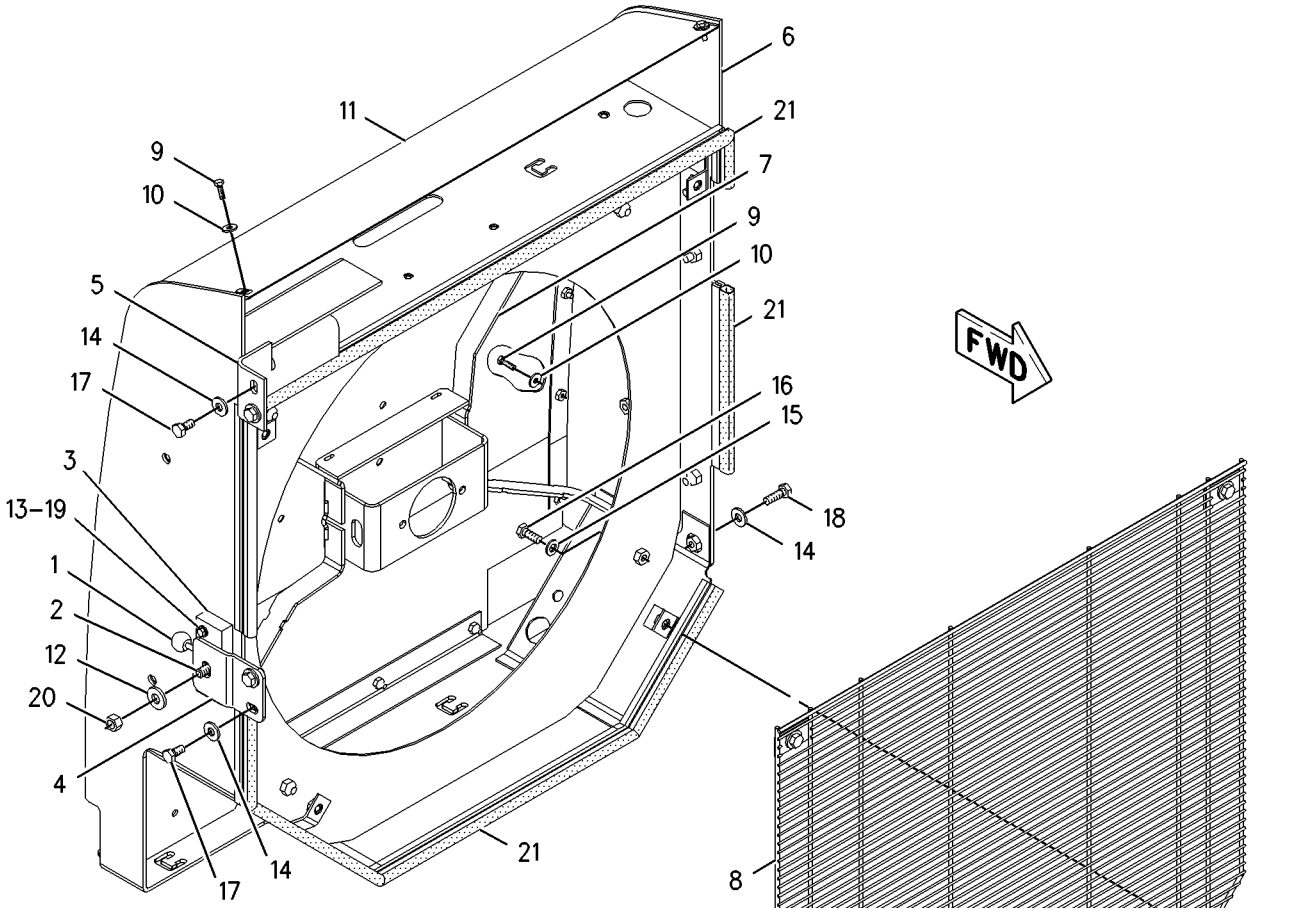

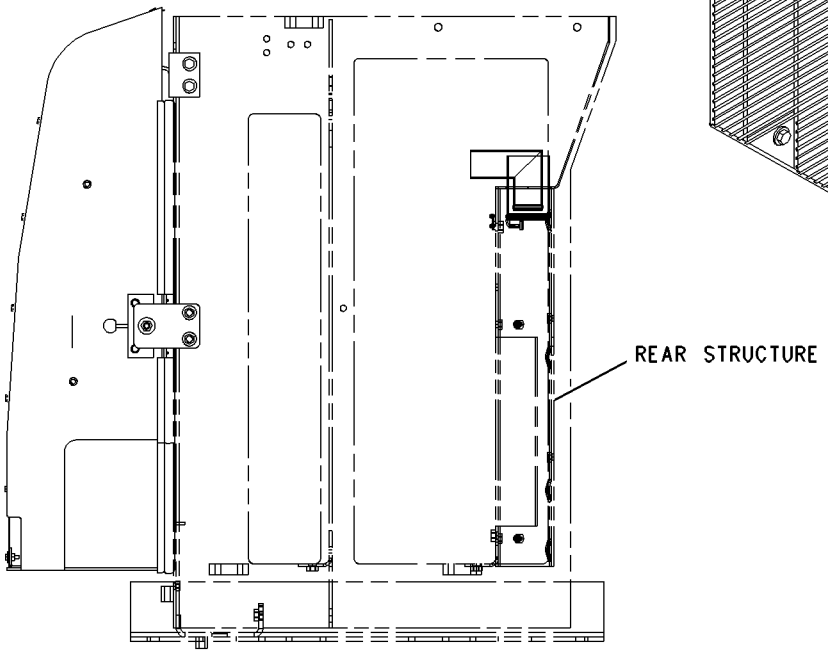

RIGHT SIDE VIEW

GRAPHIC #1 **<END>** g00916964

209-8712 GUARD GP-RADIATOR—WASTE HANDLER

S/N: TWR1-UP
PART OF 241-6400, 304-8117 WASTE HANDLING AR
AN ATTACHMENT

SMCS-7155 **i02697953**

NOTE	REF NO	GRAPHIC REF	PART NUMBER	QTY	PART NAME 1 2 3 4 5 6 (PRODUCT LEVEL)	SEE PAGE
	1	1	**209-8713**	1	GUARD AS	
	2	1	**7X-7729**	4	WASHER (11X25X3-MM THK)	
M	3	1	**8T-4195**	4	BOLT (M10X1.5X30-MM)	

M-METRIC PART

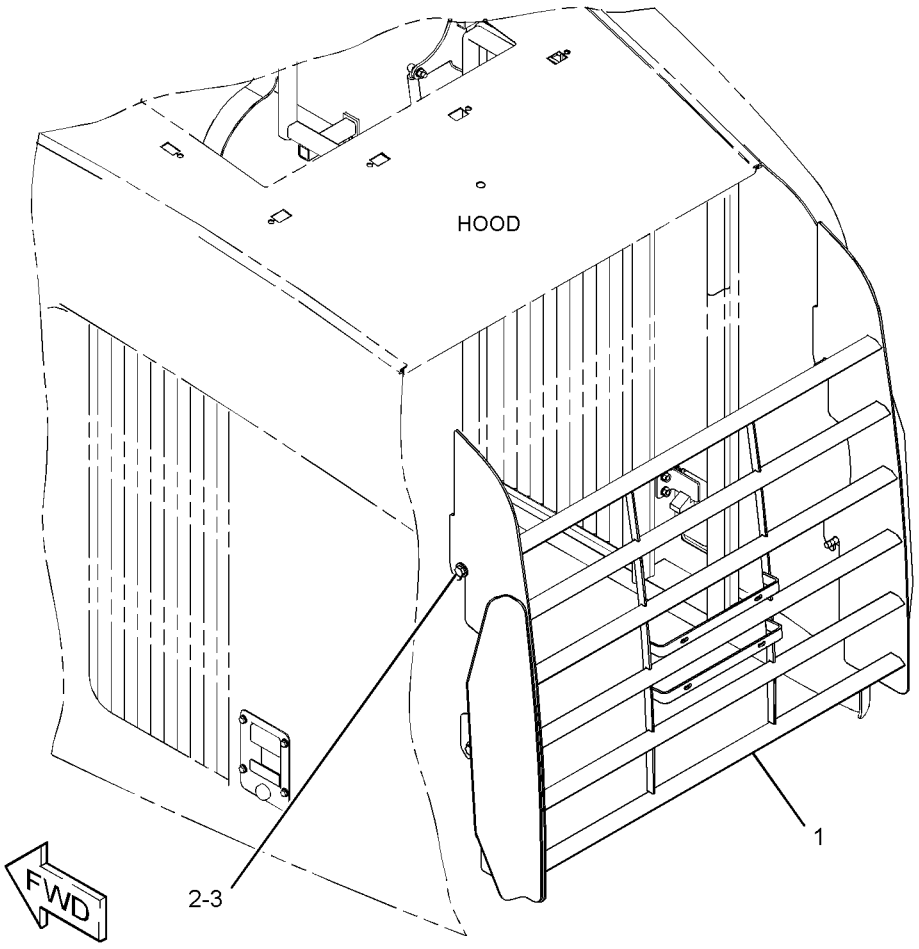

GRAPHIC #1 **<END>** g01357142

FRAME AND BODY

113-3790 HITCH GP-ARTICULATING

S/N: TWR1-UP

PART OF 235-7499 CHASSIS AR

SMCS-7057, 7100 **i03031922**

NOTE	REF NO	GRAPHIC REF	PART NUMBER	QTY	PART NAME 1 2 3 4 5 6 (PRODUCT LEVEL)	SEE PAGE
B	1	1	**4K-7464**	1	SHIM PACK (INCLUDES 19-SHIMS)	
	2	1	**6H-3568**	2	CUP-BEARING	
	3	1	**6K-4185**	1	SPACER (1.44-IN THK)	
	4	1	**6K-4191**	1	CAP-UPPER	
	5	1	**6V-1194**	2	CUP-BEARING	
	6	1	**6V-8795**	2	CONE-BEARING	
B	7	1	**6W-8246**	1	SHIM PACK (INCLUDES 27-SHIMS)	
	8	1	**6I-8849**	2	CONE-BEARING (TAPERED ROLLER)	
	9	1	**8R-7091**	1	CAP	
	10	1	**8R-7092**	1	CAP	
	11	1	**8Y-7047**	1	PIN AS	
	12	1	**9V-6343**	1	CAP	
	13	1	**110-7628**	1	SHIM	
	14	1	**113-3791**	1	PIN AS	
	15	1	**113-3793**	1	PLATE	
B	16	1	**113-3794**	2	SHIM PACK (INCLUDES 19-SHIMS)	
	17	1	**3B-8489**	2	FITTING-GREASE (ARTICULATION)	
	18	1	**6K-4186**	2	SEAL-LIP TYPE	
	19	1	**7X-0618**	1	WASHER-HARD (13.5X40X5-MM THK)	
	20	1	**8T-4121**	6	WASHER-HARD (11X21X2.5-MM THK)	
M	21	1	**8T-4192**	1	BOLT (M12X1.75X25-MM)	
M	22	1	**8T-4172**	6	BOLT (M10X1.5X80-MM)	
M	23	1	**8T-4194**	10	BOLT (M12X1.75X50-MM)	
	24	1	**8T-4223**	16	WASHER-HARD (13.5X25.5X3-MM THK)	
M	25	1	**8T-5041**	6	BOLT (M12X1.75X120-MM)	
	26	1	**9H-2258**	2	SEAL-LIP TYPE	

B-USE AS REQUIRED
M-METRIC PART

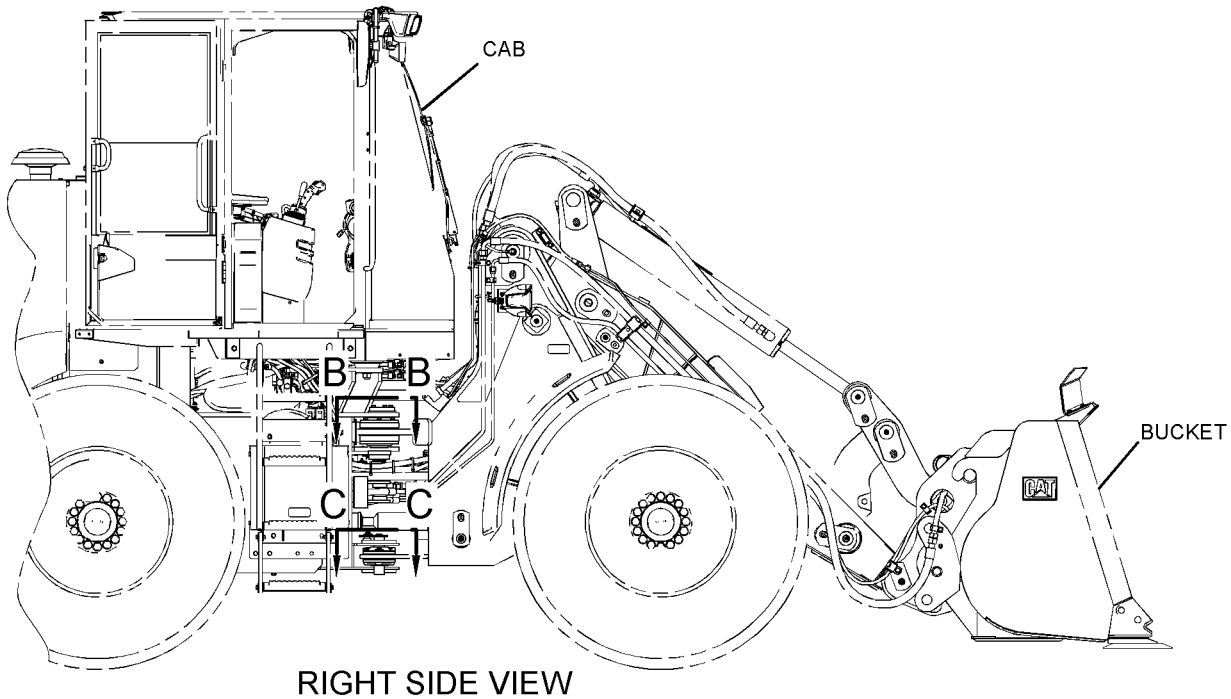

RIGHT SIDE VIEW

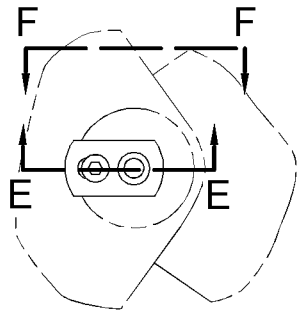

VIEW C-C

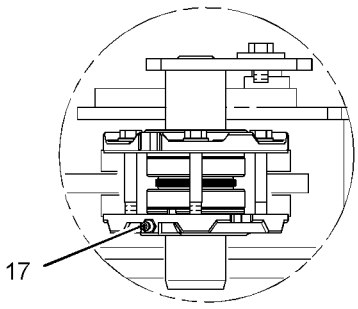

VIEW F-F

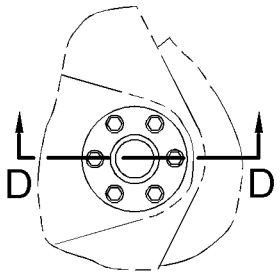

VIEW B-B

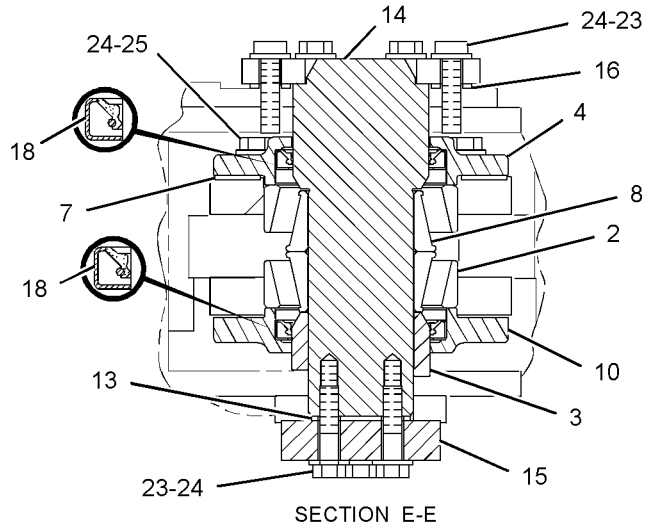

SECTION E-E

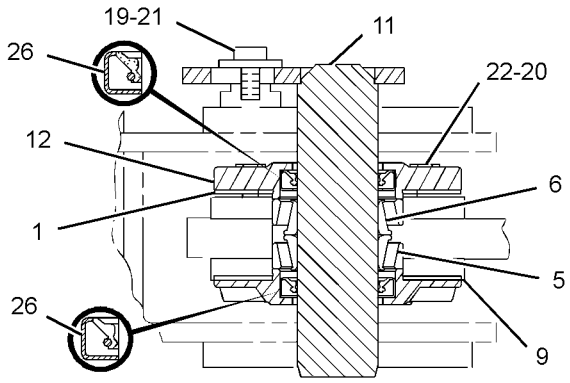

SECTION D-D

GRAPHIC #1 **<END>** g01538134

FRAME AND BODY

243-0545 HOOD & GUARD GP

S/N: TWR1-UP

PART OF 235-7499 CHASSIS AR

SMCS-7251 **i02605964**

NOTE	REF NO	GRAPHIC REF	PART NUMBER	QTY	PART NAME 1 2 3 4 5 6 (PRODUCT LEVEL)	SEE PAGE
E	1	1	**9X-8699**		SEAL (91.2-CM EACH)	
E	1A	1	**9X-8699**		SEAL (306.3-CM EACH)	
D	2	1	**5P-5637**		SEAL (0.1-M)	
	3	1	*125-2086*	1	LOCK AS-CYLINDER	
		1	**226-0294**	1	LOCK AS	
		1	**226-0339**	1	CAM	
	4	1	**130-1916**	4	STUD-BALL	
	5	1	**172-8591**	2	NUT-SPRING	
	6	1	**198-8933**	4	HINGE	
	7	1	**198-8942**	2	BRACKET	
	8	1	**198-8943**	2	BRACKET	
	9	1	**198-8944**	2	PLATE	
	10	1	**198-8945**	1	DOOR AS-HOOD (RH)	
	11	1	**198-8946**	1	DOOR AS-HOOD (LH)	
	12	1	**198-8954**	1	PANEL AS-HOOD (RH)	
	13	1	**198-8955**	1	PANEL AS-HOOD (LH)	
	14	1	**198-8961**	2	PLATE	
	15	1	**202-0370**	1	HOOD AS	
M		1	**8T-3490**	16	NUT-WELD (M10X1.5-THD)	
M		1	**8T-3612**	4	NUT-WELD (M8X1.25-THD)	
M		1	**9R-2672**	3	BOSS (M10X1.5X20-MM)	
J	16	1	**9X-2299**	2	LATCH AS	
	17	1	**225-3800**	1	HINGE AS-HOOD (RH)	
		1	**9Y-7215**	2	SLEEVE-ISOLATOR	
	18	1	**225-3801**	1	HINGE AS-HOOD (LH)	
		1	**9Y-7215**	2	SLEEVE-ISOLATOR	
	19	1	**228-7696**	2	SPRING AS-GAS	
M	20	1	**131-3540**	4	LOCKNUT (M8X1.25-THD)	
M	21	1	**5C-2890**	8	NUT (M6X1-THD)	
M	22	1	**5C-7261**	12	NUT (M8X1.25-THD)	
	23	1	**5P-4115**	2	WASHER-HARD (7.2X19X2-MM THK)	
M	24	1	**7X-2535**	2	BOLT (M6X1X60-MM)	
M	25	1	**7X-2540**	4	BOLT (M8X1.25X120-MM)	
	26	1	**7X-7729**	24	WASHER (11X25X3-MM THK)	
M	27	1	**8T-4133**	4	NUT (M10X1.5-THD)	
M	28	1	**8T-4138**	8	BOLT (M6X1X20-MM)	
M	29	1	**8T-4189**	18	BOLT (M8X1.25X20-MM)	
M	30	1	**8T-4195**	20	BOLT (M10X1.5X30-MM)	
	31	1	**8T-4205**	16	WASHER-HARD (7.2X14.5X2-MM THK)	
	32	1	**8T-4224**	42	WASHER-HARD (8.8X16X2-MM THK)	
M	33	1	**8T-4908**	4	BOLT (M8X1.25X25-MM)	
D	34	1	**136-7728**		SEAL-COMPOSITE (1.8-M EACH)	
	35	1	**193-5914**	3	PLUG	

D-ORDER BY THE METER
E-ORDER BY THE CENTIMETER
J-REQUIRES 5P-8500 KEY
M-METRIC PART

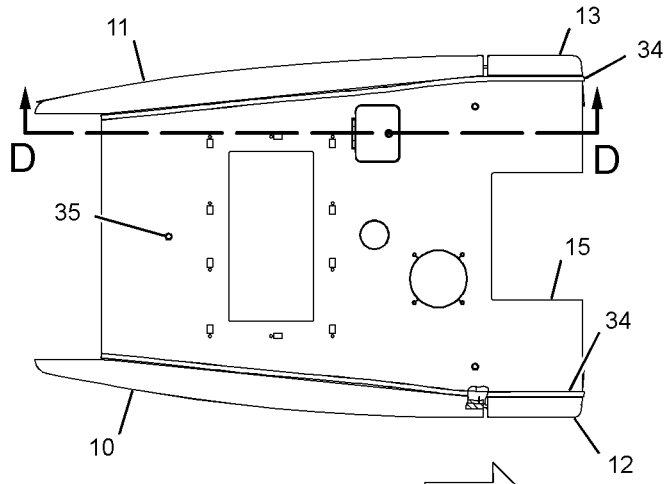

TOP VIEW FWD

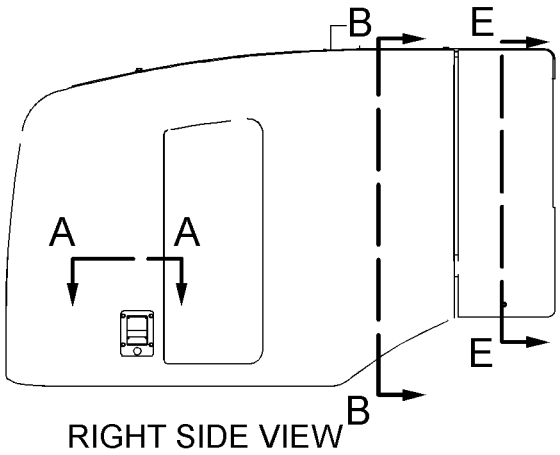

RIGHT SIDE VIEW

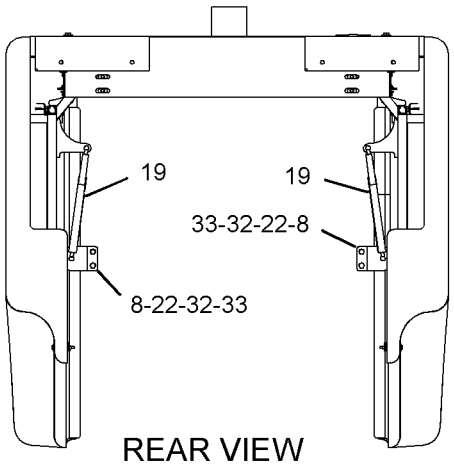

REAR VIEW

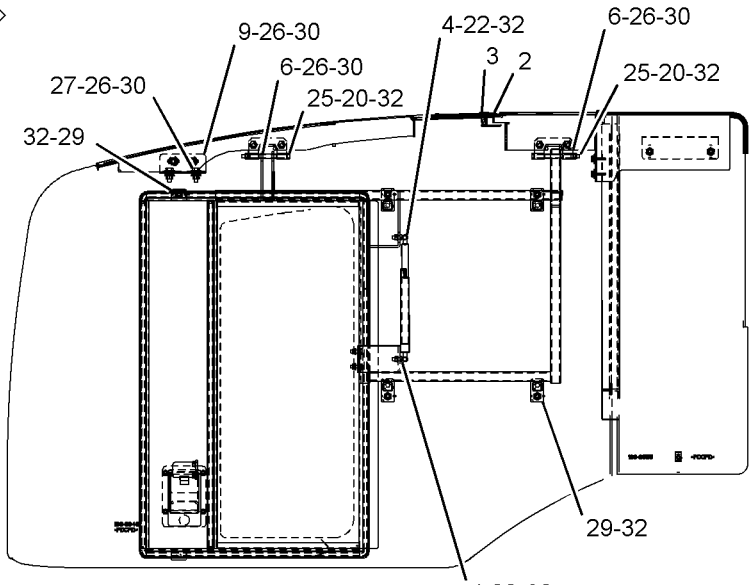

SECTION D-D

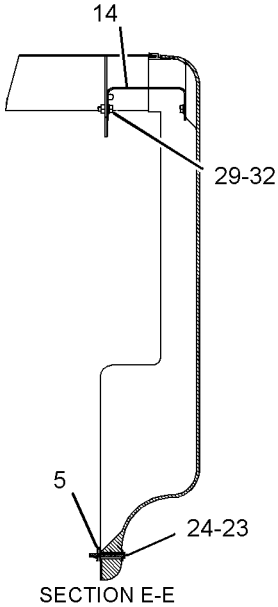

SECTION E-E

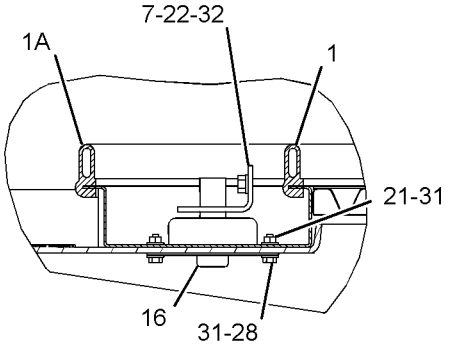

SECTION A-A

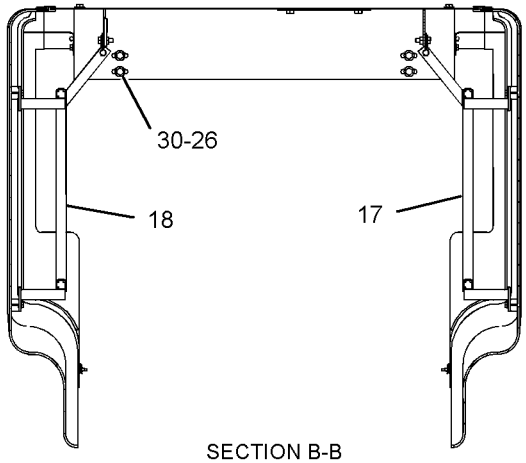

SECTION B-B

GRAPHIC #1 **<END>** g01310081

FRAME AND BODY

235-6940 LADDER GP

S/N: TWR1-UP

PART OF 235-7499 CHASSIS AR

SMCS-7254 **i02518154**

NOTE	REF NO	GRAPHIC REF	PART NUMBER	QTY	PART NAME 1 2 3 4 5 6 (PRODUCT LEVEL)	SEE PAGE
	1	1	**154-2302**	16	SPACER (11X20X15-MM THK)	
	2	1	**134-5214**	1	STEP AS	
M		1	**8T-3490**	2	NUT-WELD (M10X1.5-THD)	
	3	1	**134-5215**	1	STEP AS	
M		1	**8T-3490**	2	NUT-WELD (M10X1.5-THD)	
	4	1	**140-9189**	2	LADDER AS	
	5	1	**153-4856**	4	SUPPORT-STEP (RUBBER)	
	6	1	**153-9706**	8	PLATE	
	7	1	**189-0942**	1	BRACKET AS	
M		1	**8T-3490**	4	NUT-WELD (M10X1.5-THD)	
	8	1	**202-0392**	1	PLATFORM AS (RH)	
M		1	**6V-9632**	2	NUT-WELD (M6X1-THD)	
M		1	**8T-3490**	2	NUT-WELD (M10X1.5-THD)	
	9	1	**202-0393**	1	PLATFORM AS (LH)	
M		1	**6V-9632**	2	NUT-WELD (M6X1-THD)	
M		1	**8T-3490**	2	NUT-WELD (M10X1.5-THD)	
	10	1	**215-3886**	2	SIDE AS (STEP)	
					(EACH INCLUDES)	
M		1	**8T-3490**	4	NUT-WELD (M10X1.5-THD)	
	11	1	**251-5641**	1	BRACKET AS	
M		1	**8T-3490**	6	NUT-WELD (M10X1.5-THD)	
	12	1	**7X-7729**	52	WASHER (11X25X3-MM THK)	
M	13	1	**8T-4136**	22	BOLT (M10X1.5X25-MM)	
M	14	1	**8T-4186**	24	BOLT (M10X1.5X40-MM)	
M	15	1	**8T-4195**	8	BOLT (M10X1.5X30-MM)	
	16	1	**8T-4222**	2	WASHER-PLATED (11X32X2.5-MM THK)	

M-METRIC PART

235-6940 **LADDER GP** *(contd.)* **i02518154**

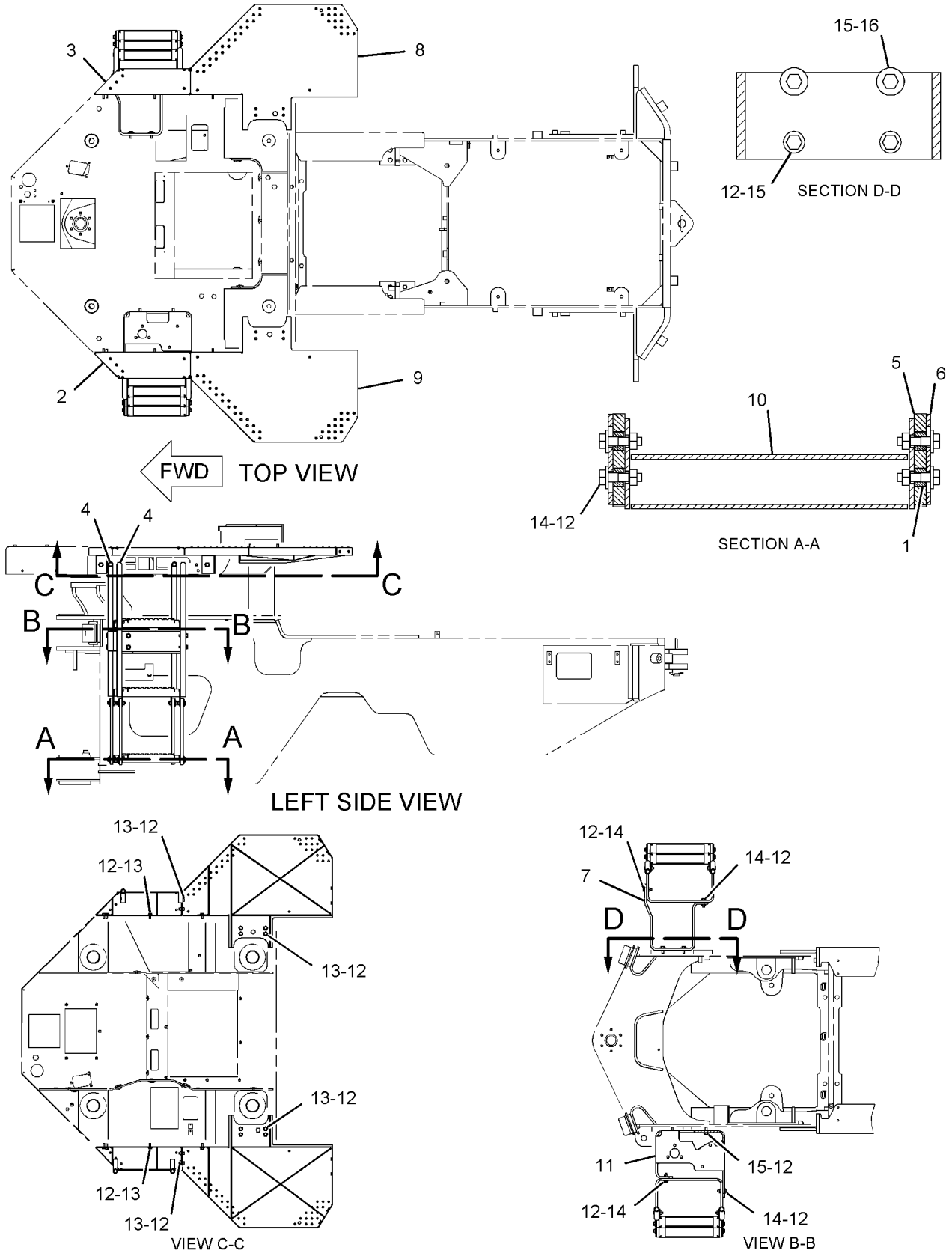

GRAPHIC #1 **<END>** g01110501

FRAME AND BODY

235-6892 LINES GP-GREASE

S/N: TWR1-UP

PART OF 235-7499 CHASSIS AR

SMCS-7510 **i02459878**

NOTE	REF NO	GRAPHIC REF	PART NUMBER	QTY	PART NAME 1 2 3 4 5 6 (PRODUCT LEVEL)	SEE PAGE
	1	1	**5T-3821**	1	HOSE AS	
	2	1	**5T-9771**	1	HOSE AS	
G	3	1	**160-2243**		SLEEVE-ABRASION (50-IN)	
	4	1	**6G-9933**	5	HOSE AS	
	5	1	**7K-1181**	14	STRAP-CABLE	
	6	1	**8W-4342**	1	HOSE AS	
	7	1	**200-6345**	1	MOUNT (DUAL SWIVEL)	
	8	1	**243-0536**	1	HOSE AS	
	9	1	**243-0537**	1	HOSE AS	
	10	1	**3B-6552**	8	ELBOW-PIPE	
	11	1	**3B-7734**	1	NIPPLE-PIPE	
	12	1	**3B-8489**	12	FITTING-GREASE	
	13	1	**8B-4884**	1	ELBOW	
	14	1	**002-0639**	1	ADAPTER-PIPE	

G-ORDER BY THE INCH

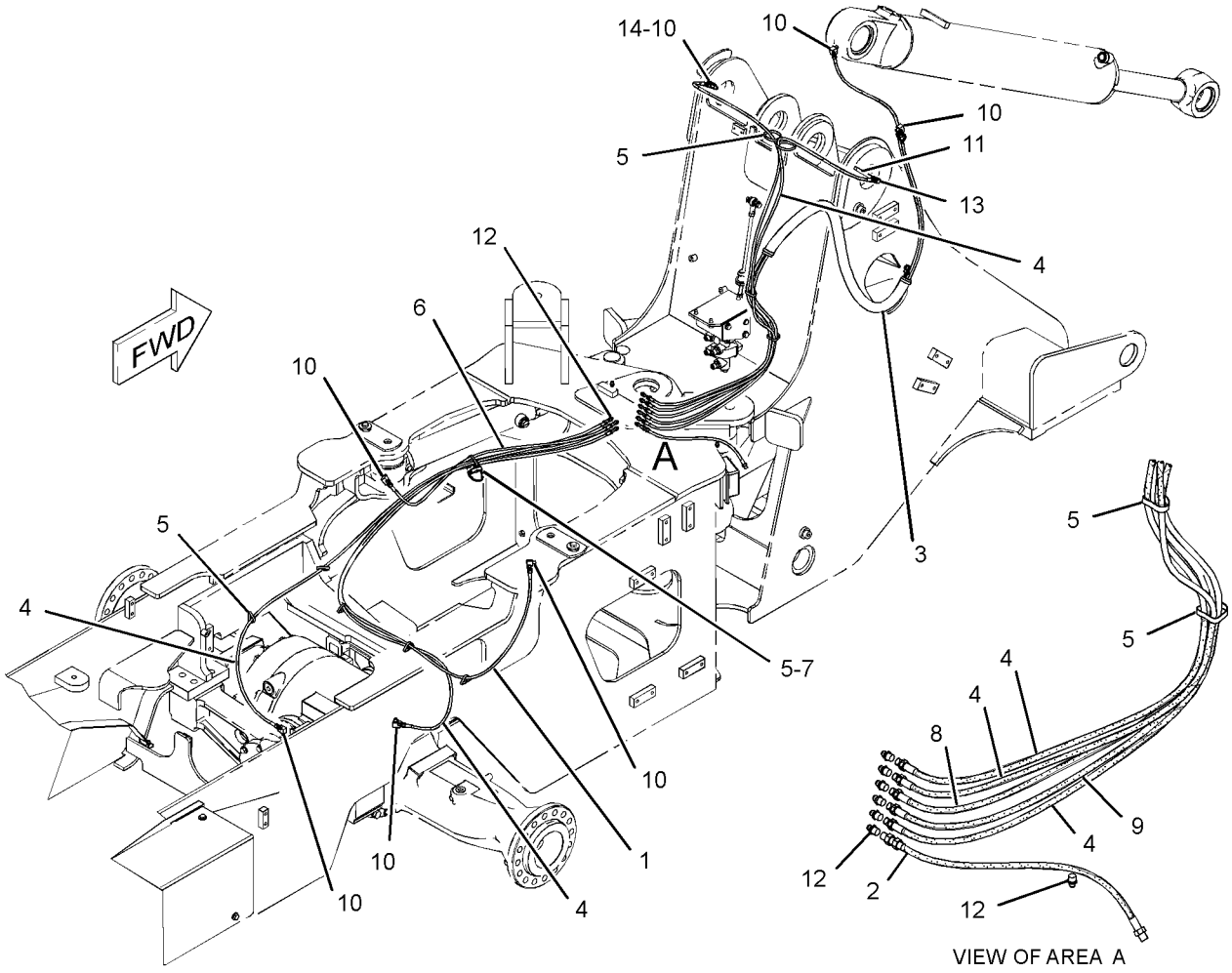

GRAPHIC #1 **<END>** g01241818

7V-2885 LINK GP-STEERING FRAME LOCK

S/N: TWR1-UP

PART OF 235-7499 CHASSIS AR

SMCS-7506 **i00189193**

NOTE	REF NO	GRAPHIC REF	PART NUMBER	QTY	PART NAME 1 2 3 4 5 6 (PRODUCT LEVEL)	SEE PAGE
	1	1	**5V-4998**	1	LINK	
	2	1	**5V-4999**	2	PIN	
	3	1	**5P-8837**	2	LOCKPIN	

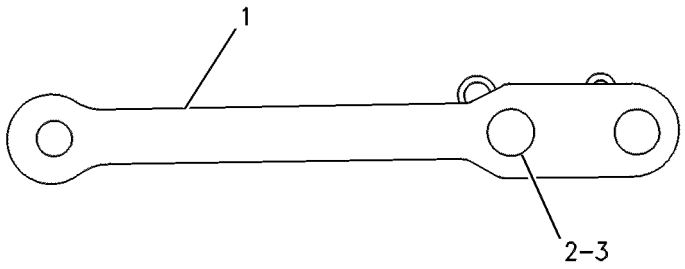

GRAPHIC #1 **<END>** g00120262

198-8964 PANEL GP-ACCESS—HOOD, CAB HEATER

S/N: TWR1-UP

PART OF 190-4401 HEATER AR-CAB, 240-7103 OPERATOR AR-OPEN ROPS

AN ATTACHMENT

SMCS-7262, 726A **i01787960**

NOTE	REF NO	GRAPHIC REF	PART NUMBER	QTY	PART NAME 1 2 3 4 5 6 (PRODUCT LEVEL)	SEE PAGE
	1	1	**172-8591**	10	NUT-SPRING	
	2	1	**191-9188**	1	PLATE	
	3	1	**198-8957**	1	PLATE	
	4	1	**220-0691**	4	PLATE AS	
					(EACH INCLUDES)	
M		1	**8T-3490**	2	NUT-WELD (M10X1.5-THD)	
	5	1	**5P-9212**	1	PLUG	
	6	1	**8T-4121**	8	WASHER-HARD (11X21X2.5-MM THK)	
M	7	1	**8T-4137**	8	BOLT (M10X1.5X20-MM)	
M	8	1	**8T-4138**	10	BOLT (M6X1X20-MM)	
	9	1	**8T-4205**	10	WASHER-HARD (7.2X14.5X2-MM THK)	

M-METRIC PART

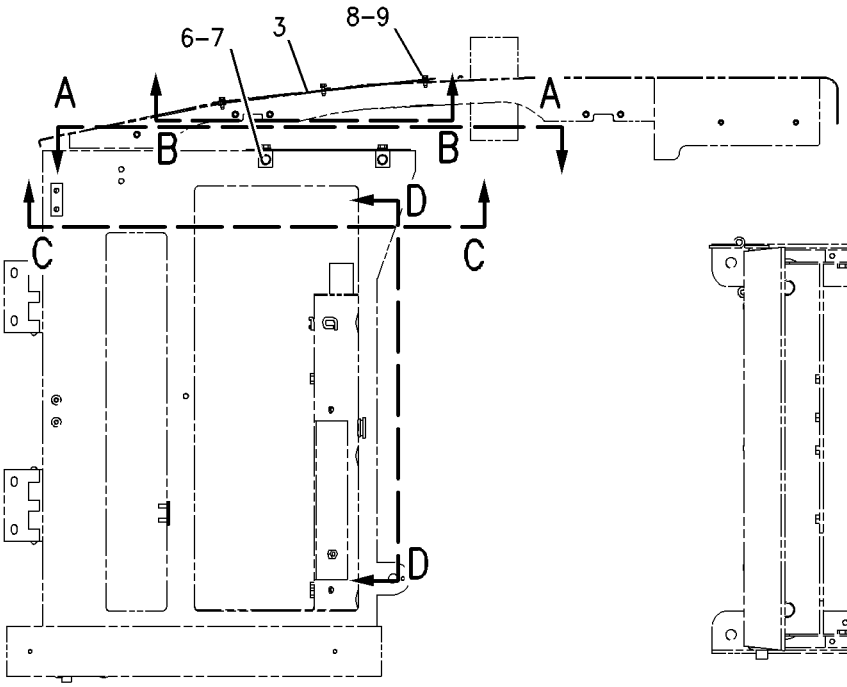

RIGHT SIDE VIEW

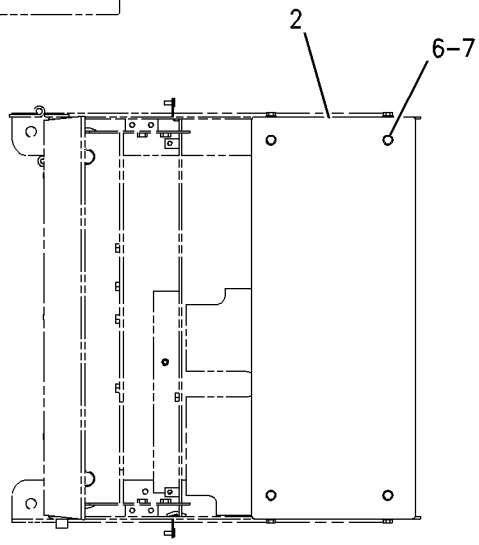

VIEW A-A

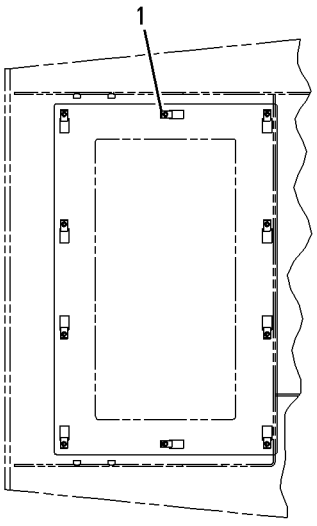

VIEW B-B

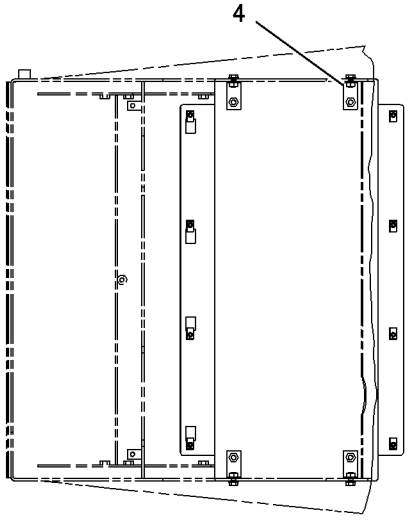

VIEW C-C

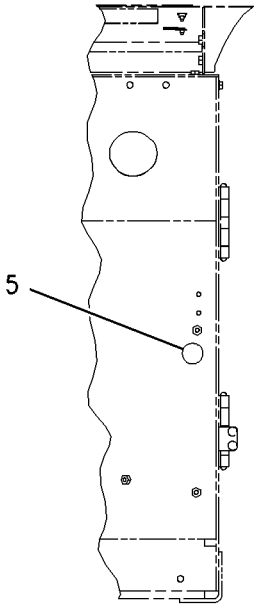

VIEW D-D

GRAPHIC #1 **<END>** g00917920

198-8965 PANEL GP-TOP—HOOD, AIR CONDITIONER

S/N: TWR1-UP

PART OF 190-4402, 227-5317 AIR CONDITIONER AR

AN ATTACHMENT

SMCS-7251 **i02147993**

NOTE	REF NO	GRAPHIC REF	PART NUMBER	QTY	PART NAME 1 2 3 4 5 6 (PRODUCT LEVEL)	SEE PAGE
	1	1	**172-8591**	10	NUT-SPRING	
C	2	1	**235-6947**	1	COVER AS	
C	3	1	**235-6948**	2	PLATE	
C	4	1	**186-0817**	2	WASHER-HARD (7X19X2-MM THK)	
M	5	1	**8T-4138**	10	BOLT (M6X1X20-MM)	
C	6	1	**8T-4205**	8	WASHER-HARD (7.2X14.5X2-MM THK)	

C-CHANGE FROM PREVIOUS TYPE
M-METRIC PART

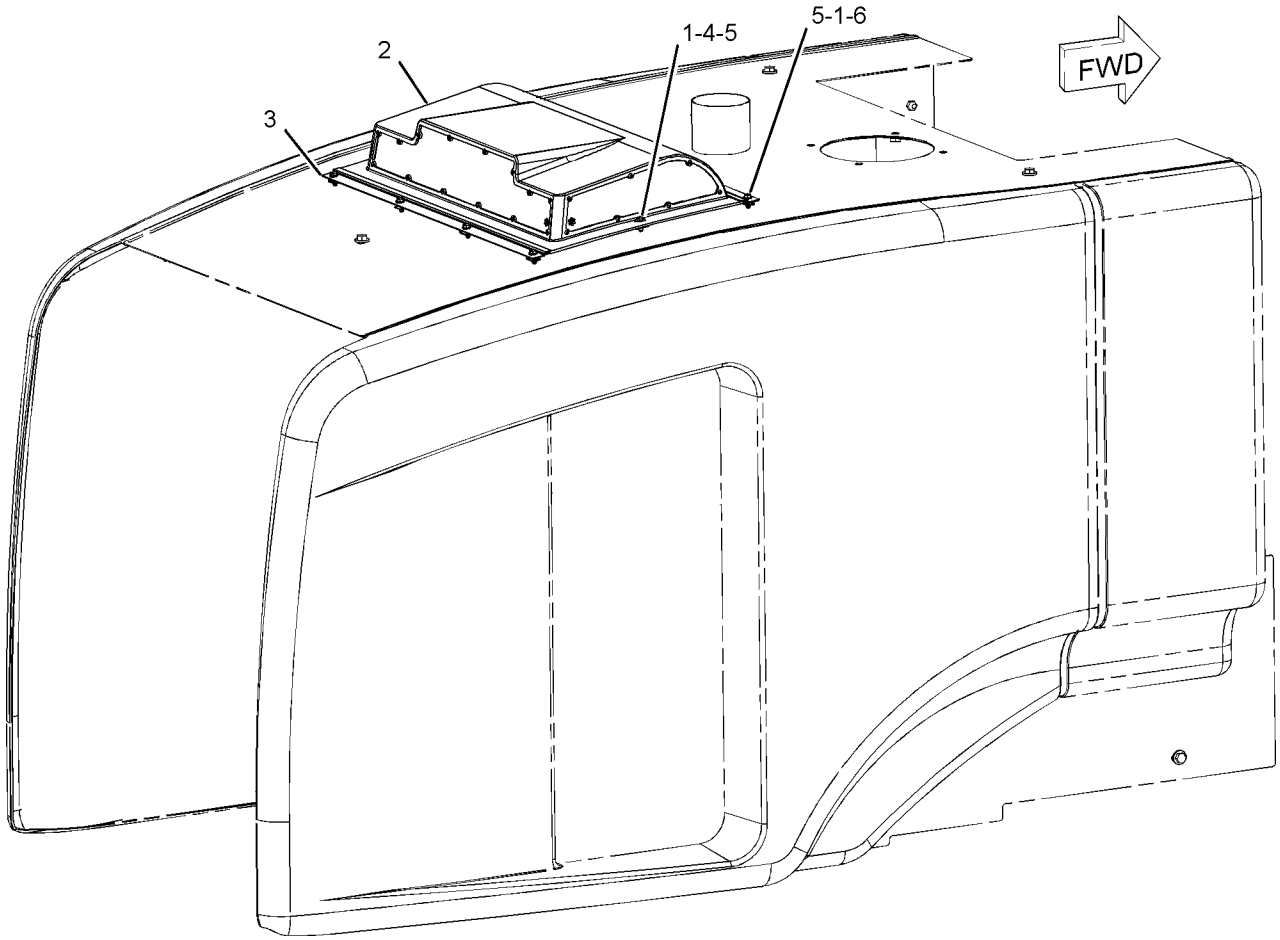

GRAPHIC #1 **<END>** g01091092

140-9251 ACCUMULATOR GP-BRAKE–CHARGED

S/N: TWR1-UP

PART OF 235-6810 LINES GP-SERVICE BRAKE

FIELD REPLACEMENT ORDER 149-5532–PAGE 390

SMCS-4263 **i02224651**

NOTE	REF NO	GRAPHIC REF	PART NUMBER	QTY	PART NAME 1 2 3 4 5 6 (PRODUCT LEVEL)	SEE PAGE
	1	1	**030-9613**	2	SCREW-FORMING (10-24X0.37-IN)	
	2	1	**1J-9671**	1	SEAL-O-RING	
	3	1	**069-2535**	1	VALVE-GAS (BRAKE ACCUMULATOR)	
	4	1	**069-2536**	1	PROTECTOR-GAS VALVE	
					AVAILABLE REPAIR KIT(S):	
			160-0496		KIT-SEAL (ACCUMULATOR)	
					(INCLUDES SEALS)	

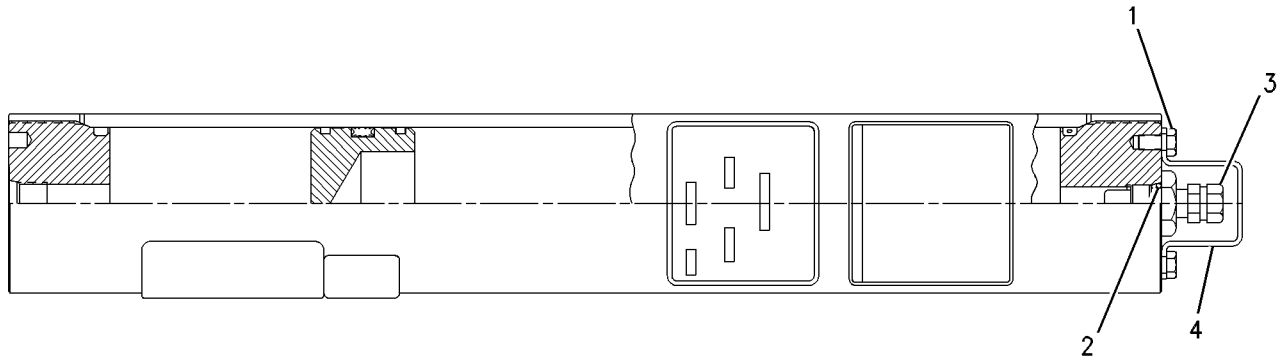

GRAPHIC #1 **<END>** g00649352

149-5532 ACCUMULATOR GP-HYDRAULIC—UNCHARGED—BRAKE

S/N: TWR1-UP

PART OF 235-6810 LINES GP-SERVICE BRAKE

FIELD REPLACEMENT FOR 140-9251—PAGE 389

SMCS-4263 **i02660231**

NOTE	REF NO	GRAPHIC REF	PART NUMBER	QTY	PART NAME 1 2 3 4 5 6 (PRODUCT LEVEL)	SEE PAGE
	1	1	**030-9613**	2	SCREW-FORMING (10-24X0.37-IN)	
	2	1	**1J-9671**	1	SEAL-O-RING	
	3	1	**069-2535**	1	VALVE-GAS	
	4	1	**069-2536**	1	PROTECTOR-GAS VALVE	
					AVAILABLE REPAIR KIT(S):	
			160-0496	1	KIT-SEAL (ACCUMULATOR)	
					(INCLUDES SEALS)	

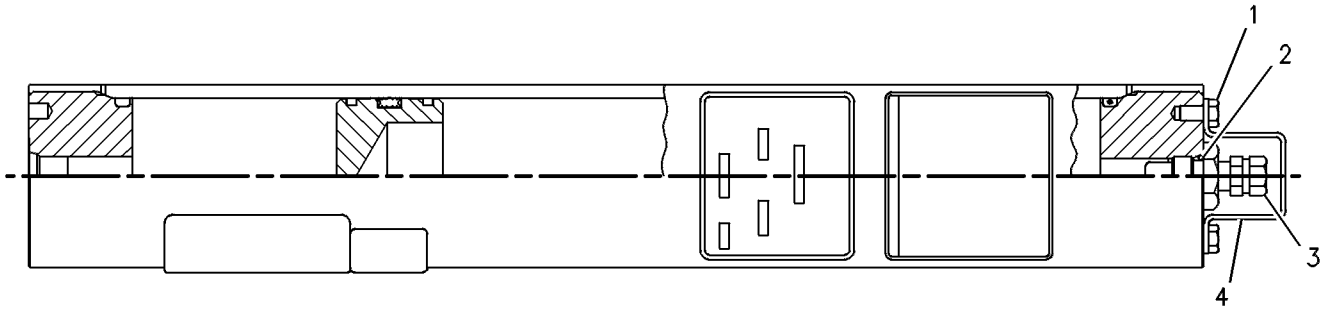

GRAPHIC #1 **<END>** g00120611

214-4769 BRAKE GP-PARKING

S/N: TPA1-UP

PART OF 234-8859 GEAR GP-OUTPUT TRANSFER

SMCS-4267 **i02194157**

NOTE	REF NO	GRAPHIC REF	PART NUMBER	QTY	PART NAME 1 2 3 4 5 6 (PRODUCT LEVEL)	SEE PAGE
	1	1	**1V-2772**	1	SPRING-EXTENSION	
	2	1	**3K-7057**	1	SPRING-EXTENSION	
	3	1	**111-9050**	2	SHOE AS-LINED	
	4	1	**214-4768**	1	PLATE AS	
	5	1	**3K-7056**	1	SPRING-EXTENSION	

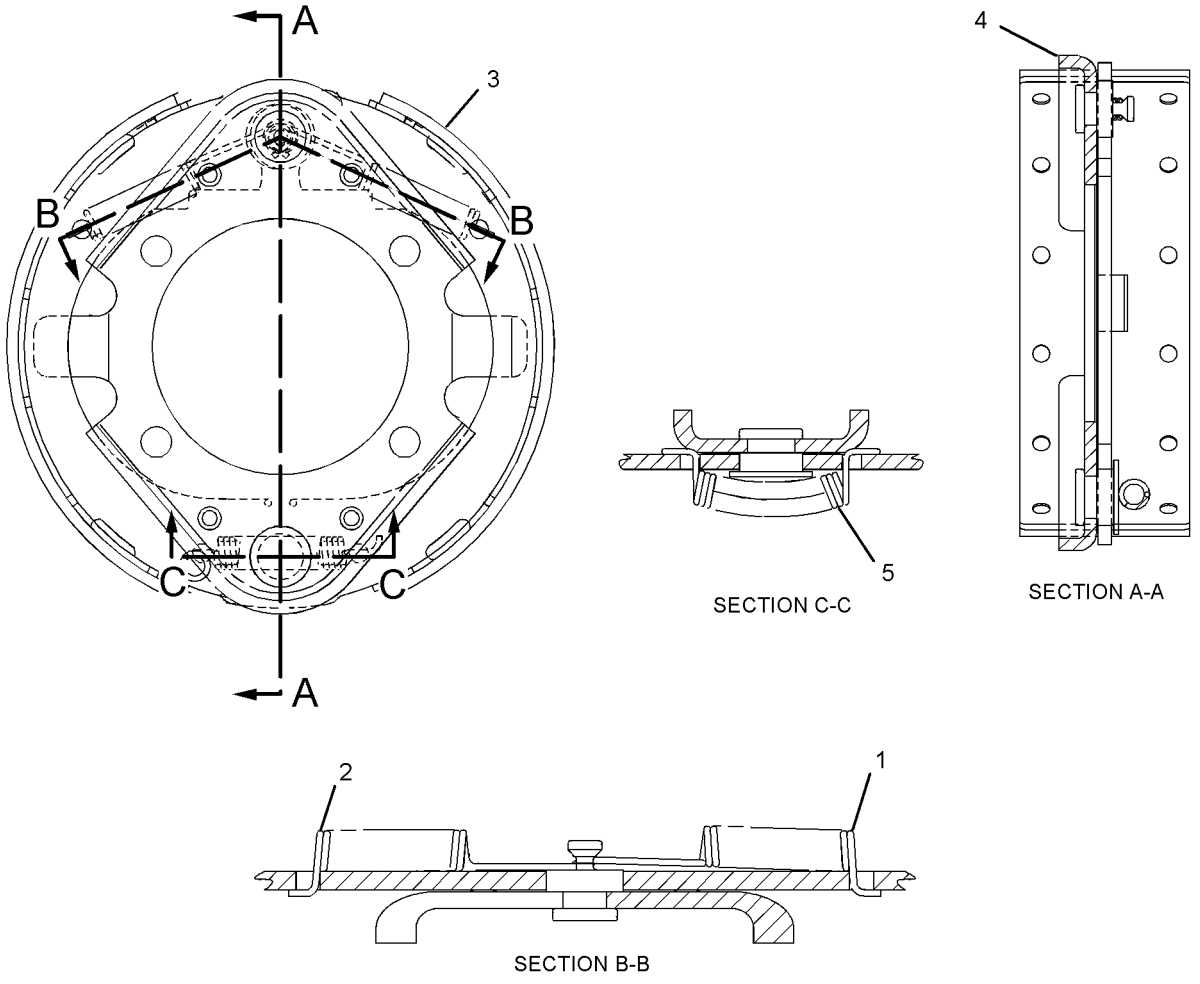

GRAPHIC #1 **<END>** g01108655

BRAKING SYSTEM

283-9971 BRAKE GP

S/N: TPA1-UP

PART OF 234-8859 GEAR GP-OUTPUT TRANSFER

SMCS-4267 **i02575748**

NOTE	REF NO	GRAPHIC REF	PART NUMBER	QTY	PART NAME 1 2 3 4 5 6 (PRODUCT LEVEL)	SEE PAGE
	1	1	**1V-2772**	1	SPRING-EXTENSION	
	2	1	**3K-7057**	1	SPRING-EXTENSION	
	3	1	**283-9972**	2	SHOE AS-LINED	
	4	1	**214-4768**	1	PLATE AS	
	5	1	**3K-7056**	1	SPRING-EXTENSION	

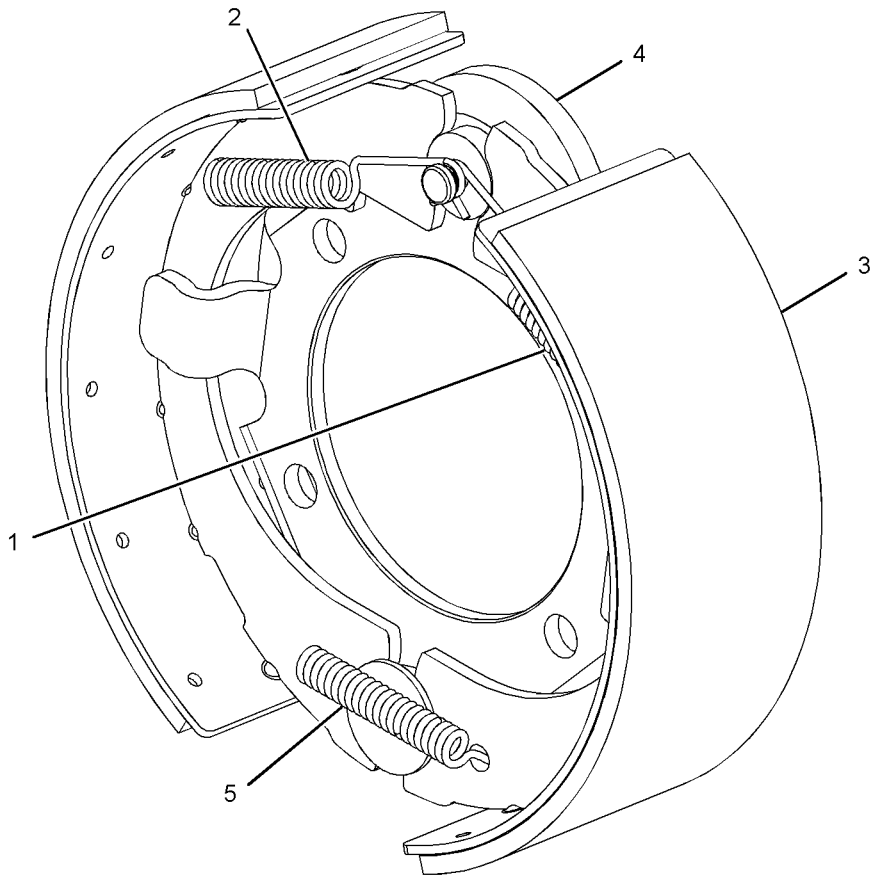

GRAPHIC #1 **<END>** g01291042

168-7000 CONTROL GP-PARKING BRAKE–HANDLE

S/N: TWR1-UP

PART OF 190-4405 OPERATOR AR, 190-4406 OPERATOR GP

AN ATTACHMENT

SMCS-4282, 4284 **i01472589**

NOTE	REF NO	GRAPHIC REF	PART NUMBER	QTY	PART NAME 1 2 3 4 5 6 (PRODUCT LEVEL)	SEE PAGE
	1	1	**3H-8538**	1	PIN	
	2	1	**6G-4195**	1	SWITCH AS-LIMIT (PARKING BRAKE)	
		1	**3L-8187**	3	LOCKWASHER	
		1	**6V-8373**	3	SCREW-MACHINE (6-32X0.187-IN)	
	3	1	**6S-6646**	1	PIN-COTTER	
	4	1	**8K-1433**	1	GROMMET	
	5	1	**186-4415**	1	CLEVIS	
	6	1	**163-6408**	1	BRACKET AS	
	7	1	**163-6412**	1	LEVER AS	
		1	**9R-9110**	1	BUTTON	
		1	**9R-9111**	1	SPRING-COMPRESSION	
	8	1	**2N-3477**	2	SCREW-MACHINE (6-32X1.25-IN)	
	9	1	**4B-5324**	4	WASHER (3.9X9.6X1.2-MM THK)	
	10	1	**7D-6922**	2	LOCKNUT (6-32-THD)	
M	11	1	**8T-4189**	4	BOLT (M8X1.25X20-MM)	
	12	1	**8T-4224**	4	WASHER-HARD (8.8X16X2-MM THK)	

M-METRIC PART

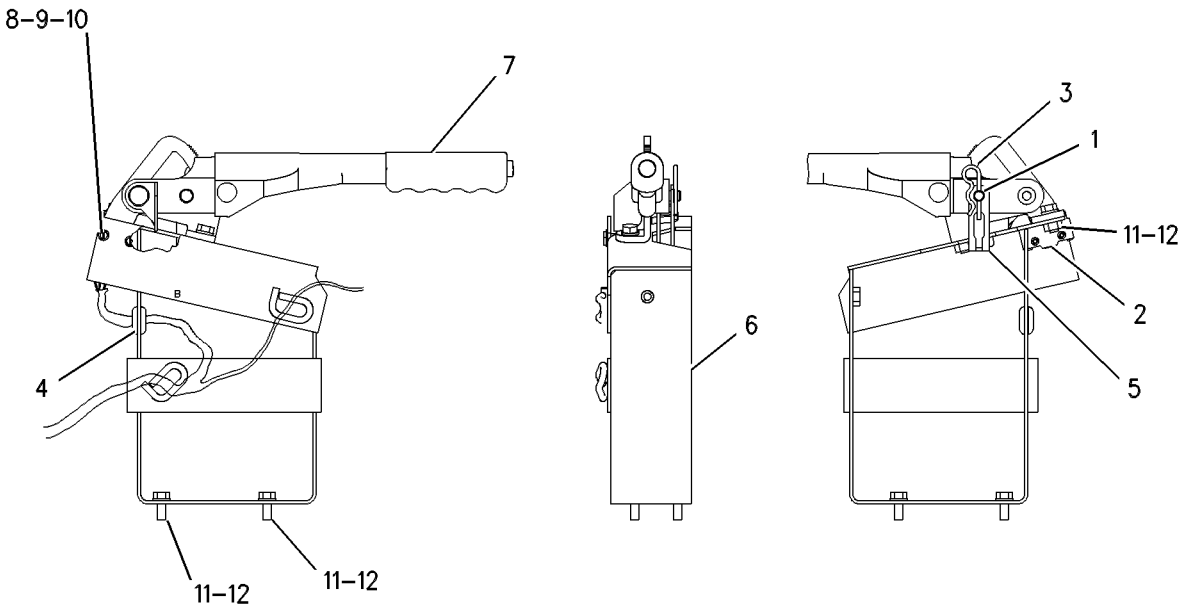

GRAPHIC #1 **<END>** g00578109

235-6809 CONTROL GP-PARKING BRAKE—CHASSIS

S/N: TWR1-UP

PART OF 235-7499 CHASSIS AR

SMCS-4282, 4284 **i02191414**

NOTE	REF NO	GRAPHIC REF	PART NUMBER	QTY	PART NAME 1 2 3 4 5 6 (PRODUCT LEVEL)	SEE PAGE
	1	1	**8C-6160**	1	CLEVIS AS	
	2	1	**9U-0710**	2	CLIP	
	3	1	**143-3193**	1	CABLE AS-PARKING BRAKE CONTROL	
	4	1	**208-0840**	1	PLATE AS	
	5	1	**3B-4610**	1	PIN-COTTER	
M	6	1	**5C-7261**	1	NUT (M8X1.25-THD)	
	7	1	**5P-9297**	3	CLIP	
	8	1	**6V-8758**	1	PIN-CLEVIS	
	9	1	**8T-4121**	3	WASHER-HARD (11X21X2.5-MM THK)	
M	10	1	**8T-4137**	3	BOLT (M10X1.5X20-MM)	
M	11	1	**8T-4192**	4	BOLT (M12X1.75X25-MM)	
	12	1	**8T-4223**	4	WASHER-HARD (13.5X25.5X3-MM THK)	

M-METRIC PART

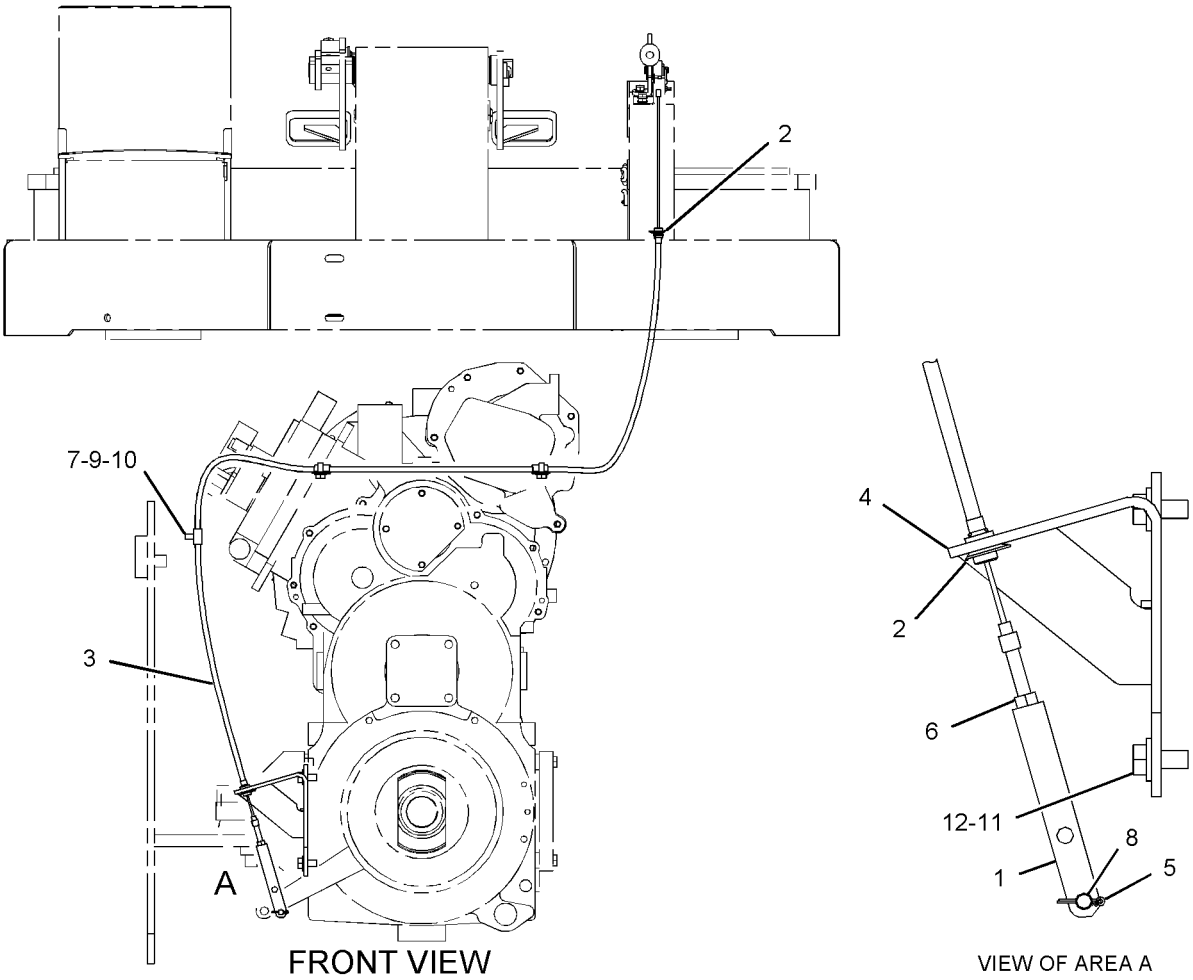

FRONT VIEW

VIEW OF AREA A

GRAPHIC #1 **<END>** g01108189

202-0430 CONTROL GP-SERVICE BRAKE

S/N: TWR1-2026

PART OF 235-7499 CHASSIS AR

SMCS-4257, 4258, 4263, 4265, 4269, 4280 **i03276421**

NOTE	REF NO	GRAPHIC REF	PART NUMBER	QTY	PART NAME 1 2 3 4 5 6 (PRODUCT LEVEL)	SEE PAGE
	1	1	**3B-4617**	2	PIN-COTTER	
	2	1	**3E-2332**	1	ELBOW	
	3	1	**6G-0233**	1	BOOT	
	4	1	**6V-0852**	1	CAP-DUST	
	5	1	**6V-3965**	1	FITTING (QUICK DISCONNECT)	
	6	1	**7C-6467**	2	PLUG	
	7	1	**8E-8296**	2	DISC-THRUST	
	8	1	**8T-6431**	1	ROD END	
M	9	1	**9X-2065**	1	NUT (M10X1.5-THD, LH)	
	10	1	**128-0168**	1	ROD	
	11	1	**128-0169**	1	ROLLER	
	12	1	**132-0988**	1	BRACKET AS	
		1	**5G-6973**	2	LUG	
	13	1	**132-0994**	1	END-BEARING ROD	
	14	1	**132-3789**	1	PLATE	
	15	1	**133-7675**	1	SPRING	
M	16	1	**134-0673**	2	BOLT (M10X1.5X50-MM)	
	17	1	**144-8521**	1	VALVE GP-BRAKE CONTROL (SERVICE)	
		1	**117-7798**	1	BOOT	
		1	**117-7799**	1	KIT-SEAL (BRAKE VALVE)	
					(INCLUDES 4 O-RINGS, 1 QUAD RING, CUP & BOOT)	
	18	1	**146-6822**	1	LEVER AS	
	19	1	**165-6365**	1	FITTING AS	
		1	**3J-1907**	1	SEAL-O-RING	
		1	**7W-7381**	1	FITTING-OUTLET	
	20	1	**188-3823**	1	SENSOR GP-PRESSURE (SERVICE BRAKE OIL)	
	21	1	*148-8336*	2	CONNECTOR AS	
					(EACH INCLUDES)	
		1	**6V-8636**	1	CONNECTOR	
		1	**3J-1907**	1	SEAL-O-RING	
		1	**6V-8397**	1	SEAL-O-RING	
	22	1	*148-8378*	1	ELBOW AS	
		1	**3J-1907**	1	SEAL-O-RING	
		1	**6V-8397**	1	SEAL-O-RING	
		1	**6V-8724**	1	ELBOW	
	23	1	*148-8443*	2	TEE AS	
					(EACH INCLUDES)	
		1	**3J-1907**	1	SEAL-O-RING	
		1	**6V-8397**	1	SEAL-O-RING	
		1	**7X-2459**	1	TEE-O-RING	
	24	1	**3J-1907**	2	SEAL-O-RING	
	25	1	**3J-7354**	1	SEAL-O-RING	
	26	1	**5V-4410**	2	BEARING-SLEEVE	
M	27	1	**8T-0389**	2	LOCKNUT (M10X1.5-THD)	
	28	1	**8T-4121**	15	WASHER-HARD (11X21X2.5-MM THK)	
M	29	1	**8T-4133**	1	NUT (M10X1.5-THD)	
M	30	1	**8T-4137**	6	BOLT (M10X1.5X20-MM)	
M	31	1	**8T-4196**	2	BOLT (M10X1.5X35-MM)	
	32	1	**9R-2807**	1	CLIP	
	33	1	**9R-3067**	1	PIN	

M-METRIC PART

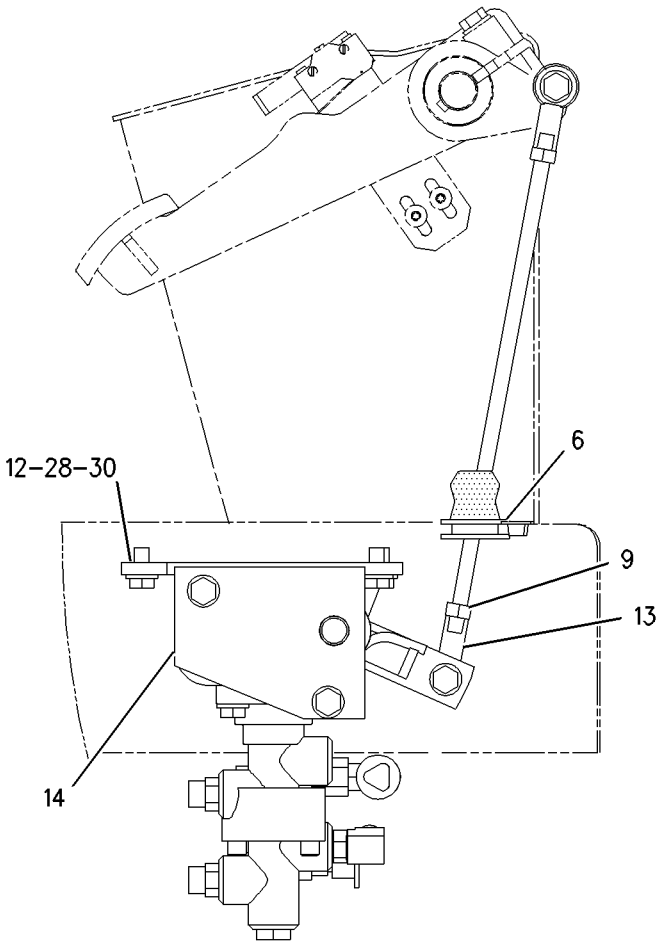

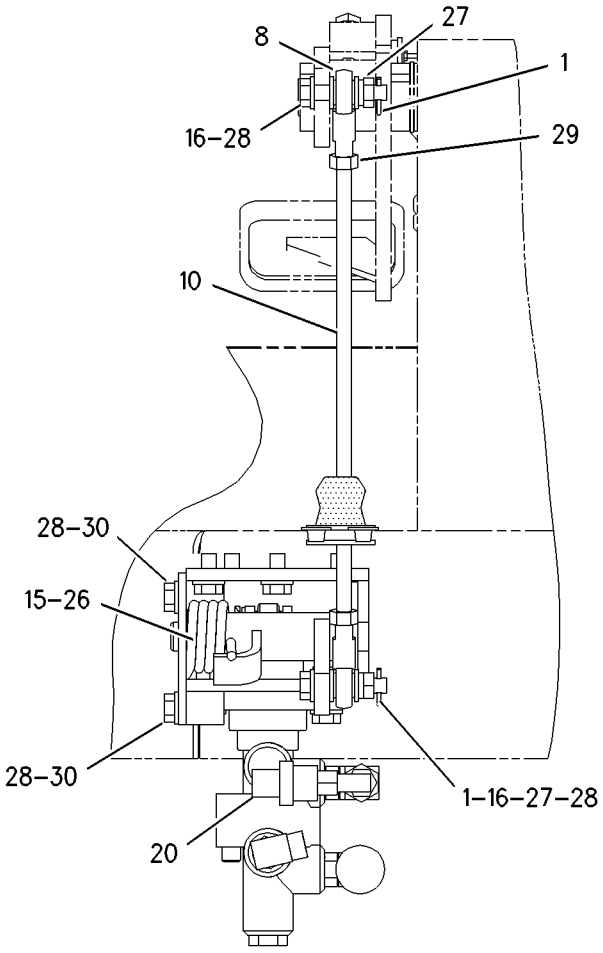

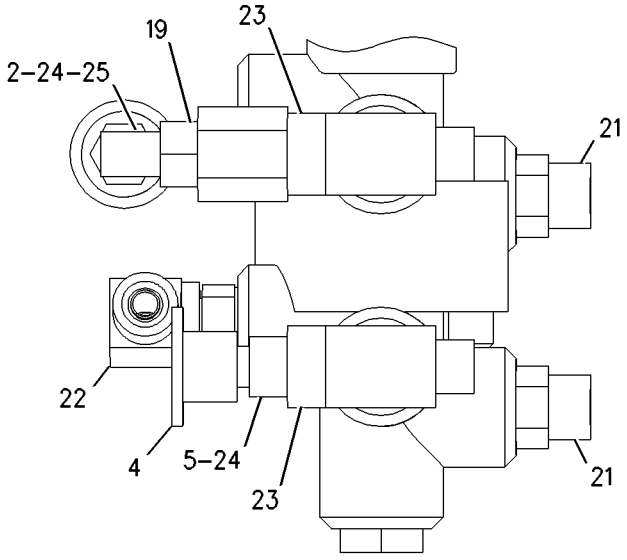

VIEW B-B

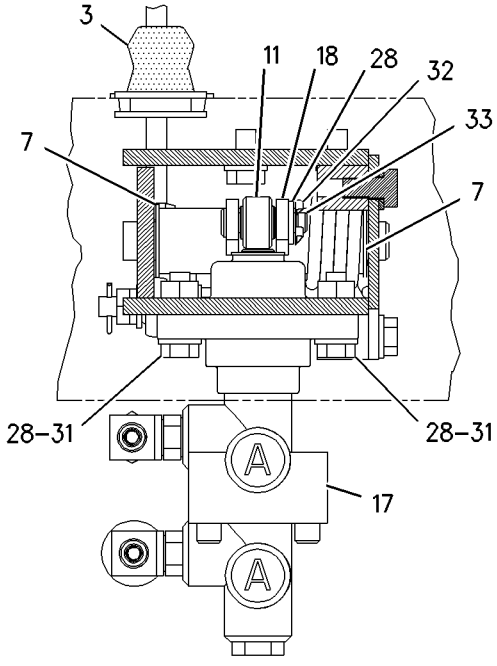

SECTION A-A

GRAPHIC #1 **<END>** g00917008

BRAKING SYSTEM

202-0430 CONTROL GP-SERVICE BRAKE

S/N: TWR2027-UP

PART OF 235-7499 CHASSIS AR

SMCS-4257, 4258, 4263, 4265, 4269, 4280 **i03276422**

NOTE	REF NO	GRAPHIC REF	PART NUMBER	QTY	PART NAME 1 2 3 4 5 6 (PRODUCT LEVEL)	SEE PAGE
	1	1	**3B-4617**	2	PIN-COTTER	
	2	1	**3E-2332**	1	ELBOW	
	3	1	**6G-0233**	1	BOOT	
	4	1	**6V-0852**	1	CAP-DUST	
	5	1	**6V-3965**	1	FITTING (QUICK DISCONNECT)	
	6	1	**7C-6467**	2	PLUG	
	7	1	**8E-8296**	2	DISC-THRUST	
	8	1	**8T-6431**	1	ROD END	
M	9	1	**9X-2065**	1	NUT (M10X1.5-THD, LH)	
	10	1	**128-0168**	1	ROD	
	11	1	**128-0169**	1	ROLLER	
	12	1	**132-0988**	1	BRACKET AS	
		1	**5G-6973**	2	LUG	
	13	1	**132-0994**	1	END-BEARING ROD	
	14	1	**132-3789**	1	PLATE	
	15	1	**133-7675**	1	SPRING	
M	16	1	**134-0673**	2	BOLT (M10X1.5X50-MM)	
	17	1	**144-8521**	1	VALVE GP-BRAKE CONTROL (SERVICE)	
		1	**117-7798**	1	BOOT	
		1	**117-7799**	1	KIT-SEAL (BRAKE VALVE) (BRAKE VALVE)	
					(INCLUDES O-RINGS, QUAD RING, CUP AND BOOT)	
	18	1	**146-6822**	1	LEVER AS	
	19	1	**165-6365**	1	FITTING AS	
C	20	1	**290-5825**	1	SENSOR GP-PRESSURE (BRAKE OIL)	
		1	**102-8803**	1	KIT-RECEPTACLE (3-PIN)	
					(INCLUDES RECEPTACLE AS & WEDGE)	
		1	**186-3735**	3	PIN-CONNECTOR (16-GA TO 18-GA)	
E		1	**9X-1813**		SLEEVE (34-CM)	
	21	1	*148-8336*	2	CONNECTOR AS	
					(EACH INCLUDES)	
		1	**6V-8636**	1	CONNECTOR	
		1	**3J-1907**	1	SEAL-O-RING	
		1	**6V-8397**	1	SEAL-O-RING	
	22	1	*148-8378*	1	ELBOW AS	
		1	**3J-1907**	1	SEAL-O-RING	
		1	**6V-8397**	1	SEAL-O-RING	
		1	**6V-8724**	1	ELBOW	
	23	1	*148-8443*	2	TEE AS	
					(EACH INCLUDES)	
		1	**3J-1907**	1	SEAL-O-RING	
		1	**6V-8397**	1	SEAL-O-RING	
		1	**7X-2459**	1	TEE-O-RING	
	24	1	**3J-1907**	2	SEAL-O-RING	
	25	1	**3J-7354**	1	SEAL-O-RING	
	26	1	**5V-4410**	2	BEARING-SLEEVE	
M	27	1	**8T-0389**	2	LOCKNUT (M10X1.5-THD)	
	28	1	**8T-4121**	15	WASHER-HARD (11X21X2.5-MM THK)	
M	29	1	**8T-4133**	1	NUT (M10X1.5-THD)	
M	30	1	**8T-4137**	6	BOLT (M10X1.5X20-MM)	
M	31	1	**8T-4196**	2	BOLT (M10X1.5X35-MM)	
	32	1	**9R-2807**	1	CLIP	
	33	1	**9R-3067**	1	PIN	

C-CHANGE FROM PREVIOUS TYPE
E-ORDER BY THE CENTIMETER
M-METRIC PART

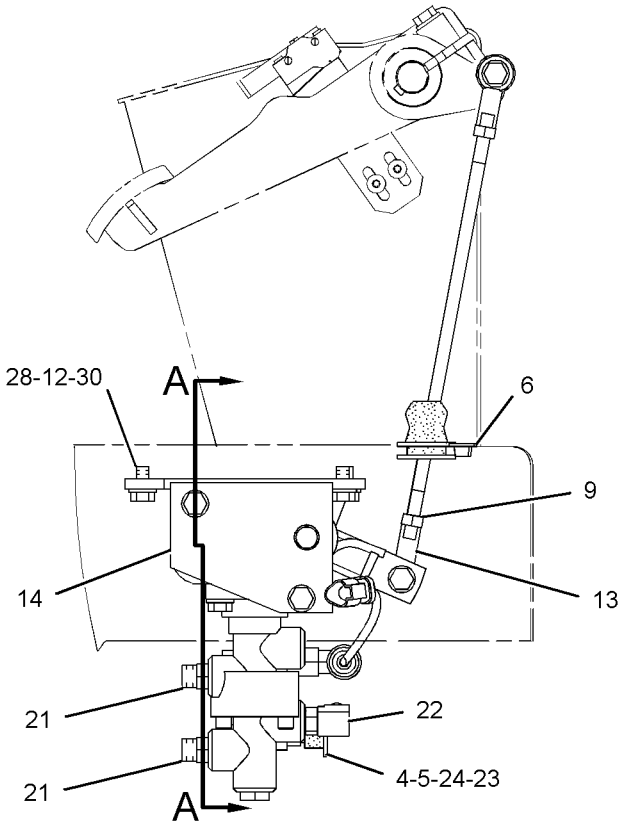

RIGHT SIDE VIEW

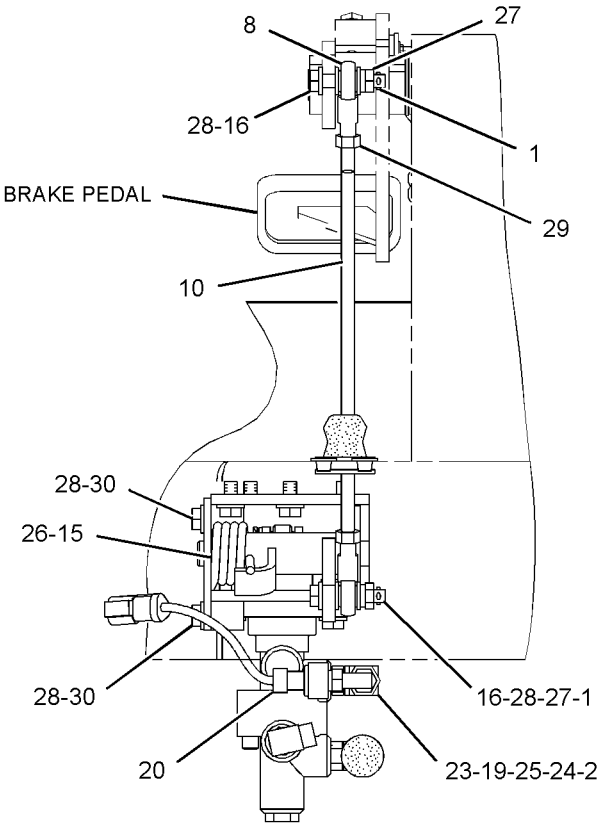

FRONT VIEW

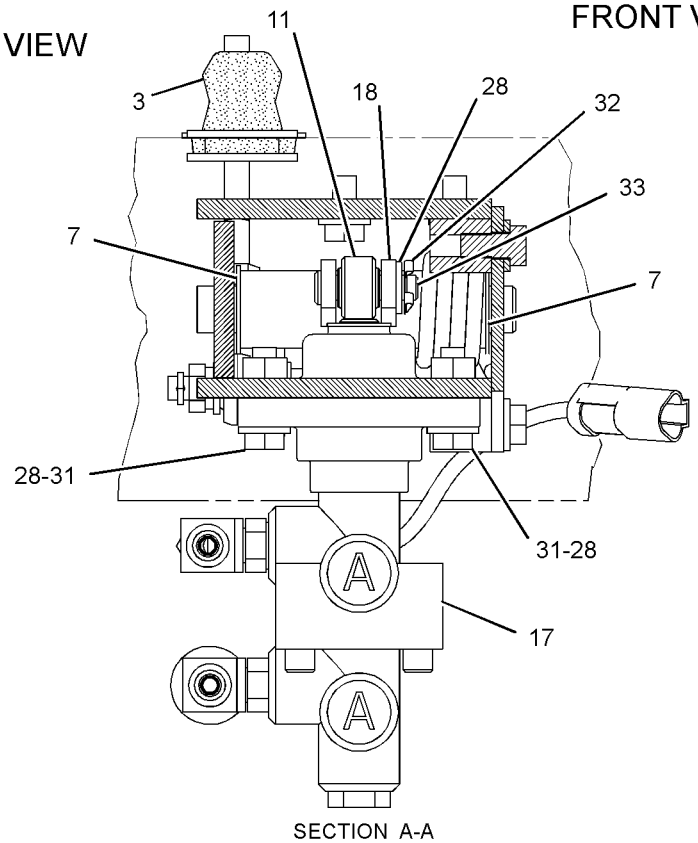

SECTION A-A

GRAPHIC #1 **<END>** g01283642

202-0430 CONTROL GP-SERVICE BRAKE

S/N: TWR2027-3472

PART OF 235-7499 CHASSIS AR

SMCS-4257, 4258, 4263, 4265, 4269, 4280 **i03276424**

NOTE	REF NO	GRAPHIC REF	PART NUMBER	QTY	PART NAME 1 2 3 4 5 6 (PRODUCT LEVEL)	SEE PAGE
	1	1	**3B-4617**	2	PIN-COTTER	
	2	1	**3E-2332**	1	ELBOW	
	3	1	**6G-0233**	1	BOOT	
	4	1	**6V-0852**	1	CAP-DUST	
	5	1	**6V-3965**	1	FITTING (QUICK DISCONNECT)	
	6	1	**7C-6467**	2	PLUG	
	7	1	**8E-8296**	2	DISC-THRUST	
	8	1	**8T-6431**	1	ROD END	
M	9	1	**9X-2065**	1	NUT (M10X1.5-THD, LH)	
	10	1	**128-0168**	1	ROD	
	11	1	**128-0169**	1	ROLLER	
	12	1	**132-0988**	1	BRACKET AS	
	13	1	**132-0994**	1	END-BEARING ROD	
C	14	1	**294-2016**	1	PLATE	
	15	1	**133-7675**	1	SPRING	
M	16	1	**134-0673**	2	BOLT (M10X1.5X50-MM)	
	17	1	**144-8521**	1	VALVE GP-BRAKE CONTROL (SERVICE)	
		1	**117-7798**	1	BOOT	
		1	**117-7799**	1	KIT-SEAL (BRAKE VALVE) (BRAKE VALVE)	
					(INCLUDES O-RINGS, QUAD RING, CUP & BOOT)	
C	18	1	**294-2018**	1	LEVER AS	
	19	1	*165-6365*	1	FITTING AS	
		1	**3J-1907**	1	SEAL-O-RING	
		1	**7W-7381**	1	FITTING-OUTLET	
	20	1	**290-5825**	1	SENSOR GP-PRESSURE (SERVICE BRAKE OIL)	
		1	**102-8803**	1	KIT-RECEPTACLE (3-PIN)	
					(INCLUDES RECEPTACLE AS & WEDGE)	
		1	**186-3735**	3	PIN-CONNECTOR (16-GA TO 18-GA)	
E		1	**9X-1813**		SLEEVE (34-CM)	
	21	1	*148-8336*	2	CONNECTOR AS	
					(EACH INCLUDES)	
		1	**6V-8636**	1	CONNECTOR	
		1	**3J-1907**	1	SEAL-O-RING	
		1	**6V-8397**	1	SEAL-O-RING	
	22	1	*148-8378*	1	ELBOW AS	
		1	**3J-1907**	1	SEAL-O-RING	
		1	**6V-8397**	1	SEAL-O-RING	
		1	**6V-8724**	1	ELBOW	
	23	1	*148-8443*	2	TEE AS	
					(EACH INCLUDES)	
		1	**3J-1907**	1	SEAL-O-RING	
		1	**6V-8397**	1	SEAL-O-RING	
		1	**7X-2459**	1	TEE-O-RING	
	24	1	**3J-1907**	2	SEAL-O-RING	
	25	1	**3J-7354**	1	SEAL-O-RING	
M	27	1	**8T-0389**	2	LOCKNUT (M10X1.5-THD)	
C	28	1	**8T-4121**	14	WASHER-HARD (11X21X2.5-MM THK)	
M	29	1	**8T-4133**	1	NUT (M10X1.5-THD)	
CM	30	1	**8T-4137**	5	BOLT (M10X1.5X20-MM)	
M	31	1	**8T-4196**	2	BOLT (M10X1.5X35-MM)	
	32	1	**9R-2807**	1	CLIP	
	33	1	**9R-3067**	1	PIN	
C	34	1	**7K-1181**	1	STRAP-CABLE	
C	35	1	**294-2017**	1	BEARING	

202-0430 **CONTROL GP-SERVICE BRAKE** *(contd.)* **i03276424**

C-CHANGE FROM PREVIOUS TYPE
E-ORDER BY THE CENTIMETER
M-METRIC PART

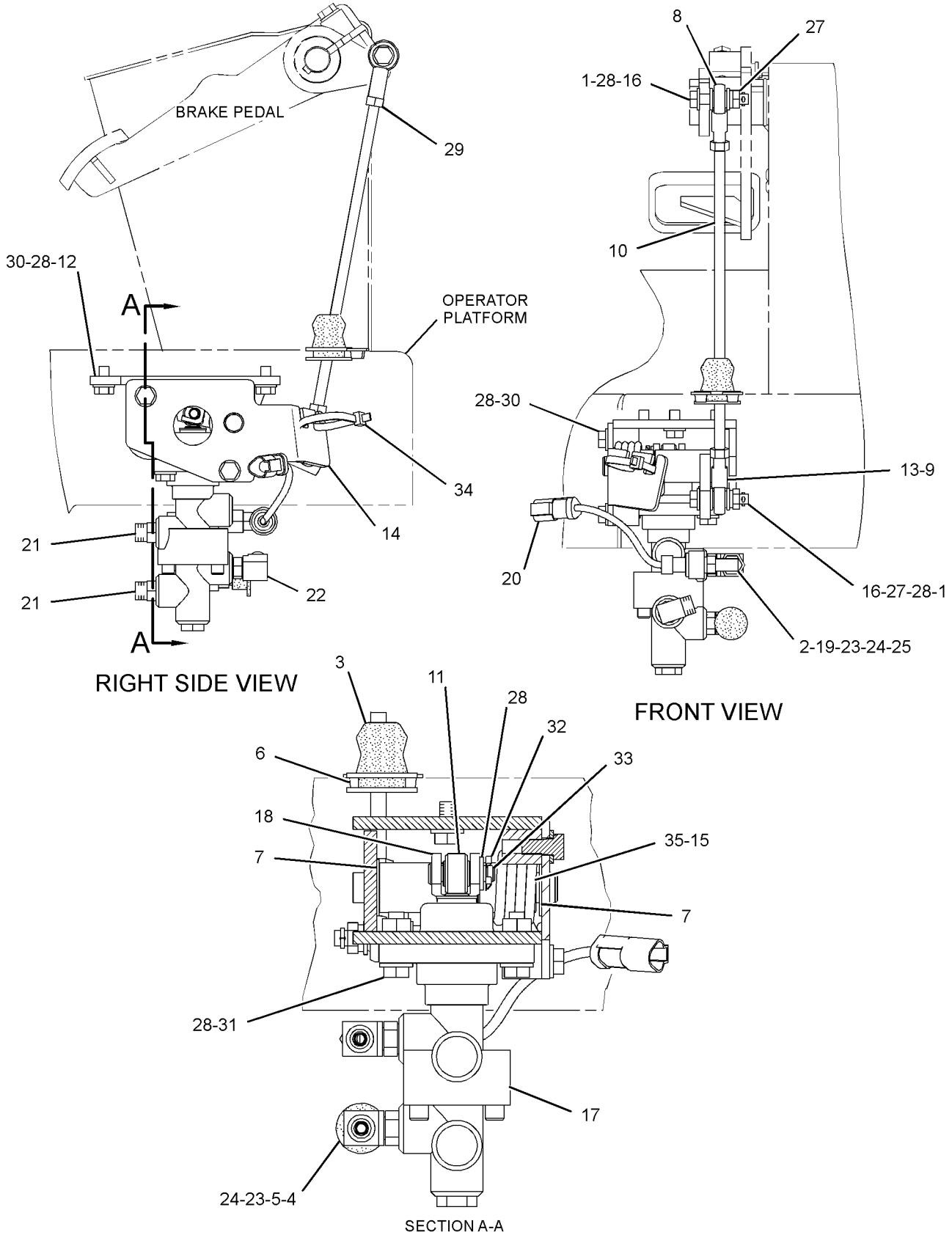

GRAPHIC #1 **<END>** g01371974

BRAKING SYSTEM

202-0430 CONTROL GP-SERVICE BRAKE

S/N: TWR3473-UP

PART OF 235-7499 CHASSIS AR

SMCS-4257, 4258, 4263, 4265, 4269, 4280 **i03276425**

NOTE	REF NO	GRAPHIC REF	PART NUMBER	QTY	PART NAME 1 2 3 4 5 6 (PRODUCT LEVEL)	SEE PAGE
	1	1	**3B-4617**	2	PIN-COTTER	
	3	1	**6G-0233**	1	BOOT	
	4	1	**6V-0852**	1	CAP-DUST	
C	5	1	*164-5567*	1	COUPLER AS-QUICK DISCONNECT	
		1	**3J-1907**	1	SEAL-O-RING	
		1	**6V-3965**	1	FITTING (QUICK DISCONNECT)	
	6	1	**7C-6467**	2	PLUG	
	7	1	**8E-8296**	2	DISC-THRUST	
	8	1	**8T-6431**	1	ROD END	
M	9	1	**9X-2065**	1	NUT (M10X1.5-THD, LH)	
	10	1	**128-0168**	1	ROD	
	11	1	**128-0169**	1	ROLLER	
	12	1	**132-0988**	1	BRACKET AS	
	13	1	**132-0994**	1	END-BEARING ROD	
	14	1	**294-2016**	1	PLATE	
	15	1	**133-7675**	1	SPRING	
M	16	1	**134-0673**	2	BOLT (M10X1.5X50-MM)	
	17	1	**144-8521**	1	VALVE GP-BRAKE CONTROL (SERVICE)	
		1	**117-7798**	1	BOOT	
		1	**117-7799**	1	KIT-SEAL (BRAKE VALVE)	
					(INCLUDES O-RINGS, QUAD RING, CUP & BOOT)	
	18	1	**294-2018**	1	LEVER AS	
	18A	1	**5V-4410**	2	BEARING-SLEEVE	
	20	1	**290-5825**	1	SENSOR GP-PRESSURE (SERVICE BRAKE OIL)	
		1	**102-8803**	1	KIT-RECEPTACLE (3-PIN)	
					(INCLUDES RECEPTACLE AS & WEDGE)	
		1	**186-3735**	3	PIN-CONNECTOR (16-GA TO 18-GA)	
E		1	**9X-1813**		SLEEVE (34-CM)	
	21	1	*148-8336*	2	CONNECTOR AS	
					(EACH INCLUDES)	
		1	**6V-8636**	1	CONNECTOR	
		1	**3J-1907**	1	SEAL-O-RING	
		1	**6V-8397**	1	SEAL-O-RING	
	22	1	*148-8378*	1	ELBOW AS	
		1	**3J-1907**	1	SEAL-O-RING	
		1	**6V-8397**	1	SEAL-O-RING	
		1	**6V-8724**	1	ELBOW	
	23	1	*148-8443*	2	TEE AS	
					(EACH INCLUDES)	
		1	**3J-1907**	1	SEAL-O-RING	
		1	**6V-8397**	1	SEAL-O-RING	
		1	**7X-2459**	1	TEE-O-RING	
M	27	1	**8T-0389**	2	LOCKNUT (M10X1.5-THD)	
	28	1	**8T-4121**	13	WASHER-HARD (11X21X2.5-MM THK)	
M	29	1	**8T-4133**	1	NUT (M10X1.5-THD)	
M	30	1	**8T-4137**	5	BOLT (M10X1.5X20-MM)	
M	31	1	**8T-4196**	2	BOLT (M10X1.5X35-MM)	
	32	1	**9R-2807**	1	CLIP	
	33	1	**9R-3067**	1	PIN	
	34	1	**7K-1181**	1	STRAP-CABLE	
	35	1	**294-2017**	1	BEARING	
C	36	1	*173-7223*	1	ADAPTER AS	
		1	**3J-1907**	1	SEAL-O-RING	
		1	**3J-7354**	1	SEAL-O-RING	
		1	**9X-0261**	1	ADAPTER	
	37	1	**238-4743**	1	WASHER (10.5X21X1.25-MM THK)	

202-0430 **CONTROL GP-SERVICE BRAKE** *(contd.)* **i03276425**

C-CHANGE FROM PREVIOUS TYPE
E-ORDER BY THE CENTIMETER
M-METRIC PART

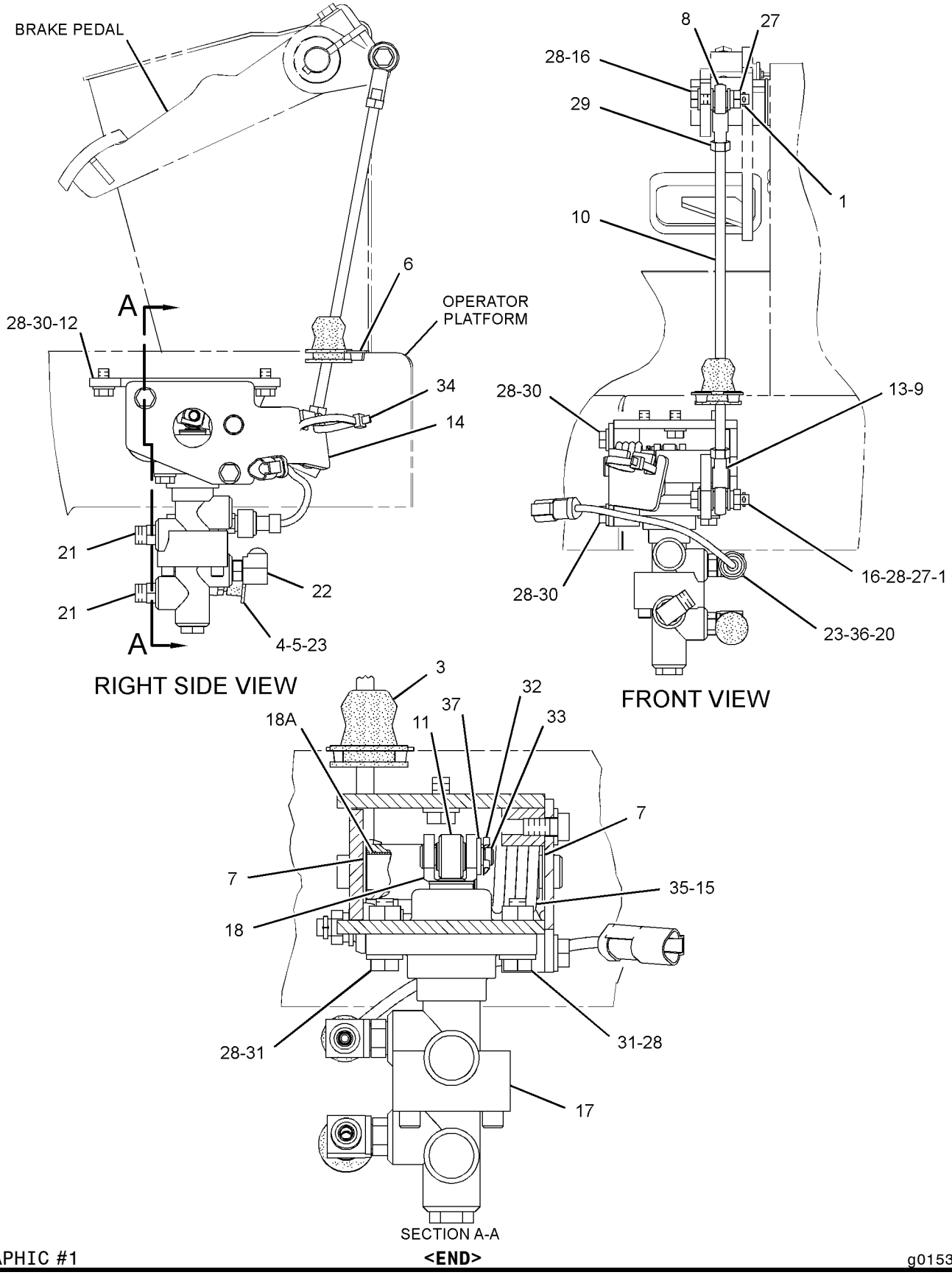

GRAPHIC #1 **<END>** g01534993

BRAKING SYSTEM

235-6810 LINES GP-SERVICE BRAKE

S/N: TWR1-1157

PART OF 235-7499 CHASSIS AR

SMCS-4257 **i02277385**

NOTE	REF NO	GRAPHIC REF	PART NUMBER	QTY	PART NAME 1 2 3 4 5 6 (PRODUCT LEVEL)	SEE PAGE
	1	1	**4E-7540**	1	ANGLE	
	2	1	**6G-2263**	1	SPACER (10.5X19X28.5-MM THK)	
	3	1	**8Y-8387**	4	BLOCK	
	4	1	**111-6940**	4	SPACER (13.1X15.9X36.5-MM THK)	
	5	1	**132-2397**	1	BRACKET AS	
Y	6	1	*140-9251*	2	ACCUMULATOR GP-BRAKE (CHARGED)	389
	7	1	**140-9289**	1	PLATE AS	
	8	1	**156-4130**	4	CLIP-TUBE	
	9	1	**200-6345**	1	MOUNT (DUAL SWIVEL)	
	10	1	**204-2281**	2	STRAP-TIE	
	11	1	**205-3961**	1	PLATE	
I	12	1	**217-3609**	2	HOSE AS	
I	13	1	**213-7436**	2	HOSE AS	
I	14	1	**213-7437**	1	HOSE AS	
I	15	1	**214-8917**	2	HOSE AS	
	16	1	**229-5152**	1	PLATE	
I	17	1	**250-3247**	1	HOSE AS	
I	18	1	**260-6171**	1	HOSE AS	
	19	1	*148-8353*	2	ELBOW AS	
					(EACH INCLUDES)	
		1	**3J-1907**	1	SEAL-O-RING	
		1	**6V-8397**	1	SEAL-O-RING	
		1	**6V-9001**	1	ELBOW	
	20	1	*148-8361*	3	ELBOW AS	
					(EACH INCLUDES)	
		1	**3J-7354**	1	SEAL-O-RING	
		1	**6V-8397**	1	SEAL-O-RING	
		1	**6V-9200**	1	ELBOW	
	21	1	*148-8433*	1	TEE AS	
		1	**6V-8397**	2	SEAL-O-RING	
		1	**6V-9836**	1	TEE-SWIVEL	
	22	1	*148-8435*	2	TEE AS	
					(EACH INCLUDES)	
		1	**3J-1907**	1	SEAL-O-RING	
		1	**6V-8397**	2	SEAL-O-RING	
		1	**6V-8781**	1	TEE-FACE SEAL	
	23	1	*173-7225*	1	TEE AS	
		1	**3J-7354**	1	SEAL-O-RING	
		1	**6V-8397**	2	SEAL-O-RING	
		1	**6V-9161**	1	TEE	
	24	1	**4D-7735**	1	CLIP	
M	25	1	**5C-7261**	1	NUT (M8X1.25-THD)	
	26	1	**5K-5338**	1	CLIP	
	27	1	**5P-4116**	2	WASHER-HARD (8.8X20.5X2-MM THK)	
	28	1	**8M-2773**	2	CLIP	
	29	1	**8T-4121**	15	WASHER-HARD (11X21X2.5-MM THK)	
M	30	1	**8T-4133**	3	NUT (M10X1.5-THD)	
M	31	1	**8T-4136**	3	BOLT (M10X1.5X25-MM)	
M	32	1	**8T-4139**	1	BOLT (M12X1.75X30-MM)	
M	33	1	**8T-4172**	1	BOLT (M10X1.5X80-MM)	
M	34	1	**8T-4195**	2	BOLT (M10X1.5X30-MM)	
M	35	1	**8T-4196**	2	BOLT (M10X1.5X35-MM)	
	36	1	**8T-4223**	1	WASHER-HARD (13.5X25.5X3-MM THK)	
	37	1	**8T-4224**	1	WASHER-HARD (8.8X16X2-MM THK)	
M	38	1	**8T-4908**	1	BOLT (M8X1.25X25-MM)	
M	39	1	**8T-5005**	3	BOLT (M10X1.5X70-MM)	

235-6810 **LINES GP-SERVICE BRAKE** *(contd.)* **i02277385**

NOTE	REF NO	GRAPHIC REF	PART NUMBER	QTY	PART NAME 1 2 3 4 5 6 (PRODUCT LEVEL)	SEE PAGE
M	40	1	**8T-6466**	1	BOLT (M10X1.5X60-MM)	
	41	1	**8Y-8388**	1	PLATE	
	42	1	**6D-4246**	1	CLIP	

I-REFER TO HYDRAULIC INFORMATION SYSTEM
M-METRIC PART
Y-SEPARATE ILLUSTRATION

235-6810 **LINES GP-SERVICE BRAKE** *(contd.)* **i02277385**

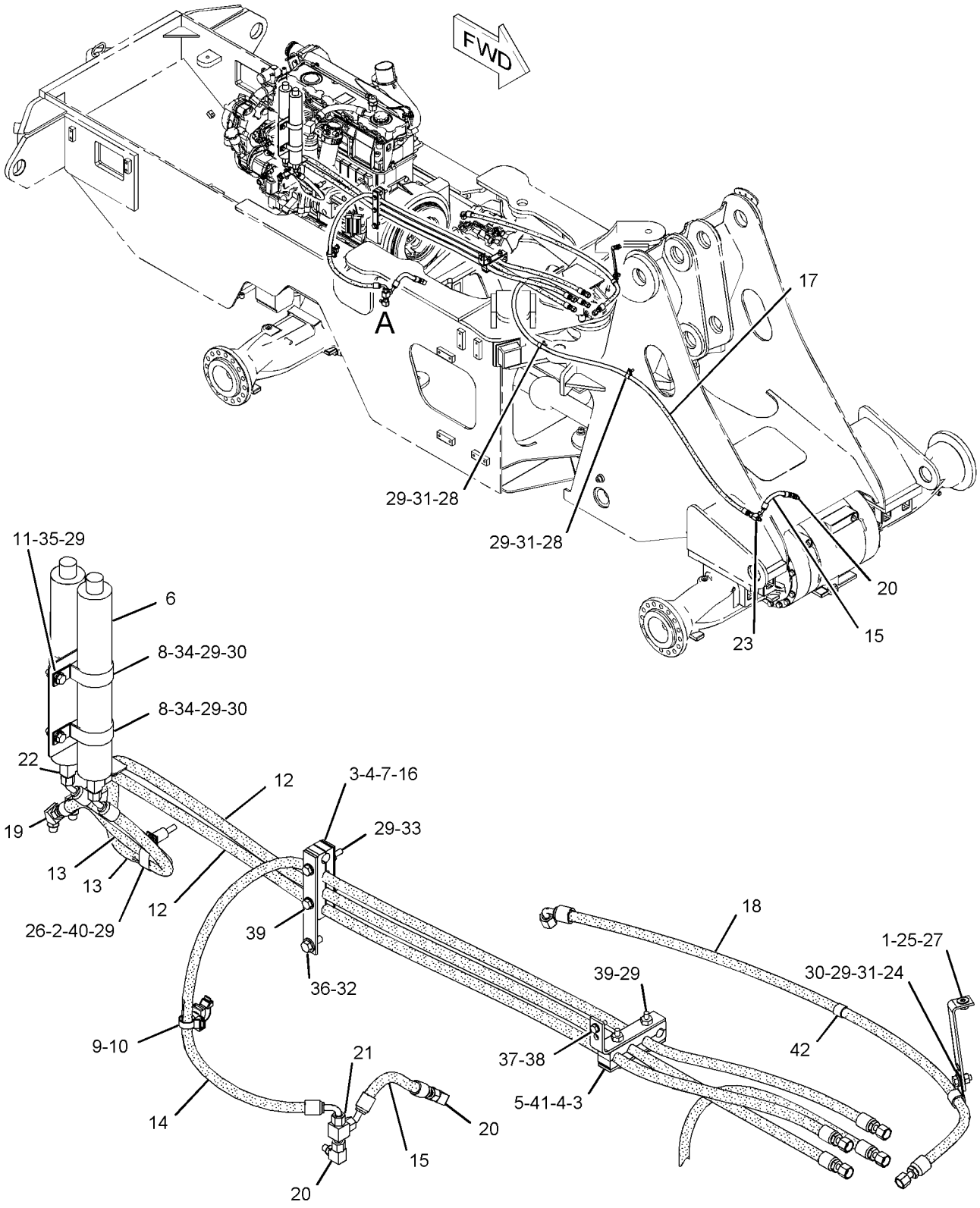

VIEW OF AREA A

GRAPHIC #1 **<END>** g01140281

BRAKING SYSTEM

235-6810 LINES GP-SERVICE BRAKE

S/N: TWR1158-UP
PART OF 235-7499 CHASSIS AR
TYPE 1

SMCS-4257 **i02502596**

NOTE	REF NO	GRAPHIC REF	PART NUMBER	QTY	PART NAME 1 2 3 4 5 6 (PRODUCT LEVEL)	SEE PAGE
	1	1	**4E-7540**	1	ANGLE	
	2	1	**6G-2263**	1	SPACER (10.5X19X28.5-MM THK)	
	3	1	**8Y-8387**	4	BLOCK	
	4	1	**111-6940**	4	SPACER (13.1X15.9X36.5-MM THK)	
	5	1	**132-2397**	1	BRACKET AS	
Y	6	1	*140-9251*	2	ACCUMULATOR GP-BRAKE (CHARGED)	389
	7	1	**140-9289**	1	PLATE AS	
	8	1	**156-4130**	4	CLIP-TUBE	
	9	1	**200-6345**	1	MOUNT (DUAL SWIVEL)	
	10	1	**204-2281**	2	STRAP-TIE	
	11	1	**205-3961**	1	PLATE	
I	12	1	**217-3609**	2	HOSE AS	
I	13	1	**213-7436**	2	HOSE AS	
I	14	1	**213-7437**	1	HOSE AS	
I	15	1	**214-8917**	2	HOSE AS	
	16	1	**229-5152**	1	PLATE	
I	17	1	**274-7519**	1	HOSE AS	
I	18	1	**260-6171**	1	HOSE AS	
	19	1	*148-8353*	2	ELBOW AS	
					(EACH INCLUDES)	
		1	**3J-1907**	1	SEAL-O-RING	
		1	**6V-8397**	1	SEAL-O-RING	
		1	**6V-9001**	1	ELBOW	
	20	1	*148-8361*	3	ELBOW AS	
					(EACH INCLUDES)	
		1	**3J-7354**	1	SEAL-O-RING	
		1	**6V-8397**	1	SEAL-O-RING	
		1	**6V-9200**	1	ELBOW	
	21	1	*148-8433*	1	TEE AS	
		1	**6V-8397**	2	SEAL-O-RING	
		1	**6V-9836**	1	TEE-SWIVEL	
	22	1	*148-8435*	2	TEE AS	
					(EACH INCLUDES)	
		1	**3J-1907**	1	SEAL-O-RING	
		1	**6V-8397**	2	SEAL-O-RING	
		1	**6V-8781**	1	TEE-FACE SEAL	
	23	1	*173-7225*	1	TEE AS	
		1	**3J-7354**	1	SEAL-O-RING	
		1	**6V-8397**	2	SEAL-O-RING	
		1	**6V-9161**	1	TEE	
	24	1	**4D-7735**	1	CLIP	
M	25	1	**5C-7261**	1	NUT (M8X1.25-THD)	
	26	1	**5K-5338**	1	CLIP	
	27	1	**5P-4116**	2	WASHER-HARD (8.8X20.5X2-MM THK)	
	28	1	**8M-2773**	2	CLIP	
	29	1	**8T-4121**	15	WASHER-HARD (11X21X2.5-MM THK)	
CM	30	1	**8T-4133**	4	NUT (M10X1.5-THD)	
CM	31	1	**8T-4136**	2	BOLT (M10X1.5X25-MM)	
M	32	1	**8T-4139**	1	BOLT (M12X1.75X30-MM)	
M	33	1	**8T-4172**	1	BOLT (M10X1.5X80-MM)	
M	34	1	**8T-4195**	2	BOLT (M10X1.5X30-MM)	
M	35	1	**8T-4196**	2	BOLT (M10X1.5X35-MM)	
	36	1	**8T-4223**	1	WASHER-HARD (13.5X25.5X3-MM THK)	
	37	1	**8T-4224**	1	WASHER-HARD (8.8X16X2-MM THK)	
M	38	1	**8T-4908**	1	BOLT (M8X1.25X25-MM)	

235-6810 **LINES GP-SERVICE BRAKE** *(contd.)* **i02502596**

NOTE	REF NO	GRAPHIC REF	PART NUMBER	QTY	PART NAME 1 2 3 4 5 6 (PRODUCT LEVEL)	SEE PAGE
M	39	1	**8T-5005**	3	BOLT (M10X1.5X70-MM)	
M	40	1	**8T-6466**	1	BOLT (M10X1.5X60-MM)	
	41	1	**8Y-8388**	1	PLATE	
	42	1	**6D-4246**	1	CLIP	

C-CHANGE FROM PREVIOUS TYPE
I-REFER TO HYDRAULIC INFORMATION SYSTEM
M-METRIC PART
Y-SEPARATE ILLUSTRATION

235-6810 **LINES GP-SERVICE BRAKE** *(contd.)* **i02502596**

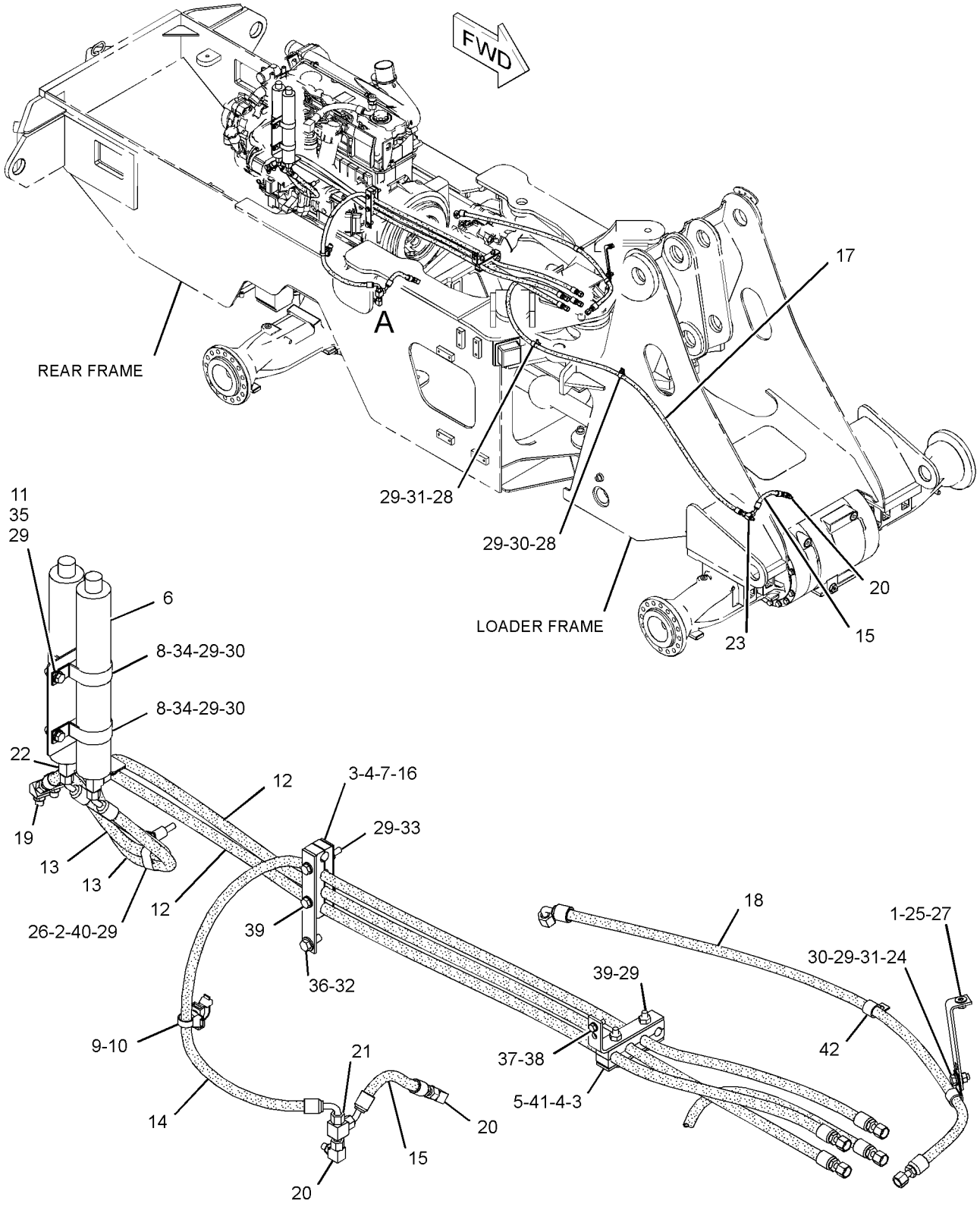

VIEW OF AREA A

GRAPHIC #1 **<END>** g01296818

BRAKING SYSTEM

235-6810 LINES GP-SERVICE BRAKE

S/N: TWR1158-UP
PART OF 235-7499 CHASSIS AR
TYPE 2

SMCS-4257 **i02735786**

NOTE	REF NO	GRAPHIC REF	PART NUMBER	QTY	PART NAME 1 2 3 4 5 6 (PRODUCT LEVEL)	SEE PAGE
	1	1	**4E-7540**	1	ANGLE	
	2	1	**6G-2263**	1	SPACER (10.5X19X28.5-MM THK)	
	3	1	**8Y-8387**	4	BLOCK	
	4	1	**111-6940**	4	SPACER (13.1X15.9X36.5-MM THK)	
	5	1	**132-2397**	1	BRACKET AS	
Y	6	1	*140-9251*	2	ACCUMULATOR GP-BRAKE (CHARGED)	389
	7	1	**140-9289**	1	PLATE AS	
	8	1	**156-4130**	4	CLIP-TUBE	
	9	1	**200-6345**	1	MOUNT (DUAL SWIVEL)	
	10	1	**204-2281**	2	STRAP-TIE	
	11	1	**205-3961**	1	PLATE	
I	12	1	**217-3609**	2	HOSE AS	
I	13	1	**213-7436**	2	HOSE AS	
I	14	1	**213-7437**	1	HOSE AS	
I	15	1	**214-8917**	2	HOSE AS	
	16	1	**229-5152**	1	PLATE	
CI	17	1	**297-4717**	1	HOSE AS	
I	18	1	**260-6171**	1	HOSE AS	
	19	1	*148-8353*	2	ELBOW AS	
					(EACH INCLUDES)	
		1	**3J-1907**	1	SEAL-O-RING	
		1	**6V-8397**	1	SEAL-O-RING	
		1	**6V-9001**	1	ELBOW	
	20	1	*148-8361*	3	ELBOW AS	
					(EACH INCLUDES)	
		1	**3J-7354**	1	SEAL-O-RING	
		1	**6V-8397**	1	SEAL-O-RING	
		1	**6V-9200**	1	ELBOW	
	21	1	*148-8433*	1	TEE AS	
		1	**6V-8397**	2	SEAL-O-RING	
		1	**6V-9836**	1	TEE-SWIVEL	
	22	1	*148-8435*	2	TEE AS	
					(EACH INCLUDES)	
		1	**3J-1907**	1	SEAL-O-RING	
		1	**6V-8397**	2	SEAL-O-RING	
		1	**6V-8781**	1	TEE-FACE SEAL	
	23	1	*173-7225*	1	TEE AS	
		1	**3J-7354**	1	SEAL-O-RING	
		1	**6V-8397**	2	SEAL-O-RING	
		1	**6V-9161**	1	TEE	
	24	1	**4D-7735**	1	CLIP	
M	25	1	**5C-7261**	1	NUT (M8X1.25-THD)	
	26	1	**5K-5338**	1	CLIP	
	27	1	**5P-4116**	2	WASHER-HARD (8.8X20.5X2-MM THK)	
	28	1	**8M-2773**	2	CLIP	
	29	1	**8T-4121**	15	WASHER-HARD (11X21X2.5-MM THK)	
CM	30	1	**8T-4133**	4	NUT (M10X1.5-THD)	
CM	31	1	**8T-4136**	2	BOLT (M10X1.5X25-MM)	
M	32	1	**8T-4139**	1	BOLT (M12X1.75X30-MM)	
	33	1	**4P-7428**	1	CLIP	
M	34	1	**8T-4195**	2	BOLT (M10X1.5X30-MM)	
M	35	1	**8T-4196**	2	BOLT (M10X1.5X35-MM)	
	36	1	**8T-4223**	1	WASHER-HARD (13.5X25.5X3-MM THK)	
	37	1	**8T-4224**	1	WASHER-HARD (8.8X16X2-MM THK)	
M	38	1	**8T-4908**	1	BOLT (M8X1.25X25-MM)	

235-6810 LINES GP-SERVICE BRAKE *(contd.)* i02735786

NOTE	REF NO	GRAPHIC REF	PART NUMBER	QTY	PART NAME 1 2 3 4 5 6 (PRODUCT LEVEL)	SEE PAGE
M	39	1	**8T-5005**	4	BOLT (M10X1.5X70-MM)	
M	40	1	**8T-6466**	1	BOLT (M10X1.5X60-MM)	
	41	1	**8Y-8388**	1	PLATE	
	42	1	**6D-4246**	1	CLIP	
	43	1	**7K-1181**	1	STRAP-CABLE	

C-CHANGE FROM PREVIOUS TYPE
I-REFER TO HYDRAULIC INFORMATION SYSTEM
M-METRIC PART
Y-SEPARATE ILLUSTRATION

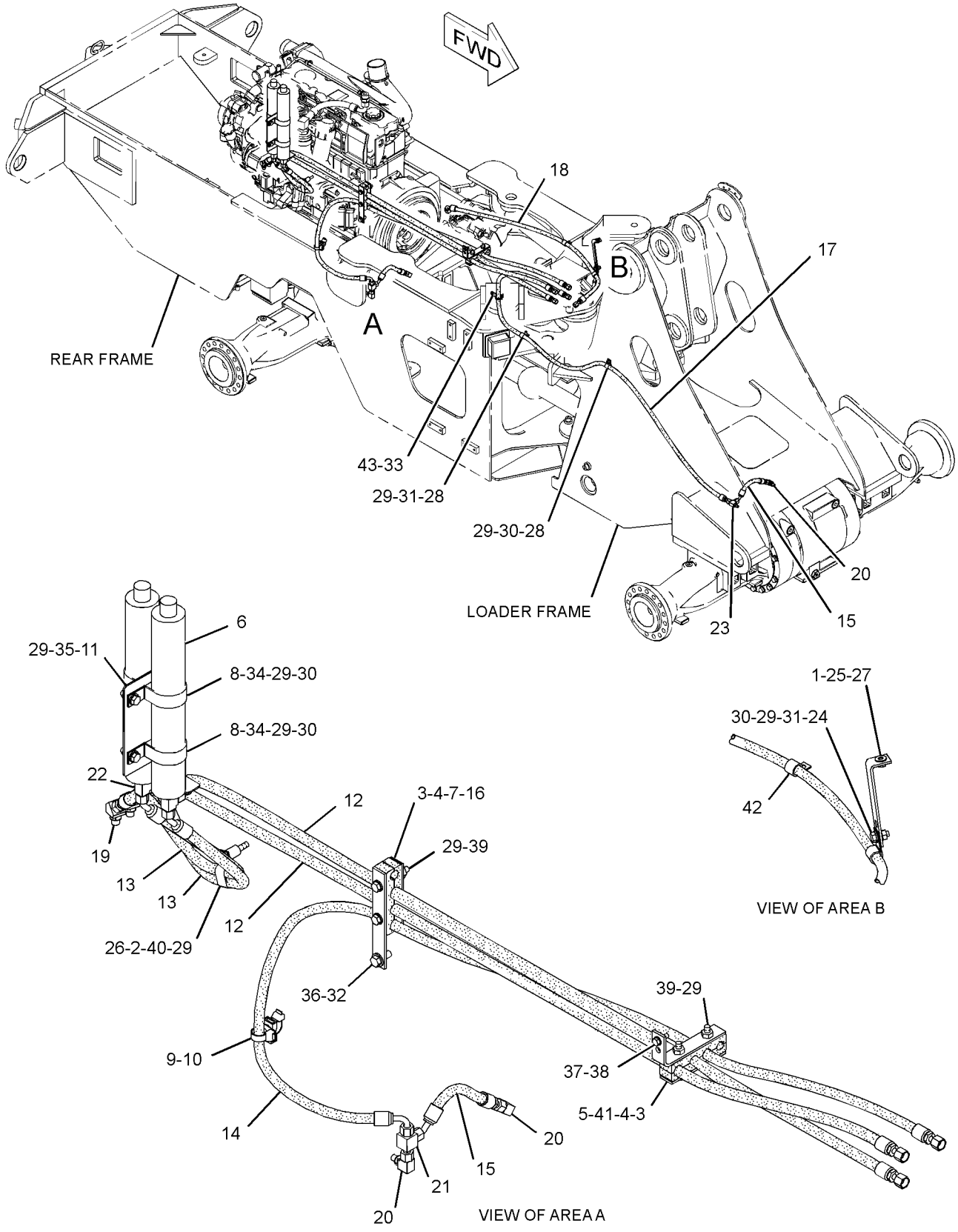

GRAPHIC #1 **<END>** g01394151

235-7195 CYLINDER & MTG GP-STEERING

S/N: TWR1-UP

PART OF 235-7499 CHASSIS AR

SMCS-4303 **i02234472**

NOTE	REF NO	GRAPHIC REF	PART NUMBER	QTY	PART NAME 1 2 3 4 5 6 (PRODUCT LEVEL)	SEE PAGE
	1	1	**132-2553**	2	PIN	
	2	1	**148-7871**	2	PIN AS	
Y	3	1	**237-9271**	2	CYLINDER GP-STEERING	413
	4	1	**6V-3213**	2	RING-RETAINING	
	5	1	**7X-0618**	2	WASHER-HARD (13.5X40X5-MM THK)	
M	6	1	**8T-4183**	2	BOLT (M12X1.75X40-MM)	
	7	1	**9C-7907**	2	SPACER (21.5X28X14-MM THK)	
B	8	1	**9D-1535**	12	WASHER-THRUST (44.8X101.6X1.22-MM THK)	

B-USE AS REQUIRED
M-METRIC PART
Y-SEPARATE ILLUSTRATION

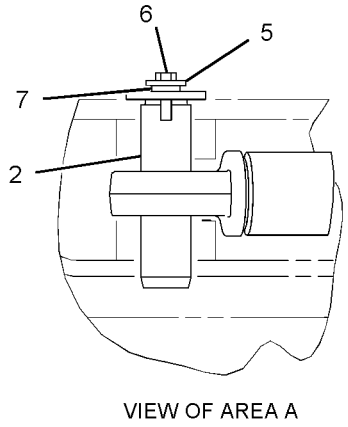

VIEW OF AREA A

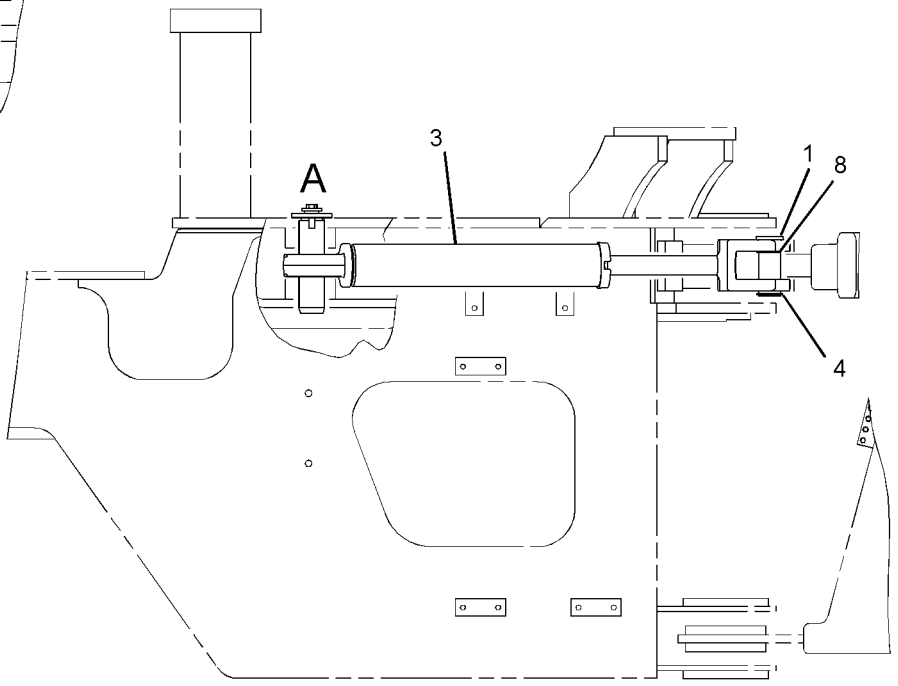

RIGHT SIDE VIEW

GRAPHIC #1 **<END>** g01127142

237-9271 CYLINDER GP-STEERING

S/N: TWR1-UP
69.8-MM (2.7-IN) BORE X 351.6-MM (13.8-IN) STROKE
PART OF 235-7195 CYLINDER & MTG GP-STEERING

SMCS-4303 **i02192750**

NOTE	REF NO	GRAPHIC REF	PART NUMBER	QTY	PART NAME 1 2 3 4 5 6 (PRODUCT LEVEL)	SEE PAGE
	1	1	**142-7568**	1	PISTON	
	2	1	**201-1063**	1	HEAD	
	3	1	**241-6995**	1	ROD AS	
	4	1	**241-6997**	1	CYLINDER AS	
	5	1	**167-2186**	1	SEAL AS-BUFFER	
	6	1	**167-2294**	1	SEAL-U-CUP	
M	7	1	**173-9779**	1	BOLT (M24X3X80-MM)	
	8	1	**175-7895**	1	SEAL-O-RING	
	9	1	**1H-5728**	1	SEAL-O-RING	
	10	1	**226-8202**	1	SEAL-WIPER	
	11	1	**4J-9225**	1	RING-BACKUP	
	12	1	**4T-6780**	1	RING-WEAR	
	13	1	**5J-7010**	1	SEAL AS	
	14	1	**6V-8237**	1	WASHER (26X44X4-MM THK)	
	15	1	**8J-0112**	1	RING-WEAR	

M-METRIC PART

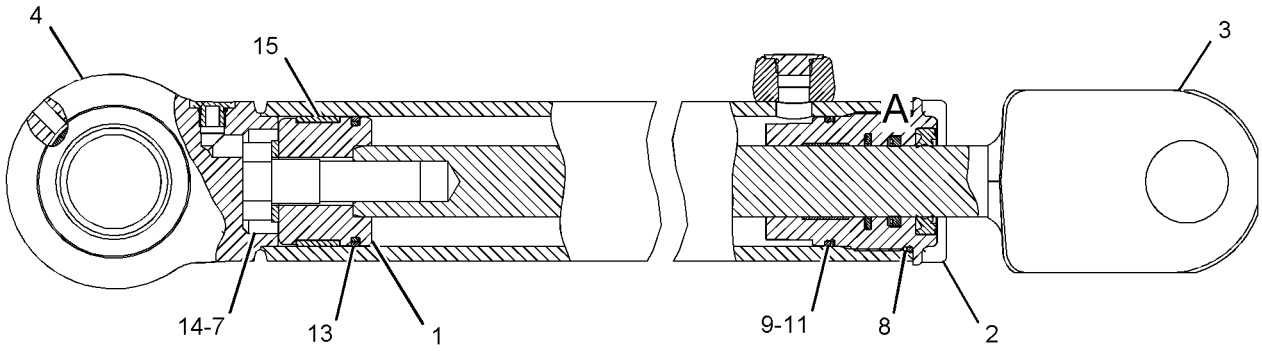

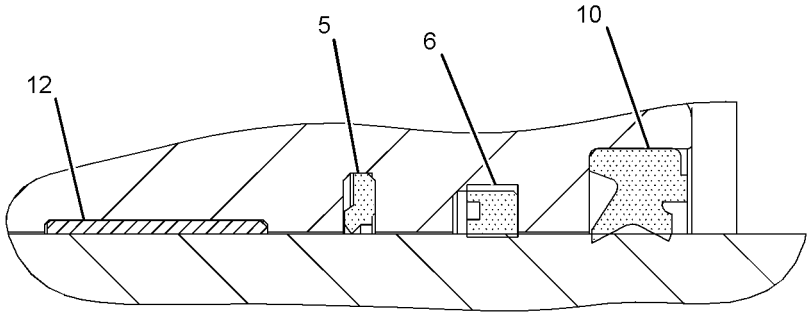

VIEW OF AREA A

GRAPHIC #1 **<END>** g01112083

STEERING SYSTEM

235-6887 LINES GP-SECONDARY STEERING

S/N: TWR1-1254

PART OF 235-6886, 241-5668 STEERING AR-SECONDARY

AN ATTACHMENT

SMCS-4304 **i02325868**

NOTE	REF NO	GRAPHIC REF	PART NUMBER	QTY	PART NAME 1 2 3 4 5 6 (PRODUCT LEVEL)	SEE PAGE
	1	2	**6V-0852**	1	CAP-DUST	
	2	2	**6V-1625**	1	TEE-O-RING	
	3	1,2	**7K-1181**	5	STRAP-CABLE	
Y	4	2	**8J-6875**	1	VALVE GP-SHUTTLE	460
	5	1	**9T-1013**	1	VALVE AS-CHECK	
		1	**3K-0360**	1	SEAL-O-RING	
		1	**6V-8398**	1	SEAL-O-RING	
I	6	1	**114-9478**	1	HOSE AS	
I	7	1	**115-8427**	1	HOSE AS	
	8	2	**151-4841**	2	BLOCK	
I	9	2	**154-9819**	1	HOSE AS	
I	10	1	**165-3133**	1	HOSE AS	
	11	1	**192-2684**	1	VALVE AS-CHECK	
I	12	1	**198-2796**	1	HOSE AS	
	13	1,2	**204-2281**	3	STRAP-TIE	
Y	14	1	**205-5266**	1	PUMP & MOTOR GP (SECONDARY STEERING)	453
I	15	2	**213-7438**	1	HOSE AS	
	16	2	**230-5771**	1	SWITCH AS-PRESSURE (SECONDARY STEERING OIL)	
I	17	1	**242-0180**	1	HOSE AS	
	18	1	**243-6627**	1	VALVE GP-RELIEF (SECONDARY STEERING)	
	19	1	**248-8882**	1	PLATE	
I	20	2	**249-1039**	1	HOSE AS	
I	21	1	**249-1054**	1	HOSE AS	
	22	1	**249-1225**	1	BRACKET AS	
	23	1	**252-7154**	1	PLATE	
	24	2	**252-7964**	1	PLATE	
I	25	2	**263-5443**	1	HOSE AS	
	26	1	**263-5474**	1	TUBE AS	
	27	1	**263-8476**	1	VALVE GP-CHECK	
		1	**6V-9746**	2	SEAL-O-RING	
	28	2	*164-5567*	1	COUPLER AS-QUICK DISCONNECT	
		2	**3J-1907**	1	SEAL-O-RING	
		2	**6V-3965**	1	FITTING (QUICK DISCONNECT)	
I	29	1,2	**111-7833**	1	HOSE AS	
	30	2	**136-1901**	1	CONNECTOR	
	31	1	*148-8324*	1	CONNECTOR AS	
		1	**3K-0360**	1	SEAL-O-RING	
		1	**6V-9746**	1	SEAL-O-RING	
		1	**6V-9874**	1	CONNECTOR	
	32	2	*148-8325*	1	CONNECTOR AS	
		2	**3J-1907**	1	SEAL-O-RING	
		2	**4J-5477**	1	SEAL-O-RING	
		2	**6V-8641**	1	CONNECTOR	
	33	2	*148-8336*	1	CONNECTOR AS	
		2	**3J-1907**	1	SEAL-O-RING	
		2	**6V-8397**	1	SEAL-O-RING	
		2	**6V-8636**	1	CONNECTOR	
	34	1	*148-8340*	5	CONNECTOR AS	
					(EACH INCLUDES)	
		1	**3K-0360**	1	SEAL-O-RING	
		1	**6V-8398**	1	SEAL-O-RING	
		1	**6V-8639**	1	CONNECTOR	
	35	1	*148-8345*	1	CONNECTOR AS	
		1	**2M-9780**	1	SEAL-O-RING	
		1	**6V-8398**	1	SEAL-O-RING	

235-6887 LINES GP-SECONDARY STEERING *(contd.)* i02325868

NOTE	REF NO	GRAPHIC REF	PART NUMBER	QTY	PART NAME 1 2 3 4 5 6 (PRODUCT LEVEL)	SEE PAGE
		1	**6V-8638**	1	CONNECTOR	
	36	1,2	*148-8347*	2	ELBOW AS	
					(EACH INCLUDES)	
		1,2	**3D-2824**	1	SEAL-O-RING	
		1,2	**6V-9007**	1	ELBOW	
		1,2	**6V-9746**	1	SEAL-O-RING	
	37	2	*148-8351*	1	ELBOW AS	
		2	**4J-5477**	1	SEAL-O-RING	
		2	**6V-9849**	1	ELBOW	
	38	1,2	*148-8364*	2	ELBOW AS	
					(EACH INCLUDES)	
		1,2	**3K-0360**	1	SEAL-O-RING	
		1,2	**6V-8398**	1	SEAL-O-RING	
		1,2	**8T-1686**	1	ELBOW	
	39	1,2	*148-8365*	2	ELBOW AS	
					(EACH INCLUDES)	
		1,2	**3J-1907**	1	SEAL-O-RING	
		1,2	**6V-8398**	1	SEAL-O-RING	
		1,2	**8T-6876**	1	ELBOW (90-DEG)	
	40	2	*148-8368*	1	ELBOW AS	
		2	**3J-1907**	1	SEAL-O-RING	
		2	**4J-5477**	1	SEAL-O-RING	
		2	**6V-8627**	1	ELBOW	
	41	1	*148-8369*	1	ELBOW AS	
		1	**3J-7354**	1	SEAL-O-RING	
		1	**4J-5477**	1	SEAL-O-RING	
	42	1,2	*148-8444*	2	TEE AS-SWIVEL	
					(EACH INCLUDES)	
		1,2	**6V-8398**	2	SEAL-O-RING	
		1,2	**6V-9837**	1	TEE-SWIVEL	
	43	2	*150-3070*	1	ADAPTER AS	
		2	**3J-1907**	1	SEAL-O-RING	
		2	**7X-3163**	1	ADAPTER-SWIVEL	
	44	2	*150-4033*	1	TEE AS	
		2	**6V-9846**	1	TEE-SWIVEL	
		2	**6V-9746**	2	SEAL-O-RING	
	45	1	*150-4037*	1	TEE AS	
		1	**6V-8398**	2	SEAL-O-RING	
		1	**6V-9844**	1	TEE-SWIVEL	
	46	2	*150-5968*	1	TEE AS	
		2	**4J-5477**	2	SEAL-O-RING	
		2	**6V-9835**	1	TEE-SWIVEL	
	47	2	*155-6258*	1	ELBOW AS	
		2	**3D-2824**	1	SEAL-O-RING	
		2	**6V-8398**	1	SEAL-O-RING	
		2	**127-1647**	1	ELBOW	
	48	2	**164-4225**	1	CLIP	
I	49	1	**176-7228**	2	HOSE AS	
	50	1,2	**204-8000**	3	MOUNT (TIE WRAP)	
	51	2	**3J-1907**	2	SEAL-O-RING	
	52	2	**3J-7354**	1	SEAL-O-RING	
	53	2	**3K-0360**	1	SEAL-O-RING	
	54	2	**4I-0899**	1	FITTING	
	55	1	**4J-5477**	1	SEAL-O-RING	
M	56	1	**5C-7261**	4	NUT (M8X1.25-THD)	
	57	2	**6V-8397**	1	SEAL-O-RING	
	58	1	**6V-9828**	1	CAP AS	
	59	2	**6V-9829**	1	CAP AS	
	60	1	**7X-7729**	2	WASHER (11X25X3-MM THK)	

235-6887 **LINES GP-SECONDARY STEERING** *(contd.)* **i02325868**

NOTE	REF NO	GRAPHIC REF	PART NUMBER	QTY	PART NAME 1 2 3 4 5 6 (PRODUCT LEVEL)	SEE PAGE
	61	1,2	**8T-4121**	7	WASHER-HARD (11X21X2.5-MM THK)	
M	62	1,2	**8T-4133**	2	NUT (M10X1.5-THD)	
M	63	1,2	**8T-4136**	4	BOLT (M10X1.5X25-MM)	
M	64	1,2	**8T-4186**	2	BOLT (M10X1.5X40-MM)	
M	65	1	**8T-4192**	2	BOLT (M12X1.75X25-MM)	
M	66	1	**8T-4196**	1	BOLT (M10X1.5X35-MM)	
	67	1	**8T-4223**	2	WASHER-HARD (13.5X25.5X3-MM THK)	
	68	1	**8T-4224**	4	WASHER-HARD (8.8X16X2-MM THK)	
M	69	1	**8T-4908**	4	BOLT (M8X1.25X25-MM)	
	70	1	**9X-8250**	1	CLIP	
	71	2	*148-8316*	1	CONNECTOR AS	
		2	**3J-7354**	1	SEAL-O-RING	
		2	**4J-5477**	1	SEAL-O-RING	
		2	**6V-8647**	1	CONNECTOR	

I-REFER TO HYDRAULIC INFORMATION SYSTEM
M-METRIC PART
Y-SEPARATE ILLUSTRATION

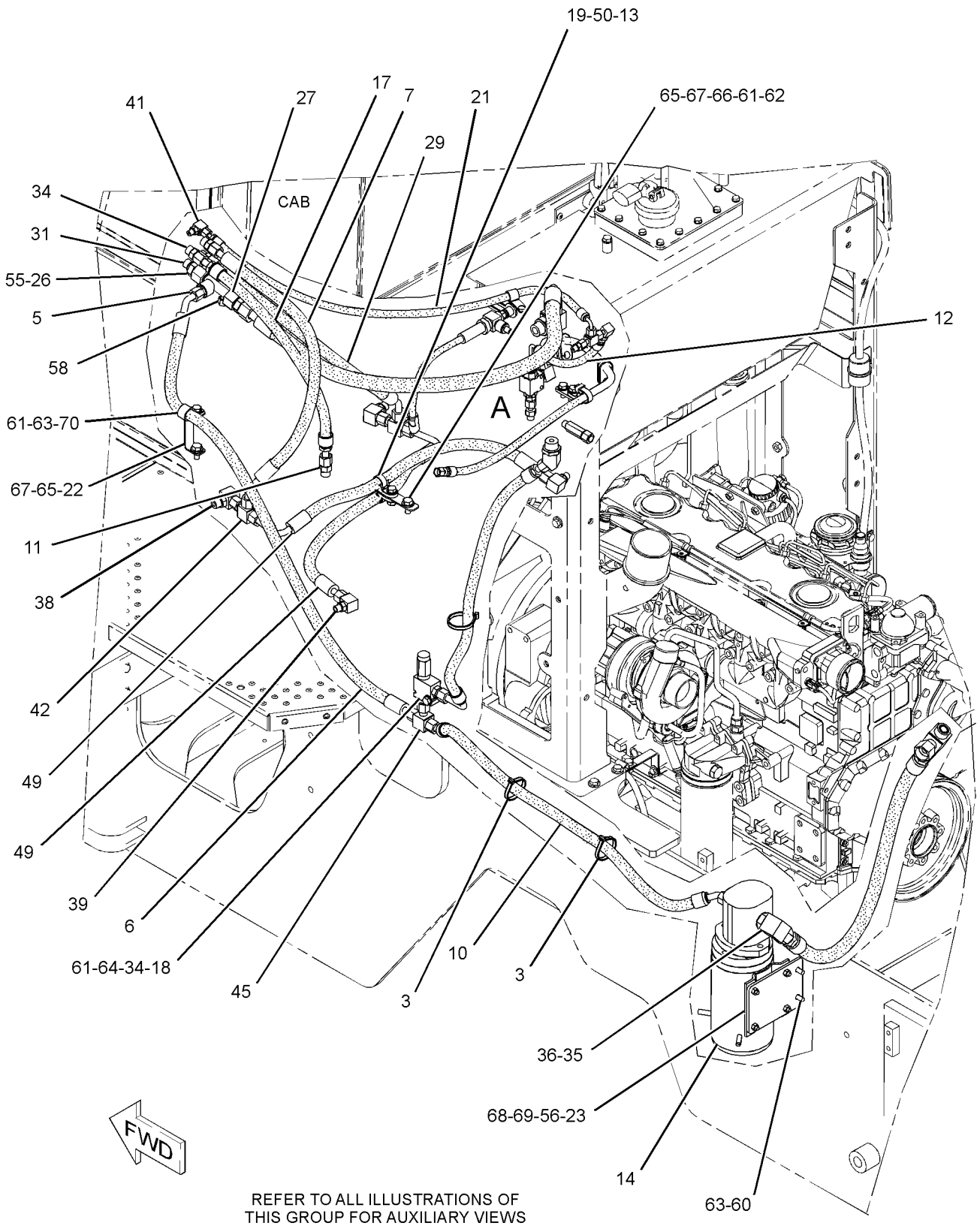

GRAPHIC #1 g01173518

235-6887 **LINES GP-SECONDARY STEERING** *(contd.)* **i02325868**

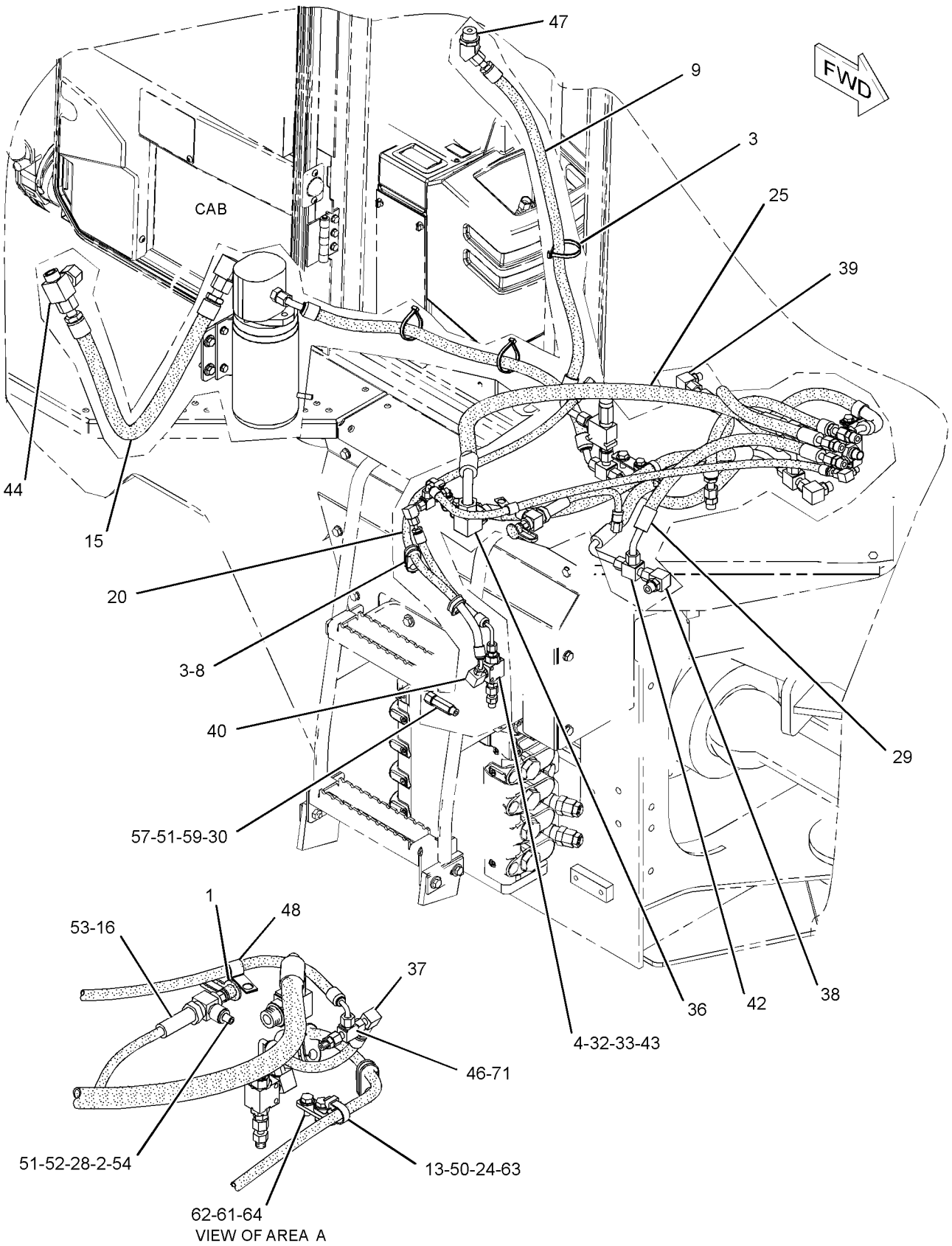

GRAPHIC #2 **<END>** g01173514

STEERING SYSTEM

235-6887 LINES GP-SECONDARY STEERING

S/N: TWR1255-1378

PART OF 235-6886, 241-5668 STEERING AR-SECONDARY

AN ATTACHMENT

SMCS-4304 **i02595403**

NOTE	REF NO	GRAPHIC REF	PART NUMBER	QTY	PART NAME 1 2 3 4 5 6 (PRODUCT LEVEL)	SEE PAGE
	1	2	**6V-0852**	1	CAP-DUST	
	2	2	**6V-1625**	1	TEE-O-RING	
	3	1,2	**7K-1181**	5	STRAP-CABLE	
Y	4	2	**8J-6875**	1	VALVE GP-SHUTTLE	460
	5	1	**9T-1013**	1	VALVE AS-CHECK	
		1	**3K-0360**	1	SEAL-O-RING	
		1	**6V-8398**	1	SEAL-O-RING	
I	6	1	**114-9478**	1	HOSE AS	
I	7	1	**115-8427**	1	HOSE AS	
	8	2	**151-4841**	2	BLOCK	
I	9	2	**154-9819**	1	HOSE AS	
I	10	1	**165-3133**	1	HOSE AS	
	11	1	**192-2684**	1	VALVE AS-CHECK	
I	12	2	**198-2796**	1	HOSE AS	
	13	2	**204-2281**	3	STRAP-TIE	
Y	14	1	**205-5266**	1	PUMP & MOTOR GP (SECONDARY STEERING)	453
I	15	2	**213-7438**	1	HOSE AS	
	16	2	**230-5771**	1	SWITCH AS-PRESSURE (SECONDARY STEERING OIL)	
		2	**102-8803**	1	KIT-RECEPTACLE (3-PIN)	
					(INCLUDES RECEPTACLE AS & WEDGE)	
		2	**186-3735**	3	PIN-CONNECTOR (16-GA TO 18-GA)	
E		2	**9X-1813**		SLEEVE (30-CM)	
I	17	1	**242-0180**	1	HOSE AS	
	18	1	**243-6627**	1	VALVE GP-RELIEF (SECONDARY STEERING)	
	19	1	**248-8882**	1	PLATE	
I	20	1	**249-1039**	1	HOSE AS	
I	21	2	**249-1054**	1	HOSE AS	
	22	1	**249-1225**	1	BRACKET AS	
	23	1	**252-7154**	1	PLATE	
	24	2	**252-7964**	1	PLATE	
I	25	2	**263-5443**	1	HOSE AS	
	26	1	**263-5474**	1	TUBE AS	
	27	1	**263-8476**	1	VALVE GP-CHECK	
		1	**6V-9746**	2	SEAL-O-RING	
	28	2	*164-5567*	1	COUPLER AS-QUICK DISCONNECT	
		2	**3J-1907**	1	SEAL-O-RING	
		2	**6V-3965**	1	FITTING (QUICK DISCONNECT)	
I	29	2	**111-7833**	1	HOSE AS	
	30	2	**136-1901**	1	CONNECTOR	
	31	1	*148-8324*	1	CONNECTOR AS	
		1	**3K-0360**	1	SEAL-O-RING	
		1	**6V-9746**	1	SEAL-O-RING	
		1	**6V-9874**	1	CONNECTOR	
	32	2	*148-8325*	1	CONNECTOR AS	
		2	**3J-1907**	1	SEAL-O-RING	
		2	**4J-5477**	1	SEAL-O-RING	
		2	**6V-8641**	1	CONNECTOR	
	33	2	*148-8336*	1	CONNECTOR AS	
		2	**3J-1907**	1	SEAL-O-RING	
		2	**6V-8397**	1	SEAL-O-RING	
		2	**6V-8636**	1	CONNECTOR	
	34	1	*148-8340*	5	CONNECTOR AS	
					(EACH INCLUDES)	
		1	**3K-0360**	1	SEAL-O-RING	
		1	**6V-8398**	1	SEAL-O-RING	

235-6887 LINES GP-SECONDARY STEERING *(contd.)* i02595403

NOTE	REF NO	GRAPHIC REF	PART NUMBER	QTY	PART NAME 1 2 3 4 5 6 (PRODUCT LEVEL)	SEE PAGE
		1	**6V-8639**	1	CONNECTOR	
	35	1	*148-8345*	1	CONNECTOR AS	
		1	**2M-9780**	1	SEAL-O-RING	
		1	**6V-8398**	1	SEAL-O-RING	
		1	**6V-8638**	1	CONNECTOR	
C	36	1	*148-8347*	1	ELBOW AS	
		1	**3D-2824**	1	SEAL-O-RING	
		1	**6V-9007**	1	ELBOW	
		1	**6V-9746**	1	SEAL-O-RING	
	37	2	*148-8351*	1	ELBOW AS	
		2	**4J-5477**	1	SEAL-O-RING	
		2	**6V-9849**	1	ELBOW	
	38	1,2	*148-8364*	2	ELBOW AS	
					(EACH INCLUDES)	
		1,2	**3K-0360**	1	SEAL-O-RING	
		1,2	**6V-8398**	1	SEAL-O-RING	
		1,2	**6V-8625**	1	ELBOW	
	39	1,2	*148-8365*	2	ELBOW AS	
					(EACH INCLUDES)	
		1,2	**3J-1907**	1	SEAL-O-RING	
		1,2	**6V-8398**	1	SEAL-O-RING	
		1,2	**8T-6876**	1	ELBOW (90-DEG)	
	40	2	*148-8368*	1	ELBOW AS	
		2	**3J-1907**	1	SEAL-O-RING	
		2	**4J-5477**	1	SEAL-O-RING	
		2	**6V-8627**	1	ELBOW	
	41	1	*148-8369*	1	ELBOW AS	
		1	**6V-8628**	1	ELBOW	
		1	**3J-7354**	1	SEAL-O-RING	
		1	**4J-5477**	1	SEAL-O-RING	
	42	1,2	*148-8444*	2	TEE AS-SWIVEL	
					(EACH INCLUDES)	
		1,2	**6V-8398**	2	SEAL-O-RING	
		1,2	**6V-9837**	1	TEE-SWIVEL	
	43	2	*150-3070*	1	ADAPTER AS	
		2	**3J-1907**	1	SEAL-O-RING	
		2	**7X-3163**	1	ADAPTER-SWIVEL	
	44	2	*150-4033*	1	TEE AS	
		2	**6V-9846**	1	TEE-SWIVEL	
		2	**6V-9746**	2	SEAL-O-RING	
	45	1	*150-4037*	1	TEE AS	
		1	**6V-8398**	2	SEAL-O-RING	
		1	**6V-9844**	1	TEE-SWIVEL	
	46	2	*150-5968*	1	TEE AS	
		2	**4J-5477**	2	SEAL-O-RING	
		2	**6V-9835**	1	TEE-SWIVEL	
	47	2	*155-6258*	1	ELBOW AS	
		2	**3D-2824**	1	SEAL-O-RING	
		2	**6V-8398**	1	SEAL-O-RING	
		2	**127-1647**	1	ELBOW	
	48	2	**164-4225**	1	CLIP	
I	49	1	**176-7228**	2	HOSE AS	
	50	2	**204-8000**	3	MOUNT (TIE WRAP)	
	51	2	**3J-1907**	2	SEAL-O-RING	
	52	2	**3J-7354**	1	SEAL-O-RING	
	53	2	**3K-0360**	1	SEAL-O-RING	
	54	2	**4I-0899**	1	FITTING	
	55	1	**4J-5477**	1	SEAL-O-RING	
M	56	1	**5C-7261**	4	NUT (M8X1.25-THD)	

235-6887 LINES GP-SECONDARY STEERING *(contd.)* i02595403

NOTE	REF NO	GRAPHIC REF	PART NUMBER	QTY	PART NAME 1 2 3 4 5 6 (PRODUCT LEVEL)	SEE PAGE
	57	2	**6V-8397**	1	SEAL-O-RING	
	58	1	**6V-9828**	1	CAP AS	
	59	2	**6V-9829**	1	CAP AS	
	60	1	**7X-7729**	4	WASHER (11X25X3-MM THK)	
	61	1,2	**8T-4121**	7	WASHER-HARD (11X21X2.5-MM THK)	
M	62	2	**8T-4133**	2	NUT (M10X1.5-THD)	
M	63	1	**8T-4136**	4	BOLT (M10X1.5X25-MM)	
M	64	1,2	**8T-4186**	2	BOLT (M10X1.5X40-MM)	
C	65	2	*148-8392*	1	ELBOW AS	
		2	**6V-9746**	1	SEAL-O-RING	
		2	**6V-9853**	1	ELBOW	
M	66	1	**8T-4196**	3	BOLT (M10X1.5X35-MM)	
C	67	2	*148-8327*	1	CONNECTOR AS	
		2	**3D-2824**	1	SEAL-O-RING	
		2	**6V-8637**	1	CONNECTOR	
		2	**6V-9746**	1	SEAL-O-RING	
	68	1	**8T-4224**	4	WASHER-HARD (8.8X16X2-MM THK)	
M	69	1	**8T-4908**	4	BOLT (M8X1.25X25-MM)	
	70	1	**9X-8250**	1	CLIP	
	71	2	*148-8316*	1	CONNECTOR AS	
		2	**3J-7354**	1	SEAL-O-RING	
		2	**4J-5477**	1	SEAL-O-RING	
		2	**6V-8647**	1	CONNECTOR	

C-CHANGE FROM PREVIOUS TYPE
E-ORDER BY THE CENTIMETER
I-REFER TO HYDRAULIC INFORMATION SYSTEM
M-METRIC PART
Y-SEPARATE ILLUSTRATION

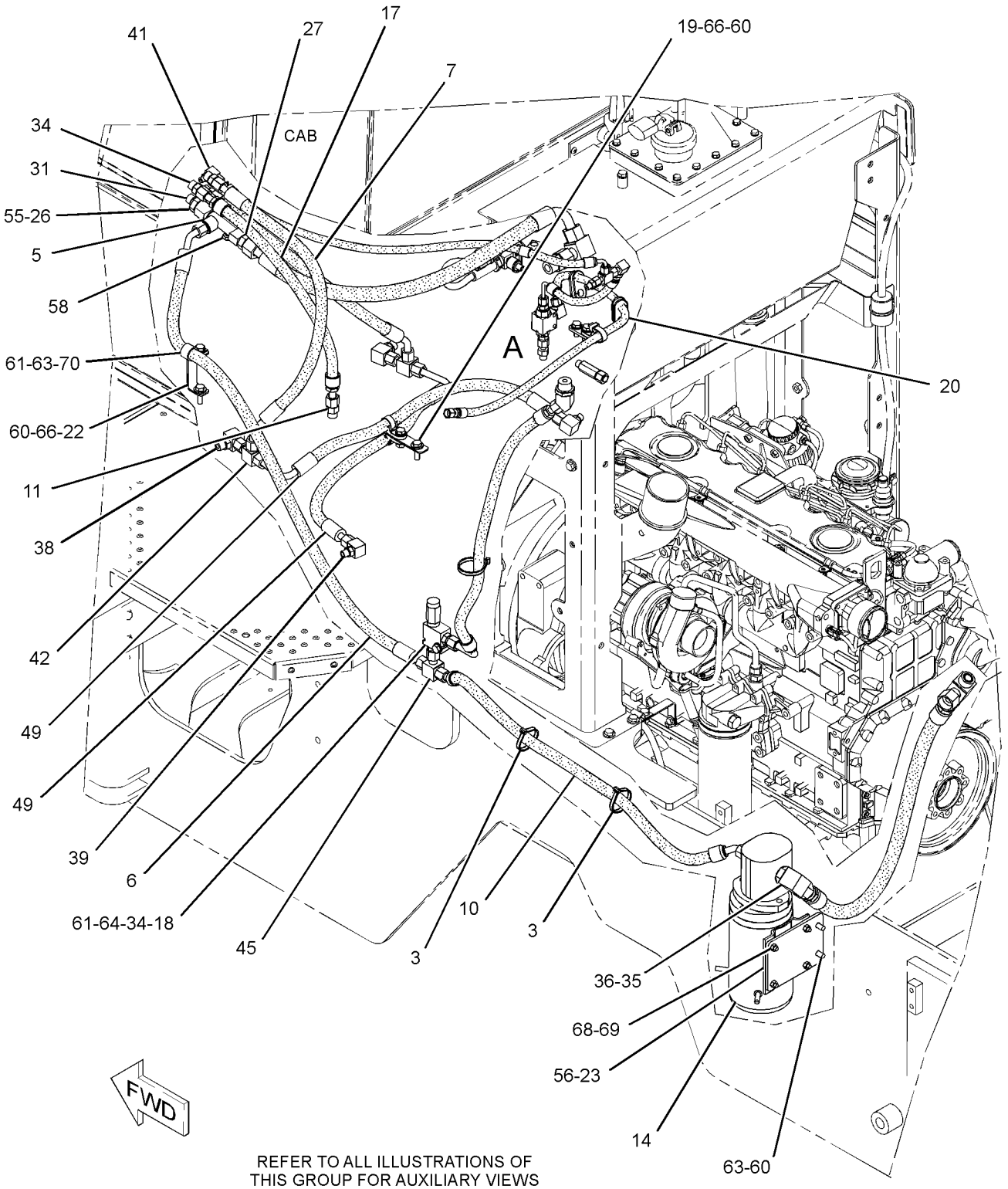

GRAPHIC #1

g01252547

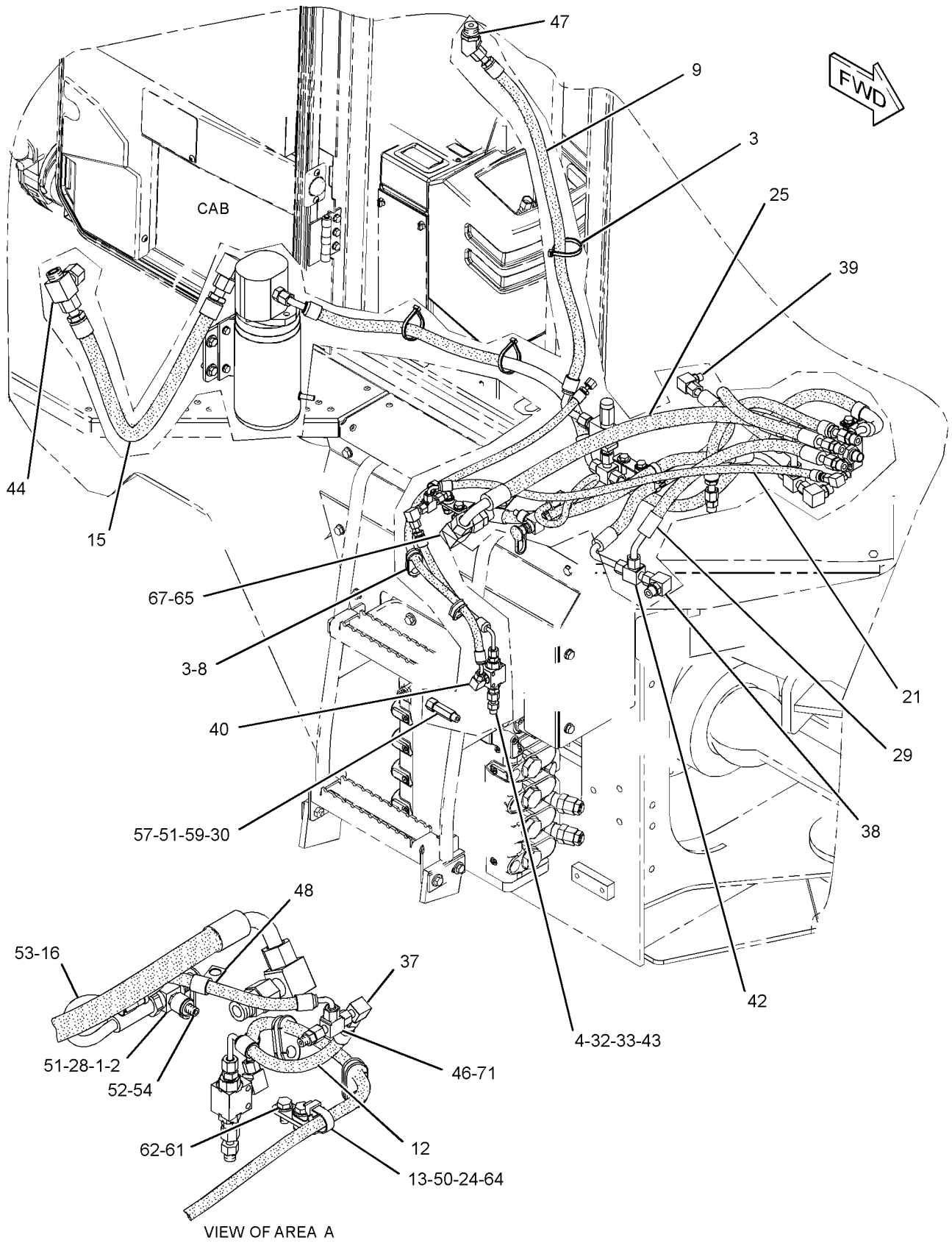

GRAPHIC #2 **<END>** g01252546

STEERING SYSTEM

235-6887 LINES GP-SECONDARY STEERING

S/N: TWR1-UP
PART OF 235-6886, 241-5668 STEERING AR-SECONDARY
AN ATTACHMENT
TYPE 1

SMCS-4304 **i02605854**

NOTE	REF NO	GRAPHIC REF	PART NUMBER	QTY	PART NAME 1 2 3 4 5 6 (PRODUCT LEVEL)	SEE PAGE
	1	1	**6V-0852**	1	CAP-DUST	
	2	1	*217-5293*	1	TEE AS	
		1	**3J-1907**	1	SEAL-O-RING	
		1	**6V-1625**	1	TEE-O-RING	
	3	1,2	**7K-1181**	5	STRAP-CABLE	
Y	4	2	**8J-6875**	1	VALVE GP-SHUTTLE	460
	5	1	**9T-1013**	1	VALVE AS-CHECK	
		1	**3K-0360**	1	SEAL-O-RING	
		1	**6V-8398**	1	SEAL-O-RING	
I	6	1	**214-1542**	1	HOSE AS	
I	7	1	**115-8427**	1	HOSE AS	
	8	2	**151-4841**	2	BLOCK	
I	9	2	**154-9819**	1	HOSE AS	
I	10	1	**165-3133**	1	HOSE AS	
	11	1	**192-2684**	1	VALVE AS-CHECK	
I	12	1	**198-2796**	1	HOSE AS	
	13	1	**204-2281**	5	STRAP-TIE	
Y	14	1	**205-5266**	1	PUMP & MOTOR GP (SECONDARY STEERING)	453
I	15	1	**213-7438**	1	HOSE AS	
	16	1	**230-5771**	1	SWITCH AS-PRESSURE (SECONDARY STEERING OIL)	
		1	**102-8803**	1	KIT-RECEPTACLE (3-PIN)	
					(INCLUDES RECEPTACLE AS & WEDGE)	
		1	**186-3735**	3	PIN-CONNECTOR (16-GA TO 18-GA)	
E		1	**9X-1813**		SLEEVE (30-CM)	
I	17	1	**242-0180**	1	HOSE AS	
	18	1	**243-6627**	1	VALVE GP-RELIEF (SECONDARY STEERING)	
	19	1	**248-8882**	1	PLATE	
I	20	1	**249-1039**	1	HOSE AS	
I	21	1	**249-1054**	1	HOSE AS	
	23	1	**252-7154**	1	PLATE	
	24	1	**252-7964**	1	PLATE	
I	25	2	**263-5443**	1	HOSE AS	
	26	1	**263-5474**	1	TUBE AS	
	27	1	**263-8476**	1	VALVE GP-CHECK	
		1	**6V-9746**	2	SEAL-O-RING	
	28	1	*164-5567*	1	COUPLER AS-QUICK DISCONNECT	
		1	**3J-1907**	1	SEAL-O-RING	
		1	**6V-3965**	1	FITTING (QUICK DISCONNECT)	
I	29	2	**111-7833**	1	HOSE AS	
	30	2	**136-1901**	1	CONNECTOR	
	31	1	*148-8324*	1	CONNECTOR AS	
		1	**3K-0360**	1	SEAL-O-RING	
		1	**6V-9746**	1	SEAL-O-RING	
		1	**6V-9874**	1	CONNECTOR	
	32	2	*148-8325*	1	CONNECTOR AS	
		2	**3J-1907**	1	SEAL-O-RING	
		2	**4J-5477**	1	SEAL-O-RING	
		2	**6V-8641**	1	CONNECTOR	
	33	2	*148-8336*	1	CONNECTOR AS	
		2	**3J-1907**	1	SEAL-O-RING	
		2	**6V-8397**	1	SEAL-O-RING	
		2	**6V-8636**	1	CONNECTOR	
	34	1	*148-8340*	5	CONNECTOR AS	
					(EACH INCLUDES)	

235-6887 LINES GP-SECONDARY STEERING *(contd.)* i02605854

NOTE	REF NO	GRAPHIC REF	PART NUMBER	QTY	PART NAME 1 2 3 4 5 6 (PRODUCT LEVEL)	SEE PAGE
		1	**3K-0360**	1	SEAL-O-RING	
		1	**6V-8398**	1	SEAL-O-RING	
		1	**6V-8639**	1	CONNECTOR	
	35	2	*148-8345*	1	CONNECTOR AS	
		2	**2M-9780**	1	SEAL-O-RING	
		2	**6V-8398**	1	SEAL-O-RING	
		2	**6V-8638**	1	CONNECTOR	
	36	1	*148-8347*	1	ELBOW AS	
		1	**3D-2824**	1	SEAL-O-RING	
		1	**6V-9007**	1	ELBOW	
		1	**6V-9746**	1	SEAL-O-RING	
	37	1	*148-8351*	1	ELBOW AS	
		1	**4J-5477**	1	SEAL-O-RING	
		1	**6V-9849**	1	ELBOW	
	38	1,2	*148-8364*	2	ELBOW AS	
					(EACH INCLUDES)	
		1,2	**3K-0360**	1	SEAL-O-RING	
		1,2	**6V-8398**	1	SEAL-O-RING	
		1,2	**6V-8625**	1	ELBOW	
	39	1,2	*148-8365*	2	ELBOW AS	
					(EACH INCLUDES)	
		1,2	**3J-1907**	1	SEAL-O-RING	
		1,2	**6V-8398**	1	SEAL-O-RING	
		1,2	**8T-6876**	1	ELBOW (90-DEG)	
	40	2	*148-8368*	1	ELBOW AS	
		2	**3J-1907**	1	SEAL-O-RING	
		2	**4J-5477**	1	SEAL-O-RING	
		2	**6V-8627**	1	ELBOW	
	41	2	*148-8369*	1	ELBOW AS	
		2	**6V-8628**	1	ELBOW	
		2	**3J-7354**	1	SEAL-O-RING	
		2	**4J-5477**	1	SEAL-O-RING	
	42	1,2	*148-8444*	2	TEE AS-SWIVEL	
					(EACH INCLUDES)	
		1,2	**6V-8398**	2	SEAL-O-RING	
		1,2	**6V-9837**	1	TEE-SWIVEL	
	43	2	*150-3070*	1	ADAPTER AS	
		2	**3J-1907**	1	SEAL-O-RING	
		2	**7X-3163**	1	ADAPTER-SWIVEL	
	44	1	*150-4033*	1	TEE AS	
		1	**6V-9846**	1	TEE-SWIVEL	
		1	**6V-9746**	2	SEAL-O-RING	
	45	1	*150-4037*	1	TEE AS	
		1	**6V-8398**	2	SEAL-O-RING	
		1	**6V-9844**	1	TEE-SWIVEL	
	46	1	*150-5968*	1	TEE AS	
		1	**4J-5477**	2	SEAL-O-RING	
		1	**6V-9835**	1	TEE-SWIVEL	
	47	2	*155-6258*	1	ELBOW AS	
		2	**3D-2824**	1	SEAL-O-RING	
		2	**6V-8398**	1	SEAL-O-RING	
		2	**127-1647**	1	ELBOW	
	48	1	**164-4225**	1	CLIP	
I	49	1	**176-7228**	2	HOSE AS	
	50	1	**204-8000**	3	MOUNT (TIE WRAP)	
	51	2	**3J-1907**	1	SEAL-O-RING	
	52	1	**3J-7354**	1	SEAL-O-RING	
	53	1	**3K-0360**	1	SEAL-O-RING	
	54	1	**4I-0899**	1	FITTING	

235-6887 LINES GP-SECONDARY STEERING *(contd.)* i02605854

NOTE	REF NO	GRAPHIC REF	PART NUMBER	QTY	PART NAME 1 2 3 4 5 6 (PRODUCT LEVEL)	SEE PAGE
	55	1	**4J-5477**	1	SEAL-O-RING	
M	56	1	**5C-7261**	4	NUT (M8X1.25-THD)	
	57	2	**6V-8397**	1	SEAL-O-RING	
B	58	1	**6V-9828**	1	CAP AS	
	59	2	**6V-9829**	1	CAP AS	
	60	1	**7X-7729**	2	WASHER (11X25X3-MM THK)	
	61	1	**8T-4121**	6	WASHER-HARD (11X21X2.5-MM THK)	
M	62	1	**8T-4133**	2	NUT (M10X1.5-THD)	
M	63	1	**8T-4136**	3	BOLT (M10X1.5X25-MM)	
M	64	1	**8T-4186**	2	BOLT (M10X1.5X40-MM)	
	65	2	*148-8392*	1	ELBOW AS	
		2	**6V-9746**	1	SEAL-O-RING	
		2	**6V-9853**	1	ELBOW	
	67	2	*148-8327*	1	CONNECTOR AS	
		2	**3D-2824**	1	SEAL-O-RING	
		2	**6V-8637**	1	CONNECTOR	
		2	**6V-9746**	1	SEAL-O-RING	
	68	1	**8T-4224**	4	WASHER-HARD (8.8X16X2-MM THK)	
M	69	1	**8T-4908**	4	BOLT (M8X1.25X25-MM)	
C	71	1	*268-1601*	1	CONNECTOR AS-ORIFICE	
		1	**3J-7354**	1	SEAL-O-RING	
		1	**4J-5477**	1	SEAL-O-RING	
		1	**112-2628**	1	CONNECTOR	
	72	1	**200-6345**	1	MOUNT (DUAL SWIVEL)	
B	73	1	**8T-4223**	1	WASHER-HARD (13.5X25.5X3-MM THK)	
BM	74	1	**8T-4196**	1	BOLT (M10X1.5X35-MM)	
M	75	1	**8T-4192**	1	BOLT (M12X1.75X25-MM)	

B-USE AS REQUIRED
C-CHANGE FROM PREVIOUS TYPE
E-ORDER BY THE CENTIMETER
I-REFER TO HYDRAULIC INFORMATION SYSTEM
M-METRIC PART
Y-SEPARATE ILLUSTRATION

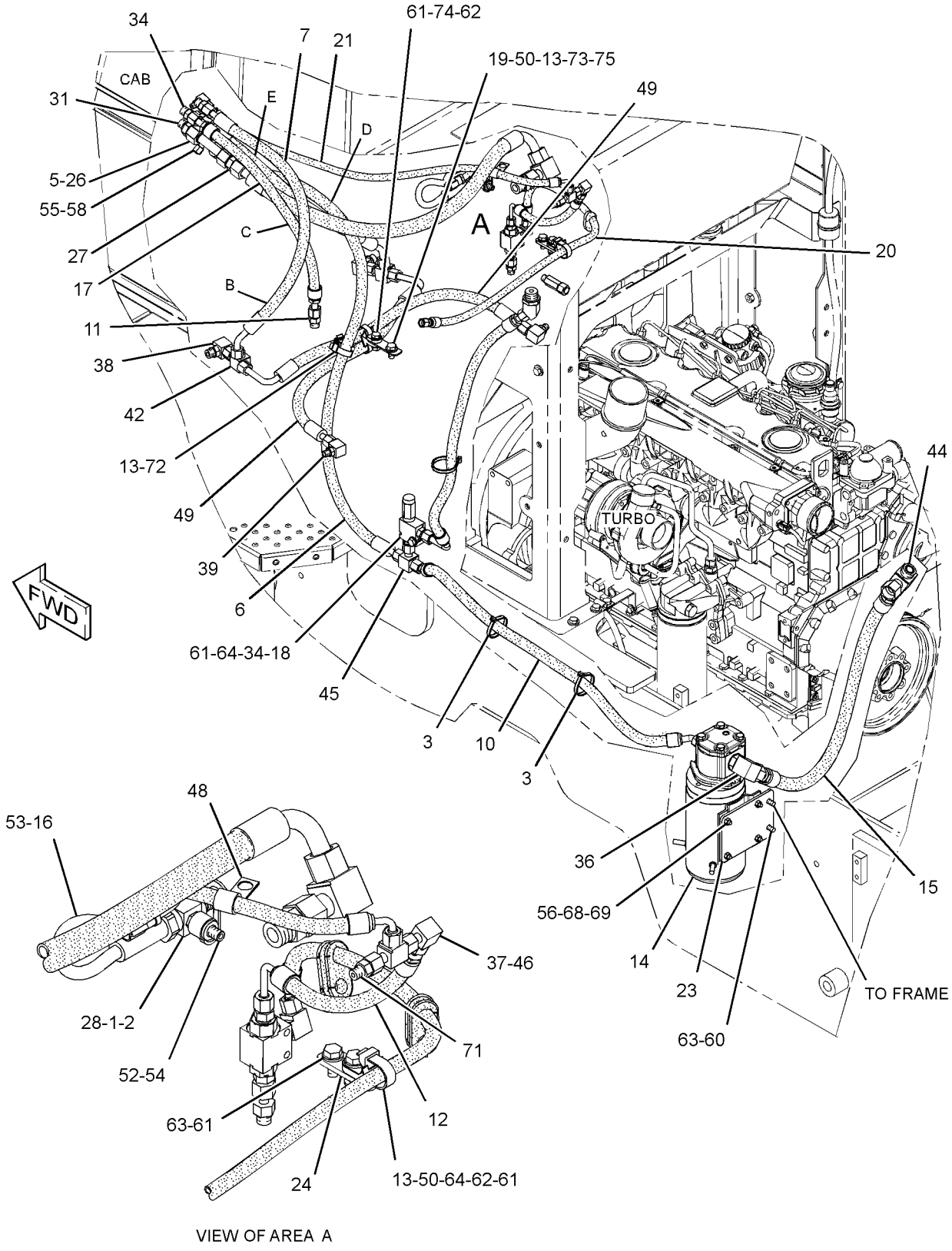

VIEW OF AREA A

GRAPHIC #1 g01310937

235-6887 **LINES GP-SECONDARY STEERING** *(contd.)* **i02605854**

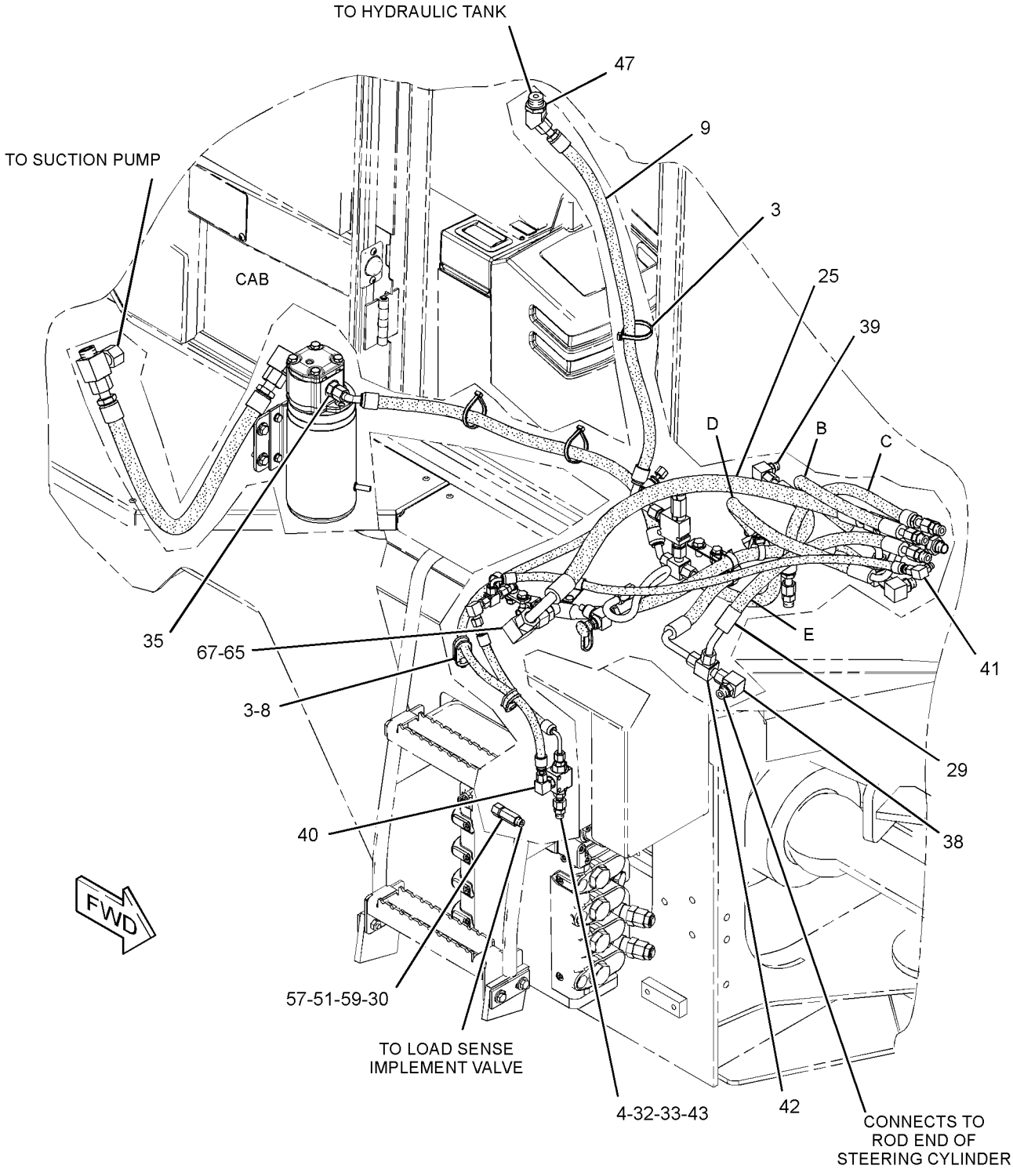

GRAPHIC #2 **<END>** g01310938

STEERING SYSTEM

235-6887 LINES GP-SECONDARY STEERING

S/N: TWR1-UP
PART OF 235-6886, 241-5668 STEERING AR-SECONDARY
AN ATTACHMENT
TYPE 2

SMCS-4304 **i02817072**

NOTE	REF NO	GRAPHIC REF	PART NUMBER	QTY	PART NAME 1 2 3 4 5 6 (PRODUCT LEVEL)	SEE PAGE
	1	1	**6V-0852**	1	CAP-DUST	
C	2	1	*217-5293*	1	TEE AS	
		1	**3J-1907**	1	SEAL-O-RING	
		1	**6V-1625**	1	TEE-O-RING	
	3	1,2	**7K-1181**	3	STRAP-CABLE	
Y	4	2	**8J-6875**	1	VALVE GP-SHUTTLE	460
	5	1	**9T-1013**	1	VALVE AS-CHECK	
		1	**3K-0360**	1	SEAL-O-RING	
		1	**6V-8398**	1	SEAL-O-RING	
CI	6	1	**214-1542**	1	HOSE AS	
I	7	1	**115-8427**	1	HOSE AS	
I	9	2	**154-9819**	1	HOSE AS	
I	10	1	**165-3133**	1	HOSE AS	
	11	1	**192-2684**	1	VALVE AS-CHECK	
I	12	1	**198-2796**	1	HOSE AS	
C	13	1	**204-2281**	5	STRAP-TIE	
Y	14	1	**205-5266**	1	PUMP & MOTOR GP (SECONDARY STEERING)	453
I	15	1	**213-7438**	1	HOSE AS	
	16	1	**230-5771**	1	SWITCH AS-PRESSURE (SECONDARY STEERING OIL)	
		1	**102-8803**	1	KIT-RECEPTACLE (3-PIN)	
					(INCLUDES RECEPTACLE AS & WEDGE)	
		1	**186-3735**	3	PIN-CONNECTOR (16-GA TO 18-GA)	
E		1	**9X-1813**		SLEEVE (30-CM)	
I	17	1	**242-0180**	1	HOSE AS	
	18	1	**243-6627**	1	VALVE GP-RELIEF (SECONDARY STEERING)	
	19	1	**248-8882**	1	PLATE	
I	20	1	**249-1039**	1	HOSE AS	
I	21	1	**249-1054**	1	HOSE AS	
	23	1	**252-7154**	1	PLATE	
	24	1	**252-7964**	1	PLATE	
I	25	2	**263-5443**	1	HOSE AS	
	26	1	**263-5474**	1	TUBE AS	
	27	1	**263-8476**	1	VALVE GP-CHECK	
		1	**6V-9746**	2	SEAL-O-RING	
	28	1	*164-5567*	1	COUPLER AS-QUICK DISCONNECT	
		1	**3J-1907**	1	SEAL-O-RING	
		1	**6V-3965**	1	FITTING (QUICK DISCONNECT)	
I	29	2	**111-7833**	1	HOSE AS	
	30	2	**164-9869**	1	CONNECTOR AS	
		2	**3J-1907**	1	SEAL-O-RING	
		2	**6V-8397**	1	SEAL-O-RING	
		2	**9X-2297**	1	CONNECTOR	
	31	1	*148-8324*	1	CONNECTOR AS	
		1	**3K-0360**	1	SEAL-O-RING	
		1	**6V-9746**	1	SEAL-O-RING	
		1	**6V-9874**	1	CONNECTOR	
	32	2	*148-8325*	1	CONNECTOR AS	
		2	**3J-1907**	1	SEAL-O-RING	
		2	**4J-5477**	1	SEAL-O-RING	
		2	**6V-8641**	1	CONNECTOR	
	33	2	*148-8336*	1	CONNECTOR AS	
		2	**3J-1907**	1	SEAL-O-RING	
		2	**6V-8397**	1	SEAL-O-RING	
		2	**6V-8636**	1	CONNECTOR	

235-6887 LINES GP-SECONDARY STEERING *(contd.)* i02817072

NOTE	REF NO	GRAPHIC REF	PART NUMBER	QTY	PART NAME 1 2 3 4 5 6 (PRODUCT LEVEL)	SEE PAGE
	34	1	*148-8340*	5	CONNECTOR AS	
					(EACH INCLUDES)	
		1	**3K-0360**	1	SEAL-O-RING	
		1	**6V-8398**	1	SEAL-O-RING	
		1	**6V-8639**	1	CONNECTOR	
	35	2	*148-8345*	1	CONNECTOR AS	
		2	**2M-9780**	1	SEAL-O-RING	
		2	**6V-8398**	1	SEAL-O-RING	
		2	**6V-8638**	1	CONNECTOR	
	36	1	*148-8347*	1	ELBOW AS	
		1	**3D-2824**	1	SEAL-O-RING	
		1	**6V-9007**	1	ELBOW	
		1	**6V-9746**	1	SEAL-O-RING	
	37	1	*148-8351*	1	ELBOW AS	
		1	**4J-5477**	1	SEAL-O-RING	
		1	**6V-9849**	1	ELBOW	
	38	1,2	*148-8364*	2	ELBOW AS	
					(EACH INCLUDES)	
		1,2	**3K-0360**	1	SEAL-O-RING	
		1,2	**6V-8398**	1	SEAL-O-RING	
		1,2	**6V-8625**	1	ELBOW	
	39	1	*148-8365*	2	ELBOW AS	
					(EACH INCLUDES)	
		1	**3J-1907**	1	SEAL-O-RING	
		1	**6V-8398**	1	SEAL-O-RING	
		1	**8T-6876**	1	ELBOW (90-DEG)	
	40	2	*148-8368*	1	ELBOW AS	
		2	**3J-1907**	1	SEAL-O-RING	
		2	**4J-5477**	1	SEAL-O-RING	
		2	**6V-8627**	1	ELBOW	
	41	2	*148-8369*	1	ELBOW AS	
		2	**6V-8628**	1	ELBOW	
		2	**3J-7354**	1	SEAL-O-RING	
		2	**4J-5477**	1	SEAL-O-RING	
	42	1,2	*148-8444*	2	TEE AS-SWIVEL	
					(EACH INCLUDES)	
		1,2	**6V-8398**	2	SEAL-O-RING	
		1,2	**6V-9837**	1	TEE-SWIVEL	
	43	2	*150-3070*	1	ADAPTER AS	
		2	**3J-1907**	1	SEAL-O-RING	
		2	**7X-3163**	1	ADAPTER-SWIVEL	
	44	1	*150-4033*	1	TEE AS	
		1	**6V-9846**	1	TEE-SWIVEL	
		1	**6V-9746**	2	SEAL-O-RING	
	45	1	*150-4037*	1	TEE AS	
		1	**6V-8398**	2	SEAL-O-RING	
		1	**6V-9844**	1	TEE-SWIVEL	
	46	1	*150-5968*	1	TEE AS	
		1	**4J-5477**	2	SEAL-O-RING	
		1	**6V-9835**	1	TEE-SWIVEL	
	47	2	*155-6258*	1	ELBOW AS	
		2	**3D-2824**	1	SEAL-O-RING	
		2	**6V-8398**	1	SEAL-O-RING	
		2	**127-1647**	1	ELBOW	
	48	1	**164-4225**	1	CLIP	
I	49	1	**176-7228**	2	HOSE AS	
	50	1	**204-8000**	3	MOUNT (TIE WRAP)	
	52	1	**3J-7354**	1	SEAL-O-RING	
	53	1	**3K-0360**	1	SEAL-O-RING	

235-6887 LINES GP-SECONDARY STEERING *(contd.)* i02817072

NOTE	REF NO	GRAPHIC REF	PART NUMBER	QTY	PART NAME 1 2 3 4 5 6 (PRODUCT LEVEL)	SEE PAGE
	54	1	**4I-0899**	1	FITTING	
	55	1	**4J-5477**	1	SEAL-O-RING	
M	56	1	**5C-7261**	4	NUT (M8X1.25-THD)	
B	58	1	**6V-9828**	1	CAP AS	
B	59	2	**6V-9829**	1	CAP AS	
C	60	1	**7X-7729**	2	WASHER (11X25X3-MM THK)	
C	61	1	**8T-4121**	6	WASHER-HARD (11X21X2.5-MM THK)	
M	62	1	**8T-4133**	2	NUT (M10X1.5-THD)	
CM	63	1	**8T-4136**	3	BOLT (M10X1.5X25-MM)	
M	64	1	**8T-4186**	2	BOLT (M10X1.5X40-MM)	
	65	2	*148-8392*	1	ELBOW AS	
		2	**6V-9746**	1	SEAL-O-RING	
		2	**6V-9853**	1	ELBOW	
	67	2	*148-8327*	1	CONNECTOR AS	
		2	**3D-2824**	1	SEAL-O-RING	
		2	**6V-8637**	1	CONNECTOR	
		2	**6V-9746**	1	SEAL-O-RING	
	68	1	**8T-4224**	4	WASHER-HARD (8.8X16X2-MM THK)	
M	69	1	**8T-4908**	4	BOLT (M8X1.25X25-MM)	
	71	1	*268-1601*	1	CONNECTOR AS-ORIFICE	
		1	**3J-7354**	1	SEAL-O-RING	
		1	**4J-5477**	1	SEAL-O-RING	
		1	**112-2628**	1	CONNECTOR	
C	72	1	**200-6345**	1	MOUNT (DUAL SWIVEL)	
C	73	1	**8T-4223**	1	WASHER-HARD (13.5X25.5X3-MM THK)	
CM	74	1	**8T-4196**	1	BOLT (M10X1.5X35-MM)	
CM	75	1	**8T-4192**	1	BOLT (M12X1.75X25-MM)	

B-USE AS REQUIRED
C-CHANGE FROM PREVIOUS TYPE
E-ORDER BY THE CENTIMETER
I-REFER TO HYDRAULIC INFORMATION SYSTEM
M-METRIC PART
Y-SEPARATE ILLUSTRATION

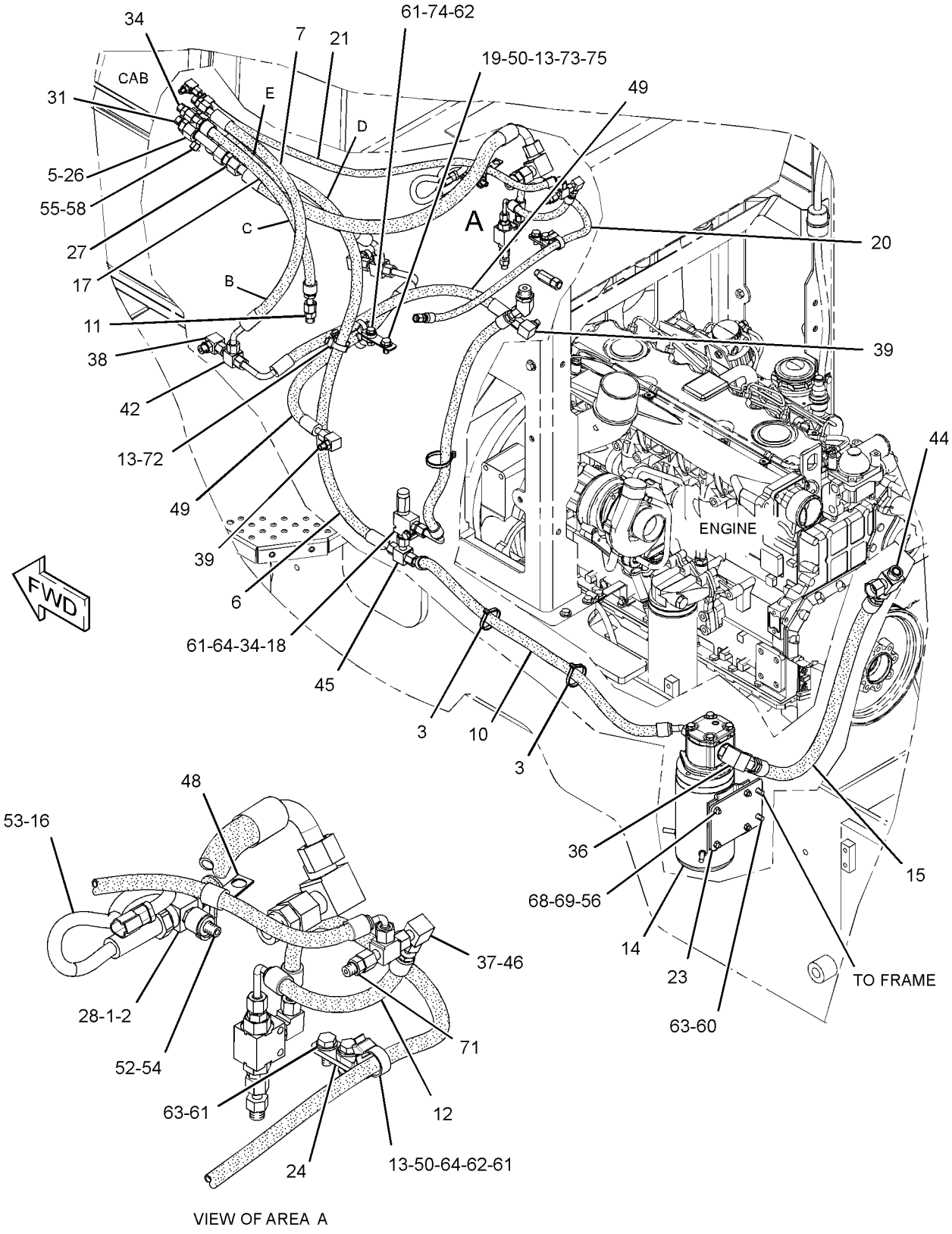

VIEW OF AREA A

GRAPHIC #1

g01529000

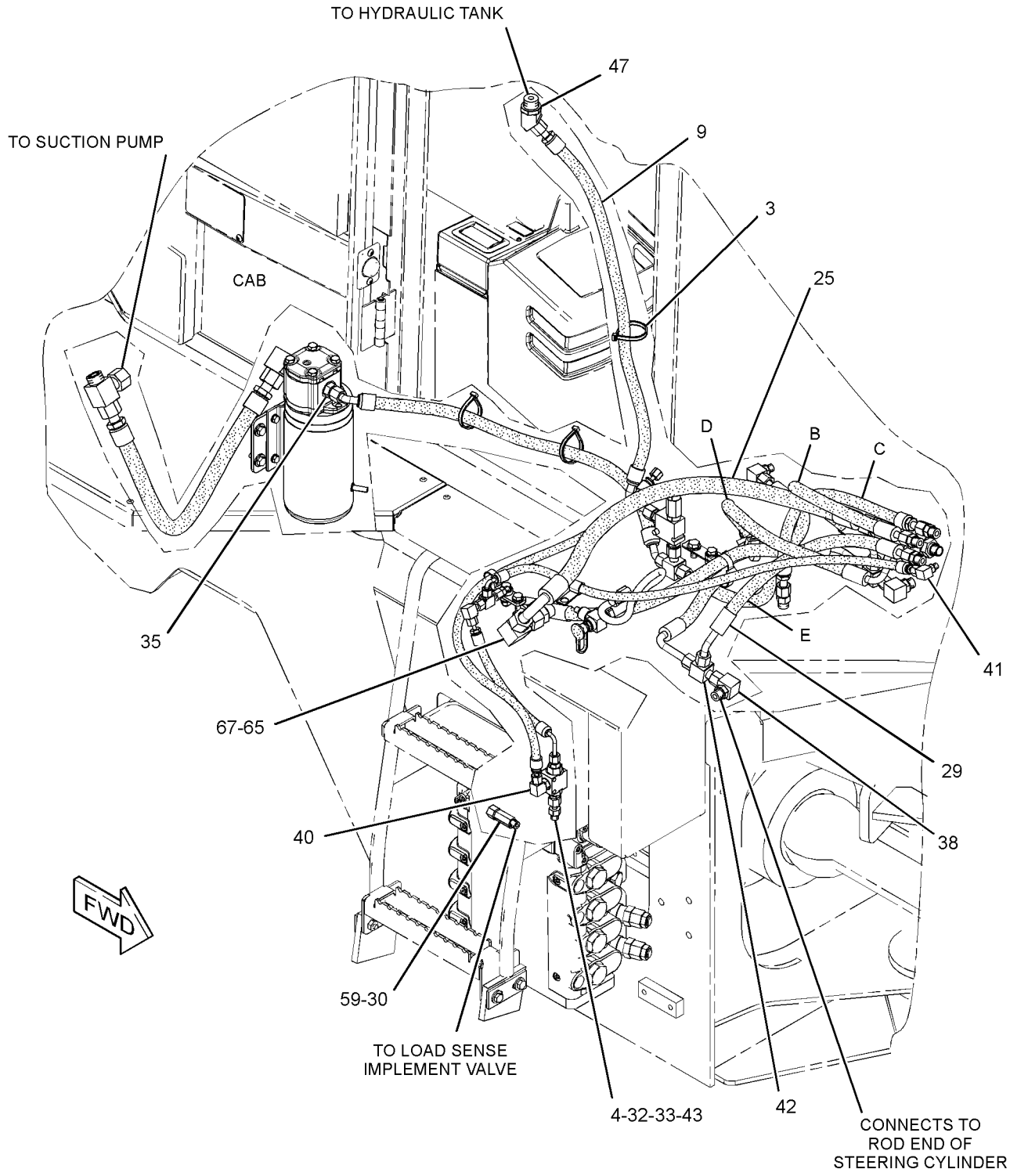

GRAPHIC #2 **<END>** g01529001

STEERING SYSTEM

310-6544 LINES GP-SECONDARY STEERING

S/N: TWR1-UP

PART OF 241-5668 STEERING AR-SECONDARY

AN ATTACHMENT

SMCS-4304 **i02772098**

NOTE	REF NO	GRAPHIC REF	PART NUMBER	QTY	PART NAME 1 2 3 4 5 6 (PRODUCT LEVEL)	SEE PAGE
	1	2	**4I-0899**	1	FITTING	
	2	2	**6V-0852**	1	CAP-DUST	
	3	1,2	**7K-1181**	3	STRAP-CABLE	
Y	4	1	**8J-6875**	1	VALVE GP-SHUTTLE	460
	5	1	**9T-1013**	1	VALVE AS-CHECK	
		1	**3K-0360**	1	SEAL-O-RING	
		1	**6V-8398**	1	SEAL-O-RING	
I	6	2	**111-7833**	1	HOSE AS	
I	7	1	**115-8427**	1	HOSE AS	
I	8	1	**142-9226**	2	HOSE AS	
I	9	2	**214-1544**	1	HOSE AS	
I	10	1	**165-3133**	1	HOSE AS	
	11	2	**192-2684**	1	VALVE AS-CHECK	
I	12	1	**198-2796**	1	HOSE AS	
	13	1	**200-6345**	1	MOUNT (DUAL SWIVEL)	
	14	1	**204-2281**	5	STRAP-TIE	
Y	15	1	**205-5266**	1	PUMP & MOTOR GP	453
I	16	2	**213-7438**	1	HOSE AS	
I	17	1	**214-1542**	1	HOSE AS	
	18	2	*217-5293*	1	TEE AS	
		2	**3J-1907**	1	SEAL-O-RING	
		2	**6V-1625**	1	TEE-O-RING	
	19	1	**230-5771**	1	SWITCH AS-PRESSURE (SECONDARY STEERING OIL)	
		1	**102-8803**	1	KIT-RECEPTACLE (3-PIN)	
					(INCLUDES RECEPTACLE AS & WEDGE)	
		1	**3E-3371**	1	WEDGE-RECEPTACLE LOCK (3-PIN)	
		1	**186-3735**	1	PIN-CONNECTOR (16-GA TO 18-GA)	
		1	**9X-1813**	1	SLEEVE	
I	20	1	**242-0180**	1	HOSE AS	
	21	1	**248-8882**	1	PLATE	
I	22	1	**249-1039**	1	HOSE AS	
I	23	1	**249-1054**	1	HOSE AS	
	24	1	**252-7154**	1	PLATE	
	25	1	**252-7964**	1	PLATE	
I	26	2	**263-5443**	1	HOSE AS	
	27	1	**263-5474**	1	TUBE AS	
	28	1	**263-8476**	1	VALVE GP-CHECK	
		1	**6V-9746**	2	SEAL-O-RING	
	29	1	*268-1601*	1	CONNECTOR AS-ORIFICE	
		1	**3J-7354**	1	SEAL-O-RING	
		1	**4J-5477**	1	SEAL-O-RING	
		1	**112-2628**	1	CONNECTOR	
	30	1	*309-5129*	1	CONNECTOR AS	
		1	**3J-7354**	1	SEAL-O-RING	
		1	**4J-5477**	1	SEAL-O-RING	
		1	**309-5128**	1	CONNECTOR	
	31	1	*148-8324*	1	CONNECTOR AS	
		1	**3K-0360**	1	SEAL-O-RING	
		1	**6V-9746**	1	SEAL-O-RING	
		1	**6V-9874**	1	CONNECTOR	
	32	1	*148-8325*	1	CONNECTOR AS	
		1	**3J-1907**	1	SEAL-O-RING	
		1	**4J-5477**	1	SEAL-O-RING	
		1	**6V-8641**	1	CONNECTOR	
	33	2	*148-8327*	1	CONNECTOR AS	

310-6544 LINES GP-SECONDARY STEERING *(contd.)* i02772098

NOTE	REF NO	GRAPHIC REF	PART NUMBER	QTY	PART NAME 1 2 3 4 5 6 (PRODUCT LEVEL)	SEE PAGE
		2	**3D-2824**	1	SEAL-O-RING	
		2	**6V-8637**	1	CONNECTOR	
		2	**6V-9746**	1	SEAL-O-RING	
	34	1	*148-8336*	1	CONNECTOR AS	
		1	**3J-1907**	1	SEAL-O-RING	
		1	**6V-8397**	1	SEAL-O-RING	
		1	**6V-8636**	1	CONNECTOR	
	35	1	*148-8340*	5	CONNECTOR AS	
					(EACH INCLUDES)	
		1	**3K-0360**	1	SEAL-O-RING	
		1	**6V-8398**	1	SEAL-O-RING	
		1	**6V-8639**	1	CONNECTOR	
	36	2	*148-8345*	1	CONNECTOR AS	
		2	**2M-9780**	1	SEAL-O-RING	
		2	**6V-8398**	1	SEAL-O-RING	
		2	**6V-8638**	1	CONNECTOR	
	37	1	*148-8347*	1	ELBOW AS	
		1	**3D-2824**	1	SEAL-O-RING	
		1	**6V-9007**	1	ELBOW	
		1	**6V-9746**	1	SEAL-O-RING	
	38	1	*148-8351*	2	ELBOW AS	
					(EACH INCLUDES)	
		1	**4J-5477**	1	SEAL-O-RING	
		1	**6V-9849**	1	ELBOW	
	39	1,2	*148-8364*	2	ELBOW AS	
					(EACH INCLUDES)	
		1,2	**3K-0360**	1	SEAL-O-RING	
		1,2	**6V-8398**	1	SEAL-O-RING	
		1,2	**6V-8625**	1	ELBOW	
	40	1,2	*148-8365*	2	ELBOW AS	
					(EACH INCLUDES)	
		1,2	**3J-1907**	1	SEAL-O-RING	
		1,2	**6V-8398**	1	SEAL-O-RING	
		1,2	**8T-6876**	1	ELBOW (90-DEG)	
	41	1	*148-8368*	1	ELBOW AS	
		1	**3J-1907**	1	SEAL-O-RING	
		1	**4J-5477**	1	SEAL-O-RING	
		1	**6V-8627**	1	ELBOW	
	42	2	*148-8392*	1	ELBOW AS	
		2	**6V-9746**	1	SEAL-O-RING	
		2	**6V-9853**	1	ELBOW	
	43	1,2	*148-8444*	2	TEE AS-SWIVEL	
					(EACH INCLUDES)	
		1,2	**6V-8398**	2	SEAL-O-RING	
		1,2	**6V-9837**	1	TEE-SWIVEL	
	44	1	*150-3070*	1	ADAPTER AS	
		1	**3J-1907**	1	SEAL-O-RING	
		1	**7X-3163**	1	ADAPTER-SWIVEL	
	45	2	*150-4033*	1	TEE AS	
		2	**6V-9746**	2	SEAL-O-RING	
		2	**6V-9846**	1	TEE-SWIVEL	
	46	1	*150-4037*	1	TEE AS	
		1	**6V-8398**	2	SEAL-O-RING	
		1	**6V-9844**	1	TEE-SWIVEL	
	47	1	*150-5968*	1	TEE AS	
		1	**4J-5477**	2	SEAL-O-RING	
		1	**6V-9835**	1	TEE-SWIVEL	
	48	2	*155-6258*	1	ELBOW AS	
		2	**3D-2824**	1	SEAL-O-RING	

310-6544 LINES GP-SECONDARY STEERING *(contd.)* i02772098

NOTE	REF NO	GRAPHIC REF	PART NUMBER	QTY	PART NAME 1 2 3 4 5 6 (PRODUCT LEVEL)	SEE PAGE
		2	**6V-8398**	1	SEAL-O-RING	
		2	**127-1647**	1	ELBOW	
	49	1	**164-4225**	1	CLIP	
	50	2	*164-5567*	1	COUPLER AS-QUICK DISCONNECT	
		1	**3J-1907**	1	SEAL-O-RING	
			6V-3965	1	FITTING (QUICK DISCONNECT)	
	51	2	*164-9869*	1	CONNECTOR AS	
		2	**3J-1907**	1	SEAL-O-RING	
		2	**6V-8397**	1	SEAL-O-RING	
		2	**9X-2297**	1	CONNECTOR	
	52	1	**204-8000**	3	MOUNT (TIE WRAP)	
	53	1	**243-6627**	1	VALVE GP-RELIEF	
	54	2	**3J-7354**	1	SEAL-O-RING	
	55	1	**3K-0360**	1	SEAL-O-RING	
	56	1	**4J-5477**	1	SEAL-O-RING	
M	57	1	**5C-7261**	4	NUT (M8X1.25-THD)	
	58	1	**7X-7729**	2	WASHER (11X25X3-MM THK)	
	59	1	**8T-4121**	6	WASHER-HARD (11X21X2.5-MM THK)	
M	60	1	**8T-4133**	2	NUT (M10X1.5-THD)	
M	61	1	**8T-4136**	3	BOLT (M10X1.5X25-MM)	
M	62	1	**8T-4186**	2	BOLT (M10X1.5X40-MM)	
M	63	1	**8T-4192**	1	BOLT (M12X1.75X25-MM)	
M	64	1	**8T-4196**	1	BOLT (M10X1.5X35-MM)	
	65	1	**8T-4223**	1	WASHER-HARD (13.5X25.5X3-MM THK)	
	66	1	**8T-4224**	4	WASHER-HARD (8.8X16X2-MM THK)	
M	67	1	**8T-4908**	4	BOLT (M8X1.25X25-MM)	

I-REFER TO HYDRAULIC INFORMATION SYSTEM
M-METRIC PART
Y-SEPARATE ILLUSTRATION

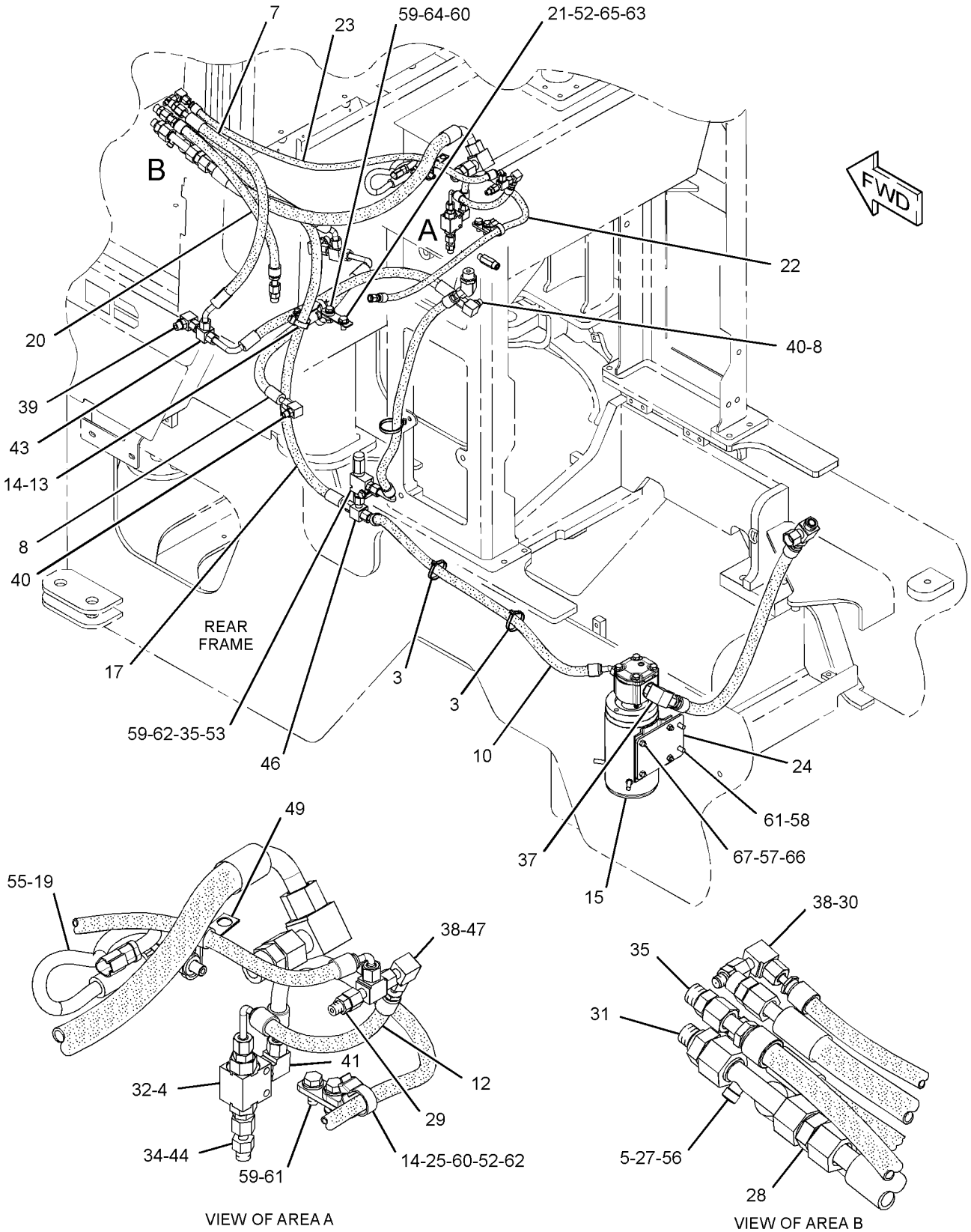

GRAPHIC #1

g01416225

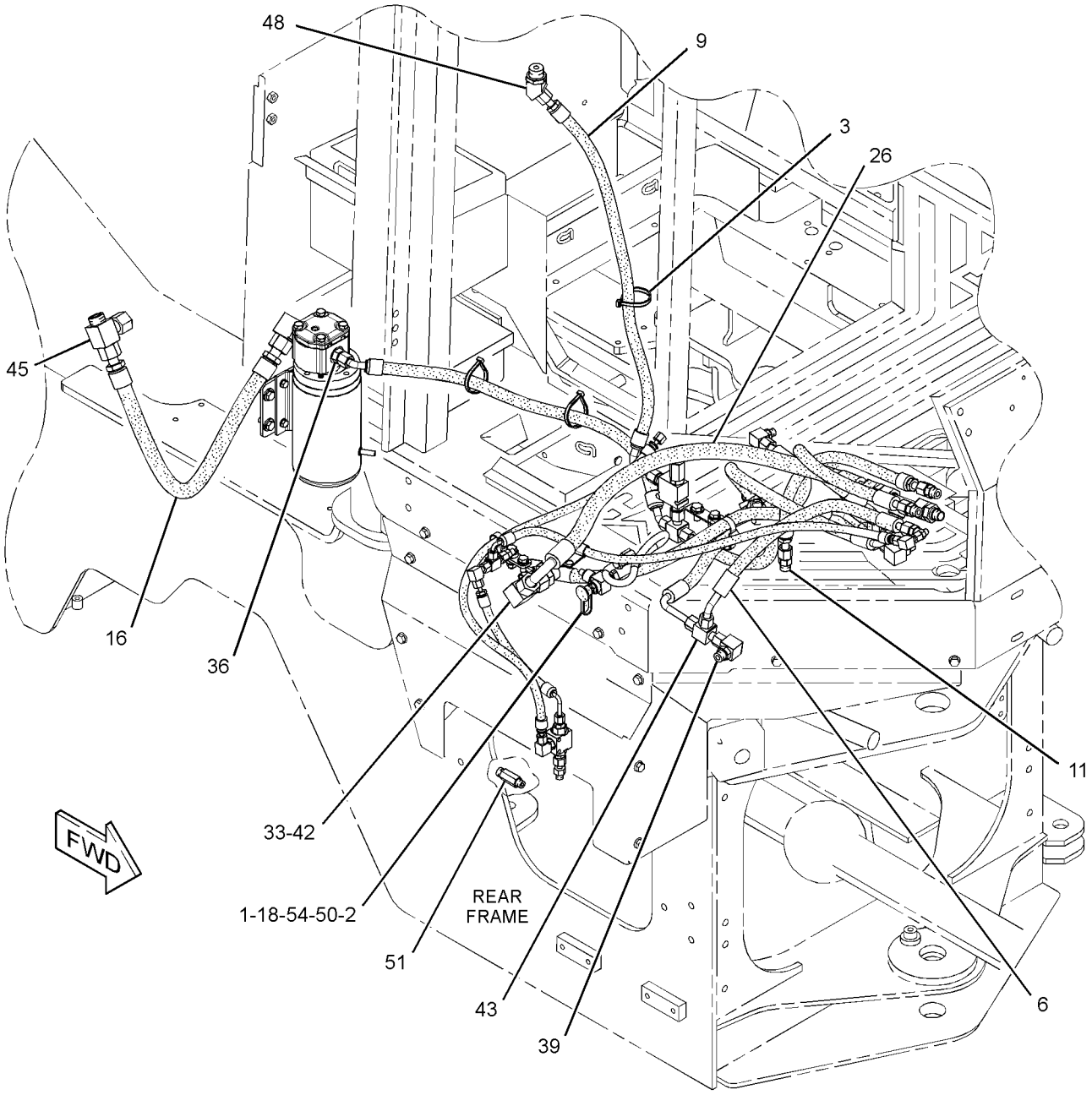

GRAPHIC #2 **<END>** g01416226

STEERING SYSTEM

235-6885 LINES GP-STEERING

S/N: TWR1-1254

PART OF 235-6884, 241-5667 STEERING AR

AN ATTACHMENT

SMCS-4304 **i02501188**

NOTE	REF NO	GRAPHIC REF	PART NUMBER	QTY	PART NAME 1 2 3 4 5 6 (PRODUCT LEVEL)	SEE PAGE
	1	1	**6V-0852**	1	CAP-DUST	
	2	1	*148-8316*	1	CONNECTOR AS	
		1	**3J-7354**	1	SEAL-O-RING	
		1	**4J-5477**	1	SEAL-O-RING	
		1	**6V-8647**	1	CONNECTOR	
Y	3	1	**8J-6875**	1	VALVE GP-SHUTTLE	460
I	4	1	**115-8427**	1	HOSE AS	
	6	1	**192-2684**	1	VALVE AS-CHECK	
I	7	1	**198-2796**	1	HOSE AS	
	8	1	**204-2281**	3	STRAP-TIE	
I	9	1	**241-6483**	1	HOSE AS	
I	10	1	**242-0180**	1	HOSE AS	
	11	1	**248-8882**	1	PLATE	
I	12	1	**249-1039**	1	HOSE AS	
I	13	1	**249-1054**	1	HOSE AS	
	14	1	**252-7964**	1	PLATE	
	15	1	**263-8475**	1	VALVE GP-CHECK (STEERING)	
		1	**3K-0360**	1	SEAL-O-RING	
		1	**6V-9746**	1	SEAL-O-RING	
	16	1	**110-6349**	1	FITTING AS (QUICK DISCONNECT)	
I	17	1	**111-7833**	1	HOSE AS	
	18	1	**136-1901**	1	CONNECTOR	
	19	1	*148-8325*	1	CONNECTOR AS	
		1	**3J-1907**	1	SEAL-O-RING	
		1	**4J-5477**	1	SEAL-O-RING	
		1	**6V-8641**	1	CONNECTOR	
	20	1	*148-8336*	1	CONNECTOR AS	
		1	**3J-1907**	1	SEAL-O-RING	
		1	**6V-8397**	1	SEAL-O-RING	
		1	**6V-8636**	1	CONNECTOR	
	21	1	*148-8340*	3	CONNECTOR AS	
					(EACH INCLUDES)	
		1	**3K-0360**	1	SEAL-O-RING	
		1	**6V-8398**	1	SEAL-O-RING	
		1	**6V-8639**	1	CONNECTOR	
	22	1	*148-8347*	1	ELBOW AS	
		1	**3D-2824**	1	SEAL-O-RING	
		1	**6V-9007**	1	ELBOW	
		1	**6V-9746**	1	SEAL-O-RING	
	23	1	*148-8351*	1	ELBOW AS	
		1	**4J-5477**	1	SEAL-O-RING	
		1	**6V-9849**	1	ELBOW	
	24	1	*148-8364*	2	ELBOW AS	
					(EACH INCLUDES)	
		1	**3K-0360**	1	SEAL-O-RING	
		1	**6V-8398**	1	SEAL-O-RING	
		1	**6V-8625**	1	ELBOW	
	25	1	*148-8365*	2	ELBOW AS	
					(EACH INCLUDES)	
		1	**3J-1907**	1	SEAL-O-RING	
		1	**6V-8398**	1	SEAL-O-RING	
		1	**8T-6876**	1	ELBOW (90-DEG)	
	26	1	*148-8368*	1	ELBOW AS	
		1	**3J-1907**	1	SEAL-O-RING	
		1	**4J-5477**	1	SEAL-O-RING	

235-6885 **LINES GP-STEERING** *(contd.)* **i02501188**

NOTE	REF NO	GRAPHIC REF	PART NUMBER	QTY	PART NAME 1 2 3 4 5 6 (PRODUCT LEVEL)	SEE PAGE
		1	**6V-8627**	1	ELBOW	
	27	1	*148-8369*	1	ELBOW AS	
		1	**3J-7354**	1	SEAL-O-RING	
		1	**4J-5477**	1	SEAL-O-RING	
		1	**6V-8628**	1	ELBOW	
	29	1	*148-8444*	2	TEE AS-SWIVEL	
					(EACH INCLUDES)	
		1	**6V-8398**	2	SEAL-O-RING	
		1	**6V-9837**	1	TEE-SWIVEL	
	30	1	*150-3070*	1	ADAPTER AS	
		1	**3J-1907**	1	SEAL-O-RING	
		1	**7X-3163**	1	ADAPTER-SWIVEL	
	31	1	*150-5968*	1	TEE AS	
		1	**4J-5477**	2	SEAL-O-RING	
		1	**6V-9835**	1	TEE-SWIVEL	
	32	1	**164-4225**	1	CLIP	
I	33	1	**176-7228**	2	HOSE AS	
	34	1	**204-8000**	3	MOUNT (TIE WRAP)	
	35	1	**3J-1907**	1	SEAL-O-RING	
	36	1	**6V-8397**	1	SEAL-O-RING	
	38	1	**6V-9829**	1	CAP AS	
	39	1	**8T-4121**	5	WASHER-HARD (11X21X2.5-MM THK)	
M	40	1	**8T-4133**	2	NUT (M10X1.5-THD)	
M	41	1	**8T-4136**	1	BOLT (M10X1.5X25-MM)	
M	42	1	**8T-4186**	1	BOLT (M10X1.5X40-MM)	
M	43	1	**8T-4192**	1	BOLT (M12X1.75X25-MM)	
M	44	1	**8T-4196**	1	BOLT (M10X1.5X35-MM)	
	45	1	**8T-4223**	1	WASHER-HARD (13.5X25.5X3-MM THK)	

I-REFER TO HYDRAULIC INFORMATION SYSTEM
M-METRIC PART
Y-SEPARATE ILLUSTRATION

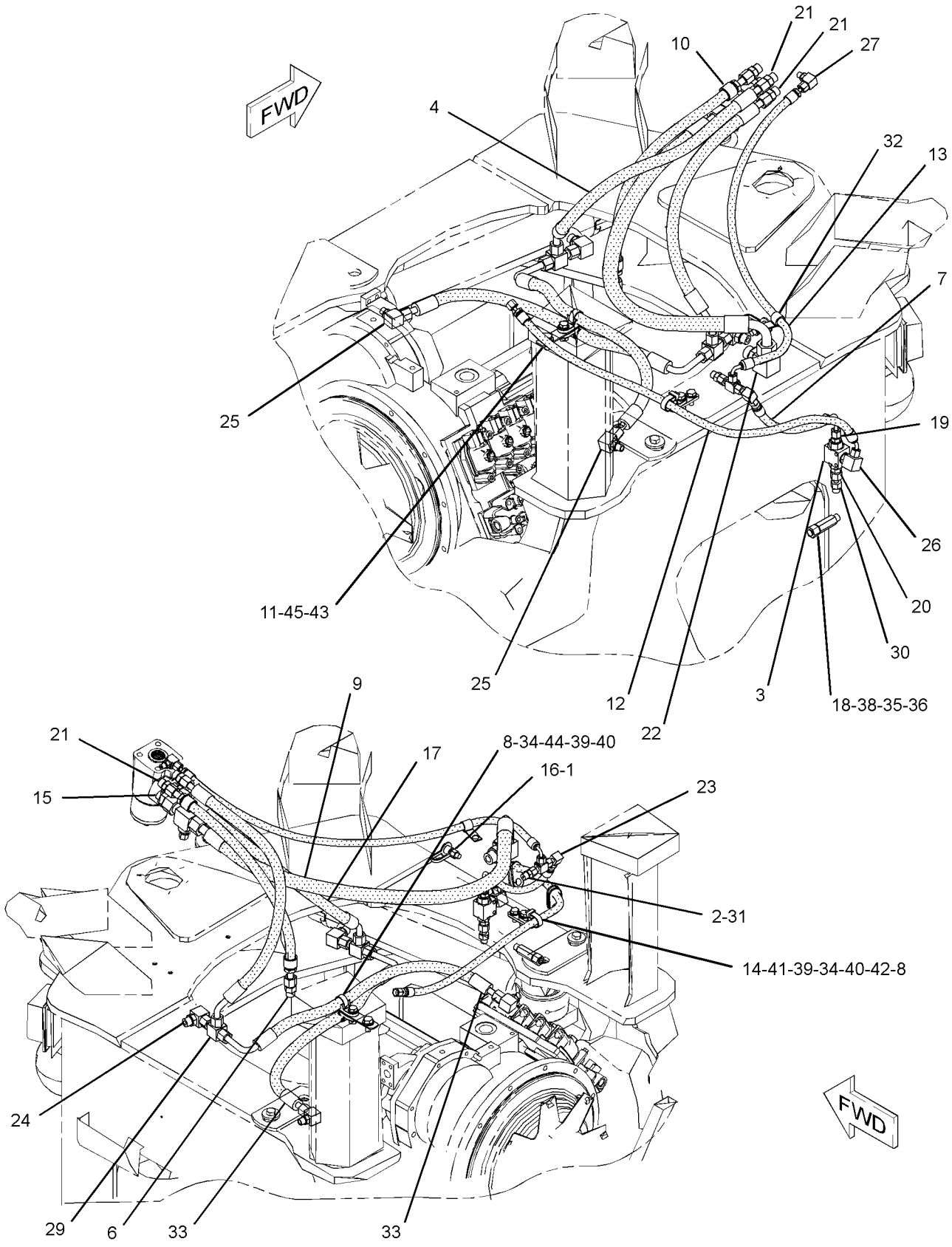

GRAPHIC #1 **<END>** g01237527

STEERING SYSTEM

235-6885 LINES GP-STEERING

S/N: TWR1255-1378

PART OF 235-6884, 241-5667 STEERING AR

AN ATTACHMENT

SMCS-4304 **i02477814**

NOTE	REF NO	GRAPHIC REF	PART NUMBER	QTY	PART NAME 1 2 3 4 5 6 (PRODUCT LEVEL)	SEE PAGE
	1	1	**6V-0852**	1	CAP-DUST	
	2	1	*148-8316*	1	CONNECTOR AS	
		1	**3J-7354**	1	SEAL-O-RING	
		1	**4J-5477**	1	SEAL-O-RING	
		1	**6V-8647**	1	CONNECTOR	
Y	3	1	**8J-6875**	1	VALVE GP-SHUTTLE	460
I	4	1	**115-8427**	1	HOSE AS	
	6	1	**192-2684**	1	VALVE AS-CHECK	
I	7	1	**198-2796**	1	HOSE AS	
	8	1	**204-2281**	3	STRAP-TIE	
I	9	1	**241-6483**	1	HOSE AS	
I	10	1	**242-0180**	1	HOSE AS	
	11	1	**248-8882**	1	PLATE	
I	12	1	**249-1039**	1	HOSE AS	
I	13	1	**249-1054**	1	HOSE AS	
	14	1	**252-7964**	1	PLATE	
	15	1	**263-8475**	1	VALVE GP-CHECK (STEERING)	
		1	**3K-0360**	1	SEAL-O-RING	
		1	**6V-9746**	1	SEAL-O-RING	
	16	1	**110-6349**	1	FITTING AS (QUICK DISCONNECT)	
I	17	1	**111-7833**	1	HOSE AS	
	18	1	**136-1901**	1	CONNECTOR	
	19	1	*148-8325*	1	CONNECTOR AS	
		1	**3J-1907**	1	SEAL-O-RING	
		1	**4J-5477**	1	SEAL-O-RING	
		1	**6V-8641**	1	CONNECTOR	
	20	1	*148-8336*	1	CONNECTOR AS	
		1	**3J-1907**	1	SEAL-O-RING	
		1	**6V-8397**	1	SEAL-O-RING	
		1	**6V-8636**	1	CONNECTOR	
	21	1	*148-8340*	3	CONNECTOR AS	
					(EACH INCLUDES)	
		1	**3K-0360**	1	SEAL-O-RING	
		1	**6V-8398**	1	SEAL-O-RING	
		1	**6V-8639**	1	CONNECTOR	
C	22	1	*148-8392*	1	ELBOW AS	
		1	**6V-9746**	1	SEAL-O-RING	
		1	**6V-9853**	1	ELBOW	
	23	1	*148-8351*	1	ELBOW AS	
		1	**4J-5477**	1	SEAL-O-RING	
		1	**6V-9849**	1	ELBOW	
	24	1	*148-8364*	2	ELBOW AS	
					(EACH INCLUDES)	
		1	**3K-0360**	1	SEAL-O-RING	
		1	**6V-8398**	1	SEAL-O-RING	
		1	**6V-8625**	1	ELBOW	
	25	1	*148-8365*	2	ELBOW AS	
					(EACH INCLUDES)	
		1	**3J-1907**	1	SEAL-O-RING	
		1	**6V-8398**	1	SEAL-O-RING	
		1	**8T-6876**	1	ELBOW (90-DEG)	
	26	1	*148-8368*	1	ELBOW AS	
		1	**3J-1907**	1	SEAL-O-RING	
		1	**4J-5477**	1	SEAL-O-RING	
		1	**6V-8627**	1	ELBOW	

235-6885 **LINES GP-STEERING** *(contd.)* **i02477814**

NOTE	REF NO	GRAPHIC REF	PART NUMBER	QTY	PART NAME 1 2 3 4 5 6 (PRODUCT LEVEL)	SEE PAGE
	27	1	*148-8369*	1	ELBOW AS	
		1	**3J-7354**	1	SEAL-O-RING	
		1	**4J-5477**	1	SEAL-O-RING	
		1	**6V-8628**	1	ELBOW	
	29	1	*148-8444*	2	TEE AS-SWIVEL	
					(EACH INCLUDES)	
		1	**6V-8398**	2	SEAL-O-RING	
		1	**6V-9837**	1	TEE-SWIVEL	
	30	1	*150-3070*	1	ADAPTER AS	
		1	**3J-1907**	1	SEAL-O-RING	
		1	**7X-3163**	1	ADAPTER-SWIVEL	
	31	1	*150-5968*	1	TEE AS	
		1	**4J-5477**	2	SEAL-O-RING	
		1	**6V-9835**	1	TEE-SWIVEL	
	32	1	**164-4225**	1	CLIP	
I	33	1	**176-7228**	2	HOSE AS	
	34	1	**204-8000**	3	MOUNT (TIE WRAP)	
	35	1	**3J-1907**	1	SEAL-O-RING	
	36	1	**6V-8397**	1	SEAL-O-RING	
	38	1	**6V-9829**	1	CAP AS	
	39	1	**8T-4121**	5	WASHER-HARD (11X21X2.5-MM THK)	
M	40	1	**8T-4133**	2	NUT (M10X1.5-THD)	
M	41	1	**8T-4136**	1	BOLT (M10X1.5X25-MM)	
M	42	1	**8T-4186**	1	BOLT (M10X1.5X40-MM)	
M	43	1	**8T-4192**	1	BOLT (M12X1.75X25-MM)	
M	44	1	**8T-4196**	1	BOLT (M10X1.5X35-MM)	
	45	1	**8T-4223**	1	WASHER-HARD (13.5X25.5X3-MM THK)	
C	46	1	*148-8327*	1	CONNECTOR AS	
		1	**3D-2824**	1	SEAL-O-RING	
		1	**6V-8637**	1	CONNECTOR	
		1	**6V-9746**	1	SEAL-O-RING	

C-CHANGE FROM PREVIOUS TYPE
I-REFER TO HYDRAULIC INFORMATION SYSTEM
M-METRIC PART
Y-SEPARATE ILLUSTRATION

235-6885 **LINES GP-STEERING** *(contd.)* **i02477814**

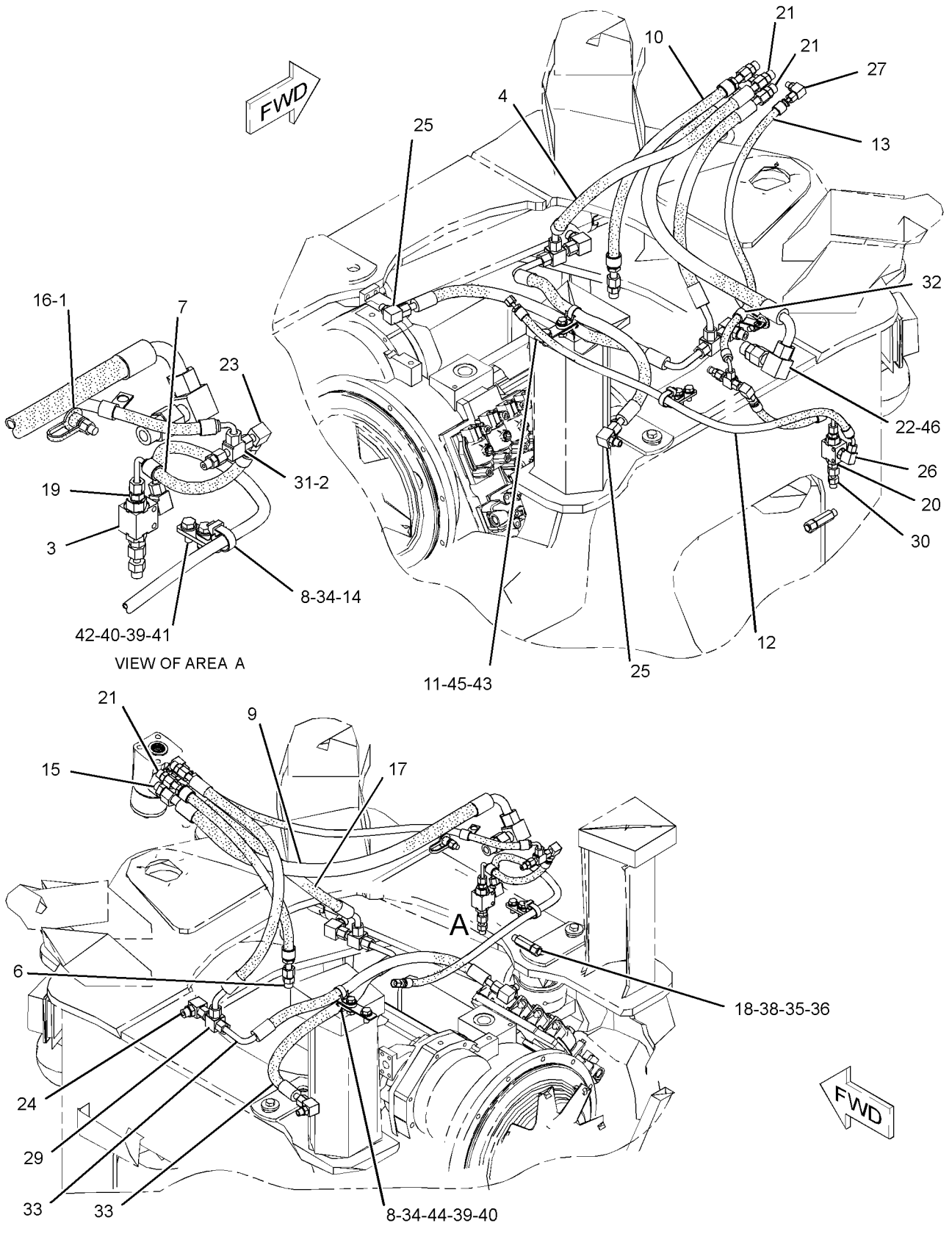

GRAPHIC #1 **<END>** g01240934

STEERING SYSTEM

235-6885 LINES GP-STEERING

S/N: TWR1-UP
PART OF 235-6884, 241-5667 STEERING AR
AN ATTACHMENT

SMCS-4304 **i02724991**

NOTE	REF NO	GRAPHIC REF	PART NUMBER	QTY	PART NAME 1 2 3 4 5 6 (PRODUCT LEVEL)	SEE PAGE
	1	1	**6V-0852**	1	CAP-DUST	
C	2	1	*268-1601*	1	CONNECTOR AS-ORIFICE	
		1	**3J-7354**	1	SEAL-O-RING	
		1	**4J-5477**	1	SEAL-O-RING	
		1	**112-2628**	1	CONNECTOR	
Y	3	1	**8J-6875**	1	VALVE GP-SHUTTLE	460
I	4	1	**115-8427**	1	HOSE AS	
	6	1	**192-2684**	1	VALVE AS-CHECK	
I	7	1	**198-2796**	1	HOSE AS	
	8	1	**204-2281**	3	STRAP-TIE	
I	9	1	**241-6483**	1	HOSE AS	
I	10	1	**242-0180**	1	HOSE AS	
	11	1	**248-8882**	1	PLATE	
I	12	1	**249-1039**	1	HOSE AS	
I	13	1	**249-1054**	1	HOSE AS	
	14	1	**252-7964**	1	PLATE	
	15	1	**263-8475**	1	VALVE GP-CHECK (STEERING)	
		1	**3K-0360**	1	SEAL-O-RING	
		1	**6V-9746**	1	SEAL-O-RING	
	16	1	**110-6349**	1	FITTING AS (QUICK DISCONNECT)	
I	17	1	**111-7833**	1	HOSE AS	
	18	1	*164-9869*	1	CONNECTOR AS	
		1	**3J-1907**	1	SEAL-O-RING	
		1	**6V-8397**	1	SEAL-O-RING	
		1	**9X-0297**	1	PLATE	
	19	1	*148-8325*	1	CONNECTOR AS	
		1	**3J-1907**	1	SEAL-O-RING	
		1	**4J-5477**	1	SEAL-O-RING	
		1	**6V-8641**	1	CONNECTOR	
	20	1	*148-8336*	1	CONNECTOR AS	
		1	**3J-1907**	1	SEAL-O-RING	
		1	**6V-8397**	1	SEAL-O-RING	
		1	**6V-8636**	1	CONNECTOR	
	21	1	*148-8340*	3	CONNECTOR AS	
					(EACH INCLUDES)	
		1	**3K-0360**	1	SEAL-O-RING	
		1	**6V-8398**	1	SEAL-O-RING	
		1	**6V-8639**	1	CONNECTOR	
	22	1	*148-8392*	1	ELBOW AS	
		1	**6V-9746**	1	SEAL-O-RING	
		1	**6V-9853**	1	ELBOW	
	23	1	*148-8351*	1	ELBOW AS	
		1	**4J-5477**	1	SEAL-O-RING	
		1	**6V-9849**	1	ELBOW	
	24	1	*148-8364*	2	ELBOW AS	
					(EACH INCLUDES)	
		1	**3K-0360**	1	SEAL-O-RING	
		1	**6V-8398**	1	SEAL-O-RING	
		1	**6V-8625**	1	ELBOW	
	25	1	*148-8365*	2	ELBOW AS	
					(EACH INCLUDES)	
		1	**3J-1907**	1	SEAL-O-RING	
		1	**6V-8398**	1	SEAL-O-RING	
		1	**8T-6876**	1	ELBOW (90-DEG)	
	26	1	*148-8368*	1	ELBOW AS	

235-6885 **LINES GP-STEERING** *(contd.)* **i02724991**

NOTE	REF NO	GRAPHIC REF	PART NUMBER	QTY	PART NAME 1 2 3 4 5 6 (PRODUCT LEVEL)	SEE PAGE
		1	**3J-1907**	1	SEAL-O-RING	
		1	**4J-5477**	1	SEAL-O-RING	
		1	**6V-8627**	1	ELBOW	
	27	1	*148-8369*	1	ELBOW AS	
		1	**3J-7354**	1	SEAL-O-RING	
		1	**4J-5477**	1	SEAL-O-RING	
		1	**6V-8628**	1	ELBOW	
	29	1	*148-8444*	2	TEE AS-SWIVEL	
					(EACH INCLUDES)	
		1	**6V-8398**	2	SEAL-O-RING	
		1	**6V-9837**	1	TEE-SWIVEL	
	30	1	*150-3070*	1	ADAPTER AS	
		1	**3J-1907**	1	SEAL-O-RING	
		1	**7X-3163**	1	ADAPTER-SWIVEL	
	31	1	*150-5968*	1	TEE AS	
		1	**4J-5477**	2	SEAL-O-RING	
		1	**6V-9835**	1	TEE-SWIVEL	
	32	1	**164-4225**	1	CLIP	
I	33	1	**176-7228**	2	HOSE AS	
	34	1	**204-8000**	3	MOUNT (TIE WRAP)	
	38	1	**6V-9829**	1	CAP AS	
	39	1	**8T-4121**	5	WASHER-HARD (11X21X2.5-MM THK)	
M	40	1	**8T-4133**	2	NUT (M10X1.5-THD)	
M	41	1	**8T-4136**	1	BOLT (M10X1.5X25-MM)	
M	42	1	**8T-4186**	1	BOLT (M10X1.5X40-MM)	
M	43	1	**8T-4192**	1	BOLT (M12X1.75X25-MM)	
M	44	1	**8T-4196**	1	BOLT (M10X1.5X35-MM)	
	45	1	**8T-4223**	1	WASHER-HARD (13.5X25.5X3-MM THK)	
	46	1	*148-8327*	1	CONNECTOR AS	
		1	**3D-2824**	1	SEAL-O-RING	
		1	**6V-8637**	1	CONNECTOR	
		1	**6V-9746**	1	SEAL-O-RING	

C-CHANGE FROM PREVIOUS TYPE
I-REFER TO HYDRAULIC INFORMATION SYSTEM
M-METRIC PART
Y-SEPARATE ILLUSTRATION

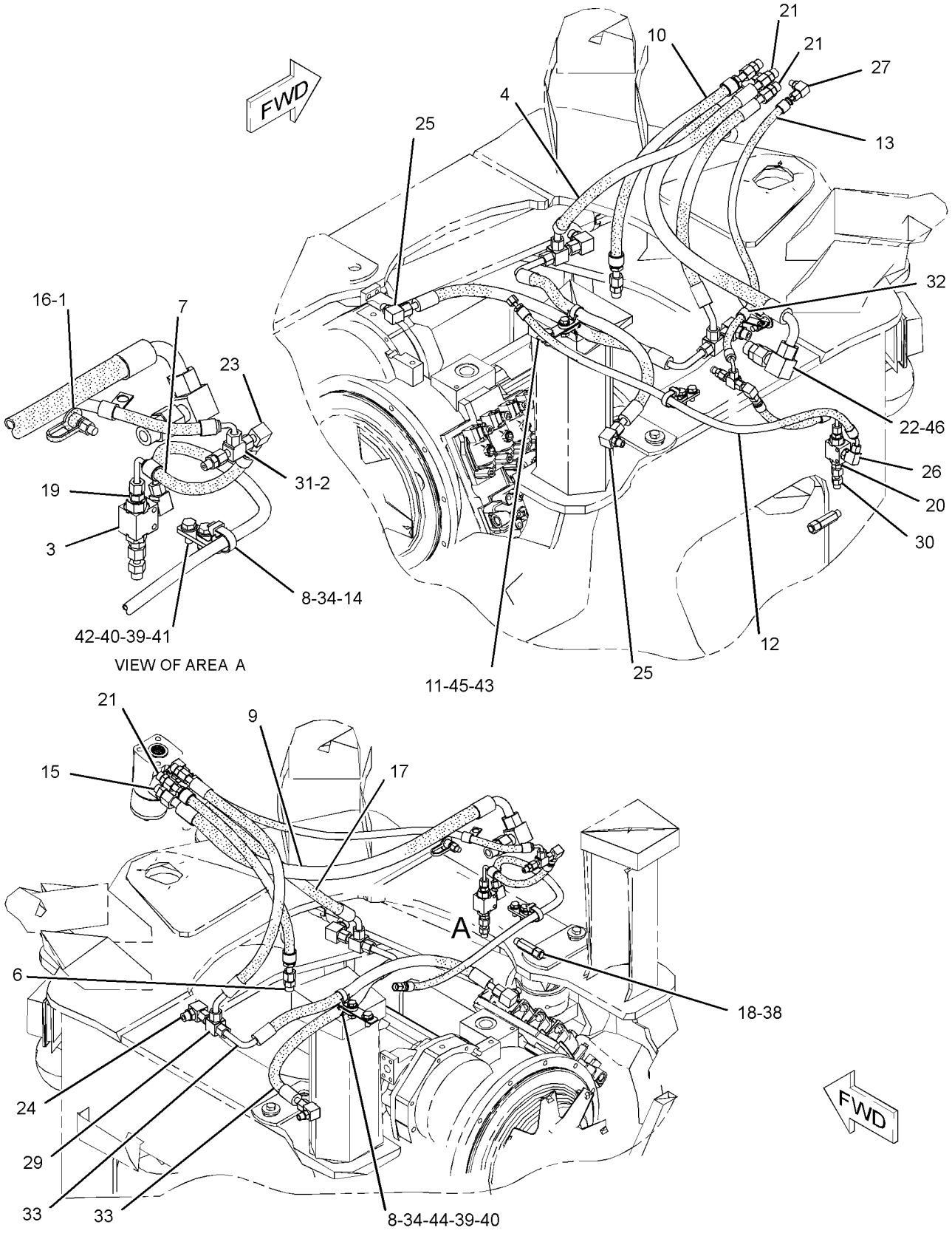

GRAPHIC #1 **<END>** g01370512

STEERING SYSTEM

240-9460 LINES GP-STEERING—QUICK STEER

S/N: TWR1-UP
NACD, EUROPEAN MARKET
PART OF 241-5667 STEERING AR, 241-5668 STEERING AR-SECONDARY
AN ATTACHMENT

SMCS-4304 **i02365158**

NOTE	REF NO	GRAPHIC REF	PART NUMBER	QTY	PART NAME 1 2 3 4 5 6 (PRODUCT LEVEL)	SEE PAGE
	1	1	**7K-1181**	3	STRAP-CABLE	
	2	1	*187-2120*	1	ELBOW AS	
		1	**4J-5477**	1	SEAL-O-RING	
		1	**8C-8408**	1	ELBOW	
	3	1	**243-4171**	1	SWITCH AS-ROCKER (QUICK STEER)	
Y	4	1	**247-4503**	1	VALVE & MTG GP-SOLENOID (QUICK STEER)	459
	5	1	**251-4319**	1	BRACKET AS	
I	6	1	**251-4389**	1	HOSE AS	
I	7	1	**251-4390**	1	HOSE AS	
I	8	1	**251-4391**	1	HOSE AS	
I	9	1	**251-4392**	1	HOSE AS	
	10	1	*148-8325*	5	CONNECTOR AS	
					(EACH INCLUDES)	
		1	**3J-1907**	1	SEAL-O-RING	
		1	**4J-5477**	1	SEAL-O-RING	
		1	**6V-8641**	1	CONNECTOR	
	11	1	*148-8351*	3	ELBOW AS	
					(EACH INCLUDES)	
		1	**4J-5477**	1	SEAL-O-RING	
		1	**6V-9849**	1	ELBOW	
	12	1	*148-8368*	1	ELBOW AS	
		1	**3J-1907**	1	SEAL-O-RING	
		1	**4J-5477**	1	SEAL-O-RING	
		1	**6V-8627**	1	ELBOW	
M	13	1	**7X-2534**	2	BOLT (M6X1X50-MM)	
M	14	1	**8T-4192**	2	BOLT (M12X1.75X25-MM)	
	15	1	**8T-4205**	2	WASHER-HARD (7.2X14.5X2-MM THK)	
	16	1	**8T-4223**	2	WASHER-HARD (13.5X25.5X3-MM THK)	
	17	1	**148-8430**	1	TEE AS	
		1	**6V-9746**	1	SEAL-O-RING	
		1	**7X-0873**	1	TEE	

I-REFER TO HYDRAULIC INFORMATION SYSTEM
M-METRIC PART
Y-SEPARATE ILLUSTRATION

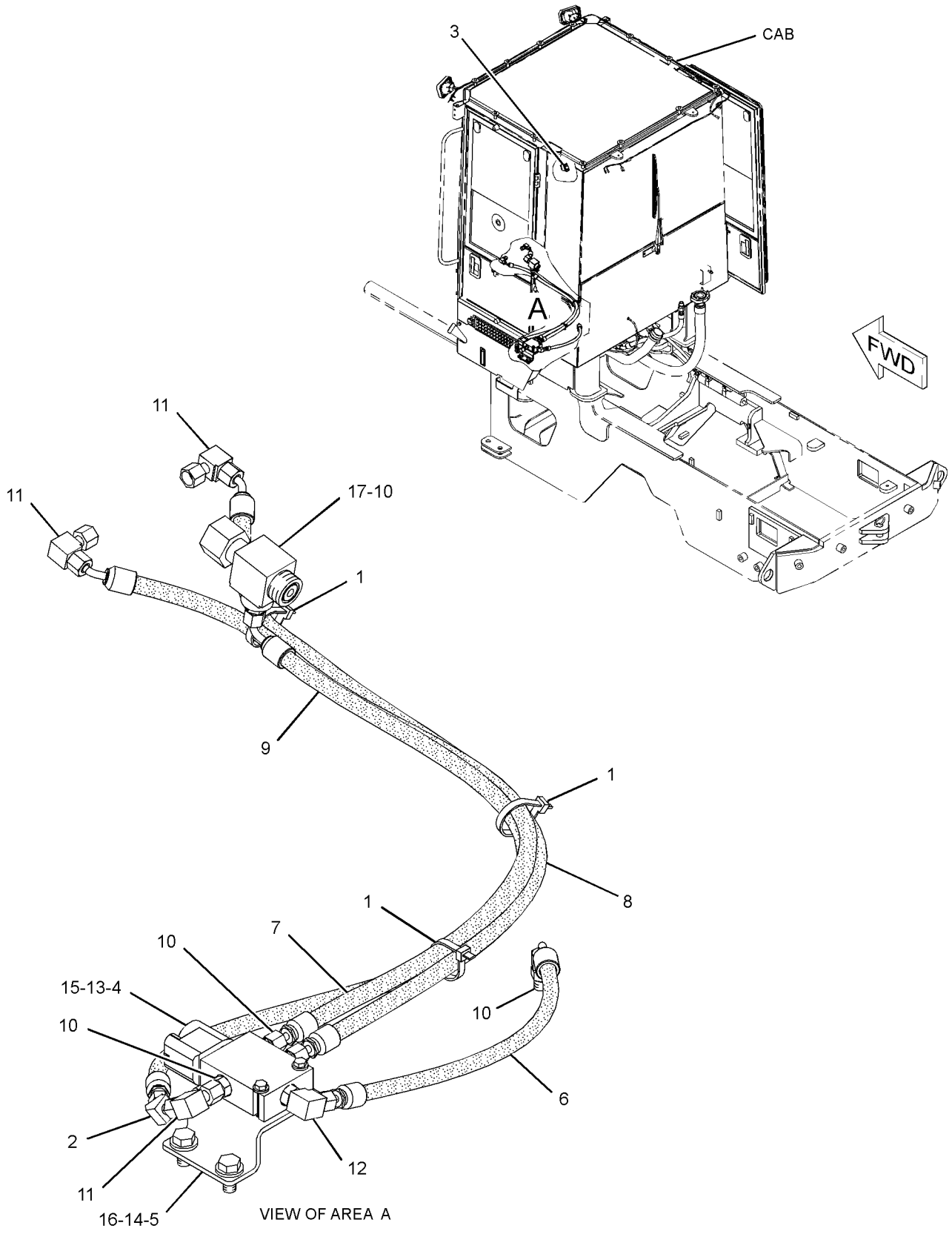

GRAPHIC #1 **<END>** g01273290

STEERING SYSTEM

310-6543 LINES GP-STEERING

S/N: TWR1-UP
PART OF 241-5667 STEERING AR
AN ATTACHMENT

SMCS-4304 **i02779323**

NOTE	REF NO	GRAPHIC REF	PART NUMBER	QTY	PART NAME 1 2 3 4 5 6 (PRODUCT LEVEL)	SEE PAGE
	1	1	**6V-0852**	1	CAP-DUST	
Y	2	1	**8J-6875**	1	VALVE GP-SHUTTLE	460
I	3	1	**111-7833**	1	HOSE AS	
I	4	1	**115-8427**	1	HOSE AS	
I	5	1	**142-9226**	2	HOSE AS	
	6	1	**192-2684**	1	VALVE AS-CHECK	
I	7	1	**198-2796**	1	HOSE AS	
	8	1	**204-2281**	3	STRAP-TIE	
I	9	1	**241-6483**	1	HOSE AS	
I	10	1	**242-0180**	1	HOSE AS	
	11	1	**248-8882**	1	PLATE	
I	12	1	**249-1039**	1	HOSE AS	
I	13	1	**249-1054**	1	HOSE AS	
	14	1	**252-7964**	1	PLATE	
	15	1	**263-8475**	1	VALVE GP-CHECK	
		1	**3K-0360**	1	SEAL-O-RING	
		1	**6V-9746**	1	SEAL-O-RING	
	16	1	*268-1601*	1	CONNECTOR AS-ORIFICE	
		1	**3J-7354**	1	SEAL-O-RING	
		1	**4J-5477**	1	SEAL-O-RING	
		1	**112-2628**	1	CONNECTOR	
	17	1	*309-5129*	1	CONNECTOR AS	
		1	**3J-7354**	1	SEAL-O-RING	
		1	**4J-5477**	1	SEAL-O-RING	
		1	**309-5128**	1	CONNECTOR	
	18	1	**110-6349**	1	FITTING AS (QUICK DISCONNECT)	
	19	1	*148-8325*	1	CONNECTOR AS	
		1	**3J-1907**	1	SEAL-O-RING	
		1	**4J-5477**	1	SEAL-O-RING	
		1	**6V-8641**	1	CONNECTOR	
	20	1	*148-8327*	1	CONNECTOR AS	
		1	**3D-2824**	1	SEAL-O-RING	
		1	**6V-8637**	1	CONNECTOR	
		1	**6V-9746**	1	SEAL-O-RING	
	21	1	*148-8336*	1	CONNECTOR AS	
		1	**3J-1907**	1	SEAL-O-RING	
		1	**6V-8397**	1	SEAL-O-RING	
		1	**6V-8636**	1	CONNECTOR	
	22	1	*148-8340*	3	CONNECTOR AS	
					(EACH INCLUDES)	
		1	**3K-0360**	1	SEAL-O-RING	
		1	**6V-8398**	1	SEAL-O-RING	
		1	**6V-8639**	1	CONNECTOR	
	23	1	*148-8351*	2	ELBOW AS	
					(EACH INCLUDES)	
		1	**4J-5477**	1	SEAL-O-RING	
		1	**6V-9849**	1	ELBOW	
	24	1	*148-8364*	2	ELBOW AS	
					(EACH INCLUDES)	
		1	**3K-0360**	1	SEAL-O-RING	
		1	**6V-8398**	1	SEAL-O-RING	
		1	**6V-8625**	1	ELBOW	
	25	1	*148-8365*	2	ELBOW AS	
					(EACH INCLUDES)	
		1	**3J-1907**	1	SEAL-O-RING	

310-6543 **LINES GP-STEERING** *(contd.)* **i02779323**

NOTE	REF NO	GRAPHIC REF	PART NUMBER	QTY	PART NAME 1 2 3 4 5 6 (PRODUCT LEVEL)	SEE PAGE
		1	**6V-8398**	1	SEAL-O-RING	
		1	**8T-6876**	1	ELBOW (90-DEG)	
	26	1	*148-8368*	1	ELBOW AS	
		1	**3J-1907**	1	SEAL-O-RING	
		1	**4J-5477**	1	SEAL-O-RING	
		1	**6V-8627**	1	ELBOW	
	27	1	*148-8392*	1	ELBOW AS	
		1	**6V-9746**	1	SEAL-O-RING	
		1	**6V-9853**	1	ELBOW	
	28	1	*148-8444*	2	TEE AS-SWIVEL	
					(EACH INCLUDES)	
		1	**6V-8398**	2	SEAL-O-RING	
		1	**6V-9837**	1	TEE-SWIVEL	
	29	1	*150-3070*	1	ADAPTER AS	
		1	**3J-1907**	1	SEAL-O-RING	
		1	**7X-3163**	1	ADAPTER-SWIVEL	
	30	1	*150-5968*	1	TEE AS	
		1	**4J-5477**	2	SEAL-O-RING	
		1	**6V-9835**	1	TEE-SWIVEL	
	31	1	**164-4225**	1	CLIP	
	32	1	*164-9869*	1	CONNECTOR AS	
		1	**3J-1907**	1	SEAL-O-RING	
		1	**6V-8397**	1	SEAL-O-RING	
		1	**9X-2297**	1	CONNECTOR	
	33	1	**204-8000**	3	MOUNT (TIE WRAP)	
	34	1	**8T-4121**	5	WASHER-HARD (11X21X2.5-MM THK)	
M	35	1	**8T-4133**	2	NUT (M10X1.5-THD)	
M	36	1	**8T-4136**	1	BOLT (M10X1.5X25-MM)	
M	37	1	**8T-4186**	1	BOLT (M10X1.5X40-MM)	
M	38	1	**8T-4192**	1	BOLT (M12X1.75X25-MM)	
M	39	1	**8T-4196**	1	BOLT (M10X1.5X35-MM)	
	40	1	**8T-4223**	1	WASHER-HARD (13.5X25.5X3-MM THK)	

I-REFER TO HYDRAULIC INFORMATION SYSTEM
M-METRIC PART
Y-SEPARATE ILLUSTRATION

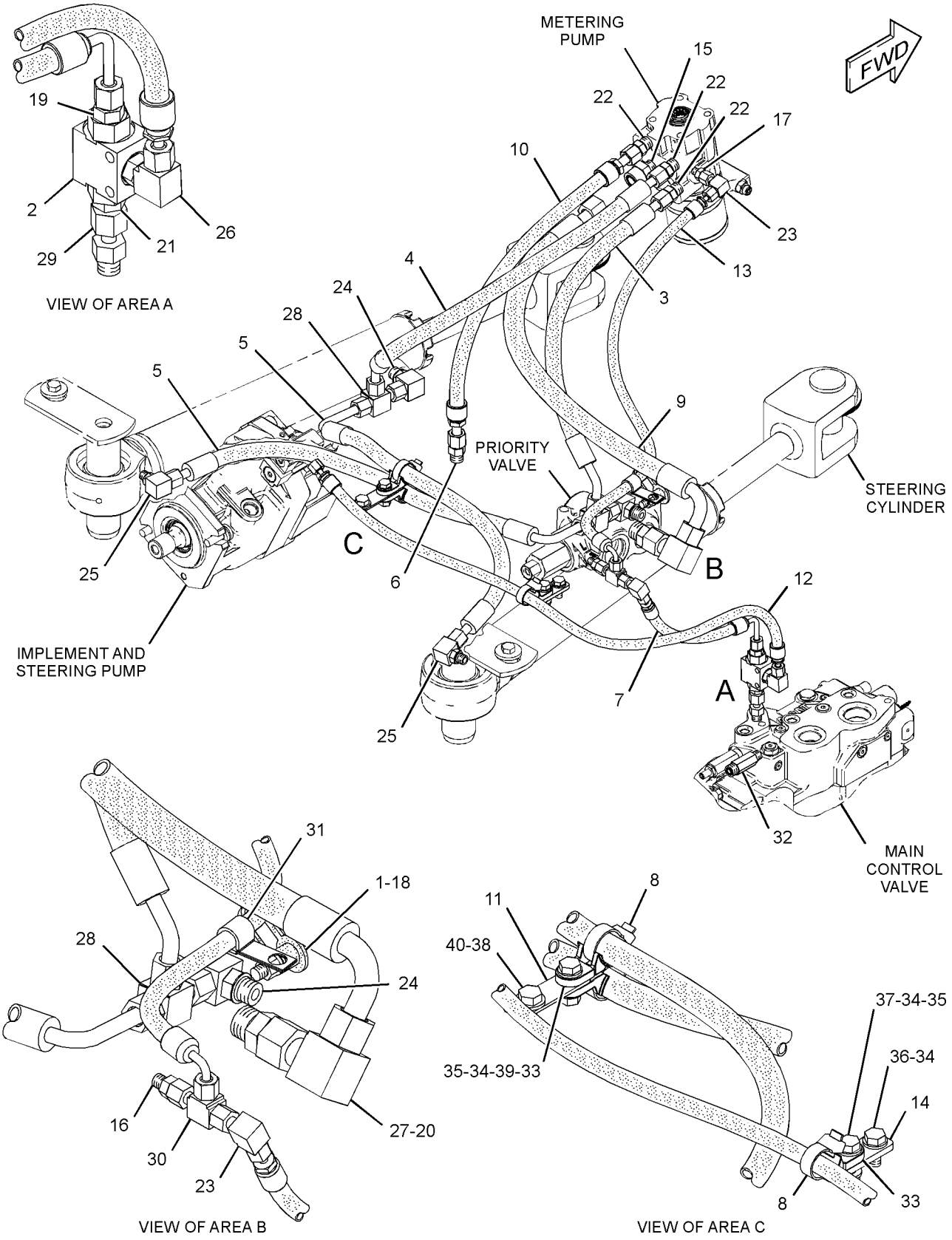

GRAPHIC #1 **<END>** g01411038

205-5266 PUMP & MOTOR GP–SECONDARY STEERING

S/N: TWR1-UP

PART OF 235-6887, 310-6544 LINES GP-SECONDARY STEERING AN ATTACHMENT

SMCS-4324, 4325 **i03157205**

NOTE	REF NO	GRAPHIC REF	PART NUMBER	QTY	PART NAME 1 2 3 4 5 6 (PRODUCT LEVEL)	SEE PAGE
	1	1	**229-9380**	1	PUMP GP-GEAR (SECONDARY STEERING)	
	2	1	**201-0416**	1	FLANGE	
	3	1	**201-0417**	1	COVER	
	4	1	**117-5268**	1	GASKET	
Y	5	1	**117-3915**	1	MOTOR GP-ELECTRIC (HYDRAULIC TANK)	174
					AVAILABLE REPAIR KIT(S):	
			200-4305		KIT-SEAL	
					(INCLUDES SEAL SHAFT, O-RINGS, E-RINGS & BACKUP RINGS)	

Y-SEPARATE ILLUSTRATION

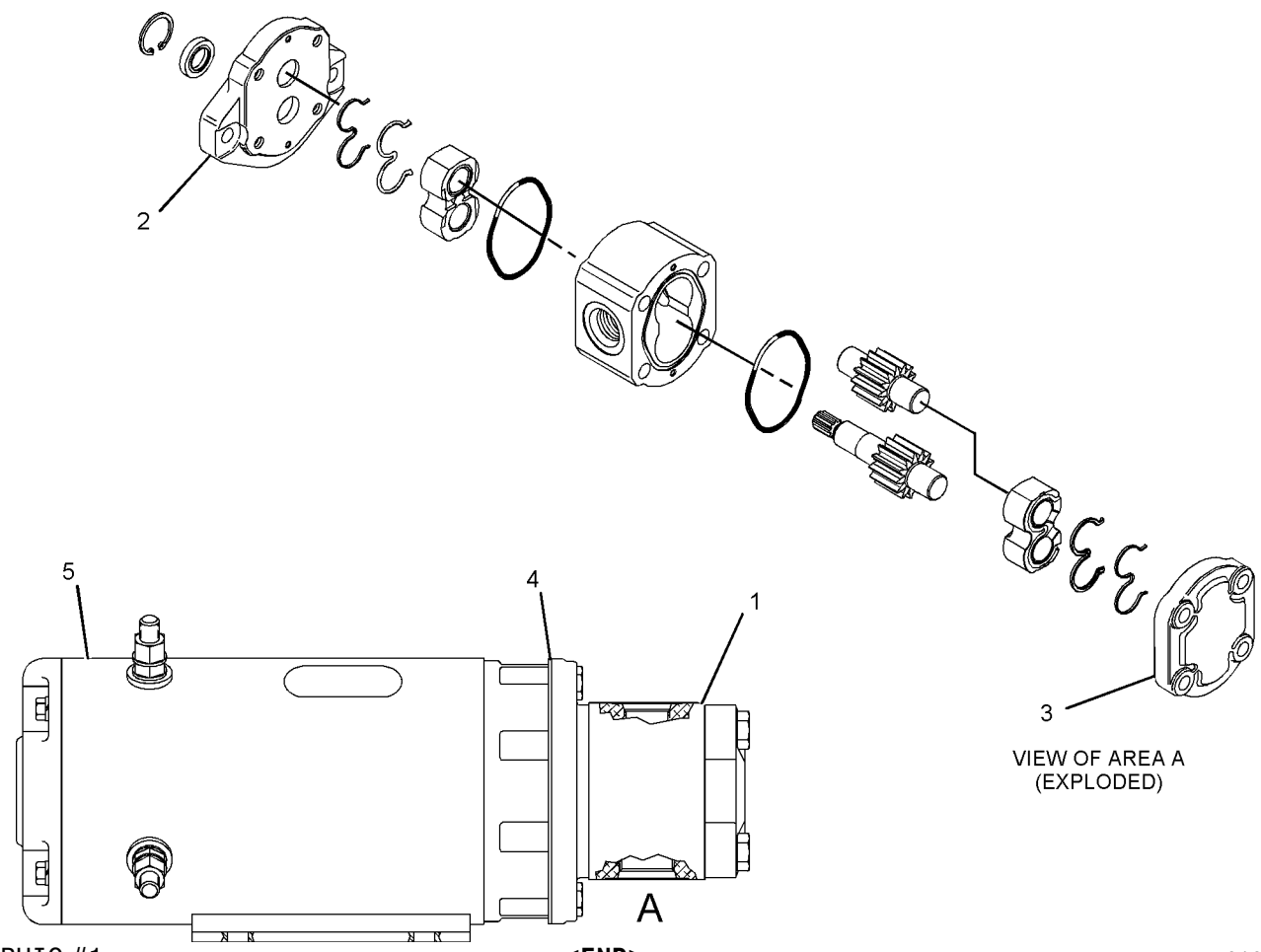

GRAPHIC #1 **<END>** g01067541

STEERING SYSTEM

235-6884 STEERING AR

S/N: TWR1-UP
AN ATTACHMENT

SMCS-4300 **i02203683**

NOTE	PART NUMBER	QTY	PART NAME 1 2 3 4 5 6 (PRODUCT LEVEL)	SEE PAGE
Y	*235-6885*	1	LINES GP-STEERING	439
	242-8360	1	PUMP GP-METERING (HMU)	

Y-SEPARATE ILLUSTRATION

<END>

241-5667 STEERING AR—QUICK STEER

S/N: TWR1-UP
AN ATTACHMENT

SMCS-4300 **i02784084**

NOTE	PART NUMBER	QTY	PART NAME 1 2 3 4 5 6 (PRODUCT LEVEL)	SEE PAGE
Y	*235-6885*	1	LINES GP-STEERING	439
			—OR—	
Y	*310-6543*	1	LINES GP-STEERING	450
Y	*240-9460*	1	LINES GP-STEERING (QUICK STEER)	448
	223-8333	1	PUMP GP-METERING (HMU, QUICK STEER)	

Y-SEPARATE ILLUSTRATION

<END>

235-6886 STEERING AR-SECONDARY

S/N: TWR1-UP
AN ATTACHMENT

SMCS-4300 **i02203722**

NOTE	PART NUMBER	QTY	PART NAME 1 2 3 4 5 6 (PRODUCT LEVEL)	SEE PAGE
Y	*235-6887*	1	LINES GP-SECONDARY STEERING	414
Y	*254-2271*	1	WIRING GP-SECONDARY STEERING	237
	242-8360	1	PUMP GP-METERING (HMU)	

Y-SEPARATE ILLUSTRATION

<END>

STEERING SYSTEM

241-5668 STEERING AR-SECONDARY—QUICK STEER

S/N: TWR1-UP

AN ATTACHMENT

SMCS-4300 **i02784087**

NOTE	PART NUMBER	QTY	PART NAME 1 2 3 4 5 6 (PRODUCT LEVEL)	SEE PAGE
Y	*235-6887*	1	LINES GP-SECONDARY STEERING	414
			—OR—	
Y	*310-6544*	1	LINES GP-SECONDARY STEERING	434
Y	*240-9460*	1	LINES GP-STEERING (QUICK STEER)	448
Y	*254-2271*	1	WIRING GP-SECONDARY STEERING	237
	223-8333	1	PUMP GP-METERING (HMU, QUICK STEER)	

Y-SEPARATE ILLUSTRATION

<END>

201-4825 STEERING COLUMN GP-ADJUSTABLE

S/N: TWR1-UP

PART OF 190-4635, 190-4643 CONTROL GP-STEERING

AN ATTACHMENT

SMCS-4338 **i03278561**

NOTE	REF NO	GRAPHIC REF	PART NUMBER	QTY	PART NAME 1 2 3 4 5 6 (PRODUCT LEVEL)	SEE PAGE
	1	1	**149-0777**	1	KNOB	
	2	1	**252-8054**	1	KIT-CONTACT (STEERING COLUMN)	
					(INCLUDES CONTACT AS & SCREW)	
M	3	1	**6V-8227**	1	NUT (M18X1.5-THD)	
	4	1	**217-4154**	1	SPRING AS-GAS (STEERING COLUMN TILT)	
	5	1	**217-4155**	1	KIT-TILT LEVER (STEERING COLUMN)	
	6	1	**224-9929**	1	KIT-PIVOT (STEERING COLUMN)	
					(INCLUDES BUSHINGS & PINS)	
	7	1	**102-8802**	1	KIT-RECEPTACLE (2-PIN)	
					(INCLUDES RECEPTACLE AS & WEGE)	
	8	1	**186-3735**	1	PIN-CONNECTOR (16-GA TO 18-GA)	
	9	1	**9G-3695**	1	PLUG	

M-METRIC PART

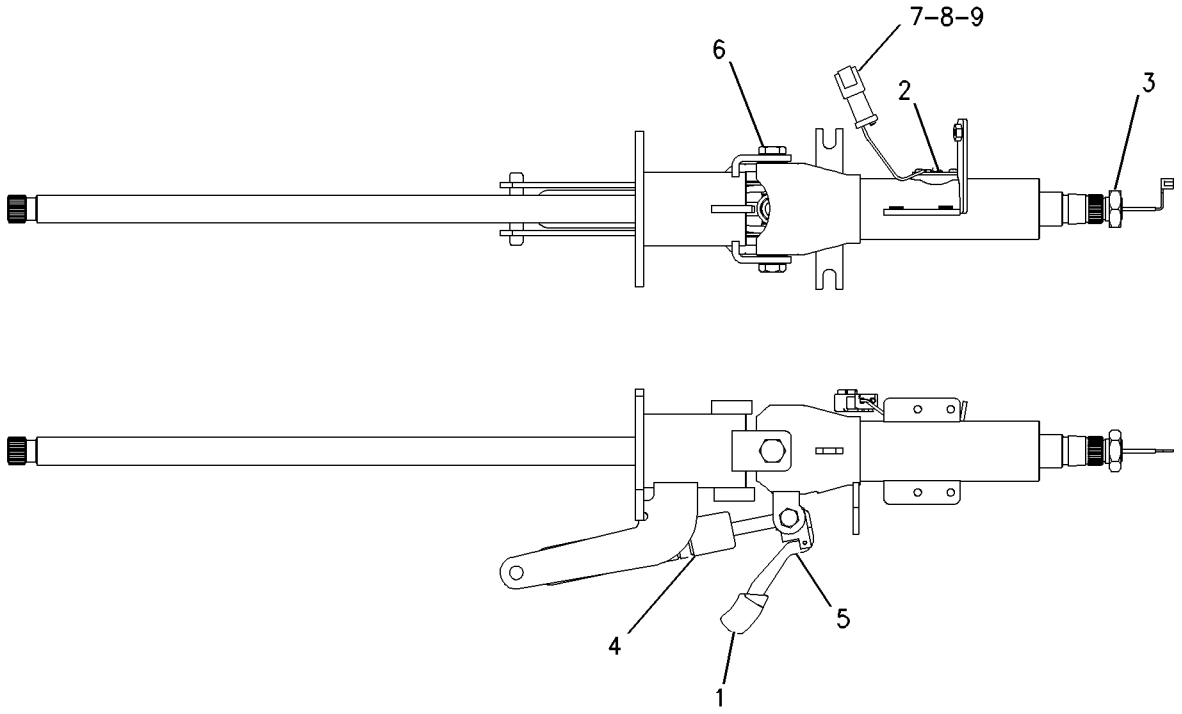

GRAPHIC #1 **<END>** g00998158

280-6837 STEERING COLUMN GP-ADJUSTABLE

S/N: TWR2601-UP

PART OF 190-4635 CONTROL GP-STEERING

AN ATTACHMENT

SMCS-4338 **i02854355**

NOTE	REF NO	GRAPHIC REF	PART NUMBER	QTY	PART NAME 1 2 3 4 5 6 (PRODUCT LEVEL)	SEE PAGE
	1	1	**9G-3695**	1	PLUG	
	2	1	**102-8802**	1	KIT-RECEPTACLE (2-PIN)	
					(INCLUDES RECEPTACLE AS & WEDGE)	
	3	1	**149-0777**	1	KNOB (STEERING COLUMN TILT)	
	4	1	**186-3735**	1	PIN-CONNECTOR (16-GA TO 18-GA)	
	5	1	**217-4154**	1	SPRING AS-GAS (STEERING COLUMN TILT)	
	6	1	**217-4155**	1	KIT-TILT LEVER (STEERING COLUMN)	
					(INCLUDES BOLTS, ROLL PIN, DOWEL, SPRING & TILT LEVER)	
	7	1	**252-8054**	1	KIT-CONTACT (STEERING COLUMN)	
					(INCLUDES HORN CONTACT AS, SCREWS & LOCKWASHERS)	
	8	1	**316-1961**	1	KIT-PIVOT (STEERING COLUMN)	
					(INCLUDES BUSHING-PIVOTS & PIN-PIVOTS)	
M	9	1	**6V-8227**	1	NUT (M18X1.5-THD)	
	10	1	**311-8557**	1	COLUMN AS-STEERING	

M-METRIC PART

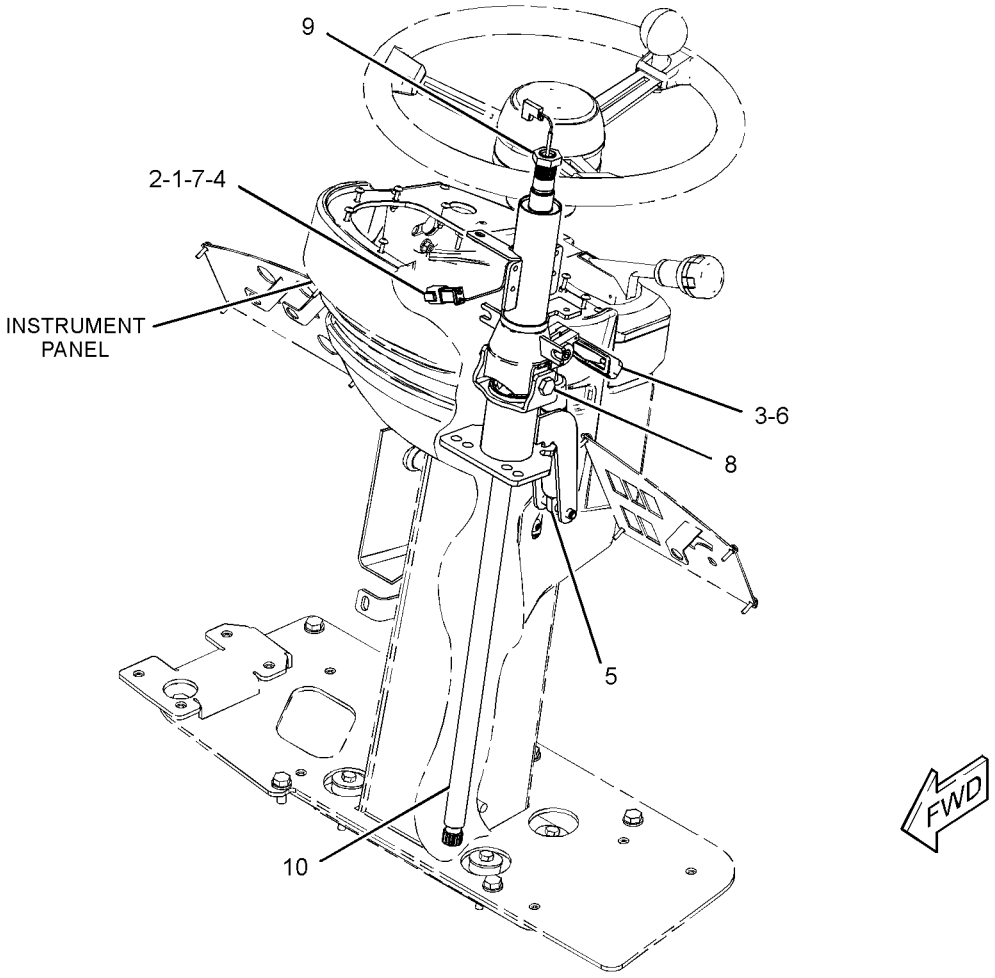

GRAPHIC #1 **<END>** g01423407

319-1625 STEERING COLUMN GP-ADJUSTABLE

S/N: TWR3302-UP

PART OF 190-4635 CONTROL GP-STEERING

AN ATTACHMENT

SMCS-4338 **i03276426**

NOTE	REF NO	GRAPHIC REF	PART NUMBER	QTY	PART NAME 1 2 3 4 5 6 (PRODUCT LEVEL)	SEE PAGE
	1	1	**9G-3695**	1	PLUG	
	2	1	**102-8802**	1	KIT-RECEPTACLE (2-PIN)	
					(INCLUDES RECEPTACLE AS & WEDGE)	
	3	1	**186-3735**	1	PIN-CONNECTOR (16-GA TO 18-GA)	
	4	1	**149-0777**	1	KNOB (STEERING COLUMN TILT)	
	5	1	**217-4154**	1	SPRING AS-GAS (STEERING COLUMN TILT)	
	6	1	**217-4155**	1	KIT-TILT LEVER (STEERING COLUMN)	
	7	1	**252-8054**	1	KIT-CONTACT (STEERING COLUMN)	
	8	1	**321-6951**	1	KIT-PIVOT (STEERING COLUMN TILT)	
	9	1	**311-8557**	1	COLUMN AS-STEERING	
M	10	1	**6V-8227**	1	NUT (M18X1.5-THD)	

M-METRIC PART

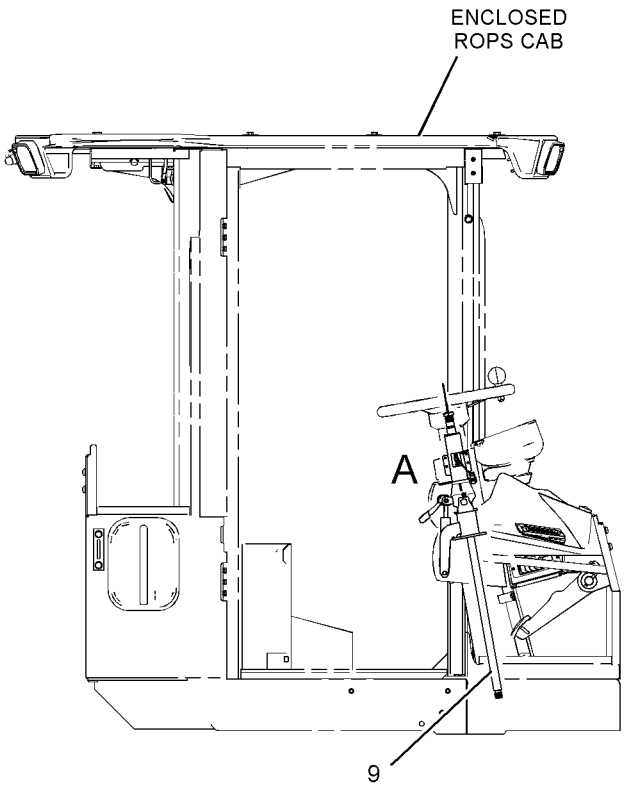

RIGHT SIDE VIEW

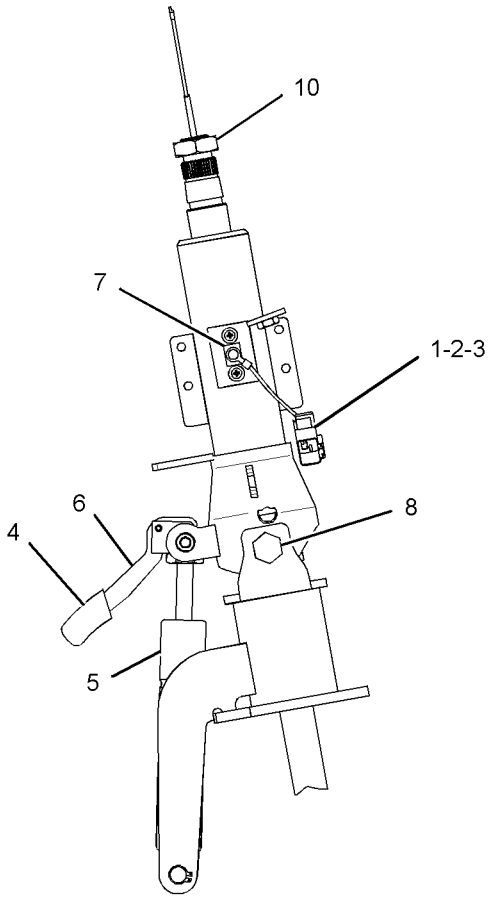

VIEW OF AREA A

GRAPHIC #1 **<END>** g01452575

247-4503 VALVE & MTG GP-SOLENOID—QUICK STEER

S/N: TWR1-UP
PART OF 240-9460 LINES GP-STEERING
AN ATTACHMENT

SMCS-5479 **i02224504**

NOTE	REF NO	GRAPHIC REF	PART NUMBER	QTY	PART NAME 1 2 3 4 5 6 (PRODUCT LEVEL)	SEE PAGE
Y	1	1	**247-4502**	1	VALVE GP-SOLENOID (24-VOLT) (QUICK STEER)	461

Y-SEPARATE ILLUSTRATION

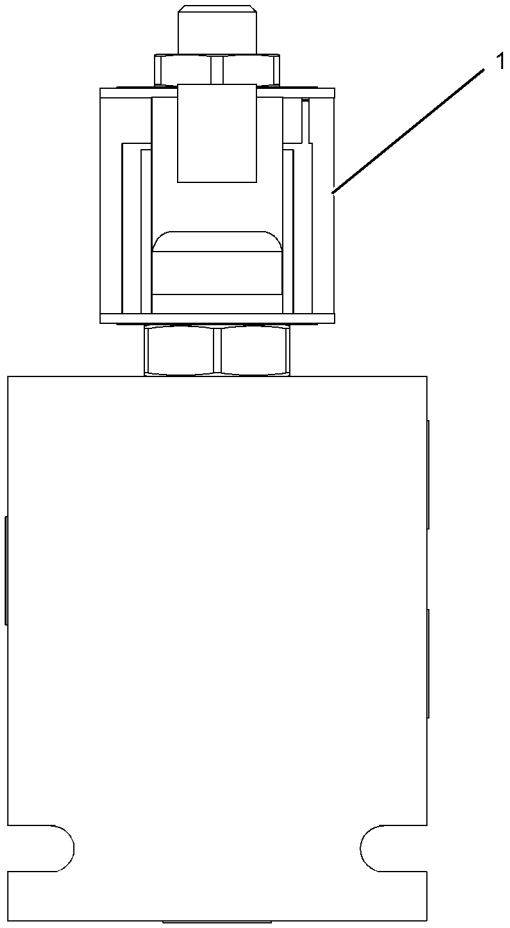

GRAPHIC #1 **<END>** g01115474

8J-6875 VALVE GP-SHUTTLE—STEERING LINES

S/N: TWR1-UP

PART OF 235-6887, 310-6544 LINES GP-SECONDARY STEERING, 235-6885, 310-6543 LINES GP-STEERING

AN ATTACHMENT

SMCS-4289 **i02773478**

NOTE	REF NO	GRAPHIC REF	PART NUMBER	QTY	PART NAME 1 2 3 4 5 6 (PRODUCT LEVEL)	SEE PAGE
	1	1	**4T-9905**	2	ADAPTER	
	2	1	**2M-9780**	2	SEAL-O-RING	
	3	1	**4B-9784**	1	BALL	

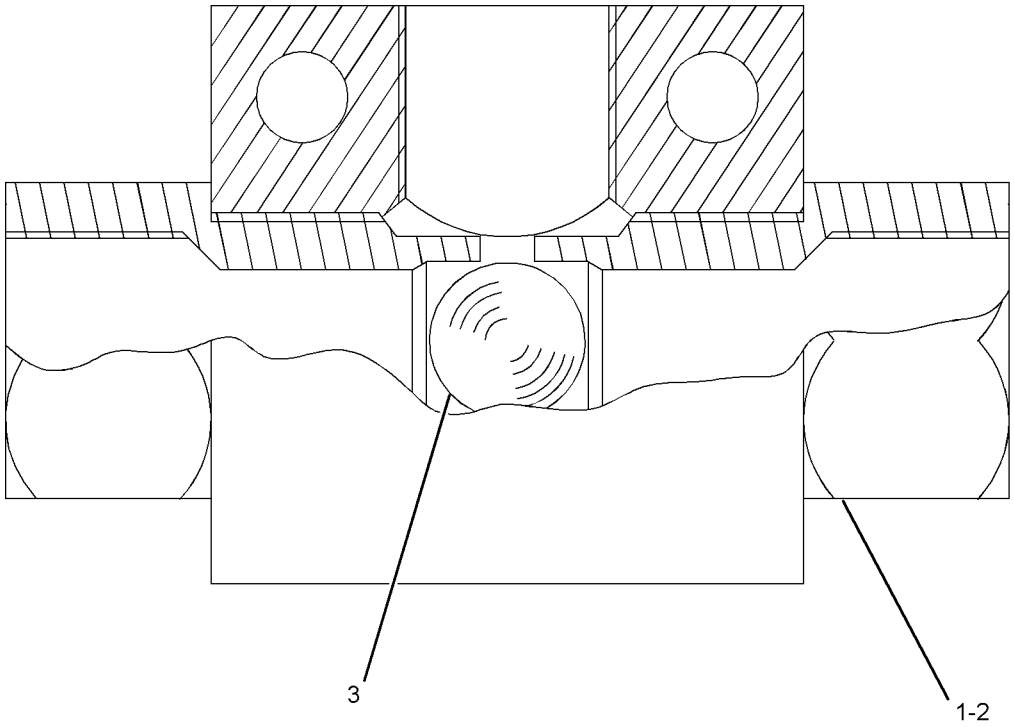

GRAPHIC #1 **<END>** g01047576

247-4502 VALVE GP-SOLENOID

S/N: TWR1-UP
PART OF 247-4503 VALVE & MTG GP-SOLENOID
AN ATTACHMENT

SMCS-4804, 4805, 5479 **i02203978**

NOTE	REF NO	GRAPHIC REF	PART NUMBER	QTY	PART NAME 1 2 3 4 5 6 (PRODUCT LEVEL)	SEE PAGE
	1	1	**250-6148**	1	COIL AS	
					AVAILABLE REPAIR KIT(S):	
			106-3108	1	KIT-SEAL	

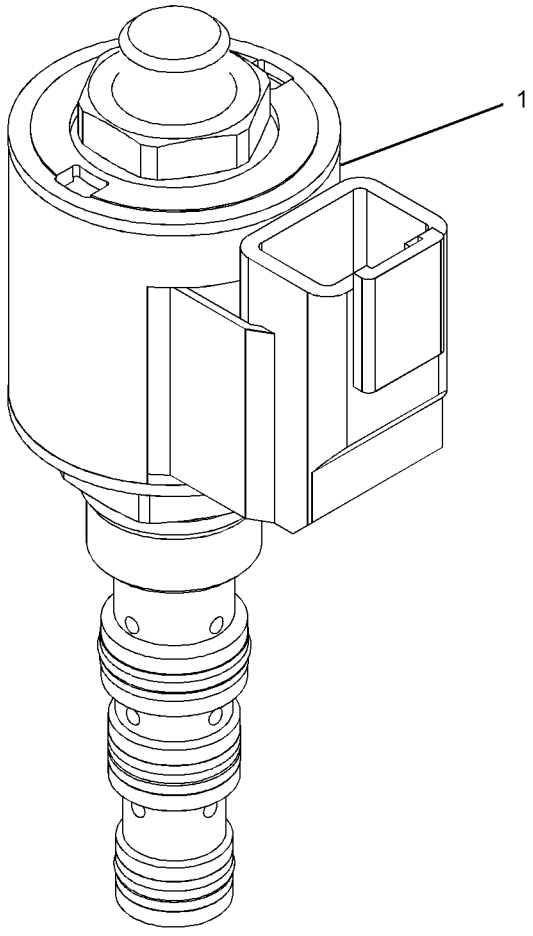

GRAPHIC #1 **<END>** g01114427

MEMORANDA

PART NUMBER INDEX

Part	Page
0	
0S-1594	940
	942
0S-1595	945
	946
0T-0244	1145
1	
1A-4350	1148
1B-0676	231
1B-2578	192
1B-3057	70
	73
	77
	81
	85
	139
1B-3978	246
	275
	277
1B-3980	275
	277
1B-8723	1133
1B-8736	13
	15
	29
	31
1C-0569	1149
1D-4677	1168
1F-0748	135
	137
1G-8878	268
1G-9963	6
	▶184
1H-3244	131
	133
	159
1H-3338	190
	191
1H-4393	168
	170
	792
	793
	985
	989
	991
	993
	995
	1084
1H-5728	413
1H-6227	703
1H-9696	309
1J-0708	487
1J-5607	902
	904
1J-9671	389
	390
	463
	676
	678
	704
	707
1K-6853	321
1K-6870	823
	824
1K-6872	940
	942
	943
	944
	945
	946
1K-7990	272
1K-7991	272
1K-8061	281
	283
1L-9080	1148
1M-4543	1059
	1062
1M-7250	107
1N-3762	18
	20
1N-5999	746
	748
	750
1P-3702	635
	639
1P-3703	676
	678
	726
	728
	730
	732
	734
	737
	739
	741
	744
	746
	748
	750
1P-3708	635
	639
	644
	649
	654
	659
1P-4278	112
1P-4576	266
1P-4582	644
	649
	654
	659
1P-4584	644
	649
	654
	659
1P-5765	635
	639
1P-6356	1059
	1062
1P-6522	928
	931
	934
	936
	1044
1P-6872	709
1P-7009	1059
	1062
1R-0739	53
1S-0833	711
	713
1S-7251	139
1S-7252	139
1S-9593	116
	119
	809
	810
1T-0936	676
	678
	726
	728
	730
	732
	734
	737
	739
	741
	744
	746
	748
	750
1U-0257	822
1U-3251	916
1U-3252	915
1U-8846	246
	279
	283
	309
1V-2772	391
	392
1V-8242	815
	817
	819
1V-9409	141
1W-2934	954
1W-9509	762
1Y-7927	1046
2	
2B-0858	8
	48
2B-2695	1149
2C-9259	849
	851
	852
	855
	857
	859
	860
	861
	862
	863
	865
	868
	869
2D-0598	246
2D-2507	314
2D-2508	314
2D-2509	314
2D-2628	339
2D-2629	339
2D-2630	339
2D-2631	339
2D-2633	339
2D-6235	1046
2F-7306	1077
2G-6595	314
2G-8767	139
2G-9524	1041
2H-3429	794
	795
	796
2H-3920	194
	195
	922
	923
	924
	926
	1042
2H-3922	187
	928
	931
	934
	936
2H-3923	928
	931
	934
	936
2H-3927	270
	272
2J-3507	822
	902
	903
	904
2J-6232	270
	272
2J-6233	270
	272
2J-7550	309
2K-4821	131
	133
2K-4973	920
	1149
	1168
	1170
2K-5957	274
2K-9295	270
	272
2L-0043	264
2L-5893	1138
2L-6726	336
2L-8051	1093
	1097
	1117
	1121
2L-8065	219
2L-8078	145
	219
2L-8081	198
	205
	209
	1093
	1097
	1117

▶ **PRIMARY REFERENCE**

PART NUMBER INDEX

Part	Page
	1121
2L-9653	1059
2M-0849	940
	942
2M-2570	685
	687
2M-7077	210
2M-7819	1046
2M-9780	63
	286
	292
	298
	414
	420
	425
	430
	435
	460
	467
	469
	474
	479
	480
	481
	503
	505
	507
	510
	603
	605
	607
	610
	613
	644
	649
	653
	658
	662
	665
	668
	671
	709
	799
	805
2N-3477	393
2N-7006	246
2N-7007	246
2P-1279	603
	605
2P-1692	342
2P-2537	63
2P-2975	800
2P-4173	22
2P-8104	185
2Q-5979	310
	311
	▶313
2S-1382	336
2S-3440	9
	11
	68
	103
2S-3745	928
	931
	1044
2S-4078	642
	643
	644
	647
	648
	649
	652
	653
	654
	657
	658
	659
2S-4663	337
2S-5835	337
2T-3360	1004
	1006
	1009
	1011
	1013
2W-1141	246
	249
	251
	253
	255
2W-1776	726
	728
	730
	732
	734
	737
	739
	741
	744
2Y-5829	581
	583
	585
	587
3B-0551	279
	281
	283
3B-4124	270
	272
3B-4501	145
	928
	931
	934
	936
3B-4516	903
3B-4605	1181
3B-4610	394
3B-4617	395
	397
	399
	401
3B-6552	384
3B-7734	384
3B-8488	321
3B-8489	320
	322
	378
	384
	486
	815
	817
	819
	893
	895
	897
	899
	913
	914
3B-8491	815
	817
	819
	893
	895
	897
	899
	913
	914
3C-3364	1135
3C-4922	1135
3D-2824	259
	266
	285
	286
	291
	292
	297
	298
	415
	420
	421
	425
	426
	430
	431
	435
	439
	443
	446
	450
	501
	574
	603
	607
	610
	613
	634
	635
	638
	639
	643
	648
	653
	658
	675
	704
	719
	724
3D-2891	249
	255
3D-2975	1046
3D-8317	337
3D-8358	249
	255
3E-1841	928
	931
	934
	936
	1044
3E-2332	395
	397
	399
3E-2338	279
	283
3E-3365	130
	178
	179
	229
	340
	605
	809
	928
3E-3368	144
3E-3371	143
	176
	181
	434
3E-3383	966
	967
3E-3389	194
	198
	201
	203
	205
3E-3805	1025
	1027
	1030
	1032
3E-3892	960
	961
	963
	965
3E-4051	1059
	1062
3E-4052	1059
	1062
3E-4057	1059
	1062
3E-4058	1059
	1062
3E-4078	1059
	1062
3E-4312	941
3E-4335	1077
3E-4336	1077
3E-4362	1077
3E-4367	1092
	1096
	1116
	1120
3E-5153	185
3E-5154	185
3E-5239	214
	219
	223
	233
	235
	958
	1020

3

▶ PRIMARY REFERENCE

PART NUMBER INDEX

Part	Page	Part	Page	Part	Page	Part	Page
3E-5464	928		419		628		421
	931		420		629		425
	934		424		631		426
	936		425		632		430
3E-6237	185		429		634		431
3E-6238	185		430		635		434
3E-6328	▶130		434		638		436
	168		435		639		439
	170		436		642		440
3E-6575	1077		439		643		442
3E-6600	369		440		644		443
	784		442		647		445
	785		443		648		446
	786		445		649		450
	787		446		652		463
3E-7445	102		448		653		490
3E-7690	285		450		654		603
	291		451		657		605
	297		467		658		642
3E-7843	▶144		468		662		643
	499		470		665		647
3E-7844	▶143		486		668		648
	499		490		671		652
3E-8016	701		501		675		653
	702		512		676		657
3E-8020	960		515		678		658
3E-8320	139		518		719		662
3E-8558	1092		521		746		665
	1096		524		748		668
	1116		527		750		671
	1120		530		765		676
3E-9411	815		533		768		678
	817		535		770		687
	819		538		773		709
3F-9556	131		542		775		725
	133		545		778		726
3G-1209	736		547		781		728
3H-0442	808		554		797		730
3H-7180	694		556		801		732
	696		562		803		734
3H-8538	393		564		899		737
3J-1907	246		566	3J-3679	676		739
	266		568		678		741
	268		571		746		744
	285		581		748		746
	286		583		750		748
	287		585	3J-4818	583		750
	291		587		585		753
	292		589		587		754
	297		591		973		755
	298		593		1170		756
	303		595	3J-7354	268		757
	334		597		285		758
	335		599		291		759
	337		601		297		760
	342		607		395		761
	395		610		397		765
	397		613		399		768
	399		616		401		770
	401		619		403		773
	403		620		406		775
	406		622		409		778
	409		623		415		781
	414		625		416		808
	415		626		420	3J-9545	487

▶ **PRIMARY REFERENCE**

PART NUMBER INDEX

Part	Page	Part	Page	Part	Page	Part	Page
3K-0360	22		77		219		406
	214		81		223		409
	220		85	3T-5201	1025	4D-9517	287
	223	3L-8187	393		1027		292
	286	3P-0647	800		1030		298
	292	3P-2404	287		1032		607
	298		292	3T-8236	676		610
	337		298		678		613
	340		607		746	4E-0659	849
	414		610		748		851
	415		613		750		852
	419	3P-5903	512	3V-2333	815		855
	420		515		817		857
	424		518		819		859
	425		521	3V-5349	1163		860
	429		524		1165		861
	430		527		1166		862
	434		530	3W-6188	139		863
	435		533		237		865
	436		535	3W-6748	467		868
	439		538		469		869
	442	3P-5904	512				870
	445		515				871
	450		518	**4**			875
	467		521			4E-1062	960
	469		524	4B-3665	309		965
	470		527	4B-4158	739	4E-1357	323
	605		530		741	4E-1384	1025
	634		533		755		1027
	638		535		756		1030
	642		538		758		1032
	643	3P-7898	308	4B-4274	215		1041
	647	3P-9900	1170		220	4E-1411	1049
	648	3S-2093	208		223	4E-2161	1051
	652		214		358		1053
	653		220		616	4E-3644	270
	657		224		619		272
	658		340		622	4E-3896	270
	662		785		625		272
	665		787		628	4E-3897	270
	668		788		631		272
	671		789	4B-4277	116	4E-4031	270
	676		790		119		272
	678		791	4B-4278	1170	4E-4305	270
	709		792	4B-4863	93		272
	719		928		94	4E-4307	270
	720		931		97		272
	723		934		215	4E-5984	319
	725		936		220	4E-5985	319
	746		958		223	4E-6104	261
	748		1002	4B-5059	1046	4E-7316	1173
	750		1003	4B-5324	393		1175
	794		1044	4B-9784	460	4E-7540	403
	795		1059	4B-9880	337		406
	796		1062	4D-0514	145		409
	807		1173	4D-1326	192	4F-2294	189
3K-4897	1082		1175	4D-6432	1148		193
3K-6060	1067		1177	4D-6466	112		1101
	1068		1179	4D-7388	70	4F-3654	885
3K-7056	391	3S-6049	139		73		888
	392	3S-6162	485		77	4F-4042	822
3K-7057	391	3S-8665	215		81	4F-4879	1157
	392		220		85		1158
3K-9520	70		223		303	4F-8824	275
	73	3T-2662	214	4D-7735	403		277

PART NUMBER INDEX

Part	Page	Part	Page	Part	Page	Part	Page
4I-0899	415	4J-0523	265		568		728
	420	4J-0527	644		571		730
	425		649		581		732
	431		654		583		734
	434		659		585		737
4I-3038	1086	4J-3745	485		587		739
	1089	4J-5267	266		589		741
	1092		616		591		744
	1096		619		593		746
	1101		622		595		748
	1106		625		597		750
	1110		628		599	4K-0173	279
	1113		631		601		281
	1116	4J-5268	797		603	4K-0367	885
	1120	4J-5351	797		605		888
	1124	4J-5477	285		607	4K-1388	726
	1128		286		610		728
4I-6141	635		291		613		730
	639		292		616		732
4I-9521	634		297		619		734
	638		298		622		737
	662		414		625		739
	665		415		628		741
	668		416		631		744
	671		419		634	4K-2039	794
4I-9522	616		420		635		795
	619		421		639		796
	622		424		642	4K-4709	361
	625		425		643	4K-4879	313
	628		426		647		315
	631		429		648	4K-4881	316
	634		430		652		317
	638		431		653	4K-7464	378
4I-9523	589		434		657	4K-7502	24
	591		435		658	4K-9429	1079
	593		436		662		1080
	595		439		665	4L-6454	943
4I-9524	597		440		668		944
	599		442		671		945
	601		443		687		946
4I-9525	662		445		719	4L-6499	192
	665		446		899	4M-0189	485
	668		448	4J-7533	676	4M-1677	244
	671		450		678		245
4I-9526	617		451		726	4M-2381	337
	620		467		728	4M-5905	337
	623		469		730	4M-6425	1138
	626		512		732	4M-7470	1177
	629		515		734		1179
	632		518		737	4N-2927	1046
4I-9527	589		521		739	4P-3838	41
	591		524		741		43
	593		527		744	4P-6236	1183
	595		530		746		1184
4I-9528	597		533		748		1185
	599		535		750	4P-7428	409
	601		538		801	4P-7581	199
4J-0520	644		542		803		201
	649		545	4J-9058	822		203
	654		547	4J-9208	903		205
	659		554	4J-9220	485		215
	662		556	4J-9225	413		220
	665		562	4J-9535	676		223
	668		564		678		227
	671		566		726		229

► **PRIMARY REFERENCE**

PART NUMBER INDEX

Part	Page
	231
	233
	340
	499
	720
	958
	1059
	1062
	1087
	1089
	1093
	1097
	1102
	1106
	1111
	1114
	1117
	1121
	1124
	1128
4P-8134	196
	199
	201
	203
	205
	215
	220
	223
	229
	231
	233
	235
	237
	1087
	1089
	1093
	1097
	1102
	1106
	1111
	1114
	1117
	1121
	1124
	1128
4S-1962	1059
	1062
4S-5879	246
4S-8264	1051
	1053
4S-8287	1077
4T-0370	815
	817
	819
4T-2972	885
	888
4T-6780	413
4T-8091	902
4T-9905	460
4V-0611	501
4V-0612	501
4V-2879	815
	817
	819
4V-4453	815
	817
	819
4V-7884	1168
4V-8256	920
4V-8520	487
4V-8577	1168
	1170
4V-8639	815
	817
	819
4V-8674	487
	815
	817
	819
4V-9798	566
	568
	571
4V-9799	566
	568
	571
4W-5359	29
4W-7356	683
	684
	706
	708
5	
5A-3604	762
	765
	770
	773
	775
	778
5C-1777	115
	122
	125
5C-1796	55
	57
	59
5C-2890	159
	163
	164
	166
	168
	170
	190
	191
	380
	540
	541
	581
	691
	692
	693
	694
	695
	696
	762
	765
	770
	773
	775
	778
	899
	1025
	1027
	1030
	1032
	1051
	1053
	1057
	1067
	1068
	1084
	1087
	1089
	1093
	1097
	1102
	1106
	1111
	1114
	1117
	1121
	1124
	1128
	1170
5C-7261	70
	73
	77
	81
	85
	94
	97
	380
	394
	403
	406
	409
	415
	420
	426
	431
	436
	974
	975
	976
	977
	978
	980
	981
	982
	984
	985
	987
	989
	991
	993
	995
	997
	998
	999
	1001
	1025
	1027
	1030
	1032
	1041
5C-8312	93
	94
	97
	168
	170
	1084
5C-8811	1177
5C-9553	229
	231
	368
	540
	541
	899
	912
	928
	931
	934
	936
	958
	1015
	1016
	1044
	1067
	1068
5D-1026	9
	11
	22
	108
	1064
5D-4822	1046
5F-8000	676
	678
	726
	728
	730
	732
	734
	737
	739
	741
	744
	746
	748
	750
5F-9657	63
5G-2373	823
	824
5G-6973	395
	397
5G-7820	499
5H-1039	281
	283
5H-3252	308
5H-3701	279
	281
	283
5H-6005	246
5I-4370	503
	507
5I-4376	652
	657
5J-2974	491
	797
5J-4986	485
5J-4989	487

► **PRIMARY REFERENCE**

PART NUMBER INDEX

Part	Page	Part	Page	Part	Page	Part	Page
5J-7010	413	5P-0767	1064		231		926
5K-5338	403	5P-1075	467		237		929
	406		469		351		932
	409		1168		354		934
5K-9090	303	5P-1076	26		368		936
	474		27		403		1042
	487		135		406	5P-5677	152
	540		137		409	5P-5755	70
	541		351		499		73
	550		354		635		77
	558		375		639		81
	566	5P-1420	112		717		85
	568	5P-1442	711		893	5P-5774	164
	571		713		895		166
	589	5P-1506	81		897	5P-5777	285
	591		85		899		291
	593	5P-1717	93		950	5P-5908	928
	595		94		1004		931
	616		97		1006		1044
	619		501		1009	5P-5927	1034
	622	5P-2304	246		1011	5P-6010	1170
	625	5P-2766	1093		1013	5P-6038	199
	628		1097		1019		201
	631		1117		1034		203
	634		1121		1087		206
	635	5P-2861	275		1089	5P-6264	229
	638		277		1093		231
	639	5P-2957	198		1097	5P-6271	198
	642	5P-3723	279		1102		205
	643		281		1106	5P-6718	22
	644		283		1111		39
	647	5P-3860	617		1114	5P-6719	797
	648		620		1117	5P-6872	1067
	649		623		1121		1068
	652		626		1124	5P-6887	70
	653		629		1128		73
	654		632	5P-4362	303		77
	657	5P-3863	246	5P-4423	1170		81
	658	5P-4115	355	5P-4484	279		85
	659		356		281	5P-7070	929
	662		358		283		932
	665		380	5P-4869	634		934
	668		499		638		936
	671		912	5P-4961	70	5P-7211	70
	899		1057		73		73
5L-3244	285		1087		77		77
	607		1089		81		81
5L-4753	264		1093		85		85
5L-7200	168		1097		112		375
	170		1102	5P-4965	215		957
5M-2894	1138		1106		220	5P-7462	547
5M-3062	823		1111		223		899
	824		1114	5P-5291	281	5P-7463	547
	1168		1117		283		899
5M-4987	308		1121	5P-5618	219	5P-7464	501
5M-6214	281		1124	5P-5623	196	5P-7465	501
	283		1128	5P-5637	380	5P-7468	265
5P-0537	1081	5P-4116	70		1051		616
5P-0599	634		73		1053		619
	638		77		1181		622
5P-0713	246		81	5P-5639	164		625
5P-0743	22		85		166		635
5P-0747	139		94	5P-5643	922		662
5P-0760	237		97		923		665
5P-0761	139		139		924		668

► **PRIMARY REFERENCE**

PART NUMBER INDEX

Part	Page
	671
5P-7469	265
	616
	619
	622
	625
	635
	662
	665
	668
	671
5P-7648	1059
	1062
5P-7684	246
5P-7957	1079
	1080
5P-7958	1065
5P-8196	63
5P-8244	704
	707
5P-8245	24
	275
	277
	281
	283
	685
	687
	943
	944
	945
	946
5P-8247	131
	133
	279
	281
	283
5P-8347	342
5P-8444	616
	619
	622
	625
	635
	663
	666
	668
	672
5P-8445	1046
5P-8500	265
	711
	713
	715
	1065
5P-8524	1057
5P-8837	385
5P-9212	386
5P-9297	394
	512
	515
	518
	521
	524
	527
	530
	533
	535
	538
	542
	545
	554
	556
	562
	564
5P-9299	237
5S-7349	131
	133
5S-7383	1138
5T-3821	384
5T-6374	73
	77
5T-9771	384
5T-9986	501
5V-0770	1046
5V-1274	261
5V-1496	1151
	1153
5V-1497	1168
5V-1498	940
	942
5V-2998	168
	170
5V-4410	395
	397
	401
5V-4998	385
5V-4999	385
5V-8780	375
5W-1437	765
	770
	775

6

Part	Page
6A-5591	246
6A-9083	945
	946
6C-3246	324
6C-3247	326
6C-3679	1041
6C-7366	324
6C-7367	327
6C-7606	912
6C-7607	912
6D-0337	313
	315
	▶339
6D-0443	339
6D-1641	1064
6D-3479	112
	139
	287
	292
	298
	512
	515
	518
	521
	524
	527
	530
	533
	535
	538
	542
	545
	554
	556
6D-4244	199
	201
	203
	205
6D-4246	404
	407
	410
6D-7690	279
	281
	283
6D-9157	487
6E-0381	723
6E-2745	697
	700
6E-2746	▶697
	699
6E-2943	706
	708
6E-4793	▶698
	699
6E-4815	698
6E-4816	▶699
	730
6E-5066	676
	746
	748
	750
6F-2956	270
	272
	279
	281
	283
6F-3930	314
6F-4855	724
6F-7045	187
6G-0233	395
	397
	399
	401
6G-2256	139
6G-2263	112
	139
	403
	406
	409
6G-4195	393
6G-9933	384
6H-3568	378
6H-3616	35
6I-0217	9
	11
	29
	31
	39
	41
	43
	108
	116
	119
	122
	125
6I-0235	52
6I-0254	29
	635
	639
	199
	201
6I-0256	203
6I-0260	205
	404
	407
	410
	279
	281
	283
	487
	723
	697
	700
6I-0289	▶697
	699
	706
6I-0291	708
	▶698
	699
	698
	▶699
	730
	676
	746
6I-0363	748
	750
	270
6I-0423	272
6I-0456	279
	281
	283
6I-0563	314
6I-0572	724
	187
	395
6I-0593	397
6I-0631	399
6I-0645	401
	139
	112
6I-0646	139
6I-0650	403
	406
6I-0654	409
6I-0686	393
6I-0787	384
	378
	35
6I-0789	9
6I-0839	11
	29
	31
	39
6I-0846	41
6I-0847	43
6I-1074	108
6I-1075	116
6I-1076	119
6I-1090	122

▶ PRIMARY REFERENCE

PART NUMBER INDEX

Part	Page	Part	Page	Part	Page	Part	Page
	125		871	6N-8155	583	6V-1363	93
6I-1132	108		▶891		961		94
6I-1206	50	6I-8312	891	6Q-2204	885		97
6I-1418	1015	6I-8313	891		888	6V-1392	929
	1016	6I-8314	891	6S-6646	393		931
6I-1497	41	6I-8315	891	6T-5598	197		934
	43	6I-8390	249	6T-6505	931		936
	54		251	6T-6506	931		1044
6I-3717	50		253	6T-6708	934	6V-1506	885
6I-3718	50		255	6T-7054	809		888
6I-4079	41	6I-8531	320	6U-5219	467	6V-1625	414
	43	6I-8849	378		469		419
	54	6I-9250	822	6V-0347	270		424
6I-4200	28	6I-9251	822		272		429
6I-4354	18	6I-9804	336		279		434
6I-4374	9	6I-9805	336		281	6V-1668	928
	11	6I-9806	246		283		931
	34		▶336	6V-0484	303		934
	55	6J-2245	709		342		936
	57	6J-2680	644		671		1044
	59		649	6V-0491	1092	6V-1720	246
	62		654		1096	6V-1820	246
	68		659		1116		309
6I-4681	39	6J-3134	676		1120	6V-1889	287
	41		678	6V-0545	265		292
	43		726	6V-0683	547		298
6I-4709	39		728		900		607
	41		730	6V-0852	246		610
	43		732		266		613
6I-4710	39		734		285	6V-1970	1
	41		737		291		▶1065
	43		739		297	6V-2313	1135
6I-4714	49		741		303	6V-2394	251
6I-4716	15		744		337		253
	49		746		342	6V-2456	1082
6I-4786	63		748		395	6V-2495	285
6I-4793	68		750		397		607
6I-8310	849	6J-7855	709		399		1059
	851	6J-9996	694		401		1062
	852		696		414	6V-2687	941
	855	6K-0806	86		419	6V-2689	198
	857		370		424		765
	859		371		429		768
	860		372		434		770
	861	6K-4185	378		439		773
	862	6K-4186	378		442		775
	863	6K-4191	378		445		781
	865	6K-6075	281		450	6V-3213	412
	868		283		642	6V-3668	275
	869	6K-6307	246		647		277
	871	6K-8088	1133		652	6V-3821	340
	▶891	6K-8178	512		657	6V-3822	340
6I-8311	849		515		662	6V-3940	337
	851		527		665	6V-3965	246
	852		530		668		266
	855	6K-8180	146		671		286
	857	6K-8987	305	6V-0894	736		292
	859	6M-5062	794	6V-1178	566		298
	860		795		581		303
	861		796		642		335
	862	6N-6984	70		647		337
	863		73		652		342
	865		77		657		395
	868		81	6V-1194	378		397
	869		85	6V-1249	501		399

▶ **PRIMARY REFERENCE**

PART NUMBER INDEX

Part	Page
	401
	414
	419
	424
	429
	436
	642
	647
	652
	657
	671
6V-4249	36
	309
6V-4429	281
	283
6V-4589	813
6V-5142	805
6V-5210	934
	936
6V-5215	340
6V-5217	246
	340
6V-5218	337
	340
6V-5222	342
6V-5223	340
6V-5230	246
6V-5258	635
	639
6V-5696	275
	277
6V-5839	36
	246
	263
	340
	566
	568
	581
	583
	585
	587
	716
	717
	975
	978
	982
	987
	991
	995
	997
	999
6V-5842	246
	308
6V-6210	1177
	1179
6V-6317	246
	309
6V-6543	1179
6V-6635	173
6V-6718	145
6V-7238	22
	642
	647
	652
	657
6V-7345	215
	220
	223
6V-7357	150
	164
	166
	355
	356
	358
	965
	1057
6V-7359	616
	619
	622
	625
	628
	631
6V-7419	1177
	1179
6V-7644	358
6V-7646	1151
	1153
6V-7728	929
	931
	1044
6V-7743	961
	963
6V-7744	716
	717
6V-7981	308
	581
	583
	585
6V-8183	50
6V-8187	214
	219
	223
6V-8188	26
	27
6V-8189	131
	133
6V-8197	281
	283
6V-8212	263
6V-8214	961
	963
6V-8218	334
6V-8224	634
	638
6V-8225	938
	939
6V-8227	456
	457
	458
6V-8237	413
6V-8369	194
	195
	922
	923
	924
	926
	1042
6V-8373	393
6V-8376	214
	219
	223
6V-8378	192
	214
	220
	223
6V-8397	285
	286
	291
	292
	297
	395
	397
	399
	401
	403
	406
	409
	414
	415
	419
	421
	424
	426
	429
	435
	436
	439
	440
	442
	443
	445
	450
	451
	467
	470
	501
	515
	518
	521
	524
	525
	530
	533
	535
	538
	539
	542
	545
	556
	564
	566
	568
	571
	616
	619
	620
	622
	623
	625
	626
	628
	629
	631
	632
	634
	635
	638
	639
	643
	648
	652
	653
	657
	658
	663
	666
	668
	672
	719
	720
	765
	768
	770
	773
	775
	778
	781
6V-8398	286
	292
	298
	414
	415
	419
	420
	424
	425
	429
	430
	434
	435
	436
	439
	440
	442
	443
	445
	446
	450
	451
	467
	469
	470
	479
	480
	481
	501
	503
	505
	507
	510
	551
	553
	559
	561
	597
	599
	601
	603
	605
	607

► **PRIMARY REFERENCE**

PART NUMBER INDEX

Part	Page	Part	Page	Part	Page	Part	Page
	610		518		397		435
	613		521		399		439
	643		524		401		442
	644		527		414		445
	648		530		419		450
	649		533		424		467
	653		535		429		605
	654		538		435		662
	658		542		439		665
	659		545		442		668
	662		547		445		671
	665		554		450	6V-8640	480
	668		556		467		481
	671		562		620	6V-8641	285
	676		564		623		291
	678		566		626		297
	719		568		629		414
	746		571		632		419
	748		607		635		424
	750		610		638		429
6V-8400	642		613		643		434
	643		635		648		439
	644		639		653		442
	647		643		658		445
	648		648		719		448
	649		653		765		450
	652		658		768		512
	653		719		770		515
	654		899		773		518
	657	6V-8628	420		775		521
	658		425		778		524
	659		430		781		527
6V-8490	1055		440	6V-8637	266		530
	1084		443		286		533
6V-8624	286		446		291		535
	292		643		297		538
	298		648		421		542
	607		653		426		545
	610		658		431		547
	613	6V-8629	286		435		554
6V-8625	286		292		443		556
	292		298		446		562
	298	6V-8632	719		450		564
	420	6V-8633	501		607		566
	425	6V-8634	634		610		568
	430		638		613		571
	435	6V-8635	303		643		581
	439		566		648		583
	442		568		653		585
	445		571		658		587
	450		589	6V-8638	415		589
	467		591		420		591
	469		593		425		593
6V-8627	415		595		430		595
	420		616		435		597
	425		619		467		599
	430		622		469		601
	435		625		480		616
	440		628		481		619
	442		631		503		622
	446		662		507		625
	448		665	6V-8639	414		628
	451		668		420		631
	512		671		425		634
	515	6V-8636	395		430		643

► **PRIMARY REFERENCE**

PART NUMBER INDEX

Part	Page
	648
	653
	658
	662
	665
	668
	671
	899
6V-8642	467
	469
6V-8647	285
	291
	297
	416
	421
	439
	442
	603
	605
	642
	647
	652
	657
	662
	665
	668
	671
	687
6V-8675	275
	277
6V-8713	719
6V-8714	634
	638
6V-8716	286
	607
6V-8721	286
	292
	298
	467
	469
	603
	605
	662
	665
	668
	671
6V-8723	470
6V-8724	395
	397
	399
	401
	468
	470
	501
	616
	619
	622
	625
	628
	631
	635
	639
6V-8726	899
6V-8736	518
	521
	524
	533
	535
	538
6V-8758	394
6V-8774	470
6V-8775	286
	292
	470
6V-8781	403
	406
	409
6V-8782	470
6V-8787	635
	639
6V-8795	378
6V-8801	174
	467
	469
6V-8837	1087
	1089
	1093
	1097
	1102
	1106
	1111
	1114
	1117
	1121
	1124
	1128
6V-8928	1055
	1057
6V-8936	470
6V-8939	503
	505
	507
	510
	643
	648
	653
	658
6V-8941	515
	525
	531
	539
	542
	545
	556
	564
6V-8946	574
6V-8969	1081
6V-8979	603
	605
6V-8981	603
	605
6V-8984	566
	568
	571
	589
	591
	593
	595
	662
	665
	668
	671
	668
	671
	503
	505
	507
	510
6V-8989	503
	505
	507
	510
6V-8994	542
	545
6V-8996	503
	505
	507
	510
6V-9001	403
	406
	409
	616
	619
	622
	625
	628
	631
	719
6V-9002	662
	665
	668
	671
6V-9004	266
	286
	292
	298
	607
	610
6V-9005	571
	595
	643
	648
	653
	658
6V-9007	266
	415
	420
	425
	430
	435
	439
	704
6V-9023	1102
6V-9032	644
	649
	653
	658
6V-9161	403
	406
	409
6V-9168	542
	545
6V-9169	597
	599
	601
	603
	605
6V-9170	503
	505
	507
	510
	551
	553
	559
	561
6V-9172	303
	540
	541
	550
	558
	566
	568
	571
	589
	591
	593
	595
	616
	619
	622
	625
	628
	631
	663
	666
	668
	672
	900
6V-9182	286
	607
6V-9189	1041
6V-9200	403
	406
	409
6V-9632	210
	219
	223
	227
	368
	382
	499
	781
	912
	928
	978
	980
	982
	987
	1003
	1015
	1016
	1044
	1053
	1057
	1172
6V-9746	266
	286
	287
	291
	292
	297
	298
	414
	415
	419

► **PRIMARY REFERENCE**

PART NUMBER INDEX

Part	Page	Part	Page	Part	Page	Part	Page
	420		629		566		554
	421		632		568		556
	424		635		571		562
	425		639		626		564
	426		644		629		616
	429		649		632		619
	430		654		635		622
	431		659		639		625
	434	6V-9830	654		720		628
	435		659	6V-9837	286		631
	439	6V-9831	503		292		899
	442		505		298	6V-9850	470
	443		507		415		635
	445		510		420		638
	446		616		425		719
	448		619		430	6V-9851	467
	450		622		435		469
	451		625		440		719
	479		628		443	6V-9852	468
	480		631		446		470
	481	6V-9832	287		451		720
	485		292	6V-9840	635	6V-9853	421
	574		298		639		426
	607		644	6V-9842	286		431
	610		649		292		435
	613		654		298		442
	616		659	6V-9843	643		445
	619		720		648		451
	622	6V-9833	550		653	6V-9855	643
	625		558		658		648
	628		635	6V-9844	415		653
	631		639		420		658
	643	6V-9835	415		425	6V-9873	644
	644		420		430		649
	648		425		435		654
	649		430	6V-9846	415		659
	653		435		420	6V-9874	414
	654		440		425		419
	658		443		430		424
	659		446		435		429
	704		451	6V-9849	415		434
6V-9828	415		512		420	6V-9875	642
	421		515		425		647
	426		518		430		652
	431		521		435		657
	554		524		439	6V-9876	643
	556		527		442		648
	562		530		445		653
	564		533		448		658
	616		535		450	6W-5652	823
	619		538		467		824
	622		547		469	6W-5656	823
	625		566		512		824
	628		568		515	6W-5677	824
	631		571		518	6W-5678	823
6V-9829	415		616		521		824
	421		619		524	6W-5679	823
	426		622		527		824
	431		625		530	6W-5760	482
	440		628		533		483
	443		631		535		900
	446		899		538	6W-5761	482
	542	6V-9836	403		542		899
	545		406		545	6W-8246	378
	626		409		547	6W-8832	▶889

▶ **PRIMARY REFERENCE**

PART NUMBER INDEX

Part	Page
6Y-0584	246
6Y-0869	259
6Y-0928	255
6Y-1300	249
	255
6Y-2525	1071
6Y-4464	308
6Y-4890	255
6Y-4997	308
6Y-5010	308
6Y-5027	251
	253
6Y-5631	249
	251
	253
	255
6Y-6584	1086
	1089
	1092
	1096
	1101
	1106
	1110
	1113
	1116
	1120
	1124
	1128
6Y-7818	249
	251
	253
	255
6Y-7922	251
	253
6Y-7968	249
	251
	253
	255
6Y-8069	274
6Y-8157	249
	251
	253
	255
6Y-8265	251
	253
6Y-8514	251
	253
6Y-9016	246
6Y-9017	246

7

Part	Page
7B-3028	337
7B-7525	1149
7C-0351	39
	41
	43
7C-1224	39
	41
	43
7C-1493	63
7C-4616	29
	31
7C-6467	395
	397
	399
	401
7D-1728	93
	94
	97
7D-5252	314
7D-6922	393
7D-8048	49
7F-2050	928
	931
	934
	936
7F-2060	928
	931
	934
	936
7F-8268	246
7G-5220	275
	277
7G-5984	628
	631
7G-5985	628
	631
7G-5986	628
	631
7J-0204	746
	748
	750
	794
	795
	796
7J-9108	467
	468
	469
	470
	503
	505
	507
	510
	512
	515
	518
	521
	524
	527
	530
	533
	535
	538
	542
	545
	554
	556
	562
	564
	581
	583
	585
	587
	605
	607
	610
	613
	617
	620
	623
	626
	629
	632
	634
	638
	642
	647
	652
	657
	672
	719
	783
	973
	1049
	1059
	1062
	1086
	1089
	1092
	1096
	1101
	1106
	1110
	1113
	1116
	1120
	1124
	1128
7K-9208	815
	817
	819
7K-9209	815
	817
	819
7K-9212	815
	817
	819
7K-9216	815
	817
	819
7M-1201	36
7M-7219	1046
7M-7410	20
	116
	119
7M-8485	246
	279
	281
	283
	285
	286
	291
	292
	297
	303
	566
	568
	571
	589
	591
	593
	595
	597
	599

PART NUMBER INDEX

Part	Page	Part	Page	Part	Page	Part	Page
	601	7T-6099	185	7W-9028	63		401
	607	7T-6496	259	7X-0338	135	7X-2465	305
	610	7T-6799	1084		137		345
	613	7T-7370	145	7X-0340	26		346
	616	7T-8332	70		27	7X-2478	928
	619		73	7X-0371	823	7X-2495	249
	622		77		824		251
	625		81	7X-0456	940		253
	628		85		942		255
	631		711	7X-0474	246	7X-2497	1025
	635		713	7X-0515	287		1027
	639		715		292		1030
	643	7T-8890	1174		298		1032
	644	7U-4898	1149		961	7X-2533	375
	648	7V-2885	1		963	7X-2534	227
	649		▶385	7X-0578	373		448
	653	7V-5191	1046	7X-0579	922		470
	654	7V-5626	499		923		499
	658	7V-5628	499		924		663
	659	7W-1251	214		926		666
	662		219		1042		669
	665		223		1167		672
	668	7W-2108	1025	7X-0599	135		961
	671		1027		137		963
	726		1030		973	7X-2535	380
	728		1032	7X-0603	1004	7X-2536	1002
	730	7W-2505	45		1006		1003
	732	7W-2518	21		1009	7X-2540	380
	734	7W-2519	21		1011	7X-2543	287
	737	7W-2520	21		1013		292
	739	7W-2628	9	7X-0606	568		298
	741		11		591		566
	744		108		593		568
7N-0718	139	7W-2634	9		620		571
	▶187		11		623		644
7N-5274	139	7W-3447	373		626		649
7S-3916	568		1059		629		654
	571		1062		632		659
	591	7W-4589	13		666	7X-2549	287
	593		15		669		292
	595	7W-4590	13		672		298
7S-3919	568		15	7X-0608	174		607
	571	7W-4591	13		920		610
	591		15	7X-0618	378		613
	593	7W-4592	13		412		644
	595		15		815		649
7T-0093	116	7W-4632	49		817		654
	119	7W-4634	49		819		659
7T-1099	135	7W-4635	49		893	7X-2553	815
	137	7W-4642	28		895		817
	361	7W-4648	55		897		819
	364		57		900	7X-2558	287
	374		59		913		292
	978	7W-4650	55		914		298
	980		57	7X-0620	192	7X-2560	287
	982		59	7X-0818	94		292
	987	7W-4782	55		97		298
	1141		57		1015	7X-2567	1071
7T-2703	246		59		1016	7X-2622	36
7T-4532	953	7W-4816	13	7X-0873	448	7X-3163	415
7T-6087	185	7W-4817	13	7X-2444	467		420
7T-6088	185	7W-4818	13		469		425
7T-6090	185	7W-4819	13	7X-2459	395		430
7T-6092	185	7W-7381	395		397		435
7T-6093	185		399		399		440

▶ **PRIMARY REFERENCE**

PART NUMBER INDEX

Part	Page	Part	Page	Part	Page	Part	Page
	443		431		625	8C-8451	150
	446		436		628		151
	451		468		631		355
7X-3229	1183		470	8C-3206	644		356
7X-3308	1087		489		649	8C-8457	928
	1089		499		654		931
	1093		512		659		934
	1097		515		663		936
	1102		518		666		1044
	1106		521		669	8C-8478	36
	1111		524		672	8C-8989	286
	1114		527	8C-3210	358		292
	1117		530	8C-3426	1051		601
	1121		533		1053		607
	1124		535	8C-3445	61		610
	1128		538	8C-3446	268		613
7X-3393	89		541		490	8C-9200	487
	90		542	8C-3447	266	8C-9778	185
7X-4776	676		545	8C-3451	490	8C-9783	185
	678		547	8C-3681	70	8C-9987	809
	746		554		73		1084
	748		556		77	8D-2707	339
	750		562		78	8D-3791	823
7X-6222	210		564		81		824
	1086		607		82	8D-9671	229
	1092		610		86		231
	1096		613		112	8E-1118	164
	1101		635	8C-3756	958	8E-1143	337
	1111		639	8C-3979	249	8E-3416	251
	1114		688		251		253
	1116		689		253	8E-4566	825
	1120		690		255		826
7X-6315	145		711	8C-3982	249		827
	147		713		251		828
7X-7729	54		715		253		830
	93		720		255		831
	101		900	8C-4000	474		833
	104		954	8C-4436	135		835
	105		1094		137		837
	106		1098	8C-4586	928		839
	112		1103		931		840
	135		1107		1044		842
	137		1118	8C-4982	93		845
	265		1122		94		847
	287		1125		97		▶902
	293		1128	8C-5225	22	8E-4567	902
	298		1181	8C-5457	185	8E-4568	▶904
	344	7X-7958	81	8C-5608	150	8E-4569	904
	348		85		151	8E-5556	249
	350		303	8C-6160	394		255
	351	7X-8549	490	8C-6354	1092	8E-5707	249
	353	7Y-1734	36		1096		251
	354				1101		253
	355				1116		255
	356	**8**			1120	8E-5726	249
	358			8C-6440	172		255
	366	8A-8580	885		1049	8E-5727	249
	367		888	8C-6712	662		255
	375	8B-4884	384		665	8E-6115	251
	377	8C-3056	197		668		253
	380		214	8C-7110	709	8E-6117	251
	382		219	8C-8408	285		253
	415	8C-3205	617		291	8E-6120	251
	421		619		297		253
	426		622		448	8E-6558	251

▶ PRIMARY REFERENCE

PART NUMBER INDEX

Part	Page	Part	Page	Part	Page	Part	Page
	253	8L-2777	709	8R-2189	279		320
8E-7841	340	8L-2779	800		281	8T-0375	279
8E-8292	1174		811		283		281
8E-8296	395	8L-2786	765	8R-2200	243		283
	397		768		244	8T-0389	77
	399		770		245		81
	401		773	8R-2202	243		85
8E-8300	1133		775		244		154
8E-8313	249		778		245		155
	251		781	8R-2211	261		156
	253	8L-8413	152	8R-2532	279		157
	255		198		281		158
8E-8317	251		201		283		395
	253		203	8R-2584	281		397
8E-8425	264		205		283		399
8F-1434	185		214	8R-2918	1009		401
	192		219		1011	8T-0643	587
	214		1046	8R-3695	566	8T-0785	485
	220		1092		568	8T-0788	518
	223		1096		581		521
8F-1462	1077		1101		644		524
8F-5535	485		1116		649		533
8F-6437	70		1120		654		535
	73		1170	8R-3809	279		538
	77	8M-2770	287		281	8T-1120	644
	81		293		283		649
	85		298	8R-5825	314		654
	711		607	8R-6904	1133		659
	713		610	8R-7091	378	8T-1138	691
	715		613	8R-7092	378		695
8F-8733	487	8M-2771	540	8R-8847	373	8T-1158	676
8F-9516	279		541	8S-0768	342		678
	281		900	8S-0948	287		746
	283	8M-2773	287		293		748
8H-5303	187		293		298		750
8H-5306	187		298	8S-3020	139	8T-1482	345
8H-7521	246		403	8S-4726	1146		346
8I-1362	70		406		1147		347
	73		409	8S-7803	941	8T-1685	286
	77		607		1046		292
8J-0112	413		610		1149	8T-1686	415
8J-0426	246		613	8S-8820	54	8T-1742	249
8J-1256	635		617	8S-9129	246		255
	639		620	8S-9130	246	8T-1889	541
8J-1717	487		623	8T-0164	581		550
8J-2413	736		626		583		558
8J-2928	822		629		585		566
8J-2933	822		632		587		589
8J-4455	185		711	8T-0255	910		663
8J-6273	683		713		911		666
	684		1062	8T-0269	215		669
8J-6875	414	8M-5251	340	8T-0288	1072		672
	419	8M-5253	337	8T-0306	1176		900
	424	8M-5254	148	8T-0328	214	8T-1890	541
	429		149		220		550
	434	8N-0869	139		223		558
	439	8N-1725	139		1072		566
	442	8N-9033	1051		1135		589
	445	8R-0512	279		1151		663
	450		281		1153		666
	▶460		283	8T-0336	279		669
8K-1433	393	8R-0768	139		281		672
8L-2746	249	8R-1703	261		283		900
	255	8R-1705	261	8T-0372	270	8T-1893	547
	813	8R-2022	321		272		900

▶ **PRIMARY REFERENCE**

PART NUMBER INDEX

Part	Page	Part	Page	Part	Page	Part	Page
8T-1894	547		1175		378		639
	900	8T-3611	643		386		644
8T-1899	617		648		394		649
	620		653		395		654
	623		658		397		659
	626	8T-3612	257		399		663
	629		374		401		666
	632		380		403		669
8T-1900	617		634		406		672
	620		638		409		680
	623		819		416		681
	626		1006		421		688
	629		1009		426		689
	632		1011		431		690
8T-2356	823		1013		436		711
8T-2397	765		1167		440		713
8T-2561	1059		1173		443		715
	1062		1175		446		720
8T-2925	243	8T-3647	635		451		814
	244		639		468		825
	245	8T-3734	1141		470		826
8T-3293	275	8T-3995	1051		489		827
	277		1053		499		828
8T-3425	690	8T-4001	312		503		829
8T-3444	501		1071		505		830
8T-3490	26	8T-4121	26		507		831
	85		27		510		832
	112		36		512		833
	214		70		515		834
	219		73		518		835
	223		77		521		836
	285		81		524		837
	303		85		527		838
	361		104		530		839
	364		105		533		840
	380		106		535		841
	382		112		538		842
	386		129		542		843
	503		139		545		872
	507		154		550		873
	510		168		554		874
	607		170		556		875
	634		184		558		876
	638		185		562		878
	719		199		564		882
	912		201		566		885
	928		203		568		888
	956		205		571		950
	957		215		589		954
	978		220		591		956
	980		223		593		957
	982		227		595		965
	987		229		597		974
	1003		231		599		975
	1059		237		601		976
	1062		265		608		977
	1086		266		610		978
	1089		287		613		980
	1110		293		617		981
	1113		298		620		982
	1163		303		623		984
	1165		360		626		985
	1166		363		629		987
	1167		369		632		989
	1173		375		635		991

PART NUMBER INDEX

Part	Page	Part	Page	Part	Page	Part	Page
	993		293		287		825
	995		298		293		826
	997		380		298		827
	998		395		303		828
	999		397		344		829
	1001		399		350		830
	1002		401		351		831
	1003		403		353		832
	1041		406		354		833
	1059		409		367		834
	1062		416		369		835
	1064		421		375		836
	1087		426		382		837
	1089		431		403		838
	1094		436		406		839
	1097		440		409		840
	1102		443		416		841
	1106		446		421		842
	1111		451		426		843
	1114		468		431		872
	1117		470		436		873
	1121		505		440		874
	1124		597		443		875
	1128		608		446		876
	1133		610		451		878
	1141		613		468		882
	1144		616		470		954
	1145		619		489		1062
	1163		622		499	8T-4137	70
	1165		625		503		73
	1166		628		507		77
	1173		631		510		81
	1175		663		542		85
8T-4122	36		666		545		112
	70		669		550		129
	73		672		558		164
	77		680		566		166
	81		681		568		215
	85		954		571		220
	319		1087		589		223
8T-4127	358		1089		591		227
8T-4131	36		1094		593		229
8T-4132	36		1097		595		231
8T-4133	54		1102		599		266
	70		1106		601		287
	73		1111		608		293
	77		1114		610		298
	81		1117		613		358
	85		1121		617		363
	104		1124		620		375
	105		1128		623		386
	106	8T-4136	54		626		394
	129		82		629		395
	139		86		632		397
	185		93		635		399
	199		112		639		401
	201		135		644		489
	203		137		649		499
	205		139		654		503
	215		168		659		505
	220		170		663		507
	223		215		666		510
	231		220		711		512
	237		223		713		515
	287		237		715		519

► **PRIMARY REFERENCE**

PART NUMBER INDEX

Part	Page	Part	Page	Part	Page	Part	Page
	522		1124	8T-4182	70		1062
	524		1128		73	8T-4189	65
	527		1141		77		89
	530		1163		81		90
	534		1165		85		163
	536		1166		885		215
	538		1173		888		220
	541		1175	8T-4183	36		237
	542		1181		135		257
	545	8T-4138	210		137		380
	547		220		412		393
	554		223		629		499
	556		380		659		950
	562		386		815		955
	564		388		817		1004
	608		960		819		1006
	610		998	8T-4184	503		1009
	613		999		505		1011
	635		1001		507		1013
	639		1041		510		1051
	688		1068		632		1053
	689		1072	8T-4185	112		1066
	690	8T-4139	403		139		1087
	711		406		635		1090
	713		409		639		1094
	715		501		1133		1098
	815		644	8T-4186	36		1102
	817		649		70		1106
	819		654		73		1111
	900		659		77		1114
	950	8T-4140	319		81		1118
	974	8T-4157	375		85		1121
	975	8T-4158	375		139		1124
	976	8T-4167	305		215		1128
	977		306		220		1139
	978		312		223		1141
	980		1071		287		1173
	981	8T-4170	36		293		1175
	982	8T-4171	215		355	8T-4191	215
	984		220		356		220
	985		223		382		224
	987		233		416		227
	989		235		421		522
	991		237		426		525
	993		928		431		536
	995		931		436		539
	997		936		440		1004
	998		1044		443		1006
	999	8T-4172	73		446		1009
	1001		77		451		1011
	1002		378		608		1013
	1003		403		610	8T-4192	215
	1059		406		617		220
	1062	8T-4177	368		620		224
	1064	8T-4178	303		623		378
	1087	8T-4179	345		626		394
	1090	8T-4180	1025		635		416
	1094		1027		663		426
	1097		1030		666		431
	1102		1032		669		436
	1106	8T-4181	581		711		440
	1111		1025		713		443
	1114		1027		715		446
	1117		1030		954		448
	1121		1032		1059		451

PART NUMBER INDEX

Part	Page	Part	Page	Part	Page	Part	Page
	644		558		451		1106
	649		559		512		1111
	654		561		515		1114
	659		571		519		1118
	688		595		522		1122
	689		597		525		1124
	690		608		527		1128
	815		610		530	8T-4200	70
	817		613		534		73
	819		617		536		77
	913		620		539		81
	914		623		554		85
8T-4193	70		626		556		89
	73		629		562		90
	77		632		564		196
	81		635		608		215
	85		663		617		220
8T-4194	70		666		620		224
	73		669		623		958
	77		672		626		1051
	81		688		629		1053
	85		689		632	8T-4205	131
	210		690		644		133
	378		720		649		164
	644		956		654		166
	649		957		659		170
	654		1059		663		214
	659		1062		666		215
8T-4195	26		1087		669		219
	27		1090		672		220
	70		1094		680		223
	73		1098		681		224
	77		1102		720		229
	81		1106		912		231
	85		1111	8T-4197	215		237
	93		1114		220		350
	101		1118		224		358
	104		1122		229		375
	105		1124	8T-4198	468		380
	106		1128		470		386
	184	8T-4196	81		512		388
	215		85		515		448
	237		104		519		540
	265		105		522		541
	287		106		525		581
	293		112		527		900
	298		265		530		928
	348		266		534		931
	358		287		536		934
	360		303		539		936
	366		395		542		958
	373		397		545		960
	375		399		554		965
	377		401		556		998
	380		403		562		999
	382		406		564		1001
	403		409	8T-4199	199		1020
	406		416		201		1025
	409		421		203		1027
	468		426		205		1030
	470		431		1087		1032
	505		436		1090		1044
	550		440		1094		1051
	551		443		1098		1053
	553		446		1102		1067

► **PRIMARY REFERENCE**

PART NUMBER INDEX

Part	Page	Part	Page	Part	Page	Part	Page
	1068		519		635		375
	1072		522		639		503
	1084		525		701		505
	1087		527		702		507
	1090		530		716		510
	1094		534		717		711
	1098		536		895		713
	1102		539		897		715
	1106		547		950		784
	1111		581		955		785
	1114		608		958		788
	1118		610		974		789
	1122		613		975		790
	1124		629		976		791
	1128		632		977		792
	1151		644		978		793
	1153		649		980		966
8T-4222	70		654		981		967
	73		659		982		971
	77		688		984		972
	81		689		985		977
	85		690		987		978
	382		711		989		981
	954		713		991		982
8T-4223	26		715		993		985
	27		900		995		989
	36		1062		997		991
	70	8T-4224	65		998		993
	73		70		999		995
	77		73		1001	8T-4742	1025
	81		77		1002		1027
	85		81		1003		1030
	135		85		1041		1032
	137		89		1051	8T-4747	1025
	210		90		1053		1027
	215		131		1066		1030
	220		133		1087		1032
	224		135		1090	8T-4815	231
	287		137		1094	8T-4835	26
	293		163		1098		27
	299		196		1102	8T-4896	823
	323		199		1106		824
	345		201		1111	8T-4908	199
	373		203		1114		201
	378		205		1118		203
	394		215		1122		205
	403		220		1124		231
	406		224		1128		257
	409		229		1138		351
	416		257		1139		354
	426		279		1141		380
	431		281		1173		403
	436		283		1175		406
	440		380	8T-4226	70		409
	443		393		73		416
	446		403		77		421
	448		406		81		426
	451		409		85		431
	501		416		164		436
	503		421		166		635
	505		426		815		639
	507		431		817		716
	510		436		819		717
	512		499	8T-4244	351		893
	515		501		354		895

► PRIMARY REFERENCE

PART NUMBER INDEX

Part	Page	Part	Page	Part	Page	Part	Page
	897		1147		653		643
	900		1148		658		648
	922	8T-5372	929	8T-6902	1135		652
	923		932	8T-6912	94		657
	924		934		97	8T-9082	1151
	926		936		215		1153
	1019		1044		220	8T-9085	246
	1034	8T-5379	306		224	8T-9371	1170
	1042	8T-5400	1177		717	8T-9381	1146
	1094		1179		1135		1147
	1098	8T-5429	603	8T-7547	70	8T-9386	474
	1103	8T-5439	36		73	8T-9405	783
	1107	8T-5452	246		77	8T-9530	895
	1118	8T-5878	312		81	8T-9655	1015
	1122	8T-5913	1174		85		1016
	1125	8T-5914	1174		139	8U-5943	752
	1129	8T-6430	815		895	8V-1412	322
	1167		817		897	8V-7315	320
8T-4910	351		819		1041		321
	354	8T-6431	395	8T-7566	1078		322
	711		397		1081	8V-7623	275
	713		399	8T-7586	708		277
	715		401	8T-7852	215	8W-4342	384
8T-4956	287	8T-6451	574		220	8X-9618	237
	293	8T-6466	70		224	8X-9925	316
	299		112	8T-7963	139	8Y-0711	266
	323		139	8T-7971	703	8Y-4200	▶940
	373		404	8T-8641	941		1157
	644		407	8T-8729	143	8Y-4489	361
	649		410		181		364
	654		1059	8T-8730	144		815
	703		1062	8T-8737	155		817
	893	8T-6631	928		156		819
	895		931		157	8Y-4501	1025
	897		934		158		1027
	900		936		194		1030
	1062	8T-6663	285		195		1032
8T-4971	210		291		209	8Y-4807	1030
	231		297		220		1032
	1025	8T-6685	814		224	8Y-5737	928
	1027	8T-6703	265		765		931
	1030	8T-6869	351		768		934
	1032		354		781		936
8T-4984	642		501		792		1044
	647		1004		985	8Y-5877	1036
	652		1006		987	8Y-5878	1149
	657		1009		989	8Y-5892	1082
8T-4986	102		1011		991	8Y-5897	940
	103		1013		993	8Y-5898	942
8T-5005	105	8T-6870	135		995	8Y-5903	1077
	106		137		997	8Y-5904	940
	287		499		1069		▶941
	293		701		1070		942
	298		702	8T-8799	223		943
	403	8T-6876	415	8T-8827	197		944
	407		420		214	8Y-5906	941
	410		425		219	8Y-5928	1149
8T-5041	378		430		237	8Y-5929	1149
8T-5093	279		435	8T-8894	1004	8Y-5930	1149
	281		439		1006	8Y-5931	1149
	283		442		1009	8Y-5932	1149
	958		445		1011	8Y-5936	1149
8T-5353	259		451		1013	8Y-5937	1149
	308		643	8T-8902	286	8Y-5938	1149
8T-5360	1146		648		292	8Y-5944	1168

▶ **PRIMARY REFERENCE**

PART NUMBER INDEX

Part	Page
8Y-5945	1046
8Y-5947	1036
	1149
8Y-5965	1168
8Y-5972	1077
8Y-5981	1149
8Y-5988	941
8Y-5992	▶1082
	1149
8Y-5995	1082
8Y-5998	1082
8Y-5999	1082
8Y-6000	▶942
	1157
8Y-6006	1077
8Y-6010	1077
8Y-6012	1168
8Y-6014	1168
8Y-6022	1168
8Y-6023	1168
8Y-6024	1168
8Y-6028	941
8Y-6029	1046
8Y-6041	1046
8Y-6045	1046
8Y-6046	1046
8Y-6047	1046
8Y-6051	1149
8Y-6060	1046
8Y-6062	1046
8Y-6063	1046
8Y-6064	1046
8Y-6066	1046
8Y-6067	1046
8Y-6068	1046
8Y-6069	1046
8Y-6277	1151
8Y-6377	950
8Y-6386	1025
	1027
	1030
	1032
8Y-6388	1034
8Y-6391	1034
8Y-6833	1149
8Y-6834	1149
8Y-6859	1047
8Y-6860	1047
8Y-6882	▶1149
	1157
8Y-6883	▶1036
	1157
8Y-6933	1149
8Y-6977	1144
	▶1157
8Y-7047	378
8Y-7119	1071
8Y-8387	403
	406
	409
8Y-8388	404
	407
	410

9

Part	Page
9B-7233	168
	170
	214
	219
	223
9C-5040	261
9C-5048	281
	283
9C-5049	281
	283
9C-6041	279
	281
	283
9C-6809	364
	374
	815
	817
9C-7862	364
9C-7907	412
	815
	817
	819
9C-8990	501
9D-1535	412
9D-3768	1059
	1062
9D-3769	1053
9D-7924	1004
	1006
	1009
	1011
	1013
9F-3965	219
9F-5644	187
9G-1950	928
	931
	934
	936
	1044
9G-2759	1025
	1027
9G-2761	1030
	1032
9G-3695	456
	457
	458
	1017
	1018
9G-5127	246
9G-5311	279
	281
	283
9G-8909	139
9H-1129	281
	283
9H-2258	378
9H-5604	893
	895
	897
	900
9J-0705	800
9J-0707	724
	800

Part	Page
9J-3169	844
	▶915
9J-3178	▶916
	917
9K-7951	314
9L-1566	237
9L-6074	355
	356
9L-6246	135
	137
9L-6770	131
	133
9L-7469	1149
9L-9068	340
	342
9L-9188	63
9M-1974	337
	340
	342
9M-2110	337
9M-4335	243
9M-4814	1064
9M-4972	215
	220
	224
9M-5733	1077
	1082
9M-7958	70
	73
	77
9M-8406	1059
	1062
9M-9439	107
9N-1756	808
9N-4354	249
	255
9N-4365	249
	255
9R-1004	551
	553
	559
	561
	597
9R-1005	551
	553
	559
	561
	597
	599
	601
9R-1499	168
	170
9R-2070	503
	507
9R-2160	1002
	1003
9R-2404	168
	170
	819
9R-2596	1177
	1179
9R-2613	716
	717

Part	Page
9R-2620	1051
	1053
9R-2672	104
	105
	106
	361
	364
	374
	380
	719
	815
	817
	819
	899
9R-2807	395
	397
	399
	401
9R-3067	395
	397
	399
	401
9R-3203	1172
9R-3204	1172
9R-3205	1172
9R-4619	634
	638
9R-4750	210
9R-5878	36
9R-7803	503
	505
	507
	510
9R-7941	164
	166
9R-7942	160
9R-7958	160
9R-7980	164
	166
9R-8870	501
9R-9110	393
9R-9111	393
9R-9572	616
	619
	622
	625
	628
	631
9S-1240	135
	137
9S-1305	1181
9S-4181	246
	644
	649
	654
	659
9S-4182	676
	678
	746
	748
	750
9S-4185	643
	648
	653
	658

▶ PRIMARY REFERENCE

PART NUMBER INDEX

Part	Page	Part	Page	Part	Page	Part	Page
	676		755	9U-3668	320		744
	678		756	9U-8263	1057	9W-8142	▶915
	720		757	9U-8669	337	9W-8143	▶917
	746		758	9U-9551	275	9W-9371	249
	748		759		277		251
	750		760	9V-1203	281		253
9S-4191	246		761		283		255
	334		765	9V-1590	823	9W-9372	249
	512		768	9V-1795	▶823		251
	515		770	9V-2412	270		253
	518		773		272		255
	521		775		320	9W-9399	251
	524		778	9V-2714	823		253
	527		781		824	9W-9436	251
	530	9S-8003	676	9V-2715	823		253
	533		678		824	9W-9662	255
	535		746	9V-6343	378	9W-9718	249
	538		748	9V-9077	889		251
	542		750	9V-9480	851		253
	545	9S-8004	337		852		255
	554		486		855	9W-9915	36
	556		675		857	9W-9940	1071
	562		676		868	9X-0261	401
	564		678		869	9X-0297	445
	643		746		870	9X-1046	146
	648		748	9W-0335	199		199
	653		750		201		201
	658		801		203		203
	765		803		205		205
	770	9S-8005	725	9W-0852	198		1084
	773	9S-8008	259		201		1087
	775		675		203		1090
	778	9S-9334	281		205		1094
	803	9T-1013	414		928		1098
9S-8001	676		419		931		1102
	678		424		1044		1107
	726		429	9W-1454	246		1111
	728		434	9W-1951	1092		1114
	730		469		1096		1118
	732	9T-3598	361		1101		1122
	734		364		1116		1124
	737		849		1120		1129
	739		851	9W-3008	501	9X-1054	214
	741		852	9W-3459	139		220
	744		855	9W-3460	139		233
	746		857	9W-6068	259		235
	748		859	9W-6466	251		1086
	750		860		253		1092
9S-8002	676		861	9W-6904	249		1096
	678		862		251		1101
	725		868		253		1111
	726		869		255		1114
	728		870	9W-6912	255		1116
	730		875	9W-6922	251		1120
	732	9T-4057	752		253	9X-1056	219
	734	9T-4506	697	9W-6927	251		235
	737		700		253		1092
	739	9U-0710	394	9W-7159	246		1096
	741	9U-2743	270	9W-7764	255		1116
	744		272	9W-7765	251		1120
	746	9U-2744	270		253	9X-1365	145
	748		272	9W-7783	726	9X-1386	181
	750	9U-3226	501		728	9X-1813	177
	753	9U-3409	270		730		178
	754		272		737		179

▶ **PRIMARY REFERENCE**

PART NUMBER INDEX

Part	Page
	190
	191
	196
	340
	397
	399
	401
	419
	424
	429
	434
	581
	973
9X-2026	1084
9X-2032	219
	223
	934
	936
9X-2036	185
9X-2038	1051
	1053
9X-2040	974
	975
	976
	977
	978
	980
	981
	982
	984
	985
	987
	989
	991
	993
	995
	997
	998
	999
	1001
	1002
	1003
	1041
9X-2041	950
	965
	974
	975
	976
	977
	978
	980
	981
	982
	984
	985
	987
	989
	991
	993
	995
	997
	998
	999
	1001
	1002
	1003
	1146
	1147
9X-2042	960
	961
	963
	1004
	1006
	1009
	1011
	1013
	1020
	1025
	1027
	1030
	1032
	1057
	1087
	1090
	1094
	1098
	1102
	1107
	1111
	1114
	1118
	1122
	1124
	1129
	1172
9X-2043	961
	963
	965
	1051
	1053
9X-2044	928
	931
	934
	936
	961
	963
	1044
	1094
	1098
	1103
	1107
	1118
	1122
	1125
	1129
9X-2045	168
	170
	965
	1004
	1006
	1009
	1011
	1013
	1051
	1053
	1055
	1057
	1084
	1087
	1090
	1094
9X-2065	395
	397
	399
	401
9X-2125	1144
	1145
9X-2133	70
	73
	77
	81
	85
9X-2185	928
	931
	934
	936
	1044
9X-2297	429
	436
	451
9X-2299	380
9X-2447	1182
9X-2488	928
	931
	934
	936
	1044
9X-2532	1176
9X-2546	150
	151
9X-2621	270
	272
9X-2622	270
	272
9X-3265	1092
	1096
	1116
	1120
9X-3401	176
9X-3463	154
	164
	166
9X-3465	155
	156
	157
	158
9X-4244	154
9X-4492	159
9X-4493	159
9X-4609	246
9X-5617	143
	144
9X-6165	150
	151
	233
	235
9X-6257	145
9X-6491	270
	272
9X-6579	899
9X-6580	516
	524
	531
	539
	542
	545
	556
	564
9X-6581	503
	505
	507
	510
	642
	647
	652
	657
9X-6656	479
9X-6772	151
9X-7378	953
	1059
	1062
9X-7380	1059
	1062
9X-7381	1059
	1062
9X-7382	1059
	1062
9X-7383	1059
	1062
9X-7385	953
9X-7725	342
9X-7849	160
9X-8139	160
9X-8250	287
	293
	297
	416
	421
9X-8256	146
	150
	168
	210
	215
	220
	224
	368
	470
	663
	666
	669
	672
	961
	963
	1015
	1016
	1041
	1049

PART NUMBER INDEX

Part	Page
	1067
	1068
9X-8408	601
9X-8482	91
	92
9X-8699	380
9X-8873	940
	942
	943
	944
9X-8918	1046
9X-9896	150
	151
9Y-5015	18
9Y-7215	380
9Y-8315	104
	105
9Y-9380	701
	702
0	
002-0639	384
002-0754	709
005-0469	246
005-0471	274
006-8606	50
009-3101	355
	356
	1181
012-0380	190
	191
030-0167	800
030-1707	237
030-1712	197
	214
	219
030-9613	389
	390
031-0214	1138
031-1348	709
031-5644	209
	210
032-8048	9
	11
	108
032-8100	112
032-9090	13
	15
032-9091	13
	15
033-5879	698
	800
033-6028	811
033-6036	698
	800
033-6043	813
033-7687	24
033-7849	112
	122
	125
033-9139	762
	765
	770
	773
	775
	778
034-1432	258
035-8055	183
035-8063	61
035-8068	18
036-5802	18
037-4426	928
	931
	934
	936
	1044
037-4838	928
	931
	1044
053-0189	70
	73
	77
	81
	85
061-6712	279
	281
	283
061-8803	1149
067-6002	18
067-6043	20
067-6083	50
067-6087	50
067-6088	50
067-6095	52
067-6178	29
	31
067-6179	29
	31
067-6268	115
	122
	125
067-6269	112
	115
	122
	125
067-6805	18
067-6808	18
067-6873	13
	15
067-6874	13
	15
067-6883	45
067-6897	29
067-6900	29
067-6927	25
067-6928	25
067-6933	55
	57
	59
067-6998	183
067-6999	183
069-1124	47
069-2535	389
	390
	465
	466
069-2536	389
	390
085-7356	266
	337
	642
	647
085-8091	634
	638
087-0991	685
	687
	704
090-1740	597
091-0079	659
	1139
091-0081	139
	285
	291
	297
	607
	610
	613
091-1637	910
	911
091-1664	910
	911
091-1665	910
	911
091-1667	910
	911
091-1745	910
	911
091-2436	198
	205
	1092
	1096
	1116
	1120
092-1136	361
	364
	374
	849
	851
	852
	855
	857
	859
	860
	861
	862
	868
	869
	870
	875
092-2467	285
095-0673	279
	281
	283
095-0843	1151
	1153
095-0878	1046
	1149
095-1207	784
	785
	786
	787
095-1314	1149
095-1750	807
095-1751	736
	805
096-1331	708
096-1820	885
	888
096-2323	1022
	1030
	1032
096-3772	1135
096-6166	214
	220
	223
099-3095	683
	684
	706
	708
1	
100-3143	928
	931
	1044
100-3224	1047
100-3253	155
	156
	157
	158
100-3254	155
	156
	157
	158
100-3255	155
	156
	157
	158
100-3426	928
	931
	1044
100-3685	185
100-4104	9
	11
100-4112	185
100-4115	185
100-4453	108
100-4454	108
100-4458	212
100-4461	63
100-4466	108
100-4830	8
	116
	119
	122
	125
100-5041	1092
	1096
	1116
	1120
100-5179	1046
100-6659	185
100-6674	219
101-0003	1168
	1170
101-2867	1138
101-2987	35

► **PRIMARY REFERENCE**

PART NUMBER INDEX

Part	Page
101-3129	139
101-3739	110
101-3740	110
101-3741	110
101-3742	110
101-3771	68
101-3805	68
101-3877	116
	119
101-3895	63
101-3906	122
	125
101-3907	122
	125
101-3983	183
101-3984	183
101-3986	183
101-4194	1168
101-4195	1168
101-7178	122
	125
101-8296	1059
	1062
101-9161	1015
	1016
102-0341	928
	931
	934
	936
	1044
102-1957	28
102-2131	316
102-2142	285
	291
	297
102-4176	139
102-8801	151
	198
	201
	203
	205
	227
	970
	1086
	1092
	1096
	1101
	1110
	1113
	1116
	1120
102-8802	130
	152
	159
	178
	179
	190
	191
	196
	198
	214
	220
	224
	227
	229
	231
	233
	235
	285
	291
	297
	340
	456
	457
	458
	467
	469
	512
	515
	518
	521
	524
	527
	530
	533
	535
	538
	554
	556
	562
	564
	605
	642
	647
	652
	719
	809
	810
	928
	931
	953
	1044
	1059
	1086
	1092
	1096
	1101
	1110
	1113
	1116
	1120
	1170
102-8803	143
	152
	159
	176
	181
	198
	209
	214
	220
	227
	229
	233
	235
	237
	340
	397
	399
	401
	419
	424
	429
	434
	499
	581
	583
	585
	958
	973
	1092
	1096
	1101
	1116
	1120
102-8804	152
	164
	166
	227
	1084
	1086
	1092
	1096
	1101
	1110
	1113
	1116
	1120
102-8805	155
	156
	157
	158
	168
	198
	201
	203
	205
	209
	210
	499
	788
	789
	790
	791
	792
	931
	966
	967
	971
	972
	985
	987
	989
	991
	993
	995
	997
	1017
	1018
	1069
	1070
	1086
	1092
	1096
	1101
	1110
	1113
	1116
	1120
	1137
102-9941	49
102-9986	122
	125
102-9987	122
	125
102-9988	122
	125
103-0280	36
103-1074	116
	119
103-1847	503
	505
	507
	510
103-2006	585
	963
	965
	973
	974
	977
	981
	985
	989
	993
	998
103-2543	1087
	1090
	1094
	1098
	1102
	1107
	1111
	1114
	1118
	1122
	1124
	1129
103-5796	363

PART NUMBER INDEX

Part	Page
104-1995	198
	205
	1093
	1096
	1117
	1120
104-2091	1034
104-4980	566
	568
	571
104-6739	262
104-6740	262
104-6742	262
104-6754	262
104-9054	505
	510
105-3249	330
	331
105-4775	275
	277
105-4776	275
	277
105-8034	1086
	1089
	1092
	1096
	1101
	1106
	1110
	1113
	1116
	1120
	1124
	1128
106-3108	461
	674
106-4835	324
106-4837	326
106-5122	▶953
	954
106-6248	699
	▶700
106-7743	912
106-7799	264
106-8704	233
	235
	512
	515
	518
	521
	524
	527
	530
	533
	535
	538
	554
	556
	562
	564
	605
	1059
	1062
106-8916	55
107-1852	▶148
107-3114	340
107-4628	1073
	▶1177
	▶1179
107-4630	▶1034
	1073
107-4641	949
	▶1172
107-4642	949
	▶1066
107-4643	▶1067
	1076
107-4645	▶1049
	1050
107-5978	▶1144
107-6007	1004
	1006
	1009
	1011
	1013
107-6013	1086
	1089
	1092
	1096
	1101
	1106
	1113
	1116
	1120
	1124
	1128
107-6021	1086
	1089
	1092
	1096
	1101
	1106
	1110
	1113
	1116
	1120
	1124
	1128
107-6032	1055
	1057
107-6050	974
	977
	981
	985
	989
	993
	998
107-6056	1133
107-6072	1087
	1089
	1093
	1097
	1111
	1114
	1117
	1121
107-6079	1034
107-6104	1022
	1030
	1032
107-6117	1030
	1032
107-6120	1022
	1032
107-6125	1030
	1032
107-6133	▶194
	1073
107-6141	1004
	1006
	1009
	1011
	1013
107-6144	950
107-6145	950
107-6146	950
107-9976	815
	817
	819
108-0358	168
	170
108-1029	▶160
	172
	173
108-3320	198
	201
	203
	205
108-4082	1157
	▶1168
108-4086	1047
108-4087	1047
108-4103	1047
108-4311	950
	1170
108-4366	291
	297
	610
	613
108-4582	▶1046
	1168
108-8421	▶1077
	1149
108-8423	1077
108-8424	1077
109-1144	798
109-1633	1062
109-1634	1062
109-4727	249
	255
109-4728	251
	253
	255
109-5080	285
	291
	297
	607
	610
	613
109-5194	515
	524
	530
	538
	556
	564
109-5351	102
	103
109-5368	512
	515
	518
	521
	524
	527
	530
	533
	535
	538
	542
	545
	554
	556
	562
	564
109-7041	164
	166
109-7669	912
109-8981	164
110-0203	198
	205
110-2023	364
110-5056	1159
	1161
110-5059	1159
	1161
110-6109	198
	201
	203
	205
	581
	583
	585
	587
	973
	1086
	1089
	1092
	1096
	1101
	1106
	1110
	1113
	1116
	1120
	1124
	1128
110-6349	439
	442
	445
	450
	642
	647
	652
	657
	662
	665
	668
110-7628	378
110-7849	487
110-7887	1084
111-0132	1133
111-0149	960
111-0157	164
	166
111-0177	950
111-0178	950

▶ **PRIMARY REFERENCE**

PART NUMBER INDEX

Part	Page
111-0200	1030
	1032
111-0201	1022
111-0202	1025
	1027
111-0204	950
111-0209	950
111-0343	809
111-1815	18
111-5719	716
	717
111-6940	139
	214
	219
	223
	403
	406
	409
111-7833	414
	419
	424
	429
	434
	439
	442
	445
	450
111-7874	1004
	1006
	1009
	1011
111-7875	960
111-7878	1004
	1006
	1009
	1011
	1013
111-7881	1051
	1053
111-7899	173
	201
	203
	233
	235
	499
	512
	518
	521
	527
	530
	533
	535
	542
	554
	562
	605
	922
	923
	926
	973
	1020
	1042
	1086
	1087
	1089
	1092
	1093
	1097
	1110
	1113
	1116
	1120
111-8222	8
111-8738	1037
111-9050	391
111-9758	849
	875
112-0885	363
112-1528	1025
	1027
112-2370	55
112-2628	426
	431
	434
	445
	450
112-4577	1149
112-4578	1149
112-4579	1149
112-4580	1149
112-4581	1149
112-4582	1149
112-4583	1149
112-5345	375
112-5965	566
	568
	571
112-6174	194
112-7702	55
	57
	59
112-7704	9
	11
	55
112-9401	128
112-9609	1086
	1093
	1096
	1101
	1110
	1113
	1117
	1121
112-9610	1086
	1093
	1096
	1101
	1110
	1113
	1117
	1121
112-9611	1093
	1097
	1117
	1121
112-9612	1093
	1097
	1117
	1121
112-9736	956
	1092
	1093
	1097
	1116
	1120
113-0899	1149
113-1504	9
	11
113-1505	9
	11
113-3632	685
	687
113-3790	1
	▶378
113-3791	378
113-3793	378
113-3794	378
113-5100	1093
	1097
	1117
	1121
113-5183	205
	1093
	1097
	1101
	1117
	1121
113-5184	198
	205
	1093
	1097
	1101
	1117
	1121
113-5280	39
	41
	43
113-5281	39
	41
113-5282	39
113-7543	24
113-7913	35
113-8085	184
113-8130	39
	41
	43
113-8231	39
113-8490	1086
	1093
	1097
	1101
	1111
	1114
	1117
	1121
113-8491	1086
	1093
	1097
	1102
	1111
	1114
	1117
	1121
113-8492	219
113-8493	1086
	1111
113-9232	1144
	1145
	1146
	1147
114-1071	251
	253
114-3140	928
	931
	934
	936
	1044
114-3937	790
	791
	793
	977
	978
	981
	982
	989
	991
	993
	995
114-3940	784
	785
	791
	792
	793
	981
	982
	985
	989
	991
	993
	995
114-3944	1037
114-3951	1086
	1089
	1092
	1096
	1101
	1106
114-3953	1057
114-3954	1057
114-3956	1067
	1068
114-4363	116
	119
	183
	212
114-6604	164
	166
114-6658	965
114-9478	414
	419
115-1552	1022
	1032
115-1558	▶163
	949
115-1559	163
115-1561	1051
115-1748	198
	201
	203
	205
	1086
	1089
	1092
	1096

▶ PRIMARY REFERENCE

PART NUMBER INDEX

Part	Page
	1101
	1106
115-2422	141
115-4550	337
115-5327	243
	244
	245
115-8427	414
	419
	424
	429
	434
	439
	442
	445
	450
116-4159	1093
	1097
	1102
	1113
	1117
	1121
116-4160	1093
	1097
	1117
	1121
116-4161	1093
	1097
	1117
	1121
116-4858	275
	277
116-4870	249
	255
116-6161	220
	224
116-7471	1086
	1089
	1092
	1096
	1101
	1106
	1110
	1113
	1116
	1120
	1124
	1128
116-7856	1037
116-9713	▶822
	844
117-2311	146
117-3787	1086
	1089
	1092
	1096
	1101
	1106
	1110
	1113
	1116
	1120
	1124
	1128
117-3788	1086
117-3789	1086
117-3915	▶174
117-4491	1156
117-4492	920
117-5268	453
117-7798	395
	397
	399
	401
117-7799	395
	397
	399
	401
117-7836	▶310
	324
	325
	329
	330
	331
	332
117-7837	▶310
	329
	330
	331
117-7839	310
	▶314
117-7840	310
	▶315
117-9081	191
117-9622	▶164
	947
118-0626	1073
118-0808	1076
	▶1167
118-0809	▶1019
	1076
118-0850	265
118-3534	▶188
	214
	219
	223
118-4651	708
118-5044	928
	931
	934
	936
	1044
118-5046	928
	931
	1044
118-5597	237
118-7236	1146
	1147
118-7250	949
	▶1143
118-7255	1141
118-7259	922
	923
	924
	926
	1042
118-7362	1086
	1089
	1092
	1096
	1101
	1106
	1110
	1113
	1116
	1120
	1124
	1128
118-8118	128
118-8119	128
118-9901	106
119-0781	164
119-2073	1143
119-3662	198
	205
	219
	931
	1093
	1097
	1102
	1117
	1121
119-4769	▶1037
	1073
119-5026	168
	170
119-7126	1149
119-7127	1149
119-7130	1036
119-7141	1149
119-8310	1167
120-0596	1051
	1053
120-4481	274
120-4482	249
	255
120-4483	309
120-6125	1022
120-6668	▶166
	952
120-9051	685
121-0192	1055
	1057
121-0883	28
121-1029	1101
121-4480	128
121-7746	97
	▶107
121-7897	347
122-1133	810
122-4401	198
	205
	1093
	1097
	1117
	1121
122-4873	112
122-6246	375
122-6453	265
122-8352	269
122-8353	269
	491
123-0275	93
123-0708	1038
123-3132	811
123-4065	474
	477
	478
123-6621	1066
123-6622	1066
123-7615	1093
	1097
	1102
	1117
	1121
123-8851	928
	931
123-9056	275
	277
124-2456	355
	356
124-2528	104
	105
124-3536	45
	46
124-3548	1093
	1097
	1102
	1114
	1117
	1121
124-3708	116
	119
124-3815	23
	39
	41
	43
	55
	57
	59
	63
	108
124-4401	784
	785
	790
	791
	792

▶ **PRIMARY REFERENCE**

PART NUMBER INDEX

Part	Page
	793
	977
	978
	981
	982
	985
	989
	991
	993
	995
124-5638	146
124-5640	219
124-6913	792
	793
	985
	989
	991
	993
	995
124-7702	41
	43
124-8335	334
124-8494	928
	931
	934
	936
	1044
124-8495	928
	931
	934
	936
	1044
124-9015	1051
	1053
124-9636	1086
	1093
	1097
	1102
	1110
	1113
	1117
	1121
124-9637	1086
	1093
	1097
	1102
	1110
	1113
	1117
	1121
125-2086	380
125-3657	▶805
	806
125-3961	▶1051
	1073
	1074
	1075
125-3962	▶1053
	1075
125-7043	1051
	1053
125-7045	1051
	1053
125-7046	1051
	1053
125-7484	105
	106
125-7874	152
	198
	205
	219
	235
	1093
	1097
	1102
	1117
	1121
125-7875	198
	205
	219
	235
	585
	1093
	1097
	1102
	1117
	1121
125-7876	219
126-0747	303
	▶334
126-0748	334
126-1034	1053
126-1035	1053
126-1036	1053
126-1367	1053
126-1767	176
126-1818	490
126-6872	719
126-6916	467
	469
126-7574	147
126-8472	1110
	1113
	1116
	1120
	1124
	1128
127-1647	415
	420
	425
	430
	436
127-5447	70
	73
	77
	81
	85
127-5483	214
	220
127-5484	1086
	1093
	1097
	1102
	1110
	1114
	1117
	1121
127-6510	1051
127-7457	1053
127-8162	122
	125
127-8613	1037
128-0168	395
	397
	399
	401
128-0169	395
	397
	399
	401
128-0219	281
	283
128-0899	1051
	1053
128-4168	1102
128-4249	212
128-5162	327
128-5163	331
	332
128-5164	326
128-5165	327
128-5167	326
128-5436	▶316
	317
128-5450	324
128-5451	325
128-7954	364
128-8614	128
129-0336	172
129-0337	173
129-1854	1055
	1057
129-3178	150
	151
	355
	356
	928
	931
	934
	936
	1044
	1084
129-3270	1009
	1011
129-3493	50
129-7184	1084
129-8087	139
	285
	291
	607
	610
129-8732	249
	255
129-8734	▶269
	306
130-1916	380
130-3216	135
	137
130-3515	155
	156
	157
	158
130-4634	711
	713
130-5300	340
130-5770	798
130-9811	▶180
	214
	219
	340
130-9888	9
	11
131-0715	706
	708
131-1236	1073
	1074
	▶1173
131-1237	1173
	1175
131-1238	1173
131-1812	128
131-2639	691
	695
131-3201	214
	219
	223
131-3540	368
	380
	1135
131-4242	1046
131-5167	1046
131-8350	676
	678
	746
	748
	750
	▶798
131-8829	96
132-0338	920
132-0988	395
	397
	399
	401
132-0994	395
	397
	399
	401
132-2397	403
	406
	409
132-2419	893
	895
	897
	899
132-2427	893
	895
	897
	899
132-2435	893
	899
132-2441	893
	899
132-2471	1
	▶305
132-2553	412
132-2558	363
132-2685	1
	▶141
132-2694	499
132-3789	395

▶ PRIMARY REFERENCE

PART NUMBER INDEX

Part	Page	Part	Page	Part	Page	Part	Page
	397	135-3327	214		223		778
132-4763	915		219	137-6727	265		781
	916		223	137-7602	947	141-4892	281
132-5789	229	135-5935	683		▶1021		283
	231		684	137-7603	947	141-4984	1051
	340	136-1543	1079		▶1021		1053
132-9623	251		1080	138-1645	243	141-6188	62
	253	136-1544	920		244	141-6821	264
133-1011	29	136-1901	414		245	141-7481	691
	31		419	138-2048	45		692
133-3235	168		424	138-2050	20		693
	170		439	138-2053	52		694
133-3260	81		442	138-2054	50		695
	85	136-1953	929	138-2060	20		762
133-4297	275		932	138-7538	597		768
133-5545	799		934		599		773
133-6106	57		936	139-4189	691		778
	59		1044		692		781
133-7675	395	136-2109	1051		693	141-7844	▶110
	397		1053		695		111
	399	136-3188	938		762	141-8061	198
	401		939	139-5514	50		205
133-8597	792	136-3190	938	140-7443	29		219
	793	136-3195	939	140-7444	29		1093
	985	136-4560	669		31		1097
	989		672	140-7445	29		1102
	991	136-4593	263		31		1117
	993	136-4595	263	140-7505	68		1121
	995	136-4794	499	140-7506	68	141-8580	1025
134-0404	268	136-6980	1038	140-7512	68		1027
134-0673	395	136-6982	1038	140-7515	62		1030
	397	136-6984	1038	140-8718	116		1032
	399	136-7728	380	140-8783	63	141-8589	108
	401	136-9291	768		212	141-8597	108
134-1374	1015	136-9292	762	140-9189	382	141-8599	108
	1016		765	140-9211	716	141-8615	▶263
134-2252	▶181		770		717		333
	342		773	140-9251	▶389	141-9191	985
134-2540	214		775		403		987
	219		778		406		989
	223	136-9297	768		409		991
	1086		773	140-9289	403	141-9236	765
	1089		778		406		768
	1092		781		409		770
	1096	136-9298	768	140-9295	▶350		773
	1101		773		357		775
	1106		778	140-9296	350		778
	1110		781	140-9312	374		781
	1113	136-9301	794	140-9926	773	141-9777	108
	1116	137-2170	1176	141-1095	773	141-9784	928
	1120	137-4234	848		778		931
	1124		850	141-1481	469		934
	1128		854		▶806		936
134-4126	147		858	141-1556	765		1044
134-4139	57		863		770	142-2651	768
134-4735	1004		865		773		773
	1006		867		775		778
	1009		877		778	142-2928	1087
	1011		879	141-2032	765		1089
	1013		880		770		1093
134-5214	382		881		773		1097
134-5215	382		884		775		1102
134-7258	1183		885		778		1106
135-0611	1070		888	141-4852	768		1111
135-2602	1128	137-6645	180		773		1114

▶ **PRIMARY REFERENCE**

PART NUMBER INDEX

Part	Page	Part	Page	Part	Page	Part	Page
	1117		219	146-3337	691		773
	1121		223		695		778
	1124	144-0195	1173	146-3728	704		781
	1128		1175	146-3765	974	146-8479	691
142-3955	483		1177	146-6274	▶264		692
142-5789	164		1179		333		693
	166	144-0367	102	146-6275	264		694
142-5862	249		103	146-6280	246		695
142-5914	255		642	146-6315	691		762
142-6183	325		647		692		773
142-6186	325		652		694		778
142-7568	413		657		695		781
142-8463	▶912	144-1569	1176		696	146-8956	▶50
142-8828	129	144-8521	395		762		52
142-8937	716		397	146-6317	691	146-8957	50
	717		399		694	146-8981	762
142-9226	434		401		695		765
	450	145-0326	1168		696		770
142-9681	1136		1170	146-6319	794		773
	1137	145-1135	1038		795		775
143-0541	184	145-1136	1038		796		778
	▶185	145-1140	1038	146-6729	185	147-1445	1086
143-1288	943	145-2322	▶691	146-6747	1184		1093
	944		762		1185		1097
	945	145-2334	765	146-6783	▶310		1102
	946		770		323		1111
	1151		773		325		1114
	1153		775		327		1117
143-1344	185		778		331		1121
143-3193	394	145-4501	110	146-6822	395	147-1446	1086
143-4973	825	145-5201	857		397		1093
	826		870	146-7453	303		1097
	827	145-5202	857	146-7986	893		1102
	828		870		895		1111
	829	145-5256	▶762		897		1114
	830		778		899		1117
	831	145-5307	1055		913		1121
	832		1057	146-7987	893	147-1773	214
	833	145-5607	1038		895		220
	834	145-6855	20		897		223
	835	145-6856	20		899	147-1979	20
	836	145-6858	20		913	147-2038	▶692
	837	145-6929	▶159	146-7990	815		762
	838		168		817	147-3114	▶693
	839		170		819		775
	840	145-8327	119	146-8000	815		778
	841	145-8428	765		817	147-3322	▶696
	842		768		819		768
	843		770	146-8003	913		773
	872		773		914		778
	873		775	146-8006	913		781
	874		778		914	147-5071	▶306
	875		781	146-8010	815		310
	876	145-8710	762		817		311
	878		▶794		819		328
	882	145-9377	895	146-8013	815	147-5484	311
143-5446	801	146-0083	355		817		▶323
	803		356		819		328
143-7899	265	146-0084	355	146-8477	762	147-5551	116
143-8874	922		356		765		119
	923	146-0085	358		770	147-5553	108
	924	146-0089	356		773	147-5576	▶323
	926	146-0090	355		775		328
	1042	146-0098	355		778		331
143-9542	214		356	146-8478	768	147-5577	323

▶ PRIMARY REFERENCE

PART NUMBER INDEX

Part	Page	Part	Page	Part	Page	Part	Page
148-1928	246		657		622		442
148-2557	728		662		625		445
	730		665		628		450
	732		668		631		467
	734		671		634		620
	737		687		643		623
	739	148-8317	634		648		626
	741		638		653		629
	744	148-8318	634		657		632
148-3026	18		638		662		634
148-3626	1034	148-8323	642		665		638
148-5318	214		647		668		643
	219		652		671		648
	223		657		899		653
148-5689	1086	148-8324	414	148-8327	266		658
	1089		419		285		719
	1092		424		291	148-8339	286
	1096		429		297		607
	1101		434		421	148-8340	414
	1106	148-8325	285		426		419
	1110		291		431		424
	1113		297		434		430
	1116		414		443		435
	1120		419		446		439
	1124		424		450		442
	1128		429		607		445
148-7827	▶482		434		610		450
	891		439		613		467
	892		442		643		605
148-7860	499		445		648		662
148-7871	412		448		653		665
148-7900	826		450		658		668
	828		512	148-8328	501		671
	829		515	148-8334	643	148-8341	719
	835		518		648	148-8342	719
	836		521		653	148-8345	414
	837		524		658		420
	838		527	148-8335	303		425
	842		530		566		430
	843		533		568		435
	873		535		571		467
	875		538		589		469
	▶913		542		591		503
148-7922	765		545		593		507
	770		547		595	148-8347	266
	773		554		616		415
	775		556		619		420
	778		562		622		425
148-8298	197		564		625		430
148-8306	285		566		628		435
	291		568		631		439
148-8315	467		571		662	148-8351	415
	469		581		665		420
148-8316	285		583		668		425
	291		585		671		430
	297		587	148-8336	395		435
	416		589		397		439
	421		591		399		442
	439		593		401		445
	442		595		414		448
	603		597		419		450
	605		599		424		467
	642		601		429		469
	647		616		435		512
	652		619		439		515

▶ **PRIMARY REFERENCE**

PART NUMBER INDEX

Part	Page	Part	Page	Part	Page	Part	Page
	518		439		420		515
	521		442		425		518
	524		445		430		521
	527		450		440		524
	530		467		443		527
	533		469		446		530
	535	148-8365	415		643		533
	538		420		648		535
	542		425		653		538
	545		430		658		542
	547		435	148-8370	467		545
	554		439		469		554
	556		442		719		556
	562		445	148-8372	286		562
	564		450		292		564
	616		643		298		643
	619		648		467		648
	622		653		469		653
	625		658		603		658
	628	148-8367	470		605	148-8411	643
	631		635		662		648
	899		638		665		653
148-8353	403		719		668		658
	406	148-8368	415		671		676
	409		420	148-8374	470		678
	616		425	148-8375	603		720
	619		430		605		746
	622		435	148-8378	395		748
	625		439		397		750
	628		442		399	148-8415	470
	631		445		401	148-8416	503
	719		448		467		505
148-8354	662		451		470		507
	665		512		501		510
	668		515		616		643
	671		518		619		648
148-8355	571		521		622		653
	595		524		625		658
	643		527		628	148-8417	515
	648		530		631		525
	653		533		635		530
	658		535		639		539
148-8358	286		538	148-8381	603		542
	291		542	148-8384	603		545
	297		545		605		556
	607		547	148-8387	643		564
	610		554		648	148-8424	286
	613		556		653		292
148-8360	286		562		658		298
	607		564	148-8388	286		643
148-8361	403		566		292		648
	406		568		298		652
	409		571	148-8392	421		657
148-8363	643		607		426	148-8428	470
	648		610		431	148-8429	635
	653		613		435		639
	658		635		442	148-8430	448
148-8364	286		639		445	148-8433	403
	292		643		451		406
	298		648	148-8393	468		409
	415		653		470		566
	420		658		719		568
	425		719	148-8406	281		571
	430		899	148-8407	334		626
	435	148-8369	415		512		629

PART NUMBER INDEX

Part	Page	Part	Page	Part	Page	Part	Page
	632		748		435		642
	635		750	150-4037	415		647
	639	149-0777	456		420	151-5145	490
	720		457		425	151-5715	1034
148-8434	643		458		430	151-9274	968
	648	149-2091	116		435	151-9275	968
	653		119	150-4043	644	152-0983	112
	658	149-4359	789		649	152-2763	1174
148-8435	403		790		654	152-2764	1173
	406		791		658		▶1174
	409		966	150-4050	518		1175
148-8436	286		967		521	152-5717	540
	292	149-4612	▶960		524		541
	298		1073		533		551
	470		1074		535		553
148-8438	635		1075		538		559
	639	149-4745	1157	150-4086	616		561
148-8439	470	149-5452	542		619		574
148-8441	643		545		622		899
	648	149-5470	768		625	152-5718	540
	653		773		628		541
	658		778		631		551
148-8442	286		781	150-5968	415		553
	292	149-5532	▶390		420		559
	298	149-5624	954		425		561
148-8443	395	149-5733	915		430		574
	397		916		435		899
	399	149-6117	122		440	152-7217	96
	401		125		443	152-7219	96
148-8444	286	149-9176	28		446	152-7224	96
	292	150-1293	788		451	153-2985	▶491
	298		789		512		716
	415		790		515		717
	420		791		518	153-4856	382
	425		792		521	153-6236	574
	430		793		524	153-6237	266
	435		966		527		286
	440		967		530		292
	443		971		533		298
	446		972		535		607
	451		985		538		610
148-8448	286		989		547		613
	292		991		566	153-6241	286
	298		993		568		292
148-8467	512		995		571		298
	518	150-3033	581		616		601
	521		583		619		607
	527		585		622		610
	533		587		625		613
	542	150-3060	501		628	153-6243	644
	545	150-3065	303		631		649
	554		671		899		654
	562	150-3070	415	150-5984	954		659
148-9359	676		420	150-6582	1066	153-6248	285
	678		425	150-8015	1176		291
	726		430	150-8982	501		297
	728		435	151-0894	928	153-6252	601
	730		440		931	153-6267	566
	732		443		934		568
	734		446		936		571
	737		451		1044	153-6932	934
	739	150-4033	415	151-4522	970	153-8925	794
	741		420	151-4841	414		795
	744		425		419		796
	746		430		424	153-8926	794

▶ **PRIMARY REFERENCE**

PART NUMBER INDEX

Part	Page
	795
	796
153-8941	691
	692
	762
153-8945	694
	696
153-8946	691
	695
153-8947	768
	773
	778
	781
153-8952	768
	773
	778
	781
153-9706	382
154-2302	382
154-4370	1051
	1053
154-5508	▶311
	323
	326
	327
	328
	329
	331
	332
154-5629	1086
	1089
	1092
	1096
	1101
	1106
	1110
	1113
	1116
	1120
	1124
	1128
154-7279	503
	505
	507
	510
154-8056	7
154-8410	851
	857
154-8411	851
	857
154-8413	851
	857
154-9819	414
	419
	424
	429
155-0576	119
155-2255	151
	214
	220
	719
	1093
	1097
	1102
	1110
	1113
	1117
	1121
155-2260	144
	152
	177
	198
	214
	220
	227
	229
	237
	340
	581
	583
	585
	1093
	1097
	1102
	1110
	1113
	1117
	1121
155-2265	152
	198
	201
	203
	205
	210
	227
	1017
	1018
	1093
	1097
	1102
	1110
	1113
	1117
	1121
155-2270	151
	152
	189
	193
	198
	214
	219
	220
	227
	229
	233
	235
	340
	554
	556
	581
	583
	585
	642
	647
	652
	719
	931
	958
	1093
	1097
	1101
	1102
	1110
	1113
	1117
	1121
155-2271	152
	198
	201
	203
	205
	227
	1017
	1018
	1093
	1097
	1102
	1110
	1113
	1117
	1121
155-2274	168
	198
	201
	203
	205
	209
	227
	1093
	1097
	1102
	1110
	1114
	1117
	1121
155-3624	676
	678
	746
	748
	750
155-4957	1159
155-5779	1177
	1179
155-5781	1177
155-5783	▶1069
	1177
	1179
155-5784	▶1070
	1177
	1179
155-6258	415
	420
	425
	430
	435
155-9816	1059
	1062
156-1148	▶1148
	1157
156-1685	1159
156-1686	1161
156-1687	1161
156-1771	512
	518
	521
	527
	533
	535
	542
	545
	554
	562
156-4130	403
	406
	409
	642
	647
	652
	657
156-4271	▶1071
	1073
	1074
	1075
156-4449	922
	923
	924
	926
	1042
156-5545	920
156-5970	810
156-6819	1044
157-2152	795
157-2153	796
157-2393	135
	137
157-4835	890
157-6144	778
157-6155	778
158-2829	135
	137
158-3412	503
	505
	507
	510
158-5089	233
	235
	237
	605
	1086
	1089
	1092
	1096
	1101
	1106
	1110
	1113
	1116
	1120
	1124
	1128
158-9956	676
	678
	▶723
	746
	748
	750
159-2829	102
	103
159-3261	93
159-3305	616

▶ PRIMARY REFERENCE

PART NUMBER INDEX

Part	Page	Part	Page	Part	Page	Part	Page
	634	160-6988	9		945	164-4557	1022
159-3781	691		11	163-1201	227	164-4883	1078
	692	160-7690	151	163-1869	985		1081
	694	160-8499	704	163-1870	989	164-5509	164
	695		707	163-4295	285	164-5557	503
	696	161-4130	885		291		507
159-4995	▶149	161-5967	1046		297	164-5567	266
159-4996	149	161-6149	799		607		286
159-5255	22		805		610		292
159-6108	148		807		613		298
159-7457	262	161-6154	723	163-4345	355		303
159-7458	262	161-6161	799	163-4347	358		401
159-8050	139		805	163-4348	358		414
159-8336	61		807	163-4639	762		419
159-9322	151	161-7620	1034	163-5512	765		424
	1093	161-8042	950		768		429
	1097	161-9639	1022		770		436
	1102		1032		773		642
	1117	161-9640	1025		775		647
	1121		1027		778		652
159-9539	1022		1030		781		657
	1032		1032	163-5776	243		671
	1087	161-9641	1025		244	164-5577	566
	1089		1027		245		568
	1093		1030	163-6408	393		571
	1097		1032	163-6412	393		589
	1102	161-9642	1025	163-7233	243		591
	1111		1027		244		593
	1114		1030		245		595
	1117		1032	163-7234	243		662
	1121	161-9645	950		244		665
160-0149	108	161-9647	1025		245		668
160-0269	801		1027	163-9256	20		671
	803		1030	163-9324	1059	164-6874	266
160-0496	389		1032		1062		337
	390	161-9820	21	164-1234	1170		642
160-0750	765	162-0177	676	164-1908	603		647
	770		678	164-2108	335	164-7556	154
	775		746	164-3207	119	164-9316	851
160-2243	372		748	164-4021	851		852
	384		750		857		855
160-2248	370	162-0236	62	164-4022	852		857
	371	162-0237	62		857		868
160-3510	29	162-0761	63		870		869
160-3518	1137	162-1504	108	164-4024	852		870
160-6298	765	162-2000	122		857	164-9869	429
	770		125		870		436
	775	162-2189	1027	164-4111	472		445
160-6300	▶694		1032		977		451
	765	162-6448	746	164-4180	644	165-0311	198
	770		748		649		201
	775		750		654		203
160-6319	367	162-7790	870		659		205
160-6320	2	162-8447	▶943	164-4225	112		1086
	▶367		1155		415		1089
160-6493	45	162-8448	▶944		420		1092
160-6494	45		1155		425		1096
160-6495	45	162-9754	63		430		1101
160-6496	45	162-9992	116		436		1106
160-6520	1110		119		440		1110
	1113	163-1135	1170		443		1113
	1116	163-1146	1168		446		1116
	1120	163-1148	944		451		1120
	1124		946	164-4227	266		1124
	1128	163-1149	943	164-4531	920		1128

▶ **PRIMARY REFERENCE**

PART NUMBER INDEX

Part	Page
165-0312	1086
	1089
	1092
	1096
	1101
	1106
	1110
	1113
	1116
	1120
	1124
	1128
165-2273	642
	647
	652
	657
165-3071	518
	521
	525
	533
	535
	538
165-3133	414
	419
	424
	429
	434
165-4929	281
165-6365	395
	397
	399
166-2033	467
	469
166-2087	93
	94
166-3988	54
166-3990	54
166-6781	1168
166-8227	634
	638
166-8725	63
166-9286	1034
166-9287	1019
167-0138	▶189
	1086
	1110
167-2153	29
167-2186	413
167-2201	485
167-2207	487
167-2294	413
167-2312	485
167-2317	487
167-3692	198
	201
	203
	205
	1093
	1097
	1102
	1111
	1114
	1117
	1121
167-3693	214
	220
	1093
	1097
	1102
	1111
	1114
	1117
	1121
167-9524	335
168-1968	719
168-2457	1030
	1032
168-2458	1025
	1027
168-4520	770
168-4521	775
168-7000	▶393
	1073
	1076
168-7314	142
	▶145
168-8389	848
	850
	854
	858
	867
	875
	877
	879
	880
	881
	884
	885
	888
	890
168-8772	1049
169-1616	736
	805
169-1617	805
169-2969	485
169-3995	1025
	1027
	1030
	1032
169-5680	26
169-5862	662
	665
	668
169-7380	1170
169-7409	503
	505
	507
	510
169-7435	958
169-8352	246
170-0108	243
	244
	245
170-0432	332
170-0493	465
	466
170-0503	465
	466
170-1112	920
170-1114	920
170-1115	920
170-3711	4
	5
	▶38
170-4635	634
	638
170-4698	243
	244
	245
170-5678	515
	524
	530
	535
	538
	556
	564
170-8590	1138
170-9360	1087
	1089
	1093
	1097
	1102
	1106
	1111
	1114
	1117
	1121
	1124
	1128
171-1230	1151
	1153
171-1411	35
171-2208	214
	219
	223
171-2211	214
	219
	223
171-2514	634
	638
171-5349	178
	179
	340
171-6029	233
	235
171-6682	1151
	1153
171-6725	574
171-7198	317
171-7199	317
171-8689	317
171-8772	810
172-2307	198
172-2309	201
	203
	205
172-2416	1151
	1153
172-7966	337
172-7968	337
172-8591	380
	386
	388
173-0064	303
173-0703	970
173-1028	▶920
	1151
	1153
173-2052	1079
	1080
173-3064	168
	170
173-3993	676
	678
	726
	728
	730
	732
	734
	737
	739
	741
	744
	746
	748
	750
173-4032	662
	665
	668
	671
	▶725
173-5787	1158
173-7035	1158
173-7061	725
	▶799
173-7062	725
173-7223	401
173-7225	403
	406
	409
173-9779	413
173-9964	765
	770
	775
174-1366	694
174-1486	928
	931
	1044
174-3734	819
174-4246	375
174-4426	869
174-4427	869
174-4726	869
	870
174-6491	1049
174-6905	634
	638
174-7449	337
174-9725	1133
174-9730	▶1133
	1139
	1141
175-2308	188
	▶190
175-2309	188
	▶191
175-3915	63
175-4782	285
	291
	297

▶ PRIMARY REFERENCE

PART NUMBER INDEX

Part	Page
	607
	610
	613
175-6746	1041
175-6749	1041
175-6750	▶1040
175-6754	1041
175-6759	1041
175-6760	2
	1040
	▶1041
175-7310	283
175-7895	413
175-7902	485
175-9443	▶695
	765
	770
	773
	775
	778
176-0118	317
176-0210	683
176-0623	893
	899
	913
176-0624	893
	899
	913
176-0720	▶483
	891
	892
176-0798	683
	684
176-1705	▶317
176-1706	▶317
	318
176-2435	344
176-3900	▶918
176-5311	961
	963
176-7228	415
	420
	425
	430
	440
	443
	446
177-0019	246
	▶259
177-0026	▶337
	342
177-1452	815
	817
	819
177-1862	1138
177-1863	1151
	1153
177-2391	31
177-4937	1145
177-7845	41
177-9653	116
	119
177-9953	▶131
	135
178-0465	914
178-0470	▶914
178-0603	▶1151
	▶1153
	1155
	1156
178-0604	▶1078
	1151
178-0605	1078
	▶1079
178-2593	1025
	1027
	1030
	1032
178-3339	145
178-3893	484
178-7877	693
	695
	696
178-7907	1079
	1080
178-7914	▶1155
	▶1156
	1158
179-0006	▶192
	237
179-3609	1183
179-3612	1183
179-4324	358
	1135
179-6396	981
	982
	984
179-6397	974
	975
	976
	977
	978
	980
179-6398	993
	995
	997
179-7071	116
	119
179-8235	231
180-2535	1025
	1030
	▶1176
180-3528	928
	936
180-3730	129
180-4686	129
180-5098	1055
	1057
180-5100	164
	166
180-7110	219
180-7486	1037
180-7487	1037
180-8801	1
	▶214
	▶219
	▶223
180-8804	1
	▶229
	▶231
180-8807	1
	▶196
180-8860	237
180-8871	139
180-8873	139
180-8874	139
180-8983	1
	▶345
180-8986	▶346
180-8992	345
180-8993	345
180-8994	346
180-9339	953
180-9740	1
	▶101
180-9872	483
	484
180-9873	922
	926
	▶928
180-9874	1042
	▶1044
183-6317	29
183-6318	55
	57
	59
183-7263	676
	678
	726
	728
	730
	732
	734
	737
	739
	741
	744
	746
	748
	750
	753
	754
	755
	756
	757
	758
	759
	760
	761
	781
183-7528	928
	931
	934
	936
183-8597	1044
	▶178
	340
184-1333	1
	▶112
184-2298	1151
	1153
184-2299	1151
	1153
184-2400	469
184-5293	1084
184-5296	492
	493
	495
	▶966
	▶967
184-5297	1073
	1074
	1075
	▶1084
184-5324	483
184-5483	4
	5
	▶49
184-5484	49
185-0882	20
185-0974	716
185-1016	▶89
	91
185-1017	70
	73
	77
	81
	85
185-1021	67
185-1023	66
	67
185-1024	66
	67
185-1027	89
	90
185-1028	▶257
	285
	291
	297
185-1030	66
185-1031	66
185-1032	474
185-1036	70
	73
	77
	81
	85
185-1039	257
185-1045	6
	▶65
185-1046	65
185-1049	70
	73
	77
	81
	85
185-1546	50
185-2638	131
	133
185-2639	131
	133
185-2643	131
185-2644	131
	133
185-2645	131
	133
185-2647	131
	133
185-2648	131
	133

▶ **PRIMARY REFERENCE**

PART NUMBER INDEX

Part	Page
185-2650	131
	133
185-2651	131
	133
185-2653	131
	133
185-2654	131
	133
185-2655	131
	133
185-2658	131
	133
185-2765	605
185-2766	198
	201
	203
	205
185-2767	233
	235
185-2768	237
185-2769	201
185-5629	1084
185-9562	616
	619
	622
	625
	628
	631
186-0815	175
	375
186-0817	175
	375
	388
186-2337	6
	▶22
186-2341	▶93
	▶94
186-2344	6
	▶104
186-2347	3
	▶102
	▶103
186-2424	469
186-3735	130
	152
	155
	156
	157
	158
	159
	178
	179
	190
	191
	194
	195
	196
	209
	229
	231
	233
	235
	285
	340
	397
	399
	401
	419
	424
	429
	434
	456
	457
	458
	467
	469
	512
	515
	518
	521
	524
	527
	530
	533
	535
	538
	554
	556
	562
	564
	581
	605
	765
	768
	770
	773
	775
	781
	788
	789
	790
	791
	809
	810
	966
	967
	968
	973
	1017
	1018
	1059
	1069
	1070
	1084
186-3736	189
	193
	1017
	1018
	1101
186-4415	393
186-4942	315
	▶317
186-4943	313
	▶318
186-5107	1170
186-6189	1062
186-6190	▶919
	1059
187-0541	807
187-1267	706
187-1979	752
187-2082	960
	965
187-2120	285
	291
	297
	448
187-2868	93
	94
	97
187-5122	1176
187-5123	1176
187-5124	1176
187-5125	1176
187-5126	1176
187-5127	1176
187-5128	1176
187-8191	704
	813
187-8557	634
	638
188-0982	483
188-3823	395
188-7675	323
189-0189	809
189-0942	382
189-1707	928
	936
	1062
189-2096	809
189-2100	685
	▶809
189-4870	▶210
189-5601	55
	57
	59
190-2911	274
190-3085	482
	▶484
	899
190-3611	483
	484
190-4401	▶1043
190-4402	▶925
	948
	949
190-4405	947
	▶1073
190-4406	952
	▶1076
190-4555	1084
190-4556	1084
190-4558	198
	201
	203
	205
190-4559	198
	201
	203
	205
190-4563	1084
190-4564	210
190-4635	▶1004
	▶1006
	▶1009
	▶1011
	1073
	1076
190-4643	▶1013
	1076
190-4690	▶1015
	▶1016
	1073
	1076
190-4700	1073
	1076
	▶1134
190-8139	634
	638
190-8308	801
	803
190-8314	801
	803
190-8985	323
190-8987	▶323
190-8992	327
190-9002	▶323
190-9821	503
	505
	507
	510
191-0107	634
	638
191-1863	285
	291
	297
191-2226	322
191-2933	1158
	▶1170
191-8920	765
	768
	770
	773
	775
	778
	781
191-8921	938
	939
191-9177	70
	73
	77
	81
	85
	▶374
191-9182	70
	73
	77
	81
	85
191-9184	70
	73
	77
	81
	85
191-9188	386
191-9192	70
	73
	77
	81
	85

▶ PRIMARY REFERENCE

PART NUMBER INDEX

Part	Page
191-9783	616
	619
	622
	625
	628
	631
192-0086	467
	▶801
192-2684	414
	419
	424
	429
	434
	439
	442
	445
	450
192-4352	102
	103
192-4360	▶66
	241
192-4367	▶67
	240
192-7054	1136
	1137
192-7625	512
	515
	518
	521
	524
	527
	530
	533
	535
	538
	542
	545
	554
	556
	562
	564
192-7752	1170
192-7755	1170
192-7760	1170
192-7767	1170
192-7783	1170
192-7787	1170
192-7790	1170
192-7795	1170
192-7799	1170
192-7805	1170
192-7810	1170
192-7812	1170
192-7820	1170
192-7822	1170
192-7848	1170
193-1664	797
193-1665	676
	678
	746
	748
	750
	▶797
193-2200	279
	281
	283
193-3059	634
	638
193-4640	320
	321
193-5913	1183
193-5914	380
	885
	1183
193-5918	1183
193-5958	801
	803
193-8334	551
	553
	559
	561
193-8335	551
	553
	559
	561
193-8638	245
194-1651	309
194-2466	45
194-5171	939
194-5226	177
194-5227	177
194-6769	554
	556
	562
	564
194-7109	815
	817
	819
194-7110	815
	817
	819
194-7111	815
	817
	819
194-7112	815
	817
	819
194-7265	229
195-0913	926
195-0916	1086
	1089
	1092
	1096
	1101
	1106
	1110
	1113
	1116
195-0917	1086
	1089
	1092
	1096
	1101
	1106
	1110
	1113
	1116
	1120
	1124
	1128
195-0921	1086
	1089
	1092
	1096
	1101
	1106
	1110
	1113
	1116
	1120
	1124
	1128
195-0922	499
195-0925	172
	173
195-1141	231
195-3761	39
195-6525	501
	574
195-6526	501
	574
195-6935	▶906
195-6937	▶907
195-6938	▶908
195-6939	▶909
195-6961	906
	907
	908
	909
195-7004	50
195-7430	810
196-1185	▶179
	340
196-2408	801
196-7921	469
196-9441	104
196-9994	518
	521
	524
	533
	535
	538
197-6861	5
197-7259	1093
	1097
	1111
	1114
	1117
	1121
197-7261	214
	219
	220
197-7689	1168
197-8820	▶133
	137
198-2796	414
	419
	424
	429
	434
	439
	442
	445
	450
198-3393	950
198-5389	152
198-8064	518
	521
	524
	533
	535
	538
198-8933	380
198-8942	380
198-8943	380
198-8944	380
198-8945	380
198-8946	380
198-8954	380
198-8955	380
198-8957	386
198-8961	380
198-8964	▶386
	1043
	1075
198-8965	▶388
	925
	926
199-1361	485
199-1363	485
199-3108	28
199-3109	28
199-4152	36
199-4284	101
199-4297	101
199-5067	104
	105
199-5681	▶683
	687
199-5682	▶684
	685
199-7041	955
	▶958
199-7042	958
199-7043	958
199-7891	131
	133
199-8124	93
	▶96
199-8436	131
	133
199-9252	116
	119
199-9267	116
	119
199-9751	116
	119
200-0831	102
200-2042	333
	▶340
200-2043	340
	▶342
200-2044	342

2

▶ **PRIMARY REFERENCE**

PART NUMBER INDEX

Part	Page
200-2045	259
200-2371	812
200-2739	36
200-4305	453
200-5728	1137
200-5729	1137
200-6345	384
	403
	406
	409
	426
	431
	434
	467
	469
	542
	545
	634
	638
	642
	647
	652
	657
	719
201-0416	453
201-0417	453
201-0684	863
	865
201-0950	801
	803
	▶810
201-1024	198
	201
	203
	205
201-1063	413
201-1802	925
	926
	▶954
201-1803	954
201-3316	342
201-4825	▶456
	1004
	1013
201-5242	706
	708
201-8745	68
201-9517	319
	▶321
202-0354	1
	▶129
202-0355	129
202-0358	129
202-0360	129
202-0363	▶955
	956
	957
202-0370	380
202-0392	382
202-0393	382
202-0420	1
	161
	▶344
202-0428	1
	▶1181
202-0430	1
	▶395
	▶397
	▶399
	▶401
202-1713	291
	297
	610
	613
202-4338	306
	▶319
202-4732	1159
	1161
202-4736	1159
	1161
202-4738	1159
	1161
202-4739	1159
	1161
202-6614	154
202-7215	1
	▶375
202-7216	375
202-7479	161
202-7857	375
202-9801	711
	713
	715
202-9802	711
	713
	715
203-2758	270
	272
203-2759	270
203-2764	272
203-3877	▶489
	492
203-3898	▶701
203-5852	244
	245
203-5853	244
	245
203-5920	▶682
203-5921	▶682
203-5931	925
	1043
	▶1064
203-5932	925
	926
	▶1059
	▶1062
203-5937	925
	926
	▶956
	▶957
203-7703	1158
204-0358	198
204-0359	201
	203
	205
204-0813	350
	353
204-1126	1159
	1161
204-1370	229
	231
204-2281	214
	219
	223
	403
	406
	409
	414
	419
	424
	429
	434
	439
	442
	445
	450
	503
	505
	510
	542
	545
	634
	638
	642
	647
	652
	657
204-3540	319
	▶322
204-4148	706
	708
204-4329	▶97
204-4332	346
204-4338	2
	▶373
204-4339	373
204-4342	1181
204-4343	6
	▶54
204-4344	54
204-6101	199
	206
	1084
	1098
	1103
	1107
	1120
	1124
	1128
204-7453	716
	717
204-8000	214
	220
	223
	286
	292
	298
	415
	420
	425
	430
	436
	440
	443
	446
204-8799	1020
205-0626	133
205-0826	152
205-1627	93
	94
	97
205-2214	375
205-3210	281
	283
205-3211	279
205-3652	257
205-3665	701
	▶704
205-3668	681
	▶685
205-3669	680
	▶687
205-3961	403
	406
	409
205-4285	146
205-4587	704
	707
205-5266	414
	419
	424
	429
	434
	▶453
205-5268	285
	291
	297
	▶307
205-5408	492
	▶711
	▶713
	▶715
205-5409	325
205-5414	716
	717
205-6024	956
	957
205-6025	955
205-6026	955
205-6027	955
205-6028	955
205-6388	1145
205-7102	642
	647
	652
	657
205-8257	152
205-8439	711
	713
	715
206-1345	1086
	1089

▶ PRIMARY REFERENCE

PART NUMBER INDEX

Part	Page
	1092
	1096
	1101
	1106
	1110
	1113
	1116
	1120
	1124
	1128
206-2423	672
206-3632	801
	803
206-4127	20
206-4431	1059
	1062
206-4432	1059
	1062
206-4433	1059
206-4435	1059
	1062
206-4441	129
206-5162	152
206-5208	152
206-5823	1070
206-7433	1015
	▶1017
206-8818	716
	717
206-9546	716
	717
207-3362	1059
	1062
207-3366	1059
	1062
207-5947	▶146
	1050
207-5948	▶1020
	1073
207-6031	329
207-6796	210
208-0011	358
208-0310	▶357
208-0792	684
208-0840	394
208-0886	685
208-2292	684
208-2293	706
208-2300	303
208-2301	303
208-4977	1182
208-4978	1182
208-4979	1182
208-4980	1182
208-4981	1182
208-4983	349
	357
	▶358
208-6097	966
	971
208-9645	237
208-9646	237
209-0091	50
209-0092	50
209-3149	489
	▶490
209-4578	102
	103
209-4580	102
	103
209-7705	26
	27
209-7801	286
	292
	298
209-8712	2
	▶377
209-8713	377
209-9218	17
209-9219	17
210-2262	1138
210-2263	1138
210-2266	1138
210-2270	▶1138
	1151
	1153
210-8471	817
211-0052	198
	201
	203
	205
	212
	1086
	1089
	1092
	1096
	1101
	1106
	1110
	1113
	1116
	1120
	1124
	1128
211-0067	39
	41
211-2092	685
	687
	▶811
211-3581	642
	647
	652
	657
211-5358	1170
211-9294	1170
212-0061	812
212-1301	▶765
	792
	985
212-1302	▶768
	786
	787
	789
	974
	975
212-1304	▶770
	989
	991
212-1305	▶773
	784
	785
	790
	977
	978
212-1306	▶775
	793
	993
	995
212-1307	▶778
	791
	981
	982
212-4962	765
	768
	770
	773
	775
	778
	781
	▶795
212-4963	768
	773
	778
	781
	▶796
212-5940	285
	291
	297
	607
	610
	613
212-6056	285
	291
	297
	607
	610
	613
212-6282	▶603
	682
212-6283	▶605
	682
212-6301	▶680
	682
212-6304	▶681
	682
212-7521	642
	647
212-8743	135
	137
213-3891	642
213-4555	704
	▶807
213-4574	1159
	1161
213-4576	1159
	1161
213-4579	1159
	1161
213-7253	2
213-7436	403
	406
	409
213-7437	403
	406
	409
213-7438	414
	419
	424
	429
	434
213-9036	2
	▶366
213-9100	196
214-1042	285
	291
	297
	607
	610
	613
214-1542	424
	429
	434
214-1544	434
214-1668	18
214-3203	8
214-4768	391
	392
214-4769	275
	▶391
214-4916	1084
214-5389	512
	515
	527
	530
	547
	899
214-5390	512
	515
	527
	530
	547
	899
214-5514	102
	103
214-5515	102
	103
214-7091	603
	605
214-7092	603
214-7636	▶938
	1177
	1179
214-8917	403
	406
	409
214-9059	340
214-9563	350
	353
214-9564	350
	353
215-1132	▶1038
215-2103	18
215-2643	355
215-2644	356
215-2645	▶355
	358
215-2646	▶356
	358
215-3810	285
	291

▶ **PRIMARY REFERENCE**

PART NUMBER INDEX

Part	Page
	297
	607
	610
	613
215-3813	605
215-3886	382
215-4011	66
	67
215-4012	102
	103
215-5644	605
215-6740	474
	▶480
215-6743	▶474
	475
215-8058	279
	281
	283
215-8125	270
	272
215-9209	469
216-2892	108
216-3041	285
	291
	297
216-3446	116
	119
216-3448	119
216-3450	119
216-3938	285
	291
	297
216-4983	102
	103
216-6944	66
	67
216-6946	66
216-8231	4
	5
	▶17
216-8235	17
	▶18
216-8314	13
	15
216-8315	13
216-8316	4
	5
	▶13
	▶15
216-8323	45
	46
216-8324	4
	5
	▶45
	▶46
216-8332	20
216-8333	20
216-8335	▶20
	21
216-8343	4
	5
	▶21
216-8348	25
216-8619	4
	5
	▶52
216-8620	4
	5
	▶7
216-8625	55
	57
	59
216-8632	29
	31
216-8634	29
	31
216-8690	108
216-8699	108
216-8703	108
216-8705	108
216-8708	108
216-8709	108
216-8710	108
216-8712	108
216-9043	122
	125
216-9053	122
	125
216-9068	1015
216-9069	1015
	1016
216-9086	122
	125
	212
216-9092	122
	125
216-9600	9
	11
216-9602	9
	11
216-9604	9
	11
216-9606	9
	11
216-9612	4
	5
216-9616	4
216-9618	9
	11
216-9637	63
216-9638	63
216-9643	63
216-9737	62
216-9743	62
216-9752	122
	125
216-9786	116
	119
216-9790	116
	119
216-9824	116
	119
216-9826	116
	119
216-9828	116
	119
216-9830	116
	119
216-9831	116
	119
216-9834	116
	119
216-9835	116
	119
217-0099	116
	119
217-0100	116
	119
217-0595	100
217-0596	100
217-0721	122
	125
217-0956	1015
	1016
217-1499	4
	5
	▶25
217-1573	45
	46
217-2211	4
	5
217-3609	403
	406
	409
217-3680	261
217-4154	456
	457
	458
217-4155	456
	457
	458
217-5293	424
	429
	434
217-6729	233
	235
217-7933	1138
217-8477	212
217-9038	212
217-9049	1151
	1153
218-0404	152
218-0861	1151
	1153
218-2401	1084
218-2439	210
218-2440	373
218-2792	93
	94
	97
218-2833	366
218-3171	243
	244
	245
218-3172	243
	244
	245
218-3173	243
218-3174	243
	244
	245
218-5003	1038
218-5004	1038
218-5005	1038
218-6245	469
218-6535	719
218-8836	▶172
218-8837	▶173
219-0302	1184
	1185
219-1790	801
	803
219-1803	9
	11
219-1818	63
219-2172	63
219-2418	366
219-2443	122
	125
219-2450	122
	125
219-2451	122
219-2452	122
219-2453	122
	125
219-2455	4
	5
	▶122
	▶125
219-2512	17
219-3311	285
	291
	297
219-3314	285
	291
	297
219-6314	152
219-6910	356
219-6911	355
219-8096	1145
	▶1158
219-8604	112
220-0186	704
220-0691	386
220-1241	36
220-1865	112
220-2657	706
	708
220-2680	684
220-2681	683
220-5557	112
	▶128
220-5573	1183
220-5574	1183
220-6151	55
220-7171	63
220-7925	239
	240
	241
	242
221-0839	351
	354
221-0840	351
221-0845	351
	354
221-1018	116
	119
221-2959	4
	▶39
221-3424	906

▶ PRIMARY REFERENCE

PART NUMBER INDEX

Part	Page	Part	Page	Part	Page	Part	Page
	907	223-5418	122	225-3800	380		1120
	908		125	225-3801	380		1124
	909	223-7937	1146	225-3861	1102		1128
221-3428	906		1147	225-4150	1183	226-3378	1086
	907	223-8276	285	225-4256	1184		1089
	908		291	225-4257	1185		1092
	909		297	225-4287	89		1096
221-4520	63	223-8333	454		90		1101
221-5278	63		455	225-4329	948		1106
221-5285	4	223-9067	▶682		949		1110
	5	223-9698	▶465		▶1050		1113
	▶63		467	225-5224	214		1116
221-5290	4		469		219		1120
	5	223-9699	▶466		223		1124
	▶53	223-9710	861	225-5438	46		1128
221-5369	4	223-9718	861	225-5439	46	226-3681	210
	5	223-9734	871	225-5441	46	226-5923	214
	▶68	224-0672	468	225-5454	46	226-6059	139
221-6835	4		469	225-6423	518	226-8202	413
	5		1185	225-7646	512	226-8778	212
	▶29	224-0759	831		515	226-8780	212
	▶31		832		518	226-9424	112
221-6858	4		▶871	225-7647	512	227-0104	70
	5	224-2263	99		515		73
	▶8	224-4536	▶177	225-7930	258		77
221-6863	108		704	225-8839	15		81
221-6864	108		707	225-9611	676		85
221-6872	33	224-5132	463		678	227-1185	675
221-6875	4	224-5152	463		746	227-1186	736
	5		464		748	227-1189	678
	▶33	224-7135	678		750		752
221-6990	4	224-7830	468	226-0294	380	227-1199	675
	5		469		1051	227-4321	94
	▶24		1184		1053		97
221-7115	4	224-8629	1086	226-0339	380		▶99
	5		1089	226-0341	1051	227-4376	70
	▶9		1092		1053		73
	▶11		1096	226-1186	349		77
221-8455	2		1101		▶351		81
222-0345	1145		1106	226-1240	1185		85
222-9020	99		1110	226-1242	1184	227-5317	▶926
222-9021	99		1113	226-1274	1185	227-7392	938
223-4717	974		1116	226-1275	1184		939
	975		1120	226-1832	960	227-7474	566
	976		1124	226-2036	15		568
	977		1128	226-2065	1110		571
	978	224-8945	1184		1113	227-9400	▶475
	980	224-8946	1185		1116		▶476
	981	224-9021	1184	226-2095	566	228-0819	711
	982	224-9022	1185		581		713
	984	224-9612	229		642		715
	985		231		647		▶716
	987	224-9855	1184		652		▶717
	989		1185		657	228-4710	351
	991	224-9929	456	226-2869	266		354
	993	225-0300	676		▶268	228-6050	157
	995		678	226-2951	1086		158
	997		746		1089	228-6051	155
	998		748		1092		156
	999		750		1096	228-6052	155
	1001		▶812		1101		156
	1002	225-0312	1185		1106		157
	1003	225-0313	1184		1110		158
223-4946	102	225-3281	485		1113	228-6053	155
	103	225-3283	487		1116		156

▶ **PRIMARY REFERENCE**

PART NUMBER INDEX

Part	Page
	157
	158
228-6054	155
	156
	157
	158
228-6056	155
	156
	157
	158
228-7372	479
228-7387	4
	5
	▶62
228-7418	4
	5
	▶23
228-7461	4
	5
	▶182
228-7477	212
228-7696	380
228-8943	116
	119
228-8956	116
	119
228-8960	116
	119
229-1494	1155
	1156
229-2935	303
229-2939	489
229-2940	303
229-2941	303
229-3555	9
	11
229-3557	9
	11
229-3558	9
	11
229-4953	▶324
229-4954	▶324
229-4955	▶324
229-4962	▶324
229-5039	328
229-5152	403
	406
	409
229-6257	214
	219
	223
229-6258	1086
	1089
	1092
	1096
	1101
	1110
	1113
	1116
	1120
	1124
229-9286	70
	73
	77
	81
	85
229-9380	453
229-9714	▶824
229-9715	824
230-0913	811
230-1340	142
	150
	210
230-1341	142
	150
230-3776	63
230-5771	414
	419
	424
	429
	434
230-7246	70
	73
	77
	81
230-8267	331
230-9666	▶325
230-9668	▶325
230-9669	▶325
230-9671	▶325
230-9672	▶326
230-9673	▶326
230-9674	▶326
230-9675	▶326
230-9676	▶327
230-9677	▶327
230-9678	▶327
230-9679	▶327
230-9681	▶328
231-0299	1022
231-0308	1022
231-0318	▶1022
	1025
	1027
231-0319	1021
	▶1025
231-0320	1021
	▶1027
231-0832	285
	607
231-1403	142
231-2995	358
231-2996	358
231-2997	358
231-3486	31
231-3497	18
231-4262	968
231-4457	122
	125
231-7692	285
	607
231-7694	285
	607
231-8047	63
231-8048	63
232-3368	115
232-3635	307
232-3649	307
232-3650	307
232-3677	307
232-3678	307
233-2483	4
	5
	▶115
233-2485	115
233-2549	512
	515
	518
	521
	524
	527
	530
	533
	535
	538
	542
	545
	554
	556
	562
	564
	▶674
233-2765	4
	5
	▶48
233-2944	824
233-6562	▶198
	1073
	1074
	1075
233-6563	▶201
	▶203
	▶205
	1075
233-6584	704
	▶706
233-6585	706
233-6745	1078
233-7387	1147
	▶1159
233-7388	1146
	▶1161
233-8008	1030
	1032
233-8012	1021
	▶1030
233-8013	1021
	▶1032
234-0636	68
234-1885	503
	505
234-1890	503
	505
	507
	510
234-4173	709
234-4243	279
234-4244	281
	283
234-4245	279
	281
	283
234-4246	239
	▶279
234-4247	242
	▶281
234-4248	239
	240
	241
	242
	▶283
234-4249	239
	242
	▶243
234-4250	239
	240
	▶244
234-4251	243
	244
	245
234-4252	244
	245
234-4253	▶239
234-4254	240
	▶242
234-4255	▶239
234-4256	240
	▶242
234-4258	▶239
	241
234-4264	▶240
	241
234-4325	▶154
	163
234-6110	68
234-6861	68
234-6862	68
234-7730	154
234-7731	154
234-8736	716
	717
234-8803	▶308
	309
234-8806	308
234-8808	308
234-8852	▶274
	333
234-8853	249
234-8854	▶249
	333
234-8855	274
234-8857	▶251
	▶253
	333
234-8858	251
	253
234-8859	▶275
	▶277
	333
234-8860	275
	277
234-8861	▶255
	333
234-8862	255
234-8863	251
234-8866	306
	▶333
234-8867	▶309
	333

▶ **PRIMARY REFERENCE**

PART NUMBER INDEX

Part	Page
235-2211	307
235-2279	1086
	1089
	1110
	1113
235-3575	597
	599
235-4546	1067
	1068
235-4589	4
	5
	▶41
	▶43
235-4605	721
	722
	▶813
235-5762	163
235-5811	239
	241
	242
	▶261
235-5917	116
	119
235-6281	116
	119
235-6331	5
	▶116
235-6343	4
	5
	▶34
235-6347	4
	5
	▶111
235-6362	4
	5
	▶183
235-6807	▶266
	306
235-6809	1
	▶394
235-6810	1
	▶403
	▶406
	▶409
235-6814	▶891
235-6820	1
	▶499
235-6822	1
	▶227
235-6823	▶485
	492
235-6824	▶487
	492
235-6830	492
	▶703
235-6833	1
	161
	▶168
	▶170
235-6835	1
	▶147
235-6841	▶891
235-6843	▶240
235-6845	1
	▶492
235-6846	▶240
235-6847	241
	▶285
235-6848	▶241
235-6850	▶241
235-6853	492
	▶974
	▶975
	▶976
235-6856	493
	▶977
	▶978
	▶980
235-6860	495
	▶981
	▶982
	▶984
235-6865	493
	▶985
	▶987
235-6868	493
	▶989
	▶991
235-6872	496
	▶993
	▶995
	▶997
235-6873	▶814
235-6875	952
	▶1163
235-6876	948
	949
	▶1165
235-6877	▶370
235-6879	▶371
235-6880	▶372
235-6884	▶454
235-6885	▶439
	▶442
	▶445
	454
235-6886	▶454
235-6887	▶414
	▶419
	▶424
	▶429
	454
	455
235-6892	1
	▶384
235-6895	1
	▶306
235-6896	349
	▶353
235-6897	▶349
235-6898	349
	▶354
235-6901	▶952
235-6904	▶948
235-6906	▶948
235-6912	▶892
235-6913	▶512
	▶515
	892
235-6914	▶892
235-6915	▶518
	▶521
	▶524
	892
235-6916	494
	495
	496
	497
	498
	▶550
	575
	576
	577
235-6917	496
	497
	498
	▶551
	▶553
235-6918	▶554
	▶556
235-6920	▶527
	▶530
	891
235-6922	▶533
	▶535
	▶538
	891
235-6923	494
	495
	497
	▶558
	578
	579
	580
235-6924	497
	▶559
	▶561
235-6925	▶562
	▶564
235-6926	▶161
235-6940	1
	▶382
235-6941	1
	▶688
	▶689
	▶690
235-6942	▶467
	▶469
	472
235-6944	492
	▶642
	▶647
	▶652
	▶657
235-6947	388
235-6948	388
235-6949	168
235-6950	368
235-6951	2
	▶368
235-6954	368
235-6955	▶349
235-6958	1
	▶1183
235-6959	▶1184
235-7195	1
	▶412
235-7200	1
	▶360
235-7201	360
	▶361
235-7202	361
235-7250	1
	▶363
235-7252	363
	▶364
235-7300	549
	▶815
	▶817
235-7301	815
	817
235-7340	815
	817
	819
235-7346	815
	817
	819
235-7350	815
	817
235-7353	815
	817
	819
235-7361	819
235-7390	815
	817
	819
235-7391	815
	817
	819
235-7392	815
	817
	819
235-7393	815
	817
	819
235-7396	815
	817
	819
235-7400	891
	892
	▶893
235-7401	893
	899
235-7450	891
	892
	▶895
	▶897
235-7451	895
	897
235-7469	895
235-7471	895
	897
235-7499	▶1
235-7500	▶819
	821
235-8084	947
	▶1139
235-8085	▶950
	1139
235-8086	950

▶ **PRIMARY REFERENCE**

PART NUMBER INDEX

Part	Page
235-8093	948
	949
	▶1073
235-8094	▶947
	1073
	1075
235-8095	947
235-8097	948
	▶1074
235-8810	283
235-8811	283
235-9631	279
	281
235-9691	4
	5
	▶28
235-9692	4
	5
	▶55
	▶57
	▶59
235-9694	108
235-9700	4
	5
	▶108
235-9719	4
	5
	▶61
235-9832	485
236-0473	54
236-0483	279
	281
236-0931	239
	240
	242
	▶262
236-1042	4
	5
	▶100
236-2295	922
	923
	924
	926
236-2541	251
	253
236-4229	1073
	1074
	1075
	▶1086
	▶1089
	▶1092
	▶1096
	▶1101
	▶1106
236-4230	1075
	▶1110
	▶1113
	▶1116
	▶1120
	▶1124
	▶1128
236-4232	1086
	1089
	1093
	1097
	1102
	1106
	1111
	1114
	1117
	1121
	1128
236-4233	922
	923
	924
	926
236-4234	1087
	1089
	1093
	1097
	1102
	1106
236-4236	214
	219
	223
236-4238	1042
236-4397	15
236-4593	▶947
	1074
236-4594	947
236-5197	1138
236-6923	1059
	1062
236-7493	270
	272
236-7495	239
	240
	241
	242
	▶270
236-7496	239
	▶272
237-0120	344
237-0292	703
	▶709
237-3856	198
	201
	203
	205
237-3943	1170
237-3970	▶921
	1170
237-5745	472
	▶634
	▶638
237-9271	412
	▶413
238-0077	227
238-0347	885
	888
238-2656	494
	496
	▶566
	▶568
	▶571
238-2797	▶155
	168
238-2798	▶156
	168
238-2866	1163
	1165
	1166
238-2867	1163
	1165
	1166
238-2868	1163
	1165
	1166
238-2869	1163
	1165
238-2870	1163
	1165
	1166
238-2871	1163
238-2872	1165
238-2922	353
238-4743	401
238-4832	▶726
	▶728
	746
	748
	750
	753
	754
	755
	756
	757
	758
238-4864	1087
	1089
	1093
	1097
	1102
	1106
	1111
	1114
	1117
	1121
	1128
238-5014	152
238-6658	▶90
	92
238-7794	354
238-8292	108
238-9593	319
	▶320
238-9594	320
239-1349	4
	5
	▶47
239-3322	1181
239-4233	1184
239-4234	1185
239-5598	1087
	1089
	1093
239-5607	246
239-5608	▶246
	333
239-5814	▶1145
239-6770	472
	▶477
239-6771	472
	473
	▶478
239-6989	1183
239-7001	▶825
239-7002	▶872
239-7003	▶826
239-7004	▶873
239-7006	▶874
239-7008	▶875
239-7394	▶472
239-7395	▶473
	476
239-7396	▶91
239-7397	▶92
239-8103	▶1042
	1043
239-8104	▶922
	925
239-9512	688
	689
	690
239-9515	▶730
	746
	748
	750
	753
	755
	757
239-9891	1181
240-0180	285
	291
	297
240-0205	21
240-1682	492
	493
	▶746
240-1686	493
	494
	▶748
240-1687	495
	496
	498
	▶750
240-1690	746
	748
	750
240-1725	676
	746
	748
	750
240-1863	726
	728
	730
	732
	734
	737
	739
	741
	744
240-1865	726
	728
	730
	732
	734
	737
	739
	741

▶ PRIMARY REFERENCE

PART NUMBER INDEX

Part	Page	Part	Page	Part	Page	Part	Page
	744		106	241-3358	183	242-0078	512
240-1866	726	240-8467	15	241-3359	183		518
	728	240-8660	746	241-4936	▶1136		521
	730		753		1137		527
	732		754	241-4939	1137		533
	734		759	241-4941	▶1137		535
	737	240-8661	472	241-5665	▶472		554
	739		748	241-5667	▶454		562
	741		755	241-5668	▶455	242-0081	662
	744		756	241-6172	303		665
240-1867	726		760	241-6189	540		668
	728	240-8662	750		541		671
	730		757		899	242-0092	▶492
	732		758	241-6190	540	242-0093	492
	734		761		541		▶581
	737	240-9450	499		899		▶583
	739	240-9451	360	241-6205	337		▶585
	741	240-9452	▶492	241-6400	▶2		▶587
	744	240-9453	▶493	241-6404	▶1185	242-0096	498
240-2562	1055		494	241-6481	642		▶998
240-2563	1055	240-9454	▶495		647		▶999
	1057		496		652		▶1001
240-2564	1055		497		657	242-0098	498
	1057	240-9455	▶493	241-6483	439		▶719
240-2565	1055	240-9456	▶493		442	242-0100	498
	1057	240-9457	▶496		445	242-0117	719
240-5335	625	240-9459	168		450		▶752
	628	240-9460	▶448	241-6486	662	242-0180	414
240-5843	499		454		665		419
240-6016	726		455		668		424
	728	240-9590	472		671		429
	730		▶732	241-6487	662		434
	732		748		665		439
	734		750		668		442
	737		755		671		445
	739		757	241-6488	642		450
	741	240-9592	739		647	242-0181	642
	744	241-0916	▶882		652		647
240-6017	726	241-0918	825		657		652
	728		▶848	241-6490	467		657
	730		872	241-6755	285	242-0182	642
	732	241-0919	▶849		291		647
	734		874		297		652
	737	241-0920	839	241-6995	413		657
	739		▶867	241-6997	413	242-0210	▶472
	741		882	241-8368	▶193	242-0265	642
	744	241-0921	▶910		1089		647
240-6832	726	241-0922	▶911		1092		652
	728	241-0923	▶839		1096		657
	730	241-0926	867		1101	242-0435	487
	737		▶868		1106	242-0443	487
	744	241-0931	868		1113	242-0575	642
240-7103	952	241-0932	868		1116		647
	▶1075	241-0934	▶827		1120		652
240-7104	▶952	241-0935	▶876		1124		657
	1075	241-0936	827		1128	242-0588	155
240-7105	▶952		▶850	241-8564	▶1055		156
240-7106	952		876		▶1057		157
	▶1141	241-0937	850		1073		158
240-7107	1141		▶851	241-9083	36	242-0968	642
240-7356	808	241-0943	▶494	241-9084	36		647
240-7956	1184		495	241-9085	6		652
240-7957	1185	241-0944	▶496		▶36		657
240-7966	▶1		497	241-9155	467	242-1830	262
240-8159	105	241-2826	331		469	242-5078	503

▶ **PRIMARY REFERENCE**

PART NUMBER INDEX

Part	Page
	505
242-5079	550
242-5080	503
	505
242-5276	503
	505
	507
	510
242-5284	503
	505
	507
	510
242-5285	503
	505
	507
	510
242-5286	503
	505
	507
	510
242-5287	503
	505
	507
	510
242-7205	▶142
	210
242-8360	454
242-8764	1159
	1161
242-8765	1159
	1161
242-8872	642
	647
	652
	657
242-9594	642
	647
	652
	657
242-9595	642
	647
	652
	657
242-9597	642
	647
	652
	657
242-9735	1
	▶6
242-9754	662
	665
	668
	671
242-9977	512
	515
	518
	521
	524
	527
	530
	533
	535
	538
	542
	545
	554
	556
	562
	564
	607
	610
	613
243-0062	1135
243-0063	1135
243-0515	▶265
	306
243-0516	▶152
243-0517	152
243-0536	384
243-0537	384
243-0543	814
243-0545	1
	▶380
243-0546	1
	▶348
243-0547	348
243-0548	▶472
243-0651	581
	583
	585
	587
	▶721
243-0652	721
243-0675	1
	▶303
243-0680	240
	▶607
243-0686	303
243-0689	70
	73
	77
	81
	85
243-0690	607
	610
	613
243-0933	467
	469
243-2249	49
243-2450	▶852
	854
243-2452	826
	▶854
	873
243-2453	875
243-3224	503
	505
	507
	510
243-3772	266
243-4166	▶162
243-4167	581
	583
	585
	587
243-4168	581
	583
	585
	587
243-4171	448
243-4274	▶157
	162
243-4275	▶158
	162
243-4398	▶463
	642
	647
	652
243-4914	550
243-4955	551
	553
243-4956	642
	647
	652
	657
243-5054	99
243-5057	94
	97
243-5062	103
243-5130	551
	553
243-5193	551
	553
	559
	561
243-5250	550
	558
243-5251	550
	558
243-6221	616
	619
	622
	625
	628
	631
243-6518	662
243-6521	616
	619
	622
	625
	628
	631
243-6523	589
243-6525	597
	599
	601
243-6627	414
	419
	424
	429
	436
244-0726	642
	647
	652
	657
244-0727	642
	647
	652
	657
244-0735	719
244-1118	566
	568
	589
	591
	593
244-1119	566
	568
	589
244-1122	540
244-1123	719
244-1422	616
	619
244-1434	616
	619
	622
	625
	628
	631
244-2643	512
	515
	518
	521
	524
	527
	530
	533
	535
	538
	542
	545
	554
	556
	562
	564
244-2983	616
	619
	622
244-3114	▶335
	342
244-3339	197
244-3595	597
	599
244-3649	848
	▶855
244-3650	852
	855
244-3651	852
	855
244-3812	662
	665
244-3813	662
	665
244-5086	512
	515
	518
	521
	524
	527
	530
	533
	535
	538
	542
	545
	554
	556
	562
	564
244-5828	662
	665
244-6619	688

▶ PRIMARY REFERENCE

PART NUMBER INDEX

Part	Page
244-6621	688
	689
	690
244-6645	662
	665
	668
	671
244-6646	662
	665
	668
	671
244-7133	558
244-7134	558
244-7177	597
	599
	601
244-7178	597
	599
	601
244-7181	566
	589
	591
244-7182	566
	589
	591
244-8945	498
	▶503
	▶505
244-8946	▶507
	▶510
244-8987	566
	589
	591
244-9501	527
	530
244-9502	527
	530
244-9503	559
	561
244-9504	559
	561
244-9505	507
	510
244-9506	507
	510
244-9507	507
	510
244-9508	507
	510
244-9513	554
	556
244-9514	554
	556
245-0873	562
	564
245-0874	562
	564
245-1229	533
245-1230	533
245-1238	1184
	1185
245-1441	719
245-1442	719
245-1443	719
245-4856	492
	▶662
	▶665
	▶668
	▶671
245-4857	492
	▶616
	▶619
	▶622
	▶625
	▶628
	▶631
245-4858	472
	493
	495
	496
	498
	▶589
	▶591
	▶593
	▶595
245-4861	495
	496
	498
	▶597
	▶599
	▶601
245-4885	616
	619
	622
	625
	628
	631
245-4886	616
	619
	622
	625
	628
	631
245-4887	566
	568
	589
	591
	593
245-4888	566
	568
	589
	591
	593
245-7320	▶147
245-8145	227
245-9088	1087
	1089
	1093
	1097
	1102
	1106
	1111
	1114
	1117
	1121
	1124
	1128
245-9808	332
246-2228	227
246-2230	227
246-2641	265
	711
	713
	715
	1038
246-3189	63
246-3263	182
247-0841	▶970
	998
	999
	1001
247-2971	676
	678
	746
	748
	750
247-4502	459
	▶461
247-4503	448
	▶459
247-4882	581
247-5571	553
	561
247-5902	719
247-8298	285
	291
	297
248-1159	709
248-1348	709
248-1353	709
248-1443	▶26
	▶27
248-2033	581
248-2821	581
	583
	585
	587
	973
248-4152	▶1137
248-5238	616
	619
	622
	625
	628
	631
248-5239	616
	619
	622
	625
	628
	631
248-5415	▶540
	575
	578
248-5416	▶541
	576
	579
248-5417	▶574
	577
	580
248-6326	619
	622
248-8882	414
	419
	424
249-0207	43
249-1039	414
	419
	424
	429
	434
	439
	442
	445
	450
249-1054	414
	419
	424
	429
	434
	439
	442
	445
	450
249-1225	414
	419
249-2757	1087
	1089
	1093
	1097
	1102
	1106
	1111
	1114
	1117
	1121
	1124
	1128
249-2826	9
	11
249-2827	9
	11
249-2895	168
	170
249-2896	168
249-2897	4
	▶119
249-7859	674
249-7863	674
249-9232	597
249-9233	597
250-0393	▶464
	657
250-1845	243
	244
250-2335	139
250-3247	403
250-4628	1078
	1081
250-6011	1159
	1161
250-6012	1159
	1161
250-6013	1159

▶ **PRIMARY REFERENCE**

PART NUMBER INDEX

Part	Page	Part	Page	Part	Page	Part	Page
	1161	251-9968	237		458		638
250-6148	461	252-0065	▶1182	252-8646	788	255-3735	634
	674		1183		971		638
250-6606	328	252-0066	1182		972	255-3736	634
250-6608	328	252-0302	719	252-8739	29		638
250-6612	▶328	252-0303	642	252-8958	227	255-3737	634
250-6614	▶328		647	253-0864	1183		638
250-8083	781		652	253-0865	1183	255-3739	634
250-8085	▶781		657	253-1222	998		638
	788	252-2362	285		999	255-3741	634
	998		291		1001		638
	999		297	253-1691	317	255-4311	704
250-8115	198	252-2363	566	253-1995	498	255-4692	94
	203		568		▶971		97
	205		571		▶972	255-8084	926
251-1221	998	252-2364	566	253-2111	214	255-9138	934
251-1478	1064		568		219		936
251-2368	198		571		223	256-0501	150
	201	252-4460	182	253-7792	▶233		151
	203	252-4575	1097		▶235	256-3786	1
	205		1102		472		▶3
251-3250	581		1106	254-1543	▶135	256-4715	▶137
	583	252-4990	135	254-2236	3	256-4929	634
	585		137		▶4	256-6803	150
	587		▶197	254-2271	▶237	256-6804	150
251-3251	581	252-5065	736		454		151
	583	252-5597	467		455	256-7264	▶141
	585		469	254-2399	▶328	256-7265	141
	587	252-6841	477	254-5630	▶734		▶175
251-4160	208		478		750	256-7266	175
251-4319	448	252-6849	477		757	256-7267	141
251-4336	29		▶479	254-5706	467		▶1072
	31	252-6850	478		469	256-7269	141
251-4389	448		▶481	254-9114	142		▶208
251-4390	448	252-6901	▶842	254-9115	142	256-7270	141
251-4391	448	252-6903	▶843	255-2355	106		▶209
251-4392	448	252-6904	842	255-2359	1	256-7271	375
251-4686	676		843		▶139	256-7516	347
	678		▶884	255-2743	1004	256-7517	347
	746	252-6905	▶870		1006	256-7518	▶347
	748		884		1013	256-8862	▶830
	750	252-6908	▶828	255-2748	1004	256-8863	▶878
251-5411	▶840	252-6909	▶829		1006	256-8864	830
251-5412	▶841	252-6910	828		1013		▶858
251-5413	840		829	255-3454	212		878
	841		▶877	255-3621	▶329	256-8865	858
	▶883	252-6911	▶857	255-3623	▶329		▶859
251-5414	▶869		877	255-3664	329	256-8869	859
	883	252-7154	414	255-3725	634		862
251-5417	903		419		638	256-8870	859
251-5418	▶903		424	255-3726	634		862
251-5641	382		429		638	256-8881	▶831
251-6182	214		434	255-3727	634	256-8882	▶832
	220	252-7173	106		638	256-8885	852
	223	252-7964	414	255-3728	634		855
251-6183	197		419		638	256-8888	▶833
251-8248	208		424	255-3729	634	256-8889	▶834
251-9918	726		429		638	256-8890	833
	728		434	255-3730	634		834
	732		439		638		▶879
	734		442	255-3731	634	256-8891	▶860
	739		445		638		879
	741		450	255-3733	634	256-8895	860
	744	252-8054	456		638	256-8896	860
	▶800		457	255-3734	634	256-8897	▶835

▶ PRIMARY REFERENCE

PART NUMBER INDEX

Part	Page
256-8898	▶836
256-8899	835
	836
	▶880
256-8900	▶861
	880
256-8910	▶837
256-8911	▶838
256-8912	837
	838
	▶881
256-8913	▶862
	881
257-0468	736
257-1660	819
257-3227	1062
257-5103	▶1146
257-5104	▶1147
257-6111	890
257-6113	▶890
257-7637	57
	59
257-7723	675
257-9363	150
258-0806	212
258-0807	4
	5
	▶212
258-2829	717
258-5462	4
	5
	▶35
258-6404	662
	665
	668
	671
258-8338	270
259-0373	35
259-1134	▶961
	▶963
	1073
	1074
	1075
259-1135	961
	963
259-1139	961
	963
259-1143	961
	963
259-1145	961
	963
259-1148	961
	963
259-1149	961
	963
259-1150	961
	963
259-1151	999
	1001
259-1152	961
	963
259-1154	961
	963
259-1155	961
	963
	965
259-1157	999
	1001
259-1158	793
	995
259-1159	786
	975
	976
	1002
259-1160	784
	978
	980
	1003
259-1161	982
	984
259-1164	991
259-1286	1055
	1057
259-1456	281
	283
259-4397	1072
259-4398	1072
259-4399	1072
259-4400	1072
260-3014	783
260-3015	752
260-3016	▶675
	752
260-3017	752
260-3018	▶736
	752
260-3024	▶783
	970
260-3025	970
260-3162	1072
260-3183	141
	▶1068
260-6150	662
	665
	668
	671
260-6163	550
	558
260-6171	403
	406
	409
260-6175	467
260-8590	676
	678
	726
	728
	730
	732
	734
	737
	739
	741
	744
	746
	748
	750
	▶808
260-9172	291
	297
	610
	613
261-0013	616
	619
	622
	625
	628
	631
261-0431	709
261-0434	709
261-0437	709
261-0438	709
261-0442	616
	619
	622
	625
	628
	631
261-3224	209
261-4173	709
261-5694	1079
	1080
261-6778	1057
261-7651	1146
	1147
261-7854	541
	899
261-7855	541
	899
261-7997	674
262-1044	9
	11
262-1045	9
	11
262-1046	9
	11
262-1388	975
	976
	978
	980
	982
	984
	987
	991
	995
	997
	999
	1001
	1002
	1003
262-1408	1015
	1016
262-1421	▶147
	150
	151
262-1618	264
262-2875	702
	▶707
262-5662	240
	▶610
	▶613
262-5670	241
	▶291
	▶297
262-9705	722
262-9706	566
	568
	571
	▶722
263-4869	209
263-5026	264
263-5443	414
	419
	424
	429
	434
263-5474	414
	419
	424
	429
	434
263-5513	707
	▶708
263-5810	494
	▶1002
263-5812	496
	▶1003
263-8475	439
	442
	445
	450
263-8476	414
	419
	424
	429
	434
263-9088	150
	▶1137
264-0153	▶329
264-0155	329
264-0437	503
	505
	507
	510
264-1131	503
	505
	507
	510
264-4297	223
264-4330	897
264-6819	6
	▶105
	▶106
264-7734	499
265-7591	312
265-7952	973
266-0652	1092
	1096
	1101
	1106
	1116
	1120
	1124
	1128
266-1467	▶176
	1135
266-1529	521
	524
266-1530	521
	524
266-2589	736

▶ **PRIMARY REFERENCE**

PART NUMBER INDEX

Part	Page
266-3439	784
	785
	786
	787
	▶968
266-7469	631
266-7545	494
	496
	▶973
266-8945	973
267-2809	159
267-3438	1002
267-3439	1003
267-5203	753
	754
	755
	756
	757
	758
	759
	760
	761
267-5219	6
	▶70
	▶73
	▶77
	▶81
	▶85
267-5295	312
267-5296	▶312
	328
267-7379	241
267-7380	241
	▶242
267-7418	241
	242
	▶245
268-0876	9
	11
268-1322	▶486
	846
	887
268-1520	297
268-1521	297
268-1601	426
	431
	434
	445
	450
268-1604	505
	510
268-2855	551
	559
268-4360	116
	119
269-3875	535
	538
269-3876	535
	538
270-0350	▶724
	726
	728
	730
	737
	744
270-2615	708
270-2616	708
270-5322	116
	119
270-7048	▶575
270-7049	▶576
270-7051	▶577
270-7052	▶578
270-7053	▶579
270-7054	▶580
270-7610	784
	786
	1002
	1003
270-7611	793
	991
	995
270-7612	975
	976
	978
	980
	982
	984
270-7613	961
	963
270-7615	961
	963
270-7616	961
	963
270-7618	1057
270-8670	249
	251
	253
	255
270-8685	▶329
270-8743	▶330
270-8746	▶330
270-8748	▶330
270-9348	329
	330
270-9350	330
270-9442	1084
271-1450	486
271-1529	486
271-2089	968
271-2099	968
271-6440	492
	▶702
272-0517	4
	5
272-3190	1057
272-9800	160
273-2998	41
	43
273-5018	973
273-5723	▶150
273-5725	▶151
273-9910	▶330
273-9911	▶331
274-6415	469
274-6720	116
274-6721	116
274-7513	669
	672
274-7514	669
	672
274-7519	406
274-7579	669
	672
274-9186	669
	672
275-5768	591
	593
	595
275-5769	665
	668
	671
275-6706	934
	936
275-7741	194
	▶195
275-9883	41
	43
276-5434	726
	728
	730
	737
	744
277-5748	▶331
278-2564	945
	946
278-5457	945
	946
278-8678	116
278-8682	116
278-9618	639
279-7127	231
279-7128	77
	81
	85
280-1996	492
	493
	▶753
	▶754
280-1997	493
	494
	▶755
	▶756
280-1998	495
	496
	498
	▶757
	▶758
280-2280	568
	571
	593
	595
280-2281	568
	571
	593
	595
280-2710	924
	957
280-6837	▶457
	1006
	1009
280-9178	515
	524
	530
	538
280-9714	893
	897
	899
281-1595	▶501
	846
	887
281-4546	219
281-4782	689
	690
281-4808	936
281-5619	231
281-7276	647
	652
	657
282-3882	▶331
282-4218	622
282-6928	885
	888
282-6935	885
	888
282-8856	99
282-9931	219
	223
283-2456	931
	934
283-2457	923
	▶931
283-3307	333
283-6406	1062
283-6407	1062
283-7724	568
	571
	593
	595
283-7725	568
	571
	593
	595
283-9380	▶676
	▶678
	753
	754
	755
	756
	757
	758
	759
	760
	761
283-9971	277
	▶392
283-9972	392
284-0506	▶923
	▶924
	925
284-8306	1062
286-2659	713
286-7131	625
286-7247	599
286-7248	599
286-9096	▶331

▶ PRIMARY REFERENCE

PART NUMBER INDEX

Part	Page
286-9097	▶332
286-9098	▶332
286-9099	▶332
286-9100	▶332
286-9101	332
286-9592	1022
287-0524	788
	789
	790
	791
	967
	972
287-2051	▶784
	▶785
	1003
287-2053	▶786
	▶787
	1002
287-2056	▶788
	1001
287-2058	▶789
	976
287-2060	472
	▶790
	980
287-2064	▶791
	984
287-2069	▶792
	987
287-2071	▶793
	997
287-8597	28
288-0422	31
288-3716	737
289-4785	487
289-4787	487
290-5825	397
	399
	401
291-3748	965
291-3749	965
291-3750	▶965
	1073
	1074
	1075
291-4226	625
291-8102	31
292-1301	▶945
	1156
292-1302	▶946
	1156
292-4110	35
292-6097	1081
292-6402	▶1080
	1081
292-9188	▶844
292-9189	▶845
292-9190	844
	845
	▶846
292-9191	846
	▶885
292-9192	885
292-9193	885
	888
292-9237	▶1081
	1153
293-2911	1138
293-5449	683
	684
293-6135	1102
	1106
	1124
	1128
293-6577	628
	631
294-0932	652
	657
294-2011	▶948
294-2014	▶949
294-2016	399
	401
294-2017	399
	401
294-2018	399
	401
294-5042	1153
294-9504	▶737
	754
	756
	758
	759
	760
	761
294-9505	678
295-1711	31
295-1915	628
	631
295-2982	601
295-4690	542
	545
295-4691	542
	545
295-4753	601
295-4831	571
	595
295-9744	3
	▶5
296-2927	571
	595
296-2928	571
	595
296-6031	683
	684
296-6814	▶542
	549
296-6815	▶545
	821
297-1209	469
	▶803
297-2470	▶547
	892
297-2778	547
	899
297-2779	547
	899
297-4717	409
297-9016	801
	803
298-3586	542
298-3587	542
298-3588	545
298-3589	545
298-3809	542
	545
298-6160	170
298-7736	587
299-5841	1016
	▶1018
299-7996	717
299-7997	717
299-7998	717
	3
300-1301	717
300-1961	▶258
300-1962	2
	▶369
300-2315	801
	803
300-6714	116
300-9915	1183
301-5241	797
301-5242	797
301-5243	797
302-0406	170
302-0408	170
302-4757	18
302-5195	101
303-2036	▶494
303-2037	▶494
303-2038	▶496
303-2039	▶497
303-2040	▶498
303-2042	▶495
303-2043	▶495
303-2044	▶497
303-2045	▶497
303-2046	▶549
303-2047	▶821
303-2048	▶892
303-4214	253
304-0358	1074
	1075
	▶1175
304-0359	1175
304-0360	948
	▶1074
304-0361	948
	949
	▶1075
304-1061	▶899
304-1137	219
304-3715	958
304-4008	224
304-8117	▶2
305-2215	246
	277
306-8142	924
	▶934
307-0205	▶939
	1179
307-1497	1106
307-3194	948
	▶1166
307-3195	1166
307-3196	1166
309-4570	▶905
309-5128	434
	450
309-5129	434
	450
309-6899	1183
309-8618	934
	936
310-1564	1134
	▶1135
310-1917	369
310-6543	▶450
	454
310-6544	▶434
	455
311-1471	▶847
311-1472	847
	▶887
311-1474	887
	▶888
311-1475	888
311-8271	▶739
	756
	758
	760
	761
311-8273	▶741
	758
	761
311-8279	▶744
	759
	760
	761
311-8547	▶936
311-8557	457
	458
312-5694	863
	865
313-4615	231
314-3211	▶863
314-3212	▶865
314-4018	953
316-1961	457
317-6905	492
	▶759
317-6907	493
	494
	▶760
317-6909	495
	496
	498
	▶761
318-2365	183
319-1625	▶458
	1011
321-5020	43
321-6951	458
322-3161	1080
323-9531	335
324-0444	31

▶ **PRIMARY REFERENCE**

PART NUMBER INDEX

Part	Page	Part	Page	Part	Page	Part	Page
324-8054	863						
	865						
325-9539	863						
325-9540	863						
325-9542	863						
	865						
325-9545	863						
325-9546	863						
325-9547	863						
	865						
325-9548	863						
	865						
326-1155	147						
326-1156	147						
329-7854	8						
329-7856	8						
330-3409	147						
330-3410	147						
332-7549	116						
333-9780	27						



© 2008 CATERPILLAR
ALL RIGHTS RESERVED

CAT, CATERPILLAR, THEIR RESPECTIVE LOGOS, “CATERPILLAR YELLOW” AND THE POWER EDGE TRADE DRESS, AS WELL AS CORPORATE AND PRODUCT IDENTITY USED HEREIN, ARE TRADEMARKS OF CATERPILLAR AND MAY NOT BE USED WITHOUT PERMISSION.

PRINTED IN U.S.A.

SEBP4156-30
VOLUME I
Pages 1-462

930G Wheel Loader

TWR1-Up