SEBP6893
May 2013

RUTHZIL TRATOR COMERCIAL DE PEÇAS LTDA 11 97083-6812 ROLANDO

Parts Manual

930K Small Wheel Loader

DYB1-Up (Machine)
E7A1-Up (Engine)

Powered By C7.1 Engine

Product and Dealer Information

Note: For product identification plate locations, see the section “Product Identification Information” in the Operation and Maintenance Manual.

Delivery Date: _____

Product Information

Model: _____

Product Identification Number: _____

Engine Serial Number: _____

Transmission Serial Number: _____

Generator Serial Number: _____

Attachment Serial Numbers: _____

Attachment Information: _____

Customer Equipment Number: _____

Dealer Equipment Number: _____

Dealer Information

Name: _____ Branch: _____

Address: _____

_____

_____

	Dealer Contact	Phone Number	Hours
Sales:	_____	_____	_____
Parts:	_____	_____	_____
Service:	_____	_____	_____

MEMORANDA

TABLE OF CONTENTS

NAME	PAGE
GENERAL INFORMATION	**A5**
REPAIR ALTERNATIVES	**A8**
SUPPLEMENTAL COOLANT ADDITIVES	A9
MAINTENANCE PARTS	**A10**
INDEX	**A13**
MACHINE ARRANGEMENT	**1**
CHASSIS AR	1
COMMON AR	1
OPTION AR-COLD WEATHER	2
OPTION AR-MACHINE	2
ENGINE ARRANGEMENT	**4**
ENGINE AR-PRIMARY	4
INSTALLATION AR-ENGINE	5
BASIC ENGINE	**6**
AIR COMPRESSOR GP	6
BELT TENSIONER GP	7
CAMSHAFT GP	8
COVER GP-SOUND SUPPRESSION	9
COVER GP-VALVE MECHANISM	10
CRANKSHAFT GP	11
CYLINDER BLOCK AS	12
CYLINDER BLOCK GP	13
CYLINDER HEAD AS	14
CYLINDER HEAD GP	15
DRAIN GP-ENGINE OIL	16
DRIVE GP-FAN	18
FLYWHEEL GP	19
HOUSING GP-FLYWHEEL	20
HOUSING GP-FRONT	21
JET GP-PISTON COOLING	23
LIFTING GP-ENGINE	24
MOUNTING GP-ALTERNATOR	25
MOUNTING GP-ENGINE	26
MOUNTING GP-ENGINE FLEXIBLE	27
PAN GP-OIL	29
PISTON & ROD GP	31
PULLEY GP-AUXILIARY DRIVE	32
PULLEY GP-CRANKSHAFT	33
ROCKER ARM GP	34
SUPPORT GP-POWER TAKE-OFF	37
LUBRICATION SYSTEM	**38**
BREATHER GP	38
FILLER GP-ENGINE OIL	39
FILTER GP-ENGINE OIL	41
GAUGE GP-OIL LEVEL (DIPSTICK)	42
LINES GP-TURBOCHARGER OIL	43
PUMP GP-ENGINE OIL	44
VALVE GP-FLUID SAMPLING	45
COOLING SYSTEM	**46**
BASE GP-OIL COOLER & FILTER	46
CONNECTION GP-HEATER	47
CONNECTION GP-WATER	48
COOLER GP-ENGINE OIL	49
FAN GP-SUCTION	50
LINES GP-RADIATOR	51
PUMP GP-WATER	53
RADIATOR & HYD OIL COOLER GP	54
TANK GP-COOLANT	56
AIR INLET AND EXHAUST SYSTEM	**57**
AIR CLEANER GP	57
EXTENSION GP-EXHAUST	59
LINES GP-AIR	60
LINES GP-TURBOCHARGER AIR	62
MANIFOLD GP-EXHAUST	63
MANIFOLD GP-INLET	64
MUFFLER GP	65
PRECLEANER GP	66
TURBOCHARGER GP	69
FUEL SYSTEM	**70**
FILTER GP-FUEL	70
FILTER GP-WATER SEP & FUEL	77
INJECTOR GP-FUEL	78
LINES GP-FUEL	79
LINES GP-FUEL INJECTION	85
PUMP GP-FUEL INJECTION	86
RAIL GP-FUEL	87
TANK & MTG GP-FUEL	88
TANK GP-FUEL	90
ELECTRICAL AND STARTING SYSTEM	91
ALTERNATOR GP-CHARGING	91
BATTERY & WIRING GP	94
BATTERY GP	101
BRACKET GP-MOUNTING	103
CONTROL GP-ENGINE ELECTRONIC	104
CONTROL GP-UNPROGRAMMED	105
ELECTRONICS AR-MACHINE	107
ELECTRONICS GP-COMMUNICATION	107
ELECTRONICS GP-IMPLEMENT	107
ELECTRONICS GP-MACHINE	107
ELECTRONICS GP-MONITOR	108
ELECTRONICS GP-POWER TRAIN	108
HARNESS AS-CAB	109
HARNESS AS-CHASSIS	111
HARNESS AS-CONSOLE	112
HARNESS AS-CONTROL	113
HARNESS AS-ENGINE	115

TABLE OF CONTENTS

NAME	PAGE
HARNESS AS-FRONT	117
HARNESS AS-HEATER & AIR COND	117
HARNESS AS-LIGHTING	118
HARNESS AS-OPERATOR CONTROLS	120
HARNESS AS-SENSOR	120
HARNESS AS-STARTING AID	121
HARNESS AS-STEERING	121
HARNESS AS-TRANSMISSION	122
HARNESS AS-WINDOW WIPER	122
HARNESS AS-WIRING	123
HEATER GP-JACKET WATER	126
INSTALLATION GP-COMMUNICATION	128
INSTALLATION GP-SECURITY	132
LAMP GP-FLOOD	134
LAMP GP-HEAD & SIGNAL	137
LAMP GP-WARNING BEACON	139
LIGHTING AR-ROADING	140
LIGHTING GP-AUXILIARY	141
LIGHTING GP-FLOOD	142
LIGHTING GP-ROADING	144
MOUNTING GP-ELECTRONIC CONTROL	146
RADIO GP-COMMUNICATION	147
SENSOR GP-ENGINE	148
SENSOR GP-POSITION	149
STARTING AID GP	151
STARTING AID GP-ETHER	152
STARTING MOTOR GP-ELECTRIC	154
SWITCH GP-DISCONNECT	155
SWITCH GP-MAGNETIC	156
SWITCH GP-START	157
SWITCH GP-TOGGLE	158
VALVE GP-ETHER STARTING	159
WIRING GP-CAB	160
WIRING GP-CAMERA	164
WIRING GP-CHASSIS	165
WIRING GP-CONSOLE	168
WIRING GP-ENGINE	170
WIRING GP-FRONT	173
WIRING GP-FUEL PUMP	175
WIRING GP-KICKOUT & POSITIONER	176
WIRING GP-SEAT	178
WIRING GP-START CONTROL	179
WIRING GP-TRANSMISSION CONTROL	180
POWER TRAIN	**182**
ACCUMULATOR GP-HYDRAULIC	182
AXLE AR-FIXED	184
AXLE AR-OSCILLATING	184
AXLE GP-OSCILLATING	184
BAFFLE GP-OIL	185
BRAKE & PLANETARY GP	186
CLUTCH GP	188
CONTROL GP-DIFFERENTIAL LOCK	189
DIFFERENTIAL GP	190
FILLER GP-POWER TRAIN OIL	192
FILTER GP-OIL	193
GEAR GP-BEVEL & PINION	194
HOUSING GP-AXLE	196
LINES GP-DIFFERENTIAL LOCK	200
LINES GP-HYDROSTATIC	202
LINES GP-TRANSMISSION FILTER	209
MOTOR & MTG GP-HYDROSTATIC	210
MOTOR GP-PISTON	212
MOUNTING GP-AXLE	216
MOUNTING GP-HYDROSTATIC PUMP	217
MOUNTING GP-RIM	218
MOUNTING GP-TRANSMISSION	219
POWER TRAIN AR	220
PUMP & MTG GP-GEAR	221
PUMP & MTG GP-HYDROSTATIC	222
PUMP GP-PISTON	223
RIM AR	225
RIM GP-DEMOUNTABLE	226
ROTATING GP-MOTOR	231
SHAFT GP-DRIVE	233
SHAFT GP-OUTPUT	235
SLIP JOINT GP	236
STOP GP-AXLE OSCILLATION	238
TIRE & RIM AR	238
TRANSMISSION AR	247
VALVE & MTG GP-SOLENOID	253
VALVE GP-CHECK	254
VALVE GP-FLUSHING	255
VALVE GP-MODULATING	256
VALVE GP-MOTOR CONTROL	257
VALVE GP-PILOT	258
VALVE GP-PUMP CONTROL	259
VALVE GP-SOLENOID & RELIEF	260
VALVE GP-TIRE	261
WHEEL & TIRE AR	262
WHEEL & TIRE GP	263
FRAME AND BODY	**265**
BOX GP-BATTERY	265
CONVERSION AR-ROADING	267
COUNTERWEIGHT GP	268
DOOR GP-ACCESS	271
EXTENSION GP-FENDER	273
FENDER AR	275
FENDER GP-FRONT	276
FRAME GP-LOADER	277
FRAME GP-REAR	278
GUARD GP-CRANKCASE	279
GUARD GP-DRIVE SHAFT	280
GUARD GP-FRAME	281

TABLE OF CONTENTS

NAME	PAGE
GUARD GP-LIGHTING	282
GUARD GP-POWER TRAIN	283
GUARD GP-RADIATOR	284
GUARD GP-REAR	287
HITCH GP-ARTICULATING	288
HOOD GP-ENGINE	290
LADDER GP	293
LINES GP-GREASE	295
LINK GP-STEERING FRAME LOCK	296
MOUNTING GP-BRACKET	297
PLATE GP-MOUNTING	298
BRAKING SYSTEM	**300**
ACCUMULATOR GP-BRAKE	300
BRAKE GP-PARKING	302
CONTROL GP-SERVICE BRAKE	305
LINES GP-BRAKE	306
STEERING SYSTEM	**311**
CYLINDER & MTG GP-STEERING	311
CYLINDER GP-STEERING	312
LINES GP-STEERING	313
PUMP GP-METERING	316
STEERING AR-STANDARD	317
HYDRAULIC SYSTEM	**318**
ACCUMULATOR GP-PILOT OIL	318
ACCUMULATOR GP-RIDE CONTROL	320
CONTROL AR-RIDE	322
CONTROL GP-RIDE	323
CYLINDER & MTG GP-LIFT	324
CYLINDER & MTG GP-TILT	325
CYLINDER GP-COUPLER	326
CYLINDER GP-LIFT	327
CYLINDER GP-TILT	328
FILTER GP-OIL	330
HYDRAULIC AR	333
HYDRAULIC AR-2 VALVE	333
HYDRAULIC AR-3 VALVE	334
HYDRAULIC AR-4 VALVE	335
LINES GP-COUPLER	336
LINES GP-FRONT	339
LINES GP-HYDRAULIC	340
LINES GP-HYDRAULIC FAN	349
LINES GP-LIFT CYLINDER	351
LINES GP-RIDE CONTROL	353
LINES GP-TILT CYLINDER	355
MOTOR & MTG GP-HYDRAULIC FAN	357
MOTOR GP-GEAR	361
MOUNTING GP-BANK VALVE	365
PUMP & MTG GP-BRAKE & HYD FAN	366
PUMP & MTG GP-IMPL & STEERING	367
PUMP GP-GEAR	368
PUMP GP-PISTON	370
ROTATING GP-PUMP	375
TANK & MTG GP-HYDRAULIC	377
TANK GP-HYDRAULIC	378
VALVE & LINES GP-COUPLER	380
VALVE & MTG GP-COUPLER	382
VALVE & MTG GP-HYDRAULIC	383
VALVE & MTG GP-RIDE CONTROL	385
VALVE GP-CONTROL	386
VALVE GP-DRAIN	390
VALVE GP-MAIN CONTROL	391
VALVE GP-MANIFOLD & RELIEF	394
VALVE GP-PILOT	396
VALVE GP-PUMP CONTROL	397
VALVE GP-SOLENOID	399
IMPLEMENTS	**402**
CONTROL GP-BUCKET	402
LINKAGE AR-FRONT	404
OPERATOR STATION	**405**
AIR CONDITIONER AR	405
AIR CONDITIONER GP	406
ARM GP-WINDOW WIPER	408
ARMREST GP	409
CAB AR-ENCLOSED ROPS	410
CAB GP-ENCLOSED ROPS	411
COMPRESSOR GP-REFRIGERANT	414
CONDENSER & MTG GP-REFRIGERANT	415
CONSOLE GP-OPERATOR	416
CONTROL & MTG GP-ELHYD	421
CONTROL GP-AIR & TEMPERATURE	422
CONTROL GP-ELECTROHYDRAULIC	424
CONTROL GP-JOYSTICK	427
CONTROL GP-STEERING	431
COVER GP-CAB	433
COVER GP-TANK	436
DOOR GP-CAB	437
DUCT GP-CAB AIR	443
FLOOR MAT GP	444
GUARD GP-WINDOW	445
HANDHOLD GP	447
HEATER & AIR CONDITIONER GP	448
INSTALLATION GP-RADIO	449
LINER GP-CAB	451
LINES GP-AIR CONDITIONER	456
LINES GP-HEATER	458
MIRROR GP-REAR VIEW	460
MONITOR & MOUNTING GP	462
MONITOR AR	463
MOTOR GP-WINDOW WIPER	464
MOUNTING GP-CAB	465
PAN GP-BACKREST	466

TABLE OF CONTENTS

NAME	PAGE
PANEL GP-INSTRUMENT	467
PEDAL GP-BRAKE	469
PEDAL GP-GOVERNOR	470
RADIO GP	471
SEAT & MOUNTING GP	474
SEAT BELT GP	476
SEAT GP	477
SEAT GP-SUSPENSION	479
SKIRT GP-CAB	481
SUSPENSION GP-SEAT	482
VALVE GP-WATER	484
VISOR GP-CAB	485
WINDOW GP-CAB	487
WINDOW GP-DOOR	488
WIPER & WASHER GP-WINDOW	490
WORK TOOLS	**492**
ADAPTER GP-COUPLER	492
ADAPTER GP-TIP	493
ARM GP-MATERIAL HANDLING	494
BUCKET AS-GENERAL PURPOSE	495
BUCKET AS-MATERIAL HANDLING	513
BUCKET GP-GENERAL PURPOSE	515
BUCKET GP-MATERIAL HANDLING	533
CARRIAGE GP-FORK	535
COUPLER AR-QUICK	536
COUPLER GP-QUICK	537
EDGE GP-CUTTING	538
EDGE GP-SEGMENT	541
FORK GP-PALLET	542
PROTECTOR GP-LINKAGE	552
TIP GP-LONG	553
TIP GP-SHORT	555
SERVICE EQUIPMENT AND SUPPLIES	557
BOX GP-TOOL	557
FILM GP	561
FILM GP-INTERNATIONAL	565
PLATE & FILM GP	566
PART NUMBER INDEX	**B1**

1. MACHINE IDENTIFICATION

Cat machines are identified by Product Identification Numbers (PIN). Some components included in a machine may be identified by Serial Numbers (S/N). Typical components that will be serialized include engines, transmissions, bulldozers, and rippers. The machine and engine are further identified by arrangement numbers and in some cases modification numbers. These numbers are shown on the product identification plate(s) and on the master plate in the operator's compartment.

Cat dealers need all of these numbers to determine accurate parts identification.

Effective First Quarter 2001 the Cat Product Identification Number (PIN) changed from 8 to 17 characters. In an effort to provide uniform equipment identification, Caterpillar and other construction equipment manufacturers are moving to comply with the latest version of the product identification numbering standard. Non-road machine PINs are defined by ISO 10261. The new PIN format will apply to all Cat machines and generator sets. The PIN plates and frame marking will display the 17 character PIN. The new format will look like the following:

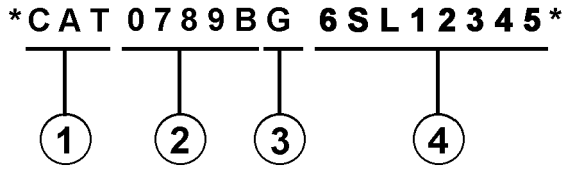

Where:

1. Caterpillar's World Manufacturing Code (characters 1-3)

2. Machine Descriptor (characters 4-8)

3. Check Character (character 9)

4. Machine Indicator Section (MIS) or Product Sequence Number (characters 10-17). These were previously referred to as the Serial Number.

Machines and generator sets produced before First Quarter 2001 will maintain their 8 character PIN format.

Components such as engines, transmissions, axles, etc. and work tools will continue to use an 8 character Serial Number (S/N).

2. ORDERING PARTS

⚠ WARNING

When replacement parts are required for this product Caterpillar recommends using Caterpillar replacement parts or parts with equivalent specifications including, but not limited to, physical dimensions, type, strength and material.

Failure to heed this warning can lead to premature failures, product damage, personal injury or death.

Quality Cat replacement parts are available from Cat dealers throughout the world. Their parts inventories are up to date and include all parts normally required to protect your investment in Cat machines. Dealers may offer repair kits or remanufactured parts to allow selection of the most effective repair alternative for a particular situation. When ordering parts, your order should specify the quantity, part number, part name, and the serial number/product identification number of the machine for which the parts are needed.

3. PARTS MANUAL ORGANIZATION

Product information in this manual is presented as "information elements" that represent all of the components for the specific model. Engine Arrangement and Seat Group are examples of information elements. The information elements are organized alphabetically by part name and secondarily by part number within each major section of the manual.

4. TABLE OF CONTENTS

A table of contents (TOC) is found at the beginning of the manual. The TOC lists each section of the manual with a complete list of all information elements organized as they appear in the manual. Page numbers are provided for quick reference to detailed parts identification illustrations and serviceable consist lists.

5. MAINTENANCE PARTS INDEX

The Maintenance Parts Index, located near the beginning of the manual, references most frequently used maintenance part numbers, providing description, quantity, usage and page number. This information is organized alphabetically by part description.

6. INDEX

The index located near the front of the manual is an alphabetical listing of all information elements included in the manual. Page numbers are provided for quick reference to detailed parts identification illustrations and serviceable consist lists.

7. PART NUMBER INDEX

A numerical index listing all part numbers and the corresponding page number(s) appears at the back of the manual.

8. CAPTIONS

Captions located at the beginning of each information element identify the part number and part name along with additional descriptive information. PIN and S/N information found in each caption should be used to select correct information for a specific machine. Field replacement options, identification of optional attachment components, and where used ("part of") information is also provided.

The first line of a caption is shown in larger type font to indicate the beginning of an information element. Captions for additional pages that may be required to illustrate an information element will be shown in standard type font and will include the term *(contd.)* .

9. NON-SERVICED PARTS

In some instances it is necessary to display non-serviced parts that are a link to a lower level serviceable consist lists. These non-serviced part numbers are shown in *italic* type indicating that they are not available.

10. PARTS LIST REFERENCE NUMBERS

Numbers shown in the Ref No column correspond to numbers used in the associated graphic(s). An alphabetic suffix may be added to a reference number to identify lower level consist items. Numbers shown in the Graphic Ref column refer to the graphic number identifier displayed in the lower left corner of each illustration. The Graphic Ref number may be used in combination with the item Ref No to determine the correct part number. There may be intentional omission of a Ref No in a consist list as information is updated to reflect the latest serviceable part numbers.

11. INDENTED PART NAMES

When a part name is indented in a parts list, it is part of (included in) the group or assembly under which it is indented.

12. ILLUSTRATION REFERENCE LETTERS

When necessary, illustrations contain reference letters (A, B, C etc.) that are intended to track lines and harnesses from one point to another. They are also used to show where to reconnect illustrations that have been separated.

13. ABBREVIATIONS AND SYMBOLS

O.D. – Outside Diameter
I.D. – Inside Diameter
A – Not Part Of This Group
B – Use As Required
C – Change From Previous Type
D – Order By The Meter
E – Order By The Centimeter
F – Not Shown
G – Order By The Inch
I – Refer To Hydraulic Information System
M – Metric Part
R – Remfg Part May Be Available
Y – Separate Illustration
Z – Not Serviced Separately

14. DESCRIPTION OF TYPE CHANGES

Type - A type is defined as any configuration change that requires an additional Information Element for an Arrangement, Group, or Assembly. If serial number breaks for types are not available, a type # (Type 1, Type 2, etc.) will be displayed in the caption. These "type" changes are identified with a "C" note (change from previous type) in the Parts List. Only the "types" that apply to this Parts Manual will be included. Additional types may exist causing "C" notes to appear on an Information Element when no other types are shown.

15.<END>

This symbol indicates the end of an information element.

NOTE:

Continuing improvement and advancement of product design may cause changes to your machine which may not be included in this publication. Whenever a question arises regarding your Cat product or this publication, please consult your Cat dealer for the latest available information.

FRAME AND BODY

8E-3299 PLATFORM GP-CAB

PIN 38K1-99999

8MS-7253 100090751

NOTE	REF NO	GRAPHIC REF	PART NUMBER	QTY	PART NAME (1 2 3 4 5 6 PRODUCT LEVEL)	SEE PAGE
	1	1	3T-3963	1	PLATE AS	
	2	1	5H-3962	25	BOLT (3/8-16X.750IN)	
	3	1	6P-1075	41	WASHER-HARD (3MM THK)	
	4	1	9P-1444	2	SUPPORT AS-FOOT	
	5	1	5P-2229	12	BOLT (1/2-13X1IN)	
		1	9z-	12	WASHER-HARD (4MM THK)	
	6	1	9E-8134		COVER AS-LH	
		1	9F-2979	6	NUT-WELD (3/8-16 THD)	
		1	1F-9189	1	CLIP	
	7	1	7S-2411	4	COVER	
	8		5J-0468	19	SCREW-HEAD (3/8-16X.87SIN)	
	9	1	9E-0974	1	COVER	
		1	9E-8976	1	GASKET	
	10	1	9E-3248	1		
		1	9E-3250	1	GASKET	
	11	1	3T-3930	1	HANDHOLD	
	12	1	9E-8978	1	COVER AS	
		1	9F-2979	6	NUT-WELD (3/8-16 THD)	
		1	9E-8979	1	GASKET	
	13	1	7T-0131	1	FLOORPLATE AS	
		1	1F-0748	4	NUT-WELD (1/2-13 THD)	
	14	1	7V-8067	1	PLUG-BUTTON	
	15	1	7T-0136	1	PLATE AS	
		1	9F-2979	5	NUT-WELD (3/8-16 THD)	
	16	1	7T-8066	1	COVER	
		1	7T-0779	1	GASKET	
	17	1	3T-3951	1	PLATE AS	
	18	1	9T-9364	4	BOLT (1/4-20X.62SIN)	
M		1	9T-4296	4	WASHER-HARD (2MM THK)	
	19	1	6I-9464	1	FLOOR MAT	
	20	1	9E-8946	1	MODULE AS-OPERATOR	
	21	1	3T-3934	1	HANDHOLD	
	22	1	9P-8571	2	PLUG	
	23	2	9T-9364	4	BOLT (1/4-20X.62SIN)	
M		2	9T-4296	4	WASHER-HARD (2MM THK)	
	24	2	5H-3962	17	BOLT (3/8-16X.750IN)	
	25	2	6P-1075	21	WASHER-HARD (3MM THK)	
	26	2	7T-0136	1	SEAL	
	27	2	7X-0375	2	BOLT (3/4-10X5IN)	
		2	7X-0682	2	WASHER-HARD (6MM THK)	
	28	2	3T-3482	2	PLATE	
	29	2	3T-8290	1	PLATE AS	
		2	7S-4028	6	SPACER	
	30	2	3T-8281	1	SEAL	
	31	2	7S-8017	1	GASKET	
	32	2	7S-8016	1	COVER AS	
		2	2R-2376	2	WASHER	
		2	6P-0626	2	SCREW-KNURLED	
	33	2	9W-3429	1	COVER	
	34	2	8E-9697	1	COVER	
	35	2	9D-3091	8	SCREW-SOCKET HEAD	
	36	2	9W-3142	8	MOUNTING	
	37	2	9W-9527	2	PLATE	
	38	2	7X-0390	2	BOLT (7/8-9X6IN)	
		2	7X-0672	2	WASHER-HARD	
	39	2	4L-6454	4	BOLT (3/8-16X1.0IN)	
	40	2	3T-4788	1	COVER	

12 FRAME AND BODY 1 of 4 SELP4570-01

FRAME AND BODY

8E-3299 PLATFORM GP-CAB (contd.)

100090751

NOTE	REF NO	GRAPHIC REF	PART NUMBER	QTY	PART NAME (1 2 3 4 5 6 PRODUCT LEVEL)	SEE PAGE
	41	2	8E-2515	1	COVER	
	42	2	7T-0134	1	PLATE	
	43	2	7T-0128	1	GASKET	
	44	2	7S-9724	1	GASKET	
	45	2	7S-8723	1	COVER	
	46	2	6V-1960	2	PLUG-BUTTON	

M-METRIC PART

SELP4570-01 2 of 4 FRAME AND BODY 13

FRAME AND BODY

8E-3299 PLATFORM GP-CAB (contd.)

100090751

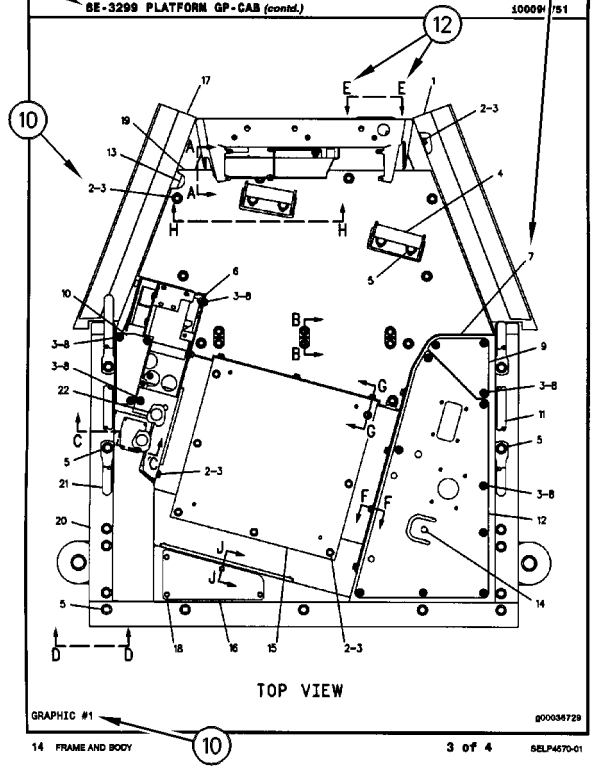

14 FRAME AND BODY 3 of 4 SELP4570-01

FRAME AND BODY

8E-3299 PLATFORM GP-CAB (contd.)

100090751

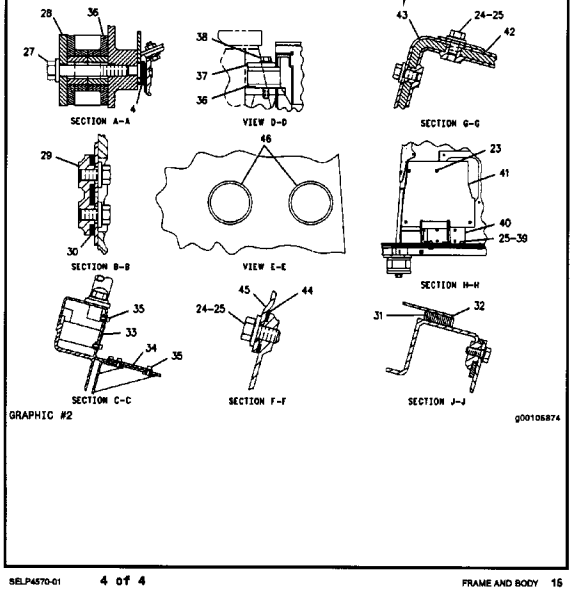

SELP4570-01 4 of 4 FRAME AND BODY 15

REMANUFACTURED COMPONENTS

As an option when making repairs consider Cat Remanufactured Components. Components that are available through the Cat Remanufactured Program are identified three ways in the parts book:

- with the letter R in the note field of the parts list
- with an R* at the beginning of the first line of the caption
- with an *R at the end of the first line of the caption

Typical components included in the Remanufacturing Program include:

ALTERNATORS
CONNECTING RODS
CRANKSHAFTS - UNDERSIZE
CRANKSHAFTS - UPGRADE TO NEW
CYLINDER HEADS
ELECTRONIC CONTROL MODULES (ECM)
ELECTRONIC SENSORS
FUEL INJECTORS
FUEL NOZZLES
FUEL PUMPS
GOVERNORS
OIL PUMPS
PISTONS
SHORT BLOCKS
STARTERS
TURBOCHARGERS - COMPLETE
TURBOCHARGER CARTRIDGES
WATER PUMPS

Cat Remanufactured engines for many engine arrangements are also available.

SUPPLEMENTAL COOLANT ADDITIVES

CUSTOMER BENEFITS:

Protects against cavitation, foam, erosion, corrosion, and scale buildup in cooling systems.

- Provides measured coolant conditioner.

DESCRIPTION:

Additives deplete from the coolant with normal operation. For this reason, Supplemental Coolant Additives (SCA) must be added to all heavy duty coolants at regular intervals. In addition, when not using a fully formulated, pre-charged antifreeze, like Cat DEAC, an initial charge of SCA must be added to the cooling system. The amount of SCA added to the system is dependent on the capacity of the system.

The SCA for initial fill is provided as a liquid. SCA's for maintenance intervals are available in liquid form and as a spin-on element. (No Spin-on available for 3600 Family of Engines)

NOTE:

The amount of SCA added at initial fill is not the same as the amount added at maintenance intervals.

The coolant additive elements can be used with any ethylene or propylene glycol type antifreeze which meets ASTM D4985 or ASTM D5345 Specifications.

NOTE:

For use with standard heavy duty coolant only, not for use with Extended Life Coolant.

PARTS NEEDED:

Cooling System Capacity		Liquid SCA at Initial Fill	Liquid SCA at Maintenance*	Spin-on SCA Maintenance Element*
Liters	Gallons			
22-30	(6-8)	3P-2044 (1)	6V-3542 (1)	111-2370 (1)
30-38	(8-10)	3P-2044 (1) 6V-3542 (1)	111-2372 (1)	111-2369 (1)
38-49	(10-13)	3P-2044 (1) 8T-1589 (1)	111-2372 (1)	111-2369 (1)
49-64	(13-17)	3P-2044 (2)	8T-1589 (1)	9N-3368 (1)
64-83	(17-22)	3P-2044 (2) 8T-1589 (1)	111-2372 (1) 6V-3542 (1)	111-2371 (1)
83-114	(22-30)	3P-2044 (3) 8T-1589 (1)	3P-2044 (1)	9N-3718 (1)
114-163	(30-43)	3P-2044 (5)	3P-2044 (1) 6V-3542 (1)	111-2371 (2)
163-242	(43-64)	3P-2044 (8)	3P-2044 (2)	9N-3718 (2)

** Normal maintenance period is 250 hrs. See your Operation and Maintenance Manual for complete coolant maintenance instructions.*

( ) Indicates quantity required.

MAINTENANCE PARTS

DESCRIPTION	PART NUMBER	QTY	WHERE USED	PAGE
AIR INLET AND EXHAUST SYSTEM				
FILTER ELEMENT AS-AIR (PRIMARY)	256-7902	1	AIR CLEANER GP	58
FILTER ELEMENT AS-AIR (SECONDARY)	256-7903	1	AIR CLEANER GP	58
BASIC ENGINE				
CAP-BREATHER (VALVE MECHANISM)	380-9615	1	COVER GP-VALVE MECHANISM	10
GASKET-OIL PAN	351-4749	1	PAN GP-OIL	29
COOLING SYSTEM				
CAP AS-COOLANT TANK	369-6549	1	TANK GP-COOLANT	56
GASKET-FILTER	277-2526	1	BASE GP-OIL COOLER & FILTER	46
GASKET-WATER REGULATOR (TEMPERATURE)	281-8744	1	CONNECTION GP-WATER	48
REGULATOR AS	417-7782	1	CONNECTION GP-WATER	48
ELECTRICAL AND STARTING SYSTEM				
BELT-SERPENTINE	350-8742	1	ALTERNATOR GP-CHARGING	93
BELT-SERPENTINE (ALTERNATOR)	350-8742	1	ALTERNATOR GP-CHARGING	92
CAP AS	180-9900	1	WIRING GP-CAB	160
CAP AS-FILLER (BATTERY)	123-1373	6	BATTERY GP	101
		6	BATTERY GP	102
CIRCUIT BREAKER AS (15-AMPERE, MANUAL RESET)	280-2709	1	WIRING GP-CAB	160
CIRCUIT BREAKER AS (20-AMPERE, MANUAL RESET)	280-2710	2	WIRING GP-CAB	160
CIRCUIT BREAKER AS (30-AMPERE)	280-2712	1	WIRING GP-CAB	160
CIRCUIT BREAKER AS (40-AMPERE)	171-2205	1	WIRING GP-CHASSIS	165
CIRCUIT BREAKER AS (70-AMPERE)	171-2209	2	WIRING GP-CHASSIS	165
FILTER (ETHER START)	358-4889	1	VALVE GP-ETHER STARTING	159
FILTER-FOAM (ALTERNATOR AIR)	364-8305	1	ALTERNATOR GP-CHARGING	92
FLASHER AS (12/24-VOLT)	380-1887	1	WIRING GP-CAB	160
FUSE (10-AMPERE)	113-8490	19	HARNESS AS-CAB	109
FUSE (15-AMPERE)	113-8491	8	HARNESS AS-CAB	109
FUSE (20-AMPERE)	113-8492	4	HARNESS AS-CAB	109
GLOW PLUG (24-VOLT)	361-9875	6	STARTING AID GP	151
KEY (BATTERY DISCONNECT)	8H-5306	1	SWITCH GP-DISCONNECT	155
KEY AS-ELECTRONIC (SECURITY)	206-5162	2	INSTALLATION GP-SECURITY	132
LAMP (24-VOLT, 21-WATT)	242-0588	1	LAMP GP-HEAD & SIGNAL	137
LAMP (24-VOLT, 21-WATT) (TURN SIGNAL)	242-0588	1	LAMP GP-HEAD & SIGNAL	138
LAMP (24-VOLT, 5-WATT)	130-3515	1	LAMP GP-HEAD & SIGNAL	137
LAMP (24-VOLT, 5-WATT) (FLOODLIGHT)	130-3515	1	LAMP GP-HEAD & SIGNAL	138
LAMP (24-VOLT, 75/70-WATT)	9X-3465	1	LAMP GP-HEAD & SIGNAL	137
LAMP (24-VOLT, 75/70-WATT) (HIGH, LOW BEAM)	9X-3465	1	LAMP GP-HEAD & SIGNAL	138

MAINTENANCE PARTS

DESCRIPTION	PART NUMBER	QTY	WHERE USED	PAGE
LAMP (24-VOLT, HID)	290-8160	1	LAMP GP-FLOOD	134
LAMP-HALOGEN (24-VOLT, 70-WATT) (FLOODLIGHT)	351-9918	1	LAMP GP-FLOOD	135
	9X-3463	1	LAMP GP-FLOOD	136
FUEL SYSTEM				
CAP AS-FUEL (FILLER)	370-9009	1	TANK & MTG GP-FUEL	88
CAP-FUEL (FILLER)	304-3885	1	TANK & MTG GP-FUEL	88
FILTER AS-WATER SEP & FUEL	391-3764	1	FILTER GP-WATER SEP & FUEL	77
FILTER ELEMENT-FUEL	360-8960	1	FILTER GP-FUEL	70
STRAINER (FUEL TANK)	393-1101	1	TANK & MTG GP-FUEL	88
HYDRAULIC SYSTEM				
BREATHER (HYDRAULIC TANK)	258-2829	1	TANK GP-HYDRAULIC	378
CAP (GAS VALVE)	224-5132	1	ACCUMULATOR GP-PILOT OIL	319
CAP AS	6V-9829	2	LINES GP-COUPLER	338
		6	LINES GP-HYDRAULIC	341
CAP AS-FILLER (HYDRAULIC TANK)	142-8937	1	TANK GP-HYDRAULIC	378
FILTER ELEMENT AS-OIL	348-1861	1	FILTER GP-OIL	331
SCREEN (HYDRAULIC OIL)	299-7997	1	TANK GP-HYDRAULIC	378
SCREEN (PILOT MANIFOLD)	6E-5066	1	VALVE & MTG GP-COUPLER	382
SCREEN-SUCTION	255-0759	1	TANK GP-HYDRAULIC	378
STRAINER (HYDRAULIC TANK)	206-8818	1	TANK GP-HYDRAULIC	378
STRAINER (RETURN)	311-3478	1	TANK GP-HYDRAULIC	378
STRAINER AS (HYDRAULIC TANK)	262-5689	2	TANK GP-HYDRAULIC	378
LUBRICATION SYSTEM				
CAP-OIL FILLER (ENGINE)	130-9888	1	FILLER GP-ENGINE OIL	39
FILTER-ENGINE OIL	269-8325	1	FILTER GP-ENGINE OIL	41
FILTER-FUMES DISPOSAL	273-5711	1	FILLER GP-ENGINE OIL	40
OPERATOR STATION				
BLADE AS-WIPER (800-MM) (FRONT)	189-8610	1	WIPER & WASHER GP-WINDOW	490
CAP (VENTED)	388-9379	1	WIPER & WASHER GP-WINDOW	490
DRYER-REFRIGERANT (IN-LINE)	257-3226	1	LINES GP-AIR CONDITIONER	456
FILTER ELEMENT-CAB AIR	353-5058	1	AIR CONDITIONER GP	406
	365-7606	1	AIR CONDITIONER GP	406
LAMP (24-VOLT, 10-WATT)	259-1286	1	LINER GP-CAB	451
LAMP AS (AMBER, LED, 24-VOLT)	250-2298	1	LINER GP-CAB	453
SCREEN AS	341-9825	1	GUARD GP-WINDOW	445
SCREEN AS (LH)	341-9827	1	GUARD GP-WINDOW	445
SCREEN AS (RH)	341-9828	1	GUARD GP-WINDOW	445
SEAL-INTEGRAL	327-0282	1	LINES GP-AIR CONDITIONER	456
	327-0283	3	LINES GP-AIR CONDITIONER	456
SEAT BELT GP (RETRACTABLE, 3-IN)	222-0345	1	SEAT & MOUNTING GP	475
SEAT BELT GP (RETRACTABLE, 76-MM)	241-6149	1	SEAT & MOUNTING GP	474

MAINTENANCE PARTS

DESCRIPTION	PART NUMBER	QTY	WHERE USED	PAGE
POWER TRAIN				
BREATHER AS (TRANSMISSION)	9G-5127	1	TRANSMISSION AR	247
CAP (GAS VALVE)	224-5132	1	ACCUMULATOR GP-HYDRAULIC	182
		1	ACCUMULATOR GP-HYDRAULIC	183
CAP AS	9T-4367	1	VALVE GP-MOTOR CONTROL	257
		1	VALVE GP-PILOT	258
CAP-FILL (POWER TRAIN OIL)	137-6727	1	FILLER GP-POWER TRAIN OIL	192
FILTER-OIL (ADVANCED EFFICIENCY) (TRANSMISSION)	144-6691	1	FILTER GP-OIL	193
PLUG-DRAIN (MAGNETIC)	9X-2230	2	TRANSMISSION AR	247
PLUG-MAGNETIC (AXLE HOUSING)	5P-4484	1	HOUSING GP-AXLE	196
		1	HOUSING GP-AXLE	198

INDEX

NAME PAGE

A

ACCUMULATOR GP-BRAKE–CHARGED 300
ACCUMULATOR GP-BRAKE–UNCHARGED. 301
ACCUMULATOR GP-HYDRAULIC–CHARGED. . . 182
ACCUMULATOR GP-HYDRAULIC–UNCHARGED 183
ACCUMULATOR GP-PILOT OIL–CHARGED 318
ACCUMULATOR GP-PILOT OIL–UNCHARGED 319
ACCUMULATOR GP-RIDE CONTROL–CHARGED 320 321
ACCUMULATOR-REFRIGERANT 456
ADAPTER GP-COUPLER 492
ADAPTER GP-TIP 493
ADJUSTER GP-CONTROL 421
AIR CLEANER GP 57 58
AIR COMPRESSOR GP 6
AIR CONDITIONER AR 405
AIR CONDITIONER GP 406
ALTERNATOR GP-CHARGING 91 93
ALTERNATOR GP-CHARGING (24-VOLT, 115-AMPERE) 93
ALTERNATOR GP-CHARGING–24-VOLT, 150-AMPERE. 92
ARM GP-MATERIAL HANDLING 494
ARM GP-WINDOW WIPER 408
ARMREST GP–LH 409
ATOMIZER GP-ETHER. 152
AXLE AR-FIXED–FRONT, DIFFERENTIAL LOCK. 184
AXLE AR-OSCILLATING–REAR, STANDARD DIFFERENTIAL 184
AXLE GP-OSCILLATING–REAR, STANDARD DIFFERENTIAL 184

B

BAFFLE GP-OIL–TRANSMISSION. 185
BASE GP-OIL COOLER & FILTER 46
BATTERY & WIRING GP 97 100
BATTERY & WIRING GP–DISCONNECT SWITCH 94
BATTERY & WIRING GP–HEAVY-DUTY 100
BATTERY GP (12-VOLT, MAINTENANCE FREE, WET) 101 102
BATTERY GP–12-VOLT, MAINTENANCE FREE, WET. 101
BATTERY GP–HEAVY-DUTY 102
BEARING GP-PILLOW BLOCK (DRIVE SHAFT) 233
BELT TENSIONER GP. 7
BELT-SERPENTINE. 93
BELT-SERPENTINE (ALTERNATOR) 92

NAME PAGE

BLADE AS-WIPER (800-MM) (FRONT) 490
BOX GP-BATTERY 265 266
BOX GP-TOOL 557 559
BRACKET GP-MOUNTING 103
BRAKE & PLANETARY GP–SINGLE DISC 186
BRAKE GP-PARKING. 302 303
BREATHER (HYDRAULIC TANK) 378
BREATHER AS (TRANSMISSION) 247
BREATHER GP 38
BUCKET AS-GENERAL PURPOSE 495 496 497 498 499 500 501 503 504 505 506 507 508 509 510 511 512
BUCKET AS-GENERAL PURPOSE–PIN-ON 502
BUCKET AS-MATERIAL HANDLING 513 514
BUCKET GP-GENERAL PURPOSE 515 516 517 518 519 520 521 522 523 524 529 530 531 532
BUCKET GP-GENERAL PURPOSE–PIN-ON 525 526 527 528
BUCKET GP-MATERIAL HANDLING 533 534

C

CAB AR-ENCLOSED ROPS 410
CAB GP-ENCLOSED ROPS 411 412
CAMERA GP (115-DEG, COLOR) 164
CAMSHAFT GP 8

INDEX

NAME	PAGE
CAP (GAS VALVE)	182, 183, 319
CAP (VENTED)	490
CAP AS	160, 257, 258, 338, 341
CAP AS-COOLANT TANK	56
CAP AS-FILLER (BATTERY)	101, 102
CAP AS-FILLER (HYDRAULIC TANK)	378
CAP AS-FUEL (FILLER)	88
CAP-BREATHER (VALVE MECHANISM)	10
CAP-FILL (POWER TRAIN OIL)	192
CAP-FUEL (FILLER)	88
CAP-OIL FILLER (ENGINE)	39
CARRIAGE GP-FORK	535
CHASSIS AR	1
CIRCUIT BREAKER AS (15-AMPERE, MANUAL RESET)	160
CIRCUIT BREAKER AS (20-AMPERE, MANUAL RESET)	160
CIRCUIT BREAKER AS (30-AMPERE)	160
CIRCUIT BREAKER AS (40-AMPERE)	165
CIRCUIT BREAKER AS (70-AMPERE)	165
CLUTCH GP	188
COMMON AR	1
COMPRESSOR GP-REFRIGERANT	414
CONDENSER & MTG GP-REFRIGERANT	415
CONDENSER GP-REFRIGERANT	415
CONNECTING ROD GP	31
CONNECTION GP-HEATER	47
CONNECTION GP-WATER	48
CONNECTOR GP	204
CONSOLE GP-OPERATOR	416
CONSOLE GP-OPERATOR–FRONT	419
CONTROL & MTG GP-ELHYD	421
CONTROL AR-RIDE	322
CONTROL GP-AIR & TEMPERATURE	422
CONTROL GP-BUCKET	402
CONTROL GP-DIFFERENTIAL LOCK	189
CONTROL GP-ELECTROHYDRAULIC	424, 426
CONTROL GP-ELECTROHYDRAULIC–3-FUNCTION	425
CONTROL GP-ENGINE ELECTRONIC	104
CONTROL GP-HANDLE (2-VALVE)	429
CONTROL GP-HANDLE (3-VALVE)	430
CONTROL GP-JOYSTICK–2-FUNCTION	429
CONTROL GP-JOYSTICK–3-FUNCTION	430
CONTROL GP-JOYSTICK–4-FUNCTION	427
CONTROL GP-JOYSTICK–4-VALVE	428
CONTROL GP-RIDE	323
CONTROL GP-SERVICE BRAKE	305
CONTROL GP-STEERING–TELESCOPE, TILT CONTROL	431
CONTROL GP-UNPROGRAMMED	106, 160
CONTROL GP-UNPROGRAMMED (MACHINE)	106
CONTROL GP-UNPROGRAMMED (PRODUCT LINK 522)	130
CONTROL GP-UNPROGRAMMED–PRODUCT LINK 522	105
CONVERSION AR-ROADING	267
COOLER GP-ENGINE OIL	49
COOLER GP-HYDRAULIC OIL	54
COUNTERWEIGHT GP	268, 269, 270
COUPLER AR-QUICK	536
COUPLER GP-QUICK	537
COVER GP-CAB	433
COVER GP-HYDRAULIC TANK	378
COVER GP-MOTOR	212
COVER GP-SOUND SUPPRESSION	9
COVER GP-TANK	436
COVER GP-VALVE MECHANISM	10
CRANKSHAFT GP	11
CYLINDER & MTG GP-LIFT	324
CYLINDER & MTG GP-STEERING	311
CYLINDER & MTG GP-TILT	325
CYLINDER BLOCK AS	12
CYLINDER BLOCK GP	13
CYLINDER GP-COUPLER	326
CYLINDER GP-LIFT	327
CYLINDER GP-STEERING	312
CYLINDER GP-TILT	328
CYLINDER HEAD AS	14
CYLINDER HEAD GP	15

D

NAME	PAGE
DIFFERENTIAL GP–LOCKING	190
DIFFERENTIAL GP–STANDARD	191
DOOR GP-ACCESS	271
DOOR GP-CAB	440
DOOR GP-CAB–LH	437, 439
DRAIN GP-ENGINE OIL	16, 17
DRIVE GP-FAN	18
DRYER-REFRIGERANT (IN-LINE)	456
DUCT GP-CAB AIR	443

E

NAME	PAGE
EDGE GP-CUTTING	538, 539, 540, 541
EDGE GP-SEGMENT	541
ELECTRONICS AR-MACHINE	107
ELECTRONICS GP-COMMUNICATION–PRODUCT LINK 300	107
ELECTRONICS GP-IMPLEMENT	107
ELECTRONICS GP-MACHINE	107

INDEX

NAME PAGE

ELECTRONICS GP-MONITOR 108
ELECTRONICS GP-POWER TRAIN 108
ENGINE AR-PRIMARY 4
EXTENSION GP-BACKREST (CLOTH) 477
EXTENSION GP-EXHAUST 59
EXTENSION GP-FENDER–REAR 273

F

FAN GP-SUCTION 50
FENDER AR–STANDARD 275
FENDER GP-FRONT 276
FILLER GP-ENGINE OIL 39
40
FILLER GP-POWER TRAIN OIL 192
FILM GP 561
FILM GP-INTERNATIONAL 565
FILM GP–AGGREGATE HANDLER 563
FILM GP–FOREST HANDLER 564
FILM GP–WASTE HANDLER 562
FILM-CONTROL (JOYSTICK) 424
426
FILM-IDENTIFICATION (CIRCUIT BREAKER) . . . 165
FILM-IDENTIFICATION (ENGINE STOP, RUN) 165
FILM-IDENTIFICATION (FUSE PANEL) 160
FILM-IDENTIFICATION (GREASE POINTS) 566
FILM-IDENTIFICATION (IGNITION SWITCH) 132
FILM-IDENTIFICATION (JOYSTICK CONTROL) 425
FILM-IDENTIFICATION (JUMP START) 95
98
FILM-INSTRUCTION (ALTERNATE EXIT, REMOVE WINDOW) 440
FILM-INSTRUCTION (MACHINE SECURITY, CONSOLE) 132
FILM-WARNING (CAB UNLOCK) 440
FILM-WARNING (CRUSH HAZARD, STAY BACK) 494
FILM-WARNING (DO NOT LIFT, READ OMM) 533
534
FILM-WARNING (EXPLOSION HAZARD, PRODUCT LINK) (INTERNATIONAL) 128
130
FILM-WARNING (EXPLOSION HAZARD, PRODUCT LINK) (U.S.) 128
130
FILM-WARNING (HIGH PRESSURE, READ OMM, INTL) 565
FILM-WARNING (HIGH PRESSURE, READ OMM) 182
183
300
301
318
319
320
321
FILM-WARNING (READ OMM) 494

NAME PAGE

FILTER (ETHER START) 159
FILTER AS-WATER SEP & FUEL 77
FILTER ELEMENT AS-AIR (PRIMARY) 58
FILTER ELEMENT AS-AIR (SECONDARY) 58
FILTER ELEMENT AS-OIL 331
FILTER ELEMENT-CAB AIR 406
FILTER ELEMENT-FUEL 70
FILTER GP-ENGINE OIL 41
FILTER GP-FUEL 70
71
72
73
74
75
FILTER GP-OIL 193
330
331
332
FILTER GP-WATER SEP & FUEL 77
FILTER-ENGINE OIL 41
FILTER-FOAM (ALTERNATOR AIR) 92
FILTER-FUMES DISPOSAL 40
FILTER-OIL (ADVANCED EFFICIENCY) (TRANSMISSION) 193
FITTING GP 204
378
FLASHER AS (12/24-VOLT) 160
FLOOR MAT 444
FLOOR MAT GP 444
FLYWHEEL GP 19
FORK GP-PALLET 542
543
544
545
546
547
548
549
550
551
FRAME GP-LOADER 277
FRAME GP-REAR 278
FUSE (10-AMPERE) 109
FUSE (15-AMPERE) 109
FUSE (20-AMPERE) 109

G

GASKET-FILTER 46
GASKET-OIL PAN 29
GASKET-WATER REGULATOR (TEMPERATURE) 48
GAUGE AS-OIL LEVEL (DIPSTICK) (AXLE) 196
198
GAUGE AS-SIGHT (HYDRAULIC TANK) 247
GAUGE GP-FUEL LEVEL (WATER SEPARATOR) 77
GAUGE GP-OIL LEVEL (DIPSTICK) 42
GAUGE GP-OIL LEVEL (DIPSTICK) (ENGINE) . . . 42
GAUGE-SIGHT (COOLANT) 378

INDEX

NAME PAGE

GEAR GP-BEVEL & PINION 195
GEAR GP-BEVEL & PINION–REAR 194
GLOW PLUG (24-VOLT) 151
GUARD GP-CRANKCASE 279
GUARD GP-DRIVE SHAFT 280
GUARD GP-FRAME 281
GUARD GP-LIGHTING 282
GUARD GP-POWER TRAIN 283
GUARD GP-RADIATOR 284
GUARD GP-REAR 287
GUARD GP-WINDOW 445

H

HAMMER GP (CAB WINDOW) 440
HANDHOLD GP–DOOR 447
HARNESS AS-ALARM 467
HARNESS AS-BRAKE (STOP LIGHT) 469
HARNESS AS-CAB 109
HARNESS AS-CAB (CAMERA, REAR) 164
HARNESS AS-CHASSIS 111
HARNESS AS-CONSOLE 112
HARNESS AS-CONSOLE (ENCLOSED ROPS) 168
HARNESS AS-CONSOLE–ROOF 113
HARNESS AS-CONTROL 114
HARNESS AS-CONTROL (PRODUCT LINK) 128 130
HARNESS AS-CONTROL (SECURITY) 132
HARNESS AS-CONTROL–SECURITY 113
HARNESS AS-ENGINE 115 116
HARNESS AS-FRONT 117
HARNESS AS-HEATER & AIR COND 118
HARNESS AS-HEATER & AIR COND–BLOWER 117
HARNESS AS-LIGHTING 118 119
HARNESS AS-OPERATOR CONTROLS 120
HARNESS AS-QUICK COUPLER 380
HARNESS AS-RADIO (AUXILIARY) 450 473
HARNESS AS-RADIO (BLUETOOTH) 450 473
HARNESS AS-RADIO (USB PORT) 450 473
HARNESS AS-SENSOR 120
HARNESS AS-STARTING AID 121 151 179
HARNESS AS-STEERING 121
HARNESS AS-TRANSMISSION 122
HARNESS AS-WINDOW WIPER 122
HARNESS AS-WIRING 123 125
HEATER & AIR CONDITIONER GP 448
HEATER GP-JACKET WATER 126 127
HITCH GP-ARTICULATING 288
HOOD GP-ENGINE 290

NAME PAGE

HOUSING GP-AXLE 196
HOUSING GP-AXLE–OSCILLATING 198
HOUSING GP-FLYWHEEL 20
HOUSING GP-FRONT 21
HYDRAULIC AR 333
HYDRAULIC AR-2 VALVE–STANDARD LINKAGE 333 334
HYDRAULIC AR-2 VALVE–WITHOUT COUPLER 333 334
HYDRAULIC AR-3 VALVE–STANDARD 334
HYDRAULIC AR-3 VALVE–STANDARD LINKAGE 334
HYDRAULIC AR-4 VALVE–STANDARD LINKAGE 335

I

INJECTOR GP-FUEL 78
INSTALLATION AR-ENGINE 5
INSTALLATION GP-COMMUNICATION–PRODUCT LINK 321SR 128
INSTALLATION GP-COMMUNICATION–PRODUCT LINK CELLULAR 130
INSTALLATION GP-RADIO 449 450
INSTALLATION GP-SECURITY–MACHINE 132

J

JET GP-PISTON COOLING 23

K

KEY (BATTERY DISCONNECT) 155
KEY AS-ELECTRONIC (SECURITY) 132

L

LADDER GP 293
LAMP (24-VOLT, 10-WATT) 451
LAMP (24-VOLT, 21-WATT) 137
LAMP (24-VOLT, 21-WATT) (TURN SIGNAL) . . . 138
LAMP (24-VOLT, 5-WATT) 137
LAMP (24-VOLT, 5-WATT) (FLOODLIGHT) 138
LAMP (24-VOLT, 75/70-WATT) 137
LAMP (24-VOLT, 75/70-WATT) (HIGH, LOW BEAM) 138
LAMP (24-VOLT, HID) 134
LAMP AS (AMBER, LED, 24-VOLT) 453
LAMP GP-DOME (24-VOLT) 453
LAMP GP-DOME (24-VOLT) (CAB) 451
LAMP GP-FLOOD 135 136
LAMP GP-FLOOD–HID 134
LAMP GP-HEAD & SIGNAL–LH 138

INDEX

NAME PAGE

LAMP GP-HEAD & SIGNAL–RH 137
LAMP GP-REAR (24-VOLT) (SIGNAL LIGHTING, LH) 144
LAMP GP-REAR (24-VOLT) (SIGNAL LIGHTING, RH) 144
LAMP GP-WARNING BEACON 139
LAMP GP-WARNING BEACON (AMBER, STROBE) 139
LAMP-HALOGEN (24-VOLT, 70-WATT) (FLOODLIGHT) 135 136
LIFTING GP-ENGINE 24
LIGHTING AR-ROADING 140
LIGHTING GP-AUXILIARY–24-VOLT, 70-WATT 141
LIGHTING GP-FLOOD–24-VOLT, HID 143
LIGHTING GP-FLOOD–CAB 142
LIGHTING GP-ROADING 144
LINER GP-CAB 451 453 455
LINES GP-AIR 60
LINES GP-AIR CONDITIONER 456
LINES GP-BRAKE 306
LINES GP-COUPLER 336
LINES GP-COUPLER–COUPLER 338
LINES GP-COUPLER–THIRD FUNCTION 337
LINES GP-DIFFERENTIAL LOCK 200
LINES GP-FRONT 339
LINES GP-FUEL 79 81 82 83 84
LINES GP-FUEL INJECTION 85
LINES GP-GREASE 295
LINES GP-HEATER 458
LINES GP-HYDRAULIC 340
LINES GP-HYDRAULIC FAN 349
LINES GP-HYDRAULIC–FOURTH FUNCTION . . . 347
LINES GP-HYDRAULIC–THIRD FUNCTION 345
LINES GP-HYDROSTATIC 202 204
LINES GP-LIFT CYLINDER 351
LINES GP-RADIATOR 51
LINES GP-RIDE CONTROL 353
LINES GP-STEERING–CYLINDERS 313
LINES GP-TILT CYLINDER 355
LINES GP-TRANSMISSION FILTER 209
LINES GP-TURBOCHARGER AIR 62
LINES GP-TURBOCHARGER OIL 43
LINK GP-STEERING FRAME LOCK 296
LINKAGE AR-FRONT 404
LITERATURE GP 1

M

MANIFOLD GP-CONTROL (BRAKE) 306
MANIFOLD GP-CONTROL (RIDE) 353
MANIFOLD GP-EXHAUST 63
MANIFOLD GP-INLET 64
MIRROR GP-REAR VIEW 460
MIRROR GP-REAR VIEW–HEATED 461
MODULE GP-INTERFACE 107
MODULE GP-KEYPAD 160
MODULE GP-WARNING INDICATOR 467
MONITOR & MOUNTING GP 462
MONITOR AR 463
MONITOR GP-OPERATOR 462
MOTOR & MTG GP-HYDRAULIC FAN 357
MOTOR & MTG GP-HYDRAULIC FAN–REVERSING 359
MOTOR & MTG GP-HYDROSTATIC 210 211
MOTOR GP-GEAR–HYDRAULIC FAN 361 364
MOTOR GP-GEAR–REVERSING FAN 362 363
MOTOR GP-PISTON 212 214
MOTOR GP-WINDOW WIPER (24-VOLT) (CAB) 464
MOTOR GP-WINDOW WIPER–24-VOLT 464
MOUNTING GP-ALTERNATOR 25
MOUNTING GP-AXLE 216
MOUNTING GP-BANK VALVE 365
MOUNTING GP-BRACKET 297
MOUNTING GP-CAB 465
MOUNTING GP-ELECTRONIC CONTROL 146
MOUNTING GP-ENGINE 26
MOUNTING GP-ENGINE FLEXIBLE 27
MOUNTING GP-HYDROSTATIC PUMP 217
MOUNTING GP-RIM 218 225 238 239 240 241 242 243 244 246 262
MOUNTING GP-RIM (AXLE OSCILLATION LIMITATION) 245 246
MOUNTING GP-TRANSMISSION 219
MUFFLER GP 65

O

OPTION AR-COLD WEATHER 2
OPTION AR-MACHINE–DEBRIS 3
OPTION AR-MACHINE–HIGH DEBRIS 3
OPTION AR-MACHINE–LOW DEBRIS 2 3
ORIFICE AS-AIR CONDITIONER 456

INDEX

NAME PAGE

P

PADLOCK GP 192
377
PAN GP-BACKREST–LUMBAR 466
PAN GP-OIL 29
30
PAN GP-SEAT 477
PANEL GP-INSTRUMENT 467
PEDAL GP-BRAKE 469
PEDAL GP-GOVERNOR 470
PISTON & ROD GP 31
PLATE & FILM GP 566
568
PLATE GP-MOUNTING 298
PLUG-DRAIN (MAGNETIC) 247
PLUG-MAGNETIC (AXLE HOUSING) 196
198
POSITIONER GP-WORK TOOL 546
POSITIONER GP-WORK TOOL (PALLET FORK) 543
544
545
547
548
549
550
551
POWER TRAIN AR 220
PRECLEANER GP 66
68
PRECLEANER GP–STANDARD 67
PROTECTOR GP-LINKAGE 552
PULLEY GP-AUXILIARY DRIVE 32
PULLEY GP-CRANKSHAFT 33
PUMP & MTG GP-BRAKE & HYD FAN 366
PUMP & MTG GP-GEAR 221
PUMP & MTG GP-HYDROSTATIC 222
PUMP & MTG GP-IMPL & STEERING 367
PUMP GP-ENGINE OIL 44
PUMP GP-FUEL INJECTION 86
PUMP GP-GEAR 369
PUMP GP-GEAR (CHARGE, HYDROSTATIC DRIVE) 221
PUMP GP-GEAR–BRAKE, HYDRAULIC FAN . . . 368
PUMP GP-METERING–HMU 316
PUMP GP-PISTON 370
371
373
PUMP GP-PISTON–HYDROSTATIC 223
PUMP GP-WATER 53

R

RADIATOR & HYD OIL COOLER GP 54
RADIATOR & HYD OIL COOLER GP–INCLUDES AFTERCOOLER 55
RADIATOR GP 54
RADIO GP (AM/FM/WB/CD/XM/USB/BLUETOOTH) 473
RADIO GP-COMMUNICATION–PRODUCT LINK 121SR 147
RADIO GP–AM/FM RADIO, CD PLAYER 472
RADIO GP–AM/FM/WB/CD PLAYER 471
RADIO GP–AM/FM/WB/SIRIUS/CD/BLUETOOTH/USB 473
RAIL GP-FUEL 87
REGULATOR AS 48
RELAY AS (24-VOLT) 160
RELAY AS (24-VOLT) (BACKUP ALARM) 160
RELAY AS (24-VOLT) (BRAKE LIGHTS) 160
RELAY AS (24-VOLT) (ETHER STARTING AID) 179
RELAY AS (24-VOLT) (HORN) 160
RELAY AS (24-VOLT) (RIDE CONTROL) 353
RELAY AS (24-VOLT) (WINDOW WIPER) 160
RIM AR–3-PIECE, OFFSET 225
RIM GP-DEMOUNTABLE–1-PIECE, CENTER MOUNT 230
RIM GP-DEMOUNTABLE–3-PIECE 226
227
228
229
ROCKER ARM GP 34
36
ROTATING GP-MOTOR 231
232
ROTATING GP-PUMP 231
375
376

S

SCREEN (HYDRAULIC OIL) 378
SCREEN (PILOT MANIFOLD) 382
SCREEN AS 445
SCREEN AS (LH) 445
SCREEN AS (RH) 445
SCREEN-SUCTION 378
SEAL GP-DUO-CONE 196
198
SEAL-INTEGRAL 456
SEAT & MOUNTING GP–CLOTH 474
SEAT & MOUNTING GP–DELUXE, CLOTH 475
SEAT BELT GP (RETRACTABLE, 3-IN) 475
SEAT BELT GP (RETRACTABLE, 76-MM) 474
SEAT BELT GP–RETRACTABLE, 3-IN 476
SEAT GP (CLOTH) 479
SEAT GP-SUSPENSION–CLOTH 479
SEAT GP-SUSPENSION–MECHANICAL 480
SEAT GP–CLOTH 477
SENSOR AS-FUEL LEVEL (TANK) 90
SENSOR AS-POSITION 427
SENSOR GP-ENGINE 148
SENSOR GP-POSITION 150
SENSOR GP-POSITION (BRAKE CONTROL) . . . 469
SENSOR GP-POSITION (ROTARY) 176
SENSOR GP-POSITION (THROTTLE) 470
SENSOR GP-POSITION–ROTARY 149
SENSOR GP-PRESSURE 170

INDEX

NAME	PAGE
SENSOR GP-PRESSURE (BOOM CYL, HEAD END)	165
SENSOR GP-PRESSURE (BRAKE OIL)	173
SENSOR GP-PRESSURE (INLET MANIFOLD AIR)	148
SENSOR GP-SPEED (CRANKSHAFT)	247
SENSOR GP-SPEED (ENGINE)	148
SENSOR GP-TEMPERATURE (EVAPORATOR)	406
SENSOR-PRESSURE (ENGINE OIL)	148
SENSOR-PRESSURE (HYDROSTATIC, FWD)	170
SENSOR-PRESSURE (HYDROSTATIC, REV)	170
SENSOR-TEMPERATURE (AIR CONDITIONER)	406
SENSOR-TEMPERATURE (AIR INLET MANIFOLD)	148
SENSOR-TEMPERATURE (CHARGE AIR)	165
SENSOR-TEMPERATURE (COOLANT)	148
SENSOR-TEMPERATURE (INLET AIR)	422
SENSOR-TEMPERATURE (INTAKE MANIFOLD AIR)	175
SENSOR-TEMPERATURE (TRANSMISSION OIL)	260
SERVICE GP-COMMUNICATION (PRODUCT LINK 300)	107
SHAFT GP-DRIVE	233 234
SHAFT GP-INPUT	247
SHAFT GP-MOTOR	232
SHAFT GP-OUTPUT	235
SKIRT GP-CAB	481
SLIP JOINT GP	237
SLIP JOINT GP–CENTER	236
SOFTWARE GP-COMMUNICATION (PRODUCT LINK 300)	107
SOFTWARE GP-ELECTRONIC	105
SOFTWARE GP-IMPLEMENT	107
SOFTWARE GP-MONITOR	108
SOFTWARE GP-MONITOR (PRODUCT LINK 121SR)	147
SOFTWARE GP-POWER TRAIN	108
SOLENOID	64
SOLENOID (PUMP CONTROL)	259
SOLENOID AS (PUMP CONTROL VALVE)	257
SOLENOID AS (PUMP CONTROL)	258
SPIDER & BEARING GP	237
SPRING AS-GAS (DOOR, LH)	273
SPRING AS-GAS (DOOR, REAR)	271
SPRING AS-GAS (DOOR, RH)	273
STARTING AID GP	151
STARTING AID GP-ETHER	152 153
STARTING MOTOR GP-ELECTRIC	154
STEERING AR-STANDARD	317
STEERING COLUMN GP (TILT)	431
STOP GP-AXLE OSCILLATION	225 238 239 240 241 242 243 244 245 246 262
STRAINER (FUEL TANK)	88
STRAINER (HYDRAULIC TANK)	378
STRAINER (RETURN)	378
STRAINER AS (HYDRAULIC TANK)	378
SUN VISOR	485 486
SUPPORT GP-POWER TAKE-OFF	37
SUSPENSION GP-SEAT	482
SWITCH AS-LIMIT (DOOR)	168
SWITCH AS-LIMIT (NORMALLY CLOSED)	469
SWITCH AS-MULTIFUNCTION (HD LIGHT, TURN SIG, WDO WIPER)	467
SWITCH AS-PRESSURE (AIR CONDITIONER)	456
SWITCH AS-PRESSURE (AWD OIL FILTER BYPASS)	193
SWITCH AS-PRESSURE (HYDRAULIC OIL)	332
SWITCH AS-PRESSURE (REFRIGERANT)	456
SWITCH AS-ROCKER (BEACON)	168
SWITCH AS-ROCKER (COUPLER)	336
SWITCH AS-ROCKER (FRONT WORK LIGHT)	168
SWITCH AS-ROCKER (HAZARD)	168
SWITCH AS-ROCKER (IMPLEMENT LOCKOUT)	160
SWITCH AS-ROCKER (PARKING BRAKE)	160
SWITCH AS-ROCKER (REAR WORK LIGHTS)	168
SWITCH AS-ROCKER (ROADING LIGHTS)	168
SWITCH AS-ROCKER (TEMPERATURE CONTROL)	422
SWITCH AS-ROCKER (WORK LIGHTS)	141 143
SWITCH GP-DISCONNECT (BATTERY)	94 97
SWITCH GP-DISCONNECT–BATTERY	155
SWITCH GP-MAGNETIC	156
SWITCH GP-START	157
SWITCH GP-TOGGLE	158
SWITCH GP-TOGGLE (ENGINE SHUTOFF)	165
SWITCH-PRESSURE (AIR CLEANER)	57

T

TANK & MTG GP-FUEL	88
TANK & MTG GP-HYDRAULIC	377
TANK GP-COOLANT	56
TANK GP-FUEL	90
TANK GP-HYDRAULIC	378

INDEX

NAME PAGE

TANK GP-WINDOW WASHER 490
TIP GP-LONG 553
554
TIP GP-SHORT 555
556
TIRE & RIM AR 240
242
243
246
TIRE & RIM AR–1-PIECE, CENTER MOUNT . . . 241
TIRE & RIM AR–3-PIECE 245
TIRE & RIM AR–3-PIECE, OFFSET 238
239
240
241
244
245
246
TRANSMISSION AR 247
TURBOCHARGER GP 69

U

UNIVERSAL JOINT GP 233

V

VALVE & LINES GP-COUPLER 380
VALVE & MTG GP 383
VALVE & MTG GP-COUPLER 382
VALVE & MTG GP-HYDRAULIC 383
VALVE & MTG GP-RIDE CONTROL 385
VALVE & MTG GP-SOLENOID 253
VALVE AS-PRESSURE RELIEF (REFRIGERANT COMPRESSOR) 414
VALVE GP-ACCUMULATOR CHARGING 369
VALVE GP-BRAKE CONTROL 469
VALVE GP-CHECK 254
VALVE GP-CHECK (BACK PRESSURE) 340
VALVE GP-CHECK (HYDROSTATIC DRIVE MOTOR) 204
VALVE GP-CHECK (IMPLEMENT) 387
VALVE GP-CHECK (PUMP CASE DRAIN) 204
VALVE GP-CHECK (QUICK COUPLER) 326
VALVE GP-CONTROL 389
VALVE GP-CONTROL–AUXILIARY 388
VALVE GP-CONTROL–LIFT 387
VALVE GP-CONTROL–TILT 386
VALVE GP-DRAIN–FUEL TANK 390
VALVE GP-ETHER STARTING 159
VALVE GP-FLUID SAMPLING 45
VALVE GP-FLUID SAMPLING (HYDRAULIC OIL) 205
VALVE GP-FLUSHING 255
VALVE GP-MAIN CONTROL–2-FUNCTION 391
VALVE GP-MAIN CONTROL–3-FUNCTION 392
VALVE GP-MAIN CONTROL–4-FUNCTION 393
VALVE GP-MANIFOLD & RELIEF–INLET 394
VALVE GP-MANIFOLD & RELIEF–OUTLET 395

NAME PAGE

VALVE GP-MANUAL (LOWERING CONTROL) 351
VALVE GP-MODULATING 256
VALVE GP-MOTOR CONTROL 257
VALVE GP-PILOT 258
396
VALVE GP-PRESSURE REDUCING (QUICK COUPLER) 382
VALVE GP-PUMP CONTROL 259
398
VALVE GP-PUMP CONTROL–FLOW COMPENSATOR 397
VALVE GP-RELIEF 260
VALVE GP-RELIEF (BUCKET CYLINDER, HEAD END) 388
VALVE GP-RELIEF (HYDRAULIC FAN MOTOR) 362
VALVE GP-RELIEF (LIFT CYLINDER HEAD END) 394
VALVE GP-RELIEF (OUTLET MANIFOLD) 395
VALVE GP-RELIEF (PISTON PUMP) 223
VALVE GP-RELIEF (TILT CYLINDER ROD END) 386
389
VALVE GP-SHUTOFF (HYDRAULIC OIL) 340
VALVE GP-SOLENOID 399
400
401
VALVE GP-SOLENOID (24-VOLT) (HYDRAULIC FAN) 361
362
VALVE GP-SOLENOID (24-VOLT) (HYDROSTATIC PUMP) 204
VALVE GP-SOLENOID (24-VOLT) (PARKING BRAKE) 306
VALVE GP-SOLENOID (24-VOLT) (PILOT PRESSURE) 396
VALVE GP-SOLENOID (24-VOLT) (QUICK COUPLER) 382
VALVE GP-SOLENOID (24-VOLT) (RIDE CONT, LIFT CYL HEAD END) 394
VALVE GP-SOLENOID (DIFFERENTIAL LOCK) 383
VALVE GP-SOLENOID (HYDRAULIC LOCKOUT) 253
VALVE GP-SOLENOID (RIDE CONTROL) 323
VALVE GP-SOLENOID & RELIEF 247
260
VALVE GP-TIRE 261
VALVE GP-WATER–HEATER CONTROL 484
VISOR GP-CAB 485
VISOR GP-CAB–FRONT 486

W

WHEEL & TIRE AR–FLEXIBLE RUBBER 262
WHEEL & TIRE GP 263
WHEEL & TIRE GP–20.5-25 264
WINDOW GP-CAB 412
487

INDEX

NAME	PAGE	NAME	PAGE
WINDOW GP-DOOR–SLIDING WINDOW, LH	488		
WIPER & WASHER GP-WINDOW	490		
WIRING GP-CAB	160		
WIRING GP-CAMERA–REAR VIEW	164		
WIRING GP-CHASSIS	165		
WIRING GP-CONSOLE–OVERHEAD	168		
WIRING GP-ENGINE	170 172		
WIRING GP-FRONT	173		
WIRING GP-FUEL PUMP	175		
WIRING GP-KICKOUT & POSITIONER	176		
WIRING GP-SEAT	178		
WIRING GP-START CONTROL	179		
WIRING GP-TRANSMISSION CONTROL–GEAR BOX	180		

MEMORANDA

MACHINE ARRANGEMENT

381-4385 CHASSIS AR

S/N: DYB1-UP

PART OF 381-4382 COMMON AR

SMCS-7000 **i05309794**

NOTE	PART NUMBER	QTY	PART NAME 1 2 3 4 5 6 (PRODUCT LEVEL)	SEE PAGE
Y	*347-8056*	1	BOX GP-BATTERY	265
Y	*333-6516*	1	CYLINDER & MTG GP-STEERING	311
Y	*347-8089*	1	DOOR GP-ACCESS	271
Y	*362-8677*	1	FILM GP	561
Y	*387-4030*	1	FRAME GP-LOADER	277
Y	*387-4055*	1	FRAME GP-REAR	278
Y	*333-6824*	1	GUARD GP-RADIATOR	284
Y	*113-3790*	1	HITCH GP-ARTICULATING	288
Y	*339-6800*	1	HOOD GP-ENGINE	290
Y	*339-6747*	1	LADDER GP	293
Y	*339-6725*	1	LIGHTING GP-ROADING	144
Y	*380-8084*	1	LINES GP-BRAKE	306
Y	*333-6944*	1	LINES GP-GREASE	295
Y	*349-7860*	1	LINK GP-STEERING FRAME LOCK	296
Y	*346-1564*	1	MOUNTING GP-AXLE	216
Y	*333-6906*	1	MOUNTING GP-BANK VALVE	365
Y	*367-9409*	1	PLATE & FILM GP	566
Y	*381-4349*	1	PLATE GP-MOUNTING	298
Y	*387-4025*	1	GUARD GP-FRAME	281
Y	*339-6730*	1	TANK & MTG GP-FUEL	88
Y	*290-6483*	1	VALVE GP-DRAIN (FUEL TANK)	390
Y	*372-1882*	1	WIRING GP-FUEL PUMP (AIR CLEANER)	175
Y	*372-1930*	1	WIRING GP-CHASSIS (REAR FRAME)	165
Y	*372-1880*	1	WIRING GP-ENGINE	170
Y	*333-1420*	1	WIRING GP-FRONT	173
Y	*333-1385*	1	WIRING GP-TRANSMISSION CONTROL (GEAR BOX)	180
	6V-1970	1	LITERATURE GP	
	5P-7958	1	SLEEVE-CABLE SPLICE	
	5P-8500	2	KEY	

Y - SEPARATE ILLUSTRATION

<END>

381-4382 COMMON AR

S/N: DYB1-UP

SMCS-7000 **i05309773**

NOTE	PART NUMBER	QTY	PART NAME 1 2 3 4 5 6 (PRODUCT LEVEL)	SEE PAGE
Y	*381-4385*	1	CHASSIS AR	1
Y	*333-1396*	1	ELECTRONICS AR-MACHINE	107
Y	*381-4358*	1	HYDRAULIC AR	333
Y	*381-4371*	1	INSTALLATION AR-ENGINE	5
Y	*381-4374*	1	POWER TRAIN AR	220

Y - SEPARATE ILLUSTRATION

<END>

MACHINE ARRANGEMENT

381-4389 OPTION AR-COLD WEATHER

S/N: DYB1-UP
120-VOLT
CANNOT BE USED WITH 333-1415—PAGE: 100, 381-4390—PAGE: 2
AN ATTACHMENT

SMCS-7000 **i05309508**

NOTE	PART NUMBER	QTY	PART NAME 1 2 3 4 5 6 (PRODUCT LEVEL)	SEE PAGE
Y	*333-1416*	1	BATTERY & WIRING GP (HEAVY-DUTY)	100
Y	*293-4050*	1	HEATER GP-JACKET WATER	126
Y	*415-4689*	1	STARTING AID GP-ETHER	153
Y	*416-2620*	1	VALVE & MTG GP-HYDRAULIC	383
Y	*377-5650*	1	WIRING GP-START CONTROL	179

Y - SEPARATE ILLUSTRATION

<END>

381-4390 OPTION AR-COLD WEATHER

S/N: DYB1-UP
240-VOLT
CANNOT BE USED WITH 333-1415—PAGE: 100, 381-4389—PAGE: 2
AN ATTACHMENT

SMCS-7000 **i05309511**

NOTE	PART NUMBER	QTY	PART NAME 1 2 3 4 5 6 (PRODUCT LEVEL)	SEE PAGE
Y	*333-1416*	1	BATTERY & WIRING GP (HEAVY-DUTY)	100
Y	*293-4052*	1	HEATER GP-JACKET WATER (240-VOLT, 1000-WATT)	127
Y	*415-4689*	1	STARTING AID GP-ETHER	153
Y	*416-2620*	1	VALVE & MTG GP-HYDRAULIC	383
Y	*377-5650*	1	WIRING GP-START CONTROL	179

Y - SEPARATE ILLUSTRATION

<END>

366-8125 OPTION AR-MACHINE—LOW DEBRIS

S/N: DYB1-UP
CANNOT BE USED WITH 366-8126—PAGE: 3, 366-8127—PAGE: 3
AN ATTACHMENT

SMCS-7000 **i05303813**

NOTE	PART NUMBER	QTY	PART NAME 1 2 3 4 5 6 (PRODUCT LEVEL)	SEE PAGE
Y	*341-0679*	1	ALTERNATOR GP-CHARGING	93
Y	*333-6913*	1	MOTOR & MTG GP-HYDRAULIC FAN	357
Y	*332-3646*	1	PRECLEANER GP	67

Y - SEPARATE ILLUSTRATION

<END>

MACHINE ARRANGEMENT

366-8126 OPTION AR-MACHINE–DEBRIS

S/N: DYB1-UP

CANNOT BE USED WITH 366-8125–PAGE: 2, 366-8127–PAGE: 3

AN ATTACHMENT

SMCS-7000 **i05303998**

NOTE	PART NUMBER	QTY	PART NAME 1 2 3 4 5 6 (PRODUCT LEVEL)	SEE PAGE
Y	*341-0679*	1	ALTERNATOR GP-CHARGING	93
Y	*333-6914*	1	MOTOR & MTG GP-HYDRAULIC FAN (REVERSING)	359
Y	*332-3647*	1	PRECLEANER GP	68

Y - SEPARATE ILLUSTRATION

<END>

366-8127 OPTION AR-MACHINE–HIGH DEBRIS

S/N: DYB1-UP

CANNOT BE USED WITH 366-8125–PAGE: 2, 366-8126–PAGE: 3

AN ATTACHMENT

SMCS-7000 **i05304077**

NOTE	PART NUMBER	QTY	PART NAME 1 2 3 4 5 6 (PRODUCT LEVEL)	SEE PAGE
Y	*332-3644*	1	ALTERNATOR GP-CHARGING (24-VOLT, 150-AMPERE)	92
Y	*333-6914*	1	MOTOR & MTG GP-HYDRAULIC FAN (REVERSING)	359
Y	*332-3647*	1	PRECLEANER GP	68

Y - SEPARATE ILLUSTRATION

<END>

381-4420 OPTION AR-MACHINE–LOW DEBRIS

S/N: DYB1-UP

CANNOT BE USED WITH 366-8125–PAGE: 2, 366-8126–PAGE: 3, 366-8127–PAGE: 3

AN ATTACHMENT

SMCS-7000 **i05306010**

NOTE	PART NUMBER	QTY	PART NAME 1 2 3 4 5 6 (PRODUCT LEVEL)	SEE PAGE
Y	*341-0679*	1	ALTERNATOR GP-CHARGING	93
Y	*333-6913*	1	MOTOR & MTG GP-HYDRAULIC FAN	357
Y	*332-3647*	1	PRECLEANER GP	68

Y - SEPARATE ILLUSTRATION

<END>

ENGINE ARRANGEMENT

371-1441 ENGINE AR-PRIMARY

S/N: E7A1-UP
140 BRAKE KW (181 BHP) AT 1800 RPM
PART OF 384-7000 CAB AR-ENCLOSED ROPS
AN ATTACHMENT

SMCS-1000 **i05346013**

NOTE	PART NUMBER	QTY	PART NAME 1 2 3 4 5 6 (PRODUCT LEVEL)	SEE PAGE
Y	*374-7094*	1	AIR COMPRESSOR GP	6
Y	*346-0099*	1	BASE GP-OIL COOLER & FILTER	46
Y	*376-1108*	1	BELT TENSIONER GP	7
Y	*425-0196*	1	BREATHER GP	38
Y	*396-2615*	1	CAMSHAFT GP	8
Y	*346-2911*	1	CONNECTION GP-HEATER	47
Y	*373-3607*	1	CONNECTION GP-WATER	48
Y	*371-2745*	1	VALVE GP-FLUID SAMPLING	45
Y	*371-2537*	1	CONTROL GP-ENGINE ELECTRONIC	104
Y	*389-3346*	1	COVER GP-VALVE MECHANISM	10
Y	*374-6300*	1	CRANKSHAFT GP	11
Y	*390-0854*	1	CYLINDER BLOCK GP	13
Y	*385-2572*	1	CYLINDER HEAD GP	15
Y	*371-2742*	1	DRAIN GP-ENGINE OIL	17
Y	*375-3937*	1	DRIVE GP-FAN	18
Y	*390-3737*	1	FILLER GP-ENGINE OIL	39
Y	*425-0197*	1	FILLER GP-ENGINE OIL	40
Y	*346-0220*	1	FILTER GP-ENGINE OIL	41
Y	*375-3995*	1	FILTER GP-FUEL	71
Y	*426-3292*	1	FILTER GP-FUEL	74
Y	*426-3312*	1	FILTER GP-FUEL	75
Y	*371-2539*	1	FLYWHEEL GP	19
Y	*371-2546*	1	GAUGE GP-OIL LEVEL (DIPSTICK)	42
Y	*393-3369*	1	HOUSING GP-FLYWHEEL	20
Y	*371-2725*	1	HOUSING GP-FRONT	21
Y	*371-2483*	1	INJECTOR GP-FUEL	78
Y	*371-2478*	1	JET GP-PISTON COOLING	23
Y	*371-2735*	1	LIFTING GP-ENGINE	24
Y	*393-7694*	1	MANIFOLD GP-EXHAUST	63
Y	*391-5523*	1	MANIFOLD GP-INLET	64
Y	*371-2558*	1	MOUNTING GP-ALTERNATOR	25
Y	*395-0112*	1	MOUNTING GP-ELECTRONIC CONTROL	146
Y	*385-8004*	1	MOUNTING GP-ENGINE	26
Y	*371-2544*	1	PAN GP-OIL	29
Y	*374-6301*	1	PISTON & ROD GP	31
Y	*378-8167*	1	PLATE & FILM GP	568
Y	*375-0098*	1	PULLEY GP-AUXILIARY DRIVE	32
Y	*371-2554*	1	PULLEY GP-CRANKSHAFT	33
Y	*346-0737*	1	PUMP GP-ENGINE OIL	44
Y	*391-4811*	1	PUMP GP-FUEL INJECTION	86
Y	*372-2297*	1	PUMP GP-WATER	53
Y	*394-9639*	1	RAIL GP-FUEL	87
Y	*371-2480*	1	ROCKER ARM GP	36
Y	*395-0110*	1	SENSOR GP-ENGINE	148
Y	*395-0114*	1	STARTING AID GP	151
Y	*371-2719*	1	SUPPORT GP-POWER TAKE-OFF	37
Y	*371-2720*	1	TURBOCHARGER GP	69
Y	*395-0113*	1	WIRING GP-ENGINE	172

Y - SEPARATE ILLUSTRATION

<END>

ENGINE ARRANGEMENT

381-4371 INSTALLATION AR-ENGINE

S/N: DYB1-UP

PART OF 381-4382 COMMON AR

SMCS-1000 **i05309776**

NOTE	PART NUMBER	QTY	PART NAME 1 2 3 4 5 6 (PRODUCT LEVEL)	SEE PAGE
Y	*371-1278*	1	AIR CLEANER GP	57
Y	*371-1277*	1	DRAIN GP-ENGINE OIL	16
Y	*332-3648*	1	EXTENSION GP-EXHAUST	59
Y	*332-3636*	1	FAN GP-SUCTION	50
Y	*371-1275*	1	LINES GP-AIR	60
Y	*371-1272*	1	LINES GP-FUEL	79
Y	*371-1273*	1	LINES GP-RADIATOR	51
Y	*387-4335*	1	MOUNTING GP-ENGINE FLEXIBLE	27
Y	*332-3638*	1	MOUNTING GP-HYDROSTATIC PUMP	217
Y	*371-1276*	1	MUFFLER GP	65
Y	*423-4666*	1	RADIATOR & HYD OIL COOLER GP	55
Y	*350-4306*	1	STARTING MOTOR GP-ELECTRIC (WITH MOUNTING)	154

Y - SEPARATE ILLUSTRATION

<END>

374-7094 AIR COMPRESSOR GP

S/N: E7A1-UP

PART OF 371-1441 ENGINE AR-PRIMARY

AN ATTACHMENT

SMCS-1803, 1804 **i05330642**

NOTE	REF NO	GRAPHIC REF	PART NUMBER	QTY	PART NAME 1 2 3 4 5 6 (PRODUCT LEVEL)	SEE PAGE
	1	1	**127-3361**	2	BOLT (M8X1.25X95-MM)	
	2	1	**101-7178**	3	BOLT (M10X1.5X55-MM)	
Y	3	1	**320-1291**	1	COMPRESSOR GP-REFRIGERANT	414
	4	1	**330-1725**	1	BRACKET AS	
		1	**161-9820**	2	PIN	
	5	1	**346-2999**	2	BOLT (M8X1.25X16.6-MM)	

Y - SEPARATE ILLUSTRATION

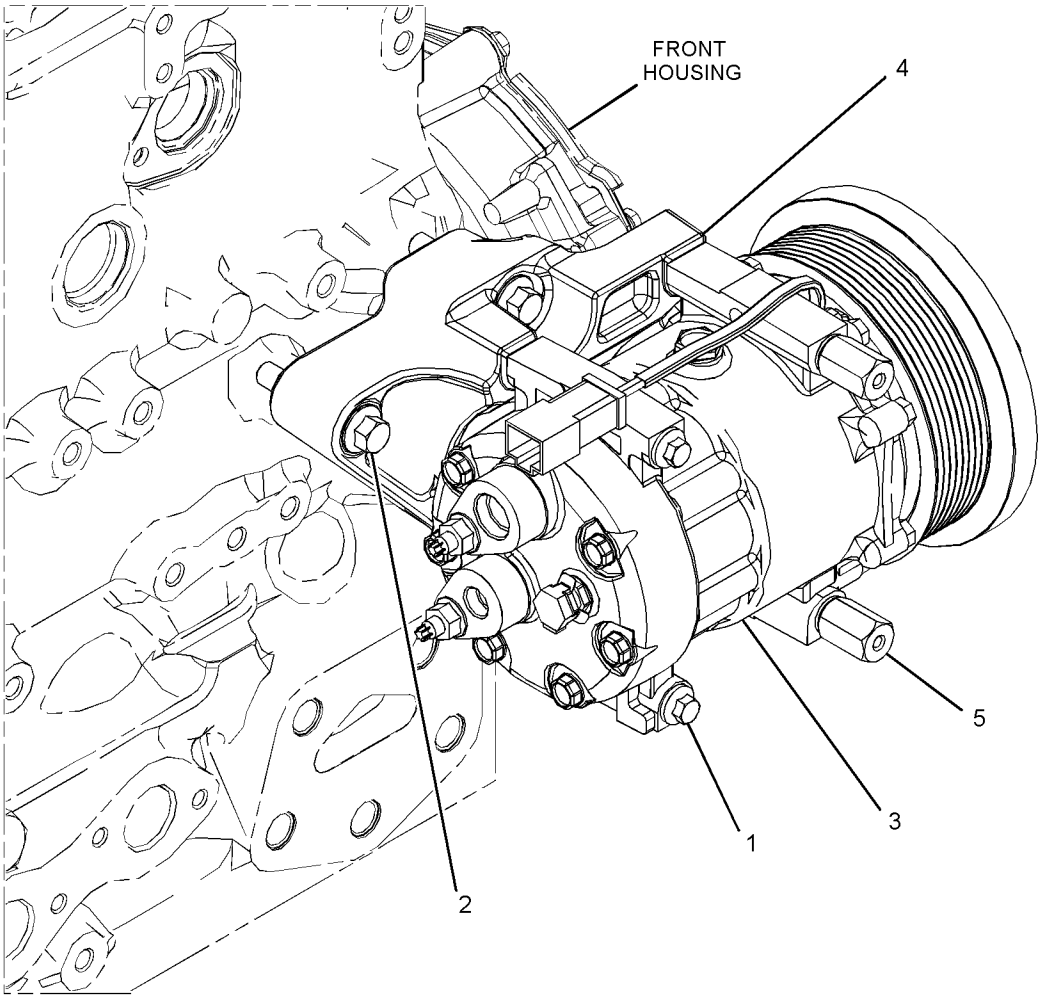

GRAPHIC #1 **<END>** g02510958

376-1108 BELT TENSIONER GP

S/N: E7A1-UP
PART OF 371-1441 ENGINE AR-PRIMARY
AN ATTACHMENT

SMCS-1357, 1358, 1397

i05330735

NOTE	REF NO	GRAPHIC REF	PART NUMBER	QTY	PART NAME 1 2 3 4 5 6 (PRODUCT LEVEL)	SEE PAGE
	1	1	**369-1255**	1	TENSIONER	

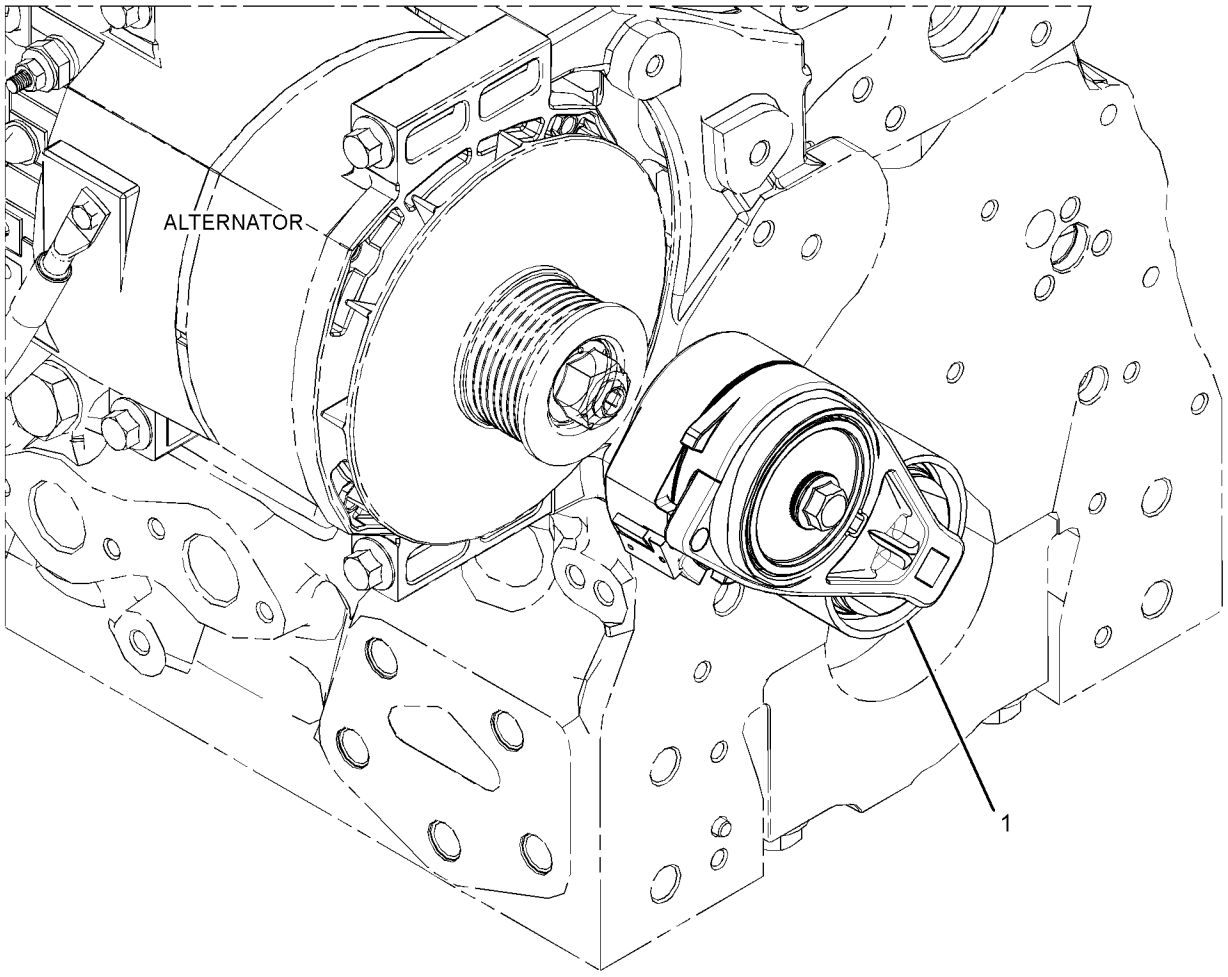

GRAPHIC #1

<END>

g02514017

396-2615 CAMSHAFT GP

S/N: E7A1-UP
PART OF 371-1441 ENGINE AR-PRIMARY
AN ATTACHMENT

SMCS-1210, 1211, 1212 **i05330842**

NOTE	REF NO	GRAPHIC REF	PART NUMBER	QTY	PART NAME 1 2 3 4 5 6 (PRODUCT LEVEL)	SEE PAGE
	1	1	**278-5125**	12	TAPPET	
	2	1	**396-8795**	1	CAMSHAFT GP	
	2A	1	**067-6135**	1	KEY-WOODRUFF	
	3	1	**319-8426**	12	PUSHROD	

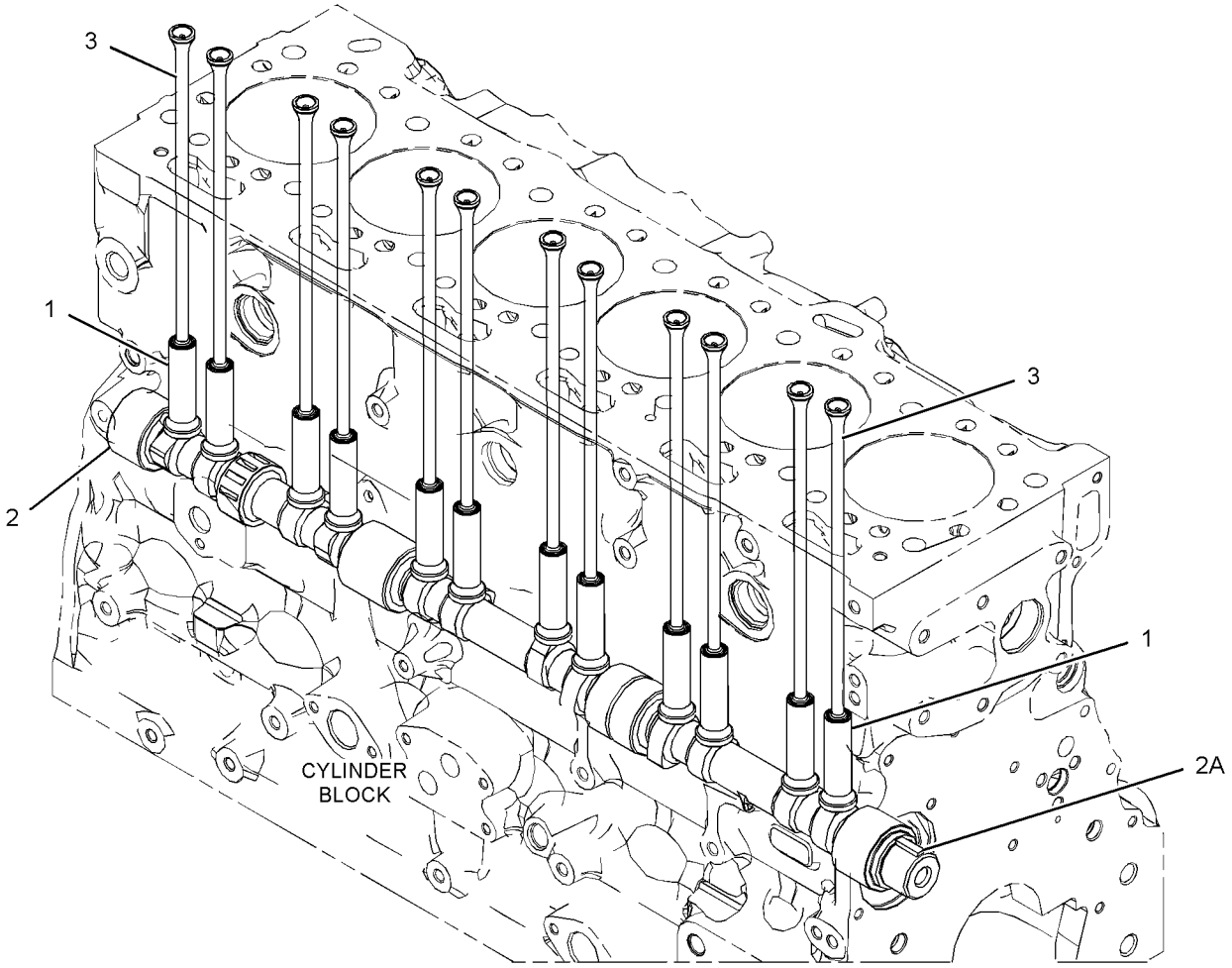

GRAPHIC #1 **<END>** g03380150

346-0402 COVER GP-SOUND SUPPRESSION

S/N: DYB1-UP

AN ATTACHMENT

SMCS-1801 **i05307916**

NOTE	REF NO	GRAPHIC REF	PART NUMBER	QTY	PART NAME 1 2 3 4 5 6 (PRODUCT LEVEL)	SEE PAGE
	1	1	**150-6579**	2	LATCH AS	
					(EACH INCLUDES)	
M		1	**5C-2890**	1	NUT (M6X1-THD)	
M		1	**6V-7357**	1	BOLT (M6X1X25-MM)	
M		1	**8T-4138**	1	BOLT (M6X1X20-MM)	
	2	1	**346-0403**	1	PLATE AS	
	3	1	**377-1538**	1	PLATE AS	

M - METRIC PART

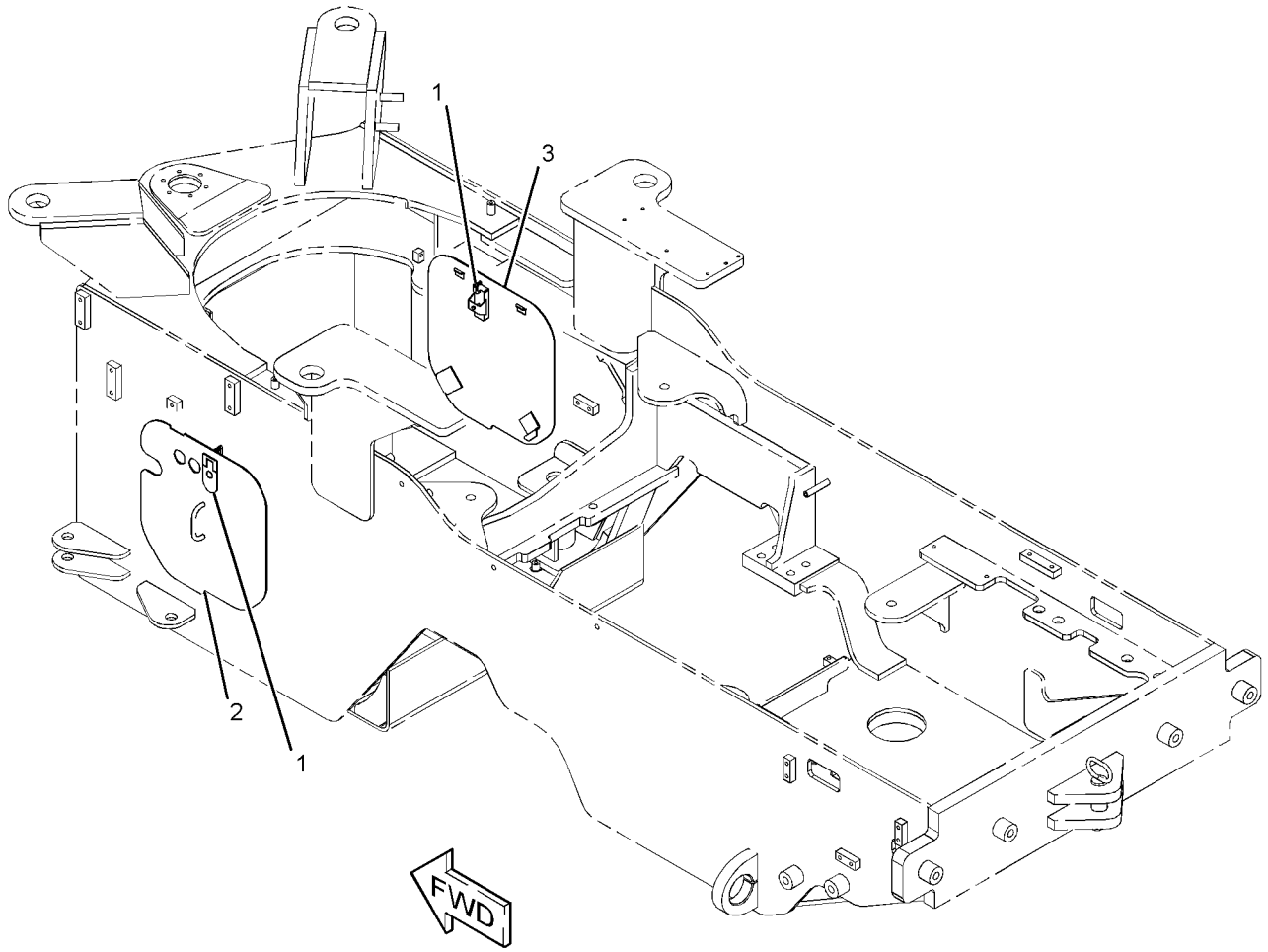

GRAPHIC #1 **<END>** g02758016

389-3346 COVER GP-VALVE MECHANISM

S/N: E7A1-UP

PART OF 371-1441 ENGINE AR-PRIMARY

AN ATTACHMENT

SMCS-1107 **i05330845**

NOTE	REF NO	GRAPHIC REF	PART NUMBER	QTY	PART NAME 1 2 3 4 5 6 (PRODUCT LEVEL)	SEE PAGE
M	1	1	**101-3895**	9	BOLT (M8X1.25X35-MM)	
	2	1	**103-5705**	6	BOLT (M8X1.25X110-MM)	
	3	1	**383-1382**	1	COVER GP-VALVE MECHANISM	
	3A	1	**195-9245**	3	SCREW (M4X0.7X10-MM)	
	3B	1	**376-4761**	1	SEAL	
	3C	1	**380-9615**	1	CAP-BREATHER (VALVE MECHANISM)	
	3D	1	**383-1383**	1	COVER-VALVE MECHANISM	
	4	1	**383-1388**	1	COVER-BASE	
	5	1	**388-0536**	1	GASKET	
M	6	1	**6I-0217**	14	BOLT (M8X1.25X20-MM)	

M - METRIC PART

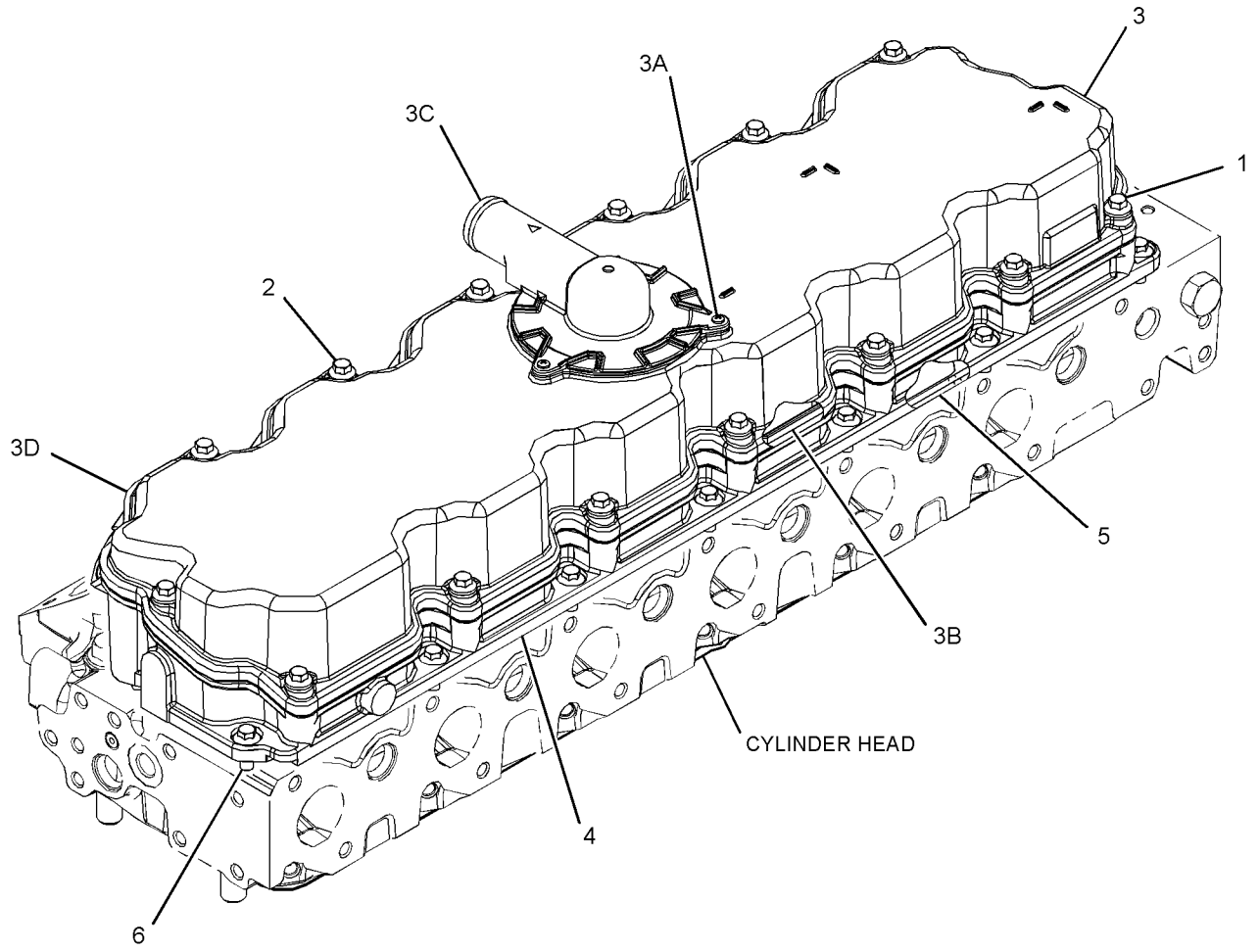

GRAPHIC #1 **<END>** g03379556

374-6300 CRANKSHAFT GP

S/N: E7A1-UP
PART OF 371-1441 ENGINE AR-PRIMARY
AN ATTACHMENT

SMCS-1202 **i05331583**

NOTE	REF NO	GRAPHIC REF	PART NUMBER	QTY	PART NAME 1 2 3 4 5 6 (PRODUCT LEVEL)	SEE PAGE
P	1	1	*317-5485*	7	BEARING	
P	2	1	*317-5486*	7	BEARING	
	3	1	**339-8780**	1	DOWEL	
J	4	1	**363-0559**	2	WASHER-THRUST	
	5	1	**376-4074**	1	CRANKSHAFT	
	6	1	**376-4078**	1	DISC-TIMING	
	7	1	**067-6135**	1	KEY-WOODRUFF	
	8	1	**276-7391**	1	GEAR (34-TEETH)	
	9	1	**276-7394**	3	BOLT	
					AVAILABLE REPAIR KIT(S):	
P			**360-1978**	1	KIT-BEARING	
					(INCLUDES BEARINGS)	
J			**364-5145**	1	KIT-WASHER	
					(INCLUDES WASHERS)	

J - KIT MARKED J SERVICES PART MARKED J
P - KIT MARKED P SERVICES PARTS MARKED P

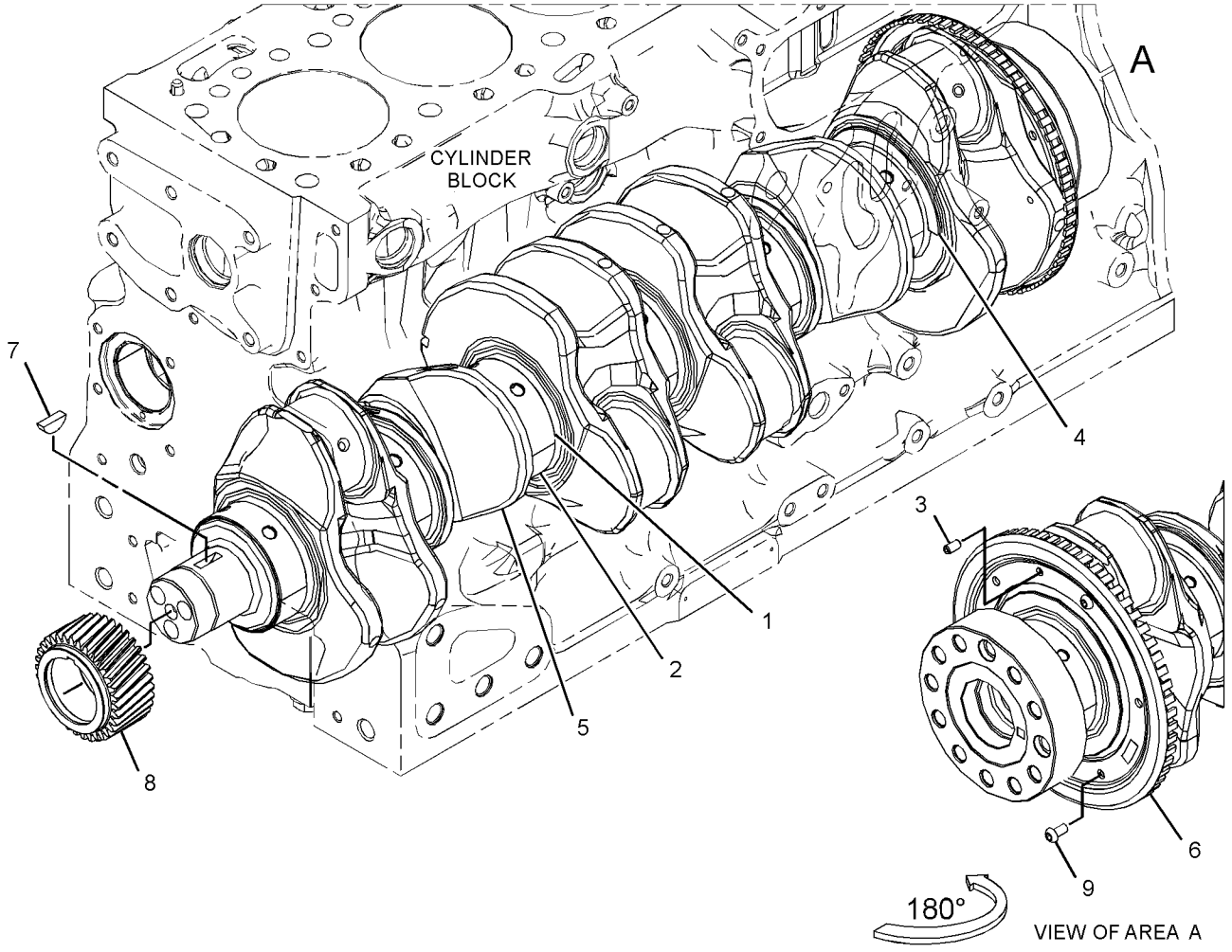

GRAPHIC #1 **<END>** g03115317

383-3581 CYLINDER BLOCK AS

S/N: E7A1-UP

PART OF 390-0854 CYLINDER BLOCK GP

AN ATTACHMENT

SMCS-1201 **i05342073**

NOTE	REF NO	GRAPHIC REF	PART NUMBER	QTY	PART NAME 1 2 3 4 5 6 (PRODUCT LEVEL)	SEE PAGE
	1	1	**232-7597**	4	PLUG	
	2	1	**276-5602**	2	PLUG-CORE	
	3	1	**232-7596**	1	PLUG	
	4	1	**067-6043**	7	PLUG-SIDE	
	5	1	**067-6823**	1	PLUG	
	6	1	**185-0884**	2	DOWEL	
	7	1	**225-8858**	2	PLUG	
	8	1	**232-7599**	2	PLUG	
	9	1	**276-5600**	14	BOLT-SPECIAL (BEARING CAP)	
	10	1	**331-6835**	2	PLUG-SEALING	

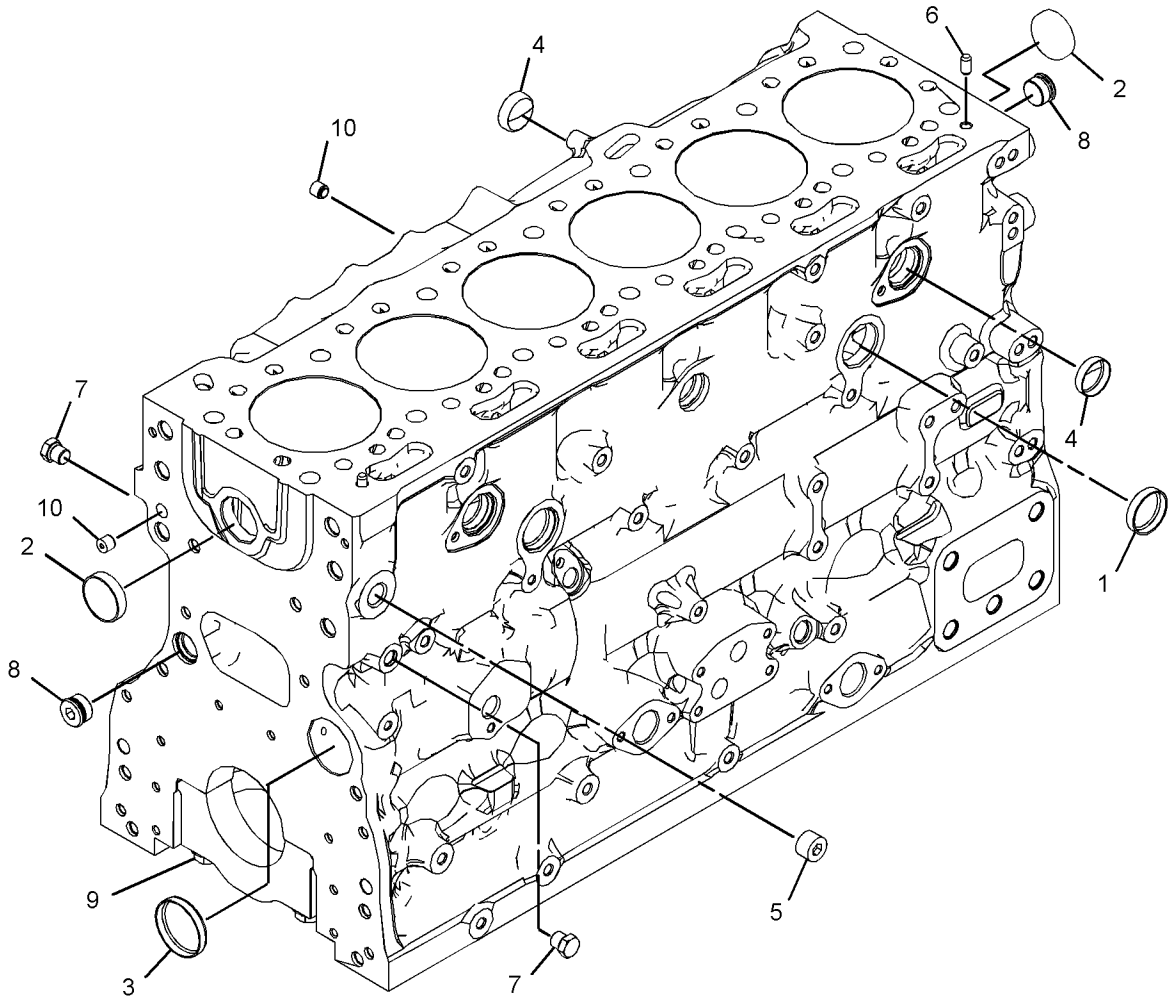

GRAPHIC #1 **<END>** g03351937

390-0854 CYLINDER BLOCK GP

S/N: E7A1-UP
PART OF 371-1441 ENGINE AR-PRIMARY
AN ATTACHMENT

SMCS-1201 **i05340224**

NOTE	REF NO	GRAPHIC REF	PART NUMBER	QTY	PART NAME 1 2 3 4 5 6 (PRODUCT LEVEL)	SEE PAGE
	1	1	**276-5603**	1	SEAL-O-RING	
Y	2	1	*383-3581*	1	CYLINDER BLOCK AS	12
M	3	1	**209-9219**	10	BOLT (M8X1.25X16-MM)	
	4	1	**232-7449**	1	HOUSING AS	
	5	1	**232-1322**	1	PLUG	

M - METRIC PART
Y - SEPARATE ILLUSTRATION

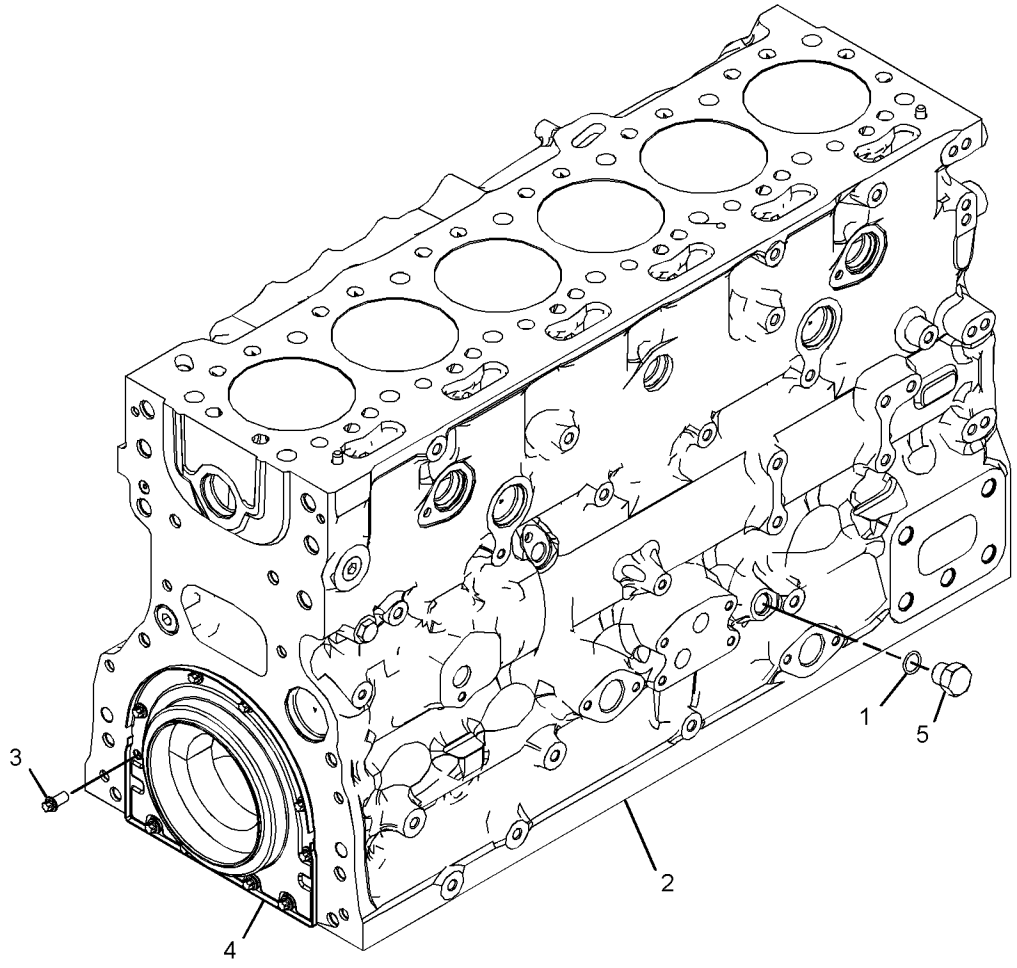

GRAPHIC #1 **<END>** g03384924

384-5313 CYLINDER HEAD AS

S/N: E7A1-UP

PART OF 385-2572 CYLINDER HEAD GP

AN ATTACHMENT

SMCS-1100, 1101

i05330860

NOTE	REF NO	GRAPHIC REF	PART NUMBER	QTY	PART NAME 1 2 3 4 5 6 (PRODUCT LEVEL)	SEE PAGE
	1	1	**276-8116**	6	PLUG-CORE	
	2	1	**377-0400**	12	INSERT-VALVE SEAT (EXHAUST)	
	3	1	**377-0399**	12	INSERT-VALVE SEAT (INTAKE)	
	4	1	**276-8117**	13	PLUG-CORE	

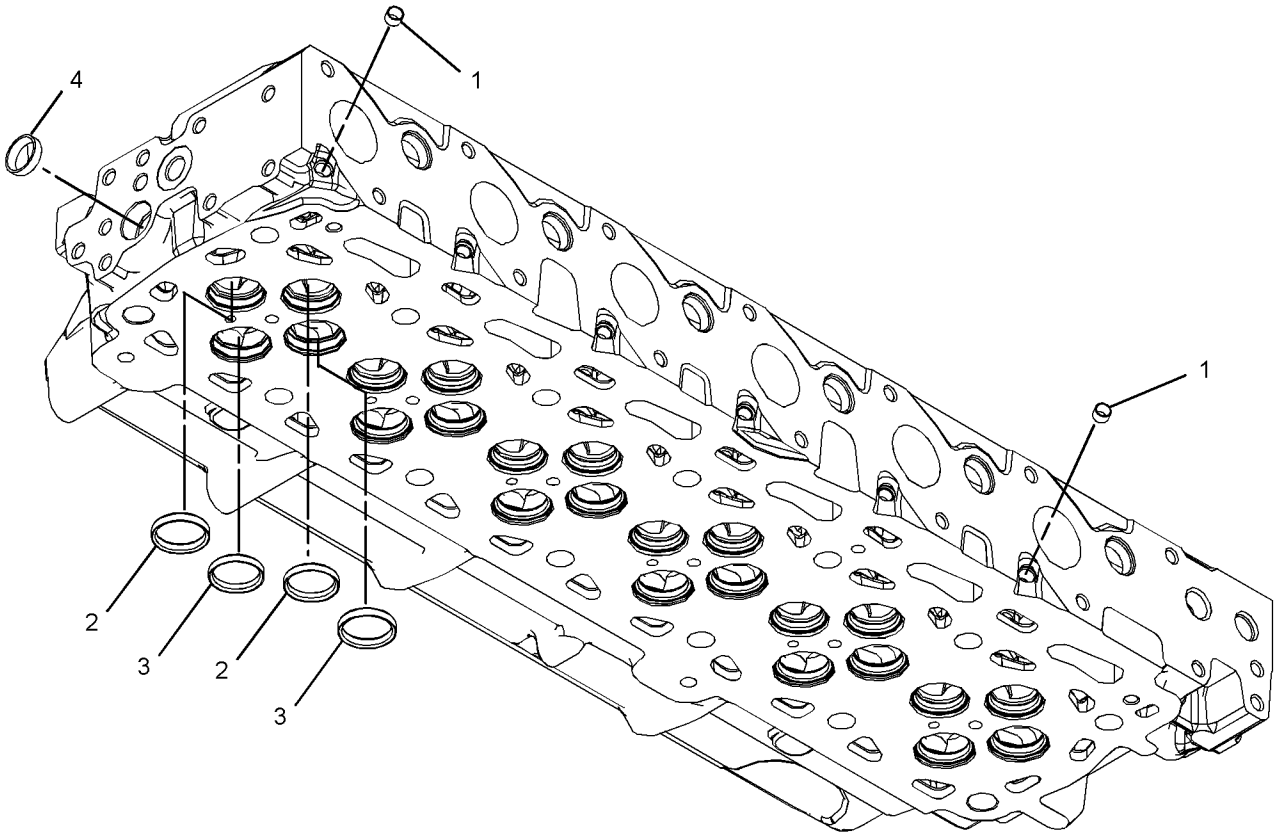

GRAPHIC #1 **<END>** g03379426

385-2572 CYLINDER HEAD GP

S/N: E7A1-UP
PART OF 371-1441 ENGINE AR-PRIMARY
AN ATTACHMENT

SMCS-1100 **i05330848**

NOTE	REF NO	GRAPHIC REF	PART NUMBER	QTY	PART NAME 1 2 3 4 5 6 (PRODUCT LEVEL)	SEE PAGE
	1	1	**199-9751**	1	SEAL-O-RING	
Y	2	1	**384-5313**	1	CYLINDER HEAD AS	14
	3	1	**388-4707**	1	GASKET-CYLINDER HEAD	
	4	1	**232-1322**	1	PLUG	
	5	1	**276-8134**	14	BOLT-SPECIAL (CYLINDER HEAD)	
	6	1	**277-4302**	2	DOWEL	
	7	1	**295-6661**	1	PLUG	

Y - SEPARATE ILLUSTRATION

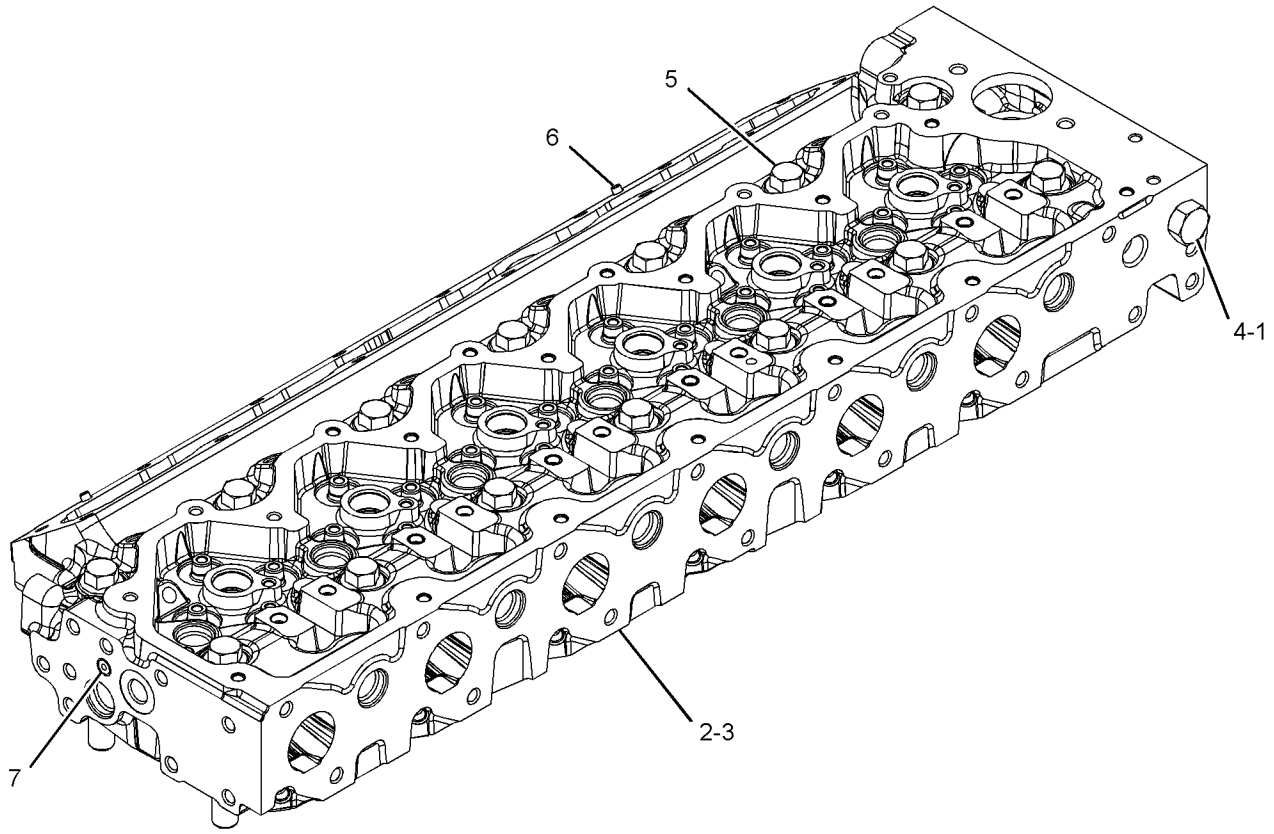

GRAPHIC #1 **<END>** g03379427

371-1277 DRAIN GP-ENGINE OIL

S/N: DYB1-UP

PART OF 381-4371 INSTALLATION AR-ENGINE

SMCS-1302 **i05296399**

NOTE	REF NO	GRAPHIC REF	PART NUMBER	QTY	PART NAME 1 2 3 4 5 6 (PRODUCT LEVEL)	SEE PAGE
	1	1	**2P-4173**	1	VALVE-SHUTOFF (DRAIN)	
	2	1	**8C-5225**	1	PLUG-SEAL	
	3	1	**8T-0154**	1	CLAMP-HOSE	
	4	1	**323-3308**	1	CAP	
E	5	1	**5P-0743**		HOSE (30-CM)	

E - ORDER BY THE CENTIMETER

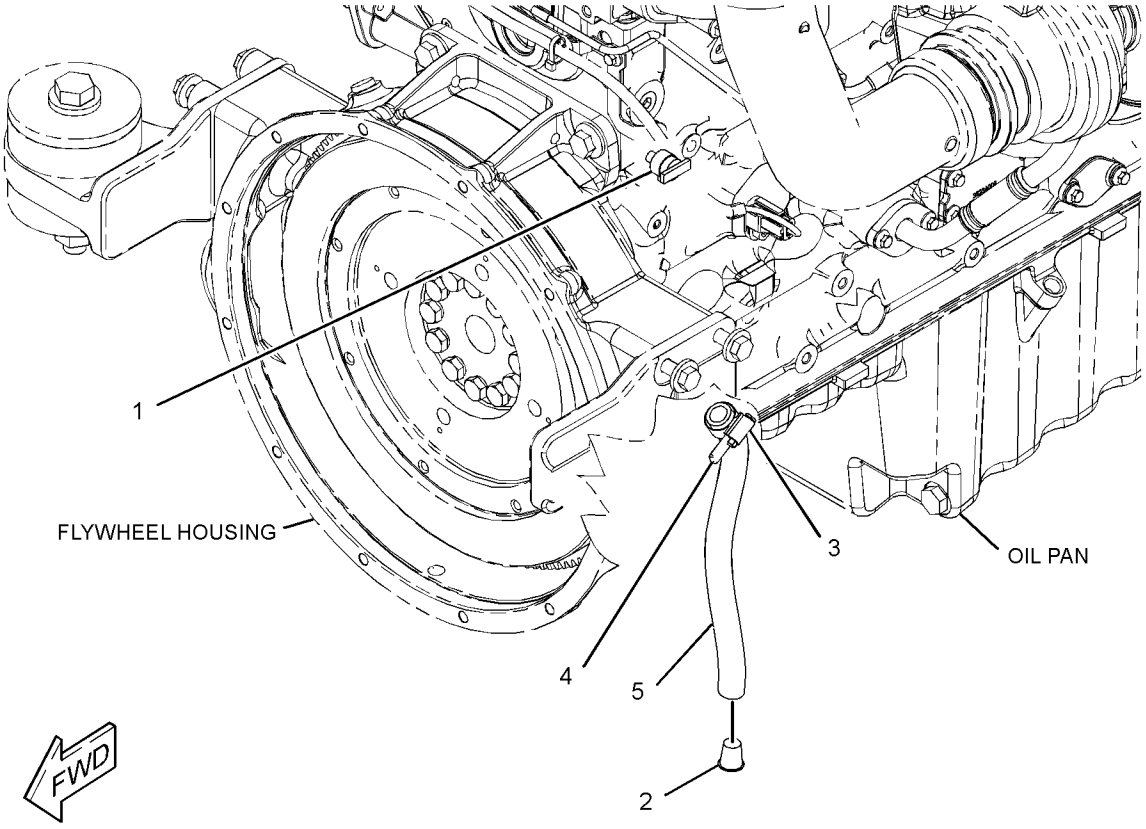

GRAPHIC #1 **<END>** g03378992

371-2742 DRAIN GP-ENGINE OIL

S/N: E7A1-UP
PART OF 371-1441 ENGINE AR-PRIMARY
AN ATTACHMENT

SMCS-1302 **i05331627**

NOTE	REF NO	GRAPHIC REF	PART NUMBER	QTY	PART NAME 1 2 3 4 5 6 (PRODUCT LEVEL)	SEE PAGE
	1	1	**3K-0360**	1	SEAL-O-RING	
	2	1	**6V-7238**	1	VALVE-SHUTOFF	

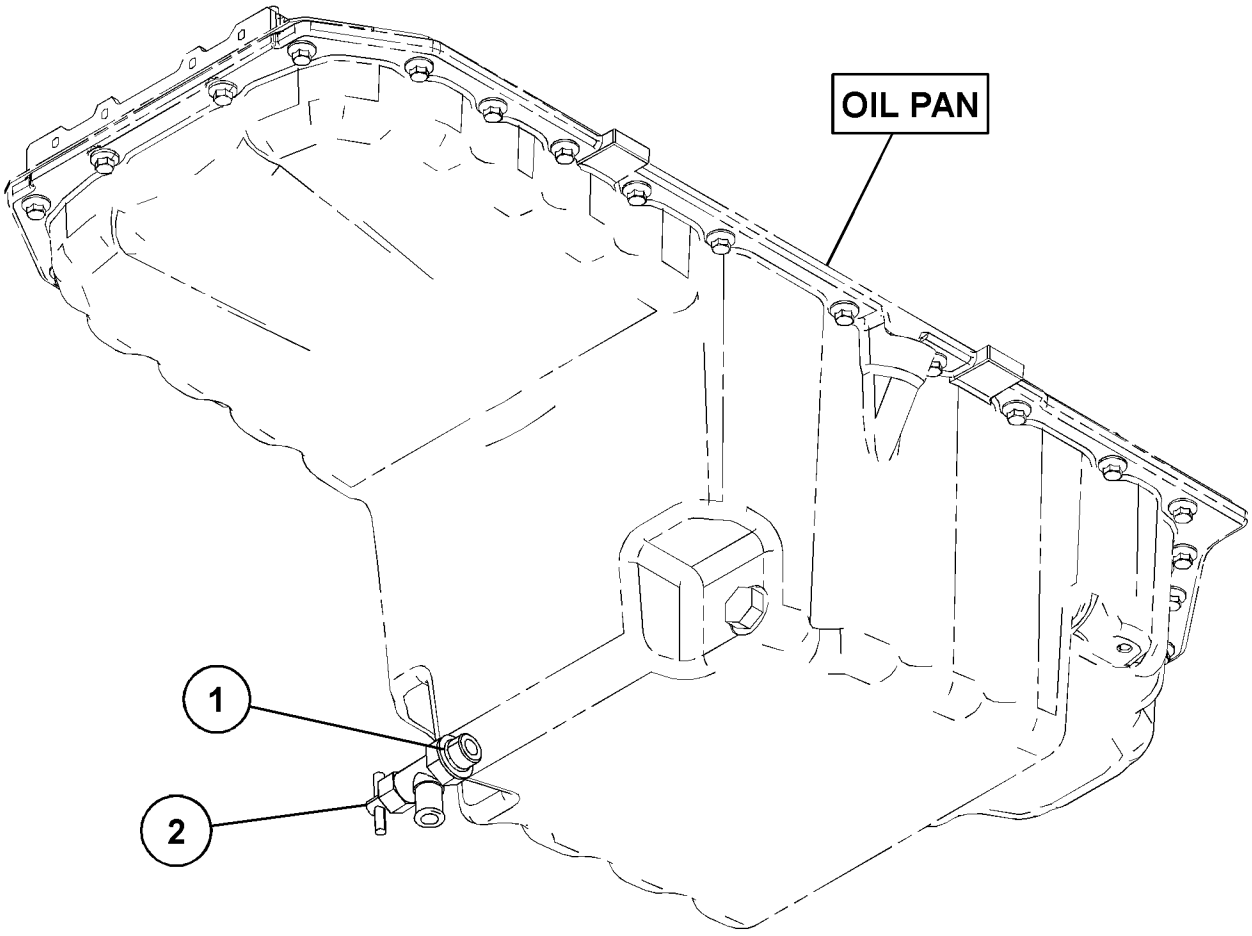

GRAPHIC #1 **<END>** g03171685

375-3937 DRIVE GP-FAN

S/N: E7A1-UP
PART OF 371-1441 ENGINE AR-PRIMARY
AN ATTACHMENT

SMCS-1359 **i05331633**

NOTE	REF NO	GRAPHIC REF	PART NUMBER	QTY	PART NAME 1 2 3 4 5 6 (PRODUCT LEVEL)	SEE PAGE
	1	1	**371-8298**	1	BRACKET	
	2	1	**377-9255**	1	PULLEY (8-GROOVE)	
	3	1	**111-0859**	2	BOLT (M10X1.5X35-MM)	

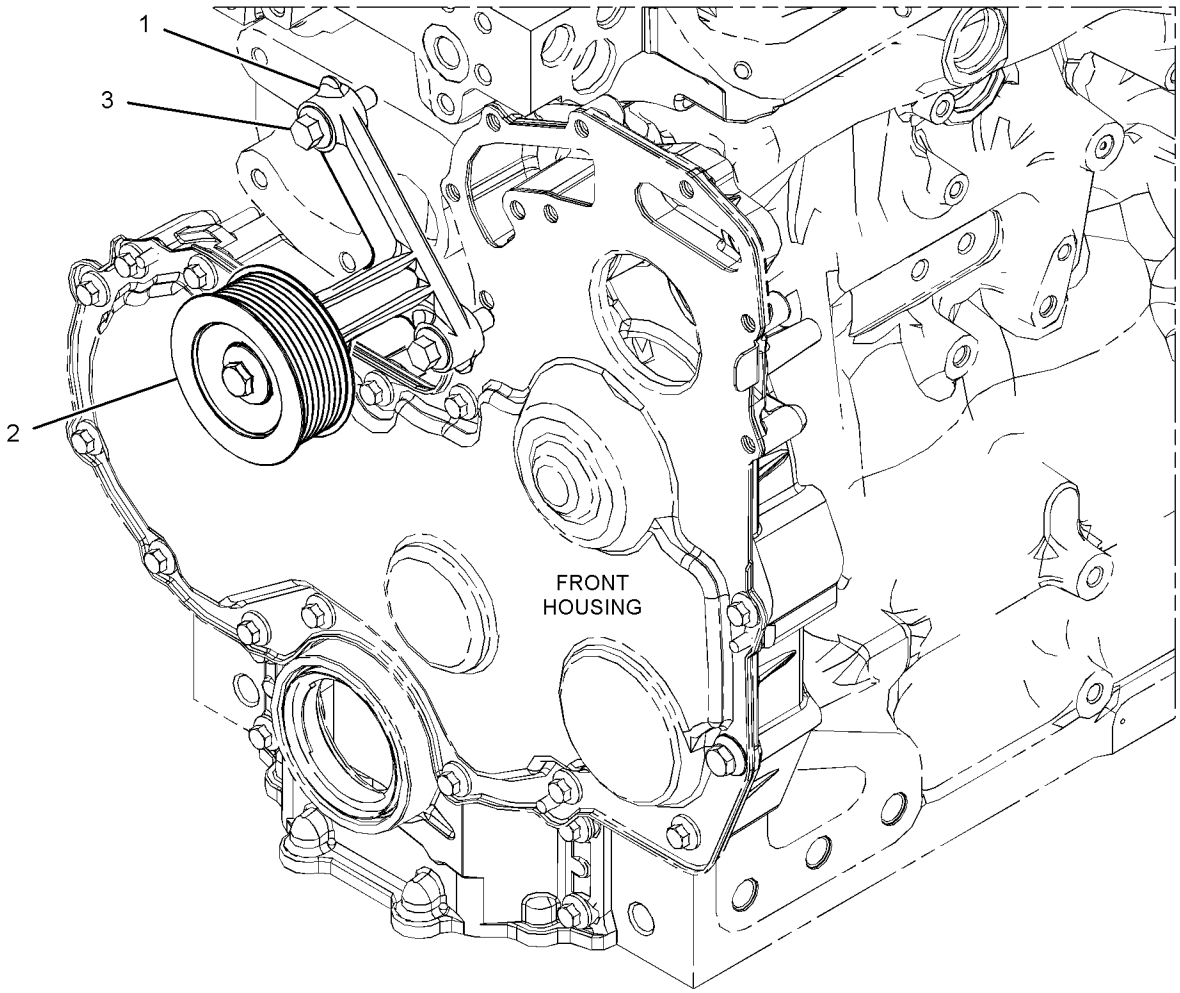

GRAPHIC #1 **<END>** g03108922

371-2539 FLYWHEEL GP

S/N: E7A1-UP
PART OF 371-1441 ENGINE AR-PRIMARY
AN ATTACHMENT

SMCS-1156 **i05281719**

NOTE	REF NO	GRAPHIC REF	PART NUMBER	QTY	PART NAME 1 2 3 4 5 6 (PRODUCT LEVEL)	SEE PAGE
	1	1	**145-4911**	12	WASHER	
	2	1	**378-4739**	1	FLYWHEEL AS	
		1	**277-0588**	1	GEAR-STARTING MOTOR RING (134-TEETH)	
	3	1	**0S-1603**	12	BOLT (1/2-20X1.5-IN)	

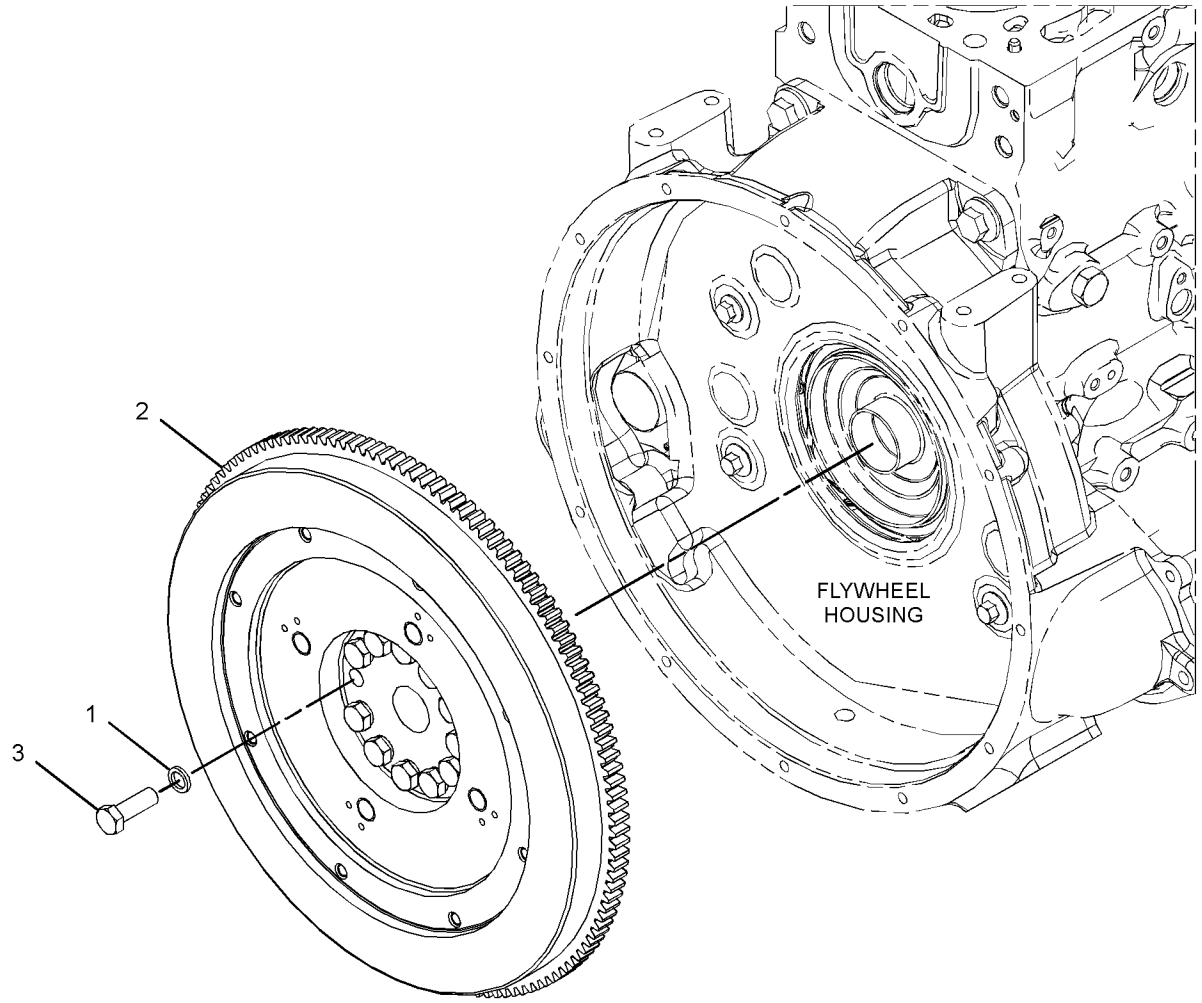

GRAPHIC #1 **<END>** g02629056

393-3369 HOUSING GP-FLYWHEEL

S/N: E7A1-UP

PART OF 371-1441 ENGINE AR-PRIMARY

AN ATTACHMENT

SMCS-1157 **i05331853**

NOTE	REF NO	GRAPHIC REF	PART NUMBER	QTY	PART NAME 1 2 3 4 5 6 (PRODUCT LEVEL)	SEE PAGE
	1	1	**277-0121**	3	PLUG	
	2	1	**283-4662**	2	BOLT-FLANGE HEAD	
	3	1	**287-8597**	2	DOWEL	
	4	1	**288-6974**	4	BOLT	
	5	1	**288-6975**	2	BOLT	
	6	1	**393-4006**	1	GASKET	
	7	1	**393-4007**	1	HOUSING-FLYWHEEL	

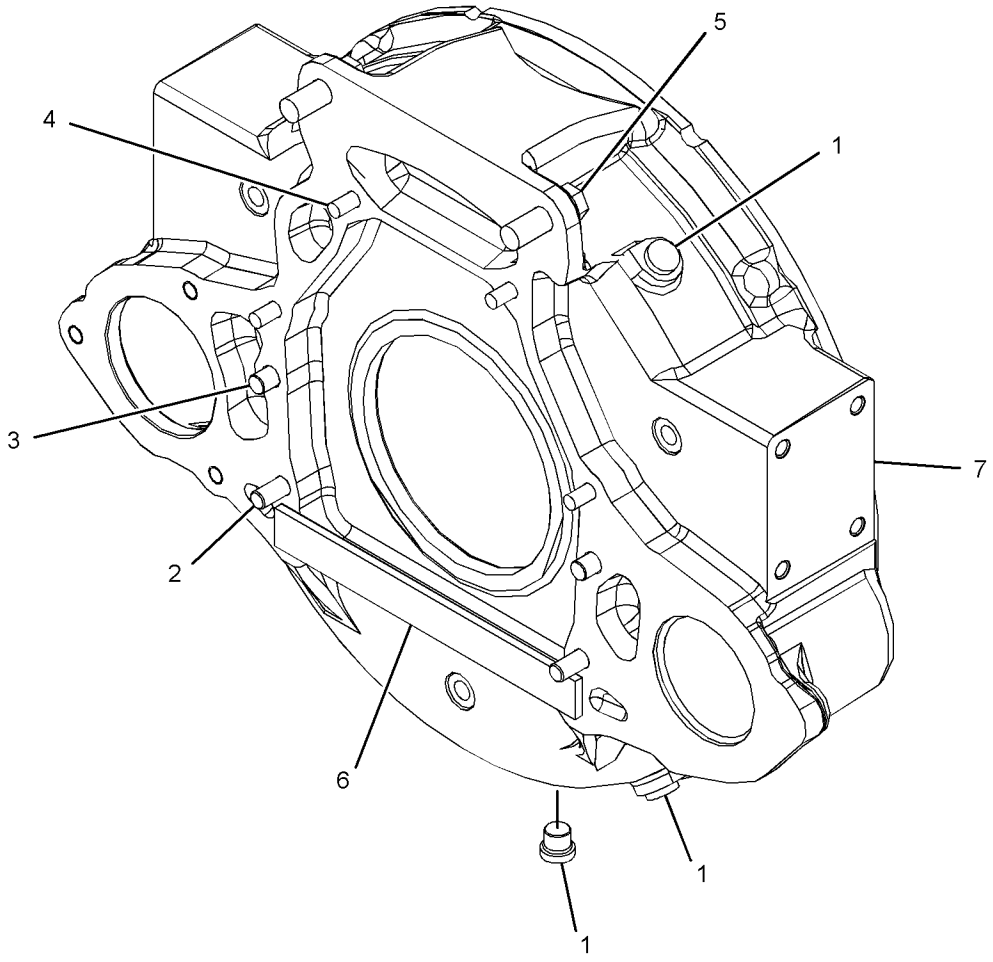

GRAPHIC #1 **<END>** g03379656

371-2725 HOUSING GP-FRONT

S/N: E7A1-UP
PART OF 371-1441 ENGINE AR-PRIMARY
AN ATTACHMENT

SMCS-1151, 1162, 1206

i05331869

NOTE	REF NO	GRAPHIC REF	PART NUMBER	QTY	PART NAME 1 2 3 4 5 6 (PRODUCT LEVEL)	SEE PAGE
M	1	1	**6I-0650**	3	BOLT (M10X1.5X65-MM)	
	2	1	**7C-4616**	1	BOLT (M12X1.75X45-MM)	
	3	1	**067-6179**	1	DOWEL	
M	4	1	**100-3751**	5	BOLT (M8X1.25X65-MM)	
M	5	1	**100-4830**	1	BOLT (M10X1.5X20-MM)	
M	6	1	**101-3895**	2	BOLT (M8X1.25X35-MM)	
M	7	1	**124-3815**	9	BOLT (M8X1.25X16-MM)	
	8	1	**133-1011**	1	WASHER	
	9	1	**232-3666**	1	WASHER-THRUST	
	10	1	**277-3013**	1	SEAL	
	11	1	**346-0408**	1	PLATE	
	12	1	**386-2110**	1	CASE-GEAR	
M	13	1	**6I-0217**	6	BOLT (M8X1.25X20-MM)	
M	14	1	**6I-0645**	4	BOLT (M8X1.25X25-MM)	
	15	1	**324-0444**	1	HUB-IDLER GEAR	
	16	1	**216-8634**	1	GEAR-CAMSHAFT (68-TEETH)	
	17	1	**226-8767**	1	COVER AS-FRONT	
		1	**226-8766**	1	GASKET-COVER	
	18	1	**251-4336**	1	GEAR AS-IDLER (73-TEETH)	
	19	1	**277-3012**	1	GASKET-COVER	

M - METRIC PART

371-2725 **HOUSING GP-FRONT (*contd.*)** **i05331869**

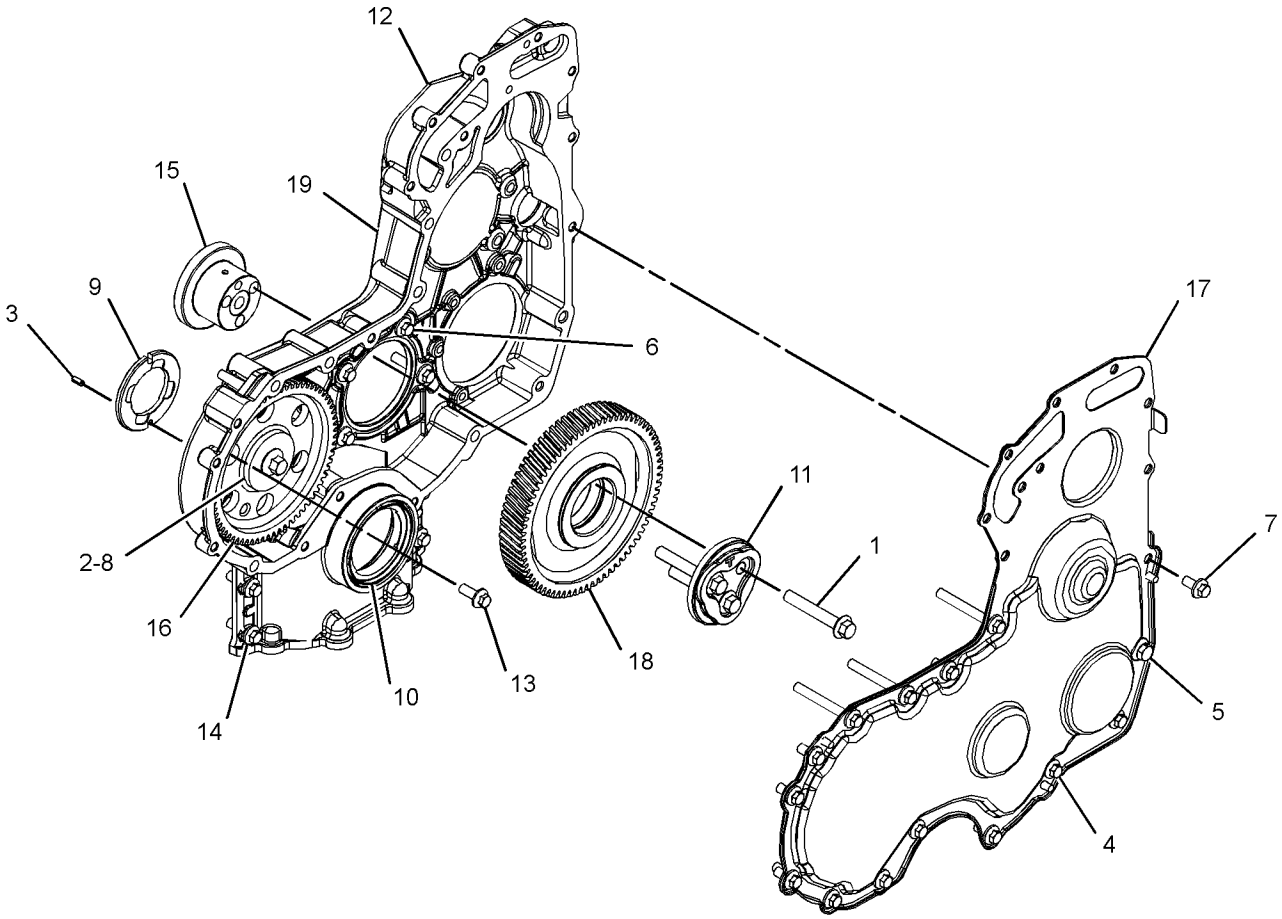

GRAPHIC #1 **<END>** g03378599

371-2478 JET GP-PISTON COOLING

S/N: E7A1-UP
PART OF 371-1441 ENGINE AR-PRIMARY
AN ATTACHMENT

SMCS-1331 **i05331889**

NOTE	REF NO	GRAPHIC REF	PART NUMBER	QTY	PART NAME 1 2 3 4 5 6 (PRODUCT LEVEL)	SEE PAGE
M	1	1	**100-4841**	6	BOLT (M6X1X10-MM)	
	2	1	**329-3796**	6	TUBE AS-OIL JET	

M - METRIC PART

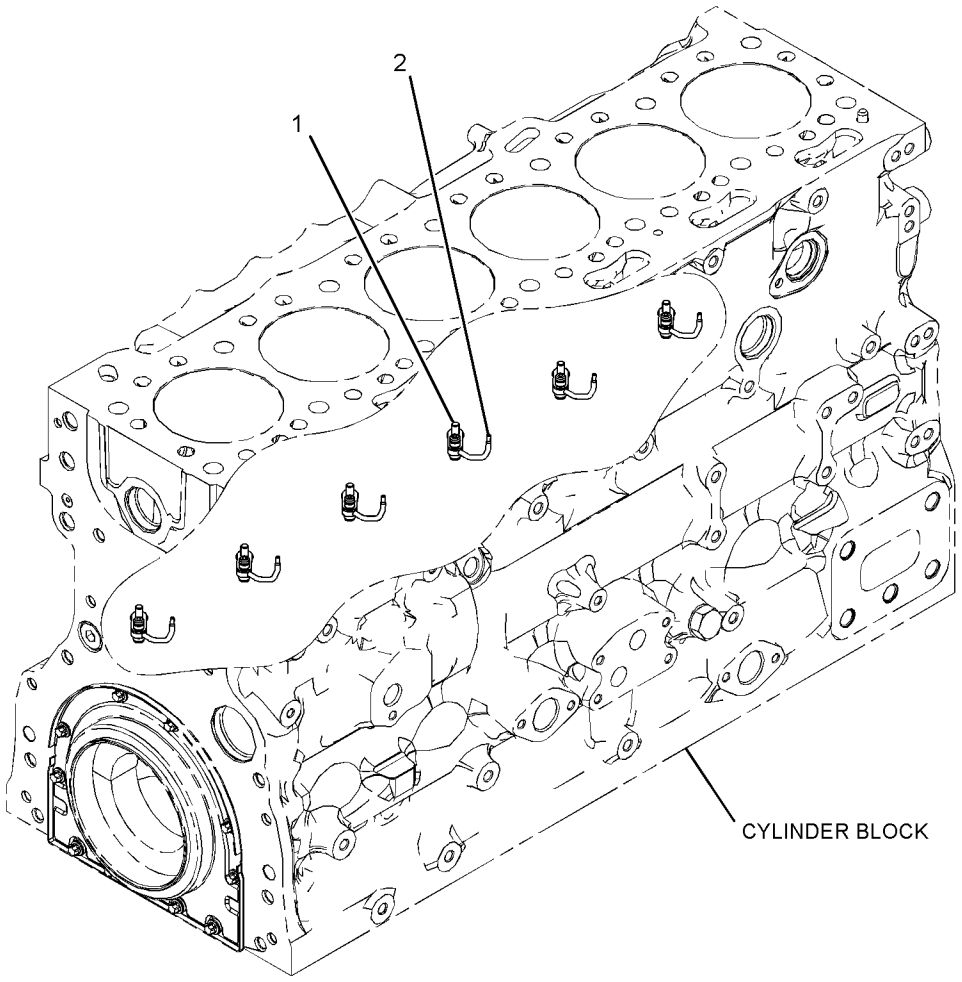

GRAPHIC #1 **<END>** g03378569

371-2735 LIFTING GP-ENGINE

S/N: E7A1-UP

PART OF 371-1441 ENGINE AR-PRIMARY

AN ATTACHMENT

SMCS-1122 **i05331884**

NOTE	REF NO	GRAPHIC REF	PART NUMBER	QTY	PART NAME 1 2 3 4 5 6 (PRODUCT LEVEL)	SEE PAGE
	1	1	**279-9651**	1	PLATE-LIFTING	
	2	1	**279-9652**	1	PLATE-LIFTING	
M	3	1	**6I-0654**	4	BOLT (M10X1.5X25-MM)	

M - METRIC PART

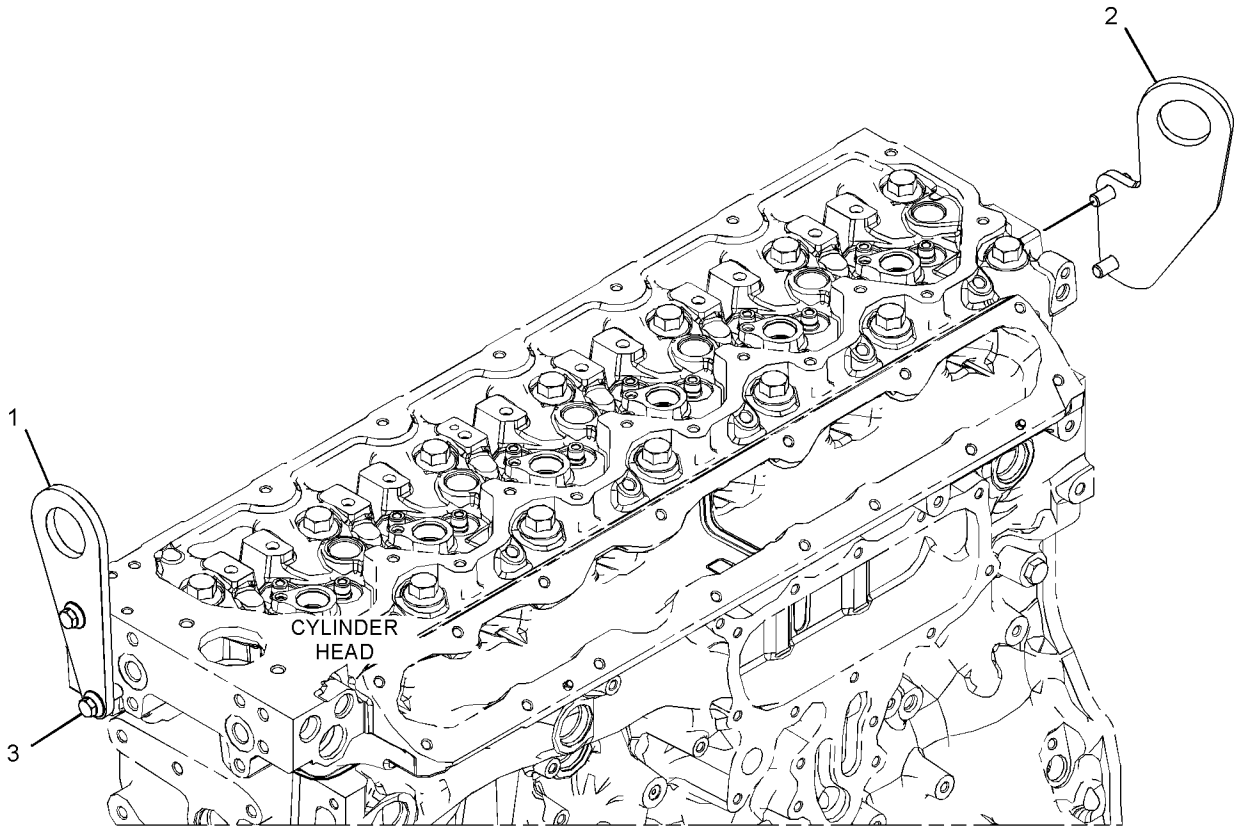

GRAPHIC #1 **<END>** g03098956

371-2558 MOUNTING GP-ALTERNATOR

S/N: E7A1-UP
PART OF 371-1441 ENGINE AR-PRIMARY
AN ATTACHMENT

SMCS-1154, 1405

i05331892

NOTE	REF NO	GRAPHIC REF	PART NUMBER	QTY	PART NAME 1 2 3 4 5 6 (PRODUCT LEVEL)	SEE PAGE
	1	1	**111-0859**	4	BOLT (M10X1.5X35-MM)	
	2	1	**394-4451**	1	BRACKET AS	
		1	**161-9820**	2	PIN	

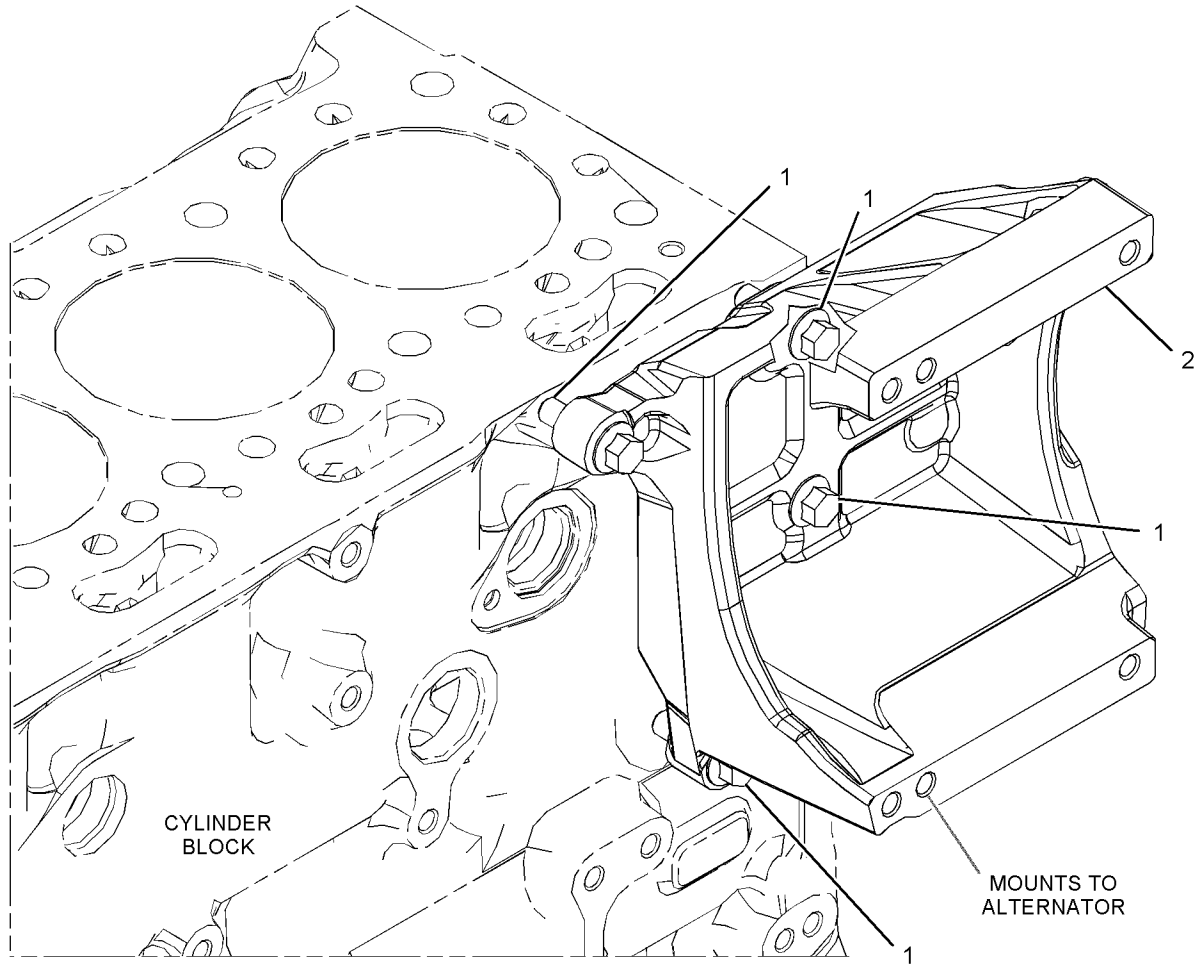

GRAPHIC #1

<END>

g03378855

385-8004 MOUNTING GP-ENGINE

S/N: E7A1-UP
FRONT LHS AND RHS
PART OF 371-1441 ENGINE AR-PRIMARY
AN ATTACHMENT

SMCS-1152, 1153, 1154 **i05331954**

NOTE	REF NO	GRAPHIC REF	PART NUMBER	QTY	PART NAME 1 2 3 4 5 6 (PRODUCT LEVEL)	SEE PAGE
	1	1	**283-8301**	3	BOLT	
	2	1	**385-4381**	1	BRACKET-MOUNTING	
	3	1	**277-4490**	1	BRACKET-MOUNTING	
	4	1	**283-8302**	3	BOLT	
	5	1	**288-6975**	2	BOLT	

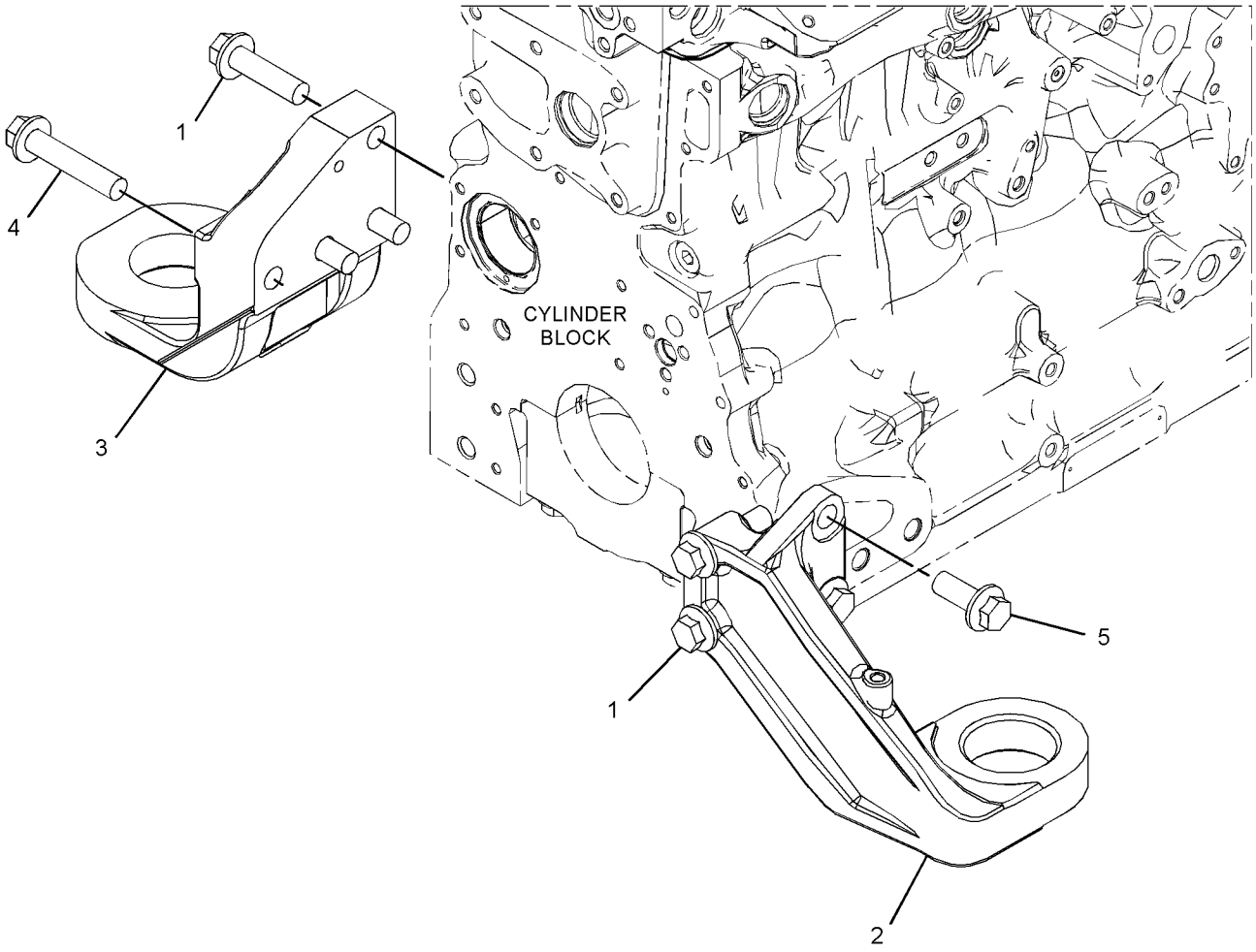

GRAPHIC #1 **<END>** g03109017

387-4335 MOUNTING GP-ENGINE FLEXIBLE

S/N: DYB1-UP

PART OF 381-4371 INSTALLATION AR-ENGINE

SMCS-1152, 1154 **i05296434**

NOTE	REF NO	GRAPHIC REF	PART NUMBER	QTY	PART NAME 1 2 3 4 5 6 (PRODUCT LEVEL)	SEE PAGE
	1	1	**228-4710**	8	SPACER (14X30X20-MM THK)	
	2	1	**335-3144**	2	SUPPORT-ENGINE	
	3	1	**341-1982**	8	MOUNT	
	4	1	**5P-1076**	8	WASHER-HARD (13.5X30X4-MM THK)	
M	5	1	**7X-2488**	4	BOLT (M20X2.5X160-MM)	
M	6	1	**8T-4131**	4	NUT (M20X2.5-THD)	
M	7	1	**8T-4648**	1	BOLT (M12X1.75X70-MM)	
M	8	1	**8T-4910**	7	BOLT (M12X1.75X60-MM)	
	9	1	**8T-5439**	8	WASHER-HARD (21.5X45X6-MM THK)	
	10	1	**9W-6584**	4	WASHER (20.5X114X10-MM THK)	

M - METRIC PART

387-4335 **MOUNTING GP-ENGINE FLEXIBLE (*contd.*)** **i05296434**

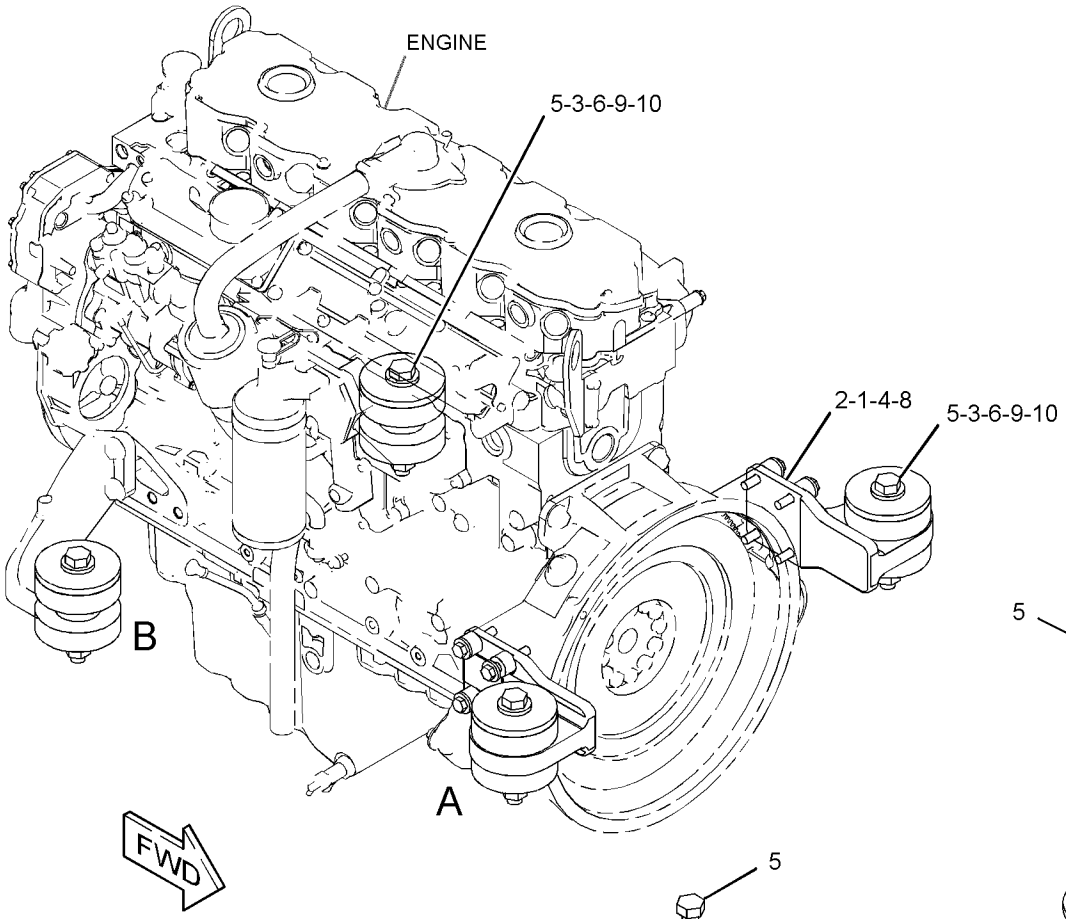

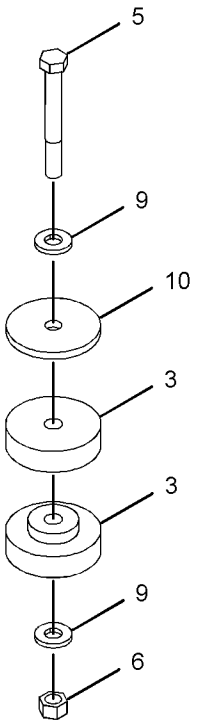

VIEW OF AREA B
(EXPLODED)

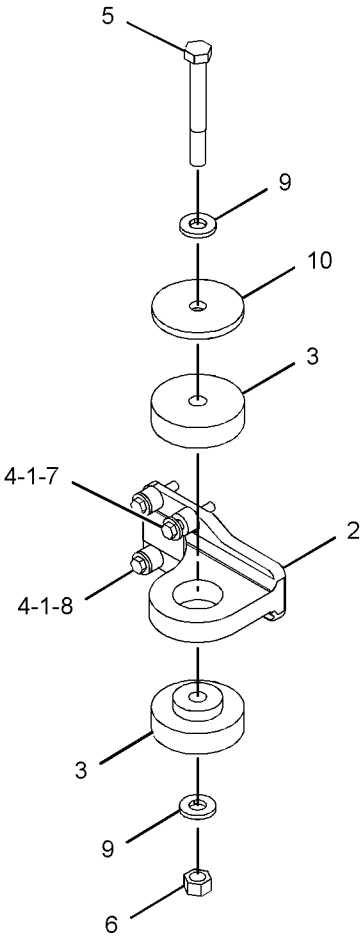

VIEW OF AREA A
(EXPLODED)

GRAPHIC #1 **<END>** g03370374

371-2544 PAN GP-OIL

S/N: E7A1-UP
PART OF 371-1441 ENGINE AR-PRIMARY
AN ATTACHMENT

SMCS-1302 **i05331983**

NOTE	REF NO	GRAPHIC REF	PART NUMBER	QTY	PART NAME 1 2 3 4 5 6 (PRODUCT LEVEL)	SEE PAGE
	1	1	**230-8094**	1	BRIDGE	
M	2	1	**6I-0217**	29	BOLT (M8X1.25X20-MM)	
M	3	1	**6I-0260**	2	BOLT (M8X1.25X25-MM)	
M	4	1	**6I-0363**	2	BOLT (M6X1X20-MM)	
	5	1	**6I-0572**	2	BOLT (M8X1.25X20-MM)	
	6	1	**351-4749**	1	GASKET-OIL PAN	
Y	7	1	**377-4718**	1	PAN GP-OIL	30
M	8	1	**6I-0654**	1	BOLT (M10X1.5X25-MM)	
	9	1	**275-9897**	1	BRACKET	
	10	1	**280-1384**	1	TUBE AS-OIL SUCTION	
	10A	1	**236-5511**	1	CLIP-PIPE	
	11	1	**6I-4681**	1	GASKET	

M - METRIC PART
Y - SEPARATE ILLUSTRATION

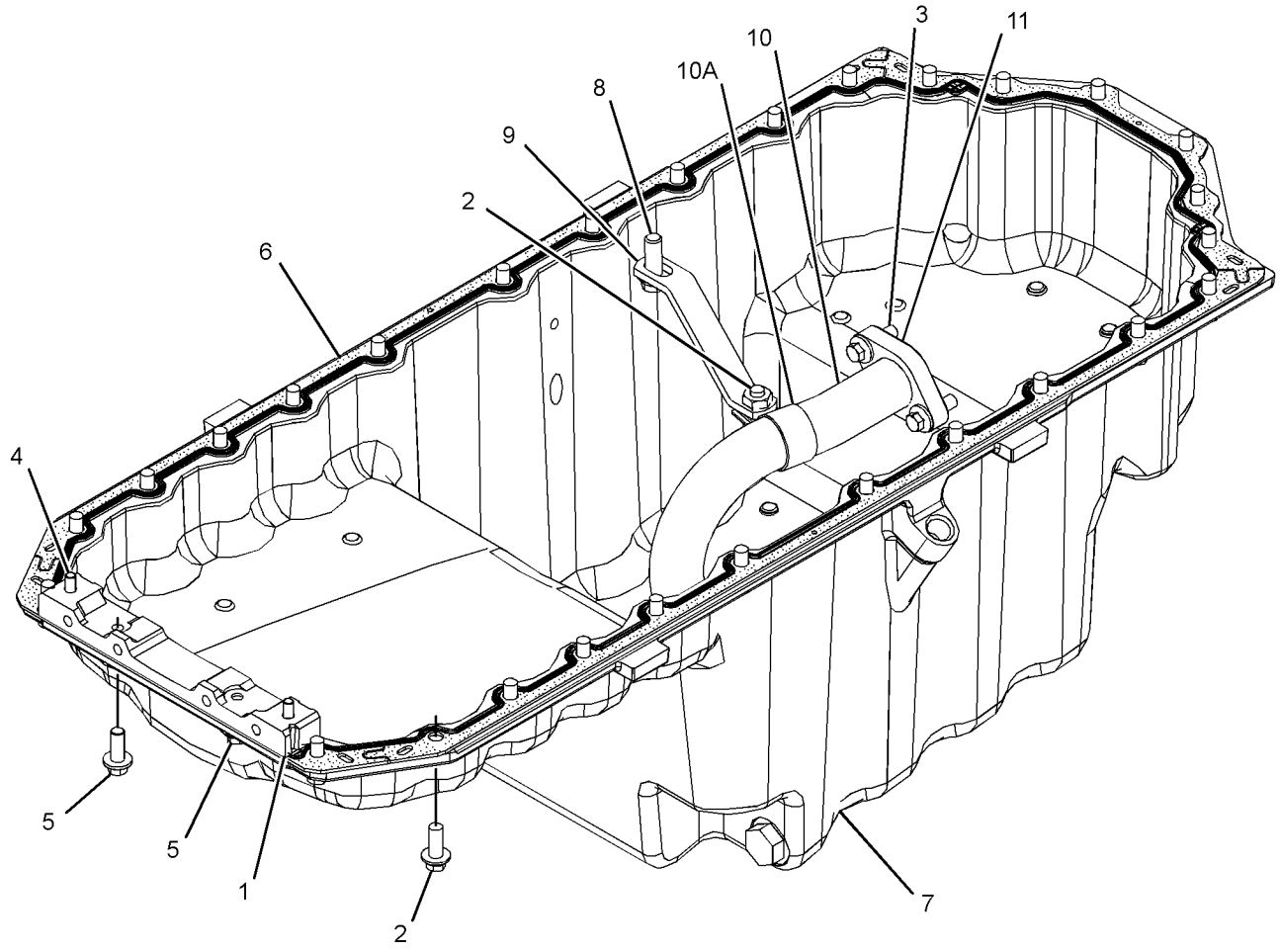

GRAPHIC #1 **<END>** g03110796

377-4718 PAN GP-OIL

S/N: E7A1-UP
PART OF 371-2544 PAN GP-OIL
AN ATTACHMENT

SMCS-1302 **i05346413**

NOTE	REF NO	GRAPHIC REF	PART NUMBER	QTY	PART NAME 1 2 3 4 5 6 (PRODUCT LEVEL)	SEE PAGE
	1	1	**8L-2786**	2	SEAL-O-RING	
	2	1	**9S-4185**	2	PLUG-O-RING	

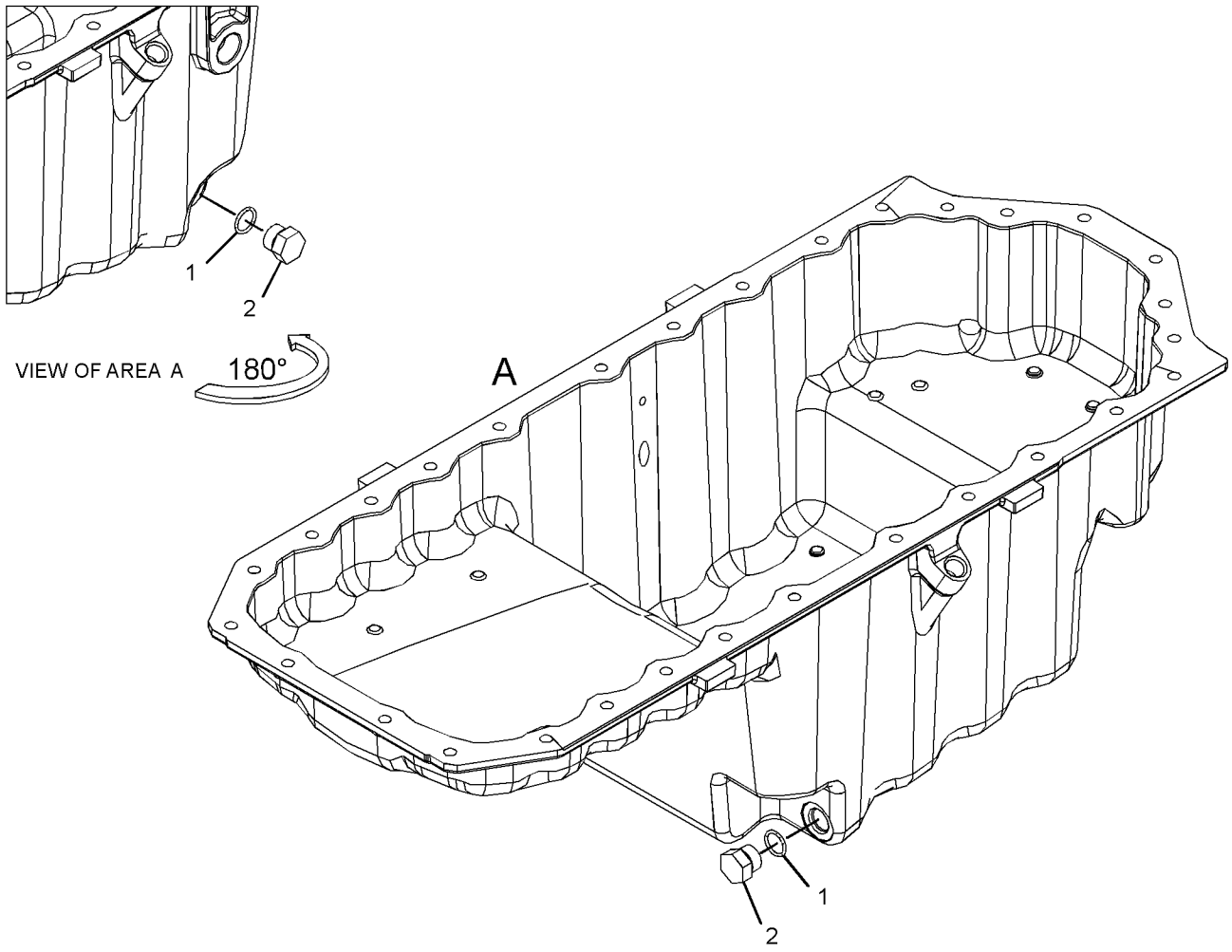

GRAPHIC #1 **<END>** g03371776

374-6301 PISTON & ROD GP

S/N: E7A1-UP
PART OF 371-1441 ENGINE AR-PRIMARY
AN ATTACHMENT

SMCS-1225 **i05332222**

NOTE	REF NO	GRAPHIC REF	PART NUMBER	QTY	PART NAME 1 2 3 4 5 6 (PRODUCT LEVEL)	SEE PAGE
	1	1	**331-0290**	6	CONNECTING ROD GP	
					(EACH INCLUDES)	
		1	**276-7478**	1	BUSHING	
		1	**323-9312**	2	BOLT (M10X1X50-MM)	
	2	1	**374-7393**	6	PISTON GP	
J	3	1	*317-5482*	6	BEARING	
J	4	1	*317-5483*	6	BEARING	
	5	1	**124-3536**	12	RING-RETAINING	
					AVAILABLE REPAIR KIT(S):	
J			**360-1564**	1	KIT-BEARING (PISTON)	
					(INCLUDES 6 UPPER HALF & 6 LOWER HALF BEARINGS)	

J - KIT MARKED J SERVICES PART(S) MARKED J

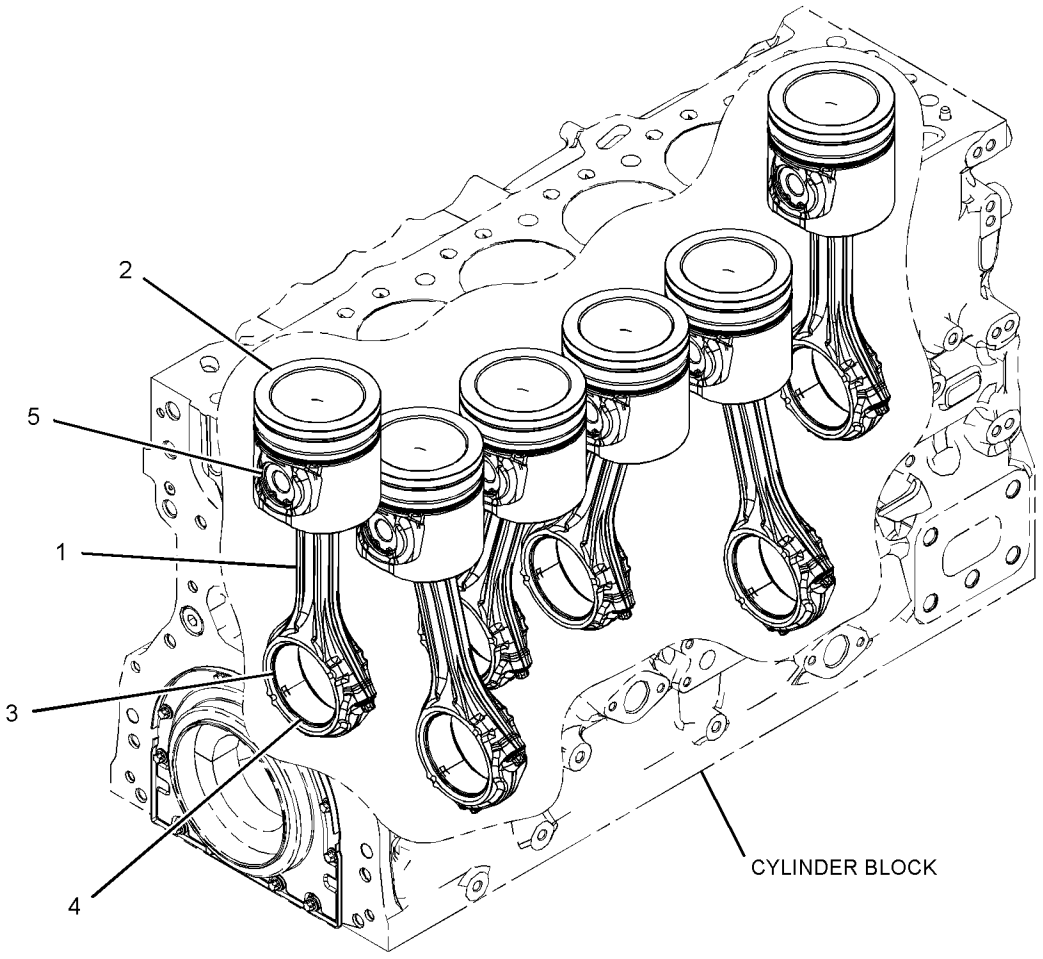

GRAPHIC #1 **<END>** g03383354

375-0098 PULLEY GP-AUXILIARY DRIVE

S/N: E7A1-UP

PART OF 371-1441 ENGINE AR-PRIMARY

AN ATTACHMENT

SMCS-1207 **i05332368**

NOTE	REF NO	GRAPHIC REF	PART NUMBER	QTY	PART NAME 1 2 3 4 5 6 (PRODUCT LEVEL)	SEE PAGE
	1	1	**274-1935**	6	BOLT	

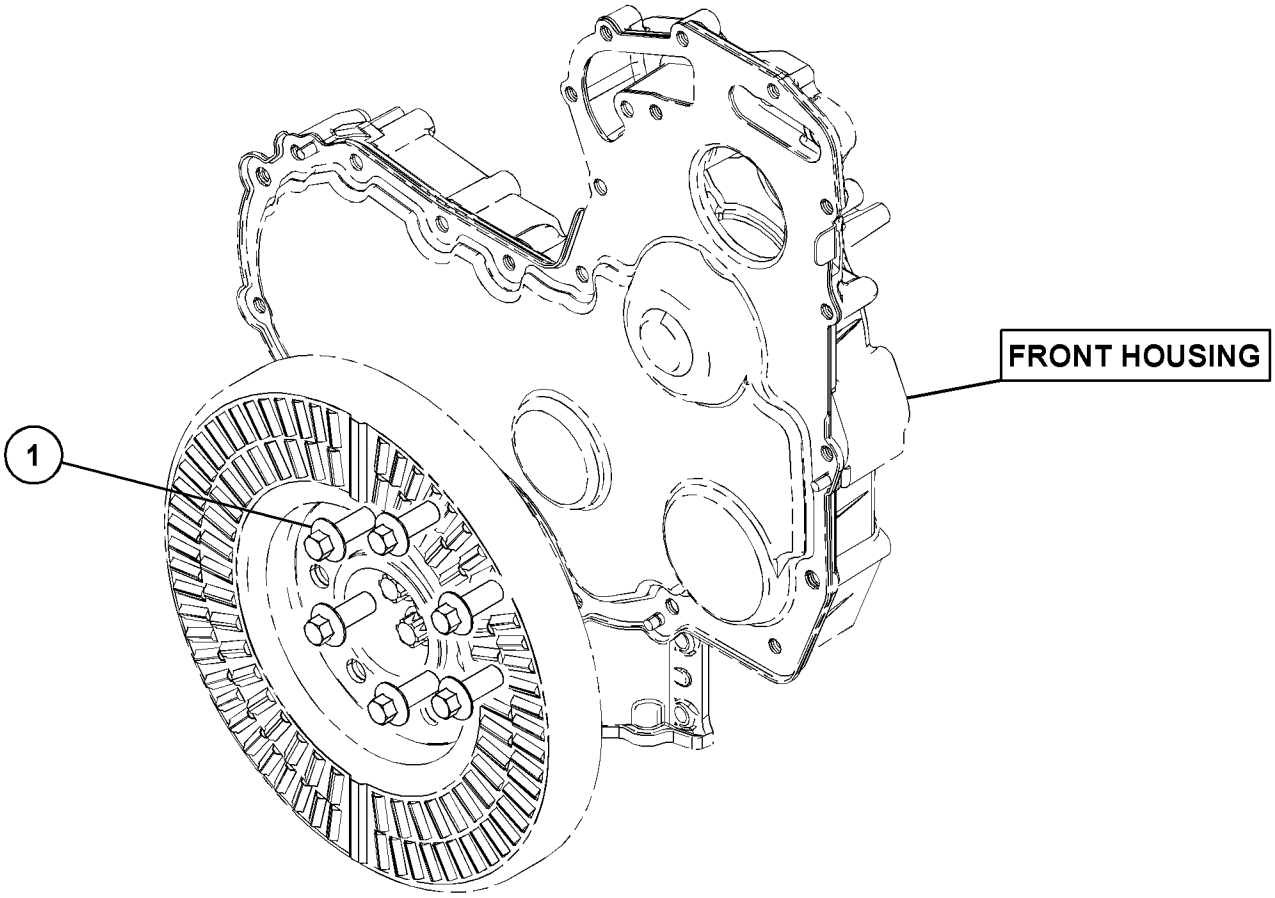

GRAPHIC #1 **<END>** g03172177

371-2554 PULLEY GP-CRANKSHAFT

S/N: E7A1-UP
PART OF 371-1441 ENGINE AR-PRIMARY
AN ATTACHMENT

SMCS-1205 **i05332376**

NOTE	REF NO	GRAPHIC REF	PART NUMBER	QTY	PART NAME 1 2 3 4 5 6 (PRODUCT LEVEL)	SEE PAGE
	1	1	**274-1931**	1	PULLEY (8-GROOVE)	
	2	1	**342-6502**	1	ADAPTER	
	3	1	**342-6510**	3	BOLT-TORX (M14X1.5X70-MM)	
	4	1	**351-1724**	1	DAMPER	

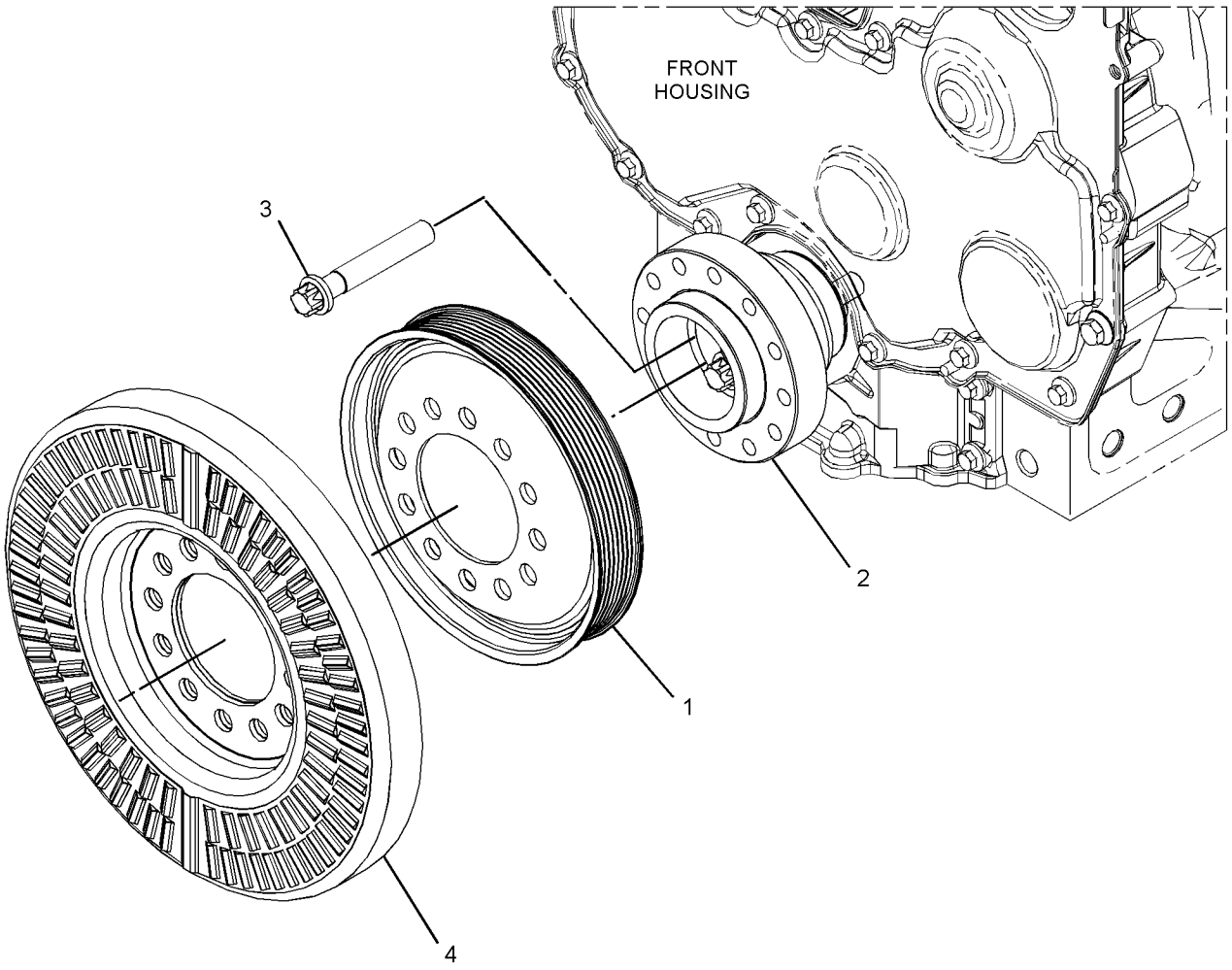

GRAPHIC #1 **<END>** g03110077

280-1911 ROCKER ARM GP

S/N: E7A1-UP

PART OF 371-2480 ROCKER ARM GP

AN ATTACHMENT

SMCS-1123 **i02752423**

NOTE	REF NO	GRAPHIC REF	PART NUMBER	QTY	PART NAME 1 2 3 4 5 6 (PRODUCT LEVEL)	SEE PAGE
	1	1	**276-9201**	1	CLIP	
	2	1	**276-9206**	5	SPRING-SHAFT	
	3	1	**276-9207**	1	SPRING-SHAFT	
	4	1	**277-5307**	1	SHAFT AS-ROCKER ARM	
	4A	1	**276-9200**	1	PLUG-SHAFT END	
	5	1	**278-5111**	6	ROCKER ARM AS	
					(EACH INCLUDES)	
	5A	1	**276-9230**	1	NUT	
	5B	1	**278-5113**	1	ADJUSTING SCREW (TORX)	
	6	1	**278-5112**	6	ROCKER ARM AS	
					(EACH INCLUDES)	
	6A	1	**276-9230**	1	NUT	
	6B	1	**278-5113**	1	ADJUSTING SCREW (TORX)	
	7	1	**280-1912**	6	BRACKET	
	8	1	**280-1913**	6	RETAINER	
	9	1	**280-1914**	12	BOLT (M8X1.25X55-MM)	

280-1911 **ROCKER ARM GP (*contd.*)** **i02752423**

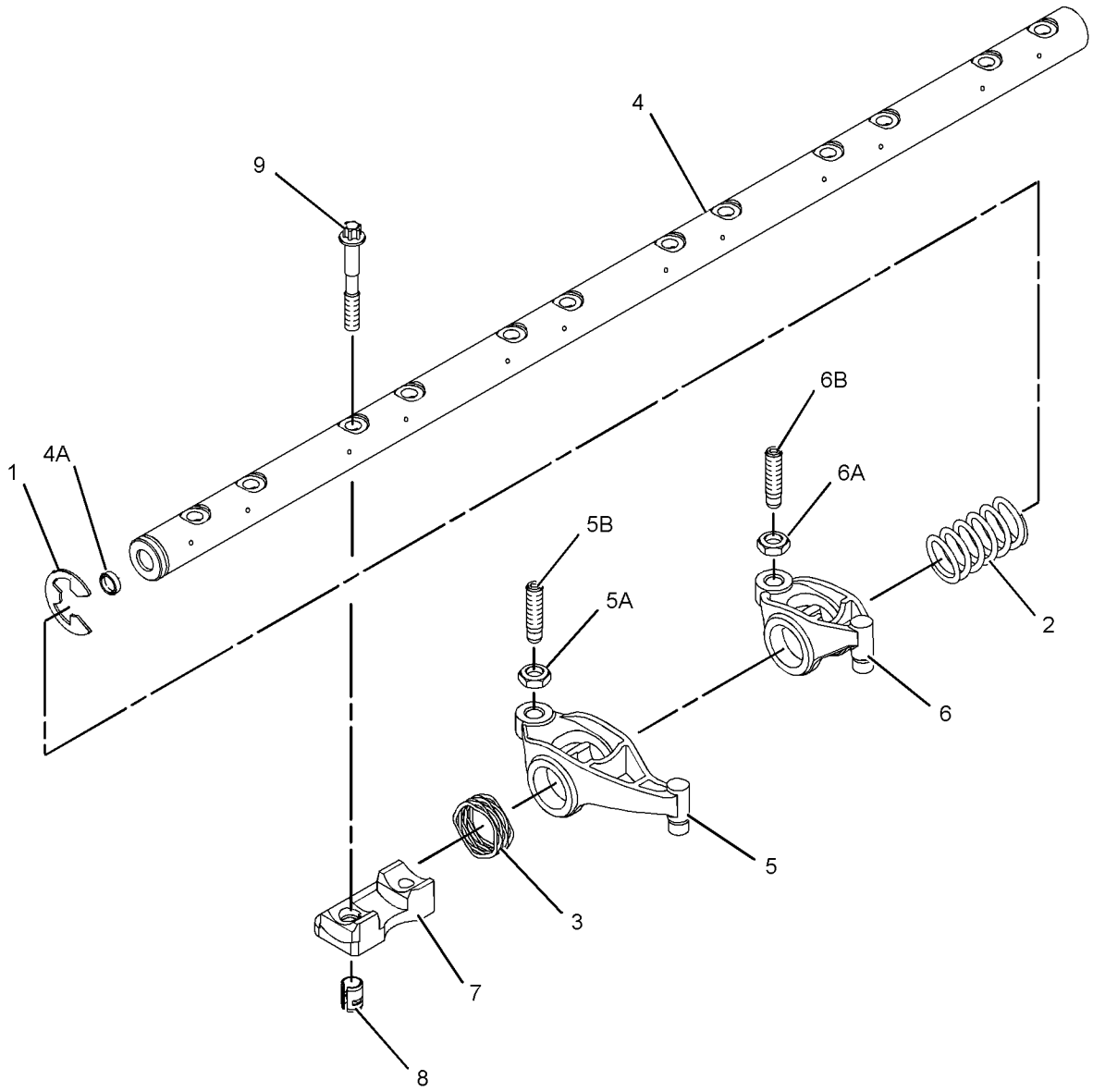

GRAPHIC #1 **<END>** g01235750

371-2480 ROCKER ARM GP

S/N: E7A1-UP
PART OF 371-1441 ENGINE AR-PRIMARY
AN ATTACHMENT

SMCS-1123 **i05332398**

NOTE	REF NO	GRAPHIC REF	PART NUMBER	QTY	PART NAME 1 2 3 4 5 6 (PRODUCT LEVEL)	SEE PAGE
	1	1	**276-8132**	24	SPRING-VALVE	
	2	1	**346-4709**	12	BRIDGE GP-VALVE	
	3	1	**276-8123**	48	RETAINER	
	4	1	**276-8133**	24	CAP-VALVE	
Y	5	1	**280-1911**	1	ROCKER ARM GP	34
	6	1	**299-5511**	24	SEAL-VALVE STEM	
	7	1	**309-6678**	12	VALVE-INLET	
	8	1	**339-9637**	12	VALVE-EXHAUST	

Y - SEPARATE ILLUSTRATION

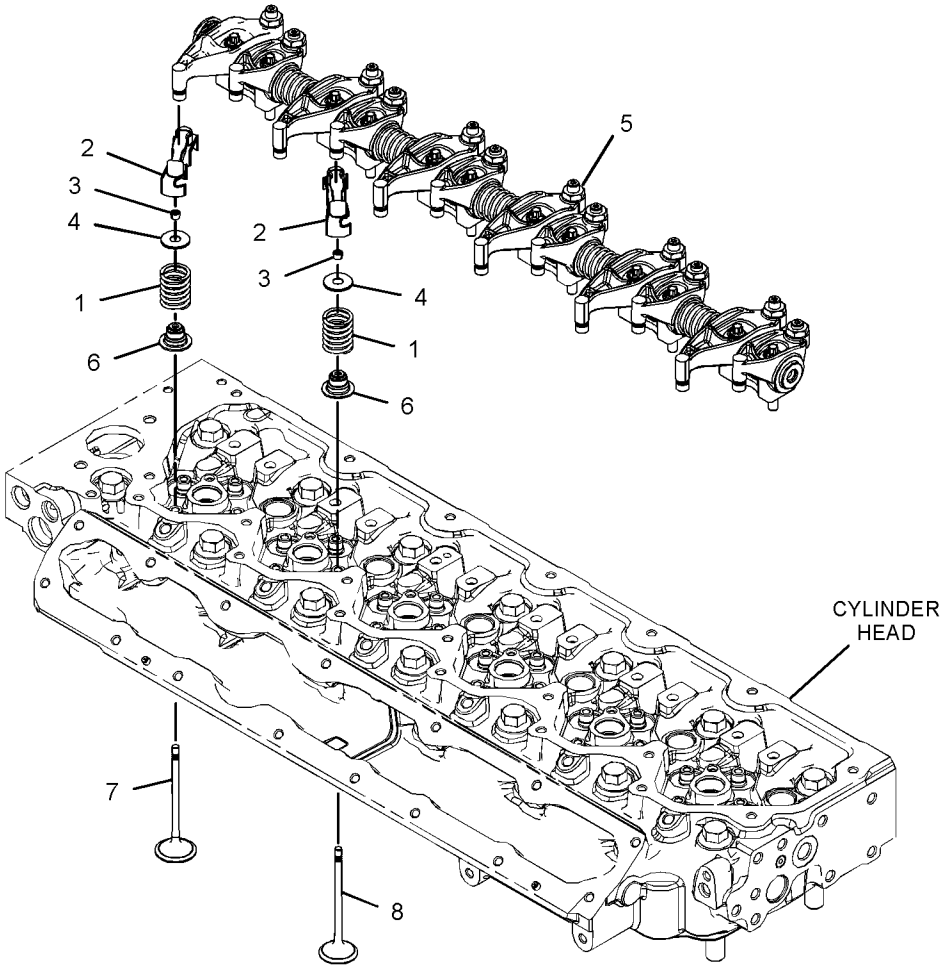

GRAPHIC #1 **<END>** g03103178

371-2719 SUPPORT GP-POWER TAKE-OFF

S/N: E7A1-UP
PART OF 371-1441 ENGINE AR-PRIMARY
AN ATTACHMENT

SMCS-1165 **i05332406**

NOTE	REF NO	GRAPHIC REF	PART NUMBER	QTY	PART NAME 1 2 3 4 5 6 (PRODUCT LEVEL)	SEE PAGE
	1	1	**329-7854**	1	PLATE AS	
	1A	1	**329-7856**	1	SEAL-O-RING	
	2	1	**111-8222**	5	BOLT (M8X16-MM)	
M	3	1	**100-4830**	1	BOLT (M10X1.5X20-MM)	
	4	1	**277-4223**	1	PLUG	

M - METRIC PART

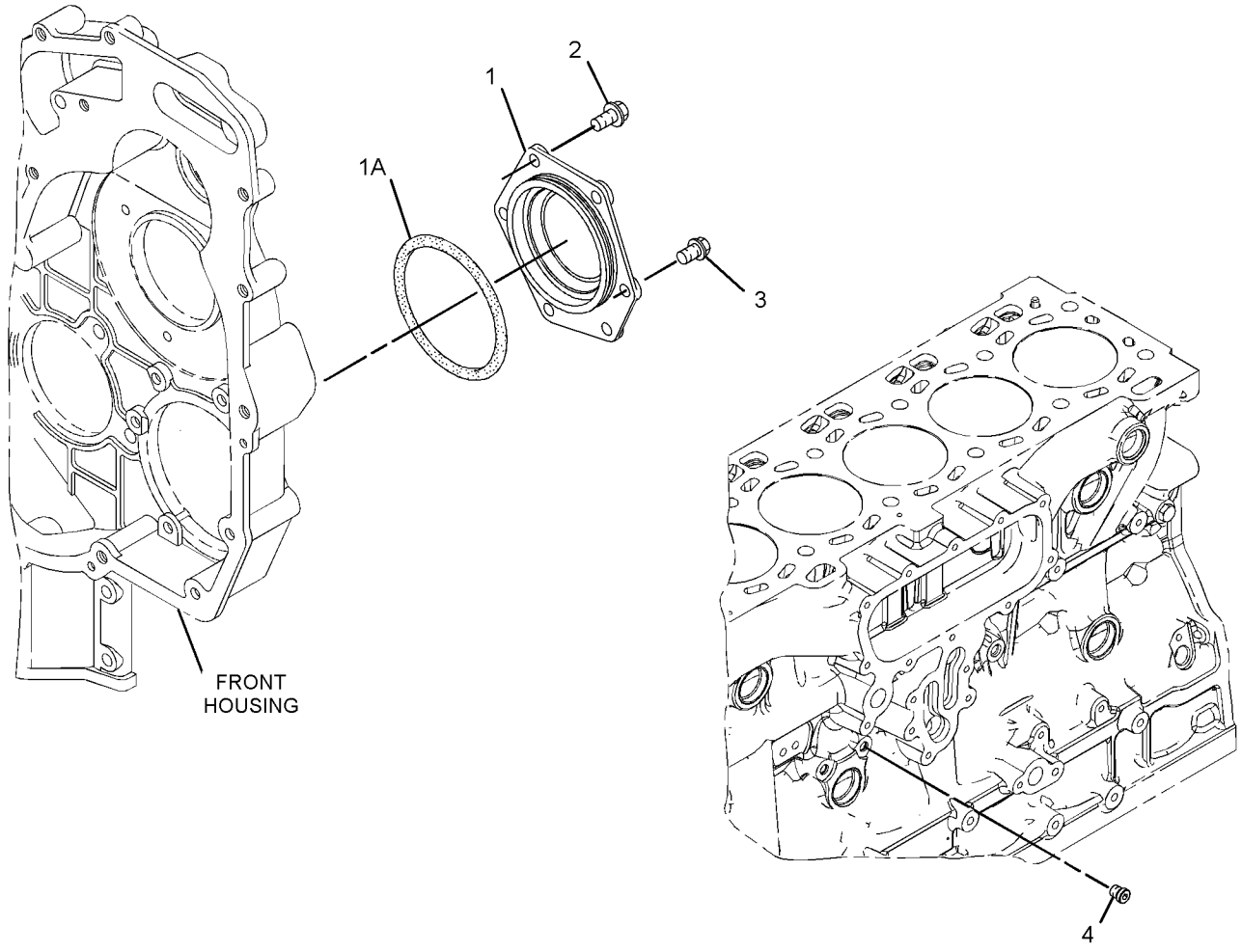

GRAPHIC #1 **<END>** g01682857

425-0196 BREATHER GP

S/N: E7A1-UP

PART OF 371-1441 ENGINE AR-PRIMARY

AN ATTACHMENT

SMCS-1317 **i05330786**

NOTE	REF NO	GRAPHIC REF	PART NUMBER	QTY	PART NAME 1 2 3 4 5 6 (PRODUCT LEVEL)	SEE PAGE
M	1	1	**124-3815**	3	BOLT (M8X1.25X16-MM)	
	2	1	**5V-9155**	1	CLAMP-HOSE	
	3	1	**9M-7958**	1	CLAMP-HOSE	
	4	1	**363-5813**	1	CLAMP-HOSE	
	5	1	**388-9243**	1	PLUG GP-ENGINE OIL LINES	
	5A	1	**331-8053**	1	SEAL-O-RING	
	6	1	**424-0566**	1	HOSE	
	7	1	**424-3214**	1	BASE AS-OIL FILTER	
	7A	1	**286-0015**	1	STEM	
	8	1	**428-7042**	1	BRACKET	
	9	1	**430-6686**	1	BRACKET-FILTER	
	10	1	**433-2039**	1	HOSE	
M	11	1	**6I-0217**	1	BOLT (M8X1.25X20-MM)	
M	12	1	**6I-0260**	2	BOLT (M8X1.25X25-MM)	
M	13	1	**195-2186**	3	BOLT-SOCKET HEAD	
	14	1	**316-9351**	1	MOUNTING-CABLE TIE	

M - METRIC PART

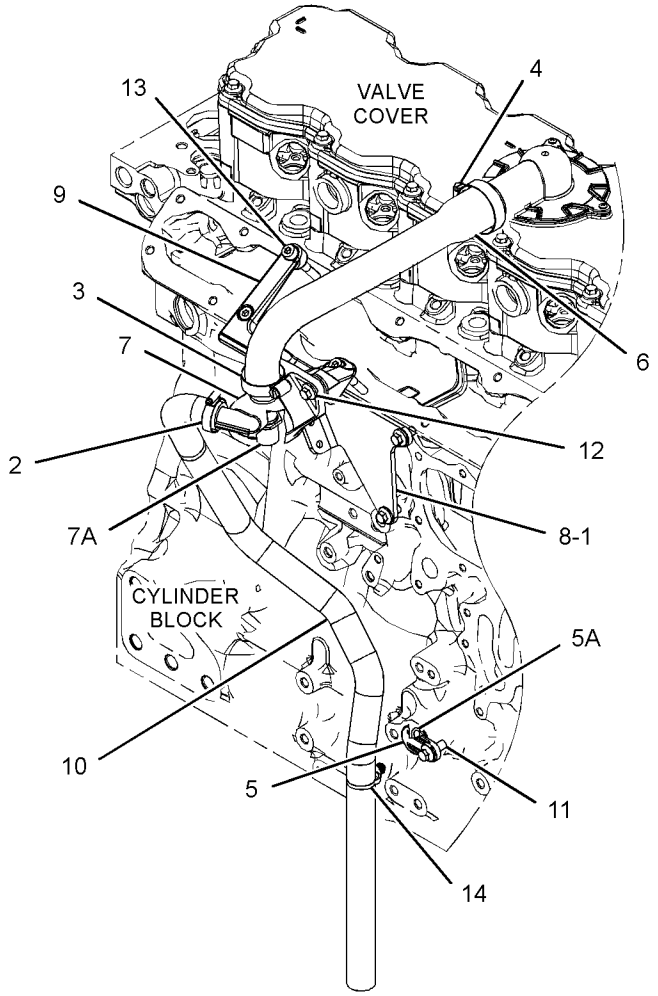

GRAPHIC #1 **<END>** g03380302

390-3737 FILLER GP-ENGINE OIL

S/N: E7A1-UP
PART OF 371-1441 ENGINE AR-PRIMARY
AN ATTACHMENT

SMCS-1316 **i05331683**

NOTE	PART NUMBER	QTY	PART NAME 1 2 3 4 5 6 (PRODUCT LEVEL)	SEE PAGE
M	**6I-0217**	2	BOLT (M8X1.25X20-MM)	
M	**6I-0254**	1	BOLT (M8X1.25X30-MM)	
	6I-4374	1	BOLT (M8X1.25X60-MM)	
	321-2383	1	FILLER GP-ENGINE OIL	
	306-2337	1	SEAL-O-RING	
	130-9888	1	CAP-OIL FILLER (ENGINE)	
	113-1504	1	SEAL-O-RING	
	277-1974	1	PLATE AS	
	277-1975	1	SEAL-O-RING	

M - METRIC PART

<END>

425-0197 FILLER GP-ENGINE OIL

S/N: E7A1-UP

PART OF 371-1441 ENGINE AR-PRIMARY

AN ATTACHMENT

SMCS-1316 **i05331705**

NOTE	REF NO	GRAPHIC REF	PART NUMBER	QTY	PART NAME 1 2 3 4 5 6 (PRODUCT LEVEL)	SEE PAGE
	1	1	**273-5711**	1	FILTER-FUMES DISPOSAL	

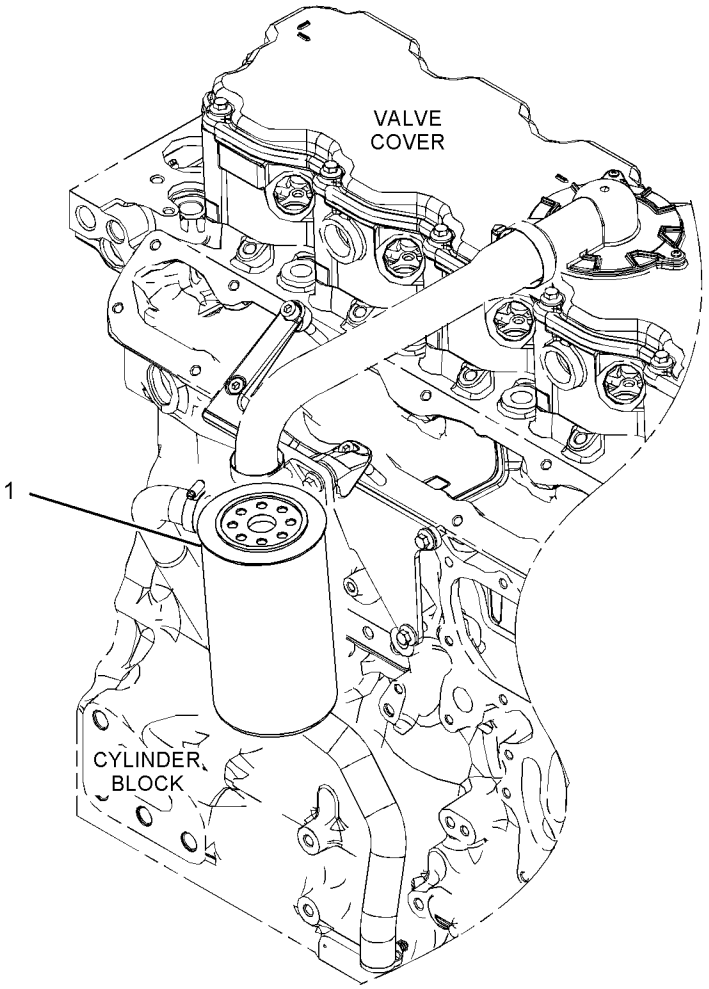

GRAPHIC #1 **<END>** g03380365

346-0220 FILTER GP-ENGINE OIL

S/N: E7A1-UP
PART OF 371-1441 ENGINE AR-PRIMARY
AN ATTACHMENT

SMCS-1306, 1308

i05331743

NOTE	REF NO	GRAPHIC REF	PART NUMBER	QTY	PART NAME 1 2 3 4 5 6 (PRODUCT LEVEL)	SEE PAGE
	1	1	**269-8325**	1	FILTER-ENGINE OIL	

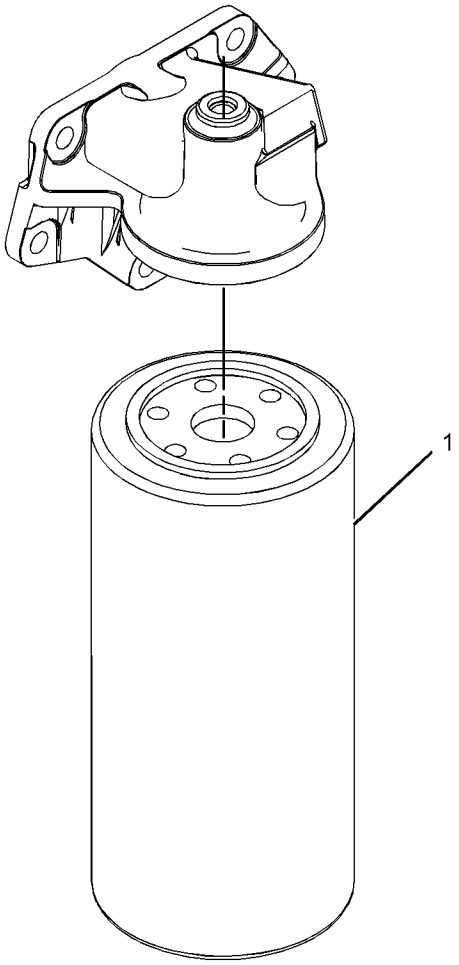

GRAPHIC #1

<END>

g01198493

371-2546 GAUGE GP-OIL LEVEL (DIPSTICK)

S/N: E7A1-UP
PART OF 371-1441 ENGINE AR-PRIMARY
AN ATTACHMENT

SMCS-1326 **i05331841**

NOTE	REF NO	GRAPHIC REF	PART NUMBER	QTY	PART NAME 1 2 3 4 5 6 (PRODUCT LEVEL)	SEE PAGE
	1	1	**353-2637**	1	GAUGE GP-OIL LEVEL (DIPSTICK) (ENGINE)	
	2	1	**354-8322**	1	PLUG	
	3	1	**6I-1497**	1	SEAL	

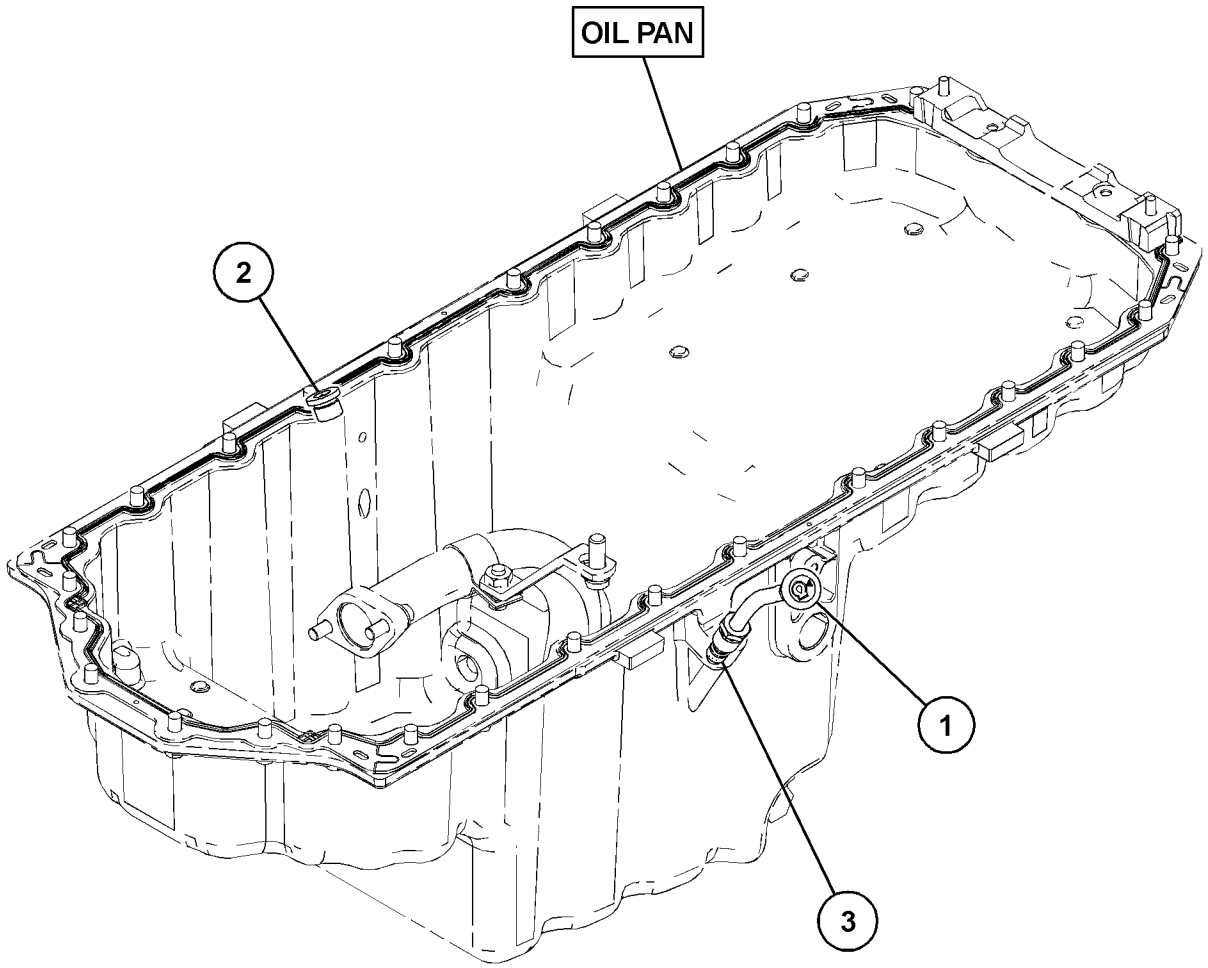

GRAPHIC #1 **<END>** g03170779

368-8559 LINES GP-TURBOCHARGER OIL

S/N: E7A1-UP
PART OF 371-2720 TURBOCHARGER GP
AN ATTACHMENT

SMCS-1052, 1307

i04838031

NOTE	REF NO	GRAPHIC REF	PART NUMBER	QTY	PART NAME 1 2 3 4 5 6 (PRODUCT LEVEL)	SEE PAGE
M	1	1	**277-9938**	1	BOLT-SPECIAL (BANJO)	
	2	1	**277-9940**	1	SEAL-O-RING	
	3	1	**365-5823**	2	WASHER	

M - METRIC PART

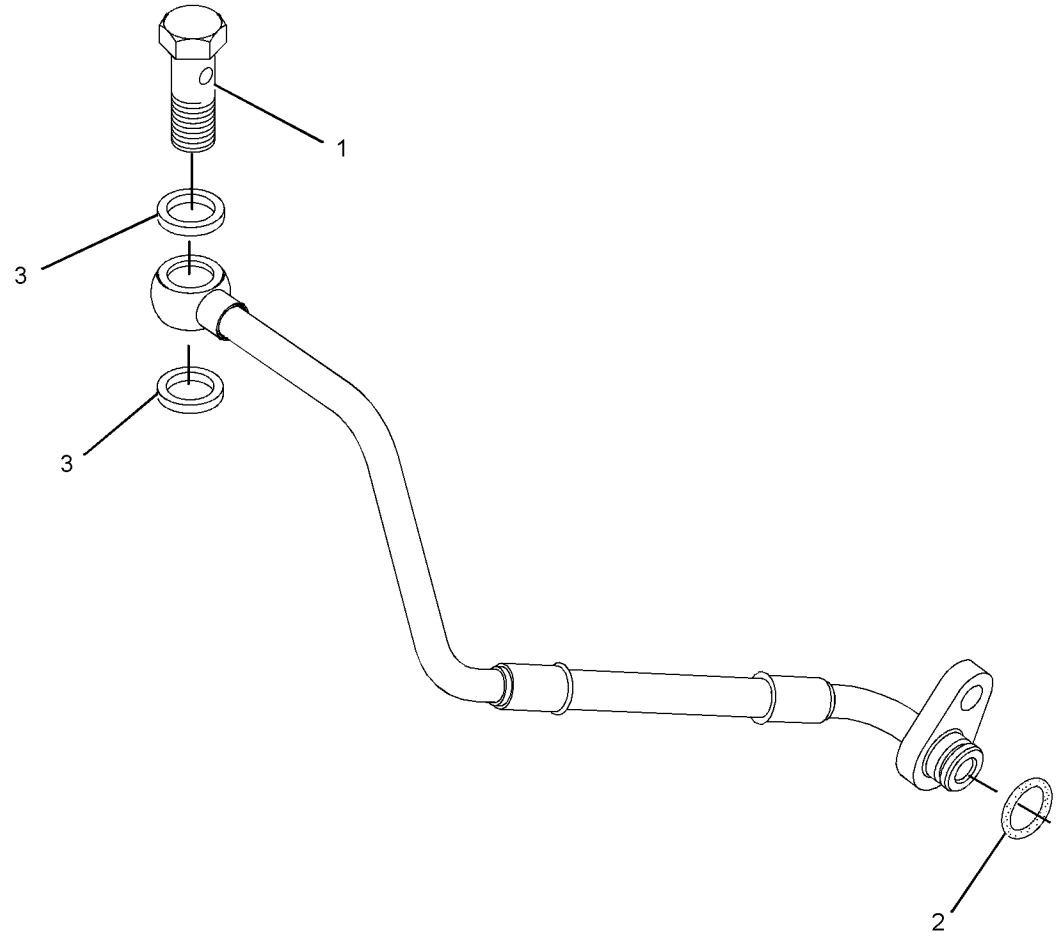

GRAPHIC #1

<END>

g02400339

346-0737 PUMP GP-ENGINE OIL

S/N: E7A1-UP

PART OF 371-1441 ENGINE AR-PRIMARY

AN ATTACHMENT

SMCS-1304, 1315 **i05281915**

NOTE	REF NO	GRAPHIC REF	PART NUMBER	QTY	PART NAME 1 2 3 4 5 6 (PRODUCT LEVEL)	SEE PAGE
	1	1	**373-8014**	1	PUMP-OIL	
	2	1	**6I-1090**	4	BOLT (M8X1.25X40-MM)	

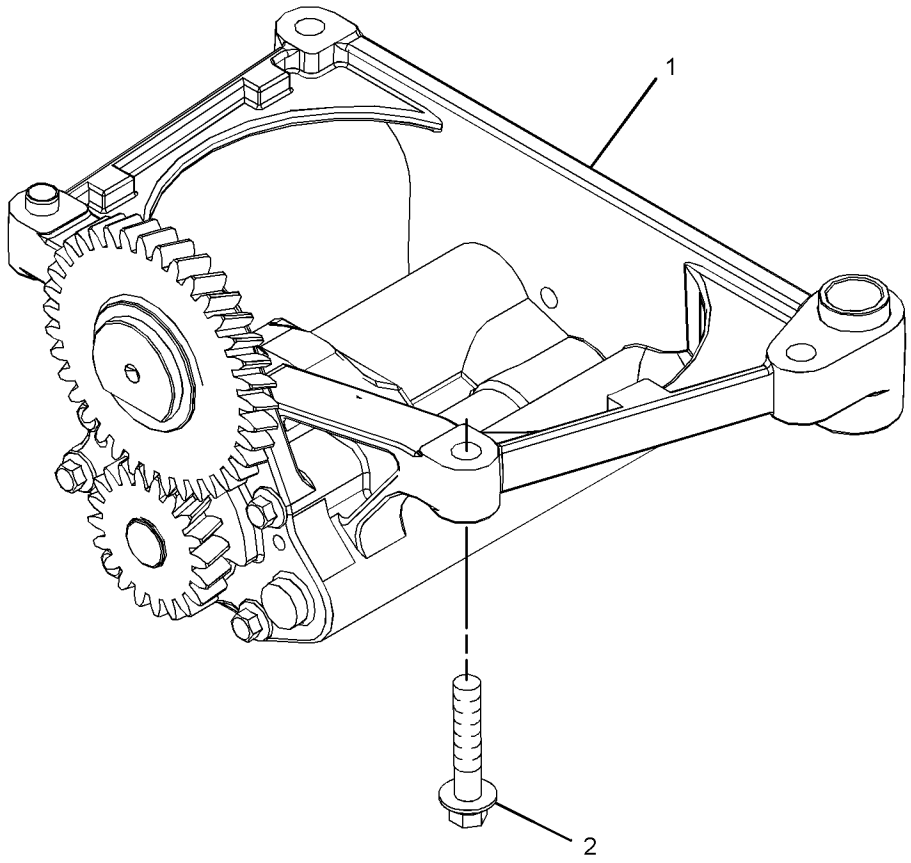

GRAPHIC #1 **<END>** g02815299

371-2745 VALVE GP-FLUID SAMPLING

S/N: E7A1-UP
PART OF 371-1441 ENGINE AR-PRIMARY
AN ATTACHMENT

SMCS-7542 **i05331565**

NOTE	REF NO	GRAPHIC REF	PART NUMBER	QTY	PART NAME 1 2 3 4 5 6 (PRODUCT LEVEL)	SEE PAGE
	1	1	**216-9633**	1	VALVE AS-FLUID SAMPLING	
	2	1	**8C-3445**	1	CAP-DUST	

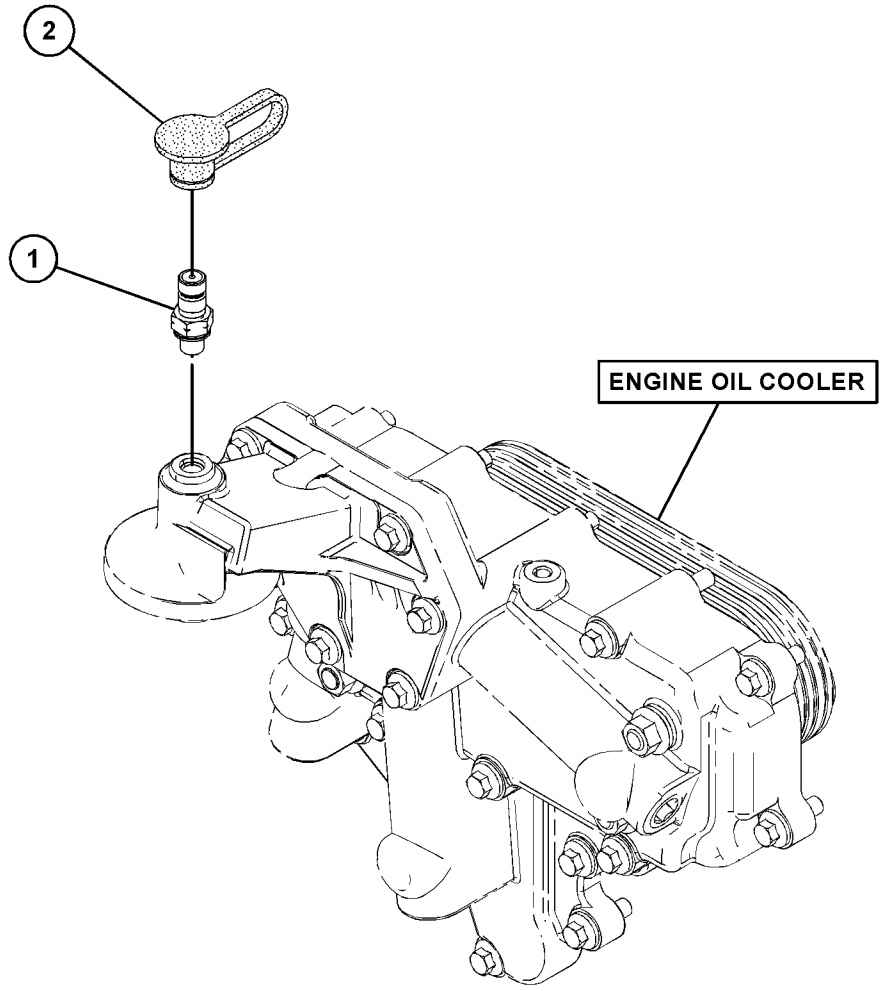

GRAPHIC #1 **<END>** g03178016

346-0099 BASE GP-OIL COOLER & FILTER

S/N: E7A1-UP
PART OF 371-1441 ENGINE AR-PRIMARY
AN ATTACHMENT

SMCS-1306, 1378 **i05330728**

NOTE	REF NO	GRAPHIC REF	PART NUMBER	QTY	PART NAME 1 2 3 4 5 6 (PRODUCT LEVEL)	SEE PAGE
M	1	1	**100-3751**	5	BOLT (M8X1.25X65-MM)	
	2	1	**225-7944**	1	GASKET	
	3	1	**232-3751**	1	PLATE	
	4	1	**277-2525**	1	HEAD AS-OIL FILTER	
	5	1	**277-2526**	1	GASKET-FILTER	
	6	1	**277-2537**	1	PLATE	
	7	1	**277-2538**	1	GASKET	
Y	8	1	**295-8610**	1	COOLER AS-ENGINE OIL	49
M	9	1	**6I-0217**	6	BOLT (M8X1.25X20-MM)	
M	10	1	**6I-0260**	9	BOLT (M8X1.25X25-MM)	
	11	1	**6I-4709**	3	BOLT (M8X1.25X100-MM)	

M - METRIC PART
Y - SEPARATE ILLUSTRATION

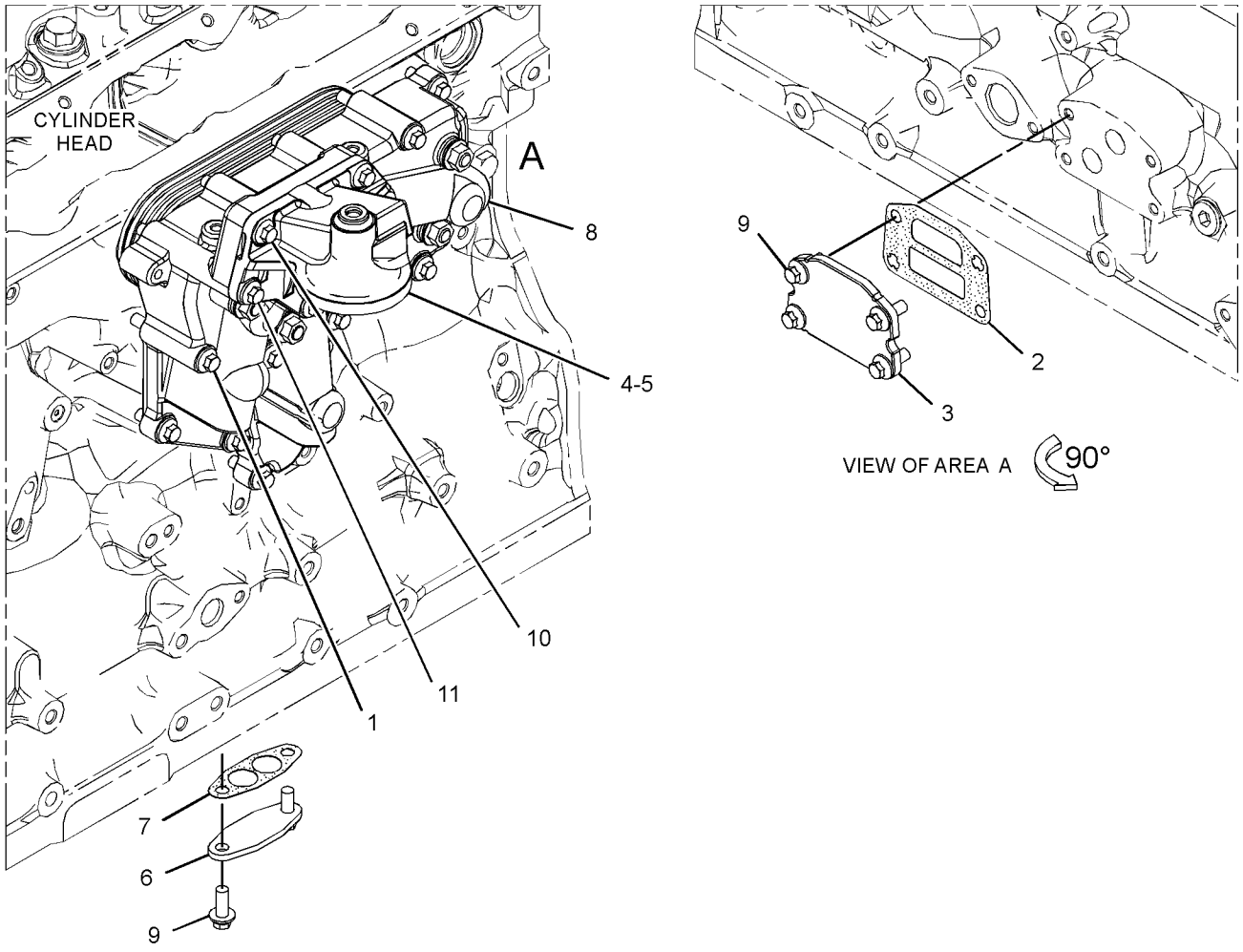

GRAPHIC #1 **<END>** g03103696

346-2911 CONNECTION GP-HEATER

S/N: E7A1-UP
FOR USE WITH OPTIONAL CUSTOMER CONNECTION FOR CAB HEATER
PART OF 371-1441 ENGINE AR-PRIMARY
AN ATTACHMENT

SMCS-1380, 1383 **i05303153**

NOTE	REF NO	GRAPHIC REF	PART NUMBER	QTY	PART NAME 1 2 3 4 5 6 (PRODUCT LEVEL)	SEE PAGE
	1	1	**067-6823**	1	PLUG	
	2	1	**9X-3959**	1	ELBOW	
	3	1	**7W-4669**	1	ADAPTER	

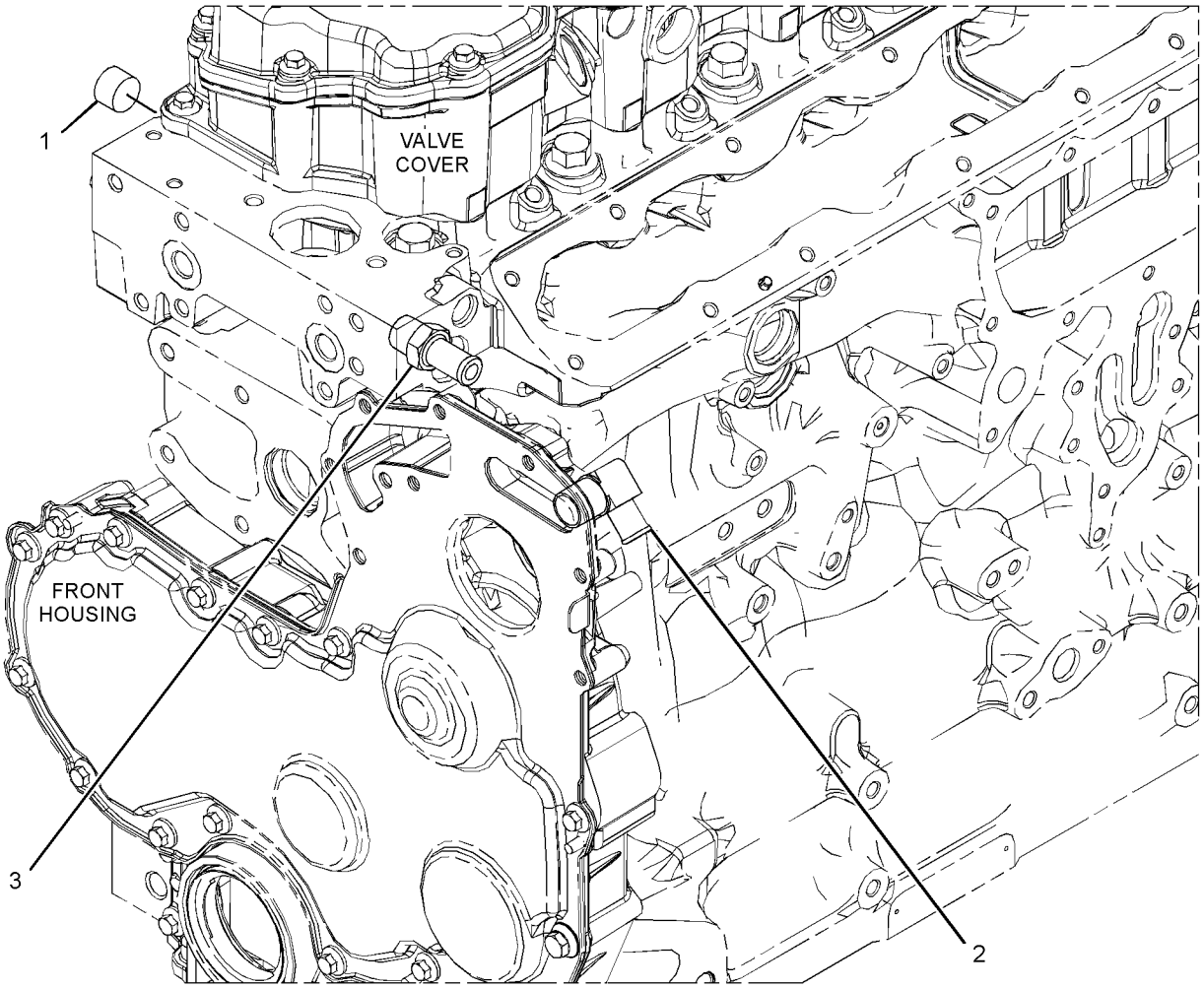

GRAPHIC #1 **<END>** g03105759

373-3607 CONNECTION GP-WATER

S/N: E7A1-UP

PART OF 371-1441 ENGINE AR-PRIMARY

AN ATTACHMENT

SMCS-1380 **i05331563**

NOTE	REF NO	GRAPHIC REF	PART NUMBER	QTY	PART NAME 1 2 3 4 5 6 (PRODUCT LEVEL)	SEE PAGE
	1	1	**123-2899**	2	BOLT (M10X1.5X40-MM)	
	2	1	**417-7782**	1	REGULATOR AS	
	3	1	**281-8744**	1	GASKET-WATER REGULATOR (TEMPERATURE)	

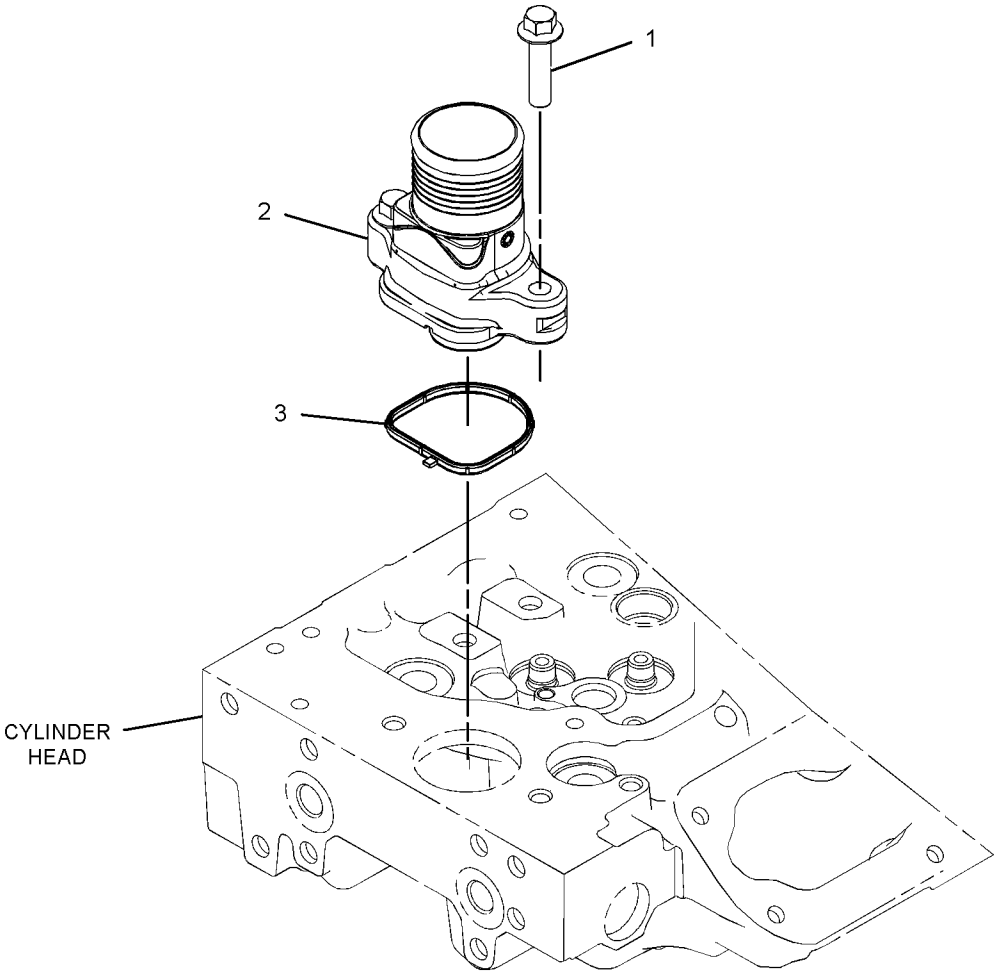

GRAPHIC #1 **<END>** g03341487

295-8610 COOLER GP-ENGINE OIL

S/N: E7A1-UP

PART OF 346-0099 BASE GP-OIL COOLER & FILTER

AN ATTACHMENT

SMCS-1378 **i05345912**

NOTE	REF NO	GRAPHIC REF	PART NUMBER	QTY	PART NAME 1 2 3 4 5 6 (PRODUCT LEVEL)	SEE PAGE
M	1	1	**6I-0260**	3	BOLT (M8X1.25X25-MM)	
	2	1	**6I-0594**	4	NUT (M10X1.5-THD)	
	3	1	**101-3917**	4	WASHER	
	4	1	**101-7547**	4	WASHER	
	5	1	**231-1455**	2	STUD	
	6	1	**277-2500**	1	GASKET	
	7	1	**277-2502**	2	STUD	
	8	1	**277-2503**	3	PLUG	
	9	1	**295-8613**	1	COOLER-OIL (ENGINE)	
	10	1	**295-8615**	2	GASKET	
					PARTS SHOWN IN GRAPHIC(S) WITHOUT A REFERENCE NUMBER ARE NOT SERVICED SEPARATELY	

M - METRIC PART

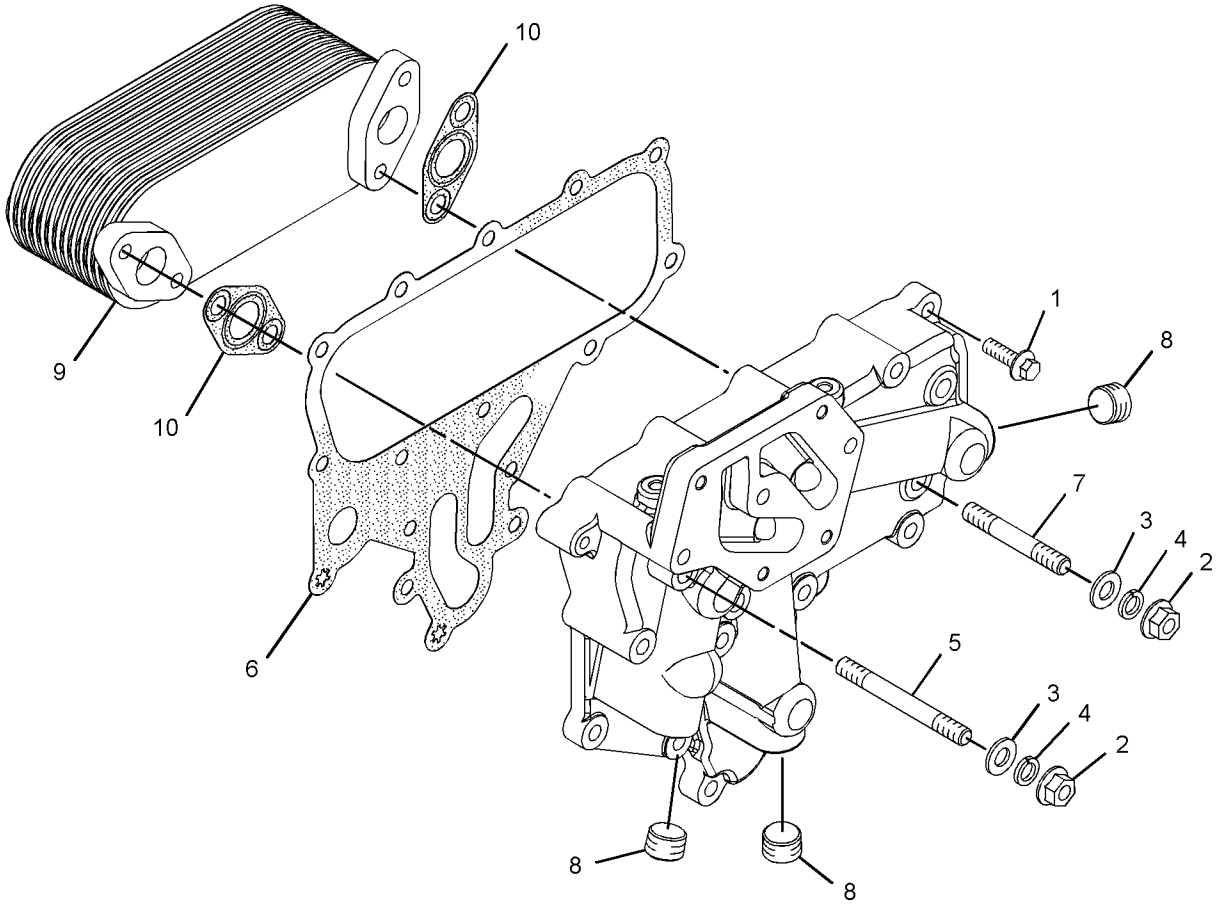

GRAPHIC #1 **<END>** g03105899

332-3636 FAN GP-SUCTION

S/N: DYB1-UP

PART OF 381-4371 INSTALLATION AR-ENGINE

SMCS-1356 **i05307809**

NOTE	REF NO	GRAPHIC REF	PART NUMBER	QTY	PART NAME 1 2 3 4 5 6 (PRODUCT LEVEL)	SEE PAGE
	1	1	**262-5517**	2	GUARD AS-FAN	
	2	1	**282-5361**	1	SPIDER AS-FAN (6-BLADE)	
	3	1	*337-5028*	1	SHROUD AS	
		1	**5P-4116**	12	WASHER-HARD (8.8X20.5X2-MM THK)	
M		1	**8T-4908**	12	BOLT (M8X1.25X25-MM)	
		1	**342-8570**	2	SHROUD AS	
		1	**342-8571**	2	SHROUD AS	
	4	1	**341-1295**	1	SUPPORT AS	
	5	1	**5P-4116**	4	WASHER-HARD (8.8X20.5X2-MM THK)	
	6	1	**7X-0579**	8	WASHER-HARD (8.8X25.5X2-MM THK)	
	7	1	**7X-7729**	8	WASHER (11X25X3-MM THK)	
M	8	1	**8T-4195**	6	BOLT (M10X1.5X30-MM)	
M	9	1	**8T-4196**	8	BOLT (M10X1.5X35-MM)	
	10	1	**8T-4222**	6	WASHER-PLATED (11X32X2.5-MM THK)	
	11	1	**8T-4224**	4	WASHER-HARD (8.8X16X2-MM THK)	
M	12	1	**8T-4908**	16	BOLT (M8X1.25X25-MM)	

M - METRIC PART

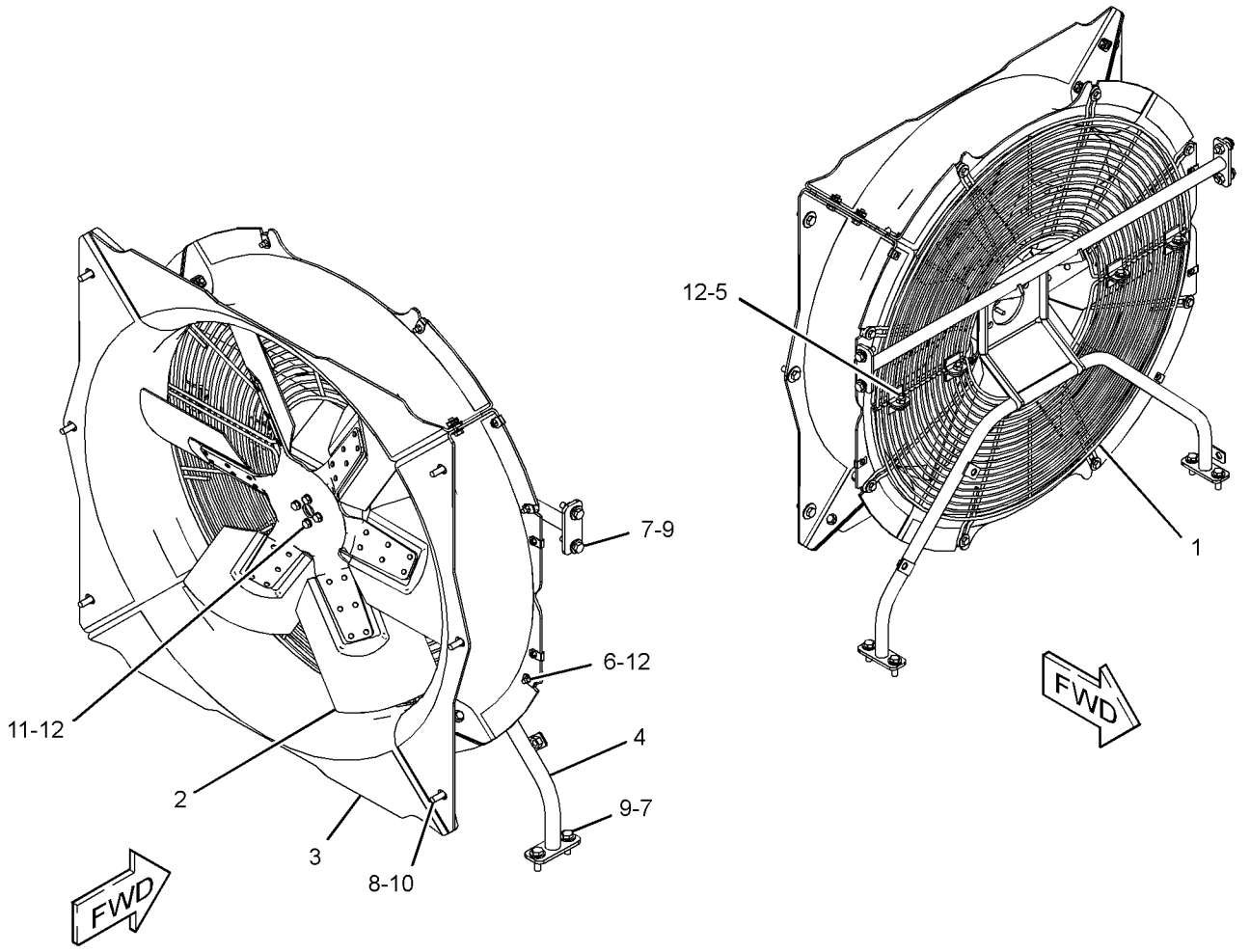

GRAPHIC #1 **<END>** g02793398

371-1273 LINES GP-RADIATOR

S/N: DYB1-UP

PART OF 381-4371 INSTALLATION AR-ENGINE

SMCS-1353, 1380 **i05296396**

NOTE	REF NO	GRAPHIC REF	PART NUMBER	QTY	PART NAME 1 2 3 4 5 6 (PRODUCT LEVEL)	SEE PAGE
	1	1	**6S-8620**	3	CLAMP-HOSE	
	2	1	**6V-2611**	1	VALVE (DRAIN)	
	3	1	**7K-1181**	4	STRAP-CABLE	
	4	1	*150-3026*	1	ELBOW AS	
		1	**3K-0360**	1	SEAL-O-RING	
		1	**6V-4292**	1	ELBOW	
	5	1	**206-2423**	3	SADDLE	
	6	1	**323-3309**	5	CAP	
	7	1	**323-6645**	3	CAP	
	8	1	**349-4853**	1	SUPPORT	
	9	1	**363-4253**	1	GROMMET	
	10	1	**371-1274**	1	HOSE-RADIATOR (UPPER)	
	11	1	**373-1374**	1	HOSE-RADIATOR (LOWER)	
Y	12	1	**393-0566**	1	TANK GP-COOLANT (RADIATOR)	56
	13	1	**1J-9671**	1	SEAL-O-RING	
	14	1	**4B-0418**	4	CLIP	
	15	1	**5P-4116**	4	WASHER-HARD (8.8X20.5X2-MM THK)	
	16	1	**7X-7729**	4	WASHER (11X25X3-MM THK)	
	17	1	**7X-7958**	1	CLAMP-HOSE	
M	18	1	**8T-4195**	4	BOLT (M10X1.5X30-MM)	
M	19	1	**8T-4200**	4	BOLT (M8X1.25X16-MM)	
	20	1	**8T-4984**	4	CLAMP-HOSE	
D	21	1	**8T-3425**		CHANNEL-TRIM (0.2-M)	
D	22	1	**8T-3426**		CHANNEL-TRIM (0.2-M)	
E	23	1	**6V-8523**		HOSE (55-CM)	
E	24	1	**9X-2133**		HOSE (76-CM)	
E	25	1	**8C-3681**		HOSE (172-CM)	
E	26	1	**3E-6600**		SEAL (18-CM)	

D - ORDER BY THE METER
E - ORDER BY THE CENTIMETER
M - METRIC PART
Y - SEPARATE ILLUSTRATION

371-1273 **LINES GP-RADIATOR (*contd.*)** **i05296396**

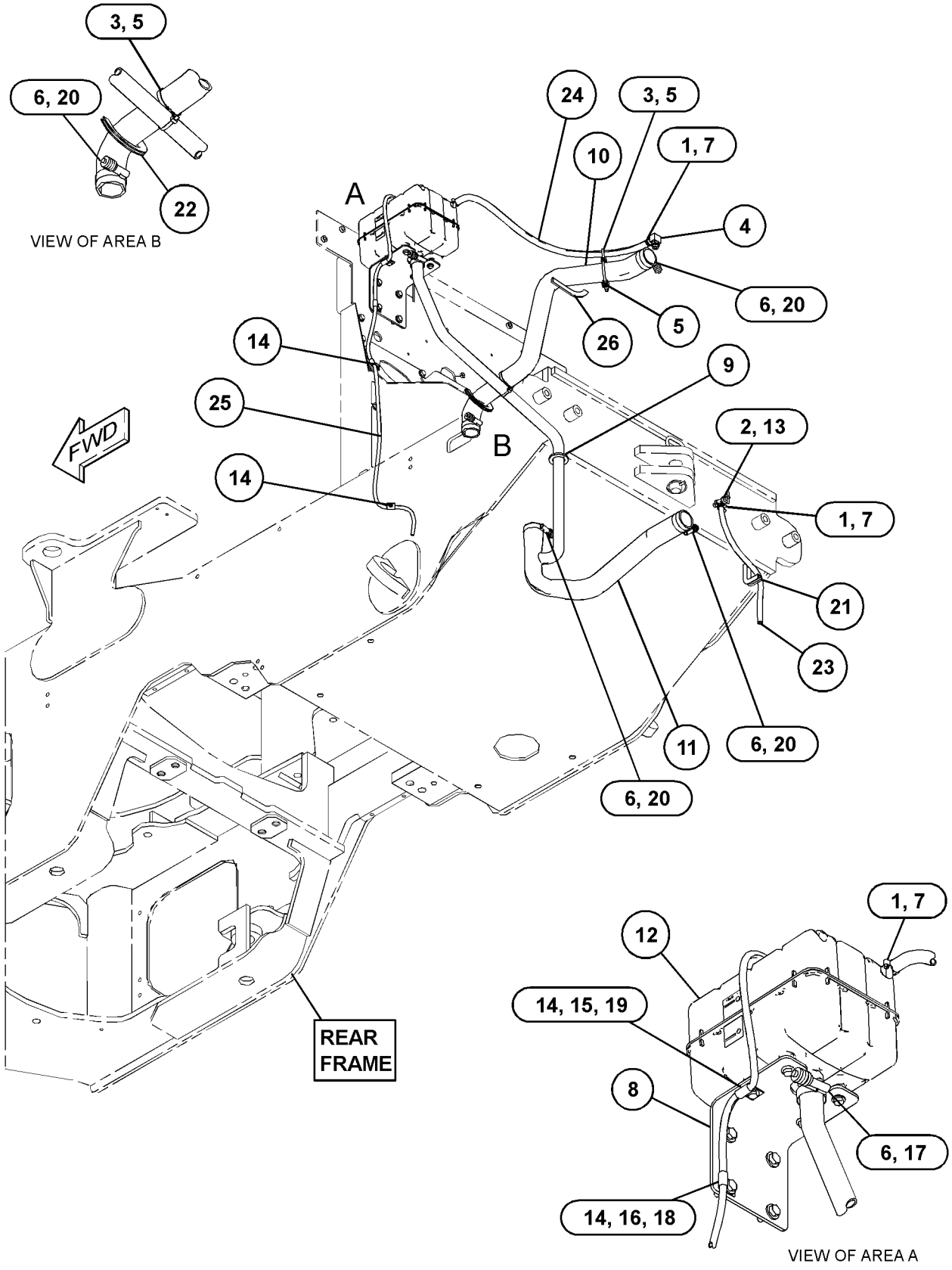

GRAPHIC #1 **<END>** g03378859

372-2297 PUMP GP-WATER

S/N: E7A1-UP
PART OF 371-1441 ENGINE AR-PRIMARY
AN ATTACHMENT

SMCS-1361 **i05332834**

NOTE	REF NO	GRAPHIC REF	PART NUMBER	QTY	PART NAME 1 2 3 4 5 6 (PRODUCT LEVEL)	SEE PAGE
M	1	1	**6I-0217**	2	BOLT (M8X1.25X20-MM)	
	2	1	**355-8710**	1	PUMP GP-WATER	
	3	1	**113-8129**	7	BOLT (M8X1.25X75-MM)	
	4	1	**225-8019**	1	GASKET	
	5	1	**277-2925**	1	CONNECTION AS	
	5A	1	**225-7738**	1	SEAL-O-RING	
	5B	1	**277-2923**	1	GASKET	
M	6	1	**6I-0254**	2	BOLT (M8X1.25X30-MM)	

M - METRIC PART

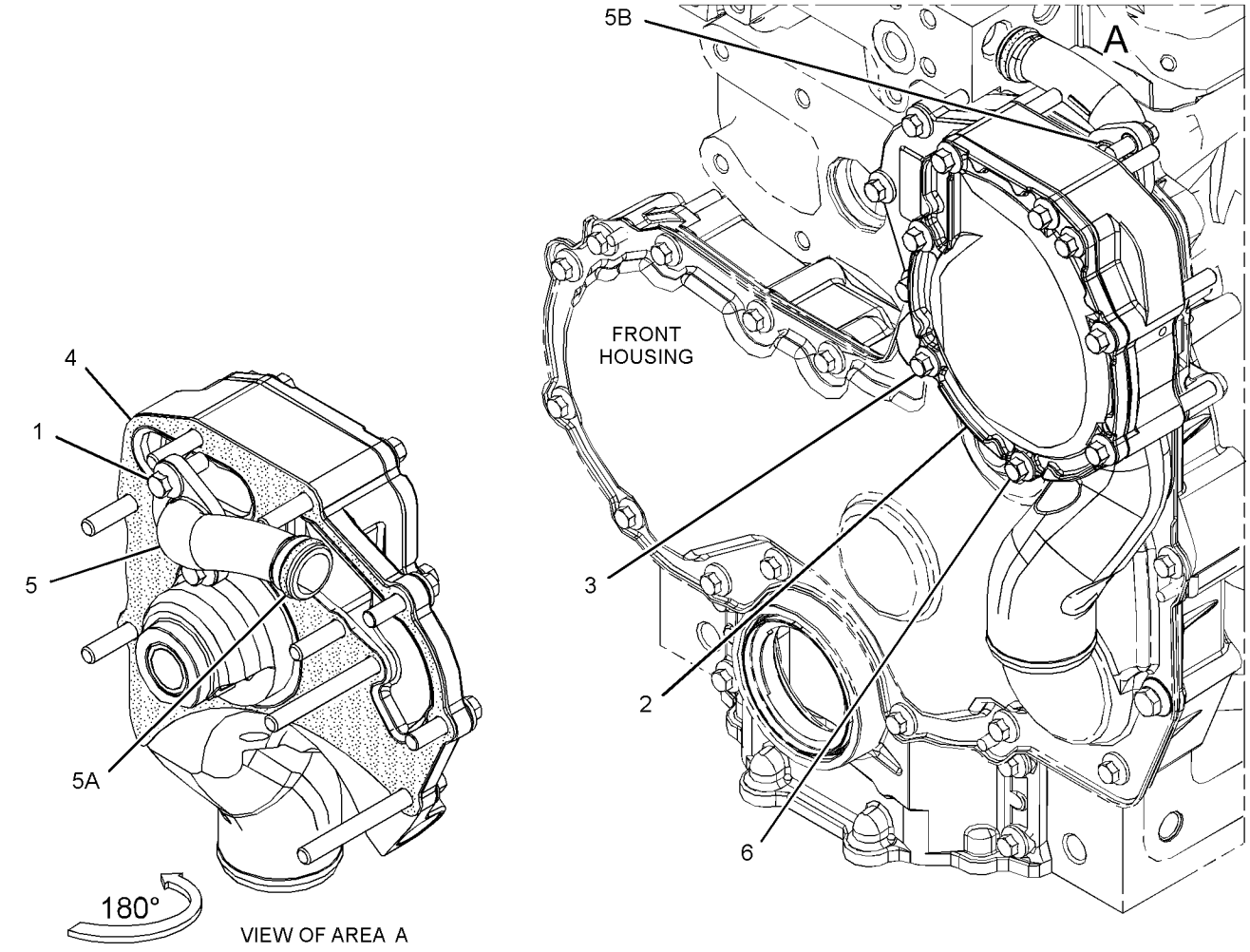

GRAPHIC #1

<END>

g03110518

423-3529 RADIATOR & HYD OIL COOLER GP

S/N: DYB1-UP

PART OF 423-4666 RADIATOR & HYD OIL COOLER GP

SMCS-1353, 1374 **i05307772**

NOTE	REF NO	GRAPHIC REF	PART NUMBER	QTY	PART NAME 1 2 3 4 5 6 (PRODUCT LEVEL)	SEE PAGE
	1	1	**423-3530**	1	RADIATOR GP	
	2	1	**423-3531**	1	COOLER GP-HYDRAULIC OIL	
	3	1	**423-3532**	1	AFTERCOOLER AS	

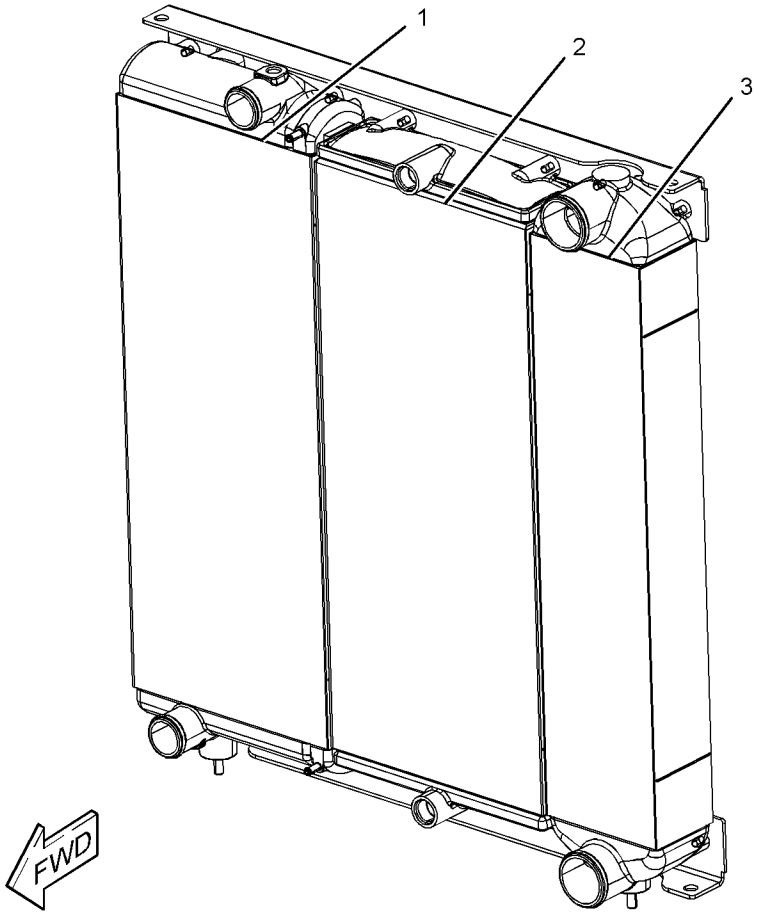

GRAPHIC #1 **<END>** g03373358

423-4666 RADIATOR & HYD OIL COOLER GP–INCLUDES AFTERCOOLER

S/N: DYB1-UP

PART OF 381-4371 INSTALLATION AR-ENGINE

SMCS-1353, 1374 **i05307771**

NOTE	REF NO	GRAPHIC REF	PART NUMBER	QTY	PART NAME 1 2 3 4 5 6 (PRODUCT LEVEL)	SEE PAGE
	1	1	**7T-8332**	4	MOUNTING	
	2	1	**357-9663**	1	PLATE	
Y	3	1	*423-3529*	1	RADIATOR & HYD OIL COOLER GP	54
	4	1	**7X-0618**	2	WASHER-HARD (13.5X40X5-MM THK)	
	5	1	**8T-4121**	4	WASHER-HARD (11X21X2.5-MM THK)	
M	6	1	**8T-4136**	4	BOLT (M10X1.5X25-MM)	
M	7	1	**8T-4910**	2	BOLT (M12X1.75X60-MM)	
D	8	1	**5P-7211**		SEAL (0.9-M)	
L	9	1	**6V-5654**		SEAL (9.3-DM)	

D - ORDER BY THE METER
L - ORDER BY THE DECIMETER
M - METRIC PART
Y - SEPARATE ILLUSTRATION

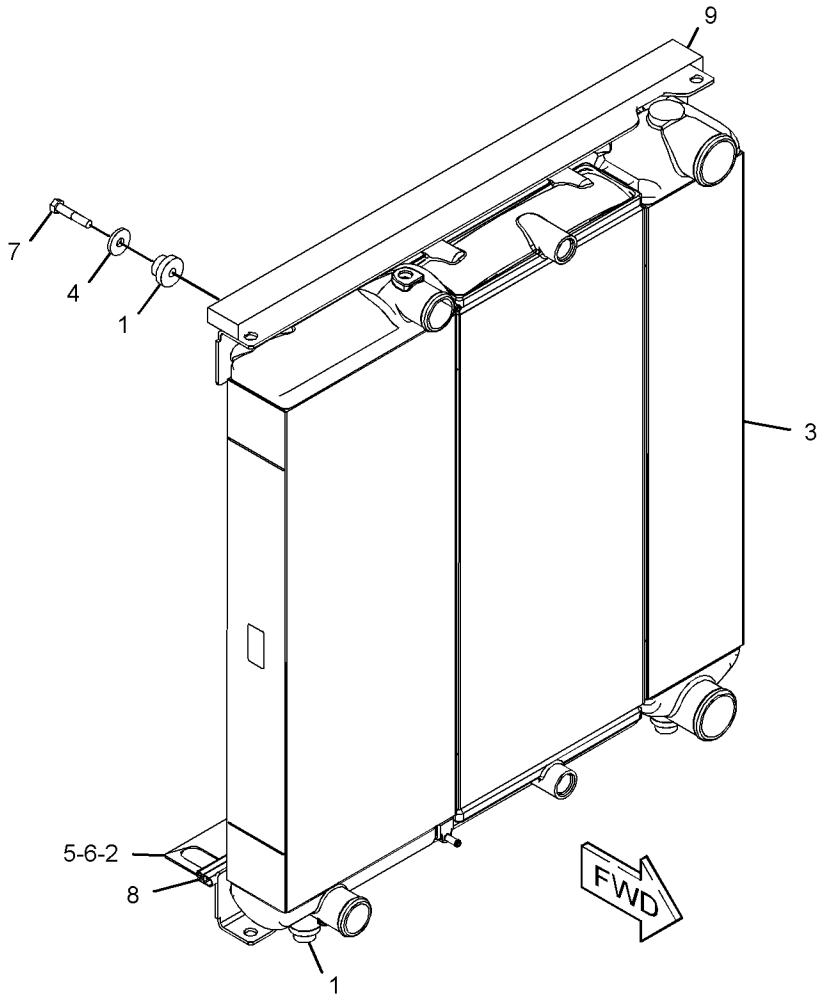

GRAPHIC #1 **<END>** g03375061

393-0566 TANK GP-COOLANT

S/N: DYB1-UP

PART OF 371-1273 LINES GP-RADIATOR

SMCS-1377 **i05296437**

NOTE	REF NO	GRAPHIC REF	PART NUMBER	QTY	PART NAME 1 2 3 4 5 6 (PRODUCT LEVEL)	SEE PAGE
	1	1	**369-6549**	1	CAP AS-COOLANT TANK	
	2	1	**421-3153**	3	FILM-IDENTIFICATION (COOLANT LEVEL)	
	3	1	**421-3154**	3	FILM-IDENTIFICATION (COOLANT LEVEL)	

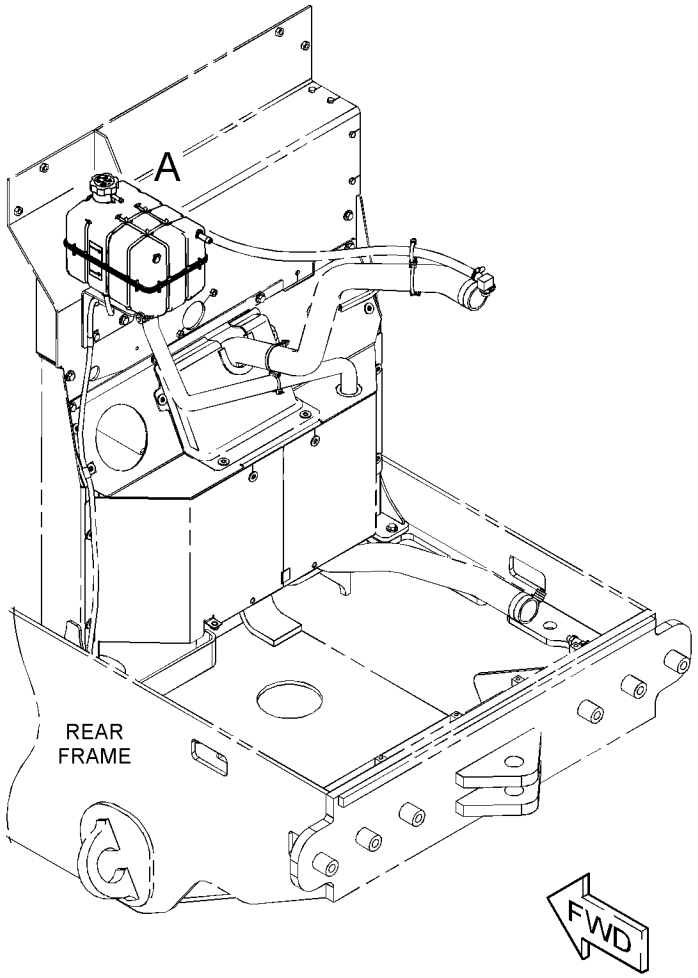

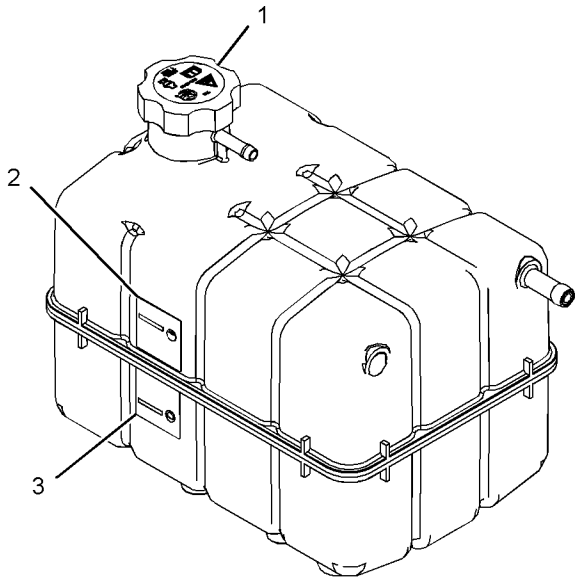

VIEW OF AREA A

GRAPHIC #1 **<END>** g03377897

371-1278 AIR CLEANER GP

S/N: DYB1-UP

PART OF 381-4371 INSTALLATION AR-ENGINE

SMCS-1051, 1054 **i05296401**

NOTE	REF NO	GRAPHIC REF	PART NUMBER	QTY	PART NAME 1 2 3 4 5 6 (PRODUCT LEVEL)	SEE PAGE
	1	1	**276-4836**	1	SWITCH-PRESSURE (AIR CLEANER)	
Y	2	1	**376-4188**	1	AIR CLEANER GP	58
M	3	1	**099-3649**	2	BOLT (M8X1.25X40-MM)	
	4	1	**5P-4116**	2	WASHER-HARD (8.8X20.5X2-MM THK)	

M - METRIC PART
Y - SEPARATE ILLUSTRATION

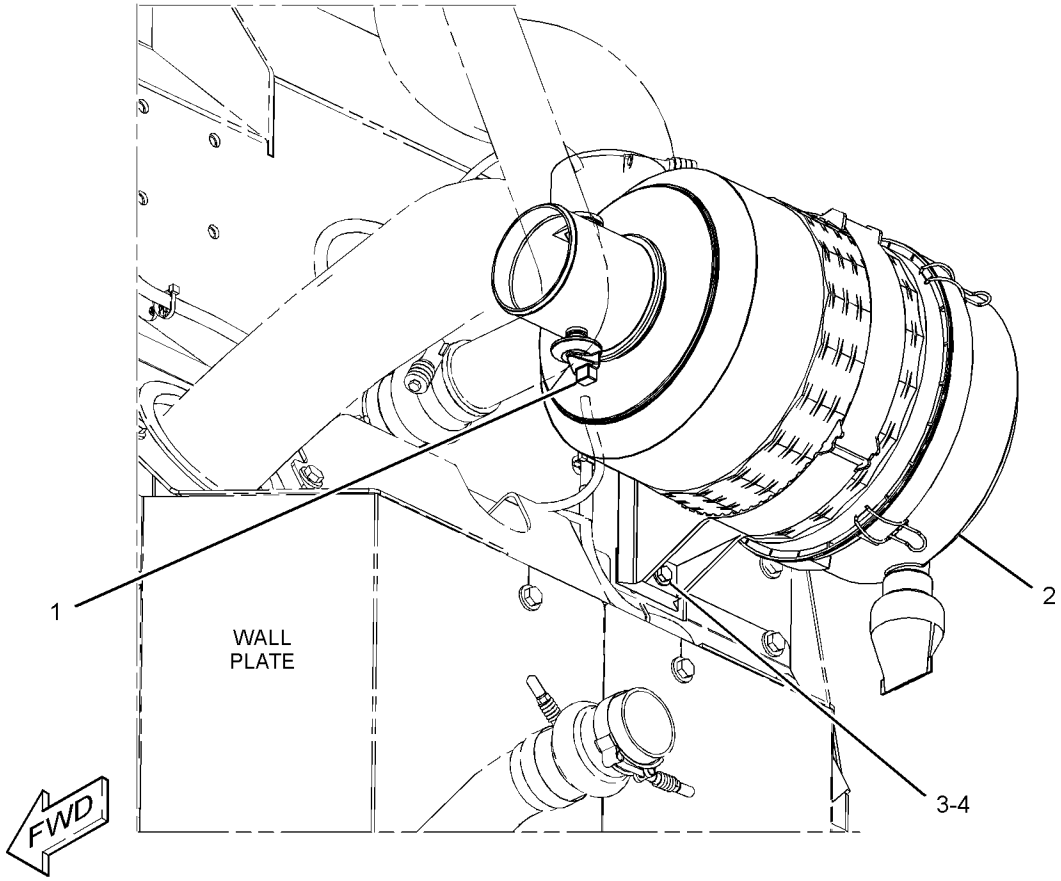

GRAPHIC #1 **<END>** g03379076

376-4188 AIR CLEANER GP

S/N: DYB1-UP

PART OF 371-1278 AIR CLEANER GP

SMCS-1051, 1054 **i05296420**

NOTE	REF NO	GRAPHIC REF	PART NUMBER	QTY	PART NAME 1 2 3 4 5 6 (PRODUCT LEVEL)	SEE PAGE
	1	1	**224-2263**	1	VALVE AS-AIR (DUST)	
	2	1	**256-7902**	1	FILTER ELEMENT AS-AIR (PRIMARY)	
	3	1	**256-7903**	1	FILTER ELEMENT AS-AIR (SECONDARY)	
	4	1	**256-7904**	1	BRACKET AS	
	5	1	**302-4393**	1	COVER AS	

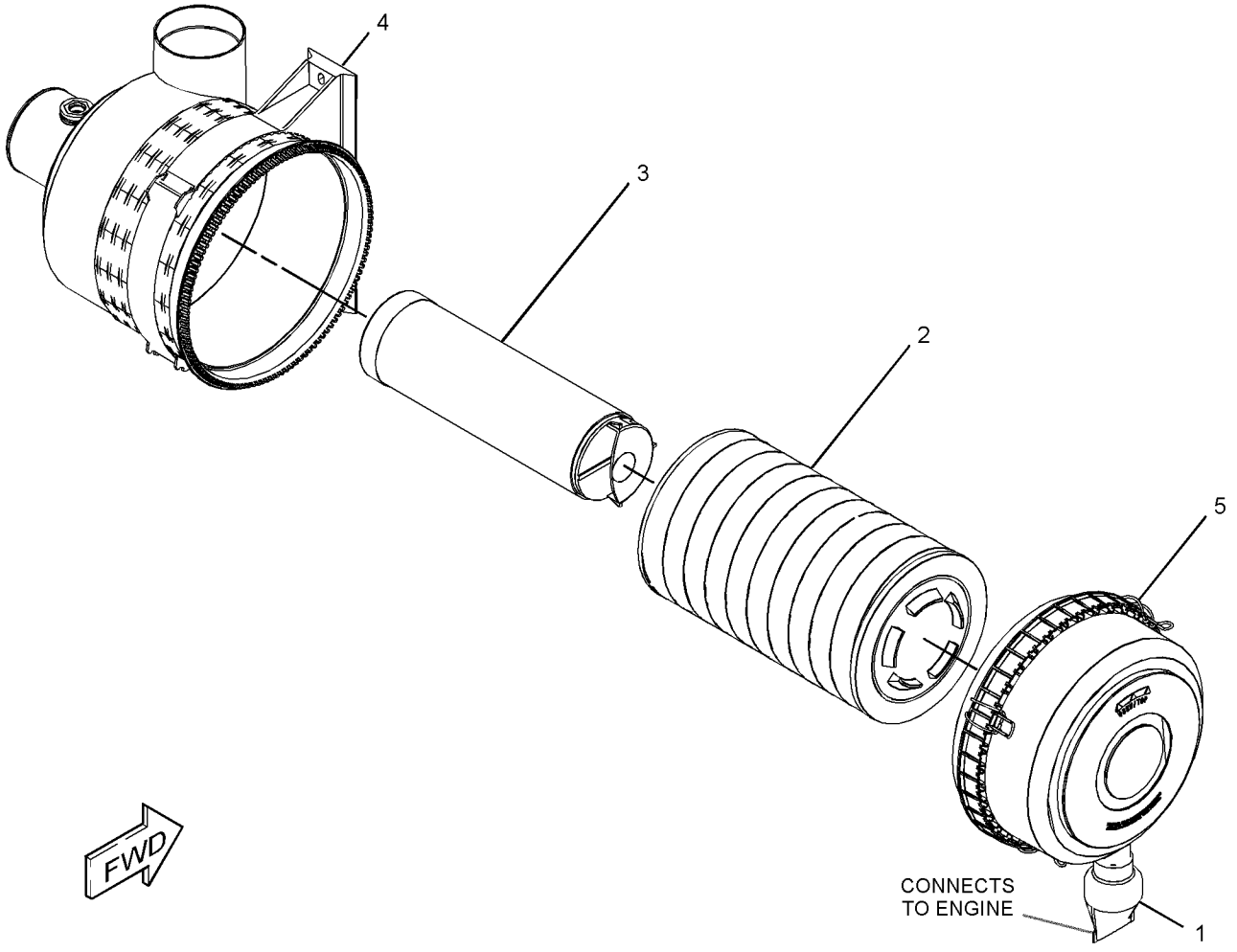

GRAPHIC #1 **<END>** g03376259

332-3648 EXTENSION GP-EXHAUST

S/N: DYB1-UP

PART OF 381-4371 INSTALLATION AR-ENGINE

SMCS-1061 **i05307814**

NOTE	REF NO	GRAPHIC REF	PART NUMBER	QTY	PART NAME 1 2 3 4 5 6 (PRODUCT LEVEL)	SEE PAGE
	1	1	**388-7018**	1	CLAMP-BENT BOLT	
	2	1	**339-7774**	1	PLATE	
	3	1	**339-7775**	1	SUPPORT AS	
	4	1	**344-4753**	1	PIPE AS	
	5	1	**7X-7729**	4	WASHER (11X25X3-MM THK)	
M	6	1	**8T-4195**	4	BOLT (M10X1.5X30-MM)	

M - METRIC PART

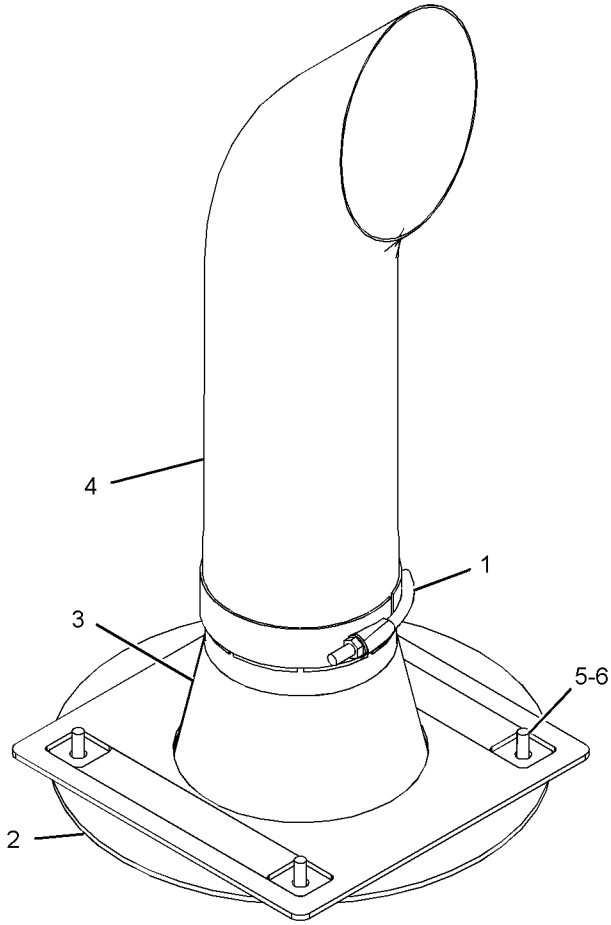

VIEW OF AREA A

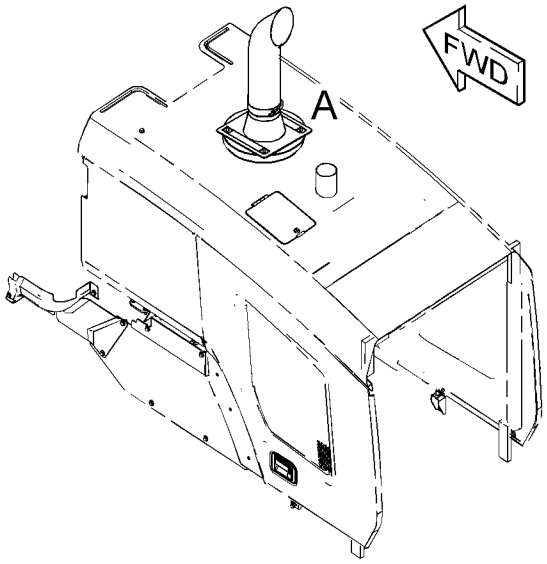

GRAPHIC #1 **<END>** g02791905

AIR INLET AND EXHAUST SYSTEM

371-1275 LINES GP-AIR

S/N: DYB1-UP

PART OF 381-4371 INSTALLATION AR-ENGINE

SMCS-1071 **i05307789**

NOTE	REF NO	GRAPHIC REF	PART NUMBER	QTY	PART NAME 1 2 3 4 5 6 (PRODUCT LEVEL)	SEE PAGE
	1	1	**159-2829**	1	HOSE	
	2	1	**209-4578**	2	CLAMP	
	3	1	**215-4012**	1	CLAMP	
	4	1	**216-4983**	3	CLAMP	
	5	1	**311-2768**	1	HOSE	
	6	1	**323-3309**	8	CAP	
	7	1	**323-6645**	6	CAP	
	8	1	**348-9501**	1	TUBE	
	9	1	**374-1258**	1	TUBE	
	10	1	**374-1580**	1	HOSE	
	11	1	**390-1760**	1	TUBE AS	
	12	1	**390-1836**	1	HOSE	
	13	1	**419-9811**	1	HOSE	
	14	1	**423-6378**	1	HOSE	
	15	1	**433-3036**	1	HOSE	
	16	1	**144-0367**	3	CLAMP-HOSE	
	17	1	**5P-4116**	2	WASHER-HARD (8.8X20.5X2-MM THK)	
M	18	1	**7X-2537**	2	BOLT (M8X1.25X35-MM)	
	19	1	**8T-4985**	1	CLAMP-HOSE	
	20	1	**8T-4986**	4	CLAMP-HOSE	
D	21	1	**8T-3426**		CHANNEL-TRIM (0.5-M)	

D - ORDER BY THE METER
M - METRIC PART

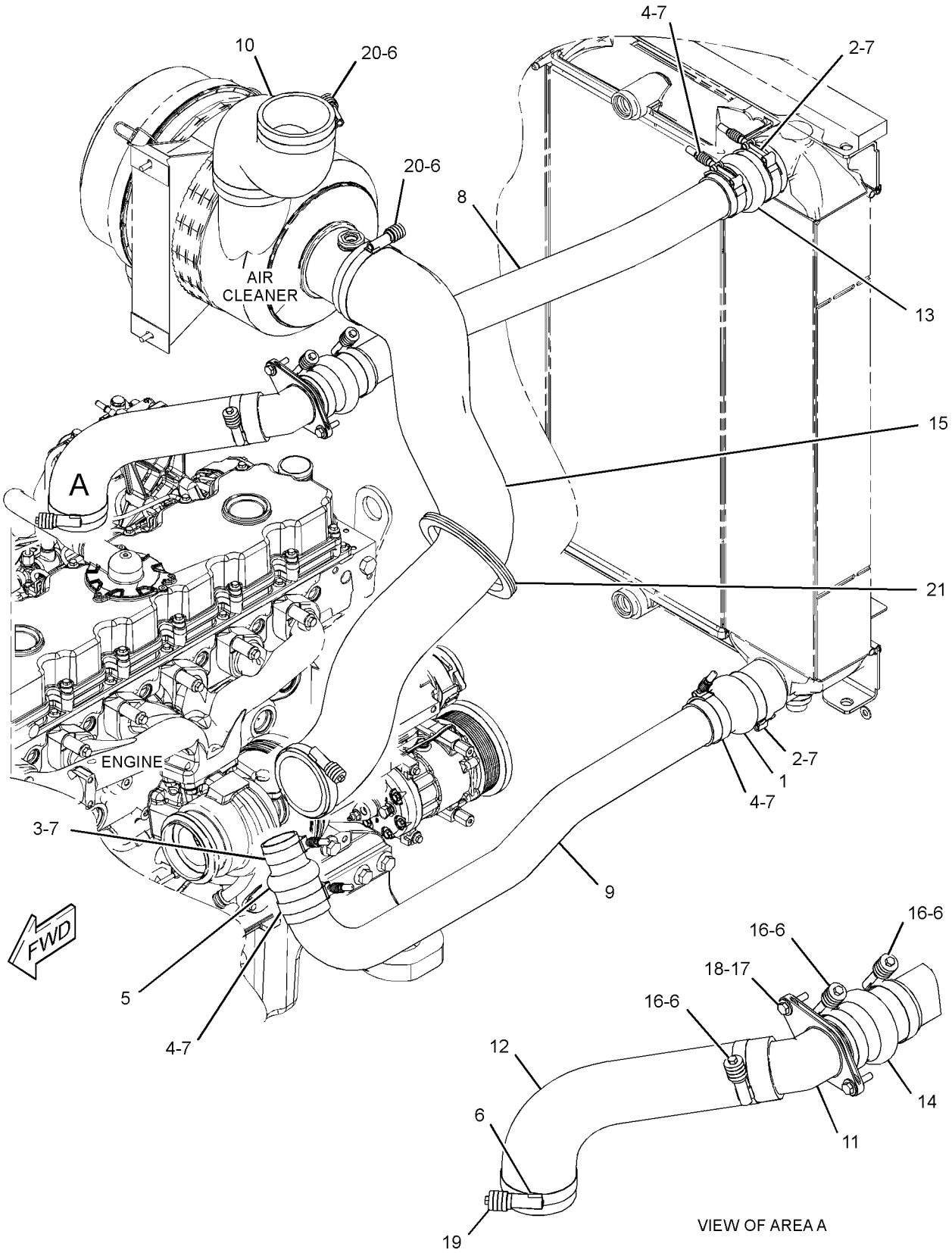

GRAPHIC #1 **<END>** g03380660

377-2877 LINES GP-TURBOCHARGER AIR

S/N: E7A1-UP
PART OF 371-2720 TURBOCHARGER GP
AN ATTACHMENT

SMCS-1052, 1071

i05333394

NOTE	REF NO	GRAPHIC REF	PART NUMBER	QTY	PART NAME 1 2 3 4 5 6 (PRODUCT LEVEL)	SEE PAGE
	1	1	**225-8526**	2	WASHER (10.4X13.75X1.37-MM THK)	
	2	1	**133-9469**	1	CLIP	
	3	1	**225-8524**	1	BOLT-SPECIAL (BANJO)	
	4	1	**335-8611**	2	CLIP	
	5	1	**377-2876**	1	TUBE AS	
	6	1	**422-7715**	1	HOSE-TURBOCHARGER	
	7	1	**107-2348**	2	CLIP	

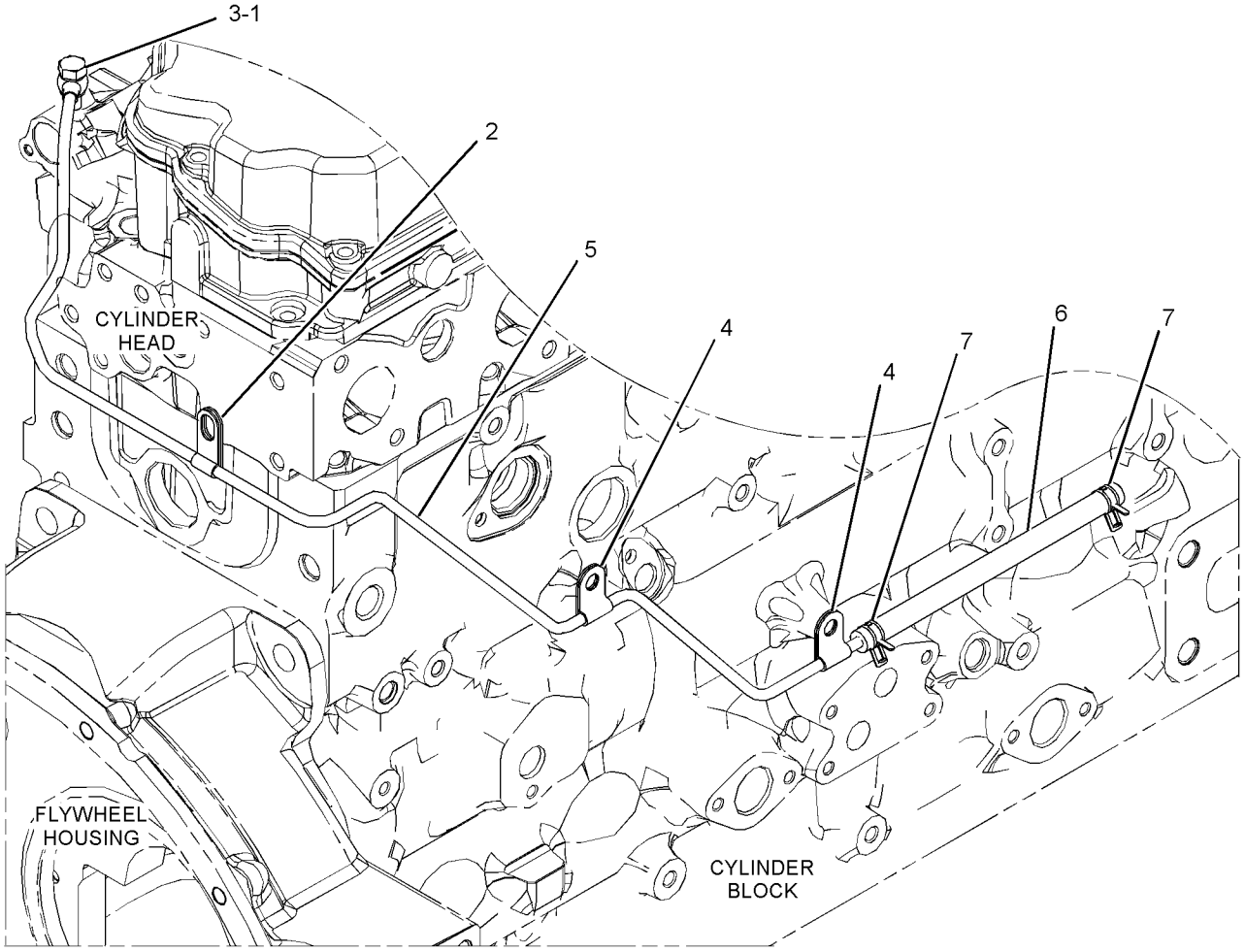

GRAPHIC #1

<END>

g03380817

393-7694 MANIFOLD GP-EXHAUST

S/N: E7A1-UP

PART OF 371-1441 ENGINE AR-PRIMARY

AN ATTACHMENT

SMCS-1059 **i05331885**

NOTE	REF NO	GRAPHIC REF	PART NUMBER	QTY	PART NAME 1 2 3 4 5 6 (PRODUCT LEVEL)	SEE PAGE
	1	1	**238-8292**	12	BOLT-FLANGE HEAD	
	2	1	**286-7851**	12	SPACER	
	3	1	**367-3340**	4	STUD	
	4	1	**384-2286**	1	MANIFOLD	
	5	1	**416-7727**	2	GASKET	

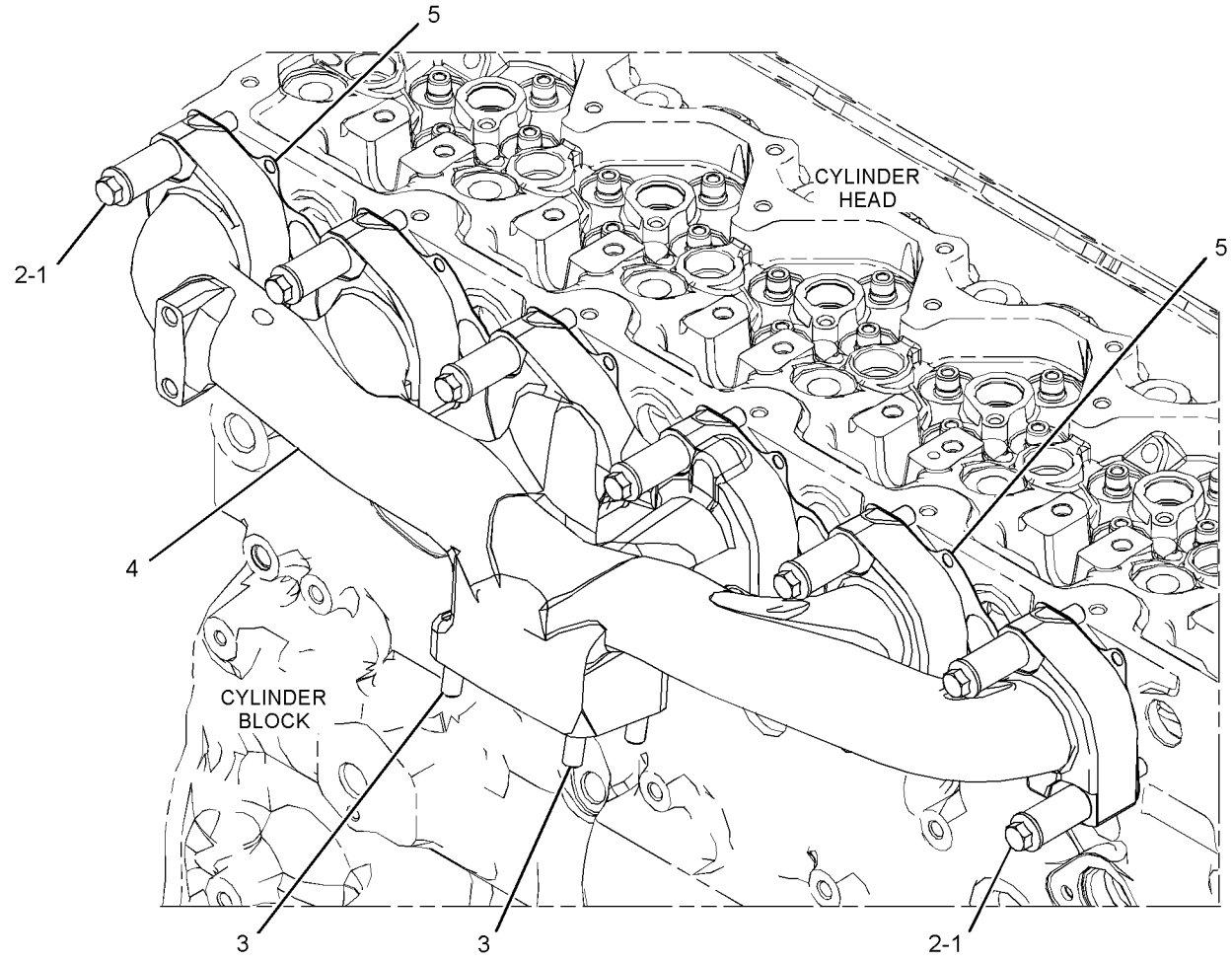

GRAPHIC #1 **<END>** g03379009

391-5523 MANIFOLD GP-INLET

S/N: E7A1-UP

PART OF 371-1441 ENGINE AR-PRIMARY

AN ATTACHMENT

SMCS-1058 **i05331888**

NOTE	REF NO	GRAPHIC REF	PART NUMBER	QTY	PART NAME 1 2 3 4 5 6 (PRODUCT LEVEL)	SEE PAGE
	1	1	**6I-0917**	2	BOLT (M6X1X25-MM)	
	2	1	**105-2740**	12	BOLT	
	3	1	**369-1658**	1	SOLENOID	
	4	1	**388-2314**	1	COVER-CYLINDER HEAD	
	5	1	**390-1558**	1	BRACKET	
	6	1	**391-8775**	1	CONNECTION GP-AIR	
		1	**292-3462**	1	PLUG-PIPE	
	7	1	**416-1036**	1	GASKET	
M	8	1	**6I-0260**	4	BOLT (M8X1.25X25-MM)	

M - METRIC PART

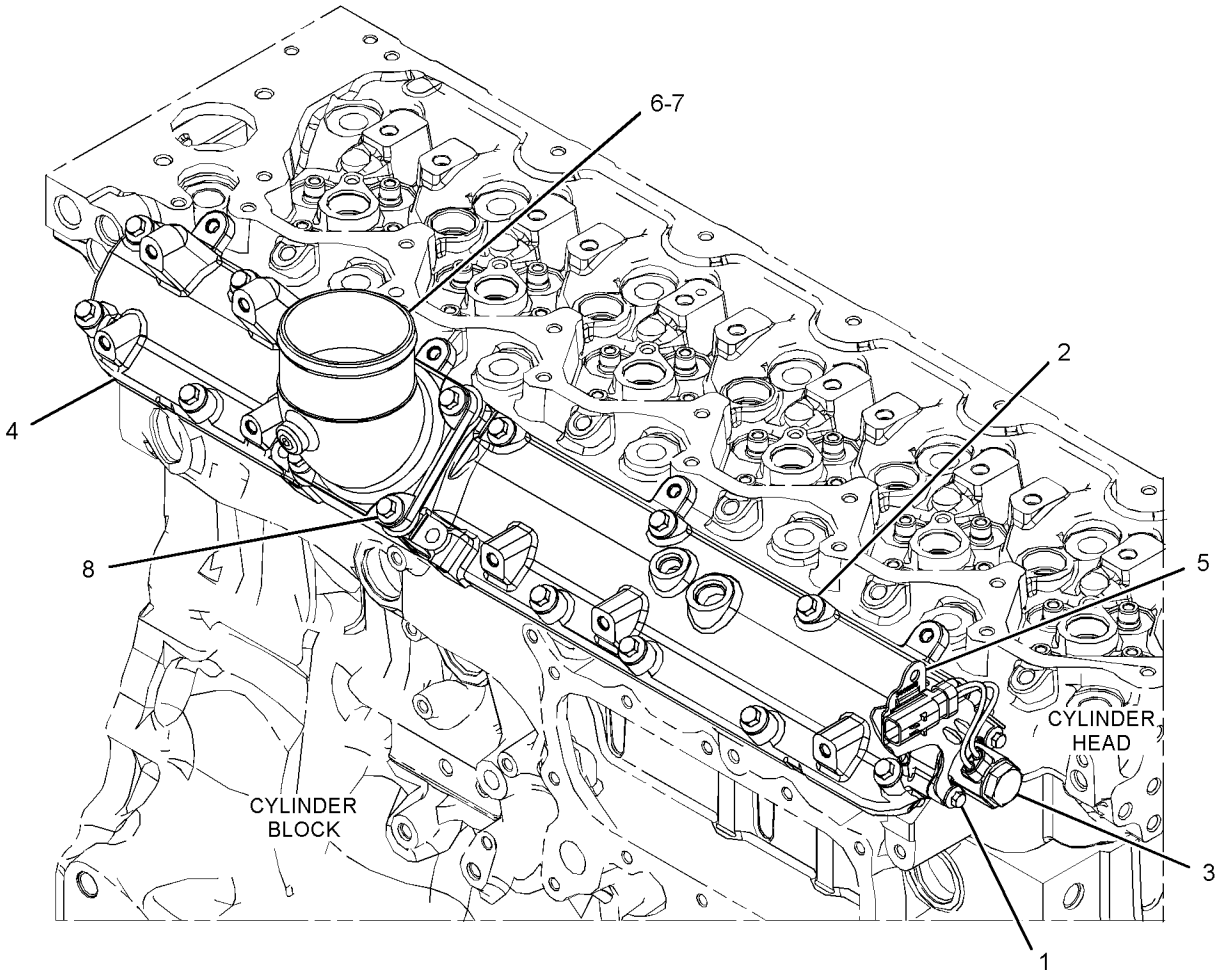

GRAPHIC #1 **<END>** g03378950

371-1276 MUFFLER GP

S/N: DYB1-UP

PART OF 381-4371 INSTALLATION AR-ENGINE

SMCS-1062 **i05296397**

NOTE	REF NO	GRAPHIC REF	PART NUMBER	QTY	PART NAME 1 2 3 4 5 6 (PRODUCT LEVEL)	SEE PAGE
	1	1	**280-2424**	1	ADAPTER	
	2	1	**371-1287**	1	MUFFLER AS	
	3	1	**371-1289**	1	ELBOW-EXHAUST	
	4	1	**371-1301**	1	BRACKET	
	5	1	**388-7010**	1	CLAMP-BENT BOLT	
	6	1	**7X-7729**	2	WASHER (11X25X3-MM THK)	
	7	1	**8T-4121**	2	WASHER-HARD (11X21X2.5-MM THK)	
M	8	1	**8T-4133**	2	NUT (M10X1.5-THD)	
M	9	1	**8T-4137**	2	BOLT (M10X1.5X20-MM)	
M	10	1	**8T-4185**	2	BOLT (M10X1.5X50-MM)	
M	11	1	**8T-4196**	2	BOLT (M10X1.5X35-MM)	
	12	1	**8T-4222**	4	WASHER-PLATED (11X32X2.5-MM THK)	

M - METRIC PART

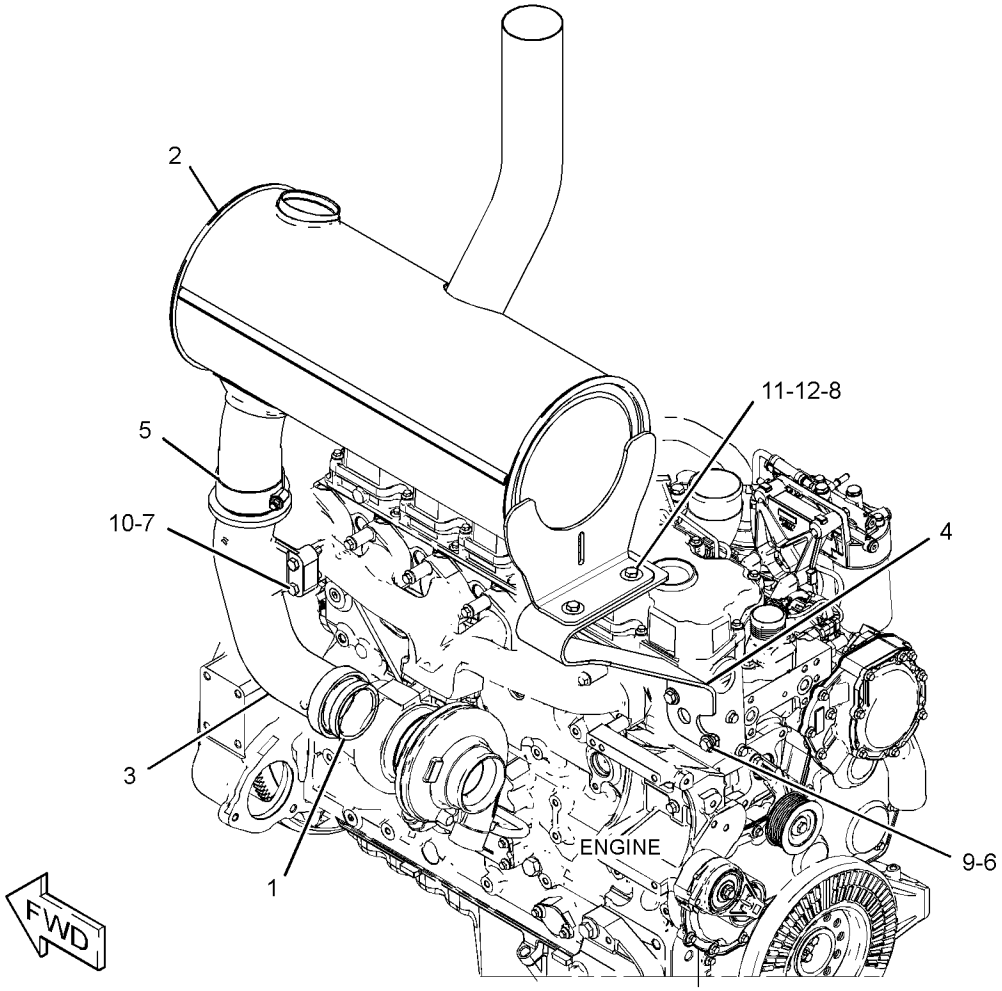

GRAPHIC #1 **<END>** g03378422

121-7746 PRECLEANER GP

S/N: DYB1-UP
PART OF 332-3646 PRECLEANER GP
AN ATTACHMENT

SMCS-1055 **i03361344**

NOTE	REF NO	GRAPHIC REF	PART NUMBER	QTY	PART NAME 1 2 3 4 5 6 (PRODUCT LEVEL)	SEE PAGE
	1	1	**1M-7250**	1	BOWL	
	2	1	**9M-9439**	1	COVER AS	
	3	1	**131-6143**	1	CLAMP-HOSE	

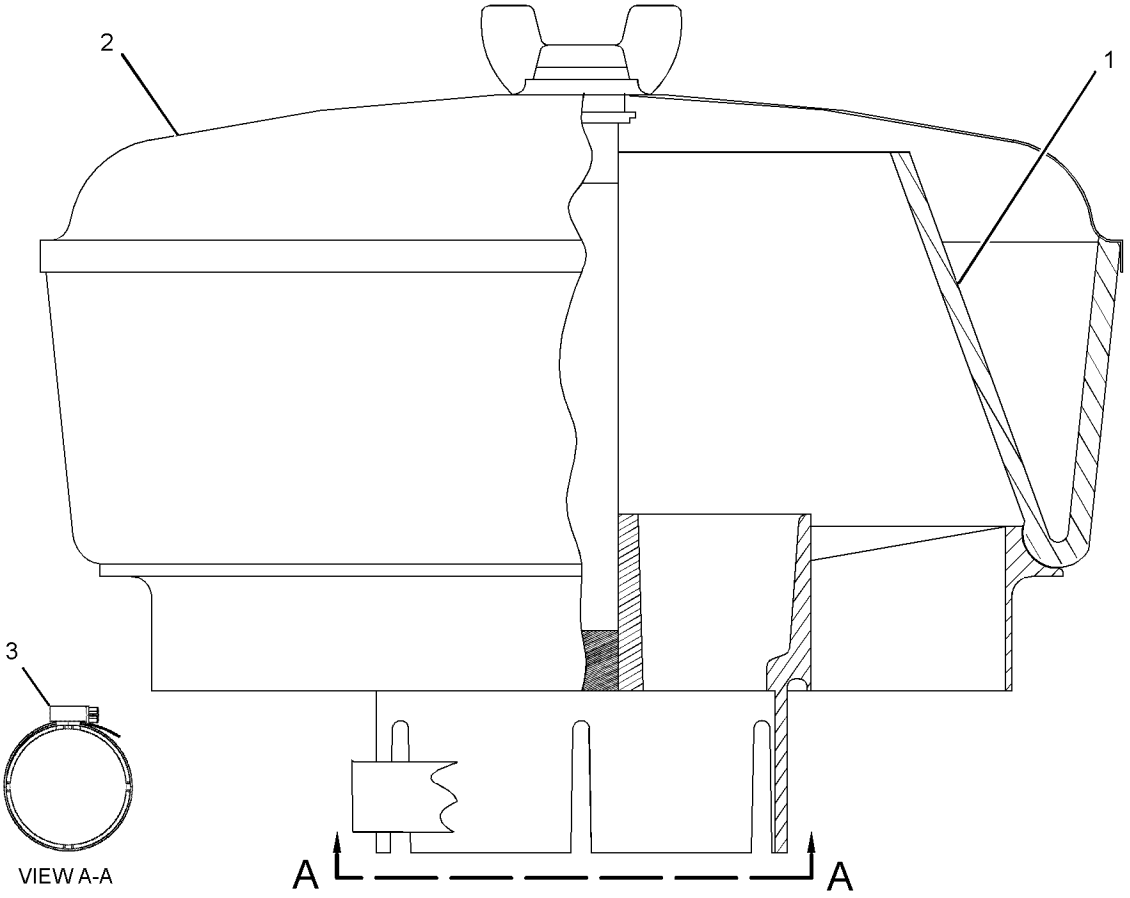

GRAPHIC #1 **<END>** g01737513

332-3646 PRECLEANER GP–STANDARD

S/N: DYB1-UP
CANNOT BE USED WITH 332-3647–PAGE: 68
PART OF 366-8125 OPTION AR-MACHINE
AN ATTACHMENT

SMCS-1055 **i03825029**

NOTE	REF NO	GRAPHIC REF	PART NUMBER	QTY	PART NAME 1 2 3 4 5 6 (PRODUCT LEVEL)	SEE PAGE
Y	1	1	**121-7746**	1	PRECLEANER GP	66

Y - SEPARATE ILLUSTRATION

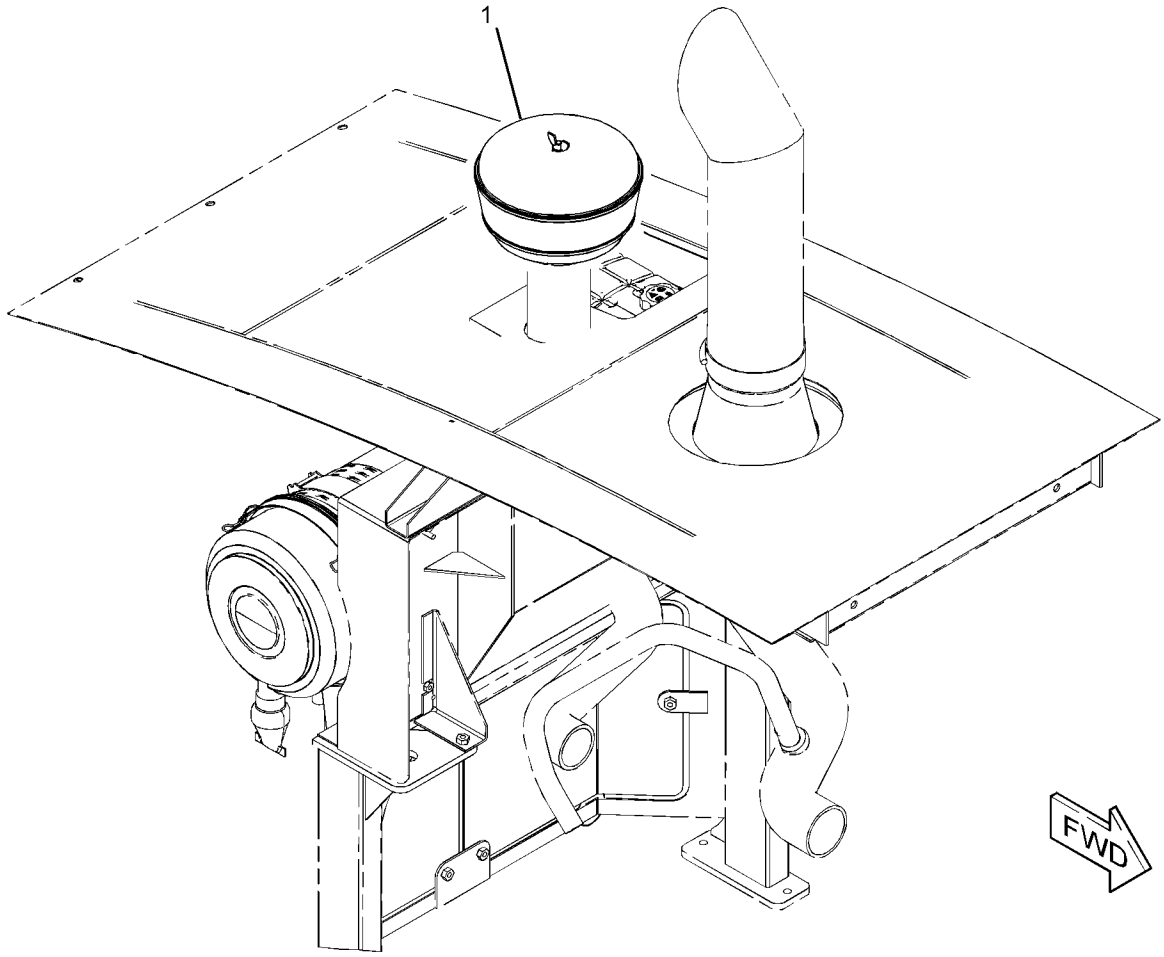

GRAPHIC #1 **<END>** g02052773

332-3647 PRECLEANER GP

S/N: DYB1-UP
CANNOT BE USED WITH 332-3646—PAGE: 67
PART OF 366-8126, 366-8127, 381-4420 OPTION AR-MACHINE
AN ATTACHMENT

SMCS-1055 **i03825030**

NOTE	REF NO	GRAPHIC REF	PART NUMBER	QTY	PART NAME 1 2 3 4 5 6 (PRODUCT LEVEL)	SEE PAGE
	1	1	**351-6217**	1	PRECLEANER GP	
		1	**343-5645**	1	PRECLEANER AS	
		1	**222-2277**	1	CLAMP	
		1	**344-7517**	1	REDUCER	

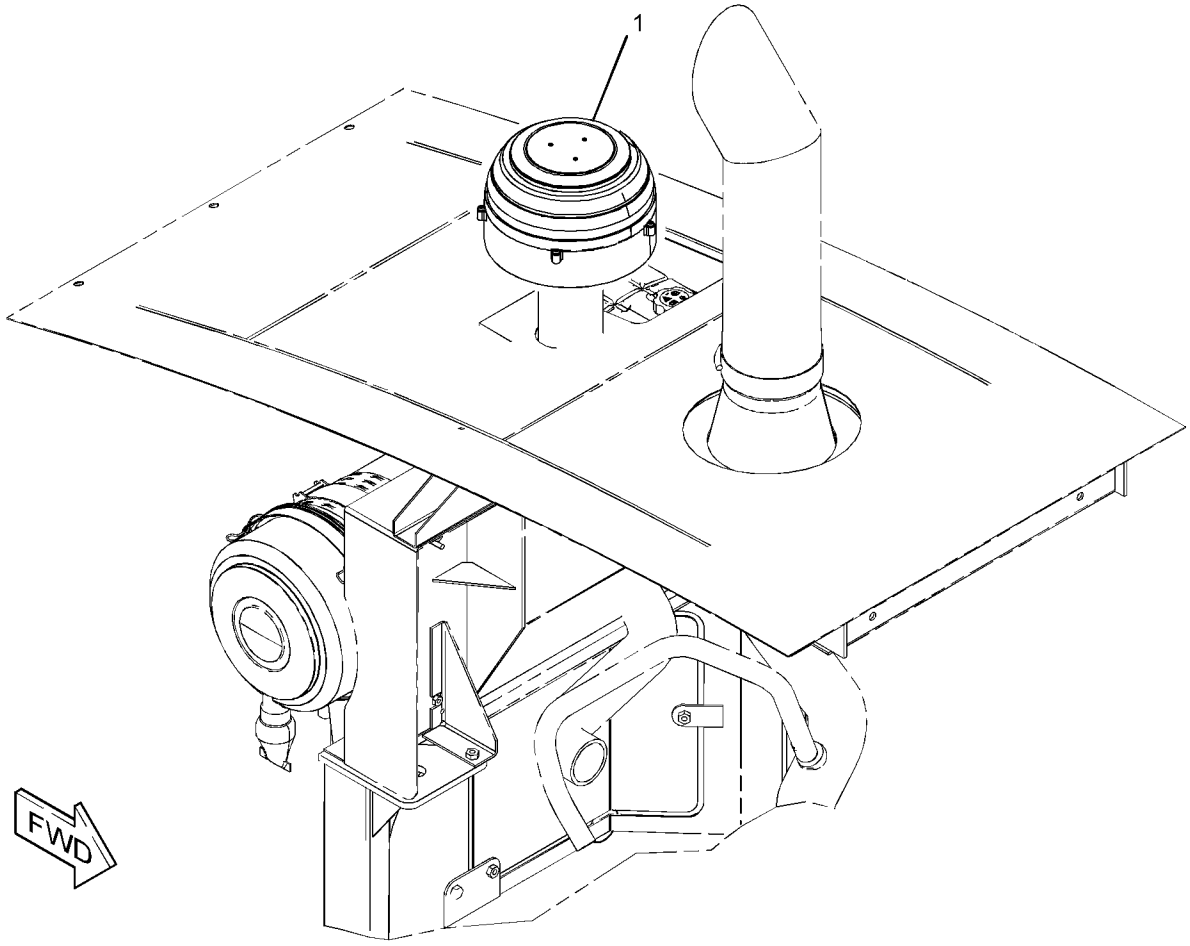

GRAPHIC #1 **<END>** g02050773

371-2720 TURBOCHARGER GP

S/N: E7A1-UP
PART OF 371-1441 ENGINE AR-PRIMARY
AN ATTACHMENT

SMCS-1052, 1053 **i05332854**

NOTE	REF NO	GRAPHIC REF	PART NUMBER	QTY	PART NAME 1 2 3 4 5 6 (PRODUCT LEVEL)	SEE PAGE
M	1	1	**100-4830**	1	BOLT (M10X1.5X20-MM)	
M	2	1	**124-3815**	2	BOLT (M8X1.25X16-MM)	
	3	1	**278-0016**	1	GASKET	
	4	1	**278-0017**	1	GASKET	
R	5	1	**315-9810**	1	TURBOCHARGER GP	
		1	**277-9602**	1	CLAMP	
		1	**277-9603**	1	CLAMP	
Y	6	1	**368-8559**	1	LINES GP-TURBOCHARGER OIL	43
Y	7	1	**377-2877**	1	LINES GP-TURBOCHARGER AIR	62
	8	1	**420-2371**	1	LINE AS	
M	9	1	**6I-0217**	5	BOLT (M8X1.25X20-MM)	
	10	1	**6I-0563**	4	NUT (M10X1.5-THD)	

M - METRIC PART
R - REMFG PART MAY BE AVAILABLE
Y - SEPARATE ILLUSTRATION

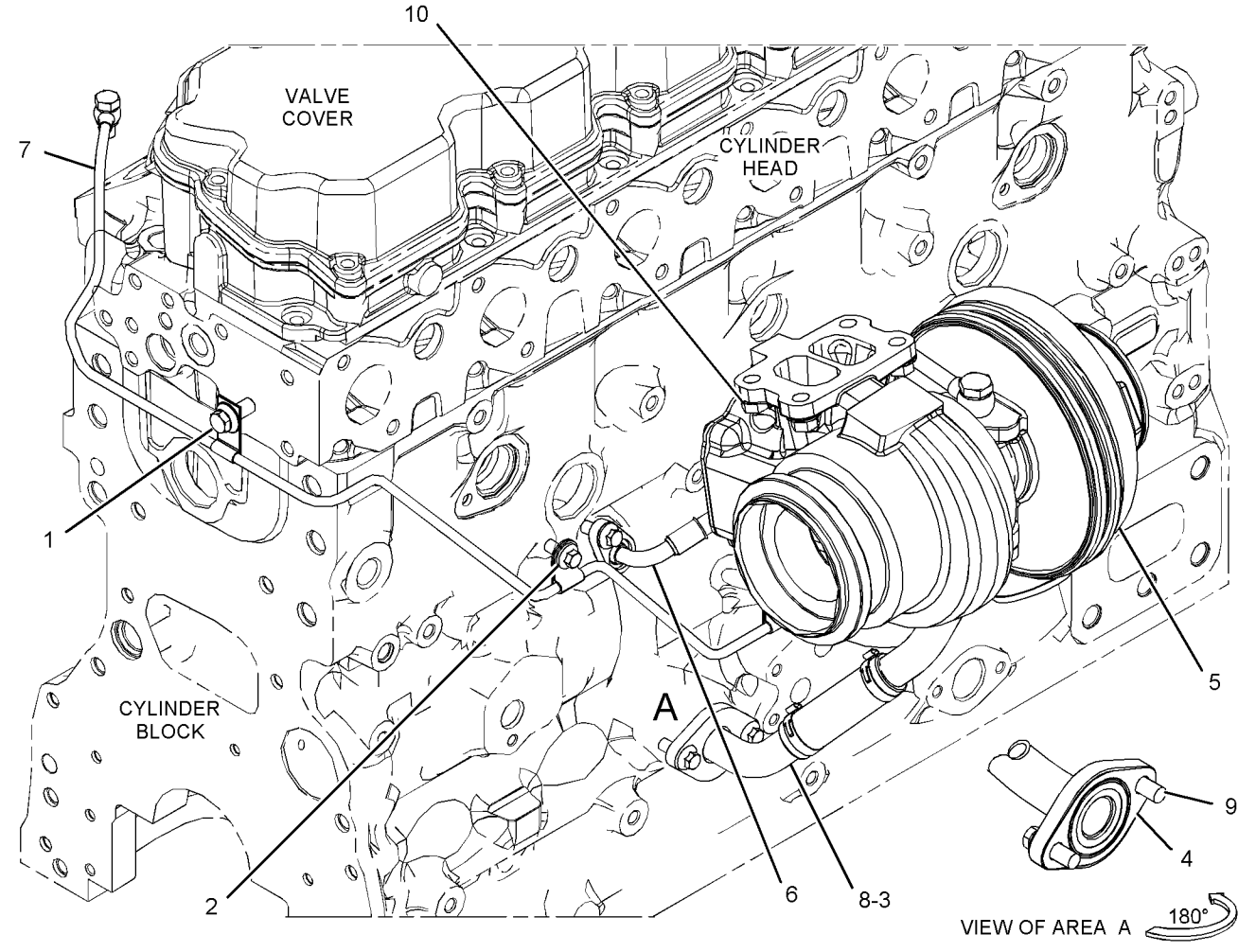

GRAPHIC #1 **<END>** g03380849

360-8958 FILTER GP-FUEL

S/N: E7A1-UP

PART OF 377-9478, 421-5684 FILTER GP-FUEL

AN ATTACHMENT

SMCS-1261 **i04994749**

NOTE	REF NO	GRAPHIC REF	PART NUMBER	QTY	PART NAME 1 2 3 4 5 6 (PRODUCT LEVEL)	SEE PAGE
	1	1	**360-8960**	1	FILTER ELEMENT-FUEL	
					AVAILABLE REPAIR KIT(S):	
			362-5412	1	KIT-DRAIN (FUEL FILTER)	
					(INCLUDES DRAIN, KNOB, & SEALS)	

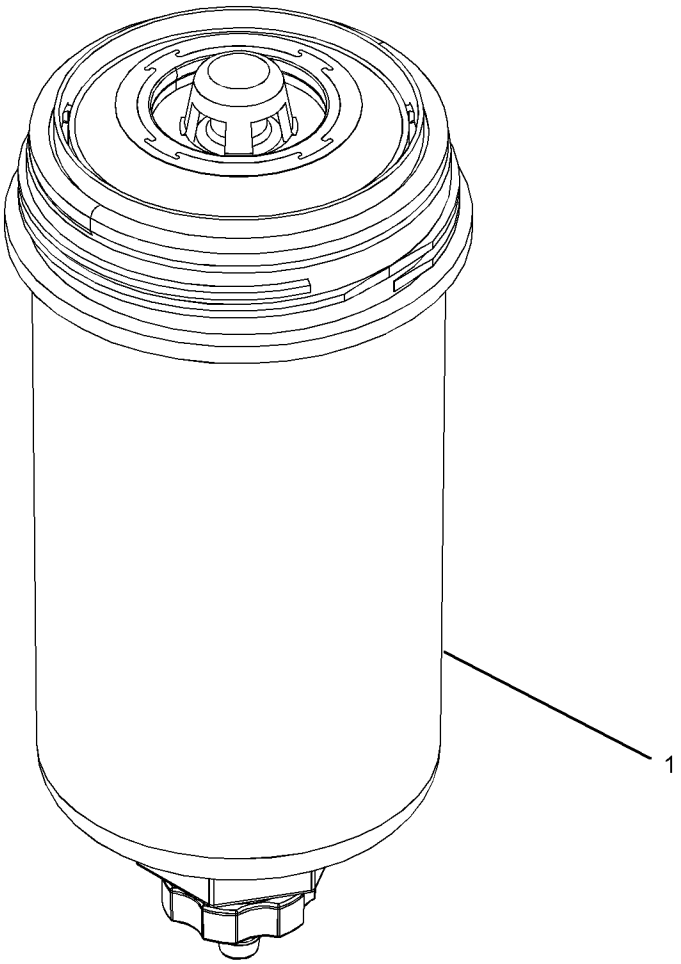

GRAPHIC #1 **<END>** g03173178

375-3995 FILTER GP-FUEL

S/N: E7A1-UP
PART OF 371-1441 ENGINE AR-PRIMARY
AN ATTACHMENT

SMCS-1261 **i05331764**

NOTE	REF NO	GRAPHIC REF	PART NUMBER	QTY	PART NAME 1 2 3 4 5 6 (PRODUCT LEVEL)	SEE PAGE
Y	1	1	*377-9478*	1	FILTER GP-FUEL	72

Y - SEPARATE ILLUSTRATION

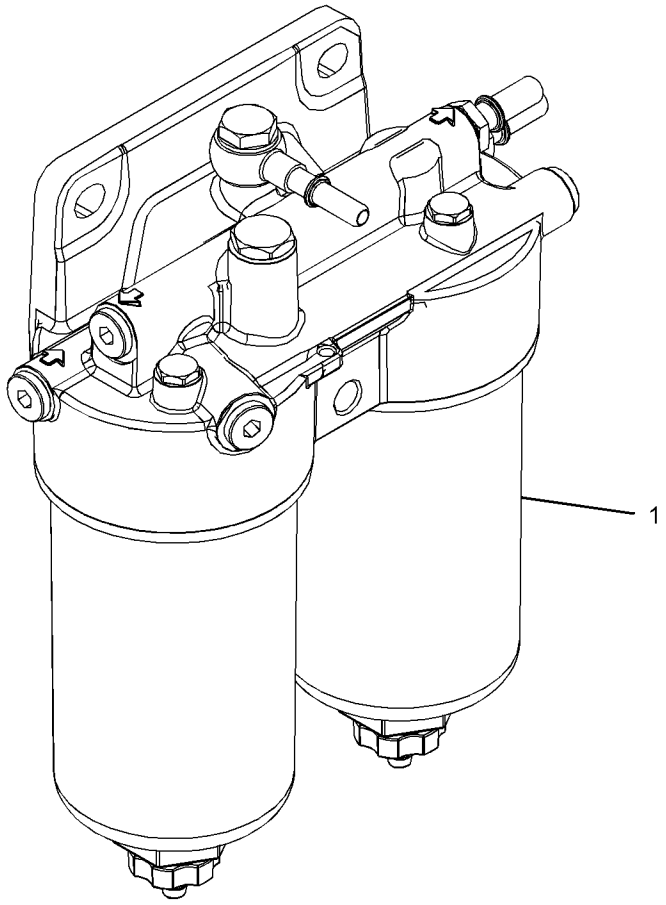

GRAPHIC #1 **<END>** g03379474

377-9478 FILTER GP-FUEL

S/N: E7A1-UP

PART OF 375-3995 FILTER GP-FUEL

AN ATTACHMENT

SMCS-1261 **i05331780**

NOTE	REF NO	GRAPHIC REF	PART NUMBER	QTY	PART NAME 1 2 3 4 5 6 (PRODUCT LEVEL)	SEE PAGE
Y	1	1	**360-8958**	1	FILTER GP-FUEL	70
	2	1	**362-9689**	1	SCREW-SPECIAL	
					AVAILABLE REPAIR KIT(S):	
			362-5412	1	KIT-DRAIN	
					(INCLUDES DRAIN, KNOB, & SEAL REPLACEMENTS)	

Y - SEPARATE ILLUSTRATION

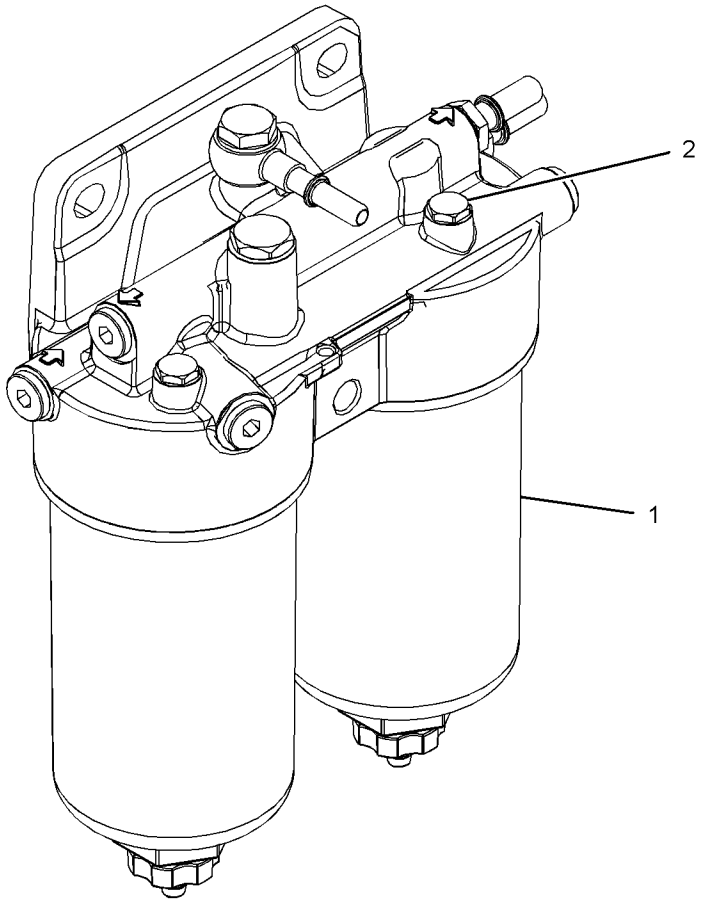

GRAPHIC #1 **<END>** g03379498

421-5684 FILTER GP-FUEL

S/N: E7A1-UP
PART OF 426-3292 FILTER GP-FUEL
AN ATTACHMENT

SMCS-1261 **i05333255**

NOTE	REF NO	GRAPHIC REF	PART NUMBER	QTY	PART NAME 1 2 3 4 5 6 (PRODUCT LEVEL)	SEE PAGE
Y	1	1	**360-8958**	1	FILTER GP-FUEL	70
	2	1	**362-9689**	1	SCREW-SPECIAL	
					AVAILABLE REPAIR KIT(S):	
			362-5412	1	KIT-DRAIN	
					(INCLUDES DRAIN, KNOB, & SEAL REPLACEMENTS)	

Y - SEPARATE ILLUSTRATION

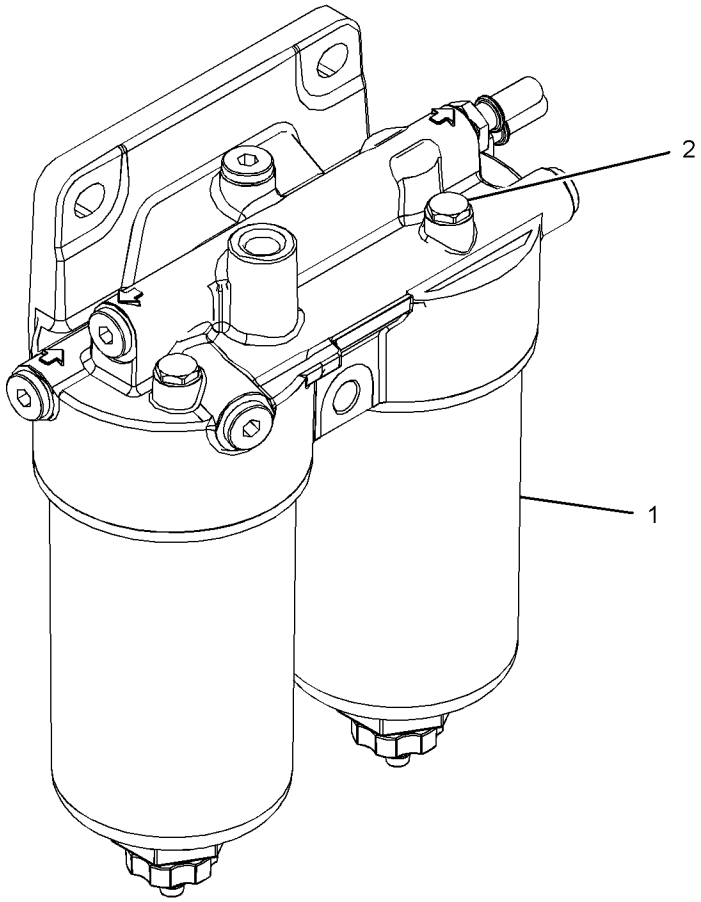

GRAPHIC #1 **<END>** g03379539

426-3292 FILTER GP-FUEL

S/N: E7A1-UP
PART OF 371-1441 ENGINE AR-PRIMARY
AN ATTACHMENT

SMCS-1261 **i05331842**

NOTE	REF NO	GRAPHIC REF	PART NUMBER	QTY	PART NAME 1 2 3 4 5 6 (PRODUCT LEVEL)	SEE PAGE
Y	1	1	*421-5684*	1	FILTER GP-FUEL	73

Y - SEPARATE ILLUSTRATION

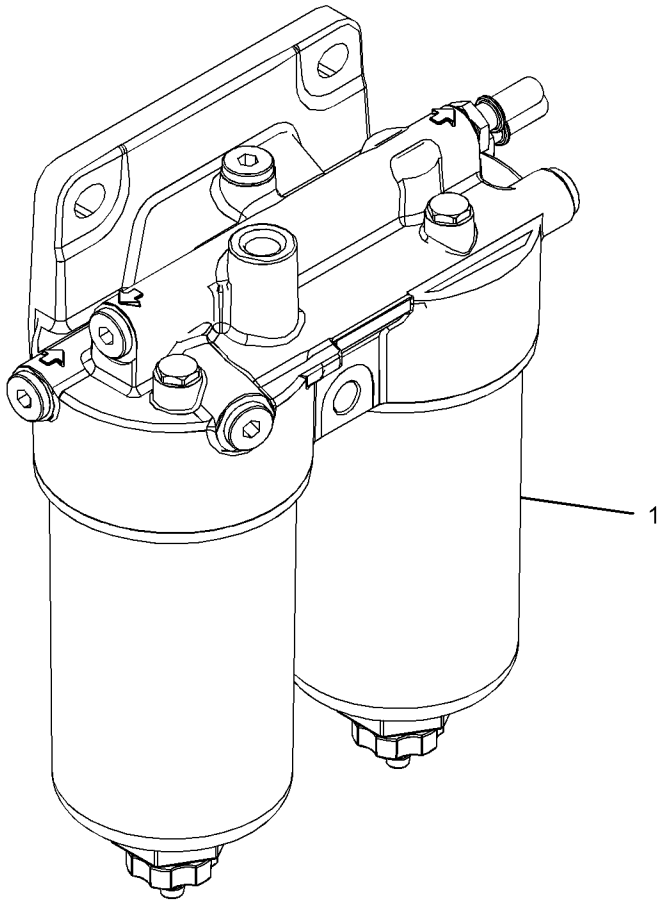

GRAPHIC #1 **<END>** g03379517

426-3312 FILTER GP-FUEL

S/N: E7A1-UP
PART OF 371-1441 ENGINE AR-PRIMARY
AN ATTACHMENT

SMCS-1261 **i05331846**

NOTE	REF NO	GRAPHIC REF	PART NUMBER	QTY	PART NAME 1 2 3 4 5 6 (PRODUCT LEVEL)	SEE PAGE
M	1	1	**6I-0593**	2	BOLT (M10X1.5X30-MM)	
	2	1	**6I-4200**	2	BOLT (M10X1.5X16-MM)	
	3	1	**100-4458**	2	BOLT (M8X1.25X14-MM)	
	4	1	**164-7468**	1	BOLT (M10X1.5X95-MM)	
	5	1	**346-0406**	2	CLIP-PIPE	
	6	1	**346-5491**	1	ADAPTER AS	
		1	**277-4993**	1	SEAL-O-RING	
Y	7	1	*384-3159*	1	LINES GP-FUEL	81
	8	1	**389-5775**	1	BRACKET	
	9	1	**389-5784**	1	BRACKET-FILTER	
	10	1	**390-0755**	1	BRACKET AS	
	11	1	**390-8738**	1	SUPPORT GP-LINES	
		1	**366-9373**	1	CLIP	
	12	1	**391-1817**	1	SUPPORT GP-LINES	
		1	**366-9373**	1	CLIP	
Y	13	1	**392-8660**	1	LINES GP-FUEL	82
Y	14	1	**425-2178**	1	LINES GP-FUEL	83
Y	15	1	**433-1316**	1	LINES GP-FUEL	84
M	16	1	**6I-0217**	1	BOLT (M8X1.25X20-MM)	
M	17	1	**6I-0260**	3	BOLT (M8X1.25X25-MM)	
	18	1	**208-9287**	2	BOLT-FLANGE HEAD (M8X1.25X50-MM)	

M - METRIC PART
Y - SEPARATE ILLUSTRATION

426-3312 **FILTER GP-FUEL (*contd.*)** **i05331846**

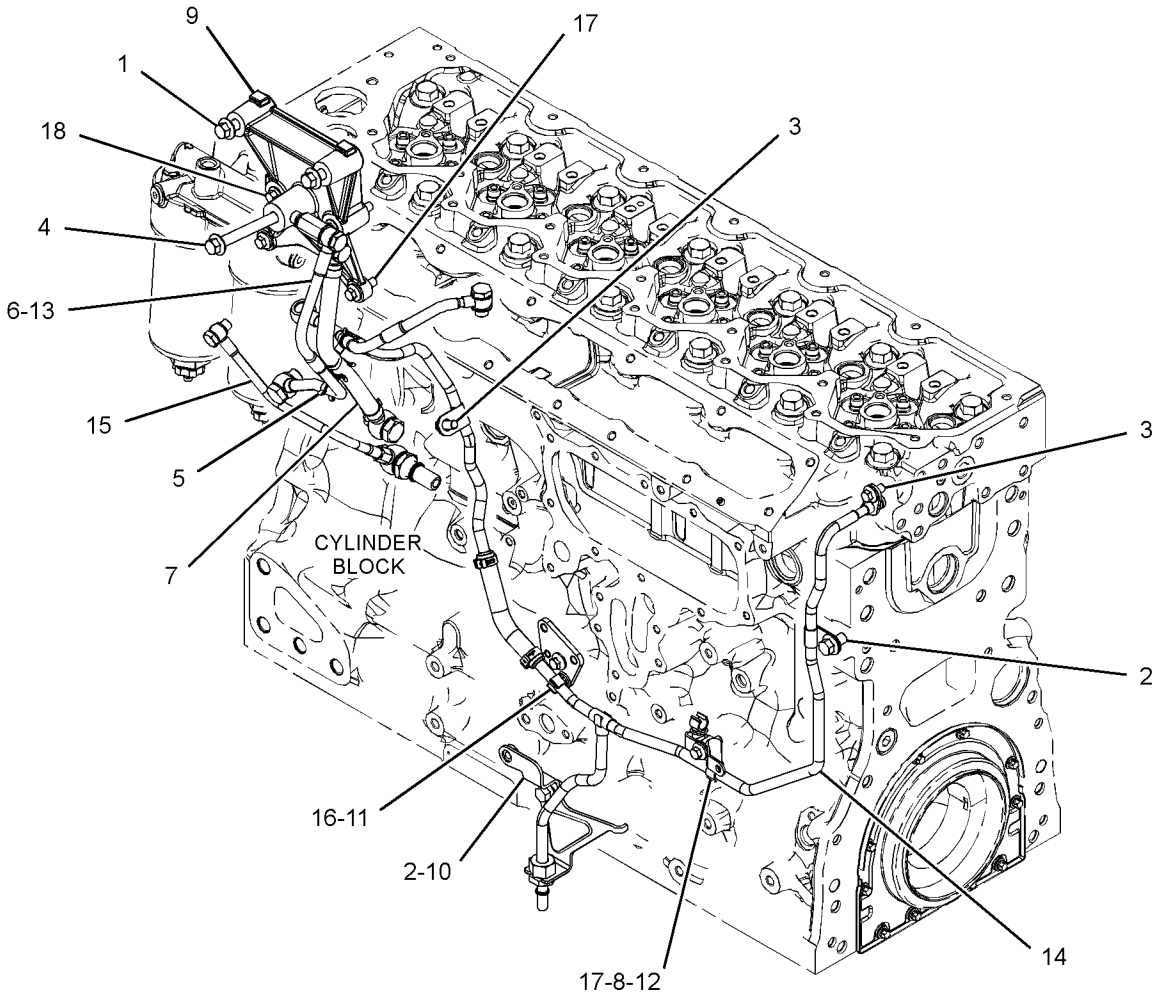

GRAPHIC #1 **<END>** g03379981

391-3762 FILTER GP-WATER SEP & FUEL

S/N: DYB1-UP

PART OF 371-1272 LINES GP-FUEL

SMCS-1260, 1261, 1263 **i05320519**

NOTE	REF NO	GRAPHIC REF	PART NUMBER	QTY	PART NAME 1 2 3 4 5 6 (PRODUCT LEVEL)	SEE PAGE
F			**391-3763**	1	BOWL AS	
F			**391-3764**	1	FILTER AS-WATER SEP & FUEL	
F			**147-1231**	1	GAUGE GP-FUEL LEVEL (WATER SEPARATOR)	

F - NOT SHOWN

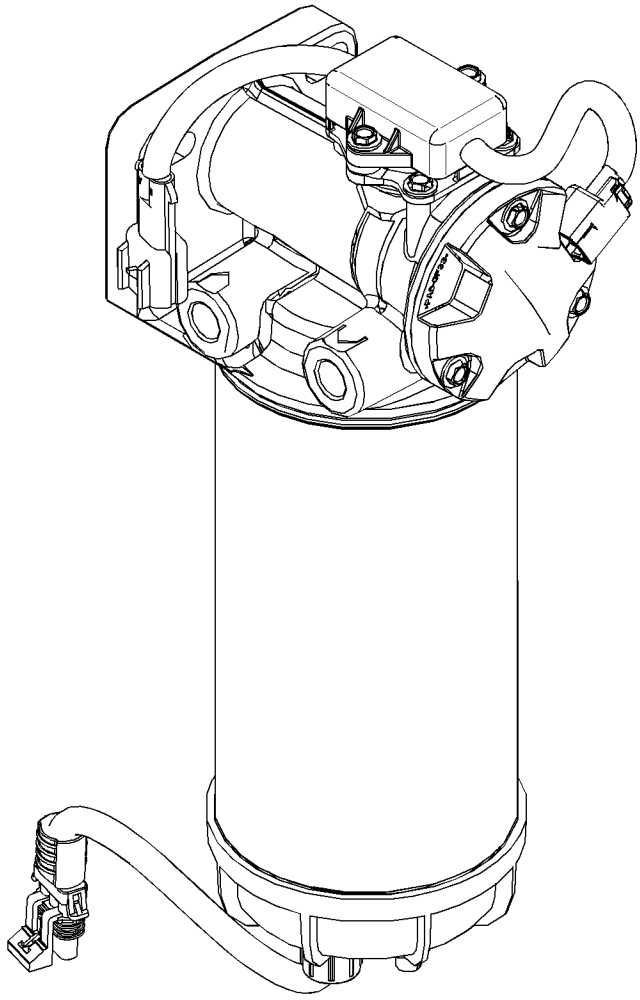

GRAPHIC #1 **<END>** g03380690

371-2483 INJECTOR GP-FUEL

S/N: E7A1-UP
PART OF 371-1441 ENGINE AR-PRIMARY
AN ATTACHMENT

SMCS-1251, 1254, 1290, 1713 **i05331880**

NOTE	REF NO	GRAPHIC REF	PART NUMBER	QTY	PART NAME 1 2 3 4 5 6 (PRODUCT LEVEL)	SEE PAGE
	1	1	**278-5170**	6	BOLT	
	2	1	**369-7799**	6	CLAMP-INJECTOR	
	3	1	**371-3974**	6	INJECTOR GP-FUEL	
					(EACH INCLUDES)	
		1	**376-6403**	1	WASHER-SEAL	
		1	**376-6405**	1	SEAL-O-RING	
	4	1	**277-5067**	6	SLEEVE	

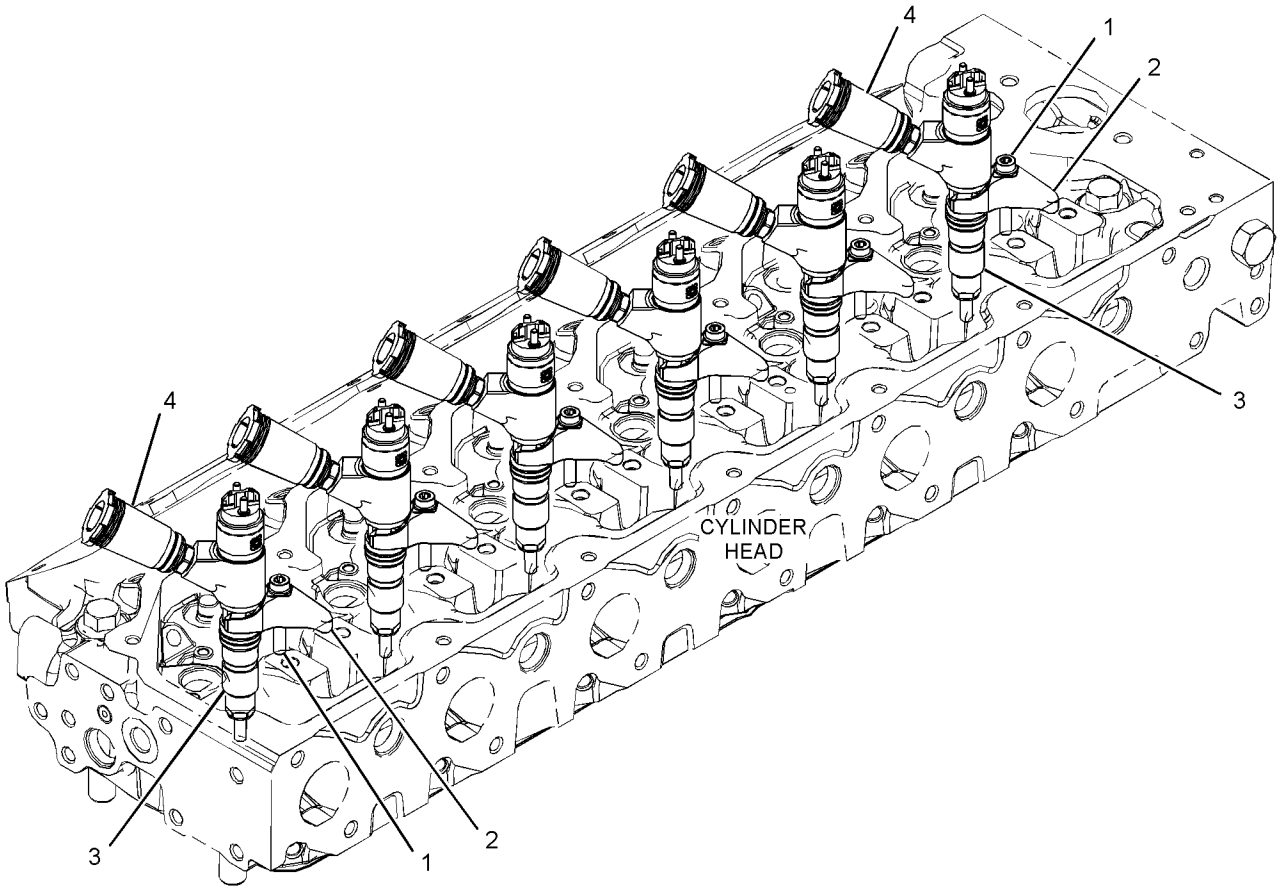

GRAPHIC #1 **<END>** g03378802

371-1272 LINES GP-FUEL

S/N: DYB1-UP

PART OF 381-4371 INSTALLATION AR-ENGINE

SMCS-1274 **i05309500**

NOTE	REF NO	GRAPHIC REF	PART NUMBER	QTY	PART NAME 1 2 3 4 5 6 (PRODUCT LEVEL)	SEE PAGE
	1	1	**7K-1181**	3	STRAP-CABLE	
	2	1	**206-2423**	1	SADDLE	
	3	1	**218-6645**	1	ELBOW	
	4	1	**241-6158**	2	PLUG	
	5	1	**264-3518**	1	CONNECTOR-RECEPTACLE	
	6	1	**323-6645**	8	CAP	
	7	1	**355-0633**	1	CONNECTOR-HOSE	
Y	8	1	**391-3762**	1	FILTER GP-WATER SEP & FUEL	77
	9	1	**124-6257**	2	CLAMP-HOSE	
	10	1	**214-7568**	1	SEAL-O-RING	
	11	1	**228-7102**	4	SEAL-O-RING	
	12	1	**297-7960**	1	ELBOW	
	13	1	**3S-2093**	1	STRAP-CABLE	
	14	1	**5P-4116**	5	WASHER-HARD (8.8X20.5X2-MM THK)	
	15	1	**6D-3479**	5	CLIP	
	16	1	**6D-4246**	2	CLIP	
	17	1	**6K-8178**	1	CLIP	
	18	1	**6S-8620**	6	CLAMP-HOSE	
M	19	1	**7X-2537**	2	BOLT (M8X1.25X35-MM)	
	20	1	**8D-9671**	1	CLIP	
	21	1	**8T-4121**	5	WASHER-HARD (11X21X2.5-MM THK)	
M	22	1	**8T-4136**	5	BOLT (M10X1.5X25-MM)	
M	23	1	**8T-4908**	3	BOLT (M8X1.25X25-MM)	
	24	1	**9S-4191**	1	PLUG-O-RING	
E	25	1	**5P-1507**		HOSE (55-CM)	
E	26	1	**347-8647**		HOSE (65-CM)	
E	27	1	**347-8646**		HOSE (152-CM)	
E	28	1	**347-8645**		HOSE (262-CM)	
E	28A	1	**347-8645**		HOSE (33-CM)	

E - ORDER BY THE CENTIMETER
M - METRIC PART
Y - SEPARATE ILLUSTRATION

371-1272 **LINES GP-FUEL (*contd.*)** **i05309500**

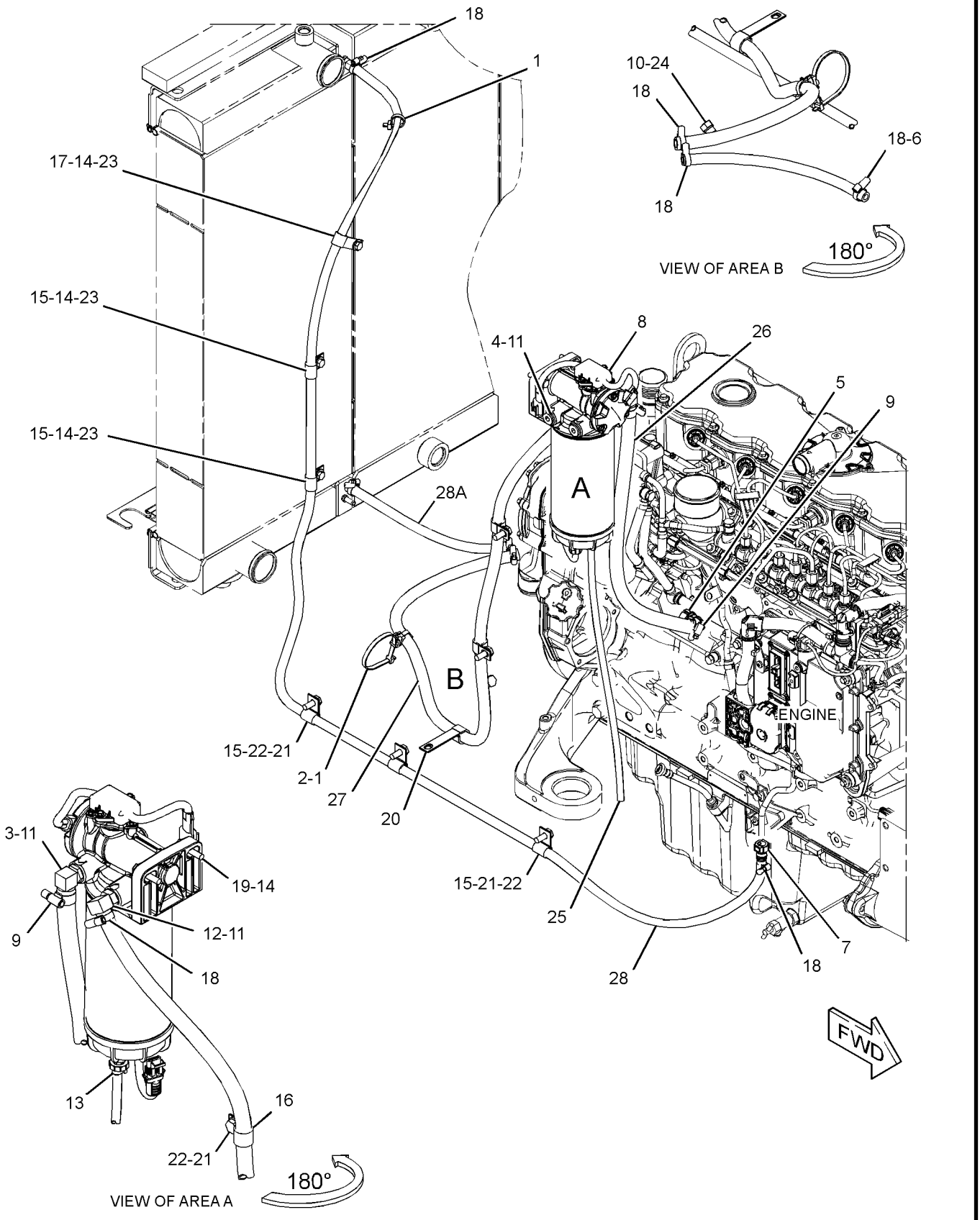

GRAPHIC #1 **<END>** g03380164

384-3159 LINES GP-FUEL

S/N: E7A1-UP
PART OF 426-3312 FILTER GP-FUEL
AN ATTACHMENT

SMCS-1274 **i05341625**

NOTE	REF NO	GRAPHIC REF	PART NUMBER	QTY	PART NAME 1 2 3 4 5 6 (PRODUCT LEVEL)	SEE PAGE
	1	1	*384-3157*	1	LINE AS-FUEL	
E		1	**347-8645**		HOSE (27-CM)	
	2	1	**386-2737**	1	BOLT-BANJO	
	3	1	**247-4928**	2	WASHER (16.5X20.5X1.6-MM THK)	
	4	1	**286-2890**	2	WASHER	
	5	1	**295-4670**	1	BOLT-SPECIAL (BANJO)	

E - ORDER BY THE CENTIMETER

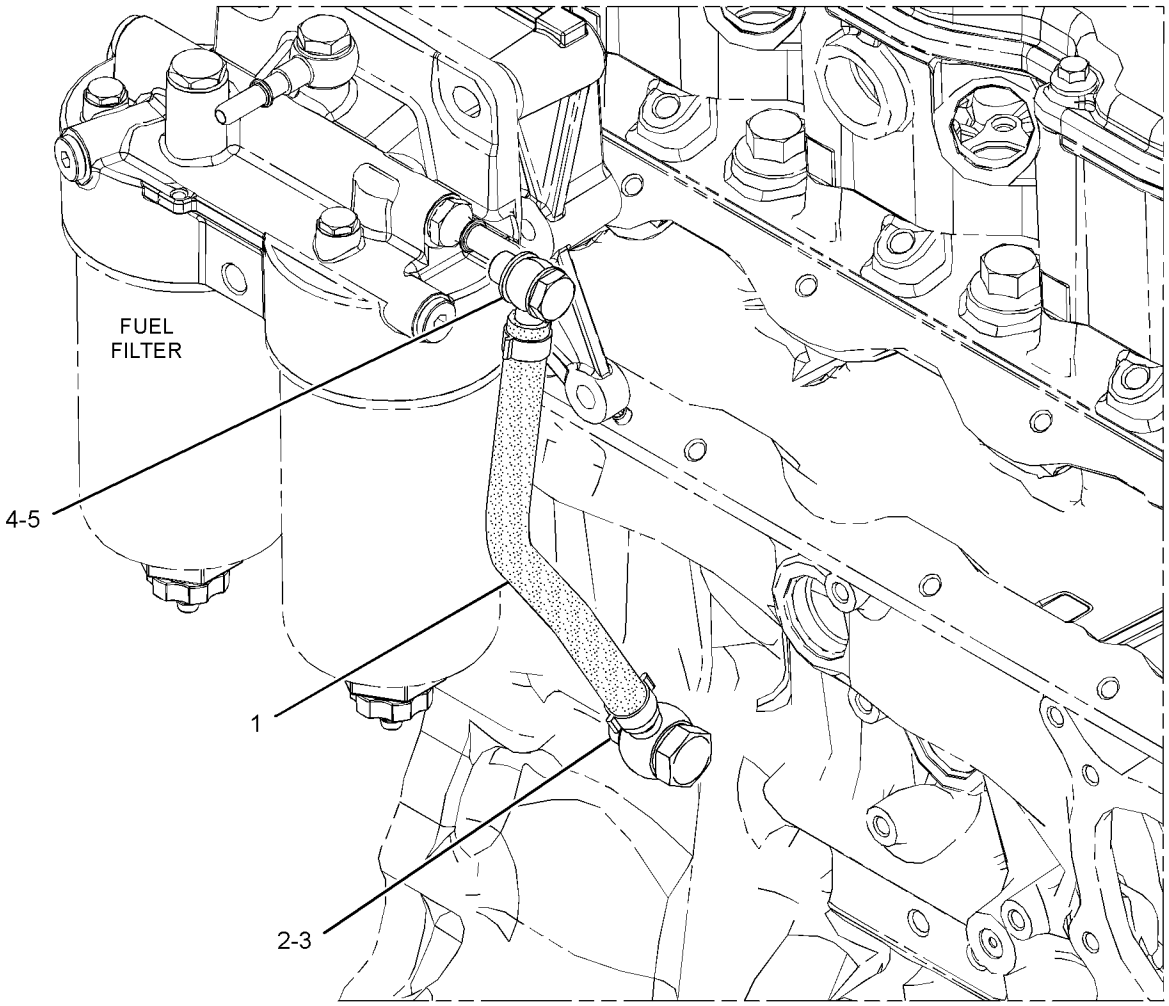

GRAPHIC #1 **<END>** g03115276

392-8660 LINES GP-FUEL

S/N: E7A1-UP
PART OF 426-3312 FILTER GP-FUEL
AN ATTACHMENT

SMCS-1274 **i05341644**

NOTE	REF NO	GRAPHIC REF	PART NUMBER	QTY	PART NAME 1 2 3 4 5 6 (PRODUCT LEVEL)	SEE PAGE
	1	1	**348-0495**	2	WASHER	
	2	1	**392-8662**	1	LINE AS-FUEL	
M	3	1	**277-9938**	1	BOLT-SPECIAL (BANJO)	
	4	1	**286-2890**	2	WASHER	
	5	1	**295-4670**	1	BOLT-SPECIAL (BANJO)	

M - METRIC PART

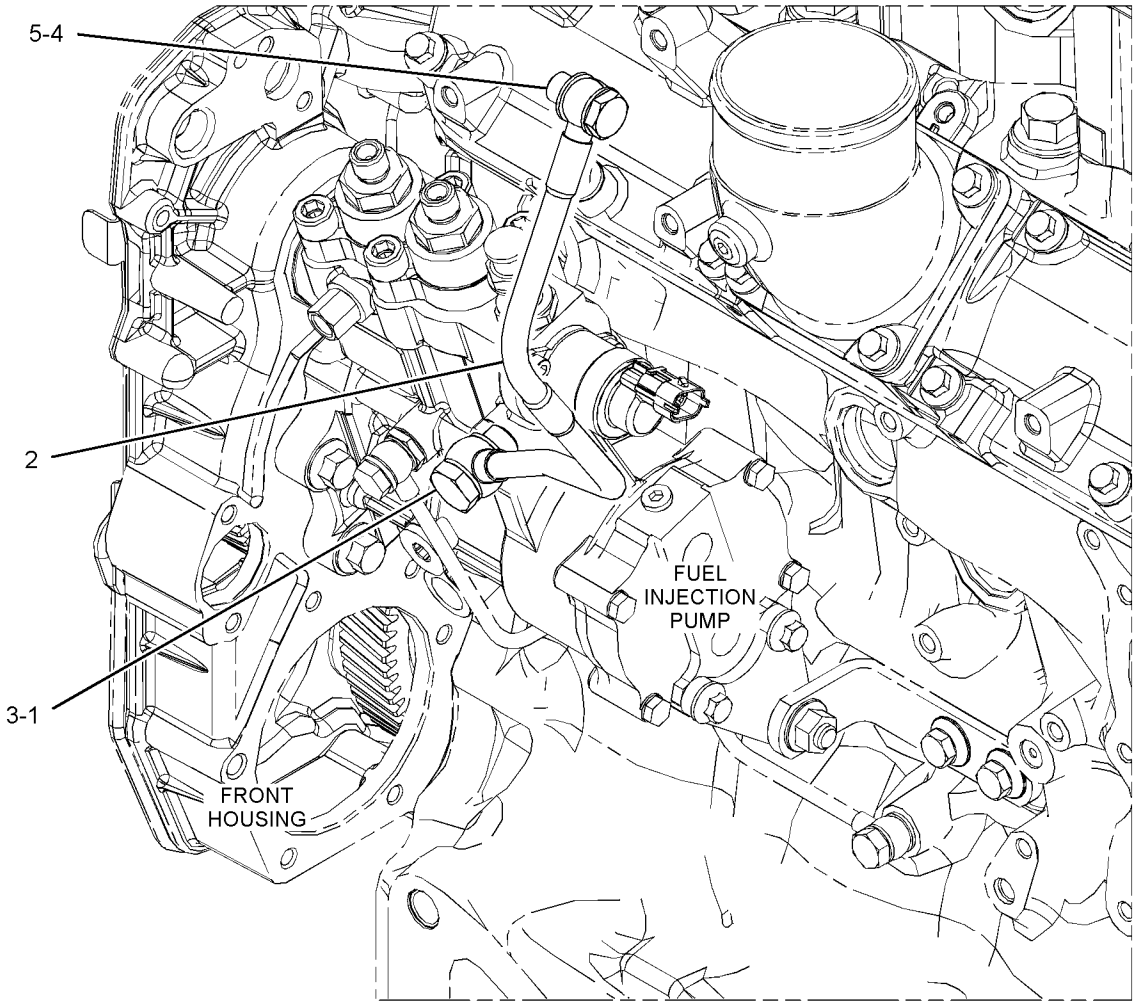

GRAPHIC #1 **<END>** g03265576

425-2178 LINES GP-FUEL

S/N: E7A1-UP
PART OF 426-3312 FILTER GP-FUEL
AN ATTACHMENT

SMCS-1274 **i05341893**

NOTE	REF NO	GRAPHIC REF	PART NUMBER	QTY	PART NAME 1 2 3 4 5 6 (PRODUCT LEVEL)	SEE PAGE
	1	1	**349-6847**	2	CLIP	
	2	1	**377-5988**	1	BOLT	
	3	1	**286-2890**	2	WASHER	
M	4	1	**161-7614**	1	NUT (M16X1.5-THD)	
	5	1	**277-4993**	1	SEAL-O-RING	

M - METRIC PART

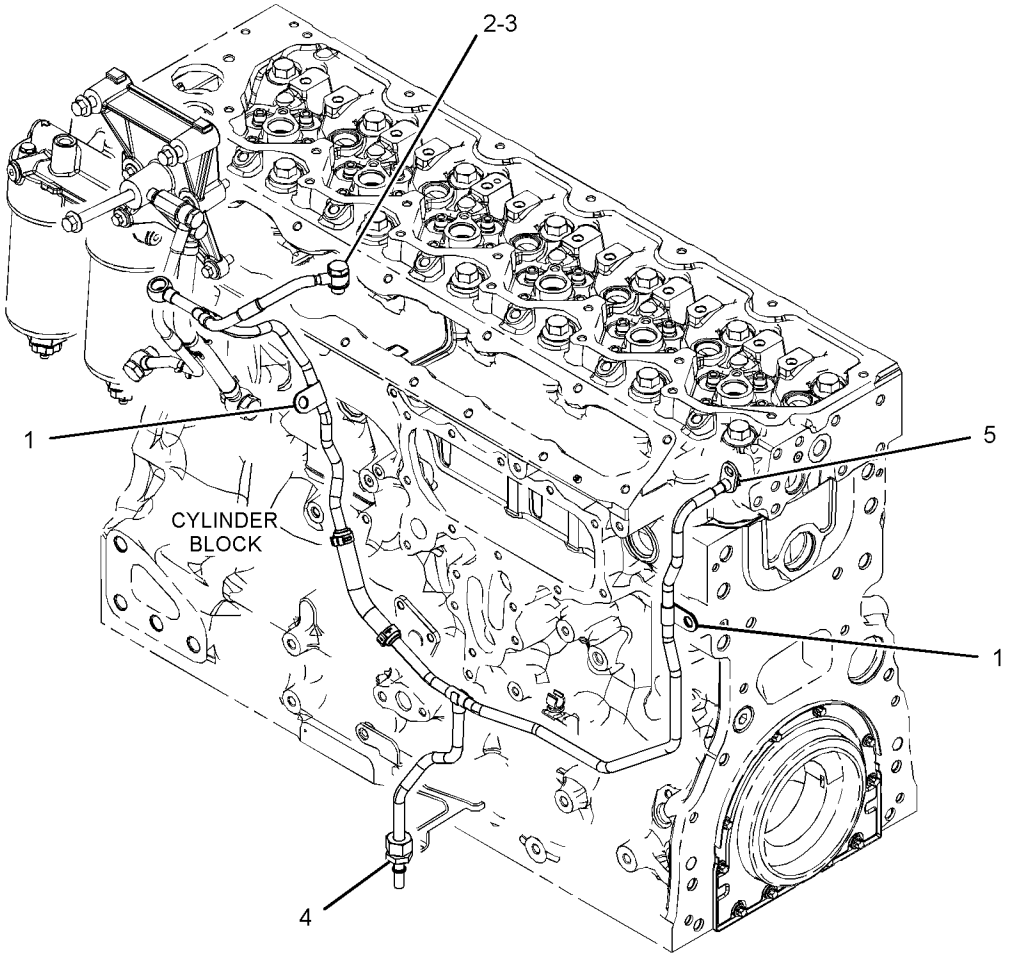

GRAPHIC #1 **<END>** g03384683

433-1316 LINES GP-FUEL

S/N: E7A1-UP
PART OF 426-3312 FILTER GP-FUEL
AN ATTACHMENT

SMCS-1274 **i05341897**

NOTE	REF NO	GRAPHIC REF	PART NUMBER	QTY	PART NAME 1 2 3 4 5 6 (PRODUCT LEVEL)	SEE PAGE
	1	1	**246-4361**	2	WASHER (10.5X14X1.5-MM THK)	
	2	1	**385-1398**	1	CONNECTION-FUEL	
	3	1	**386-1864**	1	BOLT-BANJO	
	4	1	**247-4928**	2	WASHER (16.5X20.5X1.6-MM THK)	

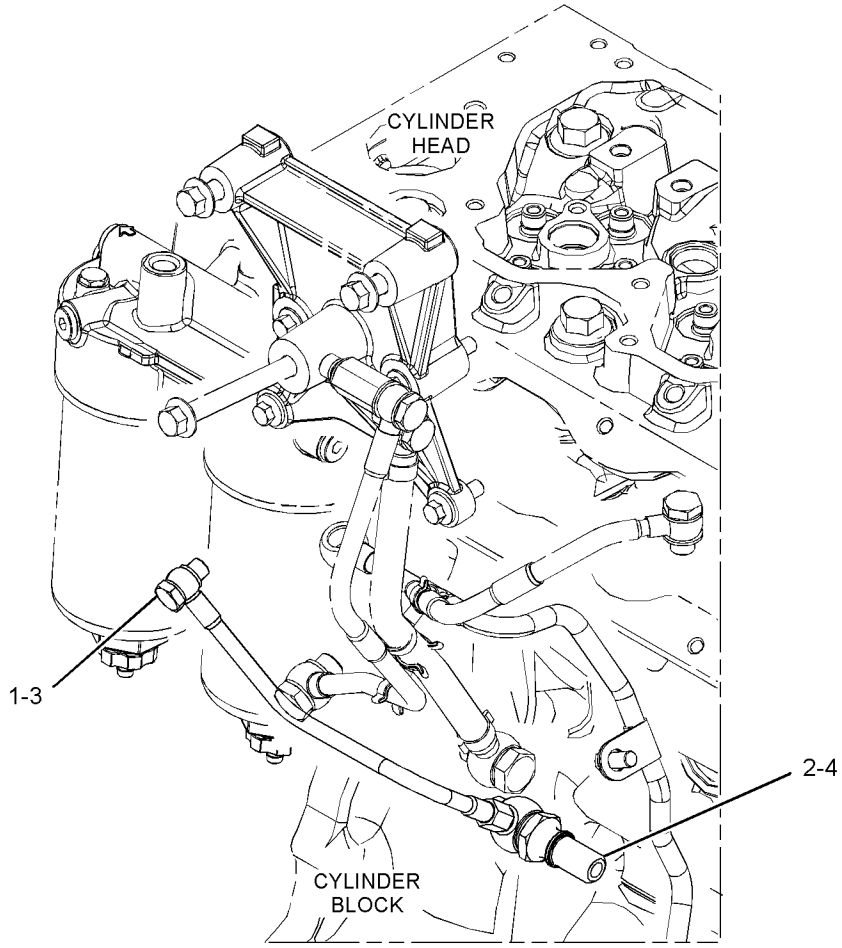

GRAPHIC #1 **<END>** g03384847

370-5520 LINES GP-FUEL INJECTION

S/N: E7A1-UP
PART OF 394-9639 RAIL GP-FUEL
AN ATTACHMENT

SMCS-1252, 1254

i05333502

NOTE	REF NO	GRAPHIC REF	PART NUMBER	QTY	PART NAME 1 2 3 4 5 6 (PRODUCT LEVEL)	SEE PAGE
	1	1	**395-1633**	1	BRACKET AS	
		1	**6I-0631**	1	BOLT (M6X1X12-MM)	
	2	1	**370-5516**	1	LINE AS-FUEL INJECTION	
	3	1	**370-5517**	1	LINE AS-FUEL INJECTION	
	4	1	**370-5518**	1	LINE AS-FUEL INJECTION	

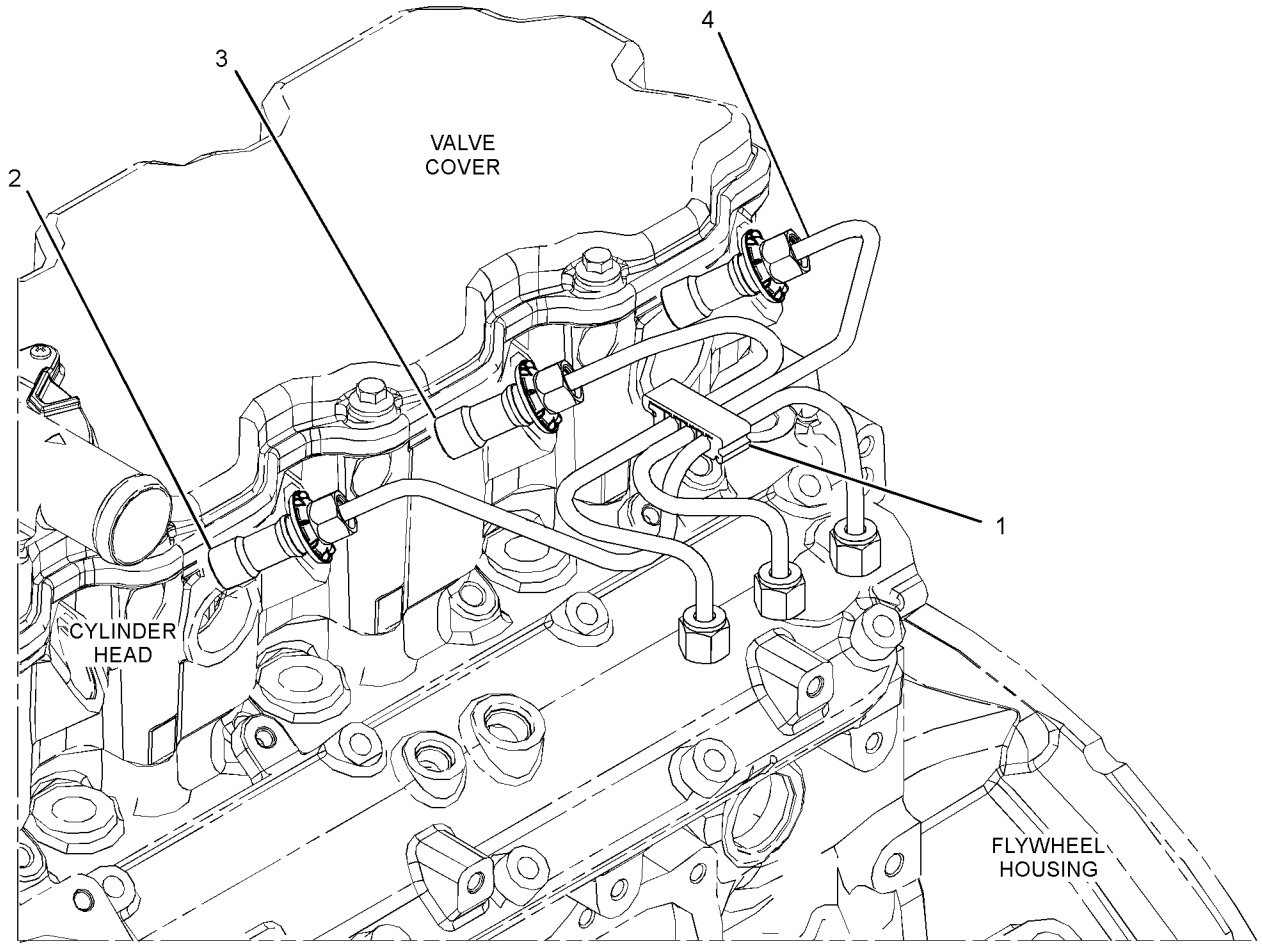

GRAPHIC #1

<END>

g03380791

391-4811 PUMP GP-FUEL INJECTION

S/N: E7A1-UP

PART OF 371-1441 ENGINE AR-PRIMARY

AN ATTACHMENT

SMCS-1251, 1290 **i05332379**

NOTE	REF NO	GRAPHIC REF	PART NUMBER	QTY	PART NAME 1 2 3 4 5 6 (PRODUCT LEVEL)	SEE PAGE
	1	1	**286-0123**	4	BOLT	
M	2	1	**6I-0654**	3	BOLT (M10X1.5X25-MM)	
	3	1	**371-2684**	1	BRACKET	
	4	1	**371-2691**	1	BRACKET	
	5	1	**371-7263**	1	LINE AS-FUEL	
	6	1	**375-2647**	1	PUMP GP-FUEL INJECTION	
		1	**375-8254**	1	VALVE	
		1	**376-6409**	1	SEAL	
		1	**376-6410**	1	RETAINER-WASHER	
		1	**376-6411**	1	NUT-SHAFT	
		1	**386-2971**	2	WASHER	
		1	**386-2976**	2	WASHER	
		1	**386-3819**	1	KEY-SHAFT	
	7	1	**387-8412**	1	GEAR-FUEL PUMP	
M	8	1	**6I-0217**	2	BOLT (M8X1.25X20-MM)	
	9	1	**346-0006**	1	BOLT-SPECIAL	
	10	1	**346-0007**	2	WASHER	
	11	1	**6I-0594**	1	NUT (M10X1.5-THD)	

M - METRIC PART

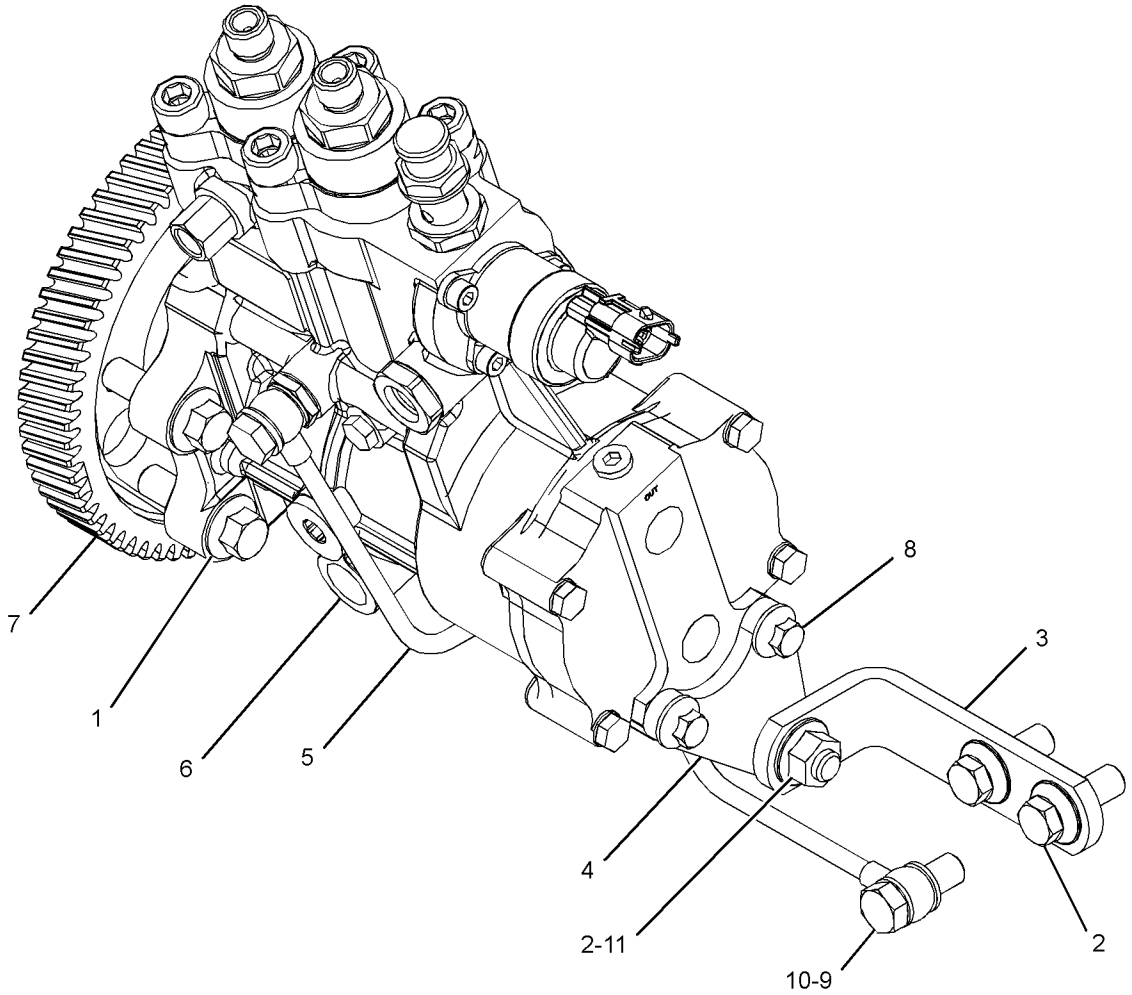

GRAPHIC #1 **<END>** g03378913

394-9639 RAIL GP-FUEL

S/N: E7A1-UP
PART OF 371-1441 ENGINE AR-PRIMARY
AN ATTACHMENT

SMCS-1288 **i05332394**

NOTE	REF NO	GRAPHIC REF	PART NUMBER	QTY	PART NAME 1 2 3 4 5 6 (PRODUCT LEVEL)	SEE PAGE
M	1	1	**6I-0260**	3	BOLT (M8X1.25X25-MM)	
	2	1	**6I-0918**	1	NUT	
	3	1	**206-1826**	3	BOLT	
Y	4	1	*370-5520*	1	LINES GP-FUEL INJECTION	85
	5	1	**375-0482**	6	CLAMP-PIPE	
	6	1	**375-0483**	3	INSERT-CLAMP	
	7	1	**375-2649**	1	RAIL GP-FUEL	
		1	**375-6988**	1	SENSOR (FUEL RAIL PRESSURE)	
		1	**398-6226**	1	VALVE (FUEL RAIL PRESSURE)	
	8	1	**393-2034**	1	LINE AS-FUEL	
	9	1	**393-2035**	1	LINE AS-FUEL	
	10	1	**394-0525**	1	LINES GP-FUEL INJECTION	

M - METRIC PART
Y - SEPARATE ILLUSTRATION

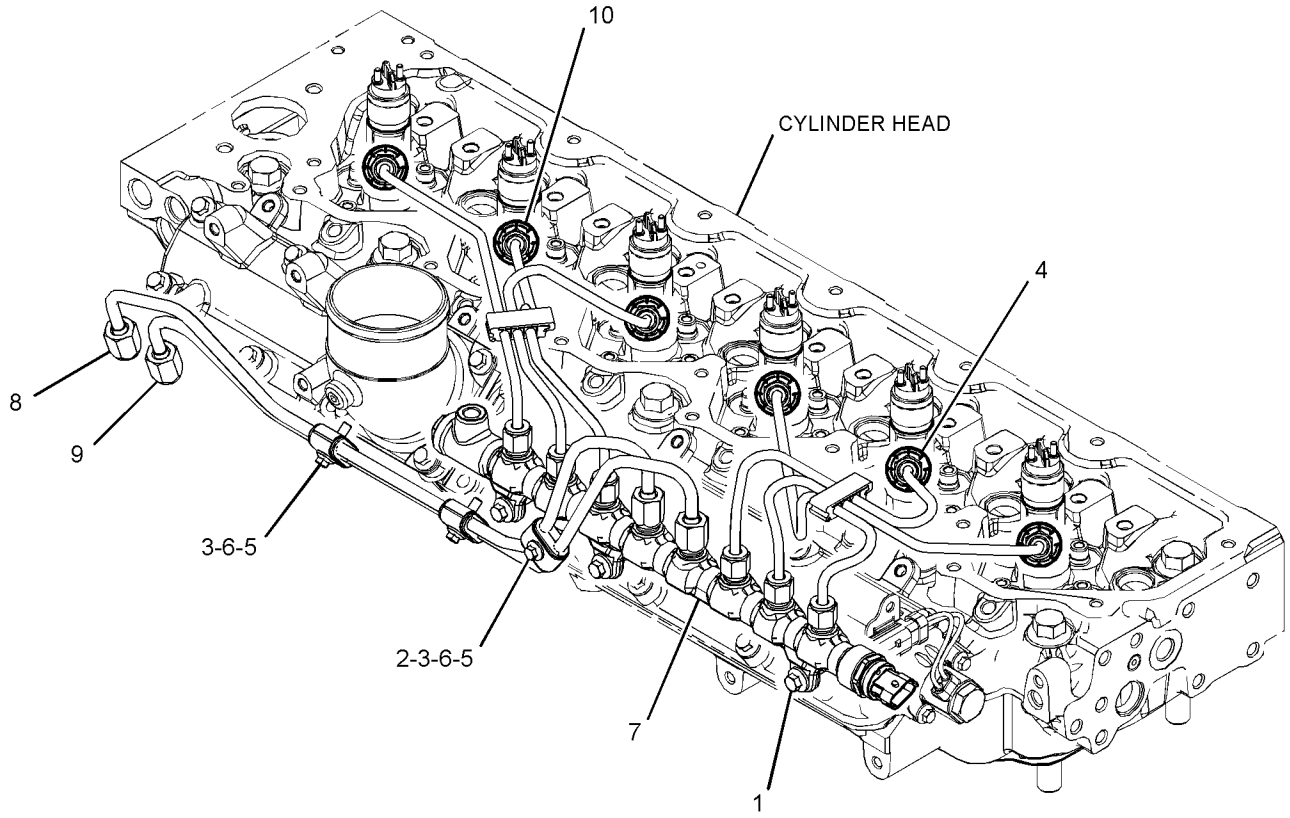

GRAPHIC #1 **<END>** g03380177

339-6730 TANK & MTG GP-FUEL

S/N: DYB1-UP

PART OF 381-4385 CHASSIS AR

SMCS-1273 **i05307656**

NOTE	REF NO	GRAPHIC REF	PART NUMBER	QTY	PART NAME 1 2 3 4 5 6 (PRODUCT LEVEL)	SEE PAGE
	1	1	**323-3309**	5	CAP	
E	2	1	**347-8647**		HOSE (58-CM)	
	3	1	**362-7976**	2	STRAP AS	
J	4	1	**370-9009**	1	CAP AS-FUEL (FILLER)	
		1	**304-3885**	1	CAP-FUEL (FILLER)	
		1	**355-8947**	1	BOOT-FUEL CAP	
	5	1	**377-7243**	1	HOSE	
	6	1	**377-7244**	1	PLATE	
	7	1	**393-1101**	1	STRAINER (FUEL TANK)	
	8	1	**417-9243**	1	GUARD AS	
		1	**417-9244**	1	GUARD AS	
Y	9	1	*419-6648*	1	TANK GP-FUEL	90
	10	1	**124-6257**	2	CLAMP-HOSE	
M	11	1	**272-2351**	2	BOLT (M10X1.5X80-MM)	
	12	1	**346-4789**	3	CLAMP-BAND	
	13	1	**352-3966**	1	CLIP	
	14	1	*353-5149*	1	ADAPTER AS	
		1	**2M-9780**	1	SEAL-O-RING	
		1	**194-4864**	1	ELBOW	
	15	1	**3S-2093**	1	STRAP-CABLE	
M	16	1	**5C-9553**	2	BOLT (M6X1X16-MM)	
	17	1	**7X-7729**	8	WASHER (11X25X3-MM THK)	
M	18	1	**8T-4133**	2	NUT (M10X1.5-THD)	
M	19	1	**8T-4136**	2	BOLT (M10X1.5X25-MM)	
M	20	1	**8T-4137**	2	BOLT (M10X1.5X20-MM)	
	21	1	**9X-2038**	2	WASHER (7X19X2-MM THK)	

E - ORDER BY THE CENTIMETER
J - REQUIRES CORPORATE KEY
M - METRIC PART
Y - SEPARATE ILLUSTRATION

339-6730 **TANK & MTG GP-FUEL (*contd.*)** **i05307656**

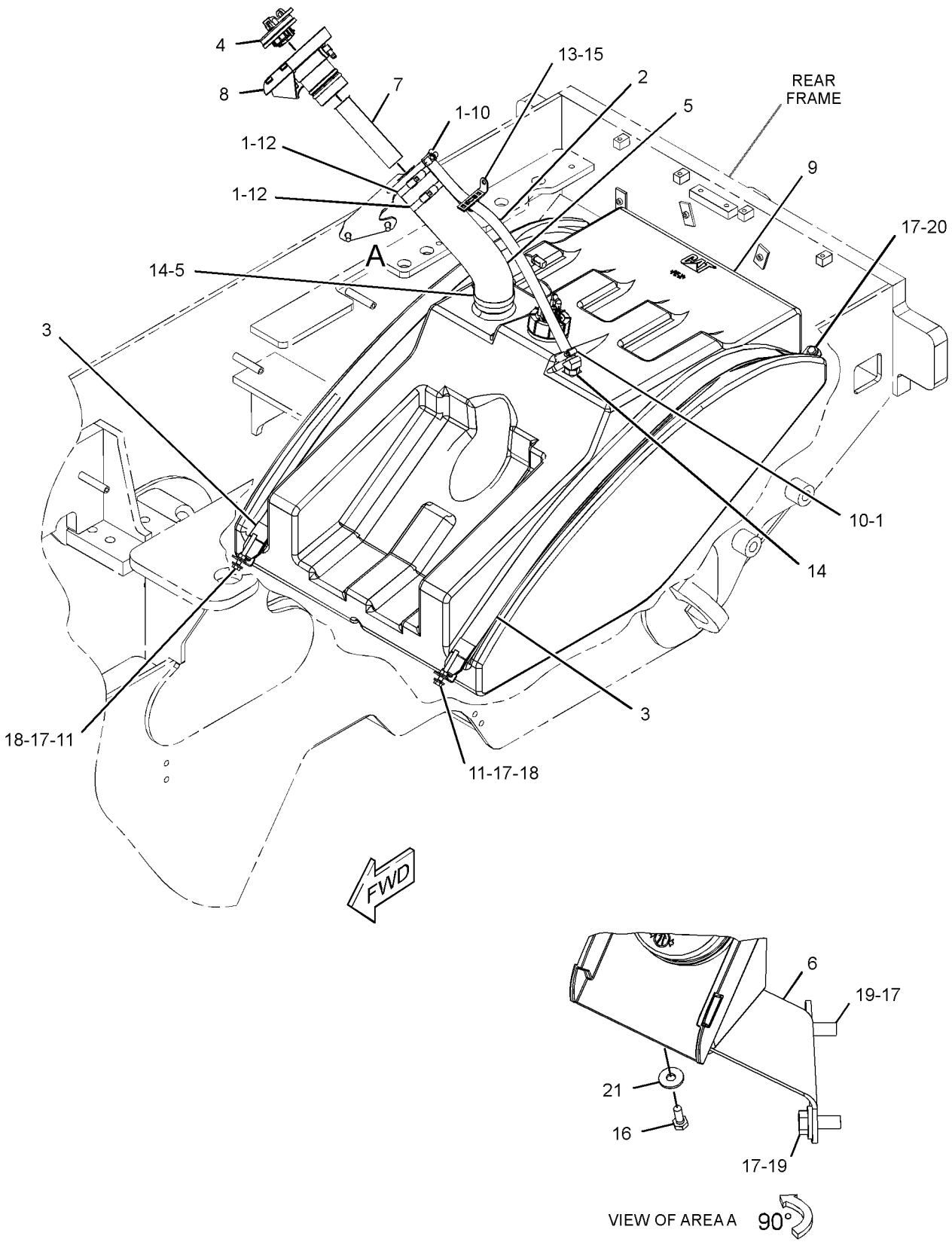

GRAPHIC #1 **<END>** g03376376

419-6648 TANK GP-FUEL

S/N: DYB1-UP
195-L (51.6-GAL)
PART OF 339-6730 TANK & MTG GP-FUEL

SMCS-1273 **i05307657**

NOTE	REF NO	GRAPHIC REF	PART NUMBER	QTY	PART NAME 1 2 3 4 5 6 (PRODUCT LEVEL)	SEE PAGE
	1	1	**313-4553**	1	PLUG	
	2	1	**351-8507**	1	SENSOR AS-FUEL LEVEL (TANK)	
		1	**1H-4393**	1	LOCKWASHER	
M		1	**5C-8312**	1	NUT (M4X0.7-THD)	
		1	**370-6998**	1	WIRE AS-GROUND	
	3	1	**2M-9780**	1	SEAL-O-RING	

M - METRIC PART

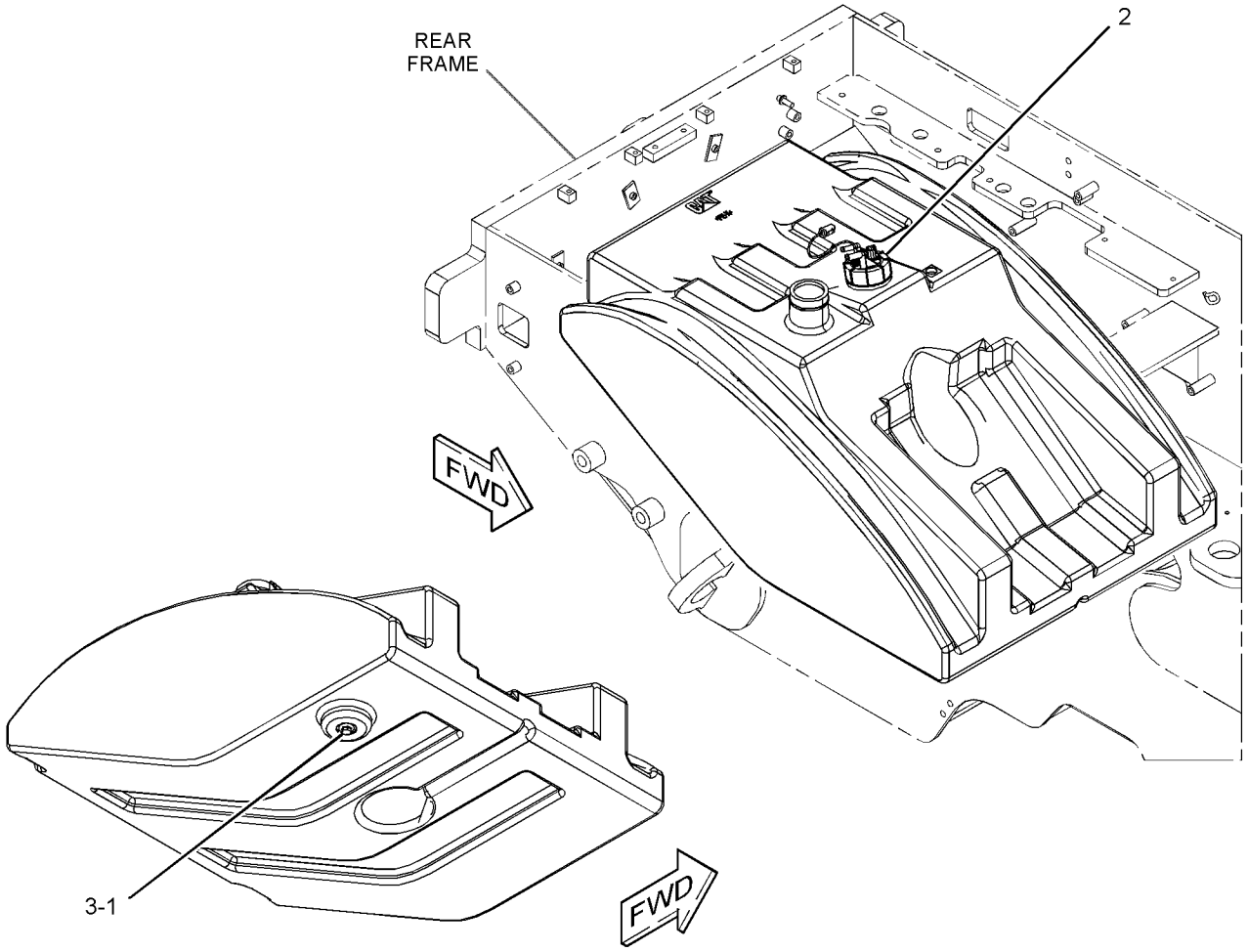

GRAPHIC #1 **<END>** g03376777

272-1889 ALTERNATOR GP-CHARGING

S/N: DYB1-UP
24-VOLT, 150-AMPERE
PART OF 332-3644 ALTERNATOR GP-CHARGING
AN ATTACHMENT

SMCS-1405 **i03967109**

NOTE	REF NO	GRAPHIC REF	PART NUMBER	QTY	PART NAME 1 2 3 4 5 6 (PRODUCT LEVEL)	SEE PAGE
					(NO SERVICED PARTS)	

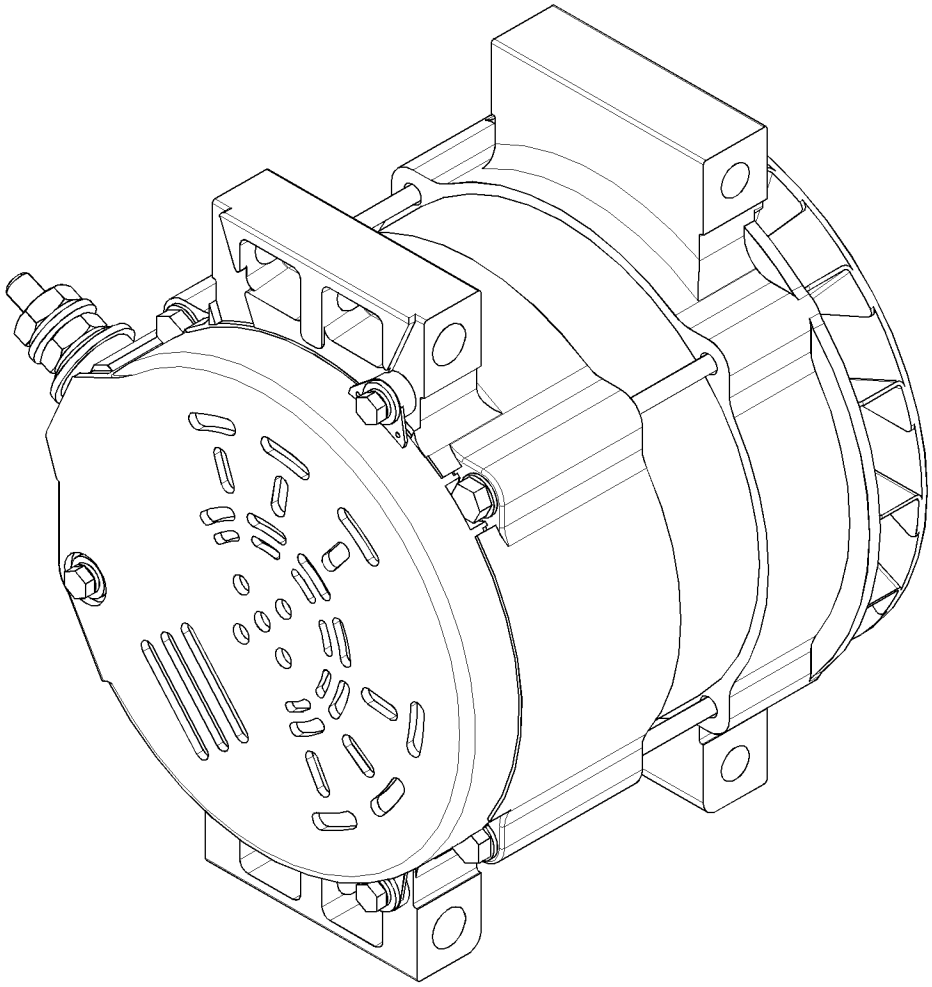

GRAPHIC #1 **<END>** g01735513

332-3644 ALTERNATOR GP-CHARGING—24-VOLT, 150-AMPERE

S/N: DYB1-UP
PART OF 366-8127 OPTION AR-MACHINE
AN ATTACHMENT

SMCS-1405 **i05305990**

NOTE	REF NO	GRAPHIC REF	PART NUMBER	QTY	PART NAME 1 2 3 4 5 6 (PRODUCT LEVEL)	SEE PAGE
YR	1	1	**272-1889**	1	ALTERNATOR GP-CHARGING (24-VOLT, 150-AMPERE)	91
	2	1	**350-8742**	1	BELT-SERPENTINE (ALTERNATOR)	
	3	1	**359-5145**	1	GUARD-ALTERNATOR	
	4	1	**364-8305**	1	FILTER-FOAM (ALTERNATOR AIR)	
	5	1	**369-3663**	1	PULLEY-ALTERNATOR (8-GROOVE)	
M	6	1	**6V-2313**	3	BOLT (M5X0.8X30-MM)	
	7	1	**8T-0328**	3	WASHER-HARD (5.5X10X1-MM THK)	
	8	1	**8T-4121**	4	WASHER-HARD (11X21X2.5-MM THK)	
M	9	1	**8T-4198**	4	BOLT (M10X1.5X100-MM)	

M - METRIC PART
R - REMFG PART MAY BE AVAILABLE
Y - SEPARATE ILLUSTRATION

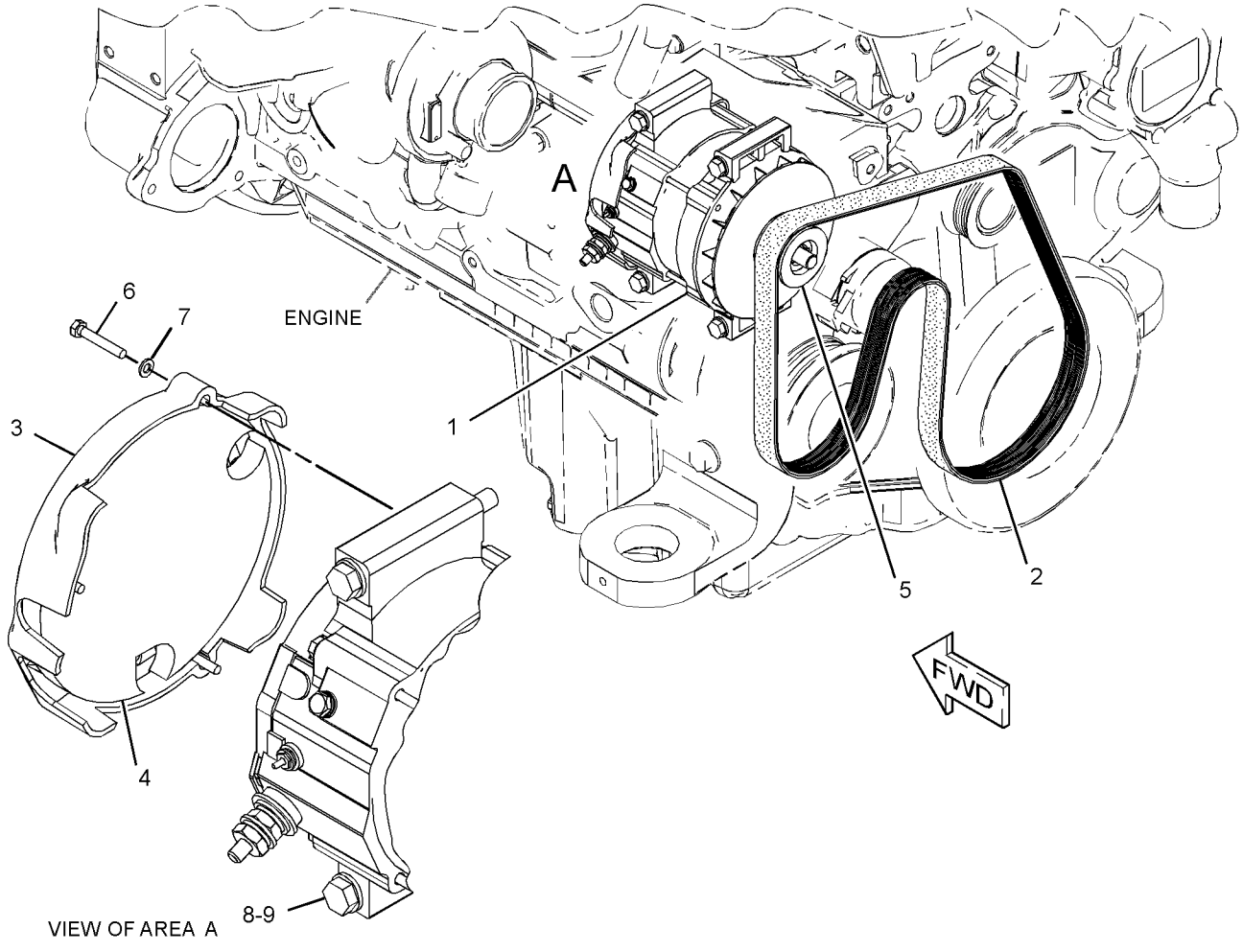

GRAPHIC #1 **<END>** g02758620

341-0679 ALTERNATOR GP-CHARGING

S/N: DYB1-UP
24-VOLT, 115-AMPERE. AIR CONDITIONER
PART OF 366-8125, 366-8126, 381-4420 OPTION AR-MACHINE
AN ATTACHMENT

SMCS-1405 **i05303817**

NOTE	REF NO	GRAPHIC REF	PART NUMBER	QTY	PART NAME 1 2 3 4 5 6 (PRODUCT LEVEL)	SEE PAGE
	1	1	**350-1238**	1	WIRE AS-ALTERNATOR	
	2	1	**350-8742**	1	BELT-SERPENTINE	
	3	1	**369-3663**	1	PULLEY-ALTERNATOR (8-GROOVE)	
	4	1	**385-1812**	1	ALTERNATOR GP-CHARGING (24-VOLT, 115-AMPERE)	
	5	1	**132-5789**	1	CLIP	
	6	1	**3S-2093**	3	STRAP-CABLE	
	7	1	**8T-4121**	5	WASHER-HARD (11X21X2.5-MM THK)	
M	8	1	**8T-4137**	1	BOLT (M10X1.5X20-MM)	
M	9	1	**8T-4198**	4	BOLT (M10X1.5X100-MM)	

M - METRIC PART

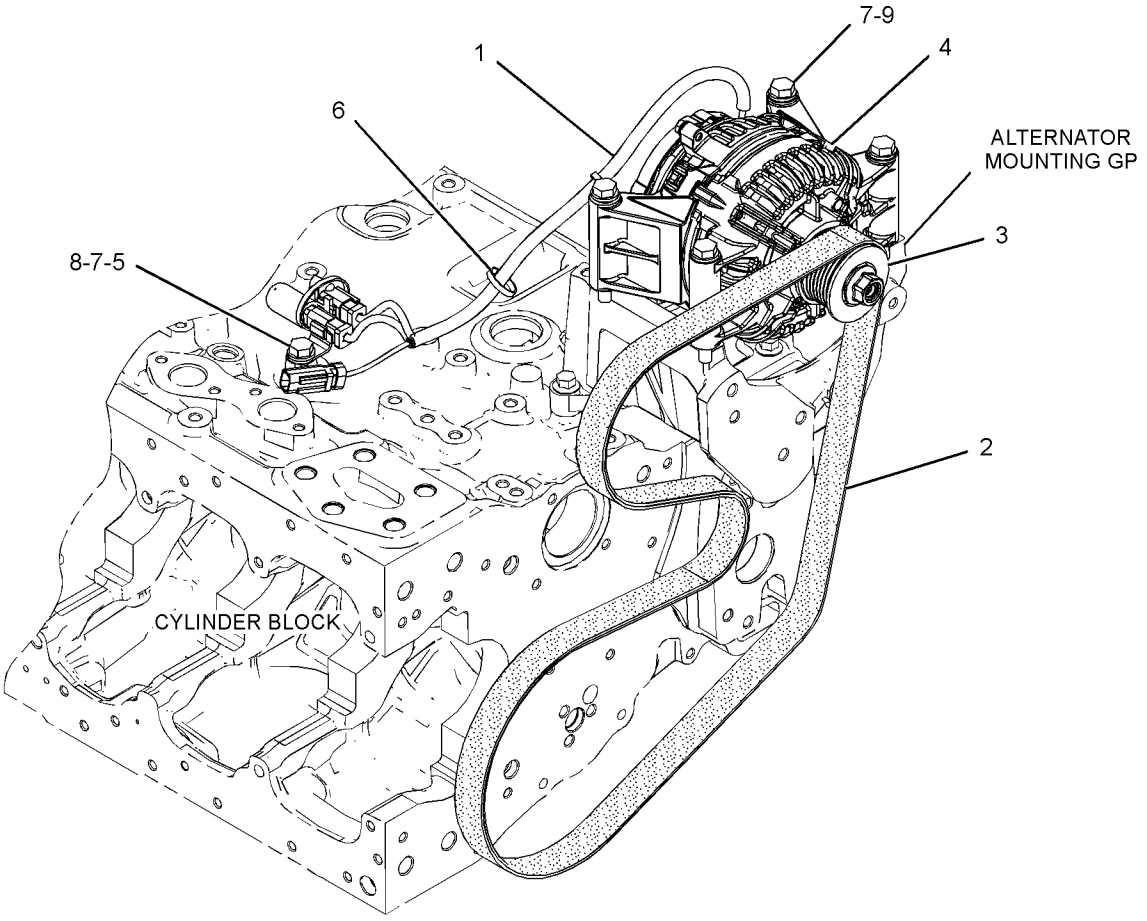

GRAPHIC #1 **<END>** g02766936

333-1400 BATTERY & WIRING GP—DISCONNECT SWITCH

S/N: DYB1-UP

PART OF 333-1415 BATTERY & WIRING GP

AN ATTACHMENT

SMCS-1401, 1402, 1408 **i05313017**

NOTE	REF NO	GRAPHIC REF	PART NUMBER	QTY	PART NAME 1 2 3 4 5 6 (PRODUCT LEVEL)	SEE PAGE
	1	1	**3E-8320**	1	PLATE-INSTRUCTION (BATTERY)	
D	2	1	**5P-7211**		SEAL (0.1-M)	
Y	3	1	**7N-0718**	1	SWITCH GP-DISCONNECT (BATTERY)	155
	4	1	**102-8703**	1	PLATE-COVER	
	5	1	**156-3617**	2	CLAMP-HALF	
	6	1	**316-9351**	1	MOUNTING-CABLE TIE	
	7	1	**333-1402**	1	CABLE AS-GROUND	
		1	**9G-8909**	2	COVER-TERMINAL (BLACK)	
E		1	**135-5009**		TUBE-HEAT SHRINK (32-MM DIA) (10-CM)	
E		1	**090-2151**		CABLE-WELDING (00-GA) (29-CM)	
		1	**216-7790**	2	TERMINAL-CABLE (00-GA, 3/8-IN SCREW)	
	8	1	**333-1403**	1	CABLE AS-BATTERY (NEGATIVE)	
E		1	**159-8050**		CABLE (00-GA, BLACK) (108-CM)	
B		1	**1P-0810**		TAPE-ELECTRICAL	
		1	**3S-6050**	1	TERMINAL AS-BATTERY (NEGATIVE)	
		1	**1M-6119**	1	BOLT (5/16-18X1.375-IN)	
		1	**1M-6120**	1	NUT (5/16-18-THD)	
		1	**7T-9988**	1	COVER AS-TERMINAL (BLACK)	
		1	**8L-8413**	1	STRAP-CABLE	
E		1	**135-5009**		TUBE-HEAT SHRINK (32-MM DIA) (5-CM)	
		1	**315-0180**	1	TERMINAL-RING	
	9	1	**333-1404**	1	CABLE AS (DISCONNECT SWITCH)	
E		1	**090-2150**		CABLE (18-CM)	
		1	**276-7278**	1	TERMINAL-RING	
		1	**315-0180**	1	TERMINAL-RING	
E		1	**135-5009**		TUBE-HEAT SHRINK (32-MM DIA) (8-CM)	
	10	1	**333-1405**	1	CABLE AS-BATTERY (POSITIVE)	
E		1	**159-8049**		CABLE (00-GA, RED) (27-CM)	
		1	**9G-0002**	1	COVER AS-TERMINAL (RED)	
		1	**8L-8413**	1	STRAP-CABLE	
		1	**8T-9756**	1	TERMINAL AS (POSITIVE)	
		1	**1M-6119**	1	BOLT (5/16-18X1.375-IN)	
		1	**1M-6120**	1	NUT (5/16-18-THD)	
		1	**9X-9825**	1	TERMINAL-CABLE (00-GA, 1/2-IN SCREW)	
E		1	**135-5009**		TUBE-HEAT SHRINK (32-MM DIA) (5-CM)	
		1	**276-1786**	1	COVER-TERMINAL (RED)	
	11	1	**333-1407**	1	CABLE AS (POSITIVE)	
E		1	**159-8049**		CABLE (00-GA, RED) (32-CM)	
		1	**216-7790**	1	TERMINAL-CABLE (00-GA, 3/8-IN SCREW)	
		1	**354-5611**	1	TERMINAL-RING	
E		1	**135-5009**		TUBE-HEAT SHRINK (32-MM DIA) (10-CM)	
	12	1	**333-1408**	1	CABLE AS-BATTERY (INTERCONNECT)	
		1	**159-8049**		CABLE (00-GA, RED) (28-CM)	
		1	**7T-9987**	1	COVER AS-TERMINAL (RED)	
		1	**7T-9988**	1	COVER AS-TERMINAL (BLACK)	
					(EACH COVER AS INCLUDES)	
		1	**8L-8413**	1	STRAP-CABLE	
		1	**3S-6049**	1	TERMINAL AS-BATTERY (POSITIVE)	
		1	**3S-6050**	1	TERMINAL AS-BATTERY (NEGATIVE)	
					(EACH TERMINAL AS INCLUDES)	
		1	**1M-6119**	1	BOLT (5/16-18X1.375-IN)	
		1	**1M-6120**	1	NUT (5/16-18-THD)	
	13	1	**356-0677**	1	CABLE AS (STARTING MOTOR)	
E		1	**135-5009**		TUBE-HEAT SHRINK (32-MM DIA) (10-CM)	
E		1	**159-8049**		CABLE (00-GA, RED) (146-CM)	

333-1400 **BATTERY & WIRING GP (*contd.*)** **i05313017**

NOTE	REF NO	GRAPHIC REF	PART NUMBER	QTY	PART NAME 1 2 3 4 5 6 (PRODUCT LEVEL)	SEE PAGE
B		1	**1P-0810**		TAPE-ELECTRICAL	
		1	**276-1786**	1	COVER-TERMINAL (RED)	
		1	**301-0091**	1	COVER-TERMINAL (RED)	
		1	**315-0180**	1	TERMINAL-RING	
		1	**354-5611**	1	TERMINAL-RING	
	14	1	**360-1844**	1	STUD AS	
		1	**062-5388**	1	LOCKNUT (1-11-1/2-THD)	
	15	1	**360-1845**	1	FILM-IDENTIFICATION (JUMP START)	
	16	1	**360-1846**	1	JUNCTION BLOCK	
	17	1	**132-5789**	1	CLIP	
C	18	1	**1S-0994**	3	CLIP	
	19	1	**248-9997**	3	NUT-BRASS (M12X1.75-THD)	
	20	1	**260-6696**	3	WASHER-COPPER (14X22X2.4-MM THK)	
	21	1	**4D-5243**	1	LOCKWASHER	
	22	1	**4P-7581**	3	CLIP	
	23	1	**5P-4116**	4	WASHER-HARD (8.8X20.5X2-MM THK)	
	24	1	**7P-1695**	4	WASHER (10.5X19X3-MM THK)	
C	25	1	**8T-4121**	4	WASHER-HARD (11X21X2.5-MM THK)	
M	26	1	**8T-4133**	4	NUT (M10X1.5-THD)	
M	27	1	**8T-4136**	3	BOLT (M10X1.5X25-MM)	
M	28	1	**8T-4191**	1	BOLT (M10X1.5X16-MM)	
M	30	1	**8T-4199**	3	BOLT (M8X1.25X12-MM)	
M	31	1	**8T-6912**	1	BOLT (M8X1.25X50-MM)	
	32	1	**9D-3769**	1	GROMMET	
M	33	1	**9X-1046**	4	SCREW (M4X0.7X18-MM)	
D	34	1	**8T-3425**		CHANNEL-TRIM (0.2-M)	

B - USE AS REQUIRED
C - CHANGE FROM PREVIOUS TYPE
D - ORDER BY THE METER
E - ORDER BY THE CENTIMETER
M - METRIC PART
Y - SEPARATE ILLUSTRATION

333-1400 **BATTERY & WIRING GP (*contd.*)** **i05313017**

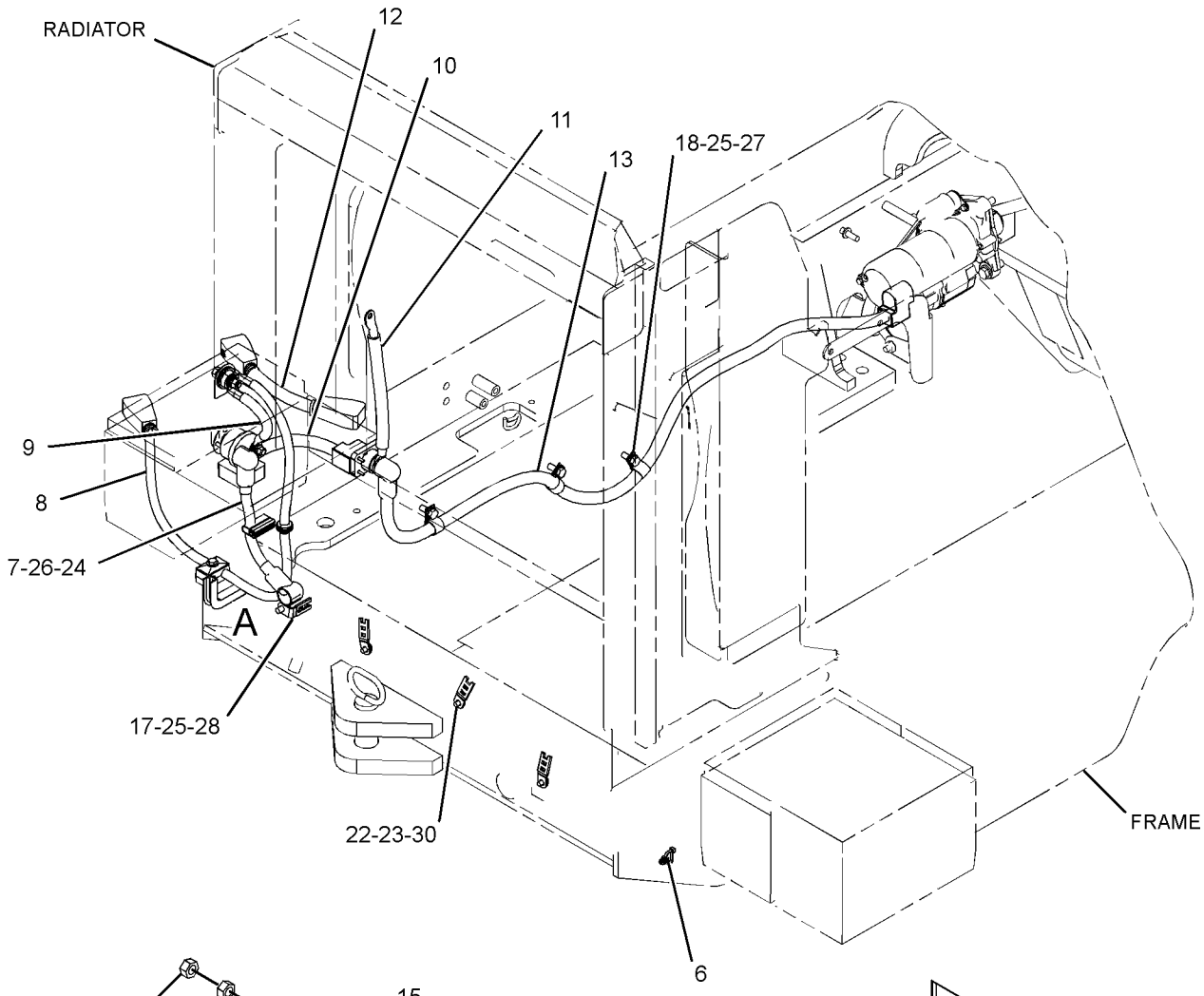

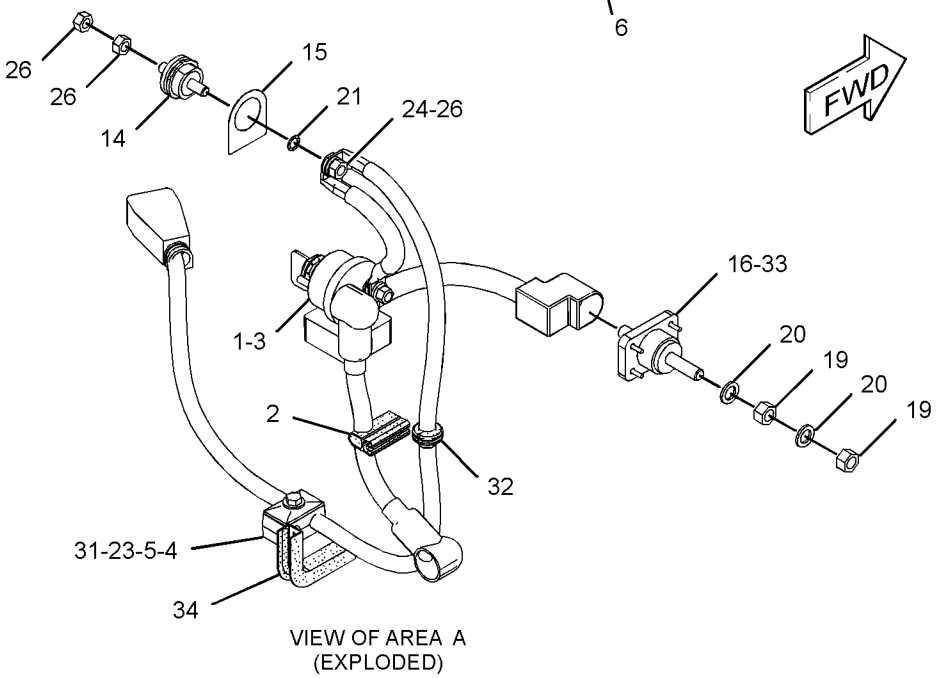

VIEW OF AREA A
(EXPLODED)

GRAPHIC #1 **<END>** g03346674

333-1401 BATTERY & WIRING GP

S/N: DYB1-UP

PART OF 333-1416 BATTERY & WIRING GP

AN ATTACHMENT

SMCS-1401, 1402, 1408

i05297429

NOTE	REF NO	GRAPHIC REF	PART NUMBER	QTY	PART NAME 1 2 3 4 5 6 (PRODUCT LEVEL)	SEE PAGE
	1	1	**3E-8320**	1	PLATE-INSTRUCTION (BATTERY)	
	2	1	**7K-1181**	2	STRAP-CABLE	
Y	3	1	**7N-0718**	1	SWITCH GP-DISCONNECT (BATTERY)	155
	4	1	**102-8703**	5	PLATE-COVER	
	5	1	**151-4841**	1	BLOCK	
	6	1	**156-3617**	10	CLAMP-HALF	
	7	1	**333-1402**	1	CABLE AS-GROUND	
		1	**9G-8909**	2	COVER-TERMINAL (BLACK)	
E		1	**090-2151**		CABLE-WELDING (00-GA) (30-CM)	
		1	**216-7790**	2	TERMINAL-CABLE (00-GA, 3/8-IN SCREW)	
E		1	**135-5009**		TUBE-HEAT SHRINK (32-MM DIA) (10-CM)	
	8	1	**333-1403**	1	CABLE AS-BATTERY (NEGATIVE)	
E		1	**159-8050**		CABLE (00-GA, BLACK) (108-CM)	
B		1	**1P-0810**		TAPE-ELECTRICAL	
		1	**7T-9988**	1	COVER AS-TERMINAL (BLACK)	
		1	**8L-8413**	1	STRAP-CABLE	
		1	**3S-6050**	1	TERMINAL AS-BATTERY (NEGATIVE)	
		1	**1M-6119**	1	BOLT (5/16-18X1.375-IN)	
		1	**1M-6120**	1	NUT (5/16-18-THD)	
		1	**315-0180**	1	TERMINAL-RING	
E		1	**135-5009**		TUBE-HEAT SHRINK (32-MM DIA) (5-CM)	
	9	1	**333-1404**	1	CABLE AS (DISCONNECT SWITCH)	
E		1	**090-2151**		CABLE-WELDING (00-GA) (18-CM)	
		1	**276-7278**	1	TERMINAL-RING	
		1	**315-0180**	1	TERMINAL-RING	
E		1	**135-5009**		TUBE-HEAT SHRINK (32-MM DIA) (8-CM)	
	10	1	**333-1407**	1	CABLE AS (POSITIVE)	
E		1	**159-8049**		CABLE (00-GA, RED) (32-CM)	
		1	**216-7790**	1	TERMINAL-CABLE (00-GA, 3/8-IN SCREW)	
		1	**354-5611**	1	TERMINAL-RING	
E		1	**135-5009**		TUBE-HEAT SHRINK (32-MM DIA) (10-CM)	
	11	1	**333-1408**	2	CABLE AS-BATTERY (INTERCONNECT)	
					(EACH INCLUDES)	
E		1	**159-8049**		CABLE (00-GA, RED) (28-CM)	
		1	**7T-9987**	1	COVER AS-TERMINAL (RED)	
		1	**7T-9988**	1	COVER AS-TERMINAL (BLACK)	
					(EACH COVER AS INCLUDES)	
		1	**8L-8413**	1	STRAP-CABLE	
		1	**3S-6050**	1	TERMINAL AS-BATTERY (NEGATIVE)	
		1	**3S-6049**	1	TERMINAL AS-BATTERY (POSITIVE)	
					(EACH TERMINAL AS-BATTERY INCLUDES)	
		1	**1M-6119**	1	BOLT (5/16-18X1.375-IN)	
		1	**1M-6120**	1	NUT (5/16-18-THD)	
	12	1	**333-1413**	1	CABLE AS-BATTERY (POSITIVE)	
E		1	**159-8049**		CABLE (00-GA, RED) (211-CM)	
		1	**7T-4924**	1	COVER-TERMINAL (RED)	
		1	**7T-9987**	1	COVER AS-TERMINAL (RED)	
		1	**8L-8413**	1	STRAP-CABLE	
		1	**276-1786**	1	COVER-TERMINAL (RED)	
B		1	**1P-0810**		TAPE-ELECTRICAL	
		1	**9S-5754**	1	TERMINAL AS (POSITIVE)	
		1	**3S-6049**	1	TERMINAL AS-BATTERY (POSITIVE)	
					(EACH TERMINAL AS INCLUDES)	
		1	**1M-6119**	1	BOLT (5/16-18X1.375-IN)	
		1	**1M-6120**	1	NUT (5/16-18-THD)	

333-1401 **BATTERY & WIRING GP (*contd.*)** **i05297429**

NOTE	REF NO	GRAPHIC REF	PART NUMBER	QTY	PART NAME 1 2 3 4 5 6 (PRODUCT LEVEL)	SEE PAGE
		1	**9X-9825**	1	TERMINAL-CABLE (00-GA, 1/2-IN SCREW)	
E		1	**135-5009**		TUBE-HEAT SHRINK (32-MM DIA) (5-CM)	
	13	1	**333-1414**	1	CABLE AS-BATTERY (NEGATIVE)	
E		1	**090-2151**		CABLE-WELDING (00-GA) (150-CM)	
		1	**7T-9988**	1	COVER AS-TERMINAL (BLACK)	
		1	**8L-8413**	1	STRAP-CABLE	
B		1	**1P-0810**		TAPE-ELECTRICAL	
		1	**3S-6050**	1	TERMINAL AS-BATTERY (NEGATIVE)	
		1	**1M-6119**	1	BOLT (5/16-18X1.375-IN)	
		1	**1M-6120**	1	NUT (5/16-18-THD)	
		1	**216-7790**	1	TERMINAL-CABLE (00-GA, 3/8-IN SCREW)	
E		1	**135-5009**		TUBE-HEAT SHRINK (32-MM DIA) (5-CM)	
	14	1	**356-0677**	1	CABLE AS (STARTING MOTOR)	
E		1	**159-8049**		CABLE (00-GA, RED) (146-CM)	
		1	**276-1786**	1	COVER-TERMINAL (RED)	
		1	**301-0091**	1	COVER-TERMINAL (RED)	
B		1	**1P-0810**		TAPE-ELECTRICAL	
		1	**315-0180**	1	TERMINAL-RING	
		1	**354-5611**	1	TERMINAL-RING	
E		1	**135-5009**		TUBE-HEAT SHRINK (32-MM DIA) (10-CM)	
	15	1	**360-1844**	1	STUD AS	
		1	**062-5388**	1	LOCKNUT (1-11-1/2-THD)	
	16	1	**360-1845**	1	FILM-IDENTIFICATION (JUMP START)	
	17	1	**360-1846**	1	JUNCTION BLOCK	
	18	1	**132-5789**	2	CLIP	
	19	1	**1S-0994**	3	CLIP	
	20	1	**248-9997**	3	NUT-BRASS (M12X1.75-THD)	
	21	1	**260-6696**	3	WASHER-COPPER (14X22X2.4-MM THK)	
	22	1	**4D-5243**	1	LOCKWASHER	
	23	1	**4P-7581**	3	CLIP	
	24	1	**5P-4116**	5	WASHER-HARD (8.8X20.5X2-MM THK)	
	25	1	**7P-1695**	4	WASHER (10.5X19X3-MM THK)	
	26	1	**8T-4121**	5	WASHER-HARD (11X21X2.5-MM THK)	
M	27	1	**8T-4133**	4	NUT (M10X1.5-THD)	
M	28	1	**8T-4136**	5	BOLT (M10X1.5X25-MM)	
M	30	1	**8T-4197**	3	BOLT (M8X1.25X40-MM)	
	31	1	**8T-4226**	1	WASHER-PLATED (10.5X45X3-MM THK)	
M	32	1	**8T-6912**	2	BOLT (M8X1.25X50-MM)	
	33	1	**9D-3769**	1	GROMMET	
	34	1	**9M-8406**	2	CLIP	
M	35	1	**9X-1046**	4	SCREW (M4X0.7X18-MM)	
D	36	1	**8T-3425**		CHANNEL-TRIM (0.2-M)	

B - USE AS REQUIRED
D - ORDER BY THE METER
E - ORDER BY THE CENTIMETER
M - METRIC PART
Y - SEPARATE ILLUSTRATION

333-1401 **BATTERY & WIRING GP (*contd.*)** **i05297429**

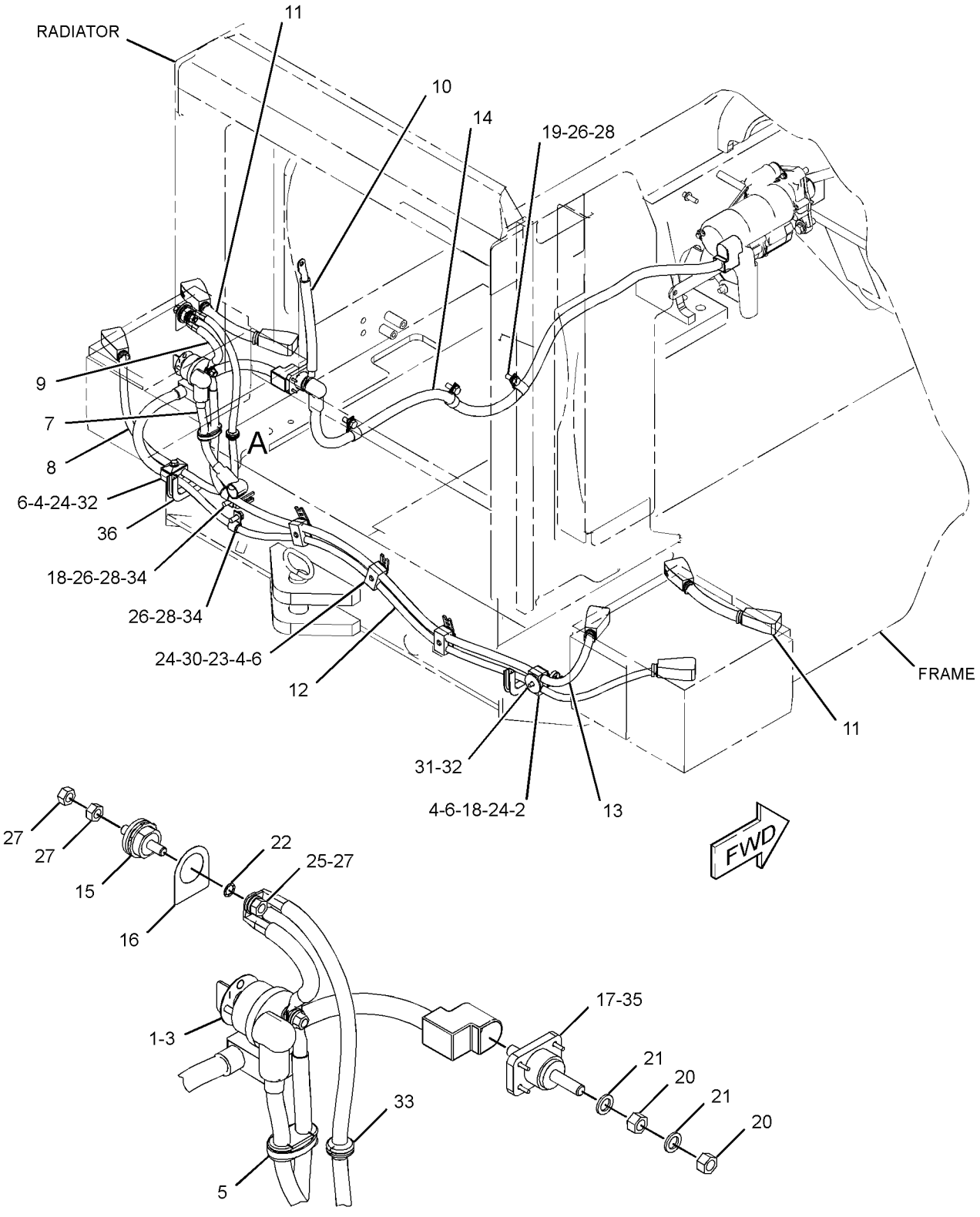

VIEW OF AREA A
(EXPLODED)

GRAPHIC #1 **<END>** g03378911

333-1415 BATTERY & WIRING GP

S/N: DYB1-UP

CANNOT BE USED WITH 381-4389—PAGE: 2, 381-4390—PAGE: 2

AN ATTACHMENT

SMCS-1401, 1402, 1408 **i05312633**

NOTE	PART NUMBER	QTY	PART NAME 1 2 3 4 5 6 (PRODUCT LEVEL)	SEE PAGE
Y	*333-1400*	1	BATTERY & WIRING GP (DISCONNECT SWITCH)	94
Y	*333-1398*	1	BATTERY GP (12-VOLT, MAINTENANCE FREE, WET)	101
Y	*347-8058*	1	BOX GP-TOOL	557

Y - SEPARATE ILLUSTRATION

<END>

333-1416 BATTERY & WIRING GP—HEAVY-DUTY

S/N: DYB1-UP

PART OF 381-4389, 381-4390 OPTION AR-COLD WEATHER

AN ATTACHMENT

SMCS-1401, 1402, 1408 **i05309509**

NOTE	PART NUMBER	QTY	PART NAME 1 2 3 4 5 6 (PRODUCT LEVEL)	SEE PAGE
Y	*333-1401*	1	BATTERY & WIRING GP (HEAVY-DUTY)	97
Y	*333-1399*	1	BATTERY GP (HEAVY-DUTY)	102
Y	*347-8057*	1	BOX GP-BATTERY	266

Y - SEPARATE ILLUSTRATION

<END>

333-1398 BATTERY GP–12-VOLT, MAINTENANCE FREE, WET

S/N: DYB1-UP

PART OF 333-1415 BATTERY & WIRING GP

AN ATTACHMENT

SMCS-1401 **i05298613**

NOTE	REF NO	GRAPHIC REF	PART NUMBER	QTY	PART NAME 1 2 3 4 5 6 (PRODUCT LEVEL)	SEE PAGE
	1	1	**115-2422**	2	BATTERY GP (12-VOLT, MAINTENANCE FREE, WET)	
					(EACH INCLUDES)	
		1	**123-1373**	6	CAP AS-FILLER (BATTERY)	

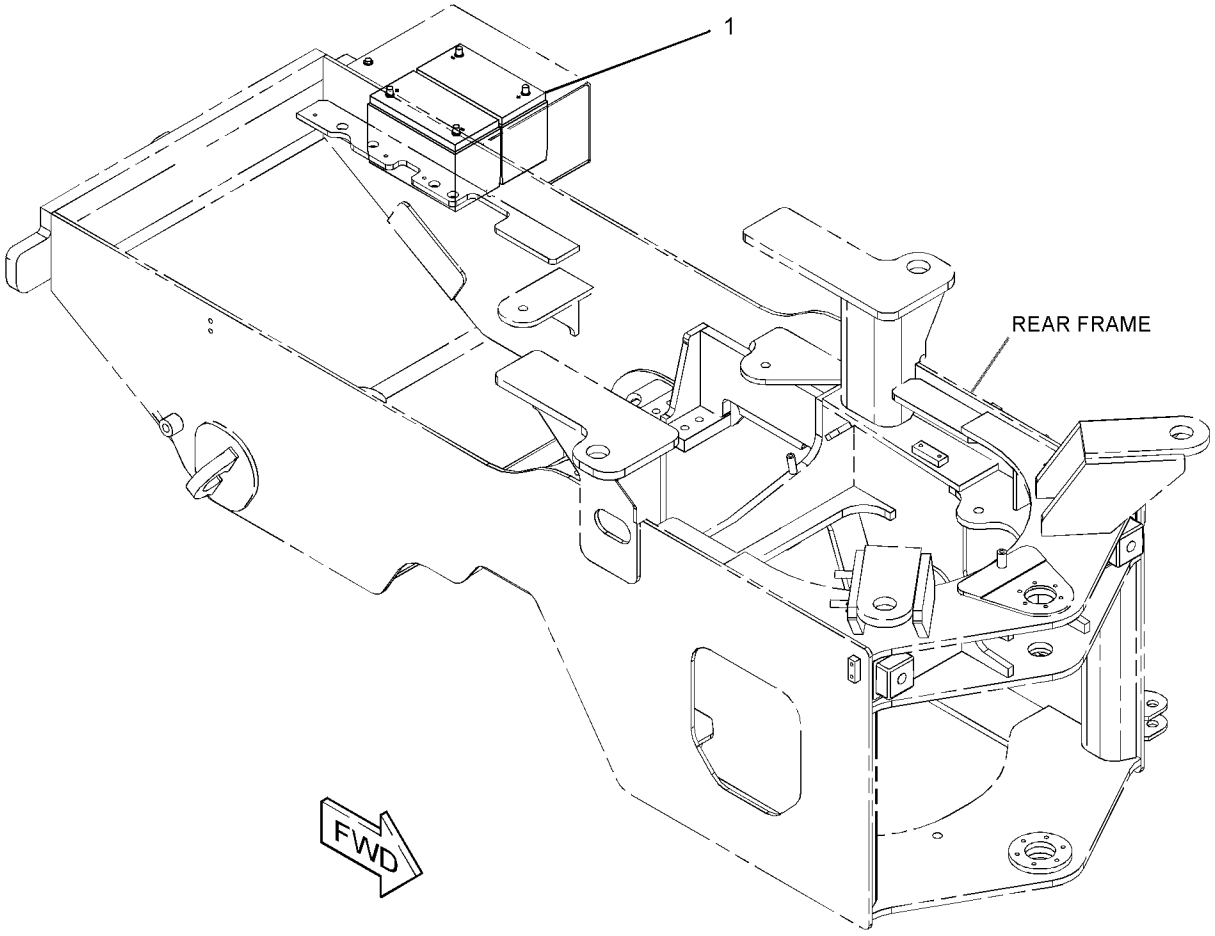

GRAPHIC #1 **<END>** g02761416

333-1399 BATTERY GP–HEAVY-DUTY

S/N: DYB1-UP
12-VOLT
PART OF 333-1416 BATTERY & WIRING GP
AN ATTACHMENT

SMCS-1401 **i05297415**

NOTE	REF NO	GRAPHIC REF	PART NUMBER	QTY	PART NAME 1 2 3 4 5 6 (PRODUCT LEVEL)	SEE PAGE
	1	1	**115-2422**	4	BATTERY GP (12-VOLT, MAINTENANCE FREE, WET)	
					(EACH INCLUDES)	
		1	**123-1373**	6	CAP AS-FILLER (BATTERY)	

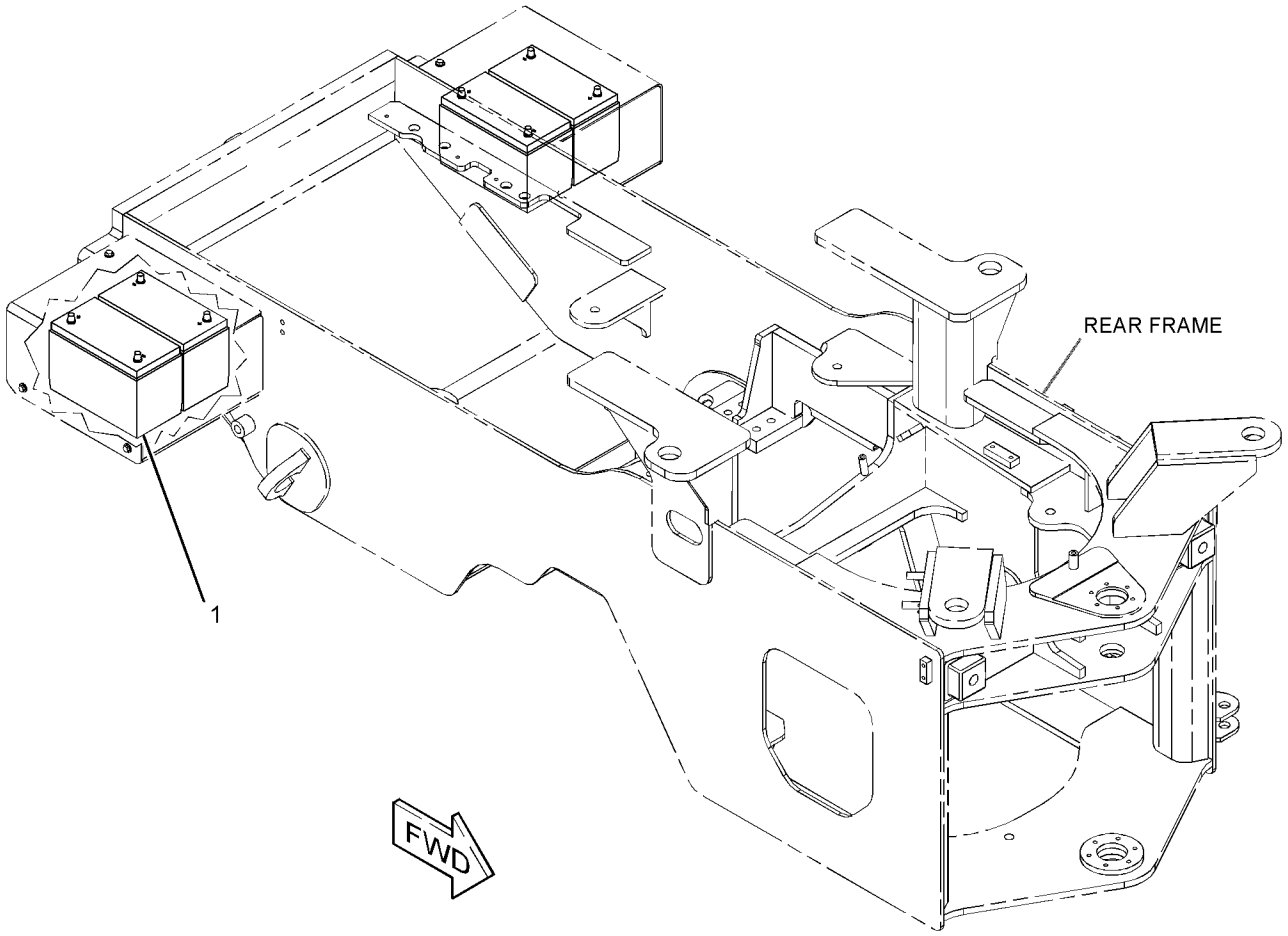

GRAPHIC #1 **<END>** g02761238

377-5640 BRACKET GP-MOUNTING

S/N: DYB1-UP
PART OF 333-1425 LAMP GP-WARNING BEACON
AN ATTACHMENT

SMCS-0635, 1408 **i05309943**

NOTE	REF NO	GRAPHIC REF	PART NUMBER	QTY	PART NAME 1 2 3 4 5 6 (PRODUCT LEVEL)	SEE PAGE
	1	1	**377-5645**	1	BRACKET AS	
M		1	**159-9539**	2	NUT-WELD (M6X1-THD)	
	2	1	**377-5646**	1	TUBE AS	
	3	1	**377-5647**	1	SPRING	
	4	1	**5P-1076**	1	WASHER-HARD (13.5X30X4-MM THK)	
	5	1	**6C-9038**	1	WASHER (12.2X25X1-MM THK)	
M	6	1	**8C-8992**	1	BOLT-LOCKING (M12X1.75X30-MM)	
	7	1	**8T-4122**	1	WASHER-HARD (17X32X3.5-MM THK)	

M - METRIC PART

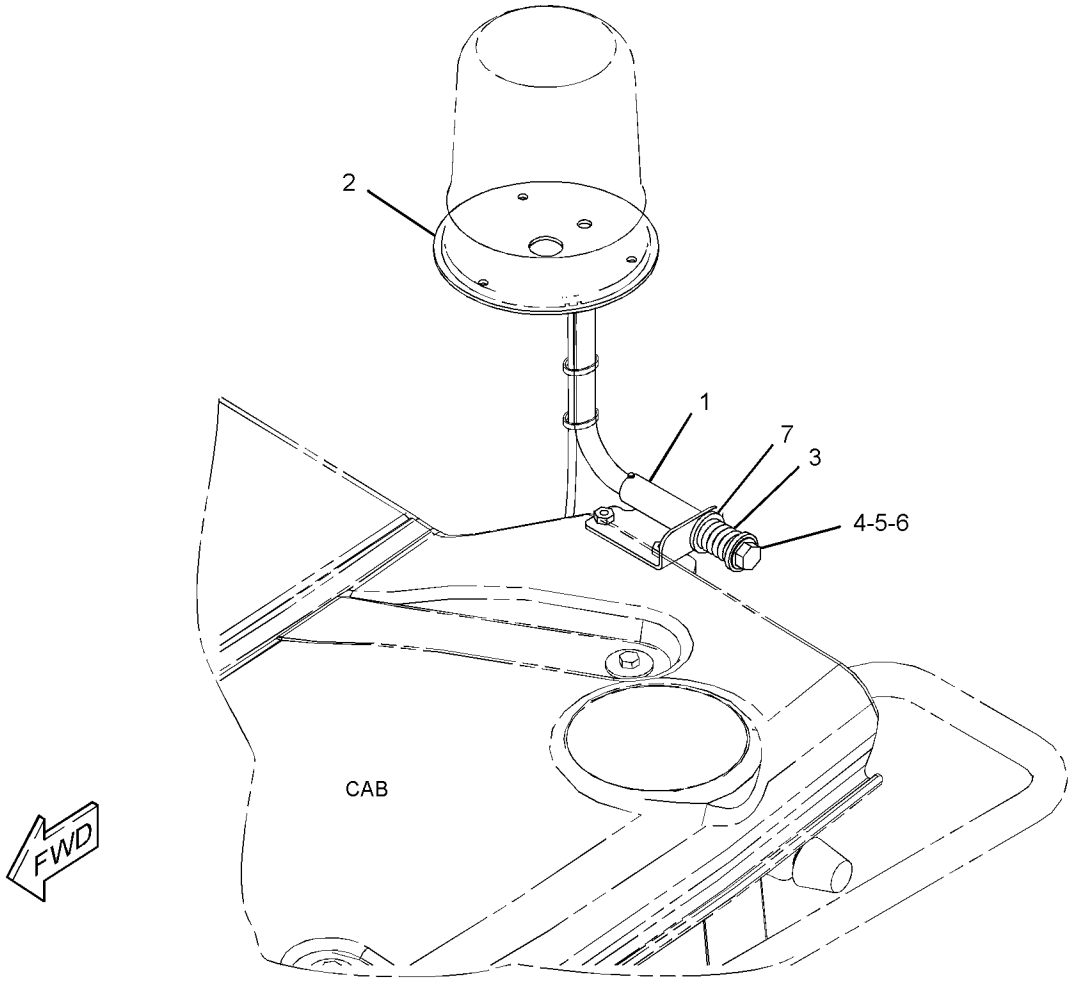

GRAPHIC #1 **<END>** g03251660

371-2537 CONTROL GP-ENGINE ELECTRONIC

S/N: E7A1-UP
PART OF 371-1441 ENGINE AR-PRIMARY
AN ATTACHMENT

SMCS-1901 **i05331592**

NOTE	REF NO	GRAPHIC REF	PART NUMBER	QTY	PART NAME 1 2 3 4 5 6 (PRODUCT LEVEL)	SEE PAGE
	1	1	**7W-2632**	1	WASHER (8.5X16.8X1.6-MM THK)	
	2	1	**217-0099**	4	SPACER (8.2X25X2-MM THK)	
	3	1	**278-5203**	4	SPACER	
	4	1	**300-6714**	8	MOUNT	
	5	1	**6I-0456**	4	BOLT (M8X1.25X45-MM)	

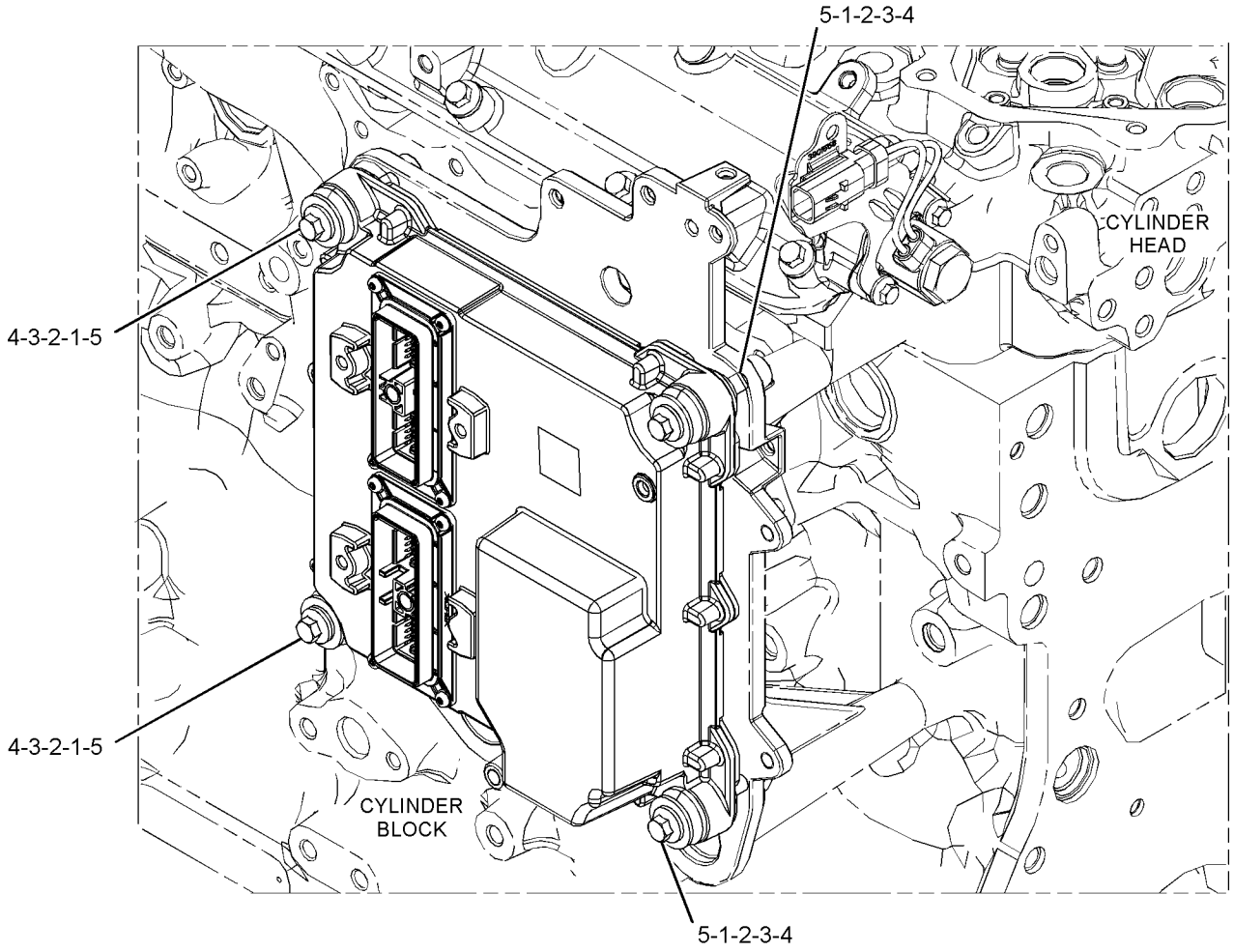

GRAPHIC #1 **<END>** g03379047

351-8490 CONTROL GP-UNPROGRAMMED–PRODUCT LINK 522

S/N: DYB1-UP

PART OF 333-1453 INSTALLATION GP-COMMUNICATION

AN ATTACHMENT

SMCS-7610 **i04925968**

NOTE	REF NO	GRAPHIC REF	PART NUMBER	QTY	PART NAME 1 2 3 4 5 6 (PRODUCT LEVEL)	SEE PAGE
	1	1	**346-7763**	1	COVER AS	
	2	1	**351-8488**	1	CARD-MEMORY (SUBSCRIBER IDENTITY MODULE)	
	3	1	**7X-6315**	1	STRAP AS-GROUND	
	4	1	**342-9022**	4	SCREW-PAN HEAD (M2.5X0.45-THD)	
	5	1	**342-9290**	1	SCREW-PAN HEAD (M4X0.7-THD)	
	6	1	**134-4126**	1	WASHER (4.52X8.28X0.76-MM THK)	
F			**382-5982**	1	SOFTWARE GP-ELECTRONIC	

F - NOT SHOWN

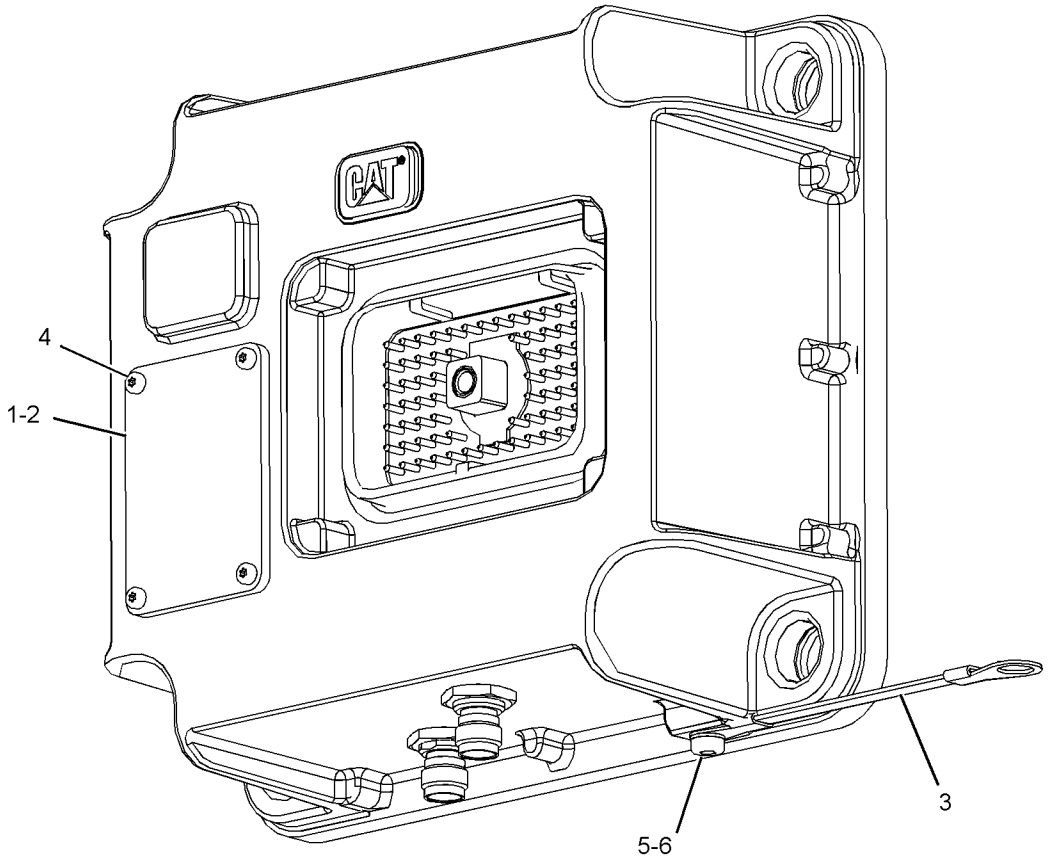

GRAPHIC #1 **<END>** g02330133

372-1877 CONTROL GP-UNPROGRAMMED

S/N: DYB1-UP

PART OF 387-4199 HYDRAULIC AR-3 VALVE, 419-8849 HYDRAULIC AR-4 VALVE AN ATTACHMENT

SMCS-7610 **i05300039**

NOTE	REF NO	GRAPHIC REF	PART NUMBER	QTY	PART NAME 1 2 3 4 5 6 (PRODUCT LEVEL)	SEE PAGE
	1	1	**6I-1418**	4	SPACER (8.2X12.7X28.7-MM THK)	
	2	1	**8T-9655**	8	MOUNT-ISOLATION	
R	3	1	**304-5691**	1	CONTROL GP-UNPROGRAMMED (MACHINE)	
Y	4	1	**372-1878**	1	HARNESS AS-CONTROL	114
M	5	1	**297-1003**	4	BOLT-SOCKET HEAD (M8X1.25X45-MM)	
	6	1	**3S-2093**	2	STRAP-CABLE	
	7	1	**7X-0579**	5	WASHER-HARD (8.8X25.5X2-MM THK)	

M - METRIC PART
R - REMFG PART MAY BE AVAILABLE
Y - SEPARATE ILLUSTRATION

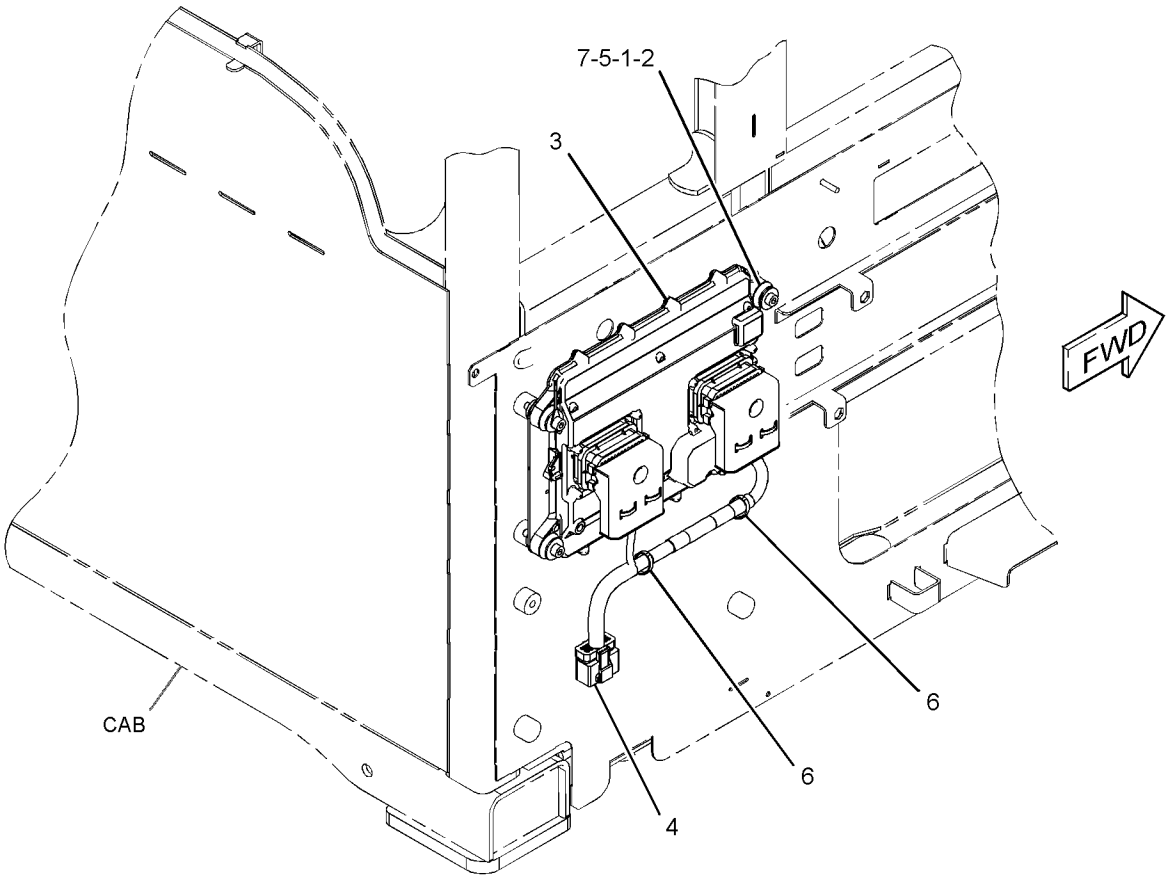

GRAPHIC #1 **<END>** g03371176

333-1396 ELECTRONICS AR-MACHINE

S/N: DYB1-UP

PART OF 381-4382 COMMON AR

SMCS-7610, 7620 **i05306018**

NOTE	PART NUMBER	QTY	PART NAME 1 2 3 4 5 6 (PRODUCT LEVEL)	SEE PAGE
Y	*360-1848*	1	ELECTRONICS GP-MONITOR	108
Y	*333-1397*	1	ELECTRONICS GP-POWER TRAIN	108

Y - SEPARATE ILLUSTRATION

<END>

262-1421 ELECTRONICS GP-COMMUNICATION—PRODUCT LINK 300

S/N: DYB1-UP

PART OF 333-1452 INSTALLATION GP-COMMUNICATION

AN ATTACHMENT

SMCS-7606, 7610, 7620 **i04660830**

NOTE	PART NUMBER	QTY	PART NAME 1 2 3 4 5 6 (PRODUCT LEVEL)	SEE PAGE
	384-6463	1	SOFTWARE GP-COMMUNICATION (PRODUCT LINK 300)	
			-OR-	
	386-3993	1	SERVICE GP-COMMUNICATION (PRODUCT LINK 300)	
			(OPTIONAL SERVICE REPLACEMENT)(INCLUDES CONTROL GP & SOFTWARE)	
	7X-6315	1	STRAP AS-GROUND	
	126-7574	1	SCREW-PAN HEAD (8-32X9.52-MM)	
	134-4126	1	WASHER (4.52X8.28X0.76-MM THK)	

<END>

333-1379 ELECTRONICS GP-IMPLEMENT

S/N: DYB1-UP

PART OF 387-4199 HYDRAULIC AR-3 VALVE, 419-8849 HYDRAULIC AR-4 VALVE

AN ATTACHMENT

SMCS-5701, 7610, 7620 **i05312292**

NOTE	PART NUMBER	QTY	PART NAME 1 2 3 4 5 6 (PRODUCT LEVEL)	SEE PAGE
	389-5927	1	SOFTWARE GP-IMPLEMENT	

<END>

310-5289 ELECTRONICS GP-MACHINE

S/N: DYB1-UP

PART OF 333-1363 INSTALLATION GP-SECURITY

AN ATTACHMENT

SMCS-7610, 7620 **i04808930**

NOTE	PART NUMBER	QTY	PART NAME 1 2 3 4 5 6 (PRODUCT LEVEL)	SEE PAGE
	310-4772	1	MODULE GP-INTERFACE	
	6V-6715	1	SCREW-PAN HEAD (4-20X0.25-IN)	
	8C-3095	1	SEAL-O-RING	

<END>

360-1839 ELECTRONICS GP-MONITOR

S/N: DYB1-UP

PART OF 333-1367 MONITOR & MOUNTING GP

AN ATTACHMENT

SMCS-7490, 7494, 7601, 7603, 7610, 7620 **i05312271**

NOTE	PART NUMBER	QTY	PART NAME 1 2 3 4 5 6 (PRODUCT LEVEL)	SEE PAGE
	435-7769	1	SOFTWARE GP-MONITOR	

<END>

360-1848 ELECTRONICS GP-MONITOR

S/N: DYB1-UP

PART OF 333-1396 ELECTRONICS AR-MACHINE

SMCS-7490, 7494, 7601, 7603, 7610, 7620 **i05306019**

NOTE	PART NUMBER	QTY	PART NAME 1 2 3 4 5 6 (PRODUCT LEVEL)	SEE PAGE
	416-5266	1	SOFTWARE GP-MONITOR	

<END>

333-1397 ELECTRONICS GP-POWER TRAIN

S/N: DYB1-UP

PART OF 333-1396 ELECTRONICS AR-MACHINE

SMCS-4800, 4808, 7610, 7620 **i05306020**

NOTE	PART NUMBER	QTY	PART NAME 1 2 3 4 5 6 (PRODUCT LEVEL)	SEE PAGE
	420-7749	1	SOFTWARE GP-POWER TRAIN	

<END>

333-1356 HARNESS AS-CAB

S/N: DYB1-UP
PART OF 372-1860 WIRING GP-CAB
AN ATTACHMENT

SMCS-1408 **i05302489**

NOTE	PART NUMBER	QTY	PART NAME 1 2 3 4 5 6 (PRODUCT LEVEL)	SEE PAGE
	275-7878	1	BLOCK AS-FUSE	
	292-9779	1	BLOCK AS-FUSE	
			(EACH BLOCK AS-FUSE INCLUDES)	
	306-0350	1	COVER	
	8C-3398	2	LOCKWASHER	
M	**5C-2890**	2	NUT (M6X1-THD)	
	306-0351	1	SEAL-COVER	
	8T-4205	2	WASHER-HARD (7.2X14.5X2-MM THK)	
	123-7615	2	CONNECTOR	
	142-9117	2	CONNECTOR	
	228-5856	4	CONNECTOR	
	113-8490	19	FUSE (10-AMPERE)	
	113-8491	8	FUSE (15-AMPERE)	
	113-8492	4	FUSE (20-AMPERE)	
	5E-9295	2	PIN-CONNECTOR (6-GA)	
	7T-0093	9	PIN-CONNECTOR (12-GA TO 14-GA)	
	9W-0852	1	PIN-CONNECTOR (14-GA TO 16-GA)	
	9X-3401	106	PIN-CONNECTOR (16-GA TO 18-GA)	
	9X-1054	1	PLUG AS-CONNECTOR (4-PIN)	
	155-2255	2	KIT-CONNECTING PLUG (12-PIN)	
	155-2260	2	KIT-CONNECTING PLUG (3-PIN)	
	155-2270	2	KIT-CONNECTING PLUG (2-PIN)	
	155-2271	2	KIT-CONNECTING PLUG (4-PIN)	
	155-2274	3	KIT-CONNECTING PLUG (6-PIN)	
			(EACH PLUG KIT INCLUDES PLUG AS, WEDGE & INTERFACE SEAL)	
	230-4009	3	PLUG AS-CONNECTOR (12-PIN)	
			(EACH INCLUDES)	
	264-7034	1	SEAL-CONNECTOR	
	230-4011	2	PLUG AS-CONNECTOR (2-PIN)	
			(EACH INCLUDES)	
	264-7029	1	SEAL-CONNECTOR	
	230-4013	2	PLUG AS-CONNECTOR (3-PIN)	
			(EACH INCLUDES)	
	264-7030	1	SEAL-CONNECTOR	
	230-5008	1	PLUG AS-CONNECTOR (4-PIN)	
	264-7031	1	SEAL-CONNECTOR	
	281-8811	1	PLUG AS-CONNECTOR (6-PIN)	
	264-7032	1	SEAL-CONNECTOR	
	7R-2751	22	PLUG-CONNECTOR	
	8T-8737	32	PLUG-SEAL	
	316-4373	4	PLUG-SEAL	
	102-8802	2	KIT-RECEPTACLE (2-PIN)	
			(EACH INCLUDES RECEPTACLE AS & WEDGE)	
	134-2540	1	RESISTOR AS-CONNECTION (3-PIN)	
	230-4010	2	RECEPTACLE AS-CONNECTOR (12-PIN)	
	230-4012	1	RECEPTACLE AS-CONNECTOR (2-PIN)	
	231-2300	1	RECEPTACLE AS-CONNECTOR (8-PIN)	
	265-4123	1	RECEPTACLE-CONNECTOR	
	169-0705	13	SEAL	
	128-4123	5	SEAL	
	128-5016	49	SEAL-CABLE	
	7R-2750	18	SEAL-CONNECTOR	
	202-0315	1	TERMINAL AS	
	128-4123	1	SEAL	
	9W-0844	1	SOCKET-CONNECTOR (14-GA TO 16-GA)	

333-1356 **HARNESS AS-CAB (*contd.*)** **i05302489**

NOTE	PART NUMBER	QTY	PART NAME 1 2 3 4 5 6 (PRODUCT LEVEL)	SEE PAGE
	9X-3402	45	SOCKET-CONNECTOR (16-GA TO 18-GA)	
	180-9340	52	SOCKET-CONNECTOR (14-GA TO 18-GA)	
	202-0313	28	TERMINAL AS	
			(EACH INCLUDES)	
	128-5016	1	SEAL-CABLE	
	202-0314	39	TERMINAL AS	
			(EACH INCLUDES)	
	128-4123	1	SEAL	
B	**1P-0810**		TAPE-ELECTRICAL	
B	**329-3734**		TAPE	
	2L-8067	2	TERMINAL-RING (10-GA TO 12-GA, 1/4-IN SCREW)	
	128-4178	1	TERMINAL AS	
	2L-8068	1	TERMINAL-RING (10-GA TO 12-GA, 5/16-IN SCREW)	
D	**5P-6006**		TUBE-HEAT SHRINK (9.52-MM DIA) (0.1-M)	
	128-4190	2	TERMINAL AS	
			(EACH INCLUDES)	
	6H-3586	1	TERMINAL-RING (6-GA TO 8-GA, 1/4-IN SCREW)	
E	**6V-9023**		TUBE-HEAT SHRINK (12.7-MM DIA) (4-CM)	
	5P-4571	5	TERMINAL-BLADE (14-GA TO 16-GA)	
	6V-0491	4	TERMINAL-BLADE (14-GA TO 18-GA)	
	091-2436	14	TERMINAL-BLADE (18-GA TO 22-GA)	
	104-1995	6	TERMINAL-BLADE (14-GA TO 18-GA)	
	112-9611	11	TERMINAL-BLADE	
	3E-9179	2	TERMINAL-RECEPTACLE (14-GA TO 18-GA)	
	100-5041	4	TERMINAL-RECEPTACLE (18-GA TO 20-GA)	
E	**6V-9023**		TUBE-HEAT SHRINK (12.7-MM DIA) (1-CM)	
E	**119-3662**		TUBE-HEAT SHRINK (10.85-MM DIA) (33-CM)	
E	**125-7874**		TUBE-HEAT SHRINK (5.72-MM DIA) (150-CM)	
E	**125-7875**		TUBE-HEAT SHRINK (7.44-MM DIA) (30-CM)	

B - USE AS REQUIRED
D - ORDER BY THE METER
E - ORDER BY THE CENTIMETER
M - METRIC PART

<END>

372-1933 HARNESS AS-CHASSIS

S/N: DYB1-UP

PART OF 372-1930 WIRING GP-CHASSIS

SMCS-1408 **i05296414**

NOTE	PART NUMBER	QTY	PART NAME 1 2 3 4 5 6 (PRODUCT LEVEL)	SEE PAGE
	374-7463	2	CAP-SEAL	
E	**292-2896**		CONDUIT (60-CM)	
	9X-3401	11	PIN-CONNECTOR (16-GA TO 18-GA)	
			—OR—	
	126-1767	11	PIN-CONNECTOR (14-GA TO 16-GA)	
	155-2270	5	KIT-CONNECTING PLUG (2-PIN)	
	155-2271	1	KIT-CONNECTING PLUG (4-PIN)	
			(EACH PLUG KIT INCLUDES PLUG AS, WEDGE & INTERFACE SEAL)	
	8T-8737	5	PLUG-SEAL	
	102-8802	1	KIT-RECEPTACLE (2-PIN)	
			(INCLUDES RECEPTACLE AS & WEDGE)	
	239-7357	1	RECEPTACLE AS-CONNECTOR (12-PIN)	
	9W-0844	2	SOCKET-CONNECTOR (14-GA TO 16-GA)	
	194-5226	10	WIRE AS (16-GA)	
			—OR—	
	194-5227	10	WIRE AS (14-GA)	
	218-4935	1	SUPPRESSOR-ARC	
B	**329-3734**		TAPE	
E	**125-7874**		TUBE-HEAT SHRINK (5.72-MM DIA) (15-CM)	

B - USE AS REQUIRED
E - ORDER BY THE CENTIMETER

<END>

333-1359 HARNESS AS-CONSOLE

S/N: DYB1-UP
PART OF 333-1390 WIRING GP-CONSOLE
AN ATTACHMENT

SMCS-1408, 7451 **i05301089**

NOTE	PART NUMBER	QTY	PART NAME 1 2 3 4 5 6 (PRODUCT LEVEL)	SEE PAGE
	110-0203	4	CONNECTOR AS	
	374-7463	2	CAP-SEAL	
	228-5856	8	CONNECTOR	
	172-8037	1	CONNECTOR (RADIO)	
	6T-6505	2	HOUSING-RECEPTACLE (BLADE, POSITIVE LOCK)	
	9W-0852	4	PIN-CONNECTOR (14-GA TO 16-GA)	
	9X-3401	29	PIN-CONNECTOR (16-GA TO 18-GA)	
			—OR—	
	126-1767	29	PIN-CONNECTOR (14-GA TO 16-GA)	
	155-2255	1	KIT-CONNECTING PLUG (12-PIN)	
	155-2270	4	KIT-CONNECTING PLUG (2-PIN)	
	177-9656	1	KIT-CONNECTING PLUG (4-PIN)	
			(EACH PLUG KIT INCLUDES PLUG AS, WEDGE & INTERFACE SEAL)	
	230-4009	1	PLUG AS-CONNECTOR (12-PIN)	
	264-7034	1	SEAL-CONNECTOR	
	230-4013	1	PLUG AS-CONNECTOR (3-PIN)	
	264-7030	1	SEAL-CONNECTOR	
	230-5010	2	PLUG AS-CONNECTOR (6-PIN)	
			(EACH INCLUDES)	
	264-7032	1	SEAL-CONNECTOR	
	8T-8737	24	PLUG-SEAL	
	177-9653	1	KIT-RECEPTACLE (4-PIN)	
			(INCLUDES RECEPTACLE AS & WEDGE)	
	230-4010	1	RECEPTACLE AS-CONNECTOR (12-PIN)	
	230-4014	1	RECEPTACLE AS-CONNECTOR (3-PIN)	
	230-5011	2	RECEPTACLE AS-CONNECTOR (6-PIN)	
	7T-0094	4	SOCKET-CONNECTOR (12-GA TO 14-GA)	
	9W-0844	3	SOCKET-CONNECTOR (14-GA TO 16-GA)	
	9X-3402	27	SOCKET-CONNECTOR (16-GA TO 18-GA)	
			—OR—	
	126-1768	27	SOCKET-CONNECTOR (14-GA TO 16-GA)	
	194-5226	15	WIRE AS (16-GA)	
			—OR—	
	194-5227	15	WIRE AS (14-GA)	
	189-3158	2	SUPPRESSOR-ARC	
B	**329-3734**		TAPE	
	5P-4571	2	TERMINAL-BLADE (14-GA TO 16-GA)	
	097-7234	6	TERMINAL-BLADE (18-GA TO 22-GA)	
	091-2436	26	TERMINAL-BLADE (18-GA TO 22-GA)	
	104-1995	13	TERMINAL-BLADE (14-GA TO 18-GA)	
	172-8039	8	TERMINAL (RADIO)	
	6T-6506	2	TERMINAL-BLADE (14-GA TO 18-GA)	
E	**119-3662**		TUBE-HEAT SHRINK (10.85-MM DIA) (20-CM)	
E	**125-7874**		TUBE-HEAT SHRINK (5.72-MM DIA) (45-CM)	
E	**125-7875**		TUBE-HEAT SHRINK (7.44-MM DIA) (25-CM)	

B - USE AS REQUIRED
E - ORDER BY THE CENTIMETER

<END>

333-1429 HARNESS AS-CONSOLE—ROOF

S/N: DYB1-UP
PART OF 333-1426 LIGHTING GP-FLOOD
AN ATTACHMENT

SMCS-1408, 7451 **i05301093**

NOTE	PART NUMBER	QTY	PART NAME 1 2 3 4 5 6 (PRODUCT LEVEL)	SEE PAGE
	374-7463	5	CAP-SEAL	
E	**292-2896**		CONDUIT (60-CM)	
	9X-3401	10	PIN-CONNECTOR (16-GA TO 18-GA)	
	155-2255	1	KIT-CONNECTING PLUG (12-PIN)	
	155-2270	7	KIT-CONNECTING PLUG (2-PIN)	
	155-2274	2	KIT-CONNECTING PLUG (6-PIN)	
			(EACH PLUG KIT INCLUDES PLUG AS, WEDGE & INTERFACE SEAL)	
	8T-8737	16	PLUG-SEAL	
	102-8802	1	KIT-RECEPTACLE (2-PIN)	
	102-8805	2	KIT-RECEPTACLE (6-PIN)	
			(EACH RECEPTACLE KIT INCLUDES RECEPTACLE AS & WEDGE)	
	9W-0844	1	SOCKET-CONNECTOR (14-GA TO 16-GA)	
	180-9340	25	SOCKET-CONNECTOR (14-GA TO 18-GA)	
B	**329-3734**		TAPE	
E	**119-3662**		TUBE-HEAT SHRINK (10.85-MM DIA) (7-CM)	
E	**125-7874**		TUBE-HEAT SHRINK (5.72-MM DIA) (20-CM)	

B - USE AS REQUIRED
E - ORDER BY THE CENTIMETER

<END>

213-6065 HARNESS AS-CONTROL—SECURITY

S/N: DYB1-UP
PART OF 333-1363 INSTALLATION GP-SECURITY
AN ATTACHMENT

SMCS-1408 **i05312440**

NOTE	PART NUMBER	QTY	PART NAME 1 2 3 4 5 6 (PRODUCT LEVEL)	SEE PAGE
	9X-3401	4	PIN-CONNECTOR (16-GA TO 18-GA)	
			—OR—	
	126-1767	4	PIN-CONNECTOR (14-GA TO 16-GA)	
	155-2265	1	KIT-CONNECTING PLUG (8-PIN)	
	155-2270	1	KIT-CONNECTING PLUG (2-PIN)	
			(EACH PLUG KIT INCLUDES PLUG AS, WEDGE & INTERRFACE SEAL)	
	8T-8737	2	PLUG-SEAL	
	102-8804	1	KIT-RECEPTACLE (4-PIN)	
			(INCLUDES RECEPTACLE AS & WEDGE)	
	194-5226	8	WIRE AS (16-GA)	
			—OR—	
	194-5227	8	WIRE AS (14-GA)	
	8L-8413	10	STRAP-CABLE	

<END>

372-1878 HARNESS AS-CONTROL

S/N: DYB1-UP
PART OF 372-1877 CONTROL GP-UNPROGRAMMED
AN ATTACHMENT

SMCS-1408 **i05300032**

NOTE	PART NUMBER	QTY	PART NAME 1 2 3 4 5 6 (PRODUCT LEVEL)	SEE PAGE
	126-1774	2	COVER-CONNECTOR	
	147-1445	1	PLUG AS-CONNECTOR (70-PIN)	
	147-1446	1	PLUG AS-CONNECTOR (70-PIN)	
			(EACH PLUG AS INCLUDES)	
	159-9322	1	SEAL-O-RING	
	344-1682	1	PLUG AS-CONNECTOR	
	8T-8737	121	PLUG-SEAL	
	9X-3402	19	SOCKET-CONNECTOR (16-GA TO 18-GA)	
			—OR—	
	126-1768	19	SOCKET-CONNECTOR (14-GA TO 16-GA)	
	3S-2093	4	STRAP-CABLE	
E	**125-7874**		TUBE-HEAT SHRINK (5.72-MM DIA) (5-CM)	
E	**125-7875**		TUBE-HEAT SHRINK (7.44-MM DIA) (5-CM)	

E - ORDER BY THE CENTIMETER

<END>

372-1945 HARNESS AS-CONTROL

S/N: DYB1-UP
PART OF 372-1940 WIRING GP-KICKOUT & POSITIONER
AN ATTACHMENT

SMCS-1408 **i05300034**

NOTE	PART NUMBER	QTY	PART NAME 1 2 3 4 5 6 (PRODUCT LEVEL)	SEE PAGE
	319-3247	1	ADAPTER-CONNECTOR	
E	**9X-2384**		HOSE (107-CM)	
	9X-3401	8	PIN-CONNECTOR (16-GA TO 18-GA)	
			—OR—	
	126-1767	8	PIN-CONNECTOR (14-GA TO 16-GA)	
	155-2260	1	KIT-CONNECTING PLUG (3-PIN)	
			(INCLUDES PLUG AS, WEDGE & INTERFACE SEAL)	
	230-5010	1	PLUG AS-CONNECTOR (6-PIN)	
	264-7032	1	SEAL-CONNECTOR	
	8T-8737	7	PLUG-SEAL	
	230-5011	1	RECEPTACLE AS-CONNECTOR (6-PIN)	
	231-2300	1	RECEPTACLE AS-CONNECTOR (8-PIN)	
	9X-3402	5	SOCKET-CONNECTOR (16-GA TO 18-GA)	
			—OR—	
	126-1768	5	SOCKET-CONNECTOR (14-GA TO 16-GA)	
	194-5226	3	WIRE AS (16-GA)	
			—OR—	
	194-5227	3	WIRE AS (14-GA)	
B	**1P-0810**		TAPE-ELECTRICAL	
D	**6V-2722**		TUBE-HEAT SHRINK (25.4-MM DIA) (0.2-M)	

B - USE AS REQUIRED
D - ORDER BY THE METER
E - ORDER BY THE CENTIMETER

<END>

372-1881 HARNESS AS-ENGINE

S/N: DYB1-UP

PART OF 372-1880 WIRING GP-ENGINE

SMCS-1408 **i05296407**

NOTE	PART NUMBER	QTY	PART NAME 1 2 3 4 5 6 (PRODUCT LEVEL)	SEE PAGE
	374-7463	2	CAP-SEAL	
	245-1045	1	COVER	
	245-1044	1	LOCK-CONNECTOR	
	155-2260	1	KIT-CONNECTING PLUG (3-PIN)	
	155-2270	6	KIT-CONNECTING PLUG (2-PIN)	
			(EACH PLUG KIT INCLUDES PLUG AS, WEDGE & INTERFACE SEAL)	
	230-4011	2	PLUG AS-CONNECTOR (2-PIN)	
			(EACH INCLUDES)	
	264-7029	1	SEAL-CONNECTOR	
	237-0227	2	PLUG AS-CONNECTOR (3-PIN)	
	230-4013	1	PLUG AS-CONNECTOR (3-PIN)	
			(EACH PLUG AS INCLUDES)	
	264-7030	1	SEAL-CONNECTOR	
	230-5010	1	PLUG AS-CONNECTOR (6-PIN)	
	264-7032	1	SEAL-CONNECTOR	
	245-1042	1	PLUG AS-CONNECTOR (64-PIN)	
M	**267-7207**	1	BOLT-SPECIAL	
	267-7208	1	RING-RETAINING	
	274-4990	1	SEAL	
	344-1682	1	PLUG AS-CONNECTOR	
	344-1683	1	PLUG AS-CONNECTOR	
	344-1684	1	PLUG AS-CONNECTOR	
	245-1048	32	PLUG-CONNECTOR	
	8T-8737	11	PLUG-SEAL	
	134-2540	1	RESISTOR AS-CONNECTION (3-PIN)	
	230-4012	1	RECEPTACLE AS-CONNECTOR (2-PIN)	
	230-5011	1	RECEPTACLE AS-CONNECTOR (6-PIN)	
	9X-3402	17	SOCKET-CONNECTOR (16-GA TO 18-GA)	
			—OR—	
	126-1768	17	SOCKET-CONNECTOR (14-GA TO 16-GA)	
	194-5226	14	WIRE AS (16-GA)	
			—OR—	
	194-5227	14	WIRE AS (14-GA)	
	267-9572	32	SOCKET-CONNECTION (18-GA)	
	189-3158	1	SUPPRESSOR-ARC	
B	**1P-0810**		TAPE-ELECTRICAL	
B	**329-3734**		TAPE	
	110-8769	1	WIRE AS	
	2L-8067	1	TERMINAL-RING (10-GA TO 12-GA, 1/4-IN SCREW)	
E	**119-3662**		TUBE-HEAT SHRINK (10.85-MM DIA) (7-CM)	
E	**125-7874**		TUBE-HEAT SHRINK (5.72-MM DIA) (35-CM)	
E	**125-7875**		TUBE-HEAT SHRINK (7.44-MM DIA) (5-CM)	

B - USE AS REQUIRED
E - ORDER BY THE CENTIMETER
M - METRIC PART

<END>

385-5997 HARNESS AS-ENGINE

S/N: E7A1-UP

PART OF 395-0113 WIRING GP-ENGINE

AN ATTACHMENT

SMCS-1408 **i05333812**

NOTE	PART NUMBER	QTY	PART NAME 1 2 3 4 5 6 (PRODUCT LEVEL)	SEE PAGE
E	**125-7874**		TUBE-HEAT SHRINK (5.72-MM DIA) (10-CM)	
	9X-3402	16	SOCKET-CONNECTOR (16-GA TO 18-GA)	
			—OR—	
	126-1768	16	SOCKET-CONNECTOR (14-GA TO 16-GA)	
	155-2271	3	KIT-CONNECTING PLUG (4-PIN)	
			(INCLUDES PLUG AS, WEDGE & INTERFACE SEAL)	
	194-5226	12	WIRE AS (16-GA)	
			—OR—	
	194-5227	12	WIRE AS (14-GA)	
	185-1861	5	SEAL-WIRE	
	206-1346	1	STRAP-CABLE	
	217-9039	6	STRAP-CABLE	
	230-4011	2	PLUG AS-CONNECTOR (2-PIN)	
			(EACH INCLUDES)	
	264-7029	1	SEAL-CONNECTOR	
	238-8245	1	PLUG AS-CONNECTOR (2-PIN)	
	264-7029	1	SEAL-CONNECTOR	
	238-8247	2	PLUG AS-CONNECTOR (2-PIN)	
			(EACH INCLUDES)	
	264-7029	1	SEAL-CONNECTOR	
	245-1043	1	PLUG AS-CONNECTOR (64-PIN)	
M	**267-7207**	1	BOLT-SPECIAL	
	245-1044	2	LOCK-CONNECTOR	
	267-9572	31	SOCKET-CONNECTION (18-GA)	
	245-1048	33	PLUG-CONNECTOR	
	281-8804	2	PLUG AS-CONNECTOR (3-PIN)	
			(EACH INCLUDES)	
	264-7030	1	SEAL-CONNECTOR	
	316-9351	19	MOUNTING-CABLE TIE	
	356-1219	3	STRAP-CABLE	
	377-6932	1	COVER	

E - ORDER BY THE CENTIMETER
M - METRIC PART

<END>

333-1421 HARNESS AS-FRONT

S/N: DYB1-UP

PART OF 333-1420 WIRING GP-FRONT

SMCS-1408 **i05307651**

NOTE	PART NUMBER	QTY	PART NAME 1 2 3 4 5 6 (PRODUCT LEVEL)	SEE PAGE
E	**5P-1506**		HOSE (96-CM)	
	155-2260	1	KIT-CONNECTING PLUG (3-PIN)	
	155-2270	16	KIT-CONNECTING PLUG (2-PIN)	
	155-2274	1	KIT-CONNECTING PLUG (6-PIN)	
			(EACH PLUG KIT INCLUDES PLUG AS, WEDGE & INTERFACE SEAL)	
	167-3693	1	PLUG AS-CONNECTOR (31-PIN)	
	230-4009	1	PLUG AS-CONNECTOR (12-PIN)	
	264-7034	1	SEAL-CONNECTOR	
	230-4013	1	PLUG AS-CONNECTOR (3-PIN)	
	264-7030	1	SEAL-CONNECTOR	
	230-5010	2	PLUG AS-CONNECTOR (6-PIN)	
			(EACH INCLUDES)	
	264-7032	1	SEAL-CONNECTOR	
	231-2295	1	PLUG AS-CONNECTOR (8-PIN)	
	264-7033	1	SEAL-CONNECTOR	
	8T-8737	21	PLUG-SEAL	
	102-8802	6	KIT-RECEPTACLE (2-PIN)	
	102-8805	1	KIT-RECEPTACLE (6-PIN)	
			(EACH RECEPTACLE KIT INCLUDES RECEPTACLE AS & WEDGE)	
	9W-0844	7	SOCKET-CONNECTOR (14-GA TO 16-GA)	
	9X-3402	33	SOCKET-CONNECTOR (16-GA TO 18-GA)	
			—OR—	
	126-1768	33	SOCKET-CONNECTOR (14-GA TO 16-GA)	
	194-5226	64	WIRE AS (16-GA)	
			—OR—	
	194-5227	64	WIRE AS (14-GA)	
	189-3158	3	SUPPRESSOR-ARC	
B	**1P-0810**		TAPE-ELECTRICAL	
E	**125-7874**		TUBE-HEAT SHRINK (5.72-MM DIA) (55-CM)	
E	**125-7875**		TUBE-HEAT SHRINK (7.44-MM DIA) (15-CM)	
E	**311-4859**		TUBE-HEAT SHRINK (14-CM)	

B - USE AS REQUIRED
E - ORDER BY THE CENTIMETER

<END>

333-1438 HARNESS AS-HEATER & AIR COND—BLOWER

S/N: DYB1-UP

PART OF 342-0186 CONTROL GP-AIR & TEMPERATURE

AN ATTACHMENT

SMCS-1408 **i05302730**

NOTE	PART NUMBER	QTY	PART NAME 1 2 3 4 5 6 (PRODUCT LEVEL)	SEE PAGE
	126-1767	6	PIN-CONNECTOR (14-GA TO 16-GA)	
	230-5011	1	RECEPTACLE AS-CONNECTOR (6-PIN)	
B	**329-3734**		TAPE	

B - USE AS REQUIRED

<END>

372-1861 HARNESS AS-HEATER & AIR COND

S/N: DYB1-UP
PART OF 399-7157 AIR CONDITIONER GP
AN ATTACHMENT

SMCS-1408 **i05309727**

NOTE	PART NUMBER	QTY	PART NAME 1 2 3 4 5 6 (PRODUCT LEVEL)	SEE PAGE
	068-8993	1	GROMMET	
	9W-0852	2	PIN-CONNECTOR (14-GA TO 16-GA)	
	9X-3401	4	PIN-CONNECTOR (16-GA TO 18-GA)	
	155-2270	1	KIT-CONNECTING PLUG (2-PIN)	
			(INCLUDES PLUG AS, WEDGE & INTERFACE SEAL)	
	230-4011	2	PLUG AS-CONNECTOR (2-PIN)	
			(EACH INCLUDES)	
	264-7029	1	SEAL-CONNECTOR	
	102-8805	1	KIT-RECEPTACLE (6-PIN)	
			(INCLUDES RECEPTACLE AS & WEDGE)	
	9W-0844	2	SOCKET-CONNECTOR (14-GA TO 16-GA)	
	9X-3402	4	SOCKET-CONNECTOR (16-GA TO 18-GA)	

<END>

333-1423 HARNESS AS-LIGHTING

S/N: DYB1-UP
PART OF 333-1420 WIRING GP-FRONT

SMCS-1408 **i05307652**

NOTE	PART NUMBER	QTY	PART NAME 1 2 3 4 5 6 (PRODUCT LEVEL)	SEE PAGE
	9X-3401	5	PIN-CONNECTOR (16-GA TO 18-GA)	
			—OR—	
	126-1767	5	PIN-CONNECTOR (14-GA TO 16-GA)	
	155-2274	1	KIT-CONNECTING PLUG (6-PIN)	
			(INCLUDES PLUG AS, WEDGE & INTERFACE SEAL)	
	8T-8737	2	PLUG-SEAL	
	230-5011	1	RECEPTACLE AS-CONNECTOR (6-PIN)	
	194-5226	5	WIRE AS (16-GA)	
			—OR—	
	194-5227	5	WIRE AS (14-GA)	

<END>

372-1934 HARNESS AS-LIGHTING

S/N: DYB1-UP

PART OF 372-1930 WIRING GP-CHASSIS

SMCS-1408 **i05296416**

NOTE	PART NUMBER	QTY	PART NAME 1 2 3 4 5 6 (PRODUCT LEVEL)	SEE PAGE
	9W-0852	2	PIN-CONNECTOR (14-GA TO 16-GA)	
	9X-3401	4	PIN-CONNECTOR (16-GA TO 18-GA)	
			—OR—	
	126-1767	4	PIN-CONNECTOR (14-GA TO 16-GA)	
	155-2270	2	KIT-CONNECTING PLUG (2-PIN)	
			(EACH INCLUDES PLUG AS, WEDGE & INTERFACE SEAL)	
	230-4011	1	PLUG AS-CONNECTOR (2-PIN)	
	264-7029	1	SEAL-CONNECTOR	
	8T-8737	2	PLUG-SEAL	
	102-8804	1	KIT-RECEPTACLE (4-PIN)	
			(INCLUDES RECEPTACLE AS & WEDGE)	
	230-4012	1	RECEPTACLE AS-CONNECTOR (2-PIN)	
	194-5226	4	WIRE AS (16-GA)	
			—OR—	
	194-5227	4	WIRE AS (14-GA)	
B	**1P-0810**		TAPE-ELECTRICAL	
B	**329-3734**		TAPE	
	286-7193	2	TERMINAL AS-RING	
			(EACH INCLUDES)	
E	**125-7874**		TUBE-HEAT SHRINK (5.72-MM DIA) (3-CM)	
E	**125-7874**		TUBE-HEAT SHRINK (5.72-MM DIA) (5-CM)	
E	**125-7875**		TUBE-HEAT SHRINK (7.44-MM DIA) (5-CM)	

B - USE AS REQUIRED
E - ORDER BY THE CENTIMETER

<END>

333-1371 HARNESS AS-OPERATOR CONTROLS

S/N: DYB1-UP
PART OF 333-1370 WIRING GP-SEAT
AN ATTACHMENT

SMCS-1408 **i05301069**

NOTE	PART NUMBER	QTY	PART NAME 1 2 3 4 5 6 (PRODUCT LEVEL)	SEE PAGE
	155-2270	1	KIT-CONNECTING PLUG (2-PIN)	
			(INCLUDES PLUS AS, WEDGE & INTERFACE SEAL)	
	230-4009	2	PLUG AS-CONNECTOR (12-PIN)	
			(EACH INCLUDES)	
	264-7034	1	SEAL-CONNECTOR	
	230-5010	1	PLUG AS-CONNECTOR (6-PIN)	
	264-7032	1	SEAL-CONNECTOR	
	231-2295	1	PLUG AS-CONNECTOR (8-PIN)	
	264-7033	1	SEAL-CONNECTOR	
	8T-8737	6	PLUG-SEAL	
	102-8802	1	KIT-RECEPTACLE (2-PIN)	
			(INCLUDES RECEPTACLE AS & WEDGE)	
	9W-0844	2	SOCKET-CONNECTOR (14-GA TO 16-GA)	
	9X-3402	34	SOCKET-CONNECTOR (16-GA TO 18-GA)	
			—OR—	
	126-1768	34	SOCKET-CONNECTOR (14-GA TO 16-GA)	
B	**1P-0810**		TAPE-ELECTRICAL	
B	**329-3734**		TAPE	

B - USE AS REQUIRED

<END>

372-1883 HARNESS AS-SENSOR

S/N: DYB1-UP
PART OF 372-1882 WIRING GP-FUEL PUMP

SMCS-1408 **i05296410**

NOTE	PART NUMBER	QTY	PART NAME 1 2 3 4 5 6 (PRODUCT LEVEL)	SEE PAGE
	100-3317	3	PIN-TERMINAL	
	176-1477	1	PLUG AS (2-PIN)	
	230-4011	1	PLUG AS-CONNECTOR (2-PIN)	
	264-7029	1	SEAL-CONNECTOR	
	344-1690	3	PLUG-SEAL	
	128-5016	2	SEAL-CABLE	
	100-6674	3	SEAL-CONNECTOR	
	196-2412	2	TERMINAL AS	
			(EACH INCLUDES)	
	7R-2750	1	SEAL-CONNECTOR	
	9X-3402	2	SOCKET-CONNECTOR (16-GA TO 18-GA)	
			—OR—	
	126-1768	2	SOCKET-CONNECTOR (14-GA TO 16-GA)	
	176-1521	2	TERMINAL	
E	**125-7874**		TUBE-HEAT SHRINK (5.72-MM DIA) (10-CM)	

E - ORDER BY THE CENTIMETER

<END>

377-5651 HARNESS AS-STARTING AID

S/N: DYB1-UP
PART OF 377-5650 WIRING GP-START CONTROL
AN ATTACHMENT

SMCS-1408 **i05297437**

NOTE	PART NUMBER	QTY	PART NAME 1 2 3 4 5 6 (PRODUCT LEVEL)	SEE PAGE
	319-3242	1	ADAPTER-CONNECTOR	
	9X-3401	5	PIN-CONNECTOR (16-GA TO 18-GA)	
			—OR—	
	126-1767	5	PIN-CONNECTOR (14-GA TO 16-GA)	
	9X-1054	1	PLUG AS-CONNECTOR (4-PIN)	
	155-2270	2	KIT-CONNECTING PLUG (2-PIN)	
			(EACH INCLUDES PLUG AS, WEDGE & INTERFACE SEAL)	
	8T-8737	1	PLUG-SEAL	
	230-5011	1	RECEPTACLE AS-CONNECTOR (6-PIN)	
	180-9340	4	SOCKET-CONNECTOR (14-GA TO 18-GA)	
B	**329-3734**		TAPE	
	9X-1056	2	TERMINAL-RECEPTACLE (14-GA TO 16-GA)	
	100-5041	2	TERMINAL-RECEPTACLE (18-GA TO 20-GA)	
E	**125-7874**		TUBE-HEAT SHRINK (5.72-MM DIA) (5-CM)	
E	**125-7875**		TUBE-HEAT SHRINK (7.44-MM DIA) (5-CM)	

B - USE AS REQUIRED
E - ORDER BY THE CENTIMETER

<END>

372-1891 HARNESS AS-STEERING

S/N: DYB1-UP
PART OF 372-1895 PANEL GP-INSTRUMENT
AN ATTACHMENT

SMCS-1408 **i05333116**

NOTE	PART NUMBER	QTY	PART NAME 1 2 3 4 5 6 (PRODUCT LEVEL)	SEE PAGE
	9X-3401	2	PIN-CONNECTOR (16-GA TO 18-GA)	
			—OR—	
	126-1767	2	PIN-CONNECTOR (14-GA TO 16-GA)	
	102-8802	1	KIT-RECEPTACLE (2-PIN)	
			(INCLUDES RECEPTACLE AS & WEDGE)	
B	**1P-0810**		TAPE-ELECTRICAL	
B	**329-3734**		TAPE	
	5P-4571	1	TERMINAL-BLADE (14-GA TO 16-GA)	

B - USE AS REQUIRED

<END>

333-1386 HARNESS AS-TRANSMISSION

S/N: DYB1-UP

PART OF 333-1385 WIRING GP-TRANSMISSION CONTROL

SMCS-1408 **i05307634**

NOTE	PART NUMBER	QTY	PART NAME 1 2 3 4 5 6 (PRODUCT LEVEL)	SEE PAGE
	319-3236	2	ADAPTER AS-COMMUNICATION	
	319-3242	3	ADAPTER-CONNECTOR	
	155-2270	5	KIT-CONNECTING PLUG (2-PIN)	
			(EACH INCLUDES PLUG AS, WEDGE & INTERFACE SEAL)	
	230-4011	1	PLUG AS-CONNECTOR (2-PIN)	
	238-8247	3	PLUG AS-CONNECTOR (2-PIN)	
			(EACH PLUG AS INCLUDES)	
	264-7029	1	SEAL-CONNECTOR	
	230-4009	1	PLUG AS-CONNECTOR (12-PIN)	
	264-7034	1	SEAL-CONNECTOR	
	230-5008	1	PLUG AS-CONNECTOR (4-PIN)	
	264-7031	1	SEAL-CONNECTOR	
	9X-3402	24	SOCKET-CONNECTOR (16-GA TO 18-GA)	
	180-9340	10	SOCKET-CONNECTOR (14-GA TO 18-GA)	
B	**1P-0810**		TAPE-ELECTRICAL	
B	**329-3734**		TAPE	
	2L-8079	1	TERMINAL-RING (14-GA TO 16-GA, 3/8-IN SCREW)	
	7N-9017	1	TERMINAL-RING (18-GA TO 22-GA, NO. 10 SCREW)	
E	**125-7874**		TUBE-HEAT SHRINK (5.72-MM DIA) (15-CM)	

B - USE AS REQUIRED
E - ORDER BY THE CENTIMETER

<END>

360-1843 HARNESS AS-WINDOW WIPER

S/N: DYB1-UP

PART OF 372-1930 WIRING GP-CHASSIS

SMCS-1408 **i05324821**

NOTE	PART NUMBER	QTY	PART NAME 1 2 3 4 5 6 (PRODUCT LEVEL)	SEE PAGE
	123-7615	2	CONNECTOR	
	9X-3401	4	PIN-CONNECTOR (16-GA TO 18-GA)	
	230-5009	1	RECEPTACLE AS-CONNECTOR (4-PIN)	
B	**329-3734**		TAPE	
	6V-0491	4	TERMINAL-BLADE (14-GA TO 18-GA)	

B - USE AS REQUIRED

<END>

372-1931 HARNESS AS-WIRING

S/N: DYB1-UP

PART OF 372-1930 WIRING GP-CHASSIS

SMCS-1408 **i05333676**

NOTE	PART NUMBER	QTY	PART NAME 1 2 3 4 5 6 (PRODUCT LEVEL)	SEE PAGE
	374-7463	2	CAP-SEAL	
	374-7465	1	CAP-SEAL	
	374-7466	1	CAP-SEAL	
E	**292-2896**		CONDUIT (27-CM)	
	126-1774	2	COVER-CONNECTOR	
	9W-0852	6	PIN-CONNECTOR (14-GA TO 16-GA)	
	9X-3401	56	PIN-CONNECTOR (16-GA TO 18-GA)	
			—OR—	
	126-1767	56	PIN-CONNECTOR (14-GA TO 16-GA)	
	147-1445	1	PLUG AS-CONNECTOR (7O-PIN)	
	147-1446	1	PLUG AS-CONNECTOR (7O-PIN)	
			(EACH PLUG AS INCLUDES))	
	159-9322	1	SEAL-O-RING	
	155-2255	1	KIT-CONNECTING PLUG (12-PIN)	
	155-2270	7	KIT-CONNECTING PLUG (2-PIN)	
	155-2271	1	KIT-CONNECTING PLUG (4-PIN)	
	155-2274	1	KIT-CONNECTING PLUG (6-PIN)	
			(EACH PLUG KIT INCLUDES PLUG AS, WEDGE & INTERFACE SEAL)	
	230-4011	2	PLUG AS-CONNECTOR (2-PIN)	
			(EACH INCLUDES)	
	264-7029	1	SEAL-CONNECTOR	
	230-4013	4	PLUG AS-CONNECTOR (3-PIN)	
			(EACH INCLUDES)	
	264-7030	1	SEAL-CONNECTOR	
	230-5008	3	PLUG AS-CONNECTOR (4-PIN)	
			(EACH INCLUDES)	
	264-7031	1	SEAL-CONNECTOR	
	239-7356	1	PLUG AS-CONNECTOR (12-PIN)	
	264-7034	1	SEAL-CONNECTOR	
	344-1678	1	PLUG AS-CONNECTOR	
	344-1682	1	PLUG AS-CONNECTOR	
	8T-8737	76	PLUG-SEAL	
	344-1690	16	PLUG-SEAL	
	102-8802	1	KIT-RECEPTACLE (2-PIN)	
			(INCLUDES RECEPTACLE AS & WEDGE)	
	167-3692	1	RECEPTACLE AS-CONNECTOR (31-PIN)	
	230-4010	2	RECEPTACLE AS-CONNECTOR (12-PIN)	
	230-4012	1	RECEPTACLE AS-CONNECTOR (2-PIN)	
	230-4014	2	RECEPTACLE AS-CONNECTOR (3-PIN)	
	230-5009	1	RECEPTACLE AS-CONNECTOR (4-PIN)	
	169-0705	15	SEAL	
	7R-3354	2	SOCKET	
	7T-0094	9	SOCKET-CONNECTOR (12-GA TO 14-GA)	
	9W-0844	6	SOCKET-CONNECTOR (14-GA TO 16-GA)	
	9X-3402	122	SOCKET-CONNECTOR (16-GA TO 18-GA)	
			—OR—	
	126-1768	122	SOCKET-CONNECTOR (14-GA TO 16-GA)	
	194-5226	91	WIRE AS (16-GA)	
			—OR—	
	194-5227	91	WIRE AS (14-GA)	
	124-5640	2	TERMINAL-SOCKET	
	3S-2093	4	STRAP-CABLE	
B	**1P-0810**		TAPE-ELECTRICAL	
B	**329-3734**		TAPE	
	2L-8067	1	TERMINAL-RING (1O-GA TO 12-GA, 1/4-IN SCREW)	
	128-4178	2	TERMINAL AS	

372-1931 **HARNESS AS-WIRING (*contd.*)** **i05333676**

NOTE	PART NUMBER	QTY	PART NAME 1 2 3 4 5 6 (PRODUCT LEVEL)	SEE PAGE
			(EACH INCLUDES)	
	2L-8068	1	TERMINAL-RING (10-GA TO 12-GA, 5/16-IN SCREW)	
D	**5P-6006**		TUBE-HEAT SHRINK (9.52-MM DIA) (0.1-M)	
	2L-8050	2	TERMINAL-RING (6-GA, 1/4-IN SCREW)	
			—OR—	
	2L-8058	2	TERMINAL-RING (8-GA, 1/4-IN SCREW)	
	2L-8052	1	TERMINAL-RING (6-GA, 3/8-IN SCREW)	
			—OR—	
	2L-8060	1	TERMINAL-RING (8-GA, 3/8-IN SCREW)	
	2L-8069	3	TERMINAL-RING (2-GA TO 10-GA, 3/8-IN SCREW)	
	2L-8079	1	TERMINAL-RING (14-GA TO 16-GA, 3/8-IN SCREW)	
E	**119-3662**		TUBE-HEAT SHRINK (10.85-MM DIA) (20-CM)	
E	**125-7874**		TUBE-HEAT SHRINK (5.72-MM DIA) (155-CM)	
E	**125-7875**		TUBE-HEAT SHRINK (7.44-MM DIA) (15-CM)	

B - USE AS REQUIRED
D - ORDER BY THE METER
E - ORDER BY THE CENTIMETER

<END>

375-8407 HARNESS AS-WIRING

S/N: E7A1-UP

PART OF 395-0113 WIRING GP-ENGINE

AN ATTACHMENT

SMCS-1408 **i05333790**

NOTE	PART NUMBER	QTY	PART NAME 1 2 3 4 5 6 (PRODUCT LEVEL)	SEE PAGE
	102-8804	1	KIT-RECEPTACLE (4-PIN)	
			(INCLUDES RECEPTACLE AS & WEDGE)	
	113-4630	1	RECEPTACLE AS-CONNECTOR (4-PIN)	
	9X-3401	4	PIN-CONNECTOR (16-GA TO 18-GA)	
			—OR—	
	126-1767	4	PIN-CONNECTOR (14-GA TO 16-GA)	
	332-7865	1	TIE-CABLE	

<END>

293-4050 HEATER GP-JACKET WATER

S/N: DYB1-UP
120-VOLT
PART OF 381-4389 OPTION AR-COLD WEATHER
AN ATTACHMENT

SMCS-1383 **i03043942**

NOTE	REF NO	GRAPHIC REF	PART NUMBER	QTY	PART NAME 1 2 3 4 5 6 (PRODUCT LEVEL)	SEE PAGE
	1	1	**6N-1604**	1	CAP AS-DUST	
	2	1	**9X-6772**	1	STRAP-CABLE	
	3	1	**260-1555**	1	ELEMENT AS-JACKET WATER HEATER (120-VOLT, 1000-WATT)	
		1	**4D-9986**	1	SEAL-O-RING	
	4	1	**260-1566**	1	CORD AS-HEATER	
	5	1	**3S-2093**	3	STRAP-CABLE	
M	6	1	**8T-4200**	1	BOLT (M8X1.25X16-MM)	
	7	1	**8T-4224**	1	WASHER-HARD (8.8X16X2-MM THK)	

M - METRIC PART

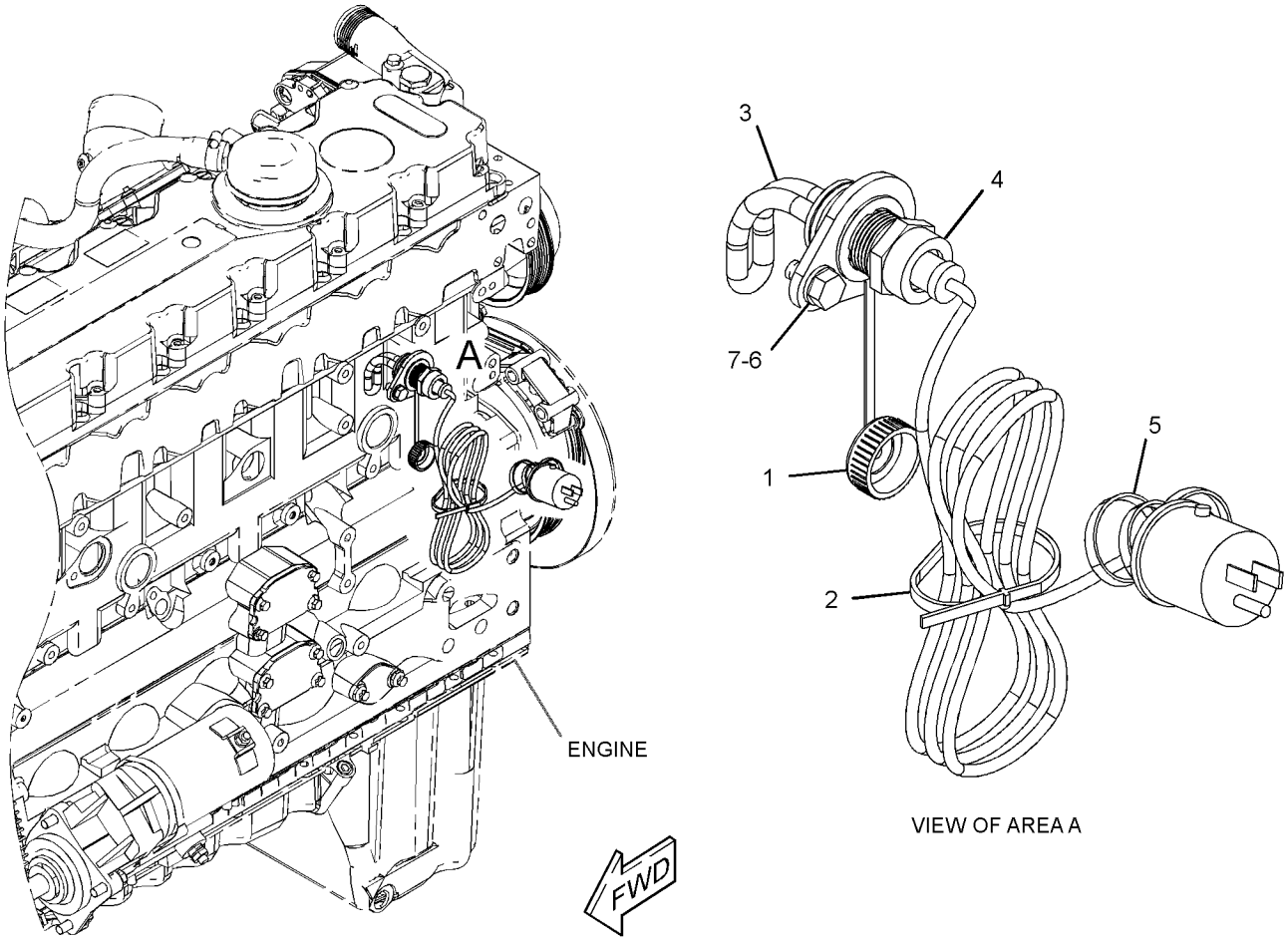

GRAPHIC #1 **<END>** g01561457

293-4052 HEATER GP-JACKET WATER

S/N: DYB1-UP
220-VOLT
PART OF 381-4390 OPTION AR-COLD WEATHER
AN ATTACHMENT

SMCS-1383 **i03043941**

NOTE	REF NO	GRAPHIC REF	PART NUMBER	QTY	PART NAME 1 2 3 4 5 6 (PRODUCT LEVEL)	SEE PAGE
	1	1	**6N-1604**	1	CAP AS-DUST	
	2	1	**9X-6772**	1	STRAP-CABLE	
	3	1	**260-1556**	1	ELEMENT AS-JACKET WATER HEATER (240-VOLT, 1000-WATT)	
		1	**4D-9986**	1	SEAL-O-RING	
	4	1	**260-1569**	1	CORD AS-HEATER	
	5	1	**3S-2093**	3	STRAP-CABLE	
M	6	1	**8T-4200**	1	BOLT (M8X1.25X16-MM)	
	7	1	**8T-4224**	1	WASHER-HARD (8.8X16X2-MM THK)	

M - METRIC PART

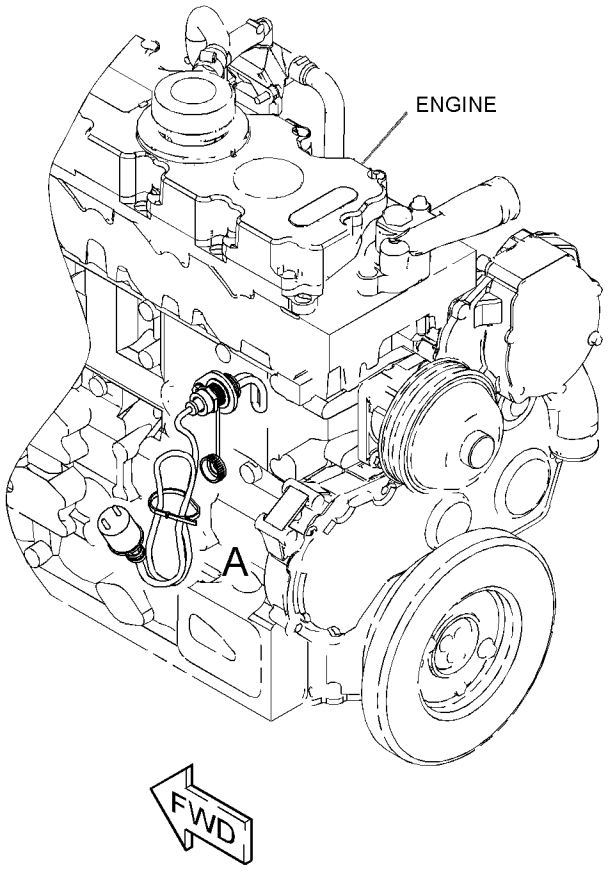

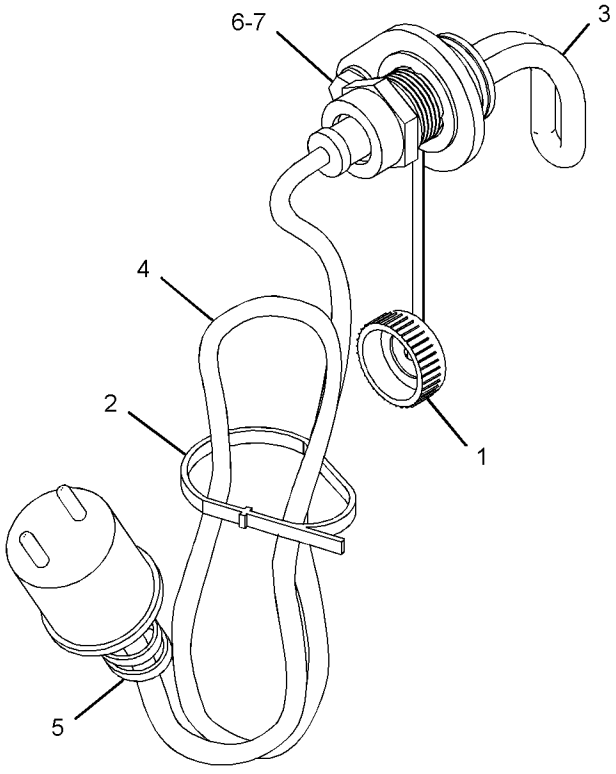

VIEW OF AREA A

GRAPHIC #1 **<END>** g01561279

333-1452 INSTALLATION GP-COMMUNICATION—PRODUCT LINK

321SR
S/N: DYB1-UP
AN ATTACHMENT

SMCS-7606 **i05309670**

NOTE	REF NO	GRAPHIC REF	PART NUMBER	QTY	PART NAME 1 2 3 4 5 6 (PRODUCT LEVEL)	SEE PAGE
	1	1	**7K-1181**	3	STRAP-CABLE	
	2	1	**8C-5607**	8	MOUNT-ISOLATION	
	3	1	**8C-5608**	4	SPACER (6.5X9.5X25.4-MM THK)	
Y	4	1	**262-1421**	1	ELECTRONICS GP-COMMUNICATION (PRODUCT LINK 300)	107
	5	1	**284-8532**	1	ANTENNA AS (ROOF)	
		1	**301-0589**	1	ANTENNA (FLEXIBLE)	
		1	**355-0598**	1	NUT-SPECIAL	
	6	1	**333-1448**	1	HARNESS AS-CONTROL (PRODUCT LINK)	
		1	**126-1774**	1	COVER-CONNECTOR	
		1	**9X-3401**	8	PIN-CONNECTOR (16-GA TO 18-GA)	
		1	**155-2255**	1	KIT-CONNECTING PLUG (12-PIN)	
					(INCLUDES PLUG AS, WEDGE & INTERFACE SEAL)	
		1	**160-7690**	1	PLUG AS-CONNECTOR (70-PIN)	
		1	**159-9322**	1	SEAL-O-RING	
		1	**8T-8737**	64	PLUG-SEAL	
		1	**102-8801**	1	KIT-RECEPTACLE (12-PIN)	
					(INCLUDES RECEPTACLE AS & WEDGE)	
		1	**9X-3402**	13	SOCKET-CONNECTOR (16-GA TO 18-GA)	
		1	**180-9340**	9	SOCKET-CONNECTOR (14-GA TO 18-GA)	
		1	**3S-2093**	2	STRAP-CABLE	
B		1	**329-3734**		TAPE	
E		1	**125-7874**		TUBE-HEAT SHRINK (5.72-MM DIA) (20-CM)	
Y	7	1	**336-3545**	1	RADIO GP-COMMUNICATION (PRODUCT LINK 121SR)	147
	8	1	**354-5618**	1	BRACKET AS	
B	9	1	**370-6996**	1	FILM-WARNING (EXPLOSION HAZARD, PRODUCT LINK) (U.S.)	
					—OR—	
B		1	**370-6997**	1	FILM-WARNING (EXPLOSION HAZARD, PRODUCT LINK) (INTERNATIONAL)	
	10	1	**9X-6165**	4	WASHER (6.5X22X2.5-MM THK)	
	11	1	**156-6175**	2	CLIP	
M	12	1	**215-6406**	4	SCREW-TRUSS HEAD (M6X1X16-MM)	
	13	1	**3S-2093**	10	STRAP-CABLE	
M	14	1	**6V-7357**	2	BOLT (M6X1X25-MM)	
M	15	1	**151-6282**	4	BOLT-SOCKET HEAD (M6X1X40-MM)	
	16	1	**8T-4205**	2	WASHER-HARD (7.2X14.5X2-MM THK)	

B - USE AS REQUIRED
E - ORDER BY THE CENTIMETER
M - METRIC PART
Y - SEPARATE ILLUSTRATION

333-1452 **INSTALLATION GP-COMMUNICATION (*contd.*)** **i05309670**

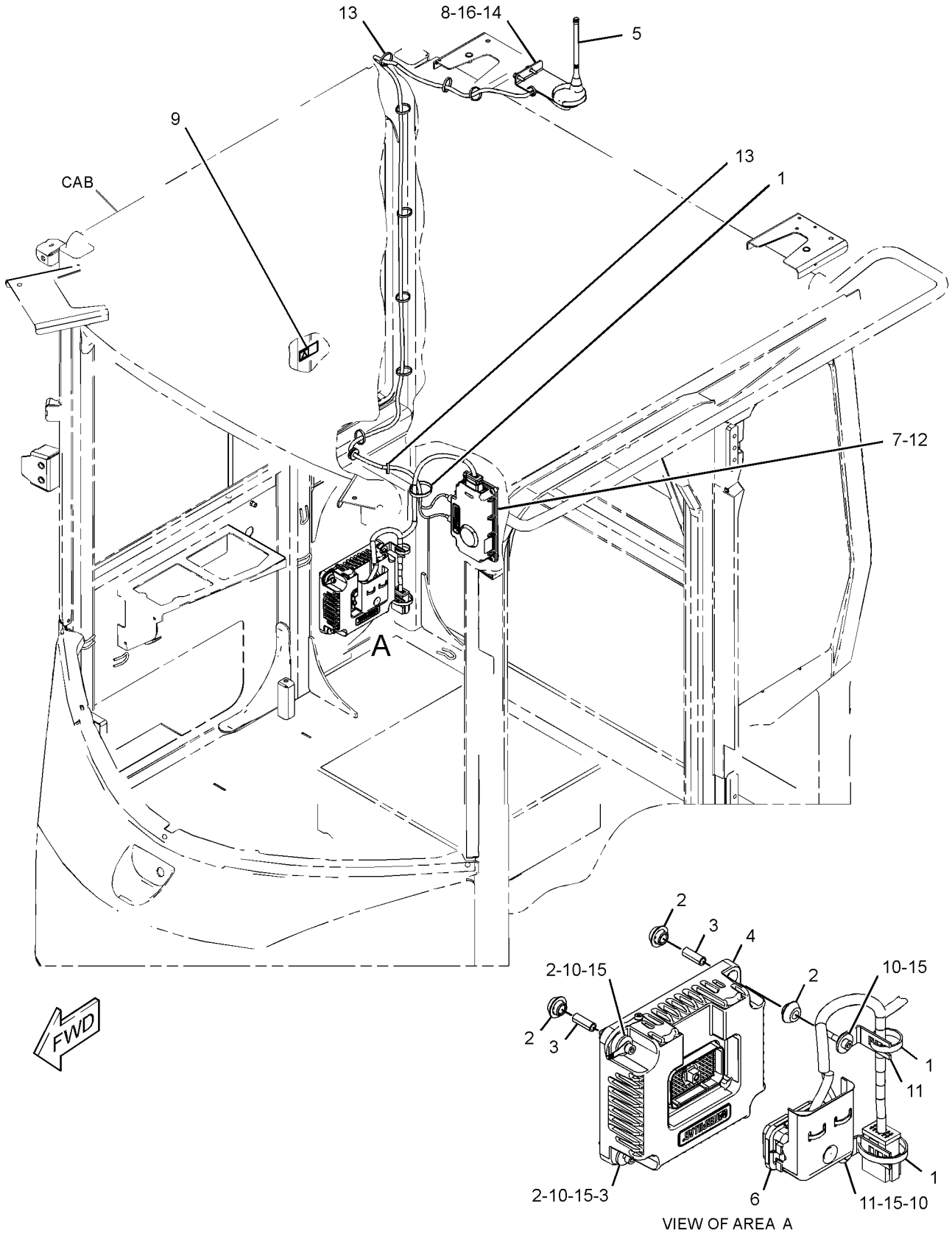

GRAPHIC #1 **<END>** g03067738

333-1453 INSTALLATION GP-COMMUNICATION—PRODUCT LINK CELLULAR

S/N: DYB1-UP

AN ATTACHMENT

SMCS-7606 **i05309725**

NOTE	REF NO	GRAPHIC REF	PART NUMBER	QTY	PART NAME 1 2 3 4 5 6 (PRODUCT LEVEL)	SEE PAGE
	1	1	**7K-1181**	2	STRAP-CABLE	
	2	1	**8C-5607**	8	MOUNT-ISOLATION	
	3	1	**8C-5608**	4	SPACER (6.5X9.5X25.4-MM THK)	
	4	1	**8T-8737**	12	PLUG-SEAL	
	5	1	**333-1448**	1	HARNESS AS-CONTROL (PRODUCT LINK)	
		1	**126-1774**	1	COVER-CONNECTOR	
		1	**9X-3401**	8	PIN-CONNECTOR (16-GA TO 18-GA)	
		1	**155-2255**	1	KIT-CONNECTING PLUG (12-PIN)	
					(INCLUDES PLUG AS, WEDGE & INTERFACE SEAL)	
		1	**160-7690**	1	PLUG AS-CONNECTOR (70-PIN)	
		1	**159-9322**	1	SEAL-O-RING	
		1	**8T-8737**	64	PLUG-SEAL	
		1	**102-8801**	1	KIT-RECEPTACLE (12-PIN)	
					(INCLUDES RECEPTACLE AS & WEDGE)	
		1	**9X-3402**	13	SOCKET-CONNECTOR (16-GA TO 18-GA)	
		1	**180-9340**	9	SOCKET-CONNECTOR (14-GA TO 18-GA)	
		1	**3S-2093**	2	STRAP-CABLE	
B		1	**329-3734**		TAPE	
E		1	**125-7874**		TUBE-HEAT SHRINK (5.72-MM DIA) (20-CM)	
	6	1	**346-9376**	1	ANTENNA AS	
		1	**355-1213**	1	PLUG	
		1	**361-1045**	1	NUT-SPECIAL (5/8-18-THD)	
	7	1	**354-5618**	1	BRACKET AS	
M		1	**159-9539**	2	NUT-WELD (M6X1-THD)	
	8	1	**370-6996**	1	FILM-WARNING (EXPLOSION HAZARD, PRODUCT LINK) (U.S.)	
					—OR—	
		1	**370-6997**	1	FILM-WARNING (EXPLOSION HAZARD, PRODUCT LINK) (INTERNATIONAL)	
	9	1	**9X-7345**	1	GROMMET	
	10	1	**156-6175**	2	CLIP	
	11	1	**349-6083**	1	CABLE AS	
Y	12	1	**351-8490**	1	CONTROL GP-UNPROGRAMMED (PRODUCT LINK 522)	105
	13	1	**102-8801**	1	KIT-RECEPTACLE (12-PIN)	
					(INCLUDES RECEPTACLE AS & WEDGE)	
	14	1	**3S-2093**	10	STRAP-CABLE	
M	15	1	**6V-7357**	2	BOLT (M6X1X25-MM)	
M	16	1	**151-6282**	4	BOLT-SOCKET HEAD (M6X1X40-MM)	
	17	1	**8T-4205**	2	WASHER-HARD (7.2X14.5X2-MM THK)	
	18	1	**9X-6165**	4	WASHER (6.5X22X2.5-MM THK)	

B - USE AS REQUIRED
E - ORDER BY THE CENTIMETER
M - METRIC PART
Y - SEPARATE ILLUSTRATION

333-1453 **INSTALLATION GP-COMMUNICATION (*contd.*)** **i05309725**

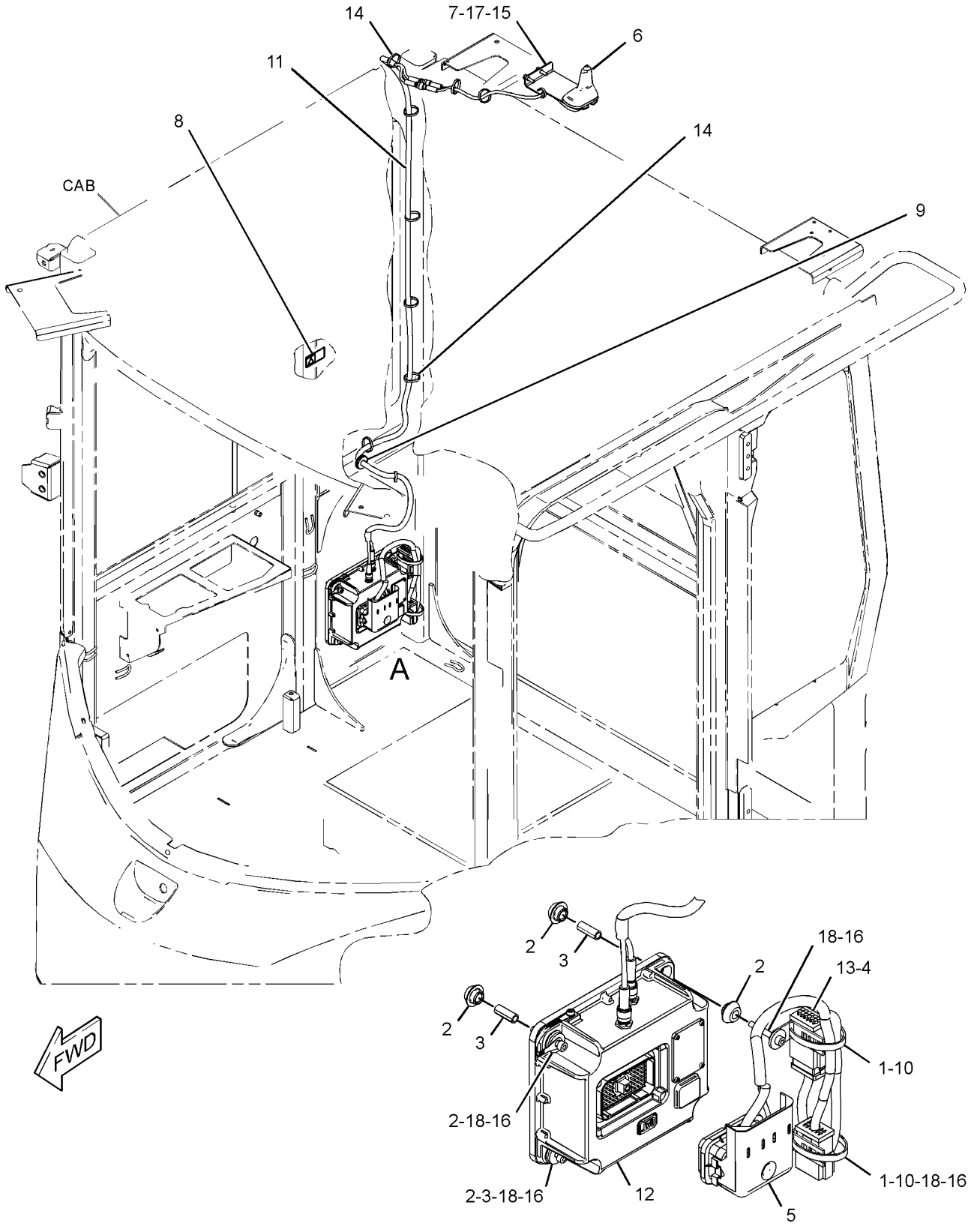

VIEW OF AREA A

GRAPHIC #1 **<END>** g02789427

333-1363 INSTALLATION GP-SECURITY—MACHINE

S/N: DYB1-UP

AN ATTACHMENT

SMCS-7631 **i05312439**

NOTE	REF NO	GRAPHIC REF	PART NUMBER	QTY	PART NAME 1 2 3 4 5 6 (PRODUCT LEVEL)	SEE PAGE
	1	1	**8C-5607**	4	MOUNT-ISOLATION	
	2	1	**8C-5608**	2	SPACER (6.5X9.5X25.4-MM THK)	
	3	1	**205-0826**	2	FILM-INSTRUCTION (MACHINE SECURITY, CONSOLE)	
	4	1	**206-5162**	2	KEY AS-ELECTRONIC (SECURITY)	
	5	1	*206-5208*	1	COIL AS (EXCITER)	
		1	**102-8802**	1	KIT-RECEPTACLE (2-PIN)	
					(INCLUDES RECEPTACLE AS & WEDGE)	
		1	**205-8257**	1	COIL AS (EXCITER)	
D		1	**5P-5677**		WIRE (18-GA, BLACK) (0.4-M)	
		1	**8T-8729**	2	PIN-CONNECTOR (16-GA TO 18-GA)	
		1	**207-5271**	1	WASHER (27X60.5X0.36-MM THK)	
Y	6	1	**213-6065**	1	HARNESS AS-CONTROL (SECURITY)	113
	7	1	**219-6314**	2	KEY RING (IDENTIFICATION)	
Y	8	1	**310-5289**	1	ELECTRONICS GP-MACHINE (SECURITY SYSTEM)	107
	9	1	**345-0401**	1	FILM-IDENTIFICATION (IGNITION SWITCH)	
	10	1	**9X-6165**	2	WASHER (6.5X22X2.5-MM THK)	
	11	1	**3S-2093**	1	STRAP-CABLE	
M	12	1	**5C-2890**	2	NUT (M6X1-THD)	
	13	1	**8T-4205**	2	WASHER-HARD (7.2X14.5X2-MM THK)	
M	14	1	**9X-2480**	2	BOLT (M6X1X45-MM)	

D - ORDER BY THE METER
M - METRIC PART
Y - SEPARATE ILLUSTRATION

333-1363 **INSTALLATION GP-SECURITY (*contd.*)** **i05312439**

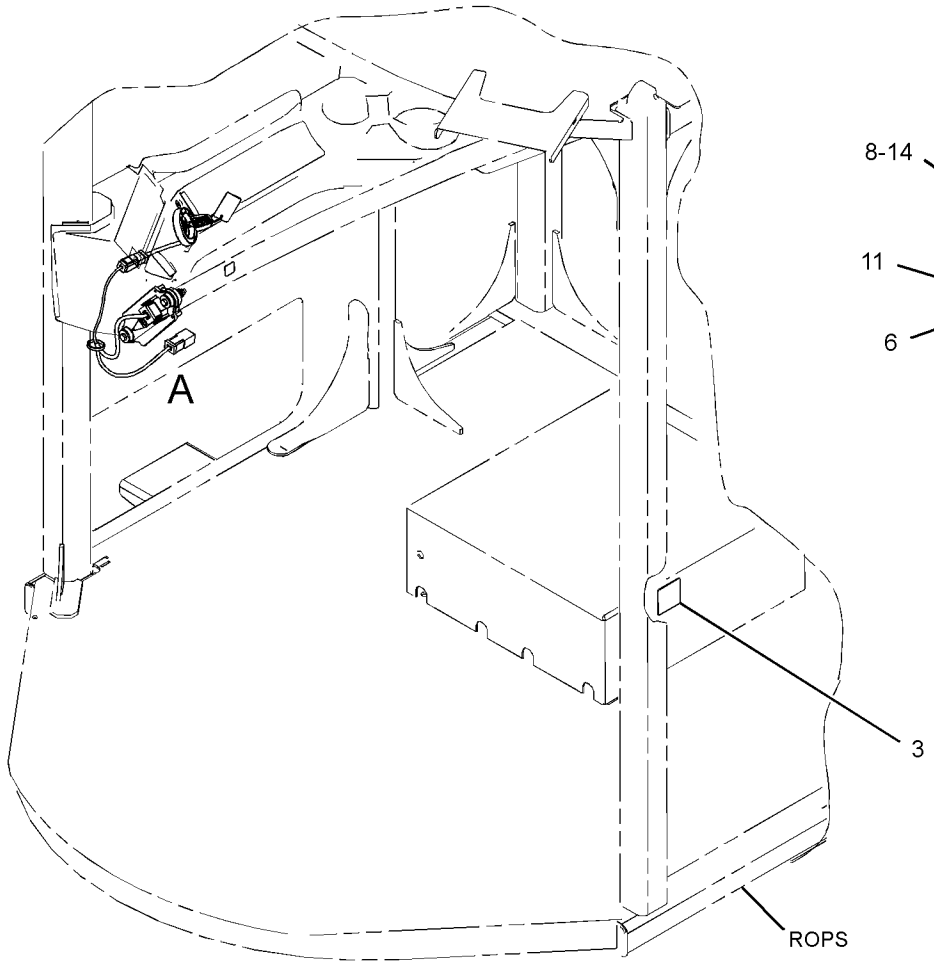

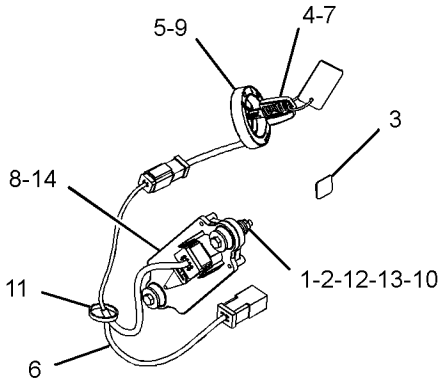

VIEW OF AREA A

GRAPHIC #1 **<END>** g02789766

324-3740 LAMP GP-FLOOD–HID

S/N: DYB1-UP
24-VOLT
PART OF 333-1428 LIGHTING GP-FLOOD
AN ATTACHMENT

SMCS-1434 **i05312296**

NOTE	REF NO	GRAPHIC REF	PART NUMBER	QTY	PART NAME 1 2 3 4 5 6 (PRODUCT LEVEL)	SEE PAGE
	1	1	**352-8986**	1	LENS (ROUND)	
	2	1	**290-8160**	1	LAMP (24-VOLT, HID)	
	3	1	**8T-4121**	2	WASHER-HARD (11X21X2.5-MM THK)	
	4	1	**9X-4244**	2	SCREW-SPECIAL (M4X1.79X25-MM)	
	5	1	**317-7685**	1	BRACKET	
	6	1	**319-7384**	1	BALLAST AS (24-VOLT, 35-WATT, HID)	
M	7	1	**6V-7744**	1	LOCKNUT (M10X1.5-THD)	
M	8	1	**8T-4189**	1	BOLT (M8X1.25X20-MM)	
M	9	1	**6V-9189**	1	LOCKNUT (M8X1.25-THD)	

M - METRIC PART

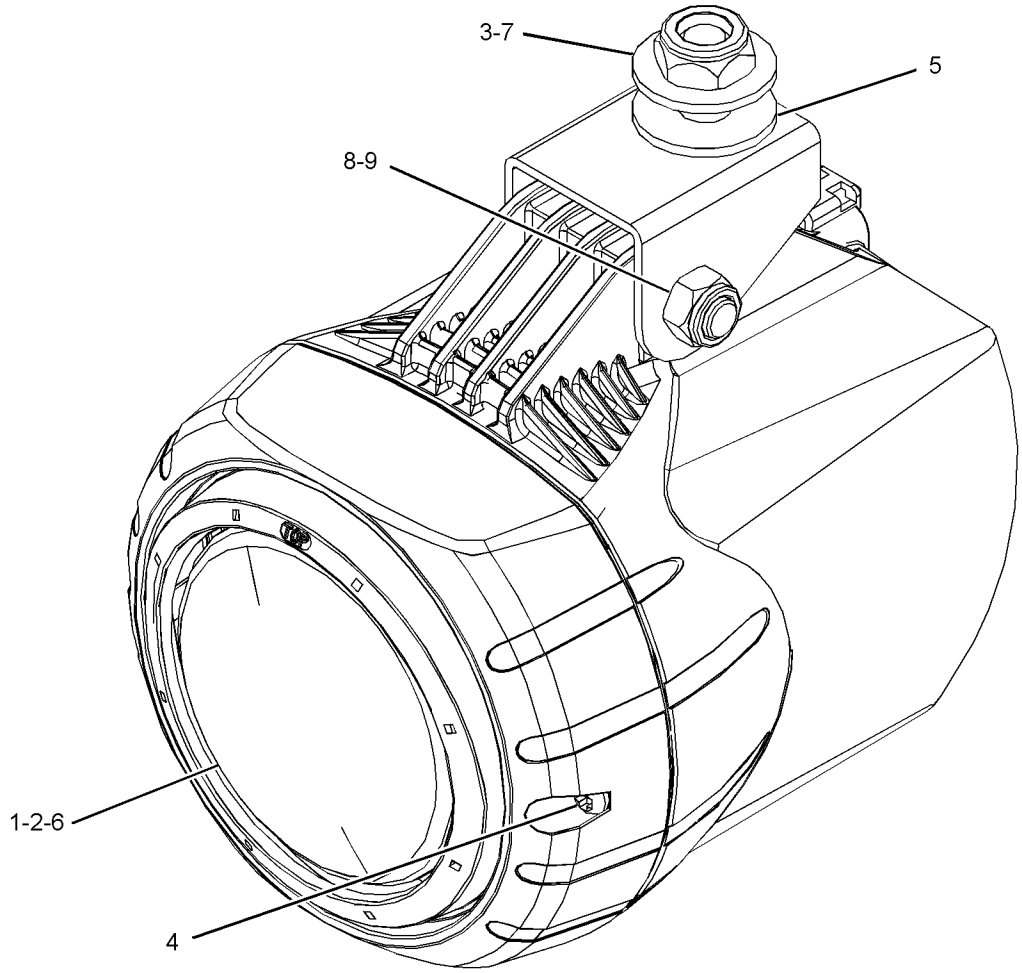

GRAPHIC #1 **<END>** g02283153

325-4471 LAMP GP-FLOOD

S/N: DYB1-UP
24-VOLT, 35-WATT
PART OF 372-1930 WIRING GP-CHASSIS

SMCS-1434 **i05324822**

NOTE	REF NO	GRAPHIC REF	PART NUMBER	QTY	PART NAME 1 2 3 4 5 6 (PRODUCT LEVEL)	SEE PAGE
	1	1	**175-4291**	1	BRACKET AS	
	2	1	**9X-4244**	2	SCREW-SPECIAL (M4X1.79X25-MM)	
	3	1	**351-9918**	1	LAMP-HALOGEN (24-VOLT, 70-WATT) (FLOODLIGHT)	
	4	1	**8T-4224**	1	WASHER-HARD (8.8X16X2-MM THK)	
M	5	1	**8T-7547**	1	BOLT (M8X1.25X30-MM)	
M	6	1	**5C-7261**	1	NUT (M8X1.25-THD)	

M - METRIC PART

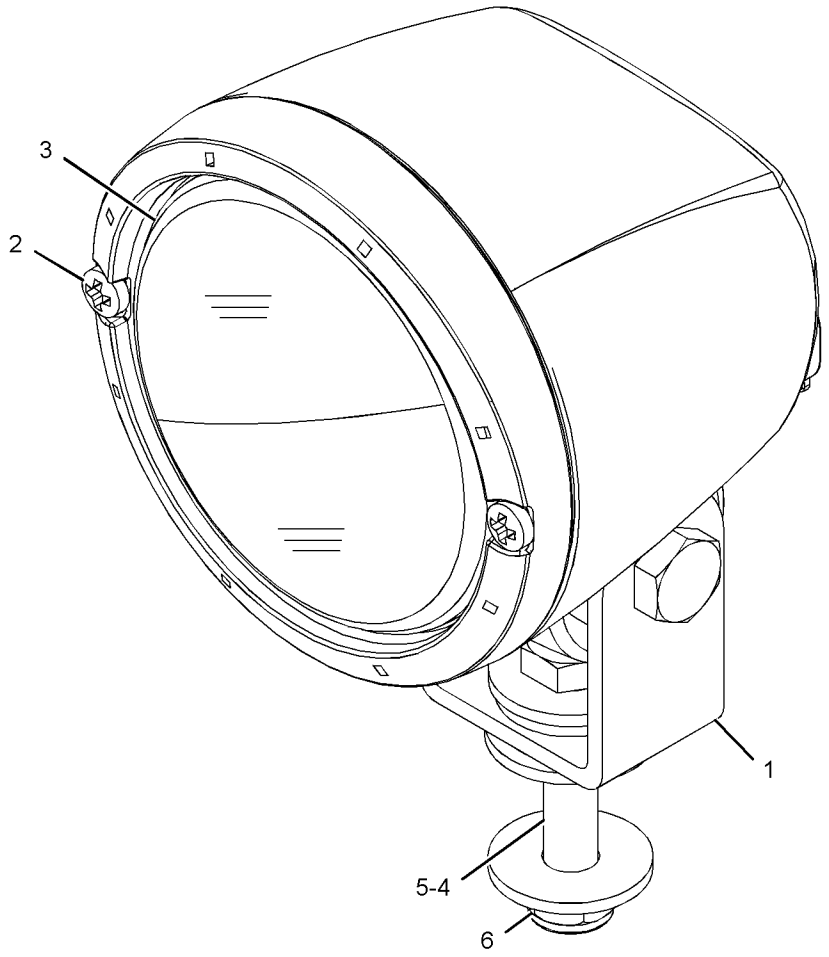

GRAPHIC #1 **<END>** g02097194

339-3505 LAMP GP-FLOOD

S/N: DYB1-UP
24-VOLT, 70-WATT
PART OF 333-1427 LIGHTING GP-AUXILIARY, 333-1426, 333-1428 LIGHTING GP-FLOOD
AN ATTACHMENT

SMCS-1434 **i05301095**

NOTE	REF NO	GRAPHIC REF	PART NUMBER	QTY	PART NAME 1 2 3 4 5 6 (PRODUCT LEVEL)	SEE PAGE
	1	1	**175-4291**	1	BRACKET AS	
	2	1	**9X-4244**	2	SCREW-SPECIAL (M4X1.79X25-MM)	
	3	1	**9X-3463**	1	LAMP-HALOGEN (24-VOLT, 70-WATT) (FLOODLIGHT)	
	4	1	**8T-4224**	1	WASHER-HARD (8.8X16X2-MM THK)	
M	5	1	**8T-7547**	1	BOLT (M8X1.25X30-MM)	
M	6	1	**5C-7261**	1	NUT (M8X1.25-THD)	

M - METRIC PART

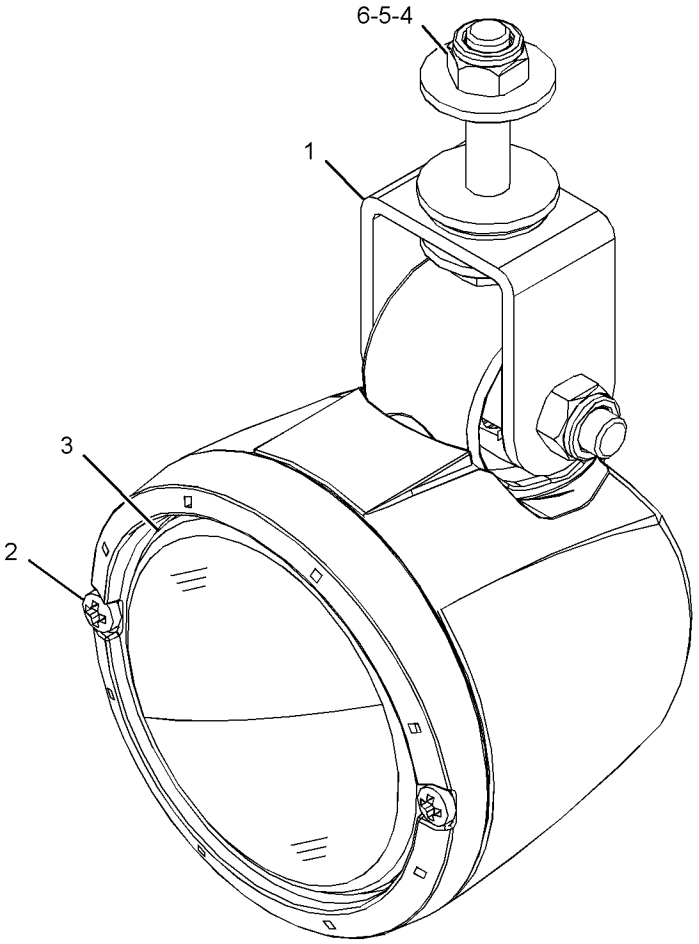

GRAPHIC #1 **<END>** g02098634

344-3455 LAMP GP-HEAD & SIGNAL–RH

S/N: DYB1-UP
PART OF 303-4113 LIGHTING AR-ROADING
AN ATTACHMENT

SMCS-1429, 1430 **i04026094**

NOTE	REF NO	GRAPHIC REF	PART NUMBER	QTY	PART NAME 1 2 3 4 5 6 (PRODUCT LEVEL)	SEE PAGE
	1	1	**320-1515**	1	BODY AS	
	2	1	**228-6054**	1	BEZEL	
	3	1	**348-7240**	1	LENS AS (HEADLIGHT)	
	4	1	**228-6052**	1	LENS AS (TURN SIGNAL)	
	5	1	**228-6056**	6	SCREW (4-32X1.26-IN)	
	6	1	**9X-3465**	1	LAMP (24-VOLT, 75/70-WATT)	
	7	1	**130-3515**	1	LAMP (24-VOLT, 5-WATT)	
	8	1	**242-0588**	1	LAMP (24-VOLT, 21-WATT)	
M	9	1	**8T-0389**	1	LOCKNUT (M10X1.5-THD)	
	10	1	**100-3253**	1	SPACER (SPHERICAL)	
	11	1	**100-3254**	1	SPACER (SPHERICAL)	
	12	1	**100-3255**	2	WASHER (SPHERICAL)	
	13	1	**102-8805**	1	KIT-RECEPTACLE (6-PIN)	
					(INCLUDES RECEPTACLE AS & WEDGE)	
	14	1	**8T-8729**	5	PIN-CONNECTOR (16-GA TO 18-GA)	
	15	1	**8T-8737**	1	PLUG-SEAL	

M - METRIC PART

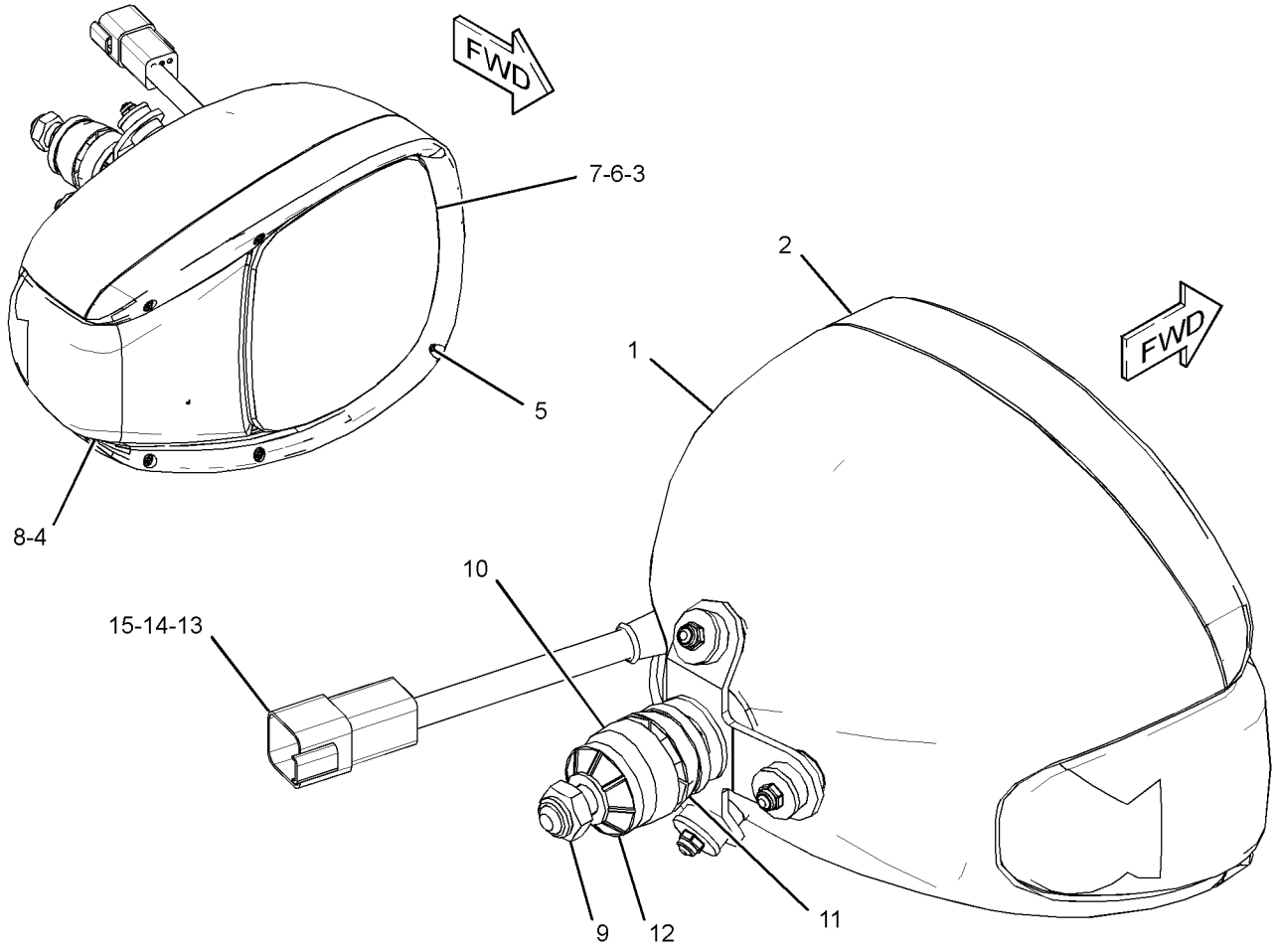

GRAPHIC #1 **<END>** g02098593

344-3456 LAMP GP-HEAD & SIGNAL–LH

S/N: DYB1-UP
PART OF 303-4113 LIGHTING AR-ROADING
AN ATTACHMENT

SMCS-1429, 1430 **i04026173**

NOTE	REF NO	GRAPHIC REF	PART NUMBER	QTY	PART NAME 1 2 3 4 5 6 (PRODUCT LEVEL)	SEE PAGE
	1	1	**320-1515**	1	BODY AS	
	2	1	**228-6054**	1	BEZEL	
	3	1	**348-7240**	1	LENS AS (HEADLIGHT)	
	4	1	**228-6052**	1	LENS AS (TURN SIGNAL)	
	5	1	**228-6056**	6	SCREW (4-32X1.26-IN)	
	6	1	**9X-3465**	1	LAMP (24-VOLT, 75/70-WATT) (HIGH, LOW BEAM)	
	7	1	**130-3515**	1	LAMP (24-VOLT, 5-WATT) (FLOODLIGHT)	
	8	1	**242-0588**	1	LAMP (24-VOLT, 21-WATT) (TURN SIGNAL)	
M	9	1	**8T-0389**	1	LOCKNUT (M10X1.5-THD)	
	10	1	**100-3253**	1	SPACER (SPHERICAL)	
	11	1	**100-3254**	1	SPACER (SPHERICAL)	
	12	1	**100-3255**	2	WASHER (SPHERICAL)	
	13	1	**102-8805**	1	KIT-RECEPTACLE (6-PIN)	
					(INCLUDES RECEPTACLE AS & WEDGE)	
	14	1	**8T-8729**	5	PIN-CONNECTOR (16-GA TO 18-GA)	
	15	1	**8T-8737**	1	PLUG-SEAL	

M - METRIC PART

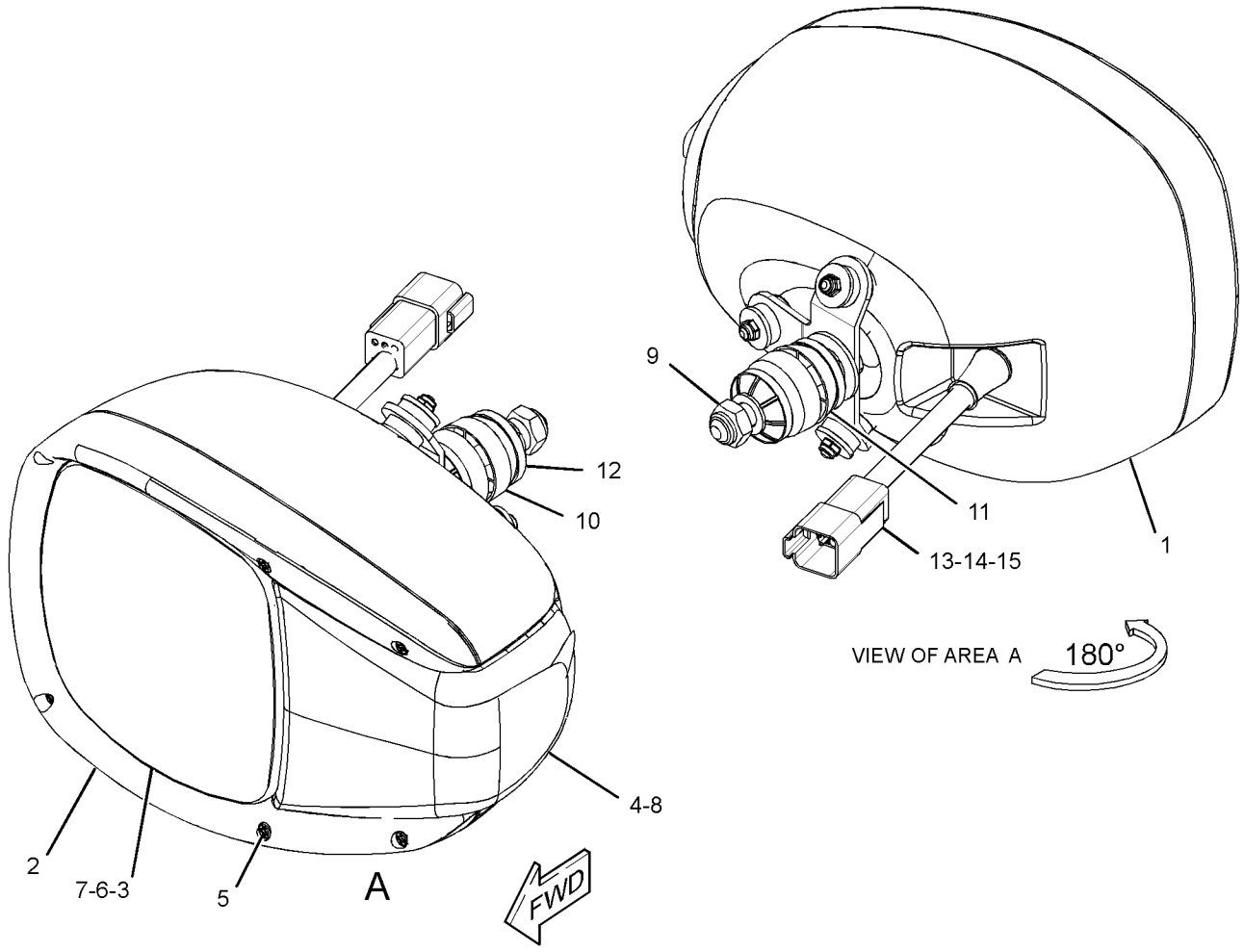

GRAPHIC #1 **<END>** g02079773

333-1425 LAMP GP-WARNING BEACON

S/N: DYB1-UP
AN ATTACHMENT

SMCS-1431 **i05312297**

NOTE	REF NO	GRAPHIC REF	PART NUMBER	QTY	PART NAME 1 2 3 4 5 6 (PRODUCT LEVEL)	SEE PAGE
Y	1	1	*377-5640*	1	BRACKET GP-MOUNTING (WARNING BEACON)	103
	2	1	**395-2112**	1	LAMP GP-WARNING BEACON (AMBER, STROBE)	
		1	**8T-8729**	2	PIN-CONNECTOR (16-GA TO 18-GA)	
		1	**102-8802**	1	KIT-RECEPTACLE (2-PIN)	
					(INCLUDES RECEPTACLE AS & WEDGE)	
	3	1	**3S-2093**	3	STRAP-CABLE	
	4	1	**9G-1307**	1	GROMMET	
M	5	1	**9X-2044**	2	SCREW-TRUSS HEAD (M6X1X16-MM)	

M - METRIC PART
Y - SEPARATE ILLUSTRATION

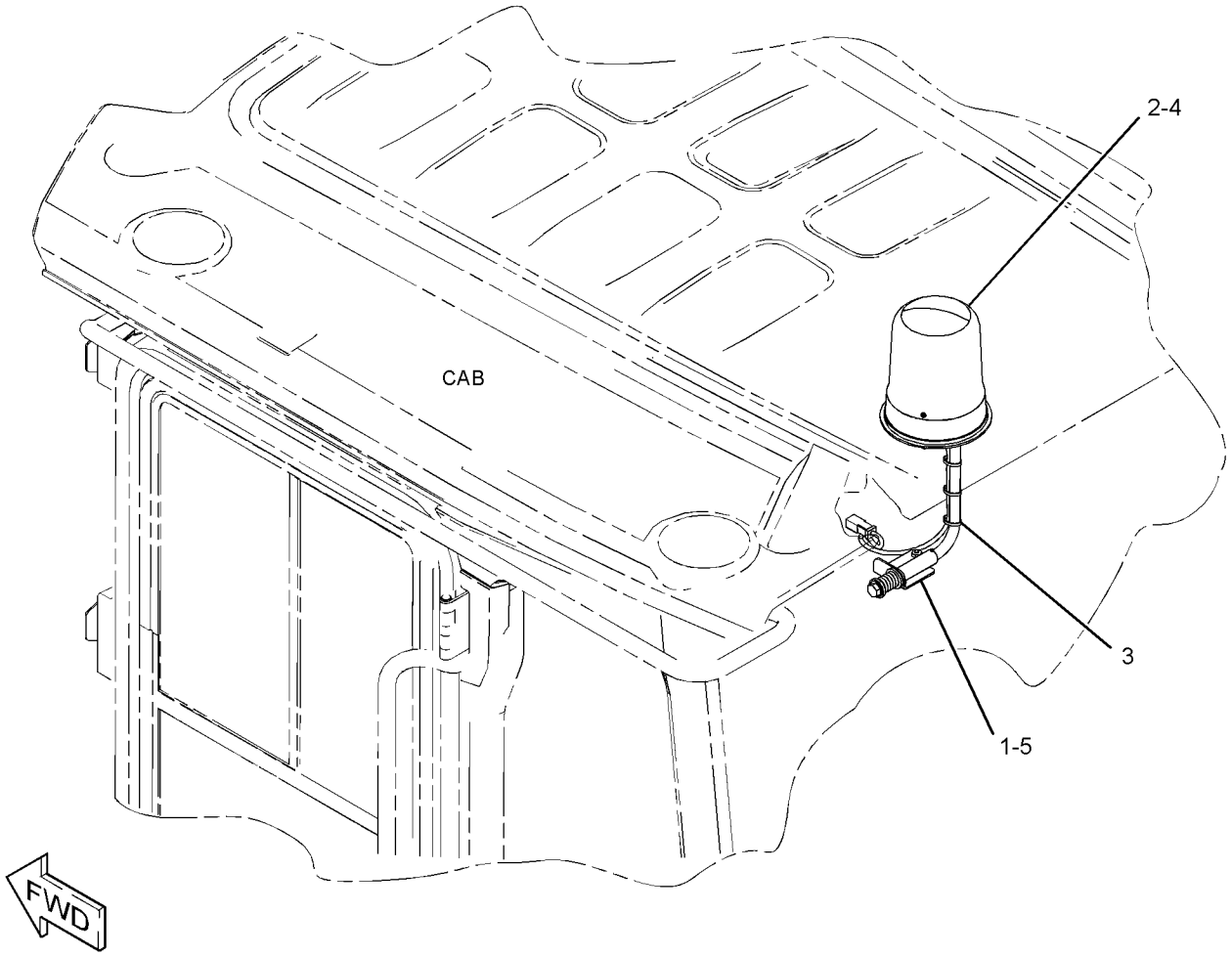

GRAPHIC #1 **<END>** g03312517

303-4113 LIGHTING AR-ROADING

S/N: DYB1-UP

PART OF 366-8166 CONVERSION AR-ROADING

AN ATTACHMENT

SMCS-1429 **i05333677**

NOTE	REF NO	GRAPHIC REF	PART NUMBER	QTY	PART NAME 1 2 3 4 5 6 (PRODUCT LEVEL)	SEE PAGE
Y	1	1	**344-3455**	1	LAMP GP-HEAD & SIGNAL (RH)	137
Y	2	1	**344-3456**	1	LAMP GP-HEAD & SIGNAL (LH)	138

Y - SEPARATE ILLUSTRATION

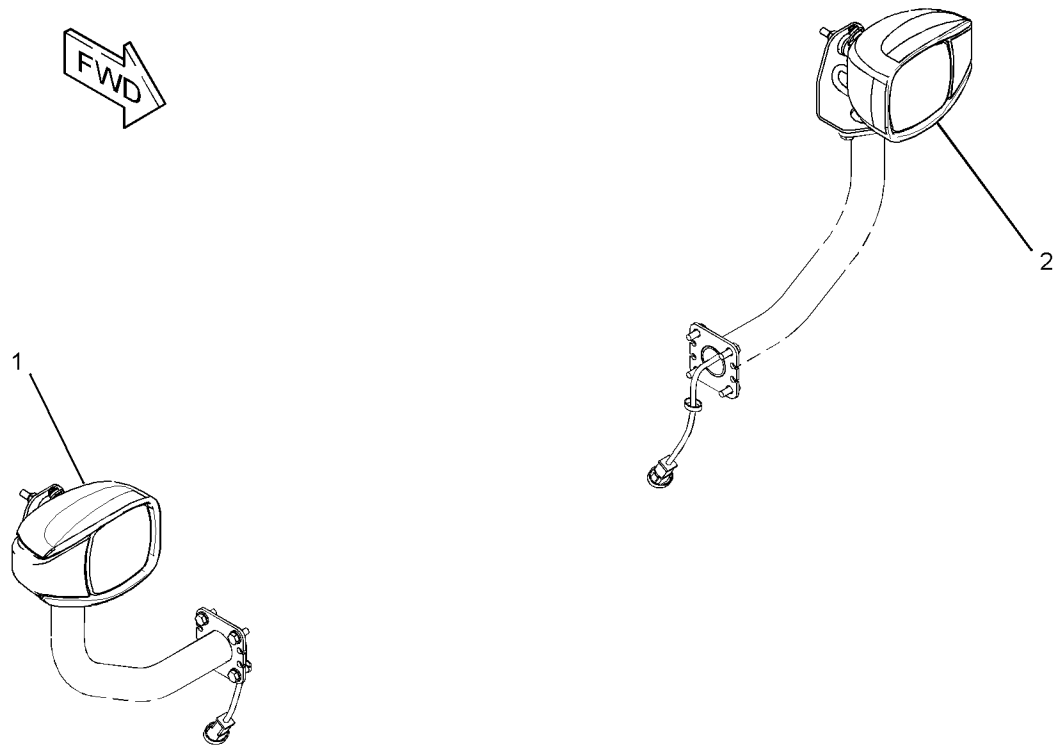

GRAPHIC #1 **<END>** g01409013

333-1427 LIGHTING GP-AUXILIARY–24-VOLT, 70-WATT

S/N: DYB1-UP

CANNOT BE USED WITH 333-1428–PAGE: 143

AN ATTACHMENT

SMCS-1429 **i05303626**

NOTE	REF NO	GRAPHIC REF	PART NUMBER	QTY	PART NAME 1 2 3 4 5 6 (PRODUCT LEVEL)	SEE PAGE
Y	1	1	**339-3505**	4	LAMP GP-FLOOD (24-VOLT, 70-WATT)	136
	2	1	**350-1235**	1	SWITCH AS-ROCKER (WORK LIGHTS)	
		1	**111-7899**	1	GASKET	

Y - SEPARATE ILLUSTRATION

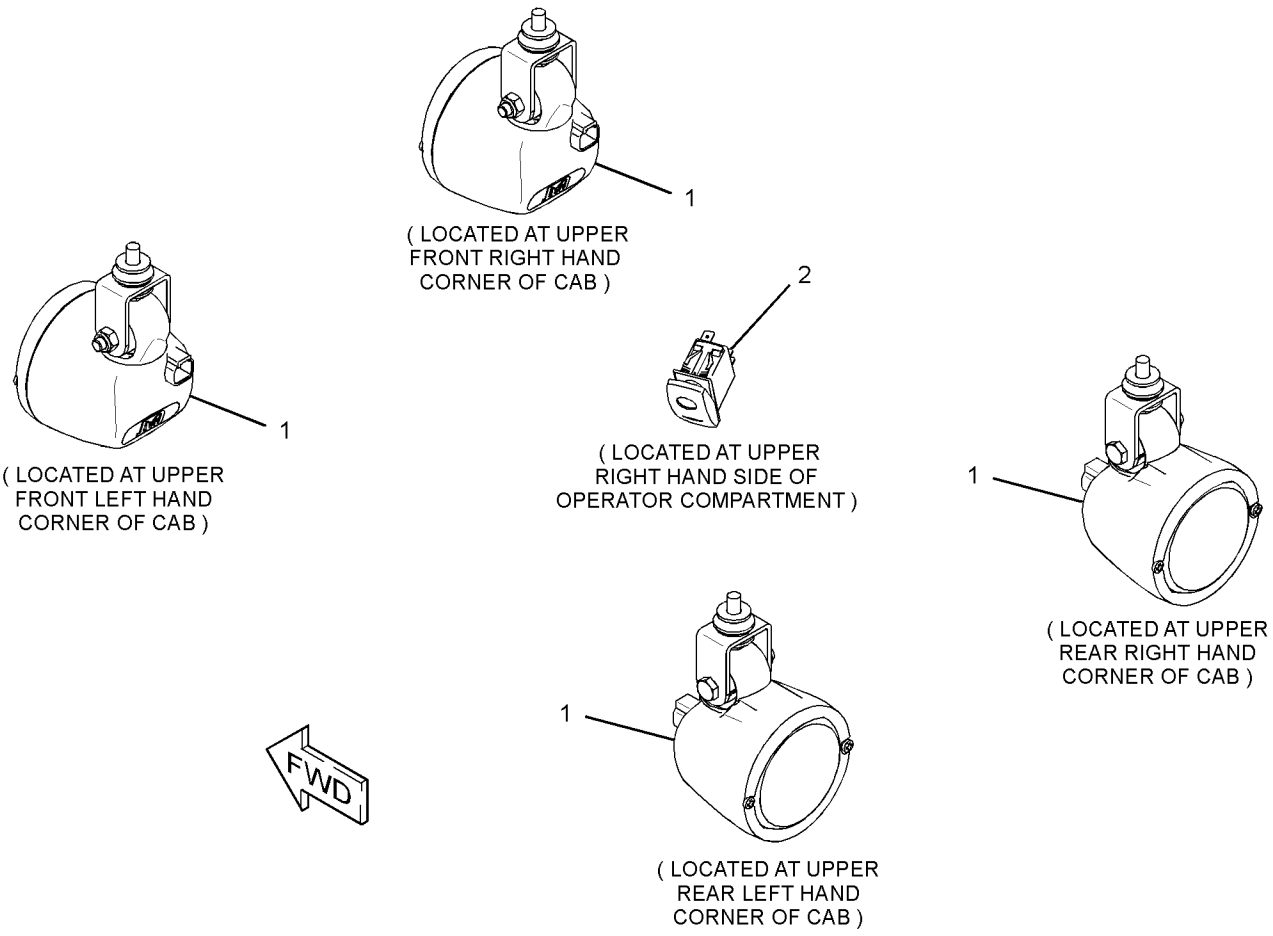

GRAPHIC #1 **<END>** g02755940

333-1426 LIGHTING GP-FLOOD—CAB

S/N: DYB1-UP
PART OF 384-7000 CAB AR-ENCLOSED ROPS
AN ATTACHMENT

SMCS-1434 **i05301091**

NOTE	REF NO	GRAPHIC REF	PART NUMBER	QTY	PART NAME 1 2 3 4 5 6 (PRODUCT LEVEL)	SEE PAGE
	1	1	**7K-1181**	2	STRAP-CABLE	
Y	2	1	**333-1429**	1	HARNESS AS-CONSOLE (ROOF)	113
Y	3	1	**339-3505**	2	LAMP GP-FLOOD (24-VOLT, 70-WATT) (CAB FRONT)	136
	4	1	**370-6972**	1	BRACKET AS	
	5	1	**132-5789**	1	CLIP	
	6	1	**3S-2093**	20	STRAP-CABLE	
	7	1	**4P-7581**	1	CLIP	
M	8	1	**5C-2890**	1	NUT (M6X1-THD)	
	9	1	**5P-4116**	1	WASHER-HARD (8.8X20.5X2-MM THK)	
M	10	1	**8T-4189**	1	BOLT (M8X1.25X20-MM)	
	11	1	**8T-4205**	5	WASHER-HARD (7.2X14.5X2-MM THK)	
M	12	1	**9X-2045**	4	SCREW-TRUSS HEAD (M6X1X20-MM)	

M - METRIC PART
Y - SEPARATE ILLUSTRATION

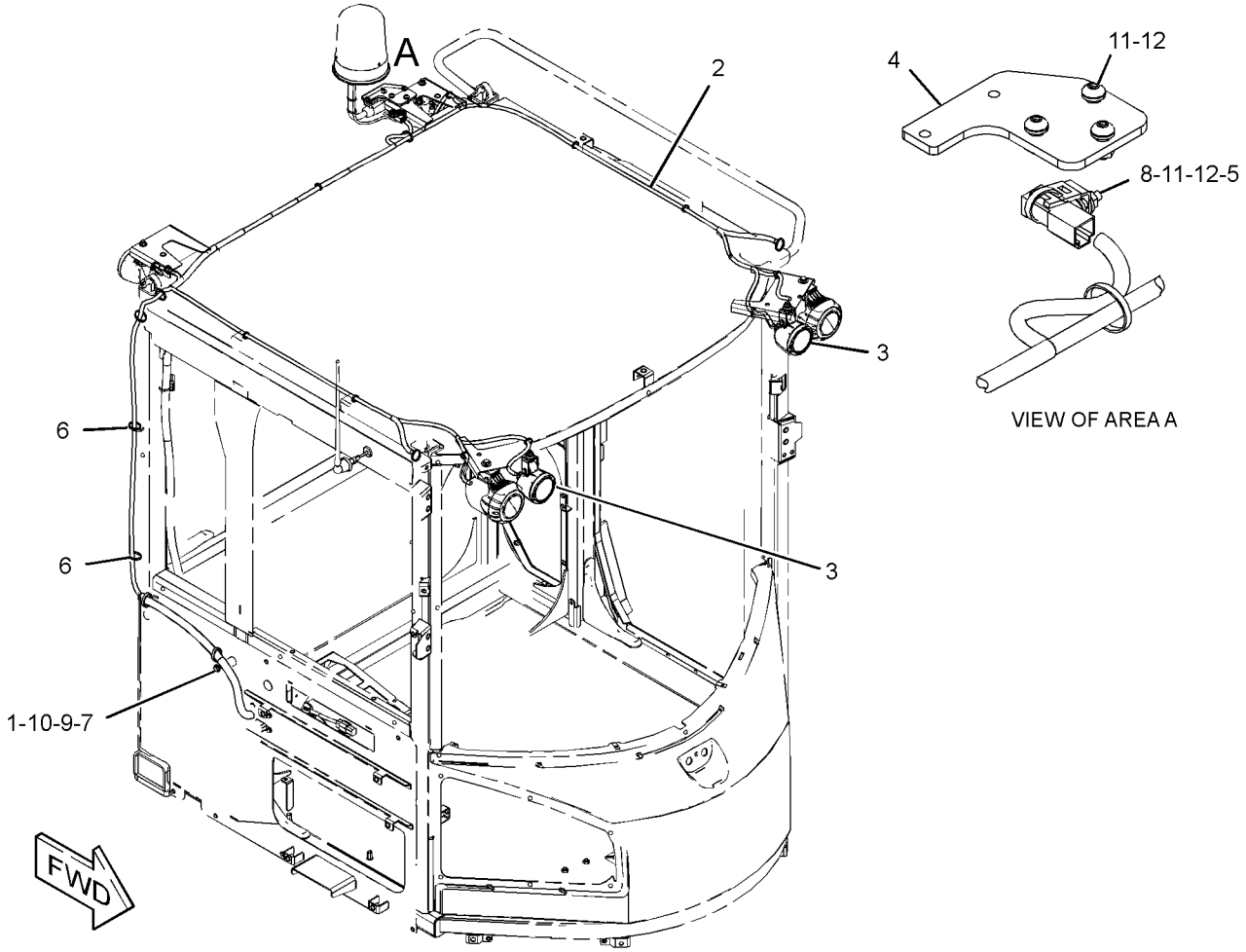

GRAPHIC #1 **<END>** g02788424

333-1428 LIGHTING GP-FLOOD–24-VOLT, HID

S/N: DYB1-UP

CANNOT BE USED WITH 333-1427–PAGE: 141

AN ATTACHMENT

SMCS-1434 **i05309938**

NOTE	REF NO	GRAPHIC REF	PART NUMBER	QTY	PART NAME 1 2 3 4 5 6 (PRODUCT LEVEL)	SEE PAGE
Y	1	1	**324-3740**	2	LAMP GP-FLOOD (24-VOLT, HID)	134
Y	2	1	**339-3505**	2	LAMP GP-FLOOD (24-VOLT, 70-WATT)	136
	3	1	**350-1235**	1	SWITCH AS-ROCKER (WORK LIGHTS)	
		1	**111-7899**	1	GASKET	

Y - SEPARATE ILLUSTRATION

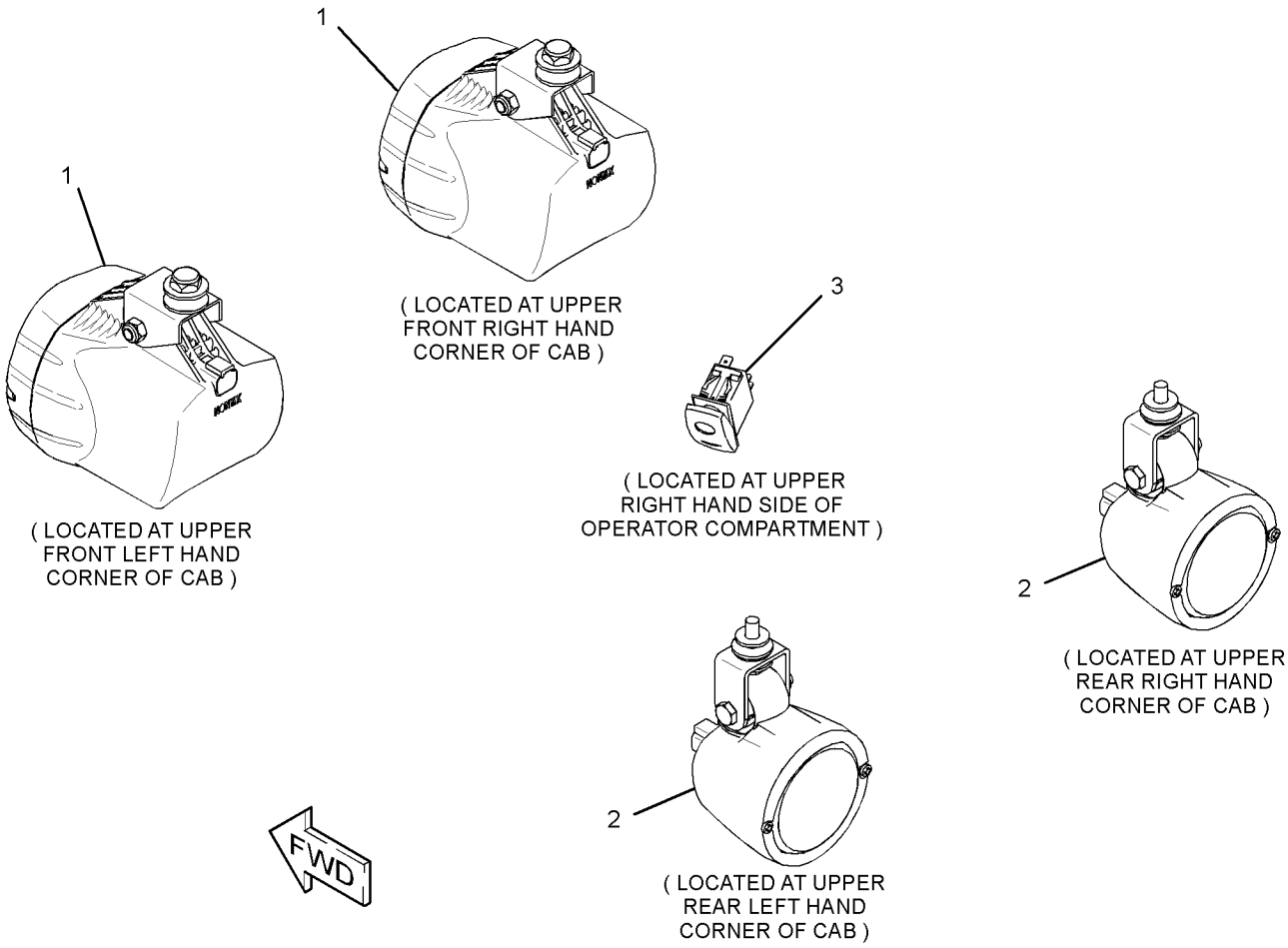

GRAPHIC #1

<END>

g02756280

339-6725 LIGHTING GP-ROADING

S/N: DYB1-UP

PART OF 381-4385 CHASSIS AR

SMCS-1429 **i05309805**

NOTE	REF NO	GRAPHIC REF	PART NUMBER	QTY	PART NAME 1 2 3 4 5 6 (PRODUCT LEVEL)	SEE PAGE
	1	1	**313-5270**	6	REFLECTOR (AMBER)	
	2	1	**313-5271**	2	REFLECTOR (RED)	
	3	1	**339-6726**	1	BRACKET AS (LH)	
	4	1	**339-6727**	1	BRACKET AS (RH)	
	5	1	**348-9324**	2	PLATE AS	
					(EACH INCLUDES)	
M		1	**159-9539**	2	NUT-WELD (M6X1-THD)	
	6	1	**351-5587**	2	LAMP GP-REAR (24-VOLT) (SIGNAL LIGHTING, LH)	
	6A	1	**351-5587**	2	LAMP GP-REAR (24-VOLT) (SIGNAL LIGHTING, RH)	
	7	1	**359-2661**	2	PLATE	
M	8	1	**5C-2890**	4	NUT (M6X1-THD)	
	9	1	**6P-4467**	2	GROMMET	
	10	1	**8T-4121**	8	WASHER-HARD (11X21X2.5-MM THK)	
M	11	1	**8T-4136**	8	BOLT (M10X1.5X25-MM)	
M	12	1	**8T-4138**	8	BOLT (M6X1X20-MM)	
	13	1	**8T-4205**	12	WASHER-HARD (7.2X14.5X2-MM THK)	

M - METRIC PART

339-6725 **LIGHTING GP-ROADING (*contd.*)** **i05309805**

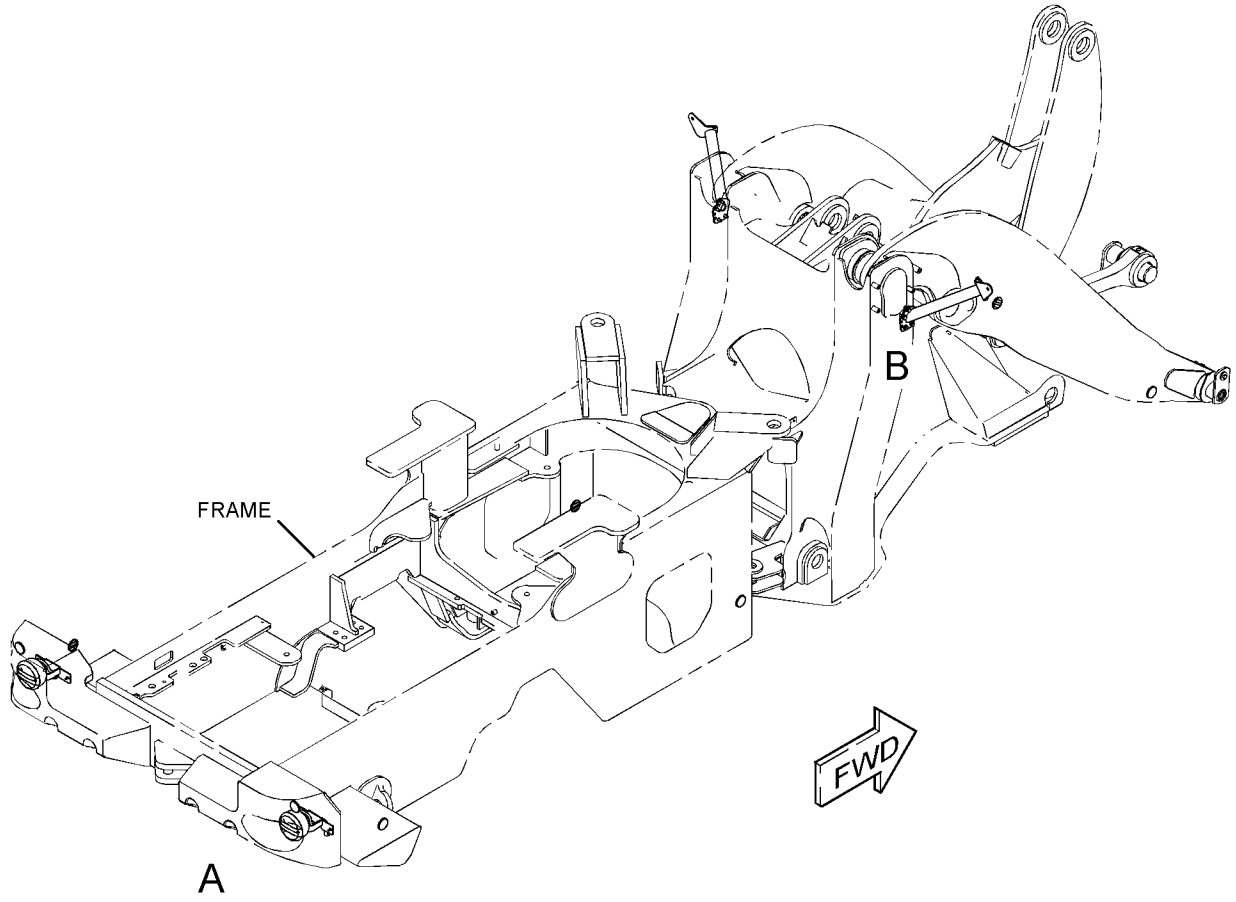

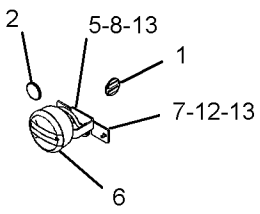

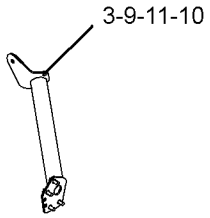

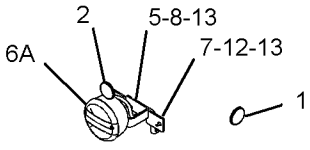

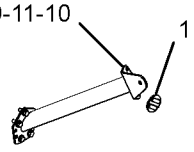

VIEW OF AREA A

VIEW OF AREA B

GRAPHIC #1 **<END>** g02794023

395-0112 MOUNTING GP-ELECTRONIC CONTROL

S/N: E7A1-UP
PART OF 371-1441 ENGINE AR-PRIMARY
AN ATTACHMENT

SMCS-1901, 7610

i05331956

NOTE	REF NO	GRAPHIC REF	PART NUMBER	QTY	PART NAME 1 2 3 4 5 6 (PRODUCT LEVEL)	SEE PAGE
	1	1	**394-9570**	1	BRACKET-CONTROL	
	2	1	**6I-0292**	2	BOLT (M8X1.25X140-MM)	
	3	1	**6I-0293**	2	BOLT (M8X1.25X80-MM)	

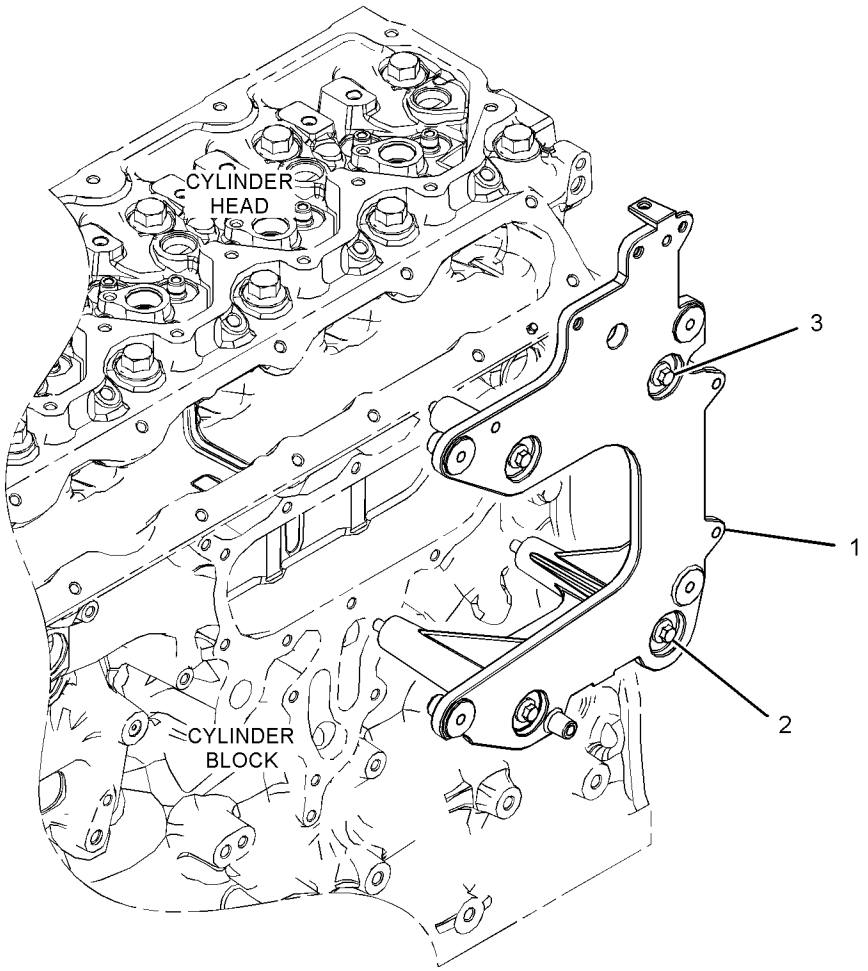

GRAPHIC #1

<END>

g03378971

336-3545 RADIO GP-COMMUNICATION–PRODUCT LINK 121SR

S/N: DYB1-UP

PART OF 333-1452 INSTALLATION GP-COMMUNICATION

AN ATTACHMENT

SMCS-733T **i05317637**

NOTE	PART NUMBER	QTY	PART NAME 1 2 3 4 5 6 (PRODUCT LEVEL)	SEE PAGE
	434-1356	1	SOFTWARE GP-MONITOR (PRODUCT LINK 121SR)	

<END>

395-0110 SENSOR GP-ENGINE

S/N: E7A1-UP
PART OF 371-1441 ENGINE AR-PRIMARY
AN ATTACHMENT

SMCS-1718, 1906, 1907, 1912, 1917, 1923, 1924, 1928, 1929, 7400

i05332833

NOTE	REF NO	GRAPHIC REF	PART NUMBER	QTY	PART NAME 1 2 3 4 5 6 (PRODUCT LEVEL)	SEE PAGE
M	1	1	**124-3815**	2	BOLT (M8X1.25X16-MM)	
	2	1	**199-9252**	1	SEAL-O-RING	
	3	1	**199-9267**	1	SEAL-O-RING	
	4	1	**199-9751**	1	SEAL-O-RING	
	5	1	**238-0120**	2	SENSOR GP-SPEED (ENGINE)	
	6	1	**256-6454**	1	SENSOR-TEMPERATURE (AIR INLET MANIFOLD)	
	6A	1	**256-6454**	1	SENSOR-TEMPERATURE (COOLANT)	
	7	1	**276-5603**	1	SEAL-O-RING	
	8	1	**320-3060**	1	SENSOR-PRESSURE (ENGINE OIL)	
	9	1	**320-3062**	1	SENSOR GP-PRESSURE (INLET MANIFOLD AIR)	
	10	1	**228-4947**	2	SEAL-O-RING	

M - METRIC PART

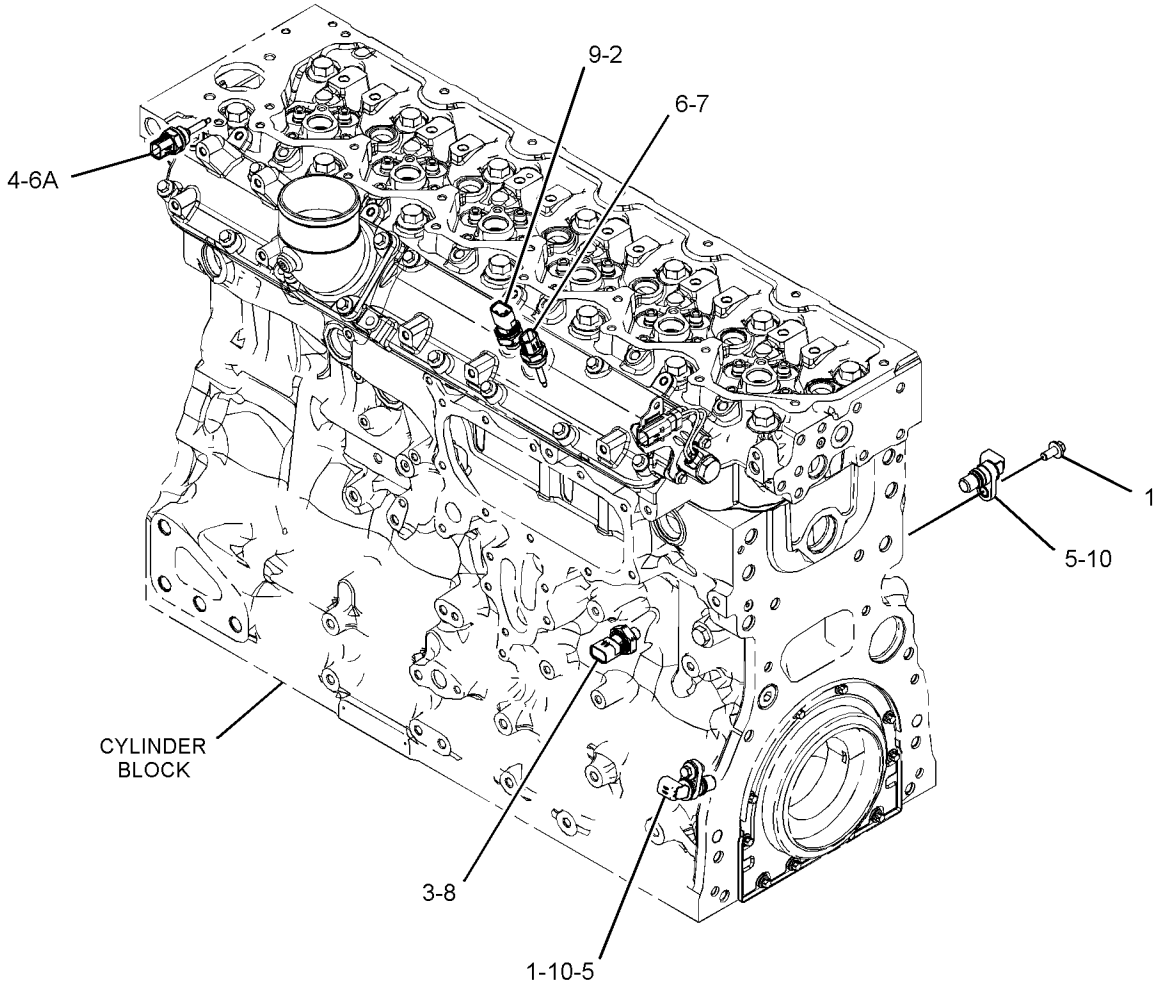

GRAPHIC #1

<END>

g03380662

266-2337 SENSOR GP-POSITION–ROTARY

S/N: DYB1-UP

PART OF 372-1940 WIRING GP-KICKOUT & POSITIONER

AN ATTACHMENT

SMCS-4269, 5702, 5736, 5737, 7494

i03753238

NOTE	REF NO	GRAPHIC REF	PART NUMBER	QTY	PART NAME 1 2 3 4 5 6 (PRODUCT LEVEL)	SEE PAGE
	1	1	**102-8803**	1	KIT-RECEPTACLE (3-PIN)	
					(INCLUDES RECEPTACLE AS & WEDGE)	
	2	1	**9X-3401**	3	PIN-CONNECTOR (16-GA TO 18-GA)	
					–OR–	
		1	**126-1767**	3	PIN-CONNECTOR (14-GA TO 16-GA)	
E	3	1	**9X-1813**		SLEEVE (17-CM)	

E - ORDER BY THE CENTIMETER

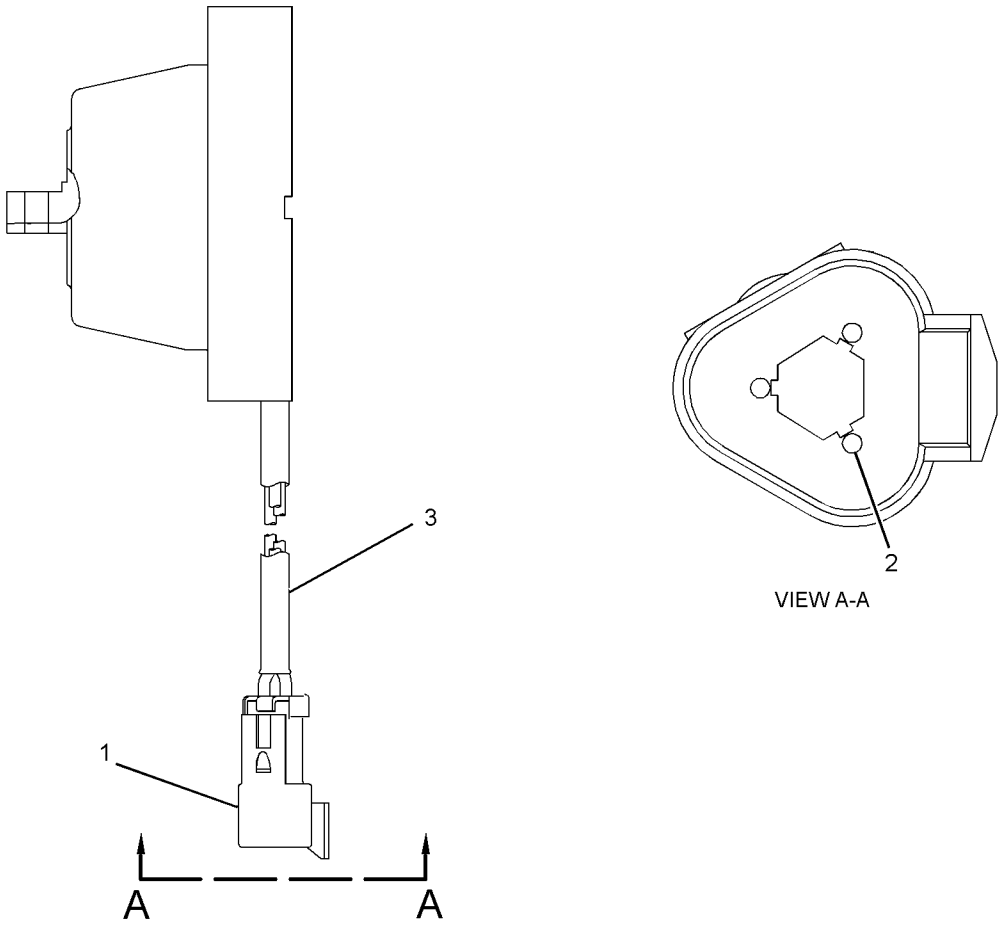

VIEW A-A

GRAPHIC #1

<END>

g01954240

269-1981 SENSOR GP-POSITION

S/N: DYB1-UP

PART OF 342-0157 PEDAL GP-BRAKE

AN ATTACHMENT

SMCS-4269, 5702, 5736, 5737, 7494 **i04199134**

NOTE	REF NO	GRAPHIC REF	PART NUMBER	QTY	PART NAME 1 2 3 4 5 6 (PRODUCT LEVEL)	SEE PAGE
	1	1	**230-4014**	2	RECEPTACLE AS-CONNECTOR (3-PIN)	
	2	1	**9X-3401**	6	PIN-CONNECTOR (16-GA TO 18-GA)	
					–OR–	
			126-1767	6	PIN-CONNECTOR (14-GA TO 16-GA)	

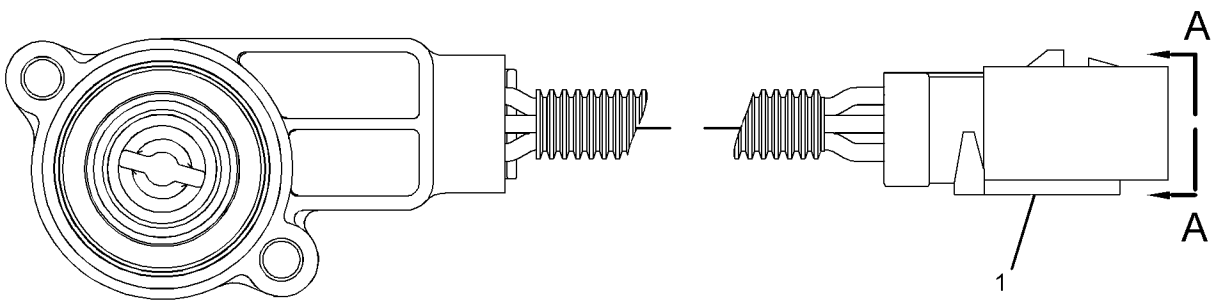

GRAPHIC #1 **<END>** g01391032

395-0114 STARTING AID GP

S/N: E7A1-UP
PART OF 371-1441 ENGINE AR-PRIMARY
AN ATTACHMENT

SMCS-1090 **i05332682**

NOTE	REF NO	GRAPHIC REF	PART NUMBER	QTY	PART NAME 1 2 3 4 5 6 (PRODUCT LEVEL)	SEE PAGE
	1	1	**112-7704**	1	BOLT	
M	2	1	**5C-2890**	2	NUT (M6X1-THD)	
	3	1	**217-9039**	1	STRAP-CABLE	
	4	1	**361-9875**	6	GLOW PLUG (24-VOLT)	
	5	1	**368-3145**	1	BUS BAR AS	
	6	1	**384-7567**	1	HARNESS AS-STARTING AID	
		1	**2L-8050**	2	TERMINAL-RING (6-GA, 1/4-IN SCREW)	
					—OR—	
		1	**2L-8058**	2	TERMINAL-RING (8-GA, 1/4-IN SCREW)	
		1	**316-9351**	1	MOUNTING-CABLE TIE	
	7	1	**208-8469**	1	LOCKNUT (M6X1-THD)	
	8	1	**275-2428**	1	INSULATOR	
	9	1	**277-4409**	1	CAP	

M - METRIC PART

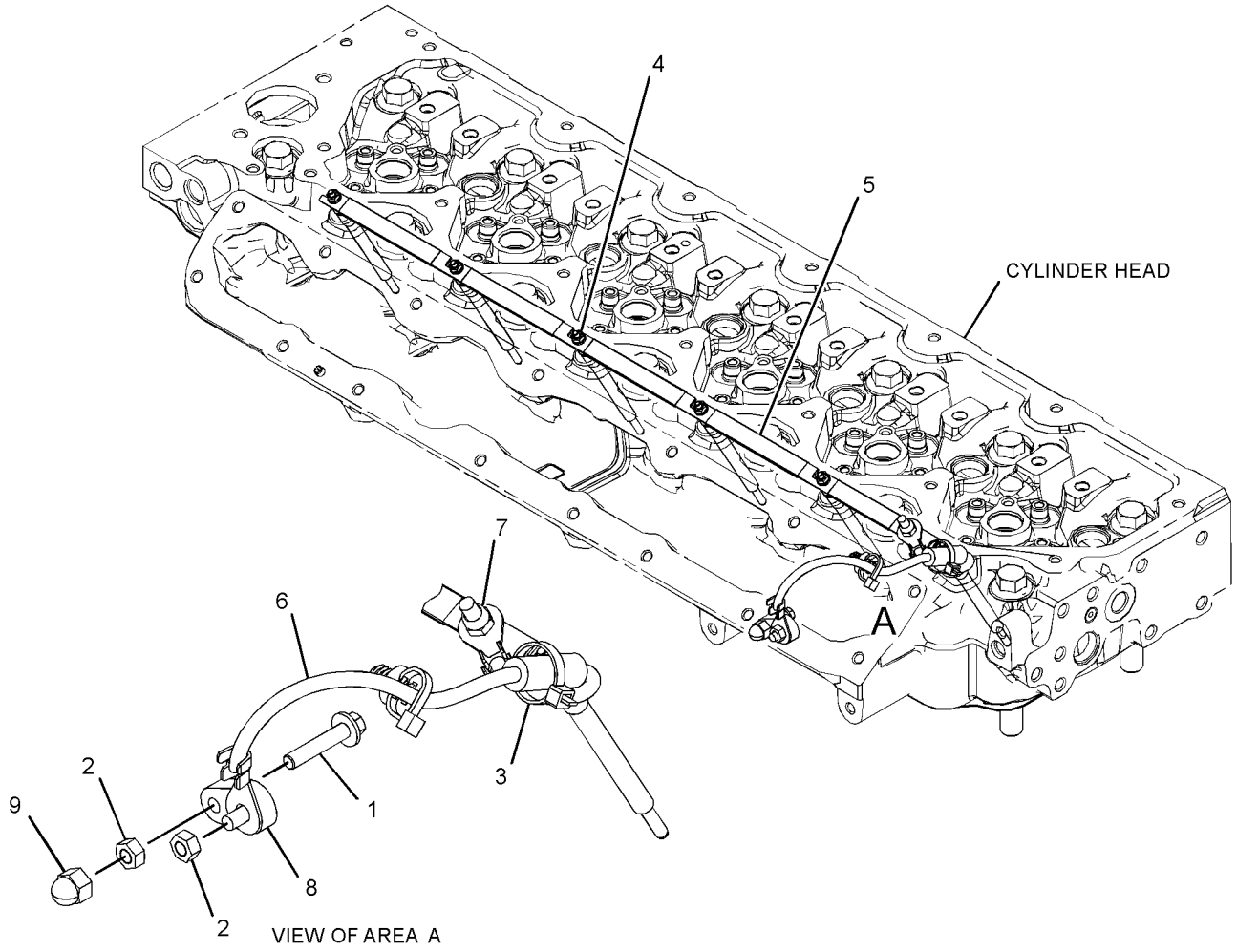

GRAPHIC #1 **<END>** g03379036

351-9257 STARTING AID GP-ETHER

S/N: DYB1-UP

PART OF 415-4689 STARTING AID GP-ETHER

AN ATTACHMENT

SMCS-1456 **i05333698**

NOTE	REF NO	GRAPHIC REF	PART NUMBER	QTY	PART NAME 1 2 3 4 5 6 (PRODUCT LEVEL)	SEE PAGE
	1	1	**236-8013**	1	BRACKET	
Y	2	1	**239-1134**	1	VALVE GP-ETHER STARTING (24-VOLT)	159
	3	1	**256-6881**	1	ATOMIZER GP-ETHER	
		1	**236-4545**	1	NUT-SLEEVE (5/16-24-THD)	
	4	1	**276-5436**	1	FITTING AS	
		1	**236-4545**	1	NUT-SLEEVE (5/16-24-THD)	
	5	1	**276-6596**	1	CLAMP	
M	6	1	**5C-7261**	2	NUT (M8X1.25-THD)	
M	7	1	**8T-4200**	4	BOLT (M8X1.25X16-MM)	
	8	1	**8T-4224**	6	WASHER-HARD (8.8X16X2-MM THK)	
D	9	1	**5P-5630**		TUBE (1.5-M)	
AF			**7N-0296**	1	CYLINDER AS-ETHER	
					–OR–	
AF			**187-4851**	1	CYLINDER AS-ETHER (EAME)	
					(MUST BE PROCURED LOCALLY FROM CAT DEALER)	

A - NOT PART OF THIS GROUP
D - ORDER BY THE METER
F - NOT SHOWN
M - METRIC PART
Y - SEPARATE ILLUSTRATION

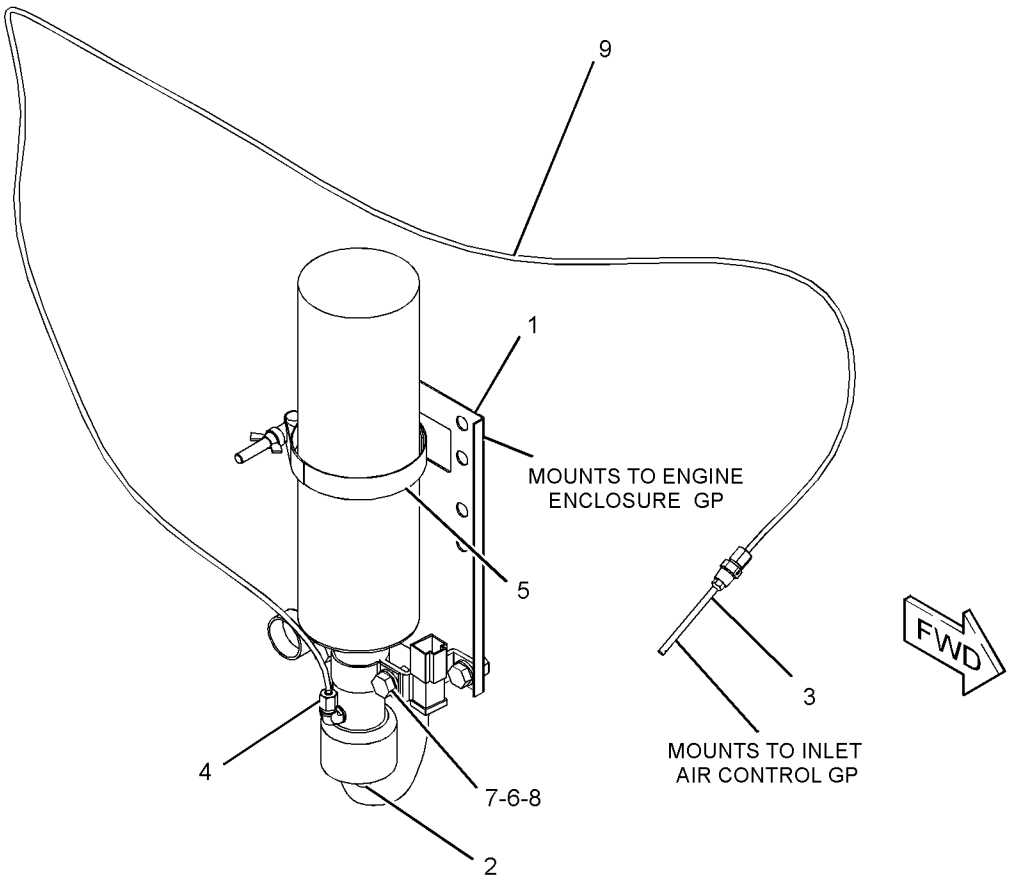

GRAPHIC #1 **<END>** g02766796

415-4689 STARTING AID GP-ETHER

S/N: DYB1-UP
PART OF 381-4389, 381-4390 OPTION AR-COLD WEATHER
AN ATTACHMENT

SMCS-1456 **i05141361**

NOTE	REF NO	GRAPHIC REF	PART NUMBER	QTY	PART NAME 1 2 3 4 5 6 (PRODUCT LEVEL)	SEE PAGE
	1	1	**129-8087**	1	SPACER (13.9X17.1X14-MM THK)	
Y	2	1	*351-9257*	1	STARTING AID GP-ETHER	152
	3	1	**132-5789**	1	CLIP	
	4	1	**3S-2093**	4	STRAP-CABLE	
	5	1	**5P-4116**	5	WASHER-HARD (8.8X20.5X2-MM THK)	
M	6	1	**8T-4200**	4	BOLT (M8X1.25X16-MM)	
M	7	1	**8T-7547**	1	BOLT (M8X1.25X30-MM)	

M - METRIC PART
Y - SEPARATE ILLUSTRATION

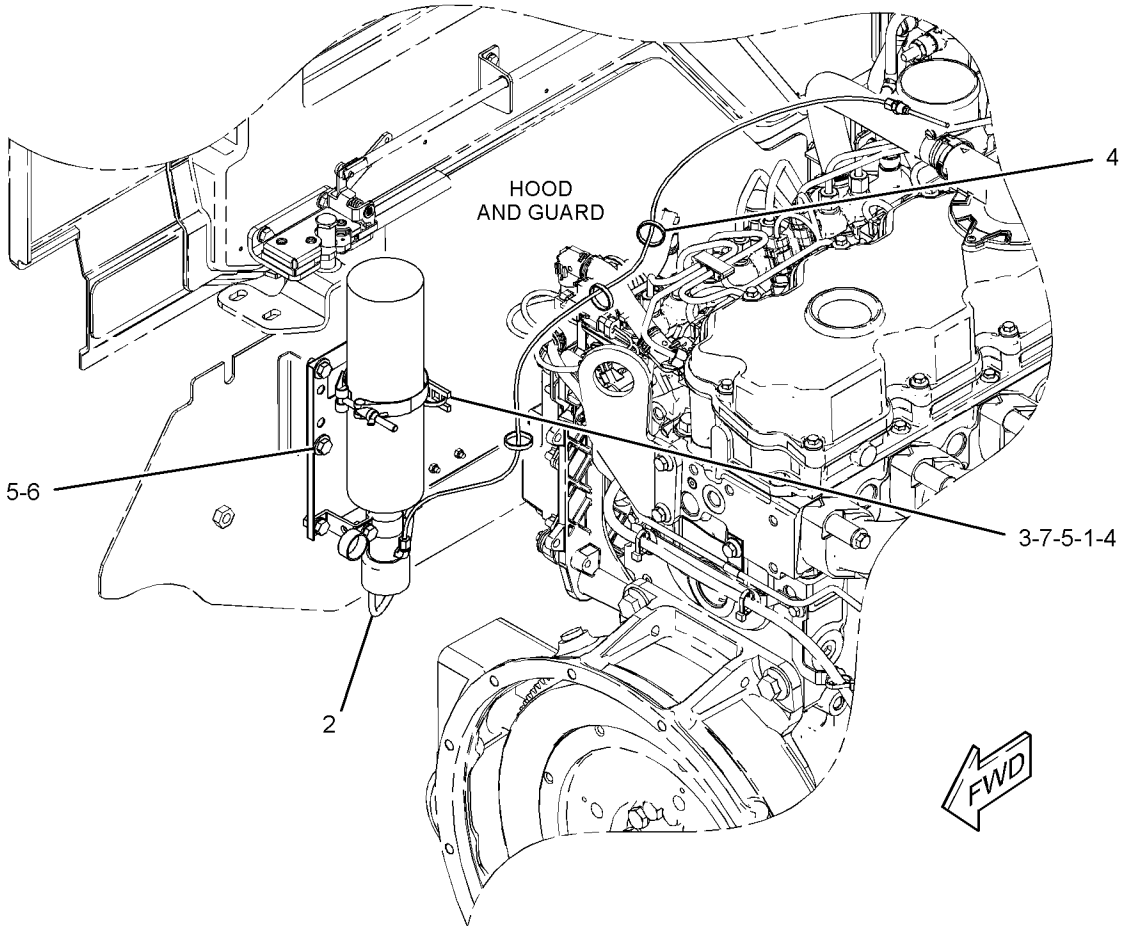

GRAPHIC #1 **<END>** g03337060

350-4306 STARTING MOTOR GP-ELECTRIC

S/N: DYB1-UP

PART OF 381-4371 INSTALLATION AR-ENGINE

SMCS-1453 **i05307816**

NOTE	REF NO	GRAPHIC REF	PART NUMBER	QTY	PART NAME 1 2 3 4 5 6 (PRODUCT LEVEL)	SEE PAGE
	1	1	**354-5671**	1	STARTING MOTOR GP-ELECTRIC	
		1	**230-4012**	1	RECEPTACLE AS-CONNECTOR (2-PIN)	
M	2	1	**8T-4183**	3	BOLT (M12X1.75X40-MM)	
	3	1	**8T-4223**	3	WASHER-HARD (13.5X25.5X3-MM THK)	

M - METRIC PART

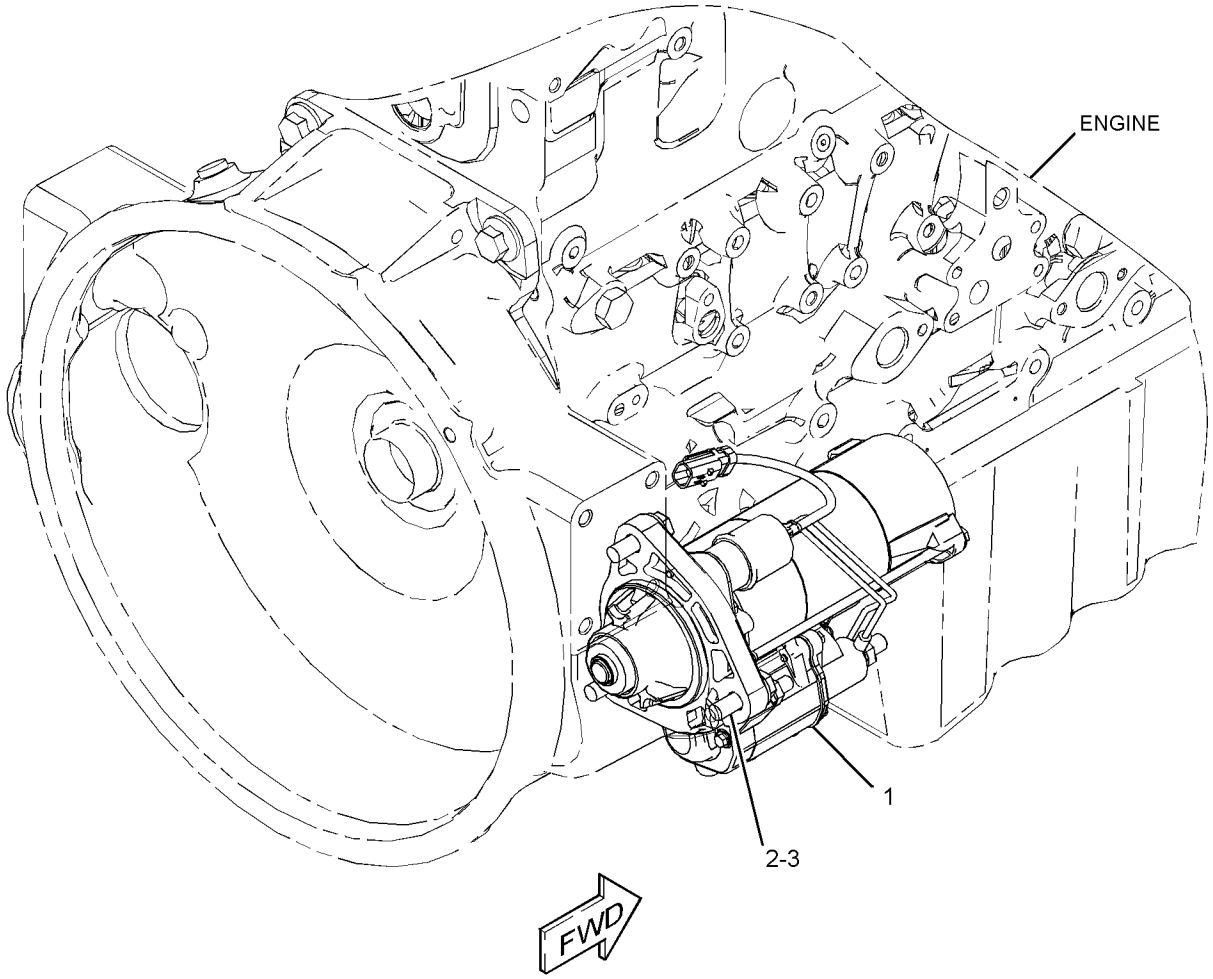

GRAPHIC #1 **<END>** g02792780

7N-0718 SWITCH GP-DISCONNECT–BATTERY

S/N: DYB1-UP
12-VOLT
PART OF 333-1400, 333-1401 BATTERY & WIRING GP
AN ATTACHMENT

SMCS-1411 **i02587657**

NOTE	REF NO	GRAPHIC REF	PART NUMBER	QTY	PART NAME 1 2 3 4 5 6 (PRODUCT LEVEL)	SEE PAGE
	1	1	**8H-5306**	1	KEY (BATTERY DISCONNECT)	
	2	1	**8H-5303**	1	NUT (3/4-16-THD)	
	3	1	**2H-3922**	2	LOCKWASHER	
	4	1	**9F-5644**	2	LOCKWASHER	
	5	1	**6F-7045**	2	NUT-FULL (3/8-24-THD)	

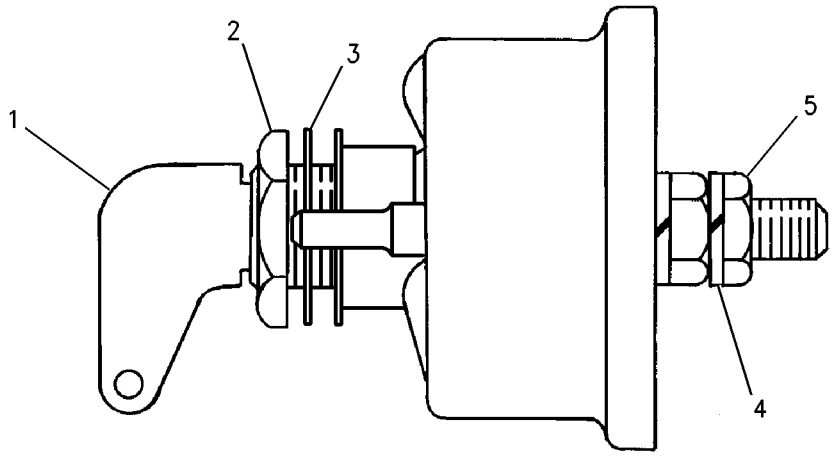

GRAPHIC #1 **<END>** g00715584

241-8368 SWITCH GP-MAGNETIC

S/N: DYB1-UP
24-VOLT
PART OF 372-1860 WIRING GP-CAB, 372-1930 WIRING GP-CHASSIS
ALSO AN ATTACHMENT

SMCS-7499 **i04842710**

NOTE	REF NO	GRAPHIC REF	PART NUMBER	QTY	PART NAME 1 2 3 4 5 6 (PRODUCT LEVEL)	SEE PAGE
	1	1	**155-2270**	1	KIT-CONNECTING PLUG (2-PIN)	
					(INCLUDES PLUG AS, WEDGE & INTERFACE SEAL)	
	2	1	**4F-2294**	2	NUT-JAM (5/16-24-THD)	
	3	1	**8T-8730**	2	SOCKET-CONNECTOR (16-GA TO 18-GA)	

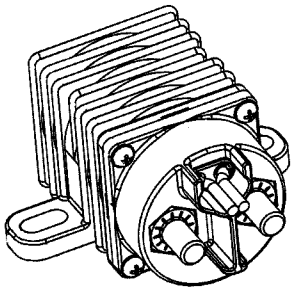

ISOMETRIC VIEW

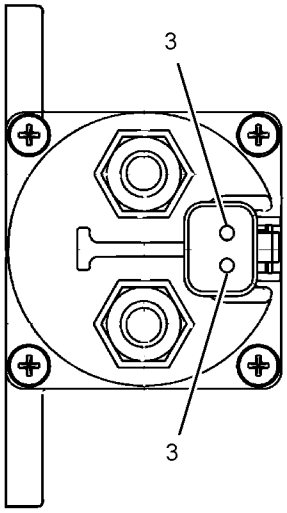

VIEW A-A

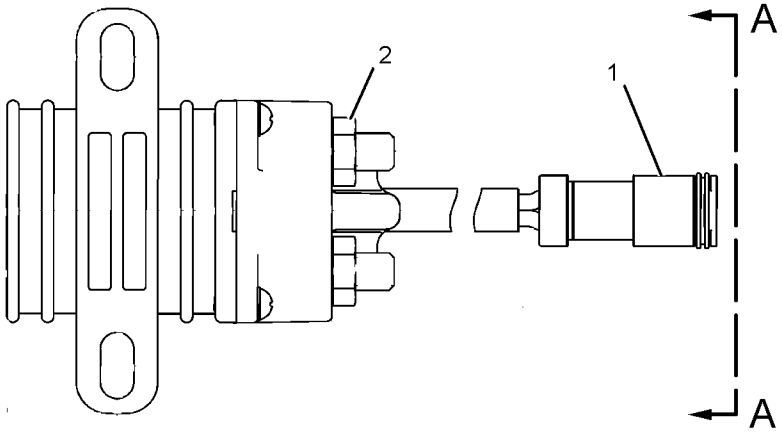

GRAPHIC #1 **<END>** g01077362

255-2752 SWITCH GP-START

S/N: DYB1-UP
PART OF 372-1860 WIRING GP-CAB
AN ATTACHMENT

SMCS-1416 **i04631637**

NOTE	REF NO	GRAPHIC REF	PART NUMBER	QTY	PART NAME 1 2 3 4 5 6 (PRODUCT LEVEL)	SEE PAGE
	1	1	**7T-6799**	1	NUT-MOUNTING (1-32-THD)	
	2	1	**102-8805**	1	KIT-RECEPTACLE (6-PIN)	
					(INCLUDES RECEPTACLE AS & WEDGE)	
	3	1	**8T-8729**	5	PIN-CONNECTOR (16-GA TO 18-GA)	
	4	1	**8T-8737**	1	PLUG-SEAL	

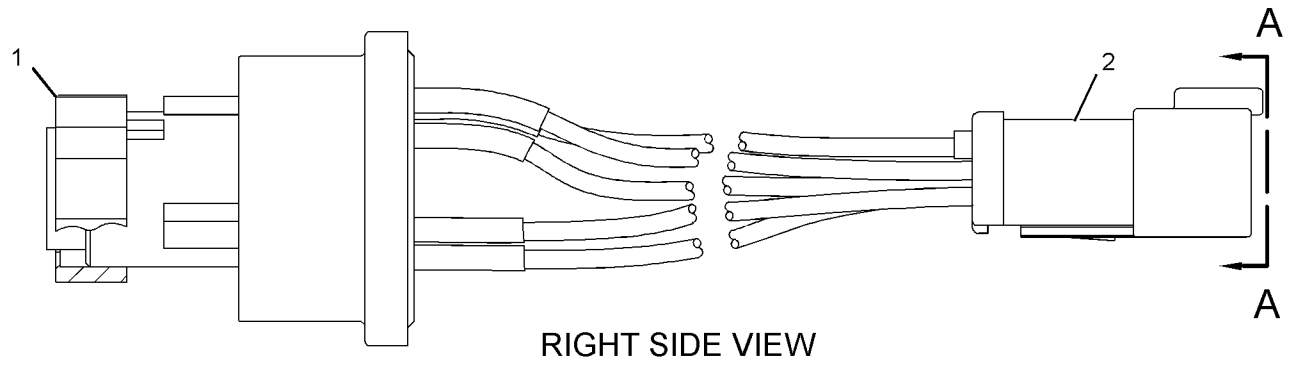

RIGHT SIDE VIEW

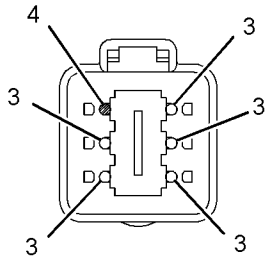

VIEW A-A

GRAPHIC #1 **<END>** g02255874

297-8752 SWITCH GP-TOGGLE

S/N: DYB1-UP

PART OF 372-1930 WIRING GP-CHASSIS

SMCS-7332 **i04786538**

NOTE	REF NO	GRAPHIC REF	PART NUMBER	QTY	PART NAME 1 2 3 4 5 6 (PRODUCT LEVEL)	SEE PAGE
	1	1	**230-4014**	1	RECEPTACLE AS-CONNECTOR (3-PIN)	
	2	1	**8T-8729**	3	PIN-CONNECTOR (16-GA TO 18-GA)	
					PARTS SHOWN IN GRAPHIC(S) WITHOUT A REFERENCE NUMBER ARE NOT SERVICED SEPARATELY	

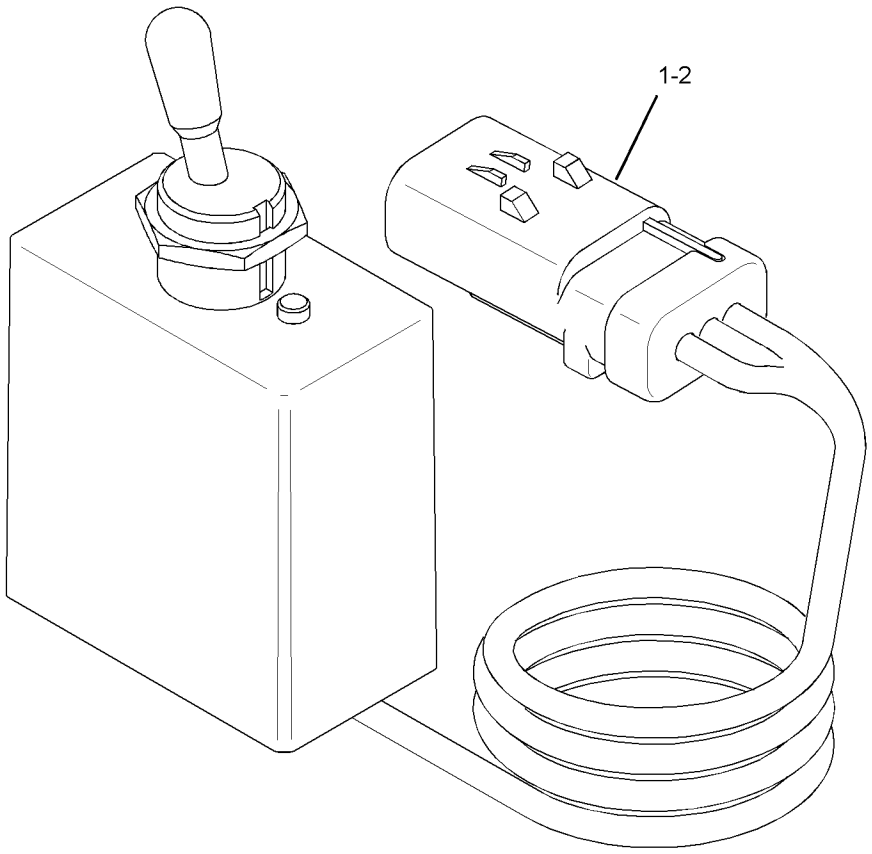

GRAPHIC #1 **<END>** g02497776

239-1134 VALVE GP-ETHER STARTING

S/N: DYB1-UP
24-VOLT
PART OF 351-9257 STARTING AID GP-ETHER
AN ATTACHMENT

SMCS-1456 **i03907816**

NOTE	REF NO	GRAPHIC REF	PART NUMBER	QTY	PART NAME 1 2 3 4 5 6 (PRODUCT LEVEL)	SEE PAGE
	1	1	**7N-9801**	1	GASKET	
	2	1	**102-8802**	1	KIT-RECEPTACLE (2-PIN)	
					(INCLUDES RECEPTACLE AS & WEDGE)	
	3	1	**8T-8729**	2	PIN-CONNECTOR (16-GA TO 18-GA)	
	4	1	**358-4889**	1	FILTER (ETHER START)	

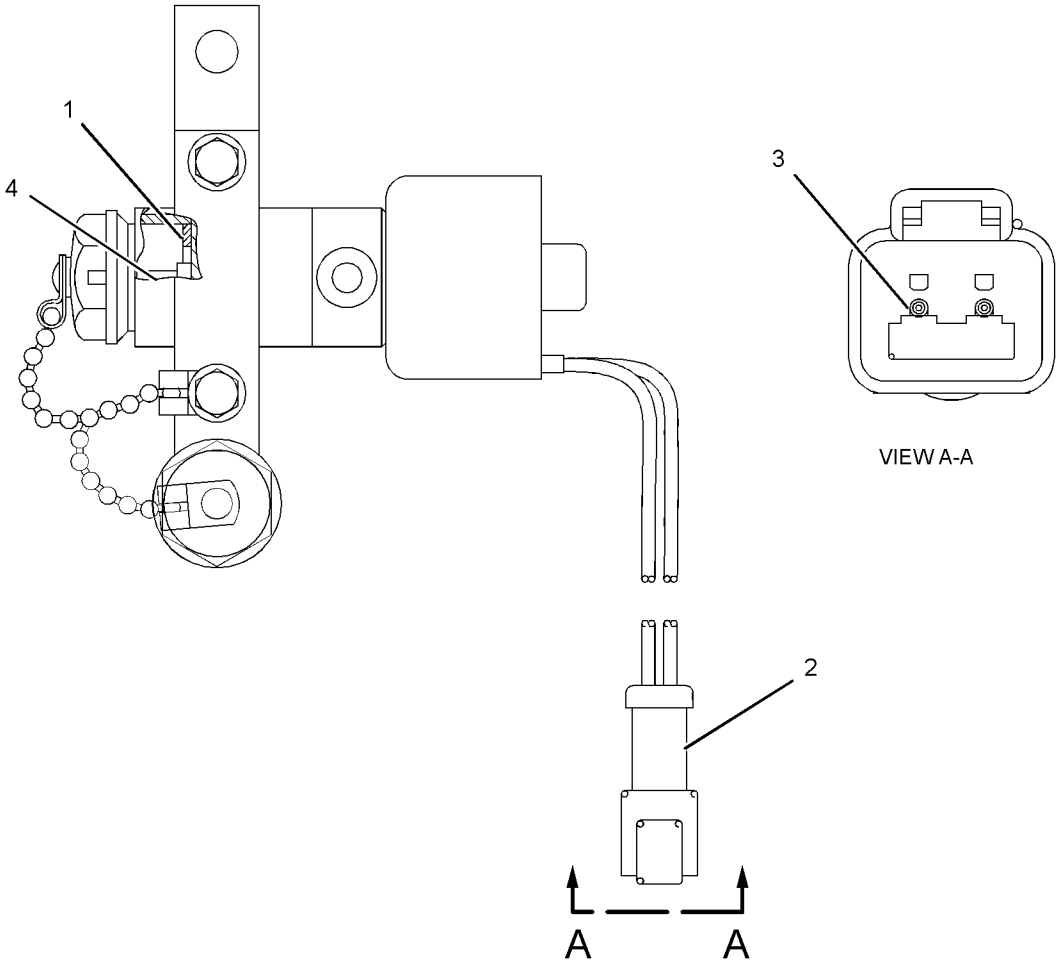

GRAPHIC #1 **<END>** g02138138

372-1860 WIRING GP-CAB

S/N: DYB1-UP

PART OF 384-7000 CAB AR-ENCLOSED ROPS

AN ATTACHMENT

SMCS-1408, 7301

i05302469

NOTE	REF NO	GRAPHIC REF	PART NUMBER	QTY	PART NAME 1 2 3 4 5 6 (PRODUCT LEVEL)	SEE PAGE
	1	1	**3E-5239**	1	RELAY AS (24-VOLT)	
	2	1	**6I-1418**	4	SPACER (8.2X12.7X28.7-MM THK)	
	3	1	**7K-1181**	32	STRAP-CABLE	
	4	1	**8F-7242**	2	WASHER (8.7X15.9X1.6-MM THK)	
	5	1	**8T-8799**	4	BOOT (RED)	
	6	1	**8T-9655**	8	MOUNT-ISOLATION	
	7	1	**116-7471**	1	PULLER-MINIFUSE	
	8	1	**165-0311**	5	PLUG	
	9	1	**180-9900**	1	CAP AS	
		1	**5P-7958**	1	SLEEVE-CABLE SPLICE	
		1	**8C-6354**	1	CAP-RECEPTACLE (ET CONNECTOR)	
		1	**179-9392**	1	LANYARD	
	10	1	**203-9007**	1	NUT (1-1/2-18-THD)	
Y	11	1	**241-8368**	1	SWITCH GP-MAGNETIC (24-VOLT)	156
	12	1	**248-2841**	1	RELAY AS (24-VOLT) (BRAKE LIGHTS)	
	12A	1	**248-2841**	1	RELAY AS (24-VOLT) (HORN)	
	12B	1	**248-2841**	1	RELAY AS (24-VOLT) (WINDOW WIPER)	
	12C	1	**248-2841**	1	RELAY AS (24-VOLT) (BACKUP ALARM)	
Y	13	1	**255-2752**	1	SWITCH GP-START	157
	14	1	**258-4142**	2	BAR-BUS	
	15	1	**270-2679**	1	LOCKWASHER	
	16	1	**280-2709**	1	CIRCUIT BREAKER AS (15-AMPERE, MANUAL RESET)	
	17	1	**280-2710**	2	CIRCUIT BREAKER AS (20-AMPERE, MANUAL RESET)	
	18	1	**280-2712**	1	CIRCUIT BREAKER AS (30-AMPERE)	
R	19	1	**304-5687**	1	CONTROL GP-UNPROGRAMMED	
Y	20	1	**333-1356**	1	HARNESS AS-CAB	109
	21	1	**333-1357**	1	PLATE AS	
	22	1	**333-1358**	1	FILM-IDENTIFICATION (FUSE PANEL)	
	23	1	**333-1360**	3	SEAL	
	24	1	**333-1361**	1	SEAL	
	25	1	**333-1366**	1	BRACKET	
	26	1	**333-1376**	1	TIMER (RELAY)	
	27	1	**333-1451**	1	CONVERTER (24-VOLT TO 12-VOLT)	
	28	1	**335-5365**	2	SOCKET-AUXILIARY POWER (12-VOLT)	
	29	1	**345-0351**	1	FILM-IDENTIFICATION (IGNITION SWITCH)	
	30	1	**347-0596**	1	FLANGE-MOUNTING	
	31	1	**348-9044**	1	MODULE GP-KEYPAD	
		1	**8F-1326**	4	WASHER (4.2X9.5X0.8-MM THK)	
M		1	**8T-2659**	4	LOCKNUT (M4X0.7-THD)	
	32	1	**350-1224**	1	SWITCH AS-ROCKER (PARKING BRAKE)	
	33	1	**350-1225**	1	SWITCH AS-ROCKER (IMPLEMENT LOCKOUT)	
					(EACH SWITCH AS INCLUDES)	
		1	**111-7899**	1	GASKET	
	34	1	**380-1887**	1	FLASHER AS (12/24-VOLT)	
	35	1	**110-2028**	4	SCREW-PAN HEAD (10-14X0.75-IN)	
	36	1	**132-5789**	1	CLIP	
	37	1	**156-6175**	3	CLIP	
	38	1	**1A-8912**	5	WASHER (6.7X12.7X1.6-MM THK)	
E	39	1	**103-2543**		SEAL (3-CM)	
M	40	1	**297-1003**	4	BOLT-SOCKET HEAD (M8X1.25X45-MM)	
	41	1	**309-4314**	3	CLIP	
	42	1	**310-1898**	2	CLIP	
	43	1	**3F-9556**	2	LOCKWASHER	
	44	1	**3S-2093**	10	STRAP-CABLE	
	45	1	**4B-4863**	4	WASHER (4.7X11X1.2-MM THK)	
	46	1	**4P-7581**	2	CLIP	

372-1860 **WIRING GP-CAB (*contd.*)** **i05302469**

NOTE	REF NO	GRAPHIC REF	PART NUMBER	QTY	PART NAME 1 2 3 4 5 6 (PRODUCT LEVEL)	SEE PAGE
	47	1	**4P-8134**	7	CLIP	
M	48	1	**5C-2890**	6	NUT (M6X1-THD)	
	49	1	**5P-7162**	12	SCREW-MACHINE (10-32X0.5-IN)	
	50	1	**7X-0579**	8	WASHER-HARD (8.8X25.5X2-MM THK)	
M	51	1	**7X-2533**	1	BOLT (M6X1X35-MM)	
	52	1	**1H-3244**	4	LOCKWASHER	
	53	1	**8T-4121**	1	WASHER-HARD (11X21X2.5-MM THK)	
M	54	1	**8T-4136**	1	BOLT (M10X1.5X25-MM)	
M	55	1	**8T-4138**	18	BOLT (M6X1X20-MM)	
M	56	1	**8T-4189**	2	BOLT (M8X1.25X20-MM)	
	57	1	**8T-4205**	11	WASHER-HARD (7.2X14.5X2-MM THK)	
M	58	1	**9X-1046**	5	SCREW (M4X0.7X18-MM)	
	59	1	**9X-2038**	7	WASHER (7X19X2-MM THK)	
	60	1	**9X-6165**	2	WASHER (6.5X22X2.5-MM THK)	

E - ORDER BY THE CENTIMETER
M - METRIC PART
R - REMFG PART MAY BE AVAILABLE
Y - SEPARATE ILLUSTRATION

372-1860 **WIRING GP-CAB (*contd.*)** **i05302469**

REFER TO ALL ILLUSTRATIONS OF
THIS GROUP FOR AUXILIARY VIEWS

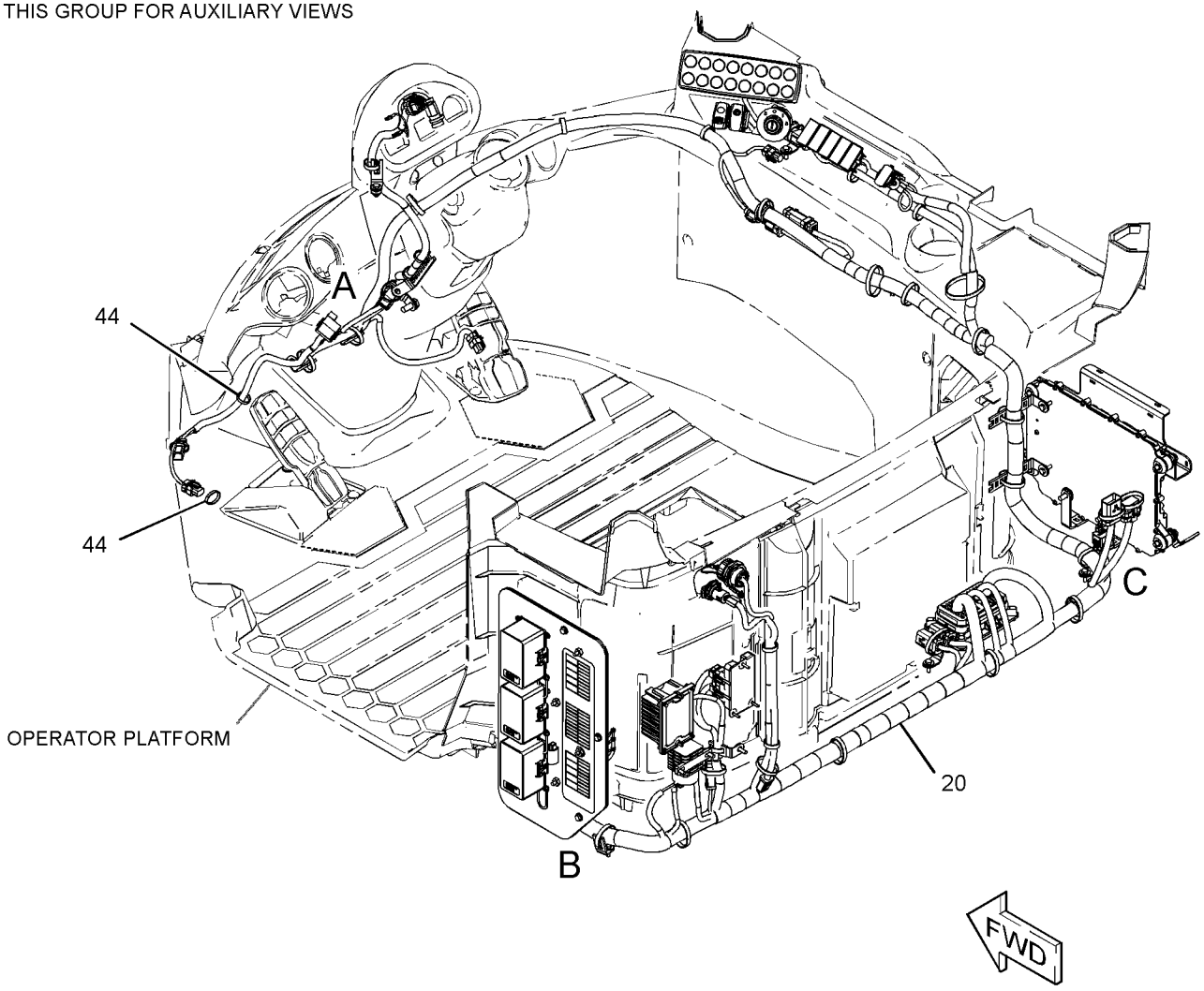

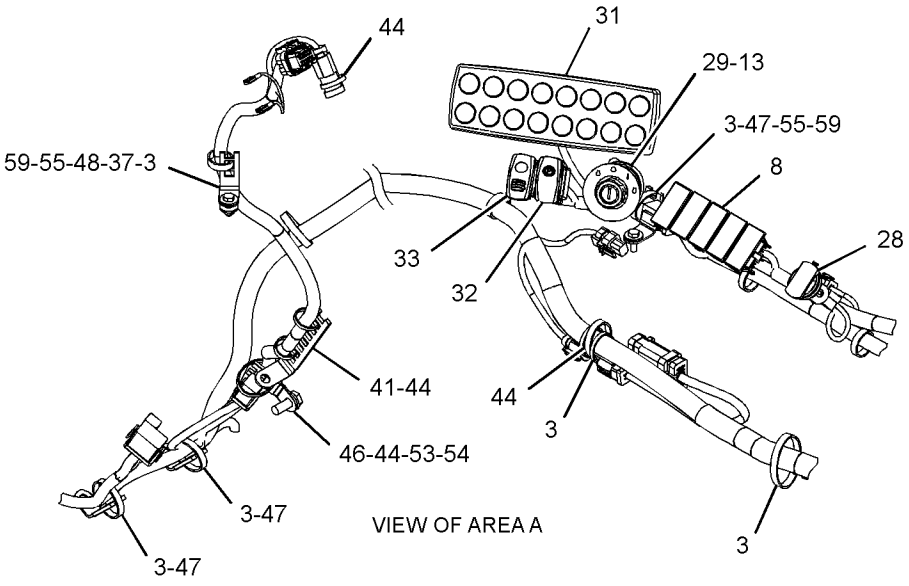

GRAPHIC #1 g03380918

372-1860 **WIRING GP-CAB (*contd.*)** **i05302469**

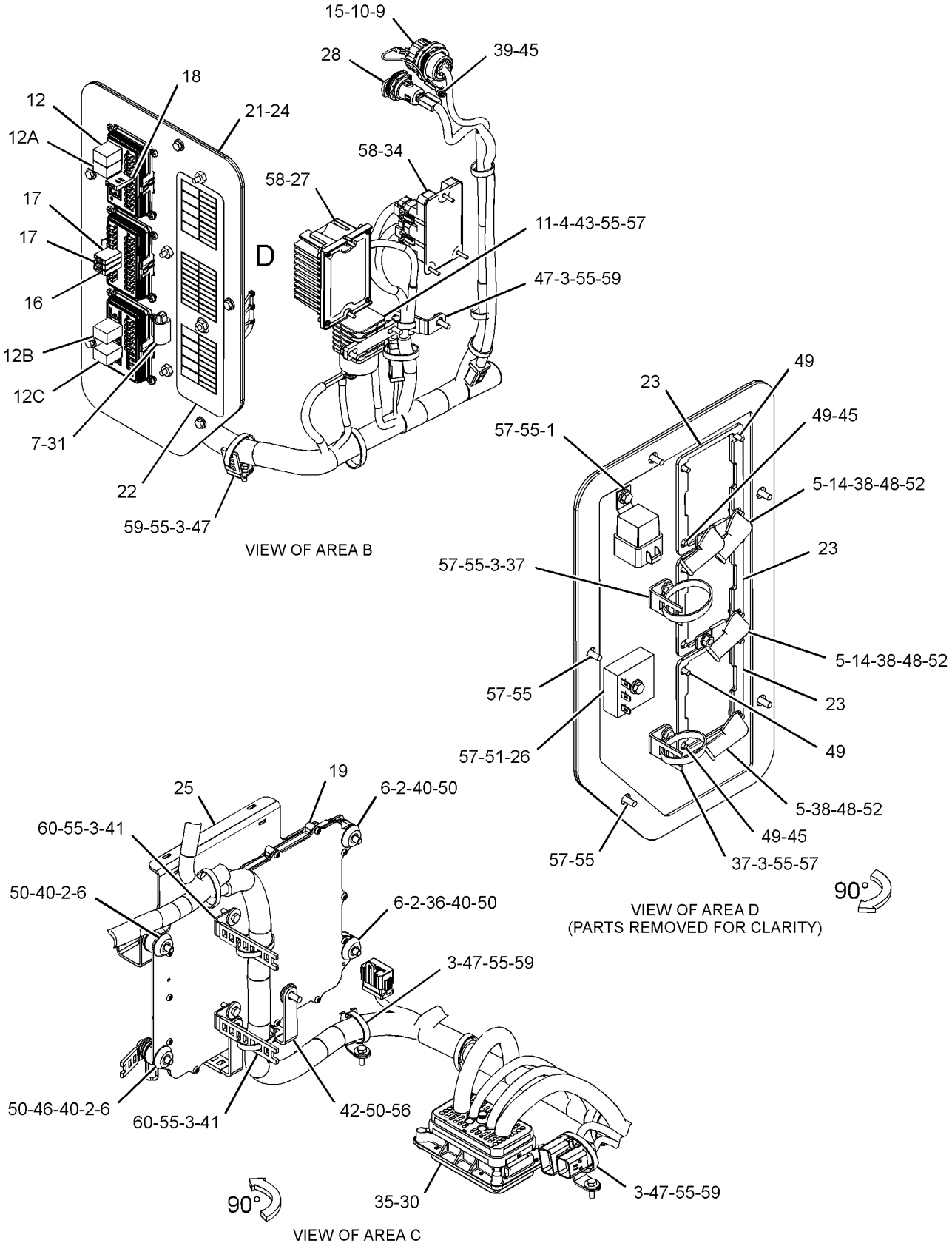

GRAPHIC #2 **<END>** g03380922

333-1450 WIRING GP-CAMERA—REAR VIEW

S/N: DYB1-UP
FOR USE WITH 333-1367—PAGE: 462
AN ATTACHMENT

SMCS-1408, 7348 **i05312438**

NOTE	REF NO	GRAPHIC REF	PART NUMBER	QTY	PART NAME 1 2 3 4 5 6 (PRODUCT LEVEL)	SEE PAGE
J	1	1	**347-1668**	1	CAMERA GP (115-DEG, COLOR)	
	2	1	**349-7894**	1	PLATE	
	3	1	**357-9059**	2	SCREW (M8X1.25X20-MM)	
	4	1	**360-1850**	1	HARNESS AS-CAB (CAMERA, REAR)	
		1	**230-4012**	1	RECEPTACLE AS-CONNECTOR (2-PIN)	
		1	**230-5010**	1	PLUG AS-CONNECTOR (6-PIN)	
		1	**264-7032**	1	SEAL-CONNECTOR	
	5	1	**268-8643**	1	CABLE AS	
	6	1	**2D-2751**	1	GROMMET	
	7	1	**3S-2093**	34	STRAP-CABLE	
	8	1	**8T-4224**	2	WASHER-HARD (8.8X16X2-MM THK)	
					AVAILABLE REPAIR KIT(S):	
J			**251-4162**	1	KIT-BRACKET (CAMERA)	
					(INCLUDES BRACKET, BOLTS, LOCK NUTS, GASKET & ALLEN KEY)	

J - KIT MARKED J SERVICES PART MARKED J

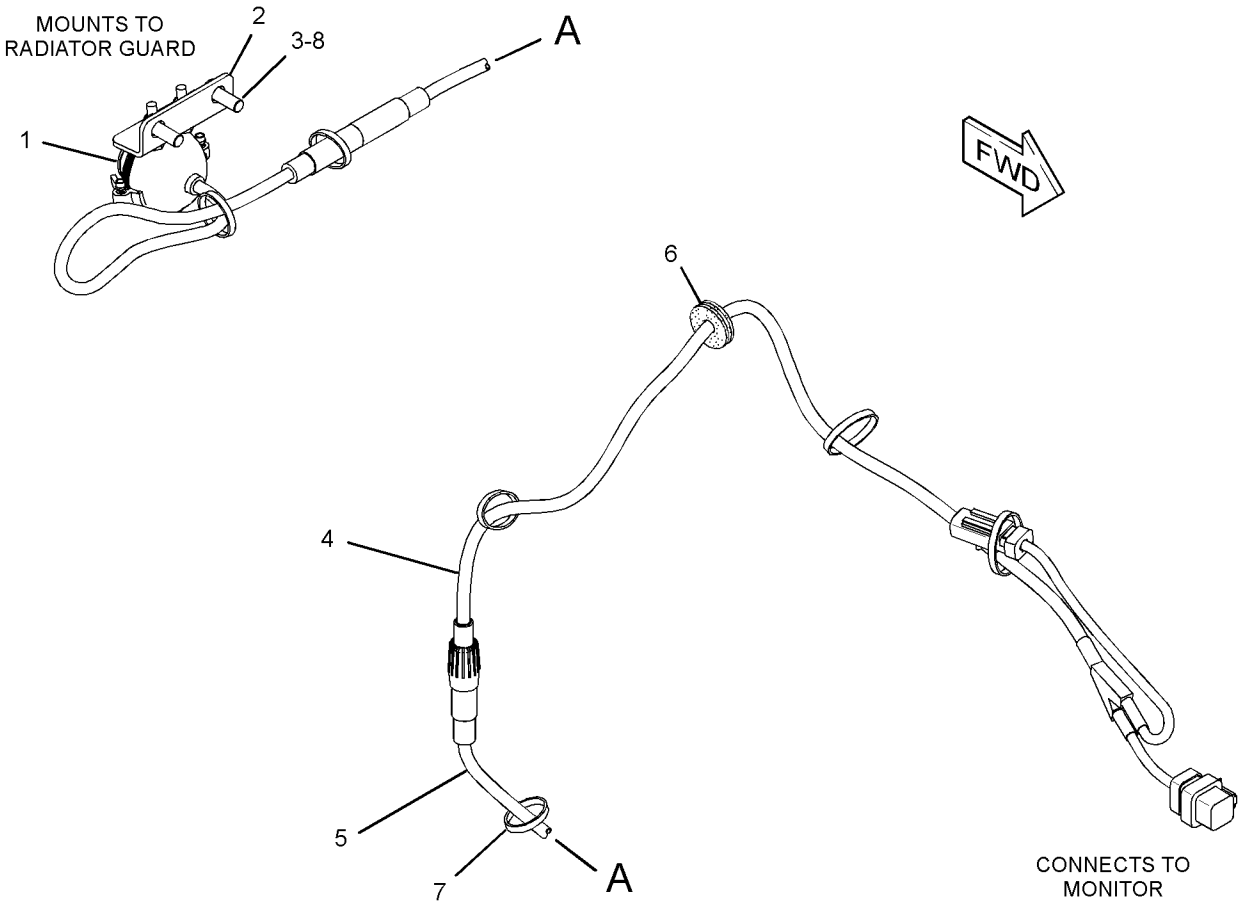

GRAPHIC #1 **<END>** g02746979

372-1930 WIRING GP-CHASSIS

S/N: DYB1-UP

PART OF 381-4385 CHASSIS AR

SMCS-1408 **i05296411**

NOTE	REF NO	GRAPHIC REF	PART NUMBER	QTY	PART NAME 1 2 3 4 5 6 (PRODUCT LEVEL)	SEE PAGE
D	1	1	**5P-7211**		SEAL (0.1-M)	
	2	1	**3E-5169**	1	GUARD-SWITCH	
	3	1	**7K-1181**	53	STRAP-CABLE	
	4	1	**117-3789**	1	RETAINER	
	5	1	**128-4249**	1	LOCKWASHER	
	6	1	**129-8087**	1	SPACER (13.9X17.1X14-MM THK)	
	7	1	**161-2539**	1	ALARM AS	
		1	**4B-2043**	2	NUT (8-32-THD)	
	8	1	**171-2205**	1	CIRCUIT BREAKER AS (40-AMPERE)	
	9	1	**171-2209**	2	CIRCUIT BREAKER AS (70-AMPERE)	
					(EACH CIRCUIT BREAKER AS INCLUDES)	
		1	**4E-5724**	2	WASHER (7X12X1-MM THK)	
		1	**8T-0122**	2	NUT-FULL (1/4-28-THD)	
		1	**1H-3244**	1	LOCKWASHER	
	10	1	**200-6345**	2	MOUNT (DUAL SWIVEL)	
	11	1	**201-1024**	1	BRACKET	
	12	1	**204-2281**	5	STRAP-CABLE	
	13	1	**211-0052**	1	NUT (1-11/16-18-THD)	
Y	14	1	**241-8368**	1	SWITCH GP-MAGNETIC (24-VOLT) (CURRENT MONITORING RELAY)	156
	15	1	**256-6454**	1	SENSOR-TEMPERATURE (CHARGE AIR)	
Y	16	1	**297-8752**	1	SWITCH GP-TOGGLE (ENGINE SHUTOFF)	158
Y	17	1	**325-4471**	2	LAMP GP-FLOOD (24-VOLT, 35-WATT) (CAB, FRONT)	135
	18	1	**333-1387**	4	RESISTOR AS (274-OHM, 1-WATT)	
	19	1	**333-1389**	1	FILM-IDENTIFICATION (CIRCUIT BREAKER)	
	20	1	**333-1417**	1	BAR-BUS	
	21	1	**333-1434**	1	PLATE AS	
M		1	**159-9539**	5	NUT-WELD (M6X1-THD)	
M		1	**195-1095**	4	STUD-WELD (M6X1X20-MM)	
	22	1	**341-9988**	1	STUD AS	
	23	1	**344-7391**	1	SENSOR GP-PRESSURE (BOOM CYL, HEAD END)	
	24	1	**350-1239**	1	COVER	
	25	1	**355-5860**	1	RECEPTACLE	
	26	1	**360-1841**	1	COVER	
	27	1	**360-1842**	1	STUD AS	
		1	**062-5388**	1	LOCKNUT (1-11-1/2-THD)	
Y	28	1	**360-1843**	1	HARNESS AS-WINDOW WIPER	122
	29	1	**360-1858**	1	FILM-IDENTIFICATION (ENGINE STOP, RUN)	
	30	1	**360-1859**	1	BRACKET AS	
M		1	**159-9539**	2	NUT-WELD (M6X1-THD)	
Y	31	1	**372-1931**	1	HARNESS AS-WIRING	123
Y	32	1	**372-1933**	1	HARNESS AS-CHASSIS	111
Y	33	1	**372-1934**	1	HARNESS AS-LIGHTING	119
	34	1	**132-5789**	1	CLIP	
	35	1	**156-6175**	4	CLIP	
	36	1	**168-4511**	6	SCREW-PAN HEAD (10-32X1-IN)	
	37	1	**1S-0994**	2	CLIP	
	38	1	**204-8000**	4	MOUNTING-CABLE TIE	
	39	1	**309-4314**	4	CLIP	
	40	1	**316-9351**	6	MOUNTING-CABLE TIE	
	41	1	**3J-1907**	1	SEAL-O-RING	
	42	1	**3S-2093**	28	STRAP-CABLE	
	43	1	**4D-5243**	1	LOCKWASHER	
	44	1	**4P-7429**	1	CLIP	
	45	1	**4P-7581**	6	CLIP	
	46	1	**4P-8134**	4	CLIP	
M	47	1	**5C-2890**	4	NUT (M6X1-THD)	
M	48	1	**5C-9553**	5	BOLT (M6X1X16-MM)	

372-1930 **WIRING GP-CHASSIS (*contd.*)** **i05296411**

NOTE	REF NO	GRAPHIC REF	PART NUMBER	QTY	PART NAME 1 2 3 4 5 6 (PRODUCT LEVEL)	SEE PAGE
	49	1	**7B-1251**	1	GROMMET	
	50	1	**7P-1695**	3	WASHER (10.5X19X3-MM THK)	
	51	1	**7X-0620**	6	WASHER-HARD (5.5X13X1.6-MM THK)	
	52	1	**7X-7729**	4	WASHER (11X25X3-MM THK)	
	53	1	**8T-4121**	14	WASHER-HARD (11X21X2.5-MM THK)	
M	54	1	**8T-4133**	5	NUT (M10X1.5-THD)	
M	55	1	**8T-4136**	10	BOLT (M10X1.5X25-MM)	
M	56	1	**8T-4137**	6	BOLT (M10X1.5X20-MM)	
M	57	1	**8T-4138**	2	BOLT (M6X1X20-MM)	
M	58	1	**8T-4186**	1	BOLT (M10X1.5X40-MM)	
M	59	1	**8T-4189**	2	BOLT (M8X1.25X20-MM)	
M	60	1	**8T-4192**	1	BOLT (M12X1.75X25-MM)	
M	61	1	**8T-4195**	1	BOLT (M10X1.5X30-MM)	
	62	1	**8T-4205**	9	WASHER-HARD (7.2X14.5X2-MM THK)	
	63	1	**8T-4223**	1	WASHER-HARD (13.5X25.5X3-MM THK)	
	64	1	**8T-4224**	2	WASHER-HARD (8.8X16X2-MM THK)	
	65	1	**8T-7524**	1	SEAL-O-RING	
	66	1	**9X-6165**	2	WASHER (6.5X22X2.5-MM THK)	

D - ORDER BY THE METER
M - METRIC PART
Y - SEPARATE ILLUSTRATION

REFER TO ALL ILLUSTRATIONS OF THIS GROUP FOR AUXILIARY VIEWS

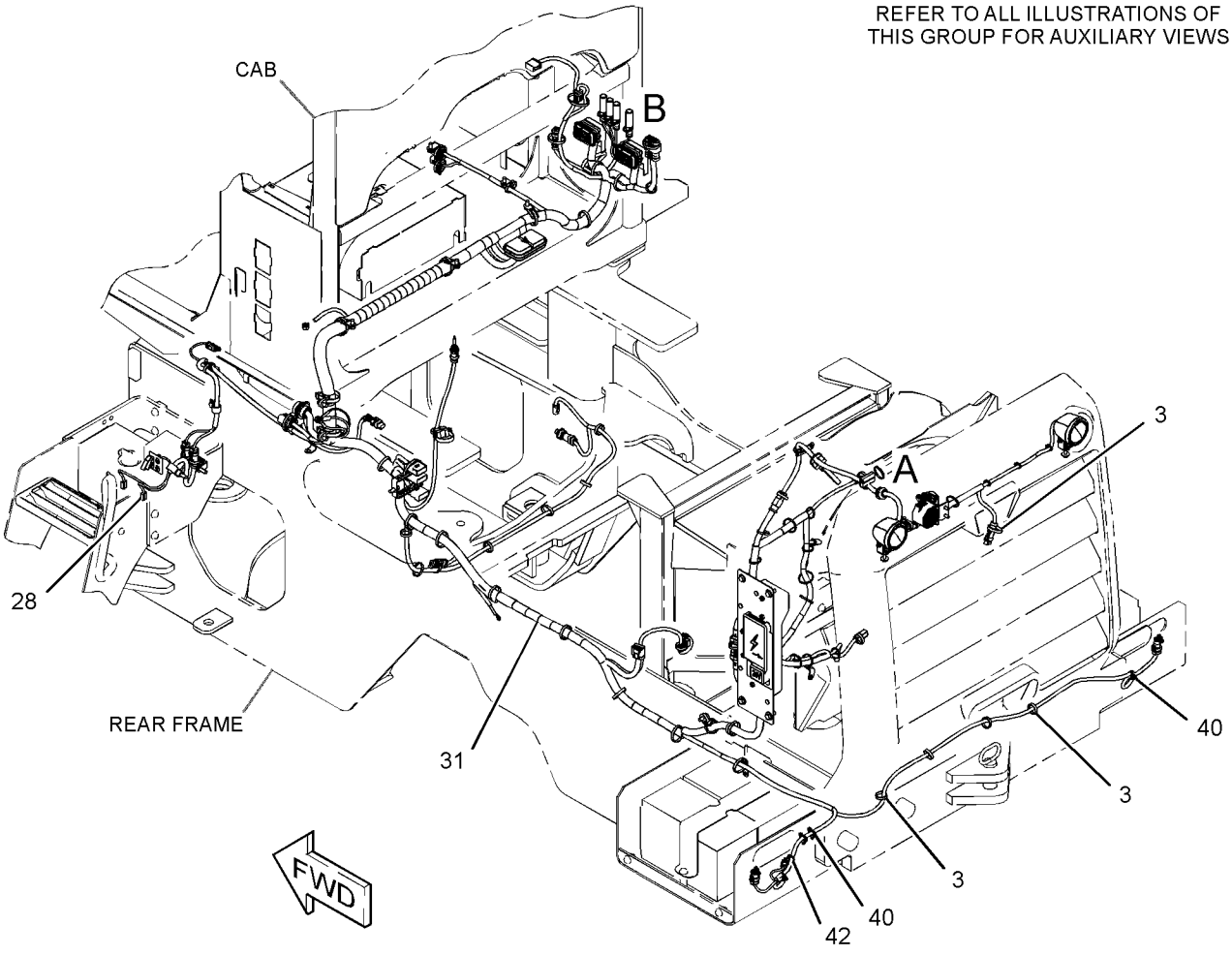

GRAPHIC #1 g03374476

372-1930 **WIRING GP-CHASSIS (*contd.*)** **i05296411**

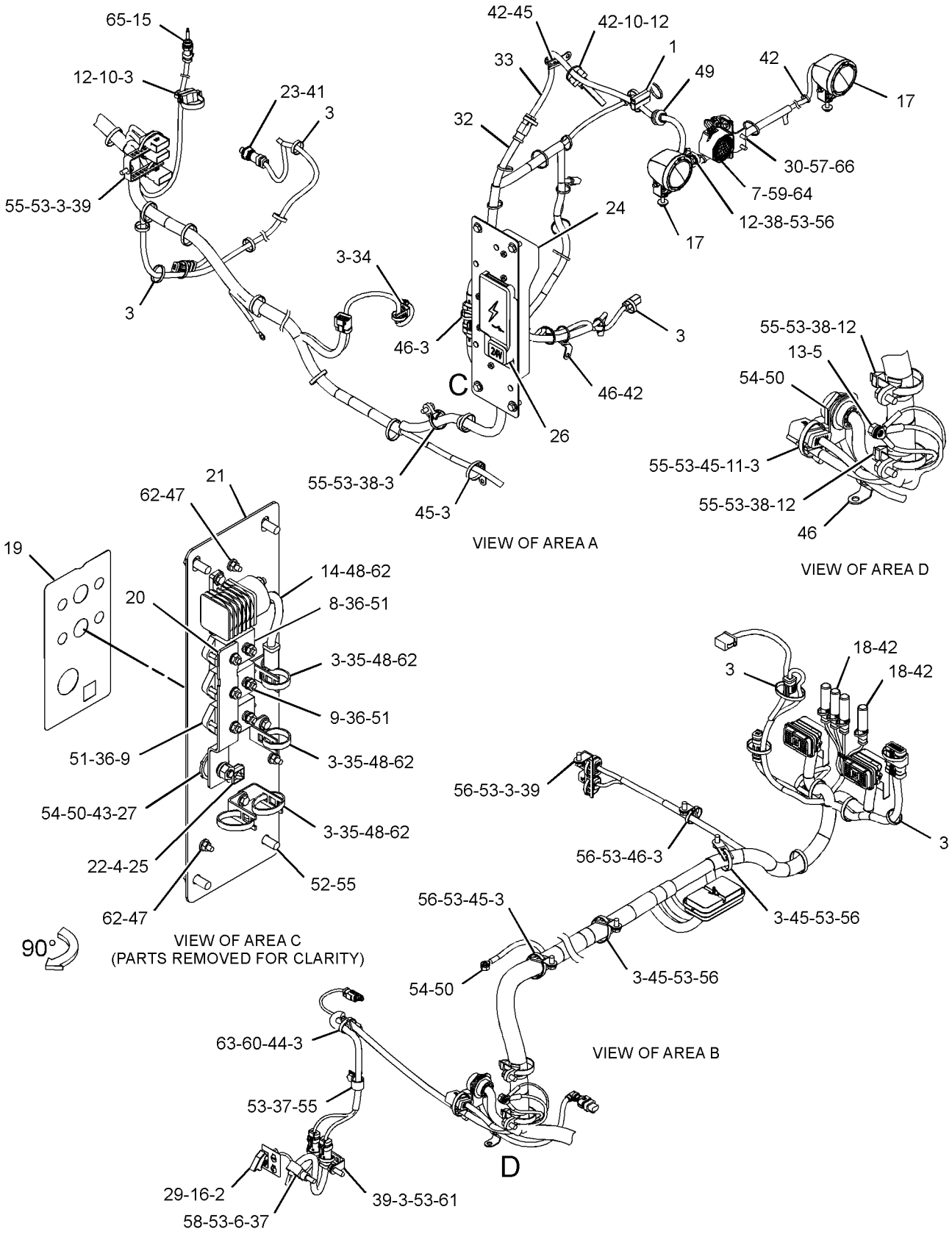

GRAPHIC #2 **<END>** g03374477

333-1390 WIRING GP-CONSOLE–OVERHEAD

S/N: DYB1-UP

PART OF 384-7000 CAB AR-ENCLOSED ROPS

AN ATTACHMENT

SMCS-1408 **i05301070**

NOTE	REF NO	GRAPHIC REF	PART NUMBER	QTY	PART NAME 1 2 3 4 5 6 (PRODUCT LEVEL)	SEE PAGE
	1	1	**7K-1181**	9	STRAP-CABLE	
	2	1	**8E-1118**	1	ANTENNA AS	
	3	1	**101-2640**	1	CABLE AS-COAXIAL	
	4	1	**105-8034**	1	SWITCH AS-LIMIT (DOOR)	
	5	1	**165-0311**	1	PLUG	
	6	1	**167-8176**	2	HOUSING (3-SWITCHES)	
	7	1	**168-8772**	2	SPEAKER AS-RADIO	
Y	8	1	**333-1359**	1	HARNESS AS-CONSOLE (ENCLOSED ROPS)	112
	9	1	**350-1230**	1	SWITCH AS-ROCKER (BEACON)	
	10	1	**350-1231**	1	SWITCH AS-ROCKER (HAZARD)	
	11	1	**350-1232**	1	SWITCH AS-ROCKER (ROADING LIGHTS)	
	12	1	**350-1233**	1	SWITCH AS-ROCKER (FRONT WORK LIGHT)	
	13	1	**350-1234**	1	SWITCH AS-ROCKER (REAR WORK LIGHTS)	
					(EACH SWITCH AS INCLUDES)	
		1	**111-7899**	1	GASKET	
	14	1	**2D-2751**	1	GROMMET	
	15	1	**3S-2093**	9	STRAP-CABLE	
	16	1	**8T-4205**	4	WASHER-HARD (7.2X14.5X2-MM THK)	
M	17	1	**8T-4970**	4	BOLT (M6X1X14-MM)	

M - METRIC PART
Y - SEPARATE ILLUSTRATION

333-1390 **WIRING GP-CONSOLE (*contd.*)** **i05301070**

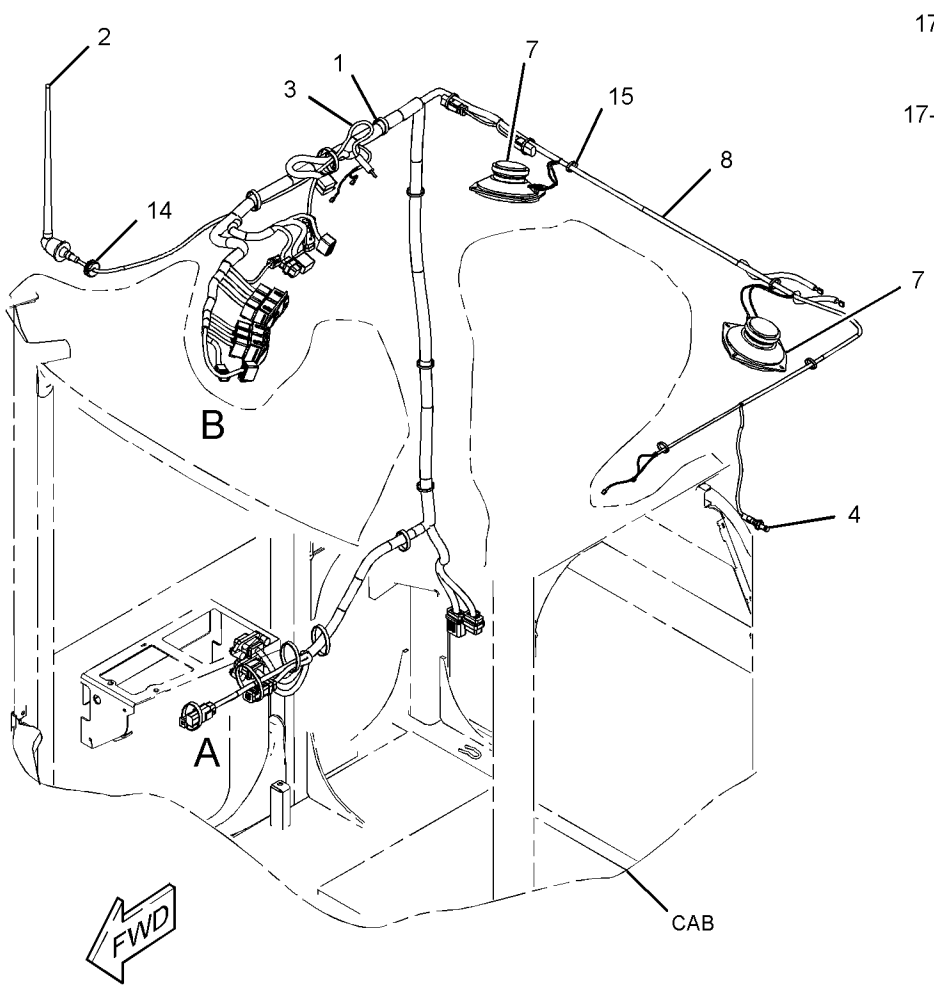

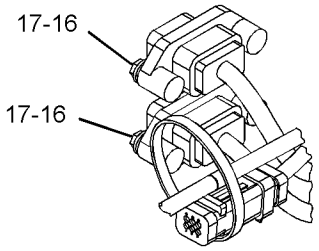

VIEW OF AREA A

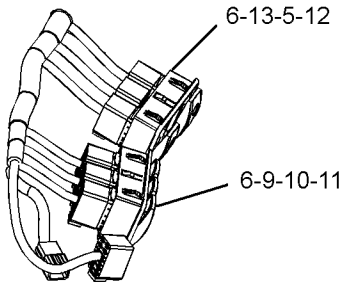

VIEW OF AREA B

GRAPHIC #1 **<END>** g02788511

372-1880 WIRING GP-ENGINE

S/N: DYB1-UP

PART OF 381-4385 CHASSIS AR

SMCS-1403, 1408 **i05296402**

NOTE	REF NO	GRAPHIC REF	PART NUMBER	QTY	PART NAME 1 2 3 4 5 6 (PRODUCT LEVEL)	SEE PAGE
	1	1	**7K-1181**	19	STRAP-CABLE	
	2	1	**8T-8799**	1	BOOT (RED)	
	3	1	**132-1806**	1	STRAP AS-GROUND	
	4	1	**200-6345**	1	MOUNT (DUAL SWIVEL)	
	5	1	**300-1271**	1	BRACKET	
	6	1	**333-1391**	1	BRACKET AS	
M		1	**159-9541**	1	NUT-WELD (M10X1.5-THD)	
	7	1	**333-1418**	1	CABLE AS (ALTERNATOR)	
E		1	**8C-0596**		CABLE (2-GA) (29-CM)	
		1	*278-1439*	1	TERMINAL AS-RING	
E		1	**125-7876**		TUBE-HEAT SHRINK (17.78-MM DIA) (4-CM)	
		1	**278-1438**	1	TERMINAL-RING	
		1	*311-6185*	1	TERMINAL AS	
E		1	**125-7876**		TUBE-HEAT SHRINK (17.78-MM DIA) (4-CM)	
		1	**311-6184**	1	TERMINAL-RING (2-GA, 3/8-IN SCREW)	
	8	1	**344-7391**	1	SENSOR GP-PRESSURE	
	9	1	**349-1178**	1	SENSOR-PRESSURE (HYDROSTATIC, FWD)	
	9A	1	**349-1178**	1	SENSOR-PRESSURE (HYDROSTATIC, REV)	
	10	1	**356-0678**	1	CABLE AS	
		1	**6T-5598**	1	TERMINAL-RING (1-GA TO 2-GA, 5/16-IN SCREW)	
		1	**8T-8827**	1	BOOT (RED)	
		1	*278-1439*	1	TERMINAL AS-RING	
E		1	**125-7876**		TUBE-HEAT SHRINK (17.78-MM DIA) (4-CM)	
		1	**278-1438**	1	TERMINAL-RING	
	11	1	**370-6989**	1	BRACKET AS	
M		1	**159-9541**	3	NUT-WELD (M10X1.5-THD)	
Y	12	1	**372-1881**	1	HARNESS AS-ENGINE	115
	13	1	**132-5789**	2	CLIP	
	14	1	**204-8000**	3	MOUNTING-CABLE TIE	
	15	1	**309-4314**	2	CLIP	
	16	1	**316-9351**	1	MOUNTING-CABLE TIE	
	17	1	**3J-1907**	3	SEAL-O-RING	
	18	1	**3S-2093**	13	STRAP-CABLE	
	19	1	**4P-7581**	7	CLIP	
	20	1	**4P-8134**	3	CLIP	
	21	1	**5P-4116**	1	WASHER-HARD (8.8X20.5X2-MM THK)	
	22	1	**7P-1695**	2	WASHER (10.5X19X3-MM THK)	
	23	1	**8T-4121**	11	WASHER-HARD (11X21X2.5-MM THK)	
M	24	1	**8T-4133**	1	NUT (M10X1.5-THD)	
M	25	1	**8T-4136**	3	BOLT (M10X1.5X25-MM)	
M	26	1	**8T-4137**	7	BOLT (M10X1.5X20-MM)	
M	27	1	**8T-4189**	1	BOLT (M8X1.25X20-MM)	
M	28	1	**8T-4195**	1	BOLT (M10X1.5X30-MM)	
M	29	1	**101-7401**	1	BOLT-SOCKET HEAD (M10X1.5X20-MM)	
	30	1	**8S-0948**	1	CLIP	

E - ORDER BY THE CENTIMETER
M - METRIC PART
Y - SEPARATE ILLUSTRATION

372-1880 **WIRING GP-ENGINE (*contd.*)** **i05296402**

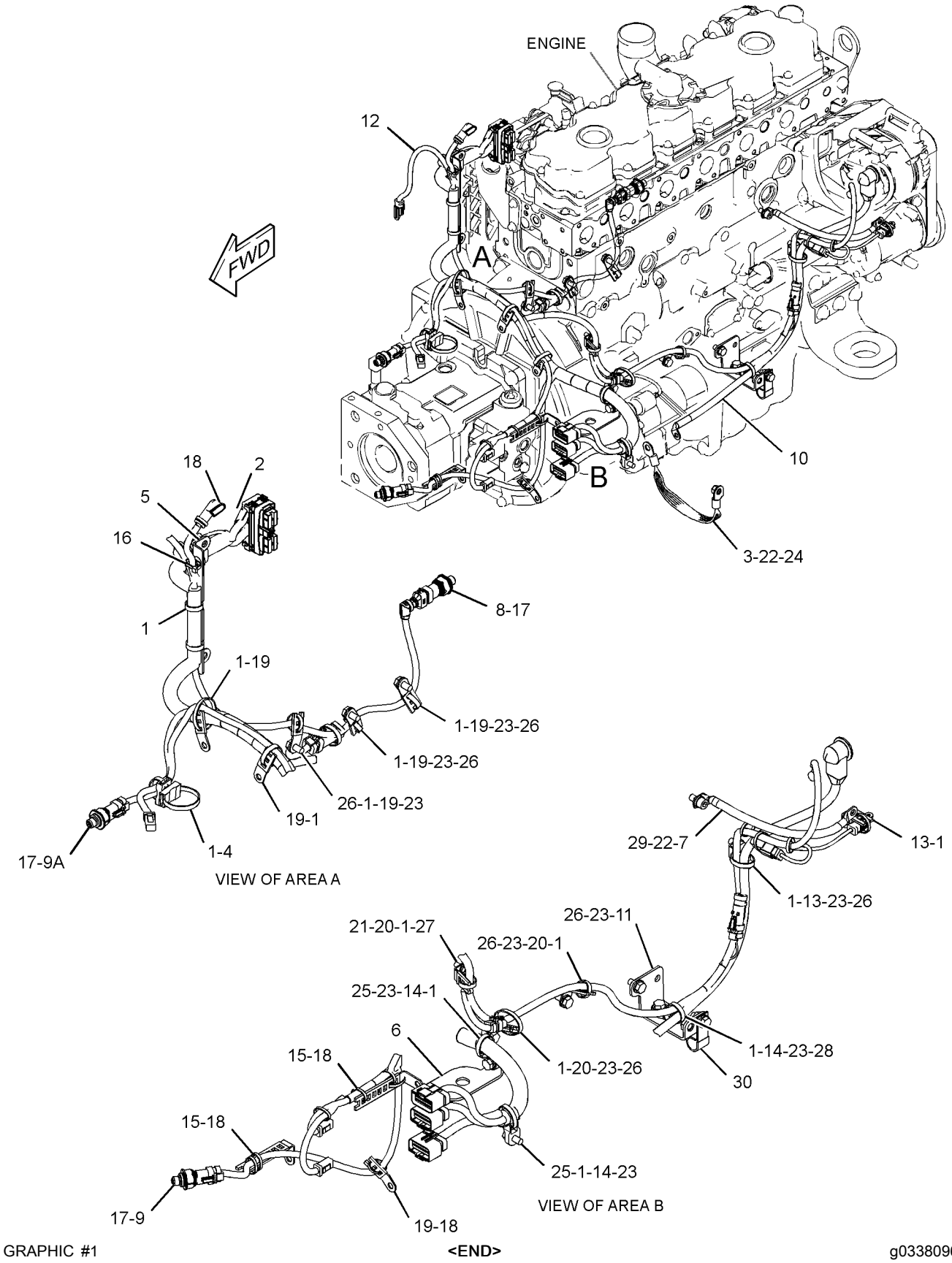

GRAPHIC #1 **<END>** g03380964

395-0113 WIRING GP-ENGINE

S/N: E7A1-UP
PART OF 371-1441 ENGINE AR-PRIMARY
AN ATTACHMENT

SMCS-1403, 1408 **i05332683**

NOTE	REF NO	GRAPHIC REF	PART NUMBER	QTY	PART NAME 1 2 3 4 5 6 (PRODUCT LEVEL)	SEE PAGE
	1	1	**277-5064**	3	SEAL-O-RING	
	2	1	**277-5065**	3	CLIP	
M	3	1	**124-3815**	4	BOLT (M8X1.25X16-MM)	
	4	1	**217-9039**	1	STRAP-CABLE	
	5	1	**348-4637**	1	BOLT	
Y	6	1	**375-8407**	3	HARNESS AS-WIRING	125
	7	1	**377-1293**	1	BRACKET	
Y	8	1	**385-5997**	1	HARNESS AS-ENGINE	116
	9	1	**389-3863**	1	BRACKET	
	10	1	**392-2780**	1	BRACKET	
	11	1	**132-5789**	1	CLIP	
M	12	1	**232-1693**	1	BOLT-FLANGE HEAD (M6X1X35-MM)	

M - METRIC PART
Y - SEPARATE ILLUSTRATION

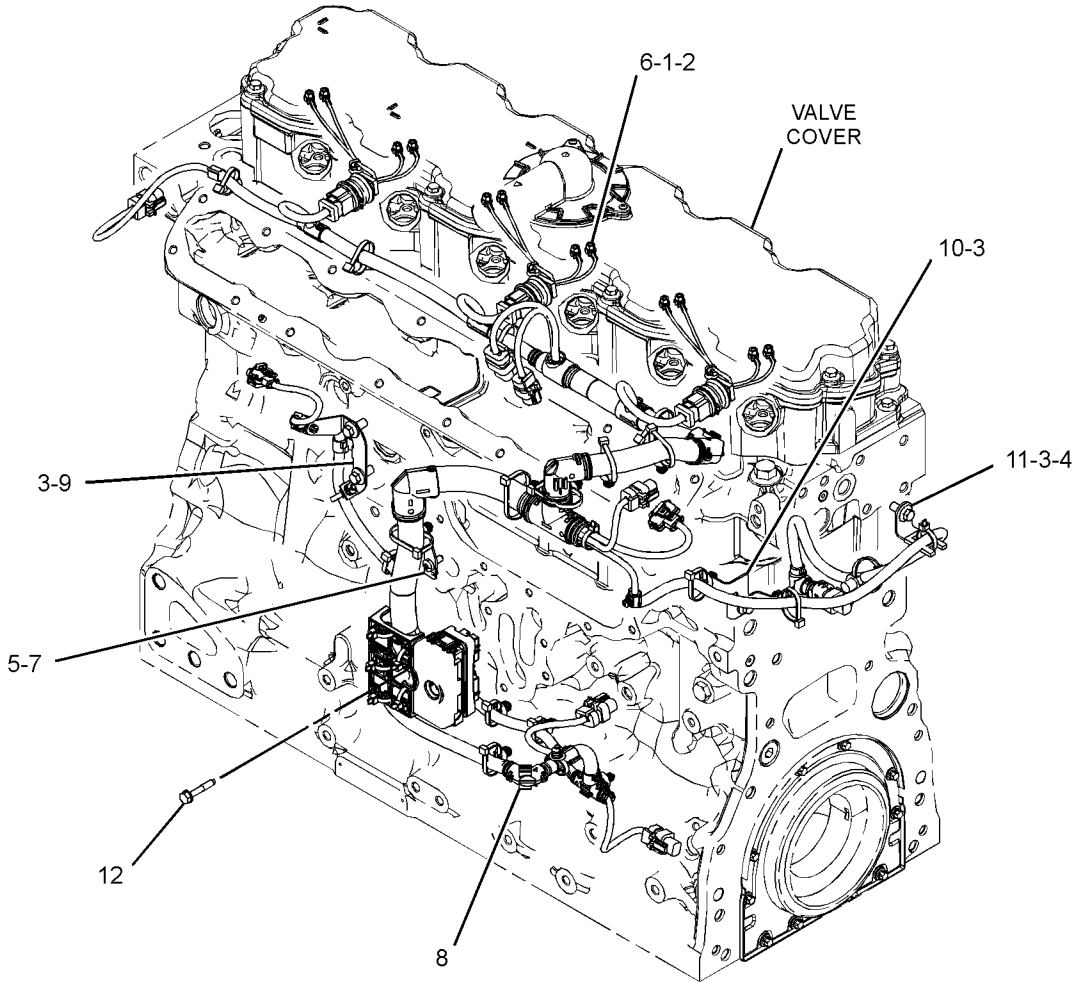

GRAPHIC #1 **<END>** g03380308

333-1420 WIRING GP-FRONT

S/N: DYB1-UP

PART OF 381-4385 CHASSIS AR

SMCS-5734 **i05307635**

NOTE	REF NO	GRAPHIC REF	PART NUMBER	QTY	PART NAME 1 2 3 4 5 6 (PRODUCT LEVEL)	SEE PAGE
	1	1	**5V-6152**	4	CLAMP	
	2	1	**5V-6153**	2	PLATE-COVER	
	3	1	**7K-1181**	38	STRAP-CABLE	
	4	1	**163-1201**	1	HORN AS (24-VOLT, LOW TONE)	
	5	1	**273-8609**	1	BRACKET AS	
Y	6	1	**333-1421**	1	HARNESS AS-FRONT	117
Y	7	1	**333-1423**	2	HARNESS AS-LIGHTING	118
	8	1	**344-7391**	1	SENSOR GP-PRESSURE (BRAKE OIL)	
	9	1	**360-1854**	1	BRACKET AS	
	10	1	**3J-1907**	1	SEAL-O-RING	
	11	1	**4P-7581**	3	CLIP	
	12	1	**8T-4121**	7	WASHER-HARD (11X21X2.5-MM THK)	
M	13	1	**8T-4136**	4	BOLT (M10X1.5X25-MM)	
M	14	1	**8T-4137**	3	BOLT (M10X1.5X20-MM)	
	15	1	**8T-4205**	4	WASHER-HARD (7.2X14.5X2-MM THK)	
M	16	1	**8T-6974**	4	BOLT (M6X1X80-MM)	

M - METRIC PART
Y - SEPARATE ILLUSTRATION

333-1420 **WIRING GP-FRONT (*contd.*)** **i05307635**

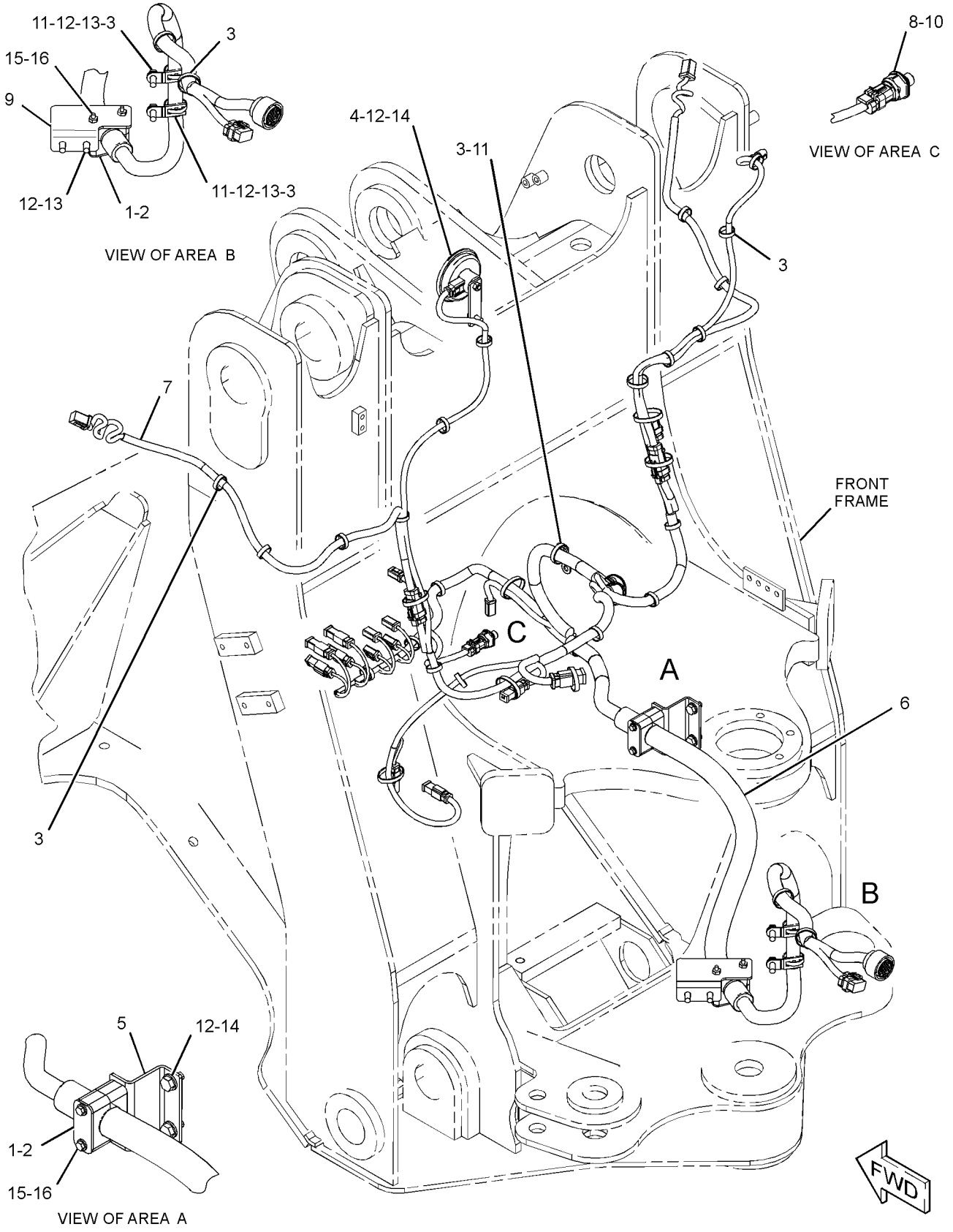

GRAPHIC #1 **<END>** g02793326

372-1882 WIRING GP-FUEL PUMP

S/N: DYB1-UP

PART OF 381-4385 CHASSIS AR

SMCS-1295, 1408 **i05296408**

NOTE	REF NO	GRAPHIC REF	PART NUMBER	QTY	PART NAME 1 2 3 4 5 6 (PRODUCT LEVEL)	SEE PAGE
	1	1	**7K-1181**	8	STRAP-CABLE	
	2	1	**256-6454**	1	SENSOR-TEMPERATURE (INTAKE MANIFOLD AIR)	
Y	3	1	**372-1883**	1	HARNESS AS-SENSOR	120
	4	1	**316-9351**	8	MOUNTING-CABLE TIE	
	5	1	**4P-7581**	1	CLIP	
	6	1	**4P-8134**	1	CLIP	
	7	1	**8S-7583**	2	GROMMET	
	8	1	**8T-4121**	1	WASHER-HARD (11X21X2.5-MM THK)	
M	9	1	**8T-4137**	1	BOLT (M10X1.5X20-MM)	
	10	1	**8T-7524**	1	SEAL-O-RING	
D	11	1	**5P-8309**		SEAL (0.18-M)	

D - ORDER BY THE METER
M - METRIC PART
Y - SEPARATE ILLUSTRATION

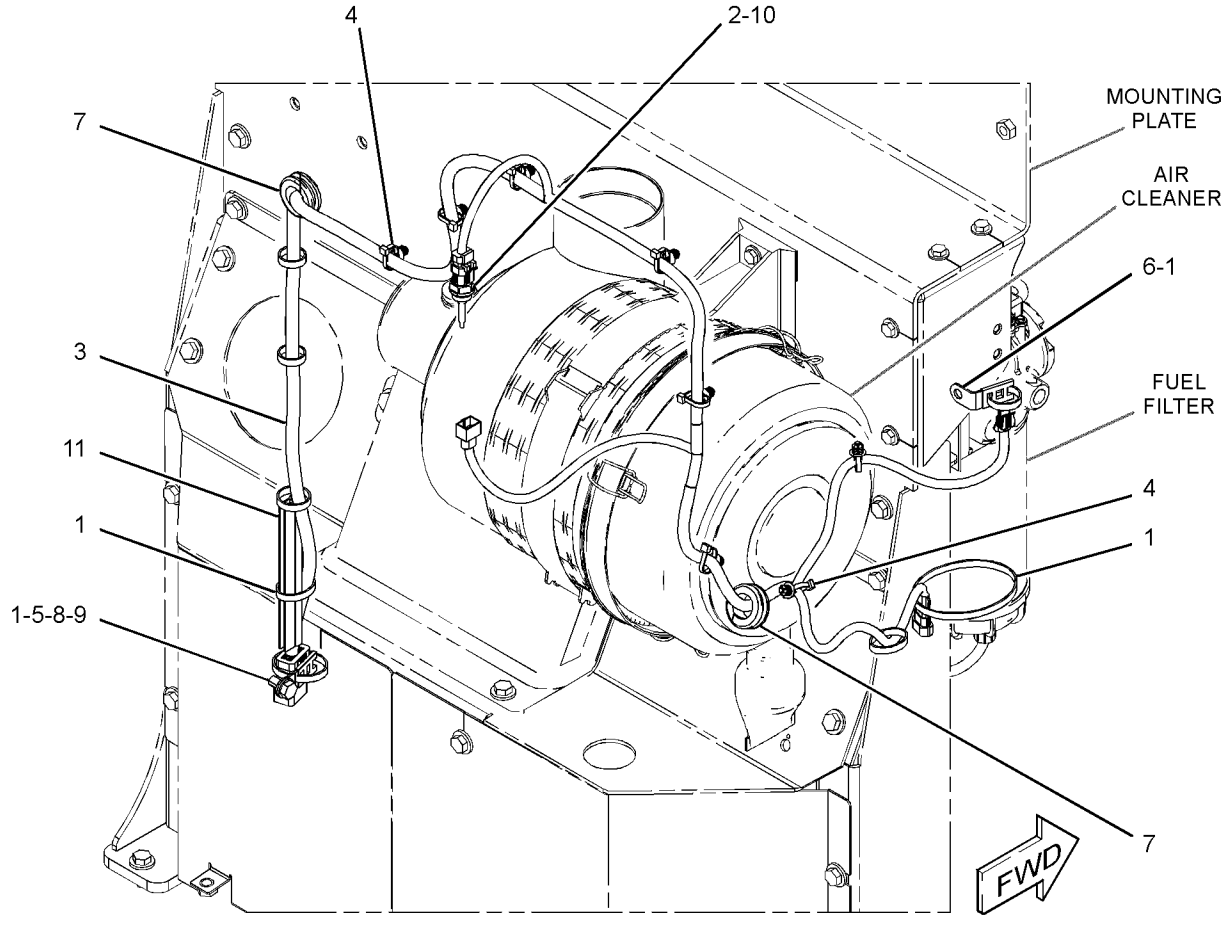

GRAPHIC #1 **<END>** g03380679

372-1940 WIRING GP-KICKOUT & POSITIONER

S/N: DYB1-UP
PART OF 381-4394 LINKAGE AR-FRONT
AN ATTACHMENT

SMCS-5109, 5112, 5734 **i05300033**

NOTE	REF NO	GRAPHIC REF	PART NUMBER	QTY	PART NAME 1 2 3 4 5 6 (PRODUCT LEVEL)	SEE PAGE
	1	1	**7K-1181**	8	STRAP-CABLE	
	2	1	**7V-5626**	4	CLAMP	
Y	3	1	**266-2337**	2	SENSOR GP-POSITION (ROTARY)	149
	4	1	**296-6980**	3	SPACER (11X25X30-MM THK)	
	5	1	**354-5615**	1	BRACKET	
	6	1	**356-0681**	2	BRACKET	
	7	1	**356-0682**	1	PLATE	
	8	1	**360-1849**	1	SPACER (12.25X19.05X125-MM THK)	
Y	9	1	**372-1945**	1	HARNESS AS-CONTROL	114
	10	1	**372-1946**	1	ROD END	
	11	1	**372-1947**	1	BRACKET AS	
	12	1	**372-1948**	1	PLATE AS	
M		1	**159-9540**	5	NUT-WELD (M8X1.25-THD)	
M	13	1	**151-6282**	4	BOLT-SOCKET HEAD (M6X1X40-MM)	
	14	1	**2M-3432**	1	GROMMET	
	15	1	**3S-2093**	1	STRAP-CABLE	
M	16	1	**5C-7261**	6	NUT (M8X1.25-THD)	
M	17	1	**7X-0818**	5	BOLT (M8X1.25X45-MM)	
	18	1	**8T-4121**	6	WASHER-HARD (11X21X2.5-MM THK)	
M	19	1	**8T-4137**	3	BOLT (M10X1.5X20-MM)	
	20	1	**8T-4224**	12	WASHER-HARD (8.8X16X2-MM THK)	
M	21	1	**8T-4971**	4	BOLT (M6X1X30-MM)	
M	22	1	**8T-5092**	1	BOLT (M12X1.75X150-MM)	
M	23	1	**8T-6466**	3	BOLT (M10X1.5X60-MM)	
M	24	1	**9X-2629**	5	SCREW-HEAD	
	25	1	**9X-8256**	4	WASHER (6.6X12X2-MM THK)	

M - METRIC PART
Y - SEPARATE ILLUSTRATION

372-1940 **WIRING GP-KICKOUT & POSITIONER (*contd.*)** **i05300033**

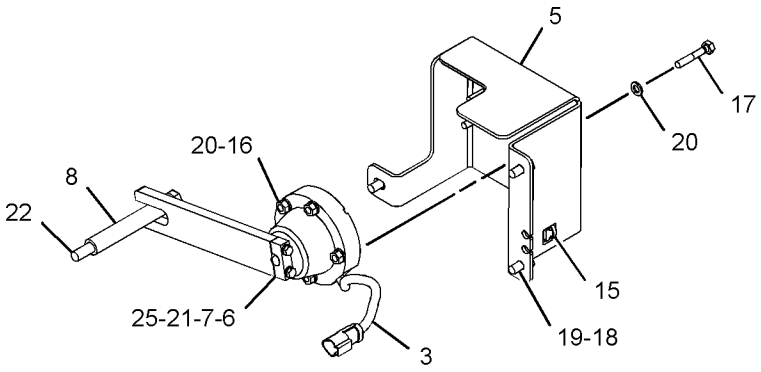

VIEW OF AREA A

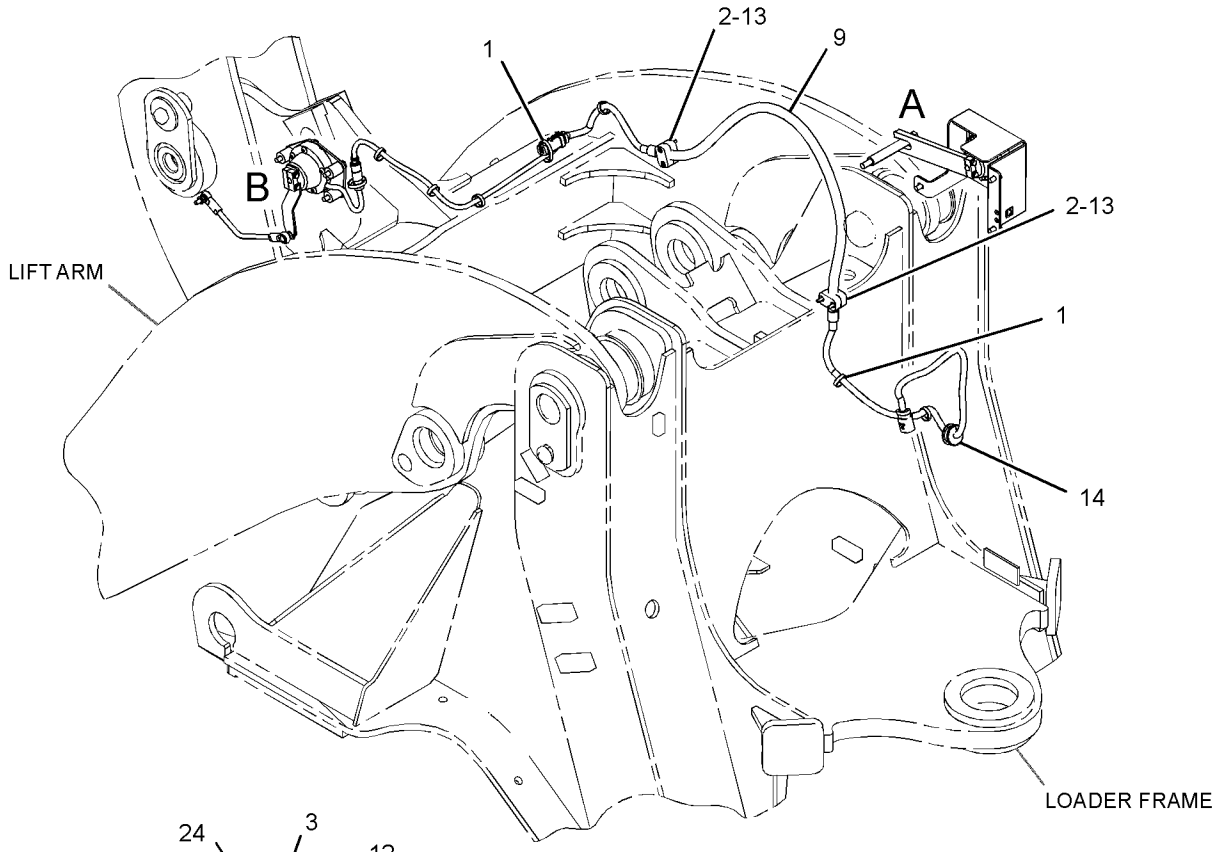

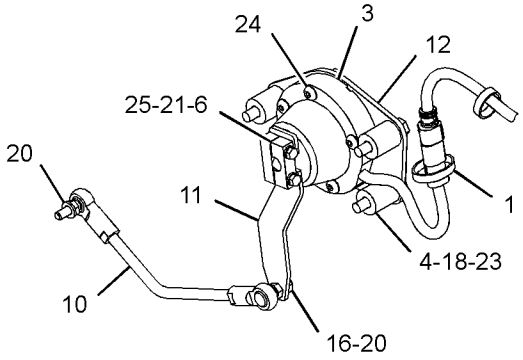

VIEW OF AREA B



GRAPHIC #1 **<END>** g03376217

333-1370 WIRING GP-SEAT

S/N: DYB1-UP
PART OF 384-7000 CAB AR-ENCLOSED ROPS
AN ATTACHMENT

SMCS-1408 **i05301006**

NOTE	REF NO	GRAPHIC REF	PART NUMBER	QTY	PART NAME 1 2 3 4 5 6 (PRODUCT LEVEL)	SEE PAGE
Y	1	1	**333-1371**	1	HARNESS AS-OPERATOR CONTROLS	120
	2	1	**354-5617**	1	BRACKET AS	
	3	1	**096-1349**	2	CLIP	
	4	1	**156-6175**	1	CLIP	
M	5	1	**3E-8020**	4	SCREW-TRUSS HEAD (M6X1X25-MM)	
	6	1	**3S-2093**	5	STRAP-CABLE	
	7	1	**4P-7581**	2	CLIP	
	8	1	**4P-8134**	2	CLIP	
M	9	1	**5C-2890**	1	NUT (M6X1-THD)	
	10	1	**8T-4205**	2	WASHER-HARD (7.2X14.5X2-MM THK)	
M	11	1	**8T-4971**	1	BOLT (M6X1X30-MM)	
	12	1	**9X-2038**	7	WASHER (7X19X2-MM THK)	
M	13	1	**9X-2043**	3	SCREW-TRUSS HEAD (M6X1X14-MM)	

M - METRIC PART
Y - SEPARATE ILLUSTRATION

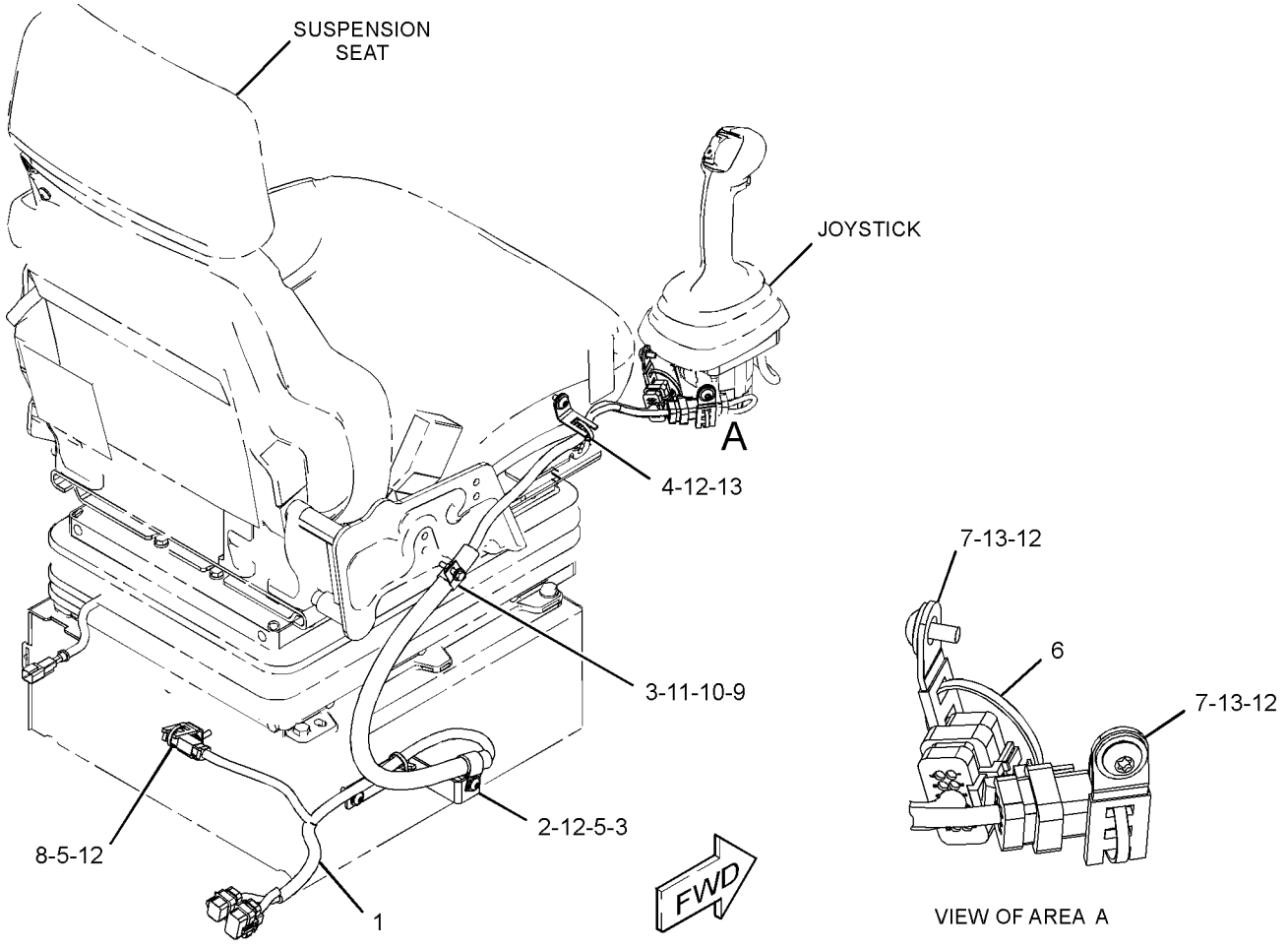

GRAPHIC #1 **<END>** g02788333

377-5650 WIRING GP-START CONTROL

S/N: DYB1-UP
PART OF 381-4389, 381-4390 OPTION AR-COLD WEATHER
AN ATTACHMENT

SMCS-1408, 1426

i05297439

NOTE	REF NO	GRAPHIC REF	PART NUMBER	QTY	PART NAME 1 2 3 4 5 6 (PRODUCT LEVEL)	SEE PAGE
	1	1	**3E-5239**	1	RELAY AS (24-VOLT) (ETHER STARTING AID)	
	2	1	**7K-1181**	2	STRAP-CABLE	
	3	1	**130-5300**	1	CLIP	
Y	4	1	**377-5651**	1	HARNESS AS-STARTING AID	121
	5	1	**377-5654**	1	BRACKET AS	
M		1	**159-9539**	1	NUT-WELD (M6X1-THD)	
M		1	**159-9540**	2	NUT-WELD (M8X1.25-THD)	
	6	1	**3S-2093**	1	STRAP-CABLE	
	7	1	**4P-8134**	1	CLIP	
M	8	1	**5C-9553**	1	BOLT (M6X1X16-MM)	
	9	1	**5P-4116**	2	WASHER-HARD (8.8X20.5X2-MM THK)	
M	10	1	**8T-4189**	2	BOLT (M8X1.25X20-MM)	
	11	1	**9X-8256**	1	WASHER (6.6X12X2-MM THK)	
	12	1	**189-3158**	1	SUPPRESSOR-ARC	

M - METRIC PART
Y - SEPARATE ILLUSTRATION

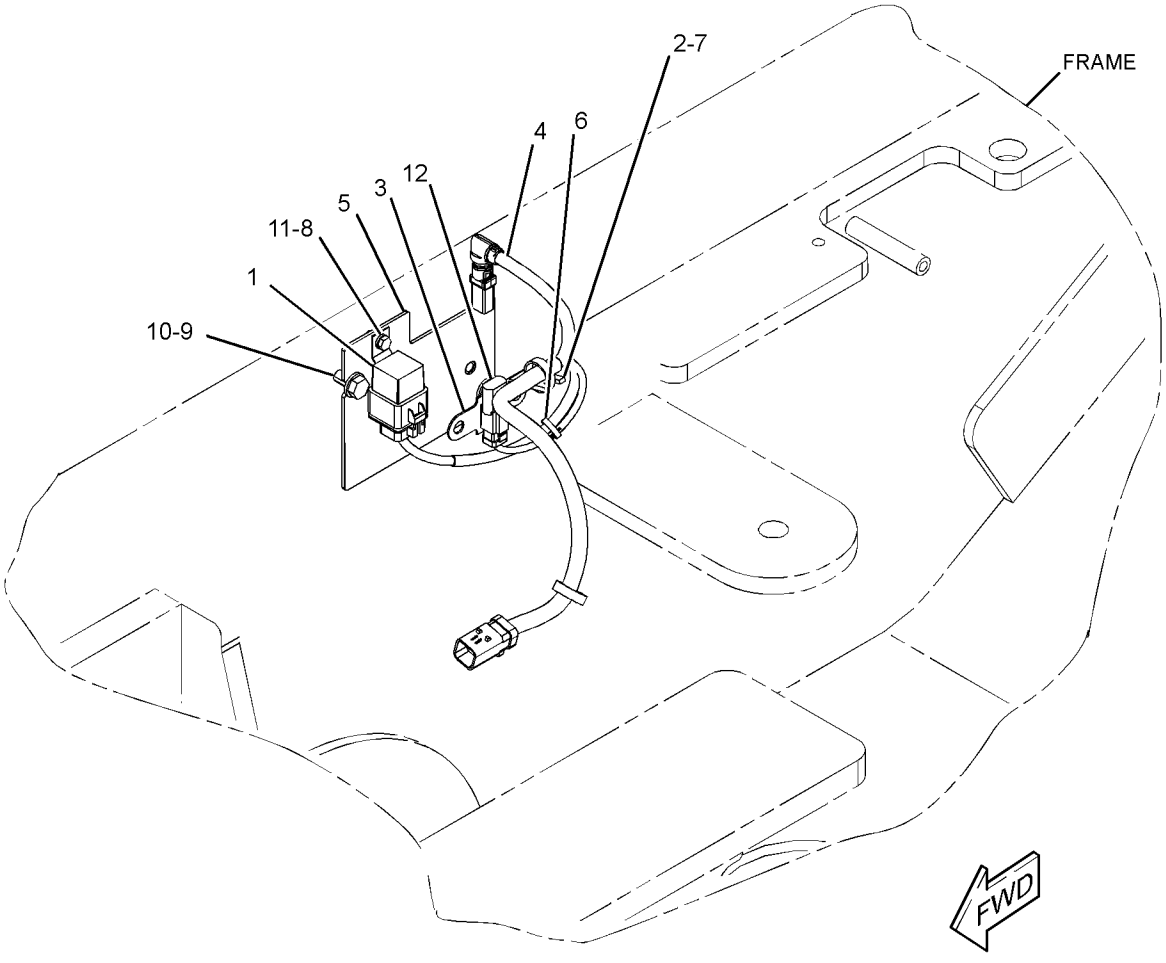

GRAPHIC #1

<END>

g03376270

333-1385 WIRING GP-TRANSMISSION CONTROL—GEAR BOX

S/N: DYB1-UP

PART OF 381-4385 CHASSIS AR

SMCS-1408, 3104 **i05307633**

NOTE	REF NO	GRAPHIC REF	PART NUMBER	QTY	PART NAME 1 2 3 4 5 6 (PRODUCT LEVEL)	SEE PAGE
	1	1	**7K-1181**	10	STRAP-CABLE	
	2	1	**206-2423**	1	SADDLE	
	3	1	**316-9351**	2	MOUNTING-CABLE TIE	
Y	4	1	**333-1386**	1	HARNESS AS-TRANSMISSION	122
	5	1	**104-6202**	1	CLIP	
	6	1	**132-5789**	1	CLIP	
	7	1	**204-8000**	1	MOUNTING-CABLE TIE	
	8	1	**3S-2093**	6	STRAP-CABLE	
	9	1	**4P-8134**	1	CLIP	
	10	1	**8T-4121**	2	WASHER-HARD (11X21X2.5-MM THK)	
M	11	1	**8T-4136**	1	BOLT (M10X1.5X25-MM)	
M	12	1	**8T-4191**	2	BOLT (M10X1.5X16-MM)	
	13	1	**4D-5243**	1	LOCKWASHER	
	14	1	**7P-1695**	1	WASHER (10.5X19X3-MM THK)	

M - METRIC PART
Y - SEPARATE ILLUSTRATION

333-1385 **WIRING GP-TRANSMISSION CONTROL (*contd.*)** **i05307633**

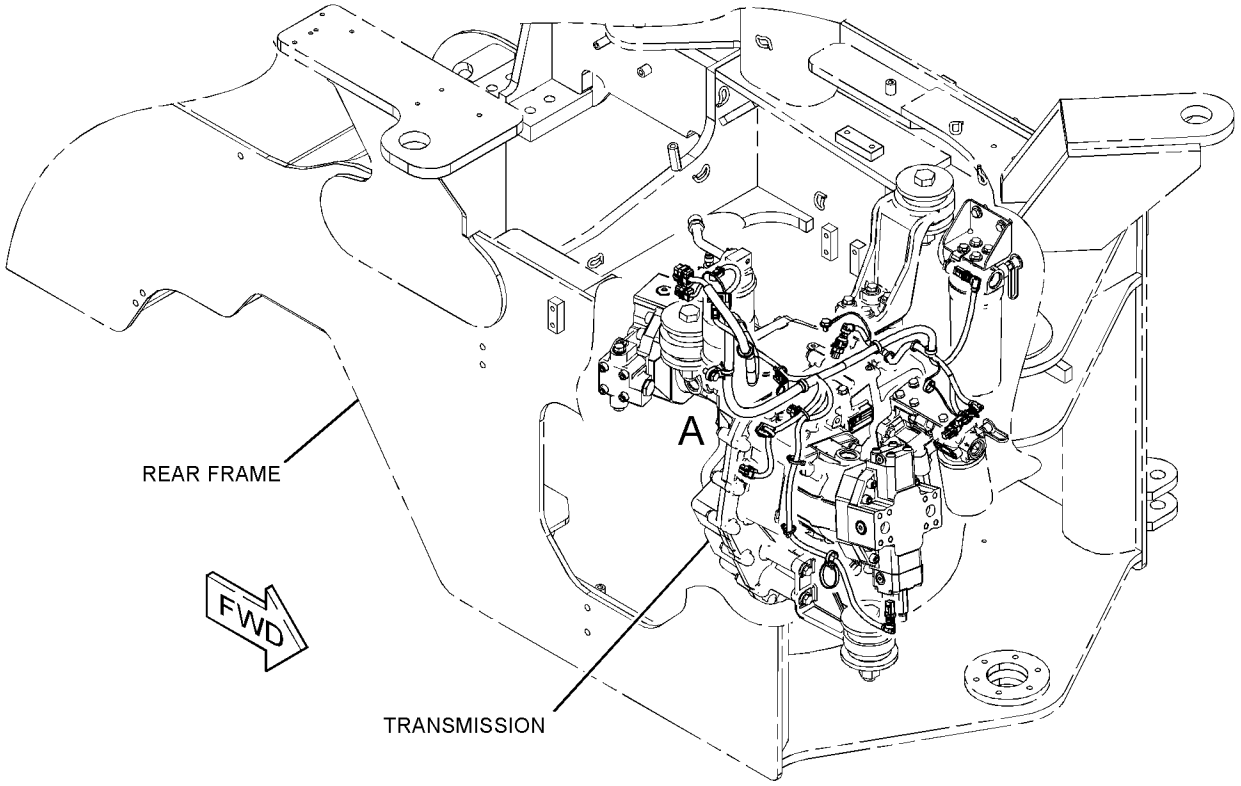

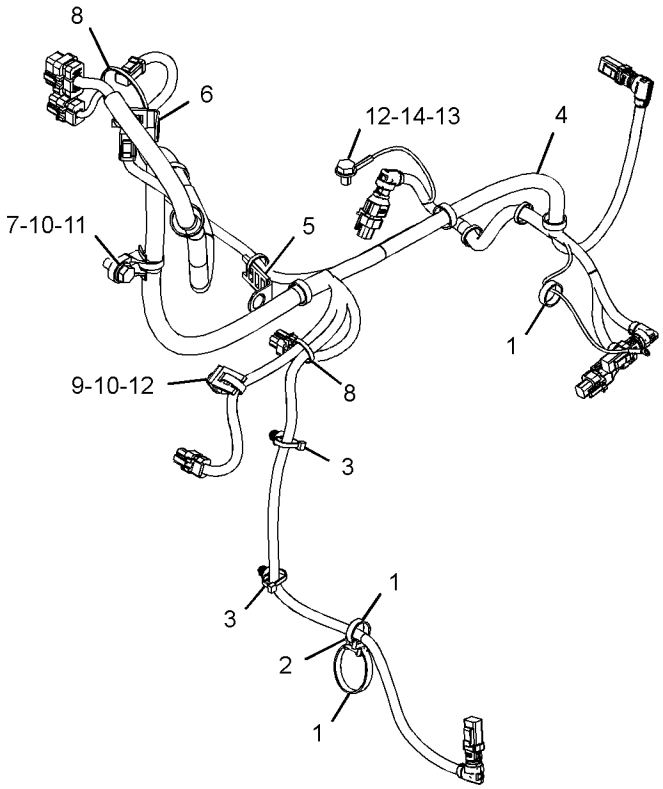

VIEW OF AREA A

GRAPHIC #1 **<END>** g03070438

373-6953 ACCUMULATOR GP-HYDRAULIC—CHARGED

S/N: DYB1-UP

FIELD REPLACEMENT ORDER 373-6964—PAGE: 183

PART OF 339-6797 LINES GP-HYDROSTATIC

SMCS-5077 **i05323431**

NOTE	REF NO	GRAPHIC REF	PART NUMBER	QTY	PART NAME 1 2 3 4 5 6 (PRODUCT LEVEL)	SEE PAGE
	1	1	**224-5152**	1	VALVE-GAS (HYDRAULIC ACCUMULATOR)	
	2	1	**224-5132**	1	CAP (GAS VALVE)	
	3	1	**3J-7354**	1	SEAL-O-RING	
	4	1	**1J-9671**	1	SEAL-O-RING	
	5	1	**241-0037**	1	FILM-WARNING (HIGH PRESSURE, READ OMM)	

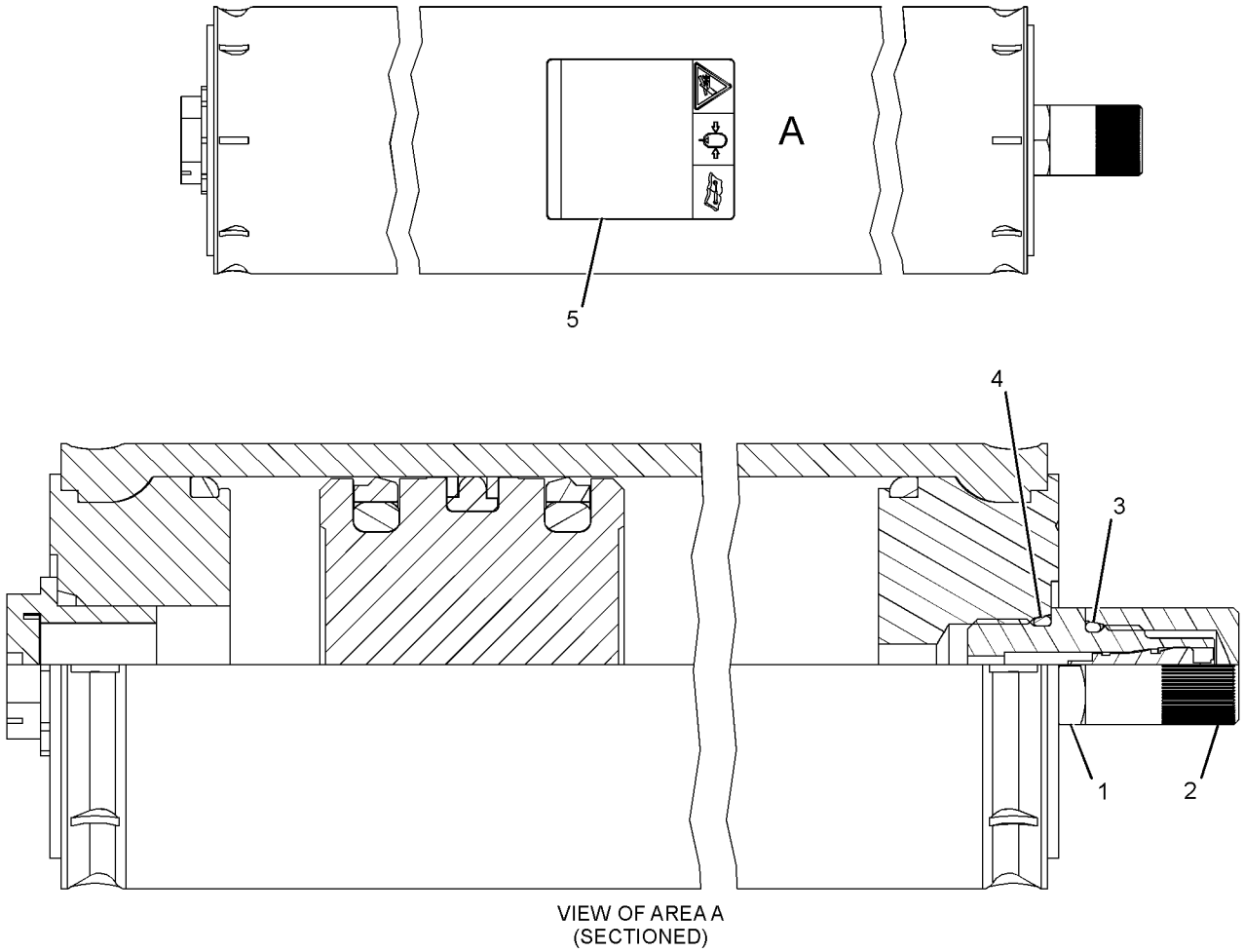

VIEW OF AREA A
(SECTIONED)

GRAPHIC #1 **<END>** g02792726

373-6964 ACCUMULATOR GP-HYDRAULIC—UNCHARGED

S/N: DYB1-UP

FIELD REPLACEMENT FOR 373-6953—PAGE: 182

SMCS-5077 **i05323437**

NOTE	REF NO	GRAPHIC REF	PART NUMBER	QTY	PART NAME 1 2 3 4 5 6 (PRODUCT LEVEL)	SEE PAGE
	1	1	**224-5152**	1	VALVE-GAS (HYDRAULIC ACCUMULATOR)	
	2	1	**224-5132**	1	CAP (GAS VALVE)	
	3	1	**3J-7354**	1	SEAL-O-RING	
	4	1	**1J-9671**	1	SEAL-O-RING	
	5	1	**241-0037**	1	FILM-WARNING (HIGH PRESSURE, READ OMM)	

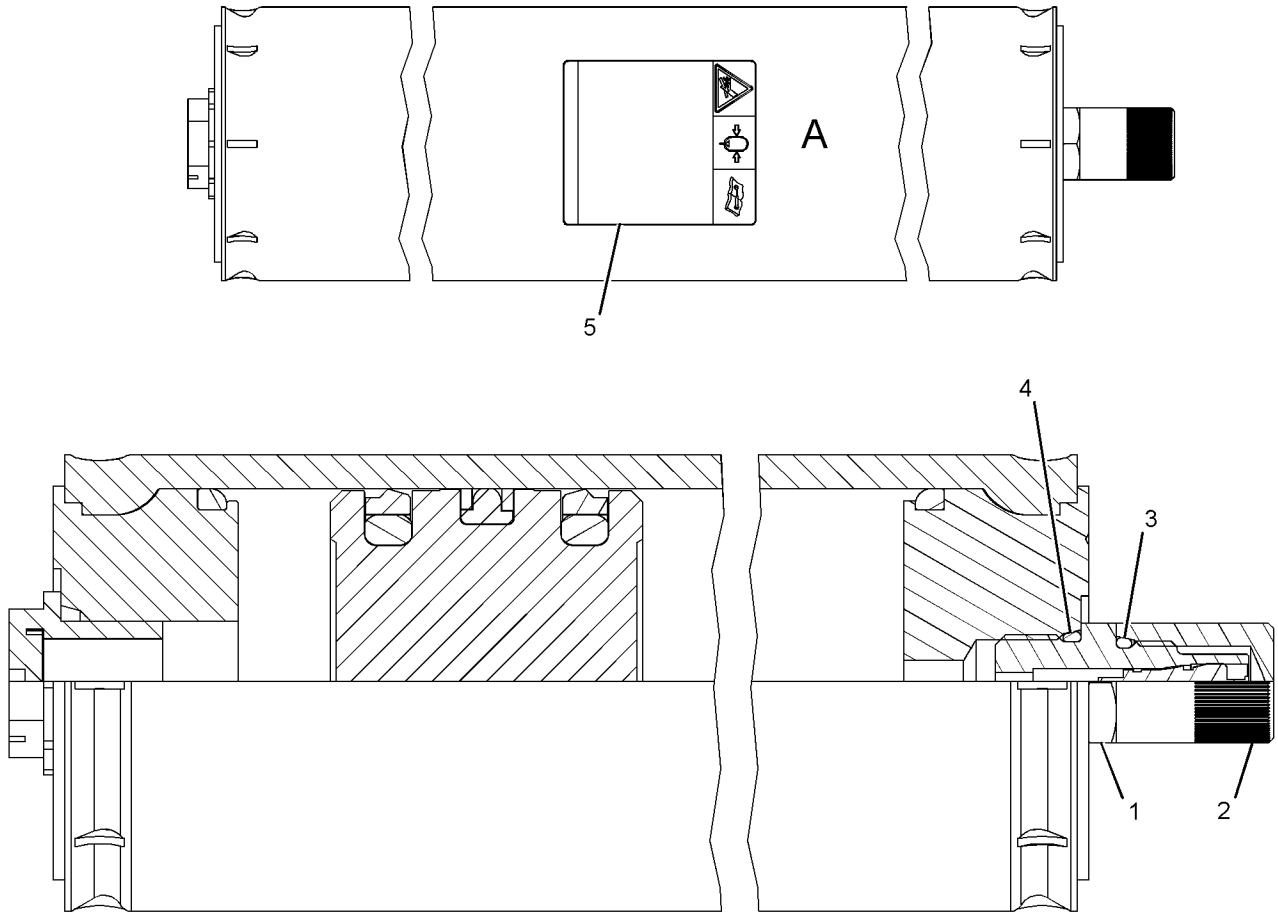

VIEW OF AREA A
(SECTIONED)

GRAPHIC #1 **<END>** g02792726

340-9906 AXLE AR-FIXED—FRONT, DIFFERENTIAL LOCK

S/N: DYB1-UP

PART OF 381-4374 POWER TRAIN AR

SMCS-3013, 3278 **i05309804**

NOTE	PART NUMBER	QTY	PART NAME 1 2 3 4 5 6 (PRODUCT LEVEL)	SEE PAGE
Y	*258-6945*	2	BRAKE & PLANETARY GP (SINGLE DISC)	186
Y	*342-7393*	1	BRAKE GP-PARKING (FRONT)	302
Y	*252-8037*	1	CONTROL GP-DIFFERENTIAL LOCK	189
Y	**252-7939**	1	DIFFERENTIAL GP (LOCKING)	190
Y	*342-7395*	1	GEAR GP-BEVEL & PINION (LOCKING DIFFERENTIAL, FRONT)	195
Y	*340-9868*	1	HOUSING GP-AXLE (LOCKING DIFFERENTIAL, FRONT)	196

Y - SEPARATE ILLUSTRATION

<END>

333-6529 AXLE AR-OSCILLATING—REAR, STANDARD DIFFERENTIAL

S/N: DYB1-UP

PART OF 381-4374 POWER TRAIN AR

SMCS-3013, 3278 **i05309800**

NOTE	PART NUMBER	QTY	PART NAME 1 2 3 4 5 6 (PRODUCT LEVEL)	SEE PAGE
Y	*340-9908*	1	AXLE GP-OSCILLATING (REAR, STANDARD DIFFERENTIAL)	184

Y - SEPARATE ILLUSTRATION

<END>

340-9908 AXLE GP-OSCILLATING—REAR, STANDARD DIFFERENTIAL

S/N: DYB1-UP

PART OF 333-6529 AXLE AR-OSCILLATING

SMCS-3278 **i05309815**

NOTE	PART NUMBER	QTY	PART NAME 1 2 3 4 5 6 (PRODUCT LEVEL)	SEE PAGE
Y	*258-6945*	2	BRAKE & PLANETARY GP (SINGLE DISC)	186
Y	**256-3748**	1	DIFFERENTIAL GP (STANDARD)	191
Y	*259-7051*	1	GEAR GP-BEVEL & PINION (REAR)	194
Y	*340-9900*	1	HOUSING GP-AXLE (OSCILLATING)	198

Y - SEPARATE ILLUSTRATION

<END>

343-3418 BAFFLE GP-OIL–TRANSMISSION

S/N: DYB1-UP

PART OF 337-7053 TRANSMISSION AR

SMCS-3030, 3064 **i05306212**

NOTE	REF NO	GRAPHIC REF	PART NUMBER	QTY	PART NAME 1 2 3 4 5 6 (PRODUCT LEVEL)	SEE PAGE
	1	1	**343-3414**	1	BAFFLE	
	2	1	**343-3417**	1	HOUSING-SEAL	
M	3	1	**134-7721**	3	BOLT (M6X1X12-MM)	
	4	1	**139-5802**	1	SEAL-LIP TYPE	
	5	1	**9X-8267**	3	WASHER (6.6X12X2-MM THK)	

M - METRIC PART

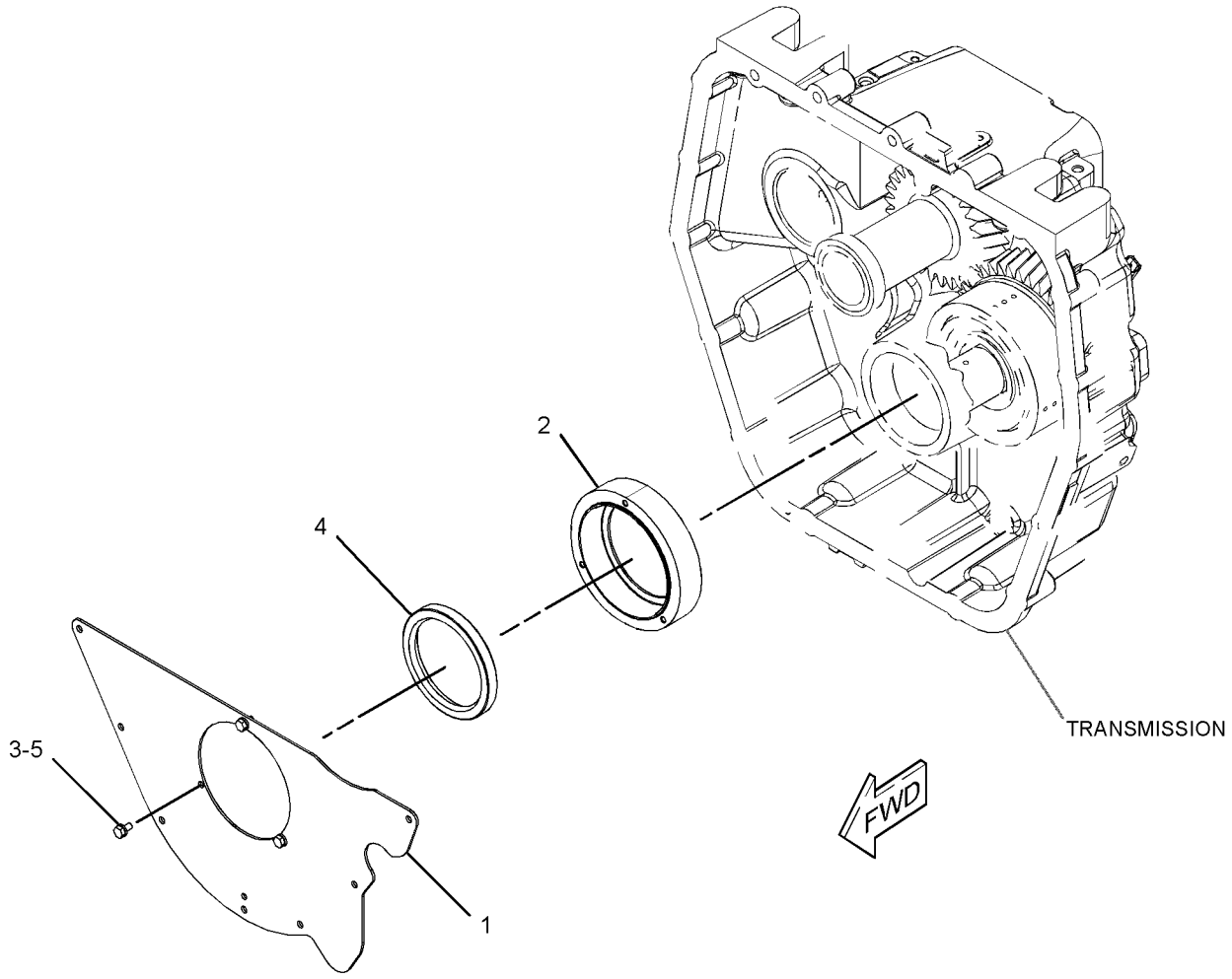

GRAPHIC #1 **<END>** g02840169

258-6945 BRAKE & PLANETARY GP–SINGLE DISC

S/N: DYB1-UP

PART OF 340-9906 AXLE AR-FIXED, 340-9908 AXLE GP-OSCILLATING

SMCS-4011, 4255 **i05309819**

NOTE	REF NO	GRAPHIC REF	PART NUMBER	QTY	PART NAME 1 2 3 4 5 6 (PRODUCT LEVEL)	SEE PAGE
	1	1	**8R-2200**	3	SHAFT-PLANETARY	
	2	1	**8R-2202**	6	WASHER-THRUST	
	3	1	**163-5776**	1	PISTON	
	4	1	**163-7233**	1	SEAL-D-RING	
	5	1	**163-7234**	1	SEAL-D-RING	
	6	1	**170-0108**	3	SPRING	
	7	1	**170-4698**	1	PLATE-REACTION	
	8	1	**218-3171**	1	GEAR-RING (87-TEETH)	
	9	1	**218-3172**	3	GEAR-PLANETARY (33-TEETH)	
	10	1	**218-3174**	1	CARRIER-PLANETARY	
	11	1	**234-4251**	3	BUSHING	
	12	1	**250-1845**	1	DISC-FRICTION	
	13	1	**254-3963**	1	GEAR-SUN (18-TEETH)	
	14	1	**115-5327**	3	DOWEL	
	15	1	**138-1645**	3	PIN-SPRING	
	16	1	**8T-2925**	3	PIN-SPRING	
	17	1	**9M-4335**	3	DOWEL-REACTION	

258-6945 **BRAKE & PLANETARY GP (*contd.*)** **i05309819**

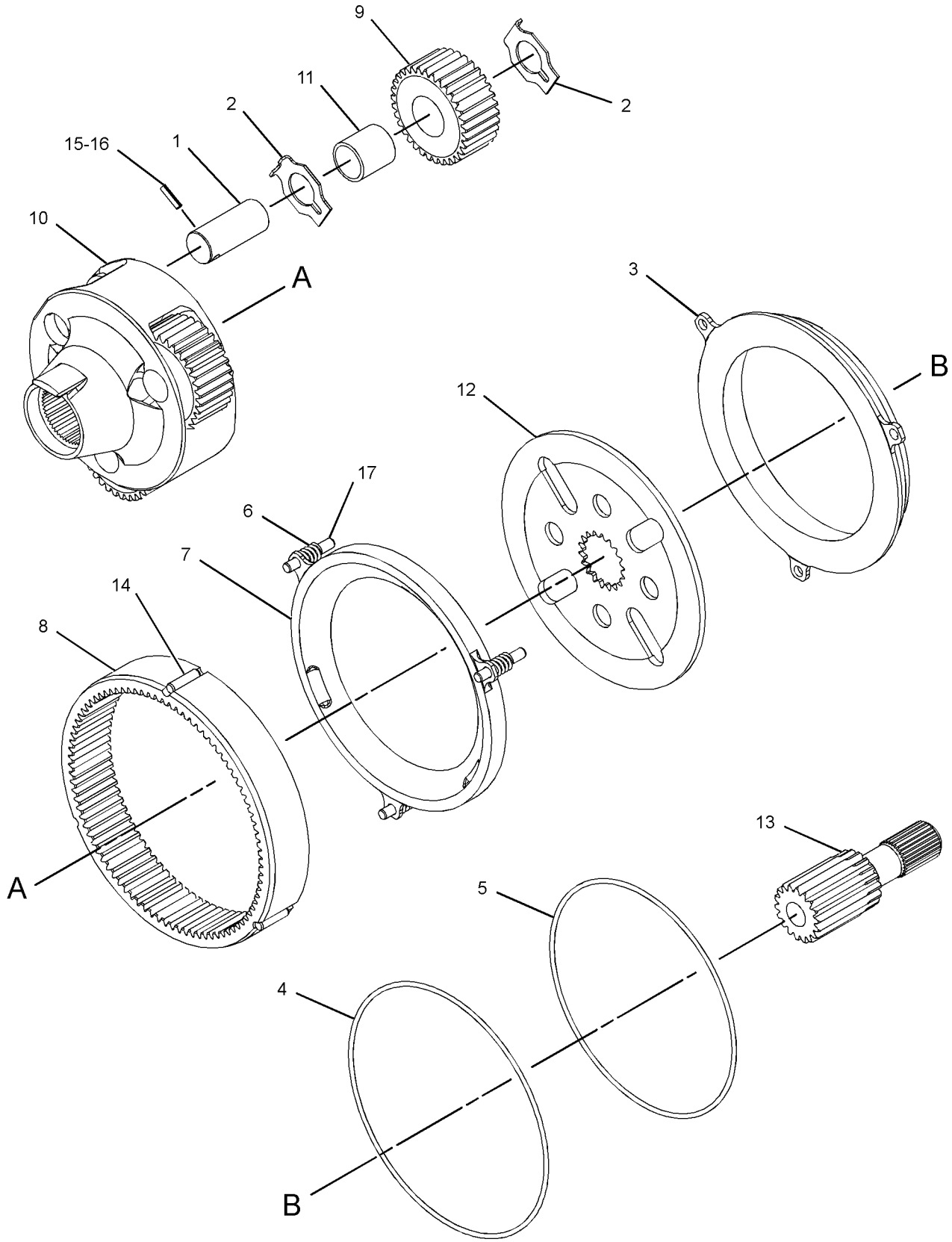

GRAPHIC #1 **<END>** g02032955

338-9600 CLUTCH GP

S/N: DYB1-UP

PART OF 337-7053 TRANSMISSION AR

SMCS-3155 **i05306209**

NOTE	REF NO	GRAPHIC REF	PART NUMBER	QTY	PART NAME 1 2 3 4 5 6 (PRODUCT LEVEL)	SEE PAGE
	1	1	**6Y-1192**	2	RING-SEAL	
	2	1	**6Y-7929**	7	DISC-FRICTION	
	3	1	**7T-6655**	2	BEARING	
	4	1	**9W-9371**	1	RING-SEAL	
	5	1	**121-2500**	1	WASHER-THRUST (50X70X4-MM THK)	
	6	1	**172-5317**	2	BEARING-SPECIAL	
	7	1	**274-4553**	7	DISC-CLUTCH	
	8	1	**338-9597**	1	SHAFT AS	
	9	1	**339-6252**	1	SPRING	
	10	1	**339-6253**	1	PISTON	
	11	1	**341-7095**	1	PLATE-END	
	12	1	**341-7097**	1	SLEEVE	
	13	1	**341-9171**	1	WASHER	
	14	1	**343-6480**	1	RETAINER-SPRING	
	15	1	**347-8324**	1	GEAR	
	16	1	**366-2620**	1	SPACER	
	17	1	**366-7249**	1	RING-RETAINING	
	18	1	**1B-3969**	1	BEARING-TAPERED ROLLER	
	19	1	**1B-3980**	1	CONE-BEARING (TAPERED ROLLER)	
	20	1	**6V-5100**	1	SEAL-O-RING	
	21	1	**8T-4241**	1	RING-RETAINING (EXTERNAL)	

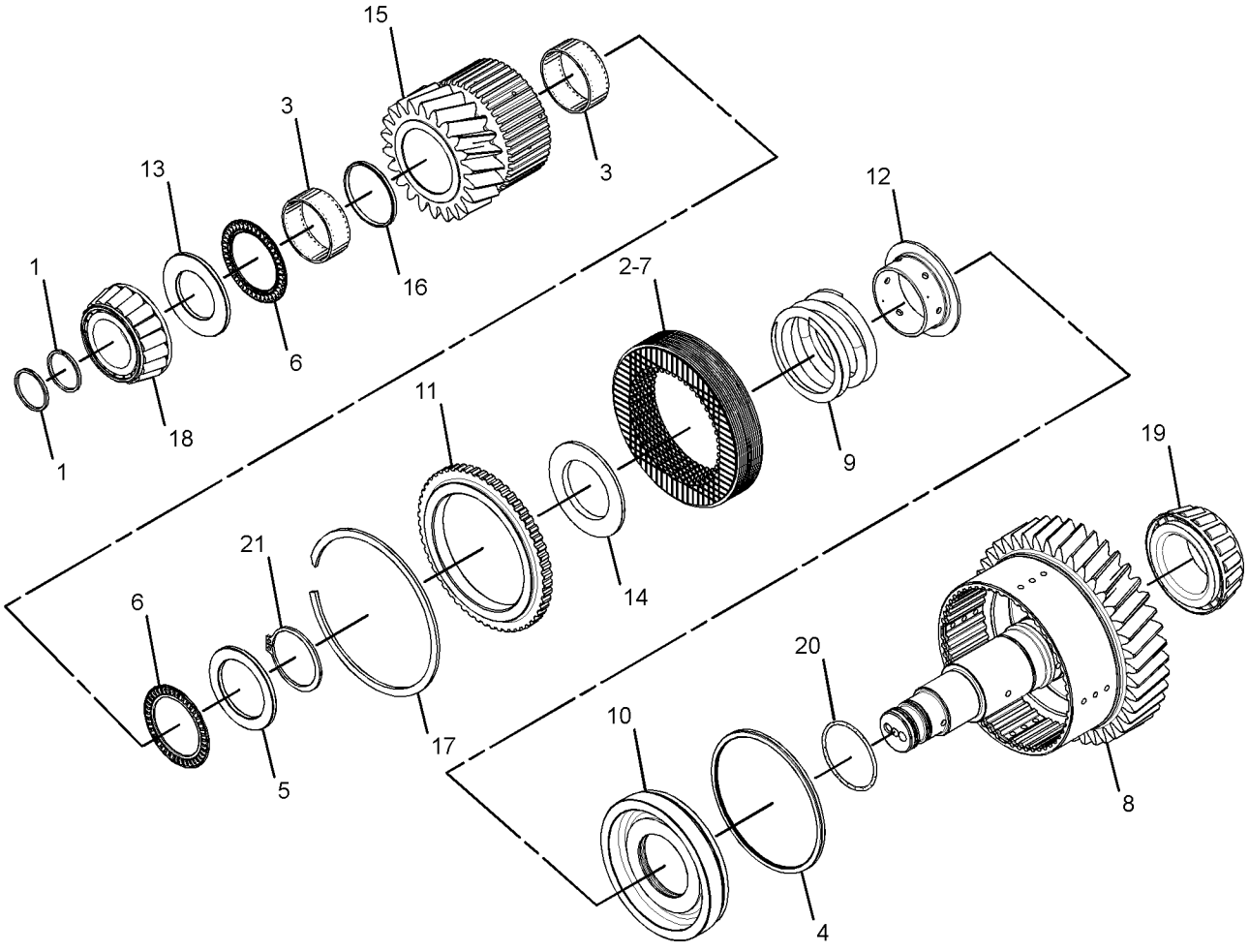

GRAPHIC #1 **<END>** g02793172

252-8037 CONTROL GP-DIFFERENTIAL LOCK

S/N: DYB1-UP

PART OF 340-9906 AXLE AR-FIXED

SMCS-3264, 3272

i02842346

NOTE	REF NO	GRAPHIC REF	PART NUMBER	QTY	PART NAME 1 2 3 4 5 6 (PRODUCT LEVEL)	SEE PAGE
	1	1	**174-4647**	1	BUSHING	
	2	1	**174-4650**	2	SPACER (20X32X8-MM THK)	
	3	1	**199-0652**	2	CLIP-PIN	
	4	1	**199-0676**	2	SPRING	
	5	1	**252-7922**	1	COLLAR	
	6	1	**252-7923**	1	FORK	
	7	1	**252-7925**	4	PIN	
	8	1	**254-5048**	1	PISTON	
	9	1	**254-5059**	1	ROD	
	10	1	**4F-9029**	2	SEAL	
	11	1	**5L-4758**	4	SEAL-O-RING	

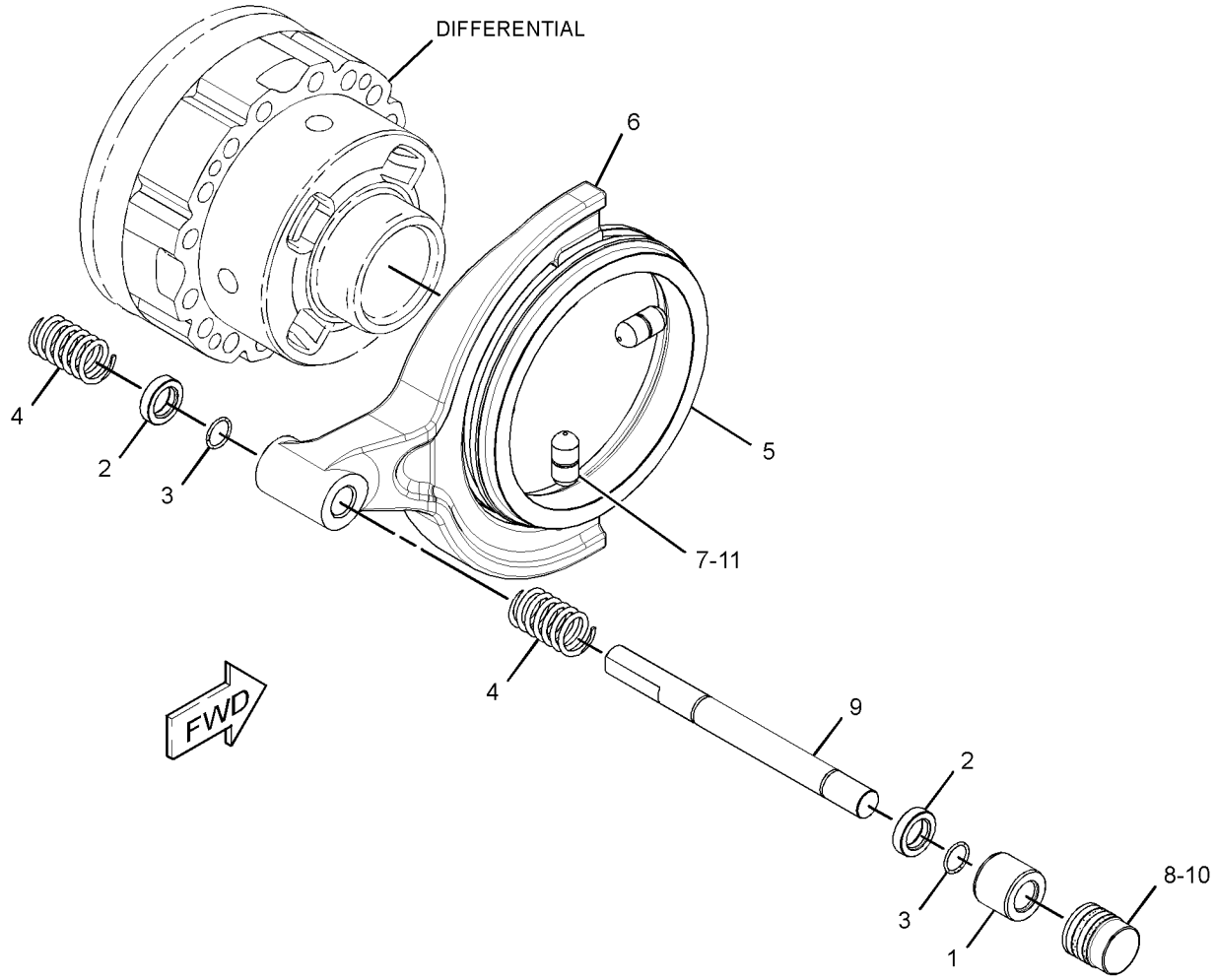

GRAPHIC #1

<END>

g01427301

252-7939 DIFFERENTIAL GP–LOCKING

S/N: DYB1-UP

PART OF 340-9906 AXLE AR-FIXED

SMCS-3258 **i05309817**

NOTE	REF NO	GRAPHIC REF	PART NUMBER	QTY	PART NAME 1 2 3 4 5 6 (PRODUCT LEVEL)	SEE PAGE
	1	1	**252-7930**	1	GEAR-DIFFERENTIAL (20-TEETH)	
	2	1	**252-7931**	1	GEAR-DIFFERENTIAL (20-TEETH)	
	3	1	**252-7932**	4	PINION-DIFFERENTIAL (11-TEETH)	
	4	1	**252-7933**	1	SPIDER (4-BLADE)	
	5	1	**337-5183**	2	WASHER-THRUST (66X97.5X2.8-MM THK)	
	6	1	**252-7935**	4	WASHER-SPECIAL	
	7	1	**252-7936**	4	BUSHING	
	8	1	**252-7945**	1	CASE AS-DIFFERENTIAL	

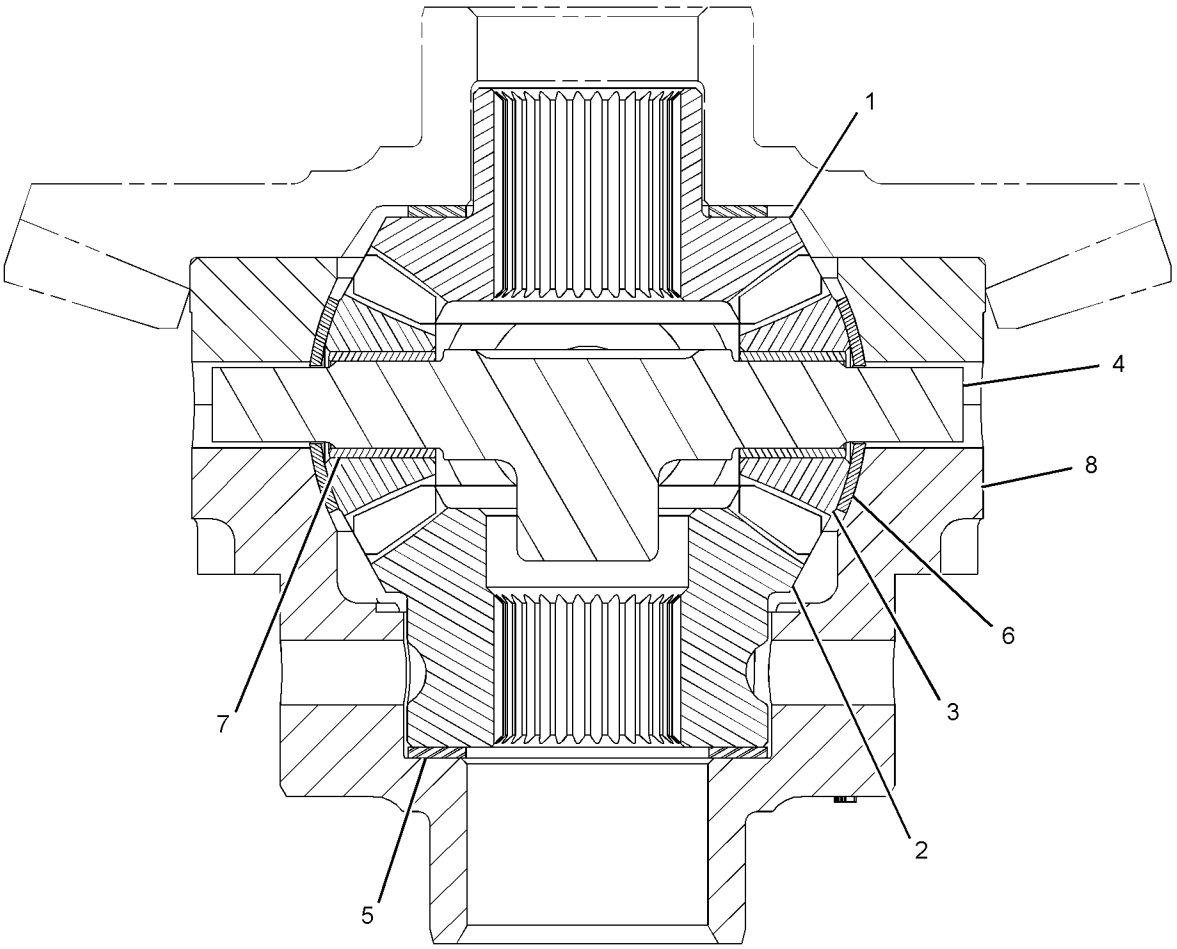

GRAPHIC #1 **<END>** g01389395

256-3748 DIFFERENTIAL GP–STANDARD

S/N: DYB1-UP

PART OF 340-9908 AXLE GP-OSCILLATING

SMCS-3258 **i05309823**

NOTE	REF NO	GRAPHIC REF	PART NUMBER	QTY	PART NAME 1 2 3 4 5 6 (PRODUCT LEVEL)	SEE PAGE
	1	1	**252-7930**	2	GEAR-DIFFERENTIAL (20-TEETH)	
	2	1	**252-7932**	4	PINION-DIFFERENTIAL (11-TEETH)	
	3	1	**252-7933**	1	SPIDER (4-BLADE)	
	4	1	**252-7935**	4	WASHER-SPECIAL	
	5	1	**252-7936**	4	BUSHING	
	6	1	**256-3746**	1	CASE AS-DIFFERENTIAL	
	7	1	**337-5183**	2	WASHER-THRUST (66X97.5X2.8-MM THK)	

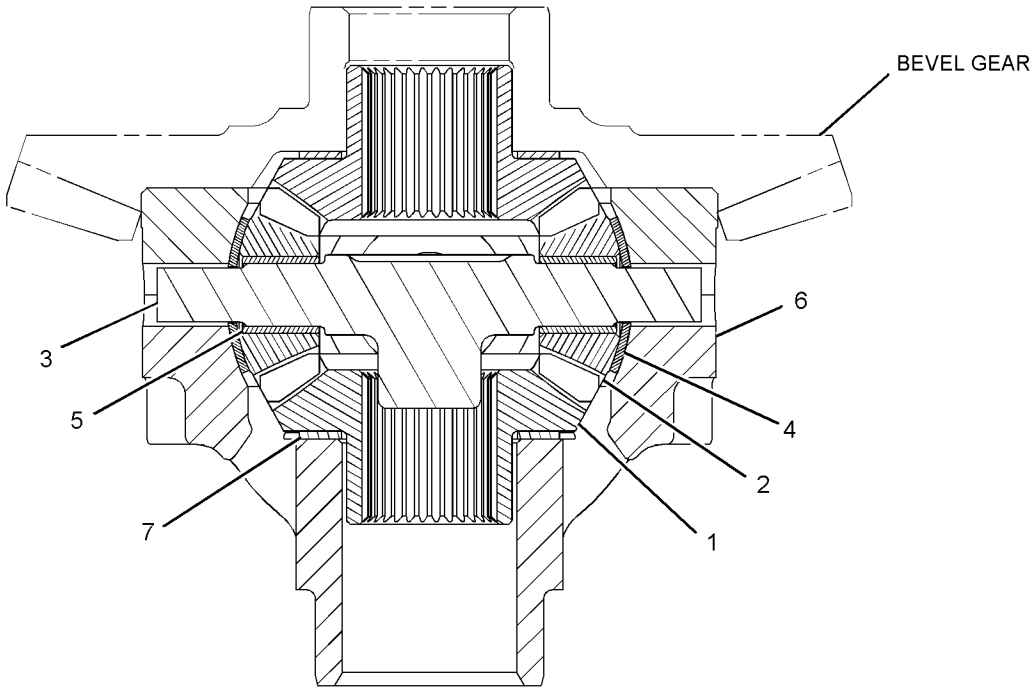

GRAPHIC #1 **<END>** g02772896

339-6722 FILLER GP-POWER TRAIN OIL

S/N: DYB1-UP

PART OF 381-4374 POWER TRAIN AR

SMCS-3005, 3081 **i05306273**

NOTE	REF NO	GRAPHIC REF	PART NUMBER	QTY	PART NAME 1 2 3 4 5 6 (PRODUCT LEVEL)	SEE PAGE
	1	1	**246-2641**	1	PADLOCK GP	
		1	**5P-8500**	1	KEY	
	2	1	**7X-7958**	2	CLAMP-HOSE	
	3	1	**137-6727**	1	CAP-FILL (POWER TRAIN OIL)	
	4	1	**323-3309**	2	CAP	
	5	1	**346-3275**	1	TUBE AS	
	6	1	**346-3276**	1	TUBE AS	
	7	1	**346-3277**	1	HOSE	
	8	1	**8M-4987**	1	SEAL-O-RING	
	9	1	**8T-1889**	1	CLIP (SLOT)	
	10	1	**8T-1890**	1	CLIP (TAB)	
	11	1	**8T-4121**	1	WASHER-HARD (11X21X2.5-MM THK)	
M	12	1	**8T-4136**	1	BOLT (M10X1.5X25-MM)	
M	13	1	**8T-4195**	2	BOLT (M10X1.5X30-MM)	
	14	1	**9X-2327**	2	WASHER (11X18.5X2.5-MM THK)	

M - METRIC PART

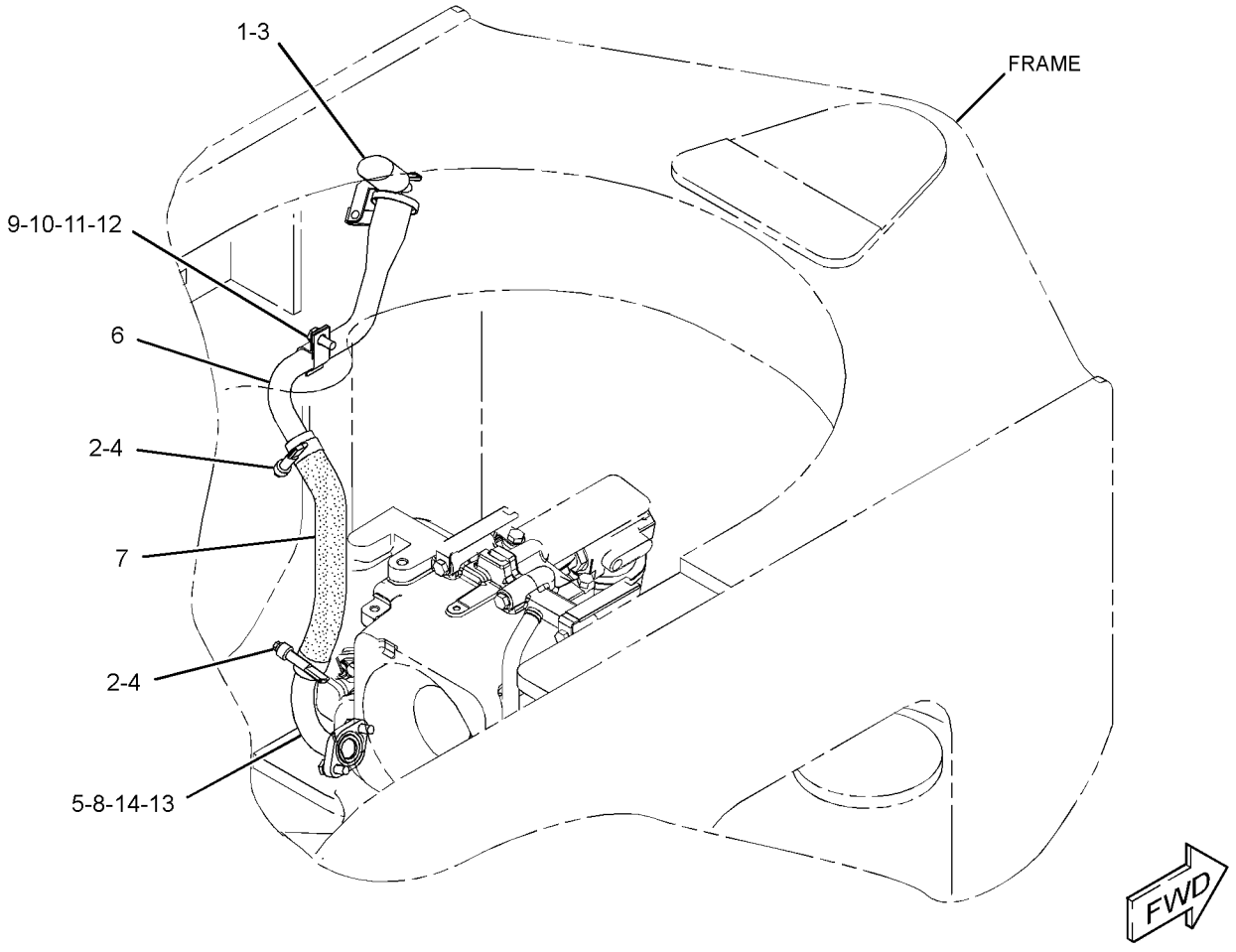

GRAPHIC #1 **<END>** g02791990

349-3667 FILTER GP-OIL

S/N: DYB1-UP

PART OF 337-7053 TRANSMISSION AR

SMCS-3004, 3067 **i05306213**

NOTE	REF NO	GRAPHIC REF	PART NUMBER	QTY	PART NAME 1 2 3 4 5 6 (PRODUCT LEVEL)	SEE PAGE
	1	1	**8C-3447**	1	CAP-DUST	
	2	1	**134-0404**	1	SWITCH AS-PRESSURE (AWD OIL FILTER BYPASS)	
	3	1	**144-6691**	1	FILTER-OIL (ADVANCED EFFICIENCY) (TRANSMISSION)	
	4	1	**214-7568**	2	SEAL-O-RING	
	5	1	**214-7566**	1	SEAL-O-RING	
	6	1	**8C-3446**	1	VALVE-FLUID SAMPLING	
	7	1	**9S-4191**	1	PLUG-O-RING	

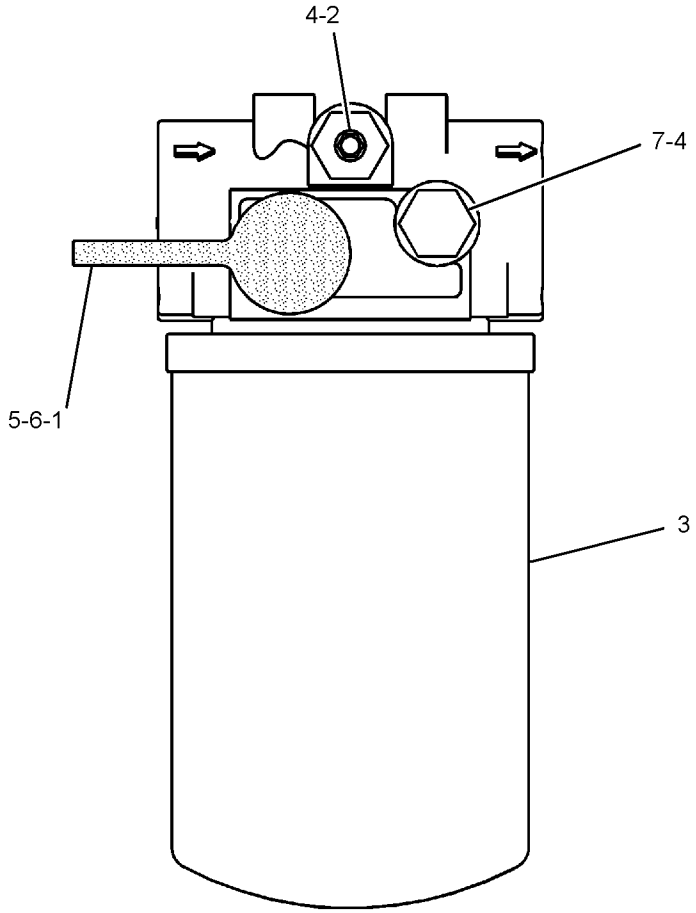

GRAPHIC #1 **<END>** g02792572

259-7051 GEAR GP-BEVEL & PINION–REAR

S/N: DYB1-UP

PART OF 340-9908 AXLE GP-OSCILLATING

SMCS-3254, 3256 **i05309824**

NOTE	REF NO	GRAPHIC REF	PART NUMBER	QTY	PART NAME 1 2 3 4 5 6 (PRODUCT LEVEL)	SEE PAGE
	1	1	**1P-3934**	1	CUP-BEARING	
	2	1	**1P-3935**	1	CONE-BEARING	
	3	1	**4L-7249**	1	CUP-BEARING	
	4	1	**9U-3409**	1	SHIM PACK (INCLUDES 20-SHIMS)	
	5	1	**9V-2412**	1	RETAINER	
	6	1	**109-5502**	1	LOCK-BEARING	
	7	1	**203-2759**	1	YOKE AS	
	8	1	**258-8338**	1	BEARING AS-TAPERED ROLLER	
	9	1	**259-0608**	1	CONE-TAPERED	
	10	1	**259-4727**	1	NUT-BEARING	
	11	1	**259-7014**	16	BOLT (M16X2X85-MM)	
	12	1	**260-3126**	1	SPACER	
	13	1	**347-9104**	1	SET-BEVEL GEAR	
		1	**347-9103**	1	SHAFT-BEVEL	
	14	1	**2H-3927**	1	SEAL-O-RING	
	15	1	**6F-2956**	1	CUP-BEARING	
	16	1	**6V-0347**	1	CONE-BEARING	
M	17	1	**6V-8210**	1	BOLT (M8X1.25X16-MM)	
M	18	1	**8T-0372**	1	BOLT (M12X1.75X90-MM)	

M - METRIC PART

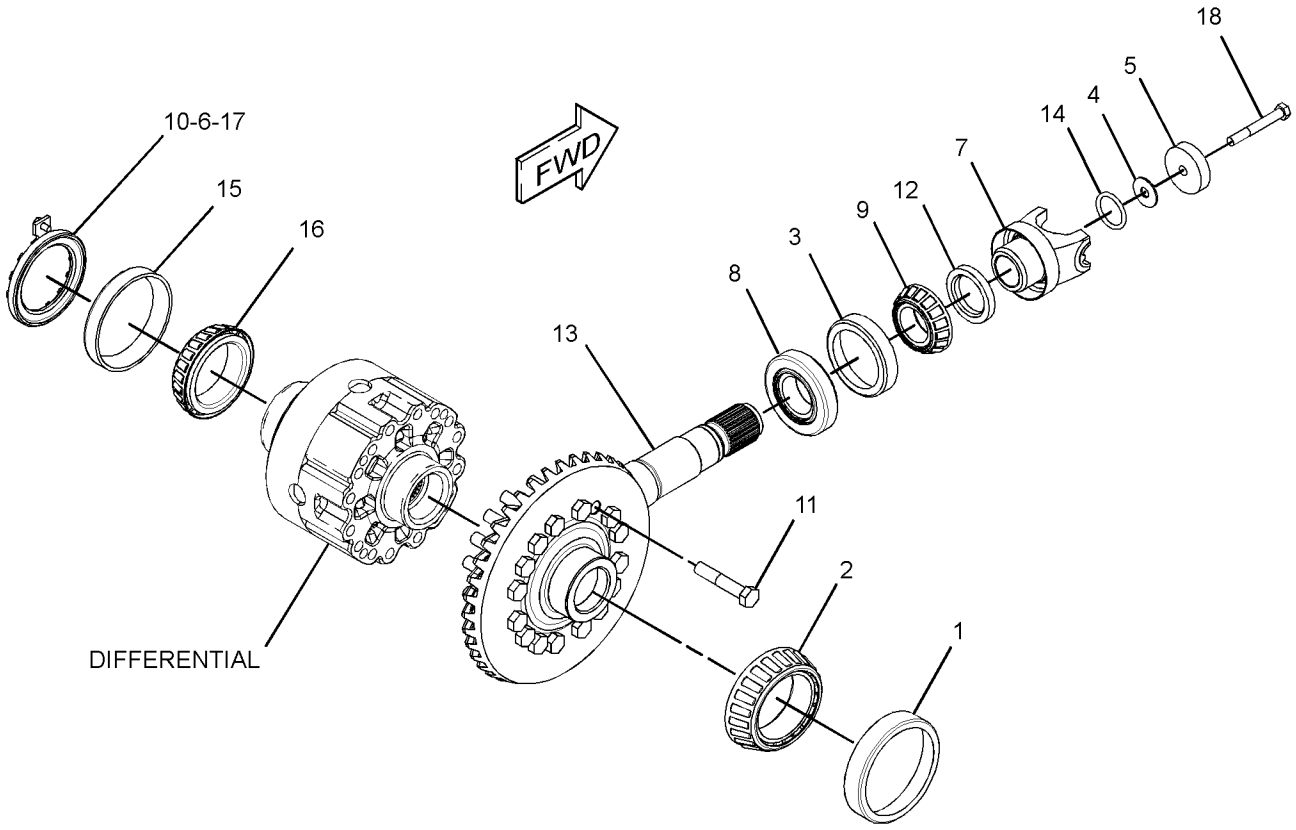

GRAPHIC #1 **<END>** g02775841

342-7395 GEAR GP-BEVEL & PINION

S/N: DYB1-UP

PART OF 340-9906 AXLE AR-FIXED

SMCS-3254, 3256 **i05309821**

NOTE	REF NO	GRAPHIC REF	PART NUMBER	QTY	PART NAME 1 2 3 4 5 6 (PRODUCT LEVEL)	SEE PAGE
	1	1	**4L-7249**	1	CUP-BEARING	
	2	1	**258-8338**	1	BEARING AS-TAPERED ROLLER	
	3	1	**259-0608**	1	CONE-TAPERED	
	4	1	**6F-2956**	1	CUP-BEARING	
	5	1	**6V-0347**	1	CONE-BEARING	
	6	1	**1P-3934**	1	CUP-BEARING	
	7	1	**1P-3935**	1	CONE-BEARING	
B	8	1	**9U-3409**	1	SHIM PACK (INCLUDES 20-SHIMS)	
	9	1	**9V-2412**	1	RETAINER	
	10	1	**109-5502**	1	LOCK-BEARING	
	11	1	**259-4727**	1	NUT-BEARING	
	12	1	**260-3126**	1	SPACER	
	13	1	**347-9104**	1	SET-BEVEL GEAR	
		1	**347-9103**	1	SHAFT-BEVEL	
	14	1	**383-8942**	1	YOKE	
	15	1	**259-7014**	16	BOLT (M16X2X85-MM)	
	16	1	**2H-3927**	1	SEAL-O-RING	
M	17	1	**6V-8210**	1	BOLT (M8X1.25X16-MM)	
M	18	1	**8T-0372**	1	BOLT (M12X1.75X90-MM)	

B - USE AS REQUIRED
M - METRIC PART

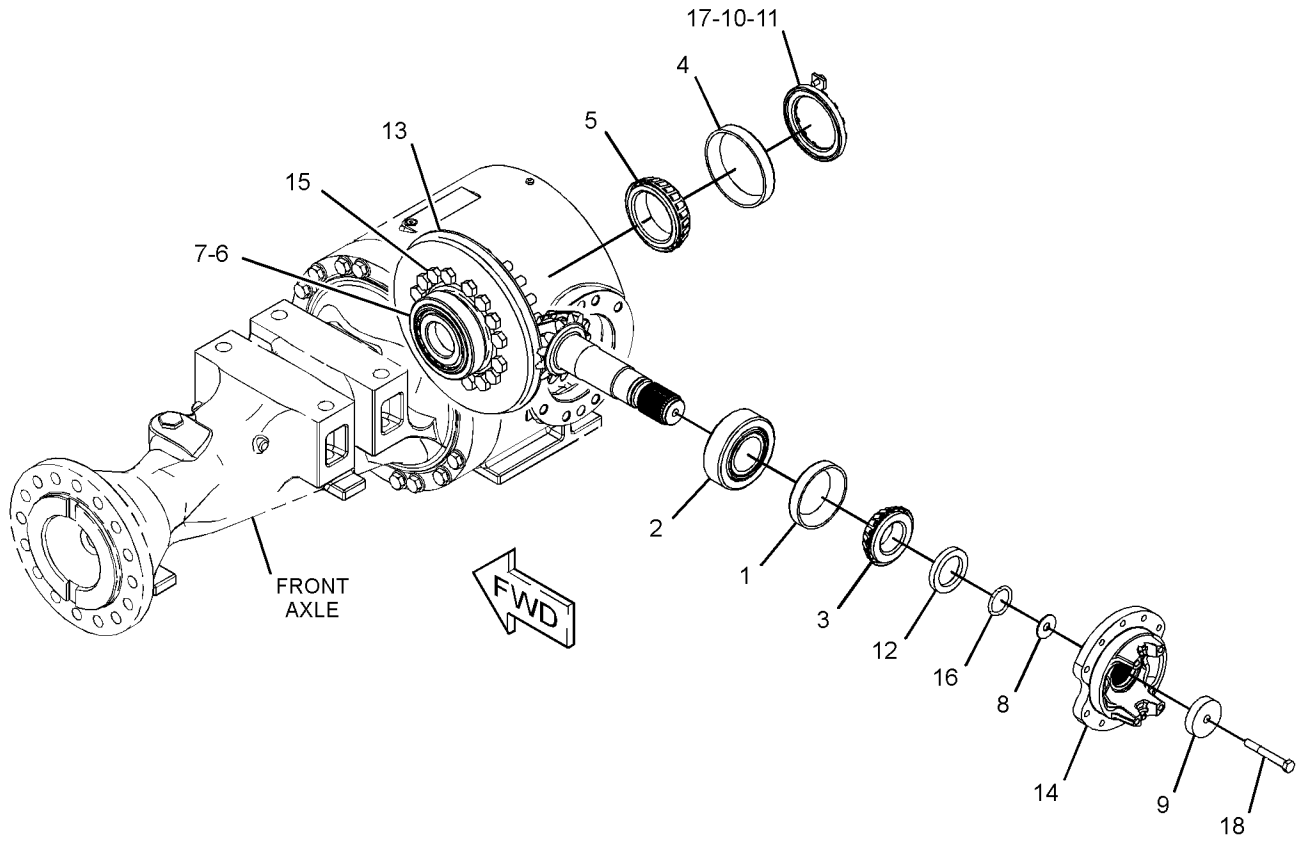

GRAPHIC #1 **<END>** g02793924

340-9868 HOUSING GP-AXLE

S/N: DYB1-UP

PART OF 340-9906 AXLE AR-FIXED

SMCS-3260, 3278 **i05309820**

NOTE	REF NO	GRAPHIC REF	PART NUMBER	QTY	PART NAME 1 2 3 4 5 6 (PRODUCT LEVEL)	SEE PAGE
	1	1	**3B-0551**	1	PLUG-PIPE	
	2	1	**5P-3723**	2	CONE-BEARING	
	3	1	**6D-7690**	2	CUP-BEARING	
	4	1	**6F-2956**	2	CUP-BEARING	
	5	1	**8R-0512**	1	GAUGE AS-OIL LEVEL (DIPSTICK) (AXLE)	
	6	1	**8R-2532**	2	NUT-BEARING (M85X2-THD)	
B	7	1	**8R-3809**	1	SHIM PACK (INCLUDES 8-SHIMS)	
	8	1	**8T-0336**	1	FITTING-PRESSURE RELIEF	
	9	1	**9G-5311**	2	SEAL GP-DUO-CONE	
					(EACH INCLUDES)	
		1	**4K-0173**	2	RING-SEALING	
	10	1	*165-4929*	1	PLUG AS (MAGNETIC)	
		1	**5P-4484**	1	PLUG-MAGNETIC (AXLE HOUSING)	
		1	**7M-8485**	1	SEAL-O-RING	
	11	1	**193-2200**	1	SEAL-LIP TYPE	
	12	1	**215-8058**	1	RETAINER-SEAL	
	13	1	**234-4245**	2	SHAFT-AXLE	
	14	1	**297-4293**	2	HOUSING	
	15	1	**340-9910**	1	HOUSING-PINION	
	16	1	**361-6540**	1	HOUSING AS	
M		1	**095-0673**	3	BOLT-SOCKET HEAD (M12X1.75X60-MM)	
	17	1	**061-6712**	2	RING-RETAINING	
	18	1	*148-8406*	2	PLUG AS	
					(EACH INCLUDES)	
		1	**7M-8485**	1	SEAL-O-RING	
		1	**9S-9334**	1	PLUG-O-RING	
	19	1	*183-7263*	1	PLUG AS	
		1	**3J-7354**	1	SEAL-O-RING	
		1	**9S-8002**	1	PLUG-O-RING	
	20	1	**235-9631**	16	BOLT (M16X2X120-MM)	
	21	1	**236-0483**	16	BOLT (M16X2X190-MM)	
	22	1	**2D-0598**	1	SEAL-O-RING	
	23	1	**5P-8247**	40	WASHER-HARD (17X32X3.5-MM THK)	
	24	1	**6V-0347**	2	CONE-BEARING	
	25	1	**8F-9516**	1	SEAL-O-RING	
M	26	1	**8T-0375**	8	BOLT (M16X2X45-MM)	
	27	1	**8T-4224**	6	WASHER-HARD (8.8X16X2-MM THK)	
M	28	1	**8T-5093**	6	BOLT-LOCKING (M8X1.25X25-MM)	
	29	1	**9C-6041**	3	DOWEL	
B	30	1	**1U-8846**		SEALANT-GASKET	

B - USE AS REQUIRED
M - METRIC PART

340-9868 **HOUSING GP-AXLE (*contd.*)** **i05309820**

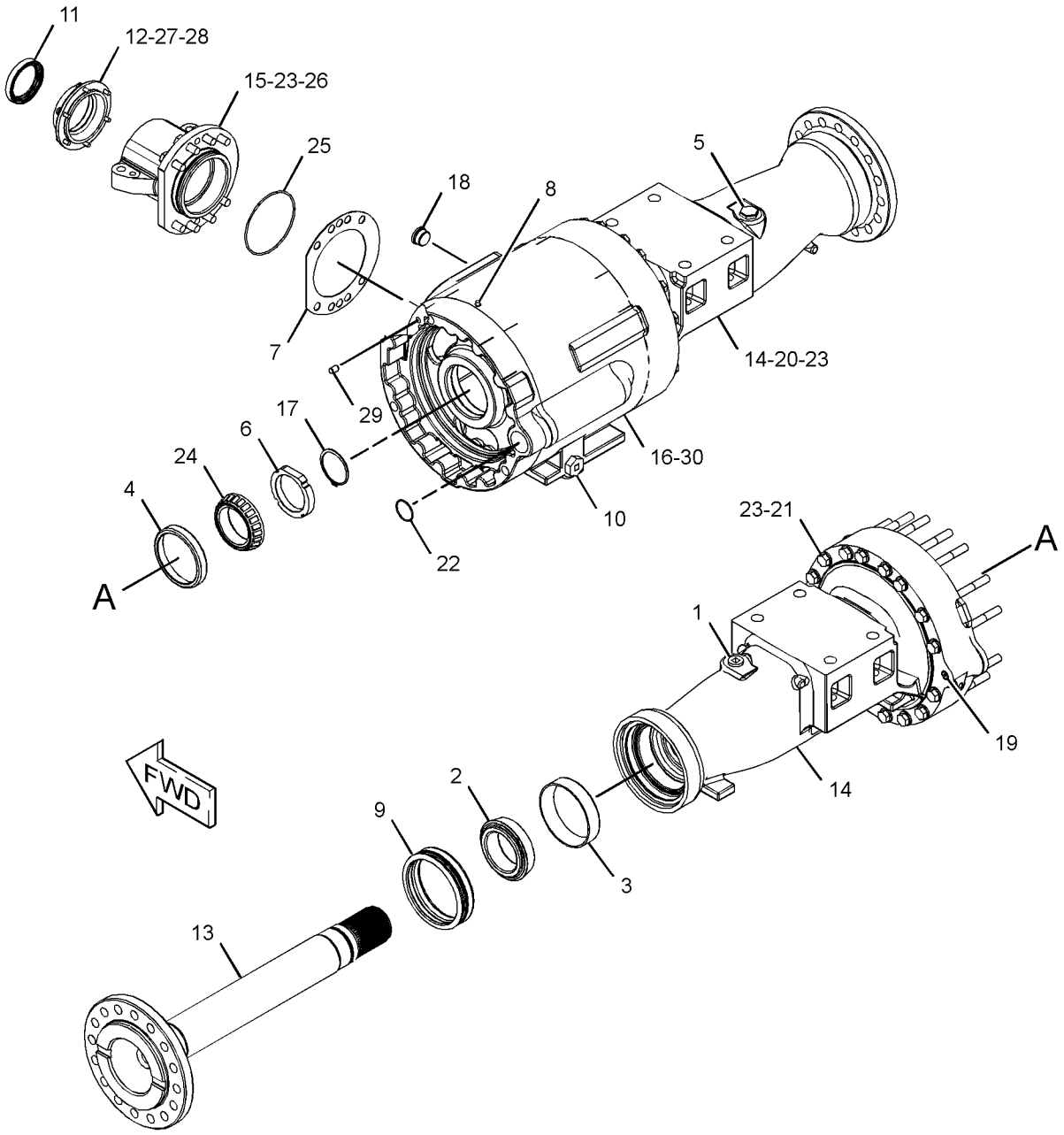

GRAPHIC #1 **<END>** g02794423

340-9900 HOUSING GP-AXLE—OSCILLATING

S/N: DYB1-UP

PART OF 340-9908 AXLE GP-OSCILLATING

SMCS-3260, 3278 **i05309825**

NOTE	REF NO	GRAPHIC REF	PART NUMBER	QTY	PART NAME 1 2 3 4 5 6 (PRODUCT LEVEL)	SEE PAGE
	1	1	**2K-0715**	2	WASHER-THRUST (5.03X6.71X0.250-IN THK)	
	2	1	**4V-5099**	1	COVER	
	3	1	**5P-3723**	2	CONE-BEARING	
	4	1	**6D-7690**	2	CUP-BEARING	
	5	1	**6F-2956**	2	CUP-BEARING	
	6	1	**8R-0512**	1	GAUGE AS-OIL LEVEL (DIPSTICK) (AXLE)	
	7	1	**8R-2532**	2	NUT-BEARING (M85X2-THD)	
	8	1	**8R-3809**	1	SHIM PACK (INCLUDES 8-SHIMS)	
	9	1	**8T-0336**	1	FITTING-PRESSURE RELIEF	
	10	1	**9G-5311**	2	SEAL GP-DUO-CONE	
					(EACH INCLUDES)	
		1	**4K-0173**	2	RING-SEALING	
	11	1	**109-4731**	1	PLATE	
	12	1	*165-4929*	1	PLUG AS (MAGNETIC)	
		1	**5P-4484**	1	PLUG-MAGNETIC (AXLE HOUSING)	
		1	**7M-8485**	1	SEAL-O-RING	
	13	1	**193-2200**	1	SEAL-LIP TYPE	
	14	1	**215-8058**	1	RETAINER-SEAL	
	15	1	**234-4245**	2	SHAFT-AXLE	
	16	1	**258-6939**	1	HOUSING-PINION	
	17	1	**258-6940**	1	TRUNNION	
	18	1	**258-6942**	1	HOUSING AS-OSCILLATING AXLE (CENTER)	
M		1	**095-0673**	3	BOLT-SOCKET HEAD (M12X1.75X60-MM)	
	19	1	**263-0930**	2	HOUSING	
	20	1	*268-9084*	1	SUPPORT AS-TRUNNION	
	20A	1	**9C-5048**	1	BUSHING	
		1	**5P-5291**	1	RING-RETAINING	
		1	**9H-1129**	2	SEAL-LIP TYPE	
		1	**128-0219**	1	SUPPORT-TRUNNION (FRONT)	
	21	1	*340-9913*	1	SUPPORT AS	
	21A	1	**258-6941**	1	BUSHING	
		1	**6K-2430**	1	SEAL-LIP TYPE	
	22	1	**061-6712**	2	RING-RETAINING	
	23	1	*148-8406*	2	PLUG AS	
					(EACH INCLUDES)	
		1	**7M-8485**	1	SEAL-O-RING	
		1	**9S-9334**	1	PLUG-O-RING	
	24	1	**235-9631**	16	BOLT (M16X2X120-MM)	
	25	1	**236-0483**	16	BOLT (M16X2X190-MM)	
	26	1	**3B-0551**	1	PLUG-PIPE	
	27	1	**5P-8247**	54	WASHER-HARD (17X32X3.5-MM THK)	
	28	1	**6V-0347**	2	CONE-BEARING	
M	29	1	**6V-3531**	4	BOLT (M20X2.5X50-MM)	
M	30	1	**6V-4429**	8	BOLT (M16X2X40-MM)	
M	31	1	**6V-5686**	6	BOLT (M16X2X50-MM)	
	32	1	**8F-9516**	1	SEAL-O-RING	
M	33	1	**8T-0375**	8	BOLT (M16X2X45-MM)	
	34	1	**8T-3282**	4	WASHER-HARD (22X35X3.5-MM THK)	
	35	1	**8T-4224**	6	WASHER-HARD (8.8X16X2-MM THK)	
M	36	1	**8T-5093**	6	BOLT-LOCKING (M8X1.25X25-MM)	
	37	1	**9C-6041**	3	DOWEL	
B	38	1	**1U-8846**		SEALANT-GASKET	

B - USE AS REQUIRED
M - METRIC PART

340-9900 **HOUSING GP-AXLE (*contd.*)** **i05309825**

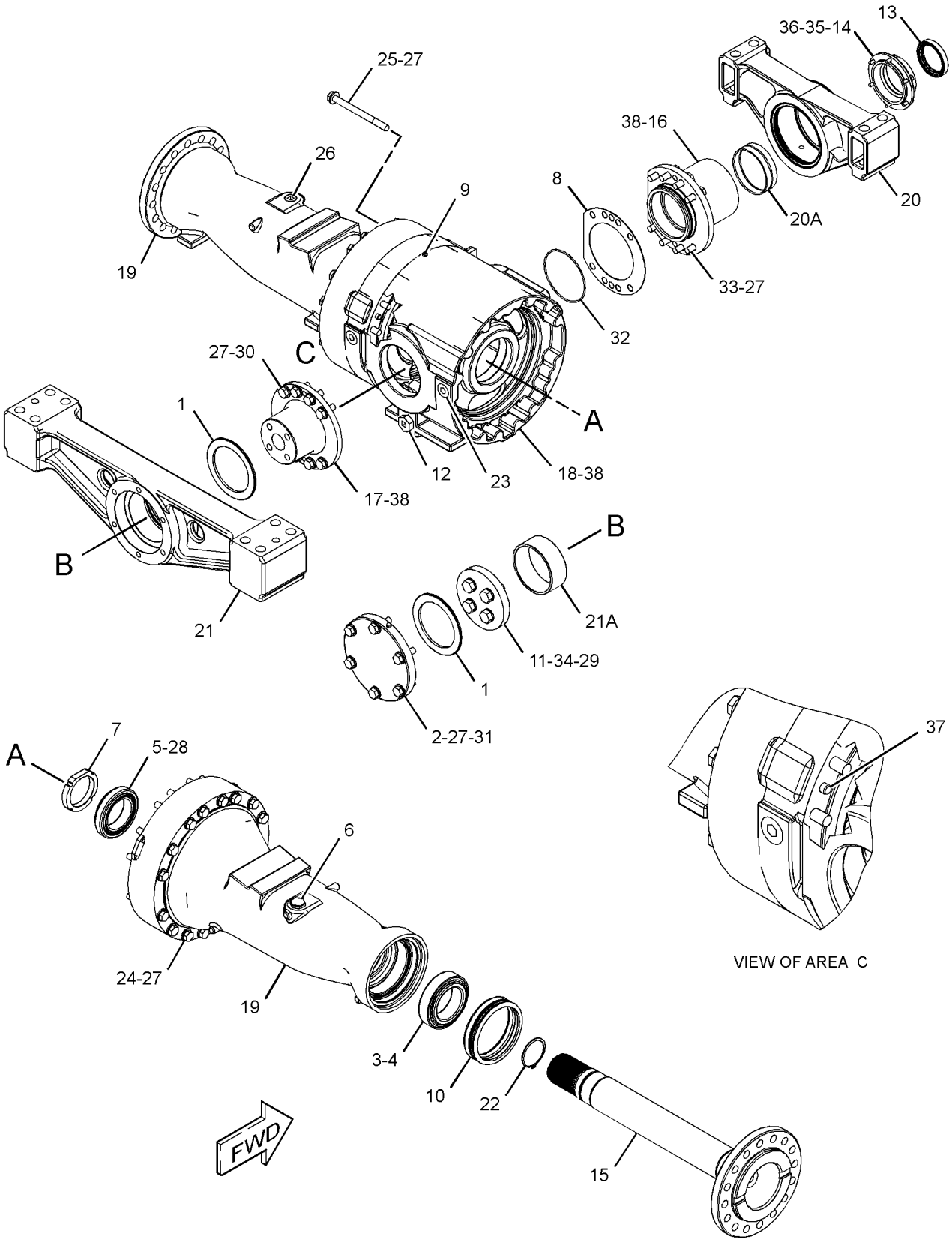

GRAPHIC #1 **<END>** g02759737

333-6934 LINES GP-DIFFERENTIAL LOCK

S/N: DYB1-UP

PART OF 381-4374 POWER TRAIN AR

SMCS-3016, 3264 **i05324799**

NOTE	REF NO	GRAPHIC REF	PART NUMBER	QTY	PART NAME 1 2 3 4 5 6 (PRODUCT LEVEL)	SEE PAGE
Y	1	1	**233-7133**	1	VALVE & MTG GP-SOLENOID (24-VOLT)	253
I	2	1	**307-2746**	1	HOSE AS	
I	3	1	**355-3097**	1	HOSE AS	
I	4	1	**355-3626**	1	HOSE AS	
	5	1	**383-3219**	1	GUARD	
	6	1	*148-8336*	1	CONNECTOR AS	
		1	**3J-1907**	1	SEAL-O-RING	
		1	**6V-8397**	1	SEAL-O-RING	
		1	**6V-8636**	1	CONNECTOR	
	7	1	*148-8361*	1	ELBOW AS	
		1	**3J-7354**	1	SEAL-O-RING	
		1	**6V-8397**	1	SEAL-O-RING	
		1	**6V-9200**	1	ELBOW	
	8	1	*148-8378*	2	ELBOW AS	
					(EACH INCLUDES)	
		1	**3J-1907**	1	SEAL-O-RING	
		1	**6V-8397**	1	SEAL-O-RING	
		1	**6V-8724**	1	ELBOW	
	10	1	**316-3296**	1	SPACER (13X22X7-MM THK)	
	11	1	**5P-1076**	1	WASHER-HARD (13.5X30X4-MM THK)	
	13	1	**8M-2773**	1	CLIP	
	14	1	**8T-4121**	3	WASHER-HARD (11X21X2.5-MM THK)	
M	15	1	**8T-4137**	1	BOLT (M10X1.5X20-MM)	
	16	1	**8T-4223**	2	WASHER-HARD (13.5X25.5X3-MM THK)	
M	17	1	**8T-4956**	3	BOLT (M12X1.75X35-MM)	
M	18	1	**8T-6466**	2	BOLT (M10X1.5X60-MM)	

I - REFER TO HYDRAULIC INFORMATION SYSTEM
M - METRIC PART
Y - SEPARATE ILLUSTRATION

333-6934 **LINES GP-DIFFERENTIAL LOCK (*contd.*)** **i05324799**

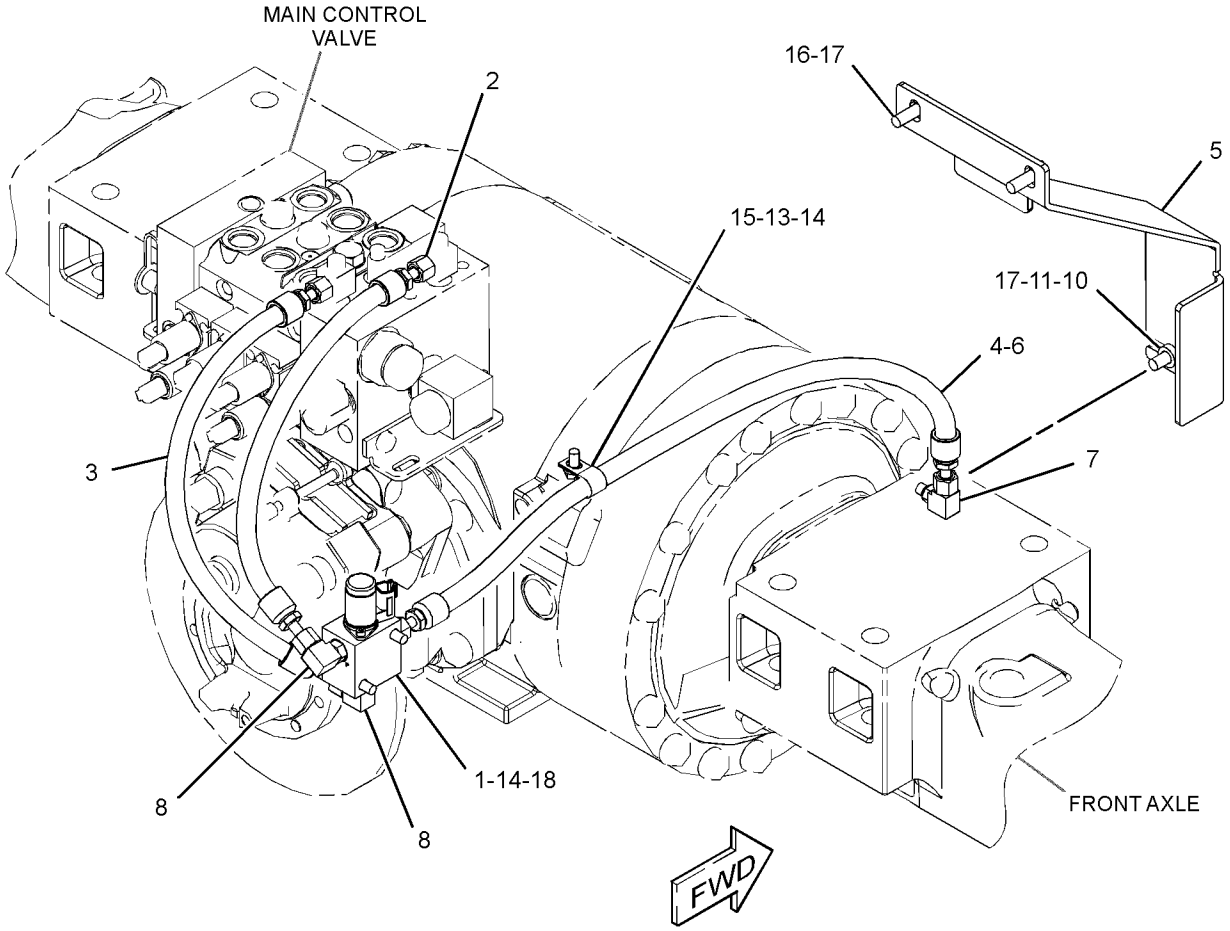

GRAPHIC #1 **<END>** g03373954

333-6916 LINES GP-HYDROSTATIC

S/N: DYB1-UP

PART OF 381-4358 HYDRAULIC AR

SMCS-3016 **i05309505**

NOTE	REF NO	GRAPHIC REF	PART NUMBER	QTY	PART NAME 1 2 3 4 5 6 (PRODUCT LEVEL)	SEE PAGE
	1	1	**124-4288**	4	FLANGE-SPLIT	
	2	1	**131-3025**	4	FLANGE-SPLIT	
	3	1	*164-6874*	1	FITTING AS-ELBOW (QUICK DISCONNECT, MALE)	
		1	**3J-1907**	1	SEAL-O-RING	
		1	**085-7356**	1	FITTING	
	4	1	**345-1707**	2	MANIFOLD	
	5	1	**347-0805**	1	TUBE AS	
	6	1	**347-0809**	1	TUBE AS	
I	7	1	**347-0824**	2	HOSE AS	
I	8	1	**347-0825**	2	HOSE AS	
	9	1	**389-7782**	1	PLATE	
	10	1	*148-8407*	2	PLUG AS	
					(EACH INCLUDES)	
		1	**3J-1907**	1	SEAL-O-RING	
		1	**9S-4191**	1	PLUG-O-RING	
	11	1	*164-5567*	2	COUPLER AS-QUICK DISCONNECT (MALE)	
					(EACH INCLUDES)	
		1	**6V-3965**	1	FITTING (QUICK DISCONNECT)	
		1	**214-7568**	1	SEAL-O-RING	
	12	1	**1P-3703**	6	SEAL-RECTANGULAR	
	13	1	**1P-3704**	2	SEAL-RECTANGULAR	
	14	1	**1P-5767**	4	FLANGE-HALF	
	15	1	**4J-0520**	2	SEAL-O-RING	
	16	1	**4J-0522**	2	SEAL-O-RING	
	17	1	**6V-0400**	12	FLANGE-HALF	
	18	1	**6V-0852**	2	CAP-DUST	
	19	1	**7X-7729**	7	WASHER (11X25X3-MM THK)	
	20	1	**8T-4121**	4	WASHER-HARD (11X21X2.5-MM THK)	
M	21	1	**8T-4133**	4	NUT (M10X1.5-THD)	
M	22	1	**8T-4184**	16	BOLT (M12X1.75X45-MM)	
M	23	1	**8T-4194**	32	BOLT (M12X1.75X50-MM)	
	24	1	**8T-4223**	48	WASHER-HARD (13.5X25.5X3-MM THK)	
M	25	1	**8T-6685**	4	BOLT (M10X1.5X110-MM)	
M	26	1	**8T-4195**	3	BOLT (M10X1.5X30-MM)	
	27	1	**389-7783**	1	PLATE AS	
M		1	**159-9541**	3	NUT-WELD (M10X1.5-THD)	

I - REFER TO HYDRAULIC INFORMATION SYSTEM
M - METRIC PART

333-6916 **LINES GP-HYDROSTATIC (*contd.*)** **i05309505**

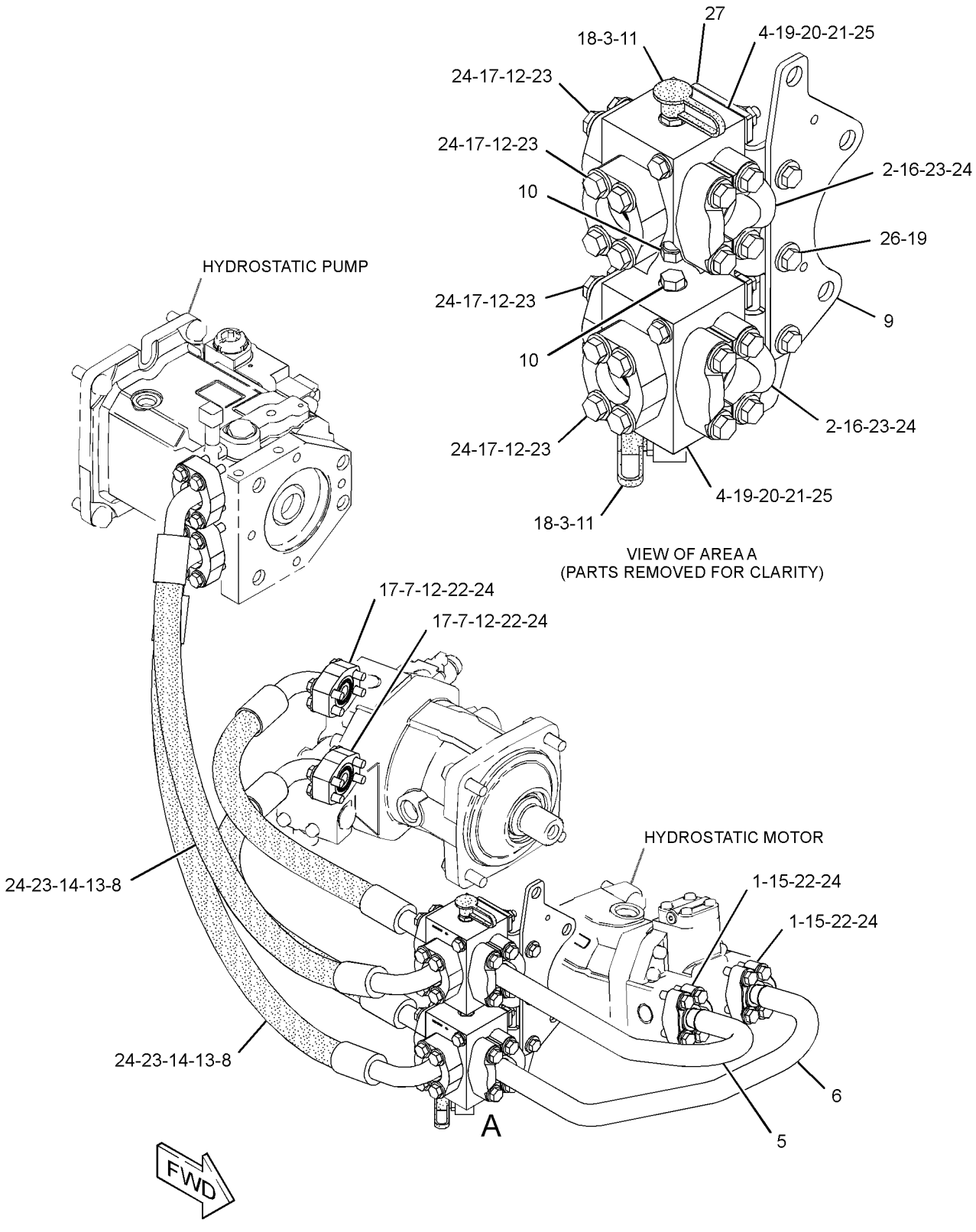

GRAPHIC #1 **<END>** g03141616

339-6797 LINES GP-HYDROSTATIC

S/N: DYB1-UP

PART OF 381-4358 HYDRAULIC AR

SMCS-3016 **i05309506**

NOTE	REF NO	GRAPHIC REF	PART NUMBER	QTY	PART NAME 1 2 3 4 5 6 (PRODUCT LEVEL)	SEE PAGE
	1	2	**5D-1026**	2	CLAMP-BAND	
	2	2	**8T-4983**	2	CLAMP-HOSE	
	3	2	**8T-4984**	2	CLAMP-HOSE	
	4	1	*9U-6994*	1	FITTING GP	
		1	**5P-4362**	1	CONNECTOR	
		1	**7M-8485**	1	SEAL-O-RING	
	5	2	**110-2445**	3	CLAMP-HOSE	
	6	2	**117-8766**	1	SEAL-O-RING	
I	7	2	**126-0198**	1	HOSE AS	
	8	2	**135-3327**	1	PLATE AS	
M		2	**8T-3490**	1	NUT-WELD (M10X1.5-THD)	
I	9	2	**144-8242**	1	HOSE AS	
	10	1	*150-3050*	1	CONNECTOR AS	
		1	**6V-7486**	1	CONNECTOR	
		1	**7M-8485**	1	SEAL-O-RING	
	11	2	*170-6771*	1	CONNECTOR GP	
		2	**5P-1045**	1	CONNECTOR	
		2	**3D-2824**	1	SEAL-O-RING	
	12	1	**178-3620**	1	STRAP-DUAL CLAMP	
	13	2	**200-6345**	3	MOUNT (DUAL SWIVEL)	
	14	2	**204-2281**	11	STRAP-CABLE	
I	15	2	**187-9023**	1	HOSE AS	
	16	2	*222-6869*	2	CONNECTOR AS	
					(EACH INCLUDES)	
		2	**3J-1907**	1	SEAL-O-RING	
		2	**6V-8397**	1	SEAL-O-RING	
		2	**9X-2614**	1	CONNECTOR	
	17	2	**323-3308**	1	CAP	
	18	1,2	**323-3309**	13	CAP	
	19	1	**330-6609**	1	PLATE AS	
M		1	**159-9541**	1	NUT-WELD (M10X1.5-THD)	
	20	2	**347-0785**	1	MANIFOLD	
I	21	2	**348-0298**	1	HOSE AS	
I	22	2	**348-0299**	1	HOSE AS	
I	23	1	**348-0300**	1	HOSE AS	
I	24	2	**348-0301**	1	HOSE AS	
I	25	2	**348-0302**	1	HOSE AS	
I	26	2	**348-0303**	1	HOSE AS	
	27	2	**348-0305**	1	HOSE AS	
	28	2	**348-2078**	1	VALVE GP-CHECK (PUMP CASE DRAIN)	
		2	**3D-2824**	1	SEAL-O-RING	
	29	2	**348-7160**	1	PLATE AS	
M		2	**159-9541**	2	NUT-WELD (M10X1.5-THD)	
	30	2	**366-8955**	1	VALVE GP-SOLENOID (24-VOLT) (HYDROSTATIC PUMP)	
		2	**384-8750**	1	COIL AS (24-VOLT)	
	31	1	**367-5450**	1	TUBE	
	32	1	**367-5451**	1	HOSE	
	33	2	**370-2280**	1	VALVE GP-CHECK (HYDROSTATIC DRIVE MOTOR)	
		2	**2M-9780**	1	SEAL-O-RING	
	34	2	**373-2292**	1	PLATE	
	35	2	**373-3397**	1	HOSE	
Y	36	2	*373-6953*	1	ACCUMULATOR GP-HYDRAULIC (CHARGED)	182
I	37	2	**374-8271**	1	HOSE AS	
	38	1	**381-1710**	1	TUBE AS	
	39	1	**381-1712**	1	TUBE	
	40	2	**115-5411**	2	ELBOW	
	41	2	*148-8319*	1	CONNECTOR AS	
		2	**2M-9780**	1	SEAL-O-RING	
		2	**6V-8397**	1	SEAL-O-RING	

339-6797 **LINES GP-HYDROSTATIC (*contd.*)** **i05309506**

NOTE	REF NO	GRAPHIC REF	PART NUMBER	QTY	PART NAME 1 2 3 4 5 6 (PRODUCT LEVEL)	SEE PAGE
		2	**6V-8715**	1	CONNECTOR	
	42	2	*148-8322*	1	CONNECTOR AS	
		2	**2M-9780**	1	SEAL-O-RING	
		2	**6V-8640**	1	CONNECTOR	
		2	**6V-9746**	1	SEAL-O-RING	
	43	2	*148-8325*	2	CONNECTOR AS	
					(EACH INCLUDES)	
		2	**3J-1907**	1	SEAL-O-RING	
		2	**4J-5477**	1	SEAL-O-RING	
		2	**6V-8641**	1	CONNECTOR	
	44	2	*148-8339*	2	CONNECTOR AS	
					(EACH INCLUDES)	
		2	**6V-8716**	1	CONNECTOR (STRAIGHT)	
		2	**6V-9746**	1	SEAL-O-RING	
		2	**7M-8485**	1	SEAL-O-RING	
	45	2	*148-8347*	2	ELBOW AS	
					(EACH INCLUDES)	
		2	**3D-2824**	1	SEAL-O-RING	
		2	**6V-9007**	1	ELBOW	
		2	**6V-9746**	1	SEAL-O-RING	
	46	2	*148-8353*	1	ELBOW AS	
		2	**3J-1907**	1	SEAL-O-RING	
		2	**6V-8397**	1	SEAL-O-RING	
		2	**6V-9001**	1	ELBOW	
	47	2	*148-8364*	1	ELBOW AS	
		2	**3K-0360**	1	SEAL-O-RING	
		2	**6V-8398**	1	SEAL-O-RING	
		2	**6V-8625**	1	ELBOW	
	48	2	*148-8368*	1	ELBOW AS	
		2	**3J-1907**	1	SEAL-O-RING	
		2	**4J-5477**	1	SEAL-O-RING	
		2	**6V-8627**	1	ELBOW	
	49	2	*148-8373*	1	ELBOW AS	
		2	**6V-8400**	1	SEAL-O-RING	
		2	**7M-8485**	1	SEAL-O-RING	
		2	**8C-3364**	1	ELBOW	
	50	2	*148-8407*	1	PLUG AS	
		2	**3J-1907**	1	SEAL-O-RING	
		2	**9S-4191**	1	PLUG-O-RING	
	51	2	*150-4049*	1	ELBOW AS	
		2	**6V-9746**	1	SEAL-O-RING	
		2	**7M-8485**	1	SEAL-O-RING	
		2	**8T-4149**	1	ELBOW	
	52	2	*153-6244*	1	ELBOW AS	
		2	**2M-9780**	1	SEAL-O-RING	
		2	**6V-9746**	1	SEAL-O-RING	
		2	**8T-5389**	1	ELBOW	
	53	2	*153-6246*	1	TEE AS	
		2	**6V-8397**	3	SEAL-O-RING	
		2	**7X-0820**	1	TEE	
	54	2	*164-4058*	1	REDUCER AS	
		2	**5K-9090**	1	SEAL-O-RING	
		2	**6V-8948**	1	REDUCER	
	55	1	*164-5590*	1	VALVE GP-FLUID SAMPLING (HYDRAULIC OIL)	
		1	**3J-7354**	1	SEAL-O-RING	
		1	**8C-3446**	1	VALVE-FLUID SAMPLING (HYDRAULIC OIL)	
	56	2	*164-9869*	1	CONNECTOR AS	
		2	**3J-1907**	1	SEAL-O-RING	
		2	**6V-8397**	1	SEAL-O-RING	
		2	**9X-2297**	1	CONNECTOR	
	57	2	**269-4970**	1	ADAPTER	
	58	2	**3K-0360**	2	SEAL-O-RING	
	59	2	**4D-7388**	1	CLIP	

339-6797 **LINES GP-HYDROSTATIC (*contd.*)** **i05309506**

NOTE	REF NO	GRAPHIC REF	PART NUMBER	QTY	PART NAME 1 2 3 4 5 6 (PRODUCT LEVEL)	SEE PAGE
	60	2	**149-7738**	1	CLIP	
M	61	2	**6V-5220**	2	BOLT (M8X1.25X65-MM)	
	62	2	**6V-8367**	1	LOCKWASHER	
	63	2	**6V-9168**	1	NUT (11/16-16-THD)	
	64	2	**7X-7729**	2	WASHER (11X25X3-MM THK)	
	65	1	**8C-3451**	1	CAP-DUST	
	66	2	**8M-2773**	1	CLIP	
	67	1,2	**8T-1889**	6	CLIP (SLOT)	
	68	1,2	**8T-1890**	6	CLIP (TAB)	
	69	1,2	**8T-4121**	9	WASHER-HARD (11X21X2.5-MM THK)	
M	70	1,2	**8T-4136**	4	BOLT (M10X1.5X25-MM)	
M	71	2	**8T-4137**	3	BOLT (M10X1.5X20-MM)	
M	72	1,2	**8T-4195**	4	BOLT (M10X1.5X30-MM)	
	73	2	**8T-4224**	2	WASHER-HARD (8.8X16X2-MM THK)	
E	74	2	**5P-1423**		HOSE (58-CM)	
E	75	2	**5P-1506**		HOSE (31-CM)	
E	75A	1	**5P-1506**		HOSE (11-CM)	
E	75B	1	**5P-1506**		HOSE (28-CM)	
	76	1	**7X-7958**	6	CLAMP-HOSE	

E - ORDER BY THE CENTIMETER
I - REFER TO HYDRAULIC INFORMATION SYSTEM
M - METRIC PART
Y - SEPARATE ILLUSTRATION

339-6797 **LINES GP-HYDROSTATIC (*contd.*)** **i05309506**

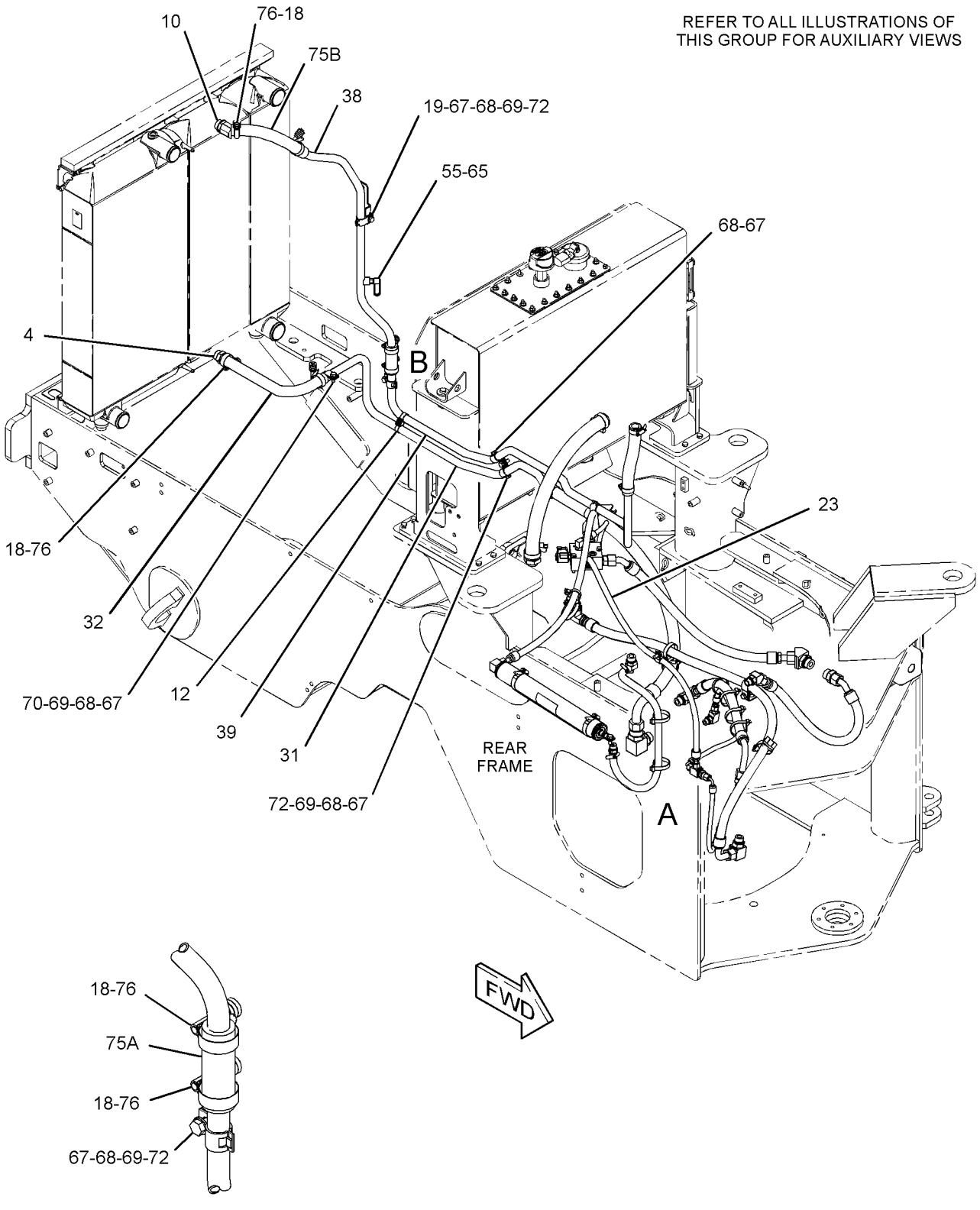

GRAPHIC #1 g03367112

339-6797 **LINES GP-HYDROSTATIC (*contd.*)** **i05309506**

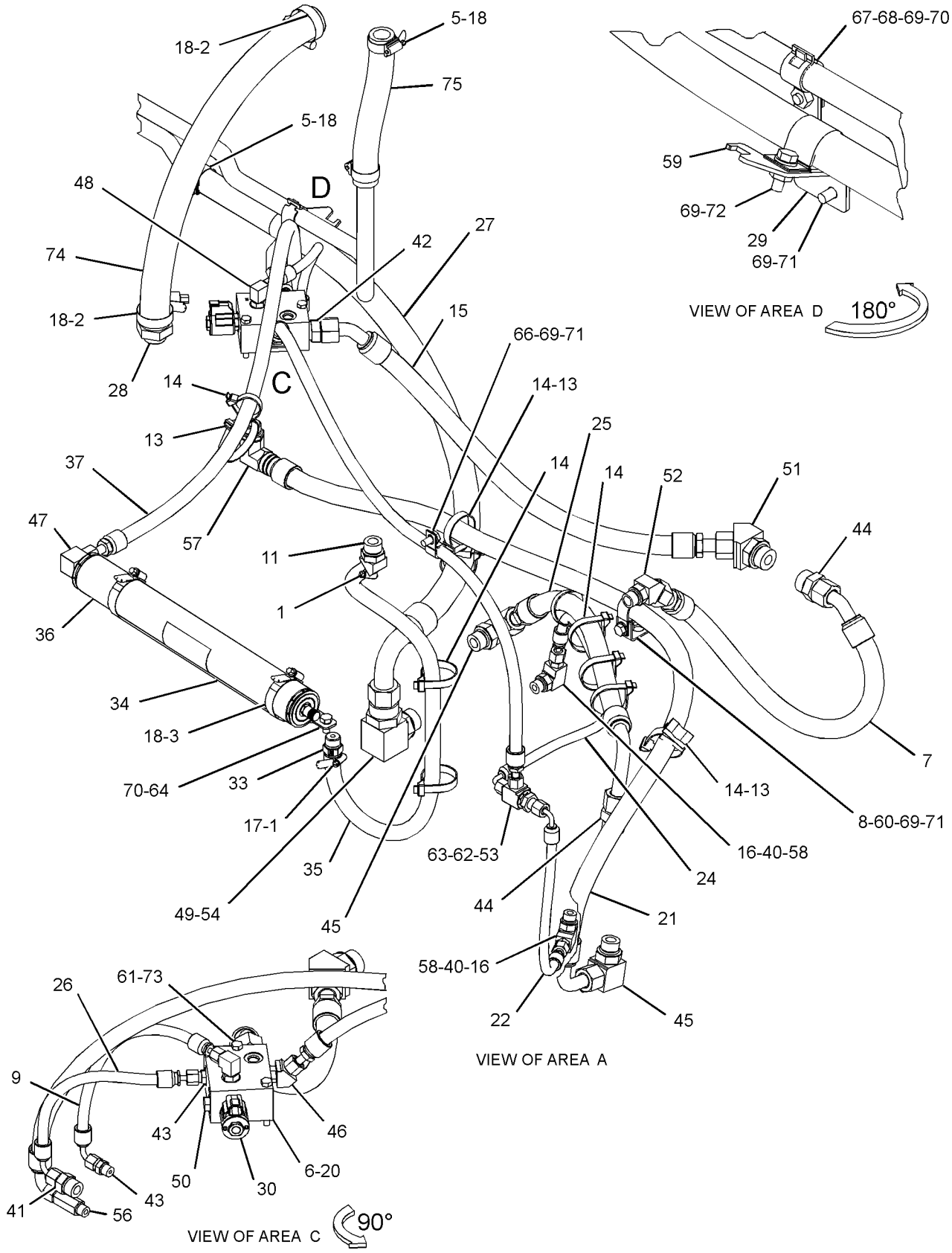

GRAPHIC #2 **<END>** g03367497

333-6928 LINES GP-TRANSMISSION FILTER

S/N: DYB1-UP

PART OF 381-4358 HYDRAULIC AR

SMCS-3154 **i05309507**

NOTE	REF NO	GRAPHIC REF	PART NUMBER	QTY	PART NAME 1 2 3 4 5 6 (PRODUCT LEVEL)	SEE PAGE
	1	1	**159-1503**	2	CLAMP-HOSE	
	2	1	**323-3309**	2	CAP	
I	3	1	**347-1308**	1	HOSE AS	
	4	1	**370-6979**	2	GROMMET	
	5	1	*148-8341*	1	CONNECTOR AS	
		1	**3D-2824**	1	SEAL-O-RING	
		1	**6V-8713**	1	CONNECTOR	
		1	**7J-9108**	1	SEAL-O-RING	
	6	1	*148-8390*	1	ELBOW AS	
		1	**2M-9780**	1	SEAL-O-RING	
		1	**6V-8626**	1	ELBOW	
		1	**7J-9108**	1	SEAL-O-RING	
	7	1	*153-9910*	1	ELBOW AS	
		1	**6V-5063**	1	SEAL-O-RING	
		1	**032-8487**	1	ELBOW	
G	8	1	**122-6905**		HOSE-HYDRAULIC (13.8-IN)	

G - ORDER BY THE INCH
I - REFER TO HYDRAULIC INFORMATION SYSTEM

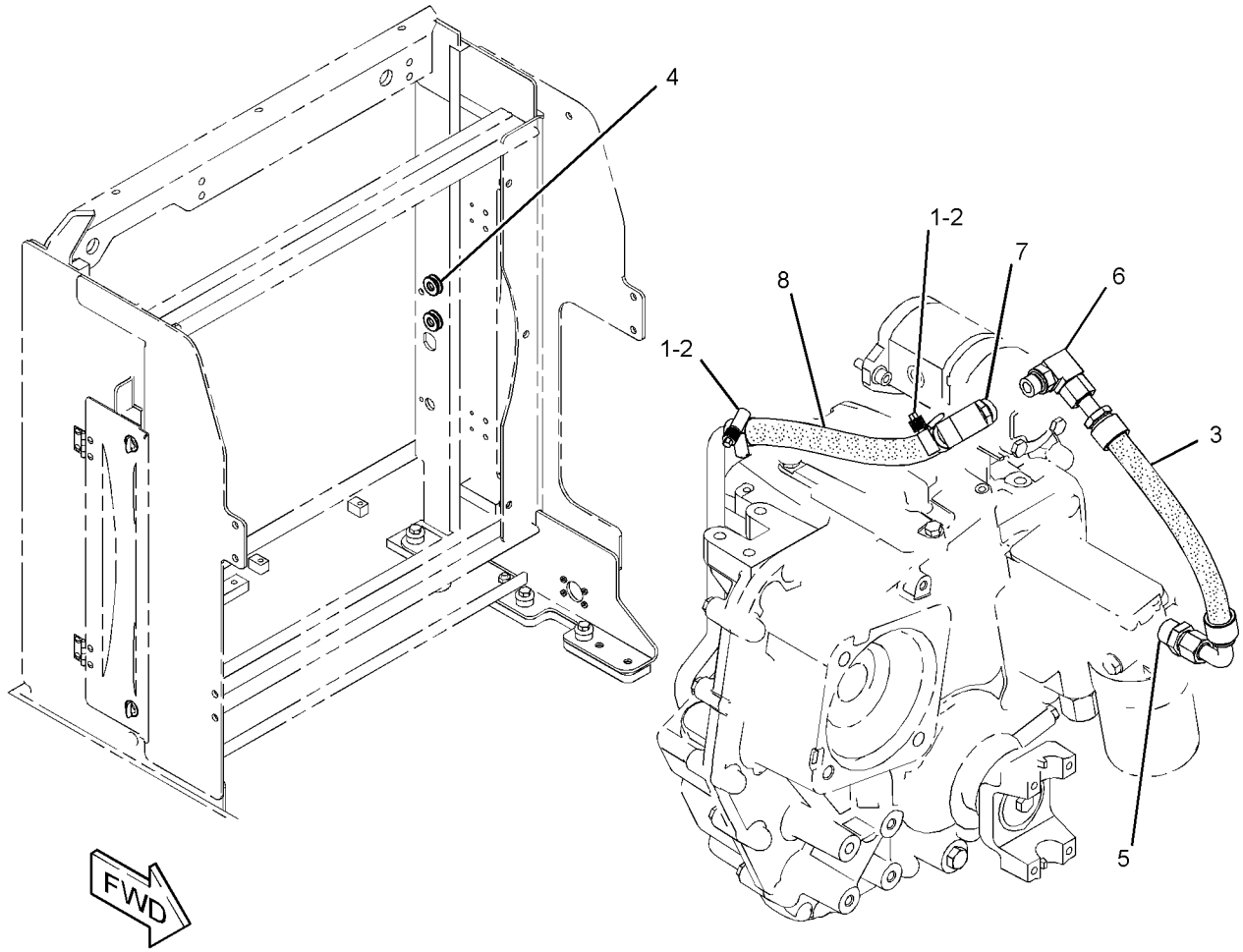

GRAPHIC #1 **<END>** g02793483

333-6536 MOTOR & MTG GP-HYDROSTATIC

S/N: DYB1-UP

PART OF 381-4374 POWER TRAIN AR

SMCS-4351, 5058 **i05306080**

NOTE	REF NO	GRAPHIC REF	PART NUMBER	QTY	PART NAME 1 2 3 4 5 6 (PRODUCT LEVEL)	SEE PAGE
Y	1	1	**307-3082**	1	MOTOR GP-PISTON	214
	2	1	**6V-1902**	1	SEAL-O-RING	
M	3	1	**8T-4140**	4	BOLT (M16X2X60-MM)	
	4	1	**9X-8257**	4	WASHER (17.5X30X3.5-MM THK)	

M - METRIC PART
Y - SEPARATE ILLUSTRATION

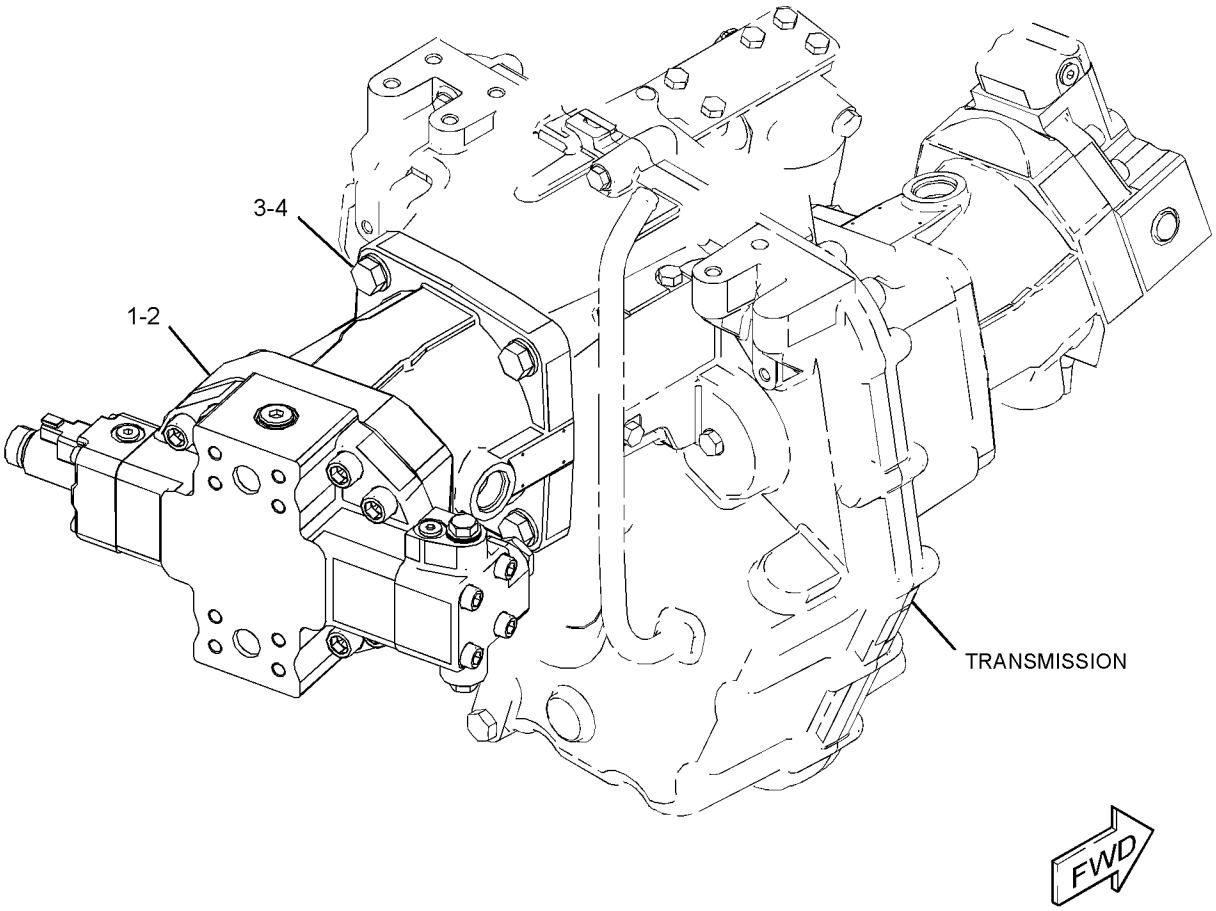

GRAPHIC #1 **<END>** g02794009

333-6537 MOTOR & MTG GP-HYDROSTATIC

S/N: DYB1-UP

PART OF 381-4374 POWER TRAIN AR

SMCS-4351, 5058 **i05306149**

NOTE	REF NO	GRAPHIC REF	PART NUMBER	QTY	PART NAME 1 2 3 4 5 6 (PRODUCT LEVEL)	SEE PAGE
Y	1	1	**307-3077**	1	MOTOR GP-PISTON	212
	2	1	**6V-3319**	1	SEAL-O-RING	
M	3	1	**8T-4140**	4	BOLT (M16X2X60-MM)	
	4	1	**9X-8257**	4	WASHER (17.5X30X3.5-MM THK)	

M - METRIC PART
Y - SEPARATE ILLUSTRATION

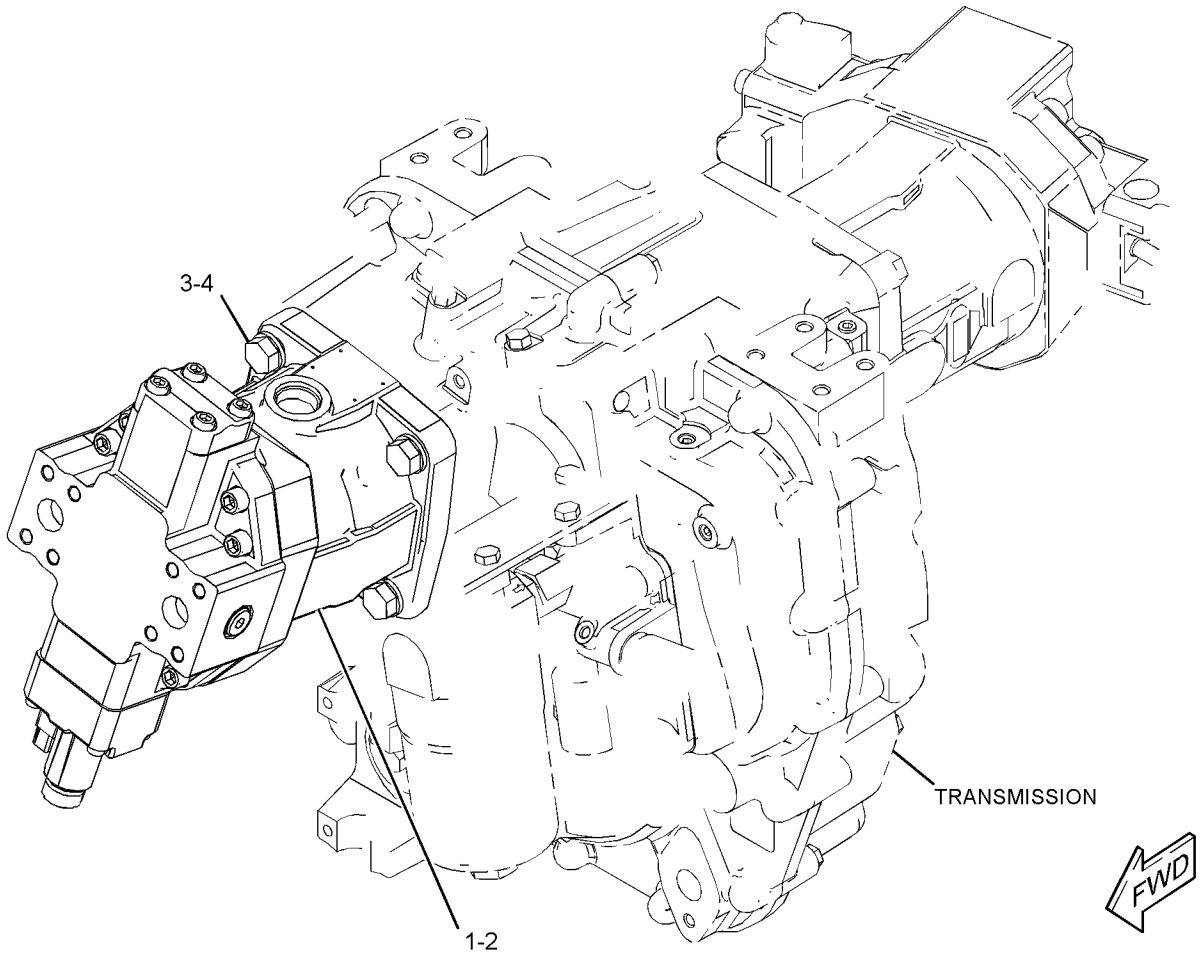

GRAPHIC #1 **<END>** g03349974

307-3077 MOTOR GP-PISTON

S/N: DYB1-UP

PART OF 333-6537 MOTOR & MTG GP-HYDROSTATIC

SMCS-4351 **i05306151**

NOTE	REF NO	GRAPHIC REF	PART NUMBER	QTY	PART NAME 1 2 3 4 5 6 (PRODUCT LEVEL)	SEE PAGE
Y	1	1	**373-8434**	1	ROTATING GP-MOTOR	231
Y	2	1	**373-8441**	1	VALVE GP-PILOT (HYDROSTATIC DRIVE)	258
	3	1	**373-8438**	1	COVER GP-MOTOR	
M	3A	1	**9X-6032**	4	BOLT-SOCKET HEAD (M10X1.5X30-MM)	
	3B	1	**9S-8004**	1	PLUG-O-RING	
	3C	1	**3J-1907**	1	SEAL-O-RING	
	3D	1	**8M-4987**	1	SEAL-O-RING	
Y	4	1	**301-7890**	2	VALVE GP-CHECK (HYDROSTATIC DRIVE MOTOR)	254
M	5	1	**8T-0273**	8	BOLT-SOCKET HEAD (M12X1.75X40-MM)	
M	6	1	**123-4953**	1	BOLT-SOCKET HEAD (M12X1.75X25-MM)	
	7	1	**373-8440**	1	PISTON	
	8	1	**373-8439**	1	PIN-THREADED	
	9	1	**123-5787**	2	SEAT	
	10	1	**9X-7680**	3	SEAL-O-RING	
	11	1	**343-9781**	1	PISTON	
	12	1	**123-5800**	2	PLUG	
	13	1	**2W-1145**	1	RING-RETAINING (INTERNAL)	
	14	1	**124-9913**	1	SEAL-SHAFT	
	15	1	**124-9914**	1	SHIM (3-MM THK)	
	16	1	**6F-4718**	1	SEAL-O-RING	
M	17	1	**6E-3283**	1	LOCKNUT (M12X1.75-THD)	
	18	1	**128-8981**	1	CAP	
	19	1	**120-4394**	1	PLUG-BREAK OFF	

M - METRIC PART
Y - SEPARATE ILLUSTRATION

307-3077 **MOTOR GP-PISTON (*contd.*)** **i05306151**

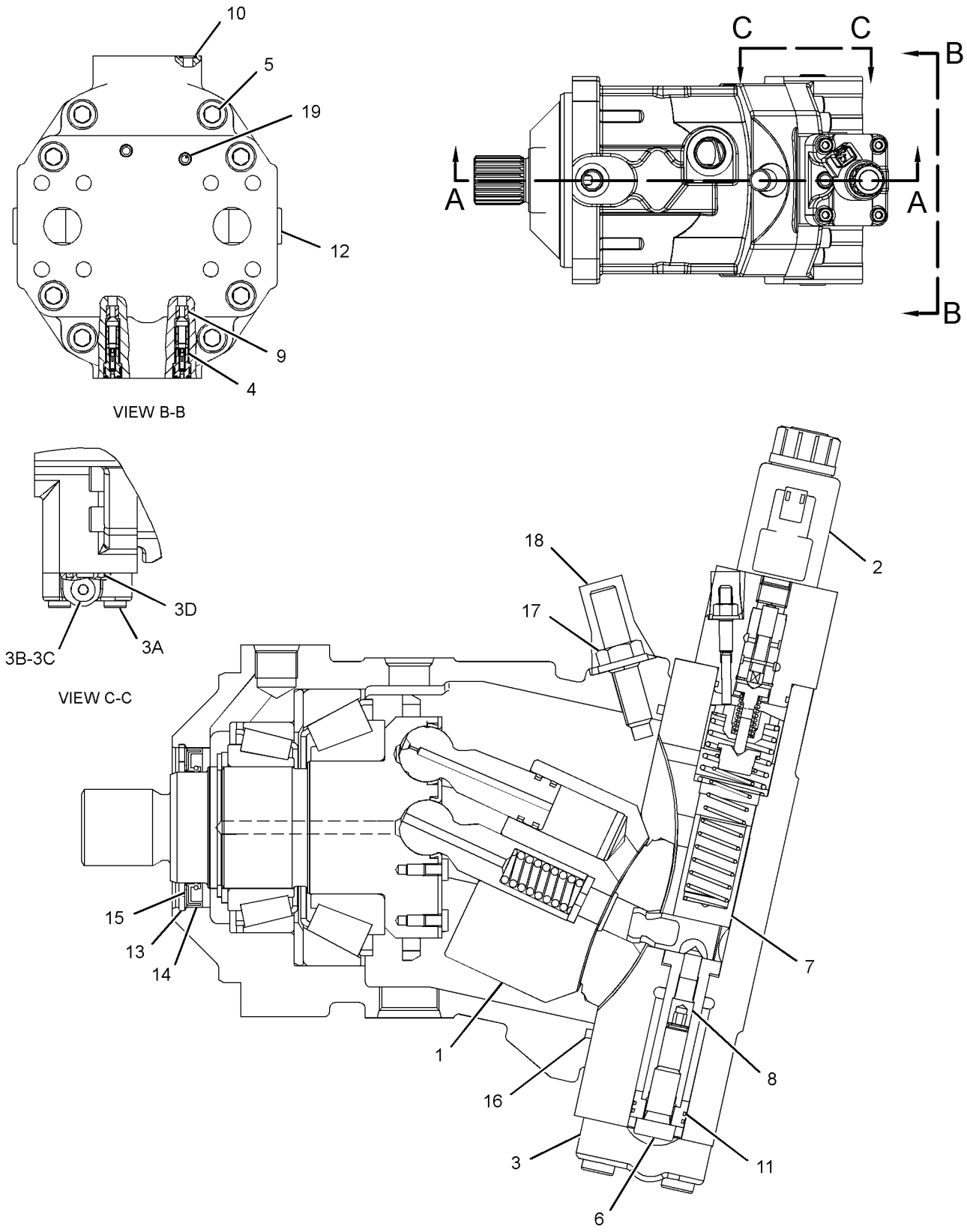

GRAPHIC #1 **<END>** g02795099

307-3082 MOTOR GP-PISTON

S/N: DYB1-UP

PART OF 333-6536 MOTOR & MTG GP-HYDROSTATIC

SMCS-4351 **i05306081**

NOTE	REF NO	GRAPHIC REF	PART NUMBER	QTY	PART NAME 1 2 3 4 5 6 (PRODUCT LEVEL)	SEE PAGE
Y	1	1	**373-8442**	1	ROTATING GP-MOTOR	232
Y	2	1	**373-8447**	1	VALVE GP-MOTOR CONTROL	257
Y	3	1	**373-8448**	1	VALVE GP-FLUSHING	255
Y	4	1	**301-7890**	2	VALVE GP-CHECK (HYDROSTATIC DRIVE MOTOR)	254
M	5	1	**8T-0348**	8	BOLT-SOCKET HEAD (M16X2X50-MM)	
	6	1	**124-9882**	1	TRUNNION	
M	7	1	**125-2205**	1	BOLT-SHALLOW HEAD (M14X1.5X25-MM)	
	8	1	**373-8445**	1	PISTON	
	9	1	**373-8446**	1	PIN-THREADED	
	10	1	**123-5787**	2	SEAT	
	11	1	**9X-7680**	3	SEAL-O-RING	
	12	1	**343-9780**	1	PISTON	
	13	1	**2W-1145**	1	RING-RETAINING (INTERNAL)	
	14	1	**124-9913**	1	SEAL-SHAFT	
	15	1	**124-9914**	1	SHIM (3-MM THK)	
	16	1	**3J-0634**	1	SEAL-O-RING	
M	17	1	**6E-3283**	1	LOCKNUT (M12X1.75-THD)	
	18	1	**128-8981**	1	CAP	
	19	1	**120-4394**	1	PLUG-BREAK OFF	

M - METRIC PART
Y - SEPARATE ILLUSTRATION

307-3082 **MOTOR GP-PISTON (*contd.*)** **i05306081**

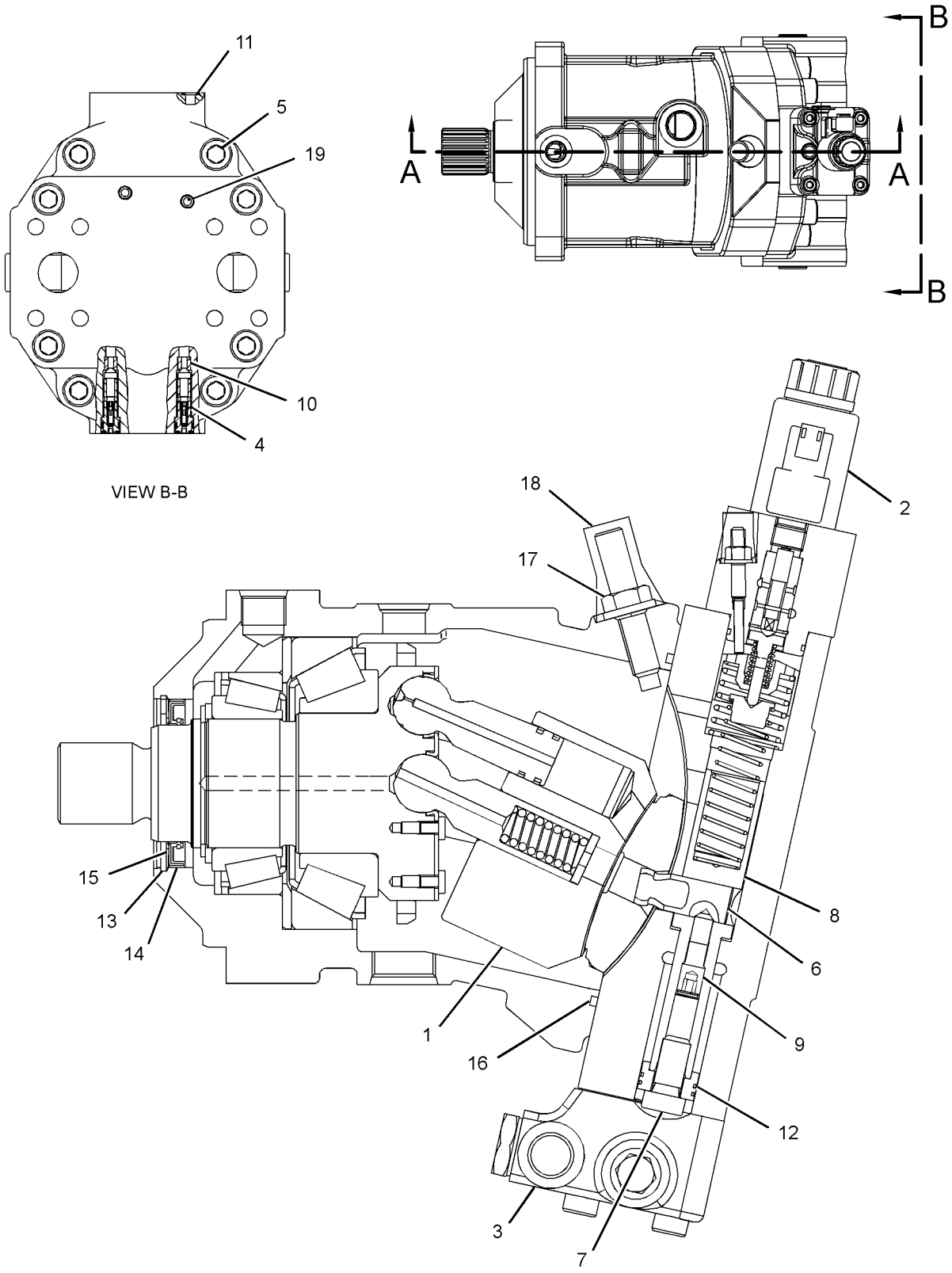

GRAPHIC #1

<END>

g02795061

346-1564 MOUNTING GP-AXLE

S/N: DYB1-UP

PART OF 381-4385 CHASSIS AR

SMCS-3268, 3278 **i05307641**

NOTE	REF NO	GRAPHIC REF	PART NUMBER	QTY	PART NAME 1 2 3 4 5 6 (PRODUCT LEVEL)	SEE PAGE
	1	1	**126-8928**	8	WASHER-HARD (26X40X8-MM THK)	
	2	1	**6K-8987**	2	DOWEL	
M	3	1	**7X-2465**	12	BOLT (M24X3X180-MM)	
M	4	1	**7X-2578**	8	BOLT (M24X3X200-MM)	
	5	1	**8T-4167**	12	WASHER-HARD (26X44X4-MM THK)	

M - METRIC PART

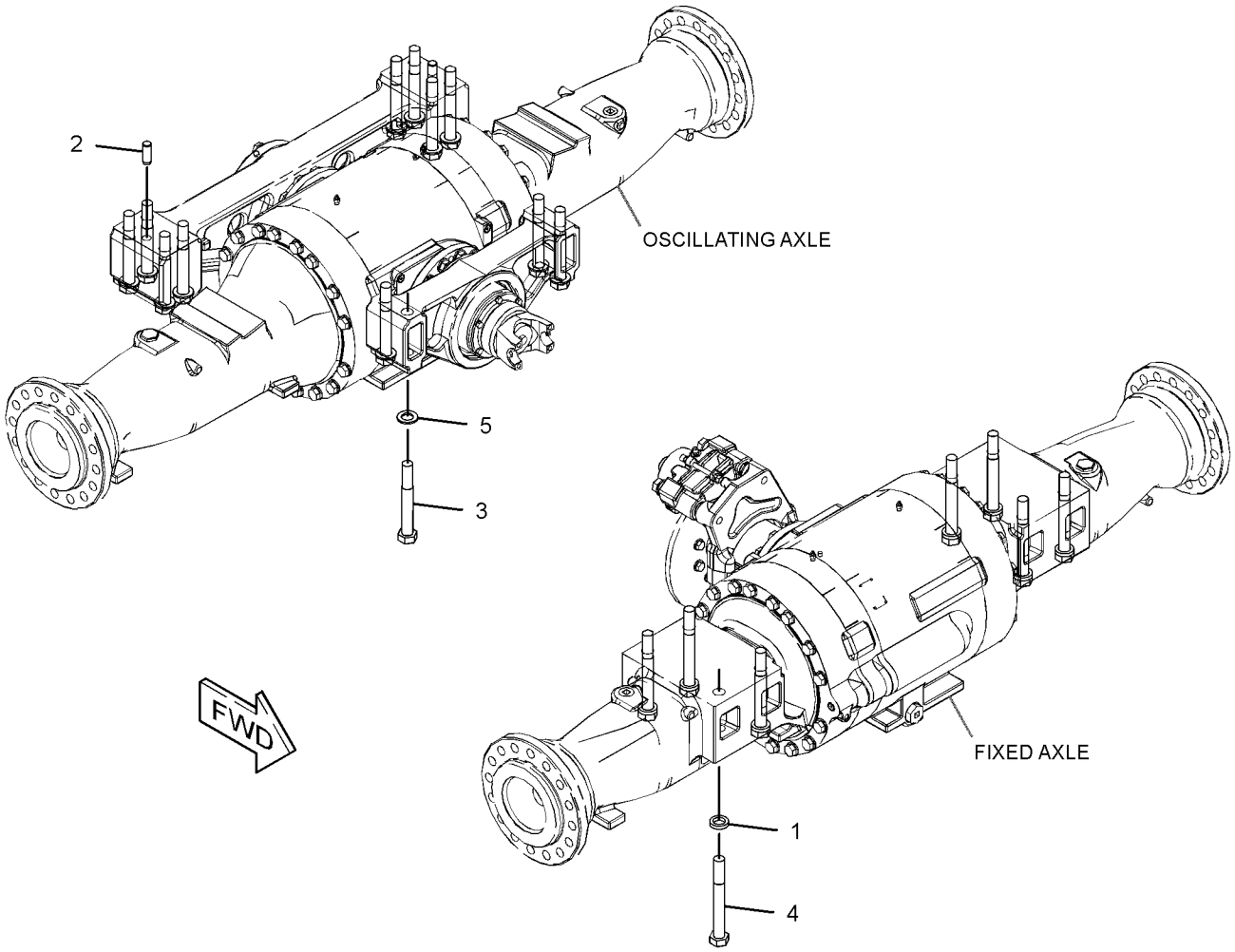

GRAPHIC #1 **<END>** g02792593

332-3638 MOUNTING GP-HYDROSTATIC PUMP

S/N: DYB1-UP

PART OF 381-4371 INSTALLATION AR-ENGINE

SMCS-3203 **i05309778**

NOTE	REF NO	GRAPHIC REF	PART NUMBER	QTY	PART NAME 1 2 3 4 5 6 (PRODUCT LEVEL)	SEE PAGE
	1	1	**336-9842**	1	PLATE	
	2	1	**346-8615**	1	COUPLING-TORSIONAL (FLANGE)	
	3	1	**385-2754**	1	COUPLING-TORSIONAL	
	4	1	**0T-0924**	8	BOLT (3/8-24X1.5-IN)	
	5	1	**8T-4121**	12	WASHER-HARD (11X21X2.5-MM THK)	
M	6	1	**8T-4185**	12	BOLT (M10X1.5X50-MM)	

M - METRIC PART

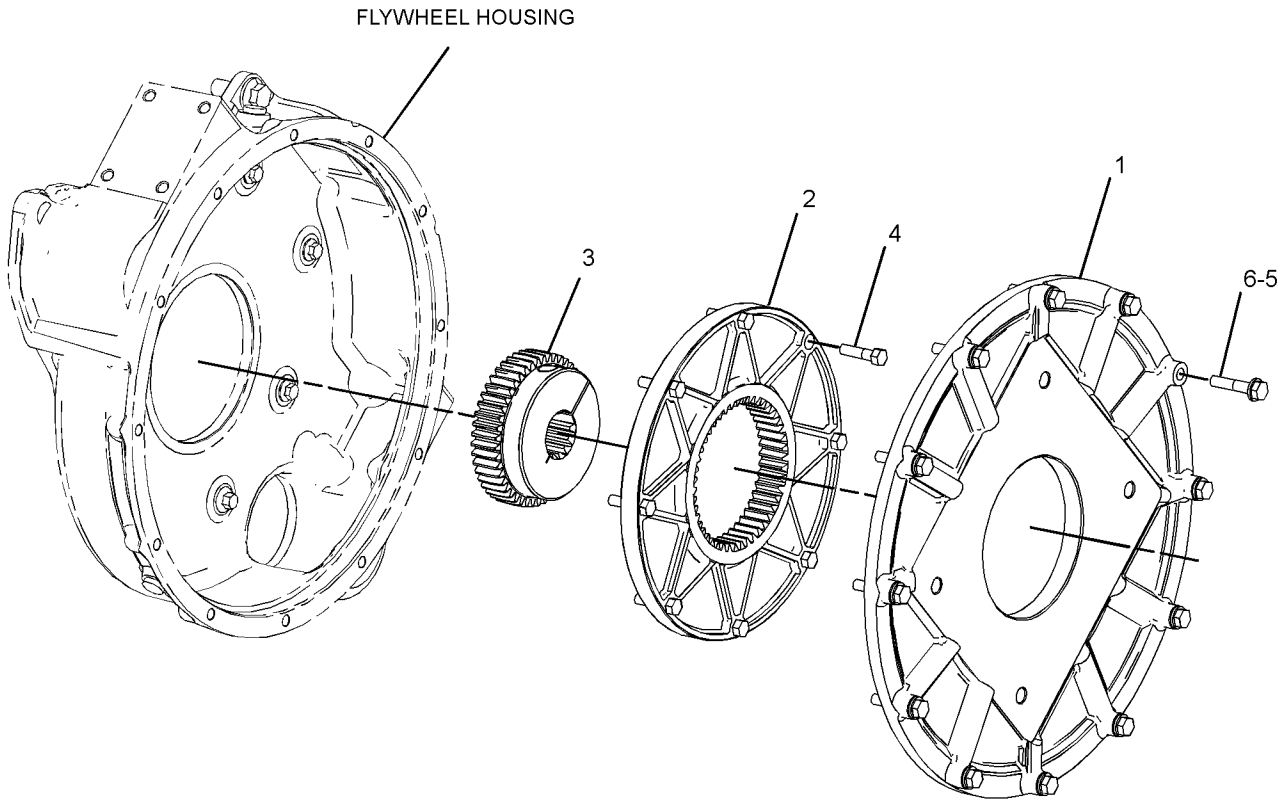

GRAPHIC #1 **<END>** g02791681

147-5071 MOUNTING GP-RIM

S/N: DYB1-UP

PART OF 357-8902, 360-2514, 360-2534, 366-6880, 366-6888, 366-6896 TIRE & RIM AR

AN ATTACHMENT

SMCS-4202, 4209

i03117943

NOTE	PART NUMBER	QTY	PART NAME 1 2 3 4 5 6 (PRODUCT LEVEL)	SEE PAGE
M	**8T-5379**	16	BOLT (M24X3X50-MM) (LEFT FRONT)	
M	**8T-5379**	16	BOLT (M24X3X50-MM) (RIGHT FRONT)	
M	**8T-5379**	16	BOLT (M24X3X50-MM) (LEFT REAR)	
M	**8T-5379**	16	BOLT (M24X3X50-MM) (RIGHT REAR)	
	8T-4167	16	WASHER-HARD (26X44X4-MM THK) (LEFT FRONT)	
	8T-4167	16	WASHER-HARD (26X44X4-MM THK) (RIGHT FRONT)	
	8T-4167	16	WASHER-HARD (26X44X4-MM THK) (LEFT REAR)	
	8T-4167	16	WASHER-HARD (26X44X4-MM THK) (RIGHT REAR)	

M - METRIC PART

<END>

339-6839 MOUNTING GP-TRANSMISSION

S/N: DYB1-UP

PART OF 381-4374 POWER TRAIN AR

SMCS-3082, 7051 **i05306274**

NOTE	REF NO	GRAPHIC REF	PART NUMBER	QTY	PART NAME 1 2 3 4 5 6 (PRODUCT LEVEL)	SEE PAGE
	1	1	**9R-0394**	3	MOUNT AS	
	2	1	**343-1297**	2	BRACKET-MOUNTING	
	3	1	**343-1298**	1	BRACKET-MOUNTING	
	4	1	**3E-4885**	6	WASHER (26X114X10-MM THK)	
M	5	1	**8C-3290**	3	BOLT (M24X3X150-MM)	
M	6	1	**8T-4001**	3	NUT (M24X3-THD)	
	7	1	**8T-4167**	3	WASHER-HARD (26X44X4-MM THK)	
M	8	1	**8T-4184**	4	BOLT (M12X1.75X45-MM)	
M	9	1	**8T-4648**	8	BOLT (M12X1.75X70-MM)	
	10	1	**8T-7971**	12	WASHER-HARD (13.5X25.5X5-MM THK)	

M - METRIC PART

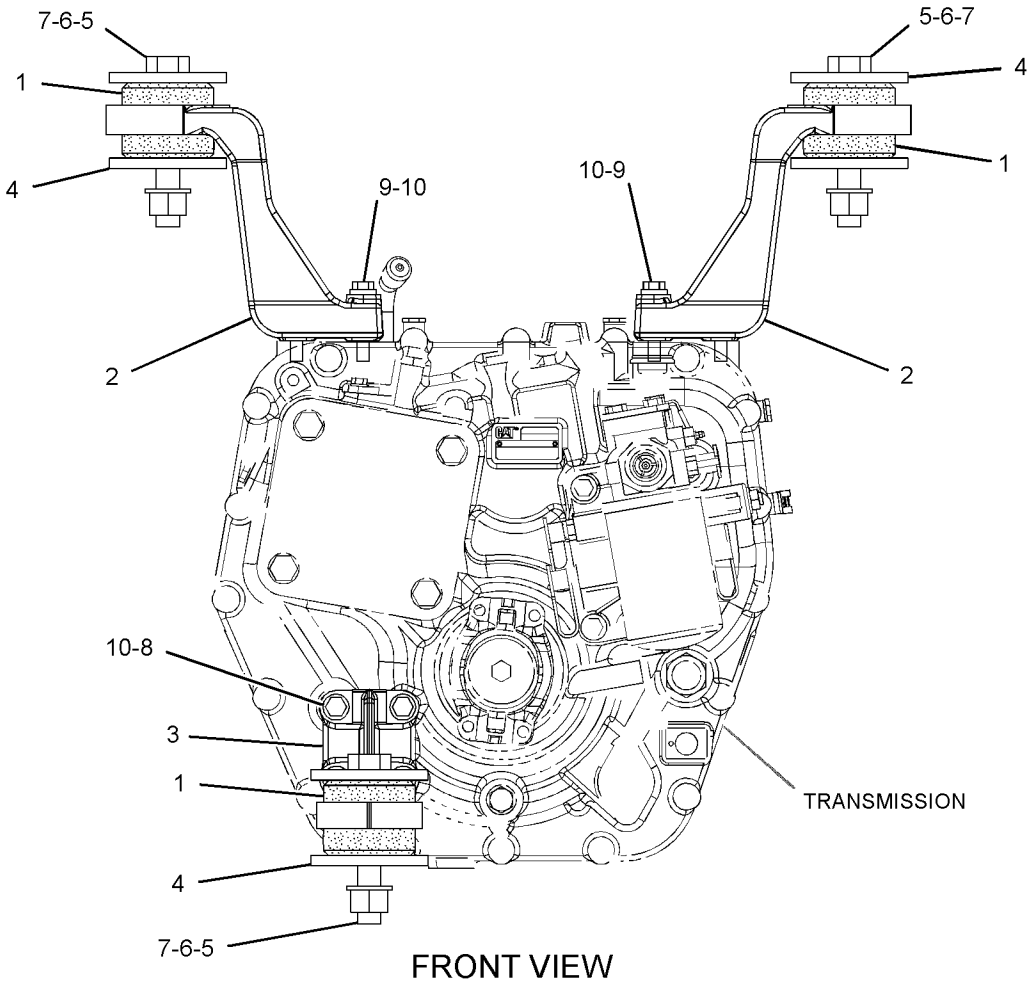

FRONT VIEW

GRAPHIC #1 **<END>** g02799957

381-4374 POWER TRAIN AR

S/N: DYB1-UP

PART OF 381-4382 COMMON AR

SMCS-3000, 4000 **i05309780**

NOTE	PART NUMBER	QTY	PART NAME 1 2 3 4 5 6 (PRODUCT LEVEL)	SEE PAGE
Y	*340-9906*	1	AXLE AR-FIXED (DIFFERENTIAL LOCK)	184
Y	*333-6529*	1	AXLE AR-OSCILLATING (REAR, STANDARD DIFFERENTIAL)	184
Y	**337-7053**	1	TRANSMISSION AR	247
Y	*339-6722*	1	FILLER GP-POWER TRAIN OIL	192
Y	*333-6934*	1	LINES GP-DIFFERENTIAL LOCK	200
Y	*333-6536*	1	MOTOR & MTG GP-HYDROSTATIC (152-CC)	210
Y	*333-6537*	1	MOTOR & MTG GP-HYDROSTATIC (115-CC)	211
Y	*339-6839*	1	MOUNTING GP-TRANSMISSION	219
Y	*333-6535*	1	PUMP & MTG GP-GEAR	221
Y	*333-6912*	1	PUMP & MTG GP-HYDROSTATIC	222
Y	*348-3435*	1	SHAFT GP-DRIVE	234

Y - SEPARATE ILLUSTRATION

<END>

333-6535 PUMP & MTG GP-GEAR

S/N: DYB1-UP

PART OF 381-4374 POWER TRAIN AR

SMCS-3204, 4350 **i05306079**

NOTE	REF NO	GRAPHIC REF	PART NUMBER	QTY	PART NAME 1 2 3 4 5 6 (PRODUCT LEVEL)	SEE PAGE
J	1	1	**307-3079**	1	PUMP GP-GEAR (CHARGE, HYDROSTATIC DRIVE)	
M		1	**7X-2547**	4	BOLT (M10X1.5X200-MM)	
		1	**8T-5095**	4	WASHER-PLATED (11X16X2-MM THK)	
M	2	1	**105-3478**	2	BOLT-SOCKET HEAD (M10X1.5X35-MM)	
	3	1	**177-0344**	1	SEAL-O-RING	
	4	1	**8T-4121**	2	WASHER-HARD (11X21X2.5-MM THK)	
					AVAILABLE REPAIR KIT(S):	
J			**358-4979**		KIT-SEAL (HYDROSTATIC PUMP)	
					(INCLUDES SEALS, SHAFT SEALS, BACKUP SEALS & RETAINING RING)	

J - KIT MARKED J SERVICES PARTS MARKED J
M - METRIC PART

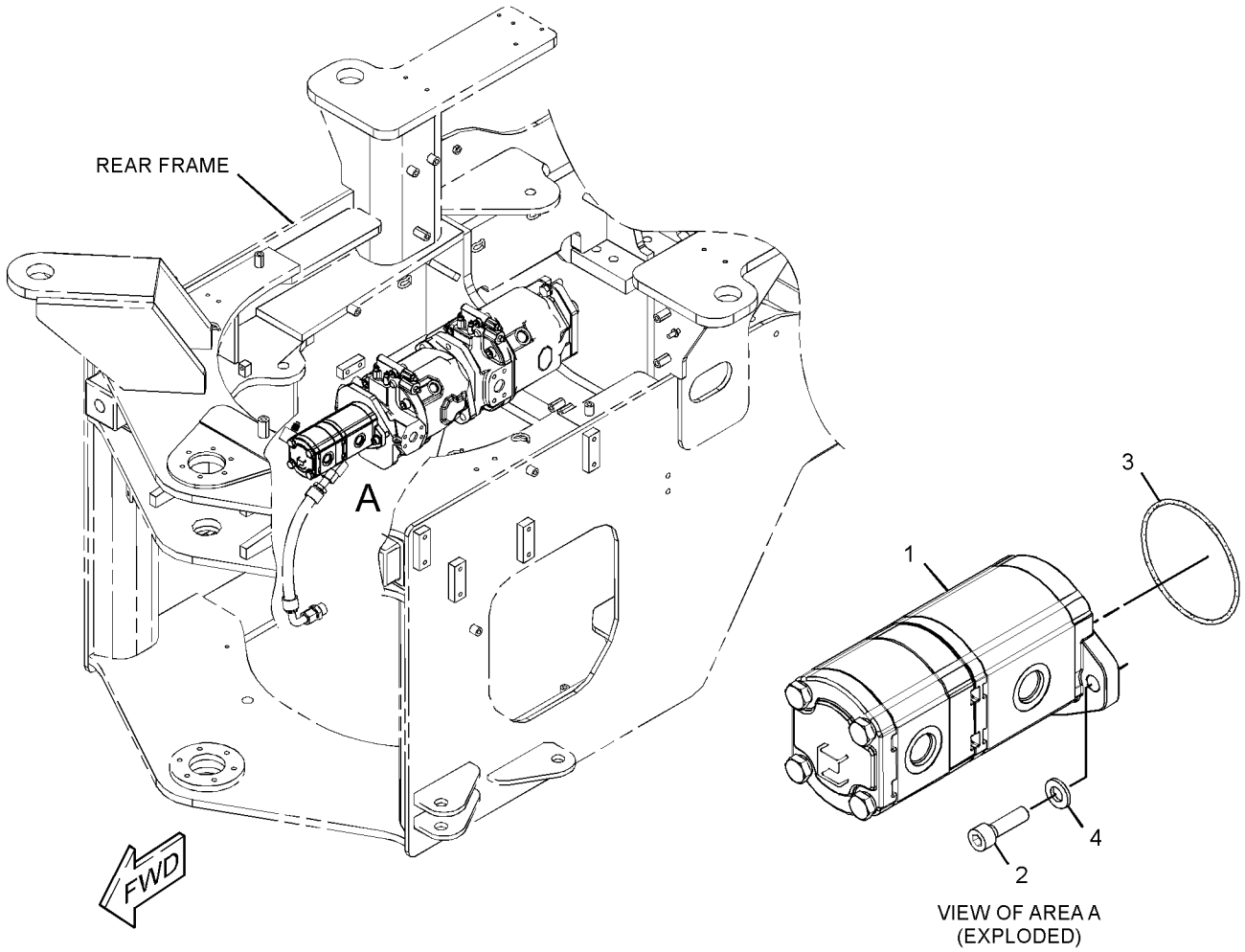

GRAPHIC #1 **<END>** g02793843

333-6912 PUMP & MTG GP-HYDROSTATIC

S/N: DYB1-UP

PART OF 381-4374 POWER TRAIN AR

SMCS-3203, 5070 **i05309801**

NOTE	REF NO	GRAPHIC REF	PART NUMBER	QTY	PART NAME 1 2 3 4 5 6 (PRODUCT LEVEL)	SEE PAGE
	1	1	**285-2663**	2	FITTING AS (QUICK DISCONNECT, MALE)	
					(EACH INCLUDES)	
		1	**3J-1907**	1	SEAL-O-RING	
		1	**285-2664**	1	FITTING	
Y	2	1	**307-3065**	1	PUMP GP-PISTON (HYDROSTATIC)	223
M	3	1	**8T-4193**	4	BOLT (M16X2X50-MM)	
	4	1	**9X-8257**	4	WASHER (17.5X30X3.5-MM THK)	
	5	1	**378-2818**	1	COUPLER-PUMP	

M - METRIC PART
Y - SEPARATE ILLUSTRATION

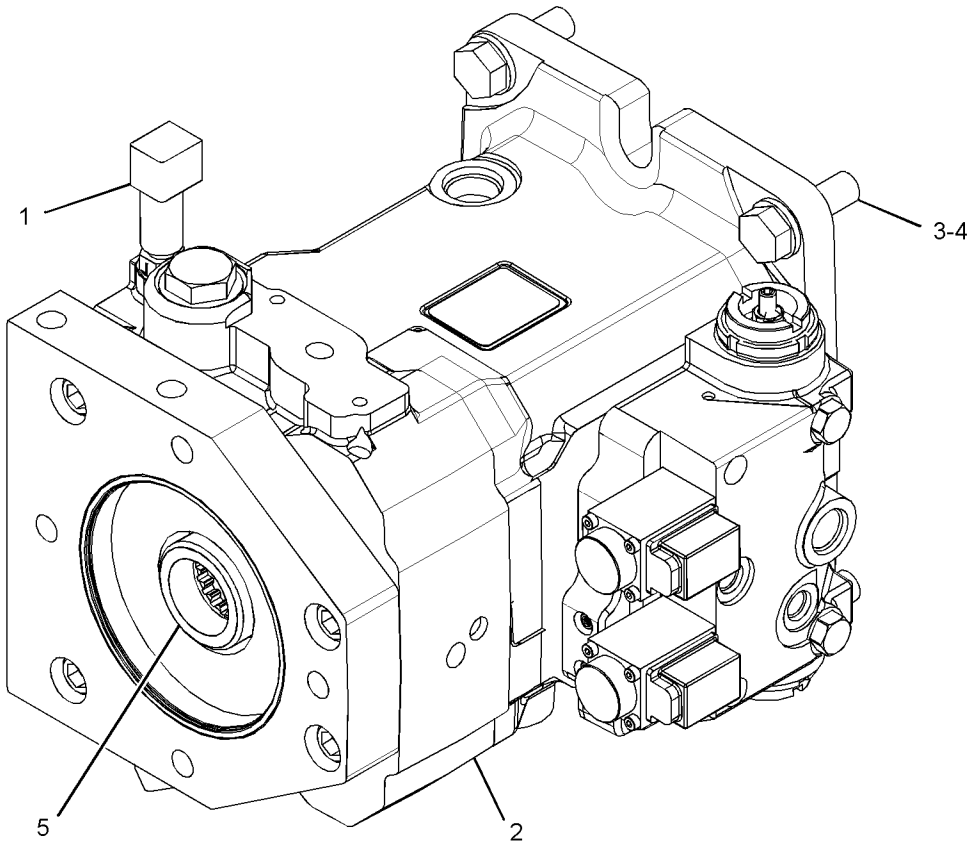

GRAPHIC #1 **<END>** g03280036

307-3065 PUMP GP-PISTON—HYDROSTATIC

S/N: DYB1-UP

PART OF 333-6912 PUMP & MTG GP-HYDROSTATIC

SMCS-3203 **i05309897**

NOTE	REF NO	GRAPHIC REF	PART NUMBER	QTY	PART NAME 1 2 3 4 5 6 (PRODUCT LEVEL)	SEE PAGE
	1	1	**302-5738**	1	RING-RETAINING	
	2	1	**244-1463**	1	SHIM (1-MM THK)	
	3	1	**9S-4191**	2	PLUG-O-RING	
	4	1	**3J-1907**	2	SEAL-O-RING	
	5	1	**121-9910**	1	RING	
	6	1	**121-9911**	1	BEARING	
	7	1	**378-2808**	1	SHAFT	
	8	1	**8U-9480**	2	PIN	
	9	1	**121-9913**	2	BEARING	
	10	1	**373-1067**	1	BARREL AS	
	11	1	**121-9931**	1	WASHER-SPECIAL	
	12	1	**6Y-2737**	1	CUP-BEARING	
	13	1	**378-2828**	1	KIT-SHIM (PISTON PUMP)	
					(INCLUDES SHIMS)	
	14	1	**378-2814**	2	VALVE GP-RELIEF (PISTON PUMP)	
					(EACH INCLUDES)	
		1	**192-7112**	1	SEAL-O-RING	
	15	1	**378-2815**	1	VALVE GP-RELIEF (PISTON PUMP)	
		1	**9X-4619**	1	SEAL-O-RING	
	16	1	**378-2836**	1	PLATE-VALVE	
	17	1	**101-2862**	2	DOWEL	
	18	1	**121-9942**	2	PIPE	
	19	1	**373-1079**	2	KIT-PISTON	
					(EACH INCLUDES PISTION, WASHER, SPRING, RETAINER, SEALS & SHIMS)	
	20	1	**378-2818**	1	COUPLER-PUMP	
M	21	1	**6V-5192**	4	BOLT-SOCKET HEAD (M8X1.25X30-MM)	
	22	1	**378-2816**	1	LEVER-CONTROL	
Y	23	1	**378-2817**	1	VALVE GP-PUMP CONTROL	259
M	24	1	**160-8493**	3	BOLT-SOCKET HEAD (M14X2X80-MM)	
M	25	1	**095-0692**	4	BOLT-SOCKET HEAD (M14X2X110-MM)	
P	26	1	**9T-4912**	1	SEAL-LIP TYPE	
	27	1	**6Y-2736**	1	CONE-BEARING	
B	28	1	**223-2321**	2	KIT-WASHER	
					(INCLUDES SHIMS, WASHERS & PLATES)	
					PARTS SHOWN IN GRAPHIC(S) WITHOUT A REFERENCE NUMBER ARE NOT SERVICED SEPARATELY	
					AVAILABLE REPAIR KIT(S):	
P			**376-8210**		KIT-SEAL (PISTON PUMP)	
					(ALSO INCLUDES PARTS MARKED " J " IN GRAPHIC)	

B - USE AS REQUIRED
M - METRIC PART
P - KIT MARKED P SERVICES PARTS MARKED P
Y - SEPARATE ILLUSTRATION

307-3065 **PUMP GP-PISTON (*contd.*)** **i05309897**

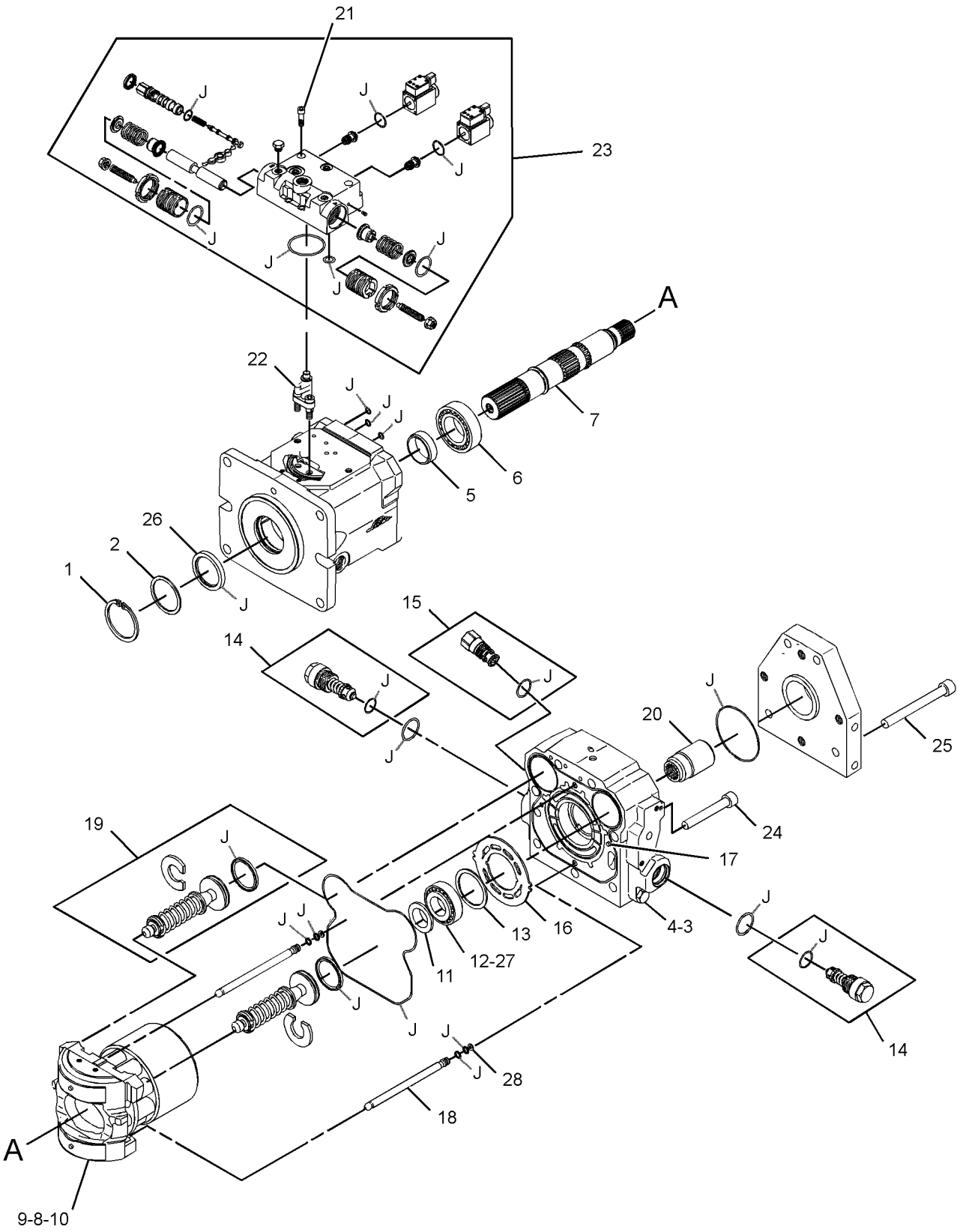

GRAPHIC #1 **<END>** g03379669

376-0834 RIM AR—3-PIECE, OFFSET

S/N: DYB1-UP

AN ATTACHMENT

SMCS-4209 **i05328109**

NOTE	PART NUMBER	QTY	PART NAME 1 2 3 4 5 6 (PRODUCT LEVEL)	SEE PAGE
Y	*357-8879*	4	RIM GP-DEMOUNTABLE (3-PIECE)	227
	147-5071	1	MOUNTING GP-RIM	
	8T-4167	64	WASHER-HARD (26X44X4-MM THK)	
M	**8T-5379**	64	BOLT (M24X3X50-MM)	
	147-5484	1	STOP GP-AXLE OSCILLATION	
	4E-1357	2	BLOCK	
	8T-4223	4	WASHER-HARD (13.5X25.5X3-MM THK)	
M	**8T-4956**	4	BOLT (M12X1.75X35-MM)	

M - METRIC PART
Y - SEPARATE ILLUSTRATION

<END>

357-8877 RIM GP-DEMOUNTABLE—3-PIECE

S/N: DYB1-UP
17X25
PART OF 357-8879 RIM GP-DEMOUNTABLE
AN ATTACHMENT

SMCS-4209 **i05315164**

NOTE	REF NO	GRAPHIC REF	PART NUMBER	QTY	PART NAME 1 2 3 4 5 6 (PRODUCT LEVEL)	SEE PAGE
	1	1	**4K-4881**	1	RING-LOCK	
	2	1	**171-8689**	1	FLANGE AS	
	3	1	**176-0118**	1	DRIVER	
	4	1	**357-8878**	1	RIM AS	

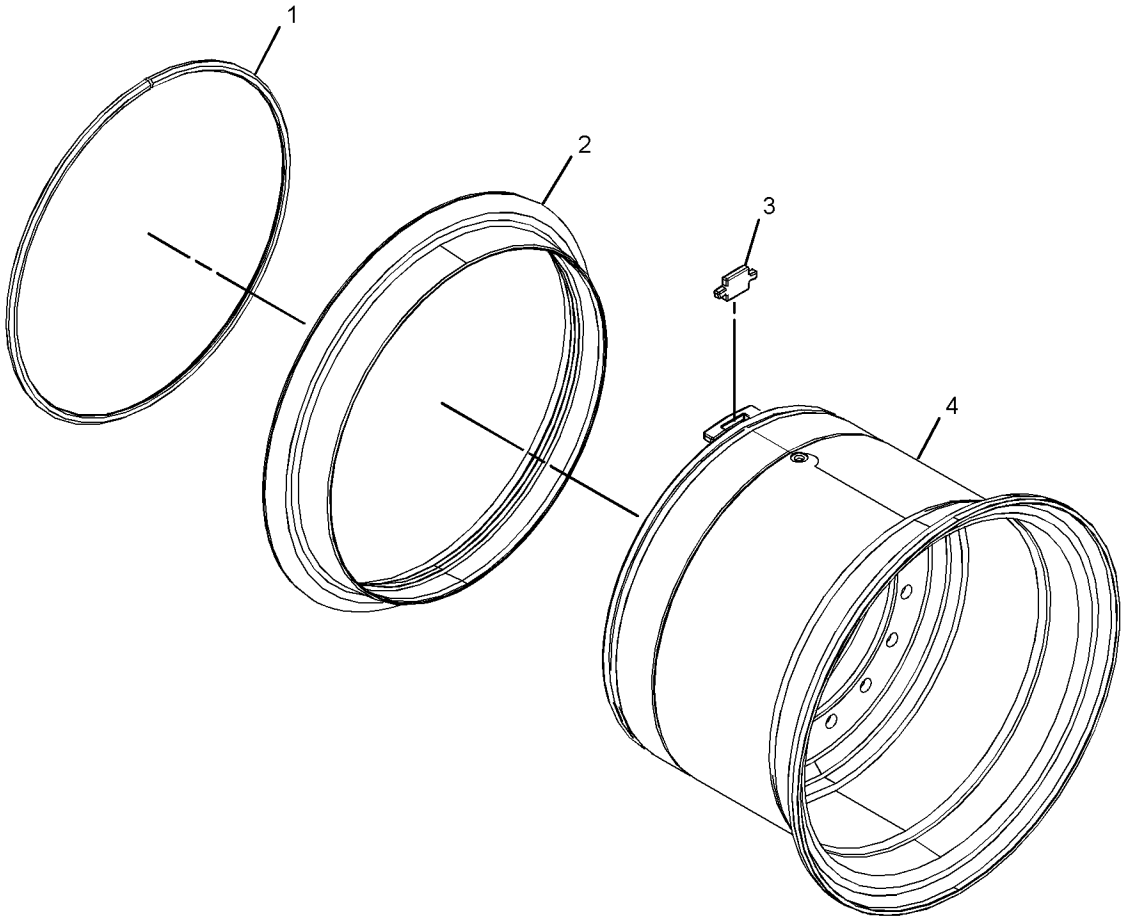

GRAPHIC #1 **<END>** g02763498

357-8879 RIM GP-DEMOUNTABLE—3-PIECE

S/N: DYB1-UP

17X25

PART OF 376-0834 RIM AR, 357-8902, 360-2510, 360-2514, 360-2534, 366-6880, 366-6888, 366-6896, 367-4256, 376-0779, 376-0786, 376-0817, 376-0822, 376-0828, 376-0863, 376-0875, 376-0879, 417-6415 TIRE & RIM AR

AN ATTACHMENT

SMCS-4209 **i05315153**

NOTE	REF NO	GRAPHIC REF	PART NUMBER	QTY	PART NAME 1 2 3 4 5 6 (PRODUCT LEVEL)	SEE PAGE
Y	1	1	*357-8877*	1	RIM GP-DEMOUNTABLE	226
	2	1	**4K-4879**	1	SEAL-O-RING	
Y	3	1	**6D-0337**	1	VALVE GP-TIRE	261
					PARTS SHOWN IN GRAPHIC(S) WITHOUT A REFERENCE NUMBER ARE NOT SERVICED SEPARATELY	

Y - SEPARATE ILLUSTRATION

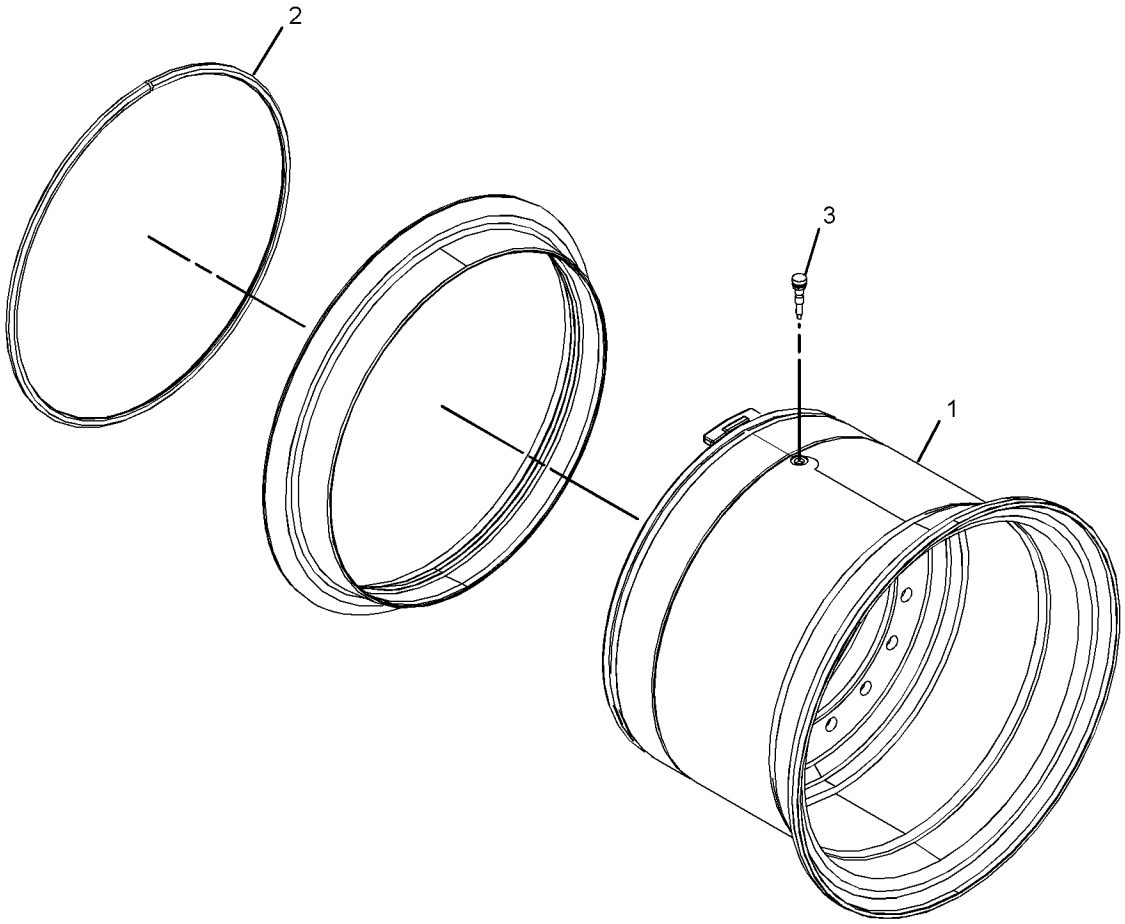

GRAPHIC #1 **<END>** g02763600

360-2483 RIM GP-DEMOUNTABLE—3-PIECE

S/N: DYB1-UP

(25X14)

PART OF 360-2503 RIM GP-DEMOUNTABLE

AN ATTACHMENT

SMCS-4209 **i05312310**

NOTE	REF NO	GRAPHIC REF	PART NUMBER	QTY	PART NAME 1 2 3 4 5 6 (PRODUCT LEVEL)	SEE PAGE
	1	1	**4K-4881**	1	RING-LOCK	
	2	1	**171-7198**	1	FLANGE AS	
	3	1	**176-0118**	1	DRIVER	
	4	1	**360-2484**	1	RIM AS	

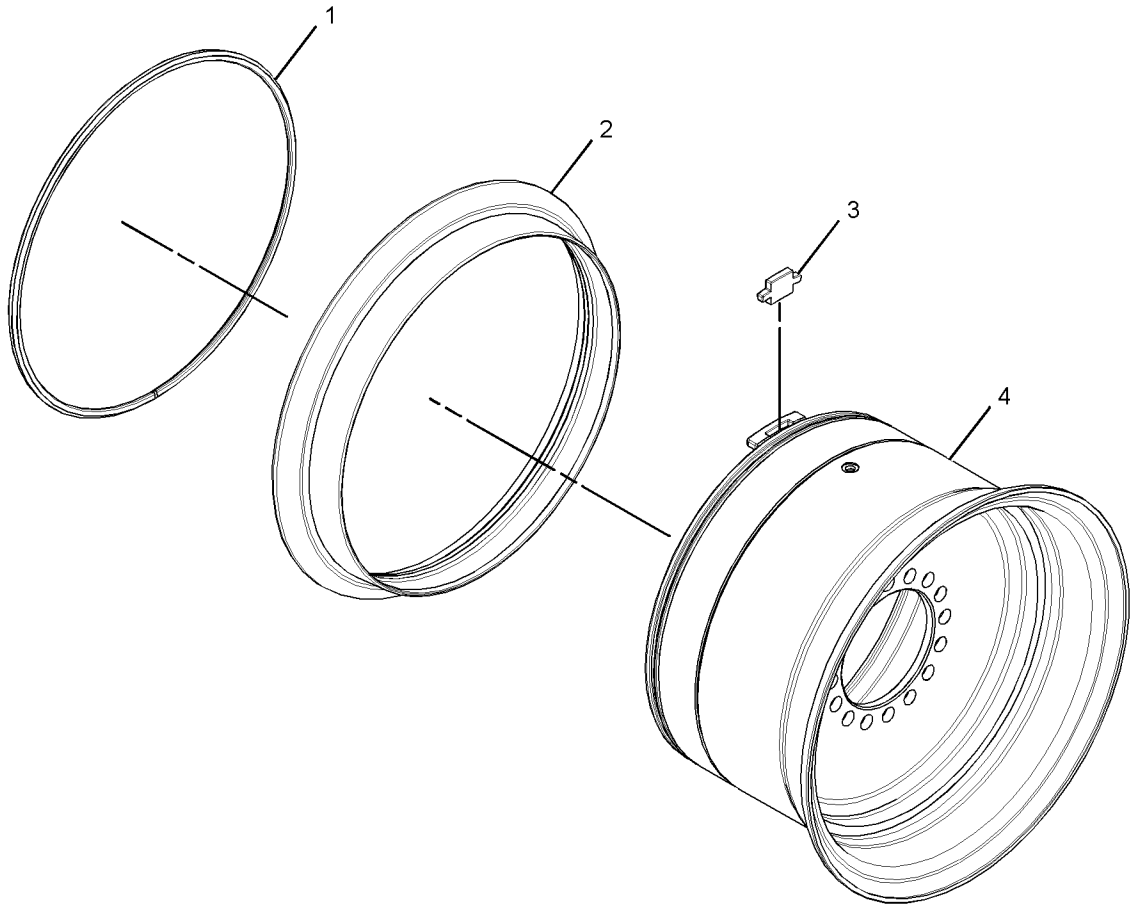

GRAPHIC #1 **<END>** g02790522

360-2503 RIM GP-DEMOUNTABLE–3-PIECE

S/N: DYB1-UP
PART OF 376-0873 TIRE & RIM AR
AN ATTACHMENT

SMCS-4209 **i05312309**

NOTE	REF NO	GRAPHIC REF	PART NUMBER	QTY	PART NAME 1 2 3 4 5 6 (PRODUCT LEVEL)	SEE PAGE
Y	1	1	*360-2483*	1	RIM GP-DEMOUNTABLE (3-PIECE)	228
	2	1	**4K-4879**	1	SEAL-O-RING	
Y	3	1	**6D-0337**	1	VALVE GP-TIRE	261

Y - SEPARATE ILLUSTRATION

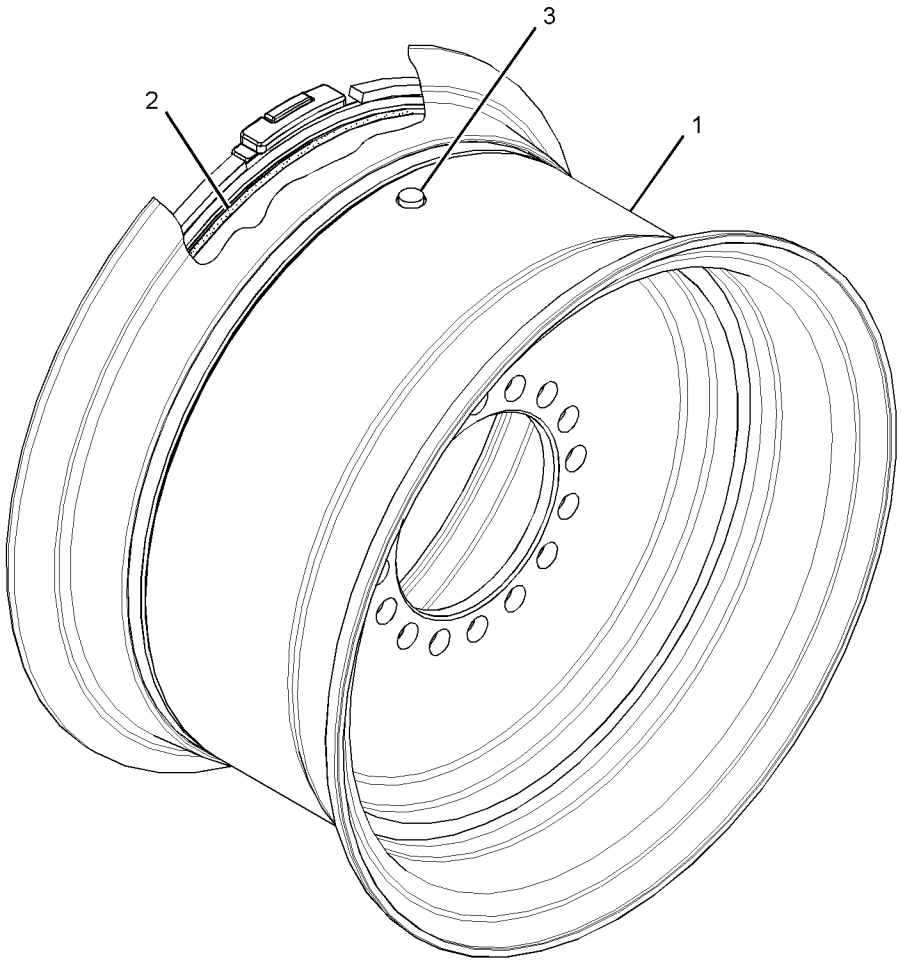

GRAPHIC #1 **<END>** g02790537

373-8108 RIM GP-DEMOUNTABLE–1-PIECE, CENTER MOUNT

S/N: DYB1-UP
(26X20)
PART OF 373-7310 TIRE & RIM AR
AN ATTACHMENT

SMCS-4209 **i05334213**

NOTE	REF NO	GRAPHIC REF	PART NUMBER	QTY	PART NAME 1 2 3 4 5 6 (PRODUCT LEVEL)	SEE PAGE
Y	1	1	**6D-0337**	1	VALVE GP-TIRE	261
	2	1	**376-0849**	1	RIM AS (26X20)	

Y - SEPARATE ILLUSTRATION

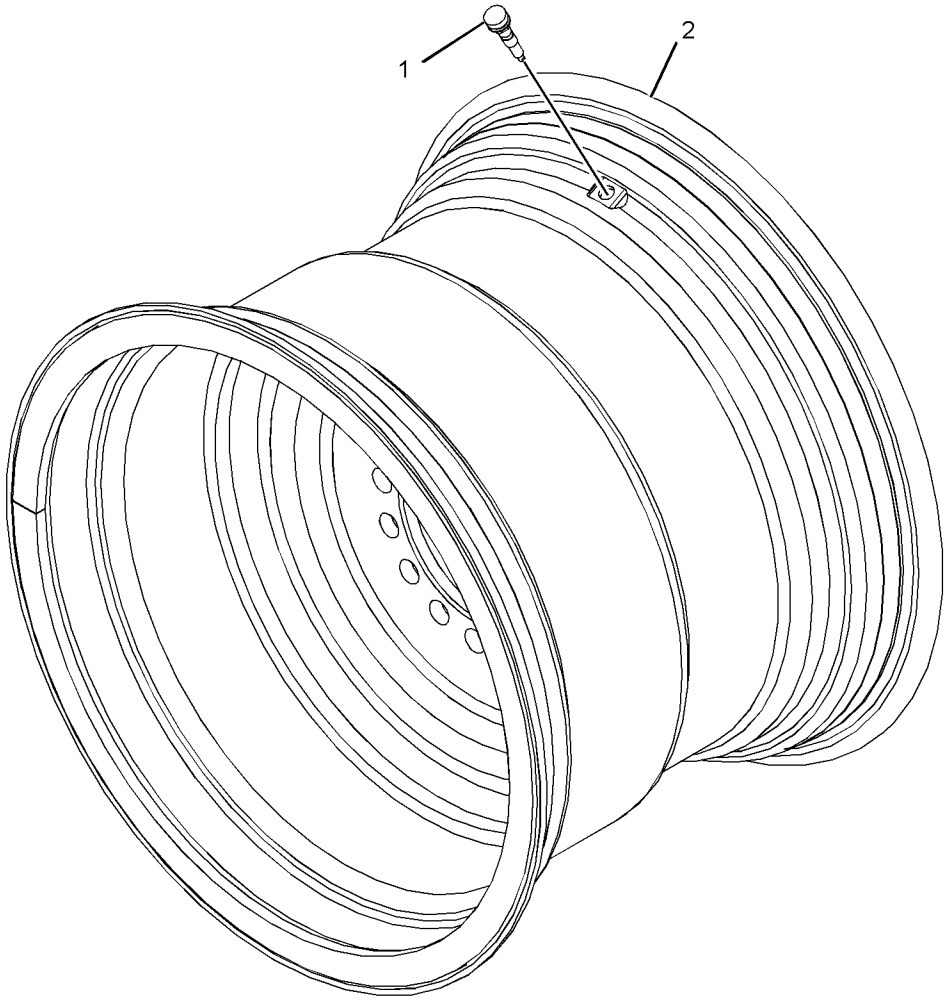

GRAPHIC #1 **<END>** g02792980

373-8434 ROTATING GP-MOTOR

S/N: DYB1-UP

PART OF 307-3077 MOTOR GP-PISTON

SMCS-4351 **i05306152**

NOTE	REF NO	GRAPHIC REF	PART NUMBER	QTY	PART NAME 1 2 3 4 5 6 (PRODUCT LEVEL)	SEE PAGE
	1	1	**373-8435**	1	SHAFT-DRIVE	
	2	1	**373-8437**	1	ROTATING GP-PUMP	
		1	**293-4373**	18	SCREW-SPECIAL	

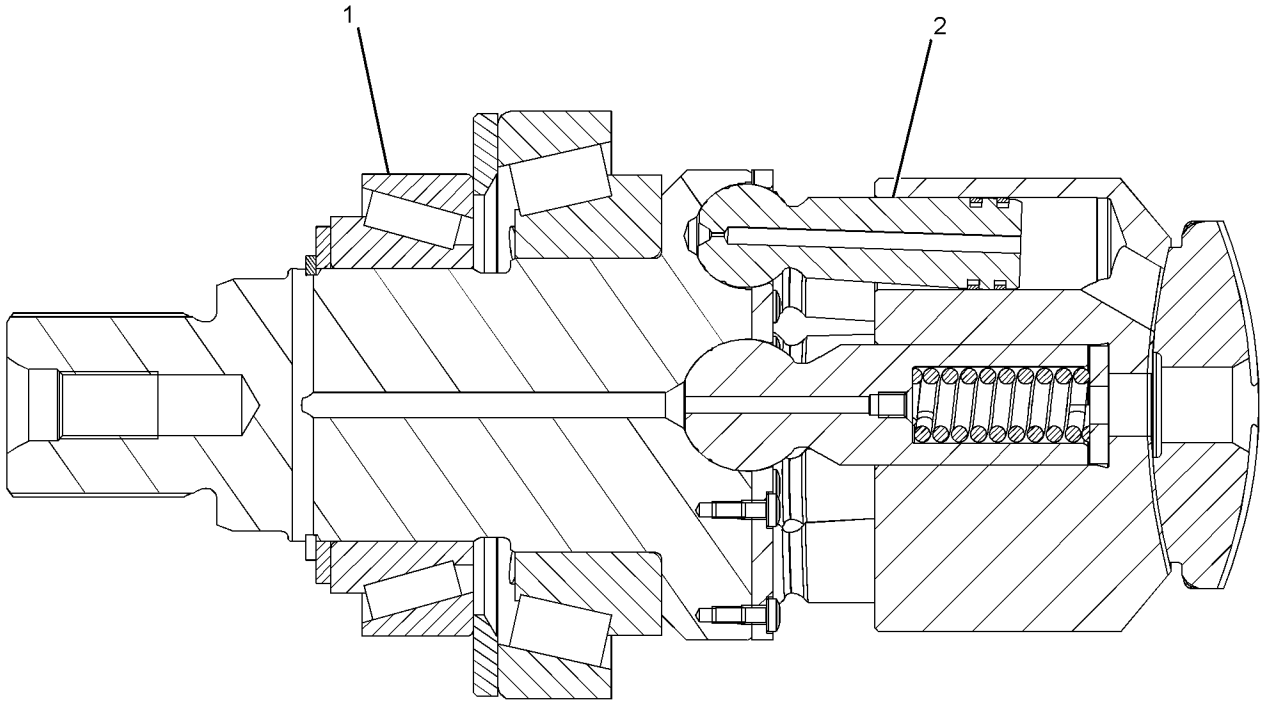

GRAPHIC #1 **<END>** g02792533

373-8442 ROTATING GP-MOTOR

S/N: DYB1-UP

PART OF 307-3082 MOTOR GP-PISTON

SMCS-4351 **i05306136**

NOTE	REF NO	GRAPHIC REF	PART NUMBER	QTY	PART NAME 1 2 3 4 5 6 (PRODUCT LEVEL)	SEE PAGE
	1	1	**373-8443**	1	SHAFT GP-MOTOR	
	2	1	**373-8444**	1	ROTATING GP-MOTOR	
		1	**253-3982**	18	SCREW-SPECIAL (M5X0.8X8-MM)	

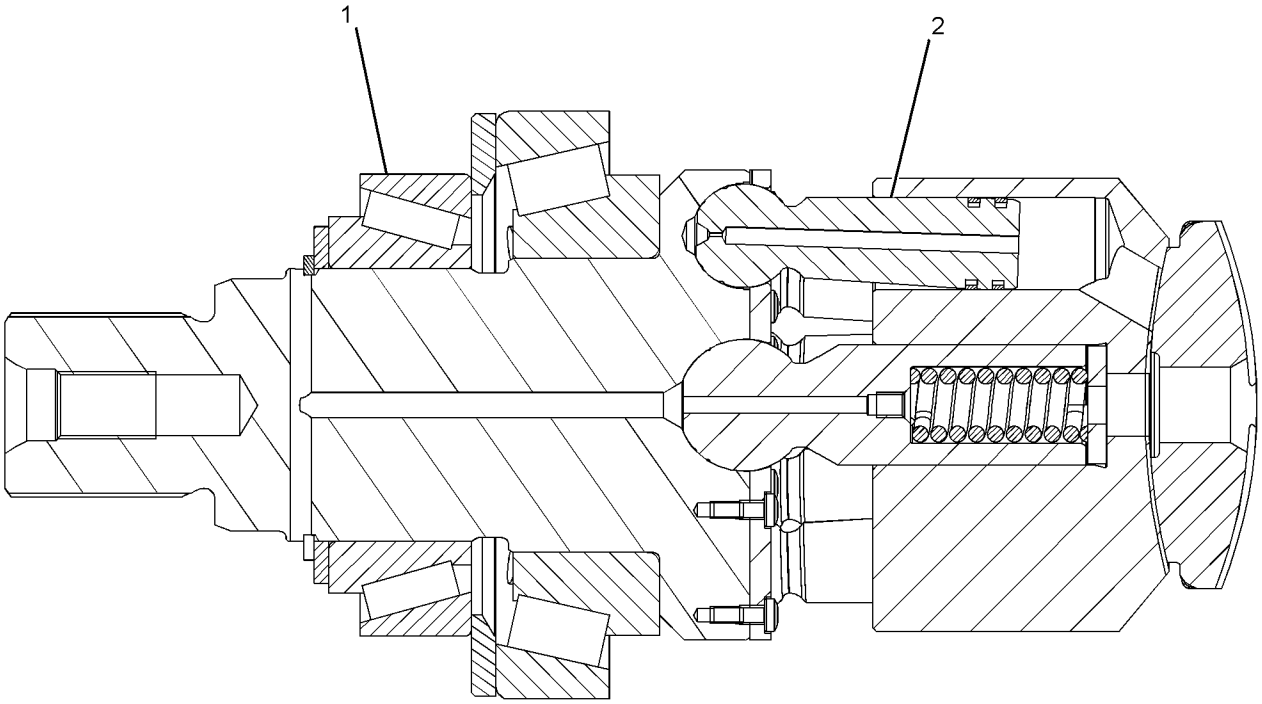

GRAPHIC #1 **<END>** g02792533

260-9634 SHAFT GP-DRIVE

S/N: DYB1-UP

PART OF 348-3435 SHAFT GP-DRIVE

SMCS-3253 **i05306276**

NOTE	REF NO	GRAPHIC REF	PART NUMBER	QTY	PART NAME 1 2 3 4 5 6 (PRODUCT LEVEL)	SEE PAGE
H	1	1	**6I-8531**	1	BEARING GP-PILLOW BLOCK (DRIVE SHAFT)	
		1	**3B-8489**	1	FITTING-GREASE	
	2	1	**9U-3668**	1	YOKE	
J	3	1	**260-9635**	1	UNIVERSAL JOINT GP	
M	4	1	**8T-0372**	1	BOLT (M12X1.75X90-MM)	
	5	1	**9V-2412**	1	RETAINER	
					AVAILABLE REPAIR KIT(S):	
H			**197-7995**	1	KIT-SETSCREW	
					(INCLUDES SETSCREWS, LOCK WIRE & NUT)	
J			**193-4640**	1	KIT-SPIDER & BEARING	
					(INCLUDES RETAINING RINGS)	

H - KIT MARKED H SERVICES PARTS MARKED H
J - KIT MARKED J SERVICES PARTS MARKED J
M - METRIC PART

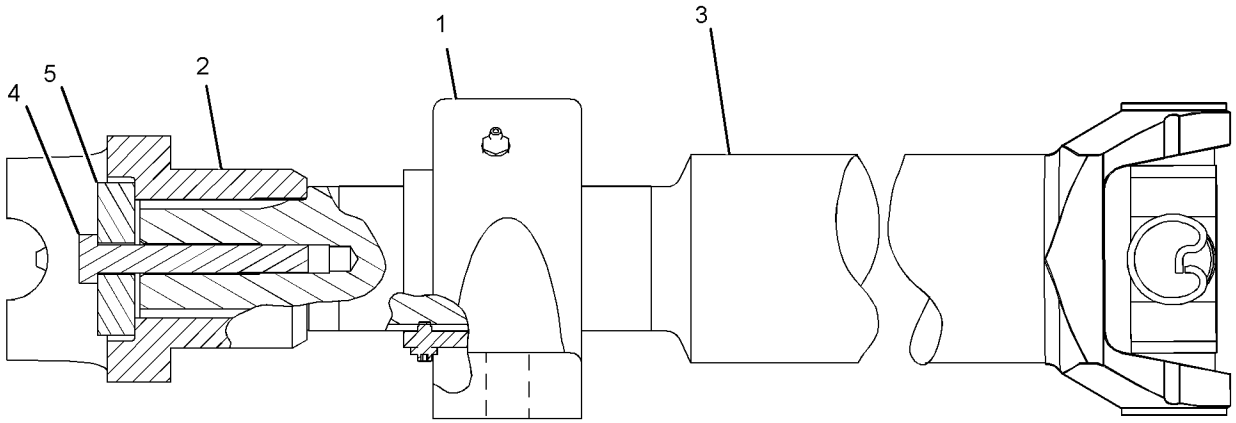

GRAPHIC #1 **<END>** g02792177

348-3435 SHAFT GP-DRIVE

S/N: DYB1-UP

PART OF 381-4374 POWER TRAIN AR

SMCS-3253 **i05306275**

NOTE	REF NO	GRAPHIC REF	PART NUMBER	QTY	PART NAME 1 2 3 4 5 6 (PRODUCT LEVEL)	SEE PAGE
Y	1	1	**346-8616**	1	SLIP JOINT GP	237
	2	1	**4E-5984**	10	STRAP	
Y	3	1	**201-9517**	1	SLIP JOINT GP (CENTER)	236
Y	4	1	*260-9634*	1	SHAFT GP-DRIVE	233
M	5	1	**4E-5985**	20	BOLT-12 POINT HEAD (M10X1.25X20-MM)	
	6	1	**8T-4122**	2	WASHER-HARD (17X32X3.5-MM THK)	
M	7	1	**8T-4140**	2	BOLT (M16X2X60-MM)	

M - METRIC PART
Y - SEPARATE ILLUSTRATION

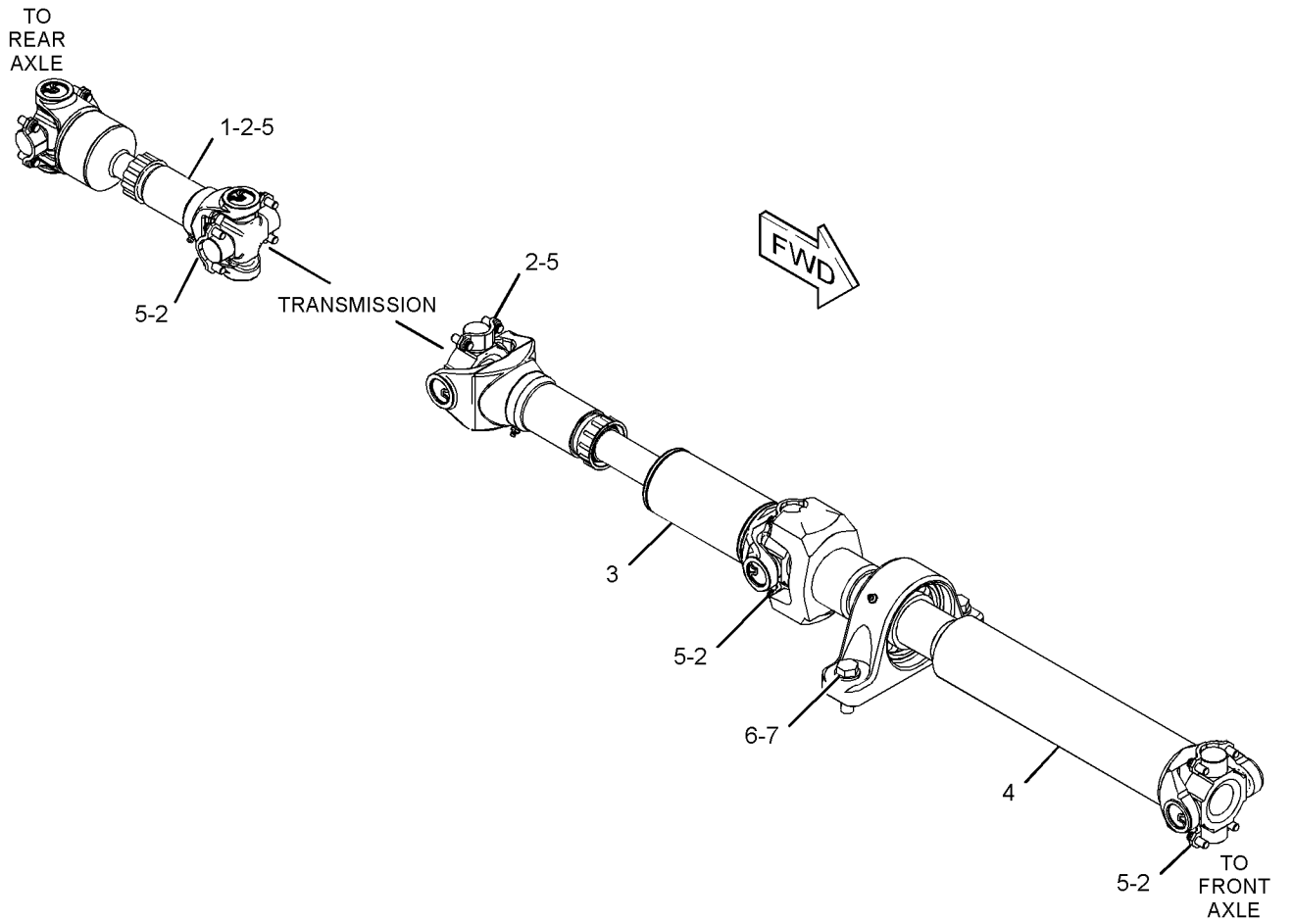

GRAPHIC #1 **<END>** g02796147

339-2899 SHAFT GP-OUTPUT

S/N: DYB1-UP

PART OF 337-7053 TRANSMISSION AR

SMCS-3053, 3063 **i05306211**

NOTE	REF NO	GRAPHIC REF	PART NUMBER	QTY	PART NAME 1 2 3 4 5 6 (PRODUCT LEVEL)	SEE PAGE
	1	1	**7G-5220**	2	RETAINER	
	2	1	**338-9428**	1	SPACER	
	3	1	**342-9356**	1	SPACER	
	4	1	**347-8323**	1	GEAR (62-TEETH)	
	5	1	**354-8645**	1	SHAFT	
	6	1	**357-0596**	1	YOKE	
	7	1	**366-5616**	1	YOKE AS	
		1	**357-0597**	1	YOKE	
		1	**366-5614**	1	GUARD	
	8	1	**4F-8824**	2	SEAL-O-RING	
M	9	1	**6V-7673**	2	BOLT (M12X1.75X50-MM)	
	10	1	**7T-9122**	2	CONE-BEARING	

M - METRIC PART

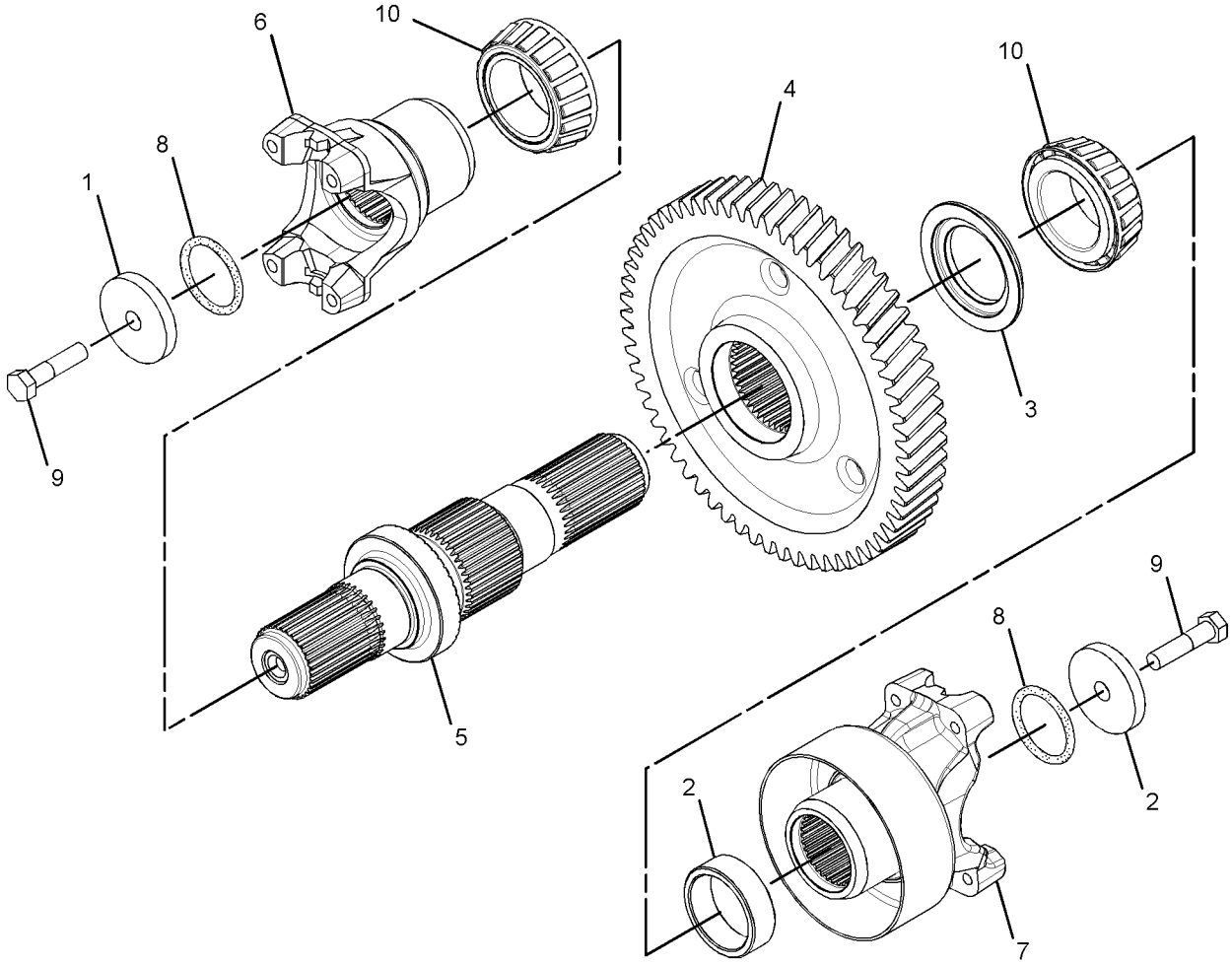

GRAPHIC #1 **<END>** g02799838

201-9517 SLIP JOINT GP–CENTER

S/N: DYB1-UP

PART OF 348-3435 SHAFT GP-DRIVE

SMCS-3251 **i04947010**

NOTE	REF NO	GRAPHIC REF	PART NUMBER	QTY	PART NAME 1 2 3 4 5 6 (PRODUCT LEVEL)	SEE PAGE
	1	1	**1K-6853**	1	FITTING-GREASE	
	2	1	**3B-8488**	1	FITTING-GREASE	
	3	1	**5V-5498**	1	RETAINER	
	4	1	**193-4640**	2	KIT-SPIDER & BEARING	
					(EACH INCLUDES)	
		1	**8V-7315**	4	RING	

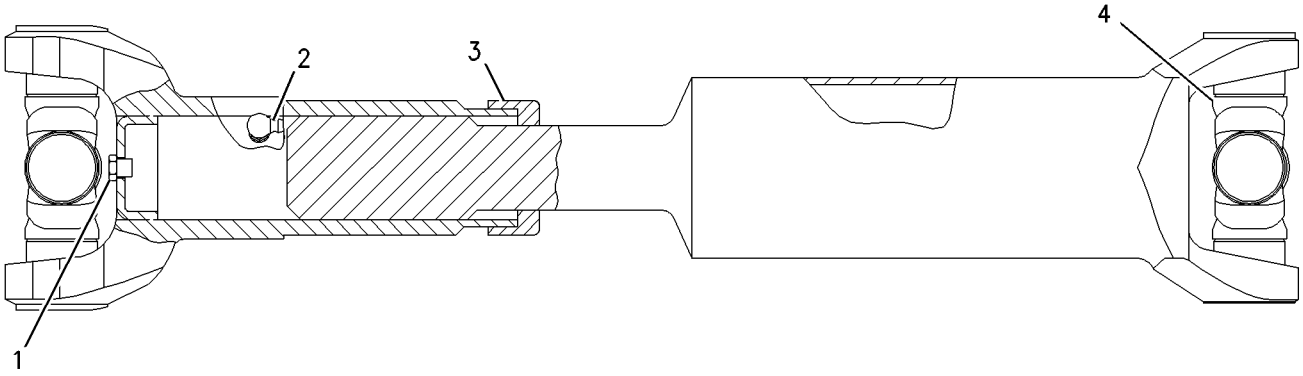

GRAPHIC #1 **<END>** g00914281

346-8616 SLIP JOINT GP

S/N: DYB1-UP

PART OF 348-3435 SHAFT GP-DRIVE

SMCS-3251 **i05306277**

NOTE	REF NO	GRAPHIC REF	PART NUMBER	QTY	PART NAME 1 2 3 4 5 6 (PRODUCT LEVEL)	SEE PAGE
	1	1	**191-2226**	2	SPIDER & BEARING GP	
					(EACH INCLUDES)	
		1	**8V-7315**	4	RING	
	2	1	**3B-8489**	1	FITTING-GREASE	

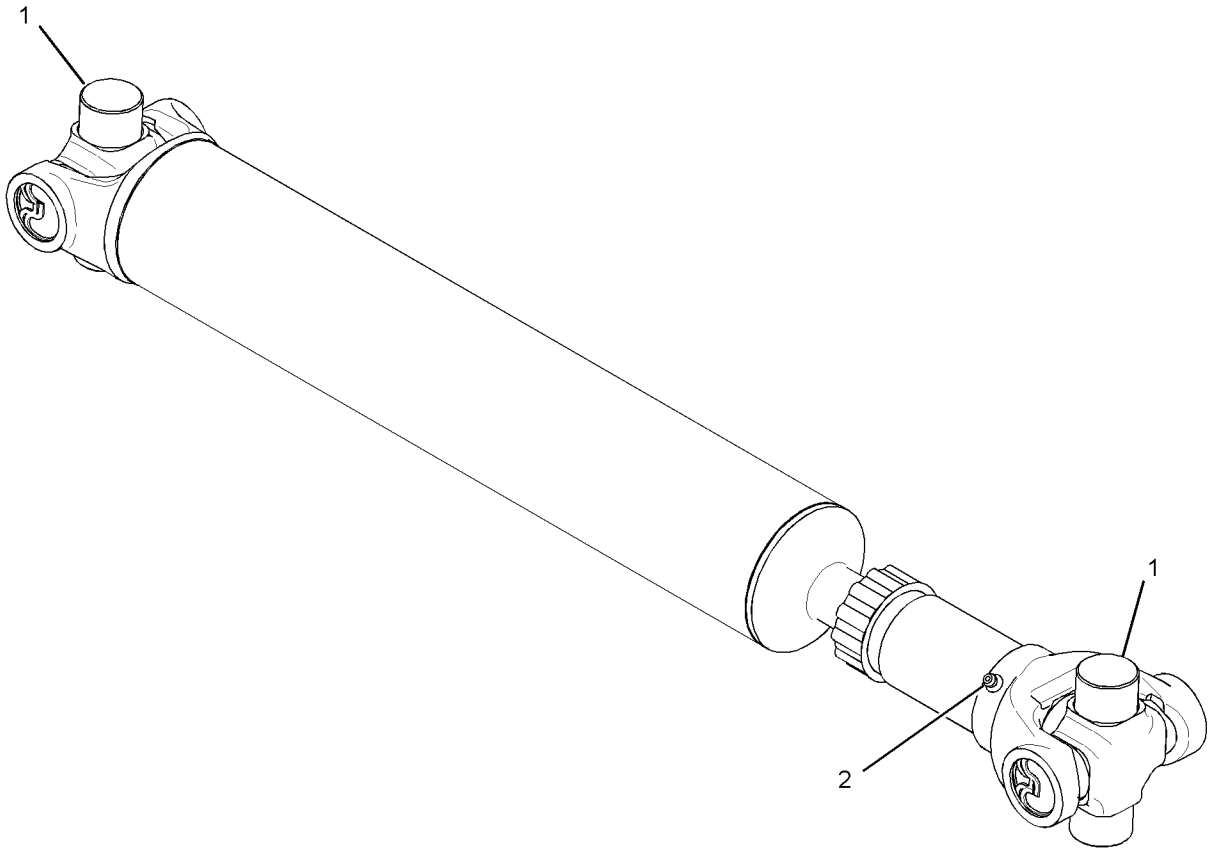

GRAPHIC #1 **<END>** g02792592

147-5484 STOP GP-AXLE OSCILLATION

S/N: DYB1-UP

PART OF 357-8902, 360-2514, 360-2534, 366-6880, 366-6888, 366-6896 TIRE & RIM AR

AN ATTACHMENT

SMCS-3259 **i01836928**

NOTE	PART NUMBER	QTY	PART NAME 1 2 3 4 5 6 (PRODUCT LEVEL)	SEE PAGE
	4E-1357	2	BLOCK	
M	**8T-4956**	4	BOLT (M12X1.75X35-MM)	
	8T-4223	4	WASHER-HARD (13.5X25.5X3-MM THK)	

M - METRIC PART

<END>

357-8902 TIRE & RIM AR—3-PIECE, OFFSET

S/N: DYB1-UP

AN ATTACHMENT

SMCS-4202 **i05315355**

NOTE	PART NUMBER	QTY	PART NAME 1 2 3 4 5 6 (PRODUCT LEVEL)	SEE PAGE
Y	*147-5071*	1	MOUNTING GP-RIM	218
Y	*357-8879*	4	RIM GP-DEMOUNTABLE (3-PIECE)	227
Y	*147-5484*	1	STOP GP-AXLE OSCILLATION	238
	353-9990	4	TIRE (20.5-R25)	

Y - SEPARATE ILLUSTRATION

<END>

360-2510 TIRE & RIM AR—3-PIECE, OFFSET

S/N: DYB1-UP

AN ATTACHMENT

SMCS-4202 **i05315165**

NOTE	PART NUMBER	QTY	PART NAME 1 2 3 4 5 6 (PRODUCT LEVEL)	SEE PAGE
Y	*357-8879*	4	RIM GP-DEMOUNTABLE (3-PIECE)	227
	147-5071	1	MOUNTING GP-RIM	
	8T-4167	64	WASHER-HARD (26X44X4-MM THK)	
M	**8T-5379**	64	BOLT (M24X3X50-MM)	
	147-5484	1	STOP GP-AXLE OSCILLATION	
	4E-1357	2	BLOCK	
	8T-4223	4	WASHER-HARD (13.5X25.5X3-MM THK)	
M	**8T-4956**	4	BOLT (M12X1.75X35-MM)	
	207-6031	4	TIRE (20.5-R25)	

M - METRIC PART
Y - SEPARATE ILLUSTRATION

<END>

360-2514 TIRE & RIM AR—3-PIECE, OFFSET

S/N: DYB1-UP
AN ATTACHMENT

SMCS-4202 **i05315354**

NOTE	PART NUMBER	QTY	PART NAME 1 2 3 4 5 6 (PRODUCT LEVEL)	SEE PAGE
Y	*147-5071*	1	MOUNTING GP-RIM	218
Y	*357-8879*	4	RIM GP-DEMOUNTABLE (3-PIECE)	227
Y	*147-5484*	1	STOP GP-AXLE OSCILLATION	238
	245-9808	4	TIRE (20.5-R25)	

Y - SEPARATE ILLUSTRATION

<END>

360-2534 TIRE & RIM AR—3-PIECE, OFFSET

S/N: DYB1-UP
AN ATTACHMENT

SMCS-4202 **i05315353**

NOTE	PART NUMBER	QTY	PART NAME 1 2 3 4 5 6 (PRODUCT LEVEL)	SEE PAGE
Y	*147-5071*	1	MOUNTING GP-RIM	218
Y	*357-8879*	4	RIM GP-DEMOUNTABLE (3-PIECE)	227
Y	*147-5484*	1	STOP GP-AXLE OSCILLATION	238
	128-5162	4	TIRE (20.5-25)	

Y - SEPARATE ILLUSTRATION

<END>

366-6880 TIRE & RIM AR—3-PIECE, OFFSET

S/N: DYB1-UP
AN ATTACHMENT

SMCS-4202 **i05315352**

NOTE	PART NUMBER	QTY	PART NAME 1 2 3 4 5 6 (PRODUCT LEVEL)	SEE PAGE
Y	*147-5071*	1	MOUNTING GP-RIM	218
Y	*357-8879*	4	RIM GP-DEMOUNTABLE (3-PIECE)	227
Y	*147-5484*	1	STOP GP-AXLE OSCILLATION	238
	357-8924	4	TIRE (20.5-R25)	

Y - SEPARATE ILLUSTRATION

<END>

366-6888 TIRE & RIM AR—3-PIECE, OFFSET

S/N: DYB1-UP
AN ATTACHMENT

SMCS-4202 **i05315351**

NOTE	PART NUMBER	QTY	PART NAME 1 2 3 4 5 6 (PRODUCT LEVEL)	SEE PAGE
Y	*147-5071*	1	MOUNTING GP-RIM	218
Y	*357-8879*	4	RIM GP-DEMOUNTABLE (3-PIECE)	227
Y	*147-5484*	1	STOP GP-AXLE OSCILLATION	238
	6W-9731	4	TIRE (20.5-R25)	

Y - SEPARATE ILLUSTRATION

<END>

366-6896 TIRE & RIM AR—3-PIECE, OFFSET

S/N: DYB1-UP
AN ATTACHMENT

SMCS-4202 **i05349574**

NOTE	PART NUMBER	QTY	PART NAME 1 2 3 4 5 6 (PRODUCT LEVEL)	SEE PAGE
Y	*147-5071*	1	MOUNTING GP-RIM	218
Y	*357-8879*	4	RIM GP-DEMOUNTABLE (3-PIECE)	227
Y	*147-5484*	1	STOP GP-AXLE OSCILLATION	238
	106-4837	4	TIRE (20.5-R25)	

Y - SEPARATE ILLUSTRATION

<END>

366-6910 TIRE & RIM AR

S/N: DYB1-UP
AN ATTACHMENT

SMCS-4202 **i05312550**

NOTE	PART NUMBER	QTY	PART NAME 1 2 3 4 5 6 (PRODUCT LEVEL)	SEE PAGE
Y	*365-6488*	4	WHEEL & TIRE GP	263
	360-2044	1	MOUNTING GP-RIM	
M	**7X-2575**	64	BOLT (M24X3X60-MM)	
	8T-4167	64	WASHER-HARD (26X44X4-MM THK)	
	373-7600	1	STOP GP-AXLE OSCILLATION	
	8T-4223	4	WASHER-HARD (13.5X25.5X3-MM THK)	
M	**8T-4956**	4	BOLT (M12X1.75X35-MM)	
	369-4656	2	BLOCK	

M - METRIC PART
Y - SEPARATE ILLUSTRATION

<END>

367-4256 TIRE & RIM AR—3-PIECE, OFFSET

S/N: DYB1-UP

AN ATTACHMENT

SMCS-4202 **i05315168**

NOTE	PART NUMBER	QTY	PART NAME 1 2 3 4 5 6 (PRODUCT LEVEL)	SEE PAGE
Y	*357-8879*	4	RIM GP-DEMOUNTABLE (3-PIECE)	227
	147-5071	1	MOUNTING GP-RIM	
	8T-4167	64	WASHER-HARD (26X44X4-MM THK)	
M	**8T-5379**	64	BOLT (M24X3X50-MM)	
	147-5484	1	STOP GP-AXLE OSCILLATION	
	4E-1357	2	BLOCK	
	8T-4223	4	WASHER-HARD (13.5X25.5X3-MM THK)	
M	**8T-4956**	4	BOLT (M12X1.75X35-MM)	
	371-1436	4	TIRE (20.5-25)	

M - METRIC PART
Y - SEPARATE ILLUSTRATION

<END>

373-7310 TIRE & RIM AR—1-PIECE, CENTER MOUNT

S/N: DYB1-UP

AN ATTACHMENT

SMCS-4202 **i05312551**

NOTE	PART NUMBER	QTY	PART NAME 1 2 3 4 5 6 (PRODUCT LEVEL)	SEE PAGE
Y	*373-8108*	4	RIM GP-DEMOUNTABLE (1-PIECE, CENTER MOUNT)	230
	147-5071	1	MOUNTING GP-RIM	
M	**8T-5379**	64	BOLT (M24X3X50-MM)	
	8T-4167	64	WASHER-HARD (26X44X4-MM THK)	
	373-7600	1	STOP GP-AXLE OSCILLATION	
	8T-4223	4	WASHER-HARD (13.5X25.5X3-MM THK)	
M	**8T-4956**	4	BOLT (M12X1.75X35-MM)	
	369-4656	2	BLOCK	
	373-7321	4	TIRE (75-R26)	

M - METRIC PART
Y - SEPARATE ILLUSTRATION

<END>

376-0779 TIRE & RIM AR

S/N: DYB1-UP
AN ATTACHMENT

SMCS-4202 **i05315349**

NOTE	PART NUMBER	QTY	PART NAME 1 2 3 4 5 6 (PRODUCT LEVEL)	SEE PAGE
Y	*357-8879*	4	RIM GP-DEMOUNTABLE (3-PIECE)	227
	147-5071	1	MOUNTING GP-RIM	
M	**8T-5379**	64	BOLT (M24X3X50-MM)	
	8T-4167	64	WASHER-HARD (26X44X4-MM THK)	
	147-5484	1	STOP GP-AXLE OSCILLATION	
	4E-1357	2	BLOCK	
M	**8T-4956**	4	BOLT (M12X1.75X35-MM)	
	8T-4223	4	WASHER-HARD (13.5X25.5X3-MM THK)	
	262-0560	4	TIRE (20.5-R25)	

M - METRIC PART
Y - SEPARATE ILLUSTRATION

<END>

376-0786 TIRE & RIM AR

S/N: DYB1-UP
AN ATTACHMENT

SMCS-4202 **i05315163**

NOTE	PART NUMBER	QTY	PART NAME 1 2 3 4 5 6 (PRODUCT LEVEL)	SEE PAGE
Y	*357-8879*	4	RIM GP-DEMOUNTABLE (3-PIECE)	227
	147-5071	1	MOUNTING GP-RIM	
M	**8T-5379**	64	BOLT (M24X3X50-MM)	
	8T-4167	64	WASHER-HARD (26X44X4-MM THK)	
	147-5484	1	STOP GP-AXLE OSCILLATION	
	4E-1357	2	BLOCK	
	8T-4223	4	WASHER-HARD (13.5X25.5X3-MM THK)	
M	**8T-4956**	4	BOLT (M12X1.75X35-MM)	
	260-1803	4	TIRE (20.5-R25)	

M - METRIC PART
Y - SEPARATE ILLUSTRATION

<END>

376-0817 TIRE & RIM AR

S/N: DYB1-UP

AN ATTACHMENT

SMCS-4202 **i05315162**

NOTE	PART NUMBER	QTY	PART NAME 1 2 3 4 5 6 (PRODUCT LEVEL)	SEE PAGE
Y	*357-8879*	4	RIM GP-DEMOUNTABLE (3-PIECE)	227
	147-5071	1	MOUNTING GP-RIM	
M	**8T-5379**	64	BOLT (M24X3X50-MM)	
	8T-4167	64	WASHER-HARD (26X44X4-MM THK)	
	147-5484	1	STOP GP-AXLE OSCILLATION	
	4E-1357	2	BLOCK	
M	**8T-4956**	4	BOLT (M12X1.75X35-MM)	
	8T-4223	4	WASHER-HARD (13.5X25.5X3-MM THK)	
	373-7330	4	TIRE (20.5-R25)	

M - METRIC PART
Y - SEPARATE ILLUSTRATION

<END>

376-0822 TIRE & RIM AR

S/N: DYB1-UP

AN ATTACHMENT

SMCS-4202 **i05315161**

NOTE	PART NUMBER	QTY	PART NAME 1 2 3 4 5 6 (PRODUCT LEVEL)	SEE PAGE
Y	*357-8879*	4	RIM GP-DEMOUNTABLE (3-PIECE)	227
	147-5071	1	MOUNTING GP-RIM	
M	**8T-5379**	64	BOLT (M24X3X50-MM)	
	8T-4167	64	WASHER-HARD (26X44X4-MM THK)	
	147-5484	1	STOP GP-AXLE OSCILLATION	
	4E-1357	2	BLOCK	
	8T-4223	48	WASHER-HARD (13.5X25.5X3-MM THK)	
M	**8T-4956**	4	BOLT (M12X1.75X35-MM)	
	376-0695	4	TIRE (20.5-25)	

M - METRIC PART
Y - SEPARATE ILLUSTRATION

<END>

376-0828 TIRE & RIM AR—3-PIECE, OFFSET

S/N: DYB1-UP

AN ATTACHMENT

SMCS-4202 **i05315159**

NOTE	PART NUMBER	QTY	PART NAME 1 2 3 4 5 6 (PRODUCT LEVEL)	SEE PAGE
Y	*357-8879*	4	RIM GP-DEMOUNTABLE (3-PIECE) (3-PIECE)	227
	147-5071	1	MOUNTING GP-RIM	
	8T-4167	64	WASHER-HARD (26X44X4-MM THK)	
M	**8T-5379**	64	BOLT (M24X3X50-MM)	
	147-5484	1	STOP GP-AXLE OSCILLATION	
	4E-1357	2	BLOCK	
	8T-4223	4	WASHER-HARD (13.5X25.5X3-MM THK)	
M	**8T-4956**	4	BOLT (M12X1.75X35-MM)	
	376-0698	4	TIRE (20.5-R25)	

M - METRIC PART
Y - SEPARATE ILLUSTRATION

<END>

376-0863 TIRE & RIM AR—3-PIECE, OFFSET

S/N: DYB1-UP

AN ATTACHMENT

SMCS-4202 **i05315158**

NOTE	PART NUMBER	QTY	PART NAME 1 2 3 4 5 6 (PRODUCT LEVEL)	SEE PAGE
Y	*357-8879*	4	RIM GP-DEMOUNTABLE (3-PIECE)	227
	147-5071	1	MOUNTING GP-RIM	
	8T-4167	64	WASHER-HARD (26X44X4-MM THK)	
M	**8T-5379**	64	BOLT (M24X3X50-MM)	
	147-5484	1	STOP GP-AXLE OSCILLATION	
	4E-1357	2	BLOCK	
	8T-4223	4	WASHER-HARD (13.5X25.5X3-MM THK)	
M	**8T-4956**	4	BOLT (M12X1.75X35-MM)	
	134-0797	4	TIRE-TUBELESS (20.5-25)	

M - METRIC PART
Y - SEPARATE ILLUSTRATION

<END>

376-0873 TIRE & RIM AR—3-PIECE, OFFSET

S/N: DYB1-UP
AN ATTACHMENT

SMCS-4202 **i05312429**

NOTE	PART NUMBER	QTY	PART NAME 1 2 3 4 5 6 (PRODUCT LEVEL)	SEE PAGE
Y	*360-2503*	4	RIM GP-DEMOUNTABLE (3-PIECE)	229
	147-5071	1	MOUNTING GP-RIM (AXLE OSCILLATION LIMITATION)	
	8T-4167	64	WASHER-HARD (26X44X4-MM THK)	
M	**8T-5379**	64	BOLT (M24X3X50-MM)	
	147-5484	1	STOP GP-AXLE OSCILLATION	
	4E-1357	2	BLOCK	
	8T-4223	4	WASHER-HARD (13.5X25.5X3-MM THK)	
M	**8T-4956**	4	BOLT (M12X1.75X35-MM)	
	376-0889	4	TIRE (17.5-R25)	

M - METRIC PART
Y - SEPARATE ILLUSTRATION

<END>

376-0875 TIRE & RIM AR—3-PIECE

S/N: DYB1-UP
AN ATTACHMENT

SMCS-4202 **i05315157**

NOTE	PART NUMBER	QTY	PART NAME 1 2 3 4 5 6 (PRODUCT LEVEL)	SEE PAGE
Y	*357-8879*	1	RIM GP-DEMOUNTABLE (3-PIECE)	227
	147-5071	1	MOUNTING GP-RIM (AXLE OSCILLATION LIMITATION)	
	8T-4167	64	WASHER-HARD (26X44X4-MM THK)	
M	**8T-5379**	64	BOLT (M24X3X50-MM)	
	147-5484	1	STOP GP-AXLE OSCILLATION	
	4E-1357	2	BLOCK	
	8T-4223	4	WASHER-HARD (13.5X25.5X3-MM THK)	
M	**8T-4956**	4	BOLT (M12X1.75X35-MM)	
	376-0890	4	TIRE (20.5-R25)	

M - METRIC PART
Y - SEPARATE ILLUSTRATION

<END>

376-0879 TIRE & RIM AR–3-PIECE, OFFSET

S/N: DYB1-UP

AN ATTACHMENT

SMCS-4202 **i05315149**

NOTE	PART NUMBER	QTY	PART NAME 1 2 3 4 5 6 (PRODUCT LEVEL)	SEE PAGE
Y	*357-8879*	4	RIM GP-DEMOUNTABLE (3-PIECE)	227
	147-5071	1	MOUNTING GP-RIM (AXLE OSCILLATION LIMITATION)	
	8T-4167	64	WASHER-HARD (26X44X4-MM THK)	
M	**8T-5379**	64	BOLT (M24X3X50-MM)	
	147-5484	1	STOP GP-AXLE OSCILLATION	
	4E-1357	2	BLOCK	
	8T-4223	4	WASHER-HARD (13.5X25.5X3-MM THK)	
M	**8T-4956**	4	BOLT (M12X1.75X35-MM)	
	264-1395	4	TIRE (20.5-25)	

M - METRIC PART
Y - SEPARATE ILLUSTRATION

<END>

417-6415 TIRE & RIM AR

S/N: DYB1-UP

AN ATTACHMENT

SMCS-4202 **i05315131**

NOTE	PART NUMBER	QTY	PART NAME 1 2 3 4 5 6 (PRODUCT LEVEL)	SEE PAGE
Y	*357-8879*	4	RIM GP-DEMOUNTABLE (3-PIECE)	227
	147-5071	1	MOUNTING GP-RIM	
	8T-4167	64	WASHER-HARD (26X44X4-MM THK)	
M	**8T-5379**	64	BOLT (M24X3X50-MM)	
	147-5484	1	STOP GP-AXLE OSCILLATION	
	4E-1357	2	BLOCK	
	8T-4223	4	WASHER-HARD (13.5X25.5X3-MM THK)	
M	**8T-4956**	4	BOLT (M12X1.75X35-MM)	
	138-7828	4	TIRE (20.5-R25)	

M - METRIC PART
Y - SEPARATE ILLUSTRATION

<END>

337-7053 TRANSMISSION AR

S/N: DYB1-UP

PART OF 381-4374 POWER TRAIN AR

SMCS-3030 **i05306170**

NOTE	REF NO	GRAPHIC REF	PART NUMBER	QTY	PART NAME 1 2 3 4 5 6 (PRODUCT LEVEL)	SEE PAGE
	1	4	**3B-2263**	1	CUP-BEARING	
	2	3	**6V-0852**	3	CAP-DUST	
	3	1	**9G-5127**	1	BREATHER AS (TRANSMISSION)	
	4	2,3	**9X-2230**	2	PLUG-DRAIN (MAGNETIC)	
	5	4	**068-8099**	2	CUP-BEARING	
	6	1,2	**120-9762**	2	SEAL-O-RING	
	7	4	**123-8910**	2	CUP-TAPERED ROLLER	
	8	3	**142-8927**	1	GAUGE AS-SIGHT (HYDRAULIC TANK)	
		3	**7M-8485**	1	SEAL-O-RING	
	9	3	**144-7339**	1	SEAL-O-RING	
	10	1,2	**238-0120**	3	SENSOR GP-SPEED (CRANKSHAFT)	
	11	4	**305-2215**	2	SEAL-LIP TYPE	
	12	1,3	**336-5469**	4	RIVET	
Y	13	4	*338-9600*	1	CLUTCH GP	188
	14	4	*339-1873*	1	SHAFT GP-INPUT	
	14A	4	**151-3568**	1	BEARING	
		4	**123-8909**	1	CONE-BEARING	
	15	4	*339-1942*	1	SHAFT GP-INPUT	
	15A	4	**151-3568**	1	BEARING	
		4	**123-8909**	1	CONE-BEARING	
Y	16	4	*339-2899*	1	SHAFT GP-OUTPUT	235
	17	1	**340-8984**	1	CASE AS-FRONT	
		1	**163-9091**	3	PLUG	
	18	2	**340-8985**	1	CASE AS (REAR)	
		2	**163-9091**	2	PLUG	
		2	**337-7051**	1	CASE-REAR	
	19	1,2	**342-5757**	4	PLUG-ORIFICE	
	20	2,3	**342-5758**	2	PLUG-ORIFICE	
Y	21	4	*343-3418*	1	BAFFLE GP-OIL	185
	22	2	**344-9010**	1	TUBE AS	
	23	3	**345-0771**	1	PLATE-IDENTIFICATION (OIL LEVEL)	
	24	4	**345-7514**	2	SPACER (82-MM)	
	25	4	**345-7515**	1	SPACER (78-MM)	
B	26	4	**345-7516**	2	SHIM (0.05-MM THK)	
B	27	4	**345-7517**	2	SHIM (0.08-MM THK)	
B	28	4	**345-7518**	2	SHIM (0.18-MM THK)	
B	29	4	**345-7519**	2	SHIM (0.6-MM THK)	
B	30	4	**345-7520**	1	SHIM (0.05-MM THK)	
B	31	4	**345-7521**	1	SHIM (0.08-MM THK)	
B	32	4	**345-7523**	1	SHIM (0.18-MM THK)	
B	33	4	**345-7529**	1	SHIM (0.6-MM THK)	
	34	2	**346-0759**	1	TUBE AS	
Y	35	3	**349-3667**	1	FILTER GP-OIL	193
Y	36	3	**356-5349**	1	VALVE GP-SOLENOID & RELIEF	260
	37	3	**357-2381**	1	BRACKET AS	
	38	1	**367-9341**	1	PLATE-IDENTIFICATION	
	39	2	**369-3717**	1	COVER	
	40	1	**369-3718**	1	COVER	
	41	3	**369-8089**	1	GASKET	
	42	1,2	**380-1662**	1	COVER-SHIPPING	
	43	4	**121-7398**	1	SPACER (70X79.5X2-MM THK)	
B	44	4	**121-7399**	1	SHIM (0.05-MM THK)	
B	45	4	**121-7400**	1	SHIM (0.08-MM THK)	
B	46	4	**121-7401**	1	SHIM (0.18-MM THK)	
B	47	4	**121-7402**	1	SHIM (0.6-MM THK)	
M	48	1,2	**121-9875**	18	BOLT (M10X1.5X55-MM)	
	49	4	**1B-3978**	1	CUP-BEARING (TAPERED ROLLER)	
	50	1,2,3	**1J-9671**	7	SEAL-O-RING	

337-7053 **TRANSMISSION AR (*contd.*)** **i05306170**

NOTE	REF NO	GRAPHIC REF	PART NUMBER	QTY	PART NAME 1 2 3 4 5 6 (PRODUCT LEVEL)	SEE PAGE
	51	3	**228-7092**	1	SEAL-O-RING	
	52	1,2	**277-1873**	3	CLIP	
	53	1	**334-7485**	1	CAP-PROTECTION	
	54	3	**351-8955**	1	SEAL-O-RING	
	55	2,3	**3K-0360**	2	SEAL-O-RING	
	56	1,2,3	**3K-8460**	7	PLUG	
	57	1,2	**4J-5268**	3	SEAL-O-RING	
	58	1,3	**4P-8134**	2	CLIP	
	59	1	**5J-5437**	1	COVER	
	60	1,2,3	**5P-7813**	1	SEAL-O-RING	
M	61	3	**6V-3822**	4	BOLT (M10X1.5X35-MM)	
	62	3	**6V-5050**	1	SEAL-O-RING	
M	63	1,2	**6V-5217**	3	BOLT (M8X1.25X20-MM)	
M	64	1,2	**6V-5224**	8	BOLT (M16X2X25-MM)	
M	65	3	**6V-5842**	4	BOLT (M10X1.5X40-MM)	
M	66	3	**6V-6317**	4	BOLT (M10X1.5X20-MM)	
M	67	1	**6V-8212**	2	BOLT (M10X1.5X16-MM)	
	68	2	**7F-8607**	2	SEAL-O-RING	
	69	3	**7I-8310**	1	COUPLING AS	
M	70	2	**8T-0267**	5	BOLT-SOCKET HEAD (M6X1X12-MM)	
M	71	4	**8T-4171**	7	BOLT (M6X1X12-MM)	
	72	2,3	**8T-5353**	4	DOWEL	
	73	1,2	**9M-1974**	3	WASHER-HARD (8.8X16X2-MM THK)	
	74	3	**9S-8007**	1	PLUG	
	75	4	**9X-8256**	7	WASHER (6.6X12X2-MM THK)	
	76	2	**9X-8267**	1	WASHER (6.6X12X2-MM THK)	
	77	1,2	**9X-8268**	8	WASHER (17.5X30X3.5-MM THK)	

B - USE AS REQUIRED
M - METRIC PART
Y - SEPARATE ILLUSTRATION

337-7053 **TRANSMISSION AR (*contd.*)** **i05306170**

REFER TO ALL ILLUSTRATIONS OF
THIS GROUP FOR AUXILIARY VIEWS

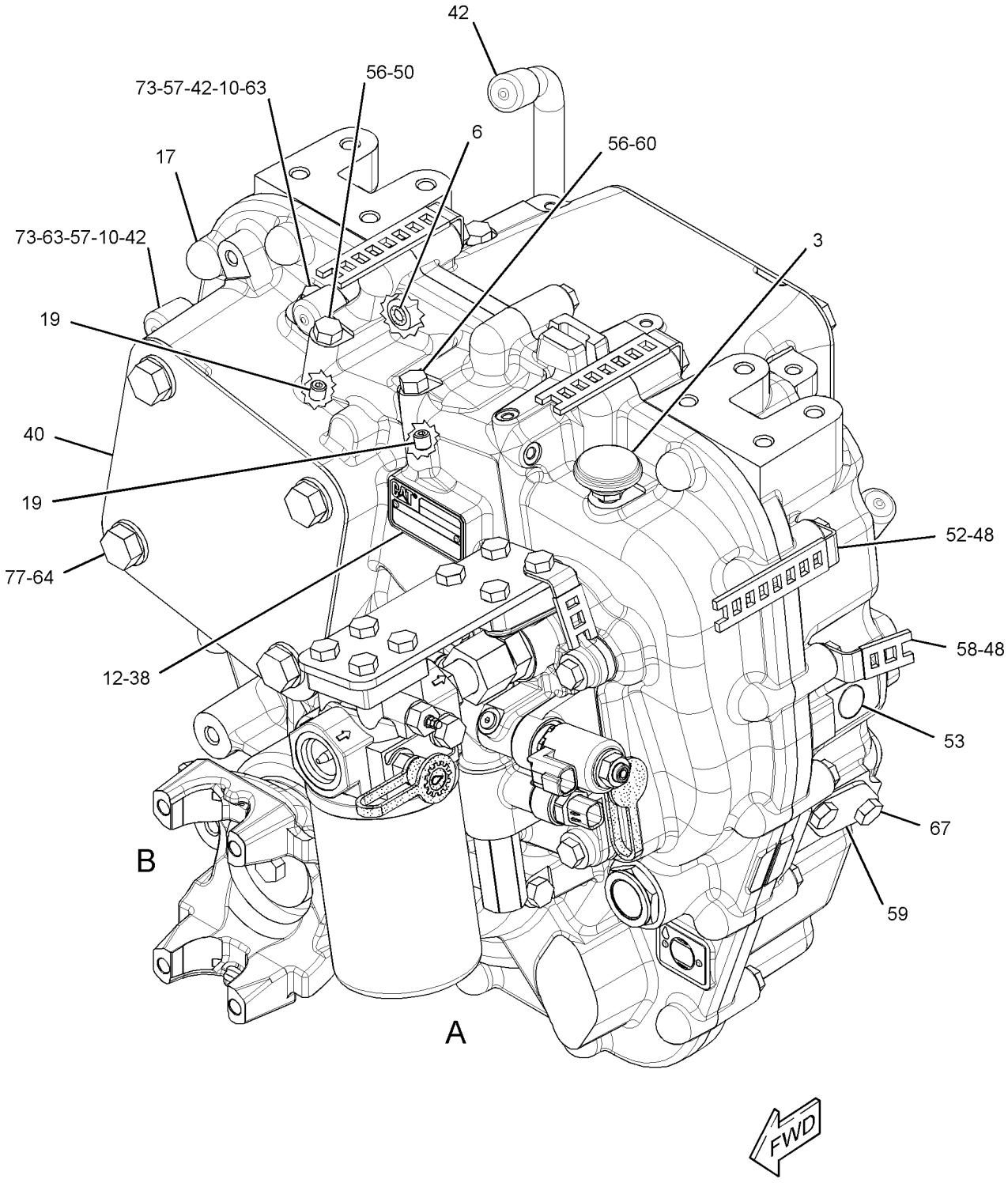

GRAPHIC #1 g02829721

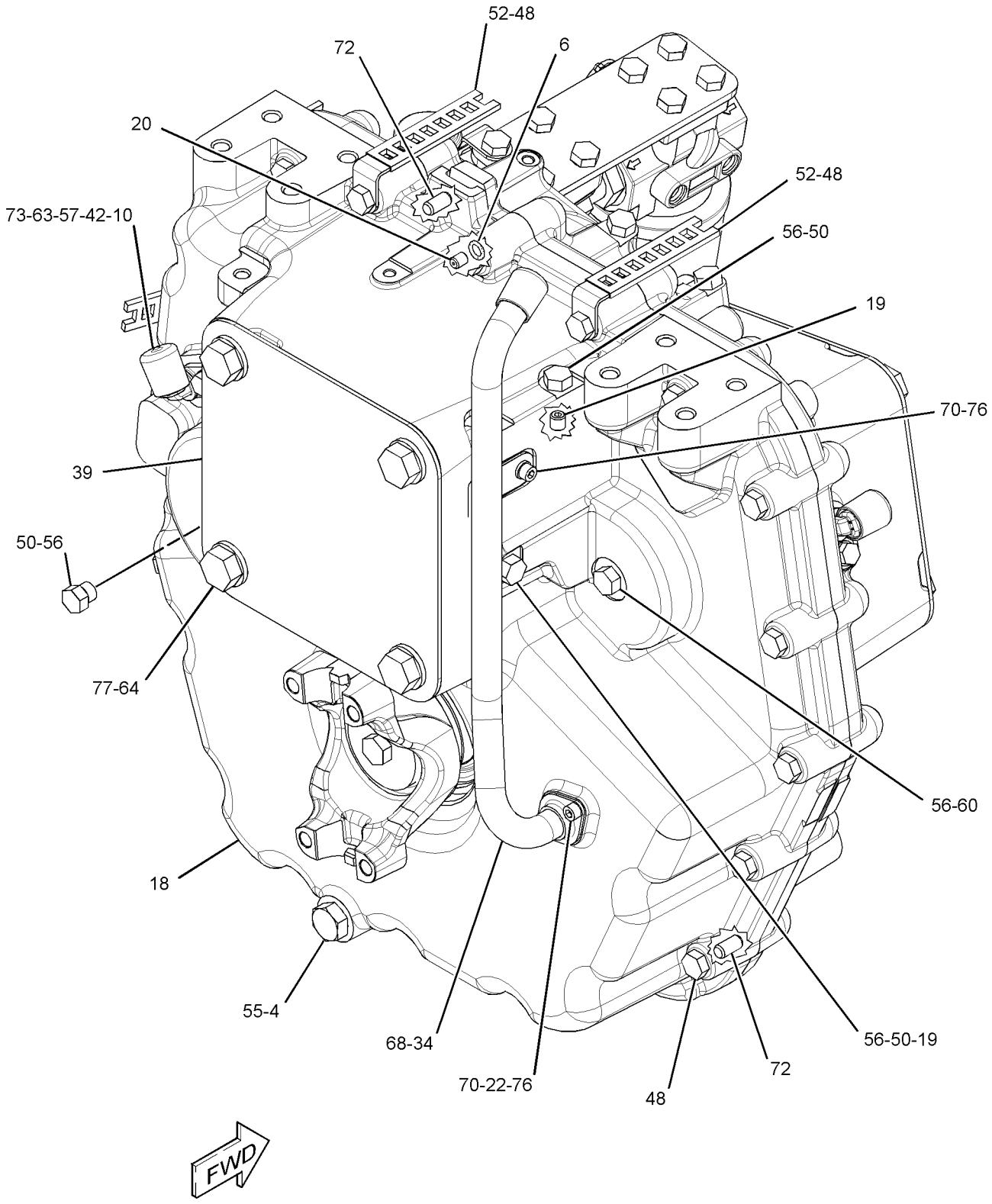

GRAPHIC #2 g02829722

337-7053 **TRANSMISSION AR (*contd.*)** **i05306170**

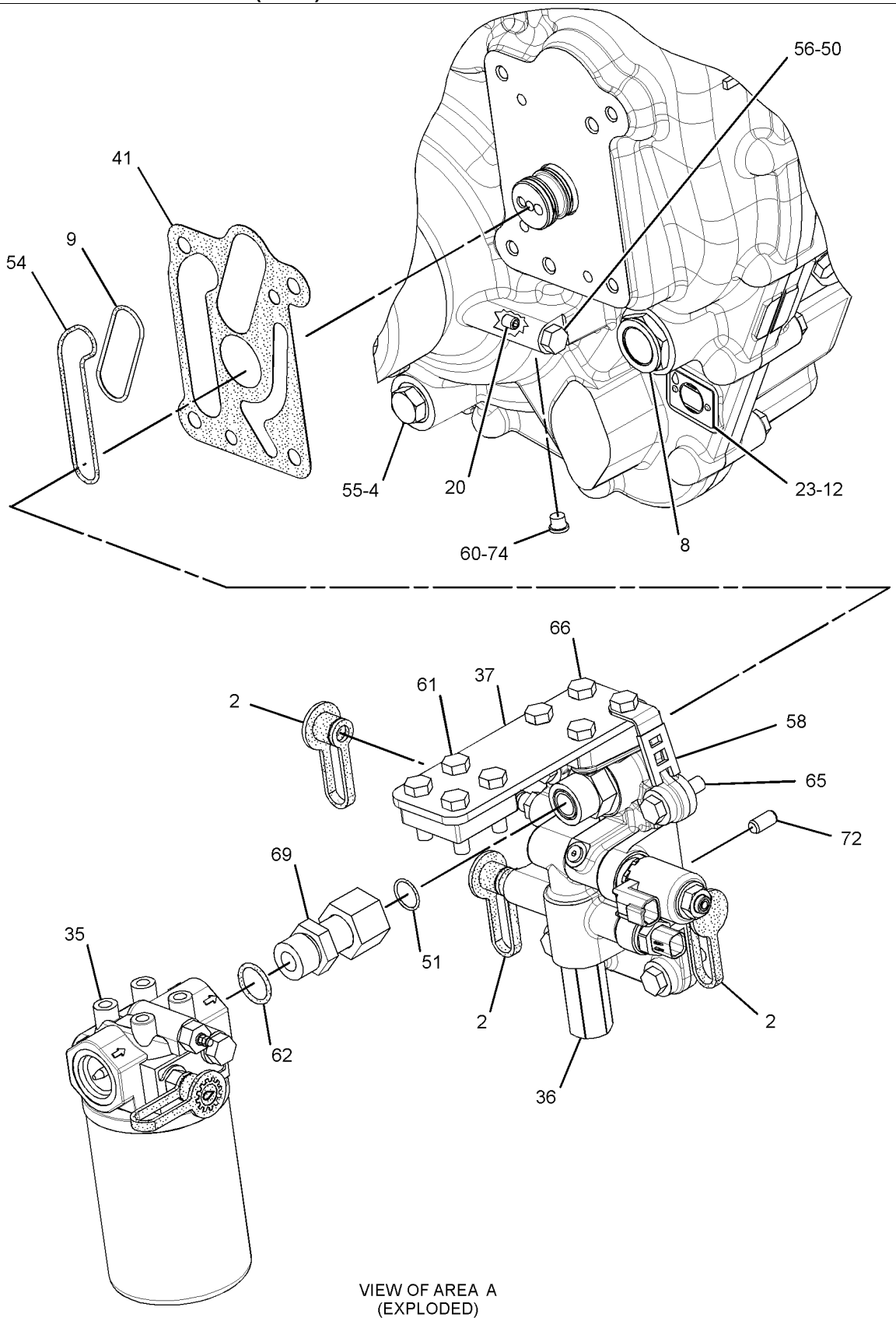

VIEW OF AREA A
(EXPLODED)

GRAPHIC #3 g02829723

337-7053 **TRANSMISSION AR (*contd.*)** **i05306170**

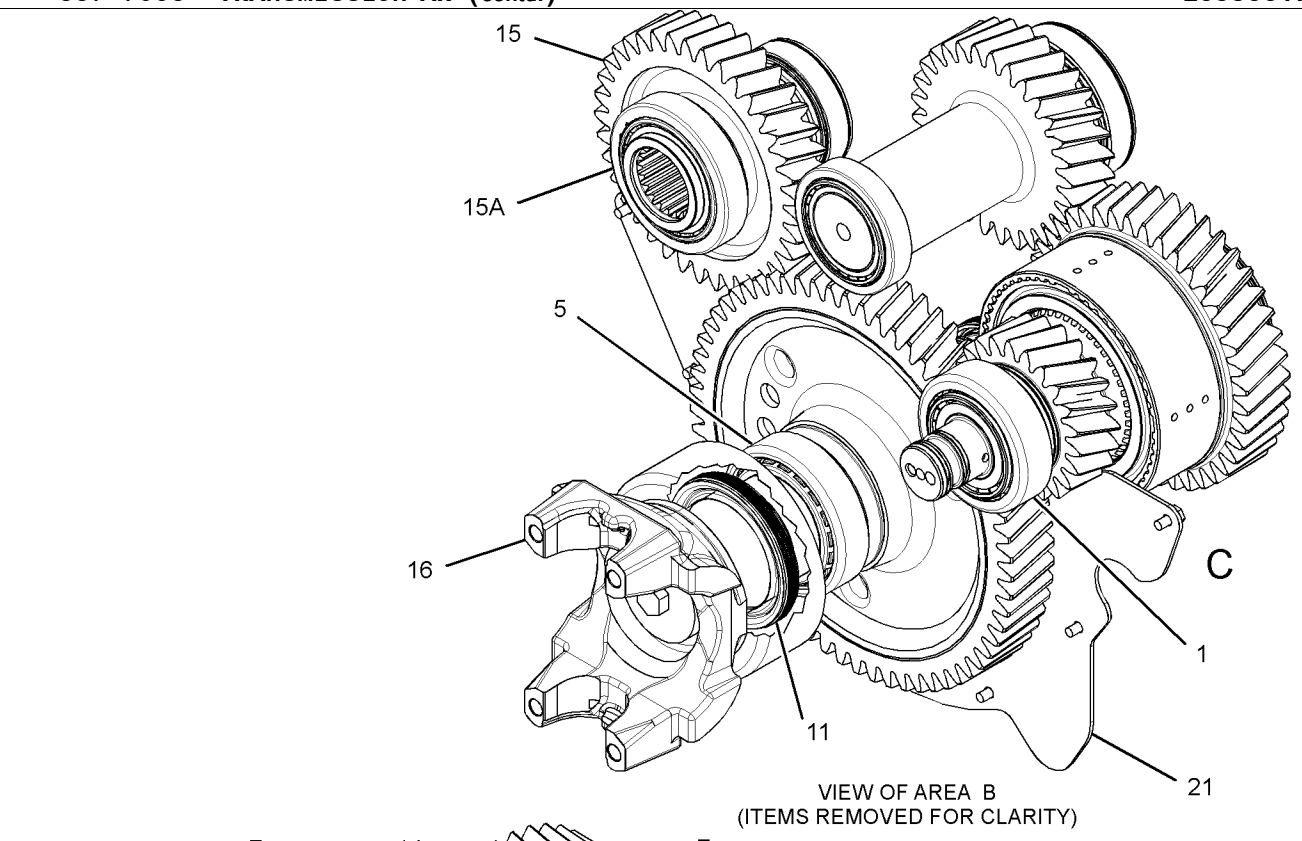

VIEW OF AREA B
(ITEMS REMOVED FOR CLARITY)

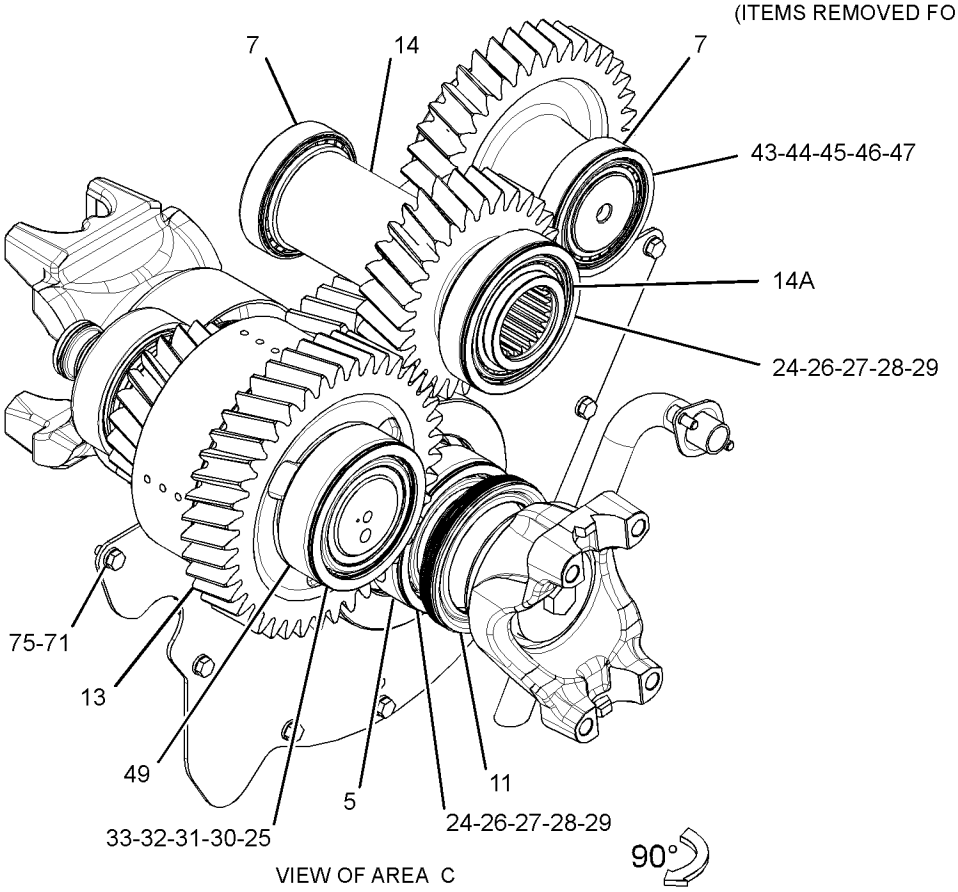

VIEW OF AREA C

GRAPHIC #4 **<END>** g02829724

233-7133 VALVE & MTG GP-SOLENOID

S/N: DYB1-UP

PART OF 333-6934 LINES GP-DIFFERENTIAL LOCK

SMCS-5479, 5571 **i03583753**

NOTE	REF NO	GRAPHIC REF	PART NUMBER	QTY	PART NAME 1 2 3 4 5 6 (PRODUCT LEVEL)	SEE PAGE
J	1	1	**233-7126**	1	VALVE GP-SOLENOID (HYDRAULIC LOCKOUT)	
M	2	1	**096-5968**	2	BOLT-SOCKET HEAD (M5X0.8X8-MM)	
					AVAILABLE REPAIR KIT(S):	
J			**250-8330**	1	KIT-SEAL	
					(INCLUDES O-RINGS)	

J - KIT MARKED J AVAILABLE FOR PART MARKED J
M - METRIC PART

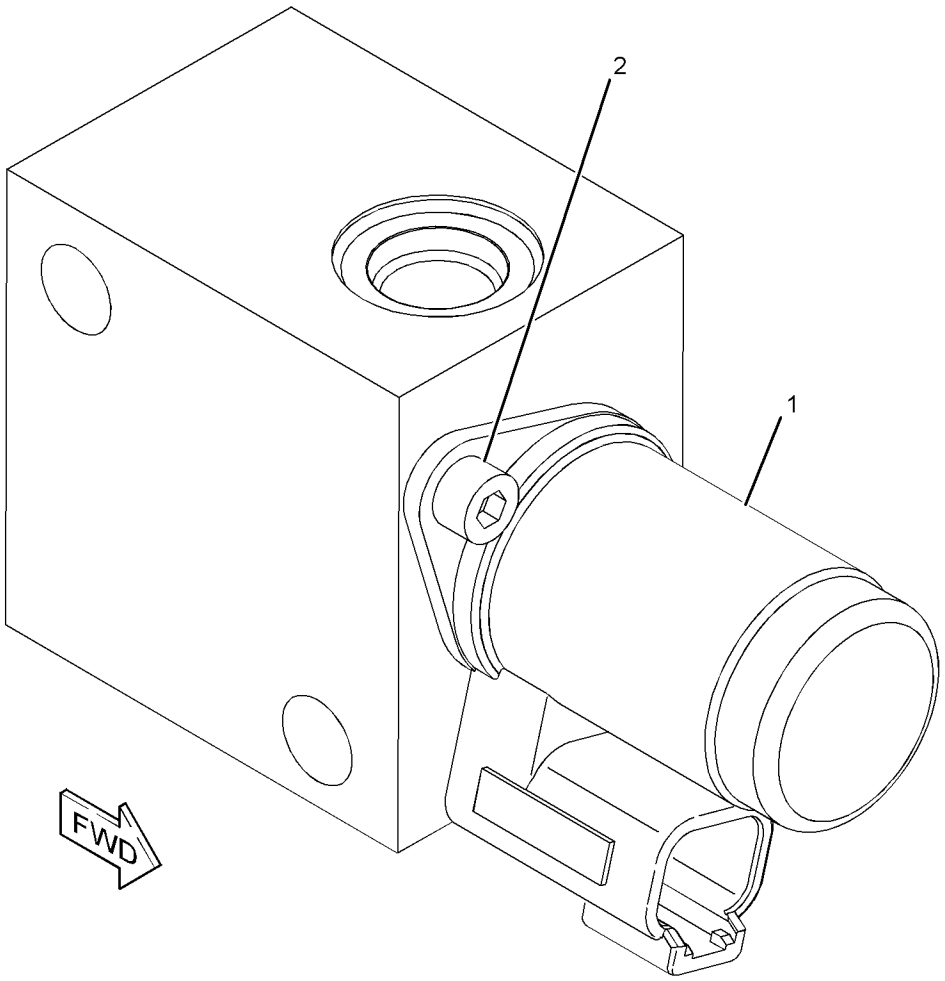

GRAPHIC #1 **<END>** g01183188

301-7890 VALVE GP-CHECK

S/N: DYB1-UP

PART OF 307-3077, 307-3082 MOTOR GP-PISTON

SMCS-5067 **i05306109**

NOTE	REF NO	GRAPHIC REF	PART NUMBER	QTY	PART NAME 1 2 3 4 5 6 (PRODUCT LEVEL)	SEE PAGE
	1	1	**033-6039**	1	SEAL-O-RING	
	2	1	**242-0262**	1	RING-BACKUP	
	3	1	**269-4676**	1	SEAL-O-RING	

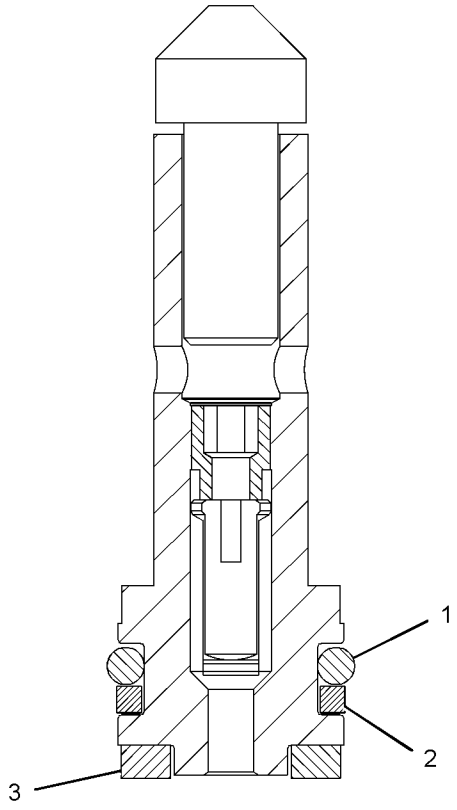

GRAPHIC #1 **<END>** g01332617

373-8448 VALVE GP-FLUSHING

S/N: DYB1-UP

PART OF 307-3082 MOTOR GP-PISTON

SMCS-5066 **i05306138**

NOTE	REF NO	GRAPHIC REF	PART NUMBER	QTY	PART NAME 1 2 3 4 5 6 (PRODUCT LEVEL)	SEE PAGE
	1	1	**6V-8352**	1	SEAL-O-RING	
	2	1	**109-3203**	2	SEAL-O-RING	
M	3	1	**3E-6910**	4	BOLT-SOCKET HEAD (M12X1.75X70-MM)	
	4	1	**3J-1907**	1	SEAL-O-RING	
	5	1	**9S-8004**	1	PLUG-O-RING	
	6	1	**191-2962**	1	SEAL-O-RING	

M - METRIC PART

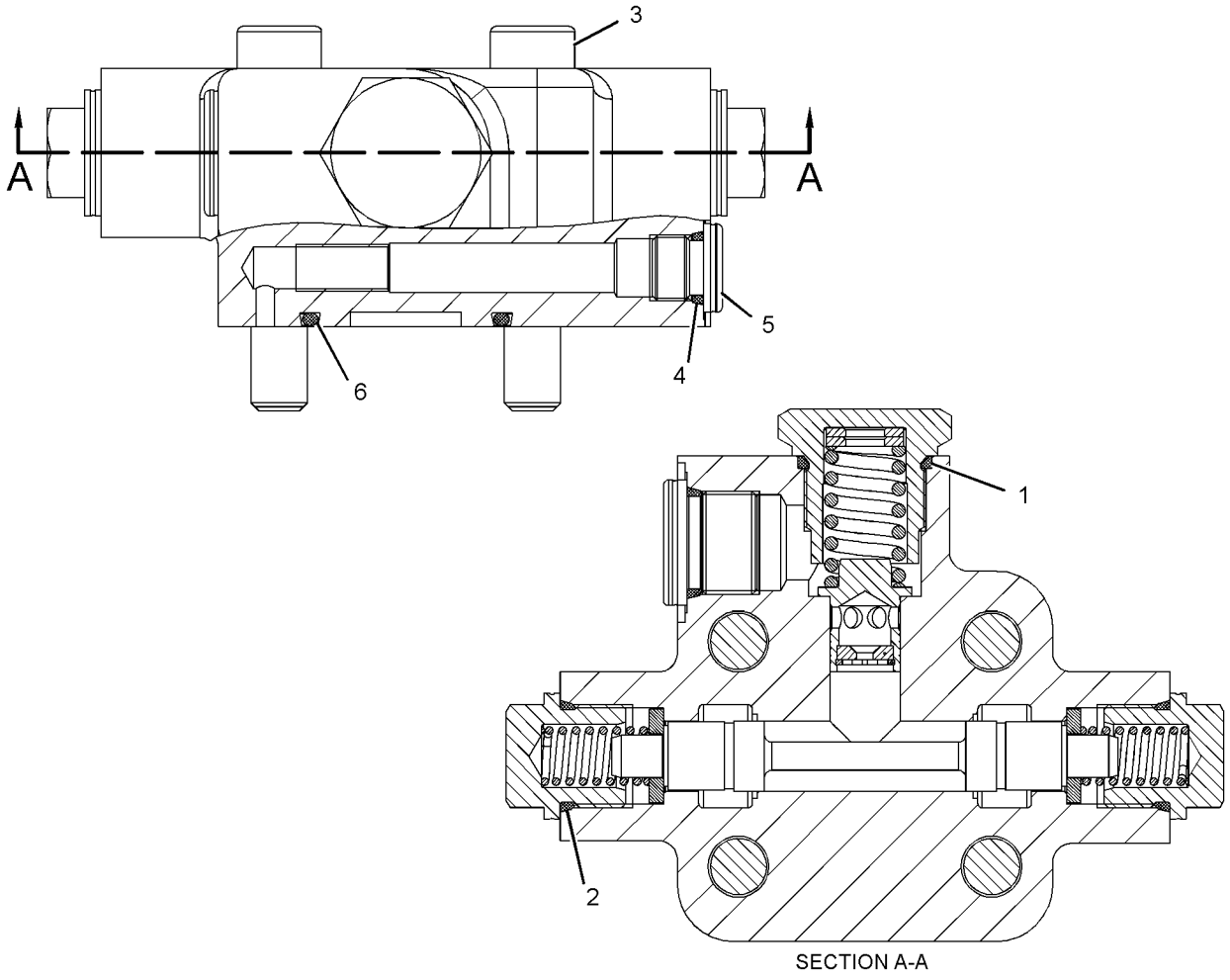

SECTION A-A

GRAPHIC #1 **<END>** g02794312

342-5313 VALVE GP-MODULATING

S/N: DYB1-UP
24-VOLT
PART OF 356-5349 VALVE GP-SOLENOID & RELIEF

SMCS-3139 **i05306215**

NOTE	REF NO	GRAPHIC REF	PART NUMBER	QTY	PART NAME 1 2 3 4 5 6 (PRODUCT LEVEL)	SEE PAGE
	1	1	**164-2108**	1	WASHER (13.03X25.4X2.38-MM THK)	
	2	1	**218-2373**	1	NUT (1/2-28-THD)	
	3	1	**323-9531**	1	COIL AS (24-VOLT) (MODULATING VALVE)	
					AVAILABLE REPAIR KIT(S):	
			108-2148	1	KIT-SEAL (SOLENOID VALVE)	
					(INCLUDES SEALS)	

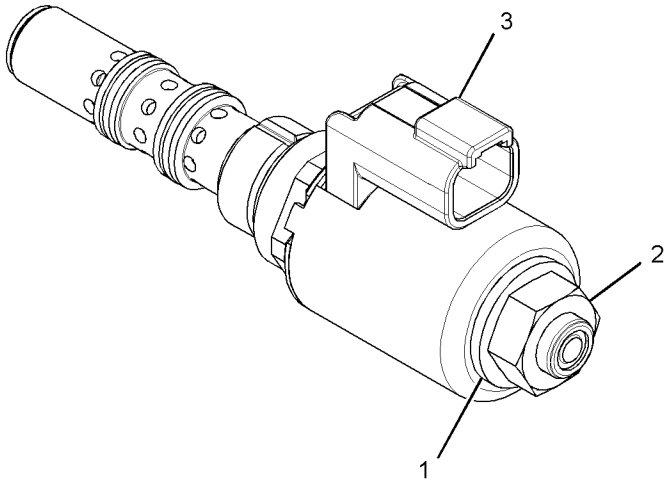

GRAPHIC #1 **<END>** g02798293

373-8447 VALVE GP-MOTOR CONTROL

S/N: DYB1-UP

PART OF 307-3082 MOTOR GP-PISTON

SMCS-5455 **i05306137**

NOTE	REF NO	GRAPHIC REF	PART NUMBER	QTY	PART NAME 1 2 3 4 5 6 (PRODUCT LEVEL)	SEE PAGE
M	1	1	**8T-0338**	4	BOLT-SOCKET HEAD (M8X1.25X45-MM)	
	2	1	**9S-8004**	1	PLUG-O-RING	
	3	1	**3J-1907**	1	SEAL-O-RING	
	4	1	**6V-1250**	1	SEAL-O-RING	
M	5	1	**9T-3853**	1	LOCKNUT (M6X1-THD)	
	6	1	**316-5999**	1	SOLENOID AS (PUMP CONTROL VALVE)	
	7	1	**9T-4367**	1	CAP AS	

M - METRIC PART

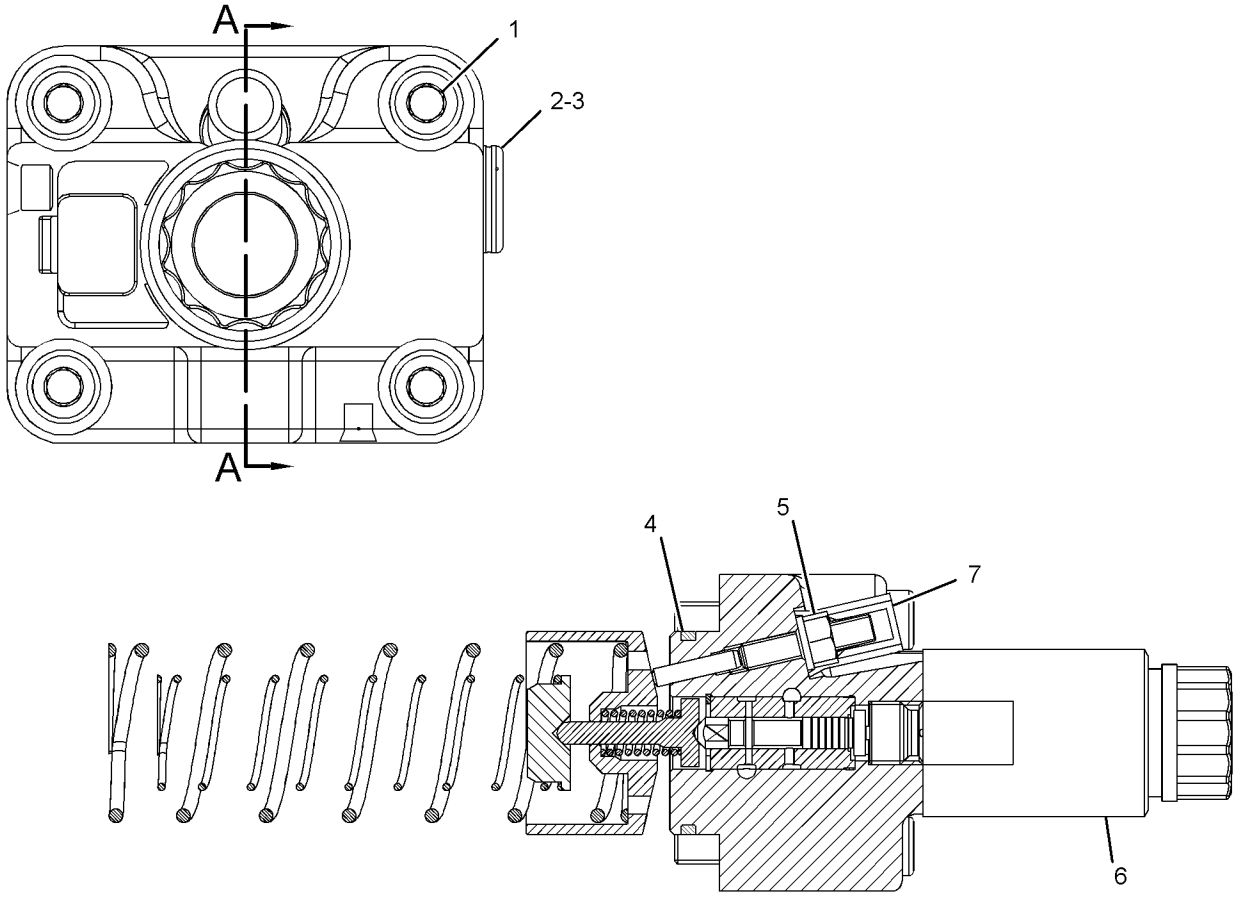

SECTION A-A

GRAPHIC #1 **<END>** g02793302

373-8441 VALVE GP-PILOT

S/N: DYB1-UP

PART OF 307-3077 MOTOR GP-PISTON

SMCS-5059 **i05306153**

NOTE	REF NO	GRAPHIC REF	PART NUMBER	QTY	PART NAME 1 2 3 4 5 6 (PRODUCT LEVEL)	SEE PAGE
M	1	1	**8T-0338**	4	BOLT-SOCKET HEAD (M8X1.25X45-MM)	
	2	1	**9S-8004**	1	PLUG-O-RING	
	3	1	**3J-1907**	1	SEAL-O-RING	
	4	1	**6V-1250**	1	SEAL-O-RING	
M	5	1	**9T-3853**	1	LOCKNUT (M6X1-THD)	
	6	1	**316-5999**	1	SOLENOID AS (PUMP CONTROL)	
	7	1	**9T-4367**	1	CAP AS	

M - METRIC PART

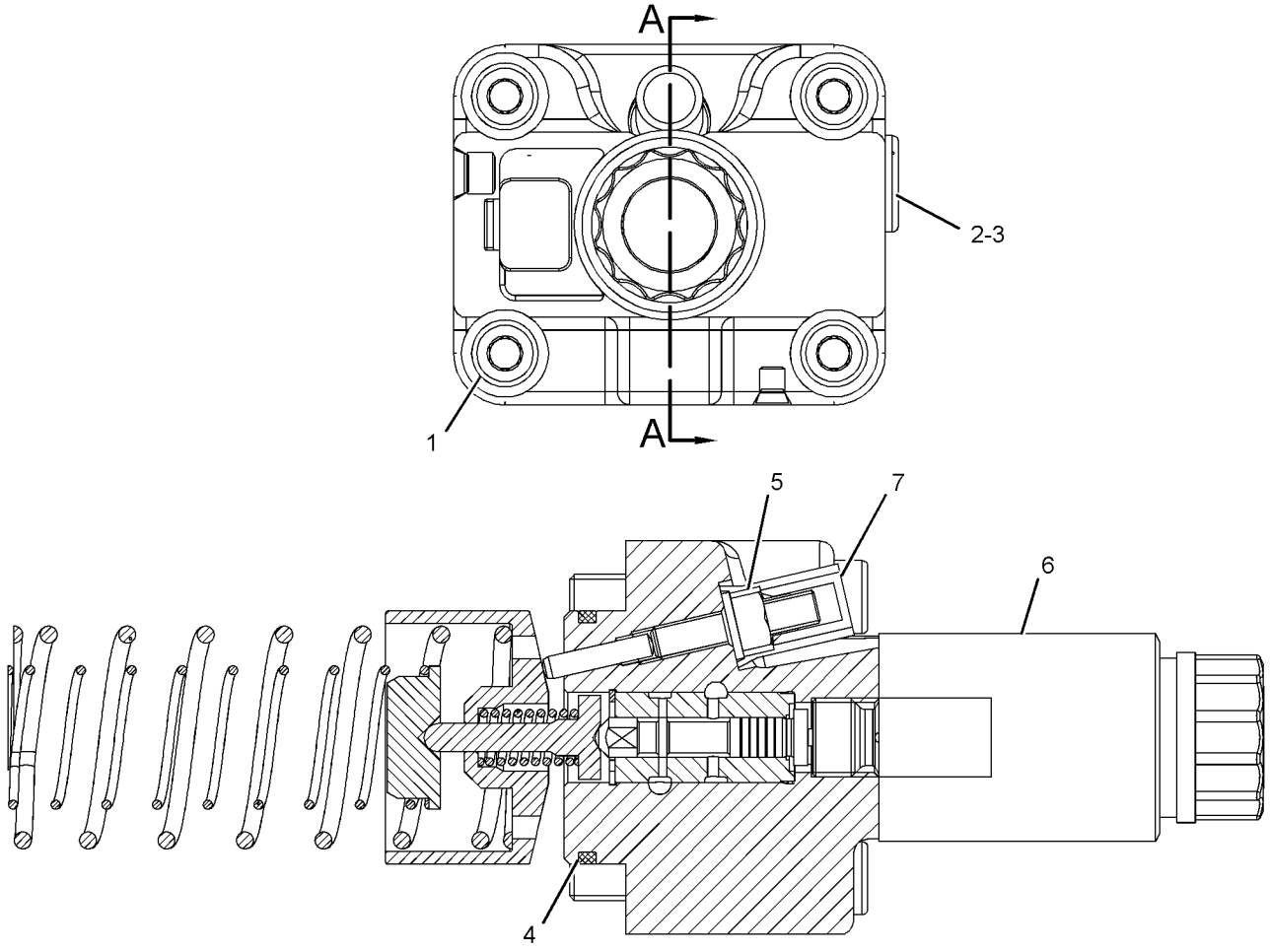

SECTION A-A

GRAPHIC #1 **<END>** g02794367

378-2817 VALVE GP-PUMP CONTROL

S/N: DYB1-UP

PART OF 307-3065 PUMP GP-PISTON

SMCS-5455 **i05310072**

NOTE	REF NO	GRAPHIC REF	PART NUMBER	QTY	PART NAME 1 2 3 4 5 6 (PRODUCT LEVEL)	SEE PAGE
	1	1	**8U-0599**	4	SEAL-O-RING	
	2	1	**8T-9525**	1	SEAL-O-RING	
	3	1	**9S-4191**	2	PLUG-O-RING	
	4	1	**3J-1907**	2	SEAL-O-RING	
	5	1	**266-7599**	2	SOLENOID (PUMP CONTROL)	
M	6	1	**154-0172**	8	BOLT-SOCKET HEAD (M4X0.7-THD)	

M - METRIC PART

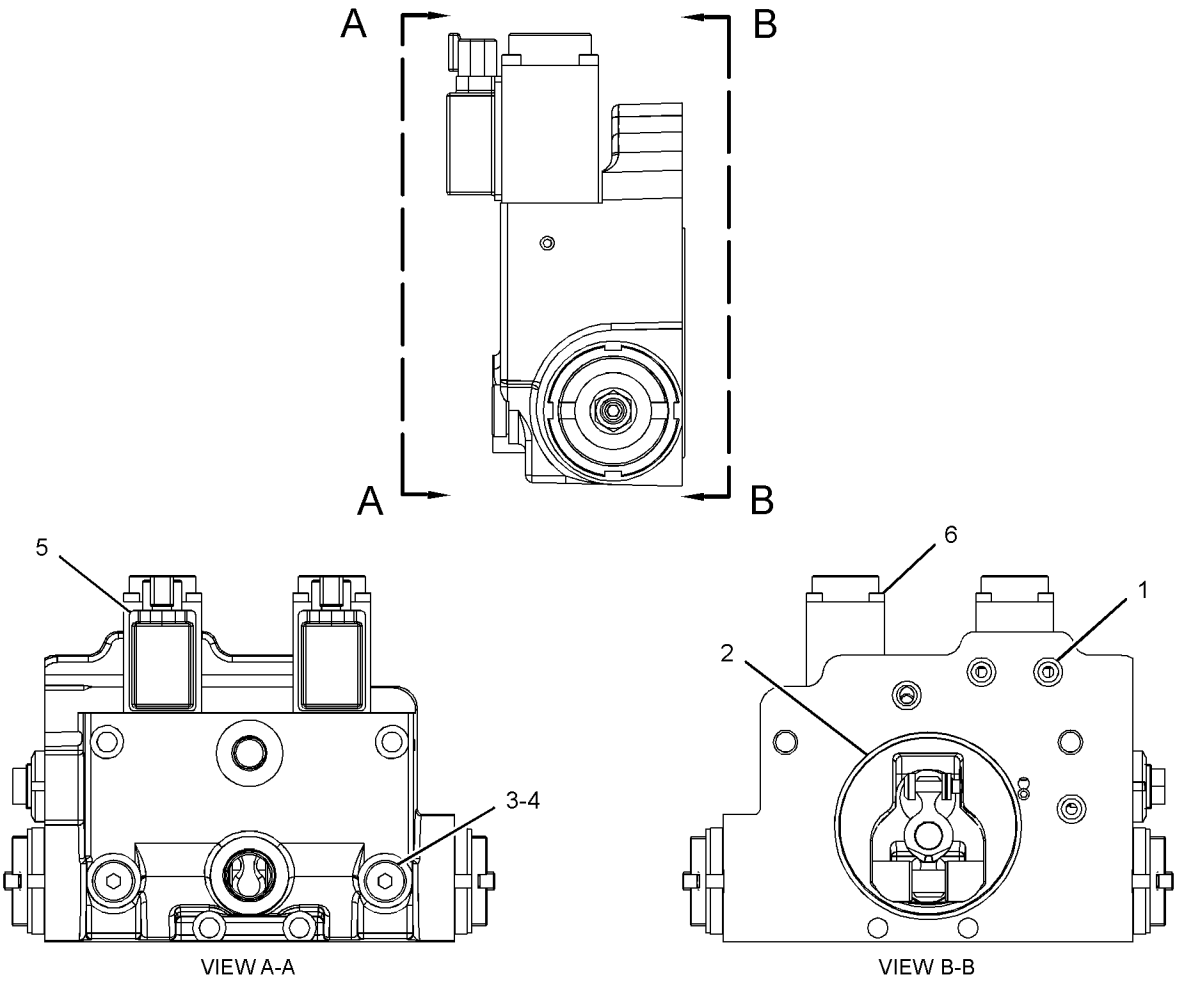

GRAPHIC #1 **<END>** g02794927

356-5349 VALVE GP-SOLENOID & RELIEF

S/N: DYB1-UP

PART OF 337-7053 TRANSMISSION AR

SMCS-5571 **i05306214**

NOTE	REF NO	GRAPHIC REF	PART NUMBER	QTY	PART NAME 1 2 3 4 5 6 (PRODUCT LEVEL)	SEE PAGE
	1	1	**6V-3965**	3	FITTING (QUICK DISCONNECT)	
Y	2	1	**342-5313**	1	VALVE GP-MODULATING	256
	3	1	**345-8272**	1	VALVE-BLOCK	
	4	1	**366-4304**	1	VALVE GP-RELIEF	
	5	1	**3J-1907**	3	SEAL-O-RING	
	6	1	**109-9685**	1	SEAL-O-RING	
	7	1	**228-7103**	1	SEAL-O-RING	
	8	1	**256-6453**	1	SENSOR-TEMPERATURE (TRANSMISSION OIL)	
	9	1	**6V-5050**	1	SEAL-O-RING	
	10	1	**6V-8637**	1	CONNECTOR	
	11	1	**9S-8001**	1	PLUG-O-RING	

Y - SEPARATE ILLUSTRATION

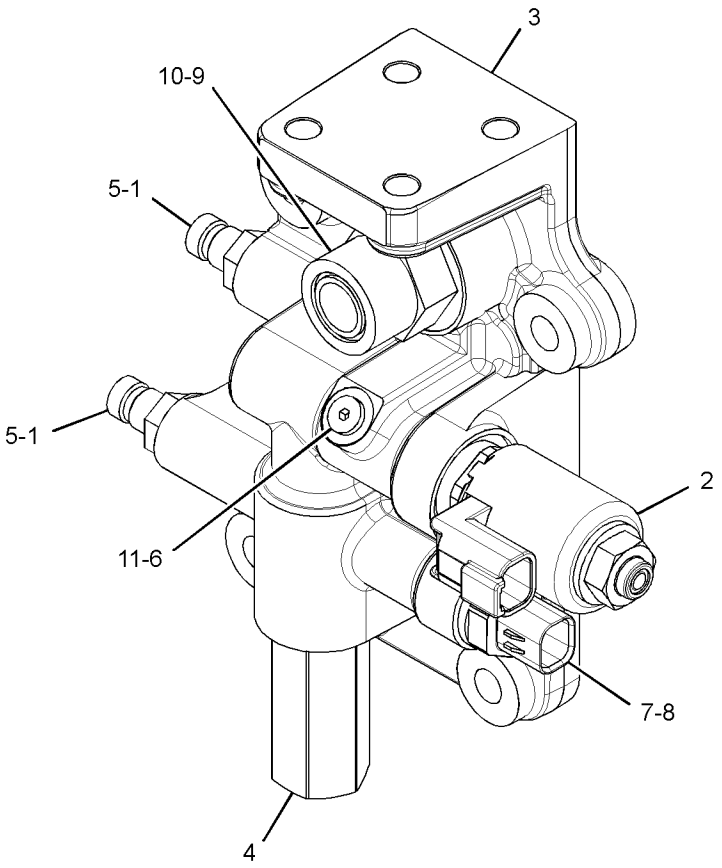

GRAPHIC #1 **<END>** g02841778

6D-0337 VALVE GP-TIRE

S/N: DYB1-UP

PART OF 357-8879, 360-2503, 373-8108 RIM GP-DEMOUNTABLE

AN ATTACHMENT

SMCS-4203 **i01683950**

NOTE	REF NO	GRAPHIC REF	PART NUMBER	QTY	PART NAME 1 2 3 4 5 6 (PRODUCT LEVEL)	SEE PAGE
	1	1	**6D-0443**	1	HOUSING AS-CORE	
	2	1	**2D-2628**	1	CORE-VALVE	
	3	1	**2D-2633**	1	CAP	
	4	1	**8D-2707**	1	SPUD AS	
	5	1	**2D-2629**	1	GROMMET	
	6	1	**2D-2630**	1	WASHER	
	7	1	**2D-2631**	1	NUT (0.482-26-THD)	

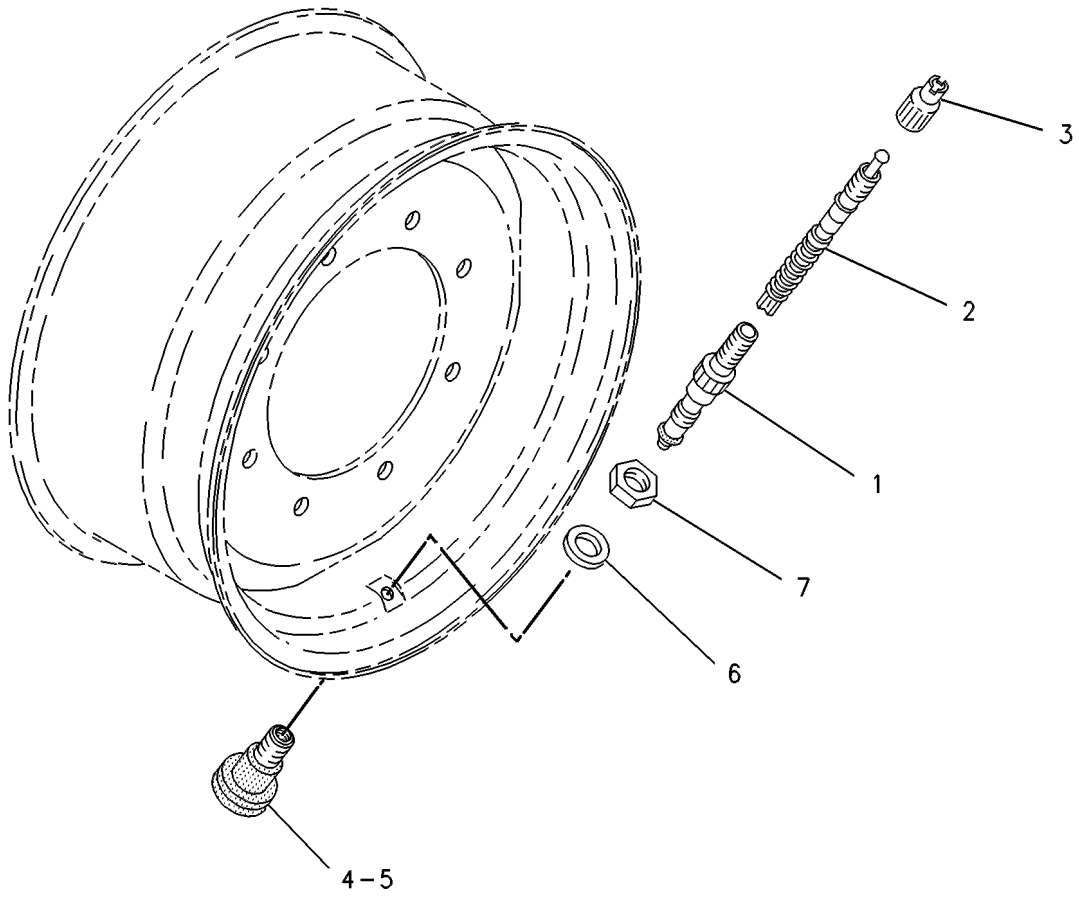

GRAPHIC #1 **<END>** g00121904

366-6911 WHEEL & TIRE AR—FLEXIBLE RUBBER

S/N: DYB1-UP

AN ATTACHMENT

SMCS-4200, 4201, 4202, 4203, 4208, 4209 **i05312329**

NOTE	PART NUMBER	QTY	PART NAME 1 2 3 4 5 6 (PRODUCT LEVEL)	SEE PAGE
Y	*365-6489*	4	WHEEL & TIRE GP (20.5-25)	264
	360-2044	1	MOUNTING GP-RIM	
M	**7X-2575**	48	BOLT (M24X3X60-MM)	
	8T-4167	48	WASHER-HARD (26X44X4-MM THK)	
	373-7600	1	STOP GP-AXLE OSCILLATION	
	8T-4223	4	WASHER-HARD (13.5X25.5X3-MM THK)	
M	**8T-4956**	4	BOLT (M12X1.75X35-MM)	
	369-4656	2	BLOCK	

M - METRIC PART
Y - SEPARATE ILLUSTRATION

<END>

365-6488 WHEEL & TIRE GP

S/N: DYB1-UP
(20.5X25)
PART OF 366-6910 TIRE & RIM AR
AN ATTACHMENT

SMCS-4202 **i05334212**

NOTE	REF NO	GRAPHIC REF	PART NUMBER	QTY	PART NAME 1 2 3 4 5 6 (PRODUCT LEVEL)	SEE PAGE
	1	1	**324-3436**	1	WHEEL & TIRE AS (20.5X25)	
	2	1	**336-8289**	1	RIM AS	
	3	1	**8T-1482**	40	WASHER-HARD (26X50X8-MM THK)	
M	4	1	**8T-4001**	20	NUT (M24X3-THD)	
M	5	1	**8T-5878**	20	BOLT (M24X3X80-MM)	

M - METRIC PART

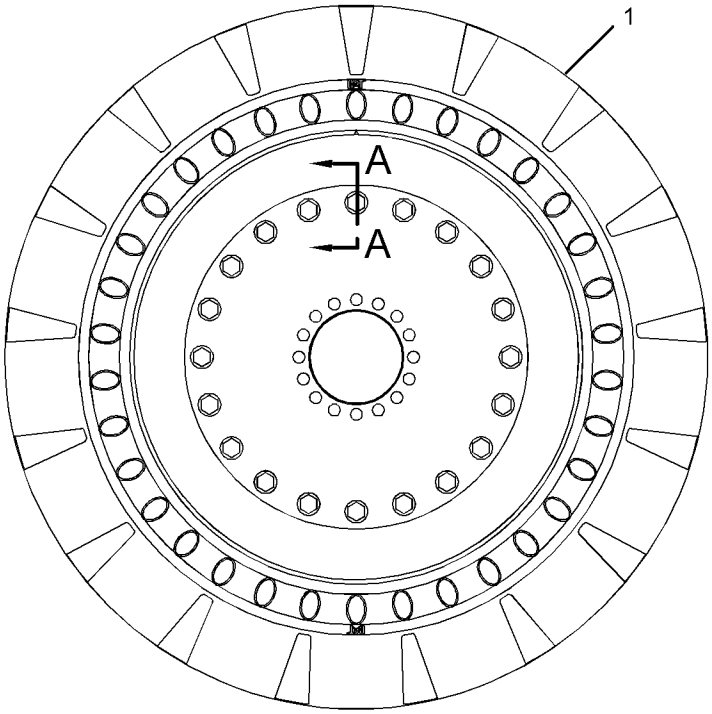

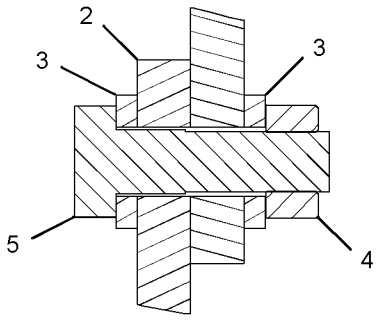

SECTION A-A

GRAPHIC #1 **<END>** g02805556

365-6489 WHEEL & TIRE GP–20.5-25

S/N: DYB1-UP
FLEXIBLE RUBBER
PART OF 366-6911 WHEEL & TIRE AR
AN ATTACHMENT

SMCS-4202 **i05312331**

NOTE	REF NO	GRAPHIC REF	PART NUMBER	QTY	PART NAME 1 2 3 4 5 6 (PRODUCT LEVEL)	SEE PAGE
	1	1	**324-3437**	1	TIRE (20.5-25)	
	2	1	**336-8289**	1	RIM AS	
	3	1	**8T-1482**	40	WASHER-HARD (26X50X8-MM THK)	
M	4	1	**8T-4001**	20	NUT (M24X3-THD)	
M	5	1	**8T-5878**	20	BOLT (M24X3X80-MM)	

M - METRIC PART

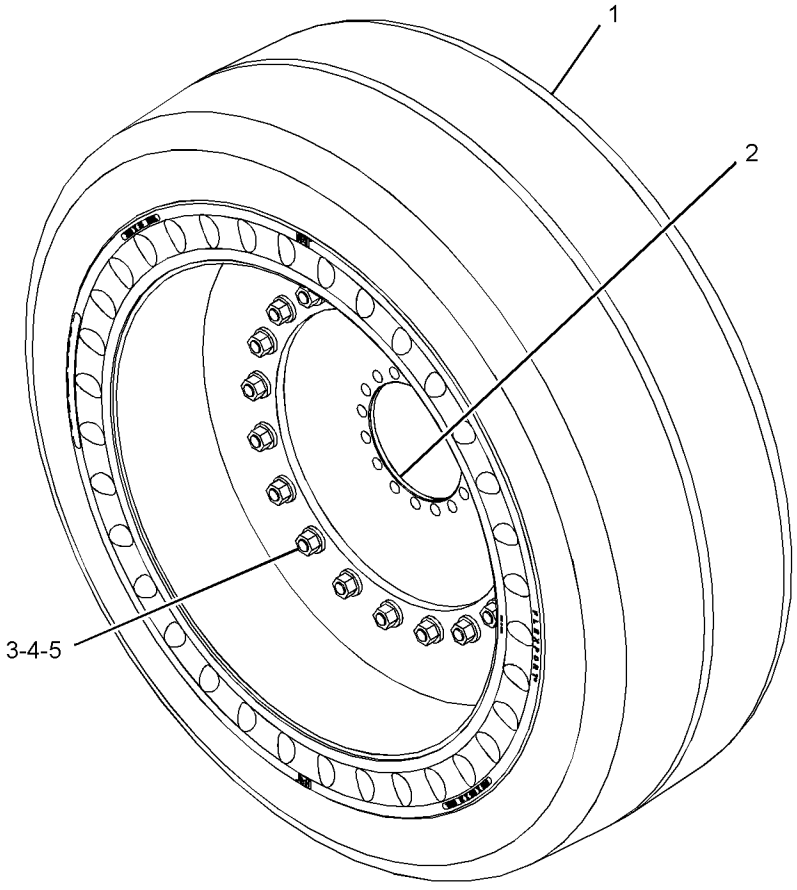

GRAPHIC #1 **<END>** g02756796

347-8056 BOX GP-BATTERY

S/N: DYB1-UP

PART OF 381-4385 CHASSIS AR

SMCS-7257 **i05309806**

NOTE	REF NO	GRAPHIC REF	PART NUMBER	QTY	PART NAME 1 2 3 4 5 6 (PRODUCT LEVEL)	SEE PAGE
	1	1	**347-8047**	1	PLATE AS	
	2	1	**347-8055**	1	PLATE	
	3	1	**349-7907**	1	CLAMP	
	4	1	**349-8038**	1	PLATE	
	5	1	**7X-7729**	11	WASHER (11X25X3-MM THK)	
M	6	1	**8T-4133**	1	NUT (M10X1.5-THD)	
M	7	1	**8T-4136**	1	BOLT (M10X1.5X25-MM)	
M	8	1	**8T-4137**	1	BOLT (M10X1.5X20-MM)	
M	9	1	**8T-4185**	1	BOLT (M10X1.5X50-MM)	
M	10	1	**8T-4195**	8	BOLT (M10X1.5X30-MM)	
E	11	1	**3E-6600**		SEAL (10-CM EACH)	

E - ORDER BY THE CENTIMETER
M - METRIC PART

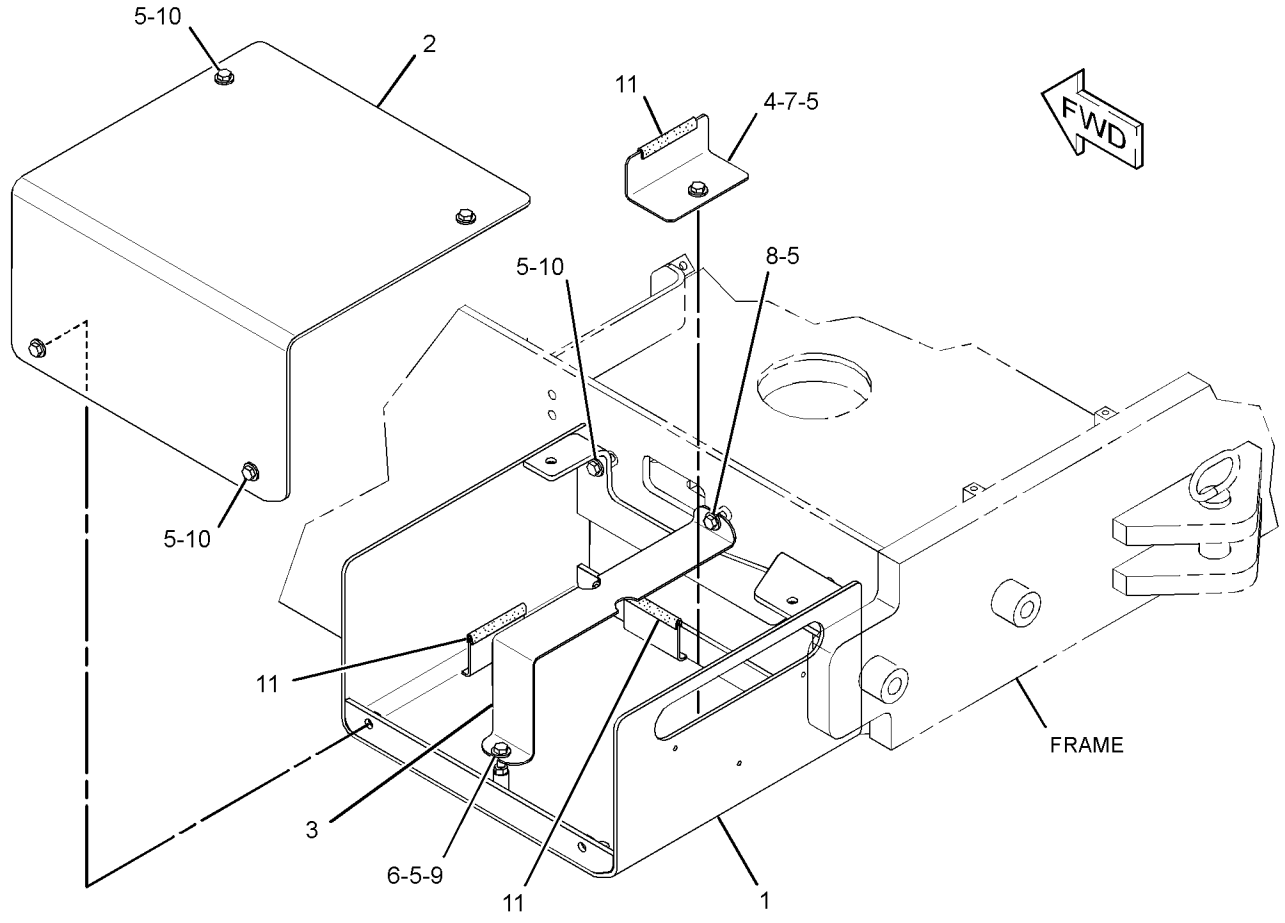

GRAPHIC #1 **<END>** g02792658

347-8057 BOX GP-BATTERY

S/N: DYB1-UP
PART OF 333-1416 BATTERY & WIRING GP
AN ATTACHMENT

SMCS-7257 **i05309510**

NOTE	REF NO	GRAPHIC REF	PART NUMBER	QTY	PART NAME 1 2 3 4 5 6 (PRODUCT LEVEL)	SEE PAGE
	1	1	**333-7010**	1	PLATE	
	2	1	**347-8048**	1	PLATE AS	
	3	1	**349-7907**	1	CLAMP	
	4	1	**349-8038**	1	PLATE	
	5	1	**7X-7729**	11	WASHER (11X25X3-MM THK)	
M	6	1	**8T-4133**	1	NUT (M10X1.5-THD)	
M	7	1	**8T-4136**	1	BOLT (M10X1.5X25-MM)	
M	8	1	**8T-4137**	1	BOLT (M10X1.5X20-MM)	
M	9	1	**8T-4185**	1	BOLT (M10X1.5X50-MM)	
M	10	1	**8T-4195**	8	BOLT (M10X1.5X30-MM)	
E	11	1	**3E-6600**		SEAL (10-CM EACH)	

E - ORDER BY THE CENTIMETER
M - METRIC PART

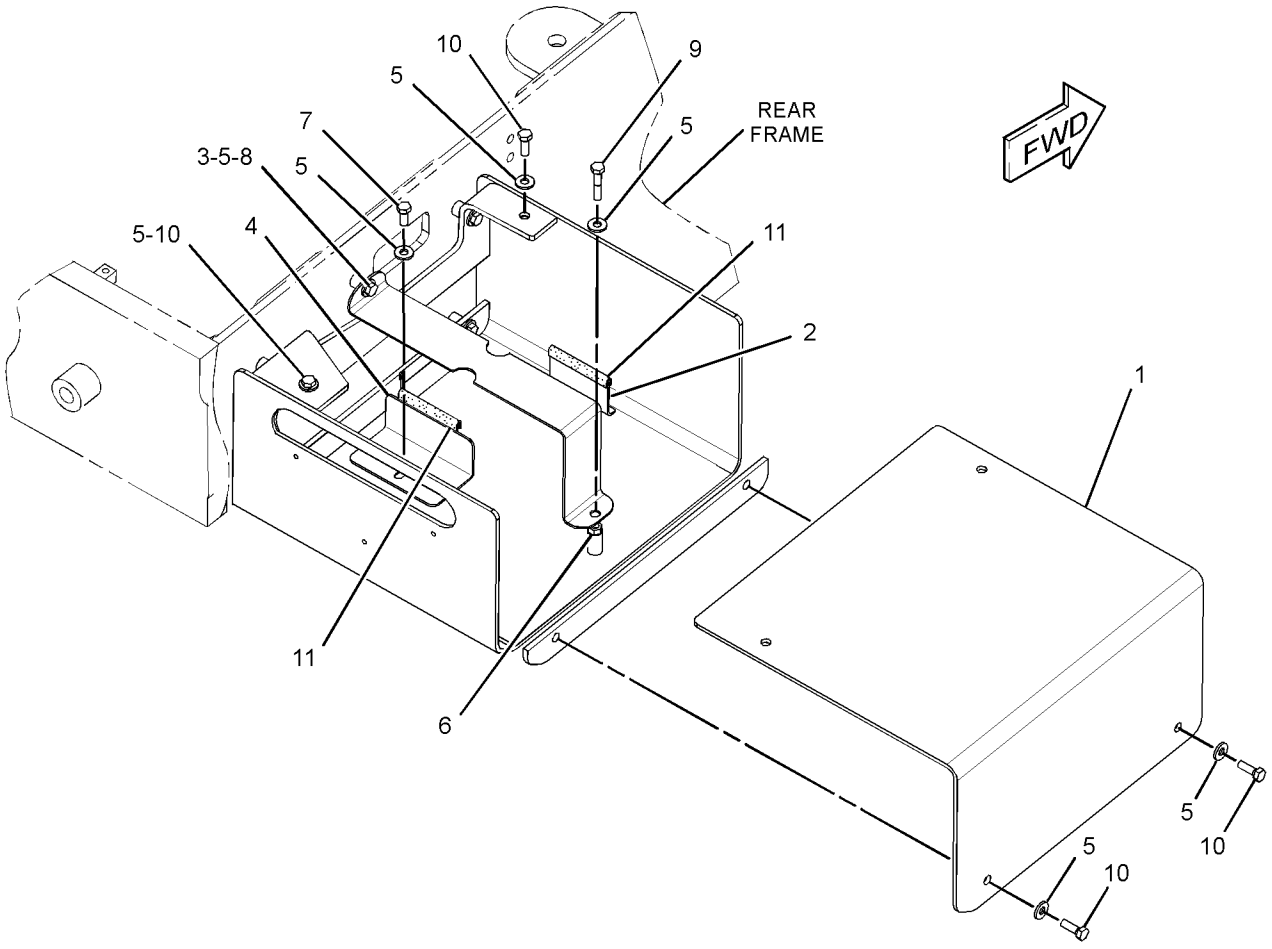

GRAPHIC #1 **<END>** g02770136

366-8166 CONVERSION AR-ROADING

S/N: DYB1-UP

AN ATTACHMENT

SMCS-7000, 7153

i05296395

NOTE	PART NUMBER	QTY	PART NAME 1 2 3 4 5 6 (PRODUCT LEVEL)	SEE PAGE
Y	*303-4113*	1	LIGHTING AR-ROADING (DIPPED, RH)	140
Y	*423-8564*	1	FILM GP-INTERNATIONAL	565

Y - SEPARATE ILLUSTRATION

<END>

333-6691 COUNTERWEIGHT GP

S/N: DYB1-UP

CANNOT BE USED WITH 346-1558—PAGE: 269, 348-2584—PAGE: 270 AN ATTACHMENT

SMCS-7056 **i05317118**

NOTE	REF NO	GRAPHIC REF	PART NUMBER	QTY	PART NAME 1 2 3 4 5 6 (PRODUCT LEVEL)	SEE PAGE
	1	1	**333-6694**	1	COUNTERWEIGHT	
	2	1	**333-6695**	1	COUNTERWEIGHT AS	
	3	1	**333-6696**	1	COUNTERWEIGHT AS	
	4	1	**333-6697**	1	COUNTERWEIGHT	
M	5	1	**121-7897**	4	BOLT (M24X3X315-MM)	
M	6	1	**7X-2552**	4	BOLT (M16X2X30-MM)	
	7	1	**8T-1482**	8	WASHER-HARD (26X50X8-MM THK)	
M	8	1	**8T-4179**	2	BOLT (M12X1.75X20-MM)	
	9	1	**8T-4223**	2	WASHER-HARD (13.5X25.5X3-MM THK)	
M	10	1	**8T-4649**	4	BOLT (M24X3X140-MM)	
	11	1	**9X-8257**	4	WASHER (17.5X30X3.5-MM THK)	

M - METRIC PART

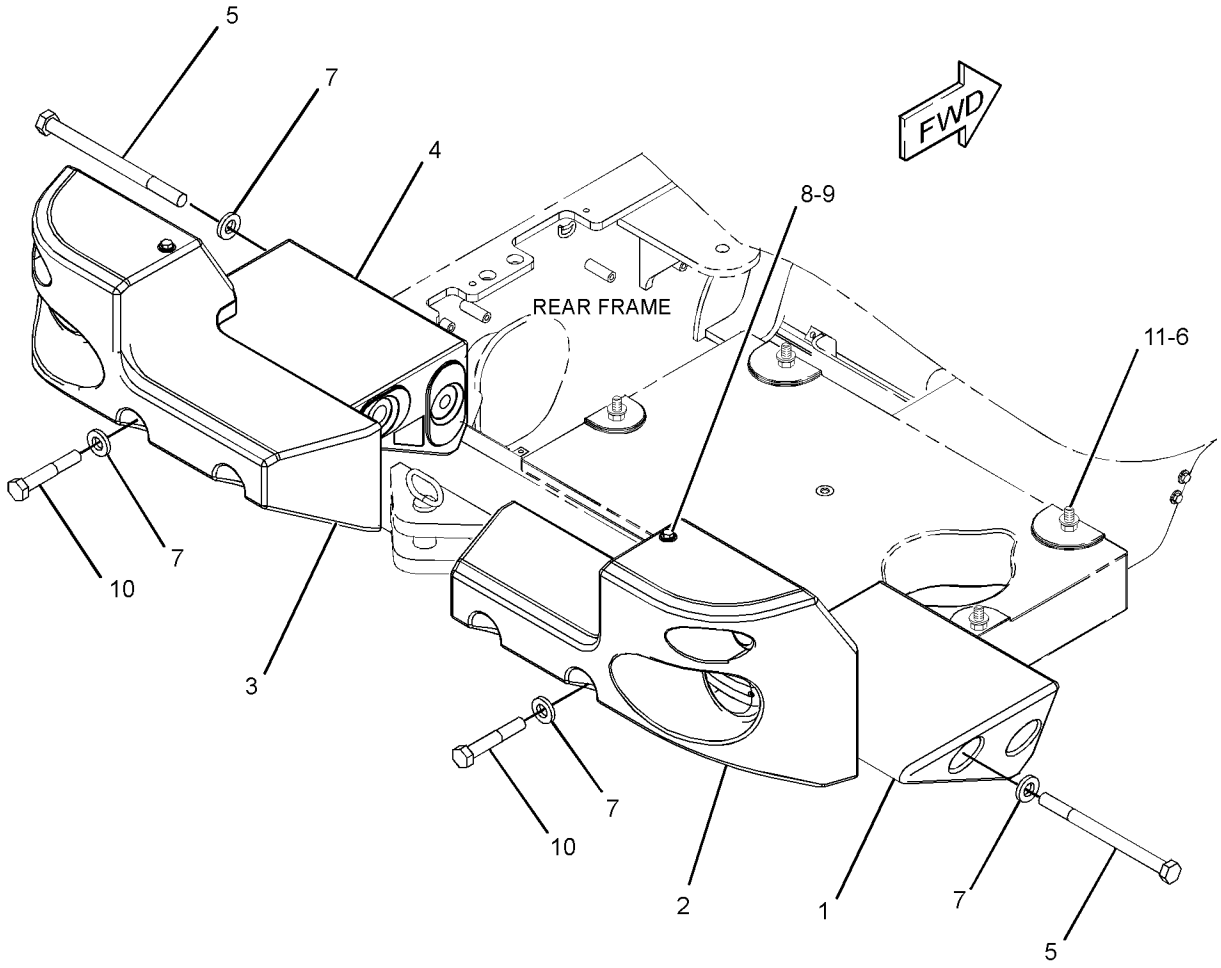

GRAPHIC #1 **<END>** g02764957

346-1558 COUNTERWEIGHT GP

S/N: DYB1-UP

CANNOT BE USED WITH 333-6691—PAGE: 268, 348-2584—PAGE: 270 AN ATTACHMENT

SMCS-7056 **i05317120**

NOTE	REF NO	GRAPHIC REF	PART NUMBER	QTY	PART NAME 1 2 3 4 5 6 (PRODUCT LEVEL)	SEE PAGE
	1	1	**333-6695**	1	COUNTERWEIGHT AS	
	2	1	**333-6696**	1	COUNTERWEIGHT AS	
M	3	1	**7X-2552**	4	BOLT (M16X2X30-MM)	
	4	1	**8T-1482**	4	WASHER-HARD (26X50X8-MM THK)	
M	5	1	**8T-4179**	2	BOLT (M12X1.75X20-MM)	
	6	1	**8T-4223**	2	WASHER-HARD (13.5X25.5X3-MM THK)	
M	7	1	**8T-4649**	4	BOLT (M24X3X140-MM)	
	8	1	**9X-8257**	4	WASHER (17.5X30X3.5-MM THK)	

M - METRIC PART

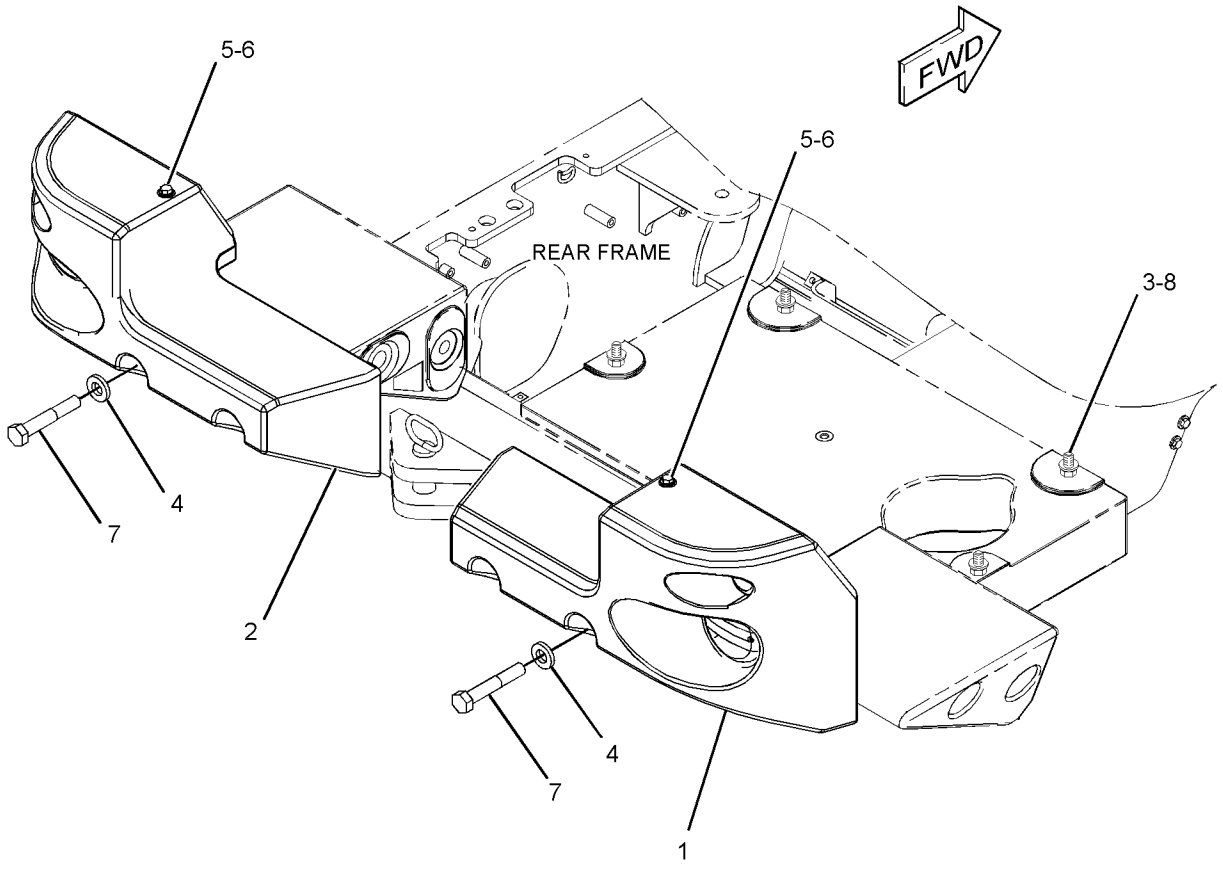

GRAPHIC #1 **<END>** g02765016

348-2584 COUNTERWEIGHT GP

S/N: DYB1-UP

CANNOT BE USED WITH 346-1558—PAGE: 269, 333-6691—PAGE: 268

AN ATTACHMENT

SMCS-7056 **i05317123**

NOTE	REF NO	GRAPHIC REF	PART NUMBER	QTY	PART NAME 1 2 3 4 5 6 (PRODUCT LEVEL)	SEE PAGE
	1	1	**333-6694**	1	COUNTERWEIGHT	
	2	1	**333-6695**	1	COUNTERWEIGHT AS	
	3	1	**333-6696**	1	COUNTERWEIGHT AS	
	4	1	**333-6697**	1	COUNTERWEIGHT	
	5	1	**333-6698**	1	COUNTERWEIGHT AS	
M	6	1	**121-7897**	4	BOLT (M24X3X315-MM)	
	7	1	**3E-9411**	4	WASHER-HARD (17.5X38X6-MM THK)	
M	8	1	**7X-2557**	4	BOLT (M16X2X140-MM)	
	9	1	**8T-1482**	8	WASHER-HARD (26X50X8-MM THK)	
M	10	1	**8T-4179**	2	BOLT (M12X1.75X20-MM)	
	11	1	**8T-4223**	2	WASHER-HARD (13.5X25.5X3-MM THK)	
M	12	1	**8T-4649**	4	BOLT (M24X3X140-MM)	

M - METRIC PART

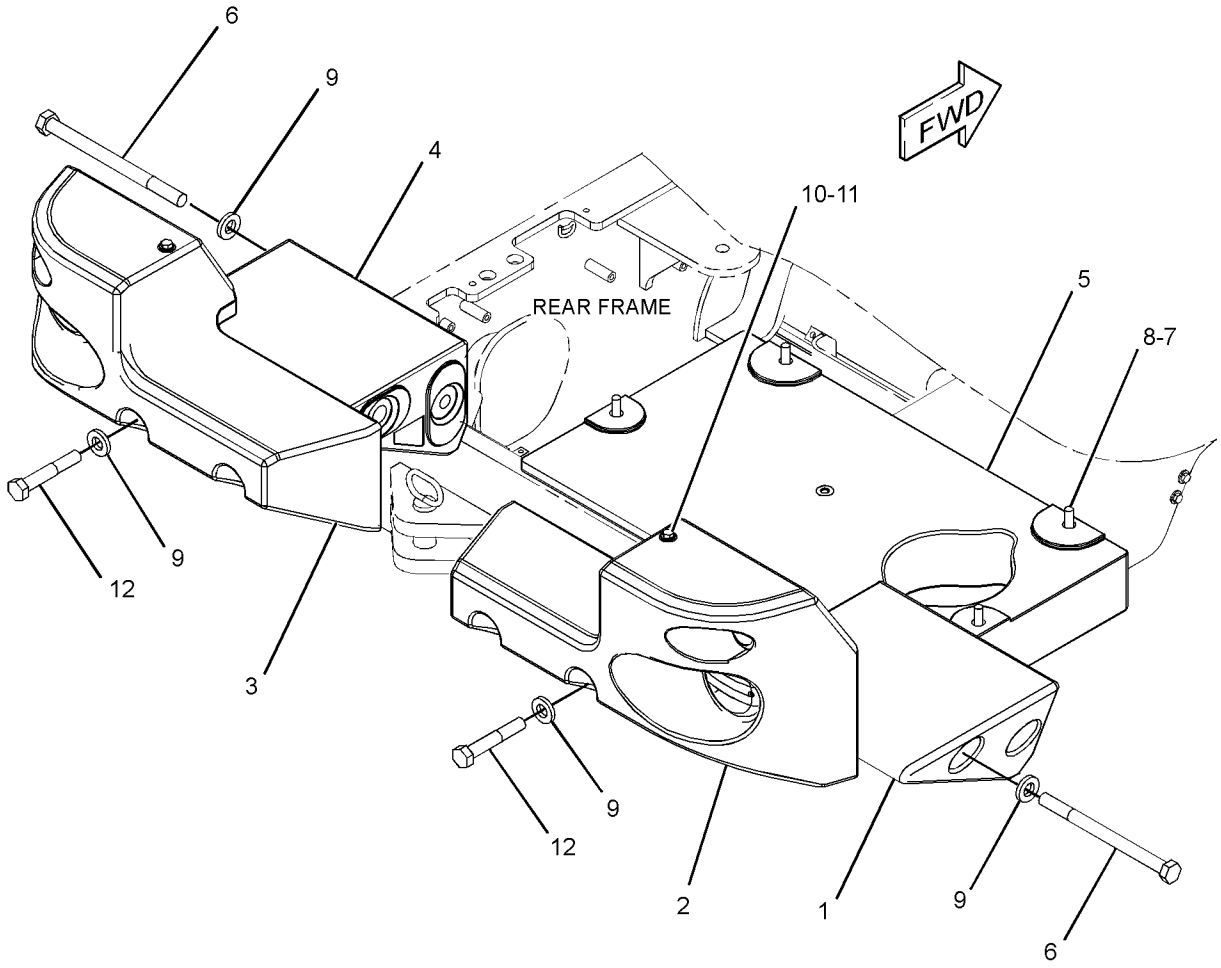

GRAPHIC #1 **<END>** g02764942

347-8089 DOOR GP-ACCESS

S/N: DYB1-UP

PART OF 381-4385 CHASSIS AR

SMCS-7273 **i05307642**

NOTE	REF NO	GRAPHIC REF	PART NUMBER	QTY	PART NAME 1 2 3 4 5 6 (PRODUCT LEVEL)	SEE PAGE
	1	1	**9X-2038**	16	WASHER (7X19X2-MM THK)	
	2	1	**130-1916**	4	STUD-BALL	
	3	1	**249-2403**	1	HANDLE AS	
	4	1	**272-0002**	1	STRIKER AS	
	5	1	**347-8090**	1	BEZEL AS	
	6	1	**347-8091**	1	SCREEN	
	7	1	**349-7885**	1	DOOR AS-REAR	
	8	1	**352-9944**	1	LATCH	
	9	1	**355-2679**	1	BRACKET	
	10	1	**357-4261**	2	SPRING AS-GAS (DOOR, REAR)	
M	11	1	**127-2170**	4	SCREW-TRUSS HEAD (M8X1.25X20-MM)	
	12	1	**359-3196**	1	BRACKET AS	
M		1	**159-9540**	1	NUT-WELD (M8X1.25-THD)	
M		1	**159-9541**	2	NUT-WELD (M10X1.5-THD)	
	13	1	**360-1633**	1	PLATE AS	
M		1	**165-8719**	1	NUT-WELD	
	14	1	**362-9220**	1	PLATE	
	15	1	**362-9221**	1	PLUG	
	16	1	**366-6105**	1	BRACKET AS	
M		1	**159-9540**	1	NUT-WELD (M8X1.25-THD)	
M		1	**159-9541**	2	NUT-WELD (M10X1.5-THD)	
	17	1	**366-6106**	1	BRACKET AS	
M		1	**159-9540**	1	NUT-WELD (M8X1.25-THD)	
M		1	**159-9541**	2	NUT-WELD (M10X1.5-THD)	
	18	1	**370-6979**	1	GROMMET	
	19	1	**311-8366**	4	WASHER-HARD (8.8X16X2-MM THK)	
M	20	1	**3E-8020**	1	SCREW-TRUSS HEAD (M6X1X25-MM)	
M	21	1	**5C-2890**	1	NUT (M6X1-THD)	
M	22	1	**5C-9553**	16	BOLT (M6X1X16-MM)	
M	23	1	**6V-7357**	4	BOLT (M6X1X25-MM)	
	24	1	**7X-7729**	12	WASHER (11X25X3-MM THK)	
M	25	1	**8T-4136**	8	BOLT (M10X1.5X25-MM)	
M	26	1	**8T-4138**	3	BOLT (M6X1X20-MM)	
M	27	1	**8T-4195**	4	BOLT (M10X1.5X30-MM)	
M	28	1	**8T-4200**	6	BOLT (M8X1.25X16-MM)	
	29	1	**8T-4205**	3	WASHER-HARD (7.2X14.5X2-MM THK)	
	30	1	**8T-4224**	11	WASHER-HARD (8.8X16X2-MM THK)	
M	31	1	**8U-7803**	1	SCREW	
	32	1	**9X-8256**	4	WASHER (6.6X12X2-MM THK)	
D	33	1	**5P-7211**		SEAL (0.8-M EACH)	
D	33A	1	**5P-7211**		SEAL (1-M)	
E	34	1	**246-0435**		SEAL (100-CM EACH)	
	35	1	**252-9205**	1	FASTENER	

D - ORDER BY THE METER
E - ORDER BY THE CENTIMETER
M - METRIC PART

347-8089 **DOOR GP-ACCESS (*contd.*)** **i05307642**

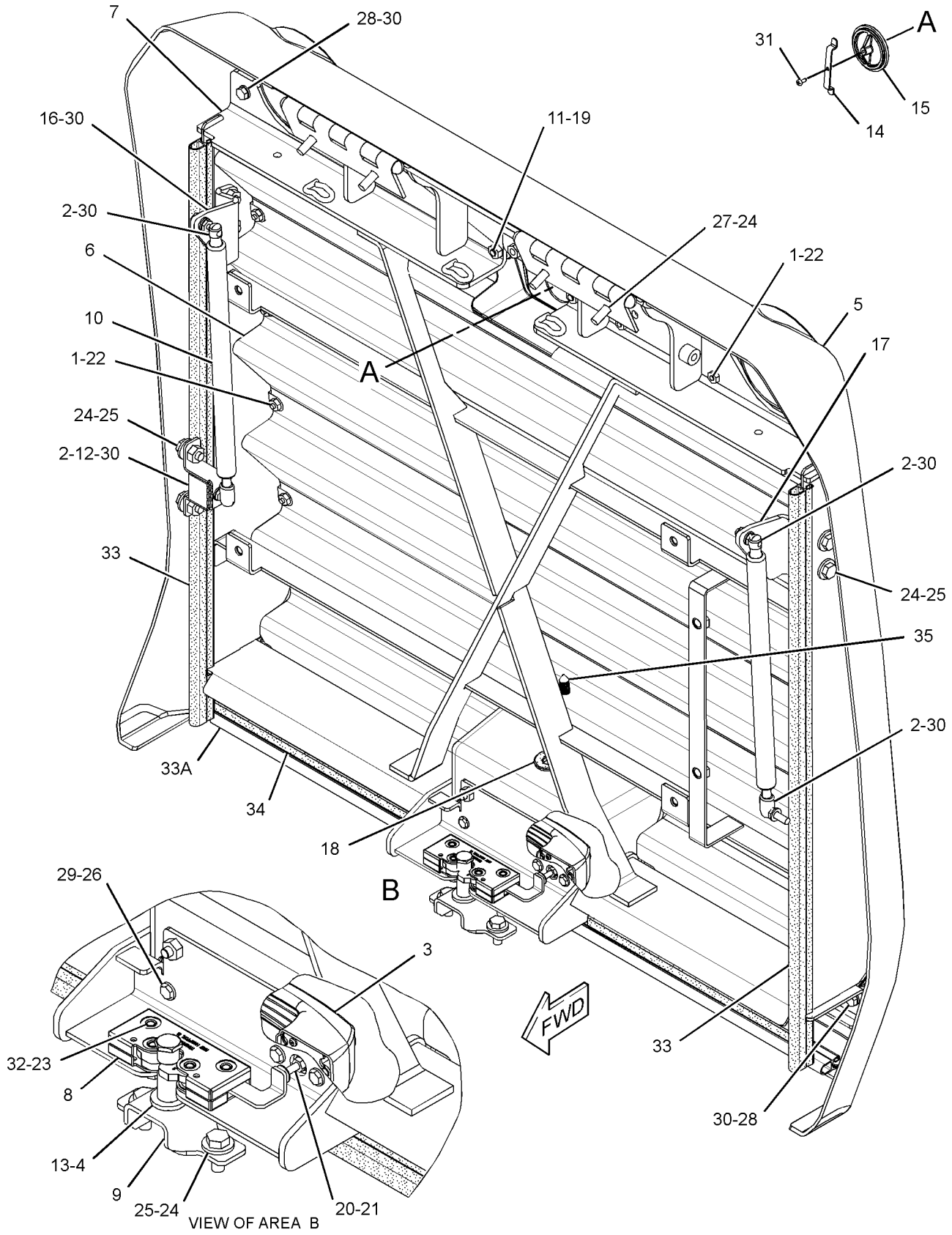

GRAPHIC #1 **<END>** g03141998

387-4029 EXTENSION GP-FENDER–REAR

S/N: DYB1-UP
PART OF 381-4398 FENDER AR
AN ATTACHMENT

SMCS-7252 **i05297354**

NOTE	REF NO	GRAPHIC REF	PART NUMBER	QTY	PART NAME 1 2 3 4 5 6 (PRODUCT LEVEL)	SEE PAGE
	1	1	**349-7878**	1	FENDER AS	
	2	1	**356-6898**	1	COVER-FENDER (LH)	
	3	1	**357-4260**	1	SPRING AS-GAS (DOOR, RH)	
	4	1	**366-6100**	1	PLATE AS	
	5	1	**366-6168**	1	PLATE AS	
M		1	**159-9540**	6	NUT-WELD (M8X1.25-THD)	
	6	1	**366-6169**	1	COVER-FENDER (RH)	
	7	1	**367-0682**	1	SPRING AS-GAS (DOOR, RH)	
	8	1	**367-0683**	1	SPRING AS-GAS (DOOR, LH)	
	9	1	**5P-4116**	8	WASHER-HARD (8.8X20.5X2-MM THK)	
	10	1	**7X-7729**	9	WASHER (11X25X3-MM THK)	
M	11	1	**8T-4137**	4	BOLT (M10X1.5X20-MM)	
M	12	1	**8T-4189**	6	BOLT (M8X1.25X20-MM)	
M	13	1	**8T-4195**	5	BOLT (M10X1.5X30-MM)	
	14	1	**8T-4226**	5	WASHER-PLATED (10.5X45X3-MM THK)	
M	15	1	**8T-4908**	7	BOLT (M8X1.25X25-MM)	

M - METRIC PART

387-4029 **EXTENSION GP-FENDER (*contd.*)** **i05297354**

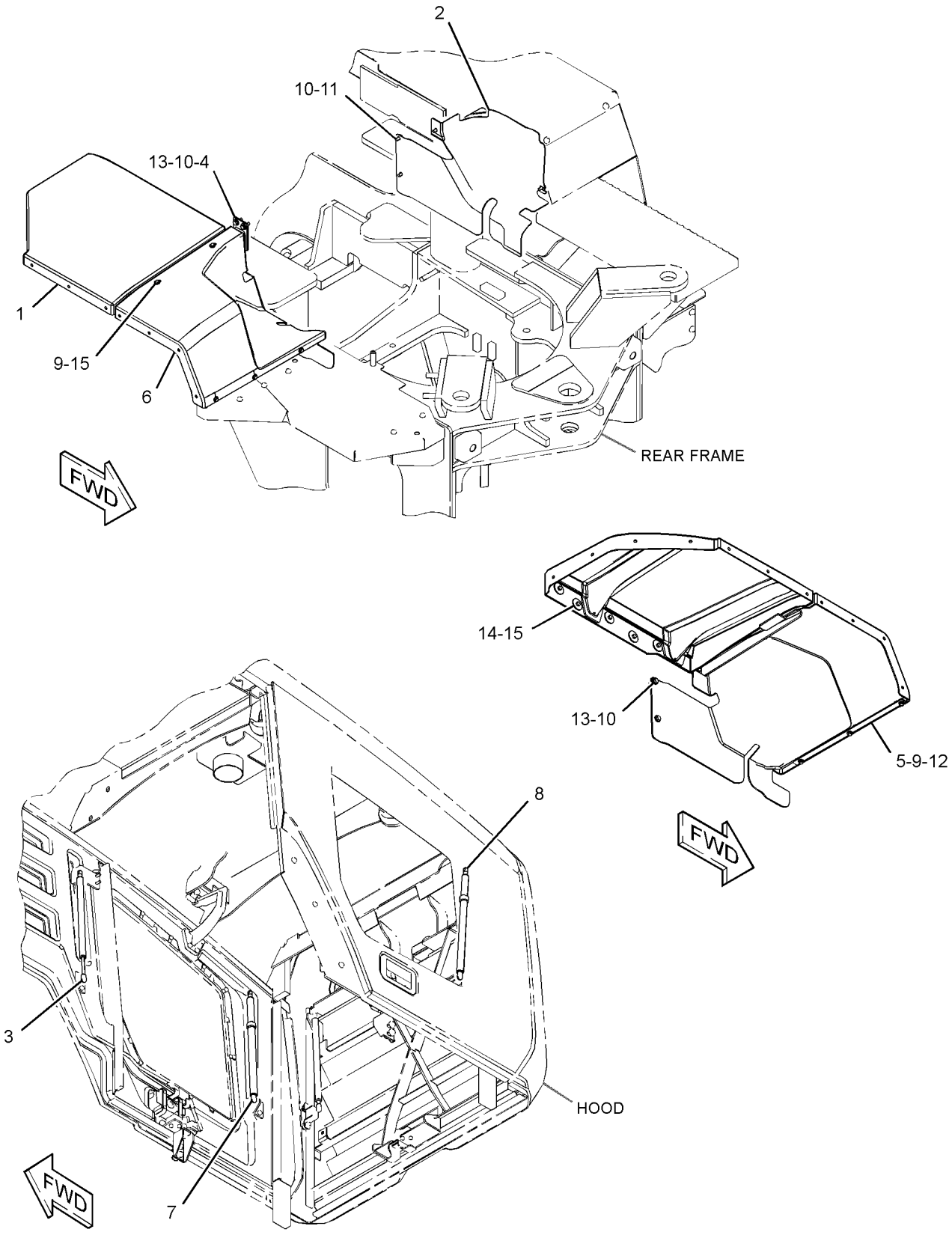

GRAPHIC #1 **<END>** g03370963

381-4398 FENDER AR–STANDARD

S/N: DYB1-UP
CANNOT BE USED WITH ANY OTHER FENDER AR AN ATTACHMENT

SMCS-7252 **i05296430**

NOTE	PART NUMBER	QTY	PART NAME 1 2 3 4 5 6 (PRODUCT LEVEL)	SEE PAGE
Y	*387-4029*	1	EXTENSION GP-FENDER (REAR)	273
Y	*339-6840*	1	FENDER GP-FRONT	276

Y - SEPARATE ILLUSTRATION

<END>

339-6840 FENDER GP-FRONT

S/N: DYB1-UP
PART OF 381-4398 FENDER AR
AN ATTACHMENT

SMCS-7252 **i05297385**

NOTE	REF NO	GRAPHIC REF	PART NUMBER	QTY	PART NAME 1 2 3 4 5 6 (PRODUCT LEVEL)	SEE PAGE
	1	1	**214-9564**	8	PLATE	
	2	1	**374-6280**	1	BRACKET AS	
	3	1	**374-6281**	1	BRACKET AS	
	4	1	**380-9519**	2	FENDER	
M	5	1	**7X-2534**	8	BOLT (M6X1X50-MM)	
	6	1	**7X-7729**	8	WASHER (11X25X3-MM THK)	
M	7	1	**8T-4136**	8	BOLT (M10X1.5X25-MM)	
	8	1	**9X-2038**	8	WASHER (7X19X2-MM THK)	

M - METRIC PART

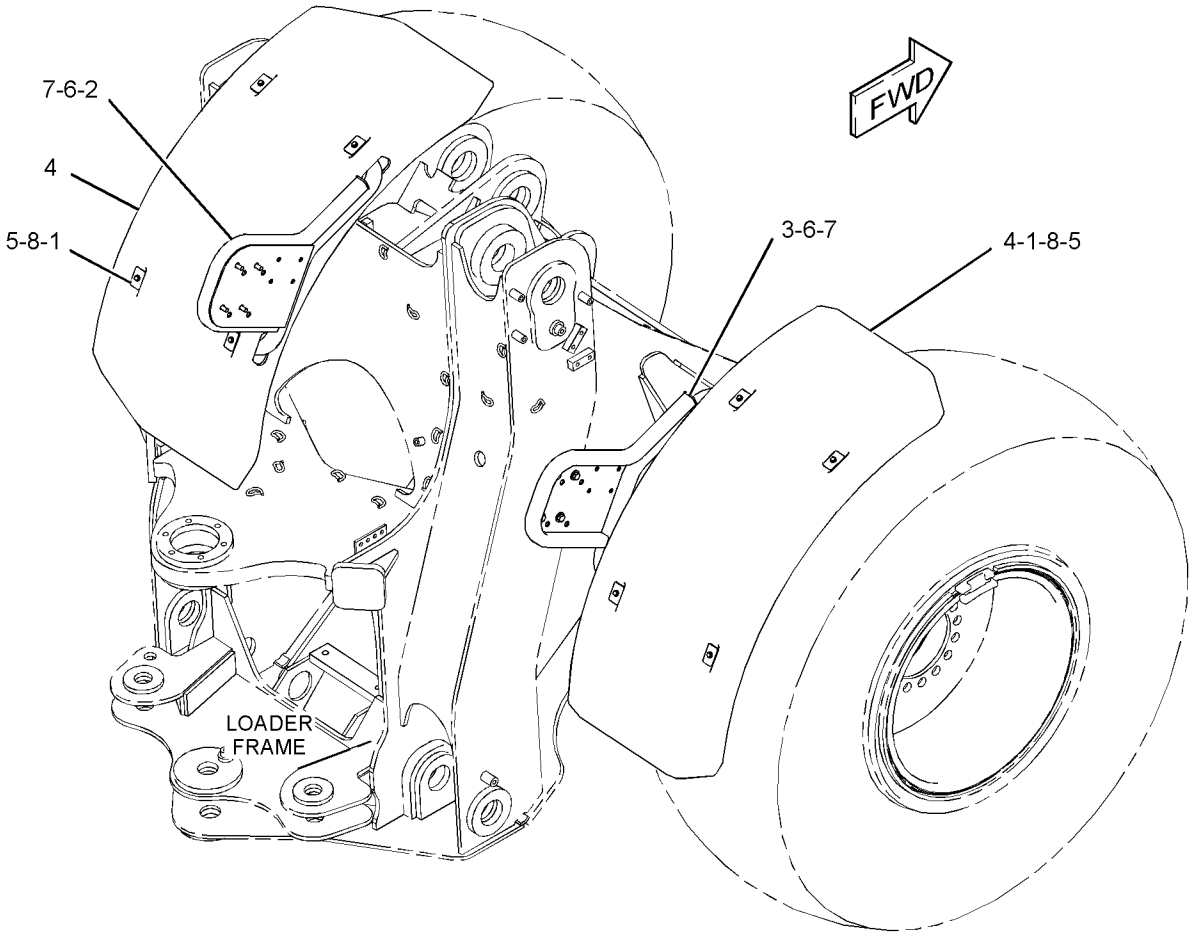

GRAPHIC #1 **<END>** g02764941

387-4030 FRAME GP-LOADER

S/N: DYB1-UP

PART OF 381-4385 CHASSIS AR

SMCS-7054 **i05309809**

NOTE	REF NO	GRAPHIC REF	PART NUMBER	QTY	PART NAME 1 2 3 4 5 6 (PRODUCT LEVEL)	SEE PAGE
	1	1	**387-4031**	1	FRAME AS-LOADER	
	2	1	**394-1731**	1	PLATE	
	3	1	**7X-7729**	6	WASHER (11X25X3-MM THK)	
M	4	1	**8T-4186**	6	BOLT (M10X1.5X40-MM)	

M - METRIC PART

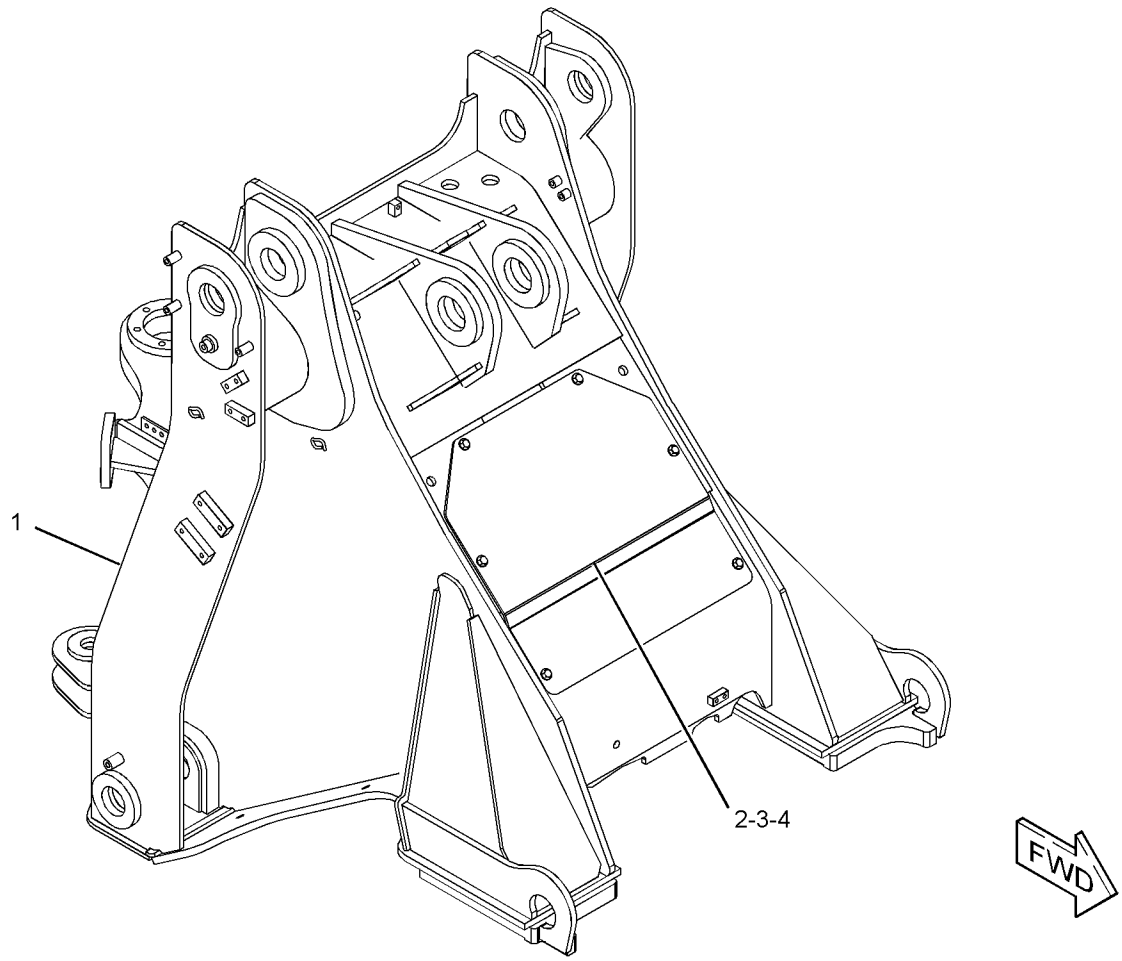

GRAPHIC #1 **<END>** g03380861

387-4055 FRAME GP-REAR

S/N: DYB1-UP

PART OF 381-4385 CHASSIS AR

SMCS-7051 **i05309808**

NOTE	REF NO	GRAPHIC REF	PART NUMBER	QTY	PART NAME 1 2 3 4 5 6 (PRODUCT LEVEL)	SEE PAGE
	1	1	**103-5796**	1	PIN-KEEPER	
	2	1	**112-0885**	2	PAD AS-RESILIENT	
	3	1	**132-2558**	1	PIN AS	
	4	1	**387-4056**	1	FRAME AS	
	5	1	**8T-4121**	2	WASHER-HARD (11X21X2.5-MM THK)	
M	6	1	**8T-4137**	2	BOLT (M10X1.5X20-MM)	

M - METRIC PART

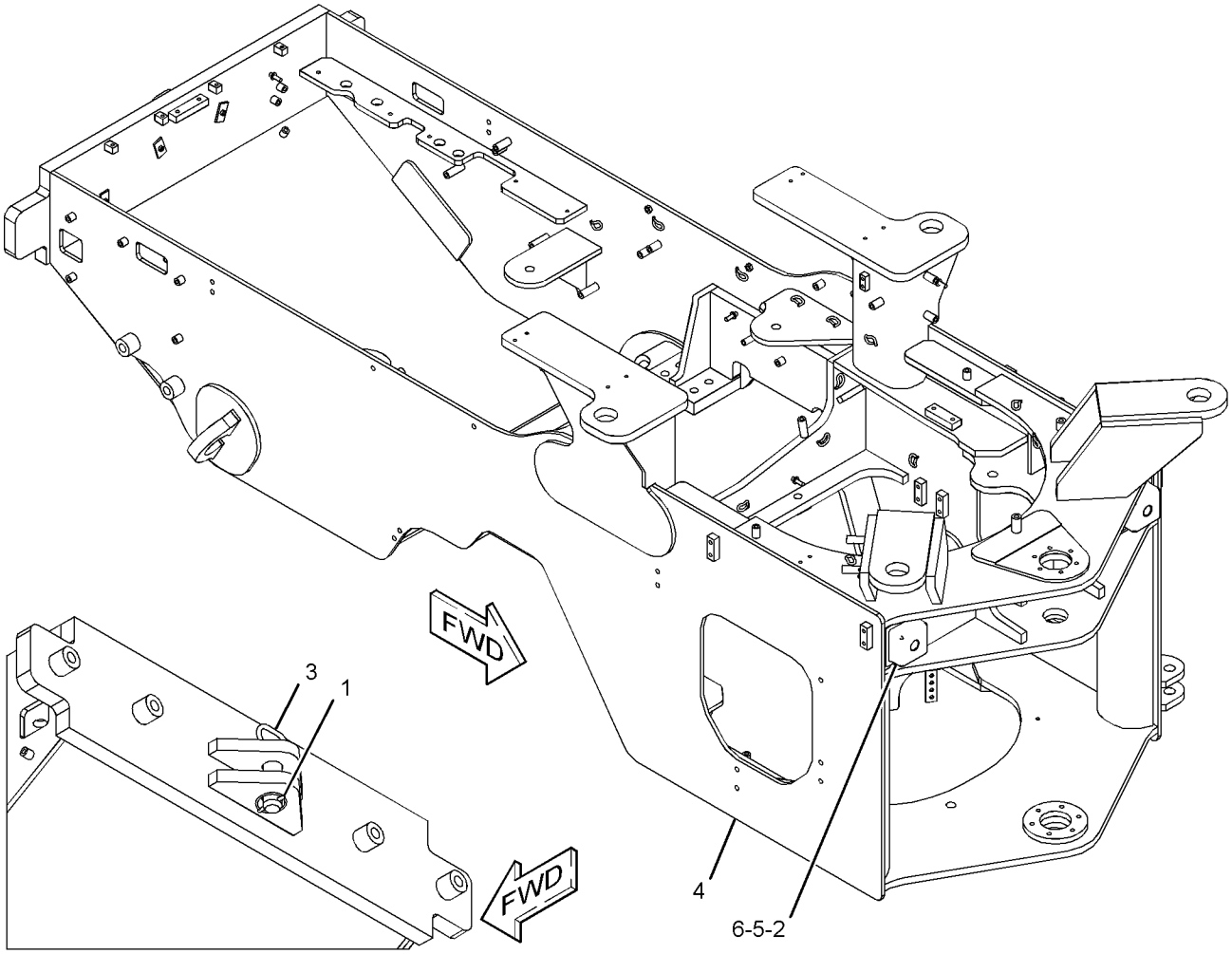

GRAPHIC #1 **<END>** g03379608

349-8163 GUARD GP-CRANKCASE

S/N: DYB1-UP

AN ATTACHMENT

SMCS-7151 **i05309451**

NOTE	REF NO	GRAPHIC REF	PART NUMBER	QTY	PART NAME 1 2 3 4 5 6 (PRODUCT LEVEL)	SEE PAGE
	1	1	**363-1934**	1	PLATE	
	2	1	**363-1950**	2	PLATE	
	3	1	**7X-7729**	8	WASHER (11X25X3-MM THK)	
M	4	1	**8T-4195**	8	BOLT (M10X1.5X30-MM)	

M - METRIC PART

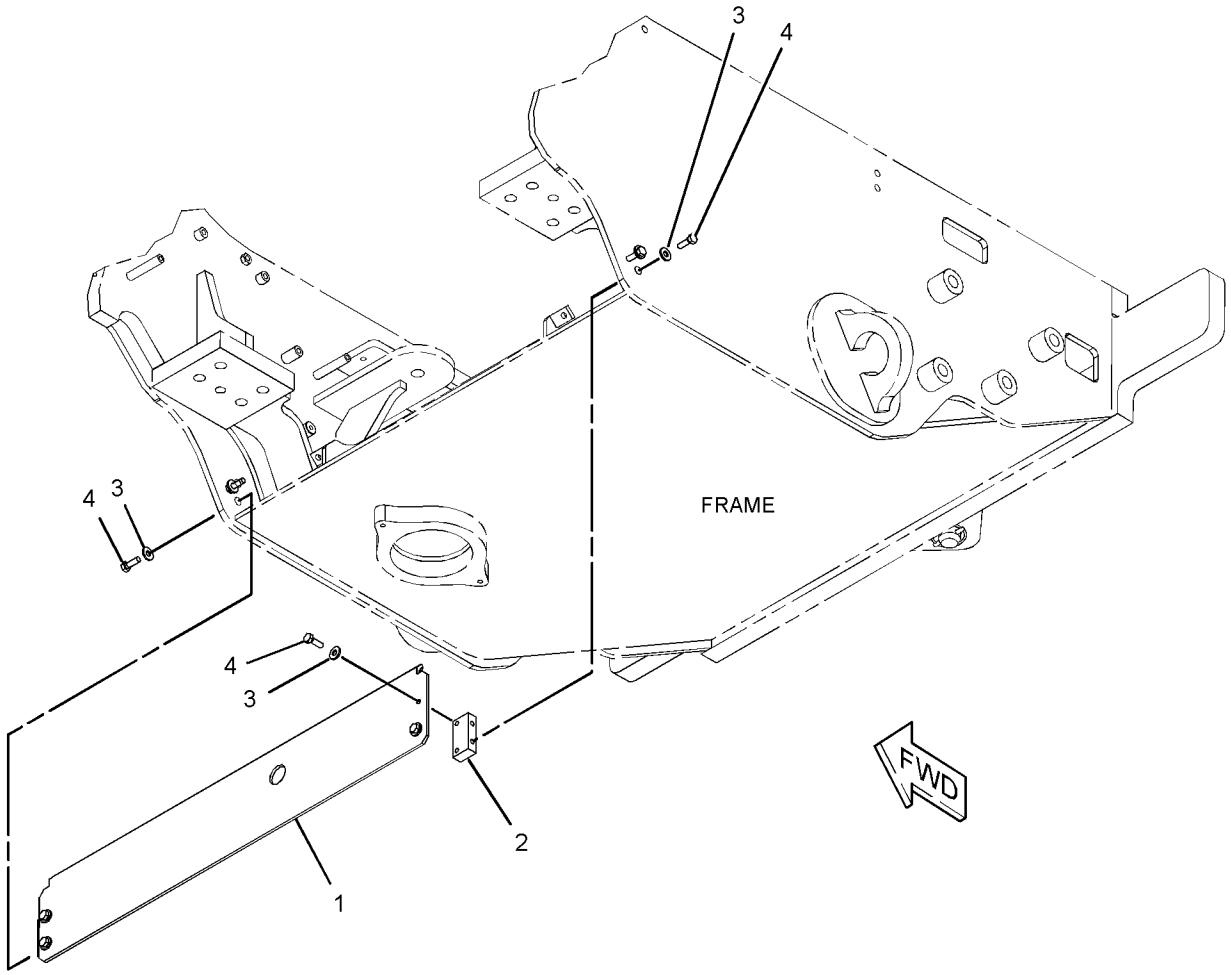

GRAPHIC #1 **<END>** g02753516

349-7940 GUARD GP-DRIVE SHAFT

S/N: DYB1-UP
AN ATTACHMENT

SMCS-7153 **i05309452**

NOTE	REF NO	GRAPHIC REF	PART NUMBER	QTY	PART NAME 1 2 3 4 5 6 (PRODUCT LEVEL)	SEE PAGE
	1	1	**349-7941**	1	PLATE AS	
	2	1	**366-2741**	1	PLATE	
	3	1	**366-2742**	1	PLATE	
	4	1	**7X-0578**	16	WASHER-HARD (10.2X32X2.5-MM THK)	
M	5	1	**8T-4133**	6	NUT (M10X1.5-THD)	
M	6	1	**8T-4186**	10	BOLT (M10X1.5X40-MM)	

M - METRIC PART

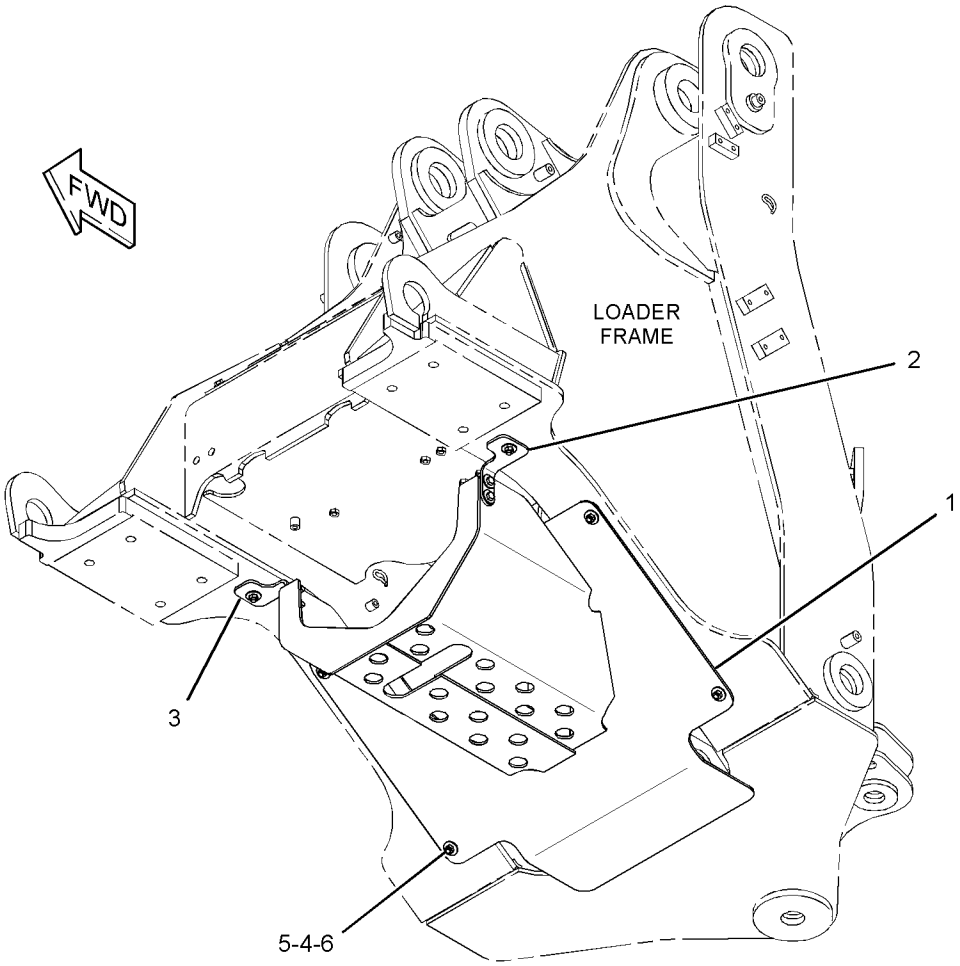

GRAPHIC #1 **<END>** g02750824

387-4025 GUARD GP-FRAME

S/N: DYB1-UP

PART OF 381-4385 CHASSIS AR

SMCS-7150 **i05296433**

NOTE	REF NO	GRAPHIC REF	PART NUMBER	QTY	PART NAME 1 2 3 4 5 6 (PRODUCT LEVEL)	SEE PAGE
	1	1	**387-4090**	1	PLATE	
M	2	1	**8T-4195**	4	BOLT (M10X1.5X30-MM)	
	3	1	**8T-4222**	4	WASHER-PLATED (11X32X2.5-MM THK)	

M - METRIC PART

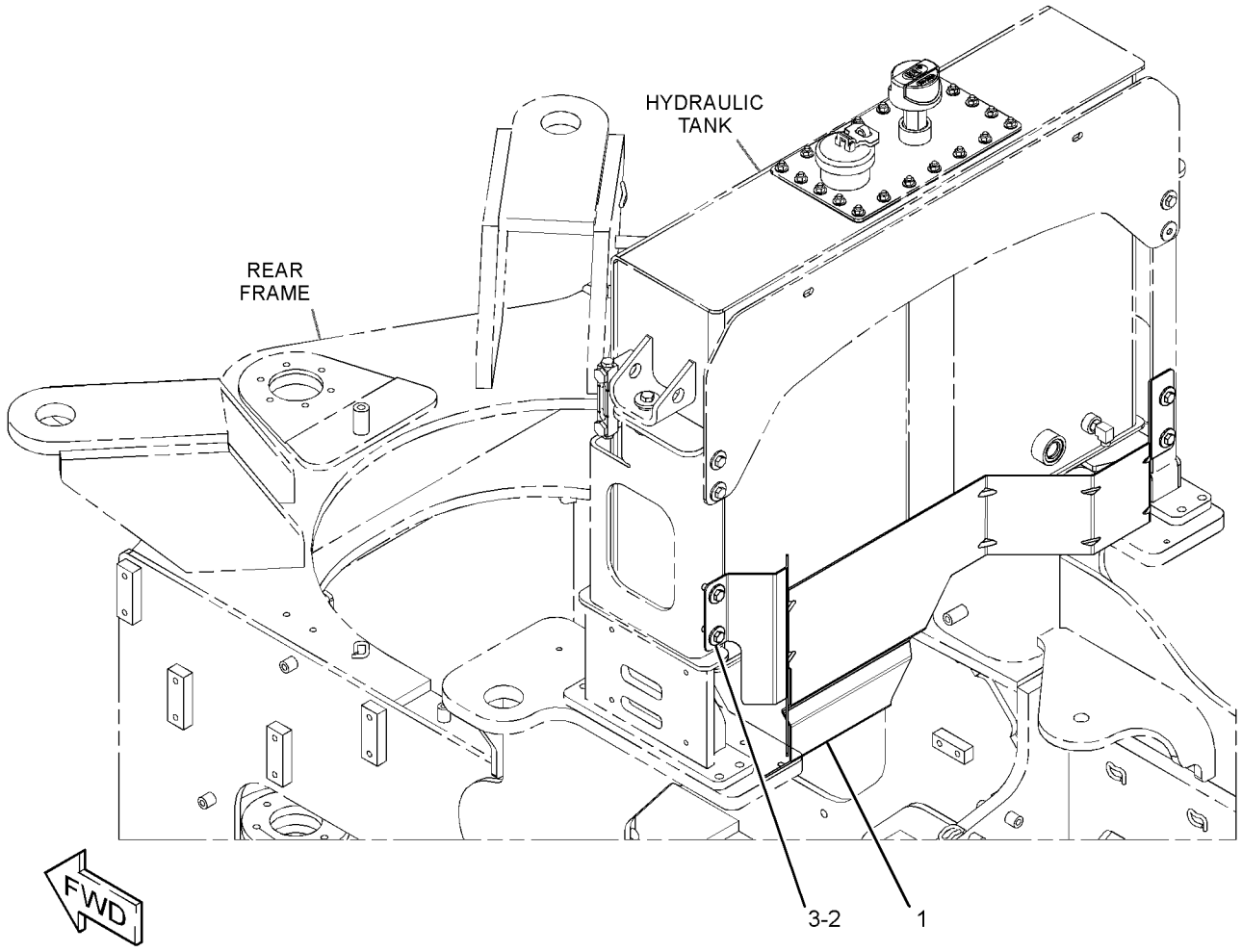

GRAPHIC #1 **<END>** g03363941

377-1530 GUARD GP-LIGHTING

S/N: DYB1-UP
AN ATTACHMENT

SMCS-715L **i05309470**

NOTE	REF NO	GRAPHIC REF	PART NUMBER	QTY	PART NAME 1 2 3 4 5 6 (PRODUCT LEVEL)	SEE PAGE
	1	1	**397-8605**	1	GUARD AS	
	2	1	**397-8606**	1	GUARD AS	
	3	1	**397-8607**	1	PLATE AS	
	4	1	**397-8608**	1	PLATE AS	
					(EACH PLATE AS INCLUDES)	
M		1	**159-9541**	5	NUT-WELD (M10X1.5-THD)	
	5	1	**193-9723**	2	WASHER (11X42X2.5-MM THK)	
	6	1	**8T-4121**	8	WASHER-HARD (11X21X2.5-MM THK)	
M	7	1	**8T-4136**	10	BOLT (M10X1.5X25-MM)	

M - METRIC PART

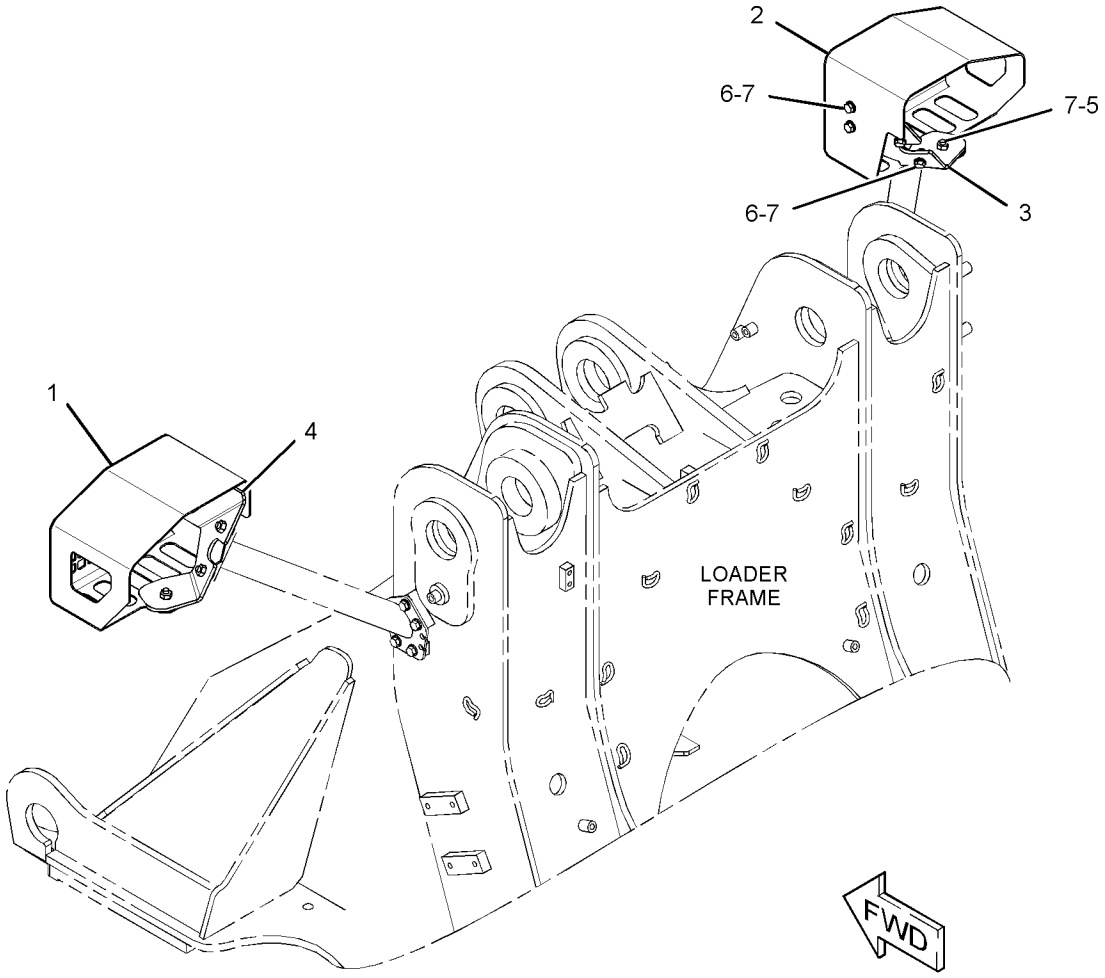

GRAPHIC #1 **<END>** g03377041

349-8165 GUARD GP-POWER TRAIN

S/N: DYB1-UP
AN ATTACHMENT

SMCS-7153 **i05309454**

NOTE	REF NO	GRAPHIC REF	PART NUMBER	QTY	PART NAME 1 2 3 4 5 6 (PRODUCT LEVEL)	SEE PAGE
	1	1	**7W-3447**	2	SPACER (10.2X19.05X10.2-MM THK)	
	2	1	**363-1936**	1	PLATE AS	
M		1	**159-9541**	4	NUT-WELD (M10X1.5-THD)	
	3	1	**363-1937**	2	SPACER (10.2X19.05X30.2-MM THK)	
	4	1	**377-7268**	1	PLATE	
	5	1	**377-7269**	1	PLATE	
M	6	1	**8T-4185**	2	BOLT (M10X1.5X50-MM)	
M	7	1	**8T-4195**	2	BOLT (M10X1.5X30-MM)	
M	8	1	**8T-4196**	4	BOLT (M10X1.5X35-MM)	
	9	1	**8T-4226**	8	WASHER-PLATED (10.5X45X3-MM THK)	

M - METRIC PART

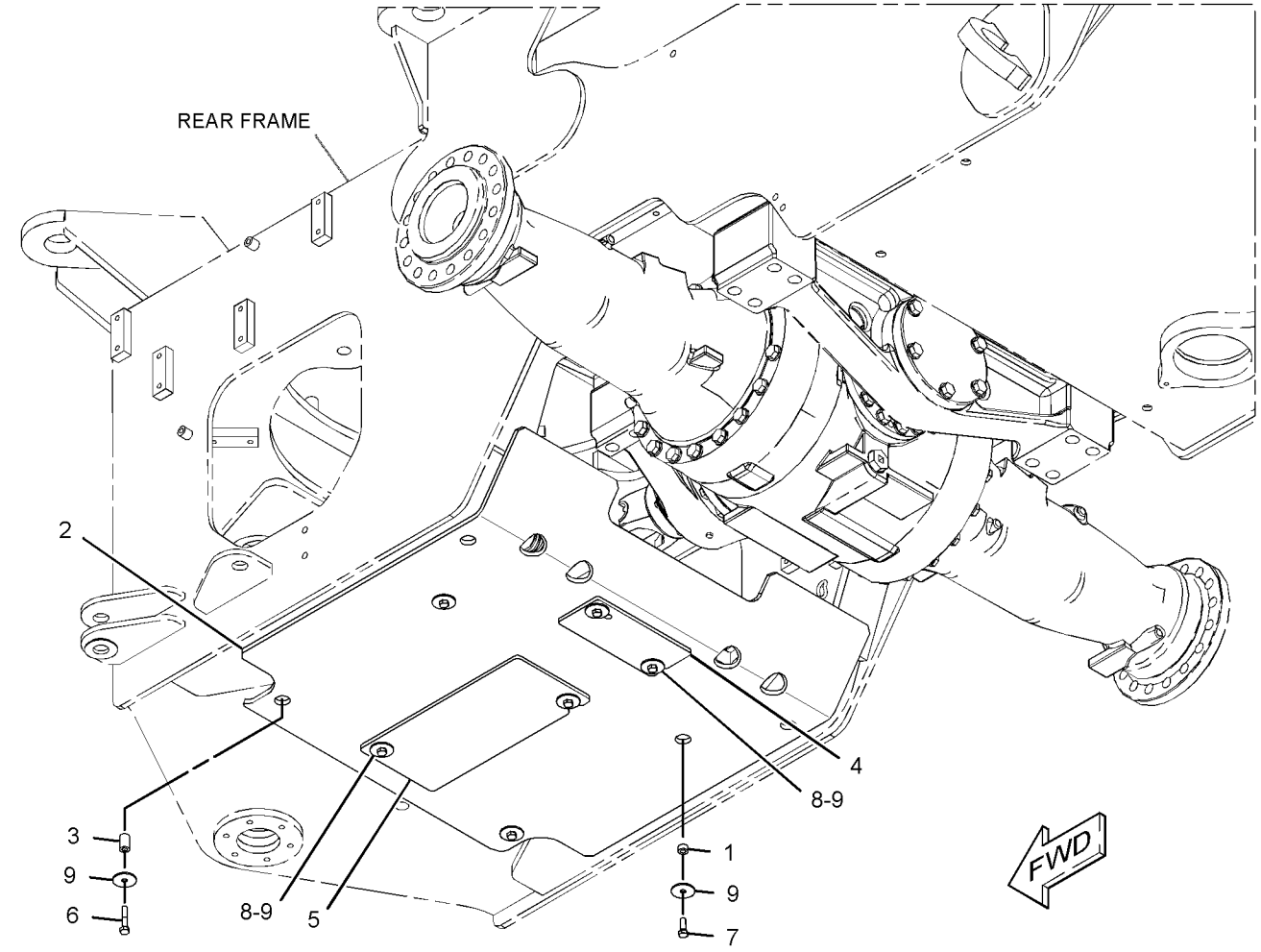

GRAPHIC #1 **<END>** g02760496

333-6824 GUARD GP-RADIATOR

S/N: DYB1-UP

PART OF 381-4385 CHASSIS AR

SMCS-7155 **i05307638**

NOTE	REF NO	GRAPHIC REF	PART NUMBER	QTY	PART NAME 1 2 3 4 5 6 (PRODUCT LEVEL)	SEE PAGE
	1	1,2	**264-3020**	6	SPACER	
	2	1,2	**301-5754**	4	HINGE AS	
	3	1,2	**333-6845**	2	PLATE AS	
	4	1	**333-6849**	1	PLATE AS	
	5	2	**339-6782**	1	PLATE AS	
	6	1	**339-6783**	1	PLATE AS	
	7	1	**339-6787**	1	PLATE AS	
	8	2	**339-6788**	1	PLATE AS	
	9	1	**339-6792**	1	PLATE AS	
	10	1,2	**349-8195**	2	COVER	
	11	1,2	**363-5908**	4	LATCH	
	12	1,2	**6C-3681**	16	RIVET-POP	
	13	1,2	**7D-1649**	6	WASHER-HARD (13.5X32X5-MM THK)	
	14	1,2	**7X-7729**	24	WASHER (11X25X3-MM THK)	
M	15	1,2	**8T-4184**	6	BOLT (M12X1.75X45-MM)	
M	16	1,2	**8T-4195**	24	BOLT (M10X1.5X30-MM)	
D	17	1,2	**5P-5649**		SEAL-BULK (0.8-M EACH)	
D	17A	1,2	**5P-5649**		SEAL-BULK (2-M EACH)	
D	18	1,2	**5P-5637**		SEAL (0.4-M EACH)	
D	18A	1,2	**5P-5637**		SEAL (2.6-M EACH)	
D	19	1,2	**5P-7211**		SEAL (3.7-M EACH)	
E	20	1	**118-0021**		SEAL (92-CM)	

D - ORDER BY THE METER
E - ORDER BY THE CENTIMETER
M - METRIC PART

333-6824 **GUARD GP-RADIATOR (*contd.*)** **i05307638**

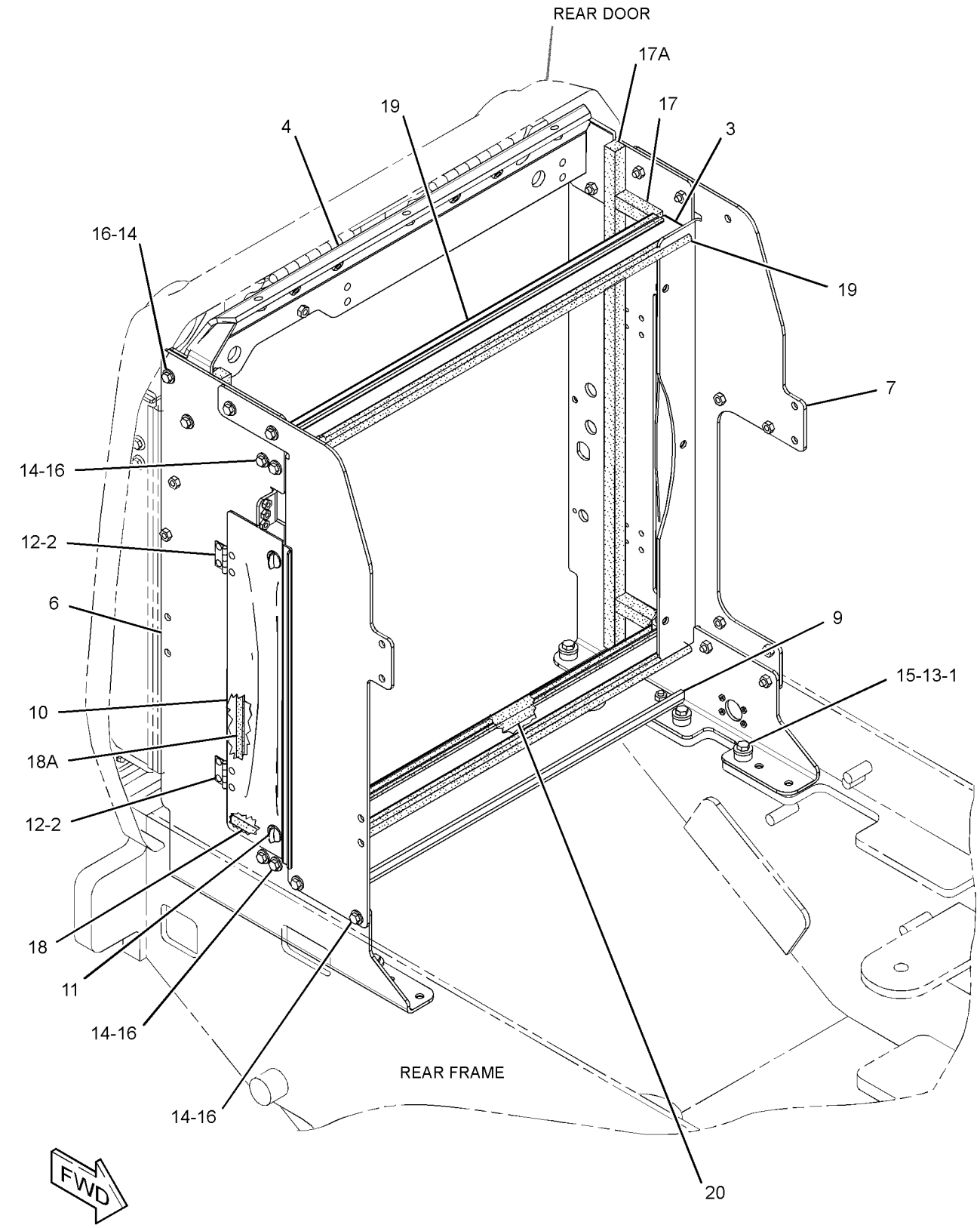

GRAPHIC #1 g02792937

333-6824 **GUARD GP-RADIATOR (*contd.*)** **i05307638**

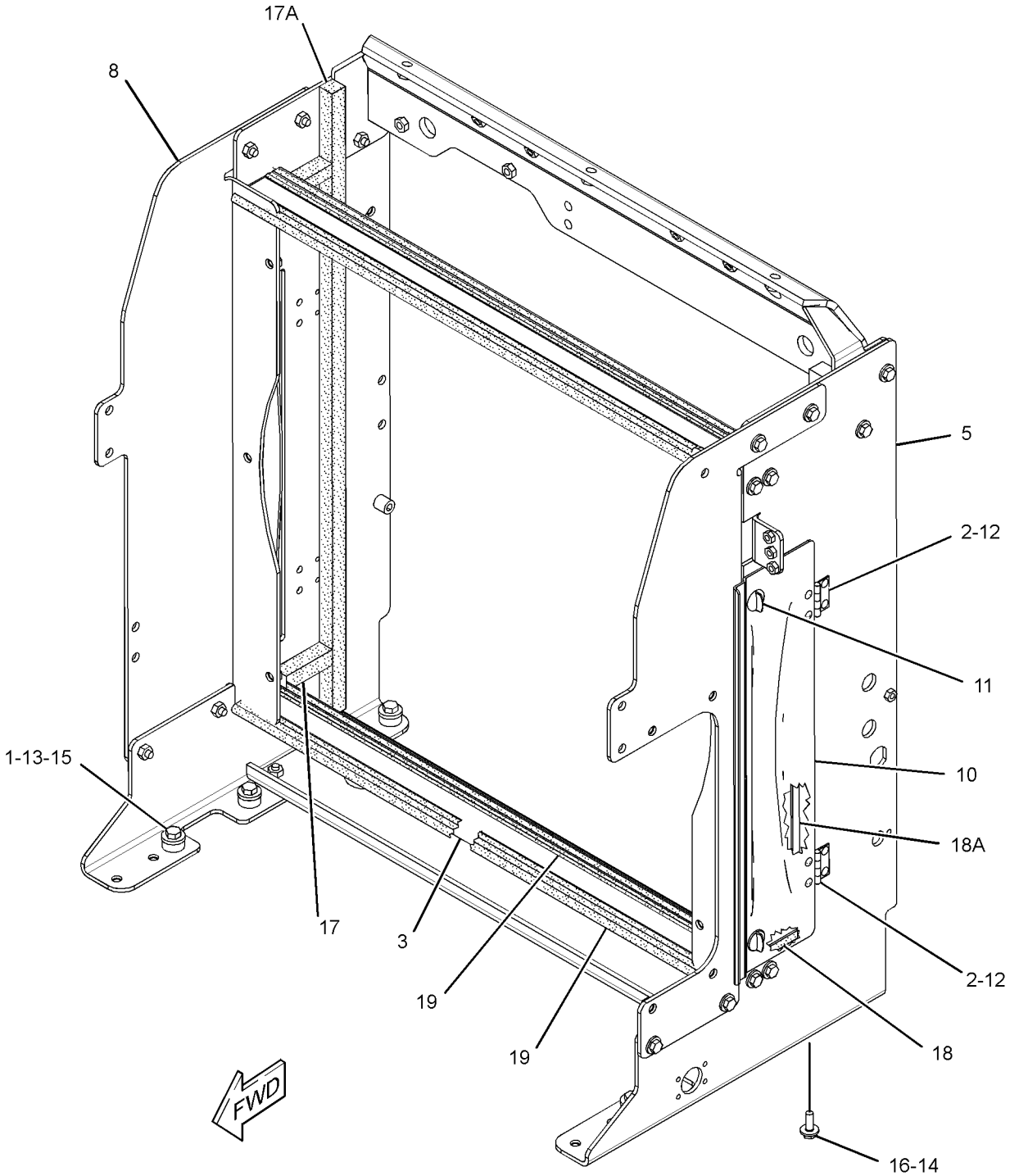

GRAPHIC #2 **<END>** g02793144

377-1540 GUARD GP-REAR

S/N: DYB1-UP

AN ATTACHMENT

SMCS-7187 **i05317185**

NOTE	REF NO	GRAPHIC REF	PART NUMBER	QTY	PART NAME 1 2 3 4 5 6 (PRODUCT LEVEL)	SEE PAGE
	1	1	**377-1541**	1	PLATE (LH)	
	2	1	**377-1548**	1	PLATE (RH)	
	3	1	**7D-1649**	2	WASHER-HARD (13.5X32X5-MM THK)	
M	4	1	**8T-4182**	2	BOLT (M10X1.5X45-MM)	
M	5	1	**8T-4192**	2	BOLT (M12X1.75X25-MM)	
B	6	1	**8T-4222**	4	WASHER-PLATED (11X32X2.5-MM THK)	
B	7	1	**8T-4226**	6	WASHER-PLATED (10.5X45X3-MM THK)	

B - USE AS REQUIRED
M - METRIC PART

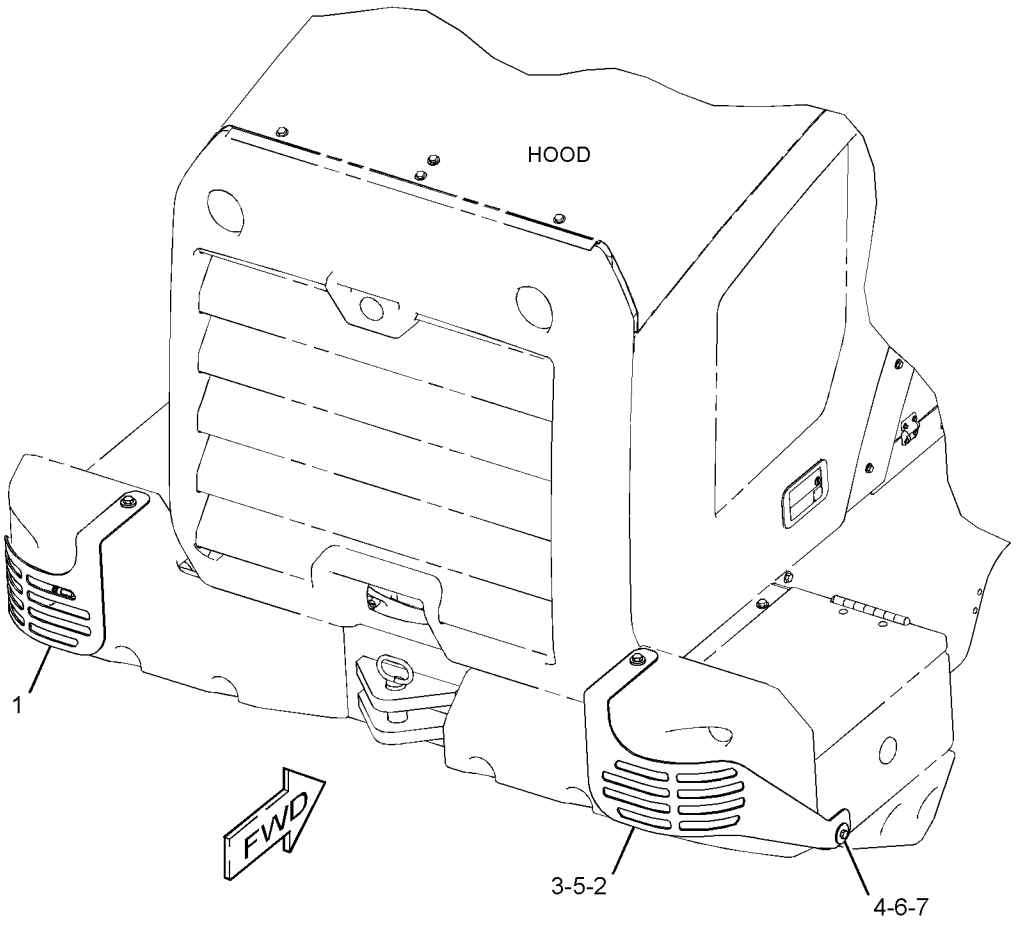

GRAPHIC #1 **<END>** g03380199

113-3790 HITCH GP-ARTICULATING

S/N: DYB1-UP

PART OF 381-4385 CHASSIS AR

SMCS-7057, 7100 **i03835809**

NOTE	REF NO	GRAPHIC REF	PART NUMBER	QTY	PART NAME 1 2 3 4 5 6 (PRODUCT LEVEL)	SEE PAGE
	1	1	**4K-7464**	1	SHIM PACK (INCLUDES 19-SHIMS)	
	2	1	**6I-8860**	2	CUP-BEARING	
	3	1	**6K-4185**	1	SPACER-SPECIAL	
	4	1	**6K-4191**	1	CAP-UPPER	
	5	1	**6V-1194**	2	CUP-BEARING	
	6	1	**6V-8795**	2	CONE-BEARING	
	7	1	**6W-8246**	1	SHIM PACK (INCLUDES 27-SHIMS)	
	8	1	**6I-8849**	2	CONE-BEARING (TAPERED ROLLER)	
	9	1	**8R-7091**	1	CAP	
	10	1	**8R-7092**	1	CAP	
	11	1	**8Y-7047**	1	PIN AS	
	12	1	**9V-6343**	1	CAP	
	13	1	**110-7628**	1	SHIM (2.97-MM THK)	
	14	1	**113-3793**	1	PLATE	
	15	1	**113-3791**	1	PIN AS	
	16	1	**113-3794**	2	SHIM PACK (INCLUDES 19-SHIMS)	
	17	1	**3B-8489**	2	FITTING-GREASE	
	18	1	**6K-4186**	2	SEAL-LIP TYPE	
	19	1	**7X-0618**	1	WASHER-HARD (13.5X40X5-MM THK)	
	20	1	**8T-4121**	6	WASHER-HARD (11X21X2.5-MM THK)	
M	21	1	**8T-4192**	1	BOLT (M12X1.75X25-MM)	
M	22	1	**8T-4172**	6	BOLT (M10X1.5X80-MM)	
M	23	1	**8T-4194**	10	BOLT (M12X1.75X50-MM)	
	24	1	**8T-4223**	16	WASHER-HARD (13.5X25.5X3-MM THK)	
M	25	1	**8T-5041**	6	BOLT (M12X1.75X120-MM)	
	26	1	**9H-2258**	2	SEAL-LIP TYPE	

M - METRIC PART

113-3790 **HITCH GP-ARTICULATING (*contd.*)** **i03835809**

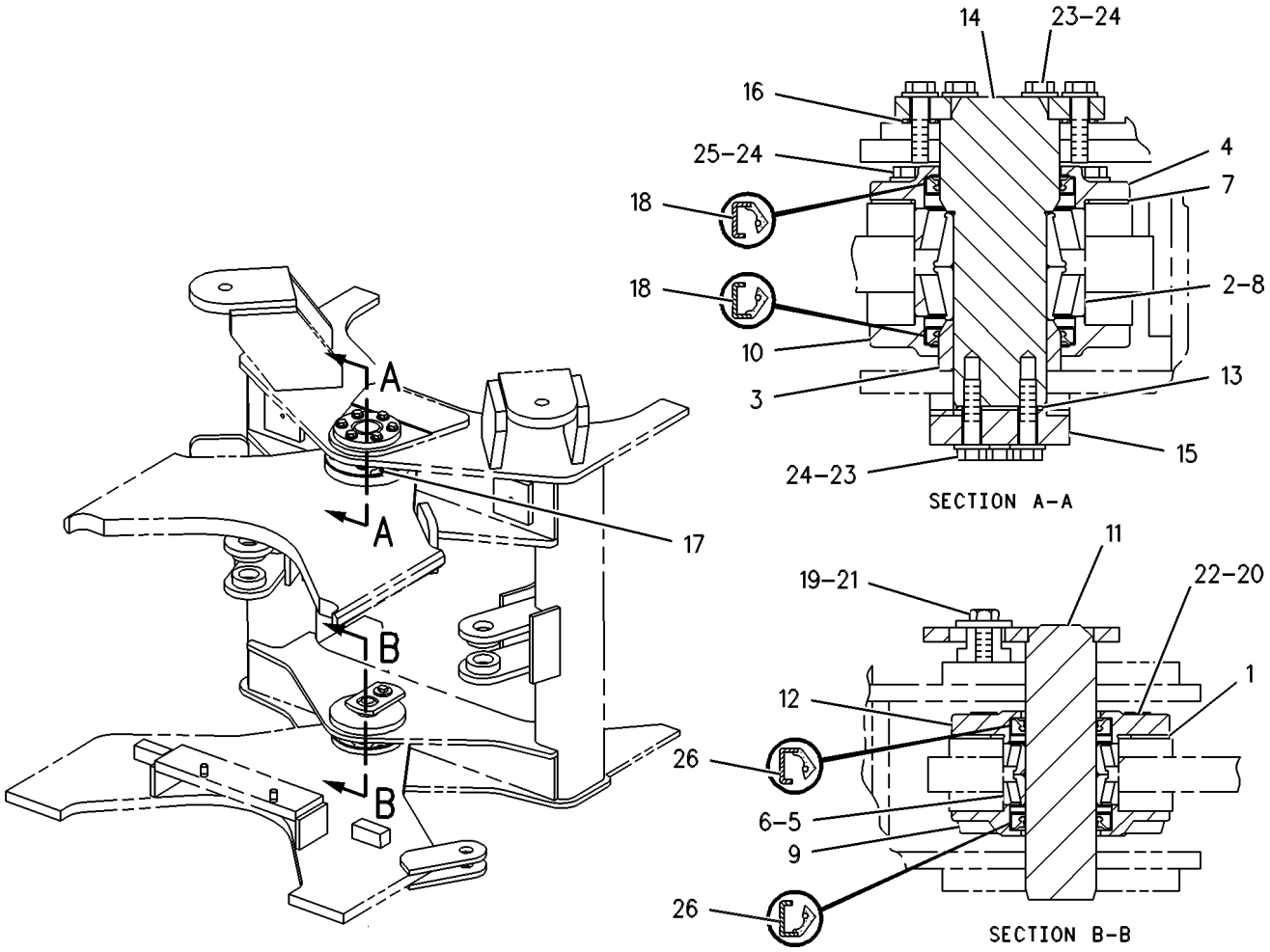

GRAPHIC #1 **<END>** g00131887

339-6800 HOOD GP-ENGINE

S/N: DYB1-UP

PART OF 381-4385 CHASSIS AR

SMCS-7251 **i05307691**

NOTE	REF NO	GRAPHIC REF	PART NUMBER	QTY	PART NAME 1 2 3 4 5 6 (PRODUCT LEVEL)	SEE PAGE
	1	1	**6V-7636**	6	PIN AS-SPRING	
	2	1	**8Y-6386**	2	SEAL-HANDLE	
	3	1	**101-9762**	2	MOUNT	
	4	1	*125-2086*	1	LOCK AS-CYLINDER	
J		1	**226-0294**	1	LOCK AS	
		1	**226-0339**	1	CAM	
	5	1	**130-1916**	6	STUD-BALL	
	6	1	**272-0002**	3	STRIKER AS	
	7	1	**333-6810**	1	HOOD AS-ENGINE	
	8	1	**339-6802**	1	DOOR AS (LH)	
	9	1	**339-6805**	1	DOOR AS (RH)	
	10	1	**341-9777**	1	BUSHING	
	11	1	**347-8062**	4	HINGE	
	12	1	**347-8077**	4	HINGE	
	13	1	**347-8083**	1	BRACKET	
	14	1	**347-8086**	1	PLATE AS	
	15	1	**347-8092**	1	PANEL AS	
	16	1	**347-8095**	1	GASKET	
	17	1	**349-7875**	2	SEAL	
	18	1	**349-7876**	2	SEAL	
	19	1	**349-7891**	1	BRACKET AS	
M		1	**159-9540**	3	NUT-WELD (M8X1.25-THD)	
	20	1	**349-7972**	1	PLATE AS	
M		1	**159-9541**	2	NUT-WELD (M10X1.5-THD)	
	21	1	**352-1212**	1	BRACKET AS	
M		1	**159-9540**	1	NUT-WELD (M8X1.25-THD)	
	22	1	**354-3321**	2	PLATE	
	23	1	**355-1157**	2	SCREEN	
	24	1	**355-3131**	1	PLATE	
	25	1	**356-5630**	2	BRACKET AS	
					(EACH INCLUDES)	
M		1	**159-9540**	1	NUT-WELD (M8X1.25-THD)	
	26	1	**356-7550**	3	LATCH AS	
	27	1	**356-7552**	1	LINK AS	
		1	**6V-8185**	1	NUT (1/4-20-THD)	
		1	**108-5471**	1	CLEVIS	
	28	1	**356-7592**	1	PLATE	
	29	1	**359-4642**	2	BRACKET AS	
	30	1	**359-7164**	2	PLATE AS	
					(EACH INCLUDES)	
M		1	**159-9541**	2	NUT-WELD (M10X1.5-THD)	
	31	1	**360-1633**	3	PLATE AS	
					(EACH INCLUDES)	
M		1	**165-8719**	1	NUT-WELD (M12X1.75-THD)	
	32	1	**363-0251**	4	BRACKET	
J	33	1	**363-5907**	2	HANDLE AS	
					(EACH INCLUDES)	
		1	**8Y-4501**	1	SPRING-HANDLE	
	34	1	**366-8155**	2	LINK-CONNECTING	
	35	1	**387-4027**	1	SEAL	
M	36	1	**131-3540**	4	LOCKNUT (M8X1.25-THD)	
	37	1	**311-8365**	2	WASHER-HARD	
M	38	1	**5C-9553**	24	BOLT (M6X1X16-MM)	
	39	1	**5P-4116**	10	WASHER-HARD (8.8X20.5X2-MM THK)	
M	40	1	**6V-7357**	12	BOLT (M6X1X25-MM)	
	41	1	**7X-0579**	2	WASHER-HARD (8.8X25.5X2-MM THK)	
M	42	1	**7X-2537**	16	BOLT (M8X1.25X35-MM)	
M	43	1	**7X-2538**	4	BOLT (M8X1.25X100-MM)	

339-6800 **HOOD GP-ENGINE (*contd.*)** **i05307691**

NOTE	REF NO	GRAPHIC REF	PART NUMBER	QTY	PART NAME 1 2 3 4 5 6 (PRODUCT LEVEL)	SEE PAGE
	44	1	**7X-7729**	19	WASHER (11X25X3-MM THK)	
	45	1	**8T-4121**	8	WASHER-HARD (11X21X2.5-MM THK)	
M	46	1	**8T-4136**	12	BOLT (M10X1.5X25-MM)	
M	47	1	**8T-4180**	8	SCREW-MACHINE (M5X0.8X20-MM)	
M	48	1	**8T-4195**	5	BOLT (M10X1.5X30-MM)	
M	49	1	**8T-4196**	10	BOLT (M10X1.5X35-MM)	
	50	1	**8T-4205**	22	WASHER-HARD (7.2X14.5X2-MM THK)	
	51	1	**8T-4224**	40	WASHER-HARD (8.8X16X2-MM THK)	
M	52	1	**8T-4908**	20	BOLT (M8X1.25X25-MM)	
M	53	1	**8T-7547**	2	BOLT (M8X1.25X30-MM)	
	54	1	**9X-8256**	14	WASHER (6.6X12X2-MM THK)	
D	55	1	**5P-5637**		SEAL (0.1-M)	
D	55A	1	**5P-5637**		SEAL (0.9-M)	
D	56	1	**5P-7211**		SEAL (1.7-M)	
D	56A	1	**5P-7211**		SEAL (0.9-M EACH)	
D	56B	1	**5P-7211**		SEAL (0.8-M EACH)	
D	56C	1	**5P-7211**		SEAL (0.2-M)	
D	56D	1	**5P-7211**		SEAL (1.1-M)	
D	56E	1	**5P-7211**		SEAL (0.6-M)	
D	56F	1	**5P-7211**		SEAL (0.3-M)	

D - ORDER BY THE METER
J - REQUIRES CORPORATE KEY
M - METRIC PART

339-6800 **HOOD GP-ENGINE (*contd.*)** **i05307691**

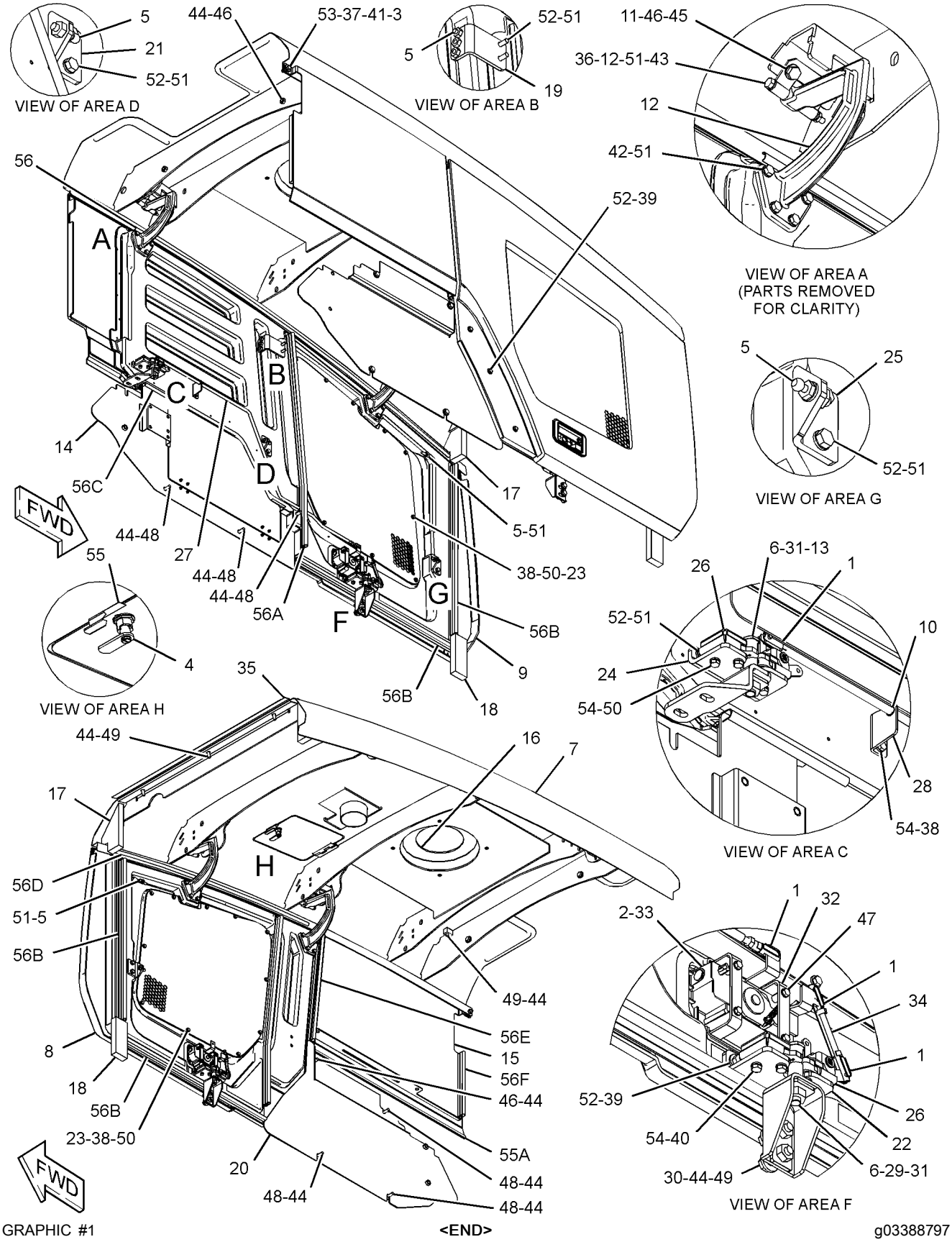

GRAPHIC #1 **<END>** g03388797

339-6747 LADDER GP

S/N: DYB1-UP

PART OF 381-4385 CHASSIS AR

SMCS-7254 **i05307669**

NOTE	REF NO	GRAPHIC REF	PART NUMBER	QTY	PART NAME 1 2 3 4 5 6 (PRODUCT LEVEL)	SEE PAGE
	1	1	**308-6660**	3	STEP	
	2	1	**333-6828**	4	PLATE	
	3	1	**339-6736**	1	PLATE AS	
M		1	**159-9541**	3	NUT-WELD (M10X1.5-THD)	
	4	1	**339-6737**	1	STEP AS	
M		1	**159-9541**	2	NUT-WELD (M10X1.5-THD)	
	5	1	**339-6739**	1	PLATE AS	
	6	1	**339-6744**	1	PLATE AS	
	7	1	**339-6745**	1	BRACKET AS	
	8	1	**339-6746**	2	SUPPORT-STEP (RUBBER)	
	9	1	**339-6749**	1	PLATE AS	
	10	1	**387-4092**	1	PLATFORM AS	
	11	1	**349-7901**	8	SPACER	
	12	1	**349-8021**	1	PLATE AS	
	13	1	**349-8022**	1	PLATE AS	
	14	1	**349-8187**	1	PLATE AS	
M	15	1	**099-3649**	8	BOLT (M8X1.25X40-MM)	
M	16	1	**5C-7261**	16	NUT (M8X1.25-THD)	
	17	1	**5P-4116**	32	WASHER-HARD (8.8X20.5X2-MM THK)	
	18	1	**7X-7729**	30	WASHER (11X25X3-MM THK)	
	19	1	**8T-4121**	6	WASHER-HARD (11X21X2.5-MM THK)	
M	20	1	**8T-4136**	14	BOLT (M10X1.5X25-MM)	
M	21	1	**8T-4137**	4	BOLT (M10X1.5X20-MM)	
M	22	1	**8T-4195**	14	BOLT (M10X1.5X30-MM)	
M	23	1	**8T-4196**	4	BOLT (M10X1.5X35-MM)	
M	24	1	**8T-4908**	8	BOLT (M8X1.25X25-MM)	

M - METRIC PART

339-6747 **LADDER GP (*contd.*)** **i05307669**

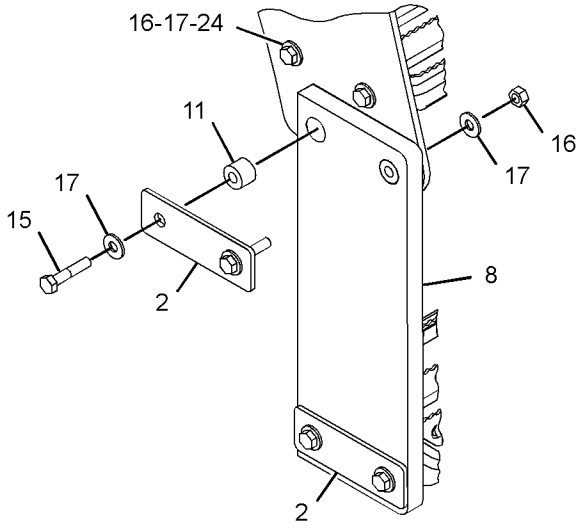

VIEW OF AREA B
(EXPLODED)

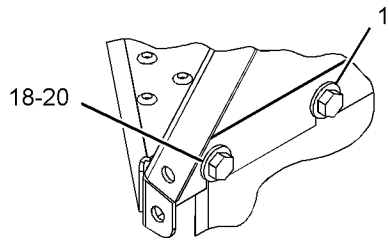

VIEW OF AREA A 90°

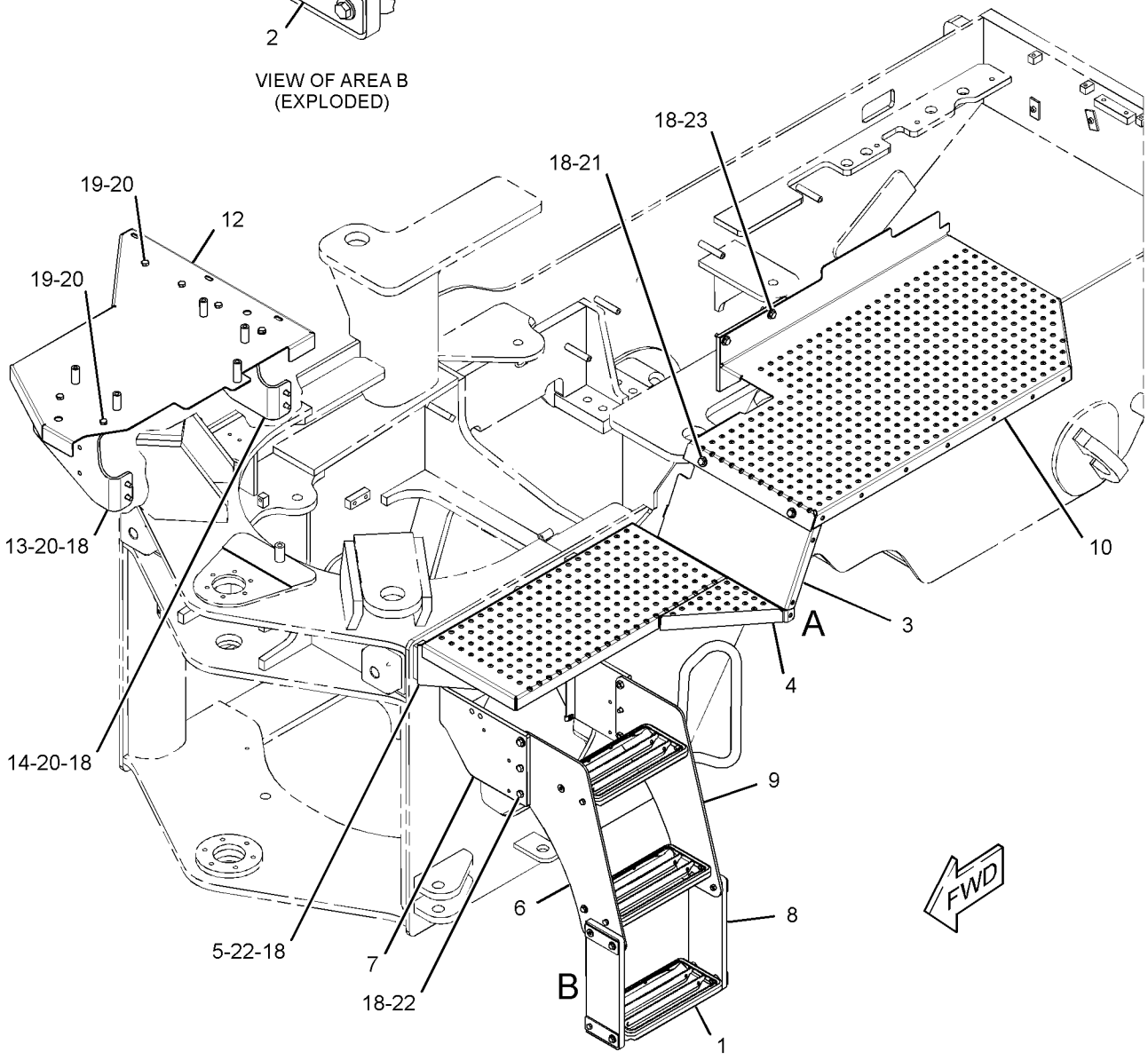

GRAPHIC #1 **<END>** g03377064

333-6944 LINES GP-GREASE

S/N: DYB1-UP

PART OF 381-4385 CHASSIS AR

SMCS-7510 **i05307640**

NOTE	REF NO	GRAPHIC REF	PART NUMBER	QTY	PART NAME 1 2 3 4 5 6 (PRODUCT LEVEL)	SEE PAGE
	1	1	**7K-1181**	12	STRAP-CABLE	
	2	1	**349-7864**	1	HOSE AS	
	3	1	**349-7865**	1	HOSE AS	
	4	1	**349-7866**	1	HOSE AS	
	5	1	**349-7867**	1	HOSE AS	
	6	1	**349-7868**	1	HOSE AS	
	7	1	**349-7870**	1	HOSE AS	
	8	1	**358-2957**	1	HOSE AS	
	9	1	**362-1628**	1	HOSE AS	
	10	1	**362-1629**	1	HOSE AS	
	11	1	**3B-6552**	2	ELBOW-PIPE	
	12	1	**4F-2861**	3	FITTING	
	13	1	**3B-7896**	1	ELBOW-STREET	
	14	1	**8B-4884**	3	ELBOW	

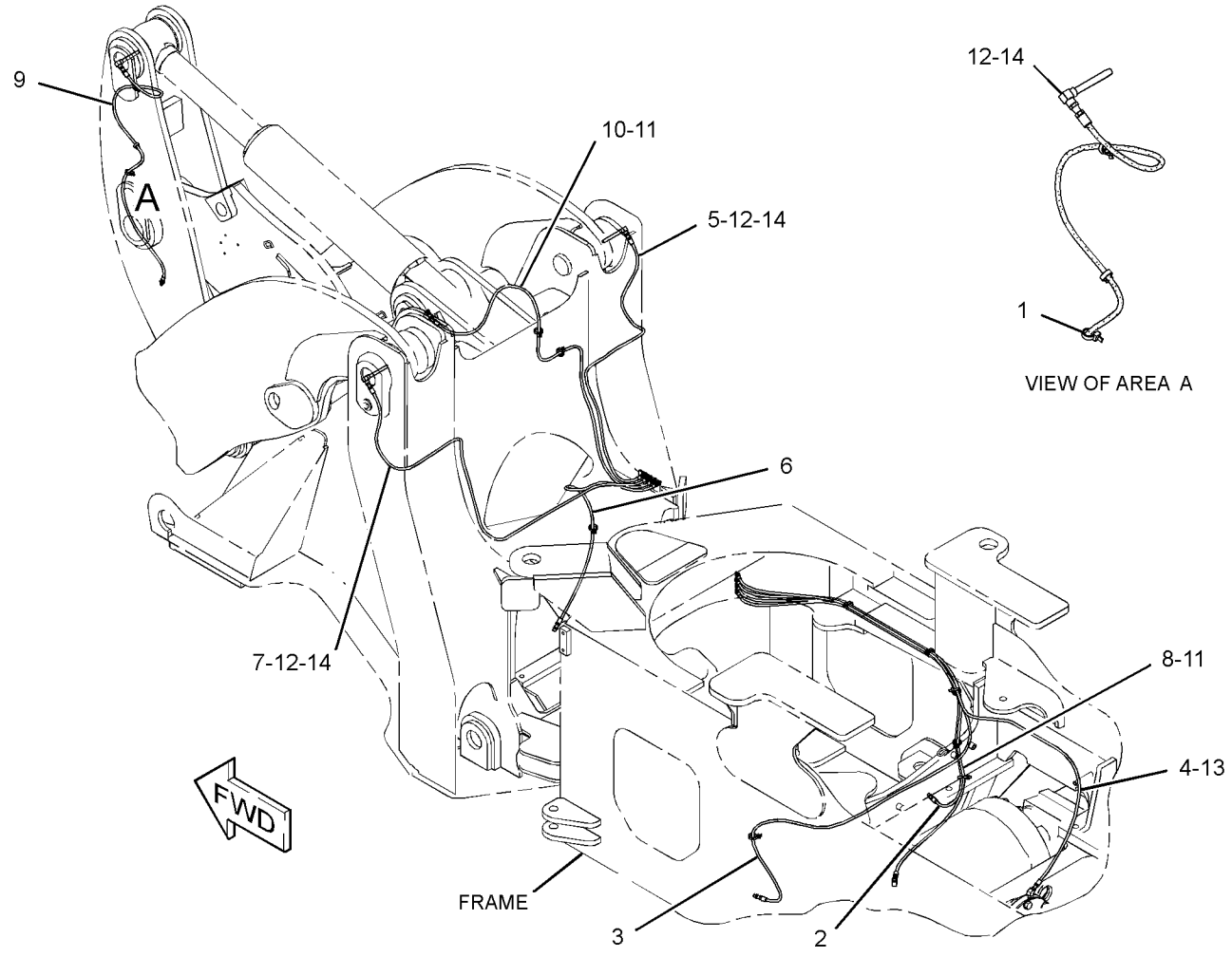

GRAPHIC #1 **<END>** g02792195

349-7860 LINK GP-STEERING FRAME LOCK

S/N: DYB1-UP

PART OF 381-4385 CHASSIS AR

SMCS-7506 **i05307690**

NOTE	REF NO	GRAPHIC REF	PART NUMBER	QTY	PART NAME 1 2 3 4 5 6 (PRODUCT LEVEL)	SEE PAGE
	1	1	**5P-8837**	2	LOCK PIN	
	2	1	**346-1556**	1	LINK AS	
	3	1	**349-7858**	2	PIN	

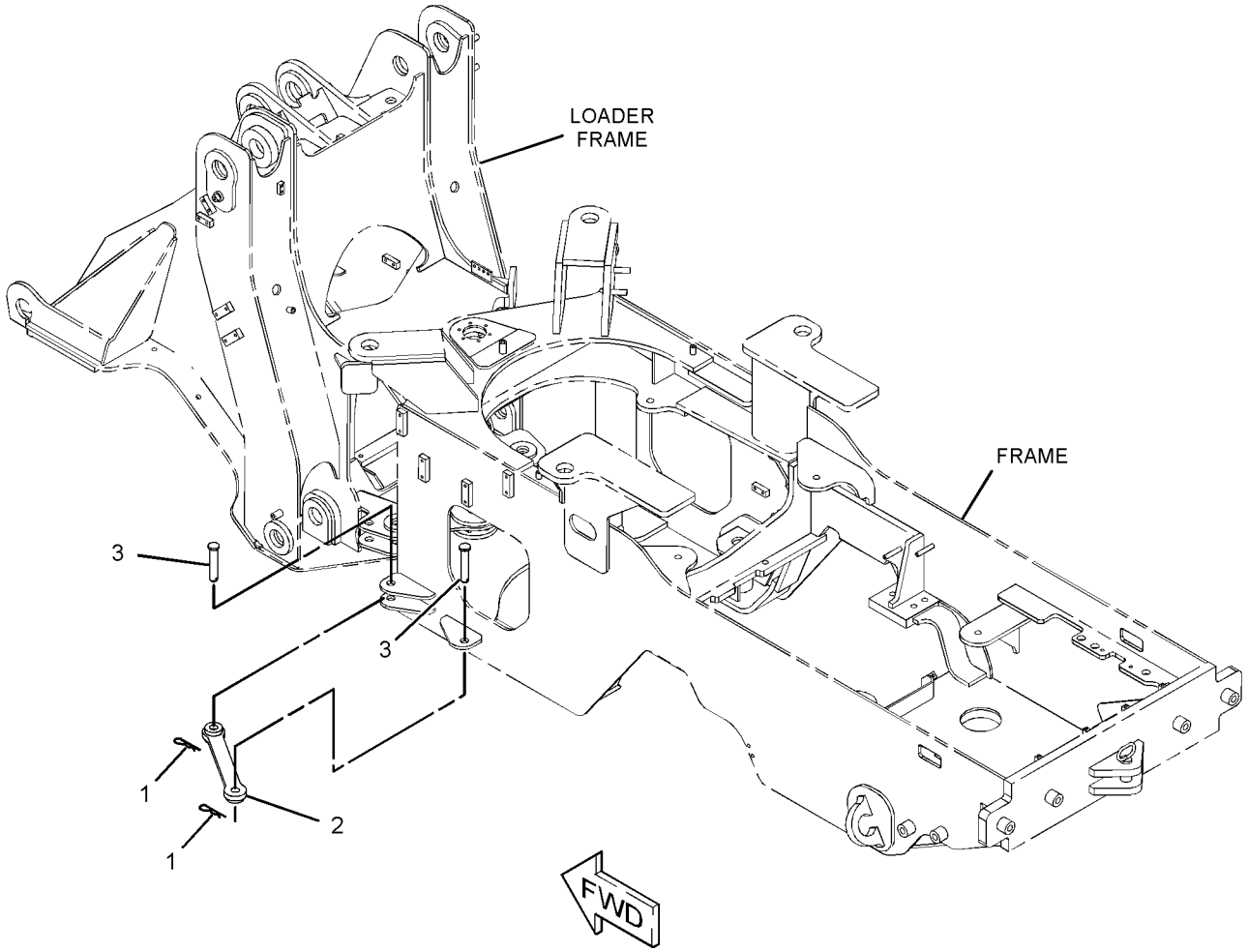

GRAPHIC #1 **<END>** g02792748

333-6907 MOUNTING GP-BRACKET

S/N: DYB1-UP

PART OF 387-4099 HYDRAULIC AR-2 VALVE, 387-4199 HYDRAULIC AR-3 VALVE, 419-8849 HYDRAULIC AR-4 VALVE

AN ATTACHMENT

SMCS-7050 **i05312249**

NOTE	REF NO	GRAPHIC REF	PART NUMBER	QTY	PART NAME 1 2 3 4 5 6 (PRODUCT LEVEL)	SEE PAGE
	1	1	**354-3085**	1	PLATE AS	
M		1	**159-9541**	2	NUT-WELD (M10X1.5-THD)	
	2	1	**7X-7729**	2	WASHER (11X25X3-MM THK)	
M	3	1	**8T-4136**	4	BOLT (M10X1.5X25-MM)	
	4	1	**389-7287**	1	PLATE	
	5	1	**8T-4121**	2	WASHER-HARD (11X21X2.5-MM THK)	

M - METRIC PART

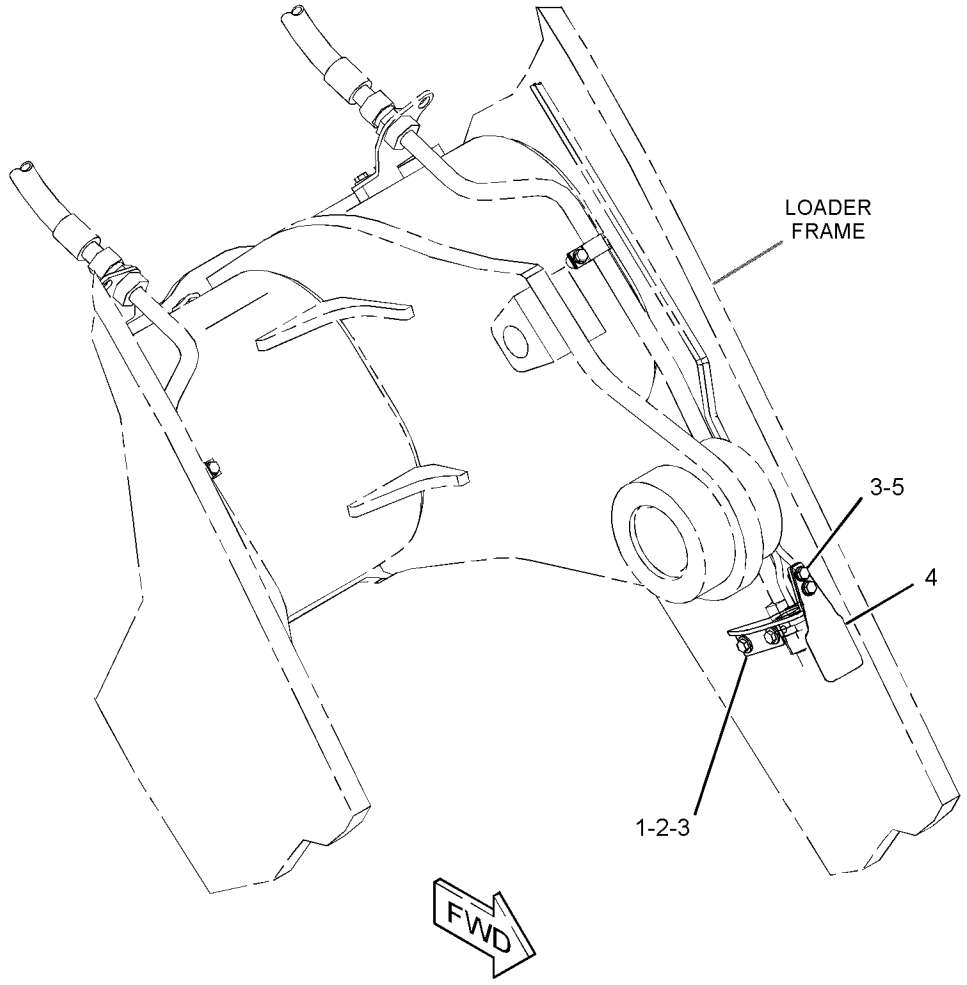

GRAPHIC #1 **<END>** g03141537

381-4349 PLATE GP-MOUNTING

S/N: DYB1-UP

PART OF 381-4385 CHASSIS AR

SMCS-7050 **i05296429**

NOTE	REF NO	GRAPHIC REF	PART NUMBER	QTY	PART NAME 1 2 3 4 5 6 (PRODUCT LEVEL)	SEE PAGE
	1	1	**374-5831**	1	PLATE AS	
M		1	**159-9540**	6	NUT-WELD (M8X1.25-THD)	
M		1	**159-9541**	12	NUT-WELD (M10X1.5-THD)	
	2	1	**374-5835**	1	PLATE AS	
M		1	**159-9540**	6	NUT-WELD (M8X1.25-THD)	
	3	1	**374-5838**	1	PLATE AS	
M		1	**159-9541**	6	NUT-WELD (M10X1.5-THD)	
	4	1	**374-5839**	1	PLATE AS	
M		1	**159-9541**	2	NUT-WELD (M10X1.5-THD)	
	5	1	**381-4475**	1	PLATE AS	
M		1	**159-9541**	3	NUT-WELD (M10X1.5-THD)	
	6	1	**389-1026**	1	PLATE AS	
M		1	**159-9541**	11	NUT-WELD (M10X1.5-THD)	
	7	1	**389-1027**	1	PLATE AS	
M		1	**159-9541**	5	NUT-WELD (M10X1.5-THD)	
	8	1	**417-3447**	1	COVER	
	9	1	**5P-4116**	4	WASHER-HARD (8.8X20.5X2-MM THK)	
	10	1	**7X-7729**	24	WASHER (11X25X3-MM THK)	
M	11	1	**8T-4136**	10	BOLT (M10X1.5X25-MM)	
M	12	1	**8T-4195**	14	BOLT (M10X1.5X30-MM)	
M	13	1	**8T-4908**	4	BOLT (M8X1.25X25-MM)	

M - METRIC PART

381-4349 **PLATE GP-MOUNTING (*contd.*)** **i05296429**

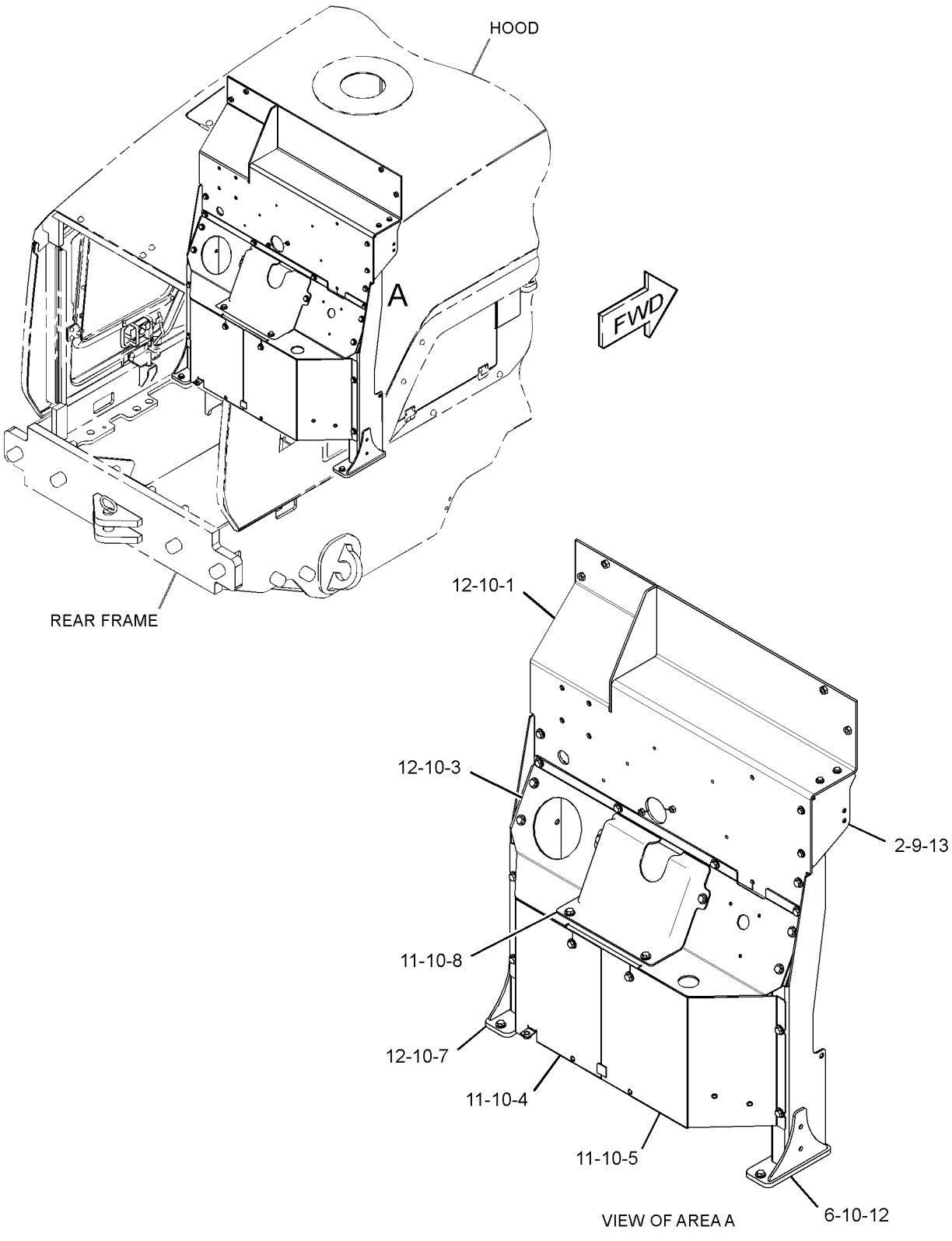

GRAPHIC #1 **<END>** g03371216

360-9207 ACCUMULATOR GP-BRAKE–CHARGED

S/N: DYB1-UP

FIELD REPLACEMENT ORDER 360-9700–PAGE: 301

PART OF 380-8084 LINES GP-BRAKE

SMCS-4263 **i05297450**

NOTE	REF NO	GRAPHIC REF	PART NUMBER	QTY	PART NAME 1 2 3 4 5 6 (PRODUCT LEVEL)	SEE PAGE
	1	1	**224-5152**	1	VALVE-GAS (BRAKE ACCUMULATOR)	
	2	1	**224-5132**	1	CAP (GAS VALVE)	
	3	1	**3J-7354**	1	SEAL-O-RING	
	4	1	**1J-9671**	1	SEAL-O-RING	
	5	1	**241-0037**	1	FILM-WARNING (HIGH PRESSURE, READ OMM)	

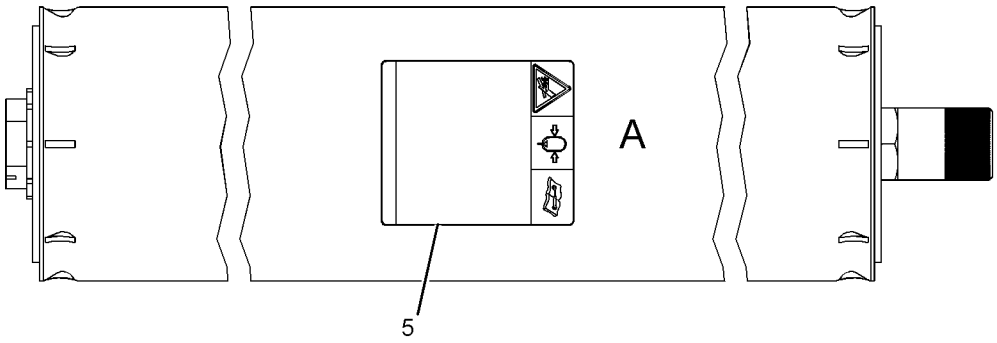

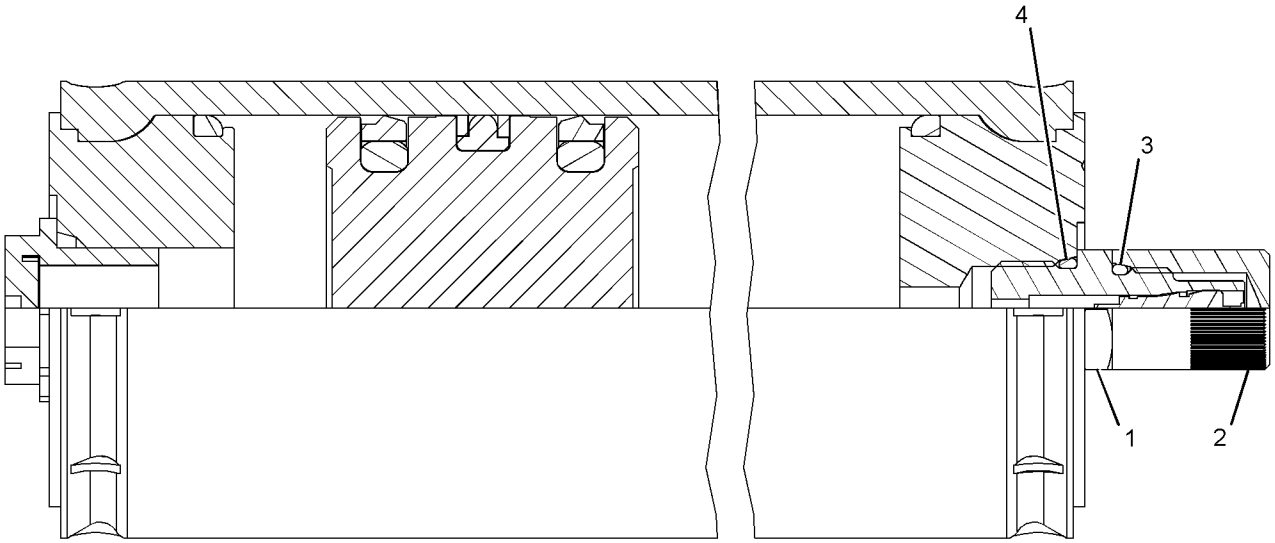

VIEW OF AREA A
(SECTIONED)

GRAPHIC #1 **<END>** g02792737

360-9700 ACCUMULATOR GP-BRAKE–UNCHARGED

S/N: DYB1-UP

FIELD REPLACEMENT FOR 360-9207–PAGE: 300

SMCS-4263 **i05297476**

NOTE	REF NO	GRAPHIC REF	PART NUMBER	QTY	PART NAME 1 2 3 4 5 6 (PRODUCT LEVEL)	SEE PAGE
	1	1	**224-5152**	1	VALVE-GAS (BRAKE ACCUMULATOR)	
	2	1	**224-5132**	1	CAP (GAS VALVE)	
	3	1	**3J-7354**	1	SEAL-O-RING	
	4	1	**1J-9671**	1	SEAL-O-RING	
	5	1	**241-0037**	1	FILM-WARNING (HIGH PRESSURE, READ OMM)	

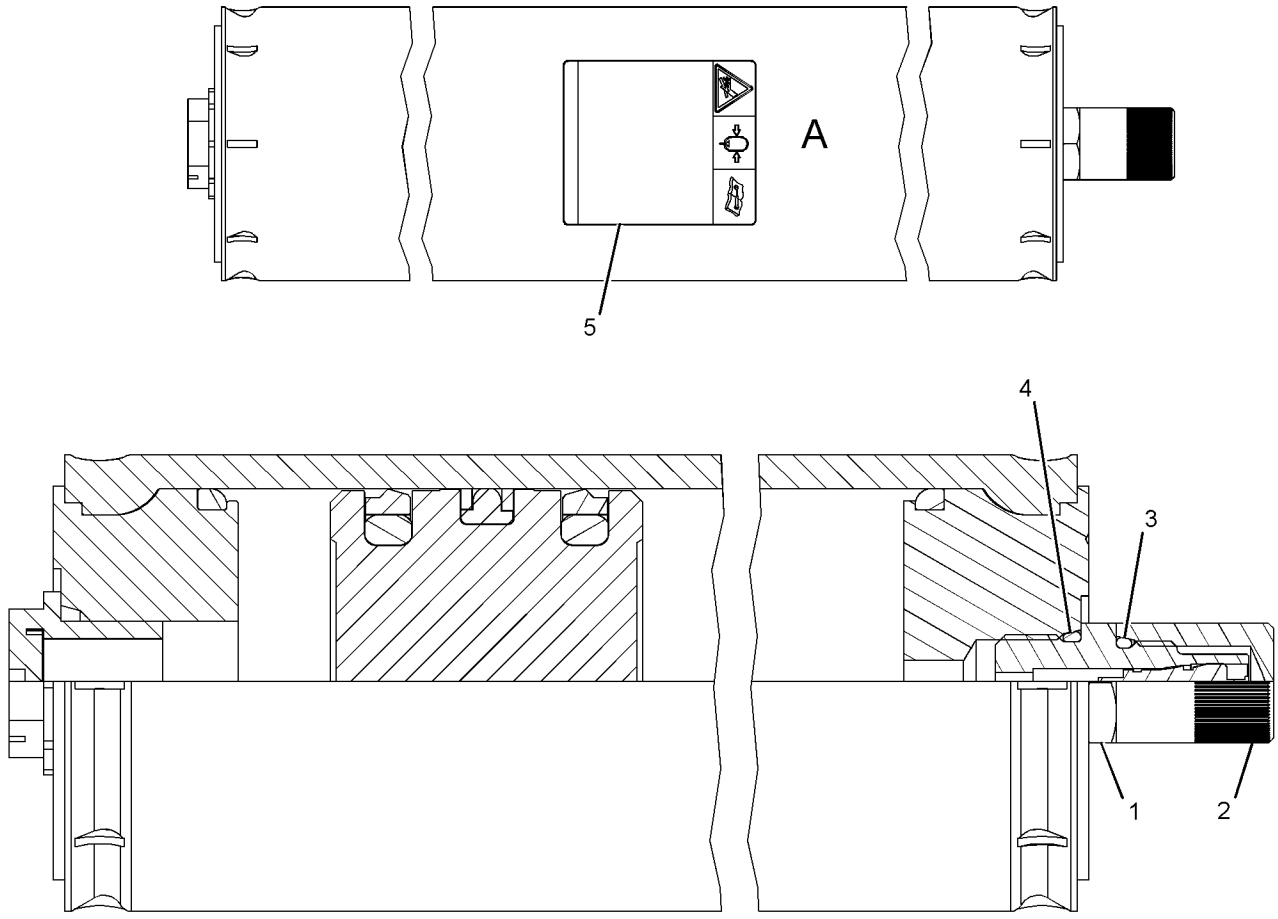

VIEW OF AREA A
(SECTIONED)

GRAPHIC #1 **<END>** g02792737

342-7393 BRAKE GP-PARKING

S/N: DYB1-UP

PART OF 340-9906 AXLE AR-FIXED

SMCS-4267 **i05306292**

NOTE	REF NO	GRAPHIC REF	PART NUMBER	QTY	PART NAME 1 2 3 4 5 6 (PRODUCT LEVEL)	SEE PAGE
	1	1	**340-9911**	1	BRACKET	
	2	1	**342-7247**	1	DISC	
Y	3	1	**343-4135**	1	BRAKE GP-PARKING	303
M	4	1	**118-7313**	2	BOLT (M16X2X70-MM)	
	5	1	**5M-7937**	2	DOWEL	
	6	1	**5P-8247**	2	WASHER-HARD (17X32X3.5-MM THK)	
	7	1	**8T-4223**	10	WASHER-HARD (13.5X25.5X3-MM THK)	
M	8	1	**8T-4956**	10	BOLT (M12X1.75X35-MM)	

M - METRIC PART
Y - SEPARATE ILLUSTRATION

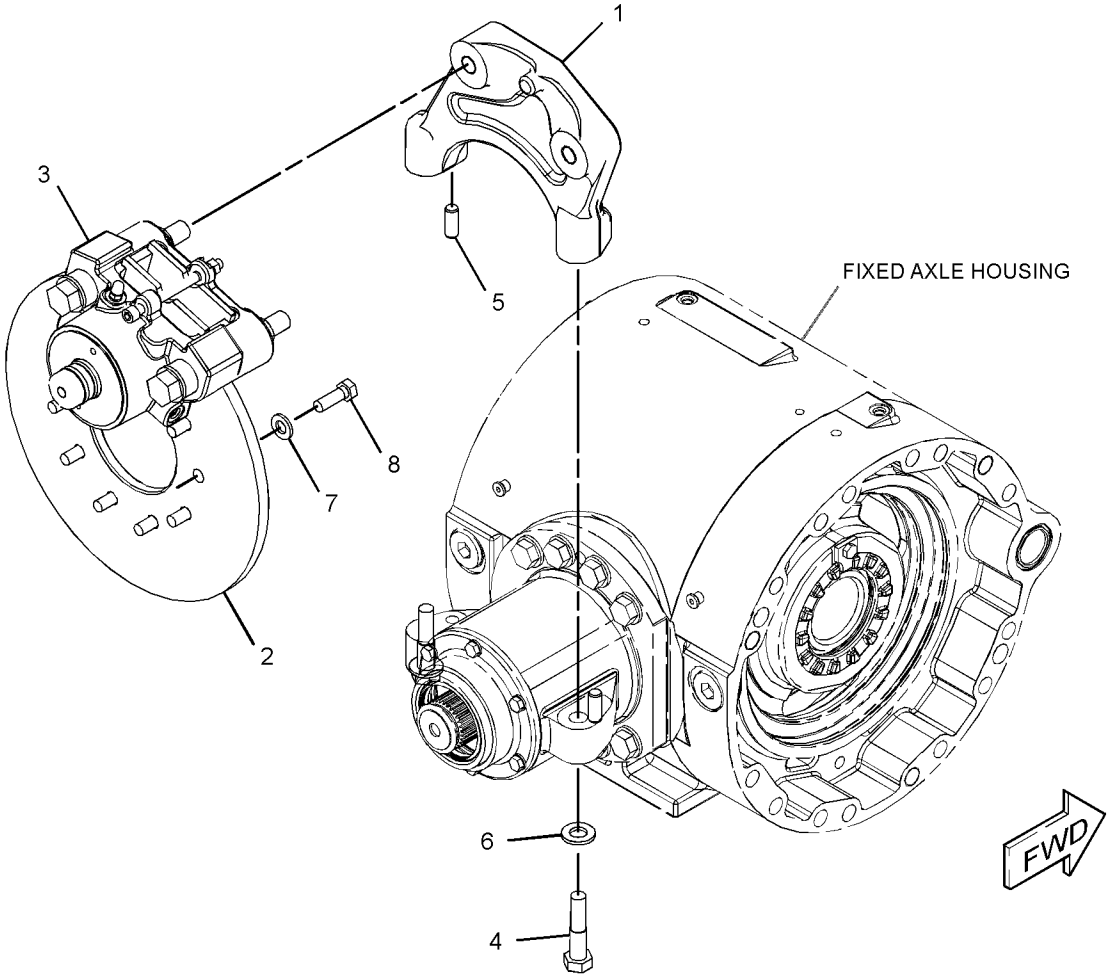

GRAPHIC #1 **<END>** g02792161

343-4135 BRAKE GP-PARKING

S/N: DYB1-UP

PART OF 342-7393 BRAKE GP-PARKING

SMCS-4267 **i05306293**

NOTE	REF NO	GRAPHIC REF	PART NUMBER	QTY	PART NAME 1 2 3 4 5 6 (PRODUCT LEVEL)	SEE PAGE
U	1	1	**8T-9312**	2	BOLT (3/4-10X6-IN)	
U	2	1	**8T-4994**	2	WASHER-HARD (20X36.5X3.5-MM THK)	
J	3	1	**169-7259**	1	BOLT-SOCKET HEAD (3/8-16X4.5-IN)	
J	4	1	**6V-8801**	2	NUT (3/8-16-THD)	
V	5	1	**7K-4942**	1	SCREW-PURGE	
					PARTS SHOWN IN GRAPHIC(S) WITHOUT A REFERENCE NUMBER ARE NOT SERVICED SEPARATELY	
					AVAILABLE REPAIR KIT(S):	
J			**348-1875**	1	KIT-LINING	
					(ALSO INCLUDES PARTS MARKED J IN THE GRAPHICS)	
U			**348-1878**	1	KIT-MOUNT	
					(ALSO INCLUDES PARTS MARKED U IN THE GRAPHICS)	
V			**348-1874**	1	KIT-SEAL	
					(ALSO INCLUDES PARTS MARKED V IN THE GRAPHICS)	
			348-1877	1	KIT-PISTON	
					(INCLUDES PARTS MARKED W IN THE GRAPHICS)	
			348-1876	1	KIT-SPRING	
					(INCLUDES PARTS MARKED X IN THE GRAPHICS)	

J - KIT MARKED J SERVICES PARTS MARKED J
U - KIT MARKED U SERVICES PARTS MARKED U
V - KIT MARKED V SERVICES PARTS MARKED V

343-4135 **BRAKE GP-PARKING (*contd.*)** **i05306293**

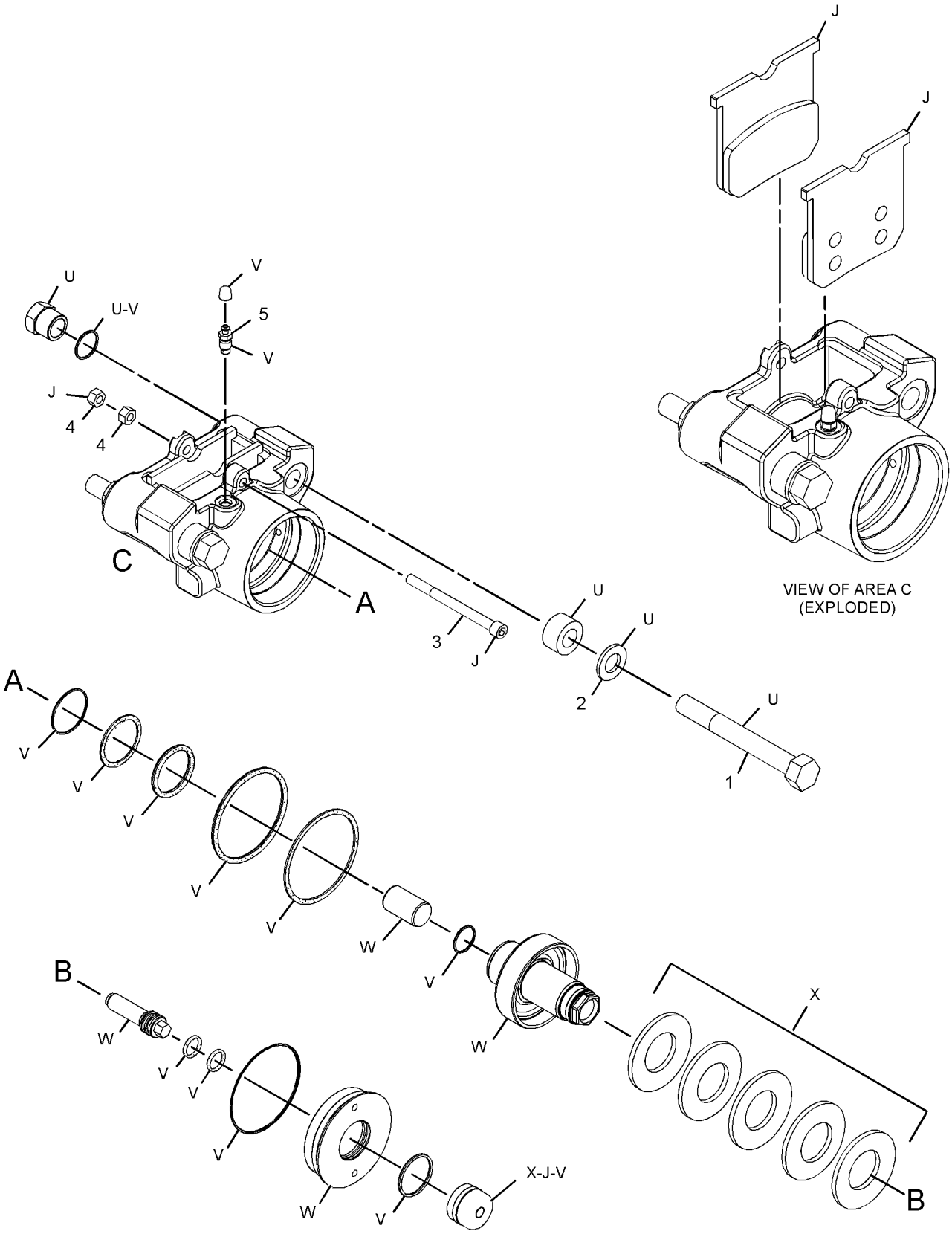

GRAPHIC #1 **<END>** g02819038

341-9880 CONTROL GP-SERVICE BRAKE

S/N: DYB1-UP
PART OF 384-7000 CAB AR-ENCLOSED ROPS
AN ATTACHMENT

SMCS-4257, 4258, 4263, 4265, 4269, 4280 **i05302364**

NOTE	REF NO	GRAPHIC REF	PART NUMBER	QTY	PART NAME 1 2 3 4 5 6 (PRODUCT LEVEL)	SEE PAGE
Y	1	1	**342-0157**	1	PEDAL GP-BRAKE	469
	2	1	**287-6692**	4	SCREW-TRUSS HEAD (M8X1.25X35-MM)	
	3	1	**352-0244**	4	WASHER-HARD (8.8X20.5X2-MM THK)	

Y - SEPARATE ILLUSTRATION

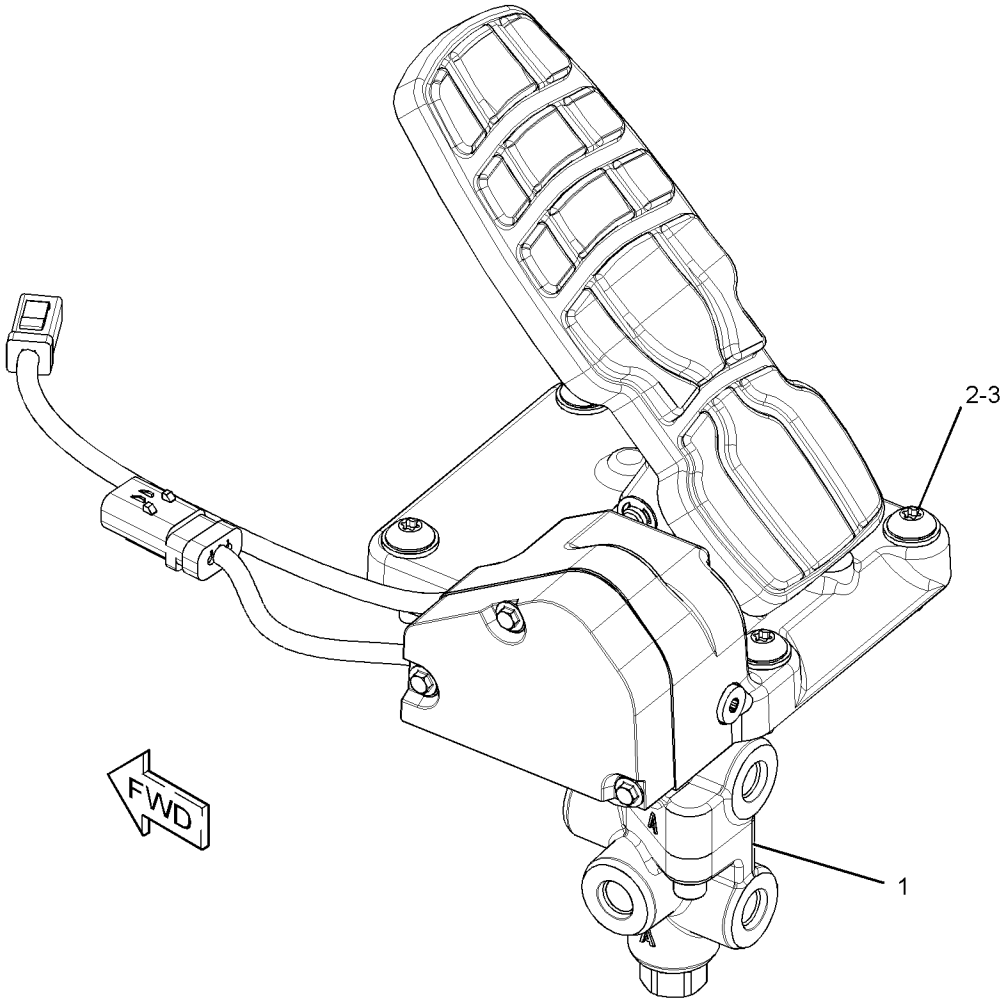

GRAPHIC #1 **<END>** g02794602

380-8084 LINES GP-BRAKE

S/N: DYB1-UP

PART OF 381-4385 CHASSIS AR

SMCS-4257, 4258, 4291, 429B **i05303591**

NOTE	REF NO	GRAPHIC REF	PART NUMBER	QTY	PART NAME 1 2 3 4 5 6 (PRODUCT LEVEL)	SEE PAGE
	1	2	**7K-1181**	3	STRAP-CABLE	
	2	2	**8Y-8387**	2	BLOCK	
	3	2	**111-6940**	2	SPACER (13.1X15.9X36.5-MM THK)	
	4	2	**122-4873**	1	BRACKET AS	
I	5	1	**160-9415**	1	HOSE AS	
I	6	1	*166-8554*	1	HOSE AS	
I	7	1	*173-1741*	1	HOSE AS	
	8	2	*183-3405*	2	TEE AS	
					(EACH INCLUDES)	
		2	**214-7568**	1	SEAL-O-RING	
		2	**7X-2459**		TEE-O-RING	
		2	**8L-2779**	1	SEAL-O-RING	
	9	2	**200-6345**	1	MOUNT (DUAL SWIVEL)	
	10	1,2	**204-2281**	10	STRAP-CABLE	
	11	2	**206-2423**	1	SADDLE	
	12	1	*260-9171*	1	CONNECTOR AS	
		1	**3J-1907**	1	SEAL-O-RING	
		1	**6V-8397**	1	SEAL-O-RING	
		1	**8T-9041**	1	CONNECTOR	
	13	1	**346-5116**	1	TUBE AS	
	14	1	**346-5117**	1	TUBE AS	
I	15	1	**346-5118**	1	HOSE AS	
	16	1	**349-8189**	1	GASKET	
	17	2	**349-9089**	1	MANIFOLD	
I	18	1	**350-1125**	1	HOSE AS	
I	19	1	**350-4259**	1	HOSE AS	
I	20	1	**350-4260**	1	HOSE AS	
I	21	1	**350-4262**	1	HOSE AS	
I	22	1	**350-4264**	1	HOSE AS	
	23	1	**350-7580**	2	SUPPORT	
I	24	1	**350-7582**	1	HOSE AS	
I	25	1	**355-3518**	1	HOSE AS	
	26	2	**357-0377**	1	MANIFOLD GP-CONTROL (BRAKE)	
		2	**357-0378**	1	VALVE GP-SOLENOID (24-VOLT) (PARKING BRAKE)	
		2	**367-8532**	1	COIL AS	
	27	2	**358-2867**	1	PLATE AS	
M		2	**159-9541**	2	NUT-WELD (M10X1.5-THD)	
	28	2	**358-2945**	1	PLATE AS	
M		2	**159-9541**	2	NUT-WELD (M10X1.5-THD)	
I	29	1	**358-2946**	1	HOSE AS	
Y	30	1	*360-9207*	2	ACCUMULATOR GP-BRAKE (CHARGED)	300
I	31	1	**362-9399**	1	HOSE AS	
I	32	1	**380-3497**	1	HOSE AS	
I	33	1	**388-1960**	1	HOSE AS	
I	34	1	**388-1961**	1	HOSE AS	
	35	1,2	**148-8336**	4	CONNECTOR AS	
					(EACH INCLUDES)	
		1,2	**3J-1907**	1	SEAL-O-RING	
		1,2	**6V-8397**	1	SEAL-O-RING	
		1,2	**6V-8636**	1	CONNECTOR	
	36	2	**148-8353**	1	ELBOW AS	
		2	**3J-1907**	1	SEAL-O-RING	
		2	**6V-8397**	1	SEAL-O-RING	
		2	**6V-9001**	1	ELBOW	
	37	1	*148-8361*	3	ELBOW AS	
					(EACH INCLUDES)	
		1	**3J-7354**	1	SEAL-O-RING	
		1	**6V-8397**	1	SEAL-O-RING	

380-8084 **LINES GP-BRAKE (*contd.*)** **i05303591**

NOTE	REF NO	GRAPHIC REF	PART NUMBER	QTY	PART NAME 1 2 3 4 5 6 (PRODUCT LEVEL)	SEE PAGE
		1	**6V-9200**	1	ELBOW	
	38	2	*148-8365*	1	ELBOW AS	
		2	**3J-1907**	1	SEAL-O-RING	
		2	**6V-8398**	1	SEAL-O-RING	
		2	**8T-6876**	1	ELBOW	
	39	2	*148-8370*	1	ELBOW AS	
		2	**6V-8398**	1	SEAL-O-RING	
		2	**6V-9851**	1	ELBOW	
	40	1,2	*148-8378*	3	ELBOW AS	
					(EACH INCLUDES)	
		1,2	**3J-1907**	1	SEAL-O-RING	
		1,2	**6V-8397**	1	SEAL-O-RING	
		1,2	**6V-8724**	1	ELBOW	
	41	1	*148-8392*	1	ELBOW AS	
		1	**6V-9746**	1	SEAL-O-RING	
		1	**6V-9853**	1	ELBOW	
	42	1	*148-8457*	2	UNION AS (STRAIGHT)	
					(EACH INCLUDES)	
		1	**6V-8398**	2	SEAL-O-RING	
		1	**6V-8995**	1	UNION (STRAIGHT)	
	43	1	*149-5452*	2	UNION AS (STRAIGHT)	
					(EACH INCLUDES)	
		1	**6V-8397**	2	SEAL-O-RING	
		1	**6V-8994**	1	UNION (STRAIGHT)	
	44	1	*155-7329*	1	ELBOW AS	
		1	**3K-0360**	1	SEAL-O-RING	
		1	**5H-8853**	1	SEAL-O-RING	
		1	**6V-8723**	1	ELBOW	
	45	2	*164-5567*	2	COUPLER AS-QUICK DISCONNECT (MALE)	
					(EACH INCLUDES)	
		2	**6V-3965**	1	FITTING (QUICK DISCONNECT)	
		2	**214-7568**	1	SEAL-O-RING	
	46	1	*164-5606*	1	CONNECTOR AS	
		1	**3D-2824**	1	SEAL-O-RING	
		1	**6V-9746**	1	SEAL-O-RING	
		1	**8T-0078**	1	CONNECTOR	
	47	1	*164-7908*	1	ELBOW AS	
		1	**3J-7354**	1	SEAL-O-RING	
		1	**6V-8397**	1	SEAL-O-RING	
		1	**8T-7546**	1	ELBOW	
	48	1	*173-7225*	1	TEE AS	
		1	**3J-7354**	1	SEAL-O-RING	
		1	**6V-8397**	2	SEAL-O-RING	
		1	**6V-9161**	1	TEE	
	49	1	**204-8000**	1	MOUNTING-CABLE TIE	
M	50	1	**227-6715**	1	STUD (M10X1.5X30-MM)	
	51	2	**269-4949**	3	ADAPTER	
	52	2	**269-4961**	2	ELBOW-ADAPTER	
	53	2	**269-4965**	2	ADAPTER AS	
					(EACH INCLUDES)	
		2	**3J-1907**	1	SEAL-O-RING	
	54	1,2	**5K-5338**	5	CLIP	
	55	2	**6V-0852**	2	CAP-DUST	
	56	1	**6V-8397**	1	SEAL-O-RING	
	57	1	**6V-9168**	2	NUT (11/16-16-THD)	
	58	1	**6V-9169**	2	NUT (13/16-16-THD)	
	59	1,2	**8T-4121**	19	WASHER-HARD (11X21X2.5-MM THK)	
M	60	1,2	**8T-4136**	7	BOLT (M10X1.5X25-MM)	
M	61	1,2	**8T-4137**	4	BOLT (M10X1.5X20-MM)	
M	62	2	**8T-4172**	2	BOLT (M10X1.5X80-MM)	
M	63	2	**8T-4185**	2	BOLT (M10X1.5X50-MM)	
M	64	1	**8T-4195**	1	BOLT (M10X1.5X30-MM)	

380-8084 **LINES GP-BRAKE (*contd.*)** **i05303591**

NOTE	REF NO	GRAPHIC REF	PART NUMBER	QTY	PART NAME 1 2 3 4 5 6 (PRODUCT LEVEL)	SEE PAGE
M	65	2	**8T-5005**	2	BOLT (M10X1.5X70-MM)	
	66	2	**8Y-8388**	1	PLATE	

I - REFER TO HYDRAULIC INFORMATION SYSTEM
M - METRIC PART
Y - SEPARATE ILLUSTRATION

380-8084 **LINES GP-BRAKE (*contd.*)** **i05303591**

REFER TO ALL ILLUSTRATIONS OF
THIS GROUP FOR AUXILIARY VIEWS

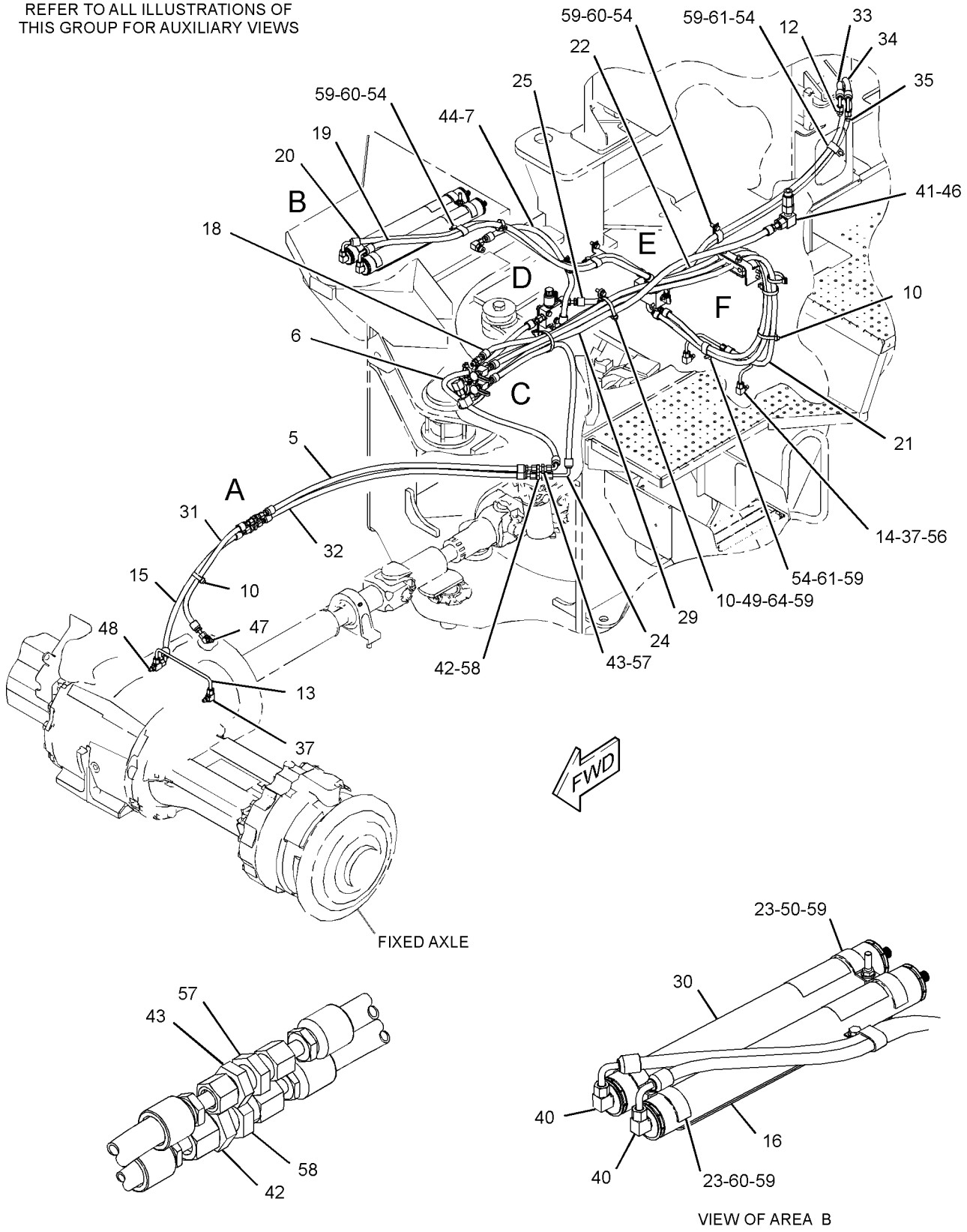

GRAPHIC #1 g03382879

380-8084 **LINES GP-BRAKE (*contd.*)** **i05303591**

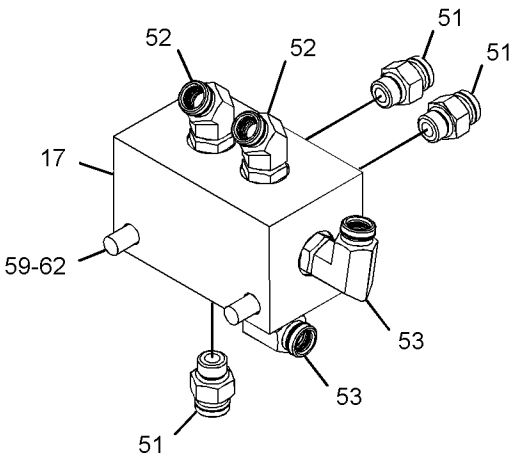

VIEW OF AREA E
(PARTS EXPLODED AND REMOVED FOR CLARITY)

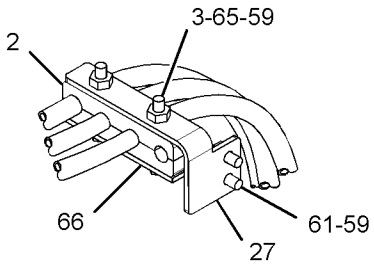

VIEW OF AREA F
(PARTS REMOVED FOR CLARITY)

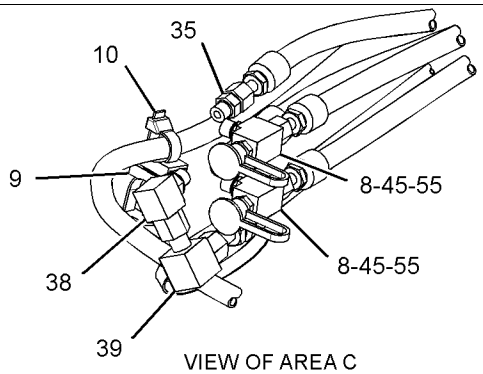

VIEW OF AREA C

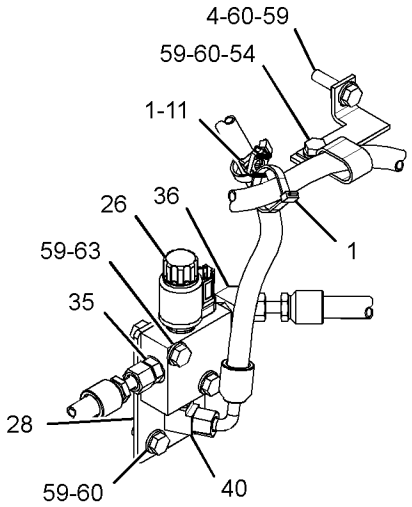

VIEW OF AREA D
(PARTS REMOVED FOR CLARITY)

GRAPHIC #2 **<END>** g03382881

333-6516 CYLINDER & MTG GP-STEERING

S/N: DYB1-UP

PART OF 381-4385 CHASSIS AR

SMCS-4303 **i05307636**

NOTE	REF NO	GRAPHIC REF	PART NUMBER	QTY	PART NAME 1 2 3 4 5 6 (PRODUCT LEVEL)	SEE PAGE
B	1	1	**9D-1535**	10	WASHER-THRUST (44.8X101.6X1.22-MM THK)	
	2	1	**148-7871**	2	PIN AS	
Y	3	1	**339-5595**	2	CYLINDER GP-STEERING	312
	4	1	**339-6676**	2	PIN	
	5	1	**3B-8489**	2	FITTING-GREASE	
	6	1	**6V-3213**	2	RING-RETAINING	
	7	1	**7X-0618**	2	WASHER-HARD (13.5X40X5-MM THK)	
M	8	1	**8T-4192**	2	BOLT (M12X1.75X25-MM)	

B - USE AS REQUIRED
M - METRIC PART
Y - SEPARATE ILLUSTRATION

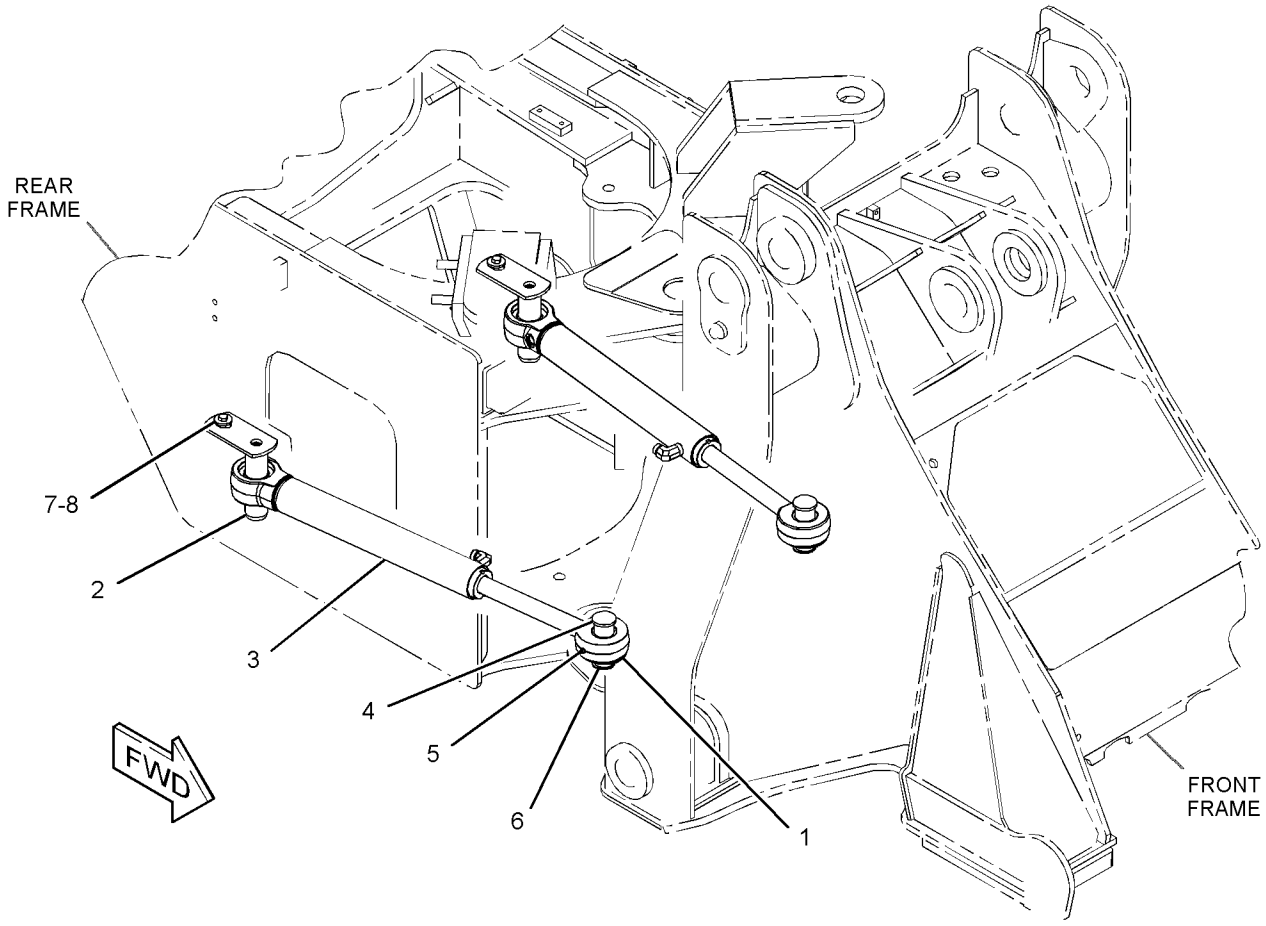

GRAPHIC #1 **<END>** g02793347

339-5595 CYLINDER GP-STEERING

S/N: DYB1-UP

70-MM (2.8-IN) BORE X 438.5-MM (17.3-IN) STROKE

PART OF 333-6516 CYLINDER & MTG GP-STEERING

SMCS-4303 **i05307637**

NOTE	REF NO	GRAPHIC REF	PART NUMBER	QTY	PART NAME 1 2 3 4 5 6 (PRODUCT LEVEL)	SEE PAGE
	1	1	**324-0496**	1	CYLINDER HEAD AS	
J	1A	1	**323-2465**	1	BUSHING	
J		1	**338-2412**	1	SEAL-WIPER	
J		1	**338-2442**	1	SEAL-U-CUP	
J		1	**340-9308**	1	SEAL-O-RING	
	2	1	**324-0498**	1	PISTON AS	
J		1	**161-7145**	11	SEAL-PISTON	
J		1	**340-6272**	2	RING-WEAR	
J		1	**340-9311**	1	SEAL-O-RING	
	3	1	**348-1149**	1	ROD AS	
	3A	1	**7K-9546**	1	BUSHING	
	4	1	**348-1153**	1	CYLINDER AS	
	4A	1	**9M-1328**	1	BEARING-SELF-ALIGNING	
	5	1	**350-3842**	2	SET SCREW (SPECIAL)	
	6	1	**7J-9108**	1	SEAL-O-RING	
					AVAILABLE REPAIR KIT(S):	
J			**324-0355**	1	KIT-SEAL (STEERING CYLINDER)	

J - KIT MARKED J SERVICES PARTS MARKED J

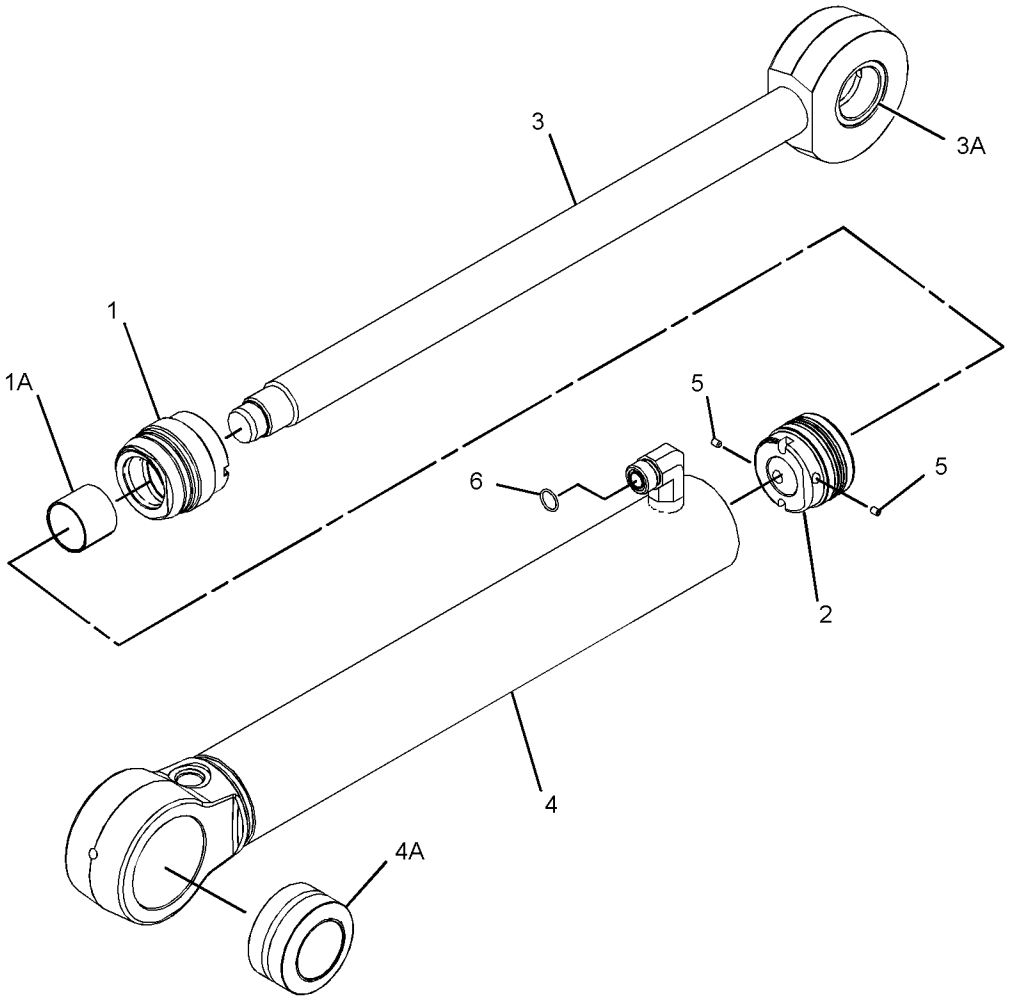

GRAPHIC #1 **<END>** g02797921

378-0966 LINES GP-STEERING—CYLINDERS

S/N: DYB1-UP
PART OF 387-4010 STEERING AR-STANDARD
AN ATTACHMENT

SMCS-4304 **i05303599**

NOTE	REF NO	GRAPHIC REF	PART NUMBER	QTY	PART NAME 1 2 3 4 5 6 (PRODUCT LEVEL)	SEE PAGE
	1	1	**6V-3582**	2	CLAMP-HOSE	
	2	1	*148-8447*	1	TEE AS-SWIVEL	
		1	**7J-9108**	1	SEAL-O-RING	
		1	**7X-0872**	1	TEE-SWIVEL	
	3	1	**192-2684**	1	VALVE AS-CHECK (PILOT OIL)	
	4	1	**200-6345**	3	MOUNT (DUAL SWIVEL)	
	5	1	**204-2281**	9	STRAP-CABLE	
	6	1	*287-7331*	1	ELBOW AS	
		1	**2M-9780**	1	SEAL-O-RING	
		1	**7J-9108**	1	SEAL-O-RING	
		1	**287-7330**	1	ELBOW	
	7	1	**323-3309**	2	CAP	
	8	1	**346-5097**	1	BOSS	
I	9	1	**346-5105**	1	HOSE AS	
I	10	1	**346-5107**	2	HOSE AS	
I	11	1	**346-5108**	1	HOSE AS	
I	12	1	**346-5119**	1	HOSE AS	
	13	1	**350-7584**	1	HOSE AS	
	14	1	**361-1995**	1	PLATE AS	
	15	1	**361-1996**	2	SUPPORT AS	
	16	1	**384-8658**	1	VALVE AS-CHECK	
		1	**3K-0360**	1	SEAL-O-RING	
		1	**7J-9108**	1	SEAL-O-RING	
I	17	1	**386-0149**	1	HOSE AS	
	18	1	**110-6349**	1	FITTING AS (QUICK DISCONNECT)	
	19	1	*148-8316*	1	CONNECTOR AS	
		1	**3J-7354**	1	SEAL-O-RING	
		1	**4J-5477**	1	SEAL-O-RING	
		1	**6V-8647**	1	CONNECTOR	
	20	1	*148-8340*	2	CONNECTOR AS	
					(EACH INCLUDES)	
		1	**3K-0360**	1	SEAL-O-RING	
		1	**6V-8398**	1	SEAL-O-RING	
		1	**6V-8639**	1	CONNECTOR	
	21	1	*148-8342*	1	CONNECTOR AS	
		1	**3K-0360**	1	SEAL-O-RING	
		1	**6V-8632**	1	CONNECTOR	
		1	**7J-9108**	1	SEAL-O-RING	
	22	1	*148-8369*	1	ELBOW AS	
		1	**3J-7354**	1	SEAL-O-RING	
		1	**4J-5477**	1	SEAL-O-RING	
		1	**6V-8628**	1	ELBOW	
	23	1	*148-8446*	1	TEE AS-SWIVEL	
		1	**6V-9838**	1	TEE-SWIVEL	
		1	**7J-9108**	2	SEAL-O-RING	
	25	1	*212-1336*	1	TEE AS	
		1	**2M-9780**	1	SEAL-O-RING	
		1	**6V-8783**	1	TEE-FACE SEAL	
		1	**7J-9108**	2	SEAL-O-RING	
	26	1	**3G-8047**	1	GROMMET	
	27	1	**3G-8054**	1	CLIP (TAB)	
	28	1	**3G-8057**	1	CLIP (SLOT)	
	29	1	**4J-0520**	1	SEAL-O-RING	
	30	1	**5P-7464**	2	CLIP (SLOT)	
	31	1	**5P-7465**	2	CLIP (TAB)	
	32	1	**5P-7854**	1	CLIP	
	33	1	**6D-1641**	1	CLIP	
	34	1	**6V-0852**	2	CAP-DUST	

378-0966 **LINES GP-STEERING (*contd.*)** **i05303599**

NOTE	REF NO	GRAPHIC REF	PART NUMBER	QTY	PART NAME 1 2 3 4 5 6 (PRODUCT LEVEL)	SEE PAGE
	35	1	**6V-1249**	2	GROMMET (22-MM ID)	
M	36	1	**7X-2544**	1	BOLT (M10X1.5X104-MM)	
	37	1	**8C-3206**	2	FLANGE-HALF	
	38	1	**8T-4121**	11	WASHER-HARD (11X21X2.5-MM THK)	
M	39	1	**8T-4136**	1	BOLT (M10X1.5X25-MM)	
M	40	1	**8T-4186**	2	BOLT (M10X1.5X40-MM)	
M	41	1	**8T-4195**	3	BOLT (M10X1.5X30-MM)	
M	42	1	**8T-4196**	4	BOLT (M10X1.5X35-MM)	
	43	1	**9X-8250**	1	CLIP	

I - REFER TO HYDRAULIC INFORMATION SYSTEM
M - METRIC PART

378-0966 **LINES GP-STEERING (*contd.*)** **i05303599**

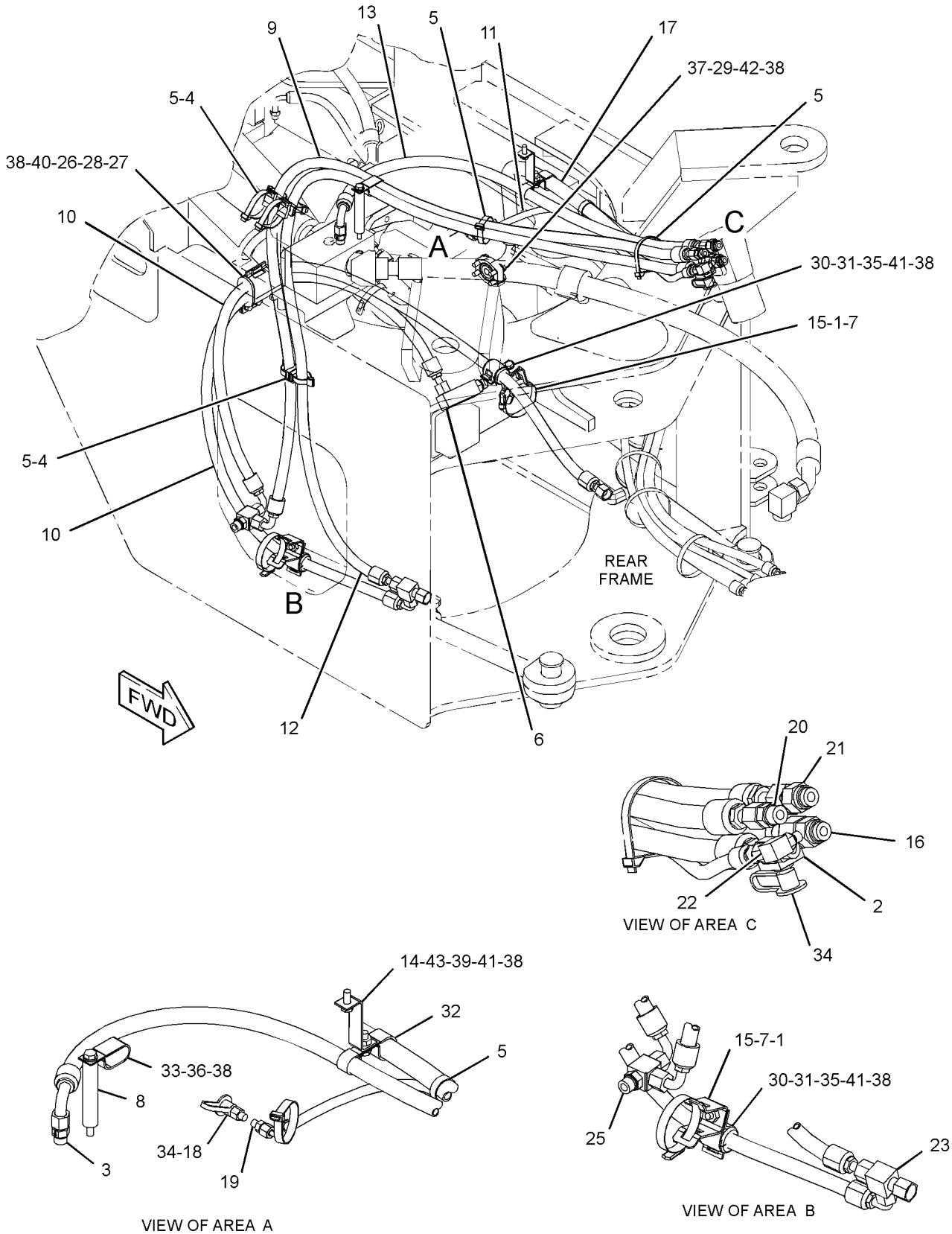

GRAPHIC #1 **<END>** g03380384

307-3053 PUMP GP-METERING–HMU

S/N: DYB1-UP

PART OF 387-4010 STEERING AR-STANDARD

AN ATTACHMENT

SMCS-4312 **i05303590**

NOTE	REF NO	GRAPHIC REF	PART NUMBER	QTY	PART NAME 1 2 3 4 5 6 (PRODUCT LEVEL)	SEE PAGE
					AVAILABLE REPAIR KIT(S):	
			257-8471	1	KIT-SEAL (HMU)	
					(INCLIDES SEAL INSTALLER AS, O-RING SEALS, U-CUP SEALS, BACKUP RING & SEAL RING)	

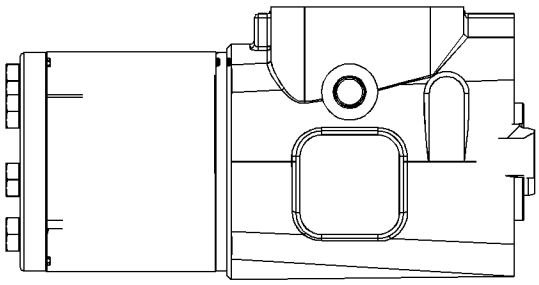

GRAPHIC #1 **<END>** g02755458

387-4010 STEERING AR-STANDARD

S/N: DYB1-UP

AN ATTACHMENT

SMCS-4300, 4307 **i05297370**

NOTE	PART NUMBER	QTY	PART NAME 1 2 3 4 5 6 (PRODUCT LEVEL)	SEE PAGE
Y	*378-0966*	1	LINES GP-STEERING	313
Y	**307-3053**	1	PUMP GP-METERING (HMU)	316

Y - SEPARATE ILLUSTRATION

<END>

373-7014 ACCUMULATOR GP-PILOT OIL–CHARGED

S/N: DYB1-UP

FIELD REPLACEMENT ORDER 373-7015–PAGE: 319

PART OF 333-6918 LINES GP-HYDRAULIC

SMCS-5077 **i05299691**

NOTE	REF NO	GRAPHIC REF	PART NUMBER	QTY	PART NAME 1 2 3 4 5 6 (PRODUCT LEVEL)	SEE PAGE
	1	1	**224-5152**	1	VALVE-GAS (HYDRAULIC ACCUMULATOR)	
	2	1	**224-5132**	1	CAP (GAS VALVE)	
	3	1	**3J-7354**	1	SEAL-O-RING	
	4	1	**1J-9671**	1	SEAL-O-RING	
	5	1	**241-0037**	1	FILM-WARNING (HIGH PRESSURE, READ OMM)	

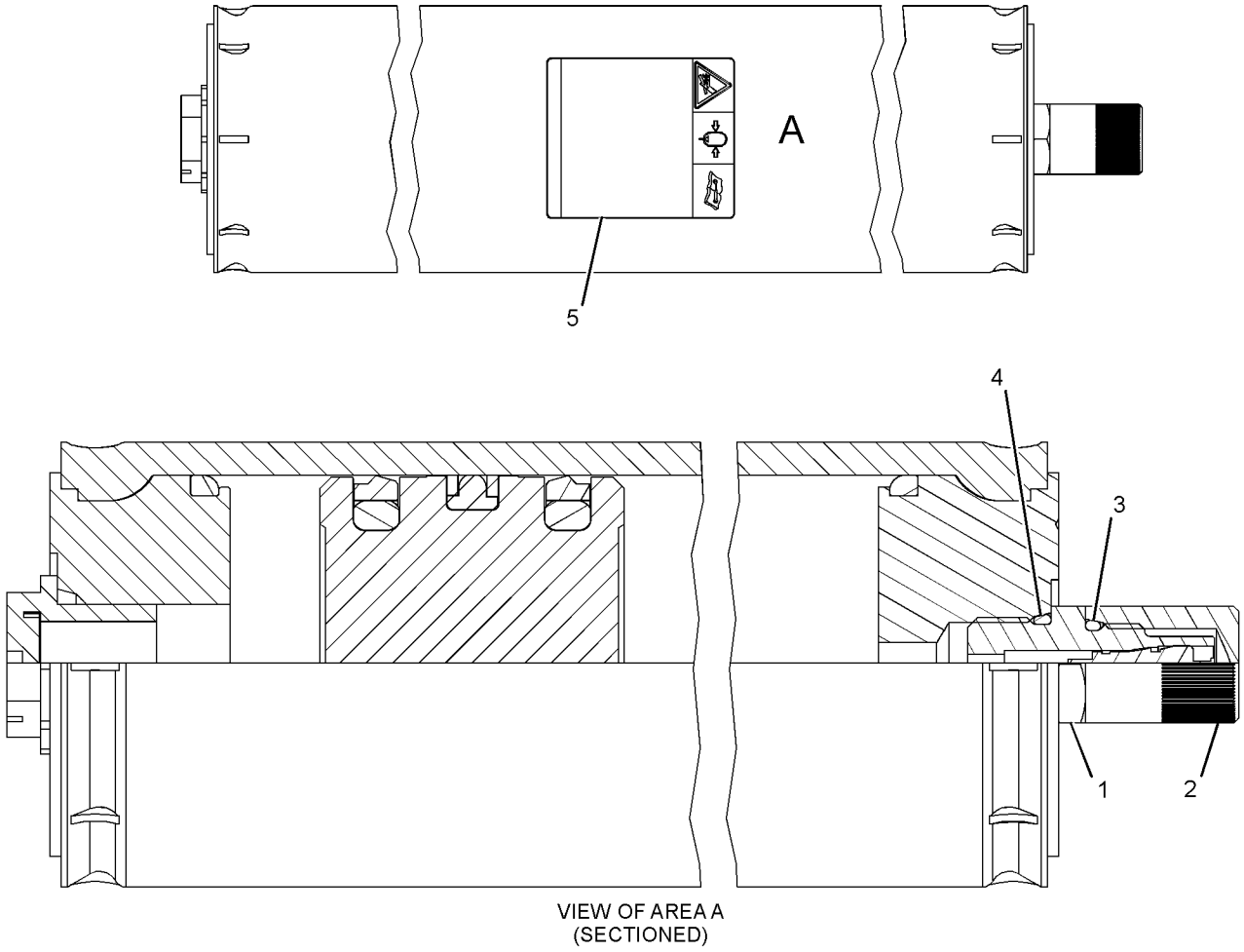

VIEW OF AREA A
(SECTIONED)

GRAPHIC #1 **<END>** g02792676

373-7015 ACCUMULATOR GP-PILOT OIL—UNCHARGED

S/N: DYB1-UP

FIELD REPLACEMENT FOR 373-7014—PAGE: 318

SMCS-5077 **i05309512**

NOTE	REF NO	GRAPHIC REF	PART NUMBER	QTY	PART NAME 1 2 3 4 5 6 (PRODUCT LEVEL)	SEE PAGE
	1	1	**224-5152**	1	VALVE-GAS (HYDRAULIC ACCUMULATOR)	
	2	1	**224-5132**	1	CAP (GAS VALVE)	
	3	1	**3J-7354**	1	SEAL-O-RING	
	4	1	**1J-9671**	1	SEAL-O-RING	
	5	1	**241-0037**	1	FILM-WARNING (HIGH PRESSURE, READ OMM)	

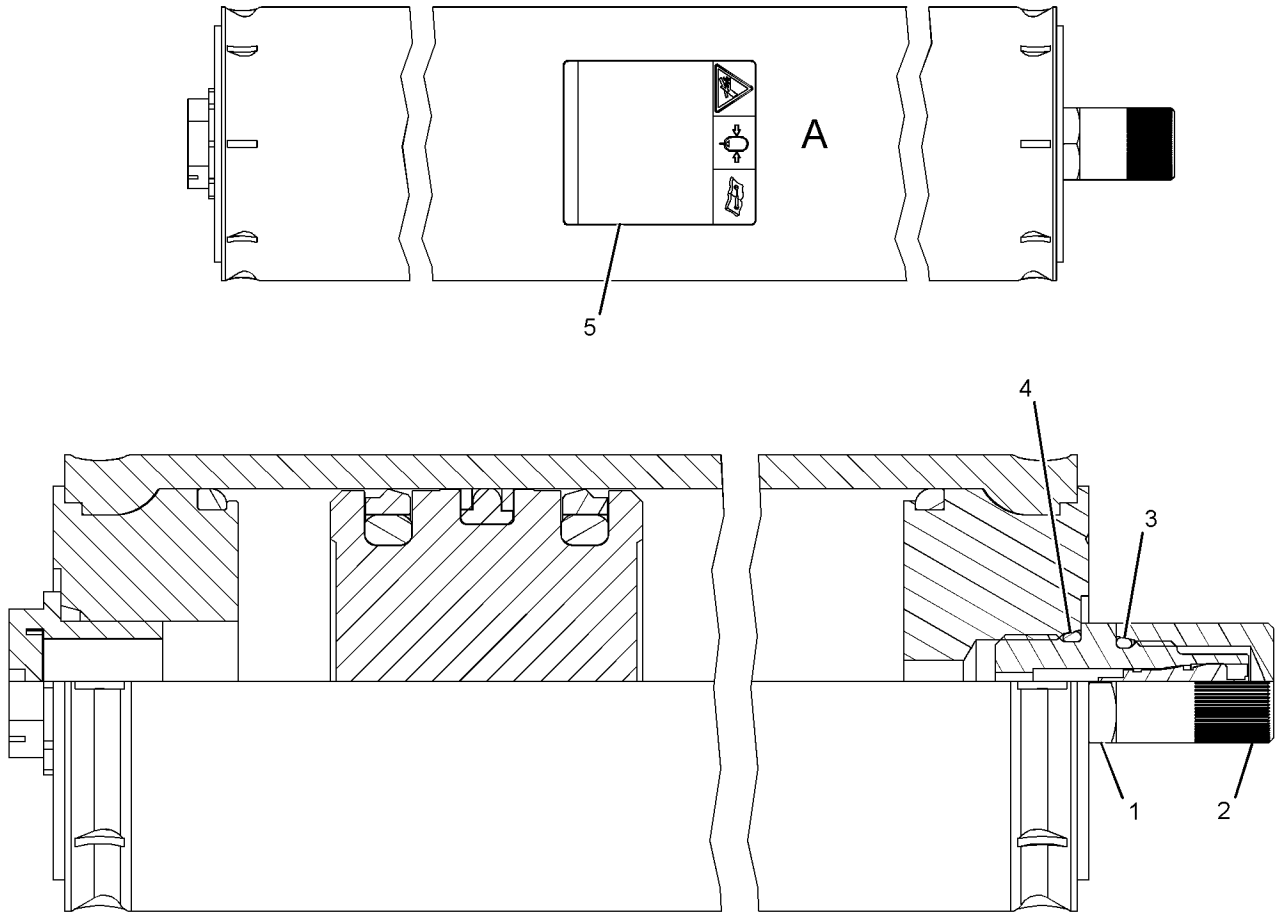

VIEW OF AREA A
(SECTIONED)

GRAPHIC #1 **<END>** g02792676

283-4418 ACCUMULATOR GP-RIDE CONTROL–CHARGED

S/N: DYB1-UP
PART OF 293-6472 CONTROL GP-RIDE
AN ATTACHMENT

SMCS-5004, 5077

i03042701

NOTE	REF NO	GRAPHIC REF	PART NUMBER	QTY	PART NAME 1 2 3 4 5 6 (PRODUCT LEVEL)	SEE PAGE
	1	1	**224-5132**	1	CAP (GAS VALVE)	
	2	1	**224-5152**	1	VALVE-GAS	
	3	1	**3J-7354**	1	SEAL-O-RING	
	4	1	**1J-9671**	1	SEAL-O-RING	
	5	1	**3D-2824**	1	SEAL-O-RING	
	6	1	**241-0037**	1	FILM-WARNING (HIGH PRESSURE, READ OMM)	
					AVAILABLE REPAIR KIT(S):	
			160-0496	1	KIT-SEAL (ACCUMULATOR)	
					(INCLUDES END CAP SEALS, PISTON SEALS & GAS VALVE SEAL)	

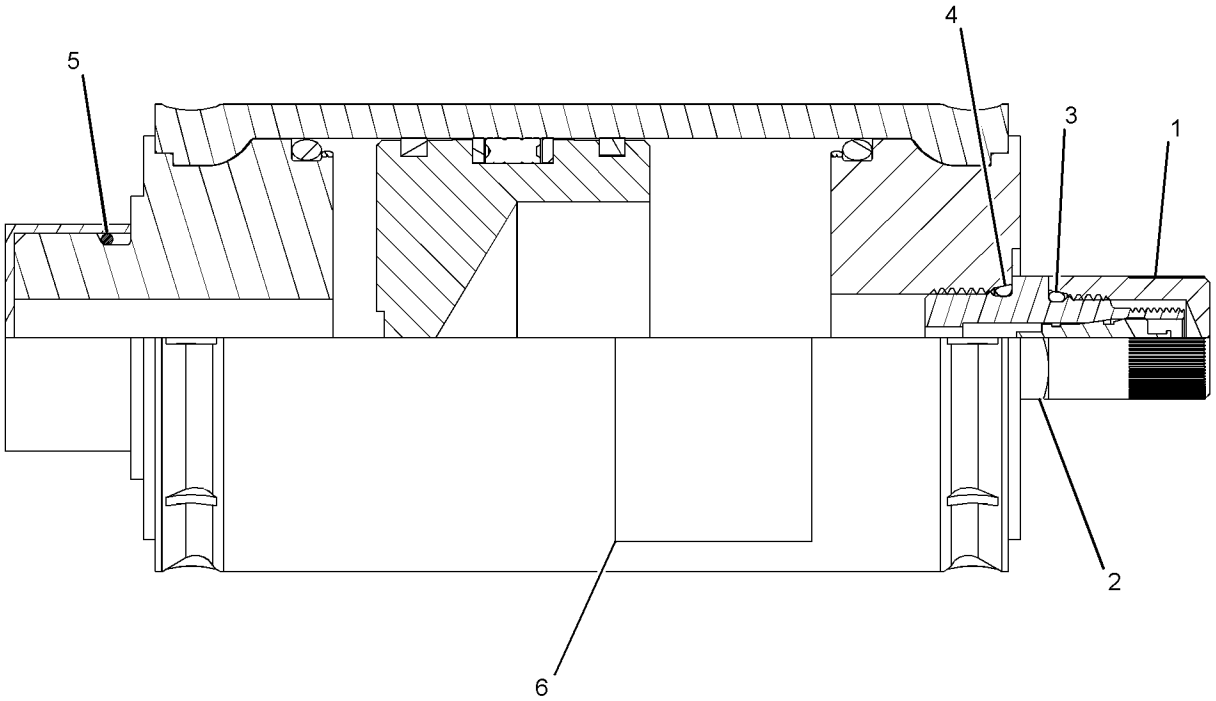

GRAPHIC #1

<END>

g01393627

298-2412 ACCUMULATOR GP-RIDE CONTROL–CHARGED

S/N: DYB1-UP
PART OF 293-6472 CONTROL GP-RIDE
AN ATTACHMENT

SMCS-5004, 5077

i03039483

NOTE	REF NO	GRAPHIC REF	PART NUMBER	QTY	PART NAME 1 2 3 4 5 6 (PRODUCT LEVEL)	SEE PAGE
	1	1	**224-5132**	1	CAP (GAS VALVE)	
	2	1	**224-5152**	1	VALVE-GAS	
	3	1	**3J-7354**	1	SEAL-O-RING	
	4	1	**1J-9671**	1	SEAL-O-RING	
	5	1	**3D-2824**	1	SEAL-O-RING	
	6	1	**241-0037**	1	FILM-WARNING (HIGH PRESSURE, READ OMM)	

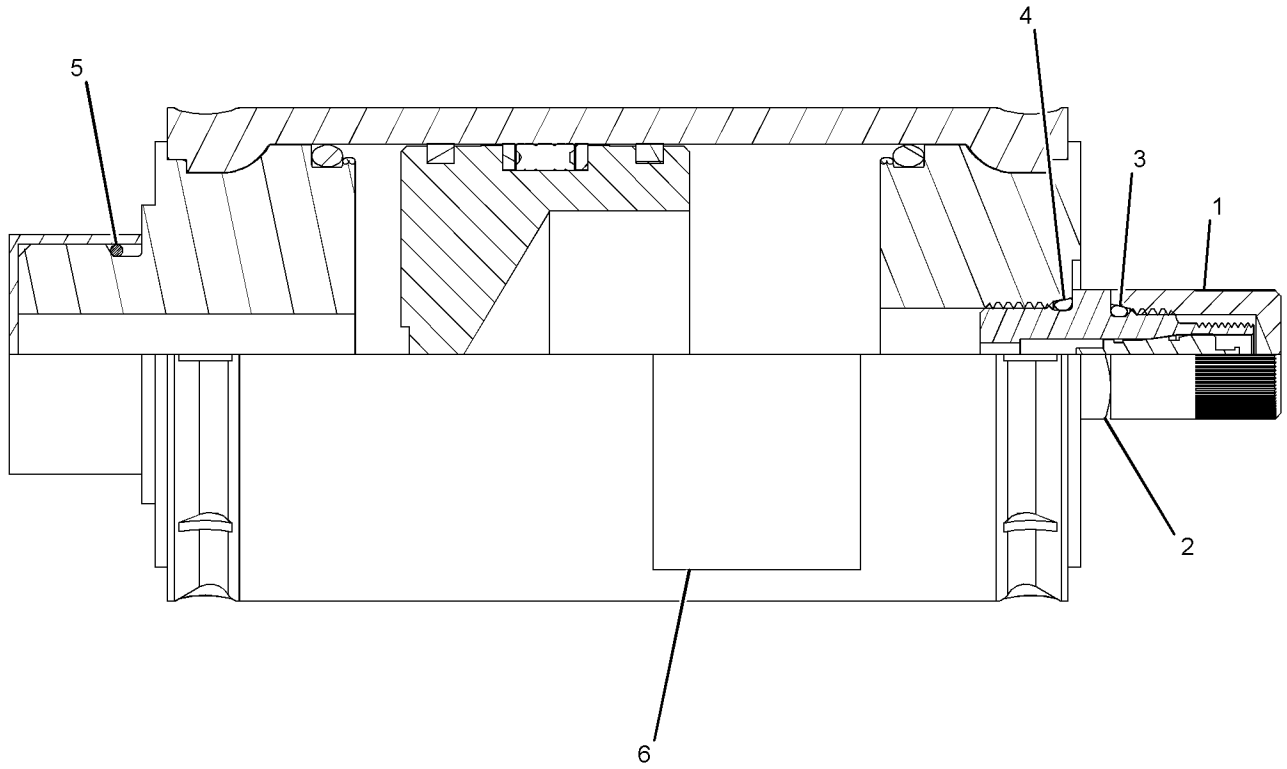

GRAPHIC #1

<END>

g01395168

333-6860 CONTROL AR-RIDE

S/N: DYB1-UP

AN ATTACHMENT

SMCS-5004 **i05328253**

NOTE	PART NUMBER	QTY	PART NAME 1 2 3 4 5 6 (PRODUCT LEVEL)	SEE PAGE
Y	*333-6947*	1	LINES GP-RIDE CONTROL	353
Y	*333-6909*	1	VALVE & MTG GP-RIDE CONTROL	385

Y - SEPARATE ILLUSTRATION

<END>

293-6472 CONTROL GP-RIDE

S/N: DYB1-UP

PART OF 333-6909 VALVE & MTG GP-RIDE CONTROL

AN ATTACHMENT

SMCS-5004 **i03039415**

NOTE	REF NO	GRAPHIC REF	PART NUMBER	QTY	PART NAME 1 2 3 4 5 6 (PRODUCT LEVEL)	SEE PAGE
	1	1	**9T-1013**	1	VALVE AS-CHECK	
		1	**3K-0360**	1	SEAL-O-RING	
		1	**6V-8398**	1	SEAL-O-RING	
	2	1	*148-8307*	1	ADAPTER AS	
		1	**3J-1907**	1	SEAL-O-RING	
		1	**5P-8874**	1	ADAPTER	
	3	1	**280-9978**	1	VALVE GP-RIDE CONTROL	
		1	**252-0741**	1	VALVE GP-SOLENOID (RIDE CONTROL)	
		1	**156-5970**	1	NUT (1/2-20-THD)	
		1	**252-0745**	1	COIL AS	
Y	4	1	*283-4418*	2	ACCUMULATOR GP-RIDE CONTROL (CHARGED)	320
Y	5	1	*298-2412*	2	ACCUMULATOR GP-RIDE CONTROL (CHARGED)	321
	6	1	**3D-2824**	4	SEAL-O-RING	

Y - SEPARATE ILLUSTRATION

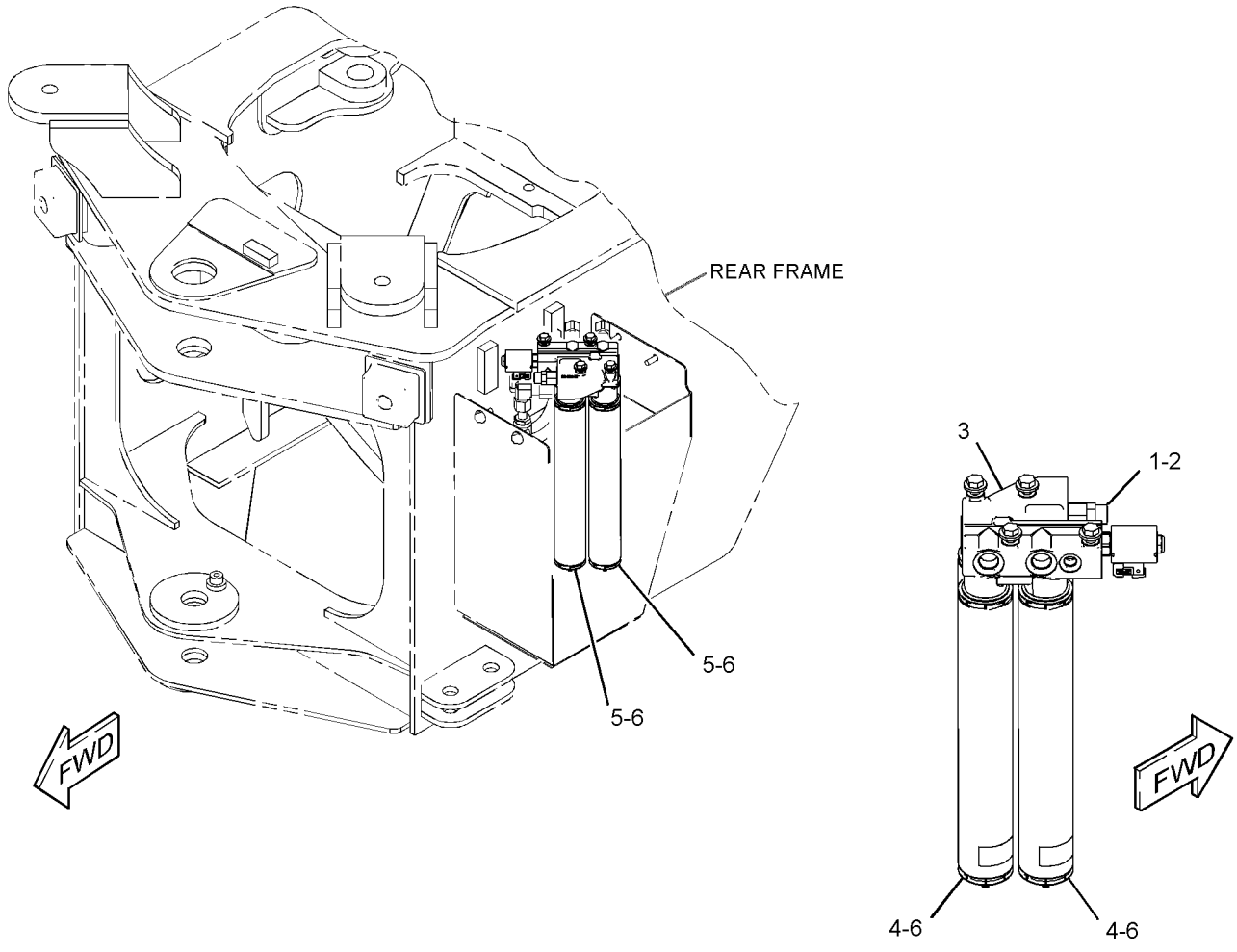

GRAPHIC #1 **<END>** g01393614

333-6540 CYLINDER & MTG GP-LIFT

S/N: DYB1-UP
PART OF 381-4394 LINKAGE AR-FRONT
AN ATTACHMENT

SMCS-5102 **i05310012**

NOTE	REF NO	GRAPHIC REF	PART NUMBER	QTY	PART NAME 1 2 3 4 5 6 (PRODUCT LEVEL)	SEE PAGE
	1	1	**333-6654**	2	PIN AS	
	2	1	**333-6656**	2	PIN AS	
Y	3	1	**339-5593**	2	CYLINDER GP-LIFT	327
	4	1	**3B-8489**	2	FITTING-GREASE	
	5	1	**3B-8491**	2	FITTING-GREASE	
	6	1	**3E-9411**	2	WASHER-HARD (17.5X38X6-MM THK)	
	7	1	**7K-9208**	4	SEAL-LIP TYPE	
	8	1	**7X-0618**	2	WASHER-HARD (13.5X40X5-MM THK)	
M	9	1	**8T-4192**	2	BOLT (M12X1.75X25-MM)	
M	10	1	**8T-7338**	2	BOLT (M16X2X45-MM)	
	11	1	**9C-7907**	2	SPACER (21.5X28X14-MM THK)	

M - METRIC PART
Y - SEPARATE ILLUSTRATION

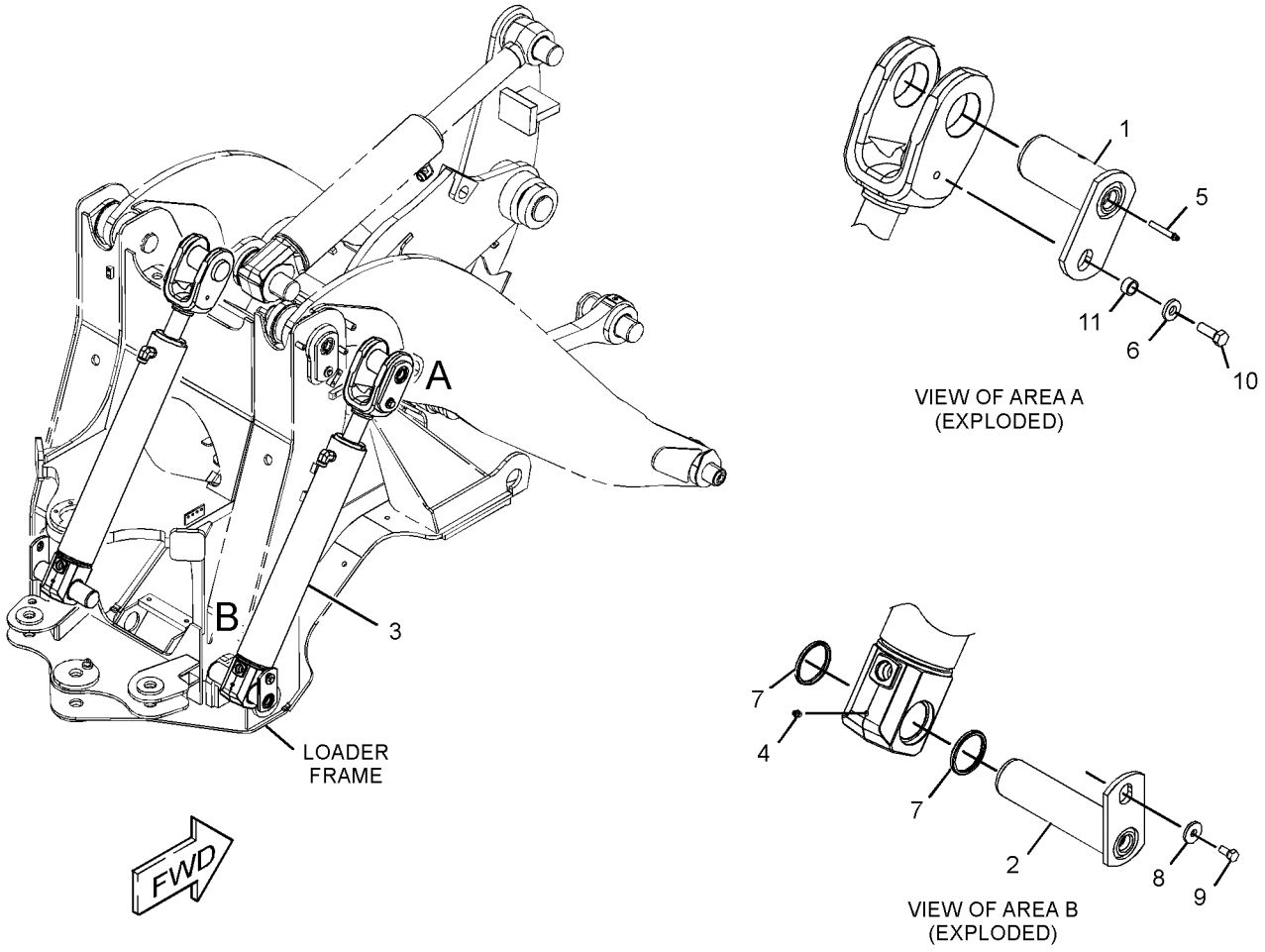

GRAPHIC #1 **<END>** g02795555

333-6541 CYLINDER & MTG GP-TILT

S/N: DYB1-UP
PART OF 381-4394 LINKAGE AR-FRONT
AN ATTACHMENT

SMCS-5104 **i05310014**

NOTE	REF NO	GRAPHIC REF	PART NUMBER	QTY	PART NAME 1 2 3 4 5 6 (PRODUCT LEVEL)	SEE PAGE
	1	1	**333-6648**	1	PIN AS	
	2	1	**333-6652**	1	PIN AS	
Y	3	1	**339-5594**	1	CYLINDER GP-TILT	328
	4	1	**347-8156**	2	SHIM (4-MM THK)	
	5	1	**347-8157**	2	SHIM (2-MM THK)	
	6	1	**7K-9210**	4	SEAL-LIP TYPE	
	7	1	**7X-0618**	2	WASHER-HARD (13.5X40X5-MM THK)	
M	8	1	**8T-4192**	2	BOLT (M12X1.75X25-MM)	

M - METRIC PART
Y - SEPARATE ILLUSTRATION

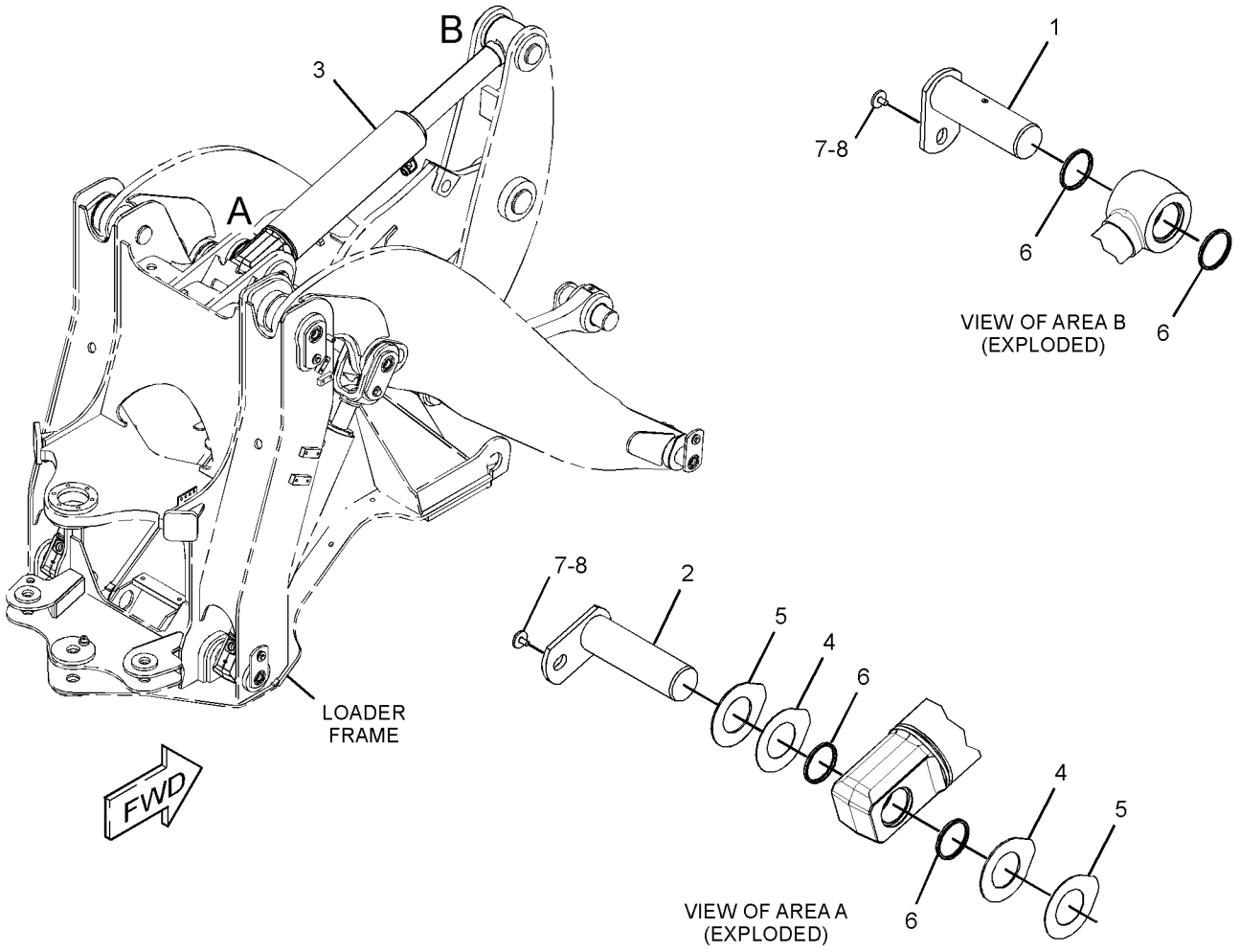

GRAPHIC #1 **<END>** g02780196

375-0724 CYLINDER GP-COUPLER

S/N: DYB1-UP
50.8-MM (2-IN) BORE X 80-MM (3.15-IN) STROKE
PART OF 333-6550 COUPLER GP-QUICK
AN ATTACHMENT

SMCS-5133 **i05317216**

NOTE	REF NO	GRAPHIC REF	PART NUMBER	QTY	PART NAME 1 2 3 4 5 6 (PRODUCT LEVEL)	SEE PAGE
J	1	1	**373-7021**	1	VALVE GP-CHECK (QUICK COUPLER)	
					AVAILABLE REPAIR KIT(S):	
J			**122-9776**	1	KIT-SEAL (CHECK VALVE)	
					(INCLUDES O-RING SEALS & BACKUP WASHERS)	
			367-5261	1	KIT-SEAL (COUPLER CYLINDER)	
					(INCLUDES PISTON RING, O-RING SEALS, BACKUP RING, U-CUP SEAL, MOISTURE EXCLUDER & WIPER)	

J - KIT MARKED J SERVICES PARTS MARKED J

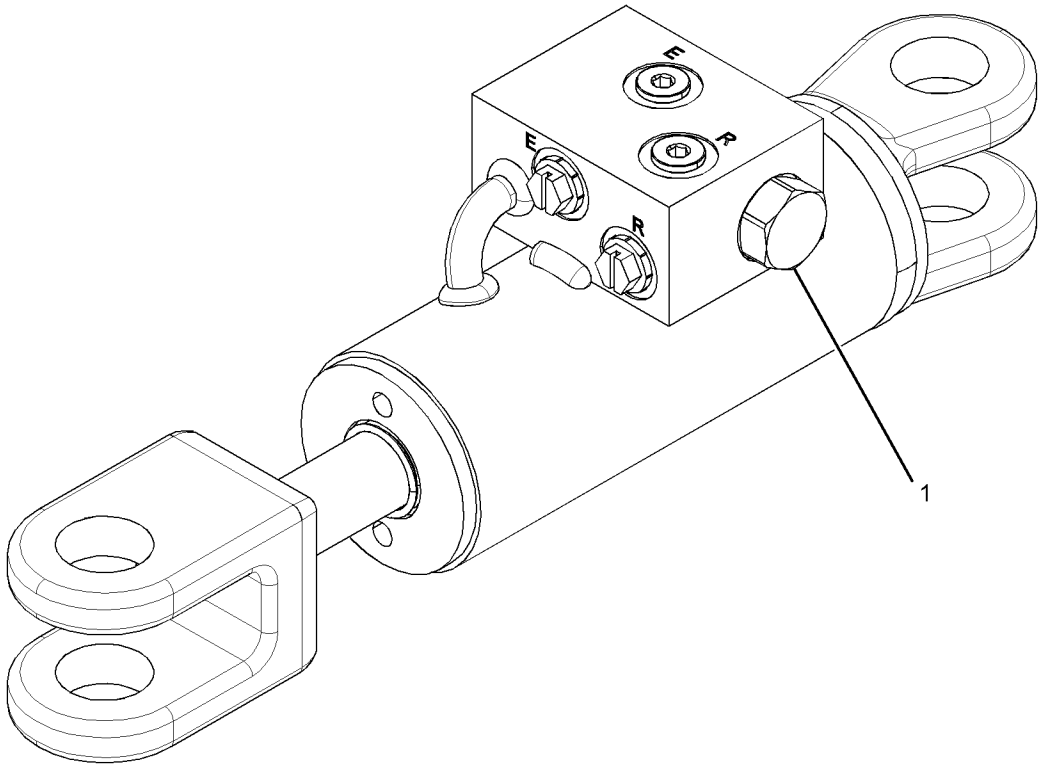

GRAPHIC #1 **<END>** g02757837

339-5593 CYLINDER GP-LIFT

S/N: DYB1-UP
120-MM (4.7-IN) BORE X 728-MM (28.7-IN) STROKE
PART OF 333-6540 CYLINDER & MTG GP-LIFT
AN ATTACHMENT

SMCS-5102 **i05310019**

NOTE	REF NO	GRAPHIC REF	PART NUMBER	QTY	PART NAME 1 2 3 4 5 6 (PRODUCT LEVEL)	SEE PAGE
	1	1	**324-0367**	1	CYLINDER HEAD AS	
J	1A	1	**323-2474**	1	BUSHING	
J		1	**338-2416**	1	SEAL-WIPER	
J		1	**338-2446**	1	SEAL-U-CUP	
J		1	**340-9322**	1	SEAL-O-RING	
	2	1	**324-0369**	1	PISTON AS	
J		1	**340-6339**	1	SEAL-PISTON	
J		1	**340-9314**	1	SEAL-O-RING	
J		1	**343-8053**	2	RING-WEAR	
	3	1	**348-2248**	1	ROD AS	
	4	1	**348-2249**	1	CYLINDER AS-LIFT	
	4A	1	**280-7448**	1	BEARING	
	5	1	**350-3842**	2	SET SCREW (SPECIAL)	
	6	1	**5K-9090**	1	SEAL-O-RING	
					AVAILABLE REPAIR KIT(S):	
J			**324-0398**	1	KIT-SEAL (STICK CYLINDER)	

J - KIT MARKED J SERVICES PARTS MARKED J

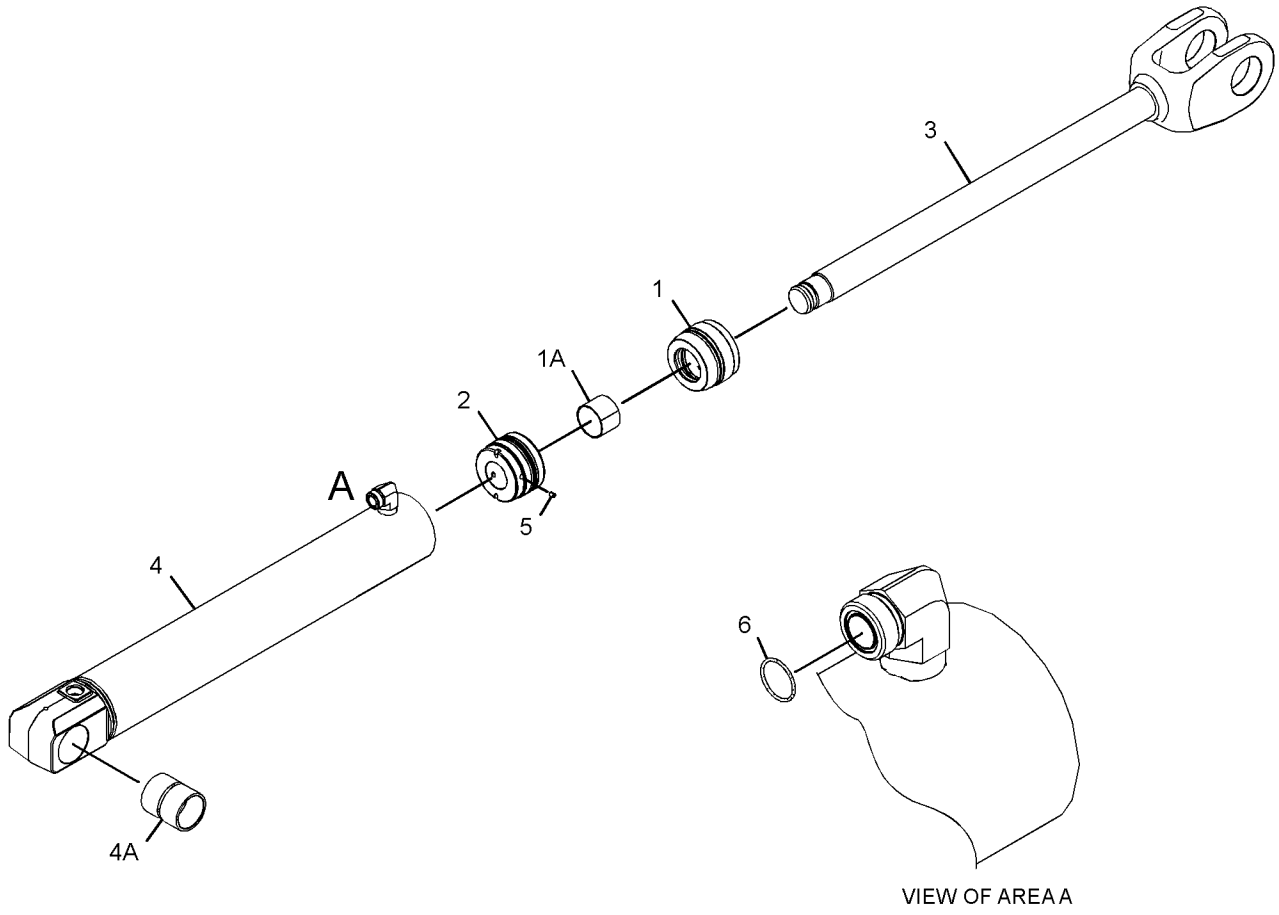

GRAPHIC #1 **<END>** g02795574

339-5594 CYLINDER GP-TILT

S/N: DYB1-UP
150-MM (6.0-IN) BORE X 555-MM (21.9-IN) STROKE
PART OF 333-6541 CYLINDER & MTG GP-TILT
AN ATTACHMENT

SMCS-5104 **i05310020**

NOTE	REF NO	GRAPHIC REF	PART NUMBER	QTY	PART NAME 1 2 3 4 5 6 (PRODUCT LEVEL)	SEE PAGE
	1	1	**349-1715**	1	ROD AS	
	1A	1	**333-6618**	2	BUSHING	
	2	1	**349-1722**	1	HEAD AS	
	2A	1	**351-2182**	1	BEARING	
		1	**349-1721**	1	HEAD	
		1	**351-2177**	1	SEAL-U-CUP	
		1	**351-2180**	1	SEAL-WIPER	
		1	**351-2185**	1	SEAL-O-RING	
	3	1	**349-1724**	1	PISTON AS	
		1	**349-1723**	1	PISTON	
		1	**351-2187**	1	SEAL-O-RING	
		1	**351-2190**	1	SEAL-PISTON	
		1	**351-2193**	2	RING-WEAR	
	4	1	**349-1725**	1	CYLINDER AS-TILT	
	4A	1	**333-6618**	2	BUSHING	
	5	1	**350-3842**	2	SET SCREW (SPECIAL)	
	6	1	**5K-9090**	1	SEAL-O-RING	
					AVAILABLE REPAIR KIT(S):	
			352-5575	1	KIT-SEAL (TILT CYLINDER)	
					(INCLUDES PISTON SEAL, WEAR BEARING, WIPER SEAL, U-CUP SEAL, O-RING SEALS & WEAR RINGS)	

339-5594 **CYLINDER GP-TILT (*contd.*)** **i05310020**

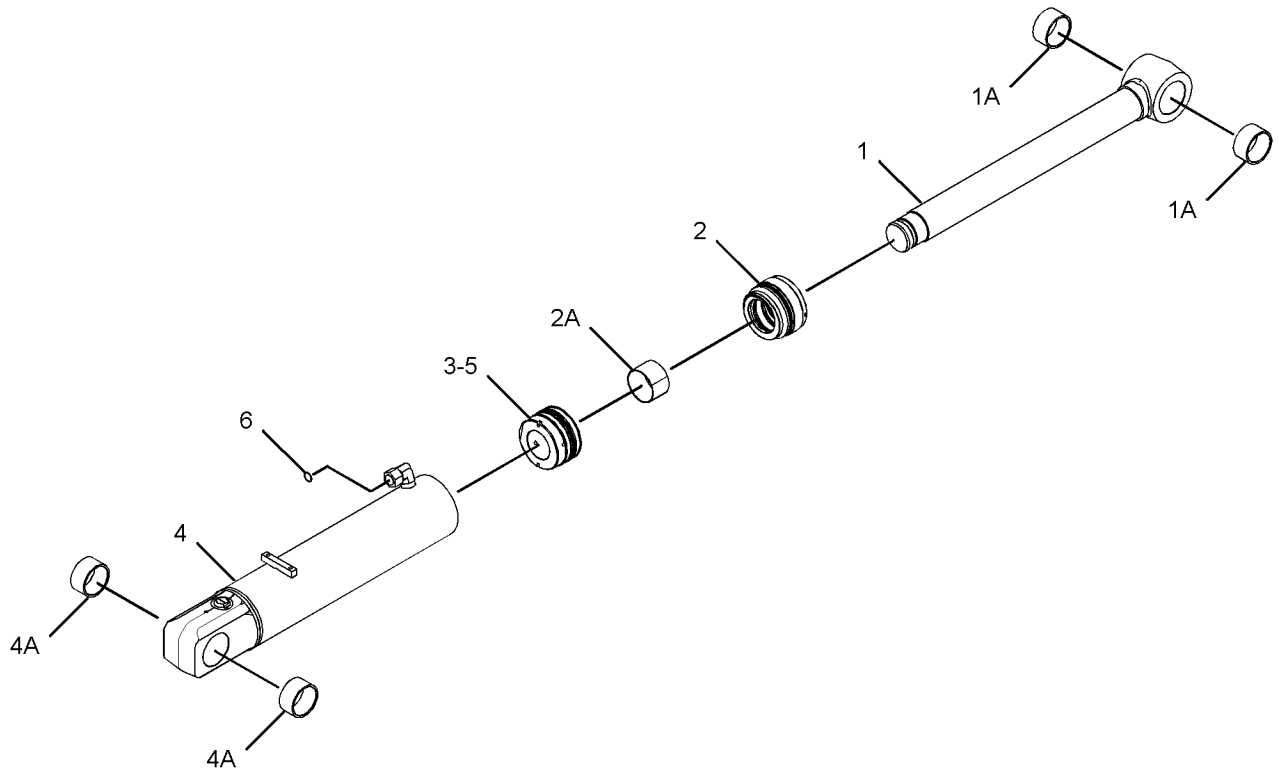

GRAPHIC #1 **<END>** g02805198

339-6799 FILTER GP-OIL

S/N: DYB1-UP

PART OF 381-4358 HYDRAULIC AR

SMCS-5068, 5091, 5092 **i05300014**

NOTE	REF NO	GRAPHIC REF	PART NUMBER	QTY	PART NAME 1 2 3 4 5 6 (PRODUCT LEVEL)	SEE PAGE
	1	1	**7K-1181**	1	STRAP-CABLE	
	2	1	**347-6907**	1	PLATE AS	
		1	**7T-1099**	1	LINK	
Y	3	1	*368-0754*	1	FILTER GP-OIL (HYDRAULIC)	332
	4	1	**110-6349**	1	FITTING AS (QUICK DISCONNECT)	
	5	1	*164-5567*	1	COUPLER AS-QUICK DISCONNECT (MALE)	
		1	**6V-3965**	1	FITTING (QUICK DISCONNECT)	
		1	**214-7568**	1	SEAL-O-RING	
	6	1	**3S-2093**	1	STRAP-CABLE	
	7	1	**4P-8134**	1	CLIP	
	8	1	**6V-0852**	2	CAP-DUST (FILTER OIL)	
	9	1	**7X-7729**	6	WASHER (11X25X3-MM THK)	
M	10	1	**8T-4136**	2	BOLT (M10X1.5X25-MM)	
M	11	1	**6V-3938**	4	BOLT (M10X1.5X20-MM)	

M - METRIC PART
Y - SEPARATE ILLUSTRATION

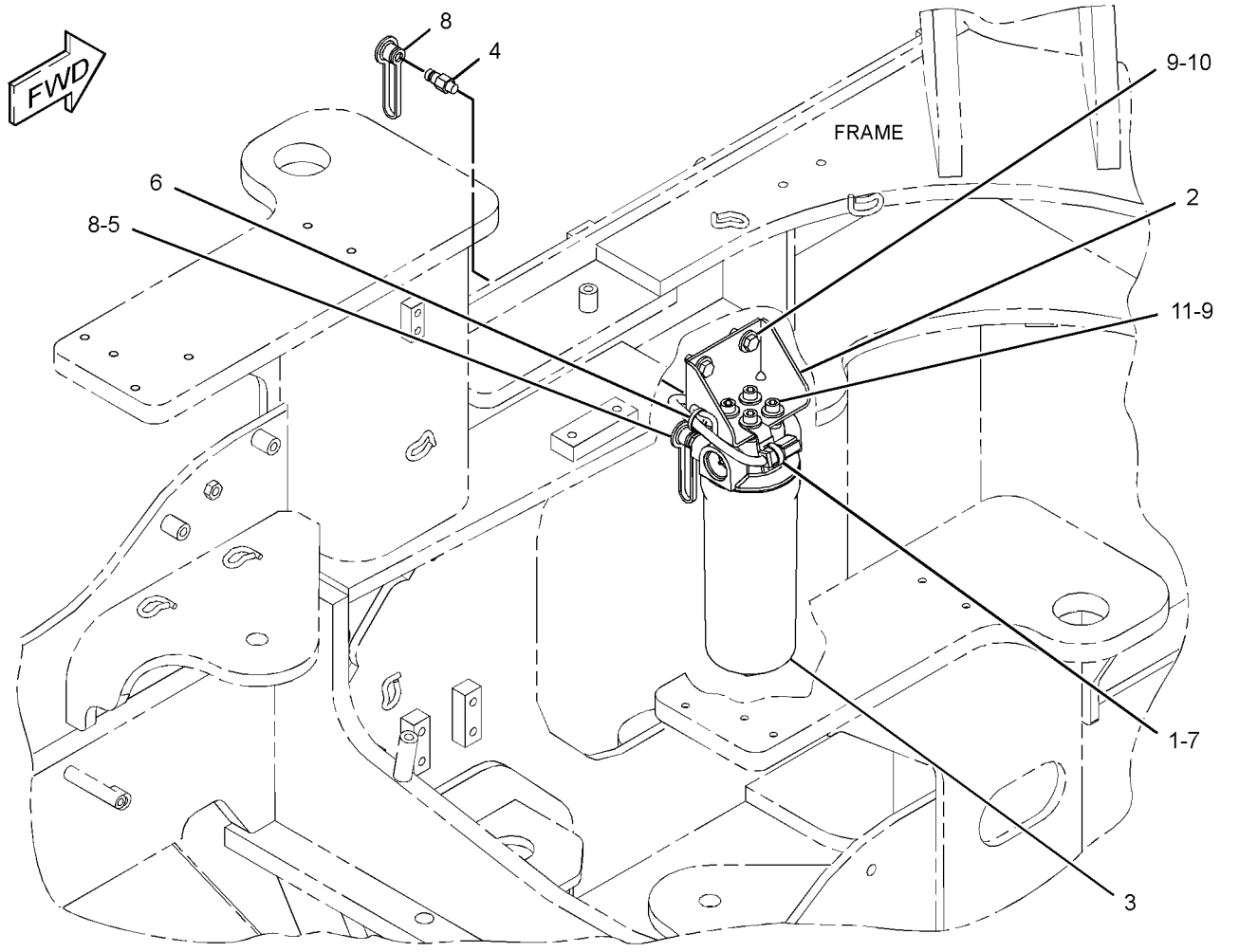

GRAPHIC #1 **<END>** g03145856

349-6211 FILTER GP-OIL

S/N: DYB1-UP

PART OF 368-0754 FILTER GP-OIL

SMCS-5068, 5091, 5092

i04832591

NOTE	REF NO	GRAPHIC REF	PART NUMBER	QTY	PART NAME 1 2 3 4 5 6 (PRODUCT LEVEL)	SEE PAGE
	1	1	**348-1861**	1	FILTER ELEMENT AS-OIL	
		1	**095-1671**	1	SEAL-O-RING	
	2	1	**352-1755**	1	TUBE-CENTER	
	3	1	**095-1671**	1	SEAL-O-RING	
	4	1	**6V-5048**	1	SEAL-O-RING	
	5	1	**9S-8002**	1	PLUG-O-RING (7/16-20-THD)	
					PARTS SHOWN IN GRAPHIC(S) WITHOUT A REFERENCE NUMBER ARE NOT SERVICED SEPARATELY	

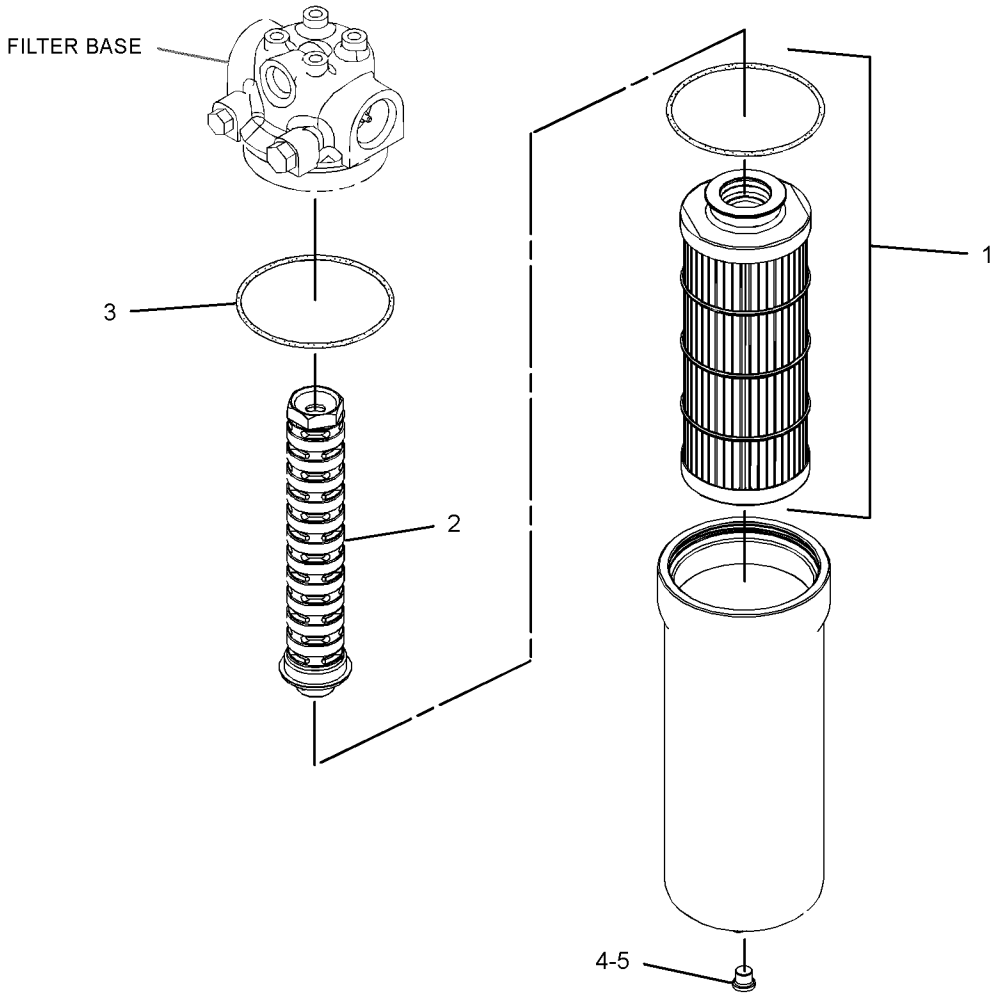

GRAPHIC #1

<END>

g02627820

368-0754 FILTER GP-OIL

S/N: DYB1-UP

PART OF 339-6799 FILTER GP-OIL

SMCS-5068, 5091, 5092 **i05309513**

NOTE	REF NO	GRAPHIC REF	PART NUMBER	QTY	PART NAME 1 2 3 4 5 6 (PRODUCT LEVEL)	SEE PAGE
	1	1	**349-6097**	1	SWITCH AS-PRESSURE (HYDRAULIC OIL)	
		1	**033-6033**	1	SEAL-O-RING	
		1	**206-9295**	1	SEAL-O-RING	
Y	2	1	**349-6211**	1	FILTER GP-OIL (HYDRAULIC, TRANSMISSION)	331
	3	1	**370-2163**	1	BASE AS-FILTER	
		1	**6V-5048**	1	SEAL-O-RING	
		1	**9S-4182**	1	PLUG-O-RING	
		1	**9S-4191**	1	PLUG-O-RING	
		1	**214-7568**	1	SEAL-O-RING	

Y - SEPARATE ILLUSTRATION

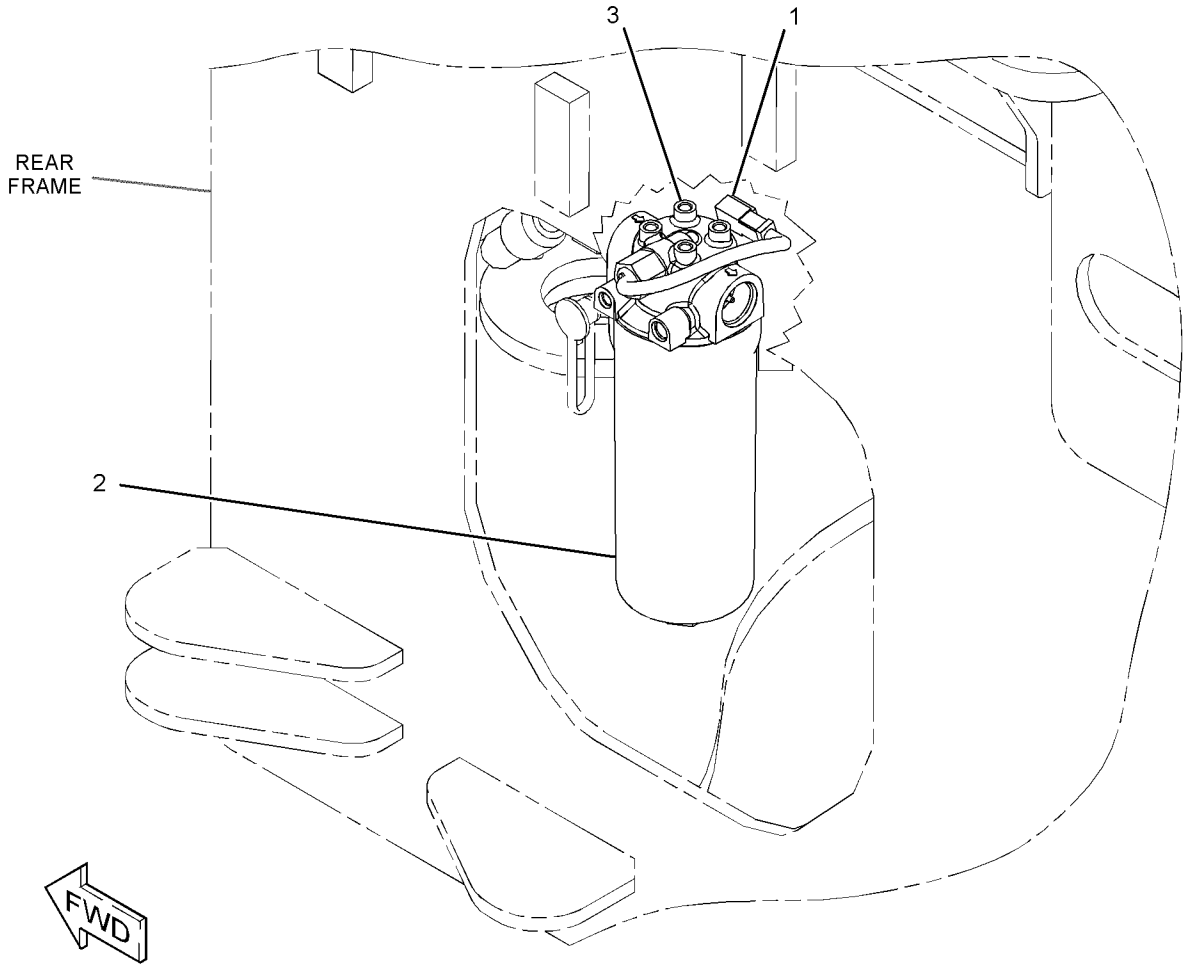

GRAPHIC #1 **<END>** g03199677

381-4358 HYDRAULIC AR

S/N: DYB1-UP

PART OF 381-4382 COMMON AR

SMCS-5051 **i05309501**

NOTE	PART NUMBER	QTY	PART NAME 1 2 3 4 5 6 (PRODUCT LEVEL)	SEE PAGE
Y	*339-6799*	1	FILTER GP-OIL	330
Y	*333-6918*	1	LINES GP-HYDRAULIC	340
Y	*380-8077*	1	LINES GP-HYDRAULIC FAN	349
Y	*333-6916*	1	LINES GP-HYDROSTATIC (PUMP, MOTOR)	202
Y	*339-6797*	1	LINES GP-HYDROSTATIC (COOLER)	204
Y	*333-6928*	1	LINES GP-TRANSMISSION FILTER	209
Y	*380-8104*	1	PUMP & MTG GP-BRAKE & HYD FAN	366
Y	*333-6902*	1	PUMP & MTG GP-IMPL & STEERING	367
Y	*339-6850*	1	TANK & MTG GP-HYDRAULIC	377

Y - SEPARATE ILLUSTRATION

<END>

347-8286 HYDRAULIC AR-2 VALVE—WITHOUT COUPLER

S/N: DYB1-UP

PART OF 387-4161 HYDRAULIC AR-2 VALVE

AN ATTACHMENT

SMCS-5051 **i05309976**

NOTE	PART NUMBER	QTY	PART NAME 1 2 3 4 5 6 (PRODUCT LEVEL)	SEE PAGE
Y	*333-1373*	1	CONTROL GP-ELECTROHYDRAULIC (2-VALVE)	424
Y	**343-3048**	1	VALVE GP-MAIN CONTROL (2-FUNCTION)	391

Y - SEPARATE ILLUSTRATION

<END>

387-4099 HYDRAULIC AR-2 VALVE—STANDARD LINKAGE

S/N: DYB1-UP

PART OF 387-4162 HYDRAULIC AR-2 VALVE

AN ATTACHMENT

SMCS-5051 **i05312270**

NOTE	PART NUMBER	QTY	PART NAME 1 2 3 4 5 6 (PRODUCT LEVEL)	SEE PAGE
Y	*333-1373*	1	CONTROL GP-ELECTROHYDRAULIC	424
Y	*387-4094*	1	LINES GP-COUPLER	338
Y	*333-6907*	1	MOUNTING GP-BRACKET	297
Y	*333-6950*	1	VALVE & LINES GP-COUPLER	380
Y	**343-3048**	1	VALVE GP-MAIN CONTROL (2-FUNCTION)	391

Y - SEPARATE ILLUSTRATION

<END>

387-4161 HYDRAULIC AR-2 VALVE—WITHOUT COUPLER

S/N: DYB1-UP

CANNOT BE USED WITH 387-4162—PAGE: 334, 387-4163—PAGE: 334, 419-8848—PAGE: 335

AN ATTACHMENT

SMCS-5051 **i05310055**

NOTE	PART NUMBER	QTY	PART NAME 1 2 3 4 5 6 (PRODUCT LEVEL)	SEE PAGE
Y	*347-8286*	1	HYDRAULIC AR-2 VALVE (WITHOUT COUPLER)	333
Y	*381-4394*	1	LINKAGE AR-FRONT	404

Y - SEPARATE ILLUSTRATION

<END>

387-4162 HYDRAULIC AR-2 VALVE—STANDARD LINKAGE

S/N: DYB1-UP

CANNOT BE USED WITH 387-4161—PAGE: 334, 387-4163—PAGE: 334, 419-8848—PAGE: 335

AN ATTACHMENT

SMCS-5051 **i05312269**

NOTE	PART NUMBER	QTY	PART NAME 1 2 3 4 5 6 (PRODUCT LEVEL)	SEE PAGE
Y	*387-4099*	1	HYDRAULIC AR-2 VALVE	333
Y	*381-4394*	1	LINKAGE AR-FRONT	404

Y - SEPARATE ILLUSTRATION

<END>

387-4163 HYDRAULIC AR-3 VALVE—STANDARD LINKAGE

S/N: DYB1-UP

CANNOT BE USED WITH 387-4161—PAGE: 334, 387-4162—PAGE: 334, 419-8848—PAGE: 335

AN ATTACHMENT

SMCS-5051 **i05312304**

NOTE	PART NUMBER	QTY	PART NAME 1 2 3 4 5 6 (PRODUCT LEVEL)	SEE PAGE
Y	*387-4199*	1	HYDRAULIC AR-3 VALVE	334
Y	*381-4394*	1	LINKAGE AR-FRONT	404

Y - SEPARATE ILLUSTRATION

<END>

387-4199 HYDRAULIC AR-3 VALVE—STANDARD

S/N: DYB1-UP

PART OF 387-4163 HYDRAULIC AR-3 VALVE

AN ATTACHMENT

SMCS-5051 **i05312303**

NOTE	PART NUMBER	QTY	PART NAME 1 2 3 4 5 6 (PRODUCT LEVEL)	SEE PAGE
Y	*333-1374*	1	CONTROL GP-ELECTROHYDRAULIC (3-FUNCTION)	425
Y	*372-1877*	1	CONTROL GP-UNPROGRAMMED	106
Y	*333-1379*	1	ELECTRONICS GP-IMPLEMENT	107
Y	*387-4094*	1	LINES GP-COUPLER	338
Y	*387-4093*	1	LINES GP-FRONT (THIRD FUNCTION)	339
Y	*333-6924*	1	LINES GP-HYDRAULIC (THIRD FUNCTION)	345
Y	*333-6907*	1	MOUNTING GP-BRACKET	297
Y	*333-6950*	1	VALVE & LINES GP-COUPLER	380
Y	**343-3050**	1	VALVE GP-MAIN CONTROL (3-FUNCTION)	392

Y - SEPARATE ILLUSTRATION

<END>

419-8848 HYDRAULIC AR-4 VALVE—STANDARD LINKAGE

S/N: DYB1-UP

CANNOT BE USED WITH 387-4161—PAGE: 334, 387-4162—PAGE: 334, 387-4163—PAGE: 334

AN ATTACHMENT

SMCS-5051 **i05312436**

NOTE	PART NUMBER	QTY	PART NAME 1 2 3 4 5 6 (PRODUCT LEVEL)	SEE PAGE
Y	*419-8849*	1	HYDRAULIC AR-4 VALVE	335
Y	*381-4394*	1	LINKAGE AR-FRONT	404

Y - SEPARATE ILLUSTRATION

<END>

419-8849 HYDRAULIC AR-4 VALVE—STANDARD LINKAGE

S/N: DYB1-UP

PART OF 419-8848 HYDRAULIC AR-4 VALVE

AN ATTACHMENT

SMCS-5051 **i05312434**

NOTE	PART NUMBER	QTY	PART NAME 1 2 3 4 5 6 (PRODUCT LEVEL)	SEE PAGE
Y	*333-1375*	1	CONTROL GP-ELECTROHYDRAULIC	426
Y	*372-1877*	1	CONTROL GP-UNPROGRAMMED	106
Y	*333-1379*	1	ELECTRONICS GP-IMPLEMENT	107
Y	*387-4094*	1	LINES GP-COUPLER	338
Y	*387-4093*	1	LINES GP-FRONT (THIRD FUNCTION)	339
Y	*333-6924*	1	LINES GP-HYDRAULIC (THIRD FUNCTION)	345
Y	*333-6926*	1	LINES GP-HYDRAULIC (FOURTH FUNCTION)	347
Y	*333-6907*	1	MOUNTING GP-BRACKET	297
Y	*333-6950*	1	VALVE & LINES GP-COUPLER	380
Y	**343-3052**	1	VALVE GP-MAIN CONTROL (4-FUNCTION)	393

Y - SEPARATE ILLUSTRATION

<END>

333-6952 LINES GP-COUPLER

S/N: DYB1-UP
PART OF 333-6865 COUPLER AR-QUICK
AN ATTACHMENT

SMCS-5057, 5133 **i05317212**

NOTE	REF NO	GRAPHIC REF	PART NUMBER	QTY	PART NAME 1 2 3 4 5 6 (PRODUCT LEVEL)	SEE PAGE
	1	1	**7K-1181**	7	STRAP-CABLE	
	2	1	**350-1226**	1	SWITCH AS-ROCKER (COUPLER)	
		1	**111-7899**	1	GASKET	
	3	1	**8T-4121**	2	WASHER-HARD (11X21X2.5-MM THK)	
I	4	1	**389-8059**	2	HOSE AS	
I	5	1	**389-8060**	2	HOSE AS	
	6	1	*148-8326*	6	CONNECTOR AS	
					(EACH INCLUDES)	
		1	**3J-7354**	1	SEAL-O-RING	
		1	**6V-8397**	1	SEAL-O-RING	
		1	**6V-9872**	1	CONNECTOR	
	7	1	**5K-5338**	2	CLIP	
M	8	1	**8T-4136**	2	BOLT (M10X1.5X25-MM)	

I - REFER TO HYDRAULIC INFORMATION SYSTEM
M - METRIC PART

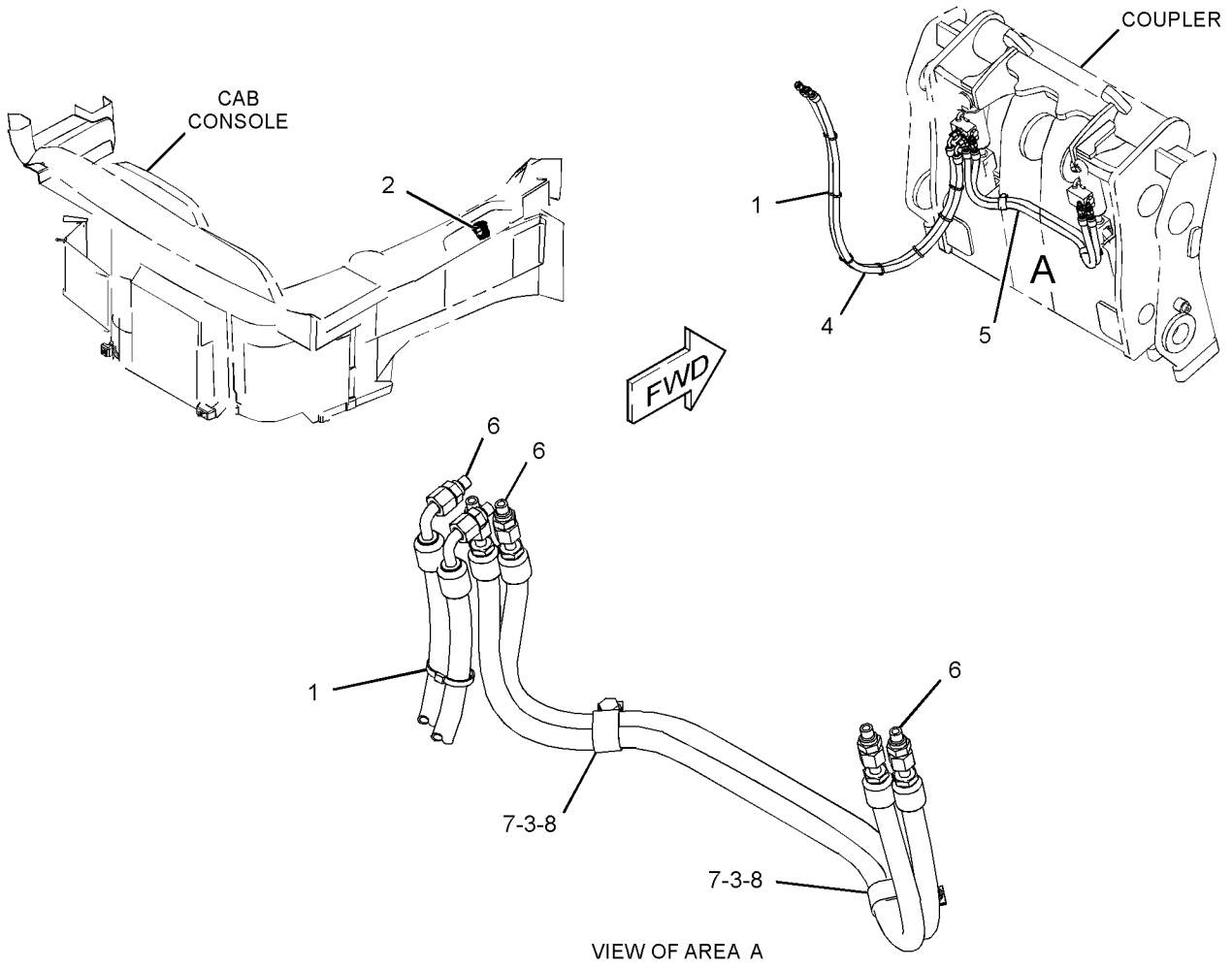

GRAPHIC #1 **<END>** g03249259

333-6962 LINES GP-COUPLER—THIRD FUNCTION

S/N: DYB1-UP

FOR USE WITH 333-6865—PAGE: 536, 387-4163—PAGE: 334

AN ATTACHMENT

SMCS-5057, 5133

i05312853

NOTE	REF NO	GRAPHIC REF	PART NUMBER	QTY	PART NAME 1 2 3 4 5 6 (PRODUCT LEVEL)	SEE PAGE
	1	1	**152-5717**	1	CAP-DUST	
	2	1	**152-5718**	1	CAP-DUST	
	3	1	**241-6189**	1	FITTING AS (QUICK DISCONNECT, MALE)	
	4	1	**241-6190**	1	FITTING AS (QUICK DISCONNECT, FEMALE)	
					(EACH FITTING AS INCLUDES)	
		1	**5K-9090**	1	SEAL-O-RING	
I	5	1	**353-5191**	2	HOSE AS	
	6	1	**390-8633**	2	PLATE	
	7	1	**5K-9090**	2	SEAL-O-RING	
	8	1	**6V-9172**	2	NUT (1-7/16-12-THD)	
	9	1	**8T-4121**	4	WASHER-HARD (11X21X2.5-MM THK)	
M	10	1	**8T-4136**	4	BOLT (M10X1.5X25-MM)	

I - REFER TO HYDRAULIC INFORMATION SYSTEM
M - METRIC PART

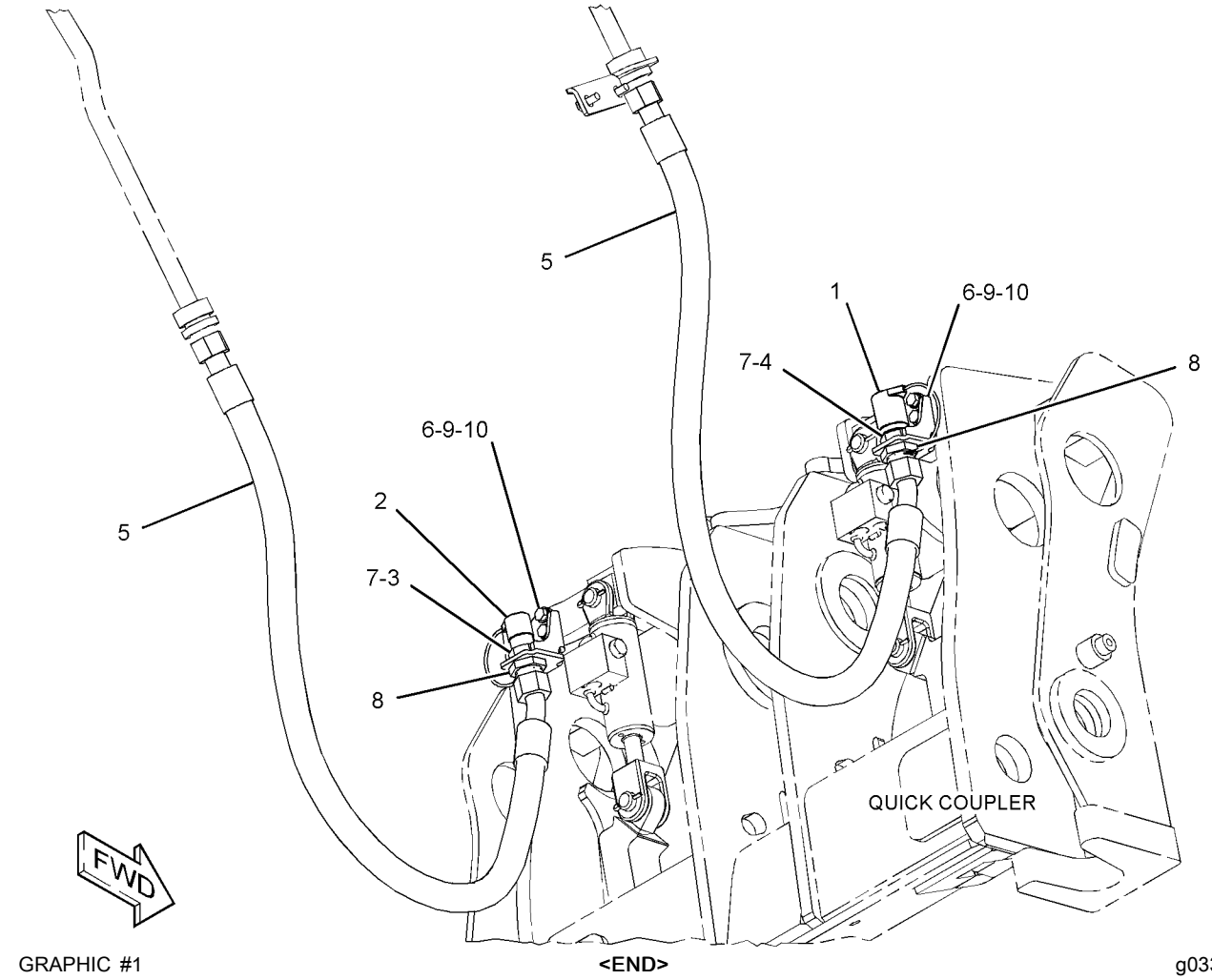

GRAPHIC #1

<END>

g03323311

387-4094 LINES GP-COUPLER–COUPLER

S/N: DYB1-UP

PART OF 387-4099 HYDRAULIC AR-2 VALVE, 387-4199 HYDRAULIC AR-3 VALVE, 419-8849 HYDRAULIC AR-4 VALVE

AN ATTACHMENT

SMCS-5057, 5133 **i05312272**

NOTE	REF NO	GRAPHIC REF	PART NUMBER	QTY	PART NAME 1 2 3 4 5 6 (PRODUCT LEVEL)	SEE PAGE
	1	1	**7K-1181**	3	STRAP-CABLE	
	2	1	**352-5586**	1	PLATE AS	
M		1	**159-9541**	1	NUT-WELD (M10X1.5-THD)	
I	3	1	**384-2862**	2	HOSE AS	
	4	1	**398-1496**	1	TUBE AS	
	5	1	**398-1497**	1	TUBE AS	
	6	1	**5P-9299**	4	CLIP	
	7	1	**6V-8397**	2	SEAL-O-RING	
	8	1	**6V-8398**	2	SEAL-O-RING	
	9	1	**6V-9168**	2	NUT (11/16-16-THD)	
	10	1	**6V-9829**	2	CAP AS	
	11	1	**8T-4121**	3	WASHER-HARD (11X21X2.5-MM THK)	
M	12	1	**8T-4136**	1	BOLT (M10X1.5X25-MM)	
M	13	1	**8T-4137**	2	BOLT (M10X1.5X20-MM)	

I - REFER TO HYDRAULIC INFORMATION SYSTEM
M - METRIC PART

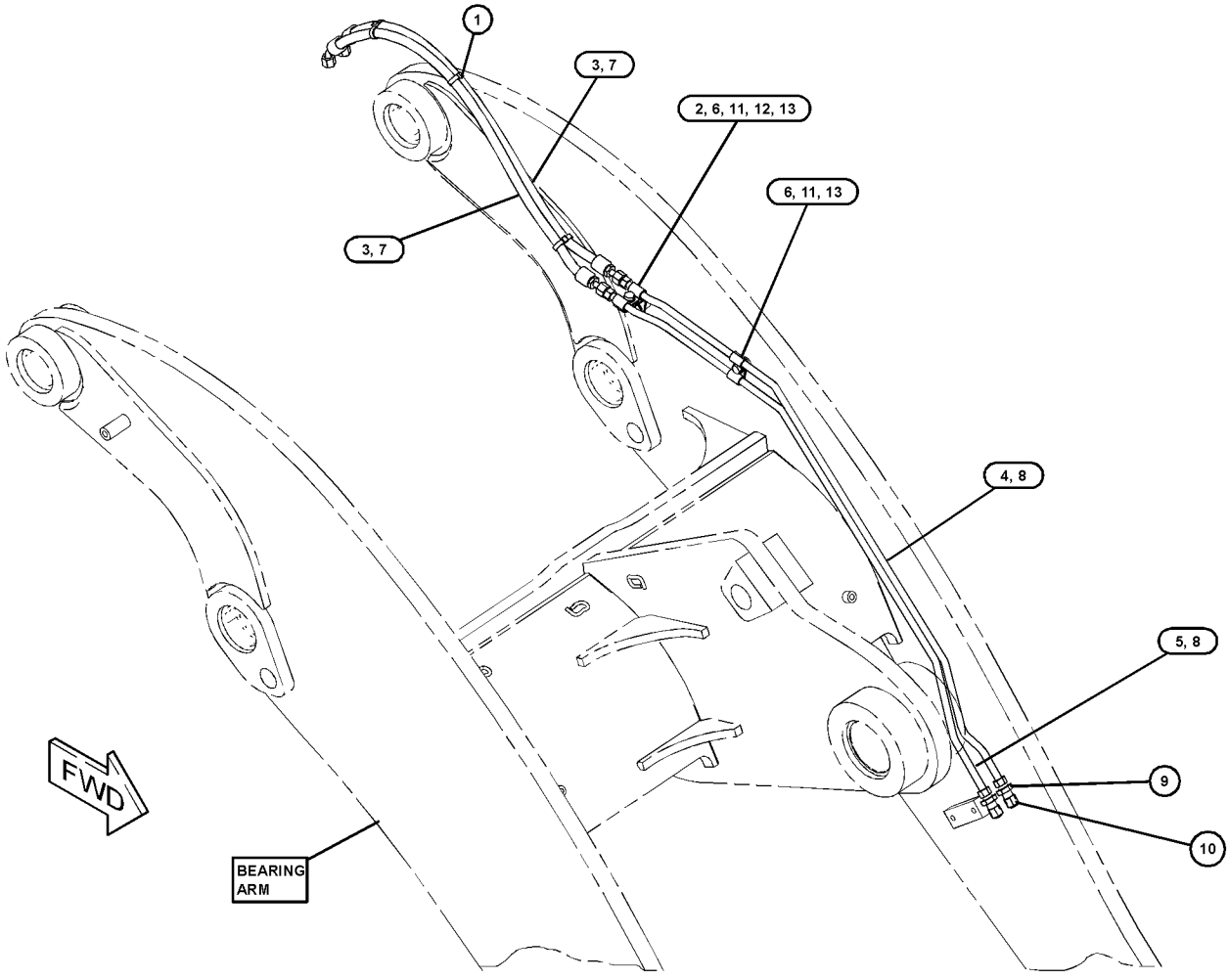

GRAPHIC #1 **<END>** g03381035

387-4093 LINES GP-FRONT

S/N: DYB1-UP

PART OF 387-4199 HYDRAULIC AR-3 VALVE, 419-8849 HYDRAULIC AR-4 VALVE AN ATTACHMENT

SMCS-5057 **i05312305**

NOTE	REF NO	GRAPHIC REF	PART NUMBER	QTY	PART NAME 1 2 3 4 5 6 (PRODUCT LEVEL)	SEE PAGE
	1	1	**353-9896**	1	PLATE	
	2	1	**393-0357**	2	PLATE	
I	3	1	**420-0811**	2	HOSE AS	
	4	1	**420-0812**	1	TUBE AS	
	5	1	**420-0813**	1	TUBE AS	
	6	1	*155-2026*	2	UNION AS	
					(EACH INCLUDES)	
		1	**5K-9090**	2	SEAL-O-RING	
		1	**6V-8998**	1	UNION	
	7	1	**5K-9090**	2	SEAL-O-RING	
	8	1	**6V-9172**	4	NUT (1-7/16-12-THD)	
B	9	1	**6V-9833**	2	CAP AS	
	10	1	**7X-7729**	6	WASHER (11X25X3-MM THK)	
	11	1	**8T-1889**	2	CLIP (SLOT)	
	12	1	**8T-1890**	2	CLIP (TAB)	
	13	1	**8T-4121**	2	WASHER-HARD (11X21X2.5-MM THK)	
M	14	1	**8T-4136**	6	BOLT (M10X1.5X25-MM)	
M	15	1	**8T-4137**	2	BOLT (M10X1.5X20-MM)	

B - USE AS REQUIRED
I - REFER TO HYDRAULIC INFORMATION SYSTEM
M - METRIC PART

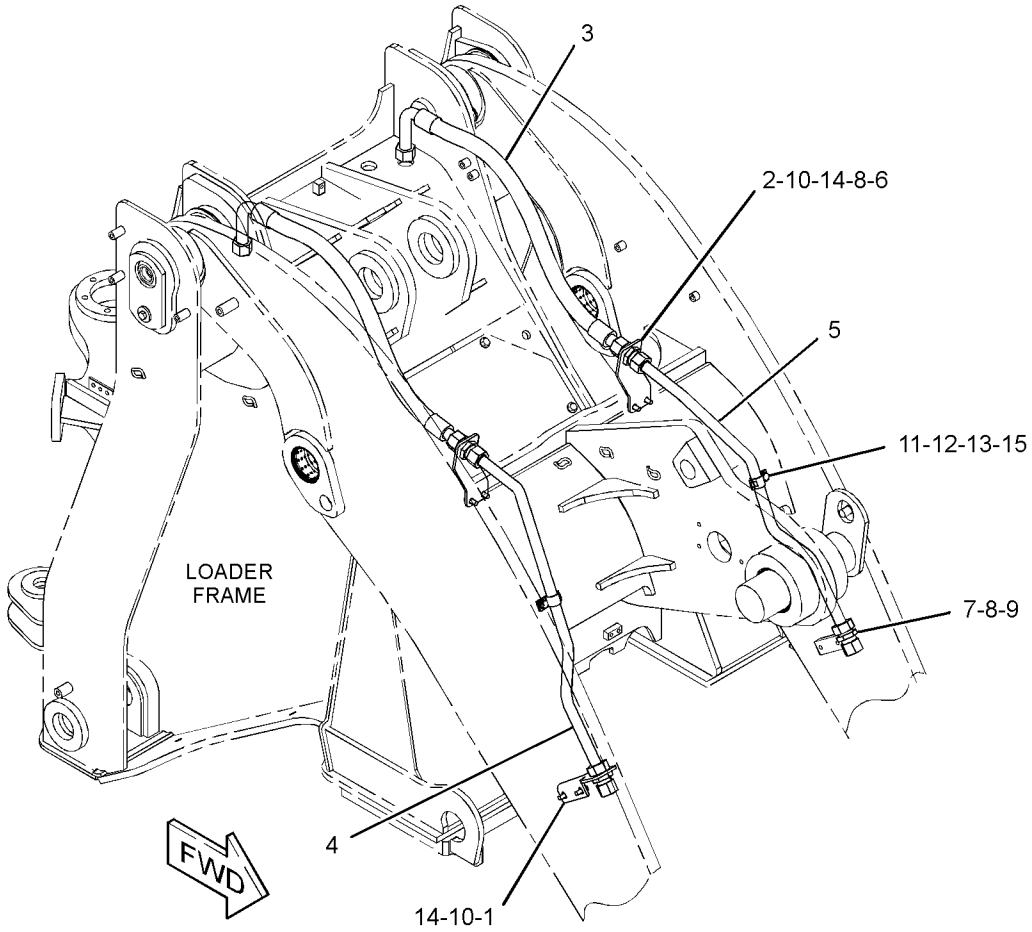

GRAPHIC #1 **<END>** g03378814

333-6918 LINES GP-HYDRAULIC

S/N: DYB1-UP

PART OF 381-4358 HYDRAULIC AR

SMCS-5057 **i05299664**

NOTE	REF NO	GRAPHIC REF	PART NUMBER	QTY	PART NAME 1 2 3 4 5 6 (PRODUCT LEVEL)	SEE PAGE
	1	2	**110-6349**	1	FITTING AS (QUICK DISCONNECT)	
I	2	1	**122-6241**	1	HOSE AS	
	3	1	**123-4750**	1	VALVE AS-CHECK (INTERLOCK)	
		1	**3J-1907**	1	SEAL-O-RING	
		1	**6V-8397**	1	SEAL-O-RING	
	4	2	**131-3025**	2	FLANGE-SPLIT	
I	5	2	**160-9415**	1	HOSE AS	
	6	2	*164-9640*	1	CONNECTOR AS	
		2	**3J-1907**	1	SEAL-O-RING	
		2	**4J-5477**	1	SEAL-O-RING	
		2	**145-2237**	1	CONNECTOR	
	7	2	*165-2273*	1	VALVE GP-SHUTOFF (HYDRAULIC OIL)	
		2	**3K-0360**	1	SEAL-O-RING	
		2	**6V-7238**	1	VALVE-SHUTOFF (HYDRAULIC OIL)	
I	8	2	*167-3925*	1	HOSE AS	
	9	2	**200-6345**	2	MOUNT (DUAL SWIVEL)	
	10	1,2	**204-2281**	9	STRAP-CABLE	
I	11	2	**214-3418**	1	HOSE AS	
I	12	2	**255-0577**	1	HOSE AS	
	13	2	**258-3899**	1	ADAPTER AS	
Y	14	2	*373-7014*	1	ACCUMULATOR GP-PILOT OIL (CHARGED)	318
	15	2	*287-7341*	1	ELBOW AS	
		2	**3J-7354**	1	SEAL-O-RING	
		2	**124-8909**	1	ELBOW	
I	16	1	**300-9104**	1	HOSE AS	
	17	2	**323-3309**	4	CAP	
	18	2	**335-9214**	1	CLAMP-BAND	
	19	2	**336-1577**	1	HOSE	
	20	2	**336-1578**	1	HOSE	
I	21	2	**307-2746**	1	HOSE AS	
	22	2	**347-4165**	3	CLAMP-BAND	
I	23	2	**347-6406**	1	HOSE AS	
I	24	2	**347-6408**	1	HOSE AS	
	25	2	**347-6410**	1	TUBE AS	
I	26	2	**347-6411**	1	HOSE AS	
I	27	1	**347-6414**	1	HOSE AS	
I	28	2	**347-6420**	1	HOSE AS	
	29	2	**347-8096**	1	MANIFOLD	
	30	2	**347-8098**	1	BRACKET AS	
M		2	**159-9541**	2	NUT-WELD (M10X1.5-THD)	
I	31	2	**347-8099**	1	HOSE AS	
	32	2	**349-7841**	1	PLATE	
	33	2	**349-7843**	1	TUBE AS	
	34	2	**352-1045**	1	VALVE GP-CHECK (BACK PRESSURE)	
		2	**2S-4078**	1	SEAL-O-RING	
		2	**6V-8400**	1	SEAL-O-RING	
I	35	2	**359-0022**	1	HOSE AS	
	36	1	**366-1739**	1	PLATE AS	
M		1	**159-9541**	4	NUT-WELD (M10X1.5-THD)	
I	37	1	**366-2736**	1	HOSE AS	
I	38	2	**366-2737**	1	HOSE AS	
	39	2	**131-8201**	2	CLIP (SLOT)	
	40	2	**131-8202**	2	CLIP (TAB)	
	41	2	*148-8313*	1	ADAPTER AS	
		2	**3K-0360**	1	SEAL-O-RING	
		2	**5P-6944**	1	ADAPTER	
	42	1	*148-8327*	1	CONNECTOR AS	
		1	**3D-2824**	1	SEAL-O-RING	
		1	**6V-8637**	1	CONNECTOR	

333-6918 **LINES GP-HYDRAULIC (*contd.*)** **i05299664**

NOTE	REF NO	GRAPHIC REF	PART NUMBER	QTY	PART NAME 1 2 3 4 5 6 (PRODUCT LEVEL)	SEE PAGE
		1	**6V-9746**	1	SEAL-O-RING	
	43	2	*148-8373*	1	ELBOW AS	
		2	**6V-8400**	1	SEAL-O-RING	
		2	**7M-8485**	1	SEAL-O-RING	
		2	**8C-3364**	1	ELBOW	
	44	1	*148-8378*	1	ELBOW AS	
		1	**3J-1907**	1	SEAL-O-RING	
		1	**6V-8397**	1	SEAL-O-RING	
		1	**6V-8724**	1	ELBOW	
	45	2	*148-8385*	1	ELBOW AS	
		2	**3J-7354**	1	SEAL-O-RING	
		2	**4J-5477**	1	SEAL-O-RING	
		2	**6V-9000**	1	ELBOW	
B	46	2	*148-8407*	1	PLUG AS	
		2	**3J-1907**	1	SEAL-O-RING	
		2	**9S-4191**	1	PLUG-O-RING	
	47	2	*148-8411*	1	PLUG AS	
		2	**3K-0360**	1	SEAL-O-RING	
		2	**9S-4185**	1	PLUG-O-RING	
	48	2	*148-8435*	4	TEE AS	
					(EACH INCLUDES)	
		2	**3J-1907**	1	SEAL-O-RING	
		2	**6V-8397**	2	SEAL-O-RING	
		2	**6V-8781**	1	TEE	
	49	1,2	*149-5452*	3	UNION AS (STRAIGHT)	
					(EACH INCLUDES)	
		1,2	**6V-8397**	2	SEAL-O-RING	
		1,2	**6V-8994**	1	UNION (STRAIGHT)	
	50	1,2	*150-4052*	2	UNION AS	
					(EACH INCLUDES)	
		1,2	**4J-5477**	2	SEAL-O-RING	
		1,2	**6V-8993**	1	UNION	
	51	1	*153-6238*	1	ELBOW AS	
		1	**2S-4078**	1	SEAL-O-RING	
		1	**6V-8400**	1	SEAL-O-RING	
		1	**6V-9006**	1	ELBOW	
	52	2	*153-6246*	1	TEE AS	
		2	**6V-8397**	3	SEAL-O-RING	
		2	**7X-0820**	1	TEE	
	53	1	*155-2026*	1	UNION AS	
		1	**5K-9090**	2	SEAL-O-RING	
		1	**6V-8998**	1	UNION	
	54	2	*164-5567*	2	COUPLER AS-QUICK DISCONNECT (MALE)	
					(EACH INCLUDES)	
		2	**6V-3965**	1	FITTING (QUICK DISCONNECT)	
		2	**214-7568**	1	SEAL-O-RING	
	55	2	**1P-4582**	4	FLANGE-HALF	
	56	2	**1P-4584**	4	FLANGE-HALF	
	57	2	**211-4348**	1	ELBOW AS	
	58	1,2	**2P-1279**	2	LOCKNUT (9/16-18-THD)	
	59	2	**4J-0522**	1	SEAL-O-RING	
	60	2	**4J-0527**	2	SEAL-O-RING	
	61	2	**5K-9090**	1	SEAL-O-RING	
	62	1	**5P-7470**	1	CLIP (SLOT)	
	63	1	**5P-7471**	1	CLIP (TAB)	
	64	1	**5P-8182**	1	GROMMET	
	65	2	**6J-2680**	2	SEAL-O-RING	
	66	2	**6V-0852**	3	CAP-DUST	
	67	2	**6V-8397**	2	SEAL-O-RING	
	68	2	**6V-8400**	1	SEAL-O-RING	
	69	1,2	**6V-9168**	4	NUT (11/16-16-THD)	
	70	1,2	**6V-9172**	2	NUT (1-7/16-12-THD)	
B	71	2	**6V-9829**	6	CAP AS	

333-6918 **LINES GP-HYDRAULIC (*contd.*)** **i05299664**

NOTE	REF NO	GRAPHIC REF	PART NUMBER	QTY	PART NAME 1 2 3 4 5 6 (PRODUCT LEVEL)	SEE PAGE
B	72	2	**6V-9831**	1	CAP AS	
	73	2	**7J-9108**	1	SEAL-O-RING	
M	74	2	**7X-2543**	2	BOLT (M10X1.5X120-MM)	
	75	1,2	**7X-7729**	5	WASHER (11X25X3-MM THK)	
	76	2	**8S-0023**	1	CLIP (SLOT)	
	77	2	**8S-0024**	1	CLIP (TAB)	
	78	2	**8T-4121**	7	WASHER-HARD (11X21X2.5-MM THK)	
M	79	1,2	**8T-4136**	8	BOLT (M10X1.5X25-MM)	
M	80	2	**8T-4183**	4	BOLT (M12X1.75X40-MM)	
M	81	2	**8T-4184**	8	BOLT (M12X1.75X45-MM)	
M	82	2	**8T-4194**	4	BOLT (M12X1.75X50-MM)	
M	83	2	**8T-4195**	2	BOLT (M10X1.5X30-MM)	
	84	1,2	**8T-4223**	21	WASHER-HARD (13.5X25.5X3-MM THK)	
M	85	1,2	**8T-4956**	5	BOLT (M12X1.75X35-MM)	
	86	2	**7K-1181**	6	STRAP-CABLE	
	87	2	**206-2423**	1	SADDLE	
C	88	2	*164-9869*	1	CONNECTOR AS	
		2	**3J-1907**	1	SEAL-O-RING	
		2	**6V-8397**	1	SEAL-O-RING	
		2	**9X-2297**	1	CONNECTOR	
	89	2	*148-8433*	1	TEE AS	
		2	**6V-8397**	2	SEAL-O-RING	
		2	**6V-9836**	1	TEE-SWIVEL	

B - USE AS REQUIRED
C - CHANGE FROM PREVIOUS TYPE
I - REFER TO HYDRAULIC INFORMATION SYSTEM
M - METRIC PART
Y - SEPARATE ILLUSTRATION

333-6918 **LINES GP-HYDRAULIC (*contd.*)** **i05299664**

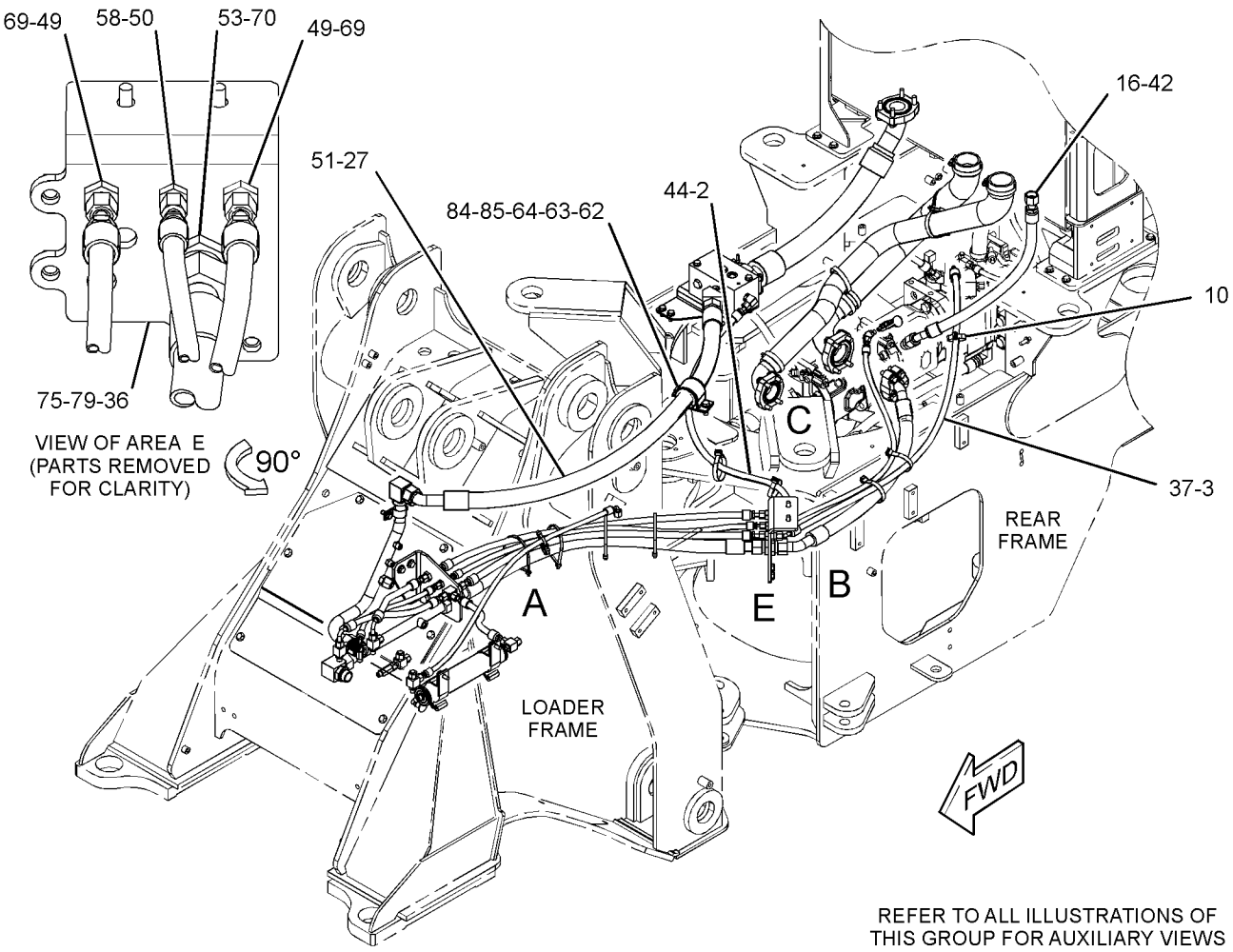

REFER TO ALL ILLUSTRATIONS OF
THIS GROUP FOR AUXILIARY VIEWS

GRAPHIC #1 g03340138

333-6918 **LINES GP-HYDRAULIC (*contd.*)** **i05299664**

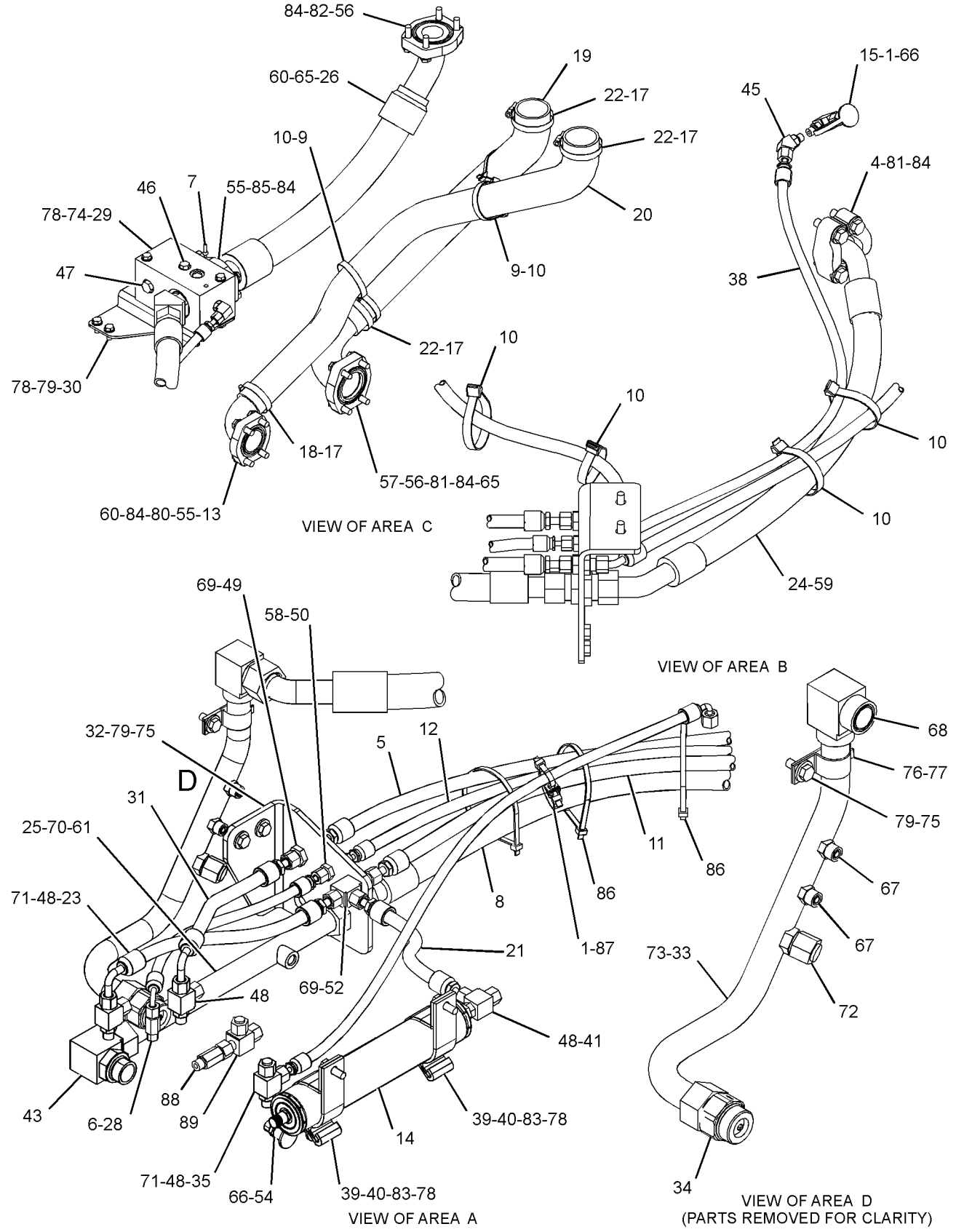

GRAPHIC #2 **<END>** g03340139

333-6924 LINES GP-HYDRAULIC—THIRD FUNCTION

S/N: DYB1-UP

PART OF 387-4199 HYDRAULIC AR-3 VALVE, 419-8849 HYDRAULIC AR-4 VALVE AN ATTACHMENT

SMCS-5057 **i05312293**

NOTE	REF NO	GRAPHIC REF	PART NUMBER	QTY	PART NAME 1 2 3 4 5 6 (PRODUCT LEVEL)	SEE PAGE
I	1	1	**348-7719**	1	HOSE AS	
I	2	1	**348-7720**	1	HOSE AS	
	3	1	**356-5801**	1	TUBE AS	
	4	1	**356-5802**	1	TUBE AS	
	5	1	**361-3389**	1	PLATE AS	
M		1	**159-9541**	1	NUT-WELD (M10X1.5-THD)	
	6	1	*148-8327*	2	CONNECTOR AS	
					(EACH INCLUDES)	
		1	**3D-2824**	1	SEAL-O-RING	
		1	**6V-8637**	1	CONNECTOR	
		1	**6V-9746**	1	SEAL-O-RING	
	7	1	**5K-9090**	4	SEAL-O-RING	
	8	1	**6V-9172**	2	NUT (1-7/16-12-THD)	
	9	1	**8T-1889**	2	CLIP (SLOT)	
	10	1	**8T-1890**	2	CLIP (TAB)	
	11	1	**8T-4121**	2	WASHER-HARD (11X21X2.5-MM THK)	
M	12	1	**8T-4136**	2	BOLT (M10X1.5X25-MM)	

I - REFER TO HYDRAULIC INFORMATION SYSTEM
M - METRIC PART

333-6924 **LINES GP-HYDRAULIC (*contd.*)** **i05312293**

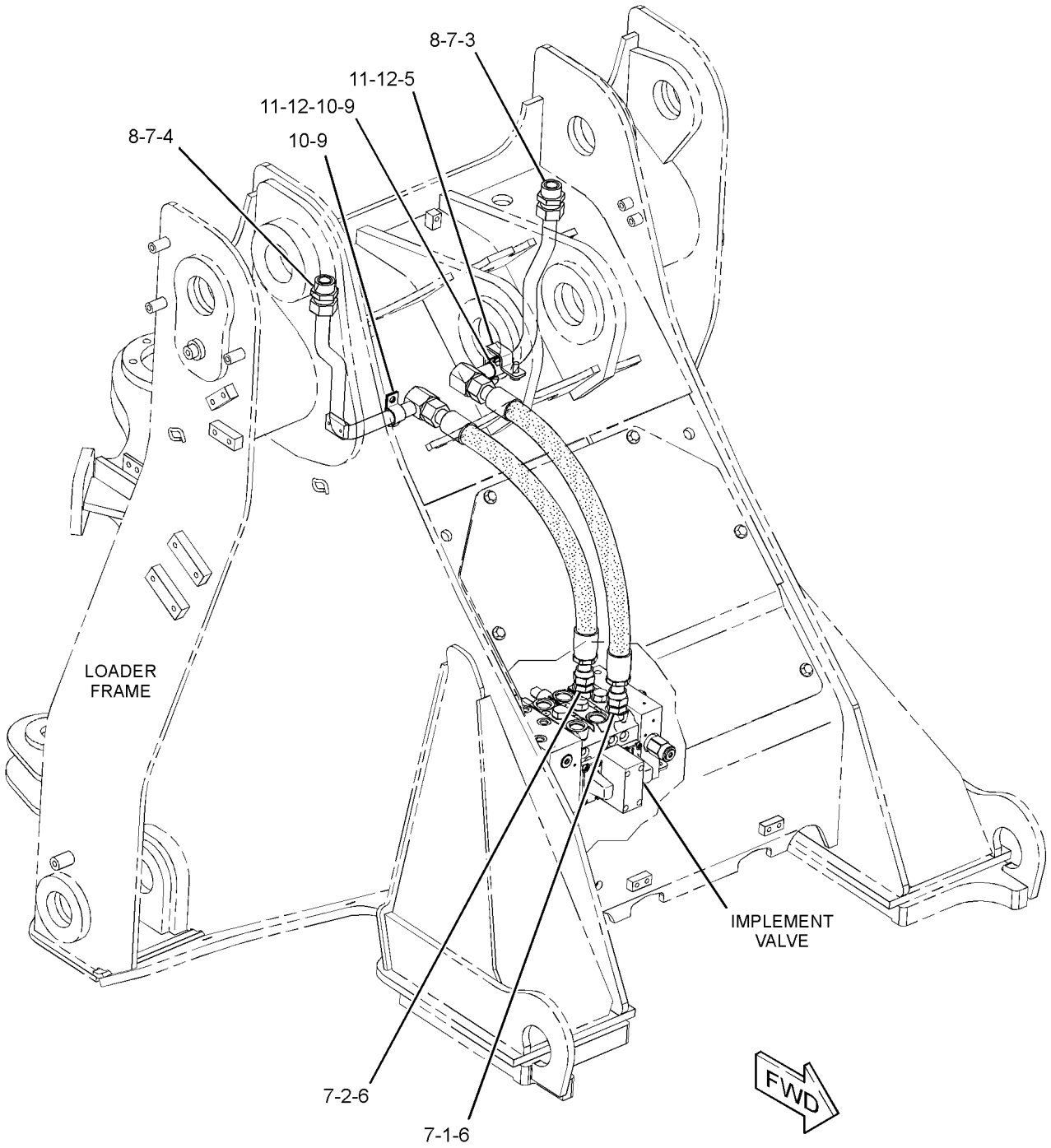

GRAPHIC #1 **<END>** g02758776

333-6926 LINES GP-HYDRAULIC—FOURTH FUNCTION

S/N: DYB1-UP

PART OF 419-8849 HYDRAULIC AR-4 VALVE AN ATTACHMENT

SMCS-5057 **i05312428**

NOTE	REF NO	GRAPHIC REF	PART NUMBER	QTY	PART NAME 1 2 3 4 5 6 (PRODUCT LEVEL)	SEE PAGE
I	1	1	**312-3032**	2	HOSE AS	
	2	1	**364-6494**	2	PLATE AS	
					(EACH INCLUDES)	
M		1	**159-9541**	1	NUT-WELD (M10X1.5-THD)	
I	3	1	**382-0691**	1	HOSE AS	
I	4	1	**382-0692**	1	HOSE AS	
	5	1	*148-8341*	2	CONNECTOR AS	
					(EACH INCLUDES)	
		1	**3D-2824**	1	SEAL-O-RING	
		1	**6V-8713**	1	CONNECTOR	
		1	**7J-9108**	1	SEAL-O-RING	
	6	1	*148-8457*	4	UNION AS (STRAIGHT)	
					(EACH INCLUDES)	
		1	**6V-8398**	2	SEAL-O-RING	
		1	**6V-8995**	1	UNION (STRAIGHT)	
	7	1	**4S-1962**	1	CLIP	
	8	1	**5P-7464**	2	CLIP (SLOT)	
	9	1	**5P-7465**	2	CLIP (TAB)	
	10	1	**6V-1249**	2	GROMMET (22-MM ID)	
	11	1	**6V-9169**	4	NUT (13/16-16-THD)	
	12	1	**6V-9830**	2	CAP AS	
	13	1	**8T-4121**	7	WASHER-HARD (11X21X2.5-MM THK)	
M	14	1	**8T-4136**	4	BOLT (M10X1.5X25-MM)	
M	15	1	**8T-4195**	3	BOLT (M10X1.5X30-MM)	

I - REFER TO HYDRAULIC INFORMATION SYSTEM
M - METRIC PART

333-6926 **LINES GP-HYDRAULIC (*contd.*)** **i05312428**

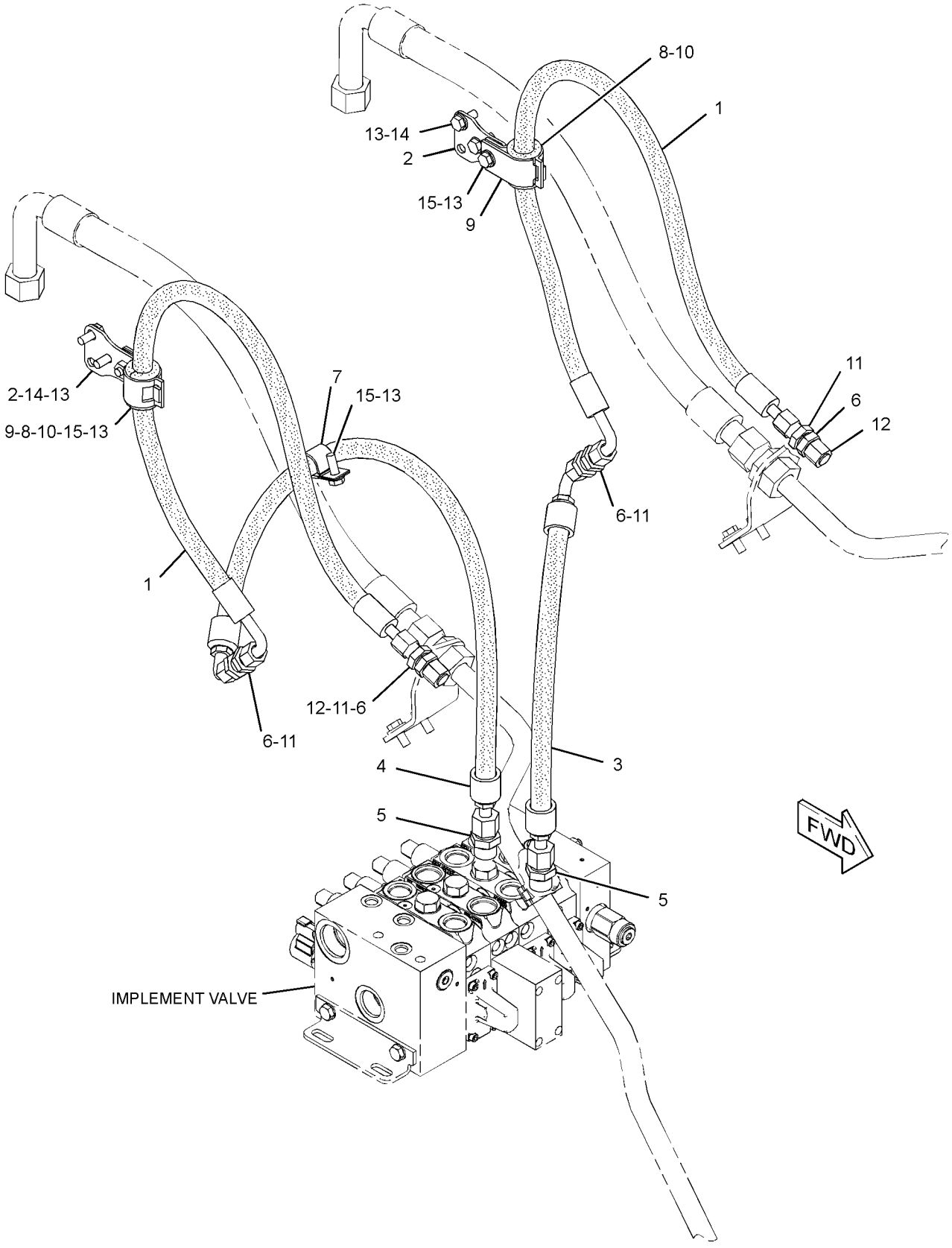

GRAPHIC #1 **<END>** g02792724

380-8077 LINES GP-HYDRAULIC FAN

S/N: DYB1-UP

PART OF 381-4358 HYDRAULIC AR

SMCS-1386, 1387, 5057 **i05296424**

NOTE	REF NO	GRAPHIC REF	PART NUMBER	QTY	PART NAME 1 2 3 4 5 6 (PRODUCT LEVEL)	SEE PAGE
	1	1	**200-6345**	1	MOUNT (DUAL SWIVEL)	
	2	1	**204-2281**	2	STRAP-CABLE	
	3	1	**323-3309**	2	CAP	
I	4	1	**350-5319**	1	HOSE AS	
	5	1	*386-6219*	1	ELBOW AS	
		1	**7M-8485**	1	SEAL-O-RING	
		1	**198-7655**	1	CONNECTOR	
	6	1	*148-8390*	1	ELBOW AS	
		1	**2M-9780**	1	SEAL-O-RING	
		1	**6V-8626**	1	ELBOW	
		1	**7J-9108**	1	SEAL-O-RING	
	7	1	**204-8000**	1	MOUNTING-CABLE TIE	
	8	1	**223-3490**	2	CLIP	
	9	1	**230-7732**	1	MOUNTING-CABLE TIE	
	10	1	**8T-4121**	5	WASHER-HARD (11X21X2.5-MM THK)	
M	11	1	**8T-4136**	4	BOLT (M10X1.5X25-MM)	
M	12	1	**8T-4195**	1	BOLT (M10X1.5X30-MM)	
	13	1	**8T-4983**	2	CLAMP-HOSE	
	14	1	**9X-8250**	3	CLIP	
G	15	1	**122-6907**		HOSE-HYDRAULIC (54-IN)	

G - ORDER BY THE INCH
I - REFER TO HYDRAULIC INFORMATION SYSTEM
M - METRIC PART

380-8077 **LINES GP-HYDRAULIC FAN (*contd.*)** **i05296424**

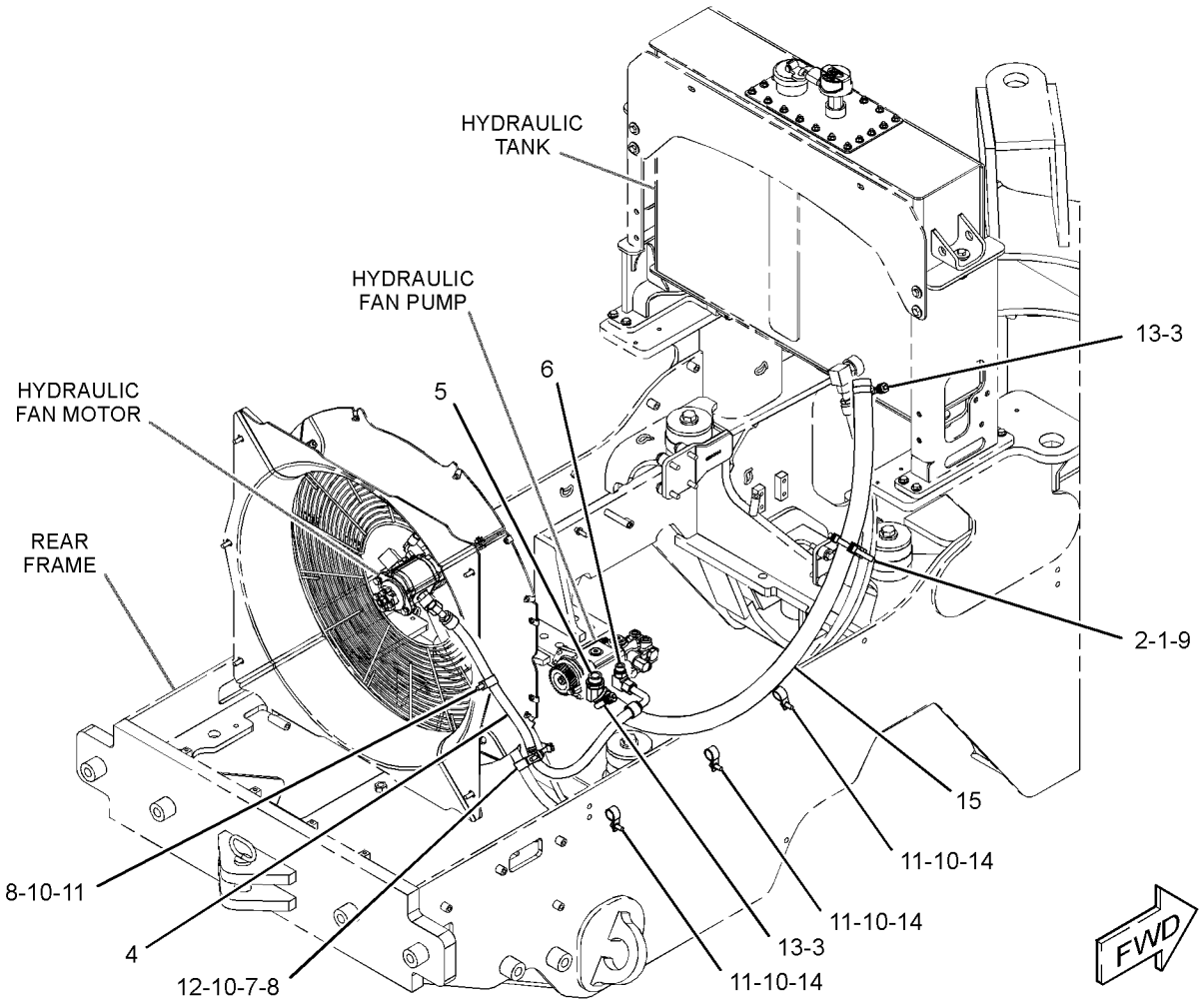

GRAPHIC #1 **<END>** g03376360

333-6922 LINES GP-LIFT CYLINDER

S/N: DYB1-UP
PART OF 381-4394 LINKAGE AR-FRONT
AN ATTACHMENT

SMCS-5057, 5102 **i05335234**

NOTE	REF NO	GRAPHIC REF	PART NUMBER	QTY	PART NAME 1 2 3 4 5 6 (PRODUCT LEVEL)	SEE PAGE
	1	1	**5P-3860**	4	CLAMP-HOSE	
	2	1	**9R-5948**	2	BLOCK	
	3	1	**9R-9572**	2	BLOCK	
	4	1	**112-1817**	1	VALVE GP-MANUAL (LOWERING CONTROL)	
	5	1	*164-5545*	1	CONNECTOR AS	
		1	**3E-2335**	1	CONNECTOR	
		1	**3J-1907**	1	SEAL-O-RING	
		1	**6V-8397**	1	SEAL-O-RING	
	6	1	**204-2281**	2	STRAP-CABLE	
I	7	1	**248-6220**	1	HOSE AS	
	8	1	**323-3309**	4	CAP	
	9	1	**346-5070**	1	PLATE	
	10	1	**346-5072**	1	TUBE AS	
	11	1	**346-5073**	2	TUBE AS	
I	12	1	**346-5078**	2	HOSE AS	
I	13	1	**346-5079**	2	HOSE AS	
	14	1	**346-5086**	1	TUBE AS	
I	15	1	**348-8593**	1	HOSE AS	
I	16	1	**350-7587**	1	HOSE AS	
	17	1	*148-8329*	2	CONNECTOR AS	
					(EACH INCLUDES)	
		1	**4K-1388**	1	SEAL-O-RING	
		1	**5K-9090**	1	SEAL-O-RING	
		1	**8T-6453**	1	CONNECTOR	
	18	1	*148-8357*	2	ELBOW AS	
					(EACH INCLUDES)	
		1	**5K-9090**	1	SEAL-O-RING	
		1	**6V-9008**	1	ELBOW	
		1	**7M-8485**	1	SEAL-O-RING	
	19	1	*150-3070*	1	ADAPTER AS	
		1	**3J-1907**	1	SEAL-O-RING	
		1	**4I-6287**	1	COUPLING	
	20	1	**204-8000**	2	MOUNTING-CABLE TIE	
	21	1	**302-3908**	2	SPACER (11X20X30-MM THK)	
	22	1	**5K-9090**	8	SEAL-O-RING	
	23	1	**6V-8397**	2	SEAL-O-RING	
	24	1	**6V-9172**	2	NUT (1-7/16-12-THD)	
B	25	1	**6V-9831**	2	CAP AS	
	26	1	**7J-9108**	2	SEAL-O-RING	
	27	1	**7X-7729**	2	WASHER (11X25X3-MM THK)	
	28	1	**8T-1889**	6	CLIP (SLOT)	
	29	1	**8T-1890**	6	CLIP (TAB)	
	30	1	**8T-4121**	6	WASHER-HARD (11X21X2.5-MM THK)	
M	31	1	**8T-4133**	2	NUT (M10X1.5-THD)	
M	32	1	**8T-4136**	2	BOLT (M10X1.5X25-MM)	
M	33	1	**8T-4186**	2	BOLT (M10X1.5X40-MM)	
M	34	1	**8T-6466**	2	BOLT (M10X1.5X60-MM)	

B - USE AS REQUIRED
I - REFER TO HYDRAULIC INFORMATION SYSTEM
M - METRIC PART

333-6922 **LINES GP-LIFT CYLINDER (*contd.*)** **i05335234**

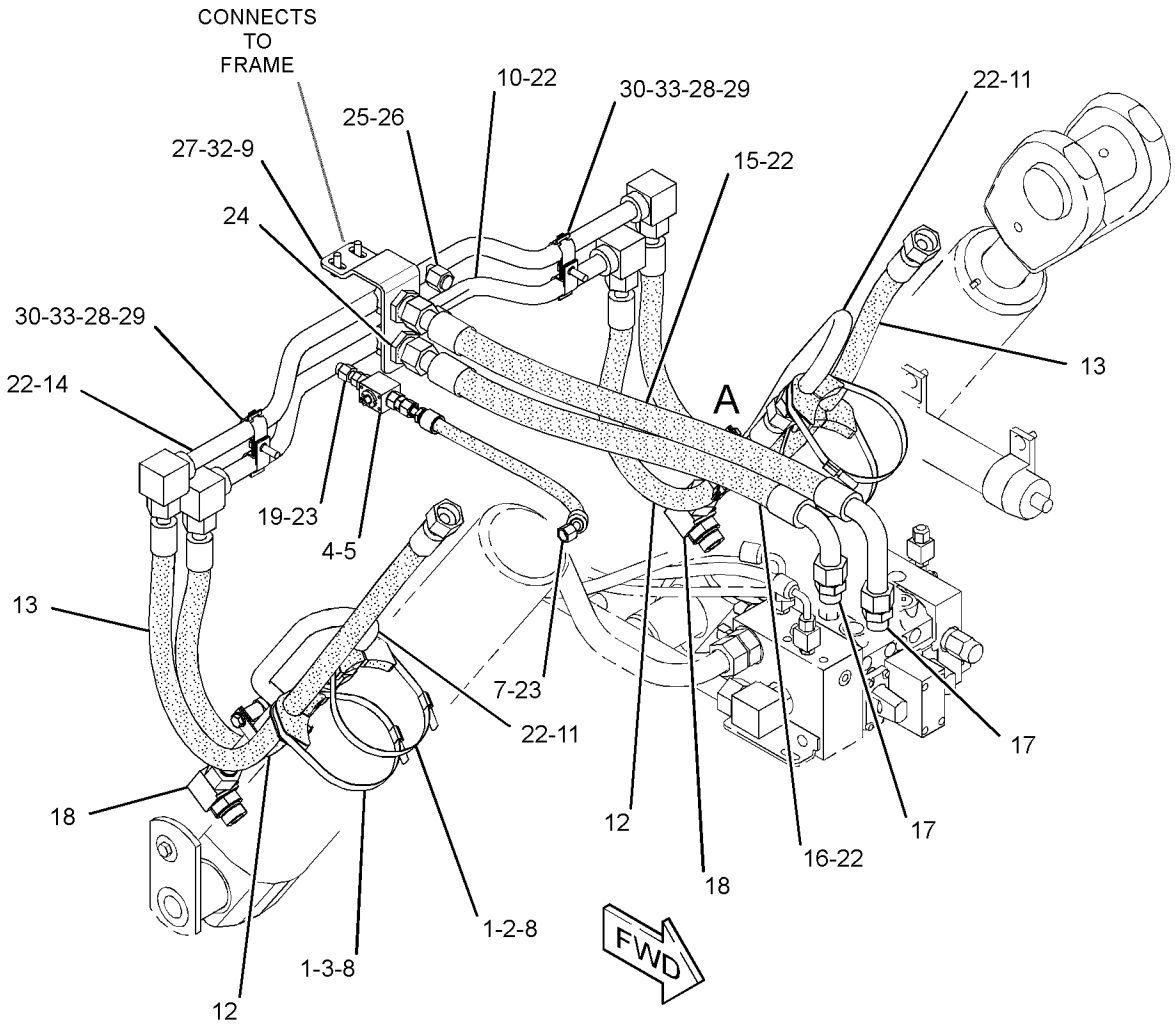

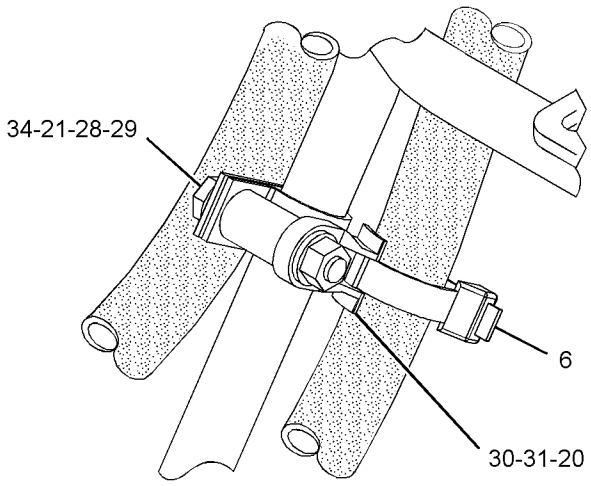

VIEW OF AREA A 90°

GRAPHIC #1 **<END>** g02794293

333-6947 LINES GP-RIDE CONTROL

S/N: DYB1-UP
PART OF 333-6860 CONTROL AR-RIDE
AN ATTACHMENT

SMCS-5004, 5057, 5077 **i05307823**

NOTE	REF NO	GRAPHIC REF	PART NUMBER	QTY	PART NAME 1 2 3 4 5 6 (PRODUCT LEVEL)	SEE PAGE
I	1	1	**356-8450**	1	HOSE AS	
	2	1	**248-2841**	1	RELAY AS (24-VOLT) (RIDE CONTROL)	
I	3	1	**277-0341**	1	HOSE AS	
	4	1	*287-7331*	1	ELBOW AS	
		1	**2M-9780**	1	SEAL-O-RING	
		1	**7J-9108**	1	SEAL-O-RING	
		1	**287-7330**	1	ELBOW	
I	5	1	**346-5084**	1	HOSE AS	
	6	1	**350-1120**	1	HOSE AS	
	7	1	**366-8973**	1	MANIFOLD GP-CONTROL (RIDE)	
I	8	1	**366-9041**	1	HOSE AS	
	9	1	**367-1908**	1	PLATE AS	
M		1	**159-9539**	2	NUT-WELD (M6X1-THD)	
I	10	1	**380-8864**	1	HOSE AS	
	11	1	*148-8315*	2	CONNECTOR AS	
					(EACH INCLUDES)	
		1	**2M-9780**	1	SEAL-O-RING	
		1	**6V-8642**	1	CONNECTOR	
		1	**7J-9108**	1	SEAL-O-RING	
	12	1	*148-8336*	1	CONNECTOR AS	
		1	**3J-1907**	1	SEAL-O-RING	
		1	**6V-8397**	1	SEAL-O-RING	
		1	**6V-8636**	1	CONNECTOR	
	13	1	*148-8353*	1	ELBOW AS	
		1	**3J-1907**		SEAL-O-RING	
		1	**6V-8397**	1	SEAL-O-RING	
		1	**6V-9001**	1	ELBOW	
	14	1	*148-8378*	2	ELBOW AS	
					(EACH INCLUDES)	
		1	**3J-1907**	1	SEAL-O-RING	
		1	**6V-8397**	1	SEAL-O-RING	
		1	**6V-8724**	1	ELBOW	
M	15	1	**7X-2534**	2	BOLT (M6X1X50-MM)	
	16	1	**8T-4121**	2	WASHER-HARD (11X21X2.5-MM THK)	
M	17	1	**8T-4195**	2	BOLT (M10X1.5X30-MM)	
	18	1	**9X-8256**	2	WASHER (6.6X12X2-MM THK)	

I - REFER TO HYDRAULIC INFORMATION SYSTEM
M - METRIC PART

333-6947 **LINES GP-RIDE CONTROL (*contd.*)** **i05307823**

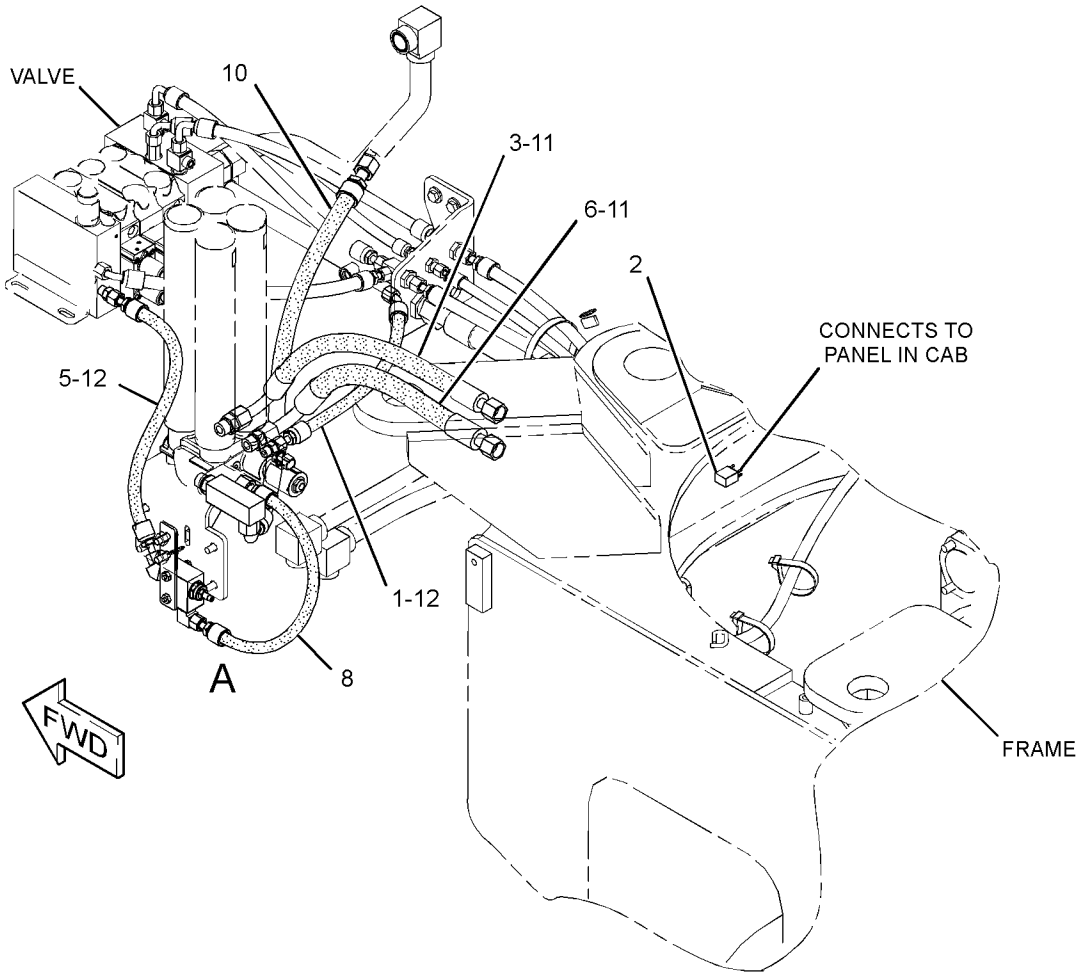

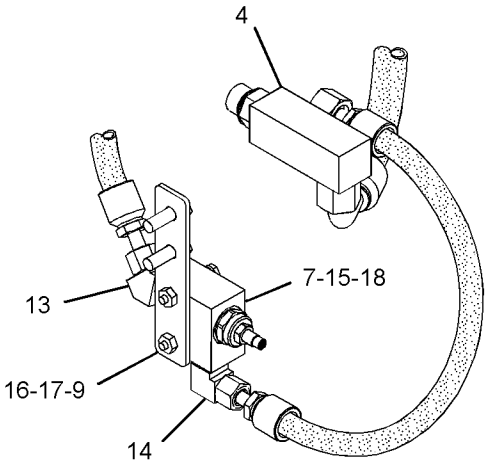

VIEW OF AREA A

GRAPHIC #1 **<END>** g02761136

333-6920 LINES GP-TILT CYLINDER

S/N: DYB1-UP
PART OF 381-4394 LINKAGE AR-FRONT
AN ATTACHMENT

SMCS-5057, 5104 **i05310053**

NOTE	REF NO	GRAPHIC REF	PART NUMBER	QTY	PART NAME 1 2 3 4 5 6 (PRODUCT LEVEL)	SEE PAGE
	1	1	**5P-4869**	1	CLAMP-HOSE	
	2	1	**323-3309**	1	CAP	
I	3	1	**348-7716**	1	HOSE AS	
I	4	1	**350-7586**	1	HOSE AS	
	5	1	**356-5798**	1	TUBE AS	
	6	1	**356-5799**	1	TUBE AS	
	7	1	**356-5803**	1	PLATE AS	
M		1	**159-9541**	1	NUT-WELD (M10X1.5-THD)	
	8	1	**356-5805**	1	SUPPORT AS	
M		1	**159-9541**	1	NUT-WELD (M10X1.5-THD)	
	9	1	**358-2947**	1	PLATE AS	
M		1	**159-9541**	1	NUT-WELD (M10X1.5-THD)	
	10	1	**364-1545**	1	TUBE AS	
	11	1	**391-9922**	1	PLATE AS	
M		1	**159-9541**	2	NUT-WELD (M10X1.5-THD)	
I	12	1	**393-0597**	2	HOSE AS	
	13	1	*148-8327*	2	CONNECTOR AS	
					(EACH INCLUDES)	
		1	**3D-2824**	1	SEAL-O-RING	
		1	**6V-8637**	1	CONNECTOR	
		1	**6V-9746**	1	SEAL-O-RING	
	14	1	*148-8356*	1	ELBOW AS	
		1	**2S-4078**	1	SEAL-O-RING	
		1	**6V-8400**	1	SEAL-O-RING	
		1	**6V-9009**	1	ELBOW	
	15	1	**5K-9090**	5	SEAL-O-RING	
	16	1	**5P-7468**	2	CLIP (SLOT)	
	17	1	**5P-7469**	2	CLIP (TAB)	
	18	1	**5P-8444**	2	GROMMET (37-MM ID)	
	19	1	**6V-9172**	2	NUT (1-7/16-12-THD)	
	20	1	**7X-7729**	5	WASHER (11X25X3-MM THK)	
	21	1	**8S-0023**	2	CLIP (SLOT)	
	22	1	**8S-0024**	2	CLIP (TAB)	
	23	1	**8T-1889**	1	CLIP (SLOT)	
	24	1	**8T-1890**	1	CLIP (TAB)	
	25	1	**8T-4121**	4	WASHER-HARD (11X21X2.5-MM THK)	
M	26	1	**8T-4136**	3	BOLT (M10X1.5X25-MM)	
M	27	1	**8T-4186**	2	BOLT (M10X1.5X40-MM)	
M	28	1	**8T-4195**	1	BOLT (M10X1.5X30-MM)	
M	29	1	**8T-4196**	3	BOLT (M10X1.5X35-MM)	

I - REFER TO HYDRAULIC INFORMATION SYSTEM
M - METRIC PART

333-6920 **LINES GP-TILT CYLINDER (*contd.*)** **i05310053**

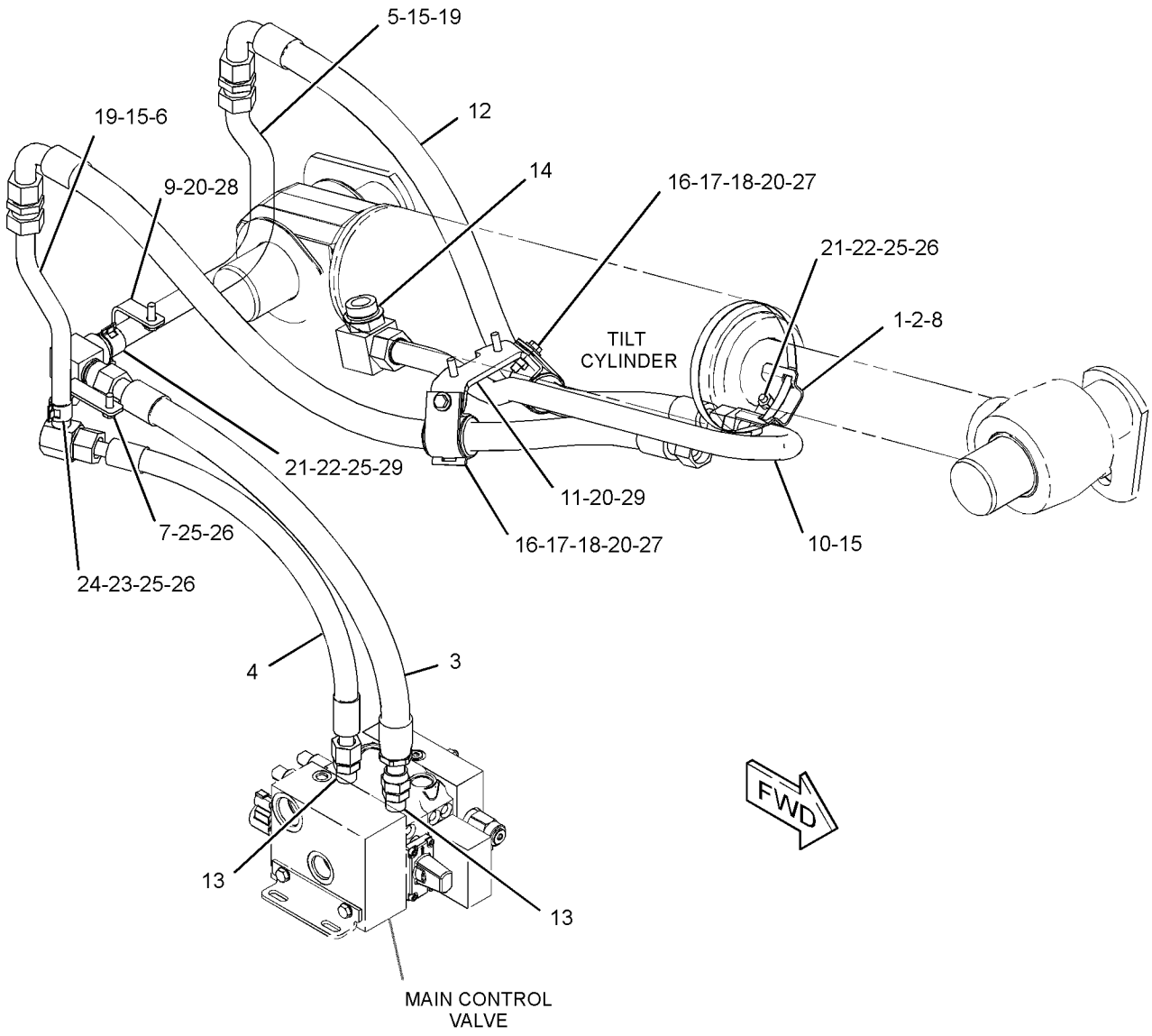

GRAPHIC #1 **<END>** g03381820

333-6913 MOTOR & MTG GP-HYDRAULIC FAN

S/N: DYB1-UP
PART OF 366-8125, 381-4420 OPTION AR-MACHINE
AN ATTACHMENT

SMCS-1386 **i05303814**

NOTE	REF NO	GRAPHIC REF	PART NUMBER	QTY	PART NAME 1 2 3 4 5 6 (PRODUCT LEVEL)	SEE PAGE
	1	1	**204-2281**	4	STRAP-CABLE	
Y	2	1	**289-6393**	1	MOTOR GP-GEAR (HYDRAULIC FAN)	361
I	3	1	**350-5317**	1	HOSE AS	
I	4	1	**377-2083**	1	HOSE AS	
	5	1	*148-8316*	1	CONNECTOR AS	
		1	**3J-7354**	1	SEAL-O-RING	
		1	**4J-5477**	1	SEAL-O-RING	
		1	**6V-8647**	1	CONNECTOR	
M	6	1	**8T-4196**	2	BOLT (M10X1.5X35-MM)	
	7	1	*148-8382*	2	ELBOW AS	
					(EACH INCLUDES)	
		1	**3D-2824**	1	SEAL-O-RING	
		1	**7J-9108**	1	SEAL-O-RING	
		1	**8T-0404**	1	ELBOW	
	8	1	*155-3504*	1	ELBOW AS	
		1	**2M-9780**	1	SEAL-O-RING	
		1	**6V-9003**	1	ELBOW	
		1	**7J-9108**	1	SEAL-O-RING	
	9	1	**8T-4121**	4	WASHER-HARD (11X21X2.5-MM THK)	
M	10	1	**8T-4133**	2	NUT (M10X1.5-THD)	

I - REFER TO HYDRAULIC INFORMATION SYSTEM
M - METRIC PART
Y - SEPARATE ILLUSTRATION

333-6913 **MOTOR & MTG GP-HYDRAULIC FAN (*contd.*)** **i05303814**

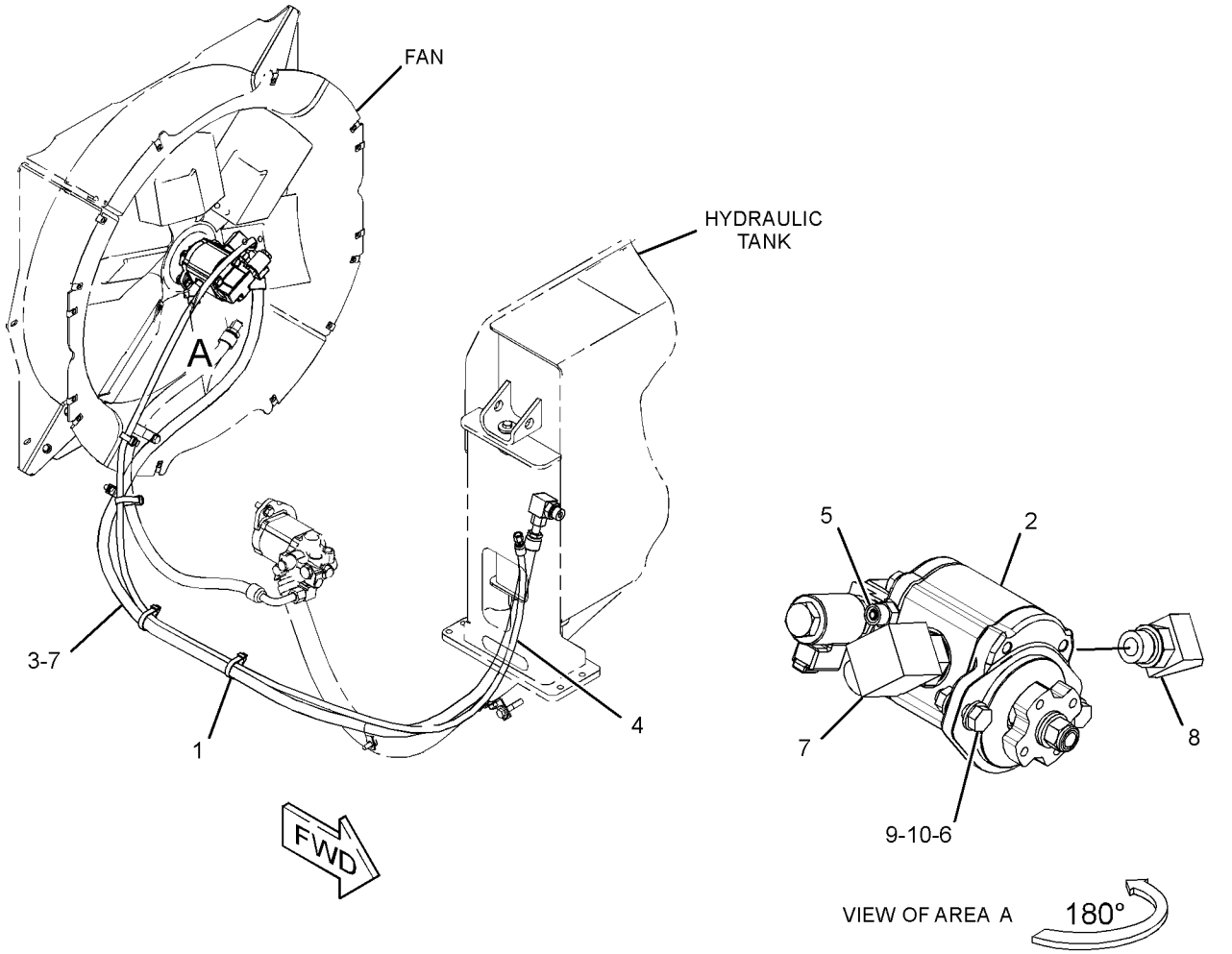

GRAPHIC #1 **<END>** g03339083

333-6914 MOTOR & MTG GP-HYDRAULIC FAN–REVERSING

S/N: DYB1-UP
PART OF 366-8126, 366-8127 OPTION AR-MACHINE
AN ATTACHMENT

SMCS-1386 **i05312290**

NOTE	REF NO	GRAPHIC REF	PART NUMBER	QTY	PART NAME 1 2 3 4 5 6 (PRODUCT LEVEL)	SEE PAGE
	1	1	**204-2281**	4	STRAP-CABLE	
Y	2	1	**289-6394**	1	MOTOR GP-GEAR (REVERSING FAN)	362
I	3	1	**359-4523**	1	HOSE AS	
I	4	1	**377-2084**	1	HOSE AS	
	5	1	*148-8316*	1	CONNECTOR AS	
		1	**3J-7354**	1	SEAL-O-RING	
		1	**4J-5477**	1	SEAL-O-RING	
		1	**6V-8647**	1	CONNECTOR	
	6	1	*148-8341*	1	CONNECTOR AS	
		1	**3D-2824**	1	SEAL-O-RING	
		1	**6V-8713**	1	CONNECTOR	
		1	**7J-9108**	1	SEAL-O-RING	
M	7	1	**8T-4196**	2	BOLT (M10X1.5X35-MM)	
	8	1	*148-8382*	1	ELBOW AS	
		1	**3D-2824**	1	SEAL-O-RING	
		1	**7J-9108**	1	SEAL-O-RING	
		1	**8T-0404**	1	ELBOW	
	9	1	*148-8390*	1	ELBOW AS	
		1	**2M-9780**	1	SEAL-O-RING	
		1	**6V-8626**	1	ELBOW	
		1	**7J-9108**	1	SEAL-O-RING	
	10	1	**8T-4121**	4	WASHER-HARD (11X21X2.5-MM THK)	
M	11	1	**8T-4133**	2	NUT (M10X1.5-THD)	

I - REFER TO HYDRAULIC INFORMATION SYSTEM
M - METRIC PART
Y - SEPARATE ILLUSTRATION

333-6914 **MOTOR & MTG GP-HYDRAULIC FAN (*contd.*)** **i05312290**

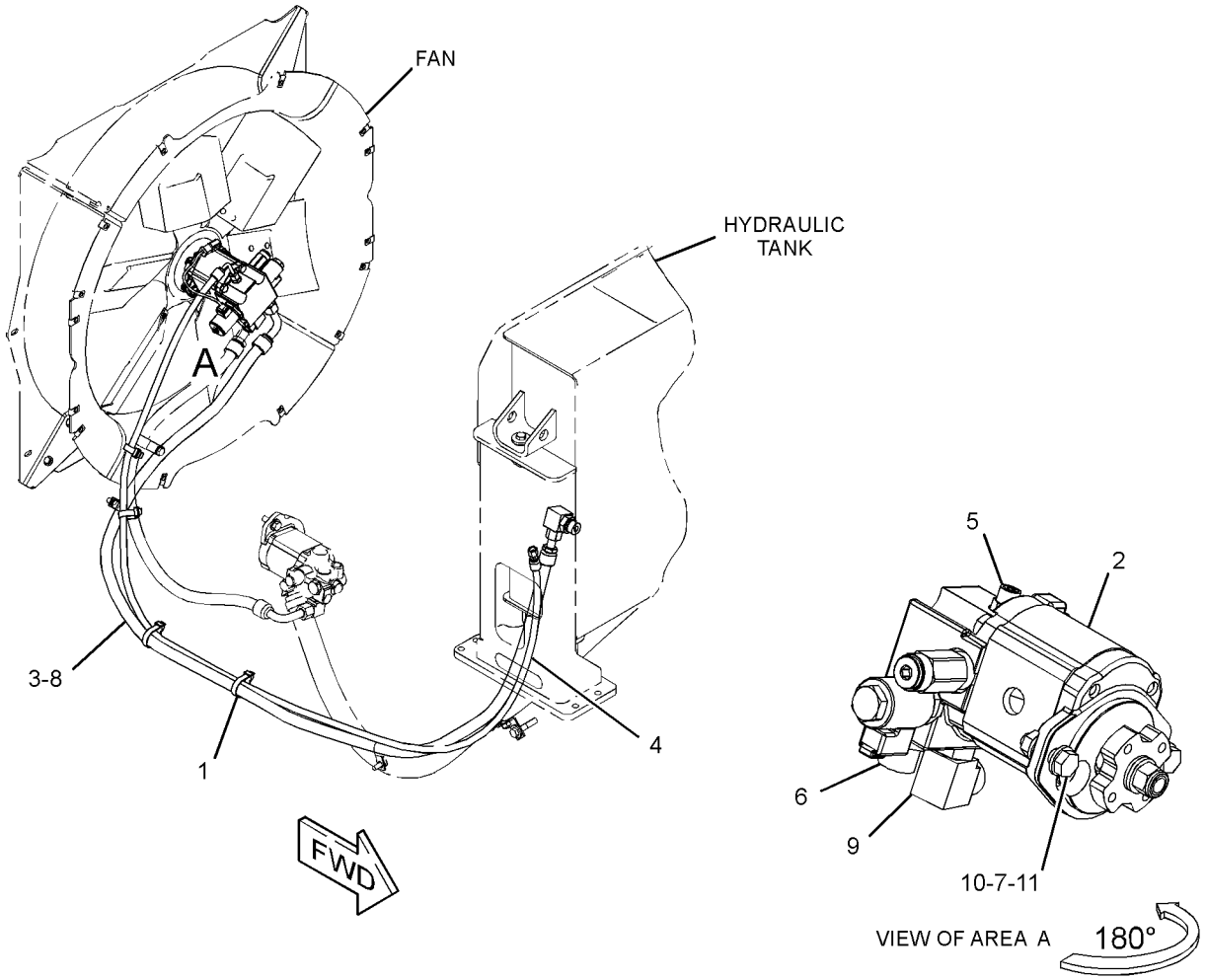

GRAPHIC #1 **<END>** g03339093

289-6393 MOTOR GP-GEAR–HYDRAULIC FAN

S/N: DYB1-UP

PART OF 333-6913 MOTOR & MTG GP-HYDRAULIC FAN

AN ATTACHMENT

SMCS-1386, 5061

i03018466

NOTE	REF NO	GRAPHIC REF	PART NUMBER	QTY	PART NAME 1 2 3 4 5 6 (PRODUCT LEVEL)	SEE PAGE
	1	1	**113-3632**	1	ADAPTER-FAN	
Y	2	1	**211-2092**	1	VALVE GP-SOLENOID (24-VOLT) (HYDRAULIC FAN)	400
	3	1	**087-0991**	1	VALVE AS-CHECK	
	4	1	**2M-2570**	1	LOCKNUT (1/2-20-THD)	
	5	1	**5P-8245**	1	WASHER-HARD (13.5X25.5X3-MM THK)	
Y	6	1	**299-3940**	1	MOTOR GP-GEAR (HYDRAULIC FAN)	364

Y - SEPARATE ILLUSTRATION

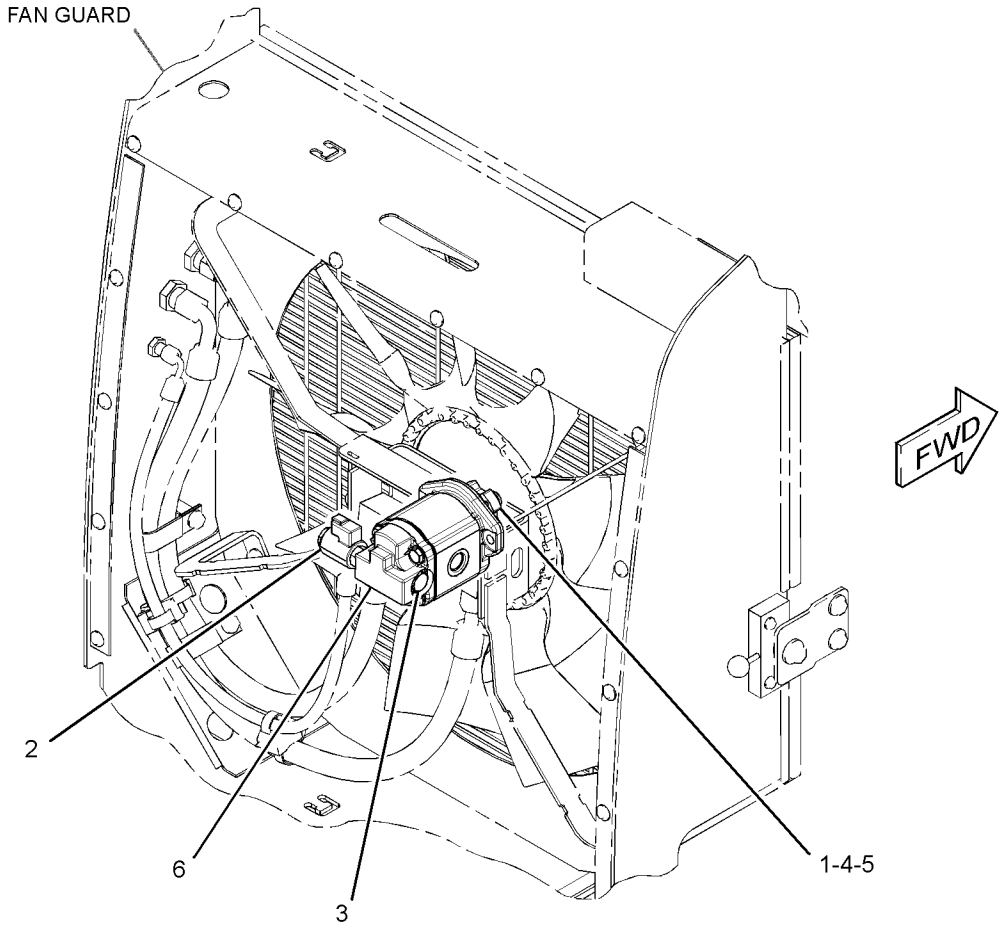

GRAPHIC #1

<END>

g01548015

289-6394 MOTOR GP-GEAR—REVERSING FAN

S/N: DYB1-UP
PART OF 333-6914 MOTOR & MTG GP-HYDRAULIC FAN
AN ATTACHMENT

SMCS-1386, 5061 **i04029117**

NOTE	REF NO	GRAPHIC REF	PART NUMBER	QTY	PART NAME 1 2 3 4 5 6 (PRODUCT LEVEL)	SEE PAGE
	1	1	**113-3632**	1	ADAPTER-FAN	
Y	2	1	**211-2092**	1	VALVE GP-SOLENOID (24-VOLT) (HYDRAULIC FAN)	400
Y	3	1	**189-2100**	1	VALVE GP-SOLENOID (24-VOLT) (HYDRAULIC FAN)	399
J	4	1	**208-0886**	1	VALVE GP-RELIEF (HYDRAULIC FAN MOTOR)	
	5	1	**087-0991**	1	VALVE AS-CHECK	
	6	1	**2M-2570**	1	LOCKNUT (1/2-20-THD)	
	7	1	**5P-8245**	1	WASHER-HARD (13.5X25.5X3-MM THK)	
Y	8	1	**299-3939**	1	MOTOR GP-GEAR (REVERSING FAN) (BASIC)	363
					AVAILABLE REPAIR KIT(S):	
J			**264-5726**	1	KIT-SEAL	
					(ALSO INCLUDES O-RING SEAL & BACKUP RINGS)	

J - KIT MARKED J SERVICES PARTS MARKED J
Y - SEPARATE ILLUSTRATION

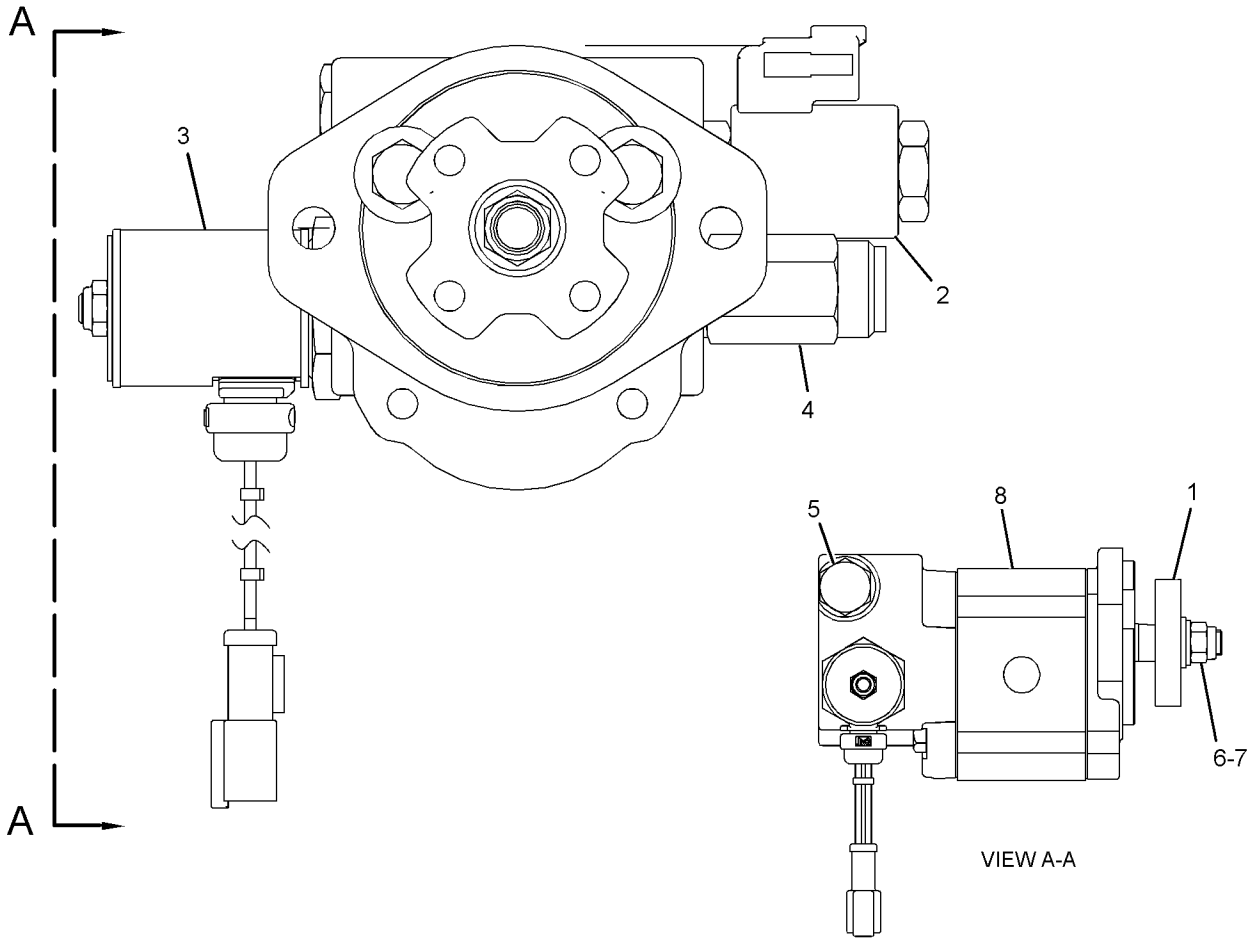

GRAPHIC #1 **<END>** g01410880

299-3939 MOTOR GP-GEAR–REVERSING FAN

S/N: DYB1-UP
PART OF 289-6394 MOTOR GP-GEAR
AN ATTACHMENT

SMCS-1386, 5061 **i04029106**

NOTE	REF NO	GRAPHIC REF	PART NUMBER	QTY	PART NAME 1 2 3 4 5 6 (PRODUCT LEVEL)	SEE PAGE
	1	1	**208-2293**	4	BOLT (M10X1.5X97.8-MM)	
J	2	1	**296-6031**	1	SEAL-LIP TYPE	
J	3	1	**8J-6273**	1	RING-RETAINING	
	4	1	**135-5935**	1	SEAL-SHAFT	
	5	1	**208-0792**	1	FLANGE	
J	6	1	**4W-7356**	2	SEAL-O-RING	
	7	1	**099-3095**	4	DOWEL	
	8	1	**220-2680**	1	CAP-END	
					PARTS SHOWN IN GRAPHIC(S) WITHOUT A REFERENCE NUMBER ARE NOT SERVICED SEPARATELY	
					AVAILABLE REPAIR KIT(S):	
J			**293-5449**	1	KIT-SEAL	
					(ALSO INCLUDES SHAFT SEAL)	

J - KIT MARKED J INCLUDES PARTS MARKED J

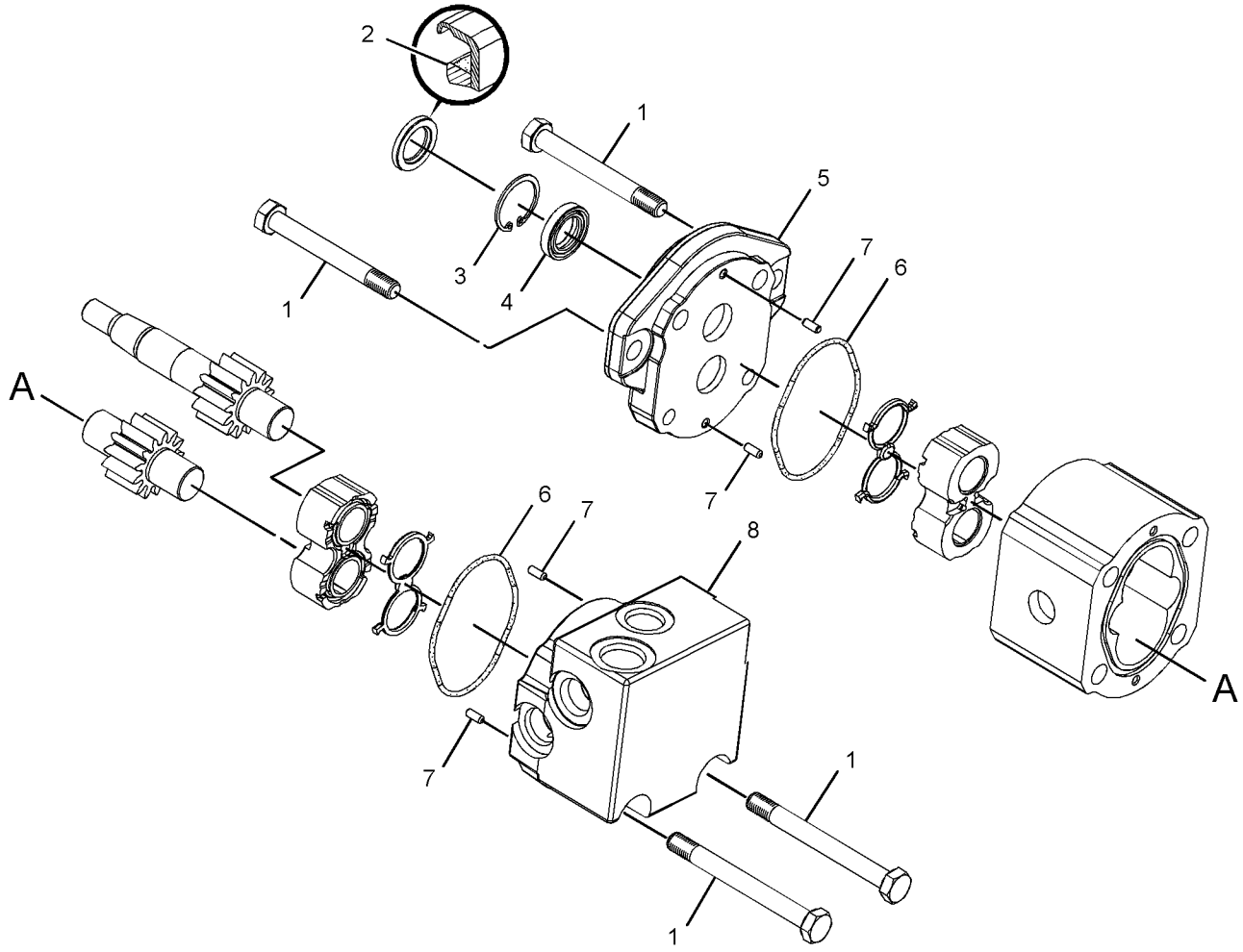

GRAPHIC #1 **<END>** g01405973

299-3940 MOTOR GP-GEAR—HYDRAULIC FAN

S/N: DYB1-UP

PART OF 289-6393 MOTOR GP-GEAR

AN ATTACHMENT

SMCS-1386, 5061 **i04029105**

NOTE	REF NO	GRAPHIC REF	PART NUMBER	QTY	PART NAME 1 2 3 4 5 6 (PRODUCT LEVEL)	SEE PAGE
	1	1	**176-0210**	1	FLANGE	
	2	1	**099-3095**	4	DOWEL	
	3	1	**220-2681**	1	CAP-END	
	4	1	**304-5866**	4	BOLT (M10X1.5X101.6-MM)	
J	5	1	**296-6031**	1	SEAL-LIP TYPE	
J	6	1	**8J-6273**	1	RING-RETAINING	
	7	1	**135-5935**	1	SEAL-SHAFT	
J	8	1	**4W-7356**	2	SEAL-O-RING	
					PARTS SHOWN IN GRAPHIC(S) WITHOUT A REFERENCE NUMBER ARE NOT SERVICED SEPARATELY	
					AVAILABLE REPAIR KIT(S):	
J			**293-5449**	1	KIT-SEAL	
					(ALSO INCLUDES SHAFT SEAL)	

J - KIT MARKED J INCLUDES PARTS MARKED J

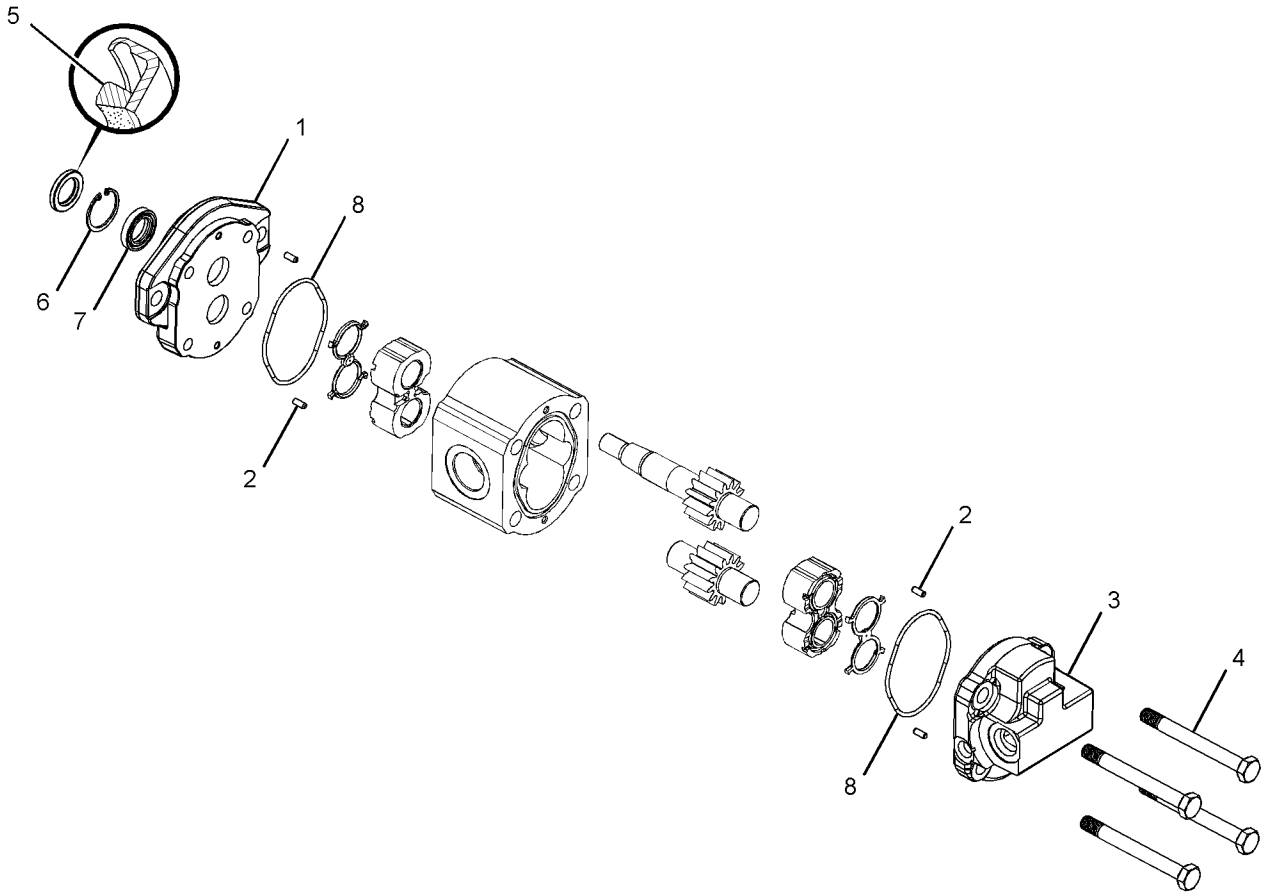

GRAPHIC #1 **<END>** g01391762

333-6906 MOUNTING GP-BANK VALVE

S/N: DYB1-UP

PART OF 381-4385 CHASSIS AR

SMCS-5051 **i05307639**

NOTE	REF NO	GRAPHIC REF	PART NUMBER	QTY	PART NAME 1 2 3 4 5 6 (PRODUCT LEVEL)	SEE PAGE
	1	1	**7X-7729**	3	WASHER (11X25X3-MM THK)	
M	2	1	**8T-4195**	3	BOLT (M10X1.5X30-MM)	

M - METRIC PART

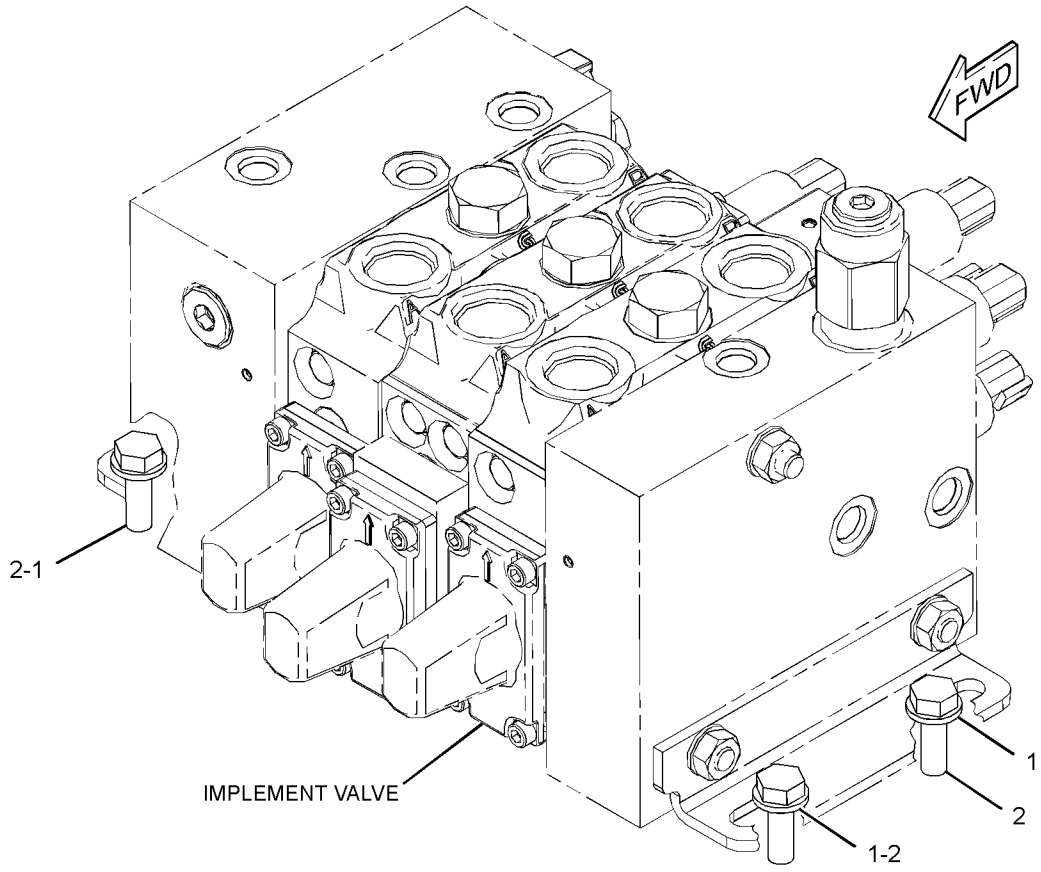

GRAPHIC #1 **<END>** g02796898

380-8104 PUMP & MTG GP-BRAKE & HYD FAN

S/N: DYB1-UP

PART OF 381-4358 HYDRAULIC AR

SMCS-1387, 4268 **i05296428**

NOTE	REF NO	GRAPHIC REF	PART NUMBER	QTY	PART NAME 1 2 3 4 5 6 (PRODUCT LEVEL)	SEE PAGE
	1	1	**9Y-9380**	1	GASKET	
Y	2	1	*378-2834*	1	PUMP GP-GEAR (BRAKE, HYDRAULIC FAN)	368
M	3	1	**3E-8016**	4	BOLT-SELF-LOCKING (M8X1.25X25-MM)	
M	4	1	**5A-3604**	1	BOLT-SOCKET HEAD (M8X1.25X25-MM)	
	5	1	**8T-4224**	8	WASHER-HARD (8.8X16X2-MM THK)	
M	6	1	**8T-6870**	1	BOLT (M8X1.25X70-MM)	

M - METRIC PART
Y - SEPARATE ILLUSTRATION

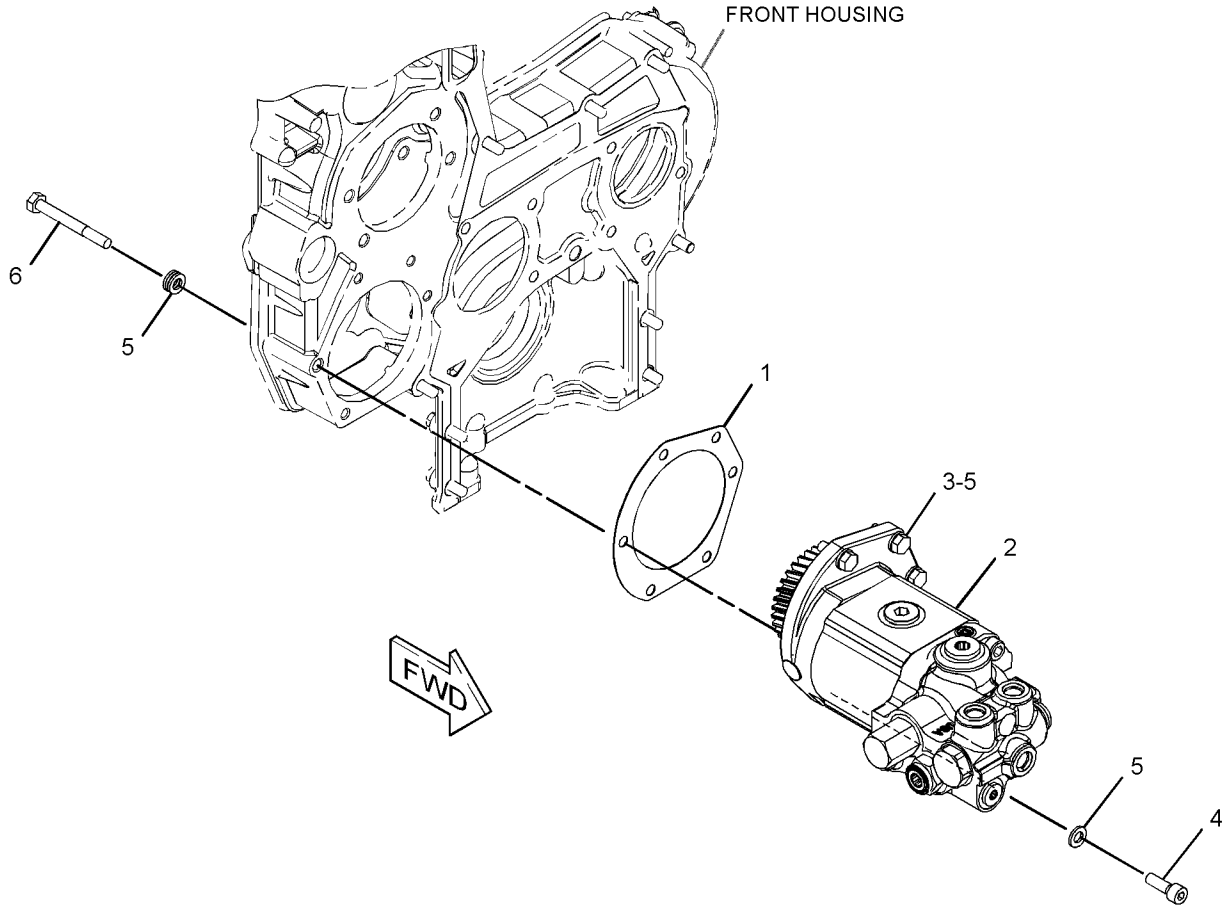

GRAPHIC #1 **<END>** g03371568

333-6902 PUMP & MTG GP-IMPL & STEERING

S/N: DYB1-UP

PART OF 381-4358 HYDRAULIC AR

SMCS-4306, 5055, 5070, 5084 **i05309502**

NOTE	REF NO	GRAPHIC REF	PART NUMBER	QTY	PART NAME 1 2 3 4 5 6 (PRODUCT LEVEL)	SEE PAGE
Y	1	1	**307-3044**	1	PUMP GP-PISTON (IMPLEMENT, STEERING)	370
	2	1	**377-6087**	1	SEAL-O-RING	
M	3	1	**8T-7338**	2	BOLT (M16X2X45-MM)	
	4	1	**9X-8257**	2	WASHER (17.5X30X3.5-MM THK)	

M - METRIC PART
Y - SEPARATE ILLUSTRATION

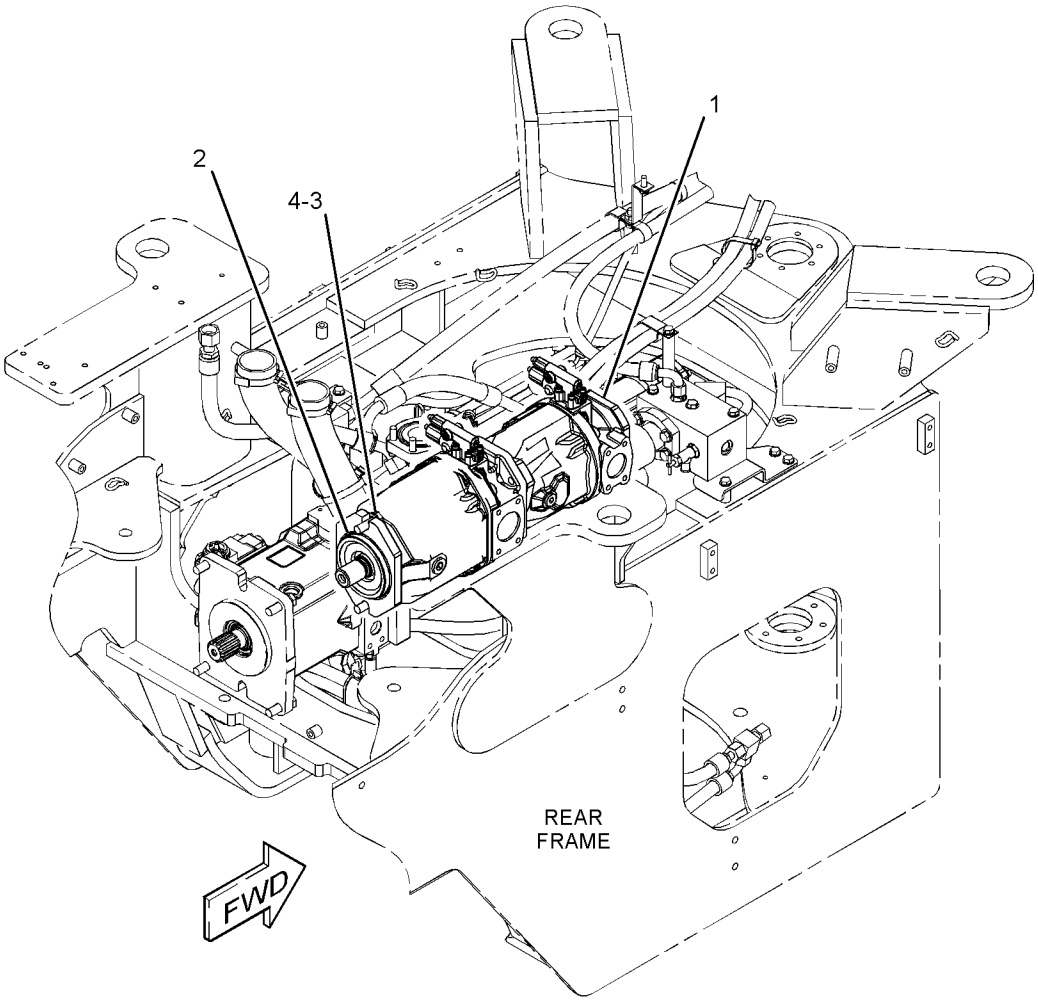

GRAPHIC #1 **<END>** g02794844

378-2834 PUMP GP-GEAR–BRAKE, HYDRAULIC FAN

S/N: DYB1-UP

PART OF 380-8104 PUMP & MTG GP-BRAKE & HYD FAN

SMCS-5073 **i05296421**

NOTE	REF NO	GRAPHIC REF	PART NUMBER	QTY	PART NAME 1 2 3 4 5 6 (PRODUCT LEVEL)	SEE PAGE
	1	1	**205-4587**	1	GEAR (33-TEETH)	
M	2	1	**160-8499**	1	NUT (M12X1.5-THD)	
	3	1	**5P-8244**	1	WASHER-HARD (12X22.5X2.5-MM THK)	
Y	4	1	**386-6620**	1	PUMP GP-GEAR (BRAKE, HYDRAULIC FAN)	369

M - METRIC PART
Y - SEPARATE ILLUSTRATION

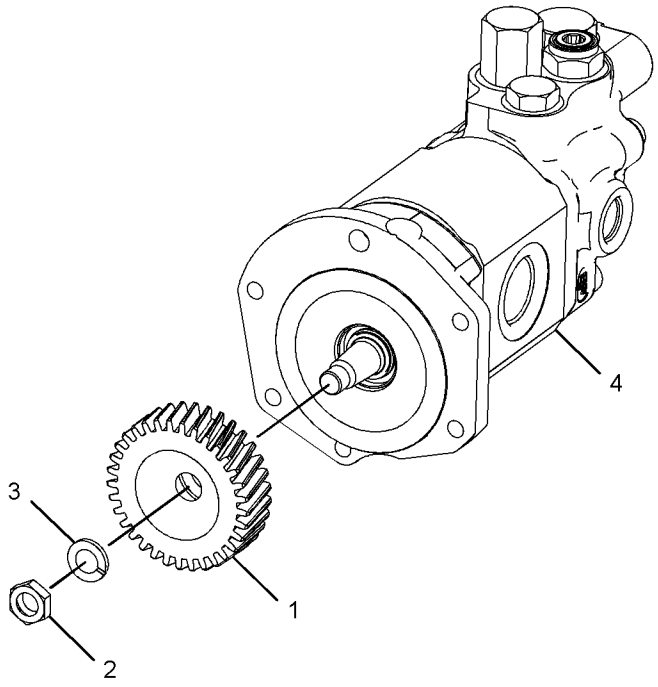

GRAPHIC #1 **<END>** g03376658

386-6620 PUMP GP-GEAR

S/N: DYB1-UP

PART OF 378-2834 PUMP GP-GEAR

SMCS-5073 **i05296431**

NOTE	REF NO	GRAPHIC REF	PART NUMBER	QTY	PART NAME 1 2 3 4 5 6 (PRODUCT LEVEL)	SEE PAGE
J	1	1	**341-6896**	1	VALVE GP-ACCUMULATOR CHARGING	
	2	1	**199-3778**	2	BOLT-SOCKET HEAD (M10X1.5X170-MM)	
	3	1	**195-3042**	1	BOLT-SOCKET HEAD (M10X1.5X115-MM)	
M	4	1	**190-7844**	1	BOLT (M10X1.5X136-MM)	
	5	1	**9S-8006**	1	PLUG-O-RING	
J	6	1	**2M-9780**	1	SEAL-O-RING	
					AVAILABLE REPAIR KIT(S):	
			201-5242	1	KIT-SEAL (GEAR PUMP)	
					(INCLUDES DUST SEAL, BACKUP RINGS, SEALS, SHAFT SEAL, RETAINING RING & O-RINGS)	
J			**270-2616**	1	KIT-SEAL (ACCUMULATOR)	
					(ALSO INCLUDES O-RING SEALS, POPPETS, PLUG & FILTER)	

J - KIT MARKED J SERVICES PARTS MARKED J
M - METRIC PART

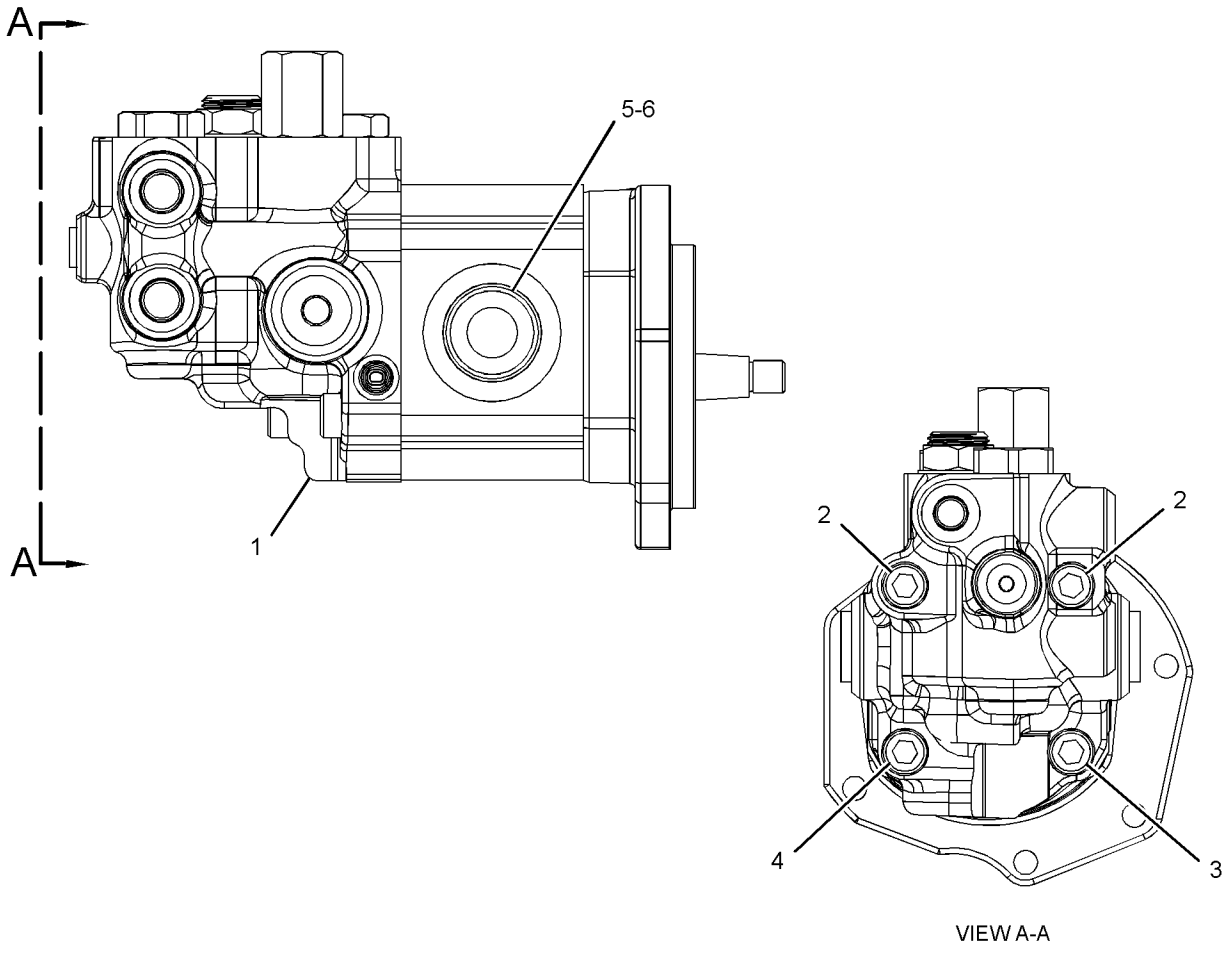

VIEW A-A

GRAPHIC #1 **<END>** g03371604

307-3044 PUMP GP-PISTON

S/N: DYB1-UP

PART OF 333-6902 PUMP & MTG GP-IMPL & STEERING

SMCS-5070 **i05309503**

NOTE	REF NO	GRAPHIC REF	PART NUMBER	QTY	PART NAME 1 2 3 4 5 6 (PRODUCT LEVEL)	SEE PAGE
Y	1	1	**358-4992**	1	PUMP GP-PISTON (IMPLEMENT)	371
Y	2	1	**358-4993**	1	PUMP GP-PISTON (STEERING)	373
M	3	1	**8T-4944**	2	BOLT-SOCKET HEAD (M16X2X40-MM)	
	4	1	**9X-8268**	2	WASHER (17.5X30X3.5-MM THK)	
	5	1	**135-7935**	1	SEAL-O-RING	

M - METRIC PART
Y - SEPARATE ILLUSTRATION

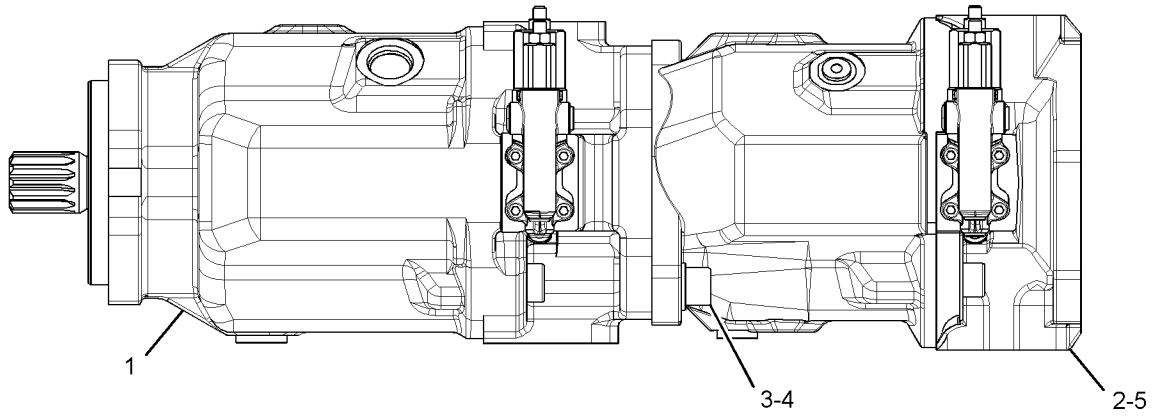

GRAPHIC #1 **<END>** g02793561

358-4992 PUMP GP-PISTON

S/N: DYB1-UP

PART OF 307-3044 PUMP GP-PISTON

SMCS-5070 **i05309504**

NOTE	REF NO	GRAPHIC REF	PART NUMBER	QTY	PART NAME 1 2 3 4 5 6 (PRODUCT LEVEL)	SEE PAGE
	1	1	**140-1739**	1	RING-RETAINING	
	2	1	**105-1642**	2	BEARING	
Y	3	1	**226-1224**	1	ROTATING GP-PUMP (IMPLEMENT)	375
	4	1	**8U-5951**	4	SEAL-O-RING	
M	5	1	**6V-8201**	4	BOLT-SOCKET HEAD (M16X2X45-MM)	
	6	1	**105-3033**	1	CUP-BEARING	
	7	1	**105-3032**	1	CONE-BEARING	
	8	1	**373-8465**	1	COUPLER	
	9	1	**105-1638**	1	SPACER	
	10	1	**162-9997**	1	SEAL-O-RING	
	11	1	**105-1636**	1	CYLINDER-CONTROL	
	12	1	**105-1635**	1	SPRING	
	13	1	**105-1634**	1	PLUNGER	
	14	1	**9S-8008**	1	PLUG-O-RING	
	15	1	**3D-2824**	1	SEAL-O-RING	
	16	1	**194-6847**	1	SHAFT	
	17	1	**3B-2263**	1	CUP-BEARING	
	18	1	**105-3031**	1	CONE-BEARING	
	19	1	**7X-1553**	1	SEAL-LIP TYPE	
	20	1	**301-9279**	1	SWASHPLATE AS	
	21	1	**188-9640**	1	PISTON-CONTROL	
	22	1	**188-9641**	1	GUIDE-CONTROL	
	23	1	**3J-7354**	1	SEAL-O-RING	
	24	1	**9X-8979**	1	DOWEL	
	25	1	**143-7052**	1	SLEEVE-STOP	
	26	1	**135-7935**	1	SEAL-O-RING	
M	27	1	**8T-8442**	4	BOLT-SOCKET HEAD (M6X1X30-MM)	
	28	1	**9S-8002**	1	PLUG-O-RING	
Y	29	1	**347-0612**	1	VALVE GP-PUMP CONTROL (IMPLEMENT)	397
	30	1	**280-7870**	1	GASKET	

M - METRIC PART
Y - SEPARATE ILLUSTRATION

358-4992 **PUMP GP-PISTON (*contd.*)** **i05309504**

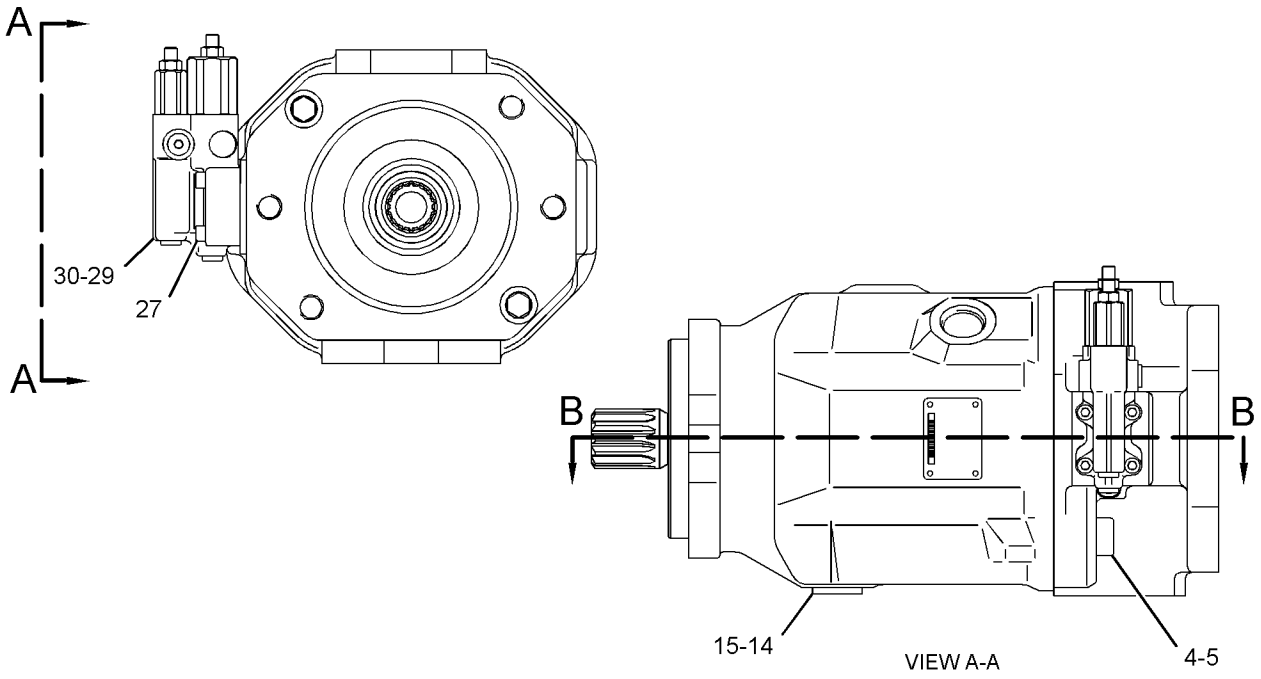

VIEW A-A

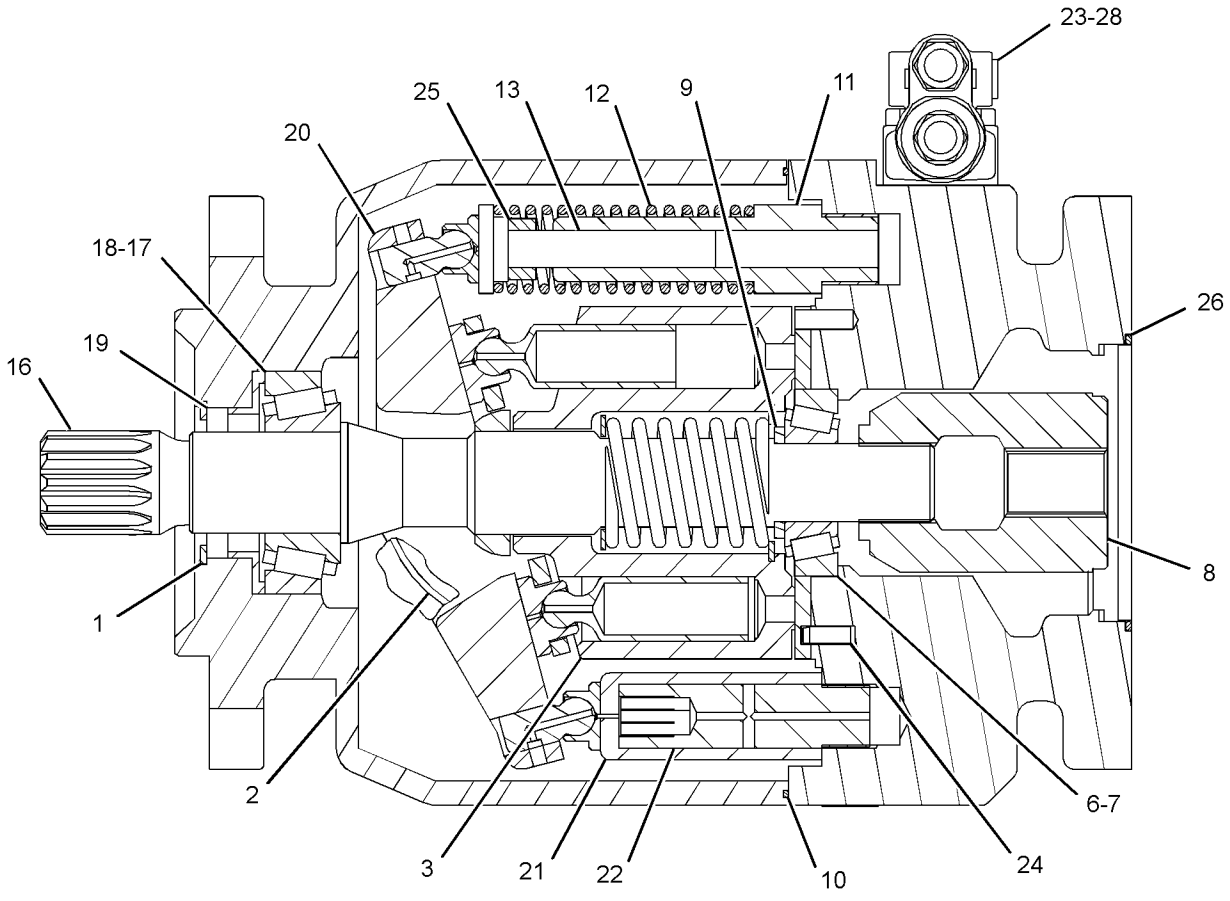

SECTION B-B

GRAPHIC #1 **<END>** g02794324

358-4993 PUMP GP-PISTON

S/N: DYB1-UP

PART OF 307-3044 PUMP GP-PISTON

SMCS-5070 **i05300831**

NOTE	REF NO	GRAPHIC REF	PART NUMBER	QTY	PART NAME 1 2 3 4 5 6 (PRODUCT LEVEL)	SEE PAGE
	1	1	**180-6213**	1	RING-RETAINING	
	2	1	**6E-4003**	2	BEARING	
Y	3	1	**280-0954**	1	ROTATING GP-PUMP (IMPLEMENT)	376
	4	1	**3E-6769**	4	SEAL-O-RING	
M	5	1	**095-9805**	4	BOLT-SOCKET HEAD (M14X2X40-MM)	
	6	1	**1P-6872**	1	CUP-BEARING	
	7	1	**109-1779**	1	CONE-BEARING	
Y	8	1	**373-8468**	1	VALVE GP-PUMP CONTROL (PRESSURE, FLOW COMPENSATOR)	398
	9	1	**6E-4000**	1	SPACER (25.5X35X3-MM THK)	
	10	1	**3E-6770**	1	SEAL-O-RING	
	11	1	**6E-3264**	1	CYLINDER	
	12	1	**6E-3265**	1	SPRING	
	13	1	**6E-3263**	1	PISTON	
	14	1	**9S-8006**	2	PLUG-O-RING	
	15	1	**2M-9780**	2	SEAL-O-RING	
	16	1	**280-0957**	1	SHAFT-DRIVE	
	17	1	**8J-0412**	1	CUP-BEARING	
	18	1	**3P-1210**	1	CONE-BEARING	
	19	1	**6E-4004**	1	SEAL-SHAFT	
	20	1	**121-3042**	1	SWASHPLATE AS	
	21	1	**120-5727**	1	PISTON-CONTROL	
	22	1	**120-5729**	1	GUIDE-PISTON	
	23	1	**9X-8979**	1	DOWEL	
	24	1	**373-8459**	1	COUPLING-SHAFT	
	25	1	**177-0344**	1	SEAL-O-RING	
M	26	1	**8T-8442**	4	BOLT-SOCKET HEAD (M6X1X30-MM)	
	27	1	**280-7870**	1	GASKET	

M - METRIC PART
Y - SEPARATE ILLUSTRATION

358-4993 **PUMP GP-PISTON (*contd.*)** **i05300831**

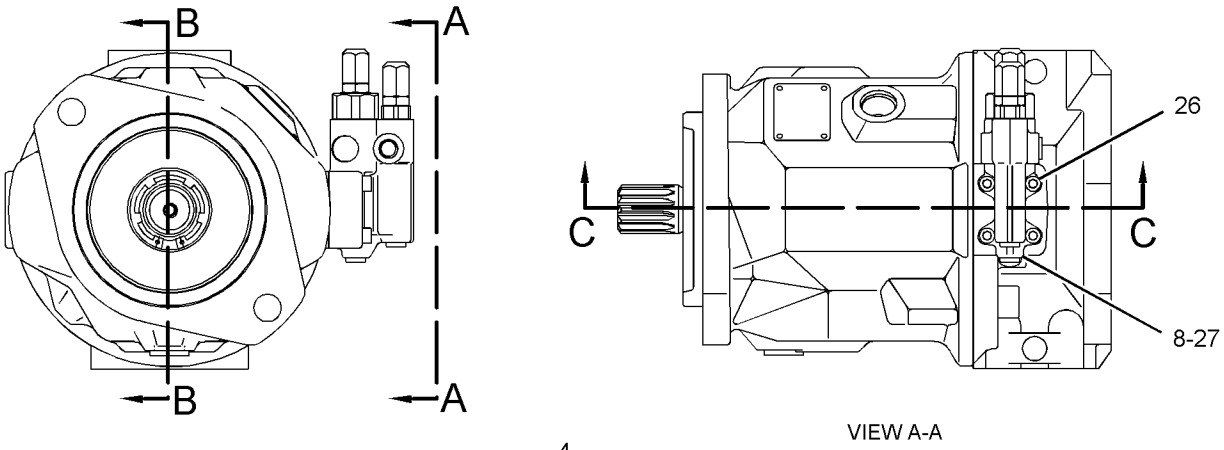

VIEW A-A

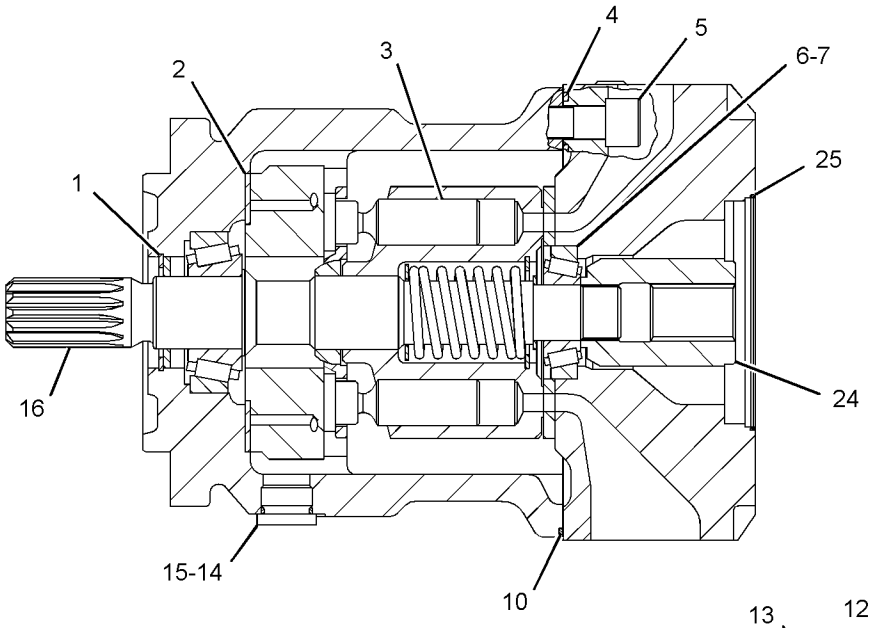

SECTION B-B

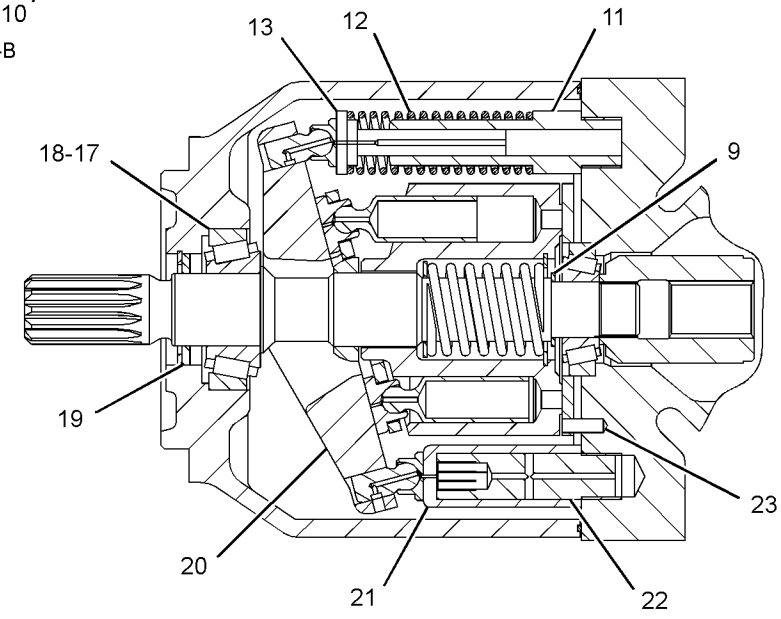

SECTION C-C

GRAPHIC #1 **<END>** g02797567

226-1224 ROTATING GP-PUMP

S/N: DYB1-UP

PART OF 358-4992 PUMP GP-PISTON

SMCS-1387, 5070, 5084

i02754440

NOTE	REF NO	GRAPHIC REF	PART NUMBER	QTY	PART NAME 1 2 3 4 5 6 (PRODUCT LEVEL)	SEE PAGE
	1	1	**105-1646**	9	PISTON AS-PUMP	
	2	1	**188-9637**	1	PLATE-RETRACTION	
	3	1	**105-1648**	1	BEARING	
	4	1	**105-1653**	3	PIN-RETRACTION	
	5	1	**226-1227**	1	BARREL	
	6	1	**105-1650**	1	SPACER	
	7	1	**105-1651**	1	SPRING	
	8	1	**180-6213**	1	RING-RETAINING	
	9	1	**245-7350**	1	PLATE	

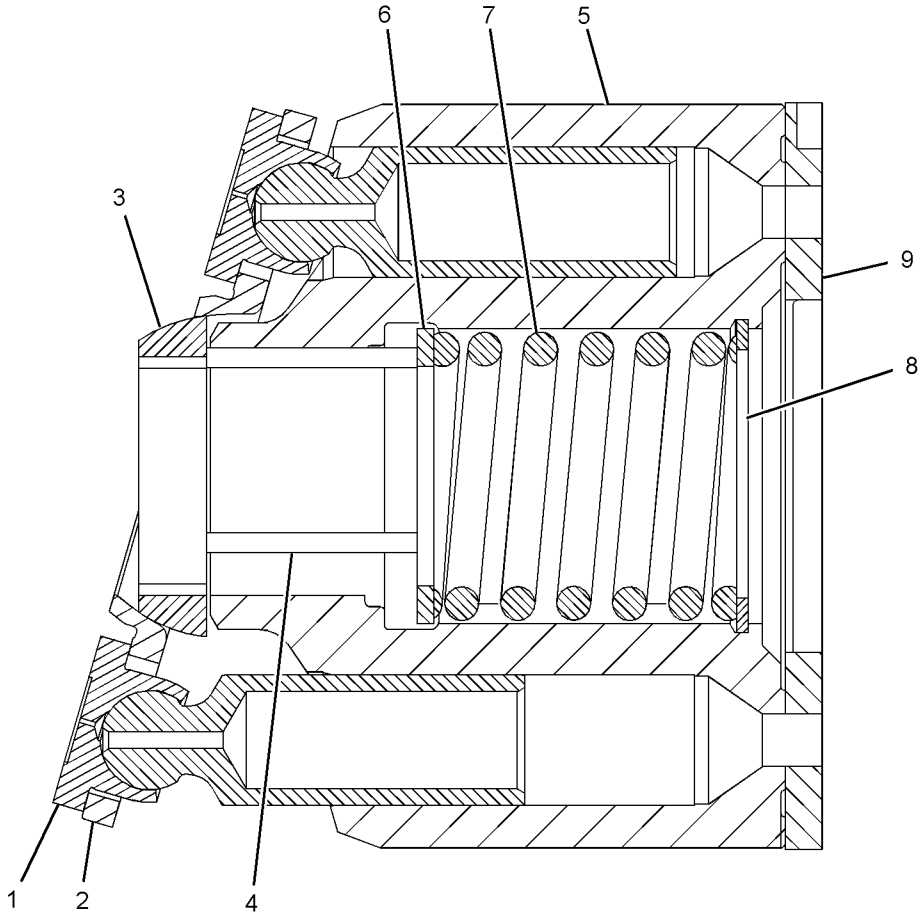

GRAPHIC #1

<END>

g01136182

280-0954 ROTATING GP-PUMP

S/N: DYB1-UP

PART OF 358-4993 PUMP GP-PISTON

SMCS-1387, 5070, 5084 **i05300832**

NOTE	REF NO	GRAPHIC REF	PART NUMBER	QTY	PART NAME 1 2 3 4 5 6 (PRODUCT LEVEL)	SEE PAGE
	1	1	**280-0964**	1	PLATE	
	2	1	**235-5767**	9	PISTON AS	
	3	1	**196-0225**	1	PLATE	
	4	1	**6E-6155**	1	BEARING	
	5	1	**6E-4009**	1	SPRING	
	6	1	**168-3379**	3	PIN	
	7	1	**6E-6158**	1	RING	
	8	1	**6E-3341**	1	SEAT-SPRING	

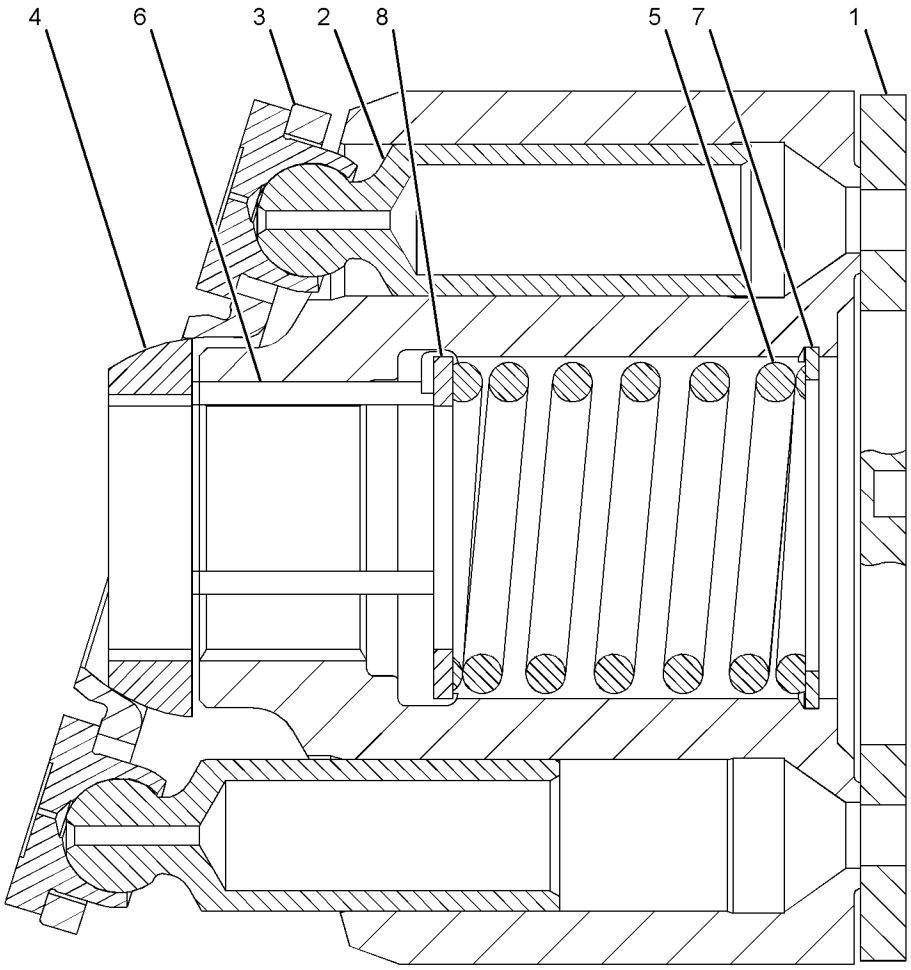

GRAPHIC #1 **<END>** g03135380

339-6850 TANK & MTG GP-HYDRAULIC

S/N: DYB1-UP

PART OF 381-4358 HYDRAULIC AR

SMCS-5056 **i05300825**

NOTE	REF NO	GRAPHIC REF	PART NUMBER	QTY	PART NAME 1 2 3 4 5 6 (PRODUCT LEVEL)	SEE PAGE
	1	1	**246-2641**	1	PADLOCK GP	
		1	**5P-8500**	1	KEY	
Y	2	1	**349-8199**	1	TANK GP-HYDRAULIC	378
	3	1	**323-3730**	2	BOLT (M10X1.5X50-MM)	
	4	1	**7X-7729**	8	WASHER (11X25X3-MM THK)	
M	5	1	**8T-4186**	6	BOLT (M10X1.5X40-MM)	

M - METRIC PART
Y - SEPARATE ILLUSTRATION

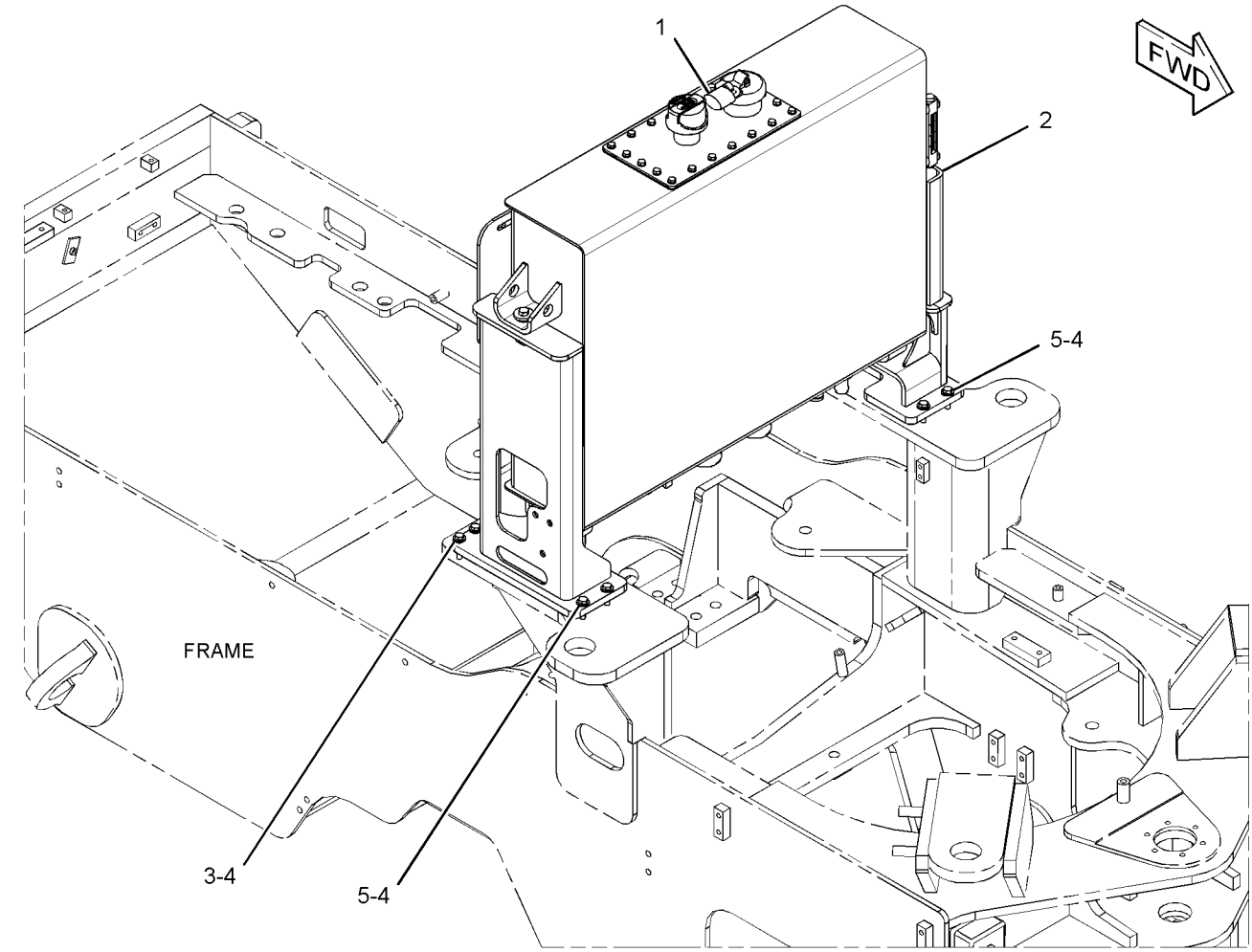

GRAPHIC #1 **<END>** g02793551

349-8199 TANK GP-HYDRAULIC

S/N: DYB1-UP

PART OF 339-6850 TANK & MTG GP-HYDRAULIC

SMCS-5056 **i05300826**

NOTE	REF NO	GRAPHIC REF	PART NUMBER	QTY	PART NAME 1 2 3 4 5 6 (PRODUCT LEVEL)	SEE PAGE
	1	1	**7T-8332**	4	MOUNTING	
	2	1	*9U-6994*	1	FITTING GP	
		1	**5P-4362**	1	CONNECTOR	
		1	**7M-8485**	1	SEAL-O-RING	
	3	1	**111-5719**	1	GASKET	
	4	1	**142-8937**	1	CAP AS-FILLER (HYDRAULIC TANK)	
	5	1	**173-3323**	1	ADAPTER	
	6	1	**206-8818**	1	STRAINER (HYDRAULIC TANK)	
	7	1	**255-0759**	1	SCREEN-SUCTION	
		1	**030-4606**	1	SEAL-O-RING	
	8	1	**258-2829**	1	BREATHER (HYDRAULIC TANK)	
	9	1	**262-5689**	2	STRAINER AS (HYDRAULIC TANK)	
					(EACH INCLUDES)	
		1	**135-7940**	1	SEAL-O-RING	
	10	1	**295-5250**	1	GAUGE-SIGHT (COOLANT)	
		1	**122-8353**	2	BOLT (M12X1.75X46.5-MM)	
		1	**133-5186**	4	SEAL-O-RING	
	11	1	**311-3478**	1	STRAINER (RETURN)	
	12	1	**311-3940**	1	BASE	
	13	1	**333-6803**	1	PLATE	
	14	1	**333-6842**	1	GASKET	
	15	1	**339-6815**	1	PLATE AS	
	16	1	**339-6820**	1	PLATE AS	
	17	1	**339-6823**	1	COVER GP-HYDRAULIC TANK	
		1	**5P-4116**	1	WASHER-HARD (8.8X20.5X2-MM THK)	
M		1	**8T-6912**	1	BOLT (M8X1.25X50-MM)	
		1	**299-7996**	1	PLATE	
		1	**299-7997**	1	SCREEN (HYDRAULIC OIL)	
	19	1	*357-4582*	1	ELBOW AS	
		1	**2S-4078**	1	SEAL-O-RING	
		1	**363-8108**	1	ADAPTER-ELBOW	
	20	1	**8T-4222**	4	WASHER-PLATED (11X32X2.5-MM THK)	
	21	1	*148-8312*	1	ADAPTER AS	
		1	**3D-2824**	1	SEAL-O-RING	
		1	**3T-4965**	1	ADAPTER-O-RING	
	22	1	*148-8327*	1	CONNECTOR AS	
		1	**3D-2824**	1	SEAL-O-RING	
		1	**6V-8637**	1	CONNECTOR	
		1	**6V-9746**	1	SEAL-O-RING	
	23	1	*148-8368*	1	ELBOW AS	
		1	**3J-1907**	1	SEAL-O-RING	
		1	**4J-5477**	1	SEAL-O-RING	
		1	**6V-8627**	1	ELBOW	
M	24	1	**5C-7261**	20	NUT (M8X1.25-THD)	
	25	1	**5P-4116**	20	WASHER-HARD (8.8X20.5X2-MM THK)	
	26	1	**6V-5839**	2	WASHER (11X21X2.5-MM THK)	
M	27	1	**6V-7744**	3	LOCKNUT (M10X1.5-THD)	
	28	1	**7M-8485**	1	SEAL-O-RING	
	29	1	**7X-0618**	6	WASHER-HARD (13.5X40X5-MM THK)	
	30	1	**8T-4121**	1	WASHER-HARD (11X21X2.5-MM THK)	
M	31	1	**8T-4195**	4	BOLT (M10X1.5X30-MM)	
M	32	1	**8T-4244**	2	NUT (M12X1.75-THD)	
M	33	1	**8T-4910**	4	BOLT (M12X1.75X60-MM)	

M - METRIC PART

349-8199 **TANK GP-HYDRAULIC (*contd.*)** **i05300826**

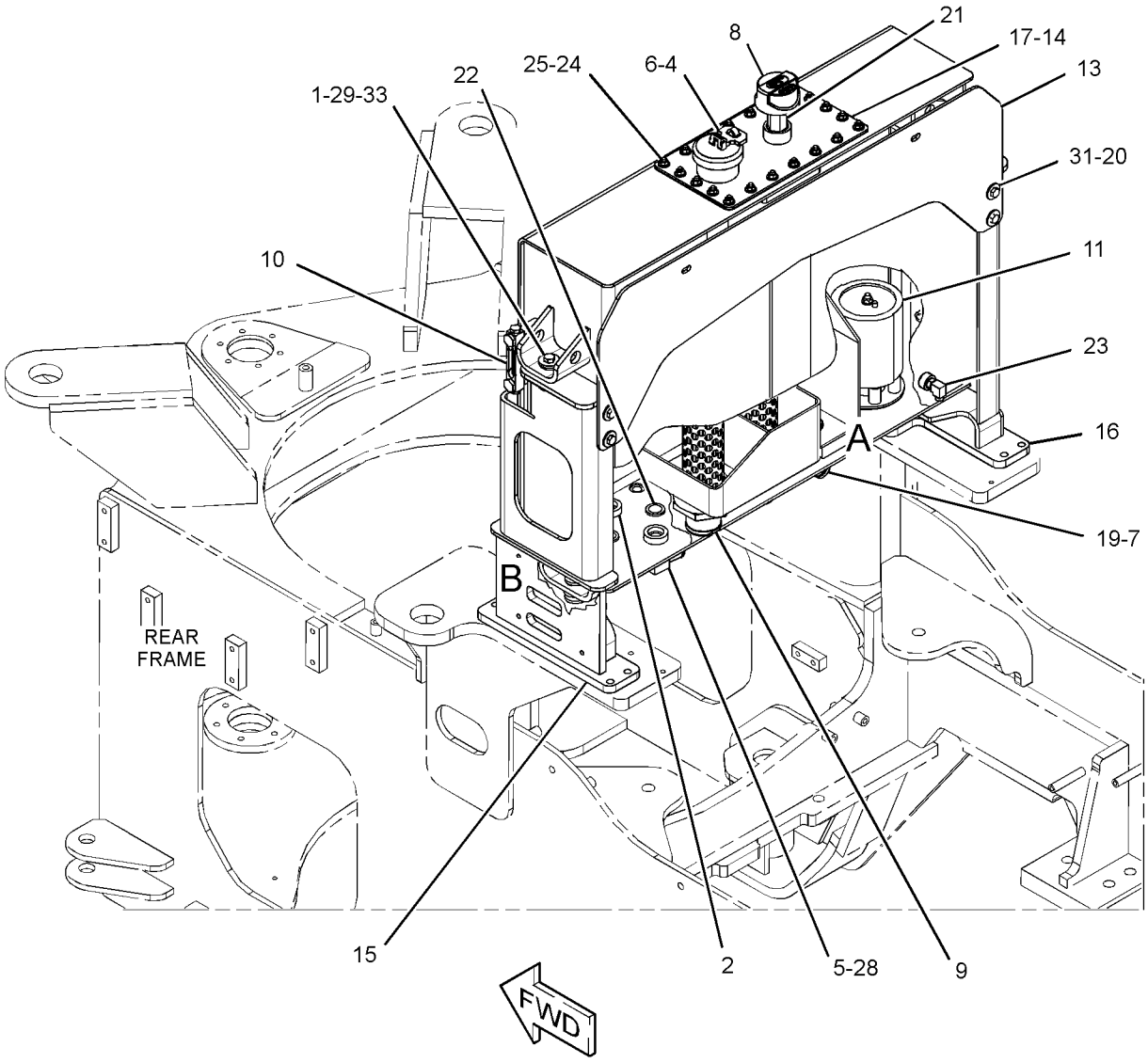

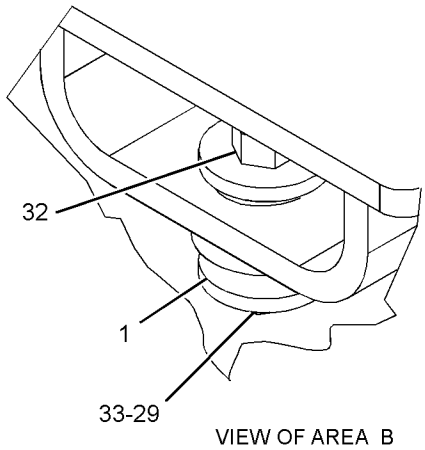

VIEW OF AREA B

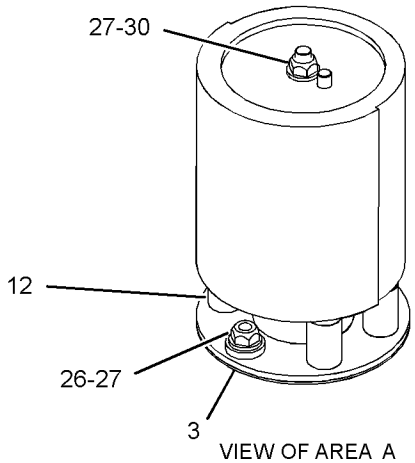

VIEW OF AREA A

GRAPHIC #1 **<END>** g03244156

333-6950 VALVE & LINES GP-COUPLER

S/N: DYB1-UP

PART OF 387-4099 HYDRAULIC AR-2 VALVE, 387-4199 HYDRAULIC AR-3 VALVE, 419-8849 HYDRAULIC AR-4 VALVE

AN ATTACHMENT

SMCS-5057, 5147, 5479 **i05312273**

NOTE	REF NO	GRAPHIC REF	PART NUMBER	QTY	PART NAME 1 2 3 4 5 6 (PRODUCT LEVEL)	SEE PAGE
	1	1	**7K-1181**	3	STRAP-CABLE	
I	4	1	**346-9735**	1	HOSE AS	
	5	1	**386-3776**	1	TUBE AS	
	6	1	**386-3777**	1	TUBE AS	
	7	1	**352-0234**	1	BRACKET AS	
M		1	**159-9541**	1	NUT-WELD (M10X1.5-THD)	
Y	8	1	*352-1108*	1	VALVE & MTG GP-COUPLER	382
	9	1	**354-5620**	1	HARNESS AS-QUICK COUPLER	
		1	**9X-3401**	6	PIN-CONNECTOR (16-GA TO 18-GA)	
		1	**155-2270**	3	KIT-CONNECTING PLUG (2-PIN)	
					(EACH INCLUDES PLUG AS, WEDGE & INTERFACE SEAL)	
		1	**102-8805**	1	KIT-RECEPTACLE (6-PIN)	
					(INCLUDES RECEPTACLE AS & WEDGE)	
		1	**194-5226**	6	WIRE AS (16-GA)	
					—OR—	
		1	**194-5227**	6	WIRE AS (14-GA)	
I	10	1	**359-0021**	1	HOSE AS	
	12	1	*148-8336*	1	CONNECTOR AS	
		1	**3J-1907**	1	SEAL-O-RING	
		1	**6V-8397**	1	SEAL-O-RING	
		1	**6V-8636**	1	CONNECTOR	
	14	1	*148-8378*	2	ELBOW AS	
					(EACH INCLUDES)	
		1	**3J-1907**	1	SEAL-O-RING	
		1	**6V-8397**	1	SEAL-O-RING	
		1	**6V-8724**	1	ELBOW	
	15	1	**5P-9299**	4	CLIP	
	16	1	**6V-8397**	2	SEAL-O-RING	
M	17	1	**8T-3647**	2	BOLT (M8X1.25X80-MM)	
	18	1	**8T-4121**	4	WASHER-HARD (11X21X2.5-MM THK)	
M	19	1	**8T-4137**	2	BOLT (M10X1.5X20-MM)	
M	20	1	**8T-4191**	2	BOLT (M10X1.5X16-MM)	
	21	1	**8T-4224**	2	WASHER-HARD (8.8X16X2-MM THK)	
	22	1	*148-8365*	2	ELBOW AS	
					(EACH INCLUDES)	
		1	**3J-1907**	1	SEAL-O-RING	
		1	**6V-8398**	1	SEAL-O-RING	
		1	**8T-6876**	1	ELBOW	
	23	1	**206-2423**	1	SADDLE	

I - REFER TO HYDRAULIC INFORMATION SYSTEM
M - METRIC PART
Y - SEPARATE ILLUSTRATION

333-6950 **VALVE & LINES GP-COUPLER (*contd.*)** **i05312273**

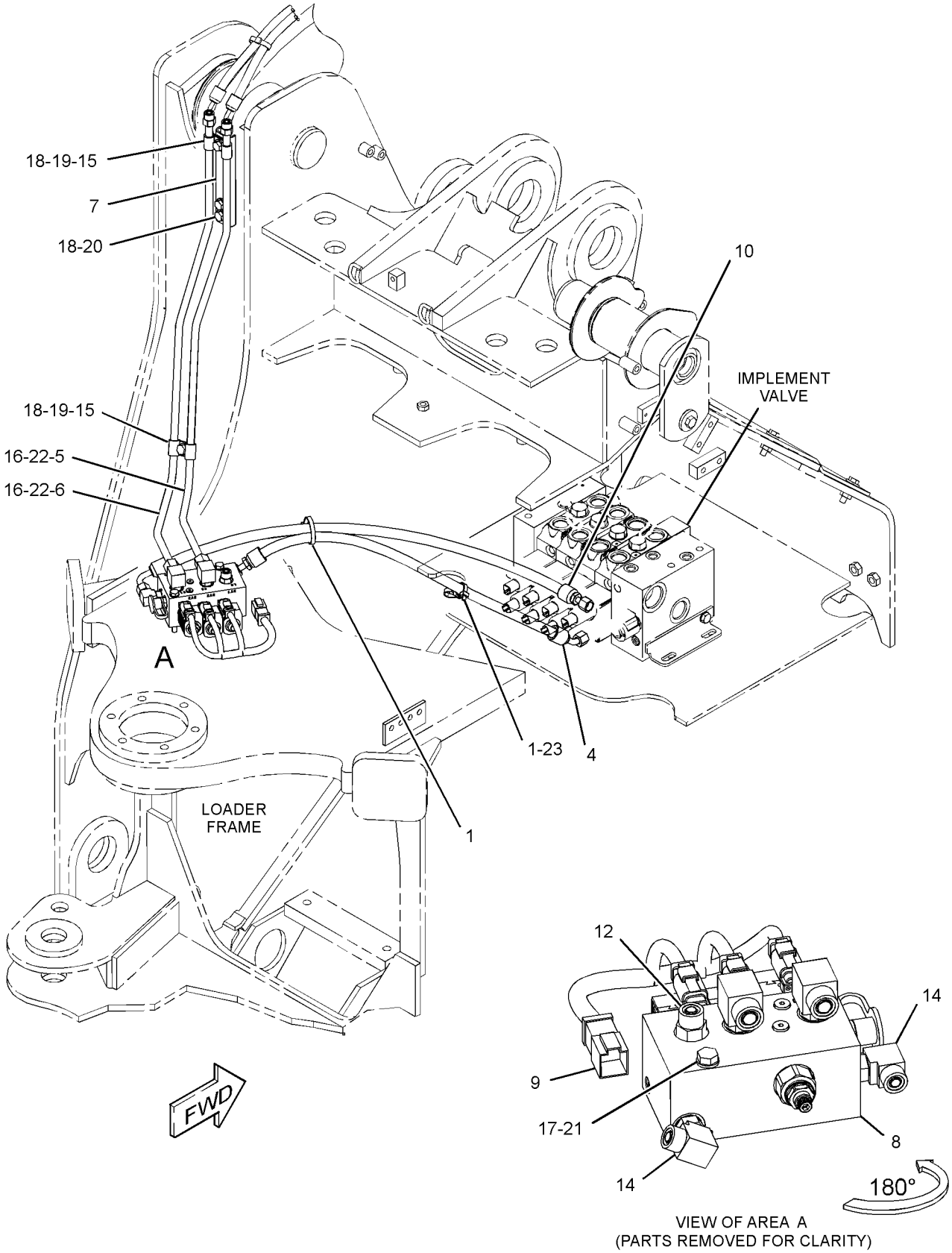

GRAPHIC #1 **<END>** g03380107

352-1108 VALVE & MTG GP-COUPLER

S/N: DYB1-UP

PART OF 333-6950 VALVE & LINES GP-COUPLER

AN ATTACHMENT

SMCS-5491 **i05312250**

NOTE	REF NO	GRAPHIC REF	PART NUMBER	QTY	PART NAME 1 2 3 4 5 6 (PRODUCT LEVEL)	SEE PAGE
	1	1	**6V-0852**	1	CAP-DUST	
	2	1	**266-1602**	1	PLUG-ORIFICE	
J	3	1	**351-7535**	3	VALVE GP-SOLENOID (24-VOLT) (QUICK COUPLER)	
					(EACH INCLUDES)	
		1	**156-5970**	1	NUT (1/2-20-THD)	
		1	**354-7468**	1	COIL AS-SOLENOID (24-VOLT)	
	4	1	**6V-3965**	1	FITTING (QUICK DISCONNECT)	
L	5	1	**367-8534**	1	VALVE GP-PRESSURE REDUCING (QUICK COUPLER)	
	6	1	**6E-5066**	1	SCREEN (PILOT MANIFOLD)	
	7	1	**9S-4180**	4	PLUG	
	8	1	**4J-7533**	4	SEAL-O-RING	
	9	1	**3J-1907**	1	SEAL-O-RING	
					AVAILABLE REPAIR KIT(S):	
J			**195-7430**	1	KIT-SEAL (SOLENOID VALVE)	
					(INCLUDES O-RING SEALS & BACKUP RINGS)	
L			**2U-7358**	1	KIT-SEAL (PRESSURE REDUCING VALVE)	
					(INCLUDES O-RING SEALS & BACKUP RINGS)	

J - KIT MARKED J SERVICES PART MARKED J
L - KIT MARKED L SERVICES PART MARKED L

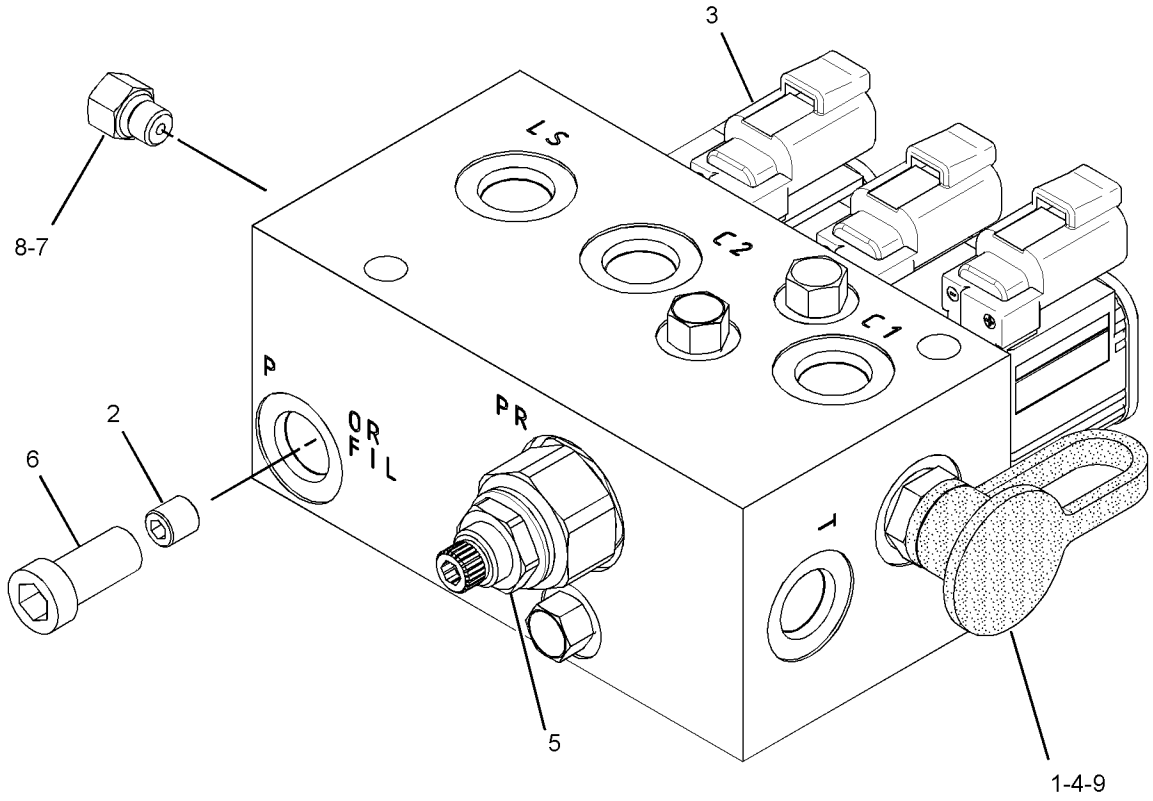

GRAPHIC #1 **<END>** g03321850

416-2620 VALVE & MTG GP-HYDRAULIC

S/N: DYB1-UP
PART OF 381-4389, 381-4390 OPTION AR-COLD WEATHER
AN ATTACHMENT

SMCS-5051 **i05294128**

NOTE	REF NO	GRAPHIC REF	PART NUMBER	QTY	PART NAME 1 2 3 4 5 6 (PRODUCT LEVEL)	SEE PAGE
	1	1	**204-2281**	1	STRAP-CABLE	
	2	1	*388-9447*	1	VALVE & MTG GP	
		1	**377-0034**	1	VALVE GP-SOLENOID (DIFFERENTIAL LOCK)	
		1	**254-0072**	1	COIL AS (24-VOLT)	
		1	**388-9448**	1	MANIFOLD	
I	3	1	**390-4484**	1	HOSE AS	
I	4	1	**416-2619**	1	HOSE AS	
	5	1	*148-8390*	2	ELBOW AS	
					(EACH INCLUDES)	
		1	**2M-9780**	1	SEAL-O-RING	
		1	**6V-8626**	1	ELBOW	
		1	**7J-9108**	1	SEAL-O-RING	
	6	1	*150-4039*	1	TEE AS	
		1	**7J-9108**	1	SEAL-O-RING	
		1	**127-2141**	1	TEE-SWIVEL-ORFS	
	7	1	*150-4048*	1	ELBOW AS	
		1	**3K-0360**	1	SEAL-O-RING	
		1	**6V-8722**	1	ELBOW	
		1	**7J-9108**	1	SEAL-O-RING	
	8	1	*155-3504*	1	ELBOW AS	
		1	**2M-9780**	1	SEAL-O-RING	
		1	**6V-9003**	1	ELBOW	
		1	**7J-9108**	1	SEAL-O-RING	
	9	1	**5P-4116**	2	WASHER-HARD (8.8X20.5X2-MM THK)	
M	10	1	**8T-6870**	2	BOLT (M8X1.25X70-MM)	

I - REFER TO HYDRAULIC INFORMATION SYSTEM
M - METRIC PART

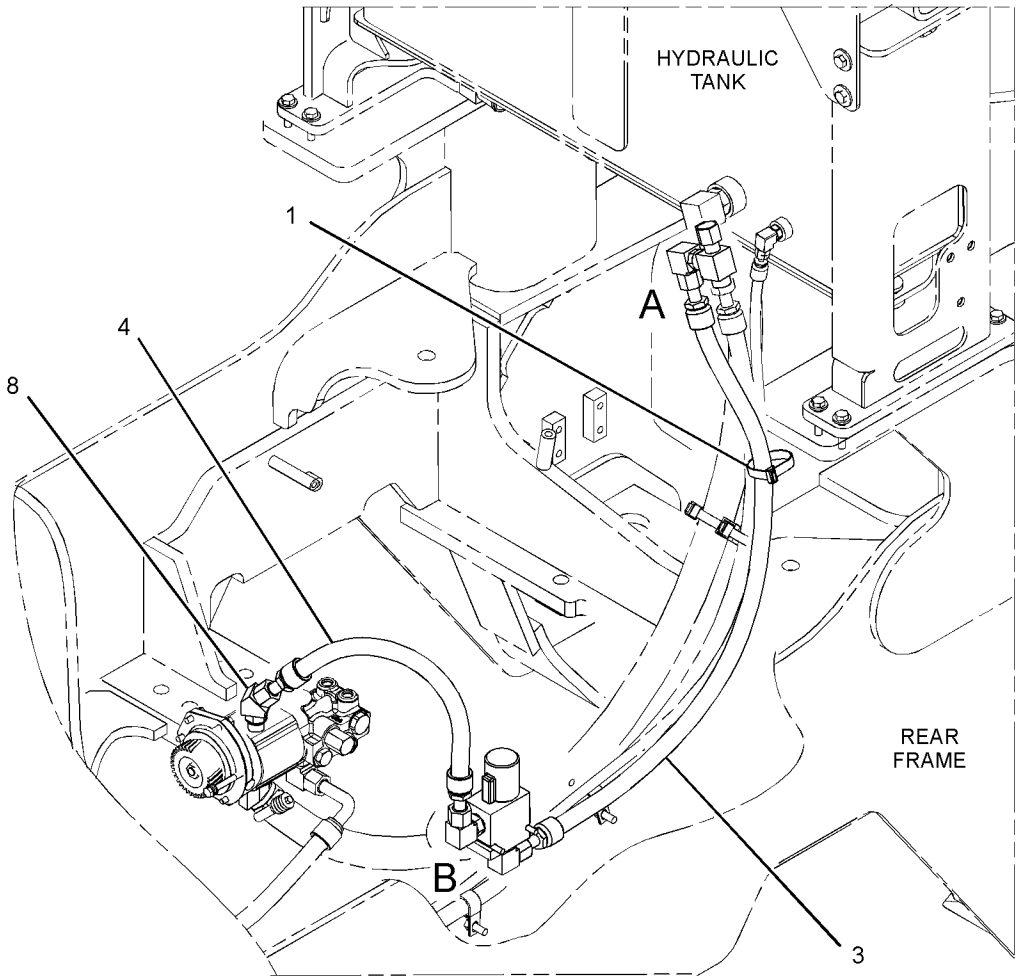



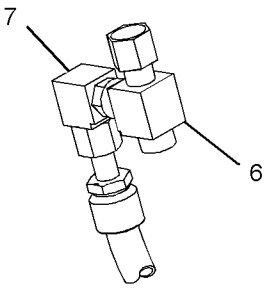

VIEW OF AREA A

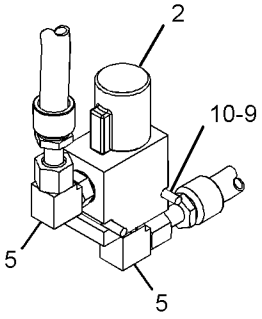

VIEW OF AREA B

GRAPHIC #1 **<END>** g03377796

333-6909 VALVE & MTG GP-RIDE CONTROL

S/N: DYB1-UP
PART OF 333-6860 CONTROL AR-RIDE
AN ATTACHMENT

SMCS-5054, 5066

i05328234

NOTE	REF NO	GRAPHIC REF	PART NUMBER	QTY	PART NAME 1 2 3 4 5 6 (PRODUCT LEVEL)	SEE PAGE
Y	1	1	*293-6472*	1	CONTROL GP-RIDE	323
	2	1	**348-8795**	1	BRACKET AS	
M		1	**159-9541**	2	NUT-WELD (M10X1.5-THD)	
	3	1	**7X-7729**	8	WASHER (11X25X3-MM THK)	
M	4	1	**8T-4136**	4	BOLT (M10X1.5X25-MM)	
M	5	1	**8T-4195**	4	BOLT (M10X1.5X30-MM)	

M - METRIC PART
Y - SEPARATE ILLUSTRATION

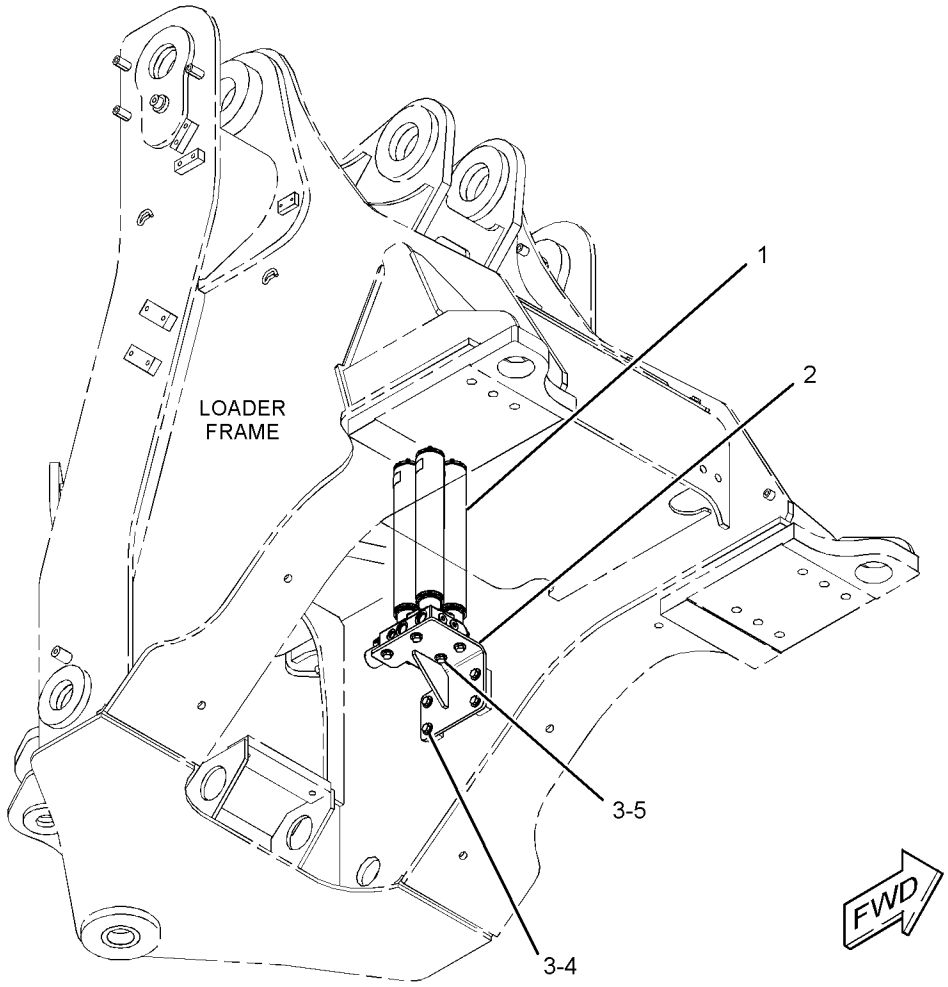

GRAPHIC #1

<END>

g02761436

373-6976 VALVE GP-CONTROL–TILT

S/N: DYB1-UP

PART OF 343-3048, 343-3050, 343-3052 VALVE GP-MAIN CONTROL

AN ATTACHMENT

SMCS-5051 **i05309995**

NOTE	REF NO	GRAPHIC REF	PART NUMBER	QTY	PART NAME 1 2 3 4 5 6 (PRODUCT LEVEL)	SEE PAGE
	1	1	**260-3002**	2	VALVE GP-RELIEF (TILT CYLINDER ROD END)	
Y	2	1	**373-6991**	1	VALVE GP-PILOT (TILT CYLINDER)	396
HJ	3	1	**373-6993**	1	KIT-COVER (VALVE CONTROL)	
					(INCLUDES O-RINGS, HOUSING, SEAL KIT & BOLTS MARKED J)	
	4	1	**6V-7970**	1	SEAL-O-RING	
J	5	1	**236-9839**	4	BOLT-SOCKET HEAD (M6X1X15-MM)	
					AVAILABLE REPAIR KIT(S):	
H			**373-7041**	1	KIT-SEAL	
					(INCLUDES O-RING SEALS)	

H - KIT MARKED H SERVICES PARTS MARKED H
J - KIT MARKED J INCLUDES PARTS MARKED J
Y - SEPARATE ILLUSTRATION

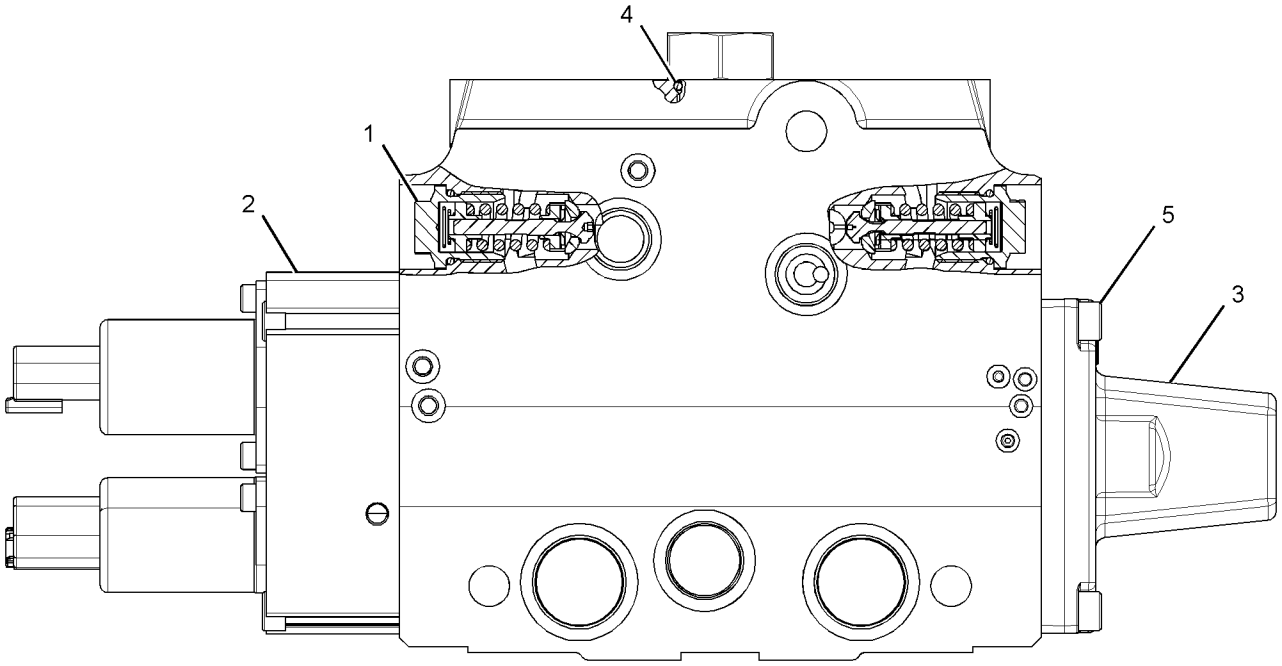

GRAPHIC #1 **<END>** g02773596

373-6979 VALVE GP-CONTROL–LIFT

S/N: DYB1-UP

PART OF 343-3048, 343-3050, 343-3052 VALVE GP-MAIN CONTROL

AN ATTACHMENT

SMCS-5051 **i05309996**

NOTE	REF NO	GRAPHIC REF	PART NUMBER	QTY	PART NAME 1 2 3 4 5 6 (PRODUCT LEVEL)	SEE PAGE
	1	1	**348-4593**	2	VALVE GP-CHECK (IMPLEMENT)	
					(EACH INCLUDES)	
		1	**6V-5138**	1	SEAL-O-RING	
Y	2	1	**373-6991**	1	VALVE GP-PILOT (LIFT CYLINDER)	396
	3	1	**373-6971**	1	KIT-COVER (CONTROL VALVE)	
					(INCLUDES HOUSING, O-RING SEAL & BOLTS)	
	4	1	**6V-7970**	1	SEAL-O-RING	
	5	1	**199-8090**	4	BOLT	

Y - SEPARATE ILLUSTRATION

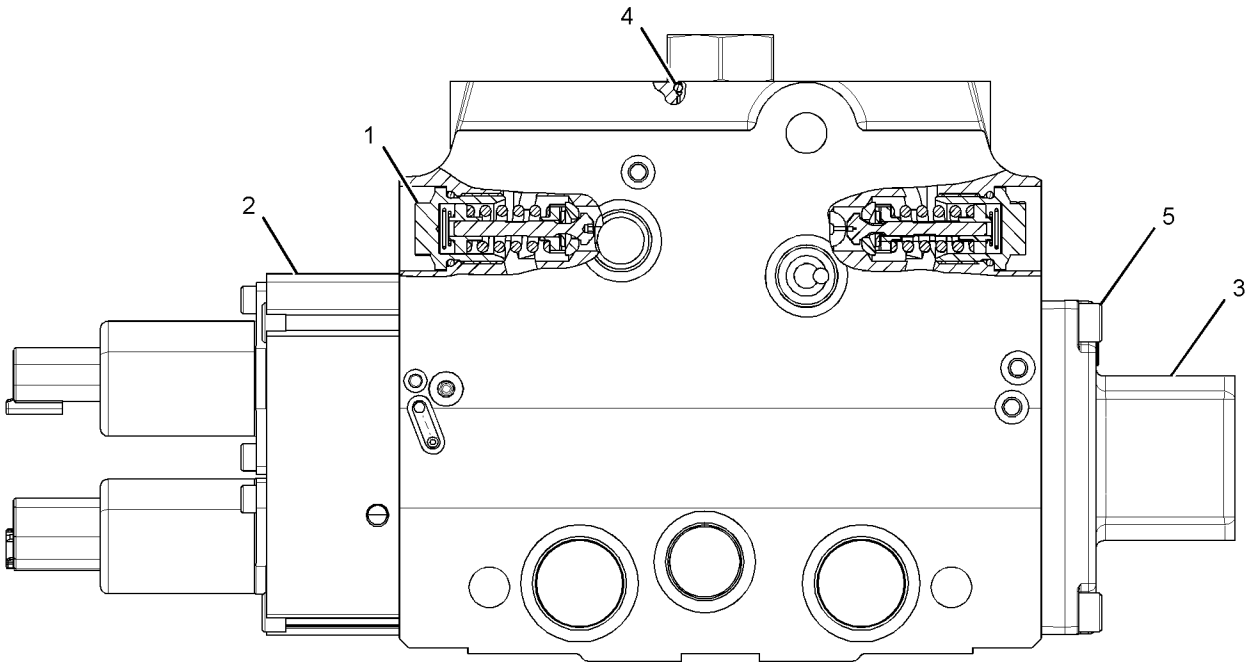

GRAPHIC #1 **<END>** g02773597

373-6980 VALVE GP-CONTROL–AUXILIARY

S/N: DYB1-UP

PART OF 343-3050, 343-3052 VALVE GP-MAIN CONTROL

AN ATTACHMENT

SMCS-5051 **i05312299**

NOTE	REF NO	GRAPHIC REF	PART NUMBER	QTY	PART NAME 1 2 3 4 5 6 (PRODUCT LEVEL)	SEE PAGE
	1	1	**260-3002**	2	VALVE GP-RELIEF (BUCKET CYLINDER, HEAD END)	
Y	2	1	**373-6991**	1	VALVE GP-PILOT (BUCKET CYLINDER)	396
HJ	3	1	**373-6993**	1	KIT-COVER (VALVE CONTROL)	
					(INCLUDES O-RINGS, HOUSING, SEAL KIT & BOLTS MARKED J)	
	4	1	**6V-7970**	1	SEAL-O-RING	
J	5	1	**236-9839**	4	BOLT-SOCKET HEAD (M6X1X15-MM)	
					AVAILABLE REPAIR KIT(S):	
H			**373-7041**	1	KIT-SEAL	
					(INCLUDES O-RING SEALS)	

H - KIT MARKED H SERVICES PARTS MARKED H
J - KIT MARKED J INCLUDES PARTS MARKED J
Y - SEPARATE ILLUSTRATION

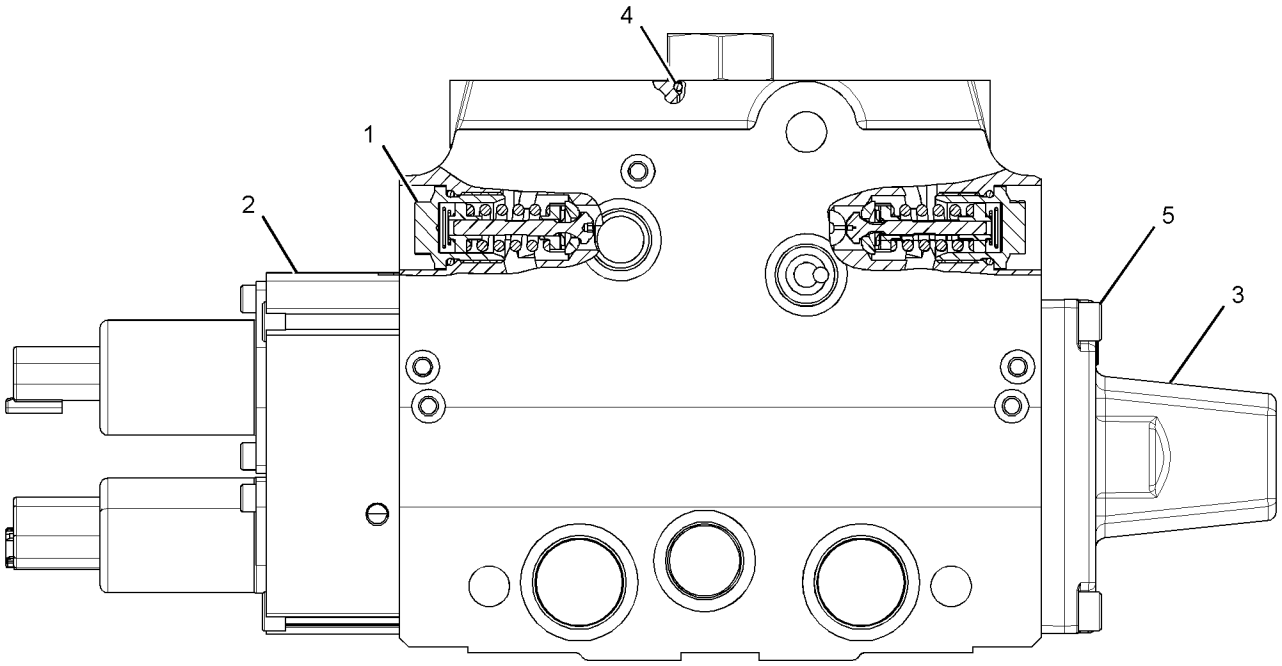

GRAPHIC #1 **<END>** g02770698

373-6982 VALVE GP-CONTROL

S/N: DYB1-UP
PART OF 343-3052 VALVE GP-MAIN CONTROL
AN ATTACHMENT

SMCS-5051 **i05312432**

NOTE	REF NO	GRAPHIC REF	PART NUMBER	QTY	PART NAME 1 2 3 4 5 6 (PRODUCT LEVEL)	SEE PAGE
	1	1	**260-3002**	2	VALVE GP-RELIEF (TILT CYLINDER ROD END)	
Y	2	1	**373-6991**	1	VALVE GP-PILOT (TILT CYLINDER)	396
HJ	3	1	**373-6993**	1	KIT-COVER (VALVE CONTROL)	
					(INCLUDES O-RINGS, HOUSING, SEAL KIT & BOLTS MARKED J)	
	4	1	**6V-7970**	1	SEAL-O-RING	
J	5	1	**236-9839**	4	BOLT-SOCKET HEAD (M6X1X15-MM)	
					AVAILABLE REPAIR KIT(S):	
H			**373-7041**	1	KIT-SEAL	
					(INCLUDES O-RING SEALS)	

H - KIT MARKED H SERVICES PARTS MARKED H
J - KIT MARKED J INCLUDES PARTS MARKED J
Y - SEPARATE ILLUSTRATION

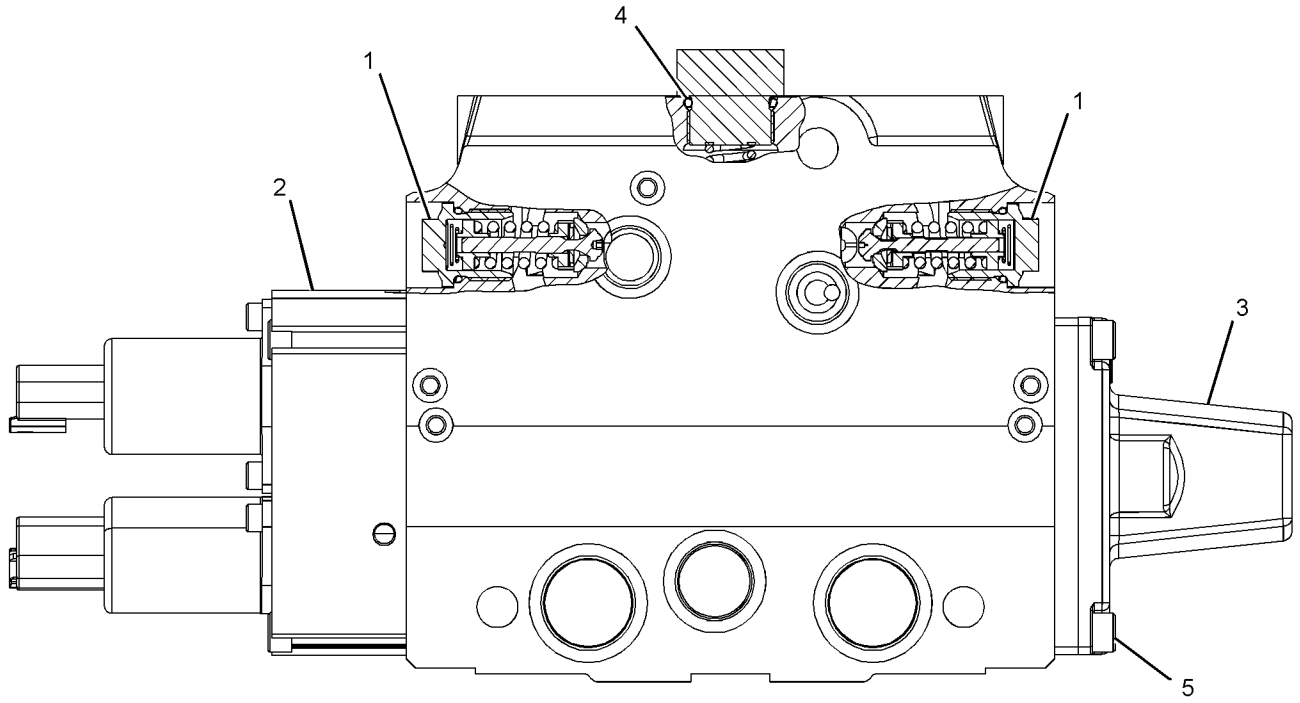

GRAPHIC #1 **<END>** g02793008

290-6483 VALVE GP-DRAIN–FUEL TANK

S/N: DYB1-UP

PART OF 381-4385 CHASSIS AR

SMCS-5076 **i04949289**

NOTE	REF NO	GRAPHIC REF	PART NUMBER	QTY	PART NAME 1 2 3 4 5 6 (PRODUCT LEVEL)	SEE PAGE
	1	1	**285-0620**	1	COVER (DRAIN)	
	2	1	**7X-7729**	2	WASHER (11X25X3-MM THK)	
M	3	1	**8T-4195**	2	BOLT (M10X1.5X30-MM)	

M - METRIC PART

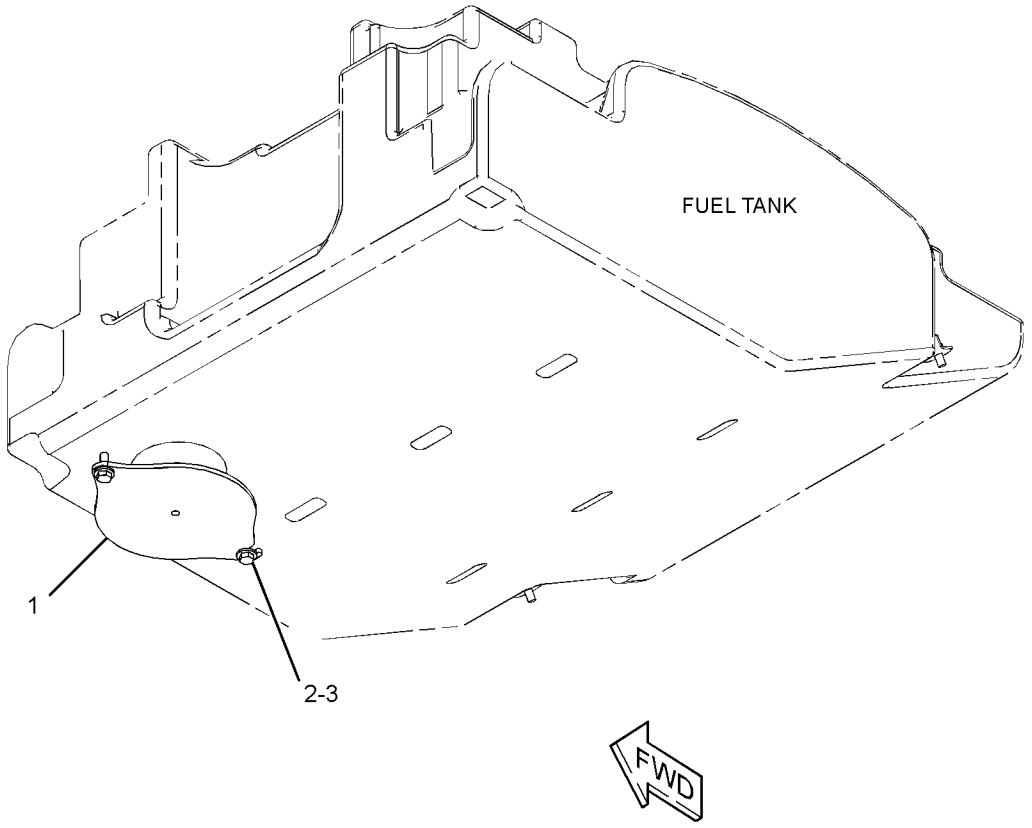

GRAPHIC #1 **<END>** g01887996

343-3048 VALVE GP-MAIN CONTROL–2-FUNCTION

S/N: DYB1-UP

PART OF 347-8286, 387-4099 HYDRAULIC AR-2 VALVE AN ATTACHMENT

SMCS-5051 **i05309990**

NOTE	REF NO	GRAPHIC REF	PART NUMBER	QTY	PART NAME 1 2 3 4 5 6 (PRODUCT LEVEL)	SEE PAGE
Y	1	1	**373-6973**	1	VALVE GP-MANIFOLD & RELIEF (INLET)	394
Y	2	1	**373-6976**	1	VALVE GP-CONTROL (TILT)	386
Y	3	1	**373-6979**	1	VALVE GP-CONTROL (LIFT)	387
Y	4	1	**373-6984**	1	VALVE GP-MANIFOLD & RELIEF (OUTLET)	395
	5	1	**373-6985**	2	BRACKET-MOUNTING	
	6	1	**349-6064**	3	KIT-SEAL (VALVES)	
					(EACH INCLUDES SEALS)	
	7	1	**259-6750**	1	KIT-FASTENER (3-BANK)	
					(INCLUDES RODS, WASHERS & NUTS)	
M	8	1	**8T-4137**	2	BOLT (M10X1.5X20-MM)	
	9	1	**8T-4121**	2	WASHER-HARD (11X21X2.5-MM THK)	

M - METRIC PART
Y - SEPARATE ILLUSTRATION

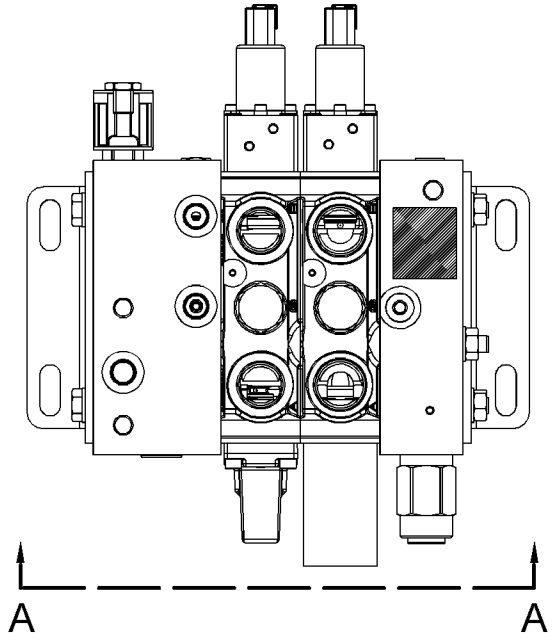

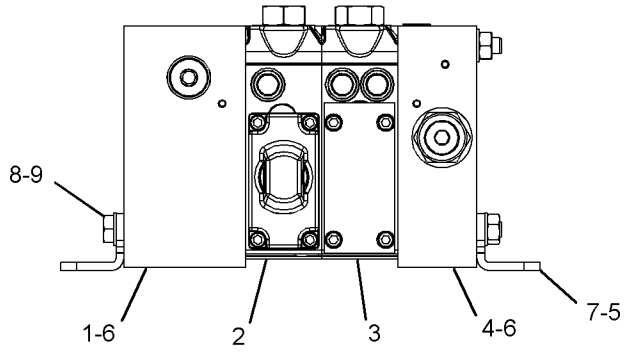

VIEW A-A

GRAPHIC #1

<END>

g02793923

343-3050 VALVE GP-MAIN CONTROL–3-FUNCTION

S/N: DYB1-UP

PART OF 387-4199 HYDRAULIC AR-3 VALVE

AN ATTACHMENT

SMCS-5051 **i05312294**

NOTE	REF NO	GRAPHIC REF	PART NUMBER	QTY	PART NAME 1 2 3 4 5 6 (PRODUCT LEVEL)	SEE PAGE
Y	1	1	**373-6973**	1	VALVE GP-MANIFOLD & RELIEF (INLET)	394
Y	2	1	**373-6976**	1	VALVE GP-CONTROL (TILT)	386
Y	3	1	**373-6979**	1	VALVE GP-CONTROL (LIFT)	387
Y	4	1	**373-6980**	1	VALVE GP-CONTROL (AUXILIARY)	388
Y	5	1	**373-6984**	1	VALVE GP-MANIFOLD & RELIEF (OUTLET)	395
	6	1	**373-6985**	2	BRACKET-MOUNTING	
	7	1	**349-6064**	4	KIT-SEAL (VALVES)	
					(EACH INCLUDES SEALS)	
	8	1	**259-6751**	1	KIT-FASTENER (4-BANK)	
					(INCLUDES RODS, WASHERS & NUTS)	
M	9	1	**8T-4137**	2	BOLT (M10X1.5X20-MM)	
	10	1	**8T-4121**	2	WASHER-HARD (11X21X2.5-MM THK)	

M - METRIC PART
Y - SEPARATE ILLUSTRATION

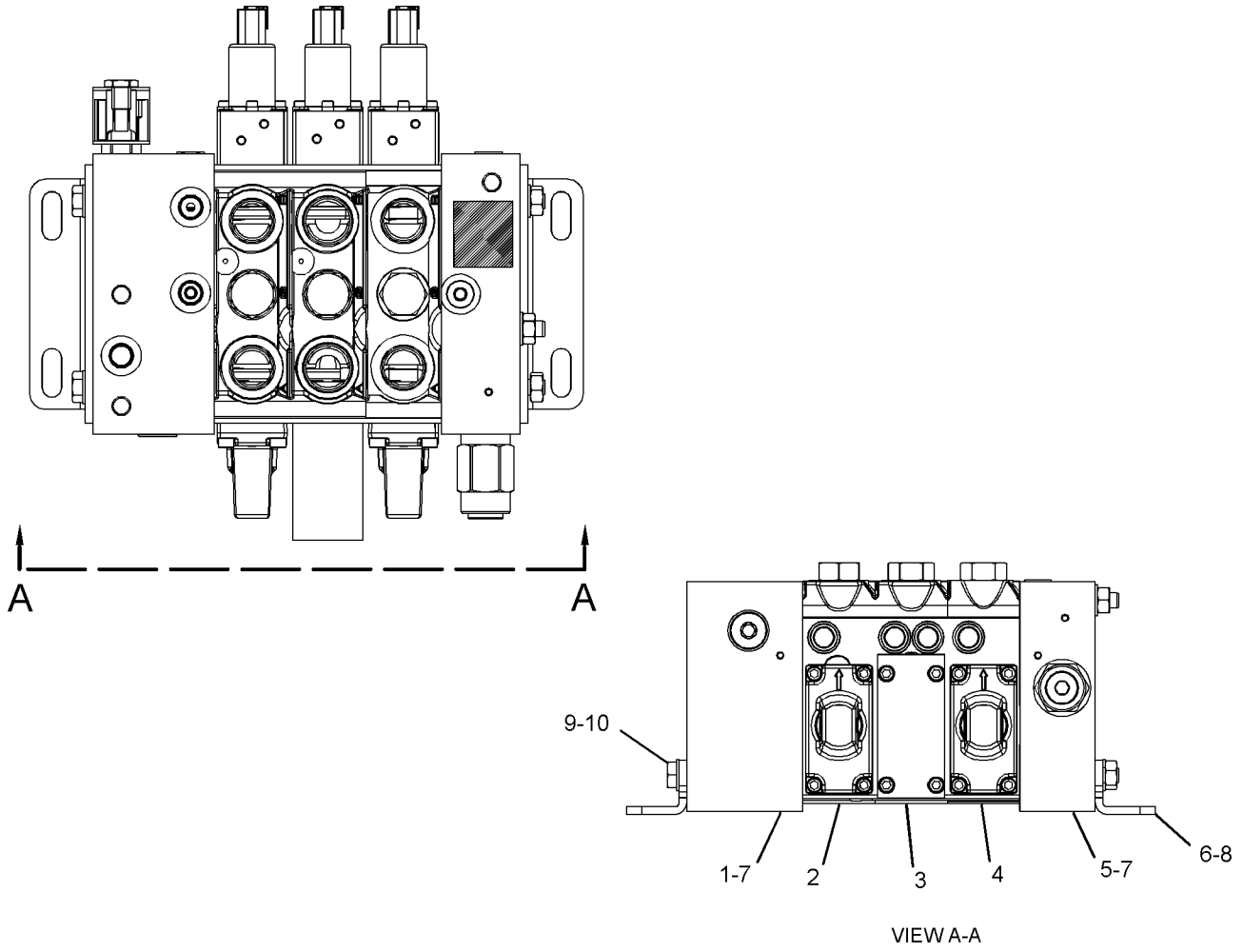

GRAPHIC #1

<END>

g02793892

343-3052 VALVE GP-MAIN CONTROL–4-FUNCTION

S/N: DYB1-UP
PART OF 419-8849 HYDRAULIC AR-4 VALVE
AN ATTACHMENT

SMCS-5051 **i05312430**

NOTE	REF NO	GRAPHIC REF	PART NUMBER	QTY	PART NAME 1 2 3 4 5 6 (PRODUCT LEVEL)	SEE PAGE
Y	1	1	**373-6973**	1	VALVE GP-MANIFOLD & RELIEF (INLET)	394
Y	2	1	**373-6976**	1	VALVE GP-CONTROL (TILT)	386
Y	3	1	**373-6979**	1	VALVE GP-CONTROL (LIFT)	387
Y	4	1	**373-6980**	1	VALVE GP-CONTROL (AUXILIARY)	388
Y	5	1	**373-6982**	1	VALVE GP-CONTROL (AUXILIARY)	389
Y	6	1	**373-6984**	1	VALVE GP-MANIFOLD & RELIEF (OUTLET)	395
	7	1	**373-6985**	2	BRACKET-MOUNTING	
	8	1	**349-6064**	5	KIT-SEAL (VALVES)	
					(EACH INCLUDES SEALS)	
	9	1	**259-6752**	1	KIT-FASTENER (5-BANK)	
					(INCLUDES RODS, WASHERS & NUTS)	
M	10	1	**8T-4137**	2	BOLT (M10X1.5X20-MM)	
	11	1	**8T-4121**	2	WASHER-HARD (11X21X2.5-MM THK)	

M - METRIC PART
Y - SEPARATE ILLUSTRATION

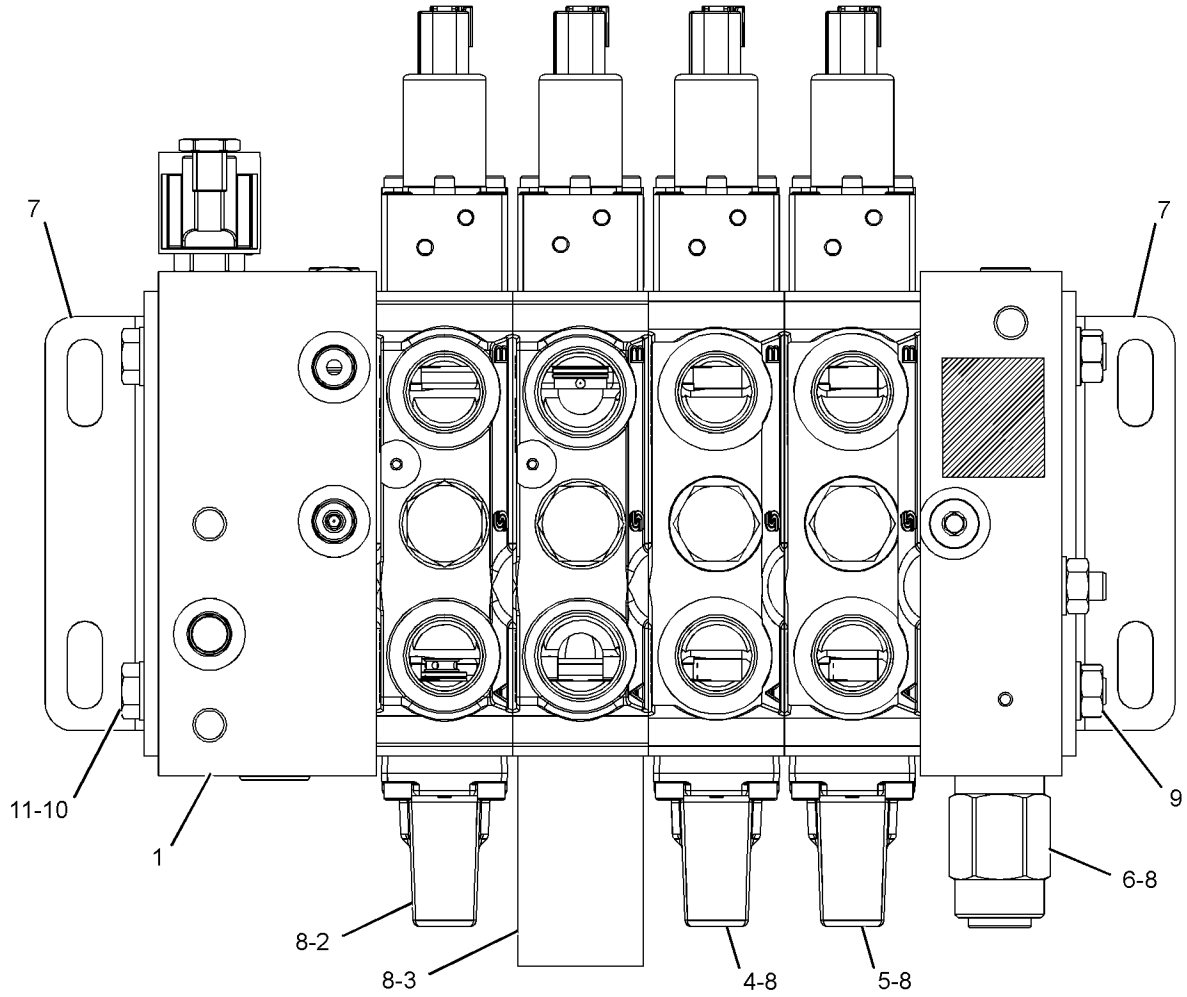

GRAPHIC #1 **<END>** g02796139

373-6973 VALVE GP-MANIFOLD & RELIEF–INLET

S/N: DYB1-UP

PART OF 343-3048, 343-3050, 343-3052 VALVE GP-MAIN CONTROL

AN ATTACHMENT

SMCS-5069 **i05309993**

NOTE	REF NO	GRAPHIC REF	PART NUMBER	QTY	PART NAME 1 2 3 4 5 6 (PRODUCT LEVEL)	SEE PAGE
Y	1	1	**251-3268**	1	VALVE GP-SOLENOID (24-VOLT) (RIDE CONT, LIFT CYL HEAD END)	401
	2	1	**373-6989**	1	VALVE GP-RELIEF (LIFT CYLINDER HEAD END)	
	3	1	**373-6990**	1	PLUG-ORIFICE	

Y - SEPARATE ILLUSTRATION

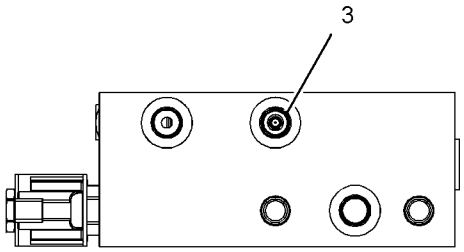

VIEW B-B

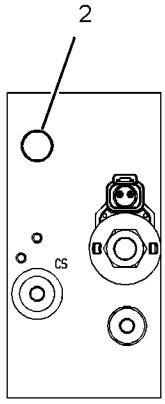

VIEW A-A

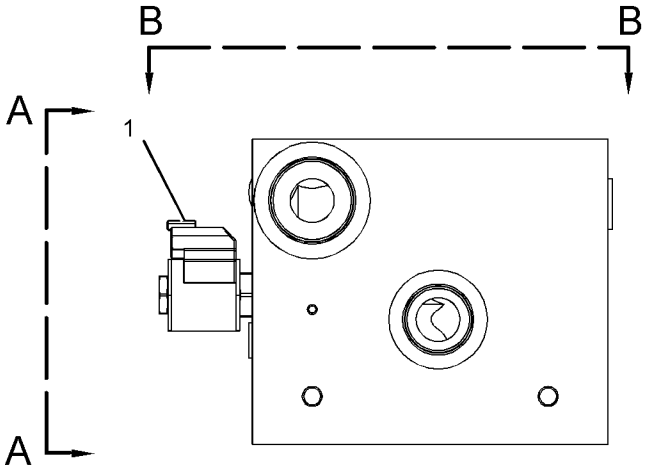

GRAPHIC #1 **<END>** g03339049

373-6984 VALVE GP-MANIFOLD & RELIEF–OUTLET

S/N: DYB1-UP

PART OF 343-3048, 343-3050, 343-3052 VALVE GP-MAIN CONTROL

AN ATTACHMENT

SMCS-5069 **i05309495**

NOTE	REF NO	GRAPHIC REF	PART NUMBER	QTY	PART NAME 1 2 3 4 5 6 (PRODUCT LEVEL)	SEE PAGE
J	1	1	**359-7245**	1	VALVE GP-RELIEF (OUTLET MANIFOLD)	
					AVAILABLE REPAIR KIT(S):	
J			**308-1838**	1	KIT-SEAL (OUTLET MANIFOLD RELIEF VALVE)	
					(INCLUDES O-RINGS & BACKUP RINGS)	

J - KIT MARKED J SERVICES PART MARKED J

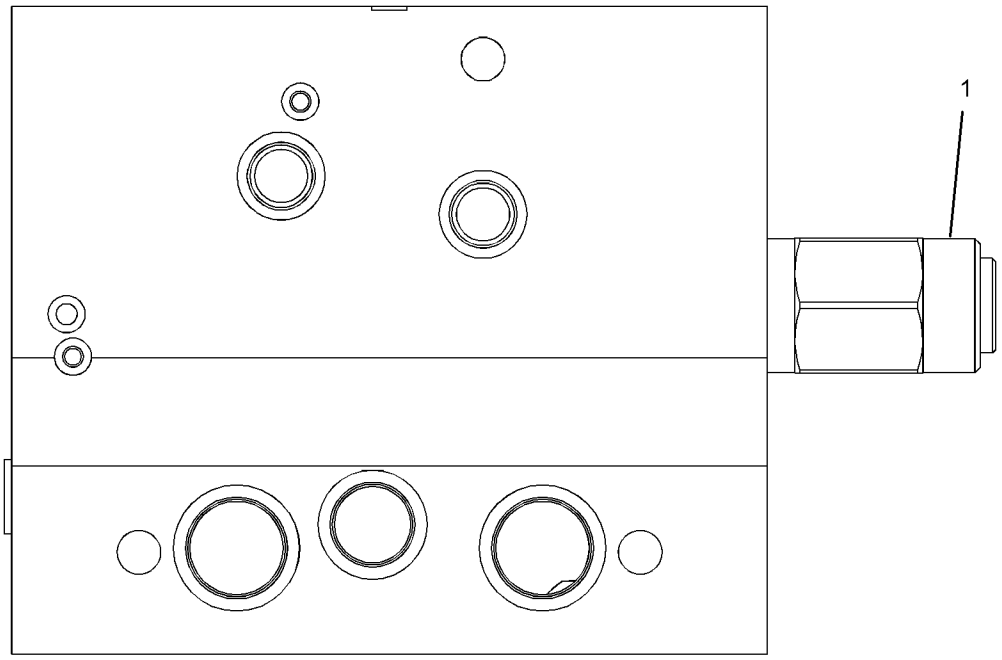

GRAPHIC #1 **<END>** g02755317

373-6991 VALVE GP-PILOT

S/N: DYB1-UP

PART OF 373-6976, 373-6979, 373-6980, 373-6982 VALVE GP-CONTROL

AN ATTACHMENT

SMCS-5059 **i05309493**

NOTE	REF NO	GRAPHIC REF	PART NUMBER	QTY	PART NAME 1 2 3 4 5 6 (PRODUCT LEVEL)	SEE PAGE
	1	1	**350-8936**	2	VALVE GP-SOLENOID (24-VOLT) (PILOT PRESSURE)	
M	2	1	**095-0641**	4	BOLT-SOCKET HEAD (M4X0.7X10-MM)	
M	3	1	**136-4192**	4	BOLT (M6X1X35-MM)	
	4	1	**373-6992**	1	KIT-SEAL	
					(INCLUDES RINGS)	

M - METRIC PART

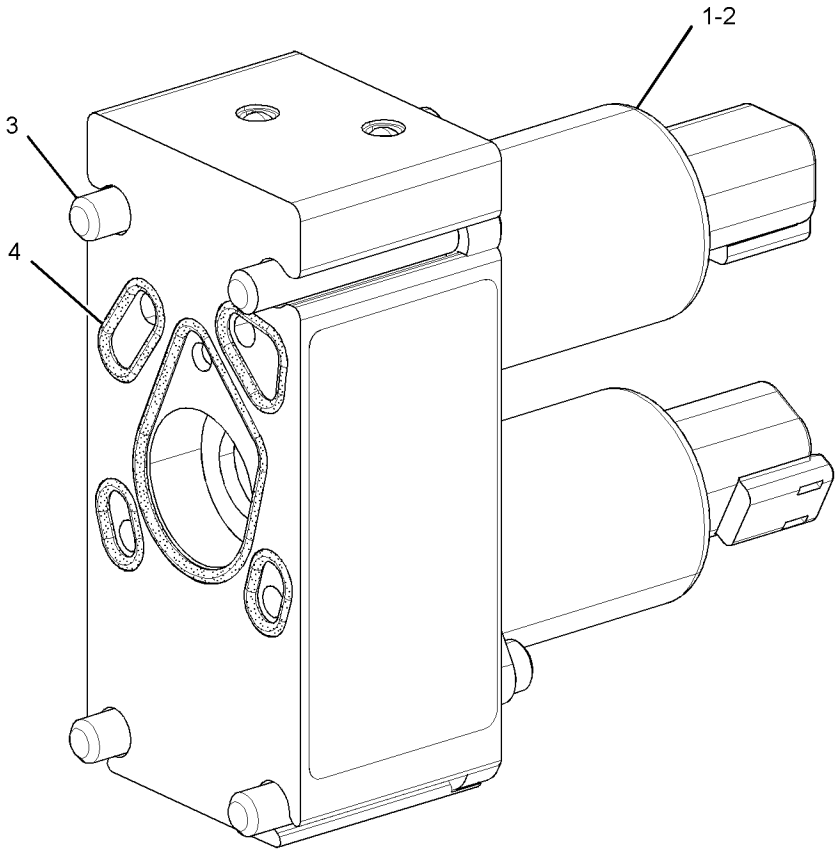

GRAPHIC #1 **<END>** g02703318

347-0612 VALVE GP-PUMP CONTROL–FLOW COMPENSATOR

S/N: DYB1-UP

PART OF 358-4992 PUMP GP-PISTON

SMCS-5455 **i05325561**

NOTE	REF NO	GRAPHIC REF	PART NUMBER	QTY	PART NAME 1 2 3 4 5 6 (PRODUCT LEVEL)	SEE PAGE
M	1	1	**8T-8442**	4	BOLT-SOCKET HEAD (M6X1X30-MM)	
	2	1	**280-7870**	1	GASKET	
	3	1	**6E-6528**	2	SEAL	
	4	1	**9S-8002**	1	PLUG-O-RING	
	5	1	**3J-7354**	1	SEAL-O-RING	
	6	1	**033-6043**	1	SEAL-O-RING	
	7	1	**033-6034**	1	SEAL-O-RING	
	8	1	**6E-6527**	2	PLUG	
					AVAILABLE REPAIR KIT(S):	
			293-8350	1	KIT-SEAL (FLOW COMPENSATOR)	
					(INCLUDES O-RINGS & BACK-UP RINGS)	

M - METRIC PART

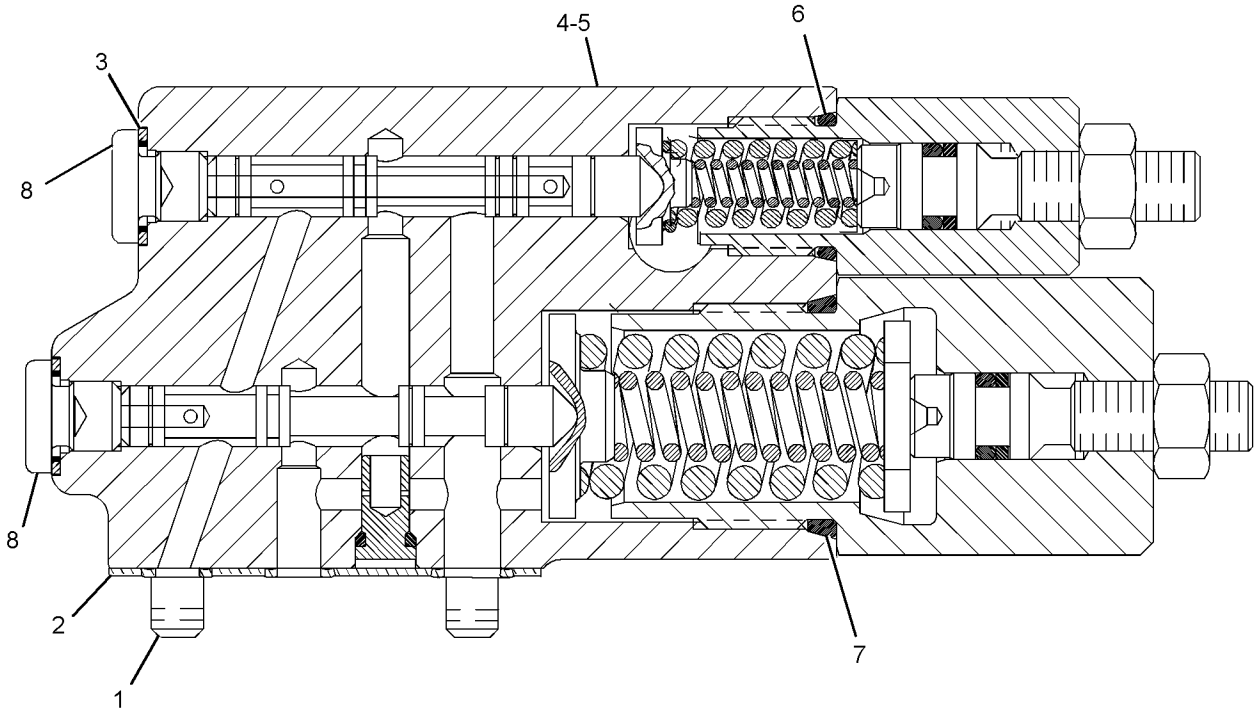

GRAPHIC #1 **<END>** g03113698

373-8468 VALVE GP-PUMP CONTROL

S/N: DYB1-UP

PART OF 358-4993 PUMP GP-PISTON

SMCS-5455 **i05300833**

NOTE	REF NO	GRAPHIC REF	PART NUMBER	QTY	PART NAME 1 2 3 4 5 6 (PRODUCT LEVEL)	SEE PAGE
M	1	1	**8T-8442**	4	BOLT-SOCKET HEAD (M6X1X30-MM)	
	2	1	**280-7870**	1	GASKET	
	3	1	**6E-6528**	2	SEAL	
	4	1	**9S-8002**	1	PLUG-O-RING	
	5	1	**3J-7354**	1	SEAL-O-RING	
	6	1	**033-6043**	1	SEAL-O-RING	
	7	1	**6V-6339**	1	SEAL-O-RING	
					AVAILABLE REPAIR KIT(S):	
			293-8350	1	KIT-SEAL (FLOW COMPENSATOR)	
					(INCLUDES O-RINGS & BACKUP RINGS)	

M - METRIC PART

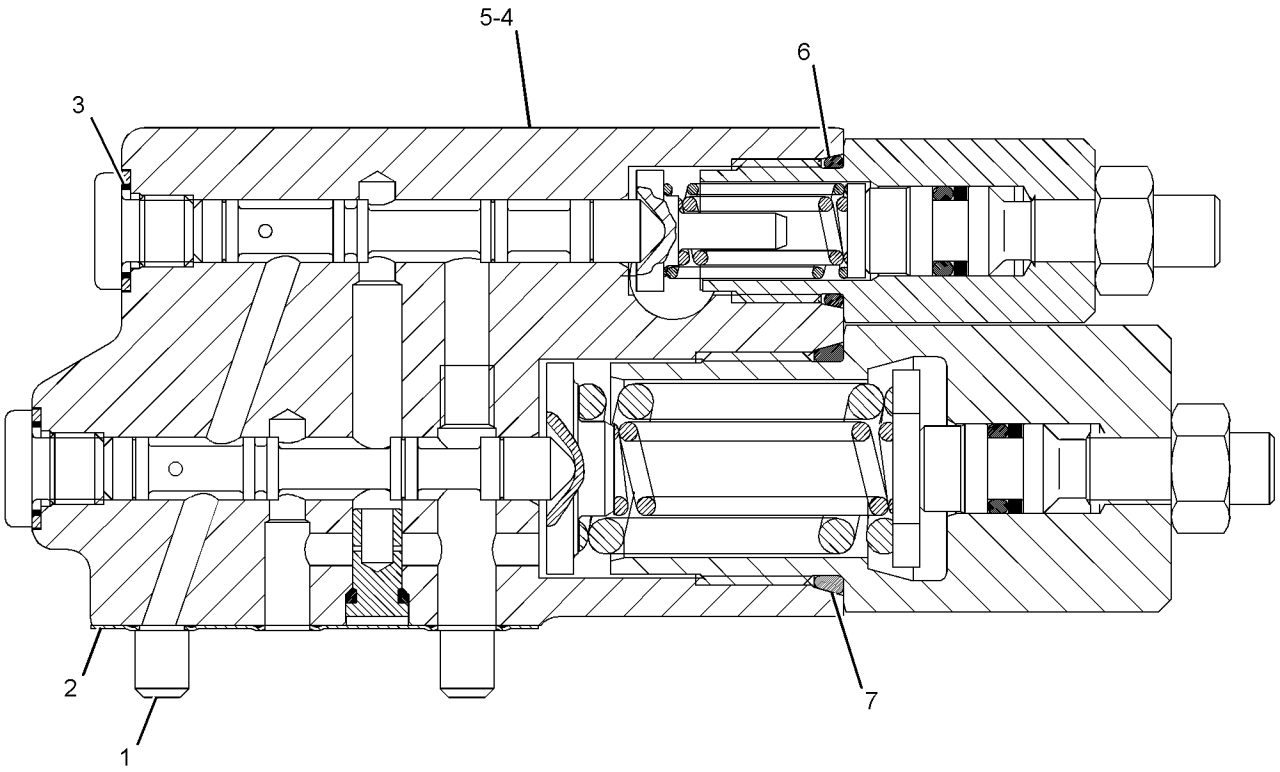

GRAPHIC #1 **<END>** g02794401

189-2100 VALVE GP-SOLENOID

S/N: DYB1-UP
24-VOLT
PART OF 289-6394 MOTOR GP-GEAR
AN ATTACHMENT

SMCS-5132, 5479 **i03537649**

NOTE	REF NO	GRAPHIC REF	PART NUMBER	QTY	PART NAME 1 2 3 4 5 6 (PRODUCT LEVEL)	SEE PAGE
	1	1	**8C-9987**	1	WASHER (8.3X28X2.5-MM THK)	
	2	1	**111-0343**	1	LOCKNUT (5/16-18-THD)	
	3	1	**189-0189**	1	COIL AS (24-VOLT)	
		1	**1S-9593**	2	STRAP-CABLE	
		1	**102-8802**	1	KIT-RECEPTACLE (2-PIN)	
					(INCLUDES RECEPTACLE AS & WEDGE)	
		1	**186-3735**	1	PIN-CONNECTOR (16-GA TO 18-GA)	
J	4	1	*189-2096*	1	CARTRIDGE AS-VALVE	
		1	**8C-9987**	1	WASHER (8.3X28X2.5-MM THK)	
		1	**111-0343**	1	LOCKNUT (5/16-18-THD)	
					AVAILABLE REPAIR KIT(S):	
J			**6T-7054**	1	KIT-SEAL (CARTRIDGE)	
					(INCLUDES SEALS & RINGS)	

J - KIT MARKED J SERVICES PART MARKED J

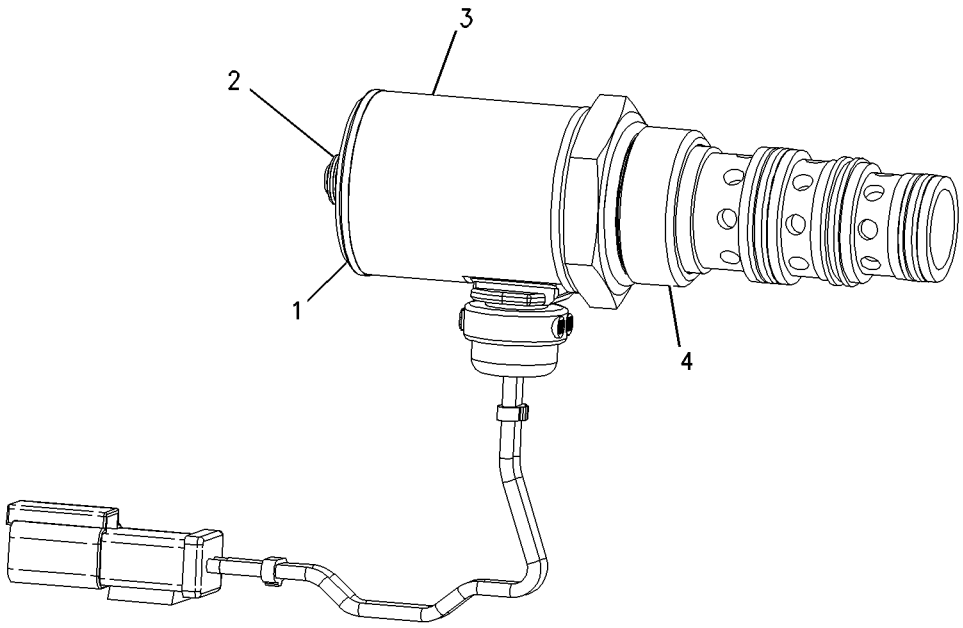

GRAPHIC #1 **<END>** g00891427

211-2092 VALVE GP-SOLENOID

S/N: DYB1-UP
24-VOLT
PART OF 289-6393, 289-6394 MOTOR GP-GEAR
AN ATTACHMENT

SMCS-5132, 5479

i02348939

NOTE	REF NO	GRAPHIC REF	PART NUMBER	QTY	PART NAME 1 2 3 4 5 6 (PRODUCT LEVEL)	SEE PAGE
	1	1	**123-3132**	1	RING-BACKUP	
	2	1	**8L-2779**	1	SEAL-O-RING	
	3	1	**230-0913**	1	COIL AS	
	4	1	**033-6028**	1	SEAL-O-RING	

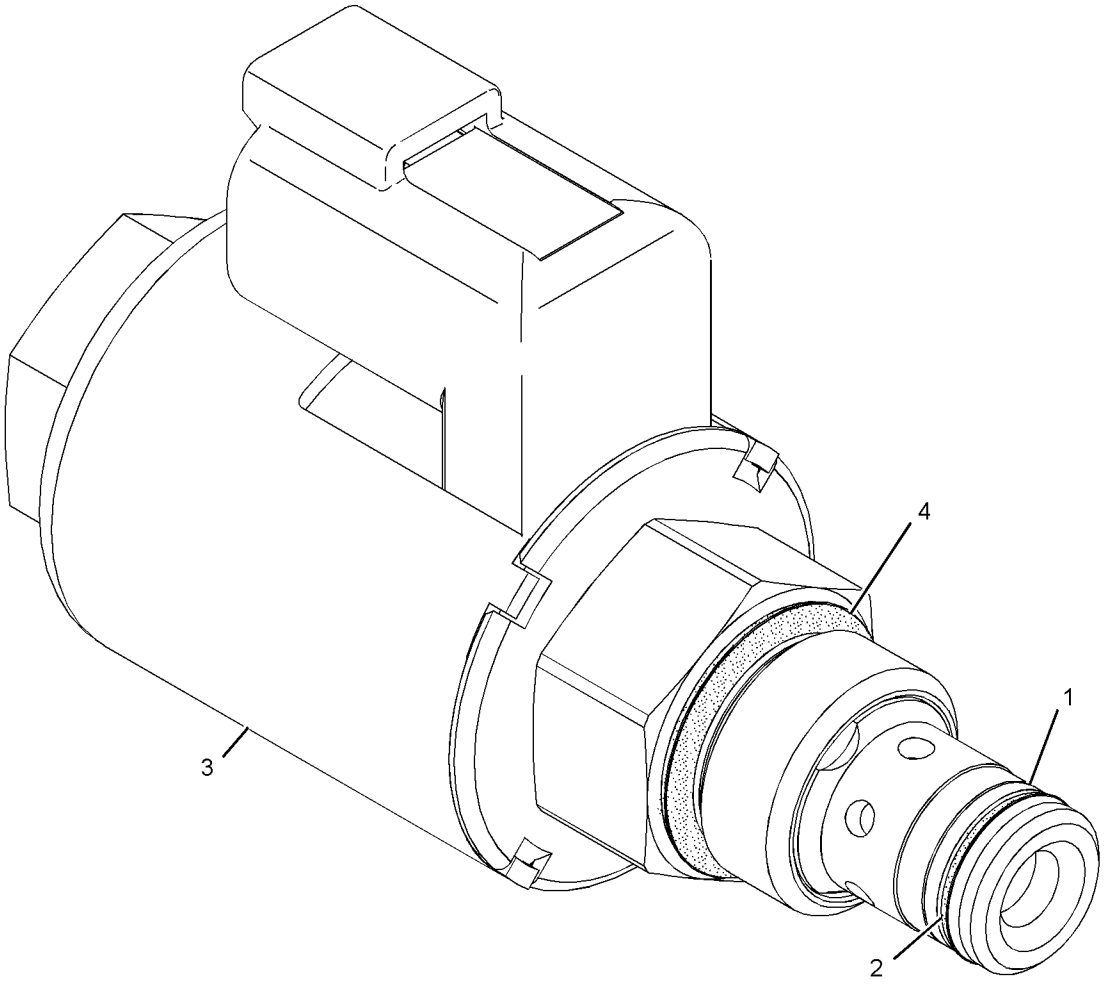

GRAPHIC #1 **<END>** g01181806

251-3268 VALVE GP-SOLENOID

S/N: DYB1-UP
24-VOLT
PART OF 373-6973 VALVE GP-MANIFOLD & RELIEF
AN ATTACHMENT

SMCS-5132, 5479 **i04997590**

NOTE	REF NO	GRAPHIC REF	PART NUMBER	QTY	PART NAME 1 2 3 4 5 6 (PRODUCT LEVEL)	SEE PAGE
	1	1	**384-8750**	1	COIL AS (24-VOLT)	

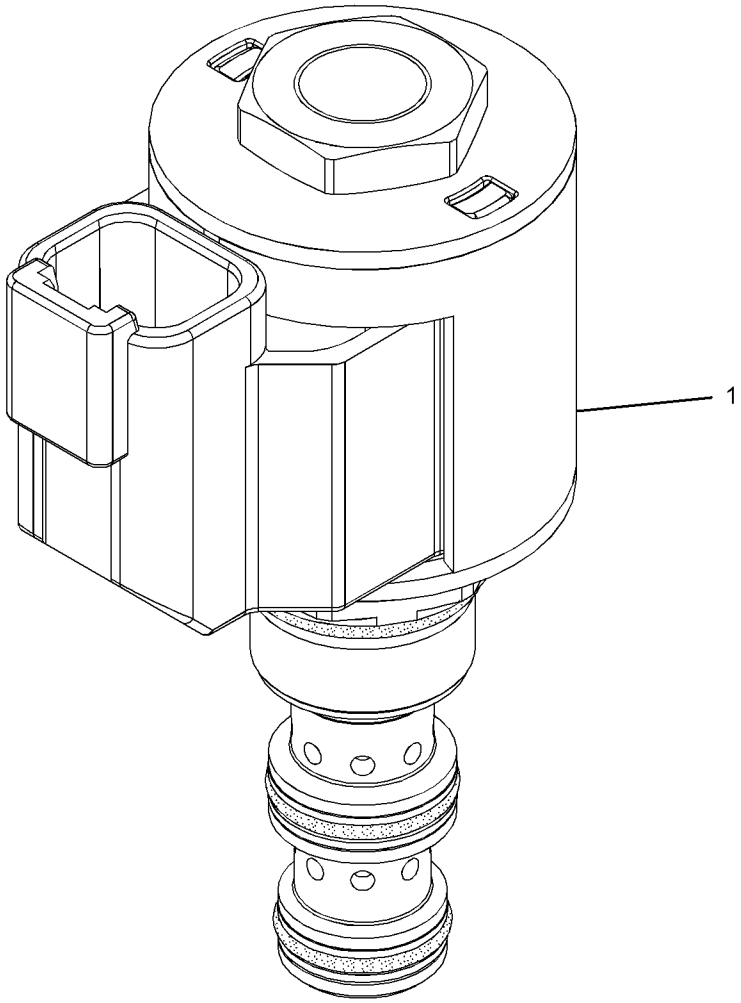

GRAPHIC #1 **<END>** g02173984

387-4100 CONTROL GP-BUCKET

S/N: DYB1-UP

PART OF 381-4394 LINKAGE AR-FRONT

AN ATTACHMENT

SMCS-6107 **i05310052**

NOTE	REF NO	GRAPHIC REF	PART NUMBER	QTY	PART NAME 1 2 3 4 5 6 (PRODUCT LEVEL)	SEE PAGE
	1	1	**176-0623**	6	WASHER (78X160X1.6-MM THK)	
	2	1	**176-0624**	4	WASHER (78X160X3-MM THK)	
	3	1	**333-6637**	2	SHIM (4-MM THK)	
	4	1	**333-6641**	2	SHIM (2-MM THK)	
	5	1	**333-6642**	2	PIN AS	
	6	1	**333-6644**	1	PIN AS	
	7	1	**333-6646**	2	PIN AS	
	8	1	**333-6650**	1	PIN AS	
	9	1	**333-6658**	1	PIN AS	
	10	1	**339-6698**	2	SHIM (4-MM THK)	
	11	1	**339-6699**	2	SHIM (2-MM THK)	
	12	1	**387-4101**	1	ARM & BEARING AS-LIFT	
	12A	1	**7P-3194**	1	BUSHING	
	12B	1	**7P-3466**	2	BUSHING	
	12C	1	**347-8172**	2	BEARING	
	12D	1	**347-8174**	2	BEARING	
	13	1	**387-4116**	1	LINK AS-BEARING	
	13A	1	**3G-8779**	1	BUSHING	
	13B	1	**7P-8753**	1	BEARING	
	14	1	**387-4120**	1	LEVER AS	
		1	**7T-1099**	3	LINK	
M		1	**9R-2160**	1	BOSS (M8X1.25X25-MM)	
	15	1	**266-7315**	1	WASHER-HARD (22X65X6-MM THK)	
	16	1	**3B-8489**	3	FITTING-GREASE	
	17	1	**5B-0651**	2	FITTING-STRAIGHT	
	18	1	**7K-9208**	4	SEAL-LIP TYPE	
	19	1	**7K-9209**	6	SEAL-LIP TYPE	
	20	1	**7K-9210**	6	SEAL-LIP TYPE	
	21	1	**7K-9216**	2	SEAL-LIP TYPE	
	22	1	**7X-0618**	6	WASHER-HARD (13.5X40X5-MM THK)	
M	23	1	**8T-4192**	6	BOLT (M12X1.75X25-MM)	
M	24	1	**8T-4780**	1	BOLT (M20X2.5X30-MM)	

M - METRIC PART

387-4100 **CONTROL GP-BUCKET (*contd.*)** **i05310052**

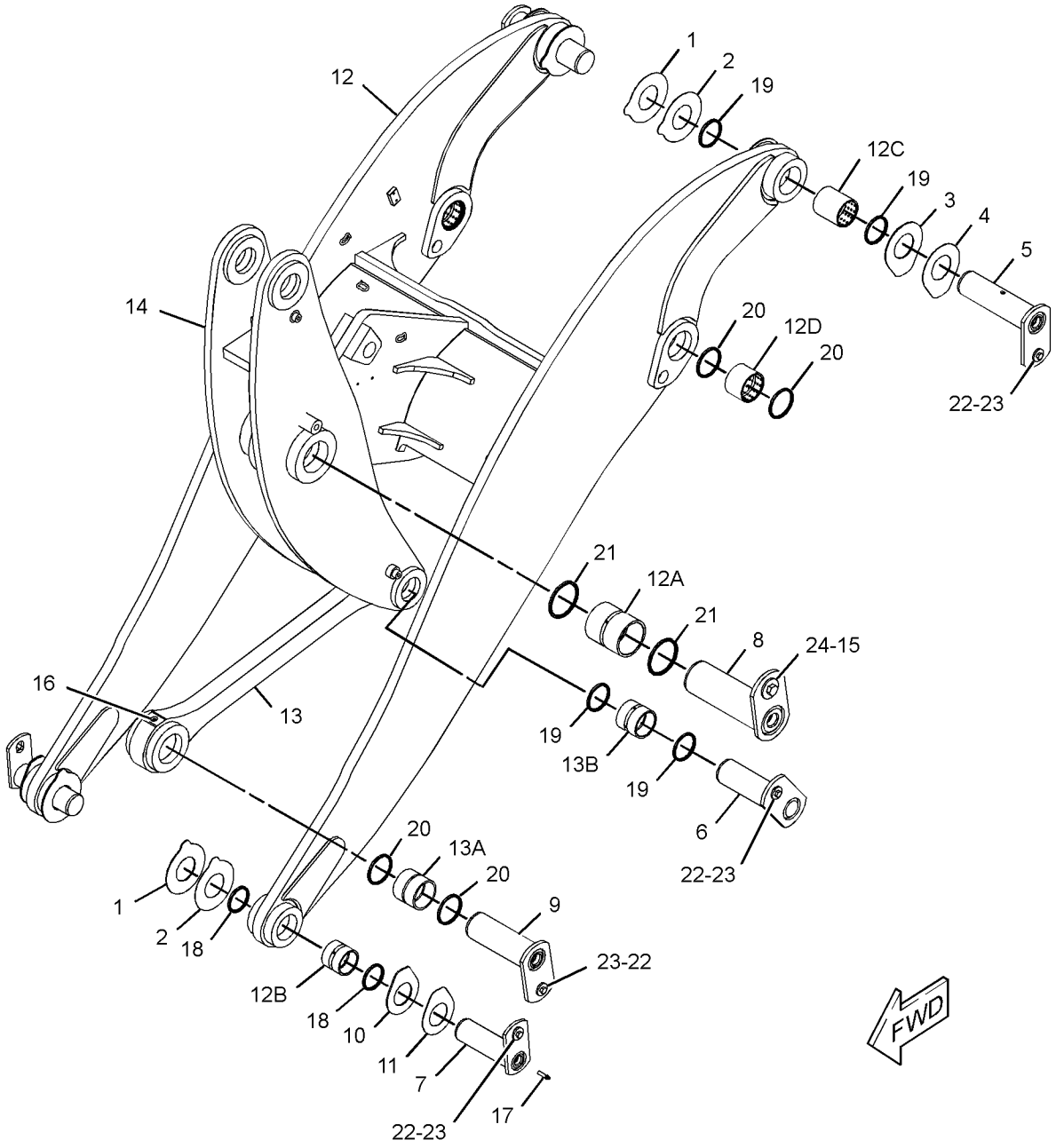

GRAPHIC #1 **<END>** g03379481

381-4394 LINKAGE AR-FRONT

S/N: DYB1-UP

PART OF 387-4161, 387-4162 HYDRAULIC AR-2 VALVE, 387-4163 HYDRAULIC AR-3 VALVE, 419-8848 HYDRAULIC AR-4 VALVE

AN ATTACHMENT

SMCS-6107 **i05310054**

NOTE	PART NUMBER	QTY	PART NAME 1 2 3 4 5 6 (PRODUCT LEVEL)	SEE PAGE
Y	*387-4100*	1	CONTROL GP-BUCKET	402
Y	*333-6540*	1	CYLINDER & MTG GP-LIFT	324
Y	*333-6541*	1	CYLINDER & MTG GP-TILT	325
Y	*333-6922*	1	LINES GP-LIFT CYLINDER	351
Y	*333-6920*	1	LINES GP-TILT CYLINDER	355
Y	*372-1940*	1	WIRING GP-KICKOUT & POSITIONER	176

Y - SEPARATE ILLUSTRATION

<END>

384-6980 AIR CONDITIONER AR

S/N: DYB1-UP

PART OF 384-7000 CAB AR-ENCLOSED ROPS

AN ATTACHMENT

SMCS-7320 **i05302512**

NOTE	PART NUMBER	QTY	PART NAME 1 2 3 4 5 6 (PRODUCT LEVEL)	SEE PAGE
Y	*332-3655*	1	CONDENSER & MTG GP-REFRIGERANT	415
Y	*342-0186*	1	CONTROL GP-AIR & TEMPERATURE	422
Y	*342-0190*	1	HEATER & AIR CONDITIONER GP (WITH MOUNTING)	448
Y	*333-6941*	1	LINES GP-AIR CONDITIONER	456
Y	*387-4019*	1	LINES GP-HEATER	458

Y - SEPARATE ILLUSTRATION

<END>

399-7157 AIR CONDITIONER GP

S/N: DYB1-UP

PART OF 342-0190 HEATER & AIR CONDITIONER GP

AN ATTACHMENT

SMCS-7320 **i05302699**

NOTE	REF NO	GRAPHIC REF	PART NUMBER	QTY	PART NAME 1 2 3 4 5 6 (PRODUCT LEVEL)	SEE PAGE
	1	1	**349-5831**	1	HOUSING-TOP	
	2	1	**185-4015**	18	CLIP	
	3	1	**252-5219**	1	LANYARD (281-MM)	
	4	1	**256-6454**	1	SENSOR-TEMPERATURE (AIR CONDITIONER)	
	5	1	**275-6706**	1	MOTOR AS-BLOWER (24-VOLT)	
		1	**102-8802**	1	KIT-RECEPTACLE (2-PIN)	
					(INCLUDES RECEPTACLE AS & WEDGE)	
		1	**9W-0852**	2	PIN-CONNECTOR (14-GA TO 16-GA)	
	6	1	**308-2525**	1	SENSOR GP-TEMPERATURE (EVAPORATOR)	
		1	**9X-3401**	2	PIN-CONNECTOR (16-GA TO 18-GA)	
					—OR—	
		1	**126-1767**	2	PIN-CONNECTOR (14-GA TO 16-GA)	
J		1	**153-5043**		SLEEVE (1-DM)	
		1	**230-4012**	1	RECEPTACLE AS-CONNECTOR (2-PIN)	
	7	1	**349-5827**	1	BAFFLE AS	
	8	1	**349-5828**	1	SEAL-COIL (TOP)	
	9	1	**349-5830**	2	GASKET	
	10	1	**349-5832**	1	HOUSING-BOTTOM	
	11	1	**349-5833**	1	PLENUM (TOP)	
	12	1	**349-5834**	1	PLENUM (BOTTOM)	
	13	1	**349-5837**	2	LATCH AS	
	14	1	**353-5058**	1	FILTER ELEMENT-CAB AIR	
	15	1	**364-5845**	1	LATCH (FILTER)	
	16	1	**364-5865**	1	COVER AS-FILTER	
	17	1	**365-7606**	1	FILTER ELEMENT-CAB AIR	
	18	1	**371-1679**	1	SCREW-FORMING	
Y	19	1	**372-1861**	1	HARNESS AS-HEATER & AIR COND	118
	20	1	**399-7741**	1	COIL AS	
	21	1	**006-8606**	1	RING-RETAINING	
M	22	1	**129-3178**	1	LOCKNUT (M6X1-THD)	
	23	1	**206-1345**	1	STRAP-CABLE	
	24	1	**2S-3745**	7	SCREW-TAPPING (10-16X0.5-IN)	
	25	1	**5L-3381**	1	GROMMET (WIRE)	
	26	1	**8T-0225**	1	WASHER-BELLEVILLE	
M	27	1	**8T-0337**	10	SCREW-MACHINE (M4X0.7X12-MM)	
M	28	1	**8T-2659**	4	LOCKNUT (M4X0.7-THD)	
M	29	1	**8T-4171**	1	BOLT (M6X1X12-MM)	
D	30	1	**5P-7070**		INSULATION-STRIP (0.1-M EACH)	
D	31	1	**5P-5688**		SEAL (0.3-M EACH)	
E	32	1	**117-4654**		SEAL (1.2-CM)	
E	33	1	**9X-6382**		SEAL (53-CM EACH)	
E	33A	1	**9X-6382**		SEAL (22-CM EACH)	

D - ORDER BY THE METER
E - ORDER BY THE CENTIMETER
J - ORDER BY THE DECIMETER
M - METRIC PART
Y - SEPARATE ILLUSTRATION

399-7157 **AIR CONDITIONER GP (*contd.*)** **i05302699**

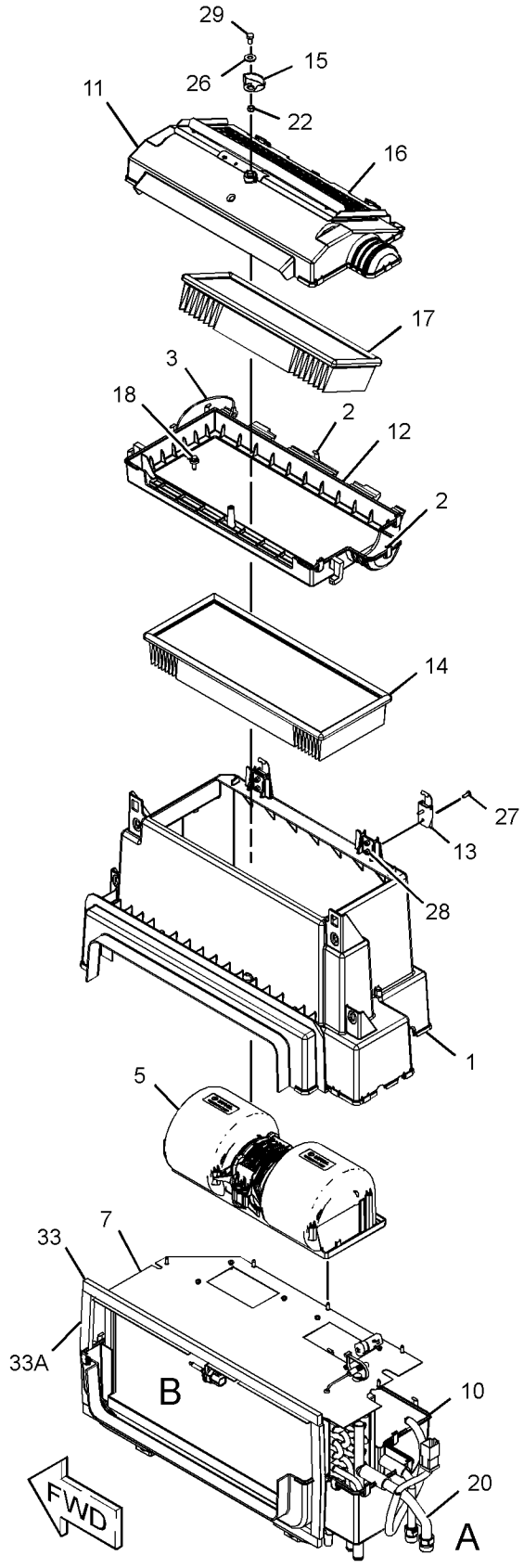

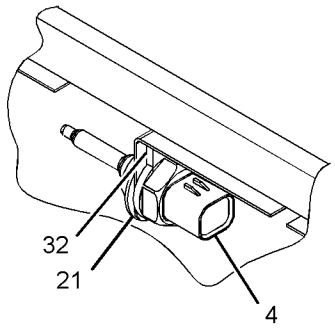

VIEW OF AREA B

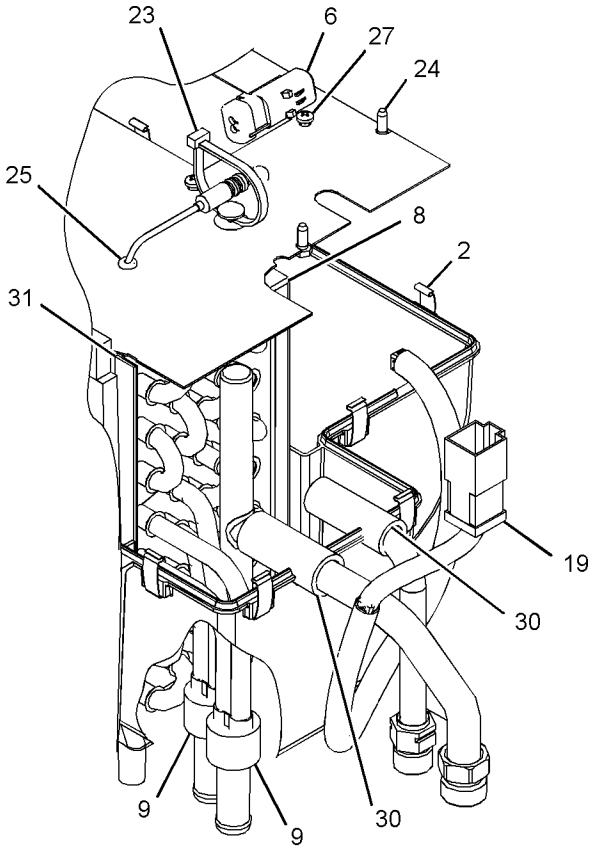

VIEW OF AREA A

GRAPHIC #1 **<END>** g03379724

368-4853 ARM GP-WINDOW WIPER

S/N: DYB1-UP

PART OF 384-6844 WIPER & WASHER GP-WINDOW

AN ATTACHMENT

SMCS-7305 **i05306456**

NOTE	REF NO	GRAPHIC REF	PART NUMBER	QTY	PART NAME 1 2 3 4 5 6 (PRODUCT LEVEL)	SEE PAGE
	1	1	**227-7392**	4	WASHER (6.3X10.3X0.4-MM THK)	
	2	1	**228-6428**	1	NOZZLE AS (WINDOW WASHER)	
M	3	1	**191-8921**	4	BOLT-SOCKET HEAD (M6X1X25-MM)	
M	4	1	**6V-8225**	4	NUT (M6X1-THD)	
E	5	1	**194-5171**		HOSE (90-CM)	

E - ORDER BY THE CENTIMETER
M - METRIC PART

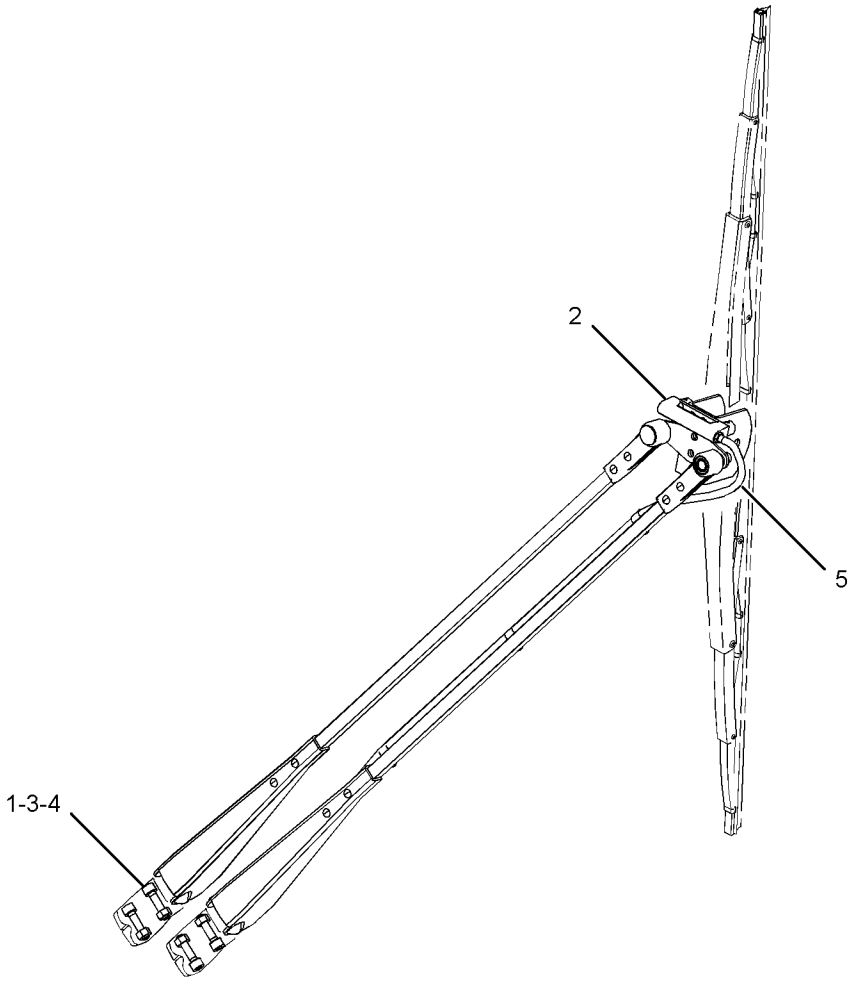

GRAPHIC #1 **<END>** g02793594

292-1301 ARMREST GP–LH

S/N: DYB1-UP
PART OF 342-0112 SEAT GP
AN ATTACHMENT

SMCS-7307, 7312

i02991588

NOTE	REF NO	GRAPHIC REF	PART NUMBER	QTY	PART NAME 1 2 3 4 5 6 (PRODUCT LEVEL)	SEE PAGE
	1	1	**143-1288**	1	LOCKNUT-FLANGE (3/8-16-THD)	
	2	1	**163-1149**	1	BRACKET AS	
	3	1	**278-5457**	1	ARMREST AS	
M		1	**6A-9083**	1	SCREW-MACHINE (M6X1X15-MM)	
		1	**278-2564**	1	PAD AS	
	4	1	**0S-1595**	1	BOLT (1/2-13X1.25-IN)	
	5	1	**1K-6872**	1	LOCKNUT (1/2-13-THD)	
	6	1	**4L-6454**	1	BOLT (3/8-16X1-IN)	
	7	1	**5P-8245**	1	WASHER-HARD (13.5X25.5X3-MM THK)	
M	8	1	**6A-9083**	1	SCREW-MACHINE (M6X1X15-MM)	

M - METRIC PART

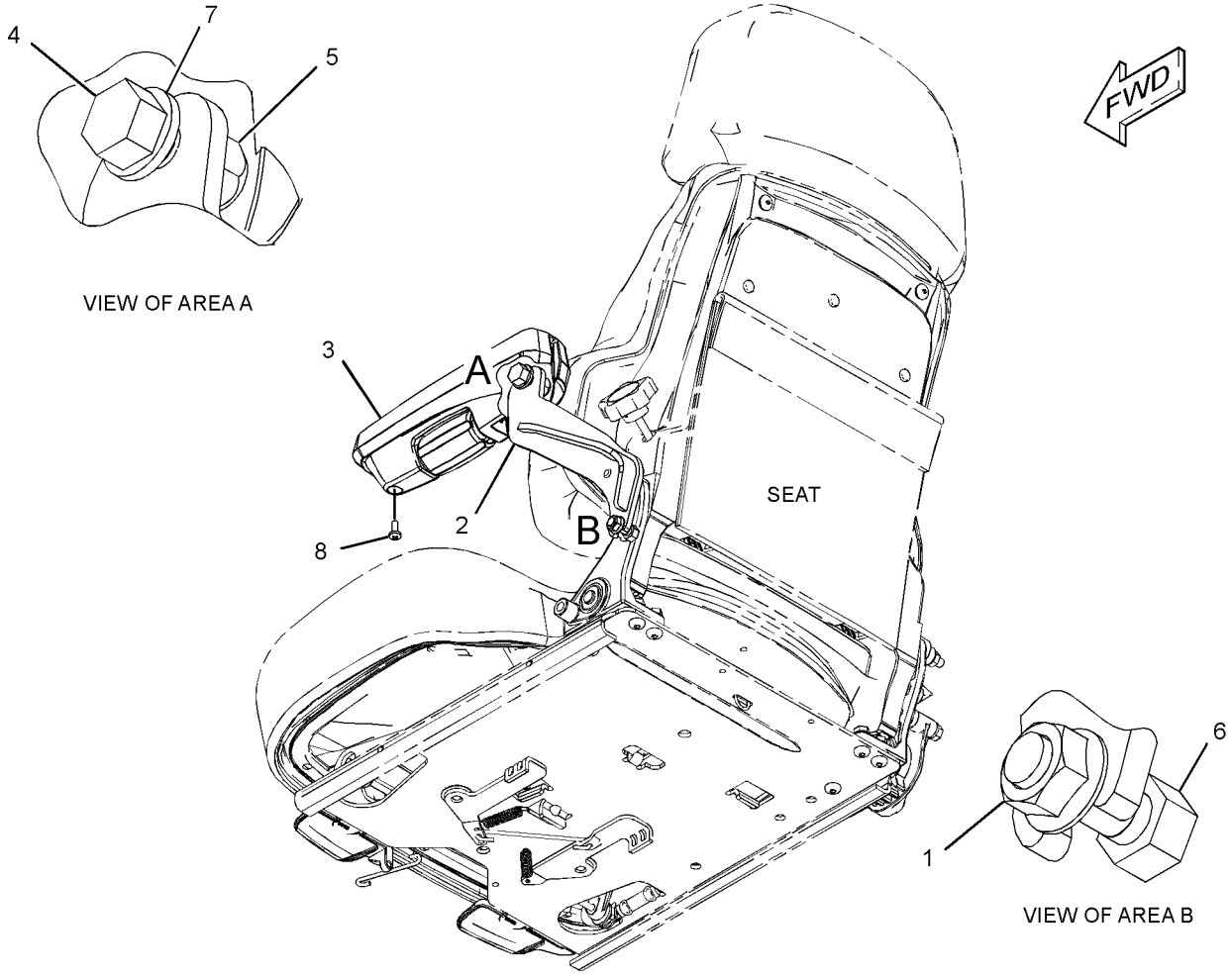

GRAPHIC #1

<END>

g01520352

384-7000 CAB AR-ENCLOSED ROPS

S/N: DYB1-UP

AN ATTACHMENT

SMCS-7301 **i05301002**

NOTE	PART NUMBER	QTY	PART NAME 1 2 3 4 5 6 (PRODUCT LEVEL)	SEE PAGE
Y	*384-6980*	1	AIR CONDITIONER AR	405
Y	*384-6950*	1	CAB GP-ENCLOSED ROPS	411
Y	*341-9810*	1	CONSOLE GP-OPERATOR	416
Y	*420-2020*	1	CONSOLE GP-OPERATOR (FRONT)	419
Y	*341-9820*	1	CONTROL & MTG GP-ELHYD	421
Y	*341-9880*	1	CONTROL GP-SERVICE BRAKE	305
Y	*418-4021*	1	CONTROL GP-STEERING	431
Y	*341-9980*	1	COVER GP-CAB	433
Y	*349-8031*	1	COVER GP-TANK (WINDOW WASHER)	436
Y	*341-9790*	1	DOOR GP-CAB	440
Y	*341-9860*	1	DUCT GP-CAB AIR	443
Y	**371-1441**	1	ENGINE AR-PRIMARY	4
Y	*342-0080*	1	FLOOR MAT GP	444
Y	*342-0270*	1	HANDHOLD GP	447
Y	*333-1426*	1	LIGHTING GP-FLOOD (CAB)	142
Y	*341-9890*	1	MIRROR GP-REAR VIEW (INSIDE)	460
Y	*384-6842*	1	MIRROR GP-REAR VIEW (OUTSIDE)	461
Y	*341-9720*	1	MOUNTING GP-CAB	465
Y	*372-1895*	1	PANEL GP-INSTRUMENT	467
Y	*341-9870*	1	PEDAL GP-GOVERNOR	470
Y	*341-9690*	1	SKIRT GP-CAB	481
Y	*421-5703*	1	VISOR GP-CAB	486
Y	*384-6844*	1	WIPER & WASHER GP-WINDOW	490
Y	*372-1860*	1	WIRING GP-CAB	160
Y	*333-1390*	1	WIRING GP-CONSOLE	168
Y	*333-1370*	1	WIRING GP-SEAT	178

Y - SEPARATE ILLUSTRATION

<END>

384-6950 CAB GP-ENCLOSED ROPS

S/N: DYB1-UP

PART OF 384-7000 CAB AR-ENCLOSED ROPS

AN ATTACHMENT

SMCS-7301 **i05302515**

NOTE	REF NO	GRAPHIC REF	PART NUMBER	QTY	PART NAME 1 2 3 4 5 6 (PRODUCT LEVEL)	SEE PAGE
	1	1	**9X-3994**	2	PLUG	
	2	1	**221-7677**	1	BUMPER AS	
Y	3	1	*341-9750*	1	DOOR GP-CAB (LH)	437
	4	1	**341-9983**	1	COVER-PROTECTIVE	
Y	5	1	**384-6954**	1	CAB GP-ENCLOSED ROPS	412
M	6	1	**5C-7261**	1	NUT (M8X1.25-THD)	

M - METRIC PART
Y - SEPARATE ILLUSTRATION

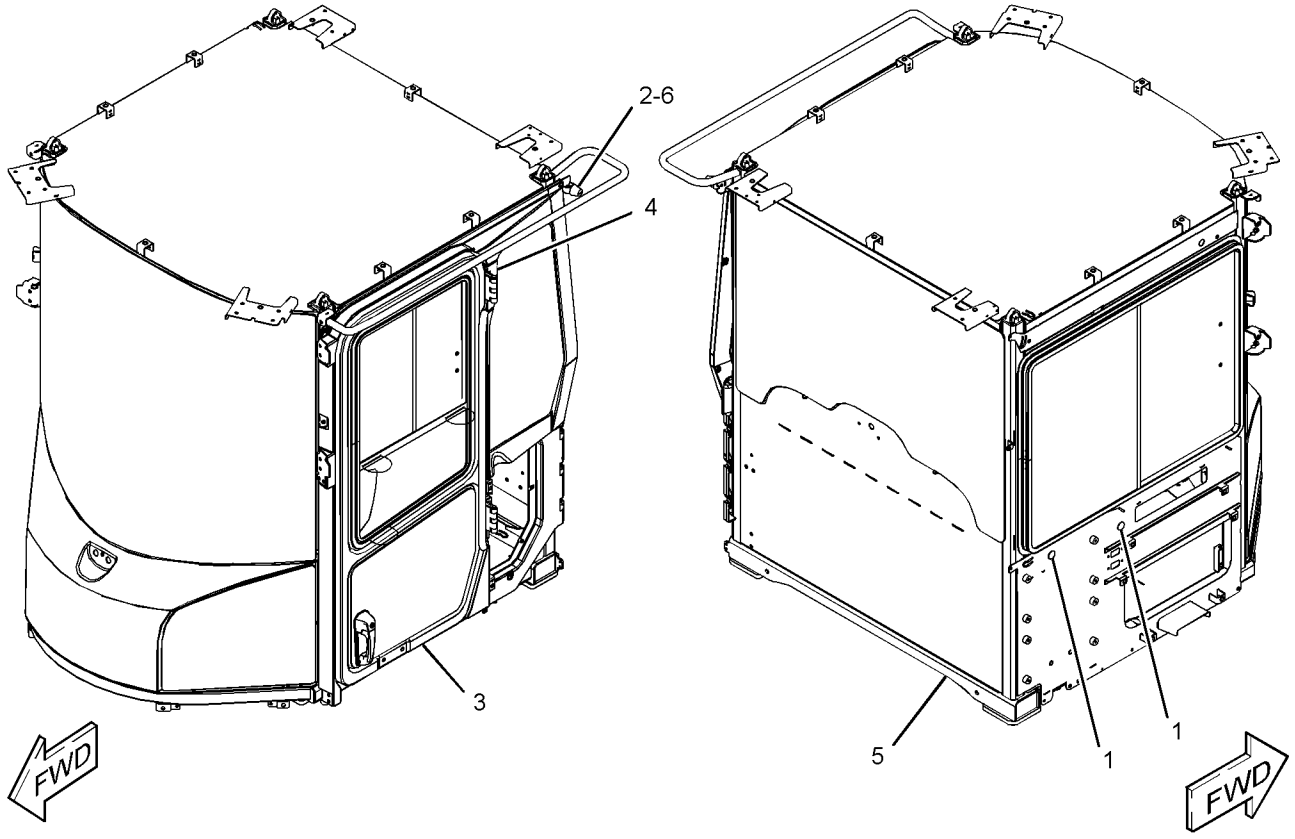

GRAPHIC #1 **<END>** g03378562

384-6954 CAB GP-ENCLOSED ROPS

S/N: DYB1-UP

PART OF 384-6950 CAB GP-ENCLOSED ROPS

AN ATTACHMENT

SMCS-7301 **i05302526**

NOTE	REF NO	GRAPHIC REF	PART NUMBER	QTY	PART NAME 1 2 3 4 5 6 (PRODUCT LEVEL)	SEE PAGE
	1	1	**110-7524**	46	BUTTON	
Y	2	1	**341-9725**	1	WINDOW GP-CAB	487
	3	1	**341-9900**	1	ROPS AS	
	4	1	**341-9901**	1	GLASS-FRONT	
	5	1	**341-9902**	1	GLASS (LH)	
	6	1	**341-9966**	1	PANEL AS-CAB (FRONT)	
		1	**172-8591**	4	NUT-SPRING (M6X1-THD)	
		1	**283-2458**	2	NUT-SPEED	
	7	1	**341-9981**	1	PANEL AS-CAB (LH)	
		1	**172-8591**	6	NUT-SPRING (M6X1-THD)	
		1	**258-3727**	3	SCREW-TRUSS HEAD (SPECIAL)	
		1	**341-9984**	1	COVER-POST	
	8	1	**354-0132**	5	INSERT-HEX (M4X0.7-THD)	
	9	1	**371-7925**	1	GLASS-FRONT (LH)	
	10	1	**371-7926**	1	GLASS-FRONT (RH)	
	11	1	**384-6959**	1	GLASS-REAR	
	12	1	**117-8929**	7	WASHER (6.6X22X2-MM THK)	
	13	1	**195-0936**	29	INSERT-THREADED (M6X1-THD)	
M	14	1	**195-0937**	23	INSERT-THREADED (M8X1.25-THD)	
M	15	1	**3E-8020**	1	SCREW-TRUSS HEAD (M6X1X25-MM)	
M	16	1	**6V-7357**	7	BOLT (M6X1X25-MM)	
	17	1	**9X-2038**	10	WASHER (7X19X2-MM THK)	
M	18	1	**9X-2044**	1	SCREW-TRUSS HEAD (M6X1X16-MM)	
M	19	1	**9X-2045**	8	SCREW-TRUSS HEAD (M6X1X20-MM)	

M - METRIC PART
Y - SEPARATE ILLUSTRATION

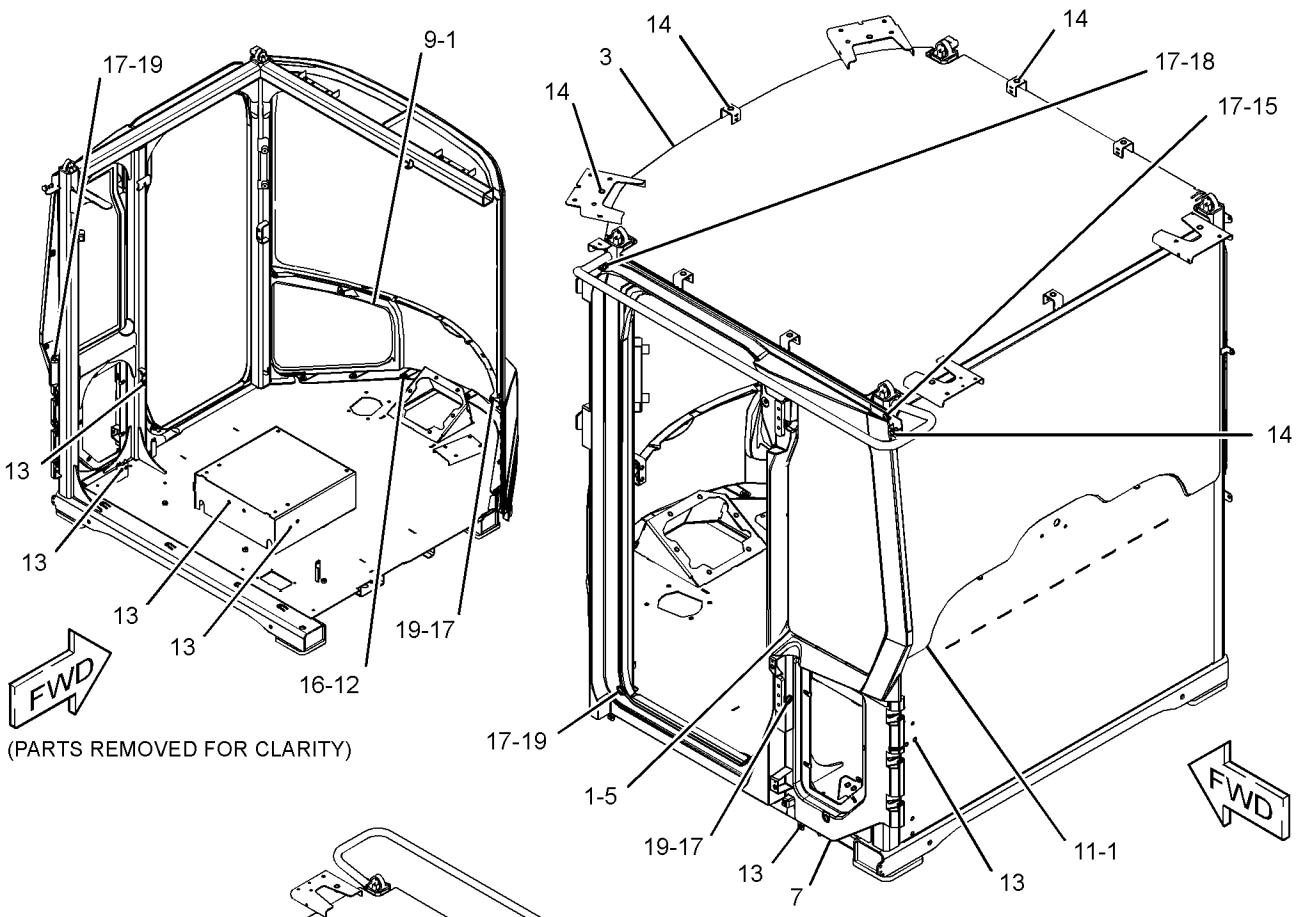

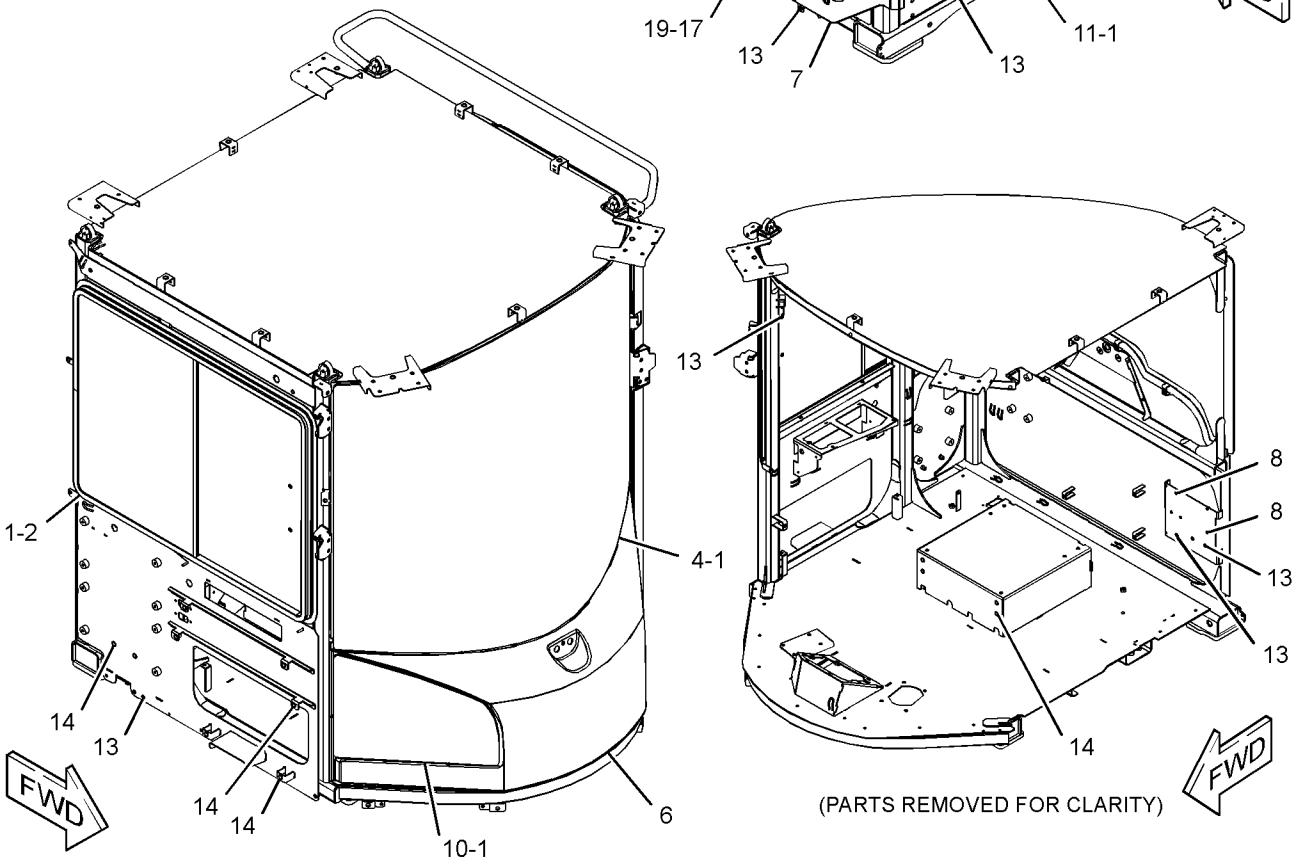

GRAPHIC #1 **<END>** g03378881

320-1291 COMPRESSOR GP-REFRIGERANT

S/N: E7A1-UP
PART OF 374-7094 AIR COMPRESSOR GP
AN ATTACHMENT

SMCS-1802 **i04009810**

NOTE	REF NO	GRAPHIC REF	PART NUMBER	QTY	PART NAME 1 2 3 4 5 6 (PRODUCT LEVEL)	SEE PAGE
	1	1	**102-8802**	1	KIT-RECEPTACLE (2-PIN)	
					(INCLUDES RECEPTACLE AS & WEDGE)	
	2	1	**314-4018**	1	VALVE AS-PRESSURE RELIEF (REFRIGERANT COMPRESSOR)	
	3	1	**126-1767**	2	PIN-CONNECTOR (14-GA TO 16-GA)	
	4	1	**7T-4532**	1	PLUG AS	

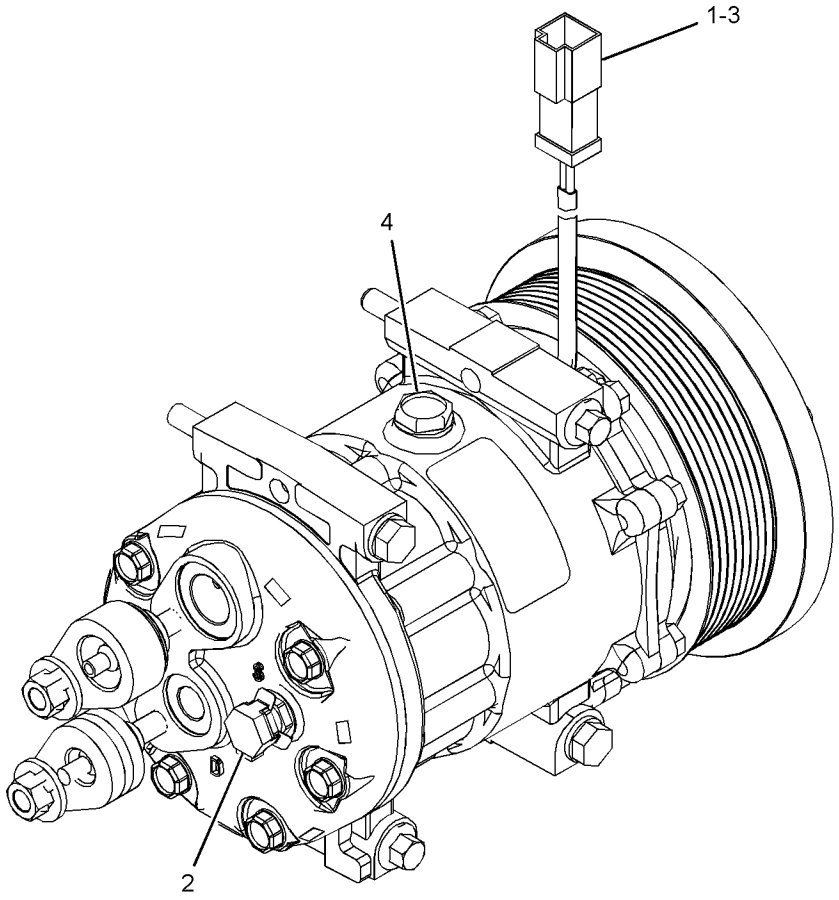

GRAPHIC #1 **<END>** g02214255

332-3655 CONDENSER & MTG GP-REFRIGERANT

S/N: DYB1-UP
PART OF 384-6980 AIR CONDITIONER AR
AN ATTACHMENT

SMCS-1805 **i05302546**

NOTE	REF NO	GRAPHIC REF	PART NUMBER	QTY	PART NAME 1 2 3 4 5 6 (PRODUCT LEVEL)	SEE PAGE
	1	1	**341-5769**	1	CONDENSER GP-REFRIGERANT	
		1	**317-8141**	1	MOUNT	
	2	1	**7X-0579**	4	WASHER-HARD (8.8X25.5X2-MM THK)	
M	3	1	**8T-4908**	4	BOLT (M8X1.25X25-MM)	

M - METRIC PART

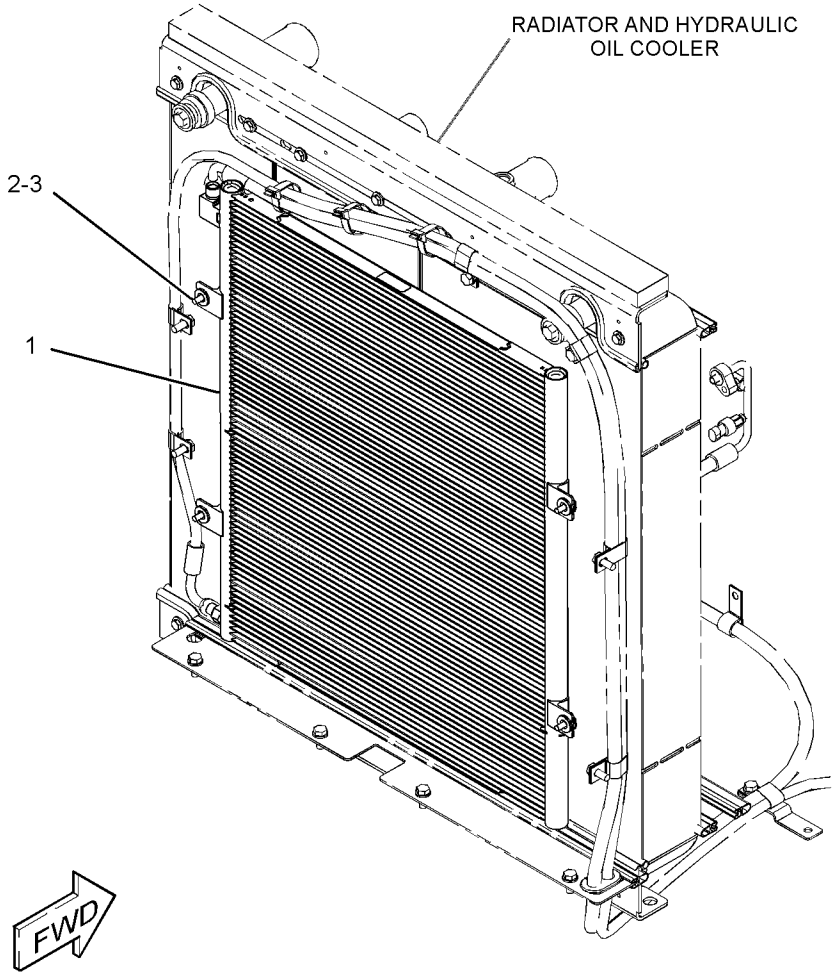

GRAPHIC #1 **<END>** g02760239

341-9810 CONSOLE GP-OPERATOR

S/N: DYB1-UP

PART OF 384-7000 CAB AR-ENCLOSED ROPS

AN ATTACHMENT

SMCS-5258 **i05301193**

NOTE	REF NO	GRAPHIC REF	PART NUMBER	QTY	PART NAME 1 2 3 4 5 6 (PRODUCT LEVEL)	SEE PAGE
	1	2	**8X-2893**	7	NUT (M4X0.7-THD)	
	2	2	**117-3787**	3	KNOB	
	3	2	**164-1178**	3	CLIP	
	4	1	**172-8591**	10	NUT-SPRING (M6X1-THD)	
	5	2	**224-4905**	2	BUMPER	
	6	1	**341-9801**	1	CONSOLE AS	
		1	**172-8591**	1	NUT-SPRING (M6X1-THD)	
	7	1	**341-9802**	1	COVER-LOWER (RIGHT)	
	8	2	**341-9803**	1	COVER-LOWER (RIGHT REAR SIDE)	
	9	2	**341-9804**	1	COVER-CONSOLE	
	10	2	**341-9806**	1	HANDLE AS-PULL	
	11	2	**341-9811**	1	LINER	
	12	2	**341-9883**	1	BRACKET	
	13	2	**342-0051**	1	COVER AS-REAR (LOWER)	
		2	**172-8591**	2	NUT-SPRING (M6X1-THD)	
	14	2	**342-0052**	1	COVER AS-REAR (UPPER)	
		1	**206-1667**	2	CLIP	
	15	1	**342-0053**	1	COVER AS (REAR)	
		1	**206-1667**	4	CLIP	
	16	1	**342-0054**	1	COVER AS (UPPER)	
		1	**172-8591**	1	NUT-SPRING (M6X1-THD)	
		1	**206-1667**	3	CLIP	
	17	1	**342-0055**	1	COVER	
	18	2	**342-0061**	1	COVER	
	19	2	**342-0062**	1	LINER	
	20	2	**342-0063**	1	COVER-STORAGE	
	21	2	**342-0064**	1	NET AS (REAR SIDE)	
	22	2	**342-0065**	1	NET AS (LEFT SIDE)	
	23	2	**342-0067**	1	STRAP	
M	24	2	**9X-1046**	7	SCREW (M4X0.7X18-MM)	
	25	1	**9X-2038**	16	WASHER (7X19X2-MM THK)	
M	26	1,2	**9X-2045**	15	SCREW-TRUSS HEAD (M6X1X20-MM)	
M	27	2	**9X-2046**	3	SCREW-TRUSS HEAD (M6X1X35-MM)	

M - METRIC PART

341-9810 **CONSOLE GP-OPERATOR (*contd.*)** **i05301193**

REFER TO ALL ILLUSTRATIONS OF
THIS GROUP FOR AUXILIARY VIEWS

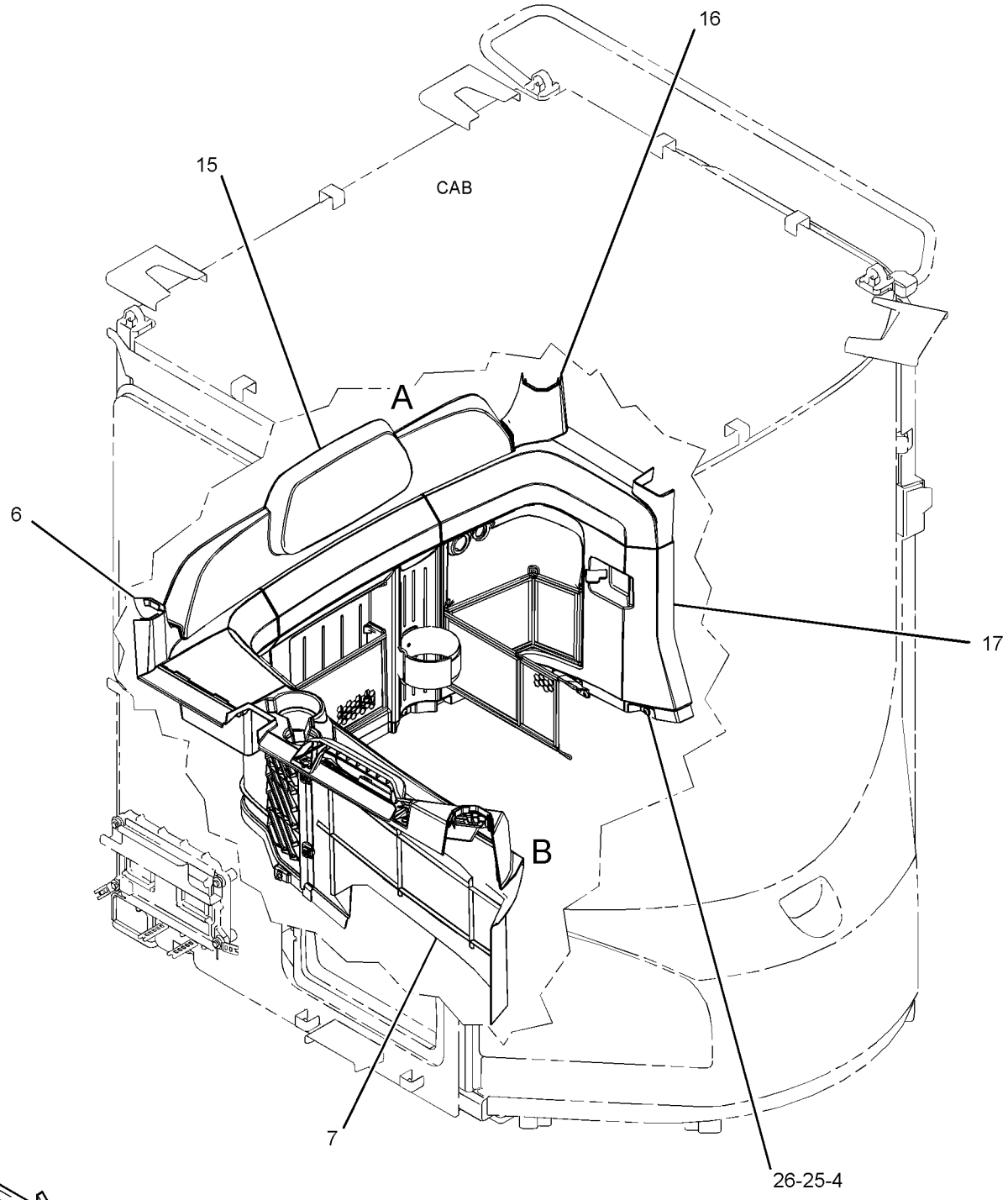

GRAPHIC #1

g02792629

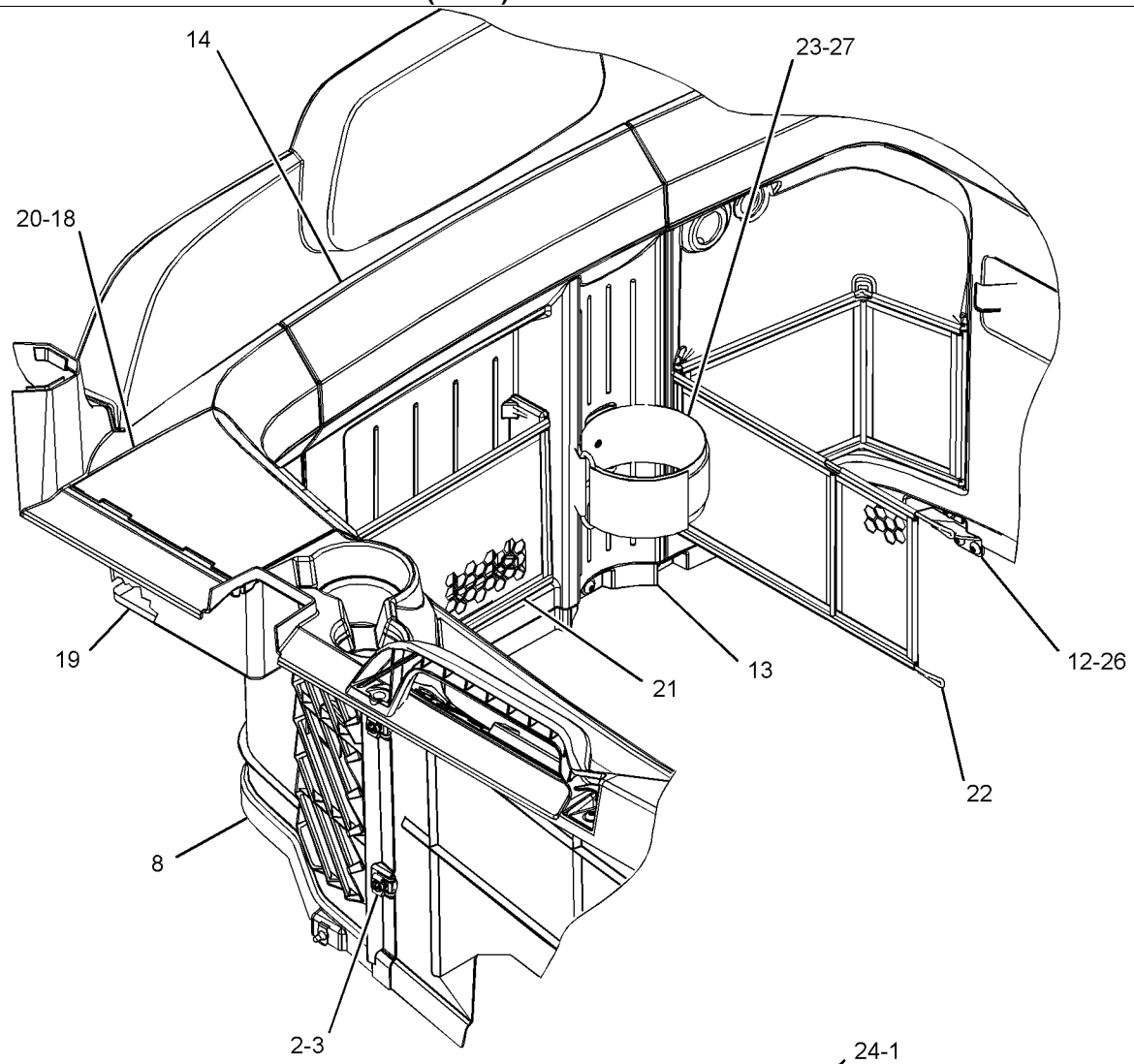

VIEW OF AREA A

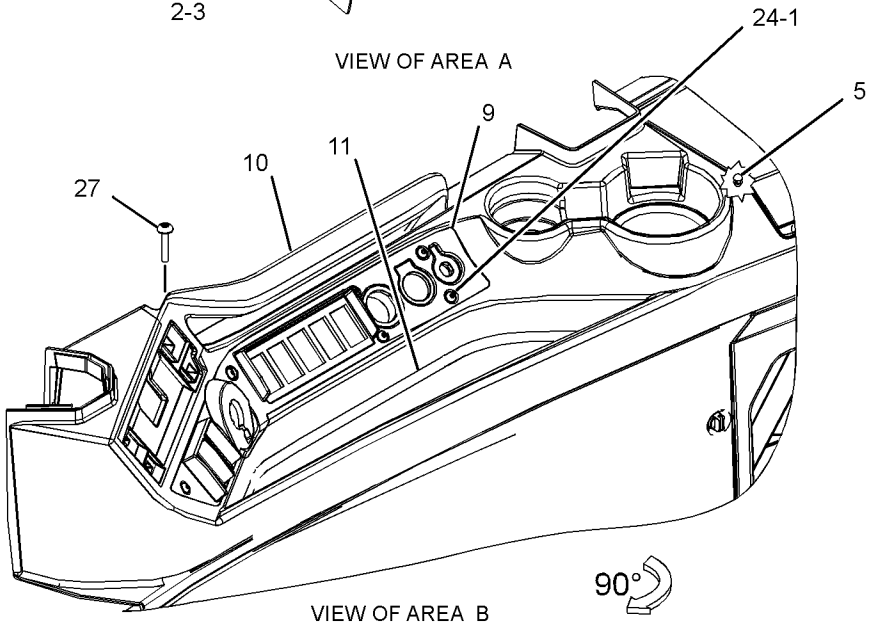

VIEW OF AREA B

GRAPHIC #2

<END>

g02792803

420-2020 CONSOLE GP-OPERATOR–FRONT

S/N: DYB1-UP

PART OF 384-7000 CAB AR-ENCLOSED ROPS

AN ATTACHMENT

SMCS-5258 **i05302849**

NOTE	REF NO	GRAPHIC REF	PART NUMBER	QTY	PART NAME 1 2 3 4 5 6 (PRODUCT LEVEL)	SEE PAGE
	1	1	**7X-3354**	2	NUT-WELD	
	2	1	**341-9701**	1	CONSOLE AS (UPPER)	
	3	1	**341-9702**	1	COVER AS-FRONT (LH)	
		1	**206-1667**	2	CLIP	
	4	1	**341-9703**	1	COVER AS-FRONT (RH)	
		1	**206-1667**	2	CLIP	
	5	1	**341-9706**	1	COVER-UPPER (FRONT)	
	6	1	**341-9707**	1	COVER AS-UPPER (REAR)	
		1	**206-1667**	4	CLIP	
	7	1	**341-9708**	1	COVER-LOWER	
	8	1	**341-9711**	1	BEZEL AS (DISPLAY)	
	9	1	**341-9712**	1	COVER AS (DISPLAY)	
	10	1	**420-2021**	1	COVER AS-LOWER (FRONT)	
	11	1	**420-2030**	1	COVER AS-LOWER (REAR)	
		1	**206-1667**	4	CLIP	
	12	1	**101-2867**	1	WASHER-HARD (7.2X25X2-MM THK)	
M	13	1	**3E-6924**	5	SCREW-TRUSS HEAD (M6X1X50-MM)	
	14	1	**9X-2038**	10	WASHER (7X19X2-MM THK)	
M	15	1	**9X-2045**	10	SCREW-TRUSS HEAD (M6X1X20-MM)	
M	16	1	**9X-2046**	2	SCREW-TRUSS HEAD (M6X1X35-MM)	

M - METRIC PART

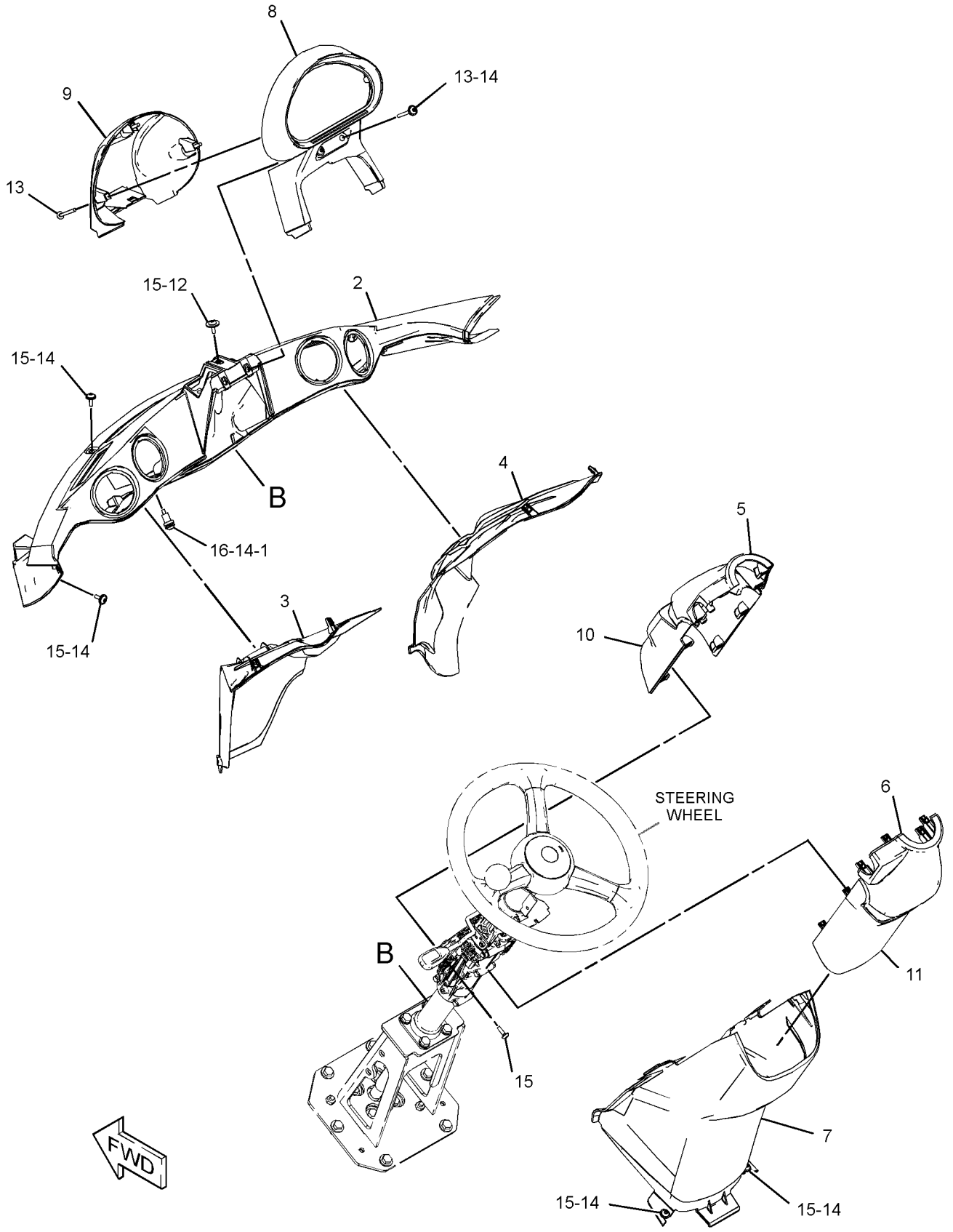

GRAPHIC #1 **<END>** g03376660

341-9820 CONTROL & MTG GP-ELHYD

S/N: DYB1-UP
PART OF 384-7000 CAB AR-ENCLOSED ROPS
AN ATTACHMENT

SMCS-5702 **i05302360**

NOTE	REF NO	GRAPHIC REF	PART NUMBER	QTY	PART NAME 1 2 3 4 5 6 (PRODUCT LEVEL)	SEE PAGE
	1	1	**258-3727**	4	SCREW-TRUSS HEAD (SPECIAL)	
	2	1	**342-0153**	1	BRACKET AS	
	3	1	**349-2591**	1	COVER AS	
	4	1	**349-2592**	1	COVER	
	5	1	**349-2600**	1	ADJUSTER GP-CONTROL	
M		1	**131-3987**	2	SCREW (M4X0.7X12-MM)	
		1	**349-2593**	1	HANDLE	
M	6	1	**5C-7261**	3	NUT (M8X1.25-THD)	
M	7	1	**8T-4138**	3	BOLT (M6X1X20-MM)	
	8	1	**8T-4224**	3	WASHER-HARD (8.8X16X2-MM THK)	
M	9	1	**9X-2045**	5	SCREW-TRUSS HEAD (M6X1X20-MM)	
	10	1	**9X-6165**	4	WASHER (6.5X22X2.5-MM THK)	

M - METRIC PART

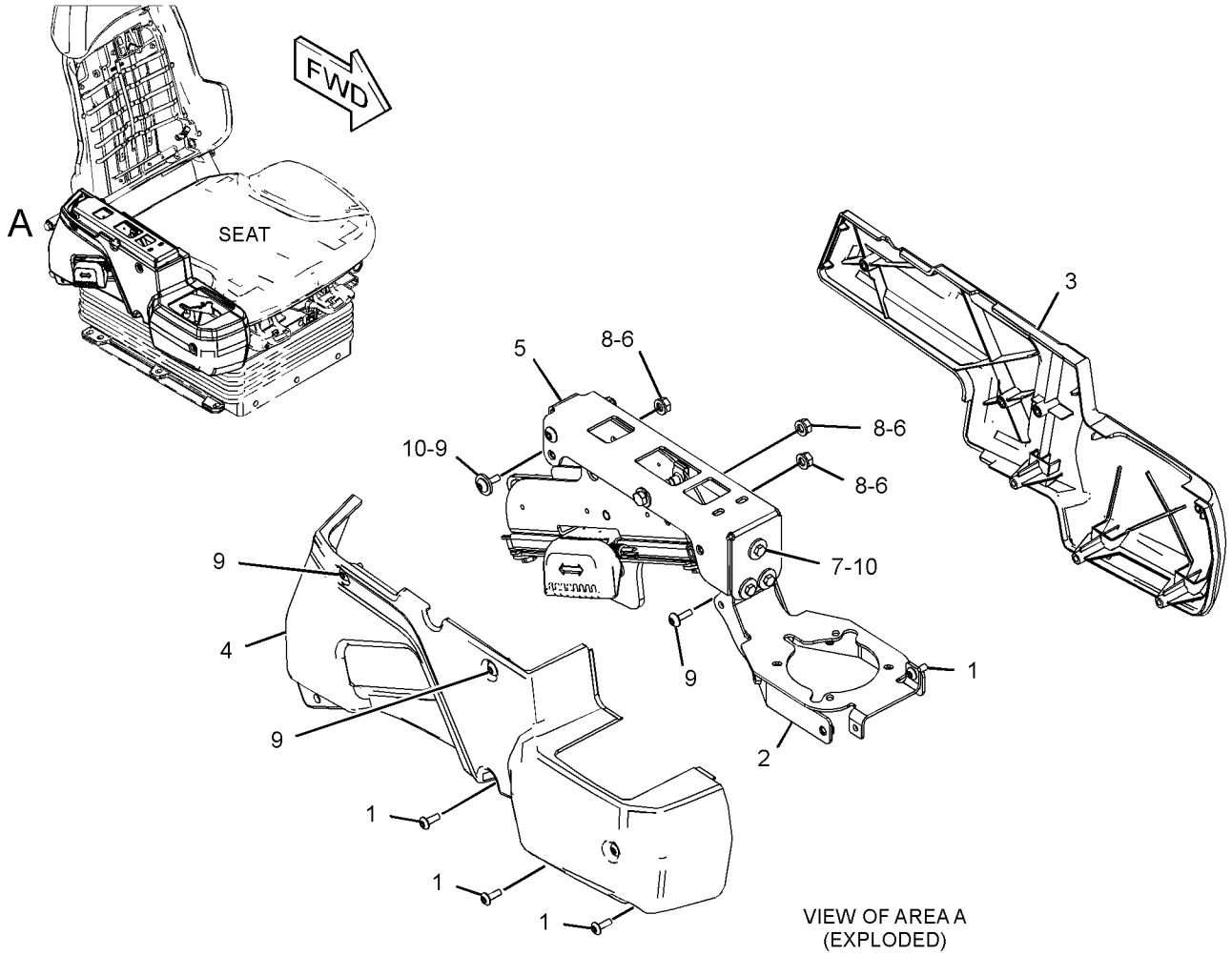

VIEW OF AREA A
(EXPLODED)

GRAPHIC #1

<END>

g03375498

342-0186 CONTROL GP-AIR & TEMPERATURE

S/N: DYB1-UP
PART OF 384-6980 AIR CONDITIONER AR
AN ATTACHMENT

SMCS-7451 **i05302574**

NOTE	REF NO	GRAPHIC REF	PART NUMBER	QTY	PART NAME 1 2 3 4 5 6 (PRODUCT LEVEL)	SEE PAGE
	1	1	**256-6454**	1	SENSOR-TEMPERATURE (INLET AIR)	
	2	1	**257-5030**	1	GUARD	
Y	3	1	**333-1438**	1	HARNESS AS-HEATER & AIR COND (BLOWER MOTOR) (BLOWER)	117
	4	1	**342-0197**	1	BRACKET AS	
	5	1	**349-5835**	1	RESISTOR AS	
	6	1	**350-1236**	1	SWITCH AS-ROCKER (TEMPERATURE CONTROL)	
		1	**111-7899**	1	GASKET	
	7	1	**382-0829**	1	PANEL AS-CONTROL	
		1	**271-7312**	1	KNOB	
		1	**285-7415**	1	KNOB	
	8	1	**270-9442**	4	SCREW-TRUSS HEAD (M6X1X20-MM)	
M	9	1	**5C-2890**	2	NUT (M6X1-THD)	
M	10	1	**5C-9553**	2	BOLT (M6X1X16-MM)	
M	11	1	**6V-8227**	1	NUT (M18X1.5-THD)	
	12	1	**8T-4205**	4	WASHER-HARD (7.2X14.5X2-MM THK)	

M - METRIC PART
Y - SEPARATE ILLUSTRATION

342-0186 **CONTROL GP-AIR & TEMPERATURE (*contd.*)** **i05302574**

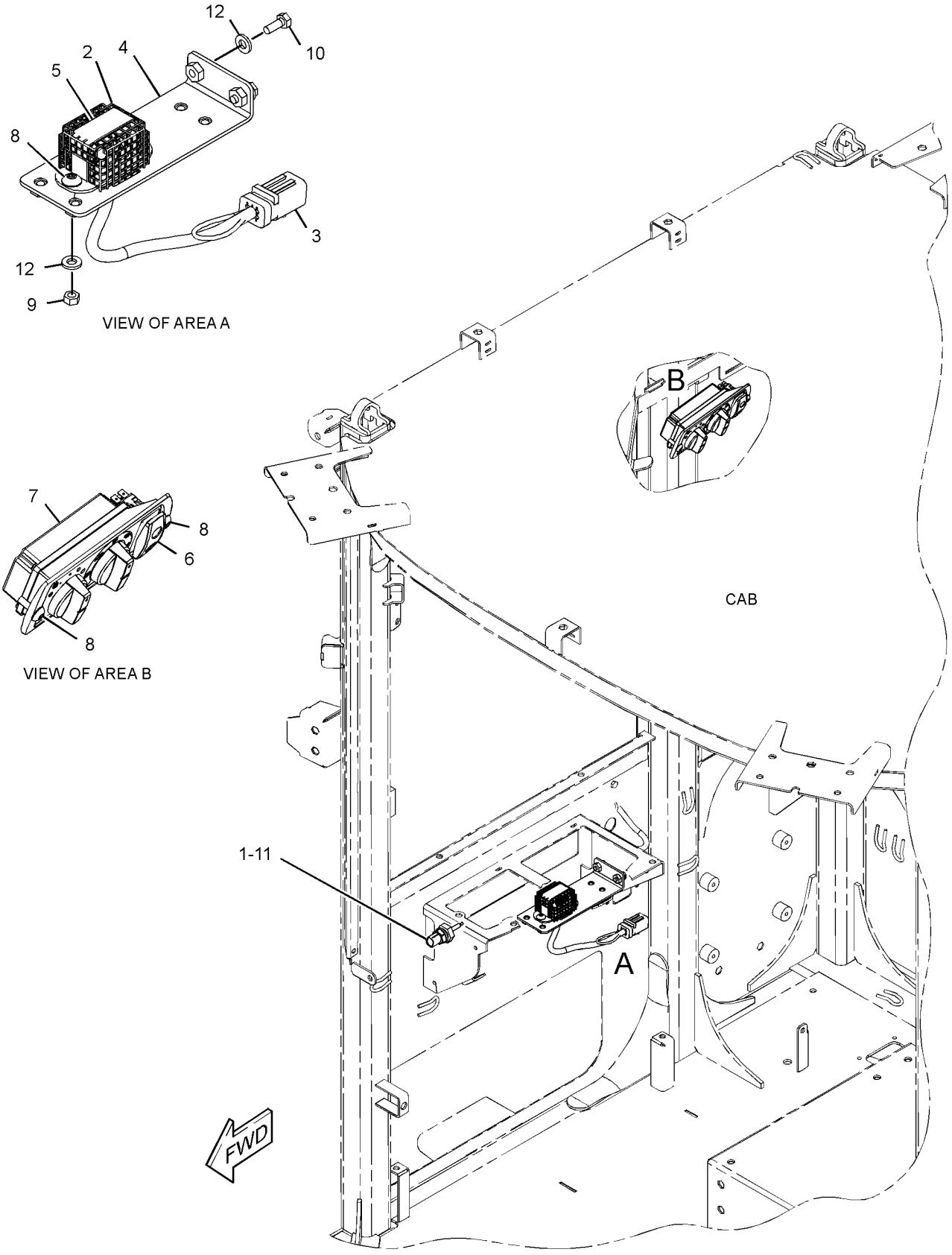

GRAPHIC #1 **<END>** g03311696

333-1373 CONTROL GP-ELECTROHYDRAULIC

S/N: DYB1-UP

PART OF 347-8286, 387-4099 HYDRAULIC AR-2 VALVE AN ATTACHMENT

SMCS-5702 **i05309496**

NOTE	REF NO	GRAPHIC REF	PART NUMBER	QTY	PART NAME 1 2 3 4 5 6 (PRODUCT LEVEL)	SEE PAGE
M	1	1	**112-6646**	4	LOCKNUT (M6X1-THD)	
	2	1	**341-9697**	1	FILM-CONTROL (JOYSTICK)	
Y	3	1	**356-5205**	1	CONTROL GP-JOYSTICK (2-VALVE)	429

M - METRIC PART
Y - SEPARATE ILLUSTRATION

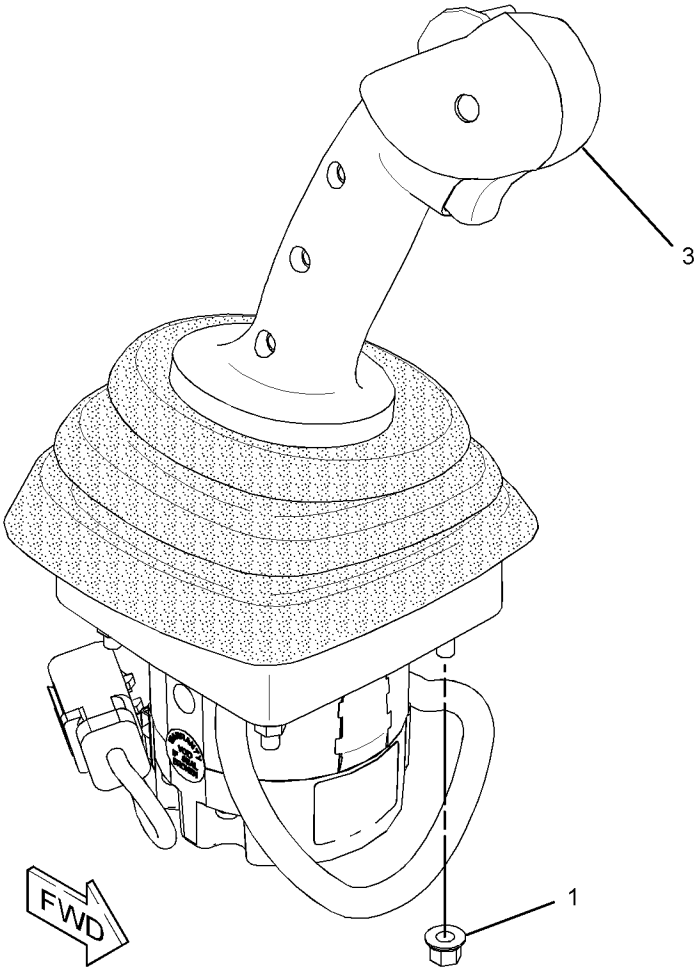

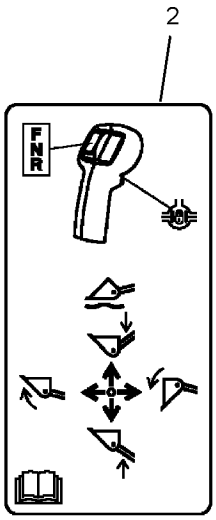

(LOCATED ON RIGHT HAND SIDE PILLAR IN CAB)

GRAPHIC #1 **<END>** g02750941

333-1374 CONTROL GP-ELECTROHYDRAULIC—3-FUNCTION

S/N: DYB1-UP
PART OF 387-4199 HYDRAULIC AR-3 VALVE
AN ATTACHMENT

SMCS-5702 **i05312291**

NOTE	REF NO	GRAPHIC REF	PART NUMBER	QTY	PART NAME 1 2 3 4 5 6 (PRODUCT LEVEL)	SEE PAGE
M	1	1	**112-6646**	4	LOCKNUT (M6X1-THD)	
	2	1	**341-9698**	1	FILM-IDENTIFICATION (JOYSTICK CONTROL)	
Y	3	1	**356-5206**	1	CONTROL GP-JOYSTICK (3-VALVE)	430

M - METRIC PART
Y - SEPARATE ILLUSTRATION

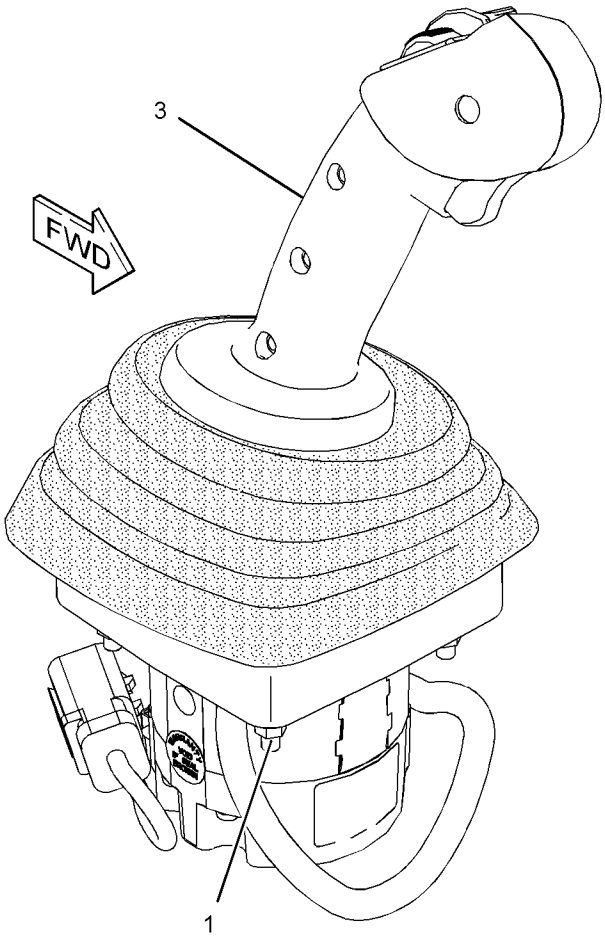

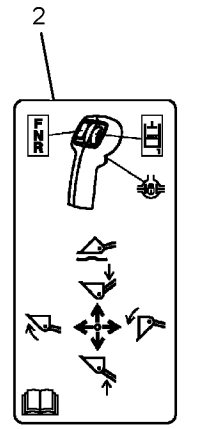

(LOCATED ON RIGHT
SIDE 'B'-POST PILLAR)

GRAPHIC #1 **<END>** g02756600

333-1375 CONTROL GP-ELECTROHYDRAULIC

S/N: DYB1-UP

PART OF 419-8849 HYDRAULIC AR-4 VALVE

AN ATTACHMENT

SMCS-5702 **i05312437**

NOTE	REF NO	GRAPHIC REF	PART NUMBER	QTY	PART NAME 1 2 3 4 5 6 (PRODUCT LEVEL)	SEE PAGE
M	1	1	**112-6646**	4	LOCKNUT (M6X1-THD)	
Y	2	1	**328-5930**	1	CONTROL GP-JOYSTICK (4-VALVE)	427
	3	1	**341-9699**	1	FILM-CONTROL (JOYSTICK)	

M - METRIC PART
Y - SEPARATE ILLUSTRATION

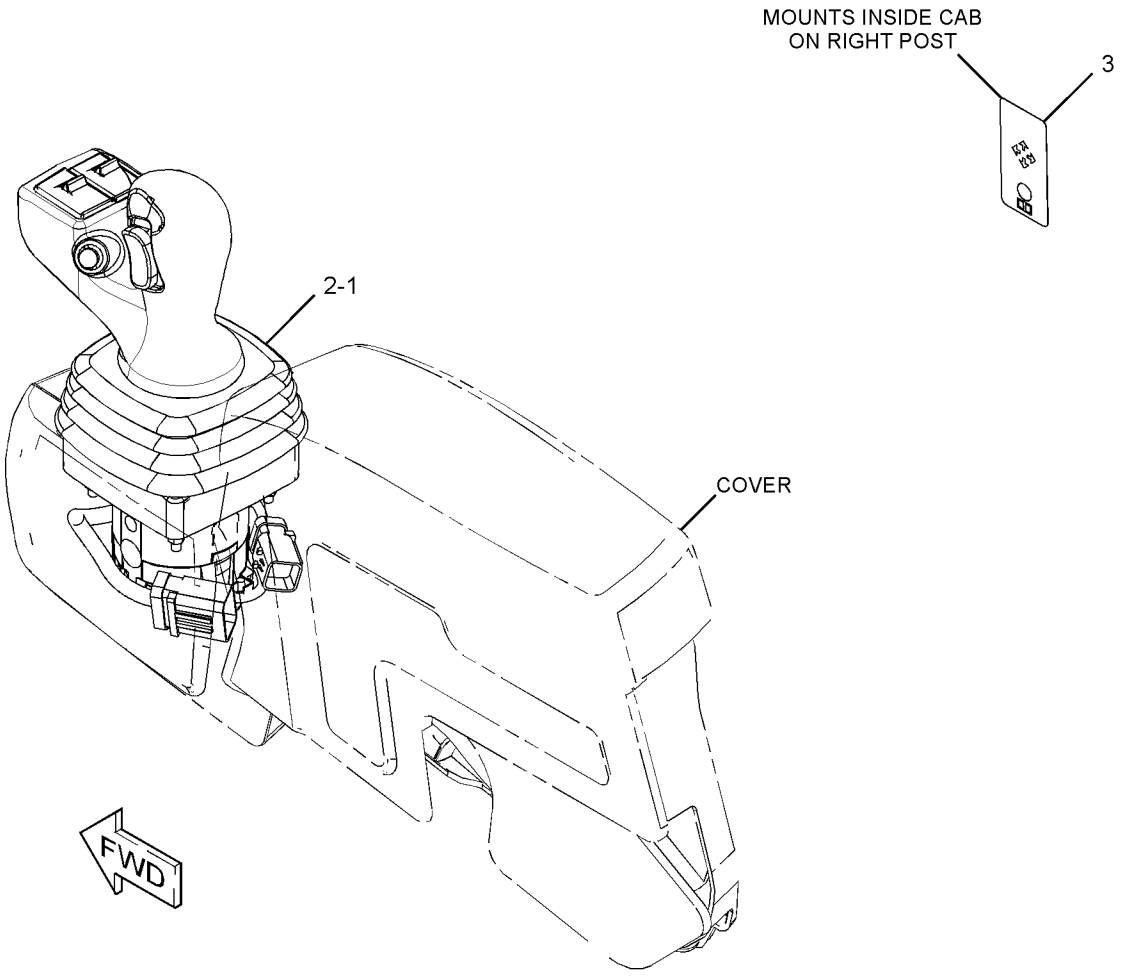

GRAPHIC #1 **<END>** g02792703

328-5930 CONTROL GP-JOYSTICK–4-FUNCTION

S/N: DYB1-UP

PART OF 333-1375 CONTROL GP-ELECTROHYDRAULIC

AN ATTACHMENT

SMCS-5063, 5705 **i04813512**

NOTE	REF NO	GRAPHIC REF	PART NUMBER	QTY	PART NAME 1 2 3 4 5 6 (PRODUCT LEVEL)	SEE PAGE
Y	1	1	**328-5935**	1	CONTROL GP-JOYSTICK (4-VALVE)	428
	2	1	**328-5936**	1	SENSOR AS-POSITION	
		1	**9X-3401**	6	PIN-CONNECTOR (16-GA TO 18-GA)	
		1	**281-3136**	1	RECEPTACLE AS-CONNECTOR (6-PIN)	
	3	1	**285-0150**	1	BOOT	
	4	1	**281-3136**	1	RECEPTACLE AS-CONNECTOR (6-PIN)	
	5	1	**260-6728**	1	RECEPTACLE AS-CONNECTOR (12-PIN)	
	6	1	**9X-3401**	18	PIN-CONNECTOR (16-GA TO 18-GA)	

Y - SEPARATE ILLUSTRATION

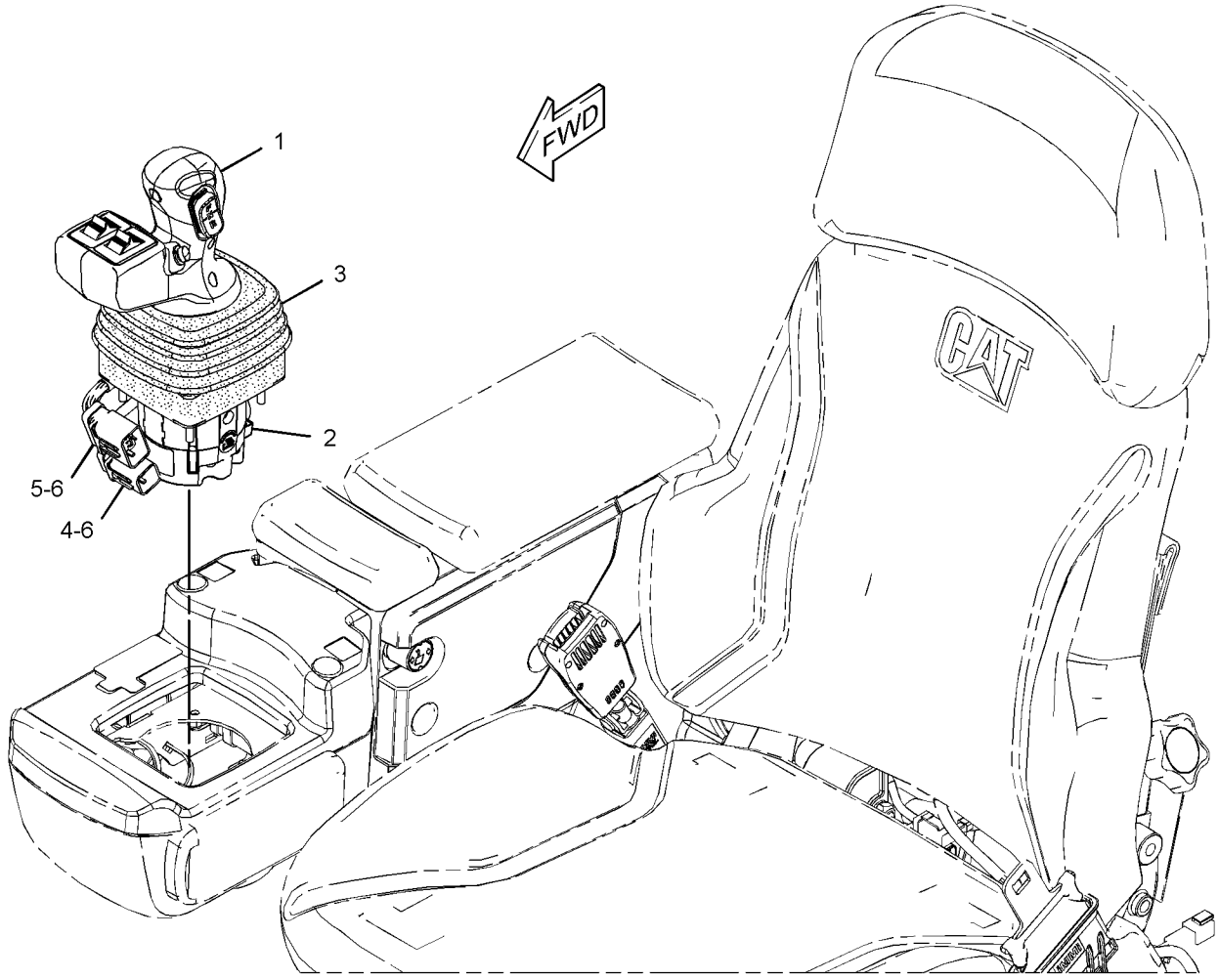

GRAPHIC #1 **<END>** g02622278

328-5935 CONTROL GP-JOYSTICK–4-VALVE

S/N: DYB1-UP
PART OF 328-5930 CONTROL GP-JOYSTICK
AN ATTACHMENT

SMCS-5063, 5705

i04813517

NOTE	REF NO	GRAPHIC REF	PART NUMBER	QTY	PART NAME 1 2 3 4 5 6 (PRODUCT LEVEL)	SEE PAGE
	1	1	**260-6728**	1	RECEPTACLE AS-CONNECTOR (12-PIN)	
	2	1	**9X-3401**	12	PIN-CONNECTOR (16-GA TO 18-GA)	

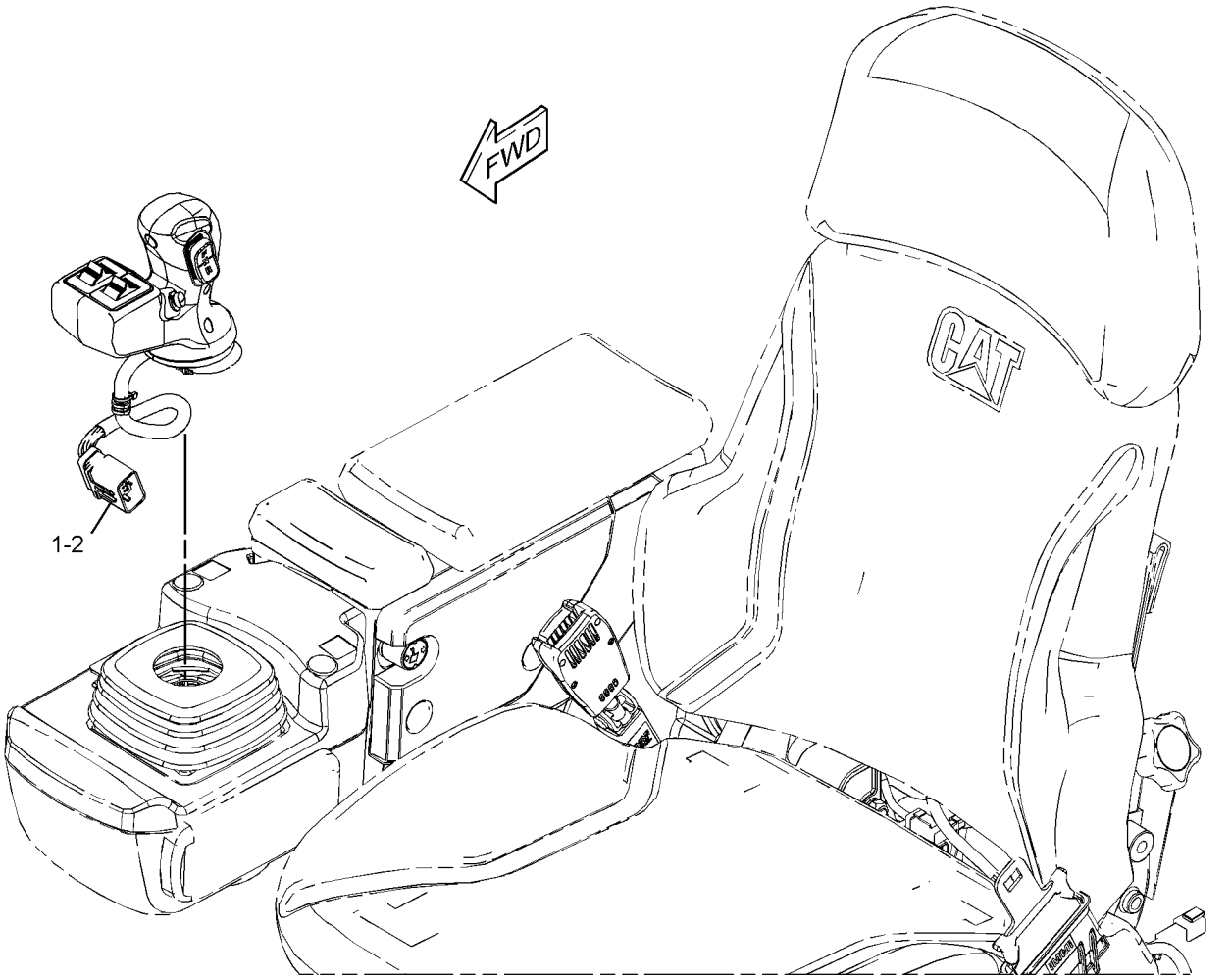

GRAPHIC #1

<END>

g02622280

356-5205 CONTROL GP-JOYSTICK–2-FUNCTION

S/N: DYB1-UP

PART OF 333-1373 CONTROL GP-ELECTROHYDRAULIC

AN ATTACHMENT

SMCS-5063, 5705 **i05324813**

NOTE	REF NO	GRAPHIC REF	PART NUMBER	QTY	PART NAME 1 2 3 4 5 6 (PRODUCT LEVEL)	SEE PAGE
	1	1	**356-5207**	1	BASE AS	
		1	**9X-3401**	6	PIN-CONNECTOR (16-GA TO 18-GA)	
		1	**281-3136**	1	RECEPTACLE AS-CONNECTOR (6-PIN)	
	2	1	**285-0150**	1	BOOT	
	3	1	**356-5208**	1	CONTROL GP-HANDLE (2-VALVE)	
		1	**8T-8737**	6	PLUG-SEAL	
		1	**9X-3401**	6	PIN-CONNECTOR (16-GA TO 18-GA)	
		1	**260-6728**	1	RECEPTACLE AS-CONNECTOR (12-PIN)	
M	4	1	**213-7489**	3	SCREW (M4X0.7X25-MM)	
M	5	1	**178-9983**	3	LOCKNUT (M4X0.7-THD)	
	6	1	**260-6728**	1	RECEPTACLE AS-CONNECTOR (12-PIN)	
	7	1	**281-3136**	1	RECEPTACLE AS-CONNECTOR (6-PIN)	
	8	1	**9X-3401**	12	PIN-CONNECTOR (16-GA TO 18-GA)	
	9	1	**8T-8737**	6	PLUG-SEAL	

M - METRIC PART

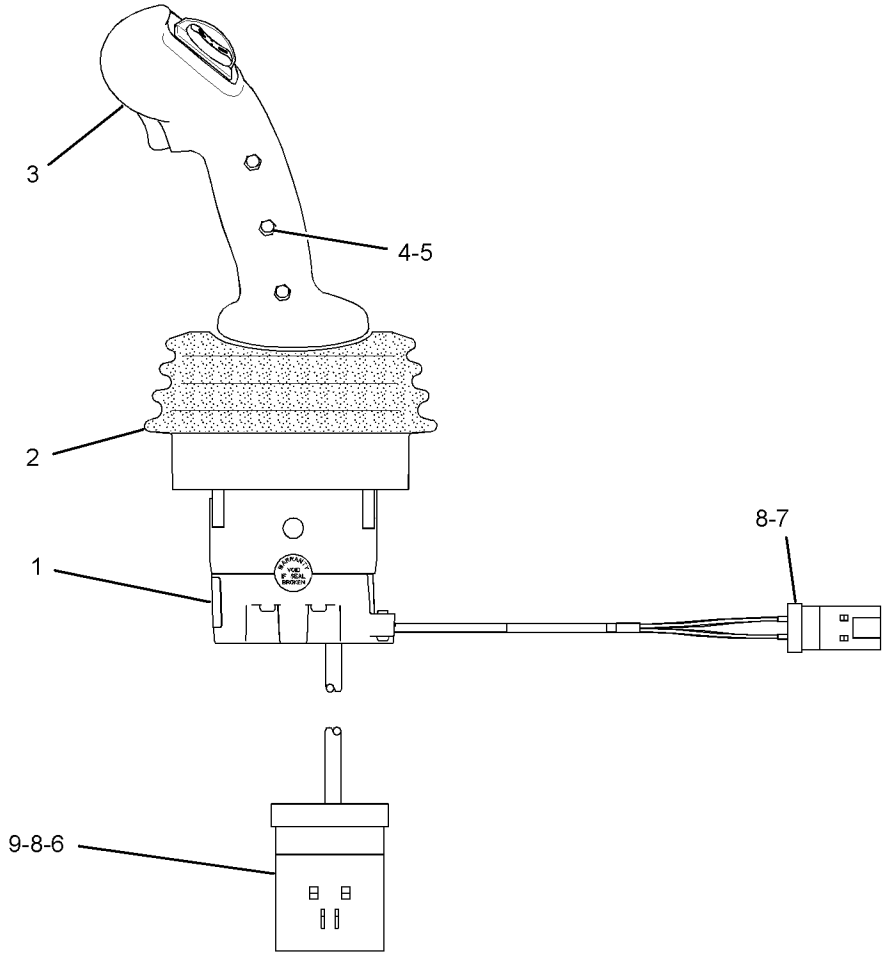

GRAPHIC #1 **<END>** g02753797

OPERATOR STATION

356-5206 CONTROL GP-JOYSTICK—3-FUNCTION

S/N: DYB1-UP

PART OF 333-1374 CONTROL GP-ELECTROHYDRAULIC

AN ATTACHMENT

SMCS-5063, 5705 **i05312298**

NOTE	REF NO	GRAPHIC REF	PART NUMBER	QTY	PART NAME 1 2 3 4 5 6 (PRODUCT LEVEL)	SEE PAGE
	1	1	**356-5207**	1	BASE AS	
		1	**9X-3401**	6	PIN-CONNECTOR (16-GA TO 18-GA)	
		1	**281-3136**	1	RECEPTACLE AS-CONNECTOR (6-PIN)	
	2	1	**285-0150**	1	BOOT	
	3	1	**356-5209**	1	CONTROL GP-HANDLE (3-VALVE)	
		1	**8T-8737**	2	PLUG-SEAL	
		1	**9X-3401**	10	PIN-CONNECTOR (16-GA TO 18-GA)	
		1	**260-6728**	1	RECEPTACLE AS-CONNECTOR (12-PIN)	
M	4	1	**213-7489**	3	SCREW (M4X0.7X25-MM)	
M	5	1	**178-9983**	3	LOCKNUT (M4X0.7-THD)	
	6	1	**260-6728**	1	RECEPTACLE AS-CONNECTOR (12-PIN)	
	7	1	**281-3136**	1	RECEPTACLE AS-CONNECTOR (6-PIN)	
	8	1	**9X-3401**	16	PIN-CONNECTOR (16-GA TO 18-GA)	
	9	1	**8T-8737**	2	PLUG-SEAL	

M - METRIC PART

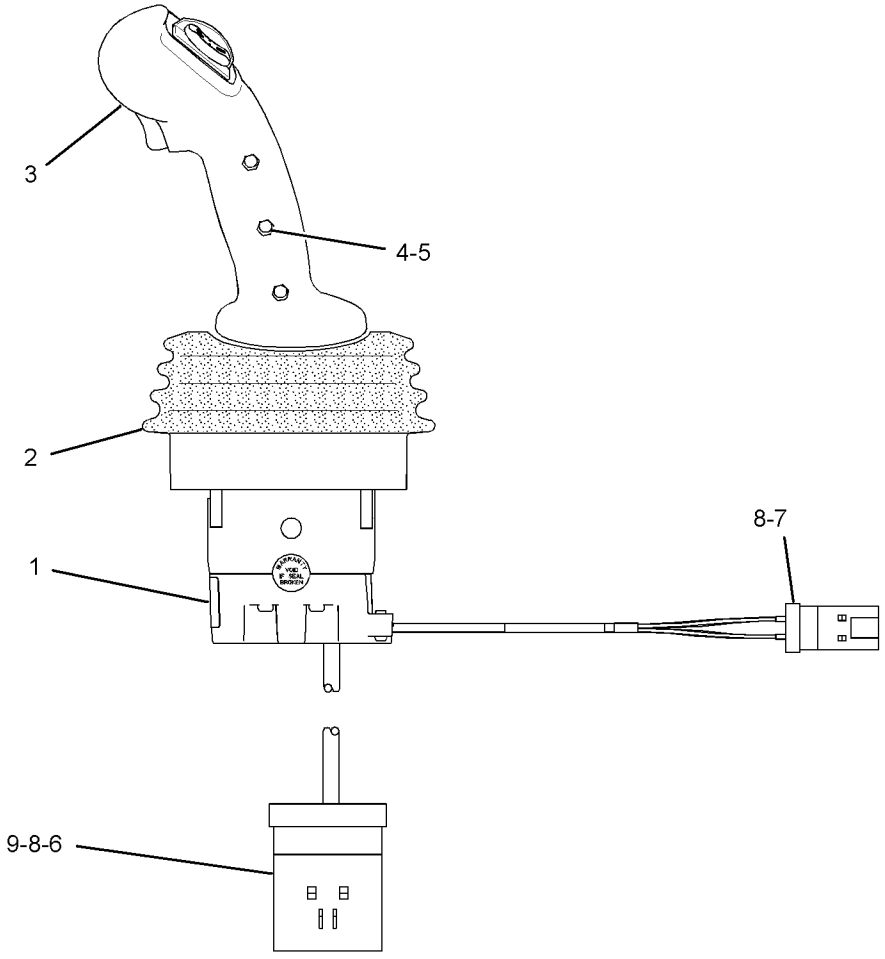

GRAPHIC #1 **<END>** g02753797

418-4021 CONTROL GP-STEERING—TELESCOPE, TILT CONTROL

S/N: DYB1-UP
PART OF 384-7000 CAB AR-ENCLOSED ROPS
AN ATTACHMENT

SMCS-4310, 4338, 4343

i05302846

NOTE	REF NO	GRAPHIC REF	PART NUMBER	QTY	PART NAME 1 2 3 4 5 6 (PRODUCT LEVEL)	SEE PAGE
	1	1	**8R-2918**	1	KNOB AS (STEERING WHEEL)	
M		1	**8T-4244**	1	NUT (M12X1.75-THD)	
	2	1	**300-6714**	8	MOUNT	
	3	1	**322-8568**	1	BUTTON AS-HORN	
	4	1	**332-3578**	4	SPACER	
	5	1	**341-9823**	1	PLATE	
	6	1	**341-9832**	1	SEAL	
	7	1	**363-5912**	1	STEERING WHEEL AS	
		1	**363-6423**	1	PLUG	
	8	1	**416-4934**	1	SUPPORT AS	
M		1	**159-9539**	2	NUT-WELD (M6X1-THD)	
M		1	**159-9540**	4	NUT-WELD (M8X1.25-THD)	
M		1	**159-9541**	8	NUT-WELD (M10X1.5-THD)	
	9	1	**418-4022**	1	STEERING COLUMN GP (TILT)	
M	10	1	**7X-0818**	4	BOLT (M8X1.25X45-MM)	
	11	1	**7X-7729**	10	WASHER (11X25X3-MM THK)	
	12	1	**8T-4121**	4	WASHER-HARD (11X21X2.5-MM THK)	
M	13	1	**8T-4136**	14	BOLT (M10X1.5X25-MM)	
	14	1	**9N-0869**	8	WASHER-HARD (8.8X25.5X2-MM THK)	

M - METRIC PART

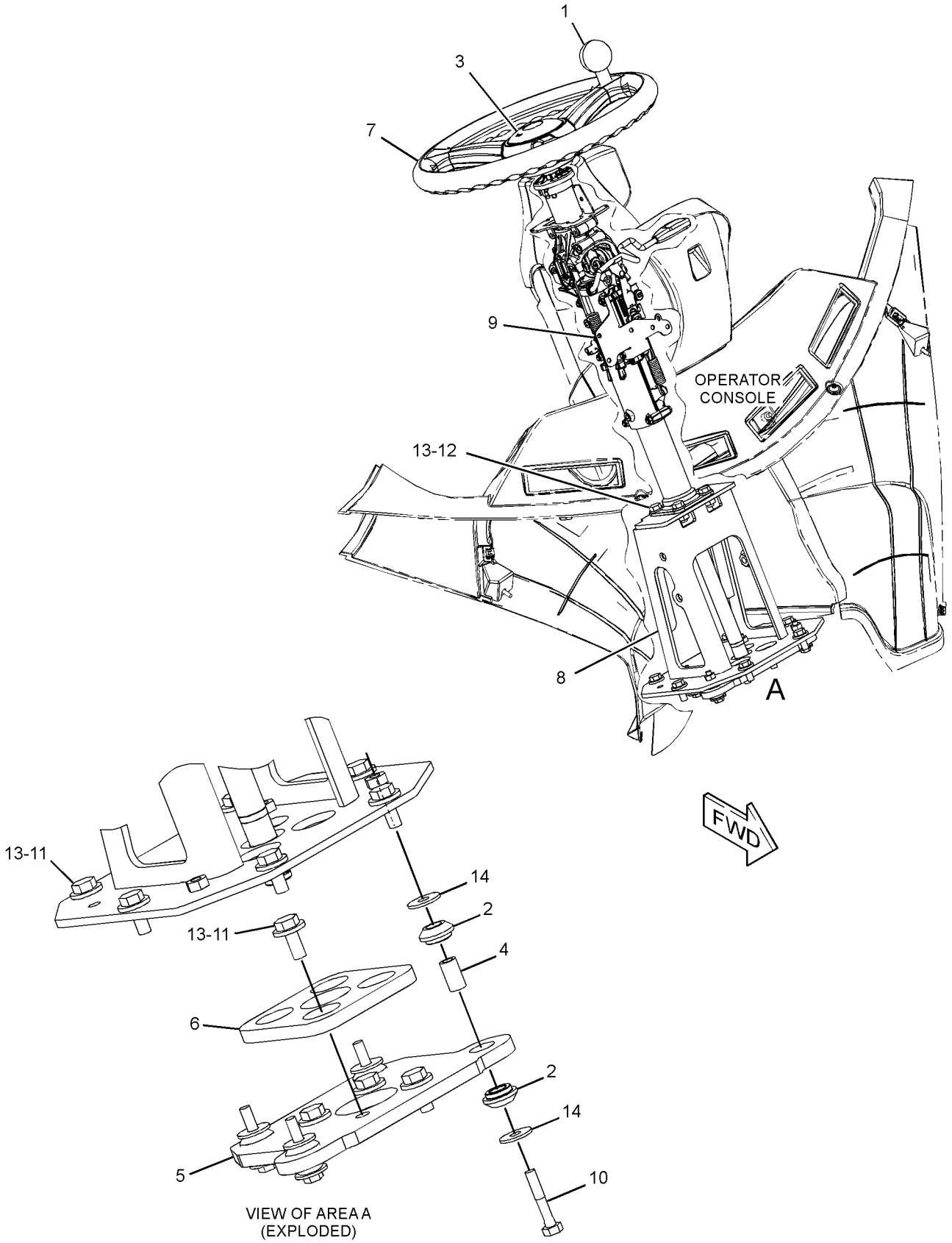

VIEW OF AREA A
(EXPLODED)

GRAPHIC #1 **<END>** g03376341

341-9980 COVER GP-CAB

S/N: DYB1-UP
PART OF 384-7000 CAB AR-ENCLOSED ROPS
AN ATTACHMENT

SMCS-7301 **i05302432**

NOTE	REF NO	GRAPHIC REF	PART NUMBER	QTY	PART NAME 1 2 3 4 5 6 (PRODUCT LEVEL)	SEE PAGE
D	1	2	**5P-8309**		SEAL (1.7-M)	
	2	1,2	**164-1178**	4	CLIP	
E	3	2	**220-0738**		SEAL (182-CM)	
E	3A	2	**220-0738**		SEAL (5.7-CM)	
E	3B	2	**220-0738**		SEAL (39.3-CM)	
	4	2	**258-3727**	1	SCREW-TRUSS HEAD (SPECIAL)	
	5	1	**341-9982**	1	PANEL-ACCESS (LH)	
	6	1	**341-9985**	1	COVER AS (CAB, RH)	
		1	**303-9447**	4	NUT-SPEED	
	7	1	**341-9986**	1	PANEL-ACCESS (RH)	
	8	1	**341-9987**	1	COVER AS (REAR, RH)	
		1	**172-8591**	2	NUT-SPRING (M6X1-THD)	
		1	**258-3727**	3	SCREW-TRUSS HEAD (SPECIAL)	
	9	1,2	**341-9988**	4	STUD AS	
	10	2	**341-9989**	1	GASKET	
	11	1	**341-9991**	1	COVER-ROOF	
	12	1	**341-9992**	1	COVER-POST (RH)	
	13	1	**341-9993**	1	COVER-POST (CAB)	
E	14	2	**341-9994**		SEAL (46.4-CM)	
	15	1	**341-9996**	4	PLUG	
	16	2	**341-9999**	1	GASKET	
	17	1	**156-0283**	10	WASHER-HARD (8.4X35X2.5-MM THK)	
M	18	2	**8T-4138**	2	BOLT (M6X1X20-MM)	
M	19	2	**5C-2890**	3	NUT (M6X1-THD)	
M	20	1	**8T-4189**	10	BOLT (M8X1.25X20-MM)	
	21	1,2	**9X-2038**	10	WASHER (7X19X2-MM THK)	
M	22	1,2	**9X-2045**	6	SCREW-TRUSS HEAD (M6X1X20-MM)	
	23	2	**164-1368**	1	FASTENER-PANEL	
	24	2	**101-2867**	2	WASHER-HARD (7.2X25X2-MM THK)	

D - ORDER BY THE METER
E - ORDER BY THE CENTIMETER
M - METRIC PART

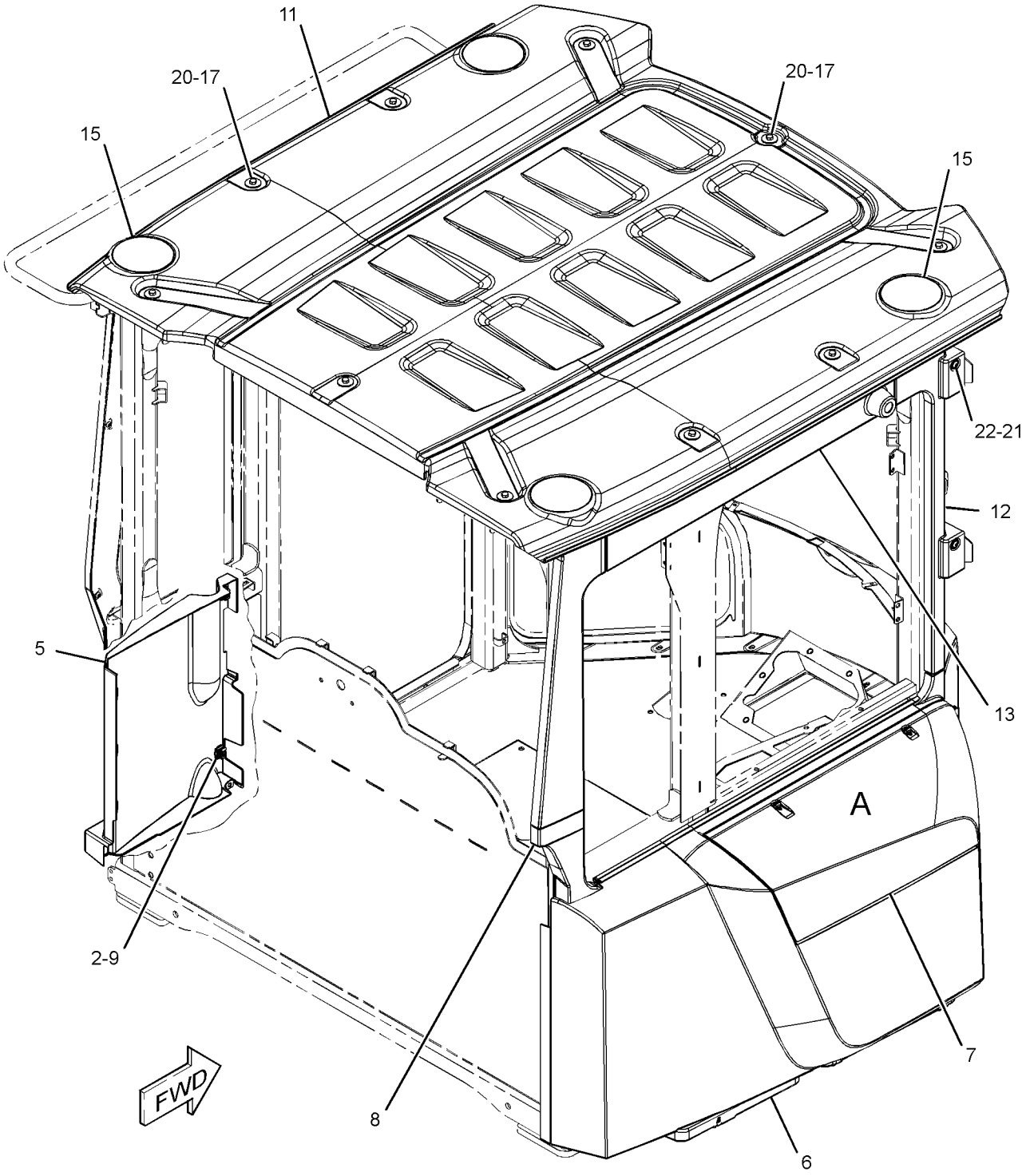

REFER TO ALL ILLUSTRATIONS OF
THIS GROUP FOR AUXILIARY VIEWS

GRAPHIC #1 g03375162

341-9980 **COVER GP-CAB (*contd.*)** **i05302432**

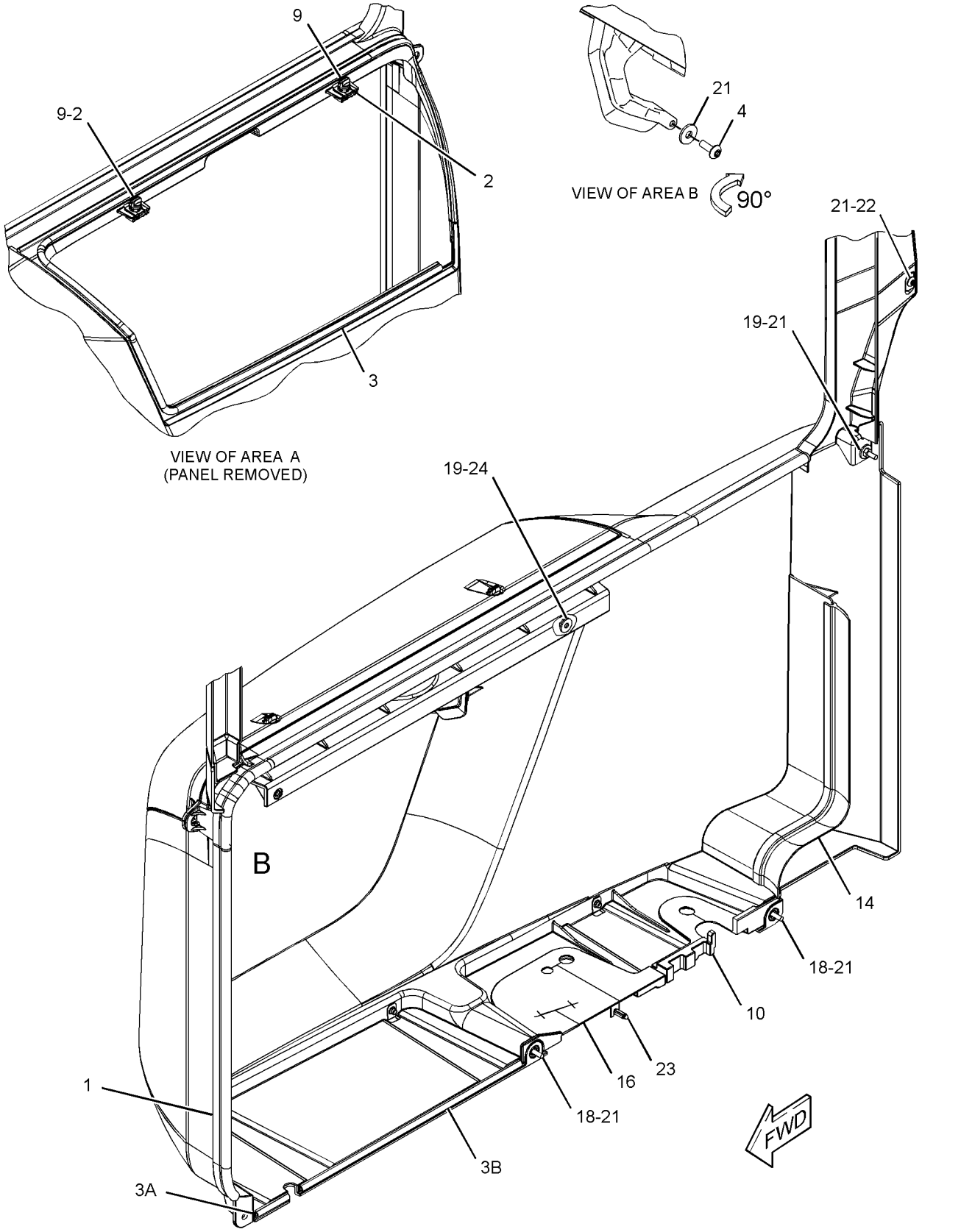

GRAPHIC #2 **<END>** g03375160

349-8031 COVER GP-TANK

S/N: DYB1-UP
PART OF 384-7000 CAB AR-ENCLOSED ROPS
AN ATTACHMENT

SMCS-7306 **i05303661**

NOTE	REF NO	GRAPHIC REF	PART NUMBER	QTY	PART NAME 1 2 3 4 5 6 (PRODUCT LEVEL)	SEE PAGE
	1	1	**366-8189**	1	COVER	
	2	1	**172-8591**	6	NUT-SPRING (M6X1-THD)	
	3	1	**9X-2038**	6	WASHER (7X19X2-MM THK)	
M	4	1	**8T-4971**	6	BOLT (M6X1X30-MM)	

M - METRIC PART

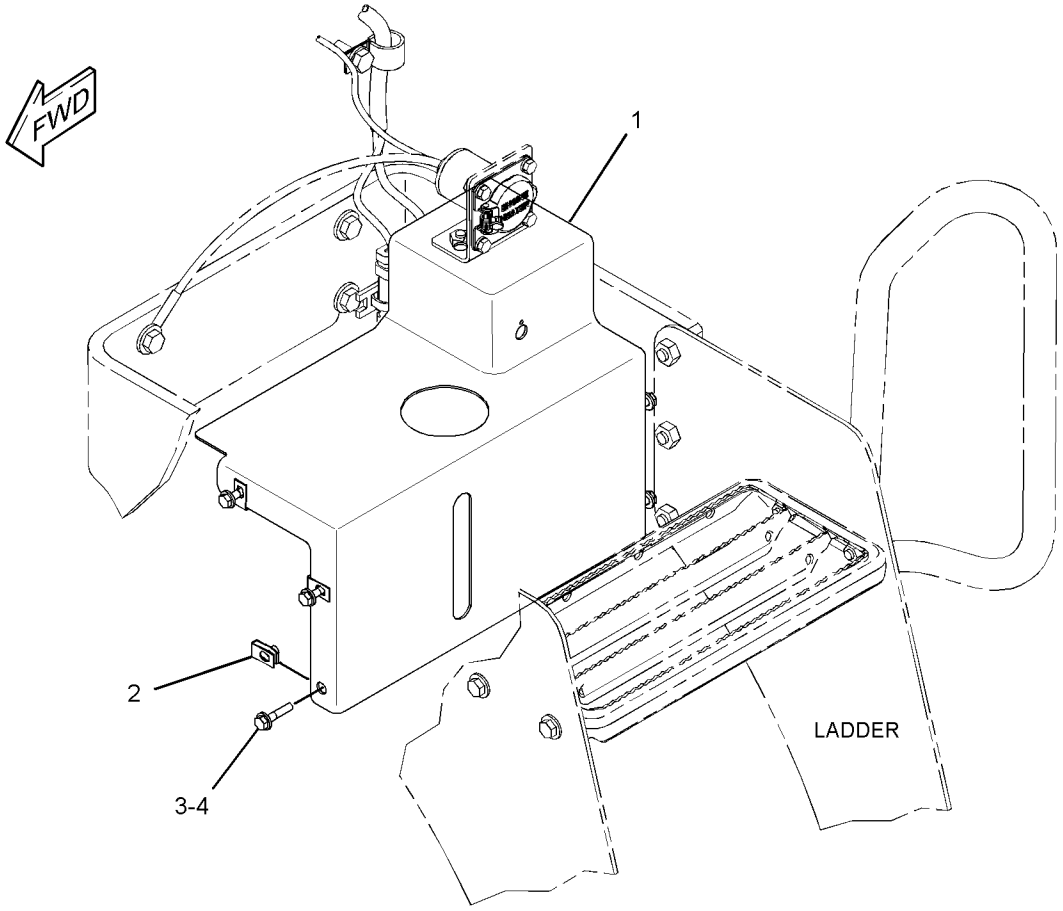

GRAPHIC #1 **<END>** g03145776

341-9750 DOOR GP-CAB—LH

S/N: DYB1-UP
PART OF 384-6950 CAB GP-ENCLOSED ROPS
AN ATTACHMENT

SMCS-7308 **i05302521**

NOTE	REF NO	GRAPHIC REF	PART NUMBER	QTY	PART NAME 1 2 3 4 5 6 (PRODUCT LEVEL)	SEE PAGE
E	1	1	**3E-3892**		SEAL (10-CM)	
	2	1	**6V-7636**	2	PIN AS-SPRING	
	3	1	**8Y-6377**	1	STRIKER	
	4	1	**8T-4224**	6	WASHER-HARD (8.8X16X2-MM THK)	
	5	1	**111-0204**	1	PLATE AS	
J	6	1	**252-1862**	1	HANDLE AS (PULL)	
	7	1	**252-1863**	1	GASKET	
	8	1	**252-8286**	2	SPACER (6.5X10.5X11.5-MM THK)	
	9	1	**257-6170**	1	SPACER (6.5X14X7.5-MM THK)	
	10	1	**257-6205**	2	SPACER (10.5X14.5X12-MM THK)	
	11	1	**257-6206**	1	SPACER (14X18X12-MM THK)	
	12	1	**269-2890**	1	CLEVIS	
	13	1	**269-2892**	1	PIN	
	14	1	**332-0195**	1	CLIP	
	15	1	**341-9757**	2	HINGE AS	
					(EACH INCLUDES)	
		1	**096-2323**	1	RING-RETAINING (EXTERNAL)	
		1	**318-0827**	1	PIN	
		1	**341-9761**	1	HINGE	
		1	**341-9762**	1	HINGE	
	16	1	**341-9759**	1	LATCH AS	
E	17	1	**341-9763**		SEAL (420-CM)	
	18	1	**341-9764**	1	ROD AS	
Y	19	1	**341-9784**	1	DOOR GP-CAB (LH)	439
	20	1	**341-9788**	1	BELLCRANK AS	
	21	1	**108-4311**	1	SCREW-MACHINE (3/8-16X0.75-IN)	
	22	1	**117-8929**	1	WASHER (6.6X22X2-MM THK)	
	23	1	**198-1725**	6	WASHER-HARD (8.8X25.5X2-M THK)	
	24	1	**216-7352**	12	SCREW-TRUSS HEAD (M8X1.25X30-MM)	
M	25	1	**6V-7357**	3	BOLT (M6X1X25-MM)	
	26	1	**8T-4121**	2	WASHER-HARD (11X21X2.5-MM THK)	
M	27	1	**8T-4136**	2	BOLT (M10X1.5X25-MM)	
M	28	1	**8T-4138**	4	BOLT (M6X1X20-MM)	
	29	1	**8T-4205**	6	WASHER-HARD (7.2X14.5X2-MM THK)	

E - ORDER BY THE CENTIMETER
J - REQUIRES CORPORATE KEY
M - METRIC PART
Y - SEPARATE ILLUSTRATION

341-9750 **DOOR GP-CAB** (*contd.*) **i05302521**

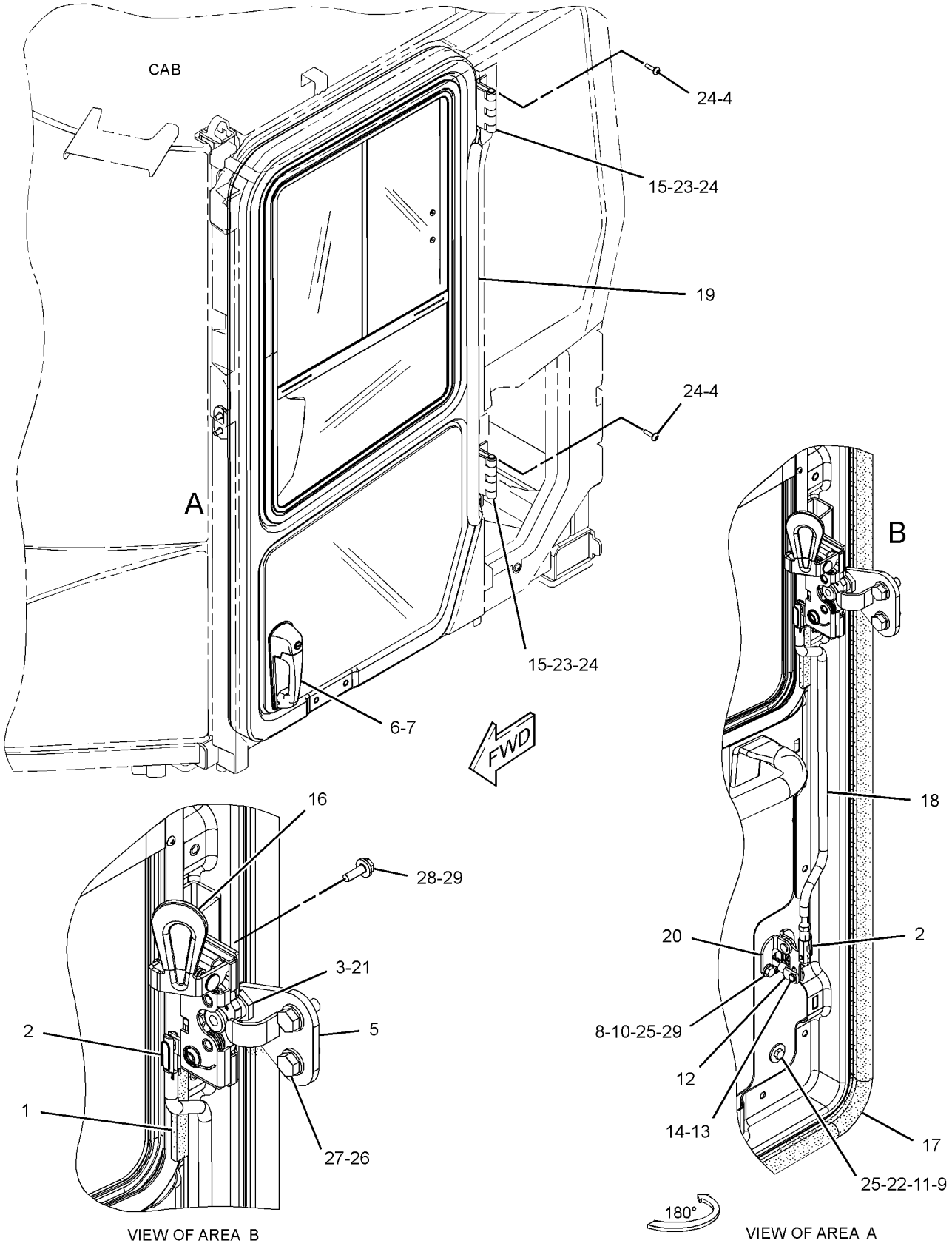

GRAPHIC #1 **<END>** g02794200

341-9784 DOOR GP-CAB—LH

S/N: DYB1-UP
PART OF 341-9750 DOOR GP-CAB
AN ATTACHMENT

SMCS-7308 **i05302525**

NOTE	REF NO	GRAPHIC REF	PART NUMBER	QTY	PART NAME 1 2 3 4 5 6 (PRODUCT LEVEL)	SEE PAGE
	1	1	**110-7524**	18	BUTTON	
	2	1	**341-9751**	1	DOOR AS (LH)	
	3	1	**341-9754**	1	GLASS-FIXED	
Y	4	1	**341-9755**	1	WINDOW GP-DOOR (SLIDING WINDOW, LH)	488

Y - SEPARATE ILLUSTRATION

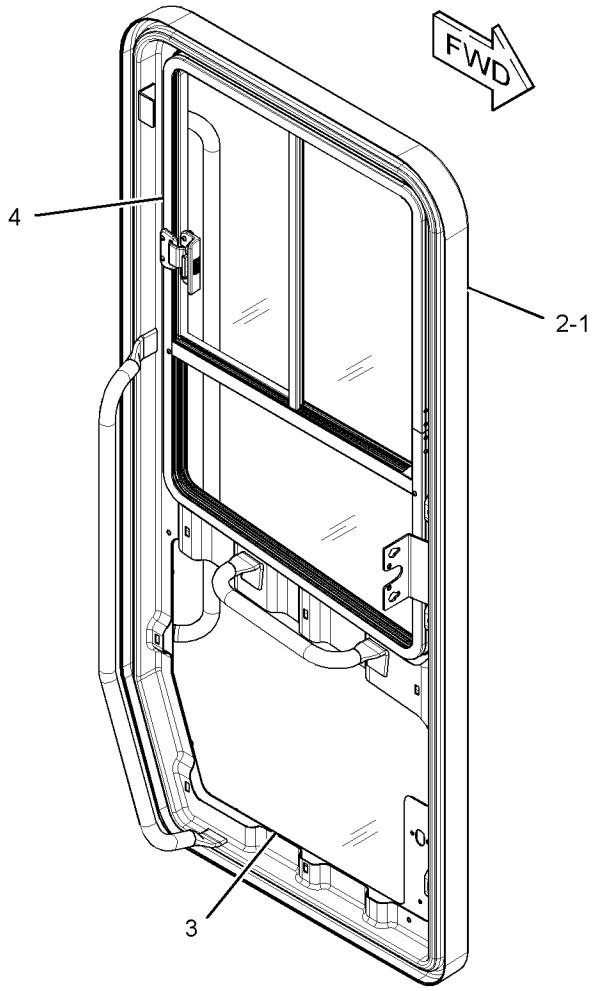

GRAPHIC #1 **<END>** g02796589

341-9790 DOOR GP-CAB

S/N: DYB1-UP

PART OF 384-7000 CAB AR-ENCLOSED ROPS

AN ATTACHMENT

SMCS-7308 **i05302359**

NOTE	REF NO	GRAPHIC REF	PART NUMBER	QTY	PART NAME 1 2 3 4 5 6 (PRODUCT LEVEL)	SEE PAGE
E	1	1	**3E-6600**		SEAL (30-CM)	
	2	2	**5E-8555**	1	CLIP	
	3	2	**6V-7636**	4	PIN AS-SPRING	
	4	1	**100-5612**	1	FILM-INSTRUCTION (ALTERNATE EXIT, REMOVE WINDOW)	
	5	2	**399-4534**	1	LATCH AS	
	6	1	**126-2373**	1	HANDLE AS-PULL	
	7	1	**209-4212**	1	HAMMER GP (CAB WINDOW)	
	8	2	**264-4458**	1	GROMMET	
	9	1	**341-9726**	1	GASKET	
	10	1	**341-9727**	2	SPACER	
	11	1	**341-9728**	1	PLATE AS	
		1	**359-1815**	2	NUT-SPECIAL	
	12	2	**341-9765**	1	PLATE	
	13	2	**341-9772**	1	ROD AS	
	14	2	**341-9773**	1	ROD	
	15	2	*399-6645*	1	BRACKET AS	
		2	**341-9774**	1	BRACKET	
	15A	2	**341-9777**	1	BUSHING	
	16	2	**341-9775**	1	BRACKET AS	
M		2	**165-8718**	2	NUT-WELD (M4X0.7-THD)	
	17	2	**341-9776**	1	HANDLE AS-DOOR	
	19	2	**341-9778**	1	ROD	
	20	2	**341-9780**	1	KNOB	
	21	2	**341-9783**	1	BRACKET AS	
M		2	**159-9539**	2	NUT-WELD (M6X1-THD)	
	21A	2	**341-9777**	1	BUSHING	
	22	2	**341-9786**	1	LINK	
	23	2	**341-9787**	1	BELLCRANK AS	
	24	1	**341-9791**	1	STRIKER AS	
	25	1	**342-0125**	1	COVER	
	26	1	**342-0128**	1	COVER AS-ACCESS	
		1	**206-1667**	7	CLIP	
M	28	2	**127-2170**	2	SCREW-TRUSS HEAD (M8X1.25X20-MM)	
M	29	2	**138-8454**	2	SCREW-TRUSS HEAD (M4X0.7X10-MM)	
M	30	1	**7Y-7389**	2	SCREW (M5X0.8X16-MM)	
	31	2	**9X-2038**	6	WASHER (7X19X2-MM THK)	
M	32	1	**9X-2041**	2	SCREW-TRUSS HEAD (M10X1.5X20-MM)	
M	33	2	**9X-2044**	4	SCREW-TRUSS HEAD (M6X1X16-MM)	
M	34	2	**9X-2045**	10	SCREW-TRUSS HEAD (M6X1X20-MM)	
M	35	1	**9X-2046**	2	SCREW-TRUSS HEAD (M6X1X35-MM)	
	36	2	**341-9796**	1	GUIDE	
	37	2	**341-9797**	1	FILM-WARNING (CAB UNLOCK)	
M	38	2	**112-6646**	2	LOCKNUT (M6X1-THD)	

E - ORDER BY THE CENTIMETER
M - METRIC PART

REFER TO ALL ILLUSTRATIONS OF
THIS GROUP FOR AUXILIARY VIEWS

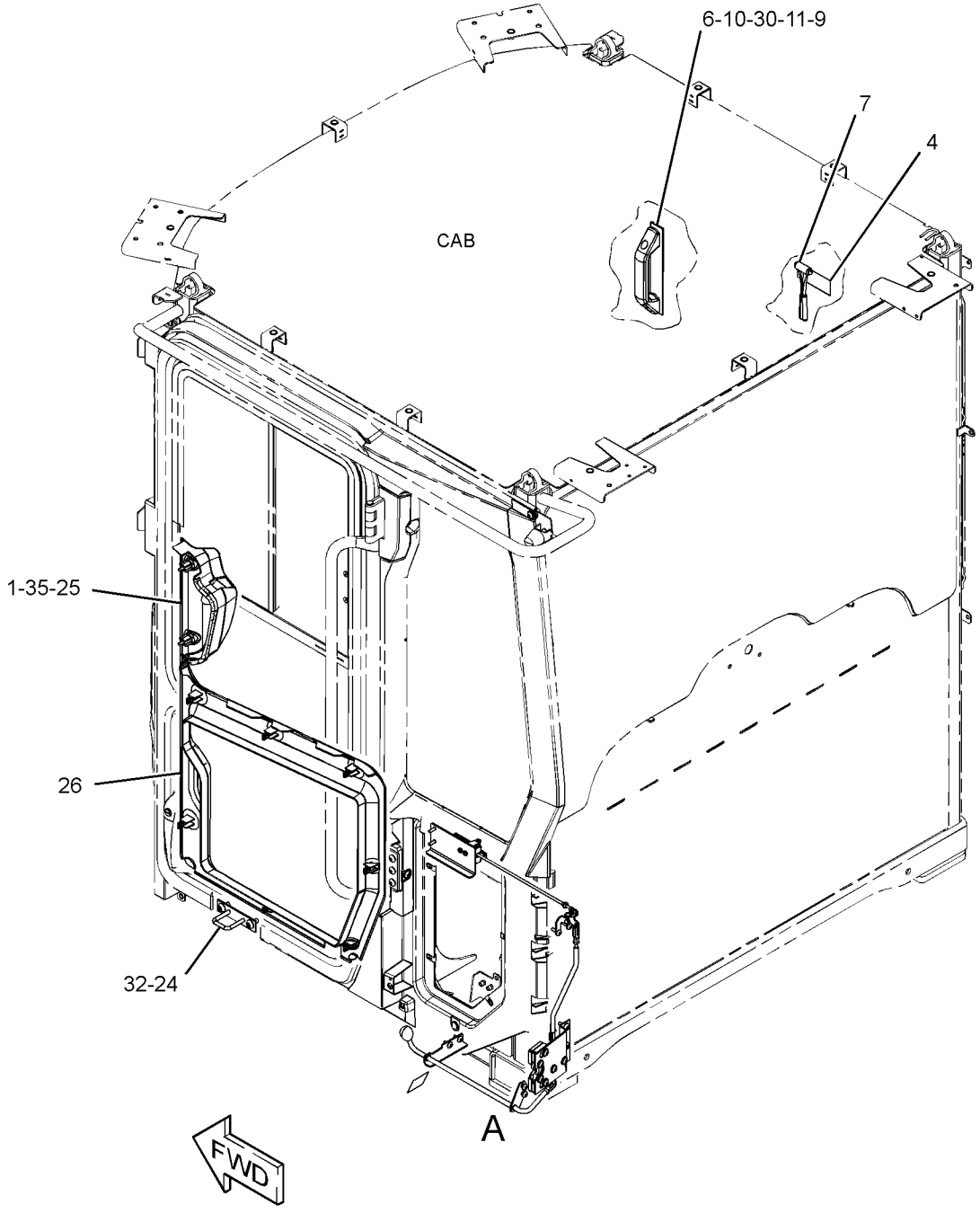

GRAPHIC #1 g03377015

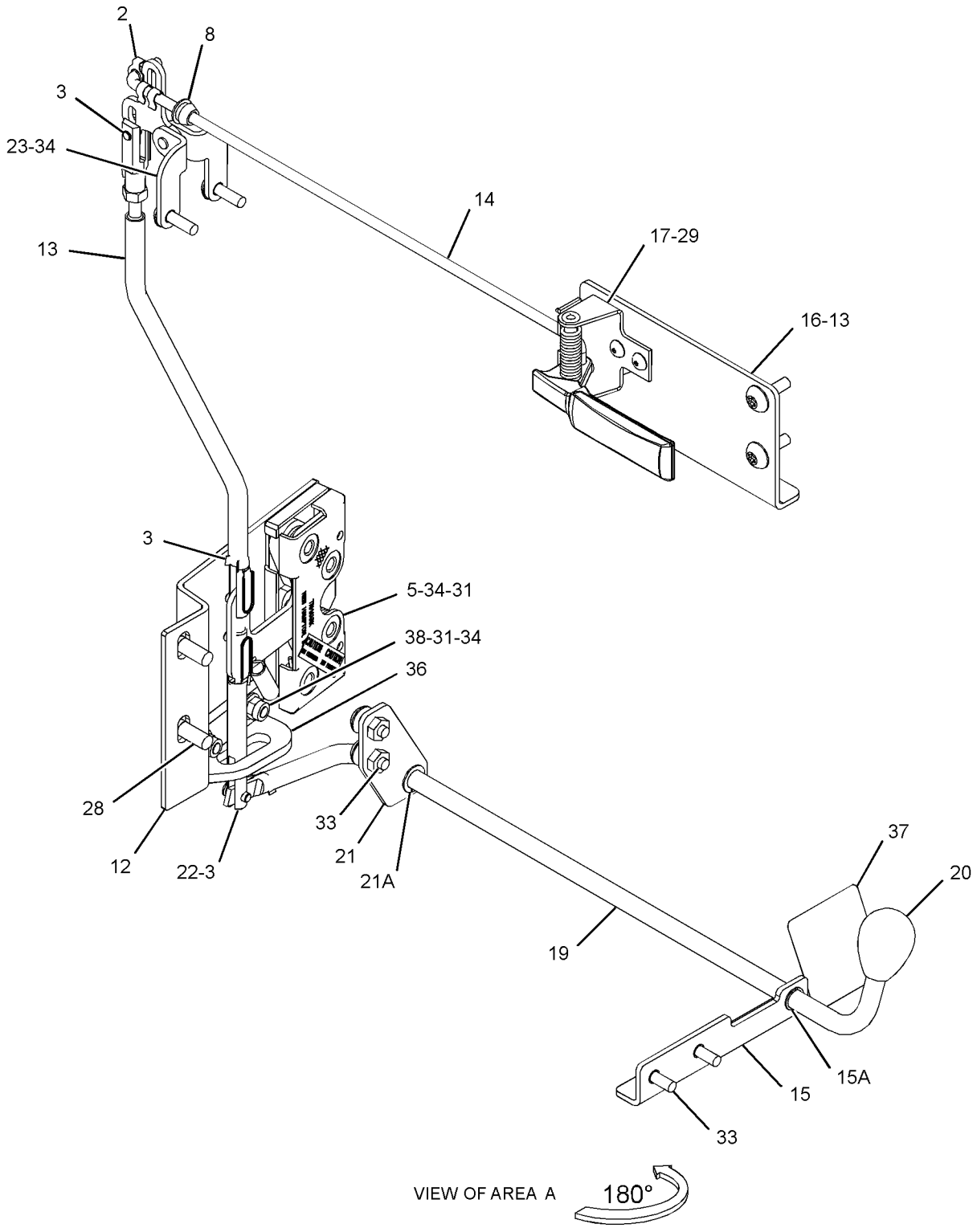

GRAPHIC #2 **<END>** g03377017

341-9860 DUCT GP-CAB AIR

S/N: DYB1-UP
PART OF 384-7000 CAB AR-ENCLOSED ROPS
AN ATTACHMENT

SMCS-734D **i05302362**

NOTE	REF NO	GRAPHIC REF	PART NUMBER	QTY	PART NAME 1 2 3 4 5 6 (PRODUCT LEVEL)	SEE PAGE
	1	1	**8Y-6352**	4	LOUVER AS	
	2	1	**164-8474**	7	LOUVER AS-VENT	
	3	1	**270-9442**	2	SCREW-TRUSS HEAD (M6X1X20-MM)	
	4	1	**341-9861**	1	DUCT	
	5	1	**341-9862**	1	DUCT	
	6	1	**341-9865**	1	GASKET	
	7	1	**341-9866**	1	GASKET	
	8	1	**341-9867**	1	GASKET	
	9	1	**172-8591**	5	NUT-SPRING (M6X1-THD)	
	10	1	**9X-2038**	1	WASHER (7X19X2-MM THK)	
M	11	1	**121-9870**	3	SCREW-MACHINE (M6X1X40-MM)	

M - METRIC PART

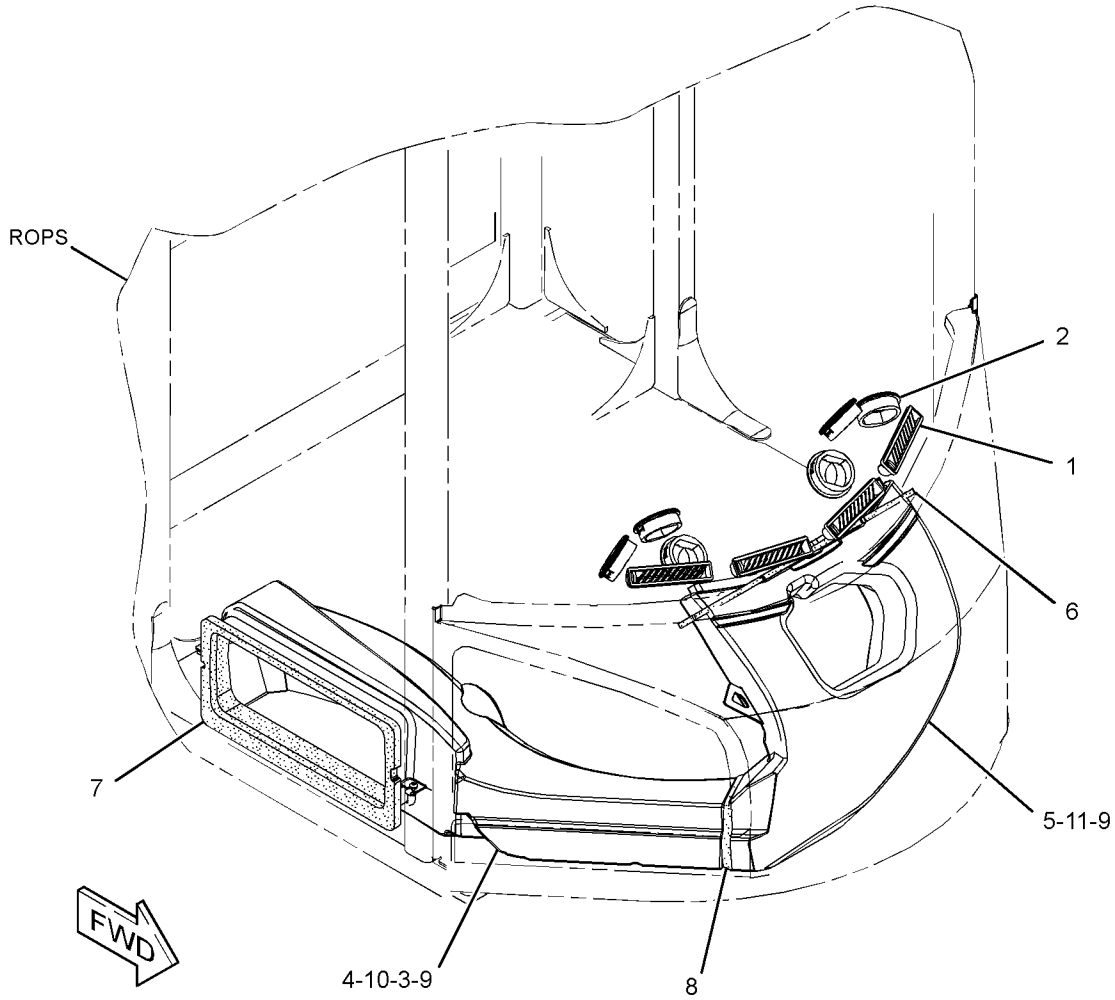

GRAPHIC #1 **<END>** g02790082

342-0080 FLOOR MAT GP

S/N: DYB1-UP

PART OF 384-7000 CAB AR-ENCLOSED ROPS

AN ATTACHMENT

SMCS-726M **i05302442**

NOTE	REF NO	GRAPHIC REF	PART NUMBER	QTY	PART NAME 1 2 3 4 5 6 (PRODUCT LEVEL)	SEE PAGE
	1	1	**342-0091**	1	FLOOR MAT	
	2	1	**342-0092**	1	FLOOR MAT	

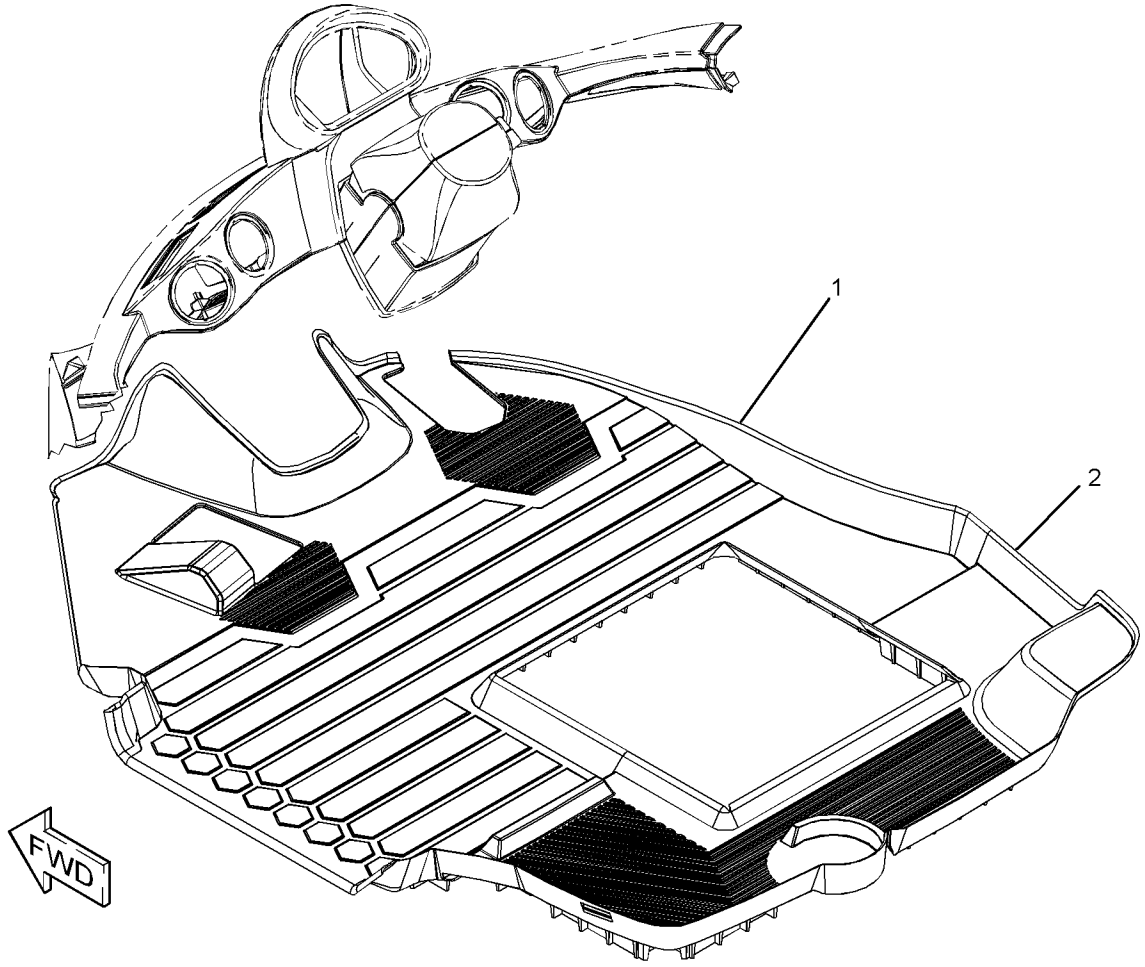

GRAPHIC #1 **<END>** g02784816

342-0250 GUARD GP-WINDOW

S/N: DYB1-UP

AN ATTACHMENT

SMCS-7165, 7182, 7310 **i05309455**

NOTE	REF NO	GRAPHIC REF	PART NUMBER	QTY	PART NAME 1 2 3 4 5 6 (PRODUCT LEVEL)	SEE PAGE
	1	1	**248-2284**	4	KNOB-CONTROL	
	2	1	**341-9824**	1	BRACKET AS	
	3	1	**341-9825**	1	SCREEN AS	
	4	1	**341-9826**	4	BRACKET	
	5	1	**341-9827**	1	SCREEN AS (LH)	
	6	1	**341-9828**	1	SCREEN AS (RH)	
	7	1	**342-0149**	1	BRACKET AS	
	8	1	**342-0239**	1	PLATE	
	9	1	**342-0241**	1	COVER	
	10	1	**342-0242**	1	COVER	
	11	1	**342-0266**	2	BRACKET AS	
					(EACH INCLUDES)	
M		1	**159-9541**	5	NUT-WELD (M10X1.5-THD)	
M	12	1	**224-6208**	4	INSERT-THREADED (M10X1.5-THD)	
	13	1	**5P-4116**	20	WASHER-HARD (8.8X20.5X2-MM THK)	
	14	1	**5P-7177**	4	RETAINER	
M	15	1	**6V-9189**	6	LOCKNUT (M8X1.25-THD)	
	16	1	**8T-4121**	28	WASHER-HARD (11X21X2.5-MM THK)	
M	17	1	**8T-4133**	4	NUT (M10X1.5-THD)	
M	18	1	**8T-4136**	10	BOLT (M10X1.5X25-MM)	
M	19	1	**8T-4137**	10	BOLT (M10X1.5X20-MM)	
M	20	1	**8T-4200**	8	BOLT (M8X1.25X16-MM)	
M	21	1	**8T-7547**	6	BOLT (M8X1.25X30-MM)	

M - METRIC PART

342-0250 **GUARD GP-WINDOW (*contd.*)** **i05309455**

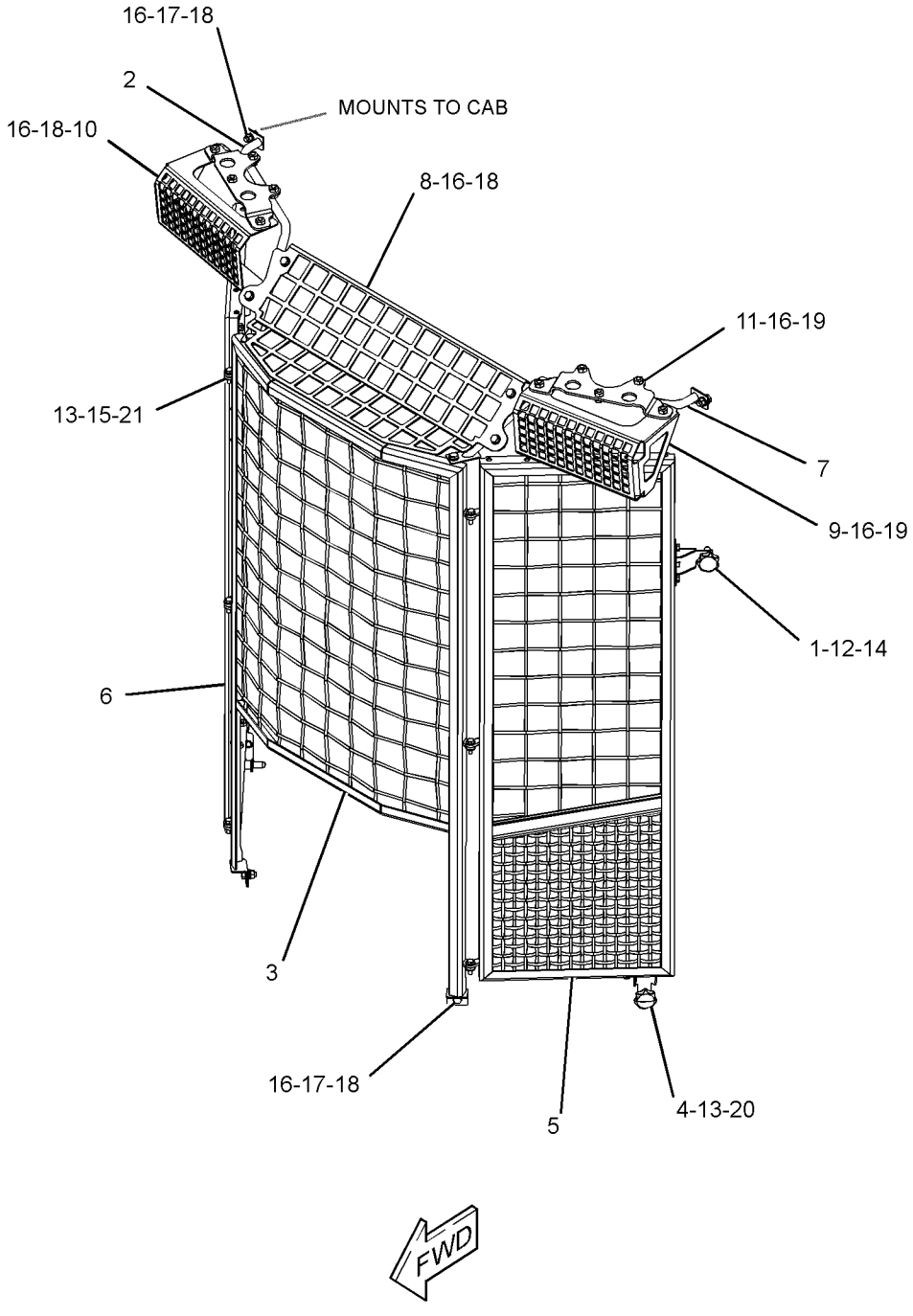

GRAPHIC #1 **<END>** g03346620

342-0270 HANDHOLD GP–DOOR

S/N: DYB1-UP
PART OF 384-7000 CAB AR-ENCLOSED ROPS
AN ATTACHMENT

SMCS-7256 **i05302460**

NOTE	REF NO	GRAPHIC REF	PART NUMBER	QTY	PART NAME 1 2 3 4 5 6 (PRODUCT LEVEL)	SEE PAGE
	1	1	**341-9742**	1	HANDHOLD	
M	2	1	**127-2170**	4	SCREW-TRUSS HEAD (M8X1.25X20-MM)	
	3	1	**7X-0579**	4	WASHER-HARD (8.8X25.5X2-MM THK)	

M - METRIC PART

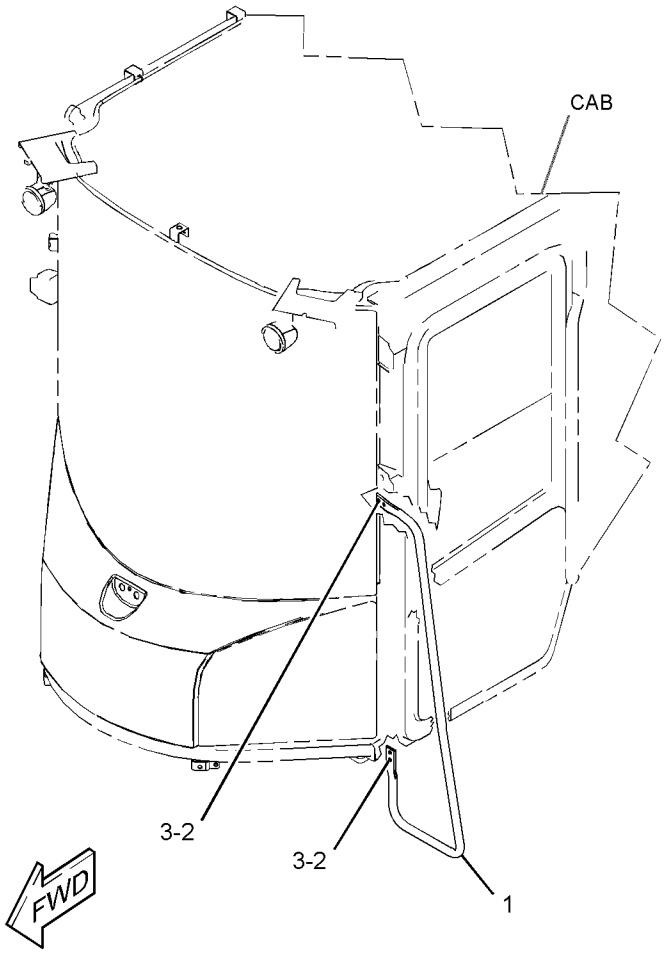

GRAPHIC #1 **<END>** g02786156

342-0190 HEATER & AIR CONDITIONER GP

S/N: DYB1-UP
PART OF 384-6980 AIR CONDITIONER AR
AN ATTACHMENT

SMCS-7304, 7309, 7320, 7337 **i05302577**

NOTE	REF NO	GRAPHIC REF	PART NUMBER	QTY	PART NAME 1 2 3 4 5 6 (PRODUCT LEVEL)	SEE PAGE
	1	1	**3S-2093**	2	STRAP-CABLE	
	2	1	**124-6257**	2	CLAMP-HOSE	
	3	1	**317-0020**	1	ELBOW	
	4	1	**342-0191**	1	GASKET	
Y	5	1	**399-7157**	1	AIR CONDITIONER GP	406
Y	6	1	*349-5842*	1	VALVE GP-WATER (HEATER CONTROL)	484
	7	1	**5P-4115**	2	WASHER-HARD (7.2X19X2-MM THK)	
	8	1	**5P-4116**	6	WASHER-HARD (8.8X20.5X2-MM THK)	
M	9	1	**8T-4138**	2	BOLT (M6X1X20-MM)	
M	10	1	**8T-4908**	6	BOLT (M8X1.25X25-MM)	
H	11	1	**267-8575**		TUBE (3.6-DM)	
H	11A	1	**267-8575**		TUBE (4.5-DM)	
	12	1	**323-3309**	2	CAP	

H - ORDER BY THE DECIMETER
M - METRIC PART
Y - SEPARATE ILLUSTRATION

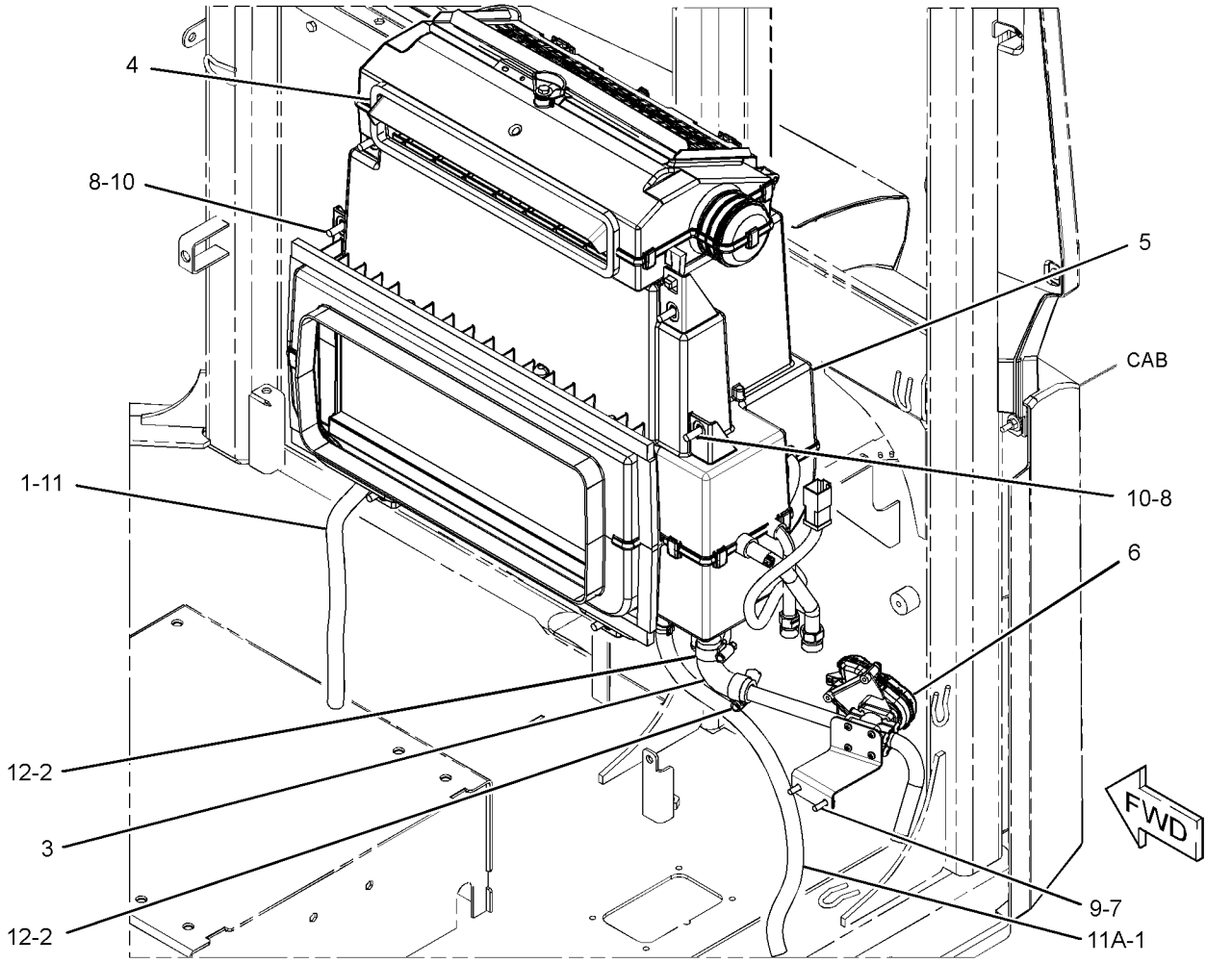

GRAPHIC #1 **<END>** g03376440

342-0130 INSTALLATION GP-RADIO

S/N: DYB1-UP

CANNOT BE USED WITH 333-1368–PAGE: 472, 333-1369–PAGE: 473, 378-0951–PAGE: 450 AN ATTACHMENT

SMCS-7338 **i05309905**

NOTE	REF NO	GRAPHIC REF	PART NUMBER	QTY	PART NAME 1 2 3 4 5 6 (PRODUCT LEVEL)	SEE PAGE
	1	1	**9U-8263**	1	COVER	
	2	1	**341-9807**	1	COVER	
	3	1	**341-9808**	1	COVER	

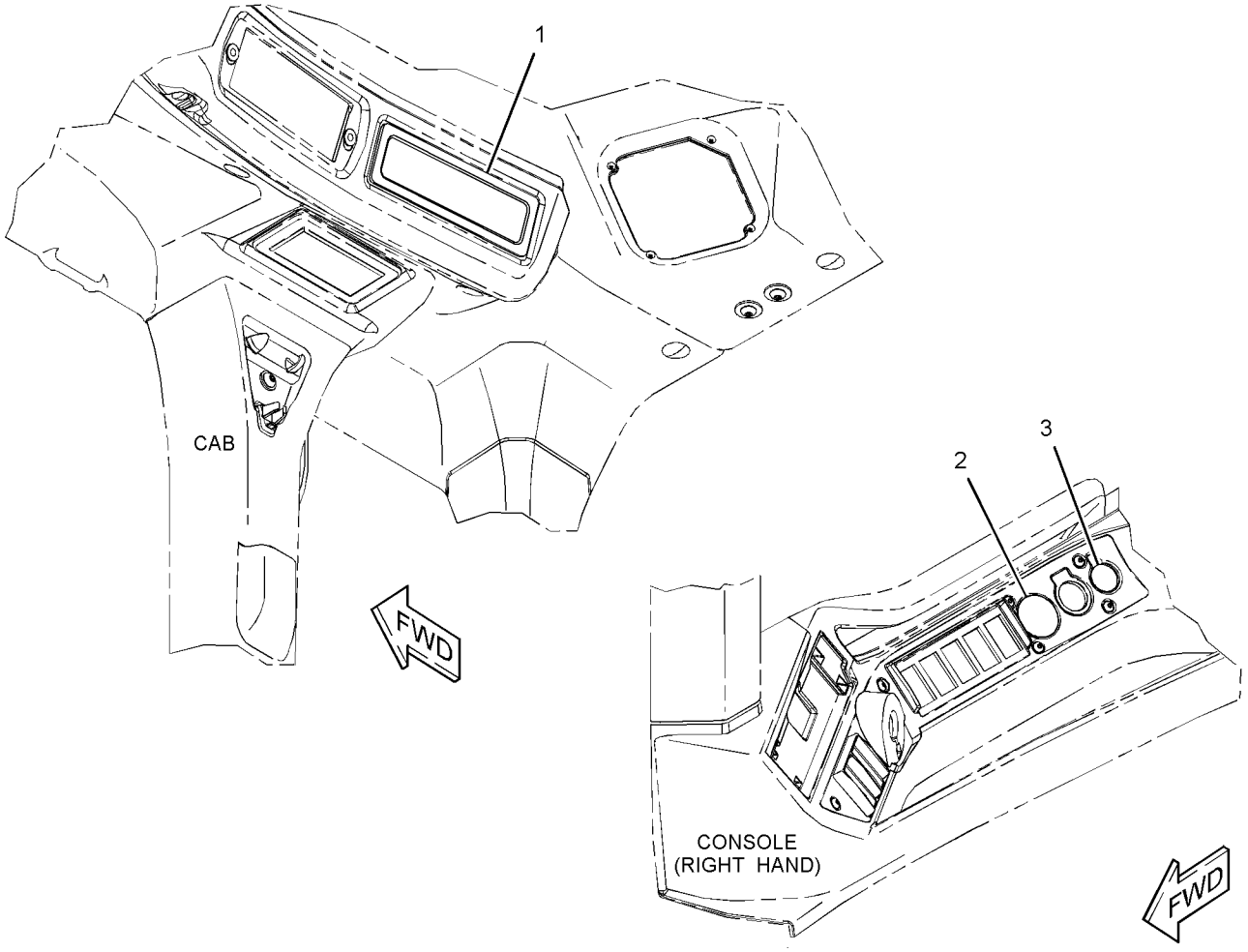

GRAPHIC #1 **<END>** g02748996

378-0951 INSTALLATION GP-RADIO

S/N: DYB1-UP

CANNOT BE USED WITH 342-0130—PAGE: 449, 333-1368—PAGE: 472, 333-1369—PAGE: 473 AN ATTACHMENT

SMCS-7338 **i05309757**

NOTE	REF NO	GRAPHIC REF	PART NUMBER	QTY	PART NAME 1 2 3 4 5 6 (PRODUCT LEVEL)	SEE PAGE
	1	1	**9U-8263**	1	COVER	
	2	1	**342-0137**	1	BRACKET	
	3	1	**391-4481**	1	HARNESS AS-RADIO (AUXILIARY)	
	4	1	**349-8642**	1	MICROPHONE	
	5	1	**353-1634**	1	HARNESS AS-RADIO (BLUETOOTH)	
	6	1	**354-7380**	1	HARNESS AS-RADIO (USB PORT)	
	7	1	**3S-2093**	9	STRAP-CABLE	

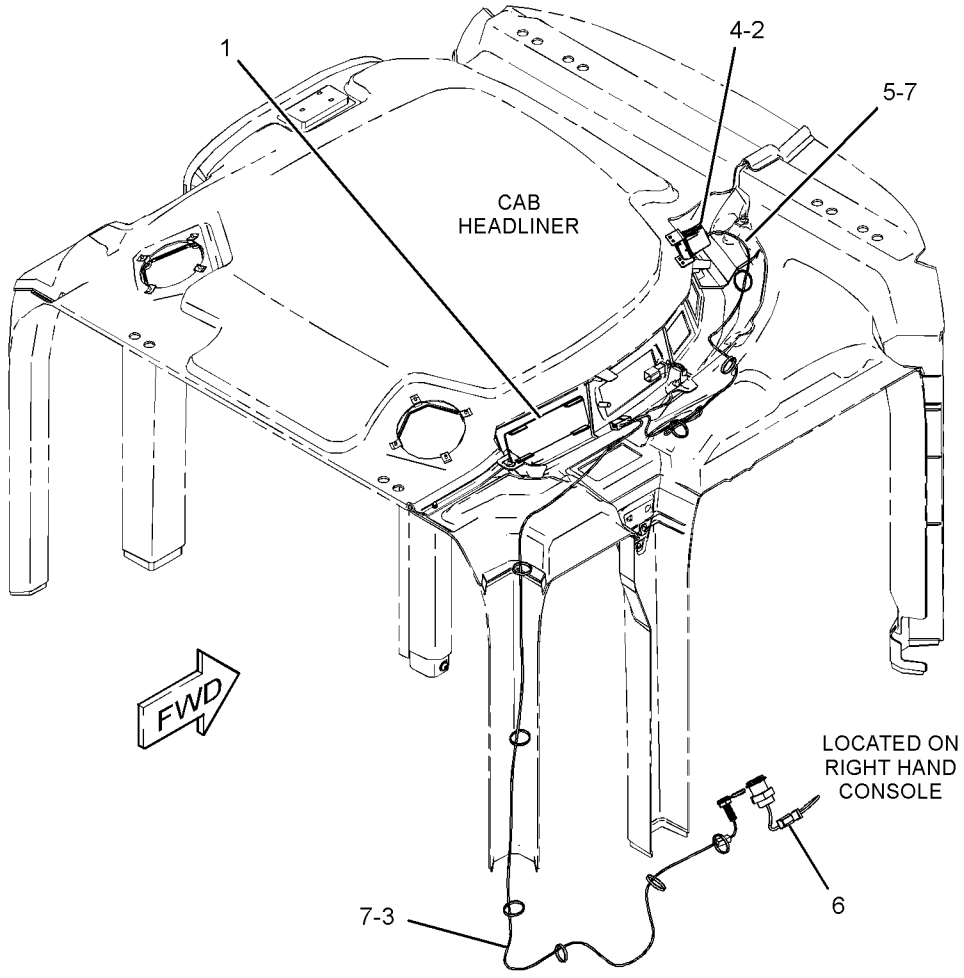

GRAPHIC #1 **<END>** g02755456

342-0160 LINER GP-CAB

S/N: DYB1-UP
PART OF 435-1242 LINER GP-CAB
AN ATTACHMENT

SMCS-7329 **i05302872**

NOTE	REF NO	GRAPHIC REF	PART NUMBER	QTY	PART NAME 1 2 3 4 5 6 (PRODUCT LEVEL)	SEE PAGE
	1	1	**6V-8928**	1	HOOK-COAT	
	2	1	**9U-2574**	2	FASTENER	
	3	1	**101-3055**	2	COVER-SPEAKER	
	4	1	**107-6032**	2	LAMP GP-DOME (24-VOLT) (CAB)	
					(EACH INCLUDES)	
		1	**259-1286**	1	LAMP (24-VOLT, 10-WATT)	
	5	1	**126-2373**	1	HANDLE AS-PULL	
	6	1	**174-5763**	8	CLIP	
	7	1	**184-5293**	1	PLUG	
	8	1	**197-8973**	4	FASTENER-PANEL	
	9	1	**342-0135**	1	CONSOLE AS	
	10	1	**342-0136**	1	BEZEL	
	11	1	**342-0161**	1	HEADLINER	
	12	1	**342-0162**	1	HEADLINER	
	13	1	**342-0164**	1	COVER AS-POST (RH)	
		1	**206-1667**	1	CLIP	
	14	1	**342-0165**	1	COVER-POST (LH)	
	15	1	**342-0167**	1	COVER-POST (RH)	
	16	1	**342-0168**	2	COVER AS-POST (LH)	
					(EACH INCLUDES)	
		1	**206-1667**	1	CLIP	
	17	1	**342-0169**	1	COVER-POST	
	18	1	**7X-0579**	8	WASHER-HARD (8.8X25.5X2-MM THK)	
	19	1	**172-8591**	7	NUT-SPRING (M6X1-THD)	
M	20	1	**3E-8020**	2	SCREW-TRUSS HEAD (M6X1X25-MM)	
M	21	1	**8T-8442**	2	BOLT-SOCKET HEAD (M6X1X30-MM)	
	22	1	**9K-5635**	8	SCREW-TAPPING (8-18X1-IN)	
	23	1	**9X-2038**	6	WASHER (7X19X2-MM THK)	
M	24	1	**9X-2045**	13	SCREW-TRUSS HEAD (M6X1X20-MM)	
E	25	1	**261-9634**		SEAL-BULK (328-CM)	
	26	1	**9R-4398**	1	BUMPER	
	27	1	**165-0311**	1	PLUG	

E - ORDER BY THE CENTIMETER
M - METRIC PART

342-0160 **LINER GP-CAB (*contd.*)** **i05302872**

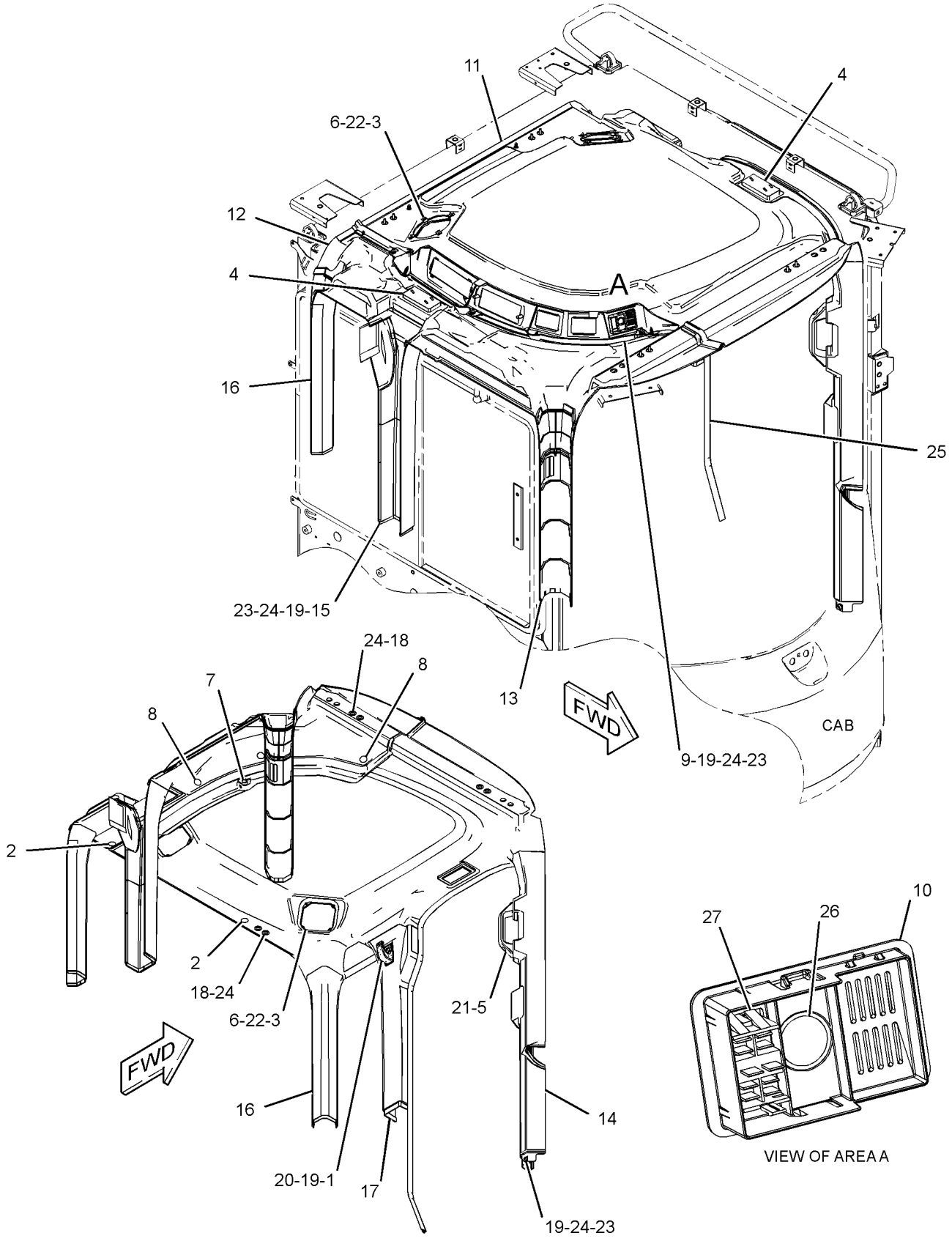

GRAPHIC #1 **<END>** g03381478

342-0170 LINER GP-CAB

S/N: DYB1-UP
PART OF 435-1243 MONITOR AR
AN ATTACHMENT

SMCS-7329 **i05328213**

NOTE	REF NO	GRAPHIC REF	PART NUMBER	QTY	PART NAME 1 2 3 4 5 6 (PRODUCT LEVEL)	SEE PAGE
	1	1	**6V-8928**	1	HOOK-COAT	
	2	1	**9U-2574**	2	FASTENER	
	3	1	**101-3055**	2	COVER-SPEAKER	
	4	1	**126-2373**	1	HANDLE AS-PULL	
	5	1	**174-5763**	8	CLIP	
	6	1	**197-8973**	4	FASTENER-PANEL	
	7	1	**250-2298**	1	LAMP AS (AMBER, LED, 24-VOLT)	
		1	**8T-8729**	2	PIN-CONNECTOR (16-GA TO 18-GA)	
	8	1	**342-0135**	1	CONSOLE AS	
	9	1	**342-0136**	1	BEZEL	
	10	1	**342-0161**	1	HEADLINER	
	11	1	**342-0162**	1	HEADLINER	
	12	1	**342-0165**	1	COVER-POST (LH)	
	13	1	**342-0166**	1	COVER AS-POST (RH)	
		1	**206-1667**	1	CLIP	
	14	1	**342-0167**	1	COVER-POST (RH)	
	15	1	**342-0168**	2	COVER AS-POST (LH)	
					(EACH INCLUDES)	
		1	**206-1667**	1	CLIP	
	16	1	**342-0169**	1	COVER-POST	
	17	1	**347-0794**	2	LAMP GP-DOME (24-VOLT)	
	18	1	**172-8591**	7	NUT-SPRING (M6X1-THD)	
	19	1	**102-8802**	1	KIT-RECEPTACLE (2-PIN)	
					(INCLUDES RECEPTACLE AS & WEDGE)	
M	21	1	**3E-8020**	2	SCREW-TRUSS HEAD (M6X1X25-MM)	
	22	1	**7X-0579**	8	WASHER-HARD (8.8X25.5X2-MM THK)	
M	23	1	**8T-8442**	2	BOLT-SOCKET HEAD (M6X1X30-MM)	
	24	1	**9K-5635**	8	SCREW-TAPPING (8-18X1-IN)	
	25	1	**9X-2038**	6	WASHER (7X19X2-MM THK)	
M	26	1	**9X-2045**	13	SCREW-TRUSS HEAD (M6X1X20-MM)	
E	27	1	**261-9634**		SEAL-BULK (328-CM)	

E - ORDER BY THE CENTIMETER
M - METRIC PART

342-0170 **LINER GP-CAB (*contd.*)** **i05328213**

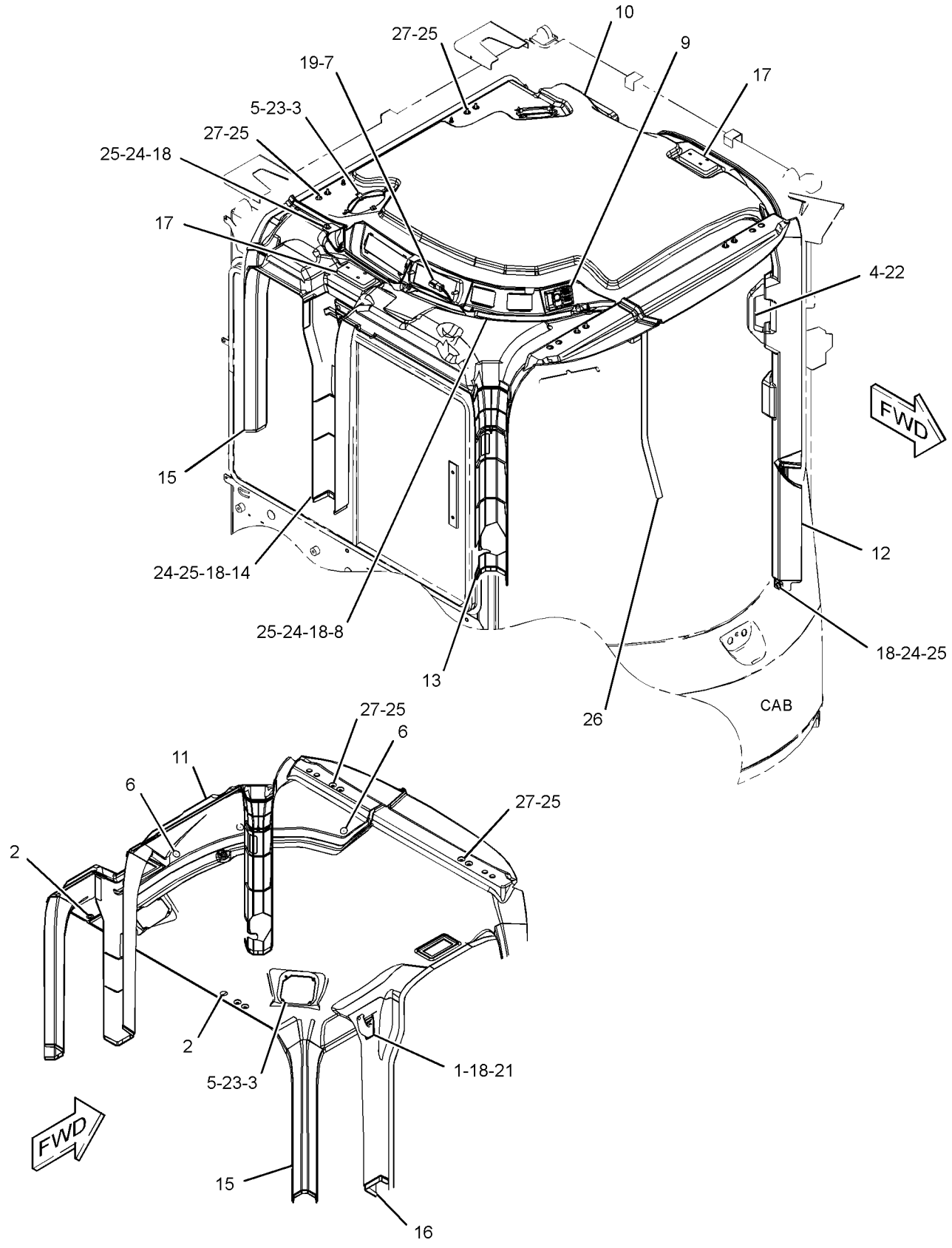

GRAPHIC #1 **<END>** g03381357

OPERATOR STATION

435-1242 LINER GP-CAB

S/N: DYB1-UP

AN ATTACHMENT

SMCS-7329 **i05295438**

NOTE	PART NUMBER	QTY	PART NAME 1 2 3 4 5 6 (PRODUCT LEVEL)	SEE PAGE
Y	*342-0160*	1	LINER GP-CAB (UPPER)	451

Y - SEPARATE ILLUSTRATION

<END>

333-6941 LINES GP-AIR CONDITIONER

S/N: DYB1-UP
PART OF 384-6980 AIR CONDITIONER AR
AN ATTACHMENT

SMCS-1808 **i05350421**

NOTE	REF NO	GRAPHIC REF	PART NUMBER	QTY	PART NAME 1 2 3 4 5 6 (PRODUCT LEVEL)	SEE PAGE
	1	1	**149-6371**	1	SWITCH AS-PRESSURE (AIR CONDITIONER)	
		1	**102-8802**	1	KIT-RECEPTACLE (2-PIN)	
					(INCLUDES RECEPTACLE AS & WEDGE)	
		1	**8T-8729**	2	PIN-CONNECTOR (16-GA TO 18-GA)	
	2	1	**201-4756**	1	GROMMET	
B	3	1	**204-2281**	4	STRAP-CABLE	
	4	1	**236-6923**	1	SWITCH AS-PRESSURE (REFRIGERANT)	
	5	1	**257-3226**	1	DRYER-REFRIGERANT (IN-LINE)	
		1	**189-1707**	1	ORIFICE AS-AIR CONDITIONER	
	6	1	**377-5120**	1	BRACKET AS	
	7	1	**308-2583**	1	ACCUMULATOR-REFRIGERANT	
	8	1	**327-0282**	1	SEAL-INTEGRAL	
	9	1	**327-0283**	3	SEAL-INTEGRAL	
	10	1	**364-1211**	1	HOSE AS	
	11	1	**390-0829**	1	HOSE AS	
	12	1	**381-7965**	1	HOSE AS	
I	13	1	**381-7966**	1	HOSE AS	
I	14	1	**364-1215**	1	HOSE AS	
	15	1	**381-7963**	1	TUBE AS	
	16	1	**364-3038**	2	CLIP	
	17	1	**381-9623**	1	PLATE AS	
M		1	**159-9541**	1	NUT-WELD (M10X1.5-THD)	
	18	1	**370-9494**	1	BRACKET AS	
	19	1	**067-3045**	2	CLIP	
	20	1	**109-1633**	2	CLIP (SLOT)	
	21	1	**109-1634**	2	CLIP (TAB)	
	22	1	**133-3260**	1	SPACER (11X19X10-MM THK)	
M	23	1	**178-3336**	4	NUT-HEX FLANGE (M8X1.25-THD)	
	25	1	**2P-4556**	2	CLIP	
	26	1	**5K-5338**	1	CLIP	
	27	1	**6D-3479**	2	CLIP	
	28	1	**1P-7009**	2	CLIP	
	29	1	**8M-2773**	3	CLIP	
	30	1	**8T-4121**	10	WASHER-HARD (11X21X2.5-MM THK)	
M	31	1	**8T-4133**	1	NUT (M10X1.5-THD)	
M	32	1	**8T-4136**	14	BOLT (M10X1.5X25-MM)	
	33	1	**4D-7733**	2	CLIP	
M	34	1	**8T-4195**	2	BOLT (M10X1.5X30-MM)	
	35	1	**9X-7378**	2	SEAL-O-RING	
	36	1	**9X-7380**	2	SEAL-O-RING	
	37	1	**9X-7381**	3	SEAL-O-RING	
	38	1	**9X-7382**	1	SEAL-O-RING	
	39	1	**9X-7383**	1	SEAL-O-RING	
	40	1	**336-8614**	1	CLIP	
	41	1	**7X-7729**	8	WASHER (11X25X3-MM THK)	
	43	1	**3S-2093**	1	STRAP-CABLE	
D	44	1	**6V-2495**		SEAL (0.3-M)	
B	45	1	**8T-4121**	1	WASHER-HARD (11X21X2.5-MM THK)	
BM	46	1	**8T-4137**	1	BOLT (M10X1.5X20-MM)	
M	47	1	**8T-4137**	1	BOLT (M10X1.5X20-MM)	

B - USE AS REQUIRED
D - ORDER BY THE METER
I - REFER TO HYDRAULIC INFORMATION SYSTEM
M - METRIC PART

333-6941 **LINES GP-AIR CONDITIONER (*contd.*)** **i05350421**

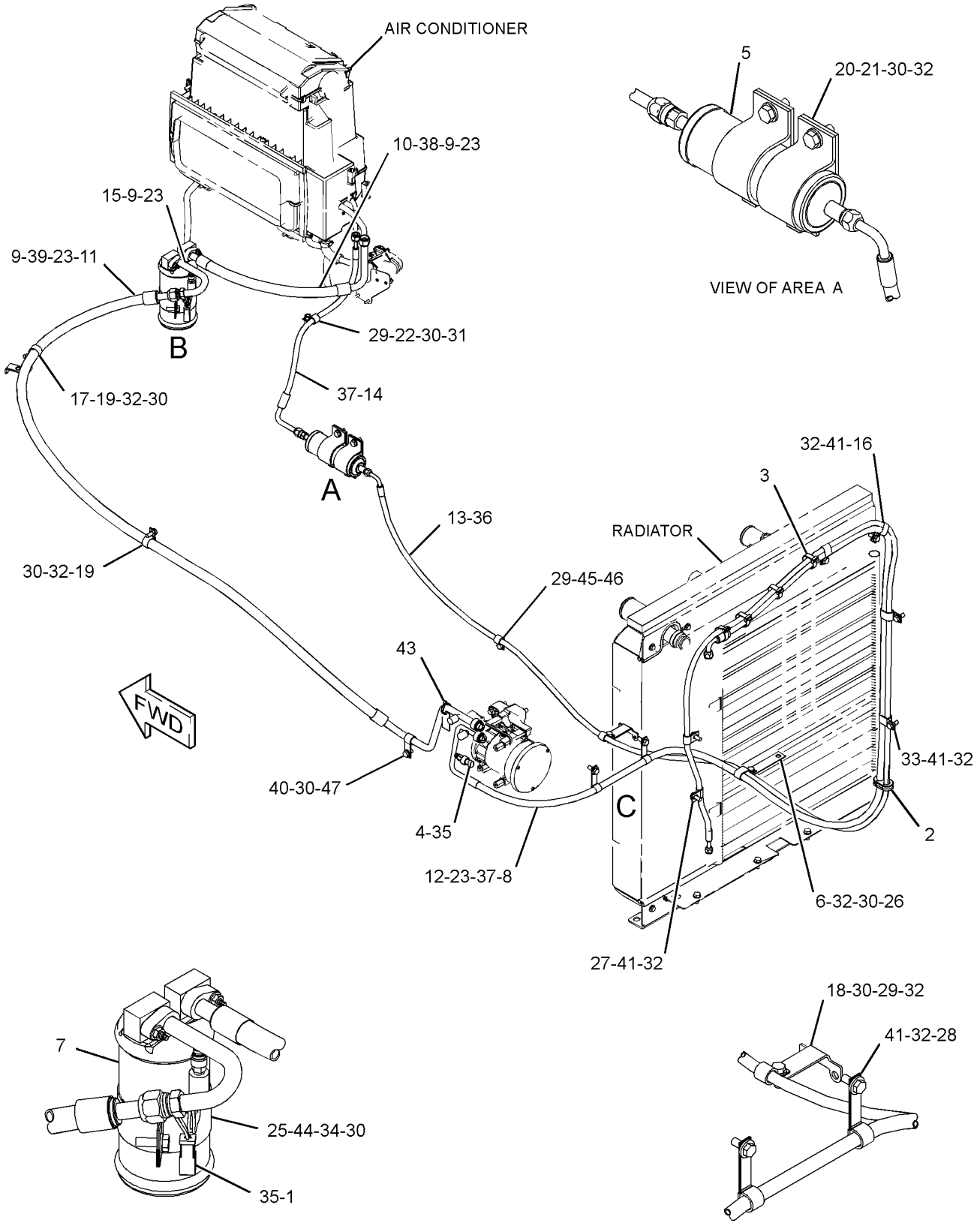

GRAPHIC #1 **<END>** g03379030

387-4019 LINES GP-HEATER

S/N: DYB1-UP
PART OF 384-6980 AIR CONDITIONER AR
AN ATTACHMENT

SMCS-1380, 1812, 7304 **i05302753**

NOTE	REF NO	GRAPHIC REF	PART NUMBER	QTY	PART NAME 1 2 3 4 5 6 (PRODUCT LEVEL)	SEE PAGE
	1	1	**7K-1181**	3	STRAP-CABLE	
	2	1	**039-2281**	2	SPACER (9X16X25-MM THK)	
	3	1	**293-9795**	2	BRACKET AS	
					(EACH INCLUDES)	
M		1	**8T-3490**	1	NUT-WELD (M10X1.5-THD)	
	4	1	**323-3308**	4	CAP	
	5	1	**394-1183**	1	BRACKET AS	
M		1	**159-9541**	1	NUT-WELD (M10X1.5-THD)	
M	6	1	**099-3649**	2	BOLT (M8X1.25X40-MM)	
	7	1	**124-6257**	4	CLAMP-HOSE	
	8	1	**6D-1641**	4	CLIP	
	9	1	**8T-4121**	6	WASHER-HARD (11X21X2.5-MM THK)	
M	10	1	**8T-4137**	5	BOLT (M10X1.5X20-MM)	
M	11	1	**8T-4195**	1	BOLT (M10X1.5X30-MM)	
	12	1	**8T-4224**	2	WASHER-HARD (8.8X16X2-MM THK)	
	13	1	**9X-8250**	1	CLIP	
E	14	1	**7I-1024**		GUARD-HOSE (20-CM)	
E	15	1	**5P-0767**		HOSE (278-CM)	
E	15A	1	**5P-0767**		HOSE (269-CM)	

E - ORDER BY THE CENTIMETER
M - METRIC PART

387-4019 **LINES GP-HEATER (*contd.*)** **i05302753**

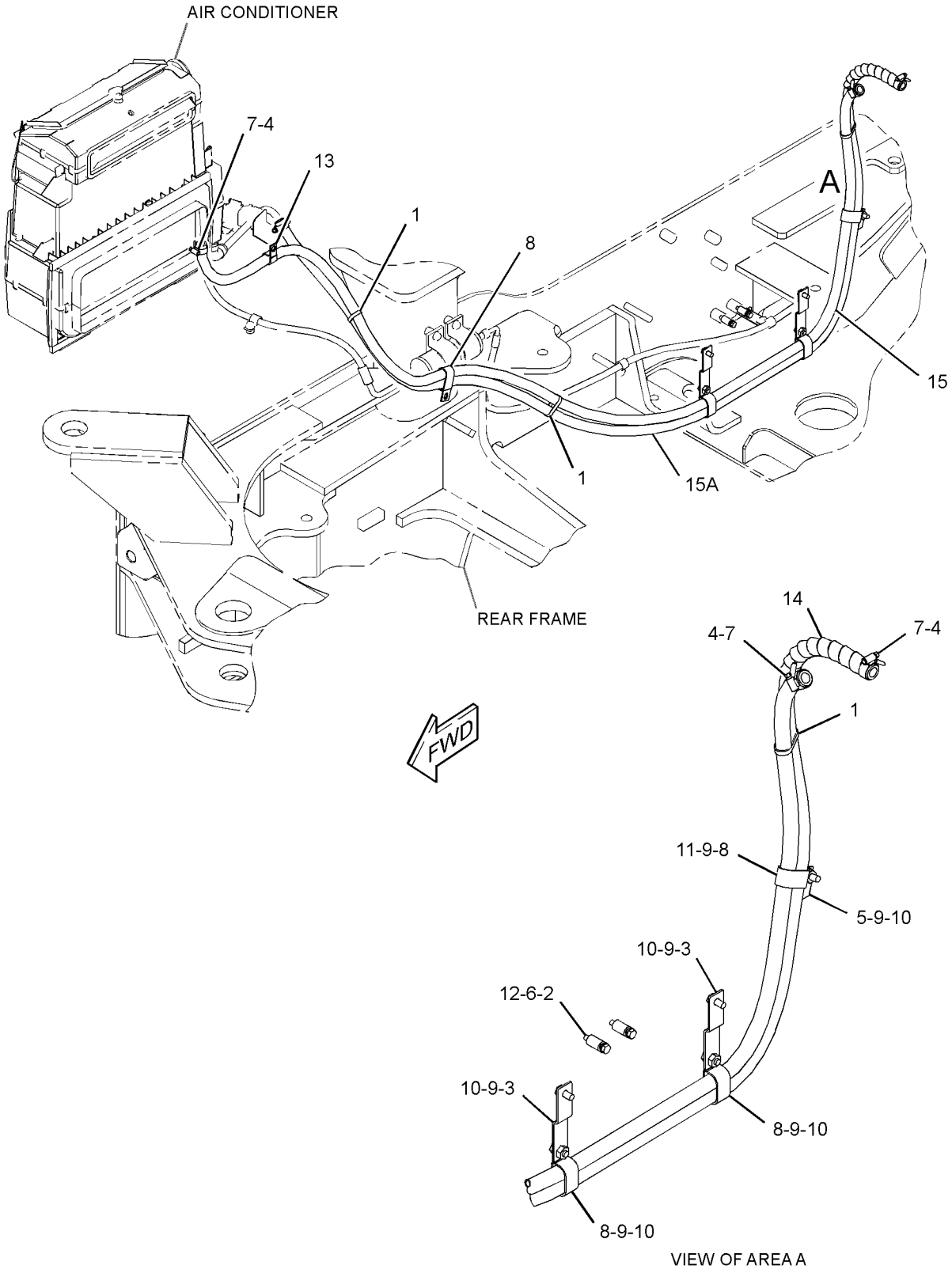

GRAPHIC #1 **<END>** g03371159

341-9890 MIRROR GP-REAR VIEW

S/N: DYB1-UP

PART OF 384-7000 CAB AR-ENCLOSED ROPS

AN ATTACHMENT

SMCS-7319 **i05302389**

NOTE	REF NO	GRAPHIC REF	PART NUMBER	QTY	PART NAME 1 2 3 4 5 6 (PRODUCT LEVEL)	SEE PAGE
	1	1	**235-4546**	2	NUT-JAM (3/8-16-THD)	
	2	1	**275-5588**	2	MIRROR AS	
					(EACH INCLUDES)	
		1	**3K-6060**	1	LOCKNUT (3/8-16-THD)	
	3	1	**341-9891**	2	BRACKET	
	4	1	**3K-6060**	2	LOCKNUT (3/8-16-THD)	
M	5	1	**9X-2045**	4	SCREW-TRUSS HEAD (M6X1X20-MM)	

M - METRIC PART

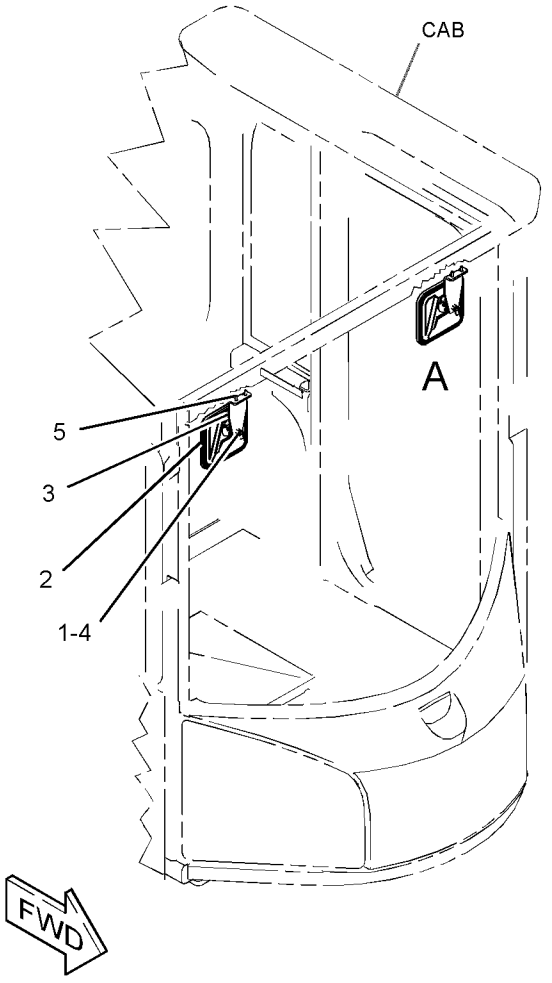

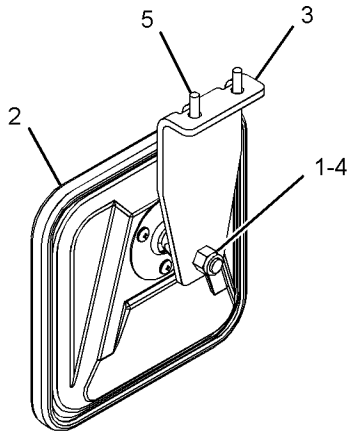

VIEW OF AREA A

GRAPHIC #1 **<END>** g02785607

384-6842 MIRROR GP-REAR VIEW—HEATED

S/N: DYB1-UP
PART OF 384-7000 CAB AR-ENCLOSED ROPS
AN ATTACHMENT

SMCS-7319 **i05302495**

NOTE	REF NO	GRAPHIC REF	PART NUMBER	QTY	PART NAME 1 2 3 4 5 6 (PRODUCT LEVEL)	SEE PAGE
	1	1	**165-0311**	1	PLUG	
	2	1	**334-9831**	2	MIRROR AS	
	3	1	**351-9085**	1	ARM AS (LH)	
	4	1	**351-9086**	1	ARM AS (RH)	
	5	1	**216-7352**	8	SCREW-TRUSS HEAD (M8X1.25X30-MM)	
	6	1	**9R-4398**	1	BUMPER	

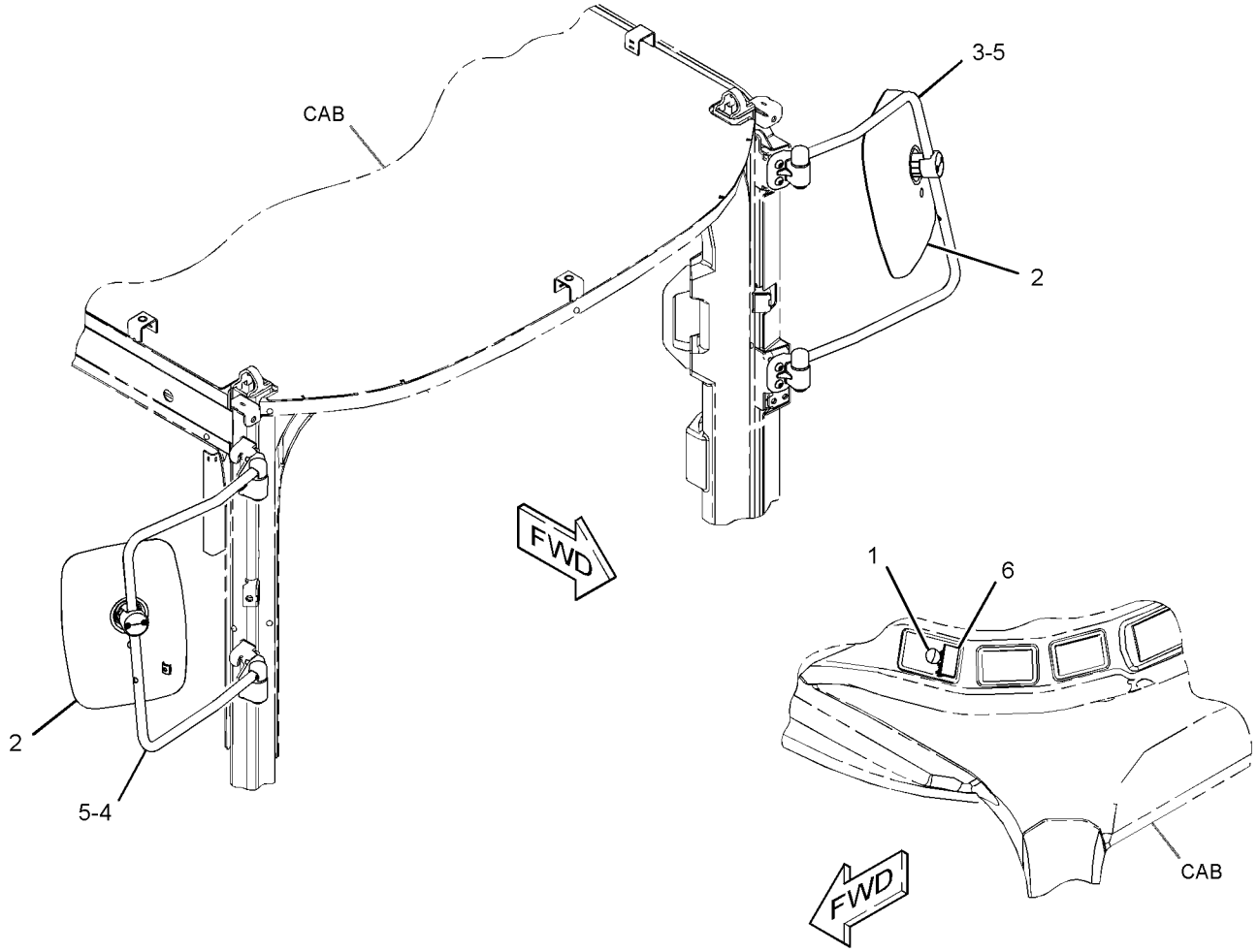

GRAPHIC #1 **<END>** g03370814

333-1367 MONITOR & MOUNTING GP

S/N: DYB1-UP
PART OF 435-1243 MONITOR AR
AN ATTACHMENT

SMCS-7490, 7494 **i05312251**

NOTE	REF NO	GRAPHIC REF	PART NUMBER	QTY	PART NAME 1 2 3 4 5 6 (PRODUCT LEVEL)	SEE PAGE
	1	1	**341-9869**	1	BRACKET AS	
Y	2	1	*360-1839*	1	ELECTRONICS GP-MONITOR	108
	3	1	**368-9117**	1	MONITOR GP-OPERATOR	
	4	1	**3S-2093**	2	STRAP-CABLE	
M	5	1	**9X-2042**	4	SCREW-TRUSS HEAD (M6X1X12-MM)	
M	6	1	**9X-2043**	2	SCREW-TRUSS HEAD (M6X1X14-MM)	

M - METRIC PART
Y - SEPARATE ILLUSTRATION

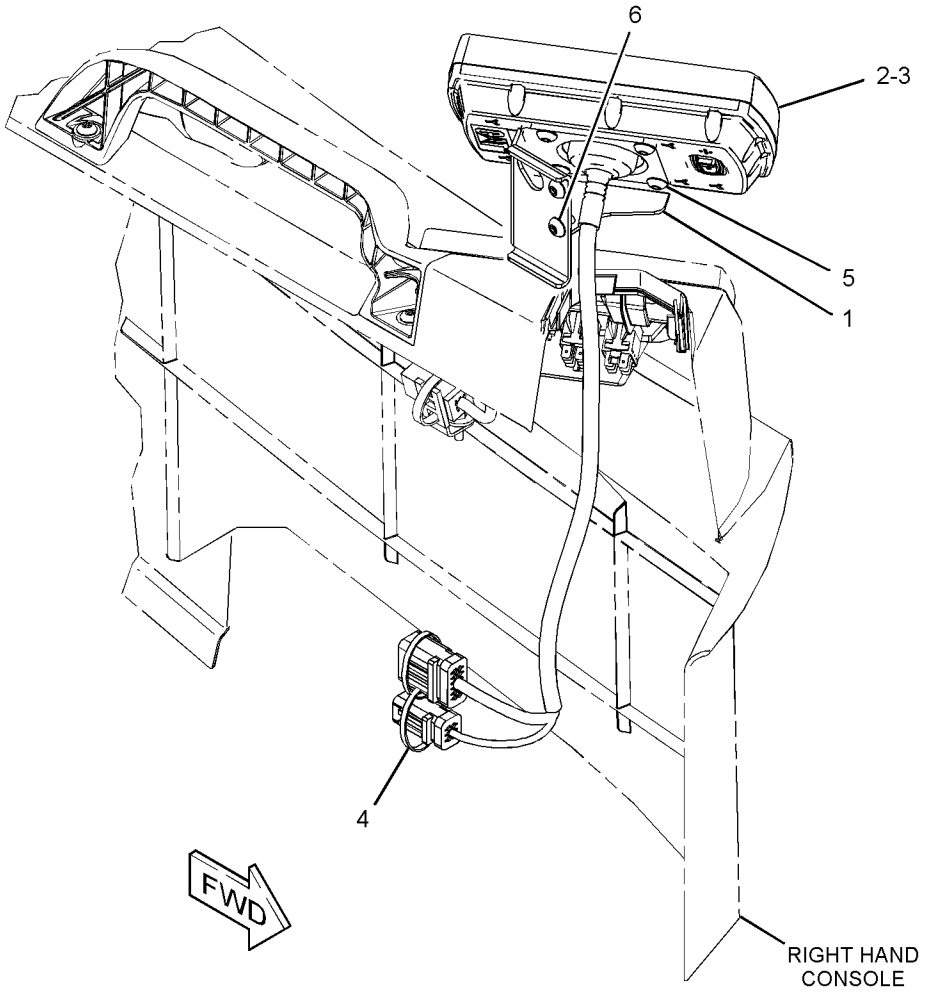

GRAPHIC #1 **<END>** g02959551

435-1243 MONITOR AR

S/N: DYB1-UP
CANNOT BE USED WITH SEMI-CAB
AN ATTACHMENT

SMCS-7490 **i05296443**

NOTE	PART NUMBER	QTY	PART NAME 1 2 3 4 5 6 (PRODUCT LEVEL)	SEE PAGE
Y	*342-0170*	1	LINER GP-CAB	453
Y	*333-1367*	1	MONITOR & MOUNTING GP	462

Y - SEPARATE ILLUSTRATION

<END>

360-9046 MOTOR GP-WINDOW WIPER–24-VOLT

S/N: DYB1-UP
FRONT
PART OF 384-6844 WIPER & WASHER GP-WINDOW
AN ATTACHMENT

SMCS-7305 **i05306454**

NOTE	REF NO	GRAPHIC REF	PART NUMBER	QTY	PART NAME 1 2 3 4 5 6 (PRODUCT LEVEL)	SEE PAGE
	1	1	**194-3710**	2	CAP-WIPER	
	2	1	**362-3508**	1	KIT-REPAIR (WINDOW WIPER ARM)	
					(INCLUDES NUTS, SEALS & WASHERS)	
	3	1	**381-3699**	1	MOTOR GP-WINDOW WIPER (24-VOLT) (CAB)	
		1	**8T-8729**	5	PIN-CONNECTOR (16-GA TO 18-GA)	
		1	**8T-8737**	1	PLUG-SEAL	
		1	**102-8805**	1	KIT-RECEPTACLE (6-PIN)	
					(INCLUDES RECEPTACLE AS & WEDGE)	

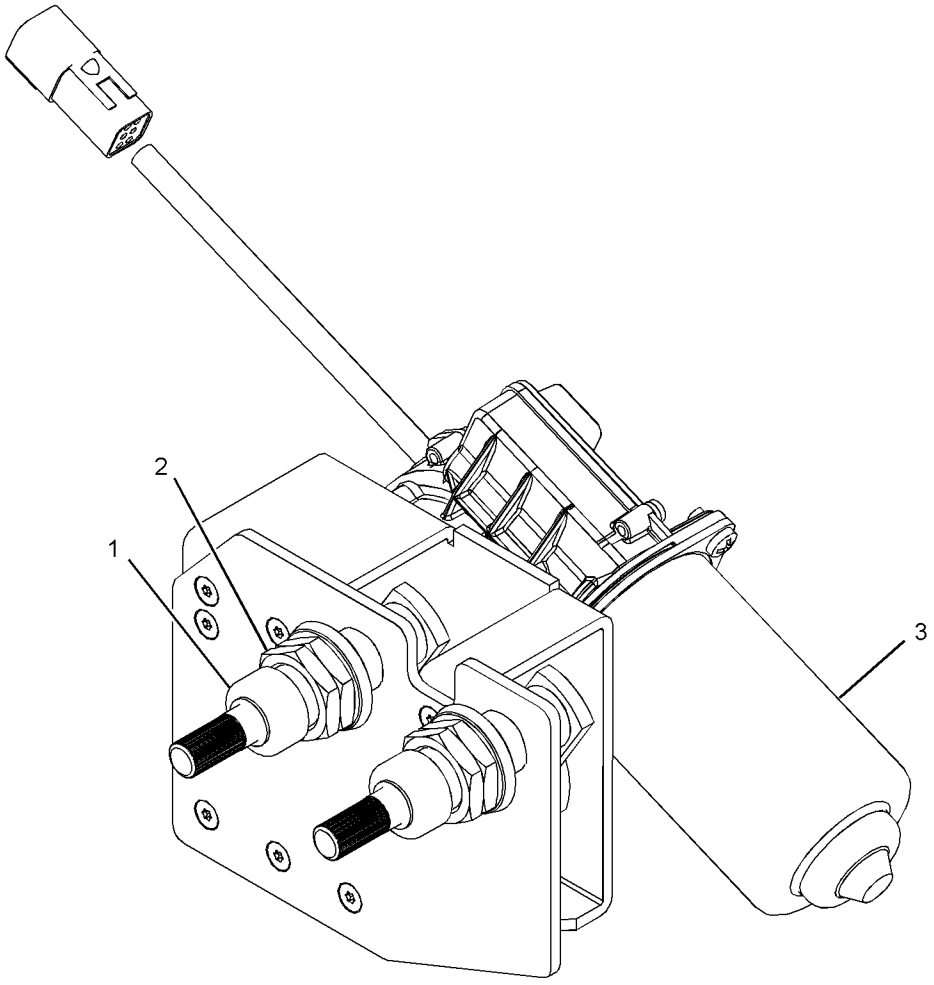

GRAPHIC #1 **<END>** g02792870

341-9720 MOUNTING GP-CAB

S/N: DYB1-UP
PART OF 384-7000 CAB AR-ENCLOSED ROPS
AN ATTACHMENT

SMCS-7301 **i05333156**

NOTE	REF NO	GRAPHIC REF	PART NUMBER	QTY	PART NAME 1 2 3 4 5 6 (PRODUCT LEVEL)	SEE PAGE
	1	1	**3E-4883**	4	SLEEVE	
	2	1	**3E-4885**	4	WASHER (26X114X10-MM THK)	
	3	1	**368-4473**	4	MOUNT AS	
M	4	1	**8C-3290**	4	BOLT (M24X3X150-MM)	
	5	1	**8T-4167**	4	WASHER-HARD (26X44X4-MM THK)	
	6	1	**3E-4907**	4	PAD-REBOUND	

M - METRIC PART

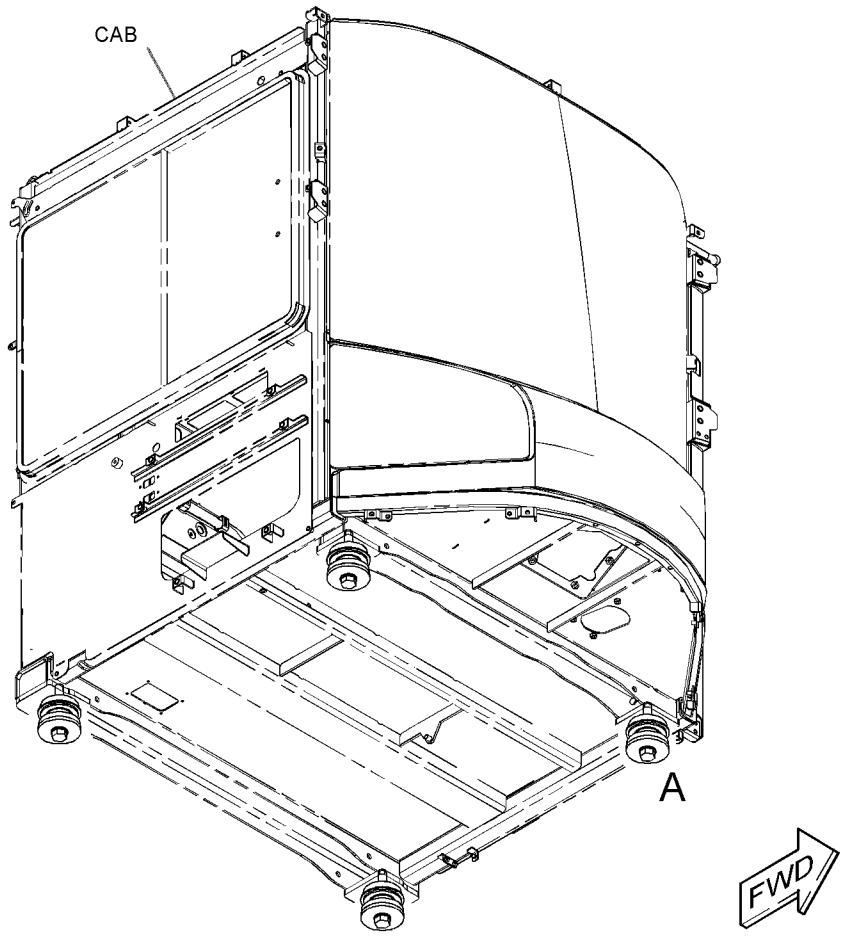

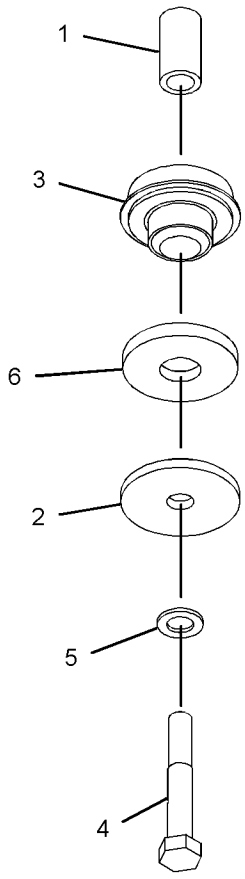

VIEW OF AREA A
(EXPLODED)

GRAPHIC #1 **<END>** g03382176

292-6402 PAN GP-BACKREST–LUMBAR

S/N: DYB1-UP
PART OF 342-0112 SEAT GP
AN ATTACHMENT

SMCS-7312 **i03095782**

NOTE	REF NO	GRAPHIC REF	PART NUMBER	QTY	PART NAME 1 2 3 4 5 6 (PRODUCT LEVEL)	SEE PAGE
	1	1	**5P-7957**	1	LANYARD	
	2	1	**136-1543**	1	PLATE AS-LUMBAR	
	3	1	**173-2052**	1	RETAINER	
	4	1	**178-7907**	1	HOLDER	
	5	1	**261-5694**	1	PAN AS-BACKREST	
	6	1	**322-3161**	1	SPRING	
	7	1	**4K-9429**	8	RIVET-POP	

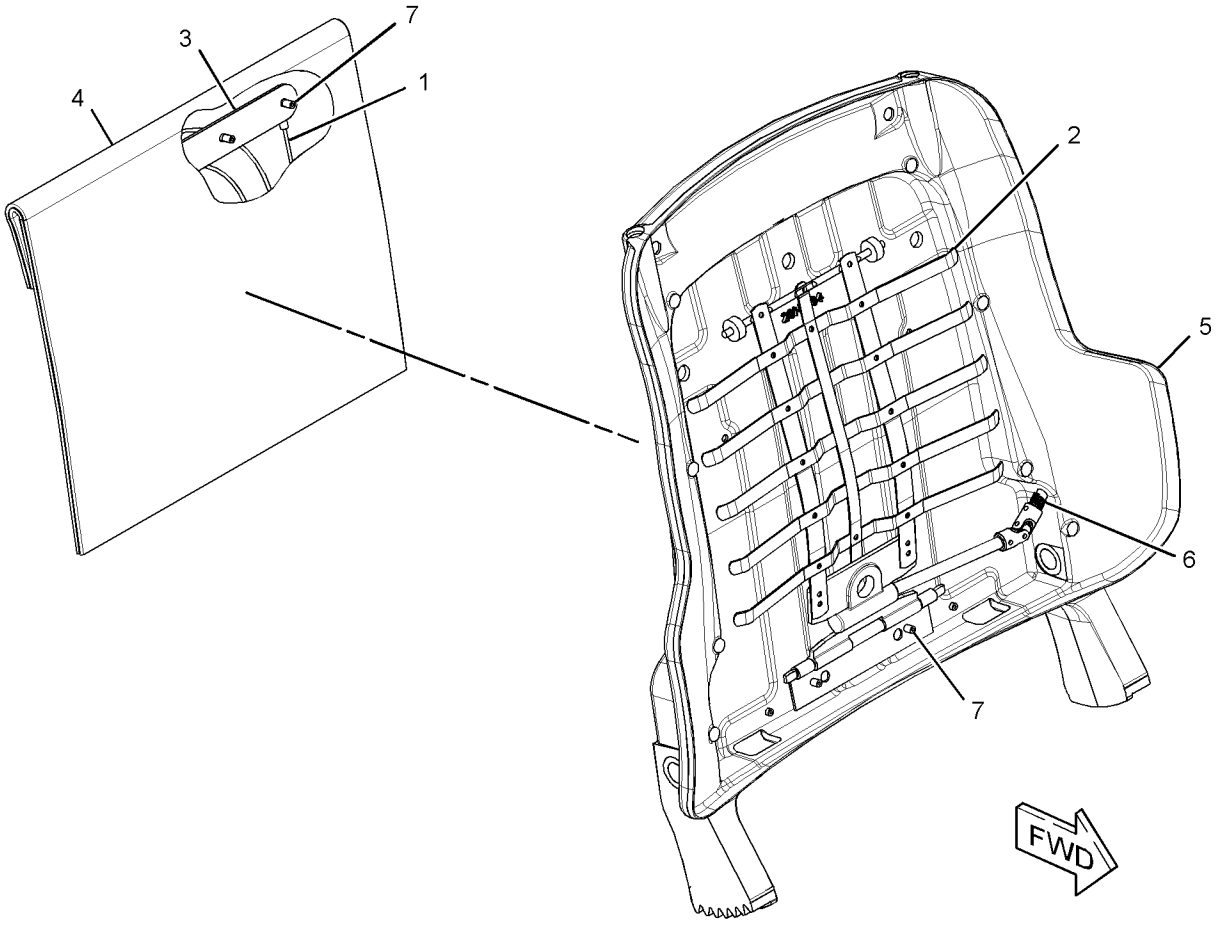

GRAPHIC #1 **<END>** g01577333

372-1895 PANEL GP-INSTRUMENT

S/N: DYB1-UP
PART OF 384-7000 CAB AR-ENCLOSED ROPS
AN ATTACHMENT

SMCS-7451 **i05302494**

NOTE	REF NO	GRAPHIC REF	PART NUMBER	QTY	PART NAME 1 2 3 4 5 6 (PRODUCT LEVEL)	SEE PAGE
	1	1	**7K-1181**	7	STRAP-CABLE	
	2	1	**339-9364**	1	SWITCH AS-MULTIFUNCTION (HD LIGHT, TURN SIG, WDO WIPER)	
		1	**8T-8729**	12	PIN-CONNECTOR (16-GA TO 18-GA)	
		1	**174-3091**	1	KIT-RECEPTACLE (12-PIN)	
					(INCLUDES RECEPTACLE AS & WEDGE)	
	3	1	**348-5738**	1	MODULE GP-WARNING INDICATOR	
	4	1	**372-1890**	1	HARNESS AS-ALARM	
D		1	**6V-2689**		TUBE-HEAT SHRINK (6.35-MM DIA) (0.2-M)	
		1	**097-7234**	1	TERMINAL-BLADE (18-GA TO 22-GA)	
		1	**5P-4571**	1	TERMINAL-BLADE (14-GA TO 16-GA)	
					—OR—	
		1	**7N-7221**	1	TERMINAL-BLADE (18-GA TO 22-GA)	
Y	5	1	**372-1891**	1	HARNESS AS-STEERING	121
	6	1	**372-1896**	1	BRACKET	
	7	1	**390-0315**	1	HORN	
	8	1	**172-8591**	2	NUT-SPRING (M6X1-THD)	
	9	1	**3S-2093**	2	STRAP-CABLE	
	10	1	**4P-7581**	1	CLIP	
	11	1	**4P-8134**	1	CLIP	
	12	1	**6K-0806**	1	STRAP-CABLE	
M	13	1	**7I-2273**	2	BOLT (M5X0.8X16-MM)	
	14	1	**8T-0328**	2	WASHER-HARD (5.5X10X1-MM THK)	
	15	1	**8T-4121**	1	WASHER-HARD (11X21X2.5-MM THK)	
M	16	1	**8T-4136**	1	BOLT (M10X1.5X25-MM)	
M	17	1	**9X-2044**	2	SCREW-TRUSS HEAD (M6X1X16-MM)	

D - ORDER BY THE METER
M - METRIC PART
Y - SEPARATE ILLUSTRATION

372-1895 **PANEL GP-INSTRUMENT (*contd.*)** **i05302494**

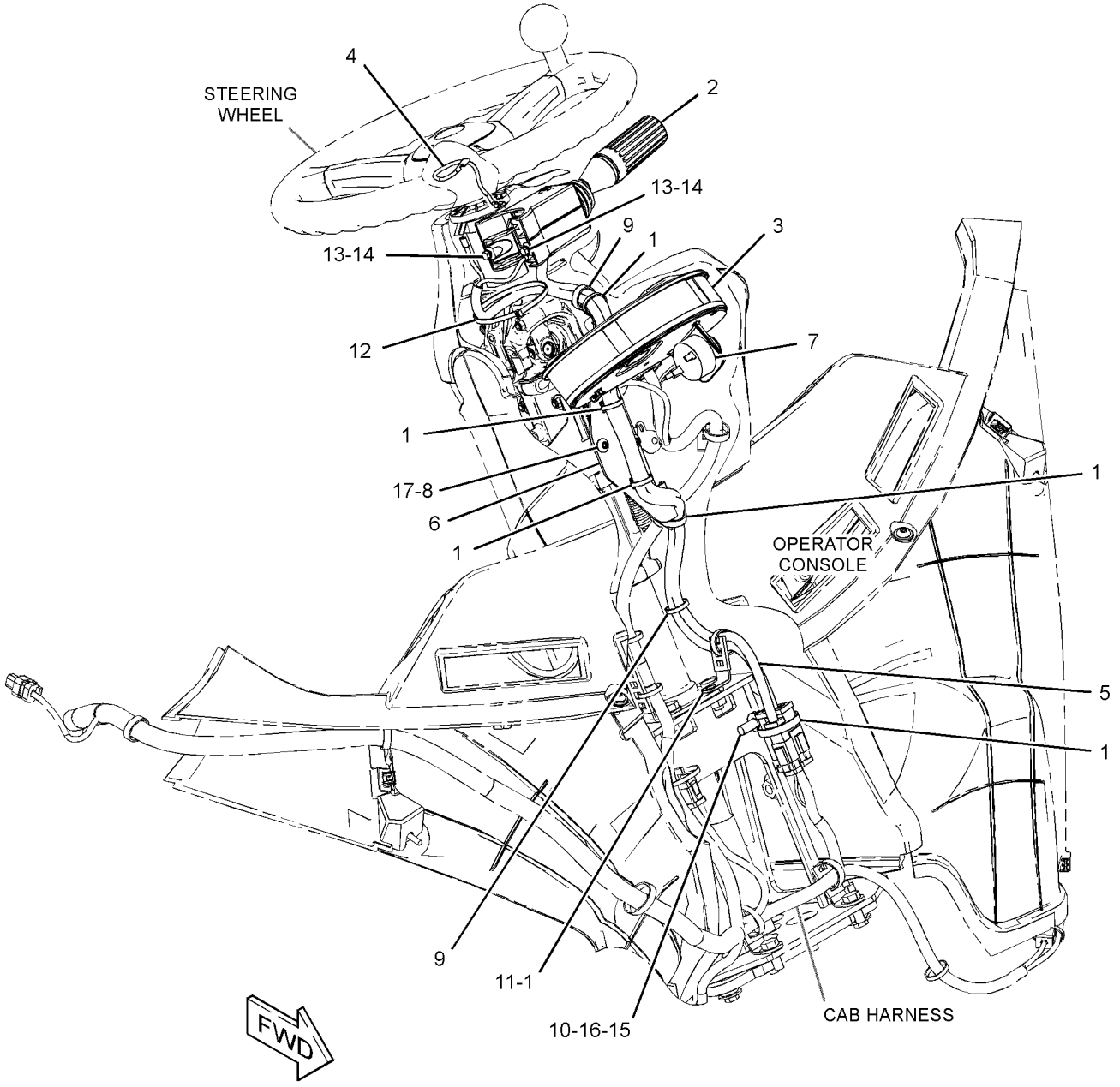

GRAPHIC #1 **<END>** g03375876

342-0157 PEDAL GP-BRAKE

S/N: DYB1-UP
PART OF 341-9880 CONTROL GP-SERVICE BRAKE
AN ATTACHMENT

SMCS-4269, 4290 **i05302365**

NOTE	REF NO	GRAPHIC REF	PART NUMBER	QTY	PART NAME 1 2 3 4 5 6 (PRODUCT LEVEL)	SEE PAGE
	1	1	**105-6117**	1	SWITCH AS-LIMIT (NORMALLY CLOSED)	
	2	1	**146-1892**	1	HARNESS AS-BRAKE (STOP LIGHT)	
		1	**8C-8514**	1	SCREW-MACHINE (8-32X0.375-IN)	
		1	**155-2270**	1	KIT-CONNECTING PLUG (2-PIN)	
					(INCLUDES PLUG AS, WEDGE & INTERFACE SEAL)	
		1	**8T-8730**	2	SOCKET-CONNECTOR (16-GA TO 18-GA)	
		1	**006-2884**	2	TERMINAL-BLADE (16-GA TO 20-GA)	
Y	3	1	**269-1981**	1	SENSOR GP-POSITION (BRAKE CONTROL)	150
	4	1	**345-2103**	1	VALVE GP-BRAKE CONTROL	
		1	**341-9848**	1	KIT-REPAIR	
					(INCLUDES BOOT, CUP, RING & O-RING SEALS)	
	5	1	**8T-4121**	2	WASHER-HARD (11X21X2.5-MM THK)	
M	6	1	**8T-4133**	2	NUT (M10X1.5-THD)	

M - METRIC PART
Y - SEPARATE ILLUSTRATION

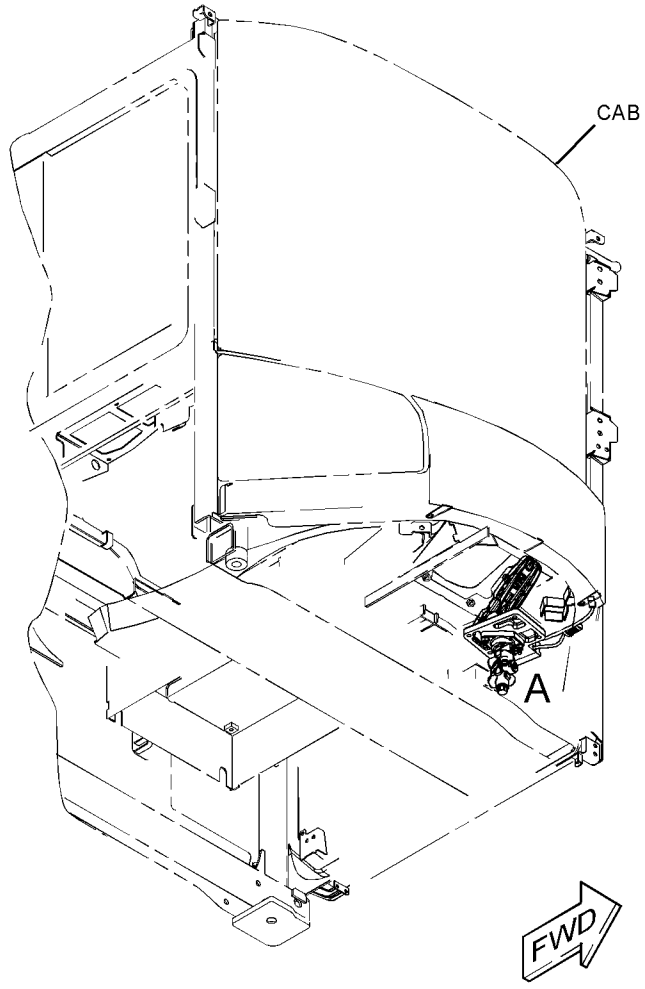

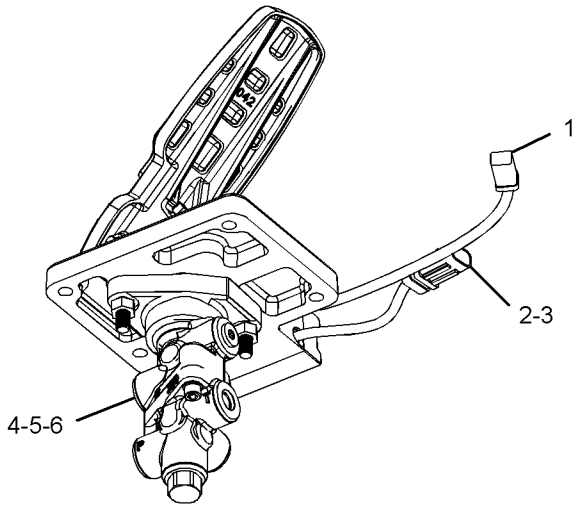

VIEW OF AREA A

GRAPHIC #1 **<END>** g02785917

341-9870 PEDAL GP-GOVERNOR

S/N: DYB1-UP

PART OF 384-7000 CAB AR-ENCLOSED ROPS

AN ATTACHMENT

SMCS-1276 **i05302363**

NOTE	REF NO	GRAPHIC REF	PART NUMBER	QTY	PART NAME 1 2 3 4 5 6 (PRODUCT LEVEL)	SEE PAGE
	1	1	**262-5778**	1	PEDAL GP-GOVERNOR	
		1	**269-1983**	1	SENSOR GP-POSITION (THROTTLE)	
		1	**292-9802**	1	COVER	
	2	1	**216-7352**	3	SCREW-TRUSS HEAD (M8X1.25X30-MM)	
	3	1	**352-0244**	3	WASHER-HARD (8.8X20.5X2-MM THK)	

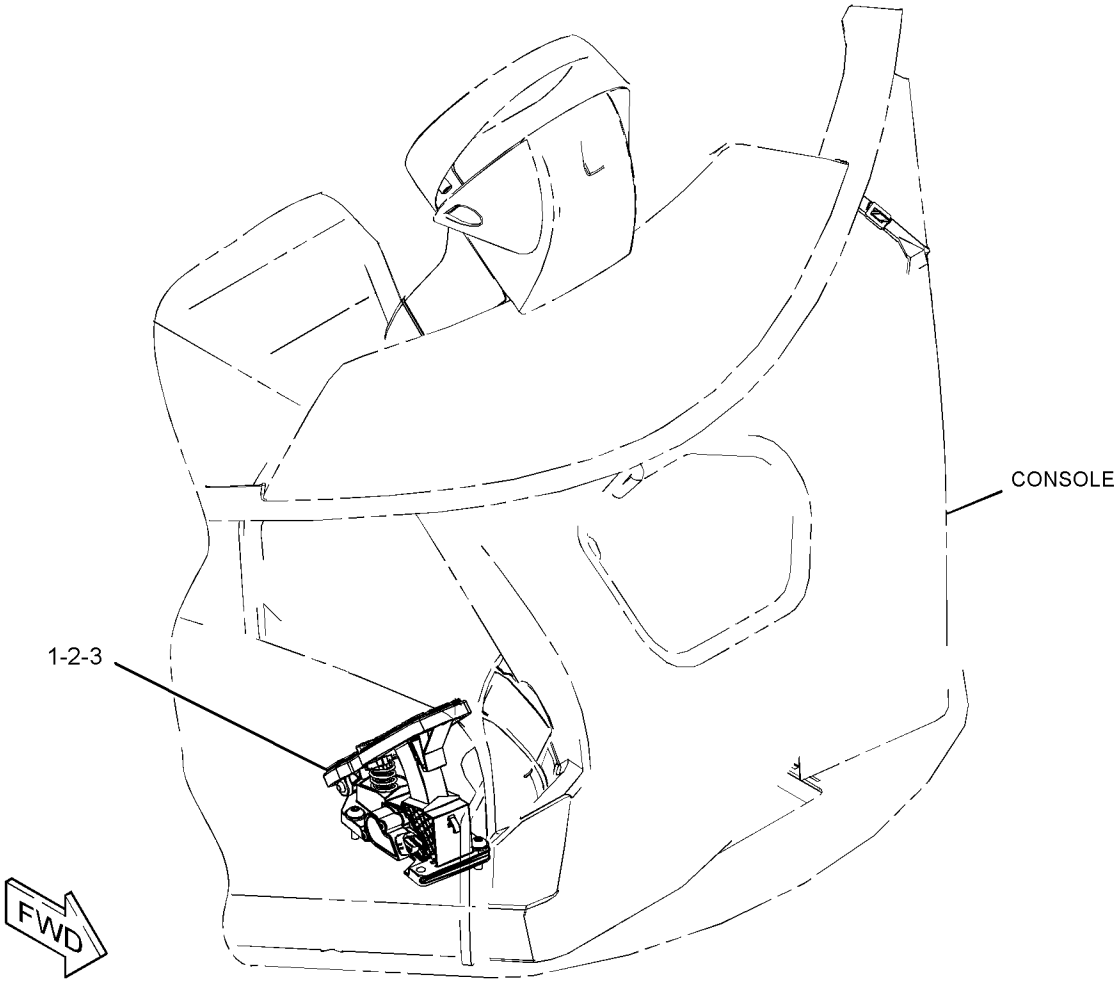

GRAPHIC #1

<END>

g02789724

331-5291 RADIO GP–AM/FM/WB/CD PLAYER

S/N: DYB1-UP
PART OF 333-1368 RADIO GP
AN ATTACHMENT

SMCS-7338 **i04543413**

NOTE	REF NO	GRAPHIC REF	PART NUMBER	QTY	PART NAME 1 2 3 4 5 6 (PRODUCT LEVEL)	SEE PAGE
					(NO SERVICED PARTS)	

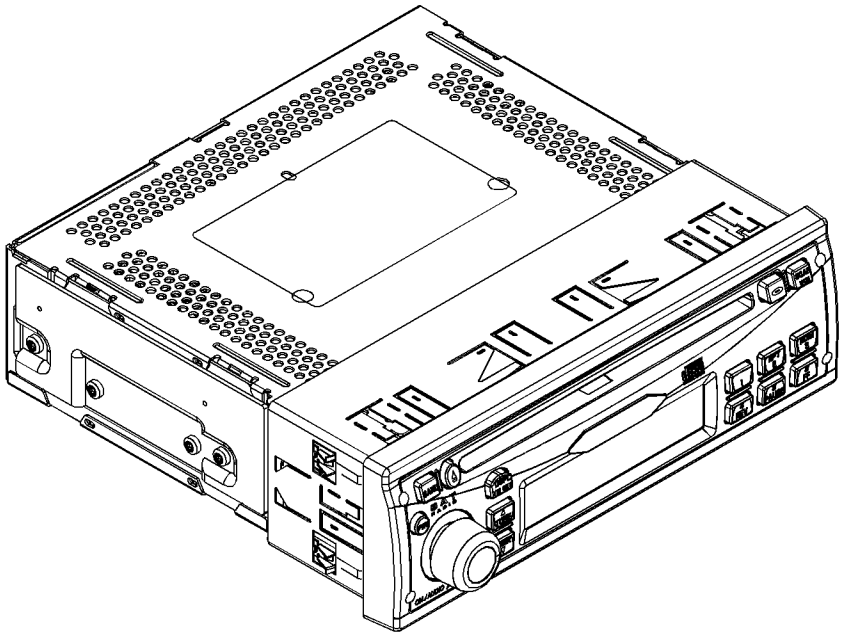

GRAPHIC #1 **<END>** g02581056

333-1368 RADIO GP–AM/FM RADIO, CD PLAYER

S/N: DYB1-UP

CANNOT BE USED WITH 333-1369–PAGE: 473, 342-0130–PAGE: 449, 378-0951–PAGE: 450 AN ATTACHMENT

SMCS-7338 **i05312300**

NOTE	REF NO	GRAPHIC REF	PART NUMBER	QTY	PART NAME 1 2 3 4 5 6 (PRODUCT LEVEL)	SEE PAGE
	1	1	**241-4939**	1	BUSHING	
Y	2	1	**331-5291**	1	RADIO GP (AM/FM/WB/CD PLAYER)	471
	3	1	**341-9807**	1	COVER	
	4	1	**341-9808**	1	COVER	

Y - SEPARATE ILLUSTRATION

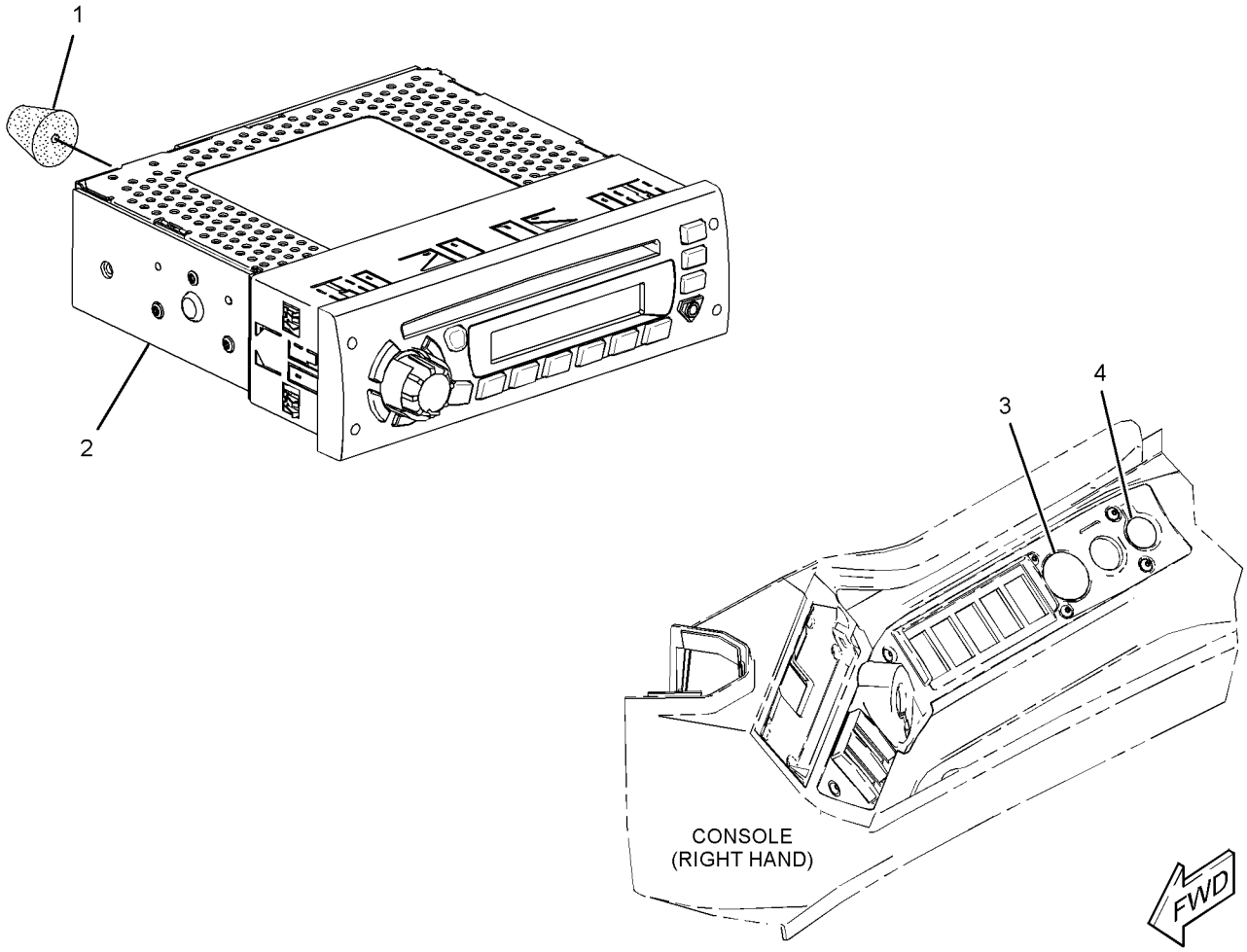

GRAPHIC #1 **<END>** g02748423

333-1369 RADIO GP–AM/FM/WB/SIRIUS/CD/BLUETOOTH/USB

S/N: DYB1-UP

AN ATTACHMENT

SMCS-7338 **i05345459**

NOTE	REF NO	GRAPHIC REF	PART NUMBER	QTY	PART NAME 1 2 3 4 5 6 (PRODUCT LEVEL)	SEE PAGE
	1	1	**241-4939**	1	BUSHING	
	2	1	**342-0137**	1	BRACKET	
	3	1	**391-4481**	1	HARNESS AS-RADIO (AUXILIARY)	
	4	1	**349-8642**	1	MICROPHONE	
	5	1	**353-1634**	1	HARNESS AS-RADIO (BLUETOOTH)	
	6	1	**354-7380**	1	HARNESS AS-RADIO (USB PORT)	
	7	1	**377-7215**	1	RADIO GP (AM/FM/WB/CD/XM/USB/BLUETOOTH)	
	8	1	**3S-2093**	9	STRAP-CABLE	

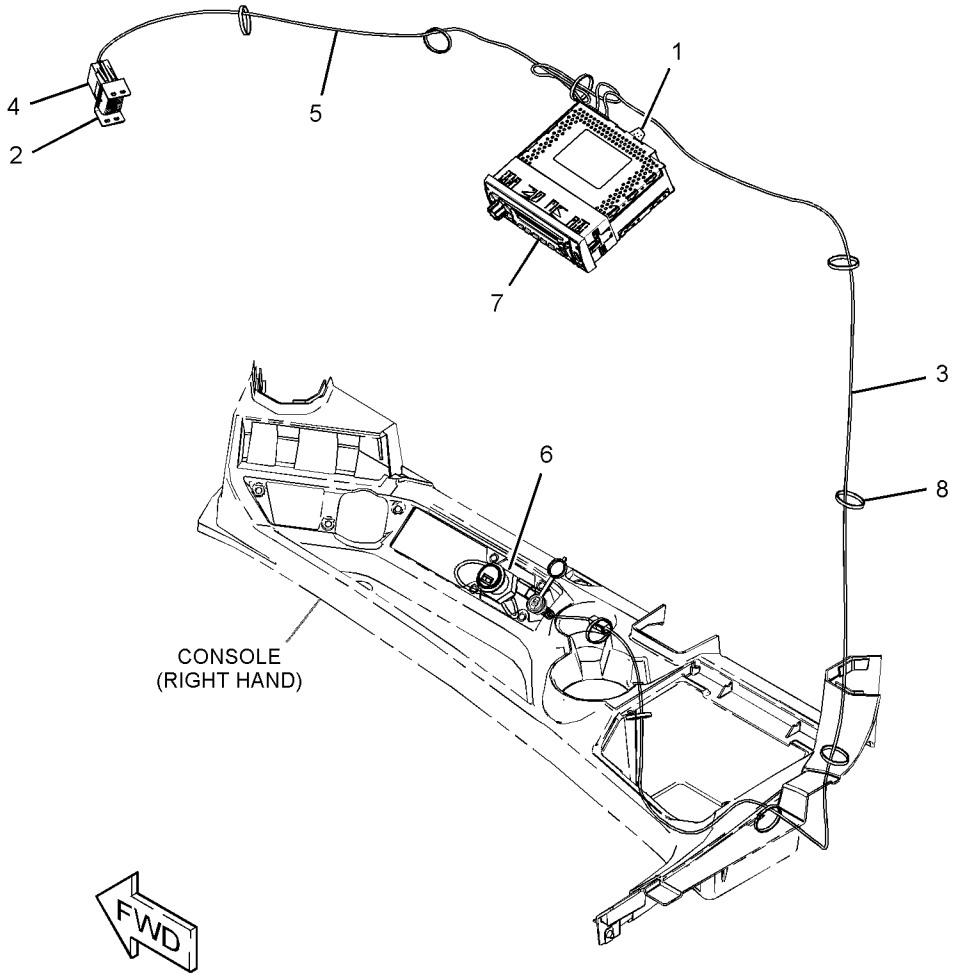

GRAPHIC #1 **<END>** g02748616

342-0143 SEAT & MOUNTING GP—CLOTH

S/N: DYB1-UP

CANNOT BE USED WITH 342-0145—PAGE: 475

AN ATTACHMENT

SMCS-7312 **i05322285**

NOTE	REF NO	GRAPHIC REF	PART NUMBER	QTY	PART NAME 1 2 3 4 5 6 (PRODUCT LEVEL)	SEE PAGE
	1	1	**241-6149**	1	SEAT BELT GP (RETRACTABLE, 76-MM)	
Y	2	1	**424-5251**	1	SEAT GP-SUSPENSION	480
	3	1	**433-2151**	1	SPACER (12.2X22.1X29-MM THK)	
	4	1	**439-4789**	1	SPACER (1.4X19.1X49.5-MM THK)	
	5	1	**7X-0507**	2	WASHER-HARD (12X22.5X5-MM THK)	
	6	1	**8S-4725**	1	BOLT (7/16-20X2.75-IN)	
	7	1	**8S-4726**	1	BOLT (7/16-20X3-IN)	
	8	1	**8T-4121**	4	WASHER-HARD (11X21X2.5-MM THK)	
M	9	1	**9X-2125**	4	BOLT-LOCKING (M10X1.5X25-MM)	

M - METRIC PART
Y - SEPARATE ILLUSTRATION

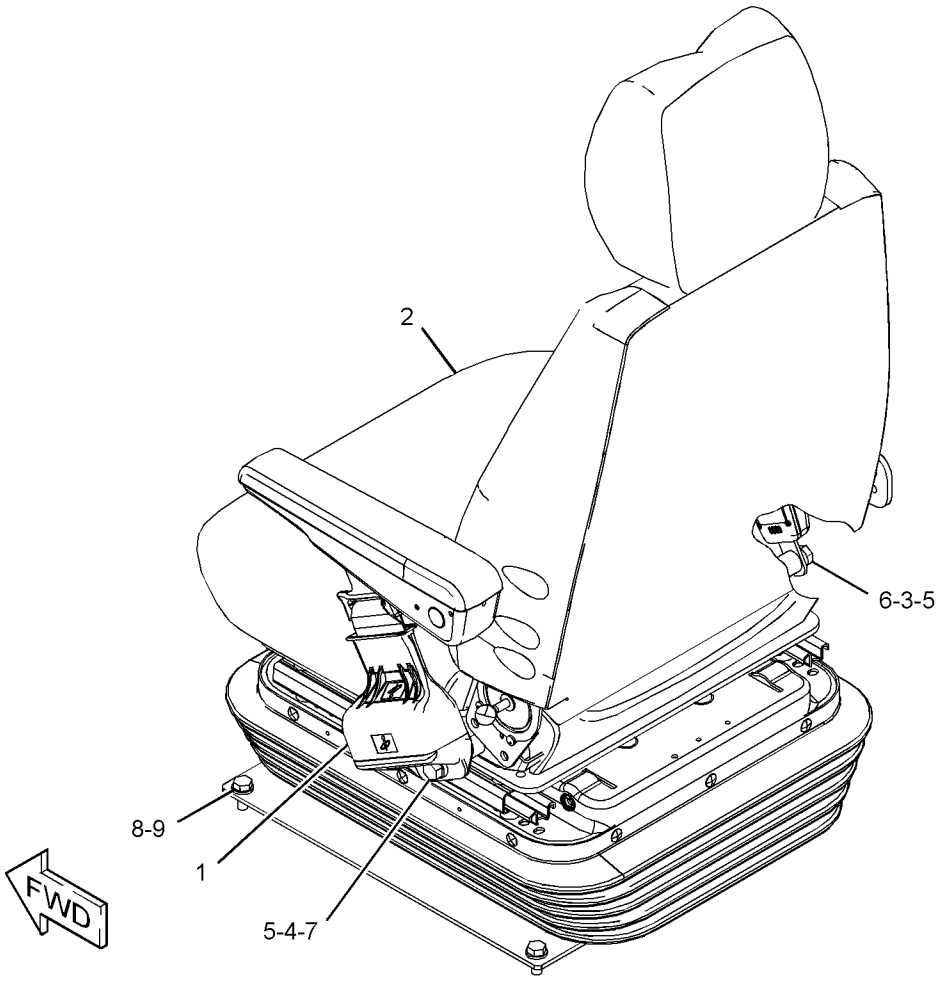

GRAPHIC #1 **<END>** g03375175

342-0145 SEAT & MOUNTING GP—DELUXE, CLOTH

S/N: DYB1-UP

CANNOT BE USED WITH 342-0143—PAGE: 474

AN ATTACHMENT

SMCS-7312 **i05322292**

NOTE	REF NO	GRAPHIC REF	PART NUMBER	QTY	PART NAME 1 2 3 4 5 6 (PRODUCT LEVEL)	SEE PAGE
	1	1	**177-4937**	1	SPACER (11.7X19.8X20.3-MM THK)	
Y	2	1	**222-0345**	1	SEAT BELT GP (RETRACTABLE, 3-IN)	476
Y	3	1	**342-0111**	1	SEAT GP-SUSPENSION (CLOTH)	479
	4	1	**0T-0244**	1	BOLT (7/16-20X1.25-IN)	
	5	1	**205-6388**	1	BOLT (7/16-20X1.75-IN)	
M	6	1	**8T-0722**	4	BOLT-LOCKING (M10X1.5X30-MM)	
	7	1	**8T-4121**	4	WASHER-HARD (11X21X2.5-MM THK)	

M - METRIC PART
Y - SEPARATE ILLUSTRATION

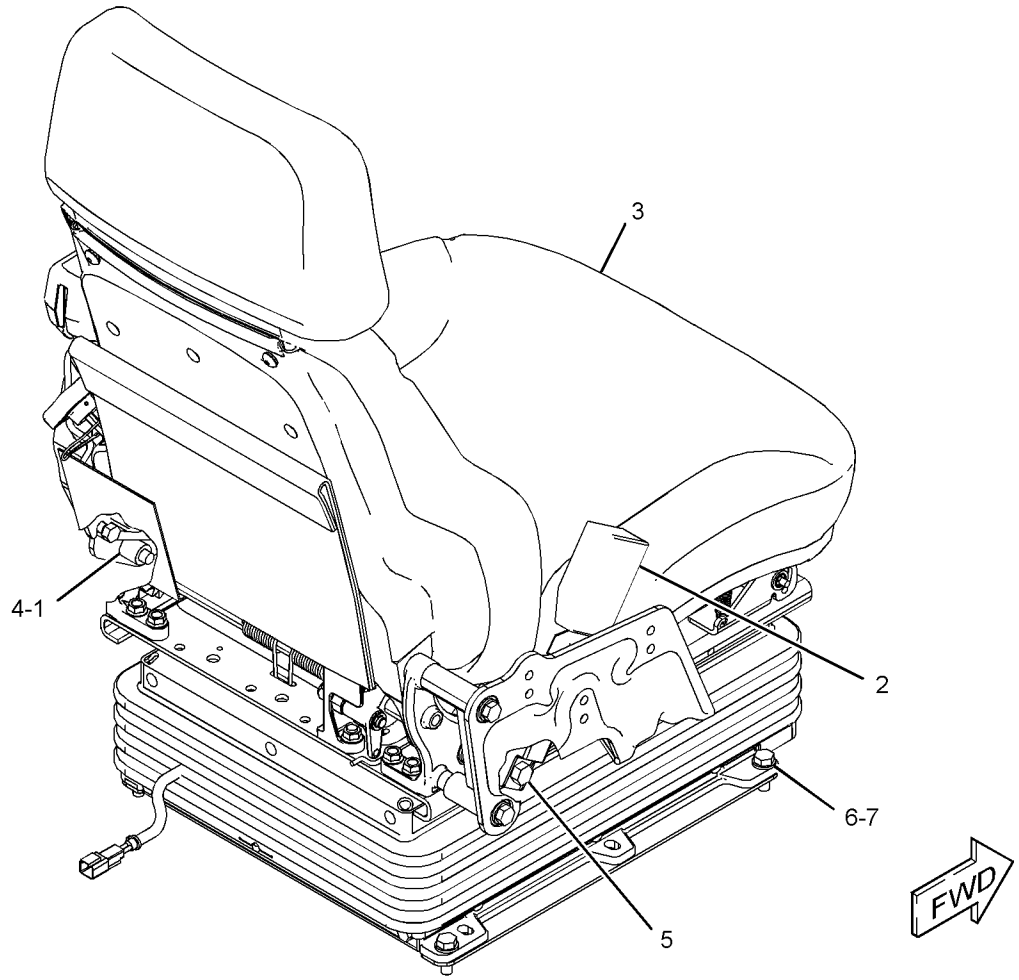

GRAPHIC #1 **<END>** g03375607

222-0345 SEAT BELT GP–RETRACTABLE, 3-IN

S/N: DYB1-UP

PART OF 342-0145 SEAT & MOUNTING GP

AN ATTACHMENT

SMCS-7327 **i02947636**

NOTE	REF NO	GRAPHIC REF	PART NUMBER	QTY	PART NAME 1 2 3 4 5 6 (PRODUCT LEVEL)	SEE PAGE
					(NO SERVICED PARTS)	

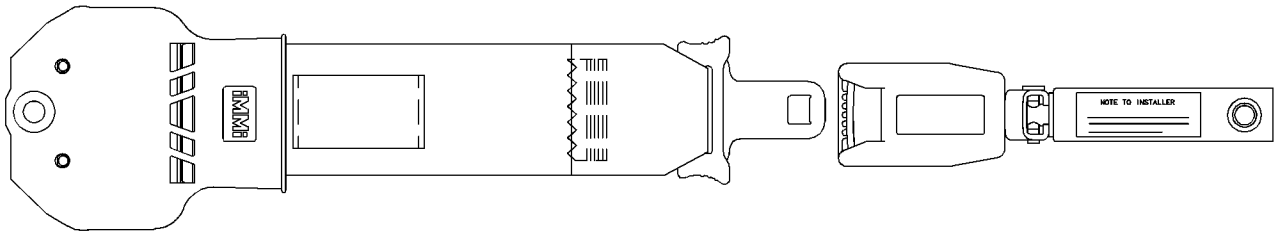

GRAPHIC #1 **<END>** g01196135

342-0112 SEAT GP–CLOTH

S/N: DYB1-UP
PART OF 342-0111 SEAT GP-SUSPENSION
AN ATTACHMENT

SMCS-7312 **i05330375**

NOTE	REF NO	GRAPHIC REF	PART NUMBER	QTY	PART NAME 1 2 3 4 5 6 (PRODUCT LEVEL)	SEE PAGE
	1	1	**4V-8256**	2	SPRING	
	2	1	**132-0338**	44	WASHER-PLASTIC (13X31.7X0.8-MM THK)	
	3	1	**143-1288**	9	LOCKNUT-FLANGE (3/8-16-THD)	
	4	1	**164-4883**	1	KNOB-LUMBAR	
	5	1	**171-1230**	8	SCREW-BUTTON HEAD (3/8-16X1-IN)	
	6	1	**177-1863**	1	BOLT-PIVOT (3/8-16X2.89-IN)	
	7	1	**218-2529**	3	PLUG	
	8	1	**229-1494**	1	EXTENSION GP-BACKREST (CLOTH)	
	9	1	**249-2844**	2	WASHER (12.7X31.7X1-MM THK)	
	10	1	**262-0767**	1	BRACKET AS (LH)	
	11	1	**262-0779**	1	LATCH (LH)	
	12	1	**262-0780**	1	LATCH (RH)	
	13	1	**262-0781**	1	ROD	
	14	1	**262-0785**	1	LEVER (RH)	
	15	1	**262-0786**	2	BOLT-SPECIAL	
	16	1	**262-0787**	1	ROD	
	17	1	**267-5159**	1	SPRING	
	18	1	**277-8103**	1	PLUG	
Y	19	1	**292-1301**	1	ARMREST GP (LH)	409
Y	20	1	**292-6402**	1	PAN GP-BACKREST (LUMBAR)	466
	21	1	**293-2915**	1	LEVER (LH)	
	22	1	**293-9379**	1	ROD	
	23	1	**293-9380**	1	ROD	
	24	1	**293-9665**	2	SPRING	
	25	1	**294-7139**	1	PAN GP-SEAT	
	26	1	**295-6472**	4	WASHER (7X19X2-MM THK)	
	27	1	**314-5162**	1	BRACKET AS (RH)	
	28	1	**319-4168**	6	SCREW-PAN HEAD (1/4-15X0.5-IN)	
	29	1	**9T-5241**	4	WASHER (9.53X18X1-MM THK)	
	30	1	**349-2602**	1	BRACKET AS	
	31	1	**355-3016**	1	PLATE AS	
	32	1	**355-3018**	1	SHAFT AS	
	33	1	**357-5168**	1	CUSHION AS (BACK, CLOTH)	
	34	1	**357-5156**	1	CUSHION AS (SEAT)	
	35	1	**369-9004**	1	CABLE AS	
M	36	1	**238-0251**	4	SCREW-BUTTON HEAD (M10X1.5X25-MM)	
	37	1	**271-7649**	2	BOLT (M10X1.5X95-MM)	
	38	1	**5P-0537**	2	WASHER-HARD (7.2X14.5X2-MM THK)	
	39	1	**5T-7486**	2	RETAINER-SPRING	
	40	1	**5V-1496**	2	RETAINER	
M	41	1	**6V-7744**	4	LOCKNUT (M10X1.5-THD)	
	42	1	**6V-8969**	2	SCREW-BUTTON HEAD (1/4-20X0.5-IN)	
	43	1	**7Y-0468**	2	PIN-SPRING	
	44	1	**8T-4121**	6	WASHER-HARD (11X21X2.5-MM THK)	
	45	1	**8T-7566**	1	PIN-SPRING	
	46	1	**9F-5975**	1	BOLT (5/16-18X0.75-IN)	

M - METRIC PART
Y - SEPARATE ILLUSTRATION

342-0112 **SEAT GP (*contd.*)** **i05330375**

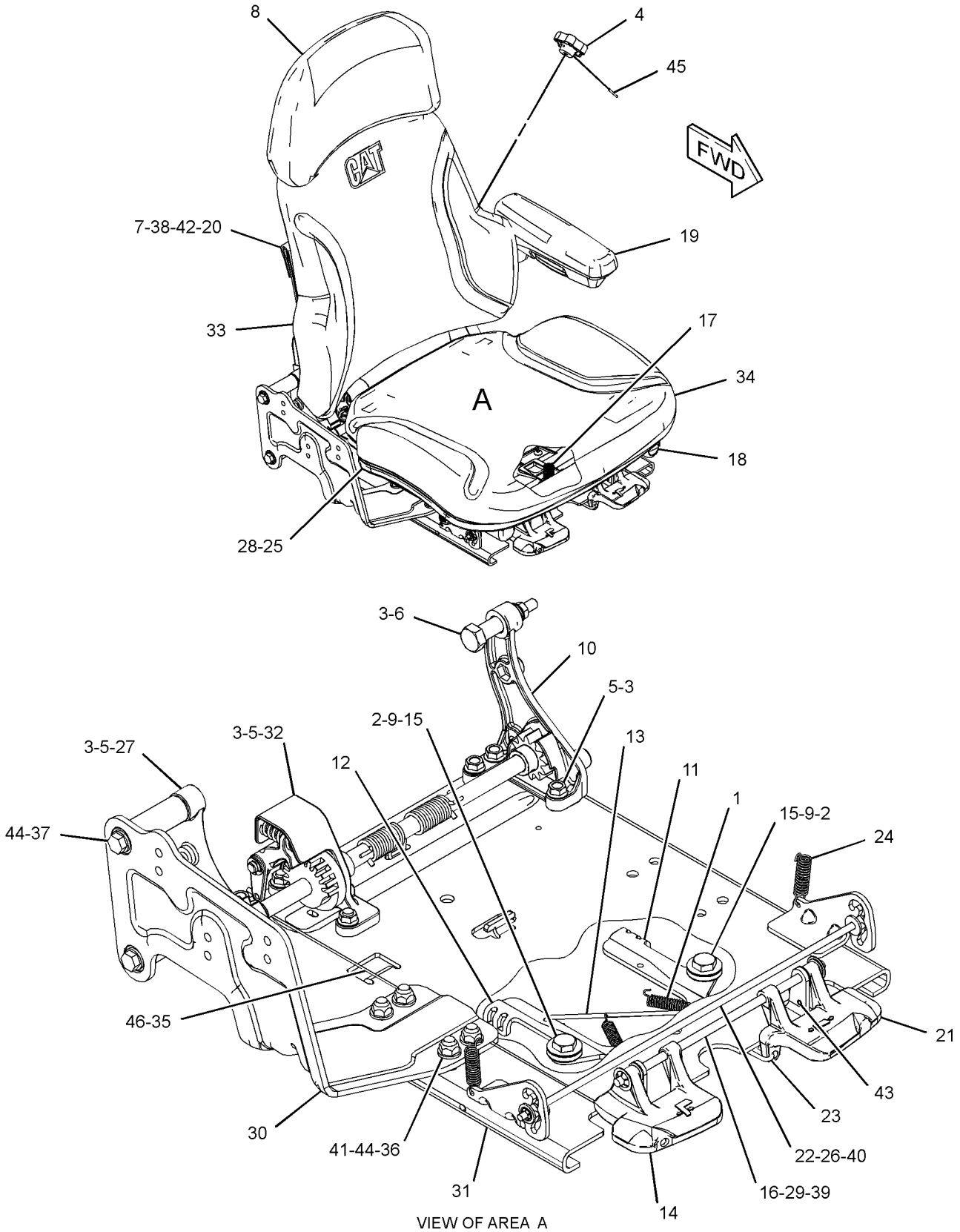

VIEW OF AREA A
(PARTS REMOVED FOR CLARITY)

GRAPHIC #1

<END>

g03280437

342-0111 SEAT GP-SUSPENSION—CLOTH

S/N: DYB1-UP
PART OF 342-0145 SEAT & MOUNTING GP
AN ATTACHMENT

SMCS-7324, 7336 **i05322489**

NOTE	REF NO	GRAPHIC REF	PART NUMBER	QTY	PART NAME 1 2 3 4 5 6 (PRODUCT LEVEL)	SEE PAGE
J	1	1	**149-4745**	2	KIT-SLIDER BLOCK (SUSPENSION SEAT)	
					(ALSO EACH INCLUDES SLIDER BLOCKS)	
	2	1	**161-9289**	2	BLOCK-SLIDER	
	3	1	**173-5787**	2	SETSCREW (1/4-20-THD)	
	4	1	**203-7703**	2	WASHER-HARD (10.2X22.22X2.38-MM THK)	
Y	5	1	**342-0112**	1	SEAT GP (CLOTH)	477
Y	6	1	**373-8745**	1	SUSPENSION GP-SEAT (AIR)	482
J	7	1	**4F-4879**	1	BOLT (3/8-16X0.5-IN)	

J - KIT MARKED J SERVICES PARTS MARKED J
Y - SEPARATE ILLUSTRATION

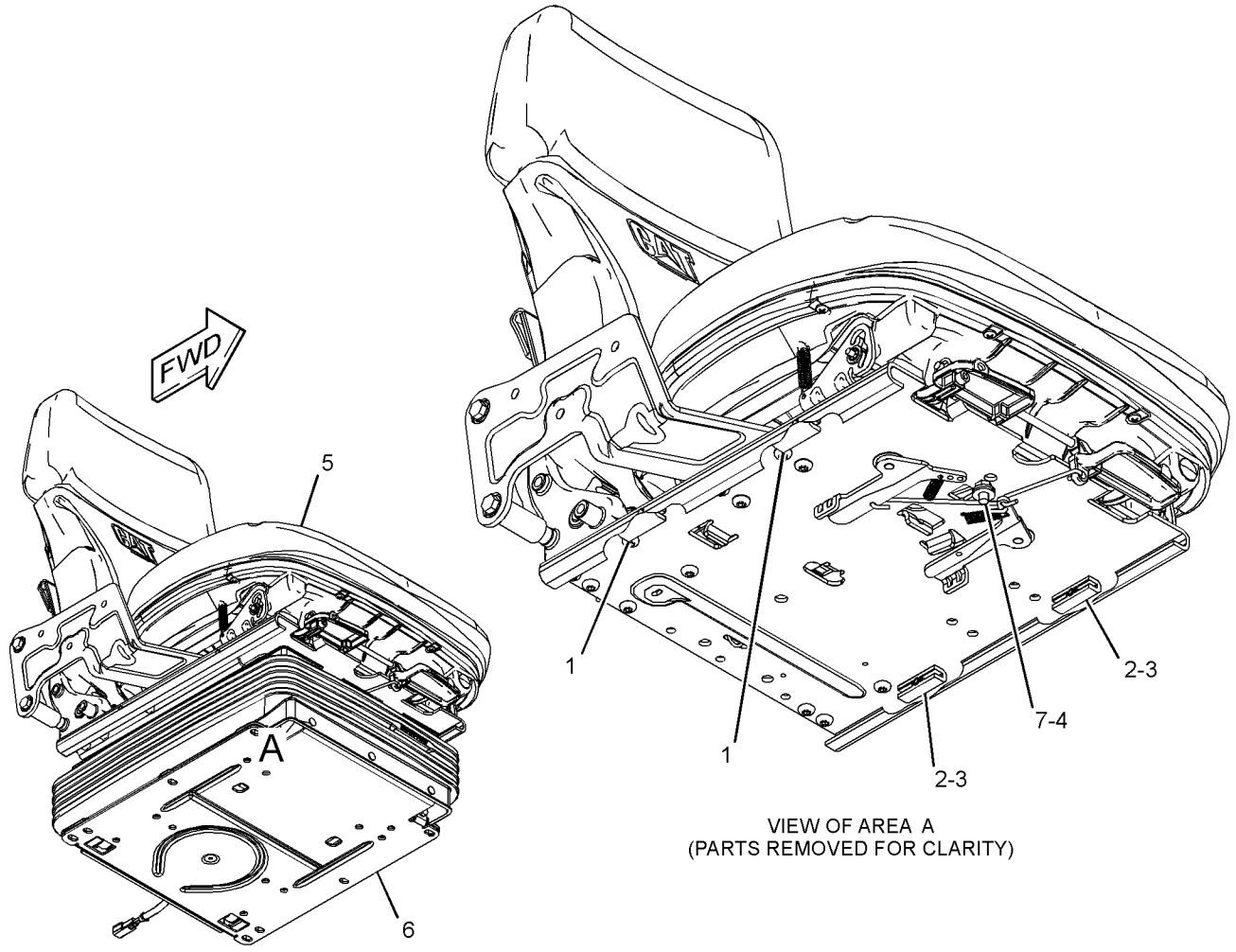

VIEW OF AREA A
(PARTS REMOVED FOR CLARITY)

GRAPHIC #1 **<END>** g02794900

424-5251 SEAT GP-SUSPENSION—MECHANICAL

S/N: DYB1-UP

PART OF 342-0143 SEAT & MOUNTING GP

AN ATTACHMENT

SMCS-7324, 7336

i05325407

NOTE	REF NO	GRAPHIC REF	PART NUMBER	QTY	PART NAME 1 2 3 4 5 6 (PRODUCT LEVEL)	SEE PAGE
					(NO BREAKDOWN OF SERVICEABLE PARTS AVAILABLE AT TIME OF PUBLICATION)	

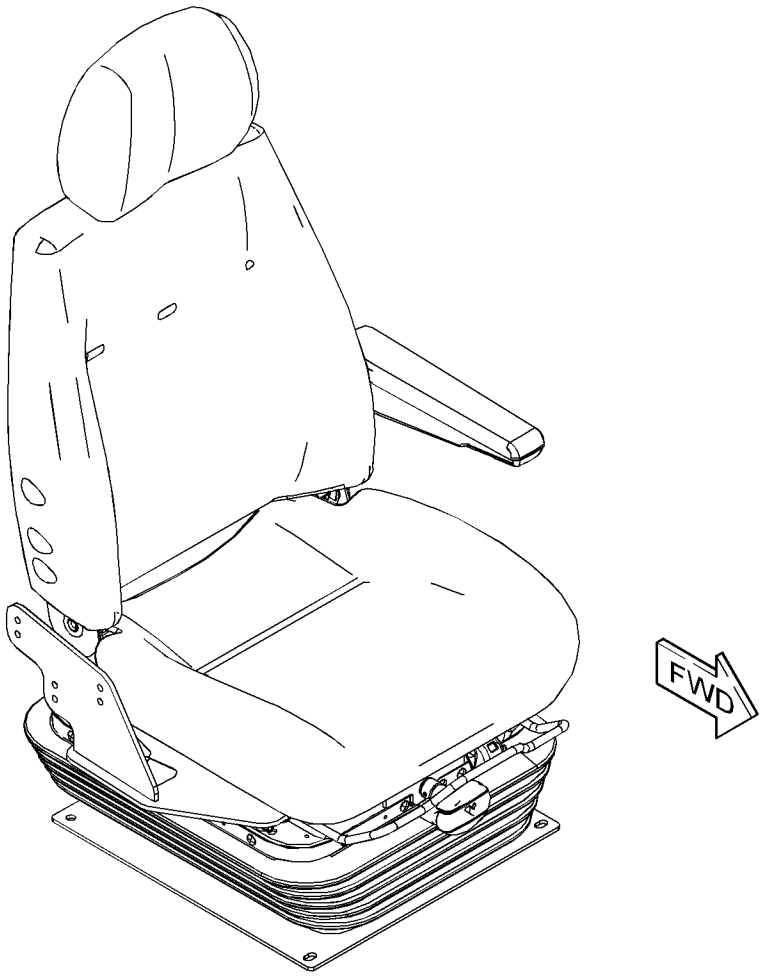

GRAPHIC #1

<END>

g03376178

341-9690 SKIRT GP-CAB

S/N: DYB1-UP
PART OF 384-7000 CAB AR-ENCLOSED ROPS
AN ATTACHMENT

SMCS-7301 **i05301145**

NOTE	REF NO	GRAPHIC REF	PART NUMBER	QTY	PART NAME 1 2 3 4 5 6 (PRODUCT LEVEL)	SEE PAGE
	1	1	**341-9691**	1	SHEET AS (RH)	
	2	1	**341-9692**	1	SHEET (RH)	
	3	1	**341-9694**	1	SHEET (LH)	
	4	1	**341-9695**	1	SHEET AS (LH)	
	5	1	**341-9831**	1	BRACKET AS	
M	6	1	**8T-4138**	15	BOLT (M6X1X20-MM)	
	7	1	**9X-2038**	15	WASHER (7X19X2-MM THK)	
	8	1	**8T-4121**	1	WASHER-HARD (11X21X2.5-MM THK)	
M	9	1	**8T-4136**	1	BOLT (M10X1.5X25-MM)	
	10	1	**4D-5243**	1	LOCKWASHER	

M - METRIC PART

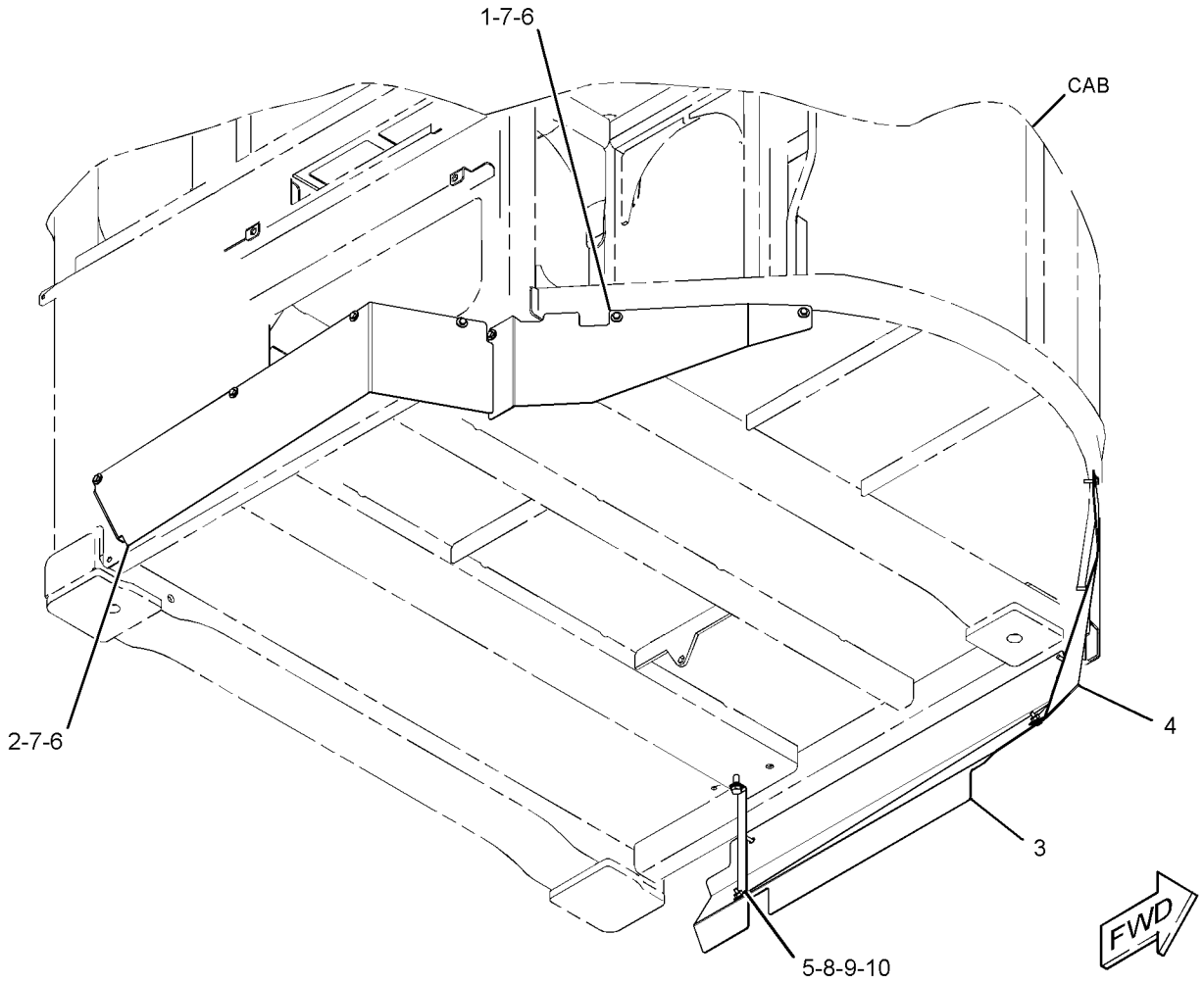

GRAPHIC #1 **<END>** g03067902

373-8745 SUSPENSION GP-SEAT

S/N: DYB1-UP

AIR

PART OF 342-0111 SEAT GP-SUSPENSION

AN ATTACHMENT

SMCS-7324 **i05344230**

NOTE	REF NO	GRAPHIC REF	PART NUMBER	QTY	PART NAME 1 2 3 4 5 6 (PRODUCT LEVEL)	SEE PAGE
	1	1	**169-7380**	1	BOLT-SOCKET HEAD (3/8-16X0.375-IN)	
	2	1	**370-8063**	1	KIT-SEAT SUSPENSION	
					(INCLUDES ARM ASSEMBLIES, BRACKET ASSEMBLIES, UPPER HOUSING, HOUSING AS, MOUNT ASSEMBLIES, PLATE AS, UPPER TOGGLE AS,	
					LOWER TOGGLE AS, BOLTS, WASHERS & LOCKNUTS)	
	3	1	**370-8064**	1	KIT-BUMPER	
					(INCLUDES BUMPERS, NUTS & LOCKNUTS)	
	4	1	**370-8066**	1	KIT-AIR SPRING	
					(INCLUDES BOLT, CLIP, ELBOW, SCREW & SPRING)	
	5	1	**370-8067**	1	KIT-COMPRESSOR	
					(INCLUDES COMPRESSOR AS, BRACKET, ELBOWS, FITTING, WIRE ASSEMBLIES & SCREWS)	
	6	1	**370-8068**	1	KIT-SWITCH (AIR)	
					(INCLUDES SWITCH AS)	
	7	1	**370-8069**	1	KIT-WIRING	
					(INCLUDES HARNESS)	
	8	1	**370-8071**	1	KIT-BOOT	
					(INCLUDES BOOT & FASTENERS)	
	9	1	**370-8156**	1	KIT-BEARING	
					(INCLUDES BUSHINGS, BOLTS, TOGGLES, LOCKNUTS & WASHERS)	
	10	1	**388-1516**	1	KIT-DAMPER	
					(COTTERS, PINS, SPACERS, WASHERS & SHOCK)	

373-8745 **SUSPENSION GP-SEAT (*contd.*)** **i05344230**

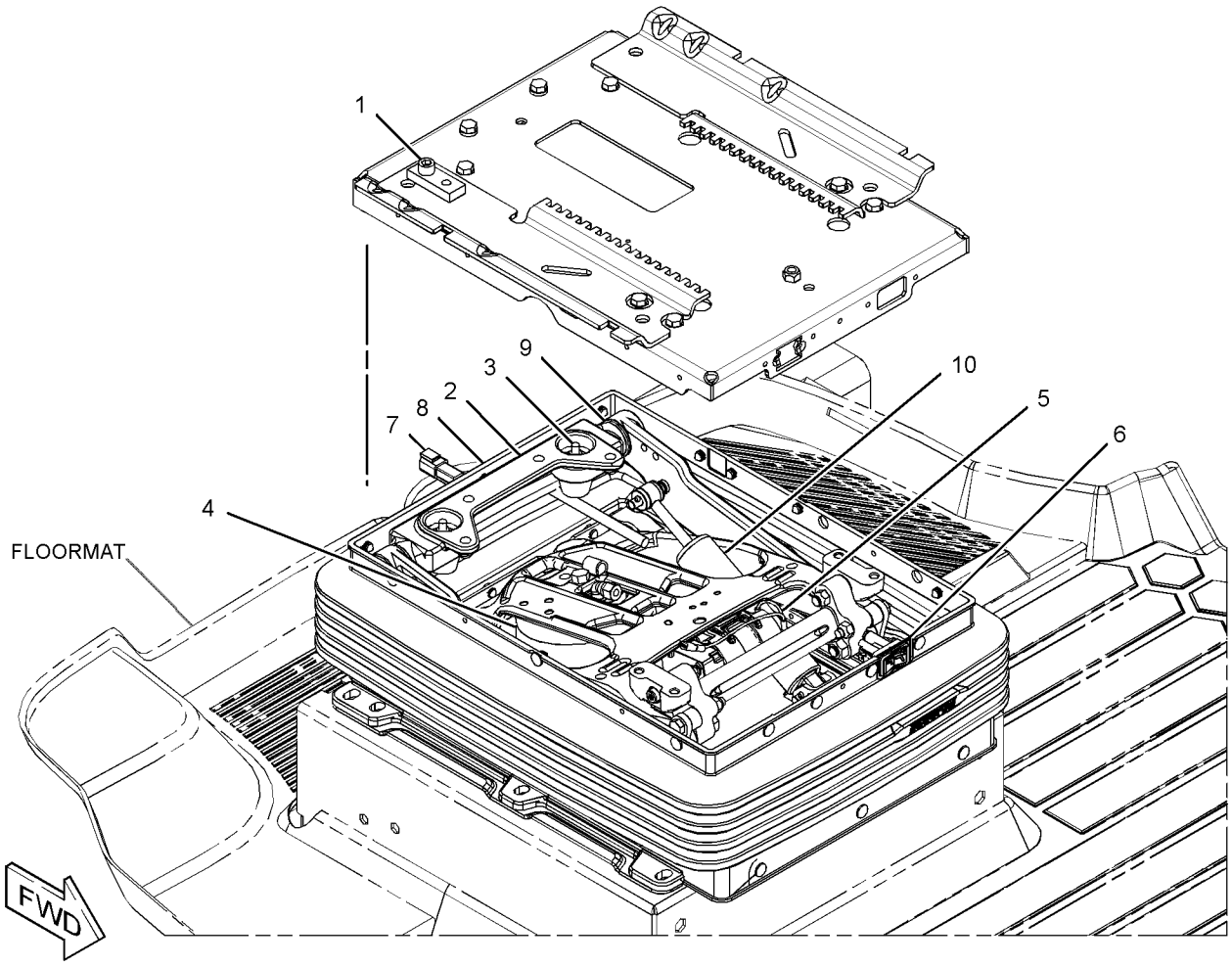

GRAPHIC #1 **<END>** g03382109

349-5842 VALVE GP-WATER—HEATER CONTROL

S/N: DYB1-UP

PART OF 342-0190 HEATER & AIR CONDITIONER GP

AN ATTACHMENT

SMCS-1800, 7320 **i05302589**

NOTE	REF NO	GRAPHIC REF	PART NUMBER	QTY	PART NAME 1 2 3 4 5 6 (PRODUCT LEVEL)	SEE PAGE
	1	1	**9X-2185**	4	SCREW (8-15X0.44-IN)	
	2	1	**131-3093**	1	BUSHING	
	3	1	**248-6772**	8	SCREW-MACHINE (8-16X7.75-IN)	
	4	1	**268-8769**	1	VALVE & MOUNTING AS-WATER	
	5	1	**349-5839**	1	TUBE	
	6	1	**279-0850**	1	ACTUATOR (ELECTRONIC)	
	7	1	**311-3520**	3	SCREW-HEX HEAD (8-16X0.5-IN)	
	8	1	**349-5838**	1	TUBE	
	9	1	**349-5843**	1	BRACKET	
	10	1	**4M-6582**	2	SEAL-O-RING	

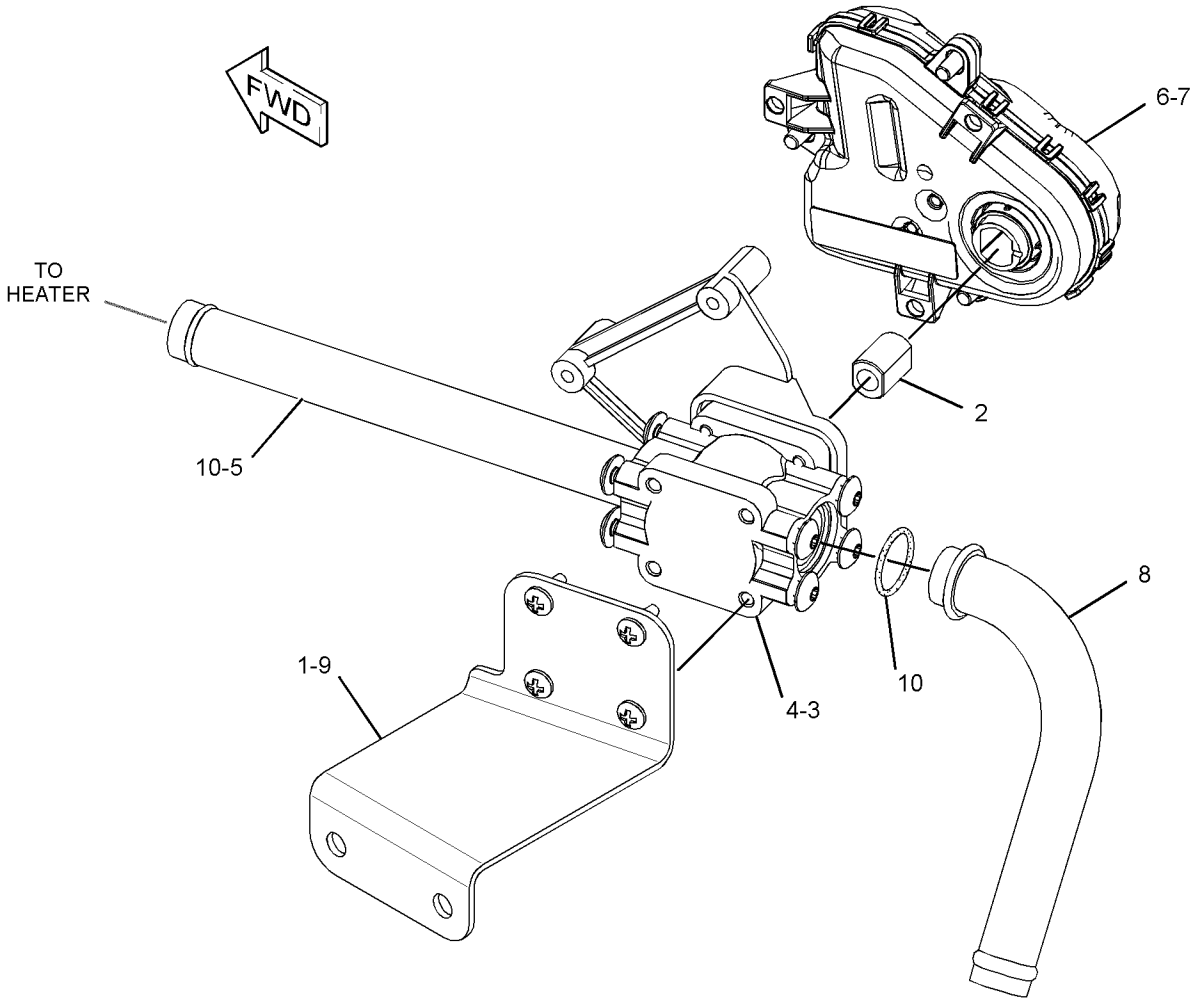

GRAPHIC #1 **<END>** g02792844

342-0215 VISOR GP-CAB

S/N: DYB1-UP
REAR
FOR USE WITH 384-7000—PAGE: 410
AN ATTACHMENT

SMCS-7301 **i05315053**

NOTE	REF NO	GRAPHIC REF	PART NUMBER	QTY	PART NAME 1 2 3 4 5 6 (PRODUCT LEVEL)	SEE PAGE
	1	1	**110-7524**	1	BUTTON	
	2	1	**243-3544**	1	VISOR AS (CAB)	

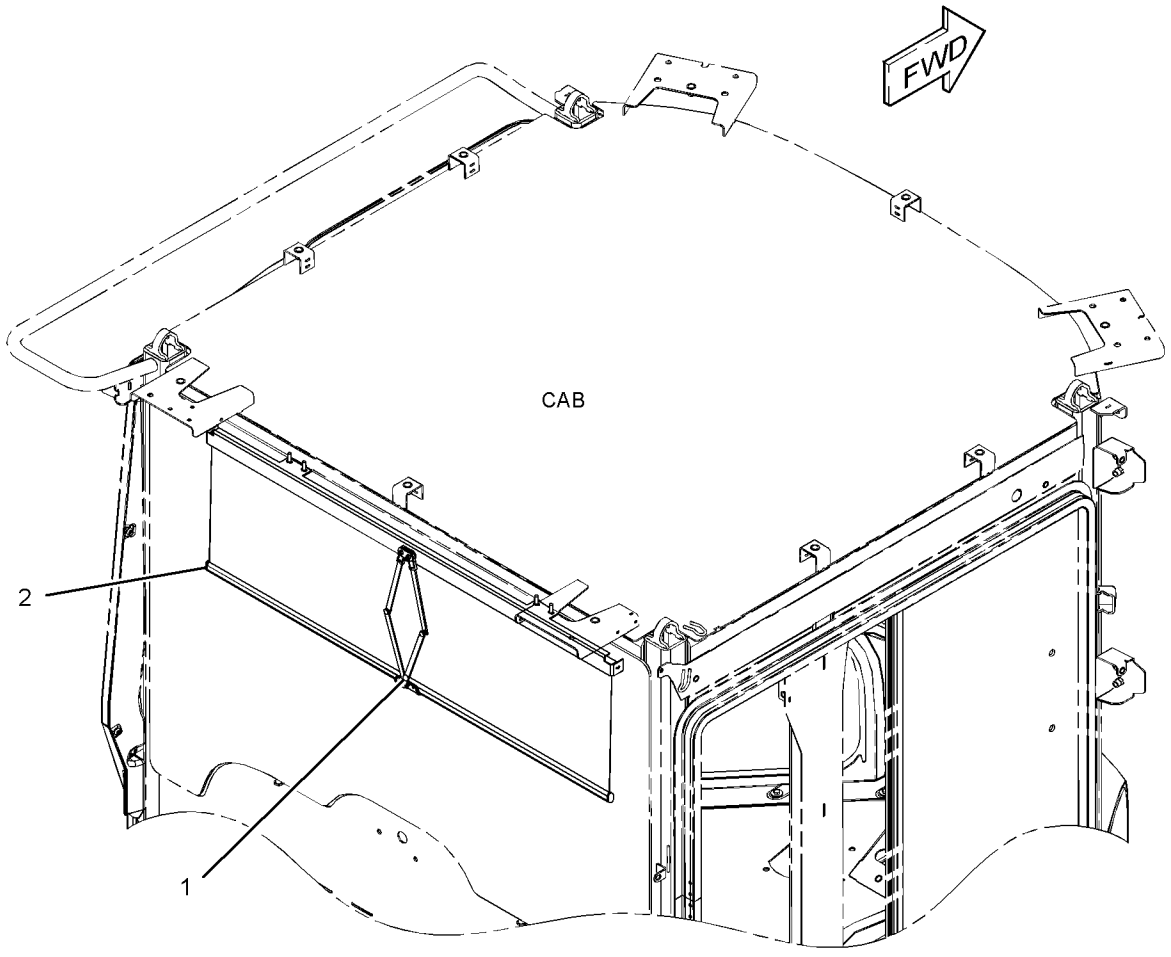

GRAPHIC #1 **<END>** g03377343

OPERATOR STATION

421-5703 VISOR GP-CAB–FRONT

S/N: DYB1-UP
PART OF 384-7000 CAB AR-ENCLOSED ROPS
AN ATTACHMENT

SMCS-7301 **i05302874**

NOTE	REF NO	GRAPHIC REF	PART NUMBER	QTY	PART NAME 1 2 3 4 5 6 (PRODUCT LEVEL)	SEE PAGE
	1	1	**243-3544**	1	VISOR AS (CAB)	

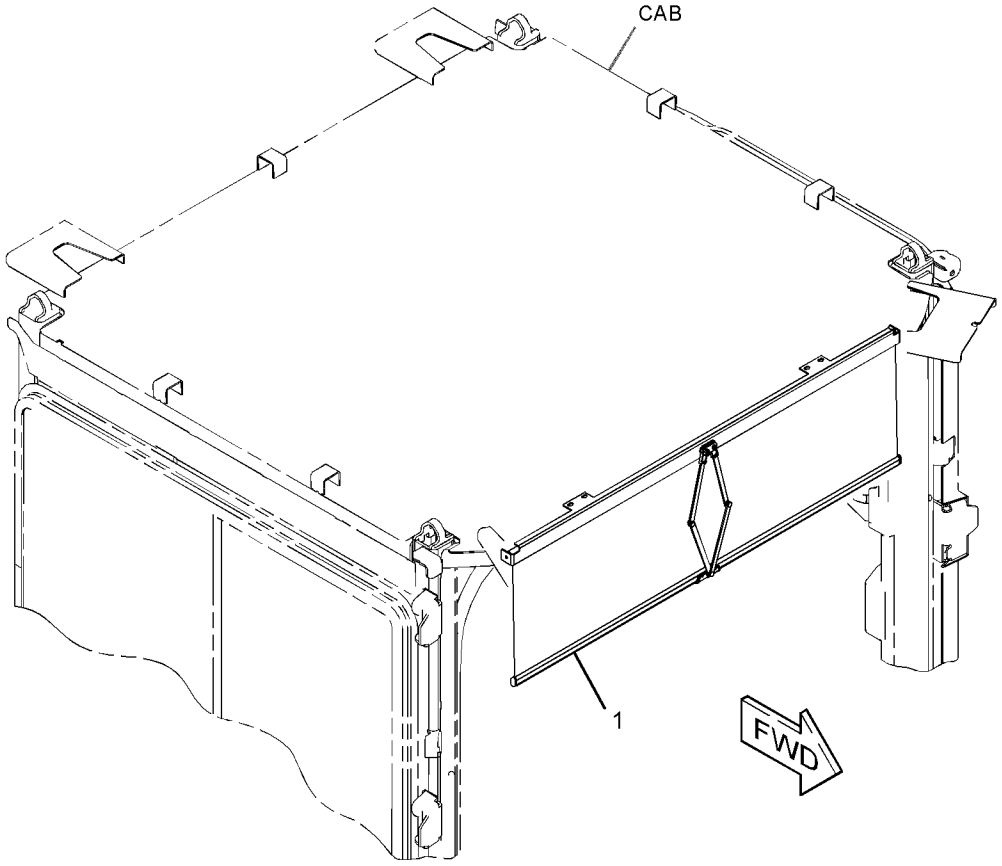

GRAPHIC #1 **<END>** g03371109

341-9725 WINDOW GP-CAB

S/N: DYB1-UP
PART OF 384-6954 CAB GP-ENCLOSED ROPS
AN ATTACHMENT

SMCS-7310 **i05312389**

NOTE	REF NO	GRAPHIC REF	PART NUMBER	QTY	PART NAME 1 2 3 4 5 6 (PRODUCT LEVEL)	SEE PAGE
	1	1	**341-9732**	1	LOCK AS-WINDOW	
	2	1	**341-9730**	1	GLASS AS-WINDOW	
	3	1	**341-9731**	1	GLASS AS-SLIDING	
					AVAILABLE REPAIR KIT(S):	
			341-9729	1	KIT-SEAL (CAB WINDOW)	
					(INCLUDES PARTS MARKED J IN GRAPHIC)	

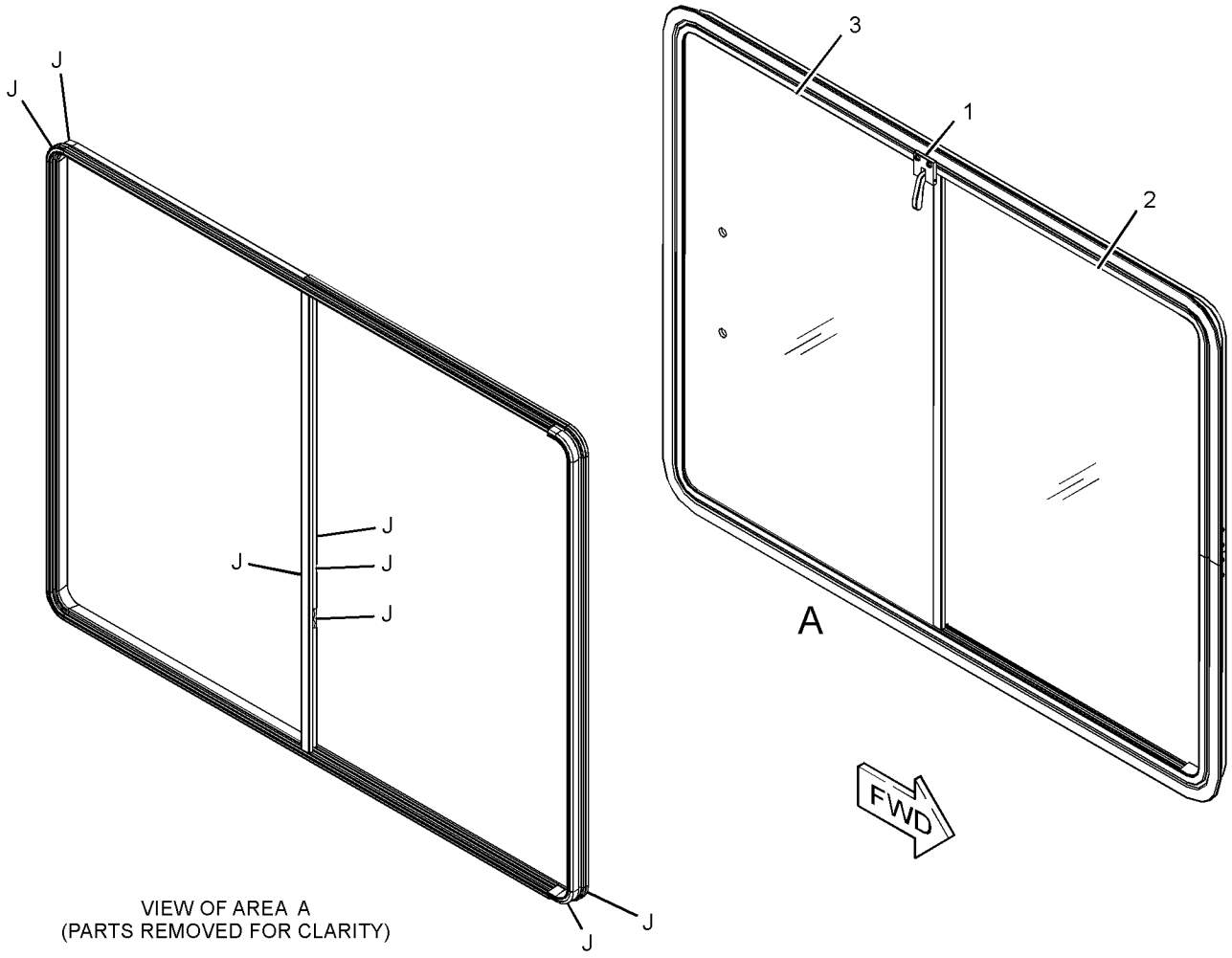

GRAPHIC #1 **<END>** g03306937

341-9755 WINDOW GP-DOOR—SLIDING WINDOW, LH

S/N: DYB1-UP
PART OF 341-9784 DOOR GP-CAB
AN ATTACHMENT

SMCS-7308, 7310

i05302528

NOTE	REF NO	GRAPHIC REF	PART NUMBER	QTY	PART NAME 1 2 3 4 5 6 (PRODUCT LEVEL)	SEE PAGE
	1	1	**258-3765**	1	LATCH AS	
	2	1	**258-3776**	1	CATCH AS	
	3	1	**341-9795**	1	GLASS-FIXED	
	4	1	**341-9793**	1	WINDOW AS-DOOR (FIXED)	
	5	1	**341-9794**	1	WINDOW AS-DOOR (SLIDING)	
					AVAILABLE REPAIR KIT(S):	
			341-9792	1	KIT-SEAL (CAB WINDOW)	
					(INCLUDES PARTS MARKED J IN GRAPHIC)	

341-9755 **WINDOW GP-DOOR (*contd.*)** **i05302528**

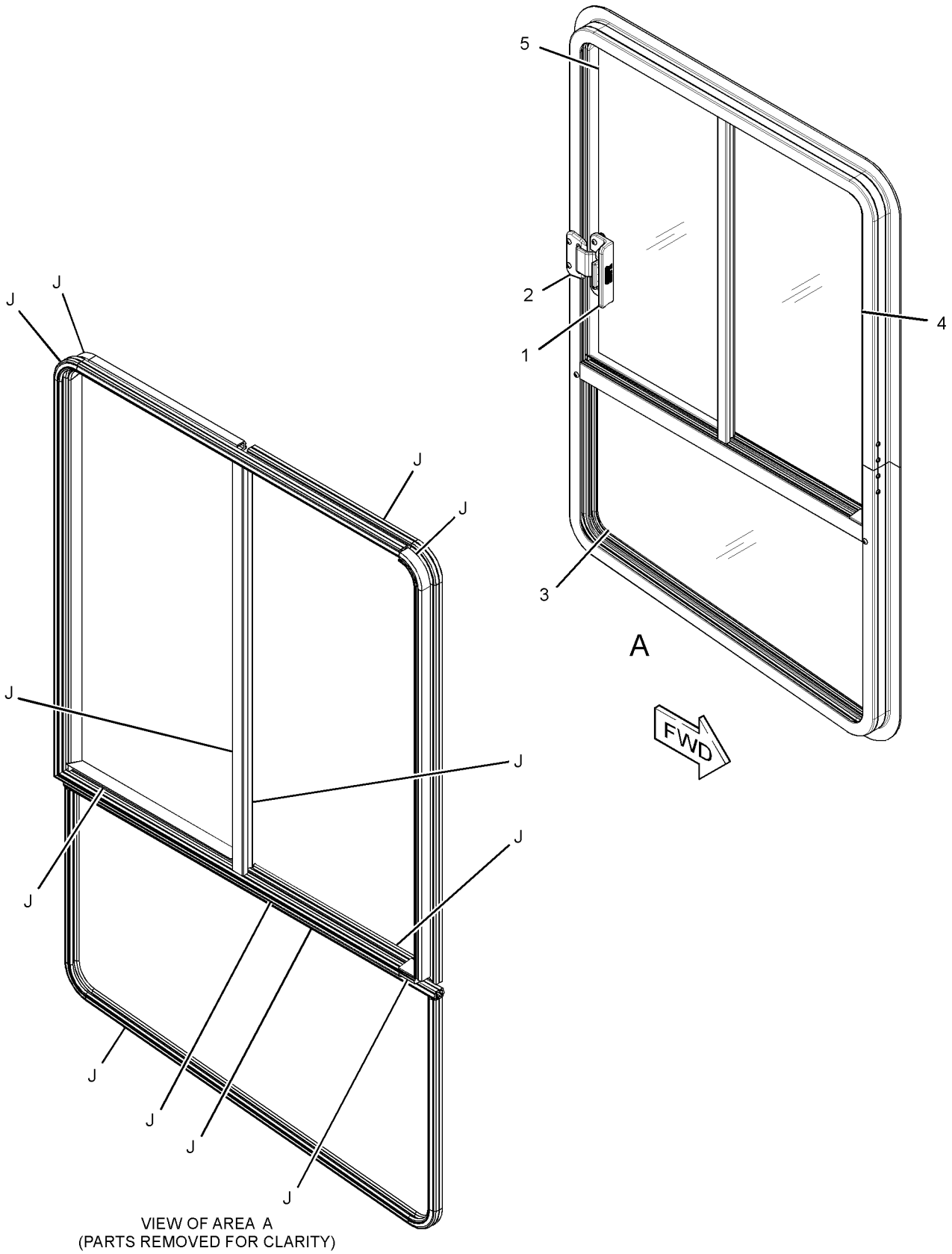

VIEW OF AREA A
(PARTS REMOVED FOR CLARITY)

GRAPHIC #1 **<END>** g03291697

384-6844 WIPER & WASHER GP-WINDOW

S/N: DYB1-UP
PART OF 384-7000 CAB AR-ENCLOSED ROPS
AN ATTACHMENT

SMCS-7305, 7306 **i05302510**

NOTE	REF NO	GRAPHIC REF	PART NUMBER	QTY	PART NAME 1 2 3 4 5 6 (PRODUCT LEVEL)	SEE PAGE
	1	1	**2S-3163**	1	PLUG	
	2	1	**189-8610**	1	BLADE AS-WIPER (800-MM) (FRONT)	
M	3	1	**215-6406**	4	SCREW-TRUSS HEAD (M6X1X16-MM)	
	4	1	**293-2320**	1	TANK GP-WINDOW WASHER	
		1	**388-9379**	1	CAP (VENTED)	
		1	**416-0021**	1	PUMP AS-WASHER (24-VOLT)	
Y	5	1	**360-9046**	1	MOTOR GP-WINDOW WIPER (24-VOLT) (FRONT)	464
Y	6	1	**368-4853**	1	ARM GP-WINDOW WIPER (FRONT)	408
	7	1	**390-3190**	2	PLUG	
	8	1	**1B-3057**	1	CLIP	
	9	1	**3S-2093**	3	STRAP-CABLE	
	10	1	**8T-4121**	1	WASHER-HARD (11X21X2.5-MM THK)	
M	11	1	**8T-4136**	1	BOLT (M10X1.5X25-MM)	
	12	1	**8T-5400**	2	CONNECTOR AS	
E	13	1	**144-0195**		HOSE (73-CM)	
E	13A	1	**144-0195**		HOSE (205-CM)	

E - ORDER BY THE CENTIMETER
M - METRIC PART
Y - SEPARATE ILLUSTRATION

384-6844 **WIPER & WASHER GP-WINDOW (*contd.*)** **i05302510**

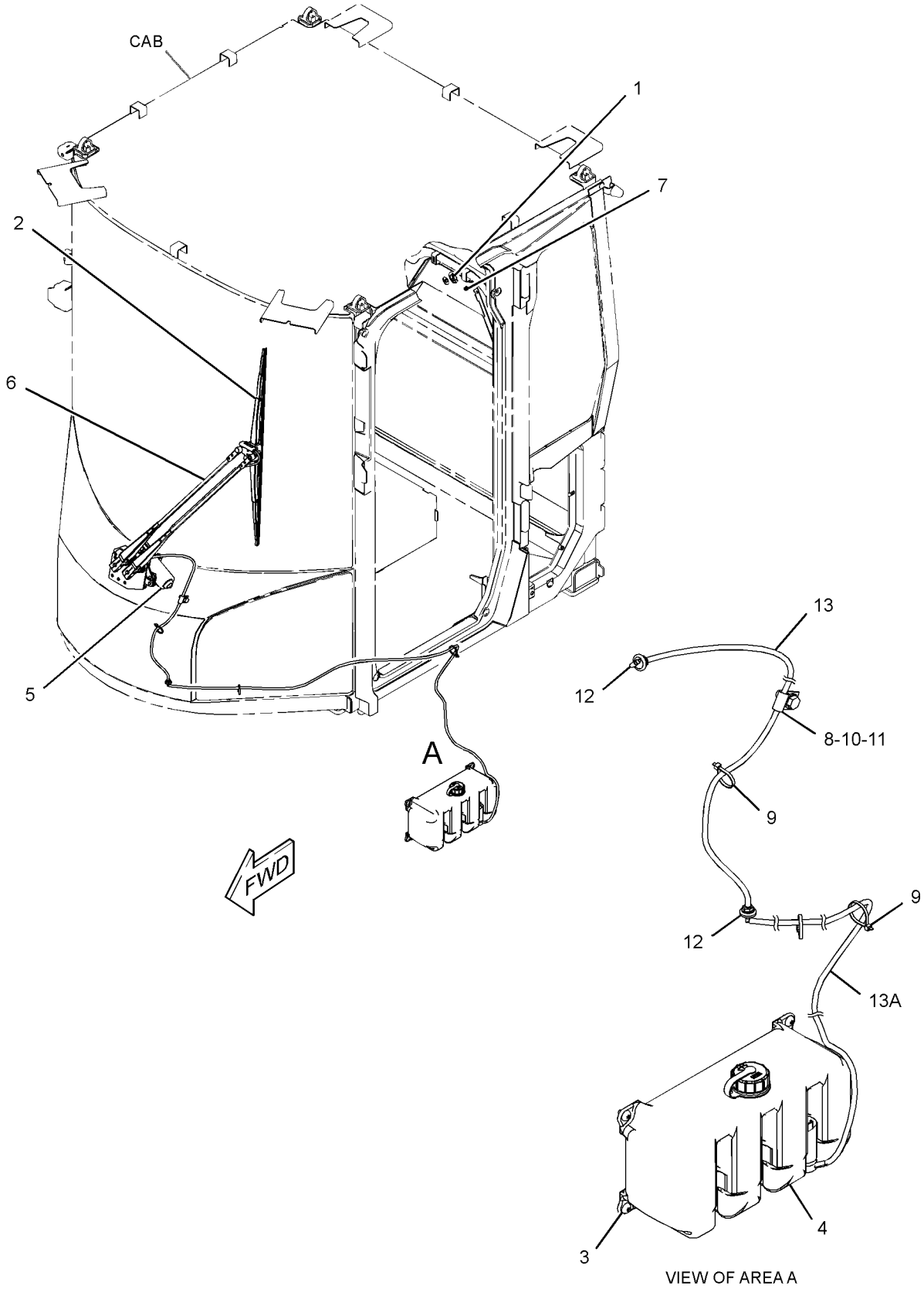

GRAPHIC #1 **<END>** g03371521

377-4149 ADAPTER GP-COUPLER

S/N: DYB1-UP

AN ATTACHMENT

SMCS-6129 **i05312557**

NOTE	REF NO	GRAPHIC REF	PART NUMBER	QTY	PART NAME 1 2 3 4 5 6 (PRODUCT LEVEL)	SEE PAGE
	1	1	**377-4150**	1	COUPLER AS	
	2	1	**377-4162**	2	PIN AS	
	3	1	**3B-5320**	2	PIN-COTTER	

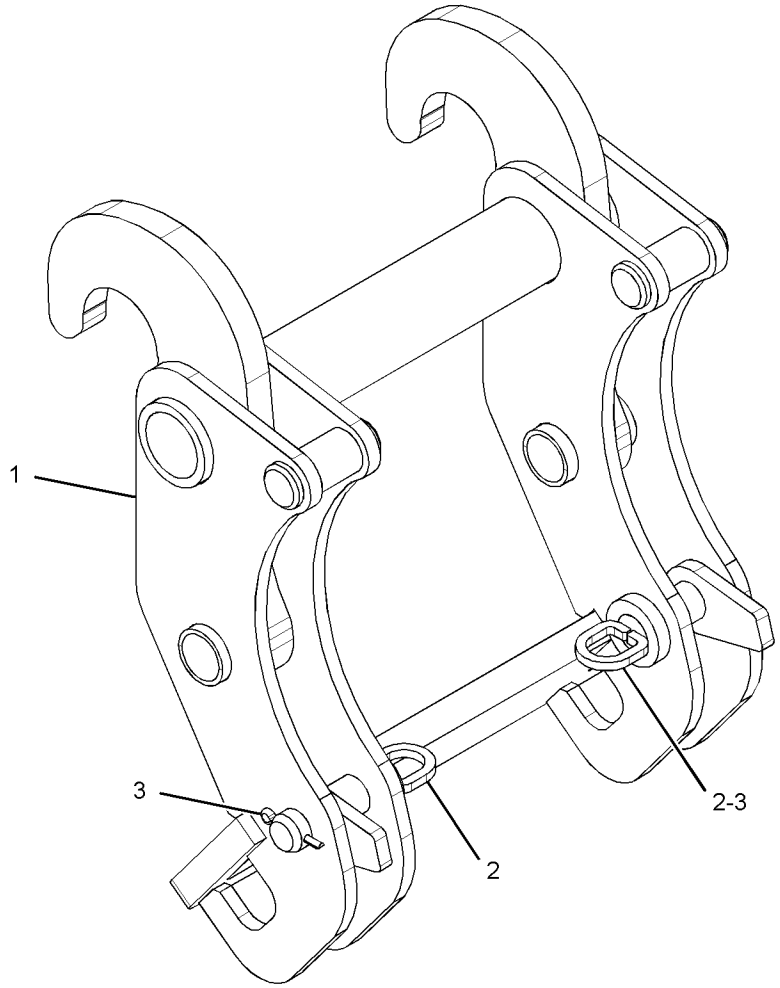

GRAPHIC #1 **<END>** g02776756

116-9713 ADAPTER GP-TIP

S/N: DYB1-UP

AN ATTACHMENT

SMCS-6803 **i04589229**

NOTE	PART NUMBER	QTY	PART NAME 1 2 3 4 5 6 (PRODUCT LEVEL)	SEE PAGE
	1U-0257	6	ADAPTER-STRAP	
	6I-9250	1	ADAPTER-TIP (LH)	
	6I-9251	1	ADAPTER-TIP (RH)	
	8J-2928	12	BOLT-PLOW (1-8X3.75-IN)	
	4F-4042	2	BOLT-PLOW (1-8X3-IN)	
	4J-9058	2	BOLT-PLOW (1-8X3.25-IN)	
	8J-2933	12	NUT (1-8-THD)	
	2J-3507	4	NUT-FULL (1-8-THD)	

<END>

360-3300 ARM GP-MATERIAL HANDLING

S/N: DYB1-UP

AN ATTACHMENT

SMCS-6542 **i05312560**

NOTE	REF NO	GRAPHIC REF	PART NUMBER	QTY	PART NAME 1 2 3 4 5 6 (PRODUCT LEVEL)	SEE PAGE
	1	1	**168-0475**	1	PIN AS	
	2	1	**9V-2714**	1	HOOK	
	3	1	**9V-2715**	1	SHACKLE AS	
	4	1	**103-5796**	1	PIN-KEEPER	
	5	1	**159-8035**	1	FILM-WARNING (CRUSH HAZARD, STAY BACK)	
	6	1	**159-8036**	1	FILM-WARNING (READ OMM)	
	7	1	**168-8389**	4	TACK-FASTENER (METAL)	
	8	1	**358-4945**	1	PLATE-IDENTIFICATION (WORK TOOL)	
	9	1	**360-3298**	1	EXTENSION AS	
	10	1	**360-3299**	1	ARM AS (MATERIAL HANDLING)	
	10A	1	**161-4130**	1	PLATE-IDENTIFICATION (CAT)	

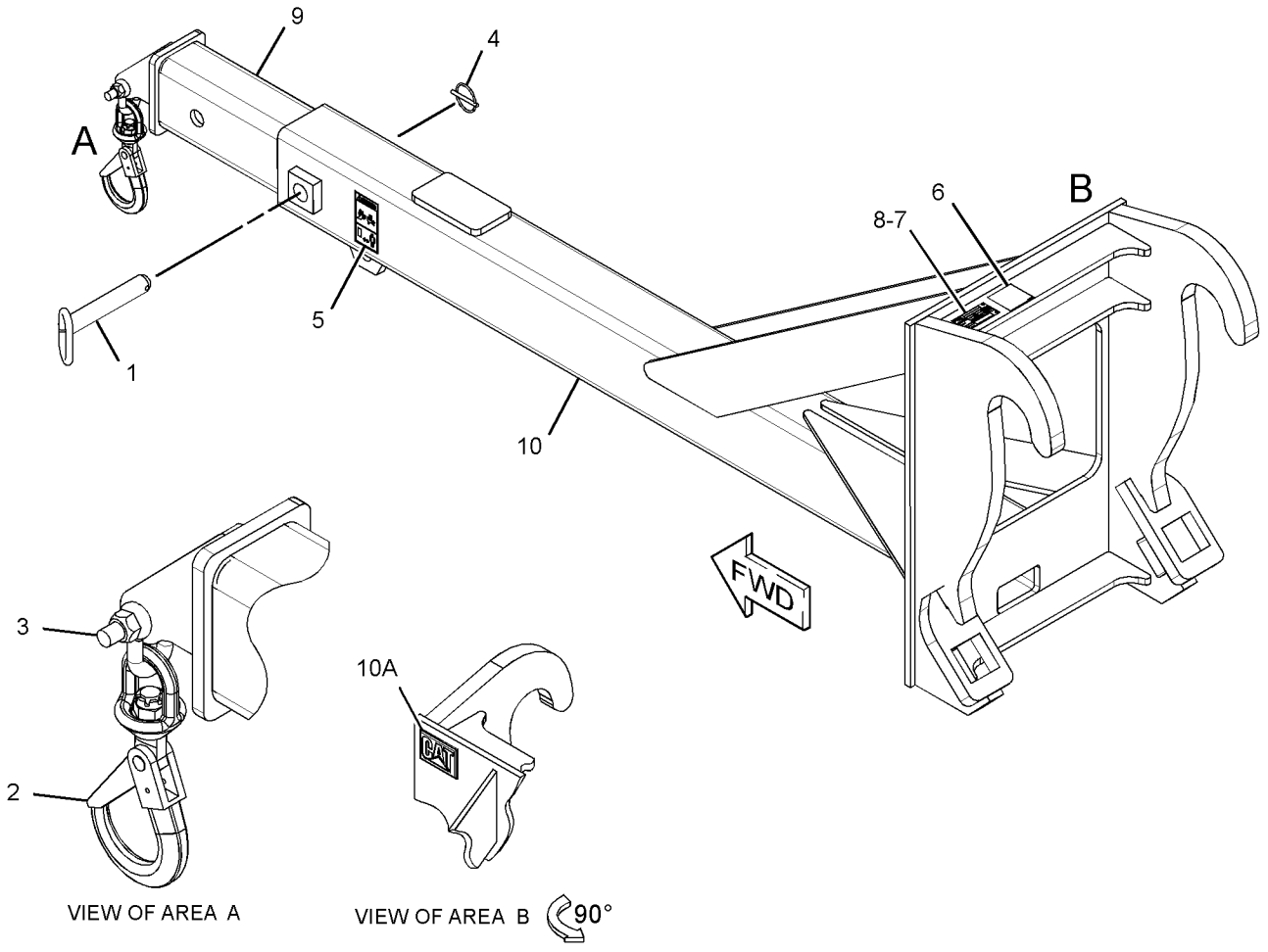

GRAPHIC #1

<END>

g03378778

332-5794 BUCKET AS-GENERAL PURPOSE

S/N: DYB1-UP
2532-MM (99.7-IN) WIDE X 2.3-CU M (3-CU YD) CAPACITY. PIN-ON
PART OF 345-2822 BUCKET GP-GENERAL PURPOSE
AN ATTACHMENT

SMCS-6101 **i05300972**

NOTE	REF NO	GRAPHIC REF	PART NUMBER	QTY	PART NAME 1 2 3 4 5 6 (PRODUCT LEVEL)	SEE PAGE
	1	1	**4E-0659**	1	EDGE-CUTTING	
	2	1	*332-5797*	1	PLATE AS	
		1	**2C-9259**	1	PLATE-IDENTIFICATION (CAT)	
		1	**6I-8311**	1	CORNER (RH)	
	3	1	*332-5798*	1	PLATE AS	
		1	**2C-9259**	1	PLATE-IDENTIFICATION (CAT)	
		1	**6I-8310**	1	CORNER (LH)	
	4	1	**332-5803**	2	PLATE	
	5	1	**360-3249**	2	PLATE-WEAR	

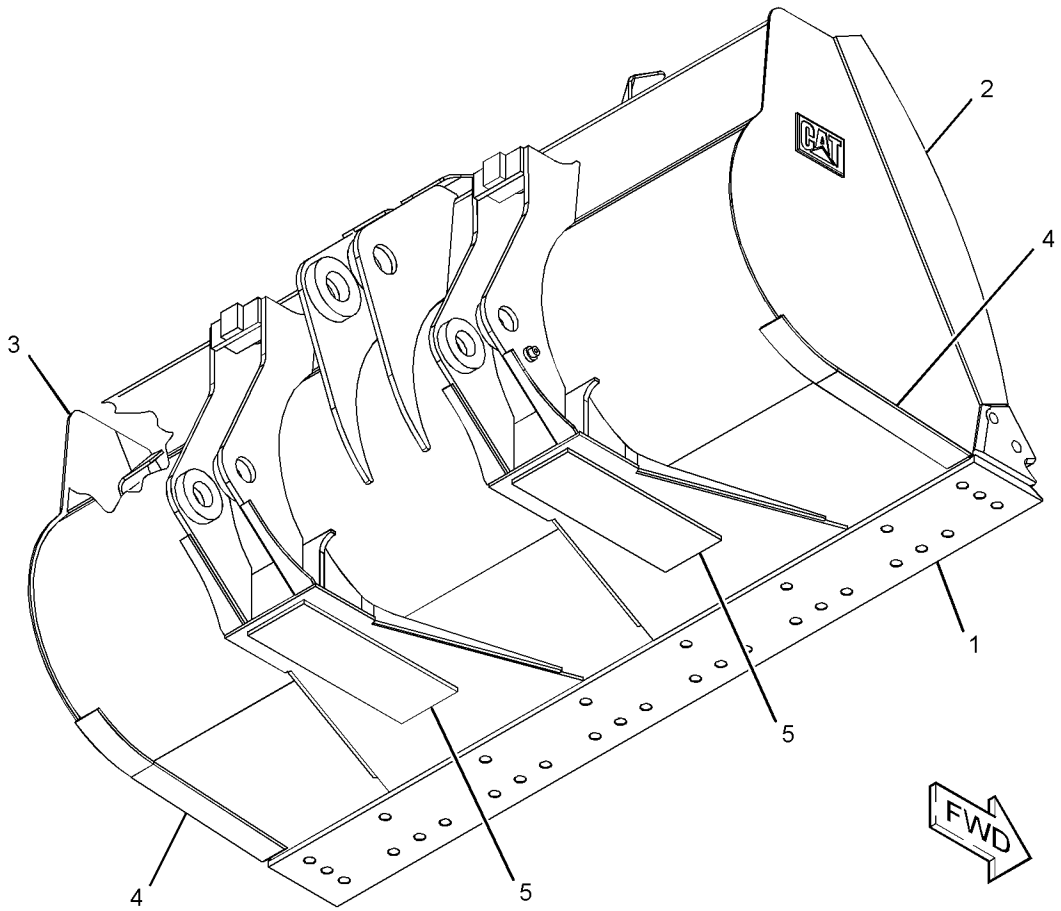

GRAPHIC #1 **<END>** g02784956

332-5808 BUCKET AS-GENERAL PURPOSE

S/N: DYB1-UP
2528-MM (99.5-IN) WIDE X 2.5-CU M (3.3-CU YD) CAPACITY. PIN-ON
PART OF 345-2824 BUCKET GP-GENERAL PURPOSE
AN ATTACHMENT

SMCS-6101 **i05329484**

NOTE	REF NO	GRAPHIC REF	PART NUMBER	QTY	PART NAME 1 2 3 4 5 6 (PRODUCT LEVEL)	SEE PAGE
	1	1	**4E-0659**	1	EDGE-CUTTING	
	2	1	*332-5811*	1	PLATE AS (RH)	
	2A	1	**2C-9259**	1	PLATE-IDENTIFICATION (CAT)	
	2B	1	**6I-8311**	1	CORNER (RH)	
	3	1	*332-5812*	1	PLATE AS (LH)	
	3A	1	**2C-9259**	1	PLATE-IDENTIFICATION (CAT)	
	3B	1	**6I-8310**	1	CORNER (LH)	
	4	1	**332-5817**	2	PLATE-WEAR	
	5	1	**360-3249**	2	PLATE-WEAR	
	6	1	**360-3252**	2	PLATE-WEAR	

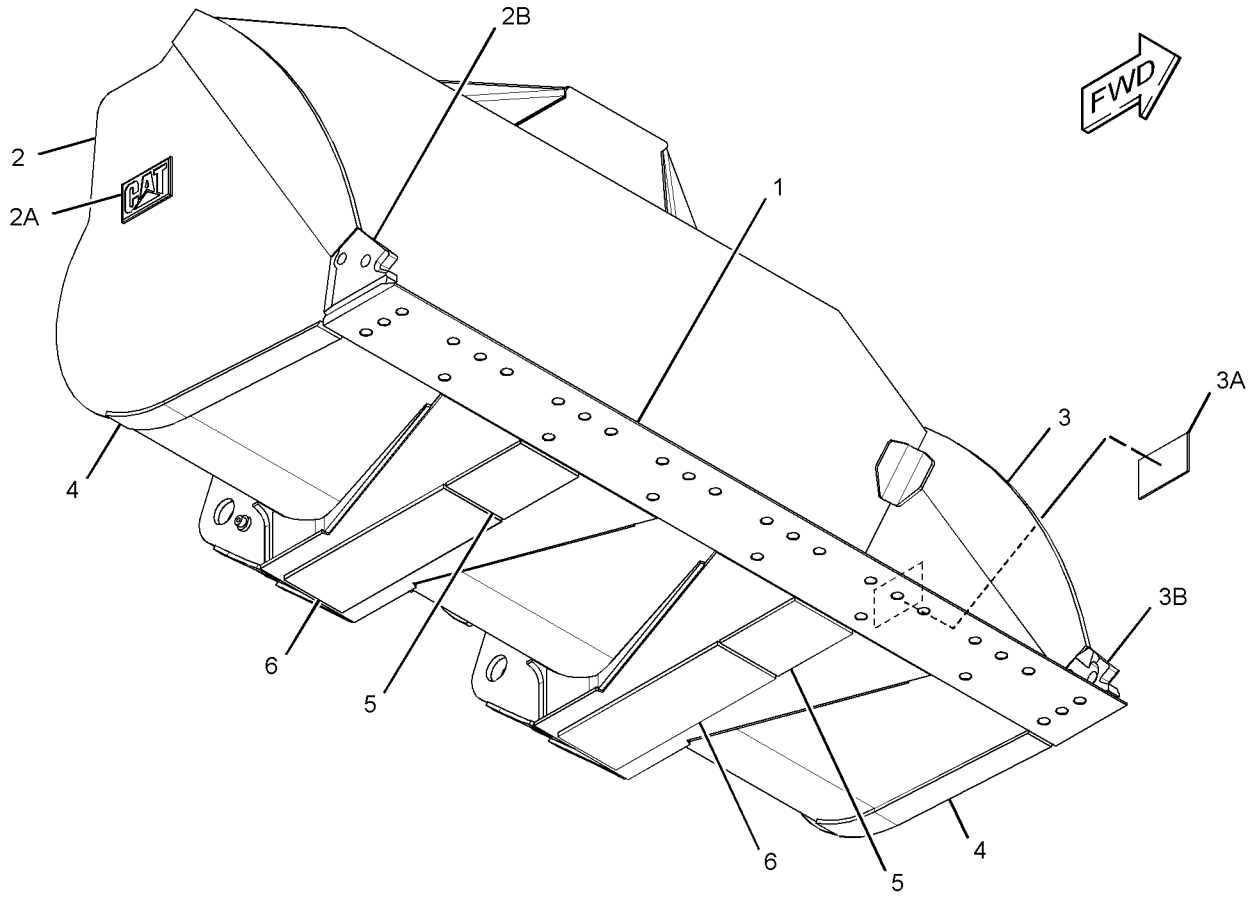

GRAPHIC #1 **<END>** g02793933

332-5809 BUCKET AS-GENERAL PURPOSE

S/N: DYB1-UP
2528-MM (99.5-IN) WIDE X 2.5-CU M (3.3-CU YD) CAPACITY
PART OF 345-2424 BUCKET GP-GENERAL PURPOSE
AN ATTACHMENT

SMCS-6101 **i05313176**

NOTE	REF NO	GRAPHIC REF	PART NUMBER	QTY	PART NAME 1 2 3 4 5 6 (PRODUCT LEVEL)	SEE PAGE
	1	1	**4E-0659**	1	EDGE-CUTTING	
	2	1	**332-5817**	2	PLATE-WEAR	
	3	1	**360-3249**	2	PLATE-WEAR	
	4	1	**360-3252**	2	PLATE-WEAR	
	5	1	**2C-9259**	2	PLATE-IDENTIFICATION (CAT)	
	6	1	**6I-8311**	1	CORNER (RH)	
	7	1	**6I-8310**	1	CORNER (LH)	

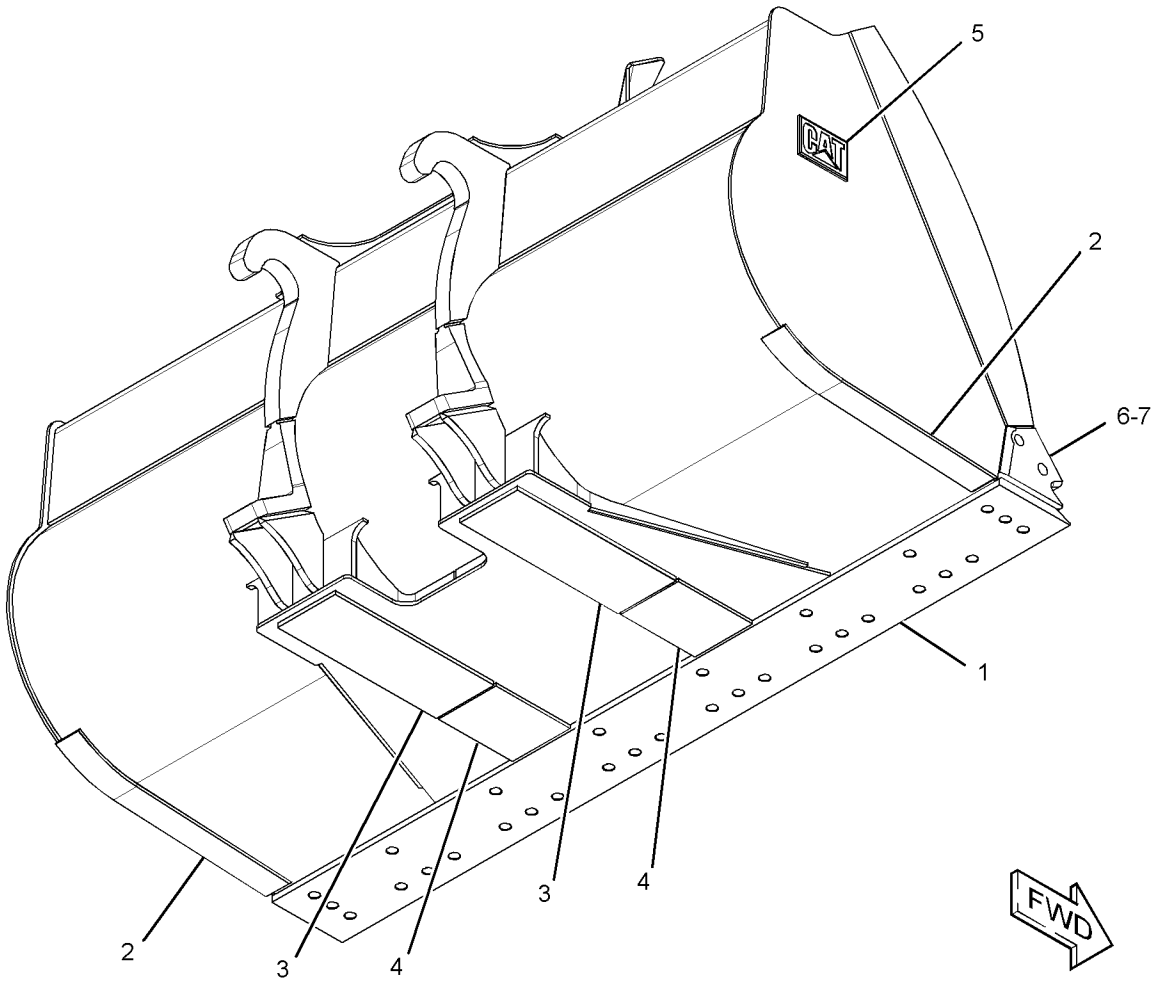

GRAPHIC #1 **<END>** g02812756

332-5821 BUCKET AS-GENERAL PURPOSE

S/N: DYB1-UP

2532-MM (99.7-IN) WIDE X 2.1-CU M (2.75-CU YD) CAPACITY. PIN-ON

PART OF 345-2820 BUCKET GP-GENERAL PURPOSE

AN ATTACHMENT

SMCS-6101 **i05300970**

NOTE	REF NO	GRAPHIC REF	PART NUMBER	QTY	PART NAME 1 2 3 4 5 6 (PRODUCT LEVEL)	SEE PAGE
	1	1	**4E-0659**	1	EDGE-CUTTING	
	2	1	*332-5827*	1	PLATE AS	
		1	**2C-9259**	1	PLATE-IDENTIFICATION (CAT)	
		1	**6I-8311**		CORNER (RH)	
	3	1	*332-5828*	1	PLATE AS	
		1	**2C-9259**	1	PLATE-IDENTIFICATION (CAT)	
		1	**6I-8310**		CORNER (LH)	
	4	1	**332-5841**	2	PLATE-WEAR	
	5	1	**360-3249**	2	PLATE-WEAR	

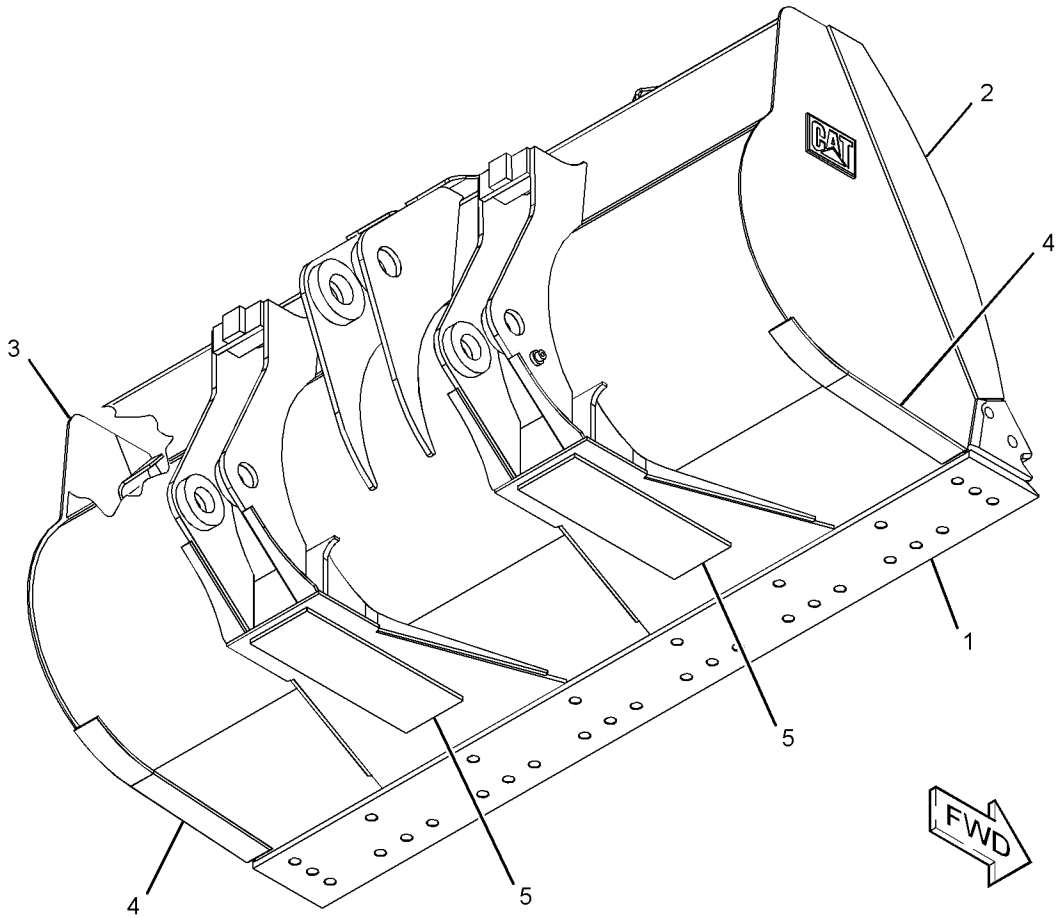

GRAPHIC #1 **<END>** g02784836

345-2786 BUCKET AS-GENERAL PURPOSE

S/N: DYB1-UP
2727-MM (107.4-IN) WIDE X 2.5-CU M (3.3-CU YD) CAPACITY
PART OF 345-2784 BUCKET GP-GENERAL PURPOSE
AN ATTACHMENT

SMCS-6101 **i05329483**

NOTE	REF NO	GRAPHIC REF	PART NUMBER	QTY	PART NAME 1 2 3 4 5 6 (PRODUCT LEVEL)	SEE PAGE
	1	1	**360-3249**	2	PLATE-WEAR	
	2	1	**110-4712**	1	EDGE	
	3	1	**360-3250**	2	PLATE-WEAR	
	4	1	**332-5803**	2	PLATE	
	5	1	**2C-9259**	2	PLATE-IDENTIFICATION (CAT)	
	6	1	**6I-8311**	1	CORNER (RH)	
	7	1	**6I-8310**	1	CORNER (LH)	

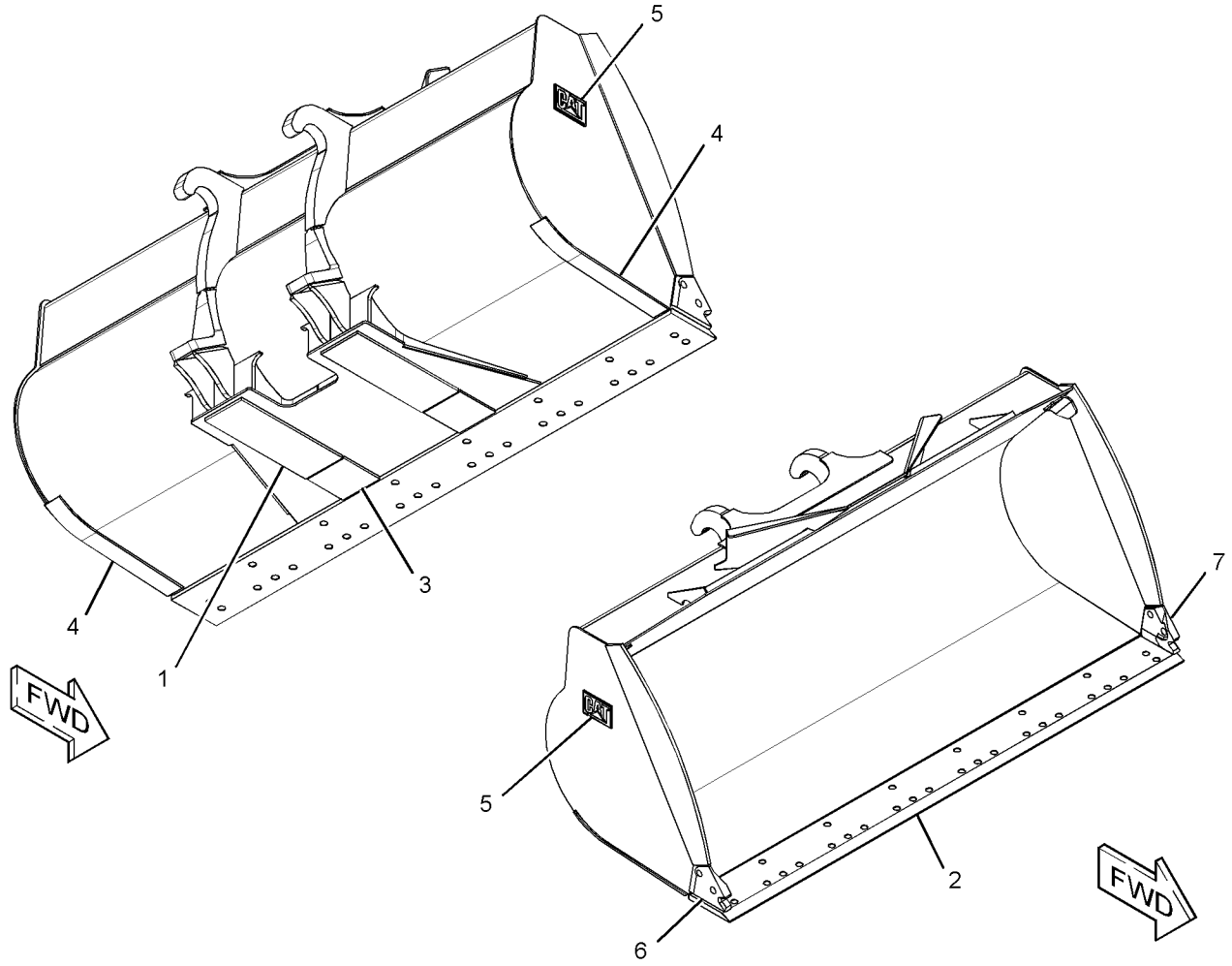

GRAPHIC #1 **<END>** g02796566

345-2806 BUCKET AS-GENERAL PURPOSE

S/N: DYB1-UP
2727-MM (107.4-IN) WIDE X 2.7-CU M (3.6-CU YD) CAPACITY
PART OF 345-2426 BUCKET GP-GENERAL PURPOSE
AN ATTACHMENT

SMCS-6101 **i05313180**

NOTE	REF NO	GRAPHIC REF	PART NUMBER	QTY	PART NAME 1 2 3 4 5 6 (PRODUCT LEVEL)	SEE PAGE
	1	1	**110-4712**	1	EDGE	
	2	1	**332-5817**	2	PLATE-WEAR	
	3	1	**360-3249**	2	PLATE-WEAR	
	4	1	**360-3252**	2	PLATE-WEAR	
	5	1	**2C-9259**	2	PLATE-IDENTIFICATION (CAT)	
	6	1	**6I-8311**	1	CORNER (RH)	
	7	1	**6I-8310**	1	CORNER (LH)	

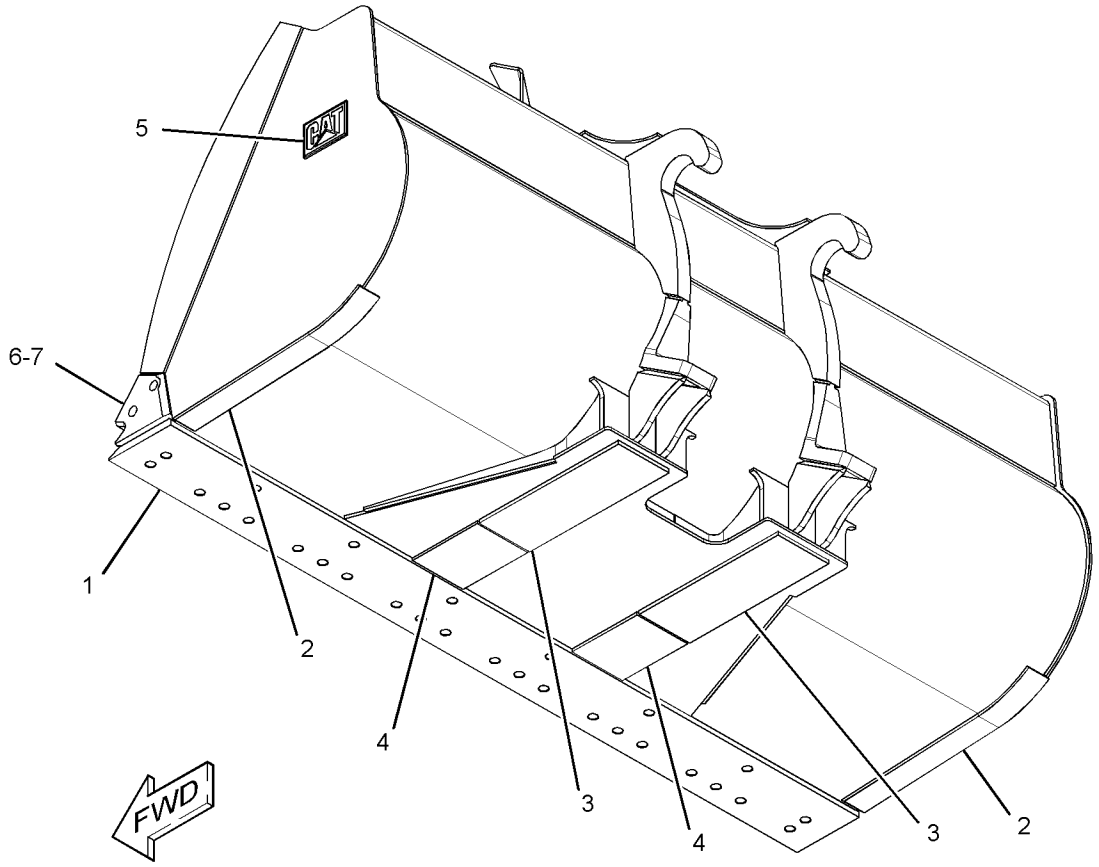

GRAPHIC #1 **<END>** g02798242

360-3247 BUCKET AS-GENERAL PURPOSE

S/N: DYB1-UP
2727-MM (107.4-IN) WIDE X 2.9-CU M (3.8-CU YD) CAPACITY
PART OF 345-2428 BUCKET GP-GENERAL PURPOSE
AN ATTACHMENT

SMCS-6101 **i05329464**

NOTE	REF NO	GRAPHIC REF	PART NUMBER	QTY	PART NAME 1 2 3 4 5 6 (PRODUCT LEVEL)	SEE PAGE
	1	1	**360-3248**	2	PLATE-WEAR	
	2	1	**110-4712**	1	EDGE	
	3	1	**360-3249**	2	PLATE-WEAR	
	4	1	*360-3236*	1	PLATE AS (RH)	
	4A	1	**2C-9259**	1	PLATE-IDENTIFICATION (CAT)	
	4B	1	**6I-8311**	1	CORNER (RH)	
	5	1	*360-3237*	1	PLATE AS (LH)	
	5A	1	**2C-9259**	1	PLATE-IDENTIFICATION (CAT)	
	5B	1	**6I-8310**	1	CORNER (LH)	
	6	1	**360-3251**	2	PLATE-WEAR	

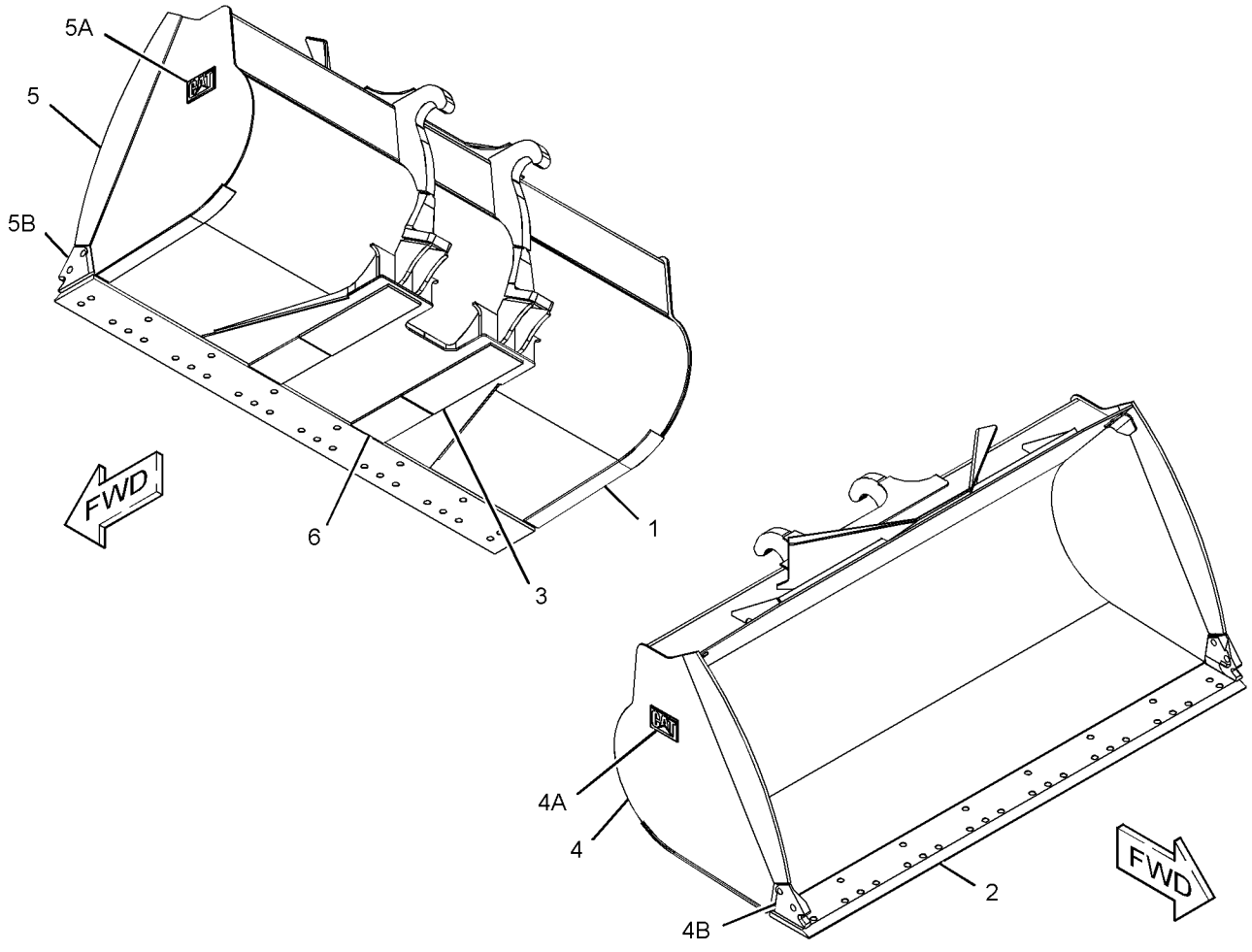

GRAPHIC #1 **<END>** g02794176

360-3314 BUCKET AS-GENERAL PURPOSE—PIN-ON

S/N: DYB1-UP
2727-MM (107.4-IN) WIDE X 2.7-CU M (3.6-CU YD) CAPACITY
PART OF 360-3309 BUCKET GP-GENERAL PURPOSE
AN ATTACHMENT

SMCS-6101 **i05329486**

NOTE	REF NO	GRAPHIC REF	PART NUMBER	QTY	PART NAME 1 2 3 4 5 6 (PRODUCT LEVEL)	SEE PAGE
	1	1	**360-3252**	2	PLATE-WEAR	
	2	1	**110-4712**	1	EDGE	
	3	1	**2C-9259**	2	PLATE-IDENTIFICATION (CAT)	
	4	1	**6I-8311**	1	CORNER (RH)	
	5	1	**6I-8310**	1	CORNER (LH)	
	6	1	**332-5817**	6	PLATE-WEAR	
	7	1	**345-2798**	2	PLATE	
	8	1	**360-3249**	2	PLATE-WEAR	

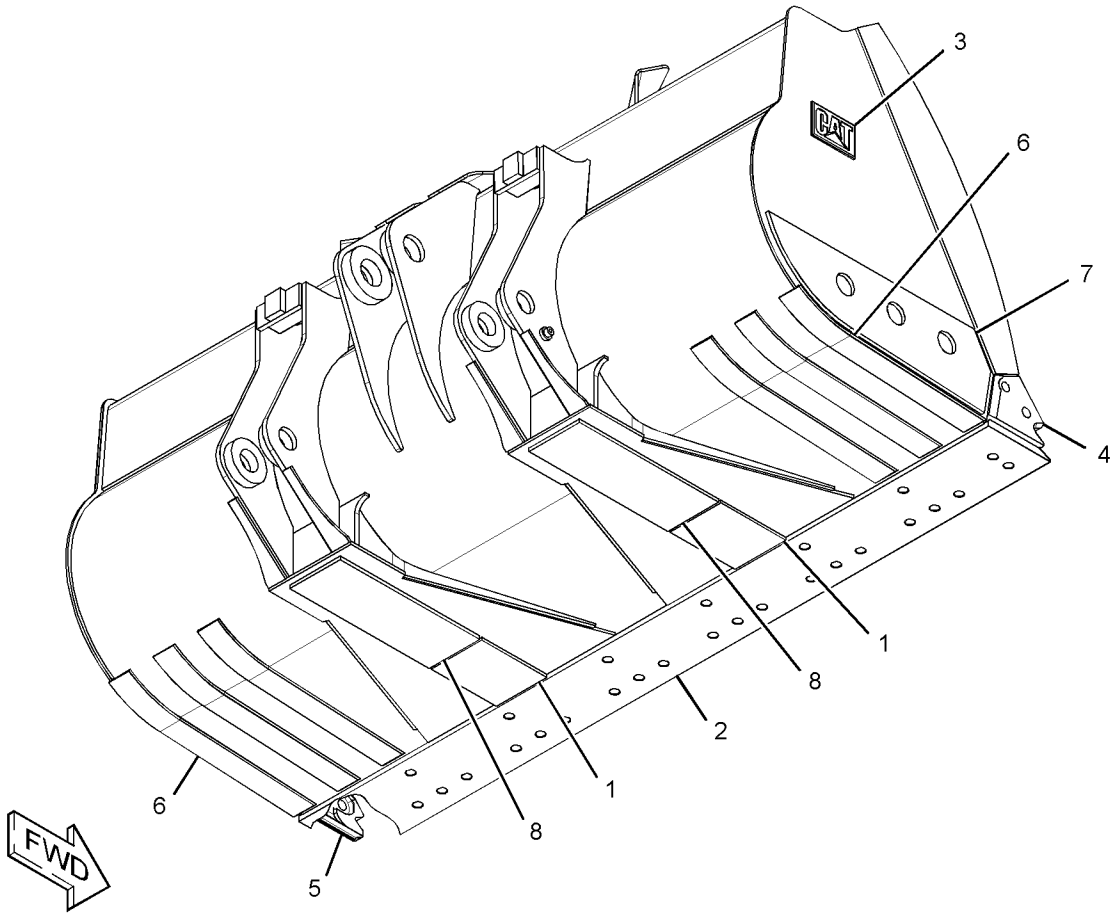

GRAPHIC #1 **<END>** g02813939

360-3318 BUCKET AS-GENERAL PURPOSE

S/N: DYB1-UP
2532-MM (99.7-IN) WIDE X 2.3-CU M (3-CU YD) CAPACITY
PART OF 360-3322 BUCKET GP-GENERAL PURPOSE
AN ATTACHMENT

SMCS-6101 **i05329489**

NOTE	REF NO	GRAPHIC REF	PART NUMBER	QTY	PART NAME 1 2 3 4 5 6 (PRODUCT LEVEL)	SEE PAGE
	1	1	**4E-0659**	1	EDGE-CUTTING	
	2	1	**332-5803**	2	PLATE	
	3	1	**360-3249**	2	PLATE-WEAR	
	4	1	**2C-9259**	2	PLATE-IDENTIFICATION (CAT)	
	5	1	**6I-8311**	1	CORNER (RH)	
	6	1	**6I-8310**	1	CORNER (LH)	

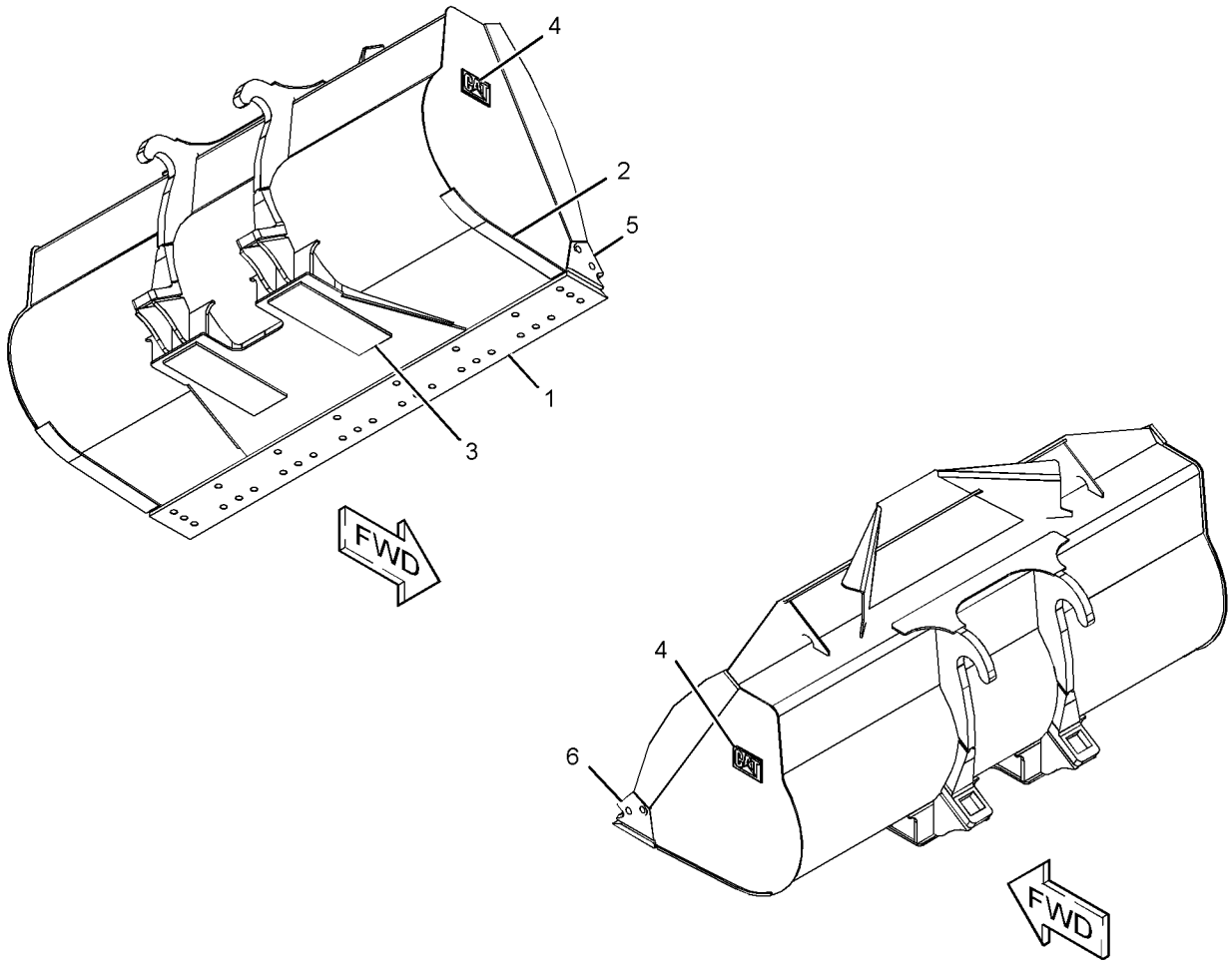

GRAPHIC #1 **<END>** g02795449

360-3319 BUCKET AS-GENERAL PURPOSE

S/N: DYB1-UP
2532-MM (99.7-IN) WIDE X 2.1-CU M (2.8-CU YD) CAPACITY
PART OF 360-3320 BUCKET GP-GENERAL PURPOSE
AN ATTACHMENT

SMCS-6101 **i05329488**

NOTE	REF NO	GRAPHIC REF	PART NUMBER	QTY	PART NAME 1 2 3 4 5 6 (PRODUCT LEVEL)	SEE PAGE
	1	1	**4E-0659**	1	EDGE-CUTTING	
	2	1	**2C-9259**	2	PLATE-IDENTIFICATION (CAT)	
	3	1	**6I-8311**	1	CORNER (RH)	
	4	1	**6I-8310**	1	CORNER (LH)	
	5	1	**332-5841**	2	PLATE-WEAR	
	6	1	**360-3249**	2	PLATE-WEAR	

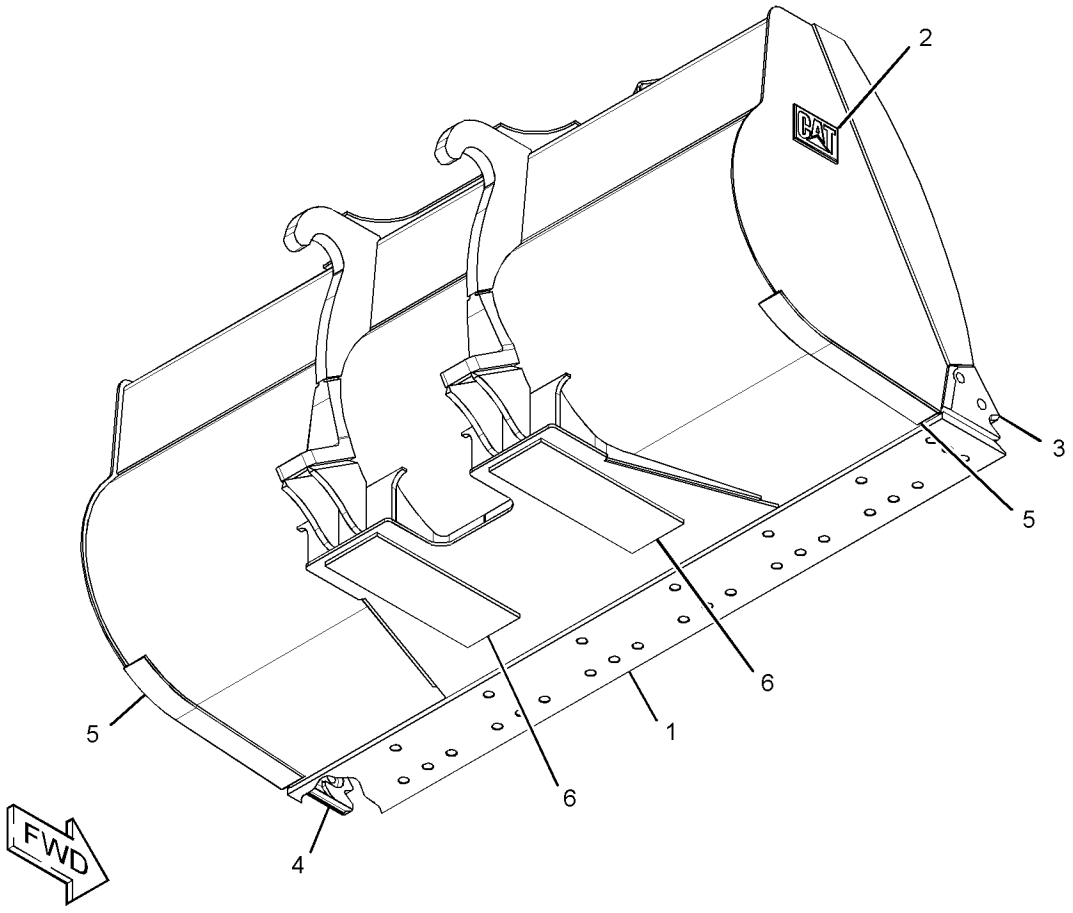

GRAPHIC #1 **<END>** g02798660

360-3331 BUCKET AS-GENERAL PURPOSE

S/N: DYB1-UP
2727-MM (107.4-IN) WIDE X 3.2-CU M (4.19-CU YD) CAPACITY
PART OF 360-3311 BUCKET GP-GENERAL PURPOSE
AN ATTACHMENT

SMCS-6101 **i05329487**

NOTE	REF NO	GRAPHIC REF	PART NUMBER	QTY	PART NAME 1 2 3 4 5 6 (PRODUCT LEVEL)	SEE PAGE
	1	1	**110-4712**	1	EDGE	
	2	1	**360-3248**	6	PLATE-WEAR	
	3	1	**360-3249**	2	PLATE-WEAR	
	4	1	**360-3251**	2	PLATE-WEAR	
	5	1	**360-3328**	2	PLATE	
	6	1	**2C-9259**	2	PLATE-IDENTIFICATION (CAT)	
	7	1	**6I-8311**	1	CORNER (RH)	
	8	1	**6I-8310**	1	CORNER (LH)	

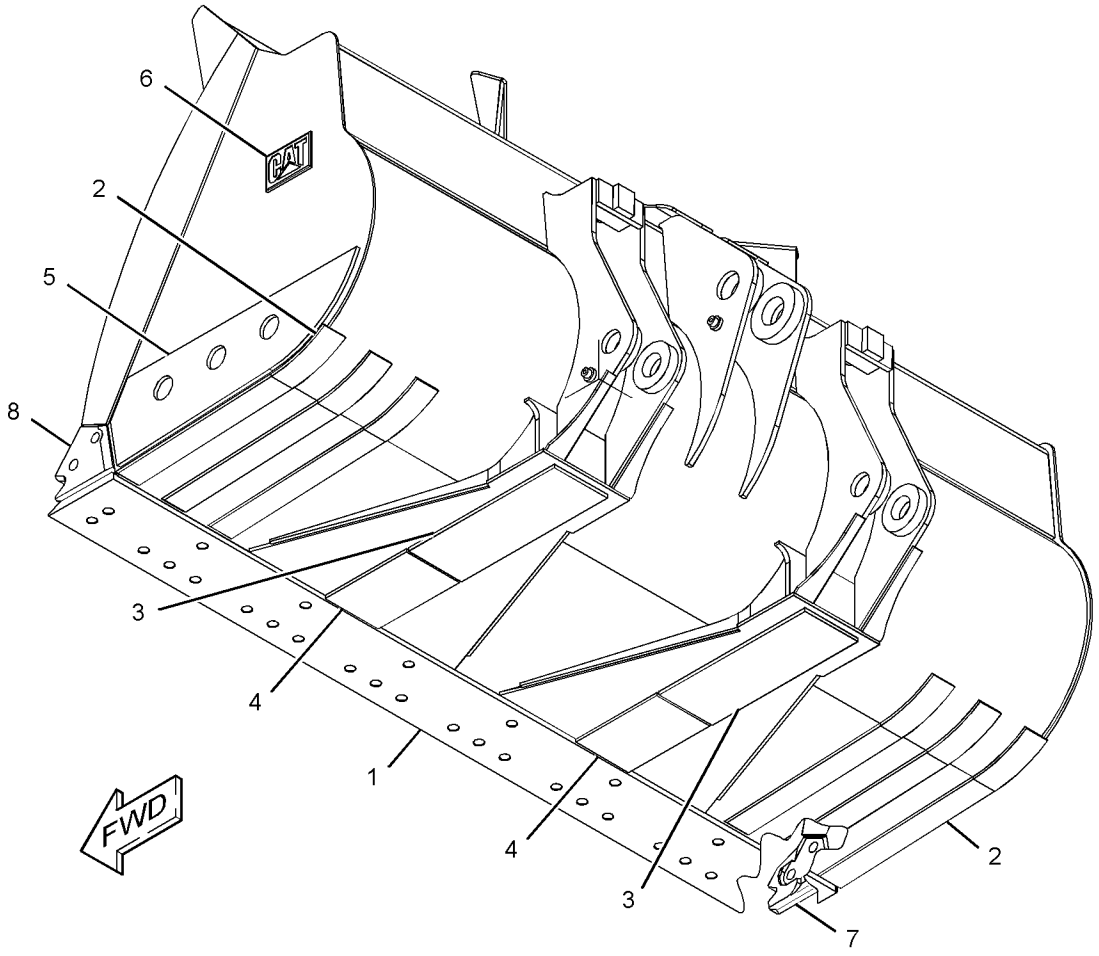

GRAPHIC #1 **<END>** g02794950

371-2310 BUCKET AS-GENERAL PURPOSE

S/N: DYB1-UP
2727-MM (107.4-IN) WIDE X 5-CU M (6.6-CU YD) CAPACITY
PART OF 345-2762 BUCKET GP-GENERAL PURPOSE
AN ATTACHMENT

SMCS-6101 **i05329481**

NOTE	REF NO	GRAPHIC REF	PART NUMBER	QTY	PART NAME 1 2 3 4 5 6 (PRODUCT LEVEL)	SEE PAGE
	1	1	**110-4712**	1	EDGE	
	2	1	**2C-9259**	2	PLATE-IDENTIFICATION (CAT)	
	3	1	**371-2304**	1	PLATE	
	4	1	**371-2303**	2	PLATE	

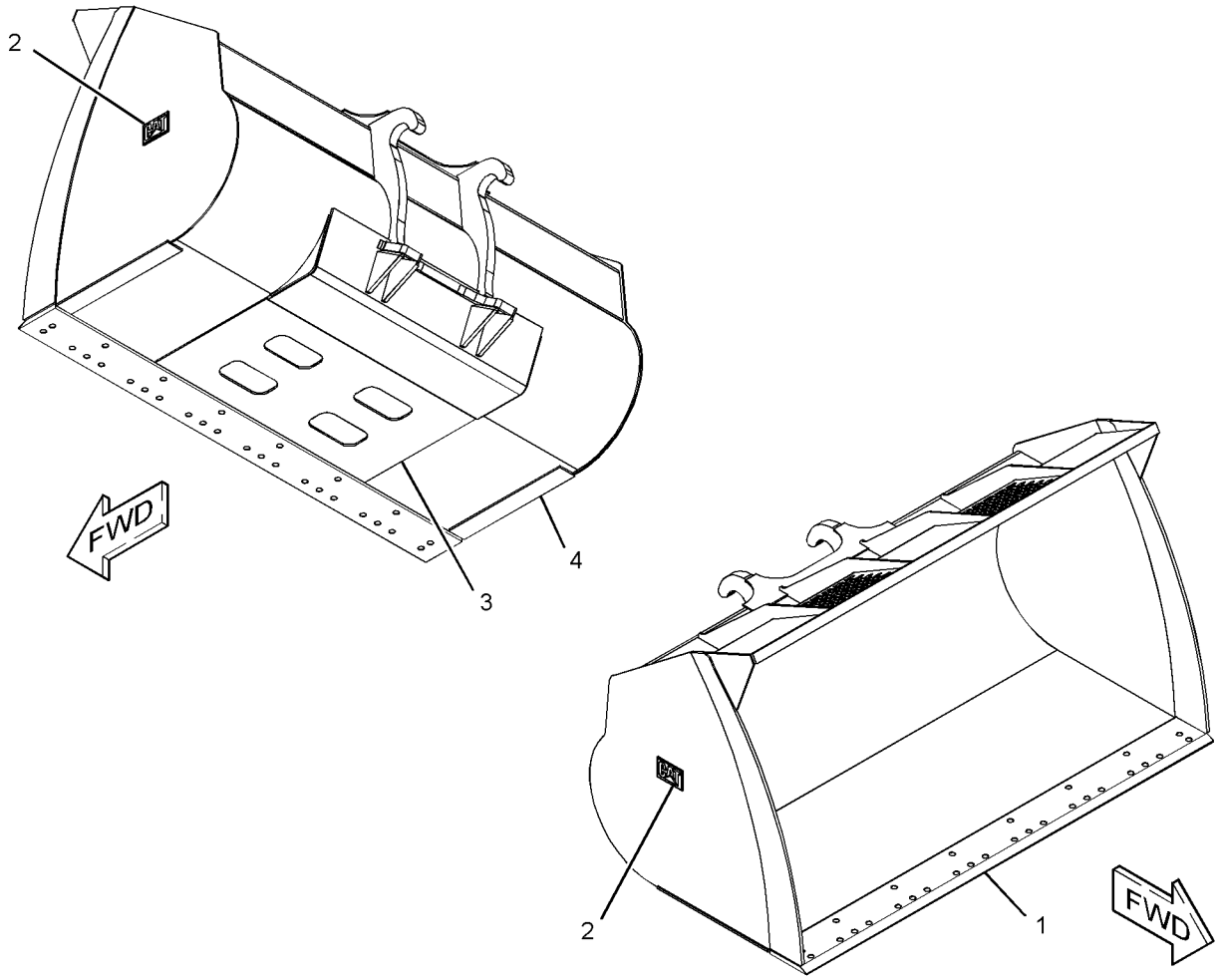

GRAPHIC #1 **<END>** g02868020

371-2320 BUCKET AS-GENERAL PURPOSE

S/N: DYB1-UP
2727-MM (107.4-IN) WIDE X 5-CU M (6.6-CU YD) CAPACITY
PART OF 345-2766 BUCKET GP-GENERAL PURPOSE
AN ATTACHMENT

SMCS-6101 **i05300936**

NOTE	REF NO	GRAPHIC REF	PART NUMBER	QTY	PART NAME 1 2 3 4 5 6 (PRODUCT LEVEL)	SEE PAGE
	1	1	**110-4712**	1	EDGE	
	2	1	**371-2303**	2	PLATE	
	3	1	**371-2304**	1	PLATE	
	4	1	**2C-9259**	2	PLATE-IDENTIFICATION (CAT)	

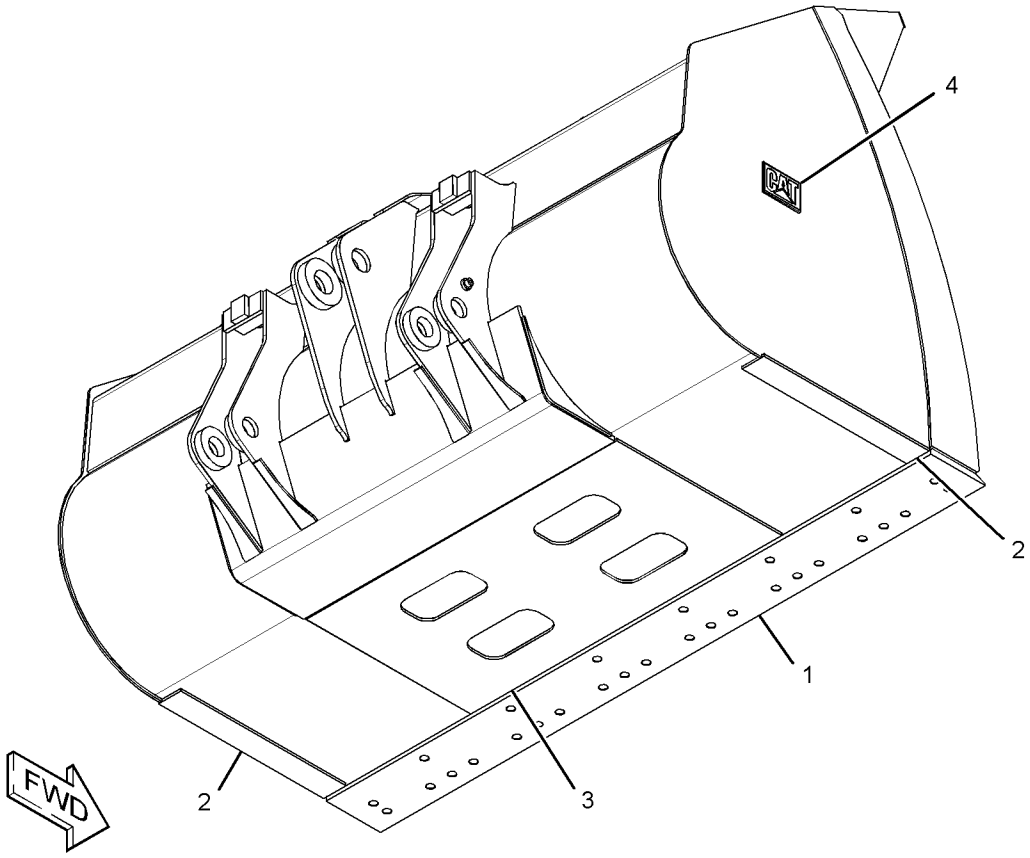

GRAPHIC #1 **<END>** g02811159

371-2321 BUCKET AS-GENERAL PURPOSE

S/N: DYB1-UP
2727-MM (107.4-IN) WIDE X 3.5-CU M (4.6-CU YD) CAPACITY
PART OF 345-2760 BUCKET GP-GENERAL PURPOSE
AN ATTACHMENT

SMCS-6101 **i05329480**

NOTE	REF NO	GRAPHIC REF	PART NUMBER	QTY	PART NAME 1 2 3 4 5 6 (PRODUCT LEVEL)	SEE PAGE
	1	1	**110-4712**	1	EDGE	
	2	1	**2C-9259**	2	PLATE-IDENTIFICATION (CAT)	
	3	1	**371-2330**	1	PLATE	
	4	1	**371-2329**	2	PLATE	

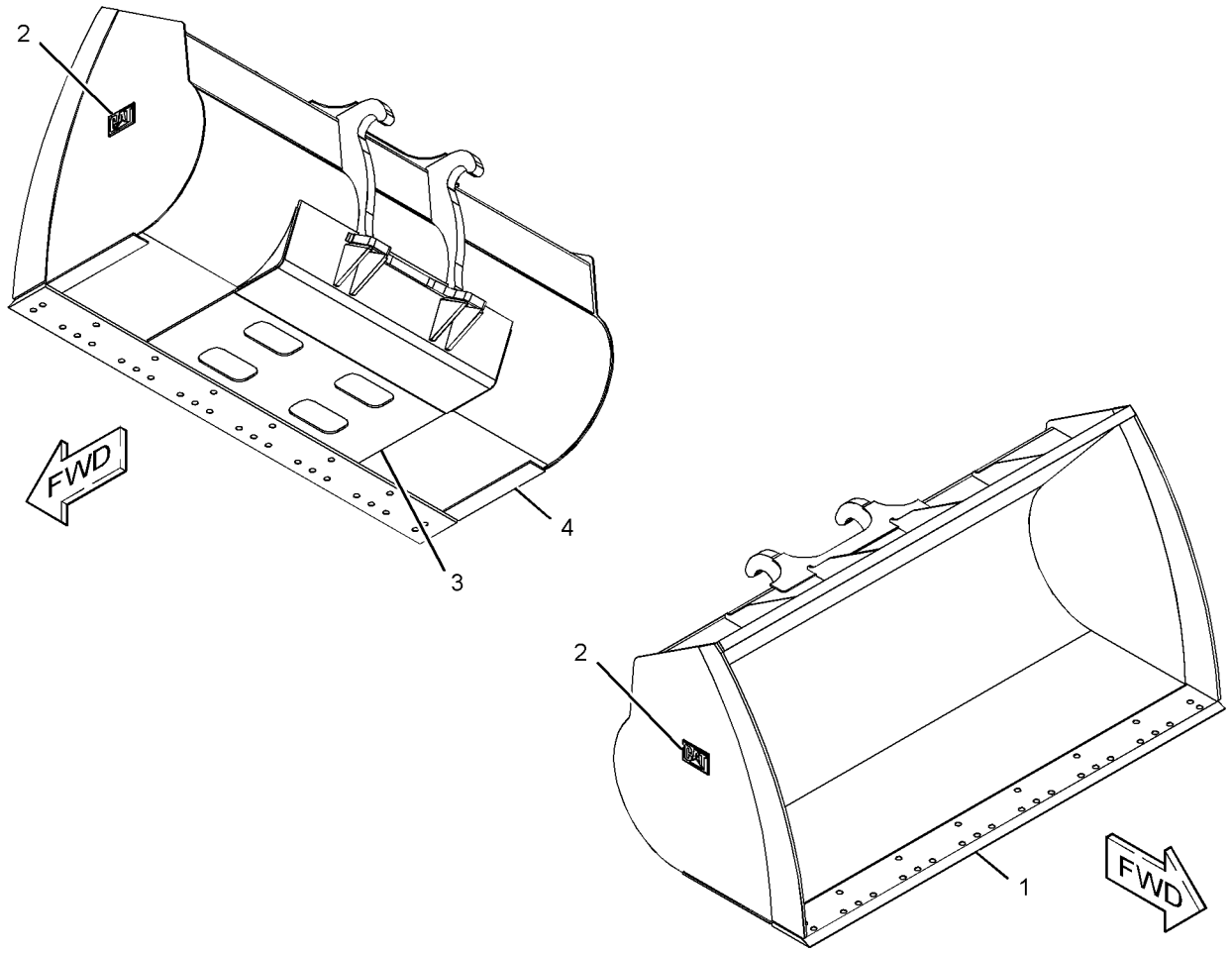

GRAPHIC #1 **<END>** g02867996

371-2331 BUCKET AS-GENERAL PURPOSE

S/N: DYB1-UP
2727-MM (107.4-IN) WIDE X 3.5-CU M (4.6-CU YD) CAPACITY
PART OF 345-2764 BUCKET GP-GENERAL PURPOSE
AN ATTACHMENT

SMCS-6101 **i05300973**

NOTE	REF NO	GRAPHIC REF	PART NUMBER	QTY	PART NAME 1 2 3 4 5 6 (PRODUCT LEVEL)	SEE PAGE
	1	1	**110-4712**	1	EDGE	
	2	1	**2C-9259**	2	PLATE-IDENTIFICATION (CAT)	
	3	1	**371-2330**	1	PLATE	
	4	1	**371-2329**	2	PLATE	

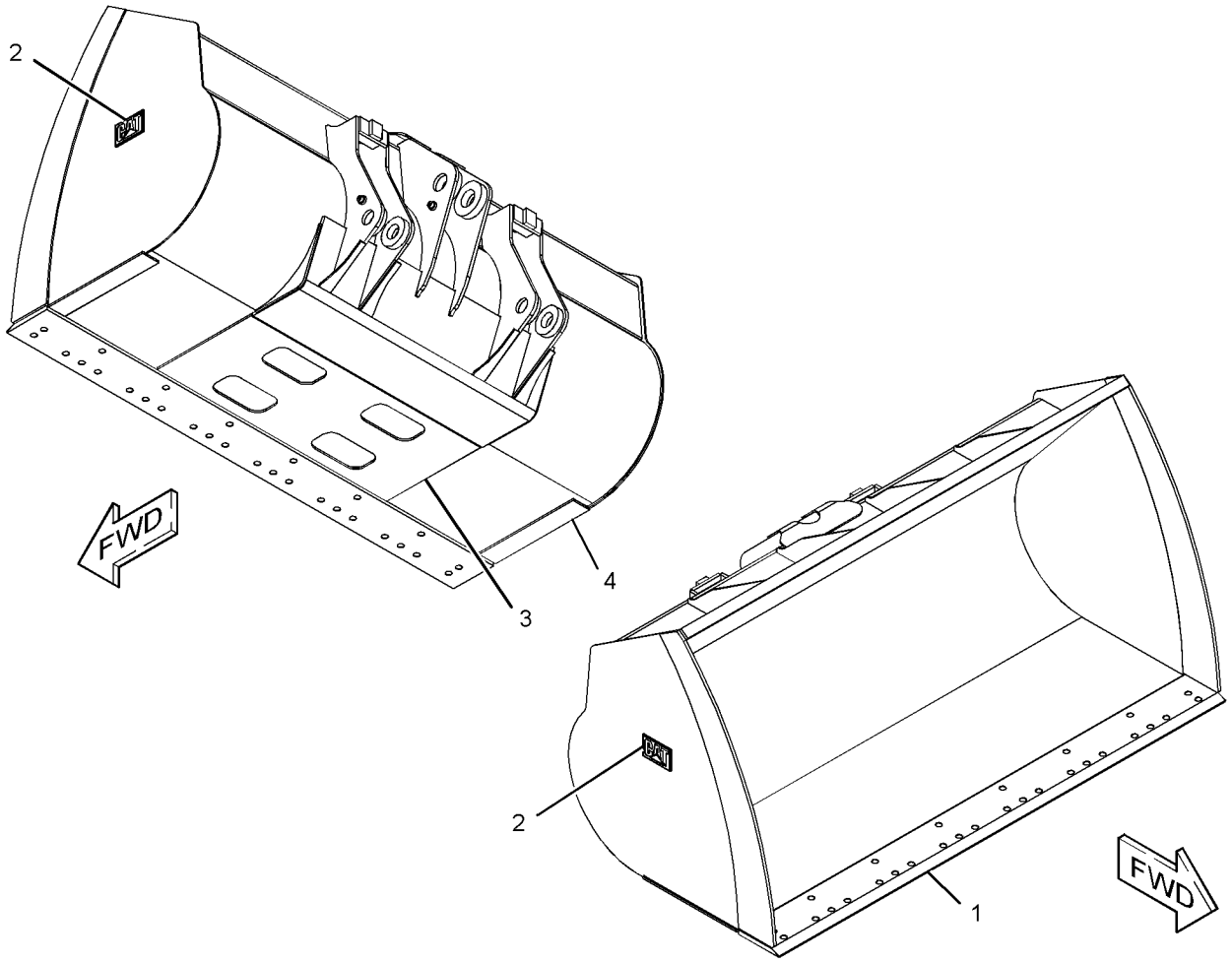

GRAPHIC #1 **<END>** g02867956

371-2337 BUCKET AS-GENERAL PURPOSE

S/N: DYB1-UP
2727-MM (107.4-IN) WIDE X 4.2-CU M (5.5-CU YD) CAPACITY
PART OF 345-2768 BUCKET GP-GENERAL PURPOSE
AN ATTACHMENT

SMCS-6101 **i05329482**

NOTE	REF NO	GRAPHIC REF	PART NUMBER	QTY	PART NAME 1 2 3 4 5 6 (PRODUCT LEVEL)	SEE PAGE
	1	1	**110-4712**	1	EDGE	
	2	1	**371-2303**	2	PLATE	
	3	1	**371-2304**	1	PLATE	
	4	1	**2C-9259**	2	PLATE-IDENTIFICATION (CAT)	

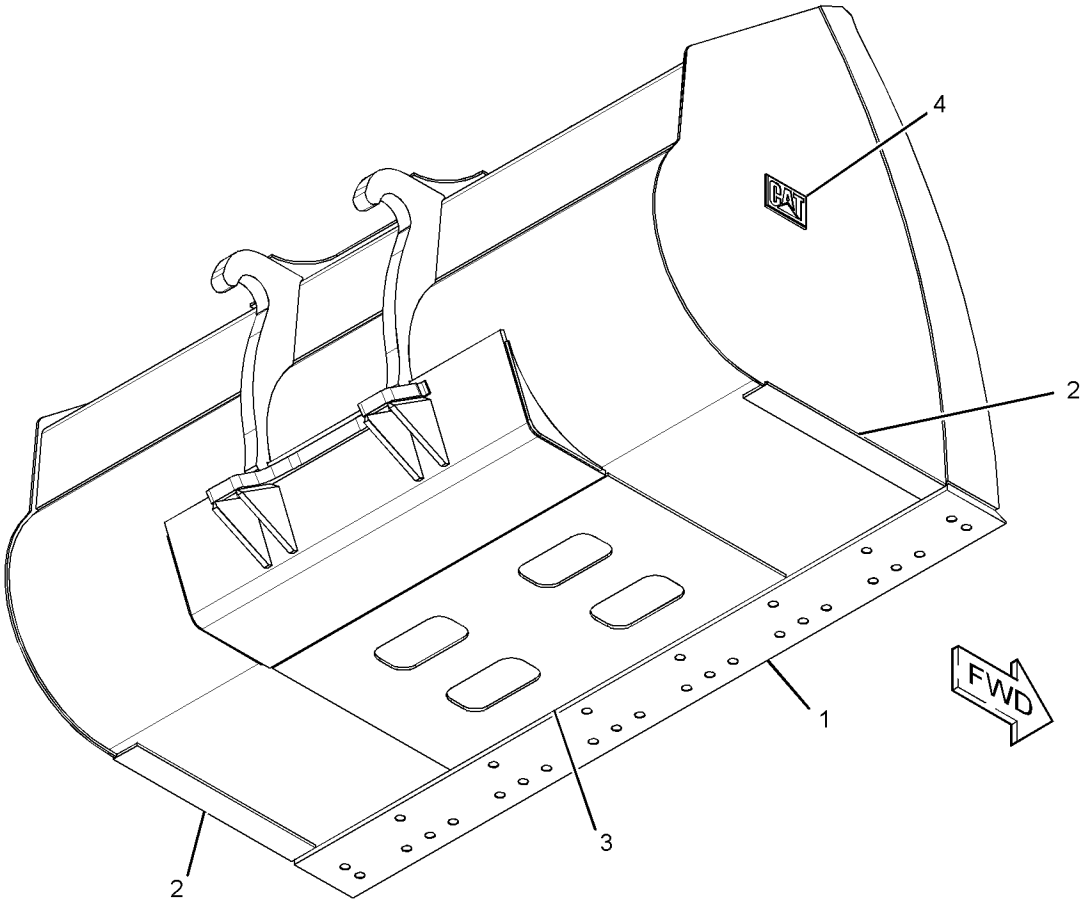

GRAPHIC #1 **<END>** g02794688

371-2338 BUCKET AS-GENERAL PURPOSE

S/N: DYB1-UP
2727-MM (107.4-IN) WIDE X 4.2-CU M (5.5-CU YD) CAPACITY
PART OF 345-2770 BUCKET GP-GENERAL PURPOSE
AN ATTACHMENT

SMCS-6101 **i05300958**

NOTE	REF NO	GRAPHIC REF	PART NUMBER	QTY	PART NAME 1 2 3 4 5 6 (PRODUCT LEVEL)	SEE PAGE
	1	1	**110-4712**	1	EDGE	
	2	1	**371-2303**	2	PLATE	
	3	1	**371-2304**	1	PLATE	
	4	1	**2C-9259**	2	PLATE-IDENTIFICATION (CAT)	

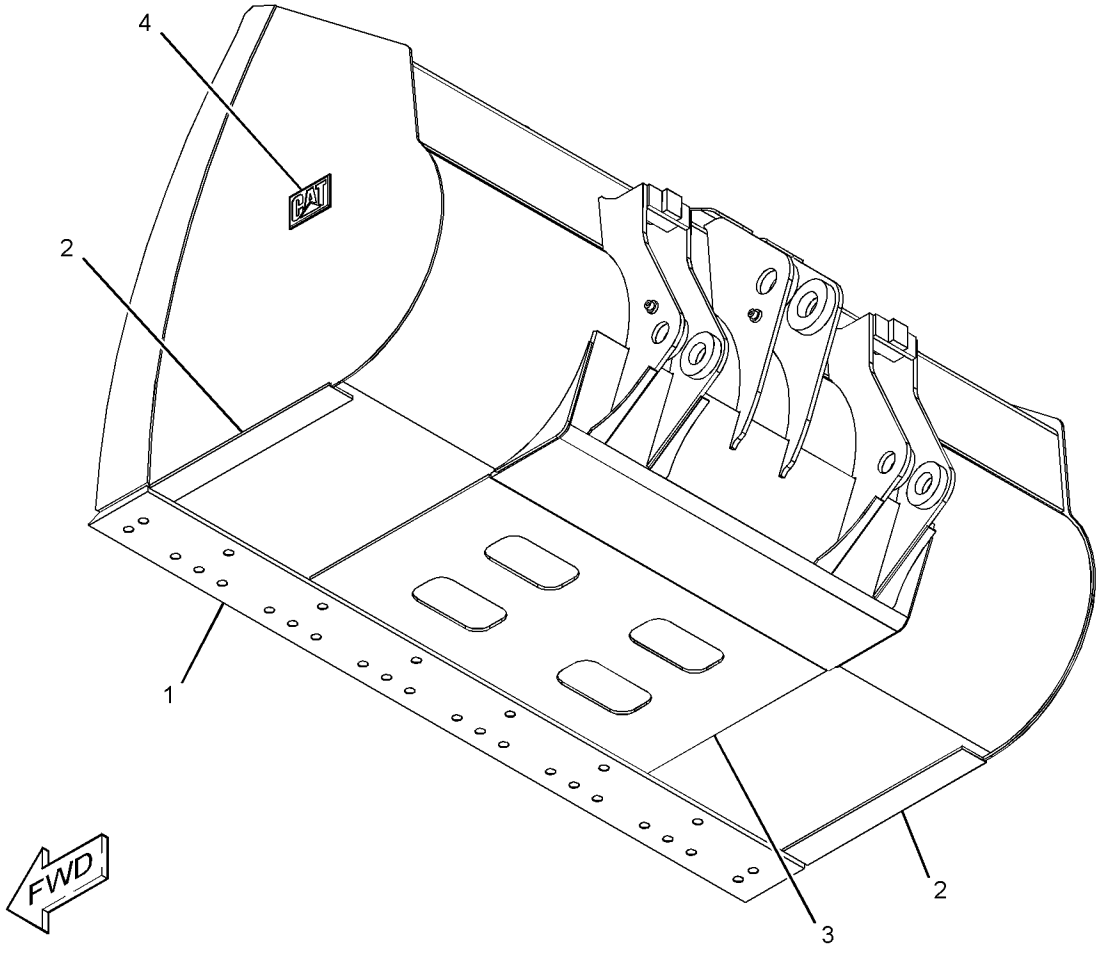

GRAPHIC #1 **<END>** g02796588

438-5482 BUCKET AS-GENERAL PURPOSE

S/N: DYB1-UP
2532-MM (99.7-IN) WIDE X 1.7-CU M (2.2-CU YD) CAPACITY
PART OF 438-5500 BUCKET GP-GENERAL PURPOSE
AN ATTACHMENT

SMCS-6101 **i05320697**

NOTE	REF NO	GRAPHIC REF	PART NUMBER	QTY	PART NAME 1 2 3 4 5 6 (PRODUCT LEVEL)	SEE PAGE
	1	1	**4E-0659**	1	EDGE-CUTTING	
	2	1	*438-5475*	1	PLATE AS (RH)	
		1	**2C-9259**	1	PLATE-IDENTIFICATION (CAT)	
		1	**6I-8311**	1	CORNER (RH)	
	3	1	**438-5492**	2	PLATE-WEAR	
	4	1	**438-5495**	2	PLATE-WEAR	
	5	1	*438-5478*	1	PLATE AS (LH)	
		1	**2C-9259**	1	PLATE-IDENTIFICATION (CAT)	
		1	**6I-8310**	1	CORNER (LH)	

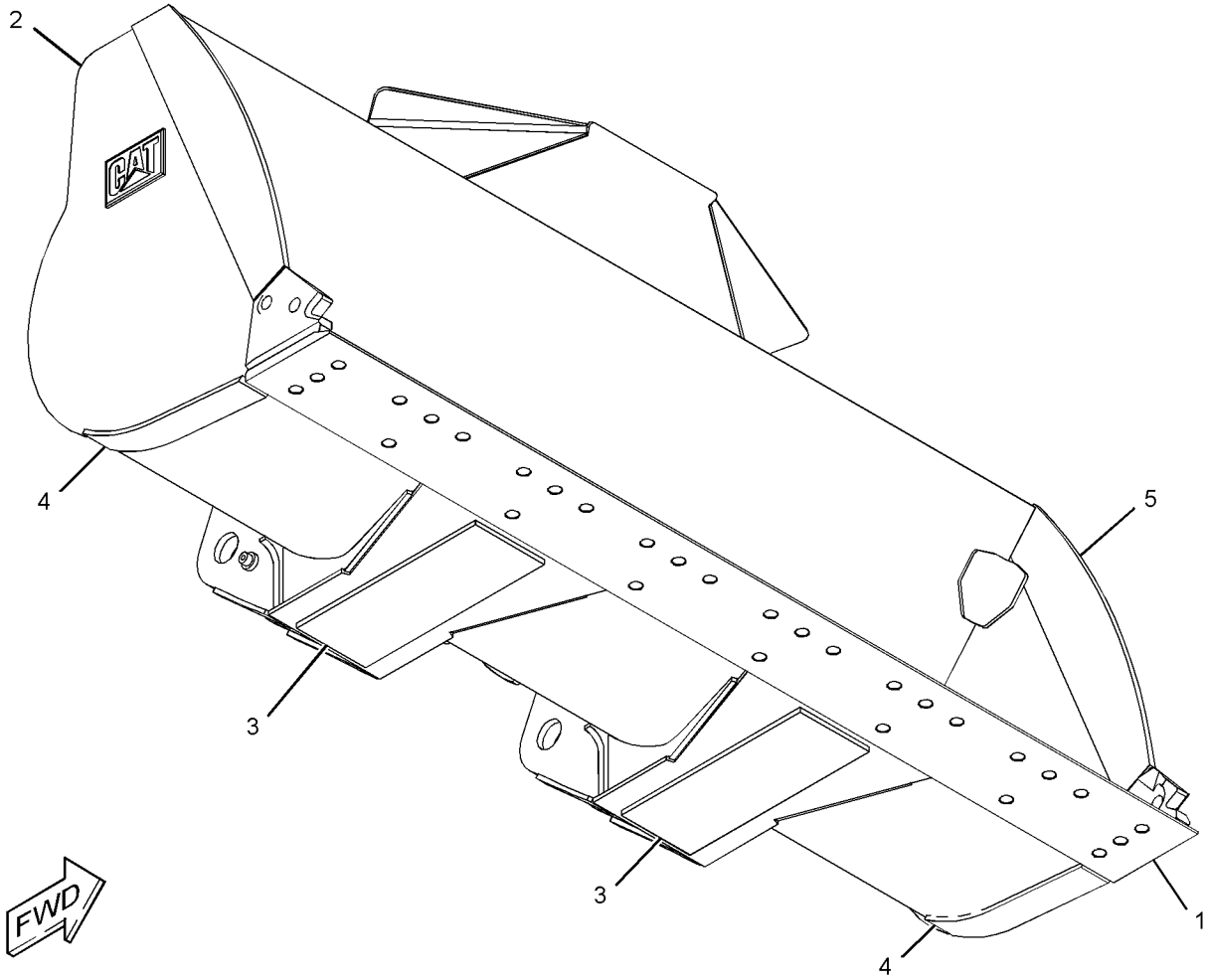

GRAPHIC #1 **<END>** g03380062

434-8967 BUCKET AS-MATERIAL HANDLING

S/N: DYB1-UP
2723-MM (107.2-IN) WIDE X 4.6-CU M (6-CU YD) CAPACITY
PART OF 434-8968 BUCKET GP-MATERIAL HANDLING
AN ATTACHMENT

SMCS-6101 **i05300998**

NOTE	REF NO	GRAPHIC REF	PART NUMBER	QTY	PART NAME 1 2 3 4 5 6 (PRODUCT LEVEL)	SEE PAGE
	1	1	**110-4712**	1	EDGE	
	2	1	**394-4710**	2	PLATE-WEAR	
	3	1	**435-0262**	2	PLATE-WEAR	
	4	1	**435-0265**	2	PLATE-WEAR	
	5	1	*435-0252*	1	PLATE AS-SIDE (RH)	
	6	1	*435-0253*	1	PLATE AS-SIDE (LH)	
					(EACH PLATE AS-SIDE INCLUDES)	
		1	**2C-9259**	1	PLATE-IDENTIFICATION (CAT)	
		1	**435-0248**	1	PLATE-SIDE BAR	

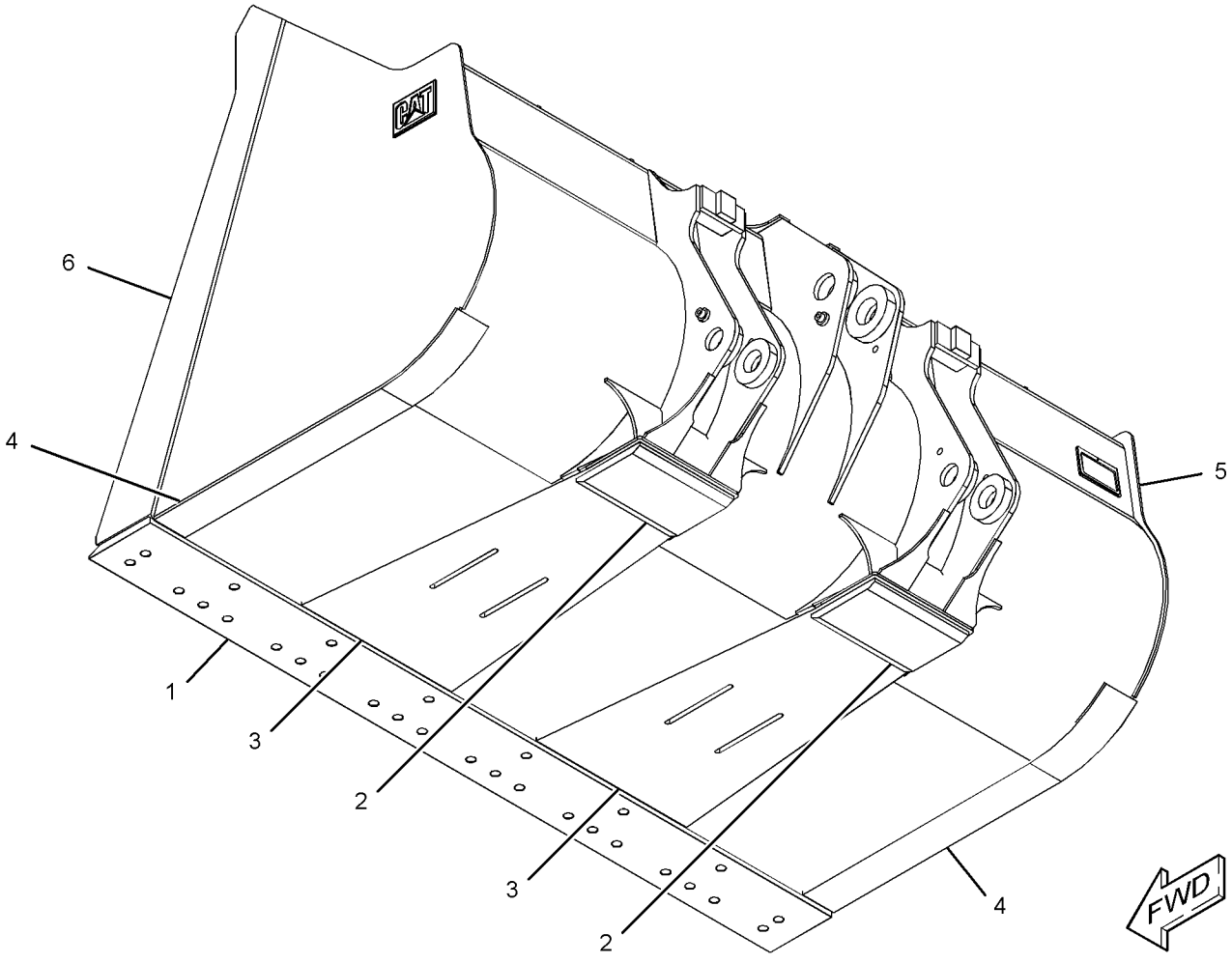

GRAPHIC #1 **<END>** g03375793

439-1334 BUCKET AS-MATERIAL HANDLING

S/N: DYB1-UP
2743-MM (108-IN) WIDE X 4.2-CU M (5.5-CU YD) CAPACITY
PART OF 439-1335 BUCKET GP-MATERIAL HANDLING
AN ATTACHMENT

SMCS-6101 **i05320526**

NOTE	REF NO	GRAPHIC REF	PART NUMBER	QTY	PART NAME 1 2 3 4 5 6 (PRODUCT LEVEL)	SEE PAGE
	1	1	**439-1499**	2	PLATE-WEAR	
	2	1	**110-4712**	1	EDGE	
	3	1	**439-1496**	2	PLATE-WEAR	
	4	1	*439-1476*	1	PLATE AS-SIDE (LH)	
		1	**2C-9259**	1	PLATE-IDENTIFICATION (CAT)	
		1	**438-9544**	1	PLATE-SIDE BAR	
		1	**439-1471**	1	PLATE-SIDE BAR	
	5	1	**394-4710**	2	PLATE-WEAR	
	6	1	*439-1475*	1	PLATE AS-SIDE (RH)	
		1	**2C-9259**	1	PLATE-IDENTIFICATION (CAT)	
		1	**438-9544**	1	PLATE-SIDE BAR	
		1	**439-1471**	1	PLATE-SIDE BAR	

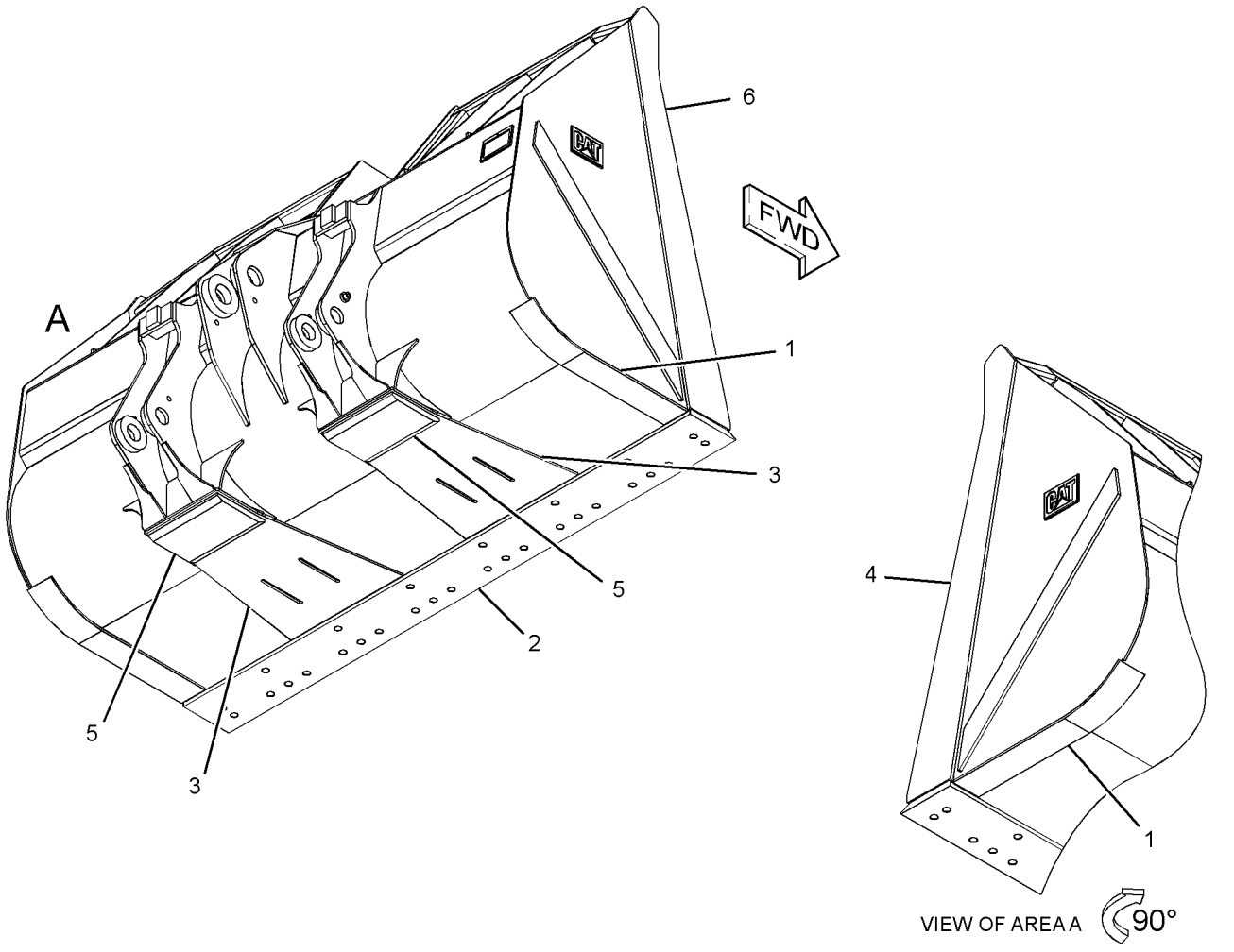

GRAPHIC #1 **<END>** g03375767

345-2424 BUCKET GP-GENERAL PURPOSE

S/N: DYB1-UP
2528-MM (99.5-IN) WIDE X 2.5-CU M (3.3-CU YD) CAPACITY
CANNOT BE USED WITH 333-6865—PAGE: 536
AN ATTACHMENT

SMCS-6101 **i05313075**

NOTE	REF NO	GRAPHIC REF	PART NUMBER	QTY	PART NAME 1 2 3 4 5 6 (PRODUCT LEVEL)	SEE PAGE
	1	1	**137-4234**	1	PLATE-IDENTIFICATION (WORK TOOL)	
	2	1	**168-8389**	4	TACK-FASTENER (METAL)	
Y	3	1	*332-5809*	1	BUCKET AS-GENERAL PURPOSE (QUICK COUPLER)	497

Y - SEPARATE ILLUSTRATION

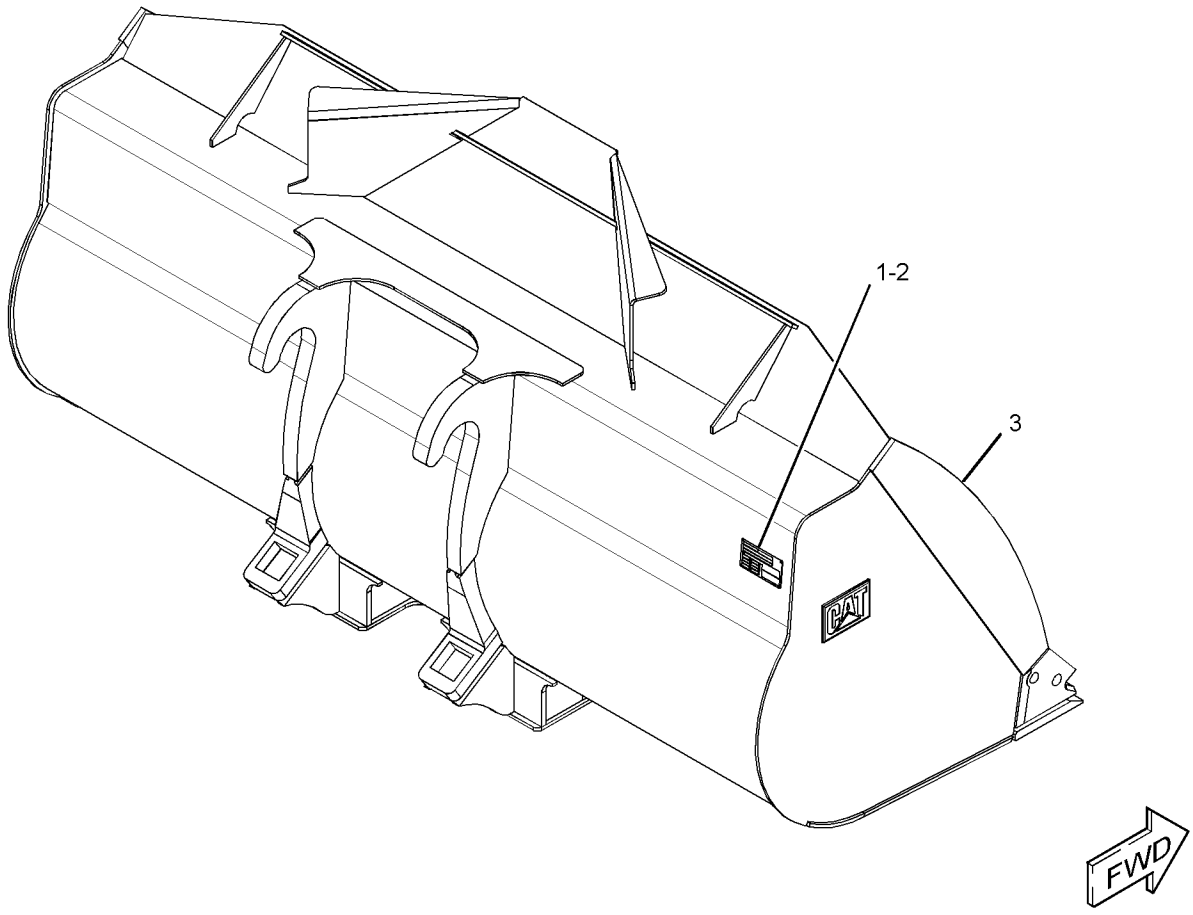

GRAPHIC #1 **<END>** g02789402

345-2426 BUCKET GP-GENERAL PURPOSE

S/N: DYB1-UP
2727-MM (107.4-IN) WIDE X 2.7-CU M (3.6-CU YD) CAPACITY
AN ATTACHMENT

SMCS-6101 **i05313178**

NOTE	REF NO	GRAPHIC REF	PART NUMBER	QTY	PART NAME 1 2 3 4 5 6 (PRODUCT LEVEL)	SEE PAGE
	1	1	**137-4234**	1	PLATE-IDENTIFICATION (WORK TOOL)	
	2	1	**168-8389**	4	TACK-FASTENER (METAL)	
Y	3	1	*345-2806*	1	BUCKET AS-GENERAL PURPOSE	500

Y - SEPARATE ILLUSTRATION

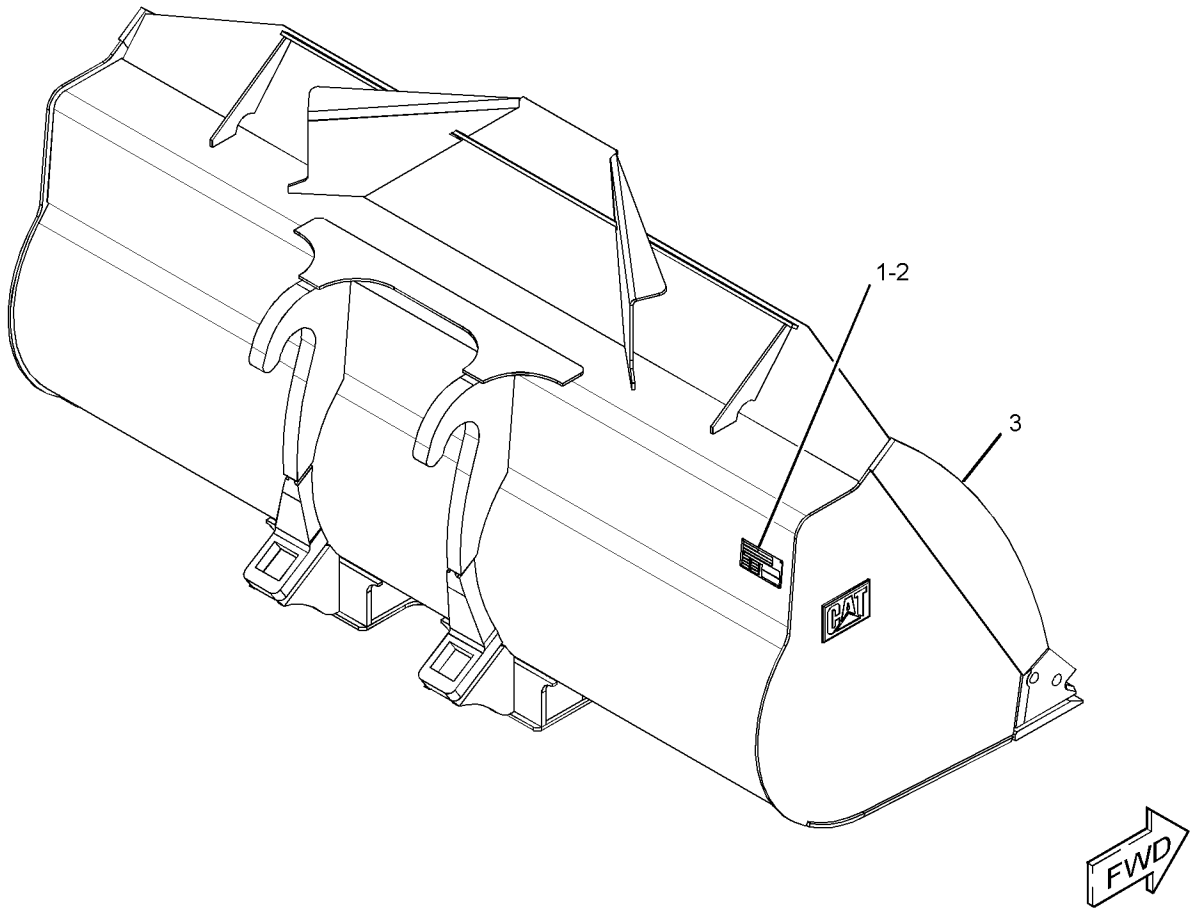

GRAPHIC #1 **<END>** g02789402

345-2428 BUCKET GP-GENERAL PURPOSE

S/N: DYB1-UP
2727-MM (107.4-IN) WIDE X 2.8-CU M (3.7-CU YD) CAPACITY
AN ATTACHMENT

SMCS-6101 **i05329459**

NOTE	REF NO	GRAPHIC REF	PART NUMBER	QTY	PART NAME 1 2 3 4 5 6 (PRODUCT LEVEL)	SEE PAGE
	1	1	**137-4234**	1	PLATE-IDENTIFICATION (WORK TOOL)	
	2	1	**168-8389**	4	TACK-FASTENER	
Y	3	1	*360-3247*	1	BUCKET AS-GENERAL PURPOSE	501

Y - SEPARATE ILLUSTRATION

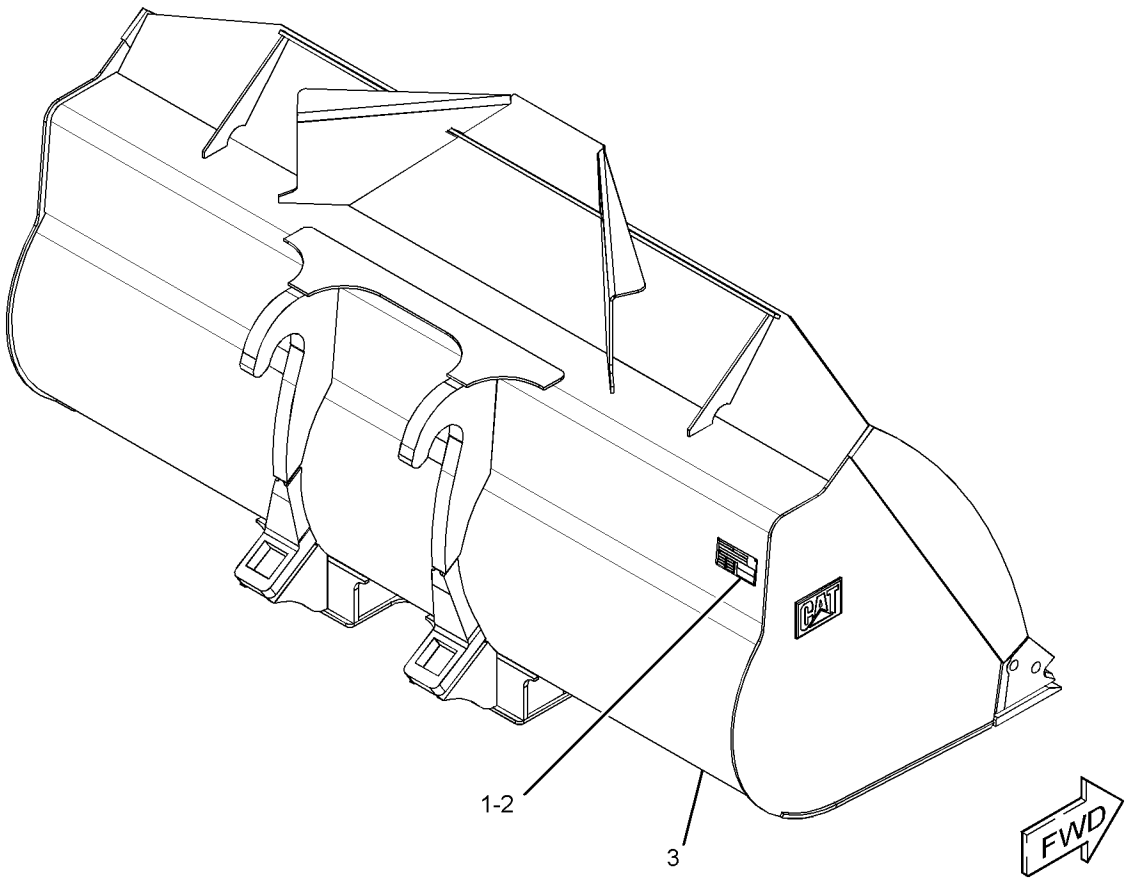

GRAPHIC #1 **<END>** g02791936

345-2760 BUCKET GP-GENERAL PURPOSE

S/N: DYB1-UP
2723-MM (107.2-IN) WIDE X 3.5-CU M (4.6-CU YD) CAPACITY
FOR USE WITH 333-6865—PAGE: 536
AN ATTACHMENT

SMCS-6101 **i05329465**

NOTE	REF NO	GRAPHIC REF	PART NUMBER	QTY	PART NAME 1 2 3 4 5 6 (PRODUCT LEVEL)	SEE PAGE
	1	1	**137-4234**	1	PLATE-IDENTIFICATION (WORK TOOL)	
	2	1	**168-8389**	4	TACK-FASTENER	
Y	3	1	*371-2321*	1	BUCKET AS-GENERAL PURPOSE	508

Y - SEPARATE ILLUSTRATION

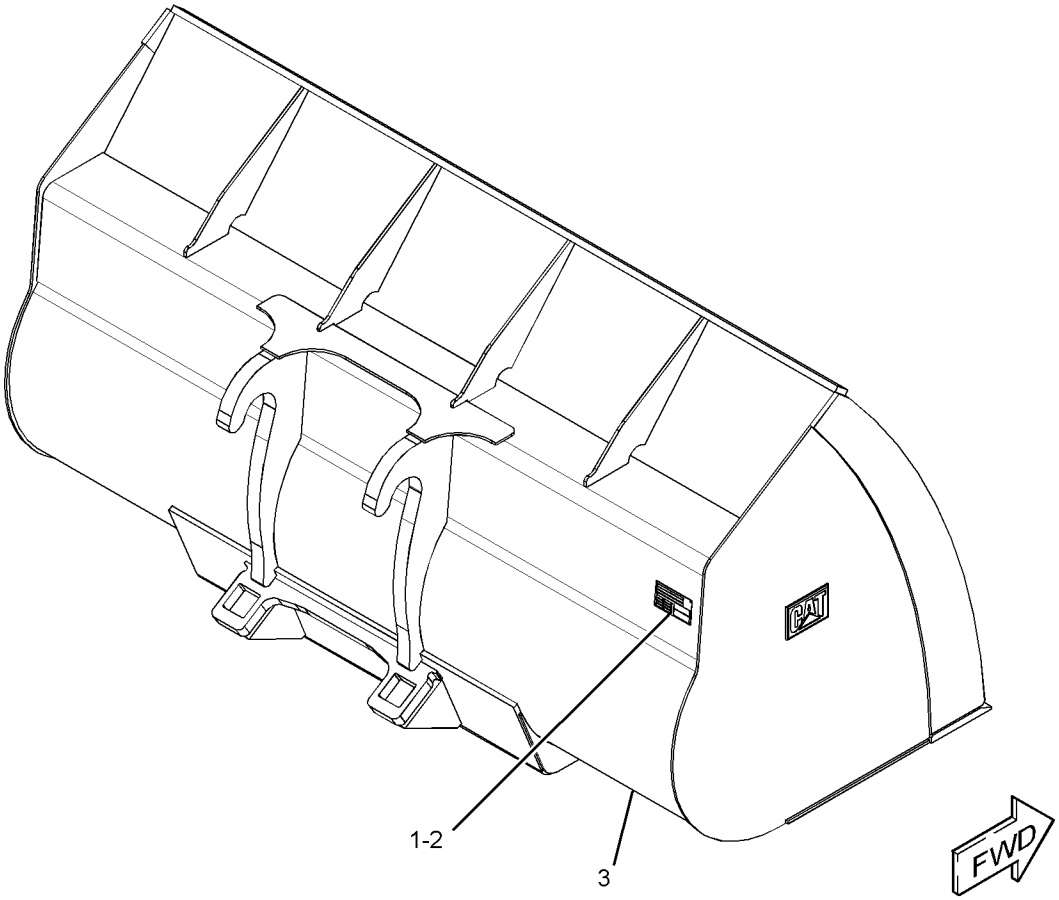

GRAPHIC #1 **<END>** g02791921

345-2762 BUCKET GP-GENERAL PURPOSE

S/N: DYB1-UP
2727-MM (107.4-IN) WIDE X 5-CU M (6.6-CU YD) CAPACITY
FOR USE WITH 333-6865—PAGE: 536
AN ATTACHMENT

SMCS-6101 **i05329466**

NOTE	REF NO	GRAPHIC REF	PART NUMBER	QTY	PART NAME 1 2 3 4 5 6 (PRODUCT LEVEL)	SEE PAGE
	1	1	**137-4234**	1	PLATE-IDENTIFICATION (WORK TOOL)	
	2	1	**168-8389**	4	TACK-FASTENER	
Y	3	1	*371-2310*	1	BUCKET AS-GENERAL PURPOSE	506

Y - SEPARATE ILLUSTRATION

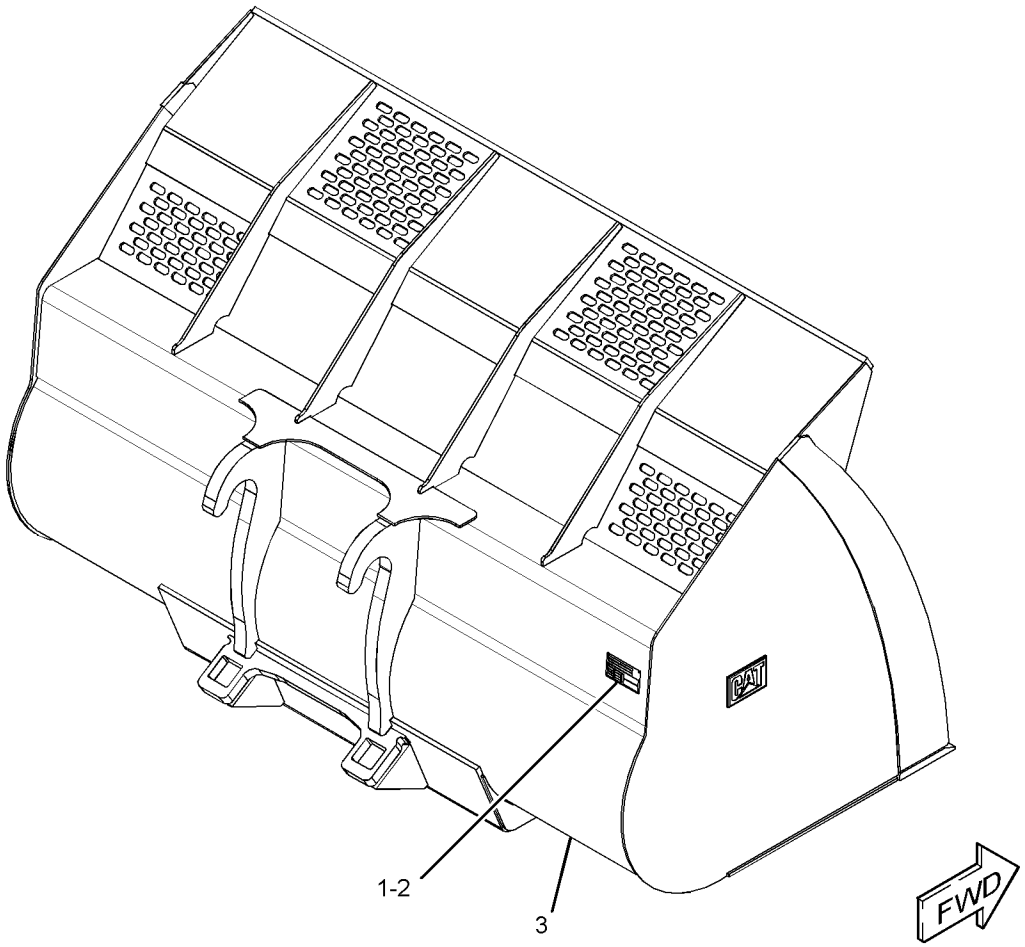

GRAPHIC #1 **<END>** g02791904

345-2764 BUCKET GP-GENERAL PURPOSE

S/N: DYB1-UP
2727-MM (107.4-IN) WIDE X 3.5-CU M (4.6-CU YD) CAPACITY
AN ATTACHMENT

SMCS-6101 **i05300930**

NOTE	REF NO	GRAPHIC REF	PART NUMBER	QTY	PART NAME 1 2 3 4 5 6 (PRODUCT LEVEL)	SEE PAGE
	1	1	**137-4234**	1	PLATE-IDENTIFICATION (WORK TOOL)	
	2	1	**168-8389**	4	TACK-FASTENER	
Y	3	1	*371-2331*	1	BUCKET AS-GENERAL PURPOSE	509

Y - SEPARATE ILLUSTRATION

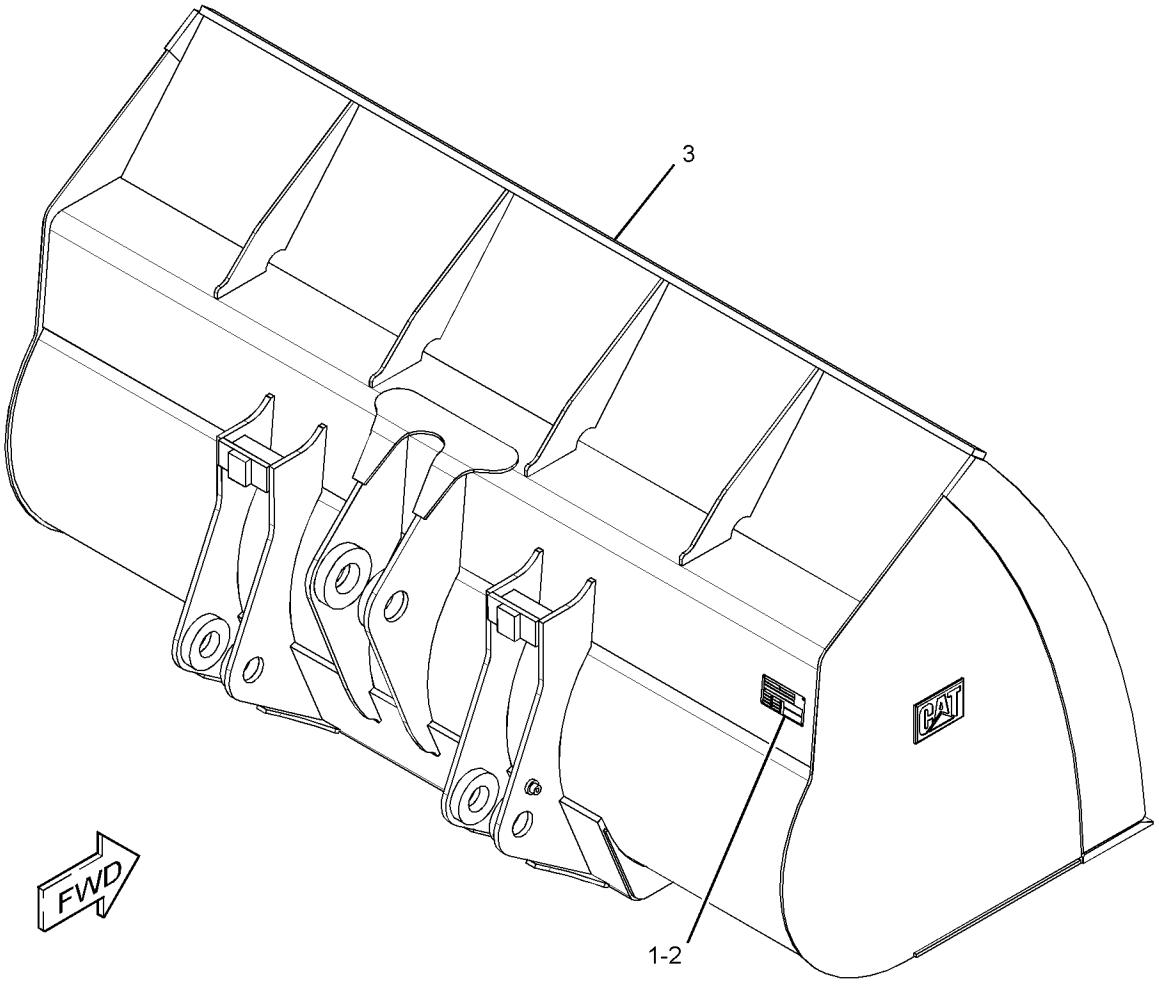

GRAPHIC #1 **<END>** g02770376

345-2766 BUCKET GP-GENERAL PURPOSE

S/N: DYB1-UP
2723-MM (107.2-IN) WIDE X 5-CU M (6.6-CU YD) CAPACITY
AN ATTACHMENT

SMCS-6101 **i05300935**

NOTE	REF NO	GRAPHIC REF	PART NUMBER	QTY	PART NAME 1 2 3 4 5 6 (PRODUCT LEVEL)	SEE PAGE
	1	1	**137-4234**	1	PLATE-IDENTIFICATION (WORK TOOL)	
	2	1	**168-8389**	4	TACK-FASTENER	
Y	3	1	*371-2320*	1	BUCKET AS-GENERAL PURPOSE	507

Y - SEPARATE ILLUSTRATION

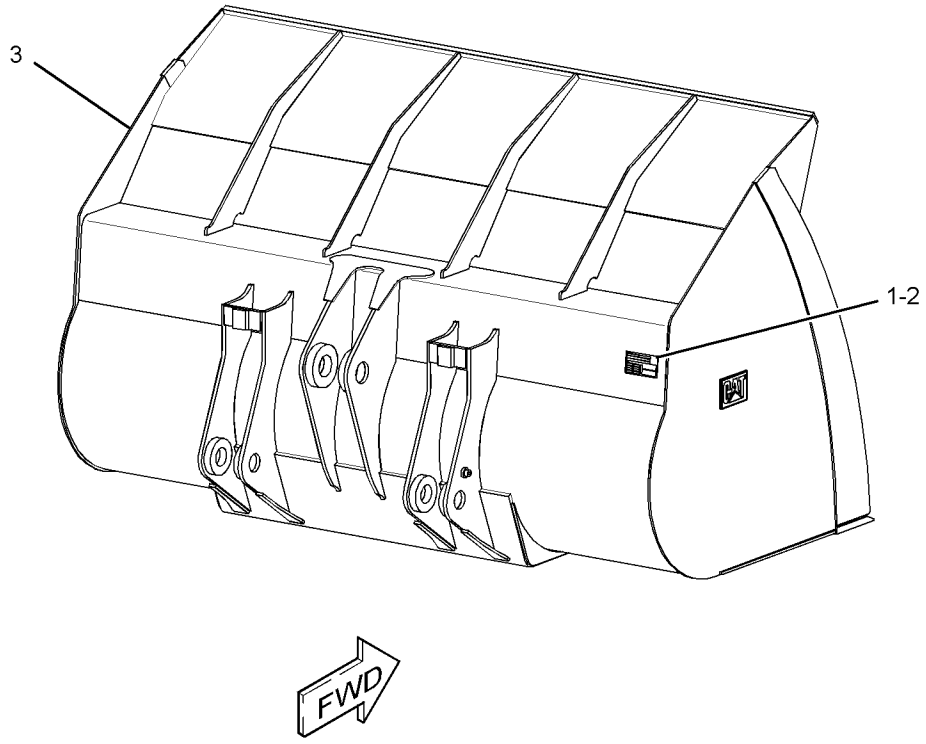

GRAPHIC #1 **<END>** g02790868

345-2768 BUCKET GP-GENERAL PURPOSE

S/N: DYB1-UP
2727-MM (107.4-IN) WIDE X 4.2-CU M (5.5-CU YD) CAPACITY
FOR USE WITH 333-6865—PAGE: 536
AN ATTACHMENT

SMCS-6101 **i05329468**

NOTE	REF NO	GRAPHIC REF	PART NUMBER	QTY	PART NAME 1 2 3 4 5 6 (PRODUCT LEVEL)	SEE PAGE
	1	1	**137-4234**	1	PLATE-IDENTIFICATION (WORK TOOL)	
	2	1	**168-8389**	4	TACK-FASTENER	
Y	3	1	*371-2337*	1	BUCKET AS-GENERAL PURPOSE	510

Y - SEPARATE ILLUSTRATION

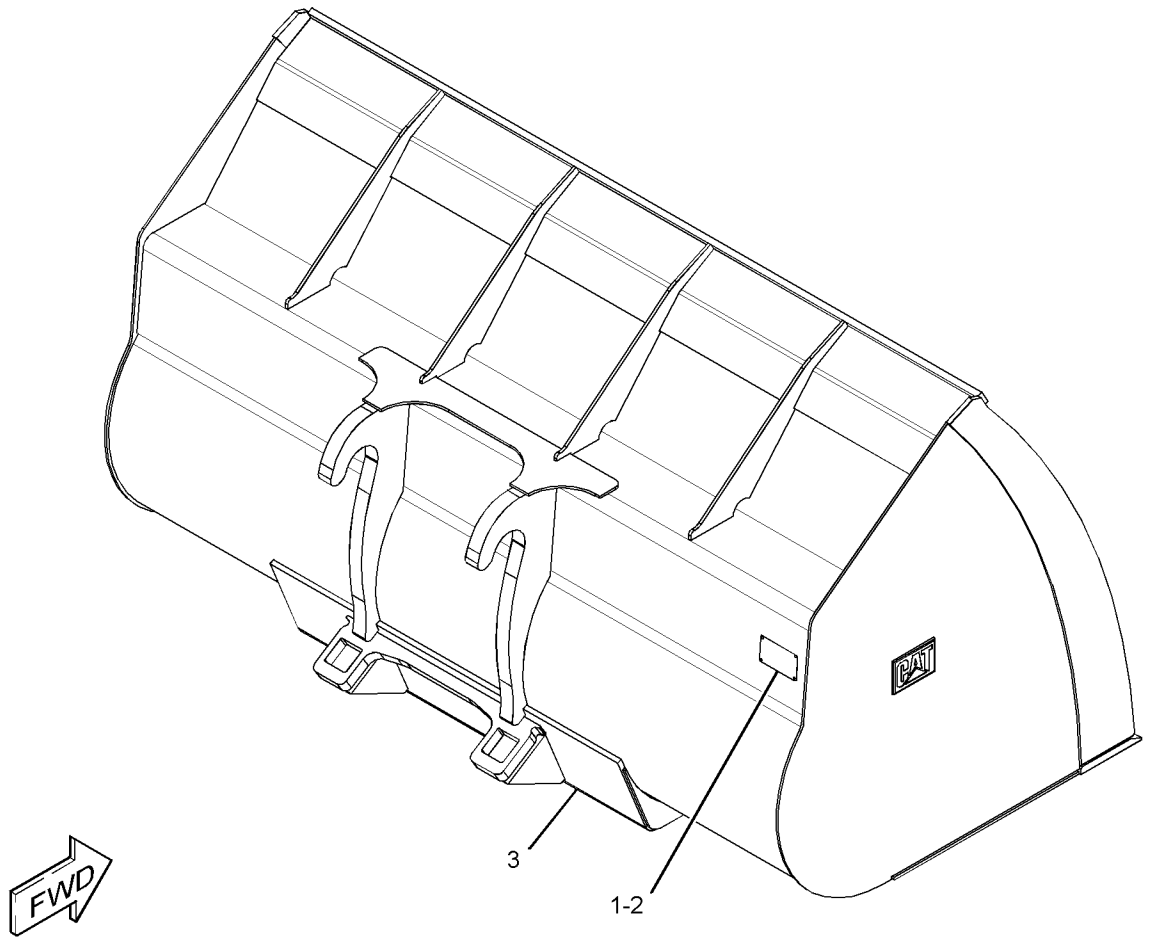

GRAPHIC #1 **<END>** g02748697

345-2770 BUCKET GP-GENERAL PURPOSE

S/N: DYB1-UP
2727-MM (107.4-IN) WIDE X 4.2-CU M (5.5-CU YD) CAPACITY
AN ATTACHMENT

SMCS-6101 **i05300957**

NOTE	REF NO	GRAPHIC REF	PART NUMBER	QTY	PART NAME 1 2 3 4 5 6 (PRODUCT LEVEL)	SEE PAGE
	1	1	**137-4234**	1	PLATE-IDENTIFICATION (WORK TOOL)	
	2	1	**168-8389**	4	TACK-FASTENER	
Y	3	1	*371-2338*	1	BUCKET AS-GENERAL PURPOSE	511

Y - SEPARATE ILLUSTRATION

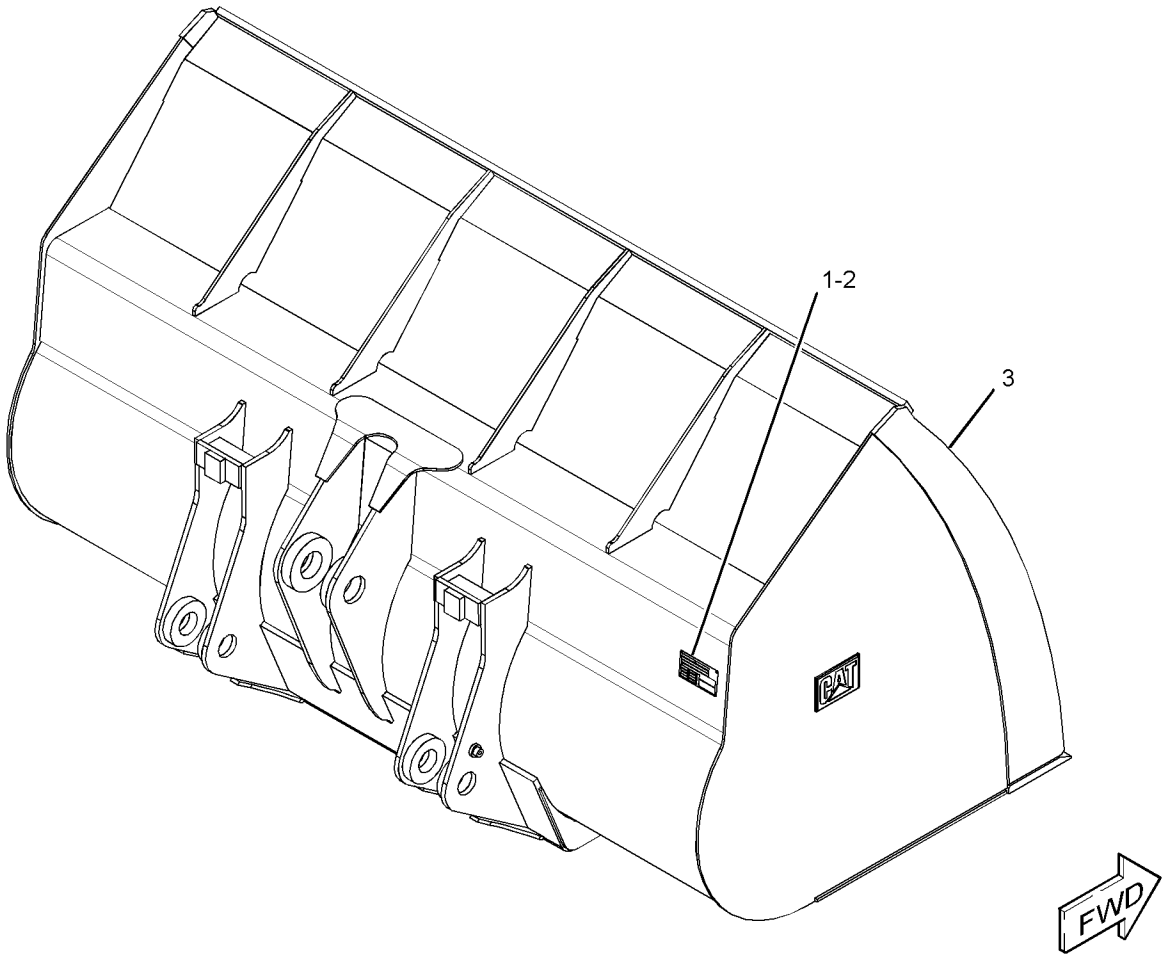

GRAPHIC #1 **<END>** g02786703

345-2784 BUCKET GP-GENERAL PURPOSE

S/N: DYB1-UP
2727-MM (107.4-IN) WIDE X 2.5-CU M (3.3-CU YD) CAPACITY
FOR USE WITH 333-6865—PAGE: 536
AN ATTACHMENT

SMCS-6101 **i05329470**

NOTE	REF NO	GRAPHIC REF	PART NUMBER	QTY	PART NAME 1 2 3 4 5 6 (PRODUCT LEVEL)	SEE PAGE
	1	1	**137-4234**	1	PLATE-IDENTIFICATION (WORK TOOL)	
	2	1	**168-8389**	4	TACK-FASTENER	
Y	3	1	*345-2786*	1	BUCKET AS-GENERAL PURPOSE	499

Y - SEPARATE ILLUSTRATION

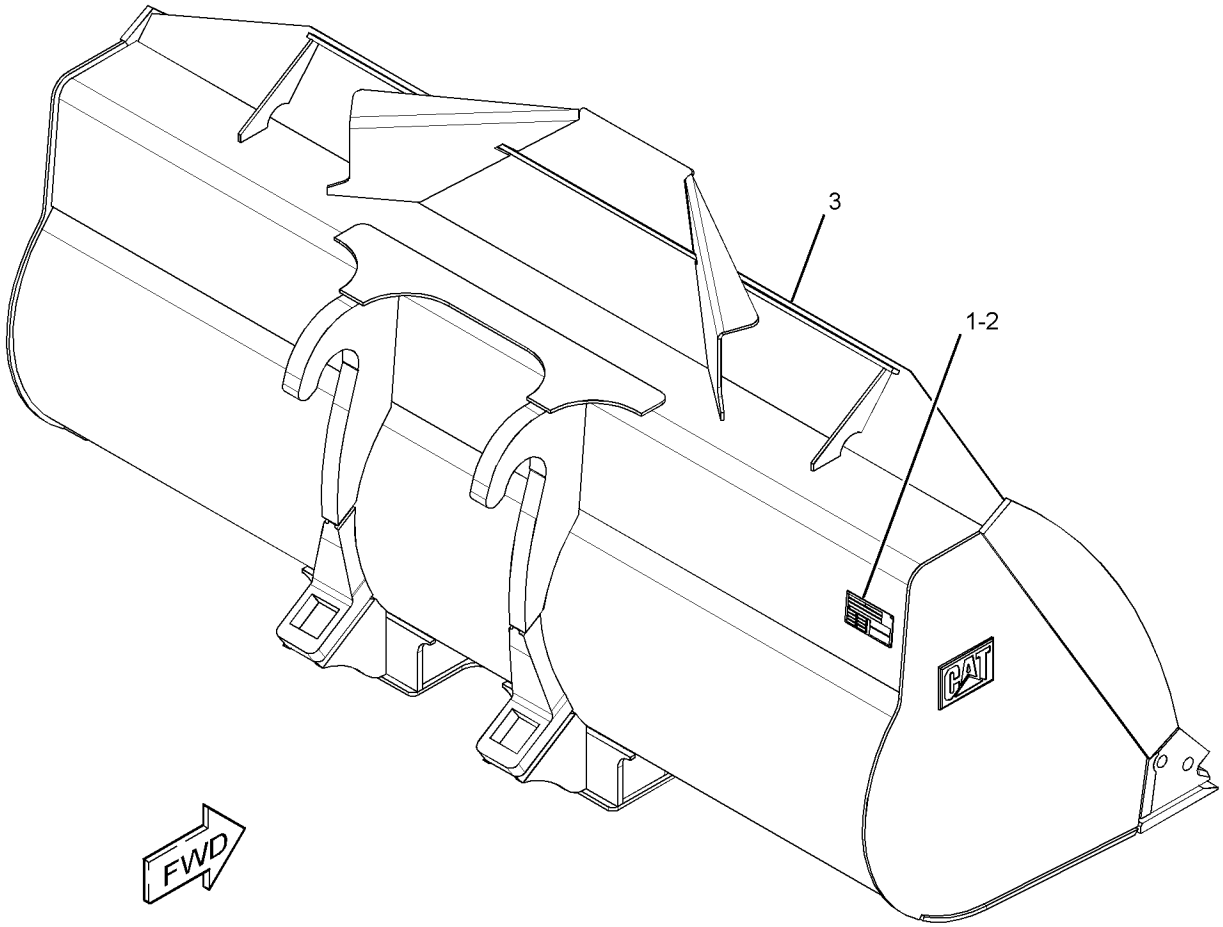

GRAPHIC #1 **<END>** g02774577

345-2820 BUCKET GP-GENERAL PURPOSE—PIN-ON

S/N: DYB1-UP

2532-MM (99.7-IN) WIDE X 2.1-CU M (2.75-CU YD) CAPACITY

AN ATTACHMENT

SMCS-6101 **i05351571**

NOTE	REF NO	GRAPHIC REF	PART NUMBER	QTY	PART NAME 1 2 3 4 5 6 (PRODUCT LEVEL)	SEE PAGE
	1	1	**137-4234**	1	PLATE-IDENTIFICATION (WORK TOOL)	
	2	1	**168-8389**	4	TACK-FASTENER (METAL)	
Y	3	1	*332-5821*	1	BUCKET AS-GENERAL PURPOSE	498

Y - SEPARATE ILLUSTRATION

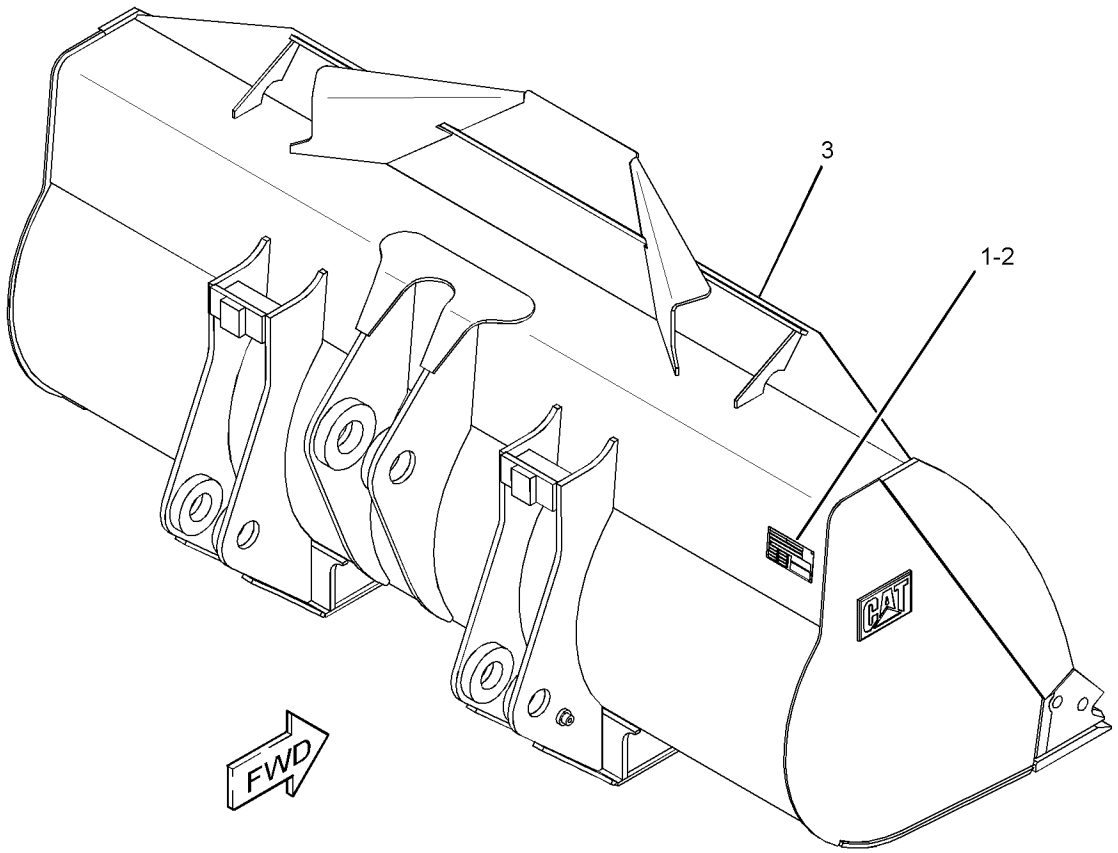

GRAPHIC #1 **<END>** g02757716

345-2822 BUCKET GP-GENERAL PURPOSE—PIN-ON

S/N: DYB1-UP

2532-MM (99.7-IN) WIDE X 2.3-CU M (3-CU YD) CAPACITY

AN ATTACHMENT

SMCS-6101 **i05300971**

NOTE	REF NO	GRAPHIC REF	PART NUMBER	QTY	PART NAME 1 2 3 4 5 6 (PRODUCT LEVEL)	SEE PAGE
	1	1	**137-4234**	1	PLATE-IDENTIFICATION (WORK TOOL)	
	2	1	**168-8389**	4	TACK-FASTENER	
Y	3	1	*332-5794*	1	BUCKET AS-GENERAL PURPOSE	495

Y - SEPARATE ILLUSTRATION

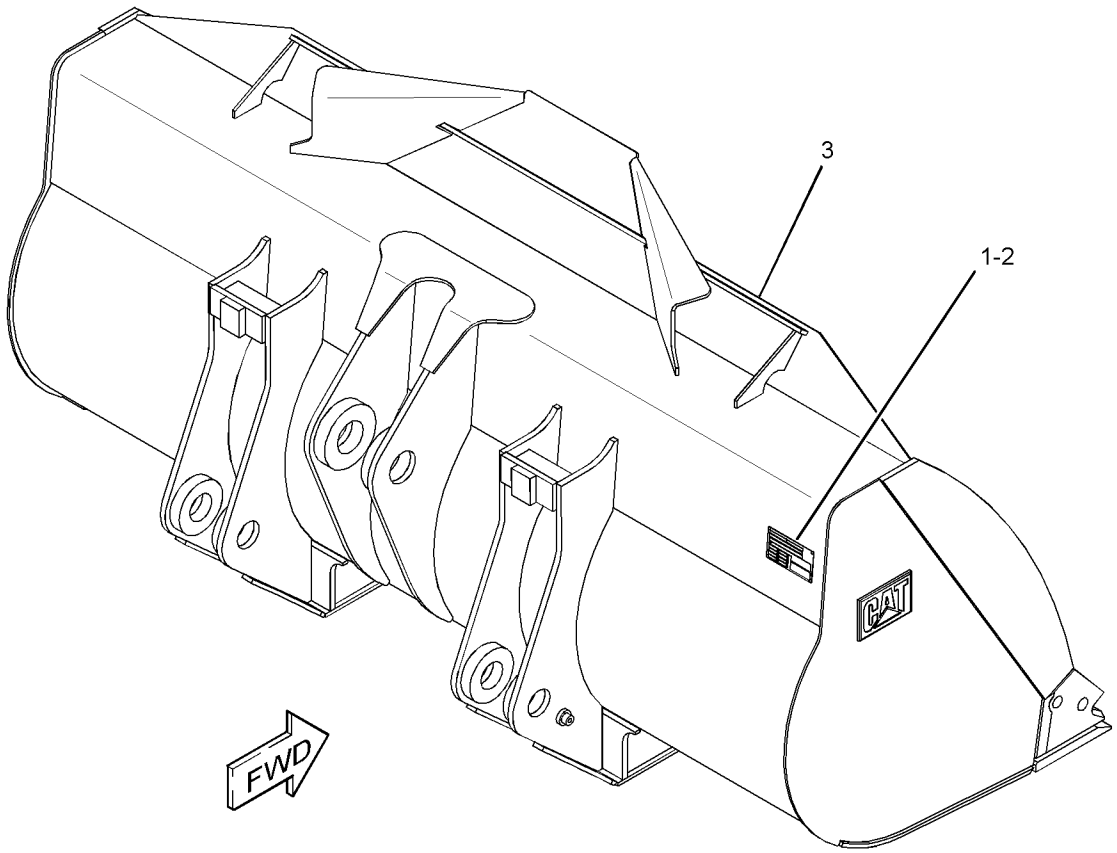

GRAPHIC #1 **<END>** g02757716

345-2824 BUCKET GP-GENERAL PURPOSE—PIN-ON

S/N: DYB1-UP
2524-MM (99.4-IN) WIDE X 2.4-CU M (3.2-CU YD) CAPACITY
AN ATTACHMENT

SMCS-6101 **i05329469**

NOTE	REF NO	GRAPHIC REF	PART NUMBER	QTY	PART NAME 1 2 3 4 5 6 (PRODUCT LEVEL)	SEE PAGE
	1	1	**137-4234**	1	PLATE-IDENTIFICATION (WORK TOOL)	
	2	1	**168-8389**	4	TACK-FASTENER	
Y	3	1	*332-5808*	1	BUCKET AS-GENERAL PURPOSE (PIN-ON)	496

Y - SEPARATE ILLUSTRATION

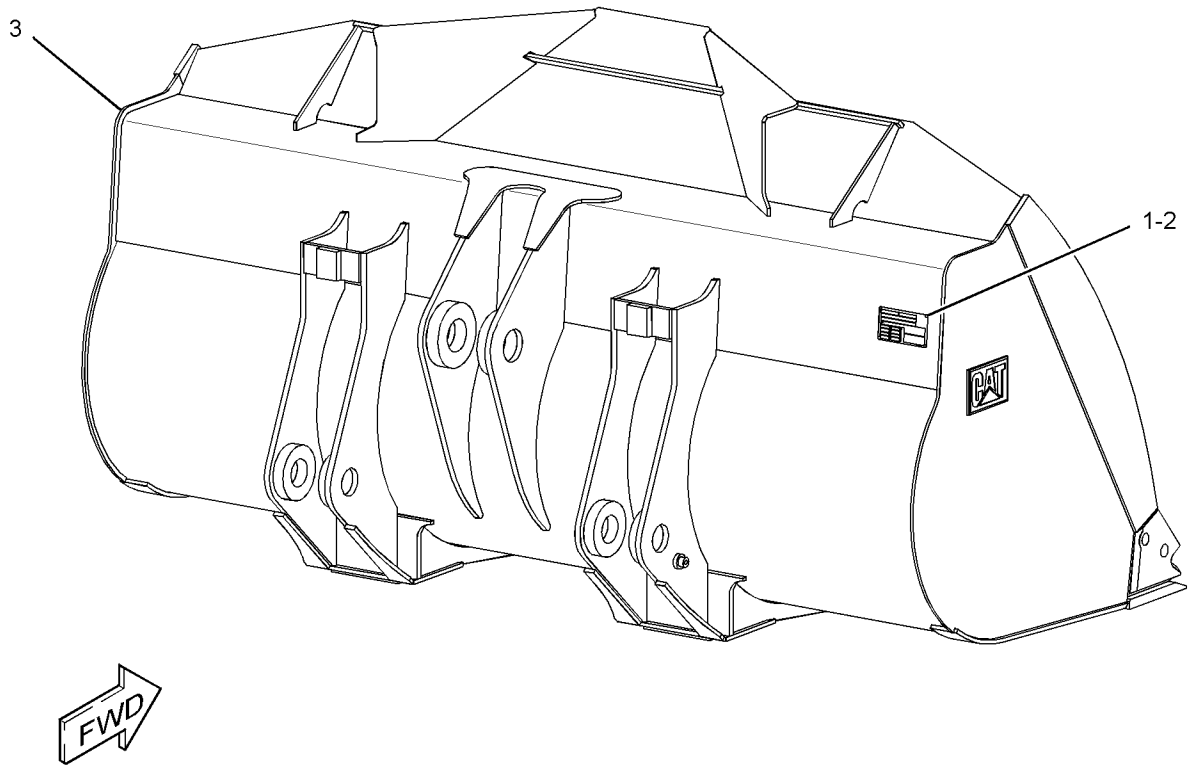

GRAPHIC #1 **<END>** g02790470

360-3309 BUCKET GP-GENERAL PURPOSE—PIN-ON

S/N: DYB1-UP

2727-MM (107.4-IN) WIDE X 2.6-CU M (3.4-CU YD) CAPACITY

AN ATTACHMENT

SMCS-6101 **i05329475**

NOTE	REF NO	GRAPHIC REF	PART NUMBER	QTY	PART NAME 1 2 3 4 5 6 (PRODUCT LEVEL)	SEE PAGE
	1	1	**137-4234**	1	PLATE-IDENTIFICATION (WORK TOOL)	
	2	1	**168-8389**	4	TACK-FASTENER	
Y	3	1	*360-3314*	1	BUCKET AS-GENERAL PURPOSE (PIN-ON)	502

Y - SEPARATE ILLUSTRATION

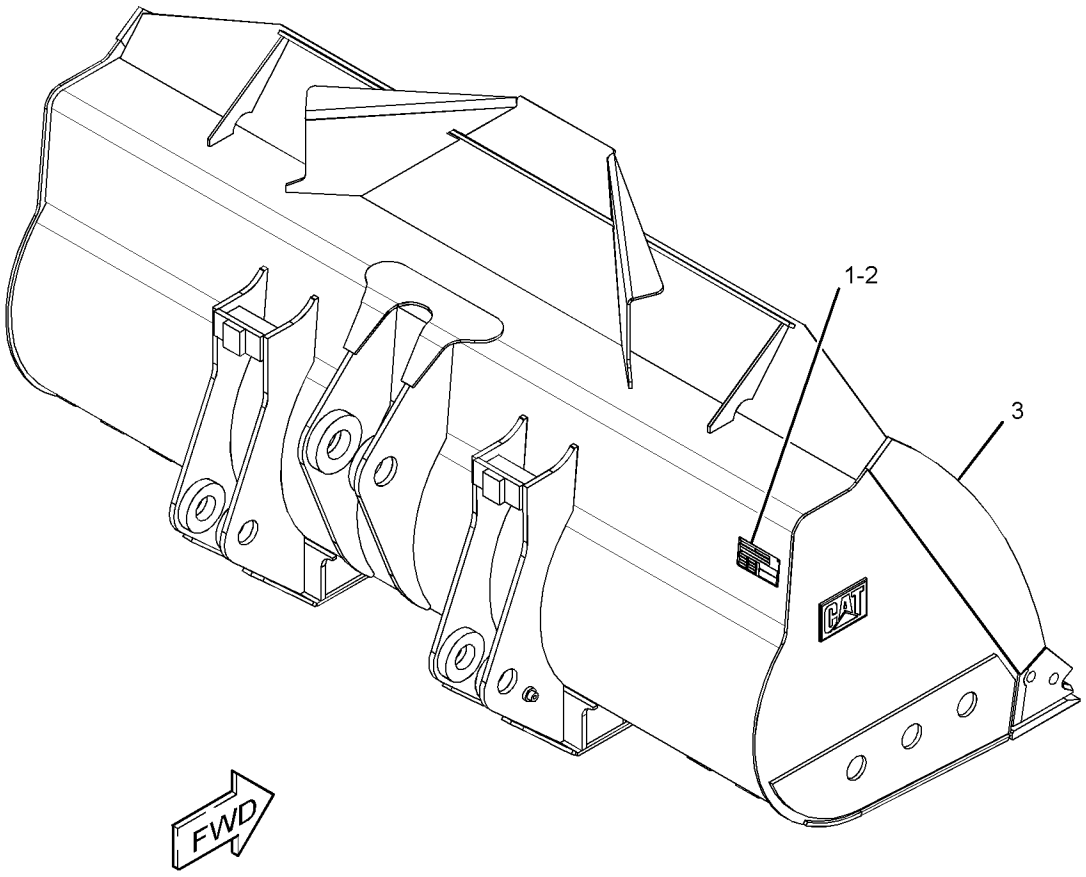

GRAPHIC #1 **<END>** g02770817

360-3311 BUCKET GP-GENERAL PURPOSE

S/N: DYB1-UP
2727-MM (107.4-IN) WIDE X 3.2-CU M (4.19-CU YD) CAPACITY
AN ATTACHMENT

SMCS-6101 **i05329477**

NOTE	REF NO	GRAPHIC REF	PART NUMBER	QTY	PART NAME 1 2 3 4 5 6 (PRODUCT LEVEL)	SEE PAGE
	1	1	**137-4234**	1	PLATE-IDENTIFICATION (WORK TOOL)	
	2	1	**168-8389**	4	TACK-FASTENER	
Y	3	1	*360-3331*	1	BUCKET AS-GENERAL PURPOSE	505

Y - SEPARATE ILLUSTRATION

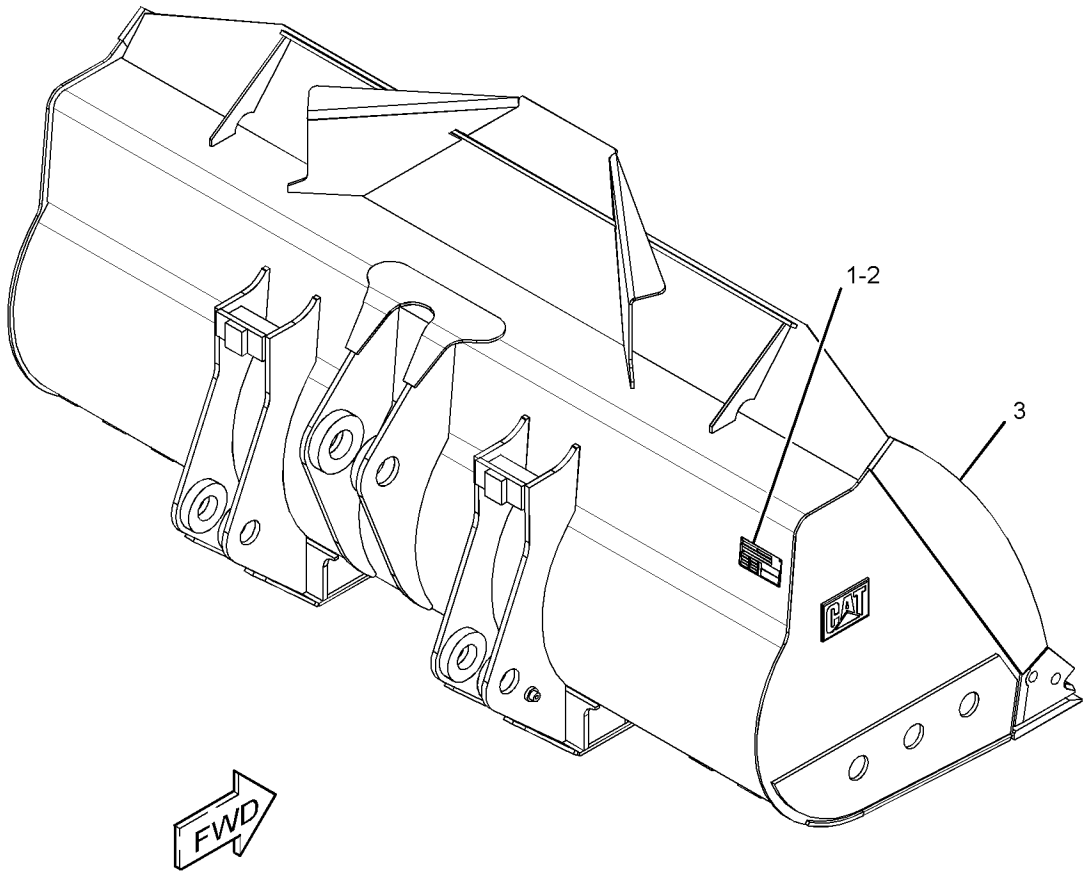

GRAPHIC #1 **<END>** g02770817

360-3320 BUCKET GP-GENERAL PURPOSE

S/N: DYB1-UP
2532-MM (99.7-IN) WIDE X 2.1-CU M (2.8-CU YD) CAPACITY
FOR USE WITH 333-6865—PAGE: 536
AN ATTACHMENT

SMCS-6101 **i05329478**

NOTE	REF NO	GRAPHIC REF	PART NUMBER	QTY	PART NAME 1 2 3 4 5 6 (PRODUCT LEVEL)	SEE PAGE
	1	1	**137-4234**	1	PLATE-IDENTIFICATION (WORK TOOL)	
	2	1	**168-8389**	4	TACK-FASTENER	
Y	3	1	*360-3319*	1	BUCKET AS-GENERAL PURPOSE	504

Y - SEPARATE ILLUSTRATION

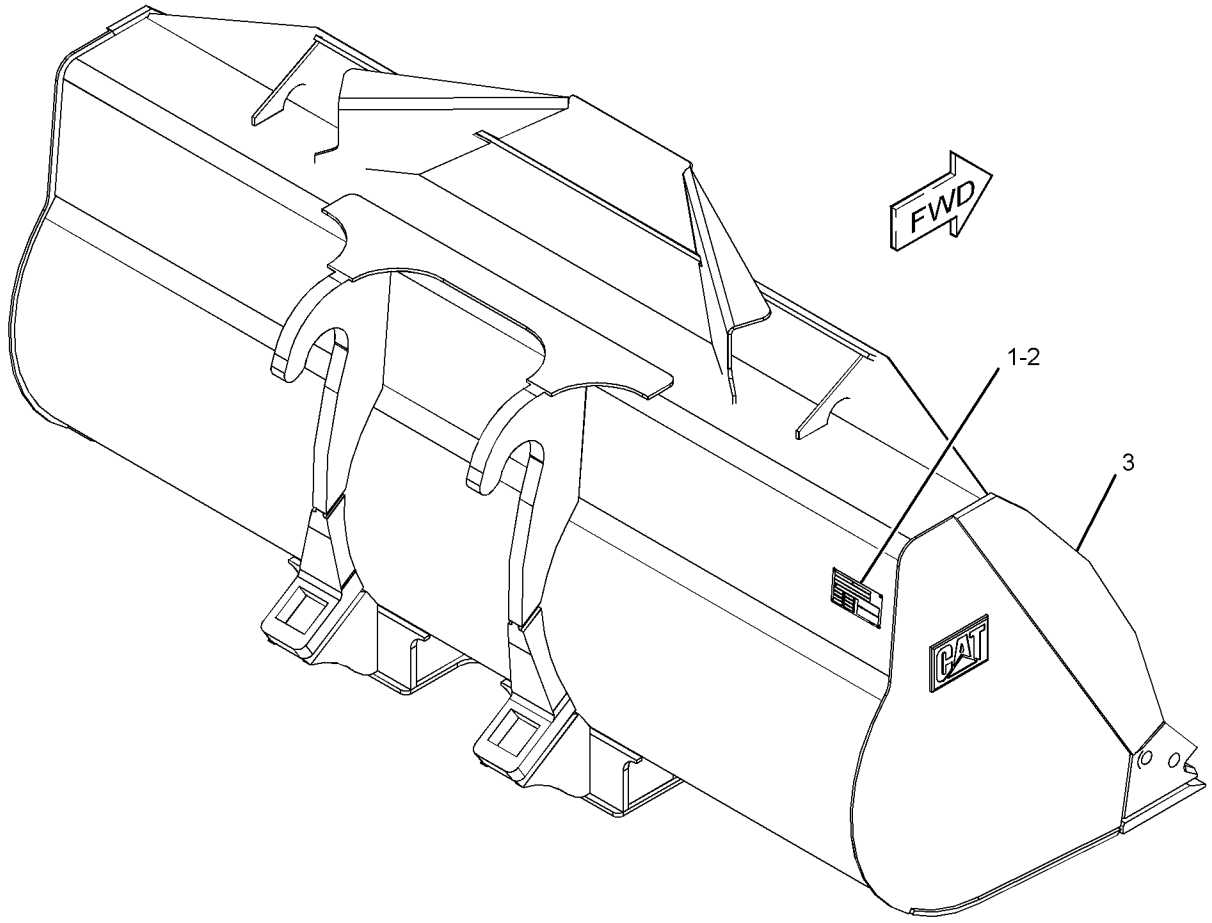

GRAPHIC #1 **<END>** g02792898

360-3322 BUCKET GP-GENERAL PURPOSE

S/N: DYB1-UP
2532-MM (99.7-IN) WIDE X 2.3-CU M (3-CU YD) CAPACITY
FOR USE WITH 333-6865—PAGE: 536
AN ATTACHMENT

SMCS-6101 **i05329479**

NOTE	REF NO	GRAPHIC REF	PART NUMBER	QTY	PART NAME 1 2 3 4 5 6 (PRODUCT LEVEL)	SEE PAGE
	1	1	**137-4234**	1	PLATE-IDENTIFICATION (WORK TOOL)	
	2	1	**168-8389**	4	TACK-FASTENER	
Y	3	1	*360-3318*	1	BUCKET AS-GENERAL PURPOSE	503

Y - SEPARATE ILLUSTRATION

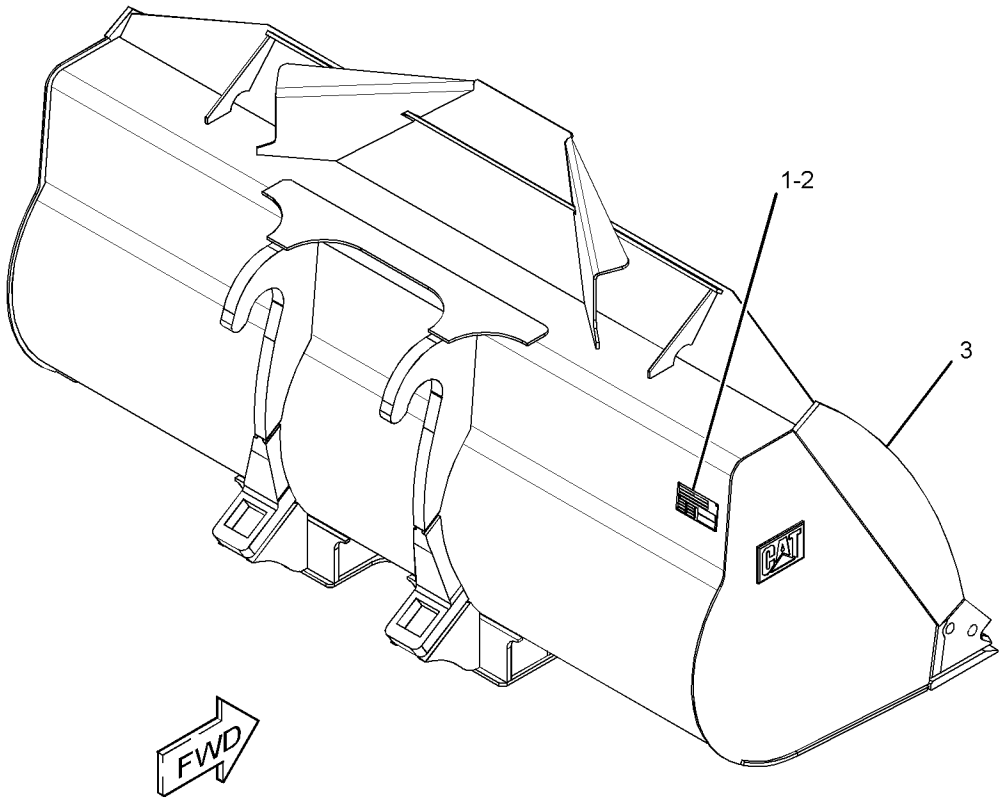

GRAPHIC #1 **<END>** g02770358

438-5500 BUCKET GP-GENERAL PURPOSE

S/N: DYB1-UP

AN ATTACHMENT

SMCS-6101 **i05320615**

NOTE	REF NO	GRAPHIC REF	PART NUMBER	QTY	PART NAME 1 2 3 4 5 6 (PRODUCT LEVEL)	SEE PAGE
	1	1	**137-4234**	1	PLATE-IDENTIFICATION (WORK TOOL)	
	2	1	**168-8389**	4	TACK-FASTENER (METAL)	
Y	3	1	*438-5482*	1	BUCKET AS-GENERAL PURPOSE	512

Y - SEPARATE ILLUSTRATION

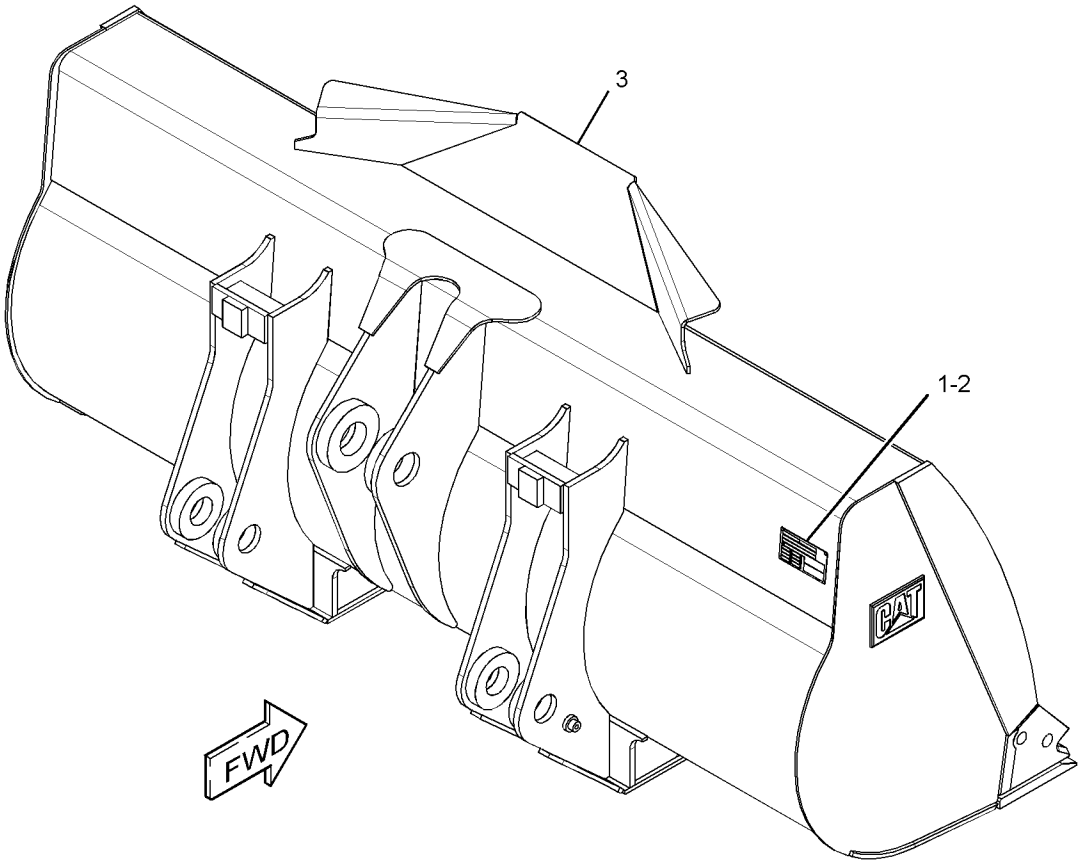

GRAPHIC #1 **<END>** g03376244

434-8968 BUCKET GP-MATERIAL HANDLING

S/N: DYB1-UP

AN ATTACHMENT

SMCS-6101 **i05300996**

NOTE	REF NO	GRAPHIC REF	PART NUMBER	QTY	PART NAME 1 2 3 4 5 6 (PRODUCT LEVEL)	SEE PAGE
	1	1	**137-4234**	1	PLATE-IDENTIFICATION (WORK TOOL)	
	2	1	**332-2788**	2	FILM-WARNING (DO NOT LIFT, READ OMM)	
Y	3	1	*434-8967*	1	BUCKET AS-MATERIAL HANDLING	513
	4	1	**312-5694**	1	SETSCREW (1/4-20X0.25-IN)	

Y - SEPARATE ILLUSTRATION

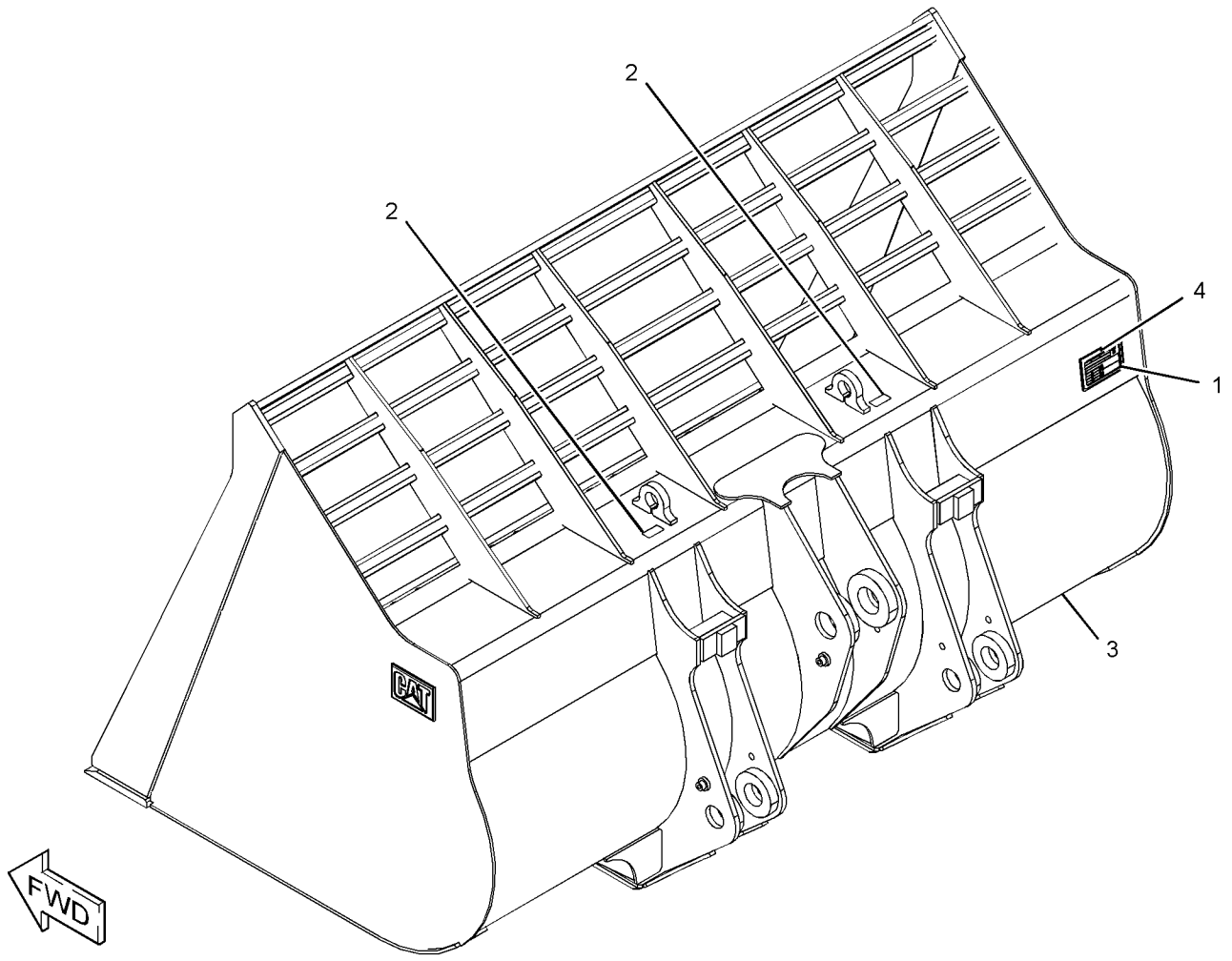

GRAPHIC #1 **<END>** g03375813

439-1335 BUCKET GP-MATERIAL HANDLING

S/N: DYB1-UP
AN ATTACHMENT

SMCS-6101 **i05320527**

NOTE	REF NO	GRAPHIC REF	PART NUMBER	QTY	PART NAME 1 2 3 4 5 6 (PRODUCT LEVEL)	SEE PAGE
	1	1	**137-4234**	1	PLATE-IDENTIFICATION (WORK TOOL)	
	2	1	**332-2788**	2	FILM-WARNING (DO NOT LIFT, READ OMM)	
Y	3	1	**439-1334**	1	BUCKET AS-MATERIAL HANDLING	514
	4	1	**312-5694**	1	SETSCREW (1/4-20X0.25-IN)	

Y - SEPARATE ILLUSTRATION

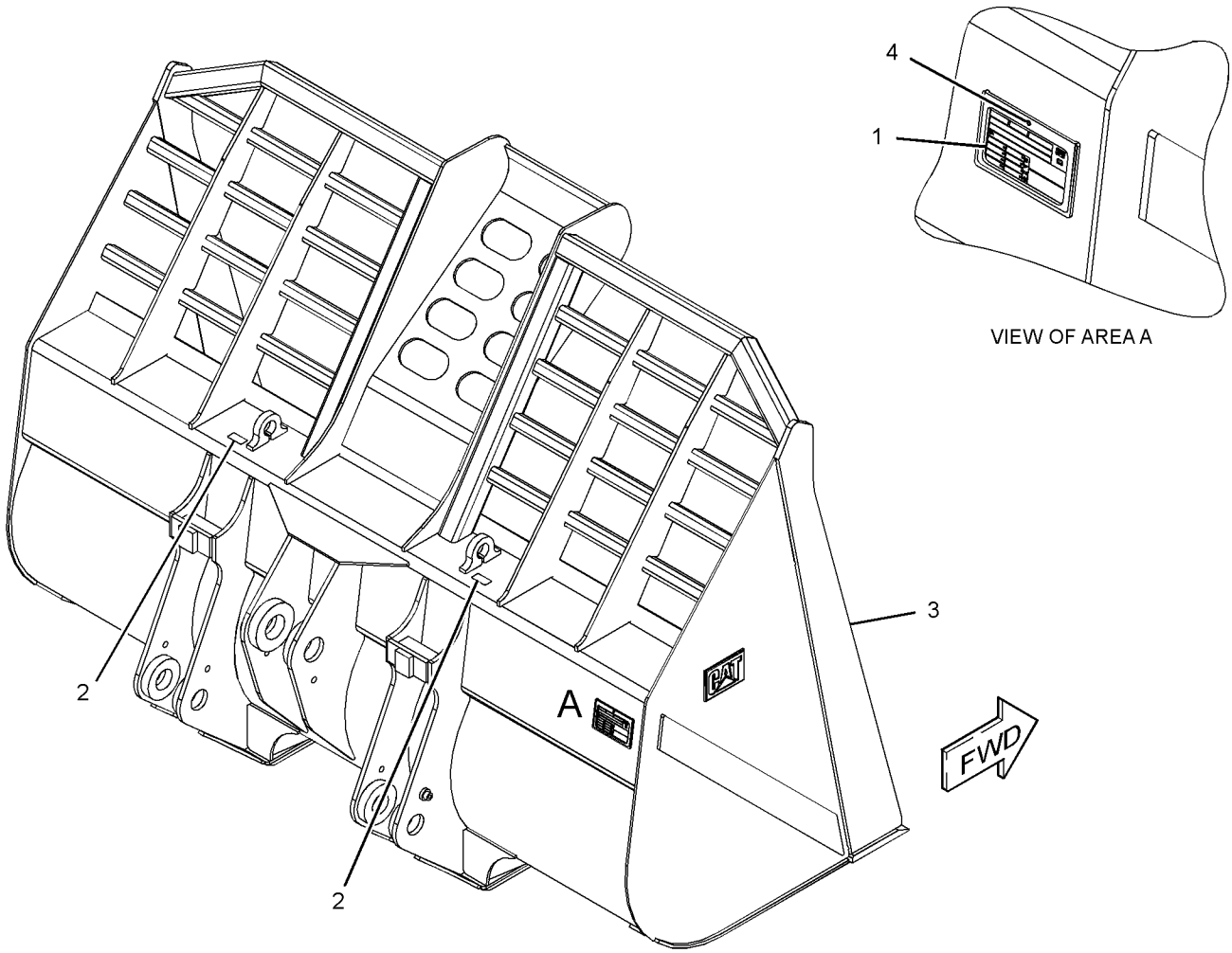

GRAPHIC #1 **<END>** g03375820

345-2417 CARRIAGE GP-FORK

S/N: DYB1-UP

AN ATTACHMENT

SMCS-6402 **i05324831**

NOTE	REF NO	GRAPHIC REF	PART NUMBER	QTY	PART NAME 1 2 3 4 5 6 (PRODUCT LEVEL)	SEE PAGE
	1	1	**157-4835**	1	PLATE-INSTRUCTION	
	2	1	**168-8389**	4	TACK-FASTENER	
	3	1	**345-2756**	1	CARRIAGE AS-FORK	

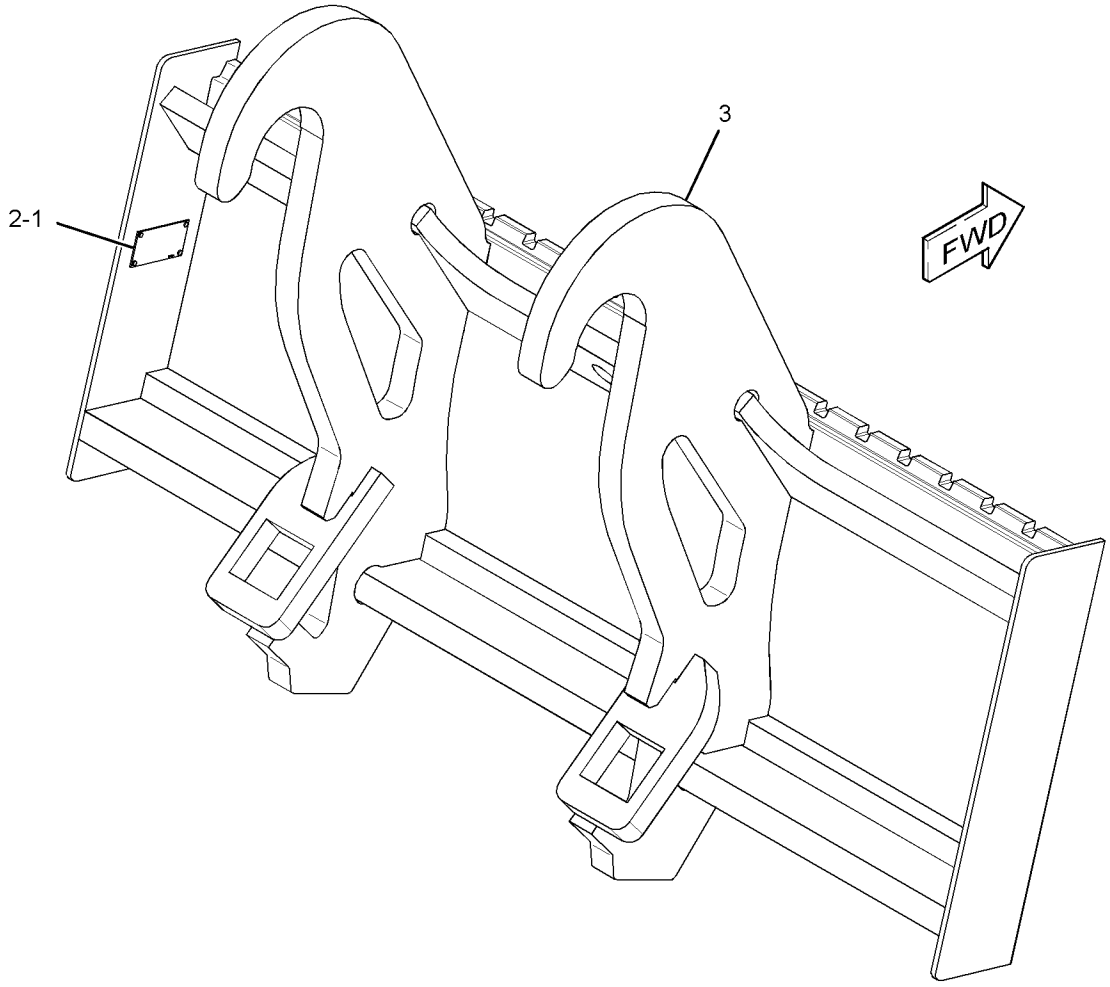

GRAPHIC #1 **<END>** g02748230

333-6865 COUPLER AR-QUICK

S/N: DYB1-UP

CANNOT BE USED WITH 387-2859—PAGE: 552

AN ATTACHMENT

SMCS-6129 **i05317200**

NOTE	PART NUMBER	QTY	PART NAME 1 2 3 4 5 6 (PRODUCT LEVEL)	SEE PAGE
Y	*333-6550*	1	COUPLER GP-QUICK	537
Y	*333-6952*	1	LINES GP-COUPLER	336

Y - SEPARATE ILLUSTRATION

<END>

333-6550 COUPLER GP-QUICK

S/N: DYB1-UP
PART OF 333-6865 COUPLER AR-QUICK
AN ATTACHMENT

SMCS-6129 **i05317214**

NOTE	REF NO	GRAPHIC REF	PART NUMBER	QTY	PART NAME 1 2 3 4 5 6 (PRODUCT LEVEL)	SEE PAGE
	1	1	**192-5881**	4	PIN	
	2	1	**280-9714**	1	PLATE-IDENTIFICATION (CAT)	
	3	1	**333-6551**	1	COUPLER AS	
M		1	**9R-2613**	2	BOSS-WELD (M10X1.5X25-MM)	
		1	**339-6694**	2	PLATE AS	
	4	1	**333-6590**	1	WEDGE AS (RH)	
	5	1	**333-6593**	1	WEDGE AS (LH)	
Y	6	1	**375-0724**	2	CYLINDER GP-COUPLER	326
	7	1	**3B-4629**	4	PIN-COTTER	
	8	1	**3B-8489**	2	FITTING-GREASE	

M - METRIC PART
Y - SEPARATE ILLUSTRATION

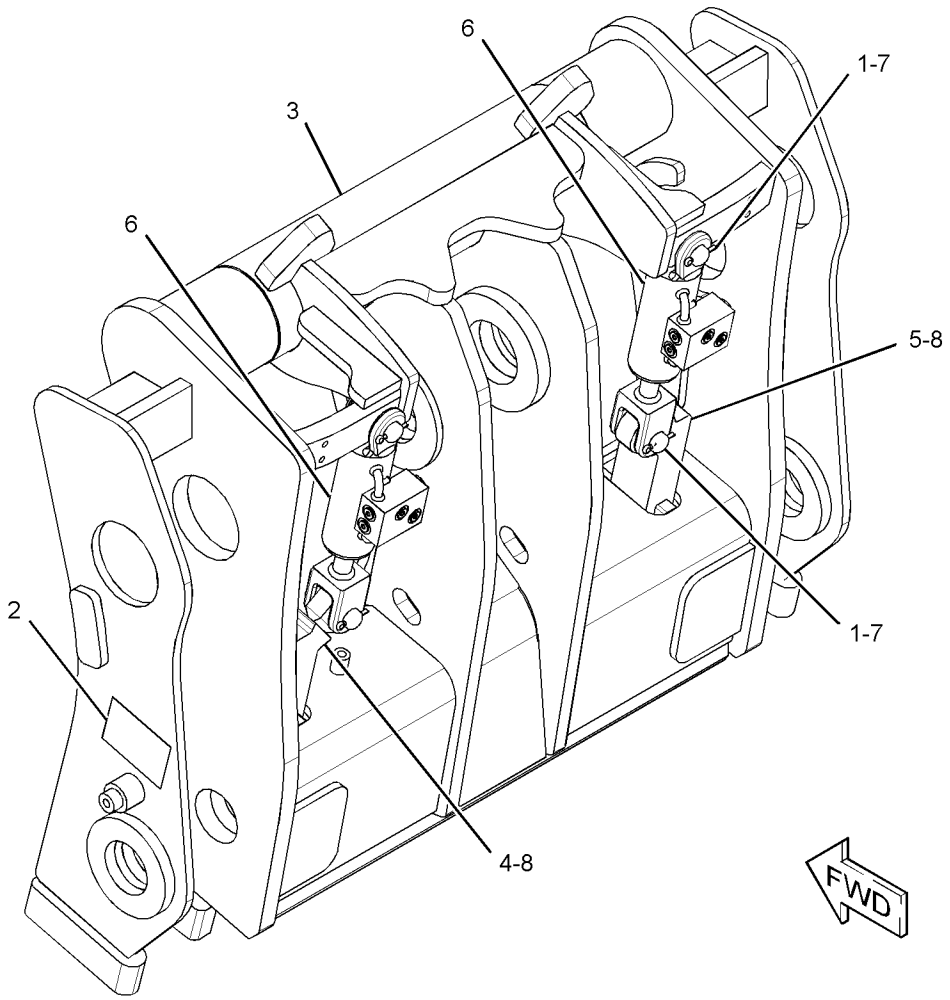

GRAPHIC #1 **<END>** g02838760

7T-9326 EDGE GP-CUTTING

S/N: DYB1-UP
FOR USE WITH G.E.T. J250 ADAPTERS
AN ATTACHMENT

SMCS-6801 **i02124273**

NOTE	REF NO	GRAPHIC REF	PART NUMBER	QTY	PART NAME 1 2 3 4 5 6 (PRODUCT LEVEL)	SEE PAGE
	1	1	**4T-6695**	7	EDGE-SEGMENT	
	2	1	**1J-5607**	14	BOLT-PLOW (1-8X2.75-IN)	
	3	1	**2J-3507**	14	NUT-FULL (1-8-THD)	

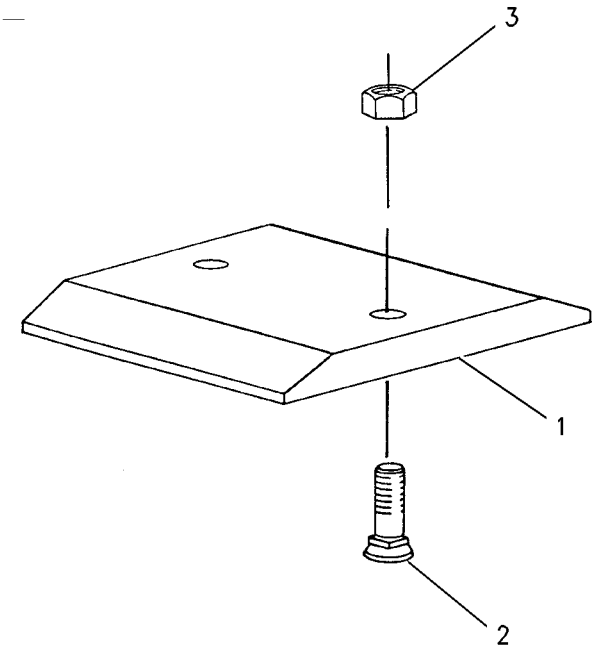

GRAPHIC #1 **<END>** g00688383

8E-4566 EDGE GP-CUTTING

S/N: DYB1-UP

AN ATTACHMENT

SMCS-6801 **i01130561**

NOTE	PART NUMBER	QTY	PART NAME 1 2 3 4 5 6 (PRODUCT LEVEL)	SEE PAGE
	1J-5607	10	BOLT-PLOW	
	8E-4567	2	EDGE-CUTTING	
	4T-8091	2	EDGE-END	
	2J-3507	10	NUT-FULL (1-8 THD)	

<END>

251-5418 EDGE GP-CUTTING

S/N: DYB1-UP

AN ATTACHMENT

SMCS-6801 **i05309449**

NOTE	REF NO	GRAPHIC REF	PART NUMBER	QTY	PART NAME 1 2 3 4 5 6 (PRODUCT LEVEL)	SEE PAGE
	1	1	**251-5417**	1	EDGE-CUTTING	
	2	1	**2J-3507**	8	NUT-FULL (1-8-THD)	
	3	1	**3B-4516**	8	LOCKWASHER	
	4	1	**4J-9208**	8	BOLT-PLOW (1-8X3.5-IN)	

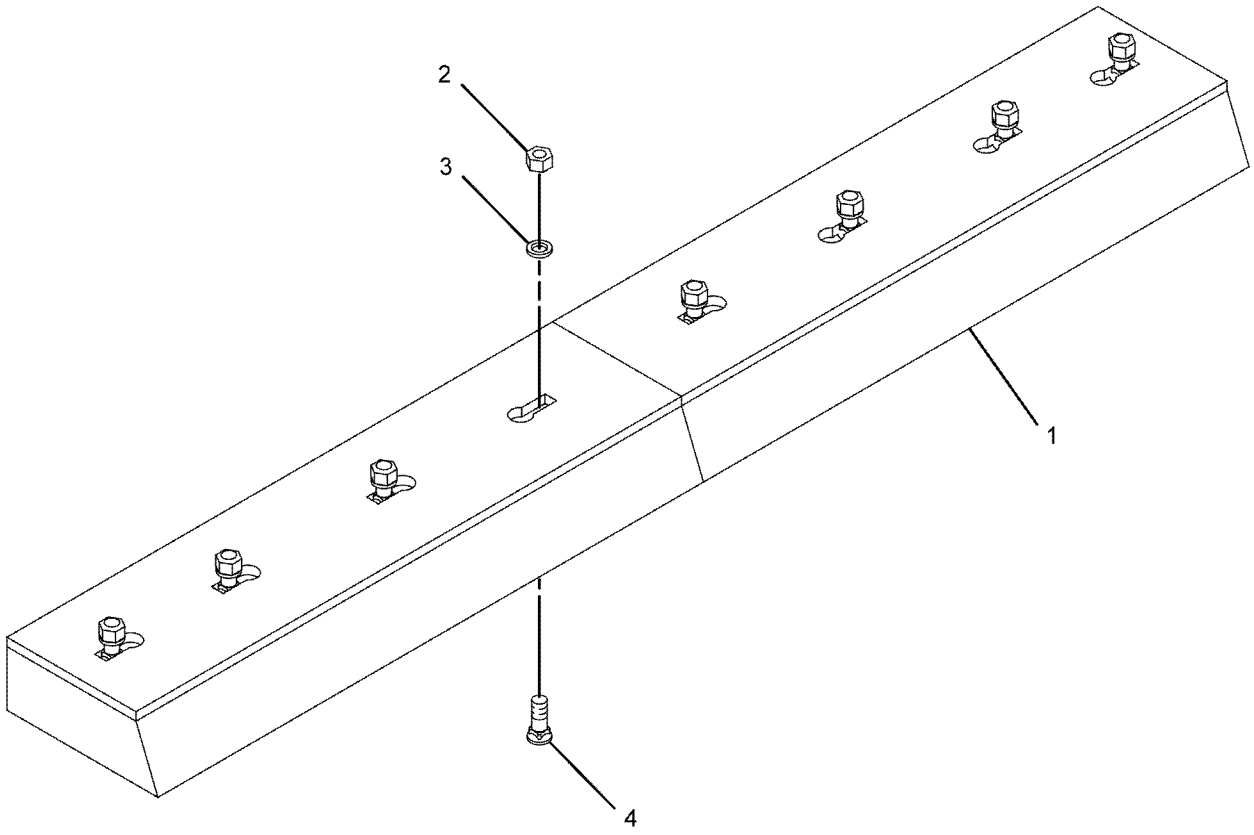

GRAPHIC #1 **<END>** g01116749

345-2758 EDGE GP-CUTTING

S/N: DYB1-UP
AN ATTACHMENT

SMCS-6801 **i05309450**

NOTE	PART NUMBER	QTY	PART NAME 1 2 3 4 5 6 (PRODUCT LEVEL)	SEE PAGE
	1J-5607	10	BOLT-PLOW (1-8X2.75-IN)	
	110-4711	2	EDGE-CUTTING	
	4T-8091	2	EDGE-END	
	2J-3507	10	NUT-FULL (1-8-THD)	

<END>

8E-4568 EDGE GP-SEGMENT

S/N: DYB1-UP
FOR USE WITH 116-9713—PAGE: 493
AN ATTACHMENT

SMCS-6818 **i01130557**

NOTE	PART NUMBER	QTY	PART NAME 1 2 3 4 5 6 (PRODUCT LEVEL)	SEE PAGE
	1J-5607	14	BOLT-PLOW	
	8E-4569	7	EDGE-SEGMENT	
	2J-3507	14	NUT-FULL (1-8 THD)	

<END>

345-2740 FORK GP-PALLET

S/N: DYB1-UP

FOR USE WITH 333-6865—PAGE: 536

AN ATTACHMENT

SMCS-6136 **i05324857**

NOTE	REF NO	GRAPHIC REF	PART NUMBER	QTY	PART NAME 1 2 3 4 5 6 (PRODUCT LEVEL)	SEE PAGE
	1	1	**303-0394**	2	BAR-STOP	
	2	1	**303-0403**	2	PLATE	
	3	1	**303-0408**	2	PLATE	
	4	1	**345-2747**	1	CARRIAGE AS-FORK	
		1	**137-4234**	1	PLATE-IDENTIFICATION (WORK TOOL)	
		1	**168-8389**	4	TACK-FASTENER	
		1	**2C-9259**	2	PLATE-IDENTIFICATION (CAT)	
	5	1	**345-2748**	2	TINE AS	
	6	1	**345-2751**	1	SHAFT	
	7	1	**150-5311**	4	LOCKWASHER	
M	8	1	**8T-4179**	2	BOLT (M12X1.75X20-MM)	
M	9	1	**8T-4183**	4	BOLT (M12X1.75X40-MM)	
M	10	1	**8T-4194**	4	BOLT (M12X1.75X50-MM)	
	11	1	**8T-4223**	8	WASHER-HARD (13.5X25.5X3-MM THK)	

M - METRIC PART

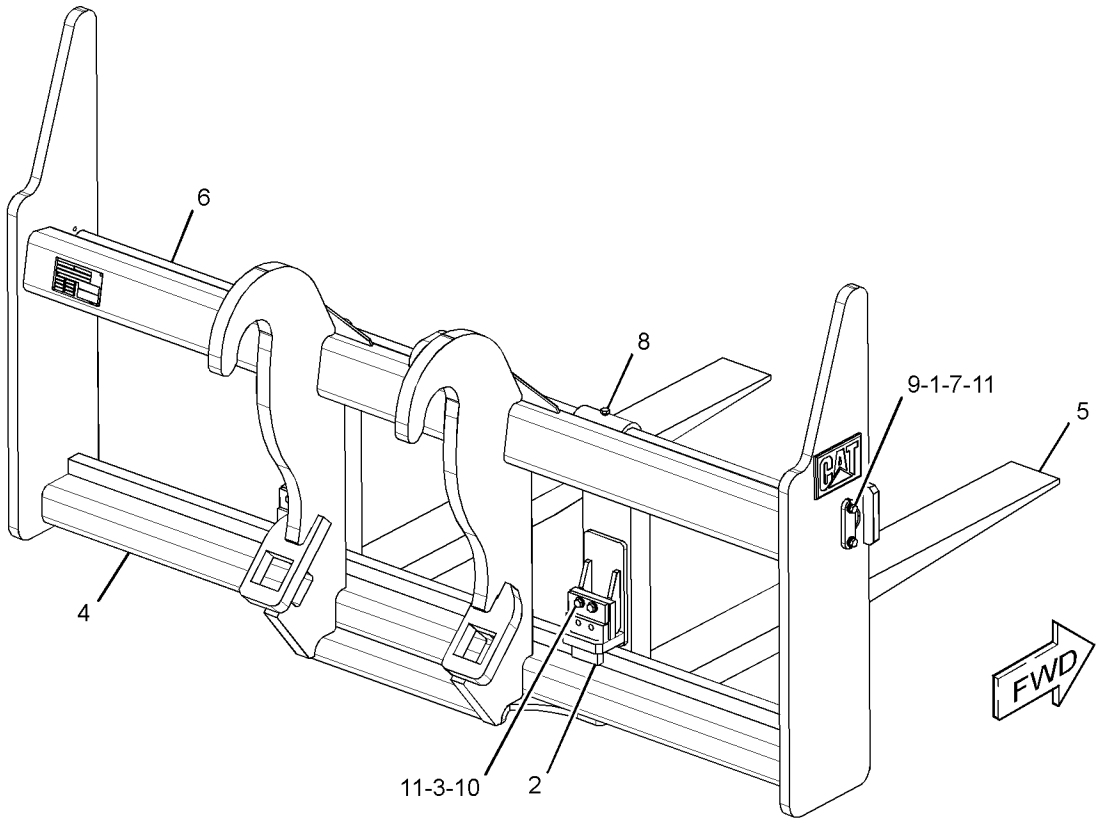

GRAPHIC #1 **<END>** g03375859

360-3354 FORK GP-PALLET

S/N: DYB1-UP
1370-MM (54-IN)
FOR USE WITH 345-2417—PAGE: 535, 360-3355—PAGE: 544, 333-6865—PAGE: 536
AN ATTACHMENT

SMCS-6136 **i05317116**

NOTE	REF NO	GRAPHIC REF	PART NUMBER	QTY	PART NAME 1 2 3 4 5 6 (PRODUCT LEVEL)	SEE PAGE
	1	1	**371-2351**	1	POSITIONER GP-WORK TOOL (PALLET FORK)	

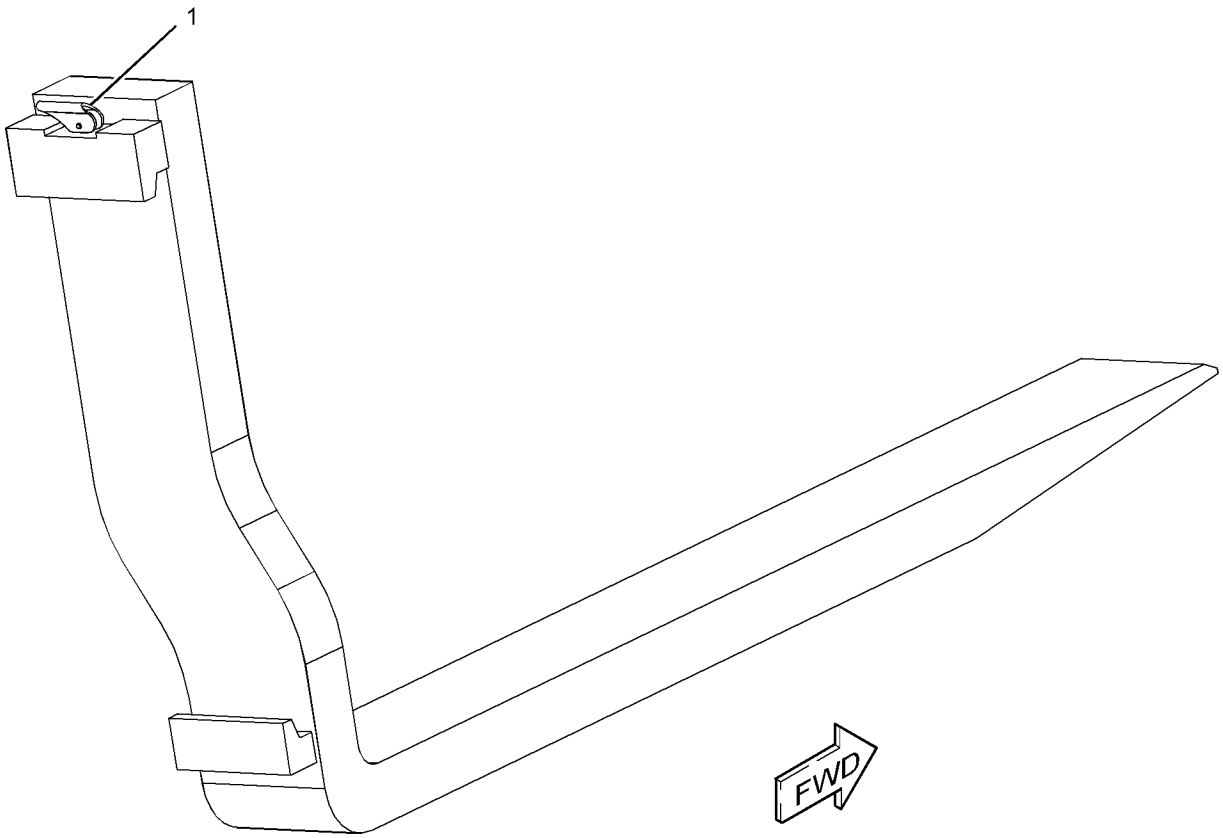

GRAPHIC #1 **<END>** g02792524

360-3355 FORK GP-PALLET

S/N: DYB1-UP
1370-MM (54-IN)
FOR USE WITH 345-2417—PAGE: 535, 360-3354—PAGE: 543, 333-6865—PAGE: 536
AN ATTACHMENT

SMCS-6136 **i05317035**

NOTE	REF NO	GRAPHIC REF	PART NUMBER	QTY	PART NAME 1 2 3 4 5 6 (PRODUCT LEVEL)	SEE PAGE
	1	1	**371-2351**	1	POSITIONER GP-WORK TOOL (PALLET FORK)	

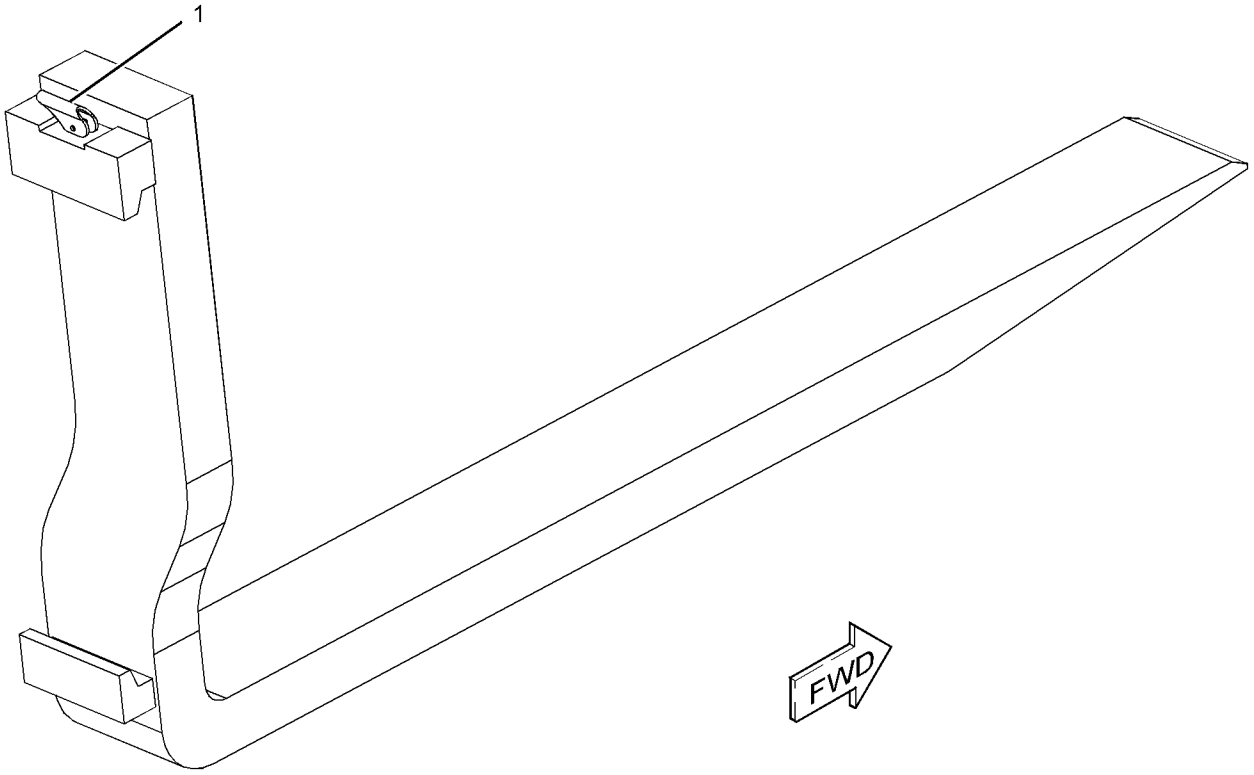

GRAPHIC #1 **<END>** g02792531

371-2348 FORK GP-PALLET

S/N: DYB1-UP
1220-MM (48-IN)
FOR USE WITH 345-2417—PAGE: 535
AN ATTACHMENT

SMCS-6136 **i05317031**

NOTE	REF NO	GRAPHIC REF	PART NUMBER	QTY	PART NAME 1 2 3 4 5 6 (PRODUCT LEVEL)	SEE PAGE
	1	1	**371-2351**	1	POSITIONER GP-WORK TOOL (PALLET FORK)	

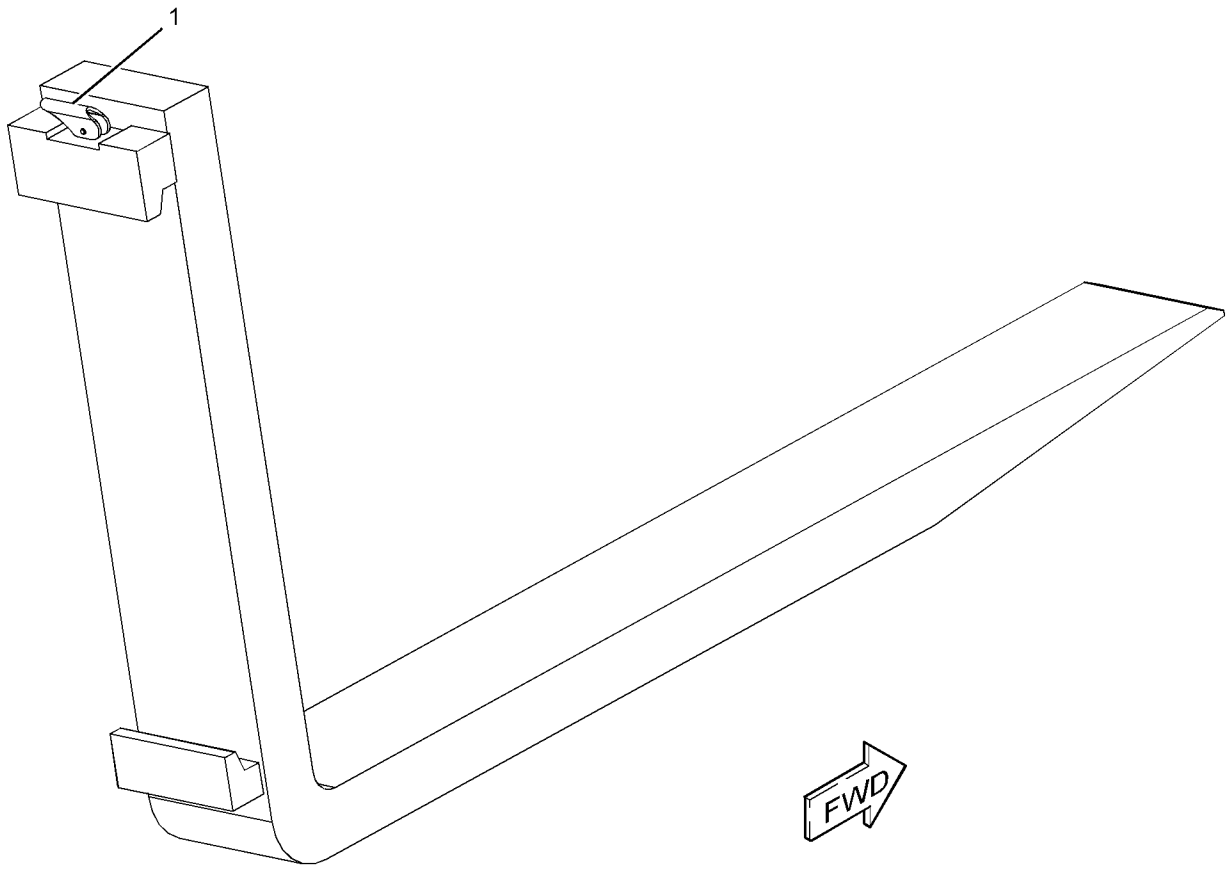

GRAPHIC #1 **<END>** g02792563

371-2354 FORK GP-PALLET

S/N: DYB1-UP
1370-MM (54-IN)
FOR USE WITH 345-2417—PAGE: 535
AN ATTACHMENT

SMCS-6136 **i05315253**

NOTE	REF NO	GRAPHIC REF	PART NUMBER	QTY	PART NAME 1 2 3 4 5 6 (PRODUCT LEVEL)	SEE PAGE
	1	1	**371-2351**	1	POSITIONER GP-WORK TOOL	

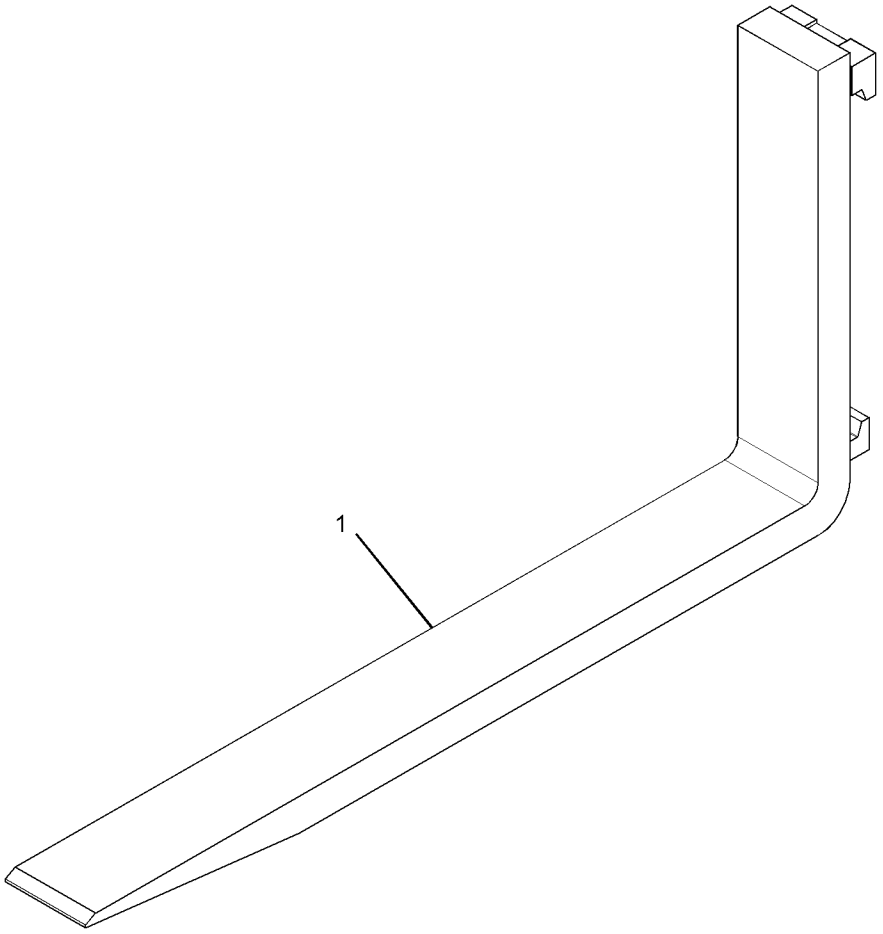

GRAPHIC #1 **<END>** g02770436

371-2360 FORK GP-PALLET

S/N: DYB1-UP
1524-MM (60-IN)
FOR USE WITH 345-2417—PAGE: 535
AN ATTACHMENT

SMCS-6136 **i05315250**

NOTE	REF NO	GRAPHIC REF	PART NUMBER	QTY	PART NAME 1 2 3 4 5 6 (PRODUCT LEVEL)	SEE PAGE
	1	1	**371-2351**	1	POSITIONER GP-WORK TOOL (PALLET FORK)	

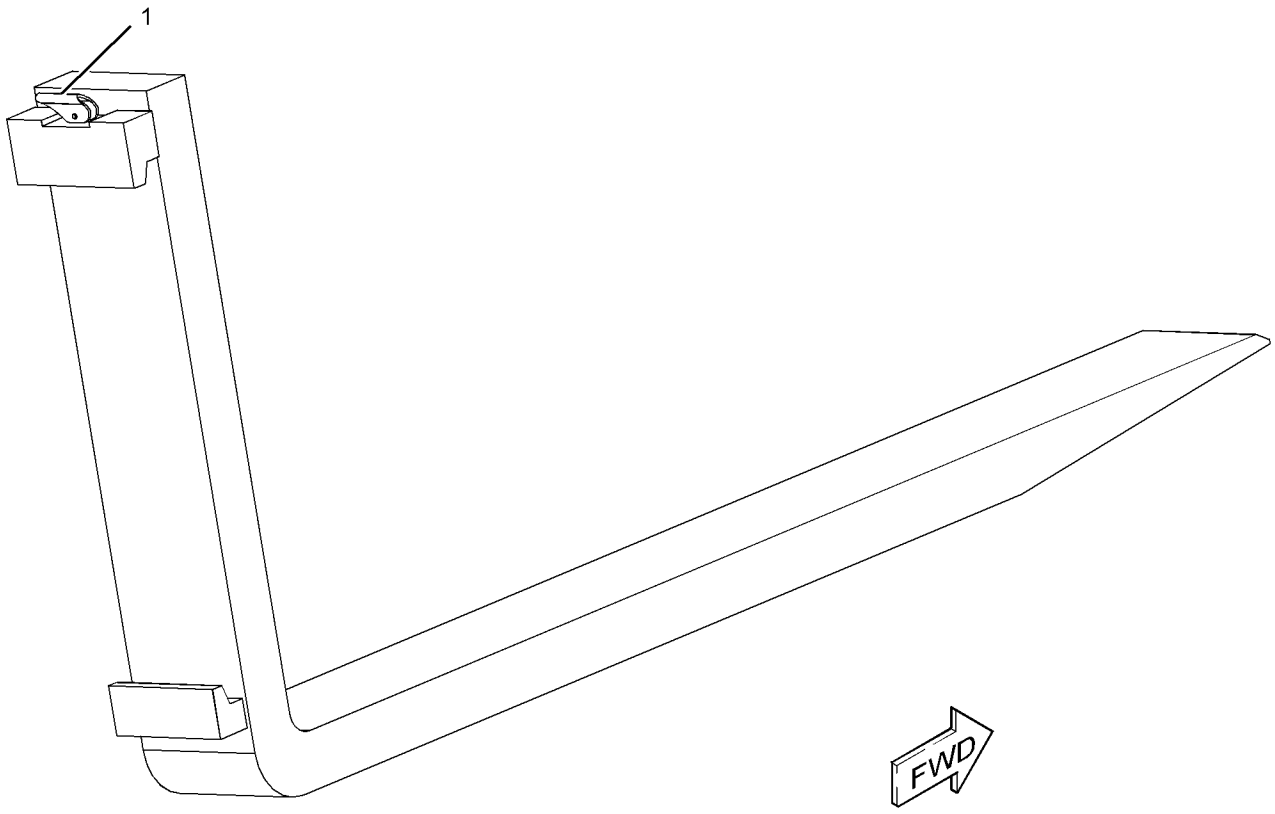

GRAPHIC #1 **<END>** g02792564

371-2374 FORK GP-PALLET

S/N: DYB1-UP
1220-MM (48-IN)
FOR USE WITH 345-2417—PAGE: 535, 371-2375—PAGE: 549
AN ATTACHMENT

SMCS-6136 **i05315229**

NOTE	REF NO	GRAPHIC REF	PART NUMBER	QTY	PART NAME 1 2 3 4 5 6 (PRODUCT LEVEL)	SEE PAGE
	1	1	**371-2351**	1	POSITIONER GP-WORK TOOL (PALLET FORK)	

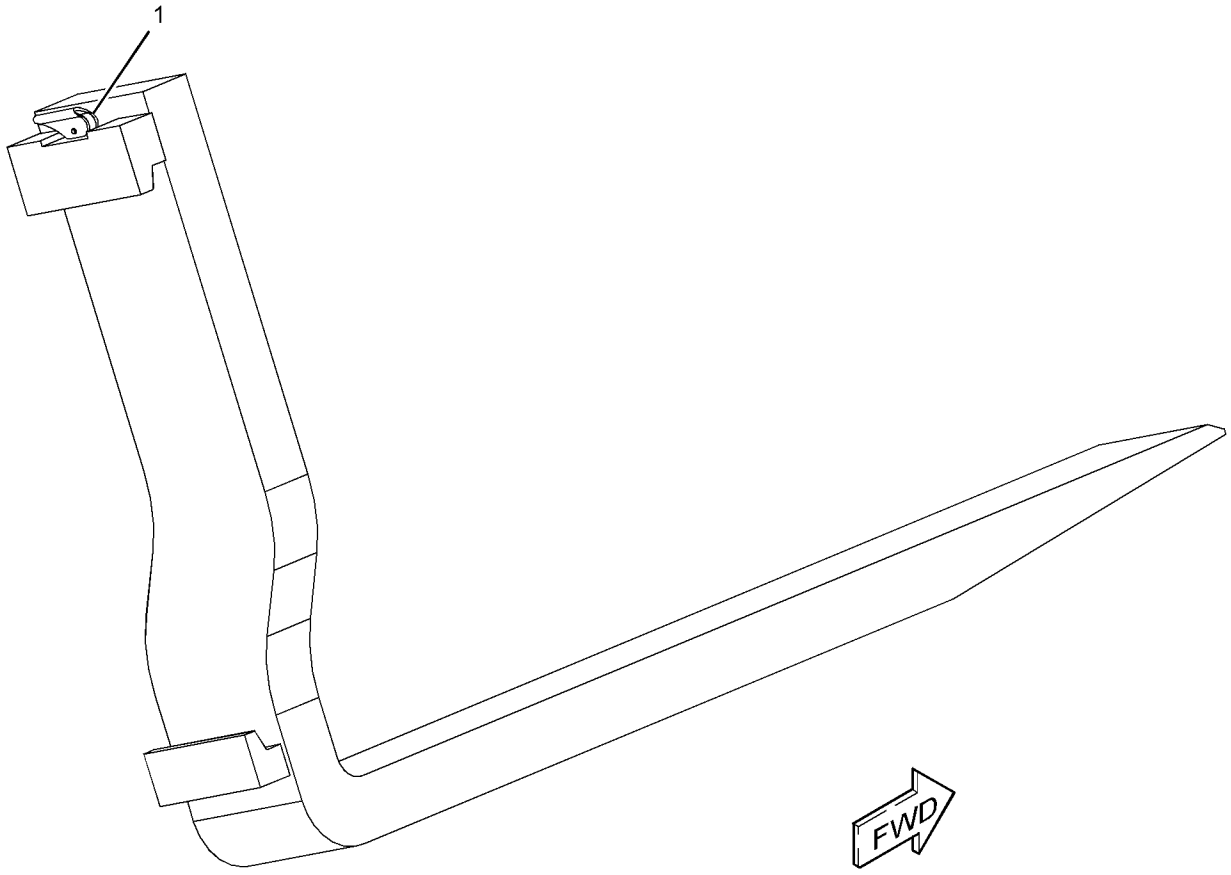

GRAPHIC #1 **<END>** g02792566

371-2375 FORK GP-PALLET

S/N: DYB1-UP
1220-MM (48-IN)
FOR USE WITH 345-2417—PAGE: 535, 371-2374—PAGE: 548
AN ATTACHMENT

SMCS-6136 **i05315209**

NOTE	REF NO	GRAPHIC REF	PART NUMBER	QTY	PART NAME 1 2 3 4 5 6 (PRODUCT LEVEL)	SEE PAGE
	1	1	**371-2351**	1	POSITIONER GP-WORK TOOL (PALLET FORK)	

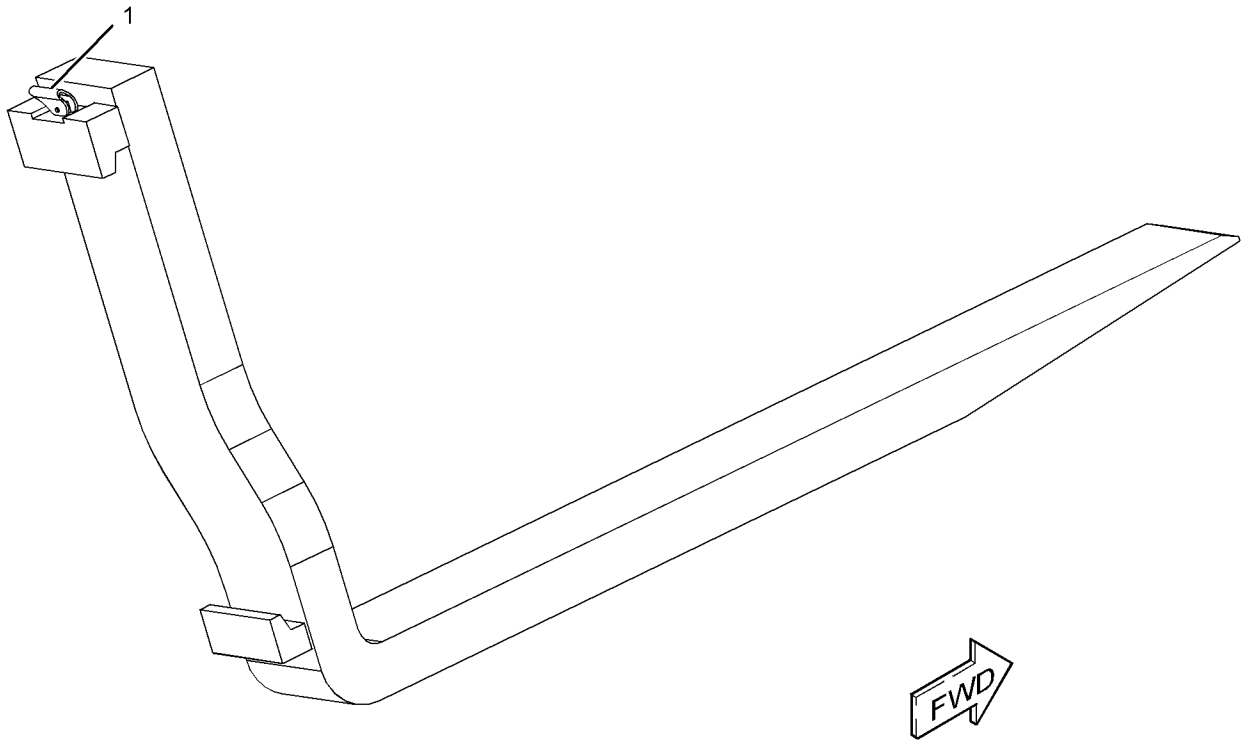

GRAPHIC #1 **<END>** g02792663

371-2376 FORK GP-PALLET

S/N: DYB1-UP
1524-MM (60-IN)
FOR USE WITH 345-2417—PAGE: 535, 371-2377—PAGE: 551
AN ATTACHMENT

SMCS-6136 **i05312999**

NOTE	REF NO	GRAPHIC REF	PART NUMBER	QTY	PART NAME 1 2 3 4 5 6 (PRODUCT LEVEL)	SEE PAGE
	1	1	**371-2351**	1	POSITIONER GP-WORK TOOL (PALLET FORK)	

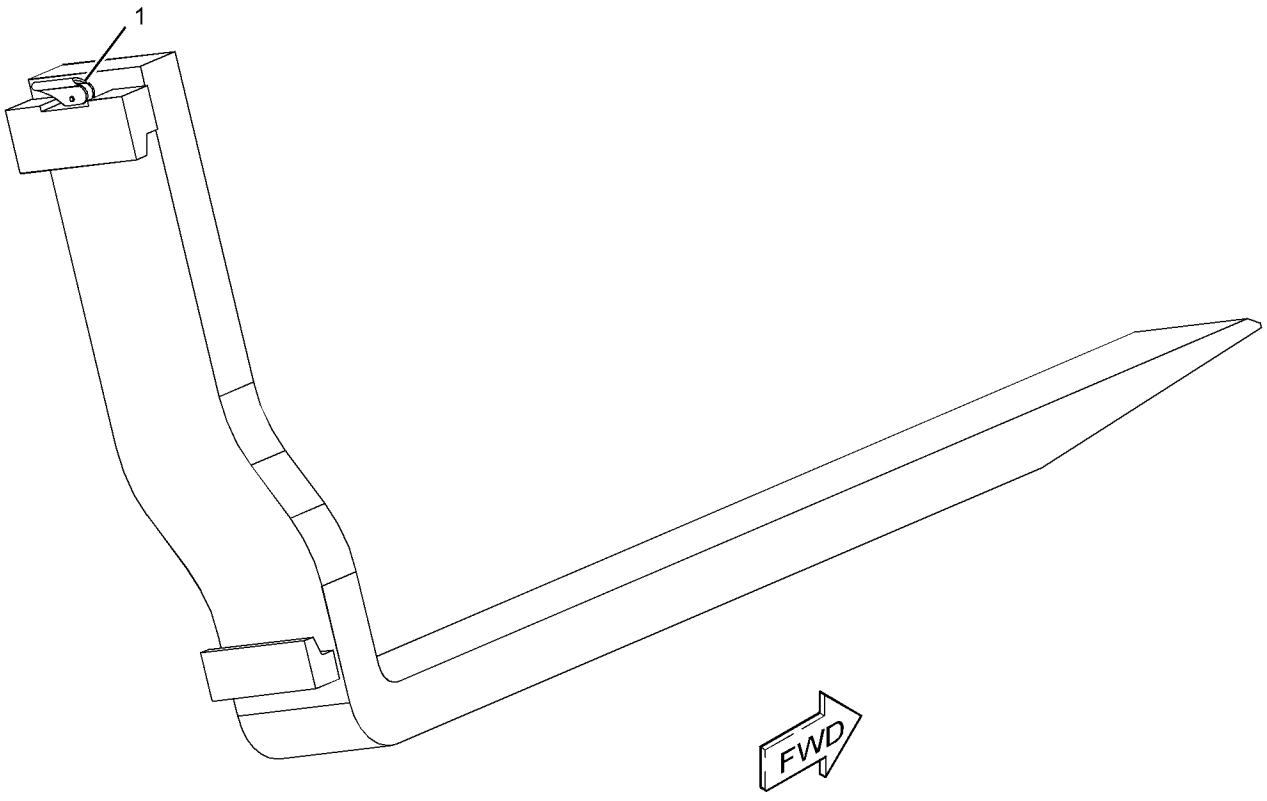

GRAPHIC #1 **<END>** g02792665

371-2377 FORK GP-PALLET

S/N: DYB1-UP
1524-MM (60-IN)
FOR USE WITH 345-2417—PAGE: 535, 371-2376—PAGE: 550
AN ATTACHMENT

SMCS-6136 **i05312974**

NOTE	REF NO	GRAPHIC REF	PART NUMBER	QTY	PART NAME 1 2 3 4 5 6 (PRODUCT LEVEL)	SEE PAGE
	1	1	**371-2351**	1	POSITIONER GP-WORK TOOL (PALLET FORK)	

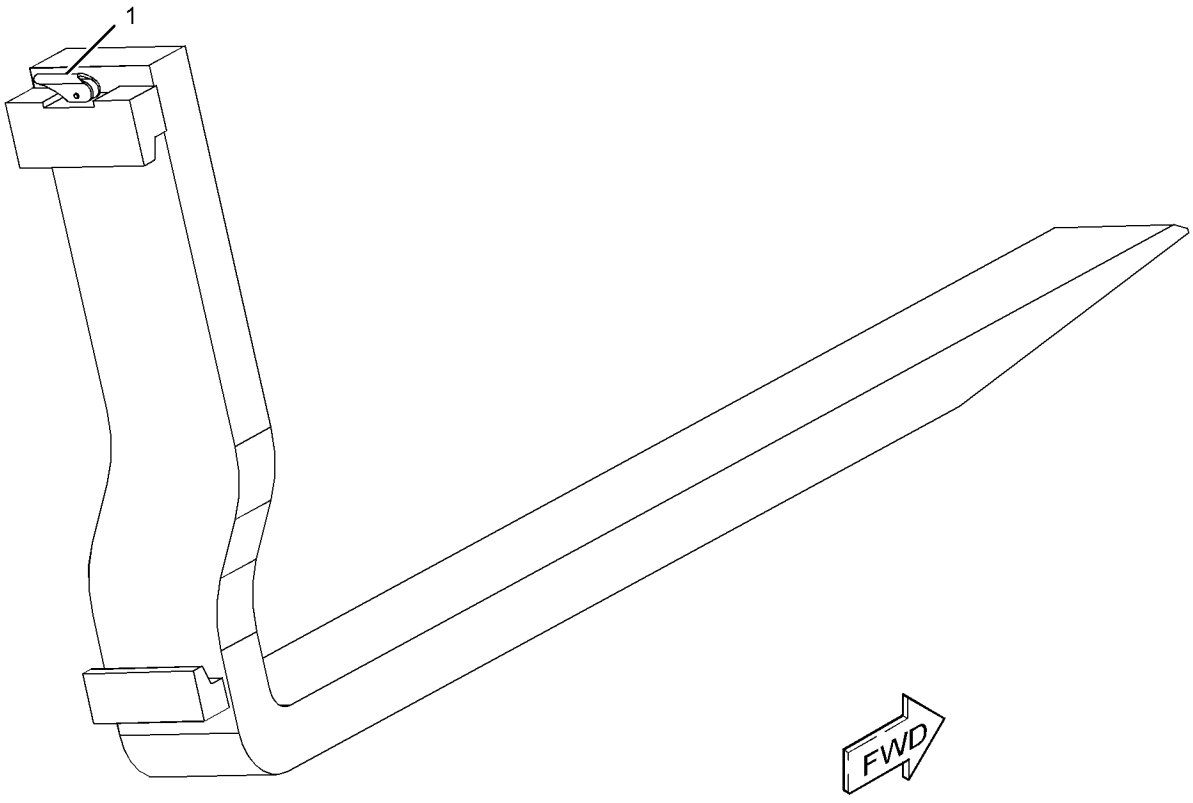

GRAPHIC #1 **<END>** g02792567

387-2859 PROTECTOR GP-LINKAGE

S/N: DYB1-UP

AN ATTACHMENT

SMCS-5063 **i05312489**

NOTE	REF NO	GRAPHIC REF	PART NUMBER	QTY	PART NAME 1 2 3 4 5 6 (PRODUCT LEVEL)	SEE PAGE
	1	1	**385-7791**	1	SUPPORT AS	

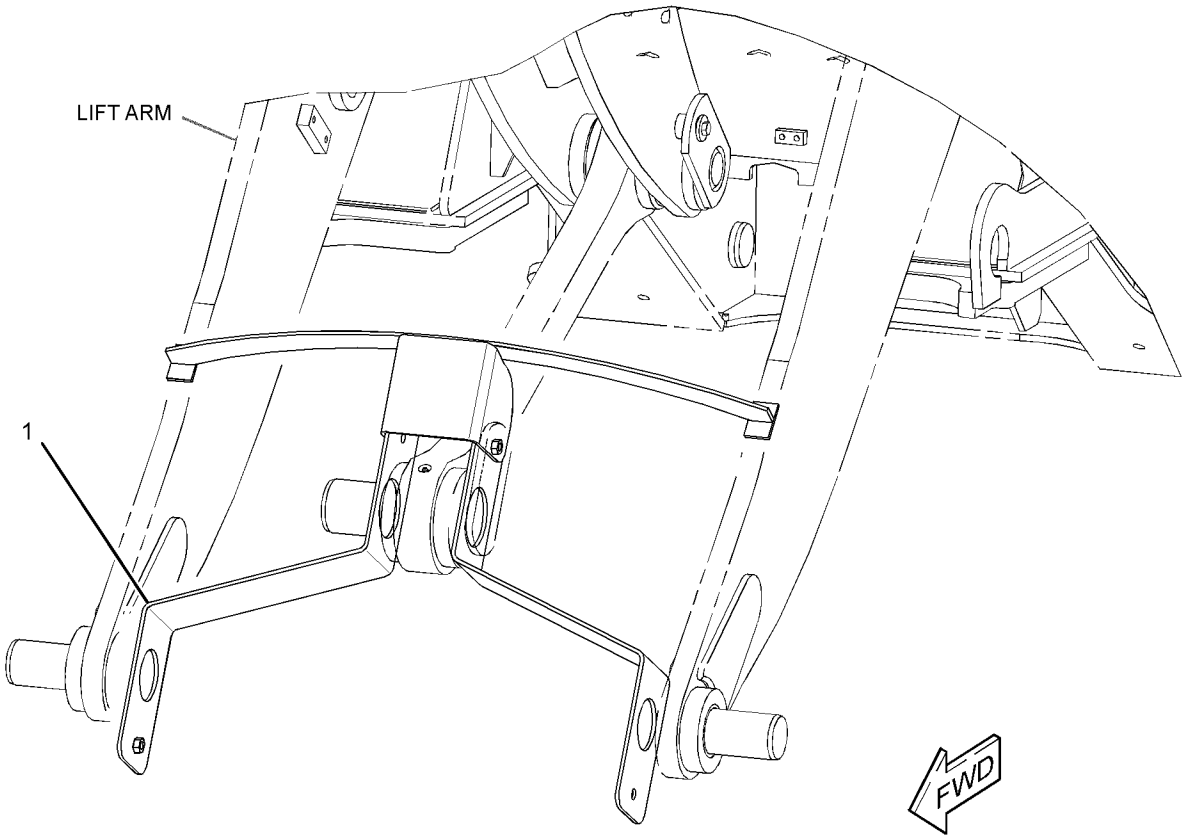

GRAPHIC #1 **<END>** g02795164

9J-3169 TIP GP-LONG

S/N: DYB1-UP
PART OF 9W-8142 TIP GP-LONG
AN ATTACHMENT

SMCS-6805 **i03627194**

NOTE	REF NO	GRAPHIC REF	PART NUMBER	QTY	PART NAME 1 2 3 4 5 6 (PRODUCT LEVEL)	SEE PAGE
	1	1	**132-4763**	1	PIN	
	2	1	**149-5733**	1	RETAINER AS (G.E.T.)	
	3	1	**1U-3252**	1	TIP-LONG	

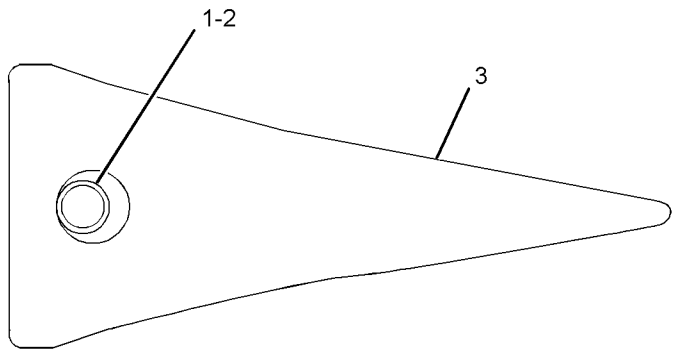

GRAPHIC #1 **<END>** g01946215

9W-8142 TIP GP-LONG

S/N: DYB1-UP
FOR USE WITH 116-9713—PAGE: 493
AN ATTACHMENT

SMCS-6805 **i00448280**

NOTE	PART NUMBER	QTY	PART NAME 1 2 3 4 5 6 (PRODUCT LEVEL)	SEE PAGE
Y	*9J-3169*	1	TIP GP-LONG	553

Y - SEPARATE ILLUSTRATION

<END>

9J-3178 TIP GP-SHORT

S/N: DYB1-UP
PART OF 9W-8143 TIP GP-SHORT
AN ATTACHMENT

SMCS-6805 **i03627178**

NOTE	REF NO	GRAPHIC REF	PART NUMBER	QTY	PART NAME 1 2 3 4 5 6 (PRODUCT LEVEL)	SEE PAGE
	1	1	**132-4763**	1	PIN	
	2	1	**149-5733**	1	RETAINER AS (G.E.T.)	
C	3	1	**1U-3251**	1	TIP-SHORT	

C - CHANGE FROM PREVIOUS TYPE

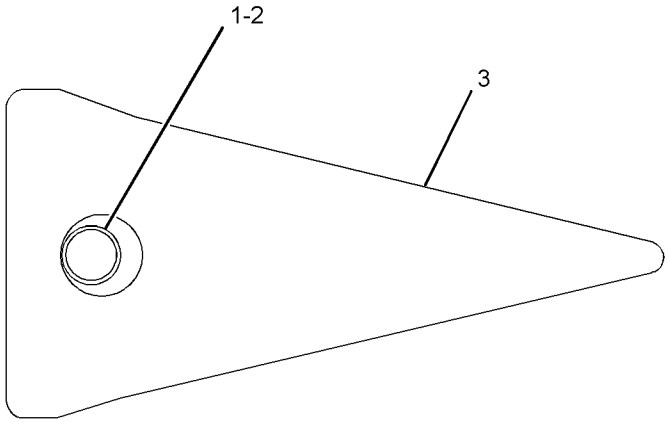

GRAPHIC #1 **<END>** g01946227

9W-8143 TIP GP-SHORT

S/N: DYB1-UP

AN ATTACHMENT

SMCS-6805 **i00448272**

NOTE	PART NUMBER	QTY	PART NAME 1 2 3 4 5 6 (PRODUCT LEVEL)	SEE PAGE
Y	*9J-3178*	1	TIP GP-SHORT	555

Y - SEPARATE ILLUSTRATION

<END>

347-8058 BOX GP-TOOL

S/N: DYB1-UP
PART OF 333-1415 BATTERY & WIRING GP
AN ATTACHMENT

SMCS-7259 **i05313021**

NOTE	REF NO	GRAPHIC REF	PART NUMBER	QTY	PART NAME 1 2 3 4 5 6 (PRODUCT LEVEL)	SEE PAGE
	1	1	**8C-8522**	1	PAWL-LATCH	
	2	1	**129-4741**	1	LATCH AS-T-BAR	
	3	1	**333-7007**	1	PLATE	
	4	1	**388-1145**	1	PLATE AS	
M		1	**7Y-8763**	3	BOSS (M10X1.5X25-MM)	
M		1	**159-9541**	3	NUT-WELD (M10X1.5-THD)	
		1	**349-8179**	1	HINGE AS	
	5	1	**386-7017**	1	PLATE	
	6	1	**366-2739**	1	PLATE	
M	7	1	**5C-7261**	2	NUT (M8X1.25-THD)	
M	8	1	**6V-7743**	2	LOCKNUT (M6X1-THD)	
	9	1	**7X-0579**	2	WASHER-HARD (8.8X25.5X2-MM THK)	
	10	1	**7X-7729**	10	WASHER (11X25X3-MM THK)	
M	11	1	**7Y-6190**	2	BOLT (M8X1.25X20-MM)	
M	12	1	**8T-4133**	2	NUT (M10X1.5-THD)	
M	13	1	**8T-4136**	9	BOLT (M10X1.5X25-MM)	
	14	1	**8T-4205**	2	WASHER-HARD (7.2X14.5X2-MM THK)	
D	15	1	**5P-5637**		SEAL (0.1-M EACH)	
D	15A	1	**5P-5637**		SEAL (0.4-M)	
D	15B	1	**5P-5637**		SEAL (0.5-M)	
M	16	1	**8T-4195**	1	BOLT (M10X1.5X30-MM)	
	17	1	**387-4054**	1	GROMMET	
	18	1	**387-4085**	1	GROMMET	

D - ORDER BY THE METER
M - METRIC PART

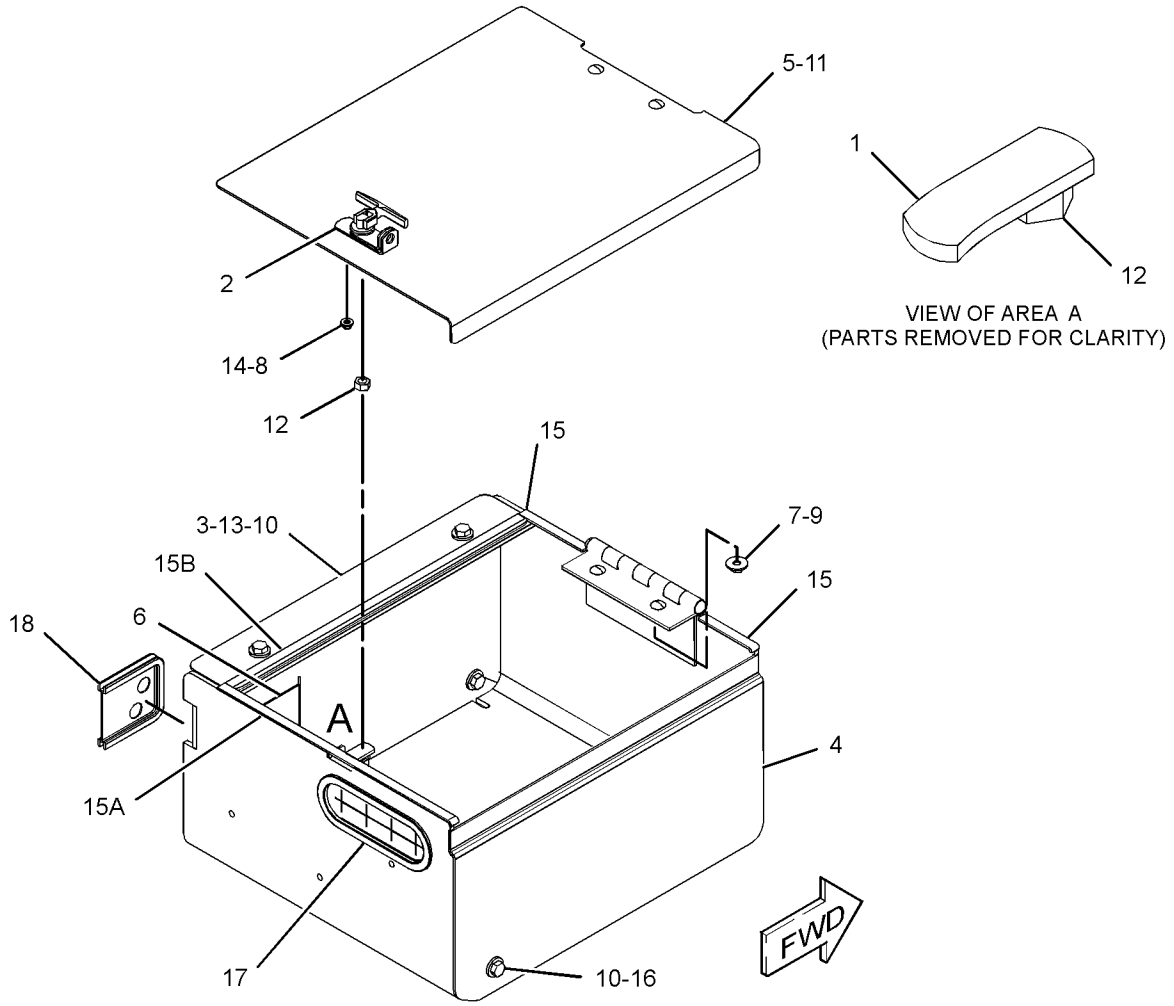

GRAPHIC #1 **<END>** g03318010

347-8059 BOX GP-TOOL

S/N: DYB1-UP

AN ATTACHMENT

SMCS-7259 **i05300929**

NOTE	REF NO	GRAPHIC REF	PART NUMBER	QTY	PART NAME 1 2 3 4 5 6 (PRODUCT LEVEL)	SEE PAGE
	1	1	**8C-8522**	1	PAWL-LATCH	
	2	1	**129-4741**	1	LATCH AS-T-BAR	
	3	1	**349-7905**	1	PLATE AS	
	4	1	**371-4686**	1	PLATE AS	
M	5	1	**5C-7261**	2	NUT (M8X1.25-THD)	
M	6	1	**6V-7743**	2	LOCKNUT (M6X1-THD)	
	7	1	**7X-0579**	2	WASHER-HARD (8.8X25.5X2-MM THK)	
	8	1	**7X-7729**	6	WASHER (11X25X3-MM THK)	
M	9	1	**7Y-6190**	2	BOLT (M8X1.25X20-MM)	
M	10	1	**8T-4133**	2	NUT (M10X1.5-THD)	
M	11	1	**8T-4186**	6	BOLT (M10X1.5X40-MM)	
	12	1	**8T-4205**	2	WASHER-HARD (7.2X14.5X2-MM THK)	
D	13	1	**5P-5637**		SEAL (0.3-M EACH)	

D - ORDER BY THE METER
M - METRIC PART

347-8059 **BOX GP-TOOL** (*contd.*) **i05300929**

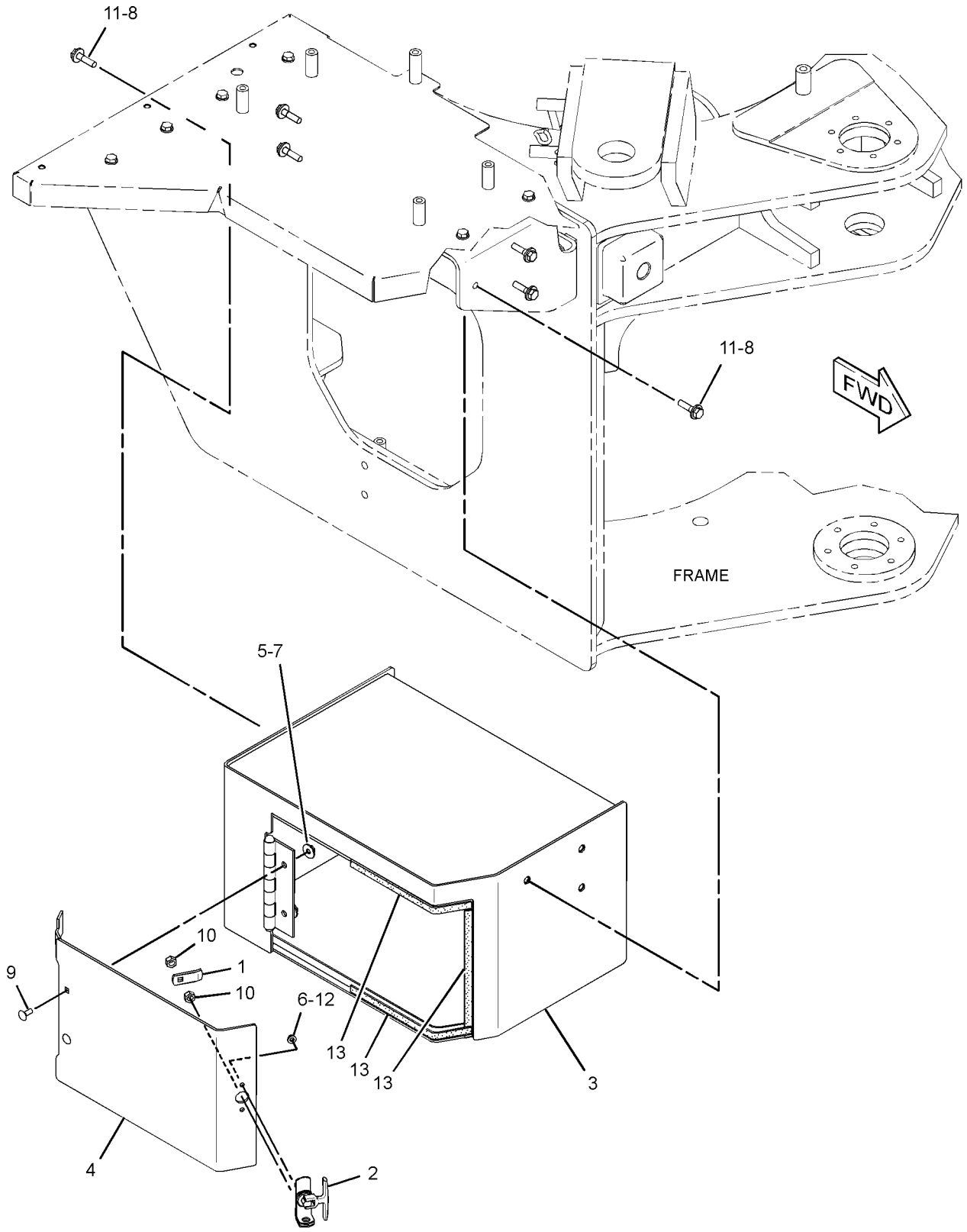

GRAPHIC #1 **<END>** g02749338

SERVICE EQUIPMENT AND SUPPLIES

362-8677 FILM GP

S/N: DYB1-UP

PART OF 381-4385 CHASSIS AR

SMCS-7405, 7557 **i05309895**

NOTE	REF NO	GRAPHIC REF	PART NUMBER	QTY	PART NAME 1 2 3 4 5 6 (PRODUCT LEVEL)	SEE PAGE
	1	1	**362-8681**	1	FILM-IDENTIFICATION (CAT 930K)	
	2	1	**362-8682**	1	FILM-IDENTIFICATION (930K CAT)	
	3	1	**362-8685**	1	FILM-IDENTIFICATION (CAT)	
	4	1	**421-1156**	1	FILM-IDENTIFICATION (CAT)	

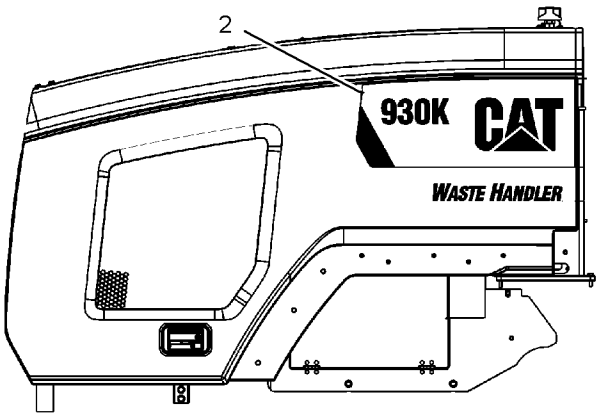

RIGHT SIDE VIEW

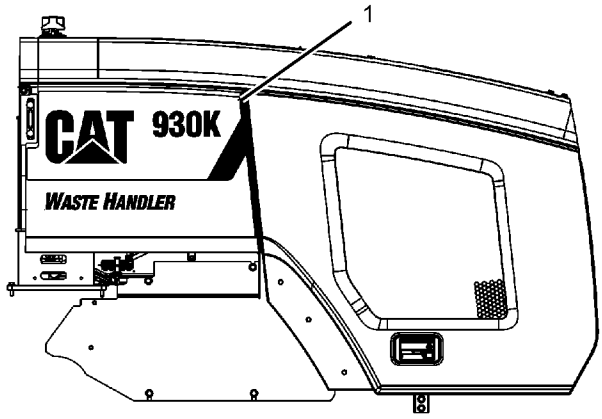

LEFT SIDE VIEW

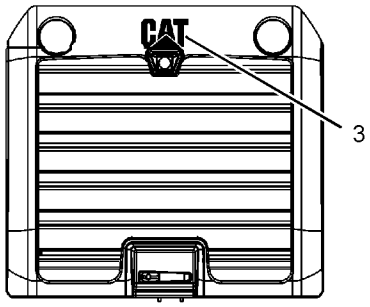

REAR VIEW

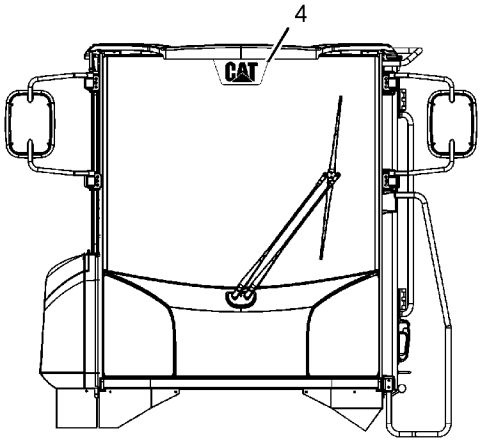

FRONT VIEW

GRAPHIC #1 **<END>** g03380782

387-4096 FILM GP–WASTE HANDLER

S/N: DYB1-UP

FOR USE WITH 349-7940–PAGE: 280, 349-8163–PAGE: 279, 349-8165–PAGE: 283, 342-0250–PAGE: 445, 377-1530–PAGE: 282

AN ATTACHMENT

SMCS-7405, 7557

i05295427

NOTE	REF NO	GRAPHIC REF	PART NUMBER	QTY	PART NAME 1 2 3 4 5 6 (PRODUCT LEVEL)	SEE PAGE
	1	1	**395-2144**	2	FILM-IDENTIFICATION (WASTE HANDLER)	

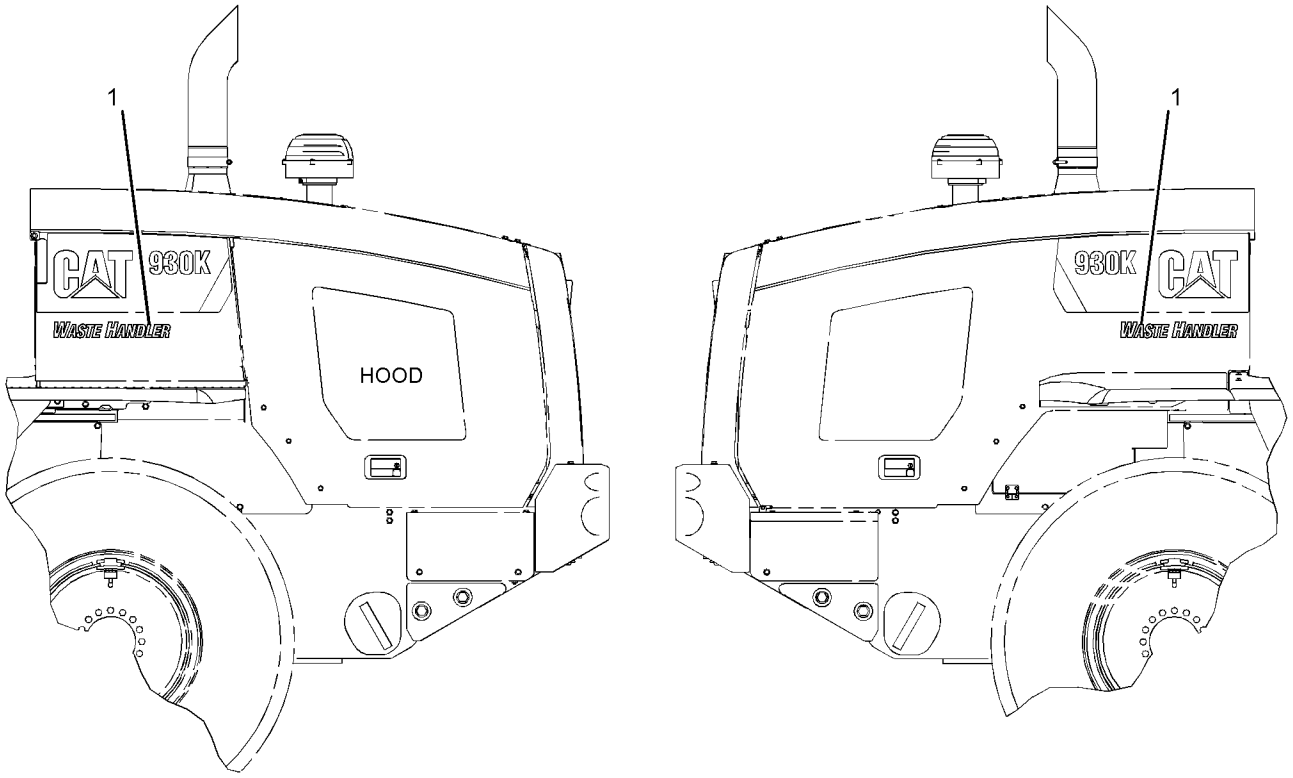

LEFT SIDE VIEW

RIGHT SIDE VIEW

GRAPHIC #1

<END>

g03378467

387-4097 FILM GP–AGGREGATE HANDLER

S/N: DYB1-UP

FOR USE WITH 348-2584–PAGE: 270, 360-3309–PAGE: 528, 360-3311–PAGE: 529

AN ATTACHMENT

SMCS-7405, 7557

i05295428

NOTE	REF NO	GRAPHIC REF	PART NUMBER	QTY	PART NAME 1 2 3 4 5 6 (PRODUCT LEVEL)	SEE PAGE
	1	1	**395-2178**	2	FILM-IDENTIFICATION (AGGREGATE HANDLER)	

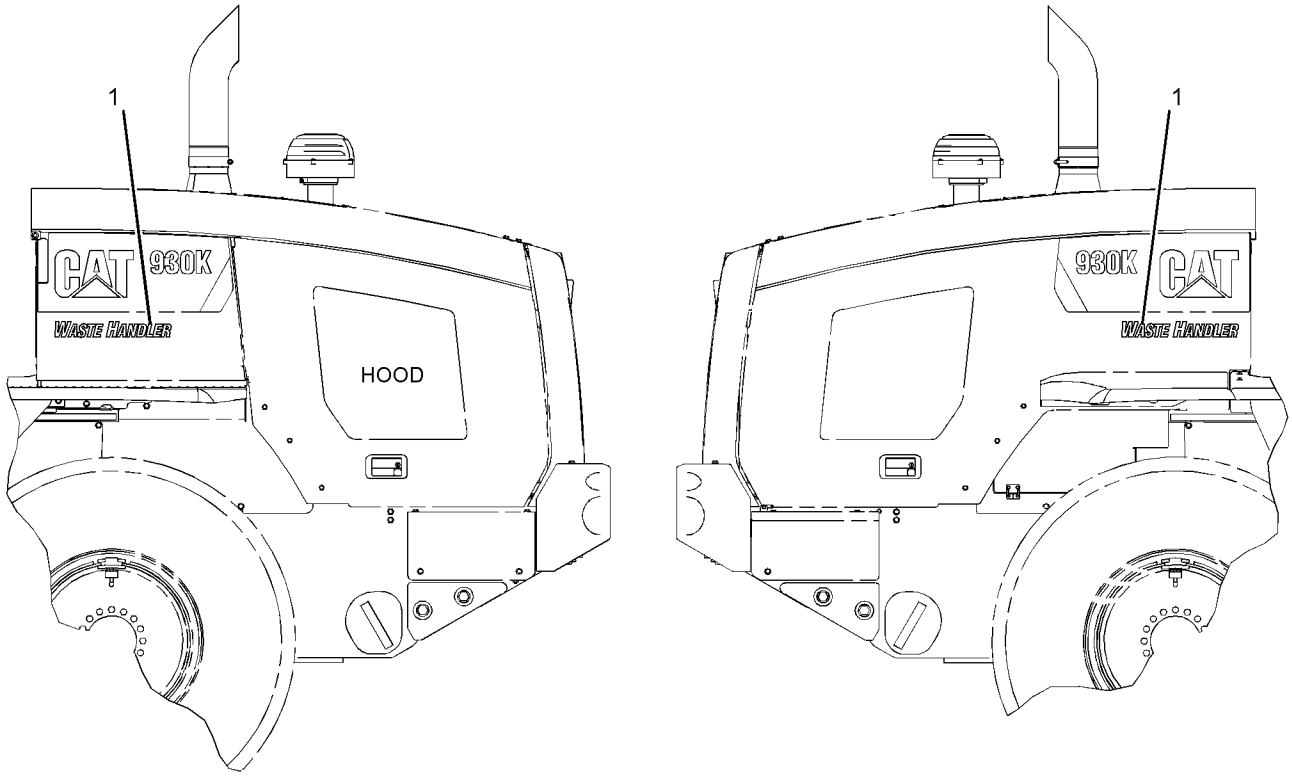

LEFT SIDE VIEW

RIGHT SIDE VIEW

GRAPHIC #1

<END>

g03378467

SERVICE EQUIPMENT AND SUPPLIES

387-4098 FILM GP—FOREST HANDLER

S/N: DYB1-UP

FOR USE WITH 342-0250—PAGE: 445, 348-2584—PAGE: 270

AN ATTACHMENT

SMCS-7405, 7557

i05323433

NOTE	REF NO	GRAPHIC REF	PART NUMBER	QTY	PART NAME 1 2 3 4 5 6 (PRODUCT LEVEL)	SEE PAGE
	1	1	**395-2179**	2	FILM-IDENTIFICATION (FOREST HANDLER)	

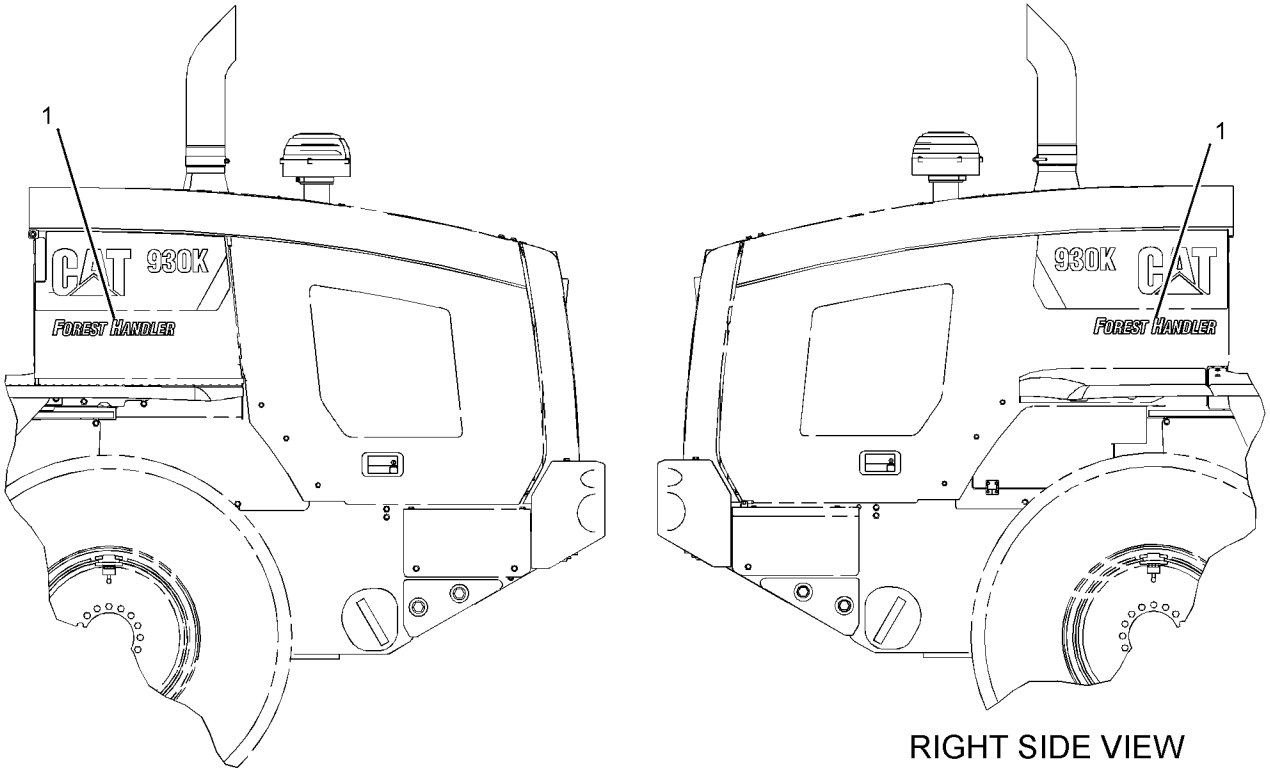

LEFT SIDE VIEW

RIGHT SIDE VIEW

GRAPHIC #1

<END>

g03380187

423-8564 FILM GP-INTERNATIONAL

S/N: DYB1-UP

PART OF 366-8166 CONVERSION AR-ROADING

AN ATTACHMENT

SMCS-7405, 7557

i05296439

NOTE	PART NUMBER	QTY	PART NAME 1 2 3 4 5 6 (PRODUCT LEVEL)	SEE PAGE
	219-0302	1	FILM-WARNING (NO WELD, NO DRILL, READ OMM)	
			(ON UPPER LEFT CORNER ON THE RISER BRACKET FOR THE SEAT INSIDE CAB)	
	224-0672	2	FILM-WARNING (HIGH PRESSURE, READ OMM, INTL)	
			(1-ON MACHINE RH SIDE ON TOP SURFACE ON THE BRAKE ACCUMULATOR PLATFORM IN FRONT OF THE ACCUMULATOR,	
			1-ON INSIDE OF THE NON ENGINE END FRAME ON MACHINE LH SIDE ABOVE THE PILOT SUPPLY ACCUMULATOR)	
	224-8946	1	FILM-WARNING (NO ETHER SPRAY/AIR INTK, INTL)	
			(ON RH SIDE OF ENGINE COMPARTMENT HOOD NEAR PRE-AIR CLEANER)	
B	**225-0312**	2	FILM-WARNING (JUMP START, READ OMM, INTL)	
			(1-ON THE INSIDE OF THE BATTERY BOX ON THE FRONT SIDE PLATE NEAR THE TOP)	
			1-USE AS REQUIRED ON THE HEAVY DUTY BATTERY OPTION OR INSIDE OF THE BATTERY BOX ON THE FRONT SIDE PLATE NEAR THE TOP)	
	225-4257	1	FILM-WARNING (HOT FLUID UNDER PRESS)	
			(ON UNDERSIDE OF THE SHUNT TANK ACCESS DOOR)	
	237-6256	2	FILM-WARNING (FAN)	
			(1-INSIDE OF THE ENCLOSURE ON MACHINE LH SIDE UNDER ELECTRICAL BREAKER PLATE ON THE RADIATOR STRUCTURE,	
			1-INSIDE OF THE ENCLOSURE ON MACHINE RH SIDE UNDER ELECTRICAL BREAKER PLATE ON THE RADIATOR STRUCTURE)	
	269-0194	2	FILM-WARNING (CRUSH HAZARD, STAY BACK, U.S.)	
			(ON ROPS STRUCTURE CROSS TUBE CENTER UNDER FRONT GLASS & ABOVE FRONT CAB SKIRT ON RH & LH SIDE OF MACHINE)	
	327-0802	1	FILM-WARNING (CRUSH HAZARD, FASTEN SEAT BELT)	
			(ON RH A-POST INSIDE OF CAB)	
	367-4215	1	FILM-WARNING (ARTICULATION LOCK, CRUSH HAZAR)	
			(ON RH A-POST INSIDE OF CAB)	
	373-7178	1	FILM-WARNING (QUICK COUPLER, READ OMM)	
			(ON THE RH B-POST IN THE LOWER)	
	385-7289	1	FILM-WARNING (UNIVERSAL, READ OMM)	
			(ON UPPER LEFT CORNER ON THE RISER BRACKET FOR THE SEAT INSIDE CAB)	
	385-7291	1	FILM-WARNING (ROTATING SHAFT, READ OMM)	
			(ON INSIDE OF THE ENCLOSURE ON MACHINE LH SIDE ON THE SOUND WALL POST)	

B - USE AS REQUIRED

<END>

367-9409 PLATE & FILM GP

S/N: DYB1-UP

PART OF 381-4385 CHASSIS AR

SMCS-7405, 7557 **i05307713**

NOTE	PART NUMBER	QTY	PART NAME 1 2 3 4 5 6 (PRODUCT LEVEL)	SEE PAGE
	239-6989	1	PLATE-SERIAL NUMBER (MACHINE)	
			(ON LH SIDE OF NON ENGINE END FRAME TOWER PLATE 20MM ABOVE SERIAL NUMBER)	
	225-4150	1	PLATE-SERVICE INFORMATION (MACHINE)	
			(TO BE ADHERED TO COMBO PIN PLATE)	
	193-5918	4	PLUG	
	7X-3229	4	FILM-IDENTIFICATION (LIFT EYE, TIE-DOWN LOCATION)	
			(ON ABOVE EACH TIE DOWN EYE & CENTER ON HOLE)	
	300-9915	1	FILM-IDENTIFICATION (HYDRAULIC OIL)	
			(ON BACK OF CAB ALIGHED WITH LH SIDE PANEL & CENTER WITH SITE GAGE SO IT CAN BE SEEN FROM GROUND)	
	366-9650	1	FILM-IDENTIFICATION (GREASE POINTS)	
			(ON FRONT OF MACHINE RH SIDE OF ENGINE END FRAME PLACE ONE FILM ON OUTSIDE FRAME RAIL & ALIGN TOP EDGE OF FILM TO TOP	
			EDGE OF FRAME CUT OUT THEN CENTER FILM HORIZONTALL BETWEEN FRONT SIDE OF FRAME & FRONT EDGE OF SIDE CUT OUT SO IT CAN	
			BE SEEN WITH OR WITHOUT OPTIONAL TOOL BOX THEN PLACE SECOND FILM DIRECTLY BELOW FIRST)	
	366-9651	1	FILM-IDENTIFICATION (GREASE POINTS)	
			(ON FRONT OF MACHINE RH SIDE OF ENGINE END FRAME PLACE ONE FILM ON OUTSIDE FRAME RAIL & ALIGN TOP EDGE OF FILM TO TOP	
			EDGE OF FRAME CUT OUT THEN CENTER FILM HORIZONTALL BETWEEN FRONT SIDE OF FRAME & FRONT EDGE OF SIDE CUT OUT SO IT CAN	
			BE SEEN WITH OR WITHOUT OPTIONAL TOOL BOX THEN PLACE SECOND FILM DIRECTLY BELOW FIRST)	
	367-2756	1	FILM-IDENTIFICATION (GREASE POINTS)	
			(NEAR GREASE BLOCK IN HITCH AREA ON NON ENGINE END FRAME)	
	367-2757	1	FILM-IDENTIFICATION (GREASE POINTS)	
			(NEAR GREASE BLOCK IN HITCH AREA ON ENGINE END FRAME)	
	134-7258	1	FILM-INFORMATION (EXTENDED LIFE COOLANT)	
			(ON UNDERSIDE OF SHUNT TANK ACCESS DOOR & ORIENT TO BE READ FROM LH SIDE OF MACHINE)	
	146-6747	2	FILM-INFORMATION (24-VOLT)	
			(1-ON INSIDE OF BATTERY BOX ON FRONT SIDE PLATE NEAR TOP)	
			(1-USE AS REQUIRED WITH OPTIONAL BATTERY BOX)	
	366-8550	1	FILM-INFORMATION (BELT ROUTING)	
			(ON INSIDE OF ENCLOSURE ON MACHINE RH SIDE ON SOUND WALL SERVICE PLATE)	
	372-5183	1	FILM-INFORMATION (BRAZIL)	
			(ON INSIDE CAB DOOR ON THE LOWER GLASS ON THE RIGHT SIDE)	
	309-6899	1	FILM-INSTRUCTION (BATTERY)	
			(IN CENTER OF FRONT GLASS VISIBLE FROM SEATED POSITION)	
	366-8546	1	FILM-INSTRUCTION (DOOR CLOSURE, READ OMM)	
			(ON RH ENGINE ACCESS FOLD DOWN PANEL ON INSIDE OF PANEL ALIGNED WITH HINGES CENTERED ON PANEL)	
	385-7287	1	FILM-START AID (READ OMM)	

367-9409 **PLATE & FILM GP (*contd.*)** **i05307713**

NOTE	PART NUMBER	QTY	PART NAME 1 2 3 4 5 6 (PRODUCT LEVEL)	SEE PAGE
			(ON RISER BRACKET FOR SEAT INSIDE CAB NEXT TO NO WELD,DRILL FILM NEXT SO BOTH CAN BE READ AS YOU STAND ON LADDER)	
	366-8547	1	FILM-WARNING (ROPS, FOPS, READ OMM)	
			(ON RISER BRACKET FOR SEAT INSIDE CAB NEXT TO NO WELD, DRILL FILM NEXT SO BOTH CAN BE READ AS YOU STAND ON LADDER)	
	236-7230	1	TAG-WARNING (STEERING FRAME LOCK)	
			(ATTACH TAG TO CONTROL GP)	
			<END>	

378-8167 PLATE & FILM GP

S/N: E7A1-UP

PART OF 371-1441 ENGINE AR-PRIMARY

AN ATTACHMENT

SMCS-7405, 7557

i05332229

NOTE	REF NO	GRAPHIC REF	PART NUMBER	QTY	PART NAME 1 2 3 4 5 6 (PRODUCT LEVEL)	SEE PAGE
	1	1	**392-8477**	1	PLATE-IDENTIFICATION (CAT)	
	2	1	**326-9053**	1	FILM-WARNING (DO NOT SPRAY, READ OMM)	
	3	1	**346-8219**	2	FILM-WARNING (UNIVERSAL WARNING)	
	4	1	**355-3486**	1	STRIP-ADHESIVE	

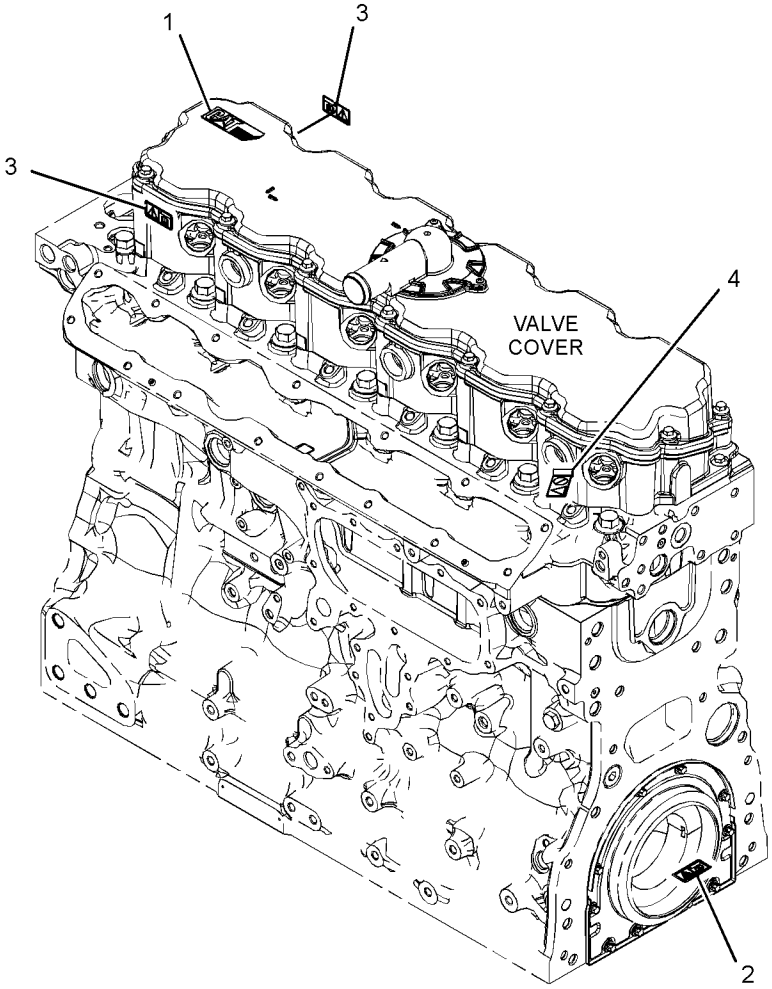

GRAPHIC #1

<END>

g03378858

PART NUMBER INDEX

Part	Page
0	
0S-1595	409
0S-1603	19
0T-0244	475
0T-0924	217
1	
1A-8912	160
1B-3057	490
1B-3969	188
1B-3978	247
1B-3980	188
1H-3244	161
	165
1H-4393	90
1J-5607	538
	539
	541
1J-9671	51
	182
	183
	247
	300
	301
	318
	319
	320
	321
1K-6853	236
1K-6872	409
1M-6119	94
	97
	98
1M-6120	94
	97
	98
1M-7250	66
1P-0810	94
	95
	97
	98
	110
	114
	115
	117
	119
	120
	121
	122
	123
1P-3703	202
1P-3704	202
1P-3934	194
	195
1P-3935	194
	195
1P-4582	341
1P-4584	341
1P-5767	202
1P-6872	373
1P-7009	456
1S-0994	95
	98
	165
1S-9593	399
1U-0257	493
1U-3251	555
1U-3252	553
1U-8846	196
	198
2	
2C-9259	495
	496
	497
	498
	499
	500
	501
	502
	503
	504
	505
	506
	507
	508
	509
	510
	511
	512
	513
	514
	542
2D-0598	196
2D-2628	261
2D-2629	261
2D-2630	261
2D-2631	261
2D-2633	261
2D-2751	164
	168
2H-3922	155
2H-3927	194
	195
2J-3507	493
	538
	539
	540
	541
2K-0715	198
2L-8050	124
	151
2L-8052	124
2L-8058	124
	151
2L-8060	124
2L-8067	110
	115
	123
2L-8068	110
	124
2L-8069	124
2L-8079	122
	124
2M-2570	361
	362
2M-3432	176
2M-9780	88
	90
	204
	205
	209
	313
	349
	353
	357
	359
	369
	373
	383
2P-1279	341
2P-4173	16
2P-4556	456
2S-3163	490
2S-3745	406
2S-4078	340
	341
	355
	378
2U-7358	382
2W-1145	212
	214
3	
3B-0551	196
	198
3B-2263	247
	371
3B-4516	540
3B-4629	537
3B-5320	492
3B-6552	295
3B-7896	295
3B-8488	236
3B-8489	233
	237
	288
	311
	324
	402
	537
3B-8491	324
3D-2824	204
	205
	209
	307
	320
	321
	323
	340
	345
	347
	355
	357
	359
	371
	378
3E-2335	351
3E-3892	437
3E-4883	465
3E-4885	219
	465
3E-4907	465
3E-5169	165
3E-5239	160
	179
3E-6600	51
	265
	266
	440
3E-6769	373
3E-6770	373
3E-6910	255
3E-6924	419
3E-8016	366
3E-8020	178
	271
	412
	451
	453
3E-8320	94
	97
3E-9179	110
3E-9411	270
	324
3F-9556	160
3G-8047	313
3G-8054	313
3G-8057	313
3G-8779	402
3J-0634	214
3J-1907	165
	170
	173
	200
	202
	204
	205
	212
	222
	223
	255
	257
	258
	259
	260
	306
	307
	323
	340
	341
	342
	351
	353
	378
	380
	382
3J-7354	182
	183
	196
	200
	205
	300
	301
	306
	307
	313
	318
	319
	320
	321
	336
	340
	341
	357
	359
	371
	397
	398
3K-0360	17
	51
	205
	248
	307
	313
	323
	340
	341
	383
3K-6060	460
3K-8460	248
3P-1210	373
3S-2093	79
	88
	93
	106
	114
	123
	126

► **PRIMARY REFERENCE**

PART NUMBER INDEX

Part	Page
	127
	128
	130
	132
	139
	142
	153
	160
	164
	165
	168
	170
	176
	178
	179
	180
	330
	448
	450
	456
	462
	467
	473
	490
3S-6049	94
	97
3S-6050	94
	97
	98
3T-4965	378
4	
4B-0418	51
4B-2043	165
4B-4863	160
4D-5243	95
	98
	165
	180
	481
4D-7388	205
4D-7733	456
4D-9986	126
	127
4E-0659	495
	496
	497
	498
	503
	504
	512
4E-1357	225
	238
	241
	242
	243
	244
	245
	246
4E-5724	165
4E-5984	234
4E-5985	234
4F-2294	156
4F-2861	295
4F-4042	493
4F-4879	479
4F-8824	235
4F-9029	189
4I-6287	351
4J-0520	202
	313
4J-0522	202
	341
4J-0527	341
4J-5268	248
4J-5477	205
	313
	340
	341
	357
	359
	378
4J-7533	382
4J-9058	493
4J-9208	540
4K-0173	196
	198
4K-1388	351
4K-4879	227
	229
4K-4881	226
	228
4K-7464	288
4K-9429	466
4L-6454	409
4L-7249	194
	195
4M-6582	484
4P-7429	165
4P-7581	95
	98
	142
	160
	165
	170
	173
	175
	178
	467
4P-8134	161
	165
	170
	175
	178
	179
	180
	248
	330
	467
4S-1962	347
4T-6695	538
4T-8091	539
	541
4V-5099	198
4V-8256	477
4W-7356	363
	364
5	
5A-3604	366
5B-0651	402
5C-2890	9
	109
	132
	142
	144
	151
	161
	165
	178
	271
	422
	433
5C-7261	135
	136
	152
	176
	293
	378
	411
	421
	557
	559
5C-8312	90
5C-9553	88
	165
	179
	271
	290
	422
5D-1026	204
5E-8555	440
5E-9295	109
5H-8853	307
5J-5437	248
5K-5338	307
	336
	456
5K-9090	205
	327
	328
	337
	339
	341
	345
	351
	355
5L-3381	406
5L-4758	189
5M-7937	302
5P-0537	477
5P-0743	16
5P-0767	458
5P-1045	204
5P-1076	27
	103
	200
5P-1423	206
5P-1506	117
	206
5P-1507	79
5P-3723	196
	198
5P-3860	351
5P-4115	448
5P-4116	50
	51
	57
	60
	79
	95
	98
	142
	153
	170
	179
	273
	290
	293
	298
	378
	383
	445
	448
5P-4362	204
	378
5P-4484	196
	198
5P-4571	110
	112
	121
	467
5P-4869	355
5P-5291	198
5P-5630	152
5P-5637	284
	291
	557
	559
5P-5649	284
5P-5677	132
5P-5688	406
5P-6006	110
	124
5P-6944	340
5P-7070	406
5P-7162	161
5P-7177	445
5P-7211	55
	94
	165
	271
	284
	291
5P-7464	313
	347
5P-7465	313
	347
5P-7468	355
5P-7469	355
5P-7470	341
5P-7471	341
5P-7813	248
5P-7854	313
5P-7957	466
5P-7958	1
	160
5P-8182	341
5P-8244	368
5P-8245	361
	362
	409
5P-8247	196
	198
	302
5P-8309	175
	433
5P-8444	355
5P-8500	1
	192
	377
5P-8837	296
5P-8874	323
5P-9299	338
	380
5T-7486	477
5V-1496	477
5V-5498	236
5V-6152	173
5V-6153	173
5V-9155	38
6	
6A-9083	409
6C-3681	284
6C-9038	103
6D-0337	227

PART NUMBER INDEX

Part	Page
	229
	230
	261
6D-0443	261
6D-1641	313
	458
6D-3479	79
	456
6D-4246	79
6D-7690	196
	198
6E-3263	373
6E-3264	373
6E-3265	373
6E-3283	212
	214
6E-3341	376
6E-4000	373
6E-4003	373
6E-4004	373
6E-4009	376
6E-5066	382
6E-6155	376
6E-6158	376
6E-6527	397
6E-6528	397
	398
6F-2956	194
	195
	196
	198
6F-4718	212
6F-7045	155
6H-3586	110
6I-0217	10
	21
	29
	38
	39
	46
	53
	69
	75
	86
6I-0254	39
	53
6I-0260	29
	38
	46
	49
	64
	75
	87
6I-0292	146
6I-0293	146
6I-0363	29
6I-0456	104
6I-0563	69
6I-0572	29
6I-0593	75
6I-0594	49
	86
6I-0631	85
6I-0645	21
6I-0650	21
6I-0654	24
	29
	86
6I-0917	64
6I-0918	87
6I-1090	44
6I-1418	106
	160
6I-1497	42
6I-4200	75
6I-4374	39
6I-4681	29
6I-4709	46
6I-8310	495
	496
	497
	498
	499
	500
	501
	502
	503
	504
	505
	512
6I-8311	495
	496
	497
	498
	499
	500
	501
	502
	503
	504
	505
	512
6I-8531	233
6I-8849	288
6I-8860	288
6I-9250	493
6I-9251	493
6J-2680	341
6K-0806	467
6K-2430	198
6K-4185	288
6K-4186	288
6K-4191	288
6K-8178	79
6K-8987	216
6N-1604	126
	127
6P-4467	144
6S-8620	51
	79
6T-5598	170
6T-6505	112
6T-6506	112
6T-7054	399
6V-0347	194
	195
	196
	198
6V-0400	202
6V-0491	110
	122
6V-0852	202
	247
	307
	313
	330
	341
	382
6V-1194	288
6V-1249	314
	347
6V-1250	257
	258
6V-1902	210
6V-1970	1
6V-2313	92
6V-2495	456
6V-2611	51
6V-2689	467
6V-2722	114
6V-3213	311
6V-3319	211
6V-3531	198
6V-3582	313
6V-3822	248
6V-3938	330
6V-3965	202
	260
	307
	330
	341
	382
6V-4292	51
6V-4429	198
6V-5048	331
	332
6V-5050	248
	260
6V-5063	209
6V-5100	188
6V-5138	387
6V-5192	223
6V-5217	248
6V-5220	206
6V-5224	248
6V-5654	55
6V-5686	198
6V-5839	378
6V-5842	248
6V-6317	248
6V-6339	398
6V-6715	107
6V-7238	17
	340
6V-7357	9
	128
	130
	271
	290
	412
	437
6V-7486	204
6V-7636	290
	437
	440
6V-7673	235
6V-7743	557
	559
6V-7744	134
	378
	477
6V-7970	386
	387
	388
	389
6V-8185	290
6V-8201	371
6V-8210	194
	195
6V-8212	248
6V-8225	408
6V-8227	422
6V-8352	255
6V-8367	206
6V-8397	200
	204
	205
	306
	307
	336
	338
	340
	341
	342
	351
	353
	380
6V-8398	205
	307
	313
	323
	338
	347
	380
6V-8400	205
	340
	341
	355
6V-8523	51
6V-8625	205
6V-8626	209
	349
	359
	383
6V-8627	205
	378
6V-8628	313
6V-8632	313
6V-8636	200
	306
	353
	380
6V-8637	260
	340
	345
	355
	378
6V-8639	313
6V-8640	205
6V-8641	205
6V-8642	353
6V-8647	313
	357
	359
6V-8713	209
	347
	359
	341
	353
	380
6V-8781	341
6V-8783	313
6V-8795	288
6V-8801	303
6V-8928	451
	453
6V-8948	205
6V-8969	477
6V-8993	341
6V-8994	307
	341
6V-8995	307
	347
6V-8998	339
	341
6V-9000	341
6V-9001	205
	306
	353
6V-9003	357

► **PRIMARY REFERENCE**

PART NUMBER INDEX

Part	Page
	383
6V-9006	341
6V-9007	205
6V-9008	351
6V-9009	355
6V-9023	110
6V-9161	307
6V-9168	206
	307
	338
	341
6V-9169	307
	347
6V-9172	337
	339
	341
	345
	351
	355
6V-9189	134
	445
6V-9200	200
	307
6V-9746	205
	307
	341
	345
	355
	378
6V-9829	338
	341
6V-9830	347
6V-9831	342
	351
6V-9833	339
6V-9836	342
6V-9838	313
6V-9851	307
6V-9853	307
6V-9872	336
6W-8246	288
6W-9731	240
6Y-1192	188
6Y-2736	223
6Y-2737	223
6Y-7929	188

7

Part	Page
7B-1251	166
7C-4616	21
7D-1649	284
	287
7F-8607	248
7G-5220	235
7I-1024	458
7I-2273	467
7I-8310	248
7J-9108	209
	312
	313
	342
	347
	349
	351
	353
	357
	359
	383
7K-1181	51
	79
	97
	128
	130
	142
	160
	165
	168
	170
	173
	175
	176
	179
	180
	295
	306
	330
	336
	338
	342
	380
	458
	467
7K-4942	303
7K-9208	324
	402
7K-9209	402
7K-9210	325
	402
7K-9216	402
7K-9546	312
7M-8485	196
	198
	204
	205
	247
	341
	349
	351
	378
7N-0296	152
7N-0718	94
	97
	155
7N-7221	467
7N-9017	122
7N-9801	159
7P-1695	95
	98
	166
	170
	180
7P-3194	402
7P-3466	402
7P-8753	402
7R-2750	109
	120
7R-2751	109
7R-3354	123
7T-0093	109
7T-0094	112
	123
7T-1099	330
	402
7T-4532	414
7T-4924	97
7T-6655	188
7T-6799	157
7T-8332	55
	378
7T-9122	235
7T-9326	▶538
7T-9987	94
	97
7T-9988	94
	97
	98
7V-5626	176
7W-2632	104
7W-3447	283
7W-4669	47
7X-0507	474
7X-0578	280
7X-0579	50
	106
	161
	290
	415
	447
	451
	453
	557
	559
7X-0618	55
	288
	311
	324
	325
	378
	402
7X-0620	166
7X-0818	176
	431
7X-0820	205
	341
7X-0872	313
7X-1553	371
7X-2459	306
7X-2465	216
7X-2488	27
7X-2533	161
7X-2534	276
	353
7X-2537	60
	79
	290
7X-2538	290
7X-2543	342
7X-2544	314
7X-2547	221
7X-2552	268
	269
7X-2557	270
7X-2575	240
	262
7X-2578	216
7X-3229	566
7X-3354	419
7X-6315	105
	107
7X-7729	50
	51
	59
	65
	88
	166
	202
	206
	265
	266
	271
	273
	276
	277
	279
	284
	291
	293
	297
	298
	330
	339
	342
	351
	355
	365
	377
	385
	390
	431
	456
	557
	559
7X-7958	51
	192
	206
7Y-0468	477
7Y-6190	557
	559
7Y-7389	440
7Y-8763	557

8

Part	Page
8B-4884	295
8C-0596	170
8C-3095	107
8C-3206	314
8C-3290	219
	465
8C-3364	205
	341
8C-3398	109
8C-3445	45
8C-3446	193
	205
8C-3447	193
8C-3451	206
8C-3681	51
8C-5225	16
8C-5607	128
	130
	132
8C-5608	128
	130
	132
8C-6354	160
8C-8514	469
8C-8522	557
	559
8C-8992	103
8C-9987	399
8D-2707	261
8D-9671	79
8E-1118	168
8E-4566	▶539
8E-4567	539
8E-4568	▶541
8E-4569	541
8F-1326	160
8F-7242	160
8F-9516	196
	198
8H-5303	155
8H-5306	155
8J-0412	373
8J-2928	493
8J-2933	493
8J-6273	363
	364
8L-2779	306
	400

PART NUMBER INDEX

Part	Page
8L-2786	30
8L-8413	94
	97
	98
	113
8M-2773	200
	206
	456
8M-4987	192
	212
8R-0512	196
	198
8R-2200	186
8R-2202	186
8R-2532	196
	198
8R-2918	431
8R-3809	196
	198
8R-7091	288
8R-7092	288
8S-0023	342
	355
8S-0024	342
	355
8S-0948	170
8S-4725	474
8S-4726	474
8S-7583	175
8T-0078	307
8T-0122	165
8T-0154	16
8T-0225	406
8T-0267	248
8T-0273	212
8T-0328	92
	467
8T-0336	196
	198
8T-0337	406
8T-0338	257
	258
8T-0348	214
8T-0372	194
	195
	233
8T-0375	196
	198
8T-0389	137
	138
8T-0404	357
	359
8T-0722	475
8T-1482	263
	264
	268
	269
	270
8T-1889	192
	206
	339
	345
	351
	355
8T-1890	192
	206
	339
	345
	351
	355
8T-2659	160
	406
8T-2925	186
8T-3282	198
8T-3425	51
	95
	98
8T-3426	51
	60
8T-3490	204
	458
8T-3647	380
8T-4001	219
	263
	264
8T-4121	55
	65
	79
	92
	93
	95
	98
	134
	144
	161
	166
	170
	173
	175
	176
	180
	192
	200
	202
	206
	217
	221
	278
	282
	288
	291
	293
	297
	307
	314
	336
	337
	338
	339
	342
	345
	347
	349
	351
	353
	355
	357
	359
	378
	380
	391
	392
	393
	431
	437
	445
	456
	458
	467
	469
	474
	475
	477
	481
	490
8T-4122	103
	234
8T-4131	27
8T-4133	65
	88
	95
	98
	166
	170
	202
	265
	266
	280
	351
	357
	359
	445
	456
	469
	557
	559
8T-4136	55
	79
	88
	95
	98
	144
	161
	166
	170
	173
	180
	192
	206
	265
	266
	271
	276
	282
	291
	293
	297
	298
	307
	314
	330
	336
	337
	338
	339
	342
	345
	347
	349
	351
	355
	385
	431
	437
	445
	456
	467
	481
	490
	557
8T-4137	65
	88
	93
	166
	170
	173
	175
	176
	200
	206
	265
	266
	273
	278
	293
	307
	338
	339
	380
	391
	392
	393
	445
	456
	458
8T-4138	9
	144
	161
	166
	271
	421
	433
	437
	448
	481
8T-4140	210
	211
	234
8T-4149	205
8T-4167	216
	218
	219
	225
	238
	240
	241
	242
	243
	244
	245
	246
	262
	465
8T-4171	248
	406
8T-4172	288
	307
8T-4179	268
	269
	270
	542
8T-4180	291
8T-4182	287
8T-4183	154
	342
	542
8T-4184	202
	219
	284
	342
8T-4185	65
	217
	265
	266
	283
	307
8T-4186	166
	277
	280
	314
	351
	355
	377
	559
8T-4189	134
	142

► **PRIMARY REFERENCE**

PART NUMBER INDEX

Part	Page
	161
	166
	170
	179
	273
	433
8T-4191	95
	180
	380
8T-4192	166
	287
	288
	311
	324
	325
	402
8T-4193	222
8T-4194	202
	288
	342
	542
8T-4195	50
	51
	59
	166
	170
	192
	202
	206
	265
	266
	271
	273
	279
	281
	283
	284
	291
	293
	298
	307
	314
	342
	347
	349
	353
	355
	365
	378
	385
	390
	456
	458
	557
8T-4196	50
	65
	283
	291
	293
	314
	355
	357
	359
8T-4197	98
8T-4198	92
	93
8T-4199	95
8T-4200	51
	126
	127
	152
	153
	271
	445
8T-4205	109
	128
	130
	132
	142
	144
	161
	166
	168
	173
	178
	271
	291
	422
	437
	557
	559
8T-4222	50
	65
	281
	287
	378
8T-4223	154
	166
	200
	202
	225
	238
	240
	241
	242
	243
	244
	245
	246
	262
	302
	342
	542
8T-4224	50
	126
	127
	135
	136
	152
	164
	166
	176
	196
	198
	206
	271
	291
	366
	380
	421
	437
	458
8T-4226	98
	273
	283
	287
8T-4241	188
8T-4244	378
	431
8T-4648	27
	219
8T-4649	268
	269
	270
8T-4780	402
8T-4908	50
	79
	273
	291
	293
	298
	415
	448
8T-4910	27
	55
	378
8T-4944	370
8T-4956	200
	225
	238
	240
	241
	242
	243
	244
	245
	246
	262
	302
	342
8T-4970	168
8T-4971	176
	178
	436
8T-4983	204
	349
8T-4984	51
	204
8T-4985	60
8T-4986	60
8T-4994	303
8T-5005	308
8T-5041	288
8T-5092	176
8T-5093	196
	198
8T-5095	221
8T-5353	248
8T-5379	218
	225
	238
	241
	242
	243
	244
	245
	246
8T-5389	205
8T-5400	490
8T-5439	27
8T-5878	263
	264
8T-6453	351
8T-6466	176
	200
	351
8T-6685	202
8T-6870	366
	383
8T-6876	307
	380
8T-6912	95
	98
	378
8T-6974	173
8T-7338	324
	367
8T-7524	166
	175
8T-7546	307
8T-7547	135
	136
	153
	291
	445
8T-7566	477
8T-7971	219
8T-8442	371
	373
	397
	398
	451
	453
8T-8729	132
	137
	138
	139
	157
	158
	159
	453
	456
	464
	467
8T-8730	156
	469
8T-8737	109
	111
	112
	113
	114
	115
	117
	118
	119
	120
	121
	123
	128
	130
	137
	138
	157
	429
	430
	464
8T-8799	160
	170
8T-8827	170
8T-9041	306
8T-9312	303
8T-9525	259
8T-9655	106
	160
8T-9756	94
8U-0599	259
8U-5951	371
8U-7803	271
8U-9480	223
8V-7315	236
	237
8X-2893	416
8Y-4501	290
8Y-6352	443
8Y-6377	437
8Y-6386	290
8Y-7047	288
8Y-8387	306
8Y-8388	308

PART NUMBER INDEX

Part	Page
9	
9C-5048	198
9C-6041	196
	198
9C-7907	324
9D-1535	311
9D-3769	95
	98
9F-5644	155
9F-5975	477
9G-0002	94
9G-1307	139
9G-5127	247
9G-5311	196
	198
9G-8909	94
	97
9H-1129	198
9H-2258	288
9J-3169	▶553
	554
9J-3178	▶555
	556
9K-5635	451
	453
9M-1328	312
9M-1974	248
9M-4335	186
9M-7958	38
9M-8406	98
9M-9439	66
9N-0869	431
9R-0394	219
9R-2160	402
9R-2613	537
9R-4398	451
	461
9R-5948	351
9R-9572	351
9S-4180	382
9S-4182	332
9S-4185	30
	341
9S-4191	79
	193
	202
	205
	223
	259
	332
	341
9S-5754	97
9S-8001	260
9S-8002	196
	331
	371
	397
	398
9S-8004	212
	255
	257
	258
9S-8006	369
	373
9S-8007	248
9S-8008	371
9S-9334	196
	198
9T-1013	323
9T-3853	257
	258
9T-4367	257
	258
9T-4912	223
9T-5241	477
9U-2574	451
	453
9U-3409	194
	195
9U-3668	233
9U-6994	204
	378
9U-8263	449
	450
9V-2412	194
	195
	233
9V-2714	494
9V-2715	494
9V-6343	288
9W-0844	109
	111
	112
	113
	117
	118
	120
	123
9W-0852	109
	112
	118
	119
	123
	406
9W-6584	27
9W-8142	▶554
9W-8143	▶556
9W-9371	188
9X-1046	95
	98
	161
	416
9X-1054	109
	121
9X-1056	121
9X-1813	149
9X-2038	88
	161
	178
	271
	276
	412
	416
	419
	433
	436
	440
	443
	451
	453
	481
9X-2041	440
9X-2042	462
9X-2043	178
	462
9X-2044	139
	412
	440
	467
9X-2045	142
	412
	416
	419
	421
	433
	440
	451
	453
	460
9X-2046	416
	419
	440
9X-2125	474
9X-2133	51
9X-2185	484
9X-2230	247
9X-2297	205
	342
9X-2327	192
9X-2384	114
9X-2480	132
9X-2614	204
9X-2629	176
9X-3401	109
	111
	112
	113
	114
	118
	119
	121
	122
	123
	125
	128
	130
	149
	150
	380
	406
	427
	428
	429
	430
9X-3402	110
	112
	114
	115
	116
	117
	118
	120
	122
	123
	128
	130
9X-3463	136
9X-3465	137
	138
9X-3959	47
9X-3994	411
9X-4244	134
	135
	136
9X-4619	223
9X-6032	212
9X-6165	128
	130
	132
	161
	166
	421
9X-6382	406
9X-6772	126
	127
9X-7345	130
9X-7378	456
9X-7380	456
9X-7381	456
9X-7382	456
9X-7383	456
9X-7680	212
	214
9X-8250	314
	349
	458
9X-8256	176
	179
	248
	271
	291
	353
9X-8257	210
	211
	222
	268
	269
	367
9X-8267	185
	248
9X-8268	248
	370
9X-8979	371
	373
9X-9825	94
	98
9Y-9380	366
0	
006-2884	469
006-8606	406
030-4606	378
032-8487	209
033-6028	400
033-6033	332
033-6034	397
033-6039	254
033-6043	397
	398
039-2281	458
061-6712	196
	198
062-5388	95
	98
	165
067-3045	456
067-6043	12
067-6135	8
	11
067-6179	21
067-6823	12
	47
068-8099	247
068-8993	118
085-7356	202
087-0991	361
	362
090-2150	94
090-2151	94
	97
	98
091-2436	110
	112
095-0641	396
095-0673	196
	198
095-0692	223
095-1671	331
095-9805	373
096-1349	178
096-2323	437
096-5968	253

PART NUMBER INDEX

Part	Page
097-7234	112
	467
099-3095	363
	364
099-3649	57
	293
	458
1	
100-3253	137
	138
100-3254	137
	138
100-3255	137
	138
100-3317	120
100-3751	21
	46
100-4458	75
100-4830	21
	37
	69
100-4841	23
100-5041	110
	121
100-5612	440
100-6674	120
101-2640	168
101-2862	223
101-2867	419
	433
101-3055	451
	453
101-3895	10
	21
101-3917	49
101-7178	6
101-7401	170
101-7547	49
101-9762	290
102-8703	94
	97
102-8801	128
	130
102-8802	109
	111
	113
	117
	120
	121
	123
	132
	139
	159
	399
	406
	414
	453
	456
102-8803	149
102-8804	113
	119
	125
102-8805	113
	117
	118
	137
	138
	157
	380
	464
103-2543	160
103-5705	10
103-5796	278
	494
104-1995	110
	112
104-6202	180
105-1634	371
105-1635	371
105-1636	371
105-1638	371
105-1642	371
105-1646	375
105-1648	375
105-1650	375
105-1651	375
105-1653	375
105-2740	64
105-3031	371
105-3032	371
105-3033	371
105-3478	221
105-6117	469
105-8034	168
106-4837	240
107-2348	62
107-6032	451
108-2148	256
108-4311	437
108-5471	290
109-1633	456
109-1634	456
109-1779	373
109-3203	255
109-4731	198
109-5502	194
	195
109-9685	260
110-0203	112
110-2028	160
110-2445	204
110-4711	541
110-4712	499
	500
	501
	502
	505
	506
	507
	508
	509
	510
	511
	513
	514
110-6349	313
	330
	340
110-7524	412
	439
	485
110-7628	288
110-8769	115
111-0204	437
111-0343	399
111-0859	18
	25
111-5719	378
111-6940	306
111-7899	141
	143
	160
	168
	336
	422
111-8222	37
112-0885	278
112-1817	351
112-6646	424
	425
	426
	440
112-7704	151
112-9611	110
113-1504	39
113-3632	361
	362
113-3790	1
	▶288
113-3791	288
113-3793	288
113-3794	288
113-4630	125
113-8129	53
113-8490	109
113-8491	109
113-8492	109
115-2422	101
	102
115-5327	186
115-5411	204
116-7471	160
116-9713	▶493
117-3787	416
117-3789	165
117-4654	406
117-8766	204
117-8929	412
	437
118-0021	284
118-7313	302
119-3662	110
	112
	113
	115
	124
120-4394	212
	214
120-5727	373
120-5729	373
120-9762	247
121-2500	188
121-3042	373
121-7398	247
121-7399	247
121-7400	247
121-7401	247
121-7402	247
121-7746	▶66
	67
121-7897	268
	270
121-9870	443
121-9875	247
121-9910	223
121-9911	223
121-9913	223
121-9931	223
121-9942	223
122-4873	306
122-6241	340
122-6905	209
122-6907	349
122-8353	378
122-9776	326
123-1373	101
	102
123-2899	48
123-3132	400
123-4750	340
123-4953	212
123-5787	212
	214
123-5800	212
123-7615	109
	122
123-8909	247
123-8910	247
124-3536	31
124-3815	21
	38
	69
	148
	172
124-4288	202
124-5640	123
124-6257	79
	88
	448
	458
124-8909	340
124-9882	214
124-9913	212
	214
124-9914	212
	214
125-2086	290
125-2205	214
125-7874	110
	111
	112
	113
	114
	115
	116
	117
	119
	120
	121
	122
	124
	128
	130
125-7875	110
	112
	114
	115
	117
	119
	121
	124
125-7876	170
126-0198	204
126-1767	111
	112
	113
	114
	117
	118
	119
	121
	123
	125
	149
	150
	406
	414
126-1768	112
	114
	115
	116
	117

PART NUMBER INDEX

Part	Page
	120
	123
126-1774	114
	123
	128
	130
126-2373	440
	451
	453
126-7574	107
126-8928	216
127-2141	383
127-2170	271
	440
	447
127-3361	6
128-0219	198
128-4123	109
	110
128-4178	110
	123
128-4190	110
128-4249	165
128-5016	109
	110
	120
128-5162	239
128-8981	212
	214
129-3178	406
129-4741	557
	559
129-8087	153
	165
130-1916	271
	290
130-3515	137
	138
130-5300	179
130-9888	39
131-3025	202
	340
131-3093	484
131-3540	290
131-3987	421
131-6143	66
131-8201	340
131-8202	340
132-0338	477
132-1806	170
132-2558	278
132-4763	553
	555
132-5789	93
	95
	98
	142
	153
	160
	165
	170
	172
	180
133-1011	21
133-3260	456
133-5186	378
133-9469	62
134-0404	193
134-0797	244
134-2540	109
	115
134-4126	105
	107
134-7258	566
134-7721	185
135-3327	204
135-5009	94
	97
	98
135-5935	363
	364
135-7935	370
	371
135-7940	378
136-1543	466
136-4192	396
137-4234	515
	516
	517
	518
	519
	520
	521
	522
	523
	524
	525
	526
	527
	528
	529
	530
	531
	532
	533
	534
	542
137-6727	192
138-1645	186
138-7828	246
138-8454	440
139-5802	185
140-1739	371
142-8927	247
142-8937	378
142-9117	109
143-1288	409
	477
143-7052	371
144-0195	490
144-0367	60
144-6691	193
144-7339	247
144-8242	204
145-2237	340
145-4911	19
146-1892	469
146-6747	566
147-1231	77
147-1445	114
	123
147-1446	114
	123
147-5071	▶218
	225
	238
	239
	240
	241
	242
	243
	244
	245
	246
147-5484	225
	▶238
	239
	240
	241
	242
	243
	244
	245
	246
148-7871	311
148-8307	323
148-8312	378
148-8313	340
148-8315	353
148-8316	313
	357
	359
148-8319	204
148-8322	205
148-8325	205
148-8326	336
148-8327	340
	345
	355
	378
148-8329	351
148-8336	200
	306
	353
	380
148-8339	205
148-8340	313
148-8341	209
	347
	359
148-8342	313
148-8347	205
148-8353	205
	306
	353
148-8356	355
148-8357	351
148-8361	200
	306
148-8364	205
148-8365	307
	380
148-8368	205
	378
148-8369	313
148-8370	307
148-8373	205
	341
148-8378	200
	307
	341
	353
	380
148-8382	357
	359
148-8385	341
148-8390	209
	349
	359
	383
148-8392	307
148-8406	196
	198
148-8407	202
	205
	341
148-8411	341
148-8433	342
148-8435	341
148-8446	313
148-8447	313
148-8457	307
	347
149-4745	479
149-5452	307
	341
149-5733	553
	555
149-6371	456
149-7738	206
150-3026	51
150-3050	204
150-3070	351
150-4039	383
150-4048	383
150-4049	205
150-4052	341
150-5311	542
150-6579	9
151-3568	247
151-4841	97
151-6282	128
	130
	176
152-5717	337
152-5718	337
153-5043	406
153-6238	341
153-6244	205
153-6246	205
	341
153-9910	209
154-0172	259
155-2026	339
	341
155-2255	109
	112
	113
	123
	128
	130
155-2260	109
	114
	115
	117
155-2265	113
155-2270	109
	111
	112
	113
	115
	117
	118
	119
	120
	121
	122
	123
	156
	380
	469
155-2271	109
	111
	116
	123
155-2274	109
	113
	117
	118
	123
155-3504	357
	383
155-7329	307
156-0283	433
156-3617	94

▶ **PRIMARY REFERENCE**

PART NUMBER INDEX

Part	Page
	97
156-5970	323
	382
156-6175	128
	130
	160
	165
	178
157-4835	535
159-1503	209
159-2829	60
159-8035	494
159-8036	494
159-8049	94
	97
	98
159-8050	94
	97
159-9322	114
	123
	128
	130
159-9539	103
	130
	144
	165
	179
	353
	431
	440
159-9540	176
	179
	271
	273
	290
	298
	431
159-9541	170
	202
	204
	271
	282
	283
	290
	293
	297
	298
	306
	338
	340
	345
	347
	355
	380
	385
	431
	445
	456
	458
	557
160-0496	320
160-7690	128
	130
160-8493	223
160-8499	368
160-9415	306
	340
161-2539	165
161-4130	494
161-7145	312
161-7614	83
161-9289	479
161-9820	6
	25
162-9997	371
163-1149	409
163-1201	173
163-5776	186
163-7233	186
163-7234	186
163-9091	247
164-1178	416
	433
164-1368	433
164-2108	256
164-4058	205
164-4883	477
164-5545	351
164-5567	202
	307
	330
	341
164-5590	205
164-5606	307
164-6874	202
164-7468	75
164-7908	307
164-8474	443
164-9640	340
164-9869	205
	342
165-0311	160
	168
	451
	461
165-2273	340
165-4929	196
	198
165-8718	440
165-8719	271
	290
166-8554	306
167-3692	123
167-3693	117
167-3925	340
167-8176	168
168-0475	494
168-3379	376
168-4511	165
168-8389	494
	515
	516
	517
	518
	519
	520
	521
	522
	523
	524
	525
	526
	527
	528
	529
	530
	531
	532
	535
	542
168-8772	168
169-0705	109
	123
169-7259	303
169-7380	482
170-0108	186
170-4698	186
170-6771	204
171-1230	477
171-2205	165
171-2209	165
171-7198	228
171-8689	226
172-5317	188
172-8037	112
172-8039	112
172-8591	412
	416
	433
	436
	443
	451
	453
	467
173-1741	306
173-2052	466
173-3323	378
173-5787	479
173-7225	307
174-3091	467
174-4647	189
174-4650	189
174-5763	451
	453
175-4291	135
	136
176-0118	226
	228
176-0210	364
176-0623	402
176-0624	402
176-1477	120
176-1521	120
177-0344	221
	373
177-1863	477
177-4937	475
177-9653	112
177-9656	112
178-3336	456
178-3620	204
178-7907	466
178-9983	429
	430
179-9392	160
180-6213	373
	375
180-9340	110
	113
	121
	122
	128
	130
180-9900	160
183-3405	306
183-7263	196
184-5293	451
185-0884	12
185-1861	116
185-4015	406
186-3735	399
187-4851	152
187-9023	204
188-9637	375
188-9640	371
188-9641	371
189-0189	399
189-1707	456
189-2096	399
189-2100	362
	►399
189-3158	112
	115
	117
	179
189-8610	490
190-7844	369
191-2226	237
191-2962	255
191-8921	408
192-2684	313
192-5881	537
192-7112	223
193-2200	196
	198
193-4640	233
	236
193-5918	566
193-9723	282
194-3710	464
194-4864	88
194-5171	408
194-5226	111
	112
	113
	114
	115
	116
	117
	118
	119
	123
	380
194-5227	111
	112
	113
	114
	115
	116
	117
	118
	119
	123
	380
194-6847	371
195-0936	412
195-0937	412
195-1095	165
195-2186	38
195-3042	369
195-7430	382
195-9245	10
196-0225	376
196-2412	120
197-7995	233
197-8973	451
	453
198-1725	437
198-7655	349
199-0652	189
199-0676	189
199-3778	369
199-8090	387
199-9252	148
199-9267	148
199-9751	15
	148
2	
200-6345	165
	170
	204
	306

► PRIMARY REFERENCE

PART NUMBER INDEX

Part	Page
	313
	340
	349
201-1024	165
201-4756	456
201-5242	369
201-9517	234
	▶236
202-0313	110
202-0314	110
202-0315	109
203-2759	194
203-7703	479
203-9007	160
204-2281	165
	204
	306
	313
	340
	349
	351
	357
	359
	383
	456
204-8000	165
	170
	180
	307
	349
	351
205-0826	132
205-4587	368
205-6388	475
205-8257	132
206-1345	406
206-1346	116
206-1667	416
	419
	440
	451
	453
206-1826	87
206-2423	51
	79
	180
	306
	342
	380
206-5162	132
206-5208	132
206-8818	378
206-9295	332
207-5271	132
207-6031	238
208-0792	363
208-0886	362
208-2293	363
208-8469	151
208-9287	75
209-4212	440
209-4578	60
209-9219	13
211-0052	165
211-2092	361
	362
	▶400
211-4348	341
212-1336	313
213-6065	▶113
	132
213-7489	429
	430
214-3418	340
214-7566	193
214-7568	79
	193
	202
	306
	307
	330
	332
	341
214-9564	276
215-4012	60
215-6406	128
	490
215-8058	196
	198
216-4983	60
216-7352	437
	461
	470
216-7790	94
	97
	98
216-8634	21
216-9633	45
217-0099	104
217-9039	116
	151
	172
218-2373	256
218-2529	477
218-3171	186
218-3172	186
218-3174	186
218-4935	111
218-6645	79
219-0302	565
219-6314	132
220-0738	433
220-2680	363
220-2681	364
221-7677	411
222-0345	475
	▶476
222-2277	68
222-6869	204
223-2321	223
223-3490	349
224-0672	565
224-2263	58
224-4905	416
224-5132	182
	183
	300
	301
	318
	319
	320
	321
224-5152	182
	183
	300
	301
	318
	319
	320
	321
224-6208	445
224-8946	565
225-0312	565
225-4150	566
225-4257	565
225-7738	53
225-7944	46
225-8019	53
225-8524	62
225-8526	62
225-8858	12
226-0294	290
226-0339	290
226-1224	371
	▶375
226-1227	375
226-8766	21
226-8767	21
227-6715	307
227-7392	408
228-4710	27
228-4947	148
228-5856	109
	112
228-6052	137
	138
228-6054	137
	138
228-6056	137
	138
228-6428	408
228-7092	248
228-7102	79
228-7103	260
229-1494	477
230-0913	400
230-4009	109
	112
	117
	120
	122
230-4010	109
	112
	123
230-4011	109
	115
	116
	118
	119
	120
	122
	123
230-4012	109
	115
	119
	123
	154
	164
	406
230-4013	109
	112
	115
	117
	123
230-4014	112
	123
	150
	158
230-5008	109
	122
	123
230-5009	122
	123
230-5010	112
	114
	115
	117
	120
	164
230-5011	112
	114
	115
	117
230-7732	349
230-8094	29
231-1455	49
231-2295	117
	120
231-2300	109
	114
232-1322	13
	15
232-1693	172
232-3666	21
232-3751	46
232-7449	13
232-7596	12
232-7597	12
232-7599	12
233-7126	253
233-7133	200
	▶253
234-4245	196
	198
234-4251	186
235-4546	460
235-5767	376
235-9631	196
	198
236-0483	196
	198
236-4545	152
236-5511	29
236-6923	456
236-7230	567
236-8013	152
236-9839	386
	388
	389
237-0227	115
237-6256	565
238-0120	148
	247
238-0251	477
238-8245	116
238-8247	116
	122
238-8292	63
239-1134	152
	▶159
239-6989	566
239-7356	123
239-7357	111
241-0037	182
	183
	300
	301
	318
	319
	320
	321
241-4939	472
	473
241-6149	474
241-6158	79
241-6189	337
241-6190	337
241-8368	▶156
	160
	165
242-0262	254
242-0588	137
	138
243-3544	485

▶ **PRIMARY REFERENCE**

PART NUMBER INDEX

Part	Page
	486
244-1463	223
245-1042	115
245-1043	116
245-1044	115
	116
245-1045	115
245-1048	115
	116
245-7350	375
245-9808	239
246-0435	271
246-2641	192
	377
246-4361	84
247-4928	81
	84
248-2284	445
248-2841	160
	353
248-6220	351
248-6772	484
248-9997	95
	98
249-2403	271
249-2844	477
250-1845	186
250-2298	453
250-8330	253
251-3268	394
	▶401
251-4162	164
251-4336	21
251-5417	540
251-5418	▶540
252-0741	323
252-0745	323
252-1862	437
252-1863	437
252-5219	406
252-7922	189
252-7923	189
252-7925	189
252-7930	190
	191
252-7931	190
252-7932	190
	191
252-7933	190
	191
252-7935	190
	191
252-7936	190
	191
252-7939	184
	▶190
252-7945	190
252-8037	184
	▶189
252-8286	437
252-9205	271
253-3982	232
254-0072	383
254-3963	186
254-5048	189
254-5059	189
255-0577	340
255-0759	378
255-2752	▶157
	160
256-3746	191
256-3748	184
	▶191
256-6453	260
256-6454	148
	165
	175
	406
	422
256-6881	152
256-7902	58
256-7903	58
256-7904	58
257-3226	456
257-5030	422
257-6170	437
257-6205	437
257-6206	437
257-8471	316
258-2829	378
258-3727	412
	421
	433
258-3765	488
258-3776	488
258-3899	340
258-4142	160
258-6939	198
258-6940	198
258-6941	198
258-6942	198
258-6945	184
	▶186
258-8338	194
	195
259-0608	194
	195
259-1286	451
259-4727	194
	195
259-6750	391
259-6751	392
259-6752	393
259-7014	194
	195
259-7051	184
	▶194
260-1555	126
260-1556	127
260-1566	126
260-1569	127
260-1803	242
260-3002	386
	388
	389
260-3126	194
	195
260-6696	95
	98
260-6728	427
	428
	429
	430
260-9171	306
260-9634	▶233
	234
260-9635	233
261-5694	466
261-9634	451
	453
262-0560	242
262-0767	477
262-0779	477
262-0780	477
262-0781	477
262-0785	477
262-0786	477
262-0787	477
262-1421	▶107
	128
262-5517	50
262-5689	378
262-5778	470
263-0930	198
264-1395	246
264-3020	284
264-3518	79
264-4458	440
264-5726	362
264-7029	109
	115
	116
	118
	119
	120
	122
	123
264-7030	109
	112
	115
	116
	117
	123
264-7031	109
	122
	123
264-7032	109
	112
	114
	115
	117
	120
	164
264-7033	117
	120
264-7034	109
	112
	117
	120
	122
	123
265-4123	109
266-1602	382
266-2337	▶149
	176
266-7315	402
266-7599	259
267-5159	477
267-7207	115
	116
267-7208	115
267-8575	448
267-9572	115
	116
268-8643	164
268-8769	484
268-9084	198
269-0194	565
269-1981	▶150
	469
269-1983	470
269-2890	437
269-2892	437
269-4676	254
269-4949	307
269-4961	307
269-4965	307
269-4970	205
269-8325	41
270-2616	369
270-2679	160
270-9442	422
	443
271-7312	422
271-7649	477
272-0002	271
	290
272-1889	▶91
	92
272-2351	88
273-5711	40
273-8609	173
274-1931	33
274-1935	32
274-4553	188
274-4990	115
275-2428	151
275-5588	460
275-6706	406
275-7878	109
275-9897	29
276-1786	94
	95
	97
	98
276-4836	57
276-5436	152
276-5600	12
276-5602	12
276-5603	13
	148
276-6596	152
276-7278	94
	97
276-7391	11
276-7394	11
276-7478	31
276-8116	14
276-8117	14
276-8123	36
276-8132	36
276-8133	36
276-8134	15
276-9200	34
276-9201	34
276-9206	34
276-9207	34
276-9230	34
277-0121	20
277-0341	353
277-0588	19
277-1873	248
277-1974	39
277-1975	39
277-2500	49
277-2502	49
277-2503	49
277-2525	46
277-2526	46
277-2537	46
277-2538	46
277-2923	53
277-2925	53
277-3012	21
277-3013	21
277-4223	37
277-4302	15
277-4409	151
277-4490	26
277-4993	75
	83
277-5064	172
277-5065	172
277-5067	78
277-5307	34
277-8103	477

▶ PRIMARY REFERENCE

PART NUMBER INDEX

Part	Page
277-9602	69
277-9603	69
277-9938	43
	82
277-9940	43
278-0016	69
278-0017	69
278-1438	170
278-1439	170
278-2564	409
278-5111	34
278-5112	34
278-5113	34
278-5125	8
278-5170	78
278-5203	104
278-5457	409
279-0850	484
279-9651	24
279-9652	24
280-0954	373
	▶376
280-0957	373
280-0964	376
280-1384	29
280-1911	▶34
	36
280-1912	34
280-1913	34
280-1914	34
280-2424	65
280-2709	160
280-2710	160
280-2712	160
280-7448	327
280-7870	371
	373
	397
	398
280-9714	537
280-9978	323
281-3136	427
	429
	430
281-8744	48
281-8804	116
281-8811	109
282-5361	50
283-2458	412
283-4418	▶320
	323
283-4662	20
283-8301	26
283-8302	26
284-8532	128
285-0150	427
	429
	430
285-0620	390
285-2663	222
285-2664	222
285-7415	422
286-0015	38
286-0123	86
286-2890	81
	82
	83
286-7193	119
286-7851	63
287-6692	305
287-7330	313
	353
287-7331	313
	353
287-7341	340
287-8597	20
288-6974	20
288-6975	20
	26
289-6393	357
	▶361
289-6394	359
	▶362
290-6483	1
	▶390
290-8160	134
292-1301	▶409
	477
292-2896	111
	113
	123
292-3462	64
292-6402	▶466
	477
292-9779	109
292-9802	470
293-2320	490
293-2915	477
293-4050	2
	▶126
293-4052	2
	▶127
293-4373	231
293-5449	363
	364
293-6472	▶323
	385
293-8350	397
	398
293-9379	477
293-9380	477
293-9665	477
293-9795	458
294-7139	477
295-4670	81
	82
295-5250	378
295-6472	477
295-6661	15
295-8610	46
	▶49
295-8613	49
295-8615	49
296-6031	363
	364
296-6980	176
297-1003	106
	160
297-4293	196
297-7960	79
297-8752	▶158
	165
298-2412	▶321
	323
299-3939	362
	▶363
299-3940	361
	▶364
299-5511	36
299-7996	378
299-7997	378
	431
300-9104	340
300-9915	566
301-0091	95
	98
301-0589	128
301-5754	284
301-7890	212
	214
	▶254
301-9279	371
302-3908	351
302-4393	58
302-5738	223
303-0394	542
303-0403	542
303-0408	542
303-4113	▶140
	267
303-9447	433
304-3885	88
304-5687	160
304-5691	106
304-5866	364
305-2215	247
306-0350	109
306-0351	109
306-2337	39
307-2746	200
	340
307-3044	367
	▶370
307-3053	▶316
	317
307-3065	222
	▶223
307-3077	211
	▶212
307-3079	221
307-3082	210
	▶214
308-1838	395
308-2525	406
308-2583	456
308-6660	293
309-4314	160
	165
	170
309-6678	36
309-6899	566
310-1898	160
310-4772	107
310-5289	▶107
	132
311-2768	60
311-3478	378
311-3520	484
311-3940	378
311-4859	117
311-6184	170
311-6185	170
311-8365	290
311-8366	271
312-3032	347
312-5694	533
	534
313-4553	90
313-5270	144
313-5271	144
314-4018	414
314-5162	477
315-0180	94
	95
	97
315-9810	69
316-3296	200
316-4373	109
316-5999	257
	258
316-9351	38
	94
	116
	151
	165
	170
	175
	180
317-0020	448
317-5482	31
317-5483	31
317-5485	11
317-5486	11
317-7685	134
317-8141	415
318-0827	437
319-3236	122
319-3242	121
	122
319-3247	114
319-4168	477
319-7384	134
319-8426	8
320-1291	6
	▶414
320-1515	137
	138
320-3060	148
320-3062	148
321-2383	39
322-3161	466
322-8568	431
323-2465	312
323-2474	327
323-3308	16
	204
	458
323-3309	51
	60
	88
	192
	204
	209
	313
	340
	349
	351
	355
	448
323-3730	377
323-6645	51
	60
	79
323-9312	31
323-9531	256
324-0355	312
324-0367	327
324-0369	327
324-0398	327
324-0444	21
324-0496	312
324-0498	312
324-3436	263
324-3437	264
324-3740	▶134
	143
325-4471	▶135
	165

3

Part	Page
300-1271	170
300-6714	104

▶ PRIMARY REFERENCE

PART NUMBER INDEX

Part	Page
326-9053	568
327-0282	456
327-0283	456
327-0802	565
328-5930	426
	▶427
328-5935	427
	▶428
328-5936	427
329-3734	110
	111
	112
	113
	115
	117
	119
	120
	121
	122
	123
	128
	130
329-3796	23
329-7854	37
329-7856	37
330-1725	6
330-6609	204
331-0290	31
331-5291	▶471
	472
331-6835	12
331-8053	38
332-0195	437
332-2788	533
	534
332-3578	431
332-3636	5
	▶50
332-3638	5
	▶217
332-3644	3
	▶92
332-3646	2
	▶67
332-3647	3
	▶68
332-3648	5
	▶59
332-3655	405
	▶415
332-5794	▶495
	526
332-5797	495
332-5798	495
332-5803	495
	499
	503
332-5808	▶496
	527
332-5809	▶497
	515
332-5811	496
332-5812	496
332-5817	496
	497
	500
	502
332-5821	▶498
	525
332-5827	498
332-5828	498
332-5841	498
	504
332-7865	125
333-1356	▶109
	160
333-1357	160
333-1358	160
333-1359	▶112
	168
333-1360	160
333-1361	160
333-1363	▶132
333-1366	160
333-1367	▶462
	463
333-1368	▶472
333-1369	▶473
333-1370	▶178
	410
333-1371	▶120
	178
333-1373	333
	▶424
333-1374	334
	▶425
333-1375	335
	▶426
333-1376	160
333-1379	▶107
	334
	335
333-1385	1
	▶180
333-1386	▶122
	180
333-1387	165
333-1389	165
333-1390	▶168
	410
333-1391	170
333-1396	1
	▶107
333-1397	107
	▶108
333-1398	100
	▶101
333-1399	100
	▶102
333-1400	▶94
	100
333-1401	▶97
	100
333-1402	94
	97
333-1403	94
	97
333-1404	94
	97
333-1405	94
333-1407	94
	97
333-1408	94
	97
333-1413	97
333-1414	98
333-1415	▶100
333-1416	2
	▶100
333-1417	165
333-1418	170
333-1420	1
	▶173
333-1421	▶117
	173
333-1423	▶118
	173
333-1425	▶139
333-1426	▶142
	410
333-1427	▶141
333-1428	▶143
333-1429	▶113
	142
333-1434	165
333-1438	▶117
	422
333-1448	128
	130
333-1450	▶164
333-1451	160
333-1452	▶128
333-1453	▶130
333-6516	1
	▶311
333-6529	▶184
	220
333-6535	220
	▶221
333-6536	▶210
	220
333-6537	▶211
	220
333-6540	▶324
	404
333-6541	▶325
	404
333-6550	536
	▶537
333-6551	537
333-6590	537
333-6593	537
333-6618	328
333-6637	402
333-6641	402
333-6642	402
333-6644	402
333-6646	402
333-6648	325
333-6650	402
333-6652	325
333-6654	324
333-6656	324
333-6658	402
333-6691	▶268
333-6694	268
	270
333-6695	268
	269
	270
333-6696	268
	269
	270
333-6697	268
	270
333-6698	270
333-6803	378
333-6810	290
333-6824	1
	▶284
333-6828	293
333-6842	378
333-6845	284
333-6849	284
333-6860	▶322
333-6865	▶536
333-6902	333
	▶367
333-6906	1
	▶365
333-6907	▶297
	333
	334
	335
333-6909	322
	▶385
333-6912	220
	▶222
333-6913	2
	3
	▶357
333-6914	3
	▶359
333-6916	▶202
	333
333-6918	333
	▶340
333-6920	▶355
	404
333-6922	▶351
	404
333-6924	334
	335
	▶345
333-6926	335
	▶347
333-6928	▶209
	333
333-6934	▶200
	220
333-6941	405
	▶456
333-6944	1
	▶295
333-6947	322
	▶353
333-6950	333
	334
	335
	▶380
333-6952	▶336
	536
333-6962	▶337
333-7007	557
333-7010	266
334-7485	248
334-9831	461
335-3144	27
335-5365	160
335-8611	62
335-9214	340
336-1577	340
336-1578	340
336-3545	128
	▶147
336-5469	247
336-8289	263
	264
336-8614	456
336-9842	217
337-5028	50
337-5183	190
	191
337-7051	247
337-7053	220
	▶247
338-2412	312
338-2416	327
338-2442	312
338-2446	327
338-9428	235
338-9597	188
338-9600	▶188
	247
339-1873	247
339-1942	247

▶ **PRIMARY REFERENCE**

PART NUMBER INDEX

Part	Page
339-2899	▶235
	247
339-3505	▶136
	141
	142
	143
339-5593	324
	▶327
339-5594	325
	▶328
339-5595	311
	▶312
339-6252	188
339-6253	188
339-6676	311
339-6694	537
339-6698	402
339-6699	402
339-6722	▶192
	220
339-6725	1
	▶144
339-6726	144
339-6727	144
339-6730	1
	▶88
339-6736	293
339-6737	293
339-6739	293
339-6744	293
339-6745	293
339-6746	293
339-6747	1
	▶293
339-6749	293
339-6782	284
339-6783	284
339-6787	284
339-6788	284
339-6792	284
339-6797	▶204
	333
339-6799	▶330
	333
339-6800	1
	▶290
339-6802	290
339-6805	290
339-6815	378
339-6820	378
339-6823	378
339-6839	▶219
	220
339-6840	275
	▶276
339-6850	333
	▶377
339-7774	59
339-7775	59
339-8780	11
339-9364	467
339-9637	36
340-6272	312
340-6339	327
340-8984	247
340-8985	247
340-9308	312
340-9311	312
340-9314	327
340-9322	327
340-9868	184
	▶196
340-9900	184
	▶198
340-9906	▶184
	220
340-9908	▶184
340-9910	196
340-9911	302
340-9913	198
341-0679	2
	3
	▶93
341-1295	50
341-1982	27
341-5769	415
341-6896	369
341-7095	188
341-7097	188
341-9171	188
341-9690	410
	▶481
341-9691	481
341-9692	481
341-9694	481
341-9695	481
341-9697	424
341-9698	425
341-9699	426
341-9701	419
341-9702	419
341-9703	419
341-9706	419
341-9707	419
341-9708	419
341-9711	419
341-9712	419
341-9720	410
	▶465
341-9725	412
	▶487
341-9726	440
341-9727	440
341-9728	440
341-9729	487
341-9730	487
341-9731	487
341-9732	487
341-9742	447
341-9750	411
	▶437
341-9751	439
341-9754	439
341-9755	439
	▶488
341-9757	437
341-9759	437
341-9761	437
341-9762	437
341-9763	437
341-9764	437
341-9765	440
341-9772	440
341-9773	440
341-9774	440
341-9775	440
341-9776	440
341-9777	290
	440
341-9778	440
341-9780	440
341-9783	440
341-9784	437
	▶439
341-9786	440
341-9787	440
341-9788	437
341-9790	410
	▶440
341-9791	440
341-9792	488
341-9793	488
341-9794	488
341-9795	488
341-9796	440
341-9797	440
341-9801	416
341-9802	416
341-9803	416
341-9804	416
341-9806	416
341-9807	449
	472
341-9808	449
	472
341-9810	410
	▶416
341-9811	416
341-9820	410
	▶421
341-9823	431
341-9824	445
341-9825	445
341-9826	445
341-9827	445
341-9828	445
341-9831	481
341-9832	431
341-9848	469
341-9860	410
	▶443
341-9861	443
341-9862	443
341-9865	443
341-9866	443
341-9867	443
341-9869	462
341-9870	410
	▶470
341-9880	▶305
	410
341-9883	416
341-9890	410
	▶460
341-9891	460
341-9900	412
341-9901	412
341-9902	412
341-9966	412
341-9980	410
	▶433
341-9981	412
341-9982	433
341-9983	411
341-9984	412
341-9985	433
341-9986	433
341-9987	433
341-9988	165
	433
341-9989	433
341-9991	433
341-9992	433
341-9993	433
341-9994	433
341-9996	433
341-9999	433
342-0051	416
342-0052	416
342-0053	416
342-0054	416
342-0055	416
342-0061	416
342-0062	416
342-0063	416
342-0064	416
342-0065	416
342-0067	416
342-0080	410
	▶444
342-0091	444
342-0092	444
342-0111	475
	▶479
342-0112	▶477
	479
342-0125	440
342-0128	440
342-0130	▶449
342-0135	451
	453
342-0136	451
	453
342-0137	450
	473
342-0143	▶474
342-0145	▶475
342-0149	445
342-0153	421
342-0157	305
	▶469
342-0160	▶451
	455
342-0161	451
	453
342-0162	451
	453
342-0164	451
342-0165	451
	453
342-0166	453
342-0167	451
	453
342-0168	451
	453
342-0169	451
	453
342-0170	▶453
	463
342-0186	405
	▶422
342-0190	405
	▶448
342-0191	448
342-0197	422
342-0215	▶485
342-0239	445
342-0241	445
342-0242	445
342-0250	▶445
342-0266	445
342-0270	410
	▶447
342-5313	▶256
	260
342-5757	247
342-5758	247
342-6502	33
342-6510	33
342-7247	302
342-7393	184
	▶302
342-7395	184
	▶195
342-8570	50

▶ **PRIMARY REFERENCE**

PART NUMBER INDEX

Part	Page
342-8571	50
342-9022	105
342-9290	105
342-9356	235
343-1297	219
343-1298	219
343-3048	333
	▶391
343-3050	334
	▶392
343-3052	335
	▶393
343-3414	185
343-3417	185
343-3418	▶185
	247
343-4135	302
	▶303
343-5645	68
343-6480	188
343-8053	327
343-9780	214
343-9781	212
344-1678	123
344-1682	114
	115
	123
344-1683	115
344-1684	115
344-1690	120
	123
344-3455	▶137
	140
344-3456	▶138
	140
344-4753	59
344-7391	165
	170
	173
344-7517	68
344-9010	247
345-0351	160
345-0401	132
345-0771	247
345-1707	202
345-2103	469
345-2417	▶535
345-2424	▶515
345-2426	▶516
345-2428	▶517
345-2740	▶542
345-2747	542
345-2748	542
345-2751	542
345-2756	535
345-2758	▶541
345-2760	▶518
345-2762	▶519
345-2764	▶520
345-2766	▶521
345-2768	▶522
345-2770	▶523
345-2784	▶524
345-2786	▶499
	524
345-2798	502
345-2806	▶500
	516
345-2820	▶525
345-2822	▶526
345-2824	▶527
345-7514	247
345-7515	247
345-7516	247
345-7517	247
345-7518	247
345-7519	247
345-7520	247
345-7521	247
345-7523	247
345-7529	247
345-8272	260
346-0006	86
346-0007	86
346-0099	4
	▶46
346-0220	4
	▶41
346-0402	▶9
346-0403	9
346-0406	75
346-0408	21
346-0737	4
	▶44
346-0759	247
346-1556	296
346-1558	▶269
346-1564	1
	▶216
346-2911	4
	▶47
346-2999	6
346-3275	192
346-3276	192
346-3277	192
346-4709	36
346-4789	88
346-5070	351
346-5072	351
346-5073	351
346-5078	351
346-5079	351
346-5084	353
346-5086	351
346-5097	313
346-5105	313
346-5107	313
346-5108	313
346-5116	306
346-5117	306
346-5118	306
346-5119	313
346-5491	75
346-7763	105
346-8219	568
346-8615	217
346-8616	234
	▶237
346-9376	130
346-9735	380
347-0596	160
347-0612	371
	▶397
347-0785	204
347-0794	453
347-0805	202
347-0809	202
347-0824	202
347-0825	202
347-1308	209
347-1668	164
347-4165	340
347-6406	340
347-6408	340
347-6410	340
347-6411	340
347-6414	340
347-6420	340
347-6907	330
347-8047	265
347-8048	266
347-8055	265
347-8056	1
	▶265
347-8057	100
	▶266
347-8058	100
	▶557
347-8059	▶559
347-8062	290
347-8077	290
347-8083	290
347-8086	290
347-8089	1
	▶271
347-8090	271
347-8091	271
347-8092	290
347-8095	290
347-8096	340
347-8098	340
347-8099	340
347-8156	325
347-8157	325
347-8172	402
347-8174	402
347-8286	▶333
	334
347-8323	235
347-8324	188
347-8645	79
	81
347-8646	79
347-8647	79
	88
347-9103	194
	195
347-9104	194
	195
348-0298	204
348-0299	204
348-0300	204
348-0301	204
348-0302	204
348-0303	204
348-0305	204
348-0495	82
348-1149	312
348-1153	312
348-1861	331
348-1874	303
348-1875	303
348-1876	303
348-1877	303
348-1878	303
348-2078	204
348-2248	327
348-2249	327
348-2584	▶270
348-3435	220
	▶234
348-4593	387
348-4637	172
348-5738	467
348-7160	204
348-7240	137
	138
348-7716	355
348-7719	345
348-7720	345
348-8593	351
348-8795	385
348-9044	160
348-9324	144
348-9501	60
349-1178	170
349-1715	328
349-1721	328
349-1722	328
349-1723	328
349-1724	328
349-1725	328
349-2591	421
349-2592	421
349-2593	421
349-2600	421
349-2602	477
349-3667	▶193
	247
349-4853	51
349-5827	406
349-5828	406
349-5830	406
349-5831	406
349-5832	406
349-5833	406
349-5834	406
349-5835	422
349-5837	406
349-5838	484
349-5839	484
349-5842	448
	▶484
349-5843	484
349-6064	391
	392
	393
349-6083	130
349-6097	332
349-6211	▶331
	332
349-6847	83
349-7841	340
349-7843	340
349-7858	296
349-7860	1
	▶296
349-7864	295
349-7865	295
349-7866	295
349-7867	295
349-7868	295
349-7870	295
349-7875	290
349-7876	290
349-7878	273
349-7885	271
349-7891	290
349-7894	164
349-7901	293
349-7905	559
349-7907	265
	266
349-7940	▶280
349-7941	280
349-7972	290
349-8021	293
349-8022	293
349-8031	410
	▶436
349-8038	265
	266
349-8163	▶279
349-8165	▶283
349-8179	557
349-8187	293

PART NUMBER INDEX

Part	Page
349-8189	306
349-8195	284
349-8199	377
	▶378
349-8642	450
	473
349-9089	306
350-1120	353
350-1125	306
350-1224	160
350-1225	160
350-1226	336
350-1230	168
350-1231	168
350-1232	168
350-1233	168
350-1234	168
350-1235	141
	143
350-1236	422
350-1238	93
350-1239	165
350-3842	312
	327
	328
350-4259	306
350-4260	306
350-4262	306
350-4264	306
350-4306	5
	▶154
350-5317	357
350-5319	349
350-7580	306
350-7582	306
350-7584	313
350-7586	355
350-7587	351
350-8742	92
	93
350-8936	396
351-1724	33
351-2177	328
351-2180	328
351-2182	328
351-2185	328
351-2187	328
351-2190	328
351-2193	328
351-4749	29
351-5587	144
351-6217	68
351-7535	382
351-8488	105
351-8490	▶105
	130
351-8507	90
351-8955	248
351-9085	461
351-9086	461
351-9257	▶152
	153
351-9918	135
352-0234	380
352-0244	305
	470
352-1045	340
352-1108	380
	▶382
352-1212	290
352-1755	331
352-3966	88
352-5575	328
352-5586	338
352-8986	134
352-9944	271
353-1634	450
	473
353-2637	42
353-5058	406
353-5149	88
353-5191	337
353-9896	339
353-9990	238
354-0132	412
354-3085	297
354-3321	290
354-5611	94
	95
	97
	98
354-5615	176
354-5617	178
354-5618	128
	130
354-5620	380
354-5671	154
354-7380	450
	473
354-7468	382
354-8322	42
354-8645	235
355-0598	128
355-0633	79
355-1157	290
355-1213	130
355-2679	271
355-3016	477
355-3018	477
355-3097	200
355-3131	290
355-3486	568
355-3518	306
355-3626	200
355-5860	165
355-8710	53
355-8947	88
356-0677	94
	98
356-0678	170
356-0681	176
356-0682	176
356-1219	116
356-5205	424
	▶429
356-5206	425
	▶430
356-5207	429
	430
356-5208	429
356-5209	430
356-5349	247
	▶260
356-5630	290
356-5798	355
356-5799	355
356-5801	345
356-5802	345
356-5803	355
356-5805	355
356-6898	273
356-7550	290
356-7552	290
356-7592	290
356-8450	353
357-0377	306
357-0378	306
357-0596	235
357-0597	235
357-2381	247
357-4260	273
357-4261	271
357-4582	378
357-5156	477
357-5168	477
357-8877	▶226
	227
357-8878	226
357-8879	225
	▶227
	238
	239
	240
	241
	242
	243
	244
	245
	246
357-8902	▶238
357-8924	239
357-9059	164
357-9663	55
358-2867	306
358-2945	306
358-2946	306
358-2947	355
358-2957	295
358-4889	159
358-4945	494
358-4979	221
358-4992	370
	▶371
358-4993	370
	▶373
359-0021	380
359-0022	340
359-1815	440
359-2661	144
359-3196	271
359-4523	359
359-4642	290
359-5145	92
359-7164	290
359-7245	395
360-1564	31
360-1633	271
	290
360-1839	▶108
	462
360-1841	165
360-1842	165
360-1843	▶122
	165
360-1844	95
	98
360-1845	95
	98
360-1846	95
	98
360-1848	107
	▶108
360-1849	176
360-1850	164
360-1854	173
360-1858	165
360-1859	165
360-1978	11
360-2044	240
	262
360-2483	▶228
	229
360-2484	228
360-2503	▶229
	245
360-2510	▶238
360-2514	▶239
360-2534	▶239
360-3236	501
360-3237	501
360-3247	▶501
	517
360-3248	501
	505
360-3249	495
	496
	497
	498
	499
	500
	501
	502
	503
	504
	505
360-3250	499
360-3251	501
	505
360-3252	496
	497
	500
	502
360-3298	494
360-3299	494
360-3300	▶494
360-3309	▶528
360-3311	▶529
360-3314	▶502
	528
360-3318	▶503
	531
360-3319	▶504
	530
360-3320	▶530
360-3322	▶531
360-3328	505
360-3331	▶505
	529
360-3354	▶543
360-3355	▶544
360-8958	▶70
	72
	73
360-8960	70
360-9046	▶464
	490
360-9207	▶300
	306
360-9700	▶301
361-1045	130
361-1995	313
361-1996	313
361-3389	345
361-6540	196
361-9875	151
362-1628	295
362-1629	295
362-3508	464
362-5412	70
	72
	73
362-7976	88
362-8677	1
	▶561
362-8681	561
362-8682	561

▶ **PRIMARY REFERENCE**

PART NUMBER INDEX

Part	Page
362-8685	561
362-9220	271
362-9221	271
362-9399	306
362-9689	72
	73
363-0251	290
363-0559	11
363-1934	279
363-1936	283
363-1937	283
363-1950	279
363-4253	51
363-5813	38
363-5907	290
363-5908	284
363-5912	431
363-6423	431
363-8108	378
364-1211	456
364-1215	456
364-1545	355
364-3038	456
364-5145	11
364-5845	406
364-5865	406
364-6494	347
364-8305	92
365-5823	43
365-6488	240
	▶263
365-6489	262
	▶264
365-7606	406
366-1739	340
366-2620	188
366-2736	340
366-2737	340
366-2739	557
366-2741	280
366-2742	280
366-4304	260
366-5614	235
366-5616	235
366-6100	273
366-6105	271
366-6106	271
366-6168	273
366-6169	273
366-6880	▶239
366-6888	▶240
366-6896	▶240
366-6910	▶240
366-6911	▶262
366-7249	188
366-8125	▶2
366-8126	▶3
366-8127	▶3
366-8155	290
366-8166	▶267
366-8189	436
366-8546	566
366-8547	567
366-8550	566
366-8955	204
366-8973	353
366-9041	353
366-9373	75
366-9650	566
366-9651	566
367-0682	273
367-0683	273
367-1908	353
367-2756	566
367-2757	566
367-3340	63
367-4215	565
367-4256	▶241
367-5261	326
367-5450	204
367-5451	204
367-8532	306
367-8534	382
367-9341	247
367-9409	1
	▶566
368-0754	330
	▶332
368-3145	151
368-4473	465
368-4853	▶408
	490
368-8559	▶43
	69
368-9117	462
369-1255	7
369-1658	64
369-3663	92
	93
369-3717	247
369-3718	247
369-4656	240
	241
	262
369-6549	56
369-7799	78
369-8089	247
369-9004	477
370-2163	332
370-2280	204
370-5516	85
370-5517	85
370-5518	85
370-5520	▶85
	87
370-6972	142
370-6979	209
	271
370-6989	170
370-6996	128
	130
370-6997	128
	130
370-6998	90
370-8063	482
370-8064	482
370-8066	482
370-8067	482
370-8068	482
370-8069	482
370-8071	482
370-8156	482
370-9009	88
370-9494	456
371-1272	5
	▶79
371-1273	5
	▶51
371-1274	51
371-1275	5
	▶60
371-1276	5
	▶65
371-1277	5
	▶16
371-1278	5
	▶57
371-1287	65
371-1289	65
371-1301	65
371-1436	241
371-1441	▶4
	410
371-1679	406
371-2303	506
	507
	510
	511
371-2304	506
	507
	510
	511
371-2310	▶506
	519
371-2320	▶507
	521
371-2321	▶508
	518
371-2329	508
	509
371-2330	508
	509
371-2331	▶509
	520
371-2337	▶510
	522
371-2338	▶511
	523
371-2348	▶545
371-2351	543
	544
	545
	546
	547
	548
	549
	550
	551
371-2354	▶546
371-2360	▶547
371-2374	▶548
371-2375	▶549
371-2376	▶550
371-2377	▶551
371-2478	4
	▶23
371-2480	4
	▶36
371-2483	4
	▶78
371-2537	4
	▶104
371-2539	4
	▶19
371-2544	4
	▶29
371-2546	4
	▶42
371-2554	4
	▶33
371-2558	4
	▶25
371-2684	86
371-2691	86
371-2719	4
	▶37
371-2720	4
	▶69
371-2725	4
	▶21
371-2735	4
	▶24
371-2742	4
	▶17
371-2745	4
	▶45
371-3974	78
371-4686	559
371-7263	86
371-7925	412
371-7926	412
371-8298	18
372-1860	▶160
	410
372-1861	▶118
	406
372-1877	▶106
	334
	335
372-1878	106
	▶114
372-1880	1
	▶170
372-1881	▶115
	170
372-1882	1
	▶175
372-1883	▶120
	175
372-1890	467
372-1891	▶121
	467
372-1895	410
	▶467
372-1896	467
372-1930	1
	▶165
372-1931	▶123
	165
372-1933	▶111
	165
372-1934	▶119
	165
372-1940	▶176
	404
372-1945	▶114
	176
372-1946	176
372-1947	176
372-1948	176
372-2297	4
	▶53
372-5183	566
373-1067	223
373-1079	223
373-1374	51
373-2292	204
373-3397	204
373-3607	4
	▶48
373-6953	▶182
	204
373-6964	▶183
373-6971	387
373-6973	391
	392
	393
	▶394
373-6976	▶386
	391
	392
	393
373-6979	▶387
	391
	392
	393

PART NUMBER INDEX

Part	Page
373-6980	▶388
	392
	393
373-6982	▶389
	393
373-6984	391
	392
	393
	▶395
373-6985	391
	392
	393
373-6989	394
373-6990	394
373-6991	386
	387
	388
	389
	▶396
373-6992	396
373-6993	386
	388
	389
373-7014	▶318
	340
373-7015	▶319
373-7021	326
373-7041	386
	388
	389
373-7178	565
373-7310	▶241
373-7321	241
373-7330	243
373-7600	240
	241
	262
373-8014	44
373-8108	▶230
	241
373-8434	212
	▶231
373-8435	231
373-8437	231
373-8438	212
373-8439	212
373-8440	212
373-8441	212
	▶258
373-8442	214
	▶232
373-8443	232
373-8444	232
373-8445	214
373-8446	214
373-8447	214
	▶257
373-8448	214
	▶255
373-8459	373
373-8465	371
373-8468	373
	▶398
373-8745	479
	▶482
374-1258	60
374-1580	60
374-5831	298
374-5835	298
374-5838	298
374-5839	298
374-6280	276
374-6281	276
374-6300	4
	▶11
374-6301	4
	▶31
374-7094	4
	▶6
374-7393	31
374-7463	111
	112
	113
	115
	123
374-7465	123
374-7466	123
374-8271	204
375-0098	4
	▶32
375-0482	87
375-0483	87
375-0724	▶326
	537
375-2647	86
375-2649	87
375-3937	4
	▶18
375-3995	4
	▶71
375-6988	87
375-8254	86
375-8407	▶125
	172
376-0695	243
376-0698	244
376-0779	▶242
376-0786	▶242
376-0817	▶243
376-0822	▶243
376-0828	▶244
376-0834	▶225
376-0849	230
376-0863	▶244
376-0873	▶245
376-0875	▶245
376-0879	▶246
376-0889	245
376-0890	245
376-1108	4
	▶7
376-4074	11
376-4078	11
376-4188	57
	▶58
376-4761	10
376-6403	78
376-6405	78
376-6409	86
376-6410	86
376-6411	86
376-8210	223
377-0034	383
377-0399	14
377-0400	14
377-1293	172
377-1530	▶282
377-1538	9
377-1540	▶287
377-1541	287
377-1548	287
377-2083	357
377-2084	359
377-2876	62
377-2877	▶62
	69
377-4149	▶492
377-4150	492
377-4162	492
377-4718	29
	▶30
377-5120	456
377-5640	▶103
	139
377-5645	103
377-5646	103
377-5647	103
377-5650	2
	▶179
377-5651	▶121
	179
377-5654	179
377-5988	83
377-6087	367
377-6932	116
377-7215	473
377-7243	88
377-7244	88
377-7268	283
377-7269	283
377-9255	18
377-9478	71
	▶72
378-0951	▶450
378-0966	▶313
	317
378-2808	223
378-2814	223
378-2815	223
378-2816	223
378-2817	223
	▶259
378-2818	222
	223
378-2828	223
378-2834	366
	▶368
378-2836	223
378-4739	19
378-8167	4
	▶568
380-1662	247
380-1887	160
380-3497	306
380-8077	333
	▶349
380-8084	1
	▶306
380-8104	333
	▶366
380-8864	353
380-9519	276
380-9615	10
381-1710	204
381-1712	204
381-3699	464
381-4349	1
	▶298
381-4358	1
	▶333
381-4371	1
	▶5
381-4374	1
	▶220
381-4382	▶1
381-4385	▶1
381-4389	▶2
381-4390	▶2
381-4394	334
	335
	▶404
381-4398	▶275
381-4420	▶3
381-4475	298
381-7963	456
381-7965	456
381-7966	456
381-9623	456
382-0691	347
382-0692	347
382-0829	422
382-5982	105
383-1382	10
383-1383	10
383-1388	10
383-3219	200
383-3581	▶12
	13
383-8942	195
384-2286	63
384-2862	338
384-3157	81
384-3159	75
	▶81
384-5313	▶14
	15
384-6463	107
384-6842	410
	▶461
384-6844	410
	▶490
384-6950	410
	▶411
384-6954	411
	▶412
384-6959	412
384-6980	▶405
	410
384-7000	▶410
384-7567	151
384-8658	313
384-8750	204
	401
385-1398	84
385-1812	93
385-2572	4
	▶15
385-2754	217
385-4381	26
385-5997	▶116
	172
385-7287	566
385-7289	565
385-7291	565
385-7791	552
385-8004	4
	▶26
386-0149	313
386-1864	84
386-2110	21
386-2737	81
386-2971	86
386-2976	86
386-3776	380
386-3777	380
386-3819	86
386-3993	107
386-6219	349
386-6620	368
	▶369
386-7017	557
387-2859	▶552
387-4010	▶317
387-4019	405
	▶458

▶ **PRIMARY REFERENCE**

PART NUMBER INDEX

Part	Page
387-4025	1
	▶281
387-4027	290
387-4029	▶273
	275
387-4030	1
	▶277
387-4031	277
387-4054	557
387-4055	1
	▶278
387-4056	278
387-4085	557
387-4090	281
387-4092	293
387-4093	334
	335
	▶339
387-4094	333
	334
	335
	▶338
387-4096	▶562
387-4097	▶563
387-4098	▶564
387-4099	▶333
	334
387-4100	▶402
	404
387-4101	402
387-4116	402
387-4120	402
387-4161	▶334
387-4162	▶334
387-4163	▶334
387-4199	▶334
387-4335	5
	▶27
387-8412	86
388-0536	10
388-1145	557
388-1516	482
388-1960	306
388-1961	306
388-2314	64
388-4707	15
388-7010	65
388-7018	59
388-9243	38
388-9379	490
388-9447	383
388-9448	383
389-1026	298
389-1027	298
389-3346	4
	▶10
389-3863	172
389-5775	75
389-5784	75
389-5927	107
389-7287	297
389-7782	202
389-7783	202
389-8059	336
389-8060	336
390-0315	467
390-0755	75
390-0829	456
390-0854	4
	▶13
390-1558	64
390-1760	60
390-1836	60
390-3190	490
390-3737	4
	▶39
390-4484	383
390-8633	337
390-8738	75
391-1817	75
391-3762	▶77
	79
391-3763	77
391-3764	77
391-4481	450
	473
391-4811	4
	▶86
391-5523	4
	▶64
391-8775	64
391-9922	355
392-2780	172
392-8477	568
392-8660	75
	▶82
392-8662	82
393-0357	339
393-0566	51
	▶56
393-0597	355
393-1101	88
393-2034	87
393-2035	87
393-3369	4
	▶20
393-4006	20
393-4007	20
393-7694	4
	▶63
394-0525	87
394-1183	458
394-1731	277
394-4451	25
394-4710	513
	514
394-9570	146
394-9639	4
	▶87
395-0110	4
	▶148
395-0112	4
	▶146
395-0113	4
	▶172
395-0114	4
	▶151
395-1633	85
395-2112	139
395-2144	562
395-2178	563
395-2179	564
396-2615	4
	▶8
396-8795	8
397-8605	282
397-8606	282
397-8607	282
397-8608	282
398-1496	338
398-1497	338
398-6226	87
399-4534	440
399-6645	440
399-7157	▶406
	448
399-7741	406

4

Part	Page
415-4689	2
	▶153
416-0021	490
416-1036	64
416-2619	383
416-2620	2
	▶383
416-4934	431
416-5266	108
416-7727	63
417-3447	298
417-6415	▶246
417-7782	48
417-9243	88
417-9244	88
418-4021	410
	▶431
418-4022	431
419-6648	88
	▶90
419-8848	▶335
419-8849	▶335
419-9811	60
420-0811	339
420-0812	339
420-0813	339
420-2020	410
	▶419
420-2021	419
420-2030	419
420-2371	69
420-7749	108
421-1156	561
421-3153	56
421-3154	56
421-5684	▶73
	74
421-5703	410
	▶486
422-7715	62
423-3529	▶54
	55
423-3530	54
423-3531	54
423-3532	54
423-4666	5
	▶55
423-6378	60
423-8564	267
	▶565
424-0566	38
424-3214	38
424-5251	474
	▶480
425-0196	4
	▶38
425-0197	4
	▶40
425-2178	75
	▶83
426-3292	4
	▶74
426-3312	4
	▶75
428-7042	38
430-6686	38
433-1316	75
	▶84
433-2039	38
433-2151	474
433-3036	60
434-1356	147
434-8967	▶513
	533
434-8968	▶533
435-0248	513
435-0252	513
435-0253	513
435-0262	513
435-0265	513
435-1242	▶455
435-1243	▶463
435-7769	108
438-5475	512
438-5478	512
438-5482	▶512
	532
438-5492	512
438-5495	512
438-5500	▶532
438-9544	514
439-1334	▶514
	534
439-1335	▶534
439-1471	514
439-1475	514
439-1476	514
439-1496	514
439-1499	514
439-4789	474

▶ PRIMARY REFERENCE



©2013 Caterpillar
All Rights Reserved

CAT, CATERPILLAR, their respective logos, “Caterpillar Yellow”, and the POWER EDGE trade dress as well as corporate and product identity used herein, are trademarks of Caterpillar and may not be used without permission.