RUTHZIL TRATOR COMERCIAL DE PEÇAS LTDA 11 97083-6812 ROLANDO CITRANGULO

930R

CATERPILLAR

C1864 TORQUE CONVERTER GROUP

Part of 3T1785 Transmission Arrangement listed on Page 90

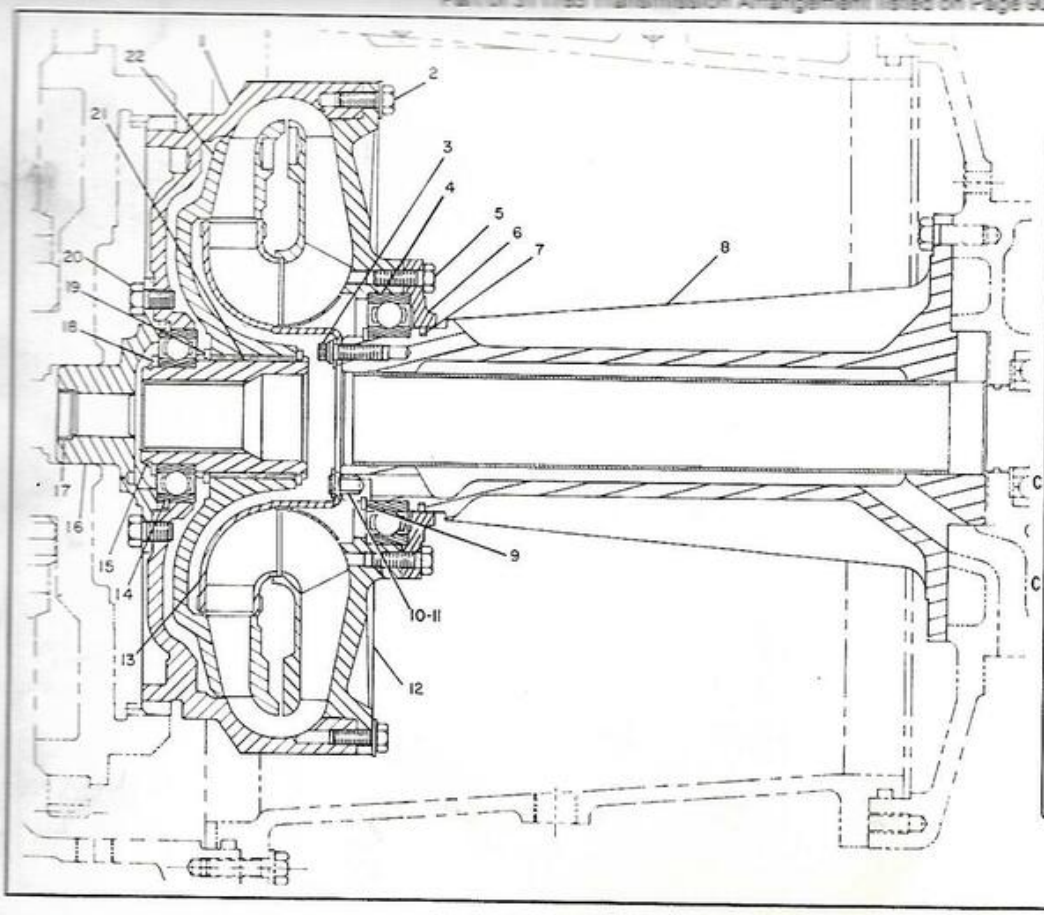

REF. NO.	PART NUMBER	DESCRIPTION	QTY.
1	1T24	HOUSING	1
2	2B2695	BOLT	24
	1T738	WASHER	24
3	1T414	BOLT	6
4	1T334	BEARING	1
5	S1618	BOLT	12
6	1T1575	RETAINER	1
7	1T1401	RING	1
8	1T1573	CARRIER ASSEM.	1
9	5K9064	RING	1
10	1T68	PIN (slotted)	4
	1T289	PIN	4
11	1T290	PLATE	2
12	1T1569	IMPELLER	1
13	1T292	WHEEL ASSEM.	1
14	6V4582	BEARING	1
15	8L9811	RING	1
16	1T1579	PILOT ASSEM. (Includes)	1
17	3T3348	ORIFICE	1
18	1T1610	SPACER	1
19	3F3727	RING	2
20	T102	BOLT	6
21	1T1576	ADAPTER	1
22	1T1609	TURBINE	1

C INDICATES CHANGE

236883

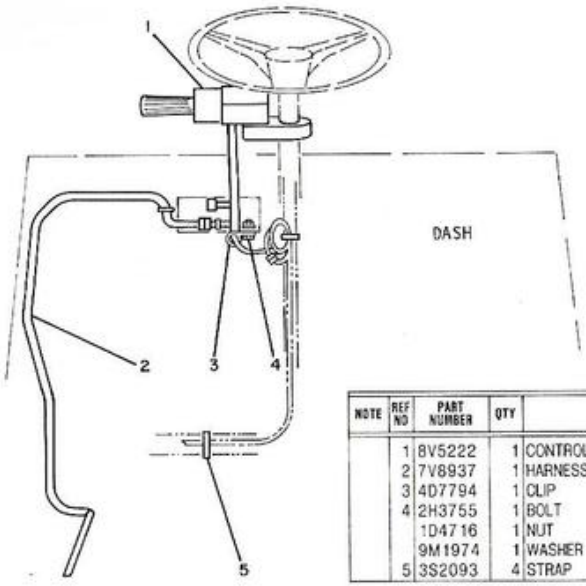

NOTE	REF NO	PART NUMBER	QTY	DESCRIPTION
	1	8V5222	1	CONTROL (TRANSMISSION)
	2	7V8937	1	HARNESS AS.
	3	4D7794	1	CLIP
	4	2H3755	1	BOLT
		1D4716	1	NUT
		9M1974	1	WASHER
	5	3S2093	4	STRAP

323319

7V8930 TRANSMISSION RATIO SELECTOR CONTROL GROUP

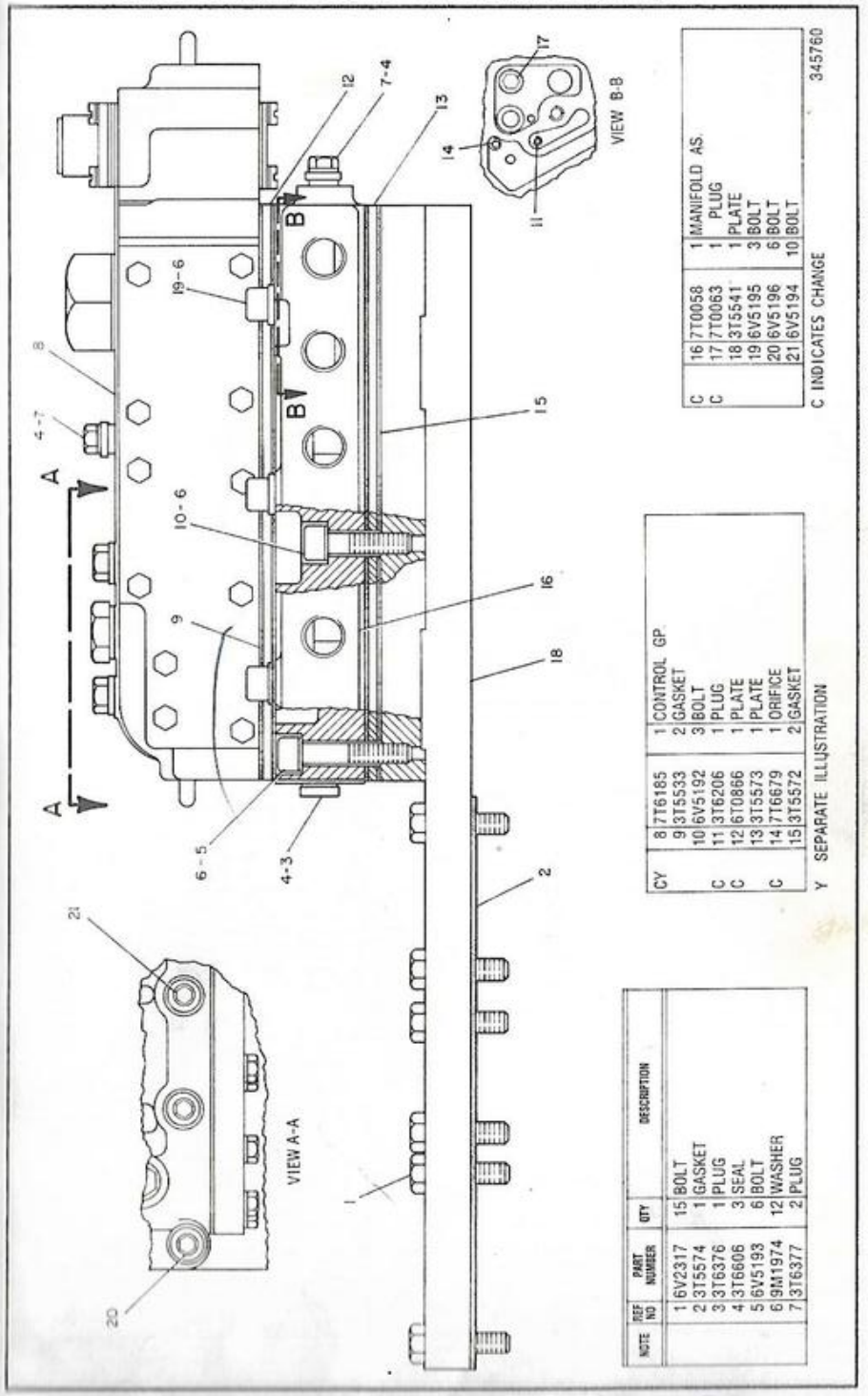

NOTE	REF NO	PART NUMBER	QTY	DESCRIPTION
	1	6V2317	15	BOLT
	2	3T5574	1	GASKET
	3	3T6376	1	PLUG
	4	3T6606	3	SEAL
	5	6V5193	6	BOLT
	6	9M1974	12	WASHER
	7	3T6377	2	PLUG

CY	8	7T6185	1	CONTROL GP
	9	3T5533	2	GASKET
	10	6V5192	3	BOLT
C	11	3T6206	1	PLUG
C	12	6T0866	1	PLATE
	13	3T5573	1	PLATE
C	14	7T6679	1	ORIFICE
	15	3T5572	2	GASKET

C	16	7T0058	1	MANIFOLD AS.
C	17	7T0063	1	PLUG
	18	3T5541	1	PLATE
	19	6V5195	3	BOLT
	20	6V5196	6	BOLT
	21	6V5194	10	BOLT

C INDICATES CHANGE

Y SEPARATE ILLUSTRATION

345760

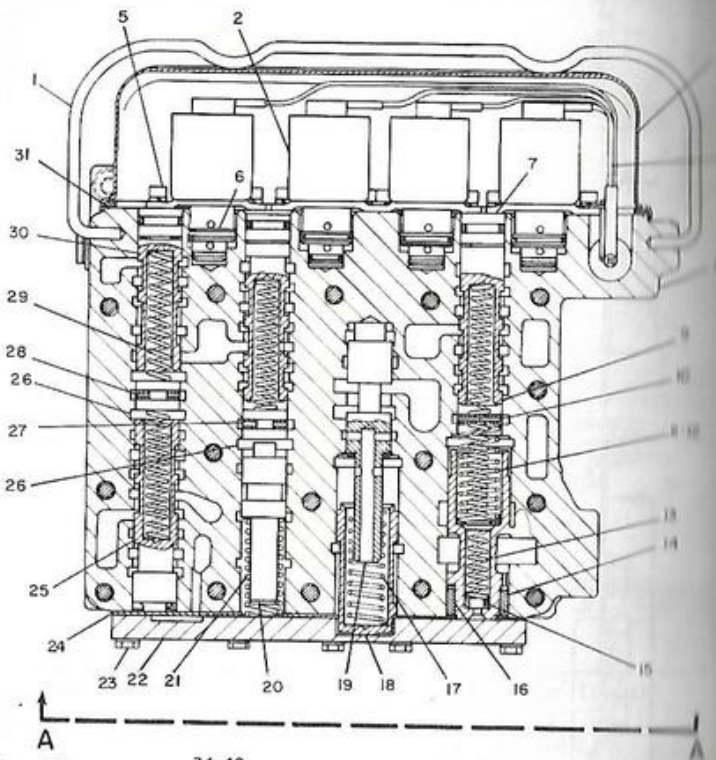

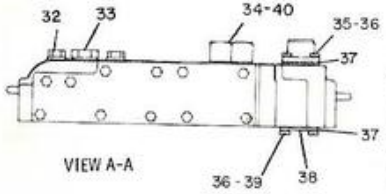

VIEW A-A

NOTE	REF NO	PART NUMBER	QTY	DESCRIPTION
	1	3T5593	1	CLAMP
	2	3T5472	4	SOLENOID
	3	3T5946	1	HARNESS AS.
	4	3T5603	1	COVER
	5	6V5213	8	BOLT
		098378	8	WASHER
	6	3T5560	1	SPOOL
	7	3T5600	3	STOP
		3T6651	3	RING
	8	3T5570	1	BODY
	9	3T5561	1	SPOOL
	10	3T5597	1	RETAINER
	11	3T5625	1	SPRING
	12	3T5575	6	SPACER
	13	3T5624	1	SPRING
	14	7T5366	1	SPOOL AS.
	15	3T5621	1	SPACER
	16	3T5596	1	SLEEVE
	17	3T5609	1	SPRING
	18	3T5839	1	PISTON
	19	3T5612	1	SPOOL
	20	3T5602	1	VALVE
	21	3T5577	1	SPRING
	22	3T5613	1	COVER
	23	6V5214	11	BOLT
	24	3T5614	1	GASKET
	25	3T5562	1	SPOOL
	26	3T5599	2	STOP
	27	3T5595	1	RETAINER
	28	3T5530	1	RETAINER
	29	3T5601	4	SPRING
	30	3T5563	1	SPOOL
	31	3T6650	1	RING
	32	3T6377	10	PLUG
		3T6606	10	SEAL
	33	3T6380	1	PLUG
		3T6612	1	SEAL
	34	3T5610	1	ADAPTER
	35	6V5211	4	SCREW
	36	6V5228	8	LOCKWASHER
	37	3T5605	2	GASKET
	38	3T5487	1	COVER
	39	6V5210	4	SCREW
	40	3T6658	1	PLUG

7T6185 TRANSMISSION CONTROL GROUP
Part Of 3T6135 Transmission Control

NOTE	REF NO	PART NUMBER	QTY	DESCRIPTION
C	1	5P9806	1	SEAL 43.10MM(16.9IN.)I.D.
C	2	6V6787	2	BOLT
C	3	9S1588	8	BOLT
C	4	5M2894	12	WASHER
C	5	5B4274	4	BOLT
C		2Y7509	4	SPACER
C	6	2Y7147	1	SUPPORT AS.
C	7	6B7394	4	BAR
C	8	1A1135	8	BOLT
C		2S7593	8	WASHER
	9	6V3669	4	BOLT
	10	5P8249	6	WASHER
C	11	1V9756	2	SUPPORT AS.
C	12	3V0787	1	SUPPORT AS.
	13	7N1164	1	MOUNT AS.
C	14	1V3584	1	BAR
B	15	8D5636	2	SHIM .25MM(.010IN.)THK
B		8D5637	5	SHIM .76MM(.030IN.)THK
CF		4J0520	1	SEAL 3.30MM(1.3IN.)I.D. (OIL DRAIN BACK SEAL)

B USE AS REQUIRED
C INDICATES CHANGE
F NOT SHOWN

320029

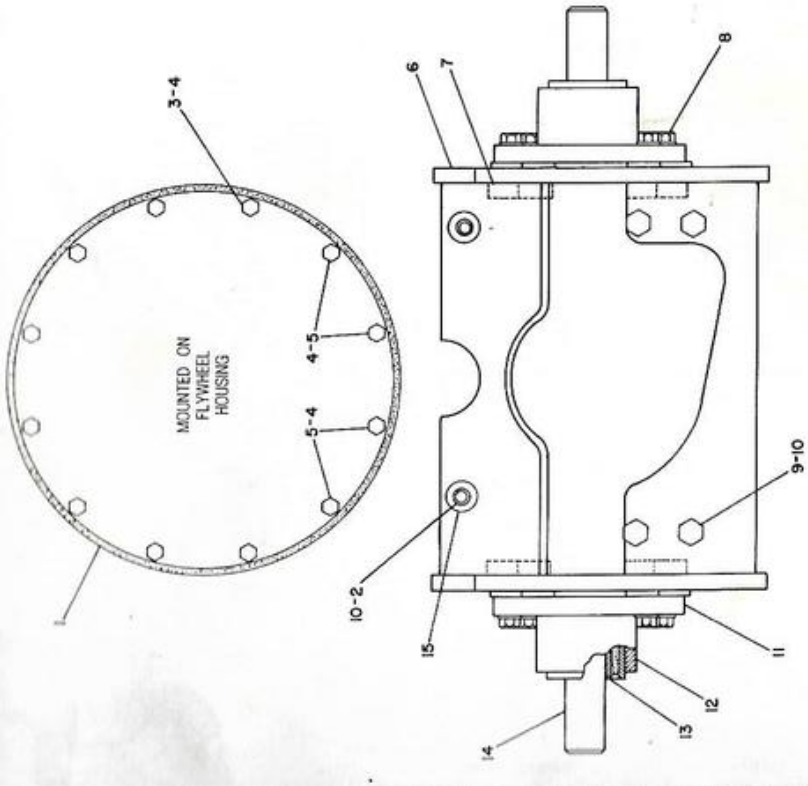

NOTE	REF NO	PART NUMBER	QTY	PART NAME
	1	5S2638	1	BOLT 133 35MM(5 25IN)LG
				- OR -
C		589603	1	BOLT 127MM(5 00IN)LG
	2	1D4717	2	NUT-FULL
	3	5M2894	4	WASHER 2 5MM(099IN)THK
C				- OR -
		5P1075	4	WASHER 3 0MM(118IN)THK
	4	3G7951	2	ELBOW
	5	7M8485	2	SEAL
	6	2V3301	1	FILTER GP
	7	2V9191	1	INDICATOR
		2N9780	1	SEAL
	8	2P5834	1	ELEMENT-FILTER
	9	2H4145	1	SEAL-O-RING
M	10	7V7537	1	BRACKET AS
M	11	6A5591	4	BOLT
		5P8245	4	WASHER
	12	7V7502	2	ELBOW
	13	7V7534	1	HOSE AS
	14	7V7550	1	HOSE AS
	15	589603	1	BOLT

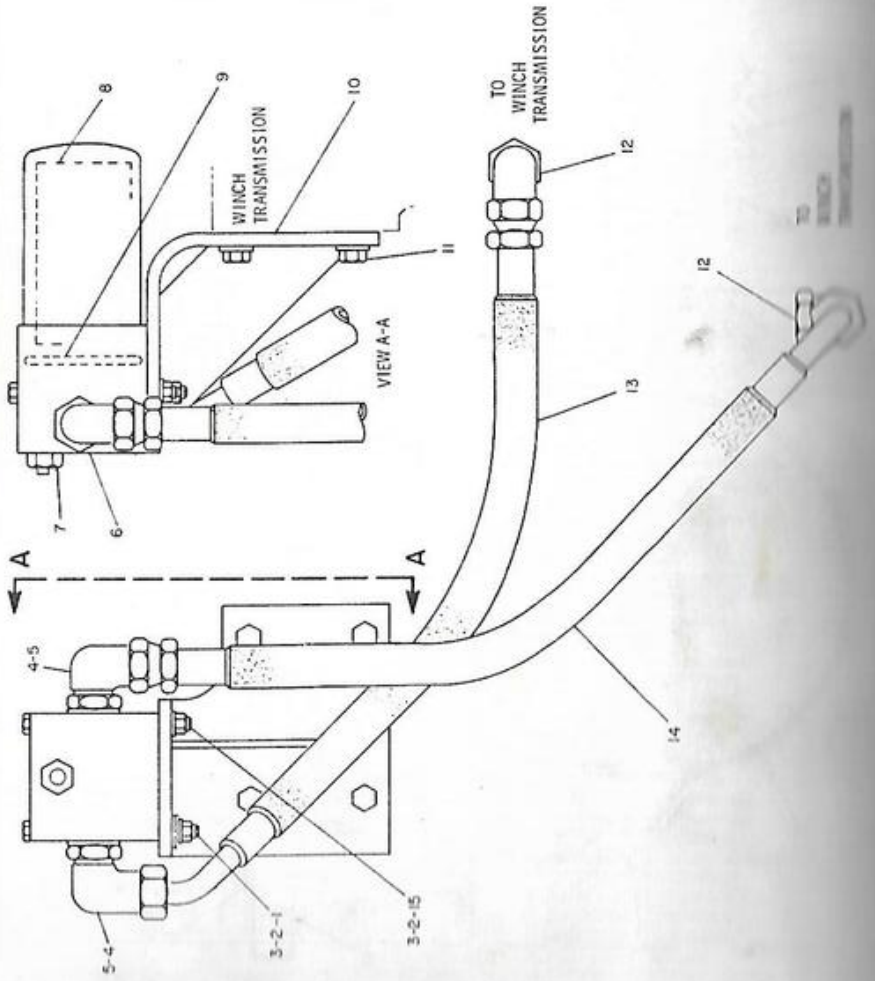

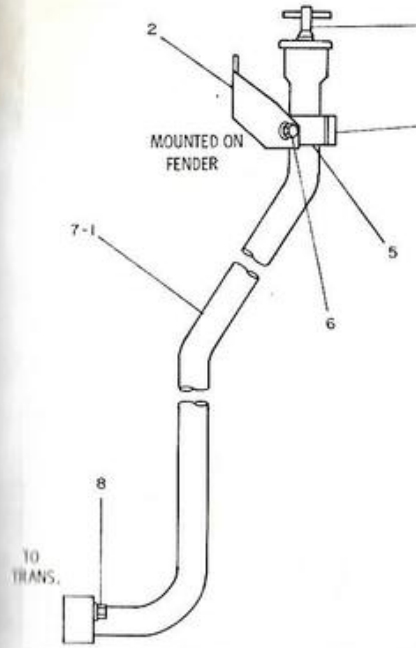

REF NO	PART NUMBER	DESCRIPTION	QTY
1	7V8971	TUBE ASSEM.	1
2	2V4097	BRACKET	1
3	2Y6021	GAUGE ASSEM.	1
4	6K4934	CLIP	1
5	6K4935	BRACKET	1
6	S1594	BOLT	1
	1D4717	NUT	1
	4B4278	WASHER	1
	5P1075	WASHER	1
7	6F6740	GASKET	1
8	6V3918	BOLT	2
	9M1974	WASHER	2

234819

7V8933 POWER TRAIN OIL FILLER GROUP
Serial No. 57Z1 To 57Z1025 Inclusive

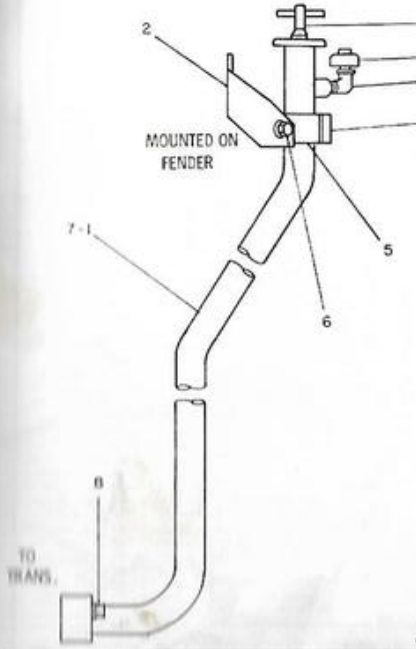

NOTE	REF NO	PART NUMBER	QTY	DESCRIPTION
	1	7V8971	1	TUBE AS.
	2	2V4097	1	BRACKET
	3	2Y6021	1	GAUGE AS.
	4	6K4934	1	CLIP
	5	6K4935	1	BRACKET
C	6	1A2029	1	BOLT
		1D4717	1	NUT
		4B4278	1	WASHER (THIN)
		5P1075	1	WASHER (THICK)
	7	6F6740	1	GASKET
	8	6V3918	2	BOLT
		9M1974	2	WASHER
C	9	2Y7359	1	BREATHER
C	10	6V3342	1	ELBOW

C INDICATES CHANGE

346112

7V8933 POWER TRAIN OIL FILLER GROUP
Serial No. 57Z1026-Up

NOTE	REF NO	PART NUMBER	QTY	DESCRIPTION
	1	3T6621	1	TUBE AS. (NO. 2)
C	2	3T5771	16	SEAL
C	3	7T0061	5	ADAPTER
C	4	7T0060	5	NUT
C	5	7T6109	5	RING
	6	3T6622	1	TUBE AS. (NO. 3)
	7	3T6618	1	TUBE AS. (FORWARD)
	8	3T6619	1	TUBE AS. (REVERSE)
	9	3T6620	1	TUBE AS. (NO. 1)
	10	3T6612	2	SEAL
	11	3T6379	2	PLUG
	12	3T5524	1	TUBE AS. (SUCTION)
C	13	6V3918	2	BOLT 50MM(2IN.)LONG
C	14	3T5476	3	GASKET
	15	3T6616	1	TUBE AS. (DRAIN CONTROL)
	16	3T6617	1	TUBE AS. (DRAIN CONV.)
CF		6T9772	1	TUBE AS. (DRAIN CONV.)
CF		3T6544	5	BOLT (HOLLOW)
CF		6V3940	2	BOLT 25MM(1IN.)LONG
F		3T6545	2	BOLT (HOLLOW)
F		3T6515	4	SEAL
F		3T6546	2	BOLT (HOLLOW)

C INDICATES CHANGE
F NOT SHOWN

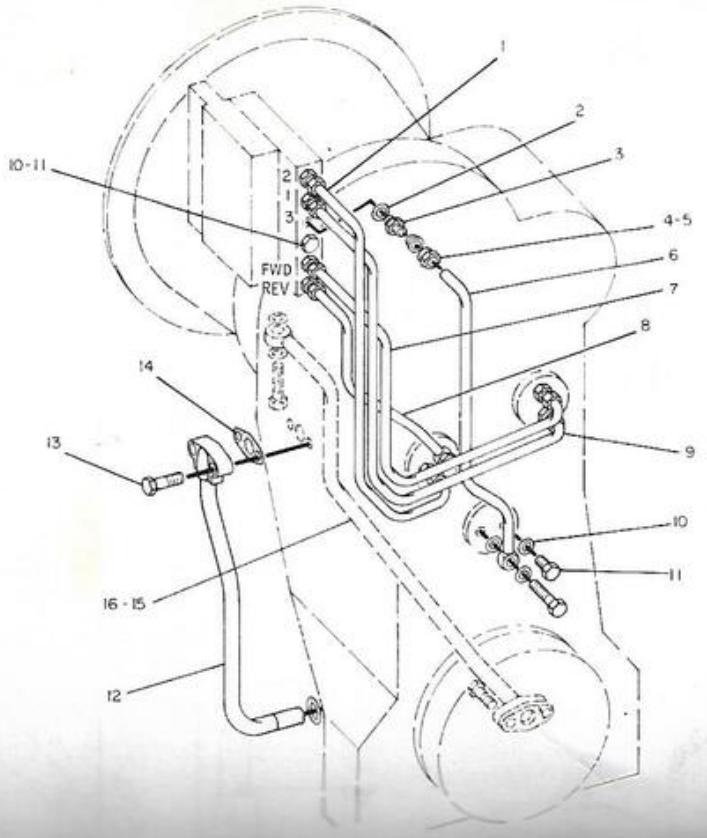

345746

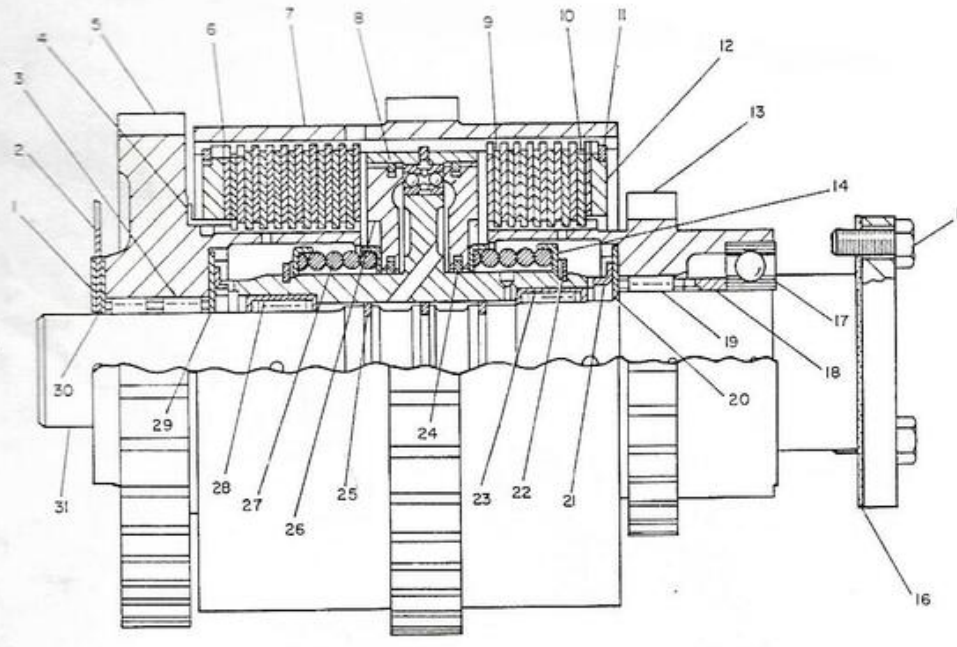

NOTE	REF NO	PART NUMBER	QTY	DESCRIPTION
CBY	1	3T5617	1	SHIM GP.
	2	3T5520	1	DISC
	3	6V5262	2	BEARING AS.
	4	3T5549	1	COLLAR
C	5	7T3334	1	GEAR
C	6	6T8533	19	DISC
	7	3T5842	1	CARRIER AS.
C		9W5394	2	VALVE
	8	3T5767	2	RING
C	9	7T3302	2	PLATE 2MM(.078IN.)THK.
C	10	7T3326	4	PLATE 1.5MM(.059IN.)THK.
C		7T3303	11	PLATE
	11	3T5580	2	RING
	12	3T5583	2	PLATE
	13	3T5781	1	GEAR
	14	3T5947	4	GUIDE
	15	6V5217	3	BOLT
C	16	6T8544	1	GASKET
	17	5P9439	1	BEARING
	18	3T5773	1	COLLAR
C	19	6T8550	1	BEARING
	20	3T5775	1	DISC
	21	3T5508	2	COLLAR
	22	3T5554	2	GUIDE
		3T6564	2	RING
	23	6V5264	1	BEARING
C	24	6T0851	2	RING
C	25	6T9561	3	RING
	26	3T5582	2	SPRING
	27	3T5484	1	PISTON
	28	6V5263	1	BEARING
C	29	6T8549	1	DISC
C	30	6T8547	1	DISC
	31	3T5557	1	SHAFT AS.

B USE AS REQUIRED
C INDICATES CHANGE
Y SEPARATE ILLUSTRATION

354392

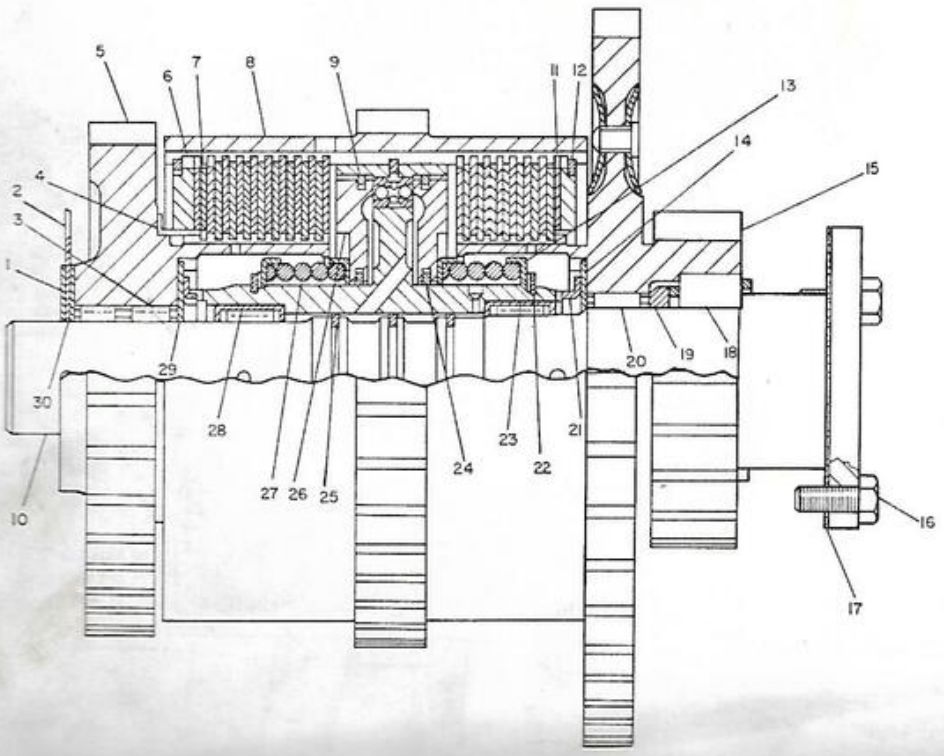

NOTE	REF NO	PART NUMBER	QTY	DESCRIPTION
BY	1	3T5617	1	SHIM GP.
	2	3T5520	1	DISC
	3	6V5262	2	BEARING
	4	3T5549	1	COLLAR
	5	7T3334	1	GEAR
	6	3T5583	2	PLATE
B	7	7T3302	2	PLATE 2.5MM(.098IN.)THK.
		7T3303	11	PLATE 2MM(.078IN.)THK.
		7T3326	4	PLATE 1.5MM(.059IN.)THK.
	8	3T5842	1	CARRIER AS.
C		9W5394	1	VALVE
	9	3T5767	2	RING
	10	3T5558	1	SHAFT AS.
	11	6T8548	1	DISC
	12	3T5580	2	RING
	13	3T5947	4	GUIDE
	14	6T8548	1	DISC
	15	9W1051	1	GEAR
	16	6V5217	3	BOLT
	17	6T8544	1	GASKET
	18	3T6483	1	BEARING
	19	3T5592	1	RING
	20	6T9573	1	BEARING
	21	3T5508	2	COLLAR
	22	3T5554	2	GUIDE
		3T6564	2	RING
	23	6V5264	1	BEARING
	24	3T9561	2	RING
	25	3T5552	3	RING
	26	3T5484	2	PISTON
	27	3T5582	2	SPRING
	28	6V5263	1	BEARING
	29	6T8549	1	DISC
	30	6T8547	1	DISC

B USE AS REQUIRED C INDICATES CHANGE Y SEPARATE ILLUSTRATION 354391

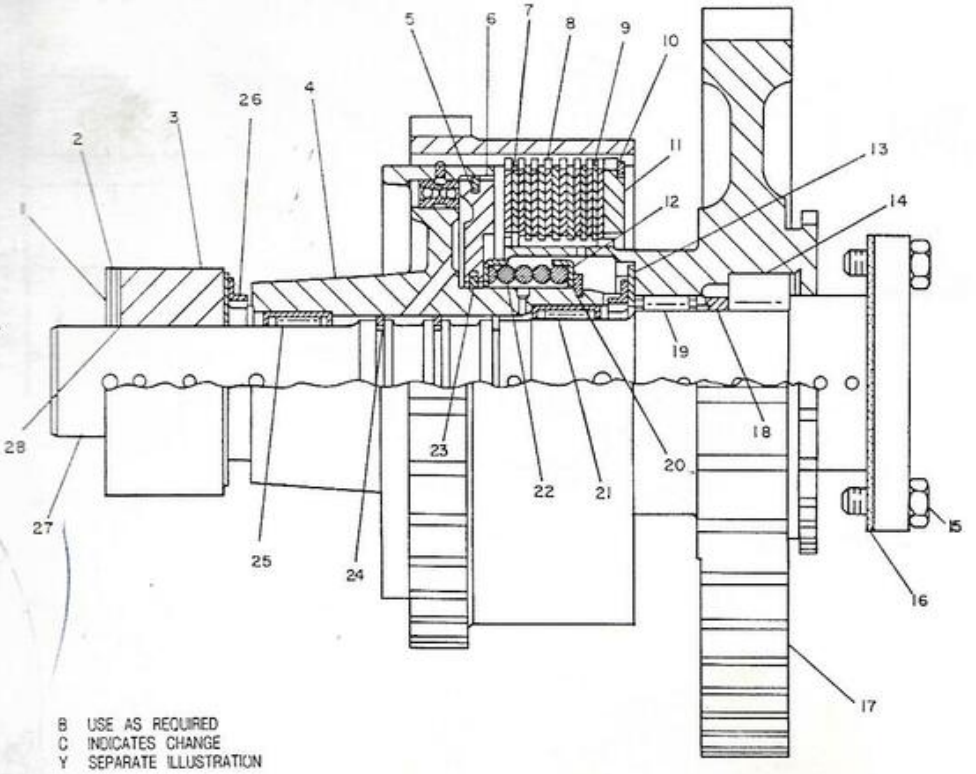

B USE AS REQUIRED
C INDICATES CHANGE
Y SEPARATE ILLUSTRATION

NOTE	REF NO	PART NUMBER	QTY	DESCRIPTION
CBY	1	3T5617	1	SHIM GP.
	2	3T5520	1	DISC
	3	3T5764	1	SLEEVE
	4	3T5772	1	CARRIER AS.
C		9W5394	1	VALVE
	5	3T5767	1	RING
	6	3T5484	1	PISTON
C	7	7T3303	6	PLATE
C	8	6T8533	8	DISC
C	9	7T3302	1	PLATE
	10	3T5580	1	RING
	11	3T5583	1	PLATE
	12	3T5947	2	GUIDE
C	13	6T8548	1	DISC
	14	3T5506	16	ROLLER
	15	6V5217	3	BOLT
C	16	5T8544	1	GASKET
C	17	9W1255	1	GEAR (CLUTCH)
	18	3T6556	1	SLEEVE
C	19	6T9573	1	BEARING
	20	3T5554	1	GUIDE
		3T6564	1	RING
	21	6V5264	1	BEARING
	22	3T5582	1	SPRING
C	23	6T0851	1	RING
C	24	6T9561	2	RING
	25	6V5263	1	BEARING
	26	3T5508	2	COLLAR
	27	3T5559	1	SHAFT AS.
C	28	6T8547	2	DISC

354393

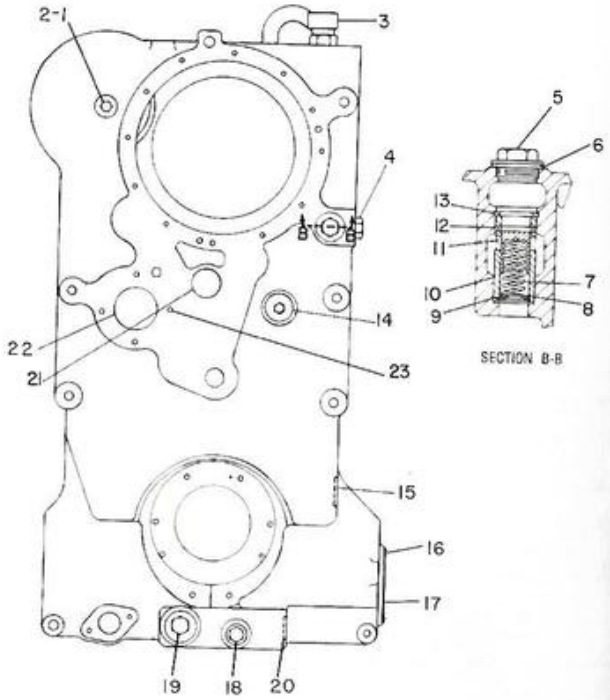

SECTION B-B

NOTE	REF NO	PART NUMBER	QTY	PART NAME	NOTE	REF NO	PART NUMBER	QTY	PART NAME
	1	3T6381	2	PLUG	C	23	3C1887	1	SETSCREW
	2	3T6612	3	SEAL					
	3	3T6389	1	BREATHER					
	4	3T6388	1	PLUG					
C	5	7T5819	1	PLUG					
	6	3T6615	1	SEAL					
	7	3T5499	1	SPRING					
	8	3T5623	1	WASHER					
	9	6V5206	1	RING					
	10	3T5471	1	SLEEVE					
C	11	6T9707	1	PISTON					
C	12	6T8546	1	DOWEL					
	13	6V5205	1	RING					
	14	3T6396	1	PLUG					
		3T6657	1	SEAL					
	15	3T6639	1	PLUG					
	16	6V5225	4	SCREW					
	17	3T8698	1	PLATE					
	18	3T6383	1	PLUG					
		3T6614	1	SEAL					
	19	3T6384	1	PLUG					
		3T6624	1	SEAL					
	20	3T6653	1	RING					
	21	6V5229	1	PLUG					
C	22	6T8537	1	PLUG					

C-INDICATES CHANGE

3T6136 PARTS ARE CASE GROUP-PART 1 OF 2
Part Of 3T1785 Transmission

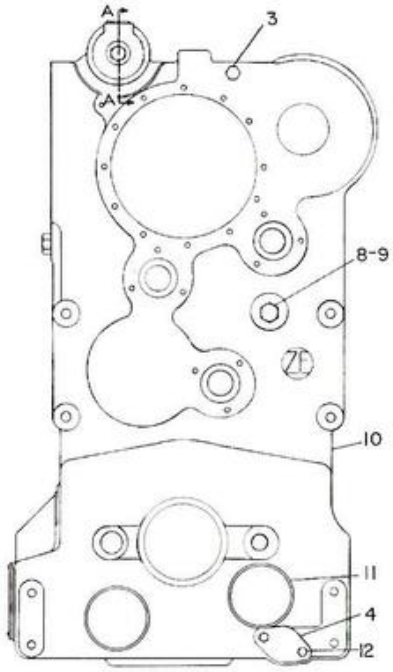

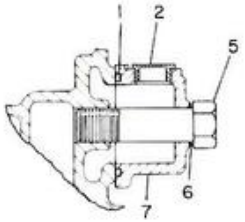

SECTION A-A

NOTE	REF NO	PART NUMBER	QTY	PART NAME	NOTE	REF NO	PART NUMBER	QTY	PART NAME
	1	3T5578	1	SEAL					
	2	3T6658	1	PLUG					
	3	6V5224	1	BOLT					
	4	3T5485	1	FLANGE					
		3T5476	1	GASKET					
	5	6T9706	1	BOLT					
	6	3T6648	1	SEAL					
	7	6T9708	1	COVER					
	8	3T6378	1	PLUG					
	9	3T6615	1	SEAL					
	10	3T5565	1	CASE					
	11	3T5567	2	PLUG					
	12	6V5215	2	BOLT					

C-INDICATES CHANGE

345748

3T6136 PARTS ARE CASE GROUP-PART 2 OF 2
Part Of 3T1785 Transmission

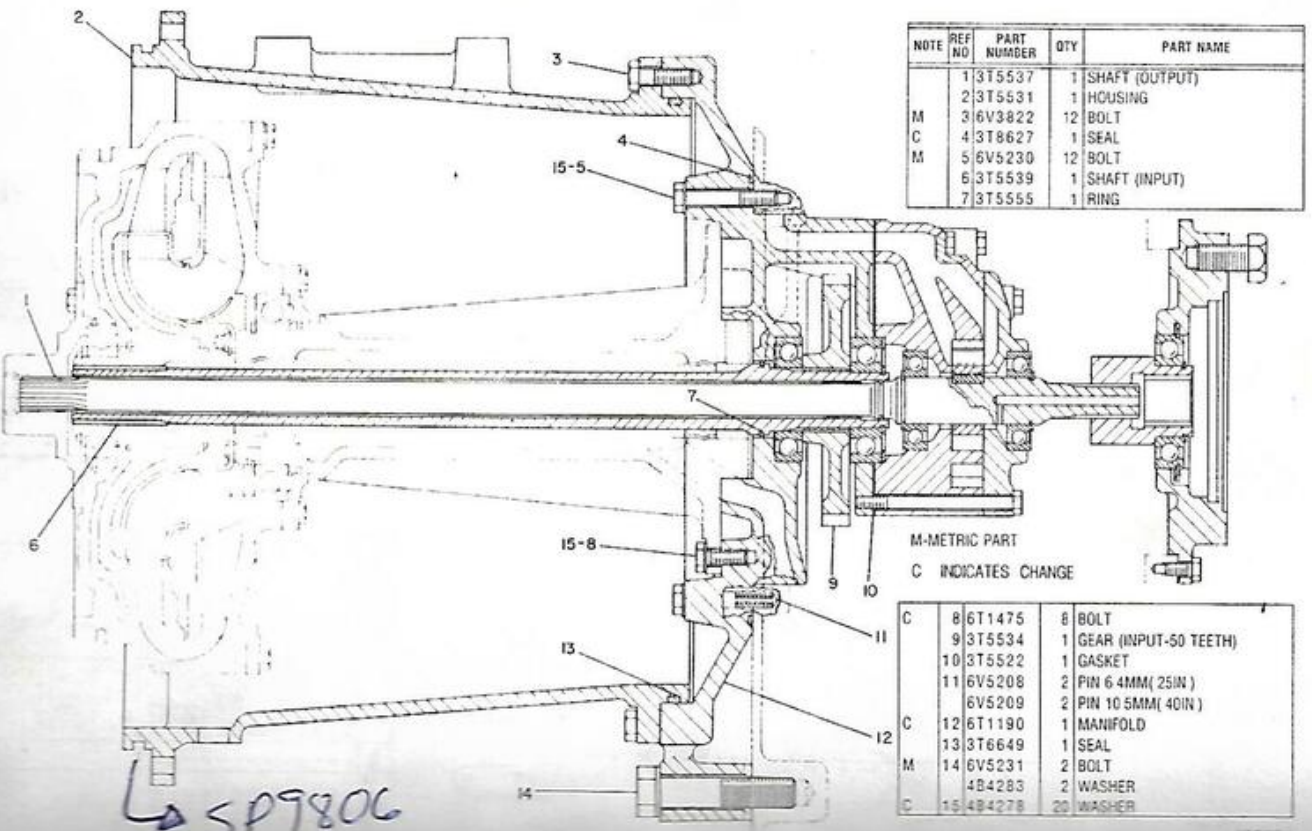

NOTE	REF NO	PART NUMBER	QTY	PART NAME
	1	3T5537	1	SHAFT (OUTPUT)
	2	3T5531	1	HOUSING
M	3	6V3822	12	BOLT
C	4	3T8627	1	SEAL
M	5	6V5230	12	BOLT
	6	3T5539	1	SHAFT (INPUT)
	7	3T5555	1	RING
C	8	6T1475	8	BOLT
	9	3T5534	1	GEAR (INPUT-50 TEETH)
	10	3T5522	1	GASKET
	11	6V5208	2	PIN 6.4MM(25IN)
		6V5209	2	PIN 10.5MM(40IN)
C	12	6T1190	1	MANIFOLD
	13	3T6649	1	SEAL
M	14	6V5231	2	BOLT
		4B4283	2	WASHER
C	15	4B4278	20	WASHER

403601

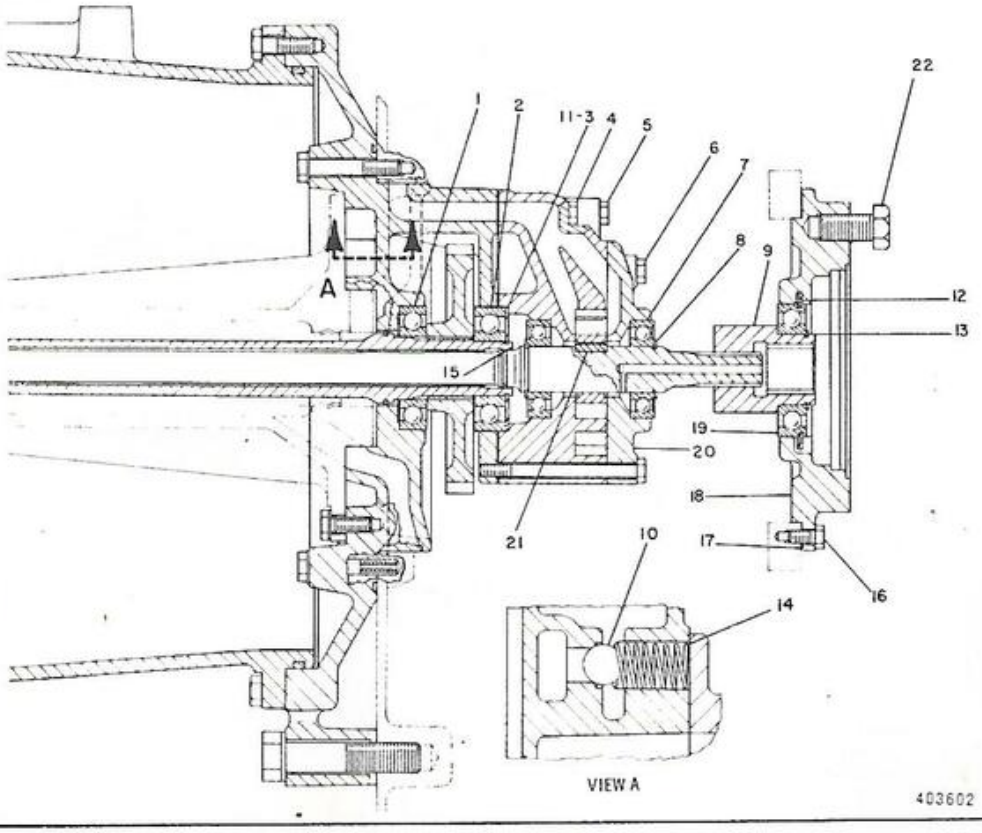

NOTE	REF NO	PART NUMBER	QTY	PART NAME
	1	6H3957	1	BEARING-BALL
C	2	3L1425	1	BEARING-BALL
CY	3	3T5500	1	SHIM GP-BEARING
CM	4	8T0100	2	BOLT
M	5	6V5221	2	BOLT
M	6	6V5223	4	BOLT
	7	6V5265	1	BEARING-BALL
	8	3T6550	2	RING
	9	3T5501	1	COUPLING
	10	3T6552	1	BALL
	11	6V5200	1	RING-RETAINING
	12	3T6547	2	RING
	13	6V5204	1	RING
	14	3T5507	1	SPRING
	15	3T6554	1	RING
M	16	6V5216	12	BOLT
	17	3T5488	1	GASKET
	18	3T5503	1	ADAPTER
	19	3T6485	1	BEARING
	20	3T5479	1	PUMP GROUP
	21	3T6555	1	KEY
CM	22	6V5844	2	BOLT

C-INDICATES CHANGE

Y-SEPARATE ILLUSTRATION

M-METRIC PART

403602

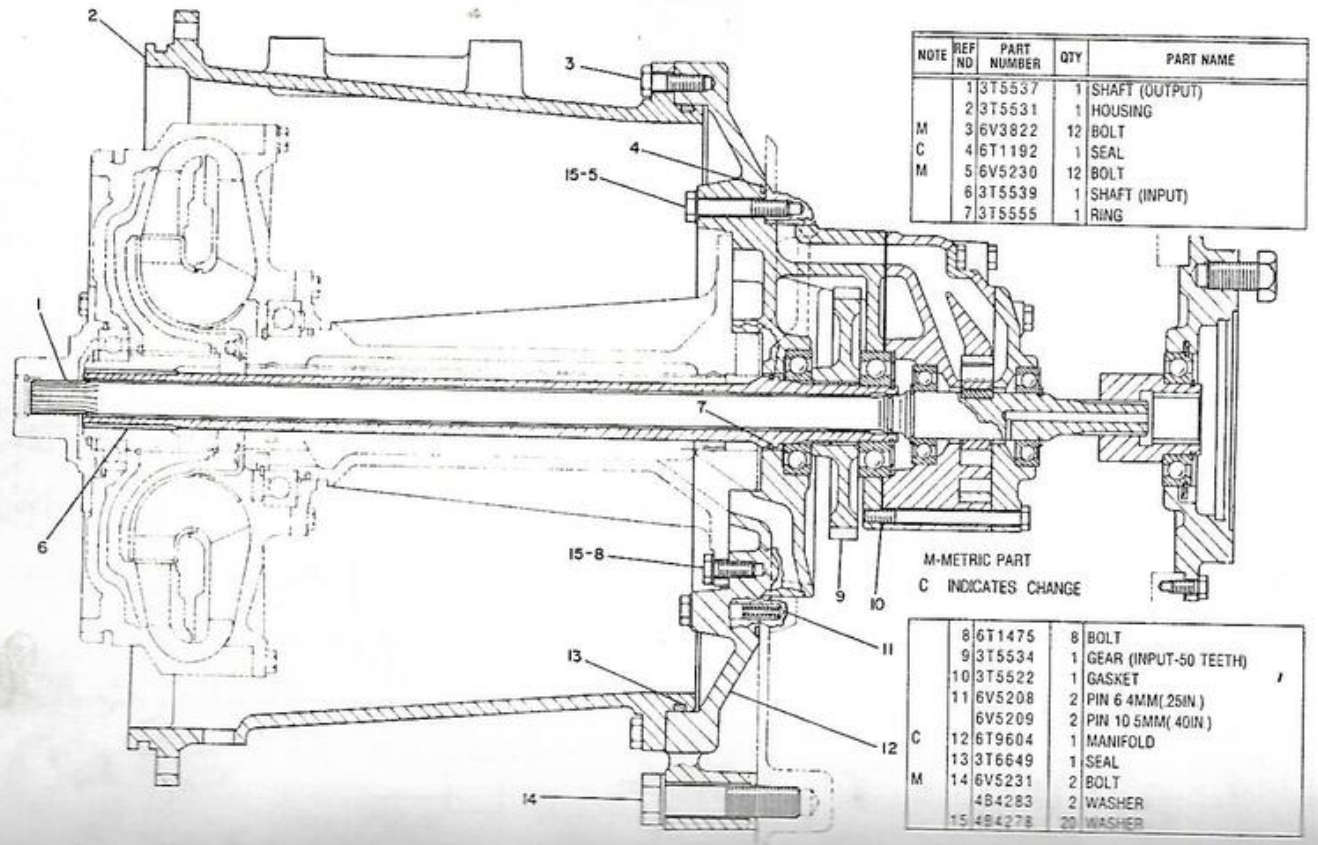

NOTE	REF NO	PART NUMBER	QTY	PART NAME
	1	3T5537	1	SHAFT (OUTPUT)
	2	3T5531	1	HOUSING
M	3	6V3822	12	BOLT
C	4	6T1192	1	SEAL
M	5	6V5230	12	BOLT
	6	3T5539	1	SHAFT (INPUT)
	7	3T5555	1	RING
	8	6T1475	8	BOLT
	9	3T5534	1	GEAR (INPUT-50 TEETH)
	10	3T5522	1	GASKET
	11	6V5208	2	PIN 6 4MM(.25IN.)
		6V5209	2	PIN 10 5MM(.40IN.)
C	12	6T9604	1	MANIFOLD
	13	3T6649	1	SEAL
M	14	6V5231	2	BOLT
		4B4283	2	WASHER
	15	4B4278	20	WASHER

M-METRIC PART
C INDICATES CHANGE

403603

NOTE	REF NO	PART NUMBER	QTY	PART NAME
	1	6H3957	1	BEARING-BALL
	2	3L1425	1	BEARING-BALL
Y	3	3T5500	1	SHIM GP-BEARING
M	4	BT0100	2	BOLT
	5	6V5221	2	BOLT
M	6	6V5223	4	BOLT
	7	6V5265	1	BEARING-BALL
	8	3T6550	2	RING
	9	3T5501	1	COUPLING
	10	3T6552	1	BALL
	11	6V5200	1	RING-RETAINING
	12	3T6547	2	RING
	13	6V5204	1	RING
	14	3T5607	1	SPRING
	15	3T6554	1	RING
M	16	6V5216	12	BOLT
	17	3T5488	1	GASKET
	18	3T5503	1	ADAPTER
	19	3T6485	1	BEARING
	20	3T5479	1	PUMP GROUP
	21	3T6555	1	KEY
M	22	6V5844	2	BOLT

Y-SEPARATE ILLUSTRATION

M-METRIC PART

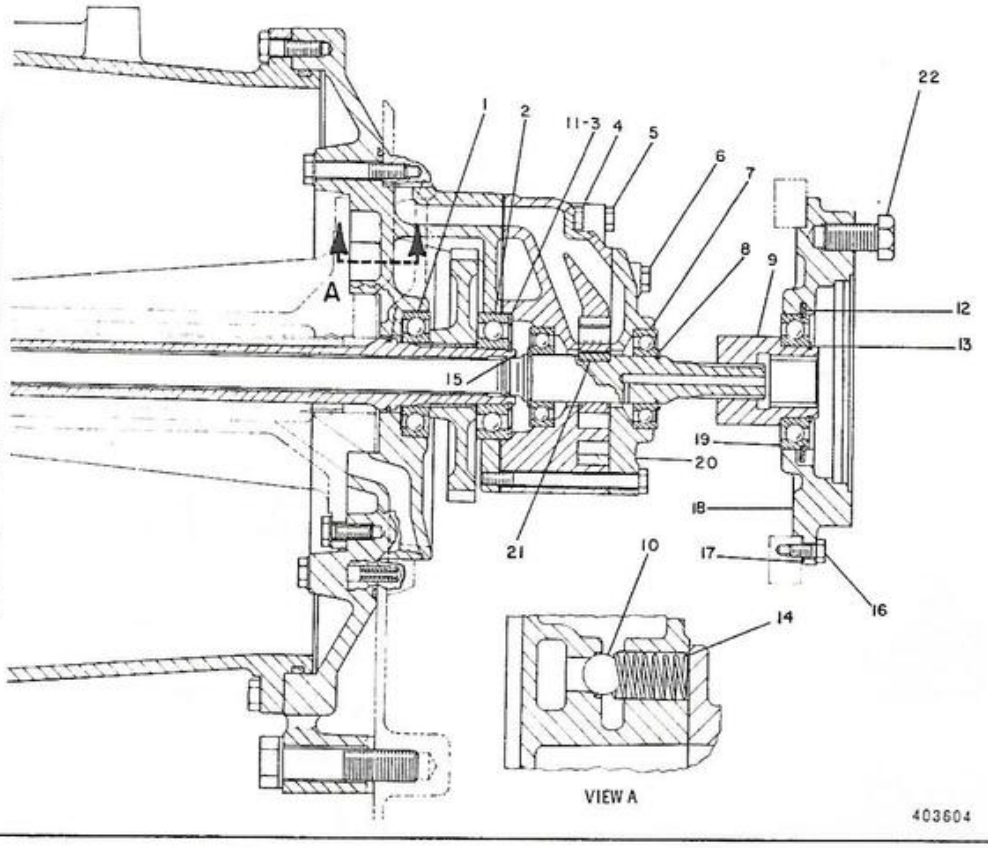

403604

NOTE	REF NO	PART NUMBER	QTY	DESCRIPTION
	1	3T8330	2	SEAL
	2	6V5203	3	RING
CY	3	3T8329	1	SPACER
C	4	6T1144	1	BEARING
	5	3T5843	1	GEAR (INPUT)
	6	3T5606	1	SLEEVE
	7	3T5548	1	SHAFT
	8	3T6488	1	BEARING
	9	3T5618	1	WASHER
	10	3T6480	1	BEARING
CY	11	3T6563	1	SPACER
	12	3T5496	1	FLANGE
	13	6V5218	2	BOLT
	14	3T5469	1	DRUM
	15	6V4248	8	BOLT
		4B4278	8	WASHER
C	16	6T1130	1	BRAKE AS.
	17	3T5493	1	SHIELD
	18	6V2316	2	BOLT
		9M1974	2	WASHER
	19	3T5494	1	SHIELD
C	20	6T293	1	FLANGE
	21	6V3940	2	BOLT
	22	3T5765	2	LOCK
	23	3T5620	2	RETAINER
C	24	6T1474	2	BOLT
C		4B4278	2	WASHER
C	25	1P7346	1	WASHER
C	26	5P1076	1	WASHER
C	27	6T1129	1	RING
C	28	6T1128	1	RING

Y SEPARATE ILLUSTRATION

319820

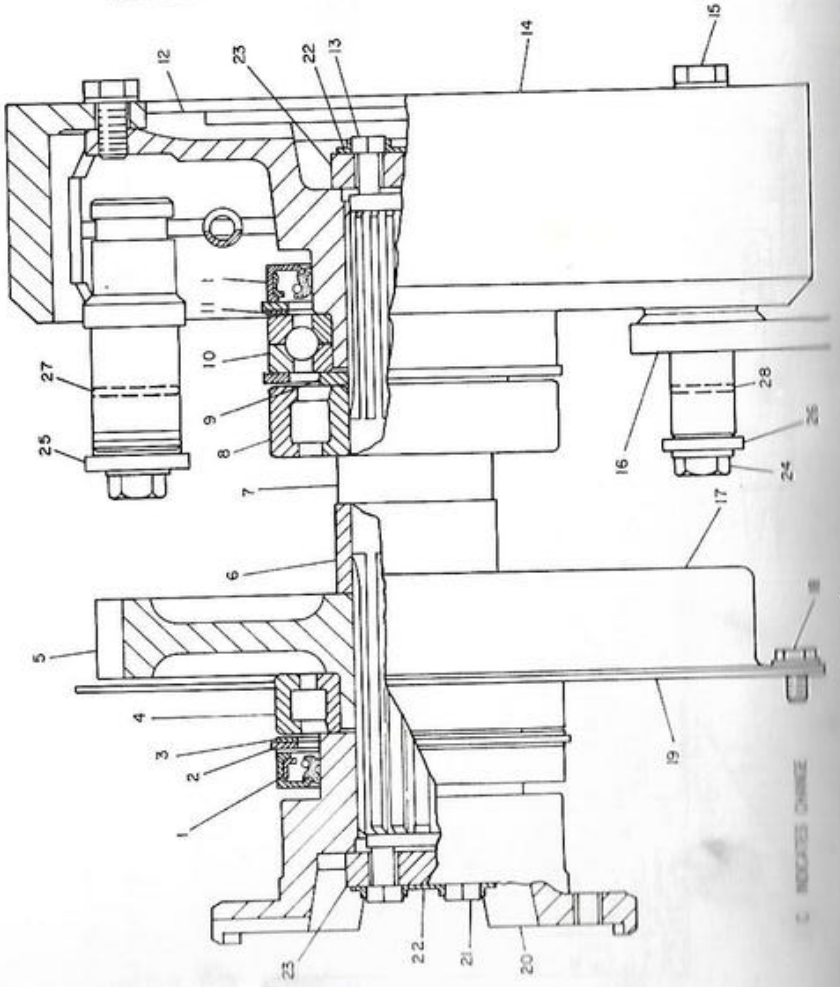

CONSISTS OF:

6T8638	SHIM	(2.8 MM THICK)
6T8639	SHIM	(2.6 MM THICK)
6T8640	SHIM	(2.4 MM THICK)
6T8641	SHIM	(2.2 MM THICK)
6T8642	SHIM	(2 MM THICK)
6T8643	SHIM	(1.8 MM THICK)
6T8644	SHIM	(1.6 MM THICK)
6T8645	SHIM	(1.4 MM THICK)
6T8646	SHIM	(1.2 MM THICK)
6T8647	SHIM	(1 MM THICK)
6T8648	SHIM	(0.8 MM THICK)
6T8649	SHIM	(0.6 MM THICK)
6T8650	SHIM	(0.4 MM THICK)
6T8651	SHIM	(0.2 MM THICK)

3T5617 BEARING SHIM GROUP
Part Of 3T6134, 3T8599 & 3T6133 Clutch

CONSISTS OF:

6T8600	SHIM	(0.9 THICK)
6T8601	SHIM	(1 THICK)
6T8602	SHIM	(2.4 THICK)
6T8603	SHIM	(1.8 THICK)
6T8604	SHIM	(1.75 THICK)
6T8605	SHIM	(1.65 THICK)
6T8606	SHIM	(1.6 THICK)
6T8607	SHIM	(1.55 THICK)
6T8608	SHIM	(1.4 THICK)
6T8609	SHIM	(1.1 THICK)
6T8610	SHIM	(1.3 THICK)
6T8611	SHIM	(1.5 THICK)
6T8612	SHIM	(1.7 THICK)
6T8613	SHIM	(1.9 THICK)
6T8614	SHIM	(2.1 THICK)

3T5500 BEARING SHIM GROUP
Part Of 3T6137 Pump And Gear

CONSISTS OF:

1	6T8668	SHIM	(1.2 THICK)
1	6T8669	SHIM	(1.1 THICK)
1	6T8670	SHIM	(1 THICK)
1	6T8671	SHIM	(0.8 THICK)
1	6T8672	SHIM	(0.7 THICK)
1	6T8673	SHIM	(0.6 THICK)
1	6T8674	SHIM	(0.5 THICK)
1	6T8675	SHIM	(0.4 THICK)

3T8329 BEARING SHIM GROUP
Part Of 3T6139 Output Gear

CONSISTS OF:

1	6T8676	SHIM	(1.9 THICK)
1	6T8677	SHIM	(1.8 THICK)
1	6T8678	SHIM	(1.7 THICK)
1	6T8679	SHIM	(1.6 THICK)
1	6T8680	SHIM	(1.5 THICK)

3T6563 BEARING SHIM GROUP
Part Of 3T6139 Output Gear

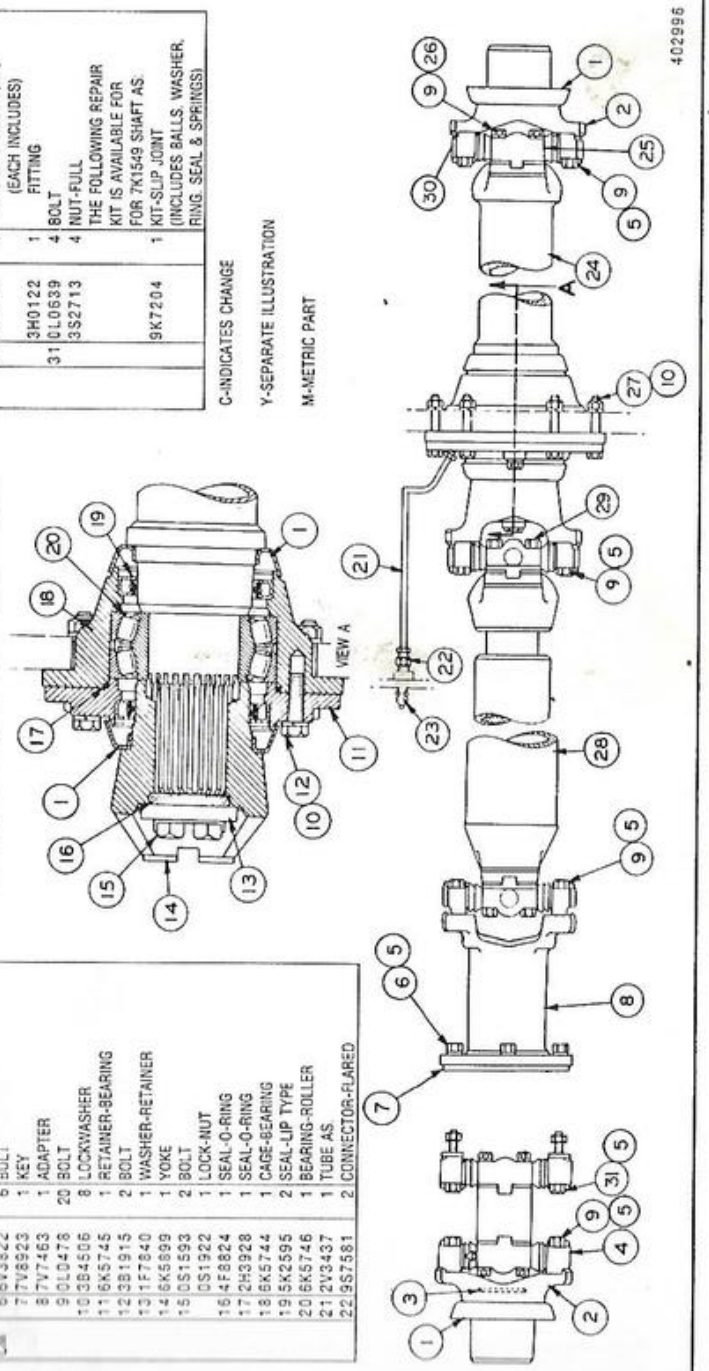

NOTE	REF NO	PART NUMBER	QTY	PART NAME
	1	3K0196	4	GUARD-DIRT
	2	6K7356	2	YOKE AS (EACH INCLUDES)
	3	6K1429	1	PLUG
CY	4	5M7882	1	JOINT GP-UNIVERSAL
	5	3V2431	26	WASHER-HARD
CM	6	6V3822	6	BOLT
	7	7V8923	1	KEY
	8	7V7463	1	ADAPTER
	9	0L0478	20	BOLT
	10	3B4506	8	LOCKWASHER
	11	6K5745	1	RETAINER-BEARING
	12	3B1915	2	BOLT
	13	1F7840	1	WASHER-RETAINER
	14	6K5899	1	YOKE
	15	0S1593	2	BOLT
		0S1922	1	LOCK-NUT
	16	4F8824	1	SEAL-O-RING
	17	2H3928	1	SEAL-O-RING
	18	6K5744	1	CAGE-BEARING
	19	5K2595	2	SEAL-LIP TYPE
	20	6K5746	1	BEARING-ROLLER
	21	2V3437	1	TUBE AS
	22	9S7581	2	CONNECTOR-FLARED
	23	3B8486	1	FITTING-HYDRAULIC
	24	6K6924	1	SHAFT AS
		3H0122	1	FITTING
	25	1S9670	1	SPIDER & BEARING AS
		9H2479	4	SEAL AS
	26	3V2431	4	WASHER-HARD
	27	0L2070	6	BOLT
		1D4717	6	NUT-FULL
	28	7K1549	1	SHAFT AS
		8K5910	1	FITTING
	29	0L0478	8	BOLT
		3V2431	8	WASHER-HARD
	30	7K3526	2	SPIDER & BEARING AS (EACH INCLUDES)
		3H0122	1	FITTING
	31	0L0639	4	BOLT
		3S2713	4	NUT-FULL
				THE FOLLOWING REPAIR KIT IS AVAILABLE FOR FOR 7K1549 SHAFT AS
		9K7204	1	KIT-SLIP JOINT (INCLUDES BALLS, WASHER, RING, SEAL & SPRINGS)

C-INDICATES CHANGE

Y-SEPARATE ILLUSTRATION

M-METRIC PART

NOTE	REF NO	PART NUMBER	QTY	PART NAME
	1	3K0196	4	GUARD-DIRT
	2	6K7356	2	YOKE AS
				(EACH INCLUDES)
	3	6K1429	1	PLUG
CY	4	2Y6467	1	UNIVERSAL JOINT GP
	5	3V2431	26	WASHER-HARD
CM	6	6V3822	6	BOLT
	7	7V8923	1	KEY
	8	7V7463	1	ADAPTER
	9	0L0478	20	BOLT
	10	3B4506	8	LOCKWASHER
	11	6K5745	1	RETAINER-BEARING
	12	3B1915	2	BOLT
	13	1F7840	1	WASHER-RETAINER
	14	6K5899	1	YOKE
	15	0S1593	2	BOLT
		0S1922	1	LOCK-NUT
	16	4F8824	1	SEAL-O-RING
	17	2H3928	1	SEAL-O-RING
	18	6K5744	1	CAGE-BEARING
	19	5K2595	2	SEAL-LIP TYPE
	20	6K5746	1	BEARING-ROLLER
	21	2V3437	1	TUBE AS.
	22	9S7581	2	CONNECTOR-FLARED
	23	3B8486	1	FITTING-HYDRAULIC
	24	6K6924	1	SHAFT AS
		3H0122	1	FITTING
	25	1S9670	1	SPIDER & BEARING AS
		9H2479	4	SEAL AS
	26	3V2431	4	WASHER-HARD
	27	0L2070	6	BOLT
		1D4717	6	NUT-FULL
	28	7K1549	1	SHAFT AS.
		8K5910	1	FITTING
	29	0L0478	8	BOLT
		3V2431	8	WASHER-HARD
	30	7K3526	2	SPIDER & BEARING AS
				(EACH INCLUDES)
		3H0122	1	FITTING
	31	0L0639	4	BOLT
		3S2713	4	NUT-FULL
				THE FOLLOWING REPAIR KIT IS AVAILABLE FOR FOR 7K1549 SHAFT AS.
		9K7204	1	KIT-SLIP JOINT (INCLUDES BALLS, WASHER, RING, SEAL & SPRINGS)

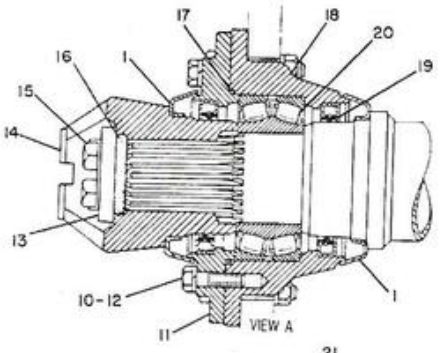

C-INDICATES CHANGE

Y-SEPARATE ILLUSTRATION

M-METRIC PART

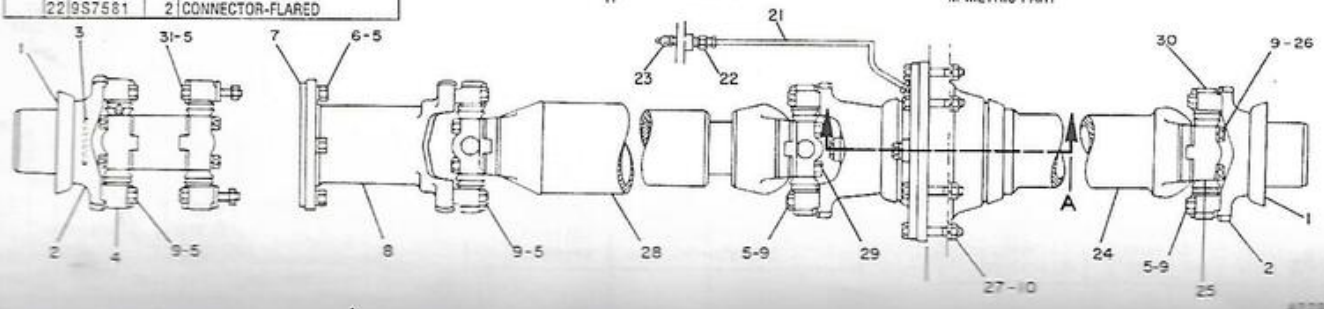

403550

NOTE	REF NO	PART NUMBER	QTY	PART NAME
	1	3K0196	4	GUARD-DIRT
	2	6K7356	2	YOKE AS
				(EACH INCLUDES)
	3	6K1429	1	PLUG
Y	4	2Y6467	1	UNIVERSAL JOINT GP
	5	3V2431	26	WASHER-HARD
M	6	6V3822	6	BOLT
	7	7V8923	1	KEY
	8	7V7463	1	ADAPTER
	9	0L0478	20	BOLT
	10	3B4506	8	LOCKWASHER
	11	6K5745	1	RETAINER-BEARING
	12	3B1915	2	BOLT
	13	1F7840	1	WASHER-RETAINER
	14	6K5899	1	YOKE
	15	0S1593	2	BOLT
		0S1922	1	LOCK-NUT
	16	4F8824	1	SEAL-O-RING
	17	2H3928	1	SEAL-O-RING
	18	6K5744	1	CAGE-BEARING
	19	5K2595	2	SEAL-LIP TYPE
	20	6K5746	1	BEARING-ROLLER
	21	2V3437	1	TUBE AS
	22	9S7581	2	CONNECTOR-FLARED
	23	3B8486	1	FITTING-HYDRAULIC
C	24	5Y0134	1	SHAFT AS
	25	5Y0154	1	SPIDER AS
	26	5Y0144	1	SHAFT AS
	27	0L2070	6	BOLT
		1D4717	6	NUT-FULL
C	28	5Y0135	1	SHAFT AS
	29	271287	1	FITTING
	30	5Y0154	2	SPIDER AS
	31	9F4446	1	SEAL-O-RING
	32	5Y0145	1	SHAFT AS
	33	0L0639	4	BOLT
		3S2713	4	NUT-FULL

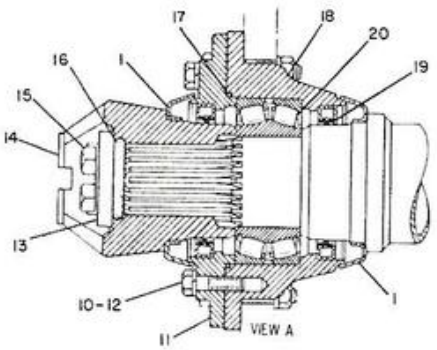

C-INDICATES CHANGE

Y-SEPARATE ILLUSTRATION

M-METRIC PART

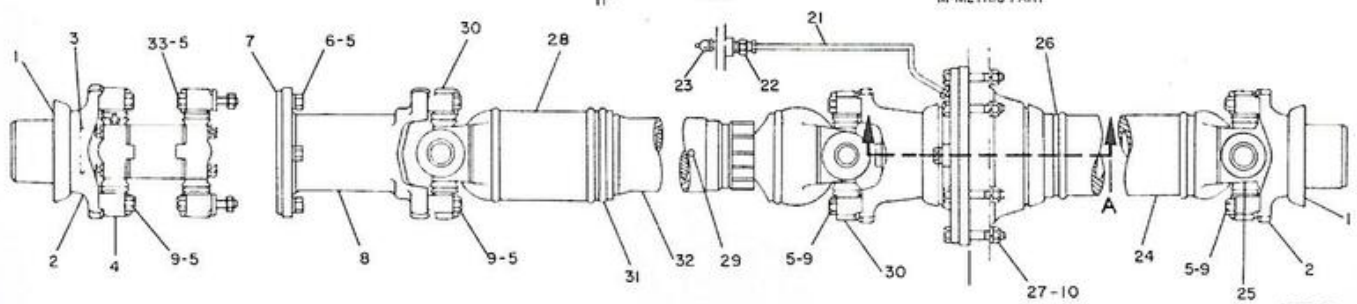

403550

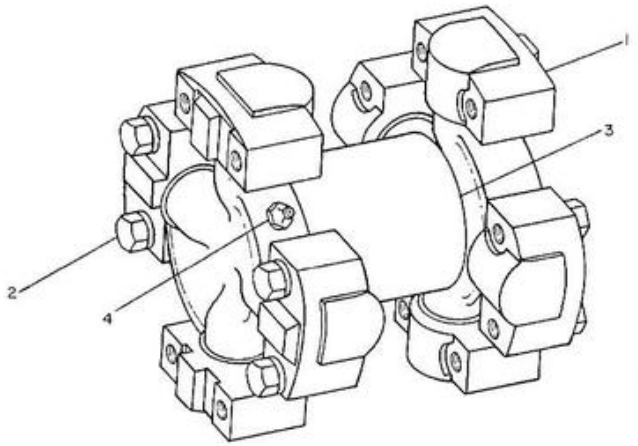

	REF NO	PART NUMBER	DESCRIPTION	QTY
	1	1S9670	SPIDER AND BEARING ASSEM.	2
C	2	L478	BOLT	8
C	2	3V2431	WASHER	8
	3	9M2036	PLATE	1
	4	3H122	FITTING	2

C INDICATES CHANGE

230334

5M7882 UNIVERSAL JOINT GROUP
S/N 57Z1-57Z390
Part Of 7V7464 Drive Shaft

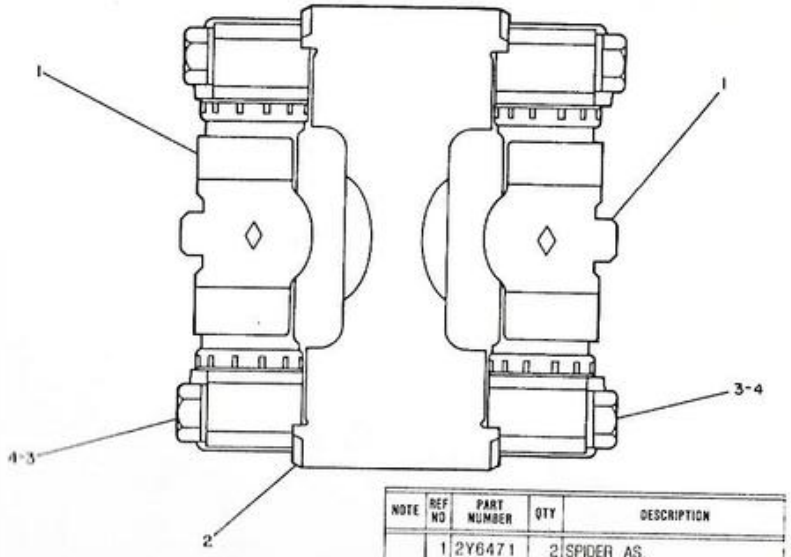

NOTE	REF NO	PART NUMBER	QTY	DESCRIPTION
	1	2Y6471	2	SPIDER AS.
	2	2Y6468	1	FORK
	3	0L0478	8	BOLT
	4	3V2431	8	WASHER (HARD)

319544

2Y6467 UNIVERSAL JOINT GROUP
S/N 57Z391-Up
Part Of 7V7464 Drive Shaft

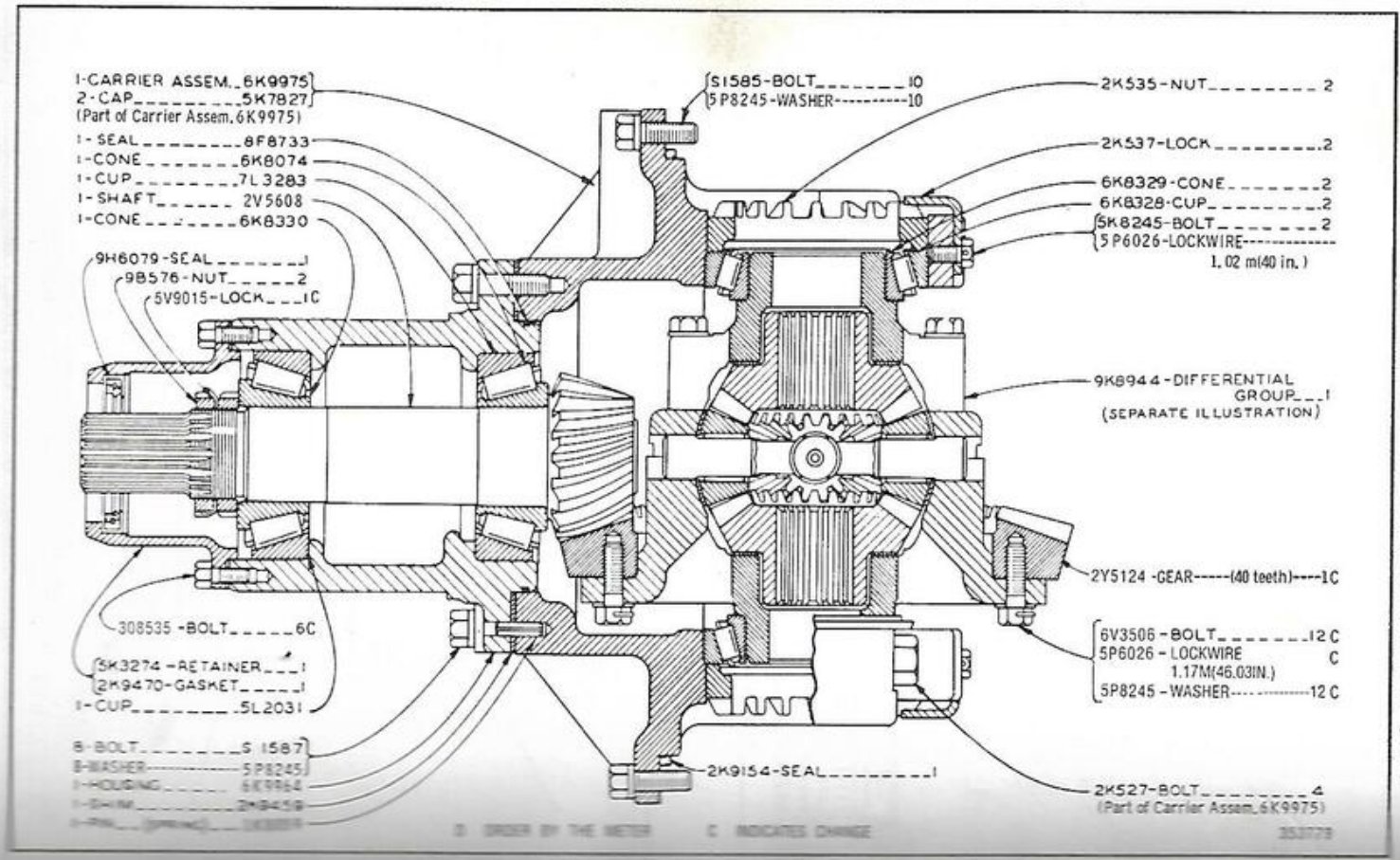
1-CARRIER ASSEM._6K9975
2-CAP_____5K7827
(Part of Carrier Assem. 6K9975)
1-SEAL_____8F8733
1-CONE_____6K8074
1-CUP_____7L3283
1-SHAFT_____2V5608
1-CONE_____6K8330
9H6079-SEAL_____1
9B576-NUT_____2
5V9015-LOCK_____1C
308535-BOLT_____6C
5K3274-RETAINER_____1
2K9470-GASKET_____1
1-CUP_____5L2031
8-BOLT_____S 1587
8-WASHER_____5P8245
1-HOUSING_____6K9964
1-SHIM_____2K9459
1-PIN_____(SPRING)_____1K8059
S1585-BOLT_____10
5P8245-WASHER_____10
2K535-NUT_____2
2K537-LOCK_____2
6K8329-CONE_____2
6K8328-CUP_____2
5K8245-BOLT_____2
5P6026-LOCKWIRE_____
1.02 m(40 in.)
9K8944-DIFFERENTIAL GROUP_____1
(SEPARATE ILLUSTRATION)
2Y5124-GEAR_____(40 teeth)_____1C
6V3506-BOLT_____12C
5P6026-LOCKWIRE C
1.17M(46.03IN.)
5P8245-WASHER_____12C
2K9154-SEAL_____1
2K527-BOLT_____4
(Part of Carrier Assem. 6K9975)
D ORDER BY THE METER
C INDICATES CHANGE
353779

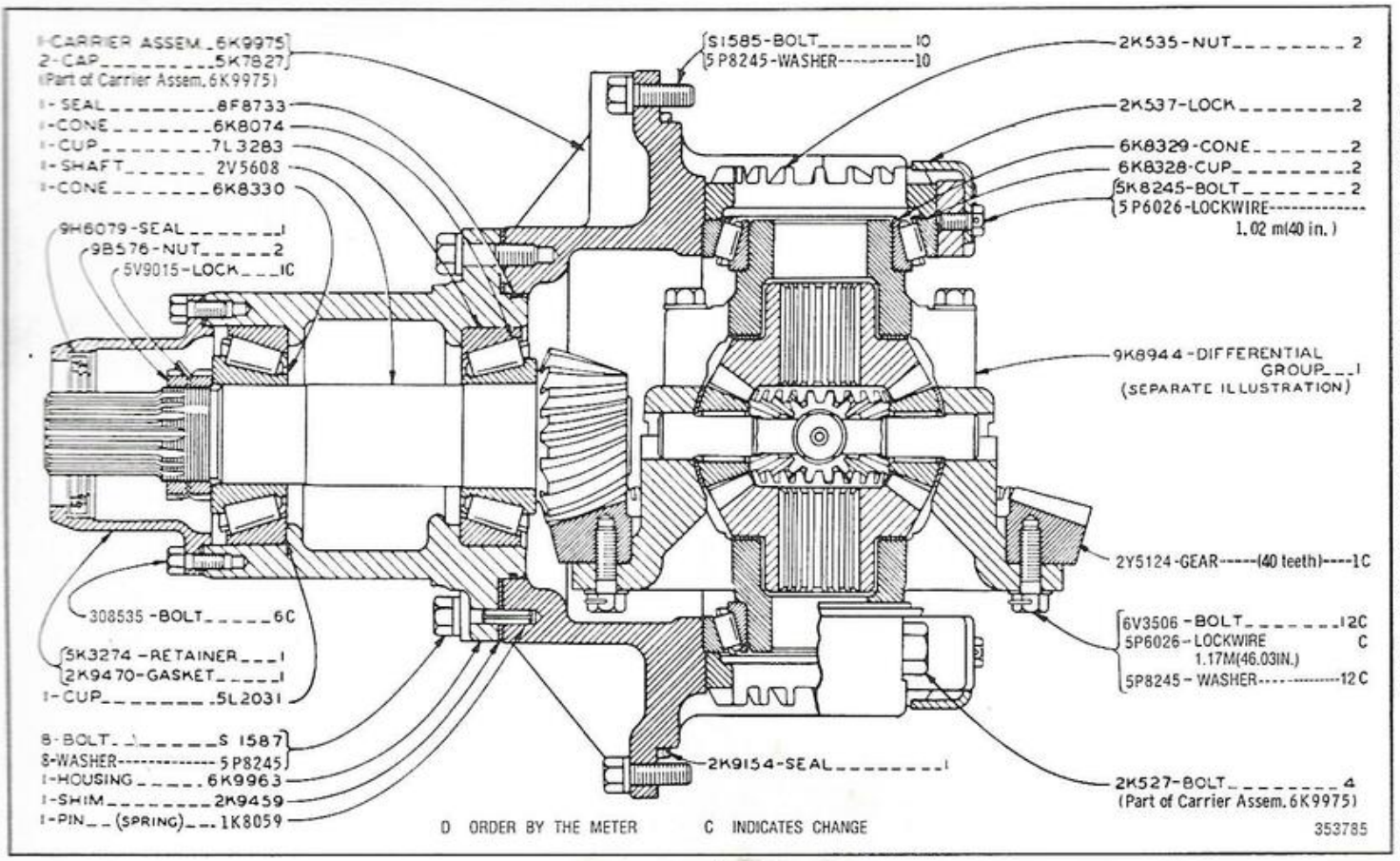
1-CARRIER ASSEM._6K9975
2-CAP_____5K7827
(Part of Carrier Assem. 6K9975)
1-SEAL_____8F8733
1-CONE_____6K8074
1-CUP_____7L3283
1-SHAFT_____2V5608
1-CONE_____6K8330
9H6079-SEAL_____1
9B576-NUT_____2
5V9015-LOCK_____1C
308535-BOLT_____6C
5K3274-RETAINER_____1
2K9470-GASKET_____1
1-CUP_____5L2031
8-BOLT_____S 1587
8-WASHER_____5P8245
1-HOUSING_____6K9963
1-SHIM_____2K9459
1-PIN_____(SPRING)_____1K8059
S1585-BOLT_____10
5P8245-WASHER_____10
2K535-NUT_____2
2K537-LOCK_____2
6K8329-CONE_____2
6K8328-CUP_____2
5K8245-BOLT_____2
5P6026-LOCKWIRE_____
1.02 m(40 in.)
9K8944-DIFFERENTIAL GROUP_____1
(SEPARATE ILLUSTRATION)
2Y5124-GEAR_____(40 teeth)_____1C
6V3506-BOLT_____12C
5P6026-LOCKWIRE C
1.17M(46.03IN.)
5P8245-WASHER_____12C
2K9154-SEAL_____1
2K527-BOLT_____4
(Part of Carrier Assem. 6K9975)
D ORDER BY THE METER
C INDICATES CHANGE
353785

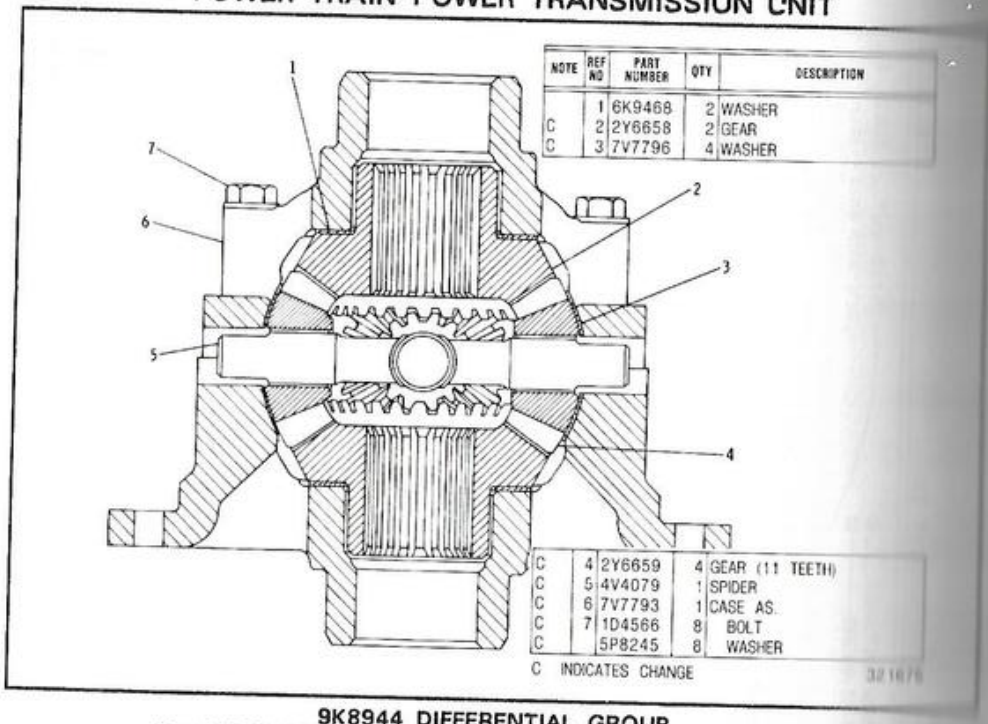

NOTE	REF NO	PART NUMBER	QTY	DESCRIPTION
	1	6K9468	2	WASHER
C	2	2Y6658	2	GEAR
C	3	7V7796	4	WASHER
C	4	2Y6659	4	GEAR (11 TEETH)
C	5	4V4079	1	SPIDER
C	6	7V7793	1	CASE AS.
C	7	1D4566	8	BOLT
C		5P8245	8	WASHER

C INDICATES CHANGE

321675

9K8944 DIFFERENTIAL GROUP
Part Of 8V3318 And 8V3319 Differential And Bevel Gear

4V6533 FRONT BRAKE AND AXLE GROUP
4V4893 Brake parts are shown on Page 113

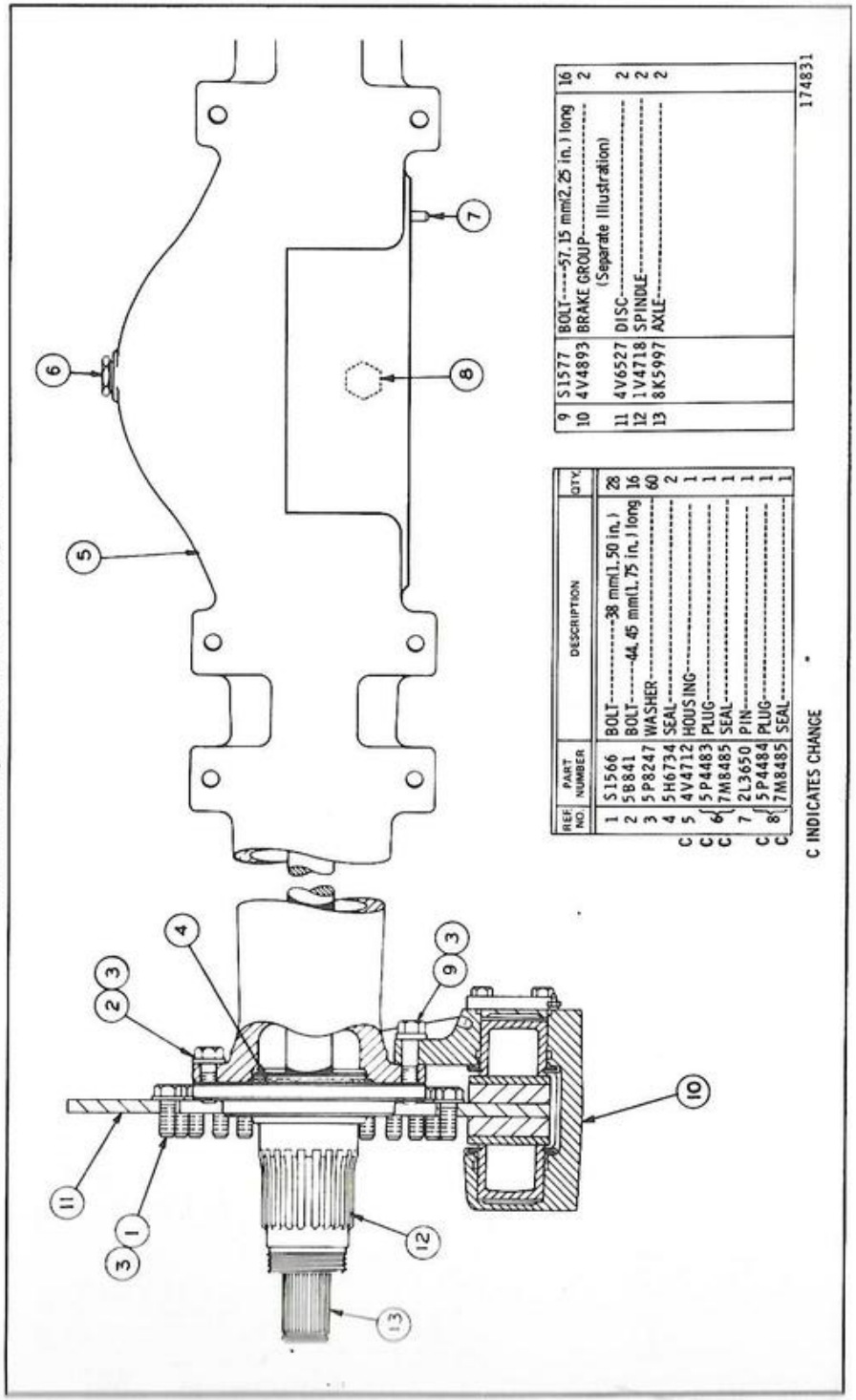

REF NO.	PART NUMBER	DESCRIPTION	QTY.
1	S1566	BOLT----------38 mm(1.50 in.)	28
2	5B841	BOLT----------44.45 mm(1.75 in.) long	16
3	5P8247	WASHER----------	60
4	5H6734	SEAL----------	2
C 5	4V4712	HOUSING----------	1
C 6	5P4483	PLUG----------	1
C	7M8485	SEAL----------	1
7	2L3650	PIN----------	1
C 8	5P4484	PLUG----------	1
C	7M8485	SEAL----------	1
9	S1577	BOLT----------57.15 mm(2.25 in.) long	16
10	4V4893	BRAKE GROUP---------- (Separate Illustration)	2
11	4V6527	DISC----------	2
12	1V4718	SPINDLE----------	2
13	8K5997	AXLE----------	2

C INDICATES CHANGE

174831

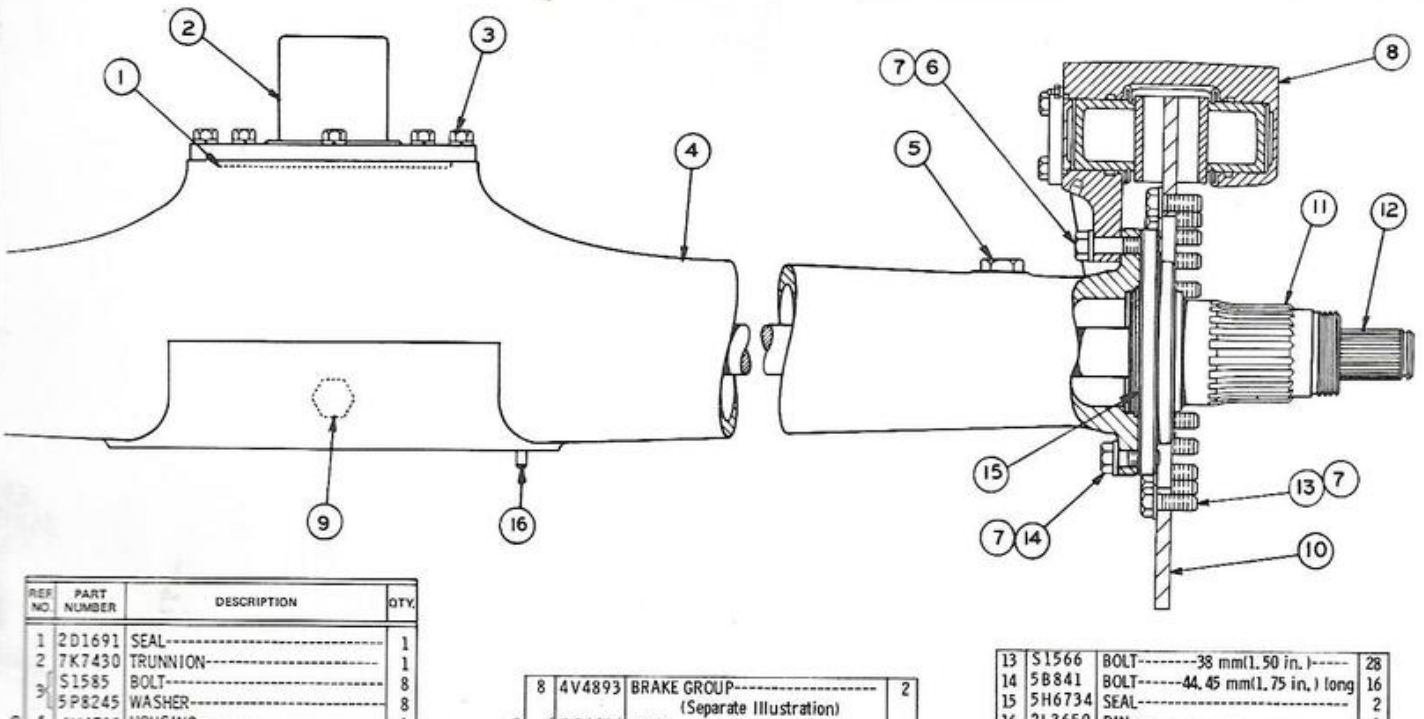

REF NO.	PART NUMBER	DESCRIPTION	QTY.
1	2D1691	SEAL	1
2	7K7430	TRUNNION	1
3	1S1585	BOLT	8
	5P8245	WASHER	8
C 4	4V4711	HOUSING	1
C 5	5P4483	PLUG	1
C	7M8485	SEAL	1
6	1S1577	BOLT----57.15 mm(2.25 in.) long	16
7	5P8247	WASHER	60
8	4V4893	BRAKE GROUP (Separate Illustration)	2
C 9	5P4484	PLUG	1
C	7M8485	SEAL	1
10	4V6527	DISC	2
11	1V4718	SPINDLE	2
12	8K5997	AXLE	2
13	1S1566	BOLT--------38 mm(1.50 in.)------	28
14	5B841	BOLT------44.45 mm(1.75 in.) long	16
15	5H6734	SEAL	2
16	2L3650	PIN	1

C INDICATES CHANGE

232073

4V8532 REAR BRAKE AND AXLE GROUP

4V8532 Brake parts are shown on Page 113

Part Of 4V8532 And 4V8533 Brake And Axle Groups Shown On Pages 111 & 112

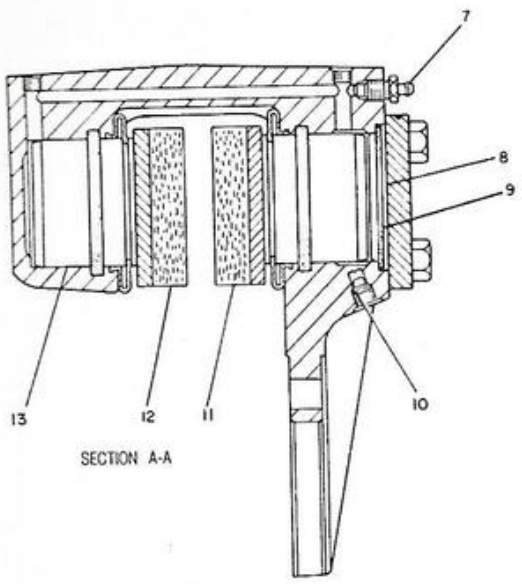

SECTION A-A

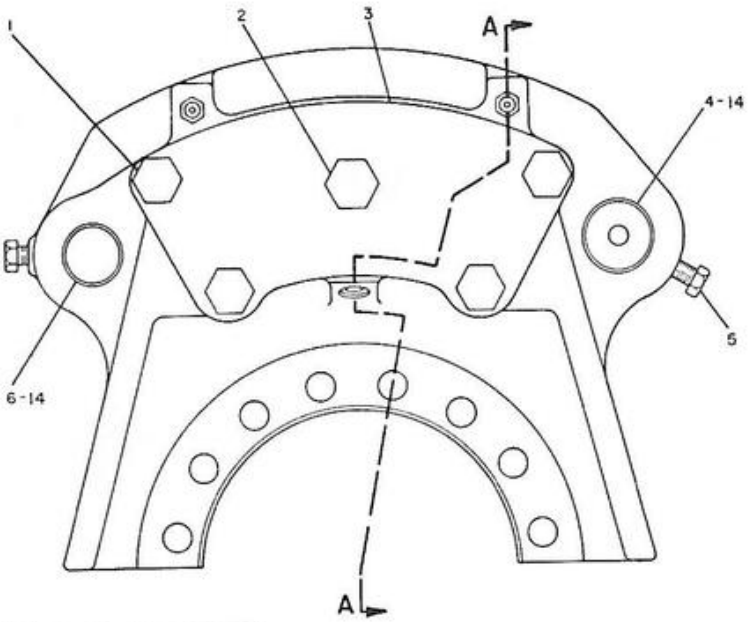

NOTE	REF NO	PART NUMBER	QTY	PART NAME
C	1	4B8519	4	BOLT
C		5P8246	4	WASHER-HARD
C	2	4B4043	1	BOLT
C		5P8247	1	WASHER
	3	5V1311	1	COVER
C	4	9V6167	2	PIN
	5	3V0197	4	BOLT
	6	4V7277	2	PIN
	7	7K4942	2	SCREW-BLEEDER
C	8	6W7379	2	PLUG
	9	4V4850	2	SEAL-RECTANGULAR
	10	5P8867	1	INSERT-FLARED
	11	4V8417	1	CARRIER-LINING
	12	4V8416	1	CARRIER-LINING
	13	4V4852	4	PISTON
C	14	5K5221	4	SEAL-O-RING
				THE FOLLOWING REPAIR KIT IS AVAILABLE
		4V6525	1	KIT-BRAKE CALIPER (INCLS PACKING & BOOTS)

C INDICATES CHANGE

403885

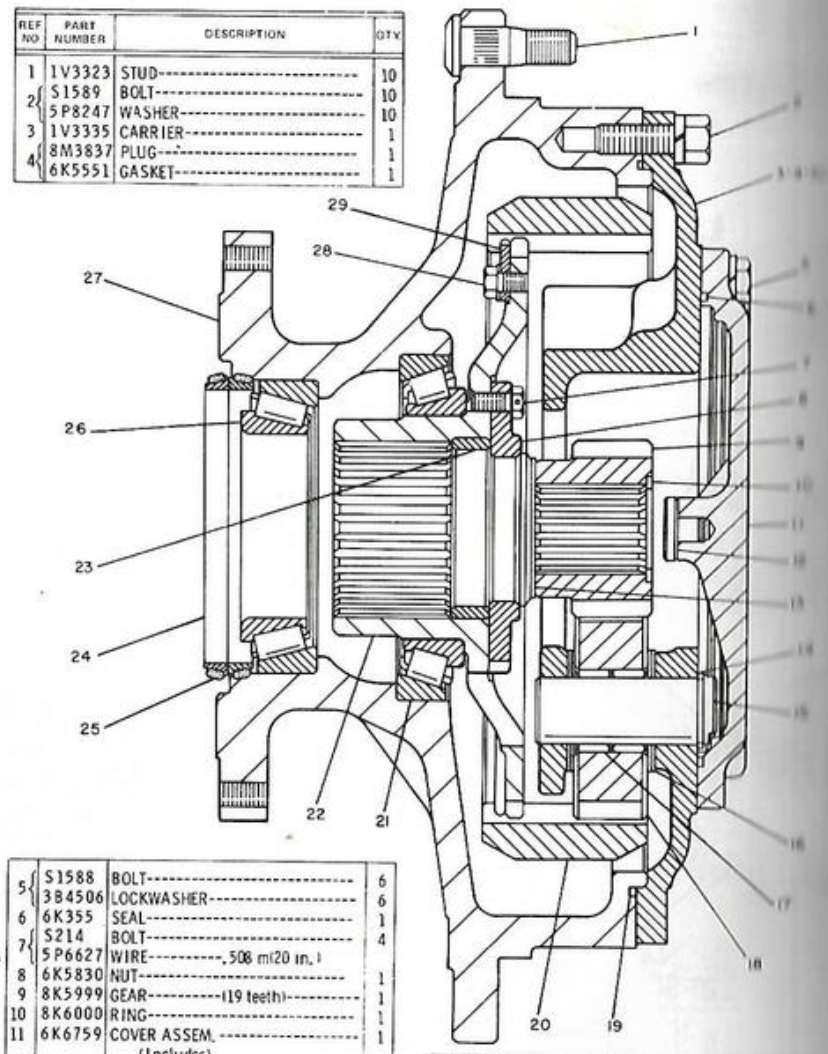

REF NO	PART NUMBER	DESCRIPTION	QTY
1	1V3323	STUD	10
2	S1589	BOLT	10
	5P8247	WASHER	10
3	1V3335	CARRIER	1
4	8M3837	PLUG	1
	6K5551	GASKET	1
5	S1588	BOLT	6
	3B4506	LOCKWASHER	6
6	6K355	SEAL	1
7	S214	BOLT	4
▲	5P6627	WIRE, .508 m(20 in.)	
8	6K5830	NUT	1
9	8K5999	GEAR (119 teeth)	1
10	8K6000	RING	1
11	6K6759	COVER ASSEM. (Includes)	1
12	2D604	BUTTON	1
13	8K5705	WASHER	1
14	5K926	RING	3
15	2V1074	SHAFT	3
16	7K1699	WASHER (steel)	6
	7K1701	WASHER (bronze)	6
17	5M2054	ROLLER ASSEM.	6
18	3K7110	GEAR (24 teeth)	3
19	6K357	SEAL	1
20	3K7112	GEAR (68 teeth)	1
21	5P2526	CUP	1
	2K5065	CONE	1
22	7K7432	HUB ASSEM. (Includes)	1
23	2K9463	BUSHING	1
24	5K5288	SEAL GROUP (Includes)	1
25	5K5129	RING	2
26	6K8275	CONE	1
	6B3223	CUP	1
27	4V4574	WHEEL	1
28	T102	BOLT	8
	6H4209	LOCK	4
29	2K9249	PLATE	4
30	2B7557	CORK	2

▲ ORDER BY THE METER

223795

4V6531 FINAL DRIVE AND WHEEL GROUP-4 REQUIRED
Serial No. 57Z1 To 57Z1025 Inclusive

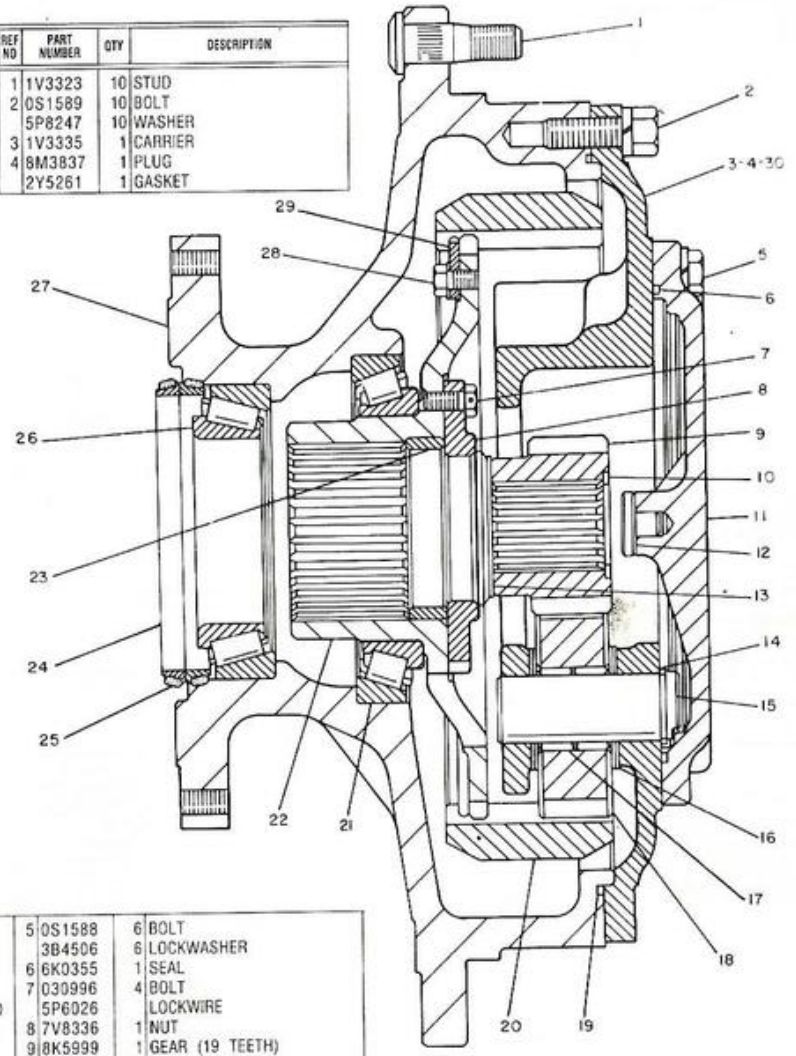

NOTE	REF NO	PART NUMBER	QTY	DESCRIPTION
	1	1V3323	10	STUD
	2	0S1589	10	BOLT
		5P8247	10	WASHER
	3	1V3335	1	CARRIER
	4	8M3837	1	PLUG
C		2Y5261	1	GASKET
	5	0S1588	6	BOLT
		3B4506	6	LOCKWASHER
	6	6K0355	1	SEAL
C	7	030996	4	BOLT
CBD		5P6026		LOCKWIRE
C	8	7V8336	1	NUT
	9	8K5999	1	GEAR (19 TEETH)
	10	8K6000	1	RING
	11	6K6759	1	COVER AS.
	12	2D0604	1	BUTTON
	13	8K5705	1	WASHER
	14	5K0926	3	RING
	15	2V1074	3	SHAFT
	16	7K1699	6	WASHER (STEEL)
		7K1701	6	WASHER (BRONZE)
	17	5M2054	6	ROLLER AS.
	18	3K7110	3	GEAR (24 TEETH)
	19	6K0357	1	SEAL
	20	3K7112	1	GEAR (68 TEETH)
	21	5P2526	1	CUP
		2K5065	1	CONE
	22	7K7432	1	HUB AS.
	23	2K9463	1	BUSHING

B USE AS REQUIRED
C INDICATES CHANGE
D ORDER BY THE METER

24	5K5288	1	SEAL GP.
25	5K5129	2	RING
26	6K8275	1	CONE
	6B3223	1	CUP
27	4V4574	1	WHEEL
28	0T0102	8	BOLT
	6H4209	4	LOCK
29	2K9249	4	PLATE
30	2B7557	2	CORK

346351

4V6531 FINAL DRIVE & WHEEL GROUP
Serial No. 57Z1026-Up

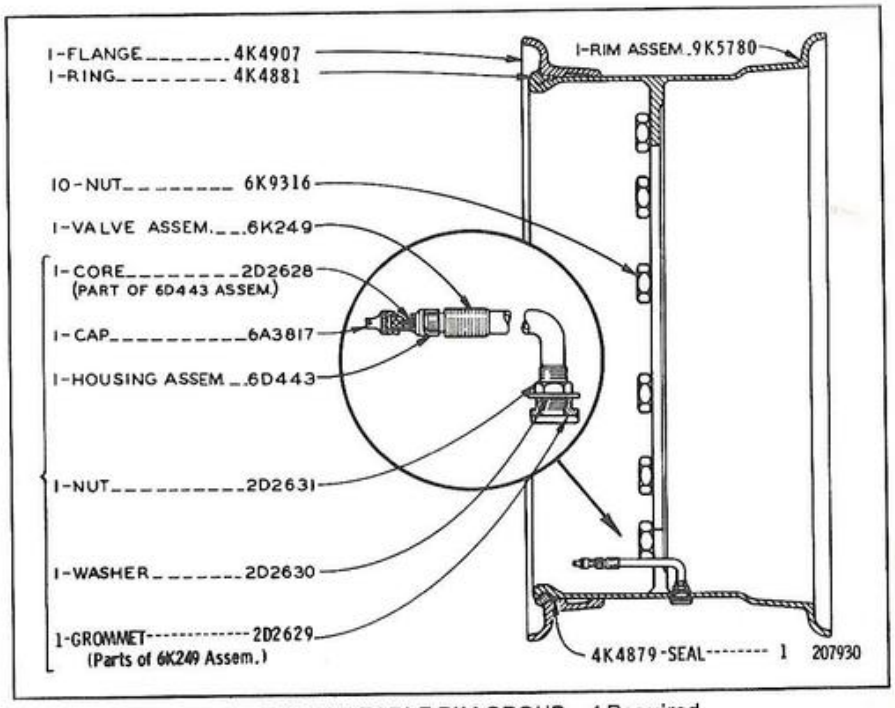

1V7251 DEMOUNTABLE RIM GROUP—4 Required
FOR USE WITH 17.50 x 25 TRACTION TREAD TUBELESS TIRES

4K4903	TIRE--17.50 x 25 TRACTION TREAD TUBELESS
6K9276	TIRE--17.50 x 25 ROCK TREAD TUBELESS
2Y4309	TIRE--17.50 x 25 SHREADED WIRE UNDERTREAD TUBELESS

TIRES—4 Required

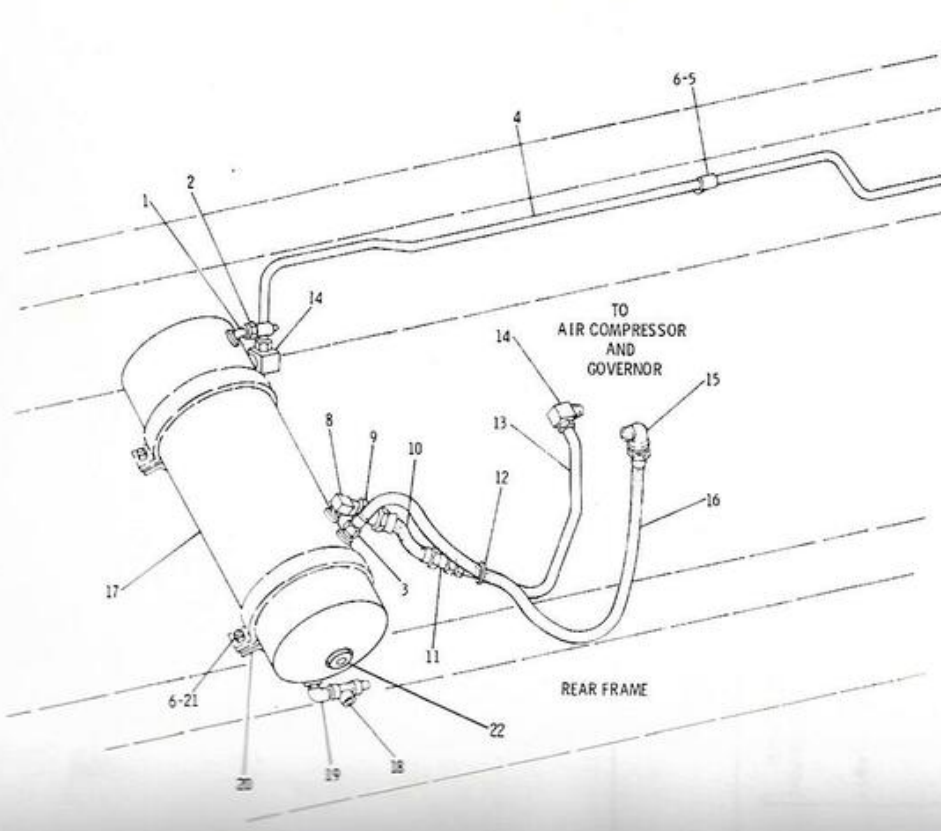

C INDICATES CHANGE

NOTE	REF NO	PART NUMBER	QTY	DESCRIPTION
	1	3B7730	1	ELBOW
	2	6B9664	1	VALVE (SAFETY)
	3	3K3415	1	FITTING
	4	6K8122	1	TUBE AS.
	5	4B418	1	CLIP
		1D4717	1	NUT
	6	3B4506	5	LOCKWASHER
	7	6K8077	1	FITTING
	8	7J482	1	ELBOW
	9	7D6936	1	VALVE AS. (CHECK)
	10	9K4523	1	HOSE AS.
	11	5K9894	1	CONNECTOR
	12	6K806	1	TIE
	13	9K7667	1	TUBE AS.
	14	5K9244	2	ELBOW
	15	3B9406	1	ELBOW
	16	9K8141	1	HOSE AS.
	17	6K6834	1	TANK AS. (AIR)
	18	5K9972	1	VALVE AS.
	19	3B6773	1	ELBOW
		6K1019	1	FITTING
	20	6K6832	2	CLAMP
	21	S1588	4	BOLT
		4B4278	4	WASHER
C	22	3J5390	2	PLUG

312377

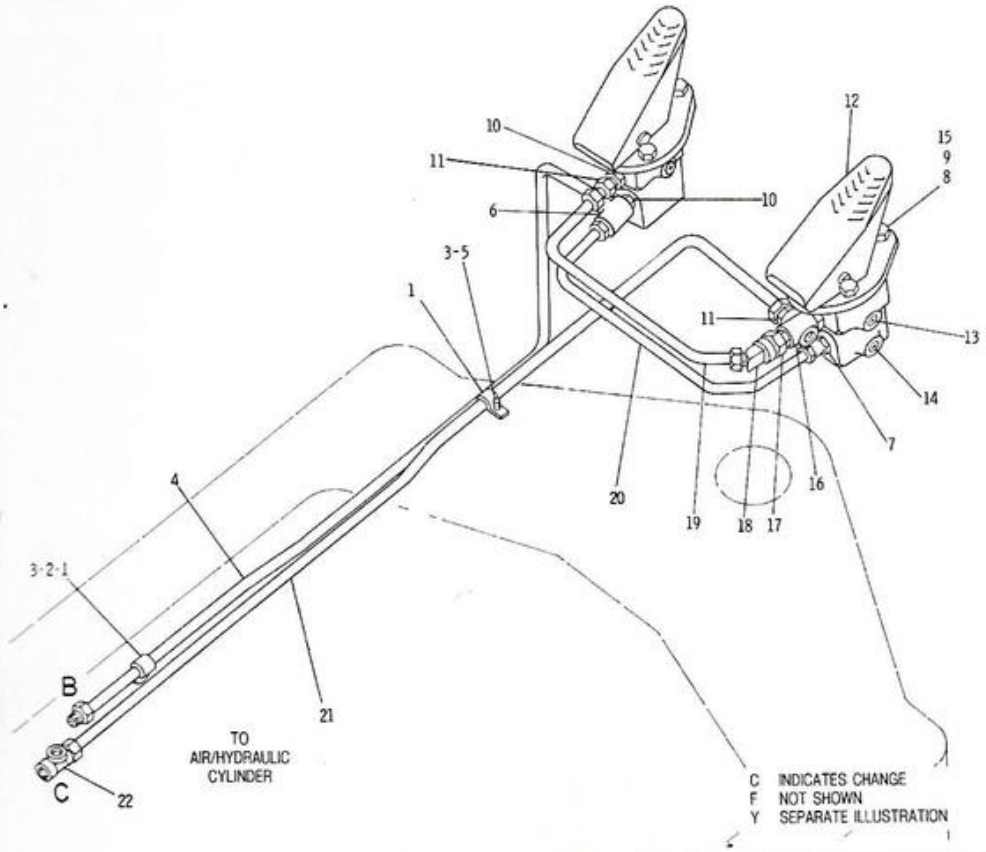

C INDICATES CHANGE
F NOT SHOWN
Y SEPARATE ILLUSTRATION

NOTE	REF NO	PART NUMBER	QTY	DESCRIPTION
	1	4B418	1	CLIP
	2	1D4717	1	NUT
	3	3B4506	2	LOCKWASHER
	4	6K6801	1	TUBE ASSEM.
	5	S509	1	BOLT
	6	6K8214	1	FITTING
C	7	5K9245	1	FITTING
C	8	2B2695	6	BOLT
	9	1D4716	6	NUT
C	10	3B7255	2	BUSHING
C	11	5K9238	2	FITTING
Y	12	2R617	2	VALVE ASSEM.
	13	2B858	7	PLUG
	14	7H3171	2	PLUG
	15	3B4505	1	LOCKWASHER
C	16	2Y6648	1	VALVE ASSEM.
	17	6K6825	1	VALVE ASSEM.
	18	6K6826	1	FITTING
	19	6K8120	1	TUBE ASSEM.
	20	6K8118	1	TUBE ASSEM.
	21	4V6865	1	TUBE ASSEM.
	22	7K2543	1	TEE
CF		4K2724	1	ADAPTER 31.75MM(1.25IN.)LONG
CF		8B6021	1	ADAPTER 26.99MM(1.06IN.)LONG
CF		9F9920	1	BUSHING 19MM(.75IN.)LONG

310631

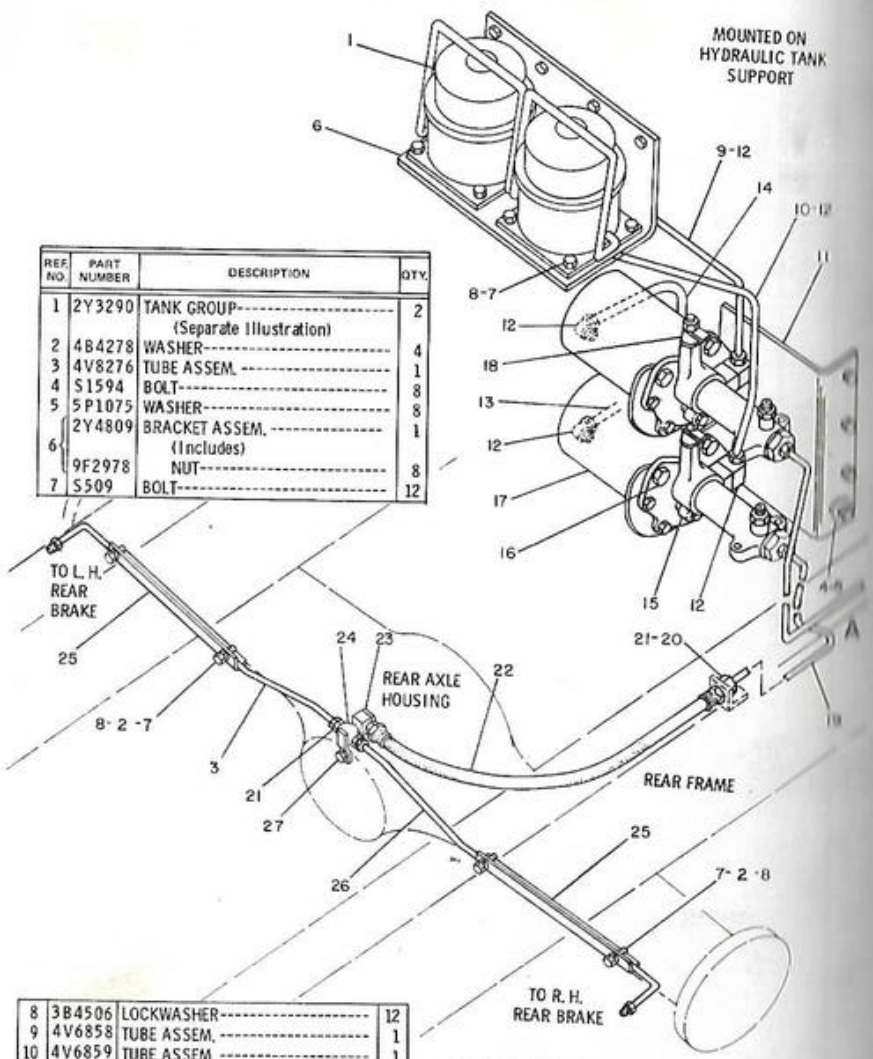

REF. NO.	PART NUMBER	DESCRIPTION	QTY.
1	2Y3290	TANK GROUP (Separate Illustration)	2
2	4B4278	WASHER	4
3	4V8276	TUBE ASSEM.	1
4	S1594	BOLT	8
5	5P1075	WASHER	8
6	2Y4809	BRACKET ASSEM. (Includes)	1
	9F2978	NUT	8
7	S509	BOLT	12
8	3B4506	LOCKWASHER	12
9	4V6858	TUBE ASSEM.	1
10	4V6859	TUBE ASSEM.	1
11	4V6805	BRACKET ASSEM.	1
12	5K9244	ELBOW	6
13	4V6860	TUBE ASSEM.	1
14	4V6861	TUBE ASSEM.	1
15	4H6112	BREATHER	2
	3B7722	BUSHING	2
16	S1595	BOLT	4
	5P8245	WASHER	4
17	4V5414	CYLINDER GROUP (Each Includes)	2
18	5V3713	SWITCH ASSEM.	1
19	2Y5596	TUBE ASSEM.	1
20	1B4206	NUT	1
	6B863	WASHER	1
21	4V6485	BUSHING	3
22	6K6827	HOSE ASSEM. --43.9 cm(17.3 in.)-	1
23	5K9243	FITTING	1
24	6K6828	TEE ASSEM.	1
25	6K6831	ANGLE	1
26	4V8275	TUBE ASSEM.	1
27	S1617	BOLT	2
	3B4505	LOCKWASHER	1

THE FOLLOWING REPAIR KIT IS AVAILABLE:

4V5415	KIT----(Pressure Converter) (Includes felt, cup, spring, seals, valve, o-rings & retaining ring)

233774

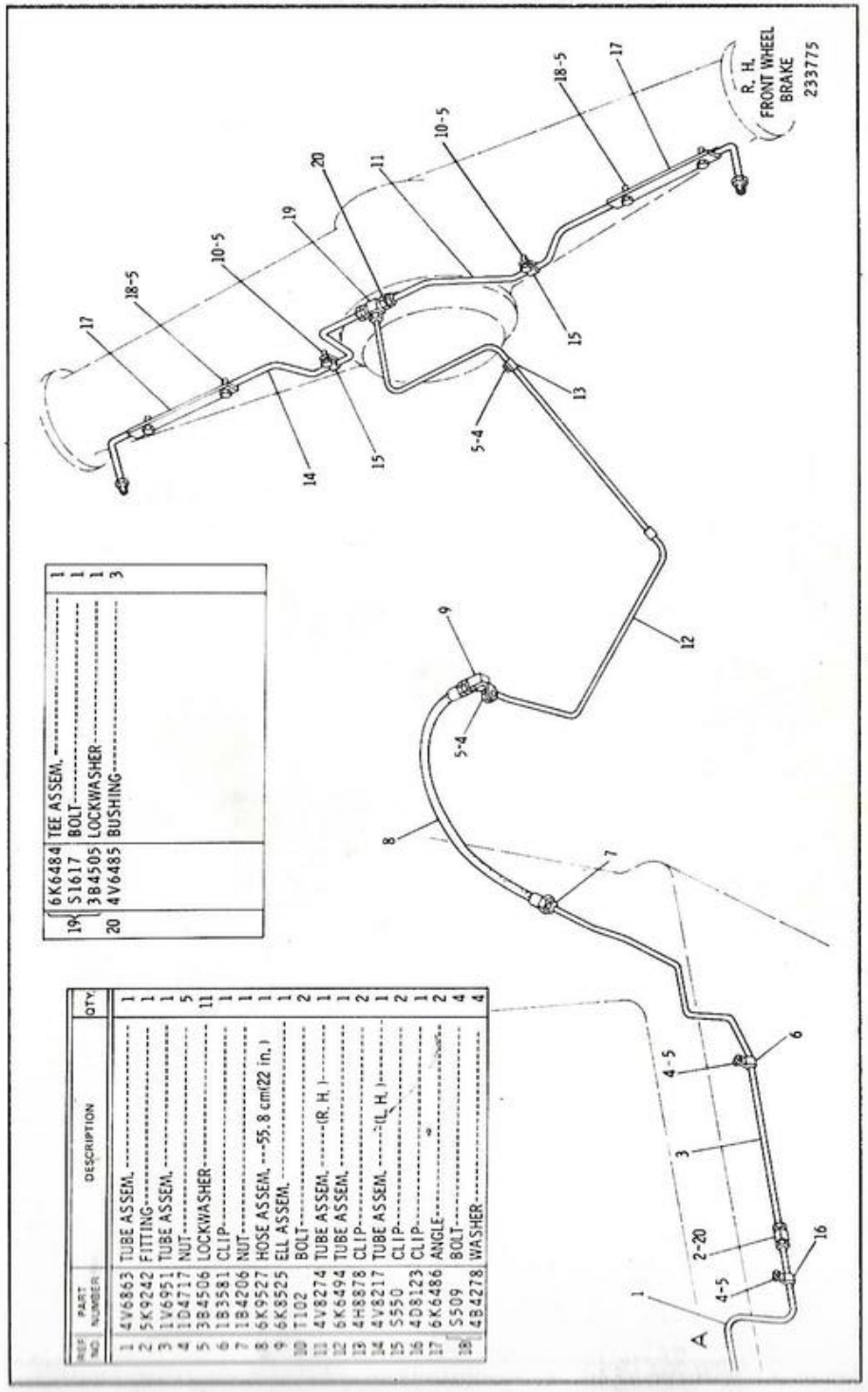

REF. NO.	PART NUMBER	DESCRIPTION	QTY.
1	4V6863	TUBE ASSEM.	1
2	5K9242	FITTING	1
3	1V6951	TUBE ASSEM.	1
4	104717	NUT	5
5	3B4506	LOCKWASHER	11
6	1B3581	CLIP	1
7	1B4206	NUT	1
8	6K9527	HOSE ASSEM. --55.8 cm(22 in.)	1
9	6K8525	ELL ASSEM.	1
10	T102	BOLT	2
11	4V8274	TUBE ASSEM. (R. H.)	1
12	6K6494	TUBE ASSEM.	1
13	4H8878	CLIP	1
14	4V8217	TUBE ASSEM. (L. H.)	2
15	5S50	CLIP	2
16	4D8123	CLIP	1
17	6K6486	ANGLE	2
18	S509	BOLT	4
19	4B4278	WASHER	4
19	6K6484	TEE ASSEM.	1
	S1617	BOLT	1
	3B4505	LOCKWASHER	1
20	4V6485	BUSHING	3

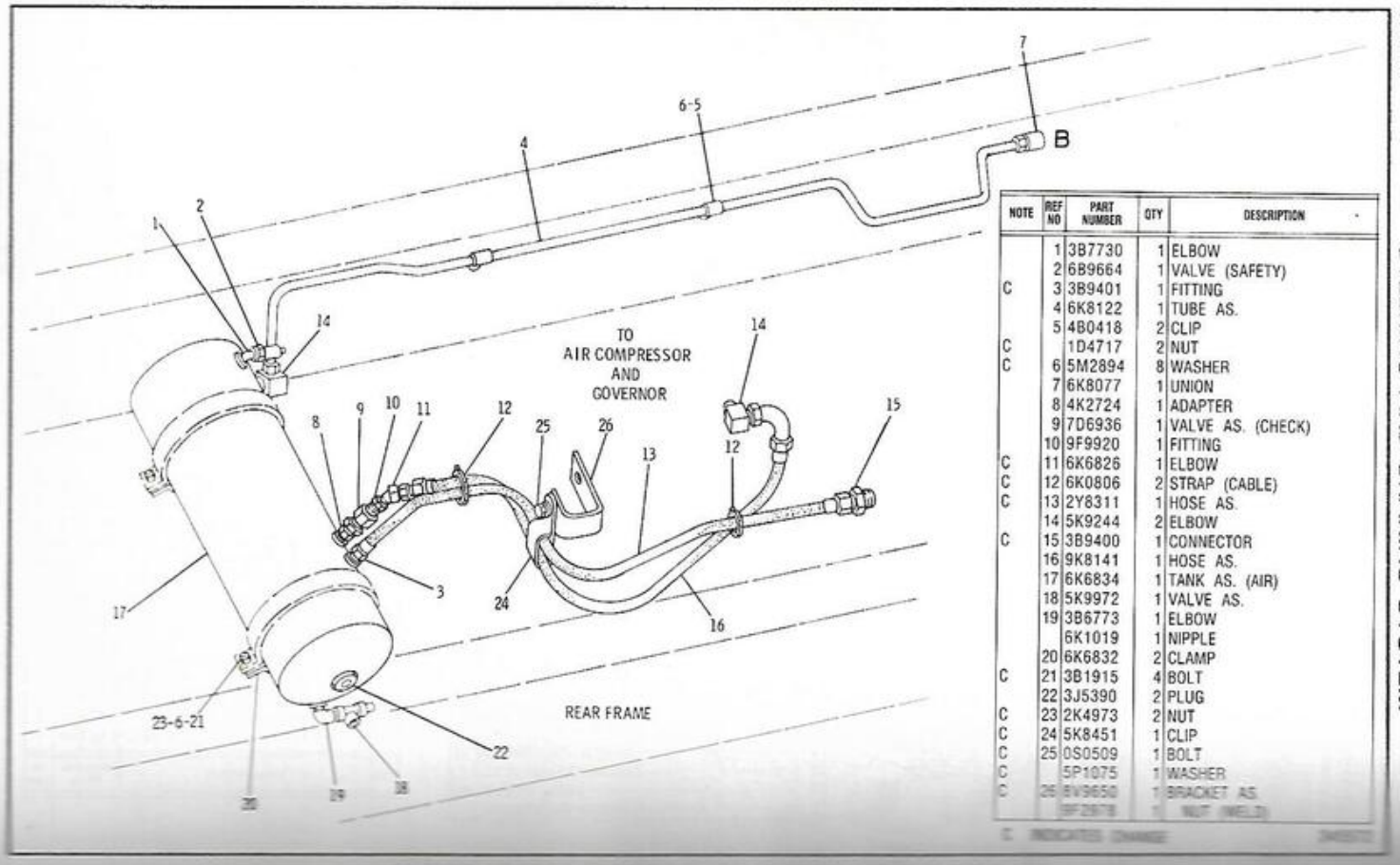

NOTE	REF NO	PART NUMBER	QTY	DESCRIPTION
	1	3B7730	1	ELBOW
	2	6B9664	1	VALVE (SAFETY)
C	3	3B9401	1	FITTING
	4	6K8122	1	TUBE AS.
	5	4B0418	2	CLIP
C		1D4717	2	NUT
C	6	5M2894	8	WASHER
	7	6K8077	1	UNION
	8	4K2724	1	ADAPTER
	9	7D6936	1	VALVE AS. (CHECK)
	10	9F9920	1	FITTING
C	11	6K6826	1	ELBOW
C	12	6K0806	2	STRAP (CABLE)
C	13	2Y8311	1	HOSE AS.
	14	5K9244	2	ELBOW
C	15	3B9400	1	CONNECTOR
	16	9K8141	1	HOSE AS.
	17	6K6834	1	TANK AS. (AIR)
	18	5K9972	1	VALVE AS.
	19	3B6773	1	ELBOW
		6K1019	1	NIPPLE
	20	6K6832	2	CLAMP
C	21	3B1915	4	BOLT
	22	3J5390	2	PLUG
C	23	2K4973	2	NUT
C	24	5K8451	1	CLIP
C	25	0S0509	1	BOLT
C		5P1075	1	WASHER
C	26	8V9650	1	BRACKET AS.
		9F2878	1	NUT (WELD)

C INDICATES CHANGE

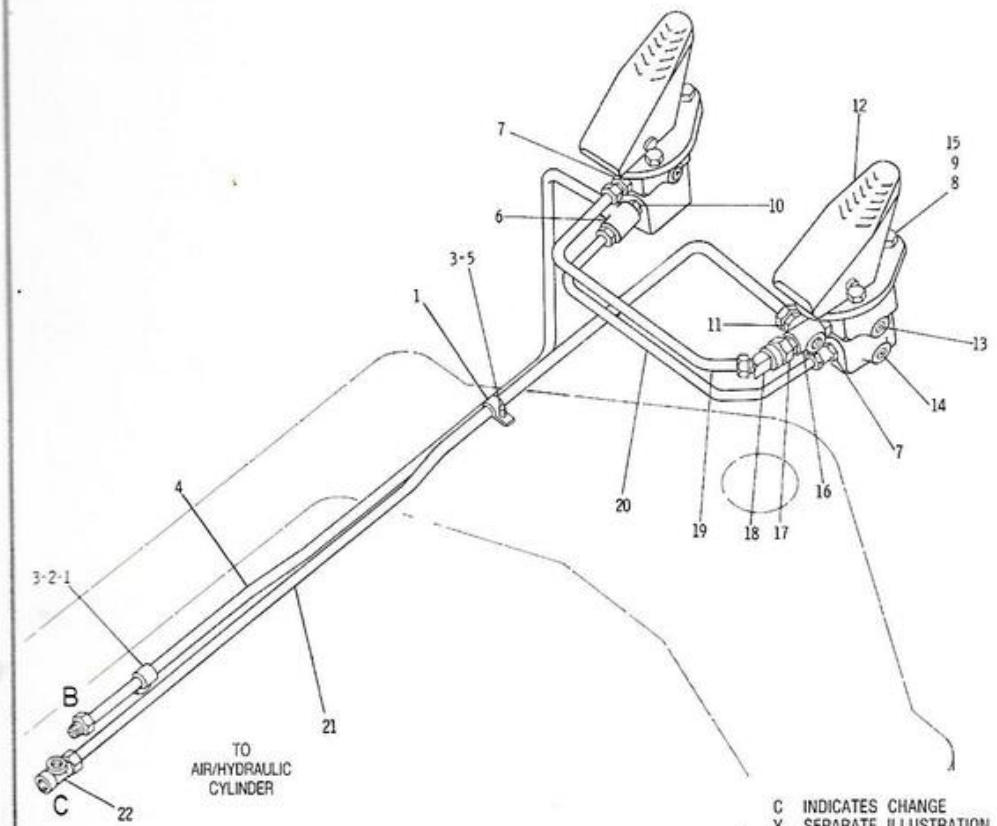

NOTE	REF NO	PART NUMBER	QTY	DESCRIPTION
C	1	4B0418	2	CLIP
	2	1D4717	1	NUT
C	3	5M2894	2	WASHER
	4	6K6801	1	TUBE AS.
	5	0S0509	1	BOLT
	6	6K8214	1	TEE
C	7	5K9245	2	CONNECTOR
	8	2B2695	6	BOLT
	9	1D4716	6	NUT
C	10	3B7255	1	BUSHING
C	11	5K9238	1	FITTING
CY	12	2Y7104	2	VALVE AS.
	13	2B0858	7	PLUG
C	14	5M6213	2	PLUG
C	15	9M1974	6	WASHER
	16	2Y6648	1	VALVE AS.
		8B6021	1	ADAPTER
	17	6K6825	1	VALVE AS.
	18	6K6826	1	ELBOW
C	19	2Y7138	1	TUBE AS.
	20	6K8118	1	TUBE AS.
	21	4V6865	1	TUBE AS.
	22	7K2543	1	TEE

C INDICATES CHANGE
Y SEPARATE ILLUSTRATION

345573

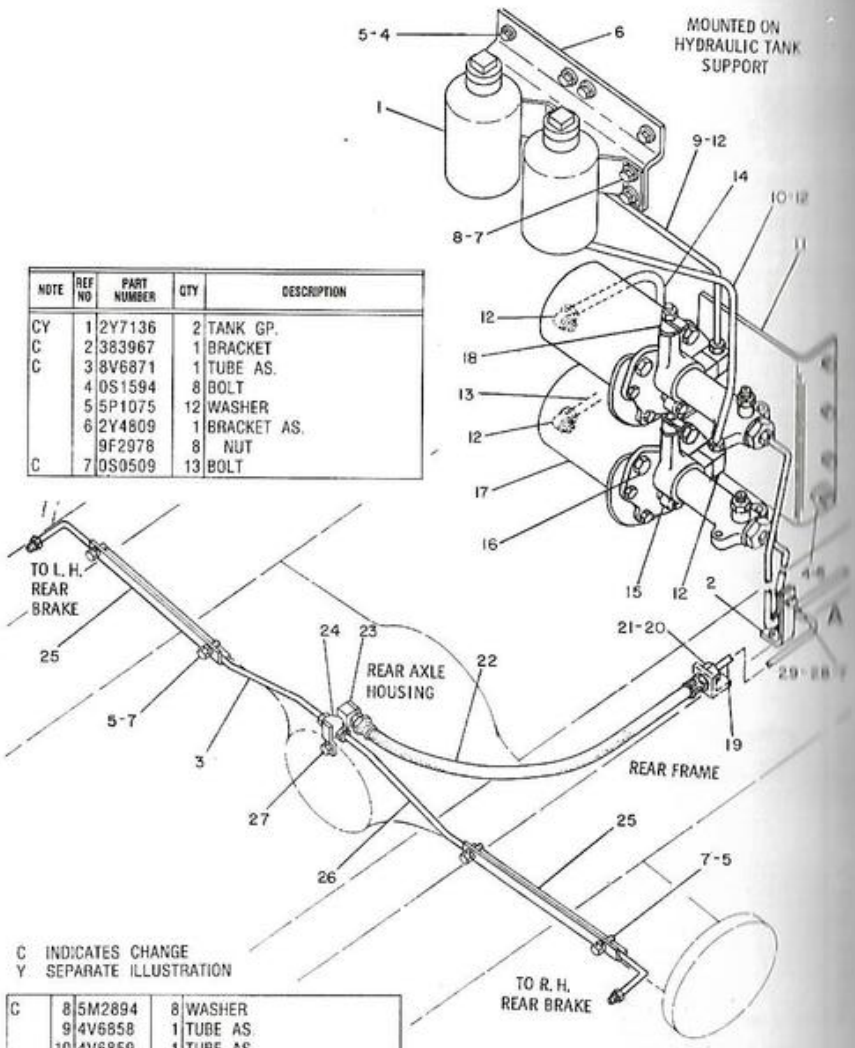

NOTE	REF NO	PART NUMBER	QTY	DESCRIPTION
CY	1	2Y7136	2	TANK GP.
C	2	383967	1	BRACKET
C	3	8V6871	1	TUBE AS.
	4	0S1594	8	BOLT
	5	5P1075	12	WASHER
	6	2Y4809	1	BRACKET AS.
		9F2978	8	NUT
C	7	0S0509	13	BOLT

C INDICATES CHANGE
Y SEPARATE ILLUSTRATION

C	8	5M2894	8	WASHER
	9	4V6858	1	TUBE AS.
	10	4V6859	1	TUBE AS.
	11	4V6805	1	BRACKET AS.
	12	5K9244	6	ELBOW
	13	4V6860	1	TUBE AS.
	14	4V6861	1	TUBE AS.
	15	4H6112	2	BREATHER
		3B7722	2	BUSHING
	16	0S1595	4	BOLT
		5P8245	4	WASHER
	17	4V5414	2	CYLINDER GP. (EACH INCLUDES)
	18	5V3713	1	SWITCH AS.
	19	2Y5596	1	TUBE AS.
C	20	9S1354	1	NUT
		6B0863	1	WASHER
	21	4V6485	1	ADAPTER
	22	6K6827	1	HOSE AS.

	23	5K9243	1	ELBOW
C	24	5V8967	1	TEE AS.
	25	6K6831	2	ANGLE
C	26	8V6870	1	TUBE AS.
	27	0S1617	1	BOLT
C		9M1974	1	WASHER
	28	1D4717	1	NUT
C	29	0S0550	1	CLIP
				THE FOLLOWING REPAIR KIT IS AVAILABLE
		4V5415	1	KIT (PRESSURE CONVERTER) (INCLUDES FELT, CUP, SPRING, SEALS, VALVE, O-RINGS & RETAINING RING)

345574

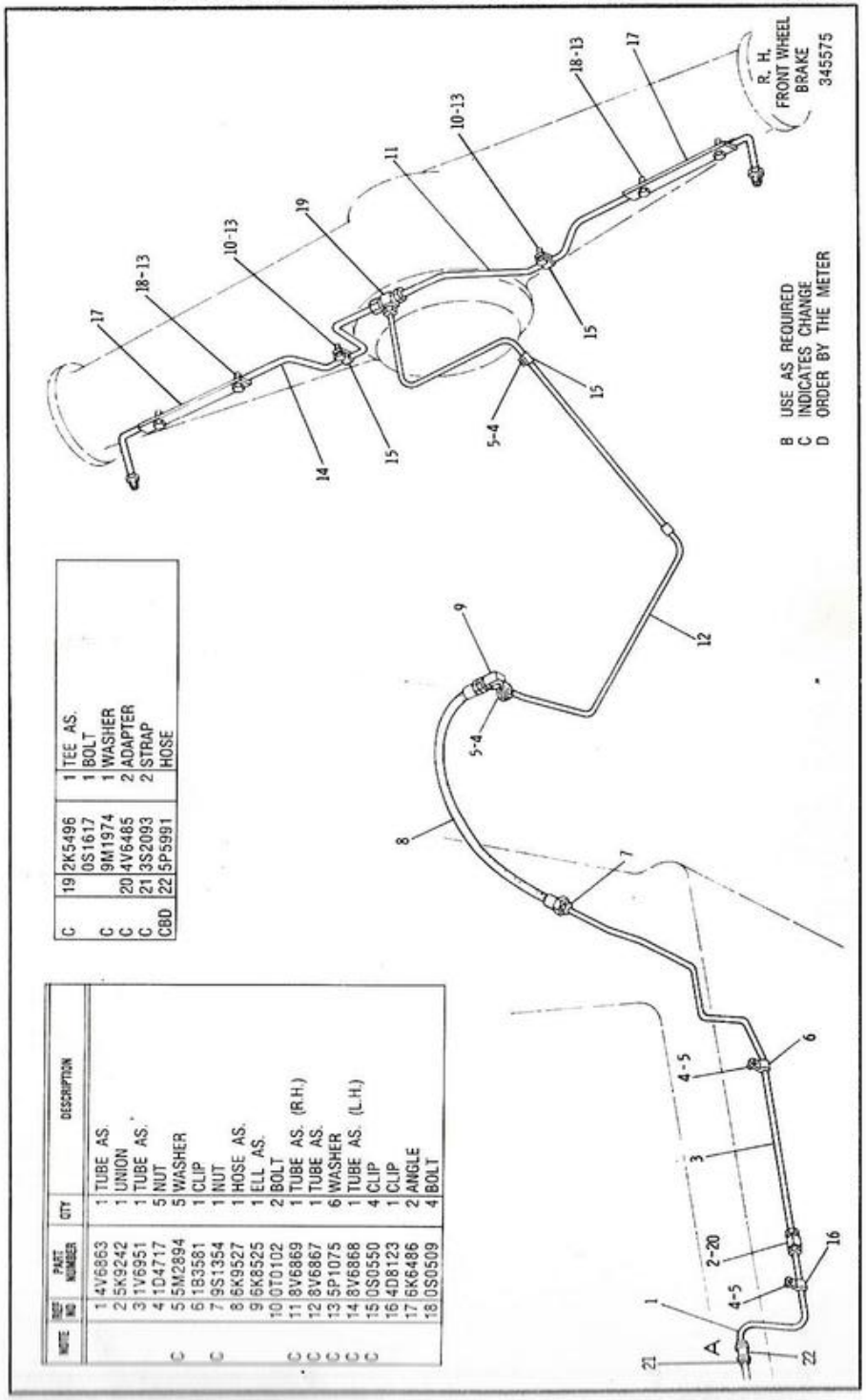

NOTE	REF NO	PART NUMBER	QTY	DESCRIPTION
	1	4V6863	1	TUBE AS.
	2	5K9242	1	UNION
	3	1V6951	1	TUBE AS.
	4	1D4717	5	NUT
C	5	5M2894	5	WASHER
C	6	1B3581	1	CLIP
C	7	9S1354	1	NUT
	8	6K9527	1	HOSE AS.
	9	6K8525	1	ELL AS.
	10	0T0102	2	BOLT
C	11	8V6869	1	TUBE AS. (R.H.)
C	12	8V6867	1	TUBE AS.
C	13	5P1075	6	WASHER
C	14	8V6868	1	TUBE AS. (L.H.)
C	15	0S0550	4	CLIP
	16	4D8123	1	CLIP
	17	6K6486	2	ANGLE
	18	0S0509	4	BOLT

C	19	2K5496	1	TEE AS.
		0S1617	1	BOLT
C		9M1974	1	WASHER
C	20	4V6465	2	ADAPTER
C	21	3S2093	2	STRAP
CBD	22	5P5991		HOSE

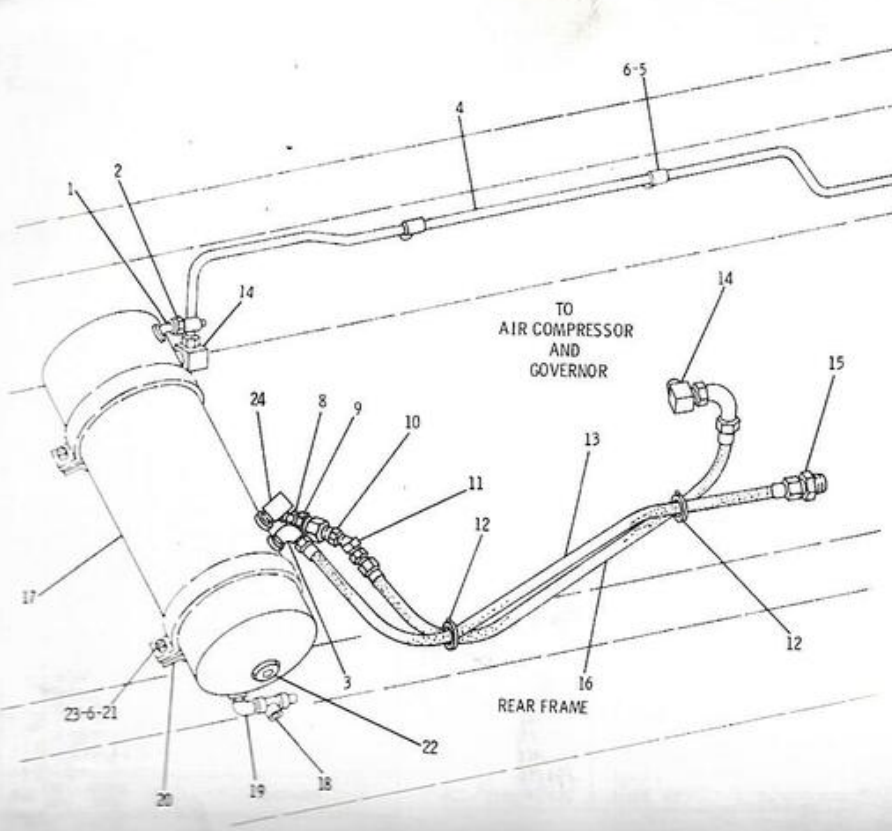

NOTE	REF NO	PART NUMBER	QTY	DESCRIPTION
	1	3B7730	1	ELBOW
	2	6B9664	1	VALVE (SAFETY)
C	3	3K3415	1	FITTING
	4	6K8122	1	TUBE AS.
	5	4B0418	2	CLIP
		1D4717	2	NUT
	6	5M2894	8	WASHER
	7	6K8077	1	UNION
	8	4K2724	1	ADAPTER
	9	7D6936	1	VALVE AS. (CHECK)
	10	9F9920	1	FITTING
	11	6K6826	1	ELBOW
	12	6K0806	2	STRAP (CABLE)
	13	2Y8311	1	HOSE AS.
	14	5K9244	2	ELBOW
	15	3B9400	1	CONNECTOR
	16	9K8141	1	HOSE AS.
	17	6K6834	1	TANK AS. (AIR)
	18	5K9972	1	VALVE AS.
	19	3B6773	1	ELBOW
		6K1019	1	NIPPLE
	20	6K6832	2	CLAMP
	21	3B1915	4	BOLT
	22	3J5390	2	PLUG
	23	2K4973	2	NUT
C	24	7J0482	1	ELBOW

C INDICATES CHANGE

345587

7W8522 AIR & BRAKE CONTROL GROUP-PART 1 OF 4

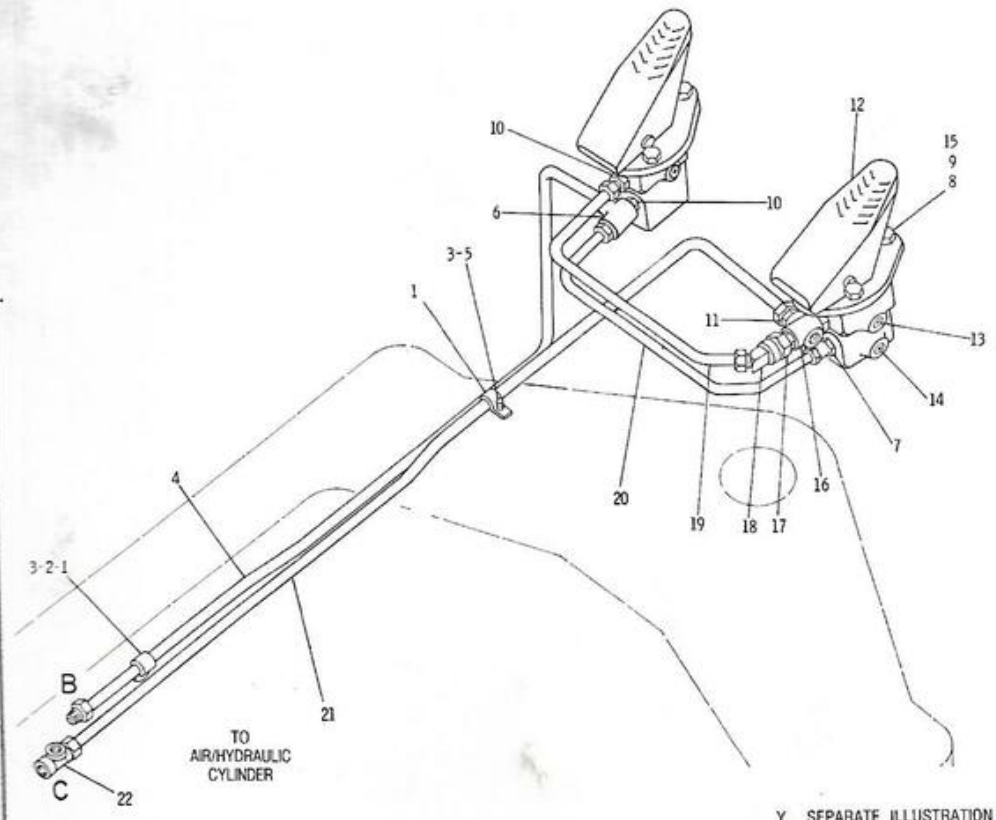

NOTE	REF NO	PART NUMBER	QTY	DESCRIPTION
	1	4B0418	2	CLIP
	2	1D4717	1	NUT
	3	5M2894	2	WASHER
	4	6K6801	1	TUBE AS.
	5	0S0509	1	BOLT
	6	6K8214	1	TEE
	7	5K9245	2	CONNECTOR
	8	2B2695	6	BOLT
	9	1D4716	6	NUT
	10	3B7255	1	BUSHING
	11	5K9238	1	FITTING
Y	12	2Y7104	2	VALVE AS.
	13	2B0858	7	PLUG
	14	5M6213	2	PLUG
	15	9M1974	6	WASHER
	16	2Y6648	1	VALVE AS.
		8B6021	1	ADAPTER
	17	6K6825	1	VALVE AS.
	18	6K6826	1	ELBOW
	19	2Y7138	1	TUBE AS.
	20	6K8118	1	TUBE AS.
	21	4V6865	1	TUBE AS.
	22	7K2543	1	TEE

Y SEPARATE ILLUSTRATION

345588

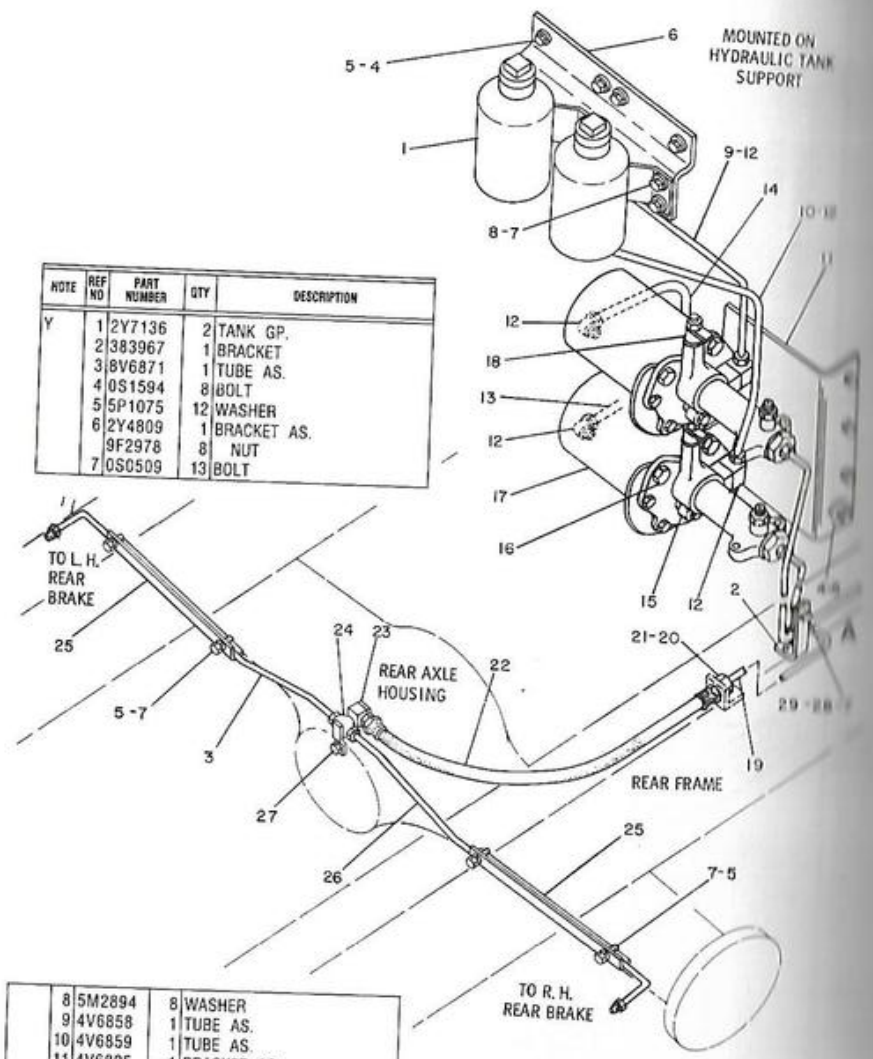

NOTE	REF NO	PART NUMBER	QTY	DESCRIPTION
Y	1	2Y7136	2	TANK GP.
	2	383967	1	BRACKET
	3	8V6871	1	TUBE AS.
	4	0S1594	8	BOLT
	5	5P1075	12	WASHER
	6	2Y4809	1	BRACKET AS.
		9F2978	8	NUT
	7	0S0509	13	BOLT

8	5M2894	8	WASHER
9	4V6858	1	TUBE AS.
10	4V6859	1	TUBE AS.
11	4V6805	1	BRACKET AS.
12	5K9244	6	ELBOW
13	4V6860	1	TUBE AS.
14	4V6861	1	TUBE AS.
15	4H6112	2	BREATHER
	3B7722	2	BUSHING
16	0S1595	4	BOLT
	5P8245	4	WASHER
17	4V5414	2	CYLINDER GP. (EACH INCLUDES)
18	5V3713	1	SWITCH AS.
19	2Y5596	1	TUBE AS.
20	9S1354	1	NUT
	6B0863	1	WASHER
21	4V6485	1	ADAPTER
22	6K6827	1	HOSE AS.

23	5K9243	1	ELBOW
24	5V8967	1	TEE AS.
25	6K6831	2	ANGLE
26	8V6870	1	TUBE AS.
27	0S1617	1	BOLT
	9M1974	1	WASHER
28	1D4717	1	NUT
29	0S0550	1	CLIP
			THE FOLLOWING REPAIR KIT IS AVAILABLE:
	4V5415	1	KIT (PRESSURE CONVERTER) (INCLUDES FELT, CUP, SPRING, SEALS, VALVE, O-RINGS & RETAINING RING)

Y SEPARATE ILLUSTRATION

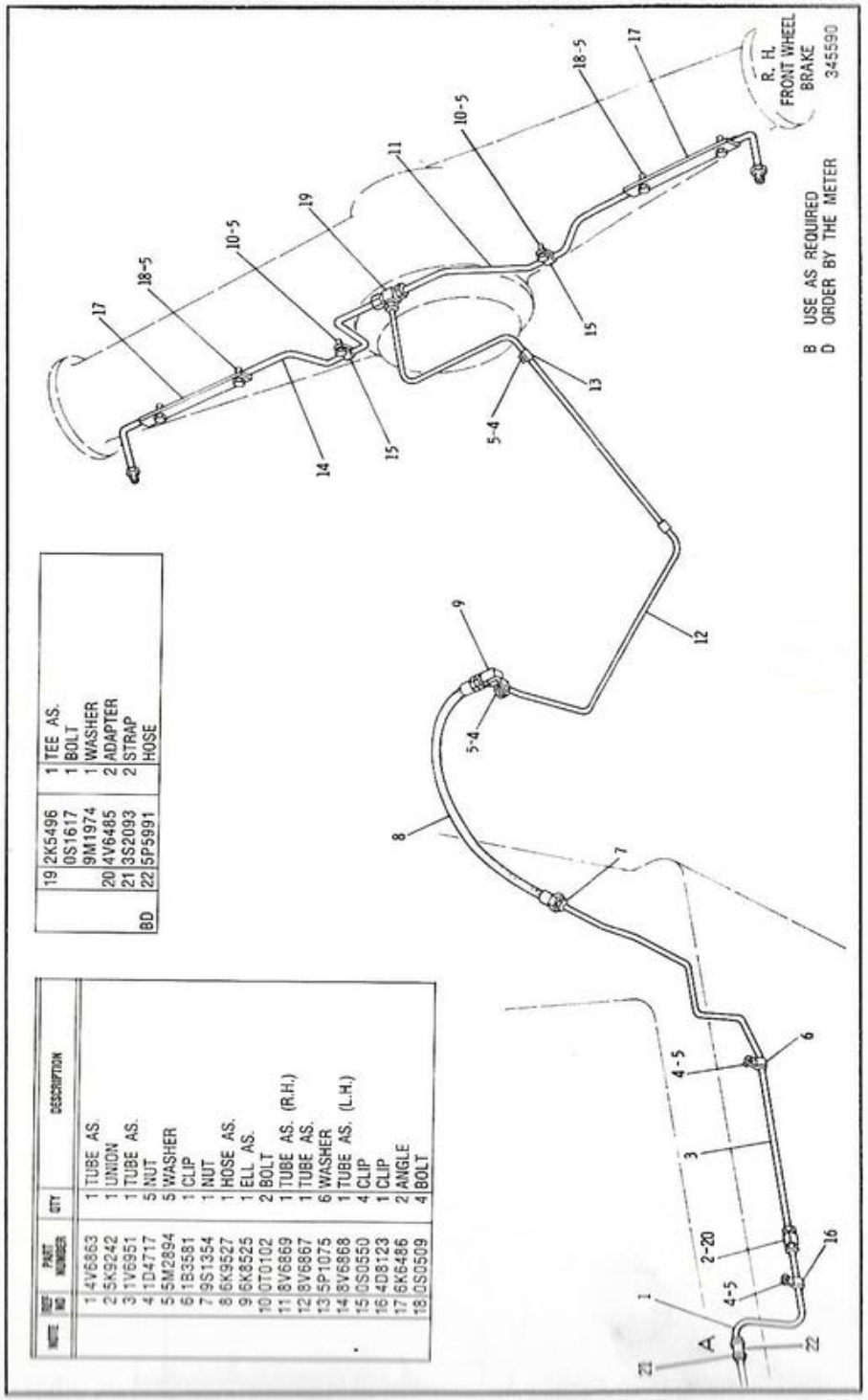

NOTE	REF NO	PART NUMBER	QTY	DESCRIPTION
	1	4V6863	1	TUBE AS.
	2	5K9242	1	UNION
	3	1V6951	1	TUBE AS.
	4	1D4717	5	NUT
	5	5M2894	5	WASHER
	6	1B3581	1	CLIP
	7	9S1354	1	NUT
	8	6K9527	1	HOSE AS.
	9	6K8525	1	ELL AS.
	10	0T0102	2	BOLT
	11	8V6869	1	TUBE AS. (R.H.)
	12	8V6867	1	TUBE AS.
	13	5P1075	6	WASHER
	14	8V6868	1	TUBE AS. (L.H.)
	15	0S0550	4	CLIP
	16	4D8123	1	CLIP
	17	6K6486	2	ANGLE
	18	0S0509	4	BOLT

19	2K5496	1	TEE AS.
	0S1617	1	BOLT
	9M1974	1	WASHER
20	4V6485	2	ADAPTER
21	3S2093	2	STRAP
22	5P5991		HOSE
BD			

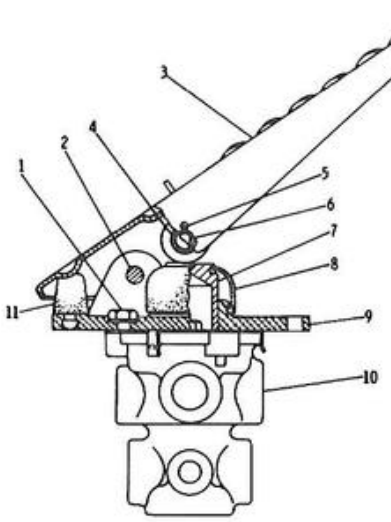

	REF NO.	PART NUMBER	DESCRIPTION	QTY
	1	S1617	BOLT	1
		3B4505	LOCKWASHER	1
	2	2R695	PIN	1
		3H6660	PIN-(spring)	1
	3	2R696	TREADLE ASSEM. (Includes)	1
	4	2R693	ROLLER	1
C	5	3B4610	COTTER PIN	1
	6	2R720	PIN	1
	7	2R719	PLUNGER	1
C	8	5D3636	BOOT	1
	9	2R694	PLATE	1
	10	4D2287	VALVE ASSEM. (Separate Illustration)	1
	11	2R724	BUTTON	1

C INDICATES CHANGE 20917A

2R617 BRAKE FOOT CONTROL VALVE ASSEMBLY
Part Of 7V8922 Air And Brake Control Group Shown On Page 117
4D2287 Valve Parts Are Shown On Page 121

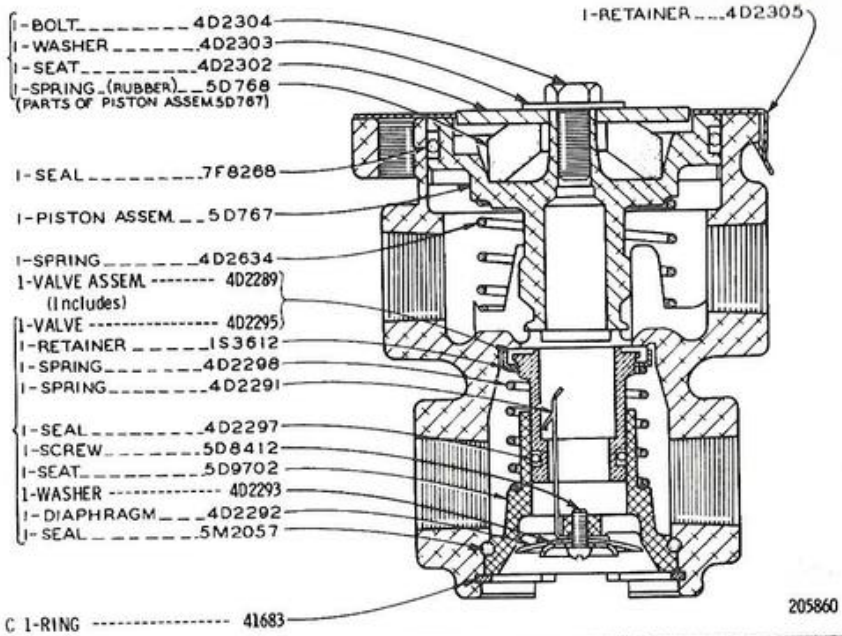

4D2287 VALVE ASSEMBLY
Part Of 2R617 Brake Foot Control Valve Assembly Shown On Page 120

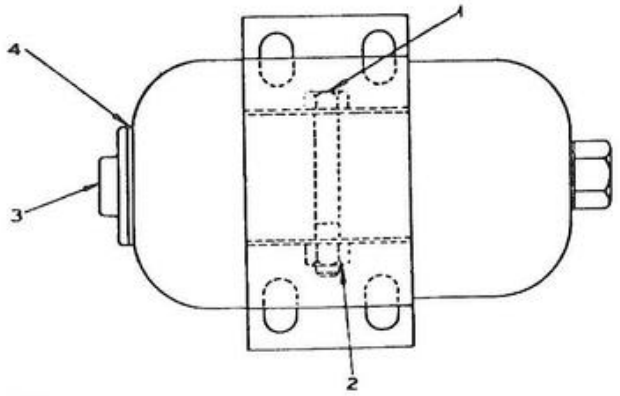

REF NO	PART NUMBER	DESCRIPTION	QTY
1	288593	BOLT	1
2	6F612	NUT	1
3	2Y3293	CAP ASSEM.	1
4	2Y3304	GASKET	1

SP1536

2Y3290 HYDRAULIC TANK GROUP
Serial No. 57Z1 To 57Z478 Inclusive
Part Of 7V8922 Control

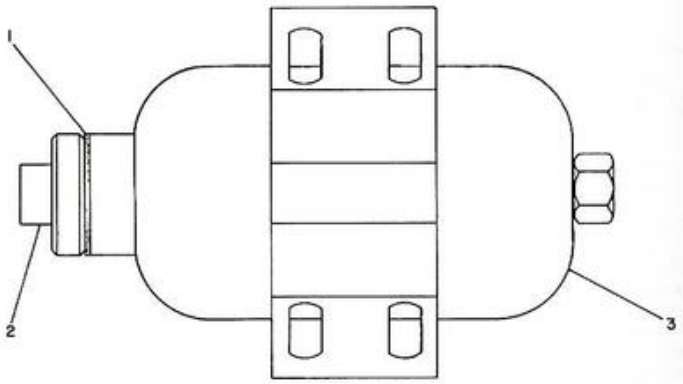

NOTE	REF NO	PART NUMBER	QTY	DESCRIPTION
	1	2Y7133	1	GASKET
	2	2Y7134	1	CAP AS.
	3	2Y7135	1	TANK AS.

332617

2Y7136 HYDRAULIC TANK GROUP
Serial No. 57Z479-Up
Part Of 7V8922 Control

REF. NO.	PART NUMBER	DESCRIPTION	QTY.
1	7V8945	CHAMBER ASSEM.	1
2	2D8932	HOSE ASSEM. --56.64 cm(22.30 in.)	1
3	6K8076	CONNECTOR	1
4	7M2220	CLIP	1
5	5K9246	CONNECTOR	1
6	6K8497	TUBE ASSEM.	1
7	3B6768	BUSHING	2
8	7K1460	TUBE ASSEM.	1
	1L6939	ELBOW	1
9	5M6213	PLUG	1
10	7K2738	VALVE ASSEM. (Separate Illustration)	1
11	7K4529	PIPE	1
12	3B7762	TEE	1
13	5K9235	ELBOW	1
14	9S7744	TEE	1
15	7V8944	TUBE ASSEM.	1
16	7J8611	ELBOW	1
17	1B4206	NUT	1
	5P8247	WASHER	1
18	9S1354	NUT	1
19	7V8947	PIN	1
	3B4622	COTTER PIN	1
20	7V8948	YOKE	1

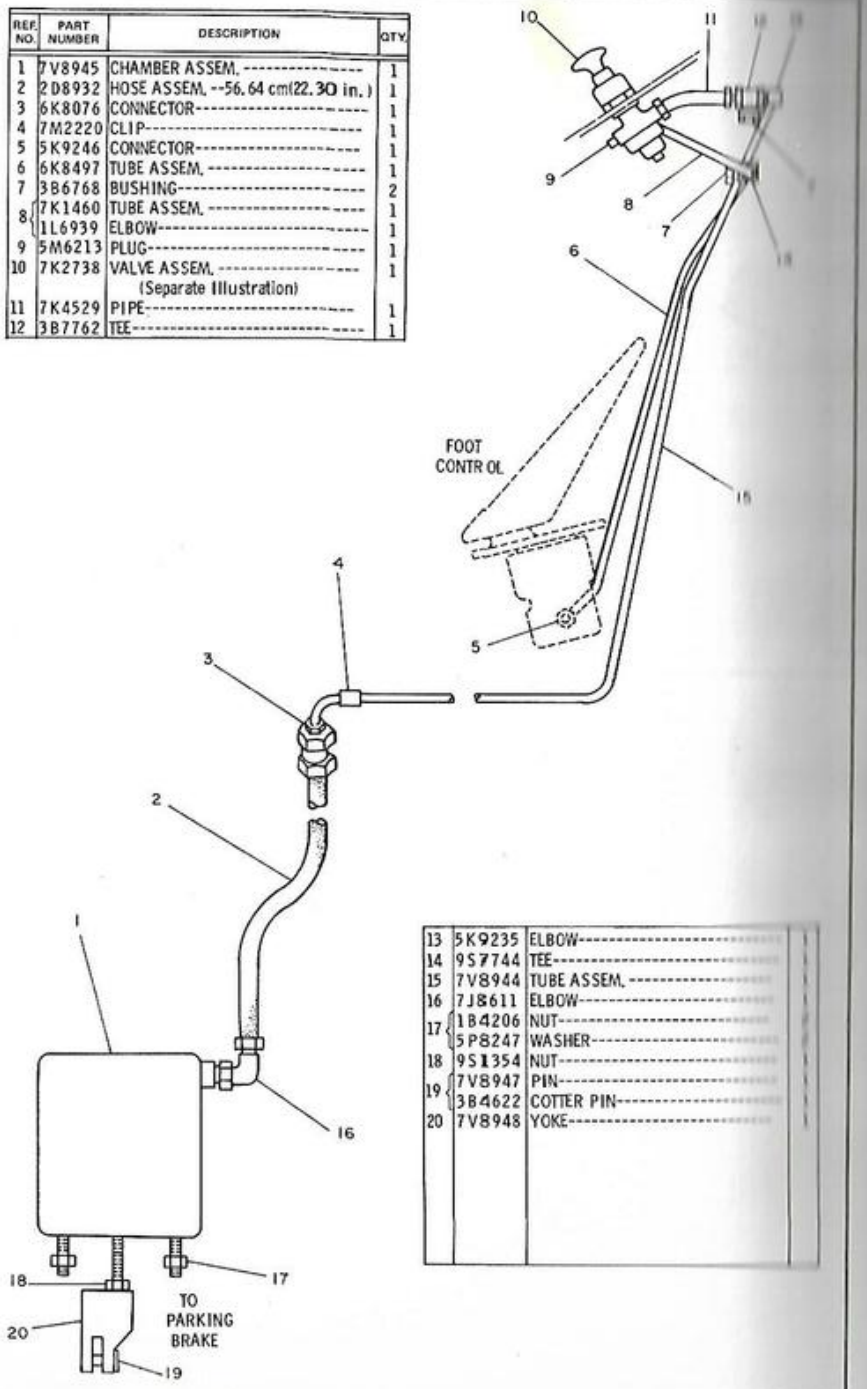

7V8916 BRAKE CONTROL GROUP
7K2738 Valve parts are shown on Page 123

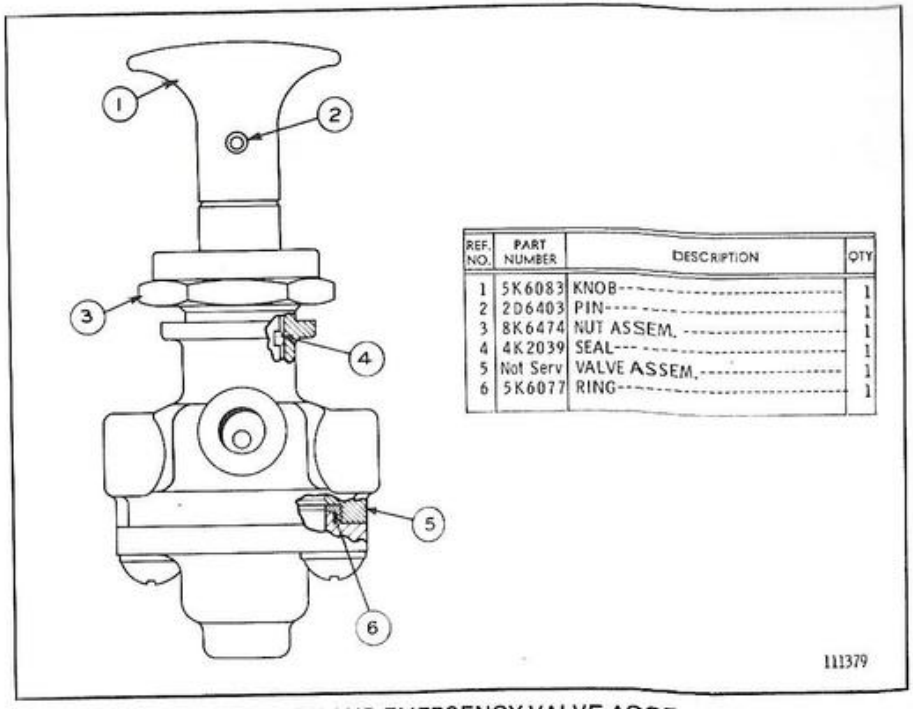

REF. NO.	PART NUMBER	DESCRIPTION	QTY.
1	5K6083	KNOB	1
2	2D6403	PIN	1
3	8K6474	NUT ASSEM.	1
4	4K2039	SEAL	1
5	Not Serv	VALVE ASSEM.	1
6	5K6077	RING	1

7K2738 PARK AND EMERGENCY VALVE ASSEMBLY
Part of 7V8916 Brake Control Group shown on Page 122

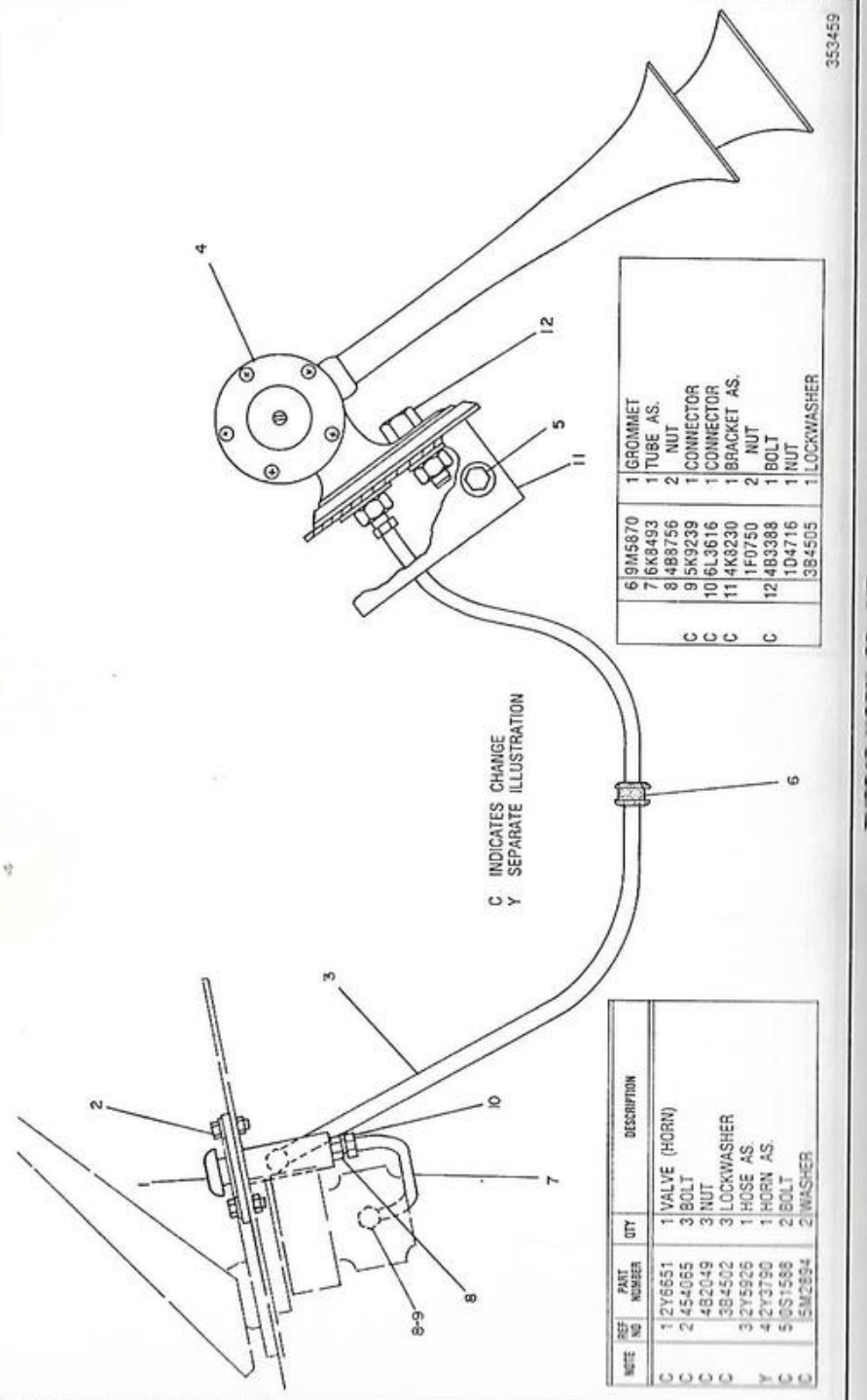

NOTE	REF NO	PART NUMBER	QTY	DESCRIPTION
C	1	2Y6651	1	VALVE (HORN)
C	2	454065	3	BOLT
C		482049	3	NUT
C		3B4502	3	LOCKWASHER
	3	2Y5926	1	HOSE AS.
Y	4	2Y3790	1	HORN AS.
C	5	0S1588	2	BOLT
C		SM2894	2	WASHER
	6	9M5870	1	GROMMET
	7	6K8493	1	TUBE AS.
	8	4B8756	2	NUT
C	9	5K9239	1	CONNECTOR
C	10	6L3616	1	CONNECTOR
C	11	4K8230	1	BRACKET AS.
		1F0750	2	NUT
C	12	4B3388	1	BOLT
		1D4716	1	NUT
		3B4505	1	LOCKWASHER

7V8918 HORN GP-AIR
2Y3790-Page 125

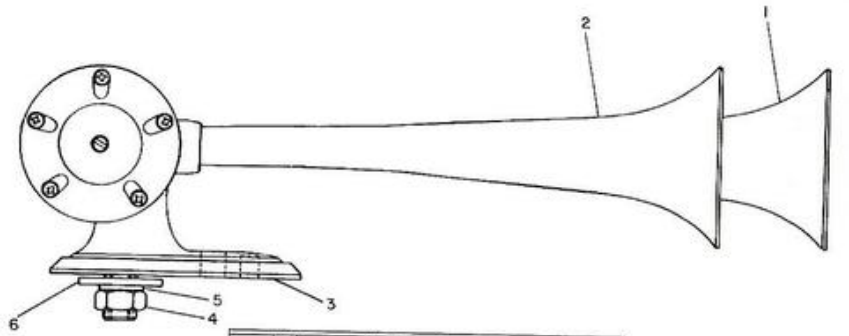

NOTE	REF NO	PART NUMBER	QTY	DESCRIPTION
C	1	2Y6708	1	PROJECTOR
C	2	2Y6707	1	PROJECTOR
C	3	2Y6709	1	PAD
	4	9S1354	1	NUT
	5	6F0253	1	LOCKWASHER
	6	4B5275	1	WASHER
				THE FOLLOWING REPAIR KIT IS AVAILABLE:
		2Y3792	1	KIT (DIAPHRAGM) (INCLUDES DIAPHRAGMS, EMBLEMS & GASKETS)

2Y3790 AIR HORN ASSEMBLY
Part Of 7V8918 Air Horn

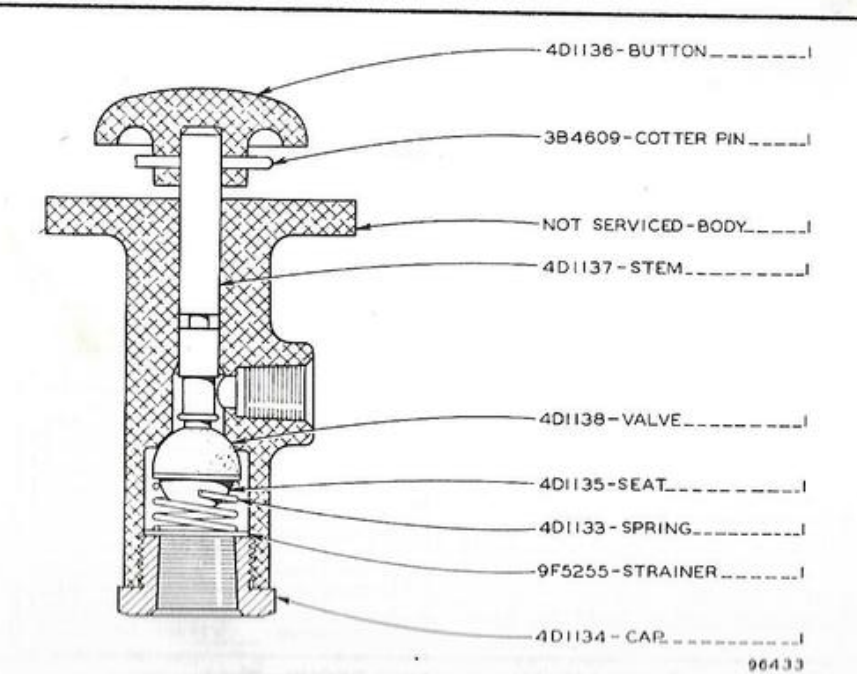

3D9943 HORN VALVE ASSEMBLY
Part Of 7V8918 Air Horn Group Shown On Page 124

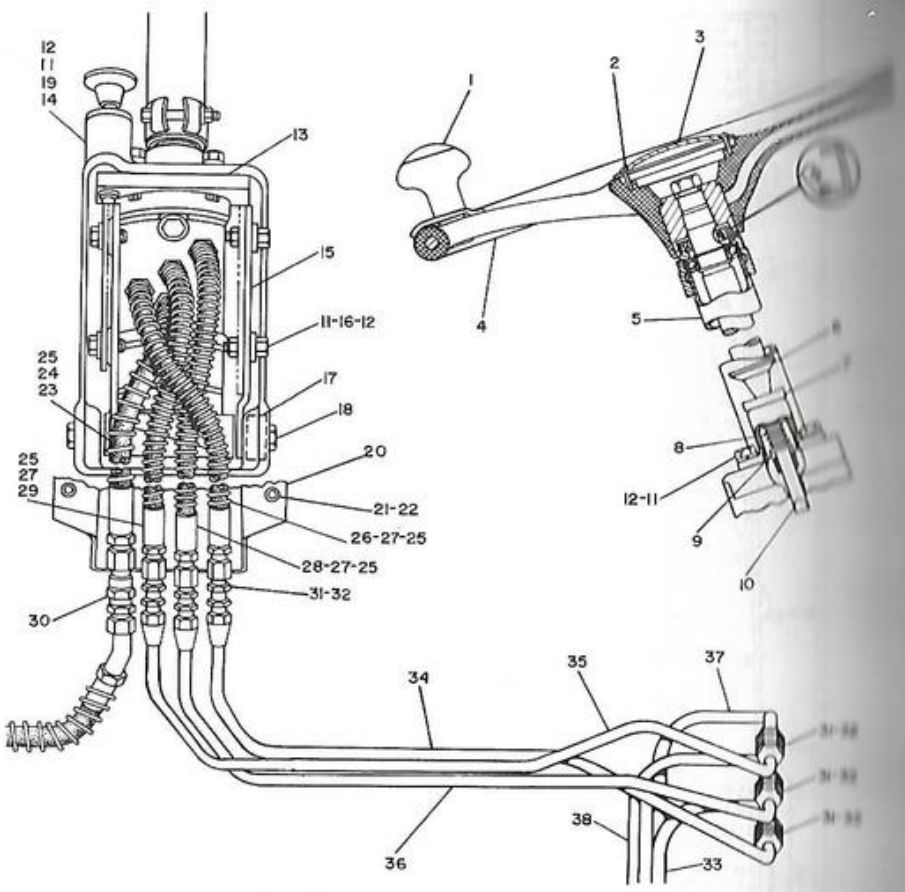

NOTE	REF NO	PART NUMBER	QTY	DESCRIPTION
	1	2K9096	1	SPINNER AS.
	2	5F5442	4	SCREW
	3	4D0874	1	COVER (EMBLEM)
		2H9458	1	GASKET
	4	3K5461	1	WHEEL
Y	5	2Y6400	1	PUMP GP.
	6	2Y6647	1	KNOB
	7	2V2776	1	NUT
	8	0L0955	1	SPRING
	9	1A7615	1	WASHER
	10	4V2835	1	PIN AS.
		4V2836	1	PIN (LARGE)
		6H3956	1	PIN-SPRING (SMALL)
	11	0L1351	8	BOLT
	12	5M2894	8	WASHER
	13	2Y5532	1	PLATE AS.
		7H0818	1	BUSHING
		346651	1	BOLT
	14	2Y5493	1	COVER
	15	2Y5537	1	PLATE
	16	1B5535	2	NUT
	17	5K2294	2	BEARING
	18	7V5547	2	BOLT
	19	2Y5494	1	BRACKET
	20	6K6769	1	COVER
	21	0S0509	4	BOLT
	22	5P1075	4	WASHER
	23	2Y7006	1	HOSE AS.
	24	8M0506	1	ADAPTER
	25	3J1907	4	SEAL
	26	2Y7108	1	HOSE AS.
	27	2R6806	3	CONNECTOR
	28	2Y7111	1	HOSE AS.
	29	2Y7109	1	HOSE AS.
	30	2P1281	1	UNION
		7F2050	1	LOCKNUT
	31	2P1278	6	UNION
	32	2P1279	6	LOCKNUT
	33	8K7783	1	TUBE AS.
	34	7K4000	1	TUBE AS.
	35	7K4007	1	TUBE AS.
	36	7K4009	1	TUBE AS.
	37	7K2609	1	TUBE AS.
	38	8K7782	1	TUBE AS.

Y SEPARATE ILLUSTRATION 332689

REF NO.	PART NUMBER	DESCRIPTION	QTY.
1	4J5267	SEAL	3
2	7V8969	TUBE ASSEM.	1
3	9S8008	PLUG	1
	3D2824	SEAL	1

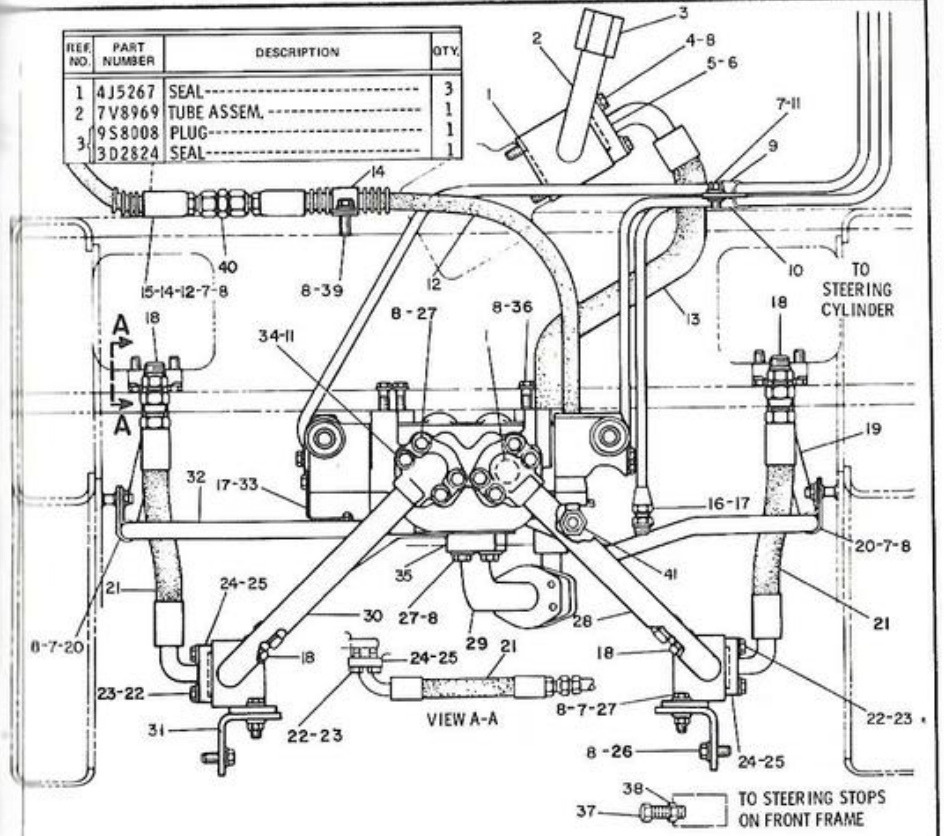

NOTE	REF NO	PART NUMBER	QTY	DESCRIPTION
	1	4J5267	3	SEAL
	2	7V8969	1	TUBE AS.
	3	9S8008	1	PLUG
		3D2824	1	SEAL
	4	8S9191	4	BOLT
	5	2K0190	2	FLANGE
	6	4J0519	1	SEAL
	7	1D4717	8	NUT
	8	5M2894	36	WASHER
	9	9S1350	1	CLIP
	10	2R1866	1	CLAMP (LOOP)
	11	5P1075	5	WASHER
	12	2Y4651	2	HOSE AS.
	13	7V8967	1	HOSE AS.
	14	4M6723	2	CLIP
	15	0S0509	1	BOLT
	16	2R6806	1	CONNECTOR
	17	3J1907	3	SEAL
	18	9M4584	4	CONNECTOR
		2M9780	4	SEAL
	19	7K4134	1	TUBE AS.
	20	6K4947	2	CLIP (STRAIGHT)
		6K4948	2	CLIP (CURVED)
	21	2Y4783	4	HOSE AS.
	22	4B3388	16	BOLT
	23	9M1974	16	WASHER
	24	2Y1346	8	FLANGE
	25	4J5140	4	SEAL
	26	0L1351	4	BOLT
	27	0S1588	16	BOLT
	28	7K2920	1	TUBE AS. (L.H.)
	29	9K1490	1	TUBE AS.
	30	7K2919	1	TUBE AS. (R.H.)
	31	7K2842	2	ANGLE
	32	7K4133	1	TUBE AS.
Y	33	8J0430	1	VALVE GP.
		307947	2	ELBOW
	34	0S1571	4	BOLT
	35	1P4577	4	FLANGE
		4J0520	2	SEAL
	36	3B1915	3	BOLT
	37	3L2415	2	BOLT
	38	1B4205	2	LOCKNUT
	39	0S1594	1	BOLT
	40	3R2704	1	UNION
	41	8M0505	1	CONNECTOR
		3K0360	1	SEAL

Y SEPARATE ILLUSTRATION 332690

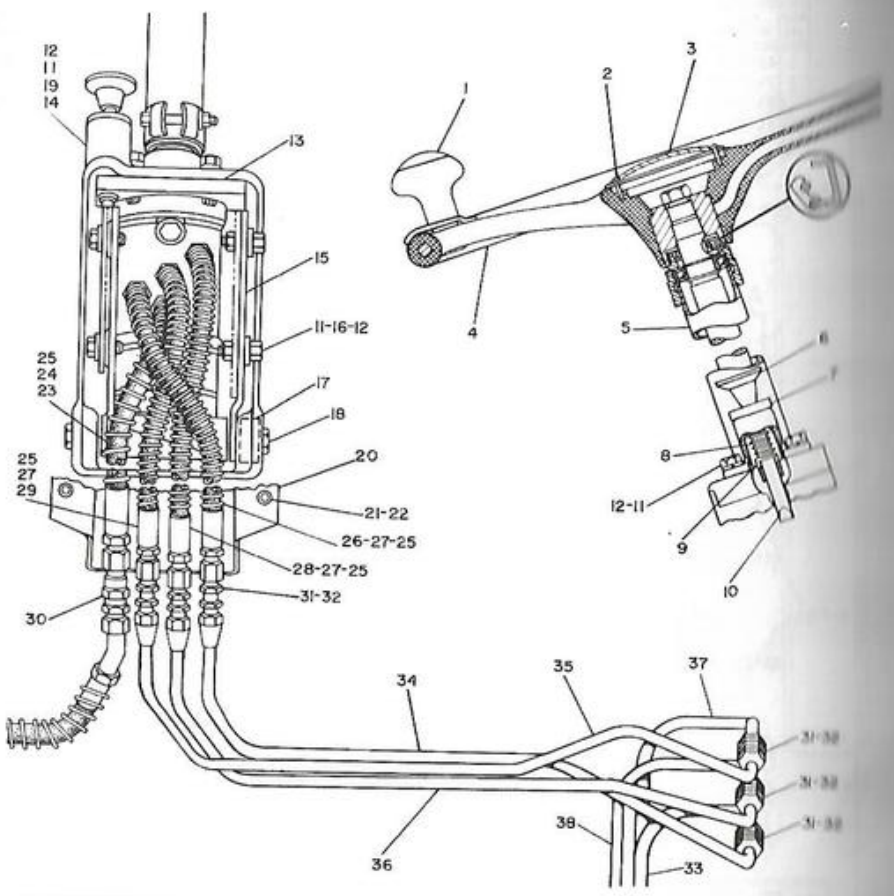

NOTE	REF NO	PART NUMBER	QTY	DESCRIPTION
	1	2K9096	1	SPINNER AS.
	2	5F5442	4	SCREW
	3	4D0874	1	COVER (EMBLEM)
		2H9458	1	GASKET
	4	3K5461	1	WHEEL
Y	5	2Y6400	1	PUMP GP.
	6	2Y6647	1	KNOB
	7	2V2776	1	NUT
C	8	2Y7345	1	SPRING
	9	1A7615	1	WASHER
	10	4V2835	1	PIN AS.
		4V2836	1	PIN (LARGE)
		6H3956	1	PIN-SPRING (SMALL)
	11	0L1351	8	BOLT
	12	5M2894	8	WASHER
	13	2Y5532	1	PLATE AS.
		7H0818	1	BUSHING
		346681	1	BOLT
	14	2Y5493	1	COVER
	15	2Y5537	1	PLATE
	16	1B5535	2	NUT

	17	5K2294	2	BEARING
	18	7V5547	2	BOLT
	19	2Y5494	1	BRACKET
	20	6K6769	1	COVER
	21	0S0509	4	BOLT
	22	5P1075	4	WASHER
	23	2Y7006	1	HOSE AS.
	24	8M0506	1	ADAPTER
	25	3J1907	4	SEAL
	26	2Y7108	1	HOSE AS.
	27	2R6806	3	CONNECTOR
	28	2Y7111	1	HOSE AS.
	29	2Y7109	1	HOSE AS.
	30	2P1281	1	UNION
		7F2050	1	LOCKNUT
	31	2P1278	6	UNION
	32	2P1279	6	LOCKNUT
	33	8K7783	1	TUBE AS.
	34	7K4000	1	TUBE AS.
	35	7K4007	1	TUBE AS.
	36	7K4009	1	TUBE AS.
	37	7K2609	1	TUBE AS.
	38	8K7782	1	TUBE AS.

C INDICATES CHANGE

Y SEPARATE ILLUSTRATION 332694

2Y5531 STEERING CONTROL GROUP-PART 1 OF 2
Serial No. 5727600 To 5727682 Inclusive
2Y6400-Page 127.05

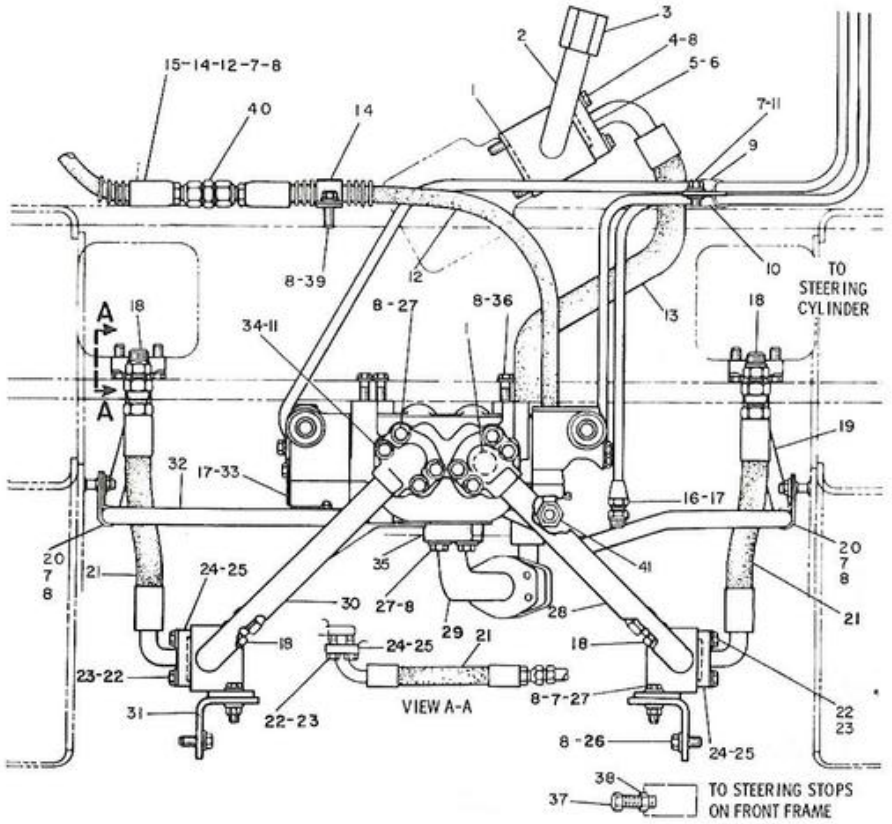

NOTE	REF NO	PART NUMBER	QTY	DESCRIPTION
	1	4J5267	3	SEAL
	2	7V8969	1	TUBE AS
	3	9S8008	1	PLUG
		3D2824	1	SEAL
	4	8S9191	4	BOLT
	5	2K0190	2	FLANGE
	6	4J0519	1	SEAL
	7	1D4717	8	NUT
	8	5M2894	36	WASHER
	9	9S1350	1	CLIP
	10	2R1866	1	CLAMP (LOOP)
	11	5P1075	5	WASHER
	12	2Y4651	2	HOSE AS.
	13	7V8967	1	HOSE AS.
	14	4M6723	2	CLIP
	15	0S0509	1	BOLT
	16	2R6806	1	CONNECTOR
	17	3J1907	3	SEAL
	18	9M4584	4	CONNECTOR
		2M9780	4	SEAL
C	19	8V1517	1	TUBE AS.
	20	6K4947	2	CLIP (STRAIGHT)
		6K4948	2	CLIP (CURVED)

	21	2Y4783	4	HOSE AS.
	22	4B3388	16	BOLT
	23	9M1974	16	WASHER
	24	2Y1346	8	FLANGE
	25	4J5140	4	SEAL
	26	0L1351	4	BOLT
	27	0S1588	16	BOLT
	28	7K2920	1	TUBE AS. (L.H.)
	29	9K1490	1	TUBE AS.
	30	7K2919	1	TUBE AS. (R.H.)
	31	7K2842	2	ANGLE
C	32	8V1515	1	TUBE AS.
Y	33	8J0430	1	VALVE GP.
		307947	2	ELBOW
	34	0S1571	4	BOLT
	35	1P4577	4	FLANGE
		4J0520	2	SEAL
	36	3B1915	3	BOLT
	37	3L2415	2	BOLT
	38	1B4205	2	LOCKNUT
	39	0S1594	1	BOLT
	40	3R2764	1	UNION
	41	8M0505	1	CONNECTOR
		3K0360	1	SEAL

C INDICATES CHANGE

Y SEPARATE ILLUSTRATION 332695

2Y5531 STEERING CONTROL GROUP-PART 2 OF 2
Serial No. 5727600 To 5727682 Inclusive
8J430-Page 128

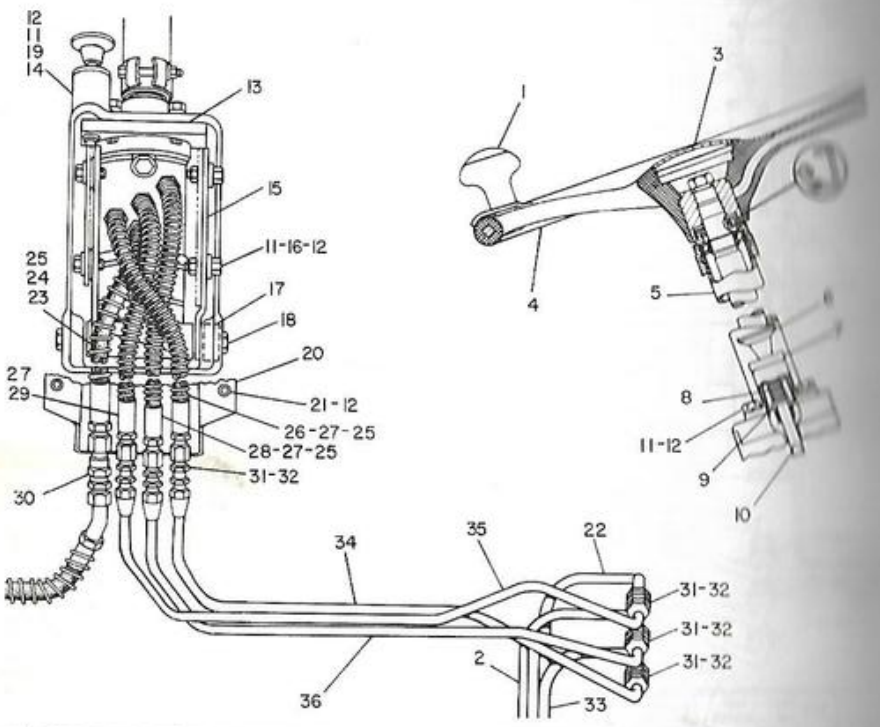

NOTE	REF NO	PART NUMBER	QTY	PART NAME
C	1	2Y7661	1	SPINNER AS.
	2	8K7782	1	TUBE AS.
C	3	2Y7660	1	COVER
C	4	2Y7644	1	WHEEL
Y	5	2Y6400	1	PUMP GP.
	6	2Y6647	1	KNOB
	7	2V2776	1	NUT
	8	2Y7345	1	SPRING
	9	1A7615	1	WASHER
	10	4V2835	1	PIN AS.
		4V2836	1	PIN (LARGE)
		6H3956	1	PIN-SPRING (SMALL)
	11	0L1351	8	BOLT
C	12	5M2894	12	WASHER
	13	2Y5532	1	PLATE AS.
		7H0818	1	BUSHING
		346681	1	BOLT
	14	2Y5493	1	COVER
	15	2Y5537	1	PLATE
	16	1B5535	2	NUT
	17	5K2294	2	BEARING
	18	7V5547	2	BOLT
	19	2Y5494	1	BRACKET
	20	6K6769	1	COVER
	21	0S0509	4	BOLT

NOTE	REF NO	PART NUMBER	QTY	PART NAME
	22	7K2609	1	TUBE AS.
	23	2Y7006	1	HOSE AS.
	24	8M0506	1	ADAPTER
	25	3J1907	4	SEAL
	26	2Y7108	1	HOSE AS.
	27	2R6806	3	CONNECTOR
	28	2Y7111	1	HOSE AS.
	29	2Y7109	1	HOSE AS.
	30	2P1281	1	UNION
		7F2050	1	LOCKNUT
	31	2P1278	6	UNION
	32	2P1279	6	LOCKNUT
	33	8K7783	1	TUBE AS.
	34	7K4000	1	TUBE AS.
	35	7K4007	1	TUBE AS.
	36	7K4009	1	TUBE AS.

C-INDICATES CHANGE
Y-SEPARATE ILLUSTRATION

2Y5531 STEERING CONTROL GROUP-PART 1 OF 2
Serial No. 57Z7683-Up
2Y6400-Page 127.05

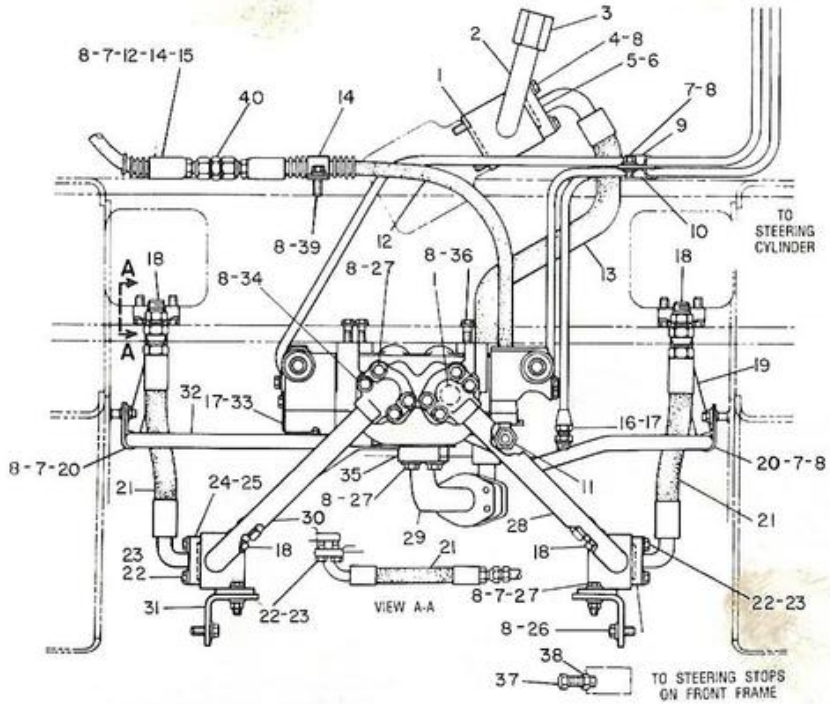

NOTE	REF NO	PART NUMBER	QTY	PART NAME
	1	4J5267	3	SEAL
	2	7V8969	1	TUBE AS.
	3	9S8008	1	PLUG
		3D2824	1	SEAL
	4	8S9191	4	BOLT
	5	2K0190	2	FLANGE
	6	4J0519	1	SEAL
	7	1D4717	8	NUT
	8	5M2894	41	WASHER
	9	8B6127	1	CLIP
	10	2R1866	1	CLAMP (LOOP)
	11	8M0505	1	CONNECTOR
		3K0360	1	SEAL
	12	2Y4651	2	HOSE AS.
	13	7V8967	1	HOSE AS.
	14	4M6723	2	CLIP
	15	0S0509	1	BOLT
	16	2R6806	1	CONNECTOR
	17	3J1907	3	SEAL
	18	9M4584	4	CONNECTOR
		2M9780	4	SEAL
	19	8V1517	1	TUBE AS.
	20	6K4947	2	CLIP (STRAIGHT)
		6K4948	2	CLIP (CURVED)
	21	2Y4783	4	HOSE AS.

NOTE	REF NO	PART NUMBER	QTY	PART NAME
	22	4B3388	16	BOLT
	23	9M1974	16	WASHER
	24	2Y1346	8	FLANGE
	25	4J5140	4	SEAL
	26	0L1351	4	BOLT
	27	0S1598	16	BOLT
	28	7K2920	1	TUBE AS. (L.H.)
	29	9K1490	1	TUBE AS.
	30	7K2919	1	TUBE AS. (R.H.)
	31	7K2842	2	ANGLE
	32	8V1515	1	TUBE AS.
Y	33	8J0430	1	VALVE GP.
		307947	2	ELBOW
	34	0S1571	4	BOLT
	35	1P4577	4	FLANGE
		4J0520	2	SEAL
	36	3B1915	3	BOLT
	37	3L2415	2	BOLT
	38	1B4205	2	LOCKNUT
	39	0S1594	1	BOLT
	40	3R2704	1	UNION

C-INDICATES CHANGE
Y-SEPARATE ILLUSTRATION

345594

2Y5531 STEERING CONTROL GROUP-PART 2 OF 2
Serial No. 57Z7683-Up
8J0430-Page 128

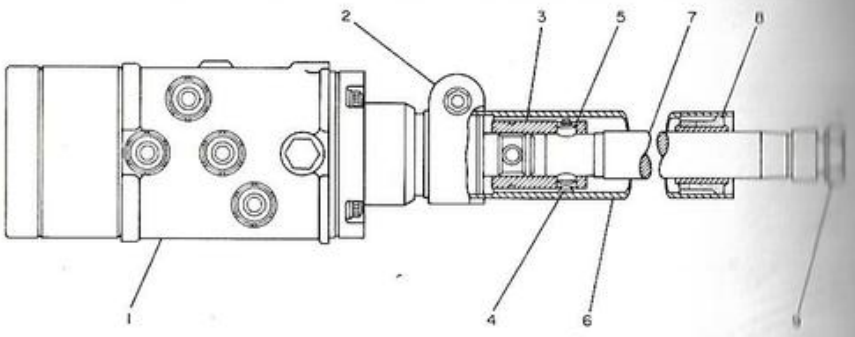

B USE AS REQUIRED
C INDICATES CHANGE
F NOT SHOWN
Y SEPARATE ILLUSTRATION

NOTE	REF NO	PART NUMBER	QTY	DESCRIPTION
Y	1	2Y6399	1	PUMP GP.
	2	2Y6396	1	CLAMP AS
	3	2Y6398	1	SLEEVE
	4	686734	2	SPRING
	5	2Y6401	2	PIN
	6	2Y6402	1	JACKET
	7	2Y6403	1	SHAFT
	8	2Y6404	1	BUSHING AS
	9	2Y6405	1	NUT
CBF		2Y8209	1	BUSHING

332673

2Y6400 STEERING COLUMN AND PUMP GROUP
Serial No.57Z392 To 57Z571 Inclusive
2Y6399-Page 127.06
Part Of 2Y5531 Steering Control

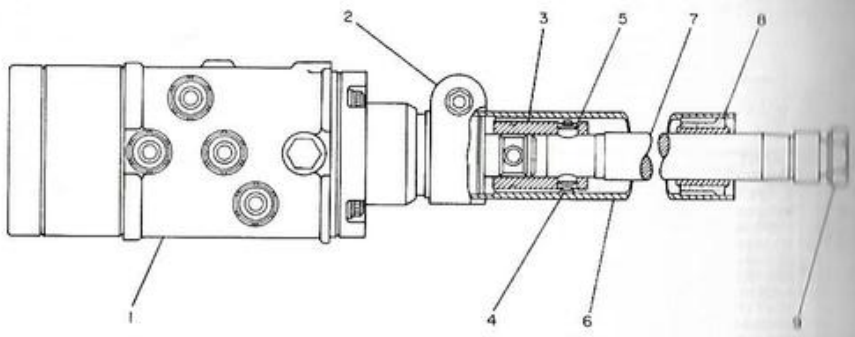

NOTE	REF NO	PART NUMBER	QTY	DESCRIPTION
Y	1	2Y6399	1	PUMP GP.
	2	2Y6396	1	CLAMP AS
	3	2Y6398	1	SLEEVE
	4	686734	2	SPRING
	5	2Y6401	2	PIN
	6	2Y6402	1	JACKET
	7	2Y6403	1	SHAFT
	8	2Y6404	1	BUSHING AS
	9	2Y6405	1	NUT

Y SEPARATE ILLUSTRATION 332674

2Y6400 STEERING COLUMN & PUMP GROUP
Serial No.57Z572-Up.2Y6399-Page 127.06
Part Of 2Y5531 Steering Control

Part Of 2Y6400 Steering Column And Pump

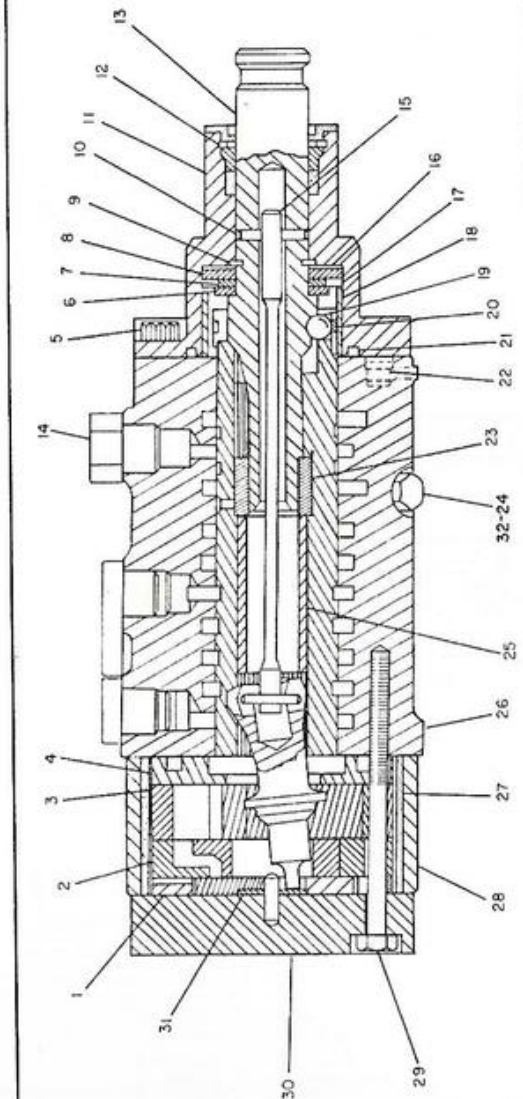

NOTE	REF NO	PART NUMBER	QTY	PART NAME
	1	666750	1	RING AS-COMMUTATOR &
	2	686749	1	MANIFOLD
	3	2Y6388	1	ROTOR SET
	4	686747	1	SPACER
	5	1T0416	4	BOLT
	6	687652	1	RACE-SPECIAL THRUST
	7	686733	1	BEARING-THRUST
	8	686732	1	WASHER-THRUST ,
	9	686728	1	RING-RETAINING
	10	6L6035	1	DOWEL
	11	2Y6397	1	COVER
	12	2D6398	1	RING-RETAINING
	13	2Y6395	1	SHAFT
	14	954191	1	PLUG
		3J1907	1	SEAL
	15	2Y6394	1	BAR AS
	16	686729	4	SHIM .25MM(.010IN)THK
B		686730	4	SHIM .13MM(.005IN)THK
B		686731	1	SHIM .074MM(.003IN)THK
B		687651	1	SHIM .76MM(.030IN)THK
B	17	354296	1	WASHER-SPRING
	18	686735	1	SPACER
	19	489880	1	BALL
	20	686734	1	SPRING-BALL
	21	686739	1	RING-SEAL
	22	686737	2	PLUG AS
		2Y5140	2	SEAL
	23	686726	1	RING-DRIVE
	24	686755	1	PLUG AS
		4J5477	1	SEAL
		2D6642	1	BALL
	25	2Y6393	1	SPACER
	26	2Y6392	1	LINK
	27	2Y6389	1	SEAL
	28	2Y6391	1	RETAINER
	29	1D4540	7	BOLT
	30	686754	1	COVER AS-END
	31	686753	1	WASHER
C	32	2Y8259	1	SPRING
				THE FOLLOWING REPAIR
		379562	1	KIT IS AVAILABLE: KIT-HYDRAGUIDE SEAL (INCLS. SEALS & WASHER)

B-USE AS REQUIRED
C-INDICATES CHANGE

403907

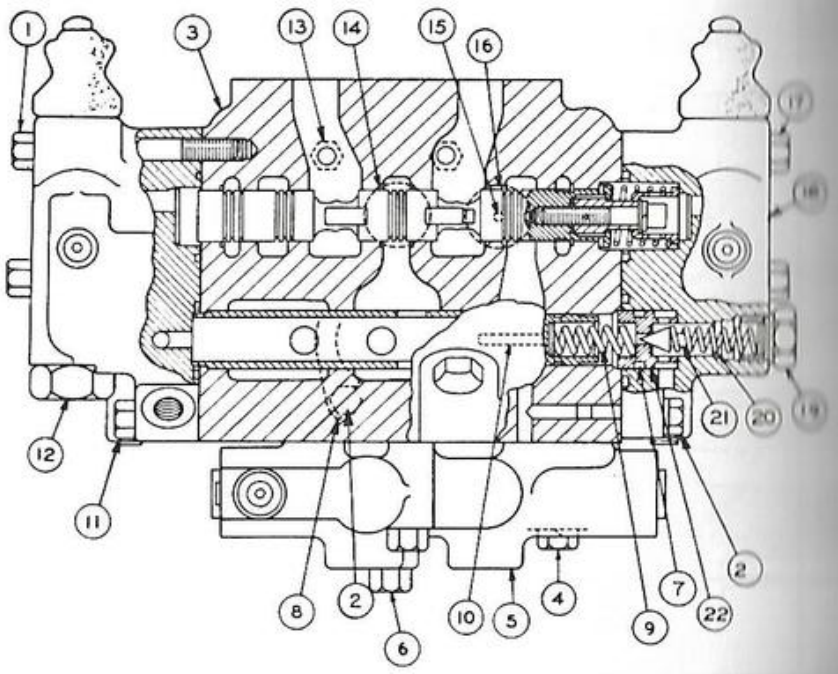

NOTE	REF NO	PART NUMBER	QTY	PART NAME
C	1	0L1352	2	BOLT
C	2	0S1588	6	BOLT
C		5M2894	6	WASHER
Y	3	8J0505	1	VALVE GP
C	4	0S1590	2	BOLT
Y	5	8J0441	1	VALVE GP-SELECTOR
C	6	0L1143	1	BOLT
	7	4J5140	1	SEAL-O-RING
C	8	1P4577	2	FLANGE-HALF
	9	7J0678	1	SPRING
C	10	9J0834	1	PIN
C	11	0S1591	2	BOLT
Y	12	6J6218	1	VALVE GP
	13	9S4182	2	PLUG-O-RING
		3J7354	2	SEAL
	14	9S8006	1	PLUG-O-RING
		2M9780	1	SEAL
	15	7B3028	1	SCREW-DRIVE
	16	8J1726	1	PLATE-IDENTIFICATION
C	17	0T0573	1	BOLT
Y	18	8J0508	1	VALVE GP-NEUTRALIZER
	19	9S4187	1	PLUG-O-RING
		3K0360	1	SEAL
B		3H2549	6	SHIM .26MM (.010IN) THK
CB		3J7470	3	SHIM 1.22MM (.048IN) THK
	20	2J6089	1	SPRING
C	21	9J8224	1	VALVE GP
		1J8497	1	VALVE
	22	7J7090	1	SEAT

C-INDICATES CHANGE Y-SEPARATE ILLUSTRATION

B-USE AS REQUIRED

403868

8J430 STEERING VALVE GROUP
Part Of 7V8935 And 2Y5531 Steering Control
8J505-Page 129,6J6218 & 8J508-Page 130,8J441-Page 131

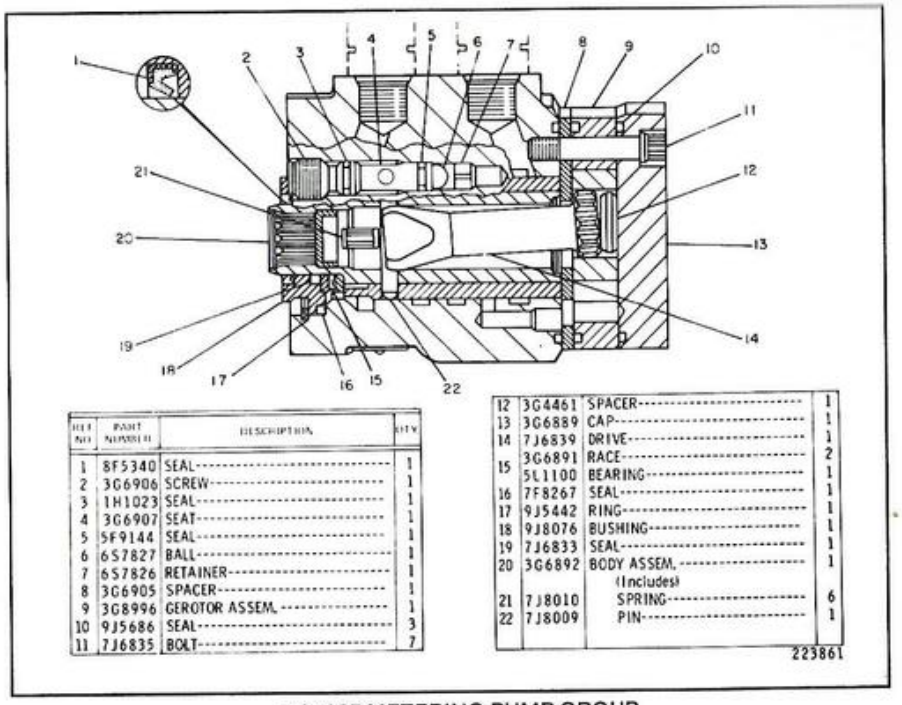

REF NO	PART NUMBER	DESCRIPTION	QTY
1	8F5340	SEAL	1
2	3G6906	SCREW	1
3	1H1023	SEAL	1
4	3G6907	SEAT	1
5	5F9144	SEAL	1
6	6S7827	BALL	1
7	6S7826	RETAINER	1
8	3G6905	SPACER	1
9	3G8996	GEROTOR ASSEM.	1
10	9J5686	SEAL	3
11	7J6835	BOLT	7
12	3G4461	SPACER	1
13	3G6889	CAP	1
14	7J6839	DRIVE	1
15	3G6891	RACE	2
	5L1100	BEARING	1
16	7F8267	SEAL	1
17	9J5442	RING	1
18	9J8076	BUSHING	1
19	7J6833	SEAL	1
20	3G6892	BODY ASSEM. (Includes)	1
21	7J8010	SPRING	6
22	7J8009	PIN	1

223861

3G7387 METERING PUMP GROUP
Part of 7V8935 Steering Control Group shown on Page 126

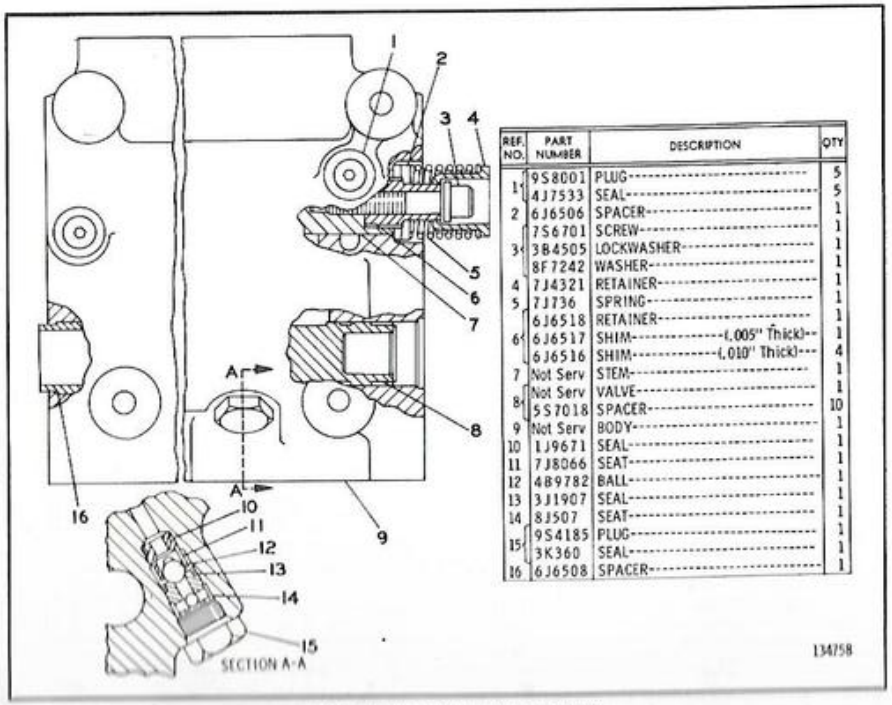

REF NO	PART NUMBER	DESCRIPTION	QTY
1	9S8001	PLUG	5
	4J7533	SEAL	5
2	6J6506	SPACER	1
	7S6701	SCREW	1
3	3B4505	LOCKWASHER	1
	8F7242	WASHER	1
4	7J4321	RETAINER	1
5	7J736	SPRING	1
6	6J6518	RETAINER	1
	6J6517	SHIM (.005" Thick)	1
	6J6516	SHIM (.010" Thick)	4
7	Not Serv	STEM	1
8	Not Serv	VALVE	1
	5S7018	SPACER	10
9	Not Serv	BODY	1
10	1J9671	SEAL	1
11	7J8066	SEAT	1
12	4B9782	BALL	1
13	3J1907	SEAL	1
14	8J507	SEAT	1
15	9S4185	PLUG	1
	3K360	SEAL	1
16	6J6508	SPACER	1

134758

8J505 BASIC VALVE GROUP
Part of 8J430 Steering Valve Group shown on Page 128

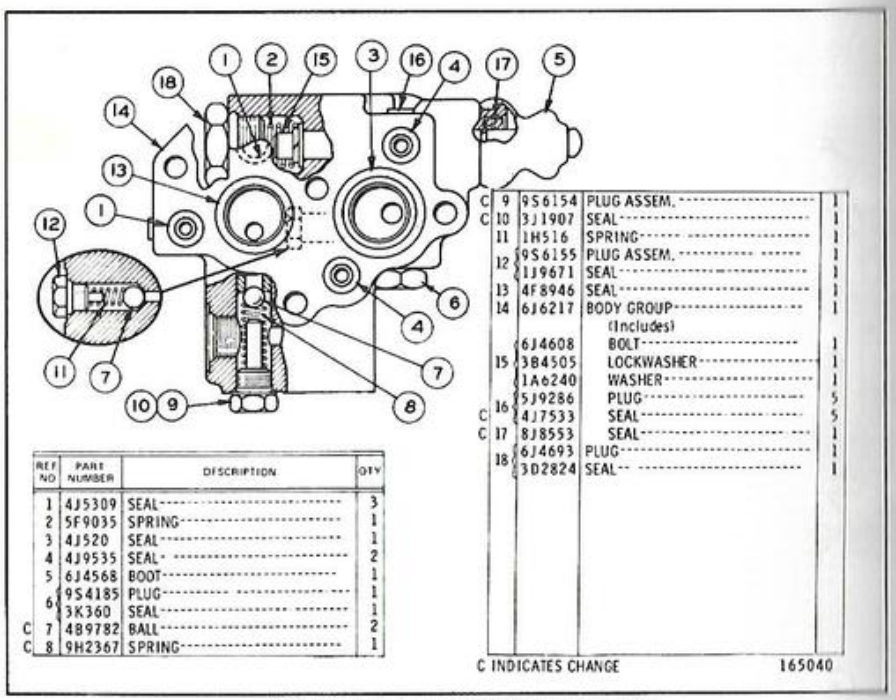

REF NO	PART NUMBER	DESCRIPTION	QTY
1	4J5309	SEAL	3
2	5F9035	SPRING	1
3	4J520	SEAL	1
4	4J9535	SEAL	2
5	6J4568	BOOT	1
6	9S4185	PLUG	1
	3K360	SEAL	1
C 7	4B9782	BALL	2
C 8	9H2367	SPRING	1
C 9	9S6154	PLUG ASSEM.	1
C 10	3J1907	SEAL	1
11	1H516	SPRING	1
12	9S6155	PLUG ASSEM.	1
	1J9671	SEAL	1
13	4F8946	SEAL	1
14	6J6217	BODY GROUP (Includes)	1
	6J4608	BOLT	1
15	3B4505	LOCKWASHER	1
	1A6240	WASHER	1
16	5J9286	PLUG	5
C	4J7533	SEAL	5
C 17	8J8553	SEAL	1
18	6J4693	PLUG	1
	3D2824	SEAL	1

C INDICATES CHANGE 165040

6J6218 NEUTRALIZER VALVE GROUP
Part of 8J430 Steering Valve Group shown on Page 128

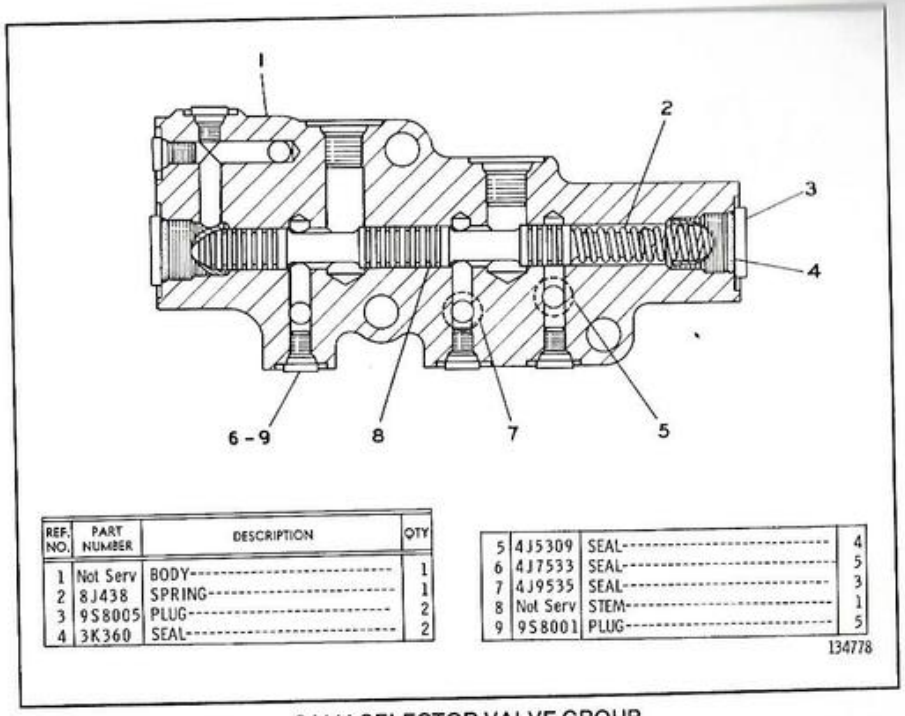

REF. NO.	PART NUMBER	DESCRIPTION	QTY
1	Not Serv	BODY	1
2	8J438	SPRING	1
3	9S8005	PLUG	2
4	3K360	SEAL	2
5	4J5309	SEAL	4
6	4J7533	SEAL	5
7	4J9535	SEAL	3
8	Not Serv	STEM	1
9	9S8001	PLUG	5

134778

8J441 SELECTOR VALVE GROUP
Part of 8J430 Steering Valve Group shown on Page 128

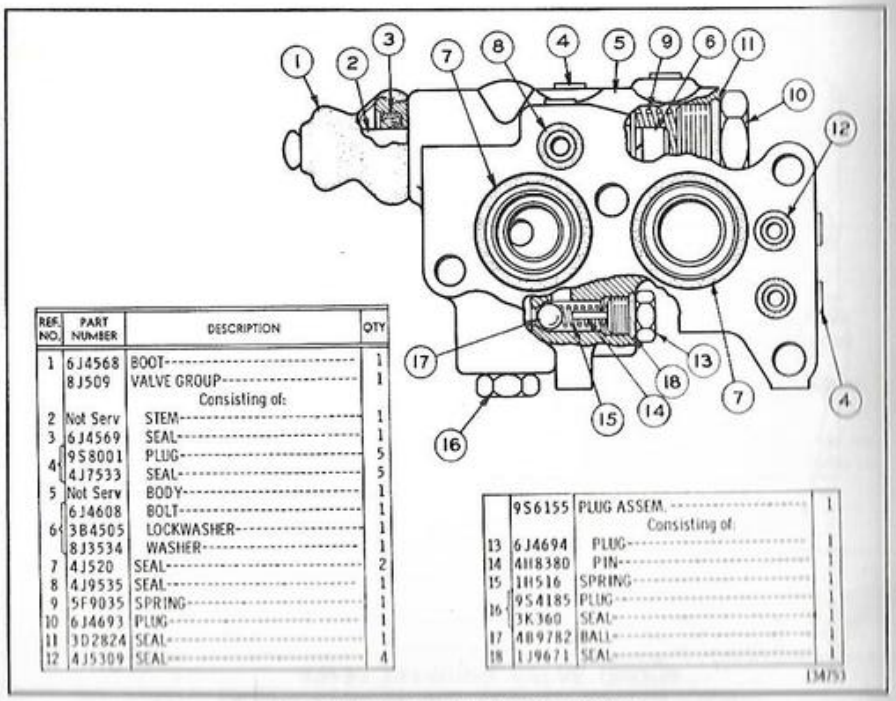

REF. NO.	PART NUMBER	DESCRIPTION	QTY
1	6J4568	BOOT	1
	8J509	VALVE GROUP	1
		Consisting of:	
2	Not Serv	STEM	1
3	6J4569	SEAL	1
4	9S8001	PLUG	5
	4J7533	SEAL	5
5	Not Serv	BODY	1
6	6J4608	BOLT	1
	3B4505	LOCKWASHER	1
	8J3534	WASHER	1
7	4J520	SEAL	2
8	4J9535	SEAL	1
9	5F9035	SPRING	1
10	6J4693	PLUG	1
11	3D2824	SEAL	1
12	4J5309	SEAL	4
	9S6155	PLUG ASSEM.	1
		Consisting of:	
13	6J4694	PLUG	1
14	4H8380	PIN	1
15	1H516	SPRING	1
16	9S4185	PLUG	1
	3K360	SEAL	1
17	4B9782	BALL	1
18	1J9671	SEAL	1

134753

8J508 NEUTRALIZER VALVE GROUP

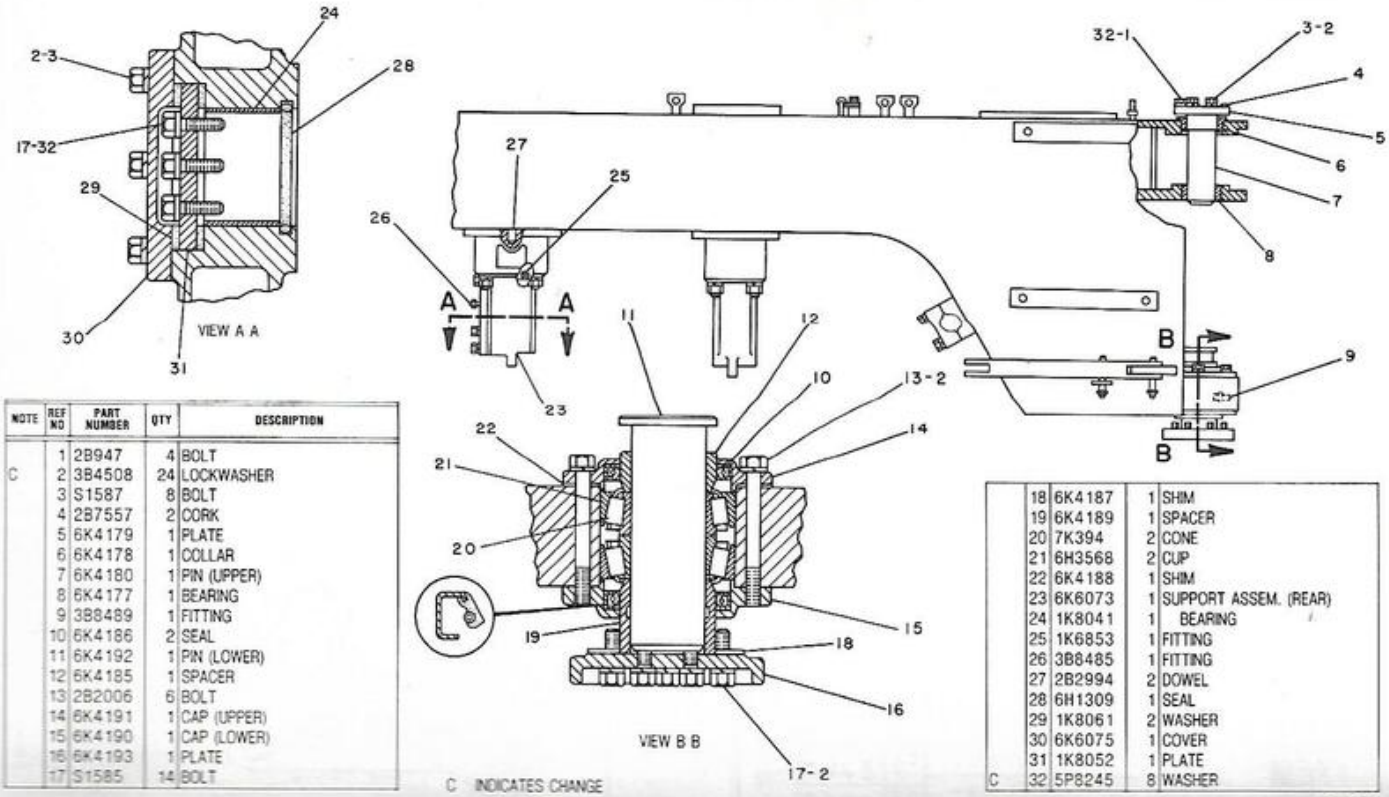

NOTE	REF NO	PART NUMBER	QTY	DESCRIPTION
	1	2B947	4	BOLT
C	2	3B4508	24	LOCKWASHER
	3	S1587	8	BOLT
	4	2B7557	2	CORK
	5	6K4179	1	PLATE
	6	6K4178	1	COLLAR
	7	6K4180	1	PIN (UPPER)
	8	6K4177	1	BEARING
	9	3B8489	1	FITTING
	10	6K4186	2	SEAL
	11	6K4192	1	PIN (LOWER)
	12	6K4185	1	SPACER
	13	2B2006	6	BOLT
	14	6K4191	1	CAP (UPPER)
	15	6K4190	1	CAP (LOWER)
	16	6K4193	1	PLATE
	17	S1585	14	BOLT
	18	6K4187	1	SHIM
	19	6K4189	1	SPACER
	20	7K394	2	CONE
	21	6H3568	2	CUP
	22	6K4188	1	SHIM
	23	6K6073	1	SUPPORT ASSEM. (REAR)
	24	1K8041	1	BEARING
	25	1K6853	1	FITTING
	26	3B8485	1	FITTING
	27	2B2994	2	DOWEL
	28	6H1309	1	SEAL
	29	1K8061	2	WASHER
	30	6K6075	1	COVER
	31	1K8052	1	PLATE
C	32	5P8245	8	WASHER

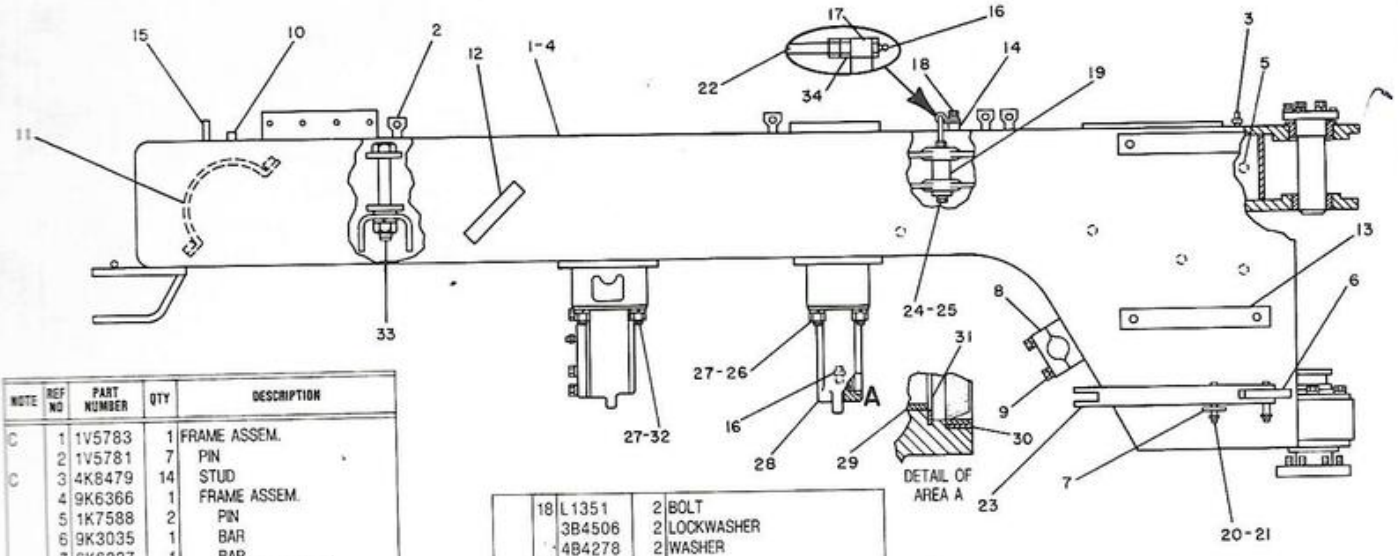

NOTE	REF NO	PART NUMBER	QTY	DESCRIPTION
C	1	1V5783	1	FRAME ASSEM.
	2	1V5781	7	PIN
C	3	4K8479	14	STUD
	4	9K6366	1	FRAME ASSEM.
	5	1K7588	2	PIN
	6	9K3035	1	BAR
	7	6K6237	1	BAR
	8	6K6940	2	BRACKET ASSEM.
		6K6938	1	CAP
	9	1A5822	4	BOLT
		3B4508	4	LOCKWASHER
	10	8F4387	3	LUG
	11	6K7986	2	CLAMP ASSEM.
		9F2978	2	NUT
	12	7K1583	2	LIFTING EYE
	13	8K7741	4	BAR
	14	1F5339	2	LUG
	15	3D4964	1	LUG
	16	3B8489	3	FITTING
C	17	2V3580	2	CLIP ASSEM.
	18	L1351	2	BOLT
		3B4506	2	LOCKWASHER
		4B4278	2	WASHER
	19	6K6185	2	PIN
	20	9K3036	2	PIN
	21	3B4617	2	COTTER PIN
C	22	2V3435	2	TUBE ASSEM.
	23	9K3037	1	LINK
	24	S1587	2	BOLT
		3B4508	2	LOCKWASHER
	25	7K6128	2	WASHER
	26	1D4616	4	BOLT
	27	2J3506	8	NUT
		3B4512	8	LOCKWASHER
	28	6K6074	1	SUPPORT ASSEM. (FRONT)
	29	1K8051	1	BEARING
	30	3K5093	2	SEAL
C	31	5V7574	1	RING (INTERNAL)
	32	6K1330	4	BOLT
	33	2B7218	2	BOLT
		1B4333	2	NUT
		3B4516	2	LOCKWASHER
		2S3728	4	WASHER
C	34	9S7581	4	CONNECTOR

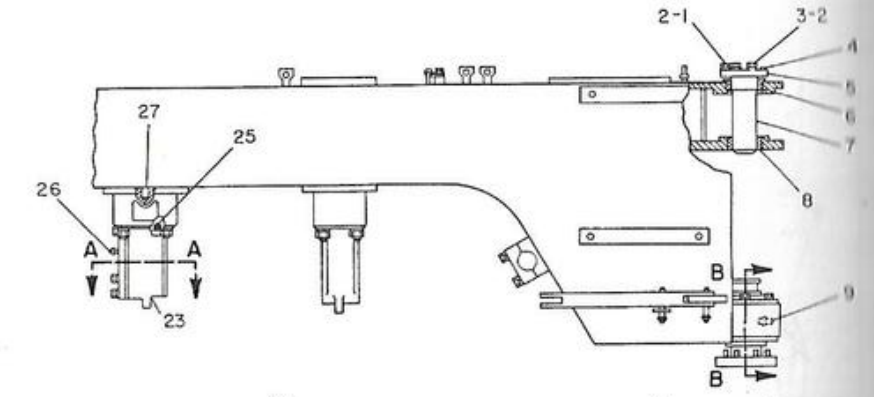

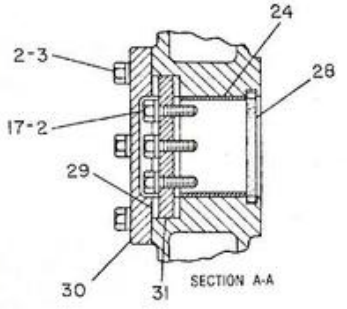

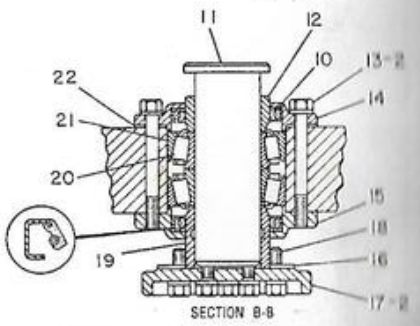

NOTE	REF NO	PART NUMBER	QTY	PART NAME	NOTE	REF NO	PART NUMBER	QTY	PART NAME
	1	2B0947	4	BOLT		27	2B2994	2	DOWEL
C	2	5P8245	32	WASHER		28	6H1309	1	RING-SEALING
	3	0S1587	8	BOLT		29	1K8061	2	WASHER-THRUST
	4	2B7557	2	CORK		30	6K6075	1	COVER
	5	6K4179	1	PLATE		31	1K8052	1	PLATE-THRUST
	6	6K4178	1	COLLAR					
	7	6K4180	1	PIN-UPPER					
	8	6K4177	1	BEARING-SLEEVE					
	9	3B8489	1	FITTING-HYDRAULIC					
	10	6K4186	2	SEAL-LIP TYPE					
	11	6K4192	1	PIN-LOWER					
	12	6K4185	1	SPACER					
	13	2B2006	6	BOLT					
	14	6K4191	1	CAP-UPPER					
	15	6K4190	1	CAP-LOWER					
	16	6K4193	1	PLATE-LOCK					
	17	0S1585	14	BOLT					
	18	6K4187	1	SHIM-PACK					
	19	6K4189	1	SPACER					
	20	7K0394	2	CONE-ROLLER BEARING					
	21	6H3568	2	CUP-BEARING					
	22	6K4188	1	SHIM-PACK					
	23	6K6073	1	SUPPORT AS-REAR					
	24	1K8041	1	BEARING-SLEEVE					
	25	1K6853	1	FITTING					
	26	3B8485	1	FITTING-HYDRAULIC					

C-INDICATES CHANGE

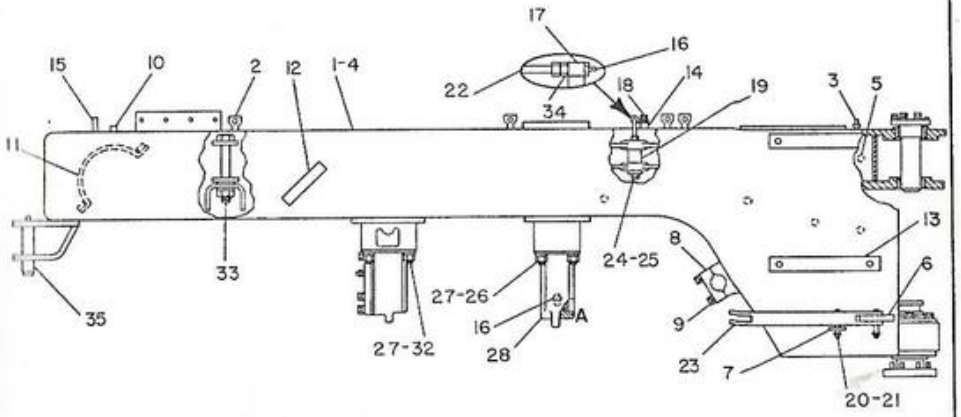

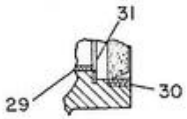

DETAIL OF AREA A

NOTE	REF NO	PART NUMBER	QTY	PART NAME	NOTE	REF NO	PART NUMBER	QTY	PART NAME
	1	1V5783	1	FRAME AS-MAIN		21	3B4617	2	COTTER
	2	1V5781	7	PIN-WELD		22	2V3435	2	TUBE AS
	3	4K8479	14	STUD-WELD		23	9K3037	1	LINK
	4	9K6366	1	FRAME AS-ENGINE END		24	0S1587	2	BOLT
	5	1K7588	2	PIN	C		5P8245	2	WASHER
	6	9K3035	1	BAR		25	7K6128	2	WASHER
	7	6K6237	1	BAR	C	26	1D4617	4	BOLT
	8	6K6940	2	BRACKET AS		27	2J3506	8	NUT-FULL
				(EACH INCLUDES)	C		5P8248	8	WASHER
		6K6938	1	CAP		28	6K6074	1	SUPPORT AS-FRONT
	9	1A5822	4	BOLT		29	1K8051	1	BEARING-SLEEVE,
		3B4508	4	LOCKWASHER		30	3K5093	2	SEAL-LIP TYPE
	10	8F4387	3	PLATE		31	5V7574	1	RING-RETAINING
	11	6K7986	2	CLAMP AS		32	6K1330	4	BOLT
				(EACH INCLUDES)		33	2B7218	2	BOLT
		9F2978	2	NUT-WELD			1B4333	2	NUT-FULL
	12	7K1583	2	LIFTING EYE	C		5P8250	2	WASHER 5MM(.197IN)THK
	13	8K7741	4	BAR			2S3728	4	WASHER-STOP
	14	1F5339	2	LUG					10.3MM(.406IN)THK
	15	3D4964	1	LUG		34	9S7581	4	CONNECTOR-FLARED
	16	3B8489	4	FITTING-HYDRAULIC	C	35	6K5823	1	PIN AS
	17	2V3580	2	CLIP AS					
	18	0L1351	2	BOLT					
		5M2894	2	WASHER					
	19	6K6185	2	PIN-CYLINDER					
	20	9K3036	2	PIN					

C-INDICATES CHANGE

405790

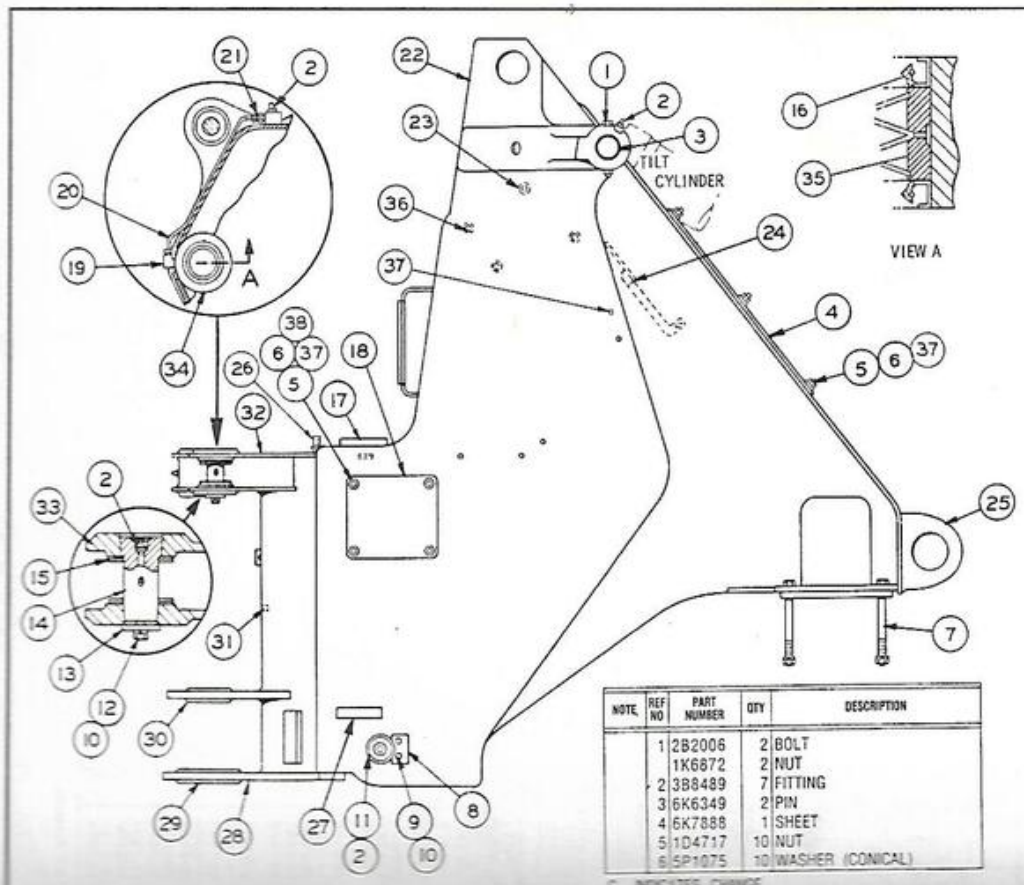

NOTE	REF NO	PART NUMBER	QTY	DESCRIPTION
	1	2B2006	2	BOLT
		1K6872	2	NUT
	2	3B8489	7	FITTING
	3	6K6349	2	PIN
	4	6K7888	1	SHEET
	5	1D4717	10	NUT
	6	5P1075	10	WASHER (CONICAL)
	7	9F8689	8	BOLT
		4K0367	8	NUT
		3B4510	8	LOCKWASHER
	8	2K0703	2	BAR
	9	9M6590	4	BOLT
	10	3B4508	6	LOCKWASHER
	11	6K6051	2	PIN
	12	0S1587	2	BOLT
	13	7K6128	2	WASHER
	14	6K6185	2	PIN
	15	3B4897	8	WASHER
	16	4F6888	2	SEAL
	17	7K1878	1	PLUG
	18	6K7686	1	COVER
	19	9S7697	1	ELBOW
	20	2V3442	1	TUBE
	21	9S7581	1	CONNECTOR
	22	6K7756	1	FRAME AS.
	23	7K5986	1	BOSS
	24	6K9991	1	PLATE AS.
C	25	3V2793	2	EYE
	26	4K8479	7	STUD
	27	9K3035	1	BAR
	28	6K6370	1	HITCH AS. (LOWER)
	29	6K6441	1	BOSS
	30	6K6442	1	BOSS
	31	4K9237	1	LUG
	32	6K6440	1	HITCH AS.
	33	6K6390	4	BOSS
	34	6K6479	1	BOSS
	35	6K4197	1	BEARING
	36	7K2271	3	BOSS
C	37	5P5014	20	STUD

C INDICATES CHANGE

353425

6K7755 FRAME GP-FRONT

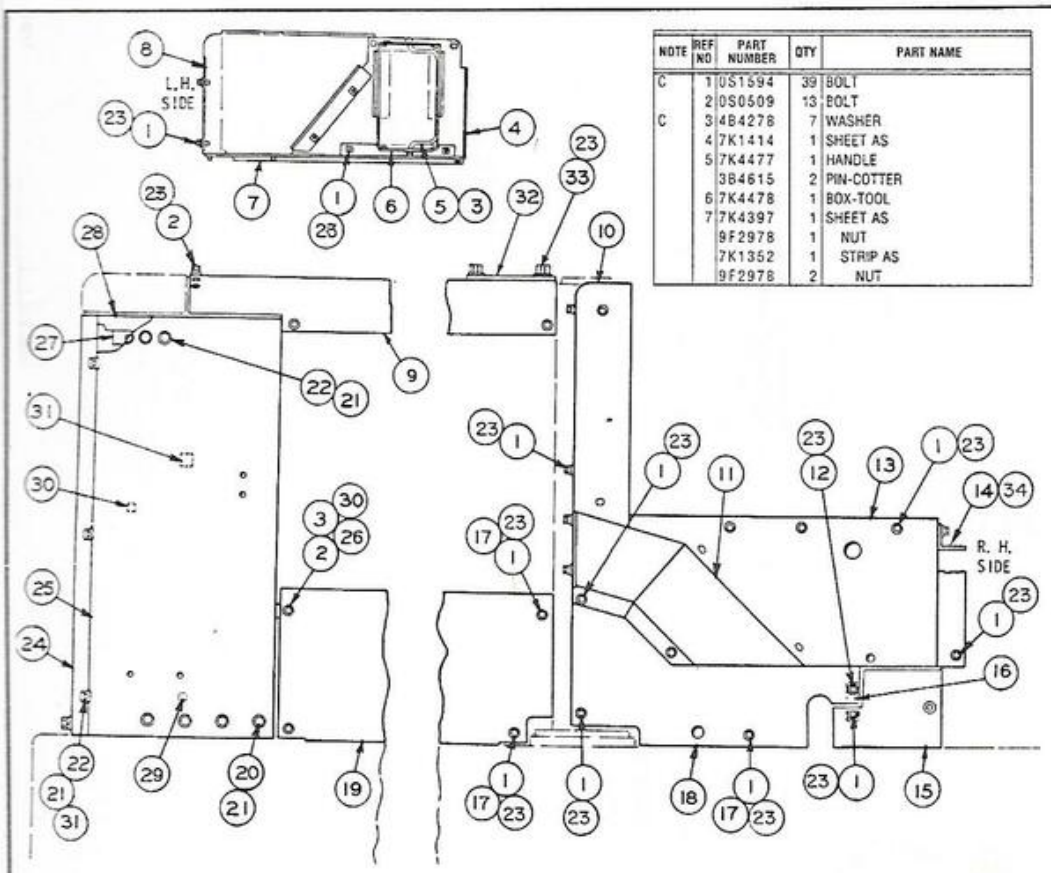

NOTE	REF NO	PART NUMBER	QTY	PART NAME
C	1	0S1594	39	BOLT
	2	0S0509	13	BOLT
C	3	4B4278	7	WASHER
	4	7K1414	1	SHEET AS
	5	7K4477	1	HANDLE
		3B4615	2	PIN-COTTER
	6	7K4478	1	BOX-TOOL
	7	7K4397	1	SHEET AS
		9F2978	1	NUT
		7K1352	1	STRIP AS
		9F2978	2	NUT
	8	6K8276	1	SHEET AS
		2Y3506	1	STRIP AS
		2Y3508	1	STRIP AS
	9	5V4857	1	HOOD AS
		9F2978	2	NUT
	10	7K0384	1	PLATE
	11	6K8073	1	SHEET AS
		9F2978	4	NUT
	12	0S1588	1	BOLT
	13	9K9394	1	SHEET AS
		9F2978	1	NUT
	14	9K9393	1	STRIP AS
	15	7K4387	1	STRIP
	16	6K8564	1	STRIP AS
		9F2978	1	NUT
C	17	2Y3079	8	NUT AS.
	18	7V9054	1	SHEET AS
		9F2978	1	NUT
	19	6K7935	1	PANEL-R.H.
		6K7936	1	PANEL-L.H.
	20	0S1621	8	BOLT
C	21	5P8245	17	WASHER
	22	0S1595	9	BOLT
C	23	5P1075	55	WASHER
	24	6K6426	1	GUARD-RADIATOR
	25	6K6435	1	GUARD AS-RADIATOR
		1F0748	3	NUT-WELD
	26	9F2978	2	NUT
	27	4D7978	2	BLOCK
	28	7K9635	1	GUARD AS-RADIATOR
	29	4K8479	4	STUD-WELD
	30	9F2978	6	NUT
	31	1F0748	5	NUT-WELD
	32	5V4877	1	PLATE
	33	0L1351	2	BOLT
	34	5P7213	1	WASHER-HARD

C-INDICATES CHANGE

403554

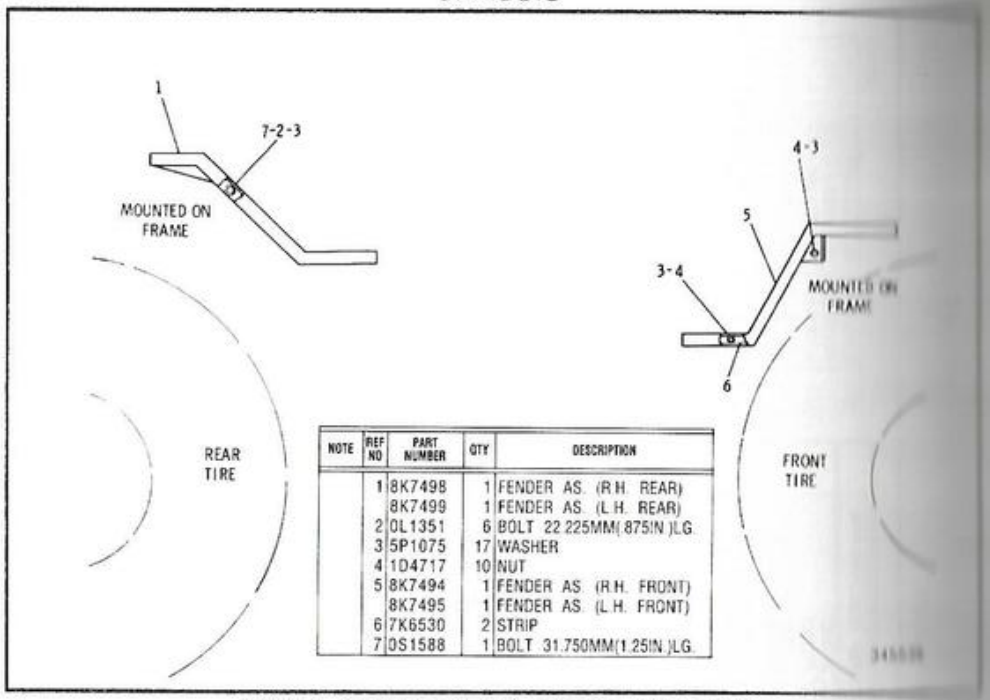

NOTE	REF NO	PART NUMBER	QTY	DESCRIPTION
	1	8K7498	1	FENDER AS. (R.H. REAR)
		8K7499	1	FENDER AS. (L.H. REAR)
	2	0L1351	6	BOLT 22.225MM(.875IN.)LG.
	3	5P1075	17	WASHER
	4	1D4717	10	NUT
	5	8K7494	1	FENDER AS. (R.H. FRONT)
		8K7495	1	FENDER AS. (L.H. FRONT)
	6	7K6530	2	STRIP
	7	0S1588	1	BOLT 31.750MM(1.25IN.)LG.

345688

6K8232 FENDER GROUP–FRONT AND REAR

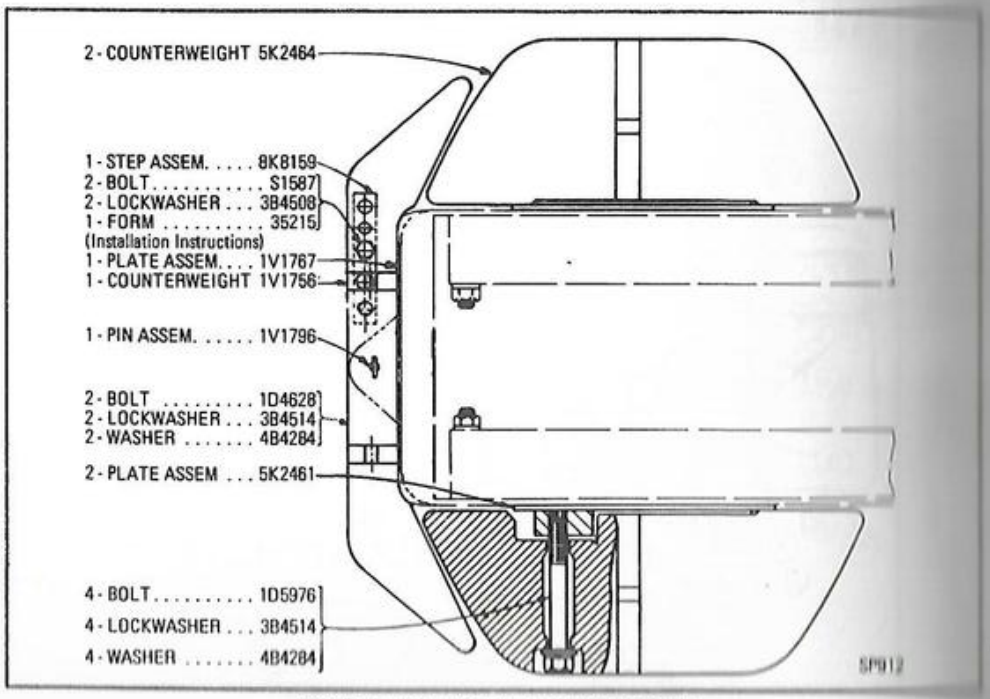

1V1848 COUNTERWEIGHT GROUP
Serial No. 57Z1 To 57Z632 Inclusive

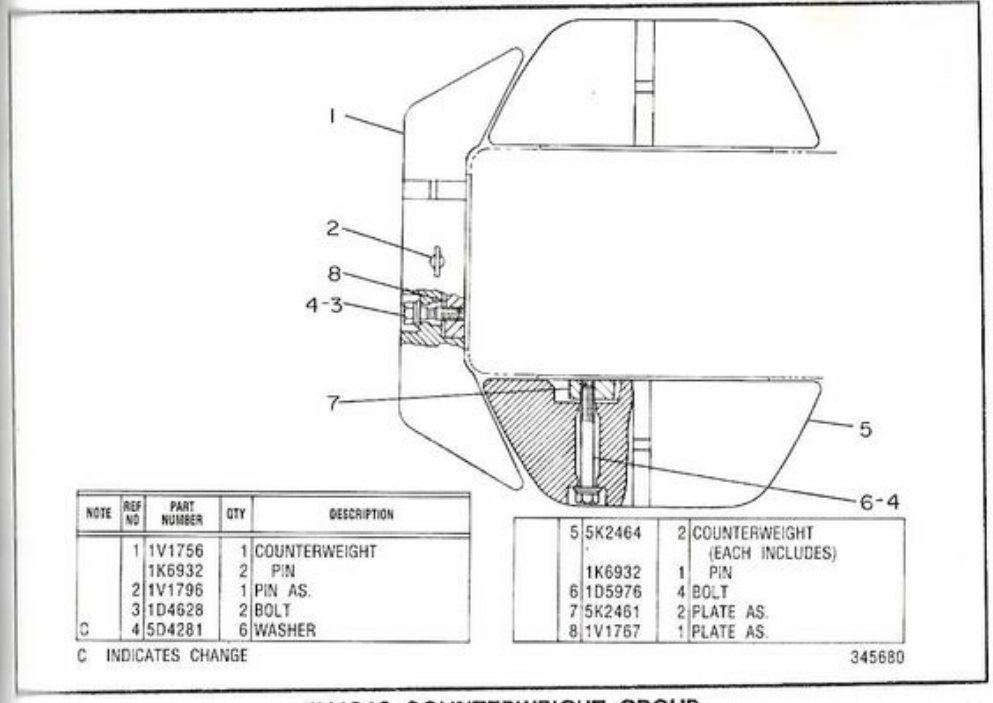

NOTE	REF NO	PART NUMBER	QTY	DESCRIPTION
	1	1V1756	1	COUNTERWEIGHT
		1K6932	2	PIN
	2	1V1796	1	PIN AS.
	3	1D4628	2	BOLT
C	4	5D4281	6	WASHER
	5	5K2464	2	COUNTERWEIGHT (EACH INCLUDES)
		1K6932	1	PIN
	6	1D5976	4	BOLT
	7	5K2461	2	PLATE AS.
	8	1V1767	1	PLATE AS.

C INDICATES CHANGE

345680

1V1848 COUNTERWEIGHT GROUP
Serial No. 57Z633–Up
An Attachment

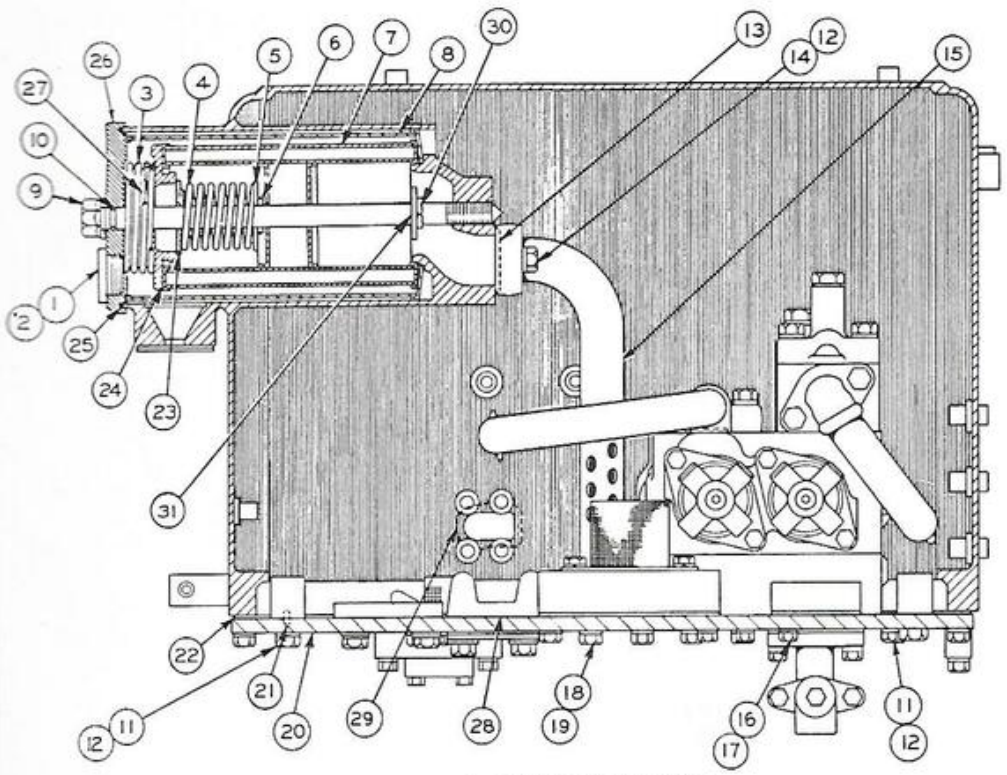

NOTE	REF NO	PART NUMBER	QTY	DESCRIPTION
	1	9S8010	1	PLUG
	2	2S4078	1	SEAL
	3	2J6114	1	SPRING (OUTER)
C	4	2Y7631	1	SPRING
	5	2J0917	1	RETAINER
	6	1H1200	1	PIN
	7	4J6064	1	ELEMENT AS.
				-OR-
CA		3G4621	1	ELEMENT (FIRE RES. FLUID)
	8	6J9403	1	SCREEN AS.
	9	7J5583	1	BOLT
	10	6F4855	1	SEAL
	11	7B3235	2	BOLT 12.7MM(.50IN.)DIA.
C	12	5P8245	4	WASHER
	13	5F8000	1	SEAL
	14	0S1587	2	BOLT
	15	6J7302	1	BAFFLE AS.
	16	0S1588	3	BOLT 9.525MM(.375IN.)DIA.
C	17	5M2894	3	WASHER
C	18	4F8965	32	BOLT 11.1MM(.438IN.)DIA.
C	19	5P8244	32	WASHER
	20	8J0216	1	PLATE
	21	3F4479	2	PIN
	22	6J7270	1	GASKET
	23	2J0918	1	VALVE
	24	5J1473	1	SEAT
	25	4K1557	1	GASKET
	26	7J8014	1	COVER
	27	2J8455	1	SPRING (INNER)
	28	6J7380	6	COVER
		7F4782	6	GASKET
	29	7J0097	1	COVER
		4J3021	1	GASKET
C		3H8430	2	SETSCREW
		0S1594	2	BOLT 2.54M(1 IN.)LG.
C		4B5167	2	WASHER
	30	7J5925	1	COTTER PIN
C	31	6K8716	1	WASHER

A NOT PART OF THIS GROUP
C INDICATES CHANGE

353703

NOTE	REF NO	PART NUMBER	QTY	DESCRIPTION
C	1	0S1595	8	BOLT 3.18CM(1.25IN.)LG.
	2	6J7545	1	BAFFLE AS.
	3	6F6673	2	SEAL
	4	0S1585	4	BOLT
C	5	5P8245	18	WASHER
B	6	6J6516	4	SHIM
	7	6J7206	1	BAFFLE AS.
Y	8	6J9991	1	VALVE GP.
	9	6J6710	2	BLOCK
	10	6F6672	8	SEAL
	11	6J7468	4	BLOCK
	12	1D4707	10	BOLT 5.72CM(2.25IN.)LG.
C		4S9191	10	WASHER
	13	6J7469	1	BLOCK
	14	6J9523	1	FLANGE
	15	7J0096	1	GASKET
	16	1D4566	2	BOLT 8.89CM(3.50IN.)LG.
	17	6J7372	1	GASKET
	18	0S0509	2	BOLT
C	19	5M2894	6	WASHER
	20	6J6711	1	FLANGE
	21	6J6714	1	STRAINER AS.
	22	1A2029	2	BOLT 2.86CM(1.125IN.)LG.
C	23	2J6195	2	COVER
C		4J0519	2	SEAL
	24	7J9828	1	FLANGE
C		4F7391	1	SEAL
	25	1G2251	2	BOLT
		8F9206	2	SEAL
	26	7J9924	1	RETAINER
	27	7J9755	1	STRAINER AS.
	28	0S1587	4	BOLT

B USE AS REQUIRED
C INDICATES CHANGE
Y SEPARATE ILLUSTRATION

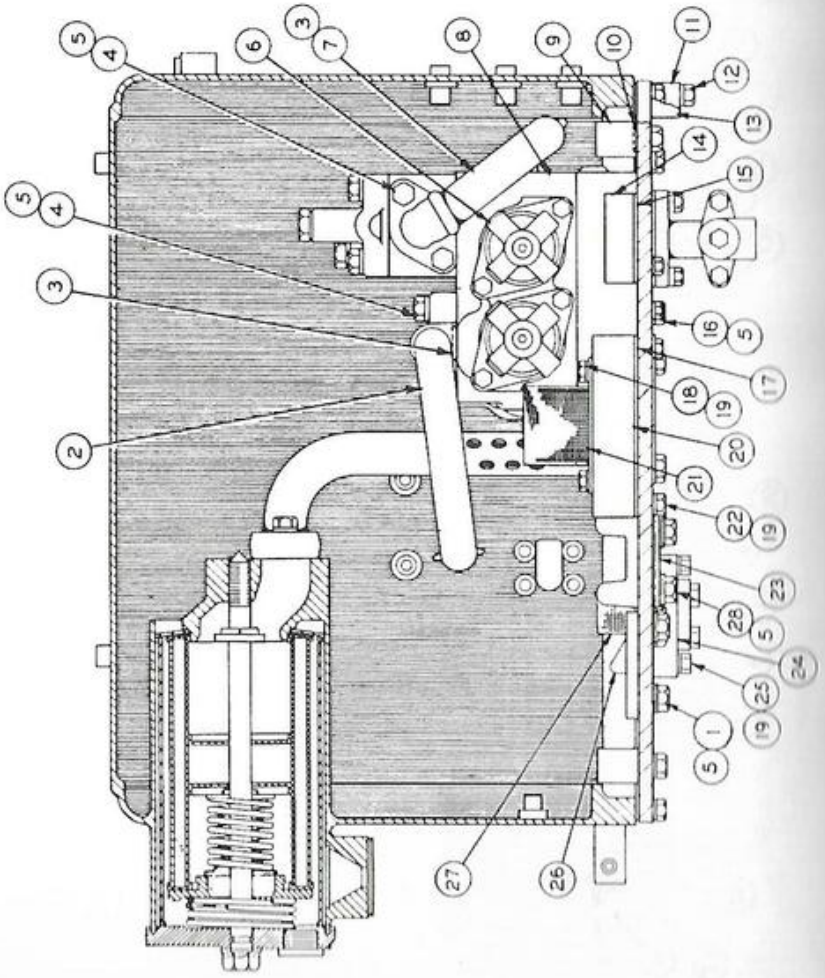

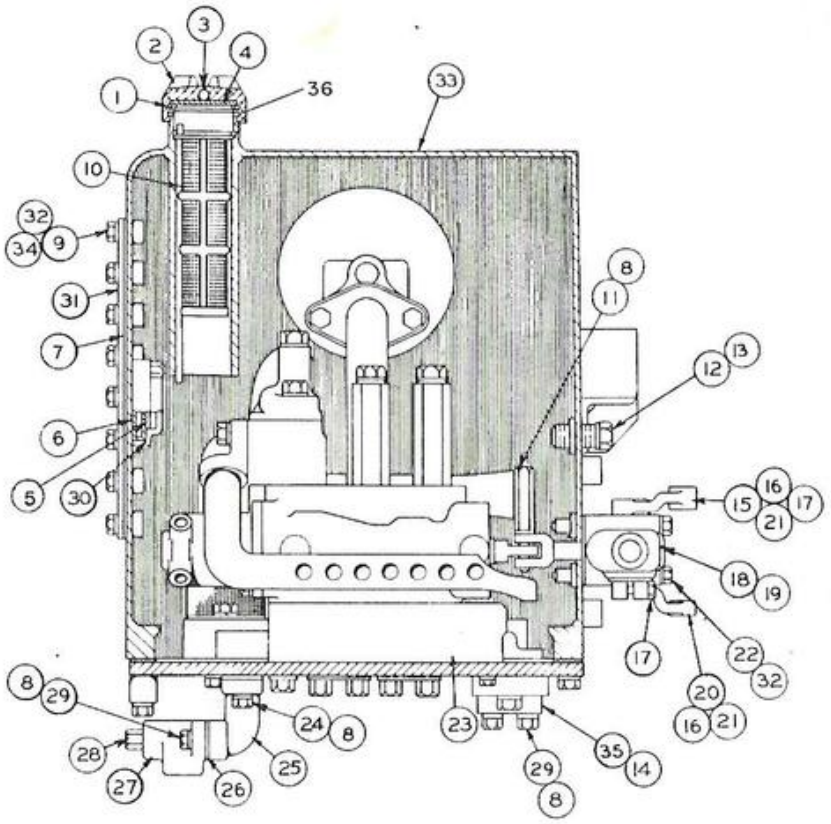

NOTE	REF NO	PART NUMBER	QTY	DESCRIPTION
	1	9H6454	1	GASKET
	2	7H1447	1	CAP
C	3	4B9782	1	BALL
	4	6H5139	1	PLATE
C	5	2Y4647	1	PLATE
	6	4J8251	1	GROMMET
	7	6J7376	1	GASKET
C	8	5M2894	10	WASHER
	9	0L1351	38	BOLT
C	10	9J3047	1	STRAINER
	11	6J7550	2	BOLT
	12	0S1620	2	BOLT
C	13	5P8245	2	WASHER
	14	4F7391	1	SEAL
	15	6J7493	1	LEVER
	16	1B8702	2	KEY
	17	3B1915	2	BOLT
Y	18	7J0001	1	HOUSING GP. (TILT)
Y		7J0002	1	HOUSING GP. (LIFT)
	19	4J3021	2	GASKET
	20	6J7495	1	LEVER
	21	2A1723	2	LOCK
	22	0T0065	4	BOLT
Y	23	6J9919	1	BODY GP.
	24	0S1571	2	BOLT
	25	7J0297	1	ELBOW
	26	8H9818	2	GASKET
	27	8H9819	1	ADAPTER
C	28	5N8780	1	PLUG
C	29	0S1588	6	BOLT
C	30	2Y9368	1	RETAINER
		4J8252	1	GLASS
		4J8265	4	NUT
C	31	8J6912	1	COVER AS.
		8J6910	4	STUD
	32	4B5167	42	WASHER
	33	6J7489	1	TANK AS
		4D9376	5	BOSS
	34	9F2978	38	NUT (WELD)
C	35	2Y1349	2	FLANGE
C	36	3G0361	1	GASKET

C INDICATES CHANGE
Y SEPARATE ILLUSTRATION
353705

8J0212 TANK & VALVE GP-HYDRAULIC-PART 3 OF 3
7J0001-Page 142, 7J0002, 6J9919-Page 143

REF NO.	PART NUMBER	DESCRIPTION	QTY
C 1	9S8009	PLUG	2
C 2	4K1388	SEAL	2
C 3	9J8729	VALVE GROUP (Separate Illustration)	1
4	6F6672	SEAL	12
5	2A5885	SPRING	2
6	5J9078	VALVE	2
7	5J9106	VALVE GROUP	2
8	5J9113	VALVE GROUP (See Separate Illustration)	1
9	6J9993	SPACER	8
10	1A2029	BOLT	4
	3B4506	LOCKWASHER	4
11	6J9992	RETAINER	2
12	6J9998	SPRING	2
13	6J9997	DETENT	1
	7J1767	PLUG	8
14	6J6516	SHIM	16
	6J9996	SPRING	8
	5H1472	BALL	1
15	7J5545	SPACER	1
16	6J9995	DETENT	1
17	5J9092	SPACER	1
18	5J9091	SPACER	1
19	4J8997	SEAL	6

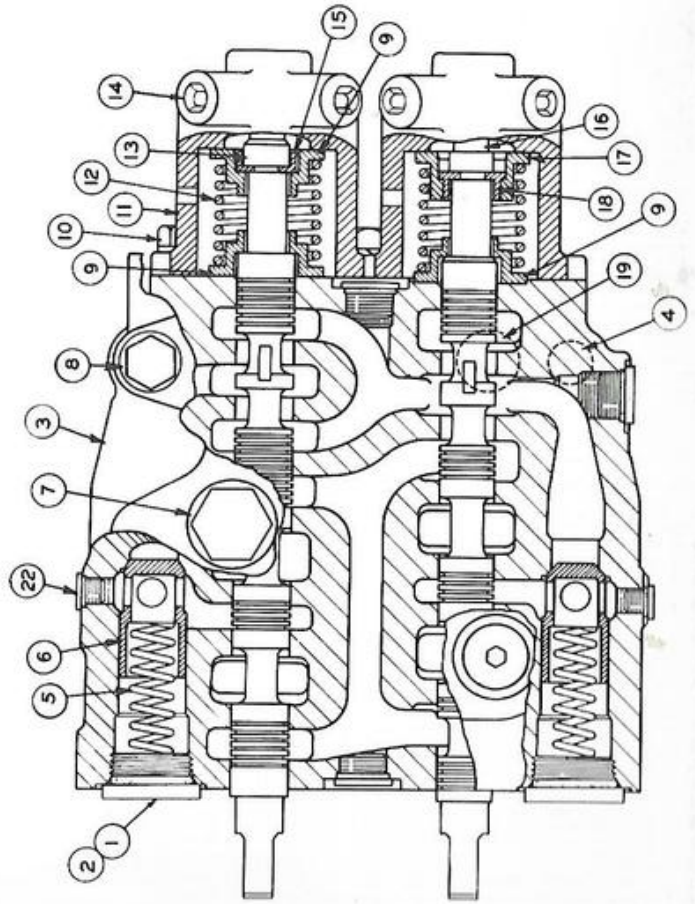

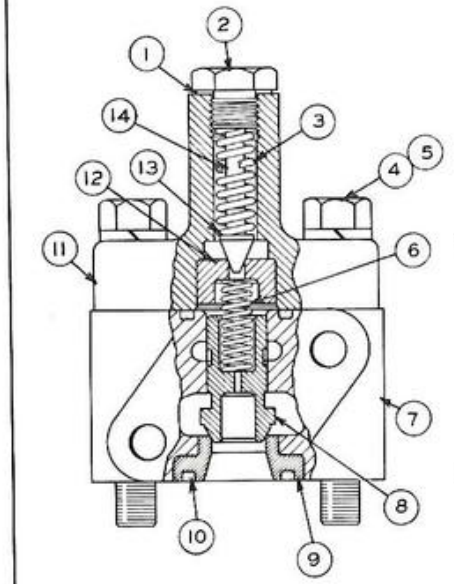

REF NO.	PART NUMBER	DESCRIPTION	QTY
1	8F1974	SHIM	8
2	1J9834	PLUG	1
3	2J6089	SPRING	1
C 4	1B2886	BOLT	2
5	3B4508	LOCKWASHER	2
6	5J9108	SPRING	1
7	5J9111	BODY GROUP	1
	Not Serv	BODY	1
8	Not Serv	VALVE	1
9	5J9112	SEAT	1
10	4J8997	SEAL	2
11	3J1051	COVER ASSEM.	1
	3J601	COVER	1
12	6J1326	SEAT	1
13	1J8497	VALVE	1
C 14	8H4952	DOWEL	1

C INDICATES CHANGE

113972

5J9113 MAIN RELIEF VALVE GROUP
Part of 6J9991 Main Control Valve Group shown on Page 140

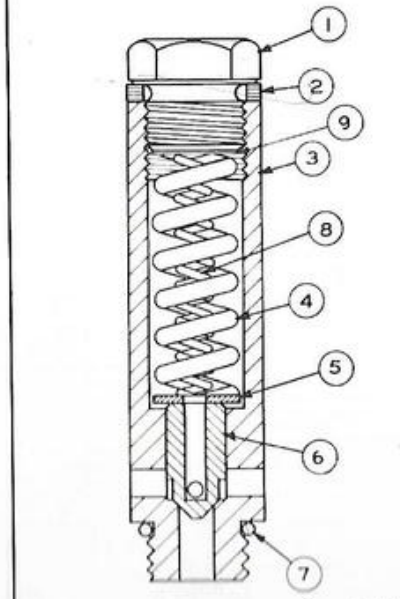

REF NO.	PART NUMBER	DESCRIPTION	QTY
1	5B5946	PLUG	1
2	5J9100	SHIM (.005" Thick)	2
	5J9101	SHIM (.010" Thick)	5
3	5J9102	BODY	1
4	5J9103	SPRING	1
5	5J9105	WASHER	1
6	6J6439	VALVE	1
7	2M9780	SEAL	1
8	5J9104	SPRING	1
C 9	5M3492	SHIM	5

C INDICATES CHANGE

114289

5J9106 TILT RELIEF VALVE GROUP
Part of 6J9991 Main Control Valve Group shown on Page 140

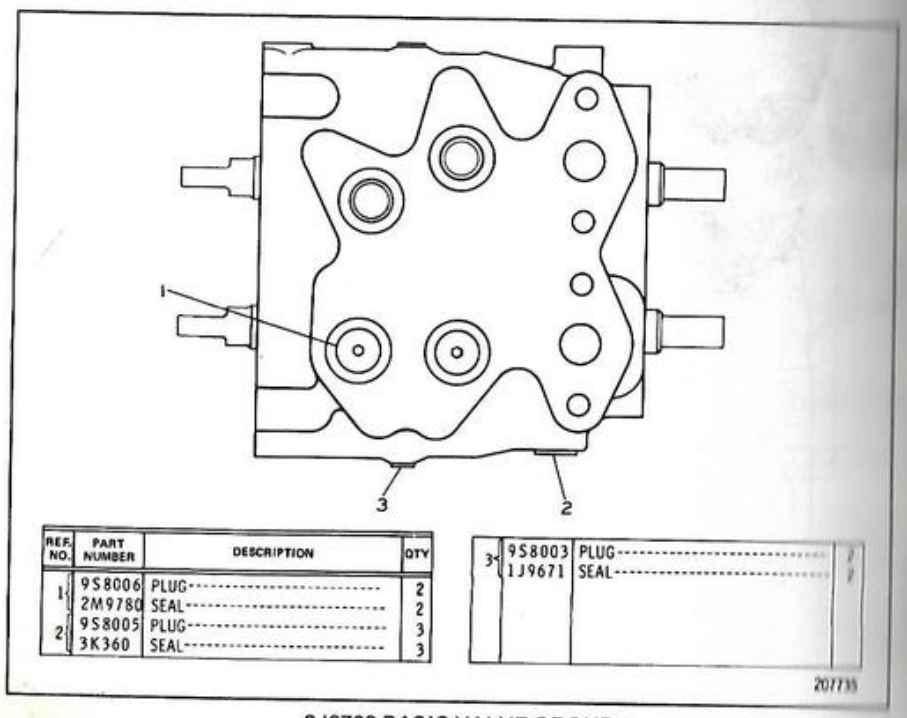

REF. NO.	PART NUMBER	DESCRIPTION	QTY
1	9S8006	PLUG	2
	2M9780	SEAL	2
2	9S8005	PLUG	3
	3K360	SEAL	3
3	9S8003	PLUG	1
	1J9671	SEAL	1

9J8729 BASIC VALVE GROUP
Part of 6J9991 Main Control Valve Group shown on Page 140

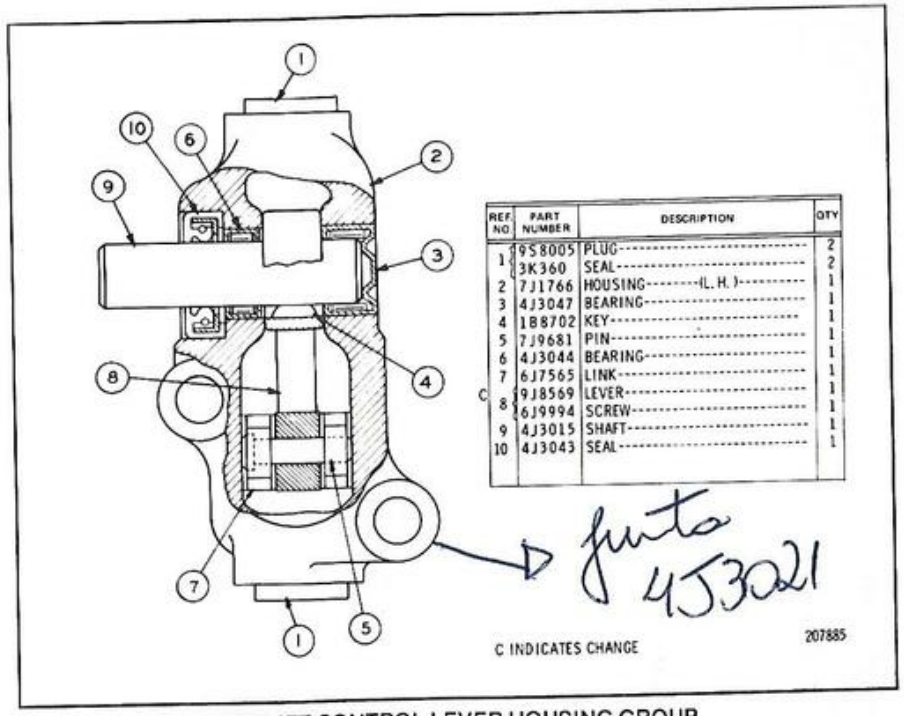

REF. NO.	PART NUMBER	DESCRIPTION	QTY
1	9S8005	PLUG	2
	3K360	SEAL	2
2	7J1766	HOUSING (L. H.)	1
3	4J3047	BEARING	1
4	1B8702	KEY	1
5	7J9681	PIN	1
6	4J3044	BEARING	1
7	6J7565	LINK	1
C 8	9J8569	LEVER	1
	6J9994	SCREW	1
9	4J3015	SHAFT	1
10	4J3043	SEAL	1

Junta 4J3021

7J2 LIFT CONTROL LEVER HOUSING GROUP
Part of 8J212 Hydraulic Tank and Valve Group shown on Page 139

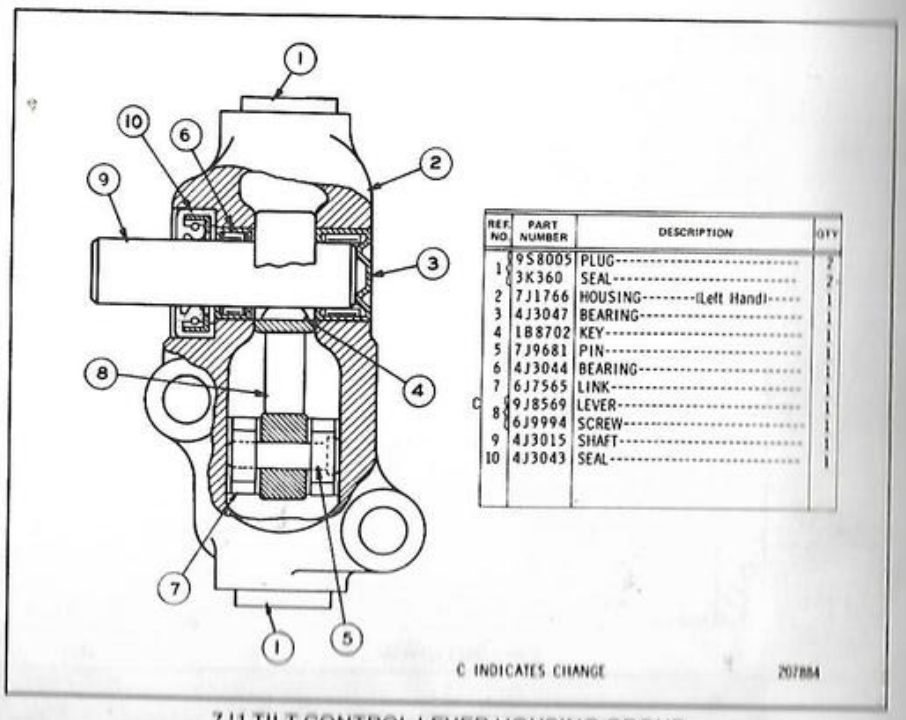

REF. NO.	PART NUMBER	DESCRIPTION	QTY
1	9S8005	PLUG	2
	3K360	SEAL	2
2	7J1766	HOUSING (Left Hand)	1
3	4J3047	BEARING	1
4	1B8702	KEY	1
5	7J9681	PIN	1
6	4J3044	BEARING	1
7	6J7565	LINK	1
C 8	9J8569	LEVER	1
	6J9994	SCREW	1
9	4J3015	SHAFT	1
10	4J3043	SEAL	1

7J1 TILT CONTROL LEVER HOUSING GROUP
Part of 8J212 Hydraulic Tank and Valve Group shown on Page 139

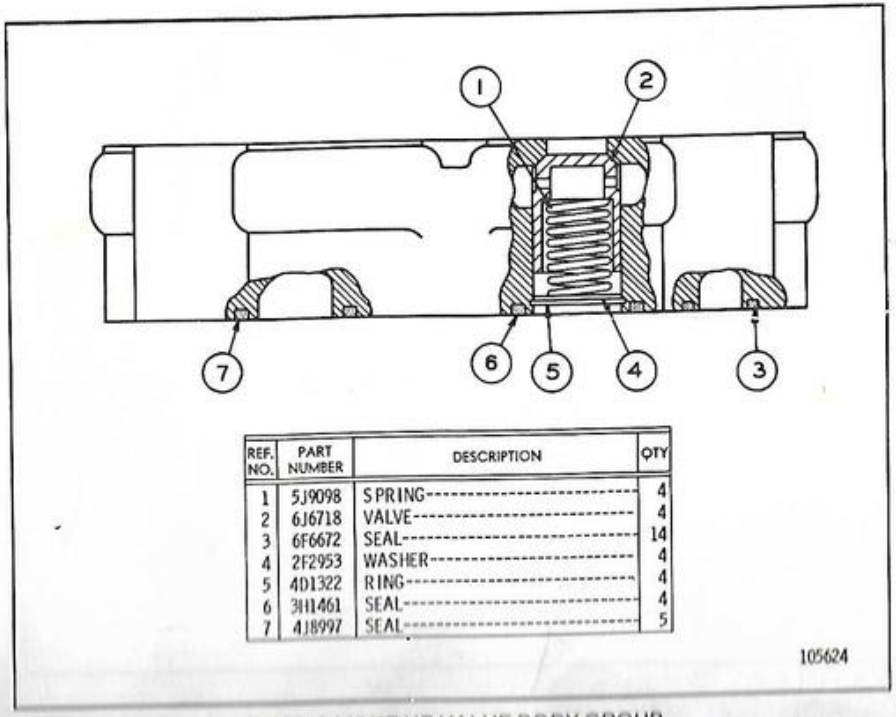

REF. NO.	PART NUMBER	DESCRIPTION	QTY
1	5J9098	SPRING	4
2	6J6718	VALVE	4
3	6F6672	SEAL	14
4	2F2953	WASHER	4
5	4D1322	RING	4
6	3H1461	SEAL	4
7	4J8997	SEAL	5

6J9919 MAKE UP VALVE BODY GROUP

6K7602 CONTROL GP-DOUBLE LEVER HAND
Tilt & Lift

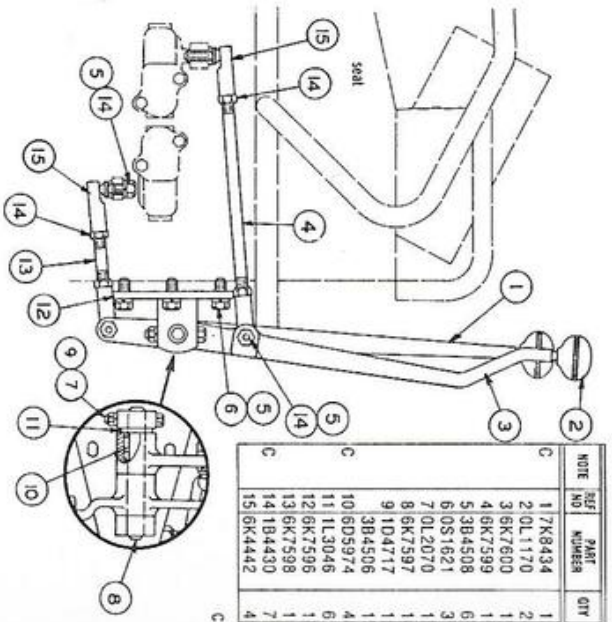

NOTE	REF NO	PART NUMBER	QTY	DESCRIPTION
C	1	7K8434	1	LEVER (TILT)
	2	0L1170	2	HANDLE
	3	6K7600	1	LEVER (LIFT)
	4	6K7599	1	ROD
	5	3B4508	6	LOCKWASHER
	6	0S1621	3	BOLT
	7	0L2070	1	BOLT
	8	6K7597	1	SHAFT
	9	1D4717	1	NUT
C	10	6D5974	4	BEARING
	11	1L3046	6	WASHER
	12	6K7596	1	BRACKET AS
	13	6K7598	1	ROD
	14	1B4430	7	NUT
	15	6K4442	4	BALLJOINT AS

C INDICATES CHANGE

7J9838 STEERING CYLINDER GROUP (7K9429 N/S) (Chg. 2)—76.2 mm (3 in.) Bore x 368.3 mm (14.5 in.) Stroke—2 Required

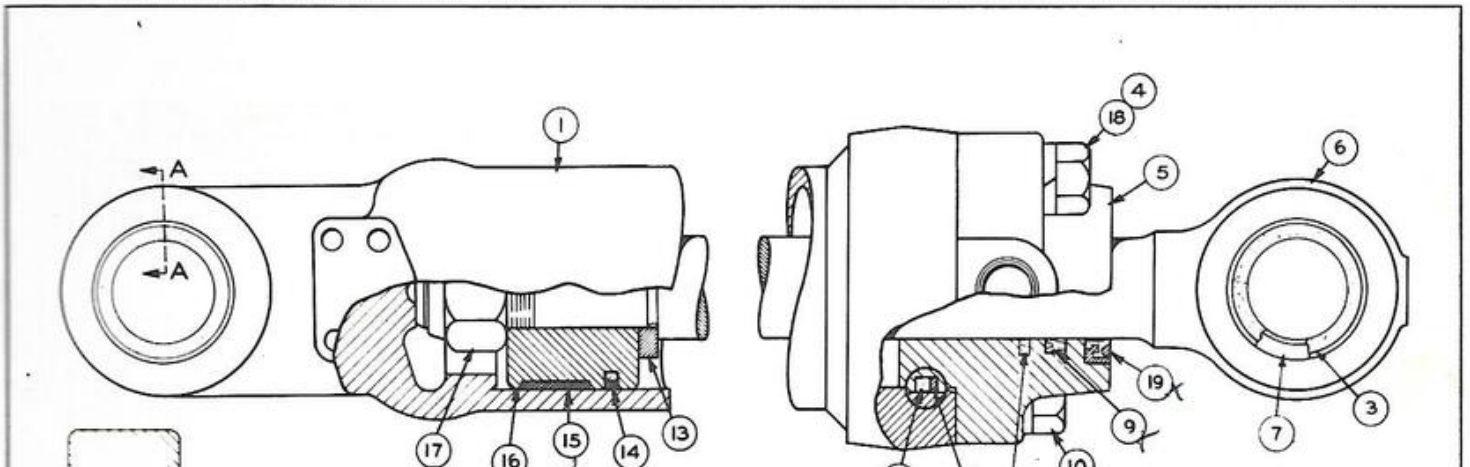

REF NO.	PART NUMBER	DESCRIPTION	QTY
1	7J9839	CYLINDER ASSEM. (Includes)	1
2	7J9842	BEARING	1
▲ 3	5P91	SEAL	4
4	3B4510	LOCKWASHER	4
C 5	9J496	HEAD	1
6	7J9843	ROD ASSEM. (Includes)	1
7	7J9842	BEARING	1
9	5J8150	SEAL	1
10	8S9092	BOLT	2
11	6J5731	RING	1
12	5H8848	SEAL	1
13	6J5737	WASHER	1
14	6J1972	SEAL ASSEM.	1
15	6J5733	RING	1
16	6J5736	PISTON	1
17	6J5730	NUT	1
18	S1625	BOLT	2
19	4J8979	SEAL	1
20	6J9733	SEAL	1

▲ NOT PART OF 7J9838 CYLINDER GROUP C INDICATES CHANGE

204915

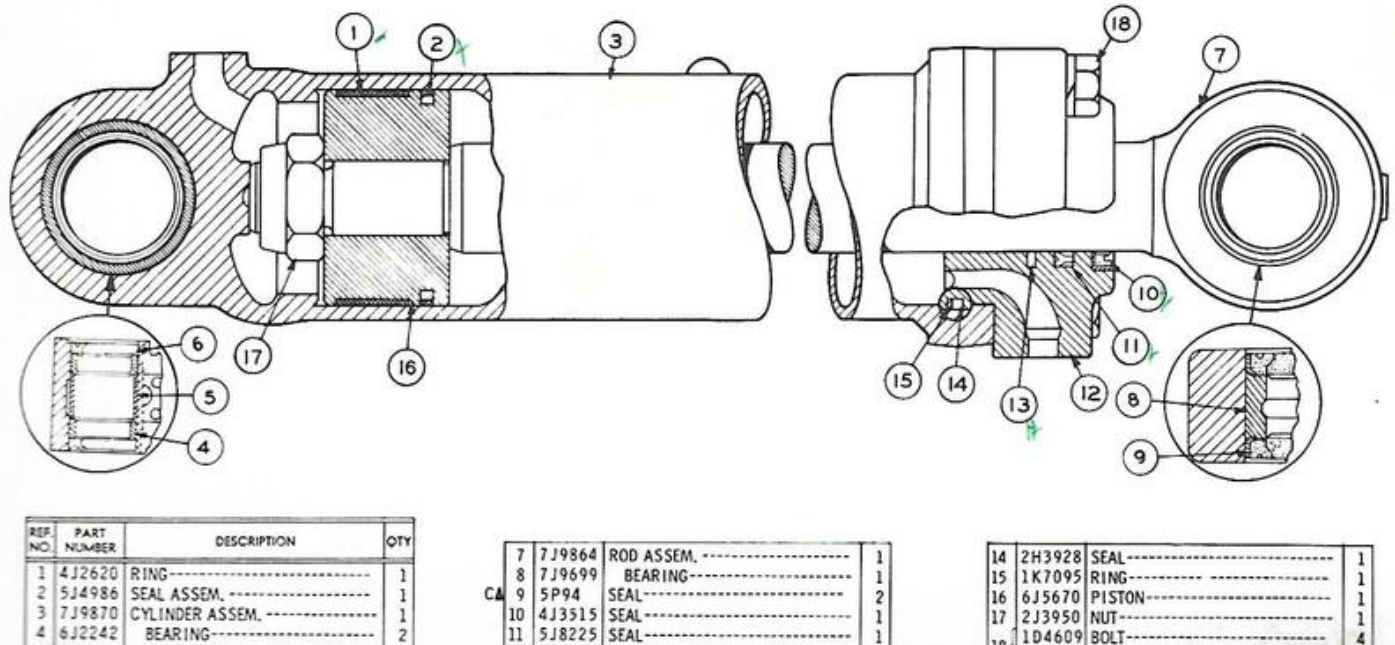

REF. NO.	PART NUMBER	DESCRIPTION	QTY
1	4J2620	RING	1
2	5J4986	SEAL ASSEM.	1
3	7J9870	CYLINDER ASSEM.	1
4	6J2242	BEARING	2
5	7J9865	SPACER	1
C▲ 6	5P65	SEAL	2
7	7J9864	ROD ASSEM.	1
8	7J9699	BEARING	1
C▲ 9	5P94	SEAL	2
10	4J3515	SEAL	1
11	5J8225	SEAL	1
12	6J5668	HEAD	1
13	5J3616	SEAL	1
14	2H3928	SEAL	1
15	1K7095	RING	1
16	6J5670	PISTON	1
17	2J3950	NUT	1
18	1D4609	BOLT	4
	3B4512	LOCKWASHER	4

C INDICATES CHANGE

▲ NOT PART OF 7J9872 CYLINDER GROUP

7J9872 LIFT CYLINDER GROUP (7K9434 N/S)(Chg. 4)—L.H.—114 mm (4.5 in.) Bore x 860 mm (33.92 in.) Stroke

7J9871 LIFT CYLINDER GROUP (7K9433 N/S)(Chg. 3)—R.H.—114 mm (4.5 in.) Bore x 860 mm (33.92 in.) Stroke

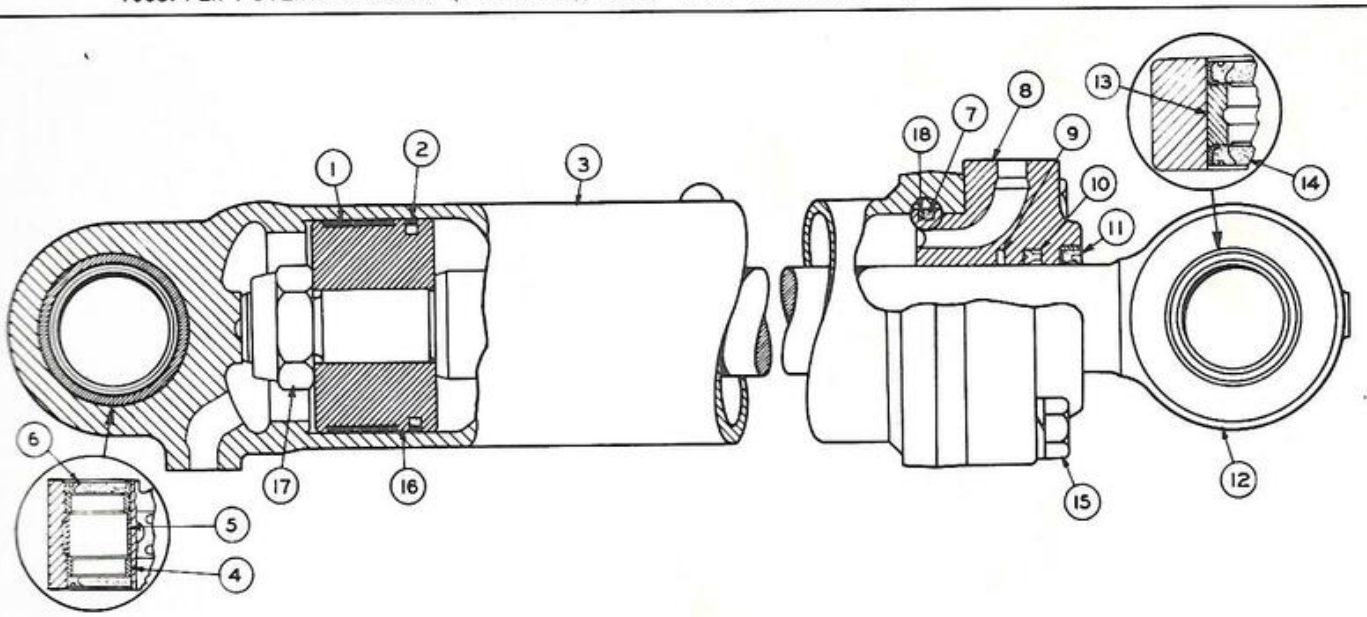

REF. NO.	PART NUMBER	DESCRIPTION	QTY
1	4J2620	RING	1
2	5J4986	SEAL ASSEM.	1
3	7J9869	CYLINDER ASSEM.	1
4	6J2242	BEARING	2
5	7J9865	SPACER	1
C▲ 6	5P65	SEAL	2
7	2H3928	SEAL	1
8	6J5668	HEAD	1
9	5J3616	SEAL	1
10	5J8225	SEAL	1
11	4J3515	SEAL	1
12	7J9864	ROD ASSEM.	1
13	7J9699	BEARING	1
C▲ 14	5P94	SEAL	2
15	1D4609	BOLT	4
	3B4512	LOCKWASHER	4
16	6J5670	PISTON	1
17	2J3950	NUT	1
18	1K7095	RING	1

C INDICATES CHANGE

▲ NOT PART OF 7J9871 CYLINDER GROUP

203480

7J9729 TILT CYLINDER GROUP (7K9405 N/S) (Chg. 3)—R.H.—108 mm (4.25 in.) Bore x 438 mm (17.25 in.) Stroke

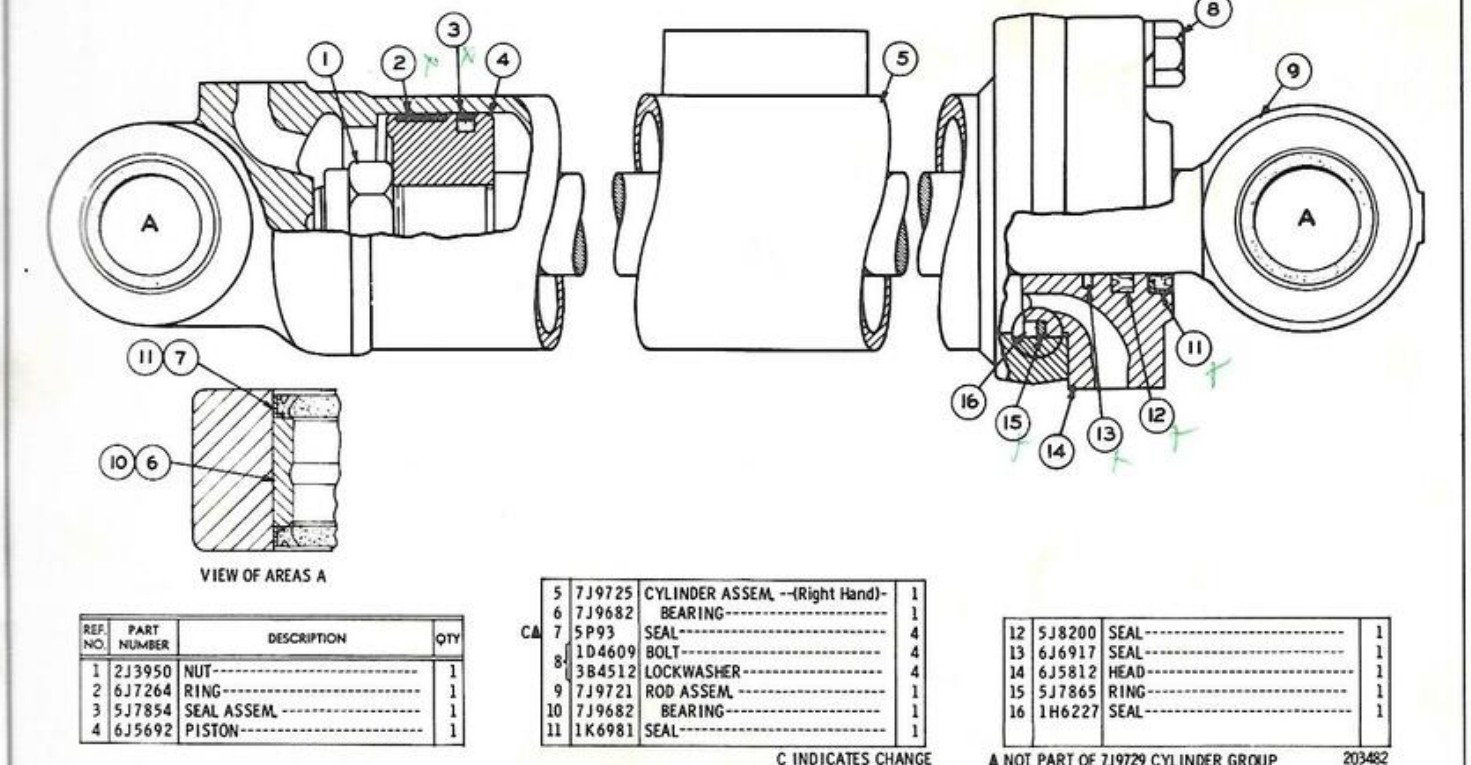

VIEW OF AREAS A

REF. NO.	PART NUMBER	DESCRIPTION	QTY
1	2J3950	NUT	1
2	6J7264	RING	1
3	5J7854	SEAL ASSEM.	1
4	6J5692	PISTON	1
5	7J9725	CYLINDER ASSEM. --(Right Hand)-	1
6	7J9682	BEARING	1
C▲ 7	5P93	SEAL	4
8	1D4609	BOLT	4
	3B4512	LOCKWASHER	4
9	7J9721	ROD ASSEM.	1
10	7J9682	BEARING	1
11	1K6981	SEAL	1
12	5J8200	SEAL	1
13	6J6917	SEAL	1
14	6J5812	HEAD	1
15	5J7865	RING	1
16	1H6227	SEAL	1

C INDICATES CHANGE

▲ NOT PART OF 7J9729 CYLINDER GROUP

203482

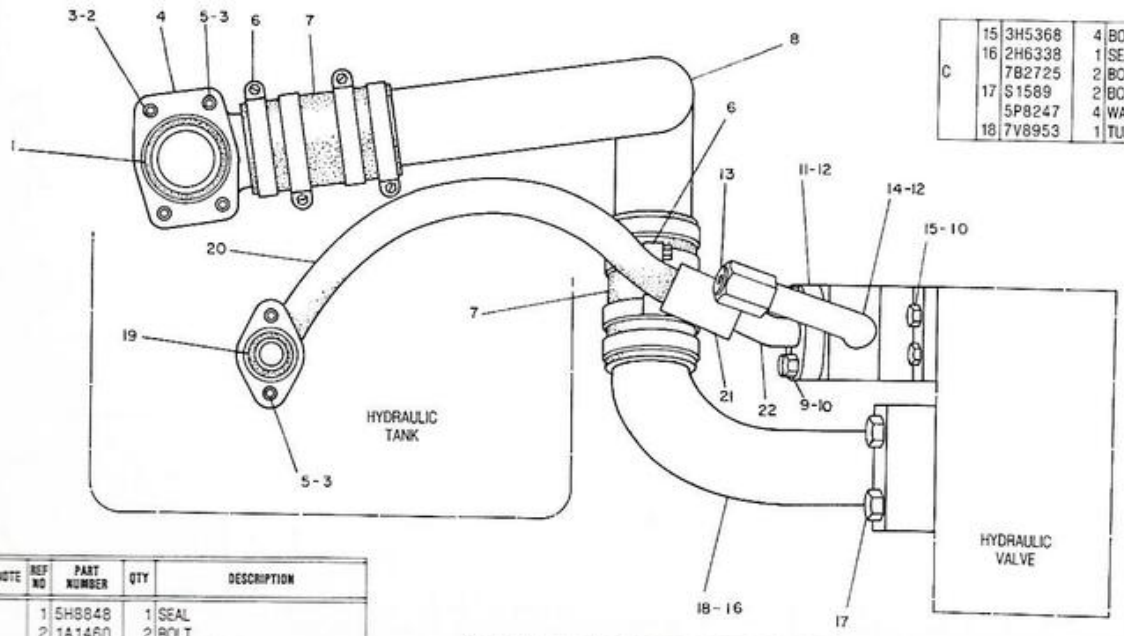

NOTE	REF NO	PART NUMBER	QTY	DESCRIPTION
	1	5H8848	1	SEAL
	2	1A1460	2	BOLT
	3	3B4508	6	LOCKWASHER
	4	6K9029	1	ELBOW
	5	1D4569	4	BOLT
	6	2Y5625	8	CLAMP
	7	6K9034	2	HOSE
	8	7V8949	1	TUBE
	9	1T772	4	BOLT
	10	5P8244	8	WASHER
	11	1P4578	2	FLANGE
	12	4J522	2	SEAL
	13	9S8008	1	PLUG
		3G2824	1	SEAL
C	14	2Y7076	1	TUBE AS.
		7V8954	1	BLOCK
C	15	3H5368	4	BOLT
	16	2H6338	1	SEAL
		7B2725	2	BOLT 70MM(2.75IN.)LONG
	17	S1589	2	BOLT 44.45MM(1.75IN.)LONG
		5P8247	4	WASHER
	18	7V8953	1	TUBE AS.
	19	4J520	1	SEAL
	20	7V8951	1	HOSE AS.
G		9S247		HOSE 23.23IN.(59CM)
		6K8325	1	STEM AS.
	21	3S7252	2	SLEEVE
		7S571	1	STEM AS.

C INDICATES CHANGE
G ORDER BY THE INCH

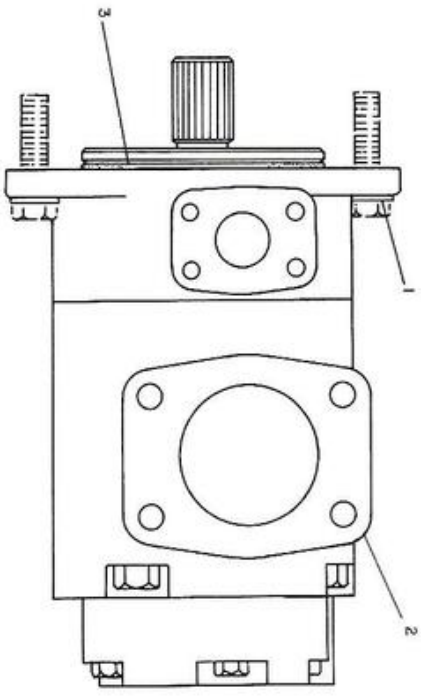

C INDICATES CHANGE
Y SEPARATE ILLUSTRATION

NOTE	REF NO	PART NUMBER	QTY	DESCRIPTION
C	1	3B4510	2	LOCKWASHER
CY	2	1U3920	1	PUMP GROUP
C	3	5F3999	1	SEAL

310636

7V7519 VANE PUMP GROUP-DOUBLE
1U3920-Page 152

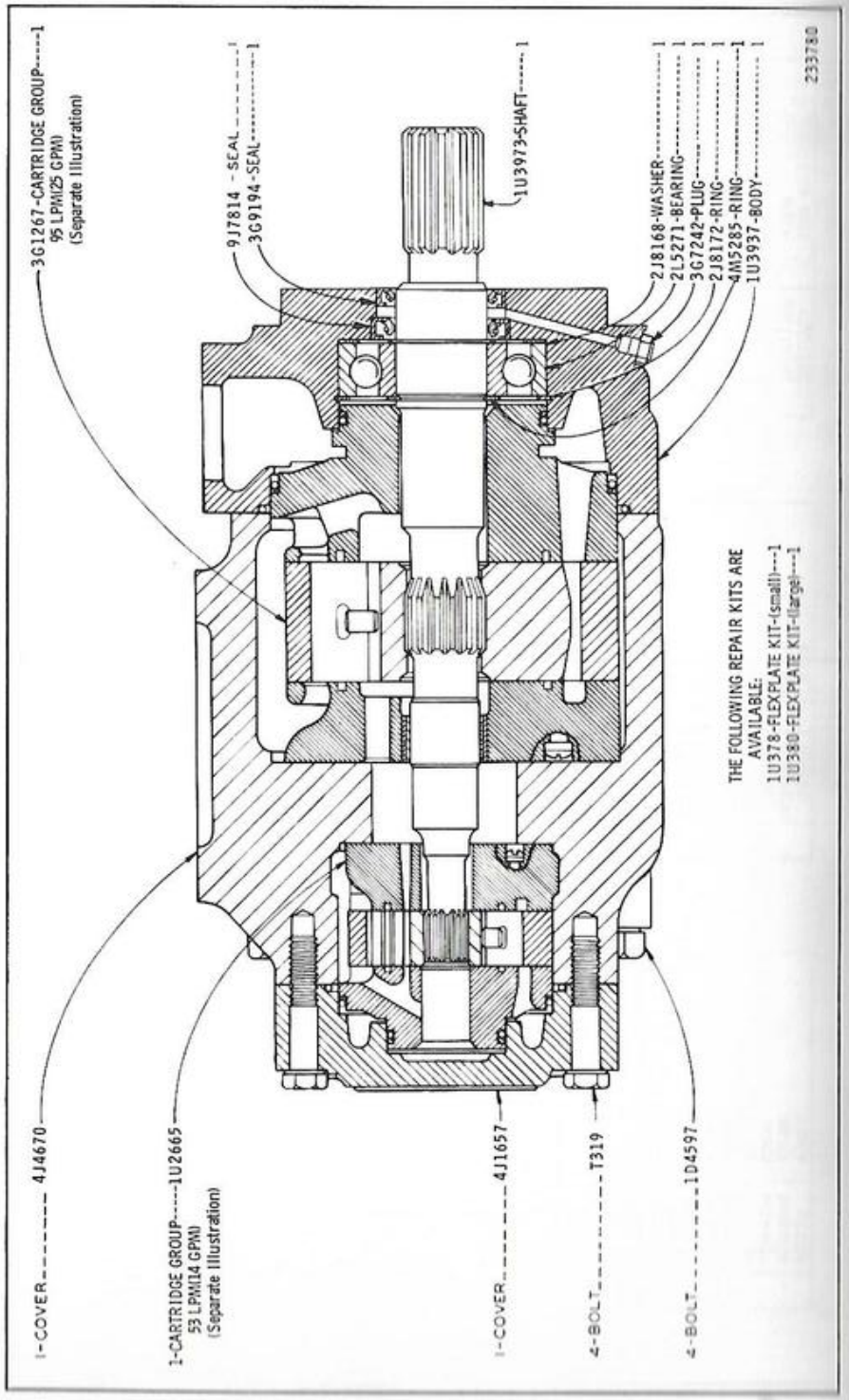

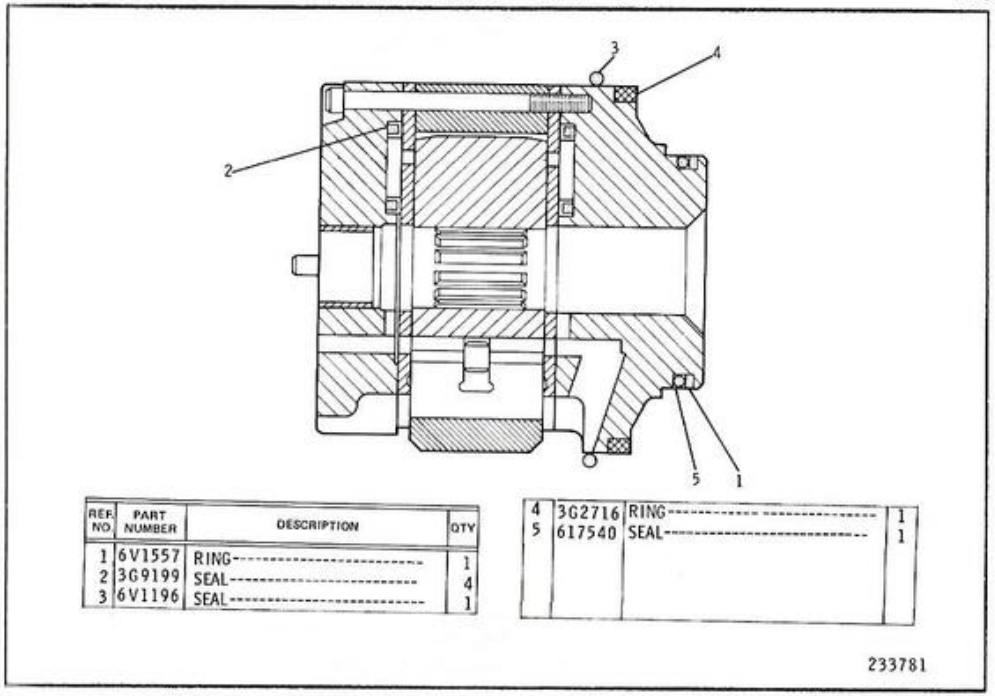

REF NO.	PART NUMBER	DESCRIPTION	QTY
1	6V1557	RING	1
2	3G9199	SEAL	4
3	6V1196	SEAL	1
4	3G2716	RING	1
5	617540	SEAL	1

1U2665 CARTRIDGE GROUP-53 L/MIN. (14 GPM)-REAR*R
Part Of 1U3920 Basic Vane Pump Group Shown On Page 152

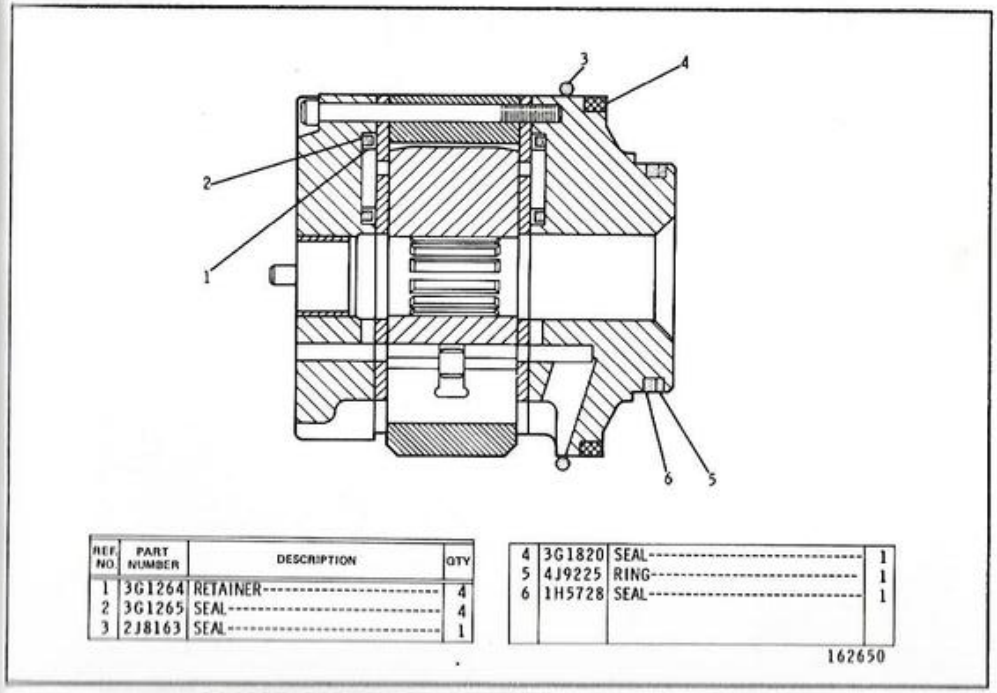

REF NO.	PART NUMBER	DESCRIPTION	QTY
1	3G1264	RETAINER	4
2	3G1265	SEAL	4
3	2J8163	SEAL	1
4	3G1820	SEAL	1
5	4J9225	RING	1
6	1H5728	SEAL	1

3G1627 CARTRIDGE GROUP-95L/MIN. (25 GPM)*R
Part Of 1U3920 Basic Vane Pump Group Shown On Page 152

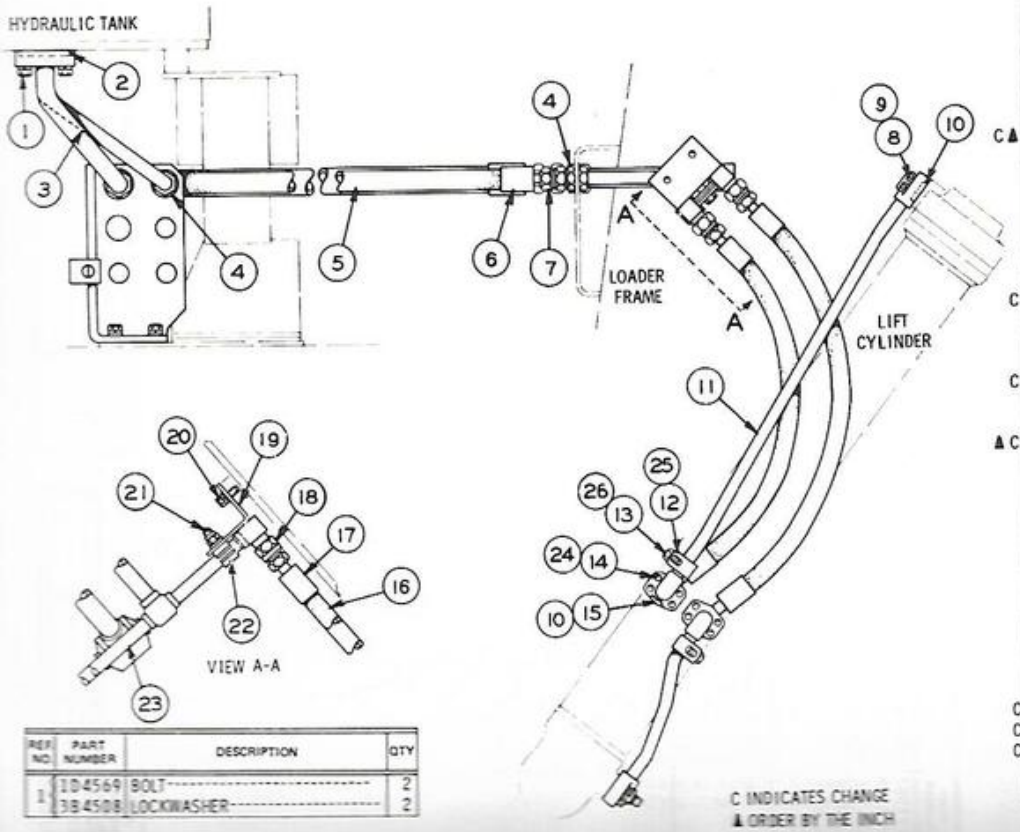

REF NO.	PART NUMBER	DESCRIPTION	QTY
1	1D4569	BOLT	2
	3B4508	LOCKWASHER	2

2	4J5267	SEAL	1
3	6K9885	TUBE ASSEM.	1
4	6K8420	NUT	2
	7K897	WASHER	4
	7K107	HOSE ASSEM. (Includes)	1
5	9S247	HOSE-------38.4 in. (97.54 cm)	
6	3S7166	SLEEVE	2
7	8S3759	COUPLING ASSEM.	2
8	1A9579	BOLT	8
9	3B4505	LOCKWASHER	8
10	4J8996	SEAL	4
11	6K9215	TUBE ASSEM. ------(R.H.)	1
	6K9216	TUBE ASSEM. ------(L.H.)	1
12	6K9573	CLIP	2
13	3L526	BOLT	2
	3B4507	LOCKWASHER	2
14	4B3388	BOLT	8
15	1P4575	FLANGE	4
	7K1338	HOSE ASSEM. (Each Includes)	2
16	9S671	HOSE--------24.5 in. (62.23 cm)	1
	8S6459	STEM ASSEM. -----(90°)------	1
17	3S8606	SLEEVE	2
18	9S128	COUPLING ASSEM.	1
19	6K9114	BRACKET	2
	S1594	BOLT	4
20	3B4506	LOCKWASHER	4
	4B4278	WASHER	4
	1A1460	BOLT	2
21	2H3788	NUT	2
	4B4280	WASHER	2
22	6K9725	CLAMP	4
23	6K9978	TUBE ASSEM.	1
24	9M1974	WASHER	8
25	6K9572	BRACKET	2
26	4B4279	WASHER	2

C INDICATES CHANGE
▲ ORDER BY THE INCH

177843

6K8290 LIFT CYLINDER LINES GROUP—Part 1

6K8290 LIFT CYLINDER LINES GROUP—Part 2

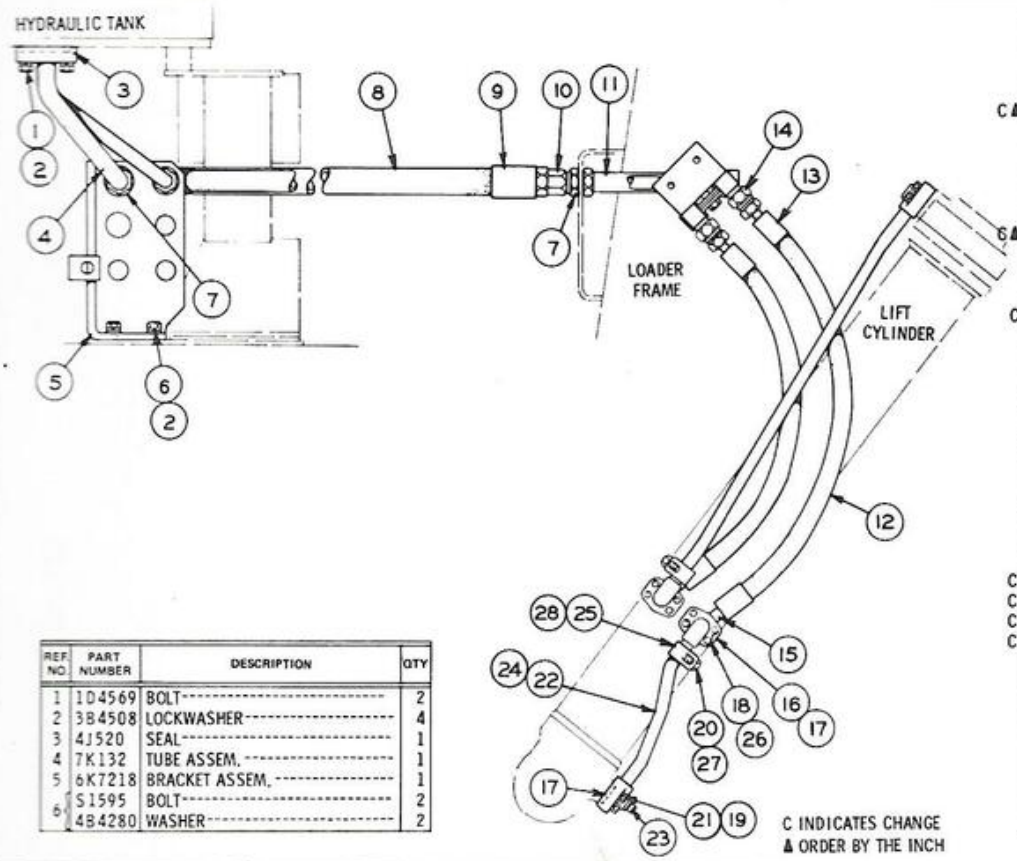

REF NO.	PART NUMBER	DESCRIPTION	QTY
1	1D4569	BOLT	2
2	3B4508	LOCKWASHER	4
3	4J520	SEAL	1
4	7K132	TUBE ASSEM.	1
5	6K7218	BRACKET ASSEM.	1
6	S1595	BOLT	2
	4B4280	WASHER	2

7	7K131	NUT	2
	7K898	WASHER	4
	7K108	HOSE ASSEM. (Includes)	1
8	8S9355	HOSE------43.4 in. (110.24 cm)	
9	3S7252	SLEEVE	2
10	8S3918	COUPLING ASSEM.	2
11	6K9979	TUBE ASSEM.	1
	7K1339	HOSE ASSEM. (Each Includes)	2
12	9S671	HOSE------29 in. (73.66 cm)	
13	3S8606	SLEEVE	2
14	9S128	COUPLING ASSEM.	1
15	8S6459	STEM ASSEM. ----(90°)------	1
16	1P4575	FLANGE	4
17	4J8996	SEAL	4
18	4B3388	BOLT	8
19	3B4505	LOCKWASHER	8
20	3L526	BOLT	2
	3B4507	LOCKWASHER	2
21	1A9579	BOLT	8
22	6K9213	TUBE ASSEM. ------(R.H.) (Includes)	1
23	3J5122	PLUG ASSEM. (Includes)	1
	3J7354	SEAL	1
24	6K9214	TUBE ASSEM. -----(L.H.)	1
25	6K9573	CLIP	2
26	9M1974	WASHER	8
27	4B4279	WASHER	2
28	6K9572	BRACKET	2

C INDICATES CHANGE
▲ ORDER BY THE INCH

177844

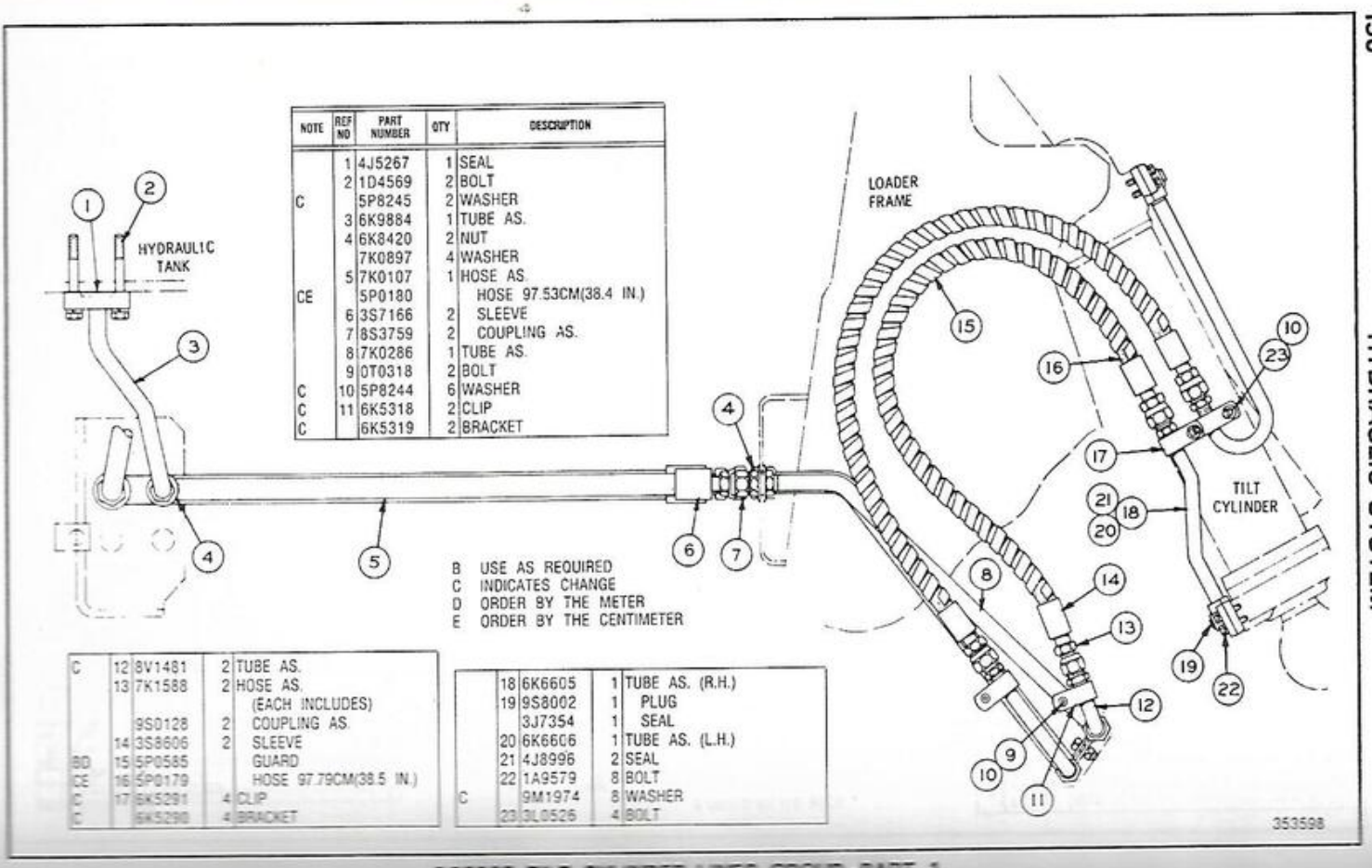

NOTE	REF NO	PART NUMBER	QTY	DESCRIPTION
	1	4J5267	1	SEAL
	2	1D4569	2	BOLT
C		5P8245	2	WASHER
	3	6K9884	1	TUBE AS.
	4	6K8420	2	NUT
		7K0897	4	WASHER
	5	7K0107	1	HOSE AS.
CE		5P0180		HOSE 97.53CM(38.4 IN.)
	6	3S7166	2	SLEEVE
	7	8S3759	2	COUPLING AS.
	8	7K0286	1	TUBE AS.
	9	0T0318	2	BOLT
C	10	5P8244	6	WASHER
C	11	6K5318	2	CLIP
C		6K5319	2	BRACKET

B USE AS REQUIRED
C INDICATES CHANGE
D ORDER BY THE METER
E ORDER BY THE CENTIMETER

C	12	8V1481	2	TUBE AS.
	13	7K1588	2	HOSE AS. (EACH INCLUDES)
		9S0128	2	COUPLING AS.
	14	3S8606	2	SLEEVE
CBD	15	5P0585		GUARD
CE	16	5P0179		HOSE 97.79CM(38.5 IN.)
C	17	6K5291	4	CLIP
C		6K5290	4	BRACKET

	18	6K6605	1	TUBE AS. (R.H.)
	19	9S8002	1	PLUG
		3J7354	1	SEAL
	20	6K6606	1	TUBE AS. (L.H.)
	21	4J8996	2	SEAL
	22	1A9579	8	BOLT
C		9M1974	8	WASHER
	23	3L0526	4	BOLT

6G8289 TILT CYLINDER LINES GROUP-PART 1

6G8289 TILT CYLINDER LINES GROUP-PART 2

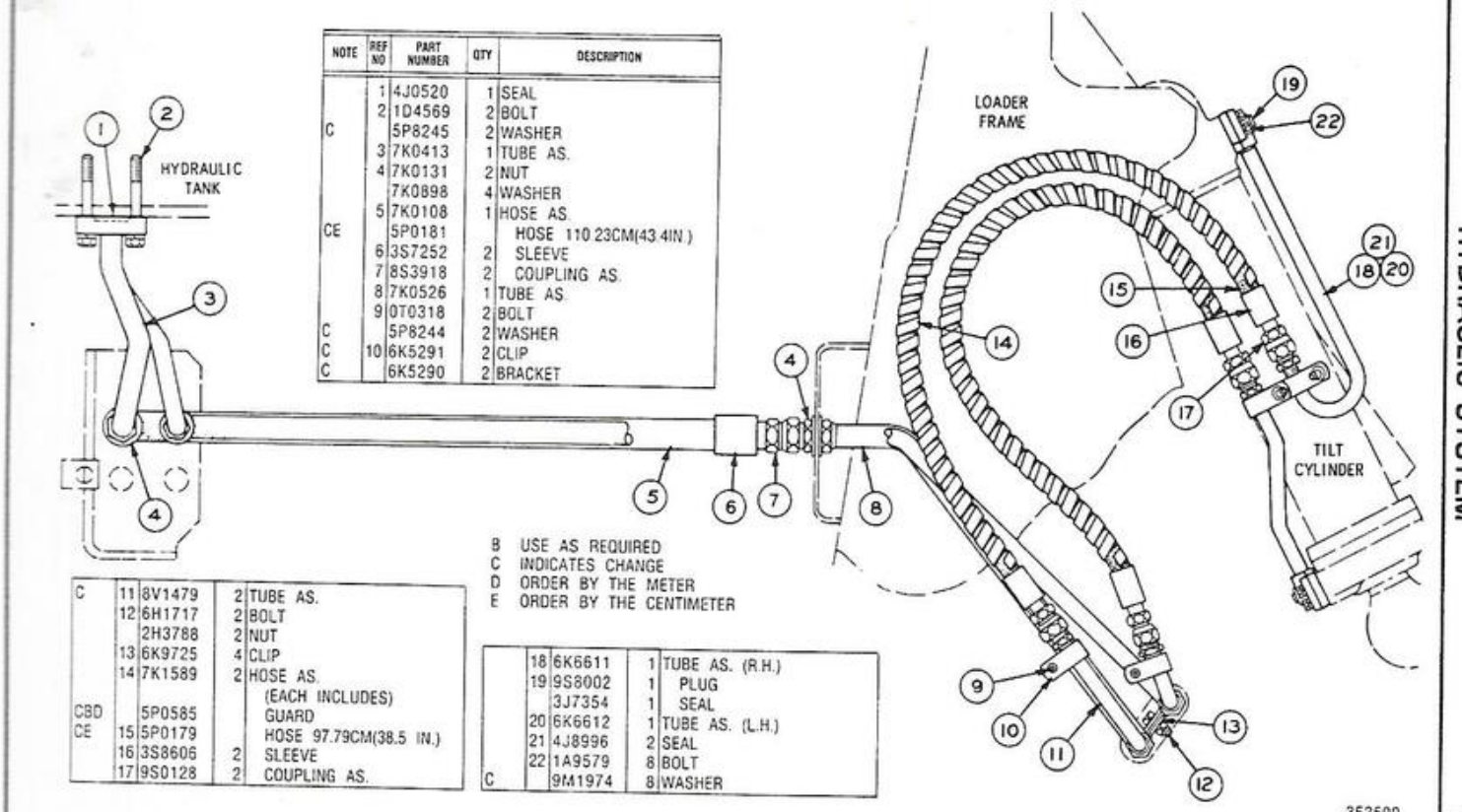

NOTE	REF NO	PART NUMBER	QTY	DESCRIPTION
	1	4J0520	1	SEAL
	2	1D4569	2	BOLT
C		5P8245	2	WASHER
	3	7K0413	1	TUBE AS.
	4	7K0131	2	NUT
		7K0898	4	WASHER
	5	7K0108	1	HOSE AS.
CE		5P0181		HOSE 110.23CM(43.4IN.)
	6	3S7252	2	SLEEVE
	7	8S3918	2	COUPLING AS.
	8	7K0526	1	TUBE AS.
	9	0T0318	2	BOLT
C		5P8244	2	WASHER
C	10	6K5291	2	CLIP
C		6K5290	2	BRACKET

B USE AS REQUIRED
C INDICATES CHANGE
D ORDER BY THE METER
E ORDER BY THE CENTIMETER

C	11	8V1479	2	TUBE AS.
	12	6H1717	2	BOLT
		2H3788	2	NUT
	13	6K9725	4	CLIP
	14	7K1589	2	HOSE AS. (EACH INCLUDES)
CBD		5P0585		GUARD
CE	15	5P0179		HOSE 97.79CM(38.5 IN.)
	16	3S8606	2	SLEEVE
	17	9S0128	2	COUPLING AS.

	18	6K6611	1	TUBE AS. (R.H.)
	19	9S8002	1	PLUG
		3J7354	1	SEAL
	20	6K6612	1	TUBE AS. (L.H.)
	21	4J8996	2	SEAL
	22	1A9579	8	BOLT
C		9M1974	8	WASHER