CATERPILLAR®

SEBP150
October 1990

RUTHZIL TRATOR COMERCIAL DE PEÇAS LTDA 11 97083-6812 ROLANDO CITRANGULO

PARTS MANUAL

930 T
Wheel Loader

17B1000-UP (Vehicle)
9CB1500-UP (Engine)
8YA673-UP (Transmission)

Powered by 3304 Engine

CATERPILLAR®

SEBP1950
October 1990

930T SÉRIE 17B01269.

MOTOR 9CB02692

transmissão 8YA01333.

ANO - 1993.

40 ADS

65 ESCAP CORREIAS MOTOR 6M08

930T
Wheel Loader

Mineradora Moraes Ltda.

MINERADORAMORAES@WOL.COM.BR.

17B1000-Up (Vehicle)
9CB1500-Up (Engine)
8YA673-Up (Transmission)

Mineradora Moares Ltda.
Rod. Castelo Branco, Km 56
Cx. Postal 05 - CEP 18147-000
Araçariguama - SP
Fones: (11) 4136 - 1064 / 4717-6116

© 1990 Caterpillar Inc.
PUBLICATIONS DIVISION
MARKETING SUPPORT DEPARTMENT

MACHINE IDENTIFICATION

Caterpillar machines are identified with SERIAL NUMBERS and/or PRODUCT IDENTIFICATION NUMBERS (PIN). These numbers are assigned to the chassis and to the engine. The chassis and the engine also carry ARRANGEMENT NUMBERS and in some cases MODIFICATION NUMBERS. These numbers are shown on the SERIAL NUMBER or PIN plates and on the MASTER PLATE in the operator's compartment.

Caterpillar dealers need all of these numbers to determine which components were included on the machine when it was assembled at the factory. This permits accurate identification of replacement part numbers.

ORDERING PARTS

Quality Caterpillar Replacement parts are available from Caterpillar dealers throughout the world. Their parts inventories are up to date and include all parts normally required to protect your investment in Caterpillar machines. Some dealers may offer repair kits, exchange components, or remanufactured parts to allow selection of the most effective repair alternative for a specific situation. When ordering parts, your order should specify the quantity, part number, part name, and the serial number. If in doubt about the part number, please provide your dealer with a complete description of the needed item.

HOW TO USE THE PARTS BOOK

Caterpillar Parts Books include illustrations of the groups or assemblies which make up the machine. These illustrations show the standard components and many of the attachments for each machine.

The alphabetical index located in the front part of the book should be used to determine the page number on which specific illustrations are shown. Reference to those pages will identify each of the individual serviceable parts. A numerical index listing each part number and the corresponding page number (s) appears in the back of the book.

Captions

The caption under each illustration identifies the part number and name of the group or assembly shown. Part numbers of groups are shown for reference purposes. Your Caterpillar dealer can assist you in identifying the availability of a complete group. If more than one illustration is included for any group, the caption identifies the specific machine serial numbers to which each illustration applies. In some cases it is not possible to determine the specific machine serial numbers to which different illustrations are applicable. In those cases the caption identifies the illustration as "TYPE 1", "TYPE 2", etc. Reference to the actual group or assembly is necessary in those cases to determine which illustration should be used.

Captions provide additional information such as page numbers where illustrations of sub assemblies are shown, information regarding quantities used and other information intended to assist the user in determining parts needs.

Abbreviations and Symbols

O.D.	Outside diameter
I.D.	Inside diameter
A	Not Part of This Group
B	Use as Required
C	Indicates Change
D	Order by the Meter
E	Order by the Centimeter
F	Not Shown
G	Order by the Inch
I	See Hose Fabrication Guide
M	Metric Part (Including Fasteners)
R	Remfg Part May Be Available
X	Major Component Exchange
Y	Separate Illustration
Z	Not Serviced Separately

Ref No

The numbers shown in this column refer to the numbers shown within the illustration. To identify any item within the illustration, first determine its reference number, then refer to the same number in the Ref. No. column for information about that part.

Part Number

These are numbers which are used to identify parts.

Qty

The quantities shown in this column indicate the total number of that item used in the group covered by the illustration.

Part Name

Information in this column provides the name of the part as well as additional information such as size, which further aids in the identification of the part.

Indented Part Names

Within each illustration is a parts list identifying each serviceable part in the illustration. When a part name is indented in this list, it means that serviceable item is a part of the serviceable item under which it is indented.

NOTE:

Continuing improvement and advancement of product design may cause changes to your machine which may not be included in this publication. Each publication is reviewed and revised, as required, to update and include these changes in later editions.

Whenever a question arises regarding your Caterpillar product, or this publication, please consult your Caterpillar dealer for the latest available information.

IDENTIFICATION DE LA MACHINE

Toutes les machines Caterpillar portent un NUMÉRO DE SÉRIE et un NUMÉRO D'IDENTIFICATION (PIN). Ces numéros d'appliquent au châssis et au moteur. Le châssis et le moteur peuvent également recevoir des NUMÉROS DE VERSION et, dans certains cas, de MODIFICATION. Ces numéros figurent sur les plaques de série ou d'identification et sur la plaque signalétique principale qui se trouve dans le poste de conduite.

Les concessionnaires Caterpillar doivent connaître tous ces numéros pour savoir quels composants ont été employés lors du montage en usine et trouver plus facilement le numéro des pièces de rechange.

COMMANDE DE PIÈCES

Les concessionnaires Caterpillar fournissent dans le monde entier des pièces de rechange de qualité Caterpillar. Leurs stocks de pièces sont constamment réapprovisionnés et comptent toutes les pièces nécessaires pour assurer la bonne marche de votre machine Caterpillar. Certains concessionnaires proposent également des kits de réparation, des échanges standard ou des pièces rénovées, ce qui permet de choisir la solution la plus économique dans une situation donnée. Lors des commandes de pièces, mentionner la quantité, le numéro et la désignation des pièces ainsi que le numéro de série. En cas de doute sur le numéro de pièce, fournir au concessionnaire une description complète de la pièce en question.

UTILISATION DU CATALOGUE DE PIÈCES

Les Catalogues de pièces Caterpillar comportent des illustrations des groupes ou ensembles qui composent la machine. Ces illustrations représentent les composants standard et nombre des accessoires disponibles.

Au début du catalogue figure un index alphabétique qui renvoie aux pages et illustrations correspondantes. Toutes les pièces du moteur avec leur numéro figurent dans ces pages. Un index numérique des pièces avec le numéro de la page correspondante se trouve à la fin du catalogue.

Légendes

Chaque illustration comporte une légende comprenant le numéro de pièce et la désignation du groupe ou celle de l'ensemble. Les numéros de groupe sont donnés à titre de référence. Pour savoir si un groupe complet peut être commandé, s'adresser au concessionnaire. Si à un groupe donné correspondent plusieurs illustrations, la légende indiquera le numéro de série de chaque machine spécifique. Parfois, il n'est pas possible de savoir à quels numéros de série spécifiques de la machine se rapportent les différentes illustrations. Dans ce cas, les légendes comportent la mention "Premier type", "Deuxième type", etc. Pour déterminer quelles illustrations utiliser, il faudra connaître la référence du groupe ou de l'ensemble correspondant.

Les légendes indiquent également les numéros de page des plans des sous-ensembles, les quantités utilisées et autres renseignements destinés à aider l'utilisateur à déterminer quelles sont les pièces nécessaires.

Abréviations et symboles

O.D.	Diamètre extérieur
I.D.	Diamètre intérieur
A	Ne fait pas partie de ce groupe
B	Utiliser selon besoin
C	Modification
D	Commander par mètre
E	Commander par centimètre
F	Non représenté
G	Commander par pouce
I	Flexible XT
M	Pièce métrique (y compris fixations)
R	Pièce rénovée éventuellement disponible
X	Echange standard
Y	Illustration séparée
Z	Non fourni séparément

Ref No (No de réf.)

Les numéros figurant dans cette colonne renvoient aux numéros utilisés dans l'illustration. Pour identifier une pièce quelconque dans l'illustration, déterminer en premier son numéro de référence, puis rechercher les renseignements sur cette pièce dans la colonne de numéro de référence.

Part Number (No de pièce)

Ces numéros identifient les pièces.

Qty (Quantité)

Les quantités qui figurent dans cette colonne indiquent le nombre total de la pièce concernée utilisé dans le groupe représenté dans l'illustration.

Part Name (Désignation de la pièce)

Les renseignements figurant dans cette colonne indiquent le nom de la pièce ainsi que des renseignements supplémentaires telles par exemple les dimensions, complétant l'identification de la pièce concernée.

Désignations de pièces en retrait

Chaque illustration comporte la liste des pièces qui la constituent et que l'on peut se procurer. Lorsqu'une désignation de pièce est en retrait, cela veut dire que l'article en regard fait partie de l'ensemble sous lequel il figure.

NOTA:

En raison du progrès technique et des améliorations continuelles apportées au matériel, votre machine comporte peut-être des modifications qui n'apparaissent pas dans la présente publication. Les éditions ultérieures seront revues et corrigées en conséquence.

En cas de doute sur un détail de votre machine Caterpillar ou sur le texte de la présente publication, adressez-vous à votre concessionnaire Caterpillar.

MAQUINAS

Las máquinas Caterpillar se identifican con NUMEROS DE SERIE y/o NUMEROS DE IDENTIFICACION DEL PRODUCTO (PIN). Estos números son asignados al chasis y al motor, respectivamente. El chasis y el motor tienen también NUMEROS DE DISPOSICION, y en algunos casos, NUMEROS DE MODIFICACION. Estos números están en la placa del número de serie del motor o en la placa principal en la cabina del operador.

Los distribuidores Caterpillar necesitan estos números para determinar con qué componentes se armó la máquina en la fábrica. Esto permite una identificación exacta de los números de pieza de repuesto.

COMO PEDIR REPUESTOS

Piezas de repuesto Caterpillar de calidad están disponibles de los distribuidores Caterpillar en todo el mundo. Sus existencias actualizadas incluyen todas las piezas normalmente requeridas para proteger su inversión en máquinas Caterpillar. Algunos distribuidores pueden tener juegos de reparación, componentes de intercambio o piezas remanufacturadas, para permitir la selección de la mejor alternativa de reparación de un caso en particular. Al pedir piezas de repuesto, especifique en su pedido la cantidad, el número de pieza, el nombre de la pieza y el número de serie. Si tiene duda del número de pieza, déle al distribuidor una descripción completa de la misma.

COMO USAR ESTE CATALOGO

Los Catálogos de Piezas Caterpillar tienen ilustraciones de los grupos o conjuntos que componen la máquina. Estas ilustraciones muestran los componentes estándar y muchos de los accesorios disponibles para la máquina.

Se debe utilizar el índice alfabético al frente de este catálogo para determinar el número de página donde se encuentran ilustraciones específicas. Dichas páginas identifican las piezas utilizables. Un índice numérico de piezas con el correspondiente número de página aparece al final de este catálogo.

Títulos

El título debajo de cada ilustración identifica el número de pieza y el nombre del grupo o del conjunto indicado. Los números de pieza de grupos se muestran para referencia. Su distribuidor Caterpillar puede ayudarle a identificar la disponibilidad de un grupo completo. Si se incluye más de una ilustración de cualquier grupo, el título identifica números de serie de las máquinas correspondientes a cada ilustración. En algunos casos no es posible determinar los números de serie de las máquinas correspondientes a las diferentes ilustraciones. En esos casos, el título identifica la ilustración como "Primer tipo", "Segundo tipo", etc. Es necesario referirse al grupo o conjunto en sí para determinar cuál ilustración se debe utilizar.

Los títulos proveen información adicional: los números de las páginas en que aparecen las ilustraciones de los subconjuntos, las cantidades utilizadas y demás información para ayudar al usuario a determinar las piezas necesarias.

Abreviaturas y símbolos

O.D.	Diámetro exterior
I.D.	Diámetro interior
A	No es pieza de este grupo
B	Utilizado según la demanda
C	Indica cambio
D	Se pide por metro
E	Se pide por centímetro
F	No se muestra
G	Se pide por pulgada
I	Manguera XT
M	Pieza métrica (Incluso tornillería)
R	Puede estar disponible como pieza remanufacturada
X	Puede ser posible el intercambio de Componentes Principales
Y	Ilustración separada
Z	No se suministra por separado

No. de Referencia

Los números en esta columna se refieren a los números en la ilustración. Para obtener información acerca de una pieza en la ilustración, determine primero el número de referencia y después refiérase al mismo número en la columna "No. de Referencia".

No. de Pieza

Estos números se utilizan para identificar piezas.

Cantidad

Las cantidades en esta columna indican el total de esa(s) pieza(s) utilizada(s) en el grupo de la ilustración.

Nombre de Pieza

La información en esta columna proporciona el nombre de la pieza, tamaño y cualesquiera otra información que ayude a identificar la pieza misma.

Nombres de Pieza sangrados

En cada ilustración hay una lista de piezas que identifica las piezas utilizables en la ilustración. Cuando el nombre de una pieza está sangrado en esta lista, significa que esta pieza forma parte de la pieza utilizable inmediatamente arriba.

NOTA:

Las continuas mejoras y adelantos en diseño podrían originar cambios a su máquina que no se incluyan en esta publicación. Cada publicación es analizada y revisada para actualizar e incluir estos cambios en ediciones subsecuentes.

Cuando tenga alguna pregunta acerca de su producto Caterpillar o de esta publicación, consulte al distribuidor Caterpillar para obtener la información más reciente.

IDENTIFICAÇÃO DA MÁQUINA

As máquinas Caterpillar são identificadas pelos NÚMEROS DE SÉRIE e/ou NÚMERO DE IDENTIFICAÇÃO DO PRODUTO (PIN). Esses números são atribuídos ao chassi e ao motor. O chassi e o motor recebem, também, NÚMEROS DE ARRANJO e, em alguns casos, NÚMEROS DE MODIFICAÇÃO. Esses números aparecem nas placas de NÚMERO DE SÉRIE ou PIN e na PLACA MESTRE no compartimento do operador.

Os revendedores Caterpillar necessitam desses números para determinar quais componentes foram incluídas na máquina durante a montagem na fábrica. Isso permite uma identificação precisa dos números de peça de reposição.

COMO OBTER PEÇAS

As Peças de Reposição de Qualidade Caterpillar estão disponíveis nos revendedores Caterpillar no mundo inteiro. Seus estoques de peças são atualizados e incluem todas as peças normalmente necessárias para proteger seu investimento nas máquinas Caterpillar. Alguns revendedores podem ter peças de troca/remanufaturadas disponíveis, como uma opção. Ao fazer um pedido de peças, especifique a quantidade, o número e o nome da peça, o número de série ou PIN, o número de arranjo e quaisquer números de modificação da máquina a que as peças se destinam. Se houver dúvidas quanto ao número de série, forneça ao seu revendedor uma descrição completa do item necessário.

COMO USAR O CATÁLOGO DE PEÇAS

Os Catálogos de Peças Caterpillar incluem ilustrações dos grupos ou conjuntos que compõem a máquina. Essas ilustrações mostram os componentes padrão e muitos dos acessórios disponíveis para cada máquina.

O índice alfabético, no início do catálogo, deve ser usado para determinar o número da página em que se encontra determinada ilustração. Consultando tais páginas, você identificará cada uma das peças serviçáveis, individualmente. No fim do livre existe um índice numérico para cada número de peça e o(s) número(s) da(s) página(s) correspondente(s).

Legendas

A legenda de cada ilustração identifica o número da peça e o nome do grupo ou do conjunto mostrado. Se for incluída mais de uma ilustração para qualquer grupo, a legenda indicará os números de série da máquina específica a que cada ilustração se aplica. Em alguns casos, não é possível determinar os números de série da máquina específica a que as diferentes ilustrações se aplicam. Em tais casos, a legenda identifica a ilustração como "Primeiro Tipo", "Segundo Tipo", etc. Será, então, necessário referir-se ao conjunto ou grupo real para determinar qual ilustração deverá ser usada.

As legendas fornecem informações adicionais, tais como: números das páginas onde são mostradas as ilustrações de subconjuntos, informações referentes às quantidades usadas e outras informações que se destinam a auxiliar o usuário a determinar as peças necessárias.

Nomes de Peças Desalinhados

Cada ilustração apresenta uma lista de peças que identifica cada peça serviçável na ilustração. Quando um nome de peça está desalinhado na lista, significa que tal item é serviçável e faz parte do item serviçável anterior.

Abreviaturas e Símbolos

O.D.	"Outside Diameter" (Diâmetro Externo)
I.D.	"Inside Diameter" (Diâmetro Interno)
A	Não faz parte deste grupo
B	Use conforme necessário
C	Indica modificação
D	Vendido por metro
E	Vendido por centímetro
F	Não mostrado
G	Vendido por polegada
I	Mangueira XT
M	Peça métrica (fixadores incluidos)
R	Peça remanufaturada pode estar disponível; consulte o seu revendedor Cat
X	Intercambio de componentes principais
Y	Ilustração separada
Z	Não serviçada separadamente

Ref No (Número de referência)

Os números indicados nesta coluna se referem aos números mostrados na ilustração. Para identificar qualquer item dentro da ilustração, primeiro determine seu No. de Ref., então refere ao mesmo número na coluna para información referente à peça.

Part Number (Número de peça)

Tais números são usados para identificar as peças.

Qty (Quantidade)

As quantidades indicadas nesta coluna indicam o número total de uma determinada peça utilizada na composição do grupo a qual se refere a ilustração.

Part Name (Nome de peça)

A informação contida nesta coluna proporciona o nome da peça tanto quanto informação adicional tal como a dimensão, que ajuda identificar a peça.

Nomes de peças desalinhados

Cada ilustração apresenta uma lista de peças que identifica cada peça serviçavel na ilustração. Quando um nome de peça está desalinhado na lista, significa que tal item é serviçavel e faz parte do item serviçavel anterior.

NOTA:

Os contínuos aperfeiçoamentos e avanços no projeto do produto podem ocasionar modificações em seu motor, que ainda não estejam incluídas nesta publicação. Cada publicação é revisada e corrigida, conforme necessário, para atualizar e incluir essas modificações nas edições mais recentes.

Sempre que surgir uma questão concernente ao seu produto Caterpillar ou a esta publicação, consulte o seu revendedor Caterpillar quanto às mais recentes informações disponíveis.

GERÄTEKENNZEICHNUNG

Cat-Geräte sind mit SERIAL NUMBERS und/oder PRODUCT IDENTIFICATION NUMBER (PIN) (Serien-Nr. und/oder Produktidentifizierungs-Nr.) gekennzeichnet. Diese Nummern dienen zur Kennzeichnung des Laufwerks und des Motors. Am Laufwerk und am Motor befinden sich außerdem ARRANGEMENT NUMBERS (Ausrüstungsnummern) sowie in einigen Fällen auch MODIFICATION NUMBERS (Änderungsnummern). Sie befinden sich auf den Typen- oder PIN-Schildern sowie auf dem HAUPTSCHILD im Fahrerhaus.

Die Cat-Händler benötigen alle genannten Nummern, um feststellen zu können, welche Baugruppen bei der Montage des Geräts im Werk eingebaut wurden. Nur mit Hilfe dieser Angaben lassen sich die Bestellnummern der benötigten Ersatzteile genau bestimmen.

BESTELLEN VON ERSATZTEILEN

Original-Cat-Ersatzteile können bei den Cat-Händlern überall auf der Welt bestellt werden. Ihre umfangreichen Lager enthalten normalerweise alle Teile, die Sie für Ihr Cat-Gerät benötigen. Einige Händler bieten Reparatursätze, Austausch- oder werküberholte Teile an, so daß Sie die Auswahl unter verschiedenen Reparaturmöglichkeiten treffen können. Ihre Bestellung muß folgende Angaben enthalten: Anzahl der benötigten Teile, Bestellnummer, Bezeichnung des Teils; Serien-Nr., Ausrüstungs-Nr. und Änderungs-Nr. des Geräts, für das die Teile benötigt werden. Wenn Sie Zweifel hinsichtlich der richtigen Bestell-Nr. haben, geben Sie dem Händler eine möglichst genaue Beschreibung des benötigten Teils.

HINWEISE ZUR BENUTZUNG DES PARTS BOOKS

Die Cat-Parts Books enthalten Zeichnungen der Gruppen oder Teile des Geräts. Gezeigt werden die Standardteile sowie verschiedenes Zubehör für die Geräte.

Anhand des Index vorn im Buch können Sie die Nummer der Seite heraussuchen, auf der sich die von Ihnen gesuchte Abbildung befindet. Beim Aufschlagen der betreffenden Seite können dann alle gesuchten Teile identifiziert werden. Hinten im Buch befindet sich ein numerischer Index, mit allen Bestell-Nr. und dem Hinweis auf die Seite, auf der sich die entsprechenden Zeichnungen befinden.

Bildunterschriften

Die Zeilen unter jeder Abbildung enthalten die Bestell-Nr. der gezeigten Baugruppen. Die Nummer wird nur als Referenz aufgeführt. Ihr Cat-Händler kann Ihnen sagen, ob eine Gruppe komplett lieferbar ist. Wenn für eine Gruppe mehrere Zeichnungen vorhanden sind, enthalten die Zeilen unter den Zeichnungen die Seriennummern, denen jede Zeichnung entspricht. In einigen Fällen ist es nicht möglich, die Serien-Nr. anzugeben, auf die sich die Zeichnungen beziehen. In diesem Fall wird lediglich "Typ 1", "Typ 2" usw. angegeben. Hier ist ein Hinweis auf die Baugruppe erforderlich, um anzuzeigen, welche Abbildung verwendet werden muß. Die Zeilen unter den Abbildungen enthalten ferner Angaben über die Seiten, auf denen sich Zeichnungen von Unterbaugruppen und Anzahl der benötigten Teile sowie andere Angaben befinden, die es dem Benutzer des Buchs erleichtern, die gewünschten Teile zu identifizieren.

Abkürzungen und Symbole

O.D.	Außendurchmesser
I.D.	Innendurchmesser
A	kein Teil dieser Gruppe
B	nach Bedarf verwenden
C	Hinweis auf eine Änderung
D	in Meter-Länge bestellen
E	in Zentimeter-Länge bestellen
F	nicht gezeigt
G	in Zoll-Länge bestellen
I	XT-Schlauch
M	metrisches Teil (einschl. Befestigungsteilen)
R	werküberholtes Teil unter Umständen lieferbar
X	Austauschteil
Y	separate Abbildung
Z	nicht einzeln erhältlich

Ref No (Referenz-Nr.)

Die in dieser Spalte aufgeführten Nummern beziehen sich auf die in der Zeichnung befindlichen Nummern. Zum Identifizieren eines Teils in der Zeichnung zuerst dessen Referenz-Nr. feststellen und diese dann in der Spalte "Ref No" aufsuchen, um weitere Angaben zum gesuchten Teil zu erhalten.

Part Number (Bestell-Nr.)

Anhand dieser Nummern lassen sich die Teile identifizieren.

Qty (Anzahl)

Die Zahlen in dieser Spalte geben an, wieviele der entsprechenden Teile insgesamt benötigt werden.

Part Name (Bezeichnung)

In dieser Spalte wird die Bezeichung der betreffenden Teile zusammen mit zusätzlichen Informationen angegeben, z.B. Größe, die das Identifizieren erleichtern.

Eingerückte Bezeichnungen

In der zu jeder Abbildung gehörenden Ersatzteilliste sind manche Bezeichnungen eingerückt. Dadurch wird angezeigt, daß das entsprechende Teil zu dem gehört, unter dessen Bezeichnung es eingerückt ist.

ANMERKUNG:

Ständig vorgenommene Verbesserungen und Weiterentwicklungen an Ihrem Gerät können Änderungen verursachen, die in der vorliegenden Ausgabe noch nicht berücksichtigt sind. Sie werden jedoch in später folgenden Ausgaben erscheinen.

Fragen zu Ihrem Cat-Gerät oder diesem Ersatzteilbuch beantwortet Ihr Cat-Händler.

MAINTENANCE PARTS

DESCRIPTION	PART NO.	PAGE NO.
BATTERY-6V	9G4250	73
BREATHER	4H6112	114
	9G5127	93
BREATHER AS	2W9162	25
CAP AS-FILLER	4B5441	61
	6N2985	24
CAP-FILLER	7H1447	148
		151
CAP-FUEL TANK	1P8680	60
ELEMENT AS	9M2341	59
ELEMENT AS-SECONDARY	8N4901	39
ELEMENT-FILTER	2P5834	100
	4B5949	61
	4J6064	146
		149
ELEMENT-PRIMARY	4M8047	39
FILTER AS-FUEL	1P2299	55
FILTER AS-OIL	2Y8096	26
FUSE (10 AMP)	3K8782	73
FUSE (15 AMP)	8M8948	73
GASKET	8H2778	59
GASKET-COVER	8S1606	14
LAMP AS	2Y7666	80
LAMP AS-FLOOD	2Y7668	80
LAMP-MINIATURE	7N9967	73
LAMP-SEALED UNIT	1M5898	78
PULLEY-ALTERNATOR	2Y8924	63
PULLEY-FAN	7N1152	17
STRAINER	9J3047	148
		151
STRAINER-FUEL TANK	9P7121	61

MAINTENANCE PARTS

DESCRIPTION	PART NO.	PAGE NO.
VALVE AS-PRESSURE RELIEF	5S1218	32

REMANUFACTURED COMPONENTS

As an option when making repairs consider Caterpillar Remanufactured Components. Components that are available through the Caterpillar Remanufactured Program are identified three ways in the parts book:

- with the letter R in the note field of the parts list
- with an R* at the beginning of the first line of the caption
- with an *R at the end of the first line of the caption

Typical components included in the Remanufacturing Program include:

ALTERNATORS
CONNECTING RODS
CRANKSHAFTS - UNDERSIZE
CRANKSHAFTS - UPGRADE TO NEW
CYLINDER HEADS
ELECTRONIC CONTROL MODULES (ECM)
ELECTRONIC SENSORS
FUEL INJECTORS
FUEL NOZZLES
FUEL PUMPS
GOVERNORS
OIL PUMPS
PISTONS
SHORT BLOCKS
STARTERS
TURBOCHARGERS - COMPLETE
TURBOCHARGER CARTRIDGES
WATER PUMPS

Caterpillar Remanufactured engines for many engine arrangements are also available.

MAJOR COMPONENT EXCHANGE

As an option when making repairs consider Caterpillar Major Component Exchange Program. Components included in this program are noted in the parts book with an *X at the end of the first line of the caption.

Typical components include:

ENGINES
PISTON TYPE HYDRAULIC MOTORS
PISTON TYPE HYDRAULIC PUMPS
SHORT BLOCKS
TRANSMISSIONS
TORQUE CONVERTERS
STEERING BRAKE AND CLUTCH

Check with your local Caterpillar Dealer for the availability of Remanufactured Components and Major Component Exchanges.

SUPPLEMENTAL COOLANT ADDITIVE ELEMENTS

... Conveniently prevents corrosion, cavitation and erosion in cooling system

Customer Benefits:

Protects against cavitation, foam, corrision, and scale build-up
• Provides measured cooling conditioner

Description:

Supplemental coolant additive is now available in spin-on type elements for all diesel engines. The elements contain a dry corrosion inhibitor which dissolves in the coolant. The inhibitor protects against cavitation, corrosion, foam and scale, reducing and eliminating pitting of cylinder liner surfaces and cylinder blocks. This protection extends the life of cylinder liners, blocks and water pumps.

Two types of coolant additive elements are available, a precharge element and maintenance element. These elements contain a premeasured amount of inhibitor, which is distributed into the cooling system. When correctly used, the precharge element will keep the cooling system inhibitor at an acceptable level during the first maintenance interval after the system is filled with new coolant. The maintenance element is used to keep the inhibitor at the correct level in the system after the first (precharge) maintenance interval. Coolant additive elements should be changed at every oil change interval. The entire coolant system should be drained and flushed every two years or 3000 hours of operation.

Note: The coolant additive elements can be used with any ethylene or propylene glycol type antifreeze, but must not be used with Dowtherm 209 Full-Fill Coolant. Presently, no corrosion inhibitor is available for addition to a cooling system with Dowtherm 209 Full-Fill.

Parts Needed:

Cooling System Capacity Gallons	Liters	Base Assembly	Valve Assembly	Precharge Element	Maintenance Element	Maintenance Period (Hrs)
6-8	22-32	9N3668(1)	9N3666(2)	9N6123(1)	9N3717(1)	500
9-12	33-47	9N3668(1)	9N3666(2)	9N6123(1)	9N3718(1)	500
* 9-12	33-47	9Y3205(1)	9N3666(1)	7E6013(1)	7E6014(1)	250
13-16	48-62	9N3668(1)	9N3666(2)	9N3366(1)	9N3717(1)	250
17-22	63-85	9N3668(1)	9N3666(2)	9N3367(1)	9N3368(1)	250
22-30	86-115	9N3668(1)	9N3666(2)	9N3367(1)	9N3718(1)	250
31-43	116-165	9N3668(2)	9N3666(2)	9N3367(2)	9N3368(2)	250
or						
31-43	116-165	9N3668(1)	9N3666(2)	1W5518(1)	9N6123(1)	250
44-65	166-247	9N3668(2)	9N3666(2)	1W5518(2)	9N3718(1)	250

* 3176 Engines Only

INDEX

Name	Page
A	
AIR CLEANER GP	38
	39
AIR COMPRESSOR GP	42
	43
AIR LINES	41
AIR LINES-INLET MANIFOLD	41
ALTERNATOR GP-CHARGING	63
	64
B	
BALANCER GP	10
BASE GP-OIL FILTER	28
BATTERY & WIRING GP	72
BATTERY-6V	73
BELT-SEAT	191
BODY GP-VALVE	152
BRAKE & AXLE GP-FRONT	103
BRAKE & AXLE GP-REAR	102
BRAKE GP-HYD CALIPER SERVICE	104
BRAKE GP-PARKING	121
	122
	123
BREATHER	93
	114
BREATHER AS	25
BREATHER GP	25
BUCKET AS	179
C	
CAMSHAFT AS	54
CAMSHAFT GP-SINGLE	10
CAP AS-FILLER	24
	61
CAP GP-PROTECTION	60
CAP-FILLER	148
	151
CAP-FUEL TANK	60
CAP-OIL FILLER	81
CARTRIDGE GP	173
	174
CHAMBER AS-BRAKE	118
CONTROL GP-BRAKE	112
	116
CONTROL GP-BUCKET	180
CONTROL GP-GOVERNOR	51
CONTROL GP-HAND	159
CONTROL GP-HYDRAULIC	160
CONTROL GP-STEERING	124
CONTROL GP-TRANSMISSION	94
CONTROL GP-TRANSMISSION HYD	96
CONVERSION GP	29
COOLER GP-FLTR BASE & ENG OIL	26
	27
COOLER GP-OIL	28
COOLER GP-TRANSMISSION OIL	30
COUNTERWEIGHT GP	144
COVER GP-CYLINDER BLOCK	7
COVER GP-CYLINDER HEAD	12
COVER GP-FRONT HOUSING	15
COVER GP-VALVE MECHANISM	14
COVERS GP-SHIPPING	101
CRANKSHAFT GP	7
CRANKSHAFT HUB	9
CRANKSHAFT SEAL	8
CRCT BREAKER AS (40 AMP)	73
CYLINDER AS	178
CYLINDER BLOCK AS	5
CYLINDER BLOCK GP	4
	6
CYLINDER GP	128
	161
	162
	163
	164
CYLINDER GP-AIR OVER HYD	118
CYLINDER HEAD FASTENER	12
CYLINDER HEAD GP	11
D	
DASH GP	187
DIFFERENTIAL & BEVEL GEAR GP	105
	106
DIFFERENTIAL GP	107
DRIVE GP-FAN	34
DRIVE GP-PUMP	92
DRIVE SHAFT GP	83
E	
ELECTRIC STARTING MOTOR	65
ELEMENT AS	59
ELEMENT AS-SECONDARY	39
ELEMENT-FILTER	61
	100
	146
	149
ELEMENT-PRIMARY	39
ENGINE AR	2
EXHAUST MANIFOLD	37
EXHAUST MANIFOLD FASTENER	36
F	
FAN GP-BLOWER	35
FASTENER GP-CYLINDER HEAD	12
FASTENER GP-EXHAUST MANIFOLD	36
FASTENER GP-FRONT HOUSING	16
FASTENER GP-OIL PAN	20
FENDER GP	144
FILLER GP-OIL	24

INDEX

Name	Page
FILLER GP-POWER TRAIN OIL	81
FILTER & LINES GP	99
FILTER AS-FUEL	55
FILTER AS-OIL	26
FILTER GP-SECONDARY	55
FILTER GP-TRANSMISSION	100
FILTER-MAGNETIC	87
FILTER-PRIMARY	59
FLYWHEEL GP	18
FRAME GP-ENGINE END	140
FRAME GP-LOADER	139
FRONT HOUSING	14
FRONT TIMING GEAR	16
FUEL INJECTION LINES	55
FUEL PRIMING PUMP	59
FUEL TANK PROTECTION CAP	60
FUEL TRANSFER PUMP	62
FUMES DISPOSAL GP	25
FUSE (10 AMP)	73
FUSE (15 AMP)	73

G

GASKET	59
GASKET-COVER	14
GAUGE AS-AMMETER	186
GAUGE GP	184
GAUGE GP-OIL LEVEL (DIPSTICK)	24
GEAR GP-FRONT TIMING	16
GEAR GP-TRANSFER	86
GOV & FUEL INJ PUMP GP	47
GOVERNOR GP	48
GREASE GUN AS	195
GUARD GP-TRACTOR	143

H

HOOD & GUARD GP	142
HORN GP-AIR	120
	121
HOUSING & REGULATOR GP	34
HOUSING GP-FLYWHEEL	18
HOUSING GP-FRONT	14
HOUSING GP-LEVER	158
	159
HOUSING GP-OUTPUT	158
HUB GP-CRANKSHAFT	9
HYDRAULIC AR	145

I

INDICATOR	38
INSERT (EXHAUST)	11
INSERT (INTAKE)	11

Name	Page

J

JOINT GP	84

K

KICKOUT GP	175
KIT (BRUSH AND SPRING)	64
KIT (ROTOR)	64
KIT (TERMINAL-B POS)	64
KIT (TERMINAL-D POS)	64
KIT-BEARING	68
KIT-BRAKE CALIPER	104
KIT-BRAKE LINING	122
	123
KIT-BRAKE REPAIR	118
KIT-BRUSH	66
	68
	71
KIT-BUSHING	71
KIT-COMPRESSOR VALVES	43
KIT-COVER	126
KIT-CYLINDER	118
	178
KIT-DIFFERENTIAL	107
KIT-FLEXPLATE (LARGE)	172
KIT-GOVERNOR OVERHAUL	42
KIT-HARDWARE	68
KIT-HOUSING	126
KIT-INSULATOR	71
KIT-JACKET	126
KIT-LEVER	68
	71
KIT-LEVERS	182
KIT-LIFT ARM	183
KIT-MISCELLANEOUS	66
KIT-PEDAL	117
KIT-REPAIR (FINAL DRIVE)	108
KIT-SEAL	68
	126
KIT-SHAFT DRIVE	126
KIT-SHIM	126
KIT-SLEEVE	126
KIT-SLIP JOINT (ROLL	83
KIT-TERMINAL	66
KIT-TERMINAL (W)	64
KIT-TURBOCHARGER	46
KIT-VALVE (COMPLETE)	117
KIT-VALVE (PARTIAL)	117
KIT-VANE	173
	174
KIT-WATER PUMP	31

INDEX

Name	Page
L	
LAMP AS	80
LAMP AS-FLOOD	80
LAMP GP	75
	78
LAMP GP-DASH	78
LAMP GP-FLOOD	80
LAMP-MINIATURE	73
LAMP-SEALED UNIT	78
LIFTING GP	15
LIGHTING GP	79
LIGHTING GP-LOADER END	77
LINES GP-AIR	41
LINES GP-COMPRESSOR	40
LINES GP-ENGINE OIL	23
LINES GP-FUEL INJECTION	55
	56
	57
	58
LINES GP-HYDRAULIC	168
LINES GP-HYDRAULIC OIL	169
LINES GP-LIFT CYLINDER	166
LINES GP-OIL COOLER	170
LINES GP-POWER TRAIN OIL	85
LINES GP-SUPPLEMENTAL STEERING	130
LINES GP-TILT CYLINDER	165
LINES GP-TORQUE CONV COOLER	82
LINES GP-TURBOCHARGER OIL	44
LINES GP-WATER	29
M	
MANIFOLD GP-EXHAUST	37
MOUNTING GP-CAB	193
MUFFLER GP	37
O	
OIL COOLER & FIL BASE-ENGINE	26
OIL FILLER	24
OIL FILTER BASE	28
OIL LINES-ENGINE	23
OIL LINES-TURBOCHARGER	44
OIL PAN	20
OIL PAN FASTENER	20
OIL PUMP-ENGINE	21
	22
ORIFICE-JET	23
P	
PADLOCK GP	60
PAN GP-OIL	20
PARTS & CASE GP	93
PISTON	9
PISTON & ROD GP	9
PLANETARY GP	90
POSITIONER GP	176
PULLEY GP-CRANKSHAFT	17
PULLEY GP-FAN	17
PULLEY-ALTERNATOR	63
PULLEY-FAN	17
PUMP GP-ENGINE OIL	21
	22
PUMP GP-FUEL INJECTION	52
	53
PUMP GP-FUEL PRIME & PRIM FLTR	58
	59
PUMP GP-FUEL PRIMING	59
PUMP GP-FUEL TFR (W/MOUNTING)	62
PUMP GP-FUEL TRANSFER	62
PUMP GP-GEAR	85
	132
PUMP GP-METERING	127
PUMP GP-STEERING COLUMN	126
PUMP GP-VANE	171
	172
PUMP GP-WATER	30
	31
R	
RADIATOR GP	32
RIM GP-DEMOUNTABLE	109
	110
ROCKER ARM GP-VALVE	13
S	
SEAL GP-CRANKSHAFT	8
SEAT BELT GP	191
SEAT GP	188
	189
	190
STARTING MOTOR GP-ELECTRIC	65
	66
	67
	68
	70
STEERING AR-SUPPLEMENTAL	129
STEP GP	186
STRAINER	148
	151
STRAINER-FUEL TANK	61
SUPPORT GP	192
SUPPORT GP-ENGINE	19
SUPPORT GP-TRANSMISSION	92
SWITCH AS	73
SWITCH AS (SOLENOID)	66
SWITCH AS (STOP LAMP)	73
SWITCH AS-DISCONNECT	74
SWITCH AS-LIGHT	76
SWITCH GP	76

INDEX

Name Page

T

TANK & VALVE GP 146
TANK & VALVE GP-HYDRAULIC 149
TANK GP-FUEL LINES 61
TANK GP-HYDRAULIC 117
TANK GP-RADIATOR TOP 33
TIRE & RIM AR 110
111
TOOL GP-HAND 194
TOOTH GP 182
TORQUE CONTROL GP 54
TORQUE CONVERTER GP 88
TRANSMISSION AR 81
TRUNNION GP-ENGINE 19
TURBOCHARGER GP 45
46

V

VALVE AS-BRAKE FOOT CONTROL 117
VALVE AS-PARK & SECONDARY 119
VALVE AS-PRESSURE RELIEF 32
VALVE COVER 14
VALVE GP 134
136
137
153
154
155
157
VALVE GP-DIVERTER 133
VALVE GP-NEUTRALIZER 98
138
VALVE GP-PITCH RELIEF 156
VALVE GP-RELIEF 98
155
156
157
VALVE GP-SELECTOR 138
VALVE GP-SELECTOR & PRESS CONT 97
VALVE GP-STEERING 135
VALVE GP-TRANSMISSION CONTROL 96
VALVE MECHANISM GP 13
VALVE-EXHAUST 11
VALVE-INLET 11

W

WATER LINES 29
WATER PUMP 30
WHEEL & FINAL DRIVE GP 108
WIRING GP-SUPPL STEERING 75

INDEX ALPHABETIQUE

Designation	Page
A	
AIR - CANALISATIONS	41
ALTERNATEUR DE CHARGE (ASS)	63
	64
AMORCAGE DE CARBURANT - POMPE	59
AMPEREMETRE (ENS)	186
ARBRE A CAMES (ENS)	54
ARBRE A CAMES - SIMPLE (ASS)	10
ARBRE DE TRANSMISSION (ASS)	83
B	
BALANCEUR (ASS)	10
BATI - CHARGEUSE (ASS)	139
BATTERIE (6 V)	73
BATTERIE ET CABLAGE	72
BLOC MOTEUR (ENS)	5
BLOC-CYLINDRES (ASS)	4
	6
BOITE DE VITESSES (ARR)	81
BOUCHON - RESERVOIR DE CARBURANT	60
BOUCHON DE PROTECTION (ASS)	60
BOUCHON DE REMPLISSAGE	148
	151
BOULONNERIE - CARTER AV (ASS)	16
BOULONNERIE DE COLLECTEUR D'ECHAPPEMENT	36
BOULONNERIE DE LA CULASSE (ASS)	12
BOULONNERIE DU CARTER D'HUILE (ASS)	20
BOULONNERIE DU COLLECTEUR D'ECHAPPEMENT (ASS)	36
BUTEE ELASTIQUE (ASS)	54
C	
CABLAGE DE DIRECTION DE SECOURS	75
CACHE-SOUPAPES	14
CACHE-SOUPAPES (ASS)	14
CADENAS (ASS)	60
CANALIS. DE REFROIDISSEMENT DU CONV. DE COUPLE	82
CANALISATIONS D'AIR (ASS)	41
CANALISATIONS D'EAU (ASS)	29
CANALISATIONS D'HUILE DE TRANSMISSION (ASS)	85
CANALISATIONS D'HUILE DE TURBOCOMPRESSEUR (ASS)	44
CANALISATIONS D'HUILE HYDRAULIQUE	169
CANALISATIONS D'HUILE MOTEUR (ASS)	23
CANALISATIONS D'INJECTION DE CARBURANT (ASS)	55
	56
	57
	58
CANALISATIONS DE COMPRESSEUR (ASS)	40

Designation	Page
CANALISATIONS DE DIRECTION DE SECOURS (ASS)	130
CANALISATIONS DE VERIN DE LEVAGE (ASS)	166
CANALISATIONS DU COLLECTEUR D'ADMISSION D'AIR	41
CANALISATIONS DU REFROIDISSEUR D'HUILE (ASS)	170
CANALISATIONS DU VERIN D'INCLINAISON (ASS)	165
CANALISATIONS HYDRAULIQUES (ASS)	168
CAPOT ET PROTECTION (ASS)	142
CARBURANT - POMPE D'ALIMENTATION	62
CARTER - RENDEMENT - CIRCUIT HYDRAULIQUE (ASS)	158
CARTER AV	14
CARTER AV (ASS)	14
CARTER D'HUILE	20
CARTER D'HUILE - BOULONNERIE	20
CARTER DE LEVIER (ASS) - CIRCUIT HYDRAULIQUE (ASS	158
	159
CARTER DE VOLANT (ASS)	18
CARTER ET PIECES (ASS)	93
CARTOUCHE (ASS)	173
	174
CEINTURE DE SECURITE	191
CEINTURE SECURITE	191
CHAMBRE (CYLINDRE) DE FREIN	118
CHAPEAU - GOULOTTE DE REMPLISSAGE (ENS)	24
	61
CHAPEAU DE PROTECTION DU RES. DE CARBURANT	60
CHAPEAU REMPL HUILE	81
CHASSIS DE COTE DU MOTEUR (ASS)	140
CLAPET (ASS)	134
	136
	137
	153
	154
	155
	157
CLAPET DE DECHARGE (ASS)	98
	155
	156
	157
CLAPET DE DECHARGE - INCLINAISON AV (ASS)	156
CLAPET DE DECHARGE DE PRESSION	32
COLLECTEUR D'ECHAPPEMENT (ASS)	37
COMMANDE DE BOITE DE VITESSES (ASS)	94
COMMANDE DE DIRECTION (ASS)	124
COMMANDE DE GODET (ASS)	180
COMMANDE DE REGULATEUR (ASS)	51
COMMANDE HYDRAULIQUE (ASS)	160

INDEX ALPHABETIQUE

Designation	Page
COMMANDE HYDRAULIQUE DE BOITE (ASS)	96
COMMANDE MANUELLE DE LEVAGE ET INCLINAISON (ASS)	159
COMPRESSEUR D'AIR (ASS)	42
	43
CONTACTEUR (ENS)	73
CONTACTEUR D'ECLAIRAGE (ENS)	76
CONTACTEUR DE FEUX DE STOP (ENS)	73
CONTACTEUR DE SOLENOIDE	66
CONTREPOIDS (ASS)	144
CONVERTISSEUR DE COUPLE (ASS)	88
COURONNE ET DIFFERENTIEL (ASS)	105
	106
COUVERCLE DE BLOC-CYLINDRES (ASS)	7
COUVERCLE DE CARTER AV (ASS)	15
COUVERCLE DE CULASSE (ASS)	12
COUVERCLES D'EXPEDITION (ASS)	101
CREPINE	148
	151
CULASSE (ASS)	11
CULASSE - BOULONNERIE	12
CULBUTERIE (ASS)	13
CULBUTEUR (ASS)	13

D

DEMARREUR ELECTRIQUE	65
DEMARREUR ELECTRIQUE (ASS)	65
	66
	67
	68
	70
DENT (ASS)	182
DIFFERENTIEL (ASS)	107
DIRECTION DE SECOURS (VERSION)	129
DISJONCTEUR - 40 A (ENS)	73
DISPOSITIF D'EVACUATION DES VAPEURS DE CARTER	25
DISTRIBUTEUR - FREIN DE STATION. ET AUXILIAIRE	119
DISTRIBUTEUR DE BOITE (ASS)	96
DISTRIBUTEUR DE PEDALE DE FREIN (ENS)	117
DISTRIBUTION AV - PIGNONS (ASS)	16

E

EAU - CANALISATIONS	29
EAU - POMPE	30
ECHAPPEMENT - COLLECTEUR	37
ECLAIRAGE (ASS)	79
ECRAN MAGNETIQUE	87
ELEMENT (ENS)	59
ELEMENT DE FILTRE	61
	100
	146
	149
ELEMENT PRIMAIRE	39
ELEMENT SECONDAIRE (ENS)	39
ENGRENAGE - POMPE (ASS)	85
	132
ENGRENAGE DE TRANSFERT (ASS)	86
ENTRAINEMENT DE POMPE (ASS)	92
ENTRAINEMENT DE VENTILATEUR (ASS)	34

F

FILTRE A AIR (ASS)	38
	39
FILTRE A CARBURANT (ASS)	55
FILTRE A CARBURANT (ENS)	55
FILTRE A HUILE (ENS)	26
FILTRE A HUILE - SUPPORT	28
FILTRE A HUILE DE BOITE	100
FILTRE ET CANALISATIONS (ASS)	99
FILTRE PRIMAIRE	59
FREIN - COMMANDE (ASS)	112
	116
FREIN DE STATIONNEMENT (ASS)	121
	122
	123
FREIN ET ESSIEU AR (ASS)	102
FREIN ET ESSIEU AV (ASS)	103
FREIN HYDRAULIQUE DE MANOEUVRE A ETRIER	104
FUSIBLE (15A)	73
FUSIBLE - 10 A	73

G

GARDE-BOUE (ASS)	144
GODET (ENS)	179
GOULOTTE D'HUILE MOTEUR (ASS)	24
GOULOTTE DE REMPLISSAGE D'HUILE DE TRANSMISSION	81
GROUPE DE PROTECTION DU CHARGEUR (ASS)	143
GROUPE DE RAPPEL A L'ANGLE DE CAVAGE (ASS)	175
GROUPE DE TRANSFORMATION	29

H

HUILE MOTEUR - CARTER (ASS)	20
HUILE MOTEUR - GOULOTTE	24
HUILE MOTEUR - POMPE	21
	22
HYDRAULIQUE (VERSION)	145

INDEX ALPHABETIQUE

Designation	Page
I	
INDICATEUR	38
INDICATEURS (ASS)	184
INJECTION DE CARBURANT - CANALISATIONS	55
INTERRUPTEUR (ASS)	76
J	
JANTE DEMONTABLE (ASS)	109
	110
JAUGE D'HUILE MOTEUR (BAIONNETTE) (ASS)	24
JOINT - ARBRE D'ENTRAINEMENT (ASS)	84
JOINT DE COUVERCLE	14
JOINT DE VILEBREQUIN (ASS)	8
JOINT PLAT	59
K	
KIT (PIECES DIFFERENTIEL)	107
KIT - DIVERS	66
KIT D'ARBRE D'ENTRAINEMENT	126
KIT D'ETRIER DE FREIN	104
KIT D'ISOLANT	71
KIT DE BAGUE	71
KIT DE BALAI	66
	68
	71
KIT DE BORNE	66
KIT DE BORNE (W)	64
KIT DE BORNE - (B) POS.	64
KIT DE BORNE - (D) POS.	64
KIT DE BOULONNERIE	68
KIT DE BRAS DE LEVAGE	183
KIT DE BROSSE ET RESSORT	64
KIT DE CALES	126
KIT DE CARDAN COULISSANT	83
KIT DE CARTER	126
KIT DE CHEMISE	126
KIT DE COMPRESSEUR DE SOUPAPES	43
KIT DE COUSSINET	68
KIT DE COUVERCLES	126
KIT DE GARNITURE DE FREIN	122
	123
KIT DE JOINTS	68
	126
KIT DE LEVIER	68
	71
KIT DE LEVIERS	182
KIT DE MANCHON	126
KIT DE PALETTE	173
	174
KIT DE PEDALE	117
KIT DE PLAQUE FLEXIBLE (GRANDE)	172
KIT DE POMPE A EAU	31
KIT DE RENOVATION DU REGULATEUR	42

Designation	Page
KIT DE REPARATION DE FREIN	118
KIT DE REPARATION DE REDUCTEUR LATERAL DE ROUE	108
KIT DE ROTOR	64
KIT DE SOUPAPE (COMPLET)	117
KIT DE SOUPAPE (PARTIEL)	117
KIT DE TURBOCOMPRESSEUR	46
KIT DE VERIN	118
	178
KLAXON PNEUMATIQUE (ASS)	120
	121
L	
LAMPE (AMPOULE MINIATURE)	73
LAMPE (ENS)	80
LAMPE - CONSOLE (ASS)	78
LAMPE - EXTREMITE DE CHARGEUR (ASS)	77
LAMPE - PHARE (ASS)	80
LAMPE - PHARE (ENS)	80
LIMITEUR DE LEVAGE (ASS)	176
M	
MARCHEPIED (ASS)	186
MONTAGE DE CABINE (ASS)	193
MOTEUR (VERSION)	2
MOTEUR - CANALISATIONS D'HUILE	23
MOYEU DE VILEBREQUIN	9
O	
OEILLETONS DE LEVAGE MOTEUR (ASS)	15
ORIFICE - CANALISATIONS D'HUILE MOTEUR	23
OUTILS (ASS)	194
P	
PHARE - OPTIQUE ETANCHE	78
PIGNONS DE DISTRIBUTION AV	16
PISTON	9
PISTON ET BIELLE (ASS)	9
PNEU ET JANTE (VERSION)	110
	111
POMPE A EAU (ASS)	30
	31
POMPE A HUILE MOTEUR (ASS)	21
	22
POMPE A PALETTES (ASS)	171
	172
POMPE D'ALIMENTATION AVEC MONTAGE (ASS)	62
POMPE D'ALIMENTATION DE CARBURANT (ASS)	62
POMPE D'AMORCAGE DE CARB. ET FILTRE PRIM. (ASS)	58

INDEX ALPHABETIQUE

Designation	Page
	59
POMPE D'AMORCAGE DE CARBURANT (ASS)	59
POMPE D'INJECTION DE CARBURANT (ASS)	52
	53
POMPE DE DOSAGE	127
POMPE DE GRAISSAGE	195
POMPE DE LA COLONNE DE DIRECTION (ASS)	126
POULIE D'ALTERNATEUR	63
POULIE DE VENTILATEUR	17
POULIE DE VENTILATEUR (ASS)	17
POULIE DE VILEBREQUIN (ASS)	17

R

RADIATEUR (ASS)	32
REFROIDISSEUR D'HUILE (ASS)	28
REFROIDISSEUR D'HUILE DE BOITE (ASS)	30
REFROIDISSEUR D'HUILE MOTEUR ET SUPPORT DE FILTRE	26
REGULATEUR (ASS)	48
REGULATEUR ET POMPE D'INJECTION DE CARB. (ASS)	47
RENIFLARD	93
	114
RENIFLARD (ASS)	25
RENIFLARD (ENS)	25
RESERVOIR - CANALISATIONS DE CARBURANT (ASS)	61
RESERVOIR DU COUVERCLE DE RADIATEUR (ASS)	33
RESERVOIR ET SOUPAPE (ASS)	146
RESERVOIR ET SOUPAPE HYDRAULIQUE (ASS)	149
RESERVOIR HYDRAULIQUE (ASS)	117
ROBINET DE BATTERIE (ENS)	74
ROUE ET REDUCTEUR LATERAL (ASS)	108

S

SIEGE (ASS)	188
	189
	190
SIEGE RAPPORTE D'ADMISSION	11
SIEGE RAPPORTE D'ECHAPPEMENT	11
SILENCIEUX (ASS)	37
SOUPAPE - CIRCUIT HYDRAULIQUE (ASS)	152
SOUPAPE D'ADMISSION	11
SOUPAPE D'ECHAPPEMENT	11
SOUPAPE DE DERIVATION (ASS)	133
SOUPAPE DE DIRECTION (ASS)	135
SOUPAPE DE NEUTRALISATION (ASS)	98
	138
SOUPAPE SELECTRICE (ASS)	138
SOUPAPE SELECTRICE ET REGULATRICE DE PRESSION	97
SUPPORT (ASS)	192
SUPPORT DE FILTRE A HUILE (ASS)	28
SUPPORT DE FILTRE ET REFROIDISSEUR D'HUILE MOTEUR	26
	27
SUPPORT DE MOTEUR (ASS)	19
SUPPORT DE TRANSMISSION (ASS)	92

T

TABLEAU DE BORD (ASS)	187
TAMIS DE RESERVOIR DE CARBURANT	61
TEMOINS (ASS)	75
	78
THERMOSTAT ET BOITIER (ASS)	34
TOURILLON DE MOTEUR (ASS)	19
TRAINS PLANETAIRES (ASS)	90
TURBOCOMPRESSEUR (ASS)	45
	46
TURBOCOMPRESSEUR - CANALISATIONS D'HUILE	44

V

VENTILATEUR SOUFFLANT (ASS)	35
VERIN (ASS)	128
	161
	162
	163
	164
VERIN (ENS)	178
VERIN OLEO-PNEUMATIQUE (ASS)	118
VILEBREQUIN (ASS)	7
VILEBREQUIN - JOINT	8
VILEBREQUIN - MOYEU (ASS)	9
VOLANT MOTEUR (ASS)	18

INDICE

Nombre — Pagina

A

ACEITE - TUBO DE LLENADO DE 24
ACEITE DEL MOTOR - TUBERIAS DE 23
ACEITE DEL TURBOALIMENTADOR - TUBERIAS DE 44
AGUA - BOMBA DE 30
AGUA - TUBERIAS DE 29
ALTERNADOR DE CARGA (GR) 63
64
AMPERIMETRO (CONJ) 186
AMPOULE 80
ARBOL DE LEVAS (CONJ) 54
ARBOL DE LEVAS SENCILLO (GR) 10
ARO DESMONTABLE (GR) 109
110
ARO Y RUEDA 110
111
ARRANQUE ELECTRICO - MOTOR DE 65
ASIENTO (GR) 188
189
190

B

BASE DEL FILTRO DE ACEITE 28
BASE DEL FILTRO DE ACEITE (GR) 28
BASE DEL FILTRO Y ENFRIADOR DE ACEITE DEL MOTOR..... 26
BASTIDOR DEL CARGADOR (GR) 139
BASTIDOR DEL LADO DEL MOTOR (GR) 140
BATERIA DE 6 V 73
BATERIA Y CABLES (GR) 72
BLOQUE MOTOR (CONJ) 5
BLOQUE MOTOR (GR) 4
6
BOCINA DE AIRE (GR) 120
121
BOMBA DE ACEITE DEL MOTOR (GR) 21
22
BOMBA DE AGUA (GR) 30
31
BOMBA DE CEBADO DE COMBUSTIBLE (GR)..... 59
BOMBA DE ENGRANAJES (GR) 85
132
BOMBA DE INYECCION DE COMBUSTIBLE (GR)..... 52
53
BOMBA DE LA COLUMNA DE DIRECCION (GR)..... 126
BOMBA DE PALETAS (GR) 171
172
BOMBA DE TRANSFERENCIA DE COMBUST. Y MONTAJE (GR)..... 62
BOMBA DE TRANSFERENCIA DE COMBUSTIBLE (GR)..... 62

Nombre — Pagina

BOMBILLA (MINIATURA) 73

C

CABLES DE LA DIRECCION AUXILIAR 75
CAJA DE ENTREGA HIDRAULICA (GR) 158
CAJA DE PALANCA (GR) 158
159
CAJA DELANTERA 14
CAJA DELANTERA (GR) 14
CAJA Y PIEZAS (GR) 93
CAMARA DEL FRENO 118
CANCAMO DE LEVANTAMIENTO DEL MOTOR (GR)..... 15
CANDADO (GR) 60
CAPO Y PROTECTOR (GR) 142
CARTER - COLECTOR DEL (GR) 20
CEBADO DE COMBUSTIBLE - BOMBA DE 59
CIGUENAL (GR) 7
CIGUENAL - MAZA DE 9
CIGUENAL - SELLO DE (GR) 8
CILINDRO (CONJ) 178
CILINDRO (GR) 128
161
162
163
164
CILINDRO OLEONEUMATICO (GR) 118
CINTURON DE SEGURIDAD 191
CINTURON DE SEGURIDAD (GR) 191
COLADOR 148
151
COLADOR DEL TANQUE DE COMBUSTIBLE 61
COLECTOR DEL CARTER 20
COLECTOR DEL CARTER - TORNILLERIA DEL 20
COMPRESOR DE AIRE (GR) 42
43
CONSOLA (GR) 187
CONTRAPESO (GR) 144
CONTROL DE DIRECCION (GR)..... 124
CONTROL DE LA TRANSMISION (GR) 94
CONTROL DE PAR (GR) 54
CONTROL DE REGULADOR (GR) 51
CONTROL DEL CUCHARON (GR) 180
CONTROL DEL FRENO (GR) 112
116
CONTROL HIDRAULICO (GR) 160
CONTROL HIDRAULICO DE LA TRANSMISION (GR)..... 96
CONVERTIDOR DE PAR (GR) 88
CUCHARON (CONJ) 179
CULATA DE CILINDROS (GR) 11
CULATA DE CILINDROS - TORNILLERIA DE LA (GR)..... 12

INDICE

Nombre Pagina

D

DIENTE (GR) 182
DIFERENCIAL (GR) 107
DIFERENCIAL Y CORONA (GR) 105
106
DIRECCION AUXILIAR (CONFIG) 129
DISYUNTOR DE 40 A 73
DOSIFICACION - BOMBA DE (GR) 127

E

EJE IMPULSOR (GR) 83
ELEMENTO (CONJ) 59
ELEMENTO DE FILTRO 61
100
146
149
ELEMENTO PRIMARIO 39
ELEMENTO SECUNDARIO (CONJ) 39
EMPAQUETADURA 59
ENFRIADOR DE ACEITE (GR) 28
ENFRIADOR DE ACEITE DE LA
TRANSMISION (GR)..... 30
ENFRIADOR DE ACEITE DEL MOTOR Y
BASE DEL FILTRO (..... 26
27
ENGRANAJE DE TRANSFERENCIA (GR) 86
ENGRANAJE DELANTERO DE
SINCRONIZACION DEL MOTOR..... 16
EQUILIBRADOR (GR) 10
ESCAPE - MULTIPLE DE 37
ESCAPE DE GASES (GR) 25
ESTRIBO DEL OPERADOR (GR) 186

F

FILTRO DE ACEITE (CONJ) 26
FILTRO DE AIRE (GR) 38
39
FILTRO DE COMBUSTIBLE (CONJ) 55
FILTRO DE COMBUSTIBLE (GR) 55
FILTRO DE LA TRANSMISION (GR) 100
FILTRO MAGNETICO 87
FILTRO PRIM. Y BOMBA DE CEBADO DEL
COMBUST. (GR) 58
59
FILTRO PRIMARIO 59
FILTRO Y TUBERIAS (GR) 99
FRENO DE ESTACIONAMIENTO (GR) 121
122
123
FRENO HIDRAULICO DE HORQUILLA (GR) .. 104
FRENO Y EJE DELANTEROS (GR) 103
FRENO Y EJE TRASEROS (GR) 102
FUSIBLE DE 10 A 73
FUSIBLE DE 15 A 73

Nombre Pagina

G

GRUPO DE INDICADORES 184
GRUPO DE LUCES 79
GRUPO DE MONTAJE DE LA CABINA 193
GRUPO DE PROTECCION DEL TRACTOR
(GR)..... 143
GRUPO DE TRANSFORMACION 29
GRUPO DE VALVULAS 134
136
137
153
154
155
157
GRUPO DE VALVULAS DE LA DIRECCION 135
GUARDABARROS (GR) 144

H

HERRAMIENTAS 194
HIDRAULICA (CONFIG) 145

I

IMPULSOR DE VENTILADOR (GR) 34
INDICADOR 38
INDICADOR DE NIVEL DEL ACEITE
(VARILLA) (GR)..... 24
INSERTO DE ADMISION 11
INSERTO DE ESCAPE 11
INTERRUPTOR (CONJ) 73
INTERRUPTOR (GR) 76
INTERRUPTOR DE LAS LUCES DE PARADA
(CONJ)..... 73
INTERRUPTOR DE LUCES 76
INTERRUPTOR DE SOLENOIDE (CONJ) 66
INTERRUPTOR GENERAL (CONJ) 74
INYECCION DE COMBUSTIBLE -
TUBERIAS DE 55

J

JUEGO (AISLADOR) 71
JUEGO COMPLETO DE VALVULA 117
JUEGO DE BOMBA DE AGUA 31
JUEGO DE BRAZO DE LEVANTAMIENTO 183
JUEGO DE BUJES 71
JUEGO DE CAJA 126
JUEGO DE CALCES 126
JUEGO DE CAMISA 126
JUEGO DE CILINDRO 118
178
JUEGO DE COJINETES 68
JUEGO DE DESCONEXION 175
JUEGO DE DIFERENCIAL 107
JUEGO DE EJE DE DIRECCION 126

INDICE

Nombre	Pagina
JUEGO DE ESCOBILLA	66
	68
	71
JUEGO DE FRENO DE HORQUILLA	104
JUEGO DE JUNTA DESLIZANTE	83
JUEGO DE MANGUITO	126
JUEGO DE PALANCA	68
	71
JUEGO DE PALANCAS	182
JUEGO DE PALETA DE BOMBA	173
	174
JUEGO DE PEDAL	117
JUEGO DE PIEZAS DIVERSAS	66
JUEGO DE PLANCHA FLEXIBLE (GRANDE)	172
JUEGO DE REACONDICIONAMIENTO DEL REGULADOR	42
JUEGO DE REPARACION DE MANDOS FINALES	108
JUEGO DE REPARACION DEL FRENO	118
JUEGO DE RESORTE Y ESCOBILLA	64
JUEGO DE REVESTIMIENTO DE FRENO	122
	123
JUEGO DE ROTOR	64
JUEGO DE SELLOS	68
	126
JUEGO DE TAPA	126
JUEGO DE TERMINAL	66
JUEGO DE TERMINAL (W)	64
JUEGO DE TERMINAL POSITIVO (B)	64
JUEGO DE TERMINAL POSITIVO (D)	64
JUEGO DE TORNILLERIA	68
JUEGO DE TURBOALIMENTADOR	46
JUEGO DE VALVULAS DE COMPRESOR	43
JUEGO PARCIAL DE VALVULA	117
JUNTA (GR)	84
JUNTA DE LA TAPA DE VALVULAS	14

L

LAMPARA DE LA CONSOLA (GR)	78
LAMPARA DE REFLECTOR (CONFIG)	80
LAMPARA SELLADA	78
LAMPARAS (GR)	75
	78
LUCES DEL EXTREMO DEL CARGADOR (GR)	77

M

MANDO	159
MANDO DE BOMBA (GR)	92
MAZA DE CIGUENAL	9
MECANISMO DE VALVULAS (GR)	13
MOTOR (CONFIG)	2
MOTOR - BOMBA DE ACEITE DEL	21
	22
MOTOR - SOPORTE DEL (GR)	19
MOTOR DE ARRANQUE ELECTRICO (GR)	65
	66
	67
	68
	70
MULTIPLE DE ADMISION DE LAS TUBERIAS DE AIRE	41
MULTIPLE DE ESCAPE (GR)	37
MULTIPLE DE ESCAPE - TORNILLERIA DEL	36
MUNON DEL MOTOR (GR)	19

N

NUCLEO (GR)	173
	174

O

ORIFICIO DE ACEITE DE ENFRIAMIENTO	23

P

PISTOLA DE ENGRASE (CONJ)	195
PISTON	9
PISTON Y BIELA (GR)	9
PLANETARIOS (GR)	90
POLEA DE CIGUENAL (GR)	17
POLEA DE VENTILADOR	17
POLEA DE VENTILADOR (GR)	17
POLEA DEL ALTERNADOR	63
POSICIONADOR (GR)	176
PROTECTORES DE EMBARQUE (GR)	101

R

RADIADOR (GR)	32
REFLECTOR (GR)	80
REGULADOR (GR)	48
REGULADOR Y BOMBA DE INYECCION DE COMBUSTIBLE	47
REGULADOR Y CAJA (GR)	34
RESPIRADERO	93
	114
RESPIRADERO (CONJ)	25
RESPIRADERO (GR)	25
RUEDA Y MANDOS FINALES	108

S

SELLO DE CIGUENAL	8
SILENCIADOR (GR)	37
SINCRONIZACION DEL MOTOR - ENGRANAJE DELANTERO DE	16
SOPLADOR - VENTILADOR (GR)	35
SOPORTE (GR)	192
SOPORTE DE LA TRANSMISION (GR)	92

INDICE

Nombre Pagina

T

TANQUE DE LAS TUBERIAS DE COMBUSTIBLE (GR)..... 61
TANQUE HIDRAULICO (GR) 117
TANQUE Y VALVULA (GR)..... 146
TANQUE Y VALVULA HIDRAULICOS (GR) 149
TAPA DE LA CAJA DELANTERA (GR) 15
TAPA DE LA CULATA DE CILINDROS (GR)..... 12
TAPA DE LLENADO 148
151
TAPA DE LLENADO (CONJ) 24
61
TAPA DE TANQUE DE RADIADOR (GR) 33
TAPA DE VALVULAS 14
TAPA DEL BLOQUE MOTOR (GR) 7
TAPA DEL MECANISMO DE VALVULAS (GR)..... 14
TAPA DEL TANQUE DE COMBUSTIBLE 60
TAPA DEL TUBO DE LLENADO DE ACEITE .. 81
TAPA PROTECTORA (GR) 60
TAPA PROTECTORA DEL TANQUE DE COMBUSTIBLE 60
TORNILLERIA DE LA CAJA DELANTERA (GR)..... 16
TORNILLERIA DE LA CULATA 12
TORNILLERIA DEL COLECTOR DEL CARTER (GR) 20
TORNILLERIA DEL MULTIPLE DE ESCAPE (GR)..... 36
TRANSFERENCIA DE COMBUSTIBLE - BOMBA DE..... 62
TRANSMISION (CONFIG) 81
TUBERIAS DE ACEITE DEL MOTOR (GR) 23
TUBERIAS DE ACEITE DEL TREN DE FUERZA (GR) 85
TUBERIAS DE ACEITE DEL TURBOALIMENTADOR (GR) 44
TUBERIAS DE AGUA (GR) 29
TUBERIAS DE AIRE 41
TUBERIAS DE AIRE (GR) 41
TUBERIAS DE INYECCION DE COMBUSTIBLE (GR)..... 55
56
57
58
TUBERIAS DE LA DIRECCION AUXILIAR (GR)..... 130
TUBERIAS DEL CILINDRO DE INCLINACION (GR)..... 165
TUBERIAS DEL CILINDRO DE LEVANTAMIENTO (GR)..... 166
TUBERIAS DEL COMPRESOR (GR) 40
TUBERIAS DEL ENFRIADOR DE ACEITE (GR)..... 170
TUBERIAS DEL ENFRIADOR DEL CONVERTIDOR DE PAR..... 82

Nombre Pagina

TUBERIAS HIDRAULICAS (GR) 168
TUBERIAS HIDRAULICAS DE ACEITE (GR)..... 169
TUBO DE LLENADO DE ACEITE (GR) 24
TUBO DE LLENADO DE ACEITE DE LA TRANSMISION (GR)..... 81
TURBOALIMENTADOR (GR) 45
46

V

VALVULA DE ALIVIO (GR) 98
155
156
157
VALVULA DE ALIVIO DE PRESION (CONJ)..... 32
VALVULA DE BALANCIN (GR) 13
VALVULA DE CONTROL DE LA TRANSMISION (GR)..... 96
VALVULA DE CONTROL DE PEDAL DEL FRENO (CONJ)..... 117
VALVULA DE CONTROL DEL FRENO (CONJ)..... 119
VALVULA DE DERIVACION (GR) 133
VALVULA DE ENTRADA 11
VALVULA DE ESCAPE 11
VALVULA DEL SISTEMA HIDRAULICO (GR)..... 152
VALVULA NEUTRALIZADORA (GR) 98
138
VALVULA SELECTORA (GR) 138
VALVULA SELECTORA Y DE CONTROL DE PRESION (GR)..... 97
VOLANTE (GR) 18
VOLANTE - CAJA DE (GR) 18

INDICE

Designacao Pagina

A

ALTERNADOR - CARREGAMENTO 63
64
AMPERIMETRO 186
ARO DESMONTAVEL 109
110
ARREFECEDOR DE OLEO 28
ARREFECEDOR DE OLEO DA TRANSMISSAO .. 30
ARREFECEDOR DE OLEO DO MOTOR E BASE DO FILTRO..... 26
27
ASSENTO 188
189
190

B

BALANCEADOR 10
BALANCIM - VALVULA 13
BASE DO FILTRO DE OLEO 28
BATERIA DE 6 V 73
BATERIA E CABOS/FIOS ELETRICOS 72
BLOCO DO MOTOR 4
5
6
BOCAL DE ENCHIMENTO DE OLEO DA TRANSMISSAO 81
BOCAL DE ENCHIMENTO DO OLEO DO MOTOR 24
BOMBA - COLUNA DE DIRECAO 126
BOMBA D'AGUA DO MOTOR 30
31
BOMBA DE ENGRENAGENS 85
132
BOMBA DE ESCORVA DO COMB. E FILTRO PRIMARIO..... 58
59
BOMBA DE ESCORVA DO COMBUSTIVEL 59
BOMBA DE INJECAO DO COMBUSTIVEL 52
53
BOMBA DE OLEO DO MOTOR 21
22
BOMBA DE PALHETAS 171
172
BOMBA DE TRANSFERENCIA DO COMB. E MONTAGEM..... 62
BOMBA DE TRANSFERENCIA DO COMBUSTIVEL 62
BOMBA MANUAL DE LUBRIFICACAO 195
BOMBA REGULADORA 127
BUZINA DE AR 120
121

Designacao Pagina

C

CABECOTE 11
CABECOTE - FIXADORES 12
CABOS/FIOS ELETRICOS DE DIRECAO SUPLEMENTAR 75
CACAMBA 179
CADEADO 60
CAIXA DA ALAVANCA 158
159
CAIXA DE SAIDA 158
CAIXA DIANTEIRA 14
CAMARA PNEUMATICA DO FREIO 118
CAPO E PROTETOR 142
CARCACA DA VALVULA; GR DE VALVULA 134
136
137
153
154
155
157
CARTER DO OLEO DO MOTOR 20
CARTUCHO 173
174
CHASSI DIANTEIRO 139
CHASSI TRASEIRO 140
CILINDRO 128
161
162
163
164
178
CILINDRO AR/HIDRAULICO DOS FREIOS 118
CINTO DE SEGURANCA 191
COLETOR DE ESCAPE 37
COMANDO DA BOMBA 92
COMANDO DO VENTILADOR 34
COMANDO HIDRAULICO 145
COMPRESSOR DE AR 42
43
CONTRAPESO 144
CONTROLE DA CACAMBA 180
CONTROLE DA TRANSMISSAO 94
CONTROLE DE DIRECAO 124
CONTROLE DO FREIO 112
116
CONTROLE DO GOVERNADOR 51
CONTROLE HIDRAULICO 160
CONTROLE HIDRAULICO DAS MARCHAS 96
CONTROLE MANUAL 159
CONVERSOR DE TORQUE 88
CORPO DE VALVULA 152
CUBO DO VIRABREQUIM 9

INDICE

Designacao	Pagina
D	
DEGRAU	186
DENTE	182
DESENGATE AUTOMATICO DA CACAMBA	175
DIFERENCIAL	107
DIFERENCIAL E COROA	105
	106
DIRECAO SUPLEMENTAR	129
DISJUNTOR ELETRICO AUTOMATICO - 40 A	73
E	
EIXO DE TRANSMISSAO	83
EIXO-COMANDO DE VALVULAS	54
EIXO-COMANDO DE VALVULAS, SINGELO	10
ELEMENTO	59
ELEMENTO FILTRANTE	61
	100
	146
	149
ELEMENTO PRIMARIO	39
ELEMENTO SECUNDARIO	39
ELIMINACAO DE VAPORES DO CARTER	25
ENGRENAGENS DE DISTRIBUICAO	16
ENGRENAGENS DE TRANSFERENCIA	86
ENGRENAGENS PLANETARIAS	90
F	
FAROL (FACHO SELADO)	78
FERRAMENTAS	194
FILTRO DE OLEO	26
FILTRO DE OLEO DA TRANSMISSAO	100
FILTRO DO COMBUSTIVEL	55
FILTRO E TUBOS	99
FILTRO MAGNETICO	87
FILTRO PRIMARIO	59
FIXADORES - CABECOTE	12
FIXADORES - CAIXA DIANTEIRA	16
FIXADORES - CARTER DO OLEO DO MOTOR	20
FIXADORES - COLETOR DE ESCAPE	36
FREIO DE ESTACIONAMENTO	121
	122
	123
FREIO E EIXO DIANTEIRO	103
FREIO E EIXO TRASEIRO	102
FREIOS HIDRAULICOS DE DISCOS EXTERNOS	104
FUSIVEL - 10 A	73
FUSIVEL - 15 A	73

Designacao	Pagina
G	
GOVERNADOR	48
GOVERNADOR E BOMBA INJETORA DO COMB.	47
GRUPO DE CONVERSAO	29
I	
ILUMINACAO - EXTREMO DIANTEIRO	77
INDIC. DE NIVEL DO OLEO DO MOTOR (VARETA)	24
INDICADOR	38
INDICADOR, MANOMETRO	184
INSERTO (ADMISSAO)	11
INSERTO (ESCAPE)	11
INTERRUPTOR	73
INTERRUPTOR - BATERIA	74
INTERRUPTOR - ELETRICO	76
INTERRUPTOR - ILUMINACAO	76
INTERRUPTOR - LUZ DE PARADA	73
INTERRUPTOR - SOLENOIDE	66
J	
JOGO DE ALAVANCA	68
	71
JOGO DE ALAVANCAS	182
JOGO DE BOMBA D'AGUA	31
JOGO DE BRACO DE LEVANTAMENTO	183
JOGO DE BUCHA	71
JOGO DE CAIXA	126
JOGO DE CALCOS	126
JOGO DE CAMISA	126
JOGO DE CAMISA - BOMBA DE DIRECAO	126
JOGO DE CILINDRO	118
	178
JOGO DE DIFERENCIAL	107
JOGO DE EIXO DE COMANDO - BOMBA DE DIRECAO	126
JOGO DE ESCOVA E MOLA	64
JOGO DE ESCOVAS	66
	68
	71
JOGO DE FIXADORES	68
JOGO DE ISOLADOR	71
JOGO DE JUNTA CORREDICA	83
JOGO DE LONA DO FREIO	122
	123
JOGO DE MANCAL	68
JOGO DE PALHETA	173
	174
JOGO DE PECAS DIVERSAS	66
JOGO DE PEDAL	117
JOGO DE PINCA DO FREIO	104
JOGO DE PLACA FLEXIVEL (GRANDE)	172
JOGO DE REPARO - COMANDO FINAL	108
JOGO DE REPARO - FREIO	118

INDICE

Designacao	Pagina
JOGO DE RETENTOR	68
	126
JOGO DE REVISAO - GOVERNADOR	42
JOGO DE ROTOR	64
JOGO DE TAMPA	126
JOGO DE TERMINAL	66
JOGO DE TERMINAL (W)	64
JOGO DE TERMINAL B POSITIVO	64
JOGO DE TERMINAL D POSITIVO	64
JOGO DE TURBOALIMENTADOR	46
JOGO DE VALVULA (COMPLETA)	117
JOGO DE VALVULA (PARCIAL)	117
JOGO DE VALVULA DO COMPRESSOR	43
JUNTA	59
JUNTA - TAMPA	14
JUNTA; UNIAO ARTICULACAO	84
L	
LAMPADA	75
	78
	80
LAMPADA - FAROL	80
LAMPADA - MINIATURA	73
LAMPADA - PAINEL	78
LEVANTAMENTO DO MOTOR	15
M	
MECANISMO DAS VALVULAS	13
MOLA DE CONTROLE DO TORQUE	54
MONTAGEM - CABINE	193
MOTOR	2
MOTOR DE ARRANQUE ELETRICO	65
	66
	67
	68
	70
MUNHAO DO MOTOR	19
O	
ORIFICIO - BICO	23
P	
PAINEL DE INSTRUMENTOS	187
PARA-LAMA	144
PENEIRA	148
	151
PENEIRA DO TANQUE DE COMBUSTIVEL	61
PISTAO	9
PISTAO E BIELA	9
PNEU E ARO	110
	111
POLIA DO ALTERNADOR	63
POLIA DO VENTILADOR	17
POLIA DO VIRABREQUIM	17

Designacao	Pagina
POSICIONADOR DA CACAMBA	176
PROTETOR DO TRATOR	143
PURIFICADOR DE AR	38
	39
R	
RADIADOR	32
RESPIRO	25
	93
	114
RODA E COMANDO FINAL	108
S	
SILENCIADOR	37
SISTEMA DE ILUMINACAO	79
SUPORTE	192
SUPORTE DA TRANSMISSAO	92
SUPORTE DO MOTOR	19
T	
TAMPA DA CAIXA DIANTEIRA	15
TAMPA DAS VALVULAS	14
TAMPA DE PROTECAO	60
TAMPA DE PROTECAO DO TANQUE DE COMBUSTIVEL	60
TAMPA DO BLOCO DO MOTOR	7
TAMPA DO BOCAL DE ENCHIMENTO	24
	61
	81
	148
	151
TAMPA DO CABECOTE	12
TAMPA DO MECANISO DE VALVULAS	14
TAMPA DO TANQUE DE COMBUSTIVEL	60
TAMPAS PARA EMBARQUE	101
TANQUE DE COMBUSTIVEL E TUBOS	61
TANQUE E VALVULA	146
TANQUE HIDRAULICO	117
TANQUE HIDRAULICO E VALVULA	149
TANQUE SUPERIOR DO RADIADOR	33
TERMOSTATO	34
TRANSMISSAO	81
TRANSMISSAO - CAIXA E COMPONENTES	93
TUBOS D'AGUA	29
TUBOS DE AR	41
TUBOS DE AR DO COLETOR DE ADMISSAO	41
TUBOS DE DIRECAO SUPLEMENTAR	130
TUBOS DE INJECAO DO COMBUSTIVEL	55
	56
	57
	58
TUBOS DE OLEO DA TRANSMISSAO	85
TUBOS DE OLEO DO MOTOR	23
TUBOS DE OLEO DO TURBOCOMPRESSOR	44
TUBOS DE OLEO HIDRAULICO	169

INDICE

Designacao	Pagina
TUBOS DO ARREF. DO CONVERSOR DE TORQUE	82
TUBOS DO ARREFECEDOR DE OLEO	170
TUBOS DO CILINDRO DE INCLINACAO	165
TUBOS DO CILINDRO DE LEVANTAMENTO	166
TUBOS DO COMPRESSOR	40
TUBOS DO OLEO DO TURBOALIMENTADOR	44
TUBOS HIDRAULICOS	168
TURBOALIMENTADOR	45
	46

V

VALVULA DA DIRECAO	135
VALVULA DE ADMISSAO	11
VALVULA DE ALIVIO	98
	155
	156
	157
VALVULA DE ALIVIO DE PASSO	156
VALVULA DE ALIVIO DE PRESSAO	32
VALVULA DE CONTROLE DA TRANSMISSAO	96
VALVULA DE CONTROLE DO PEDAL DO FREIO	117
VALVULA DE ESCAPE	11
VALVULA DESVIADORA	133
VALVULA DO FREIO SECUNDARIO E DE ESTACIONAMENTO	119
VALVULA NEUTRALIZADORA	98
	138
VALVULA SELETORA	138
VALVULA SELETORA E CONTROLE DE PRESSAO	97
VEDADOR DO VIRABREQUIM	8
VENTILADOR DE SOPRO	35
VIRABREQUIM	7
VIRABREQUIM - CUBO	9
VIRBREQUIM - VEDADOR	8
VOLANTE DO MOTOR	18
VOLANTE DO MOTOR - CAIXA	18

INHALTSVERZEICHNIS

Bezeichnung	Seite
A	
ABTRIEBSGEHAEUSE (GESTAENGE - 3. VENTIL)	158
AMPEREMETER	186
ANLASSMOTOR, ELEKTR.	65
	66
	67
	68
	70
ANSAUGKRUEMMER-DRUCKLUFTLEITUNGEN	41
ANSCHLUSSKLEMME	66
ANSCHLUSSKLEMMENEINBAUSATZ (B - POSITIV)	64
ANSCHLUSSKLEMMENEINBAUSATZ (D - POSITIV)	64
ANSCHLUSSKLEMMENEINBAUSATZ (W)	64
ANTRIEBSWELLE	83
ANTRIEBSWELLEN-EINBAUSATZ	126
ANTRIEBSWELLEN-GLEITGELENK	84
ANZEIGE	38
ANZEIGENSATZ	184
ARBEITSLEUCHTEN	80
ARMATURENBRETT	187
ARMATURENBRETTBELEUCHTUNG	78
AUFHAENGUNG	192
AUFREISSERZAHN	182
AUSGLEICHSWELLE	10
AUSLASSVENTIL	11
AUSLASSVENTILEINSAETZE	11
AUSPUFFKRUEMMER	37
AUSPUFFKRUEMMER-HALTETEILE	36
AUSSCHALTER	175
B	
BATTERIE - 6 V	73
BATTERIE UND VERDRAHTUNG	72
BEFESTIGUNGSTEILE	68
BELEUCHTUNGSANLAGE	79
	80
BETRIEBSBREMSEN-HYDRAULIKTASTER	104
BREMSENREPARATURSATZ	118
BREMSGESTAENGE	112
	116
BREMSKAMMER	118
BREMSLEUCHTENSCHALTER	73
BREMSTASTER-EINBAUSATZ	104
BUCHSEN-EINBAUSATZ	71
BUCHSENEINBAUSATZ	126
BUERSTEN- UND FEDEREINBAUSATZ	64
BUERSTEN-EINBAUSATZ	66
	68
	71

Bezeichnung	Seite
D	
DECKELSATZ	126
DICHTUNG	59
DICHTUNGSSATZ	68
	126
DIFFERENTIAL	107
DIFFERENTIAL UND TELLERRAD	105
	106
DIFFERENTIALEINBAUSATZ	107
DREHMOMENTWANDLER	88
DREHSTROMLICHTMASCHINE	63
	64
DRUCKLUEFTER	35
DRUCKLUFT-HYDRAULIKZYLINDER	118
DRUCKLUFTHUPE	120
	121
DRUCKLUFTLEITUNGEN	41
DUESENOEFFNUNG	23
E	
EINFUELLSTUTZENKAPPE	24
	61
	148
	151
EINLASSVENTIL	11
EINLASSVENTILEINSAETZE	11
ENTDUNSTER	25
ENTLUEFTER	25
	93
	114
F	
FAHRERHAUS-ANBAUSATZ	193
FAHRERSITZ	188
	189
	190
FELGE (TEILBAR)	109
	110
FESTSTELL- UND HAUPTBREMSVENTIL	119
FESTSTELLBREMSE	121
	122
	123
FETTPRESSE	195
FILTERELEMENT	59
	61
	100
	146
	149
FILTERLEITUNGEN	99
FLUEGELSATZ	173
	174
FUSSBREMSEN-STEUERVENTIL	117

INHALTSVERZEICHNIS

Bezeichnung	Seite
G	
GEGENGEWICHT	144
GEHAEUSEEINBAUSATZ	126
GERAETEVERKLEIDUNG	143
GETRIEBE	81
GETRIEBEAUFHAENGUNG	92
GETRIEBEGEHAEUSE UND TEILE	93
GETRIEBEHYDRAULIK	96
GETRIEBEOELFUELLSTUTZEN	81
GETRIEBEOELKUEHLER	30
GETRIEBESCHMIERFILTER	100
GETRIEBESTEUERUNG	94
GETRIEBESTEUERVENTIL	96
GLEITGELENK-EINBAUSATZ	83
H	
HANDSTEUERHEBEL	159
HANDWERKZEUGE	194
HAUPTSCHALTER	76
HEBEL-EINBAUSATZ	68
	71
HEBELEINBAUSATZ	182
HEBELGEHAEUSE	158
	159
HINTERRADBREMSE UND -ACHSE	102
HUBARMEINBAUSATZ	183
HUBOESE	15
HUBZYLINDERLEITUNGEN	166
HYDRAULIKOELLEITUNGEN	169
HYDRAULIKSTEUERUNG	160
HYDRAULIKSYSTEM	145
HYDRAULIKTANK	117
HYDRAULIKTANK UND VENTIL	149
I	
ISOLATOR-EINBAUSATZ	71
K	
KOLBEN	9
KOMBISCHAUFEL	168
KOMPRESSORLEITUNGEN	40
KOMPRESSORVENTIL-EINBAUSATZ	43
KRAFTSTOFF-ENTLUEFTUNGSPUMPE UND -VORFILTER	58
	59
KRAFTSTOFF-SIEBEINSATZ	61
KRAFTSTOFFEINSPRITZLEITUNGEN	55
	56
	57
	58
KRAFTSTOFFEINSPRITZPUMPE	52
	53
KRAFTSTOFFENTLUEFTUNGSPUMPE	59
KRAFTSTOFFILTER	55

Bezeichnung	Seite
KRAFTSTOFFOERDERPUMPE	62
KRAFTSTOFFOERDERPUMPE UND ANBAUSATZ	62
KRAFTSTOFFTANKLEITUNGEN	61
KRAFTUEBERTRAGUNGS-OELLEITUNGEN	85
KUEHLERNETZ	32
KUEHLERWASSERKASTEN, OBEN	33
KUEHLWASSER-TEMPERATURREGLER UND GEHAEUSE	34
KUEHLWASSERLEITUNGEN	29
KUEHLWASSERPUMPE	30
	31
KURBELWELLE	7
KURBELWELLEN-RIEMENSCHEIBE	17
KURBELWELLENDICHTUNG	8
KURBELWELLENNABE	9
L	
LADERRAHMEN	139
LADERRAHMEN-HECKBELEUCHTUNG	77
LAGERSATZ	68
LENKBETAETIGUNG	124
LENKVENTIL	135
LICHTMASCHINEN-RIEMENSCHEIBE	63
LICHTSCHALTER	76
LUEFTERANTRIEB	34
LUEFTERRIEMENSCHEIBE	17
LUFTKOMPRESSOR	42
	43
LUFTREINIGER	38
	39
M	
MAGNETFILTER	87
MAGNETSCHALTER	66
MESSERPUMPE	171
	172
MINIATURLEUCHTEN	73
MONTAGEZAPFEN	19
MOTORAUFHAENGUNG	19
MOTORAUSFUEHRUNG	2
MOTORBLOCK	4
	5
	6
MOTORBLOCKDECKEL	7
MOTORHAUBE UND VERKLEIDUNG	142
MOTOROELKUEHLER UND FILTERSOCKEL	26
	27
MOTOROELLEITUNGEN	23
MOTORRAHMEN	140

INHALTSVERZEICHNIS

Bezeichnung	Seite
N	
NEIGEZYLINDERLEITUNGEN	165
NEIGUNGS-UEBERDRUCKVENTIL	156
NEUTRALISIERVENTIL	98
	138
NOCKENWELLE	54
NOCKENWELLE (MOTOR)	10
O	
OELEINFUELLSTUTZEN	24
OELFUELLSTUTZENKAPPE	81
OELKUEHLER	28
OELKUEHLERLEITUNGEN	170
OELMESSSTAB	24
OELWANNE	20
OELWANNEN-HALTETEILE	20
P	
PEDALEINBAUSATZ	117
PLANETENSATZ	90
PLEUELSTANGE UND KOLBEN	9
PUMPENANTRIEB	92
R	
REGLER	48
REGLER UND KRAFTSTOFFEINSPRITZPUMPE	47
REGLEREINBAUSATZ	42
REGLERSTEUERUNG	51
REIFEN UND FELGE	110
	111
REPARATURSATZ (SEITENANTRIEB)	108
REPARATURSATZ - BREMSBELAG	122
	123
REPARATURSATZ - PLATTE ELAST.	172
REPARATURSATZ - WASSERPUMPEN	31
ROTOREINBAUSATZ	64
S	
SCHALLDAEMPFER	37
SCHALT- UND DRUCKSTEUERUNG	97
SCHALTER	73
SCHALTVENTIL	138
SCHAUFEL	179
SCHAUFELEINSTELLER	176
SCHAUFELSTEUERUNG	180
SCHEINWERFER	75
	78
SCHMIERFILTER	26
SCHMIERFILTERSOCKEL	28
SCHMIERPUMPE	21
	22
SCHUTZBLECHE	144
SCHUTZKAPPE	60
SCHWUNGSCHEIBE	18
SCHWUNGSCHEIBENGEHAEUSE	18
SEALED-BEAM-SCHEINWERFER	78
SEITENANTRIEB UND RAD	108
SEKUNDAERFILTERELEMENT	39
SICHERHEITSGURT	191
SICHERUNG (10 A)	73
SICHERUNG (15 A)	73
SIEBEINSATZ	148
	151
SORTIMENTSATZ	66
STEIGLEITER	186
STIRNRAD	16
STIRNRADGEHAEUSE	14
STIRNRADGEHAEUSE-HALTETEILE	16
STIRNRADGEHAEUSEDECKEL	15
T	
TANK UND VENTIL	146
TANKKAPPE	60
TRENNSCHALTER	74
TURBOLADER	45
	46
TURBOLADER - EINTEILIGER ROTOR	173
	174
TURBOLADEREINBAUSATZ	46
TURBOLADEROELLEITUNGEN	44
U	
UEBERDRUCKVENTIL	32
	98
	155
	156
	157
UMBAUSATZ	29
UMLEITVENTIL	133
UNTERBRECHER (40 A)	73
UNTERLEGSCHEIBE	126
V	
VENTILDECKEL	14
VENTILDECKELDICHTUNG	14
VENTILEINBAUSATZ (KOMPLETT)	117
VENTILEINBAUSATZ (TEILSATZ)	117
VENTILKIPPHEBEL	13
VENTILKOERPER	152
VENTILSATZ	134
	136
	137
	153
	154
	155
	157
VENTILSTEUERUNG	13

INHALTSVERZEICHNIS

Bezeichnung	Seite
VERKLEIDUNGSEINBAUSATZ	126
VERSANDDECKEL	101
VORDERRADBREMSE UND -ACHSE	103
VORFILTER	59
VORFILTERELEMENT	39
VORGELEGE	86
VORHANGSCHLOSS	60
W	
WANDLEROELKUEHLERLEITUNGEN	82
Z	
ZAHNRADPUMPE	85
	132
ZAHNSTANGENANSCHLAG	54
ZUMESSPUMPE	127
ZUMESSPUMPE (LENKSAEULE)	126
ZUSATZLENKLEITUNGEN	130
ZUSATZLENKUNG	129
ZUSATZSTEUERUNGSVERDRAHTUNG	75
ZYLINDER	128
	161
	162
	163
	164
	178
ZYLINDEREINBAUSATZ	118
	178
ZYLINDERKOPF	11
ZYLINDERKOPF-HALTETEILE	12
ZYLINDERKOPFDECKEL	12

Mineradora Moares Ltda.
Rod. Castelo Branco, Km 56
Cx. Postal 05 - CEP 18147-000
Araçariguama - SP
Fones: (11) 4136 - 1064 / 4717 - 6116

ENGINE ARRANGEMENT

			PAGE
1	1W2872	BALANCER GP	10
1	1P4244	BREATHER GP	25
1	1N4436	CAMSHAFT GP-SINGLE	10
1	2W7280	COOLER GP-FILTER BASE & ENGINE OIL	26
1	2Y8051	COOLER GP-TRANSMISSION OIL	30
1	2W0102	COVER GP-CYLINDER BLOCK	7
1	2P6530	COVER GP-CYLINDER HEAD	12
1	2P6529	COVER GP-FRONT HOUSING	15
1	8N4446	COVER GP-VALVE MECHANISM	14
1	2Y5204	CRANKSHAFT GP	7
1	7N6553	CYLINDER BLOCK GP	4
1	7N8874	CYLINDER HEAD GP	11
1	1W9124	DRIVE GP-FAN	34
1	7N9534	FASTENER GP-CYLINDER HEAD	12
1	1W3793	FASTENER GP-EXHAUST MANIFOLD	36
1	2Y5717	FASTENER GP-FRONT HOUSING	16
1	2P6189	FASTENER GP-OIL PAN	20
1	2P6855	FILLER GP-OIL	24
1	1W9532	FILTER GP-SECONDARY	55
1	7S7877	FLYWHEEL GP	18
1	1N4874	FUMES DISPOSAL GP	25
1	2P6491	GAUGE GP-OIL LEVEL (DIPSTICK)	24
1	1W5634	GEAR GP-FRONT TIMING	16
1	7C1132	GOVERNOR & FUEL INJECTION PUMP GP	47
1	2P8165	HOUSING & REGULATOR GP	34
1	1W5723	HOUSING GP-FLYWHEEL	18
1	8N0303	HOUSING GP-FRONT	14
1	2P8598	HUB GP-CRANKSHAFT	9
1	6N8326	LIFTING GP	15
1	5Y0551	LINES GP-AIR	41
1	4W4324	LINES GP-AIR	41
1	2P6512	LINES GP-ENGINE OIL	23
1	8N2772	LINES GP-FUEL INJECTION	55
1	1W0558	LINES GP-TURBOCHARGER OIL	44
1	2W6779	LINES GP-WATER	29

ENGINE ARRANGEMENT

			PAGE
1	2P6571	MANIFOLD GP-EXHAUST	37
1	2P6155	PAN GP-OIL	20
4	1W6588	PISTON & ROD GP	9
1	7N2879	PULLEY GP-CRANKSHAFT	17
1	1W9219	PULLEY GP-FAN	17
1	2P1784	PUMP GP-ENGINE OIL	21
1	7C1123	PUMP GP-FUEL PRIMING & PRIMARY FILTER	58
1	2W4160	PUMP GP-FUEL TRANSFER (W/MOUNTING)	62
1	7N5908	PUMP GP-WATER	30
1	2P6224	SEAL GP-CRANKSHAFT	8
1	1W8454	SUPPORT GP-ENGINE	19
1	7N9589	TRUNNION GP-ENGINE	19
1	1W5130	TURBOCHARGER GP	45
1	7N8024	VALVE-MECHANISM GP	13

GASKET KITS WILL BE
PROVIDED WHEN AVAILABLE

495879 P

5Y1780 ENGINE AR-PART 2 OF 2
Engine S/N 9CB1500-Up

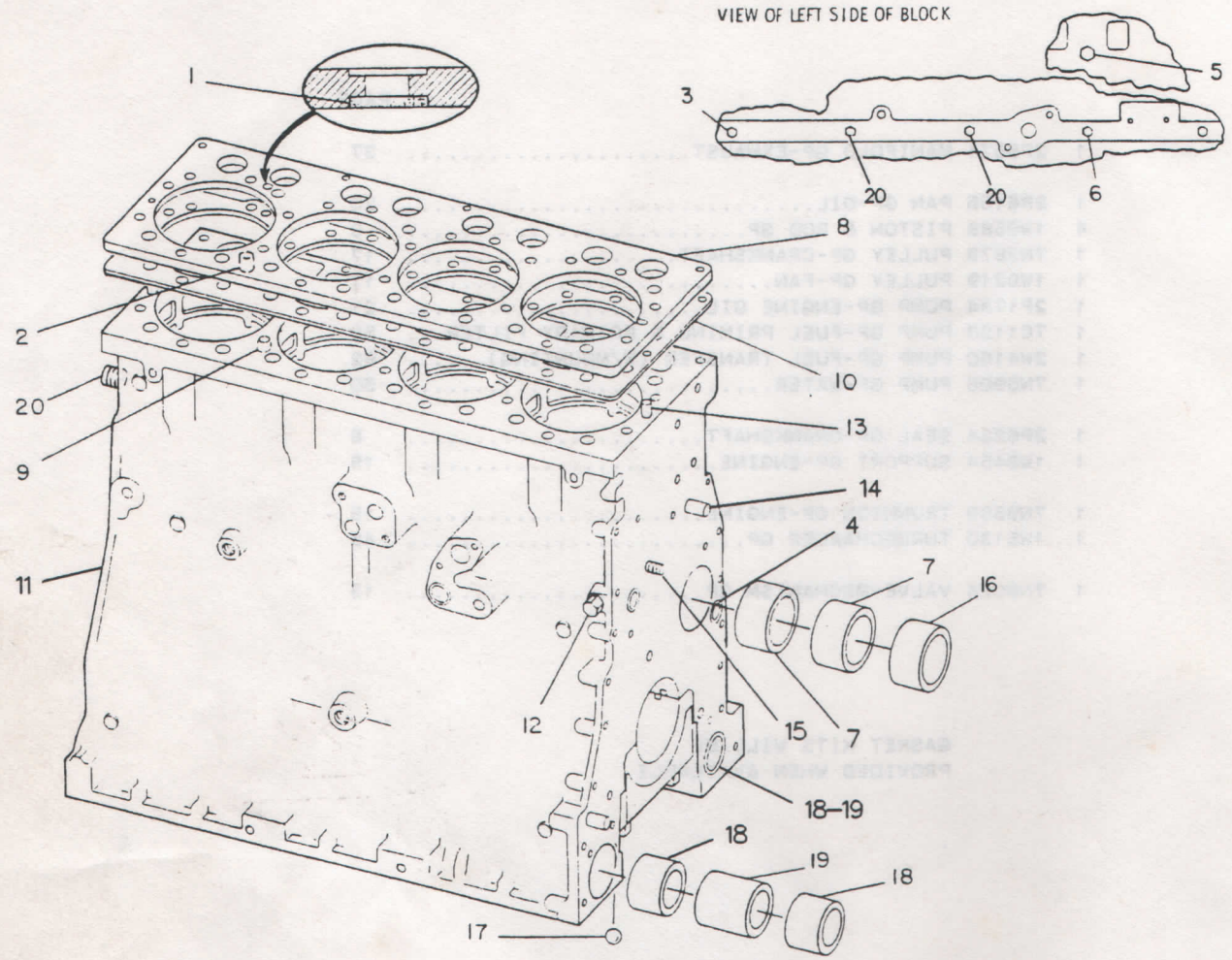

NOTE	REF NO	PART NUMBER	QTY	PART NAME
	1	3S5496	1	SEAL-O-RING
	2	1S9540	1	DOWEL
	3	7H3171	1	PLUG-PIPE
	4	4B3938	1	PLUG-CUP
	5	8M9307	1	PLUG-DRAIN
		6F7062	1	WASHER
	6	5M6213	2	PLUG
	7	7M4046	2	BEARING-SLEEVE
	8	7N8021	1	PLATE-BLOCK
	9	5B7652	2	DOWEL
	10	7W7544	1	GASKET-PLATE
Y	11	7N6552	1	CYLINDER BLOCK AS
	12	5M6214	1	PLUG-PIPE
	13	8K1207	2	PIN-DOWEL
	14	8B6349	2	DOWEL
	15	5S8462	1	STUD
	16	8N4110	1	BEARING-SLEEVE
	17	4B9782	5	BALL
	18	9Y2991	4	BEARING-SLEEVE
	19	9Y2992	2	BEARING-SLEEVE
	20	2B0858	3	PLUG-PIPE

NOTE	REF NO	PART NUMBER	QTY	PART NAME

Y-SEPARATE ILLUSTRATION

R-479898 EP

1201

7N6553 CYLINDER BLOCK GP
7N6552-Page 5

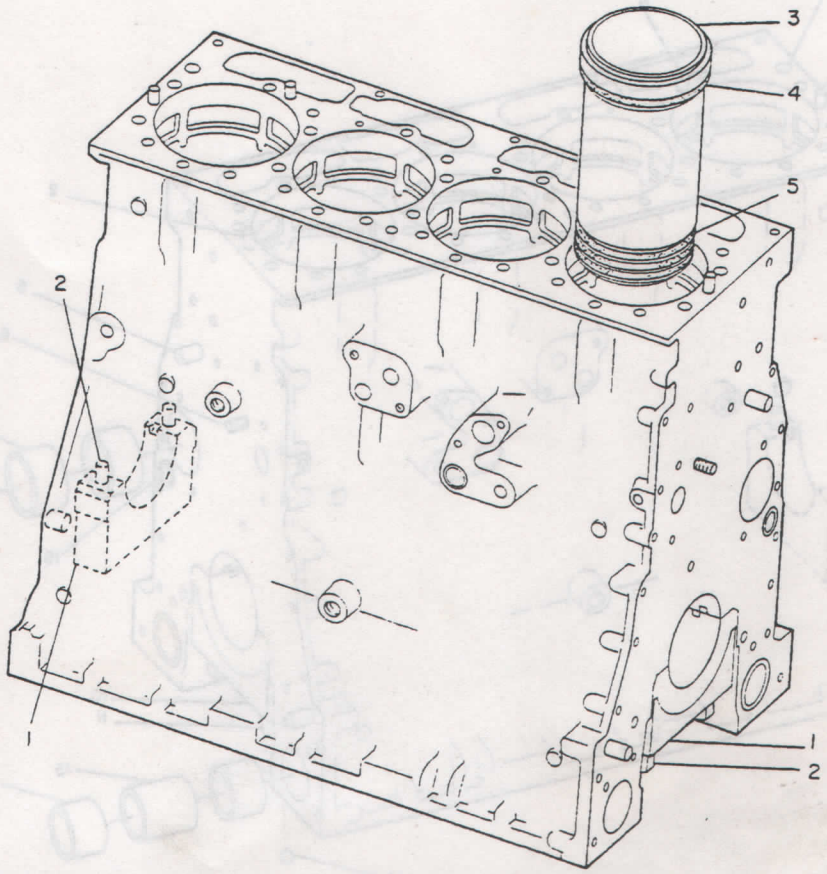

NOTE	REF NO	PART NUMBER	QTY	PART NAME	NOTE	REF NO	PART NUMBER	QTY	PART NAME
	1	6N8003	5	CAP-CRANKSHAFT BEARING					
	2	7S3224	10	BOLT					
		2S5658	10	WASHER-HARD					
	3	2P8889	4	LINER-CYLINDER					
	4	9L5854	4	BAND-FILLER					
	5	5S6670	12	SEAL-O-RING					

B-232391 EP

1216

7N6552 CYLINDER BLOCK AS.
Part Of 7N6553 Cylinder Block
Field Replacement Order 1N3574 Page 6

BASIC ENGINE

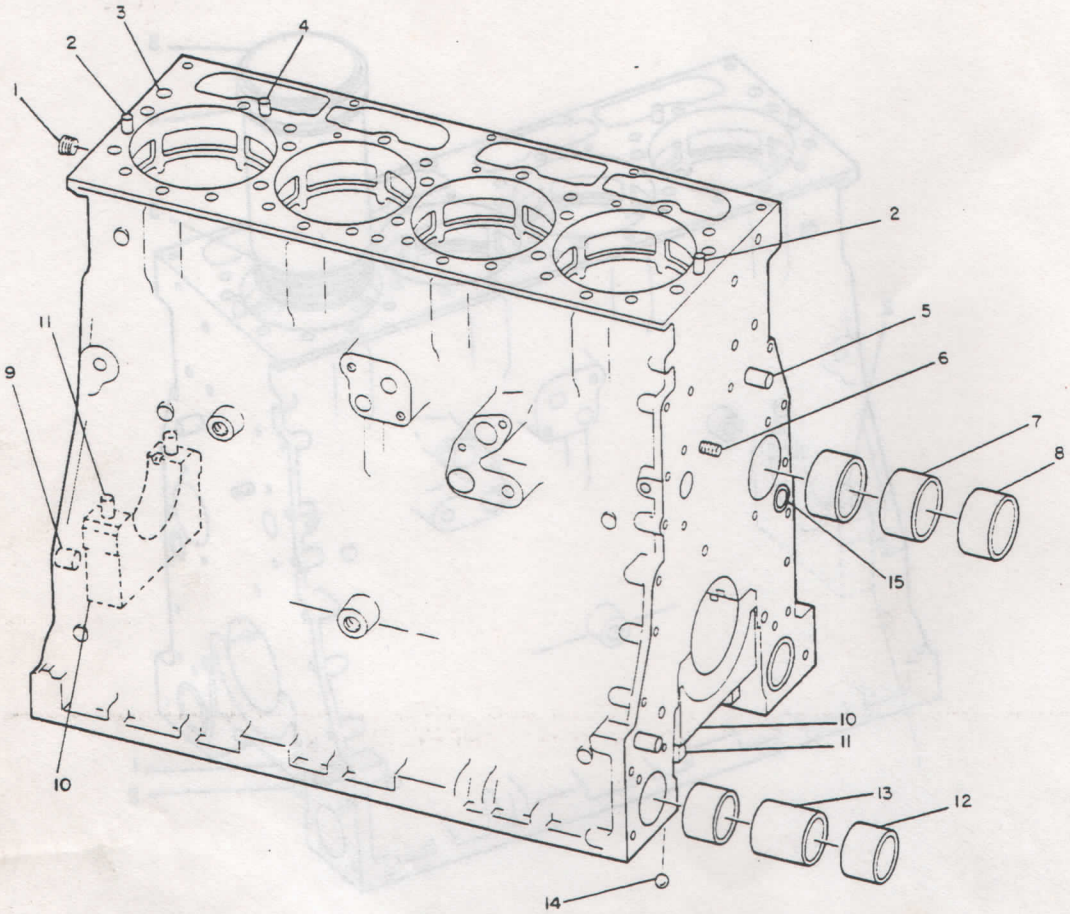

NOTE	REF NO	PART NUMBER	QTY	PART NAME	NOTE	REF NO	PART NUMBER	QTY	PART NAME
C	1	3J6019	1	PLUG					
	2	8K1207	2	PIN-DOWEL					
	3	5B7652	2	DOWEL					
	4	1S9540	1	DOWEL					
	5	8B6349	2	DOWEL					
	6	5S8462	1	STUD					
	7	7M4046	2	BEARING-SLEEVE					
	8	8N4110	1	BEARING-SLEEVE					
	9	2A3798	2	DOWEL					
	10	6N8003	5	CAP-CRANKSHAFT BEARING					
	11	7S3224	10	BOLT					
		2S5658	10	WASHER-HARD					
	12	9Y2991	4	BEARING-SLEEVE					
	13	9Y2992	2	BEARING-SLEEVE					
	14	4B9782	5	BALL					
C	15	4B3938	1	PLUG-CUP					

C-CHANGE FROM PREVIOUS TYPE

B-489402 EP

1201

1N3574 CYLINDER BLOCK GP

Field Replacement For 7N6552-Page 5

BASIC ENGINE

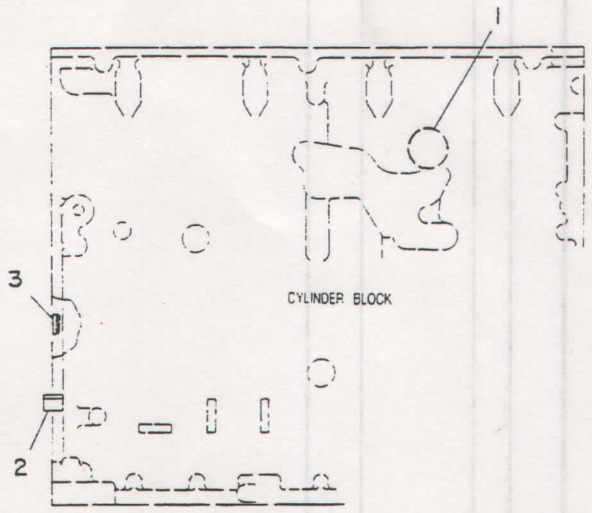

NOTE	REF NO	PART NUMBER	QTY	PART NAME
	1	9L7657	1	PLUG-CUP
	2	2A3798	2	DOWEL
	3	4B3938	1	PLUG-CUP

B-313388 EP

1151 **2W0102 COVER GP-CYLINDER BLOCK**

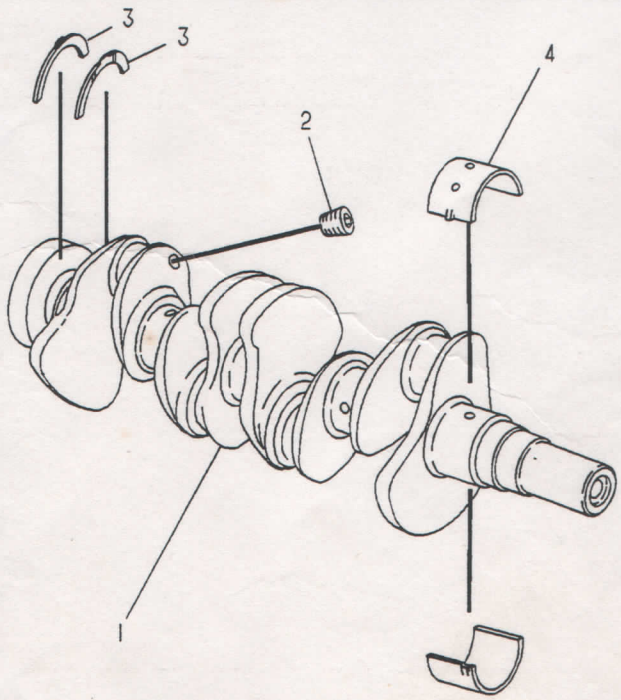

NOTE	REF NO	PART NUMBER	QTY	PART NAME
	1	5Y1544	1	CRANKSHAFT AS
	2	9F2247	4	PLUG
	3	7N9342	2	PLATE-THRUST
C	4	4W5738	5	BEARING-MAIN (STANDARD)
AB		8N8225	5	BEARING-MAIN (.25MM US)
AB		8N8226	5	BEARING-MAIN (.51MM US)
AB		8N8227	5	BEARING-MAIN (.76MM US)
AB		8N8228	5	BEARING-MAIN (.51MM OS)
AB		8N8229	5	BEARING-MAIN (.25MM US .51MM OS)

A-NOT PART OF THIS GROUP
B-USE AS REQUIRED
C-CHANGE FROM PREVIOUS TYPE

A-500092 EP

1202 **2Y5204 CRANKSHAFT GP**

BASIC ENGINE

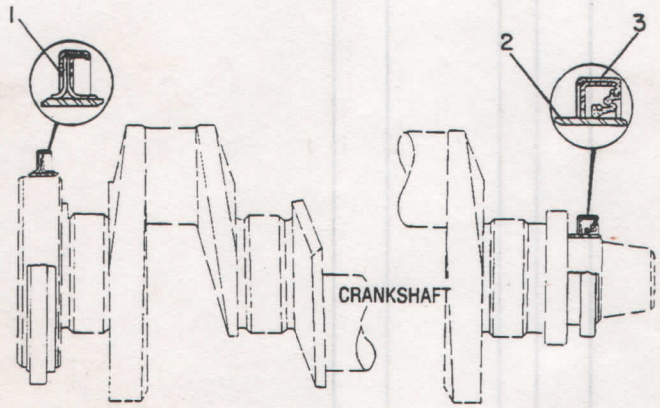

NOTE	REF NO	PART NUMBER	QTY	PART NAME
C	1	4W0452	1	SEAL GP-CRANKSHAFT
	2	2P3859	1	SLEEVE-WEAR
	3	5S6296	1	SEAL-LIP TYPE

C-CHANGE FROM PREVIOUS TYPE

B-403889 EP

1160 2P6224 SEAL GP-CRANKSHAFT

BASIC ENGINE

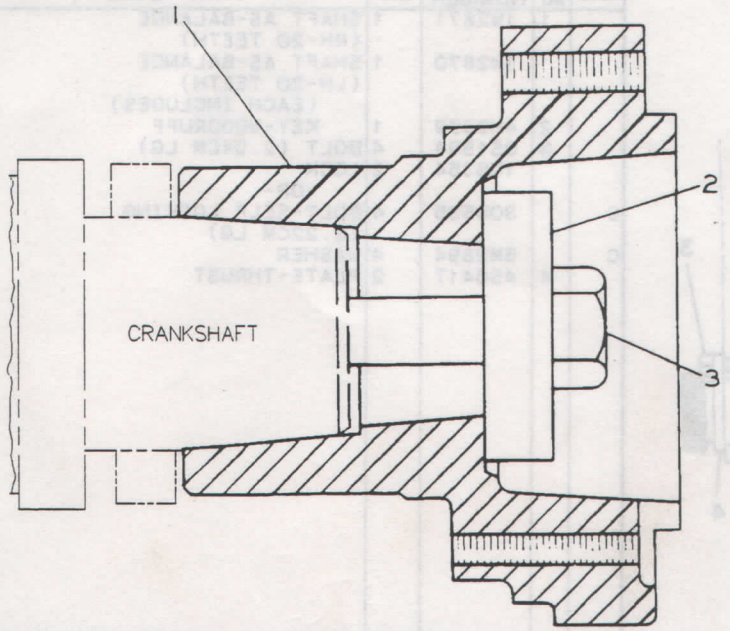

NOTE	REF NO	PART NUMBER	QTY	PART NAME
	1	7W5687	1	HUB-CRANKSHAFT
	2	7B5163	1	BOLT
	3	5S9948	1	WASHER-PULLEY

R-478266 EP

1202 **2P8598 HUB GP-CRANKSHAFT**

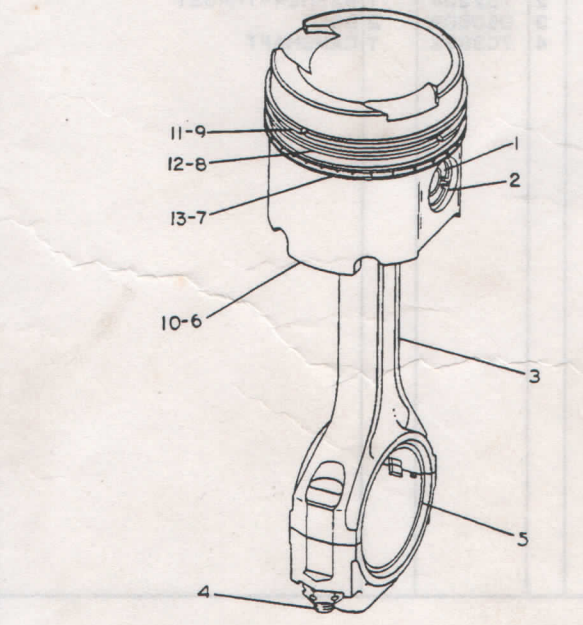

NOTE	REF NO	PART NUMBER	QTY	PART NAME
	1	7N9805	1	PIN-PISTON
	2	1S9543	2	RETAINER-PIN
R	3	8N1721	1	ROD AS-CONNECTING
		8N1849	1	BEARING-CONNECTING ROD
	4	1P9956	2	BOLT-CONNECTING ROD
		5S6348	2	NUT-SPECIAL
C	5	8N8220	1	BEARING-CONNECTING ROD (STANDARD)
AC		8N8221	1	BEARING-CONNECTING ROD (.25MM)UNDERSIZE
AC		8N8222	1	BEARING-CONNECTING ROD (.51MM)UNDERSIZE
AC		8N8223	1	BEARING-CONNECTING ROD (.76MM)UNDERSIZE
R	6	1W6757	1	BODY AS-PISTON
	7	9L6934	1	RING-PISTON (OIL)
	8	5S6750	1	RING-INTERMEDIATE
	9	9S3029	1	RING-PISTON TOP
AC	10	2W6091	1	RING GP-PISTON
	11	9S3029	1	RING-PISTON TOP
	12	5S6750	1	RING-INTERMEDIATE
	13	9L6934	1	RING-PISTON (OIL)

A-NOT PART OF THIS GROUP
C-CHANGE FROM PREVIOUS TYPE
R-REMFG PART MAY BE AVAILABLE

B-312149 EP

1225 **1W6588 PISTON & ROD GP**

BASIC ENGINE

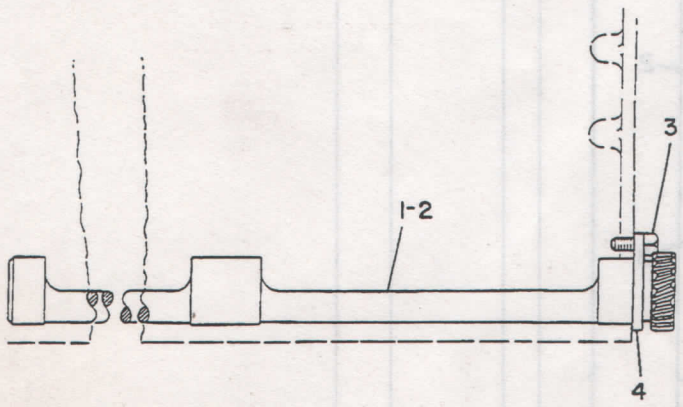

NOTE	REF NO	PART NUMBER	QTY	PART NAME
	1	1W2871	1	SHAFT AS-BALANCE (RH-20 TEETH)
		1W2870	1	SHAFT AS-BALANCE (LH-20 TEETH) (EACH INCLUDES)
	2	4H9699	1	KEY-WOODRUFF
	3	0S1594	4	BOLT (2.54CM LG)
		1N8354	2	LOCK -OR-
C		308535	4	BOLT-SELF LOCKING (2.22CM LG)
C		5M2894	4	WASHER
	4	4S6417	2	PLATE-THRUST

C-CHANGE FROM PREVIOUS TYPE

B-303465 EP

1220 1W2872 BALANCER GP

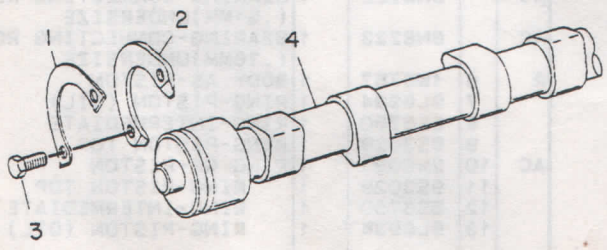

NOTE	REF NO	PART NUMBER	QTY	PART NAME
	1	8S1491	1	LOCK
	2	7S2204	1	WASHER-THRUST
	3	0S0509	2	BOLT
	4	7C3862	1	CAMSHAFT

B-479356 EP

1210 1N4436 CAMSHAFT GP-SINGLE

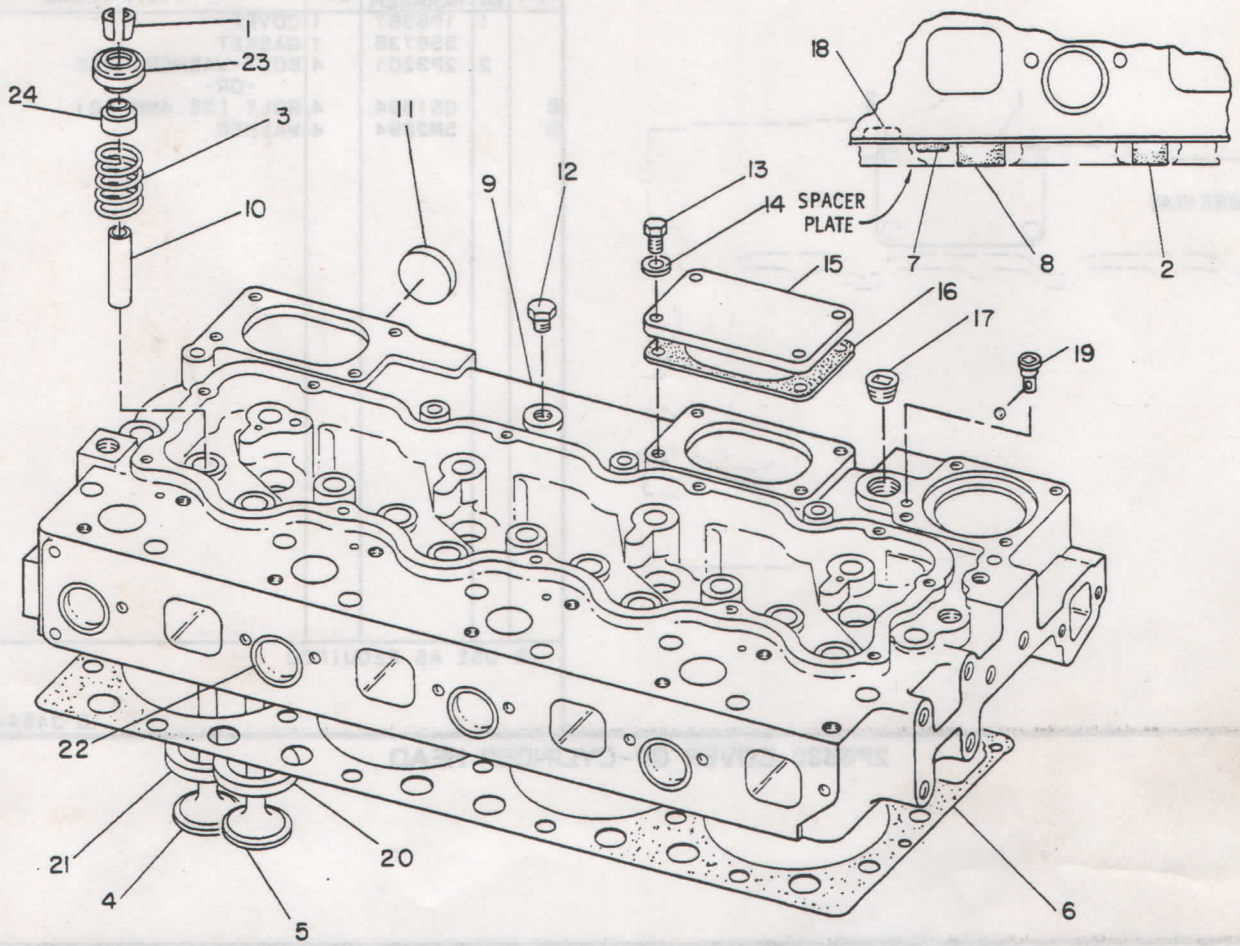

NOTE	REF NO	PART NUMBER	QTY	PART NAME
	1	2A4429	16	LOCK-RETAINER
	2	7N8018	4	SEAL-WATER
	3	7S7144	8	SPRING-VALVE
	4	6N9915	4	VALVE-INLET
	5	6N9916	4	VALVE-EXHAUST
	6	7N8022	1	GASKET-CYLINDER HEAD
	7	3S5496	1	SEAL-O-RING
C	8	4W8087	12	SEAL-WATER
R	9	1N4304	1	CYLINDER HEAD GP
	10	2P1262	8	GUIDE-VALVE
C	11	3S8313	4	PLUG-CUP
	12	5M6213	1	PLUG
	13	OS1594	4	BOLT
	14	5M2894	4	WASHER
	15	1P6367	1	COVER
	16	5S6735	1	GASKET
	17	2B0858	3	PLUG-PIPE
	18	3B0623	4	PLUG-CUP
C	19	8N4485	1	VALVE AS
C	20	2W4837	4	INSERT (EXHAUST)
	21	7N4448	4	INSERT (INTAKE)
	22	3P1896	8	PLUG-CUP
C	23	1W5300	8	ROTOCOIL AS (EACH INCLUDES)
		8N7782	1	ROTOCOIL AS
C	24	6N7174	1	SHIELD-OIL

C-CHANGE FROM PREVIOUS TYPE
R-REMFG PART MAY BE AVAILABLE

B-404456 EP

1101 7N8874 CYLINDER HEAD GP

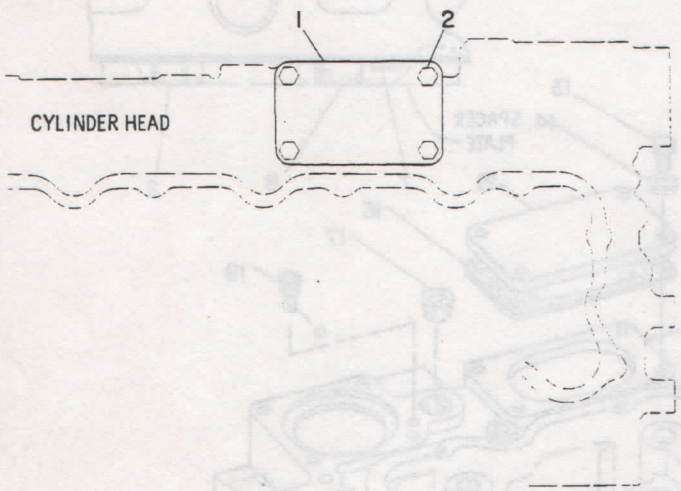

NOTE	REF NO	PART NUMBER	QTY	PART NAME
	1	1P6367	1	COVER
		5S6735	1	GASKET
	2	2P3201	4	BOLT-WASHER HEAD
				-OR-
B		0S1594	4	BOLT (25.4MM LG)
B		5M2894	4	WASHER

B-USE AS REQUIRED

B-348448 EP

1101 2P6530 COVER GP-CYLINDER HEAD

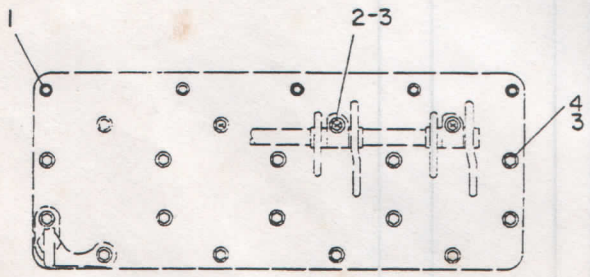

NOTE	REF NO	PART NUMBER	QTY	PART NAME
	1	5B9603	5	BOLT (3/8-16X5IN)
C	2	1B7709	3	BOLT (5/8-11X8IN)
C	3	2S0736	17	WASHER-HARD
	4	1D4595	14	BOLT (5/8-11X6IN)

C-CHANGE FROM PREVIOUS TYPE

B-227966 EP

1101 7N9534 FASTENER GP-CYLINDER HEAD

BASIC ENGINE

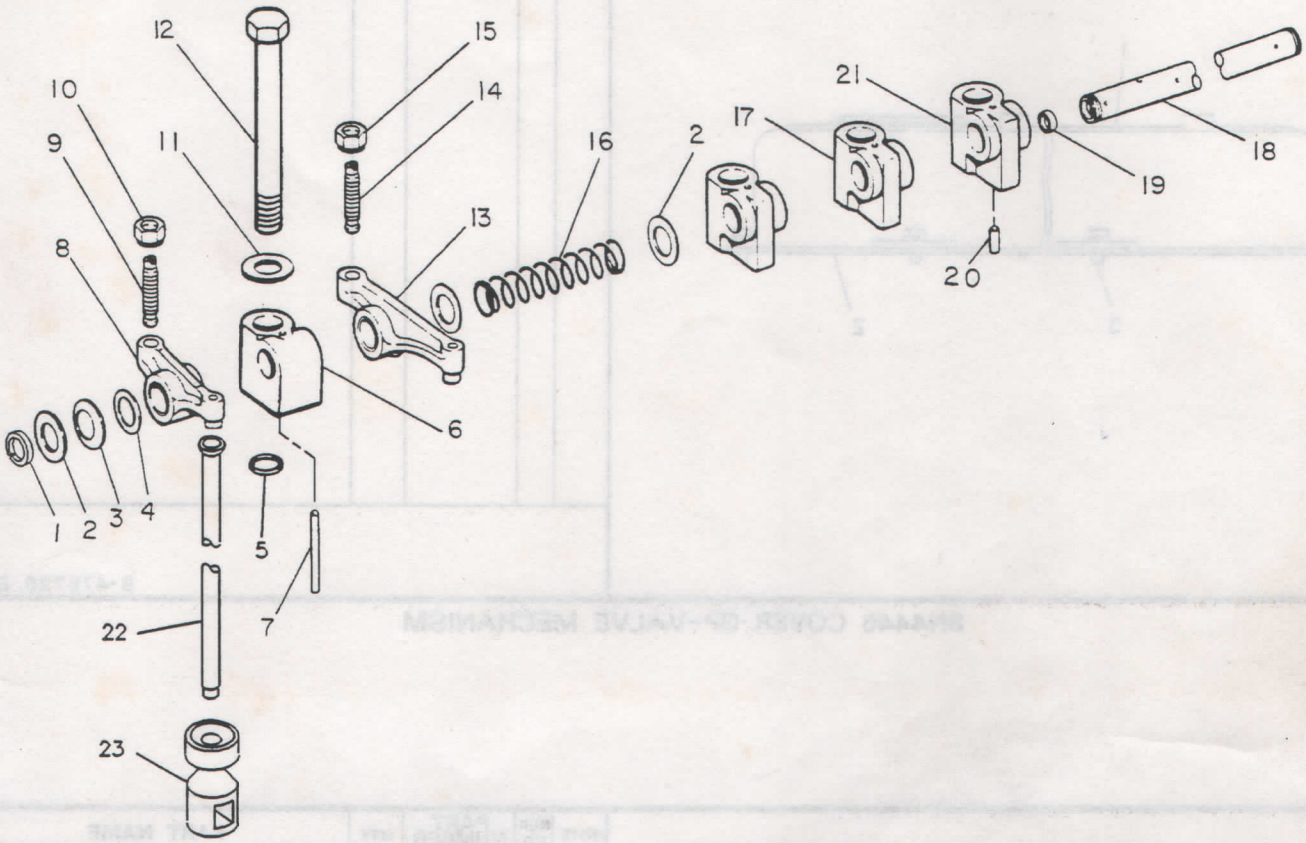

NOTE	REF NO	PART NUMBER	QTY	PART NAME
	1	9H1113	2	RING-RETAINER
	2	9H1110	8	WASHER
	3	9H1112	2	SPRING
B	4	9M9886	2	WASHER
	5	5P5598	1	SEAL-O-RING
	6	8S1498	1	BRACKET-SHAFT
	7	1L5072	1	DOWEL
C	8	8N3325	4	ROCKER ARM GP-VALVE (EXHAUST)
				(EACH INCLUDES)
	9	5S5917	1	SCREW-ROCKER ADJUSTING
	10	3S2713	1	NUT-FULL
	11	2S0736	1	WASHER-HARD
	12	1B7709	1	BOLT
C	13	8N3327	4	ROCKER ARM GP-VALVE (INTAKE)
				(EACH INCLUDES)
	14	5S5917	1	SCREW-ROCKER ADJUSTING
	15	3S2713	1	NUT-FULL
	16	4B4910	3	SPRING
	17	5S5879	1	BRACKET-SHAFT
	18	8N3312	1	SHAFT-ROCKER ARM
	19	6V3508	1	PLUG-CUP
	20	5M4606	1	DOWEL
	21	7N8015	1	BRACKET-ROCKER ARM SHAFT
	22	5S5918	8	ROD-VALVE PUSH
	23	7S3161	8	LIFTER-VALVE

B-USE AS REQUIRED
C-CHANGE FROM PREVIOUS TYPE

R-480067 EP

1102 7N8024 VALVE MECHANISM GP

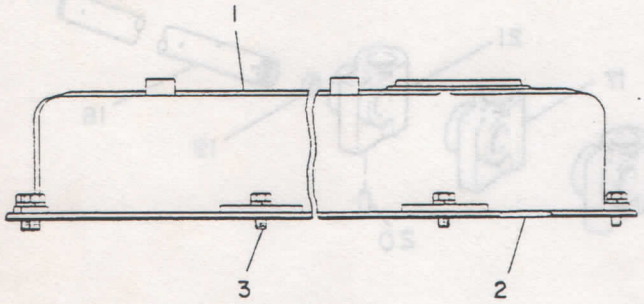

NOTE	REF NO	PART NUMBER	QTY	PART NAME
	1	8N0264	1	COVER AS-CYLINDER HEAD
	2	8S1606	1	GASKET-COVER
	3	0S1617	11	BOLT
		9M1974	11	WASHER

B-476725 EP

1107 8N4446 COVER GP-VALVE MECHANISM

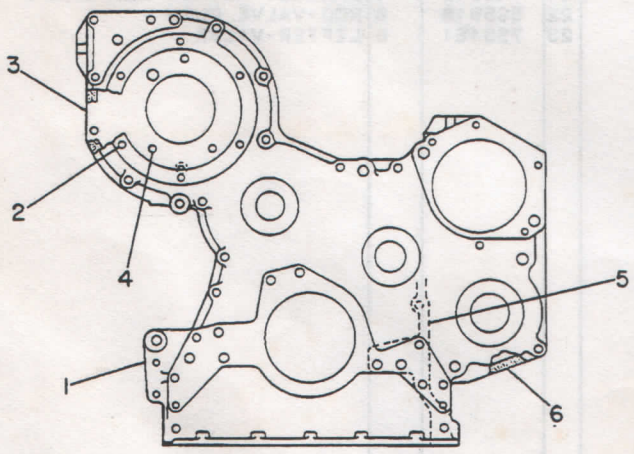

NOTE	REF NO	PART NUMBER	QTY	PART NAME
	1	8N0109	1	HOUSING AS-FRONT
	2	2S0042	6	STUD
C	3	1W7816	1	PLATE AS-FRONT
		1W7110	1	PLATE-FRONT
		5M6214	1	PLUG-PIPE
	4	6H0192	3	STUD
	5	8N0110	1	GASKET-FRONT PLATE
C	6	1W3900	1	GASKET

C-CHANGE FROM PREVIOUS TYPE

B-236978 EP

1151 8N0303 HOUSING GP-FRONT

BASIC ENGINE

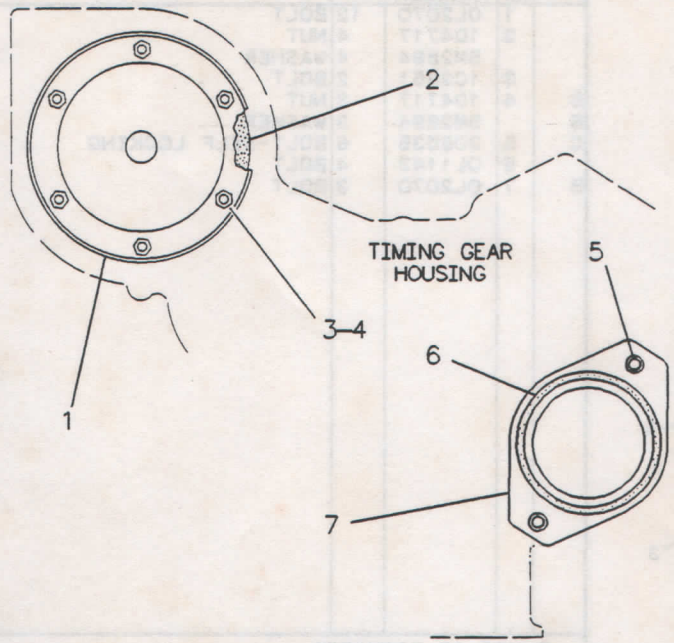

NOTE	REF NO	PART NUMBER	QTY	PART NAME
	1	9N5769	1	COVER-HOUSING
	2	6N7887	1	GASKET-HOUSING COVER
	3	3S2713	6	NUT-FULL
	4	5M2894	6	WASHER
	5	0S1589	2	BOLT
	6	5F3106	1	SEAL-O-RING
	7	6N0462	1	COVER

R-500031 EP

1151 **2P6529 COVER GP-FRONT HOUSING**

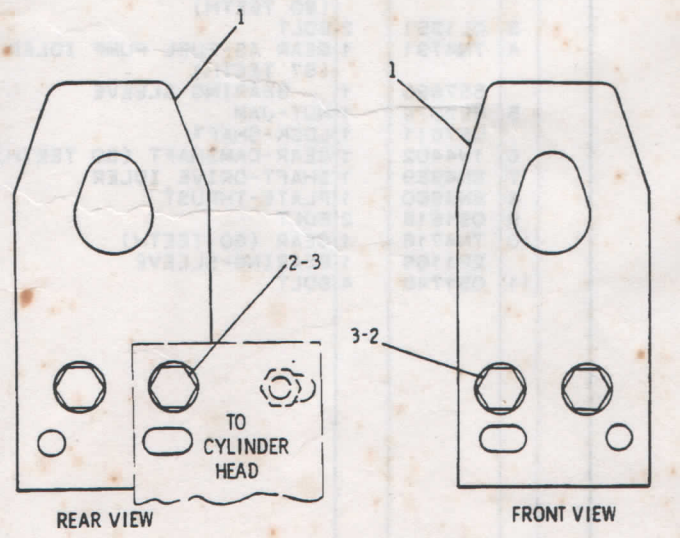

NOTE	REF NO	PART NUMBER	QTY	PART NAME
	1	8N8721	2	PLATE-LIFTING EYE
C	2	0S1566	4	BOLT
C	3	5P8247	4	WASHER-HARD

C-CHANGE FROM PREVIOUS TYPE

B-345537 EP

1122 **6N8326 LIFTING GP**

BASIC ENGINE

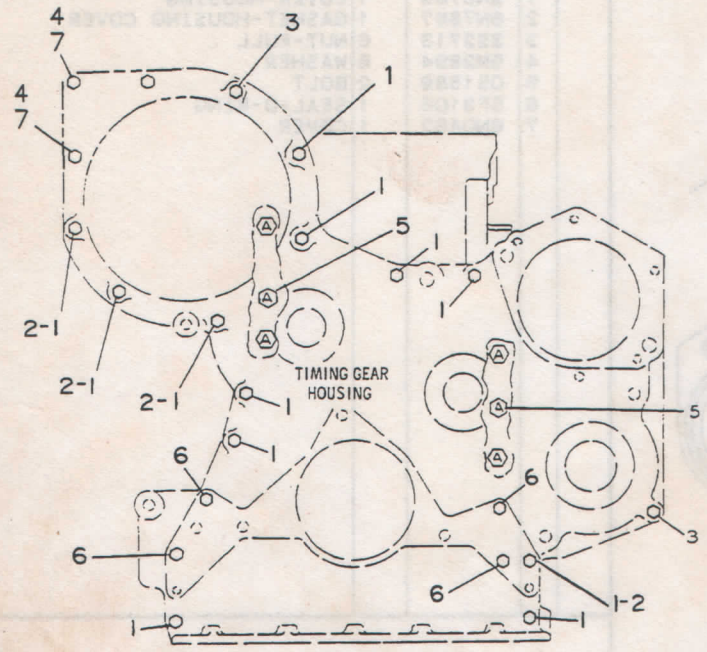

NOTE	REF NO	PART NUMBER	QTY	PART NAME
	1	0L2070	12	BOLT
	2	1D4717	4	NUT
		5M2894	4	WASHER
	3	1C2251	2	BOLT
B	4	1D4717	3	NUT
B		5M2894	3	WASHER
C	5	308535	6	BOLT-SELF LOCKING
	6	0L1143	4	BOLT
B	7	0L2070	3	BOLT

B-USE AS REQUIRED
C-CHANGE FROM PREVIOUS TYPE

R-491704 EP

1151 **2Y5717 FASTENER GP-FRONT HOUSING**

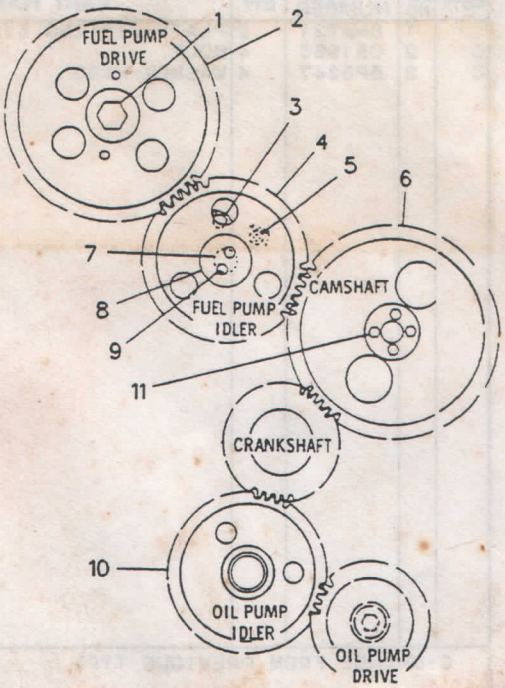

NOTE	REF NO	PART NUMBER	QTY	PART NAME
C	1	1A1135	1	BOLT
		7N2994	1	WASHER
C	2	7W0508	1	GEAR-FUEL PUMP DRIVE (80 TEETH)
	3	0L1351	2	BOLT
	4	7N4791	1	GEAR AS-FUEL PUMP IDLER (57 TEETH)
		5S7630	1	BEARING-SLEEVE
	5	5B9079	1	NUT-JAM
		5S7611	1	LOCK-SHAFT
	6	1W4402	1	GEAR-CAMSHAFT (80 TEETH)
	7	8N4959	1	SHAFT-DRIVE IDLER
	8	8N4960	1	PLATE-THRUST
	9	0S1618	2	BOLT
	10	7N4716	1	GEAR (60 TEETH)
		2P1168	1	BEARING-SLEEVE
	11	0S1748	4	BOLT

C-CHANGE FROM PREVIOUS TYPE

R-488264 EP

1164 **1W5634 GEAR GP-FRONT TIMING**

BASIC ENGINE

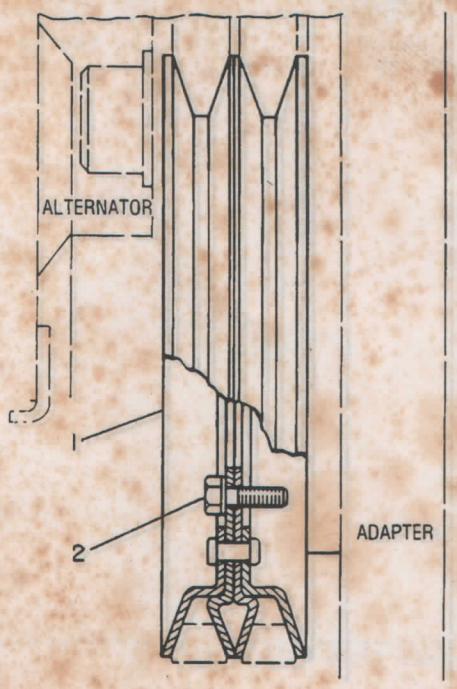

NOTE	REF NO	PART NUMBER	QTY	PART NAME
	1	7N2949	1	PULLEY
	2	0S1594	6	BOLT
		5M2894	6	WASHER-HARD

B-219553 EP

1205

5Y2002 PULLEY GP-CRANKSHAFT

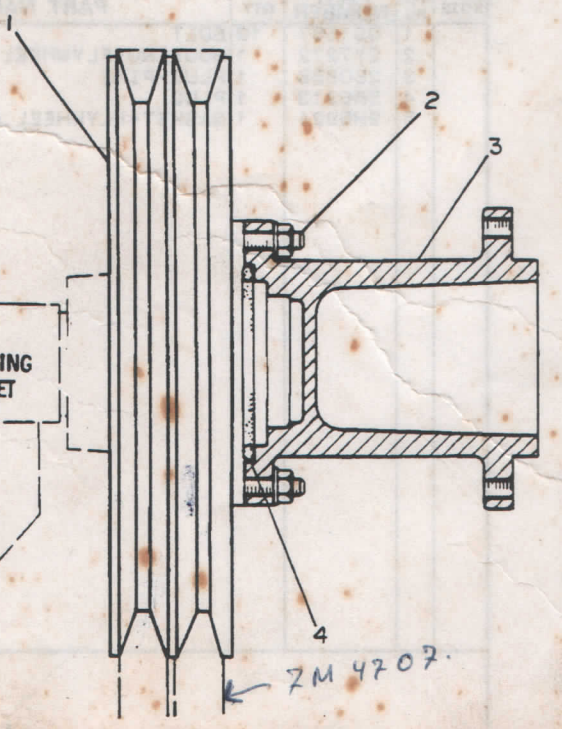

NOTE	REF NO	PART NUMBER	QTY	PART NAME
	1	7N1152	1	PULLEY
	2	0T0573	6	BOLT
		1D4717	6	NUT
		5M2894	6	WASHER-HARD
	3	1W9218	1	ADAPTER-FAN
	4	9F4446	1	SEAL-O-RING

M-489165 EP

5Y2001 PULLEY GP-FAN

7M4707 Vee Belt Set, Includes 2 Belts 4M5413, Is Available

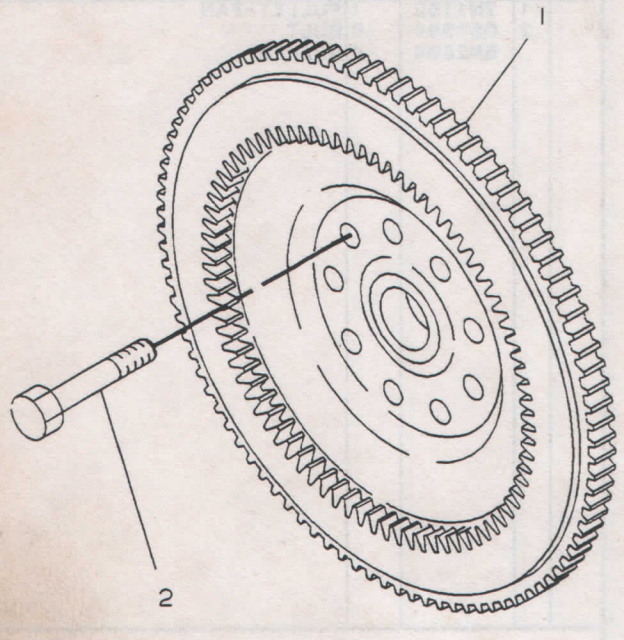

NOTE	REF NO	PART NUMBER	QTY	PART NAME
C	1	7W9308	1	FLYWHEEL AS
		7N9145	1	GEAR (130 TEETH)
	2	2L1701	9	BOLT

C-CHANGE FROM PREVIOUS TYPE

A-348483 EP

7S7877 FLYWHEEL GP

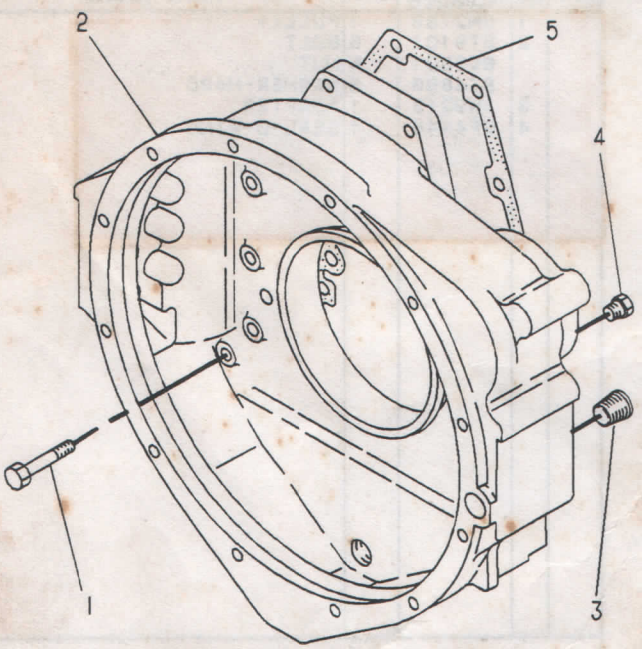

NOTE	REF NO	PART NUMBER	QTY	PART NAME
	1	OS1587	13	BOLT
	2	2Y7272	1	HOUSING-FLYWHEEL
	3	2B0858	1	PLUG-PIPE
	4	5M6213	1	PLUG
	5	9H5921	1	GASKET-FLYWHEEL HOUSING

A-354272 EP

1W5723 HOUSING GP-FLYWHEEL

BASIC ENGINE

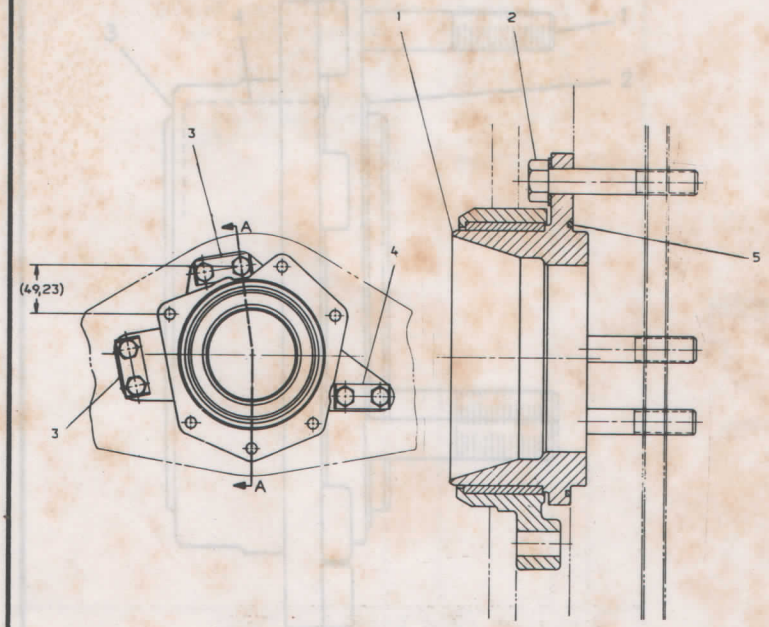

NOTE	REF NO	PART NUMBER	QTY	PART NAME
	1	2W6757	1	TRUNNION AS
	2	0L1329	6	BOLT (1/2-13)
	3	4H6173	2	LOCK
	4	2F9077	1	LOCK
	5	2P1692	1	SEAL

R-488503 EP

1154 **8N0107 TRUNNION GP-ENGINE**

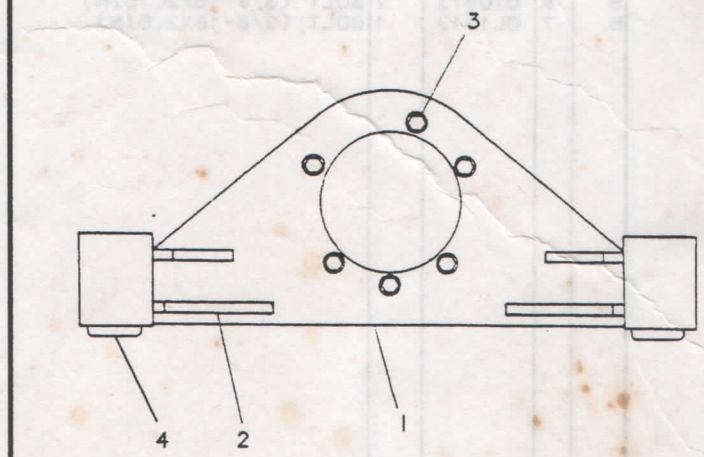

NOTE	REF NO	PART NUMBER	QTY	PART NAME
	1	1W8619	1	SUPPORT AS-ENGINE
	2	2W1702	2	GUSSET
	3	0S1587	6	BOLT
		3B4508	6	LOCKWASHER
	4	7S7043	2	MOUNT AS

R-488662 EP

1W8454 SUPPORT GP-ENGINE

BASIC ENGINE

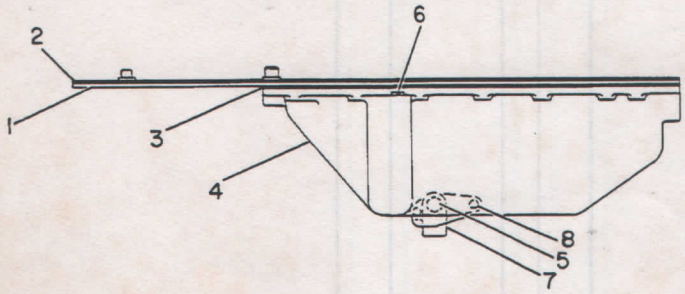

NOTE	REF NO	PART NUMBER	QTY	PART NAME
	1	2P2351	1	PLATE AS-OIL PAN
	2	5S6045	1	GASKET-PAN PLATE
	3	8S1963	1	GASKET-OIL PAN
	4	7N2942	1	PAN-OIL
C	5	5N8780	1	PLUG-DRAIN
	6	2B0858	1	PLUG-PIPE
	7	8N6849	1	ADAPTER-PLUG
		8N6854	1	GASKET-ADAPTER
	8	3B1915	2	BOLT

C-CHANGE FROM PREVIOUS TYPE

B-302914 EP

1302 **2P6155 PAN GP-OIL**

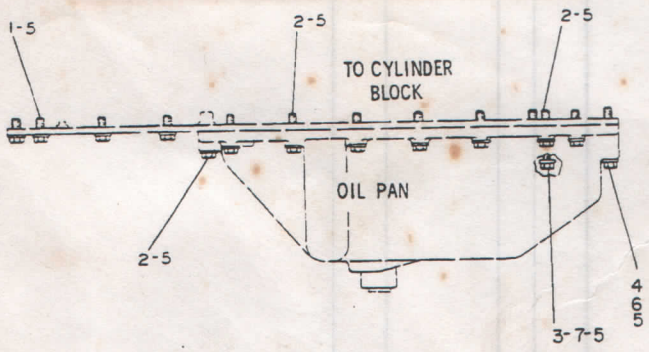

NOTE	REF NO	PART NUMBER	QTY	PART NAME
	1	OL1351	12	BOLT (3/8-16X.875IN)
	2	OS1591	17	BOLT (3/8-16X1.5IN)
B	3	OL1352	2	BOLT (3/8-16X3.25IN)
B	4	1A5183	5	BOLT (3/8-16X4.75IN)
	5	5M2894	36	WASHER
B	6	OT0573	7	BOLT (3/8-16X2.75IN)
B	7	OL1143	1	BOLT (3/8-16X2.5IN)

B-USE AS REQUIRED

B-497313 EP

1302 **2P6189 FASTENER GP-OIL PAN**

LUBRICATION SYSTEM

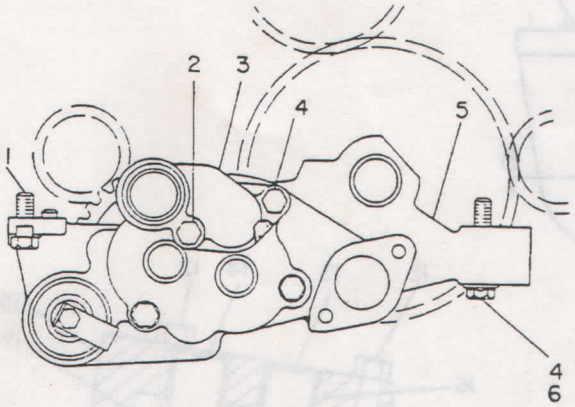

NOTE	REF NO	PART NUMBER	QTY	PART NAME
	1	3B1915	2	BOLT
		8M7587	2	LOCK-NUT
	2	0S1619	1	BOLT
	3	4N5353	1	ELBOW-LINE
		2P8746	1	GASKET
	4	0S1590	3	BOLT
CY	5	6N2642	1	PUMP GP-ENGINE OIL
	6	5M2894	2	WASHER

C-CHANGE FROM PREVIOUS TYPE
Y-SEPARATE ILLUSTRATION

B-322023 EP

1304

2P1784 PUMP GP-ENGINE OIL
6N2642-Page 21

PAGE

1 4W2448 PUMP GP-ENGINE OIL..... 22

1 0S1590 BOLT

1 7W0507 GEAR-OIL PUMP DRIVE-40 TEETH

1 8M5599 KEY-SPECIAL WOODRUFF

1 1P7346 WASHER

322022 P

1304

6N2642 PUMP GP-ENGINE OIL
Part Of 2P1784 Pump-Engine Oil

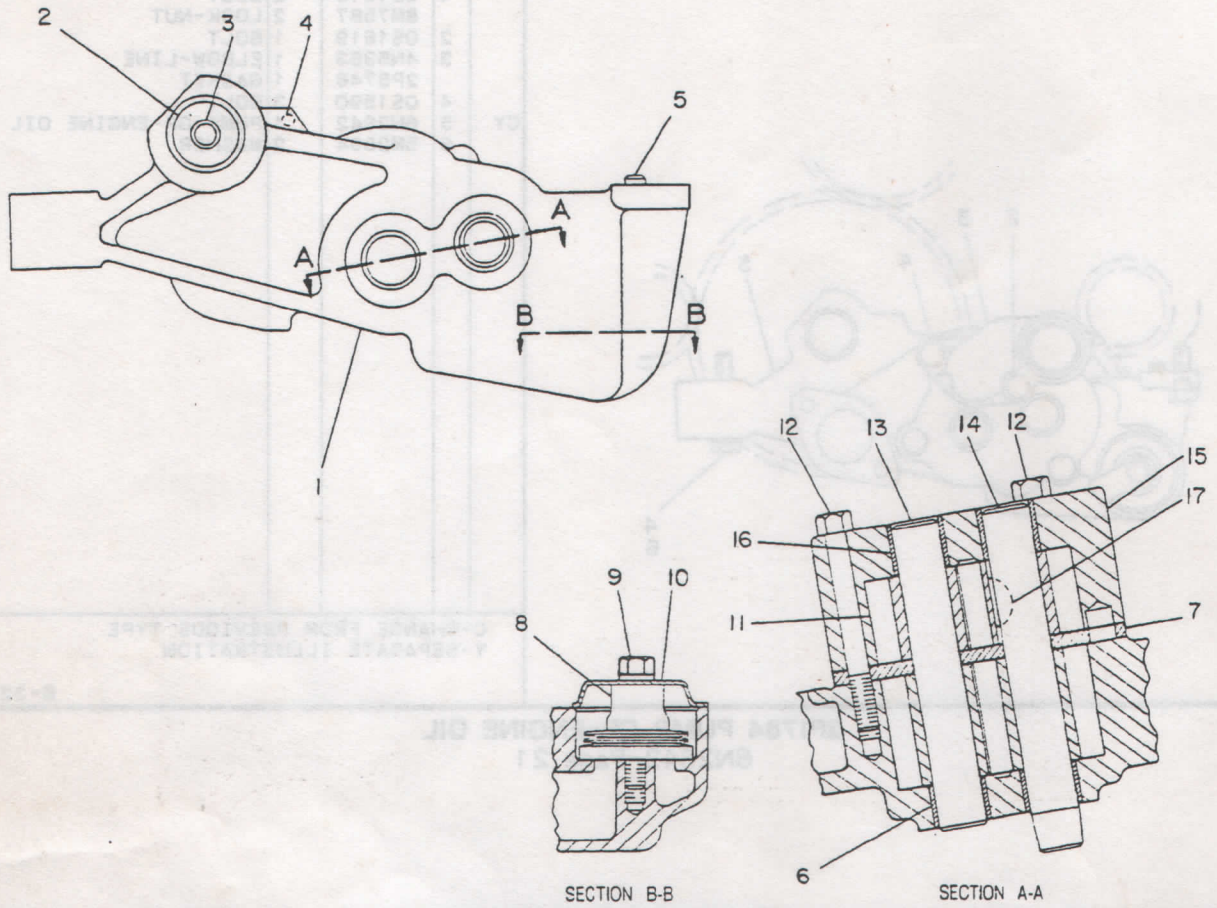

NOTE	REF NO	PART NUMBER	QTY	PART NAME
	1	4W2322	1	BODY AS-OIL PUMP
	2	2P1170	1	SHAFT AS-GEAR
	3	6F7172	1	PIN-DOWEL
	4	4B9880	1	BALL
	5	1F1006	1	DOWEL
	6	8S6511	2	BEARING-SLEEVE
	7	2P1781	1	SPACER-OIL PUMP
	8	4N8385	1	VALVE AS-RELIEF
	9	2B2694	1	BOLT
		9M1974	1	WASHER
	10	4N3732	1	COVER-VALVE
	11	6N1036	2	GEAR-OIL PUMP (8 TEETH)
	12	0T0065	3	BOLT
	13	8S0493	1	SHAFT AS-PUMP
	14	2P6245	1	SHAFT AS-PUMP
	15	4W2321	1	BODY AS-PUMP
	16	8S6511	2	BEARING-SLEEVE
	17	1B8709	1	KEY-WOODRUFF

B-322085 EP

1304

4W2448 PUMP GP-ENGINE OIL*R

Part Of 6N2642 Pump-Engine Oil

LUBRICATION SYSTEM

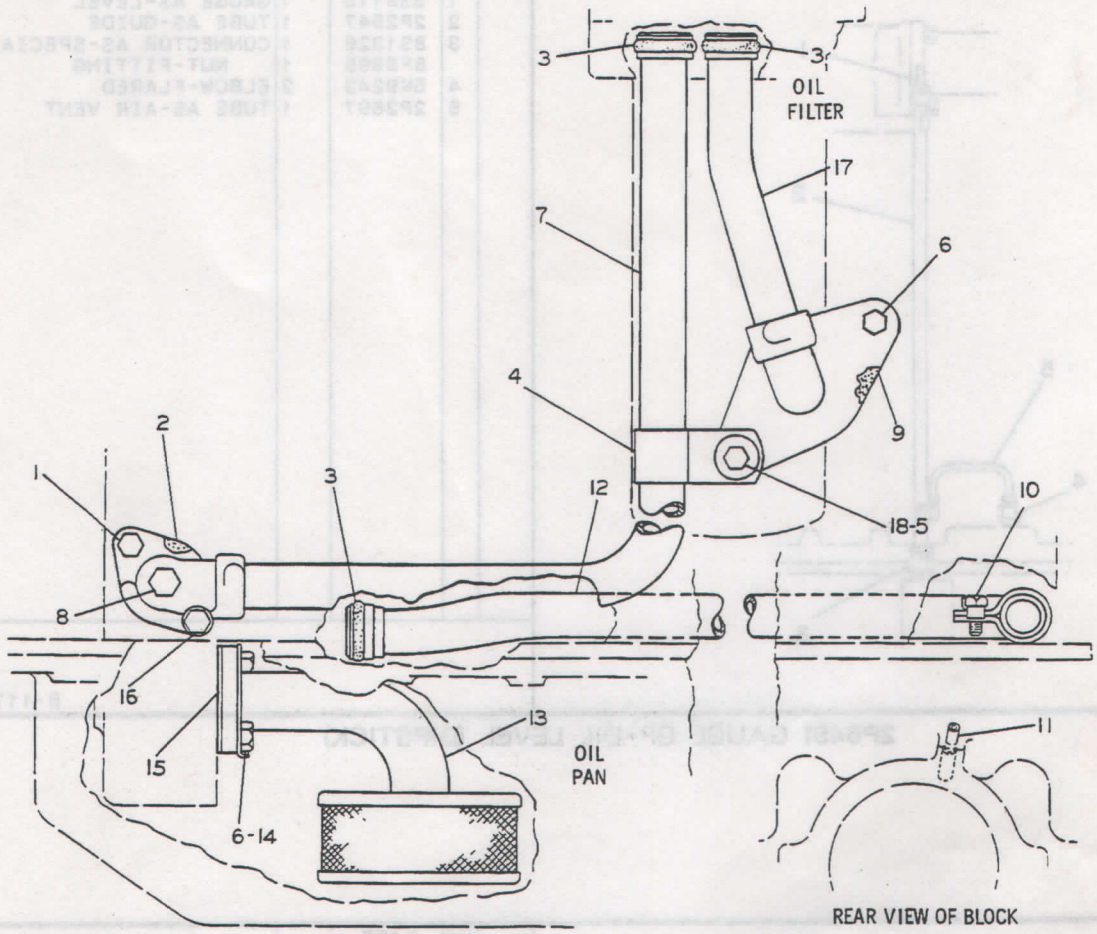

NOTE	REF NO	PART NUMBER	QTY	PART NAME	NOTE	REF NO	PART NUMBER	QTY	PART NAME
	1	1A2029	1	BOLT					
	2	2M5407	1	GASKET					
	3	9M4849	3	SEAL-O-RING					
C	4	4L3641	1	CLIP					
C	5	1L5081	1	SPACER					
C	6	OS1594	3	BOLT					
	7	8N7318	1	TUBE AS-INLET					
	8	5M6213	1	PLUG					
	9	7F7590	1	GASKET					
	10	OTO102	1	BOLT					
		OLO364	1	LOCK					
	11	2S1541	4	ORIFICE-JET					
	12	9Y7589	1	TUBE AS-SCAVENGE					
	13	7C2880	1	BELL AS-SUCTION					
	14	8S8874	1	LOCK-NUT					
	15	8MO904	1	GASKET					
	16	OL2070	1	BOLT					
	17	8N7315	1	TUBE AS-OUTLET					
	18	OS1571	1	BOLT					
		5M2894	1	WASHER					

C-CHANGE FROM PREVIOUS TYPE

B-479842 EP

1307 **2P6512 LINES GP-ENGINE OIL**

LUBRICATION SYSTEM

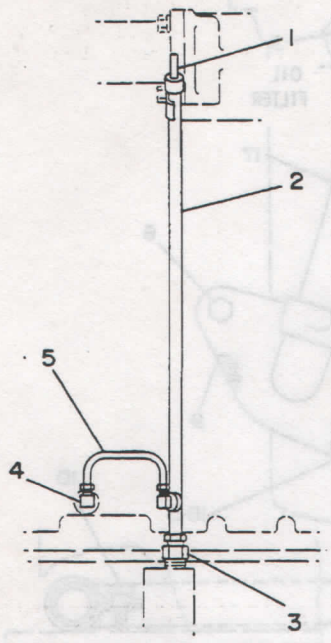

NOTE	REF NO	PART NUMBER	QTY	PART NAME
	1	5S8115	1	GAUGE AS-LEVEL
	2	2P2547	1	TUBE AS-GUIDE
	3	8S1326	1	CONNECTOR AS-SPECIAL
		8F8998	1	NUT-FITTING
	4	5K9243	2	ELBOW-FLARED
	5	2P2697	1	TUBE AS-AIR VENT

B-117328 EP

2P6491 GAUGE GP-OIL LEVEL (DIPSTICK)

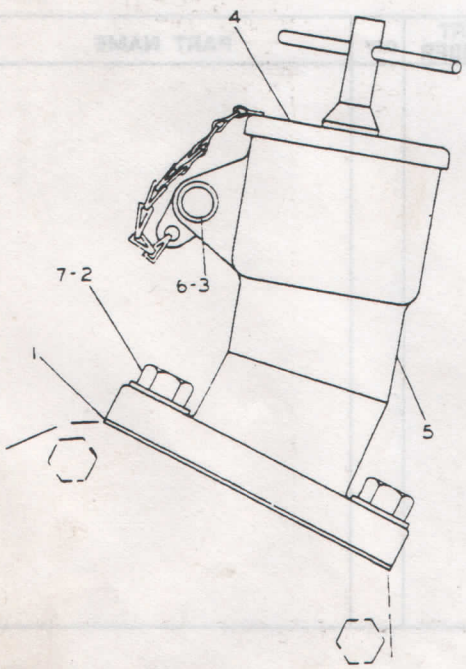

NOTE	REF NO	PART NUMBER	QTY	PART NAME
	1	2P2720	1	GASKET
C	2	1A2029	2	BOLT
	3	9M5732	1	RIVET-POP
C	4	6N2985	1	CAP AS-FILLER
	5	2P2719	1	PIPE-OIL FILLER
	6	2A3211	1	WASHER
C	7	5M2894	2	WASHER

C-CHANGE FROM PREVIOUS TYPE

B-167624 EP

1316

2P6855 FILLER GP-OIL

LUBRICATION SYSTEM

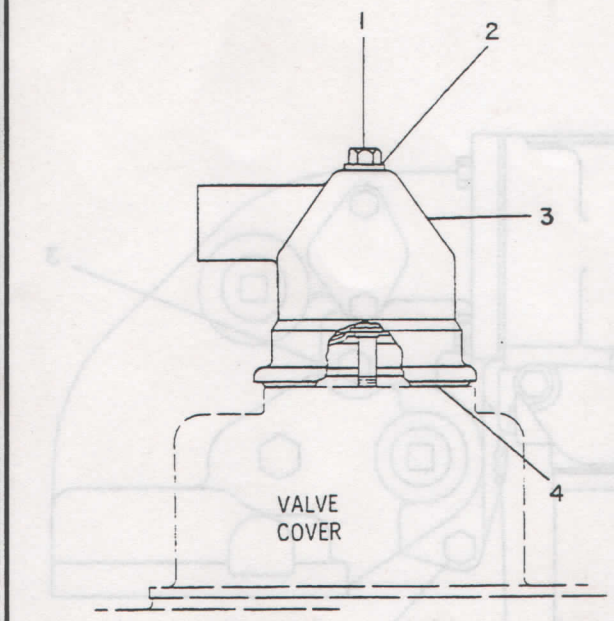

NOTE	REF NO	PART NUMBER	QTY	PART NAME
	1	3H3243	1	BOLT
C	2	9N0869	1	WASHER
C	3	2W9162	1	BREATHER AS
C	4	4L9564	1	SEAL-O-RING

C-CHANGE FROM PREVIOUS TYPE

B-403837 EP

1317

1P4244 BREATHER GP

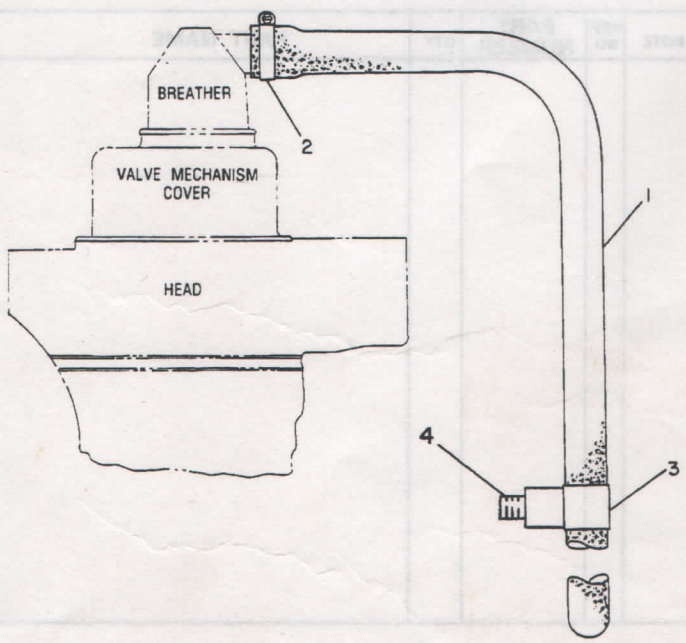

NOTE	REF NO	PART NUMBER	QTY	PART NAME
	1	4W2181	1	HOSE-DISPOSAL
	2	9M2904	1	CLAMP-HOSE
	3	4D7388	1	CLIP
B	4	0S1571	1	BOLT
B		5M2894	1	WASHER
B		7K5994	1	SPACER

B-USE AS REQUIRED

B-468413 EP

1N4874 FUMES DISPOSAL GP

COOLING SYSTEM

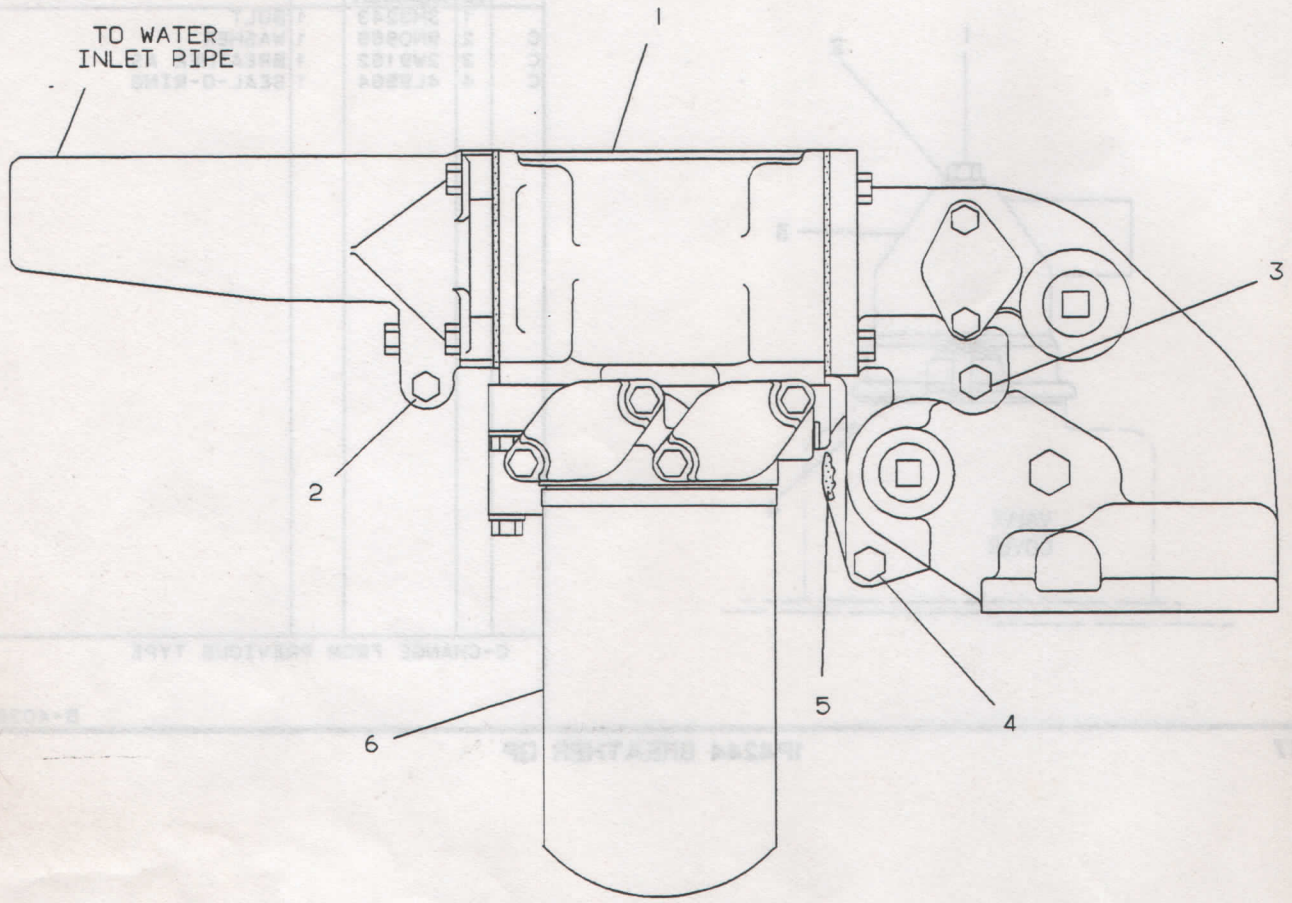

NOTE	REF NO	PART NUMBER	QTY	PART NAME	NOTE	REF NO	PART NUMBER	QTY	PART NAME
Y	1	2W7279	1	COOLER GP-FLTR BASE & ENG OIL					
	2	3B1915	1	BOLT					
		5M2894	1	WASHER					
	3	OL1352	1	BOLT					
	4	OS1591	1	BOLT					
	5	2W4561	1	GASKET					
	6	2Y8096	1	FILTER AS-OIL					

Y-SEPARATE ILLUSTRATION

C-471030 EP

2W7280 COOLER GP-FILTER BASE & ENGINE OIL
2W7279-Page 27

COOLING SYSTEM

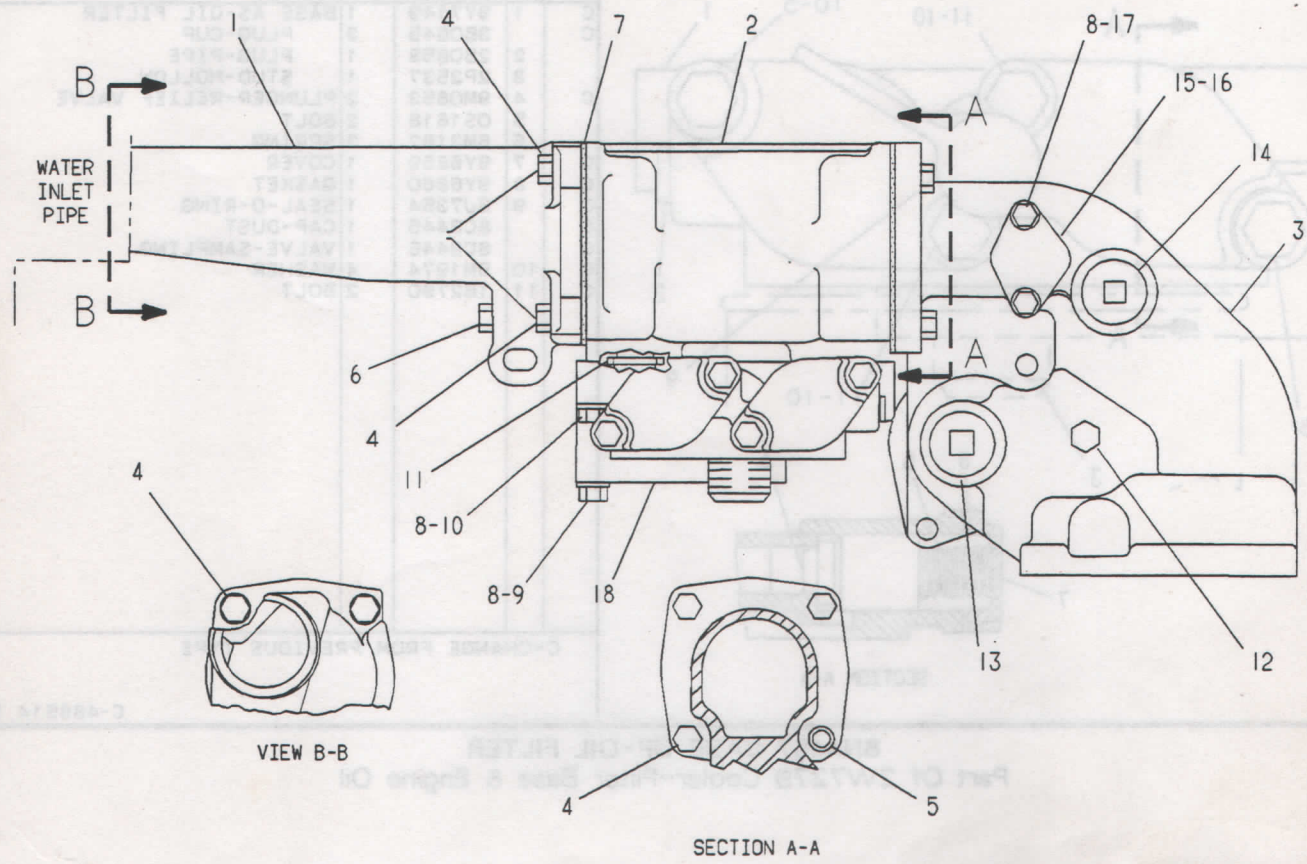

NOTE	REF NO	PART NUMBER	QTY	PART NAME
	1	2P2511	1	PIPE-PUMP OUTLET
	2	2Y9779	1	CORE AS
	3	6N0124	1	BONNET
	4	1A2029	6	BOLT
	5	1T0765	1	BOLT
	6	0L2070	1	BOLT
	7	5S6051	2	GASKET
	8	9M1974	6	WASHER
	9	9M0378	1	BOLT
	10	1H5514	3	BOLT
	11	8M4432	2	SEAL-O-RING
L	12	3J5390	1	PLUG
H	13	1B5174	1	PLUG-PIPE
J	14	3B0551	1	PLUG-PIPE
	15	4N3840	1	COVER
	16	4N3841	1	GASKET
	17	0S1617	2	BOLT
Y	18	8N4457	1	BASE GP-OIL FILTER

J-HEATER SUPPLY & WATER COOLED MANIFOLD RETURN

H-COOLANT SUPPLY FOR AIR COMPRESSOR

L-ENGINE COOLANT PREHEATER

Y-SEPARATE ILLUSTRATION

C-488501 EP

2W7279 COOLER GP-FILTER BASE & ENGINE OIL

8N4457-Page 28

Part Of 2W7280 Cooler-Filter Base & Engine Oil

COOLING SYSTEM

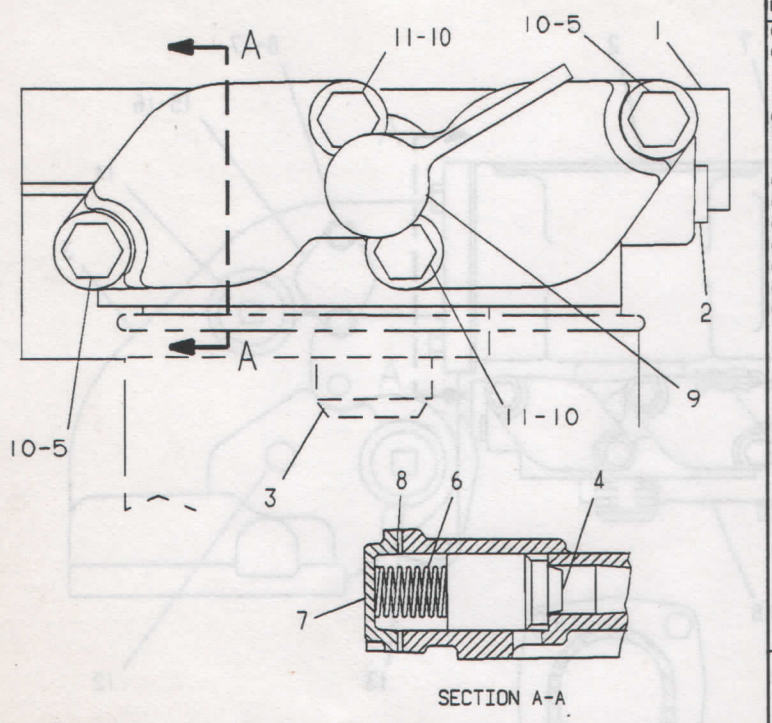

SECTION A-A

NOTE	REF NO	PART NUMBER	QTY	PART NAME
C	1	9Y7149	1	BASE AS-OIL FILTER
C		3B0645	3	PLUG-CUP
	2	2B0858	1	PLUG-PIPE
	3	2P2537	1	STUD-HOLLOW
C	4	9M0853	2	PLUNGER-RELIEF VALVE
	5	0S1618	2	BOLT
	6	8M3182	2	SPRING
C	7	9Y6859	1	COVER
C	8	9Y6860	1	GASKET
C	9	3J7354	1	SEAL-O-RING
C		8C3445	1	CAP-DUST
C		8C3446	1	VALVE-SAMPLING
C	10	9M1974	4	WASHER
C	11	1B2790	2	BOLT

C-CHANGE FROM PREVIOUS TYPE

C-488514 EP

1306

8N4457 BASE GP-OIL FILTER

Part Of 2W7279 Cooler-Filter Base & Engine Oil

			PAGE
1	5Y1402	CONVERSION GP	29
1	8F4731	BODY-VALVE	
4	2A4639	BOLT	
2	0S1594	BOLT	
2	3B1915	BOLT	
2	8S9407	BRACKET	
1	9M4584	CONNECTOR-FLARED	
1	5Y1541	CORE AS-OIL COOLER	
1	5B1309	COUPLING-PIPE	
1	6M7476	ELBOW	
2	7K2475	HOSE AS	
1	3B7741	NIPPLE	
1	4J0520	SEAL	
4	2M9780	SEAL-O-RING	
1	5J7157	VALVE	
8	5M2894	WASHER	
1	1K2728	WASHER	

498756 P

7K3274 COOLER GP-OIL

An Attachment

1	7S7174	BAFFLE AS-REAR	
4	9F2978	NUT-WELD	
1	5D5671	STRIP	
8	6B4594	RIVET	
1	7S7723	SHIELD AS-FAN RH	
2	9F2978	NUT-WELD	

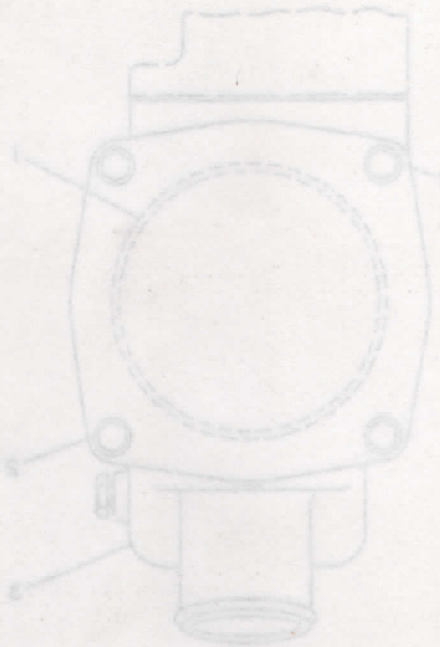

499295 P

5Y1402 CONVERSION GP
Part Of 7K3274 Cooler-Oil
An Attachment

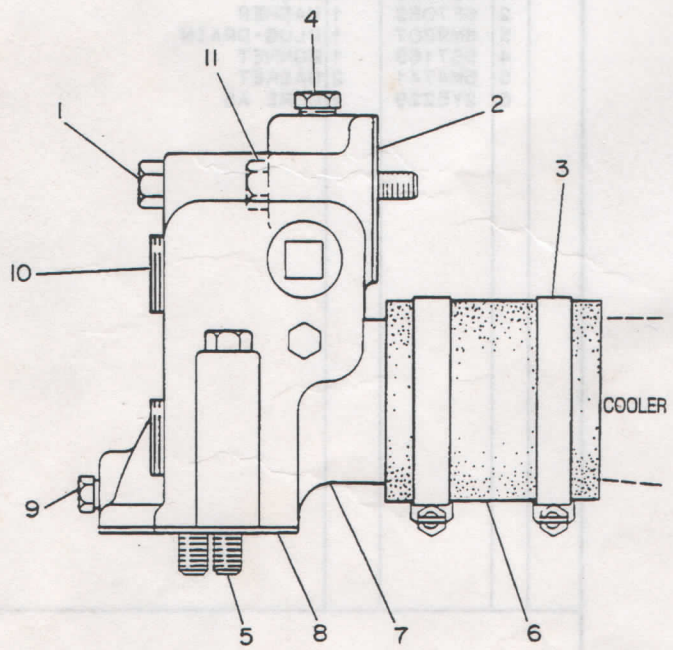

NOTE	REF NO	PART NUMBER	QTY	PART NAME
	1	0T0065	1	BOLT
	2	2P6132	1	GASKET-ELBOW
	3	5P4868	2	CLAMP
	4	3J5390	1	PLUG
	5	0S1619	2	BOLT
E	6	5P1260		HOSE 7.62CM(3IN)
	7	7N0172	1	ELBOW
	8	7N0200	1	GASKET
	9	5M6213	2	PLUG
	10	1B5174	3	PLUG-PIPE
	11	0S1590	1	BOLT

E-ORDER BY THE CENTIMETER

B-308277 EP

1380 **2W6779 LINES GP-WATER**

COOLING SYSTEM

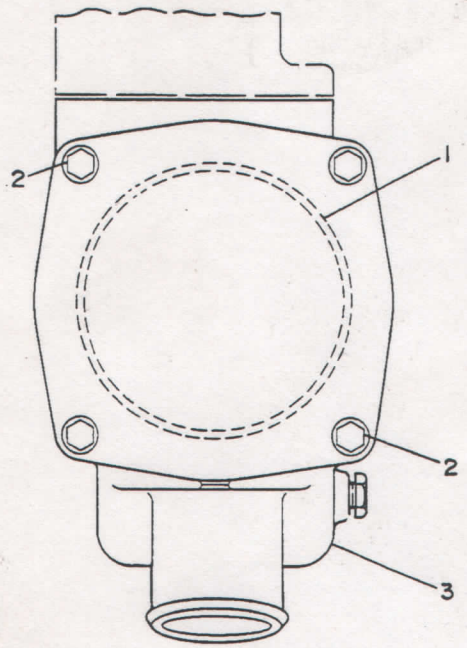

NOTE	REF NO	PART NUMBER	QTY	PART NAME
	1	5F3106	1	SEAL-O-RING
	2	0T0055	2	BOLT
		5M2894	2	WASHER
CY	3	2W8002	1	PUMP GP-WATER

C-CHANGE FROM PREVIOUS TYPE
Y-SEPARATE ILLUSTRATION

B-315173 EP

1361

7N5908 PUMP GP-WATER

2W8002–Page 31

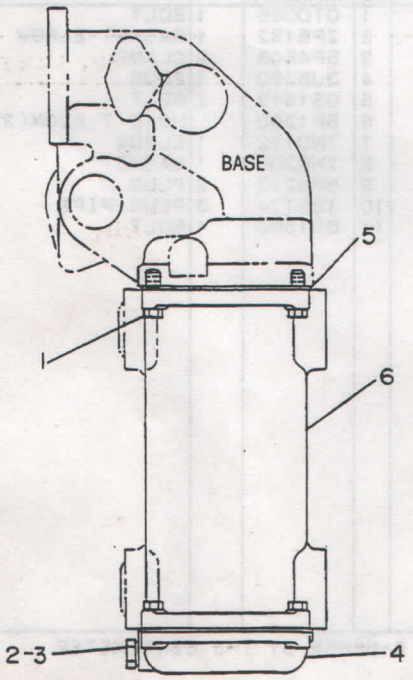

NOTE	REF NO	PART NUMBER	QTY	PART NAME
	1	0S1588	4	BOLT
	2	6F7062	1	WASHER
	3	8M9307	1	PLUG-DRAIN
	4	5S7163	1	BONNET
	5	5M4741	2	GASKET
	6	2Y5229	1	CORE AS

B-489302 EP

2Y8051 COOLER GP-TRANSMISSION OIL

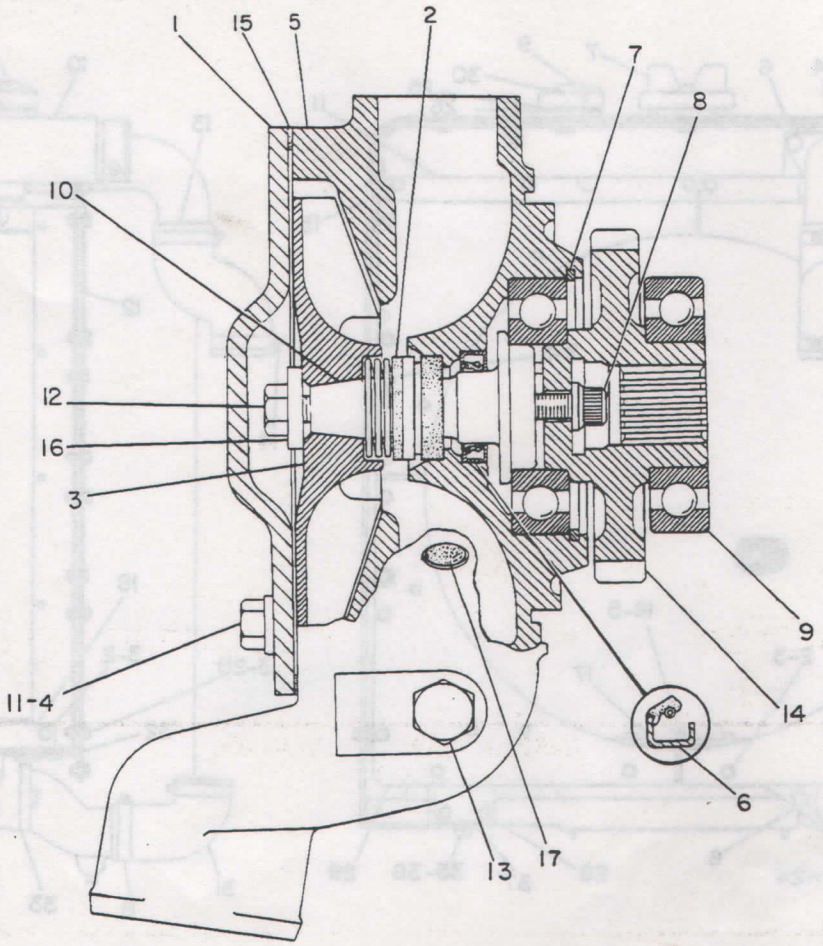

NOTE	REF NO	PART NUMBER	QTY	PART NAME
	1	8N5929	1	COVER-WATER PUMP
	2	4W3864	1	SEAL GP
	3	7N5910	1	IMPELLER-PUMP
	4	OL1351	2	BOLT
	5	1W4619	1	HOUSING-PUMP
	6	8C5210	1	SEAL-LIP TYPE
CJ	7	1K6985	1	RING-RETAINING
	8	6K3771	1	BOLT-12 POINT HEAD
CJ	9	6H3957	2	BALL BEARING
CJ	10	2W7255	1	SHAFT-WATER PUMP
	11	5M2894	2	WASHER
CJ	12	4L6454	1	BOLT
	13	5M6213	1	PLUG
	14	2W7678	1	GEAR AS (40 TEETH)
	15	8N5928	1	GASKET
CJ	16	9M6527	1	WASHER-HARD
	17	4N5834	1	FILTER
				THE FOLLOWING REPAIR KIT IS AVAILABLE:
C		6V9928	1	KIT-WATER PUMP (INCLUDES FILTER & PARTS MARKED J)

C-CHANGE FROM PREVIOUS TYPE

B-464120 EP

1361

2W8002 PUMP GP-WATER
Part Of 7N5908 Pump-Water

COOLING SYSTEM

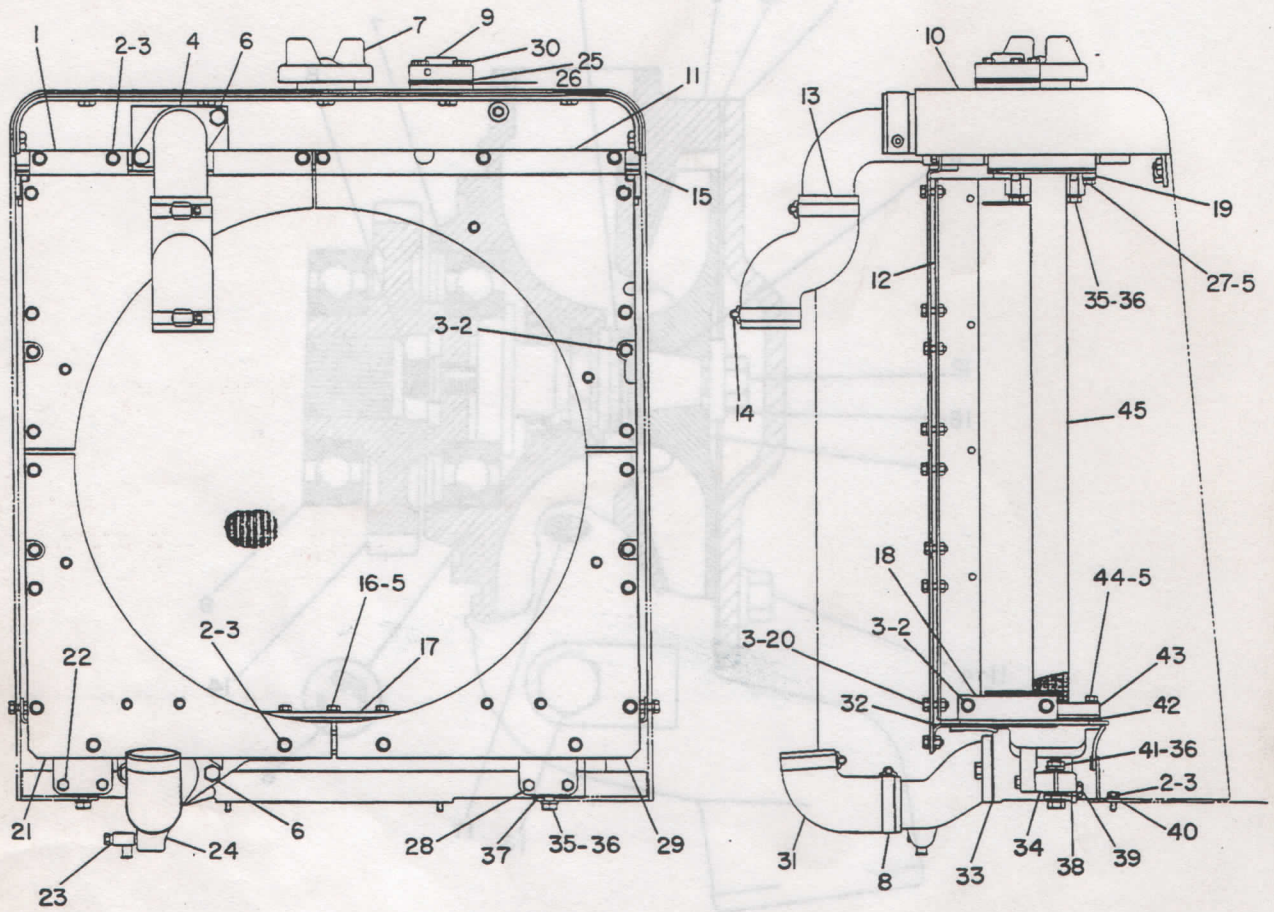

NOTE	REF NO	PART NUMBER	QTY	PART NAME
	1	7S7724	1	SHIELD AS
	2	OS0509	20	BOLT
	3	5M2894	32	WASHER
	4	7S7684	1	ELBOW
		1M7830	1	GASKET
	5	5P1075	52	WASHER-HARD
	6	8T8917	4	BOLT
	7	7N7918	1	CAP AS
	8	5P4868	2	CLAMP
	9	5S1211	1	COVER
		5S1218	1	VALVE AS-PRESSURE RELIEF
Y	10	5Y1787	1	TANK GP-RADIATOR TOP
	11	7S7723	1	SHIELD AS
	12	7S7178	2	BAFFLE AS
	13	1W8451	1	HOSE
	14	5PO598	2	CLAMP
	15	6N4985	1	GASKET
	16	9B7237	22	BOLT
	17	1M7838	2	STRIP
	18	7S7167	1	BAFFLE AS
		7S7168	1	BAFFLE AS
	19	3S8289	2	STRIP
	20	OS1594	4	BOLT
	21	7S7726	1	SHIELD AS
	22	OL1143	4	BOLT
	23	8F8151	1	COCK-SHUT-OFF
	24	1W8453	1	ELBOW
	25	5S4629	2	GASKET-VALVE
	26	5S1213	1	PLATE
	27	8T2502	26	BOLT
	28	2P8613	1	TANK
	29	7S7725	1	SHIELD AS
	30	8C3121	5	BOLT
	31	5YO459	1	HOSE
	32	7S7174	1	BAFFLE AS
	33	9H8136	1	GASKET
	34	1M6298	2	CLAMP-MOUNTING
	35	2BO947	6	BOLT
	36	5P8245	8	WASHER
	37	2Y5558	2	MOUNT AS
	38	1M7823	2	BLOCK
	39	3J5390	1	PLUG
	40	7S7171	1	BAFFLE AS
	41	1D4719	2	NUT
	42	6N4986	1	GASKET
	43	1M7827	2	STRIP
	44	4L9337	4	BOLT
	45	7S1085	1	CORE AS

Y-SEPARATE ILLUSTRATION

B-497361 EP

5Y1775 RADIATOR GP
5Y1787-Page 33

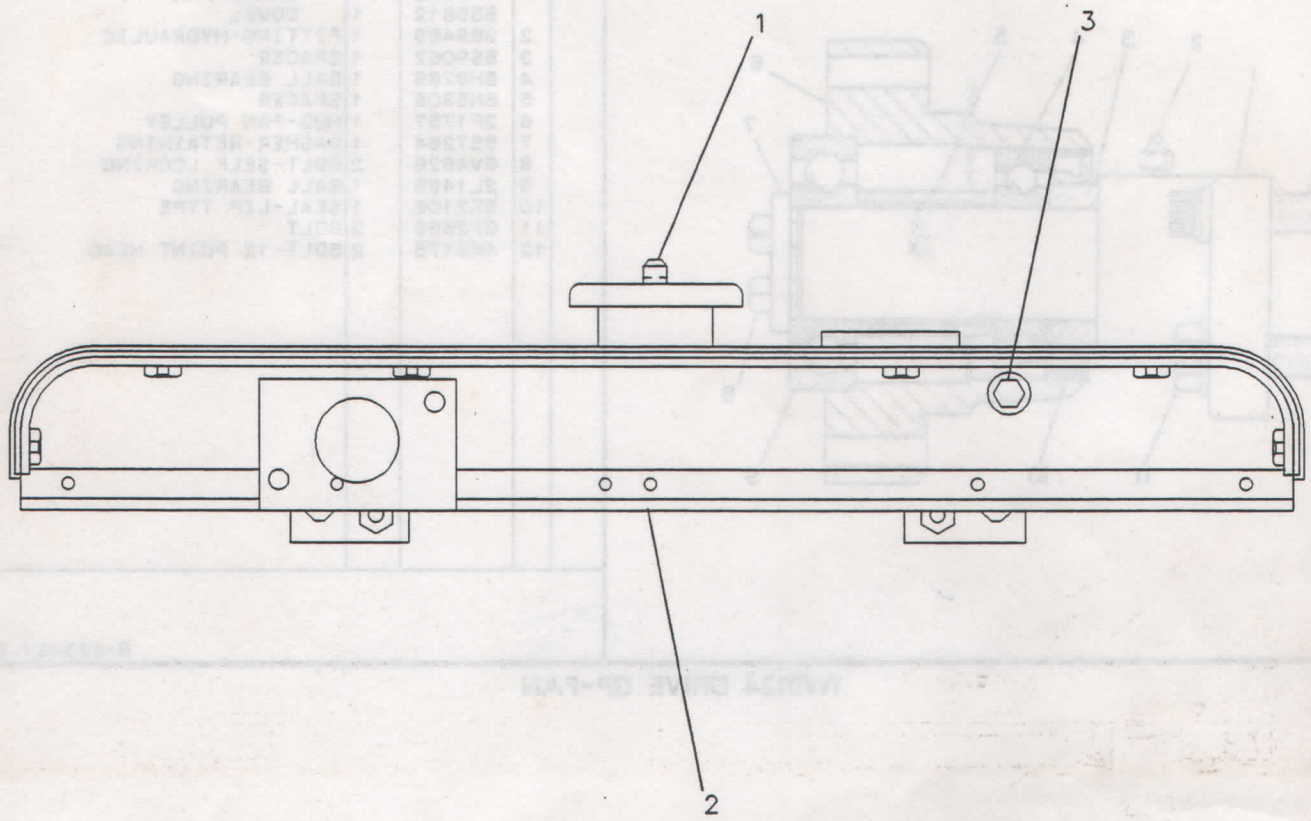

NOTE	REF NO	PART NUMBER	QTY	PART NAME	NOTE	REF NO	PART NUMBER	QTY	PART NAME
A	1	1SO286	1	STUD-TAPERLOCK					
	2	5Y1788	1	TANK AS					
B	3	5M6214	1	PLUG-PIPE					

A-NOT PART OF THIS GROUP
B-USE AS REQUIRED

F-497375 EP

5Y1787 TANK GP-RADIATOR TOP
Pary Of 5Y1775 Radiator

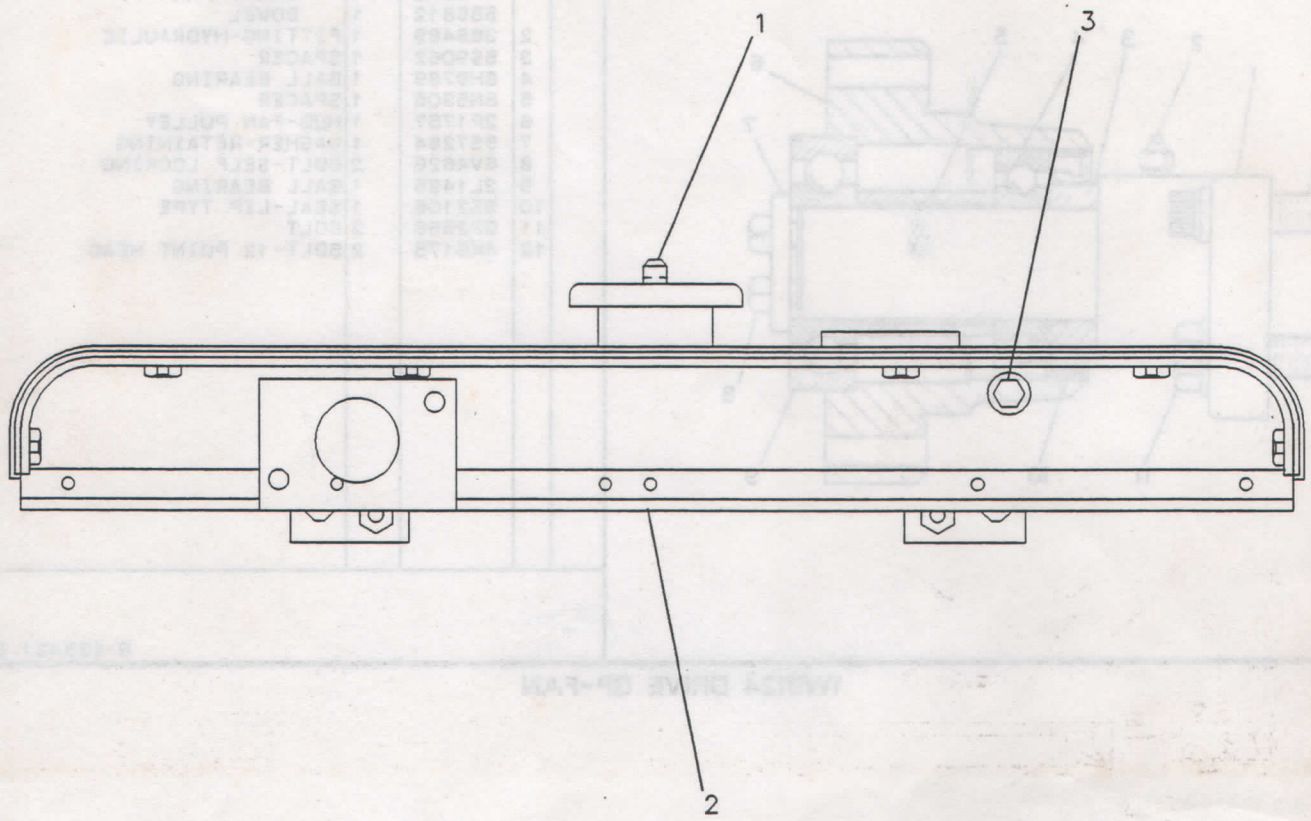

NOTE	REF NO	PART NUMBER	QTY	PART NAME	NOTE	REF NO	PART NUMBER	QTY	PART NAME
A	1	1SO286	1	STUD-TAPERLOCK					
	2	5Y1788	1	TANK AS					
B	3	5M6214	1	PLUG-PIPE					

A-NOT PART OF THIS GROUP
B-USE AS REQUIRED

F-497375 EP

5Y1787 TANK GP-RADIATOR TOP
Pary Of 5Y1775 Radiator

COOLING SYSTEM

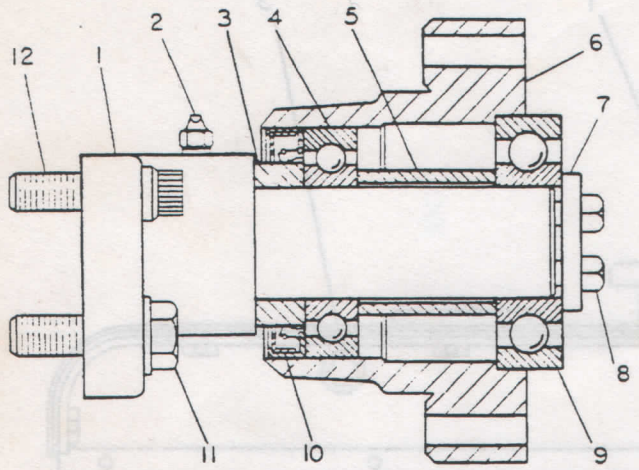

NOTE	REF NO	PART NUMBER	QTY	PART NAME
	1	1W9123	1	BRACKET AS-FAN
		1W9122	1	BRACKET-FAN
		1P9946	1	SHAFT-FAN
		5B5812	1	DOWEL
	2	3B8489	1	FITTING-HYDRAULIC
	3	5S9062	1	SPACER
	4	8H9789	1	BALL BEARING
	5	8N5305	1	SPACER
	6	2P1757	1	HUB-FAN PULLEY
	7	5S7264	1	WASHER-RETAINING
	8	6V4626	2	BOLT-SELF LOCKING
	9	3L1425	1	BALL BEARING
	10	5S2106	1	SEAL-LIP TYPE
	11	5P2566	2	BOLT
	12	4K5175	2	BOLT-12 POINT HEAD

B-488431 EP

1W9124 DRIVE GP-FAN

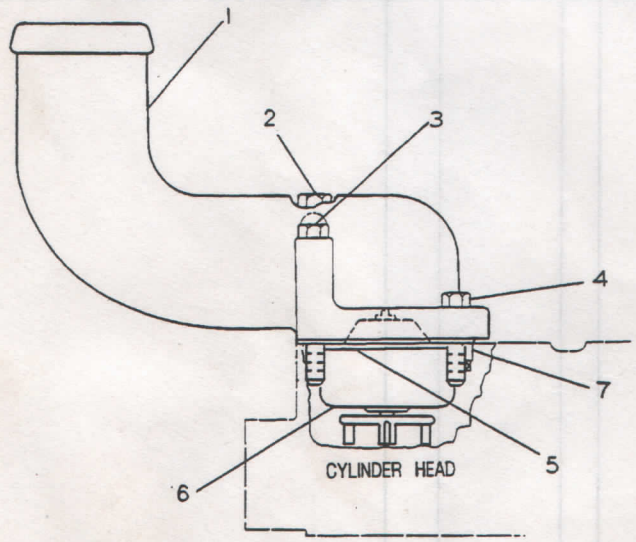

NOTE	REF NO	PART NUMBER	QTY	PART NAME
C	1	8N0488	1	ELBOW-REGULATOR HOUSING
	2	8T8915	1	BOLT
	3	8T9101	1	BOLT
	4	9B7237	2	BOLT
C	5	7N0944	1	GASKET
	6	7E3361	1	REGULATOR
	7	8N4485	1	VALVE AS (CHECK)

C-CHANGE FROM PREVIOUS TYPE

R-488498 EP

1355

2P8165 HOUSING & REGULATOR GP

COOLING SYSTEM

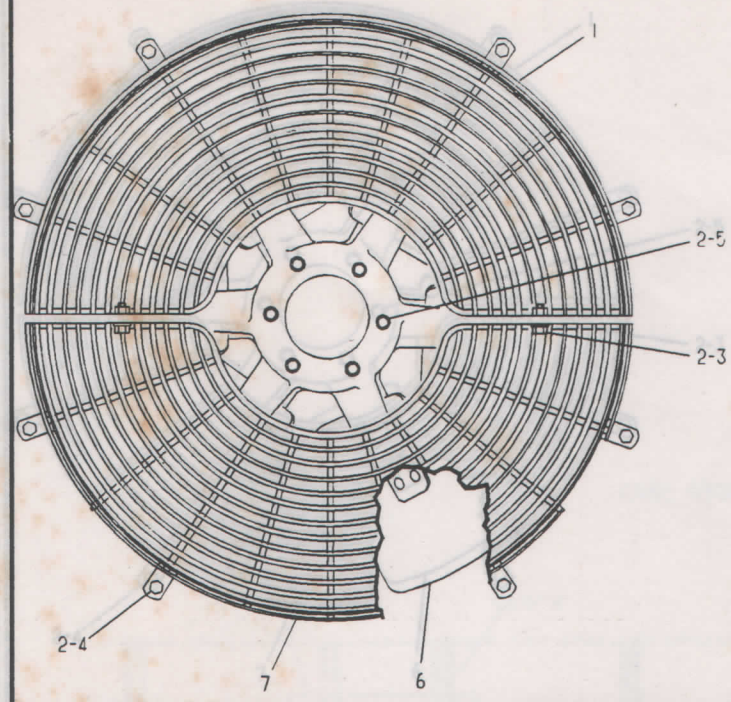

NOTE	REF NO	PART NUMBER	QTY	PART NAME
	1	8N7499	1	GUARD AS-FAN
	2	5M2894	16	WASHER
	3	0L1351	2	BOLT
	4	0S0509	8	BOLT
	5	1A2029	6	BOLT
	6	2Y7422	1	SPIDER AS-FAN
	7	8N7501	1	GUARD AS-FAN

A-335465 EP

1N3016 FAN GP-BLOWER

AIR INLET AND EXHAUST SYSTEM

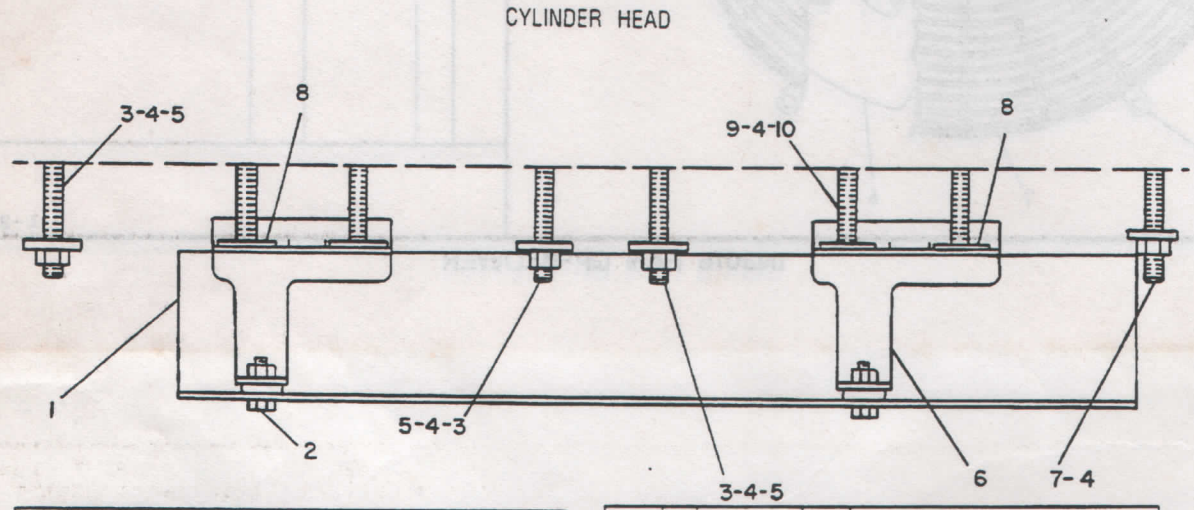

NOTE	REF NO	PART NUMBER	QTY	PART NAME
C	1	5Y0070	1	SHIELD
C	2	0S1614	2	BOLT
C		5P4115	2	WASHER-HARD
C	3	7S6719	3	STUD-TAPERLOCK
	4	1B5355	8	NUT-FULL
	5	8M7145	3	WASHER-HARD
C	6	2W6601	2	BRACKET AS (EACH INCLUDES)
		9F6445	1	NUT
C	7	8M1871	1	STUD-TAPERLOCK
		9M6527	1	WASHER-HARD
C	8	9L9132	4	WASHER-HARD
C	9	5M2894	4	WASHER
C	10	1S9130	4	STUD-TAPERLOCK

C INDICATES CHANGE

405692

B-405692 EP

1059 1W3793 FASTENER GP-EXHAUST MANIFOLD

AIR INLET AND EXHAUST SYSTEM

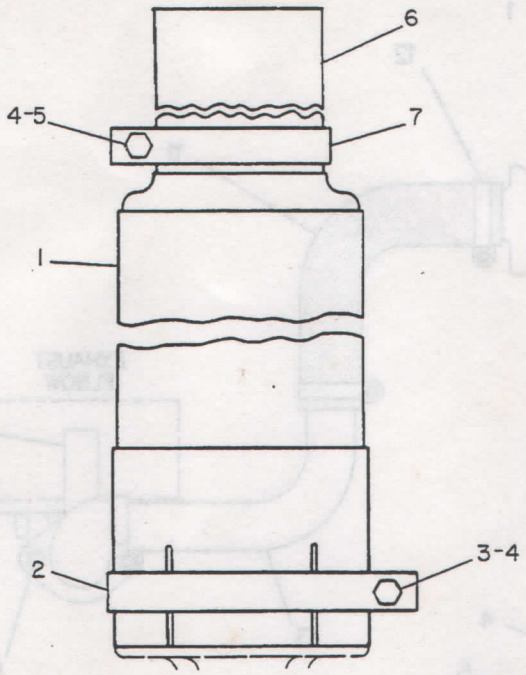

NOTE	REF NO	PART NUMBER	QTY	PART NAME
	1	2Y3967	1	MUFFLER
	2	7S7680	1	CLAMP
	3	0S1590	1	BOLT
	4	1B5355	2	NUT-FULL
	5	0L2070	1	BOLT
	6	2Y8027	1	PIPE
	7	7S8735	1	CLAMP

B-472916 EP

5Y0812 MUFFLER GP

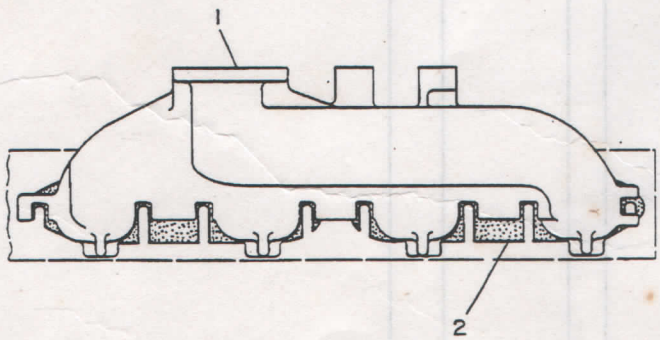

NOTE	REF NO	PART NUMBER	QTY	PART NAME
	1	1P1216	1	MANIFOLD-EXHAUST
	2	9Y1979	2	GASKET-MANIFOLD

B-469510 EP

1059 **2P6571 MANIFOLD GP-EXHAUST**

AIR INLET AND EXHAUST SYSTEM

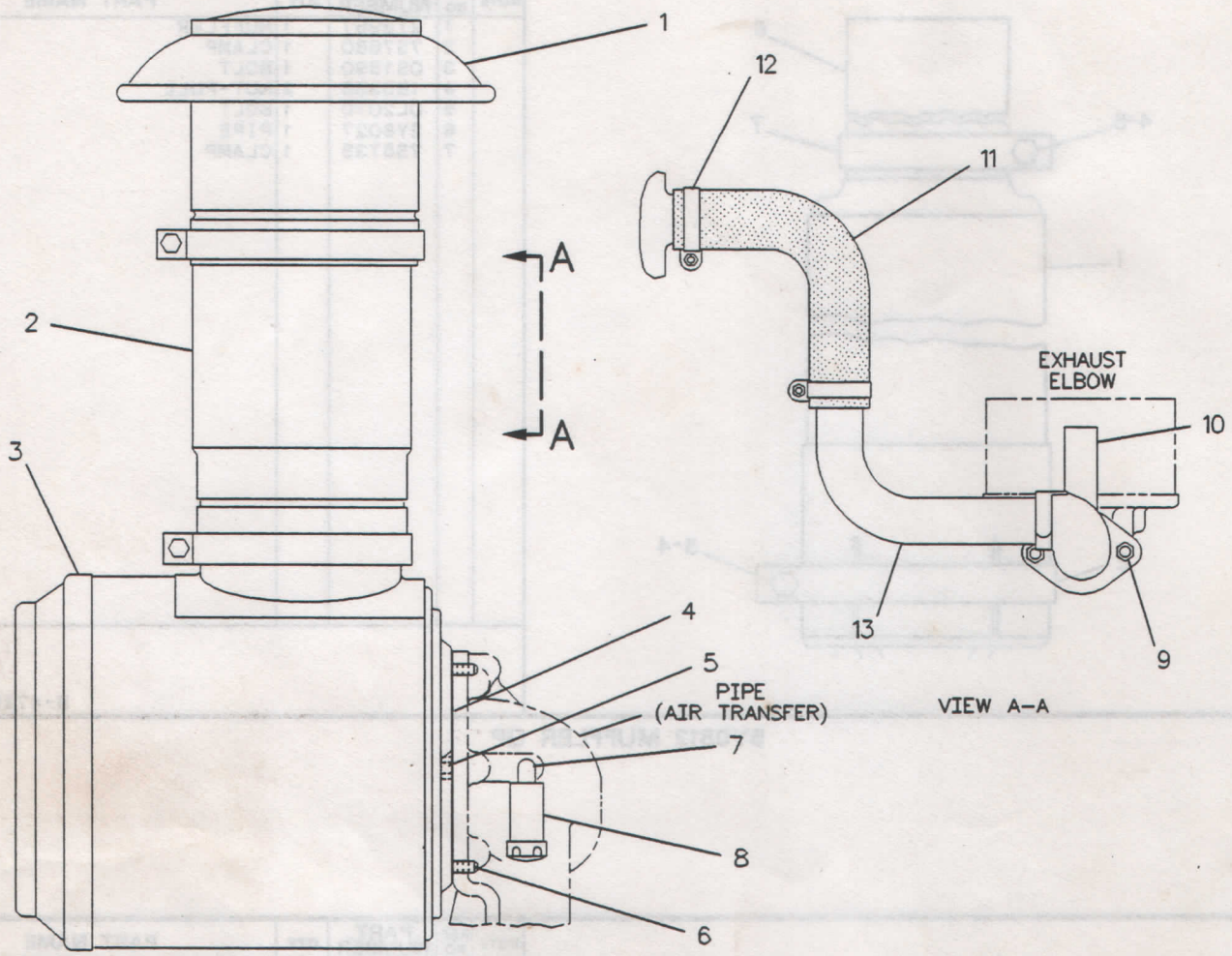

NOTE	REF NO	PART NUMBER	QTY	PART NAME
	1	4S8825	1	HOOD AS
		1D4717	1	NUT
		7FO192	1	BOLT
	2	4S8826	1	BODY AS
		1D4717	1	NUT
		7FO192	1	BOLT
Y	3	4W4565	1	AIR CLEANER GP
	4	8N4902	1	GASKET
	5	2K4973	6	LOCKNUT
	6	1TO822	2	BOLT-12 POINT HEAD
		5M2894	2	WASHER
	7	3B8822	1	ELBOW
		3B7264	1	NIPPLE
	8	1WO613	1	INDICATOR
	9	1B5355	2	NUT-FULL
	10	5S1352	1	TUBE AS
	11	5YO461	1	HOSE
	12	9M2904	2	CLAMP-HOSE
	13	9SO666	1	TUBE AS

Y-SEPARATE ILLUSTRATION

F-497389 EP

5Y1777 AIR CLEANER GP
4W4565-Page 39

AIR INLET AND EXHAUST SYSTEM

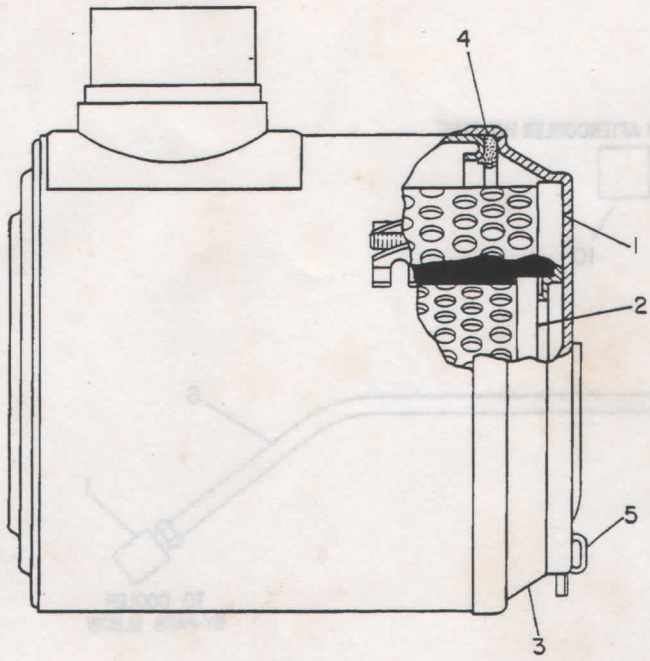

NOTE	REF NO	PART NUMBER	QTY	PART NAME
	1	4M8047	1	ELEMENT-PRIMARY
	2	8N4901	1	ELEMENT AS-SECONDARY
	3	5Y0488	1	CUP AS-CLEANER
	4	9M8511	1	GASKET
	5	2Y9827	2	ROD AS

B-464145 EP

1051

4W4565 AIR CLEANER GP
Part Of 5Y1777 Air Cleaner

AIR INLET AND EXHAUST SYSTEM

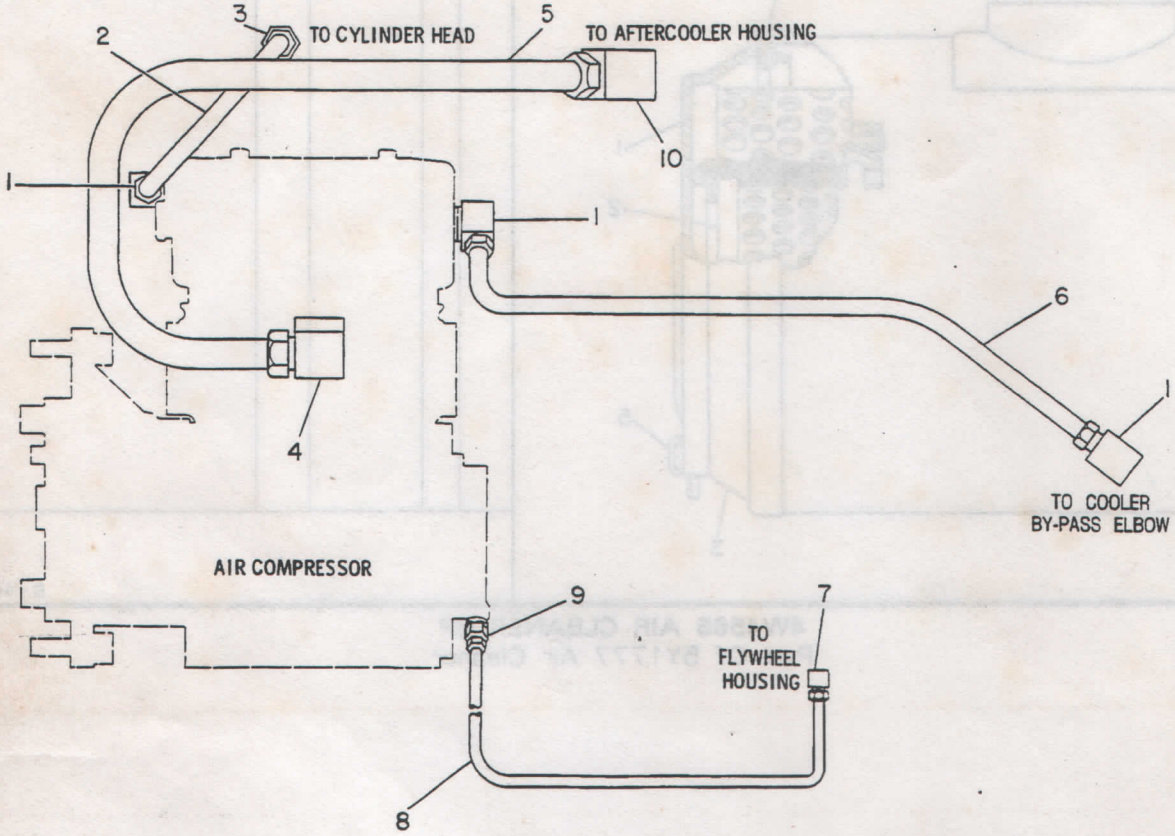

NOTE	REF NO	PART NUMBER	QTY	PART NAME	NOTE	REF NO	PART NUMBER	QTY	PART NAME
	1	5K9237	3	ELBOW					
	2	2P6229	1	TUBE AS-OUTLET					
	3	5K9248	1	CONNECTOR-FLARED					
		3B7255	1	BUSHING					
C	4	5K9240	1	ELBOW-FLARED					
C	5	2W1076	1	TUBE AS					
C	6	2W1085	1	TUBE AS					
	7	5K9241	1	ELBOW					
	8	7N3763	1	TUBE AS-OIL SUPPLY					
	9	9S7720	1	ELBOW-FLARED					
C	10	9S7724	1	ELBOW-FLARED					

C-CHANGE FROM PREVIOUS TYPE

B-318504 EP

7N3796 LINES GP-COMPRESSOR

AIR INLET AND EXHAUST SYSTEM

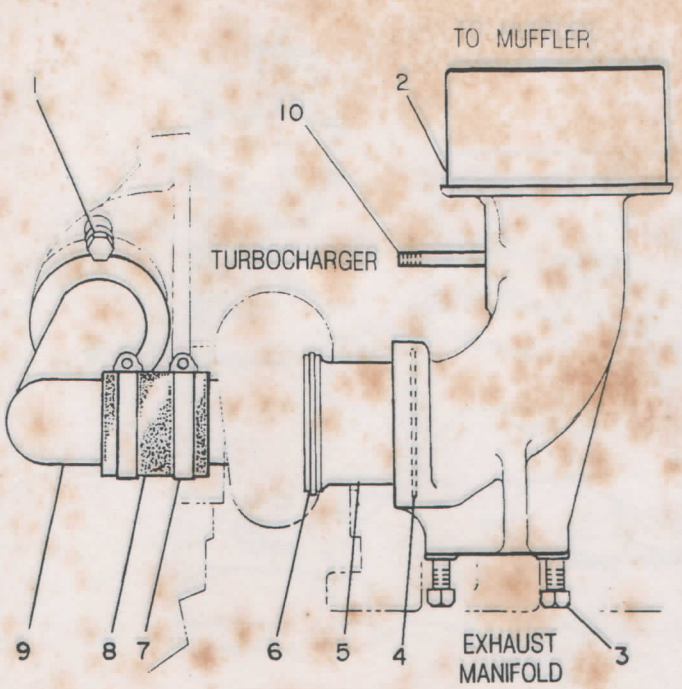

NOTE	REF NO	PART NUMBER	QTY	PART NAME
	1	0S1594	1	BOLT
	2	6N0156	1	ELBOW-AS
	3	0S1590	3	BOLT
		2N2766	3	LOCKNUT
	4	5L8855	1	SEAL RING-METAL
	5	4N8591	1	COUPLING-EXHAUST
	6	6N0009	1	SEAL RING-METAL
	7	9M7959	2	CLAMP
E	8	3P0082	1	HOSE (3 IN)
	9	1W5132	1	PIPE-INLET AIR
		4M0141	2	SEAL-O-RING
	10	1S9130	2	STUD

E-ORDER BY THE CENTIMETER

B-464106 EP

1061 **5Y0551 LINES GP-AIR**

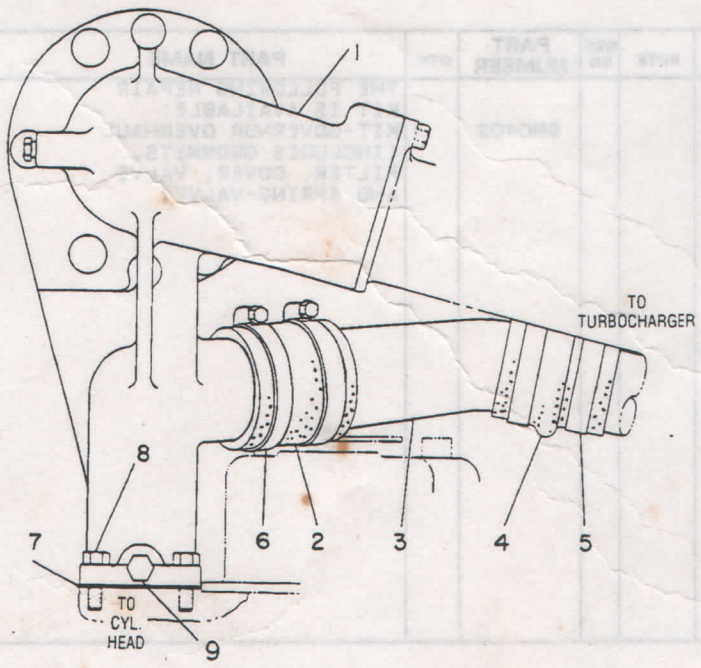

NOTE	REF NO	PART NUMBER	QTY	PART NAME
	1	4W4323	1	PIPE AS-AIR TRANSFER
	2	1W5361	1	HOSE-AIR
	3	1W5129	1	PIPE-OUTLET
	4	1W5362	1	HOSE-HUMP
	5	9M0164	2	CLAMP-HOSE
	6	5P4868	2	CLAMP
	7	5S6735	1	GASKET
	8	1A2029	4	BOLT
B	9	5M6213	1	PLUG

B-USE AS REQUIRED

R-490997 EP

1058 **4W4324 LINES GP-AIR**
Inlet Manifold

AIR INLET AND EXHAUST SYSTEM

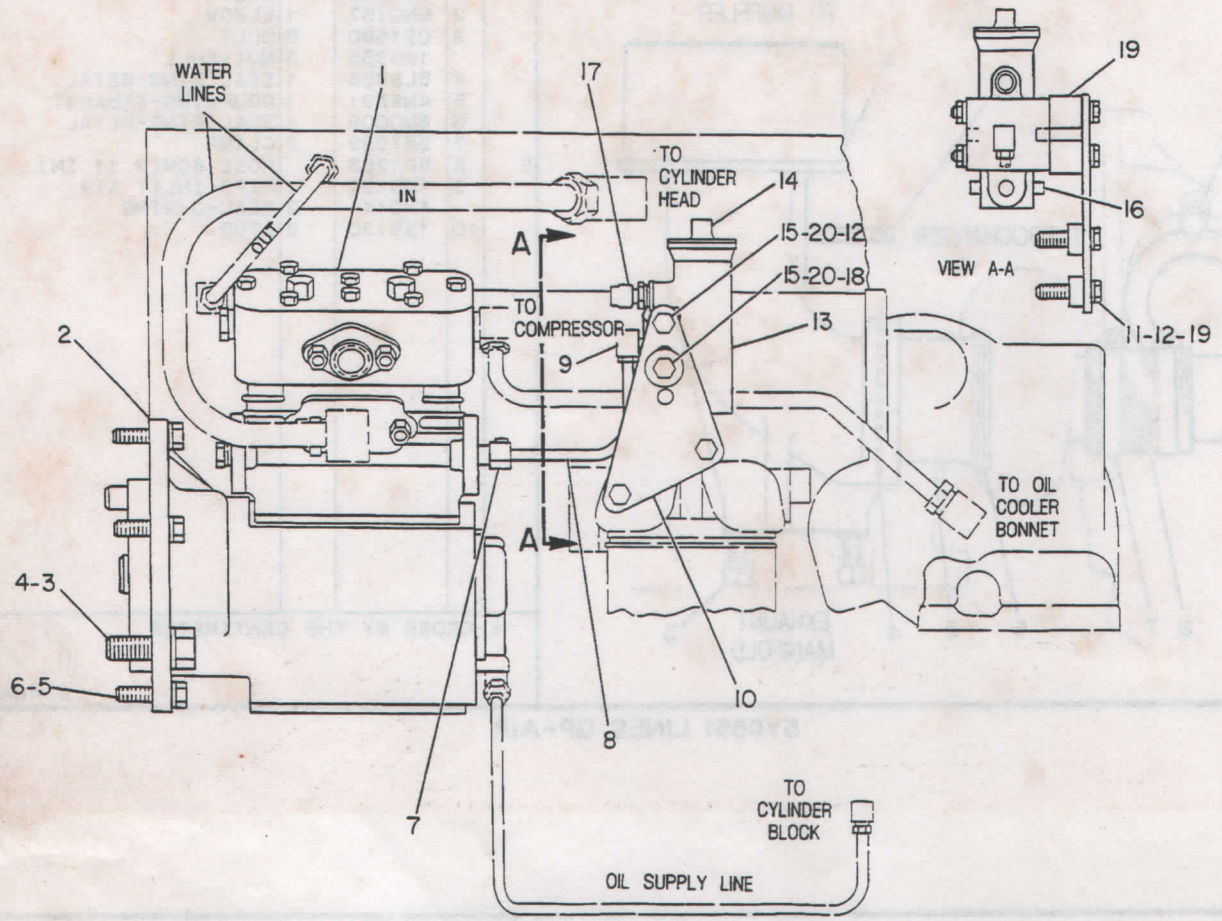

NOTE	REF NO	PART NUMBER	QTY	PART NAME
Y	1	1W6473	1	AIR COMPRESSOR GP
	2	2P0220	1	GASKET-PUMP
	3	1A1135	2	BOLT
	4	4D3704	2	WASHER-HARD
	5	0S1591	3	BOLT
	6	5M2894	3	WASHER
	7	5K9241	1	ELBOW
	8	2W1083	1	TUBE AS
	9	5K9243	1	ELBOW-FLARED
C	10	2W1088	1	BRACKET
	11	1A9579	2	BOLT
C	12	9M1974	3	WASHER
C	13	1W8939	1	GOVERNOR AS
	14	2S2923	1	COVER-GOVERNOR
C	15	1F4111	2	BOLT
	16	9F2247	4	PLUG
	17	5F5434	1	VENT AS
C	18	9N0869	1	WASHER
C	19	3S8536	4	SPACER
C	20	5S0003	2	NUT-FULL

NOTE	REF NO	PART NUMBER	QTY	PART NAME
				THE FOLLOWING REPAIR KIT IS AVAILABLE:
		9M0402	1	KIT-GOVERNOR OVERHAUL (INCLUDES GROMMETS, FILTER, COVER, VALVE AND SPRING-VALVE)

C-CHANGE FROM PREVIOUS TYPE
Y-SEPARATE ILLUSTRATION

B-329900 EP

2W2176 AIR COMPRESSOR GP
1W6473-Page 43

AIR INLET AND EXHAUST SYSTEM

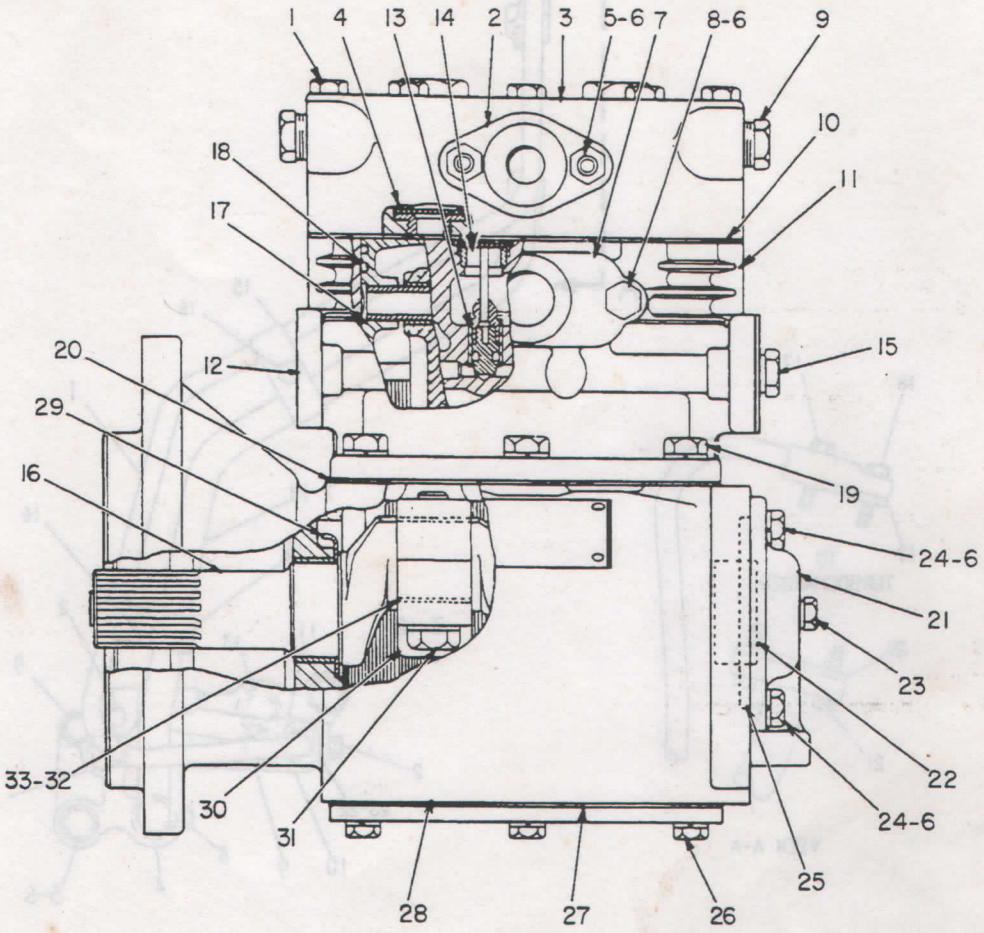

NOTE	REF NO	PART NUMBER	QTY	PART NAME
	1	8S4583	8	BOLT-HEX HEAD
	2	8S4365	1	FITTING
		1S7107	1	GASKET
	3	8S4581	1	CYLINDER HEAD AS
	4	8S7599	2	SEAT-VALVE
	5	1A2850	2	STUD
		1B4202	2	NUT
	6	4L7318	8	LOCKWASHER
	7	9M0397	1	ADAPTER-INLET
		9M0385	1	PLATE-STRAINER
		6L1884	2	GASKET-STRAINER
	8	2B2695	2	BOLT
	9	3J5390	2	PLUG
	10	8S1982	1	GASKET-HEAD
	11	8S4582	1	CYLINDER BLOCK AS
	12	3K5762	1	PLUG
	13	9M0382	2	BUSHING
	14	9M0381	2	SEAT-INLET VALVE
	15	5M6213	2	PLUG
	16	2P8670	1	CRANKSHAFT
C	17	1W2804	2	PISTON AS-COMPRESSOR (EACH INCLUDES)
		1W2803	2	PLUG
	18	1S9875	1	KIT-PISTON RINGS (8 RINGS)
	19	0L1351	6	BOLT
		3B4506	6	LOCKWASHER
	20	1F0006	1	GASKET
	21	8S1978	1	COVER AS
	22	1S9867	1	BEARING-SLEEVE
	23	5M6214	1	PLUG-PIPE
	24	4M0061	4	BOLT
	25	5M6509	1	SEAL-O-RING
	26	4M5281	6	BOLT
		3B4504	6	LOCKWASHER
C	27	3H5175	1	GASKET
	28	1W6472	1	CRANKCASE
	29	9L1518	2	WASHER-THRUST
	30	1S9873	2	ROD AS-CONNECTION (EACH INCLUDES)
	31	9M5181	2	BOLT
		2A5328	2	LOCK
J	32	4N3982	1	BEARING
J	33	4N3983	1	BEARING
J		4N3984	1	BEARING
J		4N3985	1	BEARING
				THE FOLLOWING REPAIR KIT IS AVAILABLE:
		1S9874	1	KIT-COMPRESSOR VALVES (INCL ELEMENT, GUIDES, PISTONS, PLUNGERS, ETC.)

J-REQUIRED TO MAKE A COMPLETE BEARING
C-CHANGE FROM PREVIOUS TYPE

B-497527 EP

1W6473 AIR COMPRESSOR GP
Part Of 2W2176 Air Compressor

AIR INLET AND EXHAUST SYSTEM

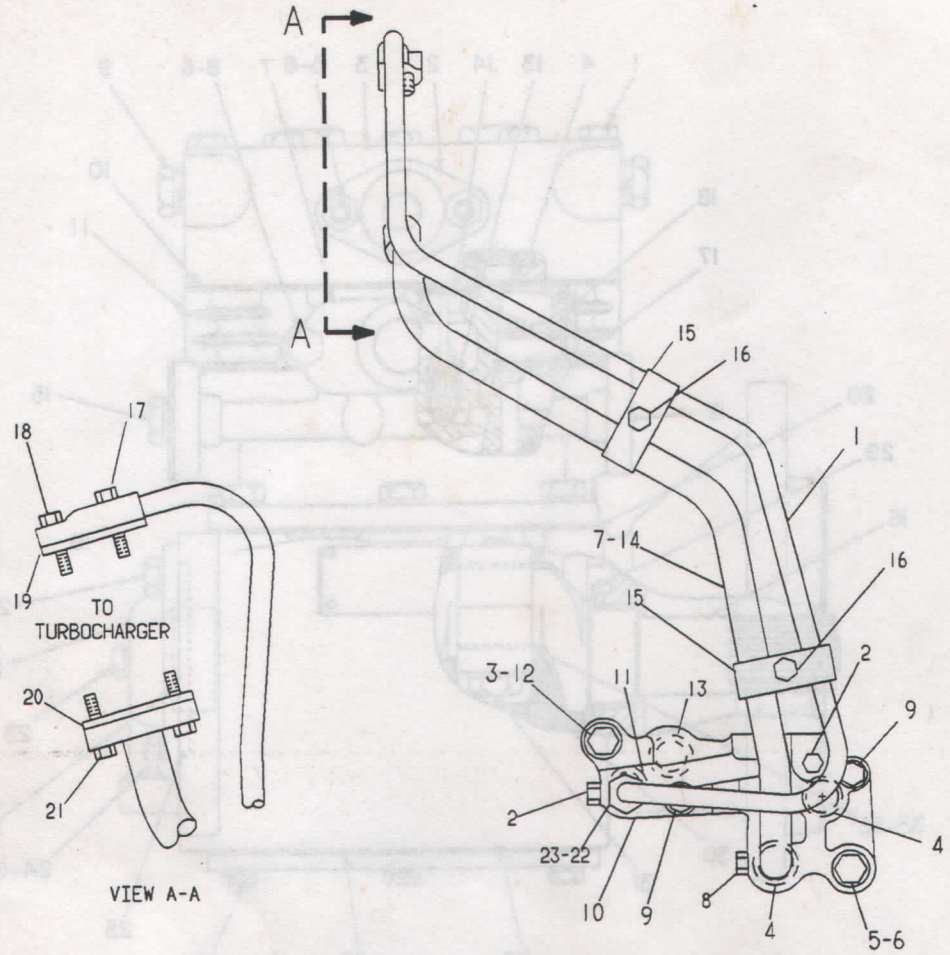

NOTE	REF NO	PART NUMBER	QTY	PART NAME	NOTE	REF NO	PART NUMBER	QTY	PART NAME
	1	7W1058	1	TUBE AS-SUPPLY		21	1A2029	2	BOLT
	2	5M6213	2	PLUG		22	8M0505	1	CONNECTOR
	3	5P8245	1	WASHER		23	3K0360	1	SEAL-O-RING
	4	8M5248	2	SEAL-O-RING					
	5	1B4367	1	BOLT 76.20MM(3IN)LG					
				-OR-					
C		1D4585	1	BOLT 82.55MM(3.25IN)LG					
C		9Y4380	1	RETAINER					
	6	5P8247	1	WASHER-HARD					
	7	9M4849	1	SEAL-O-RING					
	8	3J5390	1	PLUG					
	9	0S1619	2	BOLT					
		5M2894	2	WASHER					
	10	4W9655	1	SUPPORT					
	11	8M4438	1	SEAL-O-RING					
	12	0S1585	1	BOLT					
	13	8M4446	1	SEAL-O-RING					
	14	7W3042	1	TUBE AS-DRAIN					
	15	6N6033	4	CLIP					
	16	0S1617	2	BOLT					
		1D4716	2	NUT-FULL					
		9M1974	4	WASHER					
	17	1B2790	1	BOLT					
	18	4B3388	1	BOLT					
	19	8H9788	1	GASKET					
	20	1P1255	1	GASKET-OIL DRAIN					

C-CHANGE FROM PREVIOUS TYPE

C-460801 EP

1307 1W0558 LINES GP-TURBOCHARGER OIL

AIR INLET AND EXHAUST SYSTEM

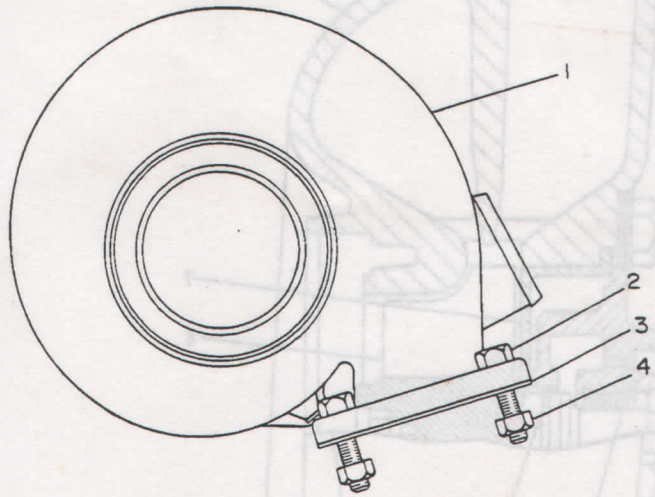

NOTE	REF NO	PART NUMBER	QTY	PART NAME
Y	1	1W5160	1	TURBOCHARGER GP
C	2	9L2295	4	BOLT-HIGH TEMP
	3	1P0451	1	GASKET-TURBOCHARGER
	4	2N2766	4	LOCKNUT

C-CHANGE FROM PREVIOUS TYPE
Y-SEPARATE ILLUSTRATION

B-315800 EP

1052

1W5130 TURBOCHARGER GP
1W5160–Page 46

AIR INLET AND EXHAUST SYSTEM

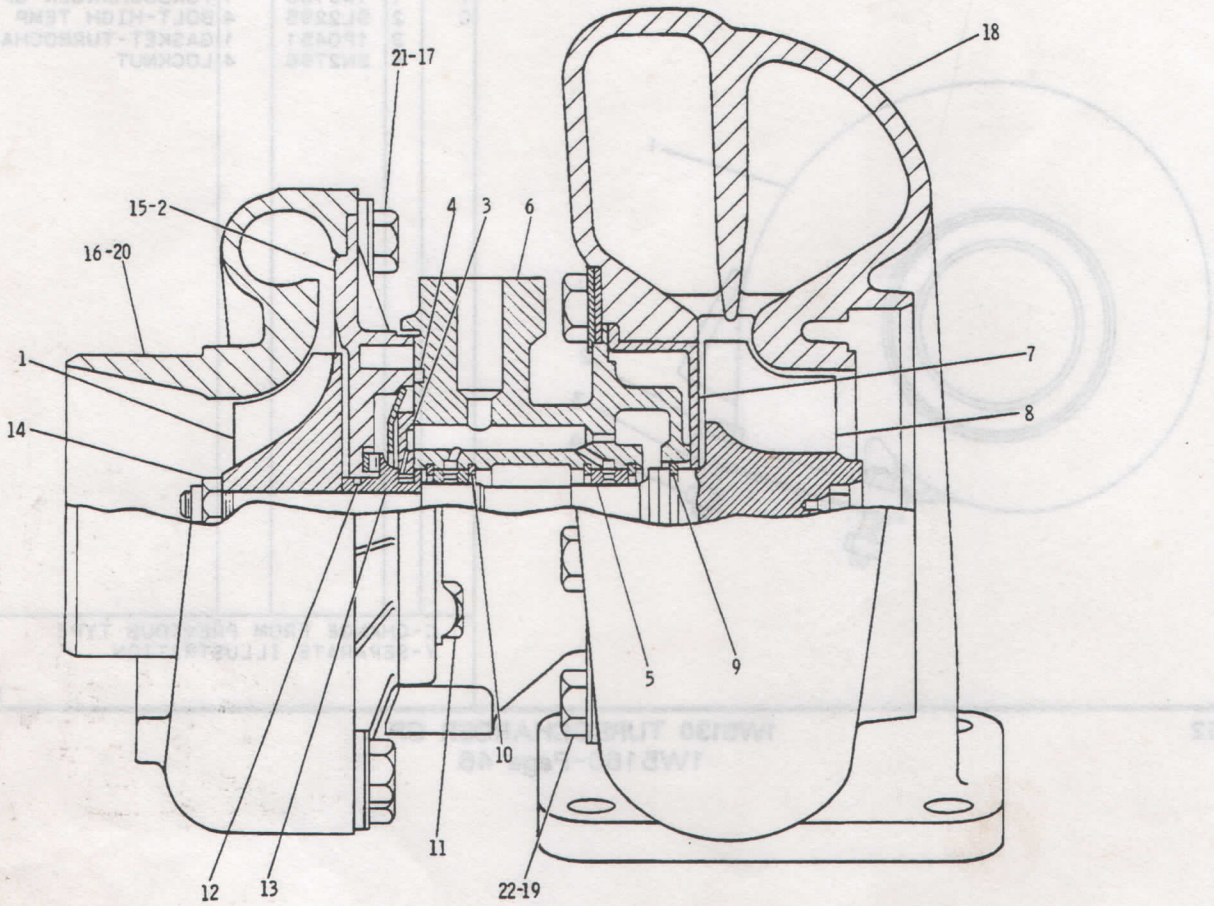

NOTE	REF NO	PART NUMBER	QTY	PART NAME
R	1	4N6860	1	CARTRIDGE
				GP-TURBOCHARGER
		4N6861	1	WHEEL-COMPRESSOR
R	2	4N6863	1	BACKPLATE AS
	3	1P1111	1	BEARING-THRUST
J	4	1P1120	1	RING-SEAL
J	5	1P1114	2	BEARING-TURBOCHARGER
R	6	2P9635	1	HOUSING AS-CENTER
		1P1136	2	PIN
	7	7N0012	1	SHROUD-TURBINE WHEEL
R	8	1P1116	1	SHAFT & WHEEL AS
J	9	7N6609	1	RING-PISTON
J	10	2P9607	4	RING-RETAINING
	11	2A0762	4	BOLT
J		1P1117	2	PLATE-LOCK
J	12	1P1124	1	RING-PISTON
	13	1P1123	1	COLLAR-THRUST
J	14	1P1125	1	LOCKNUT-TURBOCHARGER
	15	7N2434	1	NAMEPLATE-CARTRIDGE
		2F0808	2	SCREW
	16	1W4795	1	NAMEPLATE
	17	4N6864	3	CLAMP
		4N6865	3	LOCK-PLATE
R	18	7N1687	1	HOUSING-TURBINE
	19	1P1112	3	CLAMP
		1P1113	3	LOCK-PLATE

NOTE	REF NO	PART NUMBER	QTY	PART NAME
	20	4N6862	1	HOUSING-COMPRESSOR
	21	1C0569	6	BOLT
	22	6V2489	6	BOLT-HIGH TEMP
				THE FOLLOWING REPAIR KIT IS AVAILABLE:
C		2W0716	1	KIT-TURBOCHARGER CARTRIDGE (INCL PARTS MARKED J)

C-CHANGE FROM PREVIOUS TYPE
R-REMFG PART MAY BE AVAILABLE

B-403702 EP

1052

1W5160 TURBOCHARGER GP
Part Of 1W5130 Turbocharger

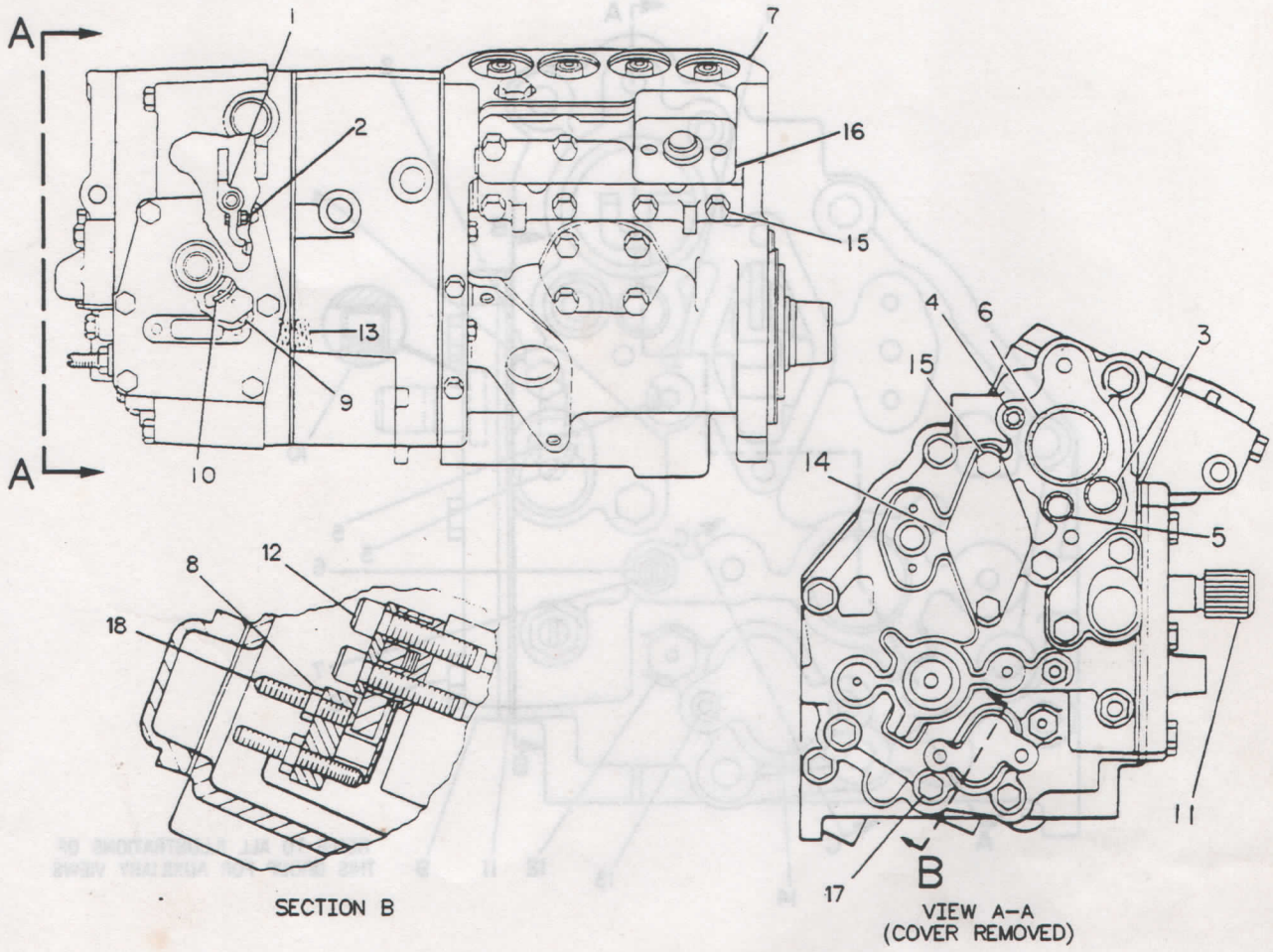

SECTION B

VIEW A-A
(COVER REMOVED)

NOTE	REF NO	PART NUMBER	QTY	PART NAME	NOTE	REF NO	PART NUMBER	QTY	PART NAME
	1	4W5734	1	LEVER AS					
	2	5H6552	1	SETSCREW-SOCKET					
	3	7C8994	1	SEAL GP					
	4	4J7533	1	SEAL-O-RING					
	5	0S1616	2	BOLT					
Y	6	1W8730	1	GOVERNOR GP					
Y	7	2W6178	1	PUMP GP-FUEL INJECTION					
	8	8L5832	1	NUT-HEX					
	9	7N2176	1	PIN-DETENT					
		7N1052	1	DOWEL					
	10	2W9657	1	SPRING-DETENT					
	11	8N3088	1	SHAFT AS-THROTTLE					
Y	12	1W3598	1	TORQUE CONTROL GP					
	13	8M9140	1	SPRING-GOVERNOR					
	14	2W5448	1	COVER					
		2W5447	1	GASKET					
	15	4B4276	2	WASHER					
	16	7N9521	1	COVER-FUEL GALLERY					
		7N3104	1	GASKET-BASE					
		8N5783	1	DEFLECTOR-PULSE					
	17	1B2713	2	BOLT					
	18	7N5334	1	SETSCREW-SOCKET					

Y-SEPARATE ILLUSTRATION

R-497343 EP

7C1132 GOVERNOR & FUEL INJECTION PUMP

1W8730-Page 48, 2W6178-Page 52, 1W3598-Page 54

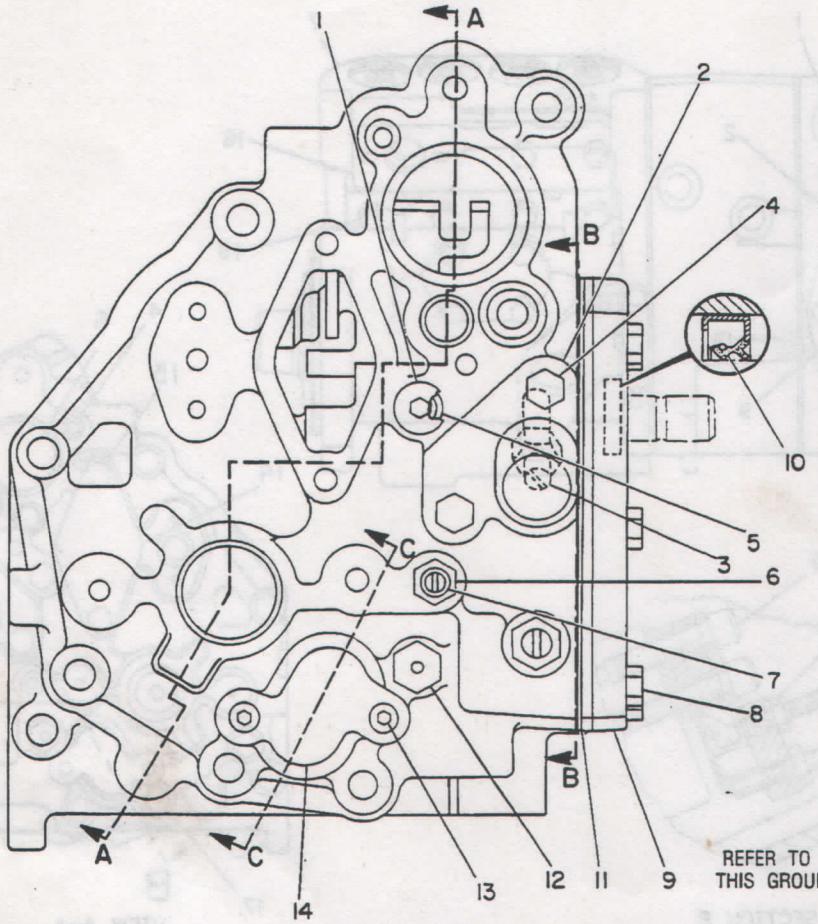

REFER TO ALL ILLUSTRATIONS OF THIS GROUP FOR AUXILIARY VIEWS

NOTE	REF NO	PART NUMBER	QTY	PART NAME	NOTE	REF NO	PART NUMBER	QTY	PART NAME
C	1	1W6523	1	PLUG-O-RING					
C	2	8N3259	1	COVER-HIGH IDLE					
C		8N3263	1	GASKET					
C	3	7N2594	1	SETSCREW-SLOTTED					
C		7N8775	1	NUT-HIGH IDLE					
C	4	5P6945	2	BOLT					
C	5	3J7354	1	SEAL-O-RING					
C	6	4N5485	1	BODY-VALVE					
C		5F9144	1	SEAL-O-RING					
C	7	4N5484	1	VALVE-NEEDLE					
C		6H9691	1	SEAL-O-RING					
C	8	0S1616	6	BOLT					
C	9	1W7867	1	COVER-CONTROL					
C	10	8T2604	1	SEAL-LIP TYPE					
C	11	7N8779	1	GASKET-COVER					
C	12	3P0009	1	INSULATOR-STUD					
C	13	1P2497	2	BOLT-HEAD					
C	14	8N3258	1	COVER-LOAD STOP					
C		8N3264	1	GASKET					

C-CHANGE FROM PREVIOUS TYPE

B-402269 EP

1264

1W8730 GOVERNOR GP-PART 1 OF 3

Part Of 7C1132 Governor & Fuel Injection Pump

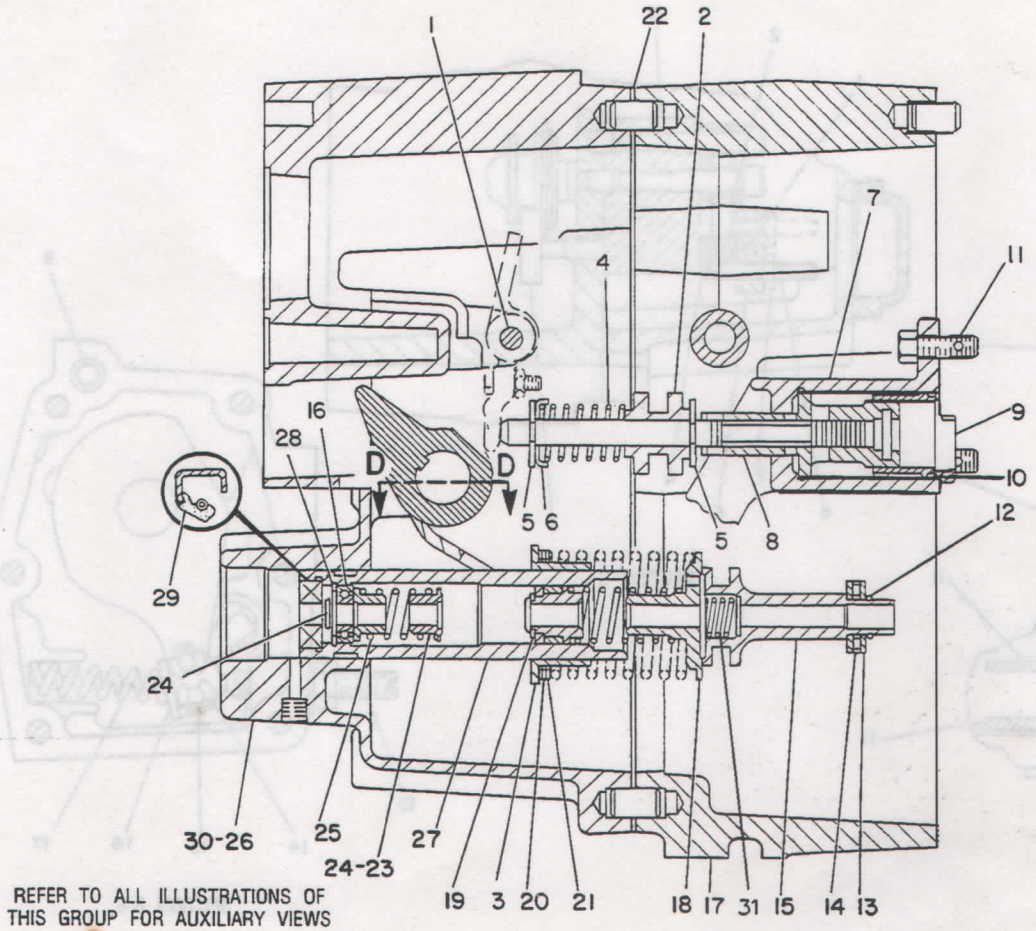

REFER TO ALL ILLUSTRATIONS OF THIS GROUP FOR AUXILIARY VIEWS

NOTE	REF NO	PART NUMBER	QTY	PART NAME
	1	7N8785	1	SHAFT-PIVOT
	2	1N3800	1	SLEEVE-RACK CONTROL
	3	6N3504	1	SEAT-GOVERNOR SPRING
	4	2W2216	1	SPRING-LINK
	5	2M7819	2	RING-RETAINING
	6	1N3802	1	SEAT-SPRING
	7	8N2507	1	PISTON AS-SERVO
		8N2505	1	VALVE-GOVERNOR SERVO
		7C0791	1	CYLINDER AS
		7N7271	1	LEVER-CONTROL
		3G3835	1	PIN
	8	1W4098	1	PISTON-GOVERNOR SERVO
	9	7W0250	1	SLEEVE
	10	5P9757	1	SEAL-O-RING
	11	310216	3	BOLT
	12	4N2953	1	RING-LOCK
	13	7E4892	2	RACE-BEARING-THRUST
	14	7M7219	1	BEARING-THRUST
	15	4W6868	1	RISER-GOVERNOR
	16	4N0432	1	BALL BEARING
	17	8N2495	1	HOUSING AS-GOVERNOR
		8S6814	4	PIN (12.7MM LG)
		4F6024	2	PIN (8MM LG)

NOTE	REF NO	PART NUMBER	QTY	PART NAME
	18	8N2503	1	DASHPOT AS-GOVERNOR
		4N6408	1	PISTON AS
		4N6407	1	SPOOL-DASHPOT
		4N6406	1	RING-SPACER
	19	4N6404	1	RING-RETAINING
	20	2P9556	1	WASHER
	21	2N0828	2	WASHER (SPRING)
C	22	8N2496	1	GASKET-GOVERNOR HOUSING
C	23	7N7270	2	SLEEVE-SPRING
C	24	7N8821	2	RING-RETAINING
C	25	3K5733	1	SPRING
C	26	8N2501	1	HOUSING AS-GOVERNOR
C		7E5346	1	VALVE AS
C	27	8N2499	1	GUIDE-SPRING
C	28	3D8317	1	RING-RETAINING
C	29	4N0260	1	SEAL-LIP TYPE
C	30	2F2290	1	PLUG-CORE
	31	7N7267	1	SPRING

C-CHANGE FROM PREVIOUS TYPE

R-491965 EP

1264

1W8730 GOVERNOR GP-PART 2 OF 3

Part Of 7C1132 Governor & Fuel Injection Pump

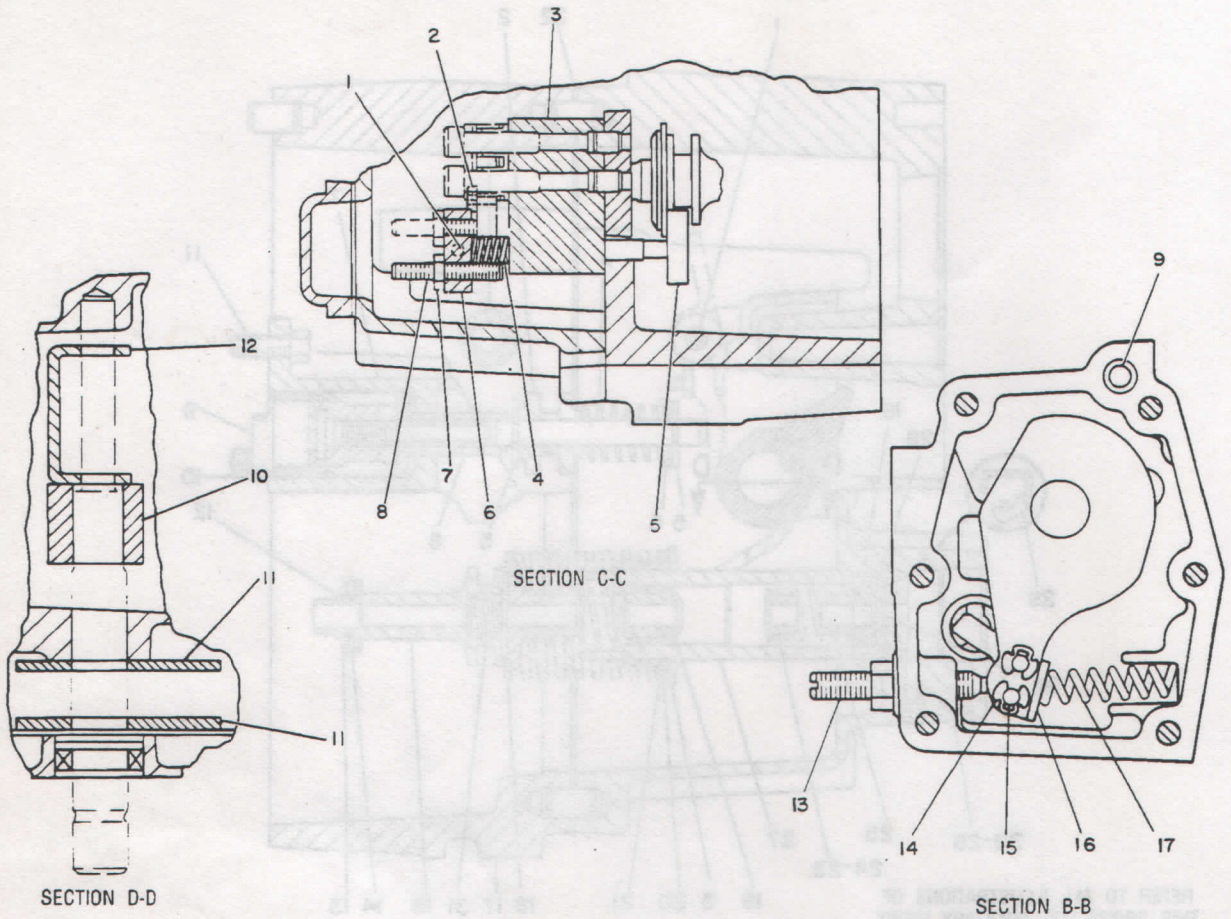

NOTE	REF NO	PART NUMBER	QTY	PART NAME
	1	6D3897	1	BOLT
	2	6L5897	2	BOLT
	3	2W6104	1	BLOCK AS-STOP
		2W6103	1	DOWEL
	4	1W4243	1	SPRING-BUMPER
	5	2W5161	1	BOLT-LOAD STOP
	6	8N3256	1	COLLAR-LOAD STOP
C	7	8L5832	1	NUT-HEX
	8	5H6552	1	SETSCREW-SOCKET (31.75MM LG)
				-OR-
C		9Y4701	1	SETSCREW-SOCKET (34.92MM LG)
	9	7N8821	1	RING-RETAINING
	10	8N3168	1	LEVER-THROTTLE
	11	2W9305	2	PLATE-THROTTLE
	12	2W6102	1	LEVER-SPRING SEAT
	13	7N2594	1	SETSCREW-SLOTTED
		7W4272	1	NUT-SEALING
	14	7N2171	4	RING-RETAINING
	15	7N2172	2	PIN
	16	8N3087	1	STOP-IDLE DETENT
	17	2W7400	1	SPRING

C-CHANGE FROM PREVIOUS TYPE

B-461174 EP

1264

1W8730 GOVERNOR GP-PART 3 OF 3

Part Of 7C1132 Governor & Fuel Injection Pump

FUEL SYSTEM

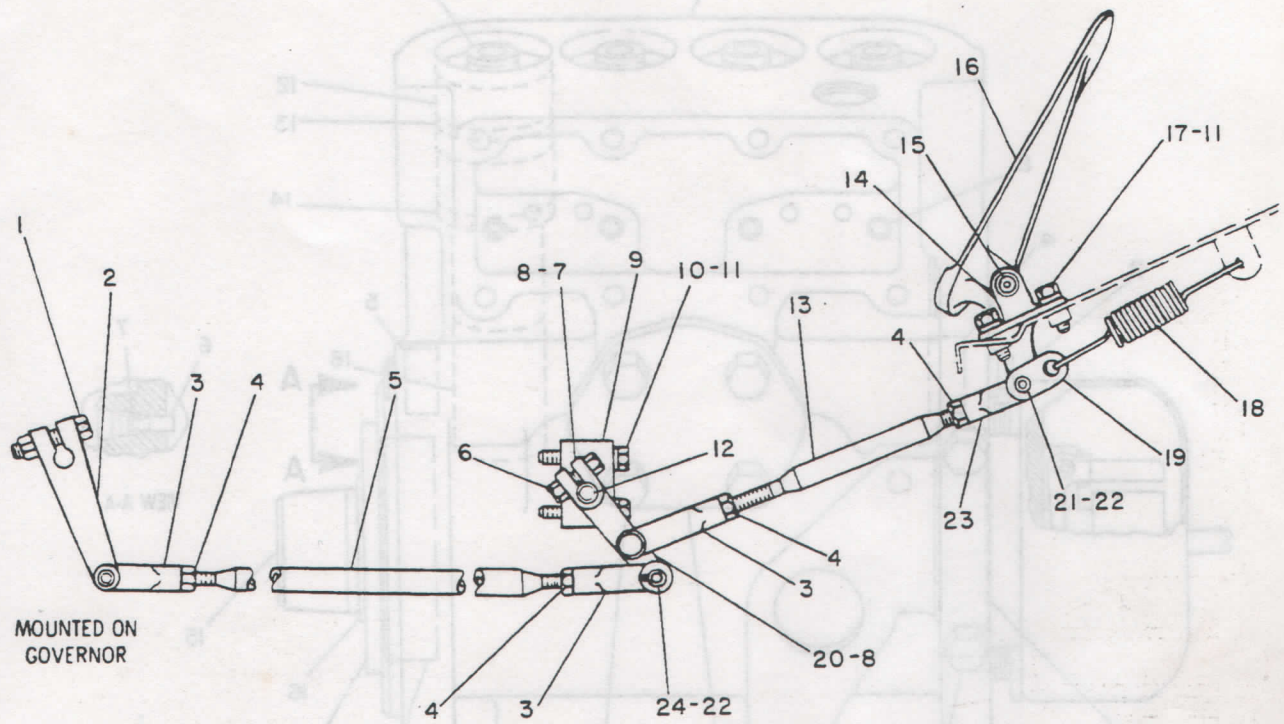

NOTE	REF NO	PART NUMBER	QTY	PART NAME
	1	2A5546	1	BOLT
		1B4330	1	NUT
	2	2S2174	1	LEVER
	3	1A9252	3	END-ADJUSTABLE ROD
	4	5B9079	4	NUT-JAM
	5	2Y9853	1	ROD
	6	0S1591	2	BOLT
		1D4717	2	NUT
	7	4D8924	1	LEVER
	8	1B8704	2	KEY-WOODRUFF
	9	6K8166	2	BRACKET AS
				(EACH INCLUDES)
		4D2619	1	BEARING
	10	0L2070	4	BOLT
	11	5M2894	8	WASHER
	12	6K8164	1	SHAFT
	13	1M9175	1	ROD
	14	7F9776	2	BRACKET
	15	7F9777	1	BUSHING
		4B2906	1	PIN
	16	3D0674	1	PEDAL-FOOT
	17	0L1351	4	BOLT
	18	5K5697	1	SPRING
	19	4D5155	1	LINK
	20	4J2684	1	LEVER
	21	3K8280	1	PIN-CLEVIS
	22	3B4615	4	PIN-COTTER
	23	1M1341	1	ROD END-YOKE
	24	1B0676	3	PIN

B-353342 EP

2Y9734 CONTROL GP-GOVERNOR

FUEL SYSTEM

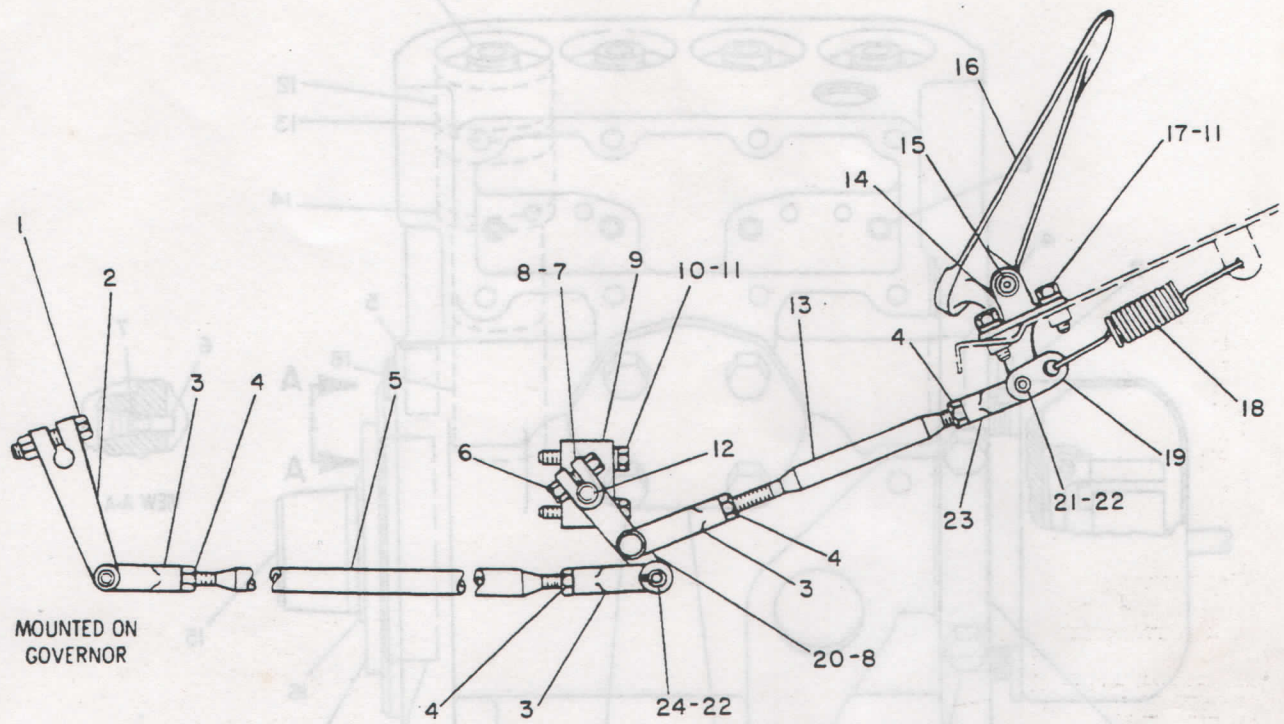

NOTE	REF NO	PART NUMBER	QTY	PART NAME
	1	2A5546	1	BOLT
		1B4330	1	NUT
	2	2S2174	1	LEVER
	3	1A9252	3	END-ADJUSTABLE ROD
	4	5B9079	4	NUT-JAM
	5	2Y9853	1	ROD
	6	0S1591	2	BOLT
		1D4717	2	NUT
	7	4D8924	1	LEVER
	8	1B8704	2	KEY-WOODRUFF
	9	6K8166	2	BRACKET AS (EACH INCLUDES)
		4D2619	1	BEARING
	10	0L2070	4	BOLT
	11	5M2894	8	WASHER
	12	6K8164	1	SHAFT
	13	1M9175	1	ROD
	14	7F9776	2	BRACKET
	15	7F9777	1	BUSHING
		4B2906	1	PIN
	16	3D0674	1	PEDAL-FOOT
	17	0L1351	4	BOLT
	18	5K5697	1	SPRING
	19	4D5155	1	LINK
	20	4J2684	1	LEVER
	21	3K8280	1	PIN-CLEVIS
	22	3B4615	4	PIN-COTTER
	23	1M1341	1	ROD END-YOKE
	24	1B0676	3	PIN

B-353342 EP

2Y9734 CONTROL GP-GOVERNOR

FUEL SYSTEM

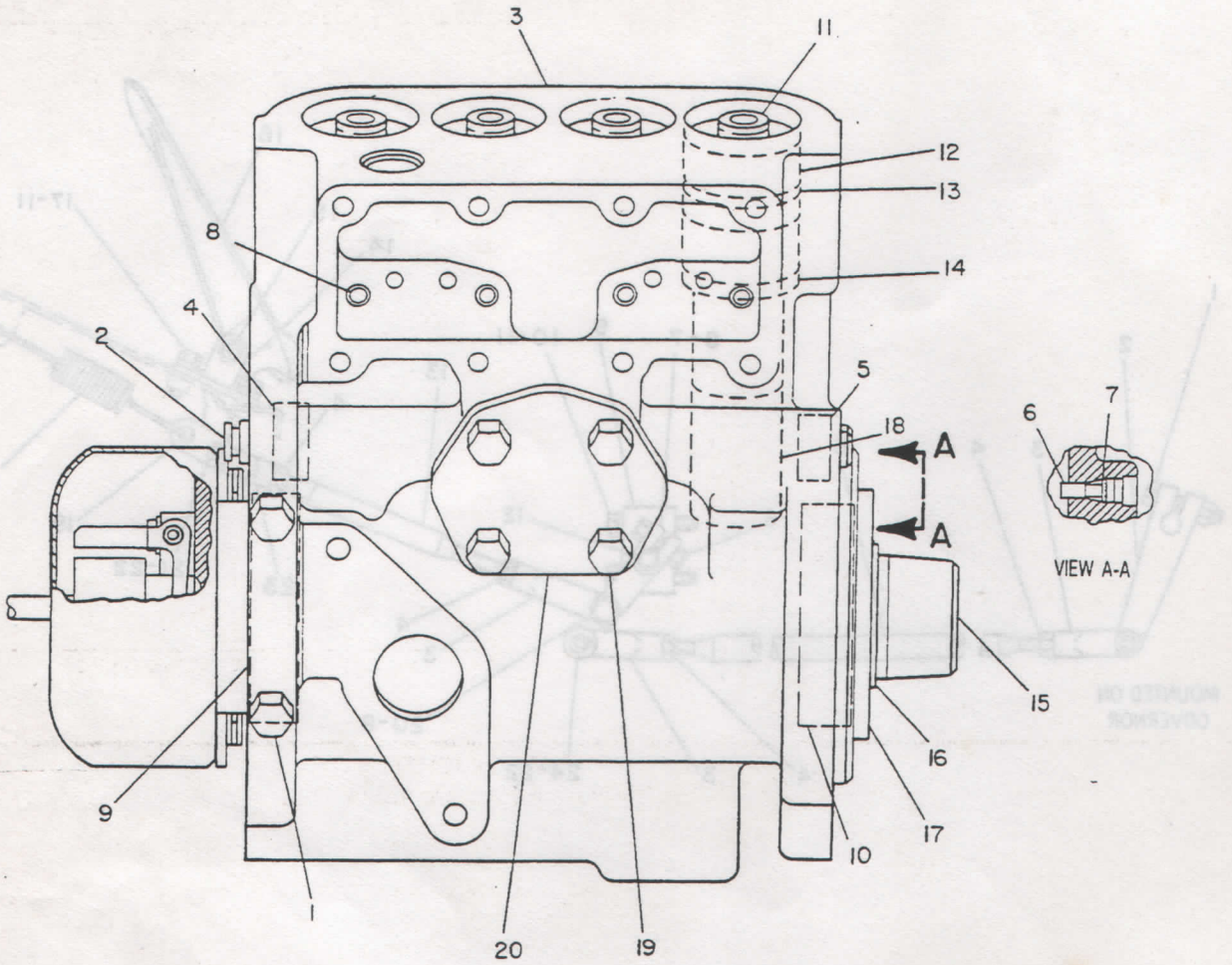

NOTE	REF NO	PART NUMBER	QTY	PART NAME
	1	9S4180	2	PLUG-O-RING
		4J7533	2	SEAL-O-RING
	2	1W3485	1	RACK-REGULATOR
	3	1W3486	1	HOUSING AS-FUEL PUMP
	4	1S1953	1	BEARING-RACK
	5	1S3285	1	BEARING
	6	8N3731	4	PIN-LIFTER GUIDE
	7	3H0442	4	SEAL-O-RING
	8	7N7969	4	DOWEL
	9	8N2518	1	BEARING-SLEEVE
	10	7N7970	1	BEARING-SLEEVE
Y	11	1W6539	4	PUMP GP-FUEL INJECTION
	12	8N5117	4	BUSHING
	13	7E4846	4	SEAL-O-RING
	14	7N1053	4	SPACER-FUEL PUMP
Y	15	2W6175	1	CAMSHAFT AS
	16	7N8421	1	RING-RETAINING
	17	8N2487	1	WASHER-THRUST
	18	8N2489	4	LIFTER AS
	19	0S1615	4	BOLT
	20	7N1047	1	COVER-TIMING
		7N1046	1	GASKET-COVER

Y-SEPARATE ILLUSTRATION

R-500524 EP

2W6178 PUMP GP-FUEL INJECTION

1W6539-Page 53, 2W6175-Page 54

Part Of 7C1132 Governor & Fuel Injection Pump

FUEL SYSTEM

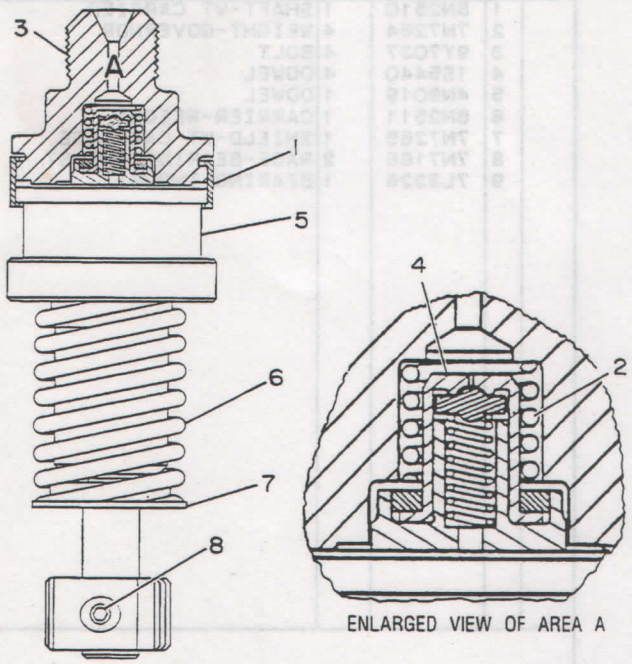

ENLARGED VIEW OF AREA A

NOTE	REF NO	PART NUMBER	QTY	PART NAME
	1	7W1927	1	RING-RETAINER
	2	8N1415	1	SPRING-CHECK
	3	1W9171	1	BONNET-VALVE
	4	1W6987	1	VALVE AS-CHECK
	5	1W6541	1	PLUNGER AS
	6	7N1067	1	SPRING-LIFTER
	7	7W2808	1	WASHER-RETAINER
	8	8H9299	1	SCREW-PLUNGER GEAR (11.1MM LG)
				-OR-
C		7C5278	1	BOLT-GEAR (12.1MM LG)

C-CHANGE FROM PREVIOUS TYPE

B-466949 EP

1251

1W6539 PUMP GP-FUEL INJECTION

Part Of 2W6178 Pump-Fuel Injection

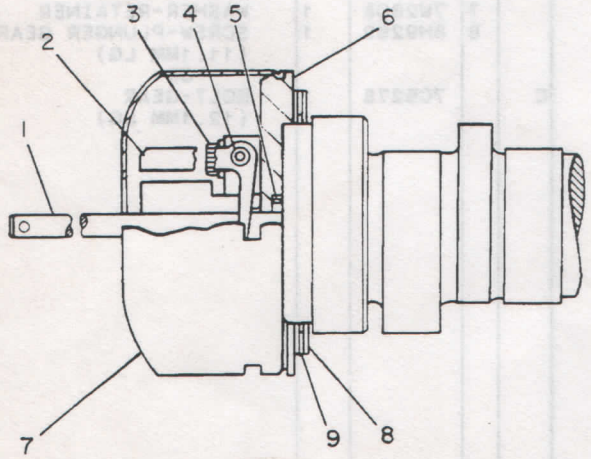

NOTE	REF NO	PART NUMBER	QTY	PART NAME
	1	8N2510	1	SHAFT-WT CARRIER
	2	7N7264	4	WEIGHT-GOVERNOR
	3	9Y7037	4	BOLT
	4	1S5440	4	DOWEL
	5	4N9019	1	DOWEL
	6	8N2511	1	CARRIER-WEIGHT
	7	7N7265	1	SHIELD-WT CARRIAGE
	8	7N7166	2	RACE-BEARING-THRUST
	9	7L3326	1	BEARING-THRUST

B-465673 EP

2W6175 CAMSHAFT AS
Part Of 2W6178 Pump-Fuel Injection

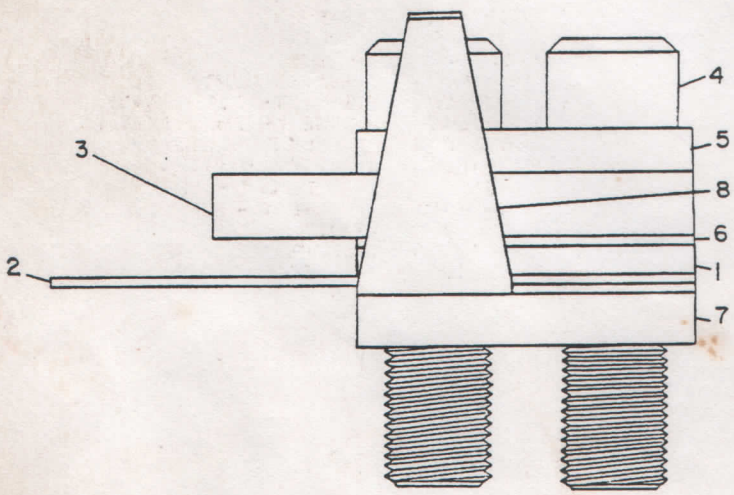

NOTE	REF NO	PART NUMBER	QTY	PART NAME
	1	7N1796	1	SPACER (1.549MM THK)
	2	8N7517	1	SPRING-TORQUE (.831MM THK)
C	3	2W7234	1	BAR-LOAD STOP (4.OMM THK)
C	4	6L5897	2	BOLT
	5	8M9062	1	RETAINER-SPRING
	6	2P2685	1	SPACER (.635 MM THK)
	7	1P6452	1	INSULATOR
C	8	7W5700	1	CONTACT

C-CHANGE FROM PREVIOUS TYPE

B-488193 EP

1264

1W3598 TORQUE CONTROL GP
Part Of 7C1132 Governor & Fuel Injection Pump

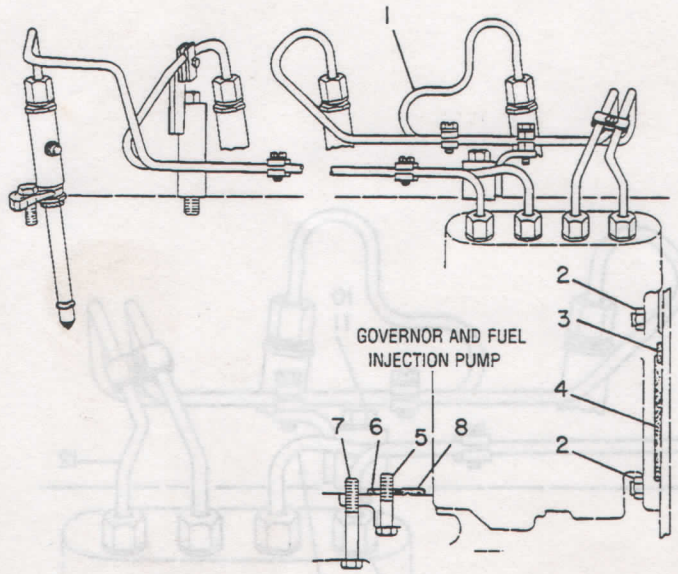

NOTE	REF NO	PART NUMBER	QTY	PART NAME
Y	1	8N8170	1	LINES GP-FUEL INJECTION
	2	3S2713	3	NUT-FULL
C	3	6V6921	1	SEAL-RING
	4	2H3934	1	SEAL
	5	2A4639	1	BOLT
	6	2H3932	1	SEAL
	7	OL1143	1	BOLT 63.5MM(2.5IN)LONG
				-OR-
C		OTO573	1	BOLT 69.85MM(2.75IN)LONG
C		5M2894	1	WASHER
	8	5F7054	1	SEAL-O-RING

C-CHANGE FROM PREVIOUS TYPE
Y-SEPARATE ILLUSTRATION

B-489504 EP

1252 **8N2772 LINES GP-FUEL INJECTION**

8N8170–Page 56

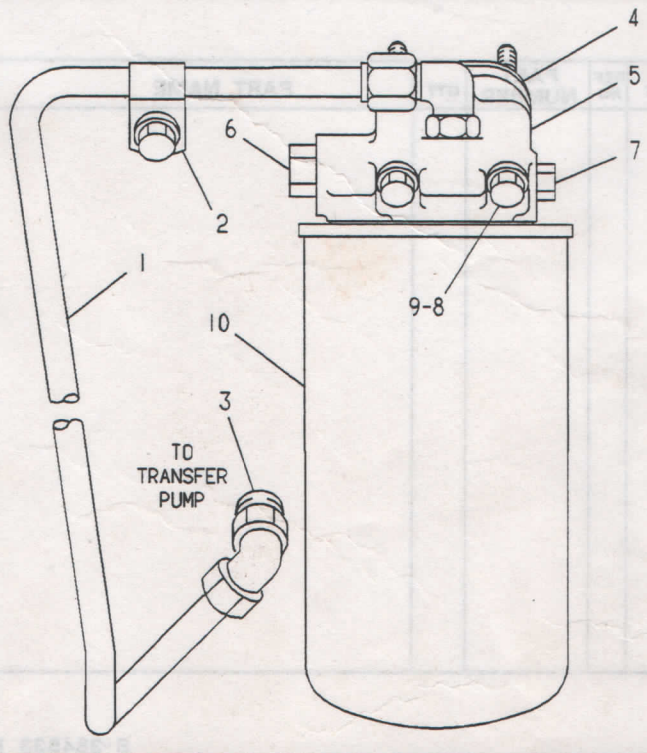

NOTE	REF NO	PART NUMBER	QTY	PART NAME
	1	2W1713	1	TUBE AS
	2	6V3265	1	CLIP
		2W1677	1	SPACER
		5P4115	1	WASHER
		4B9365	1	BOLT
	3	3O7947	2	ELBOW
		3J1907	2	SEAL-O-RING
	4	7N9520	1	GASKET-FILTER BASE
	5	7N9519	1	BASE AS-FUEL FILTER
		9S4167	1	STUD-HOLLOW
	6	3J1907	1	SEAL-O-RING
		9S4191	1	PLUG-O-RING
	7	5M6214	1	PLUG-PIPE
	8	6B4198	2	BOLT
	9	5P0537	2	WASHER
	10	1P2299	1	FILTER AS-FUEL

A-494564 EP

1258 **1W9532 FILTER GP-SECONDARY**

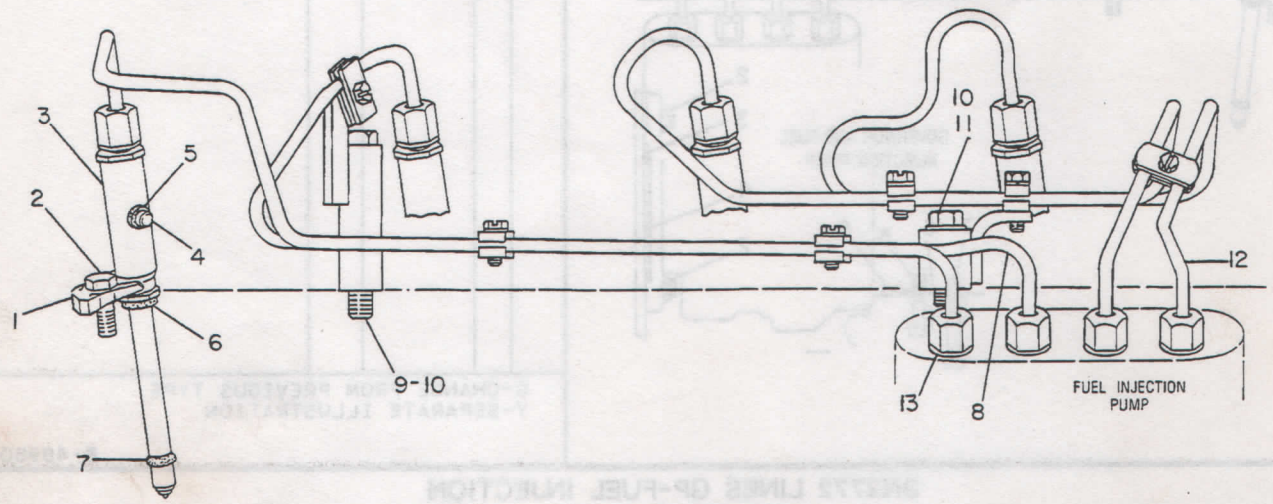

NOTE	REF NO	PART NUMBER	QTY	PART NAME
	1	8N5132	4	CLAMP-NOZZLE
	2	1T0416	4	BOLT
R	3	8N7005	4	NOZZLE AS-FUEL VALVE (EACH INCLUDES)
	4	2W1230	1	SCREW-BUTTON HEAD
	5	8T0659	1	WASHER-SEALING
	6	7W4486	1	WASHER
	7	9L9098	1	SEAL-CARBON STOP
CY	8	7C5170	1	LINES GP-FUEL INJECTION
	9	0T0065	1	BOLT
	10	5M2894	2	WASHER
	11	0S1571	1	BOLT
CY	12	7C5160	1	LINES GP-FUEL INJECTION
C	13	8H9204	4	WASHER-FELT

C-CHANGE FROM PREVIOUS TYPE
R-REMFG PART MAY BE AVAILABLE
Y-SEPARATE ILLUSTRATION

B-354533 EP

1252

8N8170 LINES GP-FUEL INJECTION
7C5160-Page 57, 7C5170-Page 58
Part Of 8N2772 Lines-Fuel Injection

FUEL SYSTEM

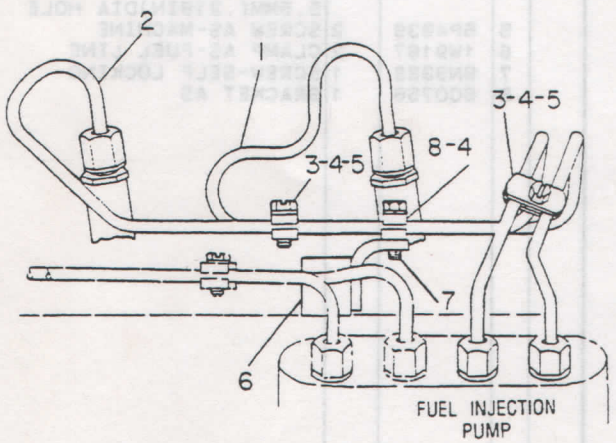

NOTE	REF NO	PART NUMBER	QTY	PART NAME
	1	7C5161	1	LINE AS-FUEL INJ
	2	7C5162	1	LINE AS-FUEL INJ
	3	1W9169	2	CLAMP 3.9MM(.156IN)DIA HOLE
	4	1W9168	3	CLAMP 5.5MM(.219IN)DIA HOLE
	5	5P4939	2	SCREW AS-MACHINE
	6	2W0845	1	BRACKET AS
	7	9N3388	1	SCREW-SELF LOCKING
	8	1W9167	1	CLAMP AS-FUEL LINE

B-354547 EP

1252

7C5160 LINES GP-FUEL INJECTION
Part Of 8N8170 Lines-Fuel Injection

FUEL SYSTEM

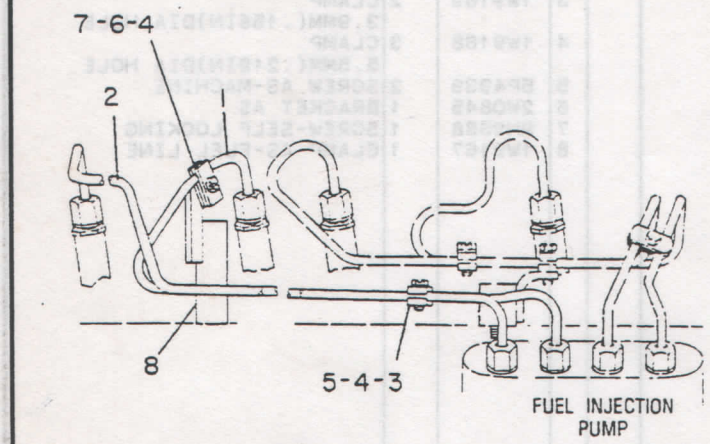

NOTE	REF NO	PART NUMBER	QTY	PART NAME
	1	7C5163	1	LINE AS-FUEL INJ
	2	7C5164	1	LINE AS-FUEL INJ
	3	1W9169	2	CLAMP 3.9MM(.156IN)DIA HOLE
	4	1W9168	3	CLAMP 5.5MM(.219IN)DIA HOLE
	5	5P4939	2	SCREW AS-MACHINE
	6	1W9167	2	CLAMP AS-FUEL LINE
	7	9N3388	1	SCREW-SELF LOCKING
	8	6C0756	1	BRACKET AS

B-354546 EP

1252

7C5170 LINES GP-FUEL INJECTION
Part Of 8N8170 Lines-Fuel Injection

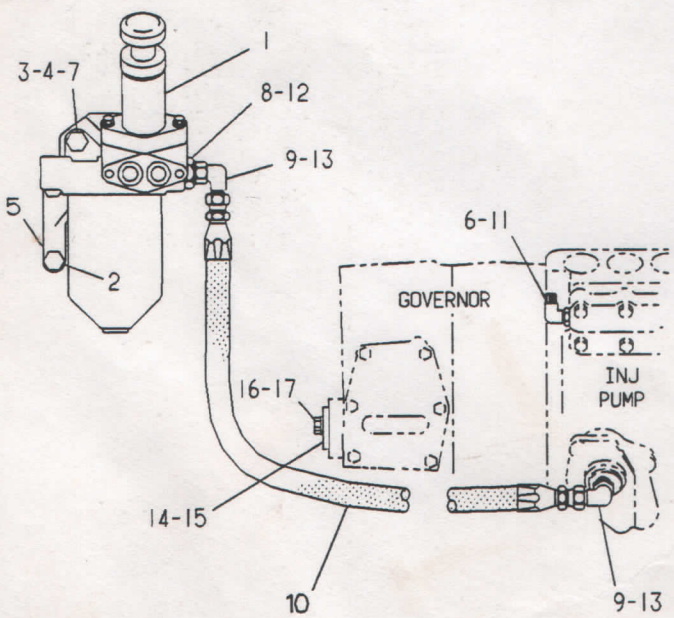

NOTE	REF NO	PART NUMBER	QTY	PART NAME
Y	1	8N5251	1	PUMP GP-FUEL PRIME & PRIM FLTR
	2	0S1571	2	BOLT
	3	1D4717	2	NUT
	4	5M2894	2	WASHER
C	5	1W6009	1	SUPPORT-FUEL FILTER
	6	3O7946	1	ELBOW
C	7	0S1591	2	BOLT
	8	5P1404	1	ADAPTER-O-RING
	9	3O7947	2	ELBOW
	10	5Y1332	1	HOSE AS
	11	3J7354	1	SEAL-O-RING
	12	2M9780	1	SEAL-O-RING
	13	3J1907	2	SEAL-O-RING
	14	4W7629	1	COVER
	15	4M8303	1	SEAL-O-RING
	16	5P0537	2	WASHER
	17	0S1615	2	BOLT

C-CHANGE FROM PREVIOUS TYPE
Y-SEPARATE ILLUSTRATION

R-500977 EP

7C1123 PUMP GP-FUEL PRIMING & PRIMARY FILTER
8N5251-Page 59

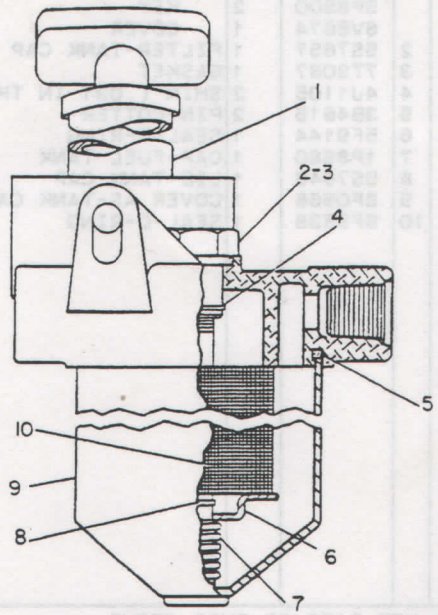

NOTE	REF NO	PART NUMBER	QTY	PART NAME
Y	1	8N3365	1	PUMP GP-FUEL PRIMING
	2	8H2807	1	NUT
	3	2J0157	1	SEAL-O-RING
	4	1L3769	1	RING-RETAINING
	5	8H2778	1	GASKET
	6	7H9678	1	RETAINER-ELEMENT
	7	7S9323	1	SPRING
	8	2H3429	1	RING-RETAINING
	9	8H2810	1	CASE AS-FILTER
	10	9M2341	1	ELEMENT AS

Y-SEPARATE ILLUSTRATION

B-233560 EP

1258 **8N5251 PUMP GP-FUEL PRIMING & PRIMARY FILTER**

8N3365-Page 59

Part Of 7C1123 Pump-Fuel Priming & Primary Filter

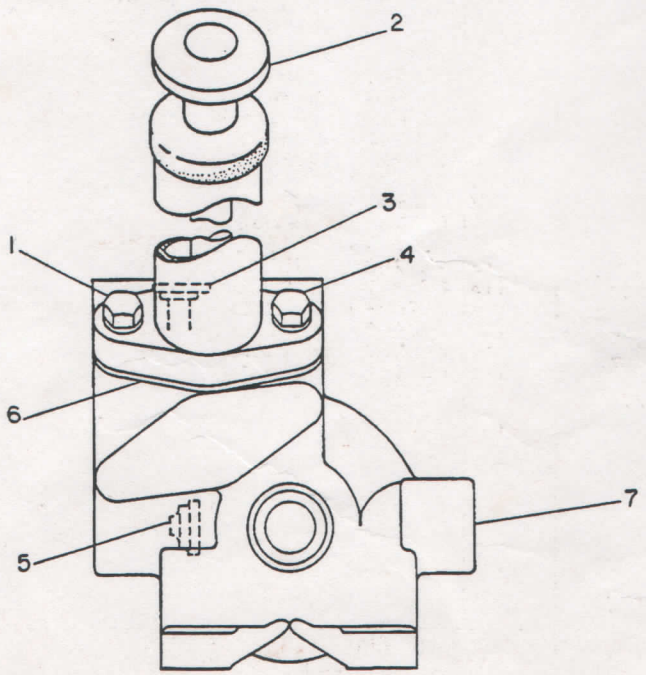

NOTE	REF NO	PART NUMBER	QTY	PART NAME
	1	7B2742	1	BOLT
		5P0537	1	WASHER
	2	4W0788	1	PUMP AS-PRIMING
		7F8607	1	SEAL-O-RING
		7E5346	1	VALVE AS
	3	9S8003	2	PLUG-O-RING
		1J9671	2	SEAL-O-RING
	4	1B7182	1	BOLT
		9M1974	1	WASHER
	5	7E5346	1	VALVE AS
	6	1P0436	1	GASKET
	7	8N0803	1	BASE-FILTER

B-496392 EP

1258 **8N3365 PUMP GP-FUEL PRIMING**

Part Of 8N5251 Pump-Fuel Priming & Primary Filter

FUEL SYSTEM

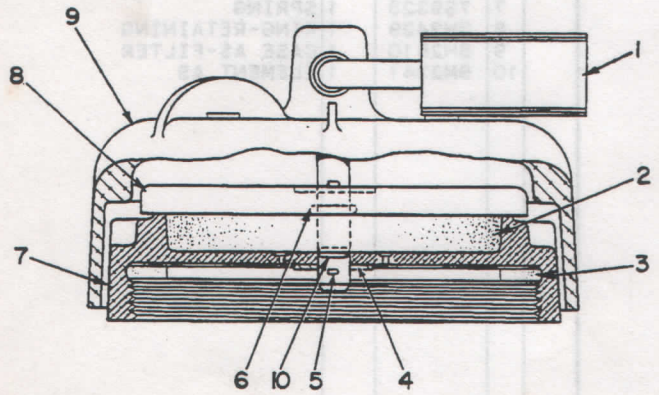

NOTE	REF NO	PART NUMBER	QTY	PART NAME
	1	5P8502	1	PADLOCK GP
A		5P8500	2	KEY
A		6V5874	1	COVER
	2	5S7657	1	FILTER-TANK CAP
C	3	7T2037	1	GASKET
	4	4J1105	2	SHIM (.031 IN THK)
	5	3B4615	2	PIN-COTTER
	6	5F9144	1	SEAL-O-RING
	7	1P8680	1	CAP-FUEL TANK
	8	5S7646	1	LID-TANK CAP
	9	8P0668	1	COVER AS-TANK CAP
	10	8F9538	1	SEAL-O-RING

A-NOT PART OF THIS GROUP
C-CHANGE FROM PREVIOUS TYPE

B-339574 EP

7315 **5G3612 CAP GP-PROTECTION**

Fuel Tank

FUEL SYSTEM

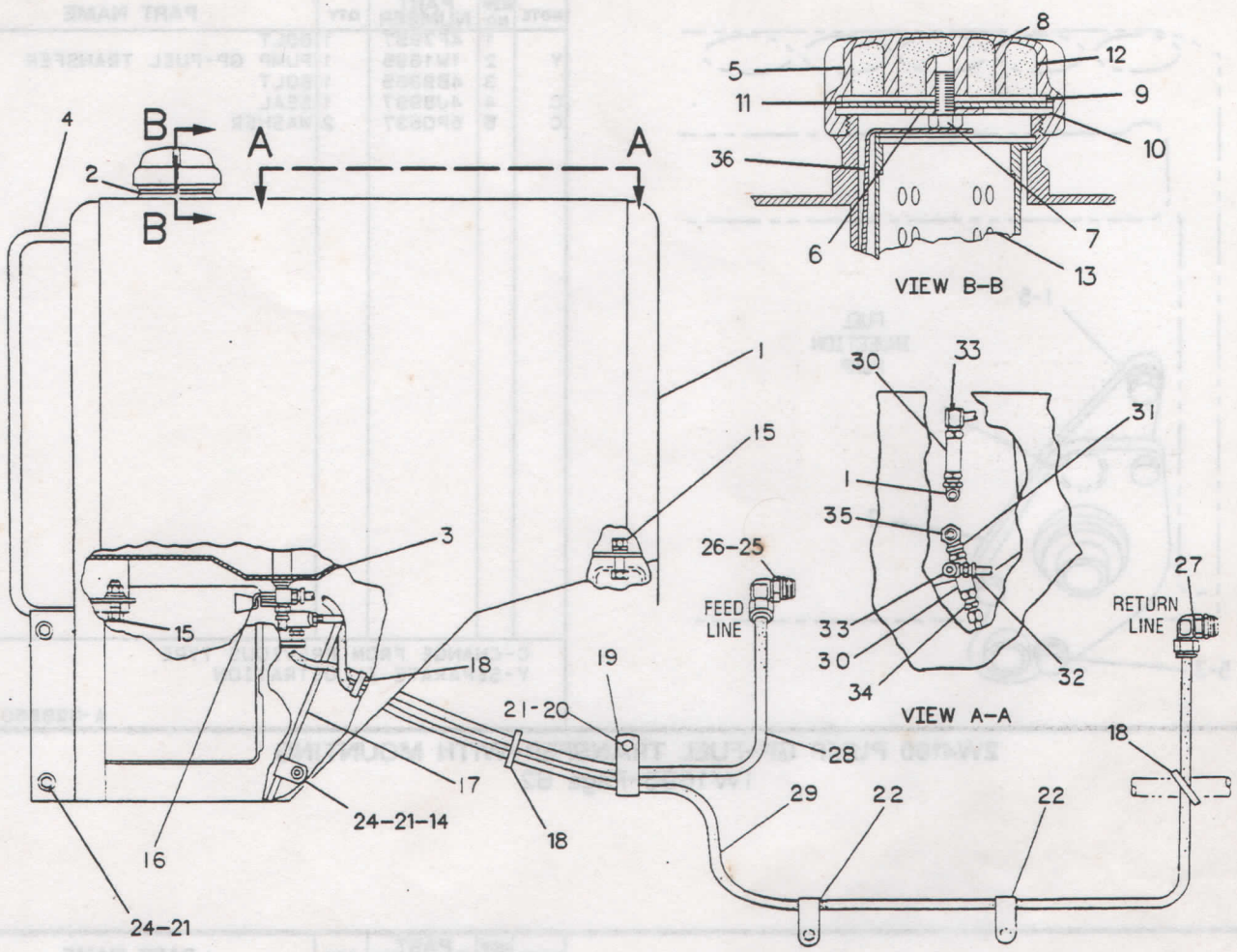

NOTE	REF NO	PART NUMBER	QTY	PART NAME
	1	1V3182	1	TANK AS-FUEL
		1F2417	1	BOSS
	2	8H3496	1	FITTING-FILLER
	3	3V6225	1	FITTING
	4	7K1400	1	GRAB HANDLE
	5	4B5441	1	CAP AS-FILLER
	6	7B2002	1	WASHER
	7	3H8389	1	SCREW-FILLER CAP
	8	4B5949	1	ELEMENT-FILTER
	9	4B5423	1	GASKET-BAFFLE
	10	7T2037	1	GASKET
	11	3F4134	1	BAFFLE-CAP
	12	4B1663	1	ELEMENT-CAP
C	13	9P7121	1	STRAINER-FUEL TANK
C	14	4L9337	1	BOLT
	15	1D4719	6	NUT
		OS1587	6	BOLT
		5P8245	12	WASHER
	16	1K8850	1	SPRING
	17	4V0660	1	TUBE AS
	18	3S2093	3	STRAP-CABLE
C	19	4D7733	1	CLIP
	20	1D4717	1	NUT
C	21	5P1075	5	WASHER-HARD
C	22	6K8178	2	CLIP
	23	OS1594	2	BOLT

NOTE	REF NO	PART NUMBER	QTY	PART NAME
	24	8B6127	1	CLIP
	25	2Y5975	2	COUPLING
	26	54362	1	ELBOW
		3K0360	1	SEAL-O-RING
	27	5P2645	1	ELBOW
		3J7354	1	SEAL-O-RING
CE	28	5P1520		HOSE (140 CM)
CE	29	5P1520		HOSE (220 CM)
	30	5P7486	2	VALVE-BALL
	31	7J8611	2	ELBOW
	32	1V3546	2	COUPLING-BARBED
	33	5K9235	2	ELBOW-FLARED
	34	321267	1	CONNECTOR-FLARED
	35	2Y8775	1	ADAPTER AS
	36	3V7042	1	PLUNGER-FUEL LEVEL

C-CHANGE FROM PREVIOUS TYPE
E-ORDER BY THE CENTIMETER

R-498433 EP

2Y9736 TANK GP-FUEL LINES

FUEL SYSTEM

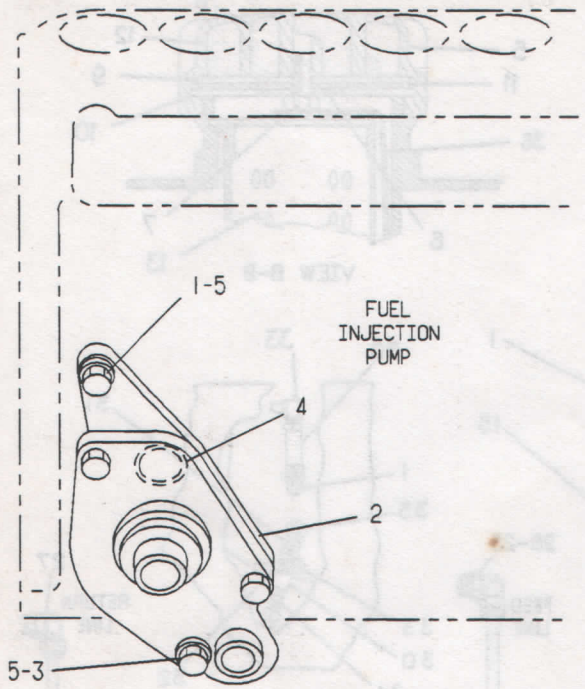

NOTE	REF NO	PART NUMBER	QTY	PART NAME
	1	4F7957	1	BOLT
Y	2	1W1695	1	PUMP GP-FUEL TRANSFER
	3	4B9365	1	BOLT
C	4	4J8997	1	SEAL
C	5	5P0537	2	WASHER

C-CHANGE FROM PREVIOUS TYPE
Y-SEPARATE ILLUSTRATION

A-329860 EP

1256

2W4160 PUMP GP-FUEL TRANSFER-WITH MOUNTING

1W1695-Page 62

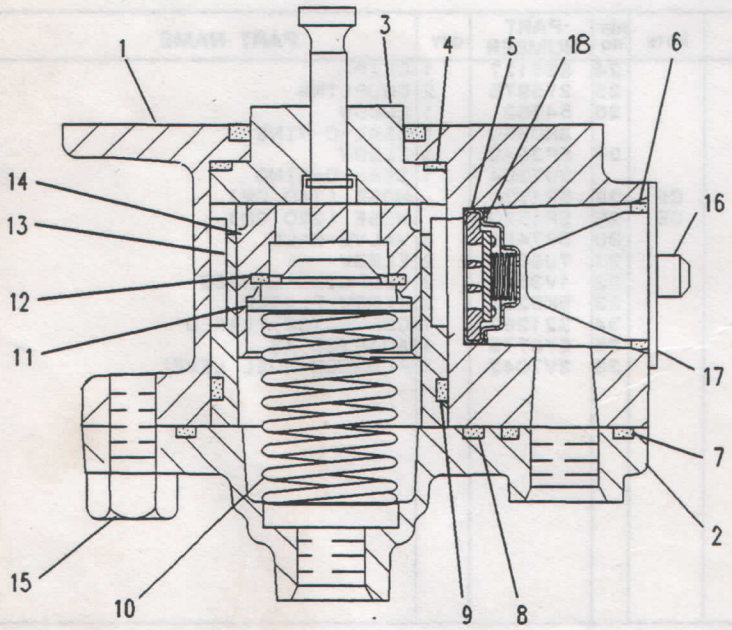

NOTE	REF NO	PART NUMBER	QTY	PART NAME
	1	1W1698	1	HOUSING-TRANSFER PUMP
	2	1W1699	1	COVER
	3	1W5912	1	GUIDE & TAPPET AS
	4	6J2419	1	SEAL-O-RING
C	5	7E2464	3	VALVE AS
	6	3D2824	1	SEAL-O-RING
	7	6F6672	1	SEAL-O-RING
	8	3D2898	1	SEAL-O-RING
	9	5P8215	1	SEAL-O-RING
	10	7W0134	1	SPRING-PUMP
	11	8N2637	1	WASHER
C	12	7E3667	1	SPACER
	13	8N2641	1	SLEEVE
	14	1W1669	1	PISTON
	15	0S1615	2	BOLT
	16	6D8498	2	SCREW-HEAD
	17	8N2640	1	COVER
	18	7E4656	1	RETAINER

C-CHANGE FROM PREVIOUS TYPE

F-479411 EP

1256

1W1695 PUMP GP-FUEL TRANSFER

Part Of 2W4160 Pump-Fuel Transfer

STARTING SYSTEM

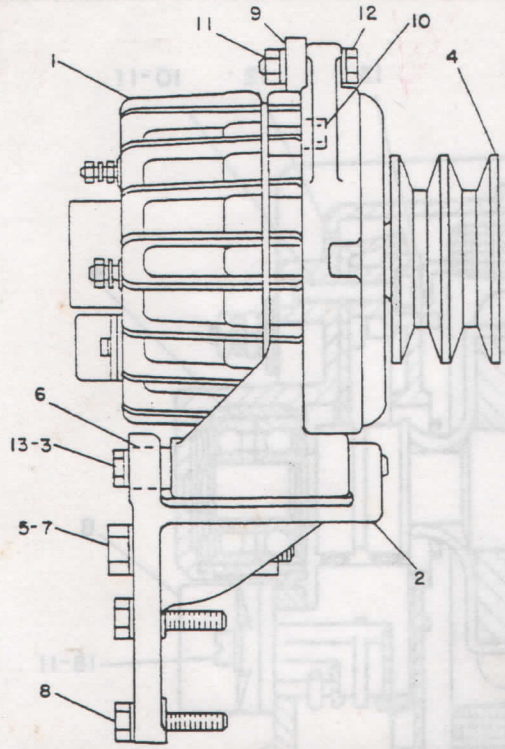

NOTE	REF NO	PART NUMBER	QTY	PART NAME
Y	1	2Y8310	1	ALTERNATOR GP-CHARGING
	2	2Y3449	1	SUPPORT AS
	3	1A5964	1	BOLT
	4	2Y8924	1	PULLEY-ALTERNATOR
	5	1D4719	1	NUT
	6	2Y3459	1	BUSHING
	7	9S1366	1	BOLT
	8	0S1591	2	BOLT
	9	2Y4847	1	STRAP
	10	2Y1948	1	SPACER
		0S1587	1	BOLT
		5P1076	1	WASHER
	11	1D4716	1	NUT-FULL
	12	1A9579	1	BOLT
		9M1974	2	WASHER
	13	5M2894	1	WASHER

Y-SEPARATE ILLUSTRATION

B-353542 EP

1405

2Y8950 ALTERNATOR GP-CHARGING
28 Volt, 21 Ampere
2Y8310–Page 64

STARTING SYSTEM

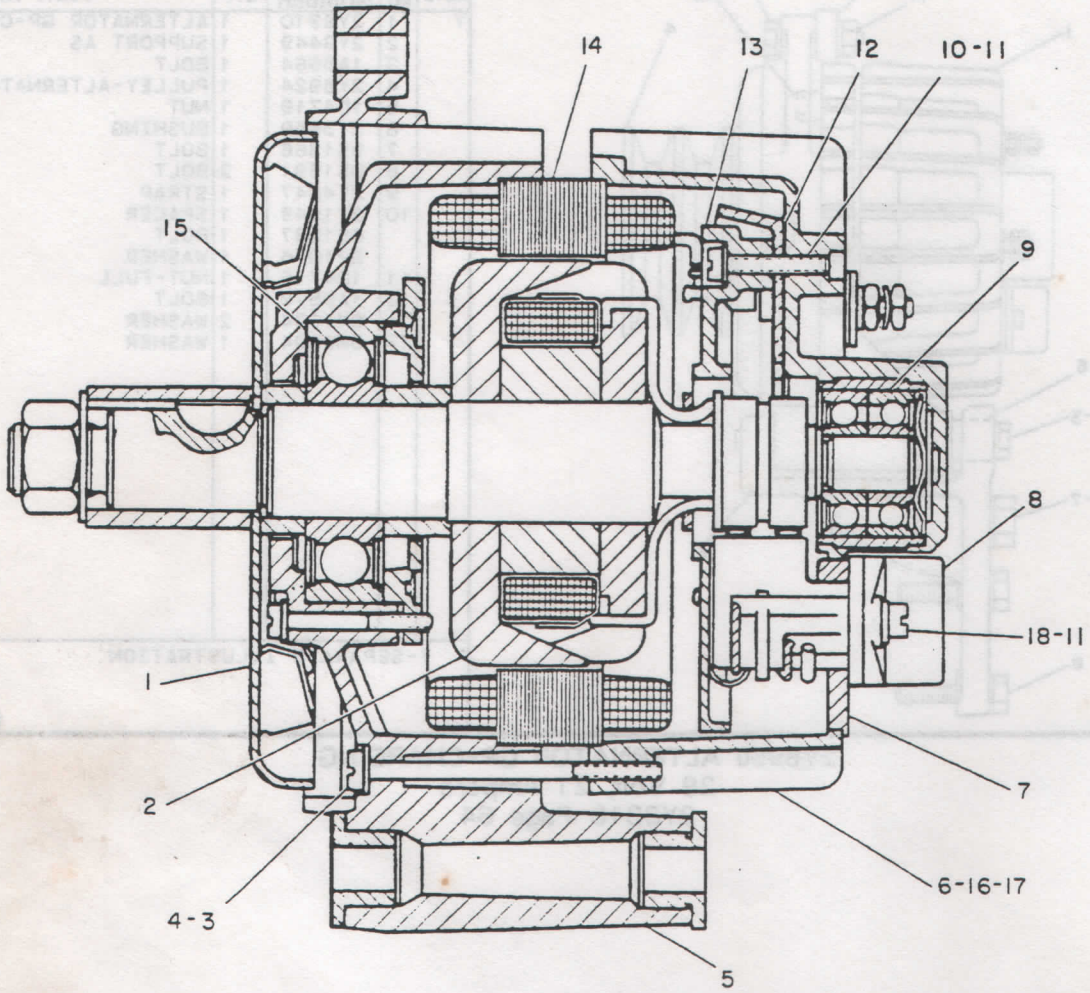

NOTE	REF NO	PART NUMBER	QTY	PART NAME
	1	2Y9548	1	FAN
	2	2Y9544	1	ROTOR AS
	3	2Y3325	4	SCREW
	4	2Y3326	4	WASHER
	5	2Y9547	1	COVER
	6	2Y9546	1	COVER
	7	2Y9542	1	GASKET
	8	2Y9541	1	REGULATOR AS
	9	2Y3321	2	BEARING
M	10	2Y9586	3	SCREW
	11	2Y9584	5	LOCKWASHER
	12	2Y9543	1	INSULATOR
	13	2Y9545	1	RECTIFIER AS
	14	2Y9549	1	STATOR
	15	2F5721	1	BALL BEARING
	16	2Y9587	1	LOCKWASHER
M	17	2Y9588	1	SCREW
M	18	2Y9585	2	SCREW

NOTE	REF NO	PART NUMBER	QTY	PART NAME
				THE FOLLOWING REPAIR KITS ARE AVAILABLE:
		2Y9576	1	KIT (TERMINAL-B POS)
		2Y9574	1	KIT (TERMINAL-D POS)
		2Y9575	1	KIT-TERMINAL (W) (TERMINAL KITS INCLUDE INSULATORS & HARDWARE)
		2Y9581	1	KIT (BRUSH AND SPRING) (INCL BRUSHES & SPRINGS)
		2Y9550	1	KIT (ROTOR) (INCL COVER & HARDWARE)

M-METRIC PART

B-487155 EP

1405

2Y8310 ALTERNATOR GP-CHARGING
28 Volt, 21 Ampere
Part Of 2Y8950 Alternator-Charging

STARTING SYSTEM

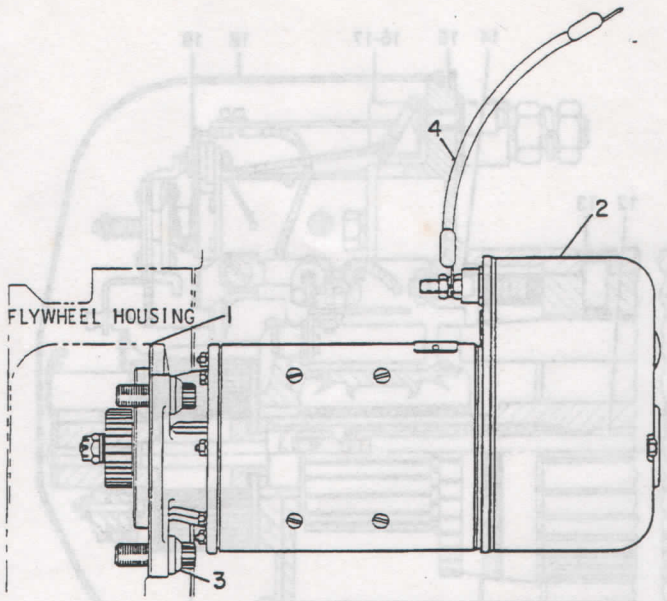

NOTE	REF NO	PART NUMBER	QTY	PART NAME
	1	4H7869	1	GASKET
Y	2	2Y2300	1	STARTING MOTOR GP-ELECTRIC
C	3	7J8902	3	BOLT-12 POINT HEAD
	4	2Y2238	1	WIRE AS.

C-CHANGE FROM PREVIOUS TYPE
Y-SEPARATE ILLUSTRATION

B-332053 EP

1453 **2Y2299 STARTING MOTOR GP-ELECTRIC**

2Y2300-Page 66

STARTING SYSTEM

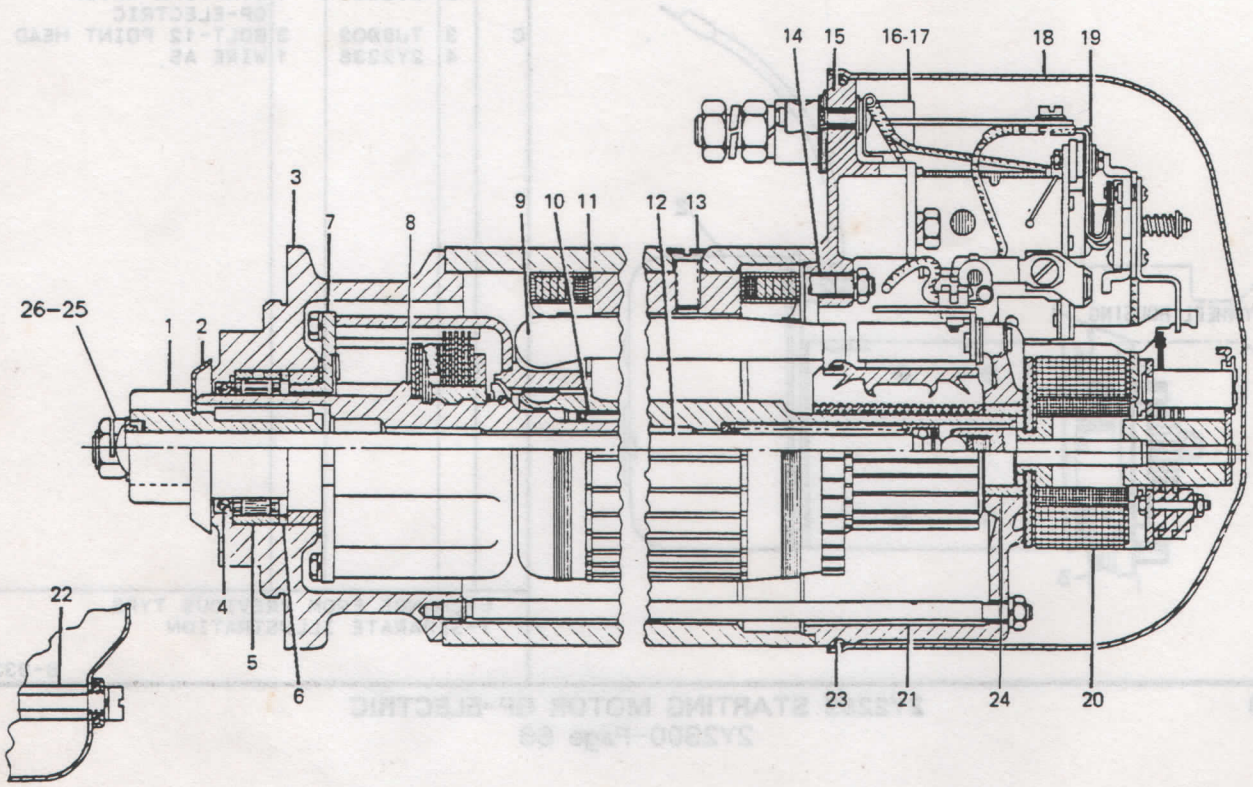

NOTE	REF NO	PART NUMBER	QTY	PART NAME	NOTE	REF NO	PART NUMBER	QTY	PART NAME
	1	2Y2373	1	PINION					
	2	2Y2374	1	BAFFLE					
	3	2Y2375	1	SUPPORT AS					THE FOLLOWING REPAIR
	4	2Y2376	1	SEAL					KITS ARE AVAILABLE:
	5	2Y2377	1	BEARING			2Y1799	1	KIT-BRUSH
	6	2Y2378	1	SLEEVE			2Y2400	1	KIT-TERMINAL
	7	2Y2379	1	BEARING					(INCLUDES NUTS, WASHERS,
	8	2Y2380	1	CLUTCH AS					BUSHINGS, SPACERS,
	9	2Y2384	1	ARMATURE AS					INSULATORS & LOCKS)
	10	2Y2385	1	BEARING			2Y5024	1	KIT-MISCELLANEOUS
	11	2Y2386	1	COIL AS					
	12	2Y2387	1	STEM AS					
M	13	2Y7497	8	SCREW					
	14	2Y2391	1	STUD					
	15	2Y2392	1	SUPPORT AS					
	16	2Y2393	1	TERMINAL (+)					
	17	2Y2394	1	TERMINAL (-)					
	18	2Y2396	1	COVER					
	19	2Y2397	1	SWITCH AS (SOLENOID)					
	20	2Y2398	1	SWITCH AS (SOLENOID)					
	21	2Y2399	3	STUD					
	22	2Y2382	2	SCREW					
	23	2Y2383	1	SEAL					
	24	2Y2858	1	BUSHING					
	25	2Y5785	1	NUT					
	26	2Y5786	1	WASHER					

M-METRIC PART

R-487157 EP

1453

2Y2300 STARTING MOTOR GP-ELECTRIC
Part Of 2Y2299 Starting Motor-Electric
Field Replacement Order 4N3181-Page 67

STARTING SYSTEM

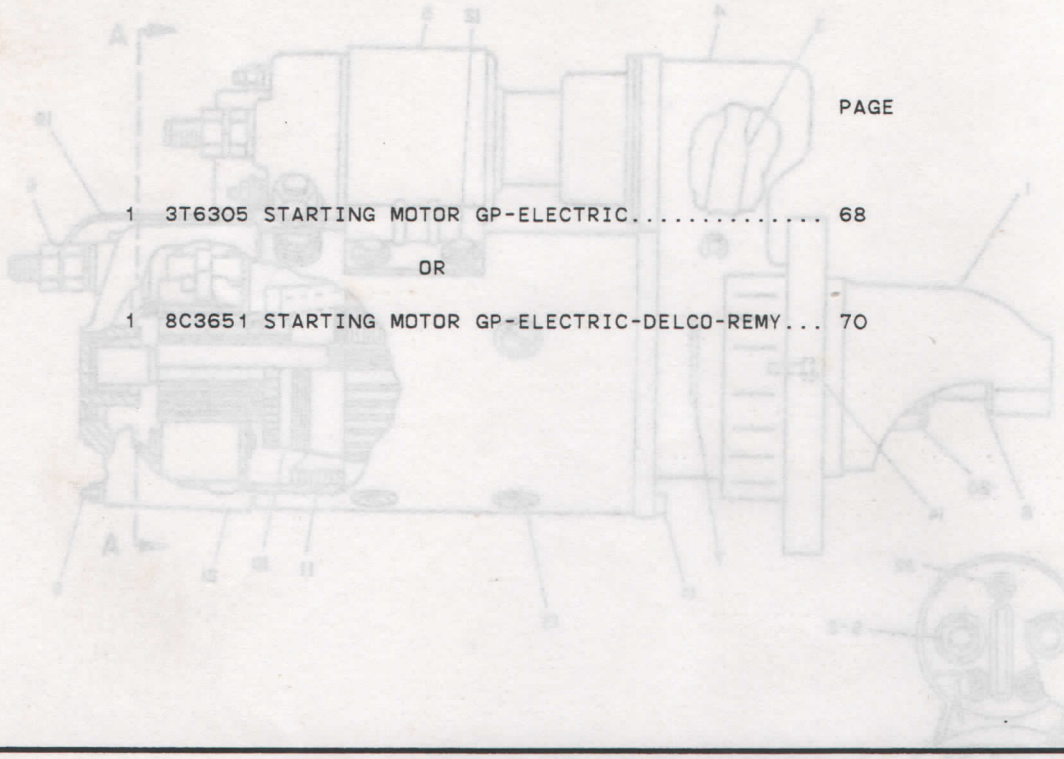

PAGE

1 3T6305 STARTING MOTOR GP-ELECTRIC..... 68

OR

1 8C3651 STARTING MOTOR GP-ELECTRIC-DELCO-REMY... 70

354422 P

1453

4N3181 STARTING MOTOR GP-ELECTRIC*R

24 Volt

Field Replacement For 2Y2300–Page 66

STARTING SYSTEM

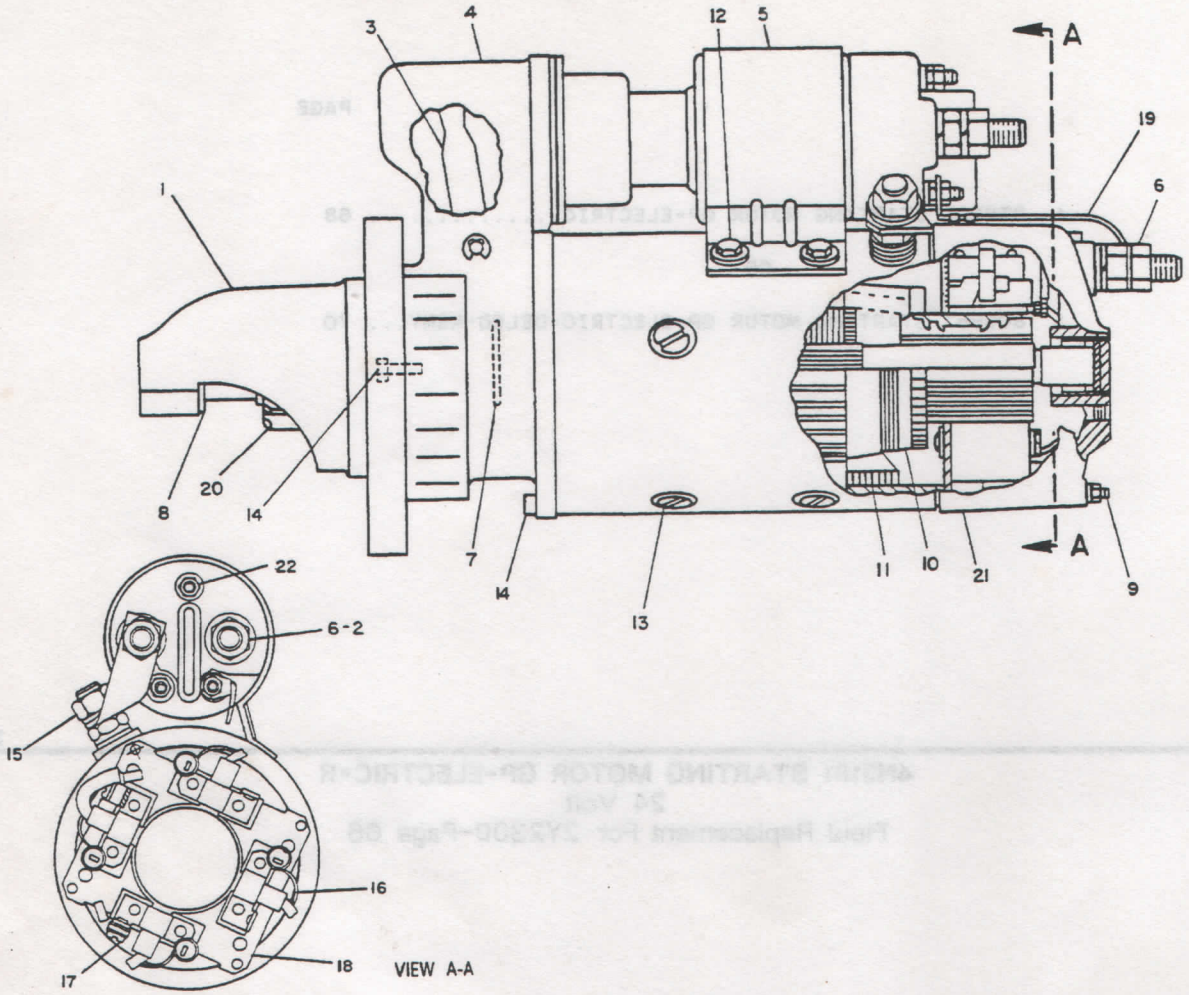

NOTE	REF NO	PART NUMBER	QTY	PART NAME
	1	3T7022	1	HOUSING AS-DRIVE
C	2	3B4508	1	LOCKWASHER
	3	3T0863	1	LEVER-SHIFT
	4	3T0864	1	HOUSING AS-LEVER
		3T0842	1	BEARING AS
	5	3T0868	1	SOLENOID AS
	6	1D4719	3	NUT
	7	3T7021	1	PLATE-BRAKE
	8	3T7020	1	WASHER
	9	3T0847	4	SCREW
		3T0851	4	LOCKNUT
	10	3T0867	1	ARM AS
	11	3T0865	1	COIL AS-FIELD
M	12	3T7024	4	SCREW
		4B4674	4	WASHER
M	13	3T0850	8	SCREW
M	14	3T0849	12	BOLT-SOCKET HEAD
CM	15	3T0853	1	NUT
	16	3T0858	4	SPRING-BRUSH
M	17	3T0848	4	SCREW
	18	3T0862	1	PLATE AS-BRUSH
	19	3T4716	1	WIRE AS
BD		5P5621		WIRE (12 GA)
		2L8071	1	TERMINAL (LARGE)
		2L8067	1	TERMINAL (SMALL)
	20	4N4517	1	DRIVE AS-MOTOR
	21	3T7025	1	COVER-END
	22	4B2049	1	NUT
		3B4502	1	LOCKWASHER
F		3T5962	1	PLATE-IDENTIFICATION
F		2H3880	2	SCREW-DRIVE
				THE FOLLOWING REPAIR KITS ARE AVAILABLE:
		3T0844	1	KIT-BRUSH (INCL BRUSHES)
		3T2768	1	KIT-SEAL (INCL SEALS & RINGS)
		3T2769	1	KIT-HARDWARE (INCL WIRE AS, BAR, WASHERS, LOCKWASHERS, BUSHING & NUTS)
		3T7017	1	KIT-BEARING (INCL SEAL, BEARINGS & SPACERS)
C		7T2339		KIT-LEVER (INCL SEALS, CLIP & LEVER)

B-USE AS REQUIRED
C-CHANGE FROM PREVIOUS TYPE
D-ORDER BY THE METER
F-NOT SHOWN
M-METRIC PART

B-406219 EP

1453

3T6305 STARTING MOTOR GP-ELECTRIC
Part Of 4N3181 Starting Motor-Electric

MEMORANDA

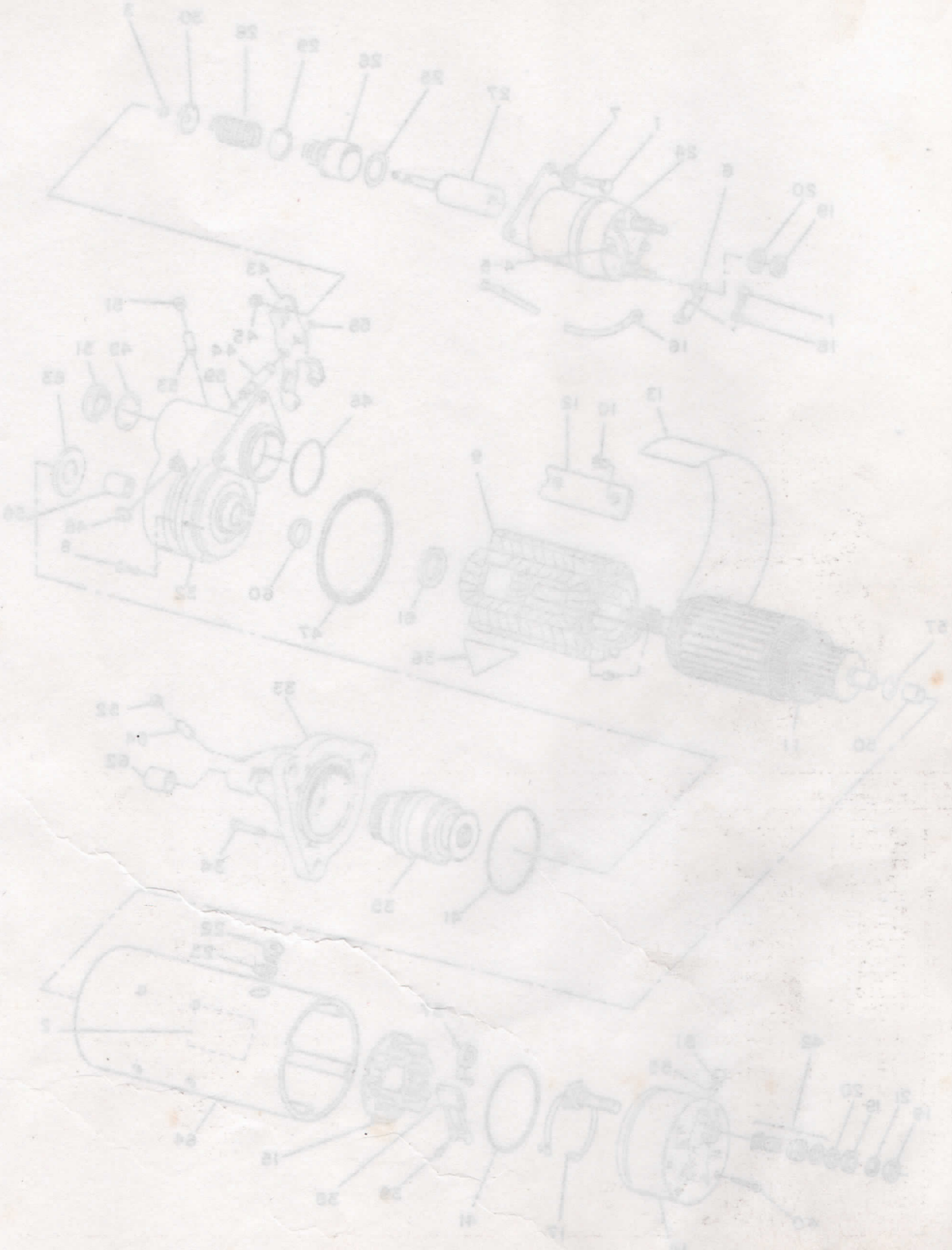

STARTING SYSTEM

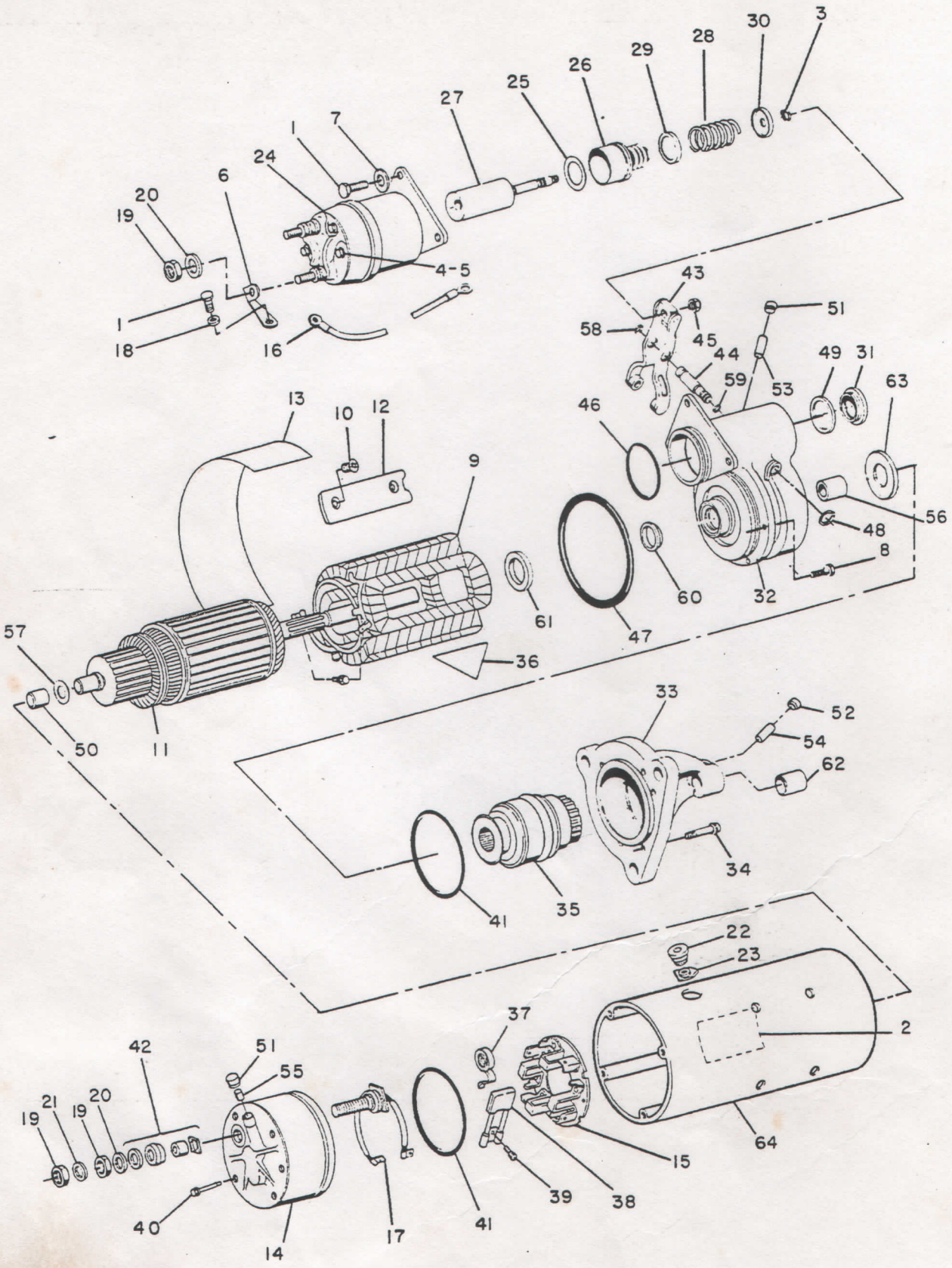

V-401536 EP

1453

8C3651 STARTING MOTOR GP-ELECTRIC
24 Volt. Delco-Remy
Part Of 4N3181 Starting Motor-Electric

STARTING SYSTEM

NOTE	REF NO	PART NUMBER	QTY	PART NAME
	1	5S7349	4	BOLT
	2	8C4171	1	NAMEPLATE
	3	2H3429	1	RING-RETAINING
	4	6V8378	1	NUT
	5	8F1434	1	LOCKWASHER
	6	7T3271	1	CONNECTOR
	7	4B4274	3	WASHER
	8	369823	5	BOLT
	9	7T3277	1	COIL AS-FIELD
	10	3F0379	8	SCREW-POLE SHOE
	11	7T3276	1	ARMATURE AS-24V
	12	8H1141	4	SHOE-POLE
	13	7T3454	1	INSULATOR
	14	7T3279	1	HOUSING AS
	15	7T3278	1	HOLDER AS-BRUSH
	16	3T3422	1	WIRE AS
	17	8T8566	1	TERMINAL AS
	18	7F4920	1	WASHER-PLAIN
	19	3H3680	3	NUT-JAM
	20	4B4280	3	WASHER
	21	9B0453	1	LOCKWASHER
	22	7T3451	1	INSULATOR-TERMINAL
	23	8T8569	1	INSULATOR-TERMINAL
	24	7T0258	1	SOLENOID AS
	25	369821	1	WASHER
	26	7T3269	1	BOOT
	27	7T3270	1	PLUNGER AS
	28	9M7609	1	SPRING
	29	4M1828	1	RETAINER-SPRING
	30	4M1827	1	RETAINER-SPRING
	31	4M1831	1	PLUG-LEVER HOUSING
	32	7T3973	1	HOUSING AS-LEVER
	33	7T3974	1	HOUSING AS-DRIVE
	34	7M0336	6	SCREW
	35	6N3827	1	DRIVE AS-MOTOR
	36	1H2629	2	STRIP-INSULATION
JZ	37		4	SPRING
JZ	38		4	BRUSH
JZ	39		4	SCREW
JPZ	40		6	SCREW AS
JPZ	41		1	SEAL(O-RING)
LZ	42		3	INSULATOR
LZ			1	BUSHING
NZ	43		1	LEVER AS
NZ	44		1	LEVER AS
NPZ	45		1	NUT
NPZ	46		1	SEAL(O-RING)
PZ	47		1	SEAL(O-RING)
NZ	48		1	RETAINER
NPZ	49		1	GASKET
PZ	50		1	BUSHING
PZ	51		2	CUP(PLUG)
PZ	52		1	CUP(PLUG)
PZ	53		1	PLUG
PZ	54		1	PLUG
PZ	55		1	PLUG
PZ	56		1	BUSHING
PZ	57		1	WASHER
NZ	58		1	SEAL(O-RING)
NZ	59		1	SEAL(O-RING)
PZ	60		1	RETAINER(SEAL)
PZ	61		1	SPACER
PZ	62		1	BUSHING
PZ	63		1	GASKET(WASHER)
Z	64		1	HOUSING

NOTE	REF NO	PART NUMBER	QTY	PART NAME
				THE FOLLOWING REPAIR KITS ARE AVAILABLE:
		8C3655	1	KIT-BRUSH (INCL PARTS MARKED J)
		7T3267	1	KIT-BUSHING (INCL PARTS MARKED P)
		7T3268	1	KIT-LEVER (INCL PARTS MARKED N)
		8T9884	1	KIT-INSULATOR (INCL PARTS MARKED L)

Z-NOT SERVICED SEPARATELY

354400 EP

1453 **8C3651 STARTING MOTOR GP-ELECTRIC**

24 Volt Delco-Remy

Part Of 4N3181 Starting Motor-Electric

STARTING SYSTEM

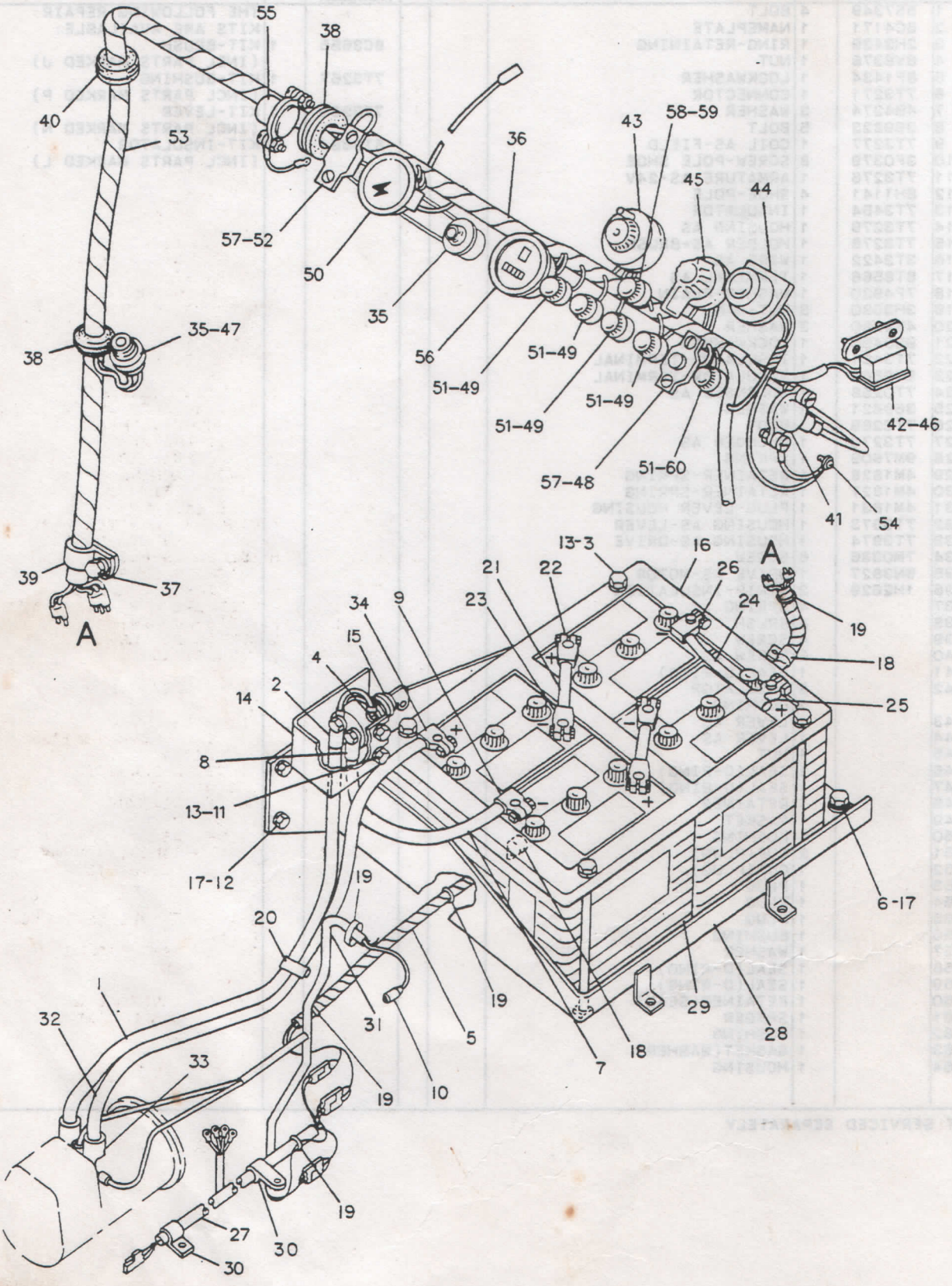

R-498421 EP

5Y1786 BATTERY & WIRING GP

STARTING SYSTEM

NOTE	REF NO	PART NUMBER	QTY	PART NAME
	1	2Y2063	1	CABLE AS
E		5P0747		CABLE (00 GAUGE) 118CM
	2	1S7252	2	TERMINAL
	3	4H3283	4	BOLT (3/8-16X9.5IN)
	4	7F9225	1	SCREW-MACHINE
		1H3338	1	LOCKWASHER
		1M3304	1	WIRE AS
	5	5Y1804	1	HARNESS AS
	6	0S1621	2	BOLT (1/2-13X1.0IN)
	7	6K8173	1	CABLE AS
E		5P0747		CABLE (00 GAUGE) 38CM
		5Y0303	1	COVER-TERMINAL
	8	1S7252	1	TERMINAL
	9	8C5918	1	TERMINAL AS
	10	9W3187	1	SWITCH AS
		6V8376	2	SCREW-MACHINE (8-32X.25IN)
		9B7233	2	LOCKWASHER
	11	0S0509	2	BOLT (3/8-16X.75IN)
	12	0S1595	2	BOLT (1/2-13X1.25IN)
	13	5M2894	6	WASHER (2.5MM THK)
	14	7K9000	1	COVER
Y	15	7N0718	1	SWITCH AS-DISCONNECT
		8H8648	1	PLATE-INSTRUCTION
	16	6K8515	1	FRAME AS
	17	5P8245	4	WASHER (3MM THK)
	18	9M8406	2	CLIP
	19	3S2093	9	STRAP-CABLE (1.75 DIA)
	20	4S1936	2	CLIP
	21	5K8074	1	CABLE AS
E		5P0747		CABLE (00 GA) 14CM
		8L8413	2	STRAP-CABLE
J	22	3S6049	1	TERMINAL AS (POS.)
		8N1725	1	COVER (MIDDLE BATTERY)
J	23	3S6050	1	TERMINAL AS (NEG.)
		7N5274	1	COVER
	24	9K3584	1	CABLE AS
E		5P0761		CABLE (00 GA) 19CM
J	25	8C5917	1	TERMINAL AS
		9G0004	1	COVER
		8L8413	1	STRAP-CABLE
J	26	8T9757	1	TERMINAL AS
		9G0003	2	COVER
		8L8413	2	STRAP-CABLE
	27	5Y1803	1	HARNESS AS
	28	9K0651	1	SHEET AS
		9F2978	8	NUT-WELD (3/8-16 THD)
		6J0499	1	LUG
	29	9G4250	4	BATTERY-6V (EACH INCLUDES)
		7N0060	3	VENT AS
	30	4D7794	3	CLIP
	31	5Y1802	1	HARNESS AS
	32	2Y2062	1	CABLE AS
E		5P0761	1	CABLE (00 GA) 119CM
	33	1S7252	1	TERMINAL (RING)
		8N0869	1	COVER
J	34	8C5917	1	TERMINAL AS
		9G0004	1	COVER
		8L8413	1	STRAP-CABLE
	35	4D4785	2	SWITCH AS (STOP LAMP) EACH INCLUDES
		6V8376	2	SCREW-MACHINE (8-32X.25IN)
		9B7233	2	LOCKWASHER
	36	2Y9856	1	HARNESS AS
	37	0S0509	1	BOLT (3/8-16X.75IN)
		1D4717	1	NUT (3/8-16 THD)
		5M2894	1	WASHER (2.5MM THK)
	38	3H2900	2	GROMMET
	39	9M8406	1	CLIP
	40	2D0388	1	GROMMET
Y	41	8M7677	1	LAMP GP-DASH
	42	5Y1438	1	BUZZER-VOLT
Y	43	3K1650	1	SWITCH AS-LIGHT
	44	1P5909	1	INDICATOR AS (BRAKE PRESSURE)
		3S4603	1	INDICATOR AS
		7S3797	1	RING-IDENTIFICATION
Y	45	7N4160	1	SWITCH GP (HEAT-START)
	46	0S1614	2	BOLT (1/4-20X.5IN)
		3B4502	2	LOCKWASHER
		4B4274	2	WASHER
	47	3B7721	1	BUSHING-REDUCING
	48	5M2555	1	CRCT BREAKER AS (40 AMP)
		6V8376	2	SCREW-MACHINE (TERMINAL)
		9B7233	2	LOCKWASHER
		5M6668	2	SCREW-MACHINE (8-32X.75IN)
	49	8M8948	4	FUSE (15 AMP)
Y	50	8M7892	1	GAUGE AS-AMMETER (60A)
		6V3507	1	SEAL-RECTANGULAR
	51	4K5122	5	HOLDER AS-FUSE (EACH INCLUDES)
		7N2867	1	CAP-FUSE HOLDER
	52	4K5124	1	CRCT BREAKER AS (15 AMP)
		4B1221	2	SCREW-MACHINE
		4B2043	2	NUT (8-32 THD)
	53	2Y9855	1	HARNESS AS
	54	4B1229	2	SCREW
		3F1147	2	LOCKWASHER-TOOTH
Y	55	9M1305	1	LAMP GP
	56	5Y0522	1	METER AS
		6V3507	1	SEAL-RECTANGULAR
		2Y5735	1	WIRE AS
		2Y9175	1	METER-SERVICE
	57	1H4393	4	LOCKWASHER
	58	7N9967	1	LAMP-MINIATURE
		2V7088	1	LENS-RED
		2G0151	1	SOCKET AS
		3J1907	1	SEAL-O-RING (11.89MM ID)
	59	8F3469	1	SEAL (15.54MM ID)
	60	3K8782	1	FUSE (10 AMP)
F		7N5986	1	SWITCH AS-PRESSURE (LOW AIR-CLOSED)
F		7N5985	1	SWITCH AS-PRESSURE (AIR-OPEN)
				J-EACH TERMINAL AS. MARKED J CONTAINS :
		1M6119	1	BOLT
		1M6120	1	NUT

E-ORDER BY THE CENTIMETER
F-NOT SHOWN
Y-SEPARATE ILLUSTRATION

498422 EP

5Y1786 BATTERY & WIRING GP

7N0718–Page 74, 9M1305–Page 75, 7N4160, 3K1650–Page 76, 8M7677–Page 78, 8M7892–Page 186

STARTING SYSTEM

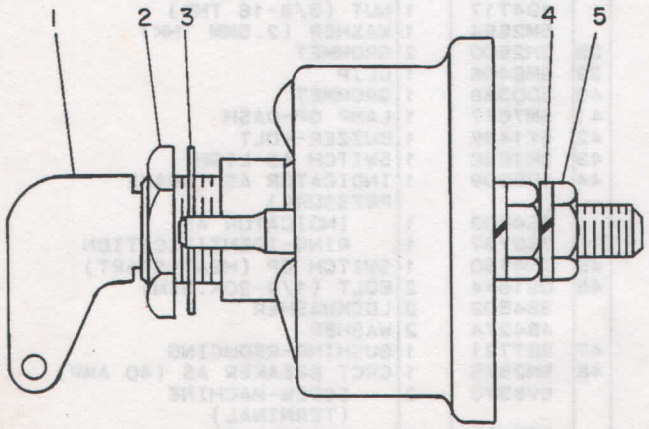

NOTE	REF NO	PART NUMBER	QTY	PART NAME
	1	8H5306	1	KEY
	2	8H5303	1	NUT-HEX
	3	2H3922	1	LOCKWASHER
C	4	9F5644	2	LOCKWASHER
C	5	6F7045	2	NUT-FULL

C-CHANGE FROM PREVIOUS TYPE

B-313370 EP

1411

7N0718 SWITCH AS-DISCONNECT
Part Of 5Y1786 Battery & Wiring

1	5Y0667	HARNESS AS
1	5Y0404	INLAY
1	2Y5780	LAMP
1	2Y6342	LENS-RED
1	5Y0439	PLATE
1	8F3469	SEAL
1	3K0360	SEAL-O-RING
1	3J1907	SEAL-O-RING
1	2Y6344	SOCKET
20	3S2093	STRAP-CABLE
1	7T2074	SWITCH AS
2	3L8187	LOCKWASHER
2	6V8374	SCREW-MACHINE

473981 P

5Y0629 WIRING GP-SUPPLEMENTAL STEERING
Part Of 5Y0668 Steering Ar-Supplemental
An Attachment

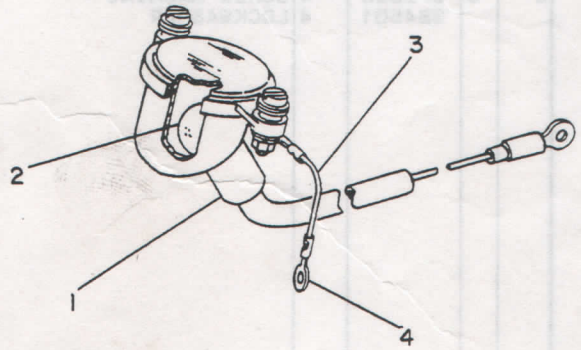

NOTE	REF NO	PART NUMBER	QTY	PART NAME
	1	2Y2642	1	SOCKET & WIRE AS
	2	3H2691	1	LAMP-MINIATURE
BD	3	5P5623		WIRE
	4	2L8076	2	TERMINAL

B-USE AS REQUIRED
D-ORDER BY THE METER

V-487561 EP

9M1305 LAMP GP-DASH
24 Volt
Part Of 5Y1786 Battery & Wiring

STARTING SYSTEM

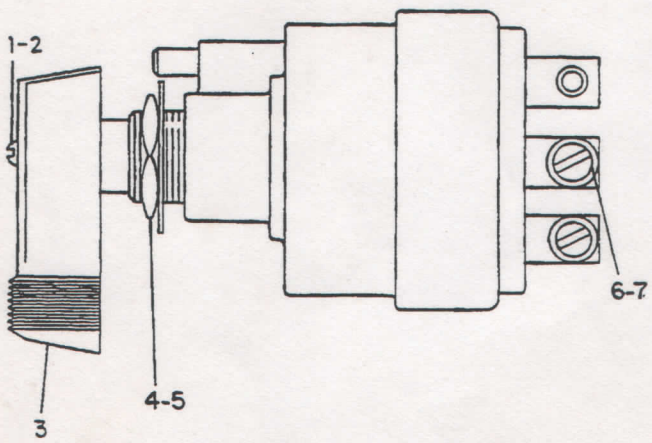

NOTE	REF NO	PART NUMBER	QTY	PART NAME
	1	5L7200	1	SCREW
C	2	3B4501	1	LOCKWASHER
	3	8F3437	1	LEVER-SWITCH
C	4	8C6808	1	NUT-SPECIAL
	5	7M0327	1	WASHER-THRUST
	6	6V8364	3	SCREW-MACHINE
	7	8F1434	3	LOCKWASHER

C-CHANGE FROM PREVIOUS TYPE

B-498187 EP

1412

7N4160 SWITCH GP
Part Of 5Y1786 Battery & Wiring

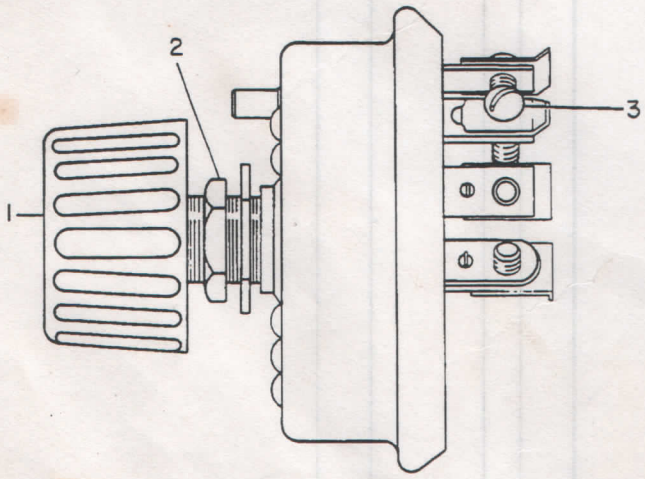

NOTE	REF NO	PART NUMBER	QTY	PART NAME
	1	7S5432	1	KNOB-SWITCH
		5L7200	1	SCREW
		3B4501	1	LOCKWASHER
	2	8F3436	1	NUT-HEX
		9B0453	1	LOCKWASHER
		8F3434	1	WASHER
C	3	2F2860	4	SCREW-MACHINE
		3B4501	4	LOCKWASHER

C-CHANGE FROM PREVIOUS TYPE

B-224356 EP

3K1650 SWITCH AS-LIGHT
Part Of 5Y1786 Battery & Wiring

STARTING SYSTEM

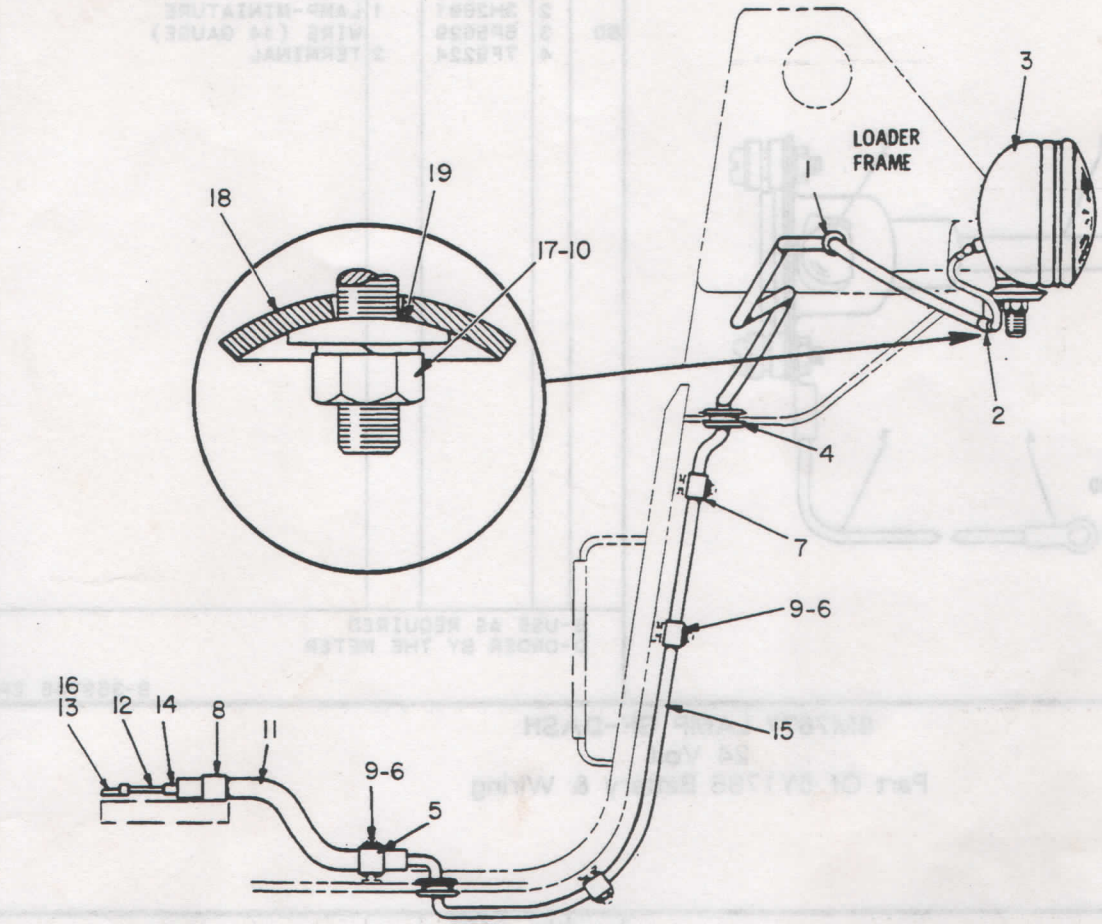

NOTE	REF NO	PART NUMBER	QTY	PART NAME
	1	3K1787	2	GROMMET
	2	4D8948	2	CLIP
Y	3	1M1882	2	LAMP GP
	4	6S1066	2	GROMMET
	5	3H0019	1	CLIP
	6	3B4506	4	LOCKWASHER
				-OR-
		5M2894	4	WASHER
	7	4D7794	3	CLIP
	8	9F5977	1	CLIP
	9	1D4717	4	NUT
	10	5D3184	2	LOCKWASHER
				-OR-
		5P8245	2	WASHER
E	11	5P0721		HOSE 30CM(11.8IN)
	12	9K9109	1	WIRE AS
D		5P5629		WIRE 4.1M(162IN)
		1H6249	1	TERMINAL
	13	5K0786	2	TERMINAL-SOLDER
E	14	5P0385		TUBE 101.6CM(40IN)
E	15	5P0687		TUBE 193CM(76IN)
	16	2D4107	1	INSULATOR
	17	5D3183	2	NUT-FULL
	18	7K0345	2	BRACKET
	19	2B8352	2	WASHER

D-ORDER BY THE METER
E-ORDER BY THE CENTIMETER
Y-SEPARATE ILLUSTRATION

B-353466 EP

2Y3597 LIGHTING GP-LOADER END
1M1882-Page 78

STARTING SYSTEM

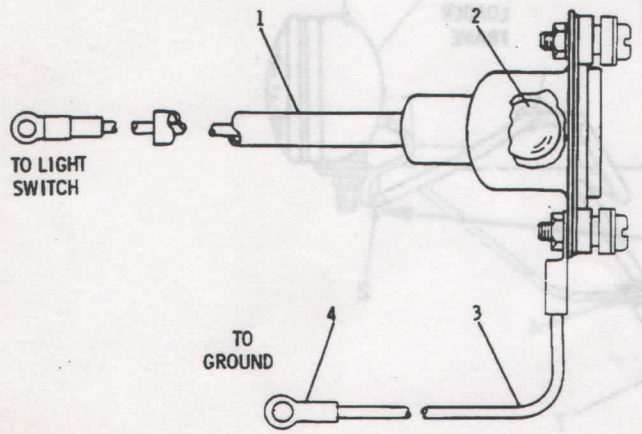

NOTE	REF NO	PART NUMBER	QTY	PART NAME
	1	2Y2642	1	SOCKET & WIRE AS
	2	3H2691	1	LAMP-MINIATURE
BD	3	5P5629		WIRE (14 GAUGE)
	4	7F9224	2	TERMINAL

B-USE AS REQUIRED
D-ORDER BY THE METER

B-353746 EP

8M7677 LAMP GP-DASH
24 Volt
Part Of 5Y1786 Battery & Wiring

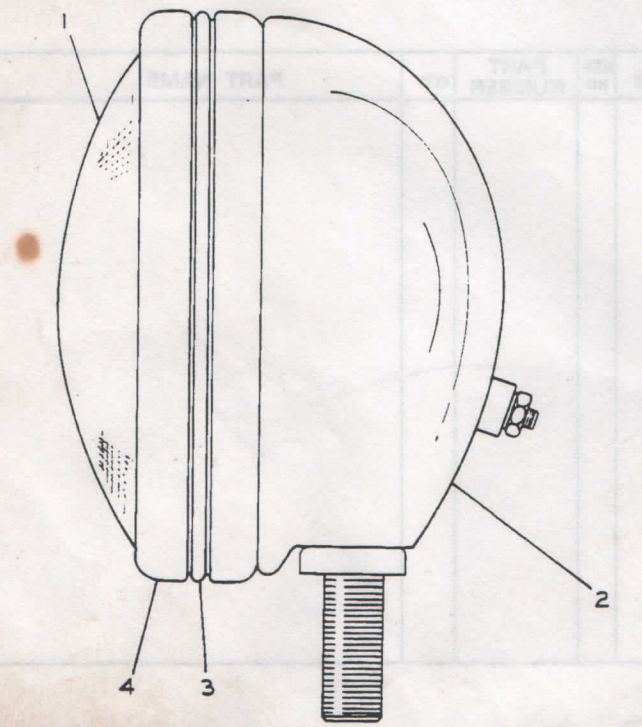

NOTE	REF NO	PART NUMBER	QTY	PART NAME
	1	1M5898	1	LAMP-SEALED UNIT
	2	2P2541	1	BODY AS
	3	2M5282	1	RING-MOUNTING
	4	2M5284	2	MOLDING AS
		5M6668	2	SCREW-MACHINE

B-119409 EP

1434

1M1882 LAMP GP-FLOOD
24 Volt
Part Of 2Y3597 Lighting-Loader End

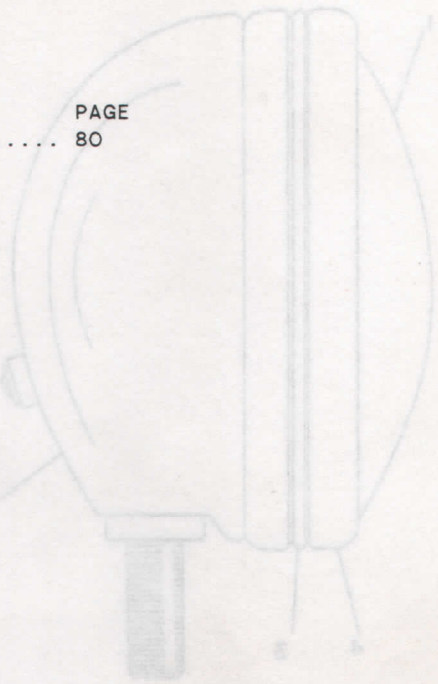

			PAGE
2	2Y4477	LAMP GP-FLOOD	80
6	OL1351	BOLT	
2	OS1621	BOLT	
1	7K8999	BRACKET	
1	5Y1819	BRACKET	
1	5Y1743	BRACKET-LH	
1	5Y1784	BRACKET-RH	
2	1H5166	CLIP	
2	4H2558	GROMMET	
1	5Y1741	HARNESS AS	
2	9G4358	LAMP GP	
6	9F8125	LOCKWASHER	
2	1D4717	NUT	
2	5D3183	NUT-FULL	
6	6V2687	SCREW-PAN HEAD	
2	5P8245	WASHER	
8	5M2894	WASHER	
2	5P8247	WASHER-HARD	

497007 P

5Y1742 LIGHTING GP

STARTING SYSTEM

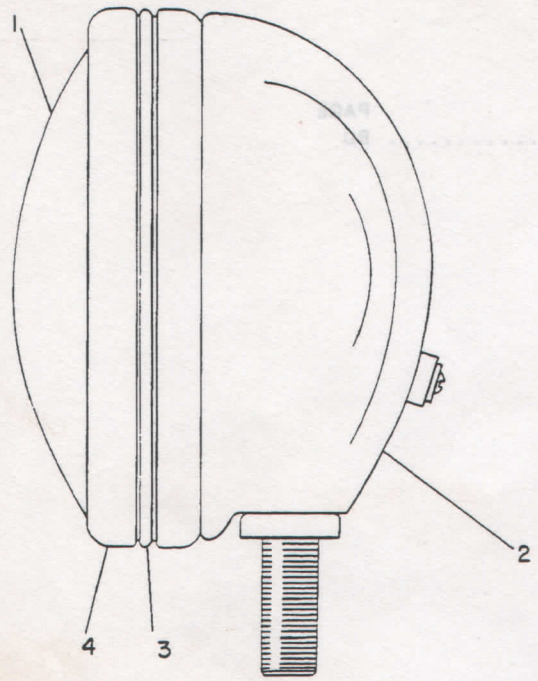

NOTE	REF NO	PART NUMBER	QTY	PART NAME
C	1	2Y7668	1	LAMP AS-FLOOD
		2Y7666	1	LAMP AS
	2	2P2541	1	BODY AS
	3	2M5282	1	RING-MOUNTING
	4	2M5284	2	MOLDING AS
		5M6668	2	SCREW-MACHINE

C-CHANGE FROM PREVIOUS TYPE

B-323297 EP

1434

2Y4477 LAMP GP-FLOOD
24 Volt
Part Of 5Y1742 Lighting

			PAGE
1	8P8980	CONTROL GP-TRANSMISSION HYDRAULIC	96
1	3T8386	COVERS GP-SHIPPING	101
1	9P9523	DRIVE GP-PUMP	92
1	3T8314	GEAR GP-TRANSFER	86
1	3T4619	LINES GP-POWER TRAIN OIL	85
1	6T4057	PARTS & CASE GP	93
1	8P9857	PLANETARY GP	90
1	1T1615	TORQUE CONVERTER GP	88
1	8P9854	VALVE GP-RELIEF	98

GASKET KITS WILL BE
PROVIDED WHEN AVAILABLE

354078 P

3T4588 TRANSMISSION AR
Transmission S/N 8YA673-Up

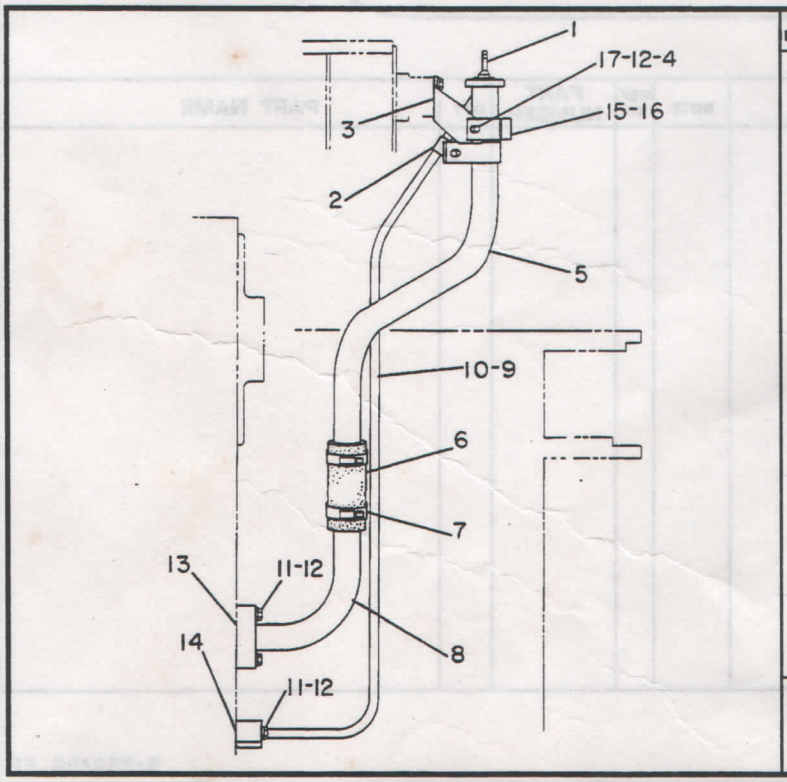

NOTE	REF NO	PART NUMBER	QTY	PART NAME
	1	684497	1	CAP-OIL FILLER
	2	4B0418	1	CLIP
	3	2V4097	1	BRACKET
	4	1D4717	2	NUT
	5	7V9096	1	TUBE
	6	8M5299	1	HOSE
	7	5P0597	2	CLAMP
	8	7V9093	1	TUBE AS
	9	7V9099	1	PLUNGER AS-OIL LEVEL
	10	7V9097	1	TUBE AS
	11	0S1571	4	BOLT
	12	5M2894	8	WASHER
	13	5P7084	1	SEAL-RECTANGULAR
	14	4K5537	1	GASKET
	15	7K1402	2	BRACKET
	16	7K1401	2	CLIP
	17	0S1594	2	BOLT

B-353788 EP

7V9100 FILLER GP-POWER TRAIN OIL

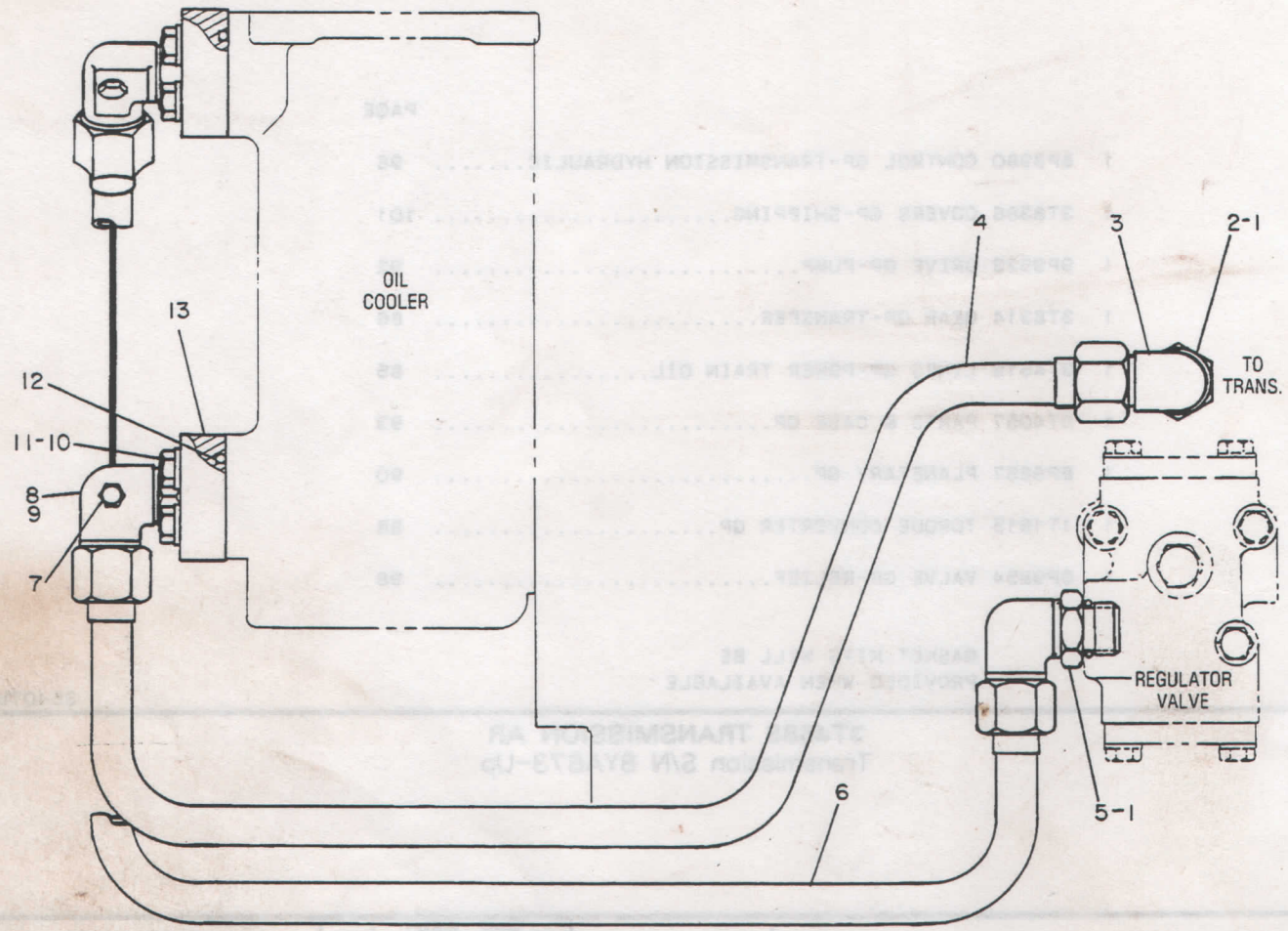

NOTE	REF NO	PART NUMBER	QTY	PART NAME	NOTE	REF NO	PART NUMBER	QTY	PART NAME
	1	2M9780	2	SEAL-O-RING					
	2	308196	1	CONNECTOR					
	3	3R9704	1	ELBOW-SWIVEL					
	4	9V4884	1	TUBE AS					
	5	684174	1	ELBOW					
	6	9V4883	1	TUBE AS					
	7	5M6214	2	PLUG-PIPE					
	8	5P3162	2	ELBOW-O-RING					
	9	3D2824	2	SEAL-O-RING					
	10	0S1591	8	BOLT					
	11	5M2894	8	WASHER					
	12	4J0520	2	SEAL					
	13	4V1533	2	FLANGE					

B-353499 EP

9V3670 LINES GP-TORQUE CONVERTER COOLER

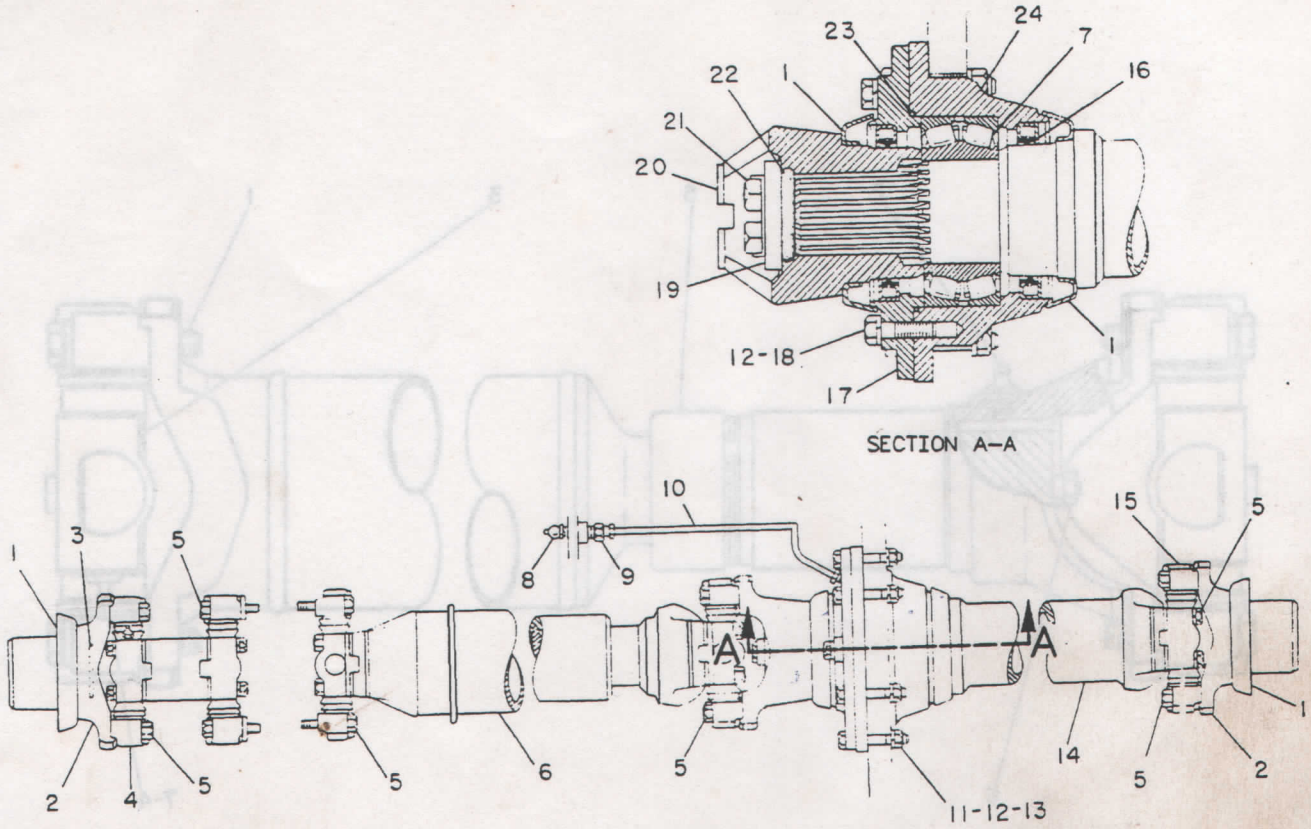

NOTE	REF NO	PART NUMBER	QTY	PART NAME
	1	3K0196	4	GUARD-DIRT
	2	6K7356	2	YOKE AS
				(EACH INCLUDES)
	3	6K1429	1	PLUG
	4	1H8499	1	UNIVERSAL JOINT AS
		0L0478	8	BOLT
		3V2431	8	WASHER
		1S9670	2	SPIDER & BEARING AS
		3H0297	1	PLATE
	5	0L0478	24	BOLT
		3V2431	24	WASHER
Y	6	8R6830	1	JOINT GP
	7	6K5746	1	BEARING-ROLLER
	8	3B8486	1	FITTING
	9	9S7581	2	CONNECTOR-FLARED
	10	2V3437	1	TUBE AS
	11	0L2070	6	BOLT
	12	5M2894	8	WASHER
	13	1D4717	6	NUT
	14	6K6924	1	SHAFT AS
		3H0122	1	FITTING
	15	1S9670	1	SPIDER & BEARING AS
	16	5K2595	2	SEAL-LIP TYPE
	17	6K5745	1	RETAINER-BEARING
	18	3B1915	2	BOLT
	19	1F7840	1	WASHER-RETAINER
	20	6K5899	1	YOKE
	21	0S1593	2	BOLT
		0S1922	1	LOCK-NUT
	22	4F8824	1	SEAL-O-RING
	23	2H3928	1	SEAL-O-RING
	24	6K5744	1	CAGE-BEARING
				THE FOLLOWING REPAIR KIT IS AVAILABLE:
		9K7204	1	KIT-SLIP JOINT (ROLL SLIP JOINT) (INCLUDES BALLS, WASHER, RING, SEALS & SPRINGS)

Y-SEPARATE ILLUSTRATION

R-496848 EP

7V9131 DRIVE SHAFT GP
8R6830-Page 84

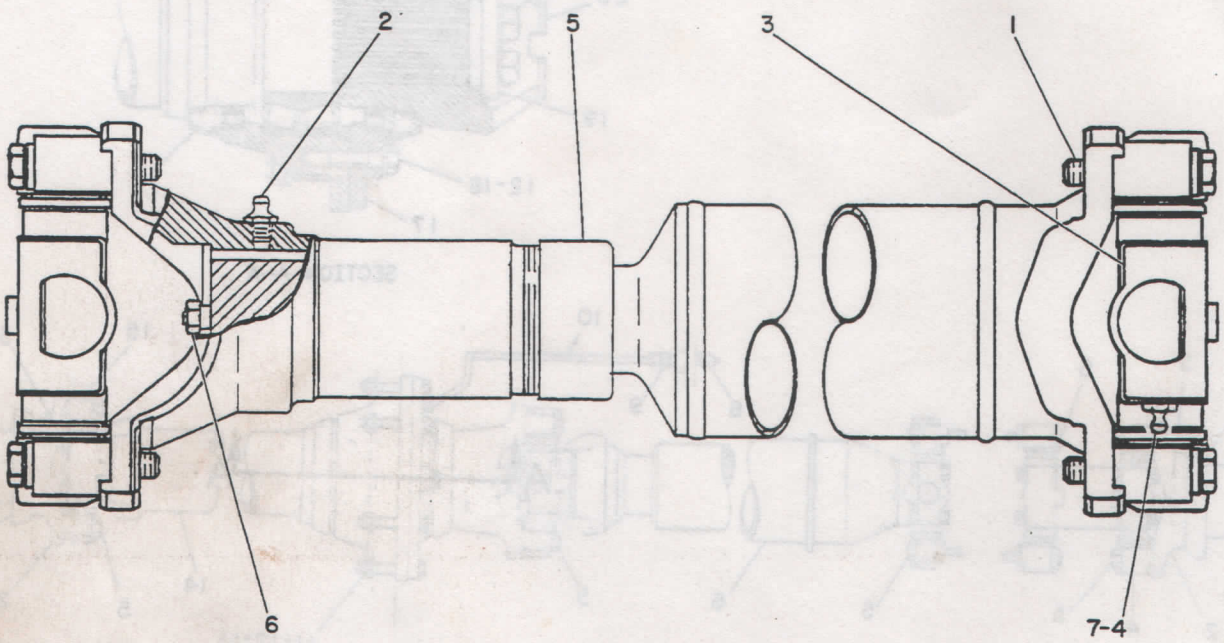

NOTE	REF NO	PART NUMBER	QTY	PART NAME
	1	OLO478	8	BOLT
		3V2431	8	WASHER
	2	3B8489	1	FITTING-HYDRAULIC
	3	1S9670	2	SPIDER & BEARING AS (EACH INCLUDES)
	4	3B8489	1	FITTING-HYDRAULIC
	5	8R6833	1	RETAINER-SEAL
	6	4K9477	1	FITTING-RELIEF
	7	3HO122	3	FITTING

B-496850 EP

8R6830 JOINT GP
Part Of 7V9131 Drive Shaft

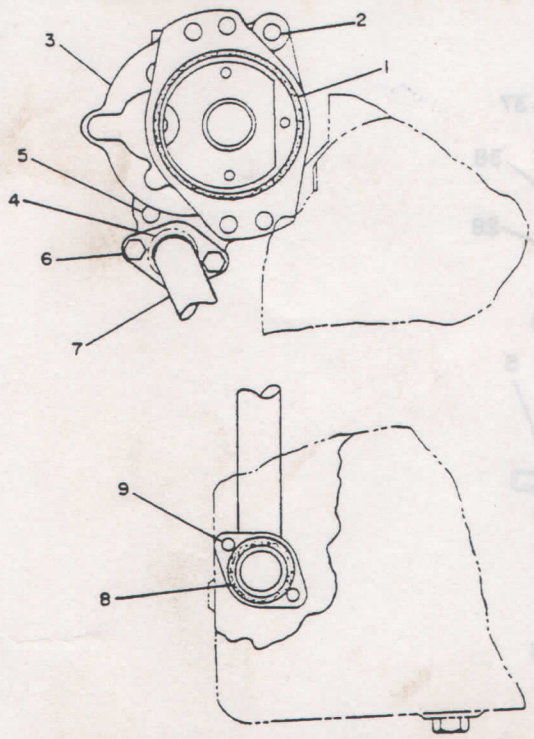

NOTE	REF NO	PART NUMBER	QTY	PART NAME
	1	7J6285	1	SEAL-O-RING
	2	1D4588	1	BOLT
Y	3	3T4604	1	PUMP GP-GEAR
	4	1P3705	1	SEAL
	5	1D4593	1	BOLT
	6	0S1587	2	BOLT
	7	9G5101	1	TUBE AS
	8	7F8268	1	SEAL-O-RING
	9	0S1571	2	BOLT

Y-SEPARATE ILLUSTRATION

B-487377 EP

3T4619 LINES GP-POWER TRAIN OIL
Transmission S/N 8YA673-Up
3T4604-Page 85
Part Of 3T4588 Transmission Ar

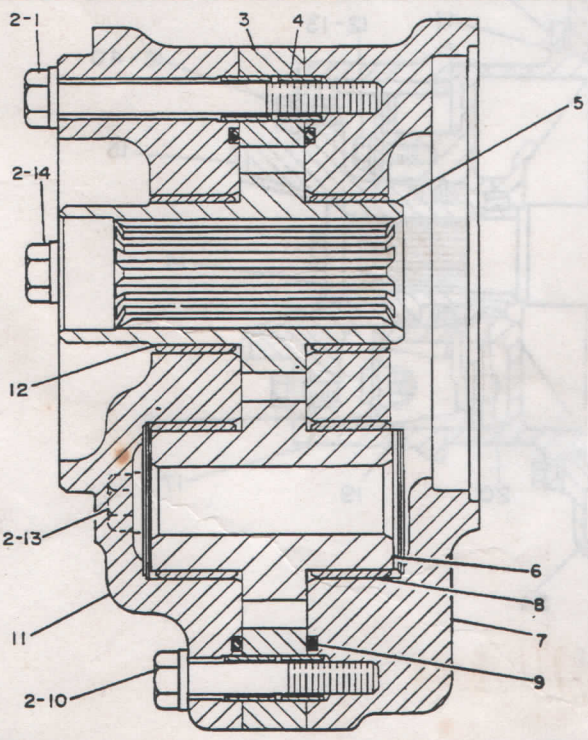

NOTE	REF NO	PART NUMBER	QTY	PART NAME
	1	8S9191	1	BOLT
	2	3S0004	6	WASHER
	3	9G0638	1	BODY AS-OIL PUMP
	4	8M8489	4	DOWEL
	5	9G0637	1	GEAR-OIL PUMP DRIVE (17 TEETH)
	6	9G0635	1	GEAR-PUMP IDLER (17 TEETH)
	7	7G3202	1	COVER AS-OIL PUMP
	8	3T2094	2	BEARING
	9	5H3252	2	SEAL-O-RING
	10	0L1143	1	BOLT
	11	7G3206	1	MANIFOLD AS-PUMP
	12	3T2094	2	BEARING
	13	0T0573	2	BOLT
	14	0S1608	2	BOLT

B-354179 EP

3T4604 PUMP GP-GEAR
Transmission S/N 8YA673-Up
Part Of 3T4619 Lines-Power Train Oil

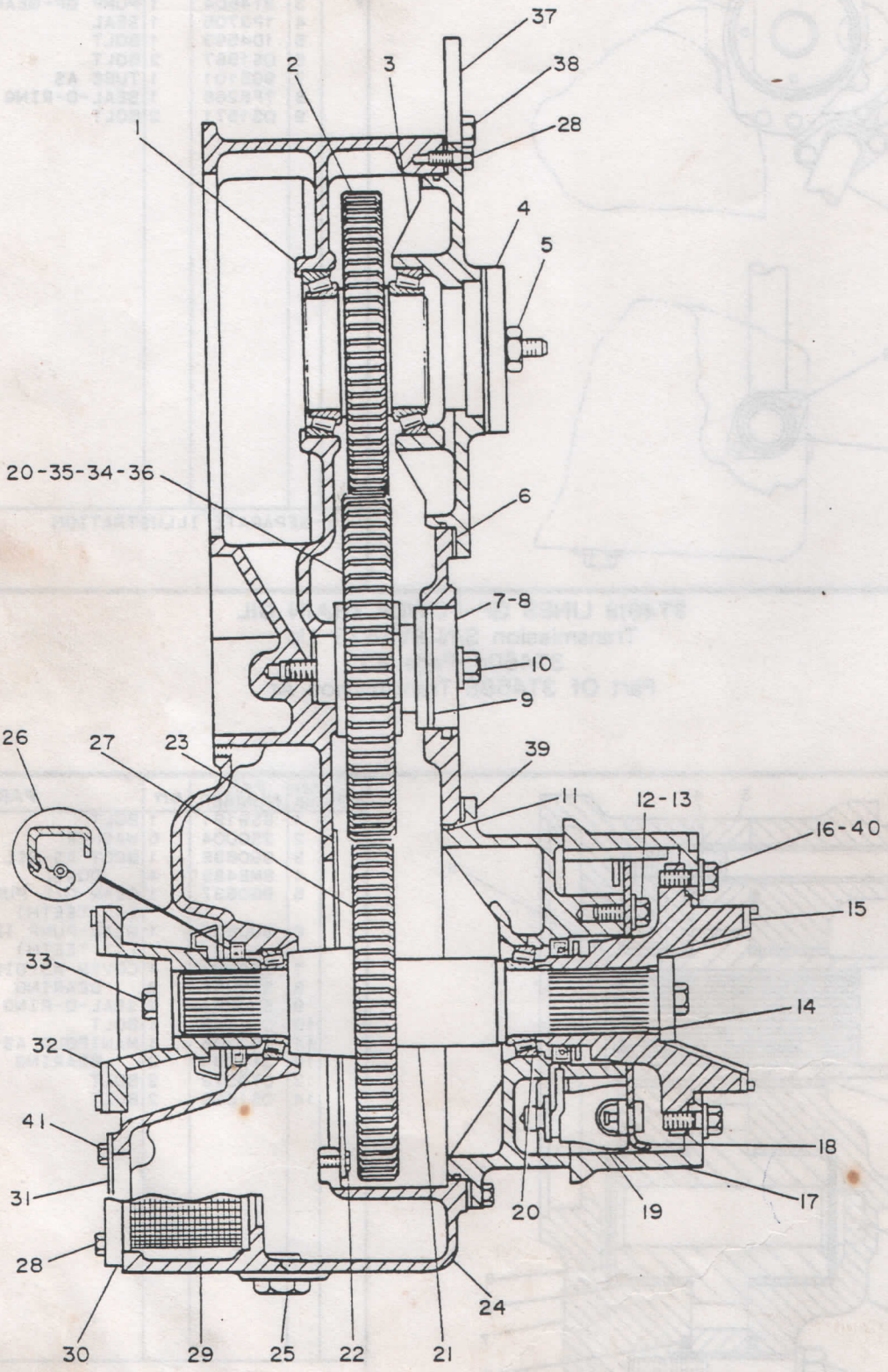

B-497912 EP

3T8314 GEAR GP-TRANSFER-OUTPUT
Transmission S/N 8YA673-Up
Part Of 3T4588 Transmission Ar

POWER TRAIN

NOTE	REF NO	PART NUMBER	QTY	PART NAME
	1	8S9151	2	CUP-ROLLER BEARING
		8S9152	2	CONE-ROLLER BEARING
	2	6T2625	1	GEAR (44 TEETH)
	3	7T6282	1	CAGE AS
		2D8806	2	STUD-TAPERLOCK
		6T0273	1	CAGE
	4	8P1438	1	COVER
		8M1280	1	GASKET
	5	1D4719	2	NUT (1/2-13 THD)
B	6	9G4314	2	SHIM PACK
	7	7G8867	1	SHAFT AS
		5H3182	1	PIN-SPRING
	8	9M4355	1	DAMPER-BOLT
	9	1P8362	1	SEAL-O-RING
	10	6F5282	1	BOLT (1/2-13X5.25IN)
		7D1649	1	WASHER
		3H4970	1	SEAL-O-RING
	11	5H4909	2	SEAL-O-RING
	12	5K8454	4	BOLT (1/2-13X1.12IN)
	13	5P8245	4	WASHER (3MM THK)
	14	2H3927	2	SEAL-O-RING (40.64MM ID)
	15	3T4953	1	YOKE
	16	1A2029	6	BOLT (3/8-16X1.125IN)
	17	6K6907	1	DRUM-BRAKE
Y	18	9C8683	1	BRAKE GP-PARKING
	19	1V2698	1	CAM & LEVER AS ALAVANCA DO FREIO DE MÃO
	20	9S3581	4	CUP-ROLLER BEARING
		9S3582	4	CONE-ROLLER BEARING
	21	6T1231	1	SHAFT
	22	0S1617	3	BOLT (5/16-18X.75IN)
	23	6T1232	1	PLATE
	24	6T2627	1	CASE
	25	5P4483	1	PLUG-O-RING
		7M8485	1	SEAL (29.74MM ID)
	26	7K2830	2	SEAL-LIP TYPE
	27	6T2626	1	GEAR (55 TEETH)
	28	0S1594	18	BOLT (3/8-16X1IN)
	29	8S9130	1	SCREEN-SUCTION
		8S9129	1	FILTER-MAGNETIC
	30	4H5440	1	COVER-PUMP INLET
		3S7781	1	GASKET
	31	6B1842	1	COVER
		3G4138	1	GASKET
	32	3T4955	1	YOKE AS
		3K0196	1	GUARD-DIRT
	33	0L2315	2	BOLT (1/2-20X3.5IN)
		1P6563	2	WASHER-RETAINER
	34	5M7333	1	RING-LOCK
	35	1P5860	1	SPACER
	36	6T0271	1	GEAR (57 TEETH)
	37	6P7731	1	PLATE-EYE
	38	0S1585	2	BOLT (1/2-13X1.5IN)
	39	6T0274	1	CAGE
	40	5M2894	6	WASHER (2.5MM THK)
	41	0S0509	4	BOLT (3/8-16X.75IN)

B-USE AS REQUIRED
Y-SEPARATE ILLUSTRATION

497913 EP

3T8314 GEAR GP-TRANSFER-OUTPUT
Transmission S/N 8YA673-Up
9C8683-Page 121
Part Of 3T4588 Transmission Ar

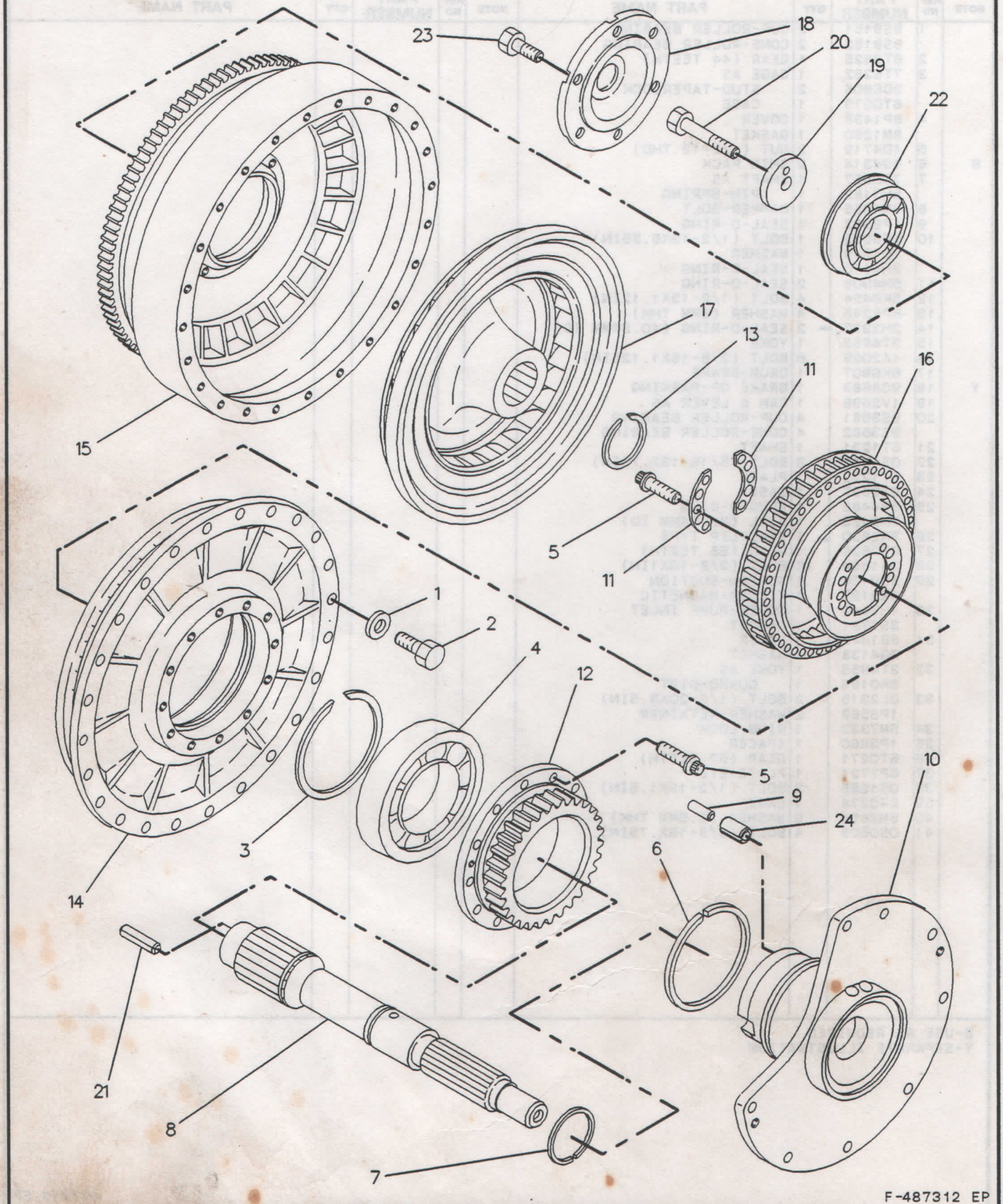

1T1615 TORQUE CONVERTER GP
Torque Converter S/N 17B1000-Up
Part Of 3T4588 Transmission Ar

POWER TRAIN

NOTE	REF NO	PART NUMBER	QTY	PART NAME	NOTE	REF NO	PART NUMBER	QTY	PART NAME
	1	1T0738	24	WASHER					
	2	2B2695	24	BOLT					
	3	5K9064	1	RING-RETAINING					
	4	1T0334	1	BALL BEARING					
	5	1T0414	18	BOLT-12 POINT HEAD					
	6	1T1401	1	RING-SEAL					
	7	1T1230	1	RING-SEAL					
	8	1T1431	1	SHAFT					
	9	1T0289	4	PIN					
	10	1T1443	1	CARRIER					
	11	1T0290	2	PLATE-CLAMP					
	12	1T1396	1	GEAR-DRIVE (35 TEETH)					
	13	1T0294	1	RING-RETAINING					
	14	1T1569	1	IMPELLER-CONVERTER					
	15	1T1828	1	HOUSING-ROTATING					
	16	1T0292	1	WHEEL AS-GUIDE					
	17	1T0020	1	WHEEL-TURBINE					
	18	1T1428	1	RETAINER-BEARING					
	19	1T0537	1	RETAINER					
	20	0S1584	1	BOLT					
	21	7M5130	1	PIN					
	22	1T0028	1	BALL BEARING					
	23	0T0102	6	BOLT					
	24	1T0068	4	PIN-SPRING					

487313 EP

1T1615 TORQUE CONVERTER GP
Torque Converter S/N 17B1000-Up
Part Of 3T4588 Transmission Ar

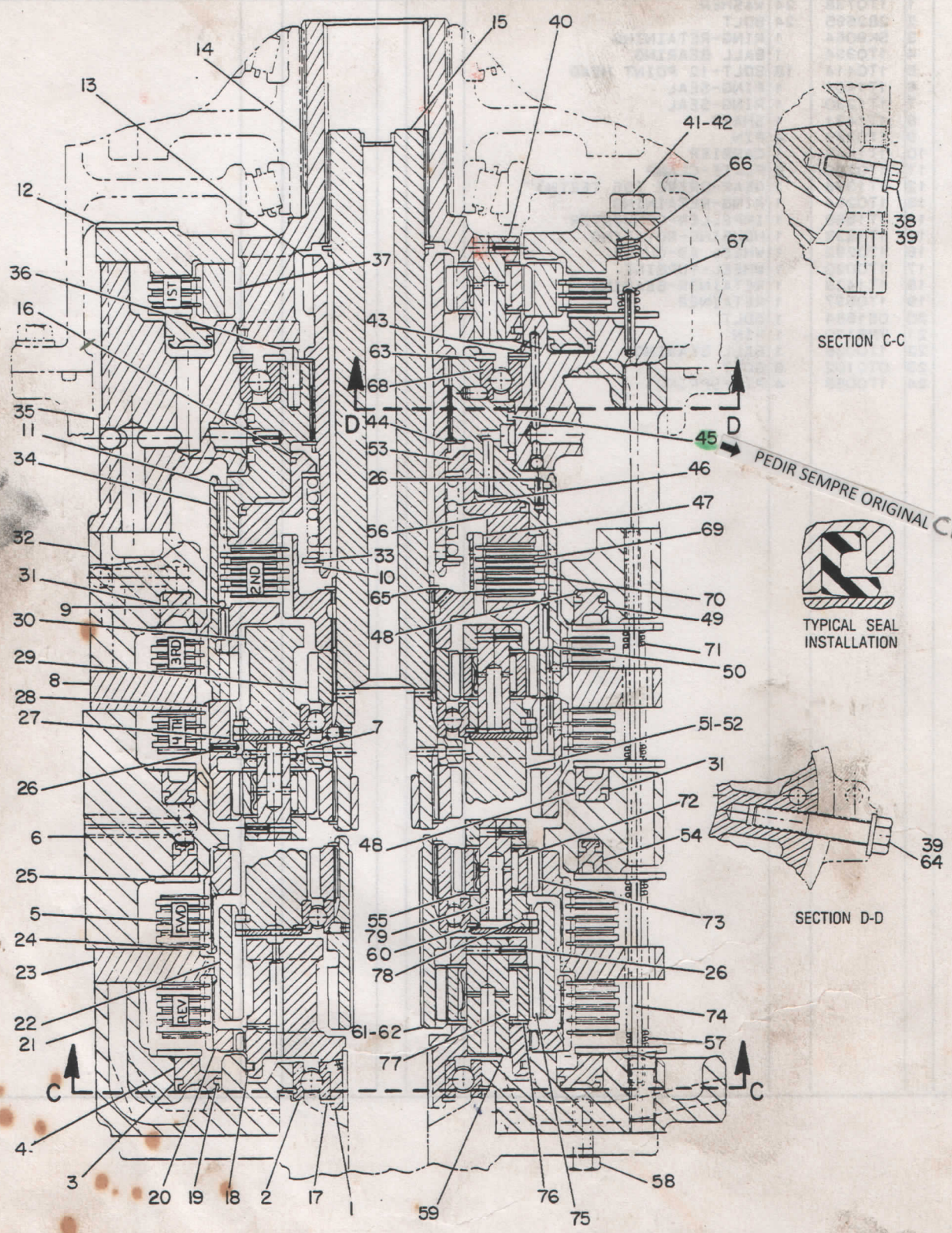

PEDIR SEMPRE ORIGINAL CAT

8P9857 PLANETARY GP
Transmission S/N 8YA673-Up
Part Of 3T4588 Transmission Ar

POWER TRAIN

NOTE	REF NO	PART NUMBER	QTY	PART NAME
	1	6P3169	1	CARRIER AS ➡ 8E4589
		9M6937	1	BEARING-SLEEVE
		8S3426	1	DOWEL
	2	5P3133	1	BALL BEARING-SPL
	3	7G1222	3	RING-SEAL
C	4	9P6799	2	PISTON-CLUTCH
	5	6Y7935	20	DISC-FRICTION
	6	7G7609	1	HOUSING-CLUTCH
	7	9G5524	1	SPACER
	8	7G0858	1	PLATE
	9	6P3964	1	RING-LOCK
	10	616711	1	RING-RETAINING
	11	6V0938	1	RING-RETAINING
C	12	9W4178	1	PLATE
	13	7G9119	1	GEAR-COUPLING (32 TEETH)
	14	6T0275	1	CARRIER
	15	9G5182	1	SHAFT AS-OUTPUT
		8S3426	1	DOWEL
		9P9736	1	ORIFICE
		6H5541	1	BEARING-SLEEVE
	16	5P3114	1	SEAL
		9P1331	1	SEAL
	17	4K4284	1	RING-RETAINING
	18	6F0156	2	RING-METAL SEAL
	19	7G1221	2	RING-SEAL
	20	6P2474	1	GEAR-RING (64 TEETH)
	21	7G7608	1	HOUSING-CLUTCH
	22	7G7612	1	GEAR-RING (64 TEETH)
	23	7G0857	1	PLATE
	24	6P2473	1	GEAR-RING (64 TEETH)
	25	9P7101	20	PLATE-CLUTCH
	26	1T0099	26	PIN-SPRING
	27	6P3843	2	PLATE-RETAINING ➡ 6Y86655
	28	7G7610	1	GEAR-RING (64 TEETH)
	29	6P2623	3	GEAR-SUN (32 TEETH)
★ ➡	30	6P0748	1	CARRIER-PLANETARY ➡ 7T8170
	31	9P6798	2	RING-SEAL
	32	7G7606	1	HOUSING AS-CLUTCH
		4B9782	1	BALL
	33	9S6012	2	SPACER
	34	7G7611	1	GEAR-RING (64 TEETH)
	35	7G0877	1	HOUSING AS
		4B9782	3	BALL 9.52MM(.374IN)DIA
		5B9318	1	BALL 4.76MM(.187IN)DIA
C	36	7T9989	1	HOUSING AS-CLUTCH
		4S8537	1	DOWEL
	37	9P0075	1	GEAR-RING (64 TEETH)
	38	0S1625	2	BOLT
	39	5P8247	4	WASHER-HARD
	40	6P3735	9	SHAFT-PLANETARY
	41	6V3238	6	BOLT
	42	5P8245	6	WASHER
	43	2S0613	1	RING-RETAINING
	44	1K6992	1	RING-LOCK
	45	9P7118	2	RING-SEAL ➡ PEDIR SEMPRE ORIGINAL CAT
	46	6P3860	1	SPRING
	47	7G7616	1	HUB-CLUTCH
	48	9P6797	3	RING-SEAL
	49	3T6792	2	PISTON-CLUTCH
	50	7G7613	1	PLATE
	51	9G8547	1	CARRIER AS ➡ 9W6046
	52	5B9318	6	BALL
	53	7G9120	1	PISTON-CLUTCH
C	54	7G1223	1	PISTON-CLUTCH
	55	6P3910	42	WASHER-THRUST ➡ 9W6045 =36 8E8294 ⬆
	56	9P1332	1	RING-SEAL
	57	6P3859	3	SPRING
	58	0S1594	8	BOLT
	59	6P3733	3	SHAFT-PLANETARY
	60	5P3134	2	BALL BEARING-SPL
	61	8P8417	1	GEAR AS (23 TEETH) (SUN)
	62	8S3426	1	DOWEL
	63	5P3119	1	RING-RETAINING
	64	1D4586	2	BOLT
	65	1K6995	4	RING-LOCK
	66	9P2614	3	SPRING MOLA.
	67	1H1200	3	PIN-SPRING
	68	4S8538	1	BALL BEARING-SPL
	69	6Y7934	5	DISC-FRICTION
	70	9P6903	4	PLATE
	71	7J5938	3	SPRING MOLA.
	72	6V2753	21	BEARING ➡ 8E5284 =18
	73	6P2234	21	GEAR (16 TEETH) (PLANET) = 18
	74	9P0073	3	ROD
	75	6P2233	3	GEAR (20 TEETH) (PLANET)
	76	9P7516	6	WASHER-RETAINING
	77	5P3131	3	BEARING AS-ROLLER
	78	7G7154	2	RING-LOCK
	79	9G5525	12	SHAFT-PLANETARY ➡ 9W6044= 6

C-CHANGE FROM PREVIOUS TYPE

09/10/2013

* Modificação transmissão CAT 930 T/R,
** Sr. Geraldo repassou para Luiz Mudanças de "Roues" que estão em oficina.

★ ITEM Nº:30

1-7T8170- CARRIER.
3-7T8174- ENGREN.
3-7T8173- EIXO.
6-7T8135- ARRUELA.
3-6Y6832- ROLAMENTO.

481308 EP

8P9857 PLANETARY GP
Transmission S/N 8YA673-Up
Part Of 3T4588 Transmission Ar

POWER TRAIN

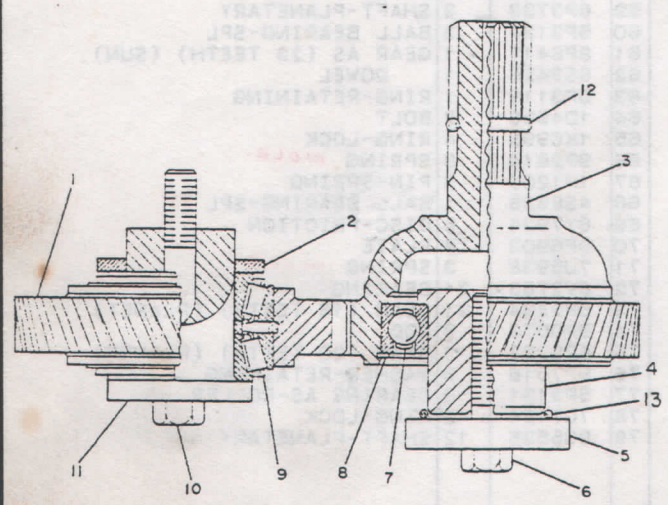

NOTE	REF NO	PART NUMBER	QTY	PART NAME
	1	9P8613	1	GEAR-IDLER (37 TEETH)
	2	9P8611	1	SPACER
	3	7G0861	1	GEAR-PUMP DRIVE (35 TEETH)
	4	9P8612	1	SHAFT
	5	4S5824	1	RETAINER
	6	9S1366	1	BOLT
	7	1T0043	1	BALL BEARING
	8	3J8903	1	RING-RETAINING
	9	300058	1	BEARING AS-ROLLER
	10	1B2886	1	BOLT
	11	9P8610	1	SHAFT-IDLER
	12	5F1678	1	SEAL-O-RING
	13	8M4436	1	SEAL-O-RING

B-487359 EP

9P9523 DRIVE GP-PUMP
Transmission S/N 8YA673-Up
Part Of 3T4588 Transmission Ar

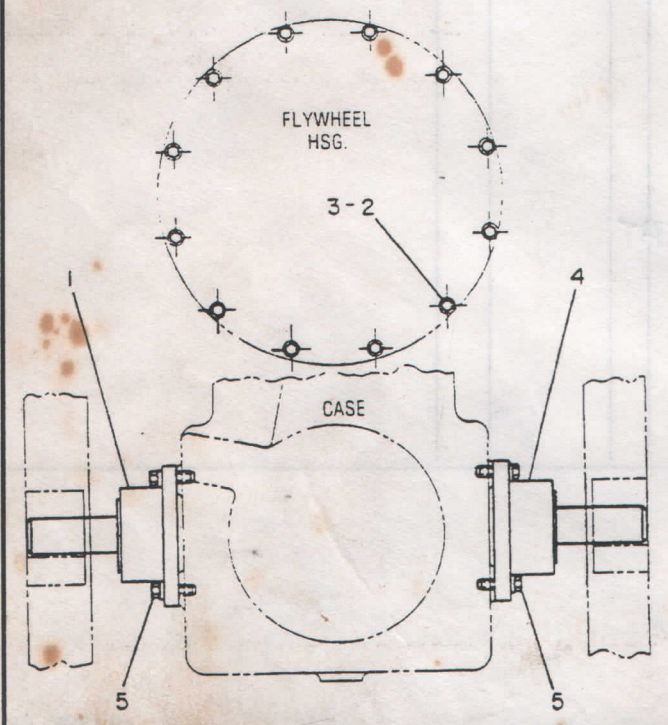

NOTE	REF NO	PART NUMBER	QTY	PART NAME
	1	7V9071	1	SUPPORT AS
		7N1164	1	MOUNT AS
	2	1A2029	12	BOLT
	3	5M2894	12	WASHER
	4	7V9070	1	SUPPORT AS
		7N1164	1	MOUNT AS
	5	0S1587	8	BOLT
		5P8245	8	WASHER

B-354090 EP

7V9074 SUPPORT GP-TRANSMISSION

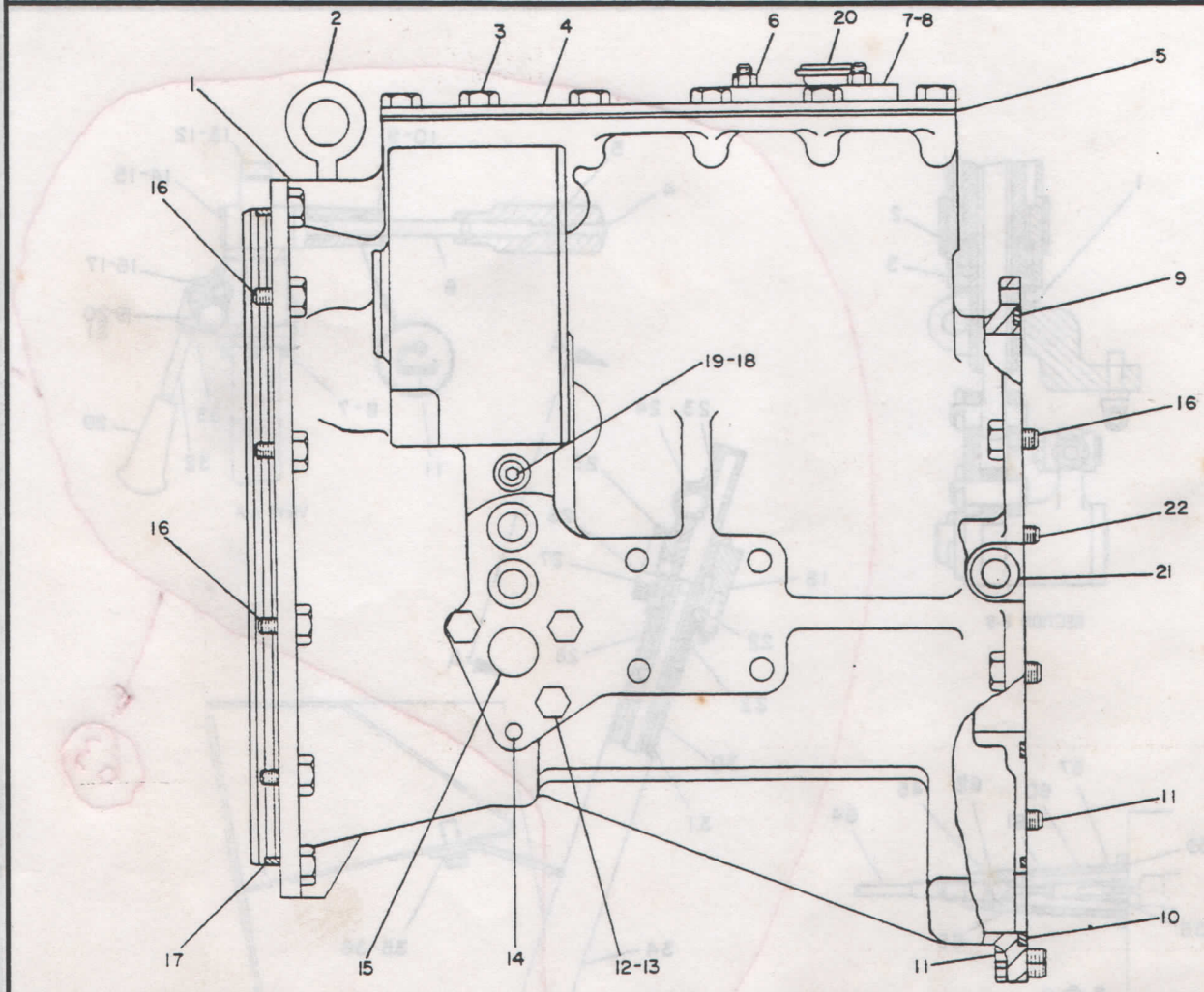

NOTE	REF NO	PART NUMBER	QTY	PART NAME
	1	6T4056	1	CASE AS-TMSN
		4B9880	4	BALL
	2	1P7407	1	EYEBOLT
	3	OS0509	18	BOLT
	4	7G0863	1	COVER AS-TRANSMISSION
	5	9G5866	1	GASKET-COVER
	6	1D4717	4	NUT
	7	1M9633	1	COVER
	8	1M9634	1	GASKET
	9	2M1309	1	SEAL-O-RING
	10	8M4436	2	SEAL-O-RING
	11	1A2029	8	BOLT
	12	OL1352	3	BOLT
	13	5M2894	3	WASHER
	14	8M8281	1	SEAL
	15	8M5254	1	SEAL-O-RING
	16	OS1594	16	BOLT
	17	5P9806	1	SEAL-O-RING
	18	9S8004	3	PLUG-O-RING
	19	3J1907	3	SEAL-O-RING
	20	9G5127	1	BREATHER
	21	5F1678	1	SEAL-O-RING
	22	OL2070	2	BOLT

R-487305 EP

6T4057 PARTS & CASE GP
Transmission S/N 8YA673-Up
Part Of 3T4588 Transmission Ar

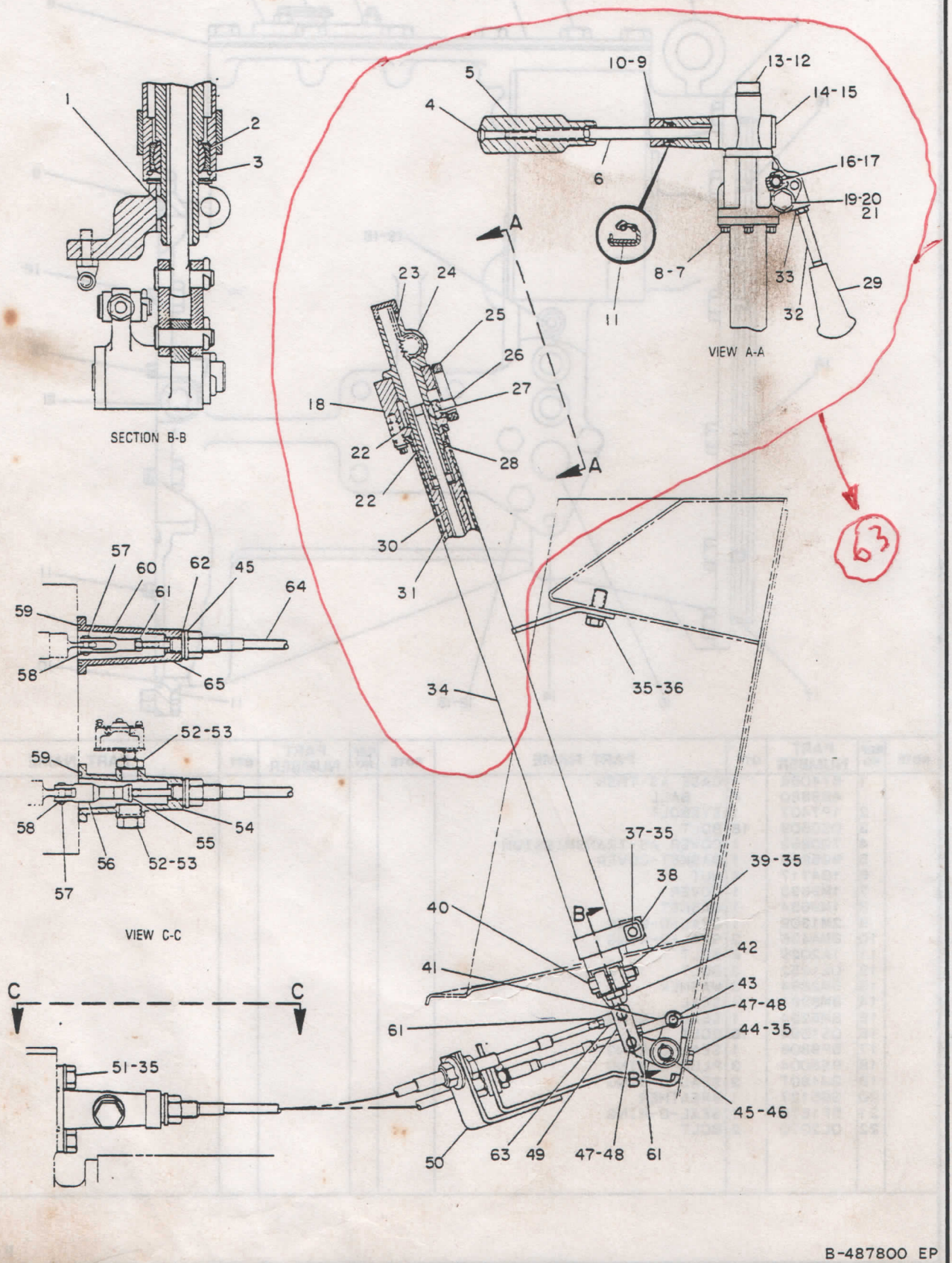

B-487800 EP

7V9138 CONTROL GP-TRANSMISSION

POWER TRAIN

NOTE	REF NO	PART NUMBER	QTY	PART NAME
	1	1B8702	1	KEY-WOODRUFF
	2	5K2294	1	BEARING
	3	8H1037	1	RING-RETAINING
	4	3K1644	1	SCREW
	5	6K5177	1	HANDLE-SHIFT
	6	6K2034	1	SHAFT
	7	1TO414	3	BOLT-12 POINT HEAD
	8	9M1974	3	WASHER (2MM THK)
	9	6KO043	1	COLLAR-INDICATOR
	10	4B9806	1	SETSCREW-SOCKET
	11	2M2489	1	SEAL-LIP TYPE
	12	8M8997	1	SEAL-O-RING
	13	9B2232	1	CAP-TACHOMETER DRIVE
	14	9S8008	1	PLUG-O-RING
	15	3D2824	1	SEAL-O-RING (23.47MM ID)
	16	6B9889	1	SPRING-SHOE ADJUSTABLE
	17	4B9784	1	BALL
	18	6KO053	1	HOUSING
	19	6K7706	1	BOLT-SHOULDER
	20	4K8599	1	WASHER
	21	2K4973	1	LOCKNUT (3/8-16 THD)
	22	2H1650	2	WASHER
	23	6K2036	1	RACK
	24	3V7427	1	HOUSING AS
		1K4682	2	BUSHING
	25	6K7382	1	LEVER
	26	6KO079	1	LOCK
	27	1B8705	1	KEY-WOODRUFF
	28	1V1762	1	RING-RETAINING
	29	2Y3009	1	KNOB
	30	6K7668	1	ROD
	31	9K4443	1	TUBE AS
	32	1P2959	1	ROD
	33	1B2578	2	NUT (3/8-16 THD)
	34	6K7680	1	COLUMN AS
	35	5M2894	10	WASHER (2.5MM THK)
	36	OSO509	2	BOLT (3/8-16X.75IN)
	37	1A2029	1	BOLT (3/8-16X1.125IN)
	38	7K1527	1	CLAMP AS
		9F2978	1	NUT-WELD (3/8-16 THD)
	39	1D4717	1	NUT (3/8-16 THD)
	40	OS1571	1	BOLT (3/8-16X1.75IN)
	41	5P6438	1	ROD END-YOKE
	42	5YO437	1	LEVER
	43	8V5933	1	BELLCRANK AS
		3K6662	2	BEARING
	44	OTO102	2	BOLT (3/8-16X.625IN)
	45	5P8247	3	WASHER-HARD (3.5MM THK)
	46	3B4617	1	COTTER
	47	1BO676	3	PIN
	48	3B4615	3	PIN-COTTER
	49	1M3836	2	LINK
	50	8V8075	1	BRACKET AS
		1BO671	1	PIN
		9F2978	2	NUT-WELD (3/8-16 THD)
	51	OL1351	4	BOLT (3/8-16X.875IN)
	52	9S4190	2	PLUG
	53	2M9780	2	SEAL-O-RING (19.18MM ID)
	54	2V6078	1	BRACKET
	55	2V6076	1	CAM
	56	7V9140	1	END
	57	8D5295	2	PIN
	58	8D5294	2	RING
	59	4F7952	2	SEAL-O-RING
	60	8B3768	1	ROD END-YOKE
	61	6FO612	3	NUT-JAM
	62	1V6341	2	SEAL
	63	9L2685	1	BALL JOINT
	64	7V9142	2	CABLE AS
	65	5V8377	1	BRACKET

63 NVT535 Alavanca inclui items 1 ao 34

487801 EP

7V9138 CONTROL GP-TRANSMISSION

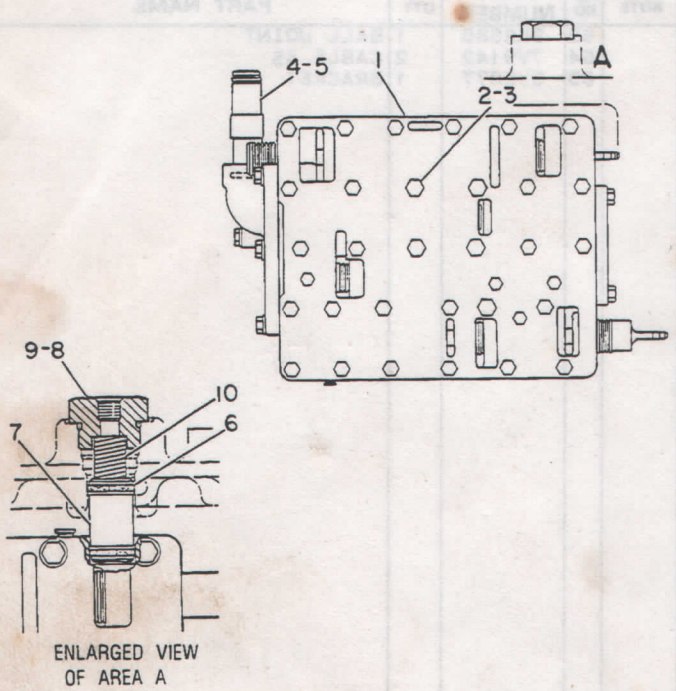

NOTE	REF NO	PART NUMBER	QTY	PART NAME
Y	1	8P8981	1	VALVE GP-TRANSMISSION CONTROL
	2	5F4899	4	BOLT
	3	5M2894	4	WASHER
	4	8M4389	2	SEAL-O-RING
	5	3S9933	1	SLEEVE
	6	5P9186	2	SEAL-O-RING
	7	3T0810	1	SLEEVE
	8	3T0811	1	ADAPTER-O-RING
	9	7M8485	1	SEAL
	10	2H4406	1	SPRING

Y-SEPARATE ILLUSTRATION

B-319508 EP

8P8980 CONTROL GP-TRANSMISSION HYDRAULIC
Transmission S/N 8YA673-Up
8P8981-Page 96
Part Of 3T4588 Transmission Ar

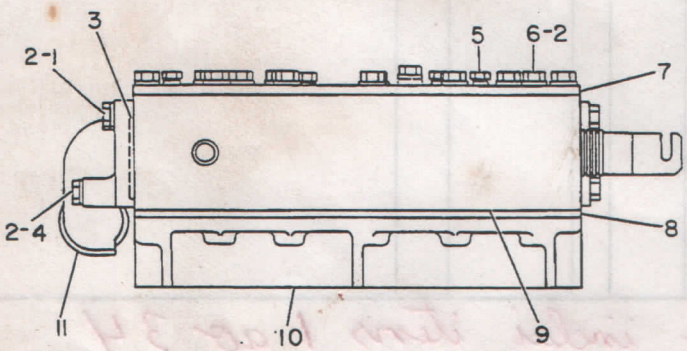

NOTE	REF NO	PART NUMBER	QTY	PART NAME
	1	0S1618	3	BOLT
	2	9M1974	30	WASHER
	3	2J1826	2	SEAL-O-RING
	4	1B9575	1	BOLT
	5	5M6214	4	PLUG-PIPE
	6	4B0831	26	BOLT
	7	9P5928	1	PLATE-TOP
	8	9G8551	1	PLATE
Y	9	7T1374	1	VALVE GP-SELECTOR & PRESS CONT
Y	10	8P3040	1	VALVE GP-NEUTRALIZER
	11	9P5768	1	MANIFOLD-INLET

Y-SEPARATE ILLUSTRATION

B-319510 EP

8P8981 VALVE GP-TRANSMISSION CONTROL
Transmission S/N 8YA673-Up
7T1374-Page 97, 8P3040-Page 98
Part Of 8P8980 Control-Transmission Hydraulic

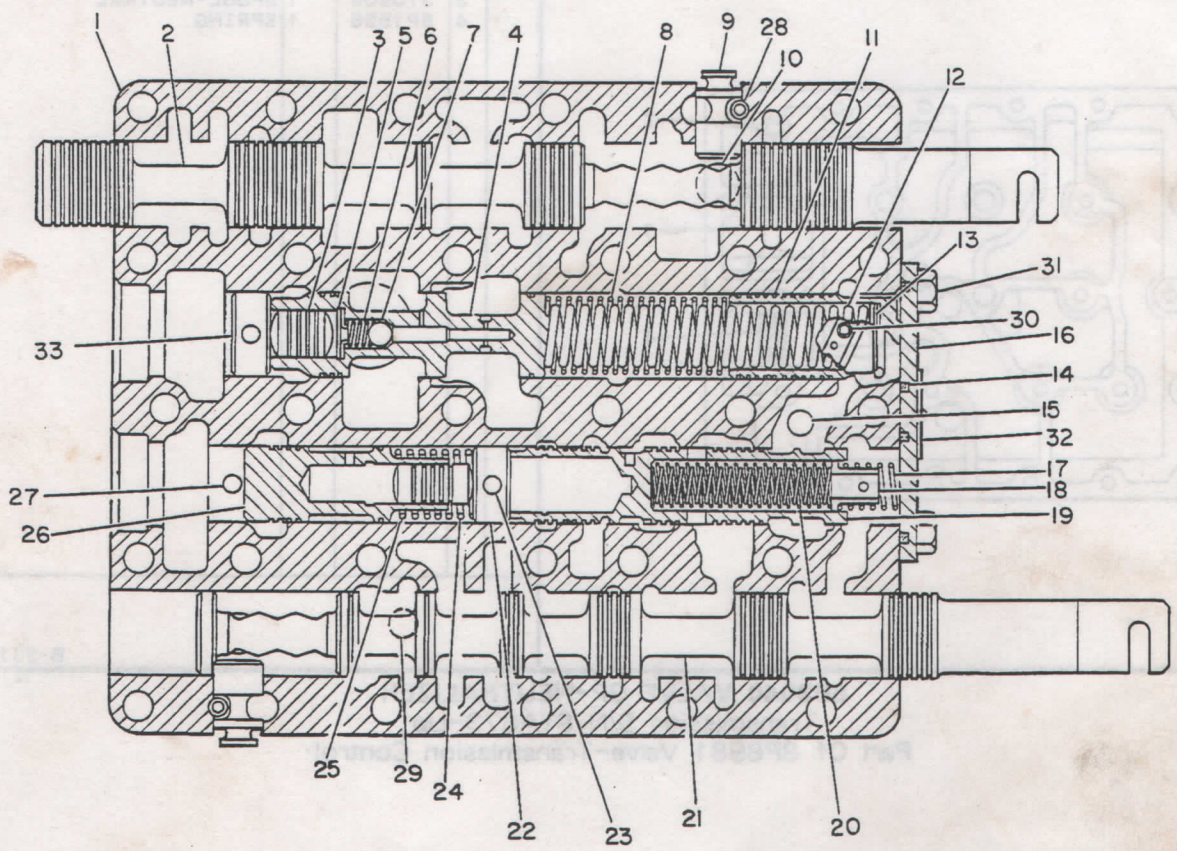

NOTE	REF NO	PART NUMBER	QTY	PART NAME
	1	7G9565	1	BODY AS
		3T8269	1	PLUG-ORIFICE
	2	6P4935	1	SPOOL-SPEED SELECTOR
	3	2M7041	1	SLUG
	4	7G4291	1	SPOOL AS-RELIEF
	5	3D8317	1	RING-RETAINING
		8M1013	1	RETAINER
	6	4M2381	1	SPRING
	7	4B9880	1	BALL
	8	7G4842	1	SPRING
	9	6P4971	2	STOP
	10	7S4607	4	DETENT AS
		1P8116	4	SEAL-O-RING
	11	6P4939	1	PISTON-LOAD
	12	9P3041	1	SPRING
B	13	5M9622	1	SPACER 1.57MM (.062IN)THICK
B		5M9623	1	SPACER .914MM (.036IN)THICK
B		5M9624	3	SPACER .254MM (.010IN)THK
	14	6F6673	2	SEAL-O-RING
	15	3T7726	1	ORIFICE
		5H8853	1	SEAL
	16	6P4938	1	COVER
	17	6P9785	1	SPRING
	18	6P9786	1	RETAINER
		3P8485	1	RING-RETAINING
	19	7G9563	1	SPOOL
	20	6P9784	1	SPRING (OUTER)
		6P9783	1	SPRING (INNER)
	21	7G2546	1	SPOOL-DIR SELECTOR
	22	2S4872	1	STOP
	23	2S0696	2	DOWEL
	24	5S7816	1	SLUG
	25	6P4978	1	SPRING
	26	6P4943	1	SPOOL-RATIO
	27	8P6321	1	DOWEL
	28	1J5353	2	PIN-SPRING
	29	2A3746	1	PLUG-CUP
	30	2H2995	1	SETSCREW
	31	2B2695	3	BOLT
	32	7T1373	1	PLATE-IDENTIFICATION
		7B3028	1	SCREW-DRIVE
	33	6P4940	1	STOP

B-USE AS REQUIRED

B-320719 EP

7T1374 VALVE GP-SELECTOR & PRESSURE CONTROL

Transmission S/N 8YA673-Up

Part Of 8P8981 Valve-Transmission Control

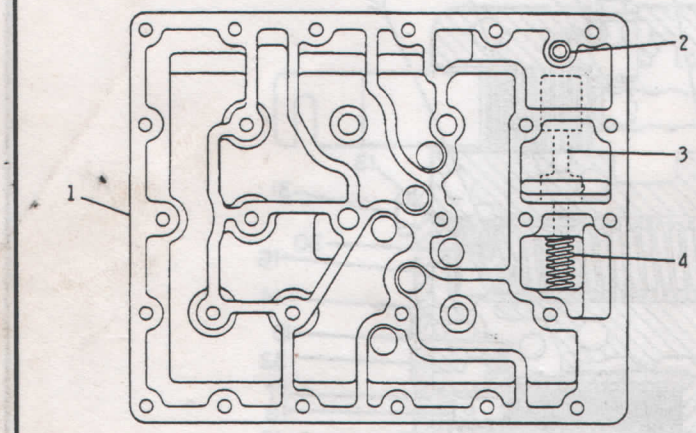

NOTE	REF NO	PART NUMBER	QTY	PART NAME
	1	9G8548	1	MANIFOLD-BOTTOM
	2	8H9189	1	DOWEL
	3	3T0809	1	SPOOL-NEUTRAL
	4	8P1556	1	SPRING

B-231078 EP

3181

8P3040 VALVE GP-NEUTRALIZER
Transmission S/N 8YA673-Up
Part Of 8P8981 Valve-Transmission Control

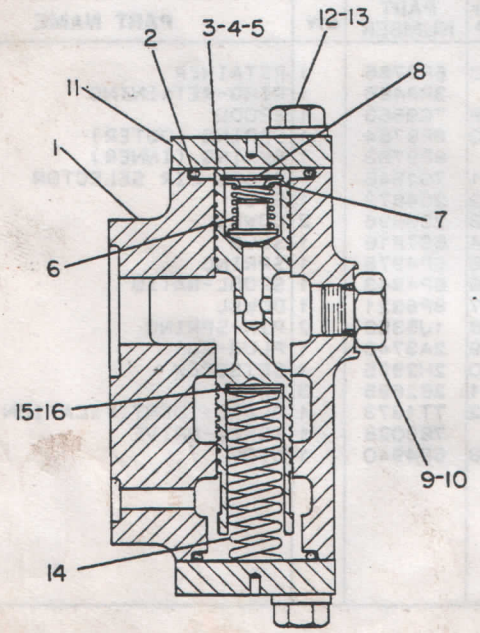

NOTE	REF NO	PART NUMBER	QTY	PART NAME
	1	8P8762	1	BODY-VALVE
	2	8M5254	2	SEAL-O-RING (31.34MM ID)
	3	2S1384	1	SPOOL AS-RELIEF
	4	2S1385	1	SPOOL-RELIEF
	5	8M2538	1	POPPET
	6	5M9548	1	SPRING
	7	8M4409	1	RETAINER
	8	7M8592	1	RING-RETAINING
	9	9S4191	1	PLUG-O-RING
	10	3J1907	1	SEAL-O-RING
	11	4M8815	2	COVER
	12	0S1594	4	BOLT
	13	5M2894	4	WASHER
	14	2S1382	1	SPRING
B	15	5S7001	4	SPACER .91MM(.036IN)THK
B	16	4M1751	1	SPACER .41MM(.016IN)THK

B-USE AS REQUIRED

B-320001 EP

8P9854 VALVE GP-RELIEF-OUTLET
Transmission S/N 8YA673-Up
Part Of 3T4588 Transmission Ar

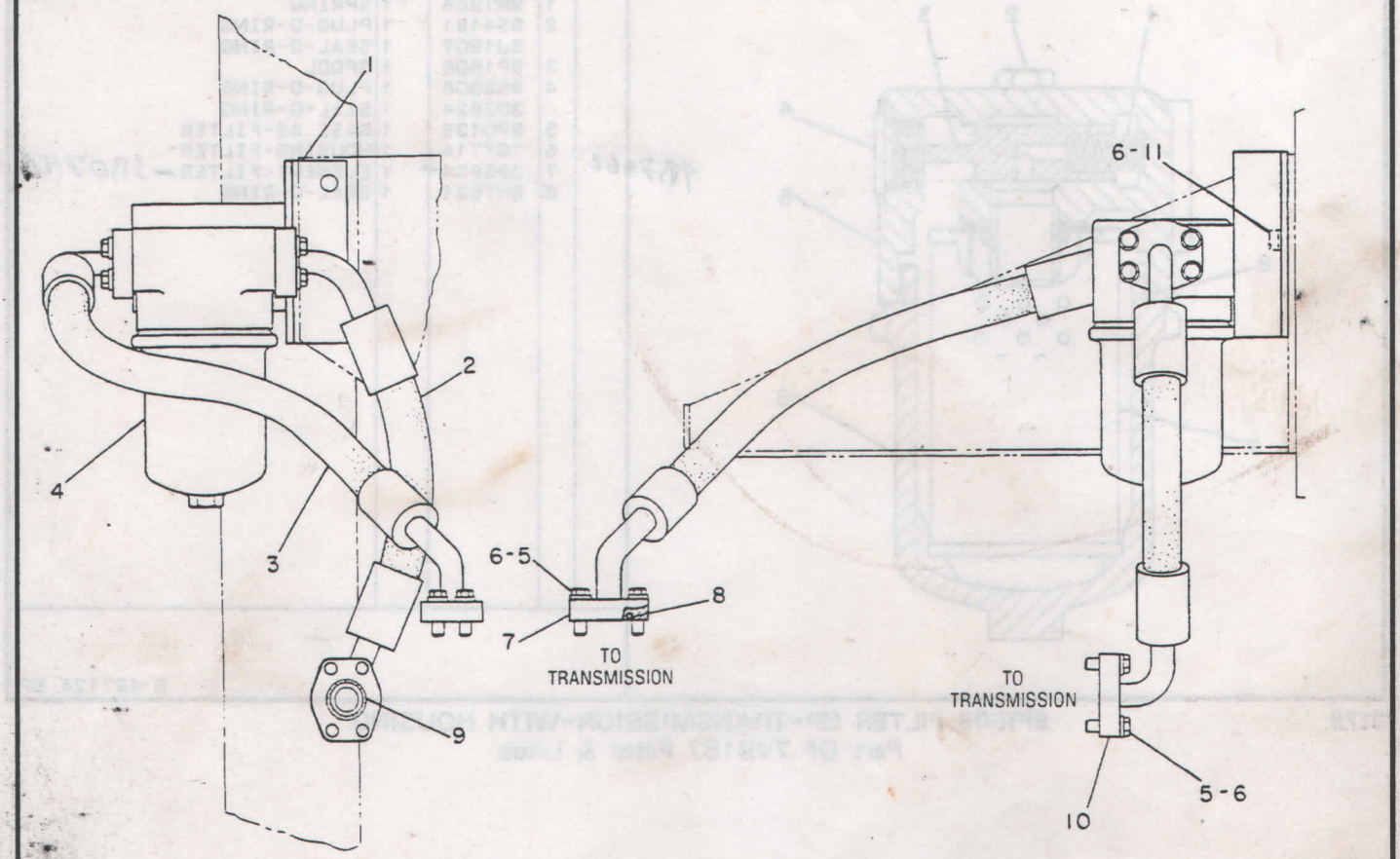

NOTE	REF NO	PART NUMBER	QTY	PART NAME	NOTE	REF NO	PART NUMBER	QTY	PART NAME
	1	7V9162	1	BRACKET AS					
	2	7V9159	1	HOSE AS					
	3	7V9158	1	HOSE AS					
Y	4	9P1509	1	FILTER GP-TRANSMISSION					
	5	OS1588	16	BOLT					
	6	5M2894	20	WASHER					
	7	1P4576	2	FLANGE					
	8	4J5267	1	SEAL					
	9	4J0520	3	SEAL					
	10	1P4577	6	FLANGE-HALF					
	11	OL1351	4	BOLT					

Y-SEPARATE ILLUSTRATION

B-487119 EP

7V9157 FILTER & LINES GP
9P1509-Page 100

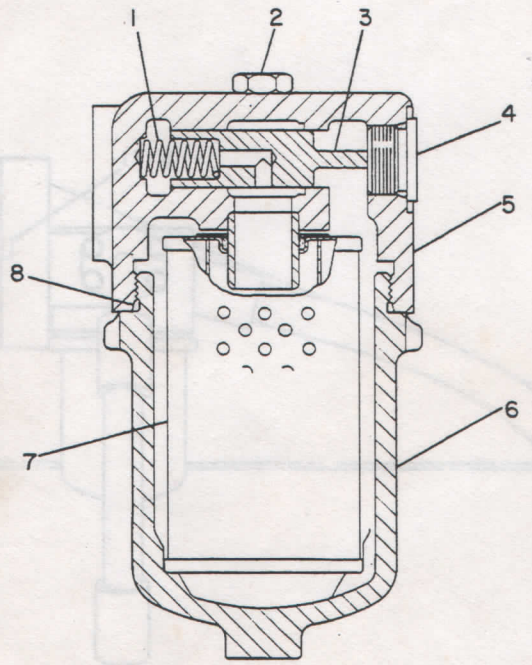

NOTE	REF NO	PART NUMBER	QTY	PART NAME
	1	9M1986	1	SPRING
	2	9S4191	1	PLUG-O-RING
		3J1907	1	SEAL-O-RING
	3	9P1508	1	SPOOL
	4	9S8008	1	PLUG-O-RING
		3D2824	1	SEAL-O-RING
	5	9P0136	1	BASE AS-FILTER
	6	7G7714	1	HOUSING-FILTER
	7	2P5834	1	ELEMENT-FILTER — 1R0746
	8	8H7521	1	SEAL-O-RING

B-487124 EP

3179 **9P1509 FILTER GP-TRANSMISSION-WITH HOUSING**

Part Of 7V9157 Filter & Lines

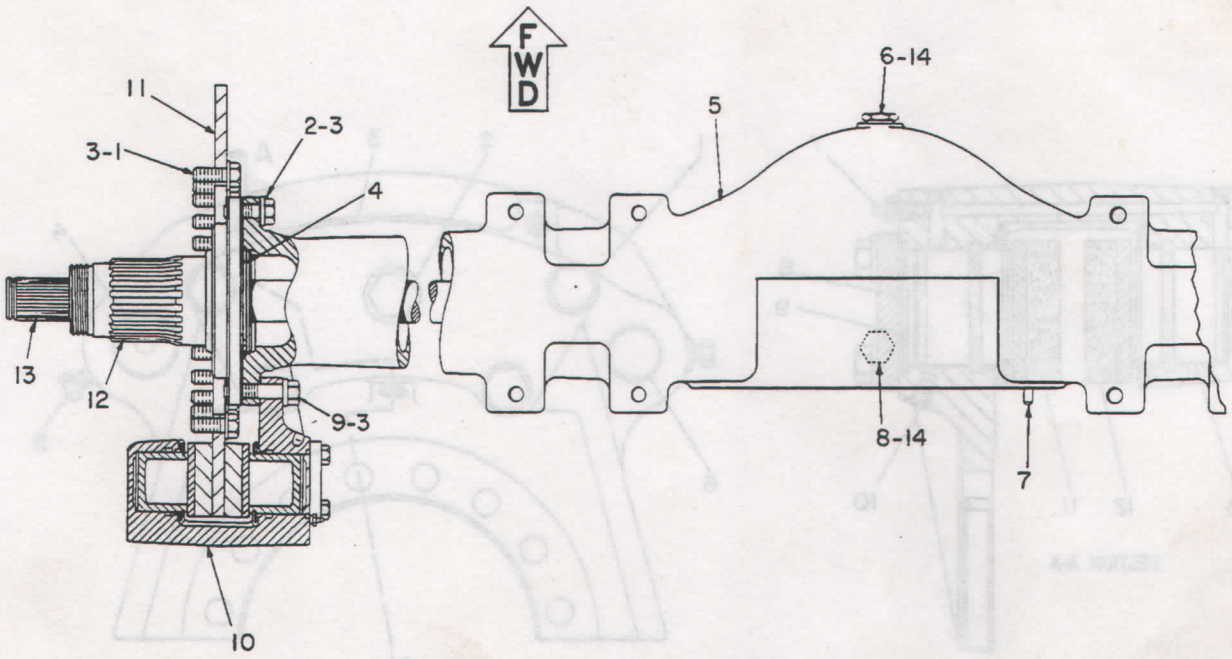

TOP VIEW

NOTE	REF NO	PART NUMBER	QTY	PART NAME	NOTE	REF NO	PART NUMBER	QTY	PART NAME
	1	OS1566	28	BOLT (5/8-11X1.5IN)					
	2	5B0841	16	BOLT (5/8-18X1.75IN)					
	3	5P8247	60	WASHER-HARD					
	4	5H6734	2	SEAL-O-RING					
	5	2Y5454	1	HOUSING					
	6	9S4181	1	PLUG-O-RING					
	7	2L3650	1	PIN-SPRING					
	8	5P4484	1	PLUG-MAGNETIC-O-RING					
	9	OS1577	16	BOLT (5/8-18X2.25IN)					
YC	10	8R0826	2	BRAKE GP-HYD CALIPER SERVICE					
	11	4V6527	2	DISC					
R	12	1V4718	2	SPINDLE					
	13	8K5997	2	SHAFT-AXLE					
	14	7M8485	2	SEAL					

C-CHANGE FROM PREVIOUS TYPE
R-REMFG PART MAY BE AVAILABLE
Y-SEPARATE ILLUSTRATION

V-487194 EP

4V6533 BRAKE & AXLE GP-FRONT
8R0826-Page 104

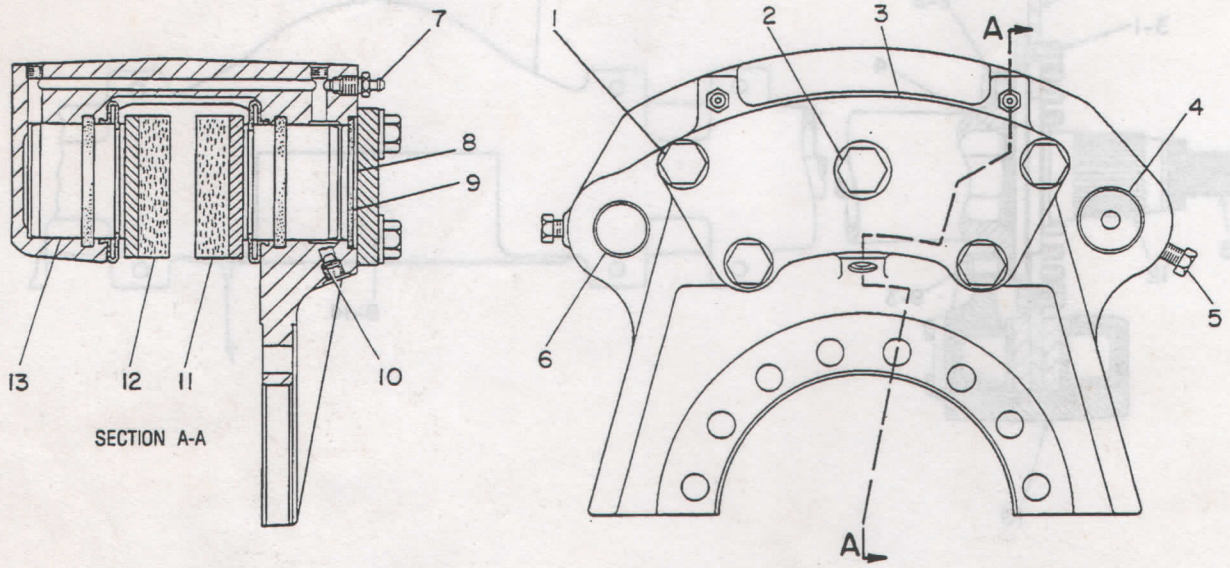

NOTE	REF NO	PART NUMBER	QTY	PART NAME
	1	4B8519	4	BOLT
		5P8246	4	WASHER-HARD
	2	4B4043	1	BOLT
		5P8247	1	WASHER-HARD
	3	5V1311	1	COVER
	4	9V6167	2	PIN
		5K5221	4	SEAL-O-RING
	5	3V0197	4	BOLT
	6	4V7277	2	PIN
	7	7K4942	2	SCREW-BLEEDER
	8	6W7379	2	PLUG
	9	4V4850	2	SEAL-RECTANGULAR
	10	5P8867	1	INSERT-FLARED
	11	9C8022	1	CARRIAGE & LINING AS
	12	9C8021	1	CARRIAGE & LINING AS
	13	4V4852	4	PISTON
				THE FOLLOWING REPAIR KIT IS AVAILABLE:
		4V6525	1	KIT-BRAKE CALIPER (INCL PACKINGS & BOOTS)

B-476102 EP

4251 **8R0826 BRAKE GP-HYDRAULIC CALIPER SERVICE**

Part Of 4V6532, 4V6533 Brakes & Axles

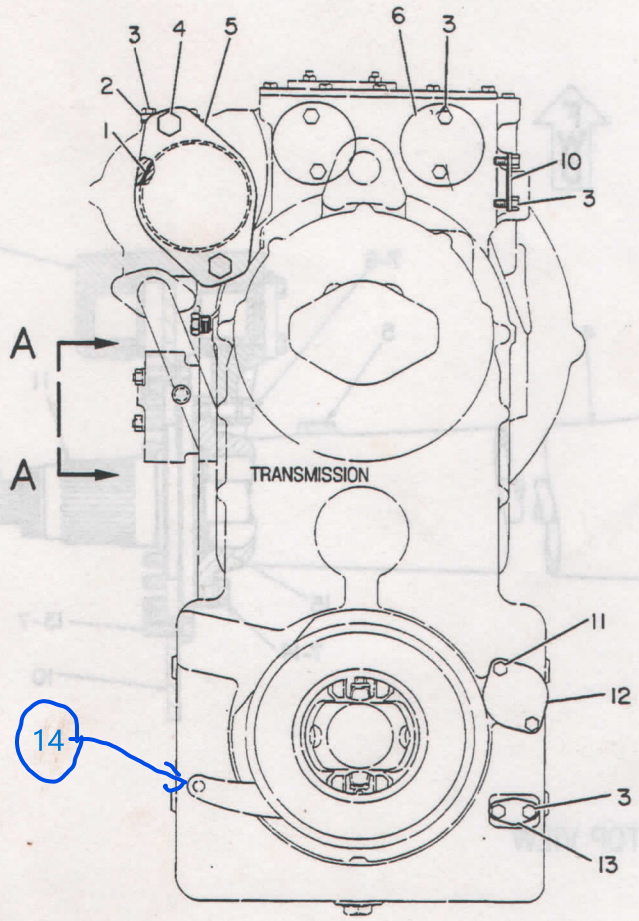

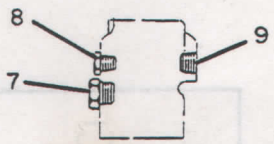

VIEW A-A

NOTE	REF NO	PART NUMBER	QTY	PART NAME
	1	3F5792	1	SEAL-O-RING
	2	7M8543	1	COVER
		2D0092	1	GASKET
	3	0S0509	14	BOLT
	4	0S1566	2	BOLT
	5	5M1152	1	COVER
	6	9P4749	2	COVER
		9P4748	2	GASKET
	7	9S4190	2	PLUG
		2M9780	2	SEAL-O-RING
	8	3J5390	1	PLUG
	9	2B0858	1	PLUG-PIPE
	10	1S2176	1	COVER
		9M6974	1	GASKET
	11	0T0102	2	BOLT
	12	3K3067	1	COVER
		2F8630	1	GASKET
	13	5M3154	1	COVER
		7H3270	1	GASKET
	14	1V2698		ALAVANCA

R-487473 EP

3T8386 COVERS GP-SHIPPING
Transmission S/N 8YA673-Up
Part Of 3T4588 Transmission Ar

POWER TRAIN

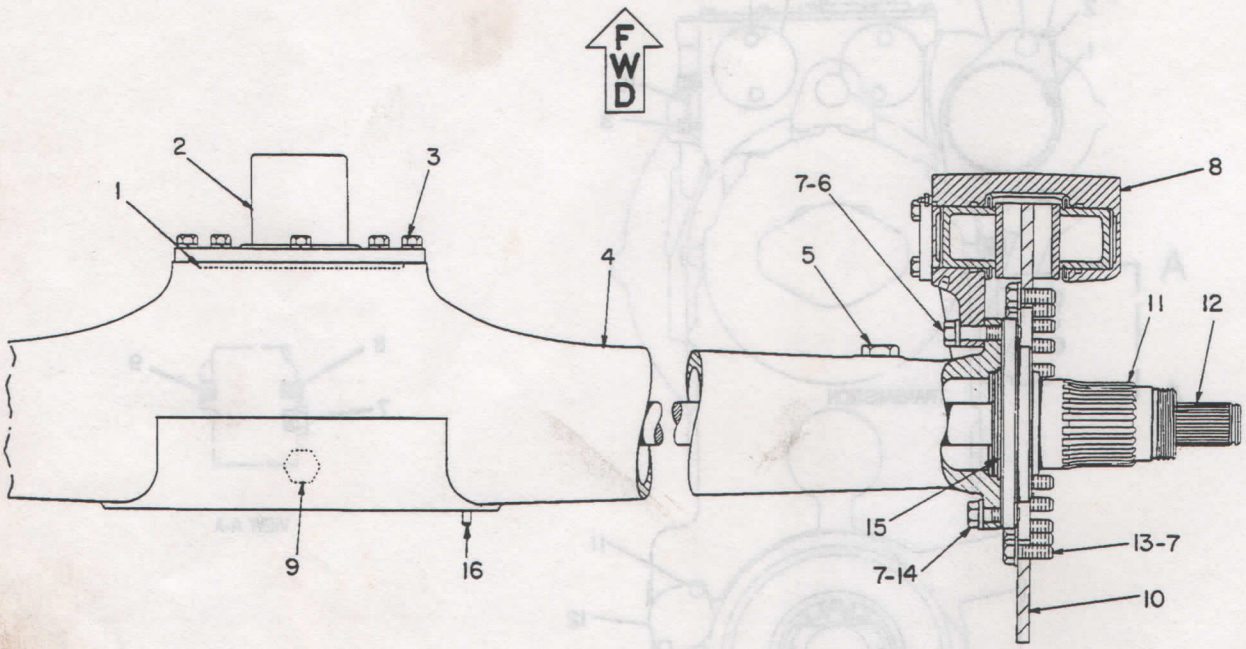

TOP VIEW

NOTE	REF NO	PART NUMBER	QTY	PART NAME	NOTE	REF NO	PART NUMBER	QTY	PART NAME
	1	2D1691	1	SEAL-RING					
	2	7K7430	1	TRUNNION-REAR					
	3	0S1585	8	BOLT					
		5P8245	8	WASHER					
	4	2Y4972	1	HOUSING-AXLE					
	5	9S4181	1	PLUG-O-RING					
		7M8485	1	SEAL					
	6	0S1577	16	BOLT					
	7	5P8247	60	WASHER-HARD					
Y	8	8R0826	2	BRAKE GP-HYD CALIPER SERVICE					
	9	5P4484	1	PLUG-MAGNETIC-O-RING					
	10	4V6527	2	DISC					
R	11	1V4718	2	SPINDLE					
	12	8K5997	2	SHAFT-AXLE					
	13	0S1566	28	BOLT					
	14	5B0841	16	BOLT					
	15	5H6734	2	SEAL-O-RING					
	16	2L3650	1	PIN-SPRING					

R-REMFG PART MAY BE AVAILABLE
Y-SEPARATE ILLUSTRATION

V-487483 EP

4V6532 BRAKE & AXLE GP-REAR
8R0826-Page 104

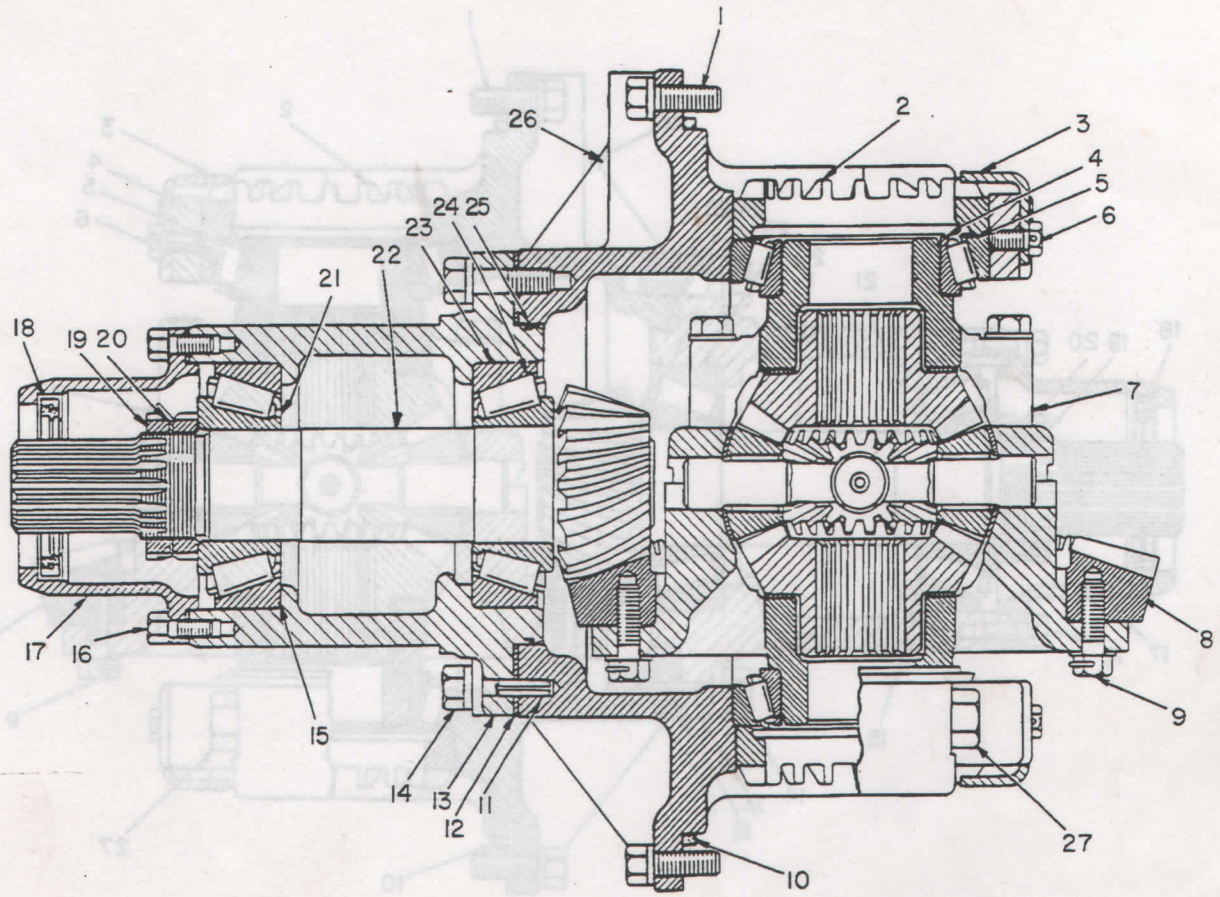

NOTE	REF NO	PART NUMBER	QTY	PART NAME
	1	0S1585	10	BOLT
		5P8245	10	WASHER
	2	2K0535	2	NUT
	3	2K0537	2	LOCK-BEARING
	4	6K8329	2	CONE-ROLLER BEARING
	5	6K8328	2	CUP-ROLLER BEARING
	6	5K8245	2	BOLT
D		5P6026		LOCKWIRE 1.02M(40IN)
Y	7	9K8944	1	DIFFERENTIAL GP
C	8	2Y5124	1	GEAR (40 TEETH)
C	9	6V3506	12	BOLT
CD		5P6026		LOCKWIRE 1.17M(46.03IN)
C		5P8245	12	WASHER
	10	2K9154	1	SEAL-RING
	11	1K8059	1	PIN-SPRING
	12	2K9459	1	SHIM
	13	6K9964	1	HOUSING
	14	0S1587	8	BOLT
		5P8245	8	WASHER
	15	5L2031	1	CUP-ROLLER BEARING
C	16	308535	6	BOLT-SELF LOCKING
	17	5K3274	1	RETAINER-SEAL
		2K9470	1	GASKET
	18	9H6079	1	SEAL-LIP TYPE
	19	9B0576	2	NUT-BEARING LOCK
C	20	5V9015	1	LOCK-NUT
	21	6K8330	1	CONE-ROLLER BEARING
	22	2V5608	1	SHAFT-BEVEL PINION
	23	7L3283	1	CUP-ROLLER BEARING
	24	6K8074	1	CONE-ROLLER BEARING
	25	8F8733	1	SEAL-O-RING
	26	6K9975	1	CARRIER AS-DIFFERENTIAL
		5K7827	2	CAP-DIFFERENTIAL BEARING
	27	2K0527	4	BOLT

C-CHANGE FROM PREVIOUS TYPE
D-ORDER BY THE METER
Y-SEPARATE ILLUSTRATION

B-353779 EP

8V3318 DIFFERENTIAL & BEVEL GEAR GP
Front
9K8944-Page 107

POWER TRAIN

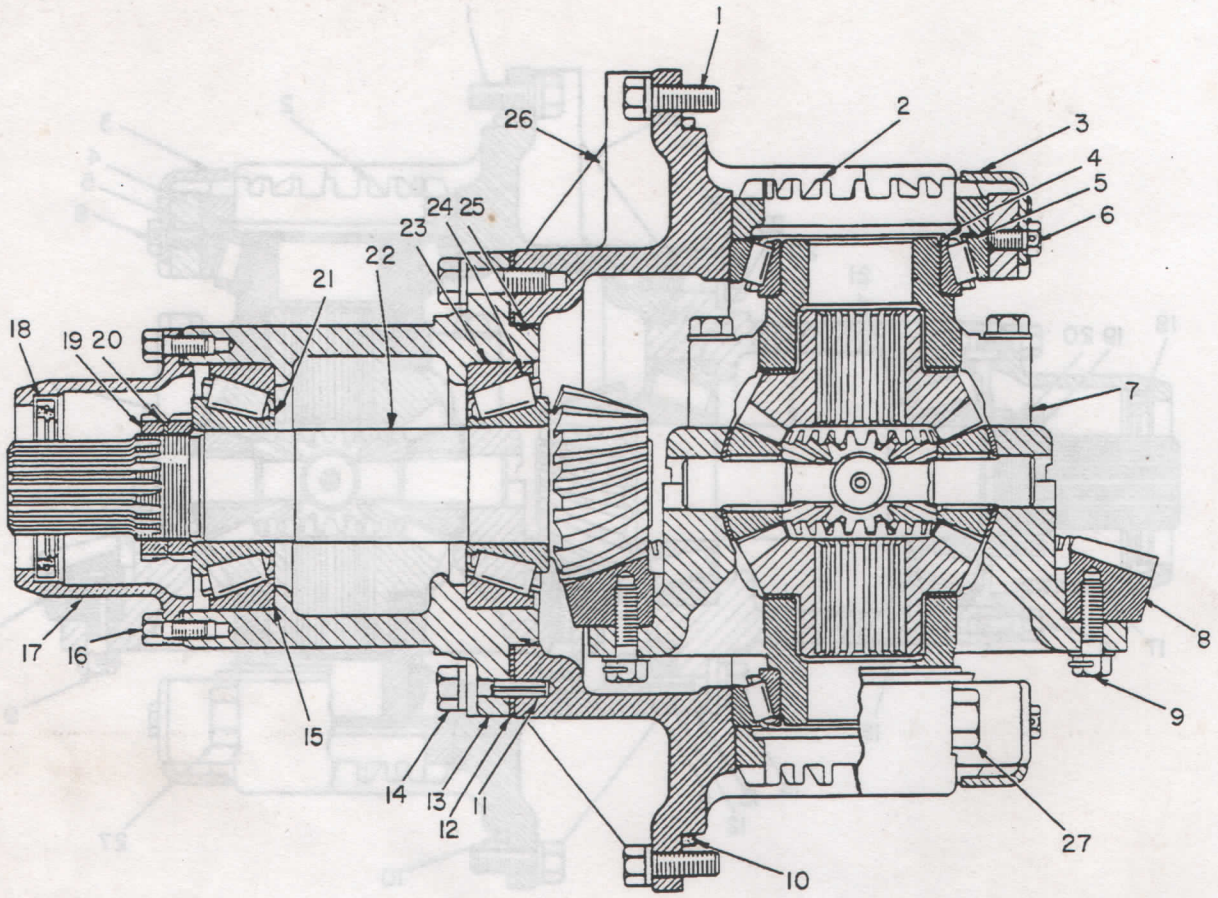

NOTE	REF NO	PART NUMBER	QTY	PART NAME	NOTE	REF NO	PART NUMBER	QTY	PART NAME
	1	0S1585	10	BOLT		21	6K8330	1	CONE-ROLLER BEARING
		5P8245	10	WASHER		22	2V5608	1	SHAFT-BEVEL PINION
	2	2K0535	2	NUT		23	7L3283	1	CUP-ROLLER BEARING
	3	2K0537	2	LOCK-BEARING		24	6K8074	1	CONE-ROLLER BEARING
	4	6K8329	2	CONE-ROLLER BEARING		25	8F8733	1	SEAL-O-RING
	5	6K8328	2	CUP-ROLLER BEARING		26	6K9975	1	CARRIER AS-DIFFERENTIAL
	6	5K8245	2	BOLT			5K7827	2	CAP-DIFFERENTIAL BEARING
D		5P6026		LOCKWIRE 1.02M(40IN)					
Y	7	9K8944	1	DIFFERENTIAL GP		27	2K0527	4	BOLT
C	8	2Y5124	1	GEAR (40 TEETH)					
C	9	6V3506	12	BOLT					
CD		5P6026		LOCKWIRE 1.17M(46.03IN)					
C		5P8245	12	WASHER					
	10	2K9154	1	SEAL-RING					
	11	1K8059	1	PIN-SPRING					
	12	2K9459	1	SHIM					
	13	6K9963	1	HOUSING					
	14	0S1587	8	BOLT					
		5P8245	8	WASHER					
	15	5L2031	1	CUP-ROLLER BEARING					
C	16	3O8535	6	BOLT-SELF LOCKING					
	17	5K3274	1	RETAINER-SEAL					
		2K9470	1	GASKET					
	18	9H6079	1	SEAL-LIP TYPE					
	19	9B0576	2	NUT-BEARING LOCK					
C	20	5V9015	1	LOCK-NUT					

C-CHANGE FROM PREVIOUS TYPE
D-ORDER BY THE METER
Y-SEPARATE ILLUSTRATION

B-353785 EP

8V3319 DIFFERENTIAL & BEVEL GEAR GP
Rear
9K8944-Page 107

POWER TRAIN

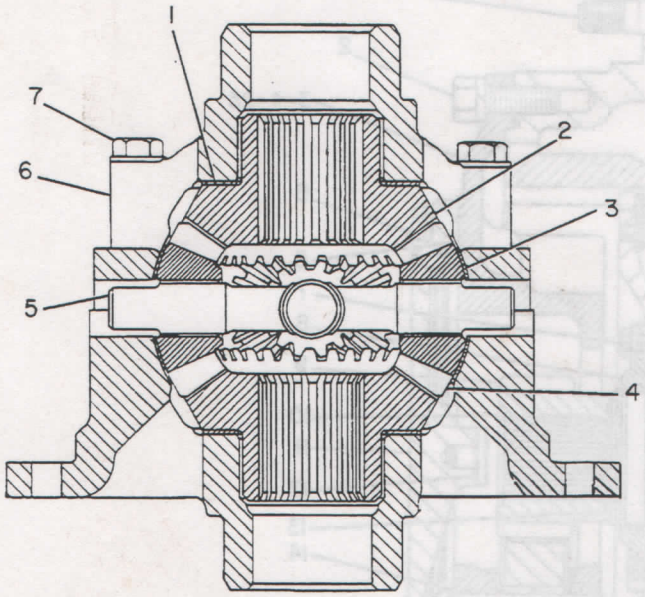

NOTE	REF NO	PART NUMBER	QTY	PART NAME
	1	6K9468	2	WASHER-THRUST
C	2	2Y6658	2	GEAR
C	3	7V7796	4	WASHER
C	4	2Y6659	4	GEAR (11 TEETH)
C	5	4V4079	1	SPIDER
C	6	7V7793	1	CASE AS-DIFFERENTIAL
C	7	1D4566	8	BOLT
C		5P8245	8	WASHER

C-CHANGE FROM PREVIOUS TYPE

B-321676 EP

9K8944 DIFFERENTIAL GP
Front & Rear
Part Of 8V3318, 8V3319 Differentials & Bevel Gears

2	6K8329	CONE-ROLLER BEARING
1	6K8330	CONE-ROLLER BEARING
1	6K8074	CONE-ROLLER BEARING
2	2B7557	CORK
1	7L3283	CUP-ROLLER BEARING
1	5L2031	CUP-ROLLER BEARING
2	6K8328	CUP-ROLLER BEARING
1	2K9470	GASKET
1	5V9015	LOCK-NUT
1	5P6026	LOCKWIRE
1	9H6079	SEAL-LIP TYPE
1	8F8733	SEAL-O-RING
1	2K9154	SEAL-RING
1	2K9459	SHIM
4	7V7796	WASHER
1	6K9468	WASHER-THRUST

491494 P

5Y1571 KIT-DIFFERENTIAL

POWER TRAIN

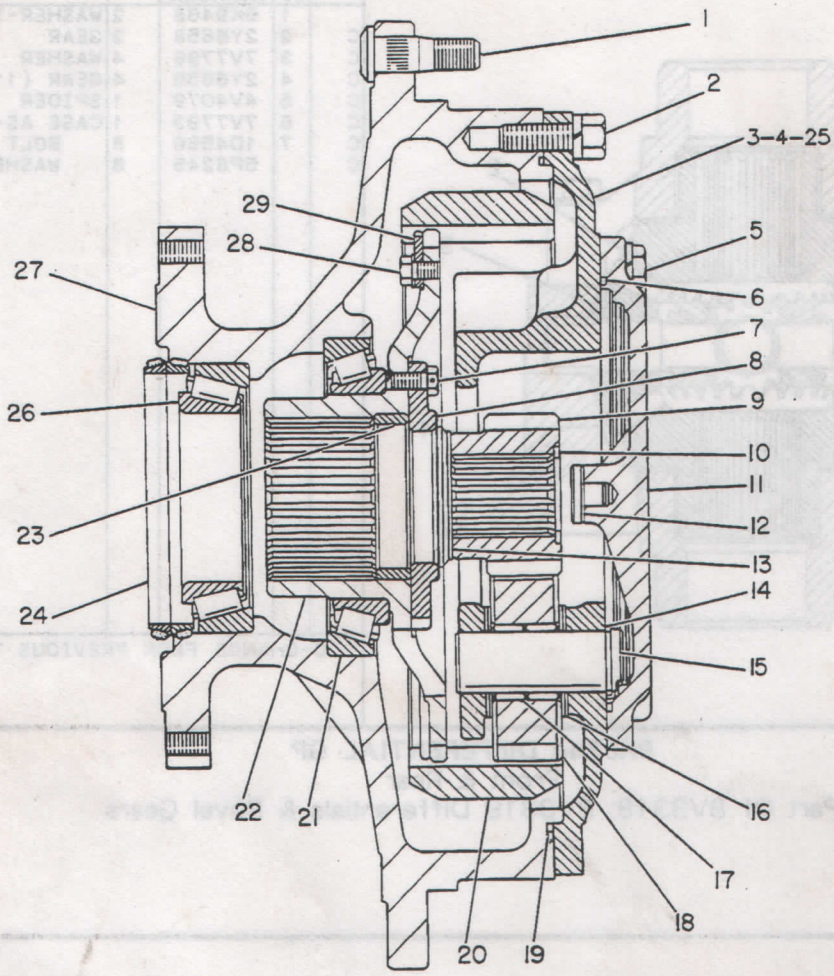

NOTE	REF NO	PART NUMBER	QTY	PART NAME
	1	1V3323	10	STUD
	2	0S1589	10	BOLT (5/8-11X1.75IN)
		5P8247	10	WASHER-HARD (3.5MM THK)
	3	6K5837	1	CARRIER-PLANETARY
	4	8M3837	1	PLUG
CJ		2Y5261	1	GASKET
	5	0S1588	6	BOLT (3/8-16X1.25IN)
		3B4506	6	LOCKWASHER
J	6	9X3969	1	SEAL-RING
C	7	30996	4	BOLT
BDJ		5P6026		LOCKWIRE
C	8	7V8336	1	NUT-LOCK
	9	8K5999	1	GEAR-SUN (19 TEETH)
	10	8K6000	1	RING-RETAINING
	11	6K6759	1	COVER AS
	12	2D0604	1	BUTTON
J	13	8K5705	1	WASHER-THRUST
	14	5K0926	3	RING-LOCK
	15	2V1074	3	SHAFT-PLANETARY
J	16	7K1699	6	WASHER-THRUST (STEEL)
JJ		7K1701	6	WASHER-THRUST (BRONZE)
J	17	5M2054	6	BEARING
	18	3K7110	3	GEAR-PLANETARY (24 TEETH)
J	19	9X3973	1	SEAL-RING
	20	3K7112	1	GEAR-RING (68 TEETH)
J	21	5P2526	1	CUP-ROLLER BEARING
J		2K5065	1	CONE-ROLLER BEARING
	22	7K7432	1	HUB AS
	23	2K9463	1	BEARING-SLEEVE
J	24	9W6645	1	SEAL GP-DUO-CONE
J	25	2B7557	2	CORK
J	26	6K8275	1	CONE-ROLLER BEARING
J		6B3223	1	CUP-BEARING
	27	4V4574	1	WHEEL
	28	0T0102	8	BOLT (3/8-16X.625IN)
J		6H4209	4	LOCK-SCREW
	29	2K9249	4	PLATE-LOCKING
				THE FOLLOWING REPAIR KIT IS AVAILABLE:
		5Y1576	1	KIT-REPAIR (FINAL DRIVE) (INCLUDES PARTS MARKED J)

B-USE AS REQUIRED
C-CHANGE FROM PREVIOUS TYPE
D-ORDER BY THE METER

R-496860 EP

4V6531 WHEEL & FINAL DRIVE GP

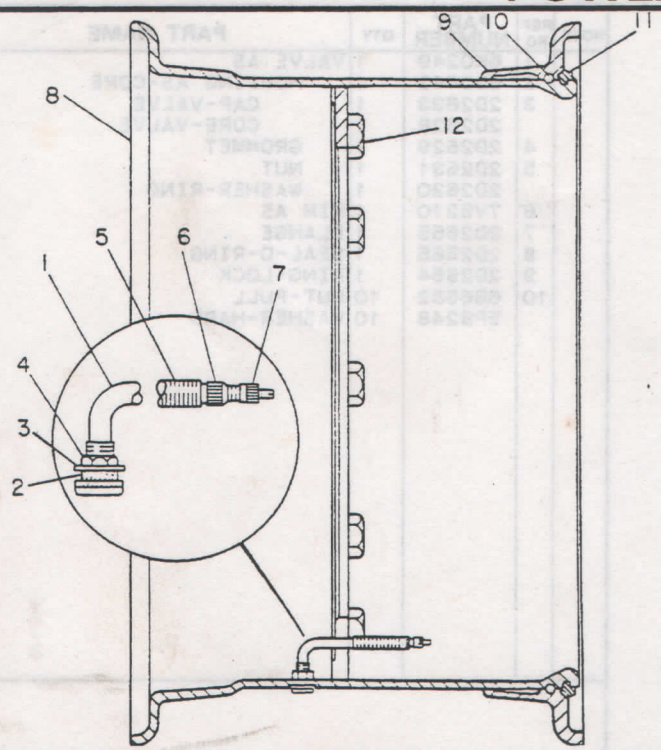

NOTE	REF NO	PART NUMBER	QTY	PART NAME
	1	6K0249	1	VALVE AS
	2	2D2629	1	GROMMET
	3	2D2630	1	WASHER-RING
	4	2D2631	1	NUT
	5	6D0443	1	HOUSING AS-CORE
	6	2D2628	1	CORE-VALVE
	7	2D2633	1	CAP-VALVE
	8	9K5780	1	RIM AS
	9	8W9594	1	FLANGE AS
	10	4K4879	1	SEAL-O-RING
	11	4K4881	1	RING-LOCK
	12	6B6682	10	NUT-FULL
		5P8248	10	WASHER-HARD

B-487114 EP

1V7251 RIM GP-DEMOUNTABLE
17.5 X 25 Tubeless Tires

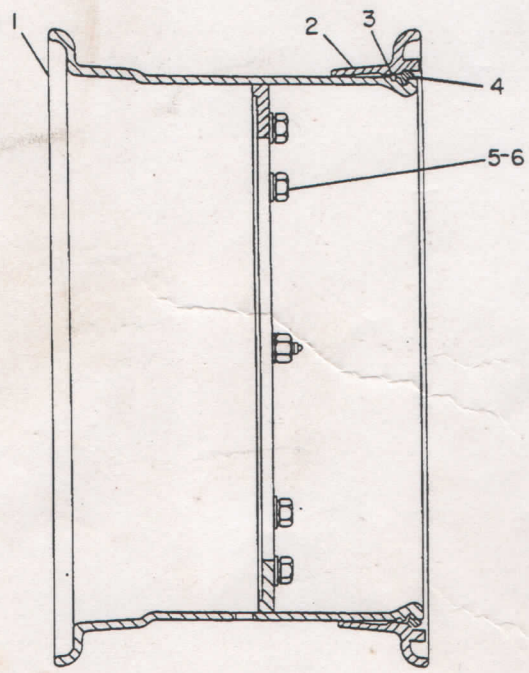

NOTE	REF NO	PART NUMBER	QTY	PART NAME
	1	2Y2885	1	RIM AS
		9K5780	1	RIM AS
	2	8W9594	1	FLANGE AS
	3	2Y7710	1	SEAL-O-RING
	4	4K4881	1	RING-LOCK
	5	6B6682	10	NUT-FULL
	6	5P8248	10	WASHER-HARD

R-498695 EP

2Y2886 RIM GP-DEMOUNTABLE
14.00 X 25 Traction Tread Tubeless Tires
An Attachment

POWER TRAIN

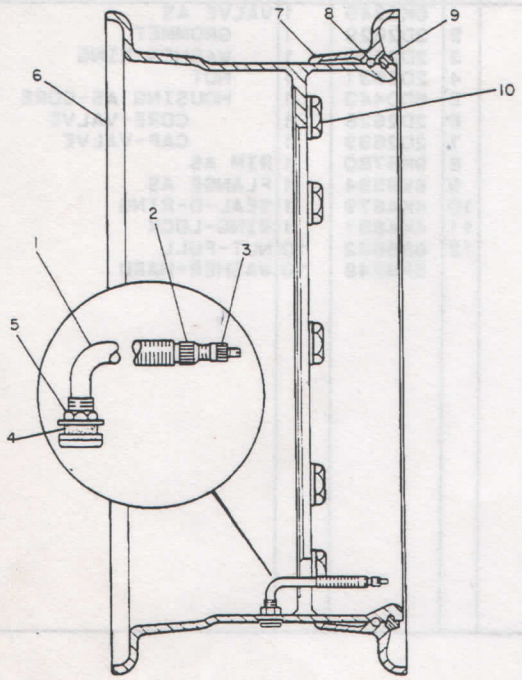

NOTE	REF NO	PART NUMBER	QTY	PART NAME
	1	6K0249	1	VALVE AS
	2	6D0443	1	HOUSING AS-CORE
	3	2D2633	1	CAP-VALVE
		2D2628	1	CORE-VALVE
	4	2D2629	1	GROMMET
	5	2D2631	1	NUT
		2D2630	1	WASHER-RING
	6	7V5210	1	RIM AS
	7	2D2655	1	FLANGE
	8	2D2565	1	SEAL-O-RING
	9	2D2654	1	RING-LOCK
	10	6B6682	10	NUT-FULL
		5P8248	10	WASHER-HARD

B-463458 EP

7V5211 RIM GP-DEMOUNTABLE
14.00 X 24 Traction Tread Tubeless Tires
An Attachment

1	8W9594	FLANGE AS
1	9K5780	RIM AS
1	4K4881	RING-LOCK
1	2Y7710	SEAL
1	6K0249	VALVE AS
1	2D2629	GROMMET
1	2D2631	NUT
1	2D2630	WASHER-RING
1	6D0443	HOUSING AS
1	2Y3536	CAP-VALVE
1	2Y5514	CORE-VALVE

500358 P

2Y7124 TIRE & RIM AR
17.50 X 25 Tubeless Tires
An Attachment

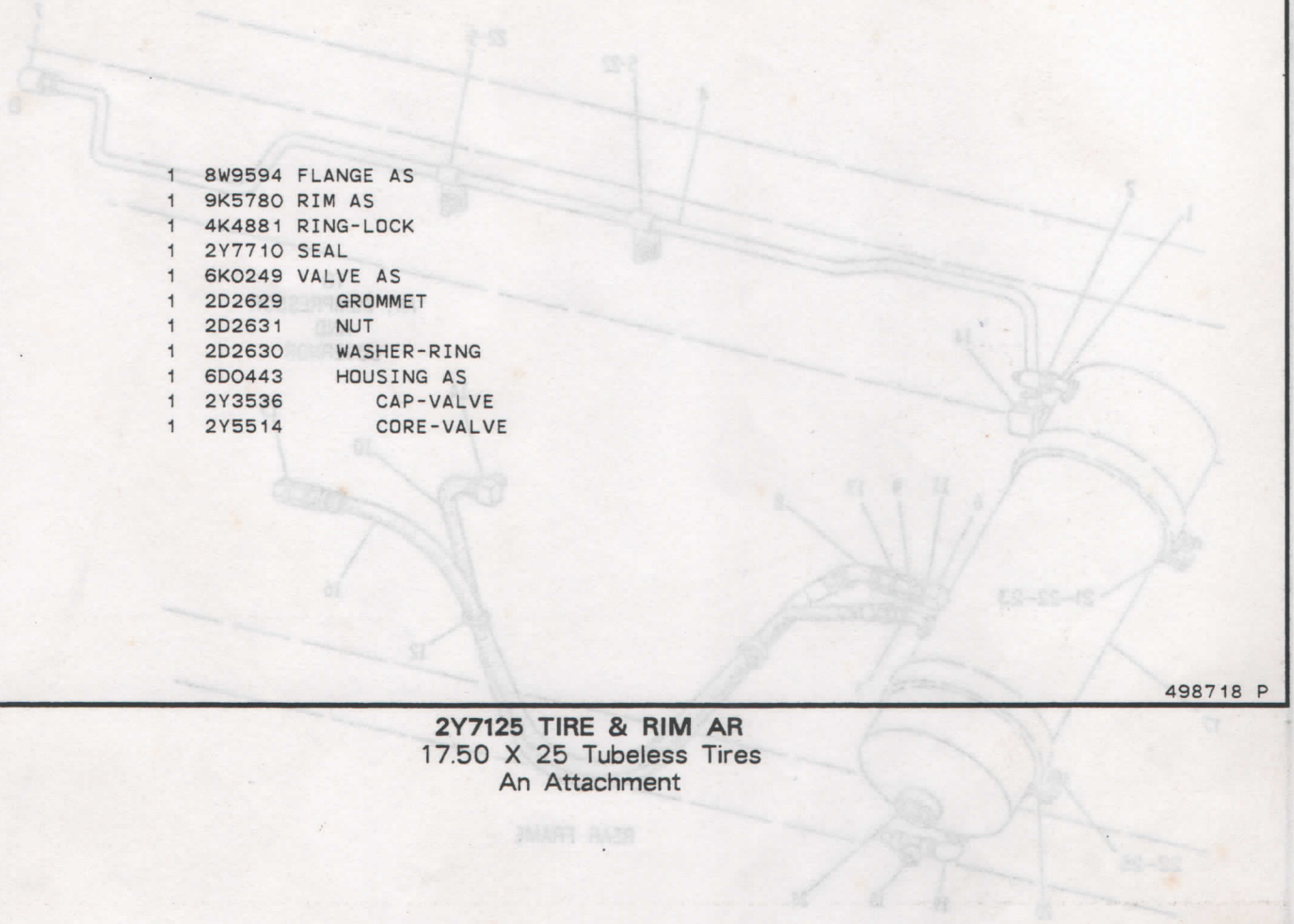

1	8W9594	FLANGE AS
1	9K5780	RIM AS
1	4K4881	RING-LOCK
1	2Y7710	SEAL
1	6K0249	VALVE AS
1	2D2629	GROMMET
1	2D2631	NUT
1	2D2630	WASHER-RING
1	6D0443	HOUSING AS
1	2Y3536	CAP-VALVE
1	2Y5514	CORE-VALVE

498718 P

2Y7125 TIRE & RIM AR
17.50 X 25 Tubeless Tires
An Attachment

STEERING AND BRAKING SYSTEM

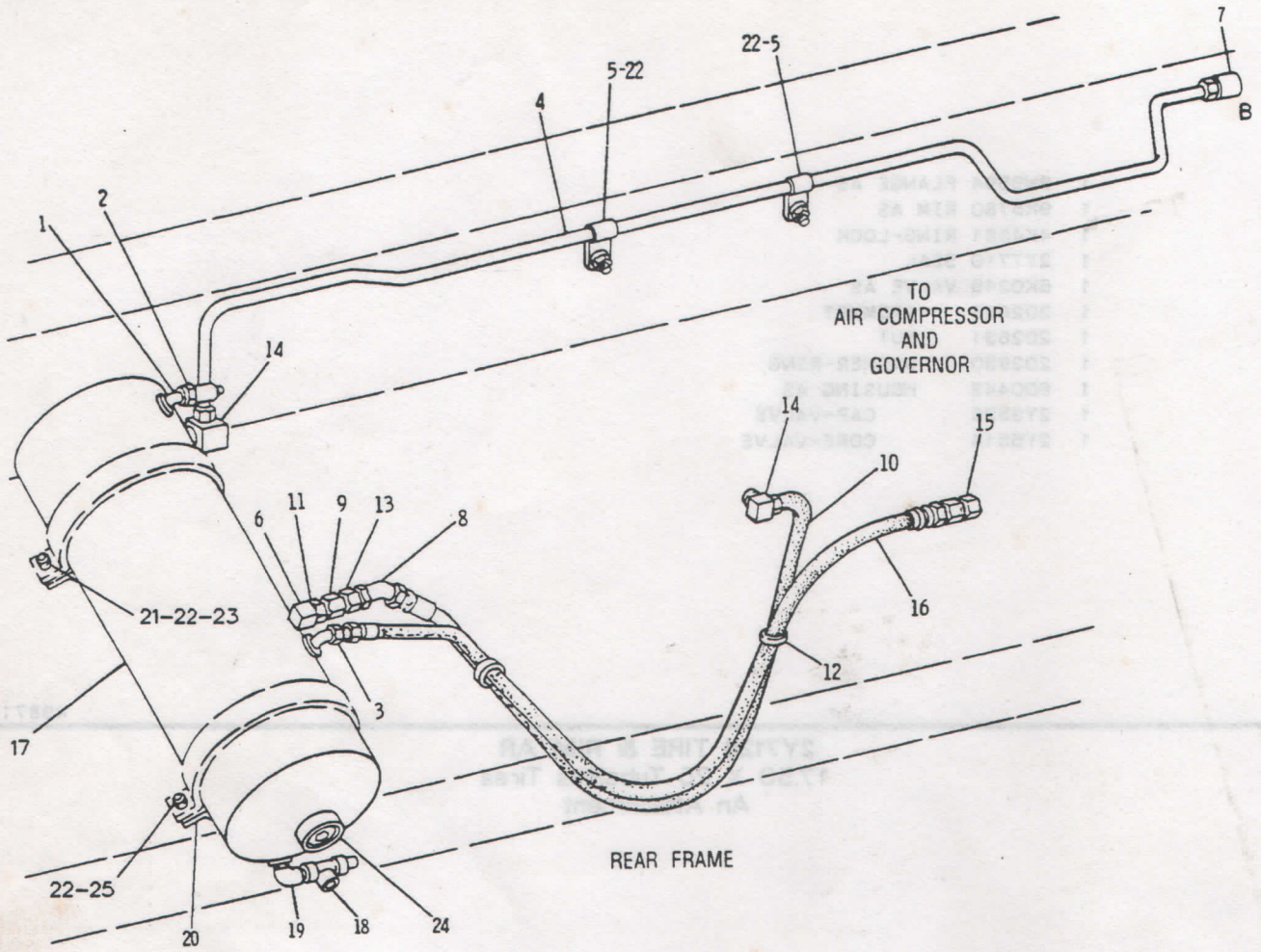

NOTE	REF NO	PART NUMBER	QTY	PART NAME	NOTE	REF NO	PART NUMBER	QTY	PART NAME
	1	3B7730	1	ELBOW		25	1A2029	2	BOLT
	2	6B9664	1	VALVE					
	3	3K3415	1	FITTING					
	4	6K8122	1	TUBE AS					
	5	4B0418	2	CLIP					
		1D4717	2	NUT					
	6	7J0482	1	ELBOW					
	7	6K8077	1	UNION-FLARED					
	8	6K6826	1	ELBOW					
	9	7D6936	1	VALVE AS-CHECK					
	10	2Y8311	1	HOSE AS					
	11	4K2724	1	ADAPTER					
	12	6K0806	2	STRAP-CABLE					
	13	9F9920	1	BUSHING-REDUCING					
	14	5K9244	2	ELBOW-FLARED					
	15	3B9400	1	CONNECTOR-FLARED					
I	16	9K8141	1	HOSE AS					
	17	6K6834	1	TANK AS (AIR)					
	18	5K9972	1	VALVE AS					
	19	3B6773	1	ELBOW					
		6K1019	1	NIPPLE-PIPE					
	20	6K6832	2	CLAMP					
	21	3B1915	2	BOLT					
	22	5M2894	8	WASHER					
	23	2K4973	2	LOCKNUT					
	24	3J5390	2	PLUG					

I-SEE HOSE FABRICATION GUIDE

R-487755 EP

8V3298 CONTROL GP-BRAKE-PART 1 OF 4

STEERING AND BRAKING SYSTEM

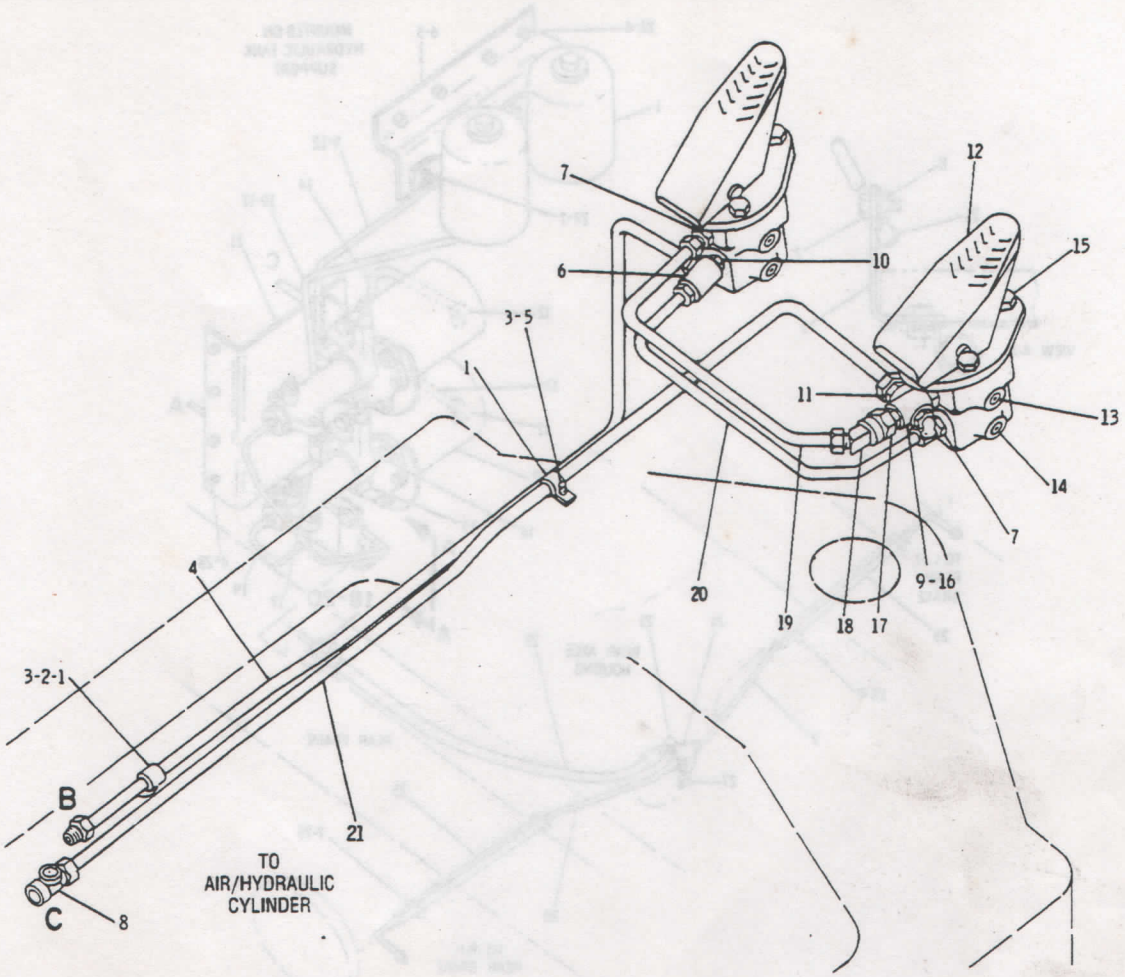

NOTE	REF NO	PART NUMBER	QTY	PART NAME	NOTE	REF NO	PART NUMBER	QTY	PART NAME
	1	4B0418	2	CLIP					
	2	1D4717	1	NUT					
	3	5M2894	2	WASHER					
	4	6K6801	1	TUBE AS					
	5	0S0509	1	BOLT					
	6	6K8214	1	TEE-FLARED					
	7	5K9245	2	CONNECTOR-FLARED					
	8	7K2543	1	TEE-INVERTER FLARED					
	9	8B6021	1	ADAPTER					
	10	3B7255	1	BUSHING					
	11	5K9238	1	CONNECTOR-FLARED					
CY	12	2Y7104	2	VALVE AS-BRAKE FOOT CONTROL					
	13	2B0858	7	PLUG-PIPE (LARGE)					
	14	5M6213	2	PLUG (SMALL)					
	15	2B2695	6	BOLT					
		1D4716	6	NUT-FULL					
		9M1974	6	WASHER					
	16	2Y6648	1	VALVE AS					
	17	6K6825	1	VALVE AS					
	18	6K6826	1	ELBOW					
	19	2Y7138	1	TUBE AS					
	20	6K8118	1	TUBE AS					
	21	4V6865	1	TUBE AS					

C-CHANGE FROM PREVIOUS TYPE
Y-SEPARATE ILLUSTRATION

B-404262 EP

8V3298 CONTROL GP-BRAKE-PART 2 OF 4
2Y7104–Page 117

STEERING AND BRAKING SYSTEM

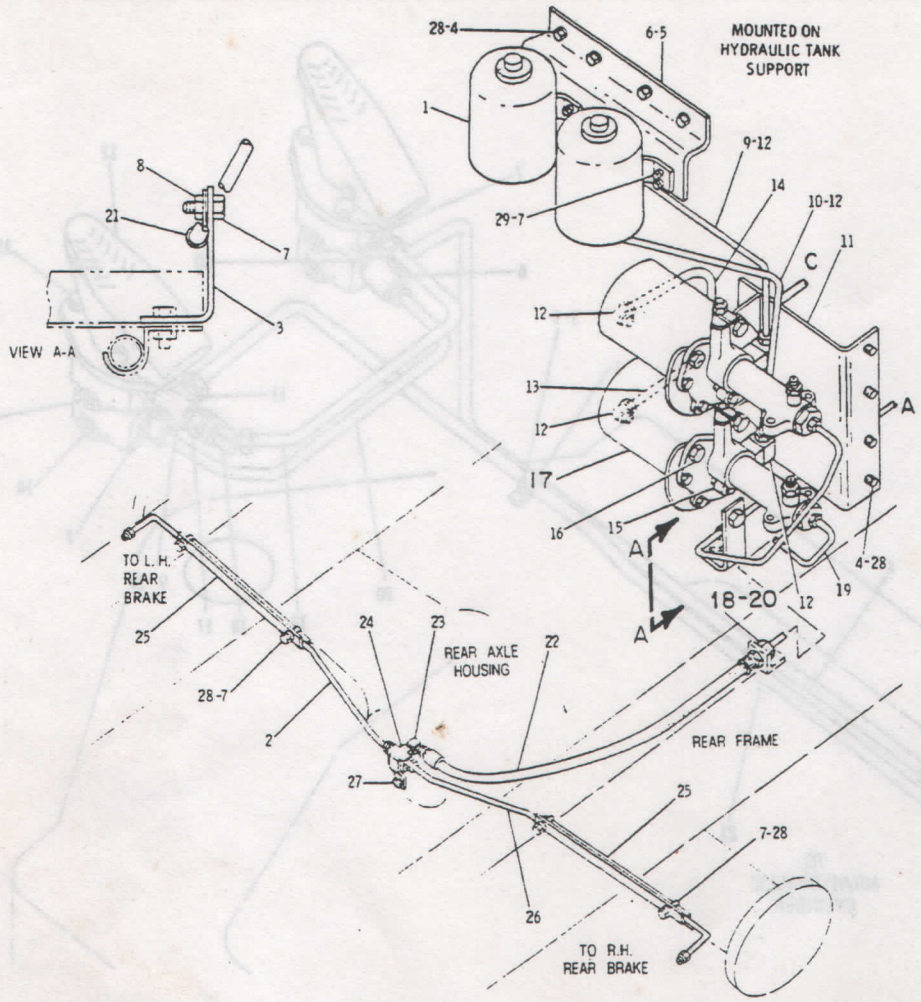

NOTE	REF NO	PART NUMBER	QTY	PART NAME	NOTE	REF NO	PART NUMBER	QTY	PART NAME
Y	1	2Y7136	2	TANK GP-HYDRAULIC		24	5V8967	1	TEE AS
	2	8V6871	1	TUBE AS		25	6K6831	2	ANGLE
	3	383967	1	BRACKET		26	8V6870	1	TUBE AS
	4	OS1594	8	BOLT		27	OS1617	1	BOLT
	5	2Y4809	1	BRACKET AS			9M1974	1	WASHER
	6	9F2978	8	NUT-WELD		28	5P1075	12	WASHER-HARD
	7	OSO509	13	BOLT		29	5M2894	8	WASHER
	8	1D4717	1	NUT					
	9	4V6858	1	TUBE AS					
	10	4V6859	1	TUBE AS					
	11	4V6805	1	BRACKET AS					
	12	5K9244	6	ELBOW-FLARED					
	13	4V6860	1	TUBE AS					
	14	4V6861	1	TUBE AS					
	15	4H6112	2	BREATHER					
		3B7722	2	BUSHING					
	16	OS1595	4	BOLT					
		5P8245	4	WASHER					
Y	17	4V5414	2	CYLINDER GP-AIR OVER HYD					
	18	4V6485	1	ADAPTER					
	19	2Y5596	1	TUBE AS					
	20	9S1354	1	NUT					
		5P8247	1	WASHER-HARD					
	21	OSO550	1	CLIP					
	22	6K6827	1	HOSE AS					
	23	5K9243	1	ELBOW-FLARED					

Y-SEPARATE ILLUSTRATION

B-353315 EP

8V3298 CONTROL GP-BRAKE-PART 3 OF 4

2Y7136-Page 117, 4V5414-Page 118

STEERING AND BRAKING SYSTEM

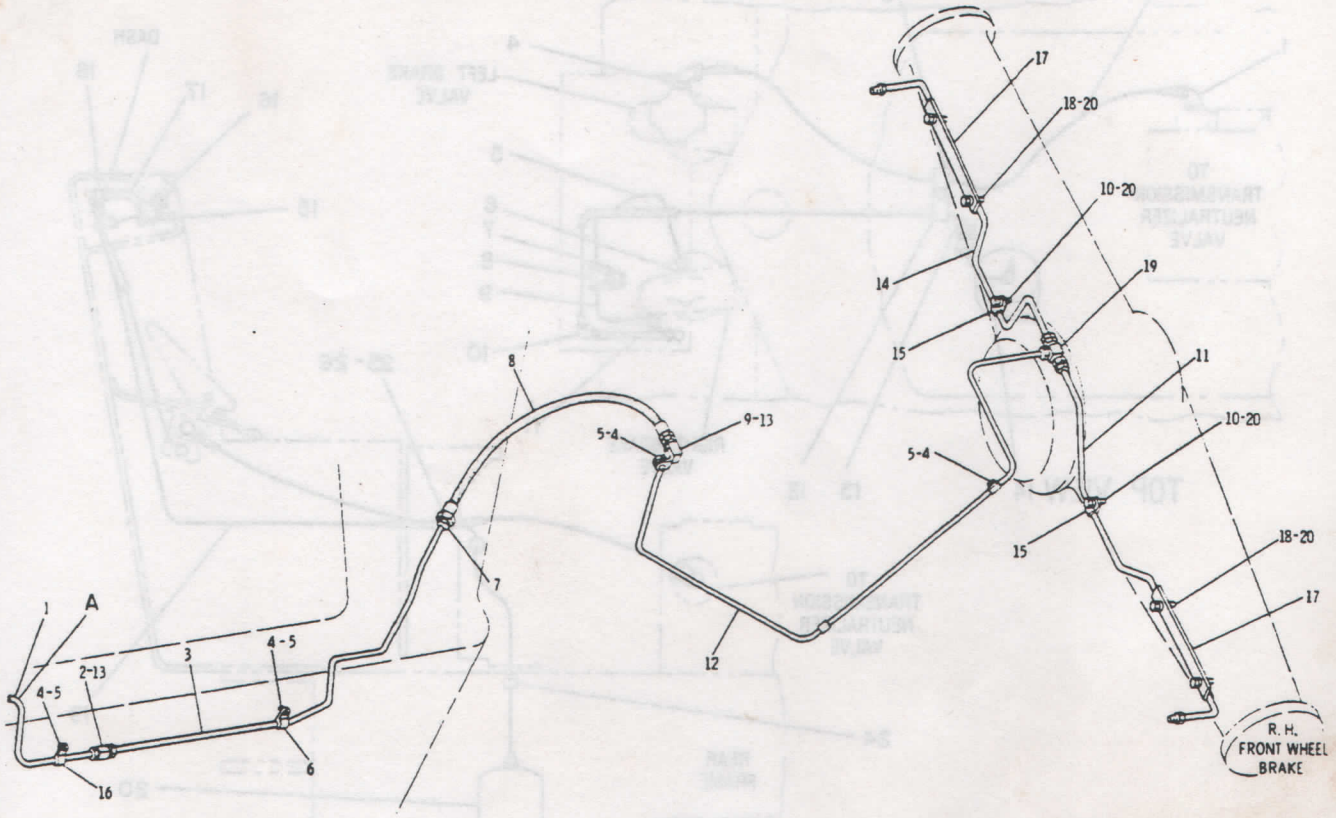

NOTE	REF NO	PART NUMBER	QTY	PART NAME	NOTE	REF NO	PART NUMBER	QTY	PART NAME
	1	4V6863	1	TUBE AS					
	2	5K9242	1	UNION-FLARED					
	3	1V6951	1	TUBE AS					
	4	1D4717	5	NUT					
	5	5M2894	5	WASHER					
	6	1B3581	1	CLIP					
	7	9S1354	1	NUT					
	8	6K9527	1	HOSE AS					
	9	6K8525	1	ELL AS-FRAME					
	10	OTO102	2	BOLT					
	11	8V6869	1	TUBE AS (R.H.)					
	12	8V6867	1	TUBE AS					
	13	4V6485	2	ADAPTER					
	14	8V6868	1	TUBE AS (L.H.)					
	15	OSO550	4	CLIP					
	16	4D8123	1	CLIP					
	17	6K6486	2	ANGLE					
	18	OSO509	4	BOLT					
	19	2K5496	1	TEE AS-FRAME					
		OS1617	1	BOLT					
		9M1974	1	WASHER					
	20	5P1075	6	WASHER-HARD					

B-353316 EP

8V3298 CONTROL GP-BRAKE-PART 4 OF 4

STEERING AND BRAKING SYSTEM

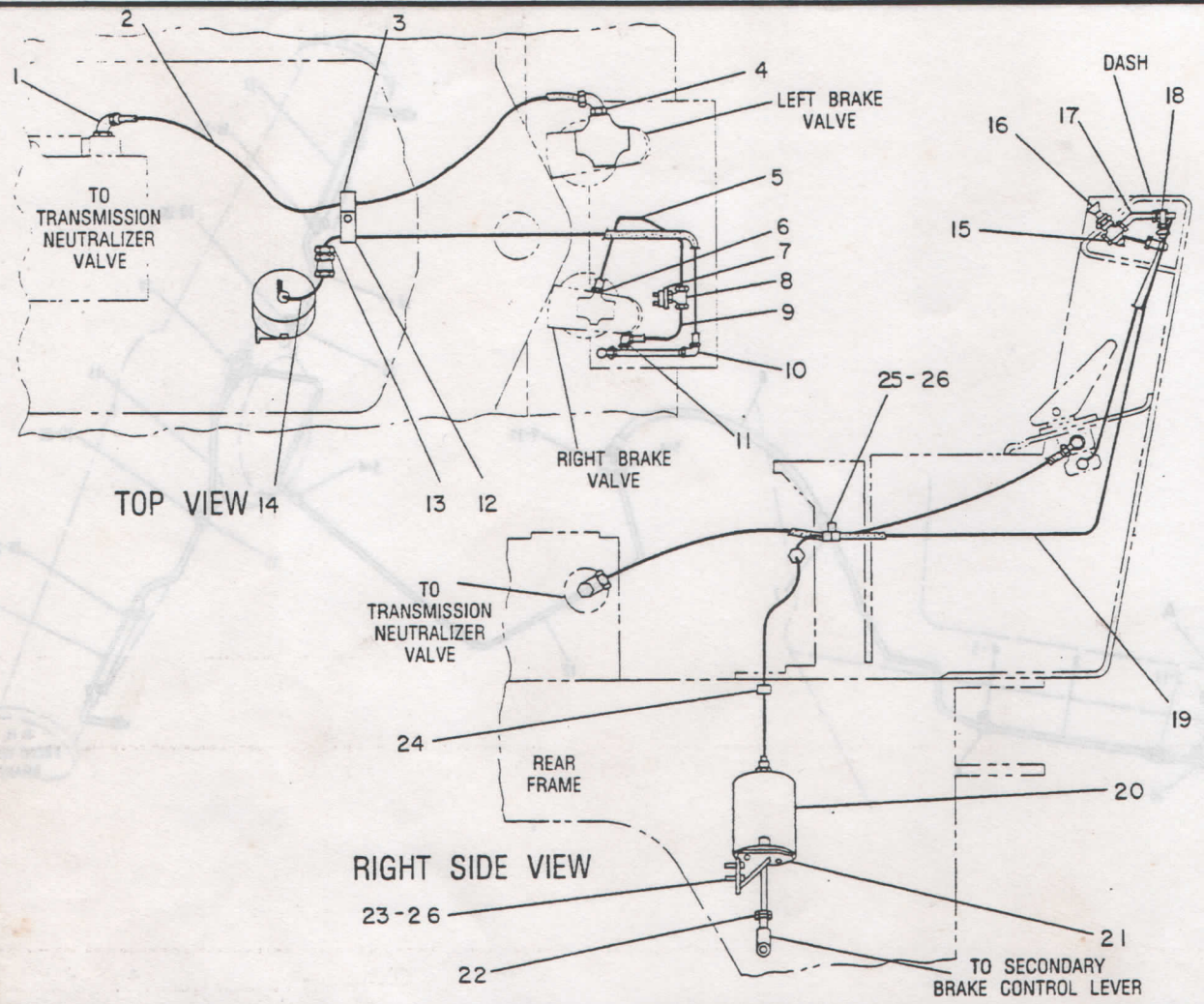

NOTE	REF NO	PART NUMBER	QTY	PART NAME	NOTE	REF NO	PART NUMBER	QTY	PART NAME
	1	3B6553	2	ELBOW		26	5M2894	5	WASHER
	2	6K8231	1	HOSE AS					
	3	9M8406	1	CLIP					
	4	6B5072	1	BUSHING					
	5	6K8497	1	TUBE AS					
	6	5K9246	1	CONNECTOR-FLARED					
	7	3B6768	2	BUSHING-REDUCING					
	8	9S7744	1	TEE-FLARED					
	9	7K1460	1	TUBE AS					
	10	5K9235	1	ELBOW-FLARED					
	11	1L6939	1	ELBOW					
	12	7M2220	1	CLIP					
	13	6K8076	1	CONNECTOR-FLARED					
	14	3S8146	1	HOSE AS					
	15	5M6213	1	PLUG					
Y	16	7K2738	1	VALVE AS-PARK & SECONDARY					
	17	7K4529	1	PIPE					
	18	3B7762	1	TEE					
	19	9K3215	1	TUBE AS					
Y	20	6K7261	1	CHAMBER AS-BRAKE					
	21	5Y0453	1	BRACKET AS					
	22	9S1354	1	NUT					
	23	0L1351	4	BOLT					
	24	6K6355	1	CLIP					
	25	0S0509	1	BOLT					

Y-SEPARATE ILLUSTRATION

B-450366 EP

7V9137 CONTROL GP-BRAKE

6K7261-Page 118, 7K2738-Page 119

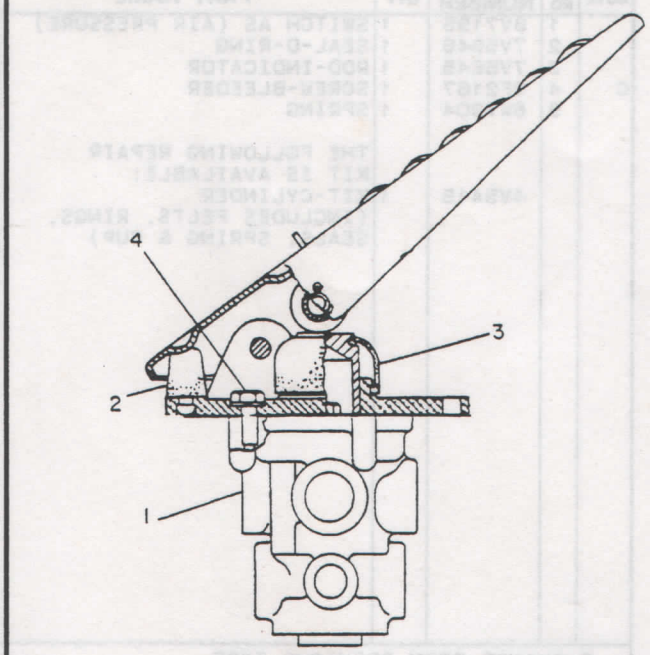

NOTE	REF NO	PART NUMBER	QTY	PART NAME
	1	2Y7485	1	VALVE AS
	2	2Y7483	1	BUTTON-STOP
	3	2Y7484	1	BOOT
	4	OS1617	3	BOLT
				THE FOLLOWING REPAIR KITS ARE AVAILABLE:
		2Y7477	1	KIT-PEDAL (INCLUDES PISTON, PEDAL, SUPPORT, FOLLOWER, COWL, PEDAL SUPPORT, PIVOT PINS, COTTER PINS, AND LUBRICANT)
		2Y7478	1	KIT-VALVE (COMPLETE) (INCL. EXHAUST VALVE GP, SPRINGS, PACKING, SEAL RINGS, DIAPHAGM, RETAINERS & LUBRICANT)
		2Y7479	1	KIT-VALVE (PARTIAL) (INCL. EXHAUST VALVE GP, DIAPHAGM, PACKING, SEAL RINGS, RETAINER & LUBRICANT)

R-487792 EP

2Y7104 VALVE AS-BRAKE FOOT CONTROL
Part Of 8V3298 Control-Brake

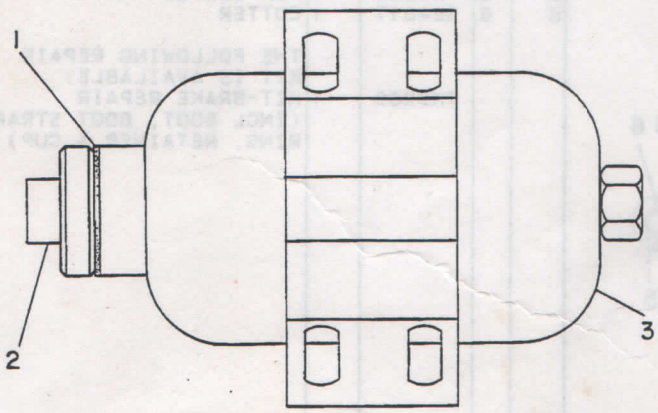

NOTE	REF NO	PART NUMBER	QTY	PART NAME
	1	2Y7133	1	GASKET
	2	2Y7134	1	CAP AS
	3	2Y7135	1	TANK AS

B-332617 EP

2Y7136 TANK GP-HYDRAULIC
Part Of 8V3298 Control-Brake

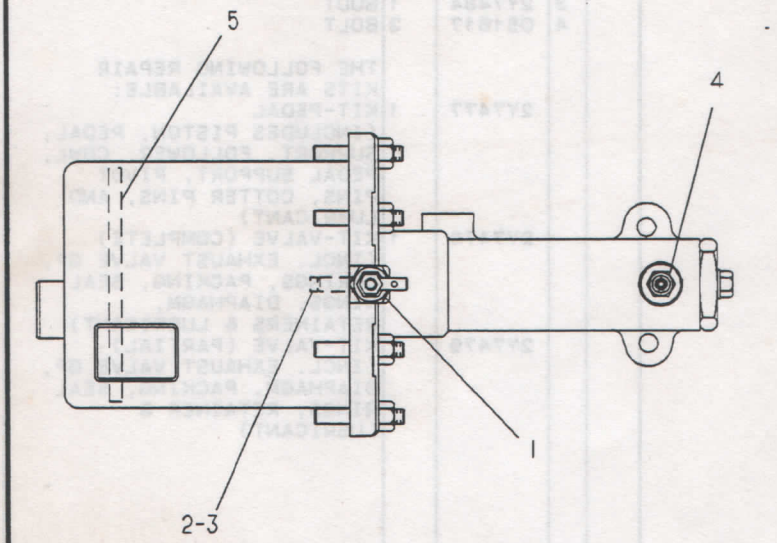

NOTE	REF NO	PART NUMBER	QTY	PART NAME
	1	8V7195	1	SWITCH AS (AIR PRESSURE)
	2	7V5646	1	SEAL-O-RING
	3	7V5645	1	ROD-INDICATOR
C	4	9F2167	1	SCREW-BLEEDER
	5	6W7304	1	SPRING
				THE FOLLOWING REPAIR KIT IS AVAILABLE:
		4V5415	1	KIT-CYLINDER (INCLUDES FELTS, RINGS, SEALS, SPRING & CUP)

C-CHANGE FROM PREVIOUS TYPE

A-460299 EP

4V5414 CYLINDER GP-AIR OVER HYDRAULIC
Part Of 8V3298 Control-Brake

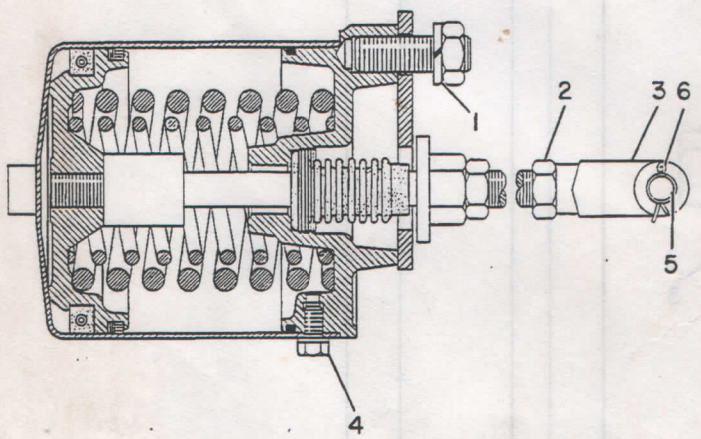

NOTE	REF NO	PART NUMBER	QTY	PART NAME
	1	3B4510	2	LOCKWASHER
	2	9S1354	4	NUT
BC	3	5K0292	1	ROD END
	4	2H3755	8	BOLT
		3F9556	8	LOCKWASHER
B	5	4K1540	1	PIN-CLEVIS
B	6	3B4617	1	COTTER
				THE FOLLOWING REPAIR KIT IS AVAILABLE:
		7K8209	1	KIT-BRAKE REPAIR (INCL BOOT, BOOT STRAP, RING, RETAINER & CUP)

B-USE AS REQUIRED
C-CHANGE FROM PREVIOUS TYPE

B-316685 EP

6K7261 CHAMBER AS-BRAKE
Part Of 7V9137 Control-Brake

STEERING AND BRAKING SYSTEM

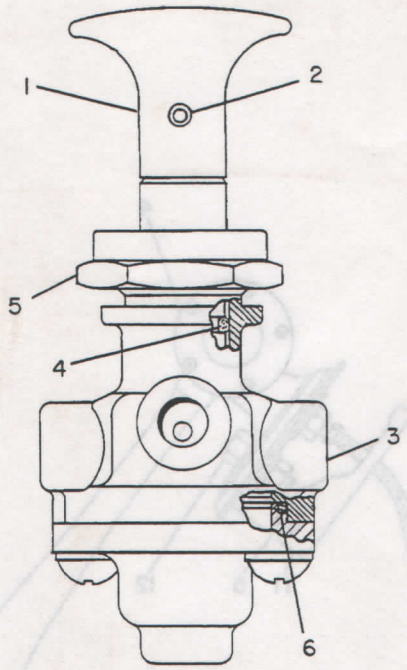

NOTE	REF NO	PART NUMBER	QTY	PART NAME
	1	9C3408	1	KNOB
	2	2D6403	1	PIN-SPRING
	3	3V8313	1	VALVE AS
	4	4K2039	1	SEAL-O-RING
	5	8K6474	1	NUT AS-SEALING
	6	5K6077	1	RING-SEALING

R-487794 EP

7K2738 VALVE AS-PARK & SECONDARY
Part Of 7V9137 Control-Brake

STEERING AND BRAKING SYSTEM

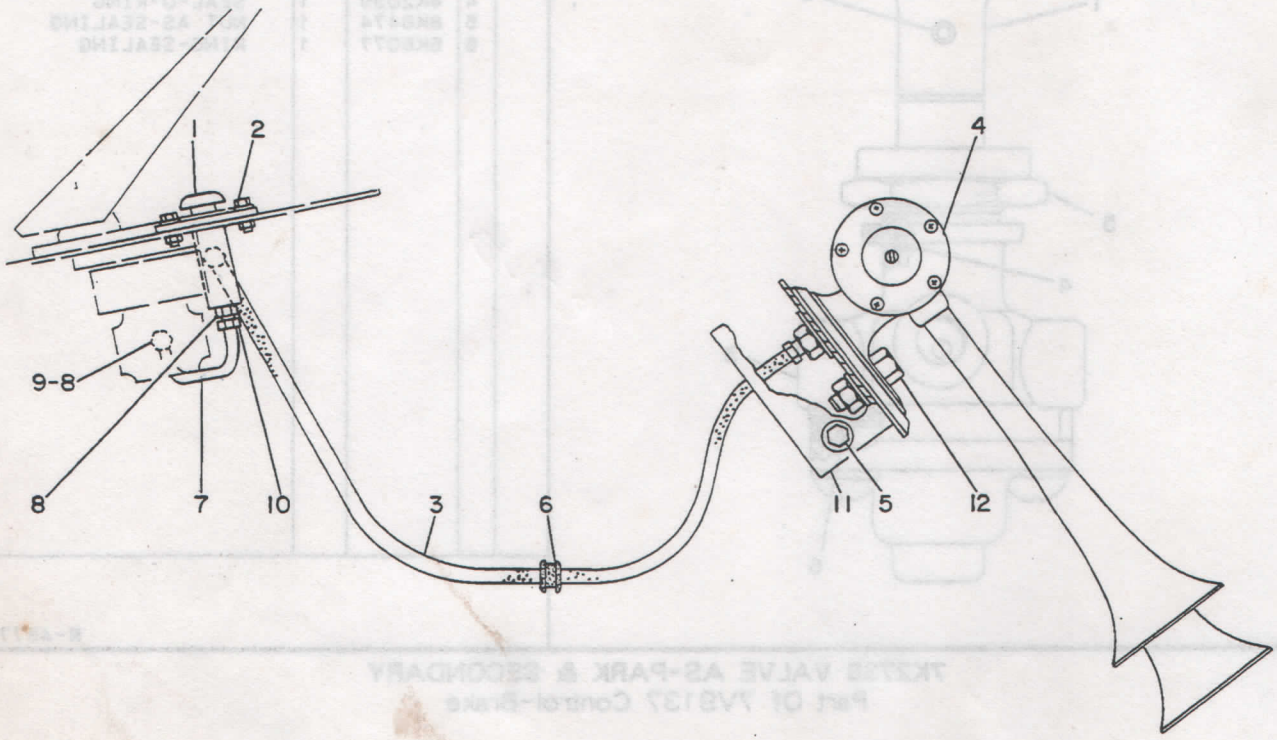

NOTE	REF NO	PART NUMBER	QTY	PART NAME	NOTE	REF NO	PART NUMBER	QTY	PART NAME
C	1	2Y6651	1	VALVE (HORN)					
C	2	454065	3	SCREW-MACHINE					
C		4B2049	3	NUT					
		3B4502	3	LOCKWASHER					
	3	2Y5926	1	HOSE AS					
Y	4	2Y3790	1	HORN GP-AIR					
C	5	1B2790	2	BOLT					
C		1D4716	2	NUT-FULL					
		3B4505	1	LOCKWASHER					
	6	9M5870	1	GROMMET					
	7	6K8493	1	TUBE AS					
	8	4B8756	2	NUT-FLARED					
C	9	5K9239	1	CONNECTOR					
C	10	6L3616	1	CONNECTOR-FLARED					
C	11	4K8230	1	BRACKET AS					
		1F0750	2	NUT-WELD					
C	12	4B3388	1	BOLT					
		1D4716	1	NUT-FULL					
		9M1974	1	WASHER					

C-CHANGE FROM PREVIOUS TYPE
Y-SEPARATE ILLUSTRATION

B-487796 EP

7V8918 HORN GP-AIR
2Y3790-Page 121

STEERING AND BRAKING SYSTEM

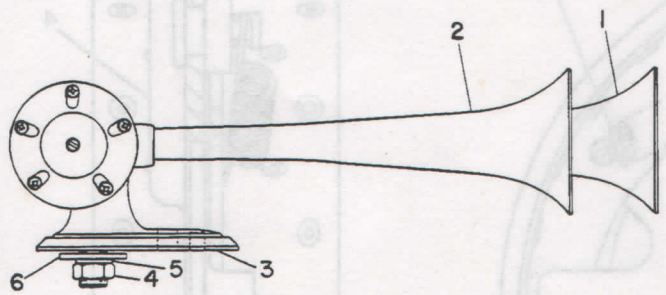

NOTE	REF NO	PART NUMBER	QTY	PART NAME
C	1	2Y6708	1	PROJECTOR
C	2	2Y6707	1	PROJECTOR
C	3	2Y6709	1	PAD
	4	9S1354	1	NUT
	5	138502	1	LOCKWASHER
	6	4B5275	1	WASHER-SCREW
				THE FOLLOWING REPAIR KIT IS AVAILABLE:
		2Y3792	1	KIT-HORN (DIAPHRAGM) (INCLUDES DIAPHRAGMS, EMBLEMS & GASKETS)

C-CHANGE FROM PREVIOUS TYPE

B-487797 EP

2Y3790 HORN GP-AIR
Part Of 7V8918 Horn-Air

PAGE

1 9C5965 BRAKE GP-PARKING..... 123

OR

1 9C5973 BRAKE GP-PARKING..... 122

478301 P

9C8683 BRAKE GP-PARKING
Transmission S/N 8YA673-Up
Part Of 3T8314 Gear-Transfer

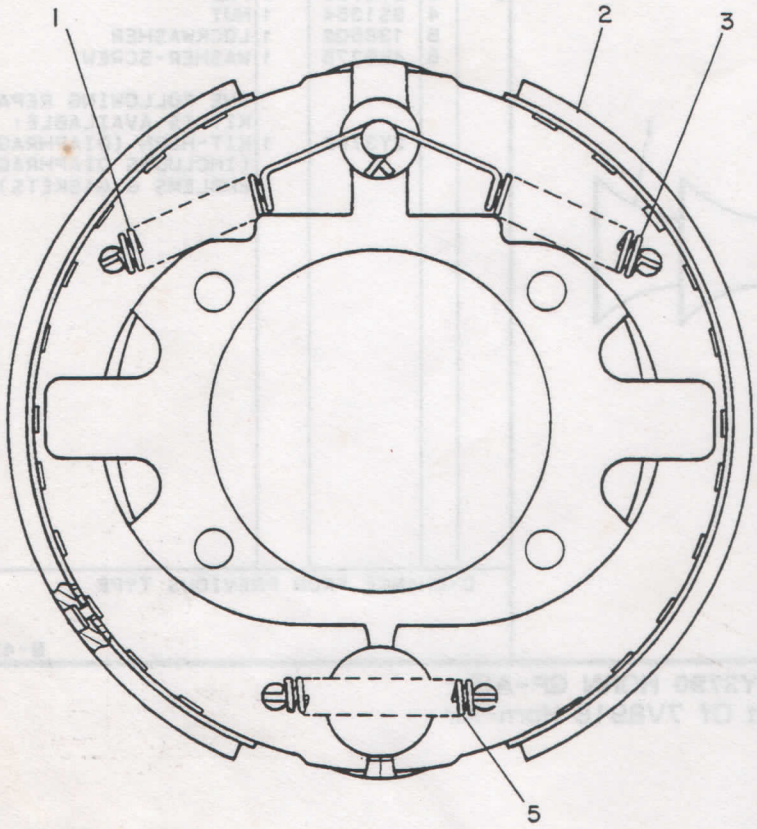

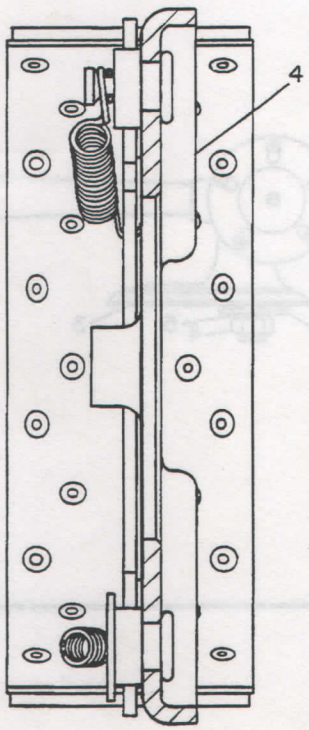

NOTE	REF NO	PART NUMBER	QTY	PART NAME
	1	6W5615	1	SPRING
	2	9C5971	2	SHOE AS-LINED
	3	6W5614	1	SPRING
	4	6W5612	1	PLATE AS
	5	6W5613	1	SPRING
				THE FOLLOWING REPAIR KIT IS AVAILABLE:
		9C5970	1	KIT-BRAKE LINING (INCLS RIVETS & LININGS)

V-478323 EP

9C5973 BRAKE GP-PARKING
Transmission S/N 8YA673-Up
Part Of 9C8683 Brake-Parking

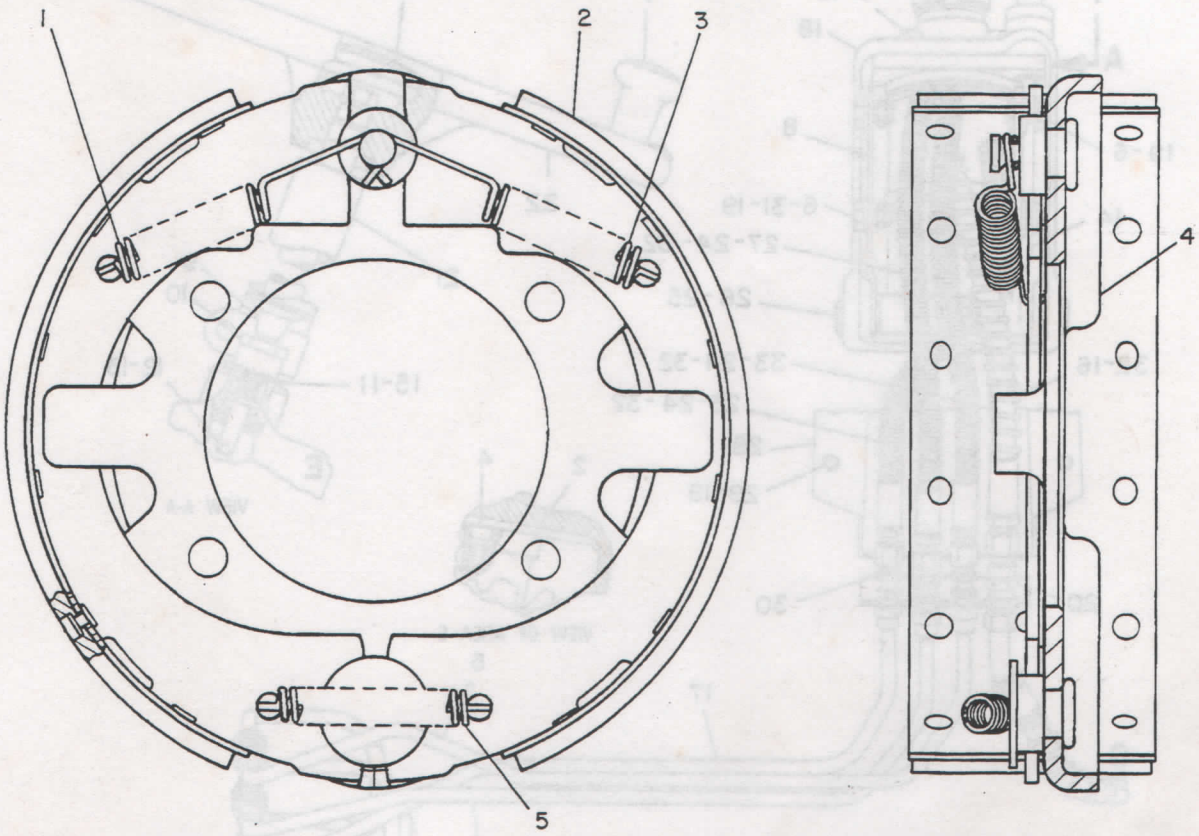

NOTE	REF NO	PART NUMBER	QTY	PART NAME
	1	1V2772	1	SPRING-EXTENSION
	2	9C8682	2	SHOE AS-LINED
	3	3K7057	1	SPRING-EXTENSION
	4	3K7058	1	PLATE AS-BRAKE SUPPORT
	5	3K7056	1	SPRING-EXTENSION
				THE FOLLOWING REPAIR KIT IS AVAILABLE:
		9C8681	1	KIT-BRAKE LINING (INCLS RIVETS & LININGS)

V-478321 EP

9C5965 BRAKE GP-PARKING
Transmission S/N 8YA673-Up
Part Of 9C8683 Brake-Parking

STEERING AND BRAKING SYSTEM

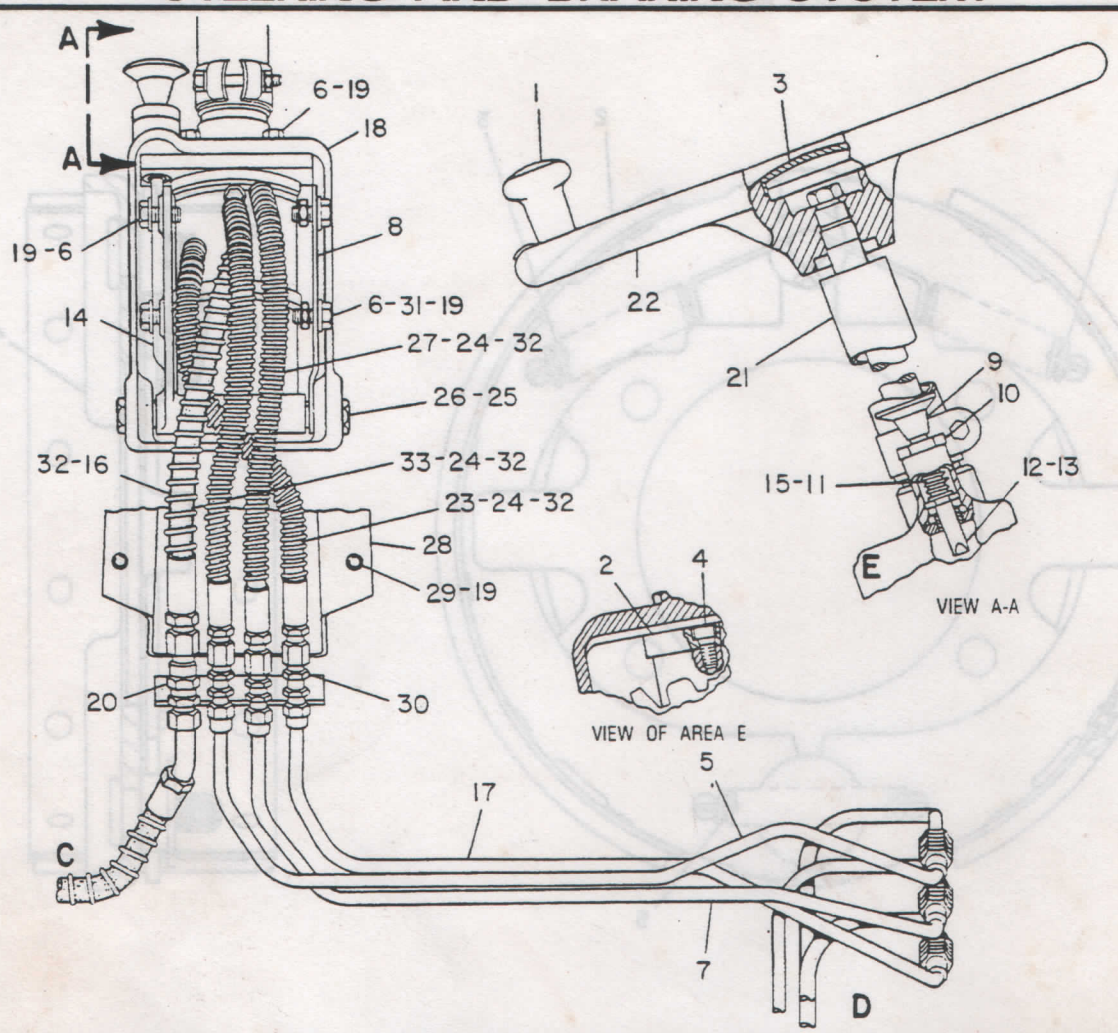

NOTE	REF NO	PART NUMBER	QTY	PART NAME
	1	2Y7661	1	SPINNER AS
	2	2Y5532	1	PLATE AS
		7H0818	1	BUSHING
	3	2Y7660	1	COVER
	4	346681	4	BOLT
	5	7K4407	1	TUBE AS
	6	0L1351	8	BOLT
	7	7K4009	1	TUBE AS
	8	2Y5537	1	PLATE
	9	2Y6647	1	KNOB
	10	2V2776	1	NUT
	11	2Y7345	1	SPRING
	12	4V2835	1	PIN AS
		4V2836	1	PIN
	13	6H3956	1	PIN (SPRING)
	14	2Y5494	1	BRACKET
	15	1A7615	1	WASHER
	16	2Y7006	1	HOSE AS
		8M0506	1	CONNECTOR
	17	7K4000	1	TUBE AS
	18	2Y5493	1	COVER
	19	5M2894	12	WASHER
	20	2P1281	1	UNION-BULKHEAD
		7F2050	1	LOCKNUT
Y	21	2Y6400	1	PUMP GP-STEERING COLUMN
	22	2Y7644	1	WHEEL
	23	2Y7111	1	HOSE AS
	24	2R6806	3	CONNECTOR
	25	5K2294	2	BEARING
	26	7V5547	2	BOLT-SHOULDER
	27	2Y7108	1	HOSE AS
	28	6K6769	1	COVER
	29	0S0509	4	BOLT
	30	2P1278	6	UNION-BULKHEAD
		2P1279	6	LOCKNUT
	31	1B5355	2	NUT-FULL
	32	3J1907	4	SEAL-O-RING
	33	2Y7109	1	HOSE AS
F		3L2415	2	BOLT
F		1B4205	2	NUT

F-NOT SHOWN
Y-SEPARATE ILLUSTRATION

B-353355 EP

2Y6783 CONTROL GP-STEERING-PART 1 OF 2

2Y6400–Page 126

STEERING AND BRAKING SYSTEM

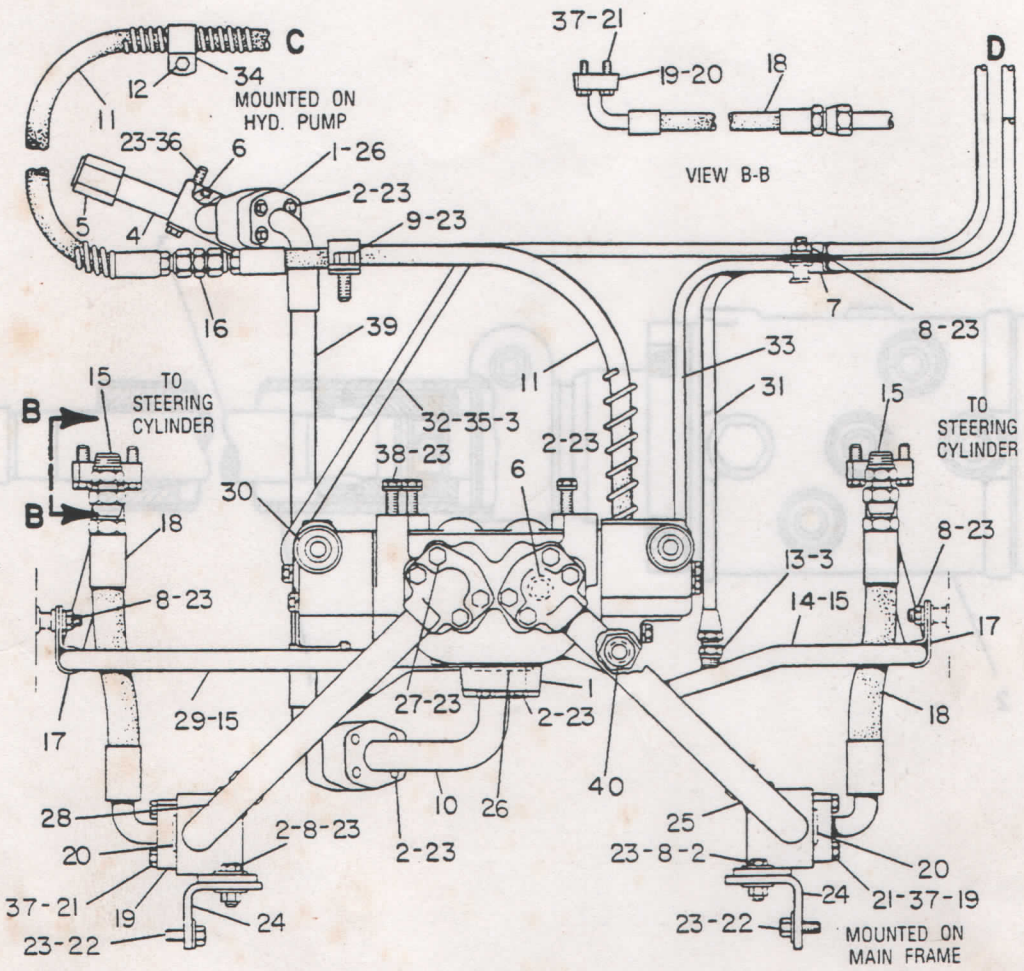

NOTE	REF NO	PART NUMBER	QTY	PART NAME
	1	1P4577	6	FLANGE-HALF
	2	0S1588	20	BOLT
	3	3J1907	3	SEAL-O-RING
	4	7V9101	1	TUBE AS
		5K7775	1	FLANGE
	5	9S8008	1	PLUG-O-RING
		3D2824	1	SEAL-O-RING
	6	4J5267	3	SEAL
	7	2R1866	1	CLAMP-LOOP (LOWER)
		8B6127	1	CLIP (UPPER)
	8	1D4717	7	NUT
	9	0S1594	1	BOLT
	10	9K1490	1	TUBE AS
	11	2Y4651	2	HOSE AS
	12	0S1615	1	BOLT
		1B4330	1	NUT
		5P0537	2	WASHER
	13	2R6806	1	CONNECTOR
	14	2Y9196	1	TUBE AS (LH)
	15	9M4584	4	CONNECTOR-FLARED
		2M9780	4	SEAL-O-RING
	16	3R2704	1	UNION-FLARED
	17	6K4947	2	BRACKET (TAB)
		6K4948	2	CLIP (TAB)
	18	2Y4783	4	HOSE AS
	19	2Y1346	8	FLANGE

NOTE	REF NO	PART NUMBER	QTY	PART NAME
	20	4J5140	4	SEAL-O-RING
	21	4B3388	16	BOLT
	22	0L1351	4	BOLT
	23	5M2894	43	WASHER
	24	7K2842	2	ANGLE
	25	7K2920	1	TUBE AS (LH)
	26	4J0520	3	SEAL
	27	0S1571	4	BOLT
	28	7K2919	1	TUBE AS (RH)
	29	8V1515	1	TUBE AS (LH)
Y	30	8J0430	1	VALVE GP-STEERING
	31	7K2609	1	TUBE AS
	32	8K7782	1	TUBE AS
	33	8K7783	1	TUBE AS
	34	4M6723	2	CLIP
	35	307947	2	ELBOW
	36	0L1143	4	BOLT
	37	9M1974	16	WASHER
	38	3B1915	3	BOLT
	39	7V9103	1	HOSE AS
	40	8M0505	1	CONNECTOR
		3K0360	1	SEAL-O-RING

Y-SEPARATE ILLUSTRATION

B-353356 EP

2Y6783 CONTROL GP-STEERING-PART 2 OF 2

8J0430-Page 135

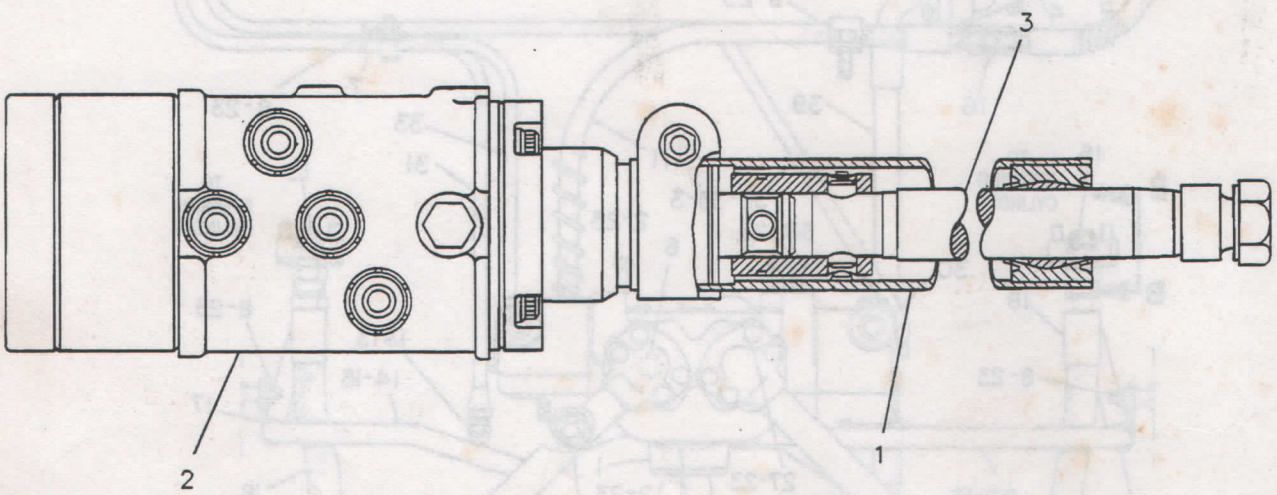

NOTE	REF NO	PART NUMBER	QTY	PART NAME	NOTE	REF NO	PART NUMBER	QTY	PART NAME
	1	5Y1686	1	JACKET					
Y	2	2Y6399	1	PUMP GP-METERING					
	3	2Y6403	1	SHAFT					
				THE FOLLOWING REPAIR KITS ARE AVAILABLE:					
		5Y1664	1	KIT-SEAL					
		5Y1666	1	KIT-SHIM					
		5Y1668	1	KIT-COVER					
		5Y1671	1	KIT-HOUSING					
		5Y1672	1	KIT-SLEEVE					
		5Y1673	1	KIT-PUMP					
		5Y1674	1	KIT-JACKET					
		5Y1692	1	KIT-SHAFT DRIVE					

Y-SEPARATE ILLUSTRATION

R-497554 EP

2Y6400 PUMP GP-STEERING COLUMN

2Y6399-Page 127

Part Of 2Y6783 Control-Steering

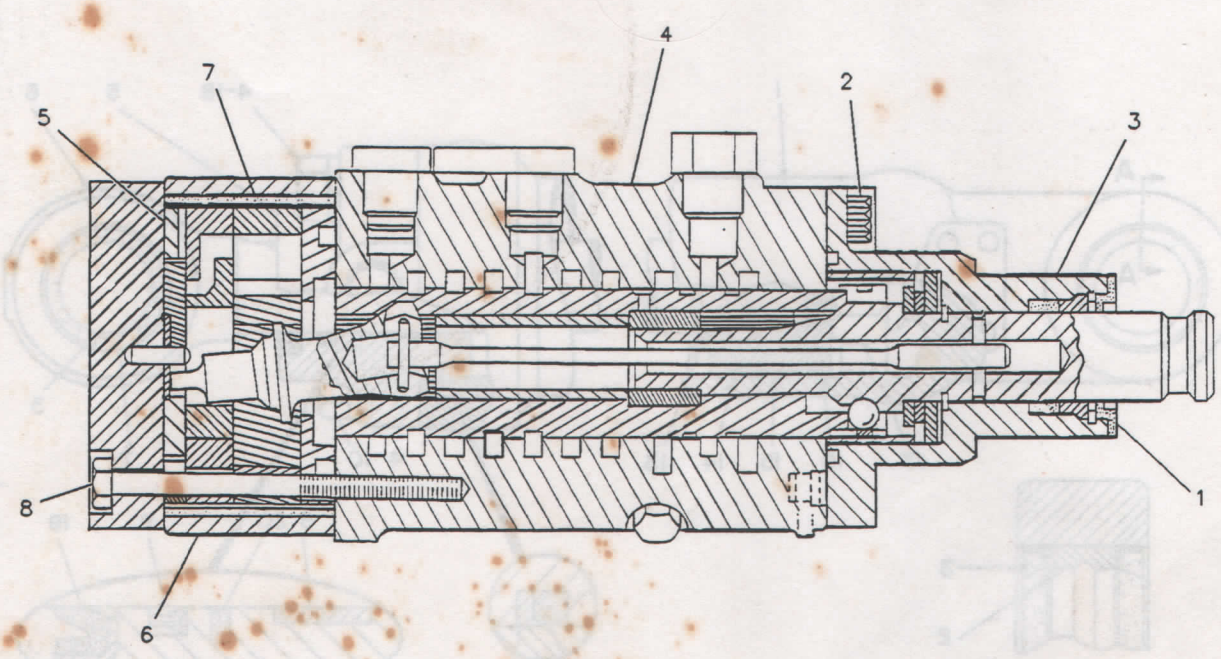

NOTE	REF NO	PART NUMBER	QTY	PART NAME	NOTE	REF NO	PART NUMBER	QTY	PART NAME
	1	5Y1669	1	SEAL					
	2	1TO416	4	BOLT					
	3	2Y6397	1	COVER					
	4	5Y1675	1	HOUSING AS					
	5	686750	1	COMMUTATOR & RING AS					
	6	2Y6391	1	RETAINER					
	7	2Y6389	1	SEAL					
	8	1D4540	7	BOLT (5/16-18X2.75IN)					

R-497570 EP

2Y6399 PUMP GP-METERING
Part Of 2Y6400 Pump-Steering Column

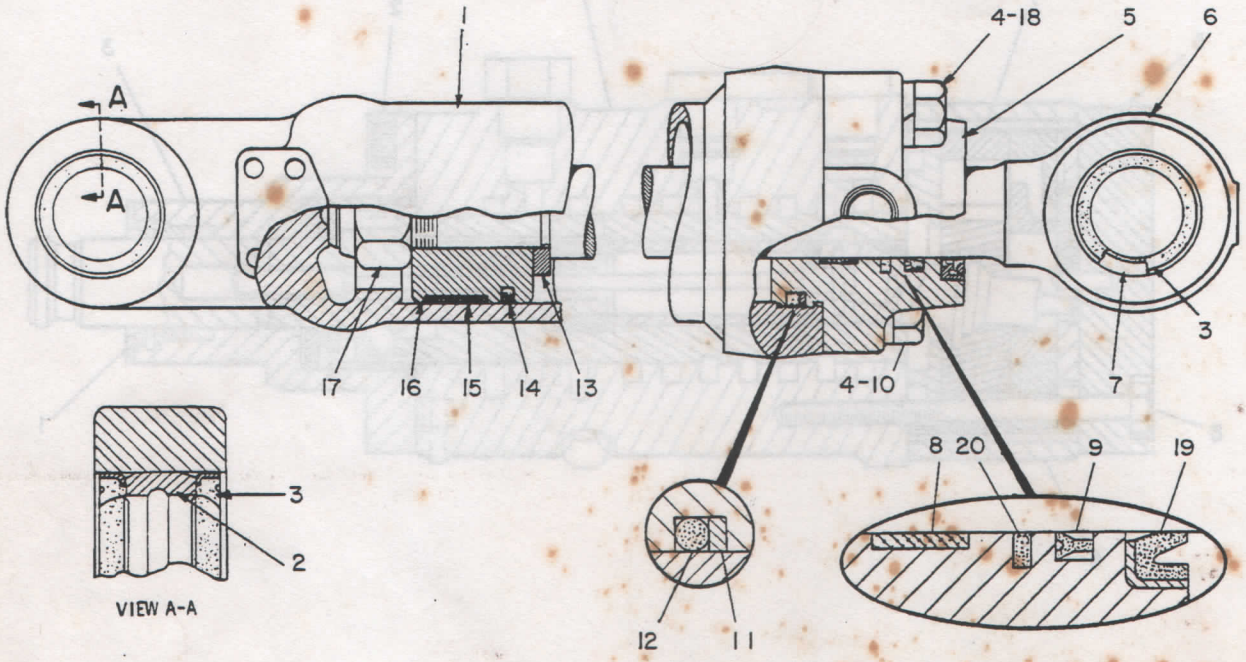

NOTE	REF NO	PART NUMBER	QTY	PART NAME	NOTE	REF NO	PART NUMBER	QTY	PART NAME
	1	7J9839	1	CYLINDER AS-HYDRAULIC					
	2	7J9842	1	BEARING-SLEEVE					
A	3	5P0091	4	SEAL-LIP TYPE					
	4	3B4510	4	LOCKWASHER					
C	5	9T5822	1	HEAD					
	6	7J9843	1	ROD AS-PISTON					
	7	7J9842	1	BEARING-SLEEVE					
C	8	8C9120	1	RING-WEAR					
	9	5J8150	1	SEAL-U-CUP					
	10	8S9092	2	BOLT					
	11	6J5731	1	RING-BACK-UP					
	12	5H8848	1	SEAL-O-RING					
	13	6J5737	1	WASHER					
	14	6J1972	1	SEAL AS					
	15	6J5733	1	RING-WEAR					
	16	6J5736	1	PISTON					
	17	6J5730	1	NUT-SELF LOCKING					
	18	0S1625	2	BOLT					
	19	4J8979	1	SEAL-LIP TYPE					
	20	6J9733	1	SEAL-RING					

A-NOT PART OF THIS GROUP
C-CHANGE FROM PREVIOUS TYPE

B-477280 EP

7J9838 CYLINDER GP-STEERING (CHANGE 03)
76.2 MM (3 In.) Bore X 368.3 MM (14.5 In.) Stroke-2 Required

PAGE

1	5YO973	FRAME AS-ENGINE END	
1	5YO627	LINES GP-SUPPLEMENTAL STEERING.....	130
1	5YO629	WIRING GP-SUPPLEMENTAL STEERING.....	75

473945 P

5Y0668 STEERING AR-SUPPLEMENTAL
An Attachment

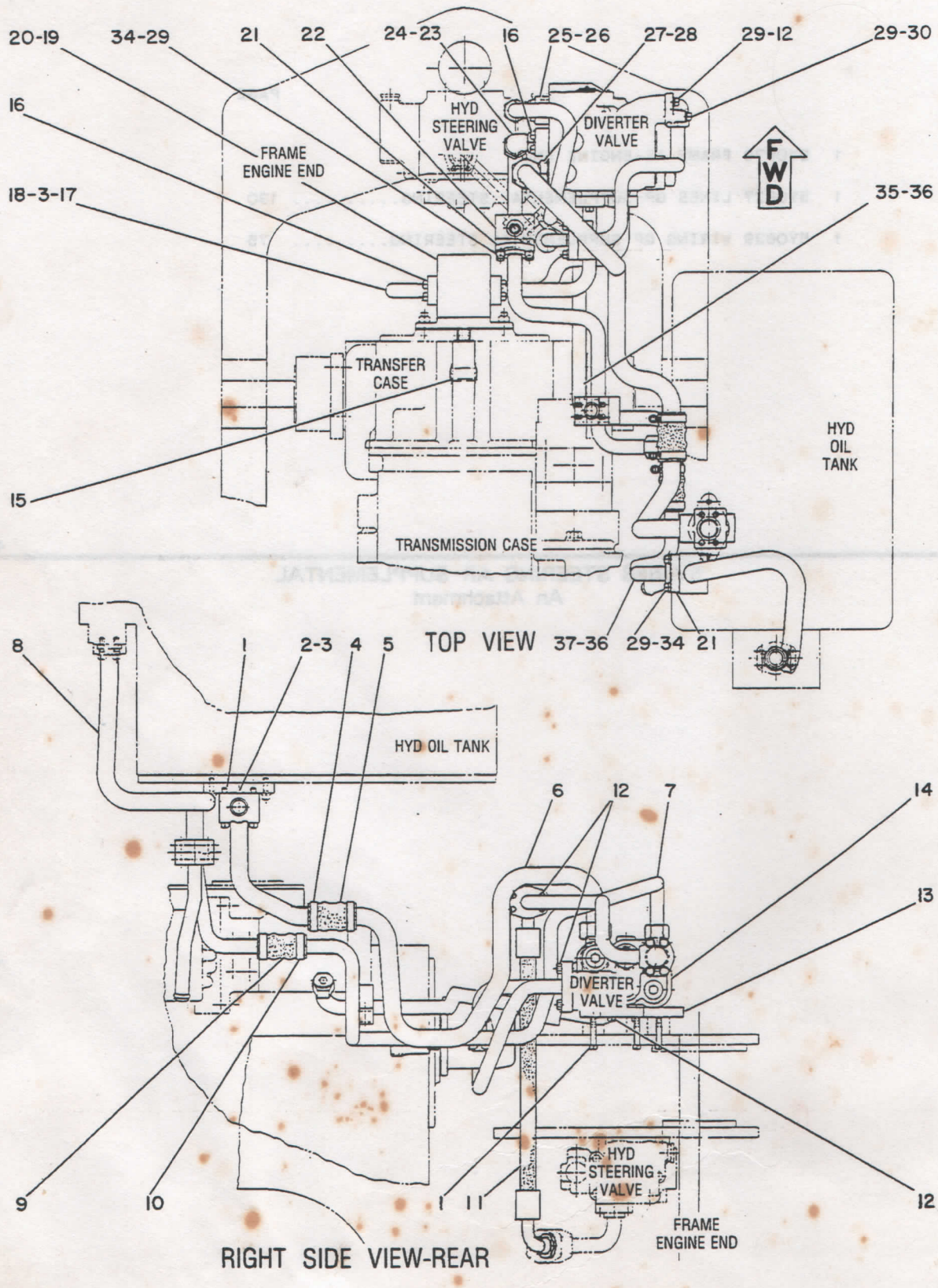

5Y0627 LINES GP-SUPPLEMENTAL STEERING
Part Of 5Y0668 Steering Ar-Supplemental
An Attachment

STEERING AND BRAKING SYSTEM

NOTE	REF NO	PART NUMBER	QTY	PART NAME
	1	0L1143	7	BOLT
	2	5Y0623	1	TUBE AS
	3	1P3704	3	SEAL
	4	9M0164	2	CLAMP-HOSE
E	5	5P6412		HOSE (8.9 CM)
	6	5Y0665	1	TUBE AS
	7	5Y0633	1	TUBE AS
	8	2V3453	1	TUBE AS
E	9	5P2094		HOSE (8.9 CM)
	10	9M7958	2	CLAMP
	11	5Y0564	1	HOSE AS
	12	0S1588	13	BOLT
	13	5Y0438	1	PLATE
Y	14	7J9976	1	VALVE GP-DIVERTER
	15	9P1519	1	COUPLING
	16	0S1591	16	BOLT
	17	5Y0565	1	TUBE AS
	18	1P3702	2	SEAL-RECTANGULAR
Y	19	8J1568	1	PUMP GP-GEAR
	20	7J8114	1	GASKET
	21	1P4577	4	FLANGE-HALF
	22	5Y0626	1	TUBE AS
	23	88381	2	ELBOW
	24	3D2824	2	SEAL-O-RING
	25	5Y0624	2	FLANGE
	26	1P3703	2	SEAL-RECTANGULAR
	27	6M5652	1	ELBOW
	28	2S4078	1	SEAL-O-RING
	29	5M2894	12	WASHER
	30	0S1590	2	BOLT
	31	5Y0566	1	TUBE AS
	32	4F7391	1	SEAL-O-RING
	33	5Y0563	1	TUBE AS
	34	3B1915	8	BOLT
	35	5Y0632	1	TUBE AS
	36	4J0520	2	SEAL
	37	5Y0567	1	TUBE AS

NOTE	REF NO	PART NUMBER	QTY	PART NAME

E-ORDER BY THE CENTIMETER
Y-SEPARATE ILLUSTRATION

499371 EP

5Y0627 LINES GP-SUPPLEMENTAL STEERING
8J1568–Page 132, 7J9976–Page 133
Part Of 5Y0668 Steering Ar–Supplemental
An Attachment

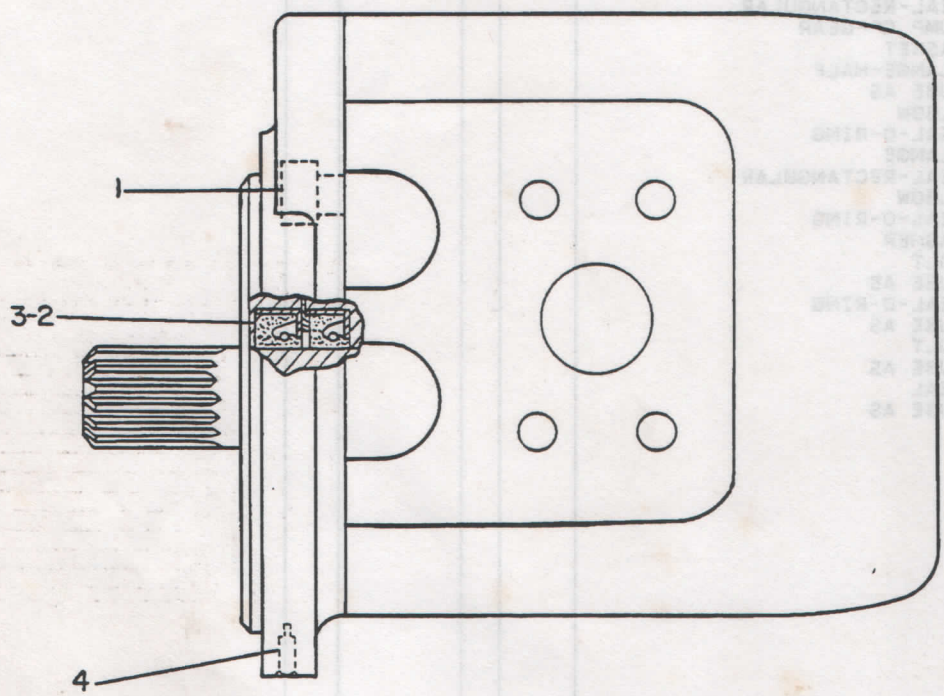

REF. NO.	PART NUMBER	DESCRIPTION	QTY.
1	5L4183	BOLT	8
2	2D9359	SEAL	2
3	1U3129	SPACER	1
4	1U3130	PLUG	1

THE FOLLOWING REPAIR KIT IS AVAILABLE:

	1U3131	KIT	1

181758

181758 EP

8J1568 PUMP GP-GEAR
Part Of 5Y0627 Lines-Supplemental Steering
An Attachment

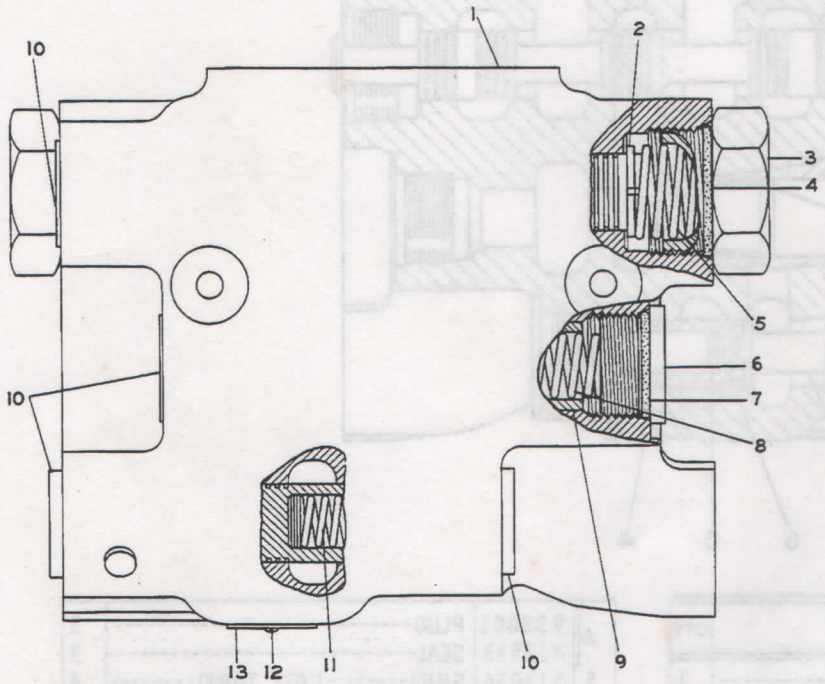

REF. NO.	PART NUMBER	DESCRIPTION	QTY
1	7J9969	VALVE GROUP (See Separate Illustration)	1
2	4J4210	RETAINER	4
3	7J9970	RETAINER	1
4	2S4078	SEAL	1
5	7S8491	SPRING	1
6	9S9334	PLUG	2
7	7M8485	SEAL	2
8	1L4418	SPRING	2
9	7J9971	VALVE	2
10	9S8009	PLUG	5
	4K1388	SEAL	5
11	6D1601	SPRING	1
12	7B3028	SCREW	1
13	7J9974	PLATE	1

134433 EP

7J9976 VALVE GP-DIVERTER
7J9969–Page 134
Part Of 5Y0627 Lines–Supplemental Steering
An Attachment

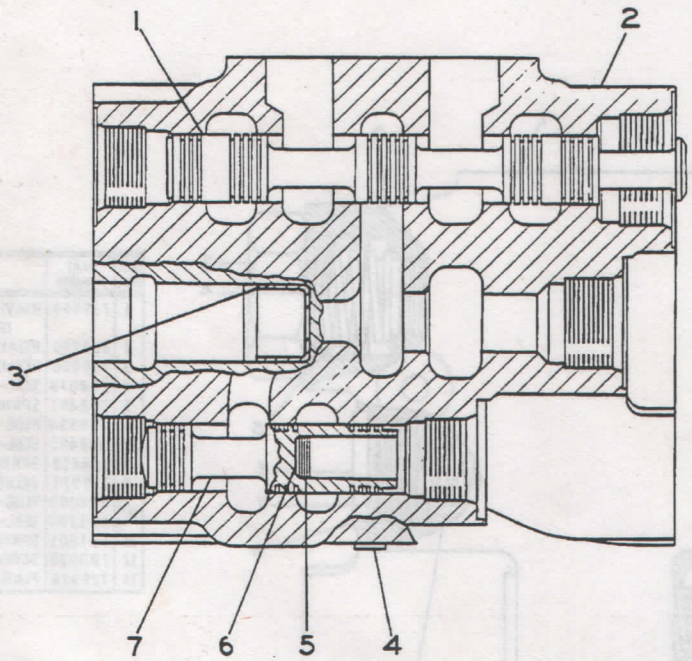

REF. NO.	PART NUMBER	DESCRIPTION	QTY
1	Not Serv	STEM----------	1
2	Not Serv	BODY----------	1
3	7J9972	ORIFICE----------	1
4	9S8001	PLUG----------	3
	4J7533	SEAL----------	3
5	5J1036	SHIM--------(.031" Thick)--------	4
6	6J3993	SHIM--------(.010" Thick)--------	1
7	Not Serv	STEM----------	1

134434

134434 EP

7J9969 VALVE GP
Part Of 7J9976 Valve-Diverter
An Attachment

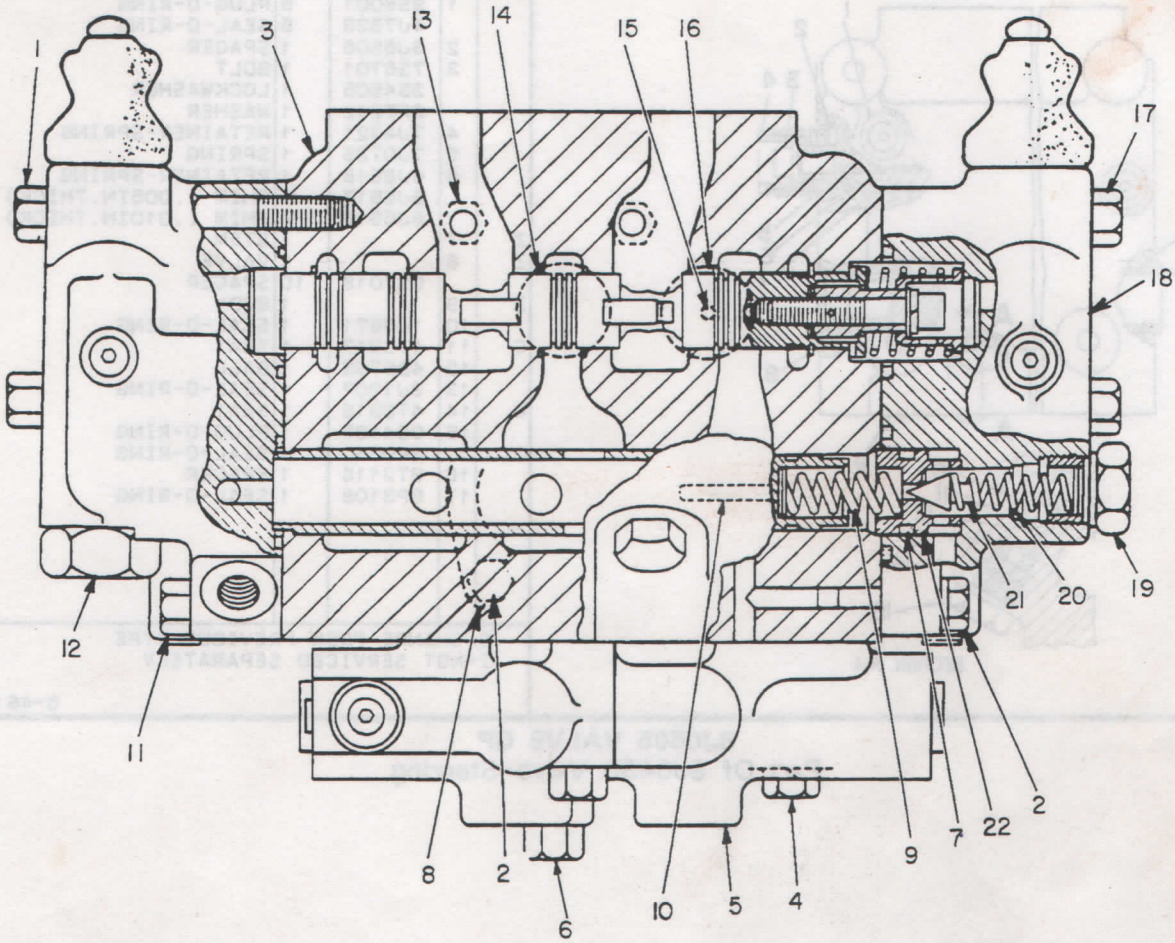

NOTE	REF NO	PART NUMBER	QTY	PART NAME	NOTE	REF NO	PART NUMBER	QTY	PART NAME
C	1	0L1352	2	BOLT	C	21	9J8224	1	VALVE GP
C	2	0S1588	6	BOLT			1J8497	1	VALVE
C		5M2894	6	WASHER		22	7J7090	1	SEAT
Y	3	8J0505	1	VALVE GP					
C	4	0S1590	2	BOLT					
Y	5	8J0441	1	VALVE GP-SELECTOR					
C	6	0L1143	1	BOLT					
	7	4J5140	1	SEAL-O-RING					
C	8	1P4577	2	FLANGE-HALF					
	9	7J0678	1	SPRING					
C	10	9J0834	1	PIN					
C	11	0S1591	2	BOLT					
Y	12	6J6218	1	VALVE GP					
	13	9S4182	2	PLUG					
		3J7354	2	SEAL-O-RING					
	14	9S8006	1	PLUG-O-RING					
		2M9780	1	SEAL-O-RING					
	15	7B3028	1	SCREW-DRIVE					
	16	8J1726	1	PLATE-IDENTIFICATION					
C	17	0T0573	1	BOLT					
Y	18	8J0508	1	VALVE GP-NEUTRALIZER					
	19	9S4187	1	PLUG-O-RING					
		3K0360	1	SEAL-O-RING					
B		3H2549	6	SHIM .254MM(.010IN)THK					
BC		3J7470	3	SHIM 1.22MM(.048IN)THK					
	20	2J6089	1	SPRING					

B-USE AS REQUIRED
C-CHANGE FROM PREVIOUS TYPE
Y-SEPARATE ILLUSTRATION

B-403905 EP

8J0430 VALVE GP-STEERING

8J0505-Page 136, 6J6218-Page 137, 8J0441, 8J0508-Page 138
Part Of 2Y6783 Control-Steering

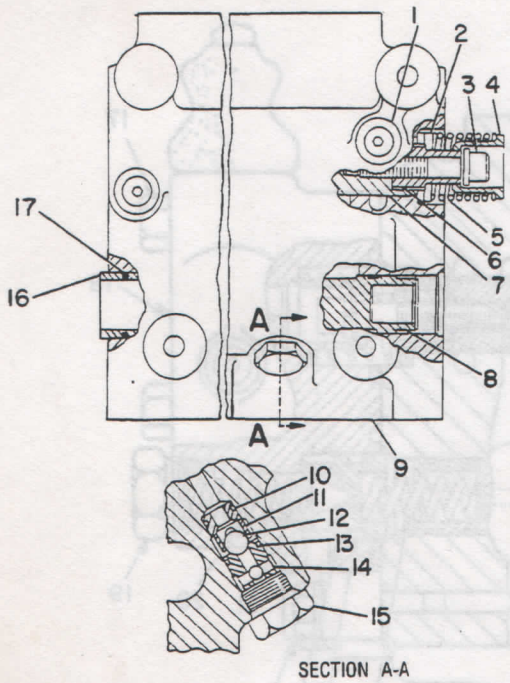

SECTION A-A

NOTE	REF NO	PART NUMBER	QTY	PART NAME
	1	9S8001	5	PLUG-O-RING
		4J7533	5	SEAL-O-RING
	2	6J6506	1	SPACER
	3	7S6701	1	BOLT
		3B4505	1	LOCKWASHER
		8F7242	1	WASHER
	4	7J4321	1	RETAINER-SPRING
	5	7J0736	1	SPRING
	6	6J6518	1	RETAINER-SPRING
		6J6517	1	SHIM (.005IN.THICK)
		6J6516	4	SHIM (.010IN.THICK)
Z	7		1	STEM
Z	8		1	VALVE
		5S7018	10	SPACER
Z	9		1	BODY
	10	1J9671	1	SEAL-O-RING
C	11	4T0317	1	SEAT
	12	4B9782	1	BALL
	13	3J1907	1	SEAL-O-RING
C	14	4T0318	1	SEAT
	15	9S4185	1	PLUG-O-RING
		3K0360	1	SEAL-O-RING
	16	9T2118	1	SPACER
	17	5P3108	1	SEAL-O-RING

C-CHANGE FROM PREVIOUS TYPE
Z-NOT SERVICED SEPARATELY

B-461435 EP

8J0505 VALVE GP
Part Of 8J0430 Valve-Steering

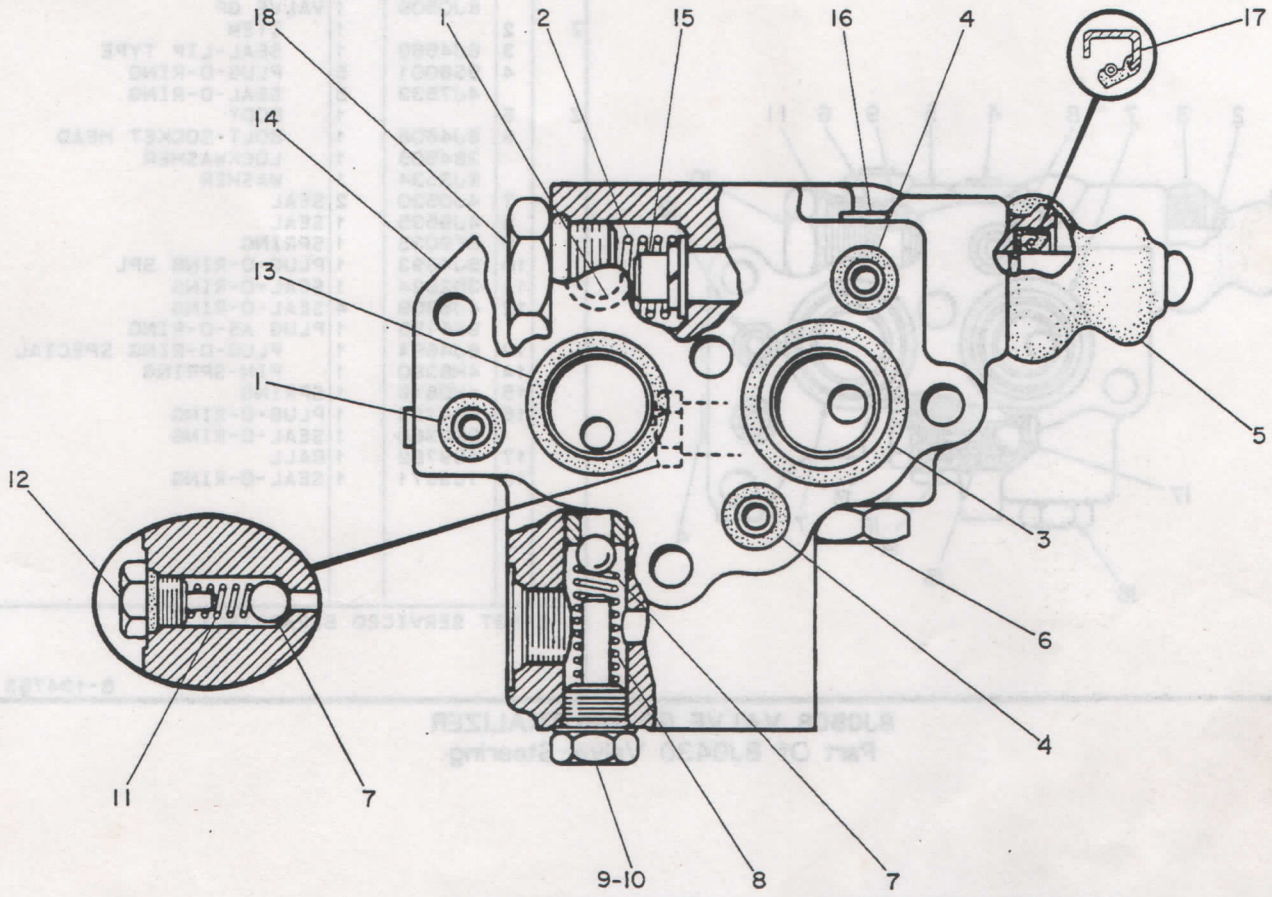

NOTE	REF NO	PART NUMBER	QTY	PART NAME	NOTE	REF NO	PART NUMBER	QTY	PART NAME
	1	4J5309	3	SEAL-O-RING					
	2	5F9035	1	SPRING					
	3	4J0520	1	SEAL					
	4	4J9535	2	SEAL					
	5	6J4568	1	BOOT					
	6	9S4185	1	PLUG-O-RING					
		3K0360	1	SEAL-O-RING					
	7	4B9782	2	BALL					
C	8	9H2367	1	SPRING-VALVE					
C	9	9S6154	1	PLUG AS-O-RING					
	10	3J1907	1	SEAL-O-RING					
	11	1H0516	1	SPRING					
	12	9S6155	1	PLUG AS-O-RING					
		1J9671	1	SEAL-O-RING					
	13	4F8946	1	SEAL-O-RING					
	14	6J6217	1	BODY GP					
	15	6J4608	1	BOLT-SOCKET HEAD					
		3B4505	1	LOCKWASHER					
		1A6240	1	WASHER					
	16	9S8001	5	PLUG-O-RING					
		4J7533	5	SEAL-O-RING					
	17	6V1949	1	SEAL-LIP TYPE					
	18	6J4693	1	PLUG-O-RING SPL					
		3D2824	1	SEAL-O-RING					

C-CHANGE FROM PREVIOUS TYPE

B-487688 EP

6J6218 VALVE GP-NEUTRALIZER
Part Of 8J0430 Valve-Steering

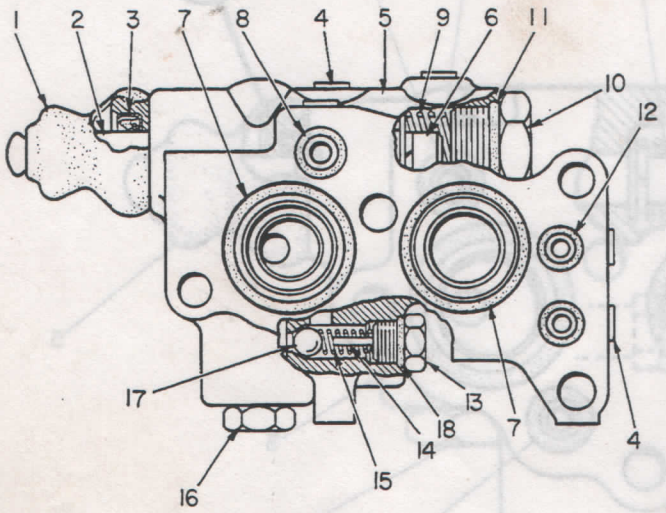

NOTE	REF NO	PART NUMBER	QTY	PART NAME
	1	6J4568	1	BOOT
		8J0509	1	VALVE GP
Z	2		1	STEM
	3	6J4569	1	SEAL-LIP TYPE
	4	9S8001	5	PLUG-O-RING
		4J7533	5	SEAL-O-RING
Z	5		1	BODY
	6	6J4608	1	BOLT-SOCKET HEAD
		3B4505	1	LOCKWASHER
		8J3534	1	WASHER
	7	4J0520	2	SEAL
	8	4J9535	1	SEAL
	9	5F9035	1	SPRING
	10	6J4693	1	PLUG-O-RING SPL
	11	3D2824	1	SEAL-O-RING
	12	4J5309	4	SEAL-O-RING
		9S6155	1	PLUG AS-O-RING
	13	6J4694	1	PLUG-O-RING SPECIAL
	14	4H8380	1	PIN-SPRING
	15	1H0516	1	SPRING
	16	9S4185	1	PLUG-O-RING
		3K0360	1	SEAL-O-RING
	17	4B9782	1	BALL
	18	1J9671	1	SEAL-O-RING

Z-NOT SERVICED SEPARATELY

B-134753 EP

8J0508 VALVE GP-NEUTRALIZER
Part Of 8J0430 Valve-Steering

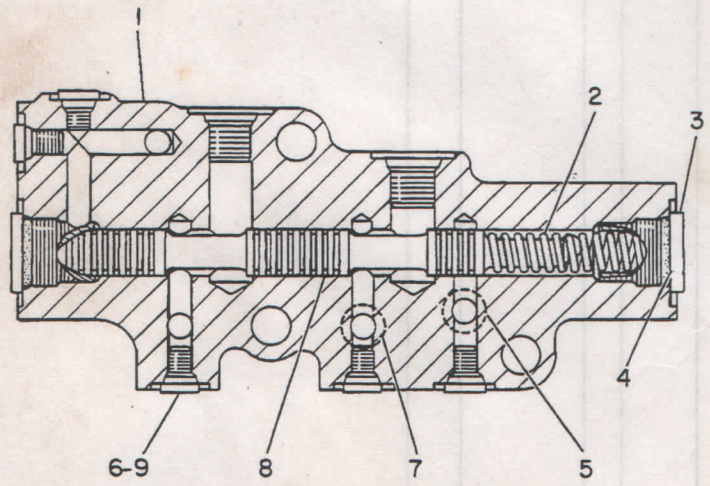

NOTE	REF NO	PART NUMBER	QTY	PART NAME
Z	1		1	BODY
	2	8J0438	1	SPRING
	3	9S8005	2	PLUG-O-RING
	4	3K0360	2	SEAL-O-RING
	5	4J5309	4	SEAL-O-RING
	6	4J7533	5	SEAL-O-RING
	7	4J9535	3	SEAL
Z	8		1	STEM
	9	9S8001	5	PLUG-O-RING

Z-NOT SERVICED SEPARATELY

B-134778 EP

8J0441 VALVE GP-SELECTOR
Part Of 8J0430 Valve-Steering

FRAME AND BODY

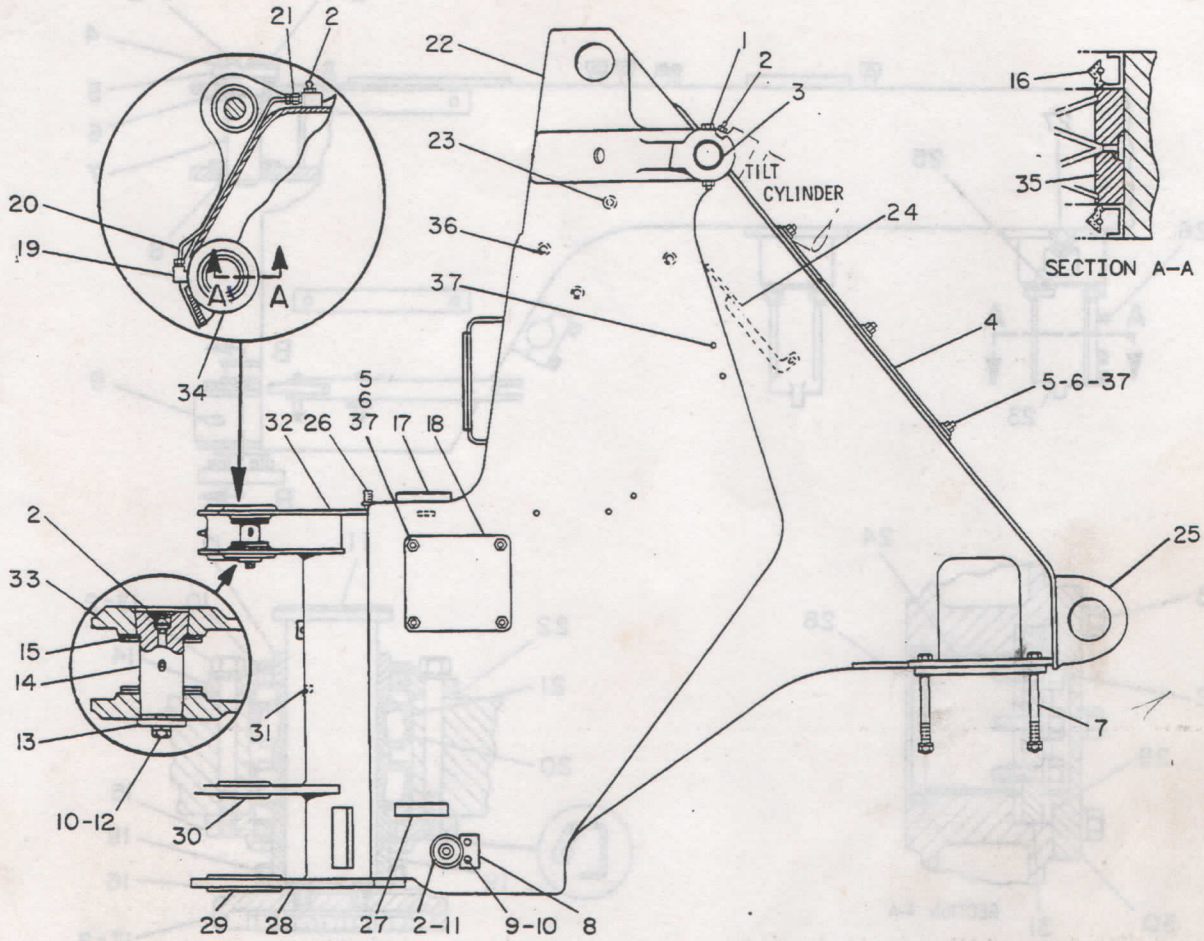

NOTE	REF NO	PART NUMBER	QTY	PART NAME	NOTE	REF NO	PART NUMBER	QTY	PART NAME
	1	2B2006	2	BOLT		24	6K9991	1	PLATE AS
		1K6872	2	LOCKNUT	C	25	3V2793	2	EYE
	2	3B8489	5	FITTING-HYDRAULIC		26	4K8479	7	STUD-WELD
	3	6K6349	2	PIN		27	9K3035	1	BAR
	4	6K7888	1	SHEET		28	6K6370	1	HITCH AS (LOWER)
	5	1D4717	10	NUT		29	6K6441	1	BOSS
	6	8M9024	10	WASHER-HARD		30	6K6442	1	BOSS
	7	9F8689	8	BOLT		31	4K9237	1	LUG
		4K0367	8	NUT		32	6K6440	1	HITCH AS
		3B4510	8	LOCKWASHER		33	6K6390	4	BOSS
	8	2K0703	2	BAR		34	6K6479	1	BOSS
	9	9M6590	4	BOLT-12 POINT HEAD		35	6K4197	1	BEARING
	10	3B4508	6	LOCKWASHER		36	7K2271	3	BOSS
	11	6K6051	2	PIN	C	37	5P5014	20	STUD-WELD
	12	0S1587	2	BOLT					
	13	7K6128	2	WASHER					
	14	6K6185	2	PIN-CYLINDER					
	15	3B4897	8	WASHER					
	16	4F6888	2	SEAL					
	17	7K1878	1	PLUG					
	18	6K7686	1	COVER					
	19	9S7697	1	ELBOW-FLARED					
	20	2V3442	1	TUBE					
	21	9S7581	1	CONNECTOR-FLARED					
	22	6K7756	1	FRAME AS					
	23	7K5986	1	BOSS					

C-CHANGE FROM PREVIOUS TYPE

V-487813 EP

6K7755 FRAME GP-LOADER

FRAME AND BODY

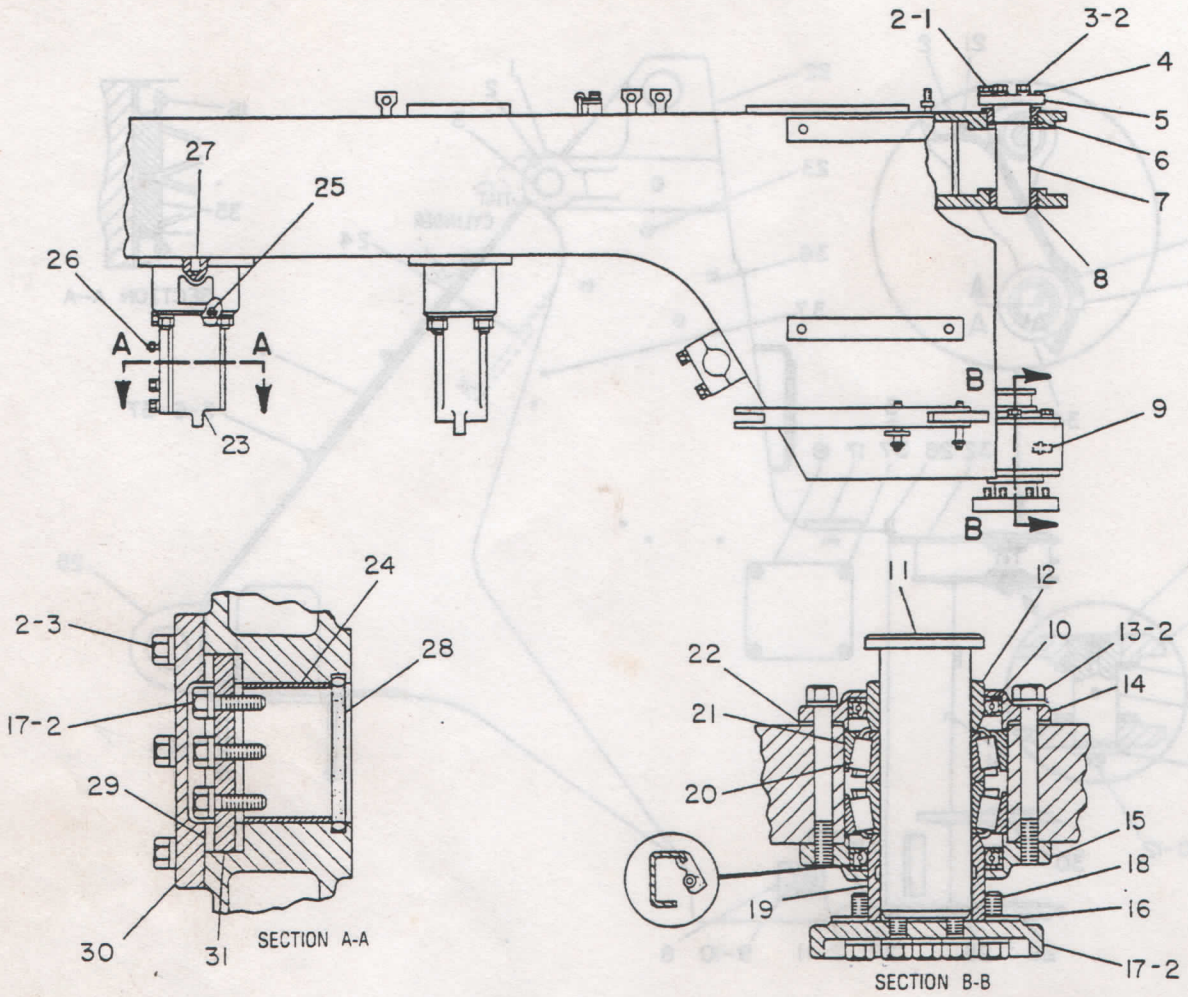

NOTE	REF NO	PART NUMBER	QTY	PART NAME	NOTE	REF NO	PART NUMBER	QTY	PART NAME
	1	2B0947	4	BOLT (1/2-13X2.25IN)		27	2B2994	2	DOWEL
C	2	5P8245	32	WASHER (3MM THK)		28	6H1309	1	RING-SEALING
	3	0S1587	8	BOLT (1/2-13X1.75IN)		29	1K8061	2	WASHER-THRUST
	4	2B7557	2	CORK		30	6K6075	1	COVER
	5	6K4179	1	PLATE		31	1K8052	1	PLATE-THRUST
	6	6K4178	1	COLLAR					
	7	6K4180	1	PIN-UPPER					
	8	6K4177	1	BEARING-SLEEVE					
	9	5B9916	1	FITTING-HYDRAULIC					
	10	6K4186	2	SEAL-LIP TYPE					
	11	6K4192	1	PIN-LOWER					
	12	6K4185	1	SPACER					
	13	2B2006	6	BOLT (1/2-13X4.75IN)					
	14	6K4191	1	CAP-UPPER					
	15	6K4190	1	CAP-LOWER					
	16	6K4193	1	PLATE-LOCK					
	17	0S1585	14	BOLT (1/2-13X1.5IN)					
	18	6K4187	1	SHIM-PACK					
	19	6K4189	1	SPACER					
	20	7K0394	2	CONE-ROLLER BEARING					
	21	6H3568	2	CUP-BEARING					
	22	6K4188	1	SHIM-PACK					
	23	6K6073	1	SUPPORT AS-REAR					
	24	1K8041	1	BEARING-SLEEVE					
	25	1K6853	1	FITTING					
	26	3B8485	1	FITTING-HYDRAULIC					

C-CHANGE FROM PREVIOUS TYPE

R-487751 EP

9K6357 FRAME GP-ENGINE END-PART 1 OF 2

FRAME AND BODY

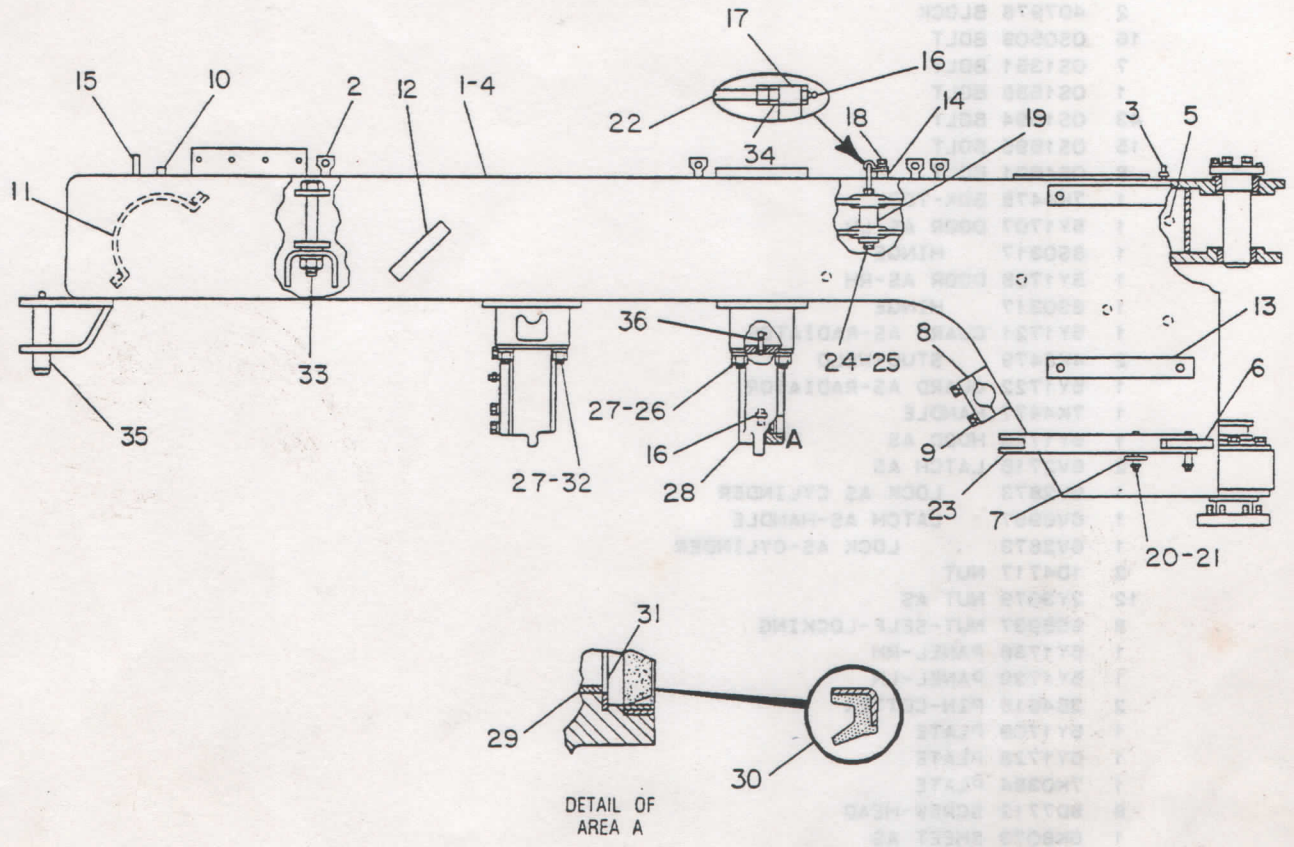

DETAIL OF AREA A

NOTE	REF NO	PART NUMBER	QTY	PART NAME
	1	1V5783	1	FRAME AS-MAIN
	2	1V5781	7	PIN-WELD
	3	4K8479	14	STUD-WELD (3/8X16X1.25IN OAL)
	4	9K6366	1	FRAME AS-ENGINE END
	5	1K7588	2	PIN
	6	9K3035	1	BAR
	7	6K6237	1	BAR
	8	6K6940	2	BRACKET AS
				(EACH INCLUDES)
		6K6938	1	CAP
	9	1A5822	4	BOLT (1/2-13X2.75IN)
		3B4508	4	LOCKWASHER
	10	8F4387	3	PLATE
	11	6K7986	2	CLAMP AS
				(EACH INCLUDES)
		9F2978	2	NUT-WELD (3/8-16 THD)
	12	7K1583	2	LIFTING EYE
	13	8K7741	4	BAR
	14	1F5339	2	LUG
	15	3D4964	1	LUG
	16	3B8489	3	FITTING-HYDRAULIC
C	17	2V3580	2	CLIP AS
	18	OL1351	2	BOLT (3/8-16X.875IN)
		5M2894	2	WASHER (2.5MM THK)
	19	6K6185	2	PIN-CYLINDER
	20	9K3036	2	PIN
	21	3B4617	2	COTTER
	22	2V3435	2	TUBE AS
	23	9K3037	1	LINK
	24	OS1587	2	BOLT (1/2-13X1.75IN)
C		5P8245	2	WASHER (3MM THK)
	25	7K6128	2	WASHER
	26	5B9916	1	FITTING-HYDRAULIC
	27	2J3506	8	NUT-FULL (3/4-10 THD)
	28	6K6074	1	SUPPORT AS-FRONT
	29	1K8051	1	BEARING-SLEEVE
	30	3K5093	2	SEAL-LIP TYPE
	31	5V7574	1	RING-RETAINING (INTERNAL)
	32	6K1330	4	BOLT (3/4-10X5.75IN)
	33	2B7218	2	BOLT (1-8X7.5IN)
		1B4333	2	NUT (1-8 THD)
C		5P8250	2	WASHER
		2S3728	4	WASHER-STOP
C	34	9S7581	4	CONNECTOR-FLARED
	35	6K5823	1	PIN AS
	36	5B9916	1	FITTING-HYDRAULIC

C-CHANGE FROM PREVIOUS TYPE

R-487846 EP

9K6357 FRAME GP-ENGINE END-PART 2 OF 2

2	4D7978	BLOCK
16	0S0509	BOLT
7	0S1351	BOLT
1	0S1588	BOLT
43	0S1594	BOLT
15	0S1595	BOLT
8	0S1621	BOLT
1	7K4478	BOX-TOOL
1	5Y1707	DOOR AS-LH
1	8S0317	HINGE
1	5Y1708	DOOR AS-RH
1	8S0317	HINGE
1	5Y1721	GUARD AS-RADIATOR
2	4K8479	STUD-WELD
1	5Y1722	GUARD AS-RADIATOR
1	7K4477	HANDLE
1	5Y1723	HOOD AS
2	6V2715	LATCH AS
1	6V2873	LOCK AS CYLINDER
1	6V6957	LATCH AS-HANDLE
1	6V2873	LOCK AS-CYLINDER
2	1D4717	NUT
12	2Y3079	NUT AS
8	9S5937	NUT-SELF-LOCKING
1	5Y1738	PANEL-RH
1	5Y1739	PANEL-LH
2	3B4615	PIN-COTTER
1	5Y1709	PLATE
1	5Y1728	PLATE
1	7K0384	PLATE
8	8D7712	SCREW-HEAD
1	6K8073	SHEET AS
1	6K8276	SHEET AS
1	7K1340	STRIP AS
1	7K1414	SHEET AS
1	7K4397	SHEET AS
1	7K1352	STRIP AS
1	7V9054	SHEET AS
1	9K9394	SHEET AS
2	5V8309	STRIKER AS
1	7K4387	STRIP
1	6K8564	STRIP AS
1	9K9393	STRIP AS
1	6K8054	STRIP
5	4B4278	WASHER
2	5M2894	WASHER
67	5P1075	WASHER
2	5P7213	WASHER
23	5P8245	WASHER

501278 P

5Y1737 HOOD & GUARD GP

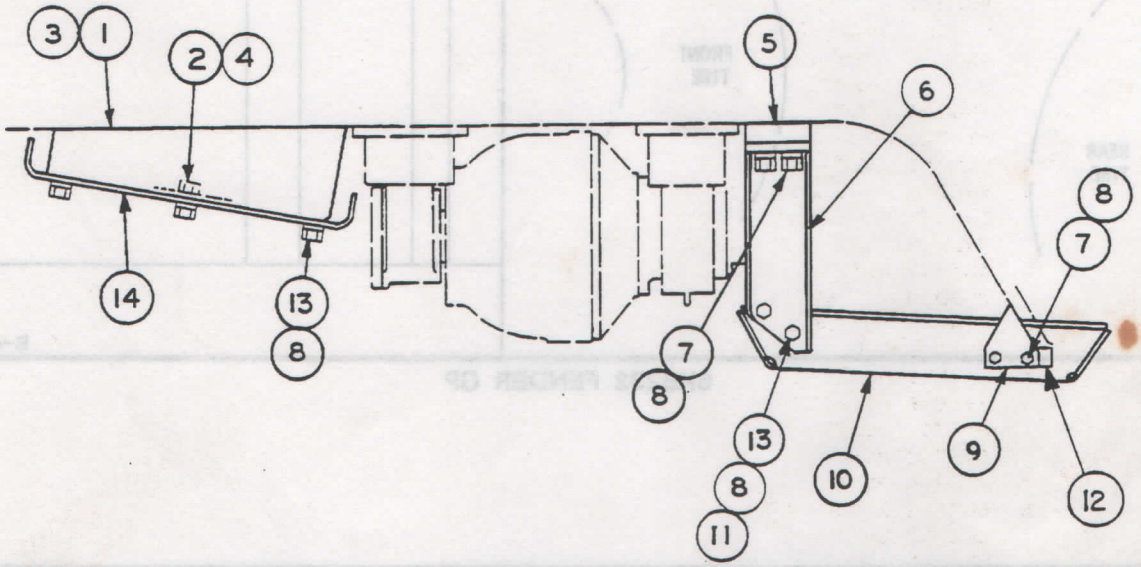

NOTE	REF NO	PART NUMBER	QTY	DESCRIPTION
	1	7K0121	1	PLATE AS. (R.H.)
	2	3J5169	3	NUT (WELD)
	3	7K0122	1	PLATE AS. (L.H.)
	4	3J5169	3	NUT (WELD)
	5	7K0206	2	BLOCK
	6	7K7213	1	CHANNEL AS. (R.H.)
		7K7214	1	CHANNEL AS. (L.H.)

	7	8S9092	8	BOLT
C	8	5P8247	18	WASHER
	9	7K0214	2	BLOCK
	10	7K7069	1	PLATE AS.
	11	3J5169	4	NUT (WELD)
C	12	7K0216	2	BLOCK
	13	0S1566	10	BOLT
	14	7K0125	1	PLATE AS.

C INDICATES CHANGE

348896

348896 EP

7K0344 GUARD GP-TRACTOR
An Attachment

FRAME AND BODY

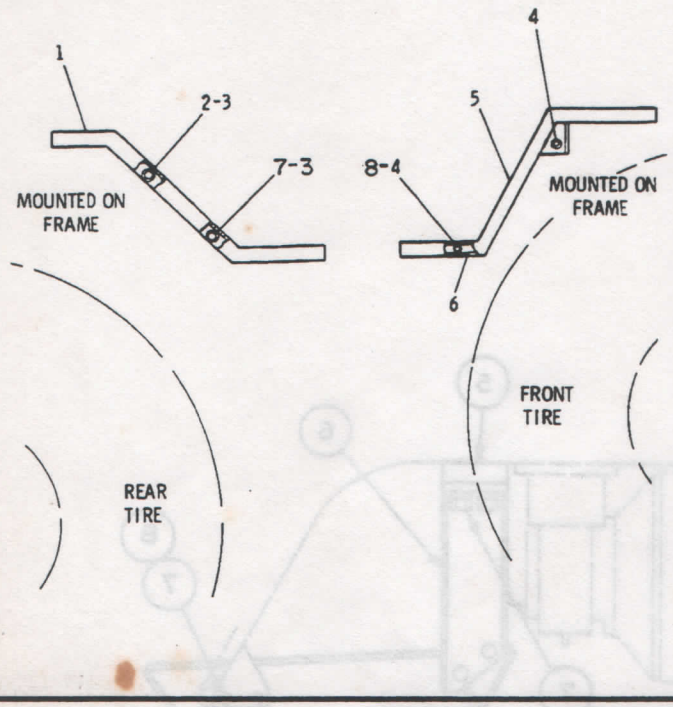

NOTE	REF NO	PART NUMBER	QTY	PART NAME
	1	8K7498	1	FENDER AS (RH REAR)
		8K7499	1	FENDER AS (LH REAR)
	2	OL1351	6	BOLT 22.225MM(.875IN)LG
	3	5P1075	11	WASHER-HARD (3MM THK)
	4	1D4717	10	NUT (3/8-16 THD)
	5	8K7494	1	FENDER AS (RH FRONT)
		8K7495	1	FENDER AS (LH FRONT)
	6	7K6530	2	STRIP
	7	OS1588	1	BOLT 31.750MM(1.25IN)LG
	8	8M9024	6	WASHER-HARD (5MM THK)

B-497598 EP

6K8232 FENDER GP

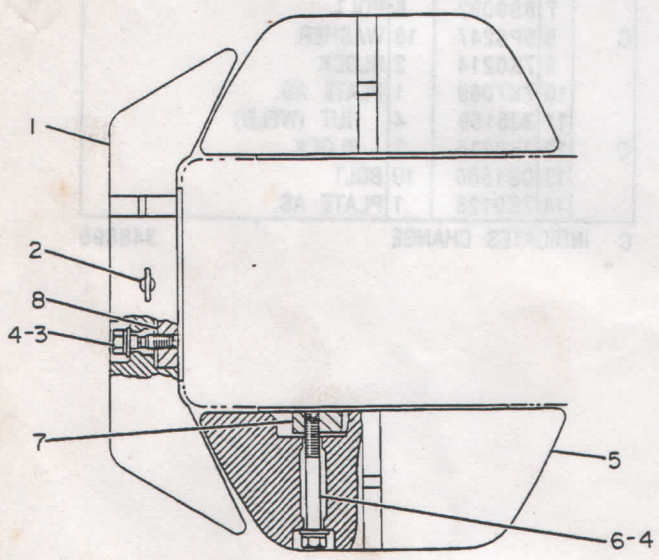

NOTE	REF NO	PART NUMBER	QTY	PART NAME
	1	1V1756	1	COUNTERWEIGHT
		1K6932	2	PIN
	2	1V1796	1	PIN AS
	3	1D4628	2	BOLT
C	4	5D4281	6	WASHER
	5	5K2464	2	COUNTERWEIGHT (EACH INCLUDES)
		1K6932	1	PIN
	6	1D5976	4	BOLT
	7	5K2461	2	PLATE AS
	8	1V1767	1	PLATE AS

C-CHANGE FROM PREVIOUS TYPE

B-345680 EP

1V1848 COUNTERWEIGHT GP
An Attachment

		PAGE
1	7K1980 CONTROL GP-HYDRAULIC	160
1	7KO602 LINES GP-HYDRAULIC	168
1	8JO214 TANK & VALVE GP	146

475106 P

6K8008 HYDRAULIC AR
Front Attachment With Auxiliary Cylinder Relief
An Attachment

HYDRAULIC SYSTEM

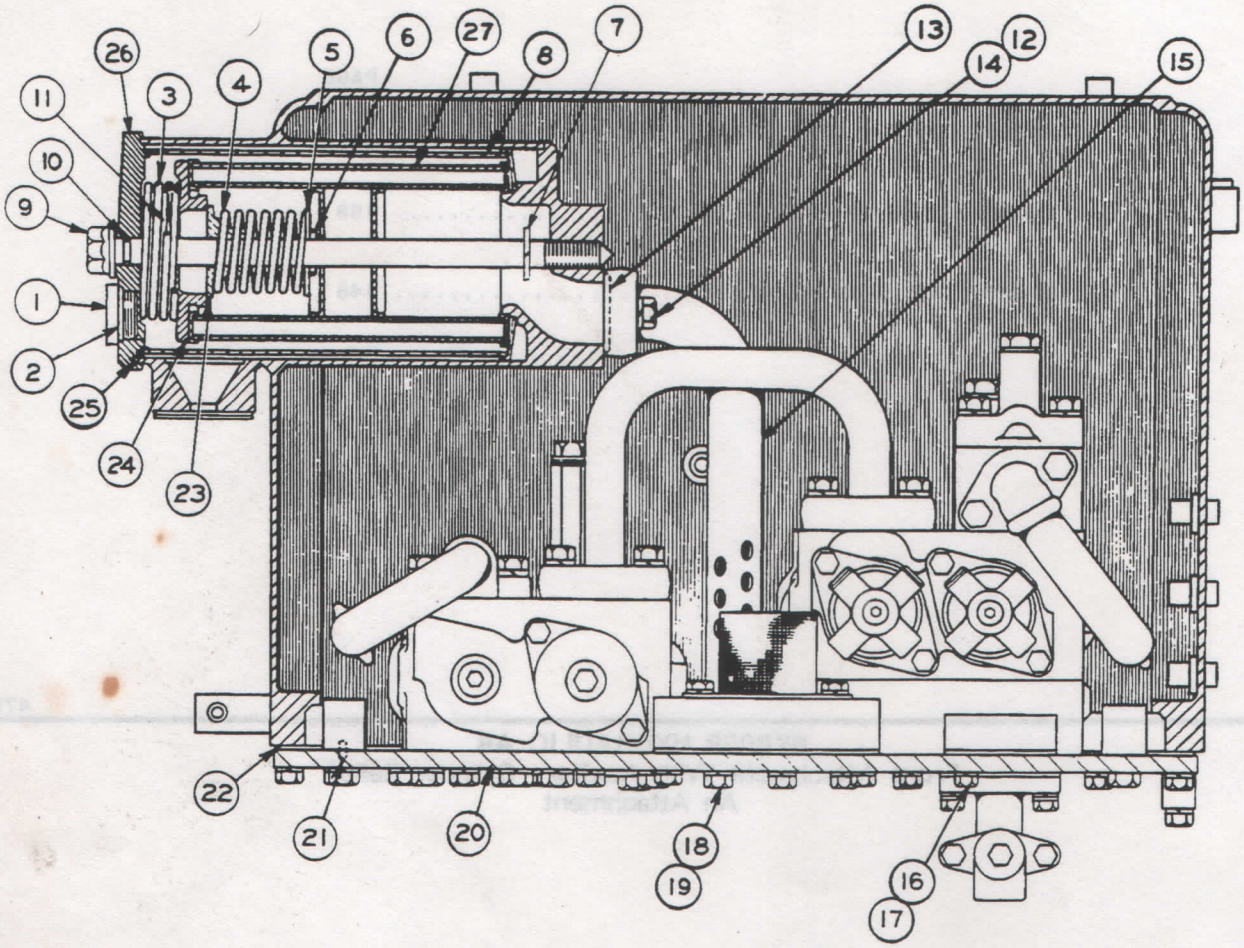

NOTE	REF NO	PART NUMBER	QTY	PART NAME	NOTE	REF NO	PART NUMBER	QTY	PART NAME
	1	9S8010	1	PLUG-O-RING		27	4J6064	1	ELEMENT-FILTER
	2	2S4078	1	SEAL-O-RING					-OR-
	3	2J6114	1	SPRING (OUTER)	A		3G4621	1	ELEMENT
	4	5J2926	1	SPRING					(FIRE RESISTANT FLUID)
	5	2J0917	1	RETAINER					
	6	1H1200	1	PIN-SPRING					
	7	7J5925	1	PIN-COTTER					
	8	6J9403	1	SCREEN AS					
	9	7J5583	1	BOLT					
	10	6F4855	1	SEAL-O-RING					
	11	2J8455	1	SPRING					
	12	3B4508	2	LOCKWASHER					
	13	5F8000	1	SEAL-O-RING					
	14	0S1587	2	BOLT					
	15	6J7302	1	BAFFLE AS					
	16	0S1588	3	BOLT					
	17	3B4506	3	LOCKWASHER					
	18	0T0320	32	BOLT					
	19	3B4507	32	LOCKWASHER					
	20	8J0216	1	PLATE					
	21	3F4479	2	PIN-SPRING					
	22	6J7270	1	GASKET					
	23	2J0918	1	VALVE					
	24	5J1473	1	SEAT-VALVE					
	25	4K1557	1	GASKET					
	26	7J8014	1	COVER-FILTER					

A-NOT PART OF THIS GROUP

B-167520 EP

8J0214 TANK & VALVE GP-PART 1 OF 3

Part Of 6K8008 Hydraulic Ar

An Attachment

HYDRAULIC SYSTEM

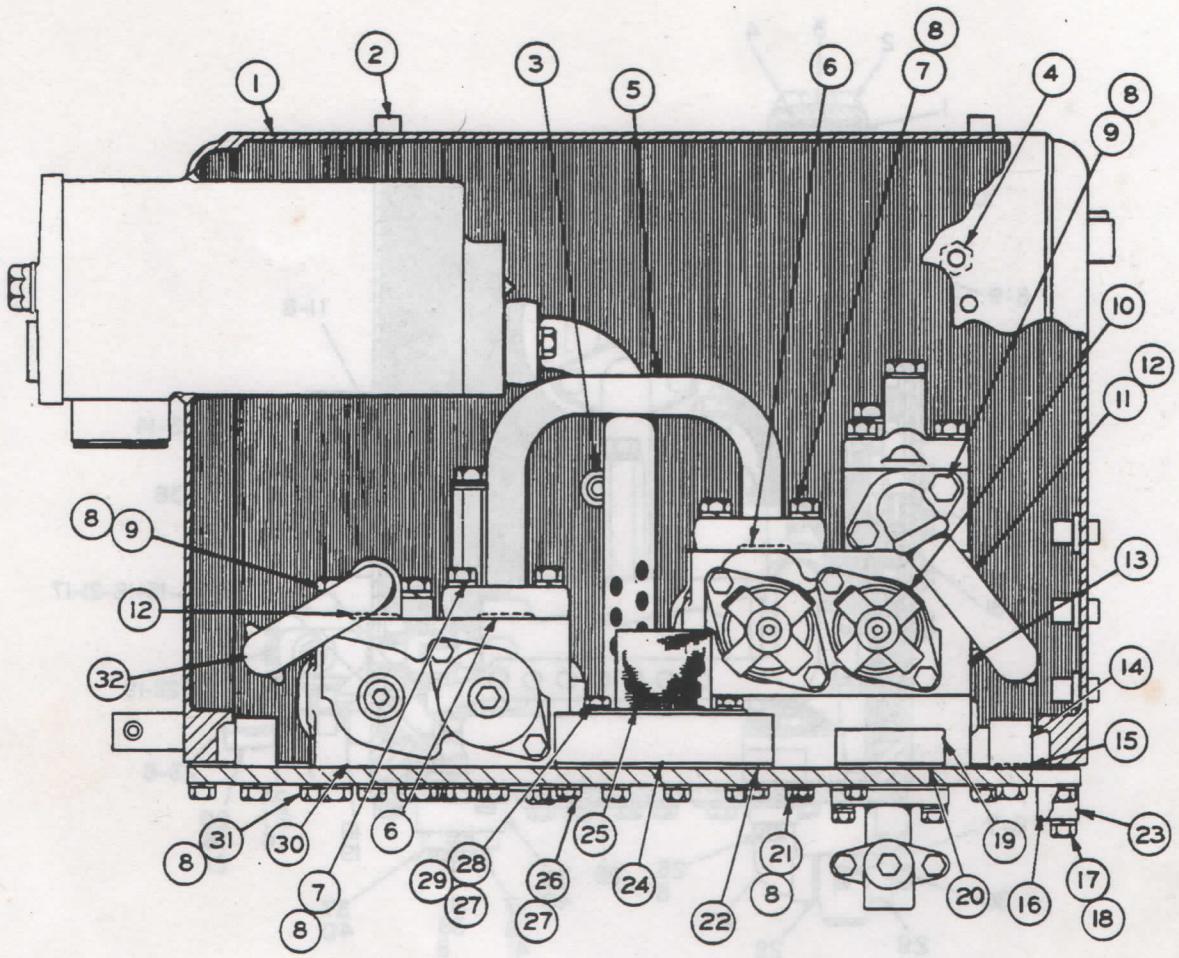

NOTE	REF NO	PART NUMBER	QTY	PART NAME
	1	6J7489	1	TANK AS
		6J2237	8	BOSS-WELD
	2	4D9376	5	BOSS
	3	6J7210	2	BOSS-WELD
	4	9F2978	38	NUT-WELD
	5	6J7214	1	TUBE AS
	6	4F9029	2	SEAL
	7	0S1587	4	BOLT
	8	3B4508	20	LOCKWASHER
	9	0S1585	4	BOLT
	10	6J6516	4	SHIM
	11	6J7206	1	BAFFLE AS
	12	6F6673	2	SEAL-O-RING
Y	13	6J9991	1	VALVE GP
	14	6J6710	2	BLOCK
	15	6F6672	8	SEAL-O-RING
	16	6J7469	1	BLOCK
	17	1D4707	10	BOLT (2.25IN)LONG
	18	3B4507	10	LOCKWASHER
	19	6J9523	1	FLANGE
	20	7J0096	1	GASKET
	21	1D4566	2	BOLT (3.5IN)LONG
	22	6J7372	1	GASKET
	23	6J7468	4	BLOCK
	24	6J6711	1	FLANGE
	25	6J6714	1	STRAINER AS
	26	1A2029	2	BOLT (1.125IN)LONG
	27	3B4506	4	LOCKWASHER
	28	0S0509	2	BOLT
	29	4B4278	2	WASHER
Y	30	6J7364	1	VALVE GP
	31	7B3235	10	BOLT (1.375IN)LONG
	32	6J7208	1	BAFFLE AS

Y-SEPARATE ILLUSTRATION

B-136046 EP

8J0214 TANK & VALVE GP-PART 2 OF 3

6J9991-Page 153, 6J7364-Page 154

Part Of 6K8008 Hydraulic Ar

An Attachment

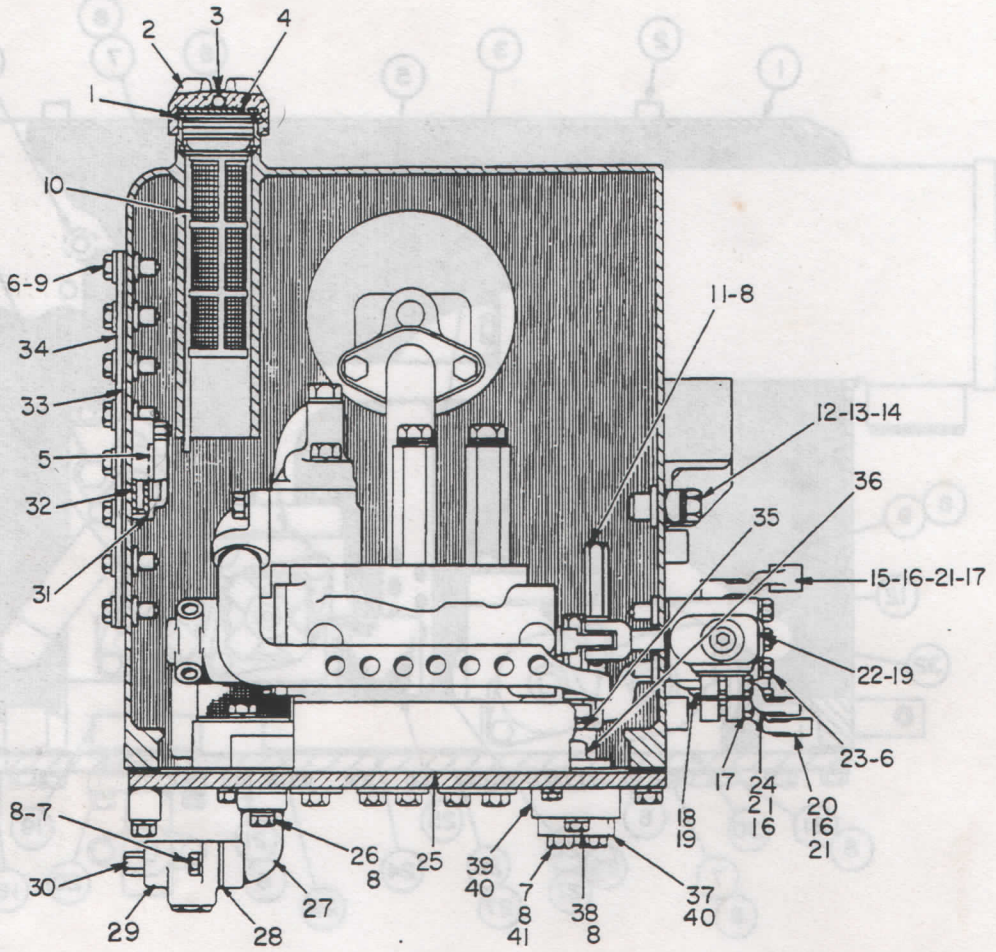

NOTE	REF NO	PART NUMBER	QTY	PART NAME	NOTE	REF NO	PART NUMBER	QTY	PART NAME
	1	9H6454	1	GASKET	Y		7J0002	1	HOUSING GP-LEVER
	2	7H1447	1	CAP-FILLER		23	0T0065	6	BOLT
	3	7B6368	1	BALL		24	6J7495	1	LEVER
	4	6H5139	1	PLATE-PRESSURE	Y	25	6J9919	1	BODY GP-VALVE
C	5	3G5980	1	PLATE		26	0S1571	2	BOLT
	6	4B5167	44	WASHER		27	7J0297	1	ELBOW
	7	0S1588	6	BOLT		28	8H9818	2	GASKET
	8	3B4506	9	LOCKWASHER		29	8H9819	1	ADAPTER-PLUG
	9	0L1351	38	BOLT		30	4B7739	1	PLUG-DRAIN
C	10	9J3047	1	STRAINER	C	31	8J6913	1	RETAINER-GLASS
	11	6J7550	3	BOLT			4J8252	1	GLASS
	12	0S1620	2	BOLT			4J8265	4	NUT
	13	3B4508	2	LOCKWASHER		32	4J8251	1	GROMMET
	14	1A7615	2	WASHER		33	6J7376	1	GASKET
	15	6J7493	1	LEVER	C	34	8J6912	1	COVER AS
	16	1B8702	3	KEY-WOODRUFF			8J6910	4	STUD-WELD
	17	3B1915	3	BOLT		35	7J9755	1	STRAINER AS
Y	18	7J2295	1	HOUSING GP-OUTPUT (3RD VALVE LINKAGE)		36	7J9924	1	RETAINER
						37	1P4577	2	FLANGE-HALF
		3H8430	2	SETSCREW		38	1C2551	2	BOLT
	19	4J3021	3	GASKET			8F9206	2	SEAL-O-RING
	20	7J2296	1	LEVER		39	7J9828	1	FLANGE
	21	2A1723	3	LOCK-NUT	C	40	4F7391	2	SEAL-O-RING
Y	22	7J0001	1	HOUSING GP-LEVER	C	41	4B4278	4	WASHER

C-CHANGE FROM PREVIOUS TYPE
Y-SEPARATE ILLUSTRATION

B-220286 EP

8J0214 TANK & VALVE GP-PART 3 OF 3
6J9919-Page 152, 7J0001, 7J2295-Page 158, 7J0002-Page 159
Part Of 6K8008 Hydraulic Ar
An Attachment

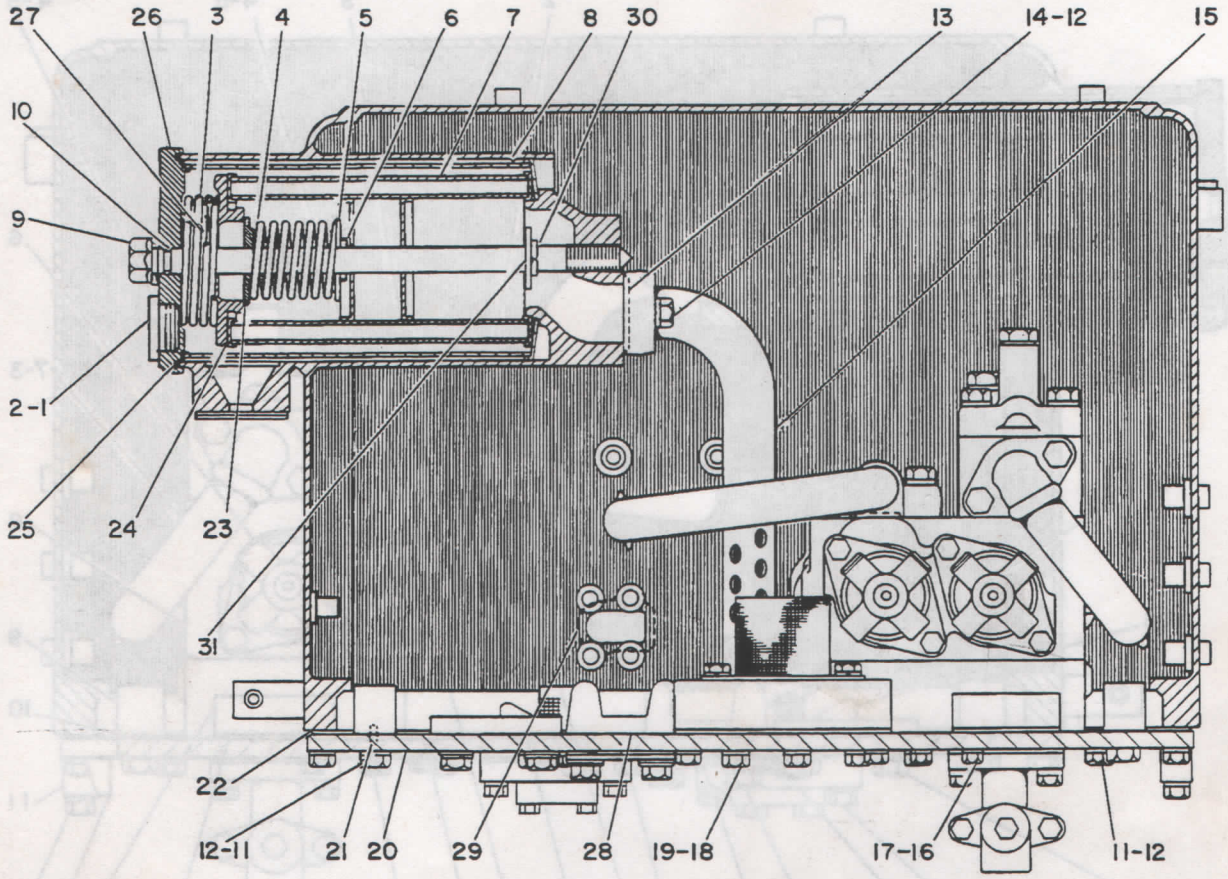

NOTE	REF NO	PART NUMBER	QTY	PART NAME
	1	9S8010	1	PLUG-O-RING
	2	2S4078	1	SEAL-O-RING (37.46MM ID)
	3	2J6114	1	SPRING (OUTER)
C	4	2Y7631	1	SPRING
	5	2J0917	1	RETAINER
	6	1H1200	1	PIN-SPRING
	7	4J6064	1	ELEMENT-FILTER
				-OR-
CA		3G4621	1	ELEMENT (FIRE RES. FLUID)
	8	6J9403	1	SCREEN AS
	9	7J5583	1	BOLT
	10	6F4855	1	SEAL-O-RING
	11	7B3235	2	BOLT 12.7MM(.50IN)DIA
C	12	5P8245	4	WASHER (3MM THK)
	13	5F8000	1	SEAL-O-RING
	14	0S1587	2	BOLT (1/2-13X1.75IN)
	15	6J7302	1	BAFFLE AS
	16	0S1588	3	BOLT 9.525MM(.375IN)DIA
C	17	5M2894	3	WASHER (2.5MM THK)
	18	0T0320	32	BOLT 11.1MM(.438IN)DIA
C	19	5P8244	32	WASHER (2.5MM THK)
	20	8J0216	1	PLATE
	21	3F4479	2	PIN-SPRING
	22	6J7270	1	GASKET
	23	2J0918	1	VALVE
	24	5J1473	1	SEAT-VALVE
	25	4K1557	1	GASKET
	26	7J8014	1	COVER-FILTER
	27	2J8455	1	SPRING (INNER)
	28	6J7380	6	COVER
		7F4782	6	GASKET
	29	7J0097	1	COVER
		4J3021	1	GASKET
		0S1594	2	BOLT 2.54M(1 IN)LG
C		4B5167	2	WASHER
	30	7J5925	1	PIN-COTTER
C	31	6K8716	1	WASHER-HARD

A-NOT PART OF THIS GROUP
C-CHANGE FROM PREVIOUS TYPE

B-487956 EP

8J0212 TANK & VALVE GP-HYDRAULIC-PART 1 OF 3

HYDRAULIC SYSTEM

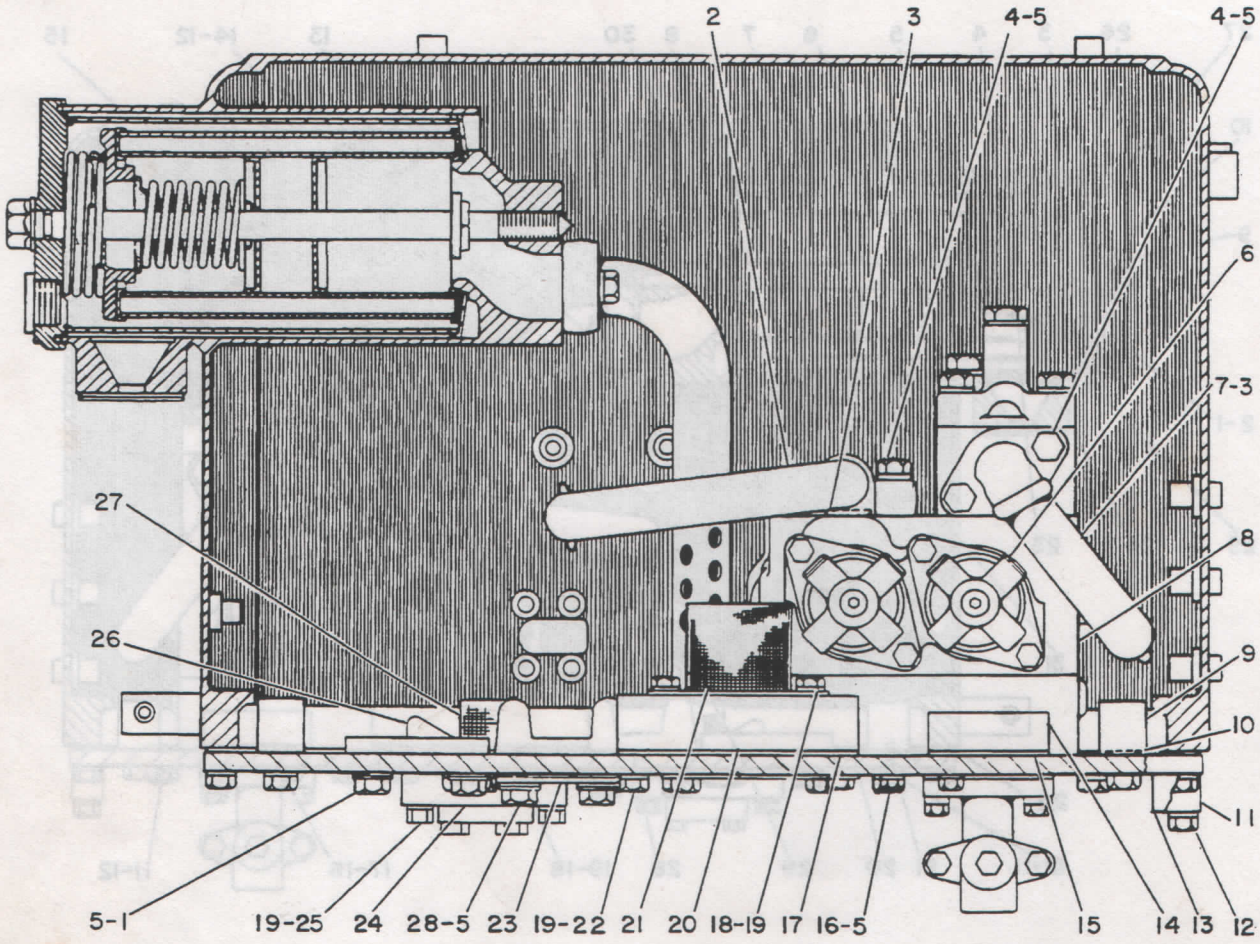

NOTE	REF NO	PART NUMBER	QTY	PART NAME
C	1	OS1595	8	BOLT 3.18CM(1.25IN)LG
	2	6J7545	1	BAFFLE AS
	3	6F6673	2	SEAL-O-RING
	4	OS1585	4	BOLT (1/2-13X1.5IN)
C	5	5P8245	18	WASHER (3MM THK)
B	6	6J6516	4	SHIM
	7	6J7206	1	BAFFLE AS
Y	8	6J9991	1	VALVE GP
	9	6J6710	2	BLOCK
	10	6F6672	8	SEAL-O-RING
	11	6J7468	4	BLOCK
	12	1D4707	10	BOLT 5.72CM(2.25IN)LG
C		5P8244	10	WASHER (2.5MM THK)
	13	6J7469	1	BLOCK
	14	6J9523	1	FLANGE
	15	7J0096	1	GASKET
	16	1D4566	2	BOLT 8.89CM(3.50IN)LG
	17	6J7372	1	GASKET
	18	OS0509	2	BOLT (3/8-16X.75IN)
C	19	5M2894	6	WASHER (2.5MM THK)
	20	6J6711	1	FLANGE
	21	6J6714	1	STRAINER AS
	22	1A2029	2	BOLT 2.86CM(1.125IN)LG
C	23	2J6195	2	COVER
C		4J0519	2	SEAL (31.34MM ID)
	24	7J9828	1	FLANGE
C		4F7391	1	SEAL-O-RING (32.92MM ID)
	25	1C2251	2	BOLT (3/8-16X1.87IN)
		8F9206	2	SEAL-O-RING (12.37MM ID)
	26	7J9924	1	RETAINER
	27	7J9755	1	STRAINER AS
	28	OS1587	4	BOLT (1/2-13X1.75IN)

B-USE AS REQUIRED
C-CHANGE FROM PREVIOUS TYPE
Y-SEPARATE ILLUSTRATION

B-487957 EP

8J0212 TANK & VALVE GP-HYDRAULIC-PART 2 OF 3
6J9991-Page 153

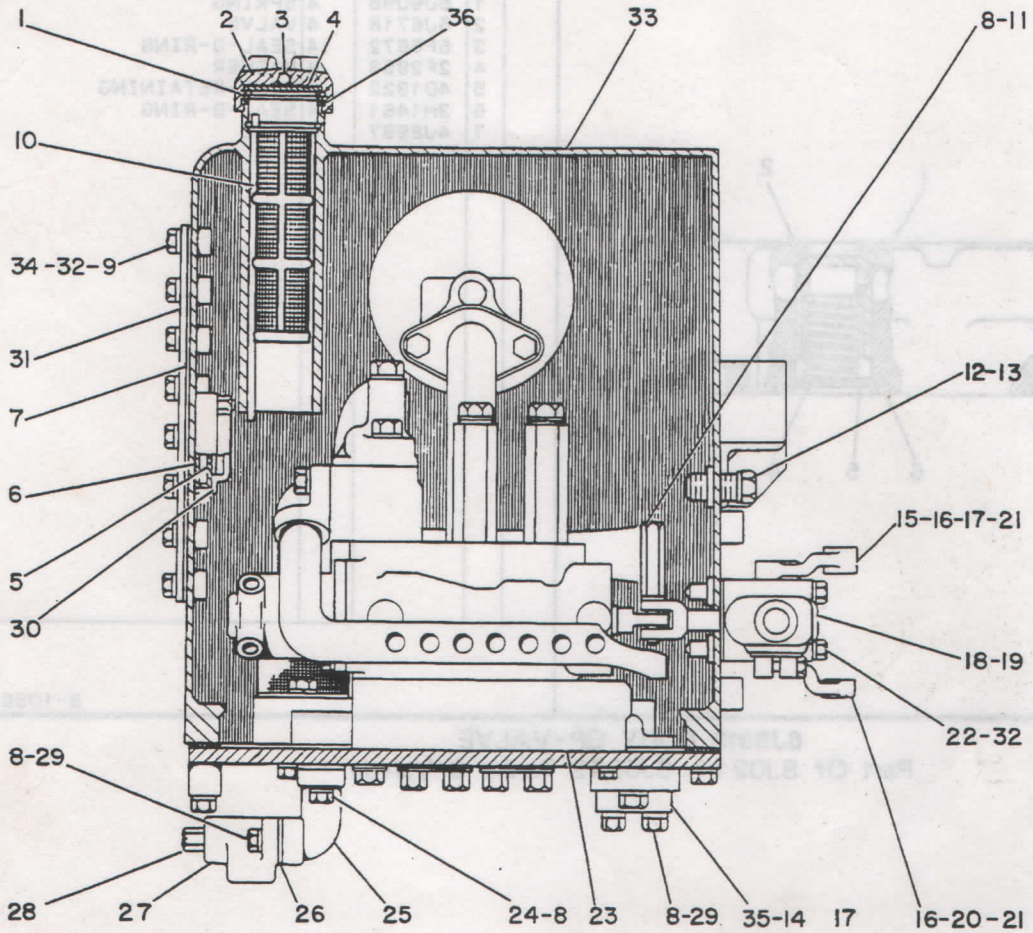

NOTE	REF NO	PART NUMBER	QTY	PART NAME
	1	9H6454	1	GASKET
	2	7H1447	1	CAP-FILLER
C	3	4B9782	1	BALL
	4	6H5139	1	PLATE-PRESSURE
C	5	2Y4647	1	PLATE
	6	4J8251	1	GROMMET
	7	6J7376	1	GASKET
C	8	5M2894	10	WASHER (2.5MM THK)
	9	OL1351	38	BOLT (3/8-16X.875IN)
C	10	9J3047	1	STRAINER
	11	6J7550	2	BOLT
	12	OS1620	2	BOLT (1/2-13X.75IN)
C	13	5P8245	2	WASHER (3MM THK)
	14	4F7391	1	SEAL-O-RING (32.92MM ID)
	15	6J7493	1	LEVER
	16	1B8702	2	KEY-WOODRUFF
	17	3B1915	2	BOLT (3/8-16X1.375IN)
Y	18	7J0001	1	HOUSING GP-LEVER (TILT)
Y		7J0002	1	HOUSING GP-LEVER (LIFT)
	19	4J3021	2	GASKET
	20	6J7495	1	LEVER
	21	2A1723	2	LOCK-NUT
	22	OT0065	4	BOLT (3/8-16X3.5IN)
Y	23	6J9919	1	BODY GP-VALVE
	24	OS1571	2	BOLT (3/8-16X1.75IN)
	25	7J0297	1	ELBOW
	26	8H9818	2	GASKET
	27	8H9819	1	ADAPTER-PLUG
C	28	5N8780	1	PLUG-DRAIN
C	29	OS1588	6	BOLT (3/8-16X1.25IN)
C	30	8J6913	1	RETAINER-GLASS
		4J8252	1	GLASS
		4J8265	4	NUT (3/8-16 THD)
C	31	8J6912	1	COVER AS
		8J6910	4	STUD-WELD (3/8 X 16 X1.25IN OAL
	32	4B5167	42	WASHER
	33	6J7489	1	TANK AS
		4D9376	5	BOSS
	34	9F2978	38	NUT-WELD (3/8-16 THD)
C	35	2Y1349	2	FLANGE
	36	3G0361	1	GASKET

C-CHANGE FROM PREVIOUS TYPE
Y-SEPARATE ILLUSTRATION

B-487958 EP

8J0212 TANK & VALVE GP-HYDRAULIC-PART 3 OF 3
6J9919–Page 152, 7J0001–Page 158, 7J0002–Page 159

HYDRAULIC SYSTEM

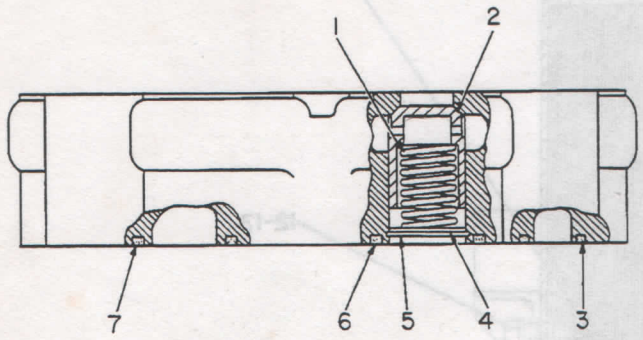

NOTE	REF NO	PART NUMBER	QTY	PART NAME
	1	5J9098	4	SPRING
	2	6J6718	4	VALVE
	3	6F6672	14	SEAL-O-RING
	4	2F2953	4	WASHER
	5	4D1322	4	RING-RETAINING
	6	3H1461	4	SEAL-O-RING
	7	4J8997	5	SEAL

B-105624 EP

6J9919 BODY GP-VALVE

Part Of 8J0214, 8J0212 Tanks & Valves

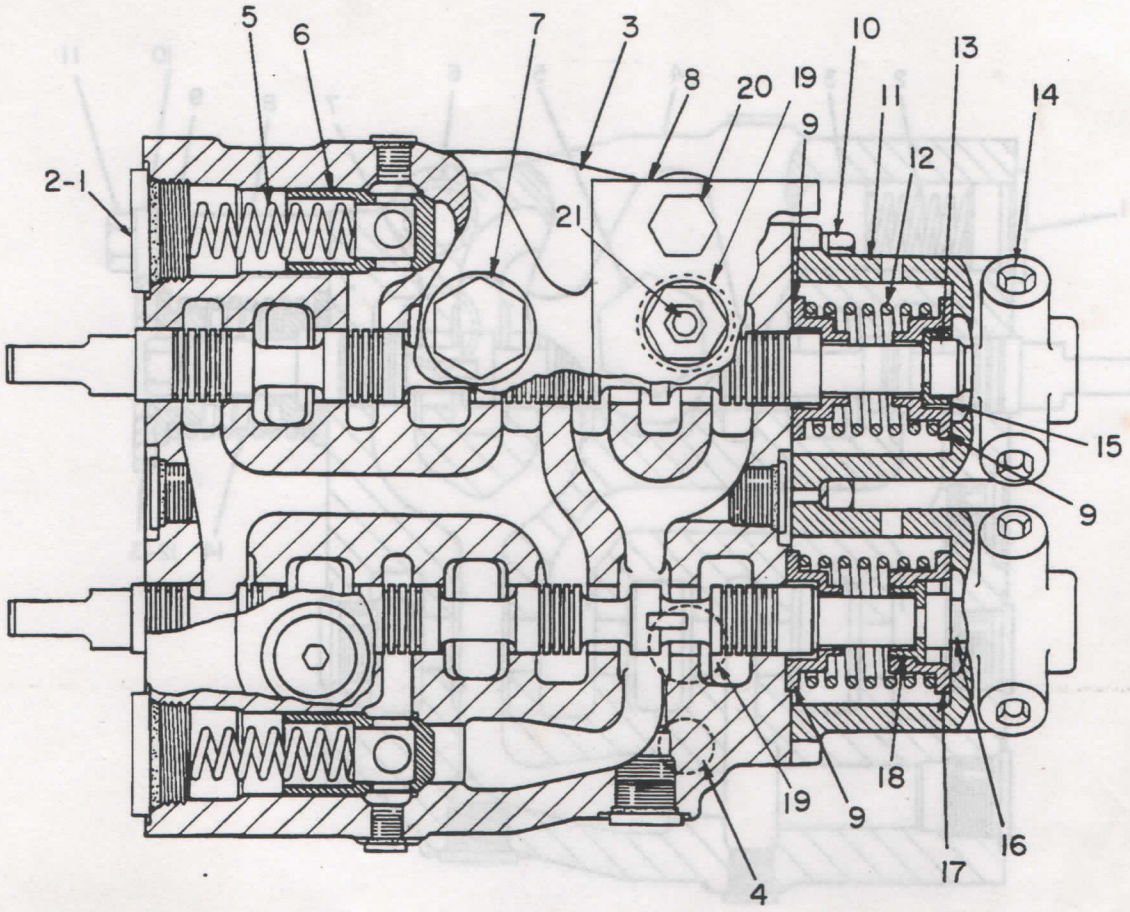

NOTE	REF NO	PART NUMBER	QTY	PART NAME	NOTE	REF NO	PART NUMBER	QTY	PART NAME
	1	9S8009	2	PLUG-O-RING					
	2	4K1388	2	SEAL-O-RING					
Y	3	9J8729	1	VALVE GP					
	4	2J0157	12	SEAL-O-RING					
	5	2A5885	2	SPRING					
	6	5J9078	2	VALVE					
Y	7	5J9106	2	VALVE GP-RELIEF					
	8	8J5449	1	BODY-VALVE					
	9	6J9993	2	SPACER					
	10	1A2029	4	BOLT					
		3B4506	4	LOCKWASHER					
	11	6J9992	2	RETAINER-SPRING					
	12	6J9998	2	SPRING					
	13	6J9997	1	DETENT-TILT STEM					
	14	7J1767	8	PLUG					
		6J6516	16	SHIM					
		6J9996	8	SPRING					
		5H1472	1	BALL					
	15	7J5545	1	SPACER					
	16	6J9995	1	DETENT-LIFT STEM					
	17	5J9092	1	SPACER					
	18	5J9091	1	SPACER					
	19	4J8997	7	SEAL					
	20	0V0375	2	BOLT					
		3B4508	2	LOCKWASHER					
Y	21	3G2315	1	VALVE GP-PITCH RELIEF					

Y-SEPARATE ILLUSTRATION

V-488007 EP

6J9991 VALVE GP-MAIN CONTROL

5J9106-Page 155, 3G2315-Page 156, 9J8729-Page 157

Part Of 8J0214, 8J0212 Tanks & Valves

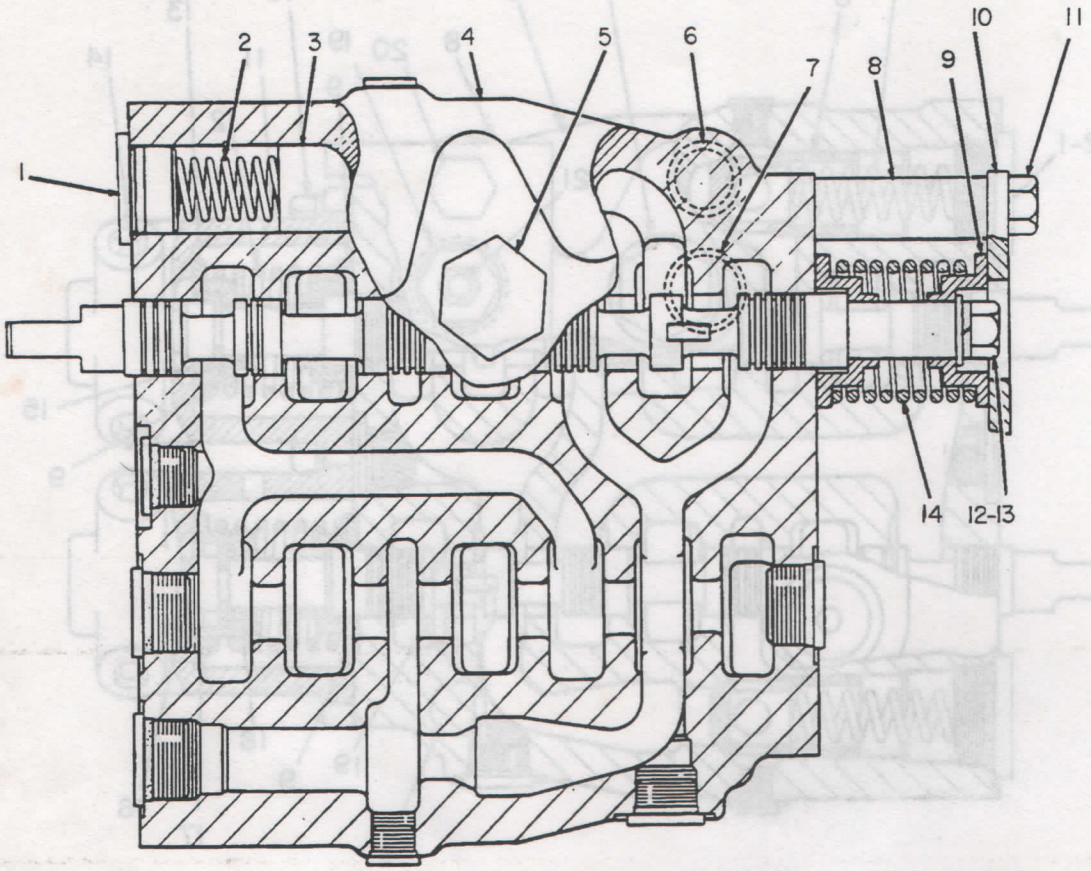

NOTE	REF NO	PART NUMBER	QTY	PART NAME	NOTE	REF NO	PART NUMBER	QTY	PART NAME
	1	9S8009	1	PLUG-O-RING					
		4K1388	1	SEAL-O-RING					
	2	2A5885	1	SPRING					
	3	5J9078	1	VALVE					
Y	4	8J8407	1	VALVE GP					
Y	5	5J9106	2	VALVE GP-RELIEF					
	6	6F6672	12	SEAL-O-RING					
	7	4J8997	6	SEAL					
	8	8J3639	2	SPACER					
	9	5J9088	2	SPACER					
	10	8J3640	1	PLATE					
C	11	7D9357	2	BOLT-LOCKING					
C	12	3B4506	1	LOCKWASHER					
	13	0L1351	1	BOLT					
		6B7949	1	WASHER					
	14	6J9998	1	SPRING					

C-CHANGE FROM PREVIOUS TYPE
Y-SEPARATE ILLUSTRATION

B-207922 EP

6J7364 VALVE GP
5J9106, 8J8407–Page 155
Part Of 8J0214 Tank & Valve
An Attachment

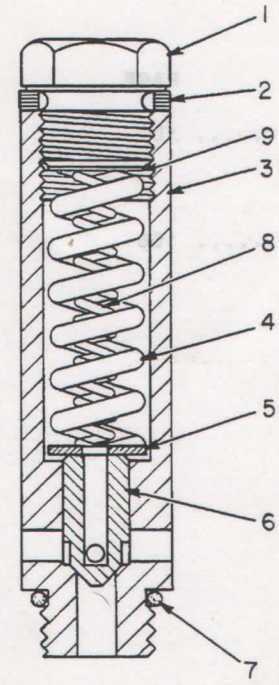

NOTE	REF NO	PART NUMBER	QTY	PART NAME
	1	5B5946	1	PLUG-DRAIN
	2	5J9100	2	SHIM (.005IN THK)
		5J9101	5	SHIM (.010IN THK)
	3	5J9102	1	BODY-VALVE
	4	5J9103	1	SPRING
	5	5J9105	1	WASHER
	6	6J6439	1	VALVE
	7	2M9780	1	SEAL-O-RING (19.18MM ID)
	8	5J9104	1	SPRING
C	9	5M3492	5	SPACER

C-CHANGE FROM PREVIOUS TYPE

B-114289 EP

5J9106 VALVE GP-RELIEF-TILT
Part Of 6J9991, 6J7364 Valves

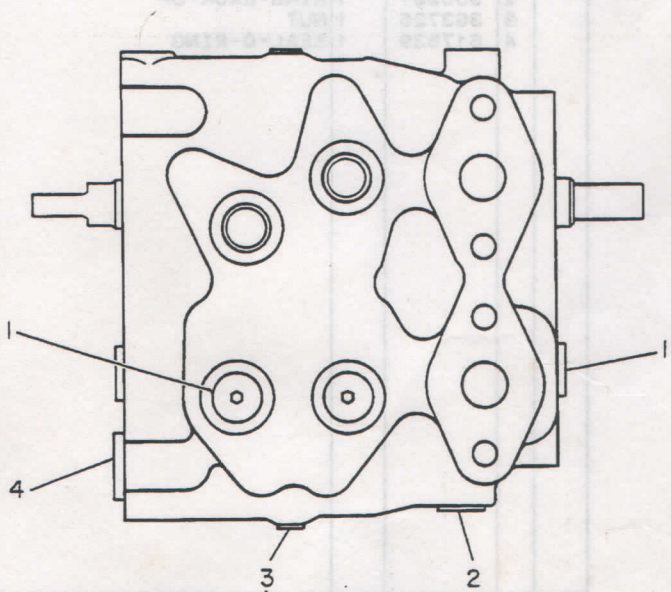

NOTE	REF NO	PART NUMBER	QTY	PART NAME
	1	9S8006	4	PLUG-O-RING
		2M9780	4	SEAL-O-RING
	2	9S8005	3	PLUG-O-RING
		3K0360	3	SEAL-O-RING
	3	9S8003	2	PLUG-O-RING
		1J9671	2	SEAL-O-RING
	4	9S8008	1	PLUG-O-RING
		3D2824	1	SEAL-O-RING

B-116970 EP

8J8407 VALVE GP
Part Of 6J7364 Valve
An Attachment

PAGE

1 4T7599 VALVE GP-RELIEF..... 157

OR

1 4T7601 VALVE GP-RELIEF..... 156

1 4T8694 SEAL KIT-RELIEF

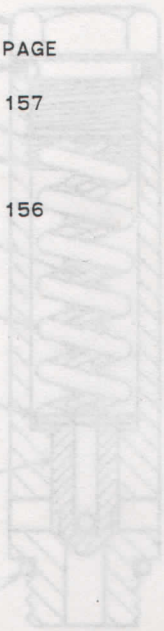

321391 P

3G2315 VALVE GP-PITCH RELIEF
Pilot Operated
Part Of 6J9991 Valve-Main Control

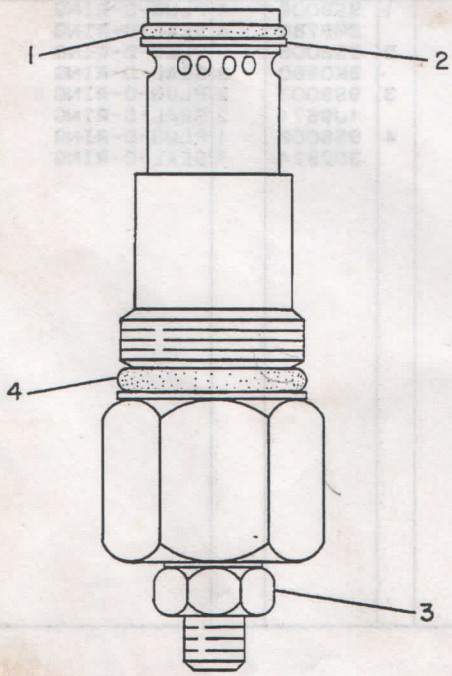

NOTE	REF NO	PART NUMBER	QTY	PART NAME
	1	6V5142	1	SEAL-O-RING
	2	9J6367	1	RING-BACK-UP
	3	3G3726	1	NUT
	4	617539	1	SEAL-O-RING

B-321396 EP

4T7601 VALVE GP-RELIEF
Pilot Operated
Part Of 3G2315 Valve-Pitch Relief

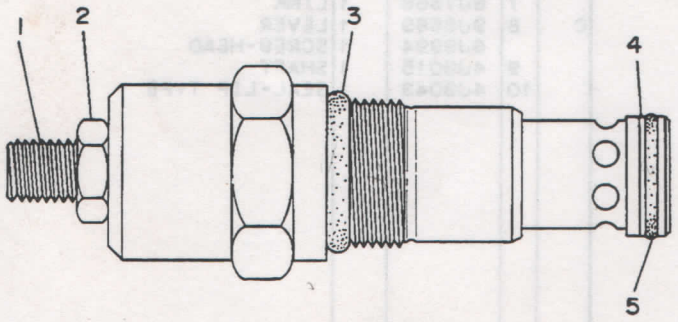

NOTE	REF NO	PART NUMBER	QTY	PART NAME
	1	4T8690	1	SCREW
	2	4T8691	1	NUT
	3	617539	1	SEAL-O-RING
	4	9J6367	1	RING-BACK-UP
	5	6V5142	1	SEAL-O-RING

B-321395 EP

5069

4T7599 VALVE GP-RELIEF
Pilot Operated
Part Of 3G2315 Valve-Pitch Relief

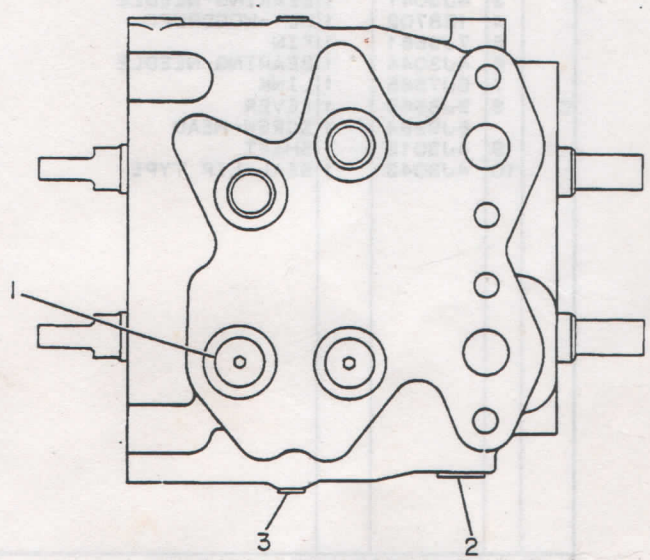

NOTE	REF NO	PART NUMBER	QTY	PART NAME
	1	9S8006	2	PLUG-O-RING
		2M9780	2	SEAL-O-RING
	2	9S8005	3	PLUG-O-RING
		3K0360	3	SEAL-O-RING
	3	9S8003	2	PLUG-O-RING
		1J9671	2	SEAL-O-RING

B-207735 EP

9J8729 VALVE GP
Part Of 6J9991 Valve-Main Control

HYDRAULIC SYSTEM

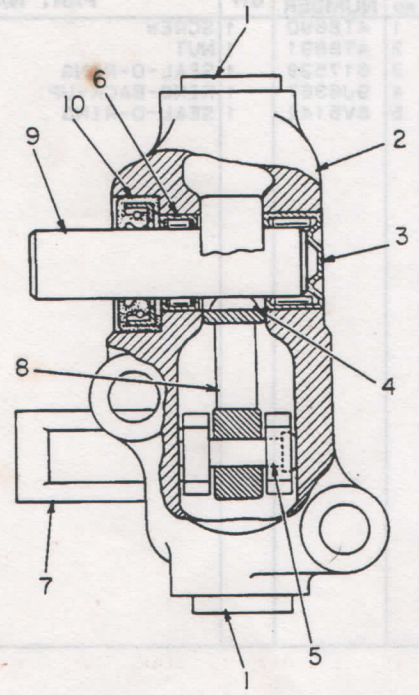

NOTE	REF NO	PART NUMBER	QTY	PART NAME
C	1	9S8005	2	PLUG-O-RING
C		3K0360	2	SEAL-O-RING
	2	7J1766	1	HOUSING-LEVER-LH
	3	4J3047	1	BEARING-NEEDLE
	4	1B8702	1	KEY-WOODRUFF
C	5	7J9681	1	PIN
	6	4J3044	1	BEARING-NEEDLE
	7	6J7566	1	LINK
C	8	9J8569	1	LEVER
		6J9994	1	SCREW-HEAD
	9	4J3015	1	SHAFT
	10	4J3043	1	SEAL-LIP TYPE

C-CHANGE FROM PREVIOUS TYPE

B-207924 EP

7J2295 HOUSING GP-OUTPUT
Part Of 8J0214 Tank & Valve
An Attachment

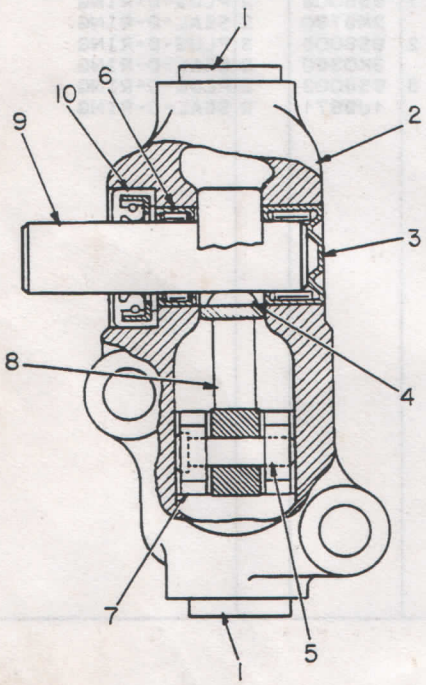

NOTE	REF NO	PART NUMBER	QTY	PART NAME
	1	9S8005	2	PLUG-O-RING
		3K0360	2	SEAL-O-RING
	2	7J1766	1	HOUSING-LEVER-LH
	3	4J3047	1	BEARING-NEEDLE
	4	1B8702	1	KEY-WOODRUFF
	5	7J9681	1	PIN
	6	4J3044	1	BEARING-NEEDLE
	7	6J7565	1	LINK
C	8	9J8569	1	LEVER
		6J9994	1	SCREW-HEAD
	9	4J3015	1	SHAFT
	10	4J3043	1	SEAL-LIP TYPE

C-CHANGE FROM PREVIOUS TYPE

B-207884 EP

7J0001 HOUSING GP-LEVER
Part Of 8J0214, 8J0212 Tanks & Valves

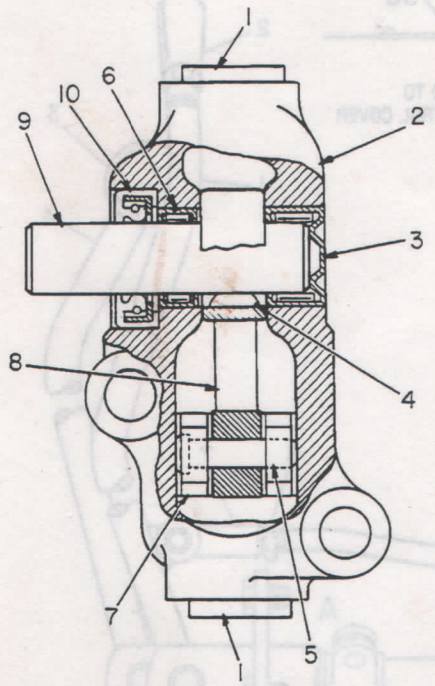

NOTE	REF NO	PART NUMBER	QTY	PART NAME
	1	9S8005	2	PLUG-O-RING
		3K0360	2	SEAL-O-RING
	2	7J1766	1	HOUSING-LEVER-LH
	3	4J3047	1	BEARING-NEEDLE
	4	1B8702	1	KEY-WOODRUFF
	5	7J9681	1	PIN
	6	4J3044	1	BEARING-NEEDLE
	7	6J7565	1	LINK
C	8	9J8569	1	LEVER
		6J9994	1	SCREW-HEAD
	9	4J3015	1	SHAFT
	10	4J3043	1	SEAL-LIP TYPE

C-CHANGE FROM PREVIOUS TYPE

B-207885 EP

7J0002 HOUSING GP-LEVER
Part Of 8J0214, 8J0212 Tanks & Valves

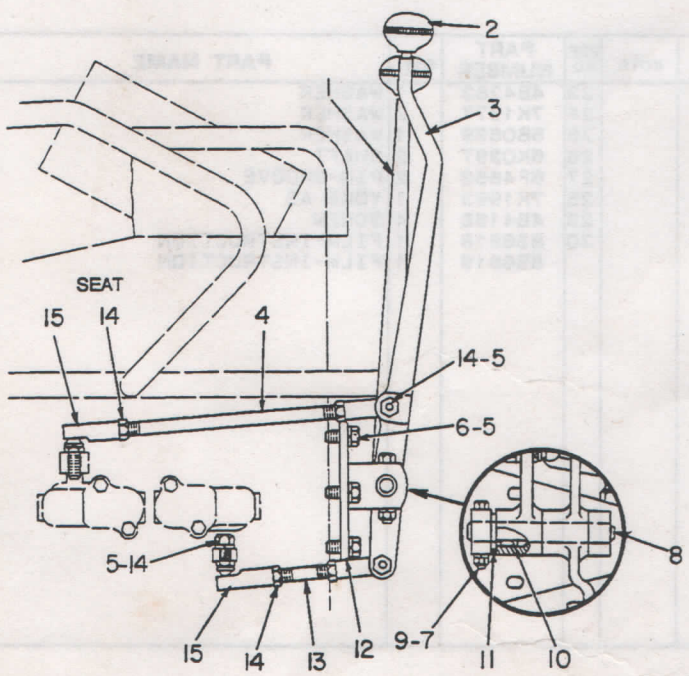

NOTE	REF NO	PART NUMBER	QTY	PART NAME
C	1	7K8434	1	LEVER (TILT)
	2	0L1170	2	HANDLE-LEVER
	3	6K7600	1	LEVER (LIFT)
	4	6K7599	1	ROD
	5	3B4508	6	LOCKWASHER
	6	0S1621	3	BOLT
	7	0L2070	1	BOLT
	8	6K7597	1	SHAFT
	9	1D4717	1	NUT
		3B4506	1	LOCKWASHER
C	10	6D5974	4	BEARING-ROLLER
	11	1L3046	6	WASHER
	12	6K7596	1	BRACKET AS
	13	6K7598	1	ROD-CONTROL
C	14	1B4430	7	NUT-JAM
	15	6K4442	4	JOINT AS-BALL

C-CHANGE FROM PREVIOUS TYPE

B-353654 EP

6K7602 CONTROL GP-HAND
Double Lever, Lift & Tilt

HYDRAULIC SYSTEM

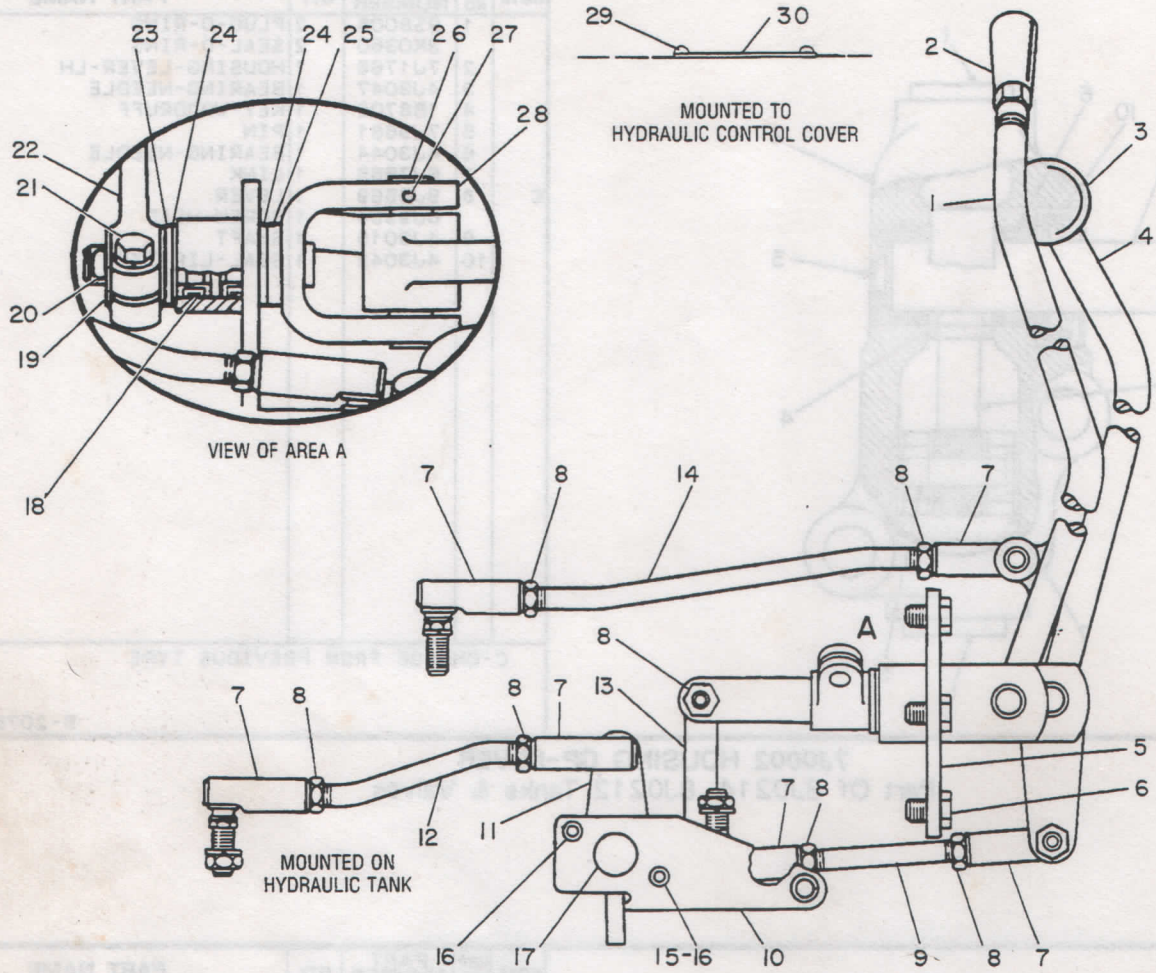

NOTE	REF NO	PART NUMBER	QTY	PART NAME
	1	7K1919	1	LEVER AS
	2	0L0829	1	HANDLE
	3	2A1736	1	HANDLE
	4	7K1920	1	LEVER AS
	5	7K1896	1	BRACKET AS
	6	0S1620	3	BOLT (1/2-13X.75IN)
		9L0864	1	BOLT (3/8-16X.875IN)
	7	6K4442	6	JOINT AS-BALL
	8	1B4430	12	NUT-JAM
	9	2H3686	1	ROD-CONTROL
	10	8K6217	1	BRACKET AS
	11	7K1971	1	BELLCRANK AS
		6K9883	2	BEARING-SLEEVE
	12	7K1939	1	ROD
	13	7K1991	1	BALLJOINT AS
	14	7K1940	1	ROD
	15	5P1075	1	WASHER-HARD
	16	0S1594	2	BOLT
	17	8K6212	1	PIN
		3B4632	1	COTTER
	18	6D5974	6	BEARING-ROLLER
	19	1L3047	1	WASHER
	20	3B4628	1	COTTER
	21	0S1588	1	BOLT
	22	7K1928	1	LEVER
		1B8706	1	KEY-WOODRUFF
	23	4B4283	1	WASHER
	24	7K1977	2	WASHER
	25	5B0639	1	WASHER
	26	6K0397	2	SHAFT
	27	6F4863	2	PIN-GROOVE
	28	7K1963	1	YOKE AS
	29	4B4158	4	SCREW
	30	8S6818	1	FILM-INSTRUCTION
		8S6819	1	FILM-INSTRUCTION

V-475142 EP

7K1980 CONTROL GP-HYDRAULIC
Part Of 6K8008 Hydraulic Ar
An Attachment

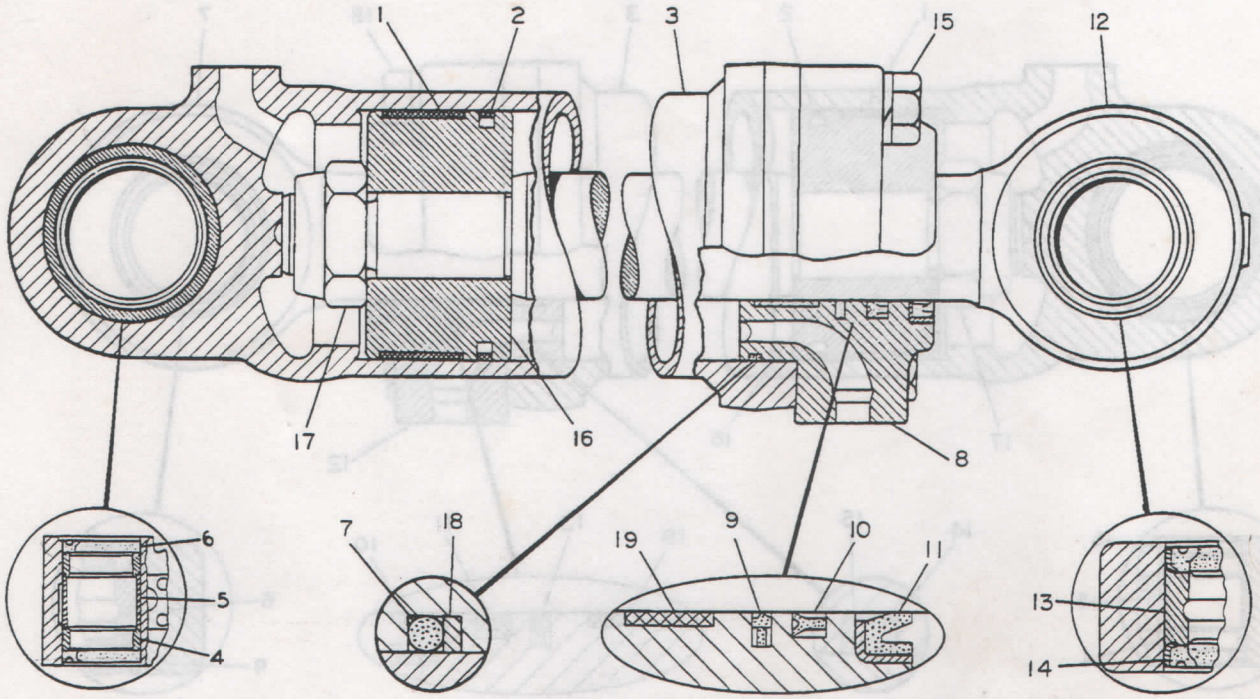

NOTE	REF NO	PART NUMBER	QTY.	PART NAME	NOTE	REF NO	PART NUMBER	QTY	PART NAME
	1	4J2620	1	RING-WEAR					
	2	5J4986	1	SEAL AS					
CR	3	7J9867	1	CYLINDER AS-HYDRAULIC					
	4	6J2242	2	BEARING-SLEEVE					
	5	7J9865	1	SPACER					
A	6	5P0065	2	SEAL-LIP TYPE					
	7	2H3928	1	SEAL-O-RING					
C	8	9T3707	1	HEAD					
	9	5J3616	1	SEAL-RING					
	10	5J8225	1	SEAL-U-CUP					
	11	4J3515	1	SEAL-LIP TYPE					
CR	12	7J9863	1	ROD AS					
	13	7J9699	1	BEARING-SLEEVE					
A	14	5P0094	1	SEAL-LIP TYPE					
	15	1D4609	4	BOLT					
	16	6J5670	1	PISTON					
	17	2J3950	1	NUT-SELF LOCKING					
	18	1K7095	1	RING-BACK-UP					
C	19	8T8204	1	RING-WEAR					

A-NOT PART OF THIS GROUP
C-CHANGE FROM PREVIOUS TYPE
R-REMFG PART MAY BE AVAILABLE

B-471615 EP

7J9871 CYLINDER GP-RH-LIFT (CHANGE 01)
114 MM (4.50 In.) Bore X 860 MM (33.92 In.) Stroke

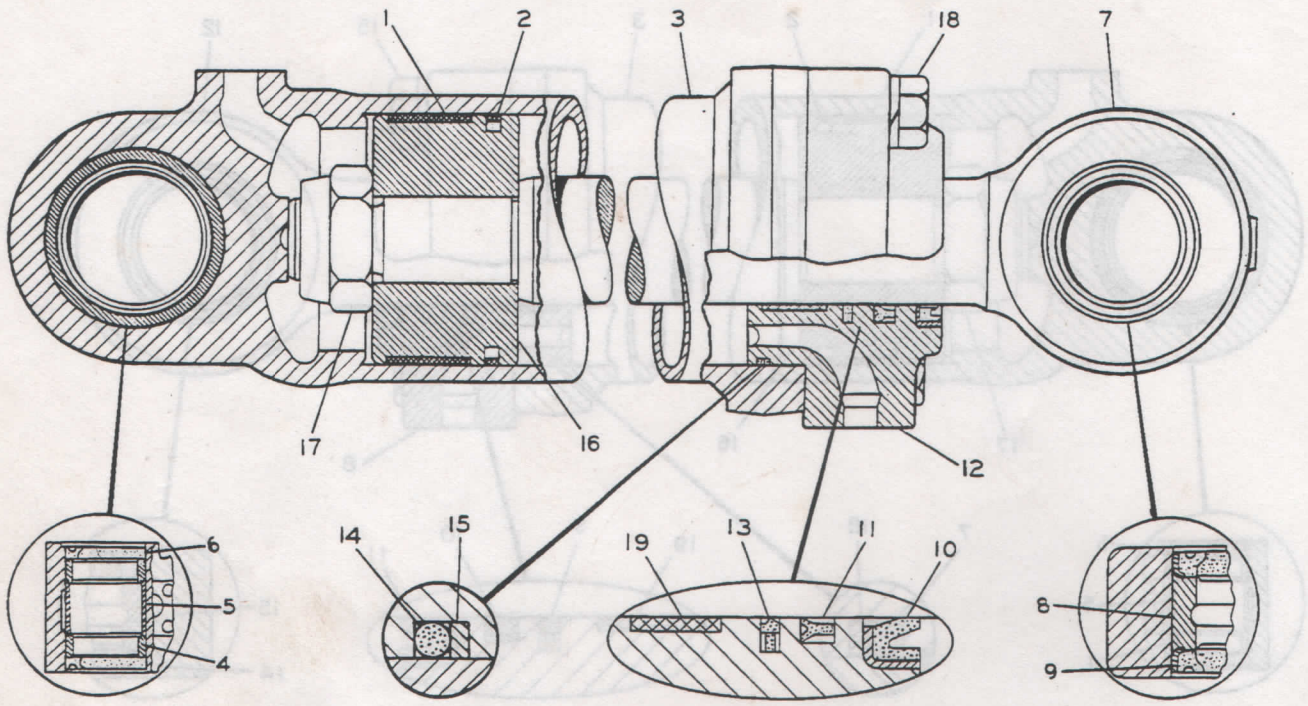

NOTE	REF NO	PART NUMBER	QTY	PART NAME
	1	4J2620	1	RING-WEAR
	2	5J4986	1	SEAL AS
	3	7J9870	1	CYLINDER AS-LH
	4	6J2242	2	BEARING-SLEEVE
	5	7J9865	1	SPACER
A	6	5P0065	2	SEAL-LIP TYPE
	7	7J9864	1	ROD AS
	8	7J9699	1	BEARING-SLEEVE
A	9	5P0094	2	SEAL-LIP TYPE
	10	4J3515	1	SEAL-LIP TYPE
	11	5J8225	1	SEAL-U-CUP
C	12	9T3707	1	HEAD
	13	5J3616	1	SEAL-RING
	14	2H3928	1	SEAL-O-RING
	15	1K7095	1	RING-BACK-UP
	16	6J5670	1	PISTON
	17	2J3950	1	NUT-SELF LOCKING
	18	1D4609	4	BOLT
		3B4512	4	LOCKWASHER
C	19	8T8204	1	RING-WEAR

A-NOT PART OF THIS GROUP
C-CHANGE FROM PREVIOUS TYPE

B-471626 EP

7J9872 CYLINDER GP-LH-LIFT (CHANGE 01)
114 MM (4.5 In.) Bore X 860 MM (33.91 In.) Stroke

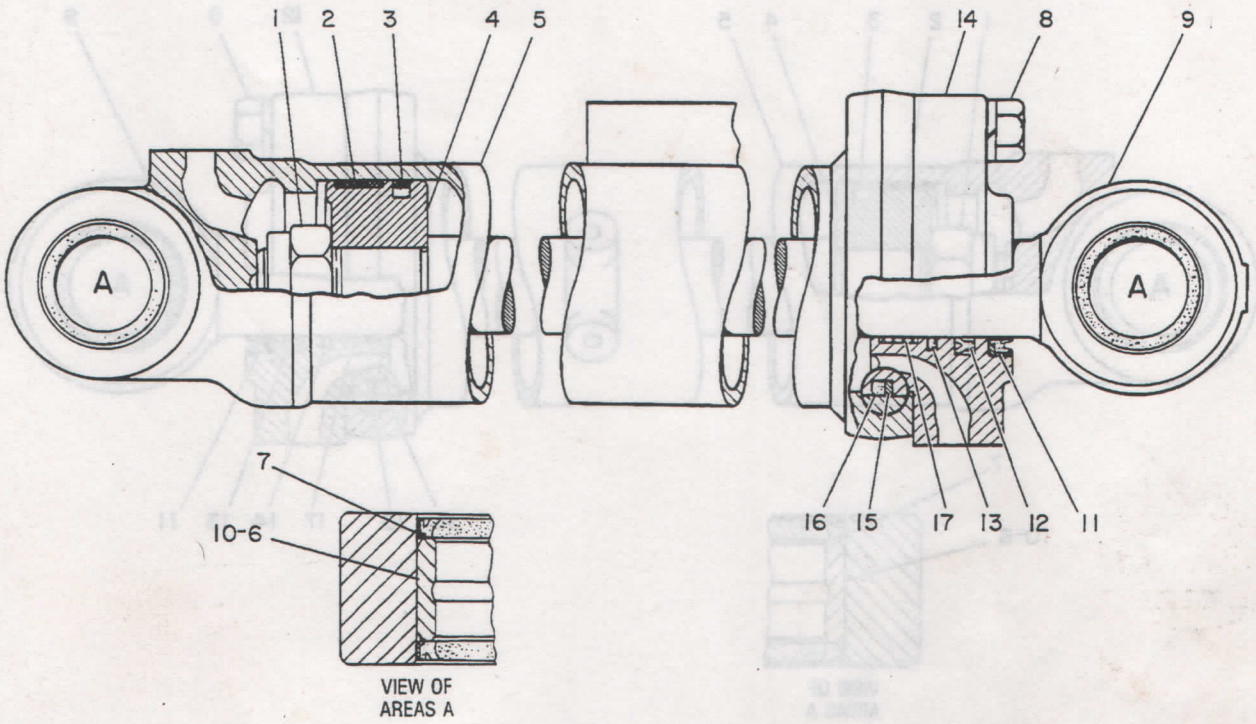

NOTE	REF NO	PART NUMBER	QTY	PART NAME	NOTE	REF NO	PART NUMBER	QTY	PART NAME
	1	2J3950	1	NUT-SELF LOCKING					
	2	6J7264	1	RING-WEAR					
	3	5J7854	1	SEAL AS					
	4	6J5692	1	PISTON					
	5	7J9727	1	CYL AS-HYD					
	6	7J9682	1	BEARING-SLEEVE					
A	7	5P0093	4	SEAL-LIP TYPE					
	8	1D4609	4	BOLT					
		3B4512	4	LOCKWASHER					
	9	7J9722	1	ROD AS-PISTON					
	10	7J9682	1	BEARING-SLEEVE					
	11	1K6981	1	SEAL-LIP TYPE					
	12	5J8200	1	SEAL-U-CUP					
	13	6J6917	1	SEAL-RING					
C	14	9T3708	1	HEAD					
	15	5J7865	1	RING-BACK-UP					
	16	1H6227	1	SEAL-O-RING					
C	17	8T8205	1	RING-WEAR					

A-NOT PART OF THIS GROUP
C-CHANGE FROM PREVIOUS TYPE

INCLINACAD

B-472978 EP

7J9729 CYLINDER GP-RH-TILT (CHANGE 02)
108 MM (4.25 In.) Bore X 438 MM (17.25 In.) Stroke

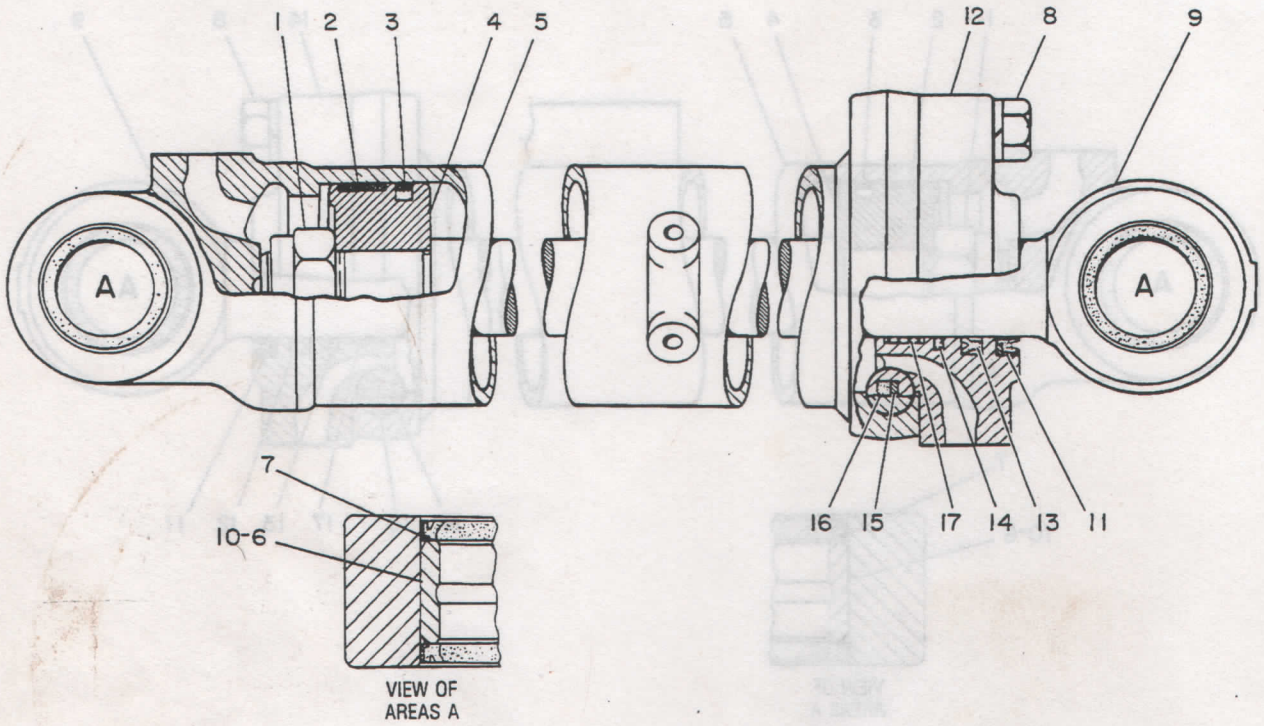

NOTE	REF NO	PART NUMBER	QTY	PART NAME	NOTE	REF NO	PART NUMBER	QTY	PART NAME
	1	2J3950	1	NUT-SELF LOCKING					
	2	6J7264	1	RING-WEAR					
	3	5J7854	1	SEAL AS					
	4	6J5692	1	PISTON					
R	5	7J9728	1	CYL AS-HYD					
	6	7J9682	1	BEARING-SLEEVE					
A	7	5P0093	4	SEAL-LIP TYPE					
	8	1D4609	4	BOLT					
		3B4512	4	LOCKWASHER					
R	9	7J9722	1	ROD AS-PISTON					
	10	7J9682	1	BEARING-SLEEVE					
	11	1K6981	1	SEAL-LIP TYPE					
C	12	9T3708	1	HEAD					
	13	5J8200	1	SEAL-U-CUP					
	14	6J6917	1	SEAL-RING					
	15	5J7865	1	RING-BACK-UP					
	16	1H6227	1	SEAL-O-RING					
C	17	8T8205	1	RING-WEAR					

A-NOT PART OF THIS GROUP
C-CHANGE FROM PREVIOUS TYPE
R-REMFG PART MAY BE AVAILABLE

B-473005 EP

7J9730 CYLINDER GP-LH-TILT (CHANGE 02)
108 MM (4.25 In.) Bore X 438 MM (17.25 In.) Stroke

HYDRAULIC SYSTEM

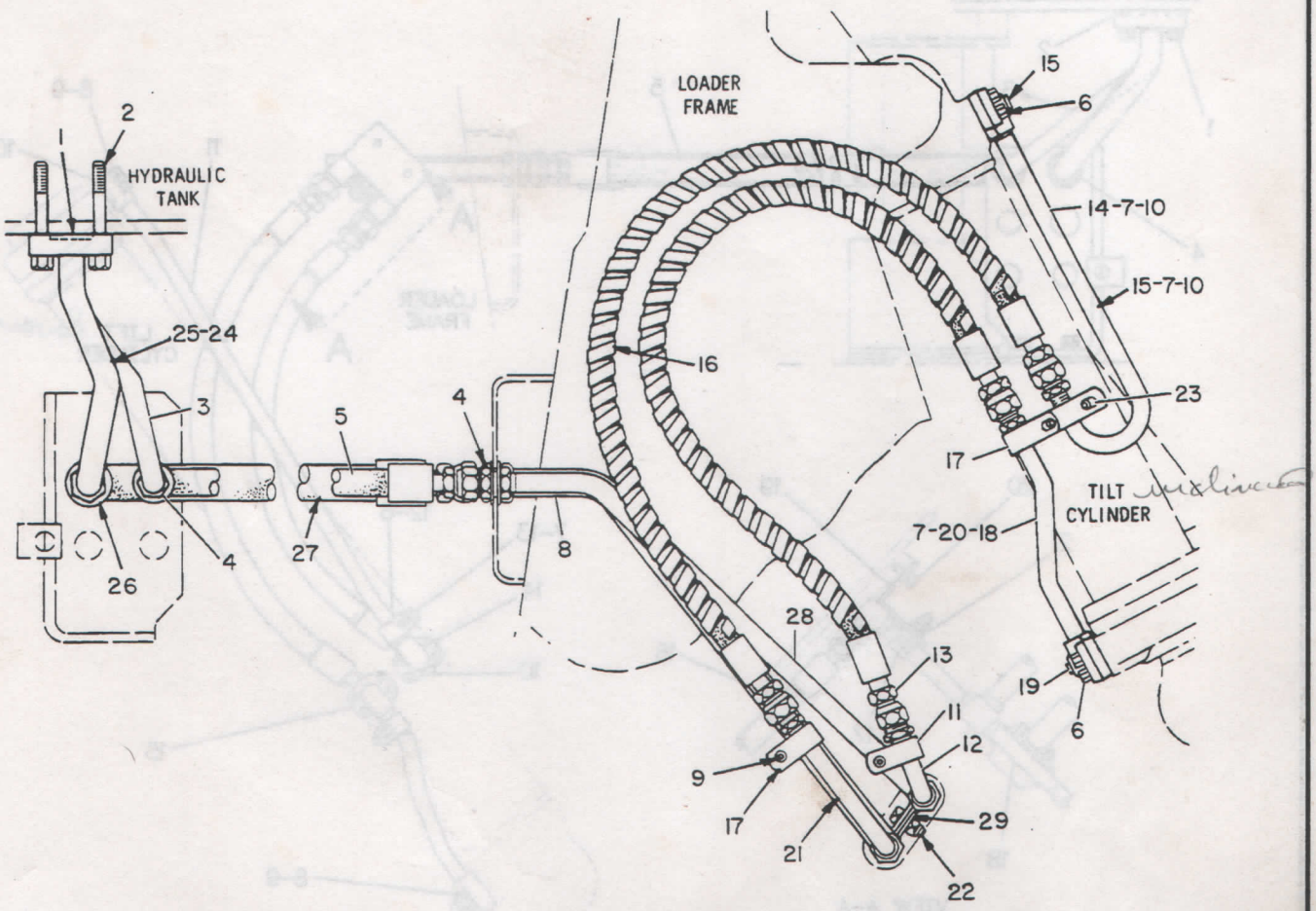

NOTE	REF NO	PART NUMBER	QTY	PART NAME	NOTE	REF NO	PART NUMBER	QTY	PART NAME
	1	4J5267	1	SEAL	C	21	8V1479	2	TUBE AS
	2	1D4569	4	BOLT		22	6H1717	2	BOLT
		5P8245	4	WASHER			2H3788	2	NUT-SELF LOCKING
	3	6K9884	1	TUBE AS	C	23	5P0060	4	BOLT
	4	6K8420	2	LOCKNUT		24	4J0520	1	SEAL
		7K0897	4	WASHER		25	7K0413	1	TUBE AS
I	5	7K0107	1	HOSE AS		26	7K0131	2	NUT-BULKHEAD
	6	1A9579	16	BOLT			7K0898	4	WASHER
	7	4J8996	4	SEAL-O-RING	I	27	7K0108	1	HOSE AS
	8	7K0286	1	TUBE AS		28	7K0526	1	TUBE AS
	9	0T0318	4	BOLT		29	6K9725	4	CLAMP
	10	6K6612	1	TUBE AS-LH					
	11	6K5318	2	CLIP					
		6K5319	2	BRACKET					
C	12	8V1481	2	TUBE AS					
I	13	7K1588	2	HOSE AS					
	14	6K6611	1	TUBE AS-RH					
	15	9S8002	1	PLUG-O-RING					
		3J7354	1	SEAL-O-RING					
I	16	7K1589	2	HOSE AS					
	17	6K5291	6	CLIP					
		6K5290	6	BRACKET					
	18	6K6605	1	TUBE AS-RH					
	19	9S8005	1	PLUG-O-RING					
		3J7354	1	SEAL-O-RING					
	20	6K6606	1	TUBE AS-LH					

C-CHANGE FROM PREVIOUS TYPE
I-SEE HOSE FABRICATION GUIDE

V-488009 EP

6K8289 LINES GP-TILT CYLINDER

HYDRAULIC SYSTEM

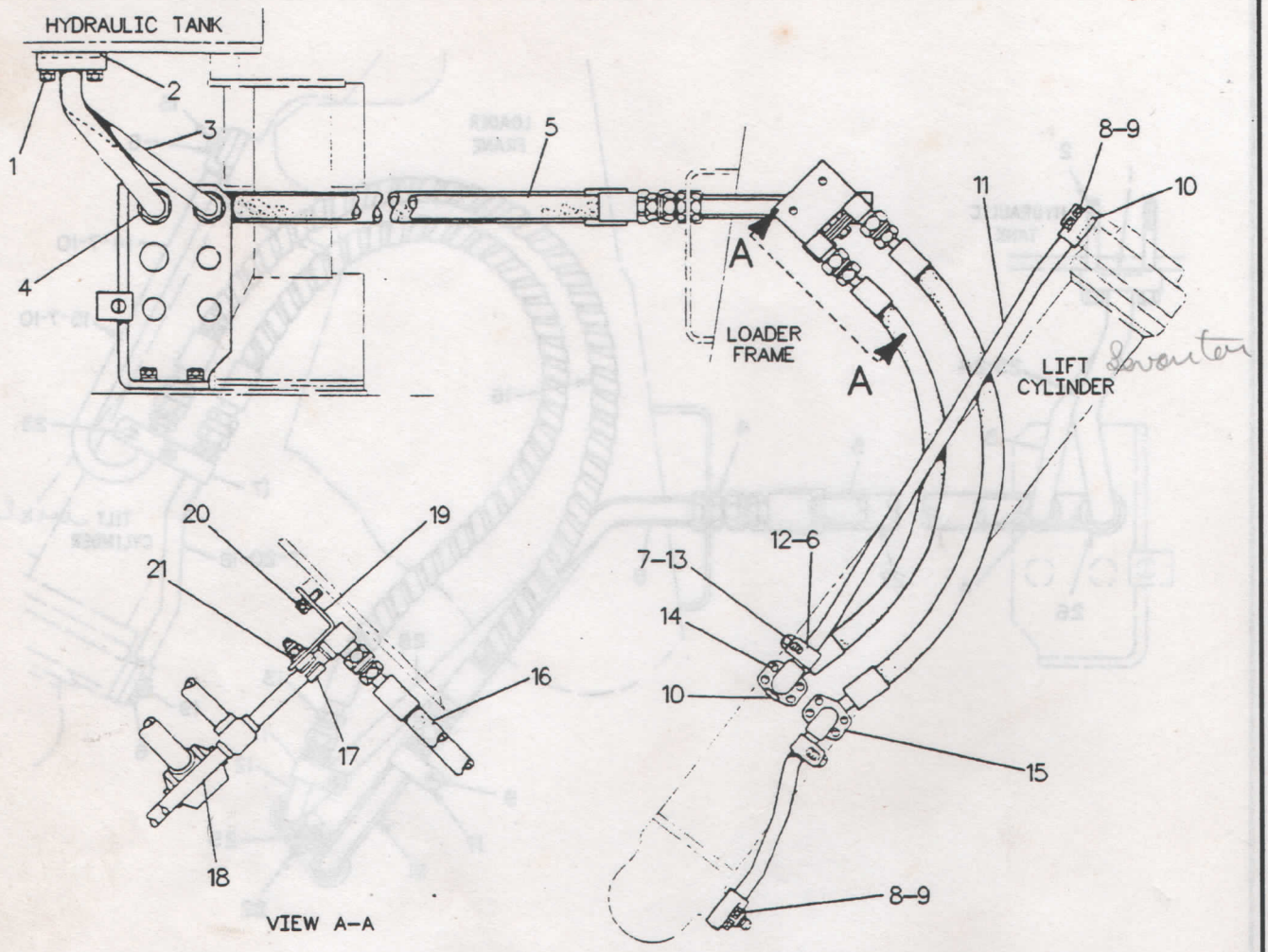

NOTE	REF NO	PART NUMBER	QTY	PART NAME	NOTE	REF NO	PART NUMBER	QTY	PART NAME
	1	1D4569	2	BOLT (1/2-13X4.25IN)		20	0S1594	4	BOLT (3/8-16X1IN)
		5P8245	2	WASHER (3MM THK)			5M2894	4	WASHER 2.5MM(.098IN)THK
	2	4J5267	1	SEAL (24.99MM ID)			4B4278	4	WASHER 1.59MM(.0625IN)THK
	3	6K9885	1	TUBE AS					
	4	6K8420	2	LOCKNUT		21	1A1460	2	BOLT
		7K0897	4	WASHER			2H3788	2	NUT-SELF LOCKING (1/2-13 THD)
I	5	7K0107	1	HOSE AS					
	6	6K9572	2	BRACKET			4B4280	2	WASHER (2.5MM THK)
	7	4B4279	2	WASHER (SMALL)					
	8	1A9579	8	BOLT (5/16-18X1.5IN)					
	9	9M1974	16	WASHER (2MM THK)					
	10	4J8996	4	SEAL-O-RING					
	11	6K9215	1	TUBE AS-RH					
		6K9216	1	TUBE AS-LH					
	12	6K9573	2	CLIP					
	13	3L0526	2	BOLT (7/16-14X.875IN)					
		5P8244	2	WASHER (LARGE)					
	14	4B3388	8	BOLT (5/16-18X1.125IN)					
	15	1P4575	4	FLANGE-HALF					
I	16	7K1338	2	HOSE AS					
	17	6K9725	4	CLAMP					
	18	6K9978	1	TUBE AS					
	19	6K9114	2	BRACKET					

I-SEE HOSE FABRICATION GUIDE

R-500503 EP

7V9135 LINES GP-LIFT CYLINDER-PART 1 OF 2

HYDRAULIC SYSTEM

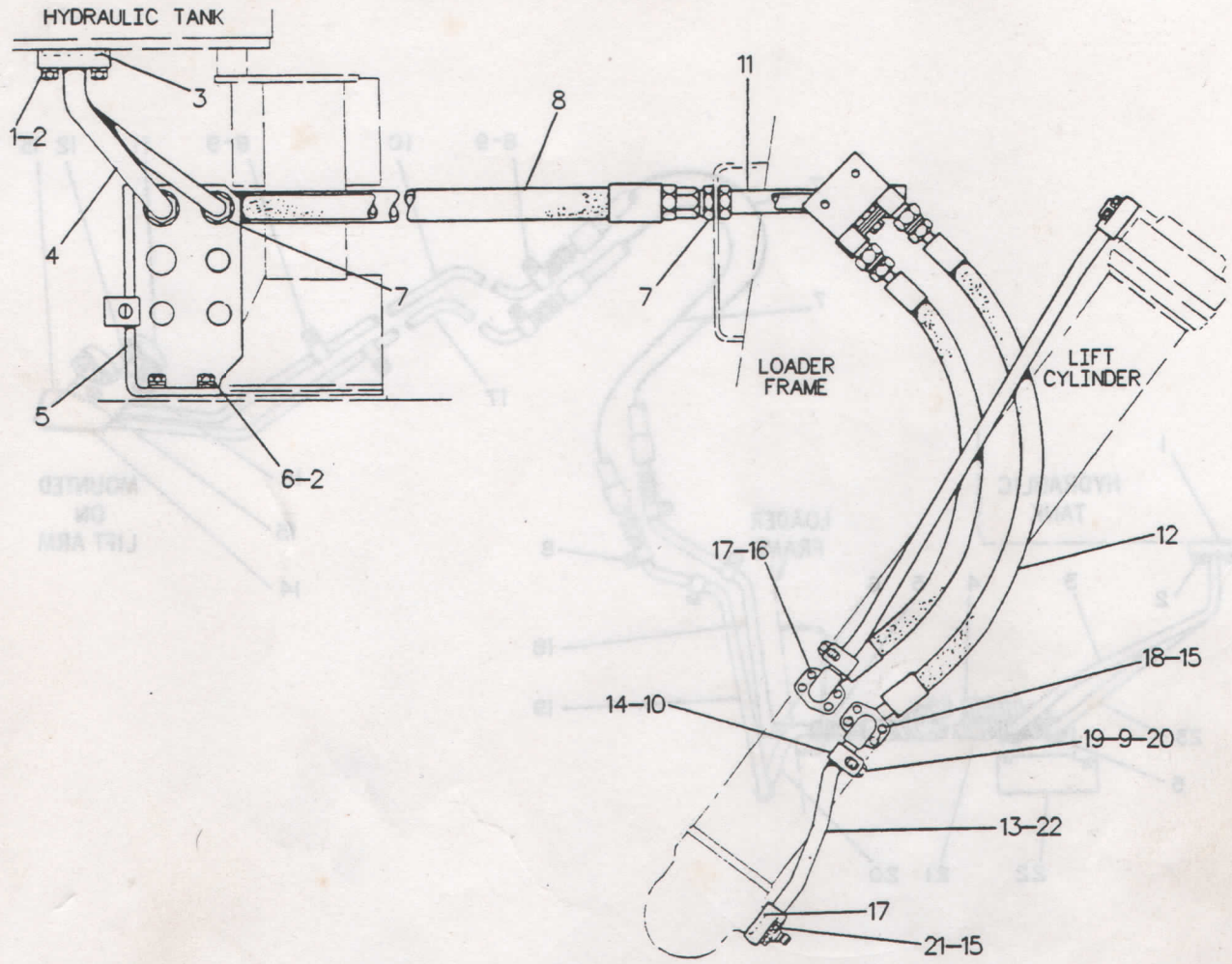

NOTE	REF NO	PART NUMBER	QTY	PART NAME
	1	1D4569	2	BOLT (1/2-13X4.25IN)
	2	5P8245	4	WASHER (3MM THK)
	3	4J0520	1	SEAL (32.92MM ID)
	4	7K0132	1	TUBE AS
	5	7V9109	1	BRACKET AS
	6	0S1595	2	BOLT (1/2-13X1.25IN)
		4B4280	2	WASHER (2.5MM THK)
	7	7K0131	2	NUT-BULKHEAD
		7K0898	4	WASHER
I	8	7K0108	1	HOSE AS
	9	4B4279	2	WASHER
	10	6K9572	2	BRACKET
	11	6K9979	1	TUBE AS
I	12	7K1339	2	HOSE AS
	13	6K9214	1	TUBE AS-LH
	14	6K9573	2	CLIP
	15	9M1974	16	WASHER (2MM THK)
	16	1P4575	4	FLANGE-HALF
	17	4J8996	4	SEAL-O-RING
	18	4B3388	8	BOLT (5/16-18X1.125IN)
	19	3L0526	2	BOLT (7/16-14X.875IN)
	20	5P8244	2	WASHER (2.5MM THK)
	21	1A9579	8	BOLT (5/16-18X1.5IN)
	22	6K9213	1	TUBE AS-RH
		9S8002	1	PLUG-O-RING
		3J7354	1	SEAL-O-RING (8.92MM ID)

I-SEE HOSE FABRICATION GUIDE

R-500493 EP

7V9135 LINES GP-LIFT CYLINDER-PART 2 OF 2

HYDRAULIC SYSTEM

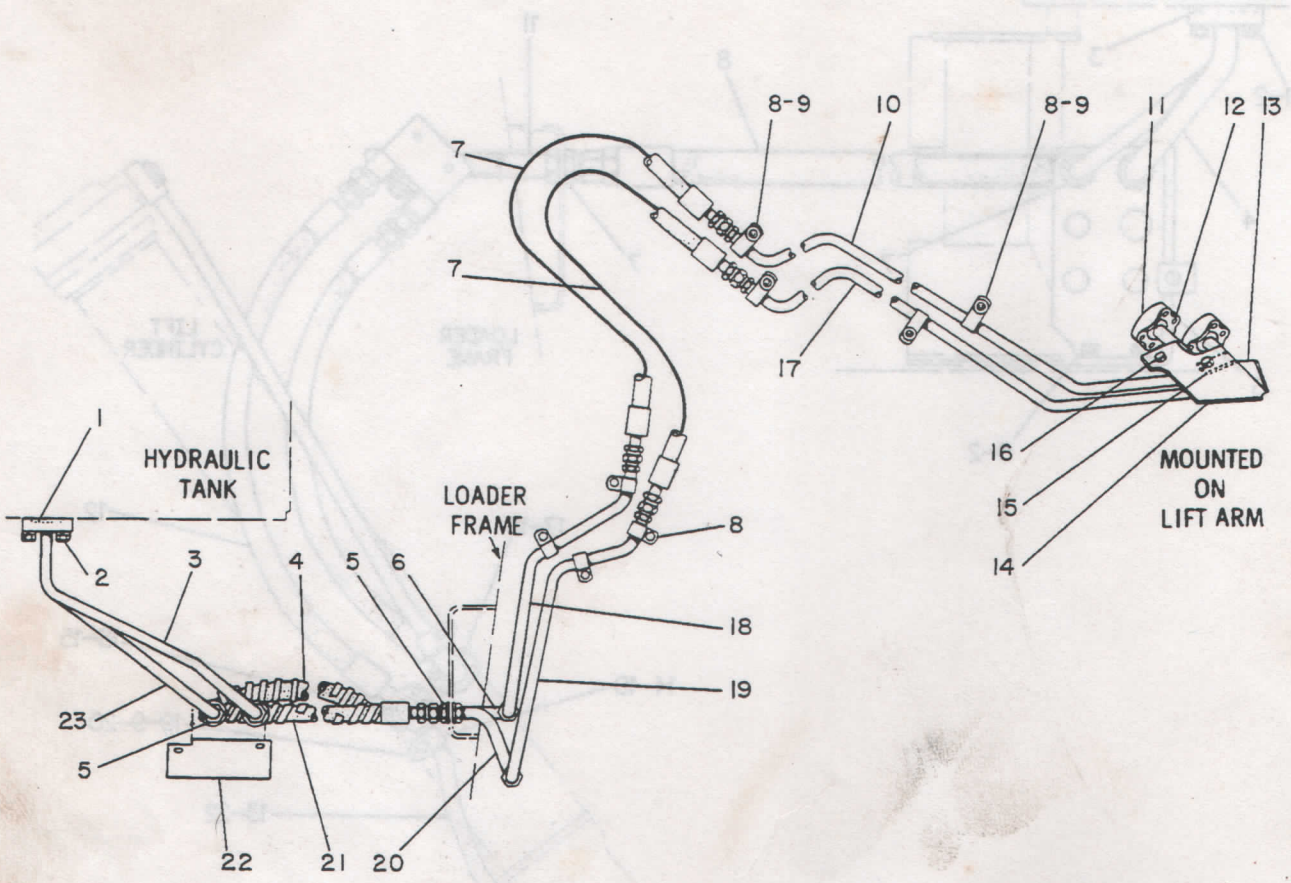

NOTE	REF NO	PART NUMBER	QTY	PART NAME	NOTE	REF NO	PART NUMBER	QTY	PART NAME
	1	4J5267	2	SEAL		18	7K0755	1	TUBE AS
	2	2B0947	4	BOLT		19	7K0754	1	TUBE AS
		5P8245	4	WASHER		20	8V1374	1	TUBE AS
	3	7K0608	1	TUBE AS	I	21	7K2416	1	HOSE AS
I	4	7K0701	1	HOSE AS		22	2V7219	1	STRIP
	5	6K8420	4	LOCKNUT		23	7K0607	1	TUBE AS
		7K0897	8	WASHER					
	6	8V1376	1	TUBE AS					
I	7	7K0702	2	HOSE AS					
	8	6K5290	8	BRACKET					
		6K5291	8	CLIP					
		7K0734	8	BOLT-SELF LOCKING					
	9	7K0744	4	BOSS					
	10	7K0757	1	TUBE AS					
	11	1P4576	4	FLANGE					
		5H4018	2	COVER					
		5F1678	2	SEAL-O-RING					
	12	0S1591	8	BOLT					
		5M2894	8	WASHER					
	13	6K9572	2	BRACKET					
	14	7K0746	1	BRACKET					
	15	6K9573	2	CLIP					
	16	4F8965	2	BOLT					
		5P8244	2	WASHER					
		9M5048	2	LOCKNUT					
	17	7K0756	1	TUBE AS					

I-SEE HOSE FABRICATION GUIDE

B-475153 EP

7K0602 LINES GP-HYDRAULIC-FRONT
Part Of 6K8008 Hydraulic Ar
An Attachment

HYDRAULIC SYSTEM

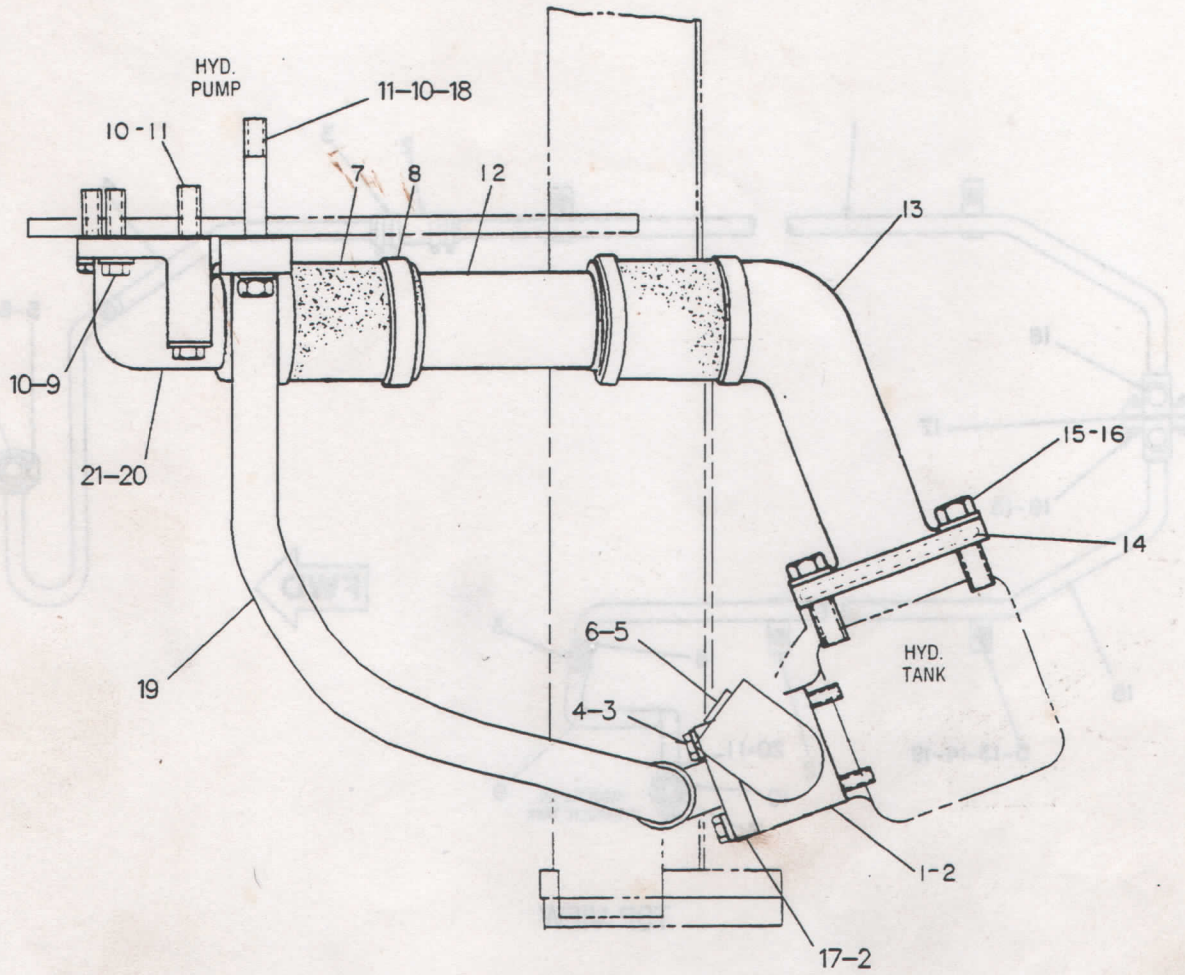

NOTE	REF NO	PART NUMBER	QTY	PART NAME	NOTE	REF NO	PART NUMBER	QTY	PART NAME
C	1	7K0022	1	TEE					
C	2	4J0522	2	SEAL					
	3	4F7226	4	BOLT					
C	4	5P8244	4	WASHER					
	5	9S8008	1	PLUG-O-RING					
	6	3D2824	1	SEAL-O-RING					
	7	8V8082	2	HOSE					
	8	5P0598	5	CLAMP					
	9	1A1460	2	BOLT					
C	10	5P8245	6	WASHER					
C	11	1D4569	4	BOLT					
	12	7V9118	1	TUBE					
	13	8V8083	1	ELBOW					
	14	5P3846	1	SEAL					
	15	0S1589	4	BOLT					
	16	5P8247	4	WASHER-HARD					
C	17	1P4578	2	FLANGE					
C	18	4J0520	1	SEAL					
C	19	5Y1374	1	HOSE AS					
	20	6K9029	1	ELBOW					
	21	5H8848	1	SEAL-O-RING					

C-CHANGE FROM PREVIOUS TYPE

R-478069 EP

7V9121 LINES GP-HYDRAULIC OIL

HYDRAULIC SYSTEM

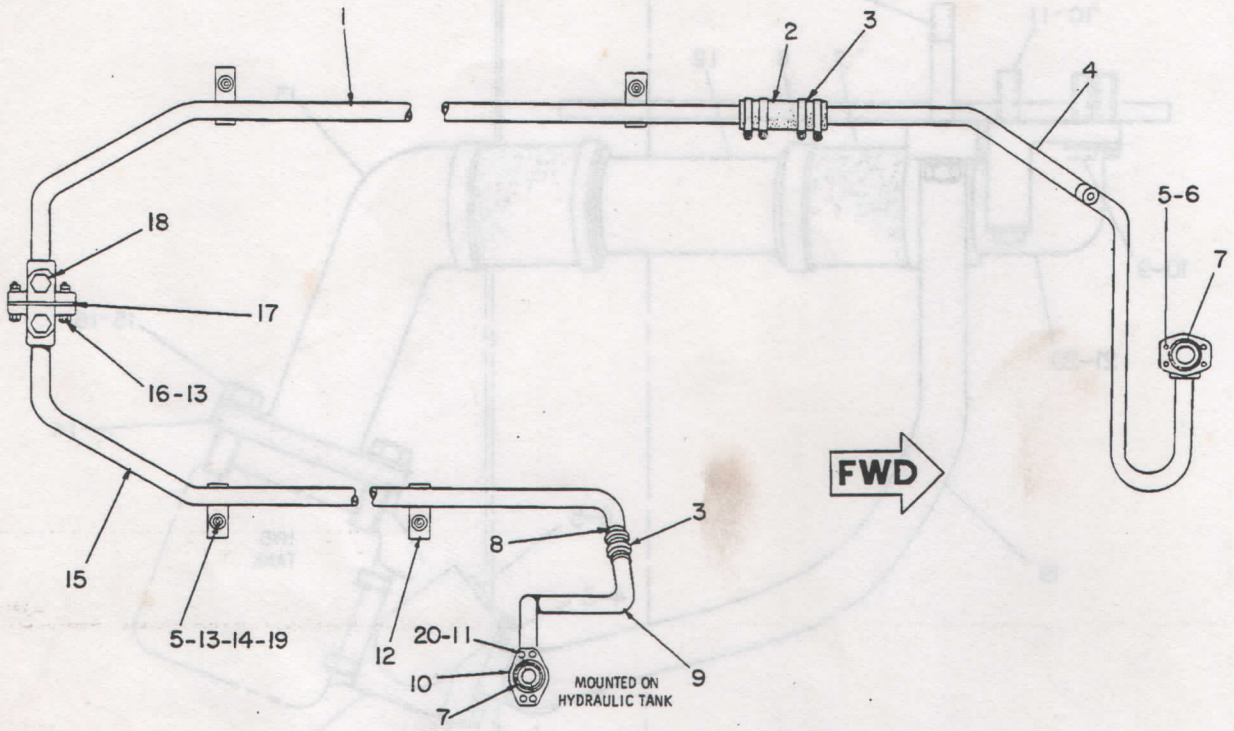

TOP VIEW

NOTE	REF NO	PART NUMBER	QTY	PART NAME	NOTE	REF NO	PART NUMBER	QTY	PART NAME
	1	7K2446	1	TUBE AS					
		5K0864	1	CLAMP					
	2	7K4975	1	HOSE					
	3	9M7958	6	CLAMP					
C	4	5V2988	1	TUBE AS					
	5	1A2029	4	BOLT 2.8CM(1.125IN.)LG					
	6	0S1590	2	BOLT 5.1CM(2 IN.)LG					
	7	4J0520	2	SEAL (32.92MM ID)					
	8	5K4725	1	HOSE					
C	9	8V1509	1	TUBE AS					
	10	1P4577	2	FLANGE-HALF					
	11	0S1588	4	BOLT (3/8-16X1.25IN)					
C	12	5K0864	4	CLAMP					
	13	1D4717	6	NUT (3/8-16 THD)					
C	14	4B4278	4	WASHER (1.6MM THK)					
	15	7K2403	1	TUBE AS					
	16	0S1571	2	BOLT (3/8-16X1.75IN)					
	17	2A4572	1	GASKET					
	18	9S4190	2	PLUG					
		2M9780	2	SEAL-O-RING (19.18MM ID)					
	19	5P1075	4	WASHER-HARD (3MM THK) (SHAKEPROOF)					
C	20	5M2894	4	WASHER (2.5MM THK)					

C-CHANGE FROM PREVIOUS TYPE

V-487812 EP

7K2468 LINES GP-OIL COOLER

HYDRAULIC SYSTEM

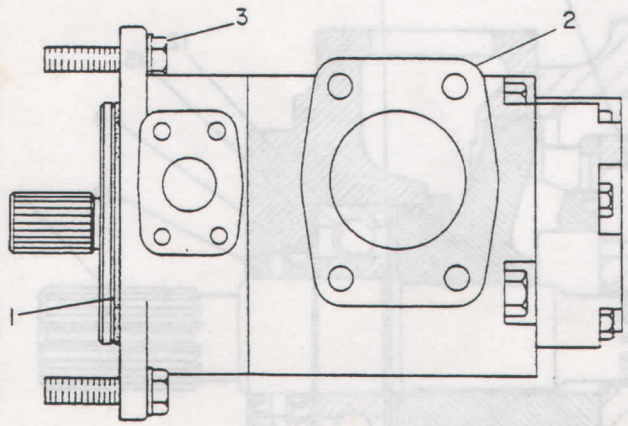

NOTE	REF NO	PART NUMBER	QTY	PART NAME
	1	5F3999	1	SEAL-O-RING
Y	2	4T0508	1	PUMP GP-VANE
	3	0S1589	2	BOLT
-		5P8247	2	WASHER-HARD

Y-SEPARATE ILLUSTRATION

B-353668 EP

7V9156 PUMP GP-VANE
4T0508-Page 172

HYDRAULIC SYSTEM

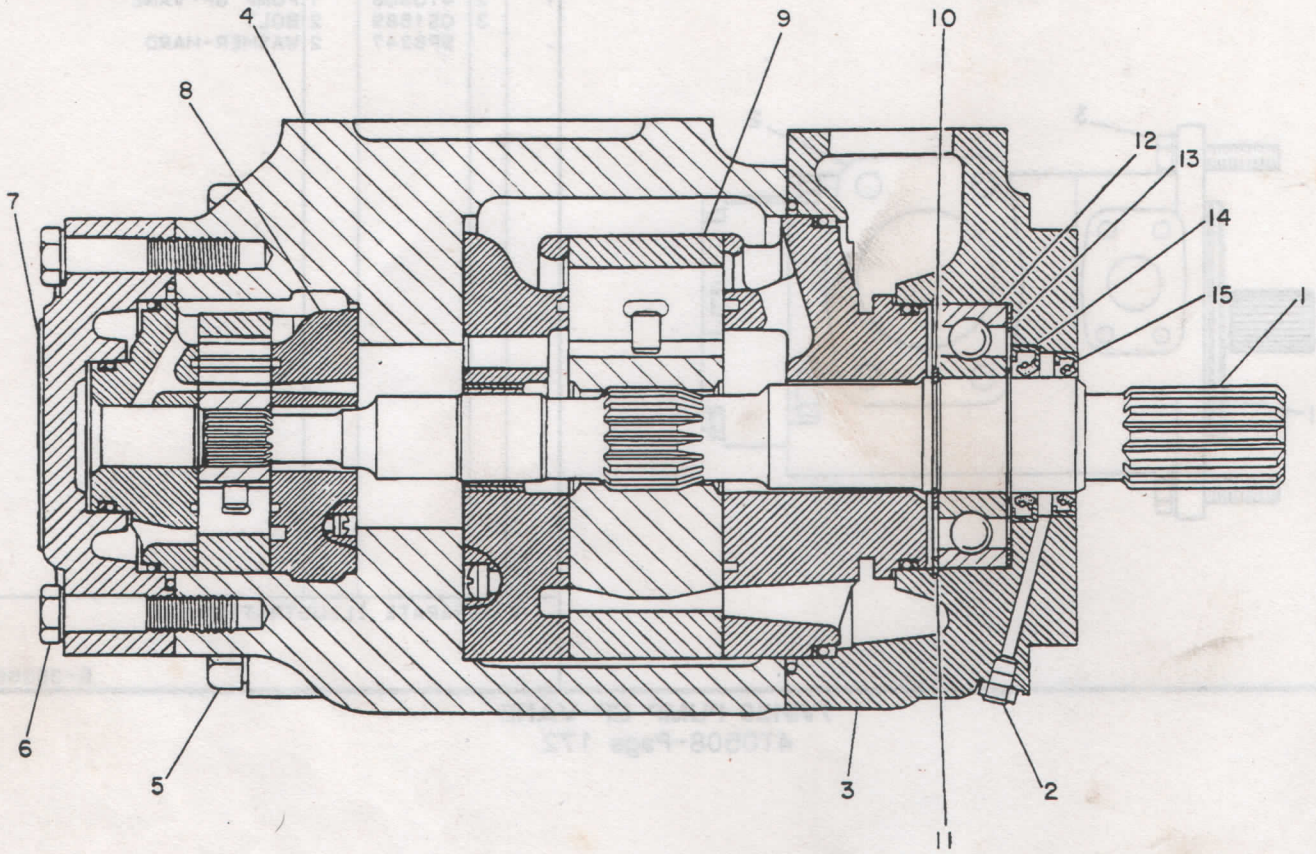

NOTE	REF NO	PART NUMBER	QTY	PART NAME	NOTE	REF NO	PART NUMBER	QTY	PART NAME
	1	9J5091	1	SHAFT					
	2	3G7242	1	PLUG					
	3	1U3937	1	BODY					
	4	4J4670	1	COVER					
	5	1D4597	4	BOLT					
	6	0T0319	4	BOLT					
	7	4J1657	1	COVER					
RY	8	1U2665	1	CARTRIDGE GP 53 L/MIN(14 GPM)					
RY	9	3G1267	1	CARTRIDGE GP 95 L/MIN(25 GPM)					
	10	4M5285	1	RING-RETAINING (INNER)					
	11	2J8172	1	RING-RETAINING (OUTER)					
	12	2L5271	1	BALL BEARING					
	13	2J8168	1	WASHER ARRUELA -					
	14	9J7814	1	SEAL-LIP TYPE					
	15	3G9194	1	SEAL-LIP TYPE					
				THE FOLLOWING REPAIR KITS ARE AVAILABLE:					
		1U0378	1	KIT-FLEXPLATE (SMALL)					
		1U0380	1	KIT-FLEXPLATE (LARGE)					

R-REMFG PART MAY BE AVAILABLE
Y-SEPARATE ILLUSTRATION

B-353680 EP

4T0508 PUMP GP-VANE
3G1267-Page 173, 1U2665-Page 174
Part Of 7V9156 Pump-Vane

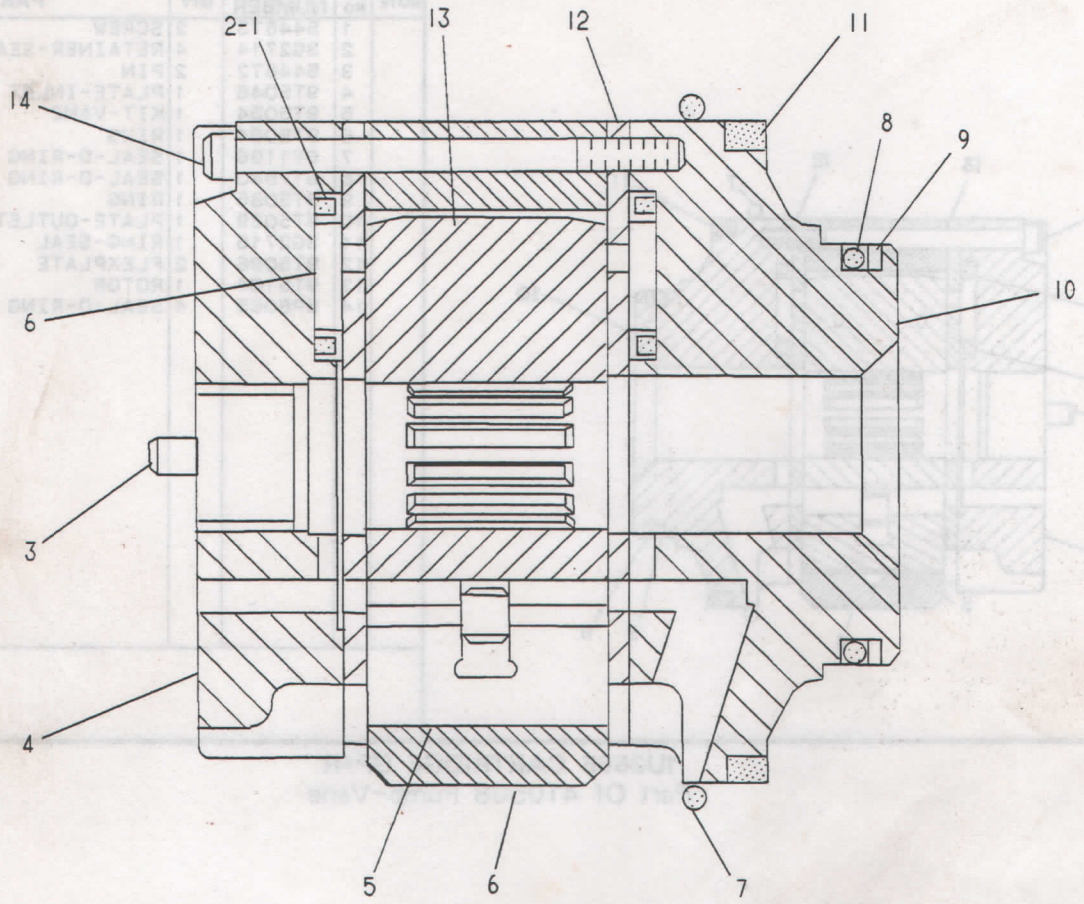

NOTE	REF NO	PART NUMBER	QTY	PART NAME	NOTE	REF NO	PART NUMBER	QTY	PART NAME
	1	8C3079	4	SEAL-O-RING					
	2	3G1264	4	RETAINER-SEAL					
	3	9T5042	2	DOWEL					
	4	9T5050	1	PLATE-INLET					
	5	9T5057	1	KIT-VANE					
	6	9T5074	1	RING					
	7	5D5958	1	SEAL-O-RING					
	8	619457	1	SEAL-O-RING					
	9	9T5087	1	RING					
	10	9T5092	1	PLATE-OUTLET					
	11	3G1820	1	RING-SEAL					
	12	9T5100	2	FLEXPLATE					
	13	9T5107	1	ROTOR					
	14	9T5112	2	SCREW					

A-354169 EP

3G1267 CARTRIDGE GP*R
Part Of 4T0508 Pump-Vane

HYDRAULIC SYSTEM

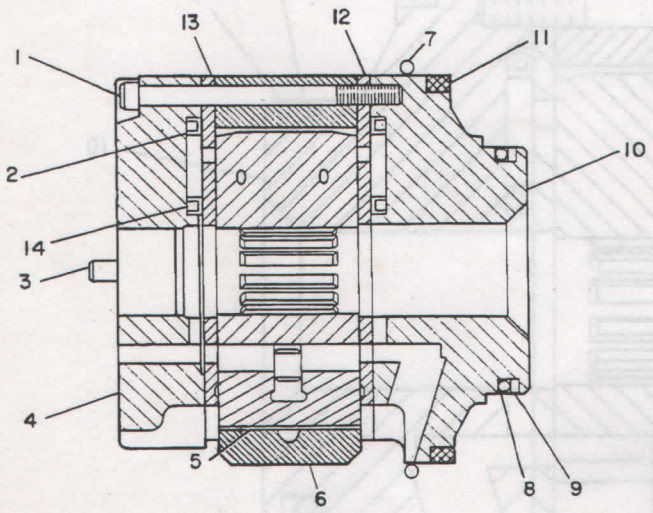

NOTE	REF NO	PART NUMBER	QTY	PART NAME
	1	544673	2	SCREW
	2	3G2714	4	RETAINER-SEAL
	3	544672	2	PIN
	4	9T5046	1	PLATE-INLET
	5	9T5054	1	KIT-VANE
	6	9T5064	1	RING
	7	6V1196	1	SEAL-O-RING
	8	617540	1	SEAL-O-RING
	9	9T5085	1	RING
	10	9T5089	1	PLATE-OUTLET
	11	3G2716	1	RING-SEAL
	12	9T5096	2	FLEXPLATE
	13	9T5104	1	ROTOR
	14	5P8065	4	SEAL-O-RING

B-465570 EP

1U2665 CARTRIDGE GP*R
Part Of 4T0508 Pump-Vane

HYDRAULIC SYSTEM

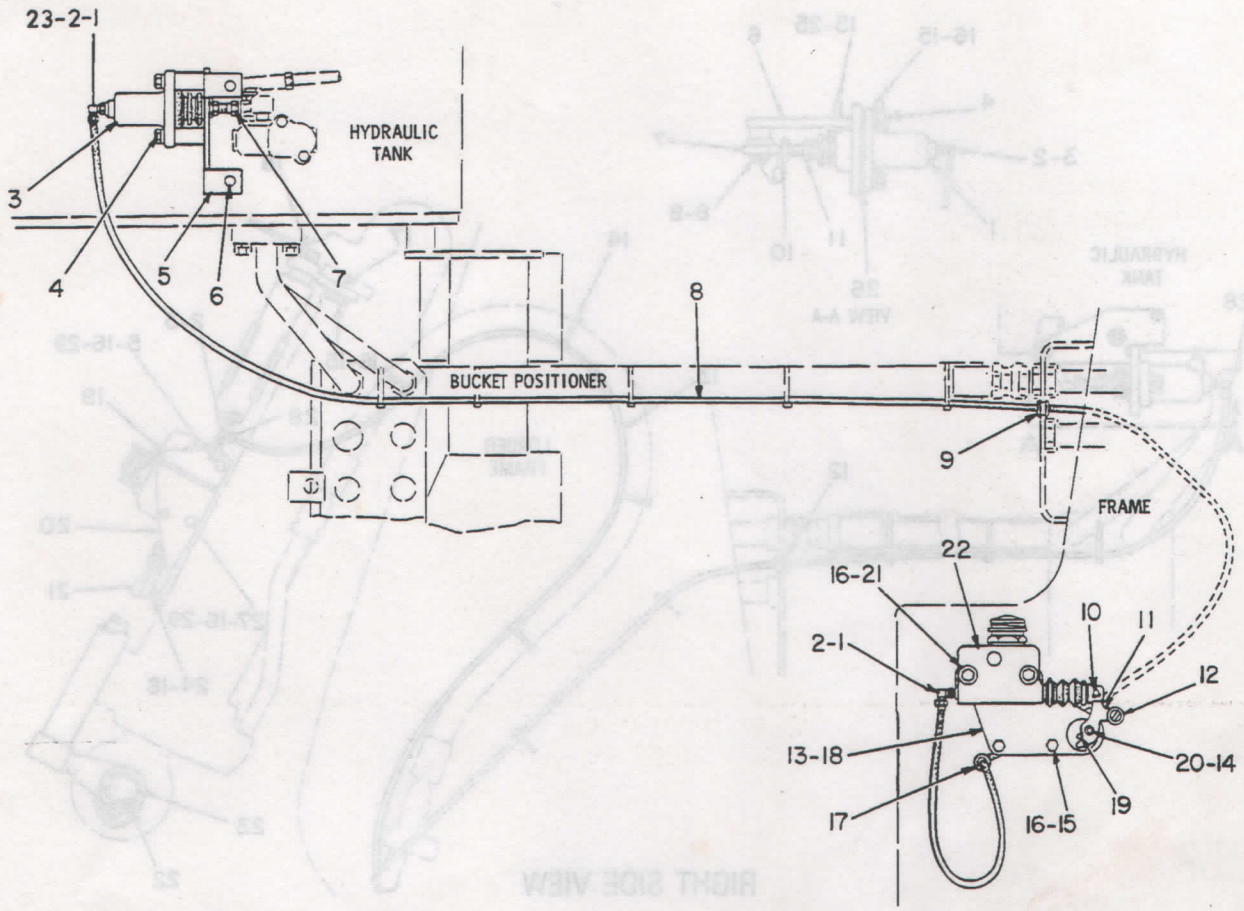

NOTE	REF NO	PART NUMBER	QTY	PART NAME	NOTE	REF NO	PART NUMBER	QTY	PART NAME
	1	6K7703	2	FITTING AS		18	9K3928	1	BRACKET AS
		7K1203	1	NUT		19	2H2525	1	PIN-SPRING
		7K1204	1	SLEEVE		20	9K3926	1	PIN
		6K7704	1	SEAL-O-RING		21	0S1619	2	BOLT
C	2	2Y6652	2	INSERT	C	22	2Y8524	1	CYLINDER AS (MASTER)
Y	3	6K7701	1	CYLINDER AS (SLAVE)		23	3J7354	2	SEAL-O-RING
	4	0T0320	2	BOLT					
		3B4507	2	LOCKWASHER					
	5	6K7691	1	BRACKET AS					
	6	0S1621	2	BOLT					
		3B4508	2	LOCKWASHER					
	7	6K9934	1	BOLT-SPECIAL					
		1B4430	1	NUT-JAM					
CD	8	5P6011		TUBE 2.616M(103IN)					
	9	4D1212	1	GROMMET					
	10	2H3259	1	PIN					
		3B4605	1	COTTER (PIN)					
	11	6K7688	3	LEVER					
	12	7K0854	1	ROLLER-CAMSHAFT					
		2F8616	1	NUT-SELF LOCKING					
C	13	9K3929	1	BAR					
C	14	2H3429	1	RING-RETAINING					
C	15	0T0573	2	BOLT					
	16	3B4506	4	LOCKWASHER					
	17	4D0012	1	GROMMET					

C-CHANGE FROM PREVIOUS TYPE
D-ORDER BY THE METER
Y-SEPARATE ILLUSTRATION

B-353592 EP

6K7705 KICKOUT GP
6K7701-Page 178

HYDRAULIC SYSTEM

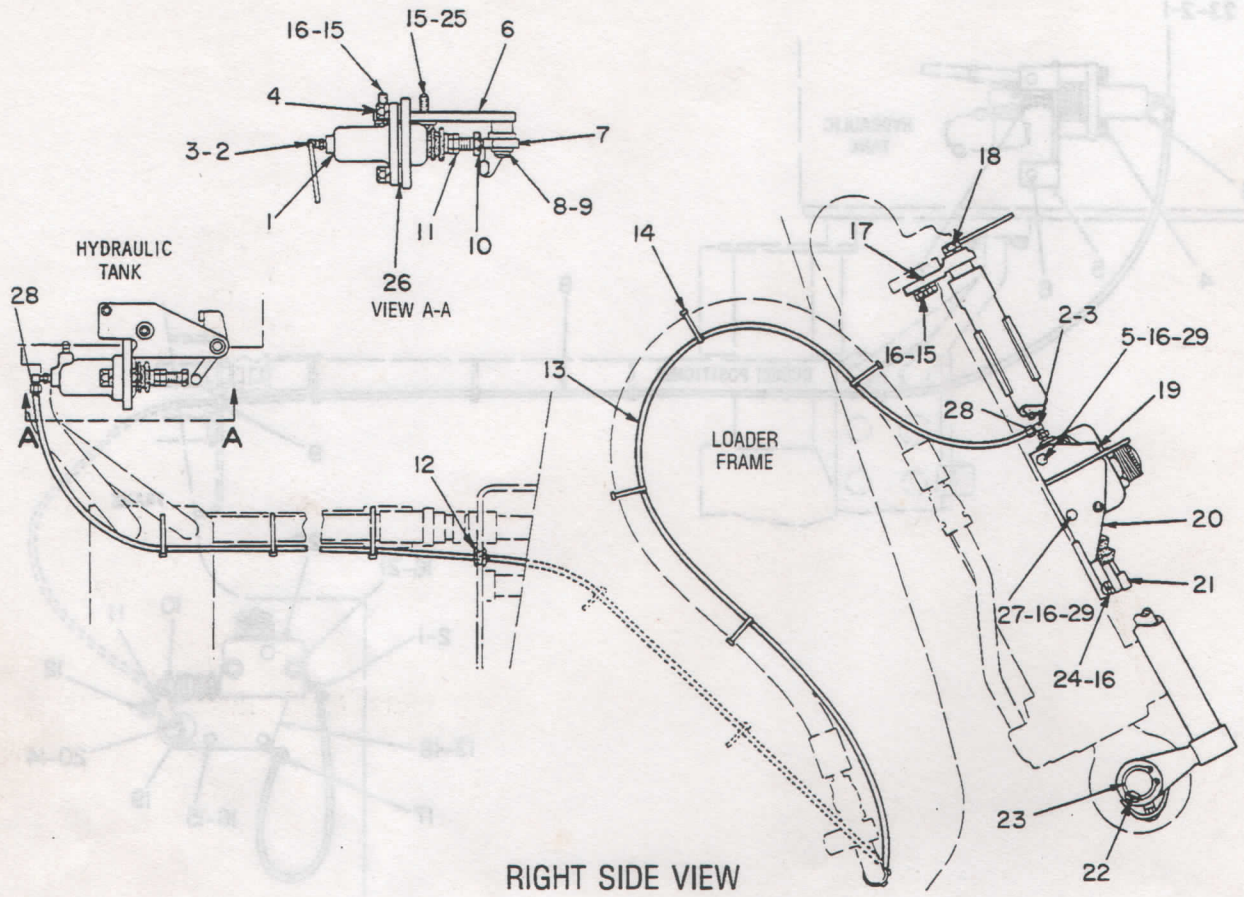

RIGHT SIDE VIEW

NOTE	REF NO	PART NUMBER	QTY	PART NAME	NOTE	REF NO	PART NUMBER	QTY	PART NAME
Y	1	6K7701	1	CYLINDER AS (SLAVE)		18	6H1717	1	BOLT
	2	6K7703	2	FITTING AS			3B4508	1	LOCKWASHER
				(EA INCL)		19	7K0261	1	ANGLE-INDICATOR
		7K1203	1	NUT		20	6K9942	1	BRACKET AS
		7K1204	1	SLEEVE		21	7K0854	1	ROLLER-CAMSHAFT
		6K7704	1	SEAL-O-RING		22	7K1861	1	BEARING
	3	2Y6652	2	INSERT		23	6K7909	1	RING-RETAINING
	4	4F8965	2	BOLT		24	1B4203	1	NUT-FULL
		3B4507	2	LOCKWASHER		25	5P1075	1	WASHER-HARD
	5	OS1591	1	BOLT (3/8-16X1.5IN)		26	4B4279	2	WASHER
				-OR-	C	27	OS1588	1	BOLT
		OS1588	1	BOLT (3/8-16X1.25IN)	C	28	3J7354	2	SEAL-O-RING
	6	8K6712	1	BRACKET AS	CB	29	5M2894	6	WASHER
	7	6K9902	1	LEVER AS					
		6K9883	1	BEARING-SLEEVE					
	8	7K0383	1	LOCK					
	9	2J6356	1	RING-RETAINING					
	10	6K9934	1	BOLT-SPECIAL					
	11	1B4430	1	NUT-JAM					
	12	4D1212	1	GROMMET					
BD	13	5P6011		TUBE					
	14	3S2093	13	STRAP-CABLE					
C	15	1A2029	4	BOLT					
	16	3B4506	6	LOCKWASHER					
	17	7K0058	1	SUPPORT-ROD					

B-USE AS REQUIRED
C-CHANGE FROM PREVIOUS TYPE
D-ORDER BY THE METER

Y-SEPARATE ILLUSTRATION

V-479098 EP

6K9900 POSITIONER GP-BUCKET-PART 1 OF 2

6K7701-Page 178

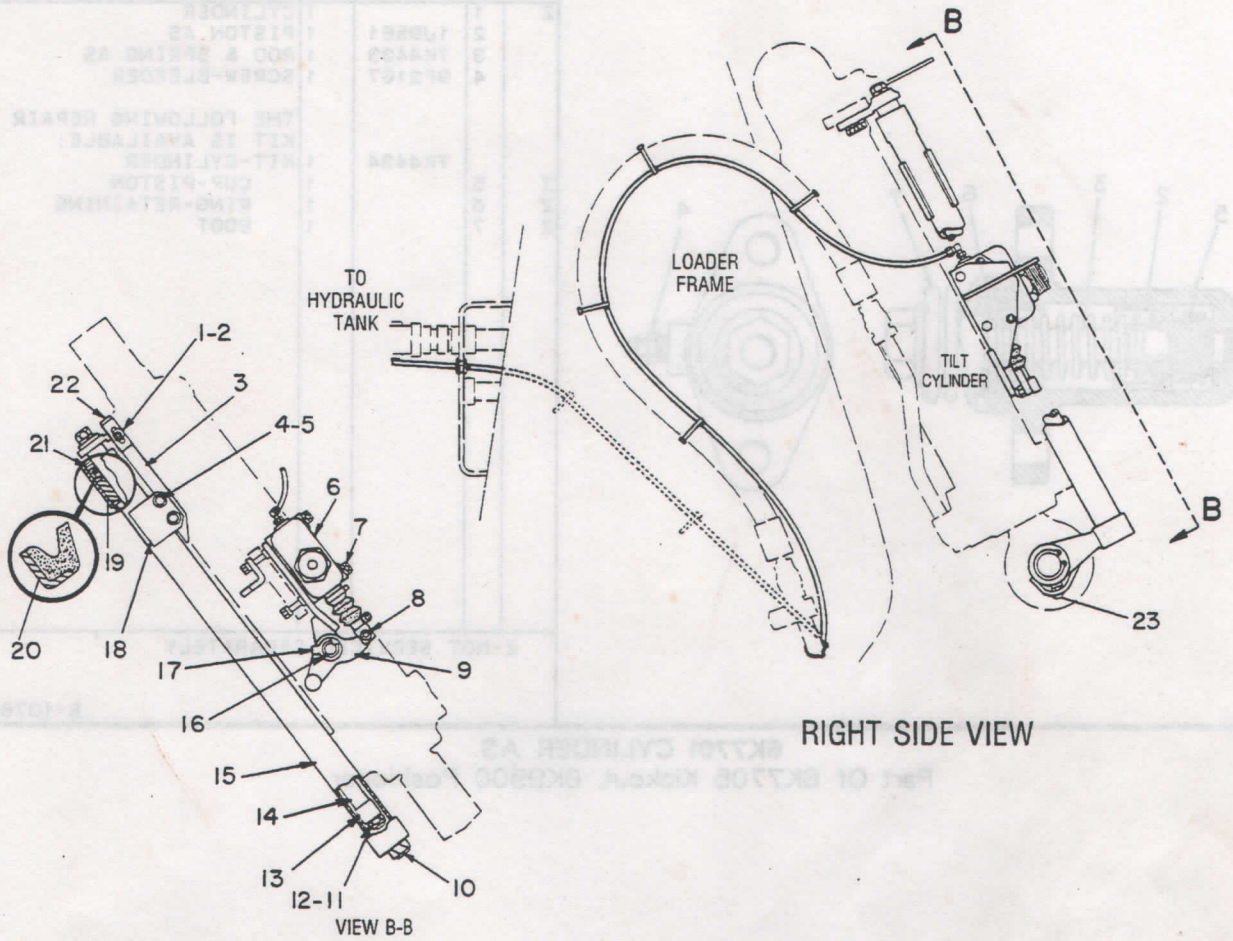

RIGHT SIDE VIEW

NOTE	REF NO	PART NUMBER	QTY	PART NAME
	1	2A0762	1	BOLT
		3B4504	1	LOCKWASHER
	2	4B4276	1	WASHER
	3	7K7123	1	CAMSHAFT
C	4	3B0731	2	BOLT-CARRIAGE
C	5	2R0504	2	NUT
CB		5M2894	4	WASHER
C	6	2Y8524	1	CYLINDER AS
	7	0T0573	2	BOLT
		3B4506	2	LOCKWASHER
	8	2H3259	1	PIN
		3B4604	1	PIN-COTTER
	9	6K9914	1	LEVER AS
		6K9883	1	BEARING-SLEEVE
	10	7K1862	1	COVER
		2H1142	1	RING-RETAINING
	11	4K8977	1	NUT-SELF LOCKING
	12	1K0502	1	WASHER
	13	5V4125	1	BEARING
	14	7K1871	1	SHAFT
C	15	5V1803	1	TUBE AS
	16	2J6356	1	RING-RETAINING
	17	7V9288	1	LOCK
	18	7K7122	2	CLAMP
	19	5V1713	1	BEARING
	20	7K1864	1	SEAL-LIP TYPE
	21	1J6473	1	RING-RETAINING
	22	4K4258	1	STRIP
C	23	3B8489	1	FITTING-HYDRAULIC

B-USE AS REQUIRED
C-CHANGE FROM PREVIOUS TYPE

V-479099 EP

6K9900 POSITIONER GP-BUCKET-PART 2 OF 2

HYDRAULIC SYSTEM

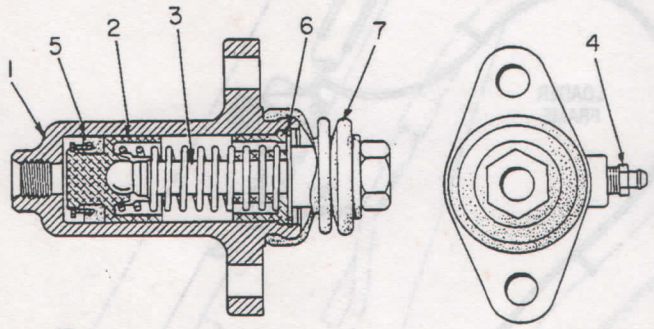

NOTE	REF NO	PART NUMBER	QTY	PART NAME
Z	1		1	CYLINDER
	2	1J9561	1	PISTON AS
	3	7K4433	1	ROD & SPRING AS
	4	9F2167	1	SCREW-BLEEDER
				THE FOLLOWING REPAIR KIT IS AVAILABLE:
		7K4434	1	KIT-CYLINDER
Z	5		1	CUP-PISTON
Z	6		1	RING-RETAINING
Z	7		1	BOOT

Z-NOT SERVICED SEPARATELY

B-107648 EP

6K7701 CYLINDER AS

Part Of 6K7705 Kickout, 6K9900 Positioner

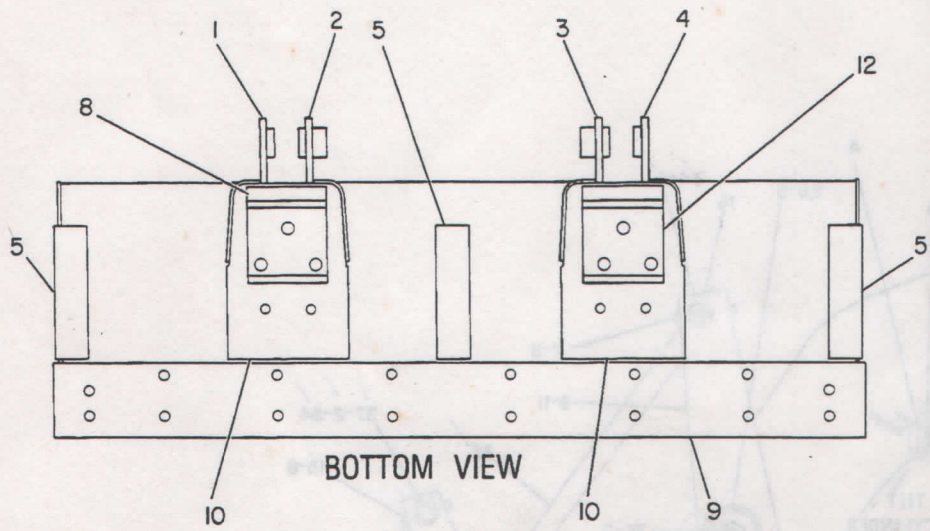

BOTTOM VIEW

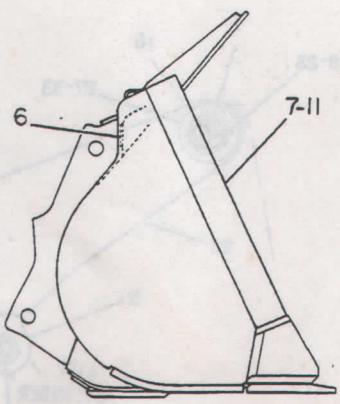

SIDE VIEW

NOTE	REF NO	PART NUMBER	QTY	PART NAME	NOTE	REF NO	PART NUMBER	QTY	PART NAME
	1	8K8988	1	HINGE AS-LH (OUTER)					
		2K4119	1	BOSS					
	2	8K8986	1	HINGE AS-LH (INNER)					
		2K3592	1	BOSS					
		2K4119	2	BOSS					
	3	8K8985	1	HINGE AS-RH (INNER)					
		2K3592	1	BOSS					
		2K4119	2	BOSS					
	4	8K8987	1	HINGE AS-RH (OUTER)					
		2K4119	1	BOSS					
	5	9K7117	3	PLATE					
	6	2K3656	1	BAR					
	7	1V6353	1	BAR (RH)					
	8	8K8969	2	BAR					
	9	2Y3939	1	EDGE AS-CUTTING					
	10	8K9761	2	PLATE					
	11	8K9760	1	BAR (LH)					
	12	2Y2108	2	PLATE					

B-234807 EP

2Y5549 BUCKET AS-GENERAL PURPOSE
1.71 Cu M (2.25 Cu Yd.) 2413 MM (95 In.) Wide

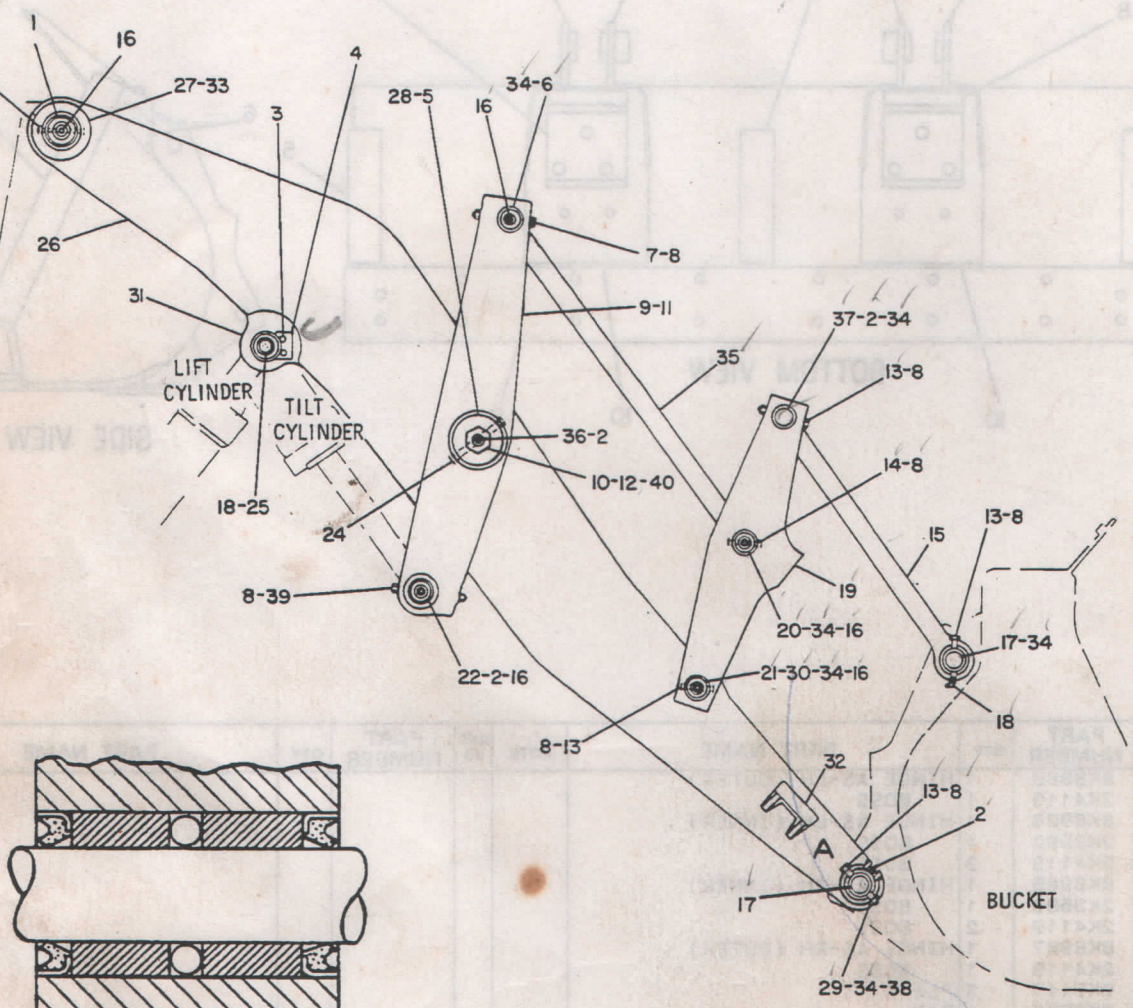

TYPICAL SEAL INSTALLATION

RIGHT SIDE VIEW

V-489738 · EP

7K9792 CONTROL GP-BUCKET

IMPLEMENTS

NOTE	REF NO	PART NUMBER	QTY	PART NAME
	1	7K9344	2	PIN
C	2	3B8489	7	FITTING-HYDRAULIC
	3	9M6590	4	BOLT-12 POINT HEAD
		3B4508	4	LOCKWASHER
	4	2K0703	2	BAR (WASHER)
	5	6K0696	2	PLATE
		7K9345	2	PIN
	6	6K6175	2	PIN
	7	8F8804	2	BOLT
	8	1K6872	16	LOCKNUT
C	9	8V9821	1	LEVER AS-REAR RH
	10	7K9604	1	BEARING-SLEEVE
C	11	8V9822	1	LEVER AS-REAR LH
	12	7K9604	1	BEARING-SLEEVE
C	13	1D4569	8	BOLT
	14	1B2886	2	BOLT
	15	7K9793	2	LINK AS-FRONT (EA INCL)
		7K0088	2	BEARING-SLEEVE
C	16	5B0651	9	FITTING-STRAIGHT
	17	7K9343	4	PIN
	18	3B8488	4	FITTING
	19	7K3755	1	LEVER-FRONT RH
		7K3756	1	LEVER-FRONT LH
	20	6K6053	2	PIN
	21	6K6054	2	PIN
	22	6K6046	1	PIN (RH)
		6K6047	1	PIN (LH)
	23	8F8804	2	BOLT
	24	2J6884	2	BOLT
		3K2889	2	LOCKNUT
	25	6K6045	2	PIN
	26	7K9775	1	ARM & BEARING AS-LIFT
C		6K5737	1	CROSSMEMBER
	27	6K4385	4	BOSS
		7K9603	2	BEARING-SLEEVE
	28	6K4386	2	BOSS
	29	6K4388	8	BOSS
		7K9601	2	BEARING-SLEEVE
	30	7K9602	2	BEARING-SLEEVE
	31	6K6161	1	BRACKET-RH
		6K6162	1	BRACKET-LH
	32	6K3946	4	STOP
	33	7K9208	4	SEAL-LIP TYPE
	34	7K9202	24	SEAL-LIP TYPE
	35	7K9794	2	LINK AS-REAR (EA INCL)
		7K9589	2	BEARING-SLEEVE
	36	6K0697	2	BOLT-SHOULDER
	37	7K7176	2	PIN
	38	7K8593	4	WASHER
	39	1D4574	2	BOLT
C	40	7K9209	4	SEAL-LIP TYPE
AF		4V3325	1	TIP AS (RH)
AF		4V3326	1	TIP AS (LH)

A-NOT PART OF THIS GROUP
C-CHANGE FROM PREVIOUS TYPE
F-NOT SHOWN

489739 EP

7K9792 CONTROL GP-BUCKET

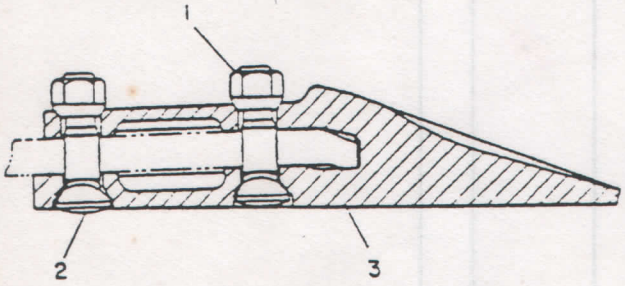

NOTE	REF NO	PART NUMBER	QTY	PART NAME
	1	8J2933	18	NUT
	2	8J2928	18	BOLT-PLOW
	3	8J4691	9	TIP

B-354646 EP

8J4989 TOOTH GP
An Attachment

4	7K9589	BEARING-SLEEVE
2	7K9604	BEARING-SLEEVE
4	7K0088	BEARING-SLEEVE
2	8F8804	BOLT
4	1D4569	BOLT
2	0S1573	BOLT
12	1G1883	CAP-GREASE
2	3B8488	FITTING
4	3B8489	FITTING-HYDRAULIC
6	5B0651	FITTING-STRAIGHT
8	1K6872	LOCKNUT
15	2P9065	LUBRICANT
2	7K7176	PIN
2	6K6054	PIN
2	6K6175	PIN
2	6K6053	PIN
16	7K9202	SEAL-LIP TYPE
4	7K9208	SEAL-LIP TYPE

476342 P

5Y0928 KIT-LEVERS

2	7K9602	BEARING-SLEEVE
2	7K9603	BEARING-SLEEVE
2	7K9601	BEARING-SLEEVE
2	2J6884	BOLT
2	1G1883	CAP-GREASE
2	3B8489	FITTING-HYDRAULIC
2	3K2889	LOCKNUT
2	7K9345	PIN
1	2Y5445	PRIMER & FINISH
8	7K9202	SEAL-LIP TYPE
4	7K9208	SEAL-LIP TYPE
4	7K8593	WASHER

476330 P

5Y0927 KIT-LIFT ARM

OPERATOR STATION

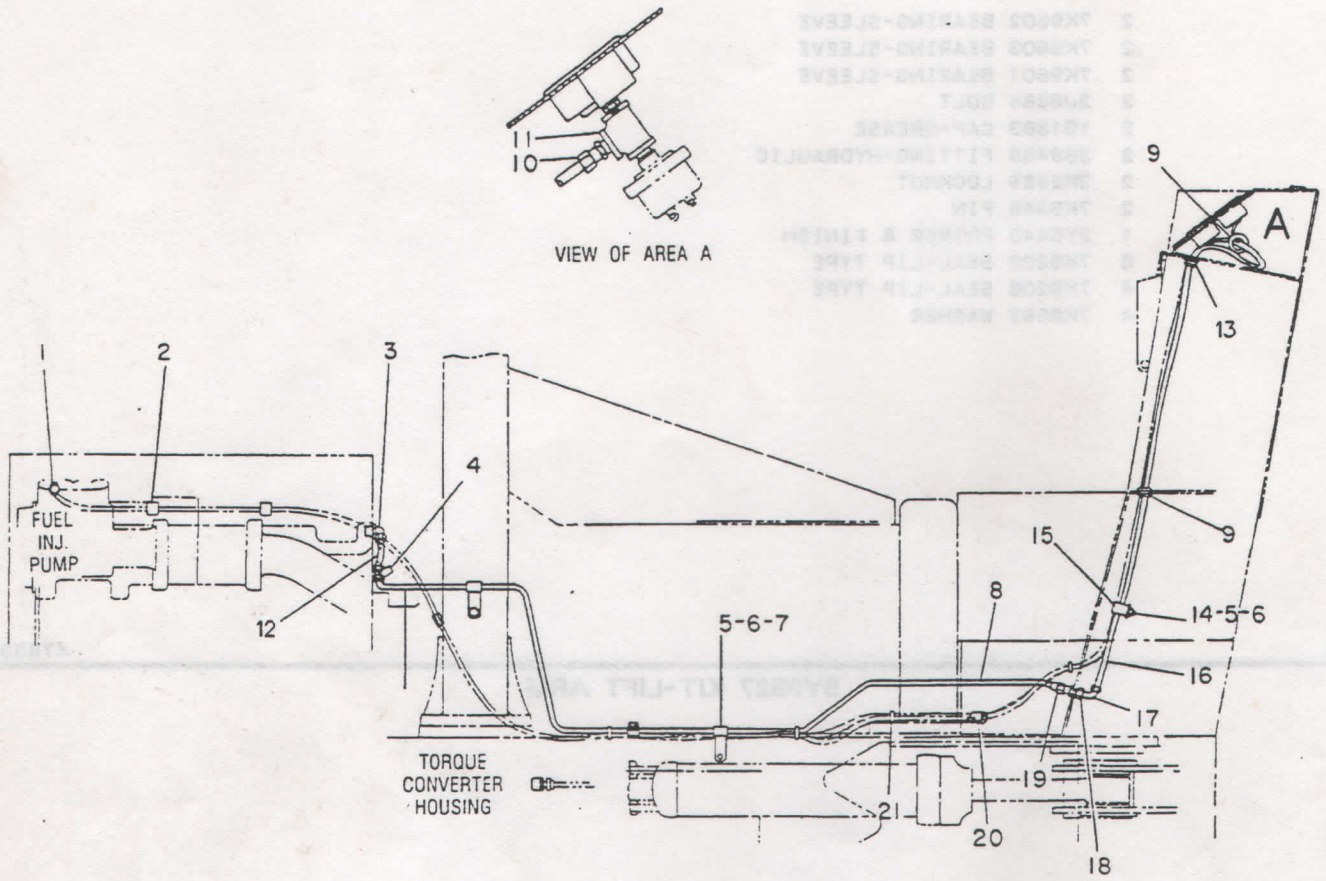

NOTE	REF NO	PART NUMBER	QTY	PART NAME	NOTE	REF NO	PART NUMBER	QTY	PART NAME
	1	6H6699	1	ADAPTER					
	2	4K0640	2	CLIP-WIRE					
	3	2H5547	1	BUSHING-REDUCING					
		2N1287	1	ELBOW-FLARED					
	4	8D0071	1	TEE-FLARED					
		3B6487	1	COUPLING					
	5	1D4717	3	NUT					
	6	5M2894	4	WASHER					
	7	7D1728	2	CLIP					
	8	3V6152	1	TUBE AS					
	9	3H2900	2	GROMMET					
	10	2Y3716	1	CONNECTOR					
	11	5P3741	1	TEE-PIPE					
I	12	6S2274	1	HOSE AS					
	13	2D0388	1	GROMMET					
	14	0S0509	1	BOLT					
	15	1H5166	1	CLIP					
BD	16	5P5630		TUBE					
	17	3K6675	1	FITTING					
	18	5P6941	1	CONNECTOR					
	19	5B3254	1	NUT					
	20	2M0287	1	CLIP-WIRE					
	21	3S2093	4	STRAP-CABLE					

B-USE AS REQUIRED
D-ORDER BY THE METER
I-SEE HOSE FABRICATION GUIDE

R-498425 EP

2Y9735 GAUGE GP-PART 1 OF 2

OPERATOR STATION

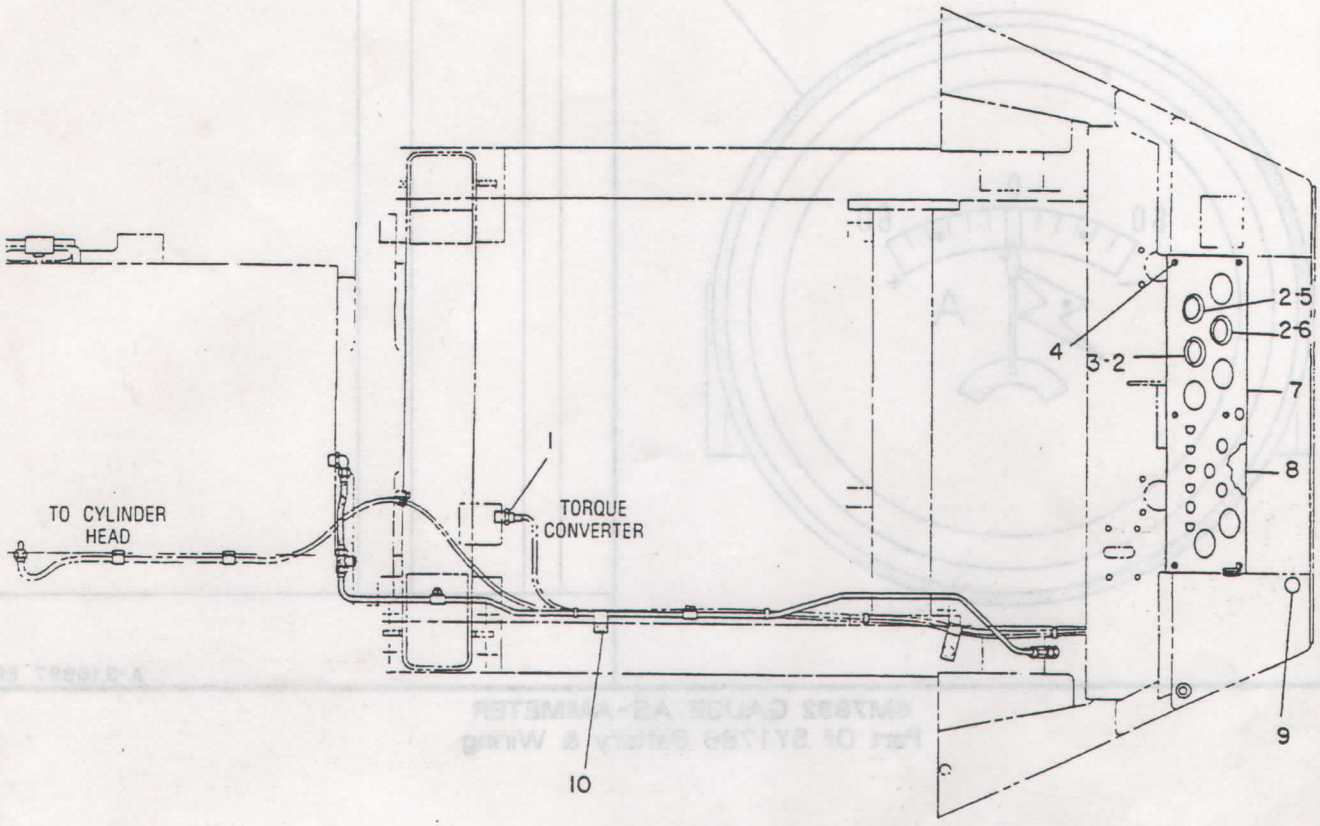

NOTE	REF NO	PART NUMBER	QTY	PART NAME	NOTE	REF NO	PART NUMBER	QTY	PART NAME
	1	6H6699	1	ADAPTER					
	2	6V3507	3	SEAL-RECTANGULAR					
	3	1W0702	1	INDICATOR (CONVERTER TEMP.)					
	4	5K0906	6	BOLT					
		4B4277	6	WASHER					
	5	1W0697	1	INDICATOR (WATER TEMP.)					
	6	1W0705	1	INDICATOR (ENG. OIL PRESS.)					
	7	2Y9752	1	INLAY					
	8	8V4998	1	PLATE					
	9	5H4871	1	PLUG-BUTTON (BUTTON)					
	10	1H5166	1	CLIP					

B-354529 EP

2Y9735 GAUGE GP-PART 2 OF 2

OPERATOR STATION

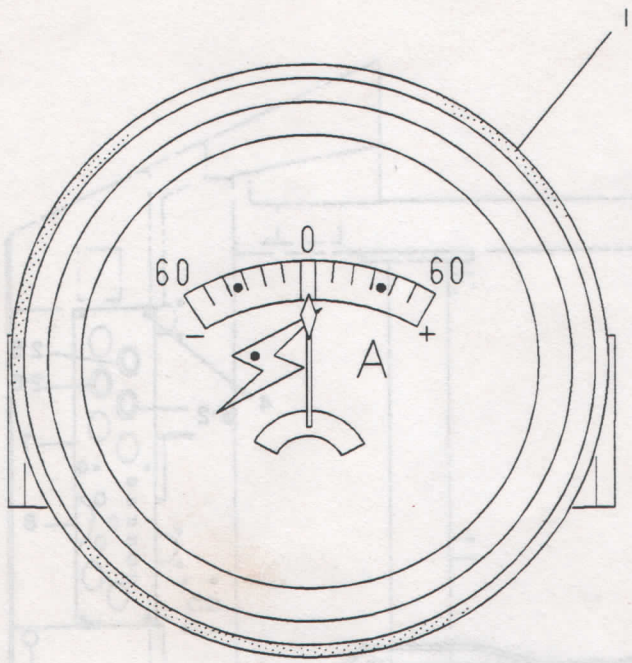

NOTE	REF NO	PART NUMBER	QTY	PART NAME
	1	6V3507	1	SEAL-RECTANGULAR

A-316997 EP

8M7892 GAUGE AS-AMMETER
Part Of 5Y1786 Battery & Wiring

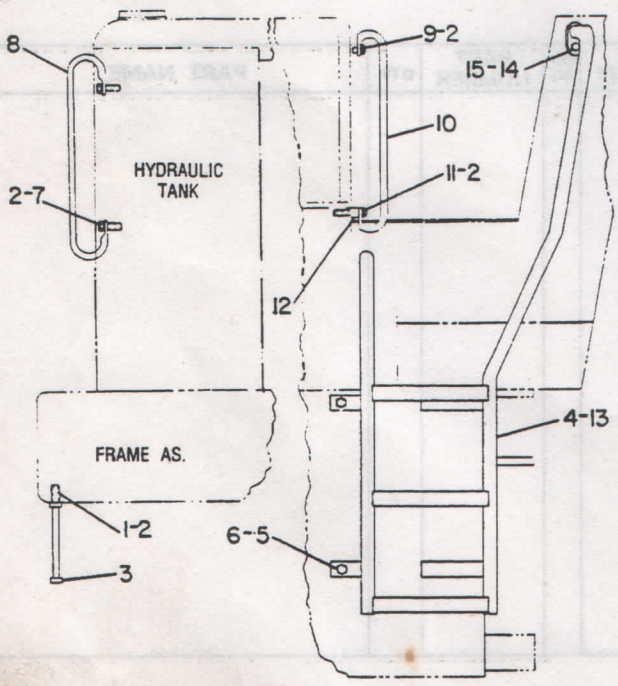

NOTE	REF NO	PART NUMBER	QTY	PART NAME
	1	OS1587	2	BOLT
	2	5P8245	8	WASHER
	3	8K8159	1	STEP AS
		1K4499	4	ROLLER
	4	5V3198	1	LADDER AS (RH)
	5	OS1626	8	BOLT
	6	2SO115	8	WASHER-HARD
	7	OS1585	4	BOLT
	8	8K8122	2	GRAB IRON
	9	OS1621	1	BOLT
	10	7K1750	1	GRAB IRON
	11	1A1460	1	BOLT
	12	8B2133	1	BOSS
	13	5V3199	1	LADDER AS (LH)
	14	OS1595	2	BOLT
	15	5P1076	2	WASHER

R-470625 EP

5V3754 STEP GP

OPERATOR STATION

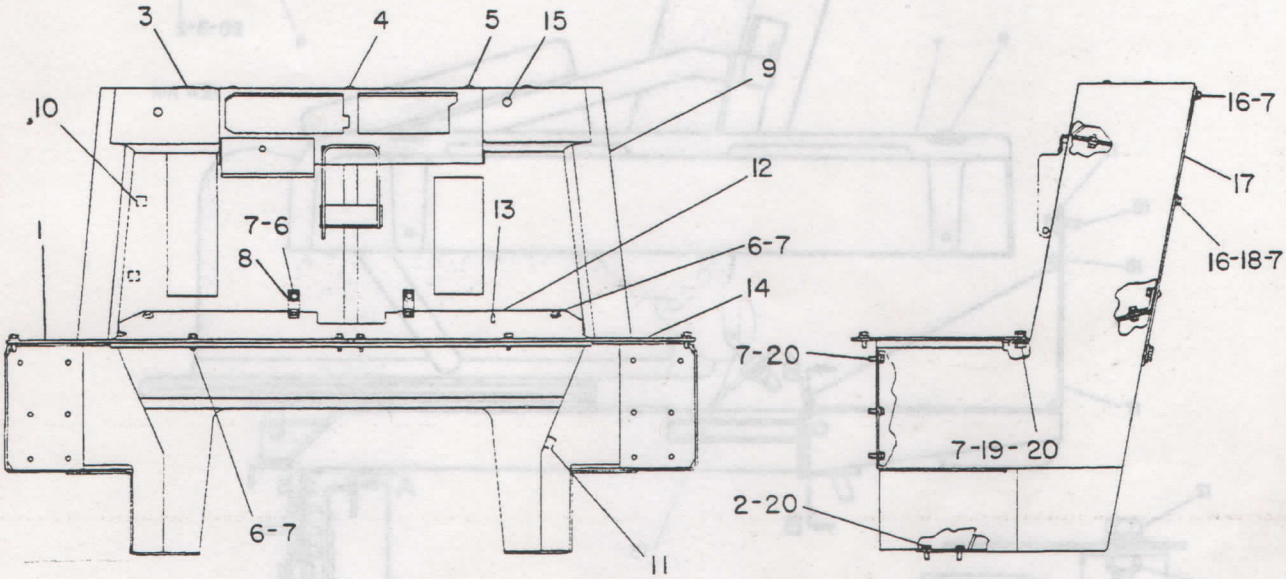

NOTE	REF NO	PART NUMBER	QTY	PART NAME	NOTE	REF NO	PART NUMBER	QTY	PART NAME
	1	6K8038	1	FLOORPLATE AS					
		4K8816	1	DOOR					
		6H2867	1	HINGE					
	2	9L9132	4	WASHER					
	3	2Y2655	1	BUTTON PLUG					
	4	2V3726	5	BUMPER					
	5	2Y5564	1	PLUG-BUTTON					
	6	0S0509	16	BOLT					
	7	5P1075	40	WASHER-HARD					
	8	2V4967	2	BRACKET					
	9	4V3673	1	DASH AS					
		8K8402	2	LUG					
	10	1P6489	7	BOSS					
	11	4L4058	2	CLIP					
	12	7V9106	1	PLATE AS-FLOOR					
		9F2978	8	NUT-WELD					
		3D2005	1	LUG					
	13	1K4061	1	LOCK-IDLER SHAFT					
	14	6K8001	1	FLOORPLATE					
	15	2Y8705	1	BUTTON PLUG					
	16	0L1351	10	BOLT					
	17	8K7263	1	COVER					
	18	1D4717	8	NUT					
		3K0925	8	WASHER					
	19	2Y3079	2	NUT AS (SPRING)					
	20	0S1594	18	BOLT					

B-353421 EP

2Y6784 DASH GP

OPERATOR STATION

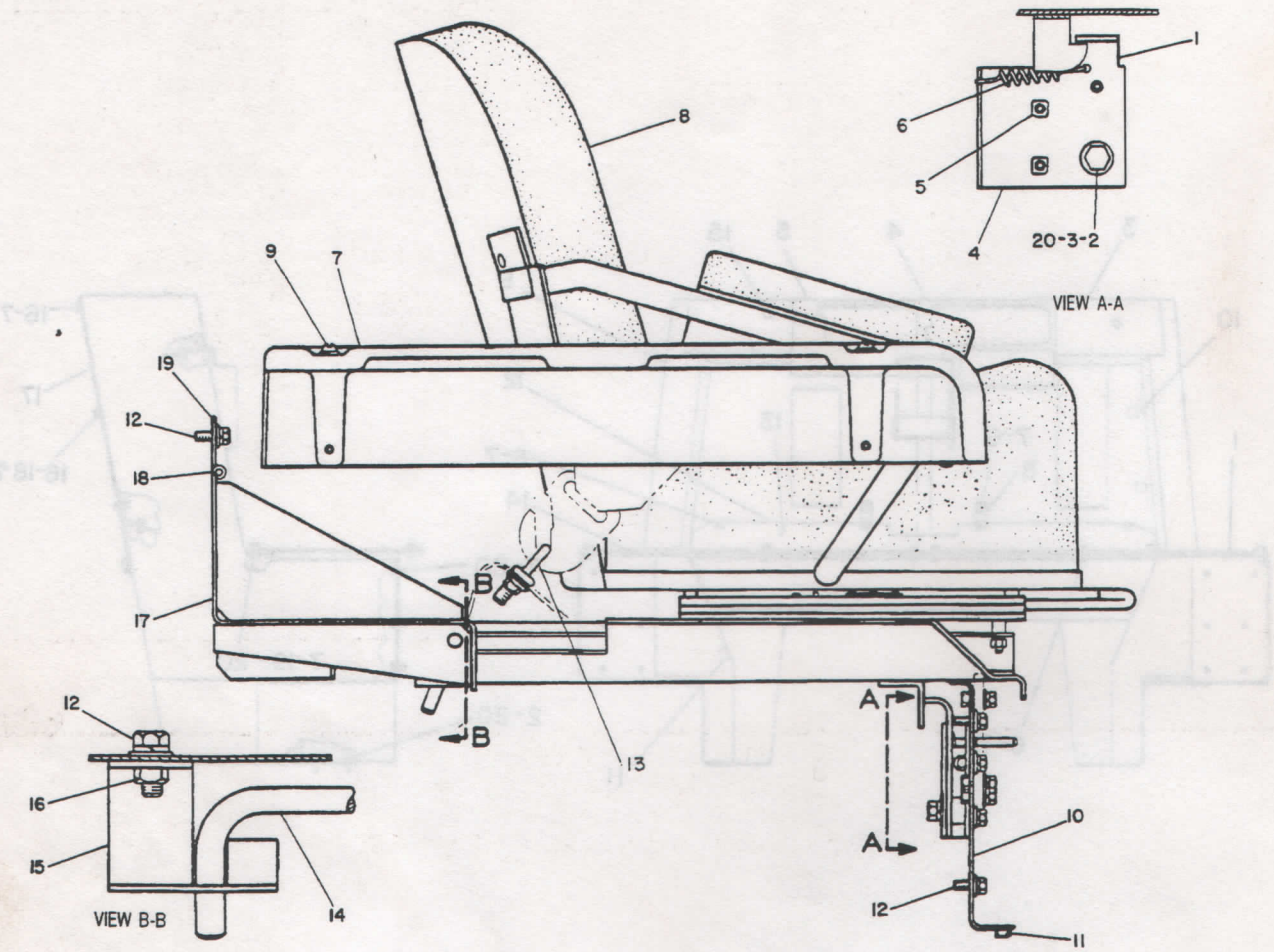

NOTE	REF NO	PART NUMBER	QTY	PART NAME
	1	6K8138	1	LATCH AS
C		6K8139	1	PIN
	2	0S1621	1	BOLT
		5P8245	1	WASHER
		4B5059	1	WASHER
	3	7K1308	1	SPACER .5CM(.199IN.)THK
	4	6K8189	1	STRIP AS
	5	9F2978	2	NUT-WELD
	6	7M9847	1	SPRING
	7	7K1749	1	SHIELD (HEAT)
Y	8	2Y2838	1	SEAT GP
	9	4F4879	5	BOLT
		6J0450	5	SHIM
		4K3533	5	WASHER
	10	6K8191	1	PLATE AS
	11	9F2978	7	NUT-WELD
	12	0L1351	12	BOLT
		5P1075	12	WASHER-HARD
	13	8S0933	2	EYEBOLT
		8S0934	2	LOCKNUT-FLANGE
	14	1V3086	1	ROD
	15	7K1307	1	STRIP AS
	16	9F2978	1	NUT-WELD
	17	1V3557	1	PLATE AS
	18	6K8137	1	ROD
	19	6K8098	1	HINGE
C	20	8F5368	1	WASHER .17CM(.065IN.)THK

C-CHANGE FROM PREVIOUS TYPE
Y-SEPARATE ILLUSTRATION

B-487547 EP

2Y3664 SEAT GP
2Y2838-Page 189

OPERATOR STATION

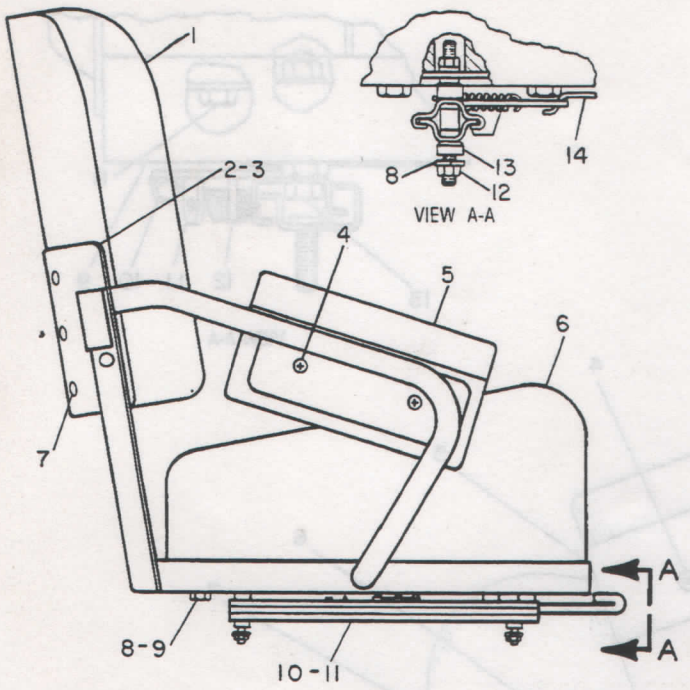

NOTE	REF NO	PART NUMBER	QTY	PART NAME
	1	2Y2830	1	CUSHION AS-BACK
	2	7K5411	1	BRACKET AS
	3	7K5412	1	BRACKET AS
	4	4M1192	4	SCREW-MACHINE
	5	8V1730	2	CUSHION AS-ARM
	6	2Y2833	1	CUSHION AS-SEAT
	7	2Y4317	6	SCREW
	8	3B4505	8	LOCKWASHER
	9	0S1617	4	BOLT
	10	2Y2836	1	RAIL AS-SEAT ADJUSTING (L.H.)
	11	2Y2837	1	RAIL AS-SEAT ADJUSTING (R.H.)
	12	1B4202	4	NUT
	13	2Y5575	8	SPACER
	14	2Y2835	1	TIE BAR

V-461956 EP

2Y2838 SEAT GP
9C6249-Page 190
Part Of 2Y3664 Seat
Field Replacement Order 9C6249-Page 190

Mineradora Moares Ltda.
Rod. Castelo Branco, Km 56
Cx. Postal 05 - CEP 18147-000
Araçariguama - SP
Fones: (11) 4136 - 1064 / 4717-6116

OPERATOR STATION

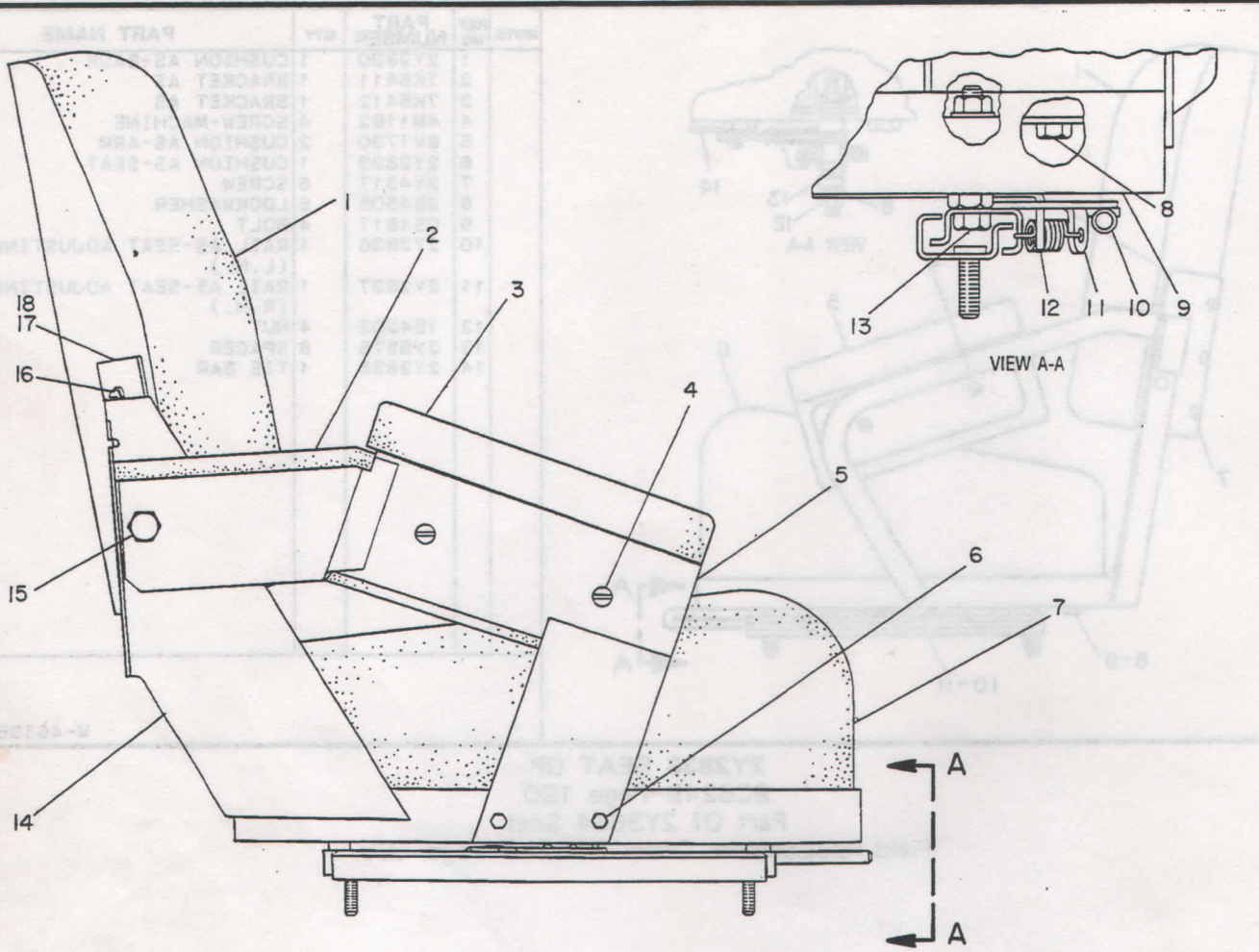

NOTE	REF NO	PART NUMBER	QTY	PART NAME
	1	7K5413	1	CUSHION AS-BACK
EB	2	7X7877		STRIP-EDGING
	3	8V1730	2	CUSHION AS-ARM
				(EACH INCLUDES)
		9F6445	2	NUT
	4	1S7443	4	SCREW-MACHINE
	5	9C2750	1	BRACKET AS-RH
		9C2754	1	BRACKET AS-LH
	6	2A0762	4	BOLT
	7	9C2815	1	CUSHION AS-SEAT
	8	2H3755	4	BOLT
	9	9C2745	1	ADJUSTER AS
	10	8V3208	1	LEVER
	11	9V8789	1	ADJUSTER AS
	12	9K9012	1	BAR-TIE
	13	2B2694	4	BOLT
		9M1974	4	WASHER
		1D4716	4	NUT-FULL
	14	9C2737	1	SUPPORT AS
		9F6445	4	NUT
	15	2H3855	2	BOLT
		7K5410	2	SPACER
	16	2K7115	6	SCREW-MACHINE
		3B4505	6	LOCKWASHER
	17	9C2746	1	BRACKET AS-RH
	18	9C2748	1	BRACKET AS-LH
				(EA BRACKET AS INCL)
		7K8967	1	NUT-WELDING LOCK
F		2V3458	2	NUT-PUSH

B-USE AS REQUIRED
E-ORDER BY THE CENTIMETER
F-NOT SHOWN

B-471831 EP

9C6249 SEAT GP
Part Of 2Y2838 Seat
Field Replacement For 2Y2838-Page 189

OPERATOR STATION

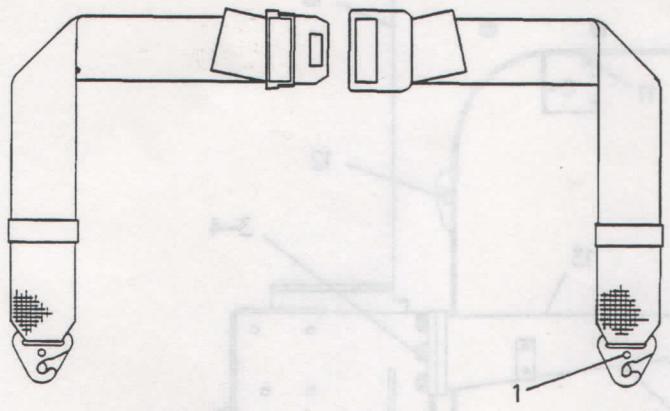

NOTE	REF NO	PART NUMBER	QTY	PART NAME
	1	5M6755	2	SCREW-MACHINE
		310249	2	NUT-SELF LOCKING

R-485368 EP

8Y4037 SEAT BELT GP

OPERATOR STATION

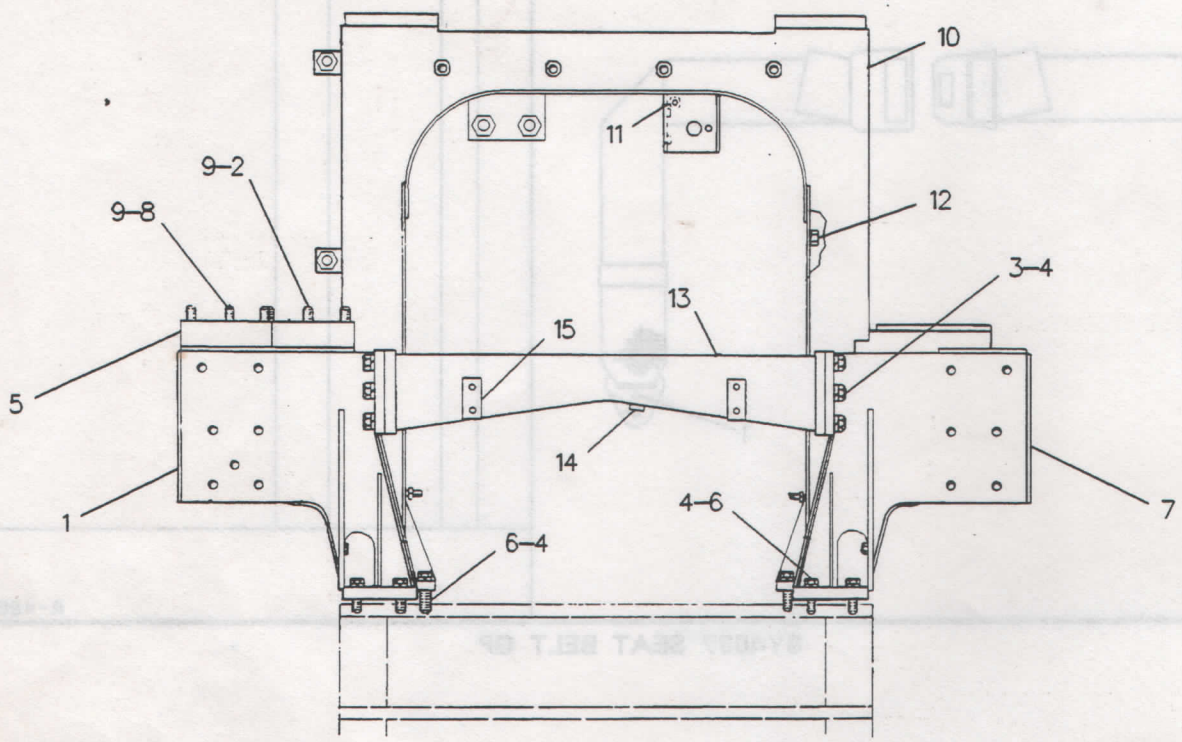

NOTE	REF NO	PART NUMBER	QTY	PART NAME	NOTE	REF NO	PART NUMBER	QTY	PART NAME
	1	7K4371	1	SUPPORT AS-FRONT-RH					
	2	0V0375	3	BOLT (1/2-13X3.25IN)					
	3	0S1589	12	BOLT (5/8-11X1.75IN)					
	4	8T4122	31	WASHER (3.5MM THK)					
	5	7K0192	2	BAR					
	6	1A1135	19	BOLT (5/8-11X2IN)					
	7	7K4372	1	SUPPORT AS-FRONT-LH					
	8	1B2886	3	BOLT (1/2-13X3.75IN)					
	9	8T4223	6	WASHER (3MM THK)					
	10	5Y1793	1	SUPPORT AS					
	11	9F6445	1	NUT (1/4-20 THD)					
	12	1F0748	2	NUT (1/2-13 THD)					
	13	2Y9137	1	PLATE AS					
	14	5B8855	1	PLATE-SCREW					
	15	5K5165	2	BAR					

R-497024 EP

5Y1794 SUPPORT GP

OPERATOR STATION

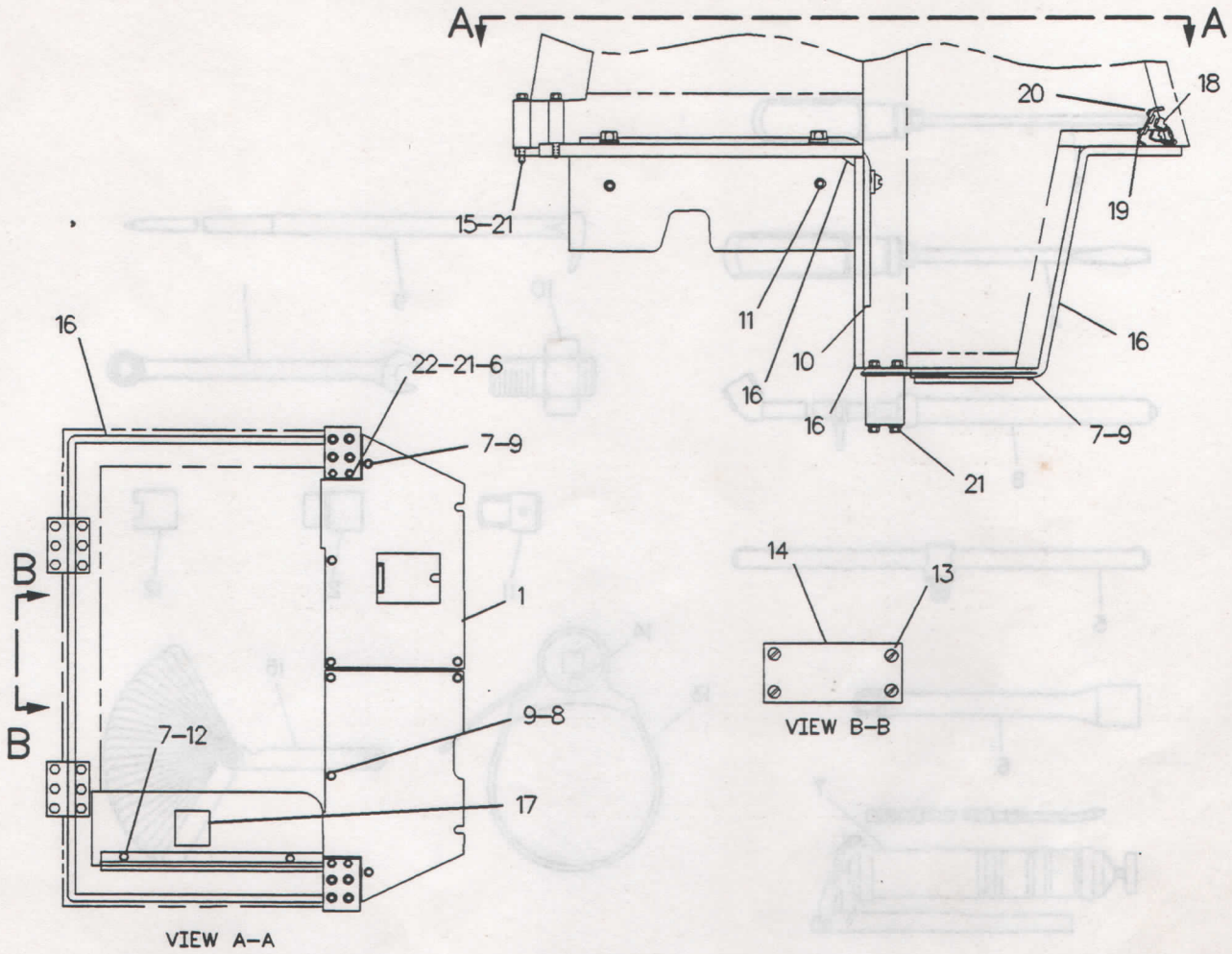

NOTE	REF NO	PART NUMBER	QTY	PART NAME
	1	7K1110	1	FLOORPLATE AS
	2	4K8816	1	DOOR
	3	6H2867	3	HINGE
	4	7K1111	1	PLATE-FLOOR
	5	1D4595	8	BOLT
	6	1D4720	4	NUT
	7	0S0509	6	BOLT
	8	0S1594	4	BOLT
	9	5P1075	8	WASHER-HARD
	10	7K2413	1	SHIELD AS
	11	3H1591	3	SCREW-MACHINE
		6J0450	3	SHIM (.79MM THK)
	12	4B4278	2	WASHER
B	13	5P2552	1	PLATE-ROPS
B		5P2553	1	PLATE-ROPS
	14	4B4158	4	SCREW
	15	1D4593	12	BOLT
		4B4280	12	WASHER
BD	16	5P5934		SEAL
	17	4V3717	1	FILM-WIRING DIAGRAM
	18	8K5279	1	HARNESS AS-WIRE
	19	4V3679	1	PLATE
		6K6361	4	BUTTON-PLUG
		3D9871	2	BUTTON-PLUG
	20	4B1229	4	SCREW
		3B4502	4	LOCKWASHER

NOTE	REF NO	PART NUMBER	QTY	PART NAME
	21	3B4510	24	LOCKWASHER
	22	5D9514	4	BOLT

B-USE AS REQUIRED
D-ORDER BY THE METER

F-500097 EP

7K1889 MOUNTING GP-CAB
An Attachment

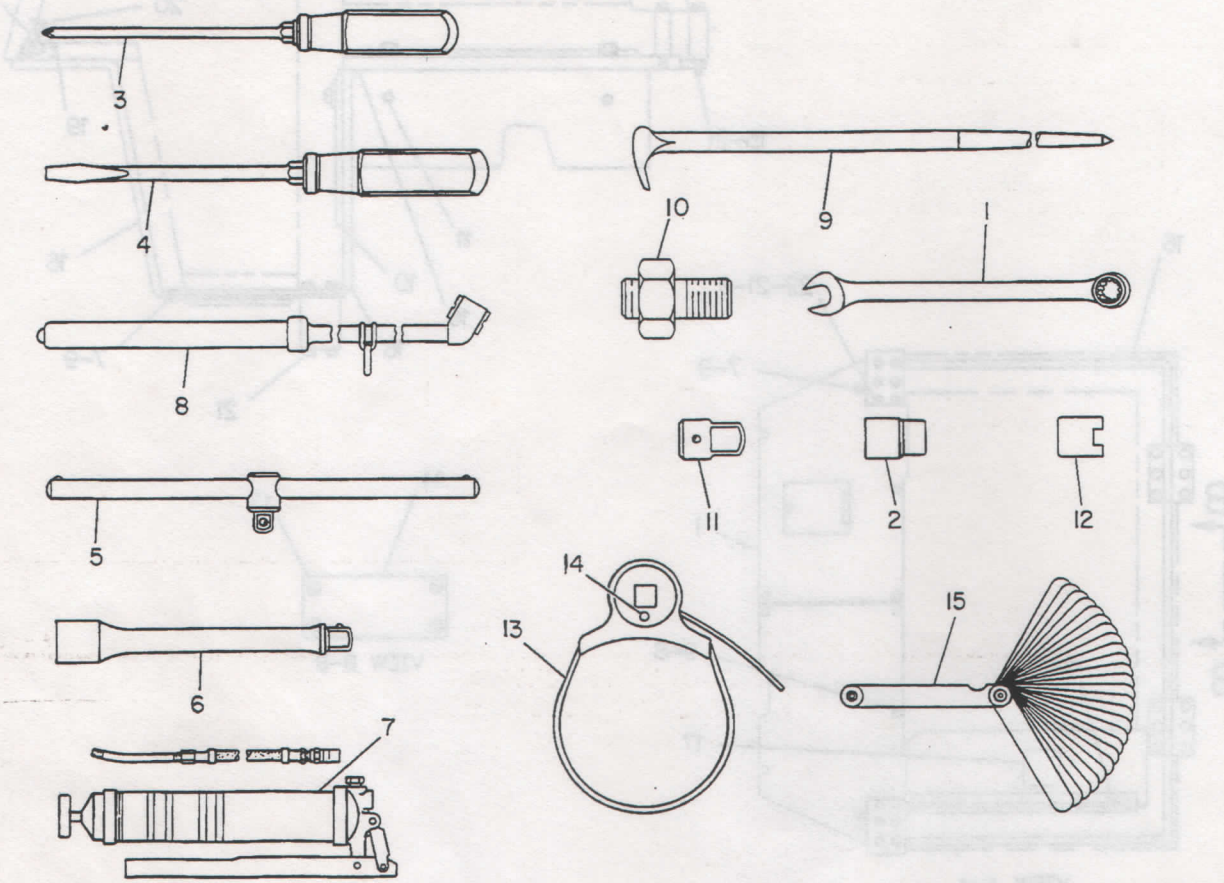

NOTE	REF NO	PART NUMBER	QTY	PART NAME
	1	2Y8279	1	TOOL GP-HAND
		1P5522	1	WRENCH 7.94MM(.313IN)
		1P5523	1	WRENCH 9.52MM(.375IN)
		1P5524	1	WRENCH 12.7MM(.5IN)
		1P5525	1	WRENCH 14.23MM(.563IN)
		1P5526	1	WRENCH 15.87MM(.625IN)
		5P6224	1	WRENCH-CMB 17.47MM(.688IN)
		1P5527	1	WRENCH 19.05MM(.75IN)
	2	5P6227	1	SOCKET 12.7MM(.5IN)
		1P5530	1	SOCKET 14.23MM(.563IN)
		1P5531	1	SOCKET 17.47MM(.688IN)
		1P5532	1	SOCKET 19.05MM(.75IN)
		1P5533	1	SOCKET 20.64MM(.813IN)
		1P5534	1	SOCKET 22.23MM(.875IN)
		1P5535	1	SOCKET 23.82MM(.938IN)
		1P5537	1	SOCKET 25.53MM(1.125IN)
		1P5538	1	SOCKET
		1P5539	1	SOCKET 33.34MM(1.313IN)
		1P5540	1	SOCKET 38.1MM(1.5IN)
		5P6226	1	SOCKET 41.28MM(1.625IN)
		1P5541	1	SOCKET 47.63MM(1.875IN)
	3	1P5521	1	SCREWDRIVER-PHILLIPS (NO 2)
	4	1P5518	1	SCREWDRIVER
	5	5S9566	1	WRENCH-SLIDING TOOTH
	6	5S9567	1	EXTENSION
Y	7	8F9866	1	GREASE GUN AS (LEVER)
	8	2Y6089	1	GAUGE (TIRE)
	9	1P5517	1	BAR-PINCH
	10	5F9999	1	ADAPTER
	11	5S9568	1	SOCKET-PLUG (DRAIN)
	12	5P1763	1	SOCKET-PETCOCK
	13	2P8250	1	WRENCH AS-STRAP
		6H7378	1	RING-RETAINING
	14	1P0551	1	PIN-SPRING
	15	1P5519	1	GAUGE-FEELER

Y-SEPARATE ILLUSTRATION

B-341877 EP

2Y2576 TOOL GP-HAND
8F9866-Page 195
An Attachment

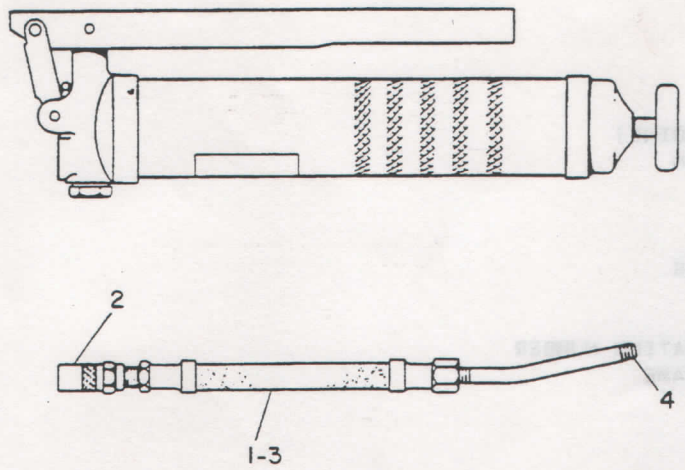

NOTE	REF NO	PART NUMBER	QTY	PART NAME
	1	9F2636	1	NOZZLE AS
	2	2M2689	1	COUPLER AS
	3	9F2638	1	HOSE AS
	4	9F2637	1	NIPPLE

B-108355 EP

0600

8F9866 GREASE GUN AS
Part Of 2Y2576 Tool-Hand
An Attachment

1	3N3790	PLATE-SERIAL NUMBER (ENGINE) ON LEFT SIDE OF BLOCK IN UPPER REAR CORNER
1	9L6531	PLATE-INFORMATION ON TOP OF VALVE COVER AS FAR FRONT AS POSSIBLE
1	9X6198	PLATE-PRODUCT IDENTIFICATION NUMBER RIGHT SIDE OF LOADER FRAME
10	4B4158	SCREWS-DRIVE
1	1RO658	FILM-IDENTIFICATION ON OIL FILTER
1	2Y3685	FILM-ADDRESS ON FRONT PANEL UNDER SEAT
2	3E1720	FILM-930T
1	3K7109	FILM-INSTRUCTION-BUCKET LEVER ON TOP OF HYDRAULIC TANK HEAT SHIELD NEXT TO LEVERS
1	5V1815	FILM-STRIPE ON RIGHT SIDE OF ENGINE COMPARTMENT
1	5Y1816	FILM-STRIPE ON LEFT SIDE OF ENGINE COMPARTMENT
1	6V7615	FILM-IDENTIFICATION ON FUEL FILTER
4	7X3229	FILM-LIFT LOCATE ONE ON EACH TIE DOWN & LIFT EYE (FRONT & REAR)
1	9X1908	FILM-CATERPILLAR ON TOP OF RADIATOR GUARD

NAME PLATES & FILMS

PART NUMBER INDEX

Number	Page	Number	Page	Number	Page	Number	Page
0			113		186		149
			114	OS1588	30		160
			115		99		166
OL0364	23		116		108		187
OL0478	83		124		125		193
	84		142		131	OS1595	73
OL0829	160		147		135		114
OL1143	16		150		142		142
	20		184		144		150
	32		187		146		167
	55		193		148		186
	85	OS0550	114		149	OS1608	85
	125		115		151	OS1614	73
	131	OS1351	142		160	OS1615	52
	135	OS1566	15		170		58
OL1170	159		101		176		62
OL1329	19		102	OS1589	15		125
OL1351	16		103		108	OS1616	47
	20	OS1571	23		169		48
	31		25		171	OS1617	14
	35		56		192		27
	43		58	OS1590	21		44
	51		81		29		87
	79		85		37		114
	95		95		41		115
	99		125		131		117
	116		148		135		189
	124		151		170	OS1618	16
	125		170	OS1591	20		28
	141	OS1573	182		26		96
	144	OS1577	102		42	OS1619	21
	148		103		51		29
	151	OS1584	89		58		44
	154	OS1585	44		63		175
	187		87		82	OS1620	148
	188		102		131		151
OL1352	20		105		135		160
	26		106		168	OS1621	73
	93		140		176		79
	135		147	OS1593	83		142
OL2070	16		150	OS1594	10		159
	23		186		11		175
	27	OS1587	18		12		186
	37		19		17		188
	51		61		23	OS1625	91
	83		63		28		128
	93		85		32	OS1626	186
	159		92		41	OS1748	16
OL2315	87		105		61	OS1922	83
OS0509	10		106		81	OT0055	30
	32		139		87	OT0065	22
	35		140		91		29
	73		141		93		56
	87		146		98		148
	93		147		114		151
	95		149		125	OT0102	23
	101		150		142		89

PART NUMBER INDEX

Number	Page
	95
	101
	108
	115
OT0318	165
OT0319	172
OT0320	146
	149
	175
OT0573	20
	55
	85
	135
	175
	177
OV0375	153
	192
1	
1A1135	16
	42
	192
1A1460	166
	169
	186
1A2029	23
	24
	27
	35
	41
	44
	87
	92
	93
	95
	112
	147
	150
	153
	170
	176
1A2850	43
1A5183	20
1A5822	141
1A5964	63
1A6240	137
1A7615	124
	148
1A9252	51
1A9579	42
	63
	165
	166
	167
1B0671	95
1B0676	51
	95
1B2578	95
1B2713	47
1B2790	28
	44
	120
1B2886	92
	181
	192
1B3581	115
1B4202	43
	189
1B4203	176
1B4205	124
1B4330	51
	125
1B4333	141
1B4367	44
1B4430	159
	160
	175
	176
1B5174	27
	29
1B5355	37
	38
	41
	124
1B7182	59
1B7709	12
	13
1B8702	95
	148
	151
	158
	159
1B8704	51
1B8705	95
1B8706	160
1B8709	22
1B9575	96
1C0569	46
1C2251	16
	150
1C2551	148
1D4540	127
1D4566	107
	147
	150
1D4569	165
	166
	167
	169
	181
	182
1D4574	181
1D4585	44
1D4586	91
1D4588	85
1D4593	85
	193
1D4595	12
	193
1D4597	172
1D4609	161
	162
	163
	164
1D4628	144
1D4707	147
	150
1D4716	44
	63
	113
	120
	190
1D4717	16
	38
	51
	58
	61
	73
	77
	79
	81
	83
	93
	95
	112
	113
	114
	115
	125
	139
	142
	144
	159
	170
	184
	187
1D4719	32
	61
	63
	68
	87
1D4720	193
1D5976	144
1F0006	43
1F0748	192
1F0750	120
1F1006	22
1F2417	61
1F4111	42
1F5339	141
1F7840	83
1G1883	182
	183
1H0516	137
	138
1H1200	91
	146
	149
1H2629	71
1H3338	73
1H4393	73
1H5166	79
	184
	185
1H5514	27
1H6227	163
	164
1H6249	77
1H8499	83
1J5353	97
1J6473	177
1J8497	135
1J9561	178
1J9671	59
	136
	137
	138
	155
	157
1K0502	177
1K2728	28
1K4061	187
1K4499	186
1K4682	95
1K6853	140
1K6872	139
	181
	182
1K6932	144
1K6981	163
	164
1K6985	31
1K6992	91
1K6995	91
1K7095	161
	162
1K7588	141
1K8041	140
1K8051	141
1K8052	140
1K8059	105
	106
1K8061	140
1K8850	61
1L3046	159
1L3047	160
1L3769	59

PART NUMBER INDEX

Number	Page	Number	Page	Number	Page	Number	Page
1L5072	13		168		84	1V6951	115
1L5081	23	1P4577	99	1S9867	43	1V7251	109
1L6939	116		125	1S9873	43	1W0558	2
1M1341	51		131	1S9874	43		44
1M1882	77		135	1S9875	43	1W0613	38
	78		148	1T0020	89	1W0697	185
1M3304	73		170	1T0028	89	1W0702	185
1M3836	95	1P4578	169	1T0043	92	1W0705	185
1M5898	78	1P5517	194	1T0068	89	1W1219	19
1M6119	73	1P5518	194	1T0099	91	1W1669	62
1M6120	73	1P5519	194	1T0289	89	1W1695	62
1M6298	32	1P5521	194	1T0290	89	1W1698	62
1M7823	32	1P5522	194	1T0292	89	1W1699	62
1M7827	32	1P5523	194	1T0294	89	1W2803	43
1M7830	32	1P5524	194	1T0334	89	1W2804	43
1M7838	32	1P5525	194	1T0414	89	1W2870	10
1M9175	51	1P5526	194		95	1W2871	10
1M9633	93	1P5527	194	1T0416	56	1W2872	2
1M9634	93	1P5530	194		127		10
1N3016	35	1P5531	194	1T0537	89	1W3485	52
1N3574	6	1P5532	194	1T0738	89	1W3486	52
1N3800	49	1P5533	194	1T0765	27	1W3598	47
1N3802	49	1P5534	194	1T0822	38		54
1N4304	11	1P5535	194	1T1230	89	1W3793	2
1N4436	2	1P5537	194	1T1396	89		36
	10	1P5538	194	1T1401	89	1W3900	14
1N4874	2	1P5539	194	1T1428	89	1W4098	49
	25	1P5540	194	1T1431	89	1W4243	50
1N8354	10	1P5541	194	1T1443	89	1W4402	16
1P0436	59	1P5860	87	1T1569	89	1W4619	31
1P0451	45	1P5909	73	1T1615	81	1W4795	46
1P0551	194	1P6367	11		88	1W5129	41
1P1111	46		12		89	1W5130	3
1P1112	46	1P6452	54	1T1828	89		45
1P1113	46	1P6489	187	1U0378	172	1W5132	41
1P1114	46	1P6563	87	1U0380	172	1W5160	45
1P1116	46	1P7346	21	1U2665	172		46
1P1117	46	1P7407	93		174	1W5300	11
1P1120	46	1P8116	97	1U3937	172	1W5361	41
1P1123	46	1P8362	87	1V1756	144	1W5362	41
1P1124	46	1P8680	60	1V1762	95	1W5634	2
1P1125	46	1P9946	34	1V1767	144		16
1P1136	46	1P9956	9	1V1796	144	1W5723	2
1P1216	37	1R0658	196	1V1848	144		18
1P1255	44	1S0286	33	1V2698	87	1W5912	62
1P2299	55	1S1953	52	1V2772	123	1W6009	58
1P2497	48	1S2176	101	1V3086	188	1W6472	43
1P2959	95	1S3285	52	1V3182	61	1W6473	42
1P3702	131	1S5440	54	1V3323	108		43
1P3703	131	1S7107	43	1V3546	61	1W6523	48
1P3704	131	1S7252	73	1V3557	188	1W6539	52
1P3705	85	1S7443	190	1V4718	102		53
1P4244	2	1S9130	41		103	1W6541	53
	25	1S9540	4	1V5781	141	1W6588	3
1P4575	166		6	1V5783	141		9
	167	1S9543	9	1V6341	95	1W6757	9
1P4576	99	1S9670	83	1V6353	179	1W6987	53

PART NUMBER INDEX

Number	Page
1W7110	14
1W7816	14
1W7867	48
1W8451	32
1W8453	32
1W8454	3
	19
1W8619	19
1W8730	47
	48
	49
	50
1W8939	42
1W9122	34
1W9123	34
1W9124	2
	34
1W9167	57
	58
1W9168	57
	58
1W9169	57
	58
1W9171	53
1W9218	17
1W9219	3
	17
1W9532	2
	55
2	
2A0762	46
	177
	190
2A1723	148
	151
2A1736	160
2A3211	24
2A3746	97
2A3798	6
	7
2A4429	11
2A4572	170
2A4639	28
	55
2A5328	43
2A5546	51
2A5885	153
	154
2B0858	4
	11
	18
	20
	28
	101
	113
2B0947	32
	140
	168
2B2006	139
	140
2B2694	22
	190
2B2695	43
	89
	97
	113
2B2994	140
2B7218	141
2B7557	107
	108
	140
2B8352	77
2D0092	101
2D0388	73
	184
2D0604	108
2D1691	102
2D2565	110
2D2628	109
	110
2D2629	109
	110
	111
2D2630	109
	110
	111
2D2631	109
	110
	111
2D2633	109
	110
2D2654	110
2D2655	110
2D4107	77
2D6403	119
2D8806	87
2F0808	46
2F2290	49
2F2860	76
2F2953	152
2F5721	64
2F8616	175
2F8630	101
2G0151	73
2H1142	177
2H1650	95
2H2525	175
2H2995	97
2H3259	175
	177
2H3429	59
	71
	175
2H3686	160
2H3755	118
	190
2H3788	165
	166
2H3855	190
2H3880	68
2H3922	74
2H3927	87
2H3928	83
	161
	162
2H3932	55
2H3934	55
2H4406	96
2H5547	184
2J0157	59
	153
2J0917	146
	149
2J0918	146
	149
2J1826	96
2J3506	141
2J3950	161
	162
	163
	164
2J6089	135
2J6114	146
	149
2J6195	150
2J6356	176
	177
2J6884	181
	183
2J8168	172
2J8172	172
2J8455	146
	149
2K0527	105
	106
2K0535	105
	106
2K0537	105
	106
2K0703	139
	181
2K3592	179
2K3656	179
2K4119	179
2K4973	38
	95
	112
2K5065	108
2K5496	115
2K7115	190
2K9154	105
	106
	107
2K9249	108
2K9459	105
	106
	107
2K9463	108
2K9470	105
	106
	107
2L1701	18
2L3650	102
	103
2L5271	172
2L8067	68
2L8071	68
2L8076	75
2M0287	184
2M1309	93
2M2489	95
2M2689	195
2M5282	78
	80
2M5284	78
	80
2M5407	23
2M7041	97
2M7819	49
2M9780	28
	58
	82
	95
	101
	125
	135
	155
	157
	170
2N0828	49
2N1287	184
2N2766	45
2P0220	42
2P1168	16
2P1170	22
2P1262	11
2P1278	124
2P1279	124
2P1281	124
2P1487	19
2P1692	19
2P1757	34
2P1781	22
2P1784	3
	21
2P2351	20

PART NUMBER INDEX

Number	Page	Number	Page	Number	Page	Number	Page
2P2511	27	2S1382	98		52	2Y2836	189
2P2537	28	2S1384	98	2W6779	2	2Y2837	189
2P2541	78	2S1385	98		29	2Y2838	188
	80	2S1541	23	2W7234	54		189
2P2547	24	2S2174	51	2W7255	31	2Y2858	66
2P2685	54	2S2923	42	2W7279	26	2Y2885	109
2P2697	24	2S3728	141		27	2Y2886	109
2P2719	24	2S4078	131	2W7280	2	2Y3009	95
2P2720	24		146		26	2Y3079	142
2P2949	19		149	2W7400	50		187
2P3201	12	2S4872	97	2W7678	31	2Y3321	64
2P3859	8	2S5658	5	2W8002	30	2Y3325	64
2P5834	100		6		31	2Y3326	64
2P6132	29	2V1074	108	2W9162	25	2Y3449	63
2P6155	3	2V2776	124	2W9305	50	2Y3459	63
	20	2V3435	141	2W9657	47	2Y3536	110
2P6189	2	2V3437	83	2Y1346	125		111
	20	2V3442	139	2Y1349	151	2Y3597	77
2P6224	3	2V3453	131	2Y1799	66	2Y3664	188
	8	2V3458	190	2Y1948	63	2Y3685	196
2P6229	40	2V3580	141	2Y2062	73	2Y3716	184
2P6245	22	2V3726	187	2Y2063	73	2Y3790	120
2P6491	2	2V4097	81	2Y2108	179		121
	24	2V4967	187	2Y2238	65	2Y3792	121
2P6512	2	2V5608	105	2Y2299	65	2Y3939	179
	23		106	2Y2300	65	2Y3967	37
2P6529	2	2V6076	95		66	2Y4317	189
	15	2V6078	95	2Y2373	66	2Y4477	79
2P6530	2	2V7088	73	2Y2374	66		80
	12	2V7219	168	2Y2375	66	2Y4647	151
2P6571	3	2W0102	2	2Y2376	66	2Y4651	125
	37		7	2Y2377	66	2Y4783	125
2P6855	2	2W0716	46	2Y2378	66	2Y4809	114
	24	2W0845	57	2Y2379	66	2Y4847	63
2P8165	2	2W1076	40	2Y2380	66	2Y4972	102
	34	2W1083	42	2Y2382	66	2Y5024	66
2P8250	194	2W1085	40	2Y2383	66	2Y5124	105
2P8598	2	2W1088	42	2Y2384	66		106
	9	2W1230	56	2Y2385	66	2Y5204	2
2P8613	32	2W1677	55	2Y2386	66		7
2P8670	43	2W1713	55	2Y2387	66	2Y5229	30
2P8746	21	2W2176	42	2Y2391	66	2Y5261	108
2P8889	5	2W2216	49	2Y2392	66	2Y5445	183
2P9065	182	2W4160	3	2Y2393	66	2Y5454	103
2P9556	49		62	2Y2394	66	2Y5493	124
2P9607	46	2W4561	26	2Y2396	66	2Y5494	124
2P9635	46	2W4837	11	2Y2397	66	2Y5514	110
2R0504	177	2W5161	50	2Y2398	66		111
2R1866	125	2W5447	47	2Y2399	66	2Y5532	124
2R6806	124	2W5448	47	2Y2400	66	2Y5537	124
	125	2W6091	9	2Y2576	194	2Y5549	179
2S0042	14	2W6102	50	2Y2642	75	2Y5558	32
2S0115	186	2W6103	50		78	2Y5564	187
2S0613	91	2W6104	50	2Y2655	187	2Y5575	189
2S0696	97	2W6175	52	2Y2830	189	2Y5596	114
2S0736	12		54	2Y2833	189	2Y5717	2
	13	2W6178	47	2Y2835	189		16

PART NUMBER INDEX

Number	Page	Number	Page	Number	Page	Number	Page
2Y5735	73	2Y7666	80		128		
2Y5780	75	2Y7668	80		139		
2Y5785	66	2Y7710	109	3B0551	27		193
2Y5786	66		110	3B0623	11	3B4512	162
2Y5926	120		111	3B0645	28		163
2Y5975	61	2Y7988	35	3B0731	177		164
2Y6089	194	2Y8027	37	3B1915	20	3B4604	177
2Y6342	75	2Y8051	2		21	3B4605	175
2Y6344	75		30		26	3B4615	51
2Y6389	127	2Y8096	26		28		60
2Y6391	127	2Y8279	194		83		95
2Y6397	127	2Y8310	63		112		142
2Y6399	126	.	64		125	3B4617	95
	127	2Y8311	112		131		118
2Y6400	124	2Y8524	175		148		141
	126		177		151	3B4628	160
2Y6403	126	2Y8705	187	3B4501	76	3B4632	160
2Y6647	124	2Y8775	61	3B4502	68	3B4897	139
2Y6648	113	2Y8924	63		73	3B6487	184
2Y6651	120	2Y8950	63		120	3B6553	116
2Y6652	175	2Y9137	192		193	3B6768	116
	176	2Y9175	73	3B4504	43	3B6773	112
2Y6658	107	2Y9196	125		177	3B7255	40
2Y6659	107	2Y9541	64	3B4505	120		113
2Y6707	121	2Y9542	64		136	3B7264	38
2Y6708	121	2Y9543	64		137	3B7721	73
2Y6709	121	2Y9544	64		138	3B7722	114
2Y6783	124	2Y9545	64		189	3B7730	112
	125	2Y9546	64		190	3B7741	28
2Y6784	187	2Y9547	64	3B4506	43	3B7762	116
2Y7006	124	2Y9548	64		77	3B8485	140
2Y7104	113	2Y9549	64		108	3B8486	83
	117	2Y9550	64		146	3B8488	181
2Y7108	124	2Y9574	64		147		182
2Y7109	124	2Y9575	64		148	3B8489	34
2Y7111	124	2Y9576	64		153		84
2Y7124	110	2Y9581	64		154		139
2Y7125	111	2Y9584	64		159		141
2Y7133	117	2Y9585	64		175		177
2Y7134	117	2Y9586	64		176		181
2Y7135	117	2Y9587	64		177		182
2Y7136	114	2Y9588	64	3B4507	146		183
	117	2Y9734	51		147	3B8822	38
2Y7138	113	2Y9735	184		175	3B9400	112
2Y7272	18		185		176	3D0674	51
2Y7345	124	2Y9736	61	3B4508	68	3D2005	187
2Y7477	117	2Y9752	185		139	3D2824	62
2Y7478	117	2Y9779	27		141		82
2Y7479	117	2Y9827	39		146		95
2Y7483	117	2Y9853	51		147		100
2Y7484	117	2Y9855	73		148		125
2Y7485	117	2Y9856	73		153		131
2Y7497	66				159		137
2Y7631	149				175		138
2Y7644	124				176		155
2Y7660	124				181		169
2Y7661	124			3B4510	118	3D2898	62

PART NUMBER INDEX

Number	Page	Number	Page	Number	Page	Number	Page
3D4964	141		137		167	3T4953	87
3D8317	49	3J5390	27	3L1425	34	3T4955	87
	97		29	3L2415	124	3T5962	68
3D9871	193		32	3L8187	75	3T6305	67
3E1720	196		43	3N3790	196		68
3F0379	71		44	3P0009	48	3T6792	91
3F1147	73		101	3P1896	11	3T7017	68
3F4134	61		112	3P8485	97	3T7020	68
3F4479	146	3J6019	6	3R2704	125	3T7021	68
	149	3J7354	28	3R9704	82	3T7022	68
3F5792	101		48	3S0004	85	3T7024	68
3F9556	118		58	3S2093	61	3T7025	68
3G0361	151		61		73	3T7726	97
3G1264	173		135		75	3T8269	97
3G1267	172		165		176	3T8314	81
	173		167		184		86
3G1820	173		175	3S2713	13		87
3G2315	153		176		15	3T8386	81
	156	3J7470	135		55		101
3G2714	174	3J8903	92	3S4603	73	3V0197	104
3G2716	174	3K0196	83	3S5496	4	3V2431	83
3G3726	156		87		11		84
3G3835	49	3K0360	44	3S6049	73	3V2793	139
3G4138	87		61	3S6050	73	3V6152	184
3G4621	146		75	3S7781	87	3V6225	61
	149		125	3S8146	116	3V7042	61
3G5980	148		135	3S8289	32	3V7427	95
3G7242	172		136	3S8313	11	3V8313	119
3G9194	172		137	3S8536	42		
3H0019	77		138	3S9933	96		
3H0122	83		155	3T0809	98		
	84		157	3T0810	96	4B0418	81
3H0297	83		158	3T0811	96		112
3H0442	52		159	3T0842	68		113
3H1461	152	3K0925	187	3T0844	68	4B0831	96
3H1591	193	3K1644	95	3T0847	68	4B1221	73
3H2549	135	3K1650	73	3T0848	68	4B1229	73
3H2691	75		76	3T0849	68		193
	78	3K1787	77	3T0850	68	4B1663	61
3H2900	73	3K2889	181	3T0851	68	4B2043	73
	184		183	3T0853	68	4B2049	68
3H3243	25	3K3067	101	3T0858	68		120
3H3680	71	3K3415	112	3T0862	68	4B2906	51
3H4970	87	3K5093	141	3T0863	68	4B3388	44
3H5175	43	3K5733	49	3T0864	68		120
3H8389	61	3K5762	43	3T0865	68		125
3H8430	148	3K6662	95	3T0867	68		166
3J1907	55	3K6675	184	3T0868	68		167
	58	3K7056	123	3T2094	85	4B3938	4
	73	3K7057	123	3T2768	68		6
	75	3K7058	123	3T2769	68		7
	93	3K7109	196	3T3422	71	4B4043	104
	98	3K7110	108	3T4588	81	4B4158	160
	100	3K7112	108	3T4604	85		193
	124	3K8280	51	3T4619	81		196
	125	3K8782	73		85	4B4274	71
	136	3L0526	166	3T4716	68		73

4

PART NUMBER INDEX

Number	Page
4B4276	47
	177
4B4277	185
4B4278	142
	147
	148
	166
	170
	193
4B4279	166
	167
	176
4B4280	71
	166
	167
	193
4B4283	160
4B4674	68
4B4910	13
4B5059	188
4B5167	148
	149
	151
4B5275	121
4B5423	61
4B5441	61
4B5949	61
4B7739	148
4B8519	104
4B8756	120
4B9365	55
	62
4B9782	4
	6
	91
	136
	137
	138
	151
4B9784	95
4B9806	95
4B9880	22
	93
	97
4D0012	175
4D1212	175
	176
4D1322	152
4D2619	51
4D3704	42
4D4785	73
4D5155	51
4D7388	25
4D7733	61
4D7794	73
	77
4D7978	142
4D8123	115
4D8924	51
4D8948	77
4D9376	147
	151
4F4879	188
4F6024	49
4F6888	139
4F7226	169
4F7391	131
	148
	150
	151
4F7952	95
4F7957	62
4F8824	83
4F8946	137
4F8965	168
	176
4F9029	147
4H2558	79
4H3283	73
4H5440	87
4H6112	114
4H7869	65
4H8380	138
4H9699	10
4J0519	150
4J0520	28
	82
	99
	125
	131
	137
	138
	165
	167
	169
	170
4J0522	169
4J1105	60
4J1657	172
4J2620	161
	162
4J2684	51
4J3015	158
	159
4J3021	148
	149
	151
4J3043	158
	159
4J3044	158
	159
4J3047	158
	159
4J3515	161
	162
4J4670	172
4J5140	125
	135
4J5267	99
	125
	165
	166
	168
4J5309	137
	138
4J6064	146
	149
4J7533	47
	52
	136
	137
	138
4J8251	148
	151
4J8252	148
	151
4J8265	148
	151
4J8979	128
4J8996	165
	166
	167
4J8997	62
	152
	153
	154
4J9535	137
	138
4K0367	139
4K0640	184
4K1388	153
	154
4K1540	118
4K1557	146
	149
4K2039	119
4K2724	112
4K3533	188
4K4258	177
4K4284	91
4K4879	109
4K4881	109
	110
	111
4K5122	73
4K5124	73
4K5175	34
4K5537	81
4K8230	120
4K8479	139
	141
4K8599	95
4K8816	187
	193
4K8977	177
4K9237	139
4K9477	84
4L3641	23
4L4058	187
4L6454	31
4L7318	43
4L9337	32
	61
4L9564	25
4M0061	43
4M0141	41
4M1192	189
4M1751	98
4M1827	71
4M1828	71
4M1831	71
4M2381	97
4M5281	43
4M5285	172
4M6723	125
4M8047	39
4M8303	58
4M8815	98
4N0260	49
4N0432	49
4N2953	49
4N3181	67
4N3732	22
4N3840	27
4N3841	27
4N3982	43
4N3983	43
4N3984	43
4N3985	43
4N4517	68
4N5353	21
4N5484	48
4N5485	48
4N5834	31
4N6404	49
4N6406	49
4N6407	49
4N6408	49
4N6860	46
4N6861	46
4N6862	46
4N6863	46
4N6864	46
4N6865	46
4N8385	22
4N8591	41
4N9019	54

PART NUMBER INDEX

Number	Page	Number	Page	Number	Page	Number	Page
4S1936	73	4W4323	41	5H3182	87	5K5165	192
4S5824	92	4W4324	2	5H3252	85	5K5221	104
4S6417	10		41	5H4018	168	5K5697	51
4S8537	91	4W4565	38	5H4871	185	5K6077	119
4S8538	91		39	5H4909	87	5K7775	125
4S8825	38	4W5734	47	5H6552	47	5K7827	105
4S8826	38	4W5738	7		50		106
4T0317	136	4W6868	49	5H6734	102	5K8074	73
4T0318	136	4W7629	58		103	5K8245	105
4T0508	171	4W8087	11	5H8848	128		106
	172	4W9655	44		169	5K8454	87
4T7599	156			5H8853	97	5K9064	89
	157	**5**		5J1473	146	5K9235	61
4T7601	156				149		116
4T8690	157	5B0639	160	5J2926	146	5K9237	40
4T8691	157	5B0651	181	5J3616	161	5K9238	113
4T8694	156		182		162	5K9239	120
4V0660	61	5B0841	102	5J4986	161	5K9240	40
4V1533	82		103		162	5K9241	40
4V2835	124	5B1309	28	5J7157	28		42
4V2836	124	5B3254	184	5J7854	163	5K9242	115
4V3325	181	5B5812	34		164	5K9243	24
4V3326	181	5B5946	155	5J7865	163		42
4V3673	187	5B7652	4		164		114
4V3679	193		6	5J8150	128	5K9244	112
4V3717	193	5B8855	192	5J8200	163		114
4V4079	107	5B9079	16		164	5K9245	113
4V4574	108		51	5J8225	161	5K9246	116
4V4850	104	5B9318	91		162	5K9248	40
4V4852	104	5B9603	12	5J9078	153	5K9972	112
4V5414	114	5B9916	140		154	5L2031	105
	118		141	5J9088	154		106
4V5415	118	5D3183	77	5J9091	153		107
4V6485	114		79	5J9092	153	5L7200	76
	115	5D3184	77	5J9098	152	5L8855	41
4V6525	104	5D4281	144	5J9100	155	5M1152	101
4V6527	102	5D5671	29	5J9101	155	5M2054	108
	103	5D5958	173	5J9102	155	5M2555	73
4V6531	108	5D9514	193	5J9103	155	5M2894	10
4V6532	102	5F1678	92	5J9104	155		11
4V6533	103		93	5J9105	155		12
4V6805	114		168	5J9106	153		15
4V6858	114	5F3106	15		154		16
4V6859	114		30		155		17
4V6860	114	5F3999	171	5K0292	118		20
4V6861	114	5F4899	96	5K0786	77		21
4V6863	115	5F5434	42	5K0864	170		23
4V6865	113	5F7054	55	5K0906	185		24
4V7277	104	5F8000	146	5K0926	108		25
4W0452	8		149	5K2294	95		26
4W0788	59	5F9035	137		124		28
4W2181	25		138	5K2461	144		30
4W2321	22	5F9144	48	5K2464	144		31
4W2322	22		60	5K2595	83		32
4W2448	21	5F9999	194	5K3274	105		35
	22	5G3612	60		106		38
4W3864	31	5H1472	153	5K4725	170		42

PART NUMBER INDEX

Number	Page	Number	Page	Number	Page	Number	Page
	44		43	5P2526	108		44
	51		55	5P2552	193		61
	55		82	5P2553	193		73
	56		96	5P2566	34		77
	58	5M6509	43	5P2645	61		79
	63	5M6668	73	5P3108	136		87
	73		78	5P3114	91		91
	77		80	5P3119	91		92
	79	5M6755	191	5P3131	91		102
	81	5M7333	87	5P3133	91		105
	82	5M9548	98	5P3134	91		106
	83	5M9622	97	5P3162	82		107
	87	5M9623	97	5P3741	184		114
	92	5M9624	97	5P3846	169		140
	93	5N8780	20	5P4115	55		141
	95		151	5P4483	87		142
	96	5P0060	165	5P4484	102		149
	98	5P0065	161		103		150
	99		162	5P4868	29		151
	112	5P0091	128		32		165
	113	5P0093	163		41		166
	114		164	5P4939	57		167
	115	5P0094	161		58		168
	116		162	5P5014	139		169
	124	5P0385	77	5P5598	13		186
	125	5P0537	55	5P5621	68		188
	131		58	5P5623	75	5P8246	104
	135		59	5P5629	77	5P8247	15
	141		62		78		44
	142		125	5P5630	184		79
	149	5P0597	81	5P5934	193		91
	150	5P0598	32	5P6011	175		95
	151		169		176		102
	166	5P0687	77	5P6026	105		103
	168	5P0721	77		106		104
	170	5P0747	73		107		108
	176	5P0761	73		108		114
	177	5P1075	32	5P6224	194		169
	184		61	5P6226	194		171
5M3154	101		114	5P6227	194	5P8248	109
5M3492	155		115	5P6412	131		110
5M4606	13		142	5P6438	95	5P8250	141
5M4741	30		144	5P6941	184	5P8500	60
5M6213	4		160	5P6945	48	5P8502	60
	11		170	5P7084	81	5P8867	104
	18		176	5P7213	142	5P9186	96
	23		187	5P7486	61	5P9757	49
	29		188	5P8065	174	5P9806	93
	31		193	5P8215	62	5S0003	42
	41	5P1076	63	5P8244	149	5S1211	32
	43		186		150	5S1213	32
	44	5P1260	29		166	5S1218	32
	113	5P1263	41		167	5S1352	38
	116	5P1404	58		168	5S2106	34
5M6214	4	5P1520	61		169	5S4629	32
	14	5P1763	194	5P8245	19	5S5879	13
	33	5P2094	131		32	5S5917	13

PART NUMBER INDEX

Number	Page	Number	Page	Number	Page	Number	Page
5S5918	13	5Y0564	131		3	6H2867	187
5S6045	20	5Y0565	131	5Y1784	79		193
5S6051	27	5Y0566	131	5Y1786	72	6H3568	140
5S6296	8	5Y0567	131		73	6H3956	124
5S6348	9	5Y0623	131	5Y1787	32	6H3957	31
5S6670	5	5Y0624	131		33	6H4209	108
5S6735	11	5Y0626	131	5Y1788	33	6H5139	148
	12	5Y0627	129	5Y1793	192		151
	41		130	5Y1794	192	6H5541	91
5S6750	9		131	5Y1802	73	6H6699	184
5S7001	98	5Y0629	75	5Y1803	73		185
5S7018	136		129	5Y1804	73	6H7378	194
5S7163	30	5Y0632	131	5Y1816	196	6H9691	48
5S7264	34	5Y0633	131	5Y1819	79	6J0450	188
5S7349	71	5Y0665	131				193
5S7611	16	5Y0667	75		6	6J0499	73
5S7630	16	5Y0668	129			6J1972	128
5S7646	60	5Y0812	37	6B1842	87	6J2237	147
5S7657	60	5Y0927	183	6B3223	108	6J2242	161
5S7816	97	5Y0928	182	6B4198	55		162
5S8115	24	5Y0973	129	6B4594	29	6J2419	62
5S8462	4	5Y1332	58	6B5072	116	6J4568	137
	6	5Y1374	169	6B6682	109		138
5S9062	34	5Y1402	28		110	6J4569	138
5S9566	194		29	6B7949	154	6J4608	137
5S9567	194	5Y1438	73	6B9664	112		138
5S9568	194	5Y1541	28	6B9889	95	6J4693	137
5S9948	9	5Y1544	7	6C0756	58		138
5V1311	104	5Y1571	107	6D0443	109	6J4694	138
5V1713	177	5Y1576	108		110	6J5670	161
5V1803	177	5Y1664	126		111		162
5V1815	196	5Y1666	126	6D3897	50	6J5692	163
5V2988	170	5Y1668	126	6D5974	159		164
5V3198	186	5Y1669	127		160	6J5730	128
5V3199	186	5Y1671	126	6D8498	62	6J5731	128
5V3754	186	5Y1672	126	6F0156	91	6J5733	128
5V4125	177	5Y1673	126	6F0612	95	6J5736	128
5V7574	141	5Y1674	126	6F4855	146	6J5737	128
5V8309	142	5Y1675	127		149	6J6217	137
5V8377	95	5Y1686	126	6F4863	160	6J6218	135
5V8967	114	5Y1692	126	6F5282	87		137
5V9015	105	5Y1707	142	6F6672	62	6J6439	155
	106	5Y1708	142		147	6J6506	136
	107	5Y1709	142		150	6J6516	136
5Y0303	73	5Y1721	142		152		147
5Y0404	75	5Y1722	142		154		150
5Y0437	95	5Y1723	142	6F6673	97		153
5Y0438	131	5Y1728	142		147	6J6517	136
5Y0439	75	5Y1737	142		150	6J6518	136
5Y0453	116	5Y1738	142	6F7045	74	6J6710	147
5Y0459	32	5Y1739	142	6F7062	4		150
5Y0461	38	5Y1741	79		30	6J6711	147
5Y0488	39	5Y1742	79	6F7172	22		150
5Y0522	73	5Y1743	79	6H0192	14	6J6714	147
5Y0551	2	5Y1775	32	6H1309	140		150
	41	5Y1777	38	6H1717	165	6J6718	152
5Y0563	131	5Y1780	2		176	6J6917	163

PART NUMBER INDEX

Number	Page	Number	Page	Number	Page	Number	Page
	164	6K0079	95		182	6K7703	175
6J7206	147	6K0249	109	6K6073	140		176
	150		110	6K6074	141	6K7704	175
6J7208	147		111	6K6075	140		176
6J7210	147	6K0397	160	6K6161	181	6K7705	175
6J7214	147	6K0696	181	6K6162	181	6K7706	95
6J7264	163	6K0697	181	6K6175	181	6K7755	139
	164	6K0806	112		182	6K7756	139
6J7270	146	6K1019	112	6K6185	139	6K7888	139
	149	6K1330	141		141	6K7909	176
6J7302	146	6K1429	83	6K6237	141	6K7986	141
	149	6K2034	95	6K6349	139	6K8001	187
6J7364	147	6K2036	95	6K6355	116	6K8008	145
	154	6K3771	31	6K6361	193	6K8038	187
6J7372	147	6K3946	181	6K6370	139	6K8054	142
	150	6K4177	140	6K6390	139	6K8073	142
6J7376	148	6K4178	140	6K6440	139	6K8074	105
	151	6K4179	140	6K6441	139		106
6J7380	149	6K4180	140	6K6442	139		107
6J7468	147	6K4185	140	6K6479	139	6K8076	116
	150	6K4186	140	6K6486	115	6K8077	112
6J7469	147	6K4187	140	6K6605	165	6K8098	188
	150	6K4188	140	6K6606	165	6K8118	113
6J7489	147	6K4189	140	6K6611	165	6K8122	112
	151	6K4190	140	6K6612	165	6K8137	188
6J7493	148	6K4191	140	6K6759	108	6K8138	188
	151	6K4192	140	6K6769	124	6K8139	188
6J7495	148	6K4193	140	6K6801	113	6K8164	51
	151	6K4197	139	6K6825	113	6K8166	51
6J7545	150	6K4385	181	6K6826	112	6K8173	73
6J7550	148	6K4386	181		113	6K8178	61
	151	6K4388	181	6K6827	114	6K8189	188
6J7565	158	6K4442	159	6K6831	114	6K8191	188
	159		160	6K6832	112	6K8214	113
6J7566	158	6K4947	125	6K6834	112	6K8231	116
6J9403	146	6K4948	125	6K6907	87	6K8232	144
	149	6K5177	95	6K6924	83	6K8275	108
6J9523	147	6K5290	165	6K6938	141	6K8276	142
	150		168	6K6940	141	6K8289	165
6J9733	128	6K5291	165	6K7261	116	6K8328	105
6J9919	148		168		118		106
	151	6K5318	165	6K7356	83		107
	152	6K5319	165	6K7382	95	6K8329	105
6J9991	147	6K5737	181	6K7596	159		106
	150	6K5744	83	6K7597	159		107
	153	6K5745	83	6K7598	159	6K8330	105
6J9992	153	6K5746	83	6K7599	159		106
6J9993	153	6K5823	141	6K7600	159		107
6J9994	158	6K5837	108	6K7602	159	6K8420	165
	159	6K5899	83	6K7668	95		166
6J9995	153	6K6045	181	6K7680	95		168
6J9996	153	6K6046	181	6K7686	139	6K8493	120
6J9997	153	6K6047	181	6K7688	175	6K8497	116
6J9998	153	6K6051	139	6K7691	175	6K8515	73
	154	6K6053	181	6K7701	175	6K8525	115
6K0043	95		182		176	6K8564	142
6K0053	95	6K6054	181		178	6K8716	149

PART NUMBER INDEX

Number	Page	Number	Page	Number	Page	Number	Page
6K9029	169		6	6V3507	73	7E2464	62
6K9114	166	6N8326	2		185	7E3361	34
6K9213	167		15		186	7E3667	62
6K9214	167	6N9915	11	6V3508	13	7E4656	62
6K9215	166	6N9916	11	6V4626	34	7E4846	52
6K9216	166	6P0748	91	6V5142	156	7E4892	49
6K9468	107	6P2233	91		157	7E5346	49
6K9527	115	6P2234	91	6V5874	60		59
6K9572	166	6P2473	91	6V6921	55	7F0192	38
	167	6P2474	91	6V6957	142	7F2050	124
	168	6P2623	91	6V7615	196	7F4782	149
6K9573	166	6P3169	91	6V8364	76	7F4920	71
	167	6P3733	91	6V8374	75	7F7590	23
	168	6P3735	91	6V8376	73	7F8268	85
6K9725	165	6P3843	91	6V8378	71	7F8607	59
	166	6P3859	91	6V8801	17	7F9224	78
6K9883	160	6P3860	91	6V9928	31	7F9225	73
	176	6P3910	91	6W5612	122	7F9776	51
	177	6P3964	91	6W5613	122	7F9777	51
6K9884	165	6P4935	97	6W5614	122	7G0857	91
6K9885	166	6P4938	97	6W5615	122	7G0858	91
6K9900	176	6P4939	97	6W7304	118	7G0861	92
	177	6P4940	97	6W7379	104	7G0863	93
6K9902	176	6P4943	97	6Y7934	91	7G0877	91
6K9914	177	6P4971	97	6Y7935	91	7G1221	91
6K9934	175	6P4978	97			7G1222	91
	176	6P7731	87		7	7G1223	91
6K9942	176	6P9783	97			7G2546	97
6K9963	106	6P9784	97	7B2002	61	7G3202	85
6K9964	105	6P9785	97	7B2742	59	7G3206	85
6K9975	105	6P9786	97	7B3028	97	7G4291	97
	106	6S1066	77		135	7G4842	97
6K9978	166	6S2274	184	7B3235	147	7G7154	91
6K9979	167	6T0271	87		149	7G7606	91
6K9991	139	6T0273	87	7B5163	9	7G7608	91
6L1884	43	6T0274	87	7B6368	148	7G7609	91
6L3616	120	6T0275	91	7C0791	49	7G7610	91
6L5897	50	6T1231	87	7C1123	3	7G7611	91
	54	6T1232	87		58	7G7612	91
6M5652	131	6T2625	87	7C1132	2	7G7613	91
6M7476	28	6T2626	87		47	7G7616	91
6N0009	41	6T2627	87	7C2880	23	7G7714	100
6N0124	27	6T4056	93	7C3862	10	7G8867	87
6N0157	41	6T4057	81	7C5160	56	7G9119	91
6N0462	15		93		57	7G9120	91
6N1036	22	6V0938	91	7C5161	57	7G9563	97
6N2642	21	6V1196	174	7C5162	57	7G9565	97
6N2789	17	6V1949	137	7C5163	58	7H0818	124
6N2985	24	6V2489	46	7C5164	58	7H1447	148
6N3504	49	6V2687	79	7C5170	56		151
6N3827	71	6V2715	142		58	7H3171	4
6N4985	32	6V2753	91	7C5278	53	7H3270	101
6N4986	32	6V2873	142	7C8994	47	7H9678	59
6N6033	44	6V3238	91	7D1649	87	7J0001	148
6N7174	11	6V3265	55	7D1728	184		151
6N7887	15	6V3506	105	7D6936	112		158
6N8003	5		106	7D9357	154	7J0002	148

PART NUMBER INDEX

Number	Page	Number	Page	Number	Page	Number	Page
	151	7J9872	162	7K1340	142	7K4407	124
	159	7J9924	148	7K1352	142	7K4433	178
7J0096	147		150	7K1400	61	7K4434	178
	150	7J9969	134	7K1401	81	7K4477	142
7J0097	149	7J9976	131	7K1402	81	7K4478	142
7J0297	148		133	7K1414	142	7K4529	116
	151	7K0022	169	7K1460	116	7K4942	104
7J0482	112	7K0058	176	7K1527	95	7K4975	170
7J0678	135	7K0088	181	7K1583	141	7K5410	190
7J0736	136		182	7K1588	165	7K5411	189
7J1766	158	7K0107	165	7K1589	165	7K5412	189
	159		166	7K1699	108	7K5413	190
7J1767	153	7K0108	165	7K1701	108	7K5986	139
7J2295	148		167	7K1749	188	7K5994	25
	158	7K0131	165	7K1750	186	7K6128	139
7J2296	148		167	7K1861	176		141
7J4321	136	7K0132	167	7K1862	177	7K6530	144
7J5545	153	7K0192	192	7K1864	177	7K7122	177
7J5583	146	7K0261	176	7K1871	177	7K7123	177
	149	7K0286	165	7K1878	139	7K7176	181
7J5925	146	7K0344	143	7K1889	193		182
	149	7K0345	77	7K1896	160	7K7430	102
7J5938	91	7K0383	176	7K1919	160	7K7432	108
7J6285	85	7K0384	142	7K1920	160	7K8209	118
7J7090	135	7K0394	140	7K1928	160	7K8434	159
7J8014	146	7K0413	165	7K1939	160	7K8593	181
	149	7K0526	165	7K1940	160		183
7J8114	131	7K0602	145	7K1963	160	7K8967	190
7J8611	61		168	7K1971	160	7K8999	79
7J8902	65	7K0607	168	7K1977	160	7K9000	73
7J9681	158	7K0608	168	7K1980	145	7K9202	181
	159	7K0701	168		160		182
7J9682	163	7K0702	168	7K1991	160		183
	164	7K0734	168	7K2271	139	7K9208	181
7J9699	161	7K0744	168	7K2403	170		182
	162	7K0746	168	7K2413	193		183
7J9722	163	7K0754	168	7K2416	168	7K9209	181
	164	7K0755	168	7K2446	170	7K9343	181
7J9727	163	7K0756	168	7K2468	170	7K9344	181
7J9728	164	7K0757	168	7K2475	28	7K9345	181
7J9729	163	7K0854	175	7K2543	113		183
7J9730	164		176	7K2609	125	7K9589	181
7J9755	148	7K0897	165	7K2738	116		182
	150		166		119	7K9601	181
7J9828	148		168	7K2830	87		183
	150	7K0898	165	7K2842	125	7K9602	181
7J9838	128		167	7K2919	125		183
7J9839	128	7K1110	193	7K2920	125	7K9603	181
7J9842	128	7K1111	193	7K3274	28		183
7J9843	128	7K1203	175	7K3755	181	7K9604	181
7J9863	161		176	7K3756	181		182
7J9864	162	7K1204	175	7K4000	124	7K9775	181
7J9865	161		176	7K4009	124	7K9792	180
	162	7K1307	188	7K4371	192		181
7J9867	161	7K1308	188	7K4372	192	7K9793	181
7J9870	162	7K1338	166	7K4387	142	7K9794	181
7J9871	161	7K1339	167	7K4397	142	7L3283	105

PART NUMBER INDEX

Number	Page	Number	Page	Number	Page	Number	Page
	106	7N5985	73	7S7178	32	7V9118	169
	107	7N5986	73	7S7680	37	7V9121	169
7L3326	54	7N6552	4	7S7684	32	7V9131	83
7M0327	76		5	7S7723	29	7V9135	166
7M0336	71	7N6553	2		32		167
7M2220	116		4	7S7724	32	7V9137	116
7M4046	4	7N6609	46	7S7725	32	7V9138	94
	6	7N7166	54	7S7726	32		95
7M5130	89	7N7264	54	7S7877	2	7V9140	95
7M7219	49	7N7265	54		18	7V9142	95
7M8485	87	7N7267	49	7S8735	37	7V9156	171
	96	7N7270	49	7S9323	59	7V9157	99
	102	7N7271	49	7T0258	71	7V9158	99
	103	7N7918	32	7T1373	97	7V9159	99
7M8543	101	7N7969	52	7T1374	96	7V9162	99
7M8592	98	7N7970	52		97	7V9288	177
7M9847	188	7N8015	13	7T2037	60	7W0134	62
7N0012	46	7N8018	11		61	7W0250	49
7N0060	73	7N8021	4	7T2074	75	7W0507	21
7N0172	29	7N8022	11	7T2339	68	7W0508	16
7N0200	29	7N8024	3	7T3267	71	7W1058	44
7N0718	73		13	7T3268	71	7W1927	53
	74	7N8421	52	7T3269	71	7W2808	53
7N0944	34	7N8775	48	7T3270	71	7W3042	44
7N1046	52	7N8779	48	7T3271	71	7W4272	50
7N1047	52	7N8785	49	7T3276	71	7W4486	56
7N1052	47	7N8821	49	7T3277	71	7W5687	9
7N1053	52		50	7T3278	71	7W5700	54
7N1067	53	7N8874	2	7T3279	71	7W7544	4
7N1152	17		11	7T3451	71	7W9308	18
7N1164	92	7N9145	18	7T3454	71	7X3229	196
7N1687	46	7N9342	7	7T3973	71	7X7877	190
7N1796	54	7N9519	55	7T3974	71		
7N2171	50	7N9520	55	7T6282	87		8
7N2172	50	7N9521	47	7T9989	91		
7N2176	47	7N9534	2	7V5210	110	8B2133	186
7N2434	46		12	7V5211	110	8B3768	95
7N2594	48	7N9589	3	7V5547	124	8B6021	113
	50		19	7V5645	118	8B6127	61
7N2867	73	7N9805	9	7V5646	118		125
7N2879	3	7N9967	73	7V7793	107	8B6349	4
	17	7S1085	32	7V7796	107		6
7N2942	20	7S2204	10	7V8336	108	8C3079	173
7N2994	16	7S3161	13	7V8918	120	8C3121	32
7N3104	47	7S3224	5	7V9054	142	8C3445	28
7N3763	40		6	7V9070	92	8C3446	28
7N3796	40	7S3797	73	7V9071	92	8C3651	67
7N4160	73	7S4607	97	7V9074	92		70
	76	7S5432	76	7V9093	81		71
7N4448	11	7S6701	136	7V9096	81	8C3655	71
7N4716	16	7S7043	19	7V9097	81	8C4171	71
7N4791	16	7S7144	11	7V9099	81	8C5210	31
7N5274	73	7S7167	32	7V9100	81	8C5917	73
7N5334	47	7S7168	32	7V9101	125	8C5918	73
7N5908	3	7S7171	32	7V9103	125	8C6808	76
	30	7S7174	29	7V9106	187	8C9120	128
7N5910	31		32	7V9109	167	8D0071	184

PART NUMBER INDEX

Number	Page	Number	Page	Number	Page	Number	Page
8D5294	95	8J0441	135		50	8N2503	49
8D5295	95		138	8L8413	73	8N2505	49
8D7712	142	8J0505	135	8M0505	44	8N2507	49
8F1434	71		136		125	8N2510	54
	76	8J0508	135	8M0506	124	8N2511	54
8F3434	76		138	8M0904	23	8N2518	52
8F3436	76	8J0509	138	8M1013	97	8N2637	62
8F3437	76	8J1568	131	8M1280	87	8N2640	62
8F3469	73		132	8M2538	98	8N2641	62
	75	8J1726	135	8M3182	28	8N2772	2
8F4387	141	8J2928	182	8M3837	108		55
8F4731	28	8J2933	182	8M4389	96	8N3087	50
8F5368	188	8J3534	138	8M4409	98	8N3088	47
8F7242	136	8J3639	154	8M4432	27	8N3168	50
8F8151	32	8J3640	154	8M4436	92	8N3256	50
8F8733	105	8J4691	182		93	8N3258	48
	106	8J4989	182	8M4438	44	8N3259	48
	107	8J5449	153	8M4446	44	8N3263	48
8F8804	181	8J6910	148	8M5248	44	8N3264	48
	182		151	8M5254	93	8N3312	13
8F8998	24	8J6912	148		98	8N3325	13
8F9206	148		151	8M5299	81	8N3327	13
	150	8J6913	148	8M5599	21	8N3365	59
8F9538	60		151	8M7587	21	8N3731	52
8F9866	194	8J8407	154	8M7677	73	8N4110	4
	195		155		78		6
8H1037	95	8K1207	4	8M7892	73	8N4446	2
8H1141	71		6		186		14
8H2778	59	8K5279	193	8M8281	93	8N4457	27
8H2807	59	8K5705	108	8M8489	85		28
8H2810	59	8K5997	102	8M8948	73	8N4485	11
8H3496	61		103	8M8997	95		34
8H5303	74	8K5999	108	8M9024	139	8N4901	39
8H5306	74	8K6000	108		144	8N4902	38
8H7521	100	8K6212	160	8M9062	54	8N4959	16
8H8648	73	8K6217	160	8M9140	47	8N4960	16
8H9189	98	8K6474	119	8M9307	4	8N5117	52
8H9204	56	8K6712	176		30	8N5132	56
8H9299	53	8K7263	187	8N0081	19	8N5251	58
8H9788	44	8K7494	144	8N0109	14		59
8H9789	34	8K7495	144	8N0110	14	8N5305	34
8H9818	148	8K7498	144	8N0264	14	8N5783	47
	151	8K7499	144	8N0303	2	8N5928	31
8H9819	148	8K7741	141		14	8N5929	31
	151	8K7782	125	8N0488	34	8N6849	20
8J0212	149	8K7783	125	8N0803	59	8N6854	20
	150	8K8122	186	8N0869	73	8N7005	56
	151	8K8159	186	8N1415	53	8N7315	23
8J0214	145	8K8402	187	8N1721	9	8N7318	23
	146	8K8969	179	8N1725	73	8N7499	35
	147	8K8985	179	8N1849	9	8N7501	35
	148	8K8986	179	8N2487	52	8N7517	54
8J0216	146	8K8987	179	8N2489	52	8N7782	11
	149	8K8988	179	8N2495	49	8N8170	55
8J0430	125	8K9760	179	8N2496	49		56
	135	8K9761	179	8N2499	49	8N8220	9
8J0438	138	8L5832	47	8N2501	49	8N8221	9

PART NUMBER INDEX

Number	Page	Number	Page	Number	Page	Number	Page
				9			
8N8222	9	8S9191	85			9G0635	85
8N8223	9	8S9407	28			9G0637	85
8N8225	7	8T0659	56	9B0453	71	9G0638	85
8N8226	7	8T2502	32		76	9G4250	73
8N8227	7	8T2604	48	9B0576	105	9G4314	87
8N8228	7	8T4122	192		106	9G4358	79
8N8229	7	8T4223	192	9B2232	95	9G5101	85
8N8721	15	8T4896	17	9B7233	73	9G5127	93
8P0668	60	8T8204	161	9B7237	32	9G5182	91
8P1438	87		162		34	9G5524	91
8P1556	98	8T8205	163	9C2737	190	9G5525	91
8P3040	96		164	9C2745	190	9G5866	93
	98	8T8566	71	9C2746	190	9G8547	91
8P6321	97	8T8569	71	9C2748	190	9G8548	98
8P8417	91	8T8915	34	9C2750	190	9G8551	96
8P8762	98	8T8917	32	9C2754	190	9H1110	13
8P8980	81	8T9101	17	9C2815	190	9H1112	13
	96		34	9C3408	119	9H1113	13
8P8981	96	8T9757	73	9C5965	121	9H2367	137
8P9854	81	8T9884	71		123	9H5921	18
	98	8V1374	168	9C5970	122	9H6079	105
8P9857	81	8V1376	168	9C5971	122		106
	90	8V1479	165	9C5973	121		107
	91	8V1481	165		122	9H6454	148
8R0826	102	8V1509	170	9C6249	190		151
	103	8V1515	125	9C8021	104	9H8136	32
	104	8V1730	189	9C8022	104	9J0834	135
8R6830	83		190	9C8681	123	9J3047	148
	84	8V3208	190	9C8682	123		151
8R6833	84	8V3298	112	9C8683	87	9J5091	172
8S0317	142		113		121	9J6367	156
8S0493	22		114	9F2167	118		157
8S0933	188		115		178	9J7814	172
8S0934	188	8V3318	105	9F2247	7	9J8224	135
8S1326	24	8V3319	106		42	9J8569	158
8S1491	10	8V4998	185	9F2636	195		159
8S1498	13	8V5933	95	9F2637	195	9J8729	153
8S1606	14	8V6867	115	9F2638	195		157
8S1963	20	8V6868	115	9F2978	29	9K0651	73
8S1978	43	8V6869	115		73	9K1490	125
8S1982	43	8V6870	114		95	9K3035	139
8S3426	91	8V6871	114		114		141
8S4365	43	8V7195	118		141	9K3036	141
8S4581	43	8V8075	95		147	9K3037	141
8S4582	43	8V8082	169		151	9K3215	116
8S4583	43	8V8083	169		187	9K3584	73
8S6511	22	8V9821	181		188	9K3926	175
8S6814	49	8V9822	181	9F4446	17	9K3928	175
8S6818	160	8W9594	109	9F5644	74	9K3929	175
8S6819	160		110	9F5977	77	9K4443	95
8S7599	43		111	9F6445	190	9K5780	109
8S8874	23	8Y4037	191		192		110
8S9092	128			9F8125	79		111
8S9129	87			9F8689	139	9K6357	140
8S9130	87			9F9920	112		141
8S9151	87			9G0003	73	9K6366	141
8S9152	87			9G0004	73	9K7117	179

PART NUMBER INDEX

Number	Page
9K7204	83
9K8141	112
9K8944	105
	106
	107
9K9012	190
9K9109	77
9K9393	142
9K9394	142
9L0864	160
9L1518	43
9L2295	45
9L2685	95
9L5854	5
9L6531	196
9L6934	9
9L7657	7
9L9098	56
9L9132	187
9M0164	41
	131
9M0378	27
9M0381	43
9M0382	43
9M0385	43
9M0397	43
9M0402	42
9M0853	28
9M1305	73
	75
9M1974	14
	22
	27
	28
	42
	44
	59
	63
	95
	96
	113
	114
	115
	120
	125
	166
	167
	190
9M1986	100
9M2341	59
9M2904	25
	38
9M4355	87
9M4584	28
	125
9M4849	23
	44
9M5048	168
9M5181	43
9M5732	24
9M5870	120
9M6527	31
9M6590	139
	181
9M6937	91
9M6974	101
9M7609	71
9M7958	131
	170
9M7959	41
9M8406	73
	116
9M8511	39
9M9886	13
9N0869	25
	42
9N3388	57
	58
9N5769	15
9P0073	91
9P0075	91
9P0136	100
9P1331	91
9P1332	91
9P1508	100
9P1509	99
	100
9P1519	131
9P2614	91
9P3041	97
9P4748	101
9P4749	101
9P5768	96
9P5928	96
9P6797	91
9P6798	91
9P6799	91
9P6903	91
9P7101	91
9P7118	91
9P7121	61
9P7516	91
9P8610	92
9P8611	92
9P8612	92
9P8613	92
9P9523	81
	92
9P9736	91
9S0666	38
9S1354	114
	115
	116
	118
	121
9S1366	63
	92
9S3029	9
9S3581	87
9S3582	87
9S4167	55
9S4180	52
9S4181	102
	103
9S4182	135
9S4185	136
	137
	138
9S4187	135
9S4190	95
	101
	170
9S4191	55
	98
	100
9S5937	142
9S6012	91
9S6154	137
9S6155	137
	138
9S7581	83
	139
	141
9S7697	139
9S7720	40
9S7724	40
9S7744	116
9S8001	136
	137
	138
9S8002	165
	167
9S8003	59
	155
	157
9S8004	93
9S8005	138
	155
	157
	158
	159
	165
9S8006	135
	155
	157
9S8008	95
	100
	125
	155
	169
9S8009	153
9S8010	146
	149
9T2118	136
9T3707	161
	162
9T3708	163
	164
9T5042	173
9T5046	174
9T5050	173
9T5054	174
9T5057	173
9T5064	174
9T5074	173
9T5085	174
9T5087	173
9T5089	174
9T5092	173
9T5096	174
9T5100	173
9T5104	174
9T5107	173
9T5112	173
9T5822	128
9V3670	82
9V4883	82
9V4884	82
9V6167	104
9V8789	190
9W3187	73
9W4178	91
9W6645	108
9X1908	196
9X3969	108
9X3973	108
9X6198	196
9Y1979	37
9Y2991	4
	6
9Y2992	4
	6
9Y4380	44
9Y4701	50
9Y6859	28
9Y6860	28
9Y7037	54
9Y7149	28
9Y7589	23
	1
138502	121

PART NUMBER INDEX

Number		Page
3		
300058	.....	92
307946	.....	58
307947	.....	55
		58
		125
308196	.....	82
308535	.....	10
		16
		105
		106
30996	.....	108
310216	.....	49
310249	.....	191
321267	.....	61
346681	.....	124
369821	.....	71
369823	.....	71
383967	.....	114
4		
454065	.....	120
5		
54362	.....	61
544672	.....	174
544673	.....	174
6		
616711	.....	91
617539	.....	156
		157
617540	.....	174
619457	.....	173
684174	.....	82
684497	.....	81
686750	.....	127
8		
88381	.....	131

5 y 1541 pedidos Reque do H.

Mineradora [illegible] Ltda.